2014 Mazda3 Service Highlights

- Service Highlights

2014 Mazda3 Wiring Diagram and Workshop Manual

Wiring Diagram

- General Information (pdf)
- Wiring Diagram

Workshop Manual

- General Information
- Engine
- Suspension
- Driveline/Axle
- Brakes
- Transmission/Transaxle
- Steering
- HVAC
- Restraints
- Body and Accessories
- Multiplex Communication System
- Personalization Features
- i-Eloop

2014-present Mazda3 Bodyshop Manual

- Body Shop Manual

Wiring Diagram - Body Accessories

2014 Mazda3

- Electrical Component List

- Connector/Ground Point Locations -- Engine Compartment
- Connector/Ground Point Locations -- Upper Dashboard
- Connector/Ground Point Locations -- Lower Dashboard
- Connector/Ground Point Locations -- Body (4SD)
- Connector/Ground Point Locations -- Body (5HB)
- Connector/Ground Point Locations -- Seat
- 00E-1a -- Electrical Wiring Schematic
- 00E-1b -- Electrical Wiring Schematic
- 00E-1c -- Electrical Wiring Schematic
- 00E-1d -- Electrical Wiring Schematic
- 00F-1a -- Relay And Fuse Block
- 00F-2 -- Fuse Block
- 00F-4 -- Main Fuse
- 00G-1a -- Ground Point (SKYACTIV-G 2.0, 2.5)
- 00G-1b -- Ground Point (SKYACTIV-G 2.0, 2.5)
- 00G-3 -- Ground Point (Upper Dashboard)
- 00G-4 -- Ground Point (Lower Dashboard)
- 00G-5 -- Ground Point (4SD)
- 00G-6 -- Ground Point (5HB)

- 00D-1a -- Data Link Connector
- 00D-1b -- Data Link Connector
- 00D-1c -- Data Link Connector
- 00D-1d -- Data Link Connector
- 00D-1e -- Data Link Connector
- 0112-1 -- Cooling System (SKYACTIV-G 2.0, 2.5)
- 0114-1 -- Fuel System (SKYACTIV-G 2.0, 2.5)
- 0117-1 -- Charging System (SKYACTIV-G 2.0, 2.5 / With i-ELOOP)
- 0117-5 -- Charging System (SKYACTIV-G 2.0, 2.5 / Without i-ELOOP)
- 0119-1 -- Starting System (SKYACTIV-G 2.0, 2.5)
- 0120-1 -- Cruise Control System (SKYACTIV-G 2.0, 2.5)
- 0140-1a -- Control System (SKYACTIV-G 2.0, 2.5)
- 0140-1b -- Control System (SKYACTIV-G 2.0, 2.5)
- 0140-1c -- Control System (SKYACTIV-G 2.0, 2.5)
- 0140-1d -- Control System (SKYACTIV-G 2.0, 2.5)
- 0140-1e -- Control System (SKYACTIV-G 2.0, 2.5)
- 0140-1f -- Control System (SKYACTIV-G 2.0, 2.5)
- 0415-1a -- Dynamic Stability Control

- **0415-1b -- Dynamic Stability Control**
- **0517-1a -- Automatic Transaxle Control System**
- **0517-1b -- Automatic Transaxle Control System**
- **0518-1 -- Shift-Lock System**
- **0613-1 -- Electric Power Steering (EPS)**
- **0740-1a -- Heater And Air Conditioner System (Manual A/C)**
- **0740-1b -- Heater And Air Conditioner System (Manual A/C)**
- **0740-2a -- Heater And Air Conditioner System (Full-Auto A/C (Single))**
- **0740-2b -- Heater And Air Conditioner System (Full-Auto A/C (Single))**
- **0740-3a -- Heater And Air Conditioner System (Full-Auto A/C (Dual))**
- **0740-3b -- Heater And Air Conditioner System (Full-Auto A/C (Dual))**
- **0740-4 -- A/C Compressor Control**
- **0810-1a -- Air Bag System (Includes Pre-Tensioner Seat Belt Information)**
- **0810-1b -- Air Bag System (Includes Pre-Tensioner Seat Belt Information)**
- **0810-1c -- Air Bag System (Includes Pre-Tensioner Seat Belt Information)**
- **0810-1d -- Air Bag System (Includes Pre-Tensioner Seat Belt Information)**
- **0912-1 -- Rear Window Defroster (Includes Heated Outer Mirror Information)**
- **0912-3 -- Power Outer Mirror**
- **0912-4 -- Auto Dimming Mirror**
- **0912-5a -- Power Window System (Auto-Open/Close Function For Driver-Side Window)**
- **0912-5b -- Power Window System (Auto-Open/Close Function For Driver-Side Window)**
- **0913-1 -- Seat Warmer**
- **0913-2 -- Power Seat**
- **0914-1a -- Door Lock System (With Keyless Entry System)**
- **0914-1b -- Door Lock System (With Keyless Entry System)**
- **0914-1c -- Door Lock System (With Keyless Entry System)**
- **0914-1d -- Door Lock System (With Keyless Entry System)**
- **0914-1e -- Door Lock System (With Keyless Entry System)**
- **0914-2a -- Door Lock System (With Advanced Keyless Entry System)**
- **0914-2b -- Door Lock System (With Advanced Keyless Entry System)**
- **0914-2c -- Door Lock System (With Advanced Keyless Entry System)**
- **0914-2d -- Door Lock System (With Advanced Keyless Entry System)**
- **0914-2e -- Door Lock System (With Advanced Keyless Entry System)**
- **0914-2f -- Door Lock System (With Advanced Keyless Entry System)**
- **0914-4 -- Theft-Deterrent System**
- **0915-1 -- Sunroof**
- **0918-1a -- Headlight (Without Discharge Headlight System)**
- **0918-1b -- Headlight (Without Discharge Headlight System)**
- **0918-2a -- Headlight (With Discharge Headlight System)**
- **0918-2b -- Headlight (With Discharge Headlight System)**
- **0918-3a -- License Plate Light / Parking Light / Side Marker Light / Taillight**
- **0918-3b -- License Plate Light / Parking Light / Side Marker Light / Taillight**
- **0918-4 -- Fog Light**
- **0918-5a -- Turn And Hazard Warning Light**
- **0918-5b -- Turn And Hazard Warning Light**
- **0918-6 -- Back-Up Light**
- **0918-7a -- Brake Light / High-Mount Brake Light**
- **0918-7b -- Brake Light / High-Mount Brake Light**
- **0918-9 -- Illumination Light**
- **0918-10 -- Headlight Manual Leveling System**
- **0918-11 -- AFS (Adaptive Front Lighting System) / Headlight Auto Leveling System**
- **0918-12 -- Steering Angle Sensor**
- **0918-13 -- High Beam Control (HBC) System**
- **0919-1a -- Wiper And Washer System**
- **0919-1b -- Wiper And Washer System**
- **0920-1a -- Audio System (Without Center Display)**
- **0920-1b -- Audio System (Without Center Display)**

- **0920-1c -- Audio System (Without Center Display)**
- **0920-1d -- Audio System (Without Center Display)**
- **0920-2a -- Audio System (With Center Display / Without Bose® Type Audio)**
- **0920-2b -- Audio System (With Center Display / Without Bose® Type Audio)**
- **0920-2c -- Audio System (With Center Display / Without Bose® Type Audio)**
- **0920-2d -- Audio System (With Center Display / Without Bose® Type Audio)**
- **0920-2e -- Audio System (With Center Display / Without Bose® Type Audio)**
- **0920-3a -- Audio System (With Center Display / Bose® Type Audio)**
- **0920-3b -- Audio System (With Center Display / Bose® Type Audio)**
- **0920-3c -- Audio System (With Center Display / Bose® Type Audio)**
- **0920-3d -- Audio System (With Center Display / Bose® Type Audio)**
- **0920-3e -- Audio System (With Center Display / Bose® Type Audio)**
- **0920-3f -- Audio System (With Center Display / Bose® Type Audio)**
- **0921-1 -- Power System**
- **0921-2 -- Accessory Socket**
- **0922-1a -- Instrument Cluster**
- **0922-1b -- Instrument Cluster**
- **0922-1c -- Instrument Cluster**
- **0922-1d -- Instrument Cluster**
- **0922-1e -- Instrument Cluster**
- **0922-2 -- Horn**
- **0922-3 -- Indicator Unit**
- **0922-5 -- Lane Departure Warning System**
- **0922-6 -- Blind Spot Monitoring (BSM)**
- **0940-1a -- Body Control System**
- **0940-1b -- Body Control System**

Workshop Manual - General Information

2014 - Mazda3

General Information

- VEHICLE IDENTIFICATION NUMBER (VIN) CODE
- VEHICLE IDENTIFICATION NUMBER (VIN)
- HOW TO USE THIS MANUAL
- UNITS
- SERVICE CAUTIONS
- INSTALLATION OF RADIO SYSTEM
- ELECTRICAL SYSTEM
- REPAIR-USE CONNECTOR REPLACEMENT PROCEDURE
- JACKING POSITIONS, VEHICLE LIFT (2 SUPPORTS) AND SAFETY STAND (RIGID RACK) POSITIONS
- TOWING
- IDENTIFICATION NUMBER LOCATIONS
- SAE STANDARDS
- ABBREVIATIONS
- PRE-DELIVERY INSPECTION
- SCHEDULED MAINTENANCE

Workshop Manual - Engine

2014 - Mazda3

On-Board Diagnostics

- FOREWORD [SKYACTIV-G 2.0, SKYACTIV-G 2.5]
- OBD-II PENDING TROUBLE CODE [SKYACTIV-G 2.0, SKYACTIV-G 2.5]
- OBD-II FREEZE FRAME DATA [SKYACTIV-G 2.0, SKYACTIV-G 2.5]
- OBD-II ON-BOARD SYSTEM READINESS TEST [SKYACTIV-G 2.0, SKYACTIV-G 2.5]
- OBD-II READ/CLEAR DIAGNOSTIC TEST RESULTS [SKYACTIV-G 2.0, SKYACTIV-G 2.5]
- OBD-II PARAMETER IDENTIFICATION (PID) ACCESS [SKYACTIV-G 2.0, SKYACTIV-G 2.5]
- ON-BOARD DIAGNOSTIC TEST [SKYACTIV-G 2.0, SKYACTIV-G 2.5]
- AFTER REPAIR PROCEDURE [SKYACTIV-G 2.0, SKYACTIV-G 2.5]
- CLEARING DTC [SKYACTIV-G 2.0, SKYACTIV-G 2.5]
- KOEO/KOER SELF TEST [SKYACTIV-G 2.0, SKYACTIV-G 2.5]
- OBD-II DRIVE MODE [SKYACTIV-G 2.0, SKYACTIV-G 2.5]
- DIAGNOSTIC MONITORING TEST RESULTS [SKYACTIV-G 2.0, SKYACTIV-G 2.5]
- DTC TABLE [SKYACTIV-G 2.0, SKYACTIV-G 2.5]
- DTC B10A2:00 [SKYACTIV-G 2.0, SKYACTIV-G 2.5]
- DTC P0010:00 [SKYACTIV-G 2.0, SKYACTIV-G 2.5]
- DTC P0011:00, P0012:00 [SKYACTIV-G 2.0, SKYACTIV-G 2.5]
- DTC P0014:00 [SKYACTIV-G 2.0, SKYACTIV-G 2.5]
- DTC P0015:00 [SKYACTIV-G 2.0, SKYACTIV-G 2.5]
- DTC P0016:00 [SKYACTIV-G 2.0, SKYACTIV-G 2.5]
- DTC P0017:00 [SKYACTIV-G 2.0, SKYACTIV-G 2.5]
- DTC P0031:00 [SKYACTIV-G 2.0, SKYACTIV-G 2.5]
- DTC P0032:00 [SKYACTIV-G 2.0, SKYACTIV-G 2.5]
- DTC P0037:00 [SKYACTIV-G 2.0, SKYACTIV-G 2.5]
- DTC P0038:00 [SKYACTIV-G 2.0, SKYACTIV-G 2.5]
- DTC P0053:00 [SKYACTIV-G 2.0, SKYACTIV-G 2.5]
- DTC P0054:00 [SKYACTIV-G 2.0, SKYACTIV-G 2.5]
- DTC P0069:00 [SKYACTIV-G 2.0, SKYACTIV-G 2.5]
- DTC P0072:00 [SKYACTIV-G 2.0, SKYACTIV-G 2.5]
- DTC P0073:00 [SKYACTIV-G 2.0, SKYACTIV-G 2.5]
- DTC P0088:00 [SKYACTIV-G 2.0, SKYACTIV-G 2.5]
- DTC P0089:00 [SKYACTIV-G 2.0, SKYACTIV-G 2.5]
- DTC P0091:00 [SKYACTIV-G 2.0, SKYACTIV-G 2.5]
- DTC P0092:00 [SKYACTIV-G 2.0, SKYACTIV-G 2.5]
- DTC P0097:00 [SKYACTIV-G 2.0, SKYACTIV-G 2.5]
- DTC P0098:00 [SKYACTIV-G 2.0, SKYACTIV-G 2.5]
- DTC P0101:00 [SKYACTIV-G 2.0, SKYACTIV-G 2.5]
- DTC P0102:00 [SKYACTIV-G 2.0, SKYACTIV-G 2.5]
- DTC P0103:00 [SKYACTIV-G 2.0, SKYACTIV-G 2.5]
- DTC P0107:00 [SKYACTIV-G 2.0, SKYACTIV-G 2.5]
- DTC P0108:00 [SKYACTIV-G 2.0, SKYACTIV-G 2.5]

- **DTC P0112:00 [SKYACTIV-G 2.0, SKYACTIV-G 2.5]**
- **DTC P0113:00 [SKYACTIV-G 2.0, SKYACTIV-G 2.5]**
- **DTC P0116:00 [SKYACTIV-G 2.0, SKYACTIV-G 2.5]**
- **DTC P0117:00 [SKYACTIV-G 2.0, SKYACTIV-G 2.5]**
- **DTC P0118:00 [SKYACTIV-G 2.0, SKYACTIV-G 2.5]**
- **DTC P011A:00 [SKYACTIV-G 2.0, SKYACTIV-G 2.5]**
- **DTC P0122:00 [SKYACTIV-G 2.0, SKYACTIV-G 2.5]**
- **DTC P0123:00 [SKYACTIV-G 2.0, SKYACTIV-G 2.5]**
- **DTC P0126:00 [SKYACTIV-G 2.0, SKYACTIV-G 2.5]**
- **DTC P0130:00 [SKYACTIV-G 2.0, SKYACTIV-G 2.5]**
- **DTC P0131:00 [SKYACTIV-G 2.0, SKYACTIV-G 2.5]**
- **DTC P0132:00 [SKYACTIV-G 2.0, SKYACTIV-G 2.5]**
- **DTC P0133:00 [SKYACTIV-G 2.0, SKYACTIV-G 2.5]**
- **DTC P0134:00 [SKYACTIV-G 2.0, SKYACTIV-G 2.5]**
- **DTC P0137:00 [SKYACTIV-G 2.0, SKYACTIV-G 2.5]**
- **DTC P0138:00 [SKYACTIV-G 2.0, SKYACTIV-G 2.5]**
- **DTC P013A:00, P013B:00 [SKYACTIV-G 2.0, SKYACTIV-G 2.5]**
- **DTC P0140:00 [SKYACTIV-G 2.0, SKYACTIV-G 2.5]**
- **DTC P0171:00 [SKYACTIV-G 2.0, SKYACTIV-G 2.5]**
- **DTC P0172:00 [SKYACTIV-G 2.0, SKYACTIV-G 2.5]**
- **DTC P0192:00 [SKYACTIV-G 2.0, SKYACTIV-G 2.5]**
- **DTC P0193:00 [SKYACTIV-G 2.0, SKYACTIV-G 2.5]**
- **DTC P0201:00 [SKYACTIV-G 2.0, SKYACTIV-G 2.5]**
- **DTC P0202:00 [SKYACTIV-G 2.0, SKYACTIV-G 2.5]**
- **DTC P0203:00 [SKYACTIV-G 2.0, SKYACTIV-G 2.5]**
- **DTC P0204:00 [SKYACTIV-G 2.0, SKYACTIV-G 2.5]**
- **DTC P0222:00 [SKYACTIV-G 2.0, SKYACTIV-G 2.5]**
- **DTC P0223:00 [SKYACTIV-G 2.0, SKYACTIV-G 2.5]**
- **DTC P025B:00 [SKYACTIV-G 2.0, SKYACTIV-G 2.5]**
- **DTC P025C:00 [SKYACTIV-G 2.0, SKYACTIV-G 2.5]**
- **DTC P025D:00 [SKYACTIV-G 2.0, SKYACTIV-G 2.5]**
- **DTC P0300:00 [SKYACTIV-G 2.0, SKYACTIV-G 2.5]**
- **DTC P0301:00, P0302:00, P0303:00, P0304:00 [SKYACTIV-G 2.0, SKYACTIV-G 2.5]**
- **DTC P0327:00 [SKYACTIV-G 2.0, SKYACTIV-G 2.5]**
- **DTC P0328:00 [SKYACTIV-G 2.0, SKYACTIV-G 2.5]**
- **DTC P0335:00 [SKYACTIV-G 2.0, SKYACTIV-G 2.5]**
- **DTC P0340:00 [SKYACTIV-G 2.0, SKYACTIV-G 2.5]**
- **DTC P0365:00 [SKYACTIV-G 2.0, SKYACTIV-G 2.5]**
- **DTC P0421:00 [SKYACTIV-G 2.0, SKYACTIV-G 2.5]**
- **DTC P0442:00, P0455:00, P0456:00 [SKYACTIV-G 2.0, SKYACTIV-G 2.5]**
- **DTC P0443:00 [SKYACTIV-G 2.0, SKYACTIV-G 2.5]**
- **DTC P0446:00 [SKYACTIV-G 2.0, SKYACTIV-G 2.5]**
- **DTC P0451:00 [SKYACTIV-G 2.0, SKYACTIV-G 2.5]**
- **DTC P0452:00 [SKYACTIV-G 2.0, SKYACTIV-G 2.5]**
- **DTC P0453:00 [SKYACTIV-G 2.0, SKYACTIV-G 2.5]**
- **DTC P0454:00 [SKYACTIV-G 2.0, SKYACTIV-G 2.5]**
- **DTC P0457:00 [SKYACTIV-G 2.0, SKYACTIV-G 2.5]**
- **DTC P0460:00 [SKYACTIV-G 2.0, SKYACTIV-G 2.5]**
- **DTC P0461:00 [SKYACTIV-G 2.0, SKYACTIV-G 2.5]**
- **DTC P0462:00 [SKYACTIV-G 2.0, SKYACTIV-G 2.5]**
- **DTC P0463:00 [SKYACTIV-G 2.0, SKYACTIV-G 2.5]**
- **DTC P0480:00 [SKYACTIV-G 2.0, SKYACTIV-G 2.5]**
- **DTC P0482:00 [SKYACTIV-G 2.0, SKYACTIV-G 2.5]**
- **DTC P0500:00 [SKYACTIV-G 2.0, SKYACTIV-G 2.5]**
- **DTC P0504:00 [SKYACTIV-G 2.0, SKYACTIV-G 2.5]**
- **DTC P0506:00, P151B:00 [SKYACTIV-G 2.0, SKYACTIV-G 2.5]**
- **DTC P0507:00 [SKYACTIV-G 2.0, SKYACTIV-G 2.5]**

- **DTC P050A:00 [SKYACTIV-G 2.0, SKYACTIV-G 2.5]**
- **DTC P050B:00 [SKYACTIV-G 2.0, SKYACTIV-G 2.5]**
- **DTC P0520:00 [SKYACTIV-G 2.0, SKYACTIV-G 2.5]**
- **DTC P0524:00 [SKYACTIV-G 2.0, SKYACTIV-G 2.5]**
- **DTC P0532:00 [SKYACTIV-G 2.0, SKYACTIV-G 2.5]**
- **DTC P0533:00 [SKYACTIV-G 2.0, SKYACTIV-G 2.5]**
- **DTC P057F:00 [SKYACTIV-G 2.0, SKYACTIV-G 2.5]**
- **DTC P058A:00 [SKYACTIV-G 2.0, SKYACTIV-G 2.5]**
- **DTC P059F:00 [SKYACTIV-G 2.0, SKYACTIV-G 2.5]**
- **DTC P05A0:00 [SKYACTIV-G 2.0, SKYACTIV-G 2.5]**
- **DTC P05A3:00 [SKYACTIV-G 2.0, SKYACTIV-G 2.5]**
- **DTC P05C0:00 [SKYACTIV-G 2.0, SKYACTIV-G 2.5]**
- **DTC P0600:00 [SKYACTIV-G 2.0, SKYACTIV-G 2.5]**
- **DTC P0601:00 [SKYACTIV-G 2.0, SKYACTIV-G 2.5]**
- **DTC P0602:00 [SKYACTIV-G 2.0, SKYACTIV-G 2.5]**
- **DTC P0604:00 [SKYACTIV-G 2.0, SKYACTIV-G 2.5]**
- **DTC P0606:00 [SKYACTIV-G 2.0, SKYACTIV-G 2.5]**
- **DTC P0607:00 [SKYACTIV-G 2.0, SKYACTIV-G 2.5]**
- **DTC P0610:00 [SKYACTIV-G 2.0, SKYACTIV-G 2.5]**
- **DTC P061B:00 [SKYACTIV-G 2.0, SKYACTIV-G 2.5]**
- **DTC P061D:00 [SKYACTIV-G 2.0, SKYACTIV-G 2.5]**
- **DTC P061F:00 [SKYACTIV-G 2.0, SKYACTIV-G 2.5]**
- **DTC P0628:00 [SKYACTIV-G 2.0, SKYACTIV-G 2.5]**
- **DTC P0629:00 [SKYACTIV-G 2.0, SKYACTIV-G 2.5]**
- **DTC P0638:00 [SKYACTIV-G 2.0, SKYACTIV-G 2.5]**
- **DTC P064D:00 [SKYACTIV-G 2.0, SKYACTIV-G 2.5]**
- **DTC P0685:00 [SKYACTIV-G 2.0, SKYACTIV-G 2.5]**
- **DTC P06B8:00 [SKYACTIV-G 2.0, SKYACTIV-G 2.5]**
- **DTC P06DA:00 [SKYACTIV-G 2.0, SKYACTIV-G 2.5]**
- **DTC P0703:00 [SKYACTIV-G 2.0, SKYACTIV-G 2.5]**
- **DTC P0704:00 [SKYACTIV-G 2.0, SKYACTIV-G 2.5]**
- **DTC P0850:00 [SKYACTIV-G 2.0, SKYACTIV-G 2.5]**
- **DTC P0A12:00 [SKYACTIV-G 2.0, SKYACTIV-G 2.5]**
- **DTC P0A8D:00 [SKYACTIV-G 2.0, SKYACTIV-G 2.5]**
- **DTC P0A8F:00 [SKYACTIV-G 2.0, SKYACTIV-G 2.5]**
- **DTC P0A94:00 [SKYACTIV-G 2.0, SKYACTIV-G 2.5]**
- **DTC P111A:00 [SKYACTIV-G 2.0, SKYACTIV-G 2.5]**
- **DTC P117A:00 [SKYACTIV-G 2.0, SKYACTIV-G 2.5]**
- **DTC P1260:00 [SKYACTIV-G 2.0, SKYACTIV-G 2.5]**
- **DTC P130C:00 [SKYACTIV-G 2.0, SKYACTIV-G 2.5]**
- **DTC P1380:00 [SKYACTIV-G 2.0, SKYACTIV-G 2.5]**
- **DTC P144A:00 [SKYACTIV-G 2.0, SKYACTIV-G 2.5]**
- **DTC P1450:00 [SKYACTIV-G 2.0, SKYACTIV-G 2.5]**
- **DTC P1794:00 [SKYACTIV-G 2.0, SKYACTIV-G 2.5]**
- **DTC P2090:00 [SKYACTIV-G 2.0, SKYACTIV-G 2.5]**
- **DTC P2091:00 [SKYACTIV-G 2.0, SKYACTIV-G 2.5]**
- **DTC P2096:00, P2097:00 [SKYACTIV-G 2.0, SKYACTIV-G 2.5]**
- **DTC P2101:00 [SKYACTIV-G 2.0, SKYACTIV-G 2.5]**
- **DTC P2107:00 [SKYACTIV-G 2.0, SKYACTIV-G 2.5]**
- **DTC P2109:00 [SKYACTIV-G 2.0, SKYACTIV-G 2.5]**
- **DTC P2110:00 [SKYACTIV-G 2.0, SKYACTIV-G 2.5]**
- **DTC P2112:00 [SKYACTIV-G 2.0, SKYACTIV-G 2.5]**
- **DTC P2119:00 [SKYACTIV-G 2.0, SKYACTIV-G 2.5]**
- **DTC P2122:00 [SKYACTIV-G 2.0, SKYACTIV-G 2.5]**
- **DTC P2123:00 [SKYACTIV-G 2.0, SKYACTIV-G 2.5]**
- **DTC P2127:00 [SKYACTIV-G 2.0, SKYACTIV-G 2.5]**
- **DTC P2128:00 [SKYACTIV-G 2.0, SKYACTIV-G 2.5]**

- DTC P2135:00 [SKYACTIV-G 2.0, SKYACTIV-G 2.5]
- DTC P2138:00 [SKYACTIV-G 2.0, SKYACTIV-G 2.5]
- DTC P2183:00 [SKYACTIV-G 2.0, SKYACTIV-G 2.5]
- DTC P2184:00 [SKYACTIV-G 2.0, SKYACTIV-G 2.5]
- DTC P2185:00 [SKYACTIV-G 2.0, SKYACTIV-G 2.5]
- DTC P2199:00 [SKYACTIV-G 2.0, SKYACTIV-G 2.5]
- DTC P2228:00 [SKYACTIV-G 2.0, SKYACTIV-G 2.5]
- DTC P2229:00 [SKYACTIV-G 2.0, SKYACTIV-G 2.5]
- DTC P2237:00 [SKYACTIV-G 2.0, SKYACTIV-G 2.5]
- DTC P2243:00 [SKYACTIV-G 2.0, SKYACTIV-G 2.5]
- DTC P2251:00 [SKYACTIV-G 2.0, SKYACTIV-G 2.5]
- DTC P2299:00 [SKYACTIV-G 2.0, SKYACTIV-G 2.5]
- DTC P2302:00 [SKYACTIV-G 2.0, SKYACTIV-G 2.5]
- DTC P2305:00 [SKYACTIV-G 2.0, SKYACTIV-G 2.5]
- DTC P2308:00 [SKYACTIV-G 2.0, SKYACTIV-G 2.5]
- DTC P2311:00 [SKYACTIV-G 2.0, SKYACTIV-G 2.5]
- DTC P2502:00 [SKYACTIV-G 2.0, SKYACTIV-G 2.5]
- DTC P2503:00 [SKYACTIV-G 2.0, SKYACTIV-G 2.5]
- DTC P2504:00 [SKYACTIV-G 2.0, SKYACTIV-G 2.5]
- DTC P2507:00 [SKYACTIV-G 2.0, SKYACTIV-G 2.5]
- DTC P2610:00 [SKYACTIV-G 2.0, SKYACTIV-G 2.5]
- DTC U0073:00, U0101:00, U0121:00, U0131:00, U0140:00, U0151:00, U0155:00, U0214:00, U0235:00 [SKYACTIV-G 2.0, SKYACTIV-G 2.5]
- DTC U0074:00 [SKYACTIV-G 2.0, SKYACTIV-G 2.5]
- DTC U0284:00 [SKYACTIV-G 2.0, SKYACTIV-G 2.5]
- DTC U0298:00 [SKYACTIV-G 2.0, SKYACTIV-G 2.5]
- DTC U0302:00 [SKYACTIV-G 2.0, SKYACTIV-G 2.5]
- DTC U0315:00 [SKYACTIV-G 2.0, SKYACTIV-G 2.5]
- DTC U0320:00 [SKYACTIV-G 2.0, SKYACTIV-G 2.5]
- DTC U0323:00 [SKYACTIV-G 2.0, SKYACTIV-G 2.5]
- DTC U0336:00 [SKYACTIV-G 2.0, SKYACTIV-G 2.5]
- DTC U0338:00 [SKYACTIV-G 2.0, SKYACTIV-G 2.5]
- DTC U0433:00 [SKYACTIV-G 2.0, SKYACTIV-G 2.5]
- DTC U1007:00 [SKYACTIV-G 2.0, SKYACTIV-G 2.5]
- DTC U2300:00 [SKYACTIV-G 2.0, SKYACTIV-G 2.5]
- DTC U3000:41 [SKYACTIV-G 2.0, SKYACTIV-G 2.5]

Symptom Troubleshooting

- FOREWORD [SKYACTIV-G 2.0, SKYACTIV-G 2.5]
- SYMPTOM DIAGNOSTIC INDEX [SKYACTIV-G 2.0, SKYACTIV-G 2.5]
- CONTROL SYSTEM DEVICE AND CONTROL RELATIONSHIP CHART [SKYACTIV-G 2.0, SKYACTIV-G 2.5]
- QUICK DIAGNOSTIC CHART [SKYACTIV-G 2.0, SKYACTIV-G 2.5]
- NO.1 BLOWN FUSES [SKYACTIV-G 2.0, SKYACTIV-G 2.5]
- NO.2 CHECK ENGINE LIGHT ILLUMINATES [SKYACTIV-G 2.0, SKYACTIV-G 2.5]
- NO.3 WILL NOT CRANK [SKYACTIV-G 2.0, SKYACTIV-G 2.5]
- NO.4 HARD TO START/LONG CRANK/ERRATIC START/ERRATIC CRANK [SKYACTIV-G 2.0, SKYACTIV-G 2.5]
- NO.5 ENGINE STALLS-AFTER START/AT IDLE [SKYACTIV-G 2.0, SKYACTIV-G 2.5]
- NO.6 CRANKS NORMALLY BUT WILL NOT START [SKYACTIV-G 2.0, SKYACTIV-G 2.5]
- NO.7 ENGINE OIL WARNING LIGHT ILLUMINATED/MESSAGE RELATED TO ENGINE HYDRAULIC PRESSURE MALFUNCTION INDICATED IN DISPLAY [SKYACTIV-G 2.0, SKYACTIV-G 2.5]
- NO.8 ENGINE RUNS ROUGH/ROLLING IDLE [SKYACTIV-G 2.0, SKYACTIV-G 2.5]
- NO.9 FAST IDLE/RUNS ON [SKYACTIV-G 2.0, SKYACTIV-G 2.5]
- NO.10 LOW IDLE/STALLS DURING DECELERATION [SKYACTIV-G 2.0, SKYACTIV-G 2.5]
- NO.11 ENGINE STALLS/QUITS, ENGINE RUNS ROUGH, MISSES, BUCK/JERK, HESITATION/STUMBLE, SURGES [SKYACTIV-G 2.0, SKYACTIV-G 2.5]
- NO.12 LACK/LOSS OF POWER-ACCELERATION/CRUISE [SKYACTIV-G 2.0, SKYACTIV-G 2.5]

NO.13 KNOCKING/PINGING-ACCELERATION/CRUISE [SKYACTIV-G 2.0, SKYACTIV-G 2.5]
- NO.14 POOR FUEL ECONOMY [SKYACTIV-G 2.0, SKYACTIV-G 2.5]
- NO.15 EMISSION COMPLIANCE [SKYACTIV-G 2.0, SKYACTIV-G 2.5]
- NO.16 HIGH OIL CONSUMPTION/LEAKAGE [SKYACTIV-G 2.0, SKYACTIV-G 2.5]
- NO.17 COOLING SYSTEM CONCERNS-OVERHEATING [SKYACTIV-G 2.0, SKYACTIV-G 2.5]
- NO.18 COOLING SYSTEM CONCERNS-RUNS COLD [SKYACTIV-G 2.0, SKYACTIV-G 2.5]
- NO.19 EXHAUST SMOKE [SKYACTIV-G 2.0, SKYACTIV-G 2.5]
- NO.20 FUEL ODOR (IN ENGINE COMPARTMENT) [SKYACTIV-G 2.0, SKYACTIV-G 2.5]
- NO.21 ENGINE NOISE [SKYACTIV-G 2.0, SKYACTIV-G 2.5]
- NO.22 VIBRATION CONCERNS (ENGINE) [SKYACTIV-G 2.0, SKYACTIV-G 2.5]
- NO.23 A/C DOES NOT WORK SUFFICIENTLY [SKYACTIV-G 2.0, SKYACTIV-G 2.5]
- NO.24 A/C IS ALWAYS ON OR A/C COMPRESSOR RUNS CONTINUOUSLY [SKYACTIV-G 2.0, SKYACTIV-G 2.5]
- NO.25 EXHAUST SULPHUR SMELL [SKYACTIV-G 2.0, SKYACTIV-G 2.5]
- NO.26 FUEL REFILL CONCERNS [SKYACTIV-G 2.0, SKYACTIV-G 2.5]
- NO.27 FUEL FILLING SHUT OFF CONCERNS [SKYACTIV-G 2.0, SKYACTIV-G 2.5]
- NO.28 SPARK PLUG CONDITION [SKYACTIV-G 2.0, SKYACTIV-G 2.5]
- INTERMITTENT CONCERN TROUBLESHOOTING [SKYACTIV-G 2.0, SKYACTIV-G 2.5]
- ENGINE CONTROL SYSTEM OPERATION INSPECTION [SKYACTIV-G 2.0, SKYACTIV-G 2.5]

Mechanical

- ENGINE LOCATION INDEX [SKYACTIV-G 2.0, SKYACTIV-G 2.5]
- ENGINE TUNE-UP [SKYACTIV-G 2.0, SKYACTIV-G 2.5]
- PLUG HOLE PLATE REMOVAL/INSTALLATION [SKYACTIV-G 2.0, SKYACTIV-G 2.5]
- DRIVE BELT INSPECTION [SKYACTIV-G 2.0, SKYACTIV-G 2.5]
- DRIVE BELT REMOVAL/INSTALLATION [SKYACTIV-G 2.0, SKYACTIV-G 2.5]
- DRIVE BELT AUTO TENSIONER INSPECTION [SKYACTIV-G 2.0, SKYACTIV-G 2.5]
- DRIVE BELT AUTO TENSIONER REMOVAL/INSTALLATION [SKYACTIV-G 2.0, SKYACTIV-G 2.5]
- COMPRESSION INSPECTION [SKYACTIV-G 2.0, SKYACTIV-G 2.5]
- ELECTRIC VARIABLE VALVE TIMING MOTOR/DRIVER INSPECTION [SKYACTIV-G 2.0, SKYACTIV-G 2.5]
- ELECTRIC VARIABLE VALVE TIMING MOTOR/DRIVER REMOVAL/INSTALLATION [SKYACTIV-G 2.0, SKYACTIV-G 2.5]
- HYDRAULIC VARIABLE VALVE TIMING ACTUATOR INSPECTION [SKYACTIV-G 2.0, SKYACTIV-G 2.5]
- ELECTRIC VARIABLE VALVE TIMING ACTUATOR INSPECTION [SKYACTIV-G 2.0, SKYACTIV-G 2.5]
- ELECTRIC VARIABLE VALVE TIMING ACTUATOR, HYDRAULIC VARIABLE VALVE TIMING ACTUATOR REMOVAL/INSTALLATION [SKYACTIV-G 2.0, SKYACTIV-G 2.5]
- OIL CONTROL VALVE (OCV) INSPECTION [SKYACTIV-G 2.0, SKYACTIV-G 2.5]
- OIL CONTROL VALVE (OCV) REMOVAL/INSTALLATION [SKYACTIV-G 2.0, SKYACTIV-G 2.5]
- TIMING CHAIN REMOVAL/INSTALLATION [SKYACTIV-G 2.0, SKYACTIV-G 2.5]
- HYDRAULIC LASH ADJUSTER (HLA) INSPECTION [SKYACTIV-G 2.0, SKYACTIV-G 2.5]
- HYDRAULIC LASH ADJUSTER (HLA) REMOVAL/INSTALLATION [SKYACTIV-G 2.0, SKYACTIV-G 2.5]
- CYLINDER HEAD GASKET REPLACEMENT [SKYACTIV-G 2.0, SKYACTIV-G 2.5]
- FRONT OIL SEAL REPLACEMENT [SKYACTIV-G 2.0, SKYACTIV-G 2.5]
- REAR OIL SEAL REPLACEMENT [SKYACTIV-G 2.0, SKYACTIV-G 2.5]
- ENGINE MOUNT DISASSEMBLY/ASSEMBLY [SKYACTIV-G 2.0, SKYACTIV-G 2.5]
- ENGINE REMOVAL/INSTALLATION [SKYACTIV-G 2.0, SKYACTIV-G 2.5]
- ENGINE DISASSEMBLY/ASSEMBLY [SKYACTIV-G 2.0, SKYACTIV-G 2.5]

Lubrication

- LUBRICATION SYSTEM LOCATION INDEX [SKYACTIV-G 2.0, SKYACTIV-G 2.5]
- ENGINE OIL LEVEL INSPECTION [SKYACTIV-G 2.0, SKYACTIV-G 2.5]
- ENGINE OIL REPLACEMENT [SKYACTIV-G 2.0, SKYACTIV-G 2.5]
- OIL FILTER REPLACEMENT [SKYACTIV-G 2.0, SKYACTIV-G 2.5]
- OIL PRESSURE INSPECTION [SKYACTIV-G 2.0, SKYACTIV-G 2.5]
- ENGINE OIL SOLENOID VALVE REMOVAL/INSTALLATION [SKYACTIV-G 2.0, SKYACTIV-G 2.5]
- ENGINE OIL SOLENOID VALVE INSPECTION [SKYACTIV-G 2.0, SKYACTIV-G 2.5]
- OIL PAN REMOVAL/INSTALLATION [SKYACTIV-G 2.0, SKYACTIV-G 2.5]

- OIL PUMP REMOVAL/INSTALLATION [SKYACTIV-G 2.0, SKYACTIV-G 2.5]

Cooling System

- COOLING SYSTEM LOCATION INDEX [SKYACTIV-G 2.0, SKYACTIV-G 2.5]
- COOLING SYSTEM SERVICE WARNINGS [SKYACTIV-G 2.0, SKYACTIV-G 2.5]
- ENGINE COOLANT LEVEL INSPECTION [SKYACTIV-G 2.0, SKYACTIV-G 2.5]
- ENGINE COOLANT REPLACEMENT [SKYACTIV-G 2.0, SKYACTIV-G 2.5]
- ENGINE COOLANT PROTECTION INSPECTION [SKYACTIV-G 2.0, SKYACTIV-G 2.5]
- ENGINE COOLANT LEAKAGE INSPECTION [SKYACTIV-G 2.0, SKYACTIV-G 2.5]
- COOLING SYSTEM CAP INSPECTION [SKYACTIV-G 2.0, SKYACTIV-G 2.5]
- COOLANT RESERVE TANK REMOVAL/INSTALLATION [SKYACTIV-G 2.0, SKYACTIV-G 2.5]
- RADIATOR REMOVAL/INSTALLATION [SKYACTIV-G 2.0, SKYACTIV-G 2.5]
- THERMOSTAT REMOVAL/INSTALLATION [SKYACTIV-G 2.0, SKYACTIV-G 2.5]
- THERMOSTAT INSPECTION [SKYACTIV-G 2.0, SKYACTIV-G 2.5]
- WATER PUMP REMOVAL/INSTALLATION [SKYACTIV-G 2.0, SKYACTIV-G 2.5]
- COOLING FAN MOTOR REMOVAL/INSTALLATION [SKYACTIV-G 2.0, SKYACTIV-G 2.5]
- COOLING FAN MOTOR INSPECTION [SKYACTIV-G 2.0, SKYACTIV-G 2.5]

In-Take Air System

- INTAKE-AIR SYSTEM LOCATION INDEX [SKYACTIV-G 2.0, SKYACTIV-G 2.5]
- INTAKE-AIR SYSTEM VACUUM HOSE ROUTING DIAGRAM [SKYACTIV-G 2.0, SKYACTIV-G 2.5]
- INTAKE-AIR SYSTEM DIAGRAM [SKYACTIV-G 2.0, SKYACTIV-G 2.5]
- INTAKE MANIFOLD VACUUM INSPECTION [SKYACTIV-G 2.0, SKYACTIV-G 2.5]
- INTAKE-AIR SYSTEM REMOVAL/INSTALLATION [SKYACTIV-G 2.0, SKYACTIV-G 2.5]
- AIR CLEANER ELEMENT REMOVAL/INSTALLATION [SKYACTIV-G 2.0, SKYACTIV-G 2.5]
- AIR CLEANER ELEMENT INSPECTION [SKYACTIV-G 2.0, SKYACTIV-G 2.5]
- THROTTLE BODY INSPECTION [SKYACTIV-G 2.0, SKYACTIV-G 2.5]
- CHECK VALVE INSPECTION [SKYACTIV-G 2.0, SKYACTIV-G 2.5]
- ACCELERATOR PEDAL REMOVAL/INSTALLATION [SKYACTIV-G 2.0, SKYACTIV-G 2.5]

Fuel System

- FUEL SYSTEM LOCATION INDEX [SKYACTIV-G 2.0, SKYACTIV-G 2.5]
- FUEL SYSTEM FLOW DIAGRAM [SKYACTIV-G 2.0, SKYACTIV-G 2.5]
- BEFORE SERVICE PRECAUTION [SKYACTIV-G 2.0, SKYACTIV-G 2.5]
- AFTER SERVICE PRECAUTION [SKYACTIV-G 2.0, SKYACTIV-G 2.5]
- FUEL LINE PRESSURE INSPECTION [SKYACTIV-G 2.0, SKYACTIV-G 2.5]
- FUEL DRAINING PROCEDURE [SKYACTIV-G 2.0, SKYACTIV-G 2.5]
- FUEL TANK REMOVAL/INSTALLATION [SKYACTIV-G 2.0, SKYACTIV-G 2.5]
- FUEL TANK INSPECTION [SKYACTIV-G 2.0, SKYACTIV-G 2.5]
- FUEL-FILLER PIPE REMOVAL/INSTALLATION [SKYACTIV-G 2.0, SKYACTIV-G 2.5]
- NON-RETURN VALVE INSPECTION [SKYACTIV-G 2.0, SKYACTIV-G 2.5]
- FUEL PUMP UNIT REMOVAL/INSTALLATION [SKYACTIV-G 2.0, SKYACTIV-G 2.5]
- FUEL PUMP UNIT DISASSEMBLY/ASSEMBLY [SKYACTIV-G 2.0, SKYACTIV-G 2.5]
- FUEL PUMP UNIT INSPECTION [SKYACTIV-G 2.0, SKYACTIV-G 2.5]
- HIGH PRESSURE FUEL PUMP REMOVAL/INSTALLATION [SKYACTIV-G 2.0, SKYACTIV-G 2.5]
- HIGH PRESSURE FUEL PUMP INSPECTION [SKYACTIV-G 2.0, SKYACTIV-G 2.5]
- QUICK RELEASE CONNECTOR REMOVAL/INSTALLATION [SKYACTIV-G 2.0, SKYACTIV-G 2.5]
- FUEL INJECTOR REMOVAL/INSTALLATION [SKYACTIV-G 2.0, SKYACTIV-G 2.5]
- FUEL INJECTOR INSPECTION [SKYACTIV-G 2.0, SKYACTIV-G 2.5]
- FUEL FILTER (HIGH-PRESSURE) REMOVAL/INSTALLATION [SKYACTIV-G 2.0, SKYACTIV-G 2.5]
- FUEL PUMP CONTROL MODULE REMOVAL/INSTALLATION [SKYACTIV-G 2.0, SKYACTIV-G 2.5]
- FUEL PUMP CONTROL MODULE INSPECTION [SKYACTIV-G 2.0, SKYACTIV-G 2.5]

Exhaust System

- EXHAUST SYSTEM INSPECTION [SKYACTIV-G 2.0, SKYACTIV-G 2.5]

- EXHAUST SYSTEM REMOVAL/INSTALLATION [SKYACTIV-G 2.0, SKYACTIV-G 2.5]

Emissions System

- EMISSION SYSTEM LOCATION INDEX [SKYACTIV-G 2.0, SKYACTIV-G 2.5]
- EMISSION SYSTEM DIAGRAM [SKYACTIV-G 2.0, SKYACTIV-G 2.5]
- FUEL-FILLER CAP INSPECTION [SKYACTIV-G 2.0, SKYACTIV-G 2.5]
- CHARCOAL CANISTER REMOVAL/INSTALLATION [SKYACTIV-G 2.0, SKYACTIV-G 2.5]
- CHARCOAL CANISTER INSPECTION [SKYACTIV-G 2.0, SKYACTIV-G 2.5]
- PURGE SOLENOID VALVE REMOVAL/INSTALLATION [SKYACTIV-G 2.0, SKYACTIV-G 2.5]
- PURGE SOLENOID VALVE INSPECTION [SKYACTIV-G 2.0, SKYACTIV-G 2.5]
- CATCH TANK INSPECTION [SKYACTIV-G 2.0, SKYACTIV-G 2.5]
- POSITIVE CRANKCASE VENTILATION (PCV) VALVE REMOVAL/INSTALLATION [SKYACTIV-G 2.0, SKYACTIV-G 2.5]
- POSITIVE CRANKCASE VENTILATION (PCV) VALVE INSPECTION [SKYACTIV-G 2.0, SKYACTIV-G 2.5]
- CHECK VALVE REMOVAL/INSTALLATION [SKYACTIV-G 2.0, SKYACTIV-G 2.5]
- CHECK VALVE INSPECTION [SKYACTIV-G 2.0, SKYACTIV-G 2.5]
- WARM-UP THREE-WAY CATALYTIC CONVERTER (WU-TWC) INSPECTION [SKYACTIV-G 2.0, SKYACTIV-G 2.5]
- ROLLOVER VALVE REMOVAL/INSTALLATION [SKYACTIV-G 2.0, SKYACTIV-G 2.5]
- ROLLOVER VALVE INSPECTION [SKYACTIV-G 2.0, SKYACTIV-G 2.5]
- FUEL SHUT-OFF VALVE REMOVAL/INSTALLATION [SKYACTIV-G 2.0, SKYACTIV-G 2.5]
- FUEL SHUT-OFF VALVE INSPECTION [SKYACTIV-G 2.0, SKYACTIV-G 2.5]
- EVAPORATIVE CHAMBER REMOVAL/INSTALLATION [SKYACTIV-G 2.0, SKYACTIV-G 2.5]
- EVAPORATIVE CHAMBER INSPECTION [SKYACTIV-G 2.0, SKYACTIV-G 2.5]
- QUICK RELEASE CONNECTOR (EMISSION SYSTEM) REMOVAL/INSTALLATION [SKYACTIV-G 2.0, SKYACTIV-G 2.5]
- CANISTER VENT (CV) SOLENOID VALVE REMOVAL/INSTALLATION [SKYACTIV-G 2.0, SKYACTIV-G 2.5]
- CANISTER VENT (CV) SOLENOID VALVE INSPECTION [SKYACTIV-G 2.0, SKYACTIV-G 2.5]

Charging System

- CHARGING SYSTEM LOCATION INDEX [SKYACTIV-G 2.0, SKYACTIV-G 2.5 (WITHOUT i-ELOOP)]
- BATTERY REMOVAL/INSTALLATION [SKYACTIV-G 2.0, SKYACTIV-G 2.5]
- BATTERY INSPECTION [SKYACTIV-G 2.0, SKYACTIV-G 2.5]
- BATTERY RECHARGING [SKYACTIV-G 2.0, SKYACTIV-G 2.5]
- NEGATIVE BATTERY CABLE DISCONNECTION/CONNECTION [SKYACTIV-G 2.0, SKYACTIV-G 2.5]
- GENERATOR REMOVAL/INSTALLATION [SKYACTIV-G 2.0, SKYACTIV-G 2.5 (WITHOUT i-ELOOP)]
- GENERATOR INSPECTION [SKYACTIV-G 2.0, SKYACTIV-G 2.5 (WITHOUT i-ELOOP)]
- GENERATOR DISASSEMBLY/ASSEMBLY [SKYACTIV-G 2.0, SKYACTIV-G 2.5 (WITHOUT i-ELOOP)]

Ignition System

- IGNITION SYSTEM LOCATION INDEX [SKYACTIV-G 2.0, SKYACTIV-G 2.5]
- IGNITION COIL/ION SENSOR REMOVAL/INSTALLATION [SKYACTIV-G 2.0, SKYACTIV-G 2.5]
- IGNITION COIL INSPECTION [SKYACTIV-G 2.0, SKYACTIV-G 2.5]
- SPARK PLUG REMOVAL/INSTALLATION [SKYACTIV-G 2.0, SKYACTIV-G 2.5]
- SPARK PLUG INSPECTION [SKYACTIV-G 2.0, SKYACTIV-G 2.5]

Starting System

- STARTING SYSTEM LOCATION INDEX [SKYACTIV-G 2.0, SKYACTIV-G 2.5]
- STARTER REMOVAL/INSTALLATION [SKYACTIV-G 2.0, SKYACTIV-G 2.5]
- STARTER INSPECTION [SKYACTIV-G 2.0, SKYACTIV-G 2.5]
- STARTER DISASSEMBLY/ASSEMBLY [SKYACTIV-G 2.0, SKYACTIV-G 2.5]
- STARTER INTERLOCK SWITCH INSPECTION [SKYACTIV-G 2.0, SKYACTIV-G 2.5]

Cruise Control System

- CRUISE CONTROL SWITCH INSPECTION [SKYACTIV-G 2.0, SKYACTIV-G 2.5]

Drive Selection

- DRIVE SELECTION SWITCH INSPECTION [SKYACTIV-G 2.5]

Control System

- CONTROL SYSTEM LOCATION INDEX [SKYACTIV-G 2.0, SKYACTIV-G 2.5]
- CONTROL SYSTEM DIAGRAM [SKYACTIV-G 2.0, SKYACTIV-G 2.5]
- CONTROL SYSTEM WIRING DIAGRAM [SKYACTIV-G 2.0, SKYACTIV-G 2.5]
- PCM REMOVAL/INSTALLATION [SKYACTIV-G 2.0, SKYACTIV-G 2.5]
- PCM INSPECTION [SKYACTIV-G 2.0, SKYACTIV-G 2.5]
- PCM CONFIGURATION (USING READ/WRITE FUNCTION) [SKYACTIV-G 2.0, SKYACTIV-G 2.5]
- PCM CONFIGURATION (USING AS-BUILT DATA) [SKYACTIV-G 2.0, SKYACTIV-G 2.5]
- CLUTCH PEDAL POSITION (CPP) SWITCH INSPECTION [SKYACTIV-G 2.0, SKYACTIV-G 2.5]
- NEUTRAL SWITCH INSPECTION [SKYACTIV-G 2.0, SKYACTIV-G 2.5]
- ENGINE COOLANT TEMPERATURE (ECT) SENSOR REMOVAL/INSTALLATION [SKYACTIV-G 2.0, SKYACTIV-G 2.5]
- ENGINE COOLANT TEMPERATURE (ECT) SENSOR INSPECTION [SKYACTIV-G 2.0, SKYACTIV-G 2.5]
- MASS AIR FLOW (MAF) SENSOR/INTAKE AIR TEMPERATURE (IAT) SENSOR NO.1 REMOVAL/INSTALLATION [SKYACTIV-G 2.0, SKYACTIV-G 2.5]
- MASS AIR FLOW (MAF) SENSOR INSPECTION [SKYACTIV-G 2.0, SKYACTIV-G 2.5]
- INTAKE AIR TEMPERATURE (IAT) SENSOR INSPECTION [SKYACTIV-G 2.0, SKYACTIV-G 2.5]
- MANIFOLD ABSOLUTE PRESSURE (MAP) SENSOR/INTAKE AIR TEMPERATURE (IAT) SENSOR NO.2 REMOVAL/INSTALLATION [SKYACTIV-G 2.0, SKYACTIV-G 2.5]
- MANIFOLD ABSOLUTE PRESSURE (MAP) SENSOR INSPECTION [SKYACTIV-G 2.0, SKYACTIV-G 2.5]
- BAROMETRIC PRESSURE (BARO) SENSOR REMOVAL/INSTALLATION [SKYACTIV-G 2.0, SKYACTIV-G 2.5]
- BAROMETRIC PRESSURE (BARO) SENSOR INSPECTION [SKYACTIV-G 2.0, SKYACTIV-G 2.5]
- THROTTLE POSITION (TP) SENSOR REMOVAL/INSTALLATION [SKYACTIV-G 2.0, SKYACTIV-G 2.5]
- THROTTLE POSITION (TP) SENSOR INSPECTION [SKYACTIV-G 2.0, SKYACTIV-G 2.5]
- ACCELERATOR PEDAL POSITION (APP) SENSOR REMOVAL/INSTALLATION [SKYACTIV-G 2.0, SKYACTIV-G 2.5]
- ACCELERATOR PEDAL POSITION (APP) SENSOR INSPECTION [SKYACTIV-G 2.0, SKYACTIV-G 2.5]
- FUEL PRESSURE SENSOR REMOVAL/INSTALLATION [SKYACTIV-G 2.0, SKYACTIV-G 2.5]
- FUEL PRESSURE SENSOR INSPECTION [SKYACTIV-G 2.0, SKYACTIV-G 2.5]
- AIR FUEL RATIO (A/F) SENSOR REMOVAL/INSTALLATION [SKYACTIV-G 2.0, SKYACTIV-G 2.5]
- AIR FUEL RATIO (A/F) SENSOR INSPECTION [SKYACTIV-G 2.0, SKYACTIV-G 2.5]
- HEATED OXYGEN SENSOR (HO2S) REMOVAL/INSTALLATION [SKYACTIV-G 2.0, SKYACTIV-G 2.5]
- HEATED OXYGEN SENSOR (HO2S) INSPECTION [SKYACTIV-G 2.0, SKYACTIV-G 2.5]
- CRANKSHAFT POSITION (CKP) SENSOR REMOVAL/INSTALLATION [SKYACTIV-G 2.0, SKYACTIV-G 2.5]
- CRANKSHAFT POSITION (CKP) SENSOR INSPECTION [SKYACTIV-G 2.0, SKYACTIV-G 2.5]
- CAMSHAFT POSITION (CMP) SENSOR REMOVAL/INSTALLATION [SKYACTIV-G 2.0, SKYACTIV-G 2.5]
- CAMSHAFT POSITION (CMP) SENSOR INSPECTION [SKYACTIV-G 2.0, SKYACTIV-G 2.5]
- KNOCK SENSOR (KS) REMOVAL/INSTALLATION [SKYACTIV-G 2.0, SKYACTIV-G 2.5]
- KNOCK SENSOR (KS) INSPECTION [SKYACTIV-G 2.0, SKYACTIV-G 2.5]
- CURRENT SENSOR REMOVAL/INSTALLATION [SKYACTIV-G 2.0, SKYACTIV-G 2.5]
- CURRENT SENSOR INSPECTION [SKYACTIV-G 2.0, SKYACTIV-G 2.5]
- FUEL TANK PRESSURE SENSOR REMOVAL/INSTALLATION [SKYACTIV-G 2.0, SKYACTIV-G 2.5]
- FUEL TANK PRESSURE SENSOR INSPECTION [SKYACTIV-G 2.0, SKYACTIV-G 2.5]
- ENGINE OIL DATA RESET [SKYACTIV-G 2.0, SKYACTIV-G 2.5]
- ION SENSOR REMOVAL/INSTALLATION [SKYACTIV-G 2.0, SKYACTIV-G 2.5]
- ION SENSOR INSPECTION [SKYACTIV-G 2.0, SKYACTIV-G 2.5]

Technical Data

- ENGINE TECHNICAL DATA [SKYACTIV-G 2.0, SKYACTIV-G 2.5]

Maintenance/Service Tools

- ENGINE SST [SKYACTIV-G 2.0, SKYACTIV-G 2.5]

Workshop Manual - Suspension

2014 - Mazda3

On-Board Diagnostics

- TIRE PRESSURE MONITORING SYSTEM (TPMS) WIRING DIAGRAM
- FOREWORD
- TIRE PRESSURE MONITORING SYSTEM (TPMS) ON-BOARD DIAGNOSIS

Symptom Troubleshooting

- TIRE PRESSURE MONITORING SYSTEM (TPMS) WIRING DIAGRAM
- FOREWORD
- SYMPTOM TROUBLESHOOTING
- NO.1 TPMS WARNING LIGHT ILLUMINATES

General Procedures

- GENERAL PROCEDURES (SUSPENSION)

Wheel Alignment

- WHEEL ALIGNMENT PRE-INSPECTION
- FRONT WHEEL ALIGNMENT
- REAR WHEEL ALIGNMENT

Wheel and Tires

- WHEEL AND TIRE SPECIFICATION
- WHEEL BALANCE ADJUSTMENT (ALUMINUM ALLOY WHEEL)
- TIRE PRESSURE MONITORING SYSTEM INITIALIZATION PROCEDURE
- TIRE PRESSURE MONITORING SYSTEM SET SWITCH REMOVAL/INSTALLATION
- TIRE PRESSURE MONITORING SYSTEM SET SWITCH INSPECTION
- TIRE PRESSURE MONITORING SYSTEM OPERATION RECORD INSPECTION

Front Suspension

- FRONT SUSPENSION LOCATION INDEX
- FRONT SHOCK ABSORBER AND COIL SPRING REMOVAL/INSTALLATION
- FRONT SHOCK ABSORBER AND COIL SPRING DISASSEMBLY/ASSEMBLY
- FRONT SHOCK ABSORBER INSPECTION
- FRONT SHOCK ABSORBER DISPOSAL
- FRONT LOWER ARM REMOVAL/INSTALLATION
- FRONT LOWER ARM INSPECTION
- FRONT STABILIZER REMOVAL/INSTALLATION
- FRONT STABILIZER CONTROL LINK INSPECTION
- FRONT CROSSMEMBER REMOVAL/INSTALLATION

Rear Suspension

- REAR SUSPENSION LOCATION INDEX
- REAR SHOCK ABSORBER REMOVAL/INSTALLATION
- REAR SHOCK ABSORBER INSPECTION
- REAR SHOCK ABSORBER DISPOSAL
- REAR COIL SPRING REMOVAL/INSTALLATION
- REAR LOWER ARM REMOVAL/INSTALLATION
- REAR UPPER ARM REMOVAL/INSTALLATION
- REAR TRAILING LINK REMOVAL/INSTALLATION
- REAR LATERAL LINK REMOVAL/INSTALLATION
- REAR STABILIZER REMOVAL/INSTALLATION
- REAR STABILIZER CONTROL LINK INSPECTION
- REAR CROSSMEMBER REMOVAL/INSTALLATION

Technical Data

- SUSPENSION TECHNICAL DATA

Maintenance/Service Tools

- SUSPENSION

Workshop Manual - DriveLine/Axle

2014 - Mazda3

General Procedures

- GENERAL PROCEDURES (FRONT AND REAR AXLES)

Front Axle

- FRONT AXLE LOCATION INDEX
- WHEEL HUB, STEERING KNUCKLE INSPECTION
- WHEEL HUB, STEERING KNUCKLE REMOVAL/INSTALLATION
- FRONT WHEEL HUB BOLT REPLACEMENT

Rear Axle

- REAR AXLE LOCATION INDEX
- WHEEL HUB COMPONENT INSPECTION
- WHEEL HUB COMPONENT REMOVAL/INSTALLATION
- REAR WHEEL HUB BOLT REPLACEMENT

Drive Shaft

- DRIVE SHAFT LOCATION INDEX
- FRONT DRIVE SHAFT INSPECTION
- FRONT DRIVE SHAFT REMOVAL/INSTALLATION
- FRONT DRIVE SHAFT (TRIPOD JOINT) DISASSEMBLY/ASSEMBLY
- FRONT DRIVE SHAFT (DOUBLE OFFSET JOINT) DISASSEMBLY/ASSEMBLY

Technical Data

- DRIVELINE/AXLE TECHNICAL DATA

Maintenance/Service Tools

- DRIVELINE/AXLE SST

Workshop Manual - Brakes

2014 - Mazda3

On-Board Diagnostics

- DYNAMIC STABILITY CONTROL SYSTEM WIRING DIAGRAM [DYNAMIC STABILITY CONTROL (DSC)]
- FOREWORD [DYNAMIC STABILITY CONTROL (DSC)]
- ON-BOARD DIAGNOSIS [DYNAMIC STABILITY CONTROL (DSC)]
- DTC B10DF:46/C1A08:1C/U2007:46/U2007:62/U3000:49 [DYNAMIC STABILITY CONTROL (DSC)]
- DTC B11D4:08 [DYNAMIC STABILITY CONTROL (DSC)]
- DTC C0001:01/C0002:01/C0003:01/C0004:01/C0010:01/C0011:01/C0014:01/C0015:01/C0018:01/C0019:01/C001C:01/C001D:01 [DYNAMIC STABILITY CONTROL (DSC)]
- DTC C0020:11/C0020:12/C0020:13/C0020:71 [DYNAMIC STABILITY CONTROL (DSC)]
- DTC C0023:62/C0040:64 [DYNAMIC STABILITY CONTROL (DSC)]
- DTC C0030:07/C0031:07/C0031:29/C0031:2F/C0031:64/C0033:07/C0034:07/C0034:29/C0034:2F/C0034:64/C0036:07/C0037:07/C0037:29/C0037:2F/C0037:64/C0039:07/C003A:07/C003A:29/C003A:2F/C003A:64 [DYNAMIC STABILITY CONTROL (DSC)]
- DTC C0031:11/C0031:15/C0034:11/C0034:15/C0037:11/C0037:15/C003A:11/C003A:15 [DYNAMIC STABILITY CONTROL (DSC)]
- DTC C0044:28/C0044:47/C0044:49/C0044:51/C0044:54/C0044:64/C0044:8F [DYNAMIC STABILITY CONTROL (DSC)]
- DTC C0051:62/C0051:64/C0051:67/C0051:85 [DYNAMIC STABILITY CONTROL (DSC)]
- DTC C0061:28/C0061:64/C0062:28/C0062:64/C0063:28/C0063:64 [DYNAMIC STABILITY CONTROL (DSC)]
- DTC C0061:54/C0062:54/C0063:54 [DYNAMIC STABILITY CONTROL (DSC)]
- DTC C0062:76 [DYNAMIC STABILITY CONTROL (DSC)]
- DTC C006B:00/C0072:68 [DYNAMIC STABILITY CONTROL (DSC)]
- DTC C1031:35 [DYNAMIC STABILITY CONTROL (DSC)]
- DTC C1031:41 [DYNAMIC STABILITY CONTROL (DSC)]
- DTC C1031:54 [DYNAMIC STABILITY CONTROL (DSC)]
- DTC C1031:68 [DYNAMIC STABILITY CONTROL (DSC)]
- DTC C1109:64 [DYNAMIC STABILITY CONTROL (DSC)]
- DTC P0942:46/P0942:49 [DYNAMIC STABILITY CONTROL (DSC)]
- DTC U0001:88/U0100:00/U0101:00/U0131:00/U0151:00/U0155:00/U0235:00 [DYNAMIC STABILITY CONTROL (DSC)]
- DTC U0301:09/U0401:00 [DYNAMIC STABILITY CONTROL (DSC)]
- DTC U0402:00 [DYNAMIC STABILITY CONTROL (DSC)]
- DTC U0420:00 [DYNAMIC STABILITY CONTROL (DSC)]
- DTC U0423:00/U0443:00 [DYNAMIC STABILITY CONTROL (DSC)]
- DTC U0433:00 [DYNAMIC STABILITY CONTROL (DSC)]
- DTC U0452:86 [DYNAMIC STABILITY CONTROL (DSC)]
- DTC U2101:00/U2300:52/U2300:54/U2300:55/U2300:56/U2300:64 [DYNAMIC STABILITY CONTROL (DSC)]
- DTC U3003:08/U3003:16/U3003:17 [DYNAMIC STABILITY CONTROL (DSC)]

On-Board Diagnostics

- SYSTEM WIRING DIAGRAM [LASER SENSOR]
- FOREWORD [LASER SENSOR]
- ON-BOARD DIAGNOSIS [LASER SENSOR]
- DTC U0001:00/U0100:00/U0121:00/U0131:00/U0155:00 [LASER SENSOR]
- DTC U0401:68 [LASER SENSOR]
- DTC U0415:68 [LASER SENSOR]
- DTC U0420:68 [LASER SENSOR]
- DTC U0423:68 [LASER SENSOR]
- DTC U1A14:49 [LASER SENSOR]
- DTC U2300:55/U2300:56 [LASER SENSOR]
- DTC U3000:00/U3000:64 [LASER SENSOR]
- DTC U3000:66 [LASER SENSOR]

Symptom Troubleshooting

- SYSTEM WIRING DIAGRAM [DYNAMIC STABILITY CONTROL (DSC)]
- FOREWORD [DYNAMIC STABILITY CONTROL (DSC)]
- PRECAUTION [DYNAMIC STABILITY CONTROL (DSC)]
- SYMPTOM TROUBLESHOOTING [DYNAMIC STABILITY CONTROL (DSC)]
- NO.1 ANY OF THE FOLLOWING LIGHTS ARE NOT ILLUMINATED WITH THE IGNITION SWITCHED ON: (ABS WARNING LIGHT, BRAKE SYSTEM WARNING LIGHT, TCS/DSC INDICATOR LIGHT AND/OR DSC OFF INDICATOR LIGHT) [DYNAMIC STABILITY CONTROL (DSC)]
- NO.2 ANY OF THE FOLLOWING LIGHTS REMAIN ILLUMINATED: (ABS WARNING LIGHT, TCS/DSC INDICATOR LIGHT AND/OR DSC OFF INDICATOR LIGHT) [DYNAMIC STABILITY CONTROL (DSC)]
- NO.3 BRAKE SYSTEM WARNING LIGHT REMAINS ILLUMINATED [DYNAMIC STABILITY CONTROL (DSC)]
- NO.4 A MALFUNCTION IN THE SYSTEM EVEN THOUGH THE ABS WARNING LIGHT, BRAKE SYSTEM WARNING LIGHT, TCS/DSC INDICATOR LIGHT AND DSC OFF INDICATOR LIGHT ARE NOT ILLUMINATED [DYNAMIC STABILITY CONTROL (DSC)]
- NO.5 ABS OR TCS*1 OPERATES FREQUENTLY/TCS DOES NOT WORK CORRECTLY *1: DSC SYSTEM FUNCTION CONTAINS TRACTION CONTROL FUNCTION, TCS/DSC INDICATOR LIGHT TURNS ON AND OFF WHILE TCS OPERATES [DYNAMIC STABILITY CONTROL (DSC)]
- NO.6 DSC*2 OPERATES FREQUENTLY/DSC DOES NOT WORK CORRECTLY *2: TCS/DSC INDICATOR LIGHT TURNS ON AND OFF WHILE DSC OPERATES [DYNAMIC STABILITY CONTROL (DSC)]
- NO.7 HILL LAUNCH ASSIST (HLA) OPERATES EVEN ON A DOWN SLOPE/HILL LAUNCH ASSIST (HLA) DOES NOT OPERATE ON A SLOPE [DYNAMIC STABILITY CONTROL (DSC)]
- NO.8 SMART CITY BRAKE SUPPORT (SCBS) INDICATOR LIGHT (AMBER) STAY ON [DYNAMIC STABILITY CONTROL (DSC)]

General Procedures

- GENERAL PROCEDURES (BRAKE)

Conventional Brake System

- CONVENTIONAL BRAKE SYSTEM LOCATION INDEX
- BRAKE FLUID INSPECTION
- BRAKE FLUID AIR BLEEDING
- VACUUM LINE INSPECTION
- VACUUM HOSE REMOVAL/INSTALLATION
- BRAKE PEDAL INSPECTION
- BRAKE PEDAL REMOVAL/INSTALLATION
- BRAKE SWITCH INSPECTION
- MASTER CYLINDER REMOVAL/INSTALLATION
- BRAKE FLUID LEVEL SENSOR INSPECTION
- POWER BRAKE UNIT INSPECTION
- POWER BRAKE UNIT REMOVAL/INSTALLATION
- VACUUM PUMP INSPECTION
- VACUUM PUMP REMOVAL/INSTALLATION
- FRONT BRAKE (DISC) INSPECTION
- FRONT BRAKE (DISC) REMOVAL/INSTALLATION
- DISC PAD (FRONT) REPLACEMENT
- CALIPER (FRONT) DISASSEMBLY/ASSEMBLY
- BRAKE HOSE (FRONT) REMOVAL/INSTALLATION
- REAR BRAKE (DISC) INSPECTION
- REAR BRAKE (DISC) REMOVAL/INSTALLATION
- DISC PAD (REAR) REPLACEMENT
- CALIPER (REAR) DISASSEMBLY/ASSEMBLY
- BRAKE HOSE (REAR) REMOVAL/INSTALLATION

Parking Brake System

- PARKING BRAKE SYSTEM LOCATION INDEX
- PARKING BRAKE LEVER INSPECTION
- PARKING BRAKE LEVER ADJUSTMENT
- PARKING BRAKE LEVER REMOVAL/INSTALLATION
- FRONT PARKING BRAKE CABLE REMOVAL/INSTALLATION
- REAR PARKING BRAKE CABLE REMOVAL/INSTALLATION
- PARKING BRAKE SWITCH INSPECTION

Dynamic Stability Control

- DYNAMIC STABILITY CONTROL LOCATION INDEX
- DSC SYSTEM WIRING DIAGRAM
- DSC HU/CM REMOVAL/INSTALLATION
- DSC RELATED PARTS SENSOR INITIALIZATION PROCEDURE
- DSC HU/CM INSPECTION
- FRONT ABS WHEEL-SPEED SENSOR REMOVAL/INSTALLATION
- FRONT ABS WHEEL-SPEED SENSOR INSPECTION
- REAR ABS WHEEL-SPEED SENSOR REMOVAL/INSTALLATION
- REAR ABS WHEEL-SPEED SENSOR INSPECTION
- BRAKE FLUID PRESSURE SENSOR INSPECTION

- DSC OFF SWITCH REMOVAL/INSTALLATION
- DSC OFF SWITCH INSPECTION
- LASER SENSOR INSPECTION
- LASER SENSOR REMOVAL/INSTALLATION

Technical Data

- BRAKES TECHNICAL DATA

Maintenance/Service Tools

- BRAKES SST

Workshop Manual - Transmission/Transaxle

2014 - Mazda3

On-Board Diagnostics

- ON-BOARD DIAGNOSTIC SYSTEM WIRING DIAGRAM [FW6A-EL]
- ON-BOARD DIAGNOSTIC SYSTEM FOREWORD [FW6A-EL]
- ON-BOARD DIAGNOSTIC SYSTEM DTC INSPECTION [FW6A-EL]
- ON-BOARD DIAGNOSTIC TEST MODE [FW6A-EL]
- ON-BOARD DIAGNOSTIC SYSTEM DTC TABLE [FW6A-EL]
- DTC P0218:00 [FW6A-EL]
- DTC P0500:00 [FW6A-EL]
- DTC P0666:00 [FW6A-EL]
- DTC P0667:00 [FW6A-EL]
- DTC P06B8:00 [FW6A-EL]
- DTC P0706:00 [FW6A-EL]
- DTC P0707:00 [FW6A-EL]
- DTC P0708:00 [FW6A-EL]
- DTC P0711:00 [FW6A-EL]
- DTC P0712:00 [FW6A-EL]
- DTC P0713:00 [FW6A-EL]
- DTC P0715:00 [FW6A-EL]
- DTC P0716:00 [FW6A-EL]
- DTC P0717:00 [FW6A-EL]
- DTC P0720:00 [FW6A-EL]
- DTC P0721:00 [FW6A-EL]
- DTC P0722:00 [FW6A-EL]
- DTC P0729:00 [FW6A-EL]
- DTC P0731:00 [FW6A-EL]
- DTC P0732:00 [FW6A-EL]
- DTC P0733:00 [FW6A-EL]
- DTC P0734:00 [FW6A-EL]
- DTC P0735:00 [FW6A-EL]
- DTC P0736:00 [FW6A-EL]
- DTC P073D:00 [FW6A-EL]
- DTC P0741:00 [FW6A-EL]
- DTC P0743:00 [FW6A-EL]
- DTC P0746:00 [FW6A-EL]
- DTC P0748:00 [FW6A-EL]
- DTC P0751:00 [FW6A-EL]
- DTC P0752:00 [FW6A-EL]
- DTC P0753:00 [FW6A-EL]
- DTC P0756:00 [FW6A-EL]
- DTC P0757:00 [FW6A-EL]
- DTC P0758:00 [FW6A-EL]

- DTC P0761:00 [FW6A-EL]
- DTC P0762:00 [FW6A-EL]
- DTC P0763:00 [FW6A-EL]
- DTC P0766:00 [FW6A-EL]
- DTC P0767:00 [FW6A-EL]
- DTC P0768:00 [FW6A-EL]
- DTC P0771:00 [FW6A-EL]
- DTC P0772:00 [FW6A-EL]
- DTC P0773:00 [FW6A-EL]
- DTC P0780:00 [FW6A-EL]
- DTC P0819:00 [FW6A-EL]
- DTC P0842:00 [FW6A-EL]
- DTC P0843:00 [FW6A-EL]
- DTC P0847:00 [FW6A-EL]
- DTC P0848:00 [FW6A-EL]
- DTC P0872:00 [FW6A-EL]
- DTC P0873:00 [FW6A-EL]
- DTC P0877:00 [FW6A-EL]
- DTC P0878:00 [FW6A-EL]
- DTC P0882:00 [FW6A-EL]
- DTC P0883:00 [FW6A-EL]
- DTC P1728:00 [FW6A-EL]
- DTC P1738:00 [FW6A-EL]
- DTC P1784:00 [FW6A-EL]
- DTC P2530:00 [FW6A-EL]
- DTC P2855:00 [FW6A-EL]
- DTC U0073:00, U0100:00, U0121:00, U0131:00, U0155:00 [FW6A-EL]
- DTC U0074:00 [FW6A-EL]
- DTC U0115:00 [FW6A-EL]
- DTC U0442:00 [FW6A-EL]
- ON-BOARD DIAGNOSTIC SYSTEM PID/DATA MONITOR INSPECTION [FW6A-EL]
- ON-BOARD DIAGNOSTIC SYSTEM SIMULATION INSPECTION [FW6A-EL]

Symptom Troubleshooting

- AUTOMATIC TRANSAXLE CONTROL SYSTEM WIRING DIAGRAM [FW6A-EL]
- FOREWORD [FW6A-EL]
- SYMPTOM TROUBLESHOOTING ITEM TABLE [FW6A-EL]
- QUICK DIAGNOSIS CHART [FW6A-EL]
- VEHICLE DOES NOT MOVE IN D, M OR R POSITION [FW6A-EL]
- VEHICLE MOVES IN P POSITION, OR PARKING GEAR DOES NOT DISENGAGE WHEN P IS DISENGAGED [FW6A-EL]
- EXCESSIVE CREEP [FW6A-EL]
- NO CREEP AT ALL [FW6A-EL]
- LOW MAXIMUM SPEED AND POOR ACCELERATION [FW6A-EL]
- NO SHIFTING [FW6A-EL]
- DOES NOT SHIFT TO 5GR OR 6GR [FW6A-EL]
- ABNORMAL SHIFTING [FW6A-EL]
- FREQUENT SHIFTING [FW6A-EL]
- SHIFT POINT IS HIGH OR LOW [FW6A-EL]
- NO KICKDOWN [FW6A-EL]
- ENGINE FLARES UP OR SLIPS WHEN UPSHIFTING OR DOWNSHIFTING [FW6A-EL]
- JUDDER UPON TORQUE CONVERTER CLUTCH (TCC) OPERATION [FW6A-EL]
- EXCESSIVE SHIFT SHOCK FROM N TO D OR N TO R POSITION [FW6A-EL]
- SLOW ENGAGING AFTER OPERATING SELECTOR LEVER FROM N TO D POSITION [FW6A-EL]
- EXCESSIVE SHIFT SHOCK IS FELT WHEN UPSHIFTING AND DOWNSHIFTING [FW6A-EL]
- EXCESSIVE SHIFT SHOCK ON TORQUE CONVERTER CLUTCH (TCC) [FW6A-EL]

NOISE OCCURS AT IDLE WHEN VEHICLE IS STOPPED IN ALL POSITIONS [FW6A-EL]
- NOISE OCCURS AT IDLE WHEN VEHICLE IS STOPPED IN D, M OR R POSITION [FW6A-EL]
- TRANSAXLE OVERHEATS [FW6A-EL]
- ENGINE STALLS WHEN SHIFTED TO D, M OR R POSITION [FW6A-EL]
- STARTER DOES NOT WORK [FW6A-EL]
- GEAR POSITION INDICATOR DOES NOT ILLUMINATE IN M POSITION [FW6A-EL]
- GEAR POSITION INDICATOR ILLUMINATES IN P, R, N AND D POSITIONS [FW6A-EL]
- M POSITION INDICATOR LIGHT DOES NOT ILLUMINATE IN M POSITION/M POSITION INDICATOR LIGHT ILLUMINATES IN D POSITION [FW6A-EL]
- ATF SEEPING FROM AUTOMATIC TRANSAXLE [FW6A-EL]

Clutch

- CLUTCH LOCATION INDEX [C66M-R]
- CLUTCH FLUID INSPECTION [C66M-R]
- CLUTCH FLUID LEAKAGE INSPECTION [C66M-R]
- CLUTCH FLUID REPLACEMENT/AIR BLEEDING [C66M-R]
- CLUTCH PEDAL INSPECTION [C66M-R]
- CLUTCH PEDAL REMOVAL/INSTALLATION [C66M-R]
- CLUTCH PEDAL POSITION SWITCH REMOVAL/INSTALLATION [C66M-R]
- STARTER INTERLOCK SWITCH REMOVAL/INSTALLATION [C66M-R]
- CLUTCH MASTER CYLINDER REMOVAL/INSTALLATION [C66M-R]
- CLUTCH PIPE AND HOSE REMOVAL/INSTALLATION [C66M-R]
- CLUTCH RELEASE CYLINDER REMOVAL/INSTALLATION [C66M-R]
- CLUTCH UNIT REMOVAL/INSTALLATION [C66M-R]
- CLUTCH RELEASE COLLAR INSPECTION [C66M-R]
- CLUTCH COVER INSPECTION [C66M-R]
- CLUTCH DISC INSPECTION [C66M-R]
- PILOT BEARING INSPECTION [C66M-R]
- FLYWHEEL INSPECTION [C66M-R]

Manual Transaxle

- MANUAL TRANSAXLE LOCATION INDEX [C66M-R]
- MANUAL TRANSAXLE OIL INSPECTION [C66M-R]
- MANUAL TRANSAXLE OIL REPLACEMENT [C66M-R]
- NEUTRAL SWITCH REMOVAL/INSTALLATION [C66M-R]
- BACK-UP LIGHT SWITCH REMOVAL/INSTALLATION [C66M-R]
- MANUAL TRANSAXLE REMOVAL/INSTALLATION [C66M-R]
- INSPECTION AFTER MANUAL TRANSAXLE OVERHAUL [C66M-R]
- OIL SEAL (DIFFERENTIAL) REPLACEMENT [C66M-R]
- SHIFT CONTROL MODULE REMOVAL/INSTALLATION [C66M-R]

Manual Transaxle Shift Mechanism

- MANUAL TRANSAXLE SHIFT MECHANISM LOCATION INDEX [C66M-R]
- MANUAL TRANSAXLE SHIFT MECHANISM REMOVAL/INSTALLATION [C66M-R]

Automatic Transaxle

- AUTOMATIC TRANSAXLE LOCATION INDEX [FW6A-EL]
- MECHANICAL SYSTEM TEST [FW6A-EL]
- ROAD TEST [FW6A-EL]
- AUTOMATIC TRANSAXLE FLUID (ATF) INSPECTION [FW6A-EL]
- AUTOMATIC TRANSAXLE FLUID (ATF) REPLACEMENT [FW6A-EL]
- AUTOMATIC TRANSAXLE FLUID (ATF) ADJUSTMENT [FW6A-EL]
- M POSITION SWITCH INSPECTION [FW6A-EL]
- M POSITION SWITCH REMOVAL/INSTALLATION [FW6A-EL]
- UP SWITCH INSPECTION [FW6A-EL]

- UP SWITCH REMOVAL/INSTALLATION [FW6A-EL]
- DOWN SWITCH INSPECTION [FW6A-EL]
- DOWN SWITCH REMOVAL/INSTALLATION [FW6A-EL]
- STEERING SHIFT SWITCH INSPECTION [FW6A-EL]
- STEERING SHIFT SWITCH REMOVAL/INSTALLATION [FW6A-EL]
- COUPLER COMPONENT REMOVAL/INSTALLATION [FW6A-EL]
- OIL PRESSURE SWITCH REMOVAL/INSTALLATION [FW6A-EL]
- ON/OFF SOLENOID REMOVAL/INSTALLATION [FW6A-EL]
- AUTOMATIC TRANSAXLE REMOVAL/INSTALLATION [FW6A-EL]
- DRIVE PLATE REMOVAL/INSTALLATION [FW6A-EL]
- OIL SEAL (DIFFERENTIAL) REPLACEMENT [FW6A-EL]
- OIL SEAL (CONTROL VALVE BODY) REPLACEMENT [FW6A-EL]
- OIL COOLER REMOVAL/INSTALLATION [FW6A-EL]
- CONTROL VALVE BODY REMOVAL/INSTALLATION [FW6A-EL]
- INITIAL LEARNING [FW6A-EL]
- TCM CONFIGURATION [FW6A-EL]

Automatic Transaxle Shift Mechanism

- AUTOMATIC TRANSAXLE SHIFT MECHANISM LOCATION INDEX
- AUTOMATIC TRANSAXLE SHIFT MECHANISM REMOVAL/INSTALLATION
- SELECTOR LEVER INSPECTION
- SHIFT-LOCK SYSTEM INSPECTION
- NOT P POSITION SWITCH INSPECTION

Technical Data

- TRANSMISSION/TRANSAXLE TECHNICAL DATA

Maintenance/Service Tools

- TRANSMISSION/TRANSAXLE SST

Workshop Manual - Steering

2014 - Mazda3

On-Board Diagnostics

- ELECTRIC POWER STEERING (EPS) SYSTEM WIRING DIAGRAM
- FOREWORD
- ELECTRIC POWER STEERING (EPS) ON-BOARD DIAGNOSIS
- DTC C200B:02/C200B:16/C200B:62/C200B:64/C200B:85
- DTC C200B:1C/C200C:1C
- DTC C200D:1C/C200D:64/U2011:19/U2011:1C/U2011:62/U2011:72/U2011:92
- DTC U0001:88/U0100:00/U0121:00/U0155:00/U0214:00
- DTC U0338:00/U0515:00
- DTC U0401:00
- DTC U0415:00
- DTC U0423:00
- DTC U2300:54/U2300:55/U2300:56
- DTC U3000:16/U3000:1C/U3000:28/U3000:41/U3000:46/U3000:47/U3000:49/U3000:61/U3000:73/U3000:96
- DTC U3000:4B
- DTC U3003:16
- DTC U3003:17

Symptom Troubleshooting

- ELECTRIC POWER STEERING (EPS) SYSTEM WIRING DIAGRAM
- FOREWORD
- PRECAUTION
- SYMPTOM TROUBLESHOOTING
- NO.1 POWER STEERING MALFUNCTION INDICATOR LIGHT DOES NOT ILLUMINATE WITH IGNITION SWITCHED ON
- NO.2 POWER STEERING MALFUNCTION INDICATOR LIGHT ILLUMINATES/FLASES EVEN THOUGH ENGINE HAS STARTED
- NO.3 POWER ASSIST DIFFERS BETWEEN RIGHT AND LEFT TURNS

General Procedures

- GENERAL PROCEDURES (STEERING)

Electric Power Steering (Eps)

- STEERING LOCATION INDEX
- ELECTRIC POWER STEERING (EPS) SYSTEM WIRING DIAGRAM
- STEERING WHEEL AND COLUMN INSPECTION
- STEERING WHEEL AND COLUMN REMOVAL/INSTALLATION
- INTERMEDIATE SHAFT REMOVAL/INSTALLATION

- STEERING SHAFT INSPECTION
- TIE-ROD END REPLACEMENT
- STEERING GEAR AND LINKAGE REMOVAL/INSTALLATION
- STEERING GEAR AND LINKAGE INSPECTION
- STEERING GEAR AND LINKAGE DISASSEMBLY
- TIE-ROD END INSPECTION
- TIE ROD INSPECTION
- STEERING GEAR AND LINKAGE ASSEMBLY
- EPS CONTROL MODULE INSPECTION

Technical Data

- STEERING TECHNICAL DATA

Maintenance/Service Tools

- STEERING SST

Workshop Manual - HVAC

2014 - Mazda3

On-Board Diagnostics

- ON-BOARD DIAGNOSTIC SYSTEM WIRING DIAGRAM [FULL-AUTO AIR CONDITIONER]
- FOREWORD [FULL-AUTO AIR CONDITIONER]
- FLOWCHART [FULL-AUTO AIR CONDITIONER]
- DTC DISPLAY [FULL-AUTO AIR CONDITIONER]
- CLEARING DTC [FULL-AUTO AIR CONDITIONER]
- DTC TABLE [FULL-AUTO AIR CONDITIONER]
- DTC B1081:71, B1082:71 [FULL-AUTO AIR CONDITIONER]
- DTC B1086:71 [FULL-AUTO AIR CONDITIONER]
- DTC B13AA:71 [FULL-AUTO AIR CONDITIONER]
- DTC B13AB:12, B13AB:13 [FULL-AUTO AIR CONDITIONER]
- DTC B1A61:11, B1A61:13 [FULL-AUTO AIR CONDITIONER]
- DTC B1A63:12, B1A63:13, B1A64:12, B1A64:13 [FULL-AUTO AIR CONDITIONER]
- DTC B1B71:11, B1B71:13 [FULL-AUTO AIR CONDITIONER]
- DTC B1C1A:11, B1C1A:13, B1C1B:11, B1C1B:13 [FULL-AUTO AIR CONDITIONER]
- DTC B1C1C:11, B1C1C:12, B1C1C:13 [FULL-AUTO AIR CONDITIONER]
- DTC U0010:88, U0155:00 [FULL-AUTO AIR CONDITIONER]
- DTC U0423:68 [FULL-AUTO AIR CONDITIONER]
- DTC U200D:11 [FULL-AUTO AIR CONDITIONER]
- DTC U2300:54, U2300:55, U2300:56, U2300:64 [FULL-AUTO AIR CONDITIONER]
- DTC U3003:16, U3003:17 [FULL-AUTO AIR CONDITIONER]
- DTC U300E:13 [FULL-AUTO AIR CONDITIONER]
- PID/DATA MONITOR DISPLAY [FULL-AUTO AIR CONDITIONER]
- PID/DATA MONITOR TABLE [FULL-AUTO AIR CONDITIONER]
- A/C OPERATION CHECK MODE [FULL-AUTO AIR CONDITIONER]

Symptom Troubleshooting

- SYMPTOM TROUBLESHOOTING SYSTEM WIRING DIAGRAM [FULL-AUTO AIR CONDITIONER]
- FOREWORD [FULL-AUTO AIR CONDITIONER]
- TROUBLESHOOTING INDEX [FULL-AUTO AIR CONDITIONER]
- INSUFFICIENT AIR (OR NO AIR) BLOWN FROM VENTS [FULL-AUTO AIR CONDITIONER]
- AMOUNT OF AIR BLOWN FROM VENTS DOES NOT CHANGE [FULL-AUTO AIR CONDITIONER]
- AIR INTAKE MODE DOES NOT CHANGE [FULL-AUTO AIR CONDITIONER]
- NO TEMPERATURE CONTROL WITH CLIMATE CONTROL UNIT [FULL-AUTO AIR CONDITIONER]
- WINDSHIELD FOGGED [FULL-AUTO AIR CONDITIONER]
- AIR FROM VENTS NOT COLD ENOUGH [FULL-AUTO AIR CONDITIONER]
- NO COOL AIR [FULL-AUTO AIR CONDITIONER]
- NOISE WHILE OPERATING A/C SYSTEM [FULL-AUTO AIR CONDITIONER]
- DUAL A/C CONTROL DOES NOT OPERATE [FULL-AUTO AIR CONDITIONER]

Symptom Troubleshooting

- SYMPTOM TROUBLESHOOTING SYSTEM WIRING DIAGRAM [MANUAL AIR CONDITIONER]
- FOREWORD [MANUAL AIR CONDITIONER]
- TROUBLESHOOTING INDEX [MANUAL AIR CONDITIONER]
- INSUFFICIENT AIR (OR NO AIR) BLOWN FROM VENTS [MANUAL AIR CONDITIONER]
- AMOUNT OF AIR BLOWN FROM VENTS DOES NOT CHANGE [MANUAL AIR CONDITIONER]
- AIR INTAKE MODE DOES NOT CHANGE [MANUAL AIR CONDITIONER]
- NO TEMPERATURE CONTROL WITH CLIMATE CONTROL UNIT [MANUAL AIR CONDITIONER]
- WINDSHIELD FOGGED [MANUAL AIR CONDITIONER]
- AIR FROM VENTS NOT COLD ENOUGH [MANUAL AIR CONDITIONER]
- NO COOL AIR [MANUAL AIR CONDITIONER]
- NOISE WHILE OPERATING A/C SYSTEM [MANUAL AIR CONDITIONER]

Refrigerant System

- REFRIGERANT SYSTEM SERVICE WARNINGS
- REFRIGERANT SYSTEM SERVICE CAUTIONS
- REFRIGERANT SYSTEM GENERAL PROCEDURES
- REFRIGERANT CHARGING
- REFRIGERANT RECOVERY
- REFRIGERANT PRESSURE CHECK
- REFRIGERANT SYSTEM PERFORMANCE TEST

Basic System

- HVAC BASIC SYSTEM LOCATION INDEX
- BLOWER UNIT REMOVAL/INSTALLATION
- BLOWER UNIT DISASSEMBLY/ASSEMBLY
- BLOWER MOTOR REMOVAL/INSTALLATION
- BLOWER MOTOR INSPECTION
- BLOWER FAN CONTROLLER REMOVAL/INSTALLATION
- BLOWER FAN CONTROLLER INSPECTION
- AIR FILTER REMOVAL/INSTALLATION
- AIR FILTER INSPECTION
- A/C UNIT REMOVAL/INSTALLATION
- A/C UNIT DISASSEMBLY/ASSEMBLY
- EXPANSION VALVE REMOVAL/INSTALLATION
- EVAPORATOR INSPECTION
- HEATER CORE INSPECTION
- AIRFLOW MODE MAIN LINK REMOVAL/INSTALLATION
- FRONT HEAT DUCT REMOVAL/INSTALLATION
- REAR HEAT DUCT REMOVAL/INSTALLATION
- A/C COMPRESSOR REMOVAL/INSTALLATION
- MAGNETIC CLUTCH DISASSEMBLY/ASSEMBLY
- MAGNETIC CLUTCH ADJUSTMENT
- MAGNETIC CLUTCH INSPECTION
- CONDENSER REMOVAL/INSTALLATION
- CONDENSER INSPECTION
- RECEIVER/DRIER REMOVAL/INSTALLATION
- HEATER HOSE REMOVAL/INSTALLATION
- REFRIGERANT LINE REMOVAL/INSTALLATION

Control System

- HVAC CONTROL SYSTEM LOCATION INDEX [FULL-AUTO AIR CONDITIONER]
- AIR INTAKE ACTUATOR REMOVAL/INSTALLATION [FULL-AUTO AIR CONDITIONER]
- AIR INTAKE ACTUATOR INSPECTION [FULL-AUTO AIR CONDITIONER]

AIR MIX ACTUATOR REMOVAL/INSTALLATION [FULL-AUTO AIR CONDITIONER]
- AIR MIX ACTUATOR INSPECTION [FULL-AUTO AIR CONDITIONER]
- AIRFLOW MODE ACTUATOR REMOVAL/INSTALLATION [FULL-AUTO AIR CONDITIONER]
- AIRFLOW MODE ACTUATOR INSPECTION [FULL-AUTO AIR CONDITIONER]
- SOLAR RADIATION SENSOR REMOVAL/INSTALLATION [FULL-AUTO AIR CONDITIONER]
- SOLAR RADIATION SENSOR INSPECTION [FULL-AUTO AIR CONDITIONER]
- AMBIENT TEMPERATURE SENSOR REMOVAL/INSTALLATION [FULL-AUTO AIR CONDITIONER]
- AMBIENT TEMPERATURE SENSOR INSPECTION [FULL-AUTO AIR CONDITIONER]
- PASSENGER COMPARTMENT TEMPERATURE SENSOR REMOVAL/INSTALLATION [FULL-AUTO AIR CONDITIONER]
- PASSENGER COMPARTMENT TEMPERATURE SENSOR INSPECTION [FULL-AUTO AIR CONDITIONER]
- EVAPORATOR TEMPERATURE SENSOR REMOVAL/INSTALLATION [FULL-AUTO AIR CONDITIONER]
- EVAPORATOR TEMPERATURE SENSOR INSPECTION [FULL-AUTO AIR CONDITIONER]
- REFRIGERANT PRESSURE SENSOR REMOVAL/INSTALLATION [FULL-AUTO AIR CONDITIONER]
- REFRIGERANT PRESSURE SENSOR INSPECTION [FULL-AUTO AIR CONDITIONER]
- CLIMATE CONTROL UNIT REMOVAL/INSTALLATION [FULL-AUTO AIR CONDITIONER]
- CLIMATE CONTROL UNIT INSPECTION [FULL-AUTO AIR CONDITIONER]

Control System

- HVAC CONTROL SYSTEM LOCATION INDEX [MANUAL AIR CONDITIONER]
- AIR INTAKE ACTUATOR REMOVAL/INSTALLATION [MANUAL AIR CONDITIONER]
- AIR INTAKE ACTUATOR INSPECTION [MANUAL AIR CONDITIONER]
- AMBIENT TEMPERATURE SENSOR REMOVAL/INSTALLATION [MANUAL AIR CONDITIONER]
- AMBIENT TEMPERATURE SENSOR INSPECTION [MANUAL AIR CONDITIONER]
- EVAPORATOR TEMPERATURE SENSOR REMOVAL/INSTALLATION [MANUAL AIR CONDITIONER]
- EVAPORATOR TEMPERATURE SENSOR INSPECTION [MANUAL AIR CONDITIONER]
- REFRIGERANT PRESSURE SENSOR REMOVAL/INSTALLATION [MANUAL AIR CONDITIONER]
- REFRIGERANT PRESSURE SENSOR INSPECTION [MANUAL AIR CONDITIONER]
- CLIMATE CONTROL UNIT REMOVAL/INSTALLATION [MANUAL AIR CONDITIONER]
- CLIMATE CONTROL UNIT DISASSEMBLY/ASSEMBLY [MANUAL AIR CONDITIONER]
- CLIMATE CONTROL UNIT INSPECTION [MANUAL AIR CONDITIONER]

Technical Data

- HVAC TECHNICAL DATA

Maintenance/Service Tools

- HVAC SST

Workshop Manual - Restraints

2014 - Mazda3

On-Board Diagnostics

- ON-BOARD DIAGNOSTIC WIRING DIAGRAM [STANDARD DEPLOYMENT CONTROL SYSTEM]
- FOREWORD [STANDARD DEPLOYMENT CONTROL SYSTEM]
- FLOWCHART [STANDARD DEPLOYMENT CONTROL SYSTEM]
- DTC INSPECTION [STANDARD DEPLOYMENT CONTROL SYSTEM]
- CLEARING DTC [STANDARD DEPLOYMENT CONTROL SYSTEM]
- DTC TABLE [STANDARD DEPLOYMENT CONTROL SYSTEM]
- DTC B0001:11/B0001:12/B0001:13/B0001:19/B0001:1A [STANDARD DEPLOYMENT CONTROL SYSTEM]
- DTC B0001:55/B0010:55 [STANDARD DEPLOYMENT CONTROL SYSTEM]
- DTC B0003:53 [STANDARD DEPLOYMENT CONTROL SYSTEM]
- DTC B0010:11/B0010:12/B0010:13/B0010:19/B0010:1A [STANDARD DEPLOYMENT CONTROL SYSTEM]
- DTC B0094:11/B0094:13/B0094:87/B0094:96 [STANDARD DEPLOYMENT CONTROL SYSTEM]
- DTC B0094:55 [STANDARD DEPLOYMENT CONTROL SYSTEM]
- DTC B00D2:01 [STANDARD DEPLOYMENT CONTROL SYSTEM]
- DTC B00D2:29 [STANDARD DEPLOYMENT CONTROL SYSTEM]
- DTC B1011:95 [STANDARD DEPLOYMENT CONTROL SYSTEM]
- DTC B10FD:11/B10FD:13/B10FD:87/B10FD:96 [STANDARD DEPLOYMENT CONTROL SYSTEM]
- DTC B10FD:55/B10FE:55 [STANDARD DEPLOYMENT CONTROL SYSTEM]
- DTC B10FE:11/B10FE:13/B10FE:87/B10FE:96 [STANDARD DEPLOYMENT CONTROL SYSTEM]
- DTC B1126:11/B1126:12/B1126:13/B1126:19/B1126:1A [STANDARD DEPLOYMENT CONTROL SYSTEM]
- DTC B1126:55/B1127:55 [STANDARD DEPLOYMENT CONTROL SYSTEM]
- DTC B1127:11/B1127:12/B1127:13/B1127:19/B1127:1A [STANDARD DEPLOYMENT CONTROL SYSTEM]
- DTC B1128:11/B1128:12/B1128:13/B1128:19/B1128:1A [STANDARD DEPLOYMENT CONTROL SYSTEM]
- DTC B1128:55/B1129:55 [STANDARD DEPLOYMENT CONTROL SYSTEM]
- DTC B1129:11/B1129:12/B1129:13/B1129:19/B1129:1A [STANDARD DEPLOYMENT CONTROL SYSTEM]
- DTC B1193:00 [STANDARD DEPLOYMENT CONTROL SYSTEM]
- DTC B1206:00/U2107:00 [STANDARD DEPLOYMENT CONTROL SYSTEM]
- DTC B1211:11/B1211:12/B1211:13/B1211:19/B1211:1A [STANDARD DEPLOYMENT CONTROL SYSTEM]
- DTC B1211:55, B1214:55 [STANDARD DEPLOYMENT CONTROL SYSTEM]
- DTC B1214:11/B1214:12/B1214:13/B1214:19/B1214:1A [STANDARD DEPLOYMENT CONTROL SYSTEM]
- DTC C0061:29/C0062:29/C0063:29/P0666:29 [STANDARD DEPLOYMENT CONTROL SYSTEM]
- DTC U0001:88/U0155:00 [STANDARD DEPLOYMENT CONTROL SYSTEM]
- DTC U0300:00/U2100:00 [STANDARD DEPLOYMENT CONTROL SYSTEM]
- DTC U2005:68 [STANDARD DEPLOYMENT CONTROL SYSTEM]
- DTC U3000:49 [STANDARD DEPLOYMENT CONTROL SYSTEM]
- DTC U3003:16/U3003:17 [STANDARD DEPLOYMENT CONTROL SYSTEM]
- PID/DATA MONITOR INSPECTION [STANDARD DEPLOYMENT CONTROL SYSTEM]
- PID/DATA MONITOR TABLE [STANDARD DEPLOYMENT CONTROL SYSTEM]

On-Board Diagnostics

- ON-BOARD DIAGNOSTIC WIRING DIAGRAM [TWO-STEP DEPLOYMENT CONTROL SYSTEM]
- FOREWORD [TWO-STEP DEPLOYMENT CONTROL SYSTEM]
- FLOWCHART [TWO-STEP DEPLOYMENT CONTROL SYSTEM]
- DTC INSPECTION [TWO-STEP DEPLOYMENT CONTROL SYSTEM]
- CLEARING DTC [TWO-STEP DEPLOYMENT CONTROL SYSTEM]
- DTC TABLE [TWO-STEP DEPLOYMENT CONTROL SYSTEM]
- DTC B0001:11/B0001:12/B0001:13/B0001:19/B0001:1A [TWO-STEP DEPLOYMENT CONTROL SYSTEM]
- DTC B0001:55/B0010:55 [TWO-STEP DEPLOYMENT CONTROL SYSTEM]
- DTC B0002:11/B0002:12/B0002:13/B0002:19/B0002:1A [TWO-STEP DEPLOYMENT CONTROL SYSTEM]
- DTC B0002:55/B0011:55 [TWO-STEP DEPLOYMENT CONTROL SYSTEM]
- DTC B0003:53 [TWO-STEP DEPLOYMENT CONTROL SYSTEM]
- DTC B0010:11/B0010:12/B0010:13/B0010:19/B0010:1A [TWO-STEP DEPLOYMENT CONTROL SYSTEM]
- DTC B0011:11/B0011:12/B0011:13/B0011:19/B0011:1A [TWO-STEP DEPLOYMENT CONTROL SYSTEM]
- DTC B0052:09/B0052:11/B0052:14 [TWO-STEP DEPLOYMENT CONTROL SYSTEM]
- DTC B0072:11/B0072:12/B0072:13/B0072:19/B0072:1A [TWO-STEP DEPLOYMENT CONTROL SYSTEM]
- DTC B0072:55/B1228:55 [TWO-STEP DEPLOYMENT CONTROL SYSTEM]
- DTC B0094:11/B0094:13/B0094:87/B0094:96 [TWO-STEP DEPLOYMENT CONTROL SYSTEM]
- DTC B0094:55/B1417:55 [TWO-STEP DEPLOYMENT CONTROL SYSTEM]
- DTC B00A0:07 [TWO-STEP DEPLOYMENT CONTROL SYSTEM]
- DTC B00A0:09 [TWO-STEP DEPLOYMENT CONTROL SYSTEM]
- DTC B00A0:1C [TWO-STEP DEPLOYMENT CONTROL SYSTEM]
- DTC B00A0:28 [TWO-STEP DEPLOYMENT CONTROL SYSTEM]
- DTC B00A0:4A [TWO-STEP DEPLOYMENT CONTROL SYSTEM]
- DTC B00A0:54 [TWO-STEP DEPLOYMENT CONTROL SYSTEM]
- DTC B00A0:81/B00A0:87/B00A0:8F [TWO-STEP DEPLOYMENT CONTROL SYSTEM]
- DTC B00C0:93 [TWO-STEP DEPLOYMENT CONTROL SYSTEM]
- DTC B00C1:93 [TWO-STEP DEPLOYMENT CONTROL SYSTEM]
- DTC B00C2:93 [TWO-STEP DEPLOYMENT CONTROL SYSTEM]
- DTC B00C3:93 [TWO-STEP DEPLOYMENT CONTROL SYSTEM]
- DTC B00D2:01 [TWO-STEP DEPLOYMENT CONTROL SYSTEM]
- DTC B00D2:29 [TWO-STEP DEPLOYMENT CONTROL SYSTEM]
- DTC B00D5:01/B00D5:29 [TWO-STEP DEPLOYMENT CONTROL SYSTEM]
- DTC B1011:95 [TWO-STEP DEPLOYMENT CONTROL SYSTEM]
- DTC B1126:11/B1126:12/B1126:13/B1126:19/B1126:1A [TWO-STEP DEPLOYMENT CONTROL SYSTEM]
- DTC B1126:55/B1127:55 [TWO-STEP DEPLOYMENT CONTROL SYSTEM]
- DTC B1127:11/B1127:12/B1127:13/B1127:19/B1127:1A [TWO-STEP DEPLOYMENT CONTROL SYSTEM]
- DTC B1128:11/B1128:12/B1128:13/B1128:19/B1128:1A [TWO-STEP DEPLOYMENT CONTROL SYSTEM]
- DTC B1128:55/B1129:55 [TWO-STEP DEPLOYMENT CONTROL SYSTEM]
- DTC B1129:11/B1129:12/B1129:13/B1129:19/B1129:1A [TWO-STEP DEPLOYMENT CONTROL SYSTEM]
- DTC B1193:00 [TWO-STEP DEPLOYMENT CONTROL SYSTEM]
- DTC B1196:11/B1196:13/B1196:87/B1196:96 [TWO-STEP DEPLOYMENT CONTROL SYSTEM]
- DTC B1196:55/B1197:55 [TWO-STEP DEPLOYMENT CONTROL SYSTEM]
- DTC B1197:11/B1197:13/B1197:87/B1197:96 [TWO-STEP DEPLOYMENT CONTROL SYSTEM]
- DTC B1206:00/U2107:00 [TWO-STEP DEPLOYMENT CONTROL SYSTEM]
- DTC B1211:11/B1211:12/B1211:13/B1211:19/B1211:1A [TWO-STEP DEPLOYMENT CONTROL SYSTEM]
- DTC B1211:55, B1214:55 [TWO-STEP DEPLOYMENT CONTROL SYSTEM]
- DTC B1214:11/B1214:12/B1214:13/B1214:19/B1214:1A [TWO-STEP DEPLOYMENT CONTROL SYSTEM]
- DTC B1226:11/B1226:13/B1226:87/B1226:96 [TWO-STEP DEPLOYMENT CONTROL SYSTEM]
- DTC B1226:55, B1227:55 [TWO-STEP DEPLOYMENT CONTROL SYSTEM]
- DTC B1227:11/B1227:13/B1227:87/B1227:96 [TWO-STEP DEPLOYMENT CONTROL SYSTEM]
- DTC B1228:11/B1228:12/B1228:13/B1228:19/B1228:1A [TWO-STEP DEPLOYMENT CONTROL SYSTEM]
- DTC B1417:11/B1417:13/B1417:87/B1417:96 [TWO-STEP DEPLOYMENT CONTROL SYSTEM]
- DTC C0061:29/C0062:29/C0063:29/P0666:29 [TWO-STEP DEPLOYMENT CONTROL SYSTEM]
- DTC U0001:88/U0155:00 [TWO-STEP DEPLOYMENT CONTROL SYSTEM]
- DTC U0300:00/U2100:00 [TWO-STEP DEPLOYMENT CONTROL SYSTEM]
- DTC U2005:68 [TWO-STEP DEPLOYMENT CONTROL SYSTEM]
- DTC U3000:49 [TWO-STEP DEPLOYMENT CONTROL SYSTEM]

- DTC U3003:16/U3003:17 [TWO-STEP DEPLOYMENT CONTROL SYSTEM]
- PID/DATA MONITOR INSPECTION [TWO-STEP DEPLOYMENT CONTROL SYSTEM]
- PID/DATA MONITOR TABLE [TWO-STEP DEPLOYMENT CONTROL SYSTEM]

Symptom Troubleshooting

- AIR BAG SYSTEM WIRING DIAGRAM (SYMPTOM TROUBLESHOOTING)
- FOREWORD
- TROUBLESHOOTING INDEX
- AIR BAG SYSTEM WARNING LIGHT DOES NOT ILLUMINATE
- AIR BAG SYSTEM WARNING LIGHT ILLUMINATES CONSTANTLY

Air Bag System

- AIR BAG SYSTEM LOCATION INDEX [TWO-STEP DEPLOYMENT CONTROL SYSTEM]
- AIR BAG SYSTEM SERVICE WARNINGS [TWO-STEP DEPLOYMENT CONTROL SYSTEM]
- AIR BAG SYSTEM SERVICE CAUTIONS [TWO-STEP DEPLOYMENT CONTROL SYSTEM]
- DRIVER-SIDE AIR BAG MODULE REMOVAL [TWO-STEP DEPLOYMENT CONTROL SYSTEM]
- DRIVER-SIDE AIR BAG MODULE INSTALLATION [TWO-STEP DEPLOYMENT CONTROL SYSTEM]
- PASSENGER-SIDE AIR BAG MODULE REMOVAL [TWO-STEP DEPLOYMENT CONTROL SYSTEM]
- PASSENGER-SIDE AIR BAG MODULE INSTALLATION [TWO-STEP DEPLOYMENT CONTROL SYSTEM]
- SIDE AIR BAG MODULE REMOVAL/INSTALLATION [TWO-STEP DEPLOYMENT CONTROL SYSTEM]
- CURTAIN AIR BAG MODULE REMOVAL/INSTALLATION [TWO-STEP DEPLOYMENT CONTROL SYSTEM]
- CRASH ZONE SENSOR REMOVAL/INSTALLATION [TWO-STEP DEPLOYMENT CONTROL SYSTEM]
- SAS CONTROL MODULE REMOVAL/INSTALLATION [TWO-STEP DEPLOYMENT CONTROL SYSTEM]
- SAS CONTROL MODULE CONFIGURATION (USING READ/WRITE FUNCTION) [TWO-STEP DEPLOYMENT CONTROL SYSTEM]
- SAS CONTROL MODULE CONFIGURATION (USING AS-BUILT DATA) [TWO-STEP DEPLOYMENT CONTROL SYSTEM]
- SEAT WEIGHT SENSOR CONTROL MODULE REMOVAL/INSTALLATION [TWO-STEP DEPLOYMENT CONTROL SYSTEM]
- SEAT WEIGHT SENSOR REMOVAL/INSTALLATION [TWO-STEP DEPLOYMENT CONTROL SYSTEM]
- SEAT WEIGHT SENSOR CALIBRATION [TWO-STEP DEPLOYMENT CONTROL SYSTEM]
- SEAT WEIGHT SENSOR INSPECTION [TWO-STEP DEPLOYMENT CONTROL SYSTEM]
- SIDE AIR BAG SENSOR REMOVAL/INSTALLATION [TWO-STEP DEPLOYMENT CONTROL SYSTEM]
- PRESSURE SENSOR REMOVAL/INSTALLATION [TWO-STEP DEPLOYMENT CONTROL SYSTEM]
- CLOCK SPRING REMOVAL/INSTALLATION [TWO-STEP DEPLOYMENT CONTROL SYSTEM]
- CLOCK SPRING ADJUSTMENT [TWO-STEP DEPLOYMENT CONTROL SYSTEM]
- CLOCK SPRING INSPECTION [TWO-STEP DEPLOYMENT CONTROL SYSTEM]
- PASSENGER AIR BAG DEACTIVATION (PAD) INDICATOR LIGHT REMOVAL/INSTALLATION [TWO-STEP DEPLOYMENT CONTROL SYSTEM]
- AIR BAG MODULE AND PRE-TENSIONER SEAT BELT DEPLOYMENT PROCEDURES [TWO-STEP DEPLOYMENT CONTROL SYSTEM]
- AIR BAG MODULE AND PRE-TENSIONER SEAT BELT DISPOSAL PROCEDURES [TWO-STEP DEPLOYMENT CONTROL SYSTEM]
- INSPECTION OF SST (DEPLOYMENT TOOL) [TWO-STEP DEPLOYMENT CONTROL SYSTEM]

Air Bag System

- AIR BAG SYSTEM LOCATION INDEX [STANDARD DEPLOYMENT CONTROL SYSTEM]
- AIR BAG SYSTEM SERVICE WARNINGS [STANDARD DEPLOYMENT CONTROL SYSTEM]
- AIR BAG SYSTEM SERVICE CAUTIONS [STANDARD DEPLOYMENT CONTROL SYSTEM]
- DRIVER-SIDE AIR BAG MODULE REMOVAL [STANDARD DEPLOYMENT CONTROL SYSTEM]
- DRIVER-SIDE AIR BAG MODULE INSTALLATION [STANDARD DEPLOYMENT CONTROL SYSTEM]
- PASSENGER-SIDE AIR BAG MODULE REMOVAL [STANDARD DEPLOYMENT CONTROL SYSTEM]
- PASSENGER-SIDE AIR BAG MODULE INSTALLATION [STANDARD DEPLOYMENT CONTROL SYSTEM]
- SIDE AIR BAG MODULE REMOVAL/INSTALLATION [STANDARD DEPLOYMENT CONTROL SYSTEM]
- CURTAIN AIR BAG MODULE REMOVAL/INSTALLATION [STANDARD DEPLOYMENT CONTROL SYSTEM]

- CRASH ZONE SENSOR REMOVAL/INSTALLATION [STANDARD DEPLOYMENT CONTROL SYSTEM]
- SAS CONTROL MODULE REMOVAL/INSTALLATION [STANDARD DEPLOYMENT CONTROL SYSTEM]
- SAS CONTROL MODULE CONFIGURATION (USING READ/WRITE FUNCTION) [STANDARD DEPLOYMENT CONTROL SYSTEM]
- SAS CONTROL MODULE CONFIGURATION (USING AS-BUILT DATA) [STANDARD DEPLOYMENT CONTROL SYSTEM]
- SIDE AIR BAG SENSOR REMOVAL/INSTALLATION [STANDARD DEPLOYMENT CONTROL SYSTEM]
- CLOCK SPRING REMOVAL/INSTALLATION [STANDARD DEPLOYMENT CONTROL SYSTEM]
- CLOCK SPRING ADJUSTMENT [STANDARD DEPLOYMENT CONTROL SYSTEM]
- CLOCK SPRING INSPECTION [STANDARD DEPLOYMENT CONTROL SYSTEM]
- AIR BAG MODULE AND PRE-TENSIONER SEAT BELT DEPLOYMENT PROCEDURES [STANDARD DEPLOYMENT CONTROL SYSTEM]
- AIR BAG MODULE AND PRE-TENSIONER SEAT BELT DISPOSAL PROCEDURES [STANDARD DEPLOYMENT CONTROL SYSTEM]
- INSPECTION OF SST (DEPLOYMENT TOOL) [STANDARD DEPLOYMENT CONTROL SYSTEM]

Seat Belts

- SEAT BELT LOCATION INDEX
- FRONT SEAT BELT REMOVAL/INSTALLATION
- ADJUSTER ANCHOR REMOVAL/INSTALLATION
- REAR SEAT BELT REMOVAL/INSTALLATION
- REAR CENTER SEAT BELT REMOVAL/INSTALLATION
- SEAT BELT INSPECTION
- FRONT BUCKLE REMOVAL/INSTALLATION
- REAR BUCKLE REMOVAL/INSTALLATION
- BUCKLE SWITCH INSPECTION

Maintenance/Service Tools

- RESTRAINTS SST

Workshop Manual - Body and Accessories

2014 - Mazda3

On-Board Diagnostics

- ON-BOARD DIAGNOSTIC WIRING DIAGRAM [ADAPTIVE FRONT LIGHTING SYSTEM (AFS)]
- FOREWORD [ADAPTIVE FRONT LIGHTING SYSTEM (AFS)]
- DTC INSPECTION [ADAPTIVE FRONT LIGHTING SYSTEM (AFS)]
- CLEARING DTC [ADAPTIVE FRONT LIGHTING SYSTEM (AFS)]
- DTC TABLE [ADAPTIVE FRONT LIGHTING SYSTEM (AFS)]
- DTC B1041:54 [ADAPTIVE FRONT LIGHTING SYSTEM (AFS)]
- DTC B1044:01 [ADAPTIVE FRONT LIGHTING SYSTEM (AFS)]
- DTC B10A3:86 [ADAPTIVE FRONT LIGHTING SYSTEM (AFS)]
- DTC B10A3:87 [ADAPTIVE FRONT LIGHTING SYSTEM (AFS)]
- DTC B10A4:86 [ADAPTIVE FRONT LIGHTING SYSTEM (AFS)]
- DTC B10A4:87 [ADAPTIVE FRONT LIGHTING SYSTEM (AFS)]
- DTC C0051:86 [ADAPTIVE FRONT LIGHTING SYSTEM (AFS)]
- DTC U0001:88/U0100:00/U0131:00/U0140:00/U0155:00 [ADAPTIVE FRONT LIGHTING SYSTEM (AFS)]
- DTC U0320:09 [ADAPTIVE FRONT LIGHTING SYSTEM (AFS)]
- DTC U0420:68 [ADAPTIVE FRONT LIGHTING SYSTEM (AFS)]
- DTC U0423:68 [ADAPTIVE FRONT LIGHTING SYSTEM (AFS)]
- DTC U2005:86 [ADAPTIVE FRONT LIGHTING SYSTEM (AFS)]
- DTC U2300:54 [ADAPTIVE FRONT LIGHTING SYSTEM (AFS)]
- DTC U2300:55 [ADAPTIVE FRONT LIGHTING SYSTEM (AFS)]
- DTC U2300:56 [ADAPTIVE FRONT LIGHTING SYSTEM (AFS)]
- DTC U3000:42 [ADAPTIVE FRONT LIGHTING SYSTEM (AFS)]
- DTC U3000:49 [ADAPTIVE FRONT LIGHTING SYSTEM (AFS)]
- DTC U3003:16 [ADAPTIVE FRONT LIGHTING SYSTEM (AFS)]
- DTC U3003:17 [ADAPTIVE FRONT LIGHTING SYSTEM (AFS)]
- PID/DATA MONITOR INSPECTION [ADAPTIVE FRONT LIGHTING SYSTEM (AFS)]
- PID/DATA MONITOR TABLE [ADAPTIVE FRONT LIGHTING SYSTEM (AFS)]
- HEADLIGHT LEVELING ACTUATOR OPERATION CHECK MODE [ADAPTIVE FRONT LIGHTING SYSTEM (AFS)]

On-Board Diagnostics

- ON-BOARD DIAGNOSTIC WIRING DIAGRAM [IMMOBILIZER SYSTEM]
- FOREWORD [IMMOBILIZER SYSTEM]
- DTC INSPECTION [IMMOBILIZER SYSTEM]
- CLEARING DTC [IMMOBILIZER SYSTEM]
- DTC TABLE [IMMOBILIZER SYSTEM]
- SECURITY INDICATOR LIGHT: 09, DTC: U3000:96/P1260:00 [IMMOBILIZER SYSTEM]
- SECURITY INDICATOR LIGHT: 11, DTC: B10D9:87/P1260:00 [IMMOBILIZER SYSTEM]
- SECURITY INDICATOR LIGHT: 13, DTC: B13D3:05/P1260:00 [IMMOBILIZER SYSTEM]
- SECURITY INDICATOR LIGHT: 13, DTC: B13D3:94/P1260:00 [IMMOBILIZER SYSTEM]
- SECURITY INDICATOR LIGHT: 15, DTC: B13D3:51/P1260:00 [IMMOBILIZER SYSTEM]
- SECURITY INDICATOR LIGHT: 16, DTC: U0100:87/P1260:00 [IMMOBILIZER SYSTEM]
- SECURITY INDICATOR LIGHT: 21, DTC: B13D4:00/P1260:00 [IMMOBILIZER SYSTEM]
- SECURITY INDICATOR LIGHT: 22, DTC: B10DA:51/P1260:00 [IMMOBILIZER SYSTEM]
- SECURITY INDICATOR LIGHT: 23, DTC: B10DA:62/P1260:00 [IMMOBILIZER SYSTEM]
- PID/DATA MONITOR INSPECTION [IMMOBILIZER SYSTEM]
- PID/DATA MONITOR TABLE [IMMOBILIZER SYSTEM]

On-Board Diagnostics

- ON-BOARD DIAGNOSTIC WIRING DIAGRAM [INSTRUMENT CLUSTER]
- FOREWORD [INSTRUMENT CLUSTER]
- DTC INSPECTION [INSTRUMENT CLUSTER]
- CLEARING DTC [INSTRUMENT CLUSTER]
- DTC TABLE [INSTRUMENT CLUSTER]
- DTC B11D4:53 [INSTRUMENT CLUSTER]
- DTC U0001:88/U0010:88/U0100:00/U0101:00/U0121:00/U0131:00/U0140:00/U0142:00/U0151:00/U0182:00/U0214:00/U0232:00/U0235:00/U023A:00 [INSTRUMENT CLUSTER]
- DTC U0300:00 [INSTRUMENT CLUSTER]

- DTC U0401:68 [INSTRUMENT CLUSTER]
- DTC U0402:68 [INSTRUMENT CLUSTER]
- DTC U0422:68 [INSTRUMENT CLUSTER]
- DTC U0433:00 [INSTRUMENT CLUSTER]
- DTC U0433:68 [INSTRUMENT CLUSTER]
- DTC U0515:68 [INSTRUMENT CLUSTER]
- DTC U053B:00 [INSTRUMENT CLUSTER]
- DTC U2005:86 [INSTRUMENT CLUSTER]
- DTC U2013:13 [INSTRUMENT CLUSTER]
- DTC U2100:00 [INSTRUMENT CLUSTER]
- DTC U2300:41 [INSTRUMENT CLUSTER]
- DTC U2300:51 [INSTRUMENT CLUSTER]
- DTC U2300:56 [INSTRUMENT CLUSTER]
- DTC U2300:57 [INSTRUMENT CLUSTER]
- DTC U3000:41 [INSTRUMENT CLUSTER]
- DTC U3003:16 [INSTRUMENT CLUSTER]
- PID/DATA MONITOR INSPECTION [INSTRUMENT CLUSTER]
- PID/DATA MONITOR TABLE [INSTRUMENT CLUSTER]
- ACTIVE COMMAND MODES INSPECTION [INSTRUMENT CLUSTER]
- ACTIVE COMMAND MODES TABLE [INSTRUMENT CLUSTER]

On-Board Diagnostics

- ON-BOARD DIAGNOSTIC WIRING DIAGRAM [AUDIO]
- FOREWORD [AUDIO]
- DTC INSPECTION [AUDIO]
- SUPPLIER IDENTIFICATION PROCEDURE [AUDIO]
- CLEARING DTC [AUDIO]
- DTC TABLE [AUDIO]
- DTC: 16:Er12, 26:Er81 [AUDIO]
- DTC: 28:Er01, 28:Er09 [AUDIO]
- DTC: 29:Er01, 29:Er09 [AUDIO]
- DTC: 09:Er20 [AUDIO]
- DTC: 09:Er21 [AUDIO]
- DTC: 26:Er82 [AUDIO]
- DTC: 26:Er83 [AUDIO]
- DTC: 26:Er84 [AUDIO]
- DTC: 26:Er85 [AUDIO]
- DTC: 26:Er86 [AUDIO]
- DTC: 30:Er01 [AUDIO]
- DTC: 30:Er07 [AUDIO]
- DTC: 30:Er30 [AUDIO]
- DIAGNOSTIC ASSIST FUNCTION [AUDIO]

On-Board Diagnostics

- FOREWORD [AUDIO AMPLIFIER]
- DTC INSPECTION [AUDIO AMPLIFIER]
- CLEARING DTC [AUDIO AMPLIFIER]
- DTC TABLE [AUDIO AMPLIFIER]
- DTC U0001:88 [AUDIO AMPLIFIER]
- DTC U3003:16 [AUDIO AMPLIFIER]
- DTC U3003:17 [AUDIO AMPLIFIER]
- DTC U3000:49 [AUDIO AMPLIFIER]
- DTC U2300:54/U2300:55/U2300:56/U2300:64 [AUDIO AMPLIFIER]

On-Board Diagnostics

- ON-BOARD DIAGNOSTIC WIRING DIAGRAM [BLIND SPOT MONITORING (BSM)]
- FOREWORD [BLIND SPOT MONITORING (BSM)]
- DTC INSPECTION [BLIND SPOT MONITORING (BSM)]
- CLEARING DTC [BLIND SPOT MONITORING (BSM)]
- DTC TABLE [BLIND SPOT MONITORING (BSM)]
- DTC B118C:11 [BLIND SPOT MONITORING (BSM)]
- DTC B118C:15 [BLIND SPOT MONITORING (BSM)]
- DTC B118D:11 [BLIND SPOT MONITORING (BSM)]
- DTC B118D:15 [BLIND SPOT MONITORING (BSM)]
- DTC U0001:88/U0100:00/U0131:00/U0155:00/U0214:00 [BLIND SPOT MONITORING (BSM)]
- DTC U0232:00 [BLIND SPOT MONITORING (BSM)]
- DTC U0233:00 [BLIND SPOT MONITORING (BSM)]
- DTC U0401:68 [BLIND SPOT MONITORING (BSM)]
- DTC U0420:68 [BLIND SPOT MONITORING (BSM)]
- DTC U0423:68 [BLIND SPOT MONITORING (BSM)]
- DTC U0515:68 [BLIND SPOT MONITORING (BSM)]
- DTC U2300:54 [BLIND SPOT MONITORING (BSM)]
- DTC U2300:56 [BLIND SPOT MONITORING (BSM)]

- DTC U2300:64 [BLIND SPOT MONITORING (BSM)]
- DTC U3000:01 [BLIND SPOT MONITORING (BSM)]
- DTC U3000:09 [BLIND SPOT MONITORING (BSM)]
- DTC U3000:54 [BLIND SPOT MONITORING (BSM)]
- DTC U3000:97 [BLIND SPOT MONITORING (BSM)]
- DTC U3003:04 [BLIND SPOT MONITORING (BSM)]
- DTC U3003:16 [BLIND SPOT MONITORING (BSM)]
- DTC U3003:17 [BLIND SPOT MONITORING (BSM)]
- PID/DATA MONITOR INSPECTION [BLIND SPOT MONITORING (BSM)]
- PID/DATA MONITOR TABLE [BLIND SPOT MONITORING (BSM)]
- ACTIVE COMMAND MODES INSPECTION [BLIND SPOT MONITORING (BSM)]
- ACTIVE COMMAND MODES TABLE [BLIND SPOT MONITORING (BSM)]

On-Board Diagnostics

- ON-BOARD DIAGNOSTIC WIRING DIAGRAM [CONNECTIVITY MASTER UNIT]
- FOREWORD [CONNECTIVITY MASTER UNIT]
- DTC INSPECTION [CONNECTIVITY MASTER UNIT]
- CLEARING DTC [CONNECTIVITY MASTER UNIT]
- DTC TABLE [CONNECTIVITY MASTER UNIT]
- DTC B1087:87 [CONNECTIVITY MASTER UNIT]
- DTC B108E:04 [CONNECTIVITY MASTER UNIT]
- DTC B108E:06 [CONNECTIVITY MASTER UNIT]
- DTC B108E:1C [CONNECTIVITY MASTER UNIT]
- DTC B108E:87 [CONNECTIVITY MASTER UNIT]
- DTC B116A:11 [CONNECTIVITY MASTER UNIT]
- DTC B116A:12 [CONNECTIVITY MASTER UNIT]
- DTC B116A:92 [CONNECTIVITY MASTER UNIT]
- DTC B119F:11 [CONNECTIVITY MASTER UNIT]
- DTC B119F:13 [CONNECTIVITY MASTER UNIT]
- DTC B119F:1D [CONNECTIVITY MASTER UNIT]
- DTC B119F:92 [CONNECTIVITY MASTER UNIT]
- DTC B11BA:11 [CONNECTIVITY MASTER UNIT]
- DTC B11BA:15 [CONNECTIVITY MASTER UNIT]
- DTC B1201:11 [CONNECTIVITY MASTER UNIT]
- DTC B1201:15 [CONNECTIVITY MASTER UNIT]
- DTC B1238:01 [CONNECTIVITY MASTER UNIT]
- DTC B1238:16 [CONNECTIVITY MASTER UNIT]
- DTC B1238:87 [CONNECTIVITY MASTER UNIT]
- DTC B1252:09 [CONNECTIVITY MASTER UNIT]
- DTC B1252:1D [CONNECTIVITY MASTER UNIT]
- DTC B1252:87 [CONNECTIVITY MASTER UNIT]
- DTC B12BD:11 [CONNECTIVITY MASTER UNIT]
- DTC B12BD:87 [CONNECTIVITY MASTER UNIT]
- DTC B1A89:13 [CONNECTIVITY MASTER UNIT]
- DTC B1A89:42 [CONNECTIVITY MASTER UNIT]
- DTC B1D19:64 [CONNECTIVITY MASTER UNIT]
- DTC B1D19:79 [CONNECTIVITY MASTER UNIT]
- DTC B1D19:98 [CONNECTIVITY MASTER UNIT]
- DTC U0001:88/U0100:00/U0101:00/U0121:00/U0131:00/U0140:00/U0151:00/U0155:00/U0182:00/U0214:00/U0235:00/U023A:00 [CONNECTIVITY MASTER UNIT]
- DTC U0028:88 [CONNECTIVITY MASTER UNIT]
- DTC U0184:00/U0187:00 [CONNECTIVITY MASTER UNIT]
- DTC U2300:54 [CONNECTIVITY MASTER UNIT]
- DTC U2300:55 [CONNECTIVITY MASTER UNIT]
- DTC U3000:42 [CONNECTIVITY MASTER UNIT]
- DTC U3003:16 [CONNECTIVITY MASTER UNIT]
- DIAGNOSTIC ASSIST FUNCTION [CONNECTIVITY MASTER UNIT]

On-Board Diagnostics

- ON-BOARD DIAGNOSTIC WIRING DIAGRAM [FRONT BODY CONTROL MODULE (FBCM)]
- FOREWORD [FRONT BODY CONTROL MODULE (FBCM)]
- DTC INSPECTION [FRONT BODY CONTROL MODULE (FBCM)]
- CLEARING DTC [FRONT BODY CONTROL MODULE (FBCM)]
- DTC TABLE [FRONT BODY CONTROL MODULE (FBCM)]
- DTC B1008:02 [FRONT BODY CONTROL MODULE (FBCM)]
- DTC B1008:62 [FRONT BODY CONTROL MODULE (FBCM)]
- DTC B1048:7B [FRONT BODY CONTROL MODULE (FBCM)]
- DTC B1087:88 [FRONT BODY CONTROL MODULE (FBCM)]
- DTC B1088:88 [FRONT BODY CONTROL MODULE (FBCM)]
- DTC B1092:11 [FRONT BODY CONTROL MODULE (FBCM)]
- DTC B109A:12 [FRONT BODY CONTROL MODULE (FBCM)]
- DTC B109A:14 [FRONT BODY CONTROL MODULE (FBCM)]
- DTC B10A6:64 [FRONT BODY CONTROL MODULE (FBCM)]
- DTC B10A8:12 [FRONT BODY CONTROL MODULE (FBCM)]

- DTC B10AD:86 [FRONT BODY CONTROL MODULE (FBCM)]
- DTC B10AF:12 [FRONT BODY CONTROL MODULE (FBCM)]
- DTC B1142:13 [FRONT BODY CONTROL MODULE (FBCM)]
- DTC B1143:13 [FRONT BODY CONTROL MODULE (FBCM)]
- DTC B11DB:86 [FRONT BODY CONTROL MODULE (FBCM)]
- DTC B1314:11 [FRONT BODY CONTROL MODULE (FBCM)]
- DTC B134D:02 [FRONT BODY CONTROL MODULE (FBCM)]
- DTC B13CF:19 [FRONT BODY CONTROL MODULE (FBCM)]
- DTC B13D0:11 [FRONT BODY CONTROL MODULE (FBCM)]
- DTC B13D2:12 [FRONT BODY CONTROL MODULE (FBCM)]
- DTC B13FE:12 [FRONT BODY CONTROL MODULE (FBCM)]
- DTC B13FE:14 [FRONT BODY CONTROL MODULE (FBCM)]
- DTC B141E:12 [FRONT BODY CONTROL MODULE (FBCM)]
- DTC B1C84:12 [FRONT BODY CONTROL MODULE (FBCM)]
- DTC B1C84:14 [FRONT BODY CONTROL MODULE (FBCM)]
- DTC B1D06:11 [FRONT BODY CONTROL MODULE (FBCM)]
- DTC B1D06:13 [FRONT BODY CONTROL MODULE (FBCM)]
- DTC B1D07:11 [FRONT BODY CONTROL MODULE (FBCM)]
- DTC B1D07:13 [FRONT BODY CONTROL MODULE (FBCM)]
- DTC U0001:88/U0100:00/U0101:00/U0151:00/U0155:00/U0214:00/U023A:00 [FRONT BODY CONTROL MODULE (FBCM)]
- DTC U0164:68 [FRONT BODY CONTROL MODULE (FBCM)]
- DTC U0231:68 [FRONT BODY CONTROL MODULE (FBCM)]
- DTC U0338:09 [FRONT BODY CONTROL MODULE (FBCM)]
- DTC U0401:68 [FRONT BODY CONTROL MODULE (FBCM)]
- DTC U053B:68 [FRONT BODY CONTROL MODULE (FBCM)]
- DTC U1007:68 [FRONT BODY CONTROL MODULE (FBCM)]
- DTC U2005:68 [FRONT BODY CONTROL MODULE (FBCM)]
- DTC U2100:00 [FRONT BODY CONTROL MODULE (FBCM)]
- DTC U2101:00 [FRONT BODY CONTROL MODULE (FBCM)]
- DTC U3000:49 [FRONT BODY CONTROL MODULE (FBCM)]
- DTC U3000:56 [FRONT BODY CONTROL MODULE (FBCM)]
- DTC U3003:16 [FRONT BODY CONTROL MODULE (FBCM)]
- DTC U3003:17 [FRONT BODY CONTROL MODULE (FBCM)]
- DTC U3006:62 [FRONT BODY CONTROL MODULE (FBCM)]
- PID/DATA MONITOR INSPECTION [FRONT BODY CONTROL MODULE (FBCM)]
- PID/DATA MONITOR TABLE [FRONT BODY CONTROL MODULE (FBCM)]
- ACTIVE COMMAND MODES INSPECTION [FRONT BODY CONTROL MODULE (FBCM)]
- ACTIVE COMMAND MODES TABLE [FRONT BODY CONTROL MODULE (FBCM)]

On-Board Diagnostics

- ON-BOARD DIAGNOSTIC WIRING DIAGRAM [REAR BODY CONTROL MODULE (RBCM)]
- FOREWORD [REAR BODY CONTROL MODULE (RBCM)]
- DTC INSPECTION [REAR BODY CONTROL MODULE (RBCM)]
- CLEARING DTC [REAR BODY CONTROL MODULE (RBCM)]
- DTC TABLE [REAR BODY CONTROL MODULE (RBCM)]
- DTC B1079:13 [REAR BODY CONTROL MODULE (RBCM)]
- DTC B108F:16 [REAR BODY CONTROL MODULE (RBCM)]
- DTC B109E:87 [REAR BODY CONTROL MODULE (RBCM)]
- DTC B113E:11 [REAR BODY CONTROL MODULE (RBCM)]
- DTC B1172:11 [REAR BODY CONTROL MODULE (RBCM)]
- DTC B1172:13 [REAR BODY CONTROL MODULE (RBCM)]
- DTC B1174:11 [REAR BODY CONTROL MODULE (RBCM)]
- DTC B1174:13 [REAR BODY CONTROL MODULE (RBCM)]
- DTC B1175:11 [REAR BODY CONTROL MODULE (RBCM)]
- DTC B1176:11 [REAR BODY CONTROL MODULE (RBCM)]
- DTC B1178:11 [REAR BODY CONTROL MODULE (RBCM)]
- DTC B11DA:16 [REAR BODY CONTROL MODULE (RBCM)]
- DTC B11E9:11 [REAR BODY CONTROL MODULE (RBCM)]
- DTC B11EA:11 [REAR BODY CONTROL MODULE (RBCM)]
- DTC B1219:11 [REAR BODY CONTROL MODULE (RBCM)]
- DTC B126A:11 [REAR BODY CONTROL MODULE (RBCM)]
- DTC B126A:13 [REAR BODY CONTROL MODULE (RBCM)]
- DTC C0023:14 [REAR BODY CONTROL MODULE (RBCM)]
- DTC U0010:88/U0155:00 [REAR BODY CONTROL MODULE (RBCM)]
- DTC U2100:00 [REAR BODY CONTROL MODULE (RBCM)]
- DTC U3000:49 [REAR BODY CONTROL MODULE (RBCM)]
- DTC U3003:16 [REAR BODY CONTROL MODULE (RBCM)]
- PID/DATA MONITOR INSPECTION [REAR BODY CONTROL MODULE (RBCM)]
- PID/DATA MONITOR TABLE [REAR BODY CONTROL MODULE (RBCM)]
- ACTIVE COMMAND MODES INSPECTION [REAR BODY CONTROL MODULE (RBCM)]
- ACTIVE COMMAND MODES TABLE [REAR BODY CONTROL MODULE (RBCM)]

On-Board Diagnostics

- ON-BOARD DIAGNOSTIC WIRING DIAGRAM [START STOP UNIT]

- FOREWORD [START STOP UNIT]
- DTC INSPECTION [START STOP UNIT]
- CLEARING DTC [START STOP UNIT]
- DTC TABLE [START STOP UNIT]
- DTC B108B:23 [START STOP UNIT]
- DTC B108B:24 [START STOP UNIT]
- DTC B108C:23 [START STOP UNIT]
- DTC B108C:24 [START STOP UNIT]
- DTC B10AC:13 [START STOP UNIT]
- DTC B10AC:23 [START STOP UNIT]
- DTC B10C9:1F [START STOP UNIT]
- DTC B10E7:11 [START STOP UNIT]
- DTC B10E7:12 [START STOP UNIT]
- DTC B10E7:16 [START STOP UNIT]
- DTC B10E7:17 [START STOP UNIT]
- DTC B112A:11 [START STOP UNIT]
- DTC B112A:12 [START STOP UNIT]
- DTC B124C:56 [START STOP UNIT]
- DTC B13D3:16 [START STOP UNIT]
- DTC B13D3:4A [START STOP UNIT]
- DTC B13D3:97 [START STOP UNIT]
- DTC B1C53:13 [START STOP UNIT]
- DTC C0040:23 [START STOP UNIT]
- DTC C0040:24 [START STOP UNIT]
- DTC C0051:95 [START STOP UNIT]
- DTC C0051:2F [START STOP UNIT]
- DTC C0052:14 [START STOP UNIT]
- DTC C0052:2F [START STOP UNIT]
- DTC C0053:14 [START STOP UNIT]
- DTC C0053:2F [START STOP UNIT]
- DTC C2003:13 [START STOP UNIT]
- DTC P0615:11 [START STOP UNIT]
- DTC P0615:12 [START STOP UNIT]
- DTC P0615:13 [START STOP UNIT]
- DTC P0615:16 [START STOP UNIT]
- DTC P0616:23 [START STOP UNIT]
- DTC P0616:24 [START STOP UNIT]
- DTC P0616:29 [START STOP UNIT]
- DTC P081C:23 [START STOP UNIT]
- DTC P081C:24 [START STOP UNIT]
- DTC P081D:29 [START STOP UNIT]
- DTC P081D:2F [START STOP UNIT]
- DTC P0830:23 [START STOP UNIT]
- DTC P0850:23 [START STOP UNIT]
- DTC P0850:24 [START STOP UNIT]
- DTC P0930:71 [START STOP UNIT]
- DTC P1708:24 [START STOP UNIT]
- DTC P1708:29 [START STOP UNIT]
- DTC P1794:16 [START STOP UNIT]
- DTC U0001:88/U0100:00/U0101:00/U0121:00/U0121:87/U0131:00/U0140:00/U0146:00/U0151:00/U0155:00 [START STOP UNIT]
- DTC U0028:87 [START STOP UNIT]
- DTC U0447:86 [START STOP UNIT]
- DTC U201F:11 [START STOP UNIT]
- DTC U201F:12 [START STOP UNIT]
- DTC U2100:00 [START STOP UNIT]
- DTC U2300:00 [START STOP UNIT]
- DTC U3000:01 [START STOP UNIT]
- DTC U3000:49 [START STOP UNIT]
- DTC U3000:96 [START STOP UNIT]
- DTC U3003:16 [START STOP UNIT]
- DTC U3004:11 [START STOP UNIT]
- DTC U3004:12 [START STOP UNIT]
- DTC U3004:16 [START STOP UNIT]
- DTC U3004:17 [START STOP UNIT]
- PID/DATA MONITOR INSPECTION [START STOP UNIT]
- PID/DATA MONITOR TABLE [START STOP UNIT]

On-Board Diagnostics

- ON-BOARD DIAGNOSTIC WIRING DIAGRAM [ADVANCED KEYLESS ENTRY SYSTEM]
- FOREWORD [ADVANCED KEYLESS ENTRY SYSTEM]
- DTC INSPECTION [ADVANCED KEYLESS ENTRY SYSTEM]
- CLEARING DTC [ADVANCED KEYLESS ENTRY SYSTEM]
- DTC TABLE [ADVANCED KEYLESS ENTRY SYSTEM]
- DTC B10C6:1F [ADVANCED KEYLESS ENTRY SYSTEM]

- DTC B10C7:1F [ADVANCED KEYLESS ENTRY SYSTEM]
- DTC B10C9:1F [ADVANCED KEYLESS ENTRY SYSTEM]
- DTC B10D1:23 [ADVANCED KEYLESS ENTRY SYSTEM]
- DTC B10D3:23 [ADVANCED KEYLESS ENTRY SYSTEM]
- DTC B11C4:23 [ADVANCED KEYLESS ENTRY SYSTEM]
- DTC B11FD:1F [ADVANCED KEYLESS ENTRY SYSTEM]
- DTC B1210:1F [ADVANCED KEYLESS ENTRY SYSTEM]
- DTC B13C3:04 [ADVANCED KEYLESS ENTRY SYSTEM]
- DTC B13C3:09 [ADVANCED KEYLESS ENTRY SYSTEM]
- DTC B13C3:16 [ADVANCED KEYLESS ENTRY SYSTEM]
- DTC B13C3:29 [ADVANCED KEYLESS ENTRY SYSTEM]
- PID/DATA MONITOR INSPECTION [ADVANCED KEYLESS ENTRY SYSTEM]
- PID/DATA MONITOR TABLE [ADVANCED KEYLESS ENTRY SYSTEM]
- ACTIVE COMMAND MODES INSPECTION [ADVANCED KEYLESS ENTRY SYSTEM]
- ACTIVE COMMAND MODES TABLE [ADVANCED KEYLESS ENTRY SYSTEM]

On-Board Diagnostics

- ON-BOARD DIAGNOSTIC WIRING DIAGRAM [FORWARD SENSING CAMERA (FSC)]
- FOREWORD [FORWARD SENSING CAMERA (FSC)]
- DTC INSPECTION [FORWARD SENSING CAMERA (FSC)]
- CLEARING DTC [FORWARD SENSING CAMERA (FSC)]
- DTC TABLE [FORWARD SENSING CAMERA (FSC)]
- DTC B115E:54 [FORWARD SENSING CAMERA (FSC)]
- DTC B13A6:11 [FORWARD SENSING CAMERA (FSC)]
- DTC C1001:92 [FORWARD SENSING CAMERA (FSC)]
- DTC C1001:97 [FORWARD SENSING CAMERA (FSC)]
- DTC U0001:88/U0100:00/U0121:00/U0131:00/U0140:00/U0155:00/U0214:00 [FORWARD SENSING CAMERA (FSC)]
- DTC U0401:68 [FORWARD SENSING CAMERA (FSC)]
- DTC U0415:68 [FORWARD SENSING CAMERA (FSC)]
- DTC U0420:68 [FORWARD SENSING CAMERA (FSC)]
- DTC U0423:68 [FORWARD SENSING CAMERA (FSC)]
- DTC U0515:68 [FORWARD SENSING CAMERA (FSC)]
- DTC U2005:86 [FORWARD SENSING CAMERA (FSC)]
- DTC U2100:00 [FORWARD SENSING CAMERA (FSC)]
- DTC U2101:00 [FORWARD SENSING CAMERA (FSC)]
- DTC U3000:04/U3000:09/U3000:42/U3000:49 [FORWARD SENSING CAMERA (FSC)]
- DTC U3003:16 [FORWARD SENSING CAMERA (FSC)]
- DTC U3003:17 [FORWARD SENSING CAMERA (FSC)]
- PID/DATA MONITOR INSPECTION [FORWARD SENSING CAMERA (FSC)]
- PID/DATA MONITOR TABLE [FORWARD SENSING CAMERA (FSC)]

Symptom Troubleshooting

- POWER WINDOW SYSTEM WIRING DIAGRAM [POWER WINDOW SYSTEM]
- FOREWORD [POWER WINDOW SYSTEM]
- SYMPTOM TROUBLESHOOTING CHART [POWER WINDOW SYSTEM]
- POWER WINDOW SYSTEM TROUBLESHOOTING QUESTIONNAIRE [POWER WINDOW SYSTEM]
- BASIC POWER WINDOW SYSTEM INSPECTION [POWER WINDOW SYSTEM]
- DRIVER-SIDE DOOR GLASS CAN BE OPERATED MANUALLY BUT CANNOT BE OPERATED AUTOMATICALLY [POWER WINDOW SYSTEM]
- DRIVER-SIDE DOOR GLASS CANNOT BE OPERATED MANUALLY OR AUTOMATICALLY [POWER WINDOW SYSTEM]
- DOOR GLASS OTHER THAN DRIVER'S DOOR CANNOT BE OPERATED (CANNOT BE OPERATED USING EACH SUBSWITCH BUT CAN BE OPERATED USING POWER WINDOW MAIN SWITCH) [POWER WINDOW SYSTEM]
- DOOR GLASS OTHER THAN DRIVER'S DOOR CANNOT BE OPERATED (CANNOT BE OPERATED USING POWER WINDOW MAIN SWITCH BUT CAN BE OPERATED USING EACH SUBSWITCH) [POWER WINDOW SYSTEM]
- DOOR GLASS OTHER THAN DRIVER'S DOOR CANNOT BE OPERATED (CANNOT BE OPERATED USING POWER WINDOW MAIN SWITCH OR EACH SUBSWITCH) [POWER WINDOW SYSTEM]
- DRIVER-SIDE DOOR GLASS REVERSE OPENS DURING AUTO-CLOSE (MANUAL-CLOSE) OPERATION (MIS REVERSE OPEN) [POWER WINDOW SYSTEM]
- ABNORMAL SOUND DURING DOOR GLASS OPENING/CLOSING [POWER WINDOW SYSTEM]

Symptom Troubleshooting

- FOREWORD [INSTRUMENT CLUSTER]
- SYMPTOM TROUBLESHOOTING [INSTRUMENT CLUSTER]
- FUEL GAUGE READING IS NOT CORRECT [INSTRUMENT CLUSTER]
- LOW ENGINE COOLANT TEMPERATURE INDICATOR LIGHT/HIGH ENGINE COOLANT TEMPERATURE WARNING LIGHT ILLUMINATES OR FLASHES CONTINUOUSLY [INSTRUMENT CLUSTER]
- ACTIVE DRIVING DISPLAY DOES NOT DISPLAY [INSTRUMENT CLUSTER]
- ACTIVE DRIVING DISPLAY DOES NOT OPERATE [INSTRUMENT CLUSTER]
- ACTIVE DRIVING DISPLAY DOES NOT DIM AUTOMATICALLY [INSTRUMENT CLUSTER]

Symptom Troubleshooting

- FOREWORD [BLIND SPOT MONITORING (BSM)]
- TROUBLESHOOTING INDEX [BLIND SPOT MONITORING (BSM)]
- BLIND SPOT MONITORING (BSM) WIRING DIAGRAM [BLIND SPOT MONITORING (BSM)]
- BSM OFF INDICATOR LIGHT DOES NOT ILLUMINATE WHEN THE IGNITION IS SWITCHED TO ON [BLIND SPOT MONITORING (BSM)]

- BSM OFF INDICATOR LIGHT DOES NOT ILLUMINATE WHILE BSM SYSTEM IS OFF [BLIND SPOT MONITORING (BSM)]
- BSM OFF INDICATOR LIGHT ILLUMINATES CONTINUOUSLY [BLIND SPOT MONITORING (BSM)]
- BSM INDICATOR LIGHT ILLUMINATES WHILE NOT UNDER LIGHT-ILLUMINATION CONDITIONS [BLIND SPOT MONITORING (BSM)]
- BSM INDICATOR LIGHT DOES NOT ILLUMINATE WHILE UNDER BSM INDICATOR LIGHT-ILLUMINATION CONDITIONS [BLIND SPOT MONITORING (BSM)]
- BSM INDICATOR LIGHT FLASHES WHILE NOT UNDER BSM INDICATOR LIGHT-FLASHING CONDITIONS (NO LIGHT SWITCH OPERATION (TURN SIGNAL SWITCH)) [BLIND SPOT MONITORING (BSM)]
- BSM INDICATOR LIGHT DOES NOT FLASH WHILE UNDER BSM INDICATOR LIGHT-FLASHING CONDITIONS (WITH LIGHT SWITCH OPERATION (TURN SIGNAL SWITCH)) [BLIND SPOT MONITORING (BSM)]
- THE BSM INDICATOR LIGHT DOES NOT FLASH OR ILLUMINATE CONTINUOUSLY, BUT A TURN SIGNAL IS ON [BLIND SPOT MONITORING (BSM)]
- BSM WARNING ALARM DOES NOT SOUND WHILE BSM INDICATOR LIGHT FLASHES [BLIND SPOT MONITORING (BSM)]

SYMPTOM TROUBLESHOOTING

- FOREWORD [SECURITY AND LOCKS]
- SYSTEM WIRING DIAGRAM [SECURITY AND LOCKS]
- SYMPTOM TROUBLESHOOTING ITEM TABLE [SECURITY AND LOCKS]
- QUICK DIAGNOSIS CHART [SECURITY AND LOCKS]
- DOOR LOCK DOES NOT OPERATE [SECURITY AND LOCKS]
- ADVANCED KEYLESS ENTRY SYSTEM DOES NOT OPERATE [SECURITY AND LOCKS]
- LOCK/UNLOCK OPERATION NOT POSSIBLE USING REMOTE TRANSMITTER [SECURITY AND LOCKS]
- ANSWER-BACK BUZZER DOES NOT SOUND [SECURITY AND LOCKS]
- PUSH BUTTON START SYSTEM DOES NOT OPERATE [SECURITY AND LOCKS]

Symptom Troubleshooting

- FOREWORD [ADAPTIVE FRONT LIGHTING SYSTEM (AFS)]
- SYSTEM WIRING DIAGRAM [ADAPTIVE FRONT LIGHTING SYSTEM (AFS)]
- SYMPTOM TROUBLESHOOTING [ADAPTIVE FRONT LIGHTING SYSTEM (AFS)]
- AFS OFF INDICATOR LIGHT ILLUMINATES CONTINUOUSLY [ADAPTIVE FRONT LIGHTING SYSTEM (AFS)]
- ADAPTIVE FRONT LIGHTING SYSTEM (AFS) OPERATES EVEN THOUGH THE AFS OFF SWITCH IS TURNED ON [ADAPTIVE FRONT LIGHTING SYSTEM (AFS)]
- THE HEADLIGHT AUTO LEVELING SYSTEM DOES NOT OPERATE IN RESPONSE TO VEHICLE POSTURE [ADAPTIVE FRONT LIGHTING SYSTEM (AFS)]

Symptom Troubleshooting

- FOREWORD [THEFT-DETERRENT SYSTEM]
- THEFT-DETERRENT SYSTEM [THEFT-DETERRENT SYSTEM]

Symptom Troubleshooting

- FOREWORD [ENTERTAINMENT SYSTEM [WITH CENTER DISPLAY]]
- SYMPTOM TROUBLESHOOTING [ENTERTAINMENT SYSTEM [WITH CENTER DISPLAY]]
- SYSTEM WIRING DIAGRAM [ENTERTAINMENT SYSTEM [WITH CENTER DISPLAY]]
- IMAGE NOT OUTPUT IN ALL MODES [ENTERTAINMENT SYSTEM [WITH CENTER DISPLAY]]
- NAVIGATION IMAGE NOT OUTPUT [ENTERTAINMENT SYSTEM [WITH CENTER DISPLAY]]
- REAR MOUNT CAMERA IMAGE NOT OUTPUT [ENTERTAINMENT SYSTEM [WITH CENTER DISPLAY]]
- NO SOUND OUTPUT IN ALL MODES [ENTERTAINMENT SYSTEM [WITH CENTER DISPLAY]]
- NO SOUND OUTPUT IN MULTIPLE MODES [ENTERTAINMENT SYSTEM [WITH CENTER DISPLAY]]
- NO Bluetooth® AUDIO AND INTERNET RADIO SOUND [ENTERTAINMENT SYSTEM [WITH CENTER DISPLAY]]
- NO USB AUDIO SOUND OUTPUT [ENTERTAINMENT SYSTEM [WITH CENTER DISPLAY]]
- NO NAVIGATION GUIDANCE VOICE OUTPUT [ENTERTAINMENT SYSTEM [WITH CENTER DISPLAY]]
- NO VOICE RECOGNITION GUIDANCE VOICE OUTPUT [ENTERTAINMENT SYSTEM [WITH CENTER DISPLAY]]
- NO CD SOUND OUTPUT [ENTERTAINMENT SYSTEM [WITH CENTER DISPLAY]]
- NO AUX AUDIO SOUND OUTPUT [ENTERTAINMENT SYSTEM [WITH CENTER DISPLAY]]
- VOICE OPERATION NOT POSSIBLE [ENTERTAINMENT SYSTEM [WITH CENTER DISPLAY]]
- Bluetooth® PAIRING NOT POSSIBLE [ENTERTAINMENT SYSTEM [WITH CENTER DISPLAY]]
- AUTOMATIC Bluetooth® CONNECTION NOT POSSIBLE [ENTERTAINMENT SYSTEM [WITH CENTER DISPLAY]]
- REAL TIME TRAFFIC FUNCTION INFORMATION NOT DISPLAYED [ENTERTAINMENT SYSTEM [WITH CENTER DISPLAY]]

Symptom Troubleshooting

- FOREWORD [ENTERTAINMENT SYSTEM [WITHOUT CENTER DISPLAY]]
- SYMPTOM TROUBLESHOOTING [ENTERTAINMENT SYSTEM [WITHOUT CENTER DISPLAY]]
- SYSTEM WIRING DIAGRAM [ENTERTAINMENT SYSTEM [WITHOUT CENTER DISPLAY]]
- NO SOUND OUTPUT IN ALL MODES [ENTERTAINMENT SYSTEM [WITHOUT CENTER DISPLAY]]
- NO USB AUDIO SOUND OUTPUT [ENTERTAINMENT SYSTEM [WITHOUT CENTER DISPLAY]]
- NO CD SOUND OUTPUT [ENTERTAINMENT SYSTEM [WITHOUT CENTER DISPLAY]]
- NO AUX AUDIO SOUND OUTPUT [ENTERTAINMENT SYSTEM [WITHOUT CENTER DISPLAY]]
- AUDIO UNIT DISPLAY NOT DISPLAYED [ENTERTAINMENT SYSTEM [WITHOUT CENTER DISPLAY]]

Symptom Troubleshooting

- FOREWORD [SEAT WARMER SYSTEM]
- SYMPTOM TROUBLESHOOTING [SEAT WARMER SYSTEM]
- SYSTEM WIRING DIAGRAM [SEAT WARMER SYSTEM]
- SEAT WARMER FUNCTION IS INOPERATIVE [SEAT WARMER SYSTEM]
- SEAT WARMER OPERATES CONSTANTLY [SEAT WARMER SYSTEM]

- TEMPERATURE OF SEAT WARMER CANNOT BE ADJUSTED [SEAT WARMER SYSTEM]

Body Panels

- BODY PANELS LOCATION INDEX
- TRUNK LID REMOVAL/INSTALLATION
- BALANCE SPRING REMOVAL/INSTALLATION
- TRUNK LID ADJUSTMENT
- FUEL-FILLER LID REMOVAL/INSTALLATION
- HOOD REMOVAL/INSTALLATION
- FUEL-FILLER LID ADJUSTMENT
- HOOD DISASSEMBLY/ASSEMBLY
- HOOD ADJUSTMENT
- FRONT BUMPER REMOVAL/INSTALLATION
- FRONT FOG LIGHT BEZEL REMOVAL/INSTALLATION
- FRONT BUMPER REINFORCEMENT REMOVAL/INSTALLATION
- ENERGY-ABSORBING FOAM REMOVAL/INSTALLATION
- BUMPER STIFFENER LOWER REMOVAL/INSTALLATION
- SEAL PLATE REMOVAL/INSTALLATION
- FRONT BUMPER DISASSEMBLY/ASSEMBLY
- BUMPER SLIDER REMOVAL/INSTALLATION
- SET PLATE REMOVAL/INSTALLATION
- INTAKE AIR GUIDE REMOVAL/INSTALLATION
- REAR BUMPER REMOVAL/INSTALLATION
- REAR BUMPER DISASSEMBLY/ASSEMBLY
- REAR BUMPER REINFORCEMENT REMOVAL/INSTALLATION
- FRONT FENDER PANEL REMOVAL/INSTALLATION
- FRONT FENDER STAY REMOVAL/INSTALLATION
- FRONT FENDER INSULATOR No.1 REMOVAL/INSTALLATION
- FRONT FENDER INSULATOR No.2 REMOVAL
- FRONT FENDER INSULATOR No.2 INSTALLATION
- SHROUD PANEL REMOVAL/INSTALLATION
- SHROUD UPPER MEMBER REMOVAL/INSTALLATION
- COWL PANEL REMOVAL/INSTALLATION

Doors and Liftgate

- DOOR AND LIFTGATE LOCATION INDEX
- FRONT DOOR REMOVAL/INSTALLATION
- FRONT DOOR MODULE PANEL REMOVAL/INSTALLATION
- FRONT DOOR CHECKER REMOVAL/INSTALLATION
- FRONT DOOR HINGE REMOVAL/INSTALLATION
- REAR DOOR REMOVAL/INSTALLATION
- REAR DOOR MODULE PANEL REMOVAL/INSTALLATION
- REAR DOOR CHECKER REMOVAL/INSTALLATION
- REAR DOOR HINGE REMOVAL/INSTALLATION
- LIFTGATE REMOVAL/INSTALLATION
- LIFTGATE HINGE REMOVAL/INSTALLATION
- STAY DAMPER DISPOSAL
- DOOR ADJUSTMENT
- LIFTGATE ADJUSTMENT

Glass/Windows/Mirrors

- GLASS/WINDOWS/MIRRORS LOCATION INDEX
- FRONT DOOR GLASS REMOVAL/INSTALLATION
- REAR DOOR GLASS REMOVAL/INSTALLATION
- REAR DOOR QUARTER GLASS REMOVAL/INSTALLATION
- WINDSHIELD REMOVAL
- WINDSHIELD INSTALLATION
- REAR WINDOW GLASS REMOVAL
- REAR WINDOW GLASS INSTALLATION
- FRONT POWER WINDOW REGULATOR REMOVAL/INSTALLATION
- REAR POWER WINDOW REGULATOR REMOVAL/INSTALLATION
- FRONT POWER WINDOW MOTOR REMOVAL/INSTALLATION
- FRONT POWER WINDOW MOTOR INSPECTION
- REAR POWER WINDOW MOTOR REMOVAL/INSTALLATION
- REAR POWER WINDOW MOTOR INSPECTION
- POWER WINDOW MAIN SWITCH REMOVAL/INSTALLATION
- POWER WINDOW MAIN SWITCH INSPECTION
- POWER WINDOW SUBSWITCH REMOVAL/INSTALLATION
- POWER WINDOW SUBSWITCH INSPECTION
- POWER OUTER MIRROR REMOVAL/INSTALLATION
- POWER OUTER MIRROR INSPECTION
- OUTER MIRROR GLASS REMOVAL
- OUTER MIRROR GLASS INSTALLATION

OUTER MIRROR GLASS INSPECTION
- OUTER MIRROR GARNISH REMOVAL/INSTALLATION
- POWER OUTER MIRROR SWITCH REMOVAL/INSTALLATION
- POWER OUTER MIRROR SWITCH INSPECTION
- REAR WINDOW DEFROSTER SYSTEM INSPECTION
- REAR WINDOW DEFROSTER INSPECTION
- REAR WINDOW DEFROSTER/GLASS ANTENNA REPAIR
- AUTO-DIMMING MIRROR REMOVAL/INSTALLATION
- AUTO-DIMMING MIRROR INSPECTION
- REARVIEW MIRROR REMOVAL/INSTALLATION
- MIRROR BASE REMOVAL
- MIRROR BASE INSTALLATION
- POWER WINDOW SYSTEM INITIALIZATION PROCEDURE

Seats

- SEATS LOCATION INDEX
- FRONT SEAT REMOVAL/INSTALLATION
- FRONT SEAT BACK TRIM REMOVAL/INSTALLATION
- REAR SEAT BACK REMOVAL/INSTALLATION
- REAR SEAT BACK FRAME REMOVAL/INSTALLATION
- REAR SEAT CUSHION REMOVAL/INSTALLATION
- POWER SEAT SYSTEM INSPECTION
- SEAT WARMER SWITCH REMOVAL/INSTALLATION
- SEAT WARMER UNIT INSPECTION
- REAR SEAT HINGE REMOVAL/INSTALLATION
- CHILD-RESTRAINT SEAT ANCHOR REMOVAL/INSTALLATION
- REAR SEAT CUSHION LOCK REMOVAL/INSTALLATION
- REMOTE HANDLE LEVER REMOVAL/INSTALLATION

Security and Locks

- SECURITY AND LOCKS LOCATION INDEX
- FRONT OUTER HANDLE REMOVAL/INSTALLATION
- REAR OUTER HANDLE REMOVAL/INSTALLATION
- INNER HANDLE REMOVAL/INSTALLATION
- DOOR LOCK SWITCH REMOVAL/INSTALLATION
- DOOR LOCK SWITCH INSPECTION
- HOOD LATCH REMOVAL/INSTALLATION
- HOOD RELEASE LEVER AND RELEASE CABLE REMOVAL/INSTALLATION
- HOOD LATCH SWITCH INSPECTION
- FUEL-FILLER LID OPENER AND LEVER REMOVAL/INSTALLATION
- FUEL-FILLER LID OPENER CABLE REMOVAL/INSTALLATION
- FRONT DOOR KEY CYLINDER REMOVAL/INSTALLATION
- FRONT DOOR KEY CYLINDER SWITCH INSPECTION
- FRONT DOOR LATCH AND LOCK ACTUATOR REMOVAL/INSTALLATION
- FRONT DOOR LATCH AND LOCK ACTUATOR INSPECTION
- FRONT DOOR LOCK ACTUATOR INSPECTION
- FRONT DOOR LATCH SWITCH INSPECTION
- FRONT DOOR LOCK-LINK SWITCH INSPECTION
- DOOR LOCK STRIKER REMOVAL/INSTALLATION
- REAR DOOR LATCH AND LOCK ACTUATOR REMOVAL/INSTALLATION
- REAR DOOR LATCH AND LOCK ACTUATOR INSPECTION
- REAR DOOR LOCK ACTUATOR INSPECTION
- REAR DOOR LATCH SWITCH INSPECTION
- REAR DOOR LOCK-LINK SWITCH INSPECTION
- DOOR LOCK SYSTEM OPERATION RECORD
- TRUNK LID LATCH AND RELEASE ACTUATOR REMOVAL/INSTALLATION
- TRUNK LID LATCH AND RELEASE ACTUATOR INSPECTION
- TRUNK LID RELEASE ACTUATOR INSPECTION
- TRUNK LID LATCH SWITCH INSPECTION
- TRUNK LID LOCK STRIKER REMOVAL/INSTALLATION
- TRUNK LID OPENER SWITCH REMOVAL/INSTALLATION
- TRUNK LID OPENER SWITCH INSPECTION
- LIFTGATE LATCH AND LOCK ACTUATOR REMOVAL/INSTALLATION
- LIFTGATE LATCH AND LOCK ACTUATOR INSPECTION
- LIFTGATE LOCK ACTUATOR INSPECTION
- LIFTGATE LATCH SWITCH INSPECTION
- LIFTGATE LOCK STRIKER REMOVAL/INSTALLATION
- LIFTGATE OPENER SWITCH REMOVAL/INSTALLATION
- LIFTGATE OPENER SWITCH INSPECTION
- START STOP UNIT REMOVAL/INSTALLATION
- START STOP UNIT INSPECTION
- START STOP UNIT CONFIGURATION (USING READ/WRITE FUNCTION)
- START STOP UNIT CONFIGURATION (USING AS-BUILT DATA)
- LF CONTROL UNIT REMOVAL/INSTALLATION

- LF CONTROL UNIT INSPECTION
- SECURITY AND LOCKS PERSONALIZATION FEATURES SETTING PROCEDURE
- REQUEST SWITCH REMOVAL/INSTALLATION
- REQUEST SWITCH INSPECTION
- KEYLESS ANTENNA REMOVAL/INSTALLATION
- KEYLESS BEEPER REMOVAL/INSTALLATION
- KEYLESS BEEPER INSPECTION
- KEYLESS RECEIVER REMOVAL/INSTALLATION
- KEYLESS RECEIVER INSPECTION
- PUSH BUTTON START REMOVAL/INSTALLATION
- PUSH BUTTON START INSPECTION
- REMOTE TRANSMITTER DISASSEMBLY/ASSEMBLY
- REMOTE TRANSMITTER ID CODE REGISTRATION
- CLEARING REMOTE TRANSMITTER
- REMOTE TRANSMITTER BATTERY VOLTAGE INSPECTION
- IMMOBILIZER SYSTEM-RELATED PARTS PROGRAMMING
- THEFT-DETERRENT HORN REMOVAL/INSTALLATION
- THEFT-DETERRENT HORN INSPECTION
- THEFT-DETERRENT SYSTEM OPERATION RECORD

Sunroof

- SUNROOF LOCATION INDEX
- DEFLECTOR REMOVAL/INSTALLATION
- GLASS PANEL REMOVAL/INSTALLATION
- GLASS PANEL ADJUSTMENT
- SUNROOF UNIT REMOVAL/INSTALLATION
- SUNROOF UNIT DISASSEMBLY/ASSEMBLY
- FRONT DRAIN HOSE REMOVAL/INSTALLATION
- REAR DRAIN HOSE REMOVAL/INSTALLATION
- SUNROOF MOTOR REMOVAL/INSTALLATION
- SUNROOF MOTOR INSPECTION
- SUNROOF SWITCH REMOVAL/INSTALLATION
- SUNROOF SWITCH INSPECTION
- SUNROOF SYSTEM INITIALIZATION PROCEDURE

Exterior Trim

- EXTERIOR TRIM LOCATION INDEX
- COWL GRILLE REMOVAL/INSTALLATION
- RADIATOR GRILLE REMOVAL/INSTALLATION
- RADIATOR GRILLE DISASSEMBLY/ASSEMBLY
- SAIL GARNISH REMOVAL/INSTALLATION
- EXTRACTOR CHAMBER REMOVAL/INSTALLATION
- FRONT BELTLINE MOLDING REMOVAL/INSTALLATION
- REAR BELTLINE MOLDING REMOVAL/INSTALLATION
- ROOF MOLDING REMOVAL
- ROOF MOLDING INSTALLATION
- MUDGUARD REMOVAL/INSTALLATION
- ROOF CARRIER BRACKET REMOVAL/INSTALLATION
- REAR SPOILER REMOVAL
- REAR SPOILER INSTALLATION
- SIDE SPOILER REMOVAL/INSTALLATION
- REAR DOOR GARNISH REMOVAL/INSTALLATION
- FRONT FENDER MOLDING REMOVAL/INSTALLATION
- FRONT DOOR GARNISH REMOVAL/INSTALLATION
- FRONT UNDER COVER No.1 REMOVAL/INSTALLATION
- FRONT UNDER COVER No.2 REMOVAL/INSTALLATION
- FLOOR UNDER COVER REMOVAL/INSTALLATION
- SPLASH SHIELD REMOVAL/INSTALLATION
- LIFTGATE GARNISH REMOVAL/INSTALLATION
- FRONT SASH MOLDING REMOVAL
- FRONT SASH MOLDING INSTALLATION
- REAR SASH MOLDING REMOVAL
- REAR SASH MOLDING INSTALLATION
- ORNAMENT INSTALLATION

Interior Trim

- INTERIOR TRIM LOCATION INDEX
- DASHBOARD REMOVAL
- DASHBOARD INSTALLATION
- SPEAKER GRILLE REMOVAL/INSTALLATION
- DEMISTER GRILLE REMOVAL/INSTALLATION
- FRONT CONSOLE REMOVAL/INSTALLATION
- CLUSTER SWITCH REMOVAL/INSTALLATION

- TRUNK COVERING REMOVAL/INSTALLATION
- LIFTGATE RECESS REMOVAL/INSTALLATION
- SHOCK ABSORBING PAD REMOVAL/INSTALLATION
- DASHBOARD DISASSEMBLY/ASSEMBLY
- COLUMN COVER REMOVAL/INSTALLATION
- LOWER PANEL REMOVAL/INSTALLATION
- METER HOOD REMOVAL/INSTALLATION
- GLOVE COMPARTMENT REMOVAL/INSTALLATION
- VENTILATOR GRILLE REMOVAL/INSTALLATION
- KNEE BOLSTER REMOVAL/INSTALLATION
- SIDE WALL REMOVAL/INSTALLATION
- DASHBOARD UNDER COVER REMOVAL/INSTALLATION
- UPPER PANEL REMOVAL
- UPPER PANEL INSTALLATION
- SHIFT PANEL REMOVAL/INSTALLATION
- FRONT CONSOLE BOX REMOVAL/INSTALLATION
- REAR CONSOLE REMOVAL/INSTALLATION
- REAR CONSOLE DISASSEMBLY/ASSEMBLY
- DECORATION PANEL REMOVAL/INSTALLATION
- DECORATION PANEL DISASSEMBLY/ASSEMBLY
- A-PILLAR TRIM REMOVAL/INSTALLATION
- FRONT SIDE TRIM REMOVAL/INSTALLATION
- TIRE HOUSE TRIM REMOVAL/INSTALLATION
- REAR PACKAGE TRIM REMOVAL/INSTALLATION
- REAR PACKAGE TRAY REMOVAL/INSTALLATION
- B-PILLAR LOWER TRIM REMOVAL/INSTALLATION
- B-PILLAR UPPER TRIM REMOVAL/INSTALLATION
- C-PILLAR TRIM REMOVAL/INSTALLATION
- FRONT SCUFF PLATE REMOVAL/INSTALLATION
- REAR SCUFF PLATE REMOVAL/INSTALLATION
- REAR DOOR TRIM DISASSEMBLY/ASSEMBLY
- TRUNK END TRIM REMOVAL/INSTALLATION
- TRUNK SIDE TRIM REMOVAL/INSTALLATION
- TRUNK SIDE UPPER TRIM REMOVAL/INSTALLATION
- FRONT DOOR TRIM REMOVAL/INSTALLATION
- FRONT DOOR TRIM DISASSEMBLY/ASSEMBLY
- REAR DOOR TRIM REMOVAL/INSTALLATION
- TRUNK LID RECESS REMOVAL/INSTALLATION
- TRUNK BOARD REMOVAL/INSTALLATION
- LIFTGATE UPPER TRIM REMOVAL/INSTALLATION
- LIFTGATE SIDE TRIM REMOVAL/INSTALLATION
- LIFTGATE LOWER TRIM REMOVAL/INSTALLATION
- TRUNK LID TRIM REMOVAL/INSTALLATION
- ASSIST HANDLE REMOVAL/INSTALLATION
- SUNVISOR REMOVAL/INSTALLATION
- HEADLINER REMOVAL/INSTALLATION
- FLOOR INSULATOR REMOVAL/INSTALLATION
- FLOOR COVERING REMOVAL/INSTALLATION

Lighting Systems

- LIGHTING SYSTEMS LOCATION INDEX
- DISCHARGE HEADLIGHT SERVICE WARNINGS
- FRONT COMBINATION LIGHT REMOVAL/INSTALLATION
- FRONT COMBINATION LIGHT DISASSEMBLY/ASSEMBLY
- HEADLIGHT BULB REMOVAL/INSTALLATION
- HEADLIGHT AIMING
- IGNITER REMOVAL/INSTALLATION
- DISCHARGE HEADLIGHT CONTROL MODULE REMOVAL/INSTALLATION
- DISCHARGE HEADLIGHT SYSTEM INSPECTION
- ADAPTIVE FRONT LIGHTING SYSTEM (AFS) CONTROL MODULE REMOVAL/INSTALLATION
- ADAPTIVE FRONT LIGHTING SYSTEM (AFS) OFF SWITCH REMOVAL/INSTALLATION
- ADAPTIVE FRONT LIGHTING SYSTEM (AFS) OFF SWITCH INSPECTION
- STEERING ANGLE SENSOR REMOVAL/INSTALLATION
- STEERING ANGLE SENSOR INSPECTION
- HEADLIGHT LEVELING ACTUATOR INSPECTION
- FRONT SIDE MARKER LIGHT/PARKING LIGHT BULB REMOVAL/INSTALLATION
- FRONT TURN LIGHT REMOVAL/INSTALLATION
- FRONT TURN LIGHT BULB REMOVAL/INSTALLATION
- FRONT TURN LIGHT SHORT CORD REMOVAL/INSTALLATION
- FRONT TURN LIGHT SHORT CORD INSPECTION
- FRONT FOG LIGHT REMOVAL/INSTALLATION
- FRONT FOG LIGHT BULB REMOVAL/INSTALLATION
- FRONT FOG LIGHT AIMING
- SIDE TURN LIGHT REMOVAL/INSTALLATION

SIDE TURN LIGHT INSPECTION
- REAR COMBINATION LIGHT REMOVAL/INSTALLATION
- BRAKE LIGHT/REAR SIDE MARKER LIGHT/TAILLIGHT BULB REMOVAL/INSTALLATION
- REAR TURN LIGHT BULB REMOVAL/INSTALLATION
- BACK-UP LIGHT BULB REMOVAL/INSTALLATION
- TRUNK LID LIGHT REMOVAL/INSTALLATION
- LIFTGATE LIGHT REMOVAL/INSTALLATION
- HIGH-MOUNT BRAKE LIGHT REMOVAL/INSTALLATION
- LICENSE PLATE LIGHT REMOVAL/INSTALLATION
- LICENSE PLATE LIGHT BULB REMOVAL/INSTALLATION
- AUTO LEVELING SENSOR REMOVAL/INSTALLATION
- AUTO LEVELING SENSOR INSPECTION
- HEADLIGHT AUTO LEVELING SYSTEM INITIALIZATION
- BACK-UP LIGHT SWITCH INSPECTION
- LIGHT SWITCH REMOVAL/INSTALLATION
- LIGHT SWITCH INSPECTION
- FRONT FOG LIGHT SWITCH INSPECTION
- HAZARD WARNING SWITCH REMOVAL/INSTALLATION
- HAZARD WARNING SWITCH INSPECTION
- HEADLIGHT LEVELING SWITCH REMOVAL/INSTALLATION
- HEADLIGHT LEVELING SWITCH INSPECTION
- AUTO LIGHT SENSOR REMOVAL/INSTALLATION
- LIGHTING SYSTEM PERSONALIZATION FEATURES SETTING PROCEDURE
- FRONT MAP LIGHT REMOVAL/INSTALLATION
- FRONT MAP LIGHT BULB REMOVAL/INSTALLATION
- FRONT MAP LIGHT INSPECTION
- REAR MAP LIGHT BULB REMOVAL/INSTALLATION
- REAR MAP LIGHT REMOVAL/INSTALLATION
- CARGO COMPARTMENT LIGHT REMOVAL/INSTALLATION
- CARGO COMPARTMENT LIGHT BULB REMOVAL/INSTALLATION
- CARGO COMPARTMENT LIGHT INSPECTION
- TRUNK COMPARTMENT LIGHT BULB REMOVAL/INSTALLATION
- VANITY MIRROR ILLUMINATION BULB REMOVAL/INSTALLATION
- VANITY MIRROR ILLUMINATION INSPECTION

Wiper/Washer System

- WIPER/WASHER SYSTEM LOCATION INDEX
- WINDSHIELD WIPER ARM AND BLADE REMOVAL/INSTALLATION
- WINDSHIELD WIPER ARM AND BLADE ADJUSTMENT
- WINDSHIELD WIPER MOTOR AND LINK REMOVAL/INSTALLATION
- WINDSHIELD WIPER MOTOR INSPECTION
- WASHER TANK REMOVAL/INSTALLATION
- WASHER MOTOR REMOVAL/INSTALLATION
- WASHER MOTOR INSPECTION
- WINDSHIELD WASHER NOZZLE REMOVAL/INSTALLATION
- WINDSHIELD WASHER NOZZLE ADJUSTMENT
- WASHER FLUID-LEVEL SENSOR INSPECTION
- WASHER FLUID-LEVEL SENSOR REMOVAL/INSTALLATION
- WINDSHIELD WASHER HOSE REMOVAL/INSTALLATION
- REAR WIPER ARM AND BLADE REMOVAL/INSTALLATION
- REAR WIPER ARM AND BLADE ADJUSTMENT
- REAR WIPER MOTOR REMOVAL/INSTALLATION
- REAR WIPER MOTOR INSPECTION
- REAR WASHER NOZZLE REMOVAL/INSTALLATION
- REAR WASHER NOZZLE ADJUSTMENT
- REAR WASHER HOSE REMOVAL/INSTALLATION
- WIPER AND WASHER SWITCH REMOVAL/INSTALLATION
- WIPER AND WASHER SWITCH INSPECTION
- RAIN SENSOR REMOVAL/INSTALLATION
- RAIN SENSOR INITIALIZATION SETTING
- WIPER/WASHER SYSTEM PERSONALIZATION FEATURES SETTING PROCEDURE

Entertainment System

- ENTERTAINMENT LOCATION INDEX
- AUDIO UNIT REMOVAL/INSTALLATION
- CENTER DISPLAY REMOVAL/INSTALLATION
- CONNECTIVITY MASTER UNIT (CMU) REMOVAL/INSTALLATION
- CONNECTIVITY MASTER UNIT (CMU) DISASSEMBLY/ASSEMBLY
- TUNER AND AMP UNIT (TAU) REMOVAL/INSTALLATION
- CD PLAYER REMOVAL
- CD PLAYER INSTALLATION
- CENTER DISPLAY PERSONALIZATION FEATURES SETTING PROCEDURE
- Bluetooth® PAIRING PROCEDURE
- MAINTENANCE MONITOR OPERATION PROCEDURE

- AUDIO AMPLIFIER REMOVAL/INSTALLATION
- FRONT DOOR SPEAKER REMOVAL/INSTALLATION
- FRONT DOOR SPEAKER INSPECTION
- REAR DOOR SPEAKER REMOVAL/INSTALLATION
- REAR DOOR SPEAKER INSPECTION
- FRONT CENTER SPEAKER REMOVAL/INSTALLATION
- FRONT CENTER SPEAKER INSPECTION
- FRONT SIDE SPEAKER REMOVAL/INSTALLATION
- FRONT SIDE SPEAKER INSPECTION
- REAR SPEAKER REMOVAL/INSTALLATION
- REAR SPEAKER INSPECTION
- TWEETER REMOVAL/INSTALLATION
- TWEETER INSPECTION
- AudioPilot®2 MICROPHONE REMOVAL/INSTALLATION
- CENTER ROOF ANTENNA REMOVAL/INSTALLATION
- CENTER ROOF ANTENNA INSPECTION
- GLASS ANTENNA INSPECTION
- ANTENNA AMPLIFIER REMOVAL/INSTALLATION
- ANTENNA AMPLIFIER INSPECTION
- CONDENSER REMOVAL/INSTALLATION
- ANTENNA FEEDER NO.1 REMOVAL/INSTALLATION
- ANTENNA FEEDER NO.1 INSPECTION
- ANTENNA FEEDER NO.2 REMOVAL
- ANTENNA FEEDER NO.2 INSTALLATION
- ANTENNA FEEDER NO.2 INSPECTION
- ANTENNA FEEDER NO.3 REMOVAL/INSTALLATION
- ANTENNA FEEDER NO.3 INSPECTION
- GLOBAL POSITIONING SYSTEM (GPS) ANTENNA REMOVAL/INSTALLATION
- GPS ANTENNA FEEDER REMOVAL/INSTALLATION
- GPS ANTENNA FEEDER INSPECTION
- STEERING SWITCH REMOVAL/INSTALLATION
- STEERING SWITCH INSPECTION
- COMMANDER SWITCH REMOVAL/INSTALLATION
- MICROPHONE REMOVAL/INSTALLATION
- Bluetooth® UNIT REMOVAL/INSTALLATION
- AUXILIARY JACK/USB PORT REMOVAL/INSTALLATION
- AUXILIARY JACK/USB PORT INSPECTION
- AUXILIARY JACK/USB PORT/SD CARD SLOT HUB REMOVAL/INSTALLATION
- AUXILIARY JACK/USB PORT/SD CARD SLOT HUB INSPECTION
- REAR MOUNT CAMERA REMOVAL/INSTALLATION

Power Systems

- POWER SYSTEM LOCATION INDEX
- RELAY AND FUSE BLOCK REMOVAL/INSTALLATION
- FRONT WIRING HARNESS PROTECTOR REMOVAL/INSTALLATION
- FUSE BLOCK REMOVAL/INSTALLATION
- FUSE SERVICE CAUTIONS
- MAIN FUSE REMOVAL/INSTALLATION
- MULTIPLEX SLOW BLOW FUSE REMOVAL/INSTALLATION
- FORCED IGNITION ON
- RELAY LOCATION
- RELAY INSPECTION
- FRONT ACCESSORY SOCKET REMOVAL/INSTALLATION
- FRONT ACCESSORY SOCKET INSPECTION
- CENTER ACCESSORY SOCKET REMOVAL/INSTALLATION
- CENTER ACCESSORY SOCKET INSPECTION

Instrumentation/Driver Info.

- INSTRUMENTATION/DRIVER INFO. LOCATION INDEX
- INSTRUMENT CLUSTER REMOVAL/INSTALLATION
- INSTRUMENT CLUSTER DISASSEMBLY/ASSEMBLY
- INSTRUMENT CLUSTER INSPECTION
- INSTRUMENT CLUSTER CONFIGURATION (USING READ/WRITE FUNCTION)
- INSTRUMENT CLUSTER CONFIGURATION (USING AS-BUILT DATA)
- INSTRUMENT CLUSTER OPERATION RECORD
- ACTIVE DRIVING DISPLAY REMOVAL/INSTALLATION
- ACTIVE DRIVING DISPLAY INSPECTION
- INSTRUMENT CLUSTER PERSONALIZATION FEATURES SETTING PROCEDURE
- FORWARD SENSING CAMERA (FSC) PERSONALIZATION FEATURES SETTING PROCEDURE
- INSTRUMENT CLUSTER DATA RESET PROCEDURE
- FUEL GAUGE SENDER UNIT REMOVAL/INSTALLATION
- FUEL GAUGE SENDER UNIT INSPECTION
- HORN REMOVAL/INSTALLATION
- HORN INSPECTION

- BLIND SPOT MONITORING (BSM) CONTROL MODULE REMOVAL/INSTALLATION
- BLIND SPOT MONITORING (BSM) CONTROL MODULE INSPECTION
- BLIND SPOT MONITORING (BSM) BRACKET REMOVAL/INSTALLATION
- BLIND SPOT MONITORING (BSM) RADAR TEST
- BLIND SPOT MONITORING (BSM) OFF SWITCH REMOVAL/INSTALLATION
- BLIND SPOT MONITORING (BSM) OFF SWITCH INSPECTION
- BLIND SPOT MONITORING (BSM) INDICATOR LIGHT REMOVAL/INSTALLATION
- BLIND SPOT MONITORING (BSM) INDICATOR LIGHT INSPECTION
- INDICATOR UNIT REMOVAL/INSTALLATION
- INDICATOR UNIT INSPECTION
- FORWARD SENSING CAMERA (FSC) REMOVAL/INSTALLATION
- FORWARD SENSING CAMERA (FSC) CLIP REMOVAL/INSTALLATION
- FORWARD SENSING CAMERA (FSC) COVER REMOVAL/INSTALLATION
- FORWARD SENSING CAMERA (FSC) SHORT-CORD REMOVAL/INSTALLATION
- FORWARD SENSING CAMERA (FSC) SHORT-CORD INSPECTION
- FORWARD SENSING CAMERA (FSC) AIMING
- FORWARD SENSING CAMERA (FSC) CONFIGURATION (USING READ/WRITE FUNCTION)
- FORWARD SENSING CAMERA (FSC) CONFIGURATION (USING AS-BUILT DATA)
- LDWS SWITCH REMOVAL/INSTALLATION
- LDWS SWITCH INSPECTION

Active Air Shutter System

- ACTIVE AIR SHUTTER LOCATION INDEX
- ACTIVE AIR SHUTTER REMOVAL/INSTALLATION
- ACTIVE AIR SHUTTER COVER REMOVAL/INSTALLATION
- ACTIVE AIR SHUTTER INSPECTION

Control System

- CONTROL SYSTEM LOCATION INDEX
- FRONT BODY CONTROL MODULE (FBCM) REMOVAL/INSTALLATION
- FRONT BODY CONTROL MODULE (FBCM) INSPECTION
- FRONT BODY CONTROL MODULE (FBCM) CONFIGURATION (USING READ/WRITE FUNCTION)
- FRONT BODY CONTROL MODULE (FBCM) CONFIGURATION (USING AS-BUILT DATA)
- REAR BODY CONTROL MODULE (RBCM) REMOVAL/INSTALLATION
- REAR BODY CONTROL MODULE (RBCM) INSPECTION
- REAR BODY CONTROL MODULE (RBCM) BRACKET REMOVAL/INSTALLATION
- REAR BODY CONTROL MODULE (RBCM) CONFIGURATION (USING READ/WRITE FUNCTION)
- REAR BODY CONTROL MODULE (RBCM) CONFIGURATION (USING AS-BUILT DATA)
- CONTROL SYSTEM PERSONALIZATION FEATURES SETTING PROCEDURE

Technical Data

- BODY AND ACCESSORIES TECHNICAL DATA

Maintenance/Service Tools

- BODY AND ACCESSORIES SST

Workshop Manual - Multiplex Communication System

2014 - Mazda3

On-Board Diagnostics

- FOREWORD
- CONTROLLER AREA NETWORK (CAN) MALFUNCTION DIAGNOSIS FLOW
- NETWORK TEST
- DTC TABLE
- DETERMINING OPEN CIRCUIT LOCATION (HS-CAN)
- DETERMINING SHORT TO GROUND LOCATION (HS-CAN)
- DETERMINING SHORT TO POWER SUPPLY LOCATION (HS-CAN)
- DETERMINING SHORT BETWEEN CIRCUITS LOCATION (HS-CAN)
- DETERMINING OPEN CIRCUIT LOCATION (MS-CAN)
- DETERMINING SHORT TO GROUND LOCATION (MS-CAN)
- DETERMINING SHORT TO POWER SUPPLY LOCATION (MS-CAN)
- DETERMINING SHORT BETWEEN CIRCUITS LOCATION (MS-CAN)

Workshop Manual - Personalized Features

2014 - Mazda3

Personalization Features

- PERSONALIZATION FEATURES

Workshop Manual - I-ELOOP

2014 - Mazda3

On-Board Diagnostics

- FOREWORD [i-ELOOP]
- DTC INSPECTION [i-ELOOP]
- CLEARING DTC [i-ELOOP]
- PID/DATA MONITOR INSPECTION [i-ELOOP]
- DTC TABLE [i-ELOOP]
- DTC P0C39:00 [i-ELOOP]
- DTC P1628:11 [i-ELOOP]
- DTC U0001:88, U0100:00, U0155:00 [i-ELOOP]
- DTC U0401:68 [i-ELOOP]
- DTC U3000:44 [i-ELOOP]
- DTC U3000:49 [i-ELOOP]
- DTC U3000:4B [i-ELOOP]
- DTC U3003:16 [i-ELOOP]
- DTC U3003:17 [i-ELOOP]

Symptom Troubleshooting

- SYMPTOM DIAGNOSTIC INDEX [i-ELOOP]
- QUICK DIAGNOSTIC CHART [i-ELOOP]
- No.1 "i-ELOOP Inspection Required" IS DISPLAYED IN LCD [i-ELOOP]
- No.2 PRE-CHARGE MODE IS PERFORMED FREQUENTLY [i-ELOOP]
- No.3 i-ELOOP-RELATED GAUGE IN LCD DOES NOT MOVE [i-ELOOP]

Charging System

- CHARGING SYSTEM LOCATION INDEX [SKYACTIV-G 2.0, SKYACTIV-G 2.5 (WITH i-ELOOP)]
- PROCEDURE BEFORE i-ELOOP-RELATED PART SERVICING [i-ELOOP]
- SERVICE PLUG DISCONNECTION/CONNECTION [i-ELOOP]
- GENERATOR REMOVAL/INSTALLATION [SKYACTIV-G 2.0, SKYACTIV-G 2.5 (WITH i-ELOOP)]
- GENERATOR INSPECTION [SKYACTIV-G 2.0, SKYACTIV-G 2.5 (WITH i-ELOOP)]
- GENERATOR DISASSEMBLY/ASSEMBLY [SKYACTIV-G 2.0, SKYACTIV-G 2.5 (WITH i-ELOOP)]
- CAPACITOR (i-ELOOP) REMOVAL/INSTALLATION [i-ELOOP]
- CAPACITOR (i-ELOOP) INSPECTION [i-ELOOP]
- CAPACITOR (i-ELOOP) COMPULSORY DISCHARGE [i-ELOOP]
- DC-DC CONVERTER REMOVAL/INSTALLATION [i-ELOOP]
- DC-DC CONVERTER INSPECTION [i-ELOOP]

Technical Data

- i-ELOOP TECHNICAL DATA

Maintenance/Service Tools

- **i-ELOOP SST**

2014 Mazda3 Electrical Component List

- (A/C Relay {A/C}) (F-01-R5)
- (A/C) (7.5A) (F-01-F22)
- (ABS/DSCS) (30A) (F-01-F9)
- (ACC Relay {ACC}) (F-01-R23)
- (ADD FAN GE) (30A) (F-01-F50)
- (AT) (15A) (F-01-F20)
- (AUDIO1) (15A) (F-01-F13)
- (AUDIO2) (7.5A) (F-01-F11)
- (Blower Relay {HEATER}) (F-01-R16)
- (BOSE) (25A) (F-01-F12)
- (Brake Light Relay {STOP}) (F-01-R9)
- (C/U IG1) (15A) (F-01-F42)
- (Cooling Fan Relay No.1 {FAN GE1}) (F-01-R26)
- (Cooling Fan Relay No.2 {FAN GE2}) (F-01-R19)
- (Cooling Fan Relay No.3 {ADD FAN GE}) <{DEFOG}> (F-01-R14)
- (DRL Relay {DRL}) <{HID R}> / (Headlight LO Relay (RH) {HID R}) <{DRL}> (F-01-R20)
- (Electric Variable Valve Timing Relay {EVVT}) <{ACC}> (F-01-R8)
- (ENG+B) (7.5A) (F-01-F6)
- (ENGINE.IG1) (15A) (F-01-F41)
- (ENGINE1) (15A) (F-01-F25)
- (ENGINE2) (15A) (F-01-F24)
- (ENGINE3) (15A) (F-01-F23)
- (EVVT) (20A) (F-01-F27)
- (F.OUTLET) (15A) (F-02-F11)
- (FAN GE) (30A) (F-01-F51)
- (FOG) (15A) (F-01-F1)
- (Front Fog Light Relay {FOG}) (F-01-R7)
- (Fuel Injector Relay {INJECTOR}) <{BLOW BY HEATER}> (F-01-R2)
- (Fuel Pump Relay {FUEL PUMP}) (F-01-R3)
- (FUEL PUMP) (15A) (F-01-F14)
- (H/L HI) (20A) (F-01-F2)
- (H/L LOW L) (HID L) (15A) (F-01-F34)
- (H/L LOW R) (15A) (F-01-F33)

- (HAZARD) (25A) (F-01-F8)
- (Headlight HI Relay {H/L HI}) (F-01-R6)
- (Headlight LO Relay {H/L LOW}) <{HID L}> / (Headlight LO Relay (LH) {HID L}) <{H/L LOW}> (F-01-R21)
- (HID R) (DRL) (15A) (F-01-F15)
- (Horn Relay {HORN}) (F-01-R12)
- (HORN) (15A) (F-01-F17)
- (IG1 Relay {IG1}) (F-01-R22)
- (IG2) (30A) (F-01-F36)
- (INJECTOR) (30A) (F-01-F49)
- (M.DEF) (7.5A) (F-02-F8)
- (Main Relay {ENG.MAIN}) (F-01-R1)
- (METER1) (10A) (F-01-F35)
- (P.SEAT D) (30A) (F-02-F1)
- (P.WINDOW1) (30A) (F-01-F32)
- (R.OUTLET3) (15A) (F-02-F5)
- (R.WIPER) (15A) (F-01-F21)
- (Rear Window Defroster Relay {DEFOG}) (F-01-R25)
- (ROOM) (15A) (F-01-F5)
- (SEAT WARM) (20A) (F-02-F4)
- (SRS1) (7.5A) (F-01-F40)
- (SRS2/ESCL) (15A) (F-02-F6)
- (Starter Relay {STARTER}) (F-01-R18)
- (STOP) (10A) (F-01-F4)
- (SUNROOF) (10A) (F-02-F7)
- (TAIL) (15A) (F-01-F18)
- (TNS Relay {TAIL}) (F-01-R11)
- (WIPER) (20A) (F-01-F28)
- A/F Sensor (EM)(0140-108)
- ABS Wheel-Speed Sensor (LF) (F)(0415-102)
- ABS Wheel-Speed Sensor (LR) (R)(0415-104)
- ABS Wheel-Speed Sensor (RF) (F)(0415-103)
- ABS Wheel-Speed Sensor (RR) (R)(0415-105)
- ABS/DSCM 50A (F-01-F45)
- Accelerator Pedal Position Sensor (F)(0140-113)
- Active Air Shutter (F)(0140-136)
- AFS Control Module (F)(0918-1101)
- Air Intake Actuator (I)(0740-105)
- Air Intake Actuator (I)(0740-208)
- Air Intake Actuator (I)(0740-308)
- Air Mix Actuator (I)(0740-210)
- Airflow Mode Actuator (I)(0740-207)
- Airflow Mode Actuator (I)(0740-307)
- Ambient Temperature Sensor (F)(0740-107)
- Ambient Temperature Sensor (F)(0740-211)

- Ambient Temperature Sensor (F)(0740-311)
- Antenna (Short Cord)(0920-113)
- Antenna (Short Cord)(0920-213)
- Antenna (Short Cord)(0920-313)
- AT IND 7.5A (F-02-F12)
- Audio Amplifier (R)(0920-322A)
- Audio Amplifier (R)(0920-322B)
- Audio Amplifier (R)(0920-322C)
- Audio Unit (I)(0920-101A)
- Audio Unit (I)(0920-101B)
- Audio Unit (Short Cord)(0920-101C)
- Audio Unit (Short Cord)(0920-101D)
- Audiopilot®2 Microphone (I)(0920-321)
- Auto Dimming Mirror (IN2)(0912-401)
- Auto Leveling Sensor (Short Cord)(0918-1102)
- Auto Light Sensor / Rain Sensor (IN2)(Short Cord)(0919-105)
- Auxiliary Jack / SD Card Slot Hub / USB Port (I)(0920-206A)
- Auxiliary Jack / SD Card Slot Hub / USB Port (I)(0920-306A)
- Auxiliary Jack / SD Card Slot Hub / USB Port (Short Cord)(0920-206B)
- Auxiliary Jack / SD Card Slot Hub / USB Port (Short Cord)(0920-306B)
- Auxiliary Jack / USB Port (Short Cord)(0920-106)
- Back-Up Light (LH) (R2)(0918-602)
- Back-Up Light (RH) (R2)(0918-603)
- Back-Up Light Switch (EM)(0918-601)
- Blower Fan Controller (I)(0740-106)
- Blower Fan Controller (I)(0740-203)
- Blower Fan Controller (I)(0740-303)
- Blower Motor (I)(0740-102)
- Blower Motor (I)(0740-202)
- Blower Motor (I)(0740-302)
- Bluetooth® Unit (I)(0920-102)
- Brake Fluid Level Sensor (F)(0922-103)
- Brake Switch (F)(0918-701)
- BSM Control Module (LH) (R4)(0922-601)
- BSM Control Module (RH) (R4)(0922-602)
- CABIN+B 50A (F-01-F44)
- Capacitor (i-ELOOP) (E2)(0117-103B)
- Capacitor (i-ELOOP) (F)(0117-103A)
- Capacitor (i-ELOOP) (Short Cord)(0117-103C)
- Cargo Compartment Light (R)(0918-905)
- CD Player (I)(0920-103)
- CD Player (I)(0920-203)
- CD Player (I)(0920-303)
- Center Accessory Socket No.1 (I)(0921-202)

- Center Display (Short Cord)(0920-204A)
- Center Display (Short Cord)(0920-204B)
- Center Display (Short Cord)(0920-304A)
- Center Display (Short Cord)(0920-304B)
- Check Connector (I)(D-102)
- Climate Control Unit (I)(0740-101)
- Climate Control Unit (I)(0740-201)
- Climate Control Unit (I)(0740-301A)
- Climate Control Unit (I)(0740-301B)
- Clock Spring (I)(0810-103)
- Clock Spring (I)(0922-201)
- Cluster Switch (I)(0922-106)
- Clutch Pedal Position Switch (F)(0140-129)
- Commander Switch (I)(0920-205)
- Commander Switch (I)(0920-305)
- Condenser (R)(0912-104)
- Condenser (R)(0918-704)
- Condenser (R)(0918-907)
- Connectivity Master Unit (I)(0920-201A)
- Connectivity Master Unit (I)(0920-201B)
- Connectivity Master Unit (I)(0920-301A)
- Connectivity Master Unit (I)(0920-301B)
- Connectivity Master Unit (Short Cord)(0920-201C)
- Connectivity Master Unit (Short Cord)(0920-201D)
- Connectivity Master Unit (Short Cord)(0920-301C)
- Connectivity Master Unit (Short Cord)(0920-301D)
- Cooling Fan Motor No.1 (F)(0112-101)
- Cooling Fan Motor No.2 (F)(0112-102)
- Crankshaft Position Sensor (EM)(0140-107)
- Cruise Control Switch / Steering Switch / Clock Spring (Short Cord)(0922-202)
- Current Sensor (F)(0140-130)
- CV Solenoid Valve (Short Cord)(0140-133)
- D.LOCK 25A (F-02-F2)
- Data Link Connector-2 (I)(D-101)
- DC-DC Converter (R)(0117-102A)
- DC-DC Converter (Short Cord)(0117-102C)
- DC-DC Converter (Short Cord)(0117-102D)
- DEFOG 40A (F-01-F48)
- Door Lock Switch (RH) (DR2)(0914-113)
- Door Lock Switch (RH) (DR2)(0914-220)
- Door No.1 Harness (DR1)-Short Cord (C-29)
- Door No.2 Harness (DR2)-Short Cord (C-30)
- Drive Selection Switch (Short Cord)(0518-103)
- Driver-Side Air Bag Module (Short Cord)(0810-104A)

- Driver-Side Air Bag Module (Short Cord)(0810-104B)
- Driver-Side Air Mix Actuator (I)(0740-309)
- Driver-Side Crash Zone Sensor / Crash Zone Sensor (F)(0810-114)
- Driver-Side Curtain Air Bag Module (R)(0810-108)
- Driver-Side Lap Pre-Tensioner Seat Belt (R)(0810-116)
- Driver-Side Pressure Sensor (DR1)(0810-118)
- Driver-Side Pre-Tensioner Seat Belt (R)(0810-106)
- Driver-Side Side Air Bag Sensor (R)(0810-112)
- DSC HU/CM (F)(0415-101)
- Electric Variable Valve Timing Motor/Driver (EM)(0140-119A)
- Electric Variable Valve Timing Motor/Driver (EM)(0140-119B)
- ENG.MAIN 40A (F-01-F46)
- Engine Coolant Temperature Sensor No.1 (EM)(0140-111)
- Engine Coolant Temperature Sensor No.2 (F)(0140-134)
- Engine Oil Solenoid Valve (EM)(0140-104)
- EPS 60A (F-04-F2)
- EPS Control Module (I)(0613-101A)
- EPS Control Module (I)(0613-101B)
- Evaporator Temperature Sensor (I)(0740-104)
- Evaporator Temperature Sensor (I)(0740-205)
- Evaporator Temperature Sensor (I)(0740-305)
- Exhaust Camshaft Position Sensor (EM)(0140-105)
- FBCM (F)(0940-101A)
- FBCM (F)(0940-101B)
- FBCM (F)(0940-101C)
- Filament (R)(R2)(0912-101A)
- Filament (Short Cord)(R2)(0912-101B)
- Forward Sensing Camera (FSC) (Short Cord)(0918-1301)
- Front Accessory Socket / Center Accessory Socket No.2 (I)(0921-201)
- Front Center Speaker (I)(0920-320)
- Front Combination Light (LH) / Headlight Leveling Actuator (LH) / Swivel Actuator (LH) (F)(0918-307)
- Front Combination Light (RH) / Headlight Leveling Actuator (RH) / Swivel Actuator (RH) (F)(0918-308)
- Front Door Latch And Lock Actuator (LH) (DR1)(0914-102)
- Front Door Latch And Lock Actuator (LH) (DR1)(0914-210)
- Front Door Latch And Lock Actuator (RH) (DR2)(0914-103)
- Front Door Latch And Lock Actuator (RH) (DR2)(0914-211)
- Front Door Speaker (LH) (DR1)(0920-107)
- Front Door Speaker (LH) (DR1)(0920-207)
- Front Door Speaker (LH) (DR1)(0920-307)
- Front Door Speaker (RH) (DR2)(0920-108)
- Front Door Speaker (RH) (DR2)(0920-208)
- Front Door Speaker (RH) (DR2)(0920-308)
- Front Fog Light (LH) (F)(0918-401)
- Front Fog Light (RH) (F)(0918-402)

- Front Harness (F)-Emission Harness (EM)(C-01)
- Front Harness (F)-Emission Harness (EM)(C-02)
- Front Harness (F)-Instrument Panel Harness (I)(0613-102)
- Front Harness (F)-Instrument Panel Harness (I)(C-03)
- Front Harness (F)-Instrument Panel Harness (I)(C-04)
- Front Harness (F)-Rear Harness (R)(C-05)
- Front Harness (F)-Short Cord (C-06)
- Front Harness (F)-Short Cord (C-07)
- Front Map Light (IN)(0918-901)
- Front Outer Handle (LH) (Short Cord)(0914-206)
- Front Outer Handle (RH) (Short Cord)(0914-207)
- Front Side Speaker (LH) (I)(0920-316)
- Front Side Speaker (RH) (I)(0920-317)
- Front Turn Light (LH) (Short Cord)(0918-507)
- Front Turn Light (RH) (Short Cord)(0918-508)
- Fuel Injector No.1 (EM)(0140-124)
- Fuel Injector No.2 (EM)(0140-125)
- Fuel Injector No.3 (EM)(0140-126)
- Fuel Injector No.4 (EM)(0140-127)
- Fuel Pressure Sensor (EM)(0140-121)
- Fuel Pump Control Module (R)(0114-102A)
- Fuel Pump Control Module (R)(0114-102B)
- Fuel Pump Unit / Fuel Gauge Sender Unit (R)(0114-101)
- Fuel Tank Pressure Sensor (Short Cord)(0140-135)
- Fuse Block (R)(F-02)
- Generator (E)(0117-501A)
- Generator (E2)(0117-101A)
- Generator (EM)(0117-101B)
- Generator (EM)(0117-501B)
- Ground1 (GND1)
- Ground2 (GND2)
- Ground3 (GND3)
- Ground4 (GND4)
- Ground8 (GND8)
- Ground9 (GND9)
- Ground10 (GND10)
- Ground11 (GND11)
- Ground12 (GND12)
- Ground13 (GND13)
- Ground14 (GND14)
- Ground15 (GND15)
- Ground16 (GND16)
- Ground17 (GND17)
- Ground19 (GND19)

- Ground20 (GND20)
- Ground21 (GND21)
- Ground22 (GND22)
- Hazard Warning Switch (I)(0918-501)
- Heated Outer Mirror (LH) / Power Outer Mirror (LH) / Door No.1 Harness (DR1)-Short Cord / BSM Indicator Light (LH) (DR1)(Short Cord)(0912-102)
- Heated Outer Mirror (RH) / Power Outer Mirror (RH) / Door No.2 Harness (DR2)-Short Cord / BSM Indicator Light (RH) (DR2)(Short Cord)(0912-103)
- HEATER 40A (F-01-F47)
- High-Mount Brake Light (R)(Short Cord)(0918-702)
- HO2S (R)(0140-112)
- Hood Latch Switch (F)(0914-111)
- Hood Latch Switch (F)(0914-218)
- Horn (F)(0922-203)
- Horn Switch (Short Cord)(0922-204)
- Ignition Coil No.1 (EM)(0140-114)
- Ignition Coil No.2 (EM)(0140-115)
- Ignition Coil No.3 (EM)(0140-116)
- Ignition Coil No.4 (EM)(0140-117)
- Indicator Unit (I)(0922-301)
- Instrument Cluster (I)(0922-101)
- Instrument Panel Harness (I)-Interior Light No.2 Harness (IN2)(C-12)
- Instrument Panel Harness (I)-Interior Light No.2 Harness (IN2)(C-13)
- Instrument Panel Harness (I)-Rear Harness (R)(C-08)
- Instrument Panel Harness (I)-Rear Harness (R)(C-09)
- Instrument Panel Harness (I)-Rear Harness (R)(C-10)
- Instrument Panel Harness (I)-Rear Harness (R)(C-11)
- Instrument Panel Harness (I)-Rear Harness (R)(C-45)
- Instrument Panel Harness (I)-Short Cord (0518-101)
- Instrument Panel Harness (I)-Short Cord (0810-126)
- Instrument Panel Harness (I)-Short Cord (C-14)
- Instrument Panel Harness (I)-Short Cord (C-15)
- Intake Camshaft Position Sensor (EM)(0140-106)
- Interior Light No.2 Harness (IN2)-Short Cord (C-27)
- Joint Box No.1 (F)(C-51)
- Joint Box No.1 (F)(C-52)
- Joint Box No.1 (I)(C-53)
- Joint Box No.1 (I)(C-54)
- Joint Box No.1 (R)(C-55)
- Joint Box No.1 (R)(C-56)
- Joint Box No.2 (I)(C-33)
- Joint Box No.2 (I)(C-34)
- Joint Connector (F)(C-32)
- Joint Connector (I)(C-35)
- Joint Connector (I)(C-36)
- Joint Connector (I)(C-37)

- Joint Connector (IN2)(C-42)
- Joint Connector (R)(C-38)
- Joint Connector (R)(C-39)
- Joint Connector (R)(C-40)
- Keyless Antenna (Exterior, Rear) (R4)(0914-205)
- Keyless Antenna (Interior, Center) (I)(0914-109)
- Keyless Antenna (Interior, Front) (I)(0914-203)
- Keyless Antenna (Interior, Rear) (R)(0914-204)
- Keyless Beeper (F)(0914-208)
- Keyless Receiver (R)(0914-101)
- Keyless Receiver (R)(0914-202)
- Knock Sensor (EM)(0140-109)
- Laser Sensor (IN2)(0415-106)
- LF Control Unit (R)(0914-201)
- License Plate Light (LH) (R2)(0918-303)
- License Plate Light (RH) (R2)(0918-304)
- Lift Motor (Short Cord)(0913-203)
- Liftgate Latch And Lock Actuator (R2)(0914-107)
- Liftgate Latch And Lock Actuator (R2)(0914-215)
- Light Switch / Fog Light Switch / Turn Switch (Short Cord)(0918-506)
- Magnetic Clutch (EM)(0740-401)
- MAIN 200A (F-04-F3)
- MAIN 200A (F-04-F4)
- Main Fuse (F)(E)(Short Cord)(F-04)
- Manifold Absolute Pressure Sensor / Intake Air Temperature Sensor No.2 (EM)(0140-120)
- Mass Air Flow Sensor / Intake Air Temperature Sensor No.1 (F)(0140-118)
- Microphone (IN2)(0920-104)
- Microphone (IN2)(0920-214)
- Microphone (IN2)(0920-314)
- MIRROR 7.5A (F-02-F10)
- Neutral Switch (EM)(0140-128)
- Oil Control Valve (EM)(0140-103)
- Oil Pressure Switch (EM)(0140-123)
- P.WINDOW2 25A (F-02-F3)
- Parking Brake Switch (I)(0922-104)
- Passenger Compartment Temperature Sensor (I)(0740-204)
- Passenger Compartment Temperature Sensor (I)(0740-304)
- Passenger-Side Air Bag Module (Short Cord)(0810-105A)
- Passenger-Side Air Bag Module (Short Cord)(0810-105B)
- Passenger-Side Air Mix Actuator (I)(0740-310)
- Passenger-Side Buckle Switch (Short Cord)(0810-125)
- Passenger-Side Crash Zone Sensor (F)(0810-115)
- Passenger-Side Curtain Air Bag Module (R)(0810-109)
- Passenger-Side Lap Pre-Tensioner Seat Belt (R)(0810-117)

- Passenger-Side Pressure Sensor (DR2)(0810-119)
- Passenger-Side Pre-Tensioner Seat Belt (R)(0810-107)
- Passenger-Side Side Air Bag Sensor (R)(0810-113)
- PCM (EM)(0140-101A)
- PCM (F)(0140-101B)
- Power Outer Mirror Switch / Power Window Main Switch / Door Lock Switch (LH) (DR1)(0912-501B)
- Power Seat Switch (Short Cord)(0913-201)
- Power Window Main Switch (DR1)(0912-501A)
- Power Window Motor (LF) (DR1)(0912-502)
- Power Window Motor (LR) (DR3)(0912-506)
- Power Window Motor (RF) (DR2)(0912-504)
- Power Window Motor (RR) (DR4)(0912-508)
- Power Window Subswitch (LR) (DR3)(0912-505)
- Power Window Subswitch (RF) (DR2)(0912-503)
- Power Window Subswitch (RR) (DR4)(0912-507)
- Purge Solenoid Valve (EM)(0140-102)
- Push Button Start (I)(0914-108)
- Push Button Start (I)(0914-216)
- RBCM (IN)(R)(0940-102A)
- RBCM (R)(0940-102B)
- RBCM (R)(0940-102C)
- RBCM (R)(0940-102D)
- Rear Door Latch And Lock Actuator (LH) (DR3)(0914-104)
- Rear Door Latch And Lock Actuator (LH) (DR3)(0914-212)
- Rear Door Latch And Lock Actuator (RH) (DR4)(0914-105)
- Rear Door Latch And Lock Actuator (RH) (DR4)(0914-213)
- Rear Door Speaker (LH) (DR3)(0920-109)
- Rear Door Speaker (LH) (DR3)(0920-209)
- Rear Door Speaker (LH) (DR3)(0920-309)
- Rear Door Speaker (RH) (DR4)(0920-110)
- Rear Door Speaker (RH) (DR4)(0920-210)
- Rear Door Speaker (RH) (DR4)(0920-310)
- Rear Harness (R)-Door No.1 Harness (DR1)(C-20)
- Rear Harness (R)-Door No.2 Harness (DR2)(C-21)
- Rear Harness (R)-Door No.3 Harness (DR3)(C-22)
- Rear Harness (R)-Door No.4 Harness (DR4)(C-23)
- Rear Harness (R)-Interior Light Harness (IN)(C-18)
- Rear Harness (R)-Rear No.2 Harness (R2)(C-16)
- Rear Harness (R)-Rear No.2 Harness (R2)(C-17)
- Rear Harness (R)-Rear No.4 Harness (R4)(C-19)
- Rear Harness (R)-Short Cord (0918-703)
- Rear Harness (R)-Short Cord (C-24)
- Rear Harness (R)-Short Cord (C-25)
- Rear Harness (R)-Short Cord (C-26)

- Rear Harness (R)-Short Cord (C-43)
- Rear Harness (R)-Short Cord (C-44)
- Rear Map Light (IN)(0918-902)
- Rear Mount Camera (R2)(0920-215)
- Rear Mount Camera (R2)(0920-315)
- Rear Side Marker Light (LH) / Taillight (Rear Combination Light) (LH) / Brake Light (LH) (R)(0918-301)
- Rear Side Marker Light (RH) / Taillight (Rear Combination Light) (RH) / Brake Light (RH) (R)(0918-302)
- Rear Speaker (LH) (R)(Short Cord)(0920-318)
- Rear Speaker (RH) (R)(Short Cord)(0920-319)
- Rear Turn Light (LH) (R)(0918-502)
- Rear Turn Light (RH) (R)(0918-503)
- Rear Wiper Motor (R2)(0919-103)
- Recliner Motor (Short Cord)(0913-204)
- Refrigerant Pressure Sensor (F)(0740-108)
- Refrigerant Pressure Sensor (F)(0740-209)
- Refrigerant Pressure Sensor (F)(0740-312)
- Relay And Fuse Block (F)(F-01)
- Remote Engine Start (Option) (I)(0914-112)
- Remote Engine Start (Option) (I)(0914-219)
- Request Switch (Liftgate) (R2)(0914-209)
- SAS Control Module (I)(0810-101C)
- SAS Control Module (R)(0810-101A)
- SAS Control Module (R)(0810-101B)
- Seat Warmer Control Unit (Short Cord)(0913-101)
- Seat Weight Sensor (LF) (Short Cord)(0810-121)
- Seat Weight Sensor (LR) (Short Cord)(0810-123)
- Seat Weight Sensor (RF) (Short Cord)(0810-122)
- Seat Weight Sensor (RR) (Short Cord)(0810-124)
- Seat Weight Sensor Control Module (Short Cord)(0810-120A)
- Seat Weight Sensor Control Module (Short Cord)(0810-120B)
- Selector Lever Component (I)(0517-103)
- Shift Panel (Short Cord)(0518-102)
- Short Cord-Short Cord (0913-102)
- Short Cord-Short Cord (0913-103)
- Short Cord-Short Cord (0913-104)
- Short Cord-Short Cord (0913-205)
- Short Cord-Short Cord (0920-111)
- Short Cord-Short Cord (0920-112)
- Short Cord-Short Cord (0920-211)
- Short Cord-Short Cord (0920-212)
- Short Cord-Short Cord (0920-311)
- Short Cord-Short Cord (0920-312)
- Short Cord-Short Cord (C-31)
- Side Turn Light (LH) (Short Cord)(0918-504)

- Side Turn Light (RH) (Short Cord)(0918-505)
- Slide Motor (Short Cord)(0913-202)
- Solar Radiation Sensor (I)(0740-206)
- Solar Radiation Sensor (I)(0740-306)
- Spill Valve Control Solenoid Valve (High Pressure Fuel Pump) (EM)(0140-122)
- Start Stop Unit (I)(0940-103A)
- Start Stop Unit (I)(0940-103B)
- Start Stop Unit (Short Cord)(0940-103C)
- Starter (E)(0119-101A)
- Starter (EM)(0119-101B)
- STARTER 250A (F-04-F4)
- STARTER 250A (F-04-F5)
- Starter Interlock Switch (F)(0119-102)
- Steering Angle Sensor (I)(0918-1201)
- Steering Shift Switch (Short Cord)(0517-104)
- Sunroof Motor (IN2)(0915-101)
- Sunroof Switch (IN2)(0915-102)
- Taillight (Trunk Lid Light) (LH) / Taillight (Liftgate Light) (LH) (R2)(0918-305)
- Taillight (Trunk Lid Light) (RH) / Taillight (Liftgate Light) (RH) (R2)(0918-306)
- TCM (EM)(0517-101)
- Theft-Deterrent Horn (R)(0914-401)
- Throttle Body (EM)(0140-110)
- Trunk Compartment Light (R)(0918-906)
- Trunk Lid Latch And Release Actuator (R2)(0914-110)
- Trunk Lid Latch And Release Actuator (R2)(0914-217)
- Trunk Lid Opener Switch (Exterior) / Liftgate Opener Switch (R2)(0914-106)
- Trunk Lid Opener Switch (Exterior) / Liftgate Opener Switch (R2)(0914-214)
- Trunk Lid Opener Switch (Interior) (I)(0914-114)
- Trunk Lid Opener Switch (Interior) (I)(0914-221)
- Tuner And AMP Unit (I)(0920-202A)
- Tuner And AMP Unit (I)(0920-202B)
- Tuner And AMP Unit (I)(0920-302A)
- Tuner And AMP Unit (I)(0920-302B)
- Tuner And AMP Unit (Short Cord)(0920-202C)
- Tuner And AMP Unit (Short Cord)(0920-302C)
- Tweeter (LH) (I)(0920-216)
- Tweeter (RH) (I)(0920-217)
- Vanity Mirror Illumination (LH) (IN)(0918-903)
- Vanity Mirror Illumination (RH) (IN)(0918-904)
- Washer Fluid-Level Sensor (F)(0922-102)
- Washer Motor (F)(0919-102)
- Windshield Wiper And Washer Switch / Rear Wiper And Washer Switch (Short Cord)(0919-104)
- Windshield Wiper Motor (F)(0919-101)

Next > 2014 - Mazda3 - Wiring Diagram

< Prev Next > 2014 - Mazda3 - Wiring Diagram

< Prev Next > 2014 - Mazda3 - Wiring Diagram

< Prev Next > 2014 - Mazda3 - Wiring Diagram

< Prev Next > 2014 - Mazda3 - Wiring Diagram

Connector F-01

Connector F-02

Connector F-04

2014 Mazda3 - 00G-1a Ground Point (SKYACTIV-G 2.0, 2.5)

2014 Mazda3 - 00G-1b Ground Point (SKYACTIV-G 2.0, 2.5)

2014 Mazda3 - 00G-3 Ground Point (Upper Dashboard)

2014 Mazda3 - 00G-4 Ground Point (Lower Dashboard)

2014 Mazda3 - 00G-5 Ground Point (4SD)

2014 Mazda3 - 00G-6 Ground Point (5HB)

< Prev Next > 2014 - Mazda3 - Wiring Diagram

< Prev Next > 2014 - Mazda3 - Wiring Diagram

< Prev Next > 2014 - Mazda3 - Wiring Diagram

< Prev Next > 2014 - Mazda3 - Wiring Diagram

< Prev Next > 2014 - Mazda3 - Wiring Diagram

< Prev Next > 2014 - Mazda3 - Wiring Diagram

< Prev Next > 2014 - Mazda3 - Wiring Diagram

< Prev Next > 2014 - Mazda3 - Wiring Diagram

< Prev Next > 2014 - Mazda3 - Wiring Diagram

< Prev Next > 2014 - Mazda3 - Wiring Diagram

< Prev Next > 2014 - Mazda3 - Wiring Diagram

< Prev Next > 2014 - Mazda3 - Wiring Diagram

< Prev Next > 2014 - Mazda3 - Wiring Diagram

< Prev Next > 2014 - Mazda3 - Wiring Diagram

< Prev Next > 2014 - Mazda3 - Wiring Diagram

< Prev Next > 2014 - Mazda3 - Wiring Diagram

< Prev Next > 2014 - Mazda3 - Wiring Diagram

< Prev Next > 2014 - Mazda3 - Wiring Diagram

< Prev Next > 2014 - Mazda3 - Wiring Diagram

< Prev Next > 2014 - Mazda3 - Wiring Diagram

< Prev Next > 2014 - Mazda3 - Wiring Diagram

< Prev Next > 2014 - Mazda3 - Wiring Diagram

< Prev Next > 2014 - Mazda3 - Wiring Diagram

< Prev Next > 2014 - Mazda3 - Wiring Diagram

< Prev Next > 2014 - Mazda3 - Wiring Diagram

< Prev Next > 2014 - Mazda3 - Wiring Diagram

< Prev Next > 2014 - Mazda3 - Wiring Diagram

2014 Mazda3 - 0912-4 Auto Dimming Mirror

< Prev Next > 2014 - Mazda3 - Wiring Diagram

< Prev Next > 2014 - Mazda3 - Wiring Diagram

< Prev Next > 2014 - Mazda3 - Wiring Diagram

2014 Mazda3 - 0913-1 Seat Warmer

< Prev Next > 2014 - Mazda3 - Wiring Diagram

< Prev Next > 2014 - Mazda3 - Wiring Diagram

< Prev Next > 2014 - Mazda3 - Wiring Diagram

< Prev Next > 2014 - Mazda3 - Wiring Diagram

< Prev Next > 2014 - Mazda3 - Wiring Diagram

< Prev Next > 2014 - Mazda3 - Wiring Diagram

< Prev Next > 2014 - Mazda3 - Wiring Diagram

< Prev Next > 2014 - Mazda3 - Wiring Diagram

< Prev Next > 2014 - Mazda3 - Wiring Diagram

< Prev Next > 2014 - Mazda3 - Wiring Diagram

< Prev Next > 2014 - Mazda3 - Wiring Diagram

2014 Mazda3 - 0915-1 Sunroof

< Prev Next > 2014 - Mazda3 - Wiring Diagram

2014 Mazda3 - 0918-3a License Plate Light / Parking Light / Side Marker Light / Taillight

< Prev Next > 2014 - Mazda3 - Wiring Diagram

2014 Mazda3 - 0918-3b License Plate Light / Parking Light / Side Marker Light / Taillight

< Prev Next > 2014 - Mazda3 - Wiring Diagram

< Prev Next > 2014 - Mazda3 - Wiring Diagram

< Prev Next > 2014 - Mazda3 - Wiring Diagram

2014 Mazda3 - 0918-5b Turn And Hazard Warning Light

2014 Mazda3 - 0918-6 Back-Up Light

< Prev Next > 2014 - Mazda3 - Wiring Diagram

< Prev Next > 2014 - Mazda3 - Wiring Diagram

< Prev Next > 2014 - Mazda3 - Wiring Diagram

< Prev Next > 2014 - Mazda3 - Wiring Diagram

< Prev Next > 2014 - Mazda3 - Wiring Diagram

< Prev Next > 2014 - Mazda3 - Wiring Diagram

< Prev Next > 2014 - Mazda3 - Wiring Diagram

< Prev Next > 2014 - Mazda3 - Wiring Diagram

< Prev Next > 2014 - Mazda3 - Wiring Diagram

< Prev Next > 2014 - Mazda3 - Wiring Diagram

< Prev Next > 2014 - Mazda3 - Wiring Diagram

2014 Mazda3 - 0921-2 Accessory Socket

< Prev Next > 2014 - Mazda3 - Wiring Diagram

2014 Mazda3 - 0922-1b Instrument Cluster

< Prev Next > 2014 - Mazda3 - Wiring Diagram

2014 Mazda3 - 0922-1c Instrument Cluster

< Prev Next > 2014 - Mazda3 - Wiring Diagram

< Prev Next > 2014 - Mazda3 - Wiring Diagram

< Prev Next > 2014 - Mazda3 - Wiring Diagram

< Prev Next > 2014 - Mazda3 - Wiring Diagram

< Prev 2014 - Mazda3 - Wiring Diagram

Next >

2014 - Mazda3 - General Information

VEHICLE IDENTIFICATION NUMBER (VIN) CODE

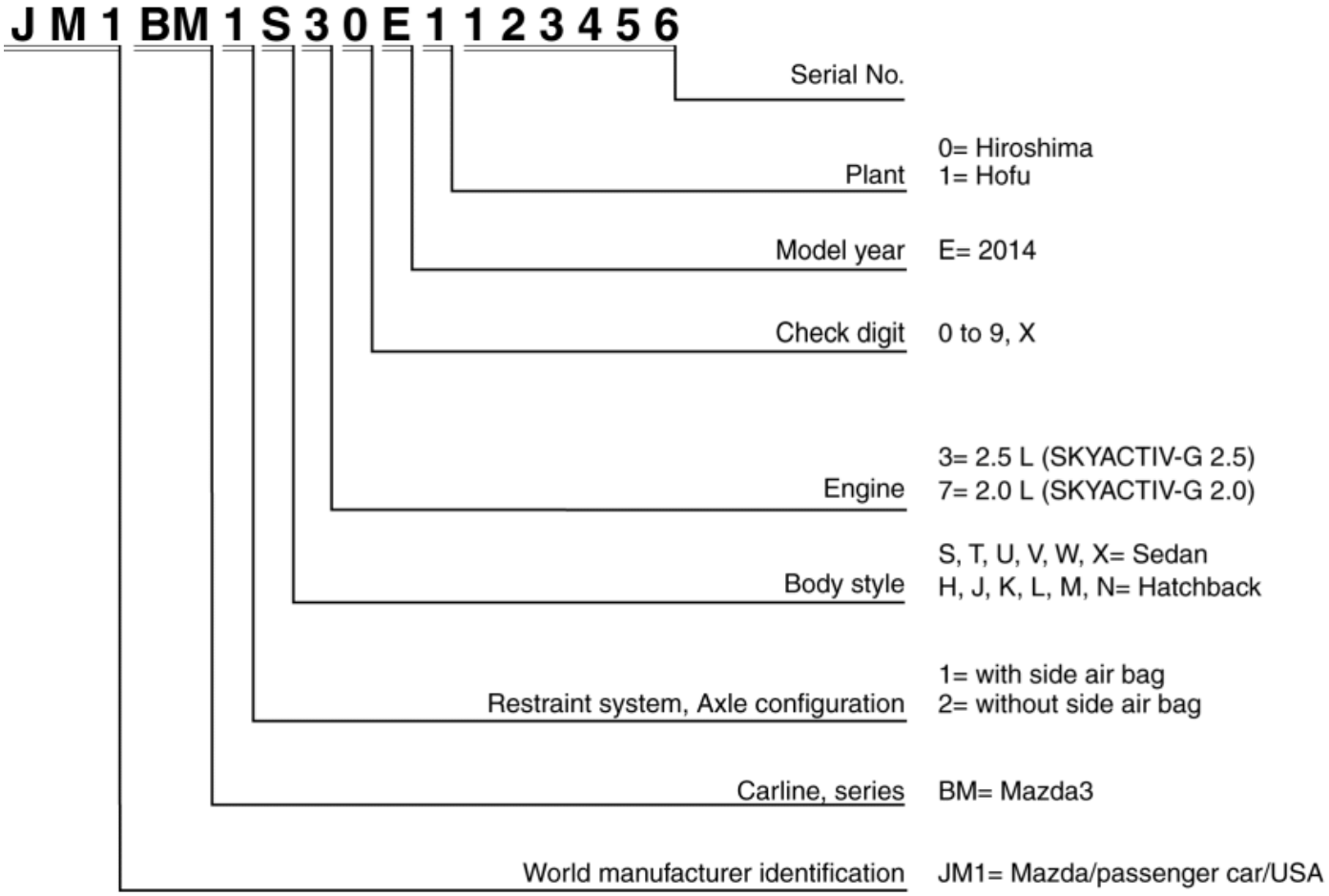

Next >

2014 - Mazda3 - General Information

VEHICLE IDENTIFICATION NUMBER (VIN)

JM1 BM1H3*E#100001—

JM1 BM1H7*E#100001—

JM1 BM1J3*E#100001—

JM1 BM1J7*E#100001—

JM1 BM1K3*E#100001—

JM1 BM1K7*E#100001—

JM1 BM1L3*E#100001—

JM1 BM1L7*E#100001—

JM1 BM1M3*E#100001—

JM1 BM1M7*E#100001—

JM1 BM1N3*E#100001—

JM1 BM1N7*E#100001—

JM1 BM1S3*E#100001—

JM1 BM1S7*E#100001—

JM1 BM1T3*E#100001—

JM1 BM1T7*E#100001—

JM1 BM1U3*E#100001—

JM1 BM1U7*E#100001—

JM1 BM1V3*E#100001—

JM1 BM1V7*E#100001—

JM1 BM1W3*E#100001—

JM1 BM1W7*E#100001—

JM1 BM1X3*E#100001—

JM1 BM1X7*E#100001—

VEHICLE IDENTIFICATION NUMBER (VIN)

2014 - Mazda3 - General Information

HOW TO USE THIS MANUAL

Range of Topics

- This manual contains procedures for performing all required service operations. The procedures are divided into the following five basic operations:
    - Removal/Installation
    - Disassembly/Assembly
    - Replacement
    - Inspection
    - Adjustment
- Simple operations which can be performed easily just by looking at the vehicle (i.e., removal/installation of parts, jacking, vehicle lifting, cleaning of parts, and visual inspection) have been omitted.

Advisory Messages

- You will find several **Warnings, Cautions, Notes, Specifications** and **Upper and Lower Limits** in this manual.

    Warning

    - A Warning indicates a situation in which serious injury or death could result if the warning is ignored.

    Caution

    - A Caution indicates a situation in which damage to the vehicle or parts could result if the caution is ignored.

    Note

    - A Note provides added information that will help you to complete a particular procedure.

    Specification

    - The values indicate the allowable range when performing inspections or adjustments.

    Upper and lower limits

    - The values indicate the upper and lower limits that must not be exceeded when performing inspections or adjustments.

Symbols

- There are nine symbols indicating oil, grease, fluids, sealant, and the use of **SST** or equivalent. These symbols show application points or use of these materials during service.

Symbol	Meaning	Kind
	Apply oil	New appropriate engine oil or gear oil
	Apply brake fluid	New appropriate brake fluid
	Apply automatic transmission/transaxle fluid	New appropriate automatic transmission/transaxle fluid
	Apply continuously variable transaxle fluid	New appropriate continuously variable transaxle fluid

GREASE	Apply grease	Appropriate grease
SEALANT	Apply sealant	Appropriate sealant
P	Apply petroleum jelly	Appropriate petroleum jelly
R	Replace part	O ring, gasket
SST	Use SST or equivalent	Appropriate tools

Service Procedure

Inspection, adjustment

- Inspection and adjustment procedures are divided into steps. Important points regarding the location and contents of the procedures are explained in detail and shown in the illustrations.

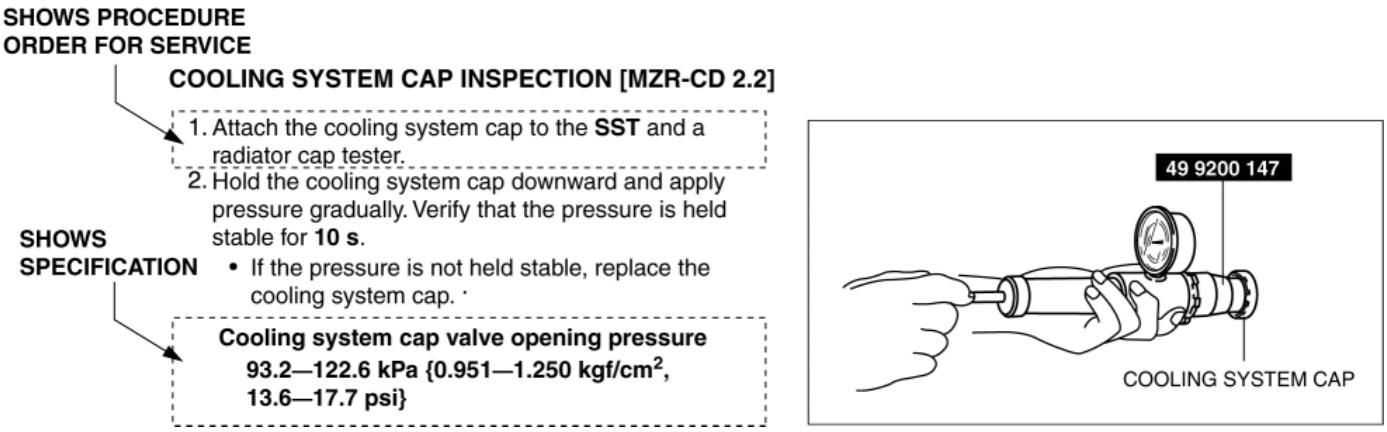

Repair procedure

1. Most repair operations begin with an overview illustration. It identifies the components, shows how the parts fit together, and describes visual part inspection. However, only removal/installation procedures that need to be performed methodically have written instructions.

2. Expendable parts, tightening torques, and symbols for oil, grease, and sealant are shown in the overview illustration. In addition, symbols indicating parts requiring the use of special service tools or equivalent are also shown.

3. Procedure steps are numbered and the part that is the main point of that procedure is shown in the illustration with the corresponding number. Occasionally, there are important points or additional information concerning a procedure. Refer to this information when servicing the related part.

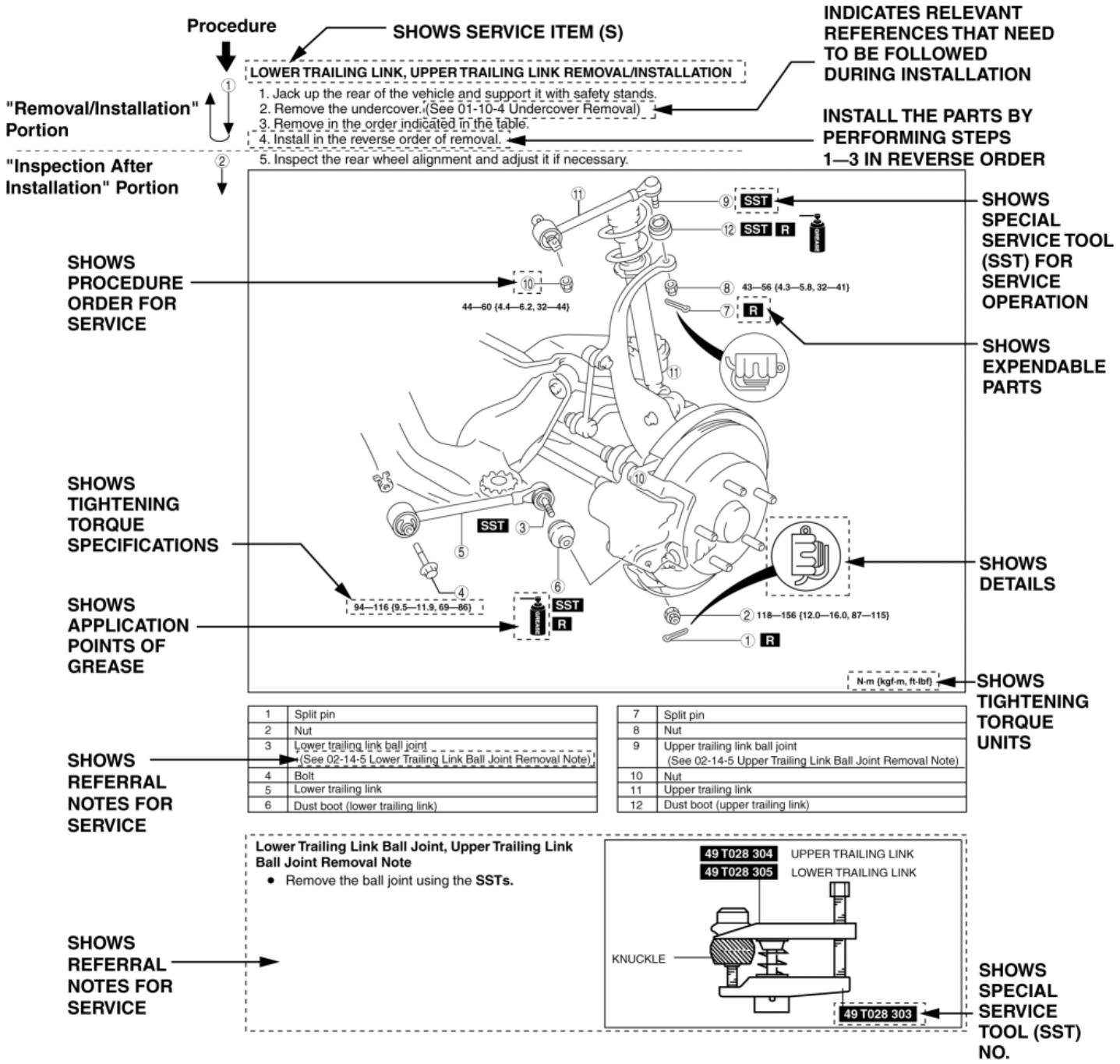

1	Split pin	7	Split pin
2	Nut	8	Nut
3	Lower trailing link ball joint (See 02-14-5 Lower Trailing Link Ball Joint Removal Note)	9	Upper trailing link ball joint (See 02-14-5 Upper Trailing Link Ball Joint Removal Note)
4	Bolt	10	Nut
5	Lower trailing link	11	Upper trailing link
6	Dust boot (lower trailing link)	12	Dust boot (upper trailing link)

Troubleshooting Procedure

Basic flow of troubleshooting

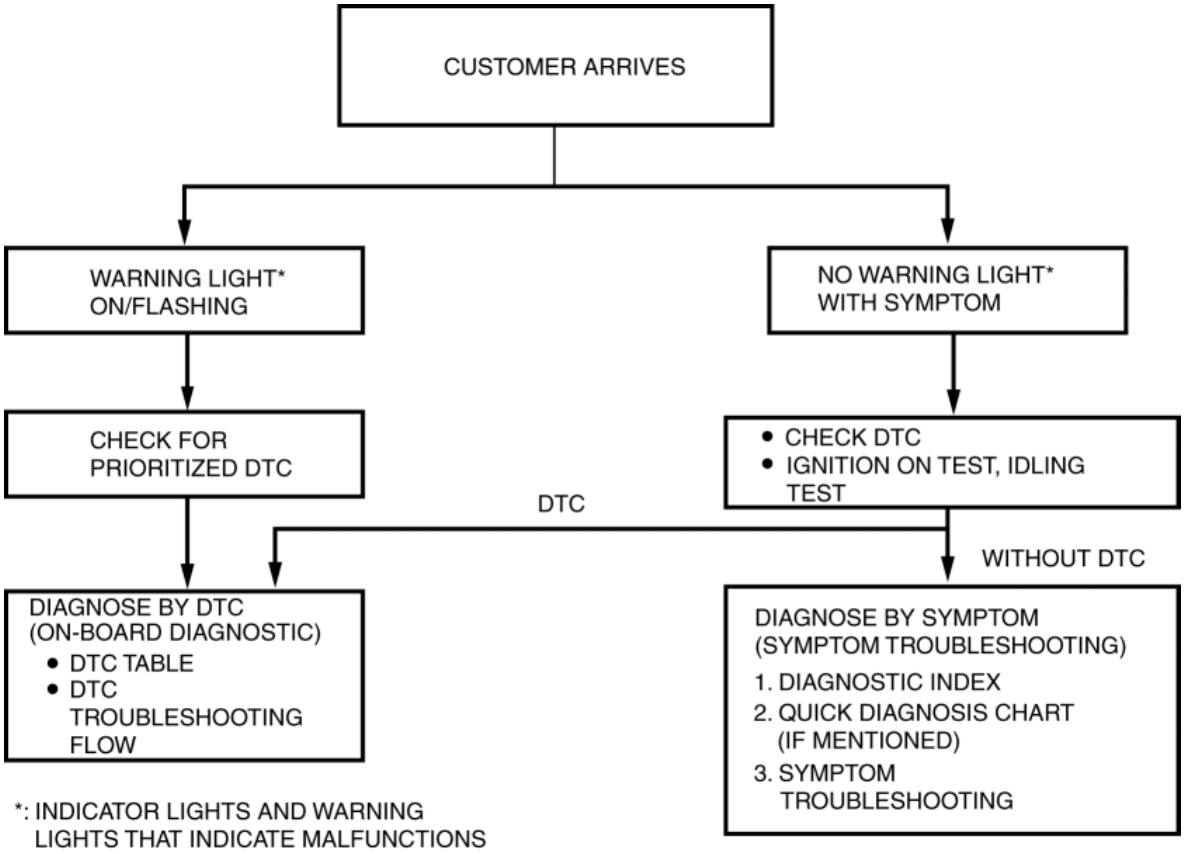

DTC troubleshooting flow (on board diagnostic)

- Diagnostic trouble codes (DTCs) are important hints for repairing malfunctions that are difficult to simulate. Perform the specific DTC diagnostic inspection to quickly and accurately diagnose the malfunction.
- The on board diagnostic function is used during inspection. When a DTC is shown specifying the cause of a malfunction, continue the diagnostic inspection according to the items indicated by the on board diagnostic function.

Diagnostic index

- The diagnostic index lists the symptoms of specific malfunctions. Select the symptoms related or most closely relating to the malfunction.

Quick diagnosis chart (if mentioned)

- The quick diagnosis chart lists diagnosis and inspection procedures to be performed specifically relating to the cause of the malfunction.

Symptom troubleshooting

- Symptom troubleshooting quickly determines the location of the malfunction according to symptom type.

Procedures for Use

Using the basic inspection (transmission/transaxle)

- Perform the basic inspection procedure before symptom troubleshooting.
- Perform each step in the order shown.
- The reference column lists the location of the detailed procedure for each basic inspection.
- Although inspections and adjustments are performed according to the reference column procedures, if the cause of the malfunction is discovered during basic inspection, continue the procedures as indicated in the action column.

SHOWS INSPECTION ORDER

SHOWS ITEM NAMES FOR DETAILED PROCEDURES

SHOW POINTS REQUIRING ATTENTION BASED ON INSPECTION RESULTS

REFERENCE COLUMN

BASIC INSPECTION

STEP	INSPECTION		ACTION
1	Perform the mechanical system test. (See 05-13-3 MECHANICAL SYSTEM TEST.) Is mechanical system normal?	Yes	Go to the next step.
		No	Repair or replace any malfunctioning parts according to the inspection result.
2	Turn the ignition switch to the ON position. When the selector lever is moved, does the selector illumination indicate synchronized position to the lever location? Also, when other ranges are selected from N or P during idling, does the vehicle move within 1—2 s?	Yes	Go to next step.
		No	Inspect the selector lever and TR switch. Repair or replace malfunctioning parts. (See 05-14-5 SELECTOR LEVER INSPECTION.) (See 05-13-10 TRANSMISSION RANGE (TR) SWITCH INSPECTION.) If the selector lever and TR switch are normal, go to the next step.
3	Inspect the ATF color condition. (See 05-13-8 AUTOMATIC TRANSMISSION FLUID (ATF) INSPECTION.) Are ATF color and odor normal?	Yes	Go to the next step.
		No	Repair or replace any malfunctioning parts according to the inspection result. Flush ATX and cooler line as necessary.
4	Perform the line pressure test. (See 05-13-3 Line Pressure Test.) Is the line pressure normal?	Yes	Go to the next step.
		No	Repair or replace any malfunctioning parts according to the inspection result.
5	Perform the stall test. (See 05-13-4 Stall Speed Test.) Is the stall speed normal?	Yes	Go to the next step.
		No	Repair or replace any malfunctioning parts according to the inspection result.
	Inspect the voltage at the following TCM terminals. (See 05-13-29 TCM INSPECTION.) • Terminal 2J (TFT sensor) • Terminals 1D, 2B, 2C, 2E (TR switch) • Terminal 2G (turbine sensor) • Terminal 2D (down switch) • Terminal 2I (up switch) • Terminal 1E (M range switch) • Terminal 1W (steering shift switch) Is the voltage normal?	Yes	Go to the next step.
		No	Repair or replace any malfunctioning parts according to the inspection result.

Using the DTC troubleshooting flow

- DTC troubleshooting flow shows diagnostic procedures, inspection methods, and proper action to take for each DTC.

DTC C0020:01/C0020:1C/C0020:71 [ABS]

DTC	C0020:01, C0020:1C, C0020:71	Pump motor, motor relay
DETECTION CONDITION	· C0020:01 — ABS motor relay signal does not correspond to ABS HU/CM ON signal. · C0020:1C — ABS motor monitor signal does not correspond to ABS HU/CM OFF signal. — ABS motor monitor signal does not correspond to ABS HU/CM ON signal. · C0020:71 — ABS HU/CM motor monitor ON signal is not input within specified time limit or more when motor signal is switched from ON to OFF by ABS HU/CM.	
FAIL-SAFE FUNCTION	· Illuminates the ABS warning light and TCS/DSC indicator light. · Inhibits the ABS, TCS, DSC and brake assist controls.	
POSSIBLE CAUSE	· ABS 40A fuse malfunction · Open or short circuit in ABS HU/CM internal motor relay, or stuck motor relay · Open or short circuit in ABS HU/CM internal pump motor, or frozen pump motor · Open circuit or short to ground in the wiring harness between the battery and ABS HU/CM terminal Y · Open circuit in the wiring harness between ABS HU/CM terminal B and body ground · Poor connection at connectors (female terminal)	

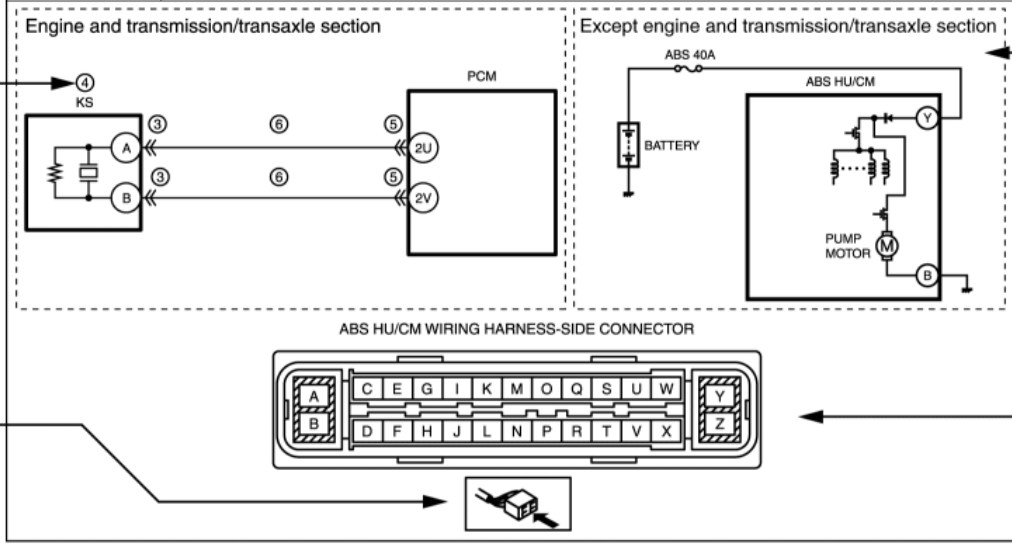

Diagnostic procedure

STEP	INSPECTION		ACTION
1	**INSPECT ABS FUSE CONDITION** · Is the ABS fuse (ABS 40A) normal?	Yes	Go to the next step.
		No	Replace the fuse, then go to Step 6.
2	**VERIFY PUMP MOTOR OPERATION** · Switch the ignition to off. · Connect the M-MDS to the DLC-2. · Switch the ignition to ON. · Access PMP_MTR active command modes using the M-MDS. · Does the pump motor operate?	Yes	Go to the next step.
		No	Replace the ABS HU/CM, then go to Step 6. (See ABS HU/CM REMOVAL/INSTALLATION.)
3	**INSPECT MOTOR RELAY POWER SUPPLY FOR OPEN CIRCUIT** · Switch the ignition to off. · Disconnect the ABS HU/CM connector. · Inspect for continuity between ABS HU/CM terminal Y and the positive battery terminal. · Is there continuity?	Yes	Go to the next step.
		No	Repair or replace the wiring harness, then go to Step 6.
4	**INSPECT MOTOR RELAY POWER SUPPLY FOR SHORT CIRCUIT** · Inspect for continuity between ABS HU/CM terminal Y and body ground. · Is there continuity?	Yes	Repair or replace the wiring harness, then go to Step 6.
		No	Go to the next step.
5	**INSPECT PUMP MOTOR GROUND FOR OPEN CIRCUIT** · Inspect for continuity between ABS HU/CM terminal B and body ground. · Is there continuity?	Yes	Go to the next step.
		No	Repair or replace the wiring harness, then go to the next step.
6	**VERIFY THAT THE SAME DTC IS NOT PRESENT** · Reconnect all disconnected connectors. · Clear the DTCs from the memory. (See ON-BOARD DIAGNOSIS [ABS].) · Start the engine and drive the vehicle at **10 km/h {6.2 mph} or more**. · Are the same DTCs present?	Yes	Repeat the inspection from Step·1. If the malfunction recurs, replace the ABS CM, then go to the next step. (See ABS HU/CM REMOVAL/INSTALLATION.)
		No	Go to the next step.
7	**VERIFY THAT NO OTHER DTCS ARE PRESENT** · Are any other DTCs output?	Yes	Go to the applicable DTC inspection. (See ON-BOARD DIAGNOSIS [ABS].)
		No	DTC troubleshooting completed.

DETECTION CONDITION describes the condition under which the DTC is detected.

TROUBLE CONDITION

FAIL-SAFE FUNCTION Indicates control status at time of detection

POSSIBLE CAUSE describes possible point(s) of malfunction

Indicates the inspection step No. to be performed

Indicates the circuit to be inspected

Indicates the direction in which to visually inspect the connector

Indicates the connector related to the inspection

STEP shows the order of troubleshooting

INSPECTION describes the method to quickly determine the malfunctioning part(s).

ACTION describes the appropriate action to be taken according to the result (Yes/No) of the INSPECTION.

Reference item(s) to perform ACTION.

Using the diagnostic index

- Malfunction symptoms are listed in the diagnostic index under symptom troubleshooting.

- The exact malfunction symptoms can be selected by following the index.
- Correctly verify the malfunction symptom according to “DESCRIPTION”.

No.	TROUBLESHOOTING ITEM		DESCRIPTION	Page
1	Melting of main or other fuses		—	(See 01-03-6 MELT NO.1 MAIN OR OTHER FUSE)
2	MIL comes on		MIL is illuminated incorrectly.	(See 01-03-7 NO.2 MIL COMES ON)
3	Will not crank		Starter does not work.	(See 01-03-8 NO. 3 WILL NOT CRANK)
4	Hard start/long crank/erratic start/erratic crank		Starter cranks engine at normal speed but engine requires excessive cranking time before starting.	(See 01-03-9 NO. 4 HARD START/ LONG CRANK/ERRATIC CRANK)
5	Engine stalls.	After start/at idle	Engine stops unexpectedly at idle and/or after start.	(See 01-03-11 NO. 5 ENGINE-STALLS AFTER START/AT IDLE)
6	Cranks normally but will not start		Starter cranks engine at normal speed but engine will not run.	(See 01-03-15 NO.6 CRANKS NORMALLY BUT WILL NOT START)
7	Slow return to idle		Engine takes more time than normal to return to idle speed.	(See 01-03-19 NO. 7 SLOW RERUN TO IDLE)
8	Engine runs rough/rolling		Engine speed fluctuates between specified idle speed and lower speed and engine shakes excessively.	(See 01-03-20 NO. 8 ENGINE RUNS ROUGH/ROLLING IDLE)
9	Fast idle/runs on		Engine speed continues at fast idle after warm-up. Engine runs after ignition key is turned to OFF.	(See 01-03-23 NO. 9 FAST IDLE/RUNS ON)

Using the quick diagnosis chart

- The related malfunction cause can be understood.
- The relation between the malfunction symptom and cause is indicated.
- The relation between the malfunction symptom and cause can be detected quickly, and if multiple malfunction symptoms occur, the area which is the common cause among the multiple malfunctions can be specified.
- The effective inspection procedure for the malfunction cause specified from the malfunction symptoms can be selected using the inspection procedure chart.

MALFUNCTION CAUSE SPECIFIED BY MALFUNCTION SYMPTOM

SYMPTOM QUICK DIAGNOSTIC CHART

② **SPECIFY MALFUNCTIONING PART CORRESPONDING TO MALFUNCTION SYMPTOM**

① **SELECT MALFUNCTION SYMPTOM**

	Troubleshooting item / Possible factor		Starter motor malfunction (Mechanical or electrical)	Starter circuit including ignition switch open	Improper engine oil level	Low or dead battery	Charging system malfunction	Improper engine compression	Improper valve timing	Hydrolocked engine	Improper engine oil viscosity	Improper dipstick	Base engine malfunction	Drive plate or flywheel seized	Improper tension or damaged drive belts	Improper engine coolant level	Water and anti-freeze mixture improperly	Cooling system malfunction (Radiator, hoses, overflow system, thermostat, etc.)	Cooling fan system malfunction	Engine or transaxle mounts improperly installed	Cooling fan or condenser fan seat improperly	Accelerator cable free play mis-adjustment	Fuel quality
1	Melts of main or other fuse																						
2	MIL comes on																						
3	Will not crank		x	x		x	x			x				x									
4	Hard to start/long crank/erratic start/erratic crank																						x
5	Engine stalls	After start/at idle						x	x	x													x
6	Cranks normally but will not start							x	x	x													x
7	Slow return to idle																		x				
8	Engine runs rough/rolling idle							x	x														x
9	Fast idle/runs on																					x	
10	Low idle/stalls during deceleration																						
11	Engine stalls/quits	Acceleration/cruise						x	x														x
	Engine runs rough	Acceleration/cruise						x	x														x
	Misses	Acceleration/cruise						x	x														x
	Buck/jerk	Acceleration/cruise/ deceleration						x	x														x
	Hesitation/stumble	Acceleration						x	x														x
	Surges	Acceleration/cruise						x	x														x
12	Lack/loss of power	Acceleration/cruise						x	x														x
13	Knocking/pinging	Acceleration/cruise						x										x					
14	Poor fuel economy							x	x							x		x	x				x
15	Emissions compliance							x	x				x					x					
16	High oil consumption/leakage										x	x	x										
17	Cooling system concerns	Overheating													x	x	x	x	x				
18	Cooling system concerns	Runs cold																x	x				
19	Exhaust smoke												x					x					
20	Fuel odor (in engine compartment)																						
21	Engine noise				x								x		x								
22	Vibration concerns (engine)														x					x	x		
23	A/C does not work sufficiently																						
24	A/C always on/ A/C compressor runs continuously																						
25	A/C does not cut off under wide open throttle conditions																						
26	Exhaust sulphur smell																						x
27	Fuel refill concerns																						
28	Fuel filling shut off issues																						
29	Intermittent concerns					x																	
30	Constant voltage																						
31	Spark plug condition							x			x		x				x						x
32	Automatic transaxle concerns	Upshift/downshift/ engagement	(See 05-01 AUTOMATIC TRANSAXLE SYMPTOM TROUBLESHOOTING)																				

Using the symptom troubleshooting

- Determine the malfunctioning part quickly and accurately based on each malfunction symptom.
- After repair, verify that the malfunction symptom is eliminated.
- There are the troubleshooting procedures and actions for each malfunctioning part.
- Structured as procedures for verifying malfunction symptom quickly and accurately.

TROUBLE SYMPTOM

DESCRIPTION describes what kind of TROUBLE SYMPTOM

POSSIBLE CAUSE describes possible point of malfunction

STEP shows the order of troubleshooting.

INSPECTION describes the method to quickly determine the malfunctioning part(s).

Reference item(s) for additional information to perform INSPECTION.

Reference item(s) to perform ACTION.

ACTION describes the appropriate action to be taken according to the result (Yes/No) of the INSPECTION.

How to perform ACTION is described in the relative material shown.

NO.2 VEHICLE MOVES IN N POSITION

2	Vehicle moves in N position
DESCRIPTION	• Vehicle creeps in N position. • Vehicle creeps if brake pedal is not depressed in N position.
POSSIBLE CAUSE	• If the vehicle moves in N position, basically, the malfunction is in the ATX. Since a malfunction in the sensor circuit or output circuit is the cause of the malfunction in the ATX, inspect the sensors, output circuit, and the related wiring harnesses. 1. Clutch burnt (Forward clutch) • Control valve body malfunction 2. Selector lever position disparity (Although the selector indicator shows N position, the hydraulic circuit shows D range or R position) **Note** • Before following the troubleshooting steps, make sure that the Automatic Transaxle On-Board Diagnostic and Automatic Transaxle Basic Inspection are conducted.

Diagnostic procedure

STEP	INSPECTION		ACTION
1	Does the vehicle creep when the selector lever is moved slightly in N position?	Yes	Go to the next step.
		No	Adjust the selector cable. (See SELECTOR CABLE ADJUSTMENT.)
2	Disconnect the TCM connector. Is the resistance between the ground terminal at the TCM connector and the body ground **less than 5.0 ohms**?	Yes	Go to the next step.
		No	Repair open ground circuit. Reconnect the TCM connector.
3	Inspect the value at the following TCM PID using the M-MDS. (See PID/DATA MONITOR INSPECTION [FS5A-EL].) • LPS Is the LPS PID value normal?	Yes	Overhaul the control valve body and repair or replace any malfunctioning parts. (See ATX workshop manual [FS5A-EL].) If any problem remains, overhaul the transaxle and repair or replace any malfunctioning parts. (See ATX workshop manual [FS5A-EL].)
		No	Repair or replace any malfunctioning parts
4	• Verify the test results. — If normal, return to the diagnostic index to service any additional symptoms. — If the malfunction remains, inspect the related Service Information and perform repair or diagnosis. • If the vehicle is repaired, troubleshooting is completed. • If the vehicle is not repaired or additional diagnostic information is not available, replace the TCM.		

2014 - Mazda3 - General Information

UNITS

Electric current	A (ampere)
Electric power	W (watt)
Electric resistance	ohm
Electric voltage	V (volt)
Length	mm (millimeter)
	in (inch)
Negative pressure	kPa (kilo pascal)
	mmHg (millimeters of mercury)
	inHg (inches of mercury)
Positive pressure	kPa (kilo pascal)
	kgf/cm^2 (kilogram force per square centimeter)
	psi (pounds per square inch)
Number of revolutions	rpm (revolutions per minute)
Torque	N·m (Newton meter)
	kgf·m (kilogram force meter)
	kgf·cm (kilogram force centimeter)
	ft·lbf (foot pound force)

	in·lbf (inch pound force)
Volume	L (liter)
	US qt (U.S. quart)
	Imp qt (Imperial quart)
	ml (milliliter)
	cc (cubic centimeter)
	cu in (cubic inch)
	fl oz (fluid ounce)
Weight	g (gram)
	oz (ounce)

Conversion From SI Units

- All numerical values in this manual are based on SI units. Numbers shown in conventional units are converted from these values.

Number of Digits for Converted Values

- The number digits for converted values is the same as the number of significant figures[*1] of the SI unit.
- For the torque value, the number of significant figures is, in principle, 2 digits, in consideration of market practicalities. However, if the number of decimal places at the upper and lower limits of the converted value differs, the one with least number of decimal places is used. In addition, if the integer part is 3 digits or more, the integer part becomes the significant number of figures.

*1 **The number of significant figures is the number of digits from the left-most non-zero digit to the right-most digit including 0. (Example: 0.12 is 2 digits, 41.0 is 3 digits)**

Converted Value Rounding Off and Rounding Up/down

- If there is no tolerance in the SI unit value, after conversion, rounding off is to within the number of significant digits.

If there is tolerance in the SI unit value and the figure after conversion indicates the upper limit, the number of digits is rounded down to within the number of significant figures. If it indicates the lower limit, they are rounded up to within the number of significant figures.

- Even if the SI unit value is the same, the converted value may differ based on whether that value is the upper or lower limit.

2014 - Mazda3 - General Information

SERVICE CAUTIONS

Injury/damage Prevention Precautions

- Depending on the vehicle, the cooling fan may operate suddenly even when the ignition is switched off. Therefore, keep hands and tools away from the cooling fan even if the cooling fan is not operating to prevent injury to personnel or damage to the cooling fan. Always disconnect the negative battery cable when servicing the cooling fan or parts near the cooling fan.

Protection of the Vehicle

- Always be sure to cover fenders, seats and floor areas before starting work.

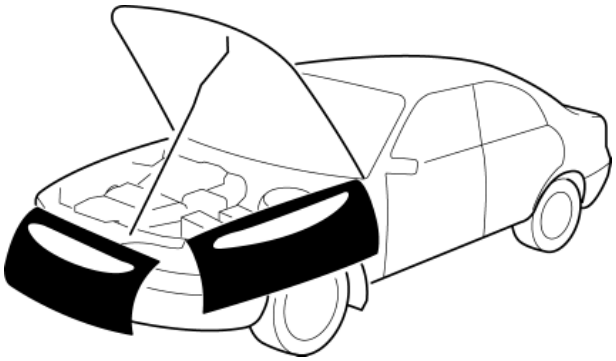

Preparation of Tools and Measuring Equipment

- Be sure that all necessary tools and measuring equipment are available before starting any work.

Special Service Tools

- Use special service tools or the equivalent when they are required.

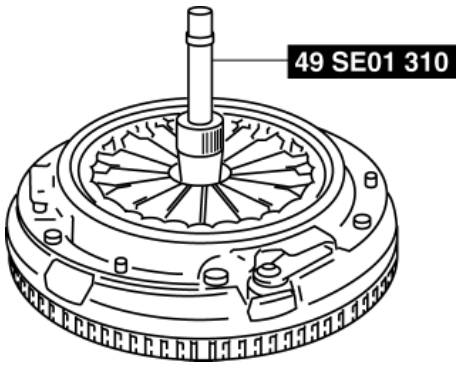

Malfunction Diagnosis System

- Use the Mazda Modular Diagnostic System (M-MDS) for malfunction diagnosis.

Connection to malfunction diagnosis system

- With the ignition switched off, connect the malfunction diagnosis system to the DLC-2 connector shown in the figure.

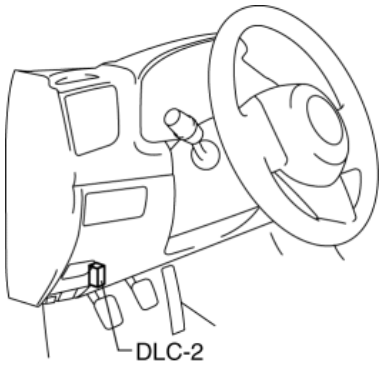

Oil Leakage Inspection

- Use either of the following procedures to identify the type of oil that is leaking:

Using UV light (black light)

1. Remove any oil on the engine or transmission/transaxle.

NOTE:

- Referring to the fluorescent dye instruction manual, mix the specified amount of dye into the engine oil or transmission/transaxle oil.

2. Pour the fluorescent dye into the engine oil or transmission/transaxle oil.
3. Allow the engine to run for **30 min**.
4. Inspect for dye leakage by irradiating with UV light (black light), and identify the type of oil that is leaking.
5. If no dye leakage is found, allow the engine to run for another **30 min**. or drive the vehicle then reinspect.
6. Find where the oil is leaking from, then make necessary repairs.

NOTE:

- To determine whether it is necessary to replace the oil after adding the fluorescent dye, refer to the fluorescent dye instruction manual.

Not using UV light (black light)

1. Gather sample of the leaking oil using an absorbent white tissue.

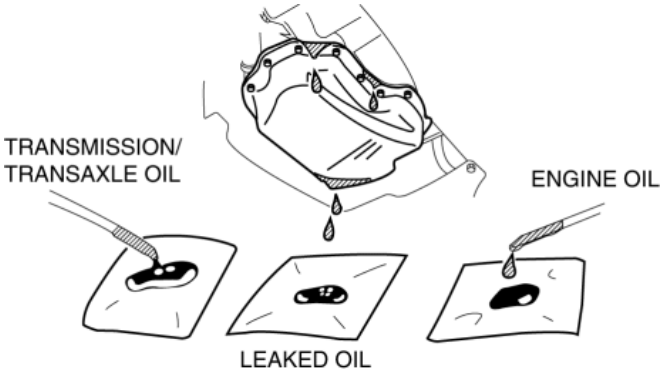

2. Then, gather some samples of engine and transmission/transaxle oil onto a white cloth or piece of paper.
    - MT vehicles: Transmission/transaxle oil
    - AT vehicles: ATF
3. Compare the appearance and smell, and identify the type of oil that is leaking.
4. Remove any oil on the engine or transmission/transaxle.
5. Allow the engine to run for **30 min**.
6. Check the area where the oil is leaking, then make necessary repairs.

Negative Battery Cable Disconnection/Connection

Warning

- Before removing the SRS air bag system-related parts, always disconnect the negative battery cable and wait for 1 min. or more to allow the back-up power supply to deplete its stored power. (See **AIR BAG SYSTEM SERVICE WARNINGS [TWO-STEP DEPLOYMENT CONTROL SYSTEM]**.)(See **AIR BAG SYSTEM SERVICE WARNINGS [STANDARD DEPLOYMENT CONTROL SYSTEM]**.)

Required procedure after negative battery cable disconnection/connection

System name	Conditions after disconnecting the negative battery cable	Required procedure		Reference
		Before disconnecting negative battery cable	After connecting negative battery cable	
Power window system	Reset to initial setting and auto-function is disabled.	—	Perform the power window system initial setting.	(See **POWER WINDOW SYSTEM INITIALIZATION PROCEDURE**.)
Sunroof system	Reset to initial setting and function is disabled.	—	Perform the sunroof system initial setting.	(See **SUNROOF SYSTEM INITIALIZATION PROCEDURE**.)
Clock and audio	Clock display and audio system memory are reset.	Verify the setting content.	Set the verified content before disconnecting negative battery cable.	—
Tire pressure monitoring system (TPMS)	The tire pressure monitoring system detection accuracy decreases.	—	Perform the tire pressure monitoring system initialization.	(See **TIRE PRESSURE MONITORING SYSTEM INITIALIZATION PROCEDURE**.)

Switch The Power Supply Using The Push Button Start And Start The Engine

- The power supply switches according to the vehicle conditions such as the shift lever (MTX)/selector lever (ATX) position and the pedal depression/release.

MTX

IGNITION	SHIFT LEVER POSITION	
	ALL	
	CLUTCH PEDAL RELEASED	CLUTCH PEDAL DEPRESSED
OFF (LOCK)*		
ACC		
ON (ENGINE OFF)		
ON (ENGINE ON)		

ATX

IGNITION	SELECTOR LEVER POSITION					
	P		N		OTHER THAN P AND N	
	BRAKE PEDAL RELEASED	BRAKE PEDAL DEPRESSED	BRAKE PEDAL RELEASED	BRAKE PEDAL DEPRESSED	BRAKE PEDAL RELEASED	BRAKE PEDAL DEPRESSED
OFF (LOCK)*						
ACC						
ON (ENGINE OFF)						
ON (ENGINE ON)						

Removal of Parts

- While correcting a problem, also try to determine its cause. Begin work only after first learning which parts and sub-components must be removed and disassembled for replacement or repair. After removing the part, plug all holes and ports to prevent foreign material from entering.

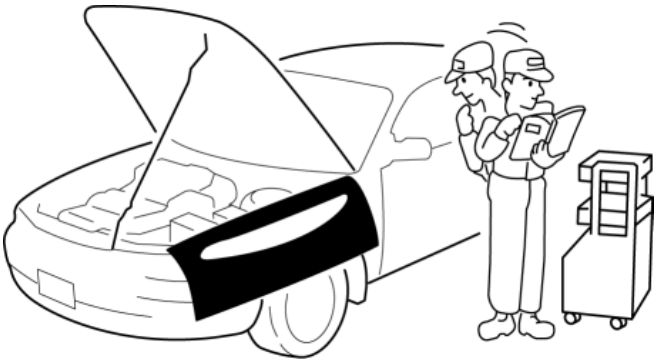

Control module configuration (initialization setting)

CAUTION:

- If the configuration procedure is not completed correctly after replacing a control module in which configuration is required, the system will not operate normally. Therefore, perform the work in accordance with the replacement procedure in the workshop manual.
- If the control module is replaced, and depending on the control module, it may be necessary to write the vehicle specification data to the new control module using the M-MDS. This procedure is for performing the configuration (initial setting).
- There are the following three methods of the configuration procedure for the control module:

Automatic configuration

- The main control module (built into instrument cluster) performs configuration of the new control module itself and automatically using the vehicle specification data sent via CAN lines.

- Configuration based on vehicle information read/write data
  - Reads the vehicle information from the control module prior to replacement, and writes the vehicle information to a new control module.
- Configuration by As-Built data:
  - Obtains the vehicle specification data when the vehicle is shipped from the factory, and writes the data to a new control module.
  - The configuration using As-Built data is used if the vehicle information cannot be read due to a damaged control module which is to be replaced, or if a DTC such as a configuration malfunction is detected.
  - If a control module having personalization features is configured using As-Built data, the settings personalized by the customer are initialized (to factory settings). In this case, verify the setting values made by the customer and change the personalized setting values using the “Programmable Parameters” from the M-MDS menu.

- If the module programming menu of the M-MDS (Programmable Module Installation, As-Built, Programmable Parameters) is performed, perform the procedure while the battery monitor icon of the M-MDS is green or gray.

Disassembly

- If the disassembly procedure is complex, requiring many parts to be disassembled, all parts should be marked in a place that will not affect their performance or external appearance, and identified so that reassembly can be performed easily and efficiently.

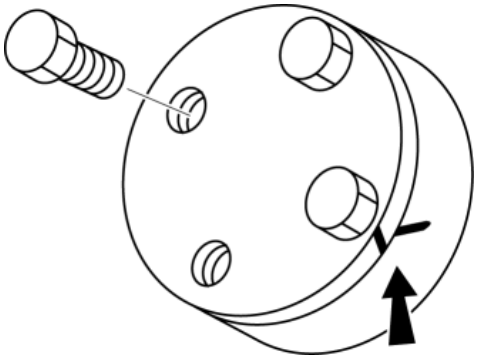

Inspection During Removal, Disassembly

- When removed, each part should be carefully inspected for malfunction, deformation, damage and other problems.

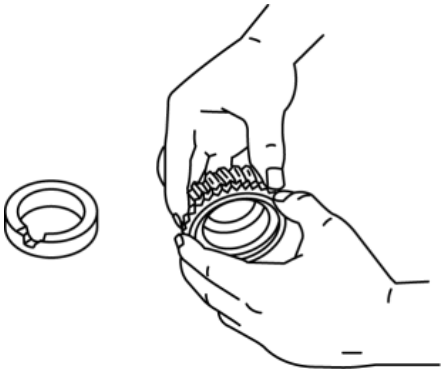

Arrangement of Parts

- All disassembled parts should be carefully arranged for reassembly.

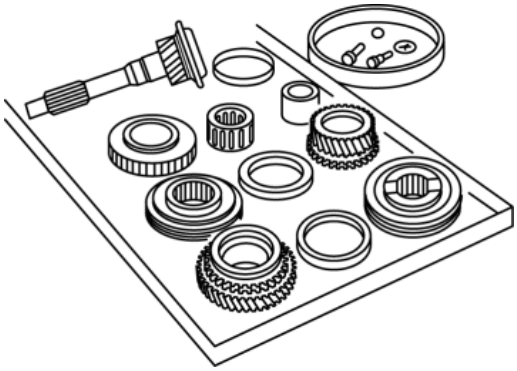

- Be sure to separate or otherwise identify the parts to be replaced from those that will be reused.

Cleaning of Parts

- All parts to be reused should be carefully and thoroughly cleaned in the appropriate method.

WARNING:

- Using compressed air can cause dirt and other particles to fly out causing injury to the eyes. Wear protective eye wear whenever using compressed air.

Reassembly

- Standard values, such as torques and certain adjustments, must be strictly observed in the reassembly of all parts.

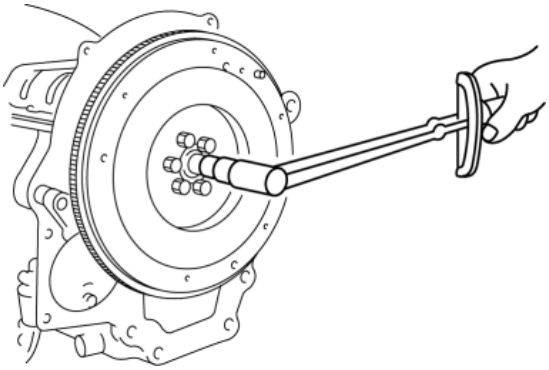

- If removed, these parts should be replaced with new ones:

Oil seals	Cotter pins
Gaskets	Locknuts (Nylon nuts)
O-rings	Spring pins
Lock washers	—

- Depending on location:
  - Sealant and gaskets, or both, should be applied to specified locations. When sealant is applied, parts should be installed before sealant hardens to prevent leakage.
  - Oil should be applied to the moving components of parts.
  - Specified oil or grease should be applied at the prescribed locations (such as oil seals) before reassembly.

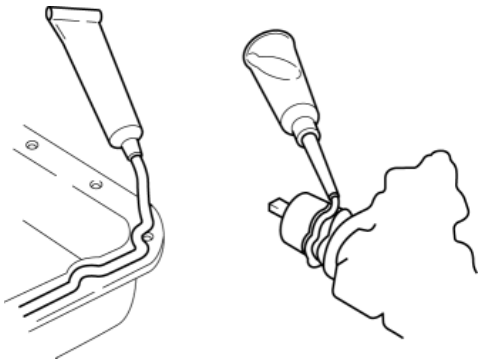

Adjustment

- Use suitable gauges and testers when making adjustments.

Rubber Parts and Tubing

- Prevent gasoline or oil from getting on rubber parts or tubing.

Hose Clamps

- When reinstalling, position the hose clamp in the original location on the hose and squeeze the clamp lightly with large pliers to ensure a good fit.

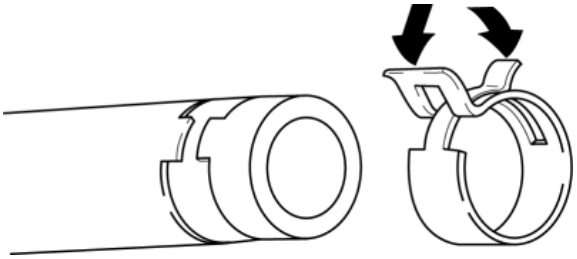

NOTE:

- Follow the description in each section because the clamps which are used with the fuel-related system differ from the one indicated above.

Torque Formulas

- When using a torque wrench-**SST** or equivalent combination, the specified torque must be recalculated due to the extra length that the **SST** or equivalent adds to the torque wrench. Recalculate the torque by using the following formulas. Choose the formula that applies to you.

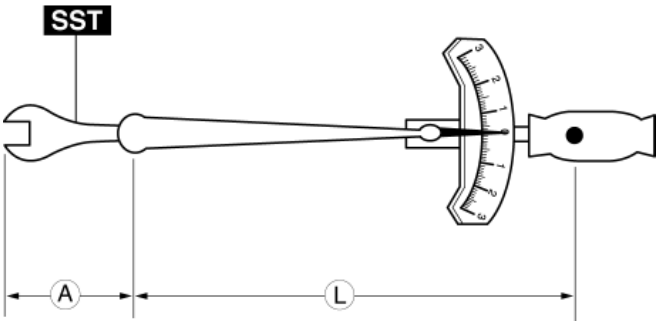

Torque Unit	Formula
N·m	N·m × [L/(L+A)]
kgf·m	kgf·m × [L/(L+A)]
kgf·cm	kgf·cm × [L/(L+A)]
ft·lbf	ft·lbf × [L/(L+A)]
in·lbf	in·lbf × [L/(L+A)]

A
The length of the SST past the torque wrench drive.

L
The length of the torque wrench.

Vise

- When using a vise, put protective plates in the jaws of the vise to prevent damage to parts.

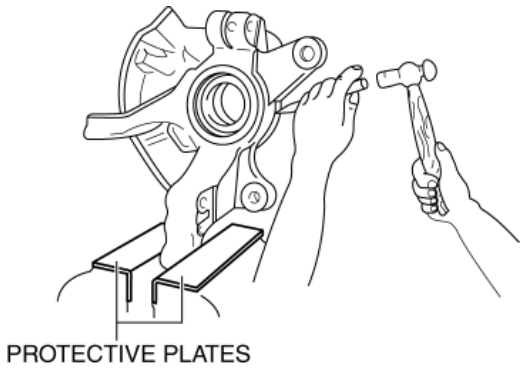

Dynamometer

Cautions on chassis dynamometer use

- When inspecting and servicing the power train on the dynamometer or speedometer tester, pay attention to the following:
    - Place a fan, preferably a vehicle-speed proportional type, in front of the vehicle.
    - Make sure the vehicle is in a facility with an exhaust gas ventilation system.
    - Keep the rear bumper cool by placing a cooling fan near the exhaust pipe so that the rear bumper does not get deformed by the heat from the exhaust.
    - Keep the area around the vehicle uncluttered so that heat does not build up.
    - Watch the water temperature gauge and do not overheat the engine.
    - Avoid added load to the engine and maintain normal driving conditions as much as possible.

NOTE:

- When only the front or rear wheels are rotated on a chassis dynamometer or equivalent, the DSC HU/CM determines that there is a malfunction in the DSC and illuminates the following lights:
    - ABS warning light
    - Brake system warning light
    - TCS/DSC indicator light
- If the above lights are illuminated, dismount the vehicle from the chassis dynamometer and switch the ignition off. Then, switch the ignition ON (engine on), run the vehicle at **10 km/h {6.2 mph} or more** and verify that the warning lights go out. In this case, a DTC will be stored in the memory. Clear the DTC from the memory by following the memory clearing procedure [DSC] in the on-board diagnostic system. (See **ON-BOARD DIAGNOSIS [DYNAMIC STABILITY CONTROL (DSC)]**.)

Cautions for vehicles with Mazda Radar Cruise Control (MRCC) system/Smart Brake Support (SBS) system/Smart City Brake Support (SCBS) system/Distance Recognition Support System (DRSS)

CAUTION:

- If a vehicle with the following systems is inspected using a chassis dynamometer, always turn off each system before performing the inspection.
    - Mazda Radar Cruise Control (MRCC) system
    - Smart Brake Support (SBS) system
    - Smart City Brake Support (SCBS) system
    - Distance Recognition Support System (DRSS)
- If a chassis dynamometer is used without turning off each system, automatic braking will operate and the inspection cannot be performed correctly.
- In the event that a chassis dynamometer is used without turning off each system, take appropriate measures referring to the following as each of the system's warning lights may be illuminated/flashed and DTCs stored in the memory.

Rotating only front or rear wheels

- If only the front or rear wheels are rotated, the DSC HU/CM will determine that the DSC is malfunctioning. It will also determine that the vehicle control module is malfunctioning and the following warning lights will be illuminated or flashed.
    - Mazda radar cruise control (MRCC) warning light (amber) is flashed

Master warning light is illuminated

- If the warning light is illuminated or flashed, remove the vehicle from the chassis dynamometer and switch the ignition off.
- Switch the ignition back ON and drive the vehicle at **10 km/h {6.2 mph} or more** to verify that the warning light turns off.
- Because DTCs are stored, clear DTCs according to the memory clearing procedure.

Rotating all four wheels

- If all four wheels are rotated, the cruise control module determines that there is an error in the location information of the object which is detected by the radar sensor. As a result, the vehicle control module determines that a malfunction occurred, illuminates the following warning lights, and displays a message in the instrument cluster.
  - Master warning light
  - Displays “MRCC Inspection Required”, “SCBS Inspection Required”, “SBS Inspection Required”, and “DRSS Inspection Required”
  - If a warning light is illuminated and a message is displayed, remove the vehicle from the chassis dynamometer and switch the ignition off.
  - Switch the ignition back ON and drive the vehicle at **10 km/h {6.2 mph} or more** to verify that the warning light is turned off and the message is cleared.
  - Because DTCs are stored, clear the DTCs according to the memory clearing procedure.

SST

- Some global **SST** or equivalent are used as **SSTs** necessary for vehicle repair. Note that these **SSTs** are marked with global **SST** numbers.
- Note that a global **SST** number is written together with a corresponding Mazda **SST** number as shown below.

Example (SST List)

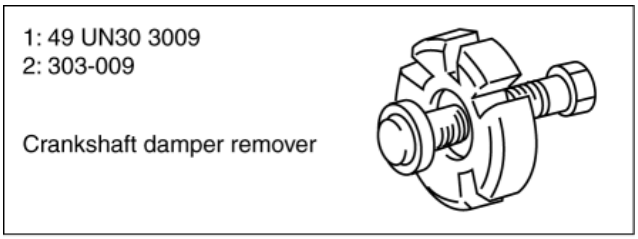

1: Mazda **SST** number
2: Global **SST** number

Example (In text)

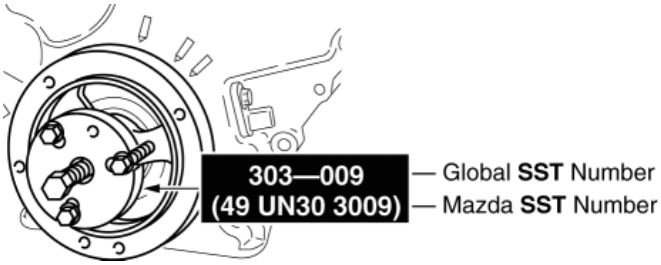

2014 - Mazda3 - General Information

INSTALLATION OF RADIO SYSTEM

- The control modules and control unit have been designed with sufficient attention to radio wave disturbances from the outside. However, observe the following precautions when installing the radio set to the vehicle to prevent adverse effects on the control modules and control unit.
  - Install the radio set and its antenna as far away as possible from the control modules and control unit.
  - The antenna feeder and power cable generate radio waves, therefore, keep them **100 mm {3.94 in}** or more from the control modules, control unit, and wiring harness. If the antenna feeder and power cable cross over the wiring harness, place them perpendicular to the wiring harness.
  - Do not install a high output radio set.
  - Do not use the control modules and control unit power source for the radio set. In addition, do not use the cigar lighter and accessory socket power source.
  - Do not attach the antenna feeder or wiring harness of the radio set to the wiring harness, fuel pipe, or brake tube of the vehicle.
  - Do not install any radio set-related devices in the area where the air bag module deploys to prevent a secondary accident if the air bag were to deploy.

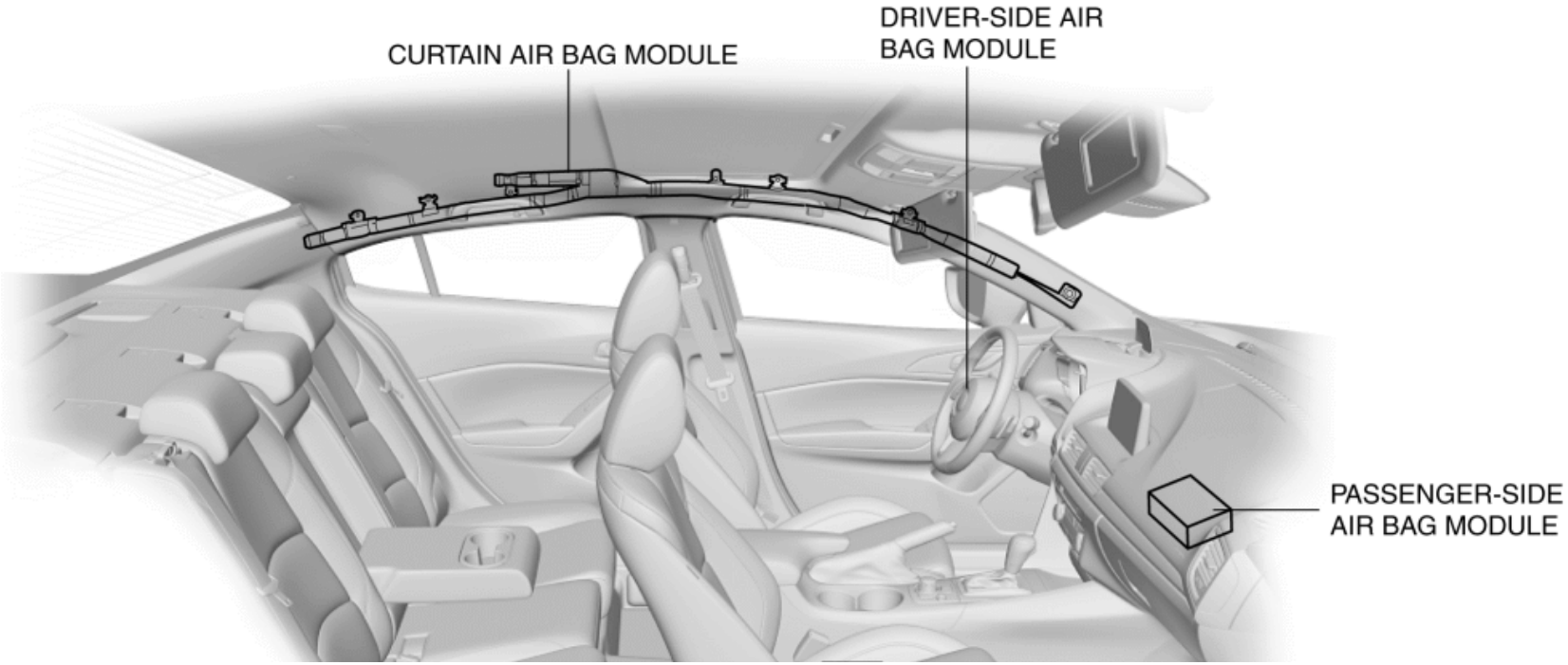

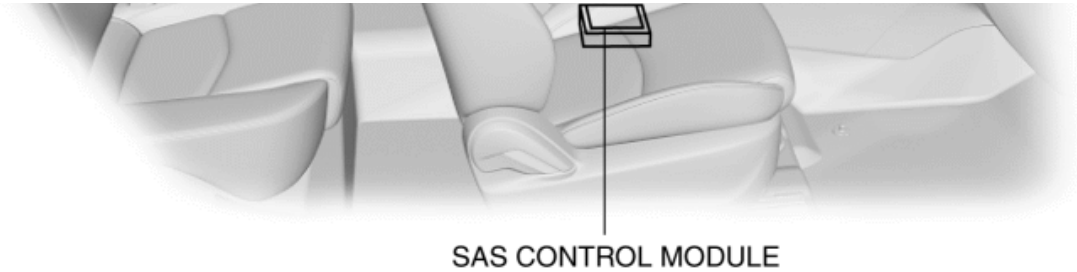

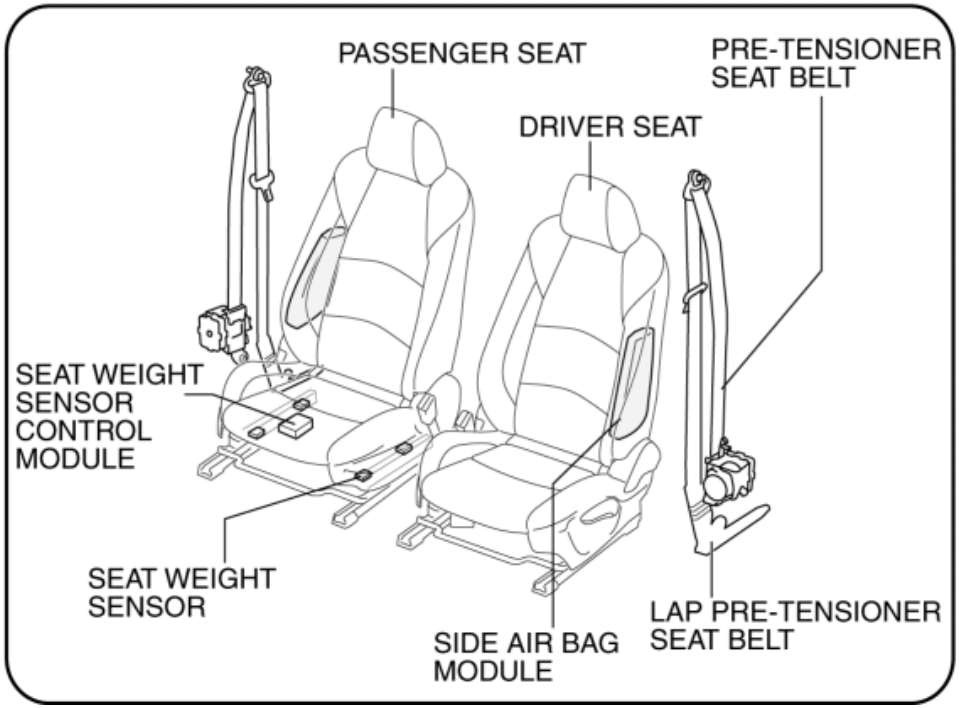

- After installing the radio set, perform a test transmission with the engine idling to verify that it does not affect engine control.

2014 - Mazda3 - General Information

ELECTRICAL SYSTEM

Electrical Parts

Battery cable

- Before disconnecting connectors or removing electrical parts, disconnect the negative battery cable.

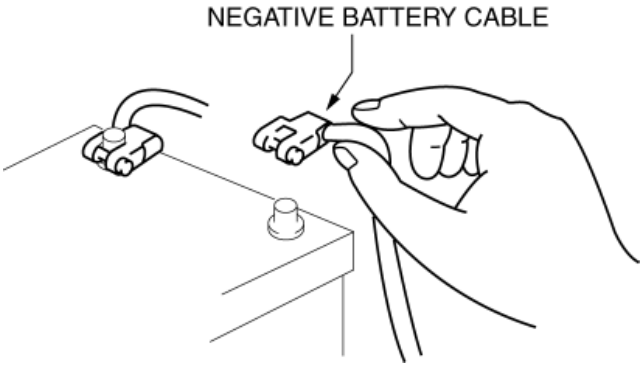

Wiring Harness

- To remove the wiring harness from the clip in the engine room, pry up the hook of the clip using a flathead screwdriver.

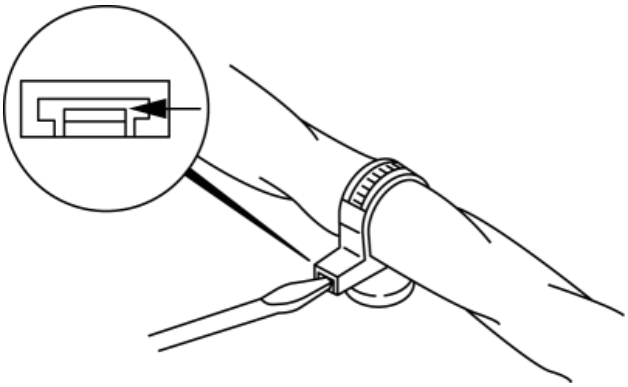

CAUTION:

- Do not remove the wiring harness protective tape. Otherwise, the wires could rub against the body, which could result in water penetration and electrical shorting.

Connectors

Disconnecting connectors

- When disconnecting a connector, grasp the connectors, not the wires.

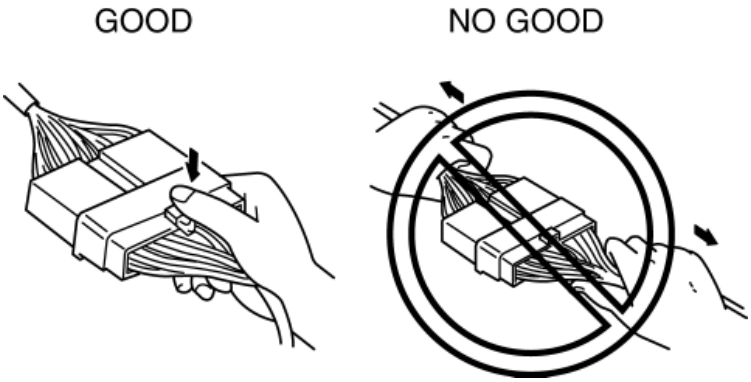

- Connectors can be disconnected by pressing or pulling the lock lever as shown.

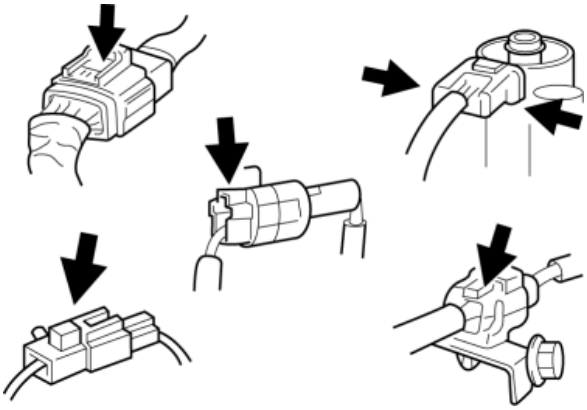

Locking connector

- When locking connectors, listen for a click indicating they are securely locked.

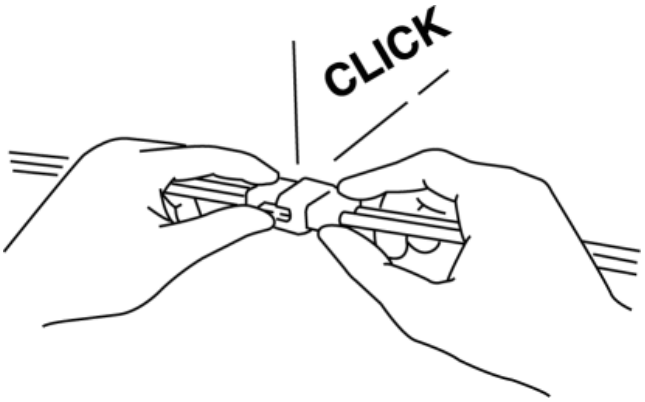

Inspection

CAUTION:

- To prevent damage to the terminal, wrap a thin wire around the tester probe before inserting into terminal.
- When a tester is used to inspect for continuity or measuring voltage, insert the tester probe from the wiring harness side.

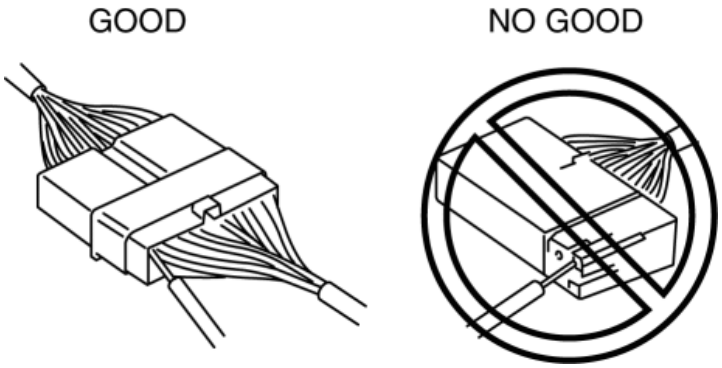

- Inspect the terminals of waterproof connectors from the connector side since they cannot be accessed from the wiring harness side.

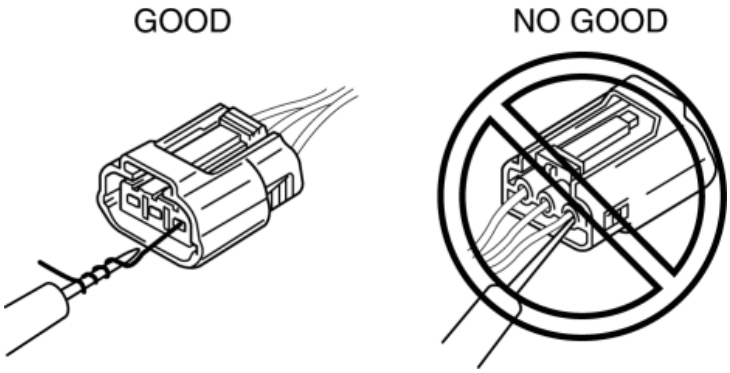

Terminals

Inspection

- Pull lightly on individual wires to verify that they are secured in the terminal.

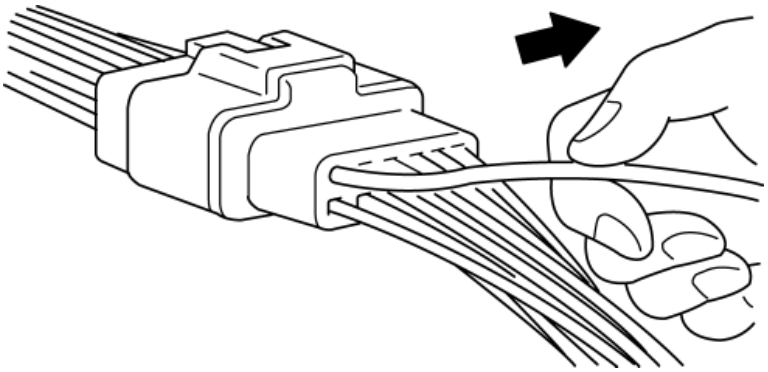

Replacement

- Use the appropriate tools to remove a terminal as shown. When installing a terminal, be sure to insert it until it locks securely.
- Insert a thin piece of metal from the terminal side of the connector and with the terminal locking tab pressed down, pull the terminal out from the connector.

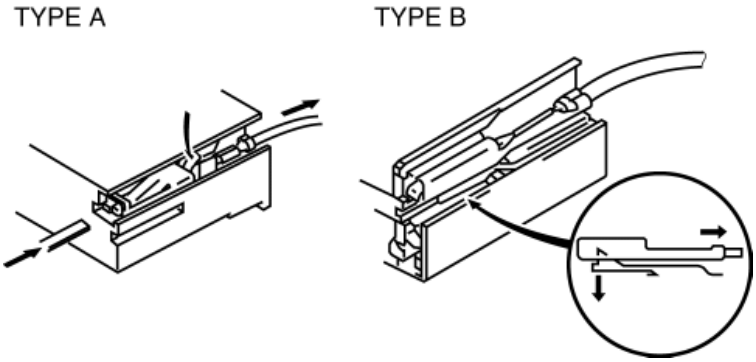

Sensors, Switches, and Relays

- Handle sensors, switches, and relays carefully. Do not drop them or strike them against other objects.

Wiring Harness

Wiring color codes

- Two color wires are indicated by a two color code symbol.
- The first letter indicates the base color of the wire and the second is the color of the stripe.

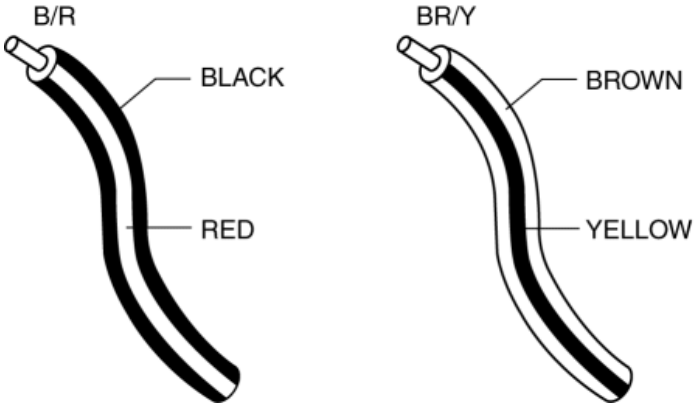

CODE	COLOR	CODE	COLOR
B	Black	O	Orange
L	Blue	P	Pink
BR	Brown	R	Red
DL	Dark Blue	SB	Sky Blue
DG	Dark Green	T	Tan
GY	Gray	V	Violet
G	Green	W	White
LB	Light Blue	Y	Yellow
LG	Light Green	–	–

Fuse

Replacement

- When replacing a fuse, be sure to replace it with one of the same capacity. If a fuse malfunctions again, the circuit probably has a short and the wiring should be inspected.
- Be sure the negative battery terminal is disconnected before replacing a main fuse.

Without i-ELOOP

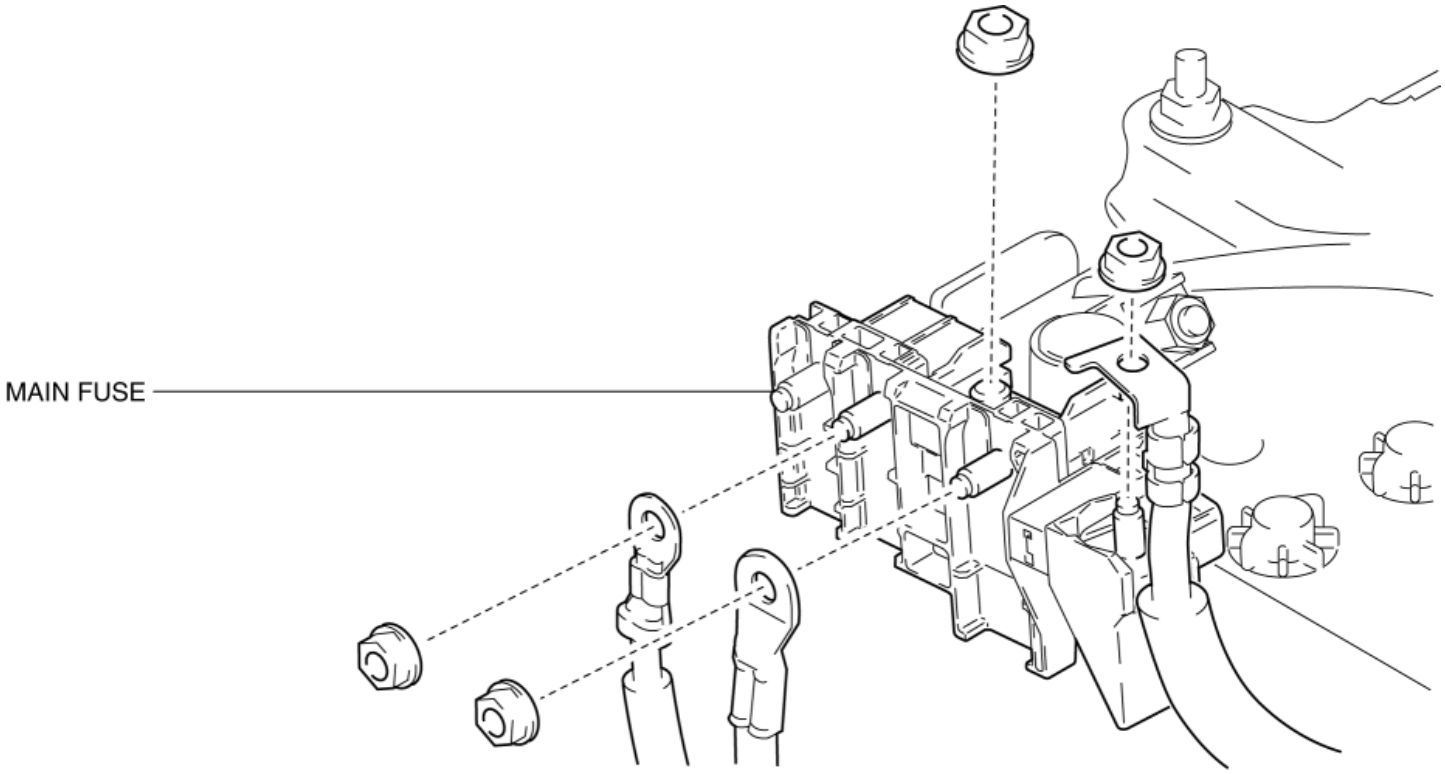

With i-ELOOP

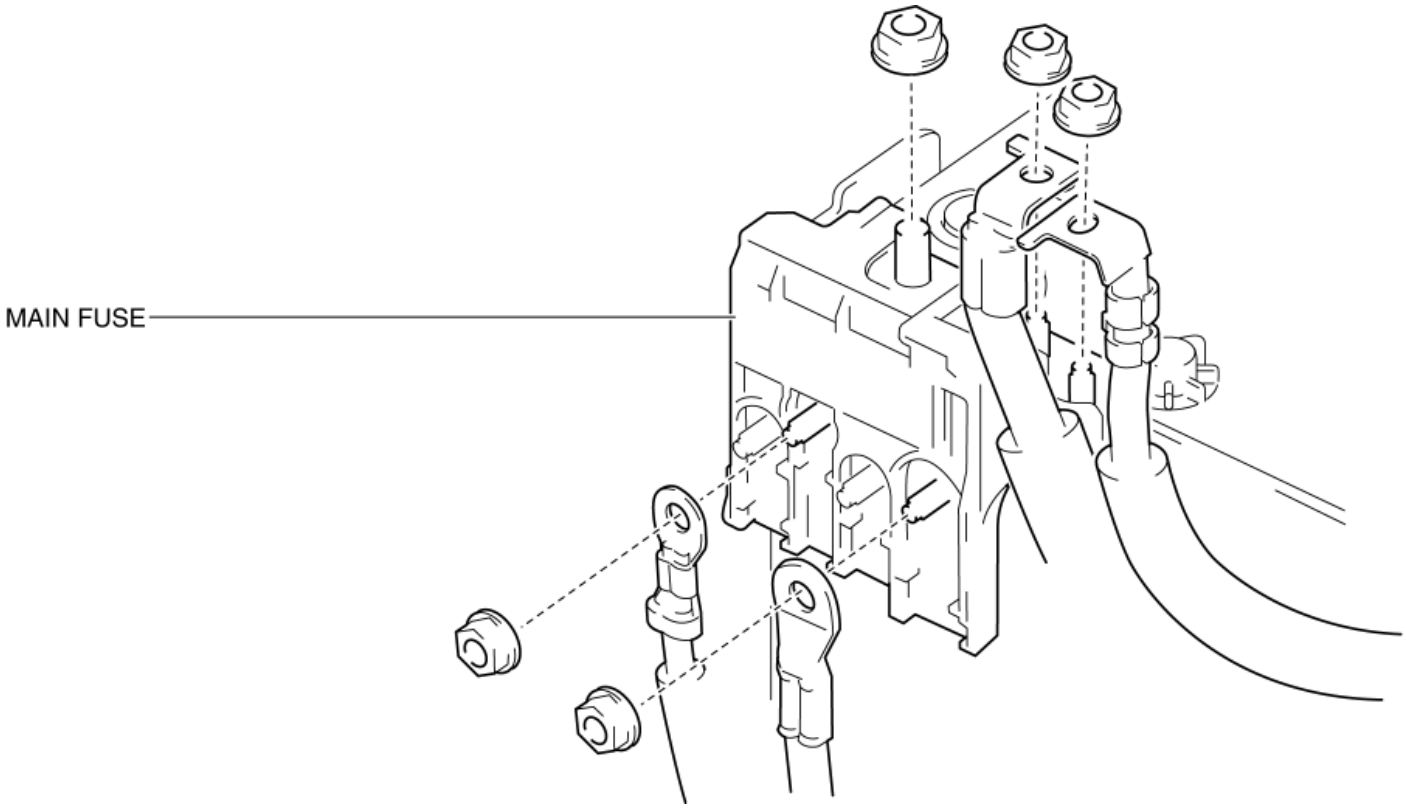

- When replacing a pullout fuse, use the fuse puller.

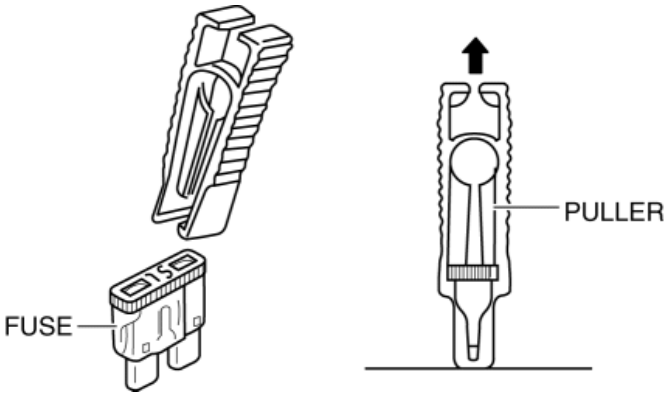

Viewing orientation for Connectors

- The viewing orientation for connectors is indicated with a symbol.
- The figures showing the viewing orientation are the same as those used in Wiring Diagrams.
- The viewing orientations are shown in the following three ways.

Part-side connector

- The viewing orientation for part-side connectors is from the terminal side.

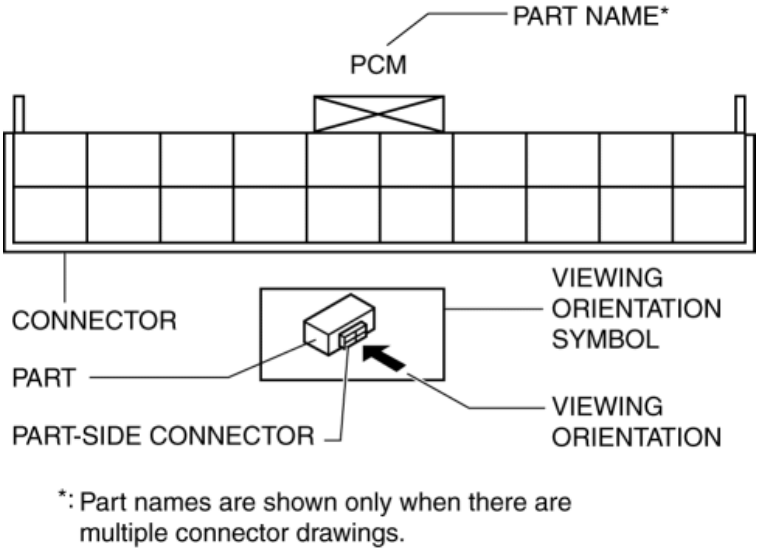

Vehicle harness-side connector

- The viewing orientation for vehicle wiring harness-side connectors is from the wiring harness side.

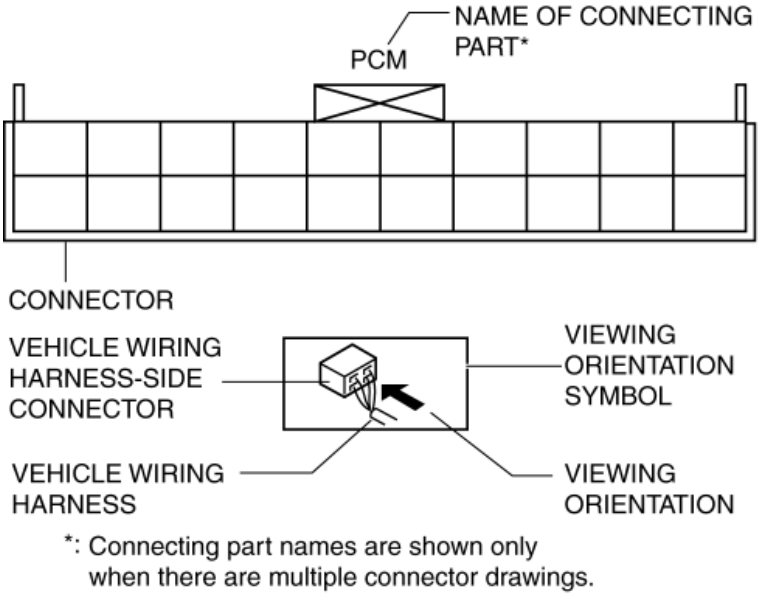

Other

- When it is necessary to show the terminal side of the vehicle wiring harness-side connectors, such as the following connectors, the viewing orientation is from the terminal side.

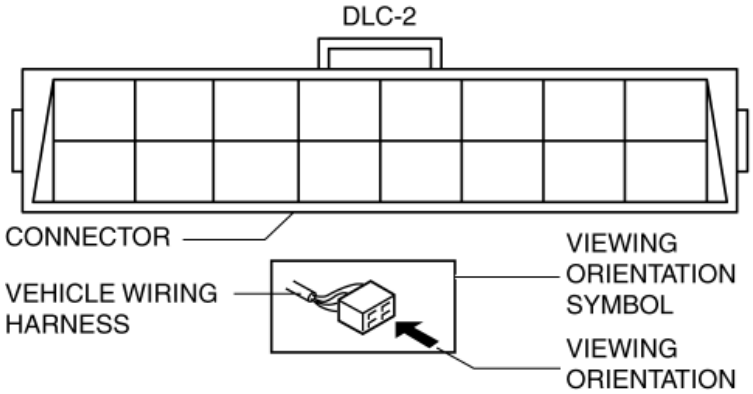

  - Main fuse block and the main fuse block relays
  - Data link connector
  - Check connector
  - Relay box

Electrical Troubleshooting Tools

Jumper wire

CAUTION:

- Do not connect a jumper wire from the power source line to a body ground. This may cause burning or other damage to wiring harnesses or electronic components.
- A jumper wire is used to create a temporary circuit. Connect the jumper wire between the terminals of a circuit to bypass a switch.

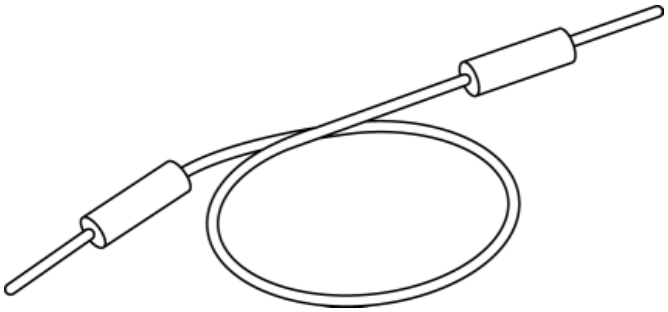

Voltmeter

- The direct current voltmeter is used to measure circuit voltage. A voltmeter with a range of **15 V or more** is used by connecting the positive (+) probe (red lead wire) to the point where voltage will be measured and the negative (-) probe (black lead wire) to a body ground.

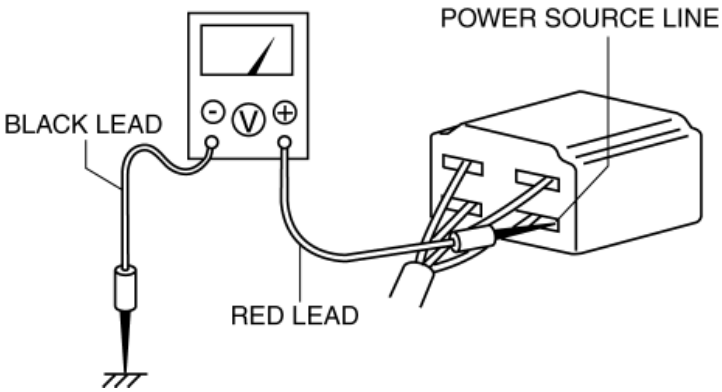

Ohmmeter

CAUTION:

- Do not connect the ohmmeter to any circuit where voltage is applied. This will damage the ohmmeter.
- The ohmmeter is used to measure the resistance between two points in a circuit and to inspect for continuity and short circuits.

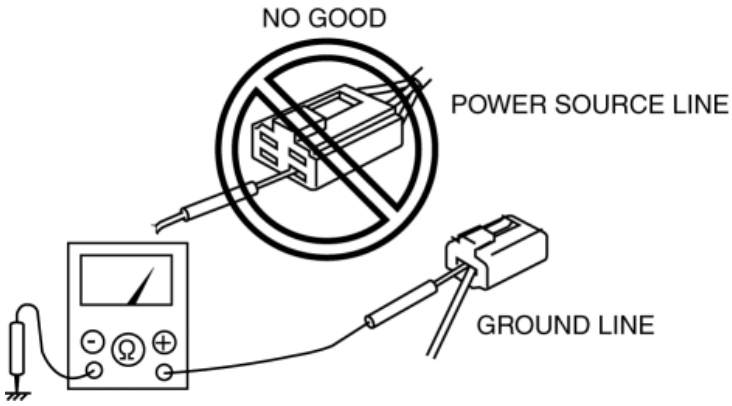

Precautions Before Welding

A vehicle has various electrical parts. To protect the parts from excessive current generated when welding, be sure to perform the following procedure.

1. Switch the ignition off.
2. Disconnect the battery cables.

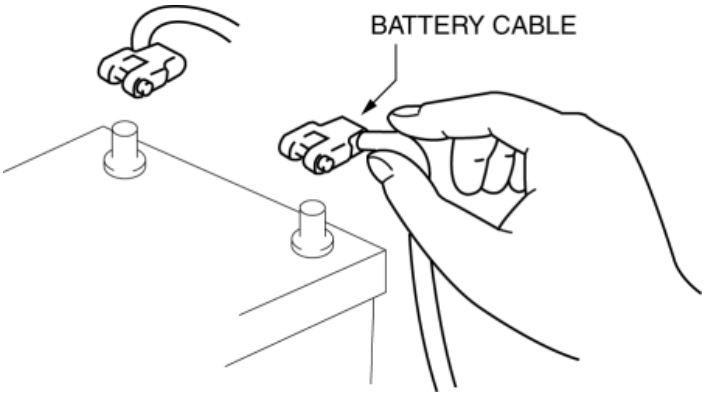

3. Securely connect the welding machine ground near the welding area.

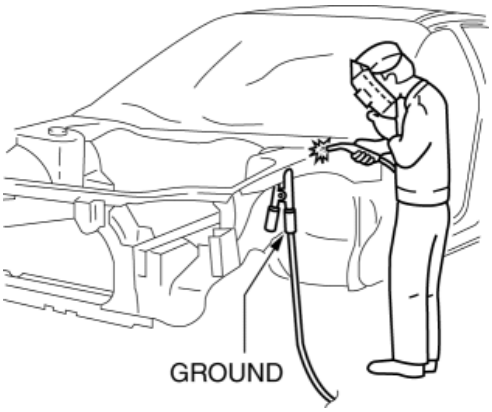

4. Cover the peripheral parts of the welding area to protect them from weld spatter.

Ground Inspection and Disconnection/reconnection

- The ground connection is extremely important for normal electrical circuit operation, therefore, inspect and disconnect/reconnect the ground connection according to the following guidelines.
    - Remove the bolt or screw of the ground to inspect for dirt or rust.
    - If there is any dirt or rust, clean it.
    - Securely tighten the bolt or screw to the specified tightening torque.
    - Verify that parts do not interfere with the ground circuit.

2014 - Mazda3 - General Information

REPAIR-USE CONNECTOR REPLACEMENT PROCEDURE

Wire Harness Cutting On Vehicle Side

1. If tubing or tape is used to protect the connector wiring harness, cut into it being careful not cut or damage the wiring, and expose **approx. 200 mm {7.84 in}** of the wiring from the connector.

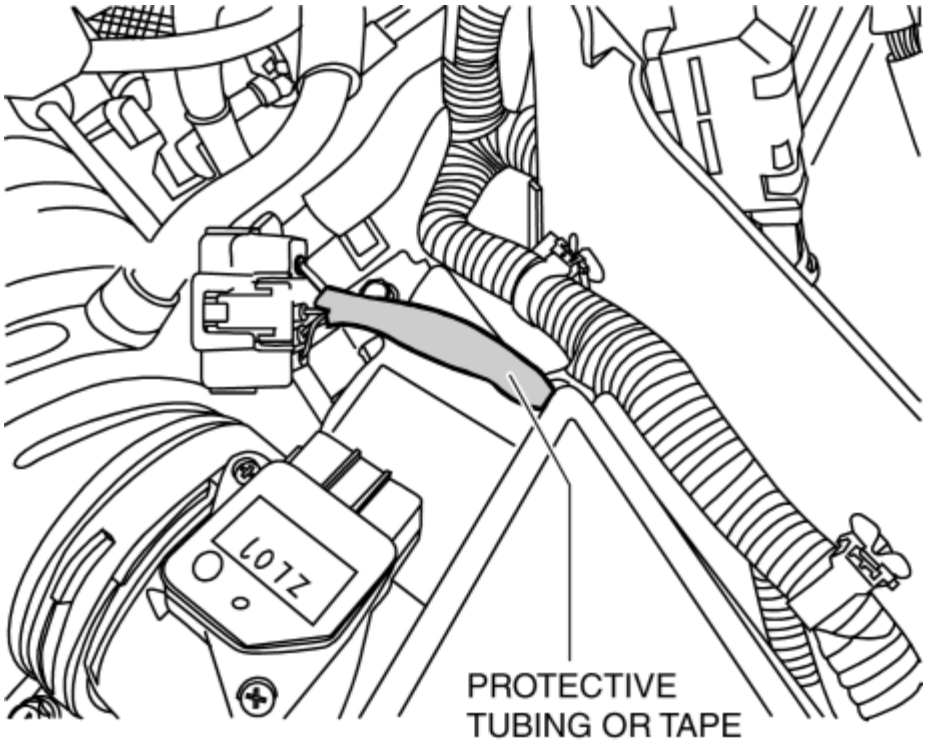

2. Cut the wiring harness once at the position near the connector so as to leave a long length of wiring harness on the vehicle side, align the length with the repair-use connector wiring harness, and then re-cut at the wiring harness on the vehicle side or the repair-use connector wiring harness at the appropriate position.

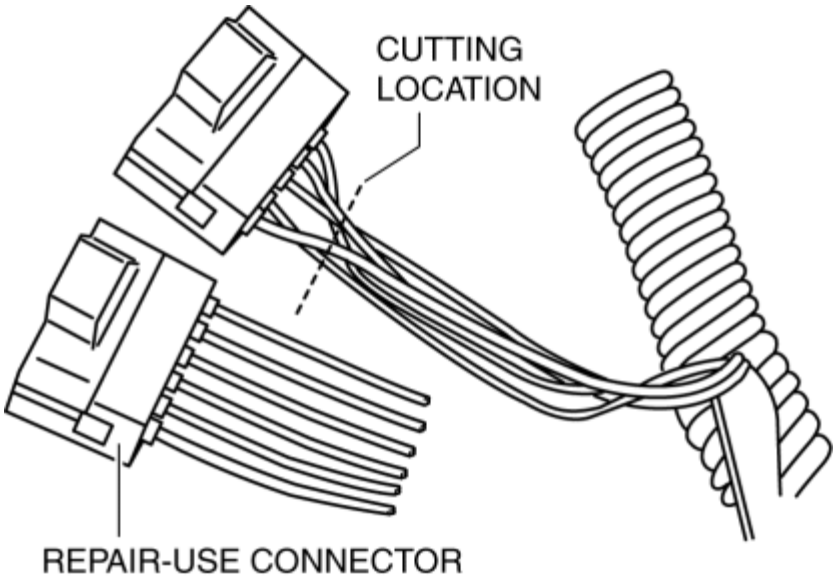

CAUTION:

- Cut longer in consideration of the amount of wiring harness length which will be soldered.
- If the cut wiring harness length is different than the repair-use wiring harness length, the following problems may occur.
  - If too short: Tension will be applied to the terminal, splice or connector resulting in an open circuit.
  - If too long: A short may occur due to pinching and wear of the extra length of wiring harness near the connector.

NOTE:

- If several wiring harnesses are connected to the same connector, stagger the cut positions so that the repair positions do not overlap as shown in the figure to prevent thickening of the wiring harness after repair.

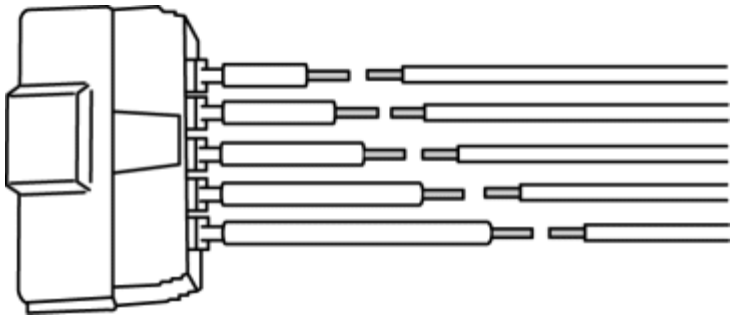

Cut Off The Insulation From The Wiring Harness On The Vehicle Side And The Repair-use Connector Wiring Harness.

1. Cut off **approx. 10—20 mm {0.39—0.79 in}** from the ends of the wiring harness on the vehicle side and the wiring harness of the repair-use connector. (If the repair-use wiring harness is thick, core twisting can be facilitated by lengthening the amount of insulation cut)

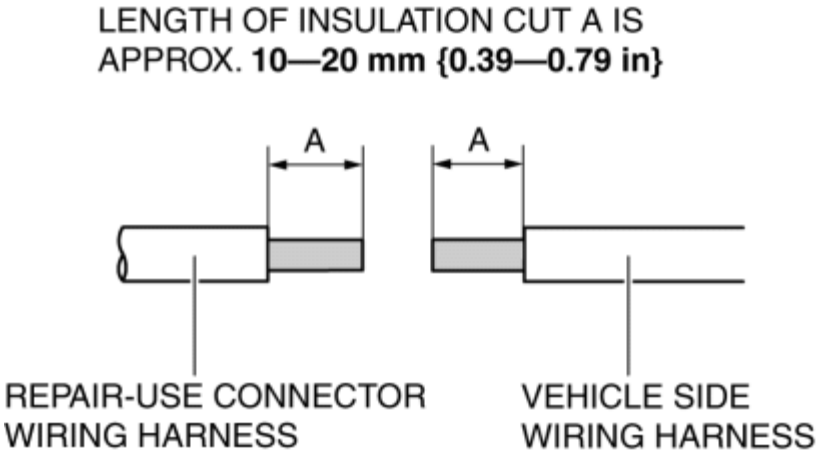

CAUTION:

- Do not damage or cut the cores of the wiring harnesses. After finishing the work, inspect the wiring harnesses for damage or cutting of the cores, and re-do the work if necessary.

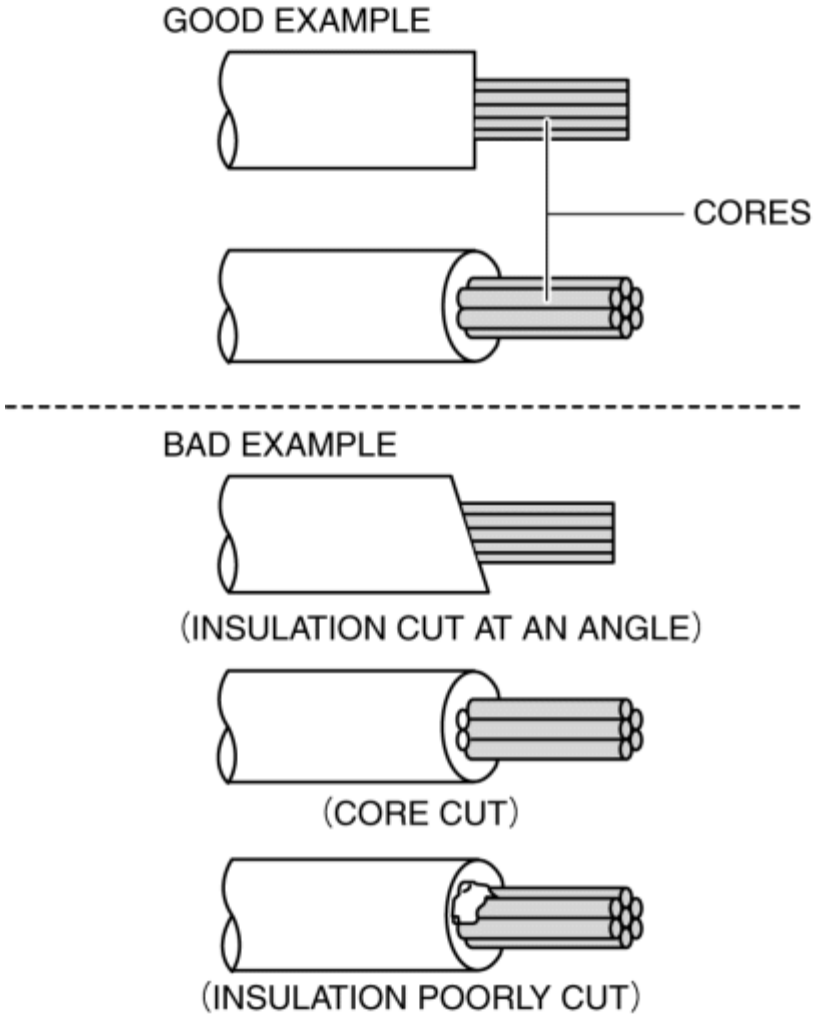

2. Depending on the thickness of the wiring harness which is being repaired, select an appropriate heat shrinkable tube, and before twisting the cores together, pass them through the heat shrinkable tube.

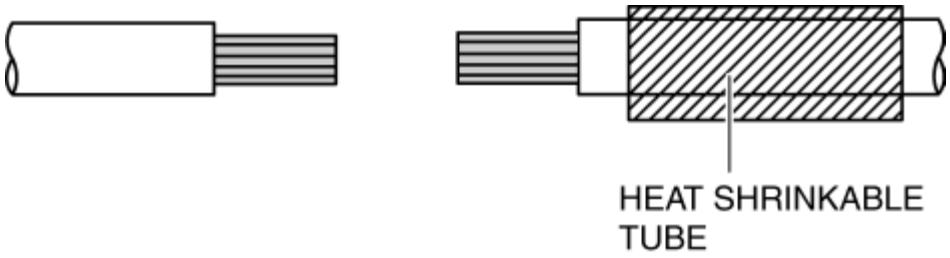

	Heat shrinkable tube		Wiring size (exterior diameter)
	Before shrinking	After shrinking	
Small	4 mm {0.2 in}	1 mm {0.04 in}	φ2 mm {0.08 in} or less
Large	8 mm {0.3 in}	2 mm {0.08 in}	φ2 mm {0.08 in} or more

NOTE:

- If the exposed area of the core in which the solder is applied is **10 mm {0.39 in}**, half the **length (25 mm {0.98 in})** of the heat shrinkable tubing can be cut and used because the total length of the heat shrinkable tubing is **50 mm {2.0 in}**.

3. Line up the cores of the wiring harnesses to be connected as shown in the figure.

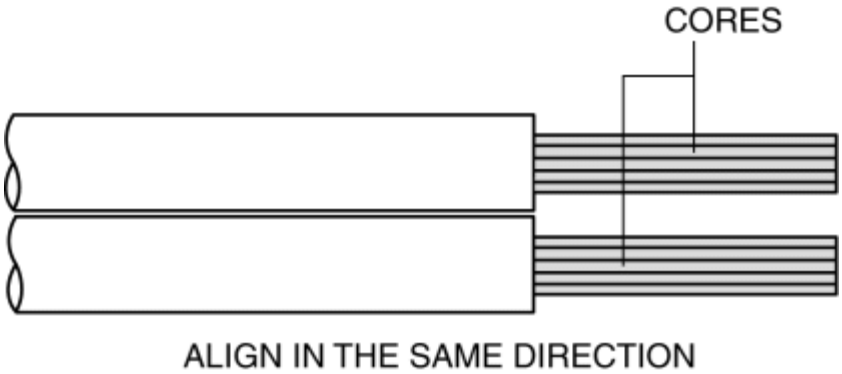

4. Twist together both of the cores.

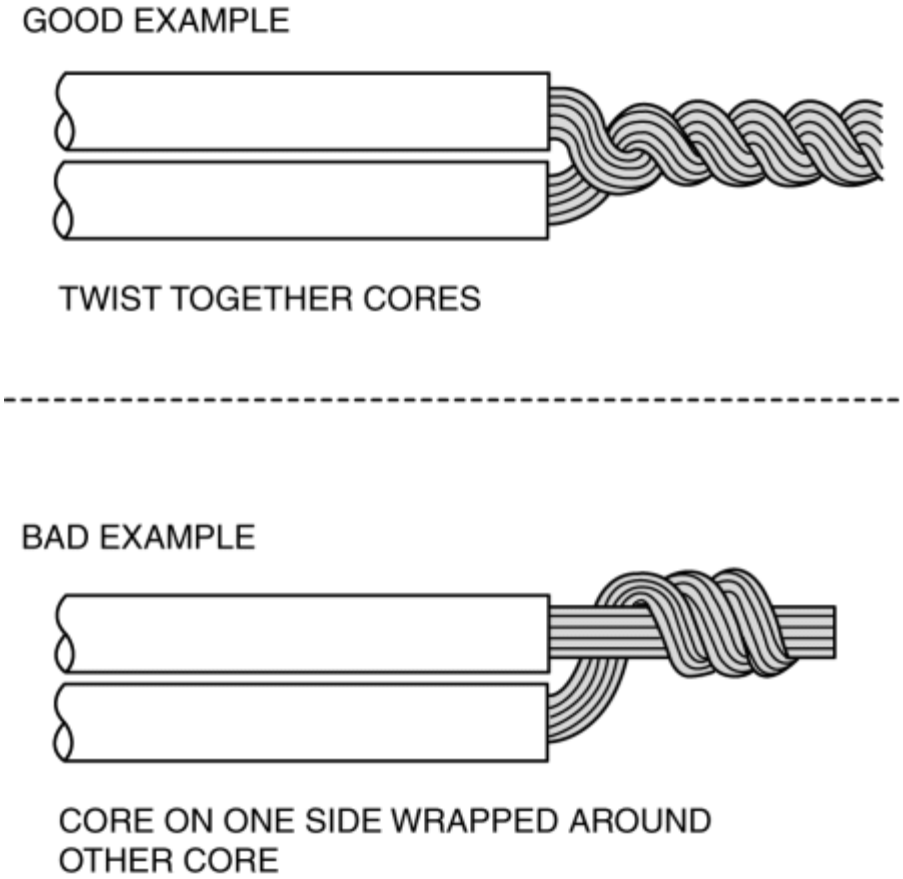

Soldering

1. Twist together firmly the cores of the wiring harnesses being connected and apply soldering in that area.

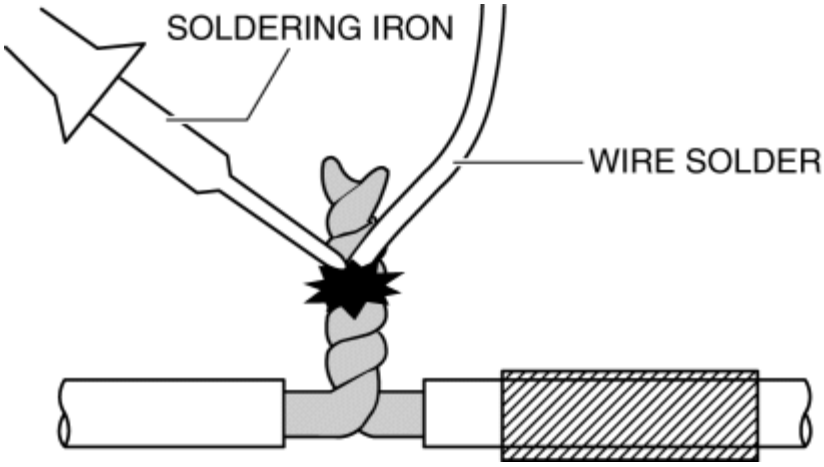

CAUTION:

- Soldering for a long period of time could affect the surrounding electrical circuit. Apply soldering for an extremely short period of time.

2. Cut the ends off the connected area, and apply the soldering iron tip to the wiring harness after removing any fraying.

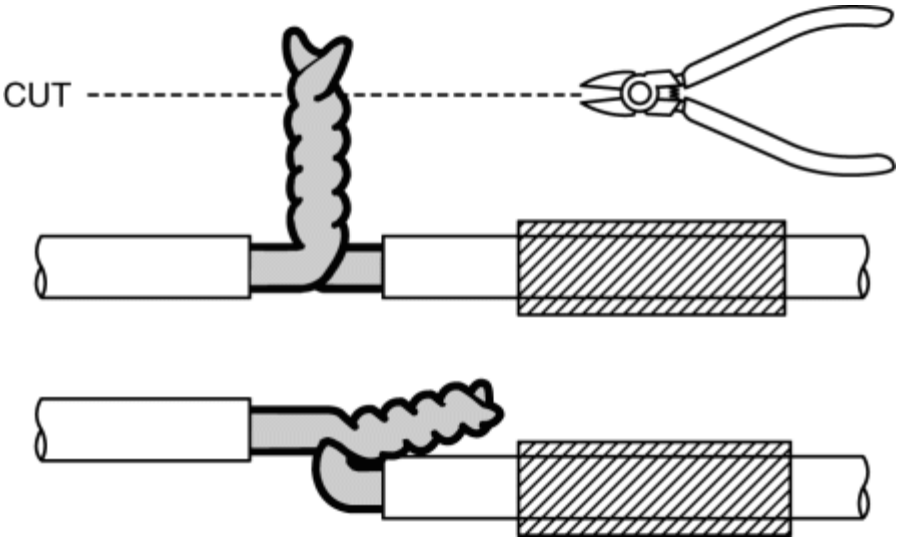

3. Set the heat shrinkable tubing to the soldered area and shrink the heat shrinkable tubing at a temperature of **approx. 100 °C {212 °F}** using a drier.

CAUTION:

- Completely shrink the heat shrinkable tubing to the wiring harness leaving no gaps.
- Perform the work being careful not to melt the insulation of the wiring harness by excessive heat.

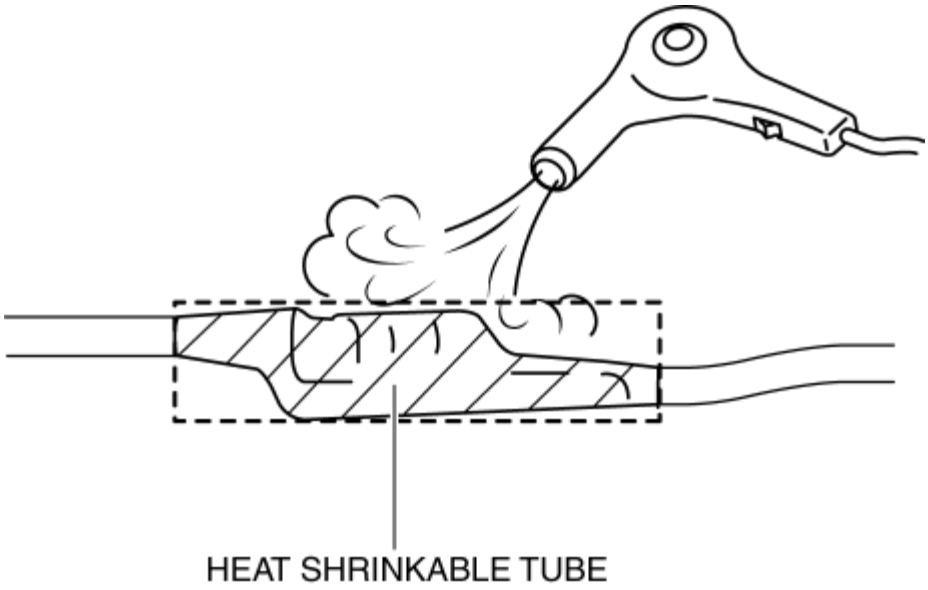

Taping Work

1. Tape the surface of the heat shrinkable tubing.

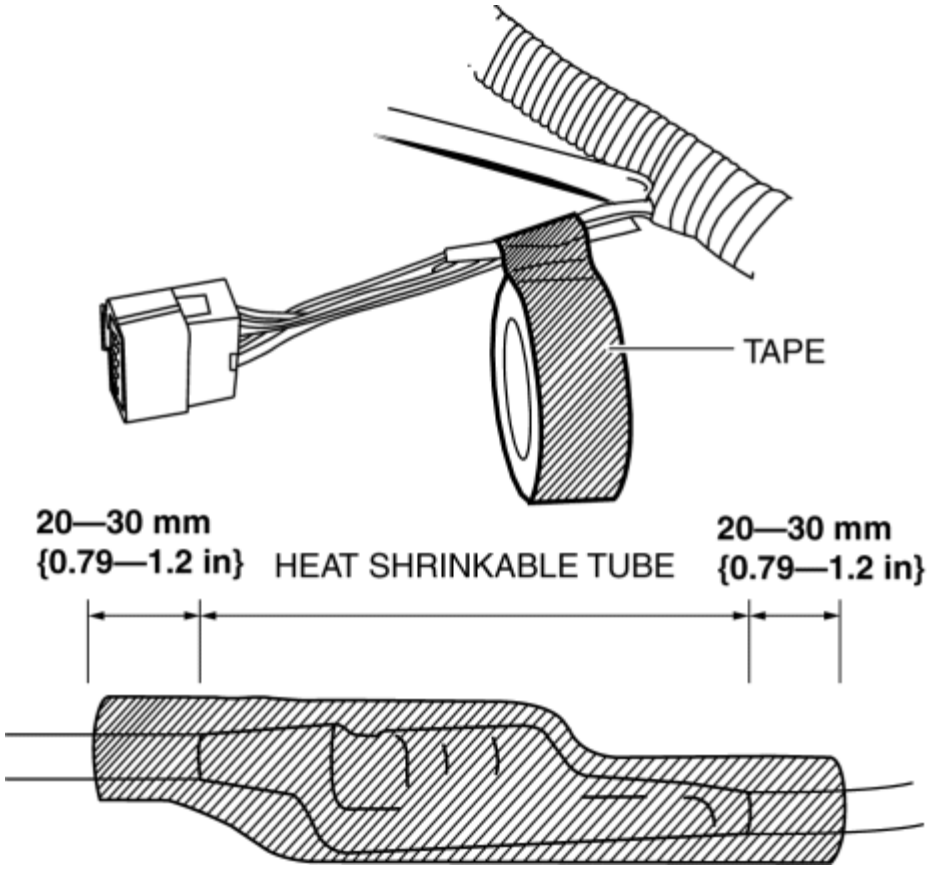

CAUTION:

- Remove moisture, oil, and dust from the area to be taped before doing the taping.
- Firmly tape the ends so that they do not peel off.
- Always superimpose the tape while wrapping.
- Wrap the tape approx. 20—30 mm {0.79—1.2 in} beyond both ends of the heat shrinkable tubing.

NOTE:

- If the wiring harness is bundled and taped, bind it **approx. 30 mm {1.2 in}** away from the connector.

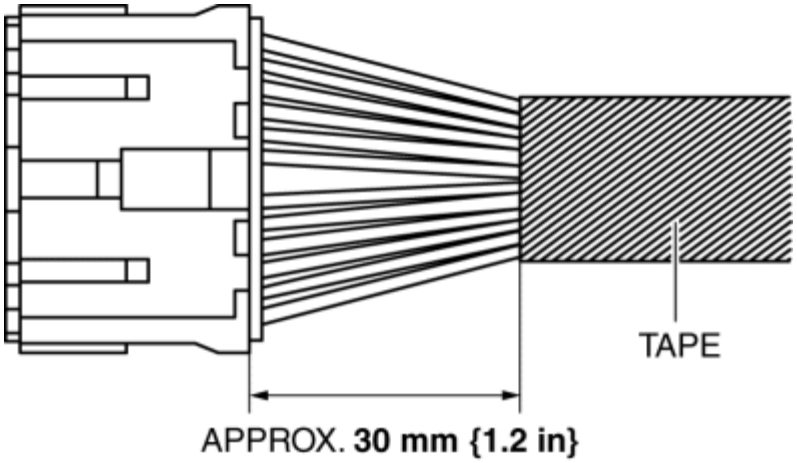

REPAIR-USE CONNECTOR REPLACEMENT PROCEDURE

2014 - Mazda3 - General Information

JACKING POSITIONS, VEHICLE LIFT (2 SUPPORTS) AND SAFETY STAND (RIGID RACK) POSITIONS

Jacking Positions

WARNING:

- Improperly jacking a vehicle is dangerous. The vehicle can slip off the jack and cause serious injury. Use only the correct front and rear jacking points and block the wheels.

CAUTION:

- Use safety stands to support the vehicle after it has been lifted.

NOTE:

- To prevent obstruction between the jack body and front bumper when the jack body is inserted, use a low-floor type jack.

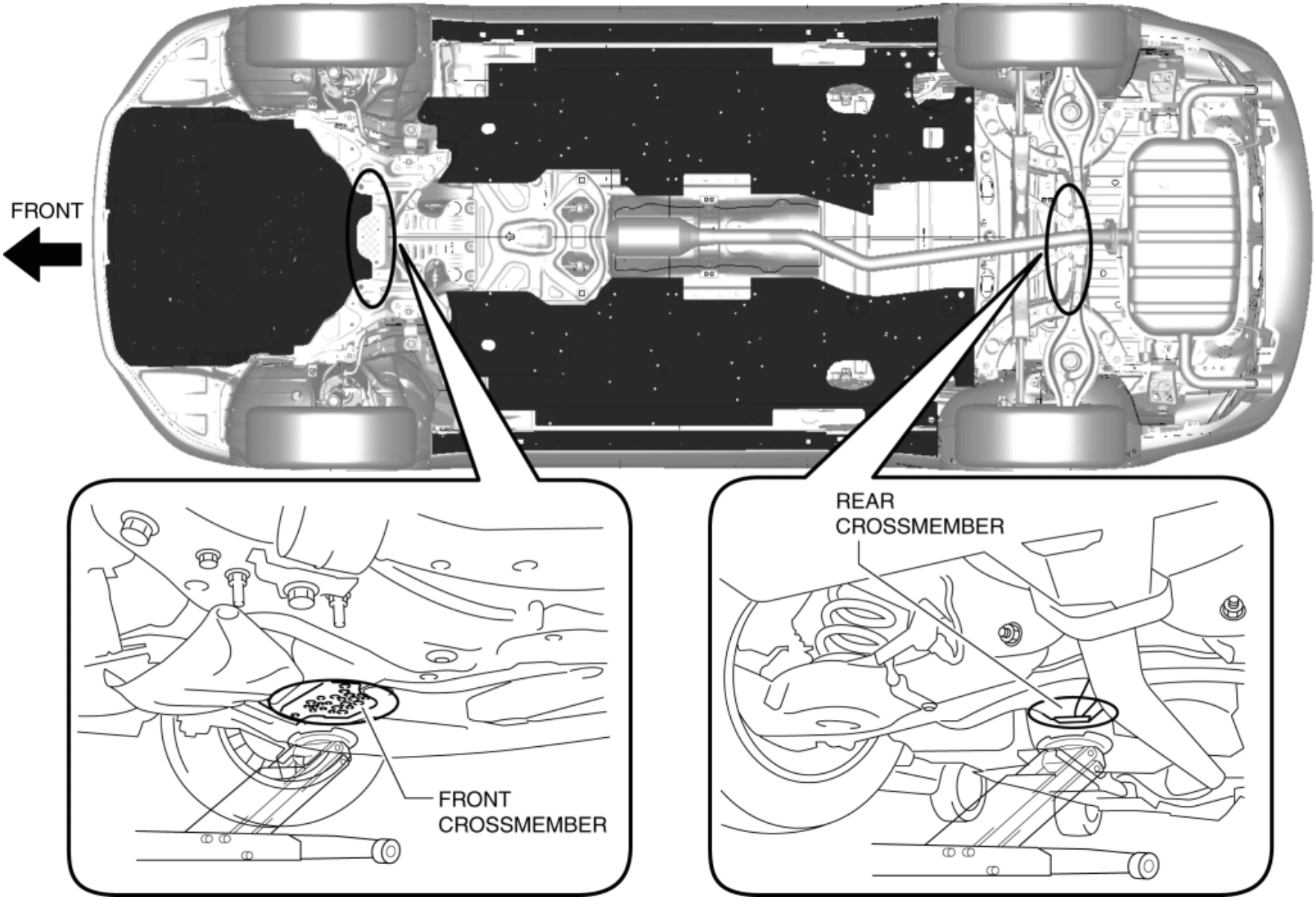

Vehicle Lift Positions

WARNING:

- Lifting a vehicle is dangerous. The vehicle can slip off the lift and cause serious injury and/or vehicle damage. Make sure that the vehicle is on the lift horizontally by adjusting the height of support at the end of the arm of the lift.

Front and rear

- Both sides of the vehicle, on side sills.

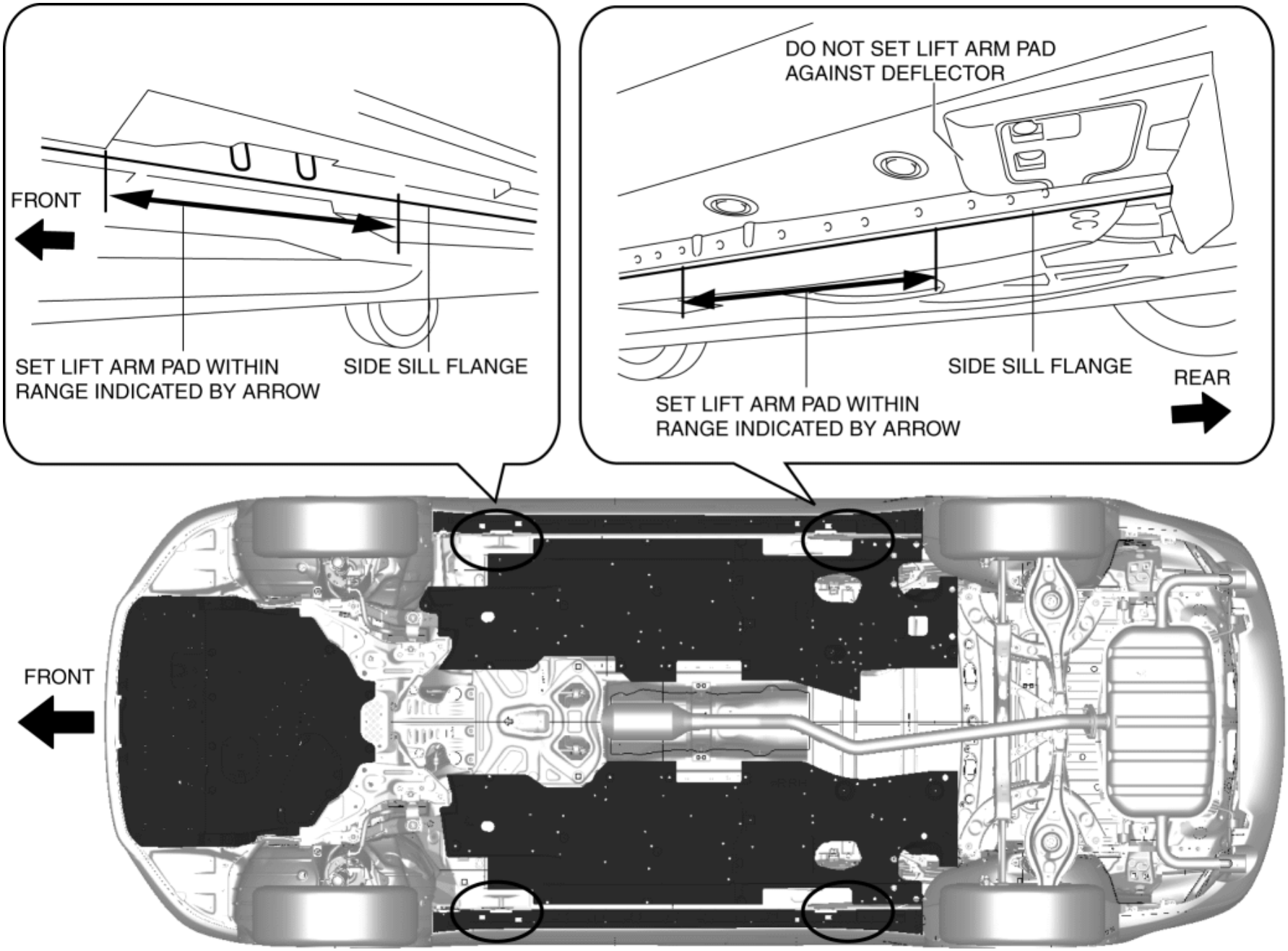

JACKING POSITIONS, VEHICLE LIFT (2 SUPPORTS) AND SAFETY STAND (RIGID RACK) POSITIONS

2014 - Mazda3 - General Information

TOWING

Towing Description

- Proper lifting and towing are necessary to prevent damage to the vehicle. Government and local laws must be followed.
- A towed vehicle usually should have its drive wheels (front wheels) off the ground. If excessive damage or other conditions prevent this, use wheel dollies.
- When towing with the rear wheels on the ground, release the parking brake.

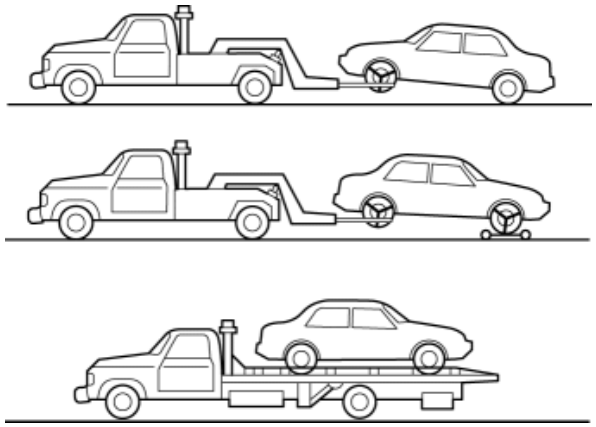

CAUTION:

- Do not tow the vehicle pointed backward with driving wheels on the ground. This may cause internal damage to the transaxle.

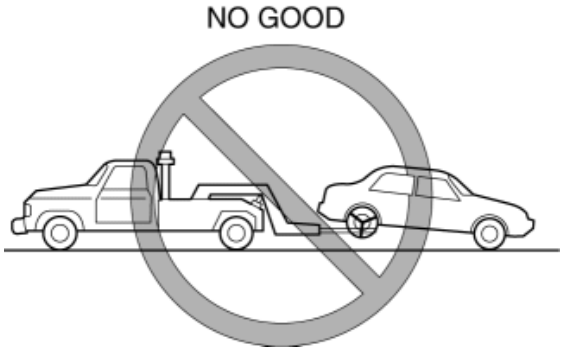

CAUTION:

- Do not tow with sling type equipment. This could damage vehicle. Use wheel lift or flatbed equipment.

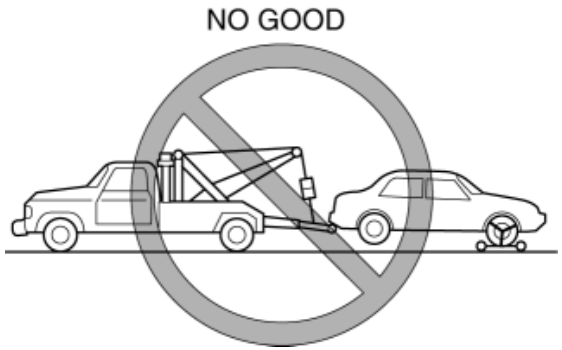

Vehicle Securing Position

- When transporting the vehicle by flat bed tow truck or trailer, secure the vehicle to the trailer using the holes and left tiedown loop shown in the figure.

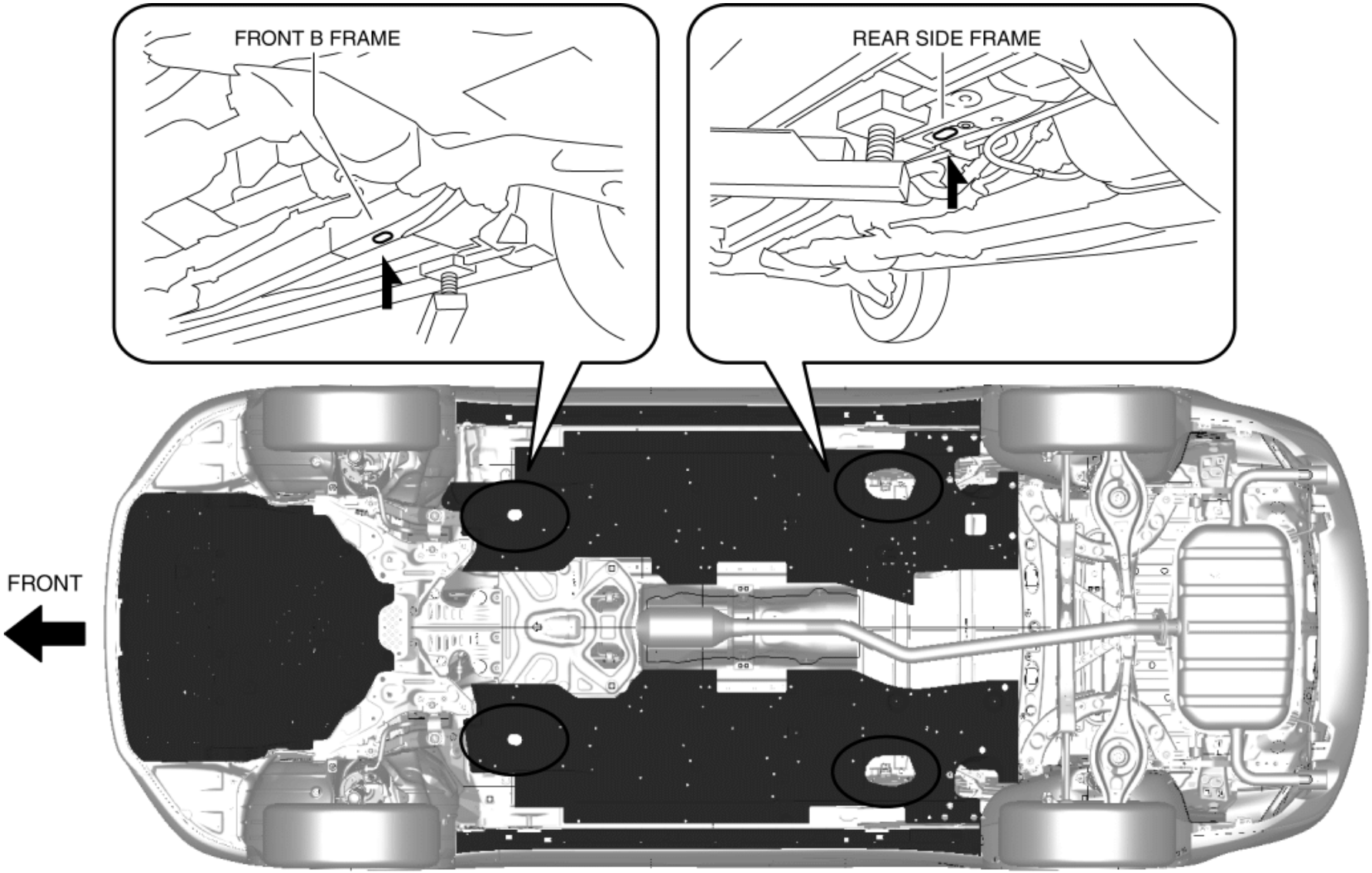

CAUTION:

- Do not use the tiedown hook on the end of the rear bumper for towing or transporting the vehicle. The tie down hook is used only for transporting the vehicle by ship. Using the tie down hook could cause damage to the bumper and the vehicle body.

2014 - Mazda3 - General Information

IDENTIFICATION NUMBER LOCATIONS

Vehicle Identification Number (VIN)

- The VIN marking position is located on the floor as shown in the figure.

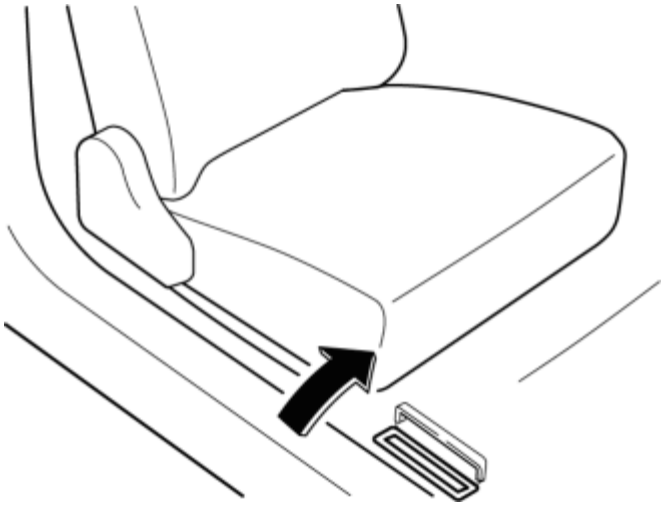

- If the VIN plate is adhered to the dashboard, it is located in the position shown in the figure.

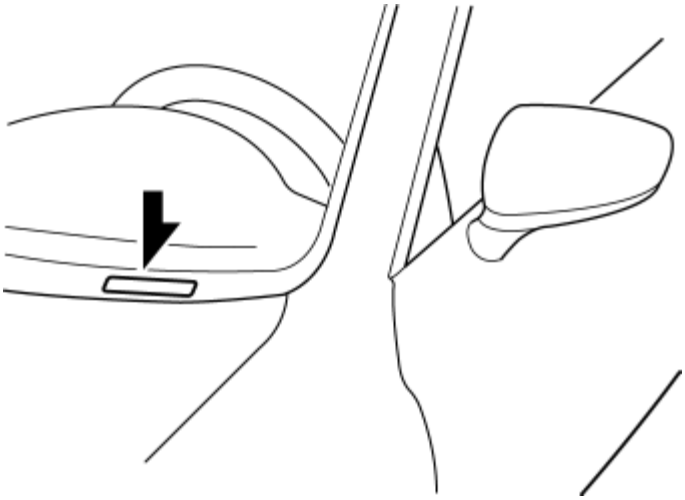

Engine Type / Number

IDENTIFICATION NUMBER LOCATIONS

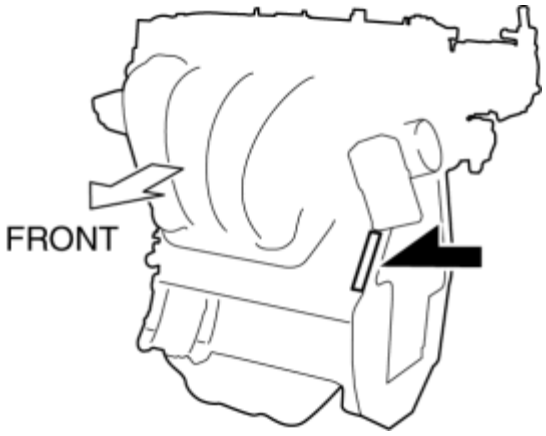

2014 - Mazda3 - General Information

SAE STANDARDS

- In accordance with new regulations, SAE (Society of Automotive Engineers) standard names and abbreviations are now used in this manual. The table below lists the names and abbreviations that have been used in Mazda manuals up to now and their SAE equivalents.

SAE Standard		Remark	SAE Standard		Remark
Abbreviation	Name		Abbreviation	Name	
AP	Accelerator Pedal		MIL	Malfunction Indicator Lamp	
APP	Accelerator Pedal Position		MAP	Manifold Absolute Pressure	
ACL	Air Cleaner		MAF sensor	Mass Air Flow Sensor	
A/C	Air Conditioning		MFI	Multiport Fuel Injection	
A/F sensor	Air Fuel Ratio Sensor		OBD	On board Diagnostic System	
BARO	Barometric Pressure		OL	Open Loop	
B+	Battery Positive Voltage		OC	Oxidation Catalytic Converter	
CMP sensor	Camshaft Position Sensor		O2S	Oxygen sensor	
CAC	Charge Air Cooler		PNP	Park/Neutral Position	
CLS	Closed Loop System		PSP	Power Steering Pressure	
CTP	Closed Throttle Position		PCM	Powertrain Control Module	#3
CPP	Clutch Pedal Position		PAIR	Pulsed Secondary Air Injection	Pulsed injection
CIS	Continuous Fuel Injection System				

CKP sensor	Crankshaft Position Sensor		AIR	Secondary Air Injection	Injection with air pump
DLC	Data Link Connector				
DTM	Diagnostic Test Mode	#1			
DTC	Diagnostic Test Code(s)		SAPV	Secondary Air Pulse Valve	
DI	Distributor Ignition		SFI	Sequential Multiport Fuel Injection	
DLI	Distributorless Ignition				
EI	Electronic Ignition	#2	3GR	Third Gear	
ECT	Engine Coolant Temperature		TWC	Three Way Catalytic Converter	
EM	Engine Modification		TB	Throttle Body	
EVAP	Evaporative Emission		TP sensor	Throttle Position Sensor	
EGR	Exhaust Gas Recirculation		TCC	Torque Converter Clutch	
FC	Fan Control		TCM	Transmission (Transaxle) Control Module	
FF	Flexible Fuel				
4GR	Fourth Gear		TR	Transmission (Transaxle) Range	
GEN	Generator		TC	Turbocharger	
GND	Ground		VSS	Vehicle Speed Sensor	
HO2S	Heated Oxygen Sensor	With heater	VR	Voltage Regulator	
			VAF sensor	Volume Air Flow Sensor	
IAC	Idle Air Control		WU-TWC	Warm Up Three Way Catalytic Converter	#4
IAT	Intake Air Temperature				
KS	Knock Sensor		WOT	Wide Open Throttle	

- #1: Diagnostic trouble codes depend on the diagnostic test mode.
- #2: Controlled by the PCM
- #3: Device that controls engine and powertrain
- #4: Directly connected to exhaust manifold

2014 - Mazda3 - General Information

ABBREVIATIONS

AAS	Active Adaptive Shift
ABS	Antilock Brake System
ABDC	After Bottom Dead Center
ACC	Accessories
AFS	Adaptive Front Lighting System
ALC	Auto Level Control
ALR	Automatic Locking Retractor
ATDC	After Top Dead Center
ATF	Automatic Transaxle Fluid
ATX	Automatic Transaxle
AWD	All-Wheel Drive
BBDC	Before Bottom Dead Center
BDC	Bottom Dead Center
BSM	Blind Spot Monitoring
BTDC	Before Top Dead Center
CAN	Controller Area Network
CCM	Comprehensive Component Monitor

CV	Canister Vent
CM	Control Module
CMU	Connectivity master unit
CPU	Central Processing Unit
DC	Drive Cycle
DRL	Daytime Running Light
DSC	Dynamic Stability Control
EBD	Electronic Brakeforce Distribution
EEPROM	Electrically Erasable Programmable Read-Only Memory
EHPAS	Electro Hydraulic Power Assist Steering
ELR	Emergency Locking Retractor
EPS	Electric Power Steering
ESA	Electronic Spark Advance
FBCM	Front Body Control Module
FET	Field Effect Transistor
FOW	Forward Obstruction Warning
GPS	Global Positioning System
HBC	High Beam Control
HF/TEL	Hands-Free Telephone
HI	High
HLA	Hydraulic Lash Adjuster
HS	High Speed

HU	Hydraulic Unit
IDS	Integrated Diagnostic Software
IG	Ignition
INT	Intermittent
KOEO	Key On Engine Off
KOER	Key On Engine Running
LCD	Liquid Crystal Display
LDWS	Lane Departure Warning System
LED	Light Emitting Diode
LF	Left Front
LH	Left Hand
LO	Low
LR	Left Rear
M	Motor
MAX	Maximum
MIN	Minimum
MOS	Metal Oxide Semiconductor
MRCC	Mazda Radar Cruise Control
MS	Middle Speed
MTX	Manual Transaxle
OCV	Oil Control Valve
OFF	Switch Off

ON	Switch On
PAD	Passenger Air Bag Deactivation
PCV	Positive Crankcase Ventilation
PID	Parameter Identification
P/W CM	Power Window Control Module
PTC	Positive Temperature Coefficient
RBCM	Rear Body Control Module
RCTA	Rear Crossing Traffic Alert
REC	Recirculate
RF	Right Front
RH	Right Hand
RR	Right Rear
SAS	Sophisticated Air Bag Sensor
SST	Special Service Tool
SW	Switch
TAU	Tuner and Amp Unit
TCS	Traction Control System
TDC	Top Dead Center
TFT	Transaxle Fluid Temperature
TNS	Tail Number Side Lights
TPMS	Tire Pressure Monitoring System
USB	Universal Serial Bus

VENT	Ventilation
1GR	First Gear
2GR	Second Gear
2WD	2-Wheel Drive
3GR	Third Gear
4GR	Fourth Gear
4SD	4 Door Sedan
5GR	Fifth Gear
5HB	5 Door Hatchback
6GR	Sixth Gear

2014 - Mazda3 - General Information

PRE-DELIVERY INSPECTION

Pre Delivery Inspection Table

Exterior

INSPECT and **ADJUST**, if necessary, the following items to specification:
□Glass, exterior bright metal and paint for damage
□Wheel lug nuts
□All weatherstrips for damage or detachment
□Adjust tire pressures to specification

- Adjust the tire pressures when the tires are cool.
- Specified pressure is indicated on the door label.

Tire pressure record				
Left front	Right front	Left rear	Right rear	Spare

□After adjusting the tire pressures, switch the ignition ON (engine off or on) and long-press the tire pressure monitoring system set switch until the tire pressure warning light flashes two times and the buzzer sounds one time (with tire pressure monitoring system switch).

Indicated that long-pressing of the tire pressure monitoring system set switch was implemented
Yes or No

□Headlight cleaner and fluid level (if equipped)
□Operation of hood release and lock
□Operation of fuel-filler lid opener
□Door operation and alignment including side door and back door
□Headlight aiming
INSTALL the following parts:
□Wheel caps or rings (if equipped)

Under hood—engine off

INSPECT and **ADJUST**, if necessary, the following items to specification:
□Fuel, engine coolant, and hydraulic lines, fittings, connections, and components for leaks
□Engine oil level
□Brake and clutch fluid level
□Windshield washer reservoir fluid level
□Automatic transmission/Transaxle fluid level
□Power steering fluid level
□Radiator coolant level and specific gravity
□Tightness of water hose clamps
□Tightness of battery terminals, electrolyte level and specific gravity

Interior

INSTALL the following items:
□Fuse for accessories
INSPECT the operations of the following items:
□Seat controls (slide and recline) and head restraints
□Folding rear seat
□Door locks, including childproof door locks
□Seat belts and warning system
□Steering lock
□Transmission/Transaxle range switch
□Warning alarm
□Warning lights
□Air bag system using warning light
□Cruise control system (if equipped)
□Power door lock
□Shift lock system (if equipped)
□Starter interlock
□All lights including warning, and indicator lights
□Horn, wipers, and washers
□Wiper blades performance
Clean wiper blades and windshield, if necessary
□Antenna
□Entertainment system
□Cigarette lighter and clock
□Power windows
□Heater, defroster, and air conditioner at various mode selections (if equipped)
INSPECT the following items:
□Presence of spare fuse
□Upholstery and interior finish
INSPECT and **ADJUST**, if necessary, the following items:
□Operation and fit of windows
□Pedal height and free play of brake and clutch pedals
□Parking brake

Under hood—engine running at operating temperature

INSPECT the following items:
□Automatic transmission/Transaxle fluid level
□Operation of idle up system for electrical load, air conditioner or power steering (if equipped)
□Operation of throttle position sensor (when inspecting for wiring harness and connector poor connection)

On hoist

INSPECT the following items:
□Manual transmission/Transaxle oil level
□Underside fuel, coolant and hydraulic lines, fittings, connections, and components for leaks
□Tires for cuts or bruises
□Steering linkage, suspension, exhaust system, and all underside hardware for looseness or damage
□Differential oil level

Road test

INSPECT the following items:
□Brake operation
□Clutch operation
□Steering control
□Engine general performance
□Emergency locking retractors and automatic locking retractors
□Cruise control system (if equipped)
□Operation of meters and gauges, squeaks, rattles, and abnormal noises

After road test

INSPECT for necessary owner information materials, tools, and spare tire in vehicle

The following items must be completed just before delivery to your customer.

□Load test battery and charge if necessary (Load test result: Volts)

□Adjust tire pressures to specification

- Adjust the tire pressures when the tire are cool.
- Specified pressure is indicated on the door label.

Tire pressure record				
Left front	Right front	Left rear	Right rear	Spare

□After adjusting the tire pressures, switch the ignition ON (engine off or on) and long-press the tire pressure monitoring system set switch until the tire pressure warning light flashes two times and the buzzer sounds one time (with tire pressure monitoring system switch).

Indicated that long-pressing of the tire pressure monitoring system set switch was implemented
Yes or No

□Clean outside of vehicle

□Remove seat and cabin carpet protective covers

□Vacuum inside of vehicle

< Previous

2014 - Mazda3 - General Information

SCHEDULED MAINTENANCE

Scheduled Maintenance Table for U.S.A., CANADA and Puerto Rico

- Follow Schedule 1 if the vehicle is operated mainly where none of the following conditions (severe driving conditions) apply.
    - Repeated short-distance driving
    - Driving in dusty conditions
    - Driving with extended use of brakes
    - Driving in areas where salt or other corrosive materials are used
    - Driving on rough or muddy roads
    - Extended periods of idling or low-speed operation
    - Driving for long periods in cold temperatures or extremely humid climates
    - Driving in extremely hot conditions
    - Driving in mountainous conditions continually
- If any do apply, follow Schedule 2. (Puerto Rico residents follow Schedule 2.)

Vehicles using Engine Oil Flexible Maintenance

- Engine Oil Flexible Maintenance is available for U.S.A. and Puerto Rico residents whose vehicle is operated mainly where none of the following conditions apply:
    - Extended periods of idling or low-speed operation such as police car, taxi or driving school car
    - Driving in dusty conditions
- If any do apply, follow Schedule 2 with engine oil fixed maintenance.
- Once engine oil flexible maintenance is selected, the vehicle calculates the remaining oil life based on engine operating conditions. The vehicle lets you know when an oil change is due by illuminating the wrench indicator light in the instrument cluster. Change the oil as soon as possible within the next 500 km's (250 miles) or 15 days.
- Mazda Genuine 0W-20 Oil and Castrol 0W-20 Oil are required to achieve optimum performance.

  NOTE:

- Please ensure that the Flexible Oil Maintenance Setting is reset after each Oil and Filter replacement.

NOTE:

- For maintenance guidelines beyond the miles/months listed, follow the maintenance intervals provided in the Scheduled Maintenance Tables.

Schedule 1: U.S.A. residents - Engine oil flexible maintenance interval

- Use when the maintenance monitor for “Oil Change” is set to “Flexible”. For details, see maintenance monitor.

Maintenance Interval		Number of months or kilometers (miles), whichever comes first.							
	Months	12	24	36	48	60	72	84	96
	×1000 km	16	32	48	64	80	96	112	128
	×1000 miles	10	20	30	40	50	60	70	80
ENGINE									
Drive belts				I			I		
Engine oil & filter*1		Replace when wrench indicator light is ON. (Max interval: 12 months/16,000km {10,000 miles})							
COOLING SYSTEM									
Engine coolant	FL22 type*2	Replace at first 192,000 km {120,000 miles} or 10 years; after that, every 96,000 km {60,000 miles} or 5 years.							
	Others	Replace at first 96,000 km {60,000 miles} or 4 years; after that, every 2 years.							
FUEL SYSTEM									
Air filter		Replace when any equivalent timing of replacing engine oil. (Max interval: 36 months/60,000km {37,500 miles})							
Fuel lines and hoses*3			I		I		I		I
Hoses and tubes for emission*3					I				I

IGNITION SYSTEM								
Spark plugs	Replace every 120,000 km {75,000 miles}.							
CHASSIS and BODY								
Brake lines, hoses and connections		I		I		I		I
Disc brakes	I	I	I	I	I	I	I	I
Tire (Rotation)	Rotate every 8,000 km {5,000 miles}.							
Steering operation and linkages		I		I		I		I
Front and rear suspension, ball joints and wheel bearing axial play		I		I		I		I
Driveshaft dust boots		I		I		I		I
Bolts and nuts on chassis and body		T		T		T		T
Exhaust system and heat shields				I				I
AIR CONDITIONER SYSTEM								
Cabin air filter	Replace when any equivalent timing of replacing engine oil. (Max interval: 24 months/48,000km {30,000 miles})							

Chart symbols

- **I**: Inspect: Inspect and clean, repair, adjust, fill up, or replace if necessary.
- **T**: Tighten

Remarks

- Refer below for a description of items marked* in the maintenance chart.
    - *1: The engine oil and filter must be changed at least once a year or within 16,000km {10,000 miles} since last engine oil and filter change. The system must be reset whenever replacing the engine oil regardless of the message/wrench indicator light display.
    - *2: Use FL22 type coolant in vehicles with the inscription "FL22" on the radiator cap itself or the surrounding area. Use FL22 when replacing the coolant.
    - *3: According to state/provincial and federal regulations, failure to perform maintenance on these items will not void your emissions warranties. However, Mazda recommends that all maintenance services

be performed at the recommended time or mileage/kilometer period to ensure long-term reliability.

Schedule 1: U.S.A. residents - Fixed maintenance interval

- Use when the maintenance monitor for “Oil Change” is set to “Fixed”. For details, see maintenance monitor.

Maintenance Interval		Number of months or kilometers (miles), whichever comes first.							
	Months	6	12	18	24	30	36	42	48
	×1000 km	12	24	36	48	60	72	84	96
	×1000 miles	7.5	15	22.5	30	37.5	45	52.5	60
ENGINE									
Drive belts						I			
Engine oil & filter		R	R	R	R	R	R	R	R
COOLING SYSTEM									
Engine coolant	FL22 type*1	Replace at first 192,000 km {120,000 miles} or 10 years; after that, every 96,000 km {60,000 miles} or 5 years.							
	Others	Replace at first 96,000 km {60,000 miles} or 4 years; after that, every 2 years.							
FUEL SYSTEM									
Air filter						R			
Fuel lines and hoses*2					I				I
Hoses and tubes for emission*2									I
IGNITION SYSTEM									
Spark plugs		Replace every 120,000 km {75,000 miles}.							
CHASSIS and BODY									

Brake lines, hoses and connections				I				I
Disc brakes		I		I		I		I
Tire (Rotation)*3	Rotate every 12,000 km {7,500 miles}.							
Steering operation and linkages				I				I
Front and rear suspension, ball joints and wheel bearing axial play				I				I
Driveshaft dust boots				I				I
Bolts and nuts on chassis and body				T				T
Exhaust system and heat shields	Inspect every 72,000 km {45,000 miles} or 5 years.							
AIR CONDITIONER SYSTEM								
Cabin air filter				R				R

Chart symbols

- **I**: Inspect: Inspect and clean, repair, adjust, fill up, or replace if necessary.
- **R**: Replace
- **L**: Lubricate
- **T**: Tighten

Remarks

- Refer below for a description of items marked* in the maintenance chart.
    - *1: Use FL22 type coolant in vehicles with the inscription “FL22” on the radiator cap itself or the surrounding area. Use FL22 when replacing the coolant.
    - *2: According to state/provincial and federal regulations, failure to perform maintenance on these items will not void your emissions warranties. However, Mazda recommends that all maintenance services be performed at the recommended time or mileage/kilometer period to ensure long-term reliability.
    - *3:To equalize tread wear for maintaining good performance in handling and braking, rotate the tires every 12,000 km {7,500 miles}. However Mazda recommends to rotate every 8,000km {5,000 miles} to help increase tire life and distribute wear more evenly.

Schedule 2:U.S.A. (severe driving conditions) and Puerto Rico residents

Maintenance Interval		Number of months or kilometers (miles), whichever comes first.											
	Months	4	8	12	16	20	24	28	32	36	40	44	48
	×1000 km	8	16	24	32	40	48	56	64	72	80	88	96
	×1000 miles	5	10	15	20	25	30	35	40	45	50	55	60
ENGINE													
Drive belts								I					
Engine oil & filter	Flexible*1	Replace when wrench indicator light is ON. (Max interval: 12 months/16,000km {10,000 miles})											
	Fixed	R	R	R	R	R	R	R	R	R	R	R	R
COOLING SYSTEM													
Engine coolant	FL22 type*2	Replace at first 192,000 km {120,000 miles} or 10 years; after that, every 96,000 km {60,000 miles} or 5 years.											
	Others	Replace at first 96,000 km {60,000 miles} or 4 years; after that, every 2 years.											
Engine coolant level		I	I	I	I	I	I	I	I	I	I	I	I
FUEL SYSTEM													
Air filter	U.S.A. (severe driving conditions)							R					
	Puerto Rico						R						R
Fuel lines and hoses*3							I						I
Hoses and tubes for emission*3													I
IGNITION SYSTEM													
Spark plugs		Replace every 120,000 km {75,000 miles}.											

ELECTRICAL SYSTEM												
Function of all lights	I	I	I	I	I	I	I	I	I	I	I	I
CHASSIS and BODY												
Brake lines, hoses and connections						I						I
Brake and clutch fluid level	I	I	I	I	I	I	I	I	I	I	I	I
Disc brakes			I			I			I			I
Tire (Rotation)	Rotate every 8,000 km {5,000 miles}.											
Tire inflation pressure and tire wear	I	I	I	I	I	I	I	I	I	I	I	I
Steering operation and linkages						I						I
Front and rear suspension, ball joints and wheel bearing axial play						I						I
Driveshaft dust boots						I						I
Bolts and nuts on chassis and body						T						T
Exhaust system and heat shields	Inspect every 72,000 km {45,000 miles} or 5 years.											
All locks and hinges	L	L	L	L	L	L	L	L	L	L	L	L
Washer fluid level	I	I	I	I	I	I	I	I	I	I	I	I
AIR CONDITIONER SYSTEM												
Cabin air filter	Replace every 40,000 km {25,000 miles} or 2 years.											

Chart symbols:

- **I**: Inspect: Inspect and clean, repair, adjust, fill up, or replace if necessary.
- **R**: Replace
- **L**: Lubricate
- **T**: Tighten

Remarks

- Refer below for a description of items marked* in the maintenance chart.
    - *1: Engine oil flexible maintenance is available for U.S.A. and Puerto Rico residents whose vehicle is operated mainly where none of the following conditions apply.
        - Extended periods of idling or low-speed operation such as police car, taxi or driving school car
        - Driving in dusty conditions
    - If any do apply, follow fixed maintenance.
    - The engine oil and filter must be changed at least once a year or within 16,000km {10,000 miles} since last engine oil and filter change. The system must be reset whenever replacing the engine oil regardless of the message/wrench indicator light display.
    - *2: Use FL22 type coolant in vehicles with the inscription “FL22” on the radiator cap itself or the surrounding area. Use FL22 when replacing the coolant.
    - *3: According to state/provincial and federal regulations, failure to perform maintenance on these items will not void your emissions warranties. However, Mazda recommends that all maintenance services be performed at the recommended time or mileage/kilometer period to ensure long-term reliability.

Schedule 2: Canada residents

Maintenance Interval	Number of months or kilometers (miles), whichever comes first.												
	Months	4	8	12	16	20	24	28	32	36	40	44	48
	×1000 km	8	16	24	32	40	48	56	64	72	80	88	96
	×1000 miles	5	10	15	20	25	30	35	40	45	50	55	60
ENGINE													
Drive belts								I					
Engine oil & filter		R	R	R	R	R	R	R	R	R	R	R	R
COOLING SYSTEM													
	FL22 type*1	Replace at first 192,000 km {120,000 miles} or 10 years; after											

Engine coolant		that, every 96,000 km {60,000 miles} or 5 years.											
	Others	Replace at first 96,000 km {60,000 miles} or 4 years; after that, every 2 years.											
Engine coolant level		I	I	I	I	I	I	I	I	I	I	I	I
FUEL SYSTEM													
Air filter								R					
Fuel lines and hoses*2							I						I
Hoses and tubes for emission*2													I
IGNITION SYSTEM													
Spark plugs		Replace every 120,000 km {75,000 miles}.											
ELECTRICAL SYSTEM													
Function of all lights		I	I	I	I	I	I	I	I	I	I	I	I
CHASSIS and BODY													
Brake lines, hoses and connections							I						I
Brake and clutch fluid level		I	I	I	I	I	I	I	I	I	I	I	I
Disc brakes				I			I			I			I
Tire (Rotation)		Rotate every 8,000 km {5,000 miles}.											
Tire inflation pressure and tire wear		I	I	I	I	I	I	I	I	I	I	I	I
Steering operation and linkages							I						I
Front and rear suspension, ball joints and wheel bearing axial play							I						I
Driveshaft dust boots							I						I
Bolts and nuts on chassis and body							T						T

Body condition (for rust, corrosion and perforation)			I			I			I			I
Exhaust system and heat shields	Inspect every 72,000 km {45,000 miles} or 5 years.											
All locks and hinges	L	L	L	L	L	L	L	L	L	L	L	L
Washer fluid level	I	I	I	I	I	I	I	I	I	I	I	I
AIR CONDITIONER SYSTEM												
Cabin air filter	Replace every 40,000 km {25,000 miles} or 2 years.											

Chart symbols:

- **I**: Inspect: Inspect and clean, repair, adjust, fill up, or replace if necessary.
- **R**: Replace
- **L**: Lubricate
- **T**: Tighten

Remarks

- Refer below for a description of items marked* in the maintenance chart.
    - *1: Use FL22 type coolant in vehicles with the inscription “FL22” on the radiator cap itself or the surrounding area. Use FL22 when replacing the coolant.
    - *2: According to state/provincial and federal regulations, failure to perform maintenance on these items will not void your emissions warranties. However, Mazda recommends that all maintenance services be performed at the recommended time or mileage/kilometer period to ensure long-term reliability.

< Previous

Next >

2014 - Mazda3 - Engine

FOREWORD [SKYACTIV-G 2.0, SKYACTIV-G 2.5]

- If there is any vehicle malfunction complaint lodged by a customer, perform malfunction diagnosis according to the troubleshooting procedure.

Troubleshooting Procedure

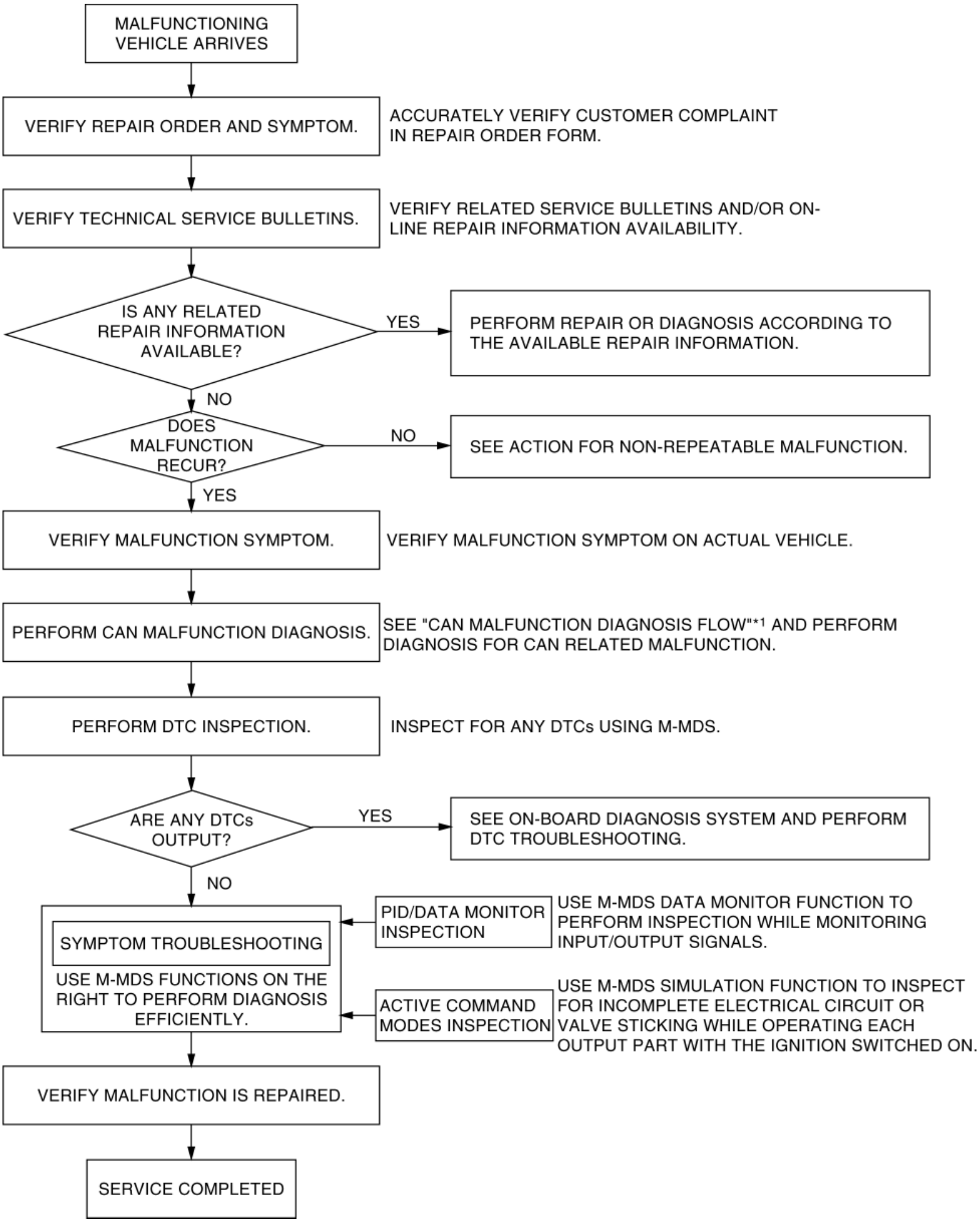
MALFUNCTIONING VEHICLE ARRIVES
VERIFY REPAIR ORDER AND SYMPTOM.
ACCURATELY VERIFY CUSTOMER COMPLAINT IN REPAIR ORDER FORM.
VERIFY TECHNICAL SERVICE BULLETINS.
VERIFY RELATED SERVICE BULLETINS AND/OR ON-LINE REPAIR INFORMATION AVAILABILITY.
IS ANY RELATED REPAIR INFORMATION AVAILABLE?
YES
PERFORM REPAIR OR DIAGNOSIS ACCORDING TO THE AVAILABLE REPAIR INFORMATION.
NO
DOES MALFUNCTION RECUR?
NO
SEE ACTION FOR NON-REPEATABLE MALFUNCTION.
YES
VERIFY MALFUNCTION SYMPTOM.
VERIFY MALFUNCTION SYMPTOM ON ACTUAL VEHICLE.
PERFORM CAN MALFUNCTION DIAGNOSIS.
SEE "CAN MALFUNCTION DIAGNOSIS FLOW"*1 AND PERFORM DIAGNOSIS FOR CAN RELATED MALFUNCTION.
PERFORM DTC INSPECTION.
INSPECT FOR ANY DTCs USING M-MDS.
ARE ANY DTCs OUTPUT?
YES
SEE ON-BOARD DIAGNOSIS SYSTEM AND PERFORM DTC TROUBLESHOOTING.
NO
SYMPTOM TROUBLESHOOTING
USE M-MDS FUNCTIONS ON THE RIGHT TO PERFORM DIAGNOSIS EFFICIENTLY.
PID/DATA MONITOR INSPECTION
USE M-MDS DATA MONITOR FUNCTION TO PERFORM INSPECTION WHILE MONITORING INPUT/OUTPUT SIGNALS.
ACTIVE COMMAND MODES INSPECTION
USE M-MDS SIMULATION FUNCTION TO INSPECT FOR INCOMPLETE ELECTRICAL CIRCUIT OR VALVE STICKING WHILE OPERATING EACH OUTPUT PART WITH THE IGNITION SWITCHED ON.
VERIFY MALFUNCTION IS REPAIRED.
SERVICE COMPLETED

*1

(See CONTROLLER AREA NETWORK (CAN) MALFUNCTION DIAGNOSIS FLOW.)

Repair order form

check sheet

	Repair order	Check with customer	Diagnosis	Repair	Explanation to customer
Date/time					
In-charge					

(s)? Where it occurs. Warning light illumination? Can anyone replicate problem?)

	Registration date:	Date of malfunction occurrence:	Odometer reading km {mph}

bo/ Miller cycle/ LPG/Direct injection) | Transmission (MT/HAT/EC-AT/CVT)

		Driving conditions										
Grade	Occurrence frequency	Fuel	Warm-up condition	Driving operation	Driving posture	Load	Accelerator opening angle	Shift position		Eng RPM	Vehicle speed	Pattern of use
Flat Upgrade Down grade N/A Other	Once/day 2-3 times/day 4-5 times/day Many times/day Once/week 2-3 times/week 4-5 times/week Once/month 2-3 times/month 4-5 times/month Other	Regular High Oct. Diesel LPG Other Fuel gauge F E	Cold Half-warmed Fully warmed N/A Other Water temp. gauge H C	When starting After starting Re-starting (min. after stopped) Idling Racing Accel. from stop Normal driving Deceleration Braking Soft braking Clutch disengage Sudden accel. Light accel. Shifting (km/h {mph} → km/h {mph}) Other	Vehicle stopped Straight-on driving Reversing Right turn Left turn Other	Headlights on Exterior lights on A/C on AUTO °C{°F} Blower: 1 step Blower: 2 steps Blower: 3 steps Blower: 4 steps Power steering lock to lock Rear defrost on Wipers on Audio on Other	0/8 1/8 2/8 3/8 4/8 5/8 6/8 7/8 8/8	MT	1 2 3 4 5 6 N R	Idle Less than 1,000 Less than 1,500 Less than 2,000 Less than 2,500 Less than 3,000 Less than 4,000 Less than 4,500 Less than 5,000 Less than 5,500 Less than 6,000 Less than 6,500 7,000 or more	5 km/h {3 mph} 10 km/h {6.2 mph} 20 km/h {12 mph} 30 km/h {19 mph} 40 km/h {25 mph} 50 km/h {31 mph} 60 km/h {37 mph} 70 km/h {43 mph} 80 km/h {50 mph} 90 km/h {56 mph} 100 km/h {62.1 mph} 110 km/h {68.4 mph} 120 km/h {74.6 mph} 130 km/h {80.8 mph} 140 km/h {87 mph} 150 km/h {93.2 mph} 160 km/h {99.4 mph}	Work_____% Minor use_____% Trips_____% Other_____% Between ENG. start→Stop: Distance, time Approx km {mile} Approx Hrs. No. of occupants: Load condition kg Other
								AT	P R N D S L Hold M (km/h {mph})			

throttle sensor electromotive force, air flow electromotive force, other), maintenance, repair, accident history, installation of commercial devices

Repair order form and malfunction symptom

Customer statement (When? What? What time(
Vehicle body number:
Engine (SOHC/DOHC/RE/DE) (Cab /EGI/ Tur

Environmental conditions		
Weather	Ambient temp.	Drive scenario
Sunny Cloudy Rain Snow High wind Wind gusts N/A Other	-10°C {14°F} or less -10— 0°C {14—32°F} 0—10°C {32—50°F} 10—15°C {50—59°F} 15—20°C {59—58°F} 20—25°C {68—77°F} 25—30°C {77—86°F} 30—35°C {86—95°F} 35—4{0°C {95—104°F} 40—45°C {104—113°F} 45°C {113°F} or more N/A Other	Depart/arrive Traffic jam (city) Standard city street Suburbs Highway Uneven road Dry road surface Wet road surface Snow bound road Icy road Other
DTC, measured data (fuel pressure, intake manifold vacuum, t		

Dealer name:	Vehicle body number:	Odometer reading:
Vehicle-in date:	Estimated repair completion date:	Person in-charge:
Subject (Content):		
Audio memory		

	1	2	3	4	5	6	Fuel level
FM1							E F
FM2							
AM							

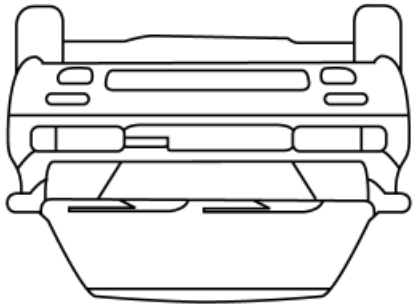

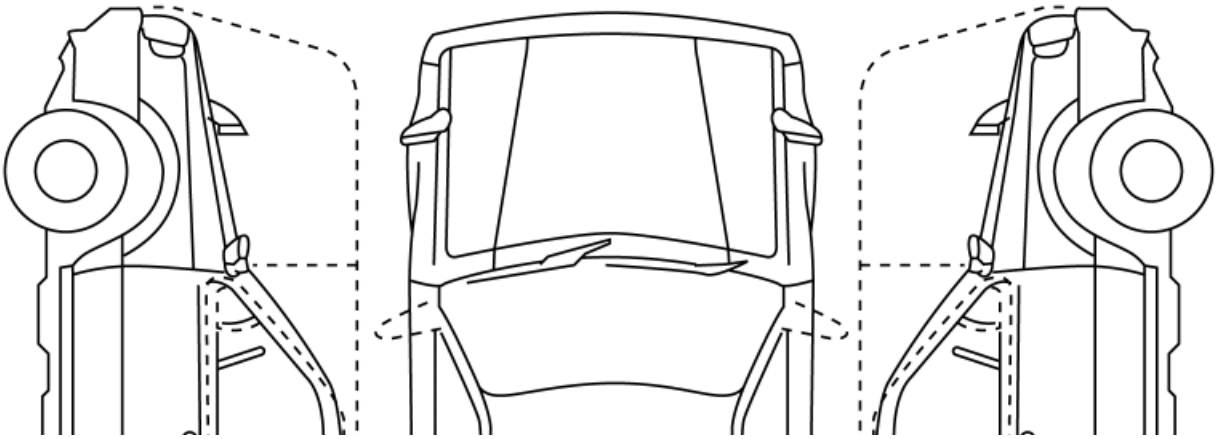

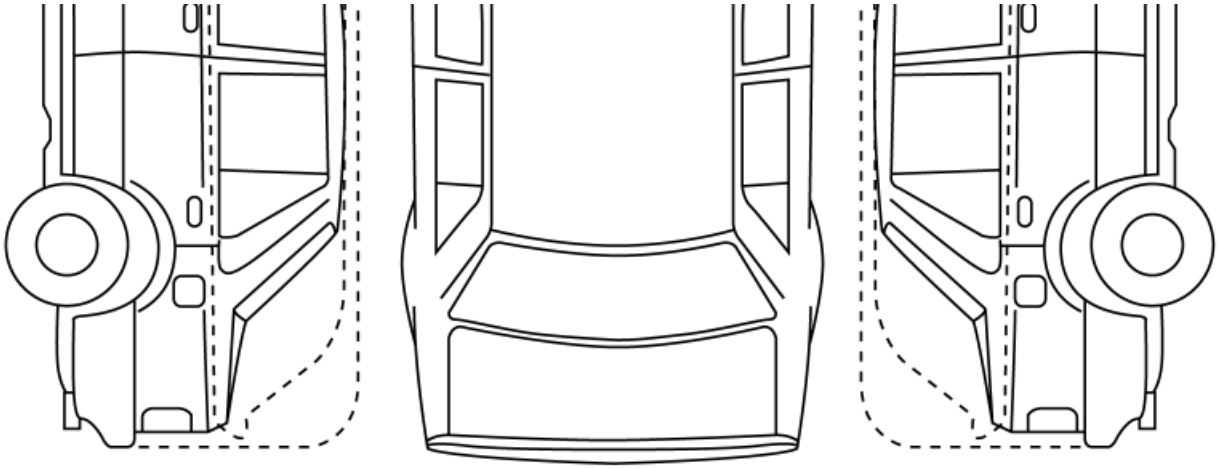

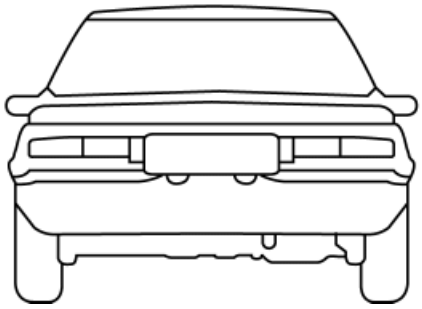

Action for Non-repeatable Malfunction

- If the malfunction does not recur, verify the malfunction cause by performing the following actions:
  - Based on the repair order form, attempt to drive the vehicle or perform tests to replicate the malfunction, record the data (such as PCM circuit voltage) at that time, and detect the malfunction cause.
  - Shake the wiring harness or connector of the electrical component which is suspected to be the cause of the malfunction, and inspect for malfunction or occurrence of any DTCs.

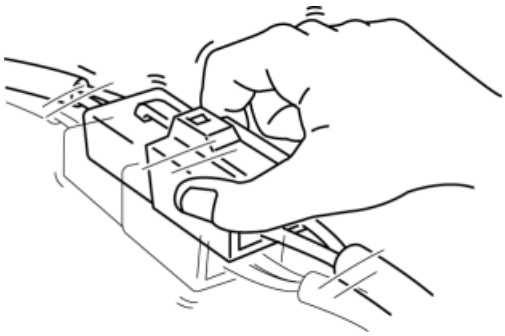

  - Inspect the female terminals on the connector of the electric component which is suspected to be the cause of the malfunction for poor connection.

Next >

2014 - Mazda3 - Engine

OBD-II PENDING TROUBLE CODE [SKYACTIV-G 2.0, SKYACTIV-G 2.5]

- These appear when a problem is detected in a monitored system. The code for a malfunctioning system is stored in the PCM memory in the first drive cycle. This code is called the pending code. If the PCM determines that the system has returned to normal or the problem was mistakenly detected, it deletes the pending code. If the problem is also found in the second drive cycle, the PCM determines that the system is malfunctioning, and the DTC is stored.

2014 - Mazda3 - Engine

OBD-II FREEZE FRAME DATA [SKYACTIV-G 2.0, SKYACTIV-G 2.5]

- This is technical data which indicates the engine condition at the time of the first malfunction. This data will remain in the memory even if another emission-related DTC is stored, with the exception of the Misfire or Fuel System DTCs. Once FREEZE FRAME DATA for the Misfire or Fuel System DTC is stored, it will overwrite any previous data and the FREEZE FRAME DATA will not be overwritten again.

2014 - Mazda3 - Engine

OBD-II ON-BOARD SYSTEM READINESS TEST [SKYACTIV-G 2.0, SKYACTIV-G 2.5]

- This shows the OBD-II systems operating status. If any monitor function is incomplete, the M-MDS will identify which monitor function has not been completed. Misfires, Fuel System and Comprehensive Components (CCM) are continuous monitoring-type functions. The catalyst, evaporation system and oxygen sensor will be monitored under drive cycles. The OBD-II diagnostic system is initialized by performing the DTC cancellation procedure or disconnecting the negative battery cable.

2014 - Mazda3 - Engine

OBD-II READ/CLEAR DIAGNOSTIC TEST RESULTS [SKYACTIV-G 2.0, SKYACTIV-G 2.5]

- This retrieves all stored DTCs in the PCM and clears the DTC, FREEZE FRAME DATA, On-Board Readiness Test Results, Diagnostic Monitoring Test Results and Pending Trouble Codes.

2014 - Mazda3 - Engine

OBD-II PARAMETER IDENTIFICATION (PID) ACCESS [SKYACTIV-G 2.0, SKYACTIV-G 2.5]

- The PID mode allows access to certain data values, analog and digital inputs and outputs, calculated values and system status information. Since PID values for output devices are PCM internal data values, inspect each device to identify which output devices are malfunctioning.

2014 - Mazda3 - Engine

ON-BOARD DIAGNOSTIC TEST [SKYACTIV-G 2.0, SKYACTIV-G 2.5]

DTC Reading Procedure

1. Connect the M-MDS to the DLC 2.

2. After the vehicle is identified, select the following items from the initialization screen of the M-MDS.

    a. Select “Self Test”.

    b. Select “Modules”.

    c. Select “PCM”.

3. Then, select the “Retrieve CMDTCs” and perform procedures according to directions on the M-MDS screen.

4. Verify the DTC according to the directions on the M-MDS screen.

    - If any DTCs are displayed, perform troubleshooting according to the corresponding DTC inspection.

5. After completion of repairs, clear all DTCs stored in the PCM, while referring to “AFTER REPAIR PROCEDURE”.

Pending Trouble Code Access Procedure

1. Connect the M-MDS to the DLC 2.

2. After the vehicle is identified, select the following items from the initialization screen of the M-MDS.

    a. Select “Self Test”.

    b. Select “Modules”.

    c. Select “PCM”.

3. Then, select the “Retrieve CMDTCs” and perform procedures according to directions on the M-MDS screen.

4. Retrieve the pending trouble codes according to the directions on the M-MDS screen.

Freeze Frame PID Data Access Procedure

1. Connect the M-MDS to the DLC 2.

2. After the vehicle is identified, select the following items from the initialization screen of the M-MDS.

   a. Select “Self Test”.

   b. Select “Modules”.

   c. Select “PCM”.

3. Then, select the “Retrieve CMDTCs” and perform procedures according to directions on the M-MDS screen.

4. Retrieve the freeze frame PID data according to the directions on the M-MDS screen.

NOTE:

- Freeze frame data/snapshot data appears at the top of the help screen when the displayed DTC is selected.

  Freeze frame data

- The freeze frame data consists of data for vehicle and engine control system operation conditions when malfunctions in the engine control system are detected and stored in the PCM.
- Freeze frame data is stored at the instant the check engine light illuminates, and only a part of the DTC data is stored.
- For the freeze frame data, if there are several malfunctions in the engine control system, the data for the malfunction which occurred initially is stored. Thereafter, if a misfire or fuel injection control malfunction occurs, data from the misfire or fuel injection control malfunction is written over the initially stored data. However, if the initially stored freeze frame data is a misfire or fuel injection control malfunction, it is not overwritten.

  Snapshot data

- The snapshot data stores the currently detected DTC data.
- The recording timing for the freeze frame data/snapshot data differs depending on the number of DTC drive cycles.
  - For a DTC with a drive cycle number 1, only the malfunction determination data is recorded.
  - For a DTC with a drive cycle number 2, both the malfunction determination and undetermined data is recorded.

Freeze frame data table

NOTE:

- Refer to the PID monitor table to confirm the engine control system operation status when the PCM does not store a DTC. (See **PCM INSPECTION [SKYACTIV-G 2.0, SKYACTIV-G 2.5]**.)
- Freeze frame data items are not displayed according to detected DTC.

—: Not applicable

Freeze frame data item	Unit	Description	Corresponding PID data monitor item
FUELSYS1	OL/CL/OL-Drive/OL-Fault/CL-Fault	Fuel system status	FUELSYS
LOAD	%	Calculated engine load	—
ECT	°C, °F	Engine coolant temperature	ECT
SFT1	%	Short term fuel trim	SHRTFT1
LFT1	%	Long term fuel trim	LONGFT1
MAP	KPa {MPa}, mBar {Bar}, psi, in H20	Manifold absolute pressure	MAP
RPM	RPM	Engine speed	RPM
VS	KPH, MPH	Vehicle speed	VSS
SPARKADV	°	Ignition timing	SPARKADV
IAT	°C, °F	Intake air temperature	IAT
MAF	g/sec	Mass airflow	MAF
TP	%	Throttle valve position No.1	TP1
RUNTM	hh:mm:ss	Time from engine start	—
EVAPPCT	%	Purge solenoid valve controlled value	EVAPCP
FLI	%	Fuel level in fuel tank	FLI
WARMUPS	—	Number of warm-up cycle after DTC cleared	—
CLRDIST	km, ft {mi}	Mileage after DTC cleared	—
FTP	KPa {MPa}, mBar {Bar}, psi, in H20	Evaporative (EVAP) system vapor pressure	FTP
BARO	KPa {MPa}, mBar {Bar},	Barometric pressure	BARO

	psi, in H20		
CATTEMP11	°C, °F	Estimated catalytic converter temperature	CATT11_DSD
VPWR	V	Module supply voltage	VPWR
ALV	%	Engine load	LOAD
EQ_RAT	—	Target equivalence ratio (lambda)	EQ_RAT11_DSD
TP_REL	%	Relative throttle position	TP_REL
AAT	°C, °F	Ambient air temperature	AAT
TP_B	%	Throttle valve position No.2	TP2
APP_D	%	Accelerator pedal position No.1	APP1
APP_E	%	Accelerator pedal position No.2	APP2
TAC_PCT	%	Target throttle valve position	ETC_DSD
FUEL_TYP	—	Type of fuel currently being utilized by the vehicle	—
STSO2FT1	%	Short term fuel trim (HO2S)	—
LGSO2FT1	%	Long term fuel trim (HO2S)	—
FRP	KPa {MPa}, mBar {Bar}, psi, in H20	Fuel pressure (absolute)	FUEL_PRES
ECT1_SUP	—	Engine coolant temperature No.1 support	—
ECT2_SUP	—	Engine coolant temperature No.2 support	—
ECT1	°C, °F	Engine coolant temperature No.1	ECT
ECT2	°C, °F	Engine coolant temperature No.2	ECT2_V
IAT11_SUP	—	Intake air temperature No.1 support	—

IAT12_SUP	—	Intake air temperature No.2 support	—
IAT11	°C, °F	Intake air temperature No.1	IAT
IAT12	°C, °F	Intake air temperature No.2	IAT2

Snapshot data table

NOTE:

- Refer to the PID monitor table to confirm the engine control system operation status when the PCM does not store a DTC. (See **PCM INSPECTION [SKYACTIV-G 2.0, SKYACTIV-G 2.5]**.)
- Snapshot data items are not displayed according to detected DTC.

—: Not applicable

Snapshot data item	Unit	Definition	Data read/use method	Corresponding PID data monitor item
ALTT_V	V	Generator output voltage	—	—
MIL	Off/On	Check engine light illumination status	—	MIL
APP1	V %	Accelerator pedal position No.1	—	APP1
APP2	V %	Accelerator pedal position No.2	—	APP2
TP1	V %	Throttle valve position No.1	—	TP1
TP2	V %	Throttle valve position No.2	—	TP2
ALT_CUR_DSD	A	Generator current desired	—	—

BATT_RES	ohm	Battery inferred internal resistance	—	—
TOTAL_TIME	hh:mm:ss	Total time	The elapsed time when the PCM detected a DTC can be calculated by performing the following procedure. • Verify the instrument cluster PID item TOTAL_TIME. • Verify the snapshot data item TOTAL_TIME. • Subtract 2 from 1.	—
TOTAL_DIST	km, ft {mi}	Total distance	The distance traveled when the PCM detected a DTC can be calculated by performing the following procedure. • Verify the odometer value in the instrument cluster. • Verify the snapshot data item TOTAL_DIST. • Subtract 2 from 1.	—
FUELSYS	OL/CL/OL-Drive/OL-Fault/CL-Fault	Fuel system status	—	FUELSYS
LOAD_C	%	Calculated engine load	—	—
ECT	°C, °F	Engine coolant temperature	—	ECT
SHRTFT1	%	Short term fuel trim	—	SHRTFT1
LONGFT1	%	Long term fuel trim	—	LONGFT1
MAP	KPa {MPa}, mBar {Bar}, psi, in H20	Manifold absolute pressure	—	MAP
RPM	RPM	Engine speed	—	RPM

VSS	KPH, MPH	Vehicle speed	—	VSS
SPARKADV	°	Ignition timing	—	SPARKADV
IAT	°C, °F	Intake air temperature No.1	—	IAT
MAF	g/sec	Mass airflow	—	MAF
O2S12	V	HO2S	—	O2S12
EG_RUN_TIME	hh:mm:ss	Time from engine start	—	—
FUEL_PRES	KPa {MPa}, mBar {Bar}, psi, in H20	Fuel pressure	—	FUEL_PRES
SEGRP_DSD	%	Target EGR valve position	—	—
EVAPCP	%	Purge solenoid valve controlled value	—	EVAPCP
FLI	%	Fuel level in fuel tank	—	FLI
CLR_CNT	—	Number of warm-up cycle after DTC cleared	—	—
CLR_DIST	km, ft {mi}	Mileage after DTC cleared	—	—
FTP	KPa {MPa}, mBar {Bar}, psi, in H20	Fuel tank pressure	—	FTP
BARO	KPa {MPa}, mBar {Bar}, psi, in H20	Barometric pressure	—	BARO
CATT11_DSD	°C, °F	Estimated catalytic converter temperature	—	CATT11_DSD

VPWR	V	Module supply voltage	—	VPWR
LOAD	%	Engine load	—	LOAD
EQ_RAT11_DSD	—	Target equivalence ratio (lambda)	—	EQ_RAT11_DSD
TP_REL	%	Relative throttle position	—	TP_REL
AAT	°C, °F	Ambient air temperature	—	AAT
ETC_DSD	%	Target throttle valve position	—	ETC_DSD
SHRTFT12	%	Short term fuel trim (HO2S)	—	—
LONGFT12	%	Long term fuel trim (HO2S)	—	—
FRP	KPa {MPa}, mBar {Bar}, psi, in H20	Fuel pressure (absolute)	—	FUEL_PRES
ECT2_SUP	—	Engine coolant temperature No.2 support	—	—
ECT2	°C, °F	Engine coolant temperature No.2	—	ECT2_V
IAT12	°C, °F	Intake air temperature No.2	—	IAT2

On-Board System Readiness Tests Access Procedure

1. Connect the M-MDS to the DLC 2.

2. After the vehicle is identified, select the following items from the initialization screen of the M-MDS.

a. Select “Powertrain”.

b. Select “OBD Test Modes”.

c. Select “Mode 1 Powertrain Data”.

d. Select “PCM”.

3. Then, select the “***SUP” and “**EVAL” PIDs in the PID selection screen.

4. Monitor those PIDs and verify that the system monitor is completed.

NOTE:

- If the on-board system readiness tests are not completed the PCM stores DTC P1000.

PID/DATA Monitor and Record Procedure

NOTE:

- The PID data screen function is used for monitoring the calculated value of input/output signals in the module. Therefore, if the monitored value of the output parts is not within specification, it is necessary to inspect the monitored value of input parts corresponding to the applicable output part control. In addition, because the system does not display an output part malfunction as an abnormality in the monitored value, it is necessary to inspect the output parts individually.
- When detecting DTCs, PIDs related to a malfunctioning system may not display even if the module is normal. Therefore, if a PID is not displayed, it is necessary to verify the DTC, perform malfunction diagnosis of the DTC that was detected, and do repairs.

1. Connect the M-MDS to the DLC 2.

2. After the vehicle is identified, select the following items from the initialization screen of the M-MDS.

a. Select “DataLogger”.

b. Select “Modules”.

c. Select “PCM”.

3. Select the applicable PID from the PID table.

4. Verify the PID data according to the detections on the screen.

Diagnostic Monitoring Test Results Access Procedure

1. Connect the M-MDS to the DLC 2.

2. After the vehicle is identified, select the following items from the initialization screen of the M-MDS.

a. Select “Powertrain”.

b. Select “OBD Test Modes”.

c. Select “Mode 6 On-Board Test Results”.

3. Verify the diagnostic monitoring test result according to the directions on the M-MDS screen.

Active Command Modes Procedure

1. Connect the M-MDS to the DLC 2.

2. After the vehicle is identified, select the following items from the initialization screen of the M-MDS.

a. Select “DataLogger”.

b. Select “Modules”.

c. Select “PCM”.

3. Select the simulation items from the PID table.

4. Using the active command modes function, inspect the operation of each part.

- If the operation of output parts cannot be verified after the active command mode inspection is performed, this could indicate the possibility of an open or short circuit, sticking, or operation malfunction in the output parts.

2014 - Mazda3 - Engine

AFTER REPAIR PROCEDURE [SKYACTIV-G 2.0, SKYACTIV-G 2.5]

1. Switch the ignition off.
2. Connect the M-MDS to the DLC 2.
3. Switch the ignition ON (engine off).
4. Verify the DTC according to the directions on the M-MDS screen.
   - Press the clear button on the DTC screen to clear the DTC.
5. Switch the ignition off for **30 s or more**.

CAUTION:

- Always switch the ignition off after clearing the DTC.
- If the engine is accidentally started, disconnect the negative battery cable and reconnect it. (See **NEGATIVE BATTERY CABLE DISCONNECTION/CONNECTION [SKYACTIV-G 2.0, SKYACTIV-G 2.5]**.)

6. Switch the ignition ON (engine on).
7. Verify all accessory loads are off.
8. Start the engine and maintain the engine speed at **2,800—3,200 rpm** until the cooling fan starts running (for A/F sensor and HO2S activation).
9. When the cooling fan starts running, idle the engine.
10. Maintain idle for **30 s or more** after the cooling fan has stopped (for fuel learning).
11. Perform the DTC inspection again and verify that no DTCs are stored. (See **ON-BOARD DIAGNOSTIC TEST [SKYACTIV-G 2.0, SKYACTIV-G 2.5]**.)
12. Switch the ignition off.
13. Disconnect the M-MDS to the DLC 2.

2014 - Mazda3 - Engine

CLEARING DTC [SKYACTIV-G 2.0, SKYACTIV-G 2.5]

1. Connect the M-MDS to the DLC 2.

2. After the vehicle is identified, select the following items from the initialization screen of the M-MDS.

    a. Select “Self Test”.

    b. Select “Modules”.

    c. Select “PCM”.

3. Then, select the “Retrieve CMDTCs” and perform procedures according to the directions on the M-MDS screen.

4. Verify the DTC according to the directions on the M-MDS screen.

5. Press the clear button on the DTC screen to clear the DTC.

6. Verify that no DTCs are displayed.

7. Switch the ignition off.

2014 - Mazda3 - Engine

KOEO/KOER SELF TEST [SKYACTIV-G 2.0, SKYACTIV-G 2.5]

KOEO Self Test

1. Connect the M-MDS to the DLC-2.

2. After the vehicle is identified, select the following items from the initialization screen of the M-MDS.

    a. Select “Self Test”.

    b. Select “Modules”.

    c. Select “PCM”.

3. Then, select the “KOEO On Demand Self Test” and perform procedures according to directions on the M-MDS screen.

4. Verify the DTC according to the directions on the M-MDS screen.

    - If any DTCs are displayed, perform troubleshooting according to the corresponding DTC inspection.

5. After completion of repairs, clear all DTCs stored in the PCM, while referring to “AFTER REPAIR PROCEDURE”.

KOER Self Test

NOTE:

- If a KOER self test is performed with the engine coolant temperature at **less than 60 °C {140 °F}**, a DTC for the variable valve timing may be detected even if the variable valve timing is normal.
- For vehicles with the variable valve timing control, execute a KOER self test after the variable valve timing learning is finished.
    - A KOER self test cannot be executed if the variable timing valve learning in not finished.
    - The variable valve timing learning is cleared if the PCM backup power supply is interrupted (including battery removal), or after reprogramming.
    - To perform variable valve timing learning, the engine speed needs to be increased momentarily to **approx. 2,000 rpm**.

1. Connect the M-MDS to the DLC-2.

2. Start engine and run it at idle.

3. After the vehicle is identified, access the ECT PID using the M-MDS.

4. Verify the ECT PID value is **above 60 °C {140 °F}**.

5. Select the following items from the initialization screen of the M-MDS.

   a. Select “Self Test”.

   b. Select “Modules”.

   c. Select “PCM”.

6. Then, select the “KOER On Demand Self Test” and perform procedures according to directions on the M-MDS screen.

7. Verify the DTC according to the directions on the M-MDS screen.

   - If any DTCs are displayed, perform troubleshooting according to the corresponding DTC inspection.

8. After completion of repairs, clear all DTCs stored in the PCM, while referring to “AFTER REPAIR PROCEDURE”.

2014 - Mazda3 - Engine

OBD-II DRIVE MODE [SKYACTIV-G 2.0, SKYACTIV-G 2.5]

- Using the OBD-II Drive Mode, the monitoring item requested by OBD-II regulations can be easily diagnosed.
- Performing the Drive Mode inspects the OBD-II system for proper operation and must be performed to ensure that no additional DTCs are present.
- The OBD-II Drive Mode is divided into the specific Drive Mode and single Drive Mode.
- For the specific Drive Mode, specified Drive Modes have been set for each individual monitoring item requested by OBD-II regulations, and they can be diagnosed individually. For the single Drive Mode, the entire monitoring item requested by OBD-II regulations can be diagnosed.
- The following modes are in the specific Drive Mode. The applicable system is diagnosed by driving in the following Drive Modes.
    - Mode 03 (Variable Valve Timing, A/F Sensor Heater, HO2S Heater, A/F Sensor, HO2S and TWC Repair Verification Drive Mode)
    - Mode 06 (EVAP System Repair Verification Drive Mode)
- The following systems are diagnosed with the single Drive Mode.
    - Oxygen sensor (A/F sensor, HO2S)
    - Oxygen sensor heater (A/F sensor heater, HO2S heater)
    - Catalytic converter (TWC)
    - Evaporative (EVAP) system

CAUTION:

- While performing the Drive Mode, always operate the vehicle in a safe and lawful manner.
- When the M-MDS is used to observe monitor system status while driving, be sure to have another technician with you, or record the data in the M-MDS using the PID/DATA MONITOR AND RECORD function and inspect later.

NOTE:

- Vehicle speed and engine speed detected by the PCM may differ from that indicated by the speedometer and tachometer. Use the M-MDS to monitor vehicle speed.
- If the OBD-II system inspection is not completed during the Drive Mode, the following causes are considered:
    - The OBD-II system detects the malfunction.
    - The Drive Mode procedure is not completed correctly.
- Disconnecting the battery will reset the memory. Do not disconnect the battery during and after Drive Mode.
- The M-MDS can be used at anytime through the course of the Drive Mode to monitor the completion status. Monitoring can be done by viewing the ON BOARD SYSTEM READINESS menu.
- The OBD monitoring status can be confirmed with the ignition switch operation. During KOEO, the check engine light illuminates for a fail-light inspection for **approx. 17 s**. The OBD monitoring status is confirmed after the fail-light inspection.
    - If all of the diagnosis is completed even one time, the check engine light will continue to illuminate.
    - If all of the diagnosis is not completed, the check engine light flashes for **approx. 7 s**, and then it illuminates until the engine is started.

Mode 03 (Variable Valve Timing, A/F Sensor Heater, HO2S Heater, A/F Sensor, HO2S and TWC Repair Verification Drive Mode)

1. Start the engine and warm it up completely.
2. Verify all accessory loads (A/C, headlights, blower fan, rear window defroster) are off.
3. Drive the vehicle as shown in the graph. The driving conditions before driving at constant speed are not specified.

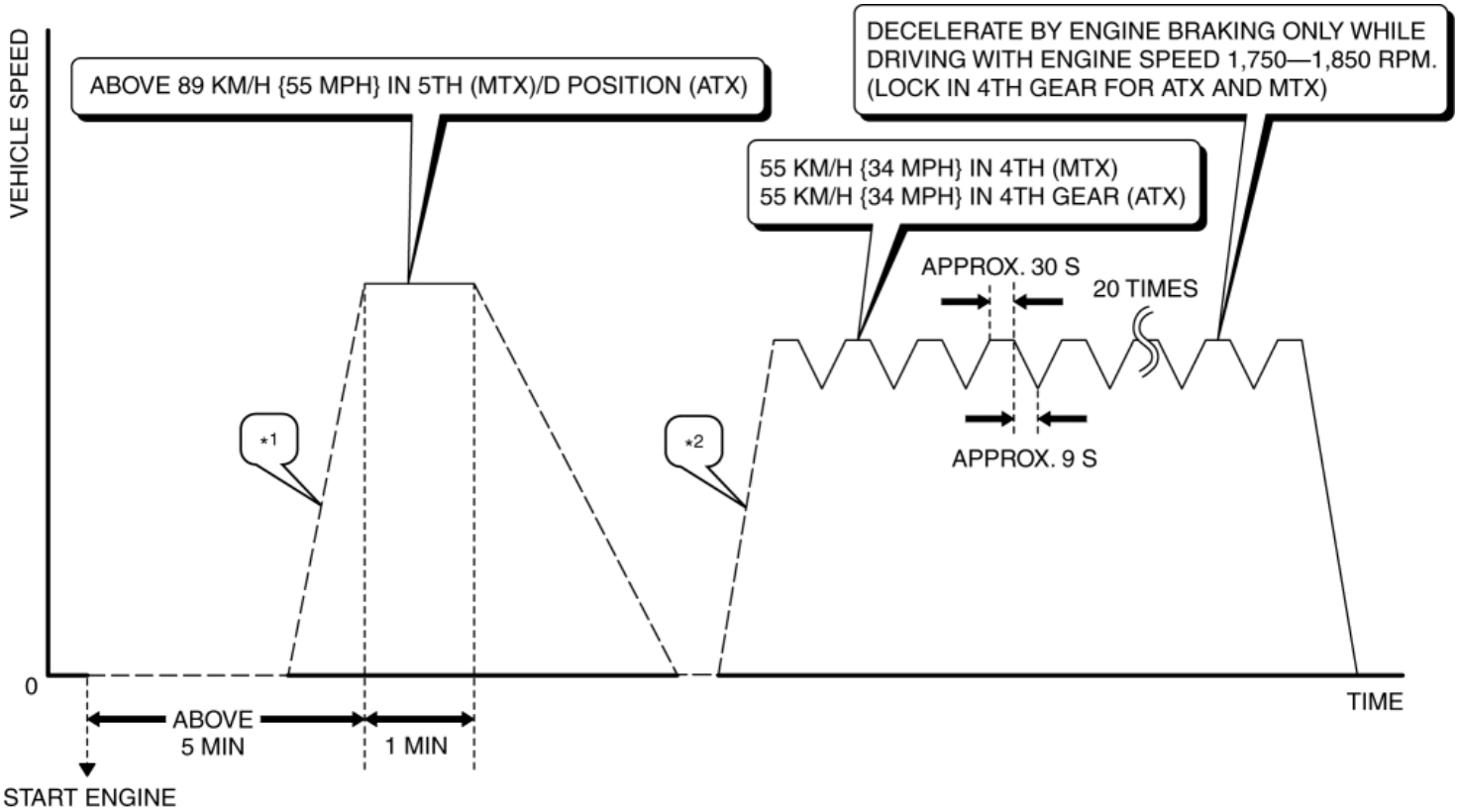

*1

MTX: accelerate in 5th. (accelerate to 89 km/h {55 mph} within 20 s.)/ATX: accelerate in D position. (accelerate to 89 km/h {55 mph} within 20 s.)

*2

MTX: accelerate in 4th. (accelerate to 45 km/h {28 mph} within 15 s, and then accelerate to 55 km/h {34 mph}.)/ATX: accelerate in 4th gear. (accelerate to 45 km/h {28 mph} within 15 s, and then accelerate to 55 km/h {34 mph}.)

4. Stop the vehicle and access the ON BOARD SYSTEM READINESS menu of GENERIC OBD-II FUNCTION to verify the OBD monitoring status.

- If completed, the OBD monitoring status items change from non-completed to completed.
- If not completed, switch the ignition off then repeat from Step 3.

5. Access the DIAGNOSTIC MONITORING TEST RESULTS menu of GENERIC OBD-II FUNCTIONS to verify the monitor results.

- If detected values are not within specification, repair has not been completed.

6. Verify that no DTCs are displayed.

Mode 06 (EVAP System Repair Verification Drive Mode)

NOTE:

- If “EVAP System Repair Verification Drive Mode” cannot be performed (it is impossible to drive the vehicle under this Drive Mode condition), perform the evaporative system test procedure as an alternative. (See **ENGINE CONTROL SYSTEM OPERATION INSPECTION [SKYACTIV-G 2.0, SKYACTIV-G 2.5]**.)

1. Verify that all of the following PIDs are within the following specifications. All PIDs must be within specifications before the engine is started to initiate the evaporative system test.

- IAT: **5—35 °C {41—95 °F}**
- FLI: **15—85 %**
- BARO: **72.2 kPa {0.736 kgf/cm^2, 10.5 psi}**

2. Start the engine and warm it up completely.

3. Clear the DTCs from the PCM memory using the M-MDS. (See **AFTER REPAIR PROCEDURE [SKYACTIV-G 2.0, SKYACTIV-G 2.5]**.)

4. Drive the vehicle as shown in the graph.

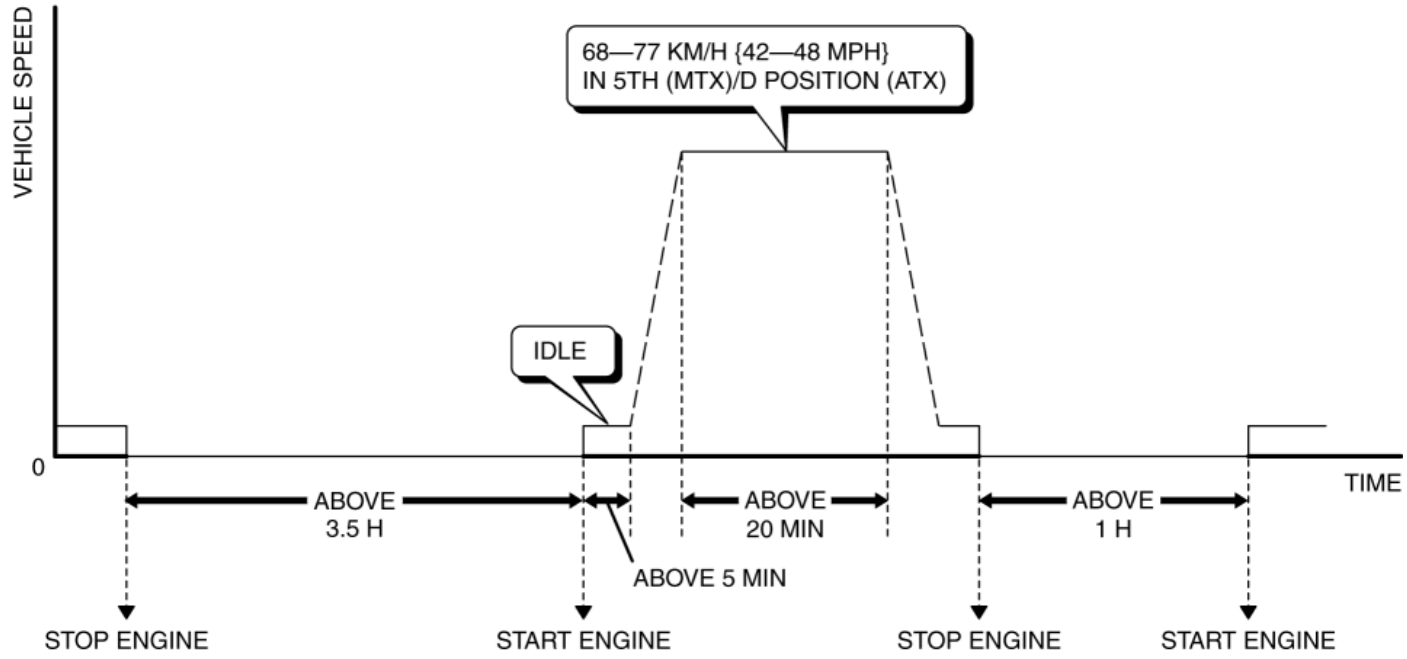

5. Access the ON BOARD SYSTEM READINESS to verify the OBD monitoring status.
    - If completed, the OBD monitoring status items change from non-completed to completed.
    - If not completed, switch the ignition off then go back to Step 1.
6. Access the DIAGNOSTIC MONITORING TEST RESULTS to verify the monitor results.
    - If detected values are not within specification, repair has not been completed.
7. Verify that no DTCs are displayed.

Single Drive Mode

1. Verify all accessory loads (A/C, headlights, blower fan, rear window defroster) are off.
2. Verify that all of the following PIDs are within the following specifications. All PIDs must be within specifications before the engine is started to initiate the evaporative system test.
    - IAT: **5—35 °C {41—95 °F}**
    - FLI: **15—85 %**
    - BARO: **72.3 kPa {0.737 kgf/cm^2, 10.5 psi}**
3. Start the engine and warm it up completely.
4. Clear the DTCs from the PCM memory using the M-MDS. (See **AFTER REPAIR PROCEDURE [SKYACTIV-G 2.0, SKYACTIV-G 2.5]**.)
5. With the vehicle stopped, race the engine at the engine speed indicated, and then drive the vehicle as shown in the graph. The driving conditions before driving at constant speed are not specified. If possible, monitor the RPM PID for engine speed during this procedure.

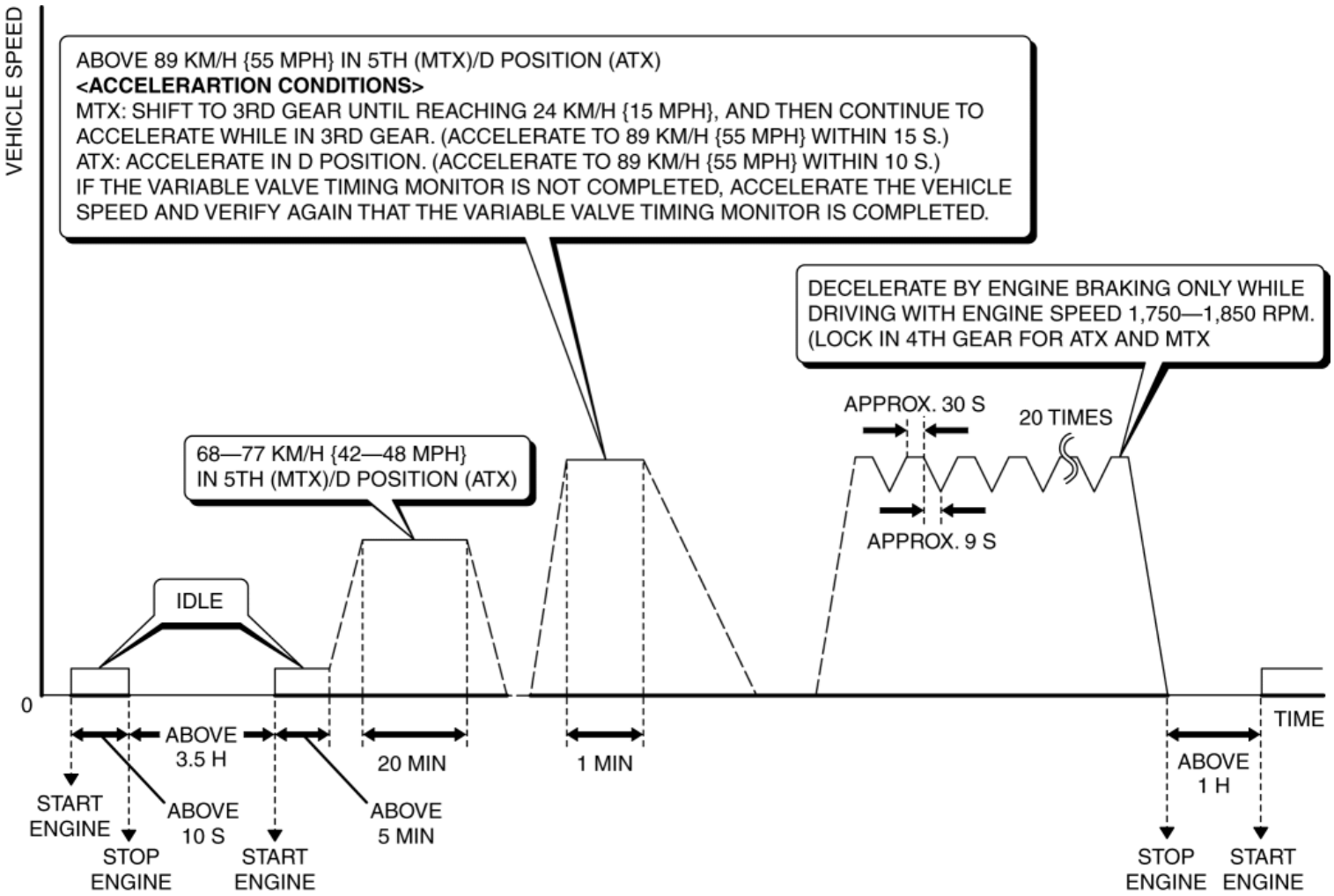

6. Access the ON BOARD SYSTEM READINESS to verify the OBD monitoring status.
    - If completed, all of the OBD monitoring status items change from non-completed to completed.
    - If not completed, switch the ignition off, then perform the applicable specific Drive Mode for any monitoring item that was not in the detection condition.
7. Access the DIAGNOSTIC MONITORING TEST RESULTS to verify the monitor results.
    - If detected values are not within specification, repair has not been completed.

2014 - Mazda3 - Engine

DIAGNOSTIC MONITORING TEST RESULTS [SKYACTIV-G 2.0, SKYACTIV-G 2.5]

- The purpose of this test mode is to confirm the result of OBD-II monitor diagnostic test results. The result values stored when particular monitor is completed are displayed. If the monitor is not completed, initial value is displayed.

OBD Monitor ID	Test ID	Description	Related system	Scaling ID	Unit
01	80	A/F sensor lean-to-rich response time (calculated)	A/F sensor, HO2S	20	Ratio
01	81	A/F sensor rich-to-lean response time (calculated)		20	Ratio
01	82	A/F sensor lean-to-rich response time (calculated)		20	Ratio
01	83	A/F sensor rich-to-lean response time (calculated)		20	Ratio
02	03	Low HO2S voltage for switch time calculation (constant)		0A	Voltage
02	04	High HO2S voltage for switch time calculation (constant)		0A	Voltage
02	05	HO2S rich-to-lean response time (calculated)		10	Time
02	06	HO2S lean-to-rich response time (calculated)		10	Time
02	80	HO2S response time out (calculated)		10	Time
21	80	A/F sensor and HO2S switching time ratio	Catalyst	20	Ratio
35	80	Over-retarded (electric variable valve timing)	Variable valve timing	9C	deg.CA
35	81	Over-advanced (electric variable valve timing)		9C	deg.CA
35	82	Over-retarded (hydraulic variable valve timing)		9C	deg.CA
35	83	Over-advanced (hydraulic variable valve timing)		9C	deg.CA

3A	80	Phase 0 end pressure result and test limits	EVAP system	FE	Pa
3A	81	Phase 4 vapor generation minimum change in pressure and test limits		FE	Pa
3A	82	Phase 0 end pressure result and test limits		FE	Pa
3B	80	Phase 2 0.040” cruise leak check vacuum bleed-up and test limits		FE	Pa
3C	81	EONV positive pressure test result and limits		FE	Pa
3C	82	EONV negative pressure (vacuum) test result and limits		FE	Pa
3C	83	Normalized average of four EONV tests results and limits		03	Raw Value
3D	80	Blocked EVAP system line-screening test		A9	Pa/s
3D	81	Blocked EVAP system line-fault confirmation test		FE	Pa
41	80	A/F sensor heater test result and limits	A/F sensor, HO2S	14	ohm
42	80	HO2S heater test result and limits		14	ohm
A2	0B	Cylinder No.1 average misfire counts for last 10 Drive Cycle	Misfire	24	Counts
A2	0C	Cylinder No.1 misfire counts for last/current Drive Cycle		24	Counts
A3	0B	Cylinder No.2 average misfire counts for last 10 Drive Cycle		24	Counts
A3	0C	Cylinder No.2 misfire counts for last/current Drive Cycle		24	Counts
A4	0B	Cylinder No.3 average misfire counts for last 10 Drive Cycle		24	Counts
A4	0C	Cylinder No.3 misfire counts for last/current Drive Cycle		24	Counts
A5	0B	Cylinder No.4 average misfire counts for last 10 Drive Cycle		24	Counts

A5	0C	Cylinder No.4 misfire counts for last/current Drive Cycle		24	Counts

2014 - Mazda3 - Engine

DTC TABLE [SKYACTIV-G 2.0, SKYACTIV-G 2.5]

×: Applicable—: Not applicable

DTC No.	Check engine light	Master warning light	Charging system warning light	Engine oil warning light	Wrench warning indicator light	Check fuel cap warning light	Condition	Fail-safe function	Drive cycle	Monitor item	Self test type*1	Memory function	Page
B10A2:00	OFF	OFF	OFF	OFF	OFF	OFF	Vehicle collision	×	1	Other	C	×	(See **DTC B10A2:00 [SKYACTIV-G 2.0, SKYACTIV-G 2.5]**.)
P0010:00	ON	OFF	OFF	OFF	OFF	OFF	Electric variable valve timing control circuit range/performance problem	×	1	CCM	C, R	×	(See **DTC P0010:00 [SKYACTIV-G 2.0, SKYACTIV-G 2.5]**.)
P0011:00	ON	OFF	OFF	OFF	OFF	OFF	Electric variable valve timing control system: over-advanced	—	1	CCM	C	×	(See **DTC P0011:00, P0012:00 [SKYACTIV-G 2.0, SKYACTIV-G 2.5]**.)
P0012:00	ON	OFF	OFF	OFF	OFF	OFF	Electric variable valve timing control system: over-retarded	—	1	CCM	C	×	
P0014:00	ON	OFF	OFF	OFF	OFF	OFF	Hydraulic variable valve timing control system: over-advanced	—	2	CCM	C	×	(See **DTC P0014:00 [SKYACTIV-G 2.0, SKYACTIV-G 2.5]**.)
P0015:00	ON	OFF	OFF	OFF	OFF	OFF	Hydraulic variable valve timing control system: over-retarded	—	2	CCM	C	×	(See **DTC P0015:00 [SKYACTIV-G 2.0, SKYACTIV-G 2.5]**.)
P0016:00*9	ON	OFF	OFF	OFF	OFF	OFF	CKP-CMP (intake side) correlation problem	—	2	CCM	C	×	(See **DTC P0016:00 [SKYACTIV-G 2.0, SKYACTIV-G 2.5]**.)
P0017:00*9	ON	OFF	OFF	OFF	OFF	OFF	CKP-CMP (exhaust side) correlation	—	2	CCM	C	×	(See **DTC P0017:00 [SKYACTIV-G 2.0,**

							problem						SKYACTIV-G 2.5].)
P0031:00	ON	OFF	OFF	OFF	OFF	OFF	A/F sensor heater control circuit low input	×	2	A/F sensor heater, HO2S heater	C, R	×	(See DTC P0031:00 [SKYACTIV-G 2.0, SKYACTIV-G 2.5].)
P0032:00	ON	OFF	OFF	OFF	OFF	OFF	A/F sensor heater control circuit high input	×	2	A/F sensor heater, HO2S heater	C, R	×	(See DTC P0032:00 [SKYACTIV-G 2.0, SKYACTIV-G 2.5].)
P0037:00	ON	OFF	OFF	OFF	OFF	OFF	HO2S heater control circuit low input	×	2	A/F sensor heater, HO2S heater	C, R	×	(See DTC P0037:00 [SKYACTIV-G 2.0, SKYACTIV-G 2.5].)
P0038:00	ON	OFF	OFF	OFF	OFF	OFF	HO2S heater control circuit high input	×	2	A/F sensor heater, HO2S heater	C, R	×	(See DTC P0038:00 [SKYACTIV-G 2.0, SKYACTIV-G 2.5].)
P0053:00*9	ON	OFF	OFF	OFF	OFF	OFF	A/F sensor heater resistance	×	2	A/F sensor heater, HO2S heater	C, R	×	(See DTC P0053:00 [SKYACTIV-G 2.0, SKYACTIV-G 2.5].)
P0054:00*9	ON	OFF	OFF	OFF	OFF	OFF	HO2S heater resistance	×	2	A/F sensor heater, HO2S heater	C, R	×	(See DTC P0054:00 [SKYACTIV-G 2.0, SKYACTIV-G 2.5].)
P0069:00	ON	OFF	OFF	OFF	OFF	OFF	Manifold absolute pressure/atmospheric pressure correlation problem	—	2	CCM	C	×	(See DTC P0069:00 [SKYACTIV-G 2.0, SKYACTIV-G 2.5].)
P0072:00	OFF	OFF	OFF	OFF	OFF	OFF	Ambient temperature sensor circuit low input	—	1	Other	C, O, R	×	(See DTC P0072:00 [SKYACTIV-G 2.0, SKYACTIV-G 2.5].)
P0073:00	OFF	OFF	OFF	OFF	OFF	OFF	Ambient temperature sensor circuit high input	—	1	Other	C, O, R	×	(See DTC P0073:00 [SKYACTIV-G 2.0, SKYACTIV-G 2.5].)

P0088:00	ON	OFF	OFF	OFF	OFF	OFF	Fuel pressure sensor circuit range/performance problem	×	1	CCM	C	×	(See **DTC P0088:00 [SKYACTIV-G 2.0, SKYACTIV-G 2.5]**.)
P0089:00	ON	OFF	OFF	OFF	OFF	OFF	Spill valve control solenoid valve control circuit range/performance problem	×	1	CCM	C, R	×	(See **DTC P0089:00 [SKYACTIV-G 2.0, SKYACTIV-G 2.5]**.)
P0091:00	ON	OFF	OFF	OFF	OFF	OFF	Fuel pressure regulator control circuit low input	×	1	CCM	C, O, R	×	(See **DTC P0091:00 [SKYACTIV-G 2.0, SKYACTIV-G 2.5]**.)
P0092:00	ON	OFF	OFF	OFF	OFF	OFF	Fuel pressure regulator control circuit high input	×	1	CCM	C, O, R	×	(See **DTC P0092:00 [SKYACTIV-G 2.0, SKYACTIV-G 2.5]**.)
P0097:00	ON	OFF	OFF	OFF	OFF	OFF	IAT sensor No.2 circuit low input	—	1	CCM	C, O, R	×	(See **DTC P0097:00 [SKYACTIV-G 2.0, SKYACTIV-G 2.5]**.)
P0098:00	ON	OFF	OFF	OFF	OFF	OFF	IAT sensor No.2 circuit high input	—	1	CCM	C, O, R	×	(See **DTC P0098:00 [SKYACTIV-G 2.0, SKYACTIV-G 2.5]**.)
P0101:00	ON	OFF	OFF	OFF	OFF	OFF	MAF sensor circuit range/performance problem	—	2	CCM	C	×	(See **DTC P0101:00 [SKYACTIV-G 2.0, SKYACTIV-G 2.5]**.)
P0102:00	ON	OFF	OFF	OFF	OFF	OFF	MAF sensor circuit low input	×	1	CCM	C, O, R	×	(See **DTC P0102:00 [SKYACTIV-G 2.0, SKYACTIV-G 2.5]**.)
P0103:00	ON	OFF	OFF	OFF	OFF	OFF	MAF sensor circuit high input	×	1	CCM	C, O, R	×	(See **DTC P0103:00 [SKYACTIV-G 2.0, SKYACTIV-G 2.5]**.)
													(See **DTC P0107:00**

P0107:00	ON	OFF	OFF	OFF	OFF	OFF	MAP sensor circuit low input	×	1	CCM	C, O, R	×	**[SKYACTIV-G 2.0, SKYACTIV-G 2.5]**.)
P0108:00	ON	OFF	OFF	OFF	OFF	OFF	MAP sensor circuit high input	×	1	CCM	C, O, R	×	(See **DTC P0108:00 [SKYACTIV-G 2.0, SKYACTIV-G 2.5]**.)
P0112:00	ON	OFF	OFF	OFF	OFF	OFF	IAT sensor No.1 circuit low input	×	1	CCM	C, O, R	×	(See **DTC P0112:00 [SKYACTIV-G 2.0, SKYACTIV-G 2.5]**.)
P0113:00	ON	OFF	OFF	OFF	OFF	OFF	IAT sensor No.1 circuit high input	×	1	CCM	C, O, R	×	(See **DTC P0113:00 [SKYACTIV-G 2.0, SKYACTIV-G 2.5]**.)
P0116:00	ON	OFF	OFF	OFF	OFF	OFF	ECT sensor No.1 circuit range/performance problem	—	1	Engine cooling system	C	×	(See **DTC P0116:00 [SKYACTIV-G 2.0, SKYACTIV-G 2.5]**.)
P0117:00	ON	OFF	OFF	OFF	OFF	OFF	ECT sensor No.1 circuit low input	×	1	Engine cooling system	C, O, R	×	(See **DTC P0117:00 [SKYACTIV-G 2.0, SKYACTIV-G 2.5]**.)
P0118:00	ON	OFF	OFF	OFF	OFF	OFF	ECT sensor No.1 circuit high input	×	1	Engine cooling system	C, O, R	×	(See **DTC P0118:00 [SKYACTIV-G 2.0, SKYACTIV-G 2.5]**.)
P011A:00*9	ON	OFF	OFF	OFF	OFF	OFF	ECT sensor No.1/No.2 performance problem	—	2	Engine cooling system	C	×	(See **DTC P011A:00 [SKYACTIV-G 2.0, SKYACTIV-G 2.5]**.)
P0122:00	ON	OFF	OFF	OFF	OFF	OFF	TP sensor No.1 circuit low input	×	1	CCM	C, O, R	×	(See **DTC P0122:00 [SKYACTIV-G 2.0, SKYACTIV-G 2.5]**.)
P0123:00	ON	OFF	OFF	OFF	OFF	OFF	TP sensor No.1 circuit high input	×	1	CCM	C, O, R	×	(See **DTC P0123:00 [SKYACTIV-G 2.0, SKYACTIV-**

													G 2.5].)
P0126:00*9	ON	OFF	OFF	OFF	OFF	OFF	Thermostat stuck open	—	2	Engine cooling system	C	×	(See DTC P0126:00 [SKYACTIV-G 2.0, SKYACTIV-G 2.5].)
P0130:00	ON	OFF	OFF	OFF	OFF	OFF	Voltage problem between PCM terminal 1AB and PCM terminal 1AG	×	2	A/F sensor, HO2S	C, R	×	(See DTC P0130:00 [SKYACTIV-G 2.0, SKYACTIV-G 2.5].)
P0131:00	ON	OFF	OFF	OFF	OFF	OFF	A/F sensor circuit low input	×	2	A/F sensor, HO2S	C, R	×	(See DTC P0131:00 [SKYACTIV-G 2.0, SKYACTIV-G 2.5].)
P0132:00	ON	OFF	OFF	OFF	OFF	OFF	A/F sensor circuit high input	×	2	A/F sensor, HO2S	C, R	×	(See DTC P0132:00 [SKYACTIV-G 2.0, SKYACTIV-G 2.5].)
P0133:00	ON	OFF	OFF	OFF	OFF	OFF	A/F sensor circuit slow response	×	2	A/F sensor, HO2S	C	×	(See DTC P0133:00 [SKYACTIV-G 2.0, SKYACTIV-G 2.5].)
P0134:00	ON	OFF	OFF	OFF	OFF	OFF	A/F sensor circuit no activity detected	×	2	A/F sensor, HO2S	C	×	(See DTC P0134:00 [SKYACTIV-G 2.0, SKYACTIV-G 2.5].)
P0137:00*9	ON	OFF	OFF	OFF	OFF	OFF	HO2S circuit low input	×	2	A/F sensor, HO2S	C	×	(See DTC P0137:00 [SKYACTIV-G 2.0, SKYACTIV-G 2.5].)
P0138:00	ON	OFF	OFF	OFF	OFF	OFF	HO2S circuit high input	—	2	A/F sensor, HO2S	C, O, R	×	(See DTC P0138:00 [SKYACTIV-G 2.0, SKYACTIV-G 2.5].)
P013A:00*9	ON	OFF	OFF	OFF	OFF	OFF	HO2S: Slow response (during transition from rich to lean)	—	2	A/F sensor, HO2S	C	×	(See DTC P013A:00, P013B:00 [SKYACTIV-G 2.0, SKYACTIV-G 2.5]
P013B:00*9	ON	OFF	OFF	OFF	OFF	OFF	HO2S: Slow response (during	—	2	A/F sensor,	C	×	

							transition from lean to rich)			HO2S			.)
P0140:00	ON	OFF	OFF	OFF	OFF	OFF	HO2S circuit no activity detected	—	2	A/F sensor, HO2S	C	×	(See **DTC P0140:00 [SKYACTIV-G 2.0, SKYACTIV-G 2.5]**.)
P0171:00	ON	OFF	OFF	OFF	OFF	OFF	Fuel trim system too lean	—	2	Fuel system	C	×	(See **DTC P0171:00 [SKYACTIV-G 2.0, SKYACTIV-G 2.5]**.)
P0172:00	ON	OFF	OFF	OFF	OFF	OFF	Fuel trim system too rich	—	2	Fuel system	C	×	(See **DTC P0172:00 [SKYACTIV-G 2.0, SKYACTIV-G 2.5]**.)
P0192:00	ON	OFF	OFF	OFF	OFF	OFF	Fuel pressure sensor circuit low input	×	1	CCM	C, O, R	×	(See **DTC P0192:00 [SKYACTIV-G 2.0, SKYACTIV-G 2.5]**.)
P0193:00	ON	OFF	OFF	OFF	OFF	OFF	Fuel pressure sensor circuit high input	×	1	CCM	C, O, R	×	(See **DTC P0193:00 [SKYACTIV-G 2.0, SKYACTIV-G 2.5]**.)
P0201:00	ON	OFF	OFF	OFF	OFF	OFF	Fuel injector circuit/open cylinder No.1	—	1	CCM	C, O, R	×	(See **DTC P0201:00 [SKYACTIV-G 2.0, SKYACTIV-G 2.5]**.)
P0202:00	ON	OFF	OFF	OFF	OFF	OFF	Fuel injector circuit/open cylinder No.2	—	1	CCM	C, O, R	×	(See **DTC P0202:00 [SKYACTIV-G 2.0, SKYACTIV-G 2.5]**.)
P0203:00	ON	OFF	OFF	OFF	OFF	OFF	Fuel injector circuit/open cylinder No.3	—	1	CCM	C, O, R	×	(See **DTC P0203:00 [SKYACTIV-G 2.0, SKYACTIV-G 2.5]**.)
P0204:00	ON	OFF	OFF	OFF	OFF	OFF	Fuel injector circuit/open cylinder No.4	—	1	CCM	C, O, R	×	(See **DTC P0204:00 [SKYACTIV-G 2.0, SKYACTIV-G 2.5]**.)

P0222:00	ON	OFF	OFF	OFF	OFF	OFF	TP sensor No.2 circuit low input	×	1	CCM	C, O, R	×	(See **DTC P0222:00 [SKYACTIV-G 2.0, SKYACTIV-G 2.5]**.)
P0223:00	ON	OFF	OFF	OFF	OFF	OFF	TP sensor No.2 circuit high input	×	1	CCM	C, O, R	×	(See **DTC P0223:00 [SKYACTIV-G 2.0, SKYACTIV-G 2.5]**.)
P025B:00	OFF	OFF	OFF	OFF	OFF	OFF	Fuel pump control module circuit range/performance problem	×	1	CCM	C, O, R	×	(See **DTC P025B:00 [SKYACTIV-G 2.0, SKYACTIV-G 2.5]**.)
P025C:00	OFF	OFF	OFF	OFF	OFF	OFF	Fuel pump control module result of on-board diagnostic test low input	—	1	CCM	C, O, R	×	(See **DTC P025C:00 [SKYACTIV-G 2.0, SKYACTIV-G 2.5]**.)
P025D:00	OFF	OFF	OFF	OFF	OFF	OFF	Fuel pump control module result of on-board diagnostic test high input	—	1	CCM	C, O, R	×	(See **DTC P025D:00 [SKYACTIV-G 2.0, SKYACTIV-G 2.5]**.)
P0300:00	Flash/ON	OFF	OFF	OFF	OFF	OFF	Random misfire detected	×	2	Misfire	C	×	(See **DTC P0300:00 [SKYACTIV-G 2.0, SKYACTIV-G 2.5]**.)
P0301:00	Flash/ON	OFF	OFF	OFF	OFF	OFF	Cylinder No.1 misfire detected	×	2	Misfire	C	×	(See **DTC P0301:00, P0302:00, P0303:00, P0304:00 [SKYACTIV-G 2.0, SKYACTIV-G 2.5]**.)
P0302:00	Flash/ON	OFF	OFF	OFF	OFF	OFF	Cylinder No.2 misfire detected	×	2	Misfire	C	×	
P0303:00	Flash/ON	OFF	OFF	OFF	OFF	OFF	Cylinder No.3 misfire detected	×	2	Misfire	C	×	
P0304:00	Flash/ON	OFF	OFF	OFF	OFF	OFF	Cylinder No.4 misfire detected	×	2	Misfire	C	×	
P0327:00	ON	OFF	OFF	OFF	OFF	OFF	KS circuit low input	×	1	CCM	C, O, R	×	(See **DTC P0327:00 [SKYACTIV-G 2.0, SKYACTIV-G 2.5]**.)
											C, O,		(See **DTC P0328:00 [SKYACTIV-**

P0328:00	ON	OFF	OFF	OFF	OFF	OFF	KS circuit high input	×	1	CCM	R	×	G 2.0, SKYACTIV-G 2.5].)
P0335:00	ON	OFF	OFF	OFF	OFF	OFF	CKP sensor circuit problem	×	1	CCM	C, R	×	(See DTC P0335:00 [SKYACTIV-G 2.0, SKYACTIV-G 2.5].)
P0340:00	ON	OFF	OFF	OFF	OFF	OFF	Intake CMP sensor circuit problem	×	1	CCM	C, R	×	(See DTC P0340:00 [SKYACTIV-G 2.0, SKYACTIV-G 2.5].)
P0365:00	ON	OFF	OFF	OFF	OFF	OFF	Exhaust CMP sensor circuit problem	×	1	CCM	C, R	×	(See DTC P0365:00 [SKYACTIV-G 2.0, SKYACTIV-G 2.5].)
P0421:00	ON	OFF	OFF	OFF	OFF	OFF	Catalytic converter system	—	1*13 or 2*14	Catalyst	C	×	(See DTC P0421:00 [SKYACTIV-G 2.0, SKYACTIV-G 2.5].)
P0442:00*9	ON	OFF	OFF	OFF	OFF	OFF	Evaporative gas leakage (leakage amount: low)	—	1	EVAP system	C	×	(See DTC P0442:00, P0455:00, P0456:00 [SKYACTIV-G 2.0, SKYACTIV-G 2.5].)
P0443:00	ON	OFF	OFF	OFF	OFF	OFF	Purge solenoid valve circuit problem	—	2	CCM	C, R	×	(See DTC P0443:00 [SKYACTIV-G 2.0, SKYACTIV-G 2.5].)
P0446:00*9	ON	OFF	OFF	OFF	OFF	OFF	CV solenoid valve control circuit problem	—	1	CCM	C, R	×	(See DTC P0446:00 [SKYACTIV-G 2.0, SKYACTIV-G 2.5].)
P0451:00*9	ON	OFF	OFF	OFF	OFF	OFF	Fuel tank pressure sensor: sensor characteristic malfunction	—	1	CCM	C	×	(See DTC P0451:00 [SKYACTIV-G 2.0, SKYACTIV-G 2.5].)
P0452:00*9	ON	OFF	OFF	OFF	OFF	OFF	Fuel tank pressure	—	1	CCM	C, O,	×	(See DTC P0452:00 [SKYACTIV-

							sensor low input				R		G 2.0, SKYACTIV-G 2.5].)
P0453:00*9	ON	OFF	OFF	OFF	OFF	OFF	Fuel tank pressure sensor high input	—	1	CCM	C, O, R	×	(See DTC P0453:00 [SKYACTIV-G 2.0, SKYACTIV-G 2.5].)
P0454:00*9	ON	OFF	OFF	OFF	OFF	OFF	Fuel tank pressure sensor intermittent malfunction	—	1	CCM	C, R	×	(See DTC P0454:00 [SKYACTIV-G 2.0, SKYACTIV-G 2.5].)
P0455:00*9	ON	OFF	OFF	OFF	OFF	OFF	Evaporative gas leakage (leakage amount: large)	—	1	EVAP system	C	×	(See DTC P0442:00, P0455:00, P0456:00 [SKYACTIV-G 2.0, SKYACTIV-G 2.5].)
P0456:00*10	ON	OFF	OFF	OFF	OFF	OFF	Evaporative gas leakage (leakage amount: extremely low)	—	1	EVAP system	C	×	
P0457:00*9	ON*8	OFF	OFF	OFF	OFF	ON	Fuel-filler cap installation malfunction	—	1	EVAP system	C	×	(See DTC P0457:00 [SKYACTIV-G 2.0, SKYACTIV-G 2.5].)
P0460:00*9	ON	OFF	OFF	OFF	OFF	OFF	Fuel level sensor circuit malfunction	—	2	CCM	C, R	×	(See DTC P0460:00 [SKYACTIV-G 2.0, SKYACTIV-G 2.5].)
P0461:00	ON*11	OFF	OFF	OFF	OFF	OFF	Fuel gauge sender unit circuit range/performance problem	—	2	CCM	C	×	(See DTC P0461:00 [SKYACTIV-G 2.0, SKYACTIV-G 2.5].)
P0462:00	ON*11	OFF	OFF	OFF	OFF	OFF	Fuel gauge sender unit circuit low input	—	2	CCM	C, O, R	×	(See DTC P0462:00 [SKYACTIV-G 2.0, SKYACTIV-G 2.5].)
P0463:00	ON*11	OFF	OFF	OFF	OFF	OFF	Fuel gauge sender unit circuit high input	—	2	CCM	C, O, R	×	(See DTC P0463:00 [SKYACTIV-G 2.0, SKYACTIV-G 2.5].)
P0480:00	OFF	OFF	OFF	OFF	OFF	OFF	Cooling fan relay No.1 control circuit	—	1	Other	C, O,	×	(See DTC P0480:00 [SKYACTIV-

							malfunction				R		G 2.0, SKYACTIV-G 2.5].)
P0482:00	OFF	OFF	OFF	OFF	OFF	OFF	Cooling fan relay No.2 and No.3 control circuit malfunction	—	1	Other	C, O, R	×	(See DTC P0482:00 [SKYACTIV-G 2.0, SKYACTIV-G 2.5].)
P0500:00	ON	OFF	OFF	OFF	OFF	OFF	VSS circuit problem	×	2	CCM	C	×	(See DTC P0500:00 [SKYACTIV-G 2.0, SKYACTIV-G 2.5].)
P0504:00	ON	ON	OFF	OFF	OFF	OFF	Brake switch circuit problem	—	1	Other	C	×	(See DTC P0504:00 [SKYACTIV-G 2.0, SKYACTIV-G 2.5].)
P0506:00	ON	OFF	OFF	OFF	OFF	OFF	IAC system RPM lower than expected	—	2	CCM	C	×	(See DTC P0506:00, P151B:00 [SKYACTIV-G 2.0, SKYACTIV-G 2.5].)
P0507:00	ON	OFF	OFF	OFF	OFF	OFF	IAC system RPM higher than expected	—	2	CCM	C	×	(See DTC P0507:00 [SKYACTIV-G 2.0, SKYACTIV-G 2.5].)
P050A:00*9	ON	OFF	OFF	OFF	OFF	OFF	Cold start IAC system performance problem	×	2	Cold start emission reduction strategy monitoring	C	×	(See DTC P050A:00 [SKYACTIV-G 2.0, SKYACTIV-G 2.5].)
P050B:00*9	ON	OFF	OFF	OFF	OFF	OFF	Cold start ignition timing performance problem	—	2	Cold start emission reduction strategy monitoring	C	×	(See DTC P050B:00 [SKYACTIV-G 2.0, SKYACTIV-G 2.5].)
P0520:00	OFF	OFF	OFF	OFF	OFF	OFF	Oil pressure switch circuit problem	—	1	Other	C, O	×	(See DTC P0520:00 [SKYACTIV-G 2.0, SKYACTIV-G 2.5].)
P0524:00	OFF	ON	OFF	ON*5	OFF	OFF	Engine oil pressure too low	—	1	Other	C	×	(See DTC P0524:00 [SKYACTIV-G 2.0, SKYACTIV-

													G 2.5].)
P0532:00	OFF	OFF	OFF	OFF	OFF	OFF	Refrigerant pressure sensor circuit low input	—	1	Other	C, O, R	×	(See DTC P0532:00 [SKYACTIV-G 2.0, SKYACTIV-G 2.5].)
P0533:00	OFF	OFF	OFF	OFF	OFF	OFF	Refrigerant pressure sensor circuit high input	—	1	Other	C, O, R	×	(See DTC P0533:00 [SKYACTIV-G 2.0, SKYACTIV-G 2.5].)
P057F:00*12	OFF	ON	OFF	OFF	OFF	OFF	Power system: Battery deterioration	×	1	Other	C	×	(See DTC P057F:00 [SKYACTIV-G 2.0, SKYACTIV-G 2.5].)
P058A:00*12	OFF	ON	ON*6	OFF	OFF	OFF	Current sensor: Function malfunction	×	2	Other	C	×	(See DTC P058A:00 [SKYACTIV-G 2.0, SKYACTIV-G 2.5].)
P059F:00*12	OFF	OFF	OFF	OFF	OFF	OFF	Active air shutter: Opening angle abnormality (spinning free)	×	2	Other	C	×	(See DTC P059F:00 [SKYACTIV-G 2.0, SKYACTIV-G 2.5].)
P05A0:00*12	OFF	OFF	OFF	OFF	OFF	OFF	Active air shutter: Opening angle abnormality (sticking)	×	2	Other	C	×	(See DTC P05A0:00 [SKYACTIV-G 2.0, SKYACTIV-G 2.5].)
P05A3:00*12	OFF	ON	OFF	OFF	OFF	OFF	Active air shutter: Actuator internal malfunction	×	1 or 2	Other	C	×	(See DTC P05A3:00 [SKYACTIV-G 2.0, SKYACTIV-G 2.5].)
P05C0:00*12	OFF	ON	OFF	OFF	OFF	OFF	Active air shutter: Actuator temperature abnormality	×	1	Other	C	×	(See DTC P05C0:00 [SKYACTIV-G 2.0, SKYACTIV-G 2.5].)
P0600:00	ON	OFF	OFF	OFF	OFF	OFF	Serial communication link	—	1	CCM	C, O, R	×	(See DTC P0600:00 [SKYACTIV-G 2.0, SKYACTIV-G 2.5].)

P0601:00	ON	OFF	OFF	OFF	OFF	OFF	PCM memory check sum error	×	1	CCM	C, O, R	×	(See **DTC P0601:00 [SKYACTIV-G 2.0, SKYACTIV-G 2.5]**.)
P0602:00	ON	OFF	OFF	OFF	OFF	OFF	PCM programming error	—	1	CCM	C, O, R	×	(See **DTC P0602:00 [SKYACTIV-G 2.0, SKYACTIV-G 2.5]**.)
P0604:00	ON	OFF	OFF	OFF	OFF	OFF	PCM RAM error	×	1	CCM	C, O, R	×	(See **DTC P0604:00 [SKYACTIV-G 2.0, SKYACTIV-G 2.5]**.)
P0606:00	ON	OFF	OFF	OFF	OFF	OFF	PCM processor error	×	1	CCM	C, O, R	×	(See **DTC P0606:00 [SKYACTIV-G 2.0, SKYACTIV-G 2.5]**.)
P0607:00	ON	OFF	OFF	OFF	OFF	OFF	Control module performance problem	—	1	CCM	C, O, R	×	(See **DTC P0607:00 [SKYACTIV-G 2.0, SKYACTIV-G 2.5]**.)
P0610:00	ON	OFF	OFF	OFF	OFF	OFF	PCM vehicle configuration error	—	1	CCM	C, O, R	×	(See **DTC P0610:00 [SKYACTIV-G 2.0, SKYACTIV-G 2.5]**.)
P061B:00	ON	OFF	OFF	OFF	OFF	OFF	Internal control module torque calculation performance problem	×	1	CCM	C, O, R	×	(See **DTC P061B:00 [SKYACTIV-G 2.0, SKYACTIV-G 2.5]**.)
P061D:00	ON	OFF	OFF	OFF	OFF	OFF	Internal control module engine air mass performance problem	×	1	CCM	C, O, R	×	(See **DTC P061D:00 [SKYACTIV-G 2.0, SKYACTIV-G 2.5]**.)
P061F:00	OFF	OFF	OFF	OFF	OFF	OFF	Internal control module throttle valve actuator controller performance problem	—	1	Other	C, O, R	×	(See **DTC P061F:00 [SKYACTIV-G 2.0, SKYACTIV-G 2.5]**.)
							Fuel pump control				C, O,		(See **DTC P0628:00 [SKYACTIV-**

P0628:00	OFF	OFF	OFF	OFF	OFF	OFF	module circuit low input	—	1	CCM	R	×	G 2.0, SKYACTIV-G 2.5].)
P0629:00	OFF	OFF	OFF	OFF	OFF	OFF	Fuel pump control module circuit high input	×	1	CCM	C, O, R	×	(See DTC P0629:00 [SKYACTIV-G 2.0, SKYACTIV-G 2.5].)
P0638:00	ON	OFF	OFF	OFF	OFF	OFF	Throttle valve actuator control range/performance problem	×	1	CCM	C, O, R	×	(See DTC P0638:00 [SKYACTIV-G 2.0, SKYACTIV-G 2.5].)
P064D:00	ON	OFF	OFF	OFF	OFF	OFF	Internal control module A/F sensor processor performance problem	—	1	A/F sensor, HO2S	C, R	×	(See DTC P064D:00 [SKYACTIV-G 2.0, SKYACTIV-G 2.5].)
P0685:00	ON	OFF	OFF	OFF	OFF	OFF	Main relay control circuit open	—	2	CCM	C	×	(See DTC P0685:00 [SKYACTIV-G 2.0, SKYACTIV-G 2.5].)
P06B8:00	ON	OFF	OFF	OFF	OFF	OFF	Internal control module non-volatile RAM error	—	1	Other	C, O, R	×	(See DTC P06B8:00 [SKYACTIV-G 2.0, SKYACTIV-G 2.5].)
P06DA:00	OFF	ON	OFF	OFF	OFF	OFF	Engine oil solenoid valve circuit problem	×	1	Other	C, R	×	(See DTC P06DA:00 [SKYACTIV-G 2.0, SKYACTIV-G 2.5].)
P0703:00	ON	ON	OFF	OFF	OFF	OFF	Brake switch input circuit problem	—	2	CCM	C	×	(See DTC P0703:00 [SKYACTIV-G 2.0, SKYACTIV-G 2.5].)
P0704:00*3	ON	OFF	OFF	OFF	OFF	OFF	CPP switch input circuit problem	—	2	CCM	C	×	(See DTC P0704:00 [SKYACTIV-G 2.0, SKYACTIV-G 2.5].)
P0850:00*3	ON	OFF	OFF	OFF	OFF	OFF	Neutral switch input circuit problem	—	2	CCM	C	×	(See DTC P0850:00 [SKYACTIV-G 2.0, SKYACTIV-

													G 2.5].)
P0A12:00*12	OFF	OFF	ON	OFF	OFF	OFF	DC-DC converter: low input/output	×	1	Other	C	×	(See DTC P0A12:00 [SKYACTIV-G 2.0, SKYACTIV-G 2.5].)
P0A8D:00*12	OFF	ON	OFF	OFF	OFF	OFF	Power supply system circuit low input	×	1	Other	C	×	(See DTC P0A8D:00 [SKYACTIV-G 2.0, SKYACTIV-G 2.5].)
P0A8F:00*12	OFF	ON	OFF	OFF	OFF	OFF	Power system: Low input	×	2	Other	C	×	(See DTC P0A8F:00 [SKYACTIV-G 2.0, SKYACTIV-G 2.5].)
P0A94:00*12	OFF	ON	ON	OFF	OFF	OFF	DC-DC converter: control circuit signal error	×	1	Other	C	×	(See DTC P0A94:00 [SKYACTIV-G 2.0, SKYACTIV-G 2.5].)
P111A:00	OFF	OFF	OFF	OFF	OFF	OFF	Engine coolant temperature is high	×	1	Other	C	×	(See DTC P111A:00 [SKYACTIV-G 2.0, SKYACTIV-G 2.5].)
P117A:00	OFF	OFF	OFF	OFF	OFF	OFF	Engine oil temperature is high	×	1	Other	C	×	(See DTC P117A:00 [SKYACTIV-G 2.0, SKYACTIV-G 2.5].)
P1260:00	OFF	OFF	OFF	OFF	OFF	OFF	Immobilizer system problem	—	—	Other	C, O	—	(See DTC P1260:00 [SKYACTIV-G 2.0, SKYACTIV-G 2.5].)
P130C:00*9	ON	OFF	OFF	OFF	OFF	OFF	Pre-ignition detected	—	1	Other	C, R	×	(See DTC P130C:00 [SKYACTIV-G 2.0, SKYACTIV-G 2.5].)
P1380:00	OFF	OFF	OFF	OFF	OFF	OFF	Electric variable valve timing control circuit problem	×	1	CCM	C, R	×	(See DTC P1380:00 [SKYACTIV-G 2.0, SKYACTIV-G 2.5].)

P144A:00*9	ON	OFF	OFF	OFF	OFF	OFF	Evaporator system: clogging between fuel tank and fuel tank pressure sensor	—	1	EVAP system	C	×	(See **DTC P144A:00 [SKYACTIV-G 2.0, SKYACTIV-G 2.5]**.)
P1450:00*9	ON	OFF	OFF	OFF	OFF	OFF	Evaporator system: abnormal negative pressure in fuel tank	—	1	EVAP system	C	×	(See **DTC P1450:00 [SKYACTIV-G 2.0, SKYACTIV-G 2.5]**.)
P151B:00*2	OFF	OFF	OFF	OFF	OFF	OFF	IAC system problem	—	—	Other	R	×	(See **DTC P0506:00, P151B:00 [SKYACTIV-G 2.0, SKYACTIV-G 2.5]**.)
P1794:00	OFF	ON	ON	OFF	OFF	OFF	Capacitor (i-ELOOP) system: Capacitor (i-ELOOP) malfunction	×	1	Other	C	×	(See **DTC P1794:00 [SKYACTIV-G 2.0, SKYACTIV-G 2.5]**.)
P2090:00	ON	OFF	OFF	OFF	OFF	OFF	OCV circuit low input	×	1	CCM	C, R	×	(See **DTC P2090:00 [SKYACTIV-G 2.0, SKYACTIV-G 2.5]**.)
P2091:00	ON	OFF	OFF	OFF	OFF	OFF	OCV circuit high input	×	1	CCM	C, R	×	(See **DTC P2091:00 [SKYACTIV-G 2.0, SKYACTIV-G 2.5]**.)
P2096:00	ON	OFF	OFF	OFF	OFF	OFF	HO2S fuel injection control system: Air fuel too lean	—	2	Fuel system	C	×	(See **DTC P2096:00, P2097:00 [SKYACTIV-G 2.0, SKYACTIV-G 2.5]**.)
P2097:00	ON	OFF	OFF	OFF	OFF	OFF	HO2S fuel injection control system: Air fuel too rich	—	2	Fuel system	C	×	
P2101:00	ON	OFF	OFF	OFF	OFF	OFF	Throttle valve actuator control motor circuit range/performance problem	×	1	CCM	C, O	×	(See **DTC P2101:00 [SKYACTIV-G 2.0, SKYACTIV-G 2.5]**.)
P2107:00	ON	OFF	OFF	OFF	OFF	OFF	Throttle valve actuator control module processor error	×	1	CCM	C, O, R	×	(See **DTC P2107:00 [SKYACTIV-G 2.0, SKYACTIV-G 2.5]**.)

P2109:00	ON	OFF	OFF	OFF	OFF	OFF	TP sensor minimum stop range/performance problem	×	1	CCM	C, O, R	×	(See **DTC P2109:00 [SKYACTIV-G 2.0, SKYACTIV-G 2.5]**.)
P2110:00	ON	OFF	OFF	OFF	OFF	OFF	Throttle valve actuator control system-forced limited RPM	×	1	CCM	C, R	×	(See **DTC P2110:00 [SKYACTIV-G 2.0, SKYACTIV-G 2.5]**.)
P2112:00	ON	OFF	OFF	OFF	OFF	OFF	Throttle valve actuator motor current range/performance problem	×	1	CCM	C, R	×	(See **DTC P2112:00 [SKYACTIV-G 2.0, SKYACTIV-G 2.5]**.)
P2119:00	ON	OFF	OFF	OFF	OFF	OFF	Throttle valve actuator control throttle body range/performance problem	×	1	CCM	C, R	×	(See **DTC P2119:00 [SKYACTIV-G 2.0, SKYACTIV-G 2.5]**.)
P2122:00	ON	OFF	OFF	OFF	OFF	OFF	APP sensor No.1 circuit low input	×	1	CCM	C, O, R	×	(See **DTC P2122:00 [SKYACTIV-G 2.0, SKYACTIV-G 2.5]**.)
P2123:00	ON	OFF	OFF	OFF	OFF	OFF	APP sensor No.1 circuit high input	×	1	CCM	C, O, R	×	(See **DTC P2123:00 [SKYACTIV-G 2.0, SKYACTIV-G 2.5]**.)
P2127:00	ON	OFF	OFF	OFF	OFF	OFF	APP sensor No.2 circuit low input	×	1	CCM	C, O, R	×	(See **DTC P2127:00 [SKYACTIV-G 2.0, SKYACTIV-G 2.5]**.)
P2128:00	ON	OFF	OFF	OFF	OFF	OFF	APP sensor No.2 circuit high input	×	1	CCM	C, O, R	×	(See **DTC P2128:00 [SKYACTIV-G 2.0, SKYACTIV-G 2.5]**.)
P2135:00	ON	OFF	OFF	OFF	OFF	OFF	TP sensor No.1/No.2 voltage correlation problem	×	1	CCM	C, O, R	×	(See **DTC P2135:00 [SKYACTIV-G 2.0, SKYACTIV-G 2.5]**.)
							APP sensor				C, O,		(See **DTC P2138:00 [SKYACTIV-**

P2138:00	ON	OFF	OFF	OFF	OFF	OFF	No.1/No.2 voltage correlation problem	×	1	CCM	R	×	G 2.0, SKYACTIV-G 2.5].)
P2183:00*9	ON	OFF	OFF	OFF	OFF	OFF	ECT sensor No.2 circuit range/performance problem	—	2	Engine cooling system	C	×	(See DTC P2183:00 [SKYACTIV-G 2.0, SKYACTIV-G 2.5].)
P2184:00*9	ON	OFF	OFF	OFF	OFF	OFF	ECT sensor No.2 circuit low input	—	2	Engine cooling system	C, O, R	×	(See DTC P2184:00 [SKYACTIV-G 2.0, SKYACTIV-G 2.5].)
P2185:00*9	ON	OFF	OFF	OFF	OFF	OFF	ECT sensor No.2 circuit high input	—	2	Engine cooling system	C, O, R	×	(See DTC P2185:00 [SKYACTIV-G 2.0, SKYACTIV-G 2.5].)
P2199:00	ON	OFF	OFF	OFF	OFF	OFF	IAT sensor No.2 correlation problem	—	2	CCM	C	×	(See DTC P2199:00 [SKYACTIV-G 2.0, SKYACTIV-G 2.5].)
P2228:00	ON	OFF	OFF	OFF	OFF	OFF	BARO sensor circuit low input	×	1	CCM	C, O, R	×	(See DTC P2228:00 [SKYACTIV-G 2.0, SKYACTIV-G 2.5].)
P2229:00	ON	OFF	OFF	OFF	OFF	OFF	BARO sensor circuit high input	×	1	CCM	C, O, R	×	(See DTC P2229:00 [SKYACTIV-G 2.0, SKYACTIV-G 2.5].)
P2237:00	ON	OFF	OFF	OFF	OFF	OFF	Open circuit between A/F sensor terminal B and PCM terminal 1AG	×	2	A/F sensor, HO2S	C, R	×	(See DTC P2237:00 [SKYACTIV-G 2.0, SKYACTIV-G 2.5].)
P2243:00	ON	OFF	OFF	OFF	OFF	OFF	A/F sensor reference voltage circuit open	—	2	A/F sensor, HO2S	C, R	×	(See DTC P2243:00 [SKYACTIV-G 2.0, SKYACTIV-G 2.5].)
P2251:00	ON	OFF	OFF	OFF	OFF	OFF	Open circuit between A/F sensor terminal D and PCM terminal 1AB	—	2	A/F sensor, HO2S	C, R	×	(See DTC P2251:00 [SKYACTIV-G 2.0, SKYACTIV-

													G 2.5].)
P2299:00	OFF	OFF	OFF	OFF	OFF	OFF	Accelerator pedal: spring back malfunction	×	1	Other	C, R	×	(See DTC P2299:00 [SKYACTIV-G 2.0, SKYACTIV-G 2.5].)
P2302:00	OFF	OFF	OFF	OFF	OFF	OFF	Ion sensor No.1 circuit problem	—	1	Other	C, R	×	(See DTC P2302:00 [SKYACTIV-G 2.0, SKYACTIV-G 2.5].)
P2305:00	OFF	OFF	OFF	OFF	OFF	OFF	Ion sensor No.2 circuit problem	—	1	Other	C, R	×	(See DTC P2305:00 [SKYACTIV-G 2.0, SKYACTIV-G 2.5].)
P2308:00	OFF	OFF	OFF	OFF	OFF	OFF	Ion sensor No.3 circuit problem	—	1	Other	C, R	×	(See DTC P2308:00 [SKYACTIV-G 2.0, SKYACTIV-G 2.5].)
P2311:00	OFF	OFF	OFF	OFF	OFF	OFF	Ion sensor No.4 circuit problem	—	1	Other	C, R	×	(See DTC P2311:00 [SKYACTIV-G 2.0, SKYACTIV-G 2.5].)
P2502:00	OFF	OFF	ON*6	OFF	OFF	OFF	Generator system: Malfunction in voltage generated by generator	×	1	Other	C	×	(See DTC P2502:00 [SKYACTIV-G 2.0, SKYACTIV-G 2.5].)
P2503:00	OFF	OFF	ON*6	OFF	OFF	OFF	Generator system: Voltage generated by generator is low	×	1	Other	C	×	(See DTC P2503:00 [SKYACTIV-G 2.0, SKYACTIV-G 2.5].)
P2504:00	OFF	OFF	ON*6	OFF	OFF	OFF	Generator system: Voltage generated by generator is high	×	1	Other	C	×	(See DTC P2504:00 [SKYACTIV-G 2.0, SKYACTIV-G 2.5].)
P2507:00	ON	OFF	OFF	OFF	OFF	OFF	PCM battery voltage low input	—	1	CCM	C, O, R	×	(See DTC P2507:00 [SKYACTIV-G 2.0, SKYACTIV-G 2.5].)

P2610:00	ON	OFF	OFF	OFF	OFF	OFF	Malfunction in instrument cluster	×	2	CCM	C, R	×	(See **DTC P2610:00 [SKYACTIV-G 2.0, SKYACTIV-G 2.5]**.)
U0073:00	OFF	OFF	OFF	OFF	OFF	OFF	CAN system communication error (HS CAN)	—	1	Other	C, O, R	×	(See **DTC U0073:00, U0101:00, U0121:00, U0131:00, U0140:00, U0151:00, U0155:00, U0214:00, U0235:00 [SKYACTIV-G 2.0, SKYACTIV-G 2.5]**.)
U0074:00*4	OFF	OFF	OFF	OFF	OFF	OFF	CAN system communication error (local CAN between PCM and TCM)	—	1	Other	C, O, R	×	(See **DTC U0074:00 [SKYACTIV-G 2.0, SKYACTIV-G 2.5]**.)
U0101:00*4	ON	OFF	OFF	OFF	OFF	OFF	CAN communication: communication error to TCM	×	1	Other	C, O, R	×	(See **DTC U0073:00, U0101:00, U0121:00, U0131:00, U0140:00, U0151:00, U0155:00, U0214:00, U0235:00 [SKYACTIV-G 2.0, SKYACTIV-G 2.5]**.)
U0121:00	ON	OFF	OFF	OFF	OFF	OFF	CAN communication: communication error to DSC HU/CM	×	1	Other	C, O, R	×	
U0131:00	OFF	OFF	OFF	OFF	OFF	OFF	CAN communication: communication error to EPS control module	—	1	Other	C, O, R	×	
U0140:00	OFF	OFF	OFF	OFF	OFF	OFF	CAN communication: communication error to front body control module (FBCM)	—	1	Other	C, O, R	×	
U0151:00	OFF	OFF	OFF	OFF	OFF	OFF	CAN communication: communication error to SAS control module	—	1	Other	C, O, R	×	
U0155:00	ON*11	OFF	OFF	OFF	OFF	OFF	CAN communication: communication error to instrument cluster	—	1	Other	C, O, R	×	
U0214:00	OFF	OFF	OFF	OFF	OFF	OFF	CAN communication: communication error to start stop unit	—	1	Other	C, O, R	×	
U0235:00	OFF	OFF	OFF	OFF	OFF	OFF	CAN communication: communication error to laser sensor	×	1	Other	C, O, R	×	
													(See **DTC**

U0284:00*12	OFF	ON	OFF	OFF	OFF	OFF	LIN communication system: communication error between active air shutter and PCM	×	1	Other	C	×	**U0284:00 [SKYACTIV-G 2.0, SKYACTIV-G 2.5]**.)
U0298:00*12	OFF	OFF	ON	OFF	OFF	OFF	CAN communication: communication error to DC-DC converter	—	1	Other	C, O, R	×	(See **DTC U0298:00 [SKYACTIV-G 2.0, SKYACTIV-G 2.5]**.)
U0302:00*4	ON	OFF	OFF	OFF	OFF	OFF	TCM processor error	—	1	Other	C, O, R	×	(See **DTC U0302:00 [SKYACTIV-G 2.0, SKYACTIV-G 2.5]**.)
U0315:00	OFF	OFF	OFF	OFF	OFF	OFF	DSC HU/CM error	—	1	Other	C, O, R	×	(See **DTC U0315:00 [SKYACTIV-G 2.0, SKYACTIV-G 2.5]**.)
U0320:00	OFF	OFF	OFF	OFF	OFF	OFF	EPS control module error	—	1	Other	C, O, R	×	(See **DTC U0320:00 [SKYACTIV-G 2.0, SKYACTIV-G 2.5]**.)
U0323:00	OFF	OFF	OFF	OFF	OFF	OFF	Instrument cluster error	—	1	Other	C, O, R	×	(See **DTC U0323:00 [SKYACTIV-G 2.0, SKYACTIV-G 2.5]**.)
U0336:00	OFF	OFF	OFF	OFF	OFF	OFF	SAS control module error	—	1	Other	C, O, R	×	(See **DTC U0336:00 [SKYACTIV-G 2.0, SKYACTIV-G 2.5]**.)
U0338:00	OFF	OFF	OFF	OFF	OFF	OFF	Start stop unit error	—	1	Other	C, O, R	×	(See **DTC U0338:00 [SKYACTIV-G 2.0, SKYACTIV-G 2.5]**.)
U0433:00	OFF	OFF	OFF	OFF	OFF	OFF	Abnormal message from rear body control module (RBCM)	×	1	Other	C, O, R	×	(See **DTC U0433:00 [SKYACTIV-G 2.0, SKYACTIV-G 2.5]**.)
							CAN/LIN communication system: current						(See **DTC U1007:00**

U1007:00*12	OFF	ON	ON*6	OFF	OFF	OFF	sensor information communication error with front body control module (FBCM)	×	1	Other	C, O, R	×	**[SKYACTIV-G 2.0, SKYACTIV-G 2.5]**.)
U2300:00	OFF	ON*7	OFF	OFF	OFF	OFF	Global central configuration error	×	1	Other	C, R	×	(See **DTC U2300:00 [SKYACTIV-G 2.0, SKYACTIV-G 2.5]**.)
U3000:41	OFF	OFF	OFF	OFF	OFF	OFF	PCM processor error	—	—	Other	C, O	—	(See **DTC U3000:41 [SKYACTIV-G 2.0, SKYACTIV-G 2.5]**.)

*1 **C: CMDTC self test, O: KOEO self test, R: KOER self test**

*2 **KOER self test only**

*3 **MTX**

*4 **ATX**

*5 **Message “Engine Oil Pressure Inspection Required” is frequently indicated in center display. (Type A instrument cluster)**

*6 **Message “Charging System Inspection Required” is frequently indicated in center display. (Type A instrument cluster)**

*7 **Message “Vehicle System Inspection Required” is frequently indicated in center display. (Type A instrument cluster)**

*8 **After two drive cycle since DTC was detected**

*9 **U.S.A. and CANADA**

*10 **CALIFORNIA**

*11 **The check engine light may be illuminated depending on the condition.**

*12 **Vehicles with i-ELOOP**

*13 **U.S.A.**

*14 **Except U.S.A.**

2014 - Mazda3 - Engine

DTC B10A2:00 [SKYACTIV-G 2.0, SKYACTIV-G 2.5]

NOTE:

- To determine the malfunctioning part, proceed with the diagnostics from “Function Inspection Using M-MDS”.

Details On DTCs

DESCRIPTION	Vehicle collision	
DETECTION CONDITION	Determination conditions	• A collision signal from the SAS control module is received.
	Preconditions	• Not applicable
	Drive cycle	• 1
	Self test type	• CMDTC self test
	Sensor used	• PCM
FAIL-SAFE FUNCTION	• Stops fuel injection control • Stops fuel pump control • Stops ignition control • Stops engine coolant fan control	
VEHICLE STATUS WHEN DTCs ARE OUTPUT	• Stops fuel pump operation when ignition is switched ON • Delays starter operation during cranking for **maximum 1.2 s**.	
POSSIBLE CAUSE	• Vehicle is involved in collision (collision signal from SAS control module is received) • SAS control module malfunction • PCM malfunction	

System Wiring Diagram

- Not applicable

Function Explanation (DTC Detection Outline)

- During a collision, the SAS control module sends a collision signal to the PCM via the CAN signal. The PCM records a DTC by receiving a collision signal.
- This DTC does not indicate a part malfunction. It indicates operation of fail-safe from safety assurance during a vehicle collision.

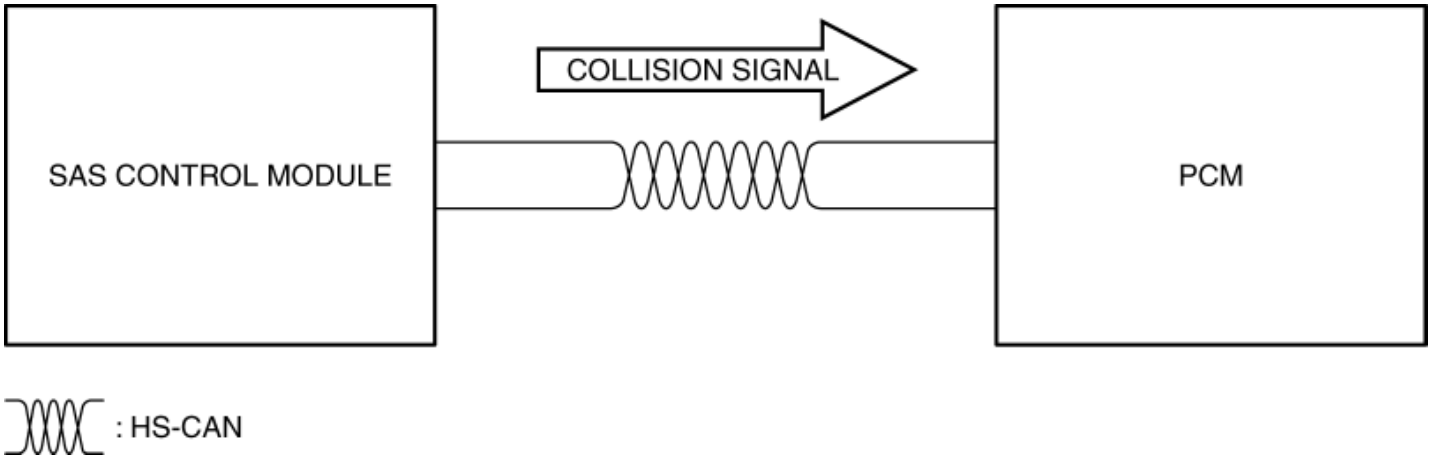

Repeatability Verification Procedure

- Switch the ignition ON and leave for **5 s or more**.
- Clear the DTC from the PCM memory using the M-MDS. (See **CLEARING DTC [SKYACTIV-G 2.0, SKYACTIV-G 2.5]**.)
- After switching the ignition off, switch the ignition back ON and leave for **5 s or more**.
- Using the M-MDS, display DTCs and verify that DTC U0151:00 is not displayed. (See **ON-BOARD DIAGNOSTIC TEST [SKYACTIV-G 2.0, SKYACTIV-G 2.5]**.)

PID Item/Simulation Item Used In Diagnosis

- Not applicable

Function Inspection Using M-MDS

STEP	INSPECTION	RESULTS	ACTION
1	**PURPOSE: VERIFY RELATED REPAIR INFORMATION AVAILABILITY** • Verify related Service Bulletins and/or on-line repair information availability. • Is any related repair information available?	Yes	Perform repair or diagnosis according to the available repair information. • If the vehicle is not repaired, go to the next step.
		No	Go to the next step.
2	**PURPOSE: VERIFY IF OPERATION IS NORMAL AFTER VEHICLE COLLISION**	Yes	Explain to the customer that the DTC is recorded as a result of a vehicle collision.

	• Ask customer about vehicle collision experience. • Has the vehicle in for servicing been involved in a collision in which the air bag is deployed?		Go to the troubleshooting procedure to perform the procedure from Step 1.
		No	Go to the next step.
3	**PURPOSE: VERIFY IF DIAGNOSTIC RESULT IS AFFECTED BY DTC RELATED TO SAS CONTROL MODULE** • Switch the ignition off, then ON (engine off). • Perform the SAS control module DTC inspection using the M-MDS. (See **DTC INSPECTION [STANDARD DEPLOYMENT CONTROL SYSTEM]**.) (See **DTC INSPECTION [TWO-STEP DEPLOYMENT CONTROL SYSTEM]**.) • Are any DTCs present?	Yes	Go to the applicable DTC inspection. (See **DTC TABLE [STANDARD DEPLOYMENT CONTROL SYSTEM]**.) (See **DTC TABLE [TWO-STEP DEPLOYMENT CONTROL SYSTEM]**.) Go to the troubleshooting procedure to perform the procedure from Step 1.
		No	Go to the troubleshooting procedure to perform the procedure from Step 1.

Troubleshooting Diagnostic Procedure

Intention of troubleshooting procedure

- Step 1—2
  - Verify that the primary malfunction is resolved and there are no other malfunctions.

STEP	INSPECTION	RESULTS	ACTION
1	**PURPOSE: PERFORM DTC INSPECTION AND VERIFY IF MALFUNCTIONING PART IS PCM** • Always reconnect all disconnected connectors. • Clear the DTC from the PCM memory using the M-MDS. (See **CLEARING DTC [SKYACTIV-G 2.0, SKYACTIV-G 2.5]**.) • Implement the repeatability verification procedure. (See **Repeatability Verification Procedure**.) • Perform the DTC Reading Procedure. (See **ON-BOARD DIAGNOSTIC TEST [SKYACTIV-G 2.0, SKYACTIV-G 2.5]**.) • Is the same DTC present?	Yes	Repeat the inspection from Step 1. • If the malfunction recurs, replace the PCM. (See **PCM REMOVAL/INSTALLATION [SKYACTIV-G 2.0, SKYACTIV-G 2.5]**.) Go to the next step.
		No	Go to the next step.
2	**PURPOSE: VERIFY IF THERE IS ANY OTHER MALFUNCTION** • Is any other DTC or pending code stored?	Yes	Go to the applicable DTC inspection. (See **DTC TABLE [SKYACTIV-G 2.0, SKYACTIV-G 2.5]**.)

		No	DTC troubleshooting completed.

2014 - Mazda3 - Engine

DTC P0010:00 [SKYACTIV-G 2.0, SKYACTIV-G 2.5]

DTC P0010:00	Electric variable valve timing control circuit range/performance problem

DETECTION CONDITION	• Any one of the following conditions is met:
	  ▪ A malfunction is detected in the results of the on-board diagnostic test received from the electric variable valve timing driver.
	  ▪ The motor speed signal received from the electric variable valve timing driver is in error.
	Diagnostic support note
	• This is a continuous monitor (CCM).
	• The check engine light illuminates if the PCM detects the above malfunction condition during the first drive cycle.
	• FREEZE FRAME DATA (Mode 2)/Snapshot data is available.
	• DTC is stored in the PCM memory.

FAIL-SAFE FUNCTION	• Stops activation of the electric variable valve timing driver.

POSSIBLE CAUSE	• Electric variable valve timing motor/driver connectors or terminals malfunction
	• Electric variable valve timing relay malfunction
	• Short to ground or open circuit in electric variable valve timing relay power supply circuit
	  ▪ Short to ground in wiring harness between MAIN 200 A fuse and electric variable valve timing relay terminal C
	  ▪ MAIN 200 A fuse and/or EVVT 20 A fuse malfunction
	  ▪ Open circuit in wiring harness between battery positive terminal and electric variable valve timing relay terminal C
	• Short to ground in wiring harness between the following terminals:
	  ▪ Electric variable valve timing relay terminal D—Electric variable valve timing motor/driver terminal 1E
	  ▪ Electric variable valve timing relay terminal D—Electric variable valve timing motor/driver terminal 2B
	• Short to power supply in wiring harness between the following terminals:
	  ▪ Electric variable valve timing relay terminal D—Electric variable valve timing motor/driver terminal 1E
	  ▪ Electric variable valve timing relay terminal D—Electric variable valve timing motor/driver terminal 2B
	• Open circuit in wiring harness between the following terminals:
	  ▪ Electric variable valve timing relay terminal D—Electric variable valve timing motor/driver terminal 1E
	  ▪ Electric variable valve timing relay terminal D—Electric variable valve timing motor/driver terminal 2B
	• Open circuit in wiring harness between electric variable valve timing motor/driver terminal 2A and body ground
	• Short to ground in wiring harness between the following terminals:

	▪ Electric variable valve timing motor/driver terminal 1D—PCM terminal 1AZ ▪ Electric variable valve timing motor/driver terminal 1C—PCM terminal 1O ▪ Electric variable valve timing motor/driver terminal 1B—PCM terminal 1J ▪ Electric variable valve timing motor/driver terminal 1A—PCM terminal 1AE • PCM connector or terminals malfunction • Short to power supply in wiring harness between the following terminals: ▪ Electric variable valve timing motor/driver terminal 1D—PCM terminal 1AZ ▪ Electric variable valve timing motor/driver terminal 1C—PCM terminal 1O ▪ Electric variable valve timing motor/driver terminal 1B—PCM terminal 1J ▪ Electric variable valve timing motor/driver terminal 1A—PCM terminal 1AE • Electric variable valve timing motor/driver circuits are shorted to each other • Open circuit in wiring harness between the following terminals: ▪ Electric variable valve timing motor/driver terminal 1D—PCM terminal 1AZ ▪ Electric variable valve timing motor/driver terminal 1C—PCM terminal 1O ▪ Electric variable valve timing motor/driver terminal 1B—PCM terminal 1J ▪ Electric variable valve timing motor/driver terminal 1A—PCM terminal 1AE • Electric variable valve timing driver malfunction • Electric variable valve timing motor malfunction • PCM malfunction

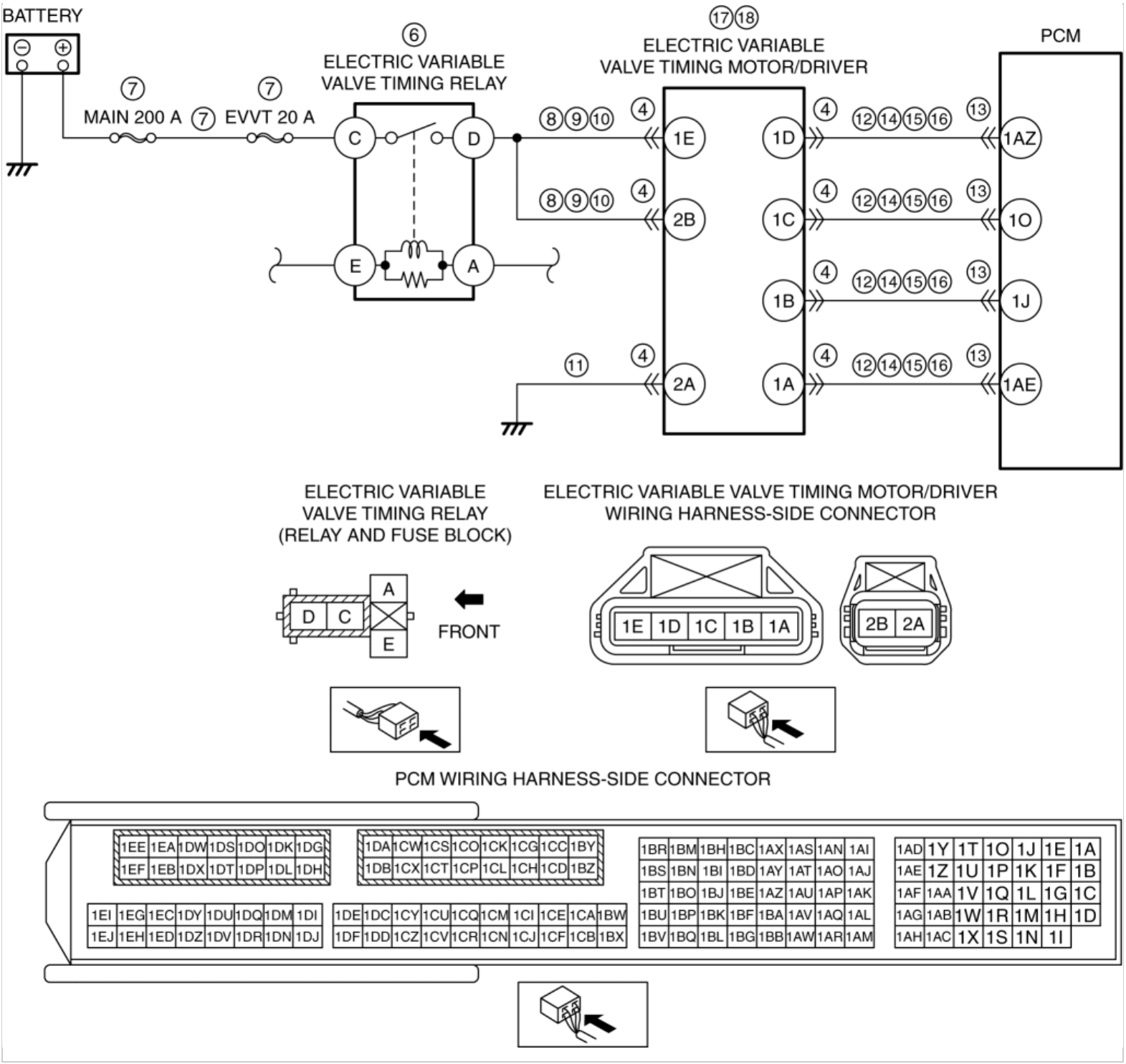

CAUTION:

- Verify the malfunction symptom according to not only the PID value but also the symptom troubleshooting.

Related PIDs

Item (definition)	Unit/Condition	Definition	Condition/Specification (Reference)
VT IN_ACT	°	Actual intake valve timing	• Displays actual intake valve timing
VT IN_DES	°	Desired intake valve timing	• Displays desired intake valve timing

Diagnostic Procedure

STEP	INSPECTION		ACTION
1	**VERIFY FREEZE FRAME DATA (MODE 2)/SNAPSHOT DATA HAS BEEN RECORDED** • Has the FREEZE FRAME DATA (Mode 2)/snapshot data been recorded?	Yes	Go to the next step.
		No	Record the FREEZE FRAME DATA (Mode 2)/snapshot data on the repair order, then go to the next step.
2	**VERIFY RELATED REPAIR INFORMATION AVAILABILITY** • Verify related Service Bulletins and/or on-line repair information availability. • Is any related repair information available?	Yes	Perform repair or diagnosis according to the available repair information. • If the vehicle is not repaired, go to the next step.
		No	Go to the next step.
3	**VERIFY RELATED PENDING CODE AND/OR DTC** • Switch the ignition off, then ON (engine off). • Perform the Pending Trouble Code Access Procedure and DTC Reading Procedure. (See **ON-BOARD DIAGNOSTIC TEST [SKYACTIV-G 2.0, SKYACTIV-G 2.5]**.) • Is the PENDING CODE/DTC P1380:00 also present?	Yes	Go to the applicable PENDING CODE or DTC inspection. (See **DTC P1380:00 [SKYACTIV-G 2.0, SKYACTIV-G 2.5]**.)
		No	Go to the next step.
4	**INSPECT ELECTRIC VARIABLE VALVE TIMING MOTOR/DRIVER CONNECTOR CONDITION** • Switch the ignition off. • Disconnect the electric variable valve timing motor/driver connector. • Inspect for poor connection (such as damaged/pulled-out pins, corrosion). • Is there any malfunction?	Yes	Repair or replace the connector and/or terminals, then go to Step 19.
		No	Go to the next step.
5	**DETERMINE IF MALFUNCTION CAUSE IS ELECTRIC VARIABLE VALVE TIMING MOTOR/DRIVER POWER SUPPLY CIRCUIT OR OTHER** • Verify that the electric variable valve timing motor/driver connector is disconnected. • Start the engine. • Measure the voltage at the following terminals (wiring harness-side): ▪ Electric variable valve timing motor/driver terminal 1E ▪ Electric variable valve timing motor/driver terminal 2B • Is the voltage **B+**?	Yes	Go to Step 11.
		No	Go to the next step.

6	**INSPECT ELECTRIC VARIABLE VALVE TIMING RELAY** • Switch the ignition off. • Remove the electric variable valve timing relay. • Inspect the electric variable valve timing relay. (See **RELAY INSPECTION**.) • Is there any malfunction?	Yes	Replace the electric variable valve timing relay, then go to Step 19.
		No	Go to the next step.
7	**INSPECT ELECTRIC VARIABLE VALVE TIMING RELAY POWER SUPPLY CIRCUIT FOR SHORT TO GROUND OR OPEN CIRCUIT** • Electric variable valve timing relay is removed. • Verify that the electric variable valve timing motor/driver connector is disconnected. • Measure the voltage at the electric variable valve timing relay terminal C (wiring harness-side). • Is the voltage **B+**?	Yes	Go to the next step.
		No	Inspect the MAIN 200 A fuse and EVVT 20 A fuse. • If the fuse is blown: ▪ Refer to the wiring diagram and verify whether or not there is a common connector between MAIN 200 A fuse and electric variable valve timing relay terminal C. **If there is a common connector:** • Determine the malfunctioning part by inspecting the common connector and the terminal for corrosion, damage, or pin disconnection, and the common wiring harness for a short to ground. • Repair or replace the malfunctioning part. **If there is no common connector:** • Repair or replace the wiring harness which has a short to ground. • Replace the fuse. • If the fuse is damaged: ▪ Replace the fuse. • If all fuses are normal: ▪ Refer to the wiring diagram and verify whether or not there is a common connector between battery positive terminal and electric variable valve timing relay terminal C. **If there is a common connector:** • Determine the malfunctioning part by inspecting the common connector and the terminal for corrosion, damage, or pin disconnection, and the common wiring harness for an open circuit. • Repair or replace the malfunctioning part. **If there is no common connector:** • Repair or replace the wiring harness which has an open

			circuit. Go to Step 19.
8	**INSPECT ELECTRIC VARIABLE VALVE TIMING RELAY CONTROL CIRCUIT FOR SHORT TO GROUND** • Electric variable valve timing relay is removed. • Verify that the electric variable valve timing motor/driver connector is disconnected. • Inspect for continuity between electric variable valve timing relay terminal D (wiring harness-side) and body ground. • Is there continuity?	Yes	Refer to the wiring diagram and verify whether or not there is a common connector between the following terminals: • Electric variable valve timing relay terminal D—Electric variable valve timing motor/driver terminal 1E • Electric variable valve timing relay terminal D—Electric variable valve timing motor/driver terminal 2B **If there is a common connector:** • Determine the malfunctioning part by inspecting the common connector and the terminal for corrosion, damage, or pin disconnection, and the common wiring harness for a short to ground. • Repair or replace the malfunctioning part. **If there is no common connector:** • Repair or replace the wiring harness which has a short to ground. Go to Step 19.
		No	Go to the next step.
9	**INSPECT ELECTRIC VARIABLE VALVE TIMING RELAY CONTROL CIRCUIT FOR SHORT TO POWER SUPPLY** • Electric variable valve timing relay is removed. • Verify that the electric variable valve timing motor/driver connector is disconnected. • Switch the ignition ON (engine off). **NOTE:** • Another DTC may be stored by the PCM detecting an open circuit. • Measure the voltage at the electric variable valve timing relay terminal D (wiring harness-side). • Is the voltage **0 V**?	Yes	Go to the next step.
		No	Refer to the wiring diagram and verify whether or not there is a common connector between the following terminals: • Electric variable valve timing relay terminal D—Electric variable valve timing motor/driver terminal 1E • Electric variable valve timing relay terminal D—Electric variable valve timing motor/driver terminal 2B **If there is a common connector:** • Determine the malfunctioning part by inspecting the common connector and the terminal for corrosion, damage, or pin disconnection, and the common wiring harness for a short to power supply. • Repair or replace the malfunctioning part. **If there is no common connector:** • Repair or replace the wiring harness which has a short to power supply. Go to Step 19.
10	**INSPECT ELECTRIC VARIABLE VALVE TIMING RELAY CONTROL CIRCUIT FOR OPEN CIRCUIT** • Electric variable valve timing relay is removed. • Verify that the electric variable valve timing motor/driver connector is disconnected. • Switch the ignition off. • Inspect for continuity between the following terminals (wiring harness-side): ▪ Electric variable valve timing relay terminal D —Electric	Yes	Go to Step 19.
		No	Refer to the wiring diagram and verify whether or not there is a common connector between the following terminals: • Electric variable valve timing relay terminal D—Electric variable valve timing motor/driver terminal 1E • Electric variable valve timing relay terminal D—Electric variable valve timing motor/driver terminal 2B **If there is a common connector:** • Determine the malfunctioning part by inspecting the common connector and the terminal for corrosion, damage, or pin disconnection, and the common wiring harness for an open circuit.

	variable valve timing motor/driver terminal 1E ▪ Electric variable valve timing relay terminal D —Electric variable valve timing motor/driver terminal 2B • Is there continuity?		Repair or replace the malfunctioning part. **If there is no common connector:** • Repair or replace the wiring harness which has an open circuit. Go to Step 19.
11	**INSPECT ELECTRIC VARIABLE VALVE TIMING MOTOR/DRIVER GROUND CIRCUIT FOR OPEN CIRCUIT** • Verify that the electric variable valve timing motor/driver connector is disconnected. • Switch the ignition off. • Inspect for continuity between electric variable valve timing motor/driver terminal 2A (wiring harness-side) and body ground. • Is there continuity?	Yes	Go to the next step.
		No	Refer to the wiring diagram and verify whether or not there is a common connector between electric variable valve timing motor/driver terminal 2A and body ground. **If there is a common connector:** • Determine the malfunctioning part by inspecting the common connector and the terminal for corrosion, damage, or pin disconnection, and the common wiring harness for an open circuit. • Repair or replace the malfunctioning part. **If there is no common connector:** • Inspect for the following: ▪ Open circuit between electric variable valve timing motor/driver and body ground ▪ Loose or lifting ground point • Repair or replace the malfunctioning part. Go to Step 19.
12	**INSPECT ELECTRIC VARIABLE VALVE TIMING MOTOR/DRIVER CIRCUIT FOR SHORT TO GROUND** • Verify that the electric variable valve timing motor/driver connector is disconnected. • Inspect for continuity between the following terminals (wiring harness-side) and body ground: ▪ Electric variable valve timing motor/driver terminal 1D ▪ Electric variable valve timing motor/driver terminal 1C ▪ Electric variable valve timing motor/driver terminal 1B ▪ Electric variable valve timing motor/driver terminal 1A	Yes	If the short to ground circuit could be detected in the wiring harness: • Refer to the wiring diagram and verify whether or not there is a common connector between the following terminals: ▪ Electric variable valve timing motor/driver terminal 1D—PCM terminal 1AZ ▪ Electric variable valve timing motor/driver terminal 1C—PCM terminal 1O ▪ Electric variable valve timing motor/driver terminal 1B—PCM terminal 1J ▪ Electric variable valve timing motor/driver terminal 1A—PCM terminal 1AE **If there is a common connector:** ▪ Determine the malfunctioning part by inspecting the common connector and the terminal for corrosion, damage, or pin disconnection, and the common wiring harness for a short to ground. ▪ Repair or replace the malfunctioning part. **If there is no common connector:** ▪ Repair or replace the wiring harness which has a short to ground.

	• Is there continuity?		If the short to ground circuit could not be detected in the wiring harness: • Replace the PCM (short to ground in the PCM internal circuit). (See **PCM REMOVAL/INSTALLATION [SKYACTIV-G 2.0, SKYACTIV-G 2.5]**.) Go to Step 19.
		No	Go to the next step.
13	**INSPECT PCM CONNECTOR CONDITION** • Disconnect the PCM connector. • Inspect for poor connection (such as damaged/pulled-out pins, corrosion). • Is there any malfunction?	Yes	Repair or replace the connector and/or terminals, then go to Step 19.
		No	Go to the next step.
14	**INSPECT ELECTRIC VARIABLE VALVE TIMING MOTOR/DRIVER CIRCUIT FOR SHORT TO POWER SUPPLY** • Verify that the electric variable valve timing motor/driver and PCM connectors are disconnected. • Switch the ignition ON (engine off). **NOTE:** • Another DTC may be stored by the PCM detecting an open circuit. • Measure the voltage at the following terminals (wiring harness-side): ▪ Electric variable valve timing motor/driver terminal 1D ▪ Electric variable valve timing motor/driver terminal 1C ▪ Electric variable valve timing motor/driver terminal 1B ▪ Electric variable valve timing motor/driver terminal 1A • Is the voltage **0 V**?	Yes	Go to the next step.
		No	Refer to the wiring diagram and verify whether or not there is a common connector between the following terminals: • Electric variable valve timing motor/driver terminal 1D—PCM terminal 1AZ • Electric variable valve timing motor/driver terminal 1C—PCM terminal 1O • Electric variable valve timing motor/driver terminal 1B—PCM terminal 1J • Electric variable valve timing motor/driver terminal 1A—PCM terminal 1AE **If there is a common connector:** • Determine the malfunctioning part by inspecting the common connector and the terminal for corrosion, damage, or pin disconnection, and the common wiring harness for a short to power supply. • Repair or replace the malfunctioning part. **If there is no common connector:** • Repair or replace the wiring harness which has a short to power supply. Go to Step 19.
15	**INSPECT ELECTRIC VARIABLE VALVE TIMING MOTOR/DRIVER CIRCUITS FOR SHORT TO EACH OTHER** • Verify that the electric variable valve timing motor/driver and PCM connectors are disconnected. • Switch the ignition off. • Inspect for continuity electric variable valve timing motor/driver terminals 1D, 1C, 1B and 1A	Yes	Refer to the wiring diagram and verify whether or not there is a common connector between the following terminals: • Electric variable valve timing motor/driver terminal 1D—PCM terminal 1AZ • Electric variable valve timing motor/driver terminal 1C—PCM terminal 1O • Electric variable valve timing motor/driver terminal 1B—PCM terminal 1J

	(wiring harness-side). • Is there continuity?		Electric variable valve timing motor/driver terminal 1A—PCM terminal 1AE **If there is a common connector:** • Determine the malfunctioning part by inspecting the common connector and the terminal for corrosion, damage, or pin disconnection, and the common wiring harness for a short to each other. • Repair or replace the malfunctioning part. **If there is no common connector:** • Repair or replace the wiring harness which has a short to each other. Go to Step 19.
		No	Go to the next step.
16	**INSPECT ELECTRIC VARIABLE VALVE TIMING MOTOR/DRIVER CIRCUIT FOR OPEN CIRCUIT** • Verify that the electric variable valve timing motor/driver and PCM connectors are disconnected. • Inspect for continuity between the following terminals (wiring harness-side): ▪ Electric variable valve timing motor/driver terminal 1D—PCM terminal 1AZ ▪ Electric variable valve timing motor/driver terminal 1C—PCM terminal 1O ▪ Electric variable valve timing motor/driver terminal 1B—PCM terminal 1J ▪ Electric variable valve timing motor/driver terminal 1A—PCM terminal 1AE • Is there continuity?	Yes	Go to the next step.
		No	Refer to the wiring diagram and verify whether or not there is a common connector between the following terminals: • Electric variable valve timing motor/driver terminal 1D—PCM terminal 1AZ • Electric variable valve timing motor/driver terminal 1C—PCM terminal 1O • Electric variable valve timing motor/driver terminal 1B—PCM terminal 1J • Electric variable valve timing motor/driver terminal 1A—PCM terminal 1AE **If there is a common connector:** • Determine the malfunctioning part by inspecting the common connector and the terminal for corrosion, damage, or pin disconnection, and the common wiring harness for an open circuit. • Repair or replace the malfunctioning part. **If there is no common connector:** • Repair or replace the wiring harness which has an open circuit. Go to Step 19.
17	**INSPECT ELECTRIC VARIABLE VALVE TIMING DRIVER** • Inspect the electric variable valve timing driver. (See **ELECTRIC VARIABLE VALVE TIMING MOTOR/DRIVER INSPECTION [SKYACTIV-G 2.0, SKYACTIV-G 2.5]**.) • Is there any malfunction?	Yes	Replace the electric variable valve timing motor/driver, then go to Step 19. (See **ELECTRIC VARIABLE VALVE TIMING MOTOR/DRIVER REMOVAL/INSTALLATION [SKYACTIV-G 2.0, SKYACTIV-G 2.5]**.)
		No	Go to the next step.
18	**INSPECT ELECTRIC VARIABLE VALVE TIMING MOTOR** • Inspect the electric variable valve timing motor.	Yes	Replace the electric variable valve timing motor/driver, then go to the next step. (See **ELECTRIC VARIABLE VALVE TIMING MOTOR/DRIVER REMOVAL/INSTALLATION [SKYACTIV-G 2.0, SKYACTIV-G 2.5]**.)

	(See **ELECTRIC VARIABLE VALVE TIMING MOTOR/DRIVER INSPECTION [SKYACTIV-G 2.0, SKYACTIV-G 2.5]**.) • Is there any malfunction?	No	Go to the next step.
19	**VERIFY DTC TROUBLESHOOTING COMPLETED** • Always reconnect all disconnected connectors. • Clear the DTC from the PCM memory using the M-MDS. (See **AFTER REPAIR PROCEDURE [SKYACTIV-G 2.0, SKYACTIV-G 2.5]**.) • Perform the KOER self test. (See **KOEO/KOER SELF TEST [SKYACTIV-G 2.0, SKYACTIV-G 2.5]**.) • Is the same DTC present?	Yes	Repeat the inspection from Step 1. • If the malfunction recurs, replace the PCM. (See **PCM REMOVAL/INSTALLATION [SKYACTIV-G 2.0, SKYACTIV-G 2.5]**.) Go to the next step.
		No	Go to the next step.
20	**VERIFY AFTER REPAIR PROCEDURE** • Perform the “AFTER REPAIR PROCEDURE”. (See **AFTER REPAIR PROCEDURE [SKYACTIV-G 2.0, SKYACTIV-G 2.5]**.) • Are any DTCs present?	Yes	Go to the applicable DTC inspection. (See **DTC TABLE [SKYACTIV-G 2.0, SKYACTIV-G 2.5]**.)
		No	DTC troubleshooting completed.

2014 - Mazda3 - Engine

DTC P0011:00, P0012:00 [SKYACTIV-G 2.0, SKYACTIV-G 2.5]

NOTE:

- To determine the malfunctioning part, proceed with the diagnostics from "Function Inspection Using M-MDS".

Details On DTCs

DESCRIPTION	Electric variable valve timing control system: • P0011:00: Over-advanced • P0012:00: Over-retarded	
DETECTION CONDITION	Determination conditions	• P0011:00: A condition in which the actual intake valve timing advances (excess advance) compared to the target intake valve timing continues for the specified period.
		• P0012:00: A condition in which the actual intake valve timing retards (excess retard) compared to the target intake valve timing continues for the specified period.
	Preconditions	• Battery voltage: **above 11 V**[*1] • Engine speed: **5,000 rpm or less**[*1] • Engine coolant temperature: **20 °C {68 °F} or more**[*1] • The following DTCs are not detected: ▪ P0010:00, P0335:00, P0340:00 • [*1]: Value can be verified by displaying PIDs using M-MDS
	Malfunction determination period	• **10 s** period
	Drive cycle	• **1**
	Self test type	• CMDTC self test
	Sensor used	• CKP sensor • Intake CMP sensor
FAIL-SAFE FUNCTION	• Not applicable	
VEHICLE STATUS WHEN DTCs ARE OUTPUT	• Illuminates check engine light.	
	• Electric variable valve timing motor/driver connectors or terminals malfunction • Short to ground or open circuit in electric variable valve timing relay power supply circuit ▪ Short to ground in wiring harness between battery positive terminal and electric variable valve timing relay terminal C ▪ MAIN 200 A fuse and/or EVVT 20 A fuse malfunction ▪ Open circuit in wiring harness between battery positive terminal and electric variable valve timing relay terminal C • Short to ground in wiring harness between the following terminals: ▪ Electric variable valve timing relay terminal D—Electric variable valve timing motor/driver terminal 1E	

POSSIBLE CAUSE	▪ Electric variable valve timing relay terminal D—Electric variable valve timing motor/driver terminal 2B • Open circuit in wiring harness between the following terminals: ▪ Electric variable valve timing relay terminal D—Electric variable valve timing motor/driver terminal 1E ▪ Electric variable valve timing relay terminal D—Electric variable valve timing motor/driver terminal 2B • PCM connector or terminals malfunction • Electric variable valve timing relay malfunction • Electric variable valve timing motor malfunction • Electric variable valve timing actuator malfunction ▪ Electric variable valve timing actuator is stuck in advanced position ▪ Electric variable valve timing actuator is stuck in retarded position • Loose timing chain or improper intake valve timing due to timing chain slippage • Timing chain malfunction ▪ Poor assembly of timing chain ▪ Looseness or jumping • Mis-detection of intake CMP sensor • Mis-detection of CKP sensor • PCM malfunction

System Wiring Diagram

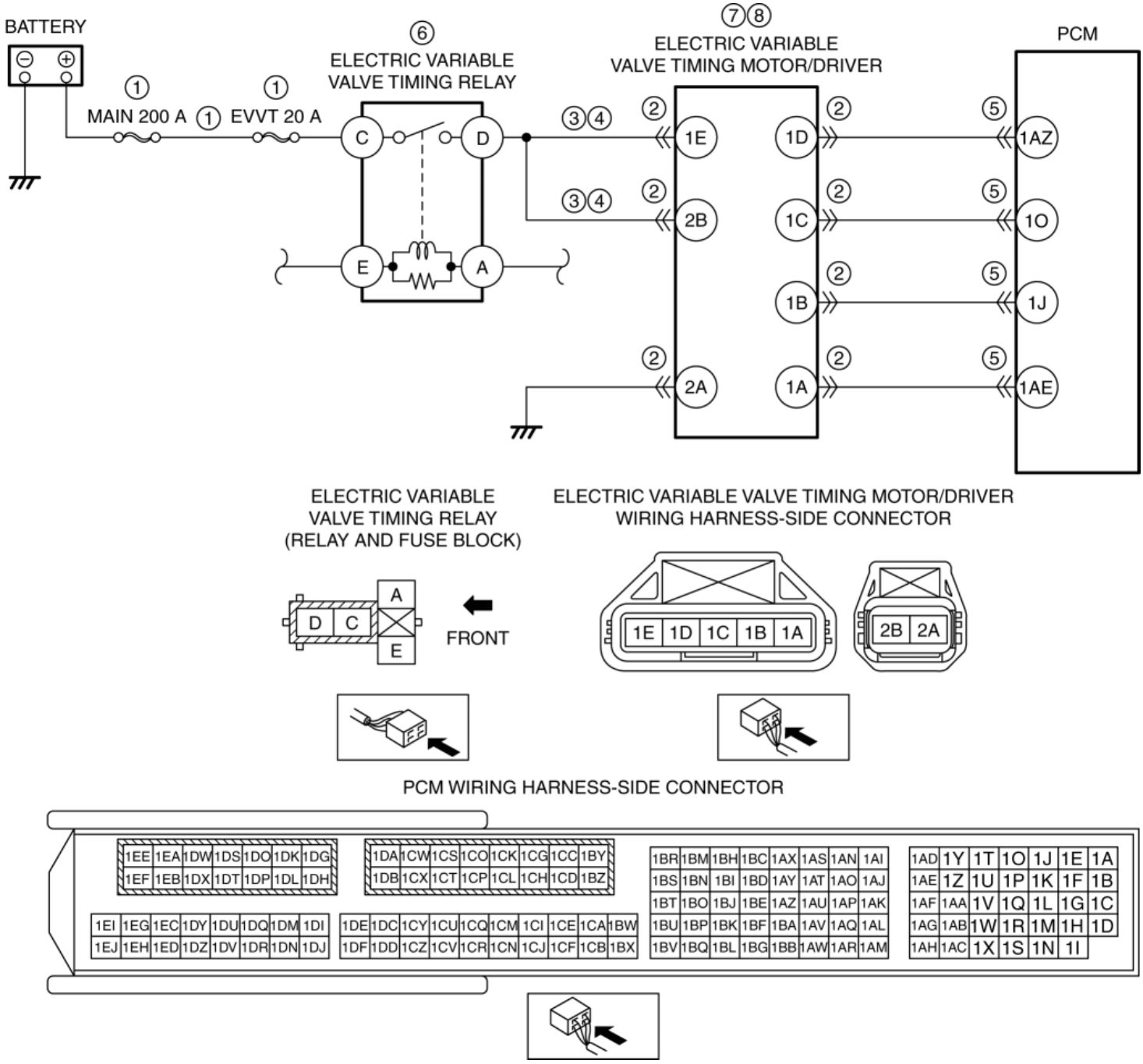

Function Explanation (DTC Detection Outline)

P0011:00

- With the preconditions met, the PCM verifies the conformity of the actual timing relative to the target valve timing. If it does not conform to the normal determination range (difference between target valve timing and actual valve timing is **15 degrees or less**) during the malfunction determination period (**approx. 10 s**), even if the target valve timing is set to the retard side, the PCM determines an excess advance malfunction condition and stores a DTC.

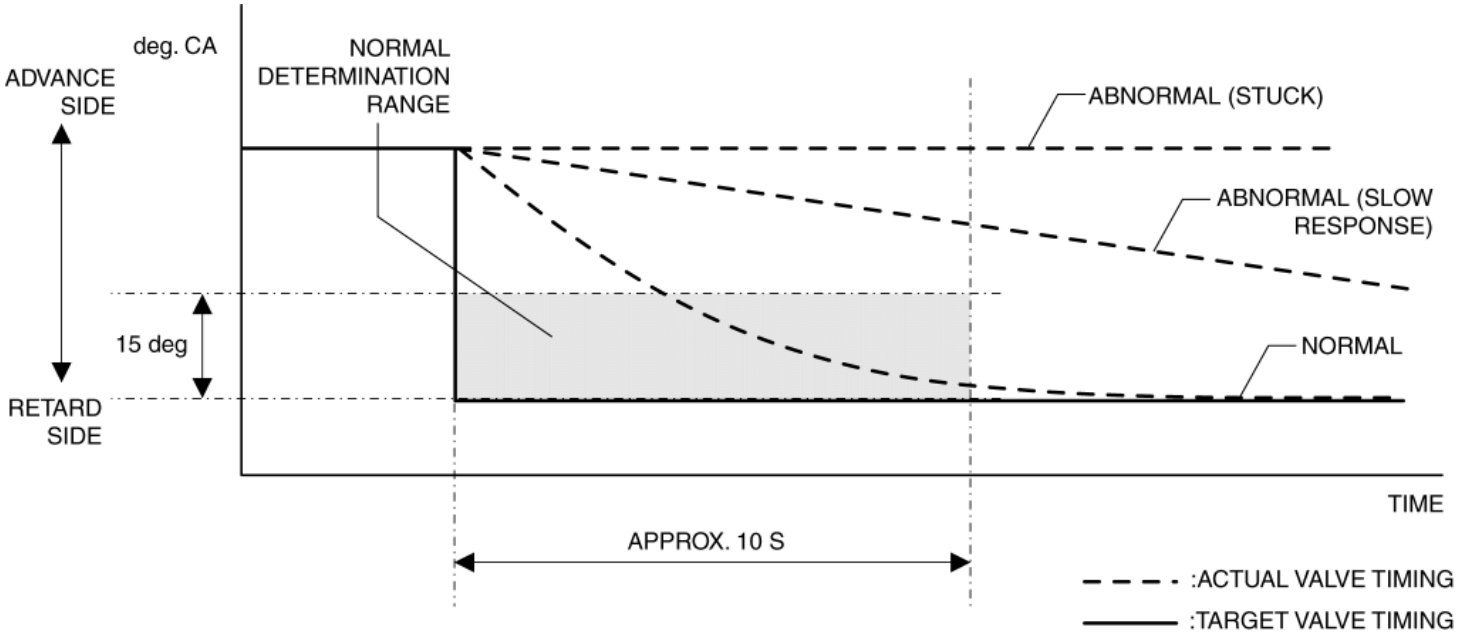

P0012:00

- With the preconditions met, the PCM verifies the conformity of the actual timing relative to the target valve timing. If it does not conform to the normal determination range (difference between target valve timing and actual valve timing is **15 degrees or less**) during the malfunction determination period (**approx. 10 s**), even if the target valve timing is set to the advance side, the PCM determines an excess retard malfunction condition and stores a DTC.

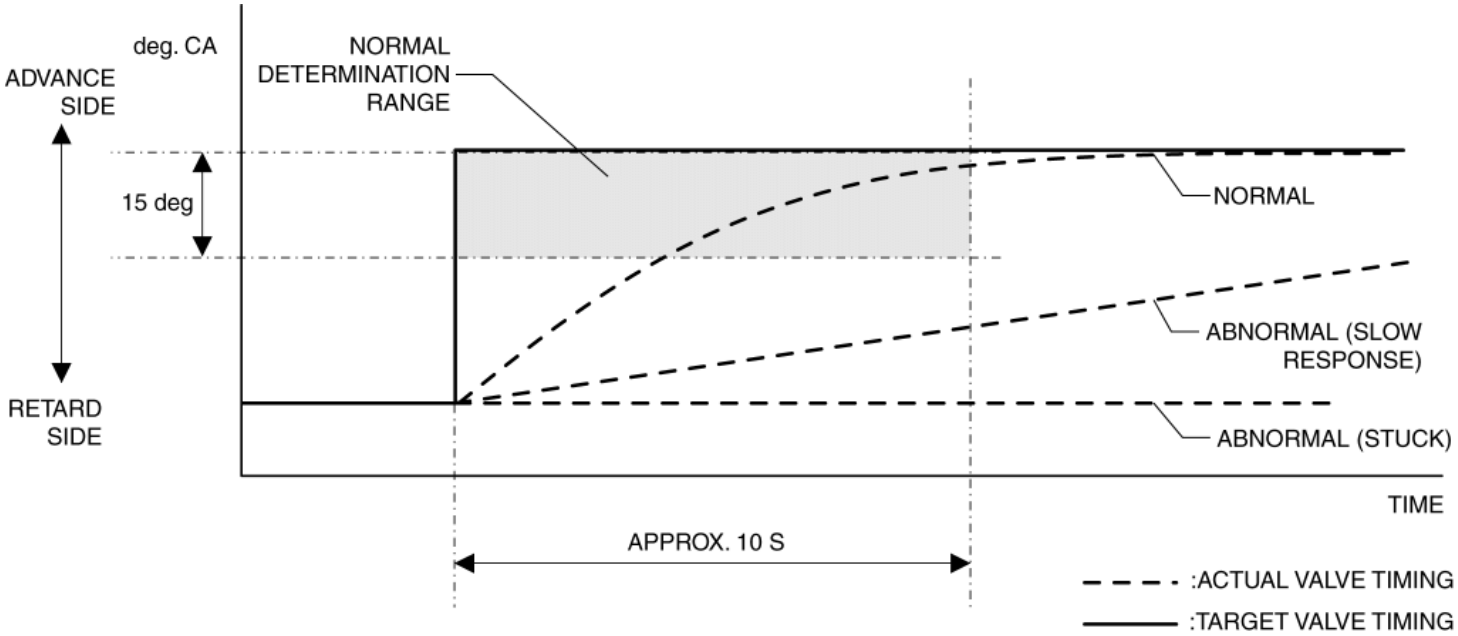

Repeatability Verification Procedure

- Warm up the engine to allow the engine coolant temperature to reach **80 °C {176 °F} or more**.

  NOTE:

  - Match the engine coolant temperature in the recorded FREEZE FRAME DATA (Mode 2)/snapshot data, the vehicle speed, and engine speed values to the best extent possible while driving the vehicle.

- Try to reproduce the malfunction by driving the vehicle for **5 min** based on the values in the FREEZE FRAME DATA (Mode 2)/snapshot data.

PID Item/Simulation Item Used In Diagnosis

PID/DATA monitor item table

Item	Definition	Unit	Condition/Specification
VT IN_ACT	Actual intake valve timing	°	• Displays actual intake valve timing
VT IN_DES	Desired intake valve timing	°	• Displays desired intake valve timing

Function Inspection Using M-MDS

STEP	INSPECTION	RESULTS	ACTION
1	**PURPOSE: VERIFY RELATED REPAIR INFORMATION AVAILABILITY** • Verify related Service Bulletins and/or on-line repair information availability. • Is any related repair information available?	Yes	Perform repair or diagnosis according to the available repair information. • If the vehicle is not repaired, go to the next step.
		No	Go to the next step.
2	**PURPOSE: RECORD VEHICLE STATUS AT TIME OF DTC DETECTION TO UTILIZE WITH REPEATABILITY VERIFICATION** • Has the FREEZE FRAME DATA (Mode 2)/snapshot data been recorded?	Yes	Go to the next step.
		No	Record the FREEZE FRAME DATA (Mode 2)/snapshot data on the repair order, then go to the next step. **NOTE:** • Recording can be facilitated using the screen capture function of the PC.
3	**PURPOSE: VERIFY IF DIAGNOSTIC RESULT IS AFFECTED BY OTHER RELATED DTCs OCCURRING** • Perform the Pending Trouble Code Access Procedure and DTC Reading Procedure. (See **ON-BOARD DIAGNOSTIC TEST [SKYACTIV-G 2.0, SKYACTIV-G 2.5]**.) • Is the PENDING CODE/DTC P0010:00, P0335:00, P0340:00 or P1380:00 also present?	Yes	Go to the applicable DTC inspection. (See **DTC P0010:00 [SKYACTIV-G 2.0, SKYACTIV-G 2.5]**.) (See **DTC P0335:00 [SKYACTIV-G 2.0, SKYACTIV-G 2.5]**.) (See **DTC P0340:00 [SKYACTIV-G 2.0, SKYACTIV-G 2.5]**.) (See **DTC P1380:00 [SKYACTIV-G 2.0, SKYACTIV-G 2.5]**.) Go to the next step.
		No	Go to the next step.
4	**PURPOSE: VERIFY CONFORMITY OF ACTUAL INTAKE VALVE TIMING** • Start the engine and idle it. • Access the following PIDs using the M-MDS: (See **ON-BOARD DIAGNOSTIC TEST [SKYACTIV-G 2.0, SKYACTIV-G 2.5]**.) ▪ VT IN_ACT ▪ VT IN_DES • Perform the following: ∘ Race the engine at an engine speed of **3,000 rpm or less**. ∘ Run it at idle. ∘ Repeat Step 1 and 2 operations above five times in succession. • Does the monitor value of the PID item VT IN_ACT conform to the VT IN_DES PID value?	Yes	Go to the next step.
		No	Go to the troubleshooting procedure to perform the procedure from Step 1.
5	**PURPOSE: VERIFY CONNECTOR CONNECTIONS** • Start the engine. • Access the VT IN_ACT PID using the M-MDS. (See **ON-BOARD DIAGNOSTIC TEST [SKYACTIV-G 2.0,**	Yes	Repair or replace the applicable wiring harness or connector parts. Go to the troubleshooting procedure to perform the procedure from Step 12.

	SKYACTIV-G 2.5].) • Does the PID value fluctuate when the following connectors are shaken? ▪ Electric variable valve timing motor/driver ▪ PCM	No	Go to the troubleshooting procedure to perform the procedure from Step 1.

Troubleshooting Diagnostic Procedure

Intention of troubleshooting procedure

- Step 1—5
  - Perform an inspection of the connectors and wiring harnesses between the battery positive terminal and electric variable valve timing relay and the electric variable valve timing motor/driver.
- Step 6
  - Perform a unit inspection of the electric variable valve timing relay.
- Step 7—9
  - Perform an inspection of the electric variable valve timing drive parts.
- Step 10—11
  - Inspect the intake CMP sensor and CKP sensor detection areas for adhesion of foreign matter.
- Step 12—13
  - Verify that the primary malfunction is resolved and there are no other malfunctions.

STEP	INSPECTION	RESULTS	ACTION
1	**PURPOSE: INSPECT ELECTRIC VARIABLE VALVE TIMING RELAY POWER SUPPLY CIRCUIT FOR SHORT TO GROUND OR OPEN CIRCUIT** • Switch the ignition off. • Remove the electric variable valve timing relay. • Measure the voltage at the electric variable valve timing relay terminal C (wiring harness-side). • Is the voltage **B+**?	Yes	Go to the next step.
		No	Inspect the MAIN 200 A fuse and EVVT 20 A fuse. • If the fuse is blown: ▪ Refer to the wiring diagram and verify whether or not there is a common connector between battery positive terminal and electric variable valve timing relay terminal C. **If there is a common connector:** • Determine the malfunctioning part by inspecting the common connector and the terminal for corrosion, damage, or pin disconnection, and the common wiring harness for a short to ground. • Repair or replace the malfunctioning part. **If there is no common connector:** • Repair or replace the wiring harness which has a short to ground. • Replace the malfunctioning fuse. • If the fuse is damaged: ▪ Replace the malfunctioning fuse. • If all fuses are normal: ▪ Refer to the wiring diagram and verify whether or not there is a common connector between battery positive terminal and electric variable

			valve timing relay terminal C. **If there is a common connector:** • Determine the malfunctioning part by inspecting the common connector and the terminal for corrosion, damage, or pin disconnection, and the common wiring harness for an open circuit. • Repair or replace the malfunctioning part. **If there is no common connector:** • Repair or replace the wiring harness which has an open circuit. Go to Step 12.
2	**PURPOSE: INSPECT ELECTRIC VARIABLE VALVE TIMING MOTOR/DRIVER CONNECTOR CONDITION** • Disconnect the electric variable valve timing motor/driver connector. • Inspect for poor connection (such as damaged/pulled-out pins, corrosion). • Is there any malfunction?	Yes	Repair or replace the connector and/or terminals, then go to Step 12.
		No	Go to the next step.
3	**PURPOSE: INSPECT ELECTRIC VARIABLE VALVE TIMING RELAY CONTROL CIRCUIT FOR SHORT TO GROUND** • Electric variable valve timing relay is removed. • Verify that the electric variable valve timing motor/driver connector is disconnected. • Inspect for continuity between electric variable valve timing relay terminal D (wiring harness-side) and body ground. • Is there continuity?	Yes	Refer to the wiring diagram and verify whether or not there is a common connector between the following terminals: • Electric variable valve timing relay terminal D—Electric variable valve timing motor/driver terminal 1E • Electric variable valve timing relay terminal D—Electric variable valve timing motor/driver terminal 2B **If there is a common connector:** • Determine the malfunctioning part by inspecting the common connector and the terminal for corrosion, damage, or pin disconnection, and the common wiring harness for a short to ground. • Repair or replace the malfunctioning part. **If there is no common connector:** • Repair or replace the wiring harness which has a short to ground. Go to Step 12.
		No	Go to the next step.
4	**PURPOSE: INSPECT ELECTRIC VARIABLE VALVE TIMING RELAY CONTROL CIRCUIT FOR OPEN CIRCUIT** • Electric variable valve timing relay is removed. • Verify that the electric variable valve timing motor/driver connector is disconnected. • Inspect for continuity between the following terminals (wiring harness-side): ▪ Electric variable valve timing relay terminal D—Electric variable valve timing motor/driver terminal 1E	Yes	Go to the next step.
		No	Refer to the wiring diagram and verify whether or not there is a common connector between the following terminals: • Electric variable valve timing relay terminal D—Electric variable valve timing motor/driver terminal 1E • Electric variable valve timing relay terminal D—Electric variable valve timing motor/driver terminal 2B **If there is a common connector:** • Determine the malfunctioning part by inspecting the common connector and the terminal for corrosion, damage, or pin disconnection, and the common wiring harness for an open circuit. • Repair or replace the malfunctioning part. **If there is no common connector:**

	▪ Electric variable valve timing relay terminal D—Electric variable valve timing motor/driver terminal 2B • Is there continuity?		• Repair or replace the wiring harness which has an open circuit. Go to Step 12.
5	**PURPOSE: INSPECT PCM CONNECTOR CONDITION** • Disconnect the PCM connector. • Inspect for poor connection (such as damaged/pulled-out pins, corrosion). • Is there any malfunction?	Yes	Repair or replace the connector and/or terminals, then go to Step 12.
		No	Go to the next step.
6	**PURPOSE: DETERMINE INTEGRITY OF ELECTRIC VARIABLE VALVE TIMING RELAY** • Inspect the electric variable valve timing relay. (See **RELAY INSPECTION**.) • Is there any malfunction?	Yes	Replace the electric variable valve timing relay, then go to Step 12.
		No	Go to the next step.
7	**PURPOSE: DETERMINE INTEGRITY OF ELECTRIC VARIABLE VALVE TIMING MOTOR** • Inspect the electric variable valve timing motor. (See **ELECTRIC VARIABLE VALVE TIMING MOTOR/DRIVER INSPECTION [SKYACTIV-G 2.0, SKYACTIV-G 2.5]**.) • Is there any malfunction?	Yes	Replace the electric variable valve timing motor/driver, then go to Step 12. (See **ELECTRIC VARIABLE VALVE TIMING MOTOR/DRIVER REMOVAL/INSTALLATION [SKYACTIV-G 2.0, SKYACTIV-G 2.5]**.)
		No	Go to the next step.
8	**PURPOSE: DETERMINE INTEGRITY OF ELECTRIC VARIABLE VALVE TIMING ACTUATOR** • Inspect the electric variable valve timing actuator. (See **ELECTRIC VARIABLE VALVE TIMING ACTUATOR INSPECTION [SKYACTIV-G 2.0, SKYACTIV-G 2.5]**.) • Is there any malfunction?	Yes	Replace the electric variable valve timing actuator, then go to Step 12. (See **ELECTRIC VARIABLE VALVE TIMING ACTUATOR, HYDRAULIC VARIABLE VALVE TIMING ACTUATOR REMOVAL/INSTALLATION [SKYACTIV-G 2.0, SKYACTIV-G 2.5]**.)
		No	Go to the next step.
9	**PURPOSE: VERIFY ASSEMBLY CONDITION OF TIMING CHAIN** • Verify the condition of the timing chain assembly (intake valve timing, looseness, jumping). (See **TIMING CHAIN REMOVAL/INSTALLATION [SKYACTIV-G 2.0, SKYACTIV-G 2.5]**.) • Is there any malfunction?	Yes	Repair or replace the malfunctioning part. Assemble the timing chain using the correct timing, then go to the Step 12. (See **TIMING CHAIN REMOVAL/INSTALLATION [SKYACTIV-G 2.0, SKYACTIV-G 2.5]**.)
		No	Go to the next step.
10	**PURPOSE: VERIFY IF FOREIGN MATTER ON INTAKE CMP SENSOR DETECTION AREA AFFECTS DIAGNOSTIC RESULTS** • Visually inspect for intake CMP sensor. (See **CAMSHAFT POSITION (CMP) SENSOR INSPECTION [SKYACTIV-G 2.0, SKYACTIV-G 2.5]**.) • Is there foreign matter such as metallic dust on the intake CMP sensor detection area?	Yes	Remove the foreign matter, then go to Step 12.
		No	Go to the next step.
11	**PURPOSE: VERIFY IF FOREIGN MATTER ON CKP SENSOR DETECTION AREA AFFECTS DIAGNOSTIC RESULTS** • Visually inspect for CKP sensor.	Yes	Remove the foreign matter, then go to the next step.
		No	Go to the next step.

	(See **CRANKSHAFT POSITION (CKP) SENSOR INSPECTION [SKYACTIV-G 2.0, SKYACTIV-G 2.5]**.) • Is there foreign matter such as metallic dust on the CKP sensor detection area?		
12	**PURPOSE: VERIFICATION OF VEHICLE REPAIR COMPLETION** • Always reconnect all disconnected connectors. • Clear the DTC from the PCM memory using the M-MDS. (See **CLEARING DTC [SKYACTIV-G 2.0, SKYACTIV-G 2.5]**.) • Implement the repeatability verification procedure. (See **Repeatability Verification Procedure**.) • Perform the DTC Reading Procedure. (See **ON-BOARD DIAGNOSTIC TEST [SKYACTIV-G 2.0, SKYACTIV-G 2.5]**.) • Is the DTC P0011:00 or P0012:00 also present?	Yes	Repeat the inspection from Step 1. • If the malfunction recurs, replace the PCM. (See **PCM REMOVAL/INSTALLATION [SKYACTIV-G 2.0, SKYACTIV-G 2.5]**.) Go to the next step.
		No	Go to the next step.
13	**PURPOSE: VERIFY IF THERE IS ANY OTHER MALFUNCTION** • Is any other DTC or pending code stored?	Yes	Go to the applicable DTC inspection. (See **DTC TABLE [SKYACTIV-G 2.0, SKYACTIV-G 2.5]**.)
		No	DTC troubleshooting completed.

2014 - Mazda3 - Engine

DTC P0014:00 [SKYACTIV-G 2.0, SKYACTIV-G 2.5]

NOTE:

- To determine the malfunctioning part, proceed with the diagnostics from “Function Inspection Using M-MDS”.

Details On DTCs

DESCRIPTION	Hydraulic variable valve timing control system: over-advanced	
DETECTION CONDITION	Determination conditions	• A condition in which the actual exhaust valve timing advances (excess advance) compared to the target exhaust valve timing continues for the specified period.
	Preconditions	• Battery voltage: **above 11 V**[*1] • Engine speed: **5,000 rpm or less**[*1] • Engine coolant temperature: **60 °C {140 °F} or more**[*1] • Hydraulic variable valve timing control: feedback mode • The following DTCs are not detected: ▪ P0335:00, P0365:00 • [*1]: Value can be verified by displaying PIDs using M-MDS
	Malfunction determination period	• **5 s** period
	Drive cycle	• 2
	Self test type	• CMDTC self test
	Sensor used	• CKP sensor • Exhaust CMP sensor
FAIL-SAFE FUNCTION	• Not applicable	
VEHICLE STATUS WHEN DTCs ARE OUTPUT	• Illuminates check engine light.	
POSSIBLE CAUSE	• OCV malfunction ▪ Spool valve in OCV is stuck in advanced position • Hydraulic variable valve timing actuator malfunction • Timing chain malfunction ▪ Poor assembly of timing chain ▪ Looseness or jumping • Mis-detection of exhaust CMP sensor • Engine oil malfunction ▪ Use of unspecified engine oil ▪ Low engine oil level ▪ Low engine oil pressure	

	▪ Engine oil runners are clogged or have leakage • PCM malfunction

System Wiring Diagram

- Not applicable

Function Explanation (DTC Detection Outline)

- With the preconditions met, the PCM verifies the conformity of the actual timing relative to the target valve timing. If it does not conform to the normal determination range (difference between target valve timing and actual valve timing is **20 degrees or less**) during the malfunction determination period (**approx. 5 s**), even if the target valve timing is set to the retard side, the PCM determines an excess advance malfunction condition and stores a DTC.

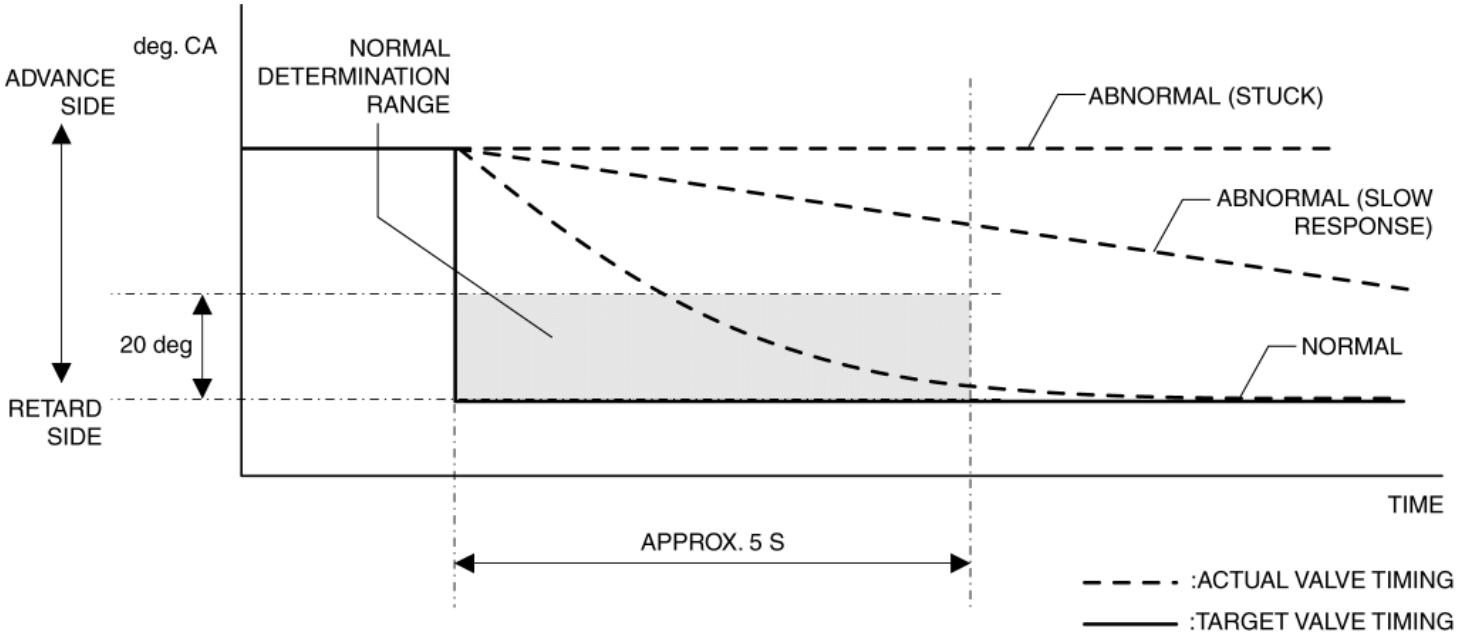

Repeatability Verification Procedure

- Warm up the engine to allow the engine coolant temperature to reach **80 °C {176 °F} or more**.
- Shift to 2nd gear and rapidly accelerate the vehicle to **50 km/h {31 mph}** (to operate hydraulic variable valve timing control).
- Decelerate to idling.
- Shift to 2nd gear and rapidly accelerate the vehicle to **50 km/h {31 mph}** again.

PID Item/Simulation Item Used In Diagnosis

PID/DATA monitor item table

Item	Definition	Unit	Condition/Specification
VT_EX_ACT	Actual exhaust valve timing	°	• Displays actual exhaust valve timing
VT EX_DES	Desired exhaust valve timing	°	• Displays desired exhaust valve timing

Simulation item table

Item	Definition	Unit	Operation
VT EX_DES	OCV control signal	%	• Changes % and forcibly drives/stops OCV.

Function Inspection Using M-MDS

STEP	INSPECTION	RESULTS	ACTION
1	**PURPOSE: VERIFY RELATED REPAIR INFORMATION AVAILABILITY** • Verify related Service Bulletins and/or on-line repair information availability. • Is any related repair information available?	Yes	Perform repair or diagnosis according to the available repair information. • If the vehicle is not repaired, go to the next step.
		No	Go to the next step.
2	**PURPOSE: RECORD VEHICLE STATUS AT TIME OF DTC DETECTION TO UTILIZE WITH REPEATABILITY VERIFICATION** • Has the FREEZE FRAME DATA (Mode 2)/snapshot data been recorded?	Yes	Go to the next step.
		No	Record the FREEZE FRAME DATA (Mode 2)/snapshot data on the repair order, then go to the next step. **NOTE:** • Recording can be facilitated using the screen capture function of the PC.
3	**PURPOSE: VERIFY IF DIAGNOSTIC RESULT IS AFFECTED BY OTHER RELATED DTCs OCCURRING** • Switch the ignition off, then ON (engine off). • Perform the Pending Trouble Code Access Procedure and DTC Reading Procedure. (See **ON-BOARD DIAGNOSTIC TEST [SKYACTIV-G 2.0, SKYACTIV-G 2.5]**.) • Is the PENDING CODE/DTC P0335:00, P0365:00, P2090:00 or P2091:00 also present?	Yes	Go to the applicable PENDING CODE or DTC inspection. (See **DTC P0335:00 [SKYACTIV-G 2.0, SKYACTIV-G 2.5]**.) (See **DTC P0365:00 [SKYACTIV-G 2.0, SKYACTIV-G 2.5]**.) (See **DTC P2090:00 [SKYACTIV-G 2.0, SKYACTIV-G 2.5]**.) (See **DTC P2091:00 [SKYACTIV-G 2.0, SKYACTIV-G 2.5]**.) Go to the next step.
		No	Go to the next step.
4	**PURPOSE: VERIFY IF DIAGNOSTIC RESULT IS AFFECTED BY DTC OCCURRING FROM OIL PRESSURE SWITCH** • Perform the Pending Trouble Code Access Procedure and DTC Reading Procedure. (See **ON-BOARD DIAGNOSTIC TEST [SKYACTIV-G 2.0, SKYACTIV-G 2.5]**.) • Is the PENDING CODE/DTC P0524:00 also present?	Yes	Go to the applicable PENDING CODE or DTC inspection. (See **DTC P0524:00 [SKYACTIV-G 2.0, SKYACTIV-G 2.5]**.) Go to the next step.
		No	Go to the next step.
5	**PURPOSE: VERIFY CONFORMITY OF ACTUAL EXHAUST VALVE TIMING AND DETERMINE IF MALFUNCTION IS CAUSED BY OCV OR CONNECTOR RELATED** • Start the engine and idle it. • Access the following PIDs using the M-MDS: (See **ON-BOARD DIAGNOSTIC TEST [SKYACTIV-G 2.0, SKYACTIV-G 2.5]**.) ▪ VT_EX_ACT ▪ VT EX_DES • Perform the following: ◦ Race the engine at an engine speed of **3,000 rpm or less**. ◦ Run it at idle. ◦ Repeat Step 1 and 2 operations above five times in	Yes	Go to Step 7.
		No	Go to the next step.

	succession. • Does the monitor value of the PID item VT_EX_ACT conform to the VT EX_DES PID value?		
6	**PURPOSE: VERIFY IF SPOOL VALVE IN OCV IS STUCK** • Switch the ignition off. • Remove the OCV without disconnect the connector. (See **OIL CONTROL VALVE (OCV) REMOVAL/INSTALLATION [SKYACTIV-G 2.0, SKYACTIV-G 2.5]**.) • Access the simulation item VT EX_DES using the M-MDS. (See **ON-BOARD DIAGNOSTIC TEST [SKYACTIV-G 2.0, SKYACTIV-G 2.5]**.) • Using the simulation function, force drive the OCV. • Can the spool valve in OCV operation be verified?	Yes	Go to the troubleshooting procedure to perform the procedure from Step 4. • If a malfunction occurs, perform diagnosis from Step 1 of the malfunction diagnostic procedure.
		No	Replace the OCV. (See **OIL CONTROL VALVE (OCV) REMOVAL/INSTALLATION [SKYACTIV-G 2.0, SKYACTIV-G 2.5]**.) Go to the troubleshooting procedure to perform the procedure from Step 8.
7	**PURPOSE: VERIFY CONNECTOR CONNECTIONS** • Start the engine. • Access the VT_EX_ACT PID using the M-MDS. (See **ON-BOARD DIAGNOSTIC TEST [SKYACTIV-G 2.0, SKYACTIV-G 2.5]**.) • Does the PID value fluctuate when the following connectors are shaken? ▪ OCV ▪ PCM	Yes	Repair or replace the applicable wiring harness or connector parts. Go to the troubleshooting procedure to perform the procedure from Step 8.
		No	Go to the troubleshooting procedure to perform the procedure from Step 4. • If a malfunction occurs, perform diagnosis from Step 3 of the malfunction diagnostic procedure.

Troubleshooting Diagnostic Procedure

Intention of troubleshooting procedure

- Step 1—2
  - Perform an inspection of the hydraulic variable valve timing drive parts.
- Step 3
  - Inspect the exhaust CMP sensor detection areas for adhesion of foreign matter.
- Step 4—7
  - Perform an engine oil related inspection.
- Step 8—9
  - Verify that the primary malfunction is resolved and there are no other malfunctions.

STEP	INSPECTION	RESULTS	ACTION
1	**PURPOSE: DETERMINE INTEGRITY OF HYDRAULIC VARIABLE VALVE TIMING ACTUATOR** • Inspect the hydraulic variable valve timing actuator. (See **HYDRAULIC VARIABLE VALVE TIMING ACTUATOR INSPECTION [SKYACTIV-G 2.0, SKYACTIV-G 2.5]**.) • Is there any malfunction?	Yes	Replace the hydraulic variable valve timing actuator, then go to Step 8. (See **ELECTRIC VARIABLE VALVE TIMING ACTUATOR, HYDRAULIC VARIABLE VALVE TIMING ACTUATOR REMOVAL/INSTALLATION [SKYACTIV-G 2.0, SKYACTIV-G 2.5]**.)
		No	Go to the next step.
2	**PURPOSE: VERIFY ASSEMBLY CONDITION OF TIMING CHAIN** • Verify the condition of the timing chain assembly (exhaust valve timing, looseness, jumping). (See **TIMING CHAIN REMOVAL/INSTALLATION**	Yes	Repair or replace the malfunctioning part. Assemble the timing chain using the correct timing, then go to the Step 8. (See **TIMING CHAIN REMOVAL/INSTALLATION [SKYACTIV-G 2.0, SKYACTIV-G 2.5]**.)

	[SKYACTIV-G 2.0, SKYACTIV-G 2.5].) • Is there any malfunction?	No	Go to the next step.
3	**PURPOSE: VERIFY IF FOREIGN MATTER ON EXHAUST CMP SENSOR DETECTION AREA AFFECTS DIAGNOSTIC RESULTS** • Visually inspect for exhaust CMP sensor. (See **CAMSHAFT POSITION (CMP) SENSOR INSPECTION [SKYACTIV-G 2.0, SKYACTIV-G 2.5]**.) • Is there foreign matter such as metallic dust on the exhaust CMP sensor detection area?	Yes	Remove the foreign matter, then go to Step 8.
		No	Go to the next step.
4	**PURPOSE: INSPECT IF INSUFFICIENT HYDRAULIC PRESSURE CAUSED BY USE OF UNSPECIFIED ENGINE OIL** • Is the specified engine oil being used?	Yes	Go to the next step.
		No	Replace the engine oil with genuine motor oil, then go to Step 8. (See **ENGINE OIL REPLACEMENT [SKYACTIV-G 2.0, SKYACTIV-G 2.5]**.)
5	**PURPOSE: INSPECT ENGINE OIL LEVEL** • Inspect the engine oil level. (See **ENGINE OIL LEVEL INSPECTION [SKYACTIV-G 2.0, SKYACTIV-G 2.5]**.) • Is the engine oil level sufficient?	Yes	Go to the next step.
		No	Add genuine motor oil, then go to Step 8. (See **ENGINE OIL REPLACEMENT [SKYACTIV-G 2.0, SKYACTIV-G 2.5]**.)
6	**PURPOSE: INSPECT ENGINE OIL PRESSURE** • Inspect the engine oil pressure. (See **OIL PRESSURE INSPECTION [SKYACTIV-G 2.0, SKYACTIV-G 2.5]**.) • Is there any malfunction?	Yes	Go to the next step.
		No	Go to Step 8.
7	**PURPOSE: VERIFY IF MALFUNCTION RELATED TO ENGINE OIL LEAK OR RESTRICTION AFFECTS DIAGNOSTIC RESULTS** • Start the engine. • Verify if there is engine oil leakage in the oil passage or restriction. • Is there engine oil leakage in the oil passage or restriction?	Yes	Repair or replace the malfunctioning part according to the inspection results. Add genuine motor oil, then go to the next step. (See **ENGINE OIL REPLACEMENT [SKYACTIV-G 2.0, SKYACTIV-G 2.5]**.)
		No	Go to the next step.
8	**PURPOSE: VERIFICATION OF VEHICLE REPAIR COMPLETION** • Always reconnect all disconnected connectors. • Clear the DTC from the PCM memory using the M-MDS. (See **CLEARING DTC [SKYACTIV-G 2.0, SKYACTIV-G 2.5]**.) • Implement the repeatability verification procedure. (See **Repeatability Verification Procedure**.) • Perform the Pending Trouble Code Access Procedure. (See **ON-BOARD DIAGNOSTIC TEST [SKYACTIV-G 2.0, SKYACTIV-G 2.5]**.) • Is the PENDING CODE for this DTC present?	Yes	Repeat the inspection from Step 1. • If the malfunction recurs, replace the PCM. (See **PCM REMOVAL/INSTALLATION [SKYACTIV-G 2.0, SKYACTIV-G 2.5]**.) Go to the next step.
		No	Go to the next step.
9	**PURPOSE: VERIFY IF THERE IS ANY OTHER MALFUNCTION** • Is any other DTC or pending code stored?	Yes	Go to the applicable DTC inspection. (See **DTC TABLE [SKYACTIV-G 2.0, SKYACTIV-G 2.5]**.)
		No	DTC troubleshooting completed.

2014 - Mazda3 - Engine

DTC P0015:00 [SKYACTIV-G 2.0, SKYACTIV-G 2.5]

NOTE:

- To determine the malfunctioning part, proceed with the diagnostics from “Function Inspection Using M-MDS”.

Details On DTCs

DESCRIPTION	Hydraulic variable valve timing control system: over-retarded	
DETECTION CONDITION	Determination conditions	• A condition in which the actual exhaust valve timing retards (excess retard) compared to the target exhaust valve timing continues for the specified period.
	Preconditions	• Battery voltage: **above 11 V**[*1] • Engine speed: **5,000 rpm or less**[*1] • Engine coolant temperature: **60 °C {140 °F} or more**[*1] • Hydraulic variable valve timing control: maximum cam advanced mode • The following DTCs are not detected: ▪ P0335:00, P0365:00 • [*1]: Value can be verified by displaying PIDs using M-MDS
	Malfunction determination period	• **5 s** period
	Drive cycle	• 2
	Self test type	• CMDTC self test
	Sensor used	• CKP sensor • Exhaust CMP sensor
FAIL-SAFE FUNCTION	• Not applicable	
VEHICLE STATUS WHEN DTCs ARE OUTPUT	• Illuminates check engine light.	

POSSIBLE CAUSE	• OCV malfunction
	  ▪ Spool valve in OCV is stuck in retard position
	• Hydraulic variable valve timing actuator malfunction
	• Timing chain malfunction
	  ▪ Poor assembly of timing chain
	  ▪ Looseness or jumping
	• Mis-detection of exhaust CMP sensor
	• Engine oil malfunction
	  ▪ Use of unspecified engine oil
	  ▪ Low engine oil level
	  ▪ Low engine oil pressure	

	▪ Engine oil runners are clogged or have leakage • PCM malfunction

System Wiring Diagram

- Not applicable

Function Explanation (DTC Detection Outline)

- With the preconditions met, the PCM verifies the conformity of the actual timing relative to the target valve timing. If it does not conform to the normal determination range (difference between target valve timing and actual valve timing is **20 degrees or less**) during the malfunction determination period (**approx. 5 s**), even if the target valve timing is set to the advance side, the PCM determines an excess retard malfunction condition and stores a DTC.

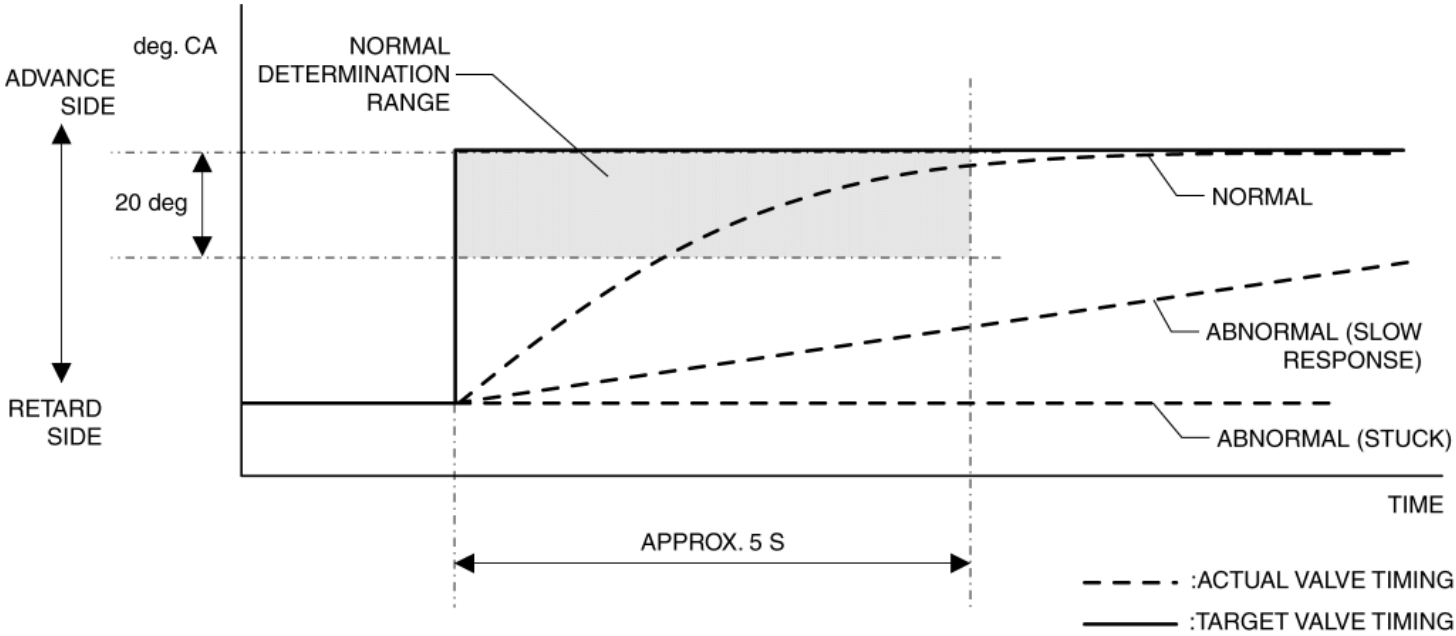

Repeatability Verification Procedure

- Warm up the engine to allow the engine coolant temperature to reach **80 °C {176 °F} or more**.
- Shift to 2nd gear and rapidly accelerate the vehicle to **50 km/h {31 mph}** (to operate hydraulic variable valve timing control).
- Decelerate to idling.
- Shift to 2nd gear and rapidly accelerate the vehicle to **50 km/h {31 mph}** again.

PID Item/Simulation Item Used In Diagnosis

PID/DATA monitor item table

Item	Definition	Unit	Condition/Specification
VT_EX_ACT	Actual exhaust valve timing	°	• Displays actual exhaust valve timing
VT EX_DES	Desired exhaust valve timing	°	• Displays desired exhaust valve timing

Simulation item table

Item	Definition	Unit	Operation
VT EX_DES	OCV control signal	%	• Changes % and forcibly drives/stops OCV.

Function Inspection Using M-MDS

STEP	INSPECTION	RESULTS	ACTION
1	**PURPOSE: VERIFY RELATED REPAIR INFORMATION AVAILABILITY** • Verify related Service Bulletins and/or on-line repair information availability. • Is any related repair information available?	Yes	Perform repair or diagnosis according to the available repair information. • If the vehicle is not repaired, go to the next step.
		No	Go to the next step.
2	**PURPOSE: RECORD VEHICLE STATUS AT TIME OF DTC DETECTION TO UTILIZE WITH REPEATABILITY VERIFICATION** • Has the FREEZE FRAME DATA (Mode 2)/snapshot data been recorded?	Yes	Go to the next step.
		No	Record the FREEZE FRAME DATA (Mode 2)/snapshot data on the repair order, then go to the next step. **NOTE:** • Recording can be facilitated using the screen capture function of the PC.
3	**PURPOSE: VERIFY IF DIAGNOSTIC RESULT IS AFFECTED BY OTHER RELATED DTCs OCCURRING** • Switch the ignition off, then ON (engine off). • Perform the Pending Trouble Code Access Procedure and DTC Reading Procedure. (See **ON-BOARD DIAGNOSTIC TEST [SKYACTIV-G 2.0, SKYACTIV-G 2.5]**.) • Is the PENDING CODE/DTC P0335:00, P0365:00, P2090:00 or P2091:00 also present?	Yes	Go to the applicable PENDING CODE or DTC inspection. (See **DTC P0335:00 [SKYACTIV-G 2.0, SKYACTIV-G 2.5]**.) (See **DTC P0365:00 [SKYACTIV-G 2.0, SKYACTIV-G 2.5]**.) (See **DTC P2090:00 [SKYACTIV-G 2.0, SKYACTIV-G 2.5]**.) (See **DTC P2091:00 [SKYACTIV-G 2.0, SKYACTIV-G 2.5]**.) Go to the next step.
		No	Go to the next step.
4	**PURPOSE: VERIFY IF DIAGNOSTIC RESULT IS AFFECTED BY DTC OCCURRING FROM OIL PRESSURE SWITCH** • Perform the Pending Trouble Code Access Procedure and DTC Reading Procedure. (See **ON-BOARD DIAGNOSTIC TEST [SKYACTIV-G 2.0, SKYACTIV-G 2.5]**.) • Is the PENDING CODE/DTC P0524:00 also present?	Yes	Go to the applicable PENDING CODE or DTC inspection. (See **DTC P0524:00 [SKYACTIV-G 2.0, SKYACTIV-G 2.5]**.) Go to the next step.
		No	Go to the next step.
5	**PURPOSE: VERIFY CONFORMITY OF ACTUAL EXHAUST VALVE TIMING AND DETERMINE IF MALFUNCTION IS CAUSED BY OCV OR CONNECTOR RELATED** • Start the engine and idle it. • Access the following PIDs using the M-MDS: (See **ON-BOARD DIAGNOSTIC TEST [SKYACTIV-G 2.0, SKYACTIV-G 2.5]**.) ▪ VT_EX_ACT ▪ VT EX_DES • Perform the following: ∘ Race the engine at an engine speed of **3,000 rpm or less**. ∘ Run it at idle. ∘ Repeat Step 1 and 2 operations above five times in	Yes	Go to Step 7.
		No	Go to the next step.

	succession. • Does the monitor value of the PID item VT_EX_ACT conform to the VT EX_DES PID value?		
6	**PURPOSE: VERIFY IF SPOOL VALVE IN OCV IS STUCK** • Switch the ignition off. • Remove the OCV without disconnect the connector. (See **OIL CONTROL VALVE (OCV) REMOVAL/INSTALLATION [SKYACTIV-G 2.0, SKYACTIV-G 2.5]**.) • Access the simulation item VT EX_DES using the M-MDS. (See **ON-BOARD DIAGNOSTIC TEST [SKYACTIV-G 2.0, SKYACTIV-G 2.5]**.) • Using the simulation function, force drive the OCV. • Can the spool valve in OCV operation be verified?	Yes	Go to the troubleshooting procedure to perform the procedure from Step 1.
		No	Replace the OCV. (See **OIL CONTROL VALVE (OCV) REMOVAL/INSTALLATION [SKYACTIV-G 2.0, SKYACTIV-G 2.5]**.) Go to the troubleshooting procedure to perform the procedure from Step 8.
7	**PURPOSE: VERIFY CONNECTOR CONNECTIONS** • Start the engine. • Access the VT_EX_ACT PID using the M-MDS. (See **ON-BOARD DIAGNOSTIC TEST [SKYACTIV-G 2.0, SKYACTIV-G 2.5]**.) • Does the PID value fluctuate when the following connectors are shaken? ▪ OCV ▪ PCM	Yes	Repair or replace the applicable wiring harness or connector parts. Go to the troubleshooting procedure to perform the procedure from Step 8.
		No	Go to the troubleshooting procedure to perform the procedure from Step 3.

Troubleshooting Diagnostic Procedure

Intention of troubleshooting procedure

- Step 1—2
  - Perform an inspection of the hydraulic variable valve timing drive parts.
- Step 3
  - Inspect the exhaust CMP sensor detection areas for adhesion of foreign matter.
- Step 4—7
  - Perform an engine oil related inspection.
- Step 8—9
  - Verify that the primary malfunction is resolved and there are no other malfunctions.

STEP	INSPECTION	RESULTS	ACTION
1	**PURPOSE: DETERMINE INTEGRITY OF HYDRAULIC VARIABLE VALVE TIMING ACTUATOR** • Inspect the hydraulic variable valve timing actuator. (See **HYDRAULIC VARIABLE VALVE TIMING ACTUATOR INSPECTION [SKYACTIV-G 2.0, SKYACTIV-G 2.5]**.) • Is there any malfunction?	Yes	Replace the hydraulic variable valve timing actuator, then go to Step 8. (See **ELECTRIC VARIABLE VALVE TIMING ACTUATOR, HYDRAULIC VARIABLE VALVE TIMING ACTUATOR REMOVAL/INSTALLATION [SKYACTIV-G 2.0, SKYACTIV-G 2.5]**.)
		No	Go to the next step.
2	**PURPOSE: VERIFY ASSEMBLY CONDITION OF TIMING CHAIN** • Verify the condition of the timing chain assembly (exhaust valve timing, looseness, jumping). (See **TIMING CHAIN REMOVAL/INSTALLATION [SKYACTIV-G 2.0, SKYACTIV-G 2.5]**.) • Is there any malfunction?	Yes	Repair or replace the malfunctioning part. Assemble the timing chain using the correct timing, then go to the Step 8. (See **TIMING CHAIN REMOVAL/INSTALLATION [SKYACTIV-G 2.0, SKYACTIV-G 2.5]**.)
		No	Go to the next step.

3	**PURPOSE: VERIFY IF FOREIGN MATTER ON EXHAUST CMP SENSOR DETECTION AREA AFFECTS DIAGNOSTIC RESULTS** • Visually inspect for exhaust CMP sensor. (See **CAMSHAFT POSITION (CMP) SENSOR INSPECTION [SKYACTIV-G 2.0, SKYACTIV-G 2.5]**.) • Is there foreign matter such as metallic dust on the exhaust CMP sensor detection area?	Yes	Remove the foreign matter, then go to Step 8.
		No	Go to the next step.
4	**PURPOSE: INSPECT IF INSUFFICIENT HYDRAULIC PRESSURE CAUSED BY USE OF UNSPECIFIED ENGINE OIL** • Is the specified engine oil being used?	Yes	Go to the next step.
		No	Replace the engine oil with genuine motor oil, then go to Step 8. (See **ENGINE OIL REPLACEMENT [SKYACTIV-G 2.0, SKYACTIV-G 2.5]**.)
5	**PURPOSE: INSPECT ENGINE OIL LEVEL** • Inspect the engine oil level. (See **ENGINE OIL LEVEL INSPECTION [SKYACTIV-G 2.0, SKYACTIV-G 2.5]**.) • Is the engine oil level sufficient?	Yes	Go to the next step.
		No	Add genuine motor oil, then go to Step 8. (See **ENGINE OIL REPLACEMENT [SKYACTIV-G 2.0, SKYACTIV-G 2.5]**.)
6	**PURPOSE: INSPECT ENGINE OIL PRESSURE** • Inspect the engine oil pressure. (See **OIL PRESSURE INSPECTION [SKYACTIV-G 2.0, SKYACTIV-G 2.5]**.) • Is there any malfunction?	Yes	Go to the next step.
		No	Go to Step 8.
7	**PURPOSE: VERIFY IF MALFUNCTION RELATED TO ENGINE OIL LEAK OR RESTRICTION AFFECTS DIAGNOSTIC RESULTS** • Start the engine. • Verify if there is engine oil leakage in the oil passage or restriction. • Is there engine oil leakage in the oil passage or restriction?	Yes	Repair or replace the malfunctioning part according to the inspection results. Add genuine motor oil, then go to the next step. (See **ENGINE OIL REPLACEMENT [SKYACTIV-G 2.0, SKYACTIV-G 2.5]**.)
		No	Go to the next step.
8	**PURPOSE: VERIFICATION OF VEHICLE REPAIR COMPLETION** • Always reconnect all disconnected connectors. • Clear the DTC from the PCM memory using the M-MDS. (See **CLEARING DTC [SKYACTIV-G 2.0, SKYACTIV-G 2.5]**.) • Implement the repeatability verification procedure. (See **Repeatability Verification Procedure**.) • Perform the Pending Trouble Code Access Procedure. (See **ON-BOARD DIAGNOSTIC TEST [SKYACTIV-G 2.0, SKYACTIV-G 2.5]**.) • Is the PENDING CODE for this DTC present?	Yes	Repeat the inspection from Step 1. • If the malfunction recurs, replace the PCM. (See **PCM REMOVAL/INSTALLATION [SKYACTIV-G 2.0, SKYACTIV-G 2.5]**.) Go to the next step.
		No	Go to the next step.
9	**PURPOSE: VERIFY IF THERE IS ANY OTHER MALFUNCTION** • Is any other DTC or pending code stored?	Yes	Go to the applicable DTC inspection. (See **DTC TABLE [SKYACTIV-G 2.0, SKYACTIV-G 2.5]**.)
		No	DTC troubleshooting completed.

2014 - Mazda3 - Engine

DTC P0016:00 [SKYACTIV-G 2.0, SKYACTIV-G 2.5]

DTC P0016:00	CKP-CMP (intake side) correlation problem
DETECTION CONDITION	• The PCM monitors the input pulses from the CKP sensor and intake CMP sensor. If the input pulse pick-up timing do not match each other, the PCM determines that the camshaft position does not coincide with the crankshaft position. **Diagnostic support note** • This is a continuous monitor (CCM). • The check engine light illuminates if the PCM detects the above malfunction condition in two consecutive drive cycles or in one drive cycle while the DTC for the same malfunction has been stored in the PCM. • PENDING CODE is available if the PCM detects the above malfunction condition during first drive cycle. • FREEZE FRAME DATA (Mode 2)/Snapshot data is available. • DTC is stored in the PCM memory.
FAIL-SAFE FUNCTION	Not applicable

POSSIBLE CAUSE	• Improper valve timing
	  ▪ Improper installation of timing chain to intake cam sprocket teeth
	  ▪ Timing chain damage
	  ▪ Intake cam sprocket damage
	• CKP sensor malfunction
	  ▪ Connector or terminals malfunction
	  ▪ Foreign matter on CKP sensor
	  ▪ Damaged or scratched CKP sensor pulse wheel
	• Intake CMP sensor malfunction
	  ▪ Connector or terminals malfunction

	▪ Foreign matter on intake CMP sensor ▪ Damaged or scratched intake CMP sensor pulse wheel • PCM connector or terminals malfunction • PCM malfunction
SYSTEM WIRING DIAGRAM	Not applicable

Diagnostic Procedure

STEP	INSPECTION		ACTION
1	**VERIFY FREEZE FRAME DATA (MODE 2)/SNAPSHOT DATA HAS BEEN RECORDED** • Has the FREEZE FRAME DATA (Mode 2)/snapshot data been recorded?	Yes	Go to the next step.
		No	Record the FREEZE FRAME DATA (Mode 2)/snapshot data on the repair order, then go to the next step.
2	**VERIFY RELATED REPAIR INFORMATION AVAILABILITY** • Verify related Service Bulletins and/or on-line repair information availability. • Is any related repair information available?	Yes	Perform repair or diagnosis according to the available repair information. • If the vehicle is not repaired, go to the next step.
		No	Go to the next step.
3	**VERIFY INTAKE VALVE TIMING MECHANISM INSTALLATION** • Verify the intake valve timing mechanism installation for the timing chain. • Is the intake valve timing mechanism installed correctly?	Yes	Go to the next step.
		No	Reinstall the timing chain correctly, then go to Step 16.
4	**INSPECT TIMING CHAIN** • Inspect the timing chain. (See **TIMING CHAIN REMOVAL/INSTALLATION [SKYACTIV-G 2.0, SKYACTIV-G 2.5]**.) • Is there any malfunction?	Yes	Repair or replace the malfunctioning part according to the inspection results, then go to Step 16.
		No	Go to the next step.
5	**INSPECT INTAKE CAMSHAFT SPROCKET** • Inspect the intake camshaft	Yes	Repair or replace the malfunctioning part according to the inspection results, then go to

	sprocket. (See **TIMING CHAIN REMOVAL/INSTALLATION [SKYACTIV-G 2.0, SKYACTIV-G 2.5]**.) • Is there any malfunction?		Step 16.
		No	Go to the next step.
6	**INSPECT VALVE TIMING** • Inspect the valve timing. (See **TIMING CHAIN REMOVAL/INSTALLATION [SKYACTIV-G 2.0, SKYACTIV-G 2.5]**.) • Is there any malfunction?	Yes	Adjust the valve timing properly, then go to Step 16. (See **TIMING CHAIN REMOVAL/INSTALLATION [SKYACTIV-G 2.0, SKYACTIV-G 2.5]**.)
		No	Go to the next step.
7	**INSPECT CKP SENSOR CONNECTOR CONDITION** • Switch the ignition off. • Disconnect the CKP sensor connector. • Inspect for poor connection (such as damaged/pulled-out pins, corrosion). • Is there any malfunction?	Yes	Repair or replace the connector and/or terminals, then go to Step 16.
		No	Go to the next step.
8	**INSPECT CKP SENSOR FOR FOREIGN MATTER** • Visually inspect the CKP sensor for foreign matter. (See **CRANKSHAFT POSITION (CKP) SENSOR INSPECTION [SKYACTIV-G 2.0, SKYACTIV-G 2.5]**.) • Is there any foreign matter on the CKP sensor?	Yes	Remove the foreign matter from the CKP sensor, then go to Step 16.
		No	Go to the next step.
9	**INSPECT CKP SENSOR PULSE WHEEL** • Visually inspect the CKP sensor pulse wheel. • Is there any damage or scratching on the CKP sensor pulse wheel?	Yes	Replace the CKP sensor pulse wheel, then go to Step 16.
		No	Go to the next step.
10	**INSPECT CKP SENSOR** • Reconnect all disconnected connectors. • Inspect the CKP sensor.	Yes	Replace the CKP sensor, then go to Step 16. (See **CRANKSHAFT POSITION (CKP) SENSOR REMOVAL/INSTALLATION [SKYACTIV-G 2.0, SKYACTIV-G 2.5]**.)

	(See **CRANKSHAFT POSITION (CKP) SENSOR INSPECTION [SKYACTIV-G 2.0, SKYACTIV-G 2.5]**.) • Is there any malfunction?	No	Go to the next step.
11	**INSPECT INTAKE CMP SENSOR CONNECTOR CONDITION** • Switch the ignition off. • Disconnect the intake CMP sensor connector. • Inspect for poor connection (such as damaged/pulled-out pins, corrosion). • Is there any malfunction?	Yes	Repair or replace the connector and/or terminals, then go to Step 16.
		No	Go to the next step.
12	**INSPECT INTAKE CMP SENSOR FOR FOREIGN MATTER** • Visually inspect the intake CMP sensor for foreign matter. (See **CAMSHAFT POSITION (CMP) SENSOR INSPECTION [SKYACTIV-G 2.0, SKYACTIV-G 2.5]**.) • Is there any foreign matter on the intake CMP sensor?	Yes	Remove the foreign matter from the intake CMP sensor, then go to Step 16.
		No	Go to the next step.
13	**INSPECT INTAKE CMP SENSOR PULSE WHEEL** • Visually inspect the intake CMP sensor pulse wheel. • Is there any damage or scratching on the intake CMP sensor pulse wheel?	Yes	Replace the intake CMP sensor pulse wheel, then go to Step 16.
		No	Go to the next step.
14	**INSPECT INTAKE CMP SENSOR** • Reconnect all disconnected connectors. • Inspect the intake CMP sensor. (See **CAMSHAFT POSITION (CMP) SENSOR INSPECTION [SKYACTIV-G 2.0, SKYACTIV-G 2.5]**.) • Is there any malfunction?	Yes	Replace the intake CMP sensor, then go to Step 16. (See **CAMSHAFT POSITION (CMP) SENSOR REMOVAL/INSTALLATION [SKYACTIV-G 2.0, SKYACTIV-G 2.5]**.)
		No	Go to the next step.
15	**INSPECT PCM CONNECTOR CONDITION** • Switch the ignition off. • Disconnect the PCM connector. • Inspect for poor connection (such	Yes	Repair or replace the connector and/or terminals, then go to the next step.
		No	Go to the next step.

	as damaged/pulled-out pins, corrosion). • Is there any malfunction?		
16	**VERIFY DTC TROUBLESHOOTING COMPLETED** • Always reconnect all disconnected connectors. • Clear the DTC from the PCM memory using the M-MDS. (See **AFTER REPAIR PROCEDURE [SKYACTIV-G 2.0, SKYACTIV-G 2.5]**.) • Start the engine and warm it up completely. • Perform the Pending Trouble Code Access Procedure. (See **ON-BOARD DIAGNOSTIC TEST [SKYACTIV-G 2.0, SKYACTIV-G 2.5]**.) • Is the PENDING CODE for this DTC present?	Yes	Repeat the inspection from Step 1. • If the malfunction recurs, replace the PCM. (See **PCM REMOVAL/INSTALLATION [SKYACTIV-G 2.0, SKYACTIV-G 2.5]**.) Go to the next step.
		No	Go to the next step.
17	**VERIFY AFTER REPAIR PROCEDURE** • Perform the “AFTER REPAIR PROCEDURE”. (See **AFTER REPAIR PROCEDURE [SKYACTIV-G 2.0, SKYACTIV-G 2.5]**.) • Are any DTCs present?	Yes	Go to the applicable DTC inspection. (See **DTC TABLE [SKYACTIV-G 2.0, SKYACTIV-G 2.5]**.)
		No	DTC troubleshooting completed.

2014 - Mazda3 - Engine

DTC P0017:00 [SKYACTIV-G 2.0, SKYACTIV-G 2.5]

DTC P0017:00	CKP-CMP (exhaust side) correlation problem
DETECTION CONDITION	• The PCM monitors the input pulses from the CKP sensor and exhaust CMP sensor. If the input pulse pick-up timing do not match each other, the PCM determines that the camshaft position does not coincide with the crankshaft position. **Diagnostic support note** • This is a continuous monitor (CCM). • The check engine light illuminates if the PCM detects the above malfunction condition in two consecutive drive cycles or in one drive cycle while the DTC for the same malfunction has been stored in the PCM. • PENDING CODE is available if the PCM detects the above malfunction condition during first drive cycle. • FREEZE FRAME DATA (Mode 2)/Snapshot data is available. • DTC is stored in the PCM memory.
FAIL-SAFE FUNCTION	Not applicable

POSSIBLE CAUSE	• Improper valve timing
	  ▪ Improper installation of timing chain to exhaust cam sprocket teeth
	  ▪ Timing chain damage
	  ▪ Exhaust cam sprocket damage
	• CKP sensor malfunction
	  ▪ Connector or terminals malfunction
	  ▪ Foreign matter on CKP sensor
	  ▪ Damaged or scratched CKP sensor pulse wheel
	• Exhaust CMP sensor malfunction
	  ▪ Connector or terminals malfunction

	▪ Foreign matter on exhaust CMP sensor ▪ Damaged or scratched exhaust CMP sensor pulse wheel • PCM connector or terminals malfunction • PCM malfunction
SYSTEM WIRING DIAGRAM	Not applicable

Diagnostic Procedure

STEP	INSPECTION		ACTION
1	**VERIFY FREEZE FRAME DATA (MODE 2)/SNAPSHOT DATA HAS BEEN RECORDED** • Has the FREEZE FRAME DATA (Mode 2)/snapshot data been recorded?	Yes	Go to the next step.
		No	Record the FREEZE FRAME DATA (Mode 2)/snapshot data on the repair order, then go to the next step.
2	**VERIFY RELATED REPAIR INFORMATION AVAILABILITY** • Verify related Service Bulletins and/or on-line repair information availability. • Is any related repair information available?	Yes	Perform repair or diagnosis according to the available repair information. • If the vehicle is not repaired, go to the next step.
		No	Go to the next step.
3	**VERIFY EXHAUST VALVE TIMING MECHANISM INSTALLATION** • Verify the exhaust valve timing mechanism installation for the timing chain. • Is the exhaust valve timing mechanism installed correctly?	Yes	Go to the next step.
		No	Reinstall the timing chain correctly, then go to Step 16.
4	**INSPECT TIMING CHAIN** • Inspect the timing chain. (See **TIMING CHAIN REMOVAL/INSTALLATION [SKYACTIV-G 2.0, SKYACTIV-G 2.5]**.) • Is there any malfunction?	Yes	Repair or replace the malfunctioning part according to the inspection results, then go to Step 16.
		No	Go to the next step.
5	**INSPECT EXHAUST CAMSHAFT SPROCKET** • Inspect the exhaust camshaft	Yes	Repair or replace the malfunctioning part according to the inspection results, then go to

	sprocket. (See **TIMING CHAIN REMOVAL/INSTALLATION [SKYACTIV-G 2.0, SKYACTIV-G 2.5]**.) • Is there any malfunction?		Step 16.
		No	Go to the next step.
6	**INSPECT VALVE TIMING** • Inspect the valve timing. (See **TIMING CHAIN REMOVAL/INSTALLATION [SKYACTIV-G 2.0, SKYACTIV-G 2.5]**.) • Is there any malfunction?	Yes	Adjust the valve timing properly, then go to Step 16. (See **TIMING CHAIN REMOVAL/INSTALLATION [SKYACTIV-G 2.0, SKYACTIV-G 2.5]**.)
		No	Go to the next step.
7	**INSPECT CKP SENSOR CONNECTOR CONDITION** • Switch the ignition off. • Disconnect the CKP sensor connector. • Inspect for poor connection (such as damaged/pulled-out pins, corrosion). • Is there any malfunction?	Yes	Repair or replace the connector and/or terminals, then go to Step 16.
		No	Go to the next step.
8	**INSPECT CKP SENSOR FOR FOREIGN MATTER** • Visually inspect the CKP sensor for foreign matter. (See **CRANKSHAFT POSITION (CKP) SENSOR INSPECTION [SKYACTIV-G 2.0, SKYACTIV-G 2.5]**.) • Is there any foreign matter on the CKP sensor?	Yes	Remove the foreign matter from the CKP sensor, then go to Step 16.
		No	Go to the next step.
9	**INSPECT CKP SENSOR PULSE WHEEL** • Visually inspect the CKP sensor pulse wheel. • Is there any damage or scratching on the CKP sensor pulse wheel?	Yes	Replace the CKP sensor pulse wheel, then go to Step 16.
		No	Go to the next step.
10	**INSPECT CKP SENSOR** • Reconnect all disconnected connectors. • Inspect the CKP sensor.	Yes	Replace the CKP sensor, then go to Step 16. (See **CRANKSHAFT POSITION (CKP) SENSOR REMOVAL/INSTALLATION [SKYACTIV-G 2.0, SKYACTIV-G 2.5]**.)

	(See **CRANKSHAFT POSITION (CKP) SENSOR INSPECTION [SKYACTIV-G 2.0, SKYACTIV-G 2.5]**.) • Is there any malfunction?	No	Go to the next step.
11	**INSPECT EXHAUST CMP SENSOR CONNECTOR CONDITION** • Switch the ignition off. • Disconnect the exhaust CMP sensor connector. • Inspect for poor connection (such as damaged/pulled-out pins, corrosion). • Is there any malfunction?	Yes	Repair or replace the connector and/or terminals, then go to Step 16.
		No	Go to the next step.
12	**INSPECT EXHAUST CMP SENSOR FOR FOREIGN MATTER** • Visually inspect the exhaust CMP sensor for foreign matter. (See **CAMSHAFT POSITION (CMP) SENSOR INSPECTION [SKYACTIV-G 2.0, SKYACTIV-G 2.5]**.) • Is there any foreign matter on the exhaust CMP sensor?	Yes	Remove the foreign matter from the exhaust CMP sensor, then go to Step 16.
		No	Go to the next step.
13	**INSPECT EXHAUST CMP SENSOR PULSE WHEEL** • Visually inspect the exhaust CMP sensor pulse wheel. • Is there any damage or scratching on the exhaust CMP sensor pulse wheel?	Yes	Replace the exhaust CMP sensor pulse wheel, then go to Step 16.
		No	Go to the next step.
14	**INSPECT EXHAUST CMP SENSOR** • Reconnect all disconnected connectors. • Inspect the exhaust CMP sensor. (See **CAMSHAFT POSITION (CMP) SENSOR INSPECTION [SKYACTIV-G 2.0, SKYACTIV-G 2.5]**.) • Is there any malfunction?	Yes	Replace the exhaust CMP sensor, then go to Step 16. (See **CAMSHAFT POSITION (CMP) SENSOR REMOVAL/INSTALLATION [SKYACTIV-G 2.0, SKYACTIV-G 2.5]**.)
		No	Go to the next step.
15	**INSPECT PCM CONNECTOR CONDITION** • Switch the ignition off. • Disconnect the PCM connector.	Yes	Repair or replace the connector and/or terminals, then go to the next step.
		No	Go to the next step.

	• Inspect for poor connection (such as damaged/pulled-out pins, corrosion). • Is there any malfunction?		
16	**VERIFY DTC TROUBLESHOOTING COMPLETED** • Always reconnect all disconnected connectors. • Clear the DTC from the PCM memory using the M-MDS. (See **AFTER REPAIR PROCEDURE [SKYACTIV-G 2.0, SKYACTIV-G 2.5]**.) • Start the engine and warm it up completely. • Perform the Pending Trouble Code Access Procedure. (See **ON-BOARD DIAGNOSTIC TEST [SKYACTIV-G 2.0, SKYACTIV-G 2.5]**.) • Is the PENDING CODE for this DTC present?	Yes	Repeat the inspection from Step 1. • If the malfunction recurs, replace the PCM. (See **PCM REMOVAL/INSTALLATION [SKYACTIV-G 2.0, SKYACTIV-G 2.5]**.) Go to the next step.
		No	Go to the next step.
17	**VERIFY AFTER REPAIR PROCEDURE** • Perform the “AFTER REPAIR PROCEDURE”. (See **AFTER REPAIR PROCEDURE [SKYACTIV-G 2.0, SKYACTIV-G 2.5]**.) • Are any DTCs present?	Yes	Go to the applicable DTC inspection. (See **DTC TABLE [SKYACTIV-G 2.0, SKYACTIV-G 2.5]**.)
		No	DTC troubleshooting completed.

2014 - Mazda3 - Engine

DTC P0031:00 [SKYACTIV-G 2.0, SKYACTIV-G 2.5]

DTC P0031:00	A/F sensor heater control circuit low input
DETECTION CONDITION	• When the PCM controls the A/F sensor heater, the voltage input to the PCM is too low. **Diagnostic support note** • This is a continuous monitor (A/F sensor heater, HO2S heater). • The check engine light illuminates if the PCM detects the above malfunction condition in two consecutive drive cycles or in one drive cycle while the DTC for the same malfunction has been stored in the PCM. • PENDING CODE is available if the PCM detects the above malfunction condition during first drive cycle. • FREEZE FRAME DATA (Mode 2)/Snapshot data is available. • DTC is stored in the PCM memory.
FAIL-SAFE FUNCTION	• Stops fuel feedback control
POSSIBLE CAUSE	• A/F sensor connector or terminals malfunction • Short to ground or open circuit in A/F sensor heater power supply circuit: ▪ Short to ground in wiring harness between ENGINE1 15 A fuse and A/F sensor terminal A ▪ ENGINE1 15 A fuse malfunction ▪ Open circuit in wiring harness between main relay terminal D and A/F sensor terminal A • PCM connector or terminals malfunction • Short to ground in wiring harness between A/F sensor terminal E and PCM terminal 1BY • A/F sensor heater malfunction • Open circuit in wiring harness between A/F sensor terminal E and PCM terminal 1BY • PCM malfunction

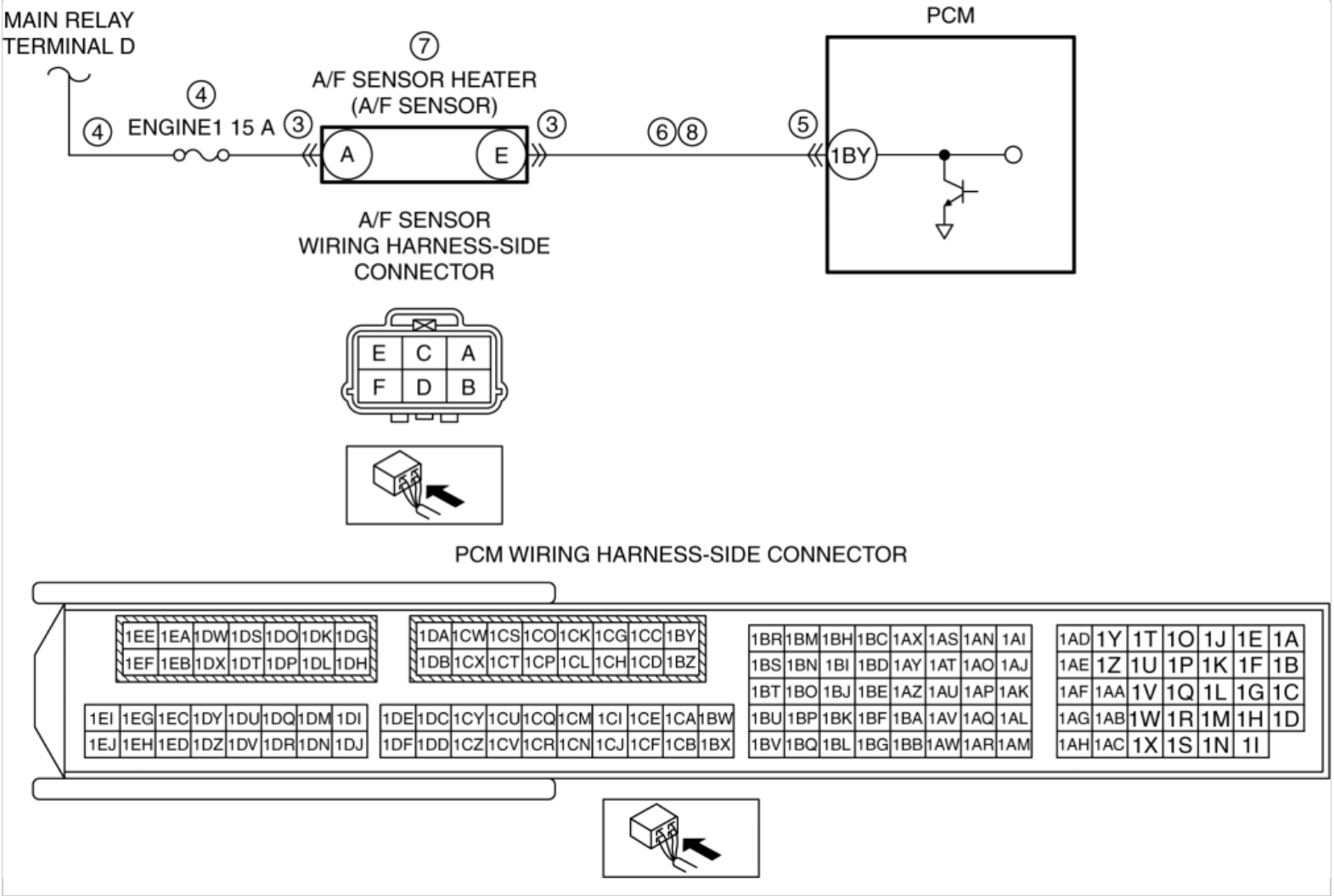

Diagnostic Procedure

STEP	INSPECTION		ACTION
1	**VERIFY FREEZE FRAME DATA (MODE 2)/SNAPSHOT DATA AND DIAGNOSTIC MONITORING TEST RESULTS HAVE BEEN RECORDED** • Have the FREEZE FRAME DATA (Mode 2)/snapshot data and DIAGNOSTIC MONITORING TEST RESULTS (A/F sensor heater, HO2S heater related) been recorded?	Yes	Go to the next step.
		No	Record the FREEZE FRAME DATA (Mode 2)/snapshot data and DIAGNOSTIC MONITORING TEST RESULTS on the repair order, then go to the next step.
2	**VERIFY RELATED REPAIR INFORMATION AVAILABILITY** • Verify related Service Bulletins and/or on-line repair information availability. • Is any related repair information available?	Yes	Perform repair or diagnosis according to the available repair information. • If the vehicle is not repaired, go to the next step.
		No	Go to the next step.
3	**INSPECT A/F SENSOR CONNECTOR CONDITION** • Switch the ignition off. • Disconnect the A/F sensor connector. • Inspect for poor connection (such as damaged/pulled-out pins, corrosion). • Is there any malfunction?	Yes	Repair or replace the connector and/or terminals, then go to Step 9.
		No	Go to the next step.

4	**INSPECT A/F SENSOR HEATER POWER SUPPLY CIRCUIT FOR SHORT TO GROUND OR OPEN CIRCUIT** • Verify that the A/F sensor connector is disconnected. • Switch the ignition ON (engine off). **NOTE:** • Another DTC may be stored by the PCM detecting an open circuit. • Measure the voltage at the A/F sensor terminal A (wiring harness-side). • Is the voltage **B+**?	Yes	Go to the next step.
		No	Inspect the ENGINE1 15 A fuse. • If the fuse is blown: ▪ Refer to the wiring diagram and verify whether or not there is a common connector between ENGINE1 15 A fuse and A/F sensor terminal A. **If there is a common connector:** • Determine the malfunctioning part by inspecting the common connector and the terminal for corrosion, damage, or pin disconnection, and the common wiring harness for a short to ground. • Repair or replace the malfunctioning part. **If there is no common connector:** • Repair or replace the wiring harness which has a short to ground. • Replace the fuse. • If the fuse is damaged: ▪ Replace the fuse. • If the fuse is normal: ▪ Refer to the wiring diagram and verify whether or not there is a common connector between main relay terminal D and A/F sensor terminal A. **If there is a common connector:** • Determine the malfunctioning part by inspecting the common connector and the terminal for corrosion, damage, or pin disconnection, and the common wiring harness for an open circuit. • Repair or replace the malfunctioning part. **If there is no common connector:** • Repair or replace the wiring harness which has an open circuit. Go to Step 9.
5	**INSPECT PCM CONNECTOR CONDITION**	Yes	Repair or replace the connector and/or terminals, then go to Step 9.

	• Switch the ignition off. • Disconnect the PCM connector. • Inspect for poor connection (such as damaged/pulled-out pins, corrosion). • Is there any malfunction?		
		No	Go to the next step.
6	**INSPECT A/F SENSOR HEATER CONTROL CIRCUIT FOR SHORT TO GROUND** • Verify that the A/F sensor and PCM connectors are disconnected. • Inspect for continuity between A/F sensor terminal E (wiring harness-side) and body ground. • Is there continuity?	Yes	Refer to the wiring diagram and verify whether or not there is a common connector between A/F sensor terminal E and PCM terminal 1BY. **If there is a common connector:** • Determine the malfunctioning part by inspecting the common connector and the terminal for corrosion, damage, or pin disconnection, and the common wiring harness for a short to ground. • Repair or replace the malfunctioning part. **If there is no common connector:** • Repair or replace the wiring harness which has a short to ground. Go to Step 9.
		No	Go to the next step.
7	**INSPECT A/F SENSOR HEATER** • Inspect the A/F sensor heater. (See **AIR FUEL RATIO (A/F) SENSOR INSPECTION [SKYACTIV-G 2.0, SKYACTIV-G 2.5]**.) • Is there any malfunction?	Yes	Replace the A/F sensor, then go to Step 9. (See **AIR FUEL RATIO (A/F) SENSOR REMOVAL/INSTALLATION [SKYACTIV-G 2.0, SKYACTIV-G 2.5]**.)
		No	Go to the next step.
8	**INSPECT A/F SENSOR HEATER CONTROL CIRCUIT FOR OPEN CIRCUIT** • Verify that the A/F sensor and PCM connectors are disconnected. • Inspect for continuity between A/F sensor terminal E (wiring harness-side) and PCM terminal 1BY (wiring harness-side). • Is there continuity?	Yes	Go to the next step.
		No	Refer to the wiring diagram and verify whether or not there is a common connector between A/F sensor terminal E and PCM terminal 1BY. **If there is a common connector:** • Determine the malfunctioning part by inspecting the common connector and the terminal for corrosion, damage, or pin disconnection, and the common wiring harness for an open circuit. • Repair or replace the malfunctioning part. **If there is no common connector:** • Repair or replace the wiring harness which has an open circuit. Go to the next step.
9	**VERIFY DTC TROUBLESHOOTING COMPLETED** • Always reconnect all disconnected connectors. • Clear the DTC from the PCM memory using the M-MDS. (See **AFTER REPAIR PROCEDURE [SKYACTIV-G 2.0, SKYACTIV-G 2.5]**.) • Perform the KOER self test. (See **KOEO/KOER SELF TEST [SKYACTIV-G 2.0, SKYACTIV-G 2.5]**.)	Yes	Repeat the inspection from Step 1. • If the malfunction recurs, replace the PCM. (See **PCM REMOVAL/INSTALLATION [SKYACTIV-G 2.0, SKYACTIV-G 2.5]**.) Go to the next step.
		No	Go to the next step.

	• Is the PENDING CODE for this DTC present?		
10	**VERIFY AFTER REPAIR PROCEDURE** • Perform the “AFTER REPAIR PROCEDURE”. (See **AFTER REPAIR PROCEDURE [SKYACTIV-G 2.0, SKYACTIV-G 2.5]**.) • Are any DTCs present?	Yes	Go to the applicable DTC inspection. (See **DTC TABLE [SKYACTIV-G 2.0, SKYACTIV-G 2.5]**.)
		No	DTC troubleshooting completed.

2014 - Mazda3 - Engine

DTC P0032:00 [SKYACTIV-G 2.0, SKYACTIV-G 2.5]

DTC P0032:00	A/F sensor heater control circuit high input
DETECTION CONDITION	• When the PCM controls the A/F sensor heater, the voltage input to the PCM is too high. **Diagnostic support note** • This is a continuous monitor (A/F sensor heater, HO2S heater). • The check engine light illuminates if the PCM detects the above malfunction condition in two consecutive drive cycles or in one drive cycle while the DTC for the same malfunction has been stored in the PCM. • PENDING CODE is available if the PCM detects the above malfunction condition during first drive cycle. • FREEZE FRAME DATA (Mode 2)/Snapshot data is available. • DTC is stored in the PCM memory.
FAIL-SAFE FUNCTION	• Stops fuel feedback control
POSSIBLE CAUSE	• A/F sensor connector or terminals malfunction • PCM connector or terminals malfunction • Short to power supply in wiring harness between A/F sensor terminal E and PCM terminal 1BY • A/F sensor heater malfunction • PCM malfunction

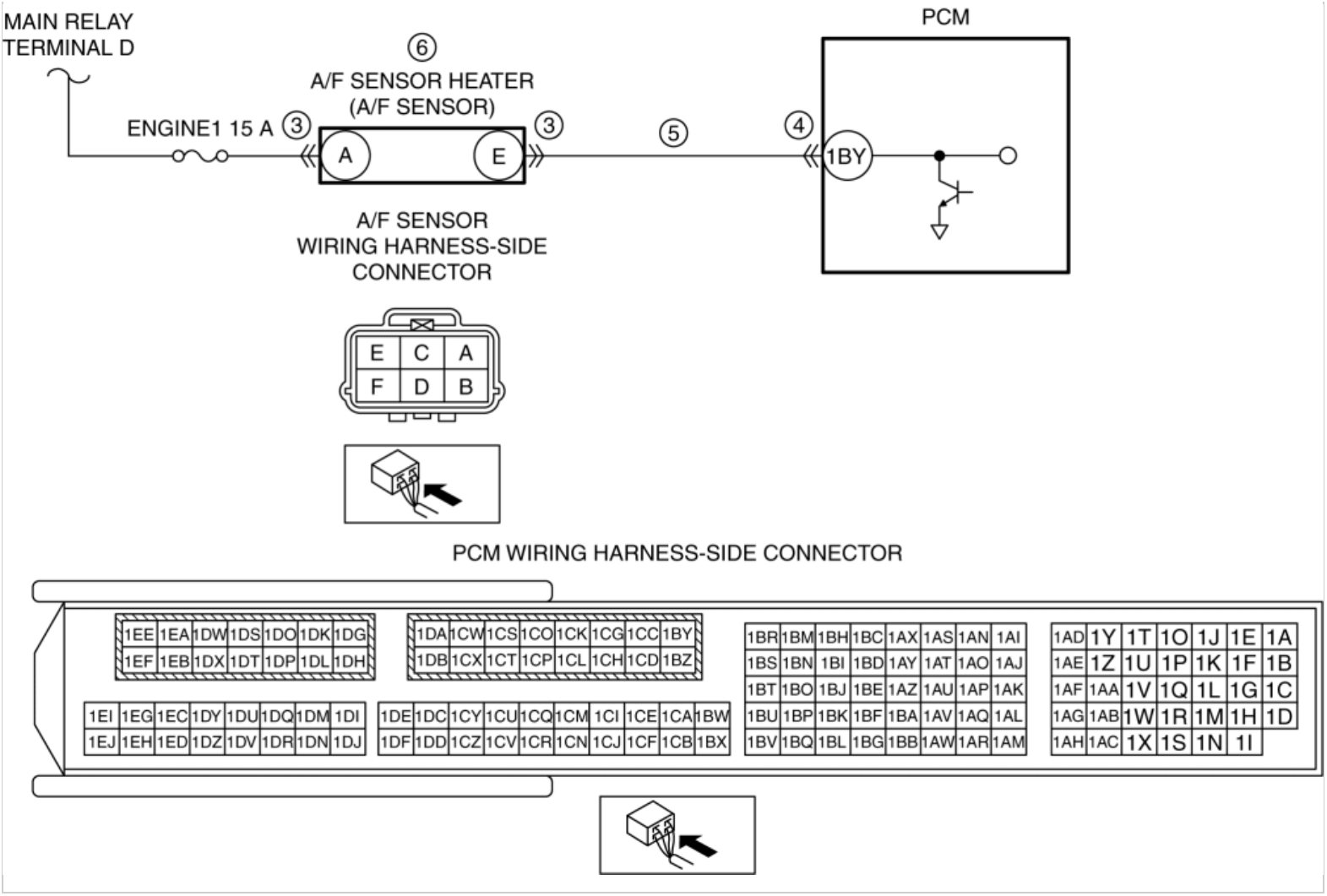

Diagnostic Procedure

STEP	INSPECTION		ACTION
1	**VERIFY FREEZE FRAME DATA (MODE 2)/SNAPSHOT DATA AND DIAGNOSTIC MONITORING TEST RESULTS HAVE BEEN RECORDED** • Have the FREEZE FRAME DATA (Mode 2)/snapshot data and DIAGNOSTIC MONITORING TEST RESULTS (A/F sensor heater, HO2S heater related) been recorded?	Yes	Go to the next step.
		No	Record the FREEZE FRAME DATA (Mode 2)/snapshot data and DIAGNOSTIC MONITORING TEST RESULTS on the repair order, then go to the next step.
2	**VERIFY RELATED REPAIR INFORMATION AVAILABILITY** • Verify related Service Bulletins and/or on-line repair information availability. • Is any related repair information available?	Yes	Perform repair or diagnosis according to the available repair information. • If the vehicle is not repaired, go to the next step.
		No	Go to the next step.
3	**INSPECT A/F SENSOR CONNECTOR CONDITION** • Switch the ignition off. • Disconnect the A/F sensor connector. • Inspect for poor connection (such as damaged/pulled-out pins, corrosion). • Is there any malfunction?	Yes	Repair or replace the connector and/or terminals, then go to Step 7.
		No	Go to the next step.

4	**INSPECT PCM CONNECTOR CONDITION** • Disconnect the PCM connector. • Inspect for poor connection (such as damaged/pulled-out pins, corrosion). • Is there any malfunction?	Yes	Repair or replace the connector and/or terminals, then go to Step 7.
		No	Go to the next step.
5	**INSPECT A/F SENSOR HEATER CONTROL CIRCUIT FOR SHORT TO POWER SUPPLY** • Verify that the A/F sensor and PCM connectors are disconnected. • Switch the ignition ON (engine off). **NOTE:** • Another DTC may be stored by the PCM detecting an open circuit. • Measure the voltage at the A/F sensor terminal E (wiring harness-side). • Is the voltage **0 V**?	Yes	Go to the next step.
		No	Refer to the wiring diagram and verify whether or not there is a common connector between A/F sensor terminal E and PCM terminal 1BY. **If there is a common connector:** • Determine the malfunctioning part by inspecting the common connector and the terminal for corrosion, damage, or pin disconnection, and the common wiring harness for a short to power supply. • Repair or replace the malfunctioning part. **If there is no common connector:** • Repair or replace the wiring harness which has a short to power supply. Go to Step 7.
6	**INSPECT A/F SENSOR HEATER** • Inspect the A/F sensor heater. (See **AIR FUEL RATIO (A/F) SENSOR INSPECTION [SKYACTIV-G 2.0, SKYACTIV-G 2.5]**.) • Is there any malfunction?	Yes	Replace the A/F sensor, then go to the next step. (See **AIR FUEL RATIO (A/F) SENSOR REMOVAL/INSTALLATION [SKYACTIV-G 2.0, SKYACTIV-G 2.5]**.)
		No	Go to the next step.
7	**VERIFY DTC TROUBLESHOOTING COMPLETED** • Always reconnect all disconnected connectors. • Clear the DTC from the PCM memory using the M-MDS. (See **AFTER REPAIR PROCEDURE [SKYACTIV-G 2.0, SKYACTIV-G 2.5]**.) • Perform the KOER self test. (See **KOEO/KOER SELF TEST [SKYACTIV-G 2.0, SKYACTIV-G 2.5]**.) • Is the PENDING CODE for this DTC present?	Yes	Repeat the inspection from Step 1. • If the malfunction recurs, replace the PCM. (See **PCM REMOVAL/INSTALLATION [SKYACTIV-G 2.0, SKYACTIV-G 2.5]**.) Go to the next step.
		No	Go to the next step.
8	**VERIFY AFTER REPAIR PROCEDURE** • Perform the “AFTER REPAIR PROCEDURE”. (See **AFTER REPAIR PROCEDURE [SKYACTIV-G 2.0, SKYACTIV-G 2.5]**.) • Are any DTCs present?	Yes	Go to the applicable DTC inspection. (See **DTC TABLE [SKYACTIV-G 2.0, SKYACTIV-G 2.5]**.)
		No	DTC troubleshooting completed.

2014 - Mazda3 - Engine

DTC P0037:00 [SKYACTIV-G 2.0, SKYACTIV-G 2.5]

DTC P0037:00	HO2S heater control circuit low input
DETECTION CONDITION	• When the PCM controls the HO2S heater, the voltage input to the PCM is too low. **Diagnostic support note** • This is a continuous monitor (A/F sensor heater, HO2S heater). • The check engine light illuminates if the PCM detects the above malfunction condition in two consecutive drive cycles or in one drive cycle while the DTC for the same malfunction has been stored in the PCM. • PENDING CODE is available if the PCM detects the above malfunction condition during first drive cycle. • FREEZE FRAME DATA (Mode 2)/Snapshot data is available. • DTC is stored in the PCM memory.
FAIL-SAFE FUNCTION	• Stops fuel feedback control

POSSIBLE CAUSE	• HO2S connector or terminals malfunction
	• Short to ground or open circuit in HO2S heater power supply circuit
	  ▪ Short to ground in wiring harness between ENGINE1 15 A fuse and HO2S terminal C
	  ▪ ENGINE1 15 A fuse malfunction
	  ▪ Open circuit in wiring harness between main relay terminal D and HO2S terminal C
	• PCM connector or terminals malfunction
	• Short to ground in wiring harness between HO2S terminal D and PCM terminal 2C
	• HO2S heater malfunction
	• Open circuit in wiring harness between HO2S terminal D and PCM terminal 2C
	• PCM malfunction

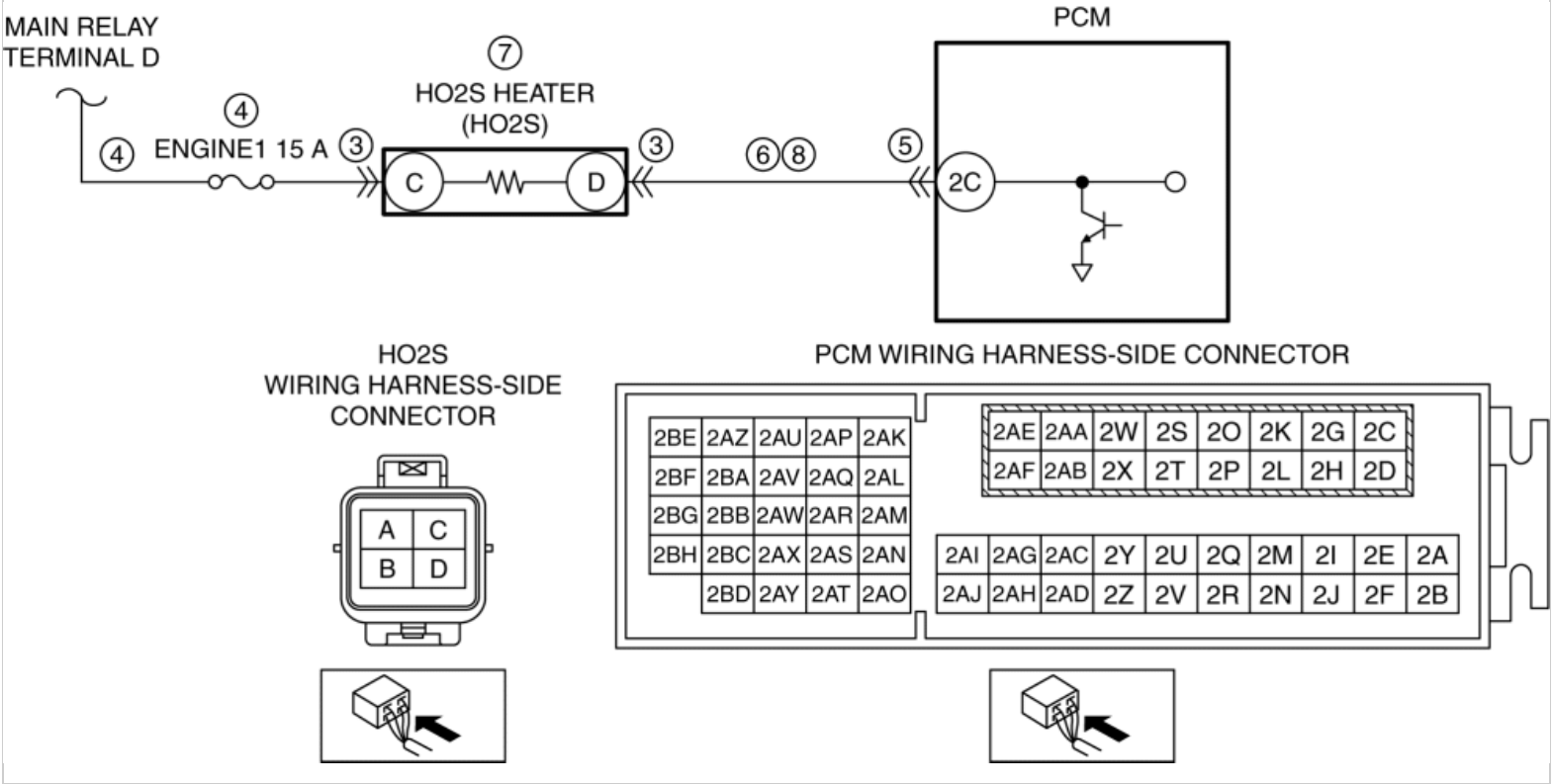

Diagnostic Procedure

STEP	INSPECTION		ACTION
1	**VERIFY FREEZE FRAME DATA (MODE 2)/SNAPSHOT DATA AND DIAGNOSTIC MONITORING TEST RESULTS HAVE BEEN RECORDED** • Have the FREEZE FRAME DATA (Mode 2)/snapshot data and DIAGNOSTIC MONITORING TEST RESULTS (A/F sensor heater, HO2S heater related) been recorded?	Yes	Go to the next step.
		No	Record the FREEZE FRAME DATA (Mode 2)/snapshot data and DIAGNOSTIC MONITORING TEST RESULTS on the repair order, then go to the next step.
2	**VERIFY RELATED REPAIR INFORMATION AVAILABILITY** • Verify related Service Bulletins and/or on-line repair information availability. • Is any related repair information available?	Yes	Perform repair or diagnosis according to the available repair information. • If the vehicle is not repaired, go to the next step.
		No	Go to the next step.
3	**INSPECT HO2S CONNECTOR CONDITION** • Switch the ignition off. • Disconnect the HO2S connector. • Inspect for poor connection (such as damaged/pulled-out pins, corrosion). • Is there any malfunction?	Yes	Repair or replace the connector and/or terminals, then go to Step 9.
		No	Go to the next step.
4	**INSPECT HO2S HEATER POWER SUPPLY CIRCUIT FOR SHORT TO GROUND OR OPEN CIRCUIT** • Verify that the HO2S connector is disconnected. • Switch the ignition ON (engine off). **NOTE:**	Yes	Go to the next step.
		No	Inspect the ENGINE1 15 A fuse. • If the fuse is blown: ▪ Refer to the wiring diagram and verify

	• Another DTC may be stored by the PCM detecting an open circuit. • Measure the voltage at the HO2S terminal C (wiring harness-side). • Is the voltage **B+**?		whether or not there is a common connector between ENGINE1 15 A fuse and HO2S terminal C. **If there is a common connector:** • Determine the malfunctioning part by inspecting the common connector and the terminal for corrosion, damage, or pin disconnection, and the common wiring harness for a short to ground. • Repair or replace the malfunctioning part. **If there is no common connector:** • Repair or replace the wiring harness which has a short to ground. • Replace the fuse. • If the fuse is damaged: ▪ Replace the fuse. • If the fuse is normal: ▪ Refer to the wiring diagram and verify whether or not there is a common connector between main relay terminal D and HO2S terminal C. **If there is a common connector:** • Determine the malfunctioning part by inspecting the common connector and the terminal for corrosion, damage, or pin disconnection, and the common wiring harness for an open circuit. • Repair or replace the malfunctioning part. **If there is no common connector:** • Repair or replace the wiring harness which has an open circuit. Go to Step 9.
5	**INSPECT PCM CONNECTOR CONDITION** • Switch the ignition off. • Disconnect the PCM connector. • Inspect for poor connection (such as damaged/pulled-out pins, corrosion). • Is there any malfunction?	Yes	Repair or replace the connector and/or terminals, then go to Step 9.
		No	Go to the next step.

6	**INSPECT HO2S HEATER CONTROL CIRCUIT FOR SHORT TO GROUND** • Verify that the HO2S and PCM connectors are disconnected. • Inspect for continuity between HO2S terminal D (wiring harness-side) and body ground. • Is there continuity?	Yes	Refer to the wiring diagram and verify whether or not there is a common connector between HO2S terminal D and PCM terminal 2C. **If there is a common connector:** • Determine the malfunctioning part by inspecting the common connector and the terminal for corrosion, damage, or pin disconnection, and the common wiring harness for a short to ground. • Repair or replace the malfunctioning part. **If there is no common connector:** • Repair or replace the wiring harness which has a short to ground. Go to Step 9.
		No	Go to the next step.
7	**INSPECT HO2S HEATER** • Inspect the HO2S heater. (See **HEATED OXYGEN SENSOR (HO2S) INSPECTION [SKYACTIV-G 2.0, SKYACTIV-G 2.5]**.) • Is there any malfunction?	Yes	Replace the HO2S, then go to Step 9. (See **HEATED OXYGEN SENSOR (HO2S) REMOVAL/INSTALLATION [SKYACTIV-G 2.0, SKYACTIV-G 2.5]**.)
		No	Go to the next step.
8	**INSPECT HO2S HEATER CONTROL CIRCUIT FOR OPEN CIRCUIT** • Verify that the HO2S and PCM connectors are disconnected. • Inspect for continuity between HO2S terminal D (wiring harness-side) and PCM terminal 2C (wiring harness-side). • Is there continuity?	Yes	Go to the next step.
		No	Refer to the wiring diagram and verify whether or not there is a common connector between HO2S terminal D and PCM terminal 2C. **If there is a common connector:** • Determine the malfunctioning part by inspecting the common connector and the terminal for corrosion, damage, or pin disconnection, and the common wiring harness for an open circuit. • Repair or replace the malfunctioning part. **If there is no common connector:** • Repair or replace the wiring harness which has an open circuit. Go to the next step.
9	**VERIFY DTC TROUBLESHOOTING COMPLETED** • Always reconnect all disconnected connectors. • Clear the DTC from the PCM memory using the M-MDS. (See **AFTER REPAIR PROCEDURE [SKYACTIV-G 2.0, SKYACTIV-G 2.5]**.) • Perform the KOER self test. (See **KOEO/KOER SELF TEST [SKYACTIV-G 2.0, SKYACTIV-G 2.5]**.) • Is the PENDING CODE for this DTC present?	Yes	Repeat the inspection from Step 1. • If the malfunction recurs, replace the PCM. (See **PCM REMOVAL/INSTALLATION [SKYACTIV-G 2.0, SKYACTIV-G 2.5]**.) Go to the next step.
		No	Go to the next step.
10	**VERIFY AFTER REPAIR PROCEDURE** • Perform the “AFTER REPAIR PROCEDURE”.	Yes	Go to the applicable DTC inspection. (See **DTC TABLE [SKYACTIV-G 2.0, SKYACTIV-G 2.5]**.)

	(See **AFTER REPAIR PROCEDURE [SKYACTIV-G 2.0, SKYACTIV-G 2.5]**.) • Are any DTCs present?	No	DTC troubleshooting completed.

2014 - Mazda3 - Engine

DTC P0038:00 [SKYACTIV-G 2.0, SKYACTIV-G 2.5]

DTC P0038:00	HO2S heater control circuit high input
DETECTION CONDITION	• When the PCM controls the HO2S heater, the voltage input to the PCM is too high. **Diagnostic support note** • This is a continuous monitor (A/F sensor heater, HO2S heater). • The check engine light illuminates if the PCM detects the above malfunction condition in two consecutive drive cycles or in one drive cycle while the DTC for the same malfunction has been stored in the PCM. • PENDING CODE is available if the PCM detects the above malfunction condition during first drive cycle. • FREEZE FRAME DATA (Mode 2)/Snapshot data is available. • DTC is stored in the PCM memory.
FAIL-SAFE FUNCTION	• Stops fuel feedback control
POSSIBLE CAUSE	• HO2S connector or terminals malfunction • PCM connector or terminals malfunction • Short to power supply in wiring harness between HO2S terminal D and PCM terminal 2C • HO2S heater malfunction • PCM malfunction

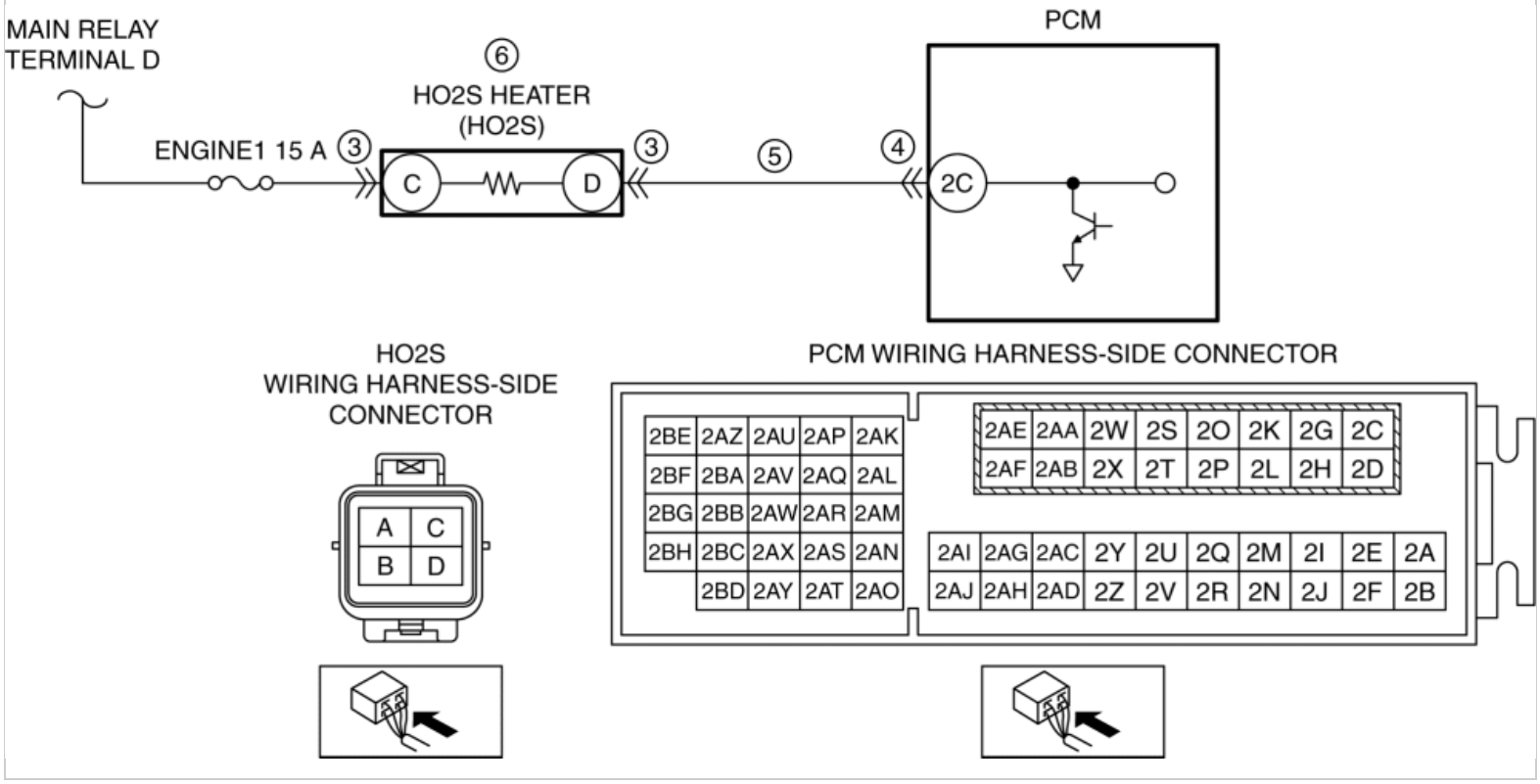

Diagnostic Procedure

STEP	INSPECTION		ACTION
1	**VERIFY FREEZE FRAME DATA (MODE 2)/SNAPSHOT DATA AND DIAGNOSTIC MONITORING TEST RESULTS HAVE BEEN RECORDED** • Have the FREEZE FRAME DATA (Mode 2)/snapshot data and DIAGNOSTIC MONITORING TEST RESULTS (A/F sensor heater, HO2S heater related) been recorded?	Yes	Go to the next step.
		No	Record the FREEZE FRAME DATA (Mode 2)/snapshot data and DIAGNOSTIC MONITORING TEST RESULTS on the repair order, then go to the next step.
2	**VERIFY RELATED REPAIR INFORMATION AVAILABILITY** • Verify related Service Bulletins and/or on-line repair information availability. • Is any related repair information available?	Yes	Perform repair or diagnosis according to the available repair information. • If the vehicle is not repaired, go to the next step.
		No	Go to the next step.
3	**INSPECT HO2S CONNECTOR CONDITION** • Switch the ignition off. • Disconnect the HO2S connector. • Inspect for poor connection (such as damaged/pulled-out pins, corrosion). • Is there any malfunction?	Yes	Repair or replace the connector and/or terminals, then go to Step 7.
		No	Go to the next step.
4	**INSPECT PCM CONNECTOR CONDITION** • Disconnect the PCM connector. • Inspect for poor connection (such as damaged/pulled-out pins, corrosion). • Is there any malfunction?	Yes	Repair or replace the connector and/or terminals, then go to Step 7.
		No	Go to the next step.
5	**INSPECT HO2S HEATER CONTROL CIRCUIT FOR SHORT TO POWER SUPPLY** • Verify that the HO2S and PCM connectors are disconnected. • Switch the ignition ON (engine off). **NOTE:** • Another DTC may be stored by the PCM detecting an open circuit. • Measure the voltage at the HO2S terminal D (wiring harness-side). • Is the voltage **0 V**?	Yes	Go to the next step.
		No	Refer to the wiring diagram and verify whether or not there is a common connector between HO2S terminal D and PCM terminal 2C. **If there is a common connector:** • Determine the malfunctioning part by inspecting the common connector and the terminal for corrosion, damage, or pin disconnection, and the common wiring harness for a short to power supply. • Repair or replace the malfunctioning part. **If there is no common connector:** • Repair or replace the wiring harness which has a short to power supply. Go to Step 7.
6	**INSPECT HO2S HEATER** • Inspect the HO2S heater. (See **HEATED OXYGEN SENSOR (HO2S) INSPECTION [SKYACTIV-G 2.0, SKYACTIV-G 2.5]**.) • Is there any malfunction?	Yes	Replace the HO2S, then go to the next step. (See **HEATED OXYGEN SENSOR (HO2S) REMOVAL/INSTALLATION [SKYACTIV-G 2.0, SKYACTIV-G 2.5]**.)
		No	Go to the next step.
	VERIFY DTC TROUBLESHOOTING COMPLETED		

7	• Always reconnect all disconnected connectors. • Clear the DTC from the PCM memory using the M-MDS. (See **AFTER REPAIR PROCEDURE [SKYACTIV-G 2.0, SKYACTIV-G 2.5]**.) • Perform the KOER self test. (See **KOEO/KOER SELF TEST [SKYACTIV-G 2.0, SKYACTIV-G 2.5]**.) • Is the PENDING CODE for this DTC present?	Yes	Repeat the inspection from Step 1. • If the malfunction recurs, replace the PCM. (See **PCM REMOVAL/INSTALLATION [SKYACTIV-G 2.0, SKYACTIV-G 2.5]**.) Go to the next step.
		No	Go to the next step.
8	**VERIFY AFTER REPAIR PROCEDURE** • Perform the “AFTER REPAIR PROCEDURE”. (See **AFTER REPAIR PROCEDURE [SKYACTIV-G 2.0, SKYACTIV-G 2.5]**.) • Are any DTCs present?	Yes	Go to the applicable DTC inspection. (See **DTC TABLE [SKYACTIV-G 2.0, SKYACTIV-G 2.5]**.)
		No	DTC troubleshooting completed.

2014 - Mazda3 - Engine

DTC P0053:00 [SKYACTIV-G 2.0, SKYACTIV-G 2.5]

DTC P0053:00	A/F sensor heater resistance
DETECTION CONDITION	• The PCM monitors the A/F sensor heater resistance when under the A/F sensor heater control. If the resistance is **more than 30 ohms**, the PCM determines that there is a A/F sensor circuit problem. **Diagnostic support note** • This is an intermittent monitor (A/F sensor heater, HO2S heater). • The check engine light illuminates if the PCM detects the above malfunction condition in two consecutive drive cycles or in one drive cycle while the DTC for the same malfunction has been stored in the PCM. • PENDING CODE is available if the PCM detects the above malfunction condition during first drive cycle. • FREEZE FRAME DATA (Mode 2)/Snapshot data is available. • DTC is stored in the PCM memory.
FAIL-SAFE FUNCTION	• Stops fuel feedback control

POSSIBLE CAUSE	• A/F sensor connector or terminals malfunction
	• A/F sensor heater malfunction
	• Short to ground or open circuit in A/F sensor heater power supply circuit
	  ▪ Short to ground in wiring harness between ENGINE1 15 A fuse and A/F sensor terminal A
	  ▪ ENGINE1 15 A fuse malfunction
	  ▪ Open circuit in wiring harness between main relay terminal D and A/F sensor terminal A
	• PCM connector or terminals malfunction
	• Short to ground in wiring harness between A/F sensor terminal E and PCM terminal 1BY
	• Open circuit in wiring harness between A/F sensor terminal E and PCM terminal 1BY
	• PCM malfunction

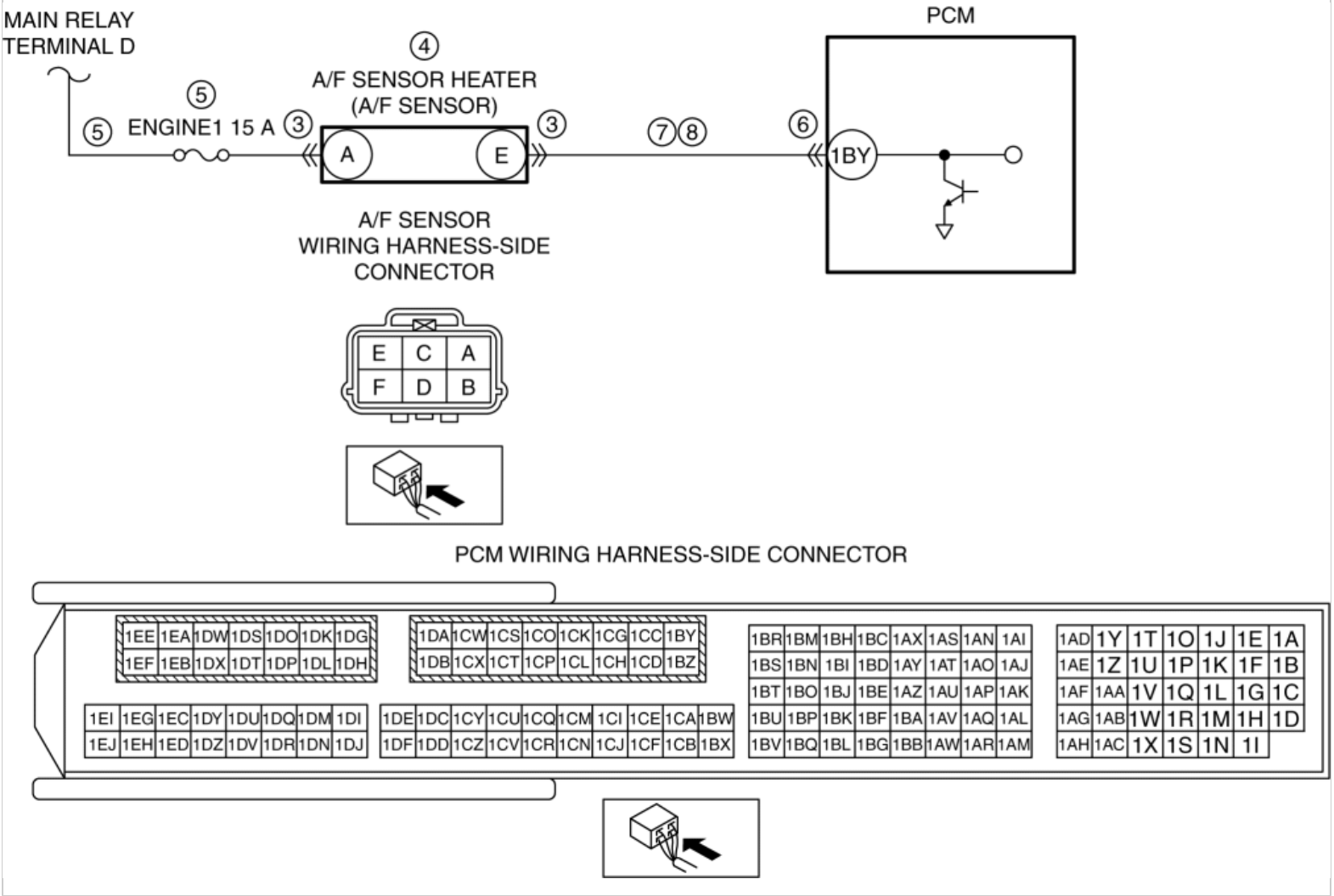

Diagnostic Procedure

STEP	INSPECTION		ACTION
1	**VERIFY FREEZE FRAME DATA (MODE 2)/SNAPSHOT DATA AND DIAGNOSTIC MONITORING TEST RESULTS HAVE BEEN RECORDED** • Have the FREEZE FRAME DATA (Mode 2)/snapshot data and DIAGNOSTIC MONITORING TEST RESULTS (A/F sensor heater, HO2S heater related) been recorded?	Yes	Go to the next step.
		No	Record the FREEZE FRAME DATA (Mode 2)/snapshot data and DIAGNOSTIC MONITORING TEST RESULTS on the repair order, then go to the next step.
2	**VERIFY RELATED REPAIR INFORMATION AVAILABILITY** • Verify related Service Bulletins and/or on-line repair information availability. • Is any related repair information available?	Yes	Perform repair or diagnosis according to the available repair information. • If the vehicle is not repaired, go to the next step.
		No	Go to the next step.
3	**INSPECT A/F SENSOR CONNECTOR CONDITION** • Switch the ignition off. • Disconnect the A/F sensor connector. • Inspect for poor connection (such as damaged/pulled-out pins, corrosion). • Is there any malfunction?	Yes	Repair or replace the connector and/or terminals, then go to Step 9.
		No	Go to the next step.

4	**INSPECT A/F SENSOR HEATER** • Inspect the A/F sensor heater. (See **AIR FUEL RATIO (A/F) SENSOR INSPECTION [SKYACTIV-G 2.0, SKYACTIV-G 2.5]**.) • Is there any malfunction?	Yes	Replace the A/F sensor, then go to Step 9. (See **AIR FUEL RATIO (A/F) SENSOR REMOVAL/INSTALLATION [SKYACTIV-G 2.0, SKYACTIV-G 2.5]**.)
		No	Go to the next step.
5	**INSPECT A/F SENSOR HEATER POWER SUPPLY CIRCUIT FOR SHORT TO GROUND OR OPEN CIRCUIT** • Verify that the A/F sensor connector is disconnected. • Switch the ignition ON (engine off). **NOTE:** • Another DTC may be stored by the PCM detecting an open circuit. • Measure the voltage at the A/F sensor terminal A (wiring harness-side). • Is the voltage **B+**?	Yes	Go to the next step.
		No	Inspect the ENGINE1 15 A fuse. • If the fuse is blown: ▪ Refer to the wiring diagram and verify whether or not there is a common connector between ENGINE1 15 A fuse and A/F sensor terminal A. **If there is a common connector:** • Determine the malfunctioning part by inspecting the common connector and the terminal for corrosion, damage, or pin disconnection, and the common wiring harness for a short to ground. • Repair or replace the malfunctioning part. **If there is no common connector:** • Repair or replace the wiring harness which has a short to ground. • Replace the fuse. • If the fuse is damaged: ▪ Replace the fuse. • If the fuse is normal: ▪ Refer to the wiring diagram and verify whether or not there is a common connector between main relay terminal D and A/F sensor terminal A. **If there is a common connector:** • Determine the malfunctioning part by inspecting the common connector and the terminal for corrosion, damage, or pin disconnection, and the common wiring harness for an open circuit. • Repair or replace the malfunctioning part. **If there is no**

			common connector: • Repair or replace the wiring harness which has an open circuit. Go to Step 9.
6	**INSPECT PCM CONNECTOR CONDITION** • Switch the ignition off. • Disconnect the PCM connector. • Inspect for poor connection (such as damaged/pulled-out pins, corrosion). • Is there any malfunction?	Yes	Repair or replace the connector and/or terminals, then go to Step 9.
		No	Go to the next step.
7	**INSPECT A/F SENSOR HEATER CONTROL CIRCUIT FOR SHORT TO GROUND** • Verify that the A/F sensor and PCM connectors are disconnected. • Inspect for continuity between A/F sensor terminal E (wiring harness-side) and body ground. • Is there continuity?	Yes	Refer to the wiring diagram and verify whether or not there is a common connector between A/F sensor terminal E and PCM terminal 1BY. **If there is a common connector:** • Determine the malfunctioning part by inspecting the common connector and the terminal for corrosion, damage, or pin disconnection, and the common wiring harness for a short to ground. • Repair or replace the malfunctioning part. **If there is no common connector:** • Repair or replace the wiring harness which has a short to ground. Go to Step 9.
		No	Go to the next step.
8	**INSPECT A/F SENSOR HEATER CONTROL CIRCUIT FOR OPEN CIRCUIT** • Verify that the A/F sensor and PCM connectors are disconnected. • Inspect for continuity between A/F sensor terminal E (wiring harness-side) and PCM terminal 1BY (wiring harness-side). • Is there continuity?	Yes	Go to the next step.
		No	Refer to the wiring diagram and verify whether or not there is a common connector between A/F sensor terminal E and PCM terminal 1BY. **If there is a common connector:** • Determine the malfunctioning part by inspecting the common connector and the terminal for corrosion, damage, or pin disconnection, and the common wiring harness for an open circuit. • Repair or replace the malfunctioning part. **If there is no common connector:** • Repair or replace the wiring harness which has an open circuit. Go to the next step.
9	**VERIFY DTC TROUBLESHOOTING COMPLETED** • Always reconnect all disconnected connectors. • Clear the DTC from the PCM memory using the M-MDS. (See **AFTER REPAIR PROCEDURE [SKYACTIV-G 2.0, SKYACTIV-G 2.5]**.) • Perform the KOER self test. (See **KOEO/KOER SELF TEST [SKYACTIV-G 2.0, SKYACTIV-G 2.5]**.)	Yes	Repeat the inspection from Step 1. • If the malfunction recurs, replace the PCM. (See **PCM REMOVAL/INSTALLATION [SKYACTIV-G 2.0, SKYACTIV-G 2.5]**.) Go to the next step.
		No	Go to the next step.

	• Is the PENDING CODE for this DTC present?		
10	**VERIFY AFTER REPAIR PROCEDURE** • Perform the “AFTER REPAIR PROCEDURE”. (See **AFTER REPAIR PROCEDURE [SKYACTIV-G 2.0, SKYACTIV-G 2.5]**.) • Are any DTCs present?	Yes	Go to the applicable DTC inspection. (See **DTC TABLE [SKYACTIV-G 2.0, SKYACTIV-G 2.5]**.)
		No	DTC troubleshooting completed.

2014 - Mazda3 - Engine

DTC P0054:00 [SKYACTIV-G 2.0, SKYACTIV-G 2.5]

DTC P0054:00	HO2S heater resistance
DETECTION CONDITION	• The PCM monitors the HO2S heater resistance when under the HO2S heater control. If the resistance is **more than 34 ohms**, the PCM determines that there is a HO2S heater circuit problem. **Diagnostic support note** • This is an intermittent monitor (A/F sensor heater, HO2S heater). • The check engine light illuminates if the PCM detects the above malfunction condition in two consecutive drive cycles or in one drive cycle while the DTC for the same malfunction has been stored in the PCM. • PENDING CODE is available if the PCM detects the above malfunction condition during first drive cycle. • FREEZE FRAME DATA (Mode 2)/Snapshot data is available. • DTC is stored in the PCM memory.
FAIL-SAFE FUNCTION	• Stops fuel feedback control of HO2S

POSSIBLE CAUSE	• HO2S connector or terminals malfunction
	• HO2S heater malfunction
	• Short to ground or open circuit in HO2S heater power supply circuit
	  ▪ Short to ground in wiring harness between ENGINE1 15 A fuse and HO2S terminal C
	  ▪ ENGINE1 15 A fuse malfunction
	  ▪ Open circuit in wiring harness between main relay terminal D and HO2S terminal C
	• PCM connector or terminals malfunction
	• Short to ground in wiring harness between HO2S terminal D and PCM terminal 2C
	• Open circuit in wiring harness between HO2S terminal D and PCM terminal 2C
	• PCM malfunction

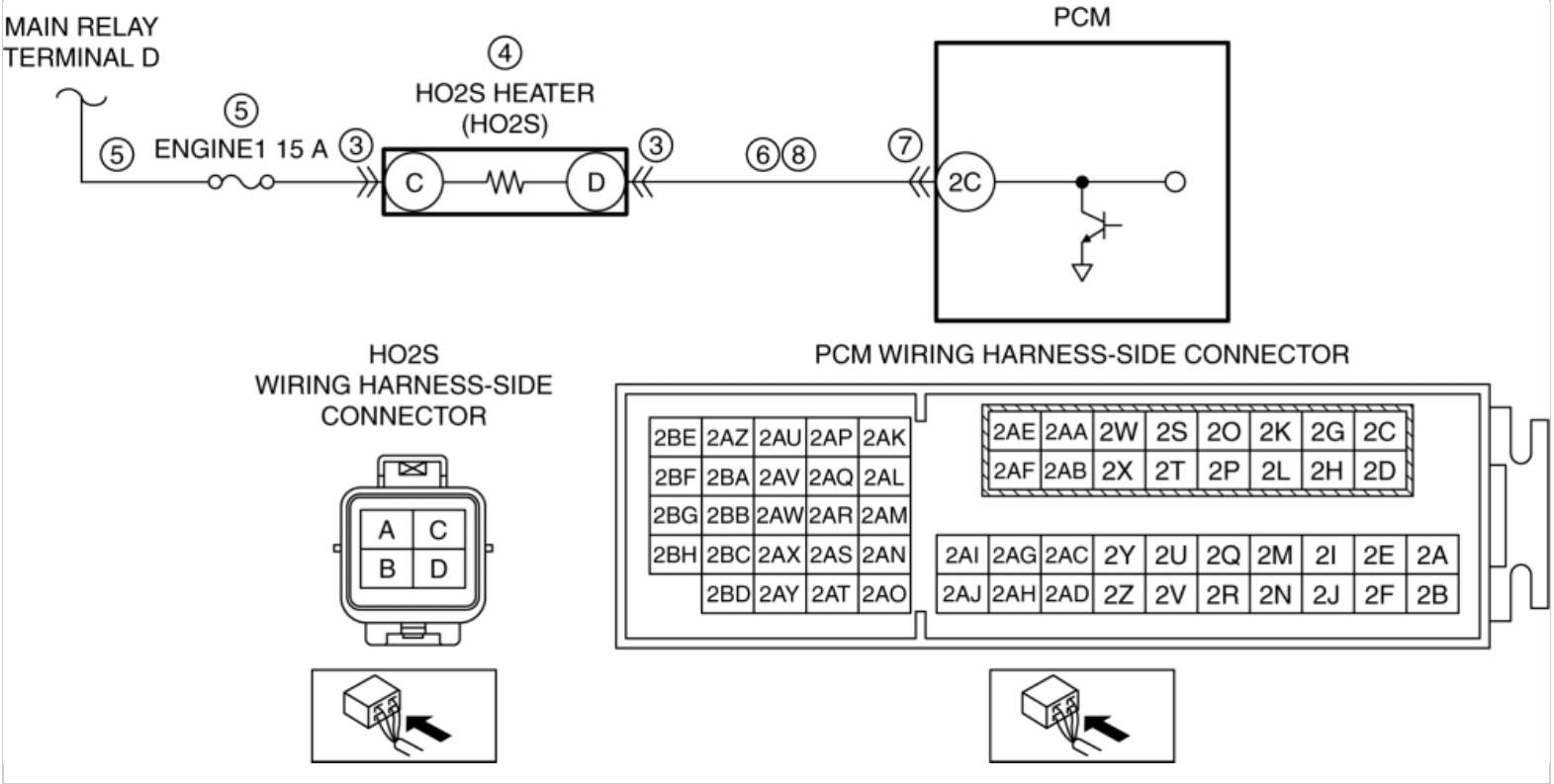

Diagnostic Procedure

STEP	INSPECTION		ACTION
1	**VERIFY FREEZE FRAME DATA (MODE 2)/SNAPSHOT DATA AND DIAGNOSTIC MONITORING TEST RESULTS HAVE BEEN RECORDED** • Have the FREEZE FRAME DATA (Mode 2)/snapshot data and DIAGNOSTIC MONITORING TEST RESULTS (A/F sensor heater, HO2S heater related) been recorded?	Yes	Go to the next step.
		No	Record the FREEZE FRAME DATA (Mode 2)/snapshot data and DIAGNOSTIC MONITORING TEST RESULTS on the repair order, then go to the next step.
2	**VERIFY RELATED REPAIR INFORMATION AVAILABILITY** • Verify related Service Bulletins and/or on-line repair information availability. • Is any related repair information available?	Yes	Perform repair or diagnosis according to the available repair information. • If the vehicle is not repaired, go to the next step.
		No	Go to the next step.
3	**INSPECT HO2S CONNECTOR CONDITION** • Switch the ignition off. • Disconnect the HO2S connector. • Inspect for poor connection (such as damaged/pulled-out pins, corrosion). • Is there any malfunction?	Yes	Repair or replace the connector and/or terminals, then go to Step 9.
		No	Go to the next step.
4	**INSPECT HO2S HEATER** • Inspect the HO2S heater. (See **HEATED OXYGEN SENSOR (HO2S) INSPECTION [SKYACTIV-G 2.0, SKYACTIV-G 2.5]**.) • Is there any malfunction?	Yes	Replace the HO2S, then go to Step 9. (See **HEATED OXYGEN SENSOR (HO2S) REMOVAL/INSTALLATION [SKYACTIV-G 2.0, SKYACTIV-G 2.5]**.)
		No	Go to the next step.

5	**INSPECT HO2S HEATER POWER SUPPLY CIRCUIT FOR SHORT TO GROUND OR OPEN CIRCUIT** • Verify that the HO2S connector is disconnected. • Switch the ignition ON (engine off). **NOTE:** • Another DTC may be stored by the PCM detecting an open circuit. • Measure the voltage at the HO2S terminal C (wiring harness-side). • Is the voltage **B+**?	Yes	Go to the next step.
		No	Inspect the ENGINE1 15 A fuse. • If the fuse is blown: ▪ Refer to the wiring diagram and verify whether or not there is a common connector between ENGINE1 15 A fuse and HO2S terminal C. **If there is a common connector:** • Determine the malfunctioning part by inspecting the common connector and the terminal for corrosion, damage, or pin disconnection, and the common wiring harness for a short to ground. • Repair or replace the malfunctioning part. **If there is no common connector:** • Repair or replace the wiring harness which has a short to ground. • Replace the fuse. • If the fuse is damaged: ▪ Replace the fuse. • If the fuse is normal: ▪ Refer to the wiring diagram and verify whether or not there is a common connector between main relay terminal D and HO2S terminal C. **If there is a common connector:** • Determine the malfunctioning part by inspecting the common connector and the terminal for corrosion, damage, or pin disconnection, and the common wiring harness for an open circuit. • Repair or replace the malfunctioning part. **If there is no common connector:** • Repair or replace the wiring harness which has an open circuit. Go to Step 9.
	INSPECT PCM CONNECTOR CONDITION		

6	• Switch the ignition off. • Disconnect the PCM connector. • Inspect for poor connection (such as damaged/pulled-out pins, corrosion). • Is there any malfunction?	Yes	Repair or replace the connector and/or terminals, then go to Step 9.
		No	Go to the next step.
7	**INSPECT HO2S HEATER CONTROL CIRCUIT FOR SHORT TO GROUND** • Verify that the HO2S and PCM connectors are disconnected. • Inspect for continuity between HO2S terminal D (wiring harness-side) and body ground. • Is there continuity?	Yes	Refer to the wiring diagram and verify whether or not there is a common connector between HO2S terminal D and PCM terminal 2C. **If there is a common connector:** • Determine the malfunctioning part by inspecting the common connector and the terminal for corrosion, damage, or pin disconnection, and the common wiring harness for a short to ground. • Repair or replace the malfunctioning part. **If there is no common connector:** • Repair or replace the wiring harness which has a short to ground. Go to Step 9.
		No	Go to the next step.
8	**INSPECT HO2S HEATER CONTROL CIRCUIT FOR OPEN CIRCUIT** • Verify that the HO2S and PCM connectors are disconnected. • Inspect for continuity between HO2S terminal D (wiring harness-side) and PCM terminal 2C (wiring harness-side). • Is there continuity?	Yes	Go to the next step.
		No	Refer to the wiring diagram and verify whether or not there is a common connector between HO2S terminal D and PCM terminal 2C. **If there is a common connector:** • Determine the malfunctioning part by inspecting the common connector and the terminal for corrosion, damage, or pin disconnection, and the common wiring harness for an open circuit. • Repair or replace the malfunctioning part. **If there is no common connector:** • Repair or replace the wiring harness which has an open circuit. Go to the next step.
9	**VERIFY DTC TROUBLESHOOTING COMPLETED** • Always reconnect all disconnected connectors. • Clear the DTC from the PCM memory using the M-MDS. (See **AFTER REPAIR PROCEDURE [SKYACTIV-G 2.0, SKYACTIV-G 2.5]**.) • Perform the KOER self test. (See **KOEO/KOER SELF TEST [SKYACTIV-G 2.0, SKYACTIV-G 2.5]**.) • Is the PENDING CODE for this DTC present?	Yes	Repeat the inspection from Step 1. • If the malfunction recurs, replace the PCM. (See **PCM REMOVAL/INSTALLATION [SKYACTIV-G 2.0, SKYACTIV-G 2.5]**.) Go to the next step.
		No	Go to the next step.
10	**VERIFY AFTER REPAIR PROCEDURE** • Perform the “AFTER REPAIR PROCEDURE”.	Yes	Go to the applicable DTC inspection. (See **DTC TABLE [SKYACTIV-G 2.0, SKYACTIV-G 2.5]**.)

	(See **AFTER REPAIR PROCEDURE [SKYACTIV-G 2.0, SKYACTIV-G 2.5]**.) • Are any DTCs present?	No	DTC troubleshooting completed.

2014 - Mazda3 - Engine

DTC P0069:00 [SKYACTIV-G 2.0, SKYACTIV-G 2.5]

DTC P0069:00	Manifold absolute pressure/atmospheric pressure correlation problem
DETECTION CONDITION	• The PCM monitors the difference between the intake manifold vacuum and the atmospheric pressure. If the difference is **below −12 kPa {−0.12 kgf/cm^2, −1.7 psi}** or **above 12 kPa {0.12 kgf/cm^2, 1.7 psi}** when the following conditions are met, the PCM determines that there is a MAP sensor performance problem. **MONITORING CONDITIONS** ▪ **12—15 s** from when ignition is switched off. **Diagnostic support note** • This is a continuous monitor (CCM). • The check engine light illuminates if the PCM detects the above malfunction condition in two consecutive drive cycles or in one drive cycle while the DTC for the same malfunction has been stored in the PCM. • PENDING CODE is available if the PCM detects the above malfunction condition during first drive cycle. • FREEZE FRAME DATA (Mode 2)/Snapshot data is available. • DTC is stored in the PCM memory.
FAIL-SAFE FUNCTION	Not applicable
POSSIBLE CAUSE	• MAP sensor malfunction • BARO sensor (built-into PCM) malfunction • PCM malfunction
SYSTEM WIRING DIAGRAM	Not applicable

CAUTION:

- Verify the malfunction symptom according to not only the PID value but also the symptom troubleshooting.

Related PIDs

Item (definition)	Unit/Condition	Definition	Condition/Specification (Reference)
BARO	KPa {MPa}, mBar {Bar}, psi, in H20	Actually measured barometric pressure input from barometric pressure sensor built into PCM	• Displays BARO
	V	BARO sensor voltage	• Ignition switched ON (at sea level): Approx. 4.08 V
MAP	KPa {MPa}, mBar {Bar}, psi, in H20	Manifold absolute pressure	• Displays MAP
	V	MAP sensor voltage	• Ignition switched ON (engine off) (MAP:101 kPa {1.03 kgf/cm^2, 14.6 psi}): Approx. 4.07 V • Idle (after warm up) (MAP: 33 kPa {0.34 kgf/cm^2, 4.8 psi}): Approx. 1.34 V • Racing (engine speed is 2,000 rpm) (MAP: 26 kPa {0.27 kgf/cm^2, 3.8 psi}): Approx. 1.05 V

Diagnostic Procedure

STEP	INSPECTION		ACTION
1	**IDENTIFY TRIGGER DTC FOR FREEZE FRAME DATA (MODE 2)** • Perform the Freeze Frame PID Data Access Procedure. (See **ON-BOARD DIAGNOSTIC TEST [SKYACTIV-G 2.0, SKYACTIV-G 2.5]**.) • Is the DTC P0069:00 on FREEZE FRAME DATA (Mode 2)?	Yes	Go to the next step.
		No	Go to the troubleshooting procedure for DTC on FREEZE FRAME DATA (Mode 2). (See **DTC TABLE [SKYACTIV-G 2.0, SKYACTIV-G 2.5]**.)

2	**VERIFY FREEZE FRAME DATA (MODE 2)/SNAPSHOT DATA HAS BEEN RECORDED** • Has the FREEZE FRAME DATA (Mode 2)/snapshot data been recorded?	Yes	Go to the next step.
		No	Record the FREEZE FRAME DATA (Mode 2)/snapshot data on the repair order, then go to the next step.
3	**VERIFY RELATED REPAIR INFORMATION AVAILABILITY** • Verify related Service Bulletins and/or on-line repair information availability. • Is any related repair information available?	Yes	Perform repair or diagnosis according to the available repair information. • If the vehicle is not repaired, go to the next step.
		No	Go to the next step.
4	**VERIFY RELATED PENDING CODE AND/OR DTC** • Switch the ignition off, then ON (engine off). • Perform the Pending Trouble Code Access Procedure and DTC Reading Procedure. (See **ON-BOARD DIAGNOSTIC TEST [SKYACTIV-G 2.0, SKYACTIV-G 2.5]**.) • Is the PENDING CODE/DTC P0107:00, P0108:00, P2228:00 or P2229:00 also present?	Yes	Go to the applicable PENDING CODE or DTC inspection. (See **DTC P0107:00 [SKYACTIV-G 2.0, SKYACTIV-G 2.5]**.) (See **DTC P0108:00 [SKYACTIV-G 2.0, SKYACTIV-G 2.5]**.) (See **DTC P2228:00 [SKYACTIV-G 2.0, SKYACTIV-G 2.5]**.) (See **DTC P2229:00 [SKYACTIV-G 2.0, SKYACTIV-G 2.5]**.)
		No	Go to the next step.
5	**INSPECT MAP SENSOR** • Inspect the MAP sensor. (See **MANIFOLD ABSOLUTE PRESSURE (MAP) SENSOR INSPECTION [SKYACTIV-G 2.0, SKYACTIV-G 2.5]**.) • Is there any malfunction?	Yes	Replace the MAP sensor/IAT sensor No.2, then go to Step 7. (See **MANIFOLD ABSOLUTE PRESSURE (MAP) SENSOR/INTAKE AIR TEMPERATURE (IAT) SENSOR NO.2 REMOVAL/INSTALLATION [SKYACTIV-G 2.0, SKYACTIV-G 2.5]**.)
		No	Go to the next step.
6	**INSPECT BARO SENSOR** • Inspect the BARO sensor. (See **BAROMETRIC PRESSURE (BARO) SENSOR INSPECTION [SKYACTIV-G 2.0, SKYACTIV-G 2.5]**.)	Yes	Replace the PCM, then go to the next step. (See **PCM REMOVAL/INSTALLATION [SKYACTIV-G 2.0, SKYACTIV-G 2.5]**.)
		No	Go to the next step.

	• Is there any malfunction?		
7	**VERIFY DTC TROUBLESHOOTING COMPLETED** • Always reconnect all disconnected connectors. • Clear the DTC from the PCM memory using the M-MDS. (See **AFTER REPAIR PROCEDURE [SKYACTIV-G 2.0, SKYACTIV-G 2.5]**.) • Start the engine. • Switch the ignition off and wait for **15 s or more**. • Perform the Pending Trouble Code Access Procedure. (See **ON-BOARD DIAGNOSTIC TEST [SKYACTIV-G 2.0, SKYACTIV-G 2.5]**.) • Is the PENDING CODE for this DTC present?	Yes	Repeat the inspection from Step 1. • If the malfunction recurs, replace the PCM. (See **PCM REMOVAL/INSTALLATION [SKYACTIV-G 2.0, SKYACTIV-G 2.5]**.) Go to the next step.
		No	Go to the next step.
8	**VERIFY AFTER REPAIR PROCEDURE** • Perform the “AFTER REPAIR PROCEDURE”. (See **AFTER REPAIR PROCEDURE [SKYACTIV-G 2.0, SKYACTIV-G 2.5]**.) • Are any DTCs present?	Yes	Go to the applicable DTC inspection. (See **DTC TABLE [SKYACTIV-G 2.0, SKYACTIV-G 2.5]**.)
		No	DTC troubleshooting completed.

2014 - Mazda3 - Engine

DTC P0072:00 [SKYACTIV-G 2.0, SKYACTIV-G 2.5]

DTC P0072:00	Ambient temperature sensor circuit low input
DETECTION CONDITION	• The PCM monitors the input signal from the ambient temperature sensor. If the voltage from the ambient temperature sensor is **below 0.18 V**, the PCM determines that the ambient temperature sensor circuit has a malfunction. **Diagnostic support note** • This is a continuous monitor (other). • The check engine light does not illuminate. • FREEZE FRAME DATA (Mode 2)/Snapshot data is not available. • DTC is stored in the PCM memory.
FAIL-SAFE FUNCTION	Not applicable
POSSIBLE CAUSE	• Ambient temperature sensor connector or terminals malfunction • Ambient temperature sensor malfunction • Short to ground in wiring harness between ambient temperature sensor terminal A and PCM terminal 2I • PCM connector or terminals malfunction • Ambient temperature sensor signal circuit and ground circuit are shorted to each other • PCM malfunction

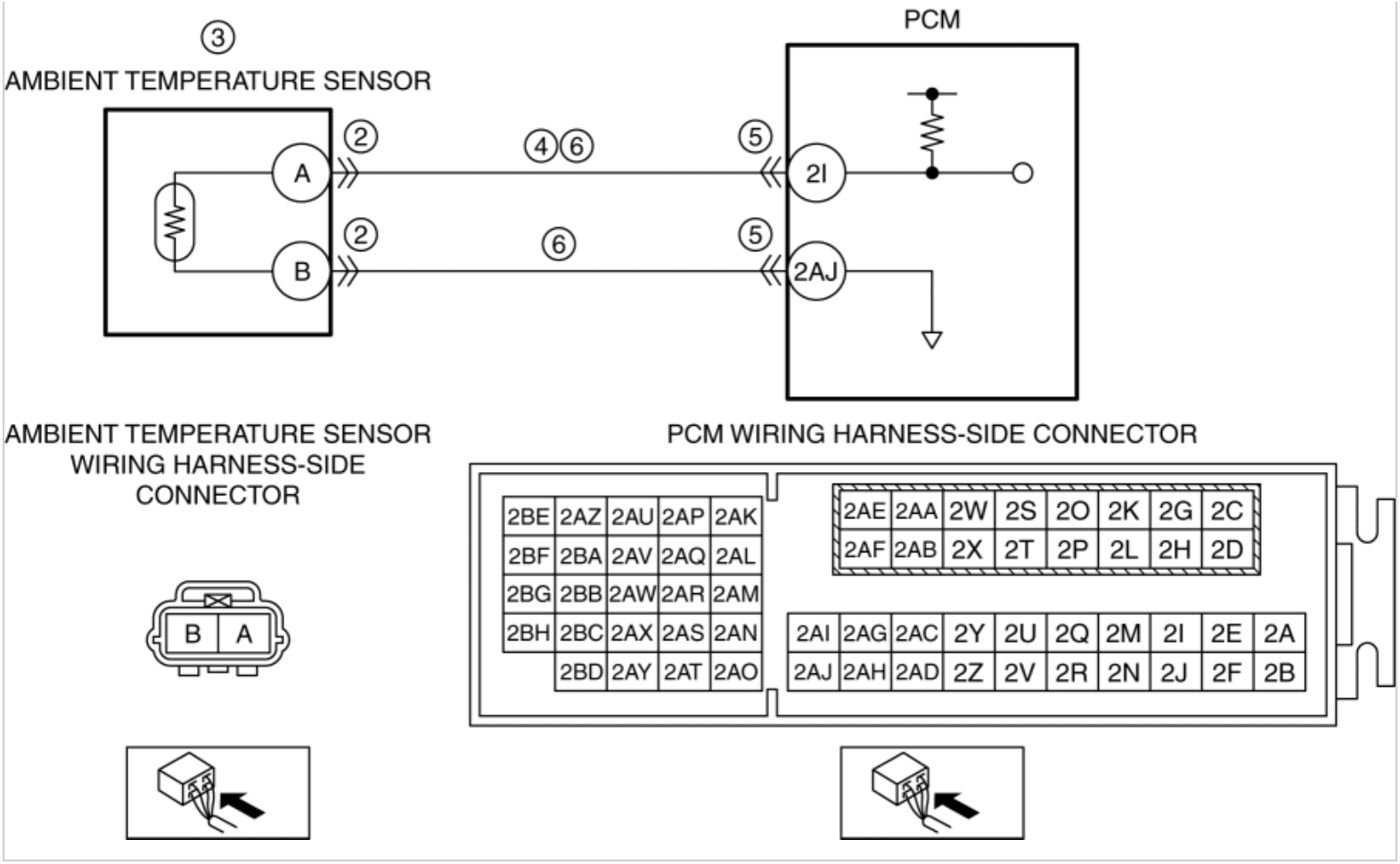

Diagnostic Procedure

STEP	INSPECTION		ACTION
1	**VERIFY RELATED REPAIR INFORMATION AVAILABILITY** • Verify related Service Bulletins and/or on-line repair information availability. • Is any related repair information available?	Yes	Perform repair or diagnosis according to the available repair information. • If the vehicle is not repaired, go to the next step.
		No	Go to the next step.
2	**INSPECT AMBIENT TEMPERATURE SENSOR CONNECTOR CONDITION** • Switch the ignition off. • Disconnect the ambient temperature sensor connector. • Inspect for poor connection (such as damaged/pulled-out pins, corrosion). • Is there any malfunction?	Yes	Repair or replace the connector and/or terminals, then go to Step 7.
		No	Go to the next step.
3	**INSPECT AMBIENT TEMPERATURE SENSOR**	Yes	Replace the ambient temperature sensor, then go to Step 7.

	• Inspect the ambient temperature sensor. (See **AMBIENT TEMPERATURE SENSOR INSPECTION [MANUAL AIR CONDITIONER]**.) (See **AMBIENT TEMPERATURE SENSOR INSPECTION [FULL-AUTO AIR CONDITIONER]**.) • Is there any malfunction?		(See **AMBIENT TEMPERATURE SENSOR REMOVAL/INSTALLATION [MANUAL AIR CONDITIONER]**.) (See **AMBIENT TEMPERATURE SENSOR REMOVAL/INSTALLATION [FULL-AUTO AIR CONDITIONER]**.)
		No	Go to the next step.
4	**INSPECT AMBIENT TEMPERATURE SENSOR SIGNAL CIRCUIT FOR SHORT TO GROUND** • Verify that the ambient temperature sensor connector is disconnected. • Inspect for continuity between ambient temperature sensor terminal A (wiring harness-side) and body ground. • Is there continuity?	Yes	If the short to ground circuit could be detected in the wiring harness: • Refer to the wiring diagram and verify whether or not there is a common connector between ambient temperature sensor terminal A and PCM terminal 2I. **If there is a common connector:** ▪ Determine the malfunctioning part by inspecting the common connector and the terminal for corrosion, damage, or pin disconnection, and the common wiring harness for a short to ground. ▪ Repair or replace the malfunctioning part. **If there is no common connector:** ▪ Repair or replace the wiring harness which has a short to ground. If the short to ground circuit could not be detected in the wiring harness: • Replace the PCM (short to ground in the PCM internal circuit). (See **PCM REMOVAL/INSTALLATION [SKYACTIV-G 2.0, SKYACTIV-G 2.5]**.) Go to Step 7.
		No	Go to the next step.
5	**INSPECT PCM CONNECTOR CONDITION** • Disconnect the PCM connector. • Inspect for poor connection (such as damaged/pulled-out pins, corrosion). • Is there any malfunction?	Yes	Repair or replace the connector and/or terminals, then go to Step 7.
		No	Go to the next step.
6	**INSPECT AMBIENT TEMPERATURE SENSOR SIGNAL CIRCUIT AND GROUND CIRCUIT FOR SHORT TO EACH OTHER**	Yes	Refer to the wiring diagram and verify whether or not there is a common connector between the following terminals: • Ambient temperature sensor terminal A—PCM terminal 2I

	Verify that the ambient temperature sensor and PCM connectors are disconnected. • Inspect for continuity between ambient temperature sensor terminals A and B (wiring harness-side). • Is there continuity?		• Ambient temperature sensor terminal B—PCM terminal 2AJ **If there is a common connector:** • Determine the malfunctioning part by inspecting the common connector and the terminal for corrosion, damage, or pin disconnection, and the common wiring harness for a short to each other. • Repair or replace the malfunctioning part. **If there is no common connector:** • Repair or replace the wiring harness which has a short to each other. Go to the next step.
		No	Go to the next step.
7	**VERIFY DTC TROUBLESHOOTING COMPLETED** • Always reconnect all disconnected connectors. • Clear the DTC from the PCM memory using the M-MDS. (See **AFTER REPAIR PROCEDURE [SKYACTIV-G 2.0, SKYACTIV-G 2.5]**.) • Perform the KOEO or KOER self test. (See **KOEO/KOER SELF TEST [SKYACTIV-G 2.0, SKYACTIV-G 2.5]**.) • Is the same DTC present?	Yes	Repeat the inspection from Step 1. • If the malfunction recurs, replace the PCM. (See **PCM REMOVAL/INSTALLATION [SKYACTIV-G 2.0, SKYACTIV-G 2.5]**.) Go to the next step.
		No	Go to the next step.
8	**VERIFY AFTER REPAIR PROCEDURE** • Perform the “AFTER REPAIR PROCEDURE”. (See **AFTER REPAIR PROCEDURE [SKYACTIV-G 2.0, SKYACTIV-G 2.5]**.) • Are any DTCs present?	Yes	Go to the applicable DTC inspection. (See **DTC TABLE [SKYACTIV-G 2.0, SKYACTIV-G 2.5]**.)
		No	DTC troubleshooting completed.

2014 - Mazda3 - Engine

DTC P0073:00 [SKYACTIV-G 2.0, SKYACTIV-G 2.5]

DTC P0073:00	Ambient temperature sensor circuit high input
DETECTION CONDITION	• The PCM monitors the input signal from the ambient temperature sensor. If the voltage from the ambient temperature sensor is **above 4.88 V**, the PCM determines that the ambient temperature sensor circuit has a malfunction. **Diagnostic support note** • This is a continuous monitor (other). • The check engine light does not illuminate. • FREEZE FRAME DATA (Mode 2)/Snapshot data is not available. • DTC is stored in the PCM memory.
FAIL-SAFE FUNCTION	Not applicable
POSSIBLE CAUSE	• Ambient temperature sensor connector or terminals malfunction • PCM connector or terminals malfunction • Ambient temperature sensor malfunction • Short to power supply in wiring harness between ambient temperature sensor terminal A and PCM terminal 2I • Open circuit in wiring harness between the following terminals: ▪ Ambient temperature sensor terminal A—PCM terminal 2I ▪ Ambient temperature sensor terminal B—PCM terminal 2AJ • PCM malfunction

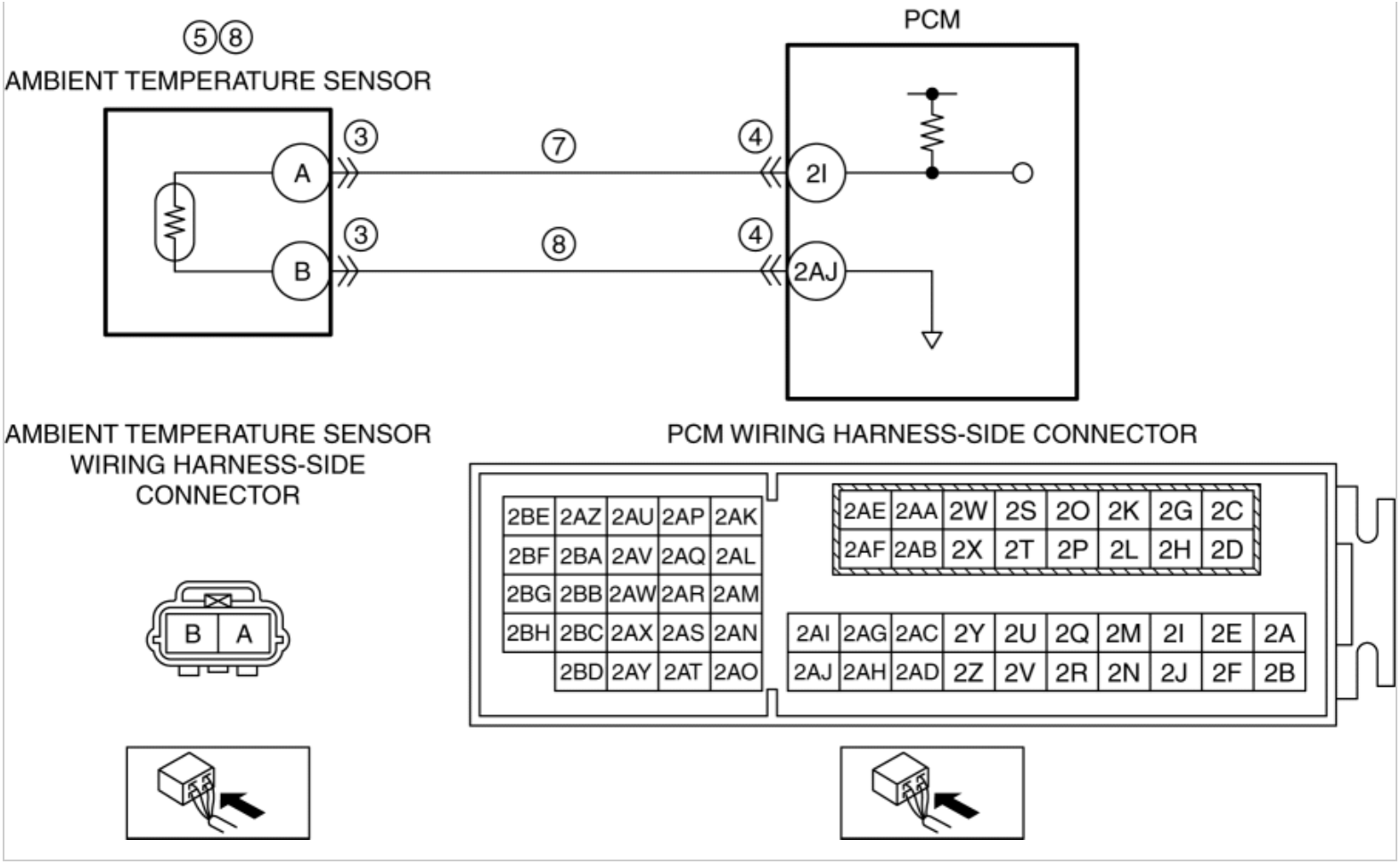

Diagnostic Procedure

STEP	INSPECTION		ACTION
1	**VERIFY RELATED REPAIR INFORMATION AVAILABILITY** • Verify related Service Bulletins and/or on-line repair information availability. • Is any related repair information available?	Yes	Perform repair or diagnosis according to the available repair information. • If the vehicle is not repaired, go to the next step.
		No	Go to the next step.
2	**DETERMINE IF AMBIENT TEMPERATURE SENSOR OR WIRING HARNESS MALFUNCTION** • Access the AAT PID using the M-MDS. (See **ON-BOARD DIAGNOSTIC TEST [SKYACTIV-G 2.0, SKYACTIV-G 2.5]**.) • Verify the AAT PID value. • Is the AAT PID value **5 V** or **B+**?	Yes	Go to Step 6.
		No	Go to the next step.
3	**INSPECT AMBIENT TEMPERATURE SENSOR CONNECTOR CONDITION** • Switch the ignition off.	Yes	Repair or replace the connector and/or terminals, then go to Step 9.

	• Disconnect the ambient temperature sensor connector. • Inspect for poor connection (such as damaged/pulled-out pins, corrosion). • Is there any malfunction?	No	Go to the next step.
4	**INSPECT PCM CONNECTOR CONDITION** • Disconnect the PCM connector. • Inspect for poor connection (such as damaged/pulled-out pins, corrosion). • Is there any malfunction?	Yes	Repair or replace the connector and/or terminals, then go to Step 9.
		No	Go to the next step.
5	**INSPECT AMBIENT TEMPERATURE SENSOR** • Inspect the ambient temperature sensor. (See **AMBIENT TEMPERATURE SENSOR INSPECTION [MANUAL AIR CONDITIONER]**.) (See **AMBIENT TEMPERATURE SENSOR INSPECTION [FULL-AUTO AIR CONDITIONER]**.) • Is there any malfunction?	Yes	Replace the ambient temperature sensor, then go to Step 9. (See **AMBIENT TEMPERATURE SENSOR REMOVAL/INSTALLATION [MANUAL AIR CONDITIONER]**.) (See **AMBIENT TEMPERATURE SENSOR REMOVAL/INSTALLATION [FULL-AUTO AIR CONDITIONER]**.)
		No	Go to Step 9.
6	**DETERMINE IF AMBIENT TEMPERATURE SENSOR SIGNAL CIRCUIT OR AMBIENT TEMPERATURE SENSOR GROUND CIRCUIT MALFUNCTION** • Switch the ignition off. • Disconnect the ambient temperature sensor connector. • Access the AAT PID using the M-MDS. (See **ON-BOARD DIAGNOSTIC TEST [SKYACTIV-G 2.0, SKYACTIV-G 2.5]**.) • Verify the AAT PID value. • Is the AAT PID value **5 V** or **B+**?	Yes	Go to the next step.
		No	Go to Step 8.
7	**INSPECT AMBIENT TEMPERATURE SENSOR SIGNAL CIRCUIT FOR OPEN CIRCUIT** • Verify that the ambient temperature sensor connector is disconnected. • Switch the ignition off. • Disconnect the PCM connector. • Inspect for continuity between ambient temperature sensor terminal A (wiring harness-side) and PCM terminal 2I (wiring harness-side).	Yes	Refer to the wiring diagram and verify whether or not there is a common connector between ambient temperature sensor terminal A and PCM terminal 2I. **If there is a common connector:** • Determine the malfunctioning part by inspecting the common connector and the terminal for corrosion, damage, or pin disconnection, and the common wiring harness for a short to power supply. • Repair or replace the malfunctioning part. **If there is no common connector:**

	• Is there continuity?		• Repair or replace the wiring harness which has a short to power supply. Go to Step 9.
		No	Refer to the wiring diagram and verify whether or not there is a common connector between ambient temperature sensor terminal A and PCM terminal 2I. **If there is a common connector:** • Determine the malfunctioning part by inspecting the common connector and the terminal for corrosion, damage, or pin disconnection, and the common wiring harness for an open circuit. • Repair or replace the malfunctioning part. **If there is no common connector:** • Repair or replace the wiring harness which has an open circuit. Go to Step 9.
8	**INSPECT AMBIENT TEMPERATURE SENSOR GROUND CIRCUIT FOR OPEN CIRCUIT** • Verify that the ambient temperature sensor connector is disconnected. • Switch the ignition off. • Disconnect the PCM connector. • Inspect for continuity between ambient temperature sensor terminal B (wiring harness-side) and PCM terminal 2AJ (wiring harness-side). • Is there continuity?	Yes	Replace the ambient temperature sensor, then go to the next step. (See **AMBIENT TEMPERATURE SENSOR REMOVAL/INSTALLATION [MANUAL AIR CONDITIONER]**.) (See **AMBIENT TEMPERATURE SENSOR REMOVAL/INSTALLATION [FULL-AUTO AIR CONDITIONER]**.)
		No	Refer to the wiring diagram and verify whether or not there is a common connector between ambient temperature sensor terminal B and PCM terminal 2AJ. **If there is a common connector:** • Determine the malfunctioning part by inspecting the common connector and the terminal for corrosion, damage, or pin disconnection, and the common wiring harness for an open circuit. • Repair or replace the malfunctioning part. **If there is no common connector:** • Repair or replace the wiring harness which has an open circuit. Go to the next step.
9	**VERIFY DTC TROUBLESHOOTING COMPLETED** • Always reconnect all disconnected connectors. • Clear the DTC from the PCM memory using the M-MDS. (See **AFTER REPAIR PROCEDURE [SKYACTIV-G 2.0, SKYACTIV-G 2.5]**.) • Perform the KOEO or KOER self	Yes	Repeat the inspection from Step 1. • If the malfunction recurs, replace the PCM. (See **PCM REMOVAL/INSTALLATION [SKYACTIV-G 2.0, SKYACTIV-G 2.5]**.) Go to the next step.
		No	Go to the next step.

	test. (See **KOEO/KOER SELF TEST [SKYACTIV-G 2.0, SKYACTIV-G 2.5]**.) • Is the same DTC present?		
10	**VERIFY AFTER REPAIR PROCEDURE** • Perform the “AFTER REPAIR PROCEDURE”. (See **AFTER REPAIR PROCEDURE [SKYACTIV-G 2.0, SKYACTIV-G 2.5]**.) • Are any DTCs present?	Yes	Go to the applicable DTC inspection. (See **DTC TABLE [SKYACTIV-G 2.0, SKYACTIV-G 2.5]**.)
		No	DTC troubleshooting completed.

2014 - Mazda3 - Engine

DTC P0088:00 [SKYACTIV-G 2.0, SKYACTIV-G 2.5]

NOTE:

- To determine the malfunctioning part, proceed with the diagnostics from "Function Inspection Using M-MDS".

Details On DTCs

DESCRIPTION	Fuel pressure sensor circuit range/performance problem	
DETECTION CONDITION	Determination conditions	• The difference between the actual and target fuel pressure is equal to or **more than the 1.2 MPa {12 kgf/cm^2, 174 psi}**, even though the fuel pressure feedback amount is maintained low or high.
	Preconditions	• Engine speed: **500 rpm or more**[*1] • The following DTCs are not detected: ▪ Fuel pressure sensor: P0088:00, P0192:00, P0193:00 ▪ High pressure fuel pump: P0091:00, P0092:00 • [*1]: Value can be verified by displaying PIDs using M-MDS
	Malfunction determination period	• **5 s** period
	Drive cycle	• 1
	Self test type	• CMDTC self test
	Sensor used	• Fuel pressure sensor
FAIL-SAFE FUNCTION	• Limits intake air amount • Stops high pressure fuel pump control	

VEHICLE STATUS WHEN DTCs ARE OUTPUT	• Illuminates check engine light.
POSSIBLE CAUSE	• Air suction in fuel line due to fuel is runout • High pressure fuel pump connector or terminals malfunction • Fuel pressure sensor connector or terminals malfunction • PCM connector or terminals malfunction • Fuel pressure sensor malfunction • Fuel system malfunction (fuel pressure malfunction) • Fuel injector malfunction • High pressure fuel pump malfunction ▪ Relief valve (built-into high pressure fuel pump) malfunction • PCM malfunction

System Wiring Diagram

- Not applicable

Function Explanation (DTC Detection Outline)

- The PCM calculates the target fuel pressure appropriate to the engine conditions relative to the actual fuel pressure based on the fuel pressure sensor signal and provides feedback to the high pressure fuel pump control. If the difference between the actual fuel pressure and the target fuel pressure relative to the feedback amount is large, the PCM determines a malfunction in the fuel pressure sensor and stores a DTC.

Repeatability Verification Procedure

- Warm up the engine to allow the engine coolant temperature to reach **80 °C {176 °F} or more**.
- Start the engine and leave it idling for **1 min**.

PID Item/Simulation Item Used In Diagnosis

PID/DATA monitor item table

Item	Definition	Unit	Condition/Specification
FUEL_PRES	Fuel pressure	KPa {MPa}, mBar {Bar}, psi, in H20	• Displays fuel pressure
	Fuel pressure sensor voltage	V	• Fuel pressure is 3.0 MPa {31 kgf/cm^2, 435 psi}: Approx. 0.92 V • Fuel pressure is 4.8 MPa {49 kgf/cm^2, 696 psi}: Approx. 1.17 V

Function Inspection Using M-MDS

STEP	INSPECTION	RESULTS	ACTION
1	**PURPOSE: VERIFY RELATED REPAIR INFORMATION AVAILABILITY** • Verify related Service Bulletins and/or on-line repair information availability. • Is any related repair information available?	Yes	Perform repair or diagnosis according to the available repair information. • If the vehicle is not repaired, go to the next step.
		No	Go to the next step.
2	**PURPOSE: IDENTIFY TRIGGER DTC FOR FREEZE FRAME DATA (MODE 2)** • Is the DTC P0088:00 on FREEZE FRAME DATA (Mode 2)?	Yes	Go to the next step.
		No	Go to the troubleshooting procedure for DTC on FREEZE FRAME DATA (Mode 2). (See **DTC TABLE [SKYACTIV-G 2.0, SKYACTIV-G 2.5]**.)
3	**PURPOSE: RECORD VEHICLE STATUS AT TIME OF DTC DETECTION TO UTILIZE WITH REPEATABILITY VERIFICATION** • Has the FREEZE FRAME DATA (Mode 2)/snapshot data been recorded?	Yes	Go to the next step.
		No	Record the FREEZE FRAME DATA (Mode 2)/snapshot data on the repair order, then go to the next step. **NOTE:** • Recording can be facilitated using the screen capture function of the PC.
	PURPOSE: VERIFICATION IF MALFUNCTION		

4	**CAUSED BY LACK OF FUEL** • Verify the snapshot data FLI. (See **ON-BOARD DIAGNOSTIC TEST [SKYACTIV-G 2.0, SKYACTIV-G 2.5]**.) • Is the snapshot data FLI **5 % or less**?	Yes	Refill the fuel. Go to the troubleshooting procedure to perform the procedure from Step 3.
		No	Go to the next step.
5	**PURPOSE: VERIFY RELATED PENDING CODE AND/OR DTC** • Switch the ignition off, then ON (engine off). • Perform the Pending Trouble Code Access Procedure and DTC Reading Procedure. (See **ON-BOARD DIAGNOSTIC TEST [SKYACTIV-G 2.0, SKYACTIV-G 2.5]**.) • Are any other PENDING CODEs and/or DTCs present?	Yes	Go to the applicable PENDING CODE or DTC inspection. (See **DTC TABLE [SKYACTIV-G 2.0, SKYACTIV-G 2.5]**.) Go to the next step.
		No	Go to the next step.
6	**PURPOSE: VERIFY CONNECTOR CONNECTIONS** • Start the engine. • Access the FUEL_PRES PID using the M-MDS. (See **ON-BOARD DIAGNOSTIC TEST [SKYACTIV-G 2.0, SKYACTIV-G 2.5]**.) • Does the PID value fluctuate when the following connectors are shaken? ▪ Fuel pressure sensor ▪ PCM	Yes	Repair or replace the applicable wiring harness or connector parts. Go to the troubleshooting procedure to perform the procedure from Step 3.
		No	Go to the next step.
7	**PURPOSE: VERIFY FUEL PRESSURE (LOW-SIDE) MALFUNCTION** • Switch the ignition off. • Disconnect the high pressure fuel pump connector. • Start the engine and idle it. • Access the FUEL_PRES PID using the M-MDS. (See **ON-BOARD DIAGNOSTIC TEST [SKYACTIV-G 2.0, SKYACTIV-G 2.5]**.) • Is the FUEL_PRES PID value **approx. 200 kPa {2.04 kgf/cm^2, 29.0 psi}**	Yes	Go to the troubleshooting procedure to perform the procedure from Step 2.
		No	Go to the troubleshooting procedure to perform the procedure from Step 1.

	or more?		

Troubleshooting Diagnostic Procedure

Intention of troubleshooting procedure

- Step 1
  - Inspect the fuel supply system (low pressure side).
- Step 2
  - Perform a unit inspection of the fuel pressure sensor.
- Step 3—4
  - Verify that the primary malfunction is resolved and there are no other malfunctions.

STEP	INSPECTION	RESULTS	ACTION
1	**PURPOSE: VERIFY IF MALFUNCTION RELATED TO FUEL SYSTEM PIPES (LOW PRESSURE SIDE) AFFECTS DIAGNOSTIC RESULTS** • Inspect the fuel pump unit. (See **FUEL PUMP UNIT INSPECTION [SKYACTIV-G 2.0, SKYACTIV-G 2.5]**.) • Is there any malfunction?	Yes	Replace the fuel pump unit, then go to Step 3. (See **FUEL PUMP UNIT REMOVAL/INSTALLATION [SKYACTIV-G 2.0, SKYACTIV-G 2.5]**.)
		No	Inspect the fuel system pipes (low to high pressure sides) for fuel leakage and restriction. • If there is any malfunction: ▪ Repair or replace the malfunctioning part according to the inspection results, then go to Step 3. • If there is no malfunction: ▪ Go to the next step.
2	**PURPOSE: DETERMINE INTEGRITY OF FUEL PRESSURE SENSOR** • Inspect the fuel pressure sensor. (See **FUEL PRESSURE SENSOR INSPECTION**	Yes	Replace the fuel distributor, then go to the next step. (See **FUEL INJECTOR REMOVAL/INSTALLATION [SKYACTIV-G 2.0, SKYACTIV-G 2.5]**.)
		No	Go to the next step.

	[SKYACTIV-G 2.0, SKYACTIV-G 2.5].) • Is there any malfunction?		
3	**PURPOSE: VERIFICATION OF VEHICLE REPAIR COMPLETION** • Always reconnect all disconnected connectors. • Clear the DTC from the PCM memory using the M-MDS. (See **CLEARING DTC [SKYACTIV-G 2.0, SKYACTIV-G 2.5]**.) • Implement the repeatability verification procedure. (See **Repeatability Verification Procedure**.) • Perform the DTC Reading Procedure. (See **ON-BOARD DIAGNOSTIC TEST [SKYACTIV-G 2.0, SKYACTIV-G 2.5]**.) • Is the same DTC present?	Yes	Repeat the inspection from Step 1. • If the malfunction recurs, replace the PCM. (See **PCM REMOVAL/INSTALLATION [SKYACTIV-G 2.0, SKYACTIV-G 2.5]**.) Go to the next step.
		No	Go to the next step.
4	**PURPOSE: VERIFY IF THERE IS ANY OTHER MALFUNCTION** • Is any other DTC or pending code stored?	Yes	Go to the applicable DTC inspection. (See **DTC TABLE [SKYACTIV-G 2.0, SKYACTIV-G 2.5]**.)
		No	DTC troubleshooting completed.

2014 - Mazda3 - Engine

DTC P0089:00 [SKYACTIV-G 2.0, SKYACTIV-G 2.5]

NOTE:

- To determine the malfunctioning part, proceed with the diagnostics from "Function Inspection Using M-MDS".

Details On DTCs

DESCRIPTION	Spill valve control solenoid valve control circuit range/performance problem	
DETECTION CONDITION	Determination conditions	• The average fuel pressure on the high pressure side, measured by the fuel pressure sensor, exceeds the specified value.
	Preconditions	• Engine speed: **500 rpm or more**[*1] • The following DTCs are not detected: ▪ Fuel pressure sensor: P0088:00, P0192:00, P0193:00 ▪ High pressure fuel pump: P0091:00, P0092:00 • [*1]: Value can be verified by displaying PIDs using M-MDS
	Malfunction determination period	• **2 s** period
	Drive cycle	• 1
	Self test type	• CMDTC self test, KOER self test
	Sensor used	• Fuel pressure sensor
FAIL-SAFE FUNCTION	• Limits intake air amount	

VEHICLE STATUS WHEN DTCs ARE OUTPUT	• Illuminates check engine light.
POSSIBLE CAUSE	• High pressure fuel pump connector or terminals malfunction • PCM connector or terminals malfunction • Fuel pressure sensor malfunction • High pressure fuel pump malfunction ▪ Spill valve control solenoid valve (built-into high pressure fuel pump) malfunction • High pressure fuel pipe clogging • Fuel distributor malfunction • Fuel injector malfunction • PCM malfunction

System Wiring Diagram

- Not applicable

Function Explanation (DTC Detection Outline)

- The PCM calculates the target fuel pressure appropriate to the engine conditions relative to the actual fuel pressure based on the fuel pressure signal, and provides feedback to the high pressure fuel pump control. If the average fuel pressure exceeds the specified value, the PCM determines a malfunction in the high pressure fuel pump system, and stores a DTC.

Repeatability Verification Procedure

- Warm up the engine to allow the engine coolant temperature to reach **80 °C {176 °F} or more**.
- Start the engine and leave it idling for **1 min**.

PID Item/Simulation Item Used In Diagnosis

- Not applicable

Function Inspection Using M-MDS

STEP	INSPECTION	RESULTS	ACTION
1	**PURPOSE: VERIFY RELATED REPAIR INFORMATION AVAILABILITY** • Verify related Service Bulletins and/or on-line repair information availability. • Is any related repair information available?	Yes	Perform repair or diagnosis according to the available repair information. • If the vehicle is not repaired, go to the next step.
		No	Go to the next step.
2	**PURPOSE: IDENTIFY TRIGGER DTC FOR FREEZE FRAME DATA (MODE 2)** • Is the DTC P0089:00 on FREEZE FRAME DATA (Mode 2)?	Yes	Go to the next step.
		No	Go to the troubleshooting procedure for DTC on FREEZE FRAME DATA (Mode 2). (See **DTC TABLE [SKYACTIV-G 2.0, SKYACTIV-G 2.5]**.)
3	**PURPOSE: RECORD VEHICLE STATUS AT TIME OF DTC DETECTION TO UTILIZE WITH REPEATABILITY VERIFICATION** • Has the FREEZE FRAME DATA (Mode 2)/snapshot data been recorded?	Yes	Go to the next step.
		No	Record the FREEZE FRAME DATA (Mode 2)/snapshot data on the repair order, then go to the next step. **NOTE:** • Recording can be facilitated using the screen capture function of the PC.
4	**PURPOSE: VERIFY RELATED PENDING CODE AND/OR DTC** • Switch the ignition off, then ON (engine off). • Perform the Pending Trouble Code Access Procedure and DTC Reading Procedure. (See **ON-BOARD DIAGNOSTIC TEST [SKYACTIV-G 2.0, SKYACTIV-G 2.5]**.) • Are any other PENDING CODEs and/or DTCs present?	Yes	Go to the applicable PENDING CODE or DTC inspection. (See **DTC TABLE [SKYACTIV-G 2.0, SKYACTIV-G 2.5]**.) Go to the troubleshooting procedure to perform the procedure from Step 1.
		No	Go to the troubleshooting procedure to perform the procedure from Step 1.

Troubleshooting Diagnostic Procedure

Intention of troubleshooting procedure

- Step 1
  - Replace the high pressure fuel system parts.
- Step 2—3
  - Verify that the primary malfunction is resolved and there are no other malfunctions.

STEP	INSPECTION	RESULTS	ACTION
1	**PURPOSE: REPLACE HIGH PRESSURE FUEL SYSTEM RELATED PARTS DUE TO MALFUNCTION IN HIGH PRESSURE FUEL SYSTEM PARTS** • Replace the following parts. ▪ High pressure fuel pump (See **HIGH PRESSURE FUEL PUMP REMOVAL/INSTALLATION [SKYACTIV-G 2.0, SKYACTIV-G 2.5]**.) ▪ High pressure fuel pipe (See **HIGH PRESSURE FUEL PUMP REMOVAL/INSTALLATION [SKYACTIV-G 2.0, SKYACTIV-G 2.5]**.) ▪ Fuel injector No.1 (See **FUEL INJECTOR REMOVAL/INSTALLATION [SKYACTIV-G 2.0, SKYACTIV-G 2.5]**.) ▪ Fuel injector No.2 ▪ Fuel injector No.3 ▪ Fuel injector No.4 ▪ Fuel distributor (See **FUEL INJECTOR REMOVAL/INSTALLATION [SKYACTIV-G 2.0, SKYACTIV-G 2.5]**.)	—	Go to the next step.
2	**PURPOSE: VERIFICATION OF VEHICLE REPAIR COMPLETION** • Always reconnect all disconnected connectors.	Yes	Replace the PCM, then go to the next step. (See **PCM**

	• Clear the DTC from the PCM memory using the M-MDS. (See **CLEARING DTC [SKYACTIV-G 2.0, SKYACTIV-G 2.5]**.) • Perform the KOER self test. (See **KOEO/KOER SELF TEST [SKYACTIV-G 2.0, SKYACTIV-G 2.5]**.) • Is the same DTC present?		**REMOVAL/INSTALLATION [SKYACTIV-G 2.0, SKYACTIV-G 2.5]**.)
		No	Go to the next step.
3	**PURPOSE: VERIFY IF THERE IS ANY OTHER MALFUNCTION** • Is any other DTC or pending code stored?	Yes	Go to the applicable DTC inspection. (See **DTC TABLE [SKYACTIV-G 2.0, SKYACTIV-G 2.5]**.)
		No	DTC troubleshooting completed.

2014 - Mazda3 - Engine

DTC P0091:00 [SKYACTIV-G 2.0, SKYACTIV-G 2.5]

DTC P0091:00	Fuel pressure regulator control circuit low input
DETECTION CONDITION	• When the PCM turns the spill valve control solenoid valve off but the spill valve control solenoid valve control circuit voltage is low for **5 s**, the PCM determines that the spill valve control solenoid valve control circuit has a malfunction. **MONITORING CONDITIONS** ▪ The following conditions are met: • Engine speed: **5,700 rpm or less** • Battery voltage: **10.5 V or more** **Diagnostic support note** • This is a continuous monitor (CCM). • The check engine light illuminates if the PCM detects the above malfunction condition during the first drive cycle. • FREEZE FRAME DATA (Mode 2)/Snapshot data is available. • DTC is stored in the PCM memory.
FAIL-SAFE FUNCTION	• Stops high pressure fuel pump control • Limits intake air amount
POSSIBLE CAUSE	• High pressure fuel pump connector or terminals malfunction • PCM connector or terminals malfunction • Short to ground in wiring harness between high pressure fuel pump terminal B and PCM terminal 1EF • Open circuit in wiring harness between the following terminals: ▪ High pressure fuel pump terminal A—PCM terminal 1EE ▪ High pressure fuel pump terminal B—PCM terminal 1EF • Spill valve control solenoid valve (built-into high pressure fuel pump) malfunction • PCM malfunction

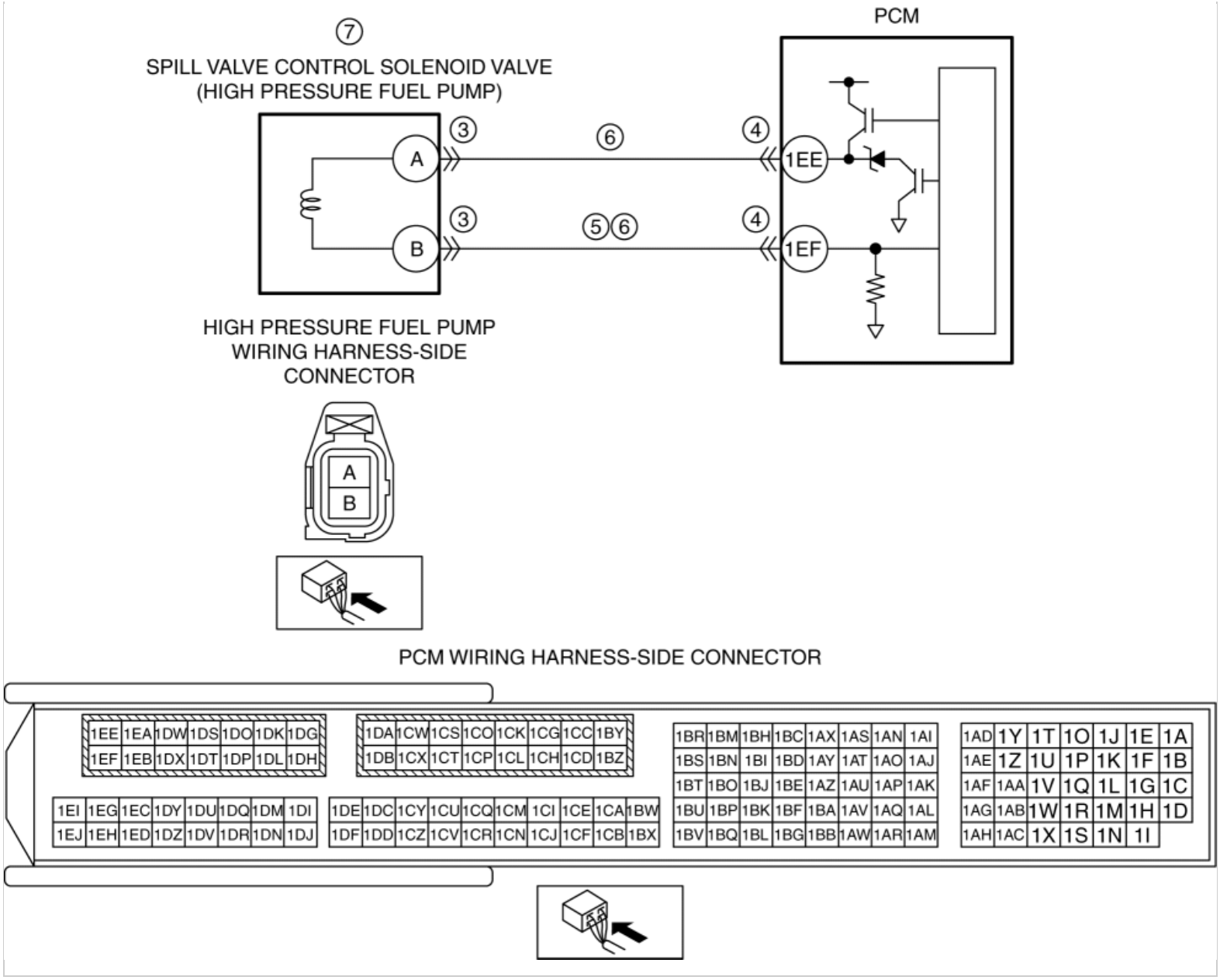

CAUTION:

- Verify the malfunction symptom according to not only the PID value but also the symptom troubleshooting.

Related PIDs

Item (definition)	Unit/Condition	Definition	Condition/Specification (Reference)
FUEL_PRES	KPa {MPa}, mBar {Bar}, psi, in H20	Fuel pressure	• Displays fuel pressure
	V	Fuel pressure sensor voltage	• Fuel pressure is 3.0 MPa {31 kgf/cm^2, 435 psi}: Approx. 0.92 V • Fuel pressure is 4.8 MPa {49 kgf/cm^2, 696 psi}: Approx. 1.17 V
			• Idle (after warm up): Approx.

LOAD	%	Ratio of actual amount of intake air to the maximum air charging amount (mass volume) of cylinder	17.64% • Racing (engine speed is 2,000 rpm): Approx. 14.51% • Racing (engine speed is 4,000 rpm): Approx. 21.17%
RPM	RPM	Engine speed	• Displays engine speed

Diagnostic Procedure

STEP	INSPECTION		ACTION
1	**VERIFY FREEZE FRAME DATA (MODE 2)/SNAPSHOT DATA HAS BEEN RECORDED** • Has the FREEZE FRAME DATA (Mode 2)/snapshot data been recorded?	Yes	Go to the next step.
		No	Record the FREEZE FRAME DATA (Mode 2)/snapshot data on the repair order, then go to the next step.
2	**VERIFY RELATED REPAIR INFORMATION AVAILABILITY** • Verify related Service Bulletins and/or on-line repair information availability. • Is any related repair information available?	Yes	Perform repair or diagnosis according to the available repair information. • If the vehicle is not repaired, go to the next step.
		No	Go to the next step.
3	**INSPECT HIGH PRESSURE FUEL PUMP CONNECTOR CONDITION** • Switch the ignition off. • Disconnect the high pressure fuel pump connector. • Inspect for poor connection (such as damaged/pulled-out pins, corrosion). • Is there any malfunction?	Yes	Repair or replace the connector and/or terminals, then go to Step 8.
		No	Go to the next step.
4	**INSPECT PCM CONNECTOR CONDITION** • Disconnect the PCM connector. • Inspect for poor connection (such as damaged/pulled-out pins, corrosion). • Is there any malfunction?	Yes	Repair or replace the connector and/or terminals, then go to Step 8.
		No	Go to the next step.
5	**INSPECT SPILL VALVE CONTROL SOLENOID VALVE CONTROL CIRCUIT FOR SHORT TO GROUND** • Verify that the high pressure fuel pump and PCM connectors are disconnected. • Inspect for continuity between high pressure fuel pump terminal B (wiring harness-side) and body ground. • Is there continuity?	Yes	Refer to the wiring diagram and verify whether or not there is a common connector between high pressure fuel pump terminal B and PCM terminal 1EF. **If there is a common connector:** • Determine the malfunctioning part by inspecting the common connector and the terminal for corrosion, damage, or pin disconnection, and the common wiring harness for a short to ground. • Repair or replace the malfunctioning part. **If there is no common connector:** • Repair or replace the wiring harness which has a short to ground. Go to Step 8.

		No	Go to the next step.
6	**INSPECT SPILL VALVE CONTROL SOLENOID VALVE CIRCUIT FOR OPEN CIRCUIT** • Verify that the high pressure fuel pump and PCM connectors are disconnected. • Inspect for continuity between the following terminals (wiring harness-side): ▪ High pressure fuel pump terminal A—PCM terminal 1EE ▪ High pressure fuel pump terminal B—PCM terminal 1EF • Is there continuity?	Yes	Go to the next step.
		No	Refer to the wiring diagram and verify whether or not there is a common connector between the following terminals: • High pressure fuel pump terminal A—PCM terminal 1EE • High pressure fuel pump terminal B—PCM terminal 1EF **If there is a common connector:** • Determine the malfunctioning part by inspecting the common connector and the terminal for corrosion, damage, or pin disconnection, and the common wiring harness for an open circuit. • Repair or replace the malfunctioning part. **If there is no common connector:** • Repair or replace the wiring harness which has an open circuit. Go to Step 8.
7	**INSPECT SPILL VALVE CONTROL SOLENOID VALVE** • Reconnect all disconnected connectors. • Inspect the spill valve control solenoid valve. (See **HIGH PRESSURE FUEL PUMP INSPECTION [SKYACTIV-G 2.0, SKYACTIV-G 2.5]**.) • Is there any malfunction?	Yes	Replace the high pressure fuel pump, then go to the next step. (See **HIGH PRESSURE FUEL PUMP REMOVAL/INSTALLATION [SKYACTIV-G 2.0, SKYACTIV-G 2.5]**.)
		No	Go to the next step.
8	**VERIFY DTC TROUBLESHOOTING COMPLETED** • Always reconnect all disconnected connectors. • Clear the DTC from the PCM memory using the M-MDS. (See **AFTER REPAIR PROCEDURE [SKYACTIV-G 2.0, SKYACTIV-G 2.5]**.) • Perform the KOEO or KOER self test. (See **KOEO/KOER SELF TEST [SKYACTIV-G 2.0, SKYACTIV-G 2.5]**.) • Is the same DTC present?	Yes	Repeat the inspection from Step 1. • If the malfunction recurs, replace the PCM. (See **PCM REMOVAL/INSTALLATION [SKYACTIV-G 2.0, SKYACTIV-G 2.5]**.) Go to the next step.
		No	Go to the next step.
9	**VERIFY AFTER REPAIR PROCEDURE** • Perform the “AFTER REPAIR PROCEDURE”. (See **AFTER REPAIR PROCEDURE [SKYACTIV-G 2.0, SKYACTIV-G 2.5]**.) • Are any DTCs present?	Yes	Go to the applicable DTC inspection. (See **DTC TABLE [SKYACTIV-G 2.0, SKYACTIV-G 2.5]**.)
		No	DTC troubleshooting completed.

2014 - Mazda3 - Engine

DTC P0092:00 [SKYACTIV-G 2.0, SKYACTIV-G 2.5]

DTC P0092:00	Fuel pressure regulator control circuit high input
DETECTION CONDITION	• When the PCM turns the spill valve control solenoid valve on but the spill valve control solenoid valve circuit voltage is high for **5 s**, the PCM determines that the spill valve control solenoid valve control circuit has a malfunction. **MONITORING CONDITIONS** ▪ The following conditions are met: • Engine speed: **5,700 rpm or less** • Battery voltage: **10.5 V or more** **Diagnostic support note** • This is a continuous monitor (CCM). • The check engine light illuminates if the PCM detects the above malfunction condition during the first drive cycle. • FREEZE FRAME DATA (Mode 2)/Snapshot data is available. • DTC is stored in the PCM memory.
FAIL-SAFE FUNCTION	• Stops high pressure fuel pump control • Limits intake air amount
POSSIBLE CAUSE	• High pressure fuel pump connector or terminals malfunction • PCM connector or terminals malfunction • Short to power supply in wiring harness between high pressure fuel pump terminal B and PCM terminal 1EF • Spill valve control solenoid valve (built-into high pressure fuel pump) malfunction • PCM malfunction

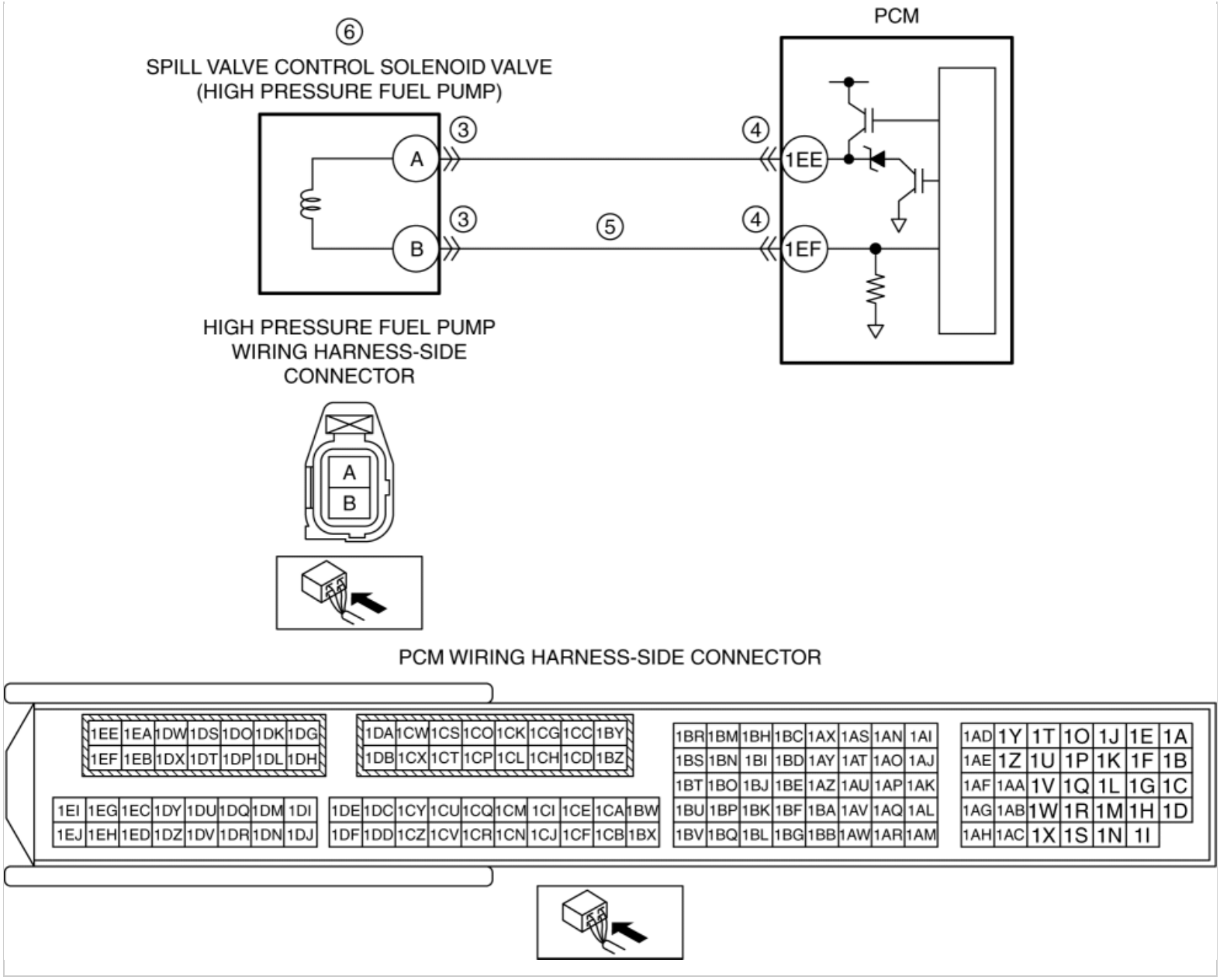

CAUTION:

- Verify the malfunction symptom according to not only the PID value but also the symptom troubleshooting.

Related PIDs

Item (definition)	Unit/Condition	Definition	Condition/Specification (Reference)
FUEL_PRES	KPa {MPa}, mBar {Bar}, psi, in H20	Fuel pressure	• Displays fuel pressure
	V	Fuel pressure sensor voltage	• Fuel pressure is 3.0 MPa {31 kgf/cm^2, 435 psi}: Approx. 0.92 V • Fuel pressure is 4.8 MPa {49 kgf/cm^2, 696 psi}: Approx. 1.17 V
			• Idle (after warm up): Approx.

LOAD	%	Ratio of actual amount of intake air to the maximum air charging amount (mass volume) of cylinder	17.64% • Racing (engine speed is 2,000 rpm): Approx. 14.51% • Racing (engine speed is 4,000 rpm): Approx. 21.17%
RPM	RPM	Engine speed	• Displays engine speed

Diagnostic Procedure

STEP	INSPECTION		ACTION
1	**VERIFY FREEZE FRAME DATA (MODE 2)/SNAPSHOT DATA HAS BEEN RECORDED** • Has the FREEZE FRAME DATA (Mode 2)/snapshot data been recorded?	Yes	Go to the next step.
		No	Record the FREEZE FRAME DATA (Mode 2)/snapshot data on the repair order, then go to the next step.
2	**VERIFY RELATED REPAIR INFORMATION AVAILABILITY** • Verify related Service Bulletins and/or on-line repair information availability. • Is any related repair information available?	Yes	Perform repair or diagnosis according to the available repair information. • If the vehicle is not repaired, go to the next step.
		No	Go to the next step.
3	**INSPECT HIGH PRESSURE FUEL PUMP CONNECTOR CONDITION** • Switch the ignition off. • Disconnect the high pressure fuel pump connector. • Inspect for poor connection (such as damaged/pulled-out pins, corrosion). • Is there any malfunction?	Yes	Repair or replace the connector and/or terminals, then go to Step 7.
		No	Go to the next step.
4	**INSPECT PCM CONNECTOR CONDITION** • Disconnect the PCM connector. • Inspect for poor connection (such as damaged/pulled-out pins, corrosion). • Is there any malfunction?	Yes	Repair or replace the connector and/or terminals, then go to Step 7.
		No	Go to the next step.
5	**INSPECT SPILL VALVE CONTROL SOLENOID VALVE CONTROL CIRCUIT FOR SHORT TO POWER SUPPLY** • Verify that the high pressure fuel pump and PCM connectors are disconnected. • Switch the ignition ON (engine off). **NOTE:** • Another	Yes	Go to the next step.
		No	Refer to the wiring diagram and verify whether or not there is a common connector between high pressure fuel pump terminal B and PCM terminal 1EF. **If there is a common connector:** • Determine the malfunctioning part by inspecting the common connector and the terminal for corrosion, damage, or pin disconnection, and the common wiring harness for a short to power supply. • Repair or replace the malfunctioning part.

	DTC may be stored by the PCM detecting an open circuit. • Measure the voltage at the high pressure fuel pump terminal B (wiring harness-side). • Is the voltage **0 V**?		**If there is no common connector:** • Repair or replace the wiring harness which has a short to power supply. Go to Step 7.
6	**INSPECT SPILL VALVE CONTROL SOLENOID VALVE** • Switch the ignition off. • Reconnect all disconnected connectors. • Inspect the spill valve control solenoid valve. (See **HIGH PRESSURE FUEL PUMP INSPECTION [SKYACTIV-G 2.0, SKYACTIV-G 2.5]**.) • Is there any malfunction?	Yes	Replace the high pressure fuel pump, then go to the next step. (See **HIGH PRESSURE FUEL PUMP REMOVAL/INSTALLATION [SKYACTIV-G 2.0, SKYACTIV-G 2.5]**.)
		No	Go to the next step.
7	**VERIFY DTC TROUBLESHOOTING COMPLETED** • Always reconnect all disconnected connectors. • Clear the DTC from the PCM memory using the M-MDS. (See **AFTER REPAIR PROCEDURE [SKYACTIV-G 2.0, SKYACTIV-G 2.5]**.) • Perform the KOEO or KOER self test. (See **KOEO/KOER SELF TEST [SKYACTIV-G 2.0, SKYACTIV-G 2.5]**.) • Is the same DTC present?	Yes	Repeat the inspection from Step 1. • If the malfunction recurs, replace the PCM. (See **PCM REMOVAL/INSTALLATION [SKYACTIV-G 2.0, SKYACTIV-G 2.5]**.) Go to the next step.
		No	Go to the next step.
8	**VERIFY AFTER REPAIR PROCEDURE** • Perform the “AFTER REPAIR PROCEDURE”. (See **AFTER REPAIR PROCEDURE [SKYACTIV-G 2.0, SKYACTIV-G 2.5]**.) • Are any DTCs present?	Yes	Go to the applicable DTC inspection. (See **DTC TABLE [SKYACTIV-G 2.0, SKYACTIV-G 2.5]**.)
		No	DTC troubleshooting completed.

2014 - Mazda3 - Engine

DTC P0097:00 [SKYACTIV-G 2.0, SKYACTIV-G 2.5]

DTC P0097:00	IAT sensor No.2 circuit low input
DETECTION CONDITION	• If the PCM detects that the IAT sensor No.2 voltage at the PCM terminal 1CE is **0.33 V or less** for **5 s**, the PCM determines that the IAT sensor No.2 circuit voltage is low. **Diagnostic support note** • This is a continuous monitor (CCM). • The check engine light illuminates if the PCM detects the above malfunction condition during the first drive cycle. • FREEZE FRAME DATA (Mode 2)/Snapshot data is available. • DTC is stored in the PCM memory.
FAIL-SAFE FUNCTION	Not applicable
POSSIBLE CAUSE	• MAP sensor/IAT sensor No.2 connector or terminals malfunction • IAT sensor No.2 malfunction • Short to ground in wiring harness between MAP sensor/IAT sensor No.2 terminal B and PCM terminal 1CE • PCM connector or terminals malfunction • IAT sensor No.2 signal circuit and ground circuit are shorted to each other • PCM malfunction

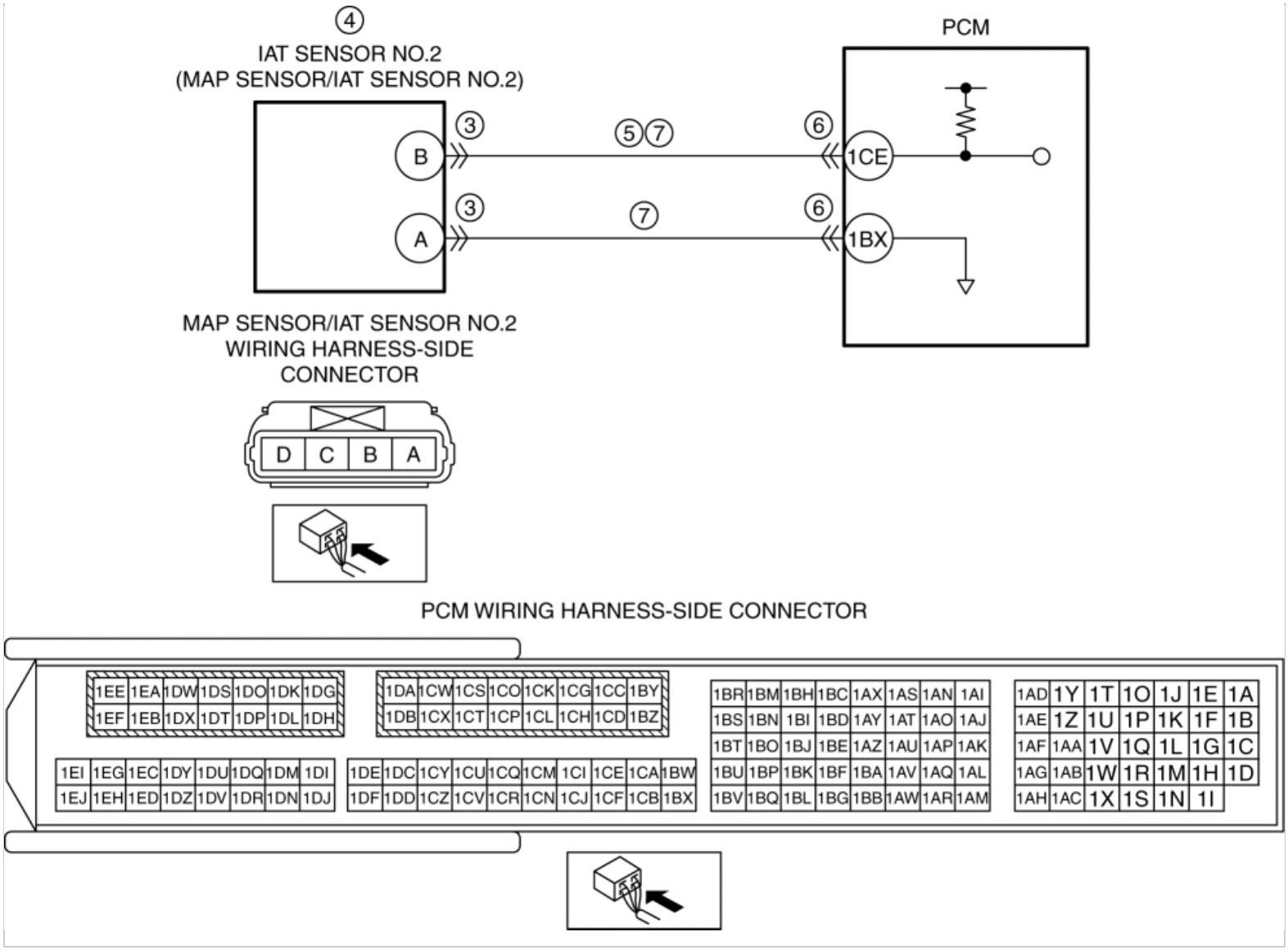

Diagnostic Procedure

STEP	INSPECTION		ACTION
1	**VERIFY FREEZE FRAME DATA (MODE 2)/SNAPSHOT DATA HAS BEEN RECORDED** • Has the FREEZE FRAME DATA (Mode 2)/snapshot data been recorded?	Yes	Go to the next step.
		No	Record the FREEZE FRAME DATA (Mode 2)/snapshot data on the repair order, then go to the next step.
2	**VERIFY RELATED REPAIR INFORMATION AVAILABILITY** • Verify related Service Bulletins and/or on-line repair information availability. • Is any related repair information available?	Yes	Perform repair or diagnosis according to the available repair information. • If the vehicle is not repaired, go to the next step.
		No	Go to the next step.
3	**INSPECT MAP SENSOR/IAT SENSOR NO.2 CONNECTOR CONDITION** • Switch the ignition off. • Disconnect the MAP sensor/IAT sensor No.2	Yes	Repair or replace the connector and/or terminals, then go to Step 8.
		No	Go to the next step.

	connector. • Inspect for poor connection (such as damaged/pulled-out pins, corrosion). • Is there any malfunction?		
4	**INSPECT IAT SENSOR NO.2** • Inspect the IAT sensor No.2. (See **INTAKE AIR TEMPERATURE (IAT) SENSOR INSPECTION [SKYACTIV-G 2.0, SKYACTIV-G 2.5]**.) • Is there any malfunction?	Yes	Replace the MAP sensor/IAT sensor No.2, then go to Step 8. (See **MANIFOLD ABSOLUTE PRESSURE (MAP) SENSOR/INTAKE AIR TEMPERATURE (IAT) SENSOR NO.2 REMOVAL/INSTALLATION [SKYACTIV-G 2.0, SKYACTIV-G 2.5]**.)
		No	Go to the next step.
5	**INSPECT IAT SENSOR NO.2 SIGNAL CIRCUIT FOR SHORT TO GROUND** • Verify that the MAP sensor/IAT sensor No.2 connector is disconnected. • Inspect for continuity between MAP sensor/IAT sensor No.2 terminal B (wiring harness-side) and body ground. • Is there continuity?	Yes	If the short to ground circuit could be detected in the wiring harness: • Refer to the wiring diagram and verify whether or not there is a common connector between MAP sensor/IAT sensor No.2 terminal B and PCM terminal 1CE. **If there is a common connector:** ▪ Determine the malfunctioning part by inspecting the common connector and the terminal for corrosion, damage, or pin disconnection, and the common wiring harness for a short to ground. ▪ Repair or replace the malfunctioning part. **If there is no common connector:** ▪ Repair or replace the wiring harness which has a short to ground. If the short to ground circuit could not be detected in the wiring harness: • Replace the PCM (short to ground in the PCM internal circuit). (See **PCM REMOVAL/INSTALLATION [SKYACTIV-G 2.0, SKYACTIV-G 2.5]**.) Go to Step 8.
		No	Go to the next step.
6	**INSPECT PCM CONNECTOR CONDITION** • Disconnect the PCM connector. • Inspect for poor connection (such as damaged/pulled-out pins, corrosion). • Is there any malfunction?	Yes	Repair or replace the connector and/or terminals, then go to Step 8.
		No	Go to the next step.
7	**INSPECT IAT SENSOR NO.2 SIGNAL CIRCUIT AND GROUND CIRCUIT FOR SHORT TO EACH OTHER** • Verify that the MAP sensor/IAT sensor No.2 and PCM connectors are disconnected. • Inspect for continuity between MAP sensor/IAT sensor No.2 terminals B and A (wiring harness-side).	Yes	Refer to the wiring diagram and verify whether or not there is a common connector between the following terminals: • MAP sensor/IAT sensor No.2 terminal B—PCM terminal 1CE • MAP sensor/IAT sensor No.2 terminal A—PCM terminal 1BX **If there is a common connector:** • Determine the malfunctioning part by inspecting the common connector and the terminal for corrosion, damage, or pin disconnection, and the common wiring harness for a short to each other.

	• Is there continuity?		• Repair or replace the malfunctioning part. **If there is no common connector:** • Repair or replace the wiring harness which has a short to each other. Go to the next step.
		No	Go to the next step.
8	**VERIFY DTC TROUBLESHOOTING COMPLETED** • Always reconnect all disconnected connectors. • Clear the DTC from the PCM memory using the M-MDS. (See **AFTER REPAIR PROCEDURE [SKYACTIV-G 2.0, SKYACTIV-G 2.5]**.) • Perform the KOEO or KOER self test. (See **KOEO/KOER SELF TEST [SKYACTIV-G 2.0, SKYACTIV-G 2.5]**.) • Is the same DTC present?	Yes	Repeat the inspection from Step 1. • If the malfunction recurs, replace the PCM. (See **PCM REMOVAL/INSTALLATION [SKYACTIV-G 2.0, SKYACTIV-G 2.5]**.) Go to the next step.
		No	Go to the next step.
9	**VERIFY AFTER REPAIR PROCEDURE** • Perform the “AFTER REPAIR PROCEDURE”. (See **AFTER REPAIR PROCEDURE [SKYACTIV-G 2.0, SKYACTIV-G 2.5]**.) • Are any DTCs present?	Yes	Go to the applicable DTC inspection. (See **DTC TABLE [SKYACTIV-G 2.0, SKYACTIV-G 2.5]**.)
		No	DTC troubleshooting completed.

2014 - Mazda3 - Engine

DTC P0098:00 [SKYACTIV-G 2.0, SKYACTIV-G 2.5]

DTC P0098:00	IAT sensor No.2 circuit high input
DETECTION CONDITION	• If the PCM detects that the IAT sensor No.2 voltage at the PCM terminal 1CE is **4.96 V or more** for **5 s**, the PCM determines that the IAT sensor No.2 circuit voltage is high. **Diagnostic support note** • This is a continuous monitor (CCM). • The check engine light illuminates if the PCM detects the above malfunction condition during the first drive cycle. • FREEZE FRAME DATA (Mode 2)/Snapshot data is available. • DTC is stored in the PCM memory.
FAIL-SAFE FUNCTION	Not applicable
POSSIBLE CAUSE	• MAP sensor/IAT sensor No.2 connector or terminals malfunction • PCM connector or terminals malfunction • IAT sensor No.2 malfunction • Short to power supply in wiring harness between MAP sensor/IAT sensor No.2 terminal B and PCM terminal 1CE • Open circuit in wiring harness between the following terminals: ▪ MAP sensor/IAT sensor No.2 terminal B—PCM terminal 1CE ▪ MAP sensor/IAT sensor No.2 terminal A—PCM terminal 1BX • PCM malfunction

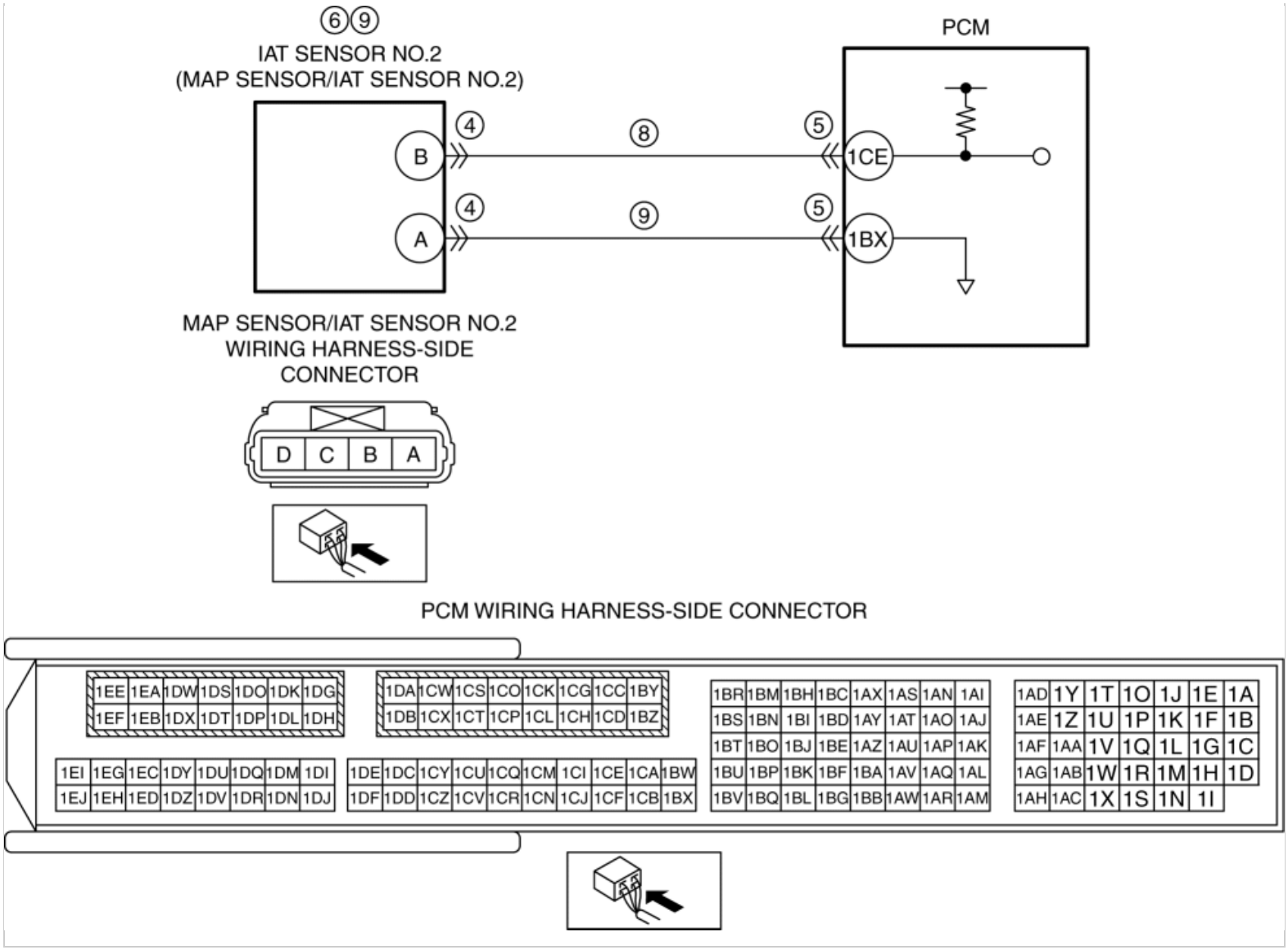

CAUTION:

- Verify the malfunction symptom according to not only the PID value but also the symptom troubleshooting.

Related PIDs

Item (definition)	Unit/Condition	Definition	Condition/Specification (Reference)
IAT2	°C, °F	Intake air temperature (No.2)	• Displays IAT (No.2)
	V	IAT sensor No.2 voltage	• IAT2 is 20 °C {68 °F}: Approx. 3.57 V • IAT2 is 40 °C {104 °F}: Approx. 2.70 V • IAT2 is 60 °C {140 °F}: Approx. 1.87 V

Diagnostic Procedure

STEP	INSPECTION		ACTION
1	**VERIFY FREEZE FRAME DATA (MODE 2)/SNAPSHOT DATA HAS BEEN RECORDED** • Has the FREEZE FRAME DATA (Mode 2)/snapshot data been recorded?	Yes	Go to the next step.
		No	Record the FREEZE FRAME DATA (Mode 2)/snapshot data on the repair

			order, then go to the next step.
2	**VERIFY RELATED REPAIR INFORMATION AVAILABILITY** • Verify related Service Bulletins and/or on-line repair information availability. • Is any related repair information available?	Yes	Perform repair or diagnosis according to the available repair information. • If the vehicle is not repaired, go to the next step.
		No	Go to the next step.
3	**DETERMINE IF IAT SENSOR NO.2 OR WIRING HARNESS MALFUNCTION** • Access the IAT2 PID using the M-MDS. (See **ON-BOARD DIAGNOSTIC TEST [SKYACTIV-G 2.0, SKYACTIV-G 2.5]**.) • Verify the IAT2 PID value. • Is the IAT2 PID value **5 V** or **B+**?	Yes	Go to Step 7.
		No	Go to the next step.
4	**INSPECT MAP SENSOR/IAT SENSOR NO.2 CONNECTOR CONDITION** • Switch the ignition off. • Disconnect the MAP sensor/IAT sensor No.2 connector. • Inspect for poor connection (such as damaged/pulled-out pins, corrosion). • Is there any malfunction?	Yes	Repair or replace the connector and/or terminals, then go to Step 10.
		No	Go to the next step.
5	**INSPECT PCM CONNECTOR CONDITION** • Disconnect the PCM connector. • Inspect for poor connection (such as damaged/pulled-out pins, corrosion). • Is there any malfunction?	Yes	Repair or replace the connector and/or terminals, then go to Step 10.
		No	Go to the next step.
6	**INSPECT IAT SENSOR NO.2** • Inspect the IAT sensor No.2. (See **INTAKE AIR TEMPERATURE (IAT) SENSOR INSPECTION [SKYACTIV-G 2.0, SKYACTIV-G 2.5]**.) • Is there any malfunction?	Yes	Replace the MAP sensor/IAT sensor No.2, then go to Step 10. (See **MANIFOLD ABSOLUTE PRESSURE (MAP) SENSOR/INTAKE AIR TEMPERATURE (IAT) SENSOR NO.2 REMOVAL/INSTALLATION [SKYACTIV-G 2.0, SKYACTIV-G 2.5]**.)
		No	Go to Step 10.
7	**DETERMINE IF IAT SENSOR NO.2 SIGNAL CIRCUIT OR IAT SENSOR NO.2 GROUND CIRCUIT MALFUNCTION** • Switch the ignition off. • Disconnect the MAP sensor/IAT sensor No.2 connector. • Access the IAT2 PID using the M-MDS. (See **ON-BOARD DIAGNOSTIC TEST [SKYACTIV-G 2.0, SKYACTIV-G 2.5]**.) • Verify the IAT2 PID value. • Is the IAT2 PID value **5 V** or **B+**?	Yes	Go to the next step.
		No	Go to Step 9.
8	**INSPECT IAT SENSOR NO.2 SIGNAL CIRCUIT FOR OPEN CIRCUIT**	Yes	Refer to the wiring diagram and verify whether or not there is a common connector between MAP sensor/IAT sensor No.2 terminal B and

	Verify that the MAP sensor/IAT sensor No.2 connector is disconnected. • Switch the ignition off. • Disconnect the PCM connector. • Inspect for continuity between MAP sensor/IAT sensor No.2 terminal B (wiring harness-side) and PCM terminal 1CE (wiring harness-side). • Is there continuity?		PCM terminal 1CE. **If there is a common connector:** • Determine the malfunctioning part by inspecting the common connector and the terminal for corrosion, damage, or pin disconnection, and the common wiring harness for a short to power supply. • Repair or replace the malfunctioning part. **If there is no common connector:** • Repair or replace the wiring harness which has a short to power supply. Go to Step 10.
		No	Refer to the wiring diagram and verify whether or not there is a common connector between MAP sensor/IAT sensor No.2 terminal B and PCM terminal 1CE. **If there is a common connector:** • Determine the malfunctioning part by inspecting the common connector and the terminal for corrosion, damage, or pin disconnection, and the common wiring harness for an open circuit. • Repair or replace the malfunctioning part. **If there is no common connector:** • Repair or replace the wiring harness which has an open circuit. Go to Step 10.
9	**INSPECT IAT SENSOR NO.2 GROUND CIRCUIT FOR OPEN CIRCUIT** • Verify that the MAP sensor/IAT sensor No.2 connector is disconnected. • Switch the ignition off. • Disconnect the PCM connector. • Inspect for continuity between MAP sensor/IAT sensor No.2 terminal A (wiring harness-side) and PCM terminal 1BX (wiring harness-side). • Is there continuity?	Yes	Replace the MAP sensor/IAT sensor No.2, then go to the next step. (See **MANIFOLD ABSOLUTE PRESSURE (MAP) SENSOR/INTAKE AIR TEMPERATURE (IAT) SENSOR NO.2 REMOVAL/INSTALLATION [SKYACTIV-G 2.0, SKYACTIV-G 2.5]**.)
		No	Refer to the wiring diagram and verify whether or not there is a common connector between MAP sensor/IAT sensor No.2 terminal A and PCM terminal 1BX. **If there is a common connector:** • Determine the malfunctioning part by inspecting the common connector and the terminal for corrosion, damage, or pin disconnection, and the common wiring harness for an open circuit. • Repair or replace the malfunctioning part. **If there is no common connector:** • Repair or replace the wiring harness which has an open circuit. Go to the next step.
10	**VERIFY DTC TROUBLESHOOTING COMPLETED** • Always reconnect all disconnected connectors. • Clear the DTC from the PCM memory using the M-MDS. (See **AFTER REPAIR PROCEDURE [SKYACTIV-G 2.0, SKYACTIV-G 2.5]**.) • Perform the KOEO or KOER self test.	Yes	Repeat the inspection from Step 1. • If the malfunction recurs, replace the PCM. (See **PCM REMOVAL/INSTALLATION [SKYACTIV-G 2.0, SKYACTIV-G 2.5]**.) Go to the next step.
		No	Go to the next step.

	(See **KOEO/KOER SELF TEST [SKYACTIV-G 2.0, SKYACTIV-G 2.5]**.) • Is the same DTC present?		
11	**VERIFY AFTER REPAIR PROCEDURE** • Perform the “AFTER REPAIR PROCEDURE”. (See **AFTER REPAIR PROCEDURE [SKYACTIV-G 2.0, SKYACTIV-G 2.5]**.) • Are any DTCs present?	Yes	Go to the applicable DTC inspection. (See **DTC TABLE [SKYACTIV-G 2.0, SKYACTIV-G 2.5]**.)
		No	DTC troubleshooting completed.

2014 - Mazda3 - Engine

DTC P0101:00 [SKYACTIV-G 2.0, SKYACTIV-G 2.5]

DTC P0101:00	MAF sensor circuit range/performance problem
DETECTION CONDITION	• The difference between the intake air amount measured by the MAF sensor and the estimated intake air amount estimated by the MAP sensor is outside of the specified value. **Diagnostic support note** • This is a continuous monitor (CCM). • The check engine light illuminates if the PCM detects the above malfunction condition in two consecutive drive cycles or in one drive cycle while the DTC for the same malfunction has been stored in the PCM. • PENDING CODE is available if the PCM detects the above malfunction condition during first drive cycle. • FREEZE FRAME DATA (Mode 2)/Snapshot data is available. • DTC is stored in the PCM memory.
FAIL-SAFE FUNCTION	Not applicable
POSSIBLE CAUSE	• MAP sensor/IAT sensor No.2 connector or terminals malfunction • MAF sensor/IAT sensor No.1 connector or terminals malfunction • MAP sensor/IAT sensor No.2 loose • MAF sensor/IAT sensor No.1 loose • PCM connector or terminals malfunction • MAP sensor malfunction • MAF sensor malfunction • Air leakage from intake-air system • Purge solenoid valve malfunction • PCV valve malfunction • PCM malfunction

SYSTEM WIRING DIAGRAM	Not applicable

CAUTION:

- Verify the malfunction symptom according to not only the PID value but also the symptom troubleshooting.

Related PIDs

Item (definition)	Unit/Condition	Definition	Condition/Specification (Reference)
ECT	°C, °F	Engine coolant temperature	• Displays ECT
	V	ECT sensor No.1 voltage	• ECT is 20 °C {68 °F}: Approx. 3.10 V • ECT is 40 °C {104 °F}: Approx. 2.16 V • ECT is 60 °C {140 °F}: Approx. 1.40 V • ECT is 80 °C {176 °F}: Approx. 0.87 V • ECT is 100 °C {212 °F}: Approx. 0.54 V
MAF	g/Sec	Mass air flow	• Displays MAF
	V	MAF sensor voltage	• Ignition switched ON (engine off) (MAF: 0.59 g/s {0.078 lb/min}): Approx. 0.72 V • Idle (after warm up) (MAF: 2.17 g/s {0.287 lb/min}): Approx. 0.86 V • Racing (engine speed is 2,000 rpm) (MAF: 4.73 g/s {0.626 lb/min}): Approx. 1.07 V
	KPa {MPa}, mBar {Bar}, psi, in H20	Manifold absolute pressure	• Displays MAP

MAP	V	MAP sensor voltage	• Ignition switched ON (engine off) (MAP:101 kPa {1.03 kgf/cm^2, 14.6 psi}): Approx. 4.07 V • Idle (after warm up) (MAP: 33 kPa {0.34 kgf/cm^2, 4.8 psi}): Approx. 1.34 V • Racing (engine speed is 2,000 rpm) (MAP: 26 kPa {0.27 kgf/cm^2, 3.8 psi}): Approx. 1.05 V
RPM	RPM	Engine speed	• Displays engine speed
TP_REL	%	Throttle valve opening angle (relative value) with value at throttle valve fully open timing as the start point	• Accelerator pedal released: Approx. 12% • Accelerator pedal fully depressed: Approx. 82%

Diagnostic Procedure

STEP	INSPECTION		ACTION
1	**VERIFY FREEZE FRAME DATA (MODE 2)/SNAPSHOT DATA HAS BEEN RECORDED** • Has the FREEZE FRAME DATA (Mode 2)/snapshot data been recorded?	Yes	Go to the next step.
		No	Record the FREEZE FRAME DATA (Mode 2)/snapshot data on the repair order, then go to the next step.
2	**VERIFY RELATED REPAIR INFORMATION AVAILABILITY** • Verify related Service Bulletins and/or on-line repair information availability. • Is any related repair information available?	Yes	Perform repair or diagnosis according to the available repair information. • If the vehicle is not repaired, go to the next step.
		No	Go to the next step.
3	**VERIFY CURRENT INPUT SIGNAL STATUS IS CONCERN INTERMITTENT OR CONSTANT** • Clear the DTC from the PCM memory using the M-MDS.	Yes	Go to the next step.
		No	Intermittent concern exists. • Perform the “INTERMITTENT CONCERN TROUBLESHOOTING”

(See **AFTER REPAIR PROCEDURE [SKYACTIV-G 2.0, SKYACTIV-G 2.5]**.)

- Start the engine.
- Access the following PIDs using the M-MDS:

  (See **ON-BOARD DIAGNOSTIC TEST [SKYACTIV-G 2.0, SKYACTIV-G 2.5]**.)

  - ECT
  - TP_REL
  - RPM
- Warm up the engine until the ECT PID is **above 70 °C {158 °F}**.
- Perform the following:
  - Depress the accelerator pedal to increase the engine speed to **approx. 5,000 rpm**.
  - Release the accelerator pedal to decrease the engine speed to idle speed.
  - Repeat Step 1 and Step 2 operations above **3 times** in succession.
- Perform the Pending Trouble Code Access Procedure.

  (See **ON-BOARD** procedure.

  (See **INTERMITTENT CONCERN TROUBLESHOOTING [SKYACTIV-G 2.0, SKYACTIV-G 2.5]**.)

	DIAGNOSTIC TEST [SKYACTIV-G 2.0, SKYACTIV-G 2.5].) • Is the PENDING CODE for this DTC present?		
4	**INSPECT MAP SENSOR/IAT SENSOR NO.2 CONNECTOR CONDITION** • Switch the ignition off. • Disconnect the MAP sensor/IAT sensor No.2 connector. • Inspect for poor connection (such as damaged/pulled-out pins, corrosion). • Is there any malfunction?	Yes	Repair or replace the connector and/or terminals, then go to Step 14.
		No	Go to the next step.
5	**INSPECT MAF SENSOR/IAT SENSOR NO.1 CONNECTOR CONDITION** • Disconnect the MAF sensor/IAT sensor No.1 connector. • Inspect for poor connection (such as damaged/pulled-out pins, corrosion). • Is there any malfunction?	Yes	Repair or replace the connector and/or terminals, then go to Step 14.
		No	Go to the next step.
6	**INSPECT INSTALLATION OF MAP SENSOR/IAT SENSOR NO.2** • Inspect installation of MAP sensor/IAT sensor No.2. • Is the MAP sensor/IAT sensor No.2 installed securely?	Yes	Go to the next step.
		No	Retighten the MAP sensor/IAT sensor No.2, then go to Step 14. (See **MANIFOLD ABSOLUTE PRESSURE (MAP) SENSOR/INTAKE AIR TEMPERATURE (IAT) SENSOR NO.2 REMOVAL/INSTALLATION [SKYACTIV-G 2.0, SKYACTIV-G 2.5]**.)
7	**INSPECT INSTALLATION OF MAF SENSOR/IAT SENSOR NO.1** • Inspect installation of MAF sensor/IAT sensor No.1. • Is the MAF sensor/IAT sensor No.1 installed securely?	Yes	Go to the next step.
		No	Retighten the MAF sensor/IAT sensor No.1, then go to Step 14. (See **MASS AIR FLOW (MAF) SENSOR/INTAKE AIR TEMPERATURE (IAT) SENSOR NO.1 REMOVAL/INSTALLATION [SKYACTIV-G 2.0, SKYACTIV-G 2.5]**.)
8	**INSPECT PCM CONNECTOR CONDITION** • Disconnect the PCM	Yes	Repair or replace the connector and/or terminals, then go to Step 14.

	connector. • Inspect for poor connection (such as damaged/pulled-out pins, corrosion). • Is there any malfunction?	No	Go to the next step.
9	**INSPECT MAP SENSOR** • Reconnect all disconnected connectors. • Inspect the MAP sensor. (See **MANIFOLD ABSOLUTE PRESSURE (MAP) SENSOR INSPECTION [SKYACTIV-G 2.0, SKYACTIV-G 2.5]**.) • Is there any malfunction?	Yes	Replace the MAP sensor/IAT sensor No.2, then go to Step 14. (See **MANIFOLD ABSOLUTE PRESSURE (MAP) SENSOR/INTAKE AIR TEMPERATURE (IAT) SENSOR NO.2 REMOVAL/INSTALLATION [SKYACTIV-G 2.0, SKYACTIV-G 2.5]**.)
		No	Go to the next step.
10	**INSPECT MAF SENSOR** • Inspect the MAF sensor. (See **MASS AIR FLOW (MAF) SENSOR INSPECTION [SKYACTIV-G 2.0, SKYACTIV-G 2.5]**.) • Is there any malfunction?	Yes	Replace the MAF sensor/IAT sensor No.1, then go to Step 14. (See **MASS AIR FLOW (MAF) SENSOR/INTAKE AIR TEMPERATURE (IAT) SENSOR NO.1 REMOVAL/INSTALLATION [SKYACTIV-G 2.0, SKYACTIV-G 2.5]**.)
		No	Go to the next step.
11	**INSPECT INTAKE-AIR SYSTEM FOR AIR LEAKAGE** • Inspect for leakage in intake-air system. • Is there any leakage?	Yes	Repair or replace the malfunctioning part according to the inspection results, then go to Step 14.
		No	Go to the next step.
12	**INSPECT PURGE SOLENOID VALVE** • Inspect the purge solenoid valve. (See **PURGE SOLENOID VALVE INSPECTION [SKYACTIV-G 2.0, SKYACTIV-G 2.5]**.) • Is there any malfunction?	Yes	Replace the purge solenoid valve, then go to Step 14. (See **PURGE SOLENOID VALVE REMOVAL/INSTALLATION [SKYACTIV-G 2.0, SKYACTIV-G 2.5]**.)
		No	Go to the next step.
13	**INSPECT PCV VALVE OPERATION** • Inspect the PCV valve operation. (See **POSITIVE CRANKCASE VENTILATION (PCV) VALVE INSPECTION [SKYACTIV-G**	Yes	Replace the PCV valve, then go to the next step. (See **POSITIVE CRANKCASE VENTILATION (PCV) VALVE REMOVAL/INSTALLATION [SKYACTIV-G 2.0, SKYACTIV-G 2.5]**.)

	2.0, SKYACTIV-G 2.5].) • Is there any malfunction?	No	Go to the next step.
14	**VERIFY DTC TROUBLESHOOTING COMPLETED** • Always reconnect all disconnected connectors. • Clear the DTC from the PCM memory using the M-MDS. (See **AFTER REPAIR PROCEDURE [SKYACTIV-G 2.0, SKYACTIV-G 2.5]**.) • Start the engine. • Access the following PIDs using the M-MDS: (See **ON-BOARD DIAGNOSTIC TEST [SKYACTIV-G 2.0, SKYACTIV-G 2.5]**.) ▪ ECT ▪ TP_REL ▪ RPM • Warm up the engine until the ECT PID is **above 70 °C {158 °F}**. • Perform the following: ◦ Depress the accelerator pedal to increase the engine speed to **approx. 5,000 rpm**. ◦ Release the accelerator pedal to decrease the engine speed to idle speed.	Yes	Repeat the inspection from Step 1. • If the malfunction recurs, replace the PCM. (See **PCM REMOVAL/INSTALLATION [SKYACTIV-G 2.0, SKYACTIV-G 2.5]**.) Go to the next step.
		No	Go to the next step.

	◦ Repeat Step 1 and Step 2 operations above **3 times** in succession. • Perform the Pending Trouble Code Access Procedure. (See **ON-BOARD DIAGNOSTIC TEST [SKYACTIV-G 2.0, SKYACTIV-G 2.5]**.) • Is the PENDING CODE for this DTC present?		
15	**VERIFY AFTER REPAIR PROCEDURE** • Perform the “AFTER REPAIR PROCEDURE”. (See **AFTER REPAIR PROCEDURE [SKYACTIV-G 2.0, SKYACTIV-G 2.5]**.) • Are any DTCs present?	Yes	Go to the applicable DTC inspection. (See **DTC TABLE [SKYACTIV-G 2.0, SKYACTIV-G 2.5]**.)
		No	DTC troubleshooting completed.

2014 - Mazda3 - Engine

DTC P0102:00 [SKYACTIV-G 2.0, SKYACTIV-G 2.5]

DTC P0102:00	MAF sensor circuit low input
DETECTION CONDITION	• The PCM monitors input voltage from the MAF sensor. If the input voltage at the PCM terminal 2BC is **below 0.2 V** for **5 s**, the PCM determines that the MAF sensor circuit has a malfunction. **Diagnostic support note** • This is a continuous monitor (CCM). • The check engine light illuminates if the PCM detects the above malfunction condition during the first drive cycle. • FREEZE FRAME DATA (Mode 2)/Snapshot data is available. • DTC is stored in the PCM memory.
FAIL-SAFE FUNCTION	• Restricts the upper limit of the engine speed. • Inhibits the evaporative purge control.

POSSIBLE CAUSE	• MAF sensor/IAT sensor No.1 connector or terminals malfunction
	• Short to ground or open circuit in MAF sensor power supply circuit
	  ▪ Short to ground in wiring harness between ENGINE1 15 A fuse and MAF sensor/IAT sensor No.1 terminal E
	  ▪ ENGINE1 15 A fuse malfunction
	  ▪ Open circuit in wiring harness between main relay terminal D and MAF sensor/IAT sensor No.1 terminal E
	• Short to ground in wiring harness between the following terminals:
	  ▪ MAF sensor/IAT sensor No.1 terminal D—PCM terminal 2BB
	  ▪ MAF sensor/IAT sensor No.1 terminal C—PCM terminal 2BC
	• PCM connector or terminals malfunction
	• MAF sensor signal circuit and ground circuit are shorted to each other
	• Open circuit in wiring harness between the following terminals:
	  ▪ MAF sensor/IAT sensor No.1 terminal D—PCM terminal 2BB
	  ▪ MAF sensor/IAT sensor No.1 terminal C—PCM terminal 2BC
	• MAF sensor malfunction
	• PCM malfunction

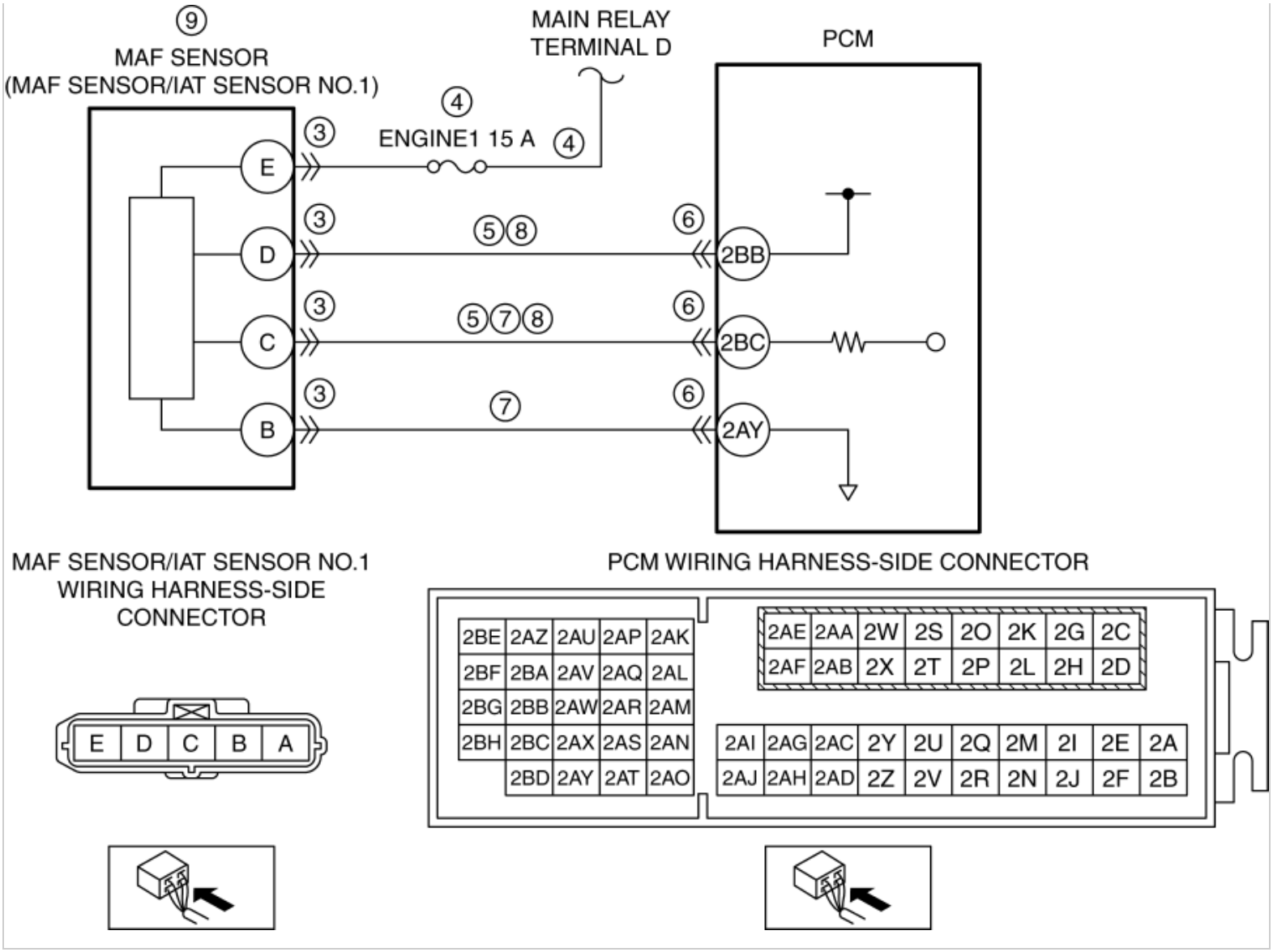

CAUTION:

- Verify the malfunction symptom according to not only the PID value but also the symptom troubleshooting.

Related PIDs

Item (definition)	Unit/Condition	Definition	Condition/Specification (Reference)
MAF	g/Sec	Mass air flow	• Displays MAF
	V	MAF sensor voltage	• Ignition switched ON (engine off) (MAF: 0.59 g/s {0.078 lb/min}): Approx. 0.72 V • Idle (after warm up) (MAF: 2.17 g/s {0.287 lb/min}): Approx. 0.86 V • Racing (engine speed is 2,000 rpm) (MAF: 4.73 g/s {0.626 lb/min}): Approx. 1.07 V

Diagnostic Procedure

STEP	INSPECTION		ACTION
1	**VERIFY FREEZE FRAME DATA (MODE 2)/SNAPSHOT DATA HAS BEEN RECORDED** • Has the FREEZE FRAME DATA (Mode 2)/snapshot data been recorded?	Yes	Go to the next step.
		No	Record the FREEZE FRAME DATA (Mode 2)/snapshot data on the repair order, then go to the next step.
2	**VERIFY RELATED REPAIR INFORMATION AVAILABILITY** • Verify related Service Bulletins and/or on-line repair information availability. • Is any related repair information available?	Yes	Perform repair or diagnosis according to the available repair information. • If the vehicle is not repaired, go to the next step.
		No	Go to the next step.
3	**INSPECT MAF SENSOR/IAT SENSOR NO.1 CONNECTOR CONDITION** • Switch the ignition off. • Disconnect the MAF sensor/IAT sensor No.1 connector. • Inspect for poor connection (such as damaged/pulled-out pins, corrosion). • Is there any malfunction?	Yes	Repair or replace the connector and/or terminals, then go to Step 10.
		No	Go to the next step.
4	**INSPECT MAF SENSOR POWER SUPPLY CIRCUIT FOR SHORT TO GROUND OR OPEN CIRCUIT** • Verify that the MAF sensor/IAT sensor No.1 connector is disconnected. • Switch the ignition ON (engine off). **NOTE:** • Another DTC may be stored by the PCM detecting an open circuit. • Measure the voltage at the MAF sensor/IAT sensor No.1 terminal E (wiring harness-side). • Is the voltage **B+**?	Yes	Go to the next step.
		No	Inspect the ENGINE1 15 A fuse. • If the fuse is blown: ▪ Refer to the wiring diagram and verify whether or not there is a common connector between ENGINE1 15 A fuse and MAF sensor/IAT sensor No.1 terminal E. **If there is a common connector:** • Determine the malfunctioning part by inspecting the common connector and the terminal for corrosion, damage, or pin disconnection, and the common wiring harness for a short to ground. • Repair or replace the malfunctioning part. **If there is no common**

			connector: • Repair or replace the wiring harness which has a short to ground. • Replace the fuse. • If the fuse is damaged: ▪ Replace the fuse. • If the fuse is normal: ▪ Refer to the wiring diagram and verify whether or not there is a common connector between main relay terminal D and MAF sensor/IAT sensor No.1 terminal E. **If there is a common connector:** • Determine the malfunctioning part by inspecting the common connector and the terminal for corrosion, damage, or pin disconnection, and the common wiring harness for an open circuit. • Repair or replace the malfunctioning part. **If there is no common connector:** • Repair or replace the wiring harness which has an open circuit. Go to Step 10.
5	**INSPECT MAF SENSOR CIRCUIT FOR SHORT TO GROUND** • Verify that the MAF sensor/IAT sensor No.1 connector is disconnected. • Switch the ignition off. • Inspect for continuity between the following terminals (wiring harness-side) and body ground: ▪ MAF sensor/IAT sensor No.1 terminal D ▪ MAF	Yes	If the short to ground circuit could be detected in the wiring harness: • Refer to the wiring diagram and verify whether or not there is a common connector between the following terminals: ▪ MAF sensor/IAT sensor No.1 terminal D—PCM terminal 2BB ▪ MAF sensor/IAT sensor No.1 terminal C—PCM terminal 2BC **If there is a common connector:** ▪ Determine the malfunctioning part by inspecting the common connector and the terminal for corrosion, damage, or pin disconnection, and the common wiring harness for a short to ground.

	sensor/IAT sensor No.1 terminal C • Is there continuity?		Repair or replace the malfunctioning part. **If there is no common connector:** ▪ Repair or replace the wiring harness which has a short to ground. If the short to ground circuit could not be detected in the wiring harness: • Replace the PCM (short to ground in the PCM internal circuit). (See **PCM REMOVAL/INSTALLATION [SKYACTIV-G 2.0, SKYACTIV-G 2.5]**.) Go to Step 10.
		No	Go to the next step.
6	**INSPECT PCM CONNECTOR CONDITION** • Disconnect the PCM connector. • Inspect for poor connection (such as damaged/pulled-out pins, corrosion). • Is there any malfunction?	Yes	Repair or replace the connector and/or terminals, then go to Step 10.
		No	Go to the next step.
7	**INSPECT MAF SENSOR SIGNAL CIRCUIT AND GROUND CIRCUIT FOR SHORT TO EACH OTHER** • Verify that the MAF sensor/IAT sensor No.1 and PCM connectors are disconnected. • Inspect for continuity between MAF sensor/IAT sensor No.1 terminals C and B (wiring harness-side). • Is there continuity?	Yes	Refer to the wiring diagram and verify whether or not there is a common connector between the following terminals: • MAF sensor/IAT sensor No.1 terminal C—PCM terminal 2BC • MAF sensor/IAT sensor No.1 terminal B—PCM terminal 2AY **If there is a common connector:** • Determine the malfunctioning part by inspecting the common connector and the terminal for corrosion, damage, or pin disconnection, and the common wiring harness for a short to each other. • Repair or replace the malfunctioning part. **If there is no common connector:** • Repair or replace the wiring harness which has a short to each other. Go to Step 10.
		No	Go to the next step.
8	**INSPECT MAF SENSOR CIRCUIT FOR OPEN CIRCUIT** • Verify that the MAF sensor/IAT sensor No.1 and PCM connectors are disconnected. • Inspect for continuity between the following	Yes	Go to the next step.
		No	Refer to the wiring diagram and verify whether or not there is a common connector between the following terminals: • MAF sensor/IAT sensor No.1 terminal D—PCM terminal 2BB

	terminals (wiring harness-side): ▪ MAF sensor/IAT sensor No.1 terminal D—PCM terminal 2BB ▪ MAF sensor/IAT sensor No.1 terminal C—PCM terminal 2BC • Is there continuity?		MAF sensor/IAT sensor No.1 terminal C—PCM terminal 2BC **If there is a common connector:** • Determine the malfunctioning part by inspecting the common connector and the terminal for corrosion, damage, or pin disconnection, and the common wiring harness for an open circuit. • Repair or replace the malfunctioning part. **If there is no common connector:** • Repair or replace the wiring harness which has an open circuit. Go to Step 10.
9	**INSPECT MAF SENSOR** • Inspect the MAF sensor. (See **MASS AIR FLOW (MAF) SENSOR INSPECTION [SKYACTIV-G 2.0, SKYACTIV-G 2.5]**.) • Is there any malfunction?	Yes	Replace the MAF sensor/IAT sensor No.1, then go to the next step. (See **MASS AIR FLOW (MAF) SENSOR/INTAKE AIR TEMPERATURE (IAT) SENSOR NO.1 REMOVAL/INSTALLATION [SKYACTIV-G 2.0, SKYACTIV-G 2.5]**.)
		No	Go to the next step.
10	**VERIFY DTC TROUBLESHOOTING COMPLETED** • Always reconnect all disconnected connectors. • Clear the DTC from the PCM memory using the M-MDS. (See **AFTER REPAIR PROCEDURE [SKYACTIV-G 2.0, SKYACTIV-G 2.5]**.) • Perform the KOEO or KOER self test. (See **KOEO/KOER SELF TEST [SKYACTIV-G 2.0, SKYACTIV-G 2.5]**.) • Is the same DTC present?	Yes	Repeat the inspection from Step 1. • If the malfunction recurs, replace the PCM. (See **PCM REMOVAL/INSTALLATION [SKYACTIV-G 2.0, SKYACTIV-G 2.5]**.) Go to the next step.
		No	Go to the next step.
11	**VERIFY AFTER REPAIR PROCEDURE** • Perform the “AFTER REPAIR PROCEDURE”. (See **AFTER REPAIR PROCEDURE [SKYACTIV-G 2.0, SKYACTIV-G 2.5]**.) • Are any DTCs present?	Yes	Go to the applicable DTC inspection. (See **DTC TABLE [SKYACTIV-G 2.0, SKYACTIV-G 2.5]**.)
		No	DTC troubleshooting completed.

DTC P0102:00 [SKYACTIV-G 2.0, SKYACTIV-G 2.5]

2014 - Mazda3 - Engine

DTC P0103:00 [SKYACTIV-G 2.0, SKYACTIV-G 2.5]

DTC P0103:00	MAF sensor circuit high input
DETECTION CONDITION	• The PCM monitors the input voltage from the MAF sensor. If the input voltage at the PCM terminal 2BC is **above 4.94 V** for **5 s**, the PCM determines that the MAF sensor circuit has a malfunction. **Diagnostic support note** • This is a continuous monitor (CCM). • The check engine light illuminates if the PCM detects the above malfunction condition during the first drive cycle. • FREEZE FRAME DATA (Mode 2)/Snapshot data is available. • DTC is stored in the PCM memory.
FAIL-SAFE FUNCTION	• Restricts the upper limit of the engine speed. • Inhibits the evaporative purge control.
POSSIBLE CAUSE	• MAF sensor/IAT sensor No.1 connector or terminals malfunction • PCM connector or terminals malfunction • MAF sensor malfunction • Short to power supply in wiring harness between MAF sensor/IAT sensor No.1 terminal C and PCM terminal 2BC • Open circuit in wiring harness between MAF sensor/IAT sensor No.1 terminal B and PCM terminal 2AY • PCM malfunction

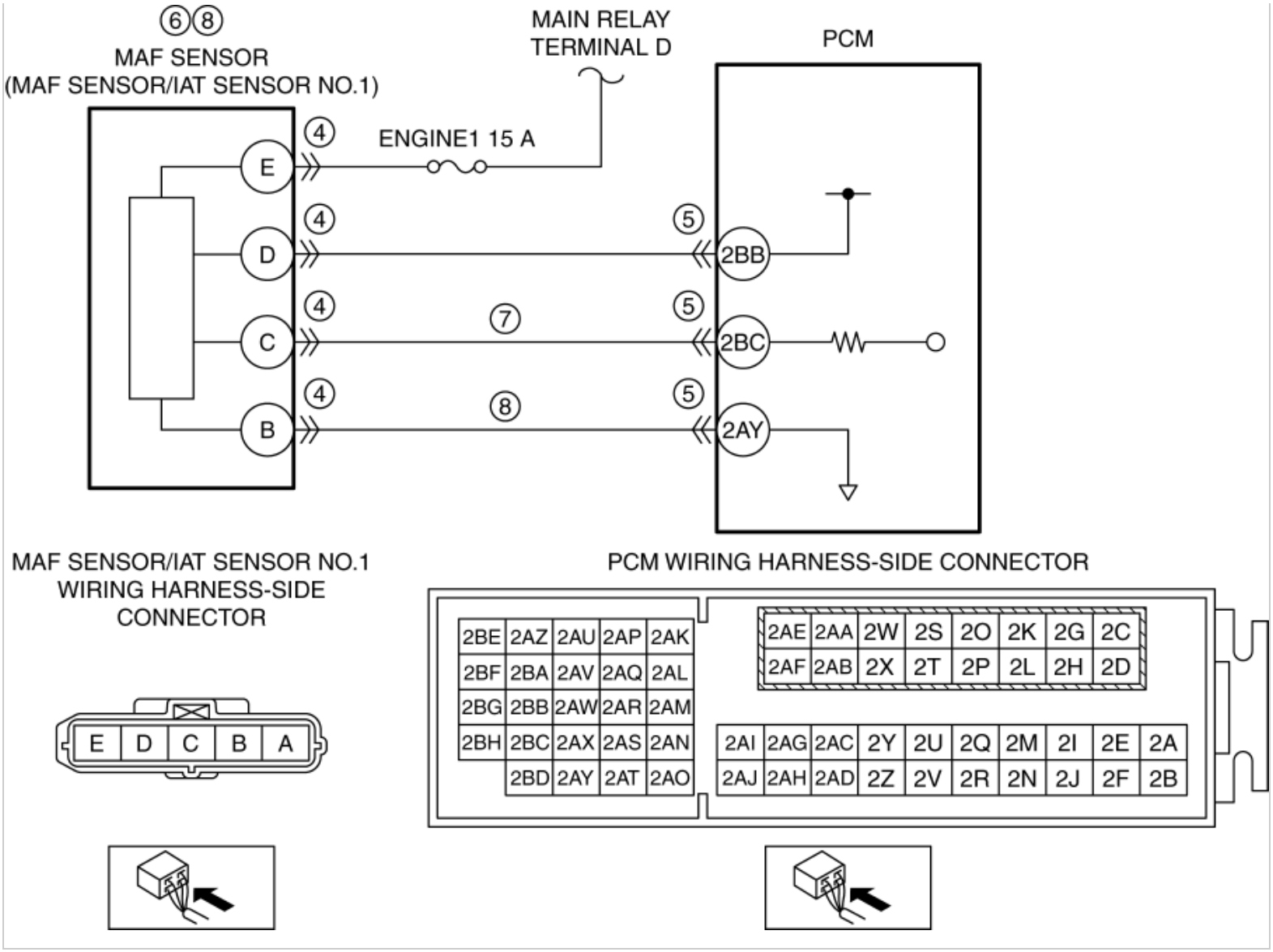

CAUTION:

- Verify the malfunction symptom according to not only the PID value but also the symptom troubleshooting.

Related PIDs

Item (definition)	Unit/Condition	Definition	Condition/Specification (Reference)
MAF	g/Sec	Mass air flow	• Displays MAF
	V	MAF sensor voltage	• Ignition switched ON (engine off) (MAF: 0.59 g/s {0.078 lb/min}): Approx. 0.72 V • Idle (after warm up) (MAF: 2.17 g/s {0.287 lb/min}): Approx. 0.86 V • Racing (engine speed is 2,000 rpm) (MAF: 4.73 g/s {0.626 lb/min}): Approx. 1.07 V

Diagnostic Procedure

STEP	INSPECTION		ACTION
1	**VERIFY FREEZE FRAME DATA (MODE 2)/SNAPSHOT DATA HAS BEEN RECORDED** • Has the FREEZE FRAME DATA (Mode 2)/snapshot data been recorded?	Yes	Go to the next step.
		No	Record the FREEZE FRAME DATA (Mode 2)/snapshot data on the repair order, then go to the next step.
2	**VERIFY RELATED REPAIR INFORMATION AVAILABILITY** • Verify related Service Bulletins and/or on-line repair information availability. • Is any related repair information available?	Yes	Perform repair or diagnosis according to the available repair information. • If the vehicle is not repaired, go to the next step.
		No	Go to the next step.
3	**DETERMINE IF MAF SENSOR OR WIRING HARNESS MALFUNCTION** • Access the MAF PID using the M-MDS. (See **ON-BOARD DIAGNOSTIC TEST [SKYACTIV-G 2.0, SKYACTIV-G 2.5]**.) • Verify the MAF PID value. • Is the MAF PID value **5 V** or **B+**?	Yes	Go to Step 7.
		No	Go to the next step.
4	**INSPECT MAF SENSOR/IAT SENSOR NO.1 CONNECTOR CONDITION** • Switch the ignition off. • Disconnect the MAF sensor/IAT sensor No.1 connector. • Inspect for poor connection (such as damaged/pulled-out pins, corrosion). • Is there any malfunction?	Yes	Repair or replace the connector and/or terminals, then go to Step 9.
		No	Go to the next step.
5	**INSPECT PCM CONNECTOR CONDITION** • Disconnect the PCM connector. • Inspect for poor connection (such as damaged/pulled-out pins, corrosion). • Is there any malfunction?	Yes	Repair or replace the connector and/or terminals, then go to Step 9.
		No	Go to the next step.
6	**INSPECT MAF SENSOR** • Inspect the MAF sensor. (See **MASS AIR FLOW (MAF) SENSOR INSPECTION [SKYACTIV-G 2.0, SKYACTIV-G 2.5]**.) • Is there any malfunction?	Yes	Replace the MAF sensor/IAT sensor No.1, then go to Step 9. (See **MASS AIR FLOW (MAF) SENSOR/INTAKE AIR TEMPERATURE (IAT) SENSOR NO.1 REMOVAL/INSTALLATION [SKYACTIV-G 2.0, SKYACTIV-G 2.5]**.)
		No	Go to Step 9.
7	**INSPECT MAF SENSOR SIGNAL CIRCUIT FOR SHORT TO POWER SUPPLY** • Switch the ignition off.	Yes	Refer to the wiring diagram and verify whether or not there is a common connector between MAF sensor/IAT sensor No.1 terminal C and PCM terminal 2BC.

	• Disconnect the MAF sensor/IAT sensor No.1 connector. • Access the MAF PID using the M-MDS. (See **ON-BOARD DIAGNOSTIC TEST [SKYACTIV-G 2.0, SKYACTIV-G 2.5]**.) • Verify the MAF PID value. • Is the MAF PID value **5 V** or **B+**?		**If there is a common connector:** • Determine the malfunctioning part by inspecting the common connector and the terminal for corrosion, damage, or pin disconnection, and the common wiring harness for a short to power supply. • Repair or replace the malfunctioning part. **If there is no common connector:** • Repair or replace the wiring harness which has a short to power supply. Go to Step 9.
		No	Go to the next step.
8	**INSPECT MAF SENSOR GROUND CIRCUIT FOR OPEN CIRCUIT** • Verify that the MAF sensor/IAT sensor No.1 connector is disconnected. • Switch the ignition off. • Disconnect the PCM connector. • Inspect for continuity between MAF sensor/IAT sensor No.1 terminal B (wiring harness-side) and PCM terminal 2AY (wiring harness-side). • Is there continuity?	Yes	Replace the MAF sensor/IAT sensor No.1, then go to the next step. (See **MASS AIR FLOW (MAF) SENSOR/INTAKE AIR TEMPERATURE (IAT) SENSOR NO.1 REMOVAL/INSTALLATION [SKYACTIV-G 2.0, SKYACTIV-G 2.5]**.)
		No	Refer to the wiring diagram and verify whether or not there is a common connector between MAF sensor/IAT sensor No.1 terminal B and PCM terminal 2AY. **If there is a common connector:** • Determine the malfunctioning part by inspecting the common connector and the terminal for corrosion, damage, or pin disconnection, and the common wiring harness for an open circuit. • Repair or replace the malfunctioning part. **If there is no common connector:** • Repair or replace the wiring harness which has an open circuit. Go to the next step.
9	**VERIFY DTC TROUBLESHOOTING COMPLETED** • Always reconnect all disconnected connectors. • Clear the DTC from the PCM memory using the M-MDS. (See **AFTER REPAIR PROCEDURE [SKYACTIV-G 2.0, SKYACTIV-G 2.5]**.) • Perform the KOEO or KOER self test. (See **KOEO/KOER SELF TEST [SKYACTIV-G 2.0, SKYACTIV-G 2.5]**.) • Is the same DTC present?	Yes	Repeat the inspection from Step 1. • If the malfunction recurs, replace the PCM. (See **PCM REMOVAL/INSTALLATION [SKYACTIV-G 2.0, SKYACTIV-G 2.5]**.) Go to the next step.
		No	Go to the next step.
	VERIFY AFTER REPAIR PROCEDURE		

10	• Perform the “AFTER REPAIR PROCEDURE”. (See **AFTER REPAIR PROCEDURE [SKYACTIV-G 2.0, SKYACTIV-G 2.5]**.) • Are any DTCs present?	Yes	Go to the applicable DTC inspection. (See **DTC TABLE [SKYACTIV-G 2.0, SKYACTIV-G 2.5]**.)
		No	DTC troubleshooting completed.

2014 - Mazda3 - Engine

DTC P0107:00 [SKYACTIV-G 2.0, SKYACTIV-G 2.5]

DTC P0107:00	MAP sensor circuit low input
DETECTION CONDITION	• The PCM monitors the input voltage from the MAP sensor. If the input voltage at the PCM terminal 1BW is **below 0.08 V** for **5 s**, the PCM determines that the MAP sensor circuit has a malfunction. **Diagnostic support note** • This is a continuous monitor (CCM). • The check engine light illuminates if the PCM detects the above malfunction condition during the first drive cycle. • FREEZE FRAME DATA (Mode 2)/Snapshot data is available. • DTC is stored in the PCM memory.
FAIL-SAFE FUNCTION	• Estimates MAP using MAF sensor and engine speed. • Restricts the upper limit of the engine speed. • Inhibits the evaporative purge control.

POSSIBLE CAUSE	• MAP sensor/IAT sensor No.2 connector or terminals malfunction
	• PCM connector or terminals malfunction
	• Short to ground in wiring harness between the following terminals:
	  ▪ MAP sensor/IAT sensor No.2 terminal C—PCM terminal 1BO
	  ▪ MAP sensor/IAT sensor No.2 terminal D—PCM terminal 1BW
	• MAP sensor signal circuit and ground circuit are shorted to each other
	• MAP sensor malfunction
	• PCM malfunction

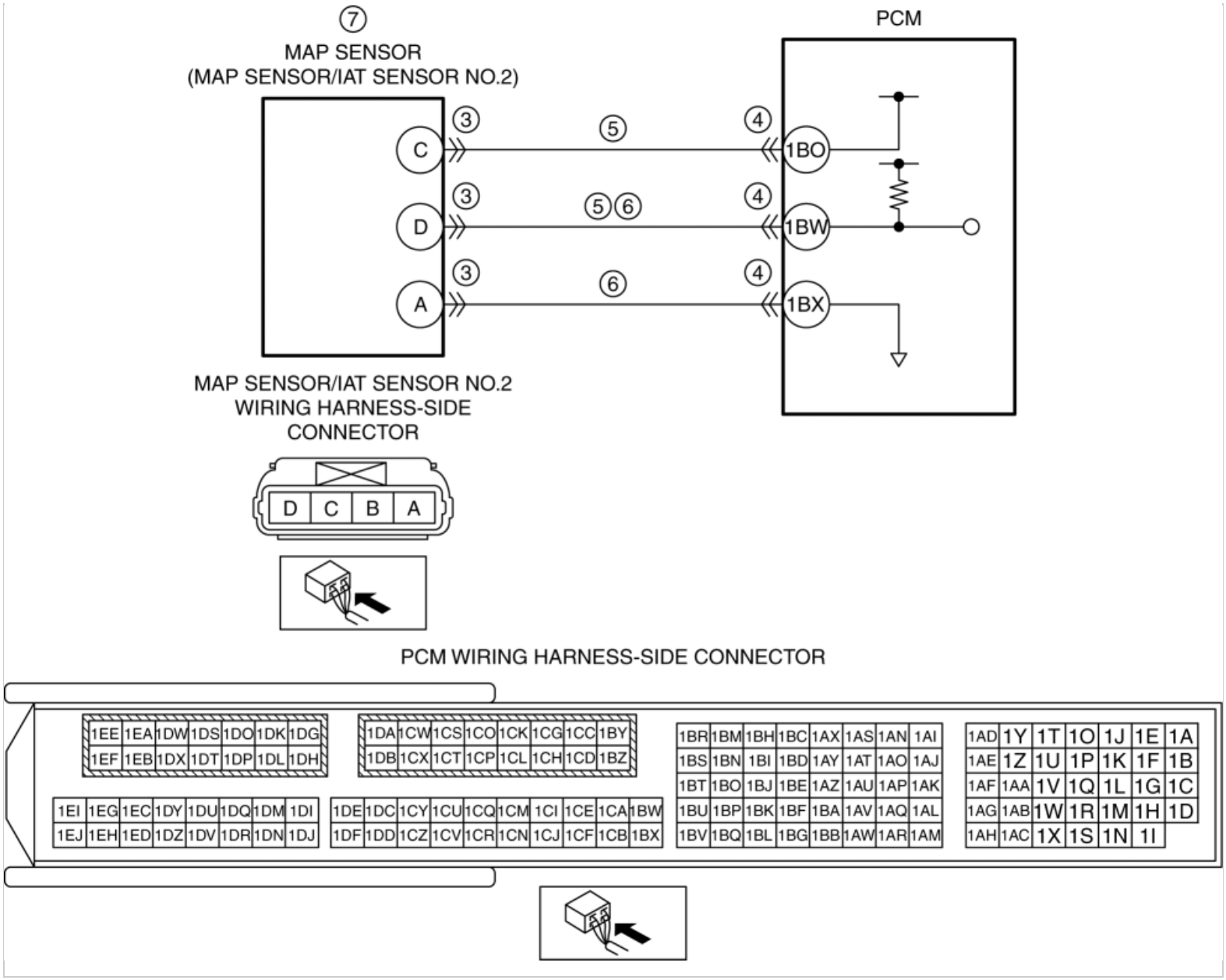

CAUTION:

- Verify the malfunction symptom according to not only the PID value but also the symptom troubleshooting.

Related PIDs

Item (definition)	Unit/Condition	Definition	Condition/Specification (Reference)
MAP	KPa {MPa}, mBar {Bar}, psi, in H20	Manifold absolute pressure	• Displays MAP
	V	MAP sensor voltage	• Ignition switched ON (engine off) (MAP:101 kPa {1.03 kgf/cm^2, 14.6 psi}): Approx. 4.07 V • Idle (after warm up) (MAP: 33 kPa {0.34 kgf/cm^2, 4.8 psi}): Approx. 1.34 V • Racing (engine speed is 2,000 rpm) (MAP: 26 kPa {0.27 kgf/cm^2, 3.8 psi}): Approx. 1.05 V

Diagnostic Procedure

STEP	INSPECTION		ACTION
1	**VERIFY FREEZE FRAME DATA (MODE 2)/SNAPSHOT DATA HAS BEEN RECORDED** • Has the FREEZE FRAME DATA (Mode 2)/snapshot data been recorded?	Yes	Go to the next step.
		No	Record the FREEZE FRAME DATA (Mode 2)/snapshot data on the repair order, then go to the next step.
2	**VERIFY RELATED REPAIR INFORMATION AVAILABILITY** • Verify related Service Bulletins and/or on-line repair information availability. • Is any related repair information available?	Yes	Perform repair or diagnosis according to the available repair information. • If the vehicle is not repaired, go to the next step.
		No	Go to the next step.
3	**INSPECT MAP SENSOR/IAT SENSOR NO.2 CONNECTOR CONDITION** • Switch the ignition off. • Disconnect the MAP sensor/IAT sensor No.2 connector. • Inspect for poor connection (such as damaged/pulled-out pins, corrosion). • Is there any malfunction?	Yes	Repair or replace the connector and/or terminals, then go to Step 8.
		No	Go to the next step.
4	**INSPECT PCM CONNECTOR CONDITION** • Disconnect the PCM connector. • Inspect for poor connection (such as damaged/pulled-out pins, corrosion). • Is there any malfunction?	Yes	Repair or replace the connector and/or terminals, then go to Step 8.
		No	Go to the next step.
5	**INSPECT MAP SENSOR CIRCUIT FOR SHORT TO GROUND** • Verify that the MAP sensor/IAT sensor No.2 and PCM connectors are disconnected. • Inspect for continuity between the following terminals (wiring harness-side) and body ground: ▪ MAP sensor/IAT sensor No.2 terminal C ▪ MAP sensor/IAT sensor No.2 terminal D • Is there continuity?	Yes	Refer to the wiring diagram and verify whether or not there is a common connector between the following terminals: • MAP sensor/IAT sensor No.2 terminal C—PCM terminal 1BO • MAP sensor/IAT sensor No.2 terminal D—PCM terminal 1BW **If there is a common connector:** • Determine the malfunctioning part by inspecting the common connector and the terminal for corrosion, damage, or pin disconnection, and the common wiring harness for a short to ground. • Repair or replace the malfunctioning part. **If there is no common connector:** • Repair or replace the wiring harness which has a short to ground. Go to Step 8.
		No	Go to the next step.
	INSPECT MAP SENSOR SIGNAL CIRCUIT		

6	**AND GROUND CIRCUIT FOR SHORT TO EACH OTHER** • Verify that the MAP sensor/IAT sensor No.2 and PCM connectors are disconnected. • Inspect for continuity between MAP sensor/IAT sensor No.2 terminals D and A (wiring harness-side). • Is there continuity?	Yes	Refer to the wiring diagram and verify whether or not there is a common connector between the following terminals: • MAP sensor/IAT sensor No.2 terminal D—PCM terminal 1BW • MAP sensor/IAT sensor No.2 terminal A—PCM terminal 1BX **If there is a common connector:** • Determine the malfunctioning part by inspecting the common connector and the terminal for corrosion, damage, or pin disconnection, and the common wiring harness for a short to each other. • Repair or replace the malfunctioning part. **If there is no common connector:** • Repair or replace the wiring harness which has a short to each other. Go to Step 8.
		No	Go to the next step.
7	**INSPECT MAP SENSOR** • Reconnect all disconnected connectors. • Inspect the MAP sensor. (See **MANIFOLD ABSOLUTE PRESSURE (MAP) SENSOR INSPECTION [SKYACTIV-G 2.0, SKYACTIV-G 2.5]**.) • Is there any malfunction?	Yes	Replace the MAP sensor/IAT sensor No.2, then go to the next step. (See **MANIFOLD ABSOLUTE PRESSURE (MAP) SENSOR/INTAKE AIR TEMPERATURE (IAT) SENSOR NO.2 REMOVAL/INSTALLATION [SKYACTIV-G 2.0, SKYACTIV-G 2.5]**.)
		No	Go to the next step.
8	**VERIFY DTC TROUBLESHOOTING COMPLETED** • Always reconnect all disconnected connectors. • Clear the DTC from the PCM memory using the M-MDS. (See **AFTER REPAIR PROCEDURE [SKYACTIV-G 2.0, SKYACTIV-G 2.5]**.) • Perform the KOEO or KOER self test. (See **KOEO/KOER SELF TEST [SKYACTIV-G 2.0, SKYACTIV-G 2.5]**.) • Is the same DTC present?	Yes	Repeat the inspection from Step 1. • If the malfunction recurs, replace the PCM. (See **PCM REMOVAL/INSTALLATION [SKYACTIV-G 2.0, SKYACTIV-G 2.5]**.) Go to the next step.
		No	Go to the next step.
9	**VERIFY AFTER REPAIR PROCEDURE** • Perform the “AFTER REPAIR PROCEDURE”. (See **AFTER REPAIR PROCEDURE [SKYACTIV-G 2.0, SKYACTIV-G 2.5]**.) • Are any DTCs present?	Yes	Go to the applicable DTC inspection. (See **DTC TABLE [SKYACTIV-G 2.0, SKYACTIV-G 2.5]**.)
		No	DTC troubleshooting completed.

2014 - Mazda3 - Engine

DTC P0108:00 [SKYACTIV-G 2.0, SKYACTIV-G 2.5]

DTC P0108:00	MAP sensor circuit high input
DETECTION CONDITION	• The PCM monitors the input voltage from the MAP sensor. If the input voltage at the PCM terminal 1BW is **above 4.89 V** for **5 s**, the PCM determines that the MAP sensor circuit has a malfunction. **Diagnostic support note** • This is a continuous monitor (CCM). • The check engine light illuminates if the PCM detects the above malfunction condition during the first drive cycle. • FREEZE FRAME DATA (Mode 2)/Snapshot data is available. • DTC is stored in the PCM memory.
FAIL-SAFE FUNCTION	• Estimates MAP using MAF sensor and engine speed. • Restricts the upper limit of the engine speed. • Inhibits the evaporative purge control.

POSSIBLE CAUSE	• MAP sensor/IAT sensor No.2 connector or terminals malfunction
	• PCM connector or terminals malfunction
	• MAP sensor malfunction
	• Short to power supply in wiring harness between MAP sensor/IAT sensor No.2 terminal D and PCM terminal 1BW
	• Open circuit in wiring harness between the following terminals:
	  ▪ MAP sensor/IAT sensor No.2 terminal C—PCM terminal 1BO
	  ▪ MAP sensor/IAT sensor No.2 terminal D—PCM terminal 1BW
	  ▪ MAP sensor/IAT sensor No.2 terminal A—PCM terminal 1BX
	• PCM malfunction

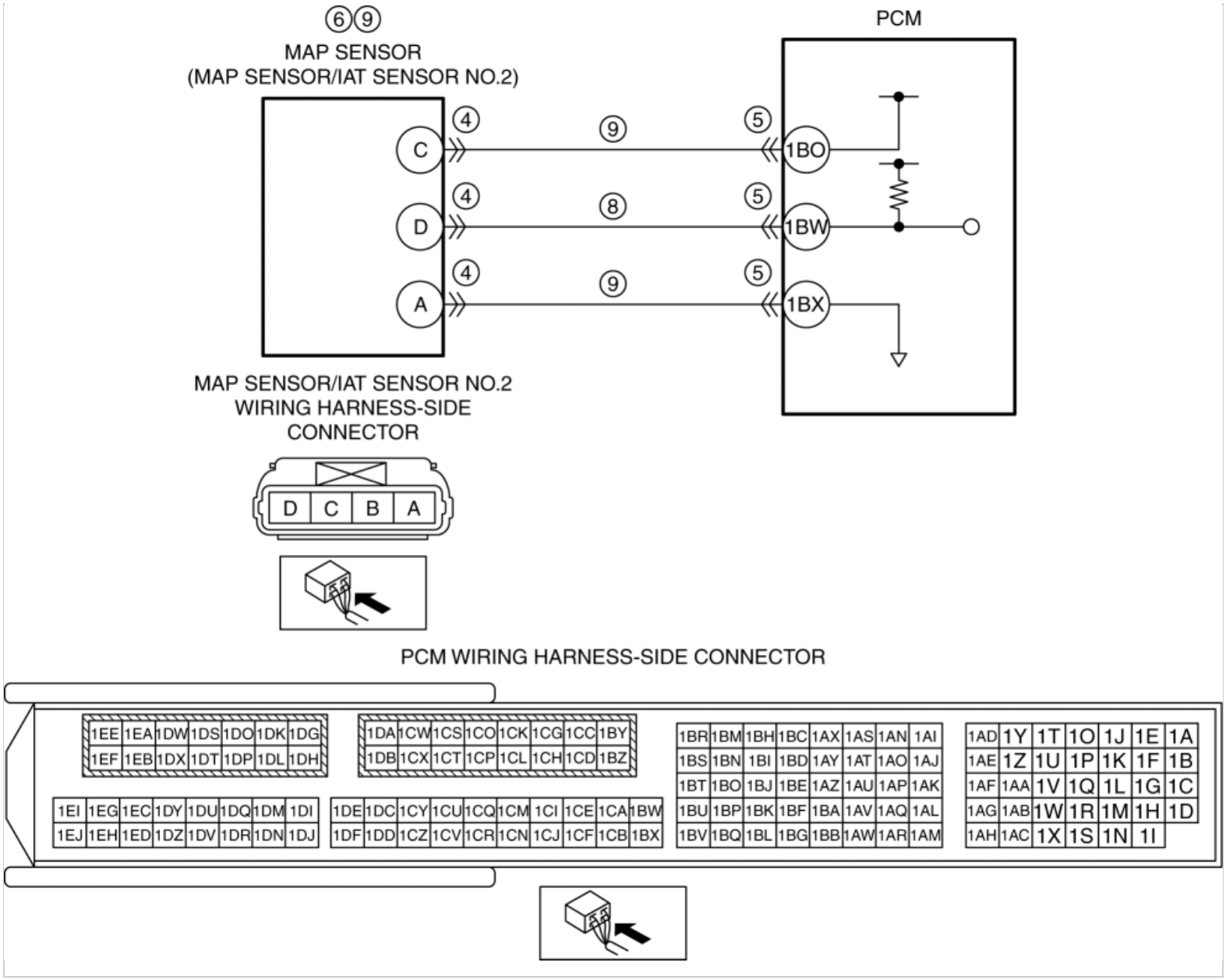

CAUTION:

- Verify the malfunction symptom according to not only the PID value but also the symptom troubleshooting.

Related PIDs

Item (definition)	Unit/Condition	Definition	Condition/Specification (Reference)
MAP	KPa {MPa}, mBar {Bar}, psi, in H20	Manifold absolute pressure	• Displays MAP
	V	MAP sensor voltage	• Ignition switched ON (engine off) (MAP:101 kPa {1.03 kgf/cm^2, 14.6 psi}): Approx. 4.07 V • Idle (after warm up) (MAP: 33 kPa {0.34 kgf/cm^2, 4.8 psi}): Approx. 1.34 V • Racing (engine speed is 2,000 rpm) (MAP: 26 kPa {0.27 kgf/cm^2, 3.8 psi}): Approx. 1.05 V

Diagnostic Procedure

STEP	INSPECTION		ACTION
1	**VERIFY FREEZE FRAME DATA (MODE 2)/SNAPSHOT DATA HAS BEEN RECORDED** • Has the FREEZE FRAME DATA (Mode 2)/snapshot data been recorded?	Yes	Go to the next step.
		No	Record the FREEZE FRAME DATA (Mode 2)/snapshot data on the repair order, then go to the next step.
2	**VERIFY RELATED REPAIR INFORMATION AVAILABILITY** • Verify related Service Bulletins and/or on-line repair information availability. • Is any related repair information available?	Yes	Perform repair or diagnosis according to the available repair information. • If the vehicle is not repaired, go to the next step.
		No	Go to the next step.
3	**DETERMINE IF MAP SENSOR OR WIRING HARNESS MALFUNCTION** • Access the MAP PID using the M-MDS. (See **ON-BOARD DIAGNOSTIC TEST [SKYACTIV-G 2.0, SKYACTIV-G 2.5]**.) • Verify the MAP PID value. • Is the MAP PID value **5 V** or **B+**?	Yes	Go to Step 7.
		No	Go to the next step.
4	**INSPECT MAP SENSOR/IAT SENSOR NO.2 CONNECTOR CONDITION** • Switch the ignition off. • Disconnect the MAP sensor/IAT sensor No.2 connector. • Inspect for poor connection (such as damaged/pulled-out pins, corrosion). • Is there any malfunction?	Yes	Repair or replace the connector and/or terminals, then go to Step 10.
		No	Go to the next step.
5	**INSPECT PCM CONNECTOR CONDITION** • Disconnect the PCM connector. • Inspect for poor connection (such as damaged/pulled-out pins, corrosion). • Is there any malfunction?	Yes	Repair or replace the connector and/or terminals, then go to Step 10.
		No	Go to the next step.
6	**INSPECT MAP SENSOR** • Reconnect all disconnected connectors. • Inspect the MAP sensor. (See **MANIFOLD ABSOLUTE PRESSURE (MAP) SENSOR INSPECTION [SKYACTIV-G 2.0, SKYACTIV-G 2.5]**.) • Is there any malfunction?	Yes	Replace the MAP sensor/IAT sensor No.2, then go to Step 10. (See **MANIFOLD ABSOLUTE PRESSURE (MAP) SENSOR/INTAKE AIR TEMPERATURE (IAT) SENSOR NO.2 REMOVAL/INSTALLATION [SKYACTIV-G 2.0, SKYACTIV-G 2.5]**.)
		No	Go to Step 10.
7	**DETERMINE IF MAP SENSOR SIGNAL CIRCUIT OR MAP SENSOR GROUND CIRCUIT MALFUNCTION** • Switch the ignition off. • Disconnect the MAP sensor/IAT sensor No.2 connector. • Access the MAP PID using the M-	Yes	Go to the next step.
		No	Go to Step 9.

	MDS. (See **ON-BOARD DIAGNOSTIC TEST [SKYACTIV-G 2.0, SKYACTIV-G 2.5]**.) • Verify the MAP PID value. • Is the MAP PID value **5 V** or **B+**?		
8	**INSPECT MAP SENSOR SIGNAL CIRCUIT FOR OPEN CIRCUIT** • Verify that the MAP sensor/IAT sensor No.2 connector is disconnected. • Switch the ignition off. • Disconnect the PCM connector. • Inspect for continuity between MAP sensor/IAT sensor No.2 terminal D (wiring harness-side) and PCM terminal 1BW (wiring harness-side). • Is there continuity?	Yes	Refer to the wiring diagram and verify whether or not there is a common connector between MAP sensor/IAT sensor No.2 terminal D and PCM terminal 1BW. **If there is a common connector:** • Determine the malfunctioning part by inspecting the common connector and the terminal for corrosion, damage, or pin disconnection, and the common wiring harness for a short to power supply. • Repair or replace the malfunctioning part. **If there is no common connector:** • Repair or replace the wiring harness which has a short to power supply. Go to Step 10.
		No	Refer to the wiring diagram and verify whether or not there is a common connector between MAP sensor/IAT sensor No.2 terminal D and PCM terminal 1BW. **If there is a common connector:** • Determine the malfunctioning part by inspecting the common connector and the terminal for corrosion, damage, or pin disconnection, and the common wiring harness for an open circuit. • Repair or replace the malfunctioning part. **If there is no common connector:** • Repair or replace the wiring harness which has an open circuit. Go to Step 10.
9	**INSPECT MAP SENSOR CIRCUIT FOR OPEN CIRCUIT** • Verify that the MAP sensor/IAT sensor No.2 connector is disconnected. • Switch the ignition off. • Disconnect the PCM connector. • Inspect for continuity between the following terminals (wiring harness-side): ▪ MAP sensor/IAT sensor No.2 terminal C—PCM terminal 1BO ▪ MAP sensor/IAT sensor No.2 terminal A—PCM terminal 1BX • Is there continuity?	Yes	Replace the MAP sensor/IAT sensor No.2, then go to the next step. (See **MANIFOLD ABSOLUTE PRESSURE (MAP) SENSOR/INTAKE AIR TEMPERATURE (IAT) SENSOR NO.2 REMOVAL/INSTALLATION [SKYACTIV-G 2.0, SKYACTIV-G 2.5]**.)
		No	Refer to the wiring diagram and verify whether or not there is a common connector between the following terminals: • MAP sensor/IAT sensor No.2 terminal C—PCM terminal 1BO • MAP sensor/IAT sensor No.2 terminal A—PCM terminal 1BX **If there is a common connector:** • Determine the malfunctioning part by inspecting the common connector and the terminal for corrosion, damage, or pin disconnection, and the common wiring harness for an open circuit. • Repair or replace the malfunctioning part. **If there is no common connector:**

			• Repair or replace the wiring harness which has an open circuit. Go to the next step.
10	**VERIFY DTC TROUBLESHOOTING COMPLETED** • Always reconnect all disconnected connectors. • Clear the DTC from the PCM memory using the M-MDS. (See **AFTER REPAIR PROCEDURE [SKYACTIV-G 2.0, SKYACTIV-G 2.5]**.) • Perform the KOEO or KOER self test. (See **KOEO/KOER SELF TEST [SKYACTIV-G 2.0, SKYACTIV-G 2.5]**.) • Is the same DTC present?	Yes	Repeat the inspection from Step 1. • If the malfunction recurs, replace the PCM. (See **PCM REMOVAL/INSTALLATION [SKYACTIV-G 2.0, SKYACTIV-G 2.5]**.) Go to the next step.
		No	Go to the next step.
11	**VERIFY AFTER REPAIR PROCEDURE** • Perform the “AFTER REPAIR PROCEDURE”. (See **AFTER REPAIR PROCEDURE [SKYACTIV-G 2.0, SKYACTIV-G 2.5]**.) • Are any DTCs present?	Yes	Go to the applicable DTC inspection. (See **DTC TABLE [SKYACTIV-G 2.0, SKYACTIV-G 2.5]**.)
		No	DTC troubleshooting completed.

2014 - Mazda3 - Engine

DTC P0112:00 [SKYACTIV-G 2.0, SKYACTIV-G 2.5]

DTC P0112:00	IAT sensor No.1 circuit low input
DETECTION CONDITION	• The PCM monitors the IAT sensor No.1 signal. If the PCM detects that the IAT sensor No.1 voltage at the PCM terminal 2U is **below 0.19 V** for **5 s**, the PCM determines that the IAT sensor No.1 circuit has a malfunction. **Diagnostic support note** • This is a continuous monitor (CCM). • The check engine light illuminates if the PCM detects the above malfunction condition during the first drive cycle. • FREEZE FRAME DATA (Mode 2)/Snapshot data is available. • DTC is stored in the PCM memory.
FAIL-SAFE FUNCTION	• Fixes the intake air temperature (for engine control) at **20 °C {68 °F}**. • Inhibits the fuel cut control during shift change.
POSSIBLE CAUSE	• MAF sensor/IAT sensor No.1 connector or terminals malfunction • IAT sensor No.1 malfunction • Short to ground in wiring harness between MAF sensor/IAT sensor No.1 terminal A and PCM terminal 2U • PCM connector or terminals malfunction • IAT sensor No.1 signal circuit and ground circuit are shorted to each other • PCM malfunction

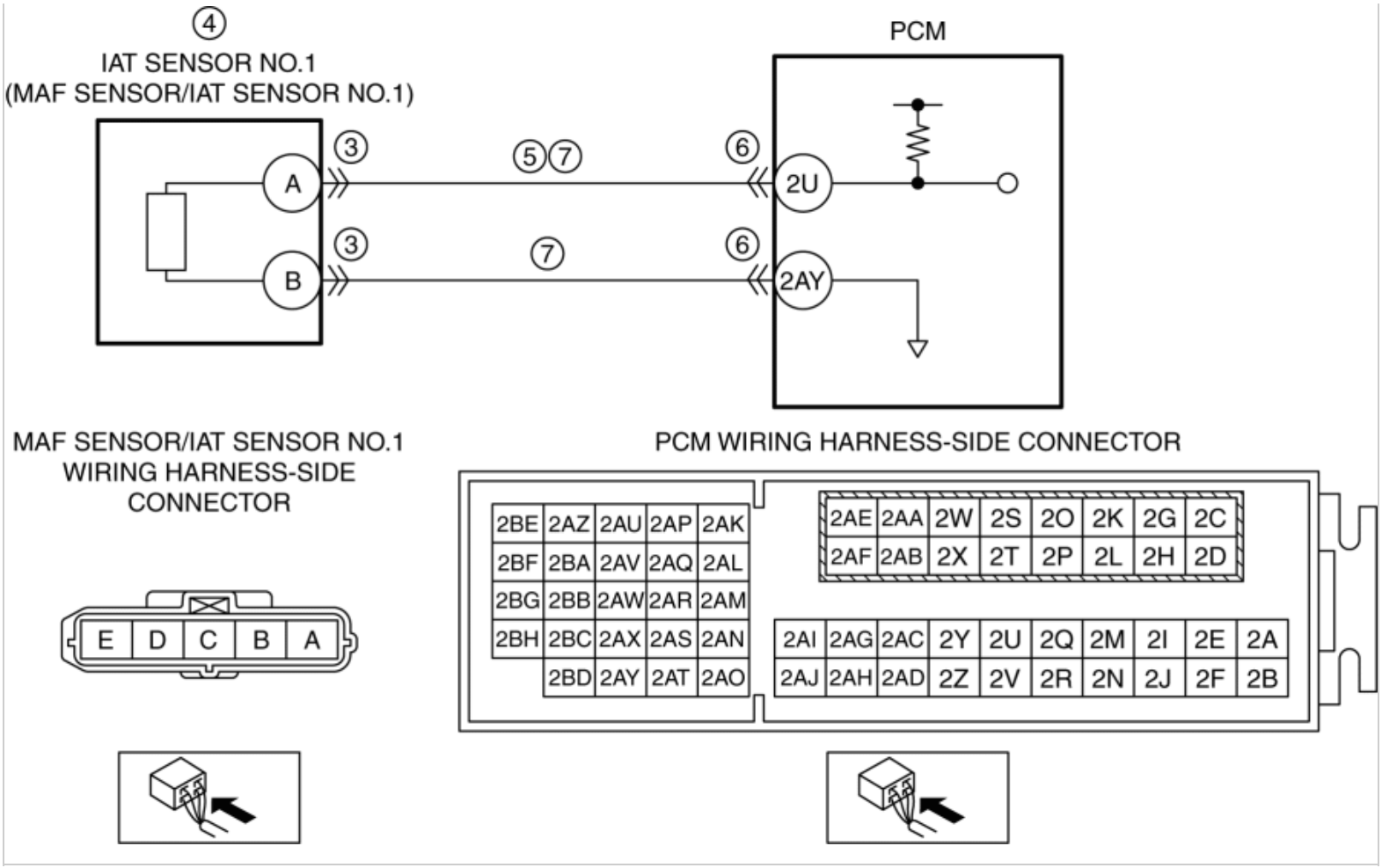

Diagnostic Procedure

STEP	INSPECTION		ACTION
1	**VERIFY FREEZE FRAME DATA (MODE 2)/SNAPSHOT DATA HAS BEEN RECORDED** • Has the FREEZE FRAME DATA (Mode 2)/snapshot data been recorded?	Yes	Go to the next step.
		No	Record the FREEZE FRAME DATA (Mode 2)/snapshot data on the repair order, then go to the next step.
2	**VERIFY RELATED REPAIR INFORMATION AVAILABILITY** • Verify related Service Bulletins and/or on-line repair information availability. • Is any related repair information available?	Yes	Perform repair or diagnosis according to the available repair information. • If the vehicle is not repaired, go to the next step.
		No	Go to the next step.
3	**INSPECT MAF SENSOR/IAT SENSOR NO.1 CONNECTOR CONDITION** • Switch the ignition off. • Disconnect the MAF sensor/IAT sensor No.1 connector.	Yes	Repair or replace the connector and/or terminals, then go to Step 8.
		No	Go to the next step.

	Inspect for poor connection (such as damaged/pulled-out pins, corrosion). • Is there any malfunction?		
4	**INSPECT IAT SENSOR NO.1** • Inspect the IAT sensor No.1. (See **INTAKE AIR TEMPERATURE (IAT) SENSOR INSPECTION [SKYACTIV-G 2.0, SKYACTIV-G 2.5]**.) • Is there any malfunction?	Yes	Replace the MAF sensor/IAT sensor No.1, then go to Step 8. (See **MASS AIR FLOW (MAF) SENSOR/INTAKE AIR TEMPERATURE (IAT) SENSOR NO.1 REMOVAL/INSTALLATION [SKYACTIV-G 2.0, SKYACTIV-G 2.5]**.)
		No	Go to the next step.
5	**INSPECT IAT SENSOR NO.1 SIGNAL CIRCUIT FOR SHORT TO GROUND** • Verify that the MAF sensor/IAT sensor No.1 connector is disconnected. • Inspect for continuity between MAF sensor/IAT sensor No.1 terminal A (wiring harness-side) and body ground. • Is there continuity?	Yes	If the short to ground circuit could be detected in the wiring harness: • Refer to the wiring diagram and verify whether or not there is a common connector between MAF sensor/IAT sensor No.1 terminal A and PCM terminal 2U. **If there is a common connector:** ▪ Determine the malfunctioning part by inspecting the common connector and the terminal for corrosion, damage, or pin disconnection, and the common wiring harness for a short to ground. ▪ Repair or replace the malfunctioning part. **If there is no common connector:** ▪ Repair or replace the wiring harness which has a short to ground. If the short to ground circuit could not be detected in the wiring harness: • Replace the PCM (short to ground in the PCM internal circuit). (See **PCM REMOVAL/INSTALLATION [SKYACTIV-G 2.0, SKYACTIV-G 2.5]**.) Go to Step 8.
		No	Go to the next step.
6	**INSPECT PCM CONNECTOR CONDITION** • Disconnect the PCM connector. • Inspect for poor connection (such as damaged/pulled-out pins, corrosion). • Is there any malfunction?	Yes	Repair or replace the connector and/or terminals, then go to Step 8.
		No	Go to the next step.
	INSPECT IAT SENSOR NO.1 SIGNAL		

7	**CIRCUIT AND GROUND CIRCUIT FOR SHORT TO EACH OTHER** • Verify that the MAF sensor/IAT sensor No.1 and PCM connectors are disconnected. • Inspect for continuity between MAF sensor/IAT sensor No.1 terminals A and B (wiring harness-side). • Is there continuity?	Yes	Refer to the wiring diagram and verify whether or not there is a common connector between the following terminals: • MAF sensor/IAT sensor No.1 terminal A—PCM terminal 2U • MAF sensor/IAT sensor No.1 terminal B—PCM terminal 2AY **If there is a common connector:** • Determine the malfunctioning part by inspecting the common connector and the terminal for corrosion, damage, or pin disconnection, and the common wiring harness for a short to each other. • Repair or replace the malfunctioning part. **If there is no common connector:** • Repair or replace the wiring harness which has a short to each other. Go to the next step.
		No	Go to the next step.
8	**VERIFY DTC TROUBLESHOOTING COMPLETED** • Always reconnect all disconnected connectors. • Clear the DTC from the PCM memory using the M-MDS. (See **AFTER REPAIR PROCEDURE [SKYACTIV-G 2.0, SKYACTIV-G 2.5]**.) • Perform the KOEO or KOER self test. (See **KOEO/KOER SELF TEST [SKYACTIV-G 2.0, SKYACTIV-G 2.5]**.) • Is the same DTC present?	Yes	Repeat the inspection from Step 1. • If the malfunction recurs, replace the PCM. (See **PCM REMOVAL/INSTALLATION [SKYACTIV-G 2.0, SKYACTIV-G 2.5]**.) Go to the next step.
		No	Go to the next step.
9	**VERIFY AFTER REPAIR PROCEDURE** • Perform the “AFTER REPAIR PROCEDURE”. (See **AFTER REPAIR PROCEDURE [SKYACTIV-G 2.0, SKYACTIV-G 2.5]**.) • Are any DTCs present?	Yes	Go to the applicable DTC inspection. (See **DTC TABLE [SKYACTIV-G 2.0, SKYACTIV-G 2.5]**.)
		No	DTC troubleshooting completed.

2014 - Mazda3 - Engine

DTC P0113:00 [SKYACTIV-G 2.0, SKYACTIV-G 2.5]

DTC P0113:00	IAT sensor No.1 circuit high input
DETECTION CONDITION	• The PCM monitors the IAT sensor No.1 signal. If the PCM detects that the IAT sensor No.1 voltage at the PCM terminal 2U is **above 4.62 V** for **5 s**, the PCM determines that the IAT sensor No.1 circuit has a malfunction. **Diagnostic support note** • This is a continuous monitor (CCM). • The check engine light illuminates if the PCM detects the above malfunction condition during the first drive cycle. • FREEZE FRAME DATA (Mode 2)/Snapshot data is available. • DTC is stored in the PCM memory.
FAIL-SAFE FUNCTION	• Fixes the intake air temperature (for engine control) at **20 °C {68 °F}**. • Inhibits the fuel cut control during shift change.
POSSIBLE CAUSE	• MAF sensor/IAT sensor No.1 connector or terminals malfunction • PCM connector or terminals malfunction • IAT sensor No.1 malfunction • Short to power supply in wiring harness between MAF sensor/IAT sensor No.1 terminal A and PCM terminal 2U • Open circuit in wiring harness between the following terminals: ▪ MAF sensor/IAT sensor No.1 terminal A—PCM terminal 2U ▪ MAF sensor/IAT sensor No.1 terminal B—PCM terminal 2AY • PCM malfunction

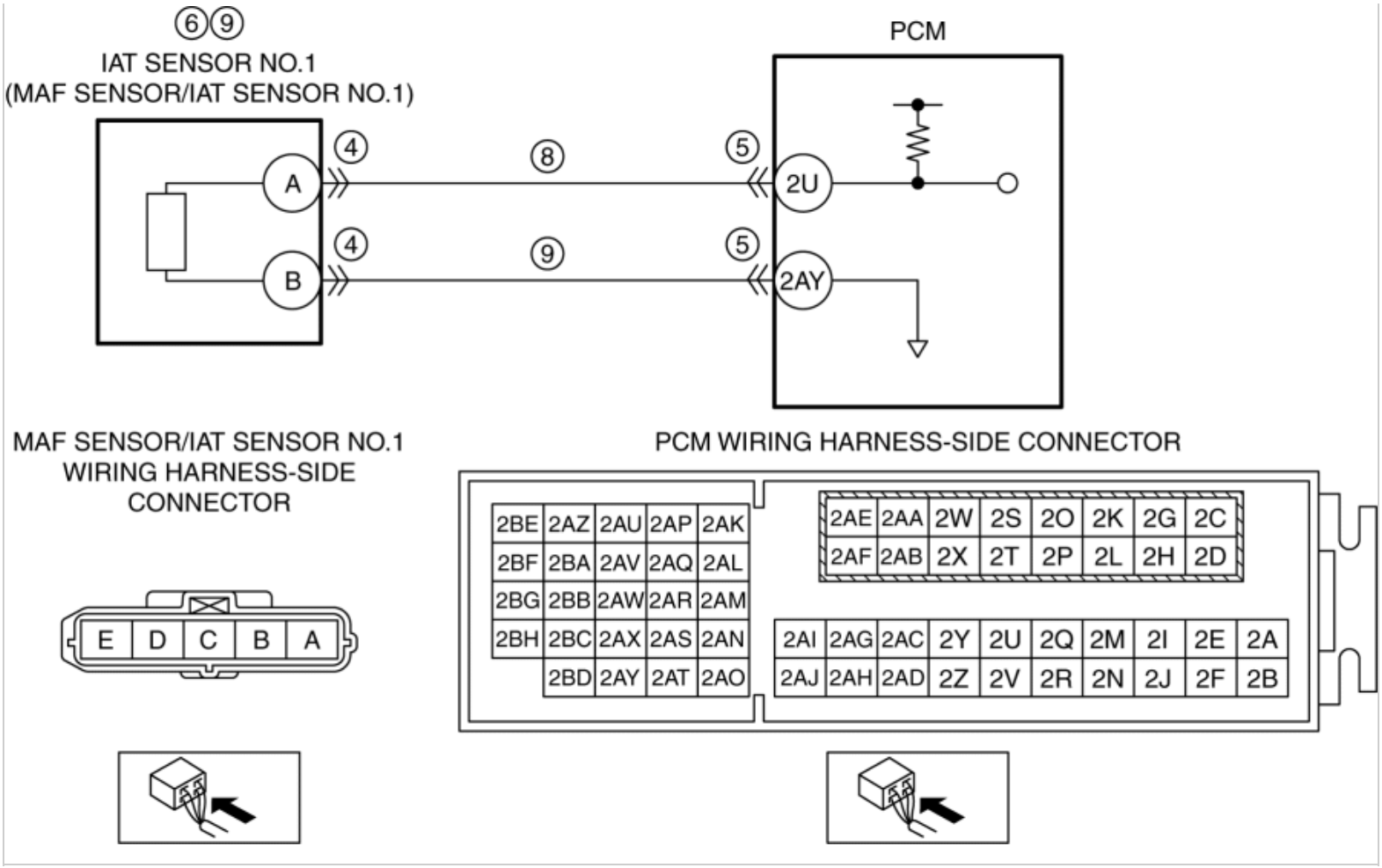

CAUTION:

- Verify the malfunction symptom according to not only the PID value but also the symptom troubleshooting.

Related PIDs

Item (definition)	Unit/Condition	Definition	Condition/Specification (Reference)
IAT	°C, °F	Intake air temperature (No.1)	• Displays IAT (No.1)
	V	IAT sensor No.1 voltage	• IAT is 20 °C {68 °F}: Approx. 2.70 V • IAT is 40 °C {104 °F}: Approx. 1.80 V • IAT is 60 °C {140 °F}: Approx. 1.20 V

Diagnostic Procedure

STEP	INSPECTION		ACTION
1	**VERIFY FREEZE FRAME DATA (MODE 2)/SNAPSHOT DATA HAS BEEN RECORDED** • Has the FREEZE FRAME DATA (Mode 2)/snapshot data been recorded?	Yes	Go to the next step.
		No	Record the FREEZE FRAME DATA (Mode 2)/snapshot data on the repair order, then go to the next step.
	VERIFY RELATED REPAIR INFORMATION		

2	**AVAILABILITY** • Verify related Service Bulletins and/or on-line repair information availability. • Is any related repair information available?	Yes	Perform repair or diagnosis according to the available repair information. • If the vehicle is not repaired, go to the next step.
		No	Go to the next step.
3	**DETERMINE IF IAT SENSOR NO.1 OR WIRING HARNESS MALFUNCTION** • Access the IAT PID using the M-MDS. (See **ON-BOARD DIAGNOSTIC TEST [SKYACTIV-G 2.0, SKYACTIV-G 2.5]**.) • Verify the IAT PID value. • Is the IAT PID value **5 V** or **B+**?	Yes	Go to Step 7.
		No	Go to the next step.
4	**INSPECT MAF SENSOR/IAT SENSOR NO.1 CONNECTOR CONDITION** • Switch the ignition off. • Disconnect the MAF sensor/IAT sensor No.1 connector. • Inspect for poor connection (such as damaged/pulled-out pins, corrosion). • Is there any malfunction?	Yes	Repair or replace the connector and/or terminals, then go to Step 10.
		No	Go to the next step.
5	**INSPECT PCM CONNECTOR CONDITION** • Disconnect the PCM connector. • Inspect for poor connection (such as damaged/pulled-out pins, corrosion). • Is there any malfunction?	Yes	Repair or replace the connector and/or terminals, then go to Step 10.
		No	Go to the next step.
6	**INSPECT IAT SENSOR NO.1** • Inspect the IAT sensor No.1. (See **INTAKE AIR TEMPERATURE (IAT) SENSOR INSPECTION [SKYACTIV-G 2.0, SKYACTIV-G 2.5]**.) • Is there any malfunction?	Yes	Replace the MAF sensor/IAT sensor No.1, then go to Step 10. (See **MASS AIR FLOW (MAF) SENSOR/INTAKE AIR TEMPERATURE (IAT) SENSOR NO.1 REMOVAL/INSTALLATION [SKYACTIV-G 2.0, SKYACTIV-G 2.5]**.)
		No	Go to Step 10.
7	**DETERMINE IF IAT SENSOR NO.1 SIGNAL CIRCUIT OR IAT SENSOR NO.1 GROUND CIRCUIT MALFUNCTION** • Switch the ignition off. • Disconnect the MAF sensor/IAT sensor No.1 connector. • Access the IAT PID using the M-MDS. (See **ON-BOARD DIAGNOSTIC**	Yes	Go to the next step.
		No	Go to Step 9.

	TEST [SKYACTIV-G 2.0, SKYACTIV-G 2.5].) • Verify the IAT PID value. • Is the IAT PID value **5 V** or **B+**?		
8	**INSPECT IAT SENSOR NO.1 SIGNAL CIRCUIT FOR OPEN CIRCUIT** • Verify that the MAF sensor/IAT sensor No.1 connector is disconnected. • Switch the ignition off. • Disconnect the PCM connector. • Inspect for continuity between MAF sensor/IAT sensor No.1 terminal A (wiring harness-side) and PCM terminal 2U (wiring harness-side). • Is there continuity?	Yes	Refer to the wiring diagram and verify whether or not there is a common connector between MAF sensor/IAT sensor No.1 terminal A and PCM terminal 2U. **If there is a common connector:** • Determine the malfunctioning part by inspecting the common connector and the terminal for corrosion, damage, or pin disconnection, and the common wiring harness for a short to power supply. • Repair or replace the malfunctioning part. **If there is no common connector:** • Repair or replace the wiring harness which has a short to power supply. Go to Step 10.
		No	Refer to the wiring diagram and verify whether or not there is a common connector between MAF sensor/IAT sensor No.1 terminal A and PCM terminal 2U. **If there is a common connector:** • Determine the malfunctioning part by inspecting the common connector and the terminal for corrosion, damage, or pin disconnection, and the common wiring harness for an open circuit. • Repair or replace the malfunctioning part. **If there is no common connector:** • Repair or replace the wiring harness which has an open circuit. Go to Step 10.
9	**INSPECT IAT SENSOR NO.1 GROUND CIRCUIT FOR OPEN CIRCUIT** • Verify that the MAF sensor/IAT sensor No.1 connector is disconnected. • Switch the ignition off. • Disconnect the PCM connector. • Inspect for continuity between MAF sensor/IAT sensor No.1 terminal B (wiring harness-side) and PCM terminal 2AY (wiring harness-side). • Is there continuity?	Yes	Replace the MAF sensor/IAT sensor No.1, then go to the next step. (See **MASS AIR FLOW (MAF) SENSOR/INTAKE AIR TEMPERATURE (IAT) SENSOR NO.1 REMOVAL/INSTALLATION [SKYACTIV-G 2.0, SKYACTIV-G 2.5]**.)
		No	Refer to the wiring diagram and verify whether or not there is a common connector between MAF sensor/IAT sensor No.1 terminal B and PCM terminal 2AY. **If there is a common connector:** • Determine the malfunctioning part by inspecting the common connector and the terminal for corrosion, damage, or pin disconnection, and the common wiring harness for an open circuit. • Repair or replace the malfunctioning part.

			If there is no common connector: • Repair or replace the wiring harness which has an open circuit. Go to the next step.
10	**VERIFY DTC TROUBLESHOOTING COMPLETED** • Always reconnect all disconnected connectors. • Clear the DTC from the PCM memory using the M-MDS. (See **AFTER REPAIR PROCEDURE [SKYACTIV-G 2.0, SKYACTIV-G 2.5]**.) • Perform the KOEO or KOER self test. (See **KOEO/KOER SELF TEST [SKYACTIV-G 2.0, SKYACTIV-G 2.5]**.) • Is the same DTC present?	Yes	Repeat the inspection from Step 1. • If the malfunction recurs, replace the PCM. (See **PCM REMOVAL/INSTALLATION [SKYACTIV-G 2.0, SKYACTIV-G 2.5]**.) Go to the next step.
		No	Go to the next step.
11	**VERIFY AFTER REPAIR PROCEDURE** • Perform the “AFTER REPAIR PROCEDURE”. (See **AFTER REPAIR PROCEDURE [SKYACTIV-G 2.0, SKYACTIV-G 2.5]**.) • Are any DTCs present?	Yes	Go to the applicable DTC inspection. (See **DTC TABLE [SKYACTIV-G 2.0, SKYACTIV-G 2.5]**.)
		No	DTC troubleshooting completed.

2014 - Mazda3 - Engine

DTC P0116:00 [SKYACTIV-G 2.0, SKYACTIV-G 2.5]

NOTE:

- To determine the malfunctioning part, proceed with the diagnostics from “Function Inspection Using M-MDS”.

Details On DTCs

DESCRIPTION	ECT sensor No.1 circuit range/performance problem	
DETECTION CONDITION	Determination conditions	• During the **5 min** after the engine is started, the engine coolant temperature does not increase **above 6 °C {11 °F}**.
	Preconditions	• Before starting the engine, leave the vehicle with the engine turned off for **6 hours or more**. • The following DTCs are not detected: ▪ ECT sensor No.1: P0117:00, P0118:00
	Drive cycle	• 1
	Self test type	• CMDTC self test
	Sensor used	• ECT sensor No.1
FAIL-SAFE FUNCTION	• Not applicable	
VEHICLE STATUS WHEN DTCs ARE OUTPUT	• Illuminates check engine light.	
POSSIBLE CAUSE	• ECT sensor No.1 connector or terminals malfunction • PCM connector or terminals malfunction • ECT sensor No.1 loose • ECT sensor No.1 malfunction • Poor assembly of engine coolant hose (engine coolant passage malfunction) • Poor engine coolant, leakage, or freezing • Use of unspecified engine coolant • Thermostat malfunction • PCM malfunction	

System Wiring Diagram

- Not applicable

Function Explanation (DTC Detection Outline)

- If the engine coolant temperature detected by the ECT sensor No.1 is not rising **6 °C {11 °F} or more** during a **5 min** period after the engine is started, the PCM determines an ECT sensor No.1 malfunction and stores a DTC.

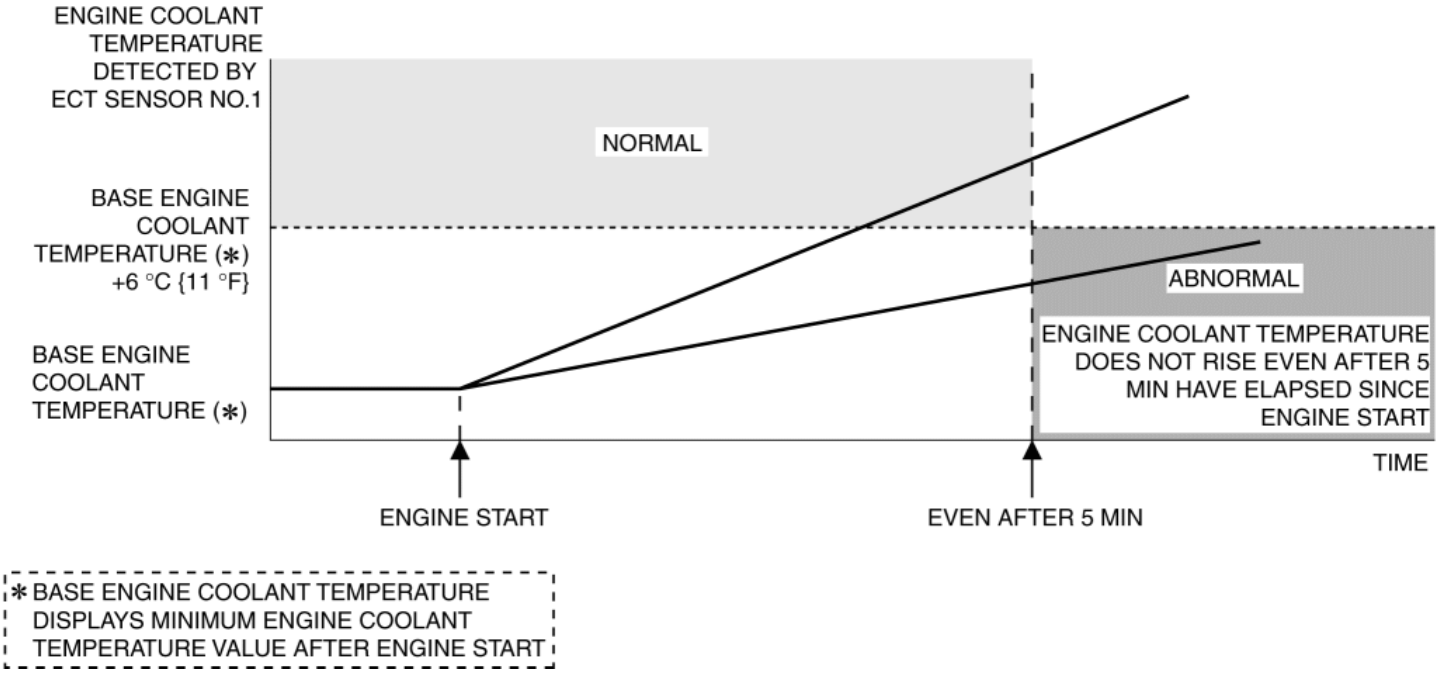

Repeatability Verification Procedure

- Start the engine and leave it idling for **10 s**.
- Switch the ignition off.
- Leave the vehicle for **6 hours or more**.
- Start the engine and leave it idling for **6 min**.

PID Item/Simulation Item Used In Diagnosis

PID/DATA monitor item table

Item	Definition	Unit	Condition/Specification
ECT	Engine coolant temperature	°C, °F	• Displays ECT
	ECT sensor No.1 voltage	V	• ECT is 20 °C {68 °F}: Approx. 3.10 V • ECT is 40 °C {104 °F}: Approx. 2.16 V • ECT is 60 °C {140 °F}: Approx. 1.40 V • ECT is 80 °C {176 °F}: Approx. 0.87 V • ECT is 100 °C {212 °F}: Approx. 0.54 V

Function Inspection Using M-MDS

STEP	INSPECTION	RESULTS	ACTION
1	**PURPOSE: VERIFY RELATED REPAIR INFORMATION AVAILABILITY** • Verify related Service Bulletins and/or on-line repair information availability. • Is any related repair information available?	Yes	Perform repair or diagnosis according to the available repair information. • If the vehicle is not repaired, go to the next step.
		No	Go to the next step.
2	**PURPOSE: RECORD VEHICLE STATUS AT TIME OF DTC DETECTION TO**	Yes	Go to the next step.

	UTILIZE WITH REPEATABILITY VERIFICATION • Has the FREEZE FRAME DATA (Mode 2)/snapshot data been recorded?		
		No	Record the FREEZE FRAME DATA (Mode 2)/snapshot data on the repair order, then go to the next step. **NOTE:** • Recording can be facilitated using the screen capture function of the PC.
3	**PURPOSE: VERIFY CONNECTOR CONNECTIONS** • Start the engine. • Access the ECT PID using the M-MDS. (See **ON-BOARD DIAGNOSTIC TEST [SKYACTIV-G 2.0, SKYACTIV-G 2.5]**.) • Does the PID value fluctuate when the PCM and ECT sensor No.1 connectors are shaken?	Yes	Repair or replace the applicable connector parts. Go to the troubleshooting procedure to perform the procedure from Step 7.
		No	Go to the next step.
4	**PURPOSE: VERIFY ECT SENSOR NO.1 INPUT SIGNAL** • Access the ECT PID using the M-MDS. (See **ON-BOARD DIAGNOSTIC TEST [SKYACTIV-G 2.0, SKYACTIV-G 2.5]**.) • Is the PID value within specification?	Yes	Go to the troubleshooting procedure to perform the procedure from Step 3.
		No	Go to the troubleshooting procedure to perform the procedure from Step 1.

Troubleshooting Diagnostic Procedure

Intention of troubleshooting procedure

- Step 1—2
  - Perform an ECT sensor No.1-related inspection.
- Step 3—5
  - Perform an engine coolant-related inspection.
- Step 6
  - Perform a unit inspection of the thermostat.
- Step 7—8
  - Verify that the primary malfunction is resolved and there are no other malfunctions.

STEP	INSPECTION	RESULTS	ACTION
1	**PURPOSE: INSPECT INSTALLATION OF ECT SENSOR NO.1** • Inspect installation of ECT sensor No.1. • Is the ECT sensor No.1 installed securely?	Yes	Go to the next step.
		No	Retighten the ECT sensor No.1, then go to Step 7. (See **ENGINE COOLANT TEMPERATURE (ECT) SENSOR REMOVAL/INSTALLATION [SKYACTIV-G 2.0, SKYACTIV-G 2.5]**.)
2	**PURPOSE: DETERMINE INTEGRITY OF ECT SENSOR NO.1** • Inspect the ECT sensor No.1. (See **ENGINE COOLANT TEMPERATURE (ECT) SENSOR INSPECTION [SKYACTIV-G 2.0, SKYACTIV-G 2.5]**.) • Is there any malfunction?	Yes	Replace the ECT sensor No.1, then go to Step 7. (See **ENGINE COOLANT TEMPERATURE (ECT) SENSOR REMOVAL/INSTALLATION [SKYACTIV-G 2.0, SKYACTIV-G 2.5]**.)
		No	Go to the next step.
3	**PURPOSE: VERIFY IF MALFUNCTION CAUSED BY POOR ENGINE COOLANT PASSAGE ASSEMBLY** • Verify the connection condition of the engine coolant passage (such as hoses). (See **COOLING SYSTEM LOCATION INDEX [SKYACTIV-G 2.0, SKYACTIV-G 2.5]**.)	Yes	Reconnect the engine coolant passage correctly. Replace the engine coolant, then go to Step 7. (See **ENGINE COOLANT REPLACEMENT [SKYACTIV-G 2.0, SKYACTIV-G 2.5]**.)
		No	Go to the next step.

	Is there any malfunction?		
4	**PURPOSE: VERIFY IF MALFUNCTION RELATED TO ENGINE COOLANT AFFECTS DIAGNOSTIC RESULTS** • Inspect the following: ▪ Is the system filled with the specified engine coolant? ▪ Is there the possibility of freezing (low engine coolant concentration)? ▪ Has foreign matter penetrated the engine coolant? • Are all items normal?	Yes	Go to the next step.
		No	Replace the engine coolant, then go to Step 7. (Advise the customer to use specified engine coolant used.) (See **ENGINE COOLANT REPLACEMENT [SKYACTIV-G 2.0, SKYACTIV-G 2.5]**.)
5	**PURPOSE: VERIFY IF MALFUNCTION RELATED TO ENGINE COOLANT LEAKAGE FROM ENGINE COOLANT PASSAGE AFFECTS DIAGNOSTIC RESULTS** • Perform the “ENGINE COOLANT LEAKAGE INSPECTION”. (See **ENGINE COOLANT LEAKAGE INSPECTION [SKYACTIV-G 2.0, SKYACTIV-G 2.5]**.) • Is there engine coolant leaking from the engine coolant passage?	Yes	Repair or replace the malfunctioning location and refill the system with engine coolant. (See **ENGINE COOLANT REPLACEMENT [SKYACTIV-G 2.0, SKYACTIV-G 2.5]**.) Go to Step 7.
		No	Go to the next step.
6	**PURPOSE: DETERMINE INTEGRITY OF THERMOSTAT** • Inspect the thermostat. (See **THERMOSTAT INSPECTION [SKYACTIV-G 2.0, SKYACTIV-G 2.5]**.) • Is there any malfunction?	Yes	Replace the thermostat, then go to the next step. (See **THERMOSTAT REMOVAL/INSTALLATION [SKYACTIV-G 2.0, SKYACTIV-G 2.5]**.)
		No	Go to the next step.
7	**PURPOSE: VERIFICATION OF VEHICLE REPAIR COMPLETION** • Always reconnect all disconnected connectors. • Clear the DTC from the PCM memory using the M-MDS. (See **CLEARING DTC [SKYACTIV-G 2.0, SKYACTIV-G 2.5]**.) • Implement the repeatability verification procedure. (See **Repeatability Verification Procedure**.) • Perform the DTC Reading Procedure. (See **ON-BOARD DIAGNOSTIC TEST [SKYACTIV-G 2.0, SKYACTIV-G 2.5]**.) • Is the same DTC present?	Yes	Repeat the inspection from Step 1. • If the malfunction recurs, replace the PCM. (See **PCM REMOVAL/INSTALLATION [SKYACTIV-G 2.0, SKYACTIV-G 2.5]**.) Go to the next step.
		No	Go to the next step.
8	**PURPOSE: VERIFY IF THERE IS ANY OTHER MALFUNCTION** • Is any other DTC or pending code stored?	Yes	Go to the applicable DTC inspection. (See **DTC TABLE [SKYACTIV-G 2.0, SKYACTIV-G 2.5]**.)
		No	DTC troubleshooting completed.

2014 - Mazda3 - Engine

DTC P0117:00 [SKYACTIV-G 2.0, SKYACTIV-G 2.5]

DTC P0117:00	ECT sensor No.1 circuit low input
DETECTION CONDITION	• The PCM monitors the ECT sensor No.1 signal. If the PCM detects that the ECT sensor No.1 voltage at the PCM terminal 1AK is **below 0.2 V** for **5 s**, the PCM determines that the ECT sensor No.1 circuit has a malfunction. **Diagnostic support note** • This is a continuous monitor (engine cooling system). • The check engine light illuminates if the PCM detects the above malfunction condition during the first drive cycle. • FREEZE FRAME DATA (Mode 2)/Snapshot data is available. • DTC is stored in the PCM memory.
FAIL-SAFE FUNCTION	• Fixes the water temperature for the engine control at **40 °C {104 °F}**, and for the idle air control at **80 °C {176 °F}**. • Operates the cooling fan (high speed rotation). • Inhibits the fuel cut control during shift change.
POSSIBLE CAUSE	• Engine overheating (cooling system malfunction) • ECT sensor No.1 connector or terminals malfunction • ECT sensor No.1 malfunction • Short to ground in wiring harness between ECT sensor No.1 terminal A and PCM terminal 1AK • PCM connector or terminals malfunction • ECT sensor No.1 signal circuit and ground circuit are shorted to each other • PCM malfunction

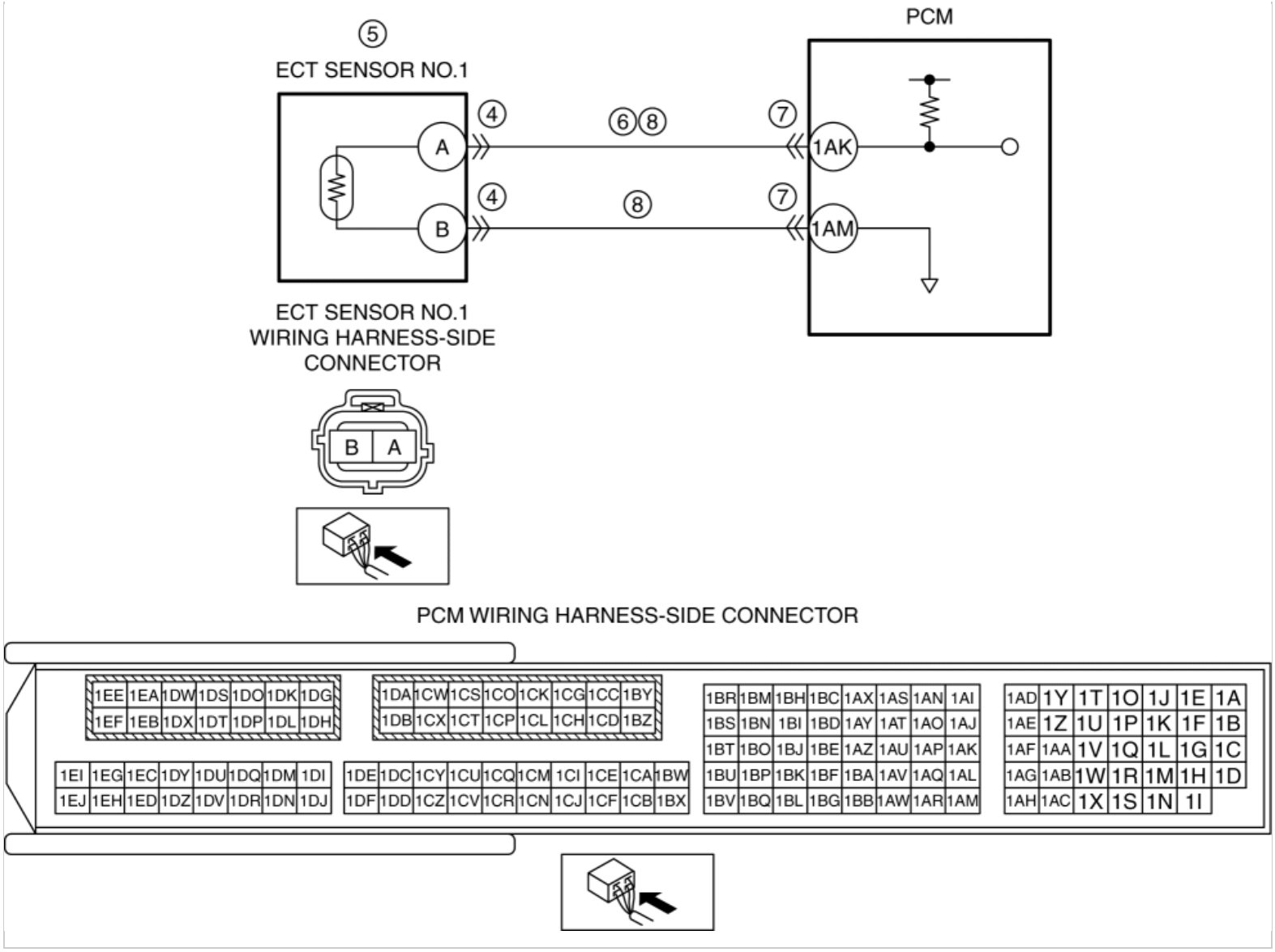

CAUTION:

- Verify the malfunction symptom according to not only the PID value but also the symptom troubleshooting.

Related PIDs

Item (definition)	Unit/Condition	Definition	Condition/Specification (Reference)
ECT	°C, °F	Engine coolant temperature	• Displays ECT
	V	ECT sensor No.1 voltage	• ECT is 20 °C {68 °F}: Approx. 3.10 V • ECT is 40 °C {104 °F}: Approx. 2.16 V • ECT is 60 °C {140 °F}: Approx. 1.40 V • ECT is 80 °C {176 °F}: Approx. 0.87 V • ECT is 100 °C {212 °F}: Approx. 0.54 V

Diagnostic Procedure

STEP	INSPECTION	ACTION
	VERIFY FREEZE FRAME DATA (MODE	

1	**2)/SNAPSHOT DATA AND DIAGNOSTIC MONITORING TEST RESULTS HAVE BEEN RECORDED** • Have the FREEZE FRAME DATA (Mode 2)/snapshot data and DIAGNOSTIC MONITORING TEST RESULTS (engine cooling system related) been recorded?	Yes	Go to the next step.
		No	Record the FREEZE FRAME DATA (Mode 2)/snapshot data and DIAGNOSTIC MONITORING TEST RESULTS on the repair order, then go to the next step.
2	**VERIFY RELATED REPAIR INFORMATION AVAILABILITY** • Verify related Service Bulletins and/or on-line repair information availability. • Is any related repair information available?	Yes	Perform repair or diagnosis according to the available repair information. • If the vehicle is not repaired, go to the next step.
		No	Go to the next step.
3	**VERIFY ENGINE CONDITION** • Verify the engine condition. • Is the engine overheating?	Yes	Perform the symptom troubleshooting “NO.17 COOLING SYSTEM CONCERNS-OVERHEATING”. (See **NO.17 COOLING SYSTEM CONCERNS-OVERHEATING [SKYACTIV-G 2.0, SKYACTIV-G 2.5]**.)
		No	Go to the next step.
4	**INSPECT ECT SENSOR NO.1 CONNECTOR CONDITION** • Switch the ignition off. • Disconnect the ECT sensor No.1 connector. • Inspect for poor connection (such as damaged/pulled-out pins, corrosion). • Is there any malfunction?	Yes	Repair or replace the connector and/or terminals, then go to Step 9.
		No	Go to the next step.
5	**DETERMINE IF ECT SENSOR NO.1 OR WIRING HARNESS MALFUNCTION** • Reconnect all disconnected connectors. • Access the ECT PID using the M-MDS. (See **ON-BOARD DIAGNOSTIC TEST [SKYACTIV-G 2.0, SKYACTIV-G 2.5]**.) • Verify the ECT PID value when disconnecting the ECT sensor No.1 connector. • Does the ECT PID value change?	Yes	Replace the ECT sensor No.1, then go to Step 9. (See **ENGINE COOLANT TEMPERATURE (ECT) SENSOR REMOVAL/INSTALLATION [SKYACTIV-G 2.0, SKYACTIV-G 2.5]**.)
		No	Go to the next step.
6	**INSPECT ECT SENSOR NO.1 SIGNAL CIRCUIT FOR SHORT TO GROUND** • Verify that the ECT sensor No.1 connector is disconnected. • Switch the ignition off. • Inspect for continuity between ECT sensor No.1 terminal A (wiring harness-side) and body ground. • Is there continuity?	Yes	If the short to ground circuit could be detected in the wiring harness: • Refer to the wiring diagram and verify whether or not there is a common connector between ECT sensor No.1 terminal A and PCM terminal 1AK. **If there is a common connector:** ▪ Determine the malfunctioning part by inspecting the common connector and the terminal for corrosion, damage, or pin disconnection, and the common wiring harness for a short to ground. ▪ Repair or replace the malfunctioning part. **If there is no common connector:**

			▪ Repair or replace the wiring harness which has a short to ground. If the short to ground circuit could not be detected in the wiring harness: • Replace the PCM (short to ground in the PCM internal circuit). (See **PCM REMOVAL/INSTALLATION [SKYACTIV-G 2.0, SKYACTIV-G 2.5]**.) Go to Step 9.
		No	Go to the next step.
7	**INSPECT PCM CONNECTOR CONDITION** • Disconnect the PCM connector. • Inspect for poor connection (such as damaged/pulled-out pins, corrosion). • Is there any malfunction?	Yes	Repair or replace the connector and/or terminals, then go to Step 9.
		No	Go to the next step.
8	**INSPECT ECT SENSOR NO.1 SIGNAL CIRCUIT AND GROUND CIRCUIT FOR SHORT TO EACH OTHER** • Verify that the ECT sensor No.1 and PCM connectors are disconnected. • Inspect for continuity between ECT sensor No.1 terminals A and B (wiring harness-side). • Is there continuity?	Yes	Refer to the wiring diagram and verify whether or not there is a common connector between the following terminals: • ECT sensor No.1 terminal A—PCM terminal 1AK • ECT sensor No.1 terminal B—PCM terminal 1AM **If there is a common connector:** • Determine the malfunctioning part by inspecting the common connector and the terminal for corrosion, damage, or pin disconnection, and the common wiring harness for a short to each other. • Repair or replace the malfunctioning part. **If there is no common connector:** • Repair or replace the wiring harness which has a short to each other. Go to the next step.
		No	Go to the next step.
9	**VERIFY DTC TROUBLESHOOTING COMPLETED** • Always reconnect all disconnected connectors. • Clear the DTC from the PCM memory using the M-MDS. (See **AFTER REPAIR PROCEDURE [SKYACTIV-G 2.0, SKYACTIV-G 2.5]**.) • Perform the KOEO or KOER self test. (See **KOEO/KOER SELF TEST [SKYACTIV-G 2.0, SKYACTIV-G 2.5]**.) • Is the same DTC present?	Yes	Repeat the inspection from Step 1. • If the malfunction recurs, replace the PCM. (See **PCM REMOVAL/INSTALLATION [SKYACTIV-G 2.0, SKYACTIV-G 2.5]**.) Go to the next step.
		No	Go to the next step.
10	**VERIFY AFTER REPAIR PROCEDURE** • Perform the “AFTER REPAIR PROCEDURE”. (See **AFTER REPAIR PROCEDURE [SKYACTIV-G 2.0, SKYACTIV-G 2.5]**.)	Yes	Go to the applicable DTC inspection. (See **DTC TABLE [SKYACTIV-G 2.0, SKYACTIV-G 2.5]**.)
		No	DTC troubleshooting completed.

	• Are any DTCs present?		

2014 - Mazda3 - Engine

DTC P0118:00 [SKYACTIV-G 2.0, SKYACTIV-G 2.5]

DTC P0118:00	ECT sensor No.1 circuit high input
DETECTION CONDITION	• The PCM monitors the ECT sensor No.1 signal. If the PCM detects that the ECT sensor No.1 voltage at the PCM terminal 1AK is **above 4.9 V** for **5 s**, the PCM determines that the ECT sensor No.1 circuit has a malfunction. **Diagnostic support note** • This is a continuous monitor (engine cooling system). • The check engine light illuminates if the PCM detects the above malfunction condition during the first drive cycle. • FREEZE FRAME DATA (Mode 2)/Snapshot data is available. • DTC is stored in the PCM memory.
FAIL-SAFE FUNCTION	• Fixes the water temperature for the engine control at **40 °C {104 °F}**, and for the idle air control at **80 °C {176 °F}**. • Operates the cooling fan (high speed rotation). • Inhibits the fuel cut control during shift change.

POSSIBLE CAUSE	• ECT sensor No.1 connector or terminals malfunction
	• ECT sensor No.1 malfunction
	• PCM connector or terminals malfunction
	• Short to power supply in wiring harness between ECT sensor No.1 terminal A and PCM terminal 1AK
	• Open circuit in wiring harness between the following terminals:
	  ▪ ECT sensor No.1 terminal A—PCM terminal 1AK
	  ▪ ECT sensor No.1 terminal B—PCM terminal 1AM
	• PCM malfunction

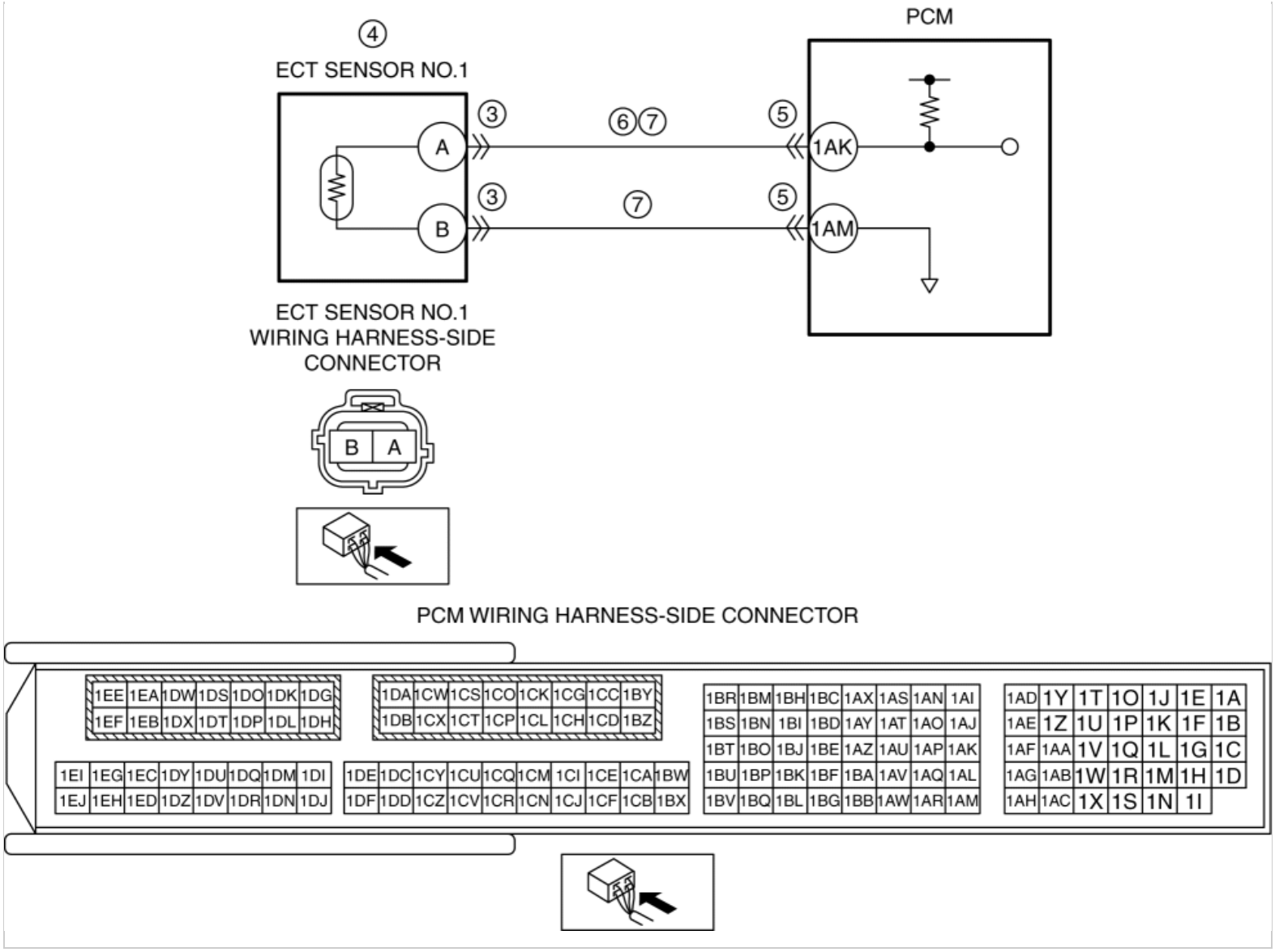

CAUTION:

- Verify the malfunction symptom according to not only the PID value but also the symptom troubleshooting.

Related PIDs

Item (definition)	Unit/Condition	Definition	Condition/Specification (Reference)
ECT	°C, °F	Engine coolant temperature	• Displays ECT
	V	ECT sensor No.1 voltage	• ECT is 20 °C {68 °F}: Approx. 3.10 V • ECT is 40 °C {104 °F}: Approx. 2.16 V • ECT is 60 °C {140 °F}: Approx. 1.40 V • ECT is 80 °C {176 °F}: Approx. 0.87 V • ECT is 100 °C {212 °F}: Approx. 0.54 V

Diagnostic Procedure

STEP	INSPECTION	ACTION
	VERIFY FREEZE FRAME DATA (MODE 2)/SNAPSHOT	

1	**DATA AND DIAGNOSTIC MONITORING TEST RESULTS HAVE BEEN RECORDED** • Have the FREEZE FRAME DATA (Mode 2)/snapshot data and DIAGNOSTIC MONITORING TEST RESULTS (engine cooling system related) been recorded?	Yes	Go to the next step.
		No	Record the FREEZE FRAME DATA (Mode 2)/snapshot data and DIAGNOSTIC MONITORING TEST RESULTS on the repair order, then go to the next step.
2	**VERIFY RELATED REPAIR INFORMATION AVAILABILITY** • Verify related Service Bulletins and/or on-line repair information availability. • Is any related repair information available?	Yes	Perform repair or diagnosis according to the available repair information. • If the vehicle is not repaired, go to the next step.
		No	Go to the next step.
3	**INSPECT ECT SENSOR NO.1 CONNECTOR CONDITION** • Switch the ignition off. • Disconnect the ECT sensor No.1 connector. • Inspect for poor connection (such as damaged/pulled-out pins, corrosion). • Is there any malfunction?	Yes	Repair or replace the connector and/or terminals, then go to Step 8.
		No	Go to the next step.
4	**DETERMINE IF ECT SENSOR NO.1 OR WIRING HARNESS MALFUNCTION** • Verify that the ECT sensor No.1 connector is disconnected. • Access the ECT PID using the M-MDS. (See **ON-BOARD DIAGNOSTIC TEST [SKYACTIV-G 2.0, SKYACTIV-G 2.5]**.) • Connect a jumper wire between ECT sensor No.1 terminals A and B (wiring harness-side). • Verify the ECT PID value. • Is the voltage **4.6 V or below**?	Yes	Replace the ECT sensor No.1, then go to Step 8. (See **ENGINE COOLANT TEMPERATURE (ECT) SENSOR REMOVAL/INSTALLATION [SKYACTIV-G 2.0, SKYACTIV-G 2.5]**.)
		No	Go to the next step.
5	**INSPECT PCM CONNECTOR CONDITION** • Switch the ignition off. • Disconnect the PCM connector. • Inspect for poor connection (such as damaged/pulled-out pins, corrosion). • Is there any malfunction?	Yes	Repair or replace the connector and/or terminals, then go to Step 8.
		No	Go to the next step.
6	**INSPECT ECT SENSOR NO.1 SIGNAL CIRCUIT FOR SHORT TO POWER SUPPLY** • Verify that the ECT sensor No.1 and PCM connectors are disconnected. • Switch the ignition ON (engine off). **NOTE:** • Another DTC may be stored by the PCM detecting an open circuit. • Measure the voltage at the ECT sensor No.1 terminal A (wiring harness-side).	Yes	Go to the next step.
		No	Refer to the wiring diagram and verify whether or not there is a common connector between ECT sensor No.1 terminal A and PCM terminal 1AK. **If there is a common connector:** • Determine the malfunctioning part by inspecting the common connector and the terminal for corrosion, damage, or pin disconnection, and the common wiring harness for a short to power supply. • Repair or replace the malfunctioning part. **If there is no common connector:**

	• Is the voltage **0 V**?		• Repair or replace the wiring harness which has a short to power supply. Go to Step 8.
7	**INSPECT ECT SENSOR NO.1 CIRCUIT FOR OPEN CIRCUIT** • Verify that the ECT sensor No.1 and PCM connectors are disconnected. • Switch the ignition off. • Inspect for continuity between the following terminals (wiring harness-side): ▪ ECT sensor No.1 terminal A—PCM terminal 1AK ▪ ECT sensor No.1 terminal B—PCM terminal 1AM • Is there continuity?	Yes	Go to the next step.
		No	Refer to the wiring diagram and verify whether or not there is a common connector between the following terminals: • ECT sensor No.1 terminal A—PCM terminal 1AK • ECT sensor No.1 terminal B—PCM terminal 1AM **If there is a common connector:** • Determine the malfunctioning part by inspecting the common connector and the terminal for corrosion, damage, or pin disconnection, and the common wiring harness for an open circuit. • Repair or replace the malfunctioning part. **If there is no common connector:** • Repair or replace the wiring harness which has an open circuit. Go to the next step.
8	**VERIFY DTC TROUBLESHOOTING COMPLETED** • Always reconnect all disconnected connectors. • Clear the DTC from the PCM memory using the M-MDS. (See **AFTER REPAIR PROCEDURE [SKYACTIV-G 2.0, SKYACTIV-G 2.5]**.) • Perform the KOEO or KOER self test. (See **KOEO/KOER SELF TEST [SKYACTIV-G 2.0, SKYACTIV-G 2.5]**.) • Is the same DTC present?	Yes	Repeat the inspection from Step 1. • If the malfunction recurs, replace the PCM. (See **PCM REMOVAL/INSTALLATION [SKYACTIV-G 2.0, SKYACTIV-G 2.5]**.) Go to the next step.
		No	Go to the next step.
9	**VERIFY AFTER REPAIR PROCEDURE** • Perform the “AFTER REPAIR PROCEDURE”. (See **AFTER REPAIR PROCEDURE [SKYACTIV-G 2.0, SKYACTIV-G 2.5]**.) • Are any DTCs present?	Yes	Go to the applicable DTC inspection. (See **DTC TABLE [SKYACTIV-G 2.0, SKYACTIV-G 2.5]**.)
		No	DTC troubleshooting completed.

2014 - Mazda3 - Engine

DTC P011A:00 [SKYACTIV-G 2.0, SKYACTIV-G 2.5]

DTC P011A:00	ECT sensor No.1/No.2 performance problem
DETECTION CONDITION	• Any of the following conditions is met after the ignition is switched ON*1: ▪ The ECT sensor No.2 detected temperature is **approx. 25.0 °C {45.0 °F}** higher than the ECT sensor No.1. ▪ The ECT sensor No.2 detected temperature is **approx. −48.0 °C {−54.0 °F}**. ▪ The ECT sensor No.2 detected temperature is **approx. 28 °C {50 °F}** higher than the ECT sensor No.1 when the intake air temperature is **15 °C {59 °F} or more***2. • *1: Ignition switch is ON when **6 h** or more have passed since the ignition was switched off. • *2: Perform determination according to the intake air temperature conditions when the calculated intake air amount **exceeds 5,000 g {176.4 oz}** (difference between ECT sensors No.1 and No.2 is determined engine coolant temperature value at engine start). **Diagnostic support note** • This is a continuous monitor (engine cooling system). • The check engine light illuminates if the PCM detects the above malfunction condition in two consecutive drive cycles or in one drive cycle while the DTC for the same malfunction has been stored in the PCM. • PENDING CODE is available if the PCM detects the above malfunction condition during first drive cycle. • FREEZE FRAME DATA (Mode 2)/Snapshot data is available. • DTC is stored in the PCM memory.
FAIL-SAFE FUNCTION	Not applicable
	• Block heater used when ambient temperature is **5 °C {41 °F} or more** • ECT sensor No.1 connector or terminals malfunction

POSSIBLE CAUSE	• ECT sensor No.2 connector or terminals malfunction • PCM connector or terminals malfunction • ECT sensor No.1 malfunction • ECT sensor No.2 malfunction • PCM malfunction
SYSTEM WIRING DIAGRAM	Not applicable

Diagnostic Procedure

STEP	INSPECTION		ACTION
1	**IDENTIFY TRIGGER DTC FOR FREEZE FRAME DATA (MODE 2)** • Perform the Freeze Frame PID Data Access Procedure. (See **ON-BOARD DIAGNOSTIC TEST [SKYACTIV-G 2.0, SKYACTIV-G 2.5]**.) • Is the DTC P011A:00 on FREEZE FRAME DATA (Mode 2)?	Yes	Go to the next step.
		No	Go to the troubleshooting procedure for DTC on FREEZE FRAME DATA (Mode 2). (See **DTC TABLE [SKYACTIV-G 2.0, SKYACTIV-G 2.5]**.)
2	**VERIFY FREEZE FRAME DATA (MODE 2)/SNAPSHOT DATA AND DIAGNOSTIC MONITORING TEST RESULTS HAVE BEEN RECORDED** • Have the FREEZE FRAME DATA (Mode 2)/snapshot data and DIAGNOSTIC MONITORING TEST RESULTS (engine cooling system related) been recorded?	Yes	Go to the next step.
		No	Record the FREEZE FRAME DATA (Mode 2)/snapshot data and DIAGNOSTIC MONITORING TEST RESULTS on the repair order, then go to the next step.
3	**VERIFY RELATED REPAIR INFORMATION AVAILABILITY** • Verify related Service Bulletins and/or on-line repair information availability. • Is any related repair information available?	Yes	Perform repair or diagnosis according to the available repair information. • If the vehicle is not repaired, go to the next step.
		No	Go to the next step.
4	**INSPECT ECT SENSOR NO.1 CONNECTOR CONDITION** • Switch the ignition off. • Disconnect the ECT sensor No.1	Yes	Repair or replace the connector and/or terminals, then go to Step 9.
		No	Go to the next step.

	connector. • Inspect for poor connection (such as damaged/pulled-out pins, corrosion). • Is there any malfunction?		
5	**INSPECT ECT SENSOR NO.2 CONNECTOR CONDITION** • Disconnect the ECT sensor No.2 connector. • Inspect for poor connection (such as damaged/pulled-out pins, corrosion). • Is there any malfunction?	Yes	Repair or replace the connector and/or terminals, then go to Step 9.
		No	Go to the next step.
6	**INSPECT PCM CONNECTOR CONDITION** • Disconnect the PCM connector. • Inspect for poor connection (such as damaged/pulled-out pins, corrosion). • Is there any malfunction?	Yes	Repair or replace the connector and/or terminals, then go to Step 9.
		No	Go to the next step.
7	**INSPECT ECT SENSOR NO.1** • Inspect the ECT sensor No.1. (See **ENGINE COOLANT TEMPERATURE (ECT) SENSOR INSPECTION [SKYACTIV-G 2.0, SKYACTIV-G 2.5]**.) • Is there any malfunction?	Yes	Replace the ECT sensor No.1, then go to Step 9. (See **ENGINE COOLANT TEMPERATURE (ECT) SENSOR REMOVAL/INSTALLATION [SKYACTIV-G 2.0, SKYACTIV-G 2.5]**.)
		No	Go to the next step.
8	**INSPECT ECT SENSOR NO.2** • Inspect the ECT sensor No.2. (See **ENGINE COOLANT TEMPERATURE (ECT) SENSOR INSPECTION [SKYACTIV-G 2.0, SKYACTIV-G 2.5]**.) • Is there any malfunction?	Yes	Replace the ECT sensor No.2, then go to the next step. (See **ENGINE COOLANT TEMPERATURE (ECT) SENSOR REMOVAL/INSTALLATION [SKYACTIV-G 2.0, SKYACTIV-G 2.5]**.)
		No	Go to the next step.
9	**VERIFY DTC TROUBLESHOOTING COMPLETED** • Always reconnect all disconnected connectors. • Clear the DTC from the PCM memory using the M-MDS. (See **AFTER REPAIR PROCEDURE [SKYACTIV-G 2.0, SKYACTIV-G 2.5]**.)	Yes	Repeat the inspection from Step 1. • If the malfunction recurs, replace the PCM. (See **PCM REMOVAL/INSTALLATION [SKYACTIV-G 2.0, SKYACTIV-G 2.5]**.)

	• Switch the ignition off. • Start the engine and warm it up completely. • Perform the Pending Trouble Code Access Procedure. (See **ON-BOARD DIAGNOSTIC TEST [SKYACTIV-G 2.0, SKYACTIV-G 2.5]**.) • Is the PENDING CODE for this DTC present?		Go to the next step.
		No	Go to the next step.
10	**VERIFY AFTER REPAIR PROCEDURE** • Perform the “AFTER REPAIR PROCEDURE”. (See **AFTER REPAIR PROCEDURE [SKYACTIV-G 2.0, SKYACTIV-G 2.5]**.) • Are any DTCs present?	Yes	Go to the applicable DTC inspection. (See **DTC TABLE [SKYACTIV-G 2.0, SKYACTIV-G 2.5]**.)
		No	DTC troubleshooting completed.

2014 - Mazda3 - Engine

DTC P0122:00 [SKYACTIV-G 2.0, SKYACTIV-G 2.5]

DTC P0122:00	TP sensor No.1 circuit low input
DETECTION CONDITION	• If the PCM detects that the TP sensor No.1 voltage at the PCM terminal 1BP is **below 0.1 V**, the PCM determines that the TP sensor No.1 circuit has a malfunction. **Diagnostic support note** • This is a continuous monitor (CCM). • The check engine light illuminates if the PCM detects the above malfunction condition during the first drive cycle. • FREEZE FRAME DATA (Mode 2)/Snapshot data is available. • DTC is stored in the PCM memory.
FAIL-SAFE FUNCTION	• Restricts the upper limit of the engine speed.
POSSIBLE CAUSE	• Throttle body connector or terminals malfunction • PCM connector or terminals malfunction • Short to ground in wiring harness between the following terminals: ▪ Throttle body terminal B—PCM terminal 1BS ▪ Throttle body terminal A—PCM terminal 1BP • TP sensor No.1 signal circuit and ground circuit are shorted to each other • TP sensor No.1 malfunction • PCM malfunction

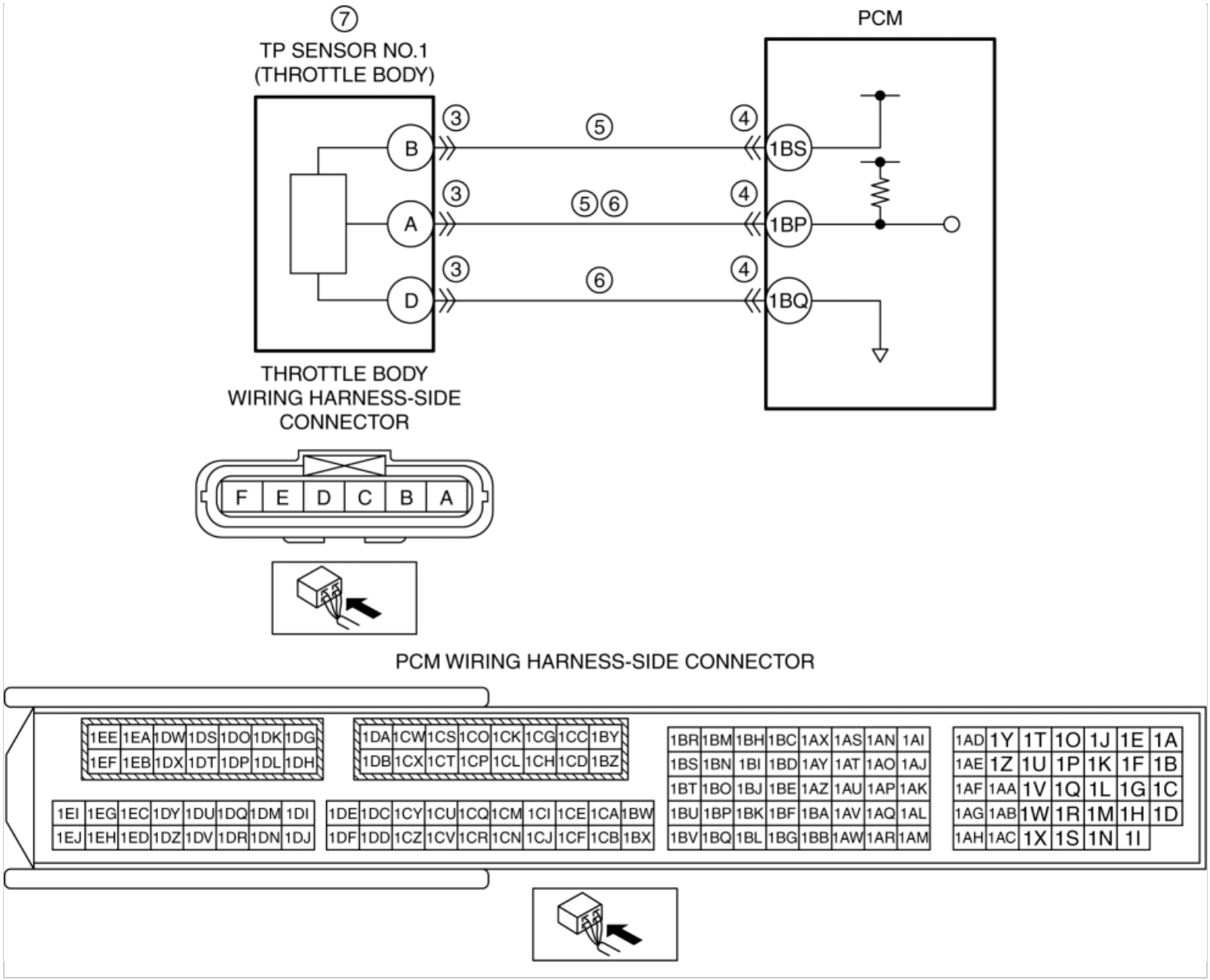

CAUTION:

- Verify the malfunction symptom according to not only the PID value but also the symptom troubleshooting.

Related PIDs

Item (definition)	Unit/Condition	Definition	Condition/Specification (Reference)
TP1	V	TP sensor No.1 voltage	• Accelerator pedal released: Approx. 1.11 V • Accelerator pedal fully depressed: Approx. 4.59 V
	%	Throttle valve position No.1	• Accelerator pedal released: Approx. 22% • Accelerator pedal fully depressed: Approx. 92%

Diagnostic Procedure

STEP	INSPECTION	ACTION

1	**VERIFY FREEZE FRAME DATA (MODE 2)/SNAPSHOT DATA HAS BEEN RECORDED** • Has the FREEZE FRAME DATA (Mode 2)/snapshot data been recorded?	Yes	Go to the next step.
		No	Record the FREEZE FRAME DATA (Mode 2)/snapshot data on the repair order, then go to the next step.
2	**VERIFY RELATED REPAIR INFORMATION AVAILABILITY** • Verify related Service Bulletins and/or on-line repair information availability. • Is any related repair information available?	Yes	Perform repair or diagnosis according to the available repair information. • If the vehicle is not repaired, go to the next step.
		No	Go to the next step.
3	**INSPECT THROTTLE BODY CONNECTOR CONDITION** • Switch the ignition off. • Disconnect the throttle body connector. • Inspect for poor connection (such as damaged/pulled-out pins, corrosion). • Is there any malfunction?	Yes	Repair or replace the connector and/or terminals, then go to Step 8.
		No	Go to the next step.
4	**INSPECT PCM CONNECTOR CONDITION** • Disconnect the PCM connector. • Inspect for poor connection (such as damaged/pulled-out pins, corrosion). • Is there any malfunction?	Yes	Repair or replace the connector and/or terminals, then go to Step 8.
		No	Go to the next step.
5	**INSPECT TP SENSOR NO.1 CIRCUIT FOR SHORT TO GROUND** • Verify that the throttle body and PCM connectors are disconnected. • Inspect for continuity between the following terminals (wiring harness-side) and body ground: ▪ Throttle body terminal B ▪ Throttle body terminal A • Is there continuity?	Yes	Refer to the wiring diagram and verify whether or not there is a common connector between the following terminals: • Throttle body terminal B—PCM terminal 1BS • Throttle body terminal A—PCM terminal 1BP **If there is a common connector:** • Determine the malfunctioning part by inspecting the common connector and the terminal for corrosion, damage, or pin disconnection, and the common wiring harness for a short to ground. • Repair or replace the malfunctioning part. **If there is no common connector:** • Repair or replace the wiring harness which has a short to ground. Go to Step 8.
		No	Go to the next step.
6	**INSPECT TP SENSOR NO.1 SIGNAL CIRCUIT AND GROUND CIRCUIT FOR SHORT TO EACH OTHER** • Verify that the throttle body and PCM connectors are disconnected.	Yes	Refer to the wiring diagram and verify whether or not there is a common connector between the following terminals: • Throttle body terminal A—PCM terminal 1BP • Throttle body terminal D—PCM terminal 1BQ

	• Inspect for continuity between throttle body terminals A and D (wiring harness-side). • Is there continuity?		**If there is a common connector:** • Determine the malfunctioning part by inspecting the common connector and the terminal for corrosion, damage, or pin disconnection, and the common wiring harness for a short to each other. • Repair or replace the malfunctioning part. **If there is no common connector:** • Repair or replace the wiring harness which has a short to each other. Go to Step 8.
		No	Go to the next step.
7	**INSPECT TP SENSOR NO.1** • Reconnect all disconnected connectors. • Inspect the TP sensor No.1. (See **THROTTLE POSITION (TP) SENSOR INSPECTION [SKYACTIV-G 2.0, SKYACTIV-G 2.5]**.) • Is there any malfunction?	Yes	Replace the throttle body, then go to the next step. (See **INTAKE-AIR SYSTEM REMOVAL/INSTALLATION [SKYACTIV-G 2.0, SKYACTIV-G 2.5]**.)
		No	Go to the next step.
8	**VERIFY DTC TROUBLESHOOTING COMPLETED** • Always reconnect all disconnected connectors. • Clear the DTC from the PCM memory using the M-MDS. (See **AFTER REPAIR PROCEDURE [SKYACTIV-G 2.0, SKYACTIV-G 2.5]**.) • Perform the KOEO or KOER self test. (See **KOEO/KOER SELF TEST [SKYACTIV-G 2.0, SKYACTIV-G 2.5]**.) • Is the same DTC present?	Yes	Repeat the inspection from Step 1. • If the malfunction recurs, replace the PCM. (See **PCM REMOVAL/INSTALLATION [SKYACTIV-G 2.0, SKYACTIV-G 2.5]**.) Go to the next step.
		No	Go to the next step.
9	**VERIFY AFTER REPAIR PROCEDURE** • Perform the “AFTER REPAIR PROCEDURE”. (See **AFTER REPAIR PROCEDURE [SKYACTIV-G 2.0, SKYACTIV-G 2.5]**.) • Are any DTCs present?	Yes	Go to the applicable DTC inspection. (See **DTC TABLE [SKYACTIV-G 2.0, SKYACTIV-G 2.5]**.)
		No	DTC troubleshooting completed.

2014 - Mazda3 - Engine

DTC P0123:00 [SKYACTIV-G 2.0, SKYACTIV-G 2.5]

DTC P0123:00	TP sensor No.1 circuit high input
DETECTION CONDITION	• If the PCM detects that the TP sensor No.1 voltage at the PCM terminal 1BP is **above 4.9 V**, the PCM determines that the TP sensor No.1 circuit has a malfunction. **Diagnostic support note** • This is a continuous monitor (CCM). • The check engine light illuminates if the PCM detects the above malfunction condition during the first drive cycle. • FREEZE FRAME DATA (Mode 2)/Snapshot data is available. • DTC is stored in the PCM memory.
FAIL-SAFE FUNCTION	• Restricts the upper limit of the engine speed.

POSSIBLE CAUSE	• Throttle body connector or terminals malfunction
	• PCM connector or terminals malfunction
	• TP sensor No.1 malfunction
	• Short to power supply in wiring harness between throttle body terminal A and PCM terminal 1BP
	• Open circuit in wiring harness between the following terminals:
	  ▪ Throttle body terminal B—PCM terminal 1BS
	  ▪ Throttle body terminal A—PCM terminal 1BP
	  ▪ Throttle body terminal D—PCM terminal 1BQ
	• PCM malfunction

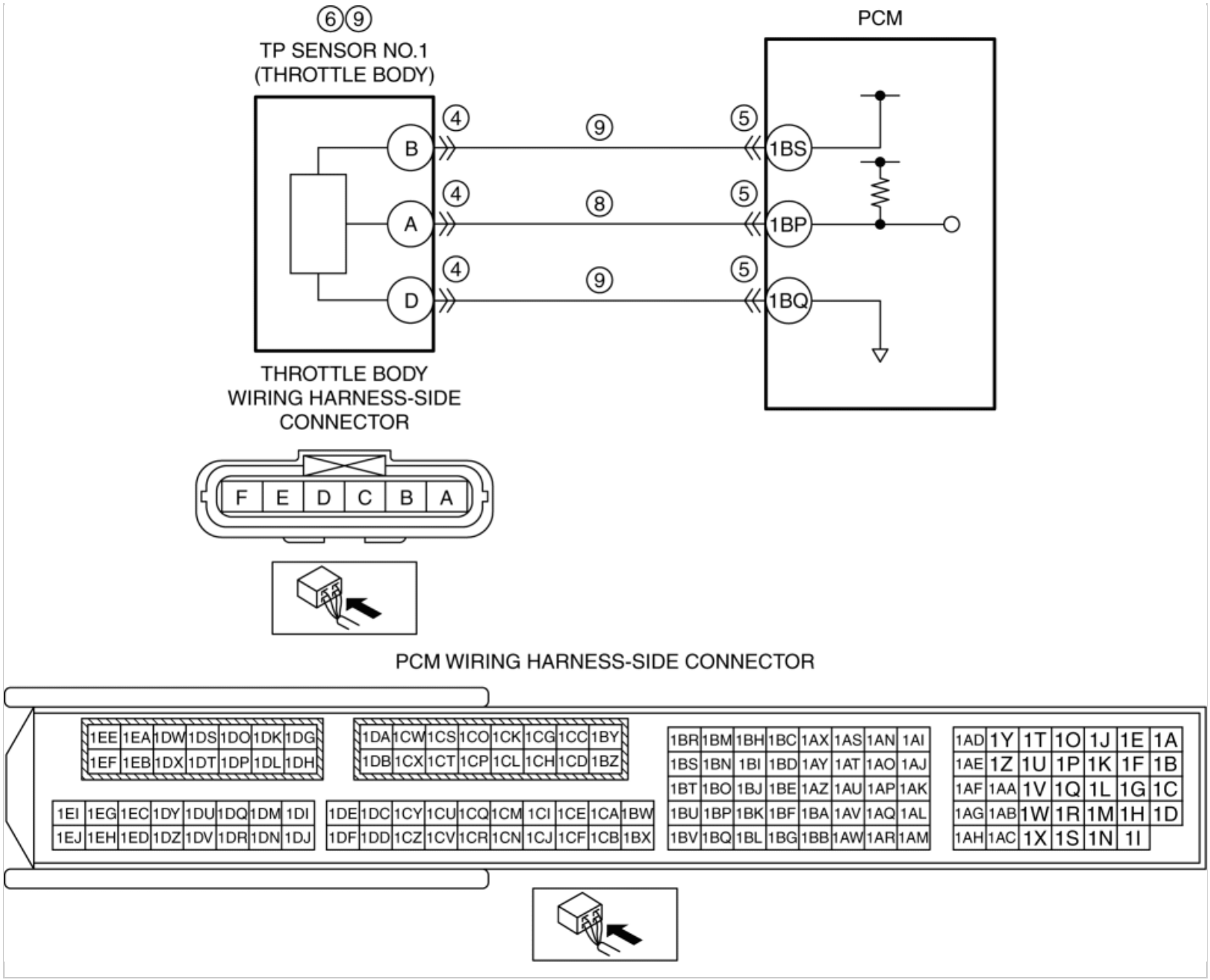

CAUTION:

- Verify the malfunction symptom according to not only the PID value but also the symptom troubleshooting.

Related PIDs

Item (definition)	Unit/Condition	Definition	Condition/Specification (Reference)
TP1	V	TP sensor No.1 voltage	• Accelerator pedal released: Approx. 1.11 V • Accelerator pedal fully depressed: Approx. 4.59 V
	%	Throttle valve position No.1	• Accelerator pedal released: Approx. 22% • Accelerator pedal fully depressed: Approx. 92%

Diagnostic Procedure

STEP	INSPECTION	ACTION

1	**VERIFY FREEZE FRAME DATA (MODE 2)/SNAPSHOT DATA HAS BEEN RECORDED** • Has the FREEZE FRAME DATA (Mode 2)/snapshot data been recorded?	Yes	Go to the next step.
		No	Record the FREEZE FRAME DATA (Mode 2)/snapshot data on the repair order, then go to the next step.
2	**VERIFY RELATED REPAIR INFORMATION AVAILABILITY** • Verify related Service Bulletins and/or on-line repair information availability. • Is any related repair information available?	Yes	Perform repair or diagnosis according to the available repair information. • If the vehicle is not repaired, go to the next step.
		No	Go to the next step.
3	**DETERMINE IF TP SENSOR NO.1 OR WIRING HARNESS MALFUNCTION** • Access the TP1 PID using the M-MDS. (See **ON-BOARD DIAGNOSTIC TEST [SKYACTIV-G 2.0, SKYACTIV-G 2.5]**.) • Verify the TP1 PID value. • Is the TP1 PID value **5 V** or **B+**?	Yes	Go to Step 7.
		No	Go to the next step.
4	**INSPECT THROTTLE BODY CONNECTOR CONDITION** • Switch the ignition off. • Disconnect the throttle body connector. • Inspect for poor connection (such as damaged/pulled-out pins, corrosion). • Is there any malfunction?	Yes	Repair or replace the connector and/or terminals, then go to Step 10.
		No	Go to the next step.
5	**INSPECT PCM CONNECTOR CONDITION** • Disconnect the PCM connector. • Inspect for poor connection (such as damaged/pulled-out pins, corrosion). • Is there any malfunction?	Yes	Repair or replace the connector and/or terminals, then go to Step 10.
		No	Go to the next step.
6	**INSPECT TP SENSOR NO.1** • Reconnect all disconnected connectors. • Inspect the TP sensor No.1. (See **THROTTLE POSITION (TP) SENSOR INSPECTION [SKYACTIV-G 2.0, SKYACTIV-G 2.5]**.) • Is there any malfunction?	Yes	Replace the throttle body, then go to Step 10. (See **INTAKE-AIR SYSTEM REMOVAL/INSTALLATION [SKYACTIV-G 2.0, SKYACTIV-G 2.5]**.)
		No	Go to Step 10.
7	**DETERMINE IF TP SENSOR NO.1 SIGNAL CIRCUIT OR TP SENSOR NO.1 GROUND CIRCUIT MALFUNCTION** • Switch the ignition off. • Disconnect the throttle body connector. • Access the TP1 PID using the M-	Yes	Go to the next step.
		No	Go to Step 9.

	MDS. (See **ON-BOARD DIAGNOSTIC TEST [SKYACTIV-G 2.0, SKYACTIV-G 2.5]**.) • Verify the TP1 PID value. • Is the TP1 PID value **5 V** or **B+**?		
8	**INSPECT TP SENSOR NO.1 SIGNAL CIRCUIT FOR OPEN CIRCUIT** • Verify that the throttle body connector is disconnected. • Switch the ignition off. • Disconnect the PCM connector. • Inspect for continuity between throttle body terminal A (wiring harness-side) and PCM terminal 1BP (wiring harness-side). • Is there continuity?	Yes	Refer to the wiring diagram and verify whether or not there is a common connector between throttle body terminal A and PCM terminal 1BP. **If there is a common connector:** • Determine the malfunctioning part by inspecting the common connector and the terminal for corrosion, damage, or pin disconnection, and the common wiring harness for a short to power supply. • Repair or replace the malfunctioning part. **If there is no common connector:** • Repair or replace the wiring harness which has a short to power supply. Go to Step 10.
		No	Refer to the wiring diagram and verify whether or not there is a common connector between throttle body terminal A and PCM terminal 1BP. **If there is a common connector:** • Determine the malfunctioning part by inspecting the common connector and the terminal for corrosion, damage, or pin disconnection, and the common wiring harness for an open circuit. • Repair or replace the malfunctioning part. **If there is no common connector:** • Repair or replace the wiring harness which has an open circuit. Go to Step 10.
9	**INSPECT TP SENSOR NO.1 CIRCUIT FOR OPEN CIRCUIT** • Verify that the throttle body connector is disconnected. • Switch the ignition off. • Disconnect the PCM connector. • Inspect for continuity between the following terminals (wiring harness-side): ▪ Throttle body terminal B—PCM terminal 1BS ▪ Throttle body terminal D—PCM terminal 1BQ • Is there continuity?	Yes	Replace the throttle body, then go to the next step. (See **INTAKE-AIR SYSTEM REMOVAL/INSTALLATION [SKYACTIV-G 2.0, SKYACTIV-G 2.5]**.)
		No	Refer to the wiring diagram and verify whether or not there is a common connector between the following terminals: • Throttle body terminal B—PCM terminal 1BS • Throttle body terminal D—PCM terminal 1BQ **If there is a common connector:** • Determine the malfunctioning part by inspecting the common connector and the terminal for corrosion, damage, or pin disconnection, and the common wiring harness for an open circuit. • Repair or replace the malfunctioning part. **If there is no common connector:** • Repair or replace the wiring harness which has an open circuit. Go to the next step.

10	**VERIFY DTC TROUBLESHOOTING COMPLETED** • Always reconnect all disconnected connectors. • Clear the DTC from the PCM memory using the M-MDS. (See **AFTER REPAIR PROCEDURE [SKYACTIV-G 2.0, SKYACTIV-G 2.5]**.) • Perform the KOEO or KOER self test. (See **KOEO/KOER SELF TEST [SKYACTIV-G 2.0, SKYACTIV-G 2.5]**.) • Is the same DTC present?	Yes	Repeat the inspection from Step 1. • If the malfunction recurs, replace the PCM. (See **PCM REMOVAL/INSTALLATION [SKYACTIV-G 2.0, SKYACTIV-G 2.5]**.) Go to the next step.
		No	Go to the next step.
11	**VERIFY AFTER REPAIR PROCEDURE** • Perform the “AFTER REPAIR PROCEDURE”. (See **AFTER REPAIR PROCEDURE [SKYACTIV-G 2.0, SKYACTIV-G 2.5]**.) • Are any DTCs present?	Yes	Go to the applicable DTC inspection. (See **DTC TABLE [SKYACTIV-G 2.0, SKYACTIV-G 2.5]**.)
		No	DTC troubleshooting completed.

2014 - Mazda3 - Engine

DTC P0126:00 [SKYACTIV-G 2.0, SKYACTIV-G 2.5]

NOTE:

- To determine the malfunctioning part, proceed with the diagnostics from "Function Inspection Using M-MDS".

Details On DTCs

DESCRIPTION	Thermostat stuck open	
DETECTION CONDITION	Determination conditions	• Actual engine coolant temperature does not exceed **71 °C {160 °F}** even though the estimated engine coolant temperature after the engine is started exceeds **71 °C {160 °F}**.
	Preconditions	• Difference between value*2 detected by ECT sensor No.2 during malfunction determination and value detected by ECT sensor No.2 at engine start is **13 °C {23 °F} or more** • Engine coolant temperature at engine start: **52 °C {126 °F} or less***1 • IAT: **−10—45 °C {14—113 °F}***1 • Vehicle speed: **140 km/h {87 mph} or less***1 • Engine speed: **5,400 rpm or less***1 • Idle ratio: **50 % or less** • The following DTCs are not detected: ▪ Fuel system malfunction: P0171:00, P0172:00, P2096:00, P2097:00 ▪ ECT sensor No.1 malfunction: P0117:00, P0118:00 ▪ MAF sensor malfunction: P0102:00, P0103:00 • *1: Value can be verified by displaying PIDs using M-MDS • *2: Uses the ECT sensor No.1 actual temperature or the estimated temperature, whichever one reaches **71 °C {160 °F}** first, as the detection determination value.
	Drive cycle	• 2
	Self test type	• CMDTC self test
	Sensor used	• Desired engine coolant temperature: intake air temperature (IAT sensor), engine speed (CKP sensor), charging efficiency • Actual engine coolant temperature: ECT sensor No.1, ECT sensor No.2
FAIL-SAFE FUNCTION	• Not applicable	
VEHICLE STATUS WHEN DTCs ARE OUTPUT	• Illuminates check engine light. • Heating is ineffective after engine is started	
POSSIBLE CAUSE	• ECT sensor No.1 malfunction • ECT sensor No.2 malfunction • Poor assembly of ECT sensor No.1 • Poor assembly of ECT sensor No.2 • Poor assembly of engine coolant hose (engine coolant passage malfunction) • Poor engine coolant, leakage, or freezing • Use of unspecified engine coolant	

	• Foreign matter caught in thermostat (foreign matter penetration in engine coolant) • Thermostat malfunction • PCM malfunction

System Wiring Diagram

- Not applicable

Function Explanation (DTC Detection Outline)

- The PCM calculates the estimated engine coolant temperature according to the engine speed, charging efficiency, and intake air temperature. If the actual engine coolant temperature does not exceed **71.1 °C {160 ° F}** during the malfunction determination time after the estimated engine coolant temperature exceeds **71.1 °C {160 °F}**, malfunction determination for the engine coolant system is performed and a DTC is stored.
- The malfunction determination time varies depending on the engine speed, charging efficiency, and intake air temperature.

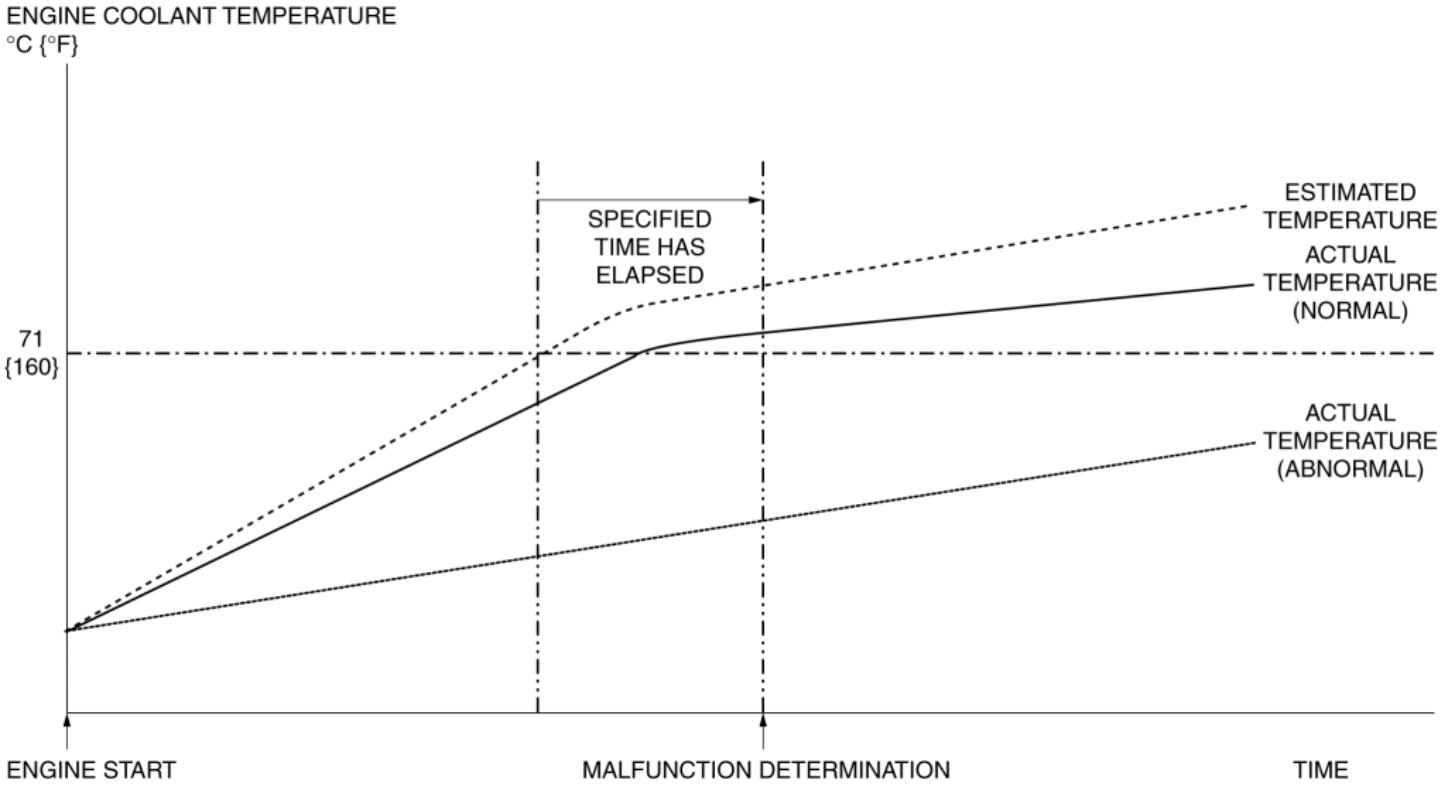

Repeatability Verification Procedure

- Switch the ignition off.
- Leave the vehicle until the engine coolant temperature reaches **approx. 35 °C {95 °F}**.
- Start the engine.

  NOTE:

  - Match the engine coolant temperature in the recorded FREEZE FRAME DATA (Mode 2)/snapshot data, the vehicle speed, and engine speed values to the best extent possible while driving the vehicle.

- Try to reproduce the malfunction by driving the vehicle for **5 min** based on the values in the FREEZE FRAME DATA (Mode 2)/snapshot data.

PID Item/Simulation Item Used In Diagnosis

PID/DATA monitor item table

Item	Definition	Unit	Condition/Specification
ECT	Engine coolant temperature	°C, °F	• Displays ECT
	ECT sensor No.1 voltage	V	• ECT is 20 °C {68 °F}: Approx. 3.10 V • ECT is 40 °C {104 °F}: Approx. 2.16 V • ECT is 60 °C {140 °F}: Approx. 1.40 V • ECT is 80 °C {176 °F}: Approx. 0.87 V • ECT is 100 °C {212 °F}: Approx. 0.54 V

Function Inspection Using M-MDS

STEP	INSPECTION	RESULTS	ACTION
1	**PURPOSE: VERIFY RELATED REPAIR INFORMATION AVAILABILITY** • Verify related Service Bulletins and/or on-line repair information availability. • Is any related repair information available?	Yes	Perform repair or diagnosis according to the available repair information. • If the vehicle is not repaired, go to the next step.
		No	Go to the next step.
2	**PURPOSE: RECORD VEHICLE STATUS AT TIME OF DTC DETECTION TO UTILIZE WITH REPEATABILITY VERIFICATION** • Has the FREEZE FRAME DATA (Mode 2)/snapshot data been recorded?	Yes	Go to the next step.
		No	Record the FREEZE FRAME DATA (Mode 2)/snapshot data on the repair order, then go to the next step. **NOTE:** • Recording can be facilitated using the screen capture function of the PC.
3	**DETERMINE IF MALFUNCTION CAUSE IS ECT SENSOR NO.1 (PCM INPUT SIGNAL) OR OTHER PART** • Switch the ignition off, then ON (engine off). • Perform the Pending Trouble Code Access Procedure and DTC Reading Procedure. (See **ON-BOARD DIAGNOSTIC TEST [SKYACTIV-G 2.0, SKYACTIV-G 2.5]**.) • Is the PENDING CODE/DTC P0116:00 also present?	Yes	Inspect for DTC P0116:00 due to the high possibility of an ECT sensor No.1 malfunction. (See **DTC P0116:00 [SKYACTIV-G 2.0, SKYACTIV-G 2.5]**.)
		No	Go to the troubleshooting procedure to perform the procedure from Step 1.

Troubleshooting Diagnostic Procedure

Intention of troubleshooting procedure

- Step 1—2
  - Perform an engine coolant-related inspection.
- Step 3
  - Perform an engine coolant passage assembly condition-related inspection.
- Step 4
  - Perform a unit inspection of the thermostat.
- Step 5—6
  - Perform a PCM input signal part-related inspection.
- Step 7—8
  - Verify that the primary malfunction is resolved and there are no other malfunctions.

STEP	INSPECTION	RESULTS	ACTION
1	**PURPOSE: DETERMINE IF ENGINE COOLANT USED AFFECTS CONDITION BY VERIFYING WITH CUSTOMER AND INSPECTING COLOR, ODOR, AND FOAMING DUE TO POSSIBILITY OF ENGINE COOLANT FREEZING IF ENGINE COOLANT CONCENTRATION IS LOW** • Is the specified engine coolant being used?	Yes	Go to the next step.
		No	Replace the engine coolant, then go to Step 7. (Advise the customer to use specified engine coolant used.) (See **ENGINE COOLANT REPLACEMENT [SKYACTIV-G 2.0, SKYACTIV-G 2.5]**.)
2	**PURPOSE: VERIFY THAT THERE IS NO ENGINE COOLANT LEAKAGE OR FOREIGN MATTER PENETRATION BECAUSE ECT SENSOR MAY NOT MEASURE CORRECT TEMPERATURE DUE TO ENGINE COOLANT LEAKAGE** • Perform the "ENGINE COOLANT LEAKAGE INSPECTION". (See **ENGINE COOLANT LEAKAGE INSPECTION [SKYACTIV-G 2.0, SKYACTIV-G 2.5]**.) • Is there engine coolant leakage or foreign matter penetration?	Yes	If there is engine coolant leakage: • Repair or replace the malfunctioning location and refill the system with engine coolant. If there is foreign matter penetration: • Replace engine coolant after removing the foreign matter. (See **ENGINE COOLANT REPLACEMENT [SKYACTIV-G 2.0, SKYACTIV-G 2.5]**.) Go to Step 7.
		No	Go to the next step.
3	**PURPOSE: VERIFY IF ENGINE COOLANT PASSAGE IS CORRECT BECAUSE CORRECT ENGINE COOLANT TEMPERATURE CANNOT BE DETERMINED IF ENGINE COOLANT PASSAGE IS INCORRECT** • Is the engine coolant passage (such as hose) connected correctly? (ask customer if engine coolant passage has been serviced somewhere other than Authorized Mazda Dealer)	Yes	Go to the next step.
		No	Connect engine coolant passage correctly, then go to Step 7.
4	**PURPOSE: EXAMINE THERMOSTAT BECAUSE ENGINE COOLANT TEMPERATURE INCREASE SLOWS IF THERMOSTAT IS STUCK OPEN** • Inspect the thermostat. (See **THERMOSTAT INSPECTION [SKYACTIV-G 2.0, SKYACTIV-G 2.5]**.) • Is there any malfunction?	Yes	Replace the thermostat, then go to Step 7. (See **THERMOSTAT REMOVAL/INSTALLATION [SKYACTIV-G 2.0, SKYACTIV-G 2.5]**.)
		No	Go to the next step.
5	**PURPOSE: EXAMINE ECT SENSOR BECAUSE ENGINE COOLANT TEMPERATURE CANNOT BE MEASURED CORRECTLY IF ECT SENSOR IS MALFUNCTIONING** • Inspect the ECT sensor No.1 and ECT sensor No.2. (See **ENGINE COOLANT TEMPERATURE (ECT) SENSOR INSPECTION [SKYACTIV-G 2.0, SKYACTIV-G 2.5]**.) • Is there any malfunction?	Yes	Replace the ECT sensor No.1 or ECT sensor No.2, then go to Step 7. (See **ENGINE COOLANT TEMPERATURE (ECT) SENSOR REMOVAL/INSTALLATION [SKYACTIV-G 2.0, SKYACTIV-G 2.5]**.)
		No	Go to the next step.
6	**PURPOSE: VERIFY ASSEMBLY CONDITION BECAUSE ENGINE COOLANT TEMPERATURE CANNOT BE MEASURED CORRECTLY IF ECT SENSOR IS NOT ASSEMBLED CORRECTLY** • Verify the ECT sensor No.1 and ECT sensor No.2 assembly conditions. (See **ENGINE COOLANT TEMPERATURE (ECT) SENSOR REMOVAL/INSTALLATION [SKYACTIV-G 2.0, SKYACTIV-G 2.5]**.) • Are the ECT sensor No.1 and ECT sensor No.2 assembled correctly?	Yes	Go to the next step.
		No	Assemble the ECT sensor No.1 and ECT sensor No.2 correctly, then go to the next step. (See **ENGINE COOLANT TEMPERATURE (ECT) SENSOR REMOVAL/INSTALLATION [SKYACTIV-G 2.0, SKYACTIV-G 2.5]**.)
7	**PURPOSE: VERIFICATION OF VEHICLE REPAIR COMPLETION** • Always reconnect all disconnected connectors. • Clear the DTC from the PCM memory using the M-MDS. (See **CLEARING DTC [SKYACTIV-G 2.0, SKYACTIV-G 2.5]**.)	Yes	Repeat the inspection from Step 1 of the troubleshooting diagnostic procedure. • If the malfunction recurs, replace the PCM.

	• Implement the repeatability verification procedure. (See **Repeatability Verification Procedure**.) • Perform the Pending Trouble Code Access Procedure. (See **ON-BOARD DIAGNOSTIC TEST [SKYACTIV-G 2.0, SKYACTIV-G 2.5]**.) • Is the PENDING CODE for this DTC present?		(See **PCM REMOVAL/INSTALLATION [SKYACTIV-G 2.0, SKYACTIV-G 2.5]**.) Go to the next step.
		No	Go to the next step.
8	**PURPOSE: VERIFY IF THERE IS ANY OTHER MALFUNCTION** • Is any other DTC or pending code stored?	Yes	Go to the applicable DTC inspection. (See **DTC TABLE [SKYACTIV-G 2.0, SKYACTIV-G 2.5]**.)
		No	DTC troubleshooting completed.

2014 - Mazda3 - Engine

DTC P0130:00 [SKYACTIV-G 2.0, SKYACTIV-G 2.5]

NOTE:

- To determine the malfunctioning part, proceed with the diagnostics from "Function Inspection Using M-MDS".

Details On DTCs

DESCRIPTION	Voltage problem between PCM terminal 1AB and PCM terminal 1AG	
DETECTION CONDITION	Determination conditions	• A condition in which the voltage between PCM terminals 1AB and 1AG exceeds the specified range continues for the specified period or more.
	Preconditions	• Switch the ignition ON (engine off or on) • Battery voltage: **11—18 V**[*1] • The following DTC is not detected: ▪ Internal PCM malfunction: P064D:00 • [*1]: Value can be verified by displaying PIDs using M-MDS
	Drive cycle	• 2
	Self test type	• CMDTC self test, KOER self test
	Sensor used	• A/F sensor
FAIL-SAFE FUNCTION	• Fixes duty value of A/F sensor heater • Stops fuel feedback control of A/F sensor	
VEHICLE STATUS WHEN DTCs ARE OUTPUT	• Illuminates check engine light.	

POSSIBLE CAUSE	• A/F sensor connector or terminals malfunction
	• PCM connector or terminals malfunction
	• Deterioration in wiring harness between the following terminals:
	  ▪ A/F sensor terminal F—PCM terminal 1W
	  ▪ A/F sensor terminal D—PCM terminal 1AB
	  ▪ A/F sensor terminal B—PCM terminal 1AG
	• A/F sensor malfunction
	• PCM malfunction	

System Wiring Diagram

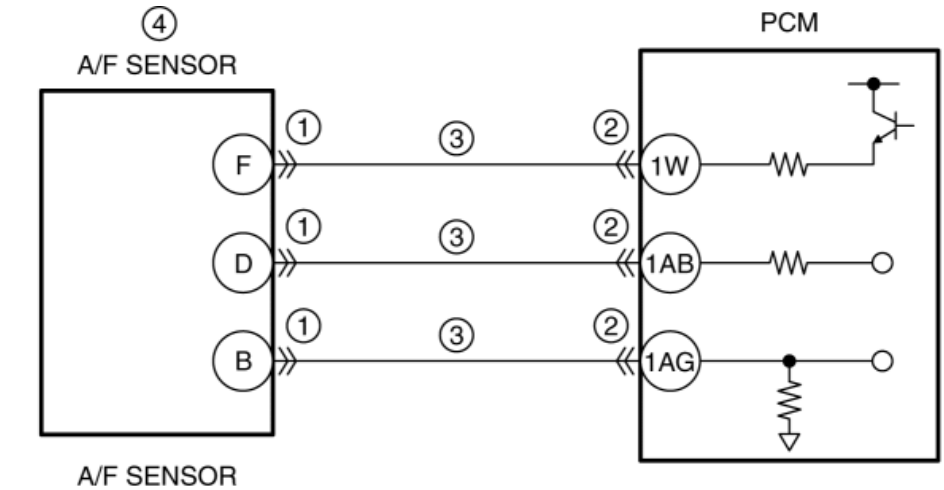

A/F SENSOR
WIRING HARNESS-SIDE
CONNECTOR

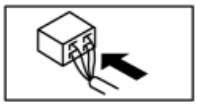

PCM WIRING HARNESS-SIDE CONNECTOR

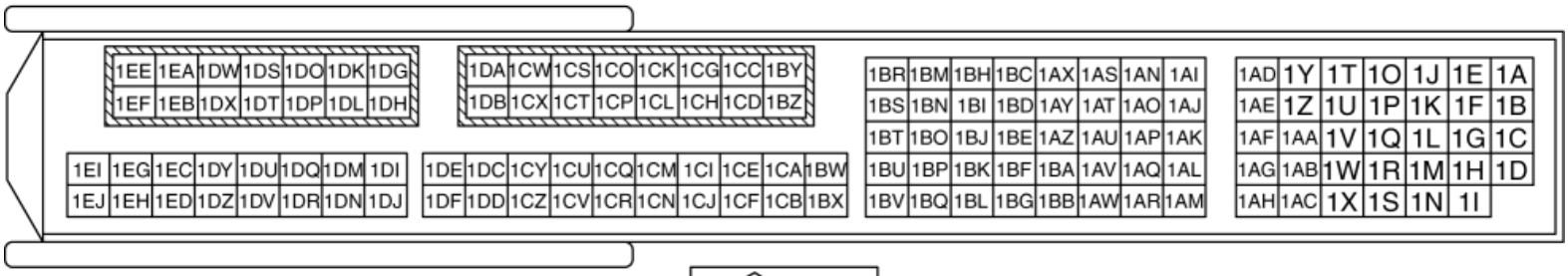

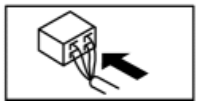

Function Explanation (DTC Detection Outline)

- If the voltage between PCM terminal 1AB and PCM terminal 1AG exceeds the specified range with the A/F sensor activated, the element in the A/F sensor could deteriorate. To prevent this, the PCM stops control of the A/F sensor and stores a DTC.

Repeatability Verification Procedure

- Warm up the engine to allow the engine coolant temperature to reach **80 °C {176 °F} or more**.
- Start the engine and leave it idling for **1 min**.

  NOTE:

  - Match the engine coolant temperature in the recorded FREEZE FRAME DATA (Mode 2)/snapshot data, the vehicle speed, and engine speed values to the best extent possible while driving the vehicle.

- Try to reproduce the malfunction by driving the vehicle for **5 min** based on the values in the FREEZE FRAME DATA (Mode 2)/snapshot data.

PID Item/Simulation Item Used In Diagnosis

PID/DATA monitor item table

Item	Definition	Unit	Condition/Specification
O2S11	A/F sensor current	µA	• Idle (after warm up): Approx. −39 µA • Deceleration fuel cut (accelerator pedal released from engine speed of 4,000 rpm or more): Approx. 3.84 mA

Function Inspection Using M-MDS

STEP	INSPECTION	RESULTS	ACTION
1	**PURPOSE: VERIFY RELATED REPAIR INFORMATION AVAILABILITY** • Verify related Service Bulletins and/or on-line repair information availability. • Is any related repair information available?	Yes	Perform repair or diagnosis according to the available repair information. • If the vehicle is not repaired, go to the next step.
		No	Go to the next step.
2	**PURPOSE: RECORD VEHICLE STATUS AT TIME OF DTC DETECTION TO UTILIZE WITH REPEATABILITY VERIFICATION** • Has the FREEZE FRAME DATA (Mode 2)/snapshot data been recorded?	Yes	Go to the troubleshooting procedure to perform the procedure from Step 1.
		No	Record the FREEZE FRAME DATA (Mode 2)/snapshot data on the repair order. **NOTE:** • Recording can be facilitated using the screen capture function of the PC. Go to the troubleshooting procedure to perform the procedure from Step 1.

Troubleshooting Diagnostic Procedure

Intention of troubleshooting procedure

- Step 1—2
  - Perform an inspection of the A/F sensor and PCM-related connectors.
- Step 3
  - Inspect the wiring harness between the A/F sensor and PCM for deterioration.
- Step 4
  - Perform a unit inspection of the A/F sensor.
- Step 5—6
  - Verify that the primary malfunction is resolved and there are no other malfunctions.

STEP	INSPECTION	RESULTS	ACTION

1	**PURPOSE: INSPECT A/F SENSOR CONNECTOR CONDITION** • Switch the ignition off. • Disconnect the A/F sensor connector. • Inspect for poor connection (such as damaged/pulled-out pins, corrosion). • Is there any malfunction?	Yes	Replace the A/F sensor, then go to Step 5. (See **AIR FUEL RATIO (A/F) SENSOR REMOVAL/INSTALLATION [SKYACTIV-G 2.0, SKYACTIV-G 2.5]**.)
		No	Go to the next step.
2	**PURPOSE: INSPECT PCM CONNECTOR CONDITION** • Disconnect the PCM connector. • Inspect for poor connection (such as damaged/pulled-out pins, corrosion). • Is there any malfunction?	Yes	Replace the PCM, then go to Step 5. (See **PCM REMOVAL/INSTALLATION [SKYACTIV-G 2.0, SKYACTIV-G 2.5]**.)
		No	Go to the next step.
3	**PURPOSE: INSPECT WIRING HARNESS BETWEEN A/F SENSOR AND PCM FOR DETERIORATION** • Inspect for deterioration between the following terminals (wiring harness-side): ▪ A/F sensor terminal F—PCM terminal 1W ▪ A/F sensor terminal D—PCM terminal 1AB ▪ A/F sensor terminal B—PCM terminal 1AG • Is there any malfunction?	Yes	Repair or replace the wiring harness which has deteriorated, then go to Step 5.
		No	Go to the next step.
4	**PURPOSE: DETERMINE INTEGRITY OF A/F SENSOR** • Start the engine and warm it up completely. • Access the O2S11 PID using the M-MDS. (See **ON-BOARD DIAGNOSTIC TEST [SKYACTIV-G 2.0, SKYACTIV-G 2.5]**.) • Drive the vehicle under the following conditions. **WARNING:** • When the M-MDS is used to observe monitor system status while driving, be sure to have another technician with you, or record the data in the M-MDS using the PID/DATA MONITOR AND RECORD capturing function and inspect later. • While performing this step, always operate the vehicle in a safe and lawful manner. ▪ After increasing the engine speed to **3,000 rpm**, decelerate using engine braking. • Is the displayed PID value as follows? ▪ O2S11: **0.25 mA or more**	Yes	Go to the next step.
		No	Replace the A/F sensor, then go to the next step. (See **AIR FUEL RATIO (A/F) SENSOR REMOVAL/INSTALLATION [SKYACTIV-G 2.0, SKYACTIV-G 2.5]**.)
5	**PURPOSE: VERIFICATION OF VEHICLE REPAIR COMPLETION** • Always reconnect all disconnected connectors. • Clear the DTC from the PCM memory using the M-MDS. (See **CLEARING DTC [SKYACTIV-G 2.0, SKYACTIV-G 2.5]**.) • Perform the KOER self test. (See **KOEO/KOER SELF TEST [SKYACTIV-G 2.0, SKYACTIV-G 2.5]**.) • Is the PENDING CODE for this DTC present?	Yes	Repair the inspection from Step 1. • If the malfunction recurs, replace the PCM. (See **PCM REMOVAL/INSTALLATION [SKYACTIV-G 2.0, SKYACTIV-G 2.5]**.) Go to the next step.
		No	Go to the next step.

6	**PURPOSE: VERIFY IF THERE IS ANY OTHER MALFUNCTION** • Is any other DTC or pending code stored?	Yes	Go to the applicable DTC inspection. (See **DTC TABLE [SKYACTIV-G 2.0, SKYACTIV-G 2.5]**.)
		No	DTC troubleshooting completed.

2014 - Mazda3 - Engine

DTC P0131:00 [SKYACTIV-G 2.0, SKYACTIV-G 2.5]

NOTE:

- To determine the malfunctioning part, proceed with the diagnostics from "Function Inspection Using M-MDS".

Details On DTCs

DESCRIPTION	A/F sensor circuit low input	
DETECTION CONDITION	Determination conditions	• Any one of the following conditions is met: ▪ Voltage of A/F sensor terminal F is less than specified value ▪ Voltage of A/F sensor terminal D is less than specified value ▪ Voltage of A/F sensor terminal B is less than specified value
	Preconditions	• Switch the ignition ON (engine off or on) • Battery voltage: **11—18 V**[*1] • The following DTC is not detected: ▪ Internal PCM malfunction: P064D:00 • [*1]: Value can be verified by displaying PIDs using M-MDS
	Drive cycle	• 2
	Self test type	• CMDTC self test, KOER self test
	Sensor used	• A/F sensor
FAIL-SAFE FUNCTION	• Fixes duty value of A/F sensor heater • Stops fuel feedback control of A/F sensor	
VEHICLE STATUS WHEN DTCs ARE OUTPUT	• Illuminates check engine light.	
POSSIBLE CAUSE	• A/F sensor connector or terminals malfunction • PCM connector or terminals malfunction • Short to ground in wiring harness between the following terminals: ▪ A/F sensor terminal F—PCM terminal 1W ▪ A/F sensor terminal D—PCM terminal 1AB ▪ A/F sensor terminal B—PCM terminal 1AG • A/F sensor malfunction	

	• PCM malfunction

System Wiring Diagram

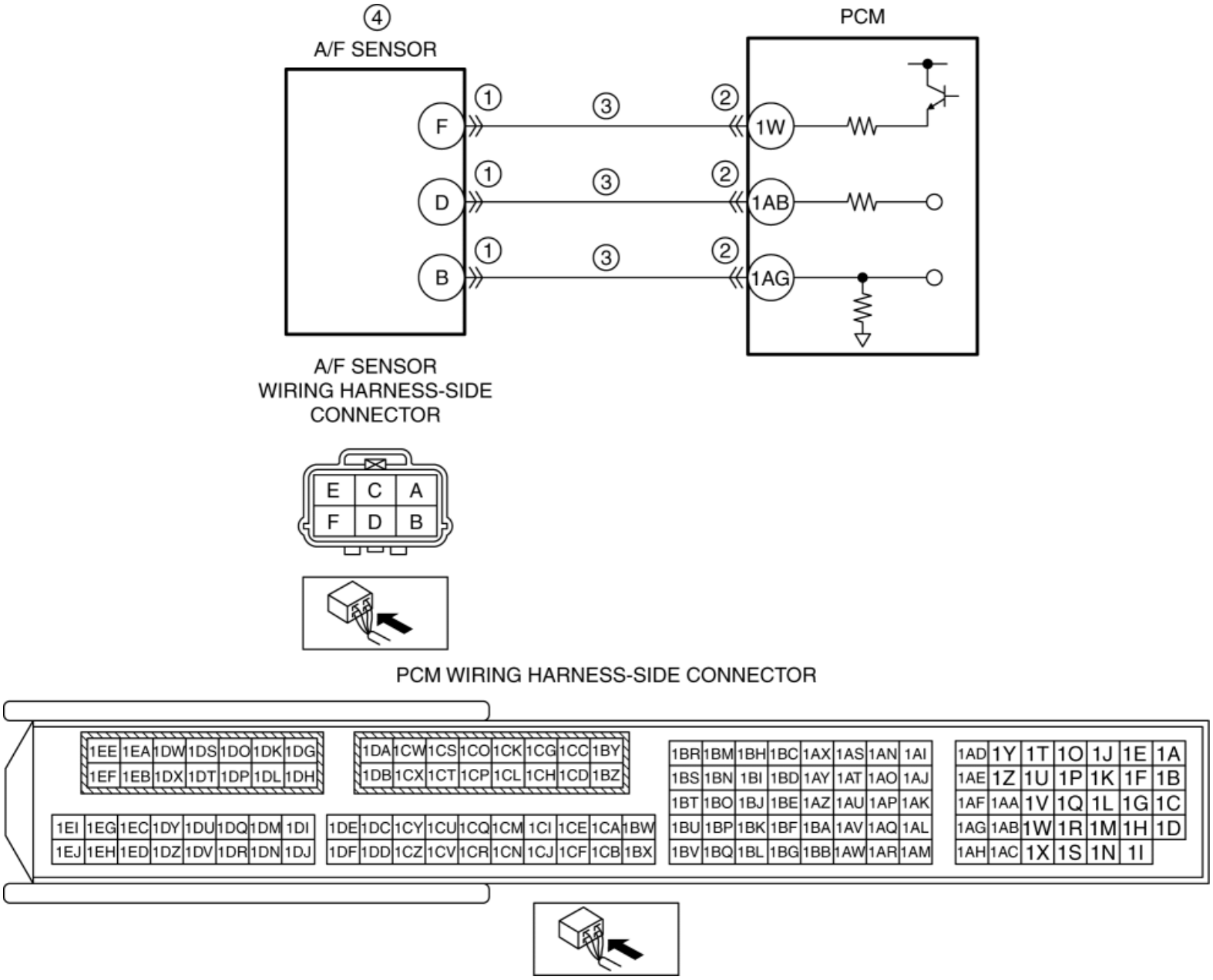

Function Explanation (DTC Detection Outline)

- If any of the following conditions is detected, the PCM determines a short to ground between the A/F sensor terminal and PCM terminal and stores a DTC.
    - Voltage of A/F sensor terminal F is less than specified value
    - Voltage of A/F sensor terminal D is less than specified value
    - Voltage of A/F sensor terminal B is less than specified value

Repeatability Verification Procedure

- Start the engine and leave it idling for **1 min**.

PID Item/Simulation Item Used In Diagnosis

PID/DATA monitor item table

Item	Definition	Unit	Condition/Specification
O2S11	A/F sensor current	µA	• Idle (after warm up): Approx. −39 µA • Deceleration fuel cut (accelerator pedal released from engine speed of 4,000 rpm or more): Approx. 3.84 mA

Function Inspection Using M-MDS

STEP	INSPECTION	RESULTS	ACTION
1	**PURPOSE: VERIFY RELATED REPAIR INFORMATION AVAILABILITY** • Verify related Service Bulletins and/or on-line repair information availability. • Is any related repair information available?	Yes	Perform repair or diagnosis according to the available repair information. • If the vehicle is not repaired, go to the next step.
		No	Go to the next step.
2	**PURPOSE: RECORD VEHICLE STATUS AT TIME OF DTC DETECTION TO UTILIZE WITH REPEATABILITY VERIFICATION** • Has the FREEZE FRAME DATA (Mode 2)/snapshot data been recorded?	Yes	Go to the troubleshooting procedure to perform the procedure from Step 1.
		No	Record the FREEZE FRAME DATA (Mode 2)/snapshot data on the repair order. **NOTE:** • Recording can be facilitated using the screen capture function of the PC. Go to the troubleshooting procedure to perform the procedure from Step 1.

Troubleshooting Diagnostic Procedure

Intention of troubleshooting procedure

- Step 1—3
  - Perform an inspection of the A/F sensor and PCM-related connectors and wiring harnesses.
- Step 4
  - Perform a unit inspection of the A/F sensor.
- Step 5—6
  - Verify that the primary malfunction is resolved and there are no other malfunctions.

STEP	INSPECTION	RESULTS	ACTION
	PURPOSE: INSPECT A/F SENSOR CONNECTOR CONDITION		

1	• Switch the ignition off. • Disconnect the A/F sensor connector. • Inspect for poor connection (such as damaged/pulled-out pins, corrosion). • Is there any malfunction?	Yes	Replace the A/F sensor, then go to Step 5. (See **AIR FUEL RATIO (A/F) SENSOR REMOVAL/INSTALLATION [SKYACTIV-G 2.0, SKYACTIV-G 2.5]**.)
		No	Go to the next step.
2	**PURPOSE: INSPECT PCM CONNECTOR CONDITION** • Disconnect the PCM connector. • Inspect for poor connection (such as damaged/pulled-out pins, corrosion). • Is there any malfunction?	Yes	Replace the PCM, then go to Step 5. (See **PCM REMOVAL/INSTALLATION [SKYACTIV-G 2.0, SKYACTIV-G 2.5]**.)
		No	Go to the next step.

3	**PURPOSE: INSPECT A/F SENSOR CIRCUIT FOR SHORT TO GROUND**
	• Verify that the A/F sensor and PCM connectors are disconnected.
	• Inspect for continuity between the following terminals (wiring harness-side) and body ground:
	  ▪ A/F sensor terminal F
	  ▪ A/F sensor terminal D
	  ▪ A/F sensor terminal B
	• Is there continuity?
		Yes	Refer to the wiring diagram and verify whether or not there is a common connector between the following terminals:
			  • A/F sensor terminal F—PCM terminal 1W
			  • A/F sensor terminal D—PCM terminal 1AB
			  • A/F sensor terminal B—PCM terminal 1AG
			  If there is a common connector:
			  • Determine the malfunctioning part by inspecting the common connector and the terminal for corrosion, damage, or pin disconnection, and the common wiring harness for a short to ground.
			  • Repair or replace the malfunctioning part.
			  If there is no common connector:
			  • Repair or replace the wiring harness which has a short to ground.
			Go to Step 5.

		No	Go to the next step.
4	**PURPOSE: DETERMINE INTEGRITY OF A/F SENSOR** • Start the engine and warm it up completely. • Access the O2S11 PID using the M-MDS. (See **ON-BOARD DIAGNOSTIC TEST [SKYACTIV-G 2.0, SKYACTIV-G 2.5]**.) • Drive the vehicle under the following conditions. **WARNING:** • When the M-MDS is used to observe monitor system status while driving, be sure to have another technician with you, or record the data in the M-MDS using the PID/DATA MONITOR AND RECORD capturing function and	Yes	Go to the next step.
		No	Replace the A/F sensor, then go to the next step. (See **AIR FUEL RATIO (A/F) SENSOR REMOVAL/INSTALLATION [SKYACTIV-G 2.0, SKYACTIV-G 2.5]**.)

	inspect later. • While performing this step, always operate the vehicle in a safe and lawful manner. ▪ After increasing the engine speed to **3,000 rpm**, decelerate using engine braking. • Is the displayed PID value as follows? ▪ O2S11: **0.25 mA or more**		
5	**PURPOSE: VERIFICATION OF VEHICLE REPAIR COMPLETION** • Always reconnect all disconnected connectors. • Clear the DTC from the PCM memory using the M-MDS. (See **CLEARING DTC [SKYACTIV-G 2.0, SKYACTIV-G 2.5]**.) • Perform the KOER self test. (See **KOEO/KOER SELF TEST [SKYACTIV-G 2.0, SKYACTIV-G 2.5]**.) • Is the PENDING CODE for this DTC present?	Yes	Repeat the inspection from Step 1. • If the malfunction recurs, replace the PCM. (See **PCM REMOVAL/INSTALLATION [SKYACTIV-G 2.0, SKYACTIV-G 2.5]**.) Go to the next step.
		No	Go to the next step.
6	**PURPOSE: VERIFY IF THERE IS ANY OTHER MALFUNCTION** • Is any other DTC or pending code stored?	Yes	Go to the applicable DTC inspection. (See **DTC TABLE [SKYACTIV-G 2.0, SKYACTIV-G 2.5]**.)
		No	DTC troubleshooting completed.

2014 - Mazda3 - Engine

DTC P0132:00 [SKYACTIV-G 2.0, SKYACTIV-G 2.5]

NOTE:

- To determine the malfunctioning part, proceed with the diagnostics from "Function Inspection Using M-MDS".

Details On DTCs

DESCRIPTION	A/F sensor circuit high input	
DETECTION CONDITION	Determination conditions	• Any one of the following conditions is met: ▪ Voltage of A/F sensor terminal F is more than specified value ▪ Voltage of A/F sensor terminal D is more than specified value ▪ Voltage of A/F sensor terminal B is more than specified value
	Preconditions	• Switch the ignition ON (engine off or on) • Battery voltage: **11—18 V**[*1] • The following DTC is not detected: ▪ Internal PCM malfunction: P064D:00 • [*1]: Value can be verified by displaying PIDs using M-MDS
	Drive cycle	• 2
	Self test type	• CMDTC self test, KOER self test
	Sensor used	• A/F sensor
FAIL-SAFE FUNCTION	• Fixes duty value of A/F sensor heater • Stops fuel feedback control of A/F sensor	
VEHICLE STATUS WHEN DTCs ARE OUTPUT	• Illuminates check engine light.	
POSSIBLE CAUSE	• A/F sensor connector or terminals malfunction • PCM connector or terminals malfunction • Short to power supply in wiring harness between the following terminals: ▪ A/F sensor terminal F—PCM terminal 1W ▪ A/F sensor terminal D—PCM terminal 1AB ▪ A/F sensor terminal B—PCM terminal 1AG • A/F sensor malfunction	

	• PCM malfunction

System Wiring Diagram

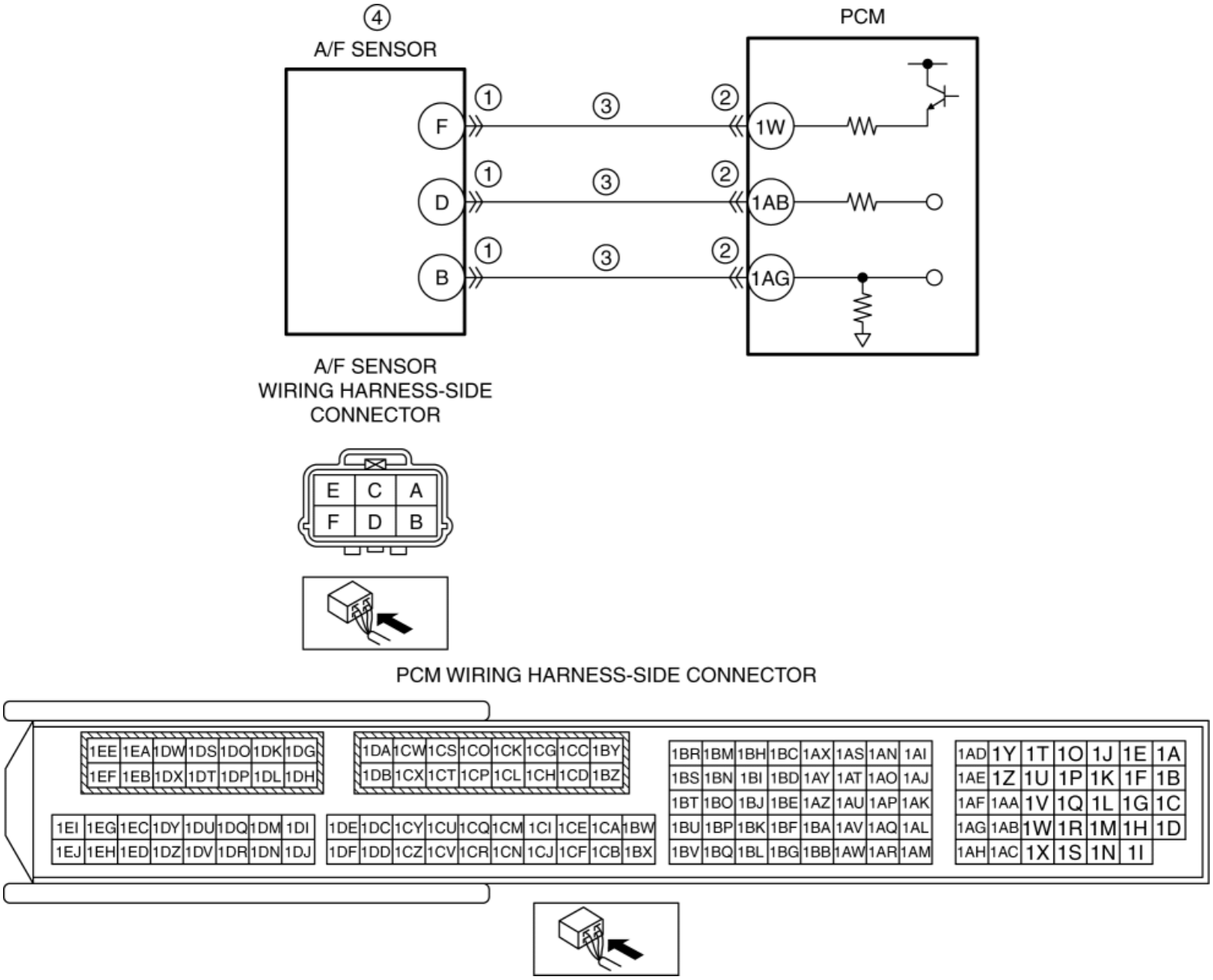

Function Explanation (DTC Detection Outline)

- If any of the following conditions is detected, the PCM determines a short to the power supply between the A/F sensor terminal and the PCM terminal and stores a DTC.
    - Voltage of A/F sensor terminal F is above specified value
    - Voltage of A/F sensor terminal D is above specified value
    - Voltage of A/F sensor terminal B is above specified value

Repeatability Verification Procedure

- Start the engine and leave it idling for **1 min**.

PID Item/Simulation Item Used In Diagnosis

PID/DATA monitor item table

Item	Definition	Unit	Condition/Specification
O2S11	A/F sensor current	µA	• Idle (after warm up): Approx. −39 µA • Deceleration fuel cut (accelerator pedal released from engine speed of 4,000 rpm or more): Approx. 3.84 mA

Function Inspection Using M-MDS

STEP	INSPECTION	RESULTS	ACTION
1	**PURPOSE: VERIFY RELATED REPAIR INFORMATION AVAILABILITY** • Verify related Service Bulletins and/or on-line repair information availability. • Is any related repair information available?	Yes	Perform repair or diagnosis according to the available repair information. • If the vehicle is not repaired, go to the next step.
		No	Go to the next step.
2	**PURPOSE: RECORD VEHICLE STATUS AT TIME OF DTC DETECTION TO UTILIZE WITH REPEATABILITY VERIFICATION** • Has the FREEZE FRAME DATA (Mode 2)/snapshot data been recorded?	Yes	Go to the troubleshooting procedure to perform the procedure from Step 1.
		No	Record the FREEZE FRAME DATA (Mode 2)/snapshot data on the repair order. **NOTE:** • Recording can be facilitated using the screen capture function of the PC. Go to the troubleshooting procedure to perform the procedure from Step 1.

Troubleshooting Diagnostic Procedure

Intention of troubleshooting procedure

- Step 1—2
  - Perform an inspection of the A/F sensor and PCM-related connectors.
- Step 3
  - Perform an inspection of the short to power supply in wiring harness between A/F sensor and PCM.
- Step 4
  - Perform a unit inspection of the A/F sensor.
- Step 5—6
  - Verify that the primary malfunction is resolved and there are no other malfunctions.

STEP	INSPECTION	RESULTS	ACTION
1	**PURPOSE: INSPECT A/F SENSOR CONNECTOR CONDITION** • Switch the ignition off. • Disconnect the A/F sensor connector. • Inspect for poor connection (such as damaged/pulled-out pins, corrosion). • Is there any malfunction?	Yes	Replace the A/F sensor, then go to Step 5. (See **AIR FUEL RATIO (A/F) SENSOR REMOVAL/INSTALLATION [SKYACTIV-G 2.0, SKYACTIV-G 2.5]**.)
		No	Go to the next step.
2	**PURPOSE: INSPECT PCM CONNECTOR CONDITION** • Disconnect the PCM connector. • Inspect for poor connection (such as damaged/pulled-out pins, corrosion). • Is there any malfunction?	Yes	Replace the PCM, then go to Step 5. (See **PCM REMOVAL/INSTALLATION [SKYACTIV-G 2.0, SKYACTIV-G 2.5]**.)
		No	Go to the next step.
3	**PURPOSE: INSPECT A/F SENSOR CIRCUIT FOR SHORT TO POWER SUPPLY** • Verify that the A/F sensor and PCM connectors are disconnected. • Switch the ignition ON (engine off). **NOTE:** • Another DTC may be stored by the PCM detecting an open circuit. • Measure the voltage at the following terminals (wiring harness-side): ▪ A/F sensor terminal F ▪ A/F sensor terminal D ▪ A/F sensor terminal B • Is the voltage **0 V**?	Yes	Go to the next step.
		No	Refer to the wiring diagram and verify whether or not there is a common connector between the following terminals: • A/F sensor terminal F—PCM terminal 1W • A/F sensor terminal D—PCM terminal 1AB • A/F sensor terminal B—PCM terminal 1AG **If there is a common connector:** • Determine the malfunctioning part by inspecting the common connector and the terminal for corrosion, damage, or pin disconnection, and the common wiring harness for a short to power supply. • Repair or replace the malfunctioning part. **If there is no common connector:** • Repair or replace the wiring harness which has a short to power supply. Go to Step 5.
4	**PURPOSE: DETERMINE INTEGRITY OF A/F SENSOR** • Start the engine and warm it up completely. • Access the O2S11 PID using the M-MDS. (See **ON-BOARD DIAGNOSTIC TEST [SKYACTIV-G 2.0, SKYACTIV-G 2.5]**.) • Drive the vehicle under the following conditions. **WARNING:** • When the M-MDS is used to observe monitor system status while driving, be sure to have another technician	Yes	Go to the next step.
		No	Replace the A/F sensor, then go to the next step. (See **AIR FUEL RATIO (A/F) SENSOR REMOVAL/INSTALLATION [SKYACTIV-G 2.0, SKYACTIV-G 2.5]**.)

	with you, or record the data in the M-MDS using the PID/DATA MONITOR AND RECORD capturing function and inspect later. • While performing this step, always operate the vehicle in a safe and lawful manner. ▪ After increasing the engine speed to **3,000 rpm**, decelerate using engine braking. • Is the displayed PID value as follows? ▪ O2S11: **0.25 mA or more**		
5	**PURPOSE: VERIFICATION OF VEHICLE REPAIR COMPLETION** • Always reconnect all disconnected connectors. • Clear the DTC from the PCM memory using the M-MDS. (See **CLEARING DTC [SKYACTIV-G 2.0, SKYACTIV-G 2.5]**.) • Perform the KOER self test. (See **KOEO/KOER SELF TEST [SKYACTIV-G 2.0, SKYACTIV-G 2.5]**.) • Is the PENDING CODE for this DTC present?	Yes	Repeat the inspection from Step 1. • If the malfunction recurs, replace the PCM. (See **PCM REMOVAL/INSTALLATION [SKYACTIV-G 2.0, SKYACTIV-G 2.5]**.) Go to the next step.
		No	Go to the next step.
6	**PURPOSE: VERIFY IF THERE IS ANY OTHER MALFUNCTION** • Is any other DTC or pending code stored?	Yes	Go to the applicable DTC inspection. (See **DTC TABLE [SKYACTIV-G 2.0, SKYACTIV-G 2.5]**.)
		No	DTC troubleshooting completed.

2014 - Mazda3 - Engine

DTC P0133:00 [SKYACTIV-G 2.0, SKYACTIV-G 2.5]

NOTE:

- To determine the malfunctioning part, proceed with the diagnostics from "Function Inspection Using M-MDS".

Details On DTCs

DESCRIPTION	A/F sensor circuit slow response	
DETECTION CONDITION	Determination conditions	• The response speed of the A/F sensor input signal when the air/fuel ratio is fluctuated is slow.
	Preconditions	• Engine speed: Within specified range • Charging efficiency: Within specified range • Engine coolant temperature: Specified value or more • Mass airflow: Within specified range • The following DTCs are not detected: ▪ A/F sensor heater: P0031:00, P0032:00 ▪ ECT sensor No.1: P0117:00, P0118:00 ▪ VSS signal: P0500:00 ▪ Misfire: P0300:00, P0301:00, P0302:00, P0303:00, P0304:00 ▪ Fuel injection correction: P0171:00, P0172:00, P2096:00, P2097:00
	Drive cycle	• **2**
	Self test type	• CMDTC self test
	Sensor used	• A/F sensor
FAIL-SAFE FUNCTION	• Fixes duty value of A/F sensor heater • Stops fuel feedback control of A/F sensor	
VEHICLE STATUS WHEN DTCs ARE OUTPUT	• Illuminates check engine light.	
POSSIBLE CAUSE	• A/F sensor signal malfunction ▪ A/F sensor connector or terminals malfunction ▪ A/F sensor loose ▪ Exhaust system leakage • A/F sensor deterioration • PCM malfunction	

System Wiring Diagram

- Not applicable

Function Explanation (DTC Detection Outline)

- The PCM detects the oxygen concentration in the exhaust gas based on the A/F sensor signal. By intentionally increasing/decreasing the fuel injection amount, the PCM controls the oxygen concentration in the exhaust gas to rich or lean and monitors the response speed of the A/F sensor to sudden changes in the oxygen concentration. If the response speed of the signal input from the A/F sensor is slow while switching repeatedly between rich and lean, the PCM determines an A/F sensor malfunction and stores a DTC.

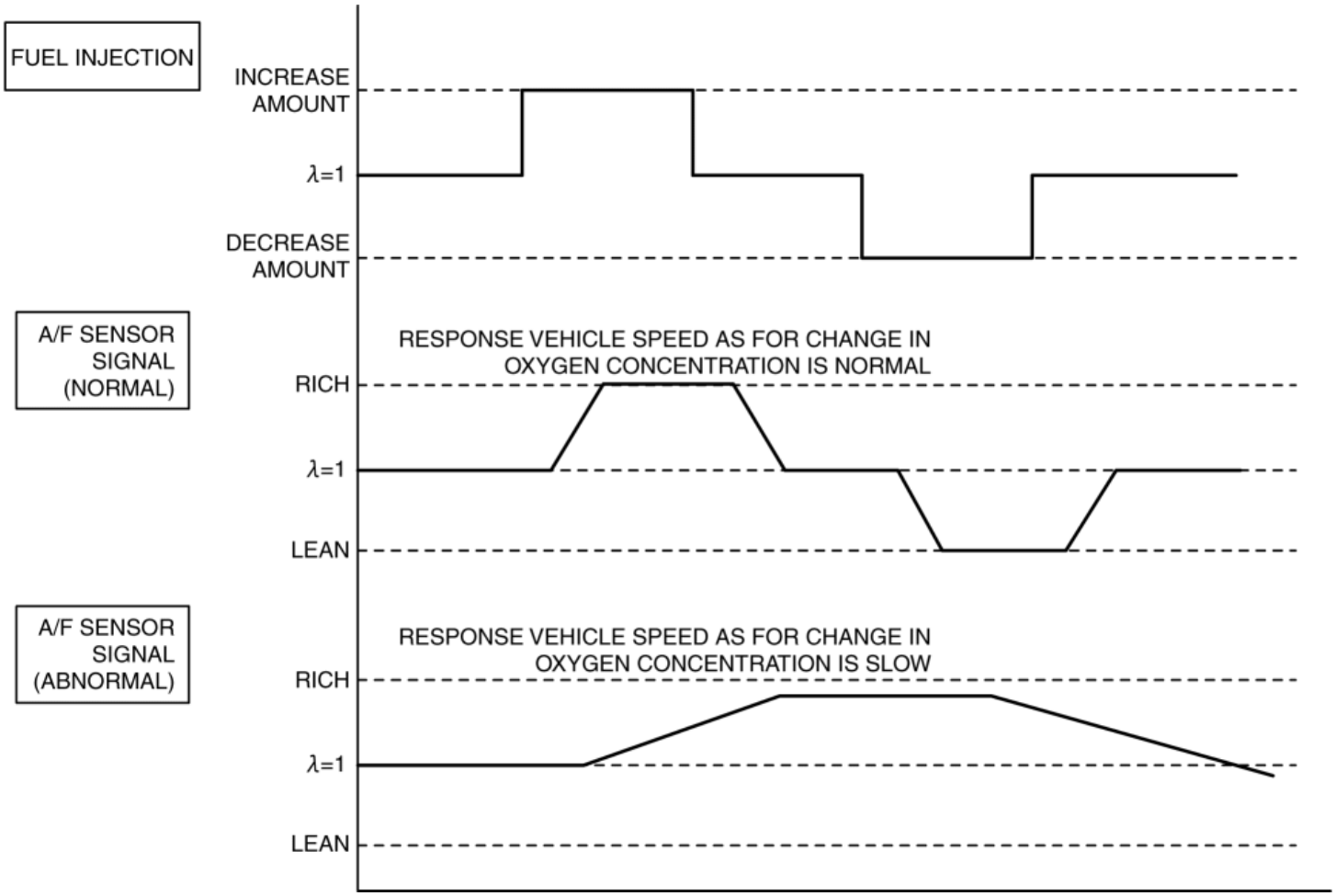

Repeatability Verification Procedure

- Warm up the engine to allow the engine coolant temperature to reach **80 °C {176 °F} or more**.
- Start the engine and leave it idling for **1 min**.
- Shift to 3rd gear and drive the vehicle for **10 min** at an engine speed of **1,500 rpm or more** and a vehicle speed of **50 km/h {31 mph} or more**.

  NOTE:

  - Match the engine coolant temperature in the recorded FREEZE FRAME DATA (Mode 2)/snapshot data, the vehicle speed, and engine speed values to the best extent possible while driving the vehicle.

- Try to reproduce the malfunction by driving the vehicle for **5 min** based on the values in the FREEZE FRAME DATA (Mode 2)/snapshot data.

PID Item/Simulation Item Used In Diagnosis

PID/DATA monitor item table

Item	Definition	Unit	Condition/Specification
HTR11	A/F sensor heater operation status	Off/On	• Ignition switched ON (engine off): Off • Idle (after warm up): On
	A/F sensor heater control duty value	%	• Ignition switched ON (engine off): 0% • Idle (after warm up): Approx. 40%
O2S11	A/F sensor current	µA	• Idle (after warm up): Approx. −39 µA • Deceleration fuel cut (accelerator pedal released from engine speed of 4,000 rpm or more): Approx. 3.84 mA

Function Inspection Using M-MDS

STEP	INSPECTION	RESULTS	ACTION
1	**PURPOSE: VERIFY RELATED REPAIR INFORMATION AVAILABILITY** • Verify related Service Bulletins and/or on-line repair information availability. • Is any related repair information available?	Yes	Perform repair or diagnosis according to the available repair information. • If the vehicle is not repaired, go to the next step.
		No	Go to the next step.
2	**PURPOSE: IDENTIFY TRIGGER DTC FOR FREEZE FRAME DATA (MODE 2)** • Is the DTC P0133:00 on FREEZE FRAME DATA (Mode 2)?	Yes	Go to the next step.
		No	Go to the troubleshooting procedure for DTC on FREEZE FRAME DATA (Mode 2). (See **DTC TABLE [SKYACTIV-G 2.0, SKYACTIV-G 2.5]**.)
3	**PURPOSE: RECORD VEHICLE STATUS AT TIME OF DTC DETECTION TO UTILIZE WITH REPEATABILITY VERIFICATION** • Has the FREEZE FRAME DATA (Mode 2)/snapshot data been recorded?	Yes	Go to the next step.
		No	Record the FREEZE FRAME DATA (Mode 2)/snapshot data on the repair order, then go to the next step. **NOTE:** • Recording can be facilitated using the screen capture function of the PC.
4	**PURPOSE: VERIFY IF DIAGNOSTIC RESULT IS AFFECTED BY DTC OCCURRING FROM A/F SENSOR UNIT** • Switch the ignition off, then ON (engine off). • Perform the Pending Trouble Code Access Procedure and DTC Reading Procedure. (See **ON-BOARD DIAGNOSTIC TEST [SKYACTIV-G 2.0, SKYACTIV-G 2.5]**.) • Is the PENDING CODE/DTC P0131:00, P0132:00, P0134:00, P2237:00, P2243:00 or P2251:00 also present?	Yes	Go to the applicable DTC inspection. (See **DTC P0131:00 [SKYACTIV-G 2.0, SKYACTIV-G 2.5]**.) (See **DTC P0132:00 [SKYACTIV-G 2.0, SKYACTIV-G 2.5]**.) (See **DTC P0134:00 [SKYACTIV-G 2.0, SKYACTIV-G 2.5]**.) (See **DTC P2237:00 [SKYACTIV-G 2.0, SKYACTIV-G 2.5]**.) (See **DTC P2243:00 [SKYACTIV-G 2.0, SKYACTIV-G 2.5]**.) (See **DTC P2251:00 [SKYACTIV-G 2.0, SKYACTIV-G 2.5]**.) Go to the next step.
		No	Go to the next step.
5	**PURPOSE: VERIFY A/F SENSOR** • Start the engine and idle it. • Access the O2S11 PID using the M-MDS. (See **ON-BOARD DIAGNOSTIC TEST [SKYACTIV-G 2.0,**	Yes	Go to the next step.
		No	Go to the troubleshooting procedure to perform the procedure from Step 1.

	SKYACTIV-G 2.5].) • Is the O2S11 PID value normal? (See PCM INSPECTION [SKYACTIV-G 2.0, SKYACTIV-G 2.5].)		
6	**PURPOSE: VERIFY A/F SENSOR HEATER** • Start the engine and idle it. • Access the HTR11 PID using the M-MDS. (See ON-BOARD DIAGNOSTIC TEST [SKYACTIV-G 2.0, SKYACTIV-G 2.5].) • Is the HTR11 PID value normal? (See PCM INSPECTION [SKYACTIV-G 2.0, SKYACTIV-G 2.5].)	Yes	Go to the next step.
		No	Go to the troubleshooting procedure to perform the procedure from Step 5.
7	**PURPOSE: VERIFY DTC** • Switch the ignition off, then ON (engine off). • Retrieve the PCM DTCs using the M-MDS. (See ON-BOARD DIAGNOSTIC TEST [SKYACTIV-G 2.0, SKYACTIV-G 2.5].) • Are any DTCs present?	Yes	Go to the applicable DTC inspection. (See DTC TABLE [SKYACTIV-G 2.0, SKYACTIV-G 2.5].) Go to the troubleshooting procedure to perform the procedure from Step 1.
		No	Go to the troubleshooting procedure to perform the procedure from Step 1.

Troubleshooting Diagnostic Procedure

Intention of troubleshooting procedure

- Step 1—5
  - Perform inspection of A/F sensor signal related parts.
- Step 6
  - Verify that the primary malfunction is resolved and there are no other malfunctions.

STEP	INSPECTION	RESULTS	ACTION
1	**PURPOSE: INSPECT A/F SENSOR CONNECTOR CONDITION** • Switch the ignition off. • Disconnect the A/F sensor connector. • Inspect for poor connection (such as damaged/pulled-out pins, corrosion). • Is there any malfunction?	Yes	Repair or replace the connector and/or terminals, then go to Step 6.
		No	Go to the next step.
2	**PURPOSE: INSPECT INSTALLATION OF A/F SENSOR** • Inspect installation of A/F sensor. • Is the A/F sensor installed securely?	Yes	Go to the next step.
		No	Retighten the A/F sensor, then go to Step 6. (See AIR FUEL RATIO (A/F) SENSOR REMOVAL/INSTALLATION [SKYACTIV-G 2.0, SKYACTIV-G 2.5].)
3	**PURPOSE: VERIFY IF MALFUNCTION RELATED TO EMISSION SYSTEM AFFECTS A/F SENSOR SIGNAL** • Inspect for exhaust gas leakage from the exhaust system. (between A/F sensor and HO2S) • Is there any malfunction?	Yes	Repair or replace the malfunctioning part according to the inspection results, then go to Step 6.
		No	Go to the next step.
4	**PURPOSE: DETERMINE INTEGRITY OF A/F SENSOR** • Reconnect all disconnected connectors. • Inspect the A/F sensor.	Yes	Replace the A/F sensor, then go to Step 6. (See AIR FUEL RATIO (A/F) SENSOR REMOVAL/INSTALLATION [SKYACTIV-G 2.0, SKYACTIV-G

	(See **AIR FUEL RATIO (A/F) SENSOR INSPECTION [SKYACTIV-G 2.0, SKYACTIV-G 2.5]**.) • Is there any malfunction?		**2.5]**.)
		No	Go to the next step.
5	**PURPOSE: DETERMINE INTEGRITY OF A/F SENSOR HEATER** • Inspect the A/F sensor heater. (See **AIR FUEL RATIO (A/F) SENSOR INSPECTION [SKYACTIV-G 2.0, SKYACTIV-G 2.5]**.) • Is there any malfunction?	Yes	Replace the A/F sensor, then go to the next step. (See **AIR FUEL RATIO (A/F) SENSOR REMOVAL/INSTALLATION [SKYACTIV-G 2.0, SKYACTIV-G 2.5]**.)
		No	Go to the next step.
6	**PURPOSE: VERIFICATION OF VEHICLE REPAIR COMPLETION** • Always reconnect all disconnected connectors. • Clear the DTC from the PCM memory using the M-MDS. (See **CLEARING DTC [SKYACTIV-G 2.0, SKYACTIV-G 2.5]**.) • Implement the repeatability verification procedure. (See **Repeatability Verification Procedure**.) • Perform the Pending Trouble Code Access Procedure. (See **ON-BOARD DIAGNOSTIC TEST [SKYACTIV-G 2.0, SKYACTIV-G 2.5]**.) • Is the PENDING CODE for this DTC present?	Yes	Repeat the inspection from Step 1. • If the malfunction recurs, replace the PCM. (See **PCM REMOVAL/INSTALLATION [SKYACTIV-G 2.0, SKYACTIV-G 2.5]**.) Go to the next step.
		No	DTC troubleshooting completed.

2014 - Mazda3 - Engine

DTC P0134:00 [SKYACTIV-G 2.0, SKYACTIV-G 2.5]

NOTE:

- To determine the malfunctioning part, proceed with the diagnostics from "Function Inspection Using M-MDS".

Details On DTCs

DESCRIPTION	A/F sensor circuit no activity detected	
DETECTION CONDITION	Determination conditions	• The condition in which the A/F sensor element impedance is the specified value or more continues for **35 s**.
	Preconditions	• Battery voltage: **11—18 V**[*1] • The following DTCs are not detected: ▪ A/F sensor heater: P0031:00, P0032:00 ▪ A/F sensor: P0131:00, P0132:00 • [*1]: Value can be verified by displaying PIDs using M-MDS
	Malfunction determination period	• **35 s** period
	Drive cycle	• 2
	Self test type	• CMDTC self test
	Sensor used	• A/F sensor
FAIL-SAFE FUNCTION	• Fixes duty value of A/F sensor heater • Stops fuel feedback control of A/F sensor	
VEHICLE STATUS WHEN DTCs ARE OUTPUT	• Illuminates check engine light.	
POSSIBLE CAUSE	• A/F sensor malfunction ▪ A/F sensor connector or terminals malfunction ▪ A/F sensor related wiring harness malfunction ▪ A/F sensor loose ▪ A/F sensor deterioration • A/F sensor related wiring harness malfunction • PCM malfunction	

System Wiring Diagram

- Not applicable

Function Explanation (DTC Detection Outline)

The PCM performs verification as to whether a condition in which A/F (air/fuel ratio) detection is not implemented due to poor A/F sensor activation by a decrease in A/F sensor performance or other malfunction has occurred. A DTC is stored if the A/F sensor cannot implement feedback (non-active condition (resistance value is specified value or more)) for a continuous 35 s or more under the condition in which the A/F sensor heater control has been normally implemented. However, under a condition prior to the A/F sensor performing activation (such as ignition switched off), and if there is an open/short circuit (P2251:00) between the A/F sensor terminal D and PCM terminal 1AB (COM terminal), or an open/short circuit (P2243:00) between A/F sensor terminal F and PCM terminal 1W (B+ terminal), A/F sensor activation determination is not performed and A/F sensor non-activation (P0134:00) is determined. In addition, if a temporary malfunction is determined in the previous drive cycle because poor A/F sensor activation was determined at the second drive cycle, DTCs are established for each malfunction determination even if the PCM determined a COM open circuit (P2251:00 temporary malfunction) or a B+ open circuit (P2243:00 temporary malfunction) in the previous drive cycle.

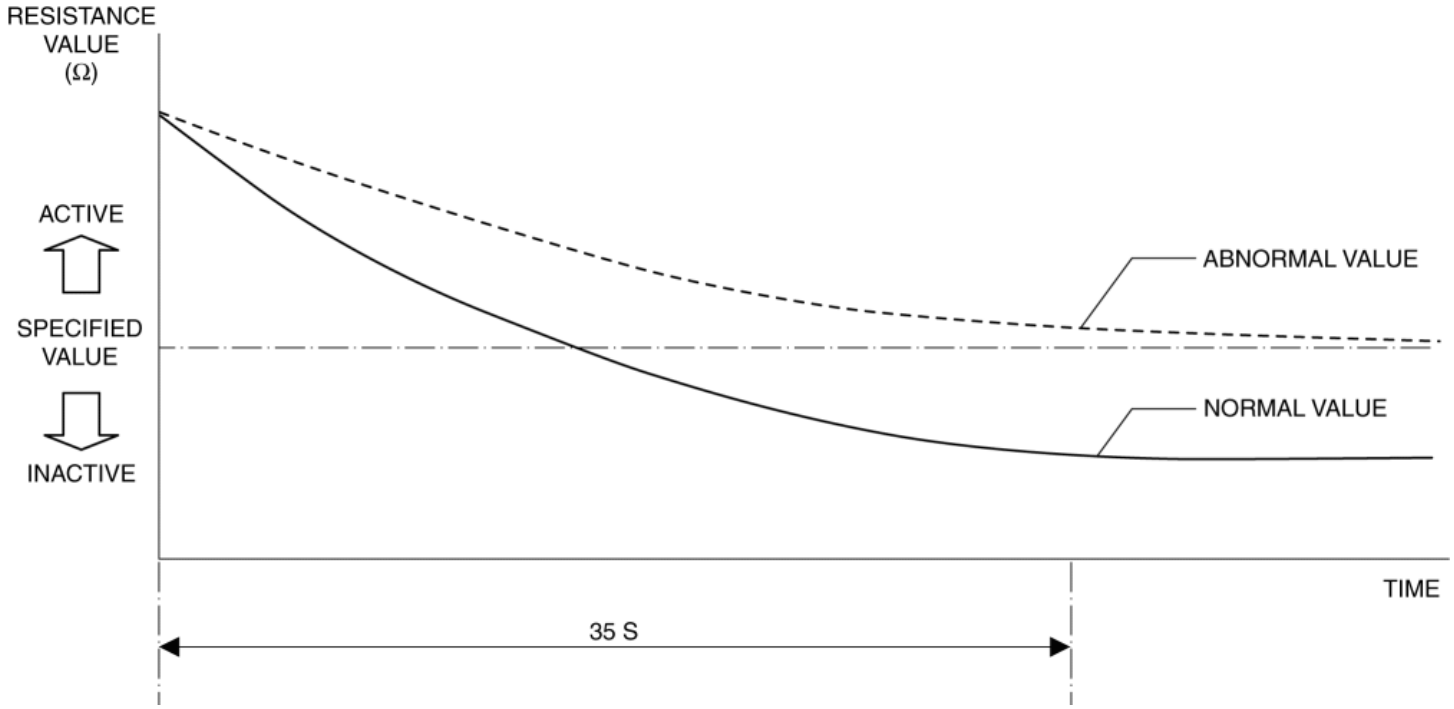

Repeatability Verification Procedure

- Warm up the engine to allow the engine coolant temperature to reach **80 °C {176 °F} or more**.
- Start the engine and leave it idling for **1 min**.

  NOTE:

  - Match the engine coolant temperature in the recorded FREEZE FRAME DATA (Mode 2)/snapshot data, the vehicle speed, and engine speed values to the best extent possible while driving the vehicle.
- Try to reproduce the malfunction by driving the vehicle for **5 min** based on the values in the FREEZE FRAME DATA (Mode 2)/snapshot data.

PID Item/Simulation Item Used In Diagnosis

PID/DATA monitor item table

Item	Definition	Unit	Condition/Specification
O2S11	A/F sensor current	µA	• Idle (after warm up): Approx. −39 µA • Deceleration fuel cut (accelerator pedal released from engine speed of 4,000 rpm or more): Approx. 3.84 mA

Function Inspection Using M-MDS

STEP	INSPECTION	RESULTS	ACTION

1	**PURPOSE: VERIFY RELATED REPAIR INFORMATION AVAILABILITY** • Verify related Service Bulletins and/or on-line repair information availability. • Is any related repair information available?	Yes	Perform repair or diagnosis according to the available repair information. • If the vehicle is not repaired, go to the next step.
		No	Go to the next step.
2	**PURPOSE: IDENTIFY TRIGGER DTC FOR FREEZE FRAME DATA (MODE 2)** • Is the DTC P0134:00 on FREEZE FRAME DATA (Mode 2)?	Yes	Go to the next step.
		No	Go to the troubleshooting procedure for DTC on FREEZE FRAME DATA (Mode 2). (See **DTC TABLE [SKYACTIV-G 2.0, SKYACTIV-G 2.5]**.)
3	**PURPOSE: RECORD VEHICLE STATUS AT TIME OF DTC DETECTION TO UTILIZE WITH REPEATABILITY VERIFICATION** • Has the FREEZE FRAME DATA (Mode 2)/snapshot data been recorded?	Yes	Go to the next step.
		No	Record the FREEZE FRAME DATA (Mode 2)/snapshot data on the repair order, then go to the next step. **NOTE:** • Recording can be facilitated using the screen capture function of the PC.
4	**PURPOSE: VERIFY DTC** • Switch the ignition off, then ON (engine off). • Perform the Pending Trouble Code Access Procedure and DTC Reading Procedure. (See **ON-BOARD DIAGNOSTIC TEST [SKYACTIV-G 2.0, SKYACTIV-G 2.5]**.) • Are any DTCs present?	Yes	Go to the applicable DTC inspection. (See **DTC TABLE [SKYACTIV-G 2.0, SKYACTIV-G 2.5]**.) Go to the next step.
		No	Go to the next step.
5	**PURPOSE: PERFORM DTC INSPECTION RELATED TO A/F SENSOR OPEN CIRCUIT** • Perform the DTC P2243:00 and DTC P2251:00 procedure. (See **DTC P2243:00 [SKYACTIV-G 2.0, SKYACTIV-G 2.5]**.) (See **DTC P2251:00 [SKYACTIV-G 2.0, SKYACTIV-G 2.5]**.)	—	Go to the next step.
6	**PURPOSE: VERIFY A/F SENSOR INPUT SIGNAL** • Start the engine and warm it up completely. • Access the O2S11 PID using the M-MDS. (See **ON-BOARD DIAGNOSTIC TEST [SKYACTIV-G 2.0, SKYACTIV-G 2.5]**.) • Drive the vehicle under the following conditions. **WARNING:** • When the M-MDS is used to observe monitor system status while driving, be sure to have another technician with you, or record the data in the M-MDS using the PID/DATA MONITOR AND RECORD capturing function and inspect later. • While performing this step, always operate the vehicle in a safe and lawful manner. ▪ After increasing the engine speed to **3,000 rpm**, decelerate using engine braking. • Is the displayed PID value as follows? ▪ O2S11: **0.25 mA or more**	Yes	Go to the troubleshooting procedure to perform the procedure from Step 2.
		No	Go to the next step.
	PURPOSE: INSPECT RELATED SENSOR WIRING HARNESS AND CONNECTOR		

7	• Access the O2S11 PID using the M-MDS. (See **ON-BOARD DIAGNOSTIC TEST [SKYACTIV-G 2.0, SKYACTIV-G 2.5]**.) • Does the PID value fluctuate when the PCM and A/F sensor connectors are shaken?	Yes	Inspect the related wiring harness and connector. • Repair or replace the malfunctioning part. Go to the troubleshooting procedure to perform the procedure from Step 3.
		No	Go to the troubleshooting procedure to perform the procedure from Step 1.

Troubleshooting Diagnostic Procedure

Intention of troubleshooting procedure

- Step 1—2
  - Perform inspection of A/F sensor signal related parts.
- Step 3—4
  - Verify that the primary malfunction is resolved and there are no other malfunctions.

STEP	INSPECTION	RESULTS	ACTION
1	**PURPOSE: INSPECT INSTALLATION OF A/F SENSOR** • Inspect installation of A/F sensor. • Is the A/F sensor installed securely?	Yes	Replace the A/F sensor, then go to Step 3. (See **AIR FUEL RATIO (A/F) SENSOR REMOVAL/INSTALLATION [SKYACTIV-G 2.0, SKYACTIV-G 2.5]**.)
		No	Retighten the A/F sensor, then go to Step 3. (See **AIR FUEL RATIO (A/F) SENSOR REMOVAL/INSTALLATION [SKYACTIV-G 2.0, SKYACTIV-G 2.5]**.)
2	**PURPOSE: INSPECT INSTALLATION OF A/F SENSOR** • Inspect installation of A/F sensor. • Is the A/F sensor installed securely?	Yes	Go to the next step.
		No	Retighten the A/F sensor, then go to the next step. (See **AIR FUEL RATIO (A/F) SENSOR REMOVAL/INSTALLATION [SKYACTIV-G 2.0, SKYACTIV-G 2.5]**.)
3	**PURPOSE: VERIFICATION OF VEHICLE REPAIR COMPLETION** • Always reconnect all disconnected connectors. • Clear the DTC from the PCM memory using the M-MDS. (See **CLEARING DTC [SKYACTIV-G 2.0, SKYACTIV-G 2.5]**.) • Implement the repeatability verification procedure. (See **Repeatability Verification Procedure**.) • Perform the Pending Trouble Code Access Procedure. (See **ON-BOARD DIAGNOSTIC TEST [SKYACTIV-G 2.0, SKYACTIV-G 2.5]**.) • Is the PENDING CODE for this DTC present?	Yes	Repeat the inspection from Step 1. • If the malfunction recurs, replace the PCM. (See **PCM REMOVAL/INSTALLATION [SKYACTIV-G 2.0, SKYACTIV-G 2.5]**.) Go to the next step.
		No	Go to the next step.
4	**PURPOSE: VERIFY IF THERE IS ANY OTHER MALFUNCTION** • Is any other DTC or pending code stored?	Yes	Go to the applicable DTC inspection. (See **DTC TABLE [SKYACTIV-G 2.0, SKYACTIV-G 2.5]**.)

		No	DTC troubleshooting completed.

2014 - Mazda3 - Engine

DTC P0137:00 [SKYACTIV-G 2.0, SKYACTIV-G 2.5]

NOTE:

- To determine the malfunctioning part, proceed with the diagnostics from "Function Inspection Using M-MDS".

Details On DTCs

DESCRIPTION	HO2S circuit low input	
DETECTION CONDITION	Determination conditions	• A condition in which the HO2S input voltage is less than the specified value continues for the specified period.
	Preconditions	• HO2S is activated. • The following DTCs are not detected: ▪ MAF sensor: P0102:00, P0103:00 ▪ ECT sensor: P0117:00, P0118:00
	Malfunction determination period	• **5 s** period
	Drive cycle	• 2
	Self test type	• CMDTC self test
	Sensor used	• HO2S
FAIL-SAFE FUNCTION	• Fixes duty value of A/F sensor heater • Stops fuel feedback control of A/F sensor	
VEHICLE STATUS WHEN DTCs ARE OUTPUT	• Illuminates check engine light.	
	• HO2S connector or terminals malfunction • PCM connector or terminals malfunction	

POSSIBLE CAUSE	• Short to ground in wiring harness between HO2S terminal A and PCM terminal 2AI • Open circuit in wiring harness between the following terminals: ▪ HO2S terminal A—PCM terminal 2AI ▪ HO2S terminal B—PCM terminal 2AG • HO2S malfunction • PCM malfunction

System Wiring Diagram

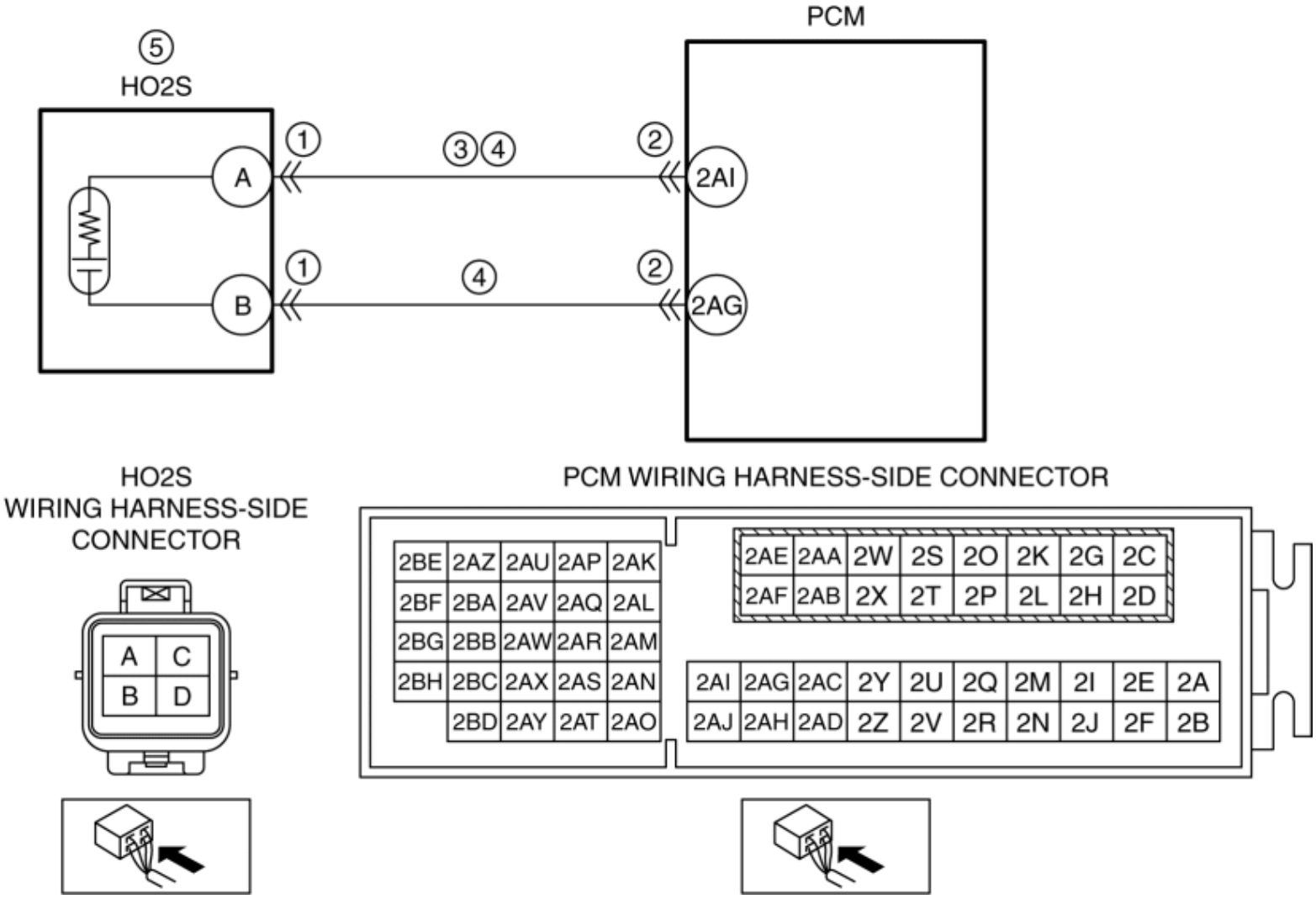

Function Explanation (DTC Detection Outline)

- The PCM detects the oxygen concentration in the exhaust gas based on the HO2S signal. The PCM determines a HO2S signal error based on the condition in which the HO2S input voltage continues to be less than the specified value, and stores a DTC.

Repeatability Verification Procedure

- Warm up the engine to allow the engine coolant temperature to reach **80 °C {176 °F} or more**.
- Start the engine and leave it idling for **1 min**.

  NOTE:

  - Match the engine coolant temperature in the recorded FREEZE FRAME DATA (Mode 2)/snapshot data, the vehicle speed, and engine speed values to the best extent possible while driving the vehicle.
- Try to reproduce the malfunction by driving the vehicle for **5 min** based on the values in the FREEZE FRAME DATA (Mode 2)/snapshot data.

PID Item/Simulation Item Used In Diagnosis

- Not applicable

Function Inspection Using M-MDS

STEP	INSPECTION	RESULTS	ACTION
1	**PURPOSE: VERIFY RELATED REPAIR INFORMATION AVAILABILITY** • Verify related Service Bulletins and/or on-line repair information availability. • Is any related repair information available?	Yes	Perform repair or diagnosis according to the available repair information. • If the vehicle is not repaired, go to the next step.
		No	Go to the next step.
2	**PURPOSE: RECORD VEHICLE STATUS AT TIME OF DTC DETECTION TO UTILIZE WITH REPEATABILITY VERIFICATION** • Has the FREEZE FRAME DATA (Mode 2)/snapshot data been recorded?	Yes	Go to the troubleshooting procedure to perform the procedure from Step 1.
		No	Record the FREEZE FRAME DATA (Mode 2)/snapshot data on the repair order. **NOTE:** • Recording can be facilitated using the screen capture function of the PC. Go to the troubleshooting procedure to perform the procedure from Step 1.

Troubleshooting Diagnostic Procedure

Intention of troubleshooting procedure

- Step 1—4
  - Perform an inspection of the HO2S and PCM-related connectors and wiring harnesses.
- Step 5
  - Perform a unit inspection of the HO2S.
- Step 6—7
  - Verify that the primary malfunction is resolved and there are no other malfunctions.

STEP	INSPECTION	RESULTS	ACTION
1	**PURPOSE: INSPECT HO2S CONNECTOR CONDITION** • Switch the ignition off. • Disconnect the HO2S connector. • Inspect for poor connection (such as damaged/pulled-out pins, corrosion). • Is there any malfunction?	Yes	Replace the HO2S, then go to Step 6. (See **HEATED OXYGEN SENSOR (HO2S) REMOVAL/INSTALLATION [SKYACTIV-G 2.0, SKYACTIV-G 2.5]**.)
		No	Go to the next step.
2	**PURPOSE: INSPECT PCM CONNECTOR CONDITION** • Disconnect the PCM connector. • Inspect for poor connection (such as damaged/pulled-out pins, corrosion). • Is there any malfunction?	Yes	Replace the PCM, then go to Step 6. (See **PCM REMOVAL/INSTALLATION [SKYACTIV-G 2.0, SKYACTIV-G 2.5]**.)
		No	Go to the next step.
3	**PURPOSE: INSPECT HO2S SIGNAL CIRCUIT FOR SHORT TO GROUND** • Verify that the HO2S and PCM connectors are disconnected. • Inspect for continuity	Yes	Refer to the wiring diagram and verify whether or not there is a common connector between HO2S terminal A and PCM terminal 2AI. **If there is a common connector:** • Determine the malfunctioning part by inspecting the common connector and

	between HO2S terminal A (wiring harness-side) and body ground. • Is there continuity?		the terminal for corrosion, damage, or pin disconnection, and the common wiring harness for a short to ground. • Repair or replace the malfunctioning part. **If there is no common connector:** • Repair or replace the wiring harness which has a short to ground. Go to Step 6.
		No	Go to the next step.
4	**PURPOSE: INSPECT HO2S CIRCUIT FOR OPEN CIRCUIT** • Verify that the HO2S and PCM connectors are disconnected. • Inspect for continuity between the following terminals (wiring harness-side): ▪ HO2S terminal A—PCM terminal 2AI ▪ HO2S terminal B—PCM terminal 2AG • Is there continuity?	Yes	Go to the next step.
		No	Refer to the wiring diagram and verify whether or not there is a common connector between the following terminals: • HO2S terminal A—PCM terminal 2AI • HO2S terminal B—PCM terminal 2AG **If there is a common connector:** • Determine the malfunctioning part by inspecting the common connector and the terminal for corrosion, damage, or pin disconnection, and the common wiring harness for an open circuit. • Repair or replace the malfunctioning part. **If there is no common connector:** • Repair or replace the wiring harness which has an open circuit. Go to Step 6.
5	**PURPOSE: DETERMINE INTEGRITY OF HO2S** • Reconnect all disconnected connectors. • Inspect the HO2S. (See **HEATED OXYGEN SENSOR (HO2S) INSPECTION [SKYACTIV-G 2.0, SKYACTIV-G 2.5]**.) • Is there any malfunction?	Yes	Replace the HO2S, then go to the next step. (See **HEATED OXYGEN SENSOR (HO2S) REMOVAL/INSTALLATION [SKYACTIV-G 2.0, SKYACTIV-G 2.5]**.)
		No	Go to the next step.
6	**PURPOSE: VERIFICATION OF VEHICLE REPAIR COMPLETION**	Yes	Repeat the inspection from Step 1.

	• Always reconnect all disconnected connectors. • Clear the DTC from the PCM memory using the M-MDS. (See **CLEARING DTC [SKYACTIV-G 2.0, SKYACTIV-G 2.5]**.) • Implement the repeatability verification procedure. (See **Repeatability Verification Procedure**.) • Perform the Pending Trouble Code Access Procedure. (See **ON-BOARD DIAGNOSTIC TEST [SKYACTIV-G 2.0, SKYACTIV-G 2.5]**.) • Is the PENDING CODE for this DTC present?		• If the malfunction recurs, replace the PCM. (See **PCM REMOVAL/INSTALLATION [SKYACTIV-G 2.0, SKYACTIV-G 2.5]**.) Go to the next step.
		No	Go to the next step.
7	**PURPOSE: VERIFY IF THERE IS ANY OTHER MALFUNCTION** • Is any other DTC or pending code stored?	Yes	Go to the applicable DTC inspection. (See **DTC TABLE [SKYACTIV-G 2.0, SKYACTIV-G 2.5]**.)
		No	DTC troubleshooting completed.

2014 - Mazda3 - Engine

DTC P0138:00 [SKYACTIV-G 2.0, SKYACTIV-G 2.5]

NOTE:

- To determine the malfunctioning part, proceed with the diagnostics from "Function Inspection Using M-MDS".

Details On DTCs

DESCRIPTION	HO2S circuit high input	
DETECTION CONDITION	Determination conditions	• A condition in which the HO2S input voltage exceeds the specified value continues for the specified period.
	Preconditions	• Not applicable
	Malfunction determination period	• **5 s** period
	Drive cycle	• 2
	Self test type	• CMDTC self test, KOEO self test, KOER self test
	Sensor used	• HO2S
FAIL-SAFE FUNCTION	• Not applicable	
VEHICLE STATUS WHEN DTCs ARE OUTPUT	• Illuminates check engine light.	
POSSIBLE CAUSE	• HO2S connector or terminals malfunction • PCM connector or terminals malfunction • Short to power supply in wiring harness between the following terminals: ▪ HO2S terminal A—PCM terminal 2AI ▪ HO2S terminal B—PCM terminal 2AG • HO2S malfunction	

	• PCM malfunction

System Wiring Diagram

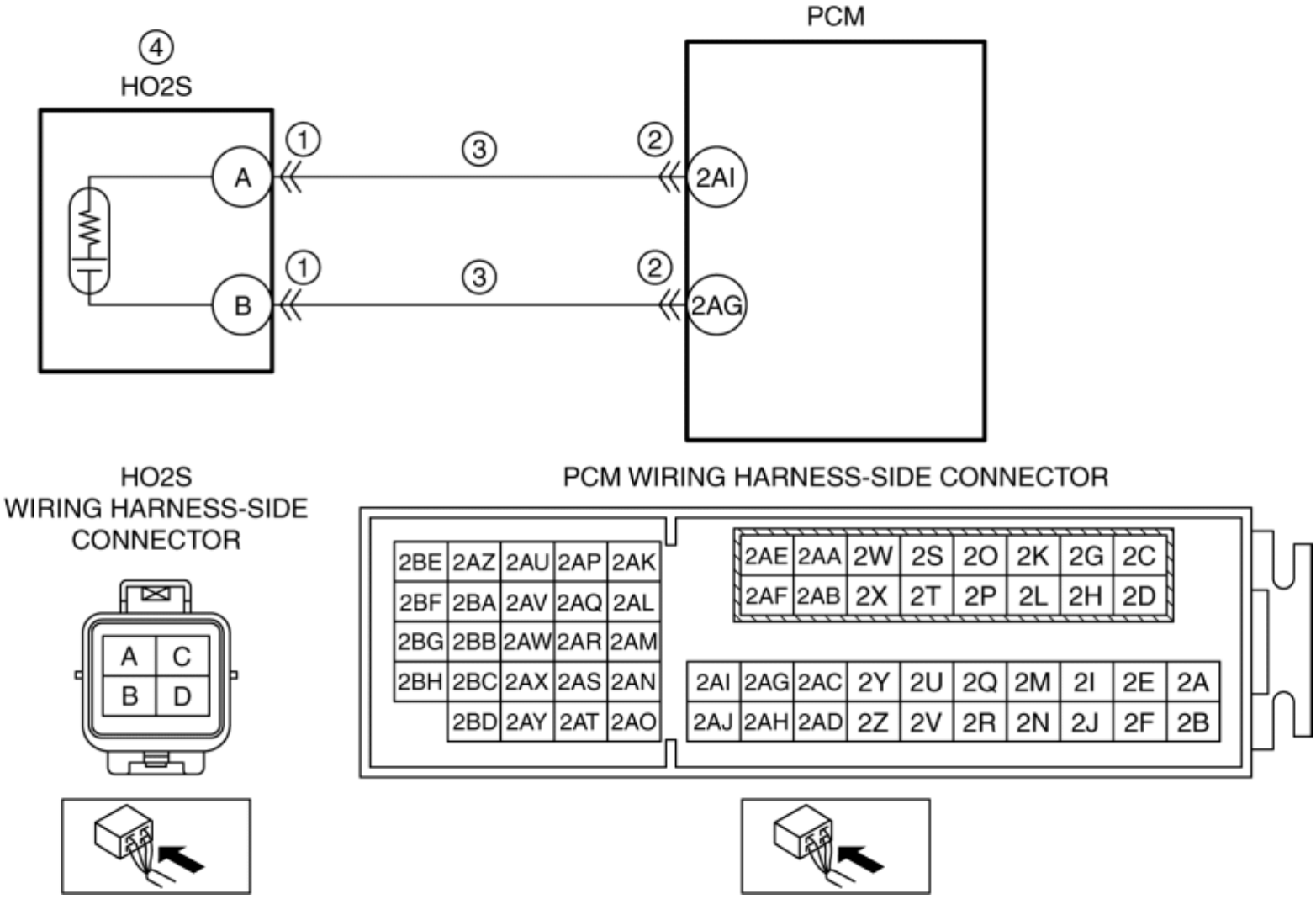

Function Explanation (DTC Detection Outline)

- The PCM detects the oxygen concentration in the exhaust gas based on the HO2S signal. The PCM determines a HO2S signal error based on the condition in which the HO2S input voltage continues to exceed the specified value, and stores a DTC.

Repeatability Verification Procedure

- Warm up the engine to allow the engine coolant temperature to reach **80 °C {176 °F} or more**.
- Start the engine and leave it idling for **1 min**.

  NOTE:

Match the engine coolant temperature in the recorded FREEZE FRAME DATA (Mode 2)/snapshot data, the vehicle speed, and engine speed values to the best extent possible while driving the vehicle.

- Try to reproduce the malfunction by driving the vehicle for **5 min** based on the values in the FREEZE FRAME DATA (Mode 2)/snapshot data.

PID Item/Simulation Item Used In Diagnosis

- Not applicable

Function Inspection Using M-MDS

STEP	INSPECTION	RESULTS	ACTION
1	**PURPOSE: VERIFY RELATED REPAIR INFORMATION AVAILABILITY** • Verify related Service Bulletins and/or on-line repair information availability. • Is any related repair information available?	Yes	Perform repair or diagnosis according to the available repair information. • If the vehicle is not repaired, go to the next step.
		No	Go to the next step.
2	**PURPOSE: RECORD VEHICLE STATUS AT TIME OF DTC DETECTION TO UTILIZE WITH REPEATABILITY VERIFICATION** • Has the FREEZE FRAME DATA (Mode 2)/snapshot data been recorded?	Yes	Go to the troubleshooting procedure to perform the procedure from Step 1.
		No	Record the FREEZE FRAME DATA (Mode 2)/snapshot data on the repair order. **NOTE:** • Recording can be facilitated using the screen capture function of the PC. Go to the troubleshooting procedure to perform the procedure from Step 1.

Troubleshooting Diagnostic Procedure

Intention of troubleshooting procedure

- Step 1—2
  - Perform an inspection of the HO2S and PCM-related connectors.

- Step 3
    - Perform an inspection of the short to power supply in wiring harness between HO2S and PCM.
- Step 4
    - Perform a unit inspection of the HO2S.
- Step 5—6
    - Verify that the primary malfunction is resolved and there are no other malfunctions.

STEP	INSPECTION	RESULTS	ACTION
1	**PURPOSE: INSPECT HO2S CONNECTOR CONDITION** • Switch the ignition off. • Disconnect the HO2S connector. • Inspect for poor connection (such as damaged/pulled-out pins, corrosion). • Is there any malfunction?	Yes	Replace the HO2S, then go to Step 5. (See **HEATED OXYGEN SENSOR (HO2S) REMOVAL/INSTALLATION [SKYACTIV-G 2.0, SKYACTIV-G 2.5]**.)
		No	Go to the next step.
2	**PURPOSE: INSPECT PCM CONNECTOR CONDITION** • Disconnect the PCM connector. • Inspect for poor connection (such as damaged/pulled-out pins, corrosion). • Is there any malfunction?	Yes	Replace the PCM, then go to Step 5. (See **PCM REMOVAL/INSTALLATION [SKYACTIV-G 2.0, SKYACTIV-G 2.5]**.)
		No	Go to the next step.
3	**PURPOSE: INSPECT HO2S CIRCUIT FOR SHORT TO POWER SUPPLY** • Verify that the HO2S and PCM connectors are disconnected. • Switch the ignition ON (engine off). **NOTE:** • Another DTC may be stored by the	Yes	Go to the next step.
		No	Refer to the wiring diagram and verify whether or not there is a common connector between the following terminals: • HO2S terminal A—PCM terminal 2AI • HO2S terminal B—PCM terminal 2AG **If there is a common connector:** • Determine the malfunctioning part by inspecting the common connector and the terminal for corrosion, damage, or pin disconnection, and the common

	PCM detecting an open circuit. • Measure the voltage at the following terminals (wiring harness-side): ▪ HO2S terminal A ▪ HO2S terminal B • Is the voltage **0 V**?		wiring harness for a short to power supply. • Repair or replace the malfunctioning part. **If there is no common connector:** • Repair or replace the wiring harness which has a short to power supply. Go to Step 5.
4	**PURPOSE: DETERMINE INTEGRITY OF HO2S** • Reconnect all disconnected connectors. • Inspect the HO2S. (See **HEATED OXYGEN SENSOR (HO2S) INSPECTION [SKYACTIV-G 2.0, SKYACTIV-G 2.5]**.) • Is there any malfunction?	Yes	Replace the HO2S, then go to the next step. (See **HEATED OXYGEN SENSOR (HO2S) REMOVAL/INSTALLATION [SKYACTIV-G 2.0, SKYACTIV-G 2.5]**.)
		No	Go to the next step.
5	**PURPOSE: VERIFICATION OF VEHICLE REPAIR COMPLETION** • Always reconnect all disconnected connectors. • Clear the DTC from the PCM memory using the M-MDS. (See **CLEARING DTC [SKYACTIV-G 2.0, SKYACTIV-G 2.5]**.) • Perform the KOEO or KOER self test. (See **KOEO/KOER SELF TEST [SKYACTIV-G 2.0, SKYACTIV-G 2.5]**.) • Is the PENDING CODE for this DTC present?	Yes	Repeat the inspection from Step 1. • If the malfunction recurs, replace the PCM. (See **PCM REMOVAL/INSTALLATION [SKYACTIV-G 2.0, SKYACTIV-G 2.5]**.) Go to the next step.
		No	Go to the next step.
6	**PURPOSE: VERIFY IF THERE IS ANY OTHER MALFUNCTION** • Is any other DTC or pending code stored?	Yes	Go to the applicable DTC inspection. (See **DTC TABLE [SKYACTIV-G 2.0, SKYACTIV-G 2.5]**.)
		No	DTC troubleshooting completed.

DTC P0138:00 [SKYACTIV-G 2.0, SKYACTIV-G 2.5]

2014 - Mazda3 - Engine

DTC P013A:00, P013B:00 [SKYACTIV-G 2.0, SKYACTIV-G 2.5]

NOTE:

- To determine the malfunctioning part, proceed with the diagnostics from "Function Inspection Using M-MDS".

Details On DTCs

DESCRIPTION	P013A:00 • HO2S: Slow response (during transition from rich to lean) P013B:00 • HO2S: Slow response (during transition from lean to rich)	
DETECTION CONDITION	Determination conditions	P013A:00 • The response speed of the HO2S input signal when the air/fuel ratio is fluctuated from rich to lean is slow.
		P013B:00 • The response speed of the HO2S input signal when the air/fuel ratio is fluctuated from lean to rich is slow.
	Preconditions	• Fuel injection control: during fuel cut*1 (P013A:00) • Catalytic converter estimated temperature: specified value or more • HO2S estimated temperature: specified value or more • HO2S output voltage during fuel cut: Specified value or more (P013A:00) • HO2S output voltage at fuel cut recovery: Specification or less (P013B:00) • The following DTCs are not detected:

		▪ HO2S heater: P0037:00, P0038:00 ▪ MAF sensor: P0102:00, P0103:00 ▪ ECT sensor No.1: P0117:00, P0118:00 ▪ HO2S: P0137:00, P0138:00, P0140:00 • *1: Condition can be verified by displaying PIDs using M-MDS
	Drive cycle	• 2
	Self test type	• CMDTC self test
	Sensor used	• HO2S
FAIL-SAFE FUNCTION	• Not applicable	
VEHICLE STATUS WHEN DTCs ARE OUTPUT	• Illuminates check engine light.	
POSSIBLE CAUSE	• HO2S malfunction ▪ HO2S connector or terminals malfunction ▪ HO2S loose ▪ Exhaust system leakage ▪ TWC damaged or malfunction • HO2S deterioration • HO2S heater malfunction • Improper operation of purge control system ▪ Purge solenoid valve malfunction ▪ Improper connection of evaporative hose (purge solenoid valve side) • Fuel leakage in fuel line • Engine malfunction ▪ Insufficient engine compression • PCM malfunction	

System Wiring Diagram

- Not applicable

Function Explanation (DTC Detection Outline)

P013A:00

- If the rate at which the HO2S output voltage is lowered is slow during fuel cut, a DTC is stored.

P013B:00

- If the speed at which the HO2S output voltage rises is slow during fuel cut recovery, a DTC is stored.

Repeatability Verification Procedure

- Warm up the engine to allow the engine coolant temperature to reach **80 °C {176 °F} or more**.
- Verify that OBD-II information (such as FREEZE FRAME DATA (Mode 2)) has been obtained and recorded.
- Clear the DTC from the PCM memory using the M-MDS. (See **CLEARING DTC [SKYACTIV-G 2.0, SKYACTIV-G 2.5]**.)
- Switch the ignition off.
- Drive the vehicle for **15 min** at a speed of **40 km/h {25 mph} or more**.
- Shift to 3rd gear and rapidly accelerate the vehicle to **60 km/h {37 mph}**.
- Release the accelerator pedal and decelerate the vehicle to **40 km/h {25 mph}**.
- Repeat Step 5 to 7 operations **above 5 times**.
- Try to reproduce the malfunction by driving the vehicle for **5 min** based on the values in the FREEZE FRAME DATA (Mode 2)/snapshot data.

NOTE:

- Match the engine coolant temperature in the recorded FREEZE FRAME DATA (Mode 2)/snapshot data, the vehicle speed, and engine speed values to the best extent possible while driving the vehicle.

PID Item/Simulation Item Used In Diagnosis

PID/DATA monitor item table

Item	Definition	Unit	Condition/Specification

O2S12	HO2S voltage	V	• Idle (after warm up): 0—1.0 V • Deceleration fuel cut (accelerator pedal released from engine speed of 4,000 rpm or more): Approx. 0 V

Function Inspection Using M-MDS

STEP	INSPECTION	RESULTS	ACTION
1	**PURPOSE: VERIFY RELATED REPAIR INFORMATION AVAILABILITY** • Verify related Service Bulletins and/or on-line repair information availability. • Is any related repair information available?	Yes	Perform repair or diagnosis according to the available repair information. • If the vehicle is not repaired, go to the next step.
		No	Go to the next step.
2	**PURPOSE: RECORD VEHICLE STATUS AT TIME OF DTC DETECTION TO UTILIZE WITH REPEATABILITY VERIFICATION** • Has the FREEZE FRAME DATA (Mode 2)/snapshot data been recorded?	Yes	Go to the next step.
		No	Record the FREEZE FRAME DATA (Mode 2)/snapshot data on the repair order, then go to the next step. **NOTE:** • Recording can be facilitated using the screen capture function of the PC.
3	**PURPOSE: VERIFY IF DIAGNOSTIC RESULT IS AFFECTED BY DTC RELATED TO A/F SENSOR RESPONSIVENESS** • Switch the ignition off, then ON (engine off). • Perform the Pending Trouble Code Access Procedure and DTC Reading Procedure. (See **ON-BOARD DIAGNOSTIC TEST [SKYACTIV-G 2.0, SKYACTIV-G 2.5]**.) • Is the PENDING CODE/DTC P0133:00 also present?	Yes	Go to the next step.
		No	P013A:00 is diagnosed: • Go to Step 6. P013B:00 is diagnosed: • Go to Step 7.

4	**PURPOSE: VERIFY IF DIAGNOSTIC RESULT IS AFFECTED BY DTC RELATED TO PURGE SOLENOID VALVE** • Perform the Pending Trouble Code Access Procedure and DTC Reading Procedure. (See **ON-BOARD DIAGNOSTIC TEST [SKYACTIV-G 2.0, SKYACTIV-G 2.5]**.) • Is the PENDING CODE/DTC P0443:00 also present?	Yes	Go to the applicable PENDING CODE or DTC inspection. (See **DTC P0443:00 [SKYACTIV-G 2.0, SKYACTIV-G 2.5]**.) Go to the next step.
		No	Go to the next step.
5	**PURPOSE: VERIFY IF DIAGNOSTIC RESULT IS AFFECTED BY DTC OCCURRING FROM FUEL SYSTEM RELATED PART** • Perform the Pending Trouble Code Access Procedure and DTC Reading Procedure. (See **ON-BOARD DIAGNOSTIC TEST [SKYACTIV-G 2.0, SKYACTIV-G 2.5]**.) • Is a DTC related to a fuel system part stored?	Yes	Go to the applicable PENDING CODE or DTC inspection. (See **DTC TABLE [SKYACTIV-G 2.0, SKYACTIV-G 2.5]**.) Go to the next step.
		No	A factor other than the HO2S can be considered the cause of the malfunction. • Go to the troubleshooting procedure to perform the procedure from Step 1.
6	**PURPOSE: VERIFY FLUCTUATION OF HO2S INPUT SIGNAL AT START OF FUEL CUT** • Start the engine and warm it up completely. • Access the O2S12 PID using the M-MDS. (See **ON-BOARD DIAGNOSTIC TEST [SKYACTIV-G 2.0, SKYACTIV-G 2.5]**.) • Drive the vehicle under the following conditions. **WARNING:** • When the M-MDS is used to observe monitor system status while driving, be sure to have another technician with you, or record the data in the M-MDS using the PID/DATA MONITOR AND RECORD capturing function and inspect later.	Yes	Go to the troubleshooting procedure to perform the procedure from Step 10. • If a malfunction occurs, perform diagnosis from Step 1 of the malfunction diagnostic procedure.
		No	HO2S signal can be considered the cause. • Go to the troubleshooting procedure to perform the procedure from Step 4.

	• While performing this step, always operate the vehicle in a safe and lawful manner. ▪ After increasing the engine speed to **4,000 rpm**, decelerate using engine braking. • Can a fluctuation in the displayed PID value be verified?		
7	**PURPOSE: VERIFY FLUCTUATION OF HO2S INPUT SIGNAL AT FUEL CUT RECOVERY** • Start the engine and warm it up completely. • Access the O2S12 PID using the M-MDS. (See **ON-BOARD DIAGNOSTIC TEST [SKYACTIV-G 2.0, SKYACTIV-G 2.5]**.) • Drive the vehicle under the following conditions. **WARNING:** • When the M-MDS is used to observe monitor system status while driving, be sure to have another technician with you, or record the data in the M-MDS using the PID/DATA MONITOR AND RECORD capturing function and inspect later. • While performing this step, always operate the vehicle in a safe and lawful manner. ▪ After increasing the engine speed to **4,000 rpm**, decelerate using engine braking. • Stop deceleration from engine braking. • After stopping deceleration from engine braking, can a fluctuation in the displayed PID value be verified?	Yes	Go to the troubleshooting procedure to perform the procedure from Step 10. • If a malfunction occurs, perform diagnosis from Step 1 of the malfunction diagnostic procedure.
		No	HO2S signal can be considered the cause. • Go to the troubleshooting procedure to perform the procedure from Step 4.

Troubleshooting Diagnostic Procedure

Intention of troubleshooting procedure

- Step 1—2
  - Perform an emission system parts inspection.
- Step 3
  - Perform an engine inspection.
- Step 4—9
  - Perform inspection of HO2S signal related parts.
- Step 10—11
  - Verify that the primary malfunction is resolved and there are no other malfunctions.

STEP	INSPECTION	RESULTS	ACTION
1	**PURPOSE: DETERMINE INTEGRITY OF PURGE SOLENOID VALVE** • Inspect the purge solenoid valve. (See **PURGE SOLENOID VALVE INSPECTION [SKYACTIV-G 2.0, SKYACTIV-G 2.5]**.) • Is there any malfunction?	Yes	Replace the purge solenoid valve, then go to Step 10. (See **PURGE SOLENOID VALVE REMOVAL/INSTALLATION [SKYACTIV-G 2.0, SKYACTIV-G 2.5]**.)
		No	Go to the next step.
2	**PURPOSE: VERIFY IF DIAGNOSTIC RESULT IS AFFECTED BY MALFUNCTION RELATED TO POOR EVAPORATIVE HOSE CONNECTION** • Verify the connection condition of the evaporative hose (purge solenoid valve side). (See **PURGE SOLENOID VALVE REMOVAL/INSTALLATION [SKYACTIV-G 2.0, SKYACTIV-G 2.5]**.) • Is the evaporative hose (purge solenoid valve side) connection normal?	Yes	Go to the next step.
		No	Connect evaporative hose correctly, then go to Step 10. (See **PURGE SOLENOID VALVE REMOVAL/INSTALLATION [SKYACTIV-G 2.0, SKYACTIV-G 2.5]**.)
3	**PURPOSE: VERIFY IF MALFUNCTION RELATED TO ENGINE COMPRESSION AFFECTS DIAGNOSTIC RESULTS** • Inspect the engine compression. (See **COMPRESSION INSPECTION [SKYACTIV-G 2.0, SKYACTIV-G 2.5]**.)	Yes	Go to the next step.
		No	Replace or overhaul the engine, then go to Step 10.

	• Are compression pressures within specification?
	
	Specification:
	
	• Compression [SKYACTIV-G 2.0]
	  ▪ Standard: **885 kPa {9.02 kgf/cm^2, 128 psi} (300 rpm)**
	  ▪ Minimum: **708 kPa {7.22 kgf/cm^2, 103 psi} (300 rpm)**
	  ▪ Maximum difference between cylinders: **150 kPa {1.53 kgf/cm^2, 21.8 psi}** (**300 rpm**)
	
	• Compression [SKYACTIV-G 2.5]
	  ▪ Standard: **954 kPa {9.73 kgf/cm^2, 138 psi} (300 rpm)**
	  ▪ Minimum: **763 kPa {7.78 kgf/cm^2, 111 psi} (300 rpm)**
	  ▪ Maximum difference between cylinders: **161 kPa {1.64 kgf/cm^2, 23.4 psi}** (**300 rpm**)
	
	NOTE:
	
	• Because the SKYACTIV-G 2.0 and SKYACTIV-G 2.5 retards the intake valve closing timing, compression pressure is low.		

4	**PURPOSE: INSPECT HO2S CONNECTOR CONDITION** • Switch the ignition off. • Disconnect the HO2S connector. • Inspect for poor connection (such	Yes	Repair or replace the connector and/or terminals, then go to Step 10.
		No	Go to the next step.

	as damaged/pulled-out pins, corrosion). • Is there any malfunction?		
5	**PURPOSE: INSPECT INSTALLATION OF HO2S** • Inspect installation of HO2S. • Is the HO2S installed securely?	Yes	Go to the next step.
		No	Retighten the HO2S, then go to Step 10. (See **HEATED OXYGEN SENSOR (HO2S) REMOVAL/INSTALLATION [SKYACTIV-G 2.0, SKYACTIV-G 2.5]**.)
6	**PURPOSE: DETERMINE INTEGRITY OF HO2S** • Reconnect all disconnected connectors. • Inspect the HO2S. (See **HEATED OXYGEN SENSOR (HO2S) INSPECTION [SKYACTIV-G 2.0, SKYACTIV-G 2.5]**.) • Is there any malfunction?	Yes	Replace the HO2S, then go to Step 10. (See **HEATED OXYGEN SENSOR (HO2S) REMOVAL/INSTALLATION [SKYACTIV-G 2.0, SKYACTIV-G 2.5]**.)
		No	Go to the next step.
7	**PURPOSE: DETERMINE INTEGRITY OF HO2S HEATER** • Reconnect all disconnected connectors. • Inspect the HO2S heater. (See **HEATED OXYGEN SENSOR (HO2S) INSPECTION [SKYACTIV-G 2.0, SKYACTIV-G 2.5]**.) • Is there any malfunction?	Yes	Replace the HO2S, then go to Step 10. (See **HEATED OXYGEN SENSOR (HO2S) REMOVAL/INSTALLATION [SKYACTIV-G 2.0, SKYACTIV-G 2.5]**.)
		No	Go to the next step.
8	**PURPOSE: INSPECT EXHAUST SYSTEM FOR LEAKAGE** • Visually inspect for exhaust gas leakage from the exhaust system. • Is there any malfunction?	Yes	Repair or replace the malfunctioning part according to the inspection results, then go to Step 10.
		No	Go to the next step.
9	**PURPOSE: VERIFY IF CATALYTIC CONVERTER DAMAGE AFFECTS HO2S SIGNAL** • Verify if the catalytic converter is damaged. • Is there any malfunction?	Yes	Repair or replace the malfunctioning part according to the inspection results, then go to the next step.
		No	Replace the HO2S, then go to the next step. (See **HEATED OXYGEN SENSOR (HO2S) REMOVAL/INSTALLATION [SKYACTIV-G 2.0, SKYACTIV-G 2.5]**.)

10	**PURPOSE: VERIFICATION OF VEHICLE REPAIR COMPLETION** • Always reconnect all disconnected connectors. • Clear the DTC from the PCM memory using the M-MDS. (See **CLEARING DTC [SKYACTIV-G 2.0, SKYACTIV-G 2.5]**.) • Implement the repeatability verification procedure. (See **Repeatability Verification Procedure**.) • Perform the Pending Trouble Code Access Procedure. (See **ON-BOARD DIAGNOSTIC TEST [SKYACTIV-G 2.0, SKYACTIV-G 2.5]**.) • Is the PENDING CODE for this DTC present?	Yes	Repeat the inspection from Step 1 of the troubleshooting diagnostic procedure. • If the malfunction recurs, replace the PCM. (See **PCM REMOVAL/INSTALLATION [SKYACTIV-G 2.0, SKYACTIV-G 2.5]**.) Go to the next step.
		No	Go to the next step.
11	**PURPOSE: VERIFY IF THERE IS ANY OTHER MALFUNCTION** • Is any other DTC or pending code stored?	Yes	Go to the applicable DTC inspection. (See **DTC TABLE [SKYACTIV-G 2.0, SKYACTIV-G 2.5]**.)
		No	DTC troubleshooting completed.

2014 - Mazda3 - Engine

DTC P0140:00 [SKYACTIV-G 2.0, SKYACTIV-G 2.5]

NOTE:

- To determine the malfunctioning part, proceed with the diagnostics from "Function Inspection Using M-MDS".

Details On DTCs

DESCRIPTION	HO2S circuit no activity detected	
DETECTION CONDITION	Determination conditions	• With the estimated temperature of the HO2S element exceeding the specified value, a condition in which the HO2S signal voltage is less than the specified value continues for the specified period.
	Preconditions	• Battery voltage: **above 11 V**[*1] • The following DTCs are not detected: ▪ HO2S: P0137:00, P0138:00 ▪ ECT sensor No.1: P0117:00, P0118:00 ▪ MAF sensor: P0101:00, P0102:00, P0103:00 • [*1]: Value can be verified by displaying PIDs using M-MDS
	Drive cycle	• 2
	Self test type	• CMDTC self test
	Sensor used	• HO2S
FAIL-SAFE FUNCTION	• Not applicable	
VEHICLE STATUS WHEN DTCs ARE OUTPUT	• Illuminates check engine light.	
	• HO2S signal line error ▪ HO2S connector or terminals malfunction	

POSSIBLE CAUSE	▪ PCM connector or terminals malfunction ▪ Short to ground in wiring harness between HO2S terminal A and PCM terminal 2AI ▪ Open circuit in wiring harness between HO2S terminal A and PCM terminal 2AI • HO2S loose • HO2S malfunction • Exhaust gas leakage from exhaust system (between A/F sensor and HO2S) • Insufficient engine compression • HO2S heater malfunction • PCM malfunction

System Wiring Diagram

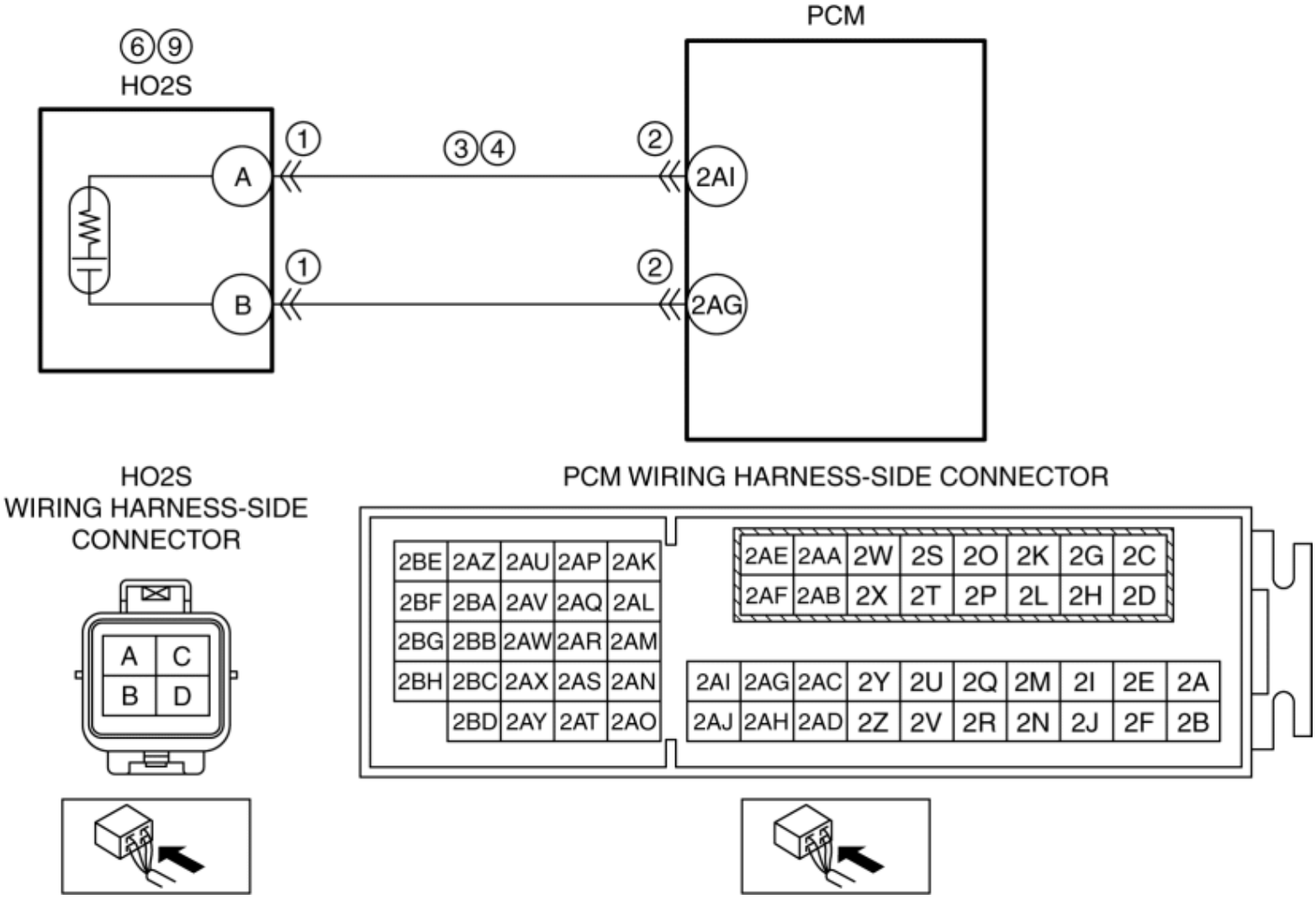

Function Explanation (DTC Detection Outline)

- If the output voltage of the HO2S continues to be low for the specified time or more even though the estimated temperature of the HO2S element after the engine is started exceeds the specified value, the PCM determines that the HO2S is not activating, and stores a DTC. The malfunction determination time varies depending on the intake air amount.

Repeatability Verification Procedure

- Warm up the engine to allow the engine coolant temperature to reach **80 °C {176 °F} or more**.
- Start the engine and leave it idling for **1 min**.

  NOTE:

  - Match the engine coolant temperature in the recorded FREEZE FRAME DATA (Mode 2)/snapshot data, the vehicle speed, and engine speed values to the best extent possible while driving the vehicle.
- Try to reproduce the malfunction by driving the vehicle for **5 min** based on the values in the FREEZE FRAME DATA (Mode 2)/snapshot data.

PID Item/Simulation Item Used In Diagnosis

PID/DATA monitor item table

Item	Definition	Unit	Condition/Specification
HTR12	HO2S heater operation status	Off/On	• Ignition switched ON (engine off): Off • Idle (after warm up): On
	HO2S heater control duty value	%	• Ignition switched ON (engine off): 0% • Idle (after warm up): Approx. 40%
O2S12	HO2S voltage	V	• Idle (after warm up): 0—1.0 V • Deceleration fuel cut (accelerator pedal released from engine speed of 4,000 rpm or more): Approx. 0 V

Function Inspection Using M-MDS

STEP	INSPECTION	RESULTS	ACTION
1	**PURPOSE: VERIFY RELATED REPAIR INFORMATION AVAILABILITY** • Verify related Service Bulletins and/or on-line repair information availability.	Yes	Perform repair or diagnosis according to the available repair information. • If the vehicle is not repaired, go to the next

	• Is any related repair information available?		step.
		No	Go to the next step.
2	**PURPOSE: RECORD VEHICLE STATUS AT TIME OF DTC DETECTION TO UTILIZE WITH REPEATABILITY VERIFICATION** • Has the FREEZE FRAME DATA (Mode 2)/snapshot data been recorded?	Yes	Go to the next step.
		No	Record the FREEZE FRAME DATA (Mode 2)/snapshot data on the repair order, then go to the next step. **NOTE:** • Recording can be facilitated using the screen capture function of the PC.
3	**PURPOSE: VERIFY CONNECTOR CONNECTIONS** • Start the engine. • Access the following PIDs using the M-MDS: (See **ON-BOARD DIAGNOSTIC TEST [SKYACTIV-G 2.0, SKYACTIV-G 2.5]**.) ▪ HTR12 ▪ O2S12 • When the following parts are shaken, does the PID value include a PID item which has changed? ▪ HO2S ▪ PCM	Yes	Repair or replace the applicable connector parts. Go to the troubleshooting procedure to perform the procedure from Step 10.
		No	Go to the next step.
4	**PURPOSE: VERIFICATION IF MALFUNCTION CAUSED BY HO2S** • Start the engine and idle it. • Access the O2S12 PID using the M-MDS. (See **ON-BOARD DIAGNOSTIC TEST [SKYACTIV-G 2.0, SKYACTIV-G 2.5]**.) • Is the O2S12 PID value normal? (See **PCM INSPECTION [SKYACTIV-G 2.0, SKYACTIV-G 2.5]**.)	Yes	Go to the next step.
		No	Go to the troubleshooting procedure to perform the procedure from Step 1.
5	**PURPOSE: VERIFICATION IF MALFUNCTION CAUSED BY HO2S HEATER** • Start the engine and idle it. • Access the HTR12 PID using the M-MDS. (See **ON-BOARD DIAGNOSTIC TEST [SKYACTIV-G 2.0, SKYACTIV-G 2.5]**.)	Yes	Go to the troubleshooting procedure to perform the procedure from Step 1.
		No	Go to the troubleshooting procedure to perform the procedure from Step 9.

	• Is the HTR12 PID value normal? (See **PCM INSPECTION [SKYACTIV-G 2.0, SKYACTIV-G 2.5]**.)		

Troubleshooting Diagnostic Procedure

Intention of troubleshooting procedure

- Step 1—4
  - Perform an inspection of the HO2S signal line-related parts.
- Step 5—6
  - Verify the condition of the HO2S installation and perform a unit inspection.
- Step 7
  - Perform an exhaust system parts inspection.
- Step 8
  - Perform an inspection of the engine compression.
- Step 9
  - Perform an inspection of the HO2S heater.
- Step 10—11
  - Verify that the primary malfunction is resolved and there are no other malfunctions.

STEP	INSPECTION	RESULTS	ACTION
1	**PURPOSE: INSPECT HO2S CONNECTOR CONDITION** • Switch the ignition off. • Disconnect the HO2S connector. • Inspect for poor connection (such as damaged/pulled-out pins, corrosion). • Is there any malfunction?	Yes	Replace the HO2S, then go to Step 10. (See **HEATED OXYGEN SENSOR (HO2S) REMOVAL/INSTALLATION [SKYACTIV-G 2.0, SKYACTIV-G 2.5]**.)
		No	Go to the next step.
2	**PURPOSE: INSPECT PCM CONNECTOR CONDITION** • Disconnect the PCM connector. • Inspect for poor connection (such as	Yes	Replace the PCM, then go to Step 10. (See **PCM REMOVAL/INSTALLATION [SKYACTIV-G 2.0, SKYACTIV-G 2.5]**.)
		No	Go to the next step.

	damaged/pulled-out pins, corrosion). • Is there any malfunction?		
3	**PURPOSE: INSPECT HO2S SIGNAL CIRCUIT FOR SHORT TO GROUND** • Verify that the HO2S and PCM connectors are disconnected. • Inspect for continuity between HO2S terminal A (wiring harness-side) and body ground. • Is there continuity?	Yes	Refer to the wiring diagram and verify whether or not there is a common connector between HO2S terminal A and PCM terminal 2AI. **If there is a common connector:** • Determine the malfunctioning part by inspecting the common connector and the terminal for corrosion, damage, or pin disconnection, and the common wiring harness for a short to ground. • Repair or replace the malfunctioning part. **If there is no common connector:** • Repair or replace the wiring harness which has a short to ground. Go to Step 10.
		No	Go to the next step.
4	**PURPOSE: INSPECT HO2S CIRCUIT FOR OPEN CIRCUIT** • Verify that the HO2S and PCM connectors are disconnected. • Inspect for continuity between HO2S terminal A (wiring harness-side) and PCM terminal 2AI (wiring harness-side). • Is there continuity?	Yes	Go to the next step.
		No	Refer to the wiring diagram and verify whether or not there is a common connector between HO2S terminal A and PCM terminal 2AI. **If there is a common connector:** • Determine the malfunctioning part by inspecting the common connector and the terminal for corrosion, damage, or pin disconnection, and the common wiring harness for an open circuit. • Repair or replace the malfunctioning part. **If there is no common connector:** • Repair or replace the wiring harness which has an open circuit. Go to Step 10.
5	**PURPOSE: INSPECT INSTALLATION OF HO2S** • Verify the installation condition of the HO2S (installation angle, tightening torque value). **HEATED OXYGEN**	Yes	Go to the next step.
		No	Retighten the HO2S, then go to Step 10. (See **HEATED OXYGEN SENSOR (HO2S) REMOVAL/INSTALLATION [SKYACTIV-G 2.0, SKYACTIV-G 2.5]**.)

	(See **SENSOR (HO2S) REMOVAL/INSTALLATION [SKYACTIV-G 2.0, SKYACTIV-G 2.5]**.) • Is the HO2S installed securely?		
6	**PURPOSE: DETERMINE INTEGRITY OF HO2S** • Reconnect all disconnected connectors. • Inspect the HO2S. (See **HEATED OXYGEN SENSOR (HO2S) INSPECTION [SKYACTIV-G 2.0, SKYACTIV-G 2.5]**.) • Is there any malfunction?	Yes	Replace the HO2S, then go to Step 10. (See **HEATED OXYGEN SENSOR (HO2S) REMOVAL/INSTALLATION [SKYACTIV-G 2.0, SKYACTIV-G 2.5]**.)
		No	Go to the next step.
7	**PURPOSE: VERIFY IF MALFUNCTION RELATED TO EMISSION SYSTEM AFFECTS HO2S SIGNAL** • Verify the exhaust gas leakage from the exhaust system. (between A/F sensor and HO2S) • Is there any malfunction?	Yes	Repair or replace the malfunctioning part according to the inspection results, then go to Step 10.
		No	Go to the next step.
8	**PURPOSE: VERIFY IF MALFUNCTION RELATED TO ENGINE COMPRESSION AFFECTS DIAGNOSTIC RESULTS** • Inspect the engine compression. (See **COMPRESSION INSPECTION [SKYACTIV-G 2.0, SKYACTIV-G 2.5]**.) • Are compression pressures within specification? **Specification:** • Compression [SKYACTIV-G 2.0] ▪ Standard: **885 kPa {9.02 kgf/cm^2, 128 psi} (300 rpm)** ▪ Minimum: **708 kPa**	Yes	Go to the next step.
		No	Replace or overhaul the engine, then go to Step 10.

	{7.22 kgf/cm^2, 103 psi} (300 rpm) ▪ Maximum difference between cylinders: **150 kPa {1.53 kgf/cm^2, 21.8 psi}** (**300 rpm**) • Compression [SKYACTIV-G 2.5] ▪ Standard: **954 kPa {9.73 kgf/cm^2, 138 psi} (300 rpm)** ▪ Minimum: **763 kPa {7.78 kgf/cm^2, 111 psi} (300 rpm)** ▪ Maximum difference between cylinders: **161 kPa {1.64 kgf/cm^2, 23.4 psi}** (**300 rpm**) **NOTE:** • Because the SKYACTIV-G 2.0 and SKYACTIV-G 2.5 retards the intake valve closing timing, compression pressure is low.		
9	**PURPOSE: DETERMINE INTEGRITY OF HO2S HEATER** • Inspect the HO2S heater.	Yes	Replace the HO2S, then go to the next step. (See **HEATED OXYGEN SENSOR (HO2S)**

	(See **HEATED OXYGEN SENSOR (HO2S) INSPECTION [SKYACTIV-G 2.0, SKYACTIV-G 2.5]**.) • Is there any malfunction?		**REMOVAL/INSTALLATION [SKYACTIV-G 2.0, SKYACTIV-G 2.5]**.)
		No	Go to the next step.
10	**PURPOSE: VERIFICATION OF VEHICLE REPAIR COMPLETION** • Always reconnect all disconnected connectors. • Clear the DTC from the PCM memory using the M-MDS. (See **CLEARING DTC [SKYACTIV-G 2.0, SKYACTIV-G 2.5]**.) • Implement the repeatability verification procedure. (See **Repeatability Verification Procedure**.) • Perform the Pending Trouble Code Access Procedure. (See **ON-BOARD DIAGNOSTIC TEST [SKYACTIV-G 2.0, SKYACTIV-G 2.5]**.) • Is the PENDING CODE for this DTC present?	Yes	Repeat the inspection from Step 1. • If the malfunction recurs, replace the PCM. (See **PCM REMOVAL/INSTALLATION [SKYACTIV-G 2.0, SKYACTIV-G 2.5]**.) Go to the next step.
		No	Go to the next step.
11	**PURPOSE: VERIFY IF THERE IS ANY OTHER MALFUNCTION** • Is any other DTC or pending code stored?	Yes	Go to the applicable DTC inspection. (See **DTC TABLE [SKYACTIV-G 2.0, SKYACTIV-G 2.5]**.)
		No	DTC troubleshooting completed.

2014 - Mazda3 - Engine

DTC P0171:00 [SKYACTIV-G 2.0, SKYACTIV-G 2.5]

NOTE:

- To determine the malfunctioning part, proceed with the diagnostics from "Function Inspection Using M-MDS".

Details On DTCs

DESCRIPTION	Fuel trim system too lean	
DETECTION CONDITION	Determination conditions	• Any one of the following conditions is met: ▪ While the engine is idling or the vehicle is driven, the fuel feedback correction amount (**30 %**) is the threshold or more, and the fuel learning correction amount is the specified value (**15 %**) or more for **10 s or more**. ▪ While the engine is idling or the vehicle is driven, the fuel feedback correction amount reaches the upper limit (**25 % or more**) for **20 s or more**.
	Preconditions	• Engine coolant temperature: **0—45 °C {32—113 °F}**, **60 °C {140 °F} or more**[*1] • [*1]: Value can be verified by displaying PIDs using M-MDS
	Malfunction determination period	• **10 s** or **20 s** period
	Drive cycle	• 2
	Self test type	• CMDTC self test
	Sensor used	• A/F sensor
FAIL-SAFE FUNCTION	• Not applicable	
VEHICLE STATUS WHEN DTCs ARE OUTPUT	• Illuminates check engine light.	
	• Erratic signal to PCM ▪ ECT sensor No.1 signal malfunction ▪ MAF sensor signal malfunction ▪ MAP sensor signal malfunction ▪ IAT sensor No.2 signal malfunction ▪ Related connector or terminals malfunction ▪ Related wiring harness malfunction • High-pressure side fuel delivery system malfunction ▪ Fuel pressure sensor malfunction	

POSSIBLE CAUSE	▪ Relief valve (built-into high pressure fuel pump) malfunction ▪ Spill valve control solenoid valve control circuit malfunction (damage to driver in PCM caused by short circuit to ground system) ▪ Spill valve control solenoid valve (built-into high pressure fuel pump) malfunction ▪ High pressure fuel pump malfunction • Fuel leakage in fuel line • Low-pressure side fuel delivery system malfunction ▪ Fuel filter clogged (built-into fuel pump unit) ▪ Low pressure side fuel line restriction (between fuel pump unit and high pressure fuel pump) ▪ Fuel pump unit malfunction ▪ Pressure regulator (built-into fuel pump unit) malfunction ▪ Fuel pump control module malfunction • Fuel injector malfunction ▪ Improper operation of fuel injector ▪ Fuel injector related wiring harness malfunction • Improper operation of purge control system ▪ Purge solenoid valve malfunction ▪ Purge solenoid hoses improper connection • PCV valve malfunction • MAF sensor malfunction • Air cleaner element malfunction • MAP sensor malfunction • Air suction in intake air system • Improper operation of electric variable valve timing control system ▪ Electric variable valve timing driver malfunction ▪ Electric variable valve timing motor malfunction ▪ Electric variable valve timing actuator malfunction • Improper operation of hydraulic variable valve timing control system • A/F sensor malfunction ▪ A/F sensor loose ▪ Exhaust system leakage • Poor fuel quality • PCM malfunction

System Wiring Diagram

- Not applicable

Function Explanation (DTC Detection Outline)

- The PCM detects the oxygen concentration in the exhaust gas from the A/F sensor signal and performs fuel injection amount feedback to maintain the optimum air/fuel ratio. If a condition in which the feedback correction amount is large (fuel injection amount being increased) continues for the specified time, a feedback correction amount malfunction is determined, and a DTC is stored. The feedback correction amount has a “Fuel feedback correction amount” for the air/fuel ratio and a

"Fuel learning correction amount" for fuel injector deterioration over time.

- "Fuel feedback correction amount (SHRTFT1)" and "Fuel learning correction amount (LONGFT1)" can be verified from the M-MDS PID item.
- The sum of the fuel feedback correction amount (SHRTFT1) and the fuel learning correction amount (LONGFT1) is the specified value (**30 %**) or more, and **10 s or more** have elapsed with the fuel learning correction amount (LONGFT1) at the specified value (**15 %**) or more.

  Engine coolant temperature: **0—45 °C {32—113 °F}**, **60 °C {140 °F} or more**

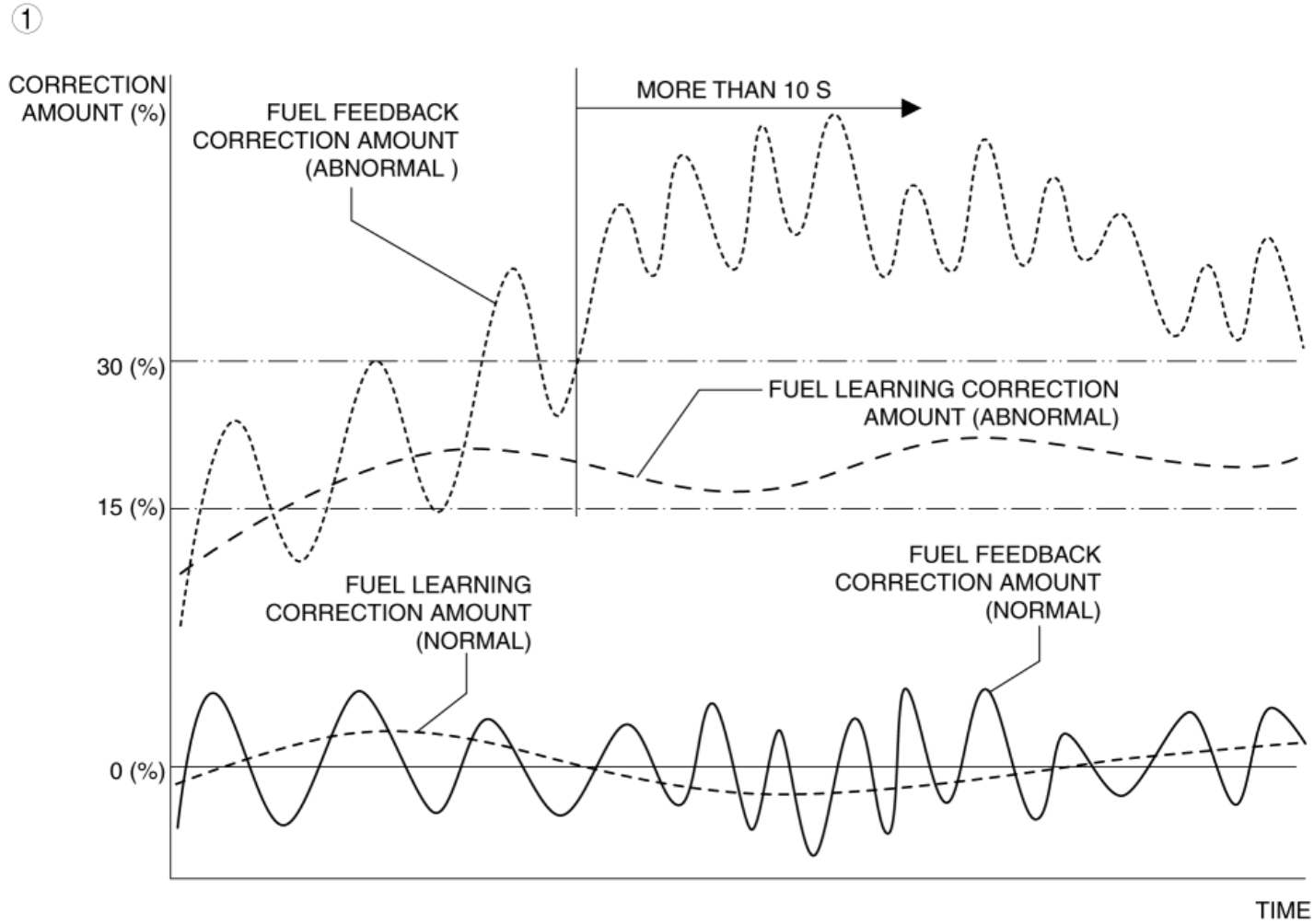

- Fuel learning correction amount (LONGFT1) at specified value (25%) or more.

  Engine coolant temperature: **0—45 °C {32—113 °F}**, **60 °C {140 °F} or more**

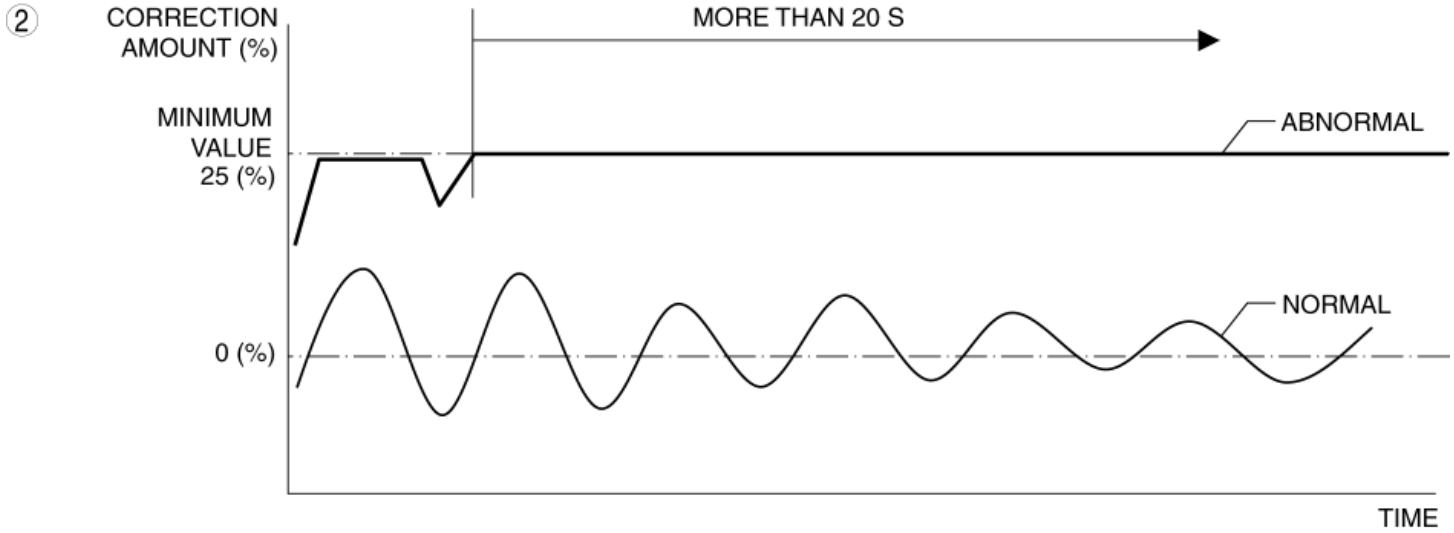

Repeatability Verification Procedure

- Warm up the engine to allow the engine coolant temperature to reach **80 °C {176 °F} or more**.
- Start the engine and leave it idling for **1 min**.

  NOTE:

  - Match the engine coolant temperature in the recorded FREEZE FRAME DATA (Mode 2)/snapshot data, the vehicle speed, and engine speed values to the best extent possible while driving the vehicle.
- Try to reproduce the malfunction by driving the vehicle for **5 min** based on the values in the FREEZE FRAME DATA (Mode 2)/snapshot data.

PID Item/Simulation Item Used In Diagnosis

PID/DATA monitor item table

Item	Definition	Unit	Condition/Specification
APP	Accelerator pedal opening angle (relative value) with the fully released status as 0% and fully depressed status as 100%	%	• Accelerator pedal released: Approx. 0% • Accelerator pedal fully depressed: Approx. 100%
ECT	Engine coolant temperature	°C, °F	• Displays ECT
	ECT sensor No.1 voltage	V	• ECT is 20 °C {68 °F}: Approx. 3.10 V • ECT is 40 °C {104 °F}: Approx. 2.16 V • ECT is 60 °C {140 °F}: Approx. 1.40 V • ECT is 80 °C {176 °F}: Approx. 0.87 V • ECT is 100 °C {212 °F}: Approx. 0.54 V
EVAPCP	Purge solenoid valve control duty value	%	• Idle (after warm up): Approx. 0% • Racing (Engine speed 2,000 rpm): 4.3—35% • Racing (Engine speed 4,000 rpm): Approx. 66%
FP	Fuel pump relay operation status	Off/On	• Ignition switched ON (engine off): Off • Cranking: On • Idle (after warm up): On
FUEL_PRES	Fuel pressure	KPa {MPa}, mBar {Bar}, psi, in H20	• Displays fuel pressure
	Fuel pressure sensor voltage	V	• Fuel pressure is 3.0 MPa {31 kgf/cm^2, 435 psi}: Approx. 0.92 V • Fuel pressure is 4.8 MPa {49 kgf/cm^2, 696 psi}: Approx. 1.17 V
HTR11	A/F sensor heater operation status	Off/On	• Ignition switched ON (engine off): Off • Idle (after warm up): On
	A/F sensor heater control duty value	%	• Ignition switched ON (engine off): 0% • Idle (after warm up): Approx. 40%

MAF	Mass air flow	g/Sec	• Displays MAF
	MAF sensor voltage	V	• Ignition switched ON (engine off) (MAF: 0.59 g/s {0.078 lb/min}): Approx. 0.72 V • Idle (after warm up) (MAF: 2.17 g/s {0.287 lb/min}): Approx. 0.86 V • Racing (engine speed is 2,000 rpm) (MAF: 4.73 g/s {0.626 lb/min}): Approx. 1.07 V
MAP	Manifold absolute pressure	KPa {MPa}, mBar {Bar}, psi, in H20	• Displays MAP
	MAP sensor voltage	V	• Ignition switched ON (engine off) (MAP:101 kPa {1.03 kgf/cm^2, 14.6 psi}): Approx. 4.07 V • Idle (after warm up) (MAP: 33 kPa {0.34 kgf/cm^2, 4.8 psi}): Approx. 1.34 V • Racing (engine speed is 2,000 rpm) (MAP: 26 kPa {0.27 kgf/cm^2, 3.8 psi}): Approx. 1.05 V
O2S11	A/F sensor current	µA	• Idle (after warm up): Approx. -39 µA • Deceleration fuel cut (accelerator pedal released from engine speed of 4,000 rpm or more): Approx. 3.84 mA
TP_REL	Throttle valve opening angle (relative value) with value at throttle valve fully open timing as the start point	%	• Accelerator pedal released: Approx. 12% • Accelerator pedal fully depressed: Approx. 82%
VT_EX_ACT	Actual exhaust valve timing	°	• Displays actual exhaust valve timing
VT EX_DES	Desired exhaust valve timing	°	• Displays desired exhaust valve timing
VT IN_ACT	Actual intake valve timing	°	• Displays actual intake valve timing
VT IN_DES	Desired intake valve timing	°	• Displays desired intake valve timing

Simulation item table

Item	Definition	Unit	Operation
INJ_1	Fuel injector No.1	OFF	• Select OFF to forcibly stop fuel injector No.1.
INJ_2	Fuel injector No.2	OFF	• Select OFF to forcibly stop fuel injector No.2.
INJ_3	Fuel injector No.3	OFF	• Select OFF to forcibly stop fuel injector No.3.
INJ_4	Fuel injector No.4	OFF	• Select OFF to forcibly stop fuel injector No.4.

Function Inspection Using M-MDS

STEP	INSPECTION	RESULTS	ACTION
1	**PURPOSE: VERIFY RELATED REPAIR INFORMATION AVAILABILITY** • Verify related Service Bulletins and/or on-line repair information availability. • Is any related repair information available?	Yes	Perform repair or diagnosis according to the available repair information. • If the vehicle is not repaired, go to the next step.
		No	Go to the next step.
2	**PURPOSE: IDENTIFY TRIGGER DTC FOR FREEZE FRAME DATA (MODE 2)** • Is the DTC P0171:00 on FREEZE FRAME DATA (Mode 2)?	Yes	Go to the next step.
		No	Go to the troubleshooting procedure for DTC on FREEZE FRAME DATA (Mode 2). (See **DTC TABLE [SKYACTIV-G 2.0, SKYACTIV-G 2.5]**.)
3	**PURPOSE: RECORD VEHICLE STATUS AT TIME OF DTC DETECTION TO UTILIZE WITH REPEATABILITY VERIFICATION** • Has the FREEZE FRAME DATA (Mode 2)/snapshot data been recorded?	Yes	Go to the next step.
		No	Record the FREEZE FRAME DATA (Mode 2)/snapshot data on the repair order, then go to the next step. **NOTE:** • Recording can be facilitated using the screen capture function of the PC.
4	**PURPOSE: VERIFY IF INPUT SIGNAL TO PCM AFFECTS FUEL INJECTION** • Start the engine. • Access the following PIDs using the M-MDS: (See **ON-BOARD DIAGNOSTIC TEST [SKYACTIV-G 2.0, SKYACTIV-G 2.5]**.) ▪ ECT ▪ APP ▪ TP_REL • Is there any signal that is far out of specification? (See **PCM INSPECTION [SKYACTIV-G 2.0, SKYACTIV-G 2.5]**.)	Yes	Inspect the suspected sensor and related wiring harness. • If there is any malfunction: ▪ Repair or replace the malfunctioning part. ▪ Go to the troubleshooting procedure to perform the procedure from Step 20. • If there is no malfunction: ▪ Go to the next step.
		No	Go to the next step.
5	**PURPOSE: VERIFY CONNECTOR CONNECTIONS** • Start the engine. • Access the following PIDs using the M-MDS: (See **ON-BOARD DIAGNOSTIC TEST [SKYACTIV-G 2.0, SKYACTIV-G 2.5]**.) ▪ FUEL_PRES ▪ FP ▪ EVAPCP ▪ MAF ▪ MAP ▪ VT_EX_ACT ▪ VT IN_ACT • When the following parts are shaken, does the PID value include a PID item which has changed?	Yes	Repair or replace the applicable connector parts. Go to the troubleshooting procedure to perform the procedure from Step 20.
		No	Go to the next step.

	▪ Fuel pressure sensor ▪ Fuel pump control module ▪ Purge solenoid valve ▪ MAF sensor ▪ MAP sensor ▪ OCV ▪ Electric variable valve timing motor/driver ▪ PCM		
6	**PURPOSE: VERIFY FUEL PRESSURE (HIGH-SIDE) MALFUNCTION** • Switch the ignition off. • Reconnect all disconnected connectors. • Start the engine and idle it. • Access the FUEL_PRES PID using the M-MDS. (See **ON-BOARD DIAGNOSTIC TEST [SKYACTIV-G 2.0, SKYACTIV-G 2.5]**.) • Is the FUEL_PRES PID value **approx. 3 MPa {31 kgf/cm^2, 435 psi}**?	Yes	Go to the next step.
		No	FUEL_PRES PID value is lower than **3 MPa {31 kgf/cm^2, 435 psi}**: • Go to the troubleshooting procedure to perform the procedure from Step 1. FUEL_PRES PID value is higher than **3 MPa {31 kgf/cm^2, 435 psi}**: • Go to Step 8.
7	**PURPOSE: VERIFY FUEL PRESSURE (LOW-SIDE) MALFUNCTION** • Switch the ignition off. • Disconnect the high pressure fuel pump connector. • Start the engine and idle it. • Access the FUEL_PRES PID using the M-MDS. (See **ON-BOARD DIAGNOSTIC TEST [SKYACTIV-G 2.0, SKYACTIV-G 2.5]**.) • Is the FUEL_PRES PID value **approx. 200 kPa {2.04 kgf/cm^2, 29.0 psi} or more**?	Yes	Go to the next step.
		No	Go to the troubleshooting procedure to perform the procedure from Step 5.
8	**PURPOSE: VERIFY IF MALFUNCTION CAUSED BY FUEL INJECTOR IMPROPER OPERATION** • Switch the ignition off. • Reconnect all disconnected connectors. • Start the engine and idle it. • Access the following simulation items using the M-MDS: (See **ON-BOARD DIAGNOSTIC TEST [SKYACTIV-G 2.0, SKYACTIV-G 2.5]**.) ▪ INJ_1 ▪ INJ_2 ▪ INJ_3 ▪ INJ_4 • Turn each fuel injector from on to off using the simulation items. • Does the vibration during idling worsen?	Yes	Go to the next step.
		No	Go to the troubleshooting procedure to perform the procedure from Step 7.
9	**PURPOSE: VERIFY IF MALFUNCTION CAUSED BY PURGE SOLENOID VALVE IMPROPER OPERATION** • Start the engine and idle it.	Yes	Go to the next step.

	• Access the EVAPCP PID using the M-MDS. (See **ON-BOARD DIAGNOSTIC TEST [SKYACTIV-G 2.0, SKYACTIV-G 2.5]**.) • Is the EVAPCP PID value normal?	No	Go to the troubleshooting procedure to perform the procedure from Step 8.
10	**PURPOSE: VERIFY MAF SENSOR** • Start the engine and idle it. • Access the MAF PID using the M-MDS. (See **ON-BOARD DIAGNOSTIC TEST [SKYACTIV-G 2.0, SKYACTIV-G 2.5]**.) • Is the MAF PID value normal?	Yes	Go to the next step.
		No	Go to the troubleshooting procedure to perform the procedure from Step 10.
11	**PURPOSE: VERIFY MAP SENSOR** • Start the engine and idle it. • Access the MAP PID using the M-MDS. (See **ON-BOARD DIAGNOSTIC TEST [SKYACTIV-G 2.0, SKYACTIV-G 2.5]**.) • Is the MAP PID value normal?	Yes	Go to the next step.
		No	Go to the troubleshooting procedure to perform the procedure from Step 12.
12	**PURPOSE: VERIFY INTAKE VALVE TIMING** • Start the engine and idle it. • Access the following PIDs using the M-MDS: (See **ON-BOARD DIAGNOSTIC TEST [SKYACTIV-G 2.0, SKYACTIV-G 2.5]**.) ▪ VT IN_ACT ▪ VT IN_DES • Depress the accelerator pedal to increase the engine speed. • Does the monitor value of the PID item VT IN_ACT conform to the VT IN_DES PID value?	Yes	Go to the next step.
		No	Go to the troubleshooting procedure to perform the procedure from Step 14.
13	**PURPOSE: VERIFY EXHAUST VALVE TIMING** • Start the engine and idle it. • Access the following PIDs using the M-MDS: (See **ON-BOARD DIAGNOSTIC TEST [SKYACTIV-G 2.0, SKYACTIV-G 2.5]**.) ▪ VT_EX_ACT ▪ VT EX_DES • Depress the accelerator pedal to increase the engine speed. • Does the monitor value of the PID item VT_EX_ACT conform to the VT EX_DES PID value?	Yes	Go to the next step.
		No	Go to the troubleshooting procedure to perform the procedure from Step 17.
14	**PURPOSE: VERIFY A/F SENSOR** • Access the O2S11 PID using the M-MDS. (See **ON-BOARD DIAGNOSTIC TEST [SKYACTIV-G 2.0, SKYACTIV-G 2.5]**.) • Is the O2S11 PID value normal?	Yes	Go to the next step.
		No	Go to the troubleshooting procedure to perform the procedure from Step 18.
15	**PURPOSE: VERIFY DTC** • Retrieve the PCM DTCs using the M-MDS. (See **ON-BOARD DIAGNOSTIC TEST [SKYACTIV-G 2.0,**	Yes	Go to the applicable DTC inspection. (See **DTC TABLE [SKYACTIV-G 2.0, SKYACTIV-G 2.5]**.)

	SKYACTIV-G 2.5].) • Are any DTCs present?		Go to the troubleshooting procedure to perform the procedure from Step 1.
		No	Go to the troubleshooting procedure to perform the procedure from Step 1.

Troubleshooting Diagnostic Procedure

Intention of troubleshooting procedure

- Step 1—7
  - Perform a fuel injector control system inspection.
- Step 8—9
  - Perform an emission system parts inspection.
- Step 10—13
  - Perform an intake air system parts inspection.
- Step 14—17
  - Perform a valve timing inspection.
- Step 18—19
  - Perform an exhaust system parts inspection.
- Step 20
  - Verify that the primary malfunction is resolved and there are no other malfunctions.

STEP	INSPECTION	RESULTS	ACTION
1	**PURPOSE: VERIFY IF CAUSE OF MALFUNCTION IS RELATED TO LACK OF FUEL** • Verify the remaining amount of fuel. • Is there a lack of fuel?	Yes	Refill the fuel, then go to Step 20.
		No	Go to the next step.
2	**PURPOSE: DETERMINE INTEGRITY OF FUEL PRESSURE SENSOR** • Inspect the fuel pressure sensor. (See **FUEL PRESSURE SENSOR INSPECTION [SKYACTIV-G 2.0, SKYACTIV-G 2.5]**.) • Is there any malfunction?	Yes	Replace the fuel distributor, then go to Step 20. (See **FUEL INJECTOR REMOVAL/INSTALLATION [SKYACTIV-G 2.0, SKYACTIV-G 2.5]**.)
		No	Go to the next step.
3	**PURPOSE: DETERMINE INTEGRITY OF HIGH PRESSURE FUEL PUMP** • Inspect the high pressure fuel pump. (See **HIGH PRESSURE FUEL PUMP INSPECTION [SKYACTIV-G 2.0, SKYACTIV-G 2.5]**.) • Is there any malfunction?	Yes	Replace the high pressure fuel pump, then go to Step 20. (See **HIGH PRESSURE FUEL PUMP REMOVAL/INSTALLATION [SKYACTIV-G 2.0, SKYACTIV-G 2.5]**.)
		No	Go to the next step.
4	**PURPOSE: VERIFY IF MALFUNCTION RELATED TO FUEL LEAK FROM FUEL SYSTEM OR RESTRICTION AFFECTS DIAGNOSTIC RESULTS** • Inspect the fuel system pipes (low to high pressure sides) for fuel leakage and restriction. • Is there any malfunction?	Yes	Repair or replace the malfunctioning part according to the inspection results, then go to Step 20.
		No	Go to the next step.
	PURPOSE: DETERMINE INTEGRITY OF FUEL PUMP		

5	**CONTROL MODULE** • Inspect the fuel pump control module. (See **FUEL PUMP CONTROL MODULE INSPECTION [SKYACTIV-G 2.0, SKYACTIV-G 2.5]**.) • Is there any malfunction?	Yes	Replace the fuel pump control module, then go to Step 20. (See **FUEL PUMP CONTROL MODULE REMOVAL/INSTALLATION [SKYACTIV-G 2.0, SKYACTIV-G 2.5]**.)
		No	Go to the next step.
6	**PURPOSE: DETERMINE INTEGRITY OF FUEL PUMP UNIT** • Inspect the fuel pump unit. (See **FUEL PUMP UNIT INSPECTION [SKYACTIV-G 2.0, SKYACTIV-G 2.5]**.) • Is there any malfunction?	Yes	Replace the fuel pump unit, then go to Step 20. (See **FUEL PUMP UNIT REMOVAL/INSTALLATION [SKYACTIV-G 2.0, SKYACTIV-G 2.5]**.)
		No	Go to the next step.
7	**PURPOSE: DETERMINE INTEGRITY OF FUEL INJECTOR** • Inspect the fuel injector. (See **FUEL INJECTOR INSPECTION [SKYACTIV-G 2.0, SKYACTIV-G 2.5]**.) • Is there any malfunction?	Yes	Replace the fuel injector, then go to Step 20. (See **FUEL INJECTOR REMOVAL/INSTALLATION [SKYACTIV-G 2.0, SKYACTIV-G 2.5]**.)
		No	Go to the next step.
8	**PURPOSE: DETERMINE INTEGRITY OF PURGE SOLENOID VALVE** • Inspect the purge solenoid valve. (See **PURGE SOLENOID VALVE INSPECTION [SKYACTIV-G 2.0, SKYACTIV-G 2.5]**.) • Is there any malfunction?	Yes	Replace the purge solenoid valve, then go to Step 20. (See **PURGE SOLENOID VALVE REMOVAL/INSTALLATION [SKYACTIV-G 2.0, SKYACTIV-G 2.5]**.)
		No	Go to the next step.
9	**PURPOSE: DETERMINE INTEGRITY OF PCV VALVE** • Inspect the PCV valve. (See **POSITIVE CRANKCASE VENTILATION (PCV) VALVE INSPECTION [SKYACTIV-G 2.0, SKYACTIV-G 2.5]**.)	Yes	Replace the PCV valve, then go to Step 20. (See **POSITIVE CRANKCASE VENTILATION (PCV) VALVE REMOVAL/INSTALLATION [SKYACTIV-G 2.0, SKYACTIV-G 2.5]**.)
		No	Go to the next step.
10	**PURPOSE: DETERMINE INTEGRITY OF MAF SENSOR** • Inspect the MAF sensor. (See **MASS AIR FLOW (MAF) SENSOR INSPECTION [SKYACTIV-G 2.0, SKYACTIV-G 2.5]**.) • Is there any malfunction?	Yes	Replace the MAF sensor/IAT sensor No.1, then go to Step 20. (See **MASS AIR FLOW (MAF) SENSOR/INTAKE AIR TEMPERATURE (IAT) SENSOR NO.1 REMOVAL/INSTALLATION [SKYACTIV-G 2.0, SKYACTIV-G 2.5]**.)
		No	Go to the next step.
11	**PURPOSE: VERIFY IF MALFUNCTION RELATED TO AIR CLEANER ELEMENT AFFECTS MEASUREMENT OF INTAKE AIR AMOUNT** • Inspect the air cleaner element. (See **AIR CLEANER ELEMENT INSPECTION [SKYACTIV-G 2.0, SKYACTIV-G 2.5]**.) • Is there any malfunction?	Yes	Replace the air cleaner element, then go to Step 20. (See **AIR CLEANER ELEMENT REMOVAL/INSTALLATION [SKYACTIV-G 2.0, SKYACTIV-G 2.5]**.)
		No	Go to the next step.
12	**PURPOSE: DETERMINE INTEGRITY OF MAP SENSOR** • Reconnect all disconnected connectors. • Inspect the MAP sensor. (See **MANIFOLD ABSOLUTE PRESSURE (MAP) SENSOR INSPECTION [SKYACTIV-G 2.0, SKYACTIV-G 2.5]**.) • Is there any malfunction?	Yes	Replace the MAP sensor/IAT sensor No.2, then go to Step 20. (See **MANIFOLD ABSOLUTE PRESSURE (MAP) SENSOR/INTAKE AIR TEMPERATURE (IAT) SENSOR NO.2 REMOVAL/INSTALLATION [SKYACTIV-G 2.0, SKYACTIV-G 2.5]**.)
		No	Go to the next step.
13	**PURPOSE: VERIFY IF MALFUNCTION RELATED TO INTAKE AIR SYSTEM AFFECTS DIAGNOSTIC RESULTS**	Yes	Repair or replace the malfunctioning part according to the

	• Visually inspect for loose, cracked or damaged hoses on intake air system. • Is there any malfunction?		inspection results, then go to Step 20.
		No	Go to the next step.
14	**PURPOSE: DETERMINE INTEGRITY OF ELECTRIC VARIABLE VALVE TIMING DRIVER** • Inspect the electric variable valve timing driver. (See **ELECTRIC VARIABLE VALVE TIMING MOTOR/DRIVER INSPECTION [SKYACTIV-G 2.0, SKYACTIV-G 2.5]**.) • Is there any malfunction?	Yes	Replace the electric variable valve timing motor/driver, then go to Step 20. (See **ELECTRIC VARIABLE VALVE TIMING MOTOR/DRIVER REMOVAL/INSTALLATION [SKYACTIV-G 2.0, SKYACTIV-G 2.5]**.)
		No	Go to the next step.
15	**PURPOSE: DETERMINE INTEGRITY OF ELECTRIC VARIABLE VALVE TIMING MOTOR** • Inspect the electric variable valve timing motor. (See **ELECTRIC VARIABLE VALVE TIMING MOTOR/DRIVER INSPECTION [SKYACTIV-G 2.0, SKYACTIV-G 2.5]**.) • Is there any malfunction?	Yes	Replace the electric variable valve timing motor/driver, then go to Step 20. (See **ELECTRIC VARIABLE VALVE TIMING MOTOR/DRIVER REMOVAL/INSTALLATION [SKYACTIV-G 2.0, SKYACTIV-G 2.5]**.)
		No	Go to the next step.
16	**PURPOSE: DETERMINE INTEGRITY OF ELECTRIC VARIABLE VALVE TIMING ACTUATOR** • Inspect the electric variable valve timing actuator. (See **ELECTRIC VARIABLE VALVE TIMING ACTUATOR INSPECTION [SKYACTIV-G 2.0, SKYACTIV-G 2.5]**.) • Is there any malfunction?	Yes	Replace the electric variable valve timing actuator, then go to Step 20. (See **ELECTRIC VARIABLE VALVE TIMING ACTUATOR, HYDRAULIC VARIABLE VALVE TIMING ACTUATOR REMOVAL/INSTALLATION [SKYACTIV-G 2.0, SKYACTIV-G 2.5]**.)
		No	Go to the next step.
17	**PURPOSE: DETERMINE INTEGRITY OF OCV** • Inspect the OCV. (See **OIL CONTROL VALVE (OCV) INSPECTION [SKYACTIV-G 2.0, SKYACTIV-G 2.5]**.) • Is there any malfunction?	Yes	Replace the OCV, then go to Step 20. (See **OIL CONTROL VALVE (OCV) REMOVAL/INSTALLATION [SKYACTIV-G 2.0, SKYACTIV-G 2.5]**.)
		No	Go to the next step.
18	**PURPOSE: DETERMINE INTEGRITY OF A/F SENSOR** • Inspect the A/F sensor. (See **AIR FUEL RATIO (A/F) SENSOR INSPECTION [SKYACTIV-G 2.0, SKYACTIV-G 2.5]**.) • Is there any malfunction?	Yes	Replace the A/F sensor, then go to Step 20. (See **AIR FUEL RATIO (A/F) SENSOR REMOVAL/INSTALLATION [SKYACTIV-G 2.0, SKYACTIV-G 2.5]**.)
		No	Go to the next step.
19	**PURPOSE: VERIFY IF MALFUNCTION RELATED TO EMISSION SYSTEM AFFECTS HO2S SIGNAL** • Verify the exhaust gas leakage from the exhaust system. (between A/F sensor and HO2S) • Is there any malfunction?	Yes	Repair or replace the malfunctioning part according to the inspection results, then go to the next step.
		No	Go to the next step.
20	**PURPOSE: VERIFICATION OF VEHICLE REPAIR COMPLETION** • Always reconnect all disconnected connectors. • Clear the DTC from the PCM memory using the M-MDS. (See **CLEARING DTC [SKYACTIV-G 2.0, SKYACTIV-G 2.5]**.)	Yes	Repeat the inspection from Step 1. • If the malfunction recurs, replace the PCM. (See **PCM REMOVAL/INSTALLATION [SKYACTIV-G 2.0, SKYACTIV-G 2.5]**.) Go to the next step.

	• Implement the repeatability verification procedure. (See **Repeatability Verification Procedure**.) • Perform the Pending Trouble Code Access Procedure. (See **ON-BOARD DIAGNOSTIC TEST [SKYACTIV-G 2.0, SKYACTIV-G 2.5]**.) • Is the PENDING CODE for this DTC present?	No	DTC troubleshooting completed.

2014 - Mazda3 - Engine

DTC P0172:00 [SKYACTIV-G 2.0, SKYACTIV-G 2.5]

NOTE:

- To determine the malfunctioning part, proceed with the diagnostics from "Function Inspection Using M-MDS".

Details On DTCs

DESCRIPTION	Fuel trim system too rich	
DETECTION CONDITION	Determination conditions	• Any one of the following conditions is met: ▪ While the engine is idling or the vehicle is driven, the fuel feedback correction amount (SHRTFT1) is the threshold (**−25 %**) or less, and the fuel learning correction amount (LONGFT1) is the threshold (**−15 %**) or less for **10 s or more**. ▪ While the engine is idling or the vehicle is driven, the fuel feedback correction amount reaches the lower limit (**−25 % or less**) for **20 s or more**.
	Preconditions	• Engine coolant temperature: **0—45 °C {32—113 °F}**, **60 °C {140 °F} or more**[*1] • [*1]: Value can be verified by displaying PIDs using M-MDS
	Malfunction determination period	• **10 s** or **20 s** period
	Drive cycle	• 2
	Self test type	• CMDTC self test
	Sensor used	• A/F sensor
FAIL-SAFE FUNCTION	• Not applicable	
VEHICLE STATUS WHEN DTCs ARE OUTPUT	• Illuminates check engine light.	
	• Erratic signal to PCM ▪ ECT sensor No.1 signal malfunction ▪ MAF sensor signal malfunction ▪ MAP sensor signal malfunction ▪ IAT sensor No.2 signal malfunction ▪ Related connector or terminals malfunction ▪ Related wiring harness malfunction • High-pressure side fuel delivery system malfunction ▪ Fuel pressure sensor malfunction	

POSSIBLE CAUSE	▪ Relief valve (built-into high pressure fuel pump) malfunction ▪ Spill valve control solenoid valve control circuit malfunction (damage to driver in PCM caused by short circuit to ground system) ▪ Spill valve control solenoid valve (built-into high pressure fuel pump) malfunction ▪ High pressure fuel pump malfunction • Low-pressure side fuel delivery system malfunction ▪ Fuel filter clogged (built-into fuel pump unit) ▪ Low pressure side fuel line restriction (between fuel pump unit and high pressure fuel pump) ▪ Fuel pump unit malfunction ▪ Pressure regulator (built-into fuel pump unit) malfunction ▪ Fuel pump control module malfunction • Fuel injector malfunction ▪ Improper operation of fuel injector ▪ Fuel injector related wiring harness malfunction • Improper operation of purge control system ▪ Purge solenoid valve malfunction ▪ Purge solenoid hoses improper connection • MAF sensor malfunction • MAP sensor malfunction • Improper operation of electric variable valve timing control system ▪ Electric variable valve timing driver malfunction ▪ Electric variable valve timing motor malfunction ▪ Electric variable valve timing actuator malfunction • Improper operation of hydraulic variable valve timing control system • A/F sensor malfunction ▪ A/F sensor loose • PCM malfunction

System Wiring Diagram

- Not applicable

Function Explanation (DTC Detection Outline)

- The PCM detects the oxygen concentration in the exhaust gas from the A/F sensor signal and performs fuel injection amount feedback to maintain the optimum air/fuel ratio. If a condition in which the feedback correction amount is small (fuel injection amount being decreased) continues for the specified time, a feedback correction amount malfunction is determined, and a DTC is stored. The feedback correction amount has a “Fuel feedback correction amount” for the air/fuel ratio and a “Fuel learning correction amount” for fuel injector deterioration over time.
- “Fuel feedback correction amount (SHRTFT1)” and “Fuel learning correction amount (LONGFT1)” can be verified from the M-MDS PID item.
- The sum of the fuel feedback correction amount (SHRTFT1) and the fuel learning correction amount (LONGFT1) is the specified value (**−25 %**) or less, and **10 s or more** have elapsed with the fuel learning correction amount (LONGFT1) at the specified value (**−15 %**) or less.

  Engine coolant temperature: **0—45 °C {32—113 °F}**, **60 °C {140 °F} or more**

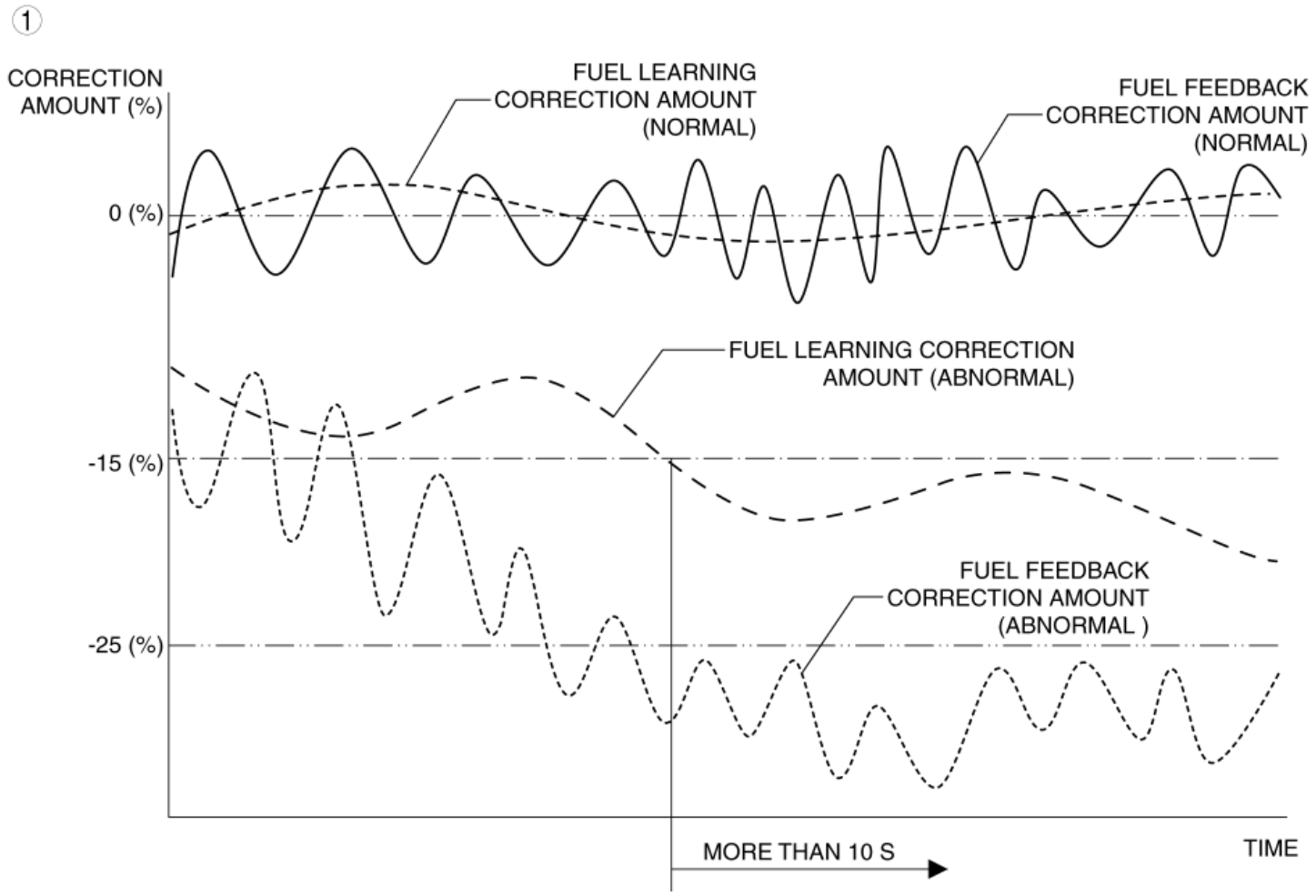

- Fuel learning correction amount (LONGFT1) at the specified value (-25%) or less.

  Engine coolant temperature: **0—45 °C {32—113 °F}**, **60 °C {140 °F} or more**

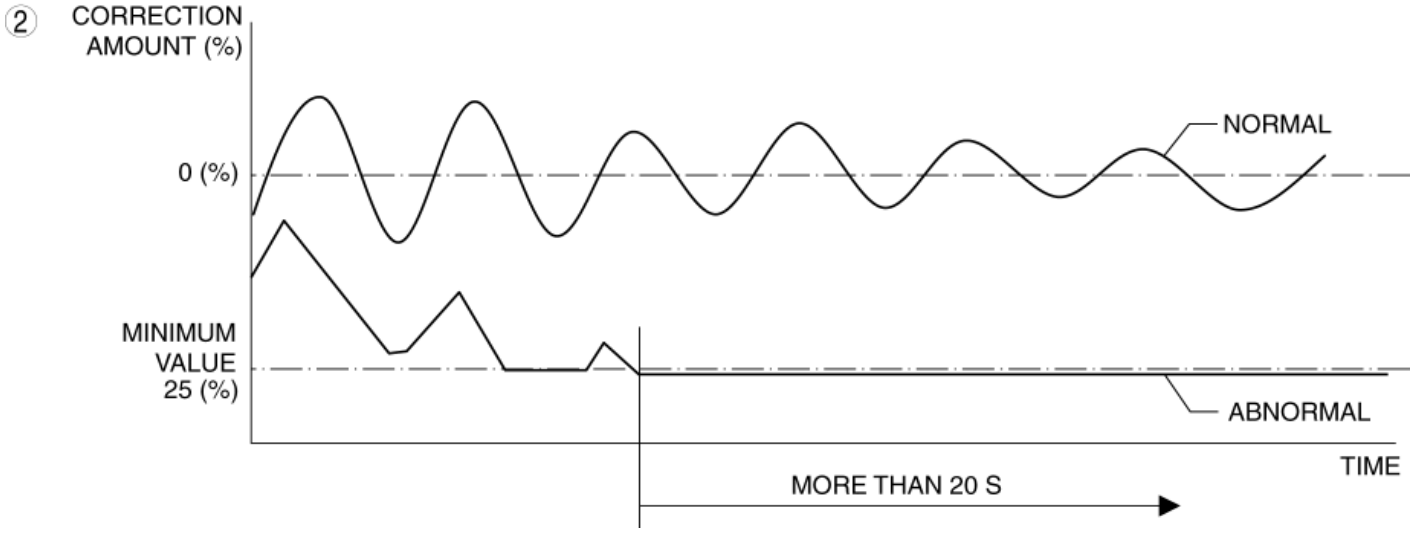

Repeatability Verification Procedure

- Warm up the engine to allow the engine coolant temperature to reach **80 °C {176 °F} or more**.
- Start the engine and leave it idling for **1 min**.

  NOTE:

  - Match the engine coolant temperature in the recorded FREEZE FRAME DATA (Mode 2)/snapshot data, the vehicle speed, and engine speed values to the best extent possible while driving the vehicle.

- Try to reproduce the malfunction by driving the vehicle for **5 min** based on the values in the FREEZE FRAME DATA (Mode 2)/snapshot data.

PID Item/Simulation Item Used In Diagnosis

PID/DATA monitor item table

Item	Definition	Unit	Condition/Specification
APP	Accelerator pedal opening angle (relative value) with the fully released status as 0% and fully depressed status as 100%	%	• Accelerator pedal released: Approx. 0% • Accelerator pedal fully depressed: Approx. 100%
ECT	Engine coolant temperature	°C, °F	• Displays ECT
	ECT sensor No.1 voltage	V	• ECT is 20 °C {68 °F}: Approx. 3.10 V • ECT is 40 °C {104 °F}: Approx. 2.16 V • ECT is 60 °C {140 °F}: Approx. 1.40 V • ECT is 80 °C {176 °F}: Approx. 0.87 V • ECT is 100 °C {212 °F}: Approx. 0.54 V
EVAPCP	Purge solenoid valve control duty value	%	• Idle (after warm up): Approx. 0% • Racing (Engine speed 2,000 rpm): 4.3—35% • Racing (Engine speed 4,000 rpm): Approx. 66%
FP	Fuel pump relay operation status	Off/On	• Ignition switched ON (engine off): Off • Cranking: On • Idle (after warm up): On
FUEL_PRES	Fuel pressure	KPa {MPa}, mBar {Bar}, psi, in H20	• Displays fuel pressure
	Fuel pressure sensor voltage	V	• Fuel pressure is 3.0 MPa {31 kgf/cm^2, 435 psi}: Approx. 0.92 V • Fuel pressure is 4.8 MPa {49 kgf/cm^2, 696 psi}: Approx. 1.17 V
HTR11	A/F sensor heater operation status	Off/On	• Ignition switched ON (engine off): Off • Idle (after warm up): On
	A/F sensor heater control duty value	%	• Ignition switched ON (engine off): 0% • Idle (after warm up): Approx. 40%
MAF	Mass air flow	g/Sec	• Displays MAF
	MAF sensor voltage	V	• Ignition switched ON (engine off) (MAF: 0.59 g/s {0.078 lb/min}): Approx. 0.72 V • Idle (after warm up) (MAF: 2.17 g/s {0.287 lb/min}): Approx. 0.86 V • Racing (engine speed is 2,000 rpm)

			(MAF: 4.73 g/s {0.626 lb/min}): Approx. 1.07 V
MAP	Manifold absolute pressure	KPa {MPa}, mBar {Bar}, psi, in H20	• Displays MAP
	MAP sensor voltage	V	• Ignition switched ON (engine off) (MAP:101 kPa {1.03 kgf/cm^2, 14.6 psi}): Approx. 4.07 V • Idle (after warm up) (MAP: 33 kPa {0.34 kgf/cm^2, 4.8 psi}): Approx. 1.34 V • Racing (engine speed is 2,000 rpm) (MAP: 26 kPa {0.27 kgf/cm^2, 3.8 psi}): Approx. 1.05 V
O2S11	A/F sensor current	µA	• Idle (after warm up): Approx. -39 µA • Deceleration fuel cut (accelerator pedal released from engine speed of 4,000 rpm or more): Approx. 3.84 mA
TP_REL	Throttle valve opening angle (relative value) with value at throttle valve fully open timing as the start point	%	• Accelerator pedal released: Approx. 12% • Accelerator pedal fully depressed: Approx. 82%
VT_EX_ACT	Actual exhaust valve timing	°	• Displays actual exhaust valve timing
VT EX_DES	Desired exhaust valve timing	°	• Displays desired exhaust valve timing
VT IN_ACT	Actual intake valve timing	°	• Displays actual intake valve timing
VT IN_DES	Desired intake valve timing	°	• Displays desired intake valve timing

Simulation item table

Item	Definition	Unit	Operation
INJ_1	Fuel injector No.1	OFF	• Select OFF to forcibly stop fuel injector No.1.
INJ_2	Fuel injector No.2	OFF	• Select OFF to forcibly stop fuel injector No.2.
INJ_3	Fuel injector No.3	OFF	• Select OFF to forcibly stop fuel injector No.3.
INJ_4	Fuel injector No.4	OFF	• Select OFF to forcibly stop fuel injector No.4.

Function Inspection Using M-MDS

STEP	INSPECTION	RESULTS	ACTION
1	**PURPOSE: VERIFY RELATED REPAIR INFORMATION AVAILABILITY** • Verify related Service Bulletins and/or on-line repair information availability. • Is any related repair information available?	Yes	Perform repair or diagnosis according to the available repair information. • If the vehicle is not repaired, go to the next step.
		No	Go to the next step.

2	**PURPOSE: IDENTIFY TRIGGER DTC FOR FREEZE FRAME DATA (MODE 2)** • Is the DTC P0172:00 on FREEZE FRAME DATA (Mode 2)?	Yes	Go to the next step.
		No	Go to the troubleshooting procedure for DTC on FREEZE FRAME DATA (Mode 2). (See **DTC TABLE [SKYACTIV-G 2.0, SKYACTIV-G 2.5]**.)
3	**PURPOSE: RECORD VEHICLE STATUS AT TIME OF DTC DETECTION TO UTILIZE WITH REPEATABILITY VERIFICATION** • Has the FREEZE FRAME DATA (Mode 2)/snapshot data been recorded?	Yes	Go to the next step.
		No	Record the FREEZE FRAME DATA (Mode 2)/snapshot data on the repair order, then go to the next step. **NOTE:** • Recording can be facilitated using the screen capture function of the PC.
4	**PURPOSE: VERIFY IF INPUT SIGNAL TO PCM AFFECTS FUEL INJECTION** • Start the engine. • Access the following PIDs using the M-MDS: (See **ON-BOARD DIAGNOSTIC TEST [SKYACTIV-G 2.0, SKYACTIV-G 2.5]**.) ▪ ECT ▪ APP ▪ TP_REL • Is there any signal that is far out of specification? (See **PCM INSPECTION [SKYACTIV-G 2.0, SKYACTIV-G 2.5]**.)	Yes	Inspect the suspected sensor and related wiring harness. • If there is any malfunction: ▪ Repair or replace the malfunctioning part. ▪ Go to the troubleshooting procedure to perform the procedure from Step 13. • If there is no malfunction: ▪ Go to the next step.
		No	Go to the next step.
5	**PURPOSE: VERIFY CONNECTOR CONNECTIONS** • Start the engine. • Access the following PIDs using the M-MDS: (See **ON-BOARD DIAGNOSTIC TEST [SKYACTIV-G 2.0, SKYACTIV-G 2.5]**.) ▪ FUEL_PRES ▪ FP ▪ EVAPCP ▪ MAF ▪ MAP ▪ VT_EX_ACT ▪ VT IN_ACT • When the following parts are shaken, does the PID value include a PID item which has changed? ▪ Fuel pressure sensor ▪ Fuel pump control module ▪ Purge solenoid valve ▪ MAF sensor ▪ MAP sensor ▪ OCV ▪ Electric variable valve timing	Yes	Repair or replace the applicable connector parts. Go to the troubleshooting procedure to perform the procedure from Step 13.
		No	Go to the next step.

	motor/driver ▪ PCM		
6	**PURPOSE: VERIFY FUEL PRESSURE (HIGH-SIDE) MALFUNCTION** • Switch the ignition off. • Reconnect all disconnected connectors. • Start the engine and idle it. • Access the FUEL_PRES PID using the M-MDS. (See **ON-BOARD DIAGNOSTIC TEST [SKYACTIV-G 2.0, SKYACTIV-G 2.5]**.) • Is the FUEL_PRES PID value **approx. 3 MPa {31 kgf/cm^2, 435 psi}**?	Yes	Go to the next step.
		No	FUEL_PRES PID value is lower than **3 MPa {31 kgf/cm^2, 435 psi}**: • Go to the troubleshooting procedure to perform the procedure from Step 1. FUEL_PRES PID value is higher than **3 MPa {31 kgf/cm^2, 435 psi}**: • Go to Step 8.
7	**PURPOSE: VERIFY FUEL PRESSURE (LOW-SIDE) MALFUNCTION** • Switch the ignition off. • Disconnect the high pressure fuel pump connector. • Start the engine and idle it. • Access the FUEL_PRES PID using the M-MDS. (See **ON-BOARD DIAGNOSTIC TEST [SKYACTIV-G 2.0, SKYACTIV-G 2.5]**.) • Is the FUEL_PRES PID value **approx. 200 kPa {2.04 kgf/cm^2, 29.0 psi} or more**?	Yes	Go to the next step.
		No	Go to the troubleshooting procedure to perform the procedure from Step 1.
8	**PURPOSE: VERIFY IF MALFUNCTION CAUSED BY FUEL INJECTOR IMPROPER OPERATION** • Switch the ignition off. • Reconnect all disconnected connectors. • Start the engine and idle it. • Access the following simulation items using the M-MDS: (See **ON-BOARD DIAGNOSTIC TEST [SKYACTIV-G 2.0, SKYACTIV-G 2.5]**.) ▪ INJ_1 ▪ INJ_2 ▪ INJ_3 ▪ INJ_4 • Turn each fuel injector from on to off using the simulation items. • Does the vibration during idling worsen?	Yes	Go to the next step.
		No	Go to the troubleshooting procedure to perform the procedure from Step 3.
9	**PURPOSE: VERIFY IF MALFUNCTION CAUSED BY PURGE SOLENOID VALVE IMPROPER OPERATION** • Start the engine and idle it. • Access the EVAPCP PID using the M-MDS. (See **ON-BOARD DIAGNOSTIC TEST [SKYACTIV-G 2.0, SKYACTIV-G 2.5]**.) • Is the EVAPCP PID value normal?	Yes	Go to the next step.
		No	Go to the troubleshooting procedure to perform the procedure from Step 4.
10	**PURPOSE: VERIFY MAF SENSOR** • Start the engine and idle it. • Access the MAF PID using the M-MDS. **ON-BOARD DIAGNOSTIC TEST [SKYACTIV-G 2.0,**	Yes	Go to the next step.
		No	Go to the troubleshooting procedure to perform the procedure from Step 5.

	(See **SKYACTIV-G 2.5]**.) • Is the MAF PID value normal?		
11	**PURPOSE: VERIFY MAP SENSOR** • Start the engine and idle it. • Access the MAP PID using the M-MDS. (See **ON-BOARD DIAGNOSTIC TEST [SKYACTIV-G 2.0, SKYACTIV-G 2.5]**.) • Is the MAP PID value normal?	Yes	Go to the next step.
		No	Go to the troubleshooting procedure to perform the procedure from Step 7.
12	**PURPOSE: VERIFY INTAKE VALVE TIMING** • Start the engine and idle it. • Access the following PIDs using the M-MDS: (See **ON-BOARD DIAGNOSTIC TEST [SKYACTIV-G 2.0, SKYACTIV-G 2.5]**.) ▪ VT IN_ACT ▪ VT IN_DES • Depress the accelerator pedal to increase the engine speed. • Does the monitor value of the PID item VT IN_ACT conform to the VT IN_DES PID value?	Yes	Go to the next step.
		No	Go to the troubleshooting procedure to perform the procedure from Step 8.
13	**PURPOSE: VERIFY EXHAUST VALVE TIMING** • Start the engine and idle it. • Access the following PIDs using the M-MDS: (See **ON-BOARD DIAGNOSTIC TEST [SKYACTIV-G 2.0, SKYACTIV-G 2.5]**.) ▪ VT_EX_ACT ▪ VT EX_DES • Depress the accelerator pedal to increase the engine speed. • Does the monitor value of the PID item VT_EX_ACT conform to the VT EX_DES PID value?	Yes	Go to the next step.
		No	Go to the troubleshooting procedure to perform the procedure from Step 11.
14	**PURPOSE: VERIFY A/F SENSOR** • Access the O2S11 PID using the M-MDS. (See **ON-BOARD DIAGNOSTIC TEST [SKYACTIV-G 2.0, SKYACTIV-G 2.5]**.) • Is the O2S11 PID value normal?	Yes	Go to the next step.
		No	Go to the troubleshooting procedure to perform the procedure from Step 12.
15	**PURPOSE: VERIFY DTC** • Retrieve the PCM DTCs using the M-MDS. (See **ON-BOARD DIAGNOSTIC TEST [SKYACTIV-G 2.0, SKYACTIV-G 2.5]**.) • Are any DTCs present?	Yes	Go to the applicable DTC inspection. (See **DTC TABLE [SKYACTIV-G 2.0, SKYACTIV-G 2.5]**.) Go to the troubleshooting procedure to perform the procedure from Step 1.
		No	Go to the troubleshooting procedure to perform the procedure from Step 1.

Troubleshooting Diagnostic Procedure

Intention of troubleshooting procedure

- Step 1—3
  - Perform a fuel injector control system inspection.
- Step 4
  - Perform an emission system parts inspection.
- Step 5—7
  - Perform an intake air system parts inspection.
- Step 8—11
  - Perform a valve timing inspection.
- Step 12
  - Perform an exhaust system parts inspection.
- Step 13
  - Verify that the primary malfunction is resolved and there are no other malfunctions.

STEP	INSPECTION	RESULTS	ACTION
1	**PURPOSE: DETERMINE INTEGRITY OF FUEL PUMP CONTROL MODULE** • Inspect the fuel pump control module. (See **FUEL PUMP CONTROL MODULE INSPECTION [SKYACTIV-G 2.0, SKYACTIV-G 2.5]**.) • Is there any malfunction?	Yes	Replace the fuel pump control module, then go to Step 13. (See **FUEL PUMP CONTROL MODULE REMOVAL/INSTALLATION [SKYACTIV-G 2.0, SKYACTIV-G 2.5]**.)
		No	Go to the next step.
2	**PURPOSE: DETERMINE INTEGRITY OF FUEL PUMP UNIT** • Inspect the fuel pump unit. (See **FUEL PUMP UNIT INSPECTION [SKYACTIV-G 2.0, SKYACTIV-G 2.5]**.) • Is there any malfunction?	Yes	Replace the fuel pump unit, then go to Step 13. (See **FUEL PUMP UNIT REMOVAL/INSTALLATION [SKYACTIV-G 2.0, SKYACTIV-G 2.5]**.)
		No	Go to the next step.
3	**PURPOSE: DETERMINE INTEGRITY OF FUEL INJECTOR** • Inspect the fuel injector. (See **FUEL INJECTOR INSPECTION [SKYACTIV-G 2.0, SKYACTIV-G 2.5]**.) • Is there any malfunction?	Yes	Replace the fuel injector, then go to Step 13. (See **FUEL INJECTOR REMOVAL/INSTALLATION [SKYACTIV-G 2.0, SKYACTIV-G 2.5]**.)
		No	Go to the next step.
4	**PURPOSE: DETERMINE INTEGRITY OF PURGE SOLENOID VALVE** • Inspect the purge solenoid valve. (See **PURGE SOLENOID VALVE INSPECTION [SKYACTIV-G 2.0, SKYACTIV-G 2.5]**.) • Is there any malfunction?	Yes	Replace the purge solenoid valve, then go to Step 13. (See **PURGE SOLENOID VALVE REMOVAL/INSTALLATION [SKYACTIV-G 2.0, SKYACTIV-G 2.5]**.)
		No	Go to the next step.
5	**PURPOSE: DETERMINE INTEGRITY OF MAF SENSOR** • Inspect the MAF sensor. (See **MASS AIR FLOW (MAF) SENSOR INSPECTION [SKYACTIV-G 2.0, SKYACTIV-G 2.5]**.) • Is there any malfunction?	Yes	Replace the MAF sensor/IAT sensor No.1, then go to Step 13. (See **MASS AIR FLOW (MAF) SENSOR/INTAKE AIR TEMPERATURE (IAT) SENSOR NO.1 REMOVAL/INSTALLATION [SKYACTIV-G 2.0, SKYACTIV-G 2.5]**.)
		No	Go to the next step.

6	**PURPOSE: AIR CLEANER ELEMENT** • Remove the air cleaner element with the engine is running. (See **AIR CLEANER ELEMENT REMOVAL/INSTALLATION [SKYACTIV-G 2.0, SKYACTIV-G 2.5]**.) • Does the engine speed increase?	Yes	Inspect the air cleaner element. (See **AIR CLEANER ELEMENT INSPECTION [SKYACTIV-G 2.0, SKYACTIV-G 2.5]**.) • If there is any malfunction: ▪ Clean or replace the air cleaner element, then go to Step 13. (See **AIR CLEANER ELEMENT REMOVAL/INSTALLATION [SKYACTIV-G 2.0, SKYACTIV-G 2.5]**.) • If there is no malfunction: ▪ Go to the next step.
		No	Go to the next step.
7	**PURPOSE: DETERMINE INTEGRITY OF MAP SENSOR** • Reconnect all disconnected connectors. • Inspect the MAP sensor. (See **MANIFOLD ABSOLUTE PRESSURE (MAP) SENSOR INSPECTION [SKYACTIV-G 2.0, SKYACTIV-G 2.5]**.) • Is there any malfunction?	Yes	Replace the MAP sensor/IAT sensor No.2, then go to Step 13. (See **MANIFOLD ABSOLUTE PRESSURE (MAP) SENSOR/INTAKE AIR TEMPERATURE (IAT) SENSOR NO.2 REMOVAL/INSTALLATION [SKYACTIV-G 2.0, SKYACTIV-G 2.5]**.)
		No	Go to the next step.
8	**PURPOSE: DETERMINE INTEGRITY OF ELECTRIC VARIABLE VALVE TIMING DRIVER** • Inspect the electric variable valve timing driver. (See **ELECTRIC VARIABLE VALVE TIMING MOTOR/DRIVER INSPECTION [SKYACTIV-G 2.0, SKYACTIV-G 2.5]**.) • Is there any malfunction?	Yes	Replace the electric variable valve timing motor/driver, then go to Step 13. (See **ELECTRIC VARIABLE VALVE TIMING MOTOR/DRIVER REMOVAL/INSTALLATION [SKYACTIV-G 2.0, SKYACTIV-G 2.5]**.)
		No	Go to the next step.
9	**PURPOSE: DETERMINE INTEGRITY OF ELECTRIC VARIABLE VALVE TIMING MOTOR** • Inspect the electric variable valve timing motor. (See **ELECTRIC VARIABLE VALVE TIMING MOTOR/DRIVER INSPECTION [SKYACTIV-G 2.0, SKYACTIV-G 2.5]**.) • Is there any malfunction?	Yes	Replace the electric variable valve timing motor/driver, then go to Step 13. (See **ELECTRIC VARIABLE VALVE TIMING MOTOR/DRIVER REMOVAL/INSTALLATION [SKYACTIV-G 2.0, SKYACTIV-G 2.5]**.)
		No	Go to the next step.
10	**PURPOSE: DETERMINE INTEGRITY OF ELECTRIC VARIABLE VALVE TIMING ACTUATOR** • Inspect the electric variable valve timing actuator. (See **ELECTRIC VARIABLE VALVE TIMING ACTUATOR INSPECTION [SKYACTIV-G 2.0, SKYACTIV-G 2.5]**.) • Is there any malfunction?	Yes	Replace the electric variable valve timing actuator, then go to Step 13. (See **ELECTRIC VARIABLE VALVE TIMING ACTUATOR, HYDRAULIC VARIABLE VALVE TIMING ACTUATOR REMOVAL/INSTALLATION [SKYACTIV-G 2.0, SKYACTIV-G 2.5]**.)
		No	Go to the next step.
11	**PURPOSE: DETERMINE INTEGRITY OF OCV** • Inspect the OCV. (See **OIL CONTROL VALVE (OCV) INSPECTION [SKYACTIV-G 2.0, SKYACTIV-G 2.5]**.) • Is there any malfunction?	Yes	Replace the OCV, then go to Step 13. (See **OIL CONTROL VALVE (OCV) REMOVAL/INSTALLATION [SKYACTIV-G 2.0, SKYACTIV-G 2.5]**.)
		No	Go to the next step.

12	**PURPOSE: DETERMINE INTEGRITY OF A/F SENSOR** • Inspect the A/F sensor. (See **AIR FUEL RATIO (A/F) SENSOR INSPECTION [SKYACTIV-G 2.0, SKYACTIV-G 2.5]**.) • Is there any malfunction?	Yes	Replace the A/F sensor, then go to the next step. (See **AIR FUEL RATIO (A/F) SENSOR REMOVAL/INSTALLATION [SKYACTIV-G 2.0, SKYACTIV-G 2.5]**.)
		No	Go to the next step.
13	**PURPOSE: VERIFICATION OF VEHICLE REPAIR COMPLETION** • Always reconnect all disconnected connectors. • Clear the DTC from the PCM memory using the M-MDS. (See **CLEARING DTC [SKYACTIV-G 2.0, SKYACTIV-G 2.5]**.) • Implement the repeatability verification procedure. (See **Repeatability Verification Procedure**.) • Perform the Pending Trouble Code Access Procedure. (See **ON-BOARD DIAGNOSTIC TEST [SKYACTIV-G 2.0, SKYACTIV-G 2.5]**.) • Is the PENDING CODE for this DTC present?	Yes	Repeat the inspection from Step 1. • If the malfunction recurs, replace the PCM. (See **PCM REMOVAL/INSTALLATION [SKYACTIV-G 2.0, SKYACTIV-G 2.5]**.) Go to the next step.
		No	DTC troubleshooting completed.

2014 - Mazda3 - Engine

DTC P0192:00 [SKYACTIV-G 2.0, SKYACTIV-G 2.5]

DTC P0192:00	Fuel pressure sensor circuit low input
DETECTION CONDITION	• If the input voltage at the PCM terminal 1CA is **less than 0.16 V** for **5 s**, the PCM determines that the fuel pressure sensor circuit is low. **Diagnostic support note** • This is a continuous monitor (CCM). • The check engine light illuminates if the PCM detects the above malfunction condition during the first drive cycle. • FREEZE FRAME DATA (Mode 2)/Snapshot data is available. • DTC is stored in the PCM memory.
FAIL-SAFE FUNCTION	• Stops high pressure fuel pump control • Limits intake air amount
POSSIBLE CAUSE	• Fuel pressure sensor connector or terminals malfunction • PCM connector or terminals malfunction • Short to ground in wiring harness between the following terminals: ▪ Fuel pressure sensor terminal C—PCM terminal 1BJ ▪ Fuel pressure sensor terminal B—PCM terminal 1CA • Fuel pressure sensor signal circuit and ground circuit are shorted to each other • Fuel pressure sensor malfunction • PCM malfunction

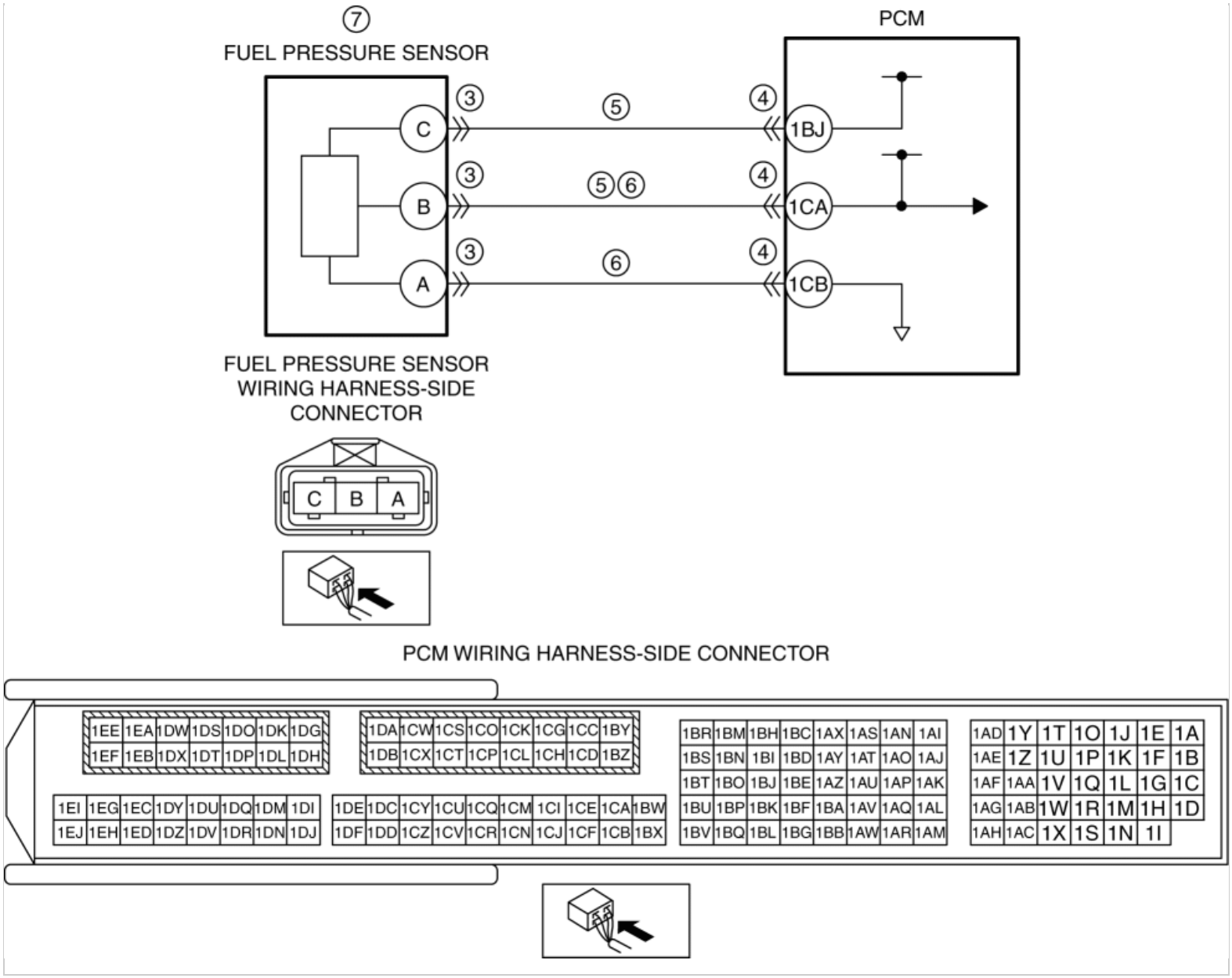

CAUTION:

- Verify the malfunction symptom according to not only the PID value but also the symptom troubleshooting.

Related PIDs

Item (definition)	Unit/Condition	Definition	Condition/Specification (Reference)
FUEL_PRES	KPa {MPa}, mBar {Bar}, psi, in H20	Fuel pressure	• Displays fuel pressure
	V	Fuel pressure sensor voltage	• Fuel pressure is 3.0 MPa {31 kgf/cm^2, 435 psi}: Approx. 0.92 V • Fuel pressure is 4.8 MPa {49 kgf/cm^2, 696 psi}: Approx. 1.17 V

Diagnostic Procedure

STEP	INSPECTION	ACTION

1	**VERIFY FREEZE FRAME DATA (MODE 2)/SNAPSHOT DATA HAS BEEN RECORDED** • Has the FREEZE FRAME DATA (Mode 2)/snapshot data been recorded?	Yes	Go to the next step.
		No	Record the FREEZE FRAME DATA (Mode 2)/snapshot data on the repair order, then go to the next step.
2	**VERIFY RELATED REPAIR INFORMATION AVAILABILITY** • Verify related Service Bulletins and/or on-line repair information availability. • Is any related repair information available?	Yes	Perform repair or diagnosis according to the available repair information. • If the vehicle is not repaired, go to the next step.
		No	Go to the next step.
3	**INSPECT FUEL PRESSURE SENSOR CONNECTOR CONDITION** • Switch the ignition off. • Disconnect the fuel pressure sensor connector. • Inspect for poor connection (such as damaged/pulled-out pins, corrosion). • Is there any malfunction?	Yes	Repair or replace the connector and/or terminals, then go to Step 8.
		No	Go to the next step.
4	**INSPECT PCM CONNECTOR CONDITION** • Disconnect the PCM connector. • Inspect for poor connection (such as damaged/pulled-out pins, corrosion). • Is there any malfunction?	Yes	Repair or replace the connector and/or terminals, then go to Step 8.
		No	Go to the next step.
5	**INSPECT FUEL PRESSURE SENSOR CIRCUIT FOR SHORT TO GROUND** • Verify that the fuel pressure sensor and PCM connectors are disconnected. • Inspect for continuity between the following terminals (wiring harness-side) and body ground: ▪ Fuel pressure sensor terminal C ▪ Fuel pressure sensor terminal B • Is there continuity?	Yes	Refer to the wiring diagram and verify whether or not there is a common connector between the following terminals: • Fuel pressure sensor terminal C—PCM terminal 1BJ • Fuel pressure sensor terminal B—PCM terminal 1CA **If there is a common connector:** • Determine the malfunctioning part by inspecting the common connector and the terminal for corrosion, damage, or pin disconnection, and the common wiring harness for a short to ground. • Repair or replace the malfunctioning part. **If there is no common connector:** • Repair or replace the wiring harness which has a short to ground. Go to Step 8.
		No	Go to the next step.
6	**INSPECT FUEL PRESSURE SENSOR SIGNAL CIRCUIT AND GROUND CIRCUIT FOR SHORT TO EACH OTHER** • Verify that the fuel pressure sensor and PCM connectors	Yes	Refer to the wiring diagram and verify whether or not there is a common connector between the following terminals: • Fuel pressure sensor terminal B—PCM terminal 1CA • Fuel pressure sensor terminal A—PCM terminal 1CB

	are disconnected. • Inspect for continuity between fuel pressure sensor terminals B and A (wiring harness-side). • Is there continuity?		**If there is a common connector:** • Determine the malfunctioning part by inspecting the common connector and the terminal for corrosion, damage, or pin disconnection, and the common wiring harness for a short to each other. • Repair or replace the malfunctioning part. **If there is no common connector:** • Repair or replace the wiring harness which has a short to each other. Go to Step 8.
		No	Go to the next step.
7	**INSPECT FUEL PRESSURE SENSOR** • Reconnect all disconnected connectors. • Inspect the fuel pressure sensor. (See **FUEL PRESSURE SENSOR INSPECTION [SKYACTIV-G 2.0, SKYACTIV-G 2.5]**.) • Is there any malfunction**?**	Yes	Replace the fuel distributor, then go to the next step. (See **FUEL INJECTOR REMOVAL/INSTALLATION [SKYACTIV-G 2.0, SKYACTIV-G 2.5]**.)
		No	Go to the next step.
8	**VERIFY DTC TROUBLESHOOTING COMPLETED** • Always reconnect all disconnected connectors. • Clear the DTC from the PCM memory using the M-MDS. (See **AFTER REPAIR PROCEDURE [SKYACTIV-G 2.0, SKYACTIV-G 2.5]**.) • Perform the KOEO or KOER self test. (See **KOEO/KOER SELF TEST [SKYACTIV-G 2.0, SKYACTIV-G 2.5]**.) • Is the same DTC present?	Yes	Repeat the inspection from Step 1. • If the malfunction recurs, replace the PCM. (See **PCM REMOVAL/INSTALLATION [SKYACTIV-G 2.0, SKYACTIV-G 2.5]**.) Go to the next step.
		No	Go to the next step.
9	**VERIFY AFTER REPAIR PROCEDURE** • Perform the “AFTER REPAIR PROCEDURE”. (See **AFTER REPAIR PROCEDURE [SKYACTIV-G 2.0, SKYACTIV-G 2.5]**.) • Are any DTCs present?	Yes	Go to the applicable DTC inspection. (See **DTC TABLE [SKYACTIV-G 2.0, SKYACTIV-G 2.5]**.)
		No	DTC troubleshooting completed.

2014 - Mazda3 - Engine

DTC P0193:00 [SKYACTIV-G 2.0, SKYACTIV-G 2.5]

DTC P0193:00	Fuel pressure sensor circuit high input
DETECTION CONDITION	• If the input voltage at the PCM terminal 1CA is **more than 4.86 V** for **5 s**, the PCM determines that the fuel pressure sensor circuit is high. **Diagnostic support note** • This is a continuous monitor (CCM). • The check engine light illuminates if the PCM detects the above malfunction condition during the first drive cycle. • FREEZE FRAME DATA (Mode 2)/Snapshot data is available. • DTC is stored in the PCM memory.
FAIL-SAFE FUNCTION	• Stops high pressure fuel pump control • Limits intake air amount
POSSIBLE CAUSE	• Fuel pressure sensor connector or terminals malfunction • PCM connector or terminals malfunction • Fuel pressure sensor malfunction • Short to power supply in wiring harness between fuel pressure sensor terminal B and PCM terminal 1CA • Open circuit in wiring harness between the following terminals: ▪ Fuel pressure sensor terminal C—PCM terminal 1BJ ▪ Fuel pressure sensor terminal B—PCM terminal 1CA ▪ Fuel pressure sensor terminal A—PCM terminal 1CB • PCM malfunction

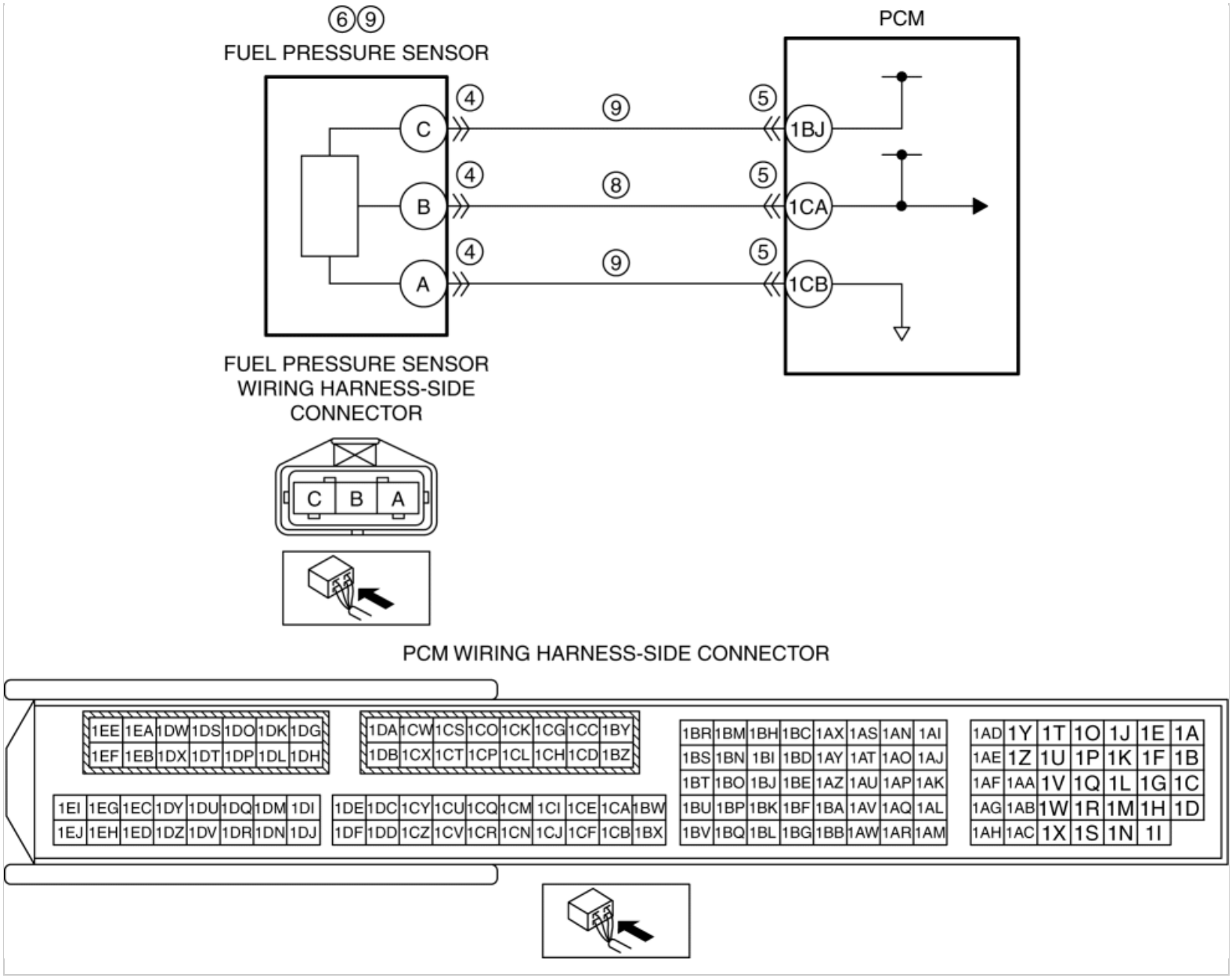

CAUTION:

- Verify the malfunction symptom according to not only the PID value but also the symptom troubleshooting.

Related PIDs

Item (definition)	Unit/Condition	Definition	Condition/Specification (Reference)
FUEL_PRES	KPa {MPa}, mBar {Bar}, psi, in H20	Fuel pressure	• Displays fuel pressure
	V	Fuel pressure sensor voltage	• Fuel pressure is 3.0 MPa {31 kgf/cm^2, 435 psi}: Approx. 0.92 V • Fuel pressure is 4.8 MPa {49 kgf/cm^2, 696 psi}: Approx. 1.17 V

Diagnostic Procedure

STEP	INSPECTION	ACTION

1	**VERIFY FREEZE FRAME DATA (MODE 2)/SNAPSHOT DATA HAS BEEN RECORDED** • Has the FREEZE FRAME DATA (Mode 2)/snapshot data been recorded?	Yes	Go to the next step.
		No	Record the FREEZE FRAME DATA (Mode 2)/snapshot data on the repair order, then go to the next step.
2	**VERIFY RELATED REPAIR INFORMATION AVAILABILITY** • Verify related Service Bulletins and/or on-line repair information availability. • Is any related repair information available?	Yes	Perform repair or diagnosis according to the available repair information. • If the vehicle is not repaired, go to the next step.
		No	Go to the next step.
3	**DETERMINE IF FUEL PRESSURE SENSOR OR WIRING HARNESS MALFUNCTION** • Access the FUEL_PRES PID using the M-MDS. (See **ON-BOARD DIAGNOSTIC TEST [SKYACTIV-G 2.0, SKYACTIV-G 2.5]**.) • Verify the FUEL_PRES PID value. • Is the FUEL_PRES PID value **5 V** or **B+**?	Yes	Go to Step 7.
		No	Go to the next step.
4	**INSPECT FUEL PRESSURE SENSOR CONNECTOR CONDITION** • Switch the ignition off. • Disconnect the fuel pressure sensor connector. • Inspect for poor connection (such as damaged/pulled-out pins, corrosion). • Is there any malfunction?	Yes	Repair or replace the connector and/or terminals, then go to Step 10.
		No	Go to the next step.
5	**INSPECT PCM CONNECTOR CONDITION** • Disconnect the PCM connector. • Inspect for poor connection (such as damaged/pulled-out pins, corrosion). • Is there any malfunction?	Yes	Repair or replace the connector and/or terminals, then go to Step 10.
		No	Go to the next step.
6	**INSPECT FUEL PRESSURE SENSOR** • Reconnect all disconnected connectors. • Inspect the fuel pressure sensor. (See **FUEL PRESSURE SENSOR INSPECTION [SKYACTIV-G 2.0, SKYACTIV-G 2.5]**.) • Is there any malfunction**?**	Yes	Replace the fuel distributor, then go to Step 10. (See **FUEL INJECTOR REMOVAL/INSTALLATION [SKYACTIV-G 2.0, SKYACTIV-G 2.5]**.)
		No	Go to Step 10.
7	**DETERMINE IF FUEL PRESSURE SENSOR SIGNAL CIRCUIT OR FUEL PRESSURE SENSOR GROUND CIRCUIT MALFUNCTION** • Switch the ignition off. • Disconnect the fuel pressure sensor connector.	Yes	Go to the next step.
		No	Go to Step 9.

	• Access the FUEL_PRES PID using the M-MDS. (See **ON-BOARD DIAGNOSTIC TEST [SKYACTIV-G 2.0, SKYACTIV-G 2.5]**.) • Verify the FUEL_PRES PID value. • Is the FUEL_PRES PID value **5 V** or **B+**?		
8	**INSPECT FUEL PRESSURE SENSOR SIGNAL CIRCUIT FOR OPEN CIRCUIT** • Verify that the fuel pressure sensor connector is disconnected. • Switch the ignition off. • Disconnect the PCM connector. • Inspect for continuity between fuel pressure sensor terminal B (wiring harness-side) and PCM terminal 1CA (wiring harness-side). • Is there continuity?	Yes	Refer to the wiring diagram and verify whether or not there is a common connector between fuel pressure sensor terminal B and PCM terminal 1CA. **If there is a common connector:** • Determine the malfunctioning part by inspecting the common connector and the terminal for corrosion, damage, or pin disconnection, and the common wiring harness for a short to power supply. • Repair or replace the malfunctioning part. **If there is no common connector:** • Repair or replace the wiring harness which has a short to power supply. Go to Step 10.
		No	Refer to the wiring diagram and verify whether or not there is a common connector between fuel pressure sensor terminal B and PCM terminal 1CA. **If there is a common connector:** • Determine the malfunctioning part by inspecting the common connector and the terminal for corrosion, damage, or pin disconnection, and the common wiring harness for an open circuit. • Repair or replace the malfunctioning part. **If there is no common connector:** • Repair or replace the wiring harness which has an open circuit. Go to Step 10.
9	**INSPECT FUEL PRESSURE SENSOR CIRCUIT FOR OPEN CIRCUIT** • Verify that the fuel pressure sensor connector is disconnected. • Switch the ignition off. • Disconnect the PCM connector. • Inspect for continuity between the following terminals (wiring harness-side): ▪ Fuel pressure sensor terminal C—PCM terminal 1BJ ▪ Fuel pressure sensor terminal A—PCM terminal 1CB • Is there continuity?	Yes	Replace the fuel distributor, then go to the next step. (See **FUEL INJECTOR REMOVAL/INSTALLATION [SKYACTIV-G 2.0, SKYACTIV-G 2.5]**.)
		No	Refer to the wiring diagram and verify whether or not there is a common connector between the following terminals: • Fuel pressure sensor terminal C—PCM terminal 1BJ • Fuel pressure sensor terminal A—PCM terminal 1CB **If there is a common connector:** • Determine the malfunctioning part by inspecting the common connector and the terminal for corrosion, damage, or pin disconnection, and the common wiring harness for an open circuit. • Repair or replace the malfunctioning part. **If there is no common connector:** • Repair or replace the wiring harness which has an open circuit.

			Go to the next step.
10	**VERIFY DTC TROUBLESHOOTING COMPLETED** • Always reconnect all disconnected connectors. • Clear the DTC from the PCM memory using the M-MDS. (See **AFTER REPAIR PROCEDURE [SKYACTIV-G 2.0, SKYACTIV-G 2.5]**.) • Perform the KOEO or KOER self test. (See **KOEO/KOER SELF TEST [SKYACTIV-G 2.0, SKYACTIV-G 2.5]**.) • Is the same DTC present?	Yes	Repeat the inspection from Step 1. • If the malfunction recurs, replace the PCM. (See **PCM REMOVAL/INSTALLATION [SKYACTIV-G 2.0, SKYACTIV-G 2.5]**.) Go to the next step.
		No	Go to the next step.
11	**VERIFY AFTER REPAIR PROCEDURE** • Perform the “AFTER REPAIR PROCEDURE”. (See **AFTER REPAIR PROCEDURE [SKYACTIV-G 2.0, SKYACTIV-G 2.5]**.) • Are any DTCs present?	Yes	Go to the applicable DTC inspection. (See **DTC TABLE [SKYACTIV-G 2.0, SKYACTIV-G 2.5]**.)
		No	DTC troubleshooting completed.

2014 - Mazda3 - Engine

DTC P0201:00 [SKYACTIV-G 2.0, SKYACTIV-G 2.5]

DTC P0201:00	Fuel injector circuit/open cylinder No.1
DETECTION CONDITION	• If the fuel injection verification signal is not input at **25 times** continuously even though the PCM drives the fuel injector No.1, the PCM determines that there is an open circuit in the fuel injector No.1 control circuit. **MONITORING CONDITIONS** ▪ The following conditions are met: • Battery voltage: **10.5 V or more** • Fuel injection control: except during fuel cut **Diagnostic support note** • This is a continuous monitor (CCM). • The check engine light illuminates if the PCM detects the above malfunction condition during the first drive cycle. • FREEZE FRAME DATA (Mode 2)/Snapshot data is available. • DTC is stored in the PCM memory.
FAIL-SAFE FUNCTION	Not applicable
POSSIBLE CAUSE	• Fuel injector No.1 connector or terminals malfunction • PCM connector or terminals malfunction • Short to ground in wiring harness between the following terminals: ▪ Fuel injector No.1 terminal B—PCM terminal 1DP ▪ Fuel injector No.1 terminal A—PCM terminal 1DO • Short to power supply in wiring harness between fuel injector No.1 terminal A and PCM terminal 1DO • Open circuit in wiring harness between the following terminals: ▪ Fuel injector No.1 terminal B—PCM terminal 1DP ▪ Fuel injector No.1 terminal A—PCM terminal 1DO • Fuel injector No.1 malfunction • PCM malfunction

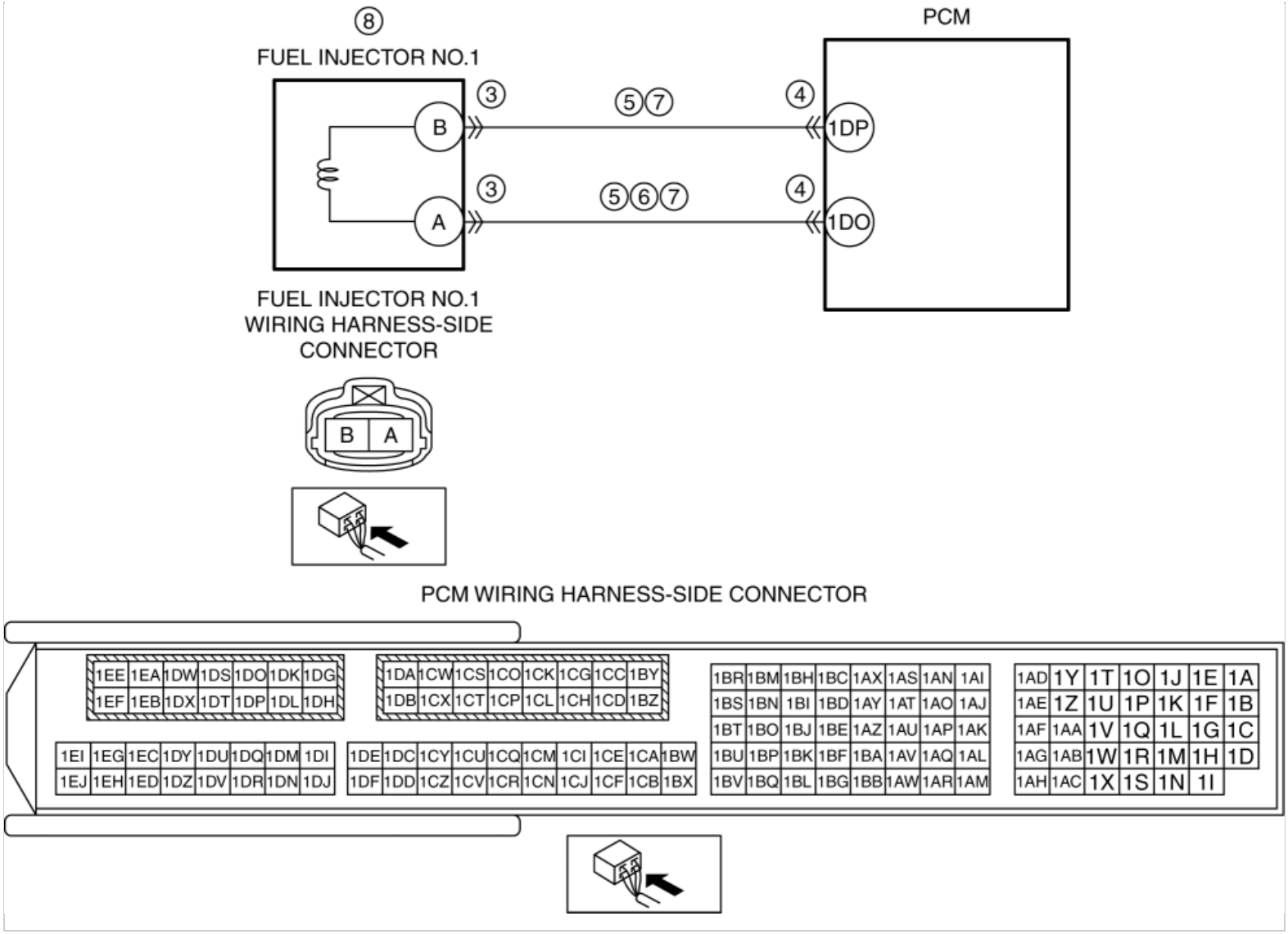

Diagnostic Procedure

STEP	INSPECTION		ACTION
1	**VERIFY FREEZE FRAME DATA (MODE 2)/SNAPSHOT DATA HAS BEEN RECORDED** • Has the FREEZE FRAME DATA (Mode 2)/snapshot data been recorded?	Yes	Go to the next step.
		No	Record the FREEZE FRAME DATA (Mode 2)/snapshot data on the repair order, then go to the next step.
2	**VERIFY RELATED REPAIR INFORMATION AVAILABILITY** • Verify related Service Bulletins and/or on-line repair information availability. • Is any related repair information available?	Yes	Perform repair or diagnosis according to the available repair information. • If the vehicle is not repaired, go to the next step.
		No	Go to the next step.
3	**INSPECT FUEL INJECTOR NO.1 CONNECTOR CONDITION** • Switch the ignition off. • Disconnect the fuel injector No.1 connector.	Yes	Repair or replace the connector and/or terminals, then go to Step 9.
		No	Go to the next step.

	• Inspect for poor connection (such as damaged/pulled-out pins, corrosion). • Is there any malfunction?		
4	**INSPECT PCM CONNECTOR CONDITION** • Disconnect the PCM connector. • Inspect for poor connection (such as damaged/pulled-out pins, corrosion). • Is there any malfunction?	Yes	Repair or replace the connector and/or terminals, then go to Step 9.
		No	Go to the next step.
5	**INSPECT FUEL INJECTOR NO.1 CIRCUIT FOR SHORT TO GROUND** • Verify that the fuel injector No.1 and PCM connectors are disconnected. • Inspect for continuity between the following terminals (wiring harness-side) and body ground: ▪ Fuel injector No.1 terminal B ▪ Fuel injector No.1 terminal A • Is there continuity?	Yes	Refer to the wiring diagram and verify whether or not there is a common connector between the following terminals: • Fuel injector No.1 terminal B—PCM terminal 1DP • Fuel injector No.1 terminal A—PCM terminal 1DO **If there is a common connector:** • Determine the malfunctioning part by inspecting the common connector and the terminal for corrosion, damage, or pin disconnection, and the common wiring harness for a short to ground. • Repair or replace the malfunctioning part. **If there is no common connector:** • Repair or replace the wiring harness which has a short to ground. Go to Step 9.
		No	Go to the next step.
6	**INSPECT FUEL INJECTOR NO.1 CIRCUIT FOR SHORT TO POWER SUPPLY** • Verify that the fuel injector No.1 and PCM connectors are disconnected. • Switch the ignition ON (engine off). **NOTE:** • Another DTC may be stored by the PCM detecting an open circuit. • Measure the voltage at the fuel injector No.1 terminal A (wiring harness-side). • Is the voltage **0 V**?	Yes	Go to the next step.
		No	Refer to the wiring diagram and verify whether or not there is a common connector between fuel injector No.1 terminal A and PCM terminal 1DO. **If there is a common connector:** • Determine the malfunctioning part by inspecting the common connector and the terminal for corrosion, damage, or pin disconnection, and the common wiring harness for a short to power supply. • Repair or replace the malfunctioning part. **If there is no common connector:** • Repair or replace the wiring harness which has a short to power supply. Go to Step 9.
7	**INSPECT FUEL INJECTOR NO.1 CIRCUIT FOR OPEN CIRCUIT** • Verify that the fuel injector No.1 and PCM connectors are disconnected.	Yes	Go to the next step.
		No	Refer to the wiring diagram and verify whether or not there is a common connector between the following terminals:

	• Switch the ignition off. • Inspect for continuity between the following terminals (wiring harness-side): ▪ Fuel injector No.1 terminal B—PCM terminal 1DP ▪ Fuel injector No.1 terminal A—PCM terminal 1DO • Is there continuity?		Fuel injector No.1 terminal B—PCM terminal 1DP • Fuel injector No.1 terminal A—PCM terminal 1DO **If there is a common connector:** • Determine the malfunctioning part by inspecting the common connector and the terminal for corrosion, damage, or pin disconnection, and the common wiring harness for an open circuit. • Repair or replace the malfunctioning part. **If there is no common connector:** • Repair or replace the wiring harness which has an open circuit. Go to Step 9.
8	**INSPECT FUEL INJECTOR NO.1** • Inspect the fuel injector No.1. (See **FUEL INJECTOR INSPECTION [SKYACTIV-G 2.0, SKYACTIV-G 2.5]**.) • Is there any malfunction?	Yes	Replace the fuel injector No.1, then go to the next step. (See **FUEL INJECTOR REMOVAL/INSTALLATION [SKYACTIV-G 2.0, SKYACTIV-G 2.5]**.)
		No	Go to the next step.
9	**VERIFY DTC TROUBLESHOOTING COMPLETED** • Always reconnect all disconnected connectors. • Clear the DTC from the PCM memory using the M-MDS. (See **AFTER REPAIR PROCEDURE [SKYACTIV-G 2.0, SKYACTIV-G 2.5]**.) • Perform the KOEO or KOER self test. (See **KOEO/KOER SELF TEST [SKYACTIV-G 2.0, SKYACTIV-G 2.5]**.) • Is the same DTC present?	Yes	Repeat the inspection from Step 1. • If the malfunction recurs, replace the PCM. (See **PCM REMOVAL/INSTALLATION [SKYACTIV-G 2.0, SKYACTIV-G 2.5]**.) Go to the next step.
		No	Go to the next step.
10	**VERIFY AFTER REPAIR PROCEDURE** • Perform the “AFTER REPAIR PROCEDURE”. (See **AFTER REPAIR PROCEDURE [SKYACTIV-G 2.0, SKYACTIV-G 2.5]**.) • Are any DTCs present?	Yes	Go to the applicable DTC inspection. (See **DTC TABLE [SKYACTIV-G 2.0, SKYACTIV-G 2.5]**.)
		No	DTC troubleshooting completed.

2014 - Mazda3 - Engine

DTC P0202:00 [SKYACTIV-G 2.0, SKYACTIV-G 2.5]

DTC P0202:00	Fuel injector circuit/open cylinder No.2
DETECTION CONDITION	• If the fuel injection verification signal is not input at **25 times** continuously even though the PCM drives the fuel injector No.2, the PCM determines that there is an open circuit in the fuel injector No.2 control circuit. **MONITORING CONDITIONS** ▪ The following conditions are met: • Battery voltage: **10.5 V or more** • Fuel injection control: except during fuel cut **Diagnostic support note** • This is a continuous monitor (CCM). • The check engine light illuminates if the PCM detects the above malfunction condition during the first drive cycle. • FREEZE FRAME DATA (Mode 2)/Snapshot data is available. • DTC is stored in the PCM memory.
FAIL-SAFE FUNCTION	Not applicable
POSSIBLE CAUSE	• Fuel injector No.2 connector or terminals malfunction • PCM connector or terminals malfunction • Short to ground in wiring harness between the following terminals: ▪ Fuel injector No.2 terminal B—PCM terminal 1DX ▪ Fuel injector No.2 terminal A—PCM terminal 1DW • Short to power supply in wiring harness between fuel injector No.2 terminal A and PCM terminal 1DW • Open circuit in wiring harness between the following terminals: ▪ Fuel injector No.2 terminal B—PCM terminal 1DX ▪ Fuel injector No.2 terminal A—PCM terminal 1DW • Fuel injector No.2 malfunction • PCM malfunction

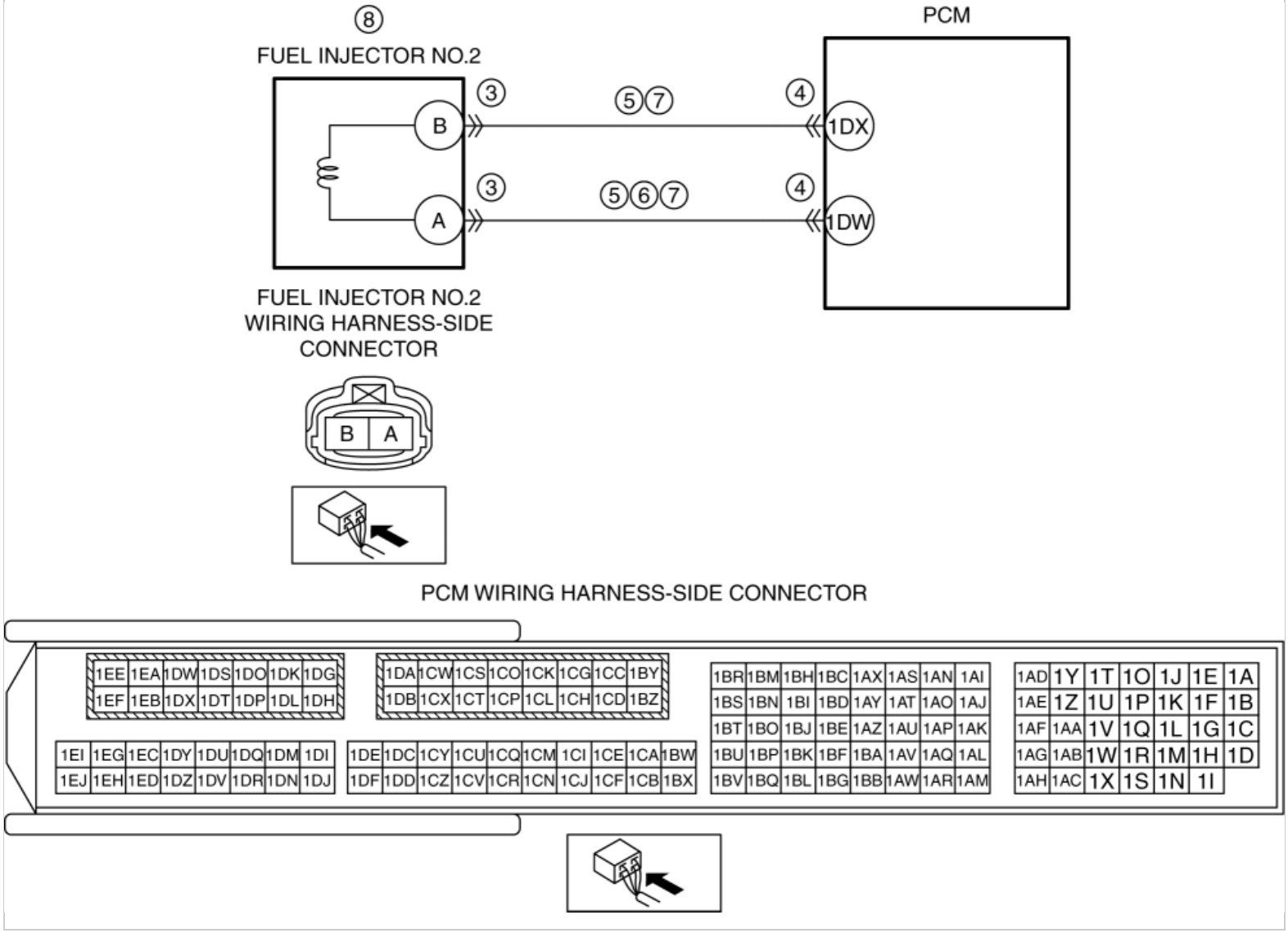

Diagnostic Procedure

STEP	INSPECTION		ACTION
1	**VERIFY FREEZE FRAME DATA (MODE 2)/SNAPSHOT DATA HAS BEEN RECORDED** • Has the FREEZE FRAME DATA (Mode 2)/snapshot data been recorded?	Yes	Go to the next step.
		No	Record the FREEZE FRAME DATA (Mode 2)/snapshot data on the repair order, then go to the next step.
2	**VERIFY RELATED REPAIR INFORMATION AVAILABILITY** • Verify related Service Bulletins and/or on-line repair information availability. • Is any related repair information available?	Yes	Perform repair or diagnosis according to the available repair information. • If the vehicle is not repaired, go to the next step.
		No	Go to the next step.
3	**INSPECT FUEL INJECTOR NO.2 CONNECTOR CONDITION** • Switch the ignition off. • Disconnect the fuel injector No.2 connector.	Yes	Repair or replace the connector and/or terminals, then go to Step 9.
		No	Go to the next step.

	• Inspect for poor connection (such as damaged/pulled-out pins, corrosion). • Is there any malfunction?		
4	**INSPECT PCM CONNECTOR CONDITION** • Disconnect the PCM connector. • Inspect for poor connection (such as damaged/pulled-out pins, corrosion). • Is there any malfunction?	Yes	Repair or replace the connector and/or terminals, then go to Step 9.
		No	Go to the next step.
5	**INSPECT FUEL INJECTOR NO.2 CIRCUIT FOR SHORT TO GROUND** • Verify that the fuel injector No.2 and PCM connectors are disconnected. • Inspect for continuity between the following terminals (wiring harness-side) and body ground: ▪ Fuel injector No.2 terminal B ▪ Fuel injector No.2 terminal A • Is there continuity?	Yes	Refer to the wiring diagram and verify whether or not there is a common connector between the following terminals: • Fuel injector No.2 terminal B—PCM terminal 1DX • Fuel injector No.2 terminal A—PCM terminal 1DW **If there is a common connector:** • Determine the malfunctioning part by inspecting the common connector and the terminal for corrosion, damage, or pin disconnection, and the common wiring harness for a short to ground. • Repair or replace the malfunctioning part. **If there is no common connector:** • Repair or replace the wiring harness which has a short to ground. Go to Step 9.
		No	Go to the next step.
6	**INSPECT FUEL INJECTOR NO.2 CIRCUIT FOR SHORT TO POWER SUPPLY** • Verify that the fuel injector No.2 and PCM connectors are disconnected. • Switch the ignition ON (engine off). **NOTE:** • Another DTC may be stored by the PCM detecting an open circuit. • Measure the voltage at the fuel injector No.2 terminal A (wiring harness-side). • Is the voltage **0 V**?	Yes	Go to the next step.
		No	Refer to the wiring diagram and verify whether or not there is a common connector between fuel injector No.2 terminal A and PCM terminal 1DW. **If there is a common connector:** • Determine the malfunctioning part by inspecting the common connector and the terminal for corrosion, damage, or pin disconnection, and the common wiring harness for a short to power supply. • Repair or replace the malfunctioning part. **If there is no common connector:** • Repair or replace the wiring harness which has a short to power supply. Go to Step 9.
7	**INSPECT FUEL INJECTOR NO.2 CIRCUIT FOR OPEN CIRCUIT** • Verify that the fuel injector No.2 and PCM connectors are disconnected.	Yes	Go to the next step.
		No	Refer to the wiring diagram and verify whether or not there is a common connector between the following terminals:

	• Switch the ignition off. • Inspect for continuity between the following terminals (wiring harness-side): ▪ Fuel injector No.2 terminal B—PCM terminal 1DX ▪ Fuel injector No.2 terminal A—PCM terminal 1DW • Is there continuity?		Fuel injector No.2 terminal B—PCM terminal 1DX • Fuel injector No.2 terminal A—PCM terminal 1DW **If there is a common connector:** • Determine the malfunctioning part by inspecting the common connector and the terminal for corrosion, damage, or pin disconnection, and the common wiring harness for an open circuit. • Repair or replace the malfunctioning part. **If there is no common connector:** • Repair or replace the wiring harness which has an open circuit. Go to Step 9.
8	**INSPECT FUEL INJECTOR NO.2** • Inspect the fuel injector No.2. (See **FUEL INJECTOR INSPECTION [SKYACTIV-G 2.0, SKYACTIV-G 2.5]**.) • Is there any malfunction?	Yes	Replace the fuel injector No.2, then go to the next step. (See **FUEL INJECTOR REMOVAL/INSTALLATION [SKYACTIV-G 2.0, SKYACTIV-G 2.5]**.)
		No	Go to the next step.
9	**VERIFY DTC TROUBLESHOOTING COMPLETED** • Always reconnect all disconnected connectors. • Clear the DTC from the PCM memory using the M-MDS. (See **AFTER REPAIR PROCEDURE [SKYACTIV-G 2.0, SKYACTIV-G 2.5]**.) • Perform the KOEO or KOER self test. (See **KOEO/KOER SELF TEST [SKYACTIV-G 2.0, SKYACTIV-G 2.5]**.) • Is the same DTC present?	Yes	Repeat the inspection from Step 1. • If the malfunction recurs, replace the PCM. (See **PCM REMOVAL/INSTALLATION [SKYACTIV-G 2.0, SKYACTIV-G 2.5]**.) Go to the next step.
		No	Go to the next step.
10	**VERIFY AFTER REPAIR PROCEDURE** • Perform the “AFTER REPAIR PROCEDURE”. (See **AFTER REPAIR PROCEDURE [SKYACTIV-G 2.0, SKYACTIV-G 2.5]**.) • Are any DTCs present?	Yes	Go to the applicable DTC inspection. (See **DTC TABLE [SKYACTIV-G 2.0, SKYACTIV-G 2.5]**.)
		No	DTC troubleshooting completed.

2014 - Mazda3 - Engine

DTC P0203:00 [SKYACTIV-G 2.0, SKYACTIV-G 2.5]

DTC P0203:00	Fuel injector circuit/open cylinder No.3
DETECTION CONDITION	• If the fuel injection verification signal is not input at **25 times** continuously even though the PCM drives the fuel injector No.3, the PCM determines that there is an open circuit in the fuel injector No.3 control circuit. **MONITORING CONDITIONS** ▪ The following conditions are met: • Battery voltage: **10.5 V or more** • Fuel injection control: except during fuel cut **Diagnostic support note** • This is a continuous monitor (CCM). • The check engine light illuminates if the PCM detects the above malfunction condition during the first drive cycle. • FREEZE FRAME DATA (Mode 2)/Snapshot data is available. • DTC is stored in the PCM memory.
FAIL-SAFE FUNCTION	Not applicable
POSSIBLE CAUSE	• Fuel injector No.3 connector or terminals malfunction • PCM connector or terminals malfunction • Short to ground in wiring harness between the following terminals: ▪ Fuel injector No.3 terminal B—PCM terminal 1EB ▪ Fuel injector No.3 terminal A—PCM terminal 1EA • Short to power supply in wiring harness between fuel injector No.3 terminal A and PCM terminal 1EA • Open circuit in wiring harness between the following terminals: ▪ Fuel injector No.3 terminal B—PCM terminal 1EB ▪ Fuel injector No.3 terminal A—PCM terminal 1EA • Fuel injector No.3 malfunction • PCM malfunction

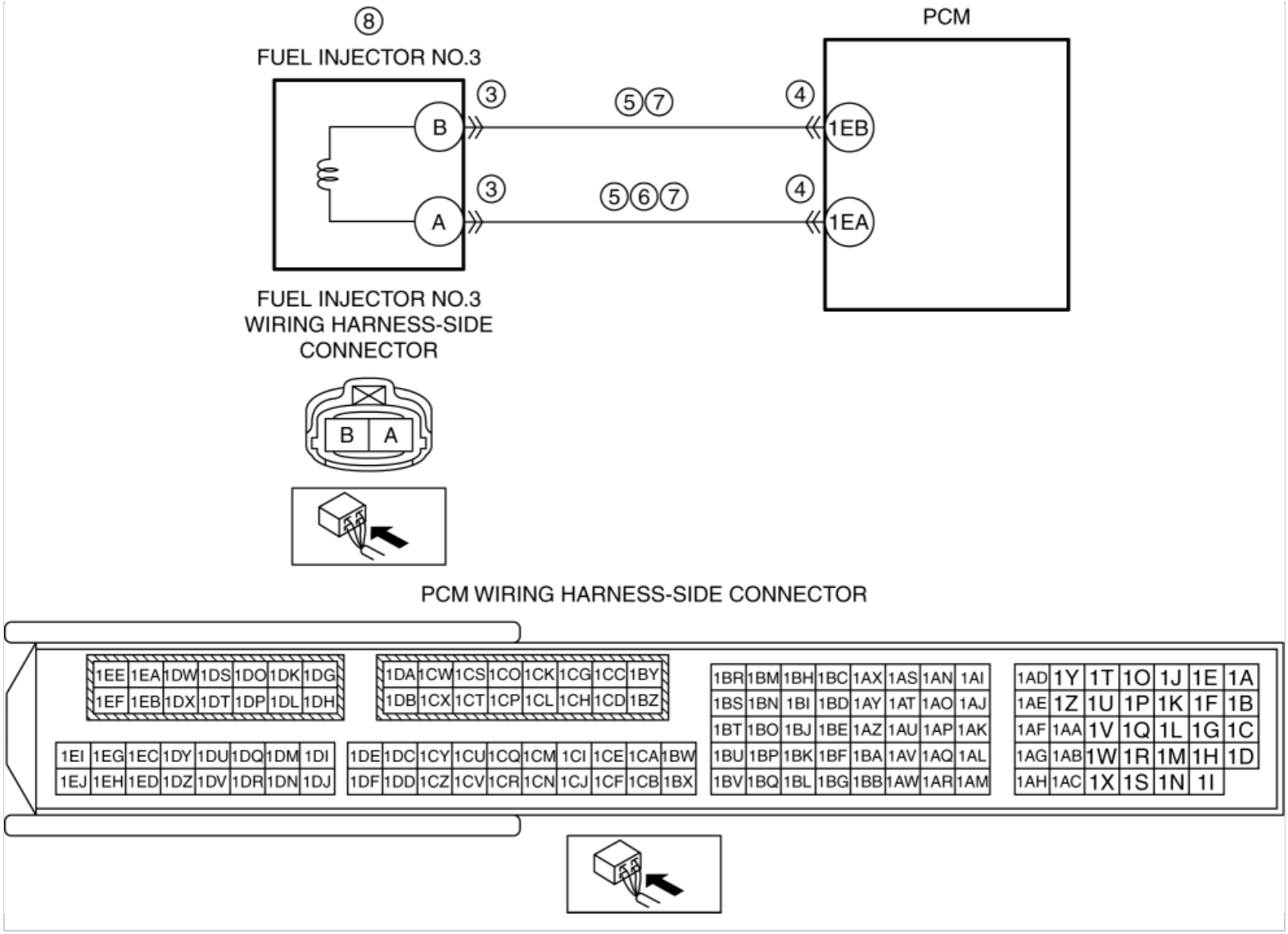

Diagnostic Procedure

STEP	INSPECTION		ACTION
1	**VERIFY FREEZE FRAME DATA (MODE 2)/SNAPSHOT DATA HAS BEEN RECORDED** • Has the FREEZE FRAME DATA (Mode 2)/snapshot data been recorded?	Yes	Go to the next step.
		No	Record the FREEZE FRAME DATA (Mode 2)/snapshot data on the repair order, then go to the next step.
2	**VERIFY RELATED REPAIR INFORMATION AVAILABILITY** • Verify related Service Bulletins and/or on-line repair information availability. • Is any related repair information available?	Yes	Perform repair or diagnosis according to the available repair information. • If the vehicle is not repaired, go to the next step.
		No	Go to the next step.
3	**INSPECT FUEL INJECTOR NO.3 CONNECTOR CONDITION** • Switch the ignition off. • Disconnect the fuel injector No.3 connector.	Yes	Repair or replace the connector and/or terminals, then go to Step 9.
		No	Go to the next step.

	• Inspect for poor connection (such as damaged/pulled-out pins, corrosion). • Is there any malfunction?		
4	**INSPECT PCM CONNECTOR CONDITION** • Disconnect the PCM connector. • Inspect for poor connection (such as damaged/pulled-out pins, corrosion). • Is there any malfunction?	Yes	Repair or replace the connector and/or terminals, then go to Step 9.
		No	Go to the next step.
5	**INSPECT FUEL INJECTOR NO.3 CIRCUIT FOR SHORT TO GROUND** • Verify that the fuel injector No.3 and PCM connectors are disconnected. • Inspect for continuity between the following terminals (wiring harness-side) and body ground: ▪ Fuel injector No.3 terminal B ▪ Fuel injector No.3 terminal A • Is there continuity?	Yes	Refer to the wiring diagram and verify whether or not there is a common connector between the following terminals: • Fuel injector No.3 terminal B—PCM terminal 1EB • Fuel injector No.3 terminal A—PCM terminal 1EA **If there is a common connector:** • Determine the malfunctioning part by inspecting the common connector and the terminal for corrosion, damage, or pin disconnection, and the common wiring harness for a short to ground. • Repair or replace the malfunctioning part. **If there is no common connector:** • Repair or replace the wiring harness which has a short to ground. Go to Step 9.
		No	Go to the next step.
6	**INSPECT FUEL INJECTOR NO.3 CIRCUIT FOR SHORT TO POWER SUPPLY** • Verify that the fuel injector No.3 and PCM connectors are disconnected. • Switch the ignition ON (engine off). **NOTE:** • Another DTC may be stored by the PCM detecting an open circuit. • Measure the voltage at the fuel injector No.3 terminal A (wiring harness-side). • Is the voltage **0 V**?	Yes	Go to the next step.
		No	Refer to the wiring diagram and verify whether or not there is a common connector between fuel injector No.3 terminal A and PCM terminal 1EA. **If there is a common connector:** • Determine the malfunctioning part by inspecting the common connector and the terminal for corrosion, damage, or pin disconnection, and the common wiring harness for a short to power supply. • Repair or replace the malfunctioning part. **If there is no common connector:** • Repair or replace the wiring harness which has a short to power supply. Go to Step 9.
7	**INSPECT FUEL INJECTOR NO.3 CIRCUIT FOR OPEN CIRCUIT** • Verify that the fuel injector No.3 and PCM connectors are disconnected.	Yes	Go to the next step.
		No	Refer to the wiring diagram and verify whether or not there is a common connector between the following terminals:

	• Switch the ignition off. • Inspect for continuity between the following terminals (wiring harness-side): ▪ Fuel injector No.3 terminal B—PCM terminal 1EB ▪ Fuel injector No.3 terminal A—PCM terminal 1EA • Is there continuity?		Fuel injector No.3 terminal B—PCM terminal 1EB • Fuel injector No.3 terminal A—PCM terminal 1EA **If there is a common connector:** • Determine the malfunctioning part by inspecting the common connector and the terminal for corrosion, damage, or pin disconnection, and the common wiring harness for an open circuit. • Repair or replace the malfunctioning part. **If there is no common connector:** • Repair or replace the wiring harness which has an open circuit. Go to Step 9.
8	**INSPECT FUEL INJECTOR NO.3** • Inspect the fuel injector No.3. (See **FUEL INJECTOR INSPECTION [SKYACTIV-G 2.0, SKYACTIV-G 2.5]**.) • Is there any malfunction?	Yes	Replace the fuel injector No.3, then go to the next step. (See **FUEL INJECTOR REMOVAL/INSTALLATION [SKYACTIV-G 2.0, SKYACTIV-G 2.5]**.)
		No	Go to the next step.
9	**VERIFY DTC TROUBLESHOOTING COMPLETED** • Always reconnect all disconnected connectors. • Clear the DTC from the PCM memory using the M-MDS. (See **AFTER REPAIR PROCEDURE [SKYACTIV-G 2.0, SKYACTIV-G 2.5]**.) • Perform the KOEO or KOER self test. (See **KOEO/KOER SELF TEST [SKYACTIV-G 2.0, SKYACTIV-G 2.5]**.) • Is the same DTC present?	Yes	Repeat the inspection from Step 1. • If the malfunction recurs, replace the PCM. (See **PCM REMOVAL/INSTALLATION [SKYACTIV-G 2.0, SKYACTIV-G 2.5]**.) Go to the next step.
		No	Go to the next step.
10	**VERIFY AFTER REPAIR PROCEDURE** • Perform the “AFTER REPAIR PROCEDURE”. (See **AFTER REPAIR PROCEDURE [SKYACTIV-G 2.0, SKYACTIV-G 2.5]**.) • Are any DTCs present?	Yes	Go to the applicable DTC inspection. (See **DTC TABLE [SKYACTIV-G 2.0, SKYACTIV-G 2.5]**.)
		No	DTC troubleshooting completed.

2014 - Mazda3 - Engine

DTC P0204:00 [SKYACTIV-G 2.0, SKYACTIV-G 2.5]

DTC P0204:00	Fuel injector circuit/open cylinder No.4
DETECTION CONDITION	• If the fuel injection verification signal is not input at **25 times** continuously even though the PCM drives the fuel injector No.4, the PCM determines that there is an open circuit in the fuel injector No.4 control circuit. **MONITORING CONDITIONS** ▪ The following conditions are met: • Battery voltage: **10.5 V or more** • Fuel injection control: except during fuel cut **Diagnostic support note** • This is a continuous monitor (CCM). • The check engine light illuminates if the PCM detects the above malfunction condition during the first drive cycle. • FREEZE FRAME DATA (Mode 2)/Snapshot data is available. • DTC is stored in the PCM memory.
FAIL-SAFE FUNCTION	Not applicable
POSSIBLE CAUSE	• Fuel injector No.4 connector or terminals malfunction • PCM connector or terminals malfunction • Short to ground in wiring harness between the following terminals: ▪ Fuel injector No.4 terminal B—PCM terminal 1DT ▪ Fuel injector No.4 terminal A—PCM terminal 1DS • Short to power supply in wiring harness between fuel injector No.4 terminal A and PCM terminal 1DS • Open circuit in wiring harness between the following terminals: ▪ Fuel injector No.4 terminal B—PCM terminal 1DT ▪ Fuel injector No.4 terminal A—PCM terminal 1DS • Fuel injector No.4 malfunction • PCM malfunction

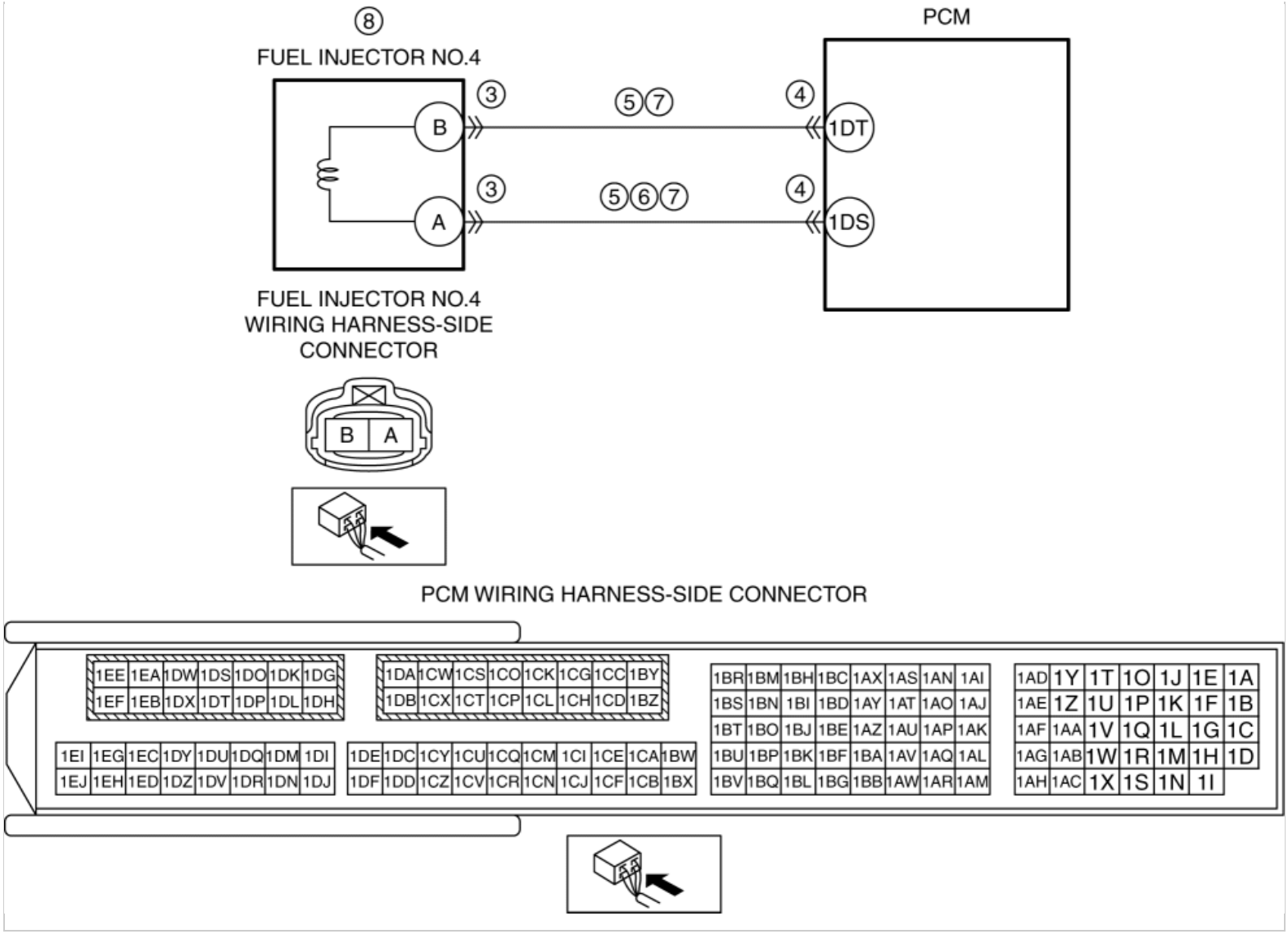

Diagnostic Procedure

STEP	INSPECTION		ACTION
1	**VERIFY FREEZE FRAME DATA (MODE 2)/SNAPSHOT DATA HAS BEEN RECORDED** • Has the FREEZE FRAME DATA (Mode 2)/snapshot data been recorded?	Yes	Go to the next step.
		No	Record the FREEZE FRAME DATA (Mode 2)/snapshot data on the repair order, then go to the next step.
2	**VERIFY RELATED REPAIR INFORMATION AVAILABILITY** • Verify related Service Bulletins and/or on-line repair information availability. • Is any related repair information available?	Yes	Perform repair or diagnosis according to the available repair information. • If the vehicle is not repaired, go to the next step.
		No	Go to the next step.
3	**INSPECT FUEL INJECTOR NO.4 CONNECTOR CONDITION** • Switch the ignition off. • Disconnect the fuel injector No.4 connector.	Yes	Repair or replace the connector and/or terminals, then go to Step 9.
		No	Go to the next step.

	• Inspect for poor connection (such as damaged/pulled-out pins, corrosion). • Is there any malfunction?		
4	**INSPECT PCM CONNECTOR CONDITION** • Disconnect the PCM connector. • Inspect for poor connection (such as damaged/pulled-out pins, corrosion). • Is there any malfunction?	Yes	Repair or replace the connector and/or terminals, then go to Step 9.
		No	Go to the next step.
5	**INSPECT FUEL INJECTOR NO.4 CIRCUIT FOR SHORT TO GROUND** • Verify that the fuel injector No.4 and PCM connectors are disconnected. • Inspect for continuity between the following terminals (wiring harness-side) and body ground: ▪ Fuel injector No.4 terminal B ▪ Fuel injector No.4 terminal A • Is there continuity?	Yes	Refer to the wiring diagram and verify whether or not there is a common connector between the following terminals: • Fuel injector No.4 terminal B—PCM terminal 1DT • Fuel injector No.4 terminal A—PCM terminal 1DS **If there is a common connector:** • Determine the malfunctioning part by inspecting the common connector and the terminal for corrosion, damage, or pin disconnection, and the common wiring harness for a short to ground. • Repair or replace the malfunctioning part. **If there is no common connector:** • Repair or replace the wiring harness which has a short to ground. Go to Step 9.
		No	Go to the next step.
6	**INSPECT FUEL INJECTOR NO.4 CIRCUIT FOR SHORT TO POWER SUPPLY** • Verify that the fuel injector No.4 and PCM connectors are disconnected. • Switch the ignition ON (engine off). **NOTE:** • Another DTC may be stored by the PCM detecting an open circuit. • Measure the voltage at the fuel injector No.4 terminal A (wiring harness-side). • Is the voltage **0 V**?	Yes	Go to the next step.
		No	Refer to the wiring diagram and verify whether or not there is a common connector between fuel injector No.4 terminal A and PCM terminal 1DS. **If there is a common connector:** • Determine the malfunctioning part by inspecting the common connector and the terminal for corrosion, damage, or pin disconnection, and the common wiring harness for a short to power supply. • Repair or replace the malfunctioning part. **If there is no common connector:** • Repair or replace the wiring harness which has a short to power supply. Go to Step 9.
7	**INSPECT FUEL INJECTOR NO.4 CIRCUIT FOR OPEN CIRCUIT** • Verify that the fuel injector No.4 and PCM connectors are disconnected.	Yes	Go to the next step.
		No	Refer to the wiring diagram and verify whether or not there is a common connector between the following terminals:

	• Switch the ignition off. • Inspect for continuity between the following terminals (wiring harness-side): ▪ Fuel injector No.4 terminal B—PCM terminal 1DT ▪ Fuel injector No.4 terminal A—PCM terminal 1DS • Is there continuity?		Fuel injector No.4 terminal B—PCM terminal 1DT • Fuel injector No.4 terminal A—PCM terminal 1DS **If there is a common connector:** • Determine the malfunctioning part by inspecting the common connector and the terminal for corrosion, damage, or pin disconnection, and the common wiring harness for an open circuit. • Repair or replace the malfunctioning part. **If there is no common connector:** • Repair or replace the wiring harness which has an open circuit. Go to Step 9.
8	**INSPECT FUEL INJECTOR NO.4** • Inspect the fuel injector No.4. (See **FUEL INJECTOR INSPECTION [SKYACTIV-G 2.0, SKYACTIV-G 2.5]**.) • Is there any malfunction?	Yes	Replace the fuel injector No.4, then go to the next step. (See **FUEL INJECTOR REMOVAL/INSTALLATION [SKYACTIV-G 2.0, SKYACTIV-G 2.5]**.)
		No	Go to the next step.
9	**VERIFY DTC TROUBLESHOOTING COMPLETED** • Always reconnect all disconnected connectors. • Clear the DTC from the PCM memory using the M-MDS. (See **AFTER REPAIR PROCEDURE [SKYACTIV-G 2.0, SKYACTIV-G 2.5]**.) • Perform the KOEO or KOER self test. (See **KOEO/KOER SELF TEST [SKYACTIV-G 2.0, SKYACTIV-G 2.5]**.) • Is the same DTC present?	Yes	Repeat the inspection from Step 1. • If the malfunction recurs, replace the PCM. (See **PCM REMOVAL/INSTALLATION [SKYACTIV-G 2.0, SKYACTIV-G 2.5]**.) Go to the next step.
		No	Go to the next step.
10	**VERIFY AFTER REPAIR PROCEDURE** • Perform the “AFTER REPAIR PROCEDURE”. (See **AFTER REPAIR PROCEDURE [SKYACTIV-G 2.0, SKYACTIV-G 2.5]**.) • Are any DTCs present?	Yes	Go to the applicable DTC inspection. (See **DTC TABLE [SKYACTIV-G 2.0, SKYACTIV-G 2.5]**.)
		No	DTC troubleshooting completed.

2014 - Mazda3 - Engine

DTC P0222:00 [SKYACTIV-G 2.0, SKYACTIV-G 2.5]

DTC P0222:00	TP sensor No.2 circuit low input
DETECTION CONDITION	• If the PCM detects that the TP sensor No.2 voltage at the PCM terminal 1BU is **below 0.1 V**, the PCM determines that the TP sensor No.2 circuit has a malfunction. **Diagnostic support note** • This is a continuous monitor (CCM). • The check engine light illuminates if the PCM detects the above malfunction condition during the first drive cycle. • FREEZE FRAME DATA (Mode 2)/Snapshot data is available. • DTC is stored in the PCM memory.
FAIL-SAFE FUNCTION	• Restricts the upper limit of the engine speed.
POSSIBLE CAUSE	• Throttle body connector or terminals malfunction • Short to ground in wiring harness between the following terminals: ▪ Throttle body terminal B—PCM terminal 1BS ▪ Throttle body terminal C—PCM terminal 1BU • PCM connector or terminals malfunction • TP sensor No.2 signal circuit and ground circuit are shorted to each other • Open circuit in wiring harness between the following terminals: ▪ Throttle body terminal B—PCM terminal 1BS ▪ Throttle body terminal C—PCM terminal 1BU • TP sensor No.2 malfunction • PCM malfunction

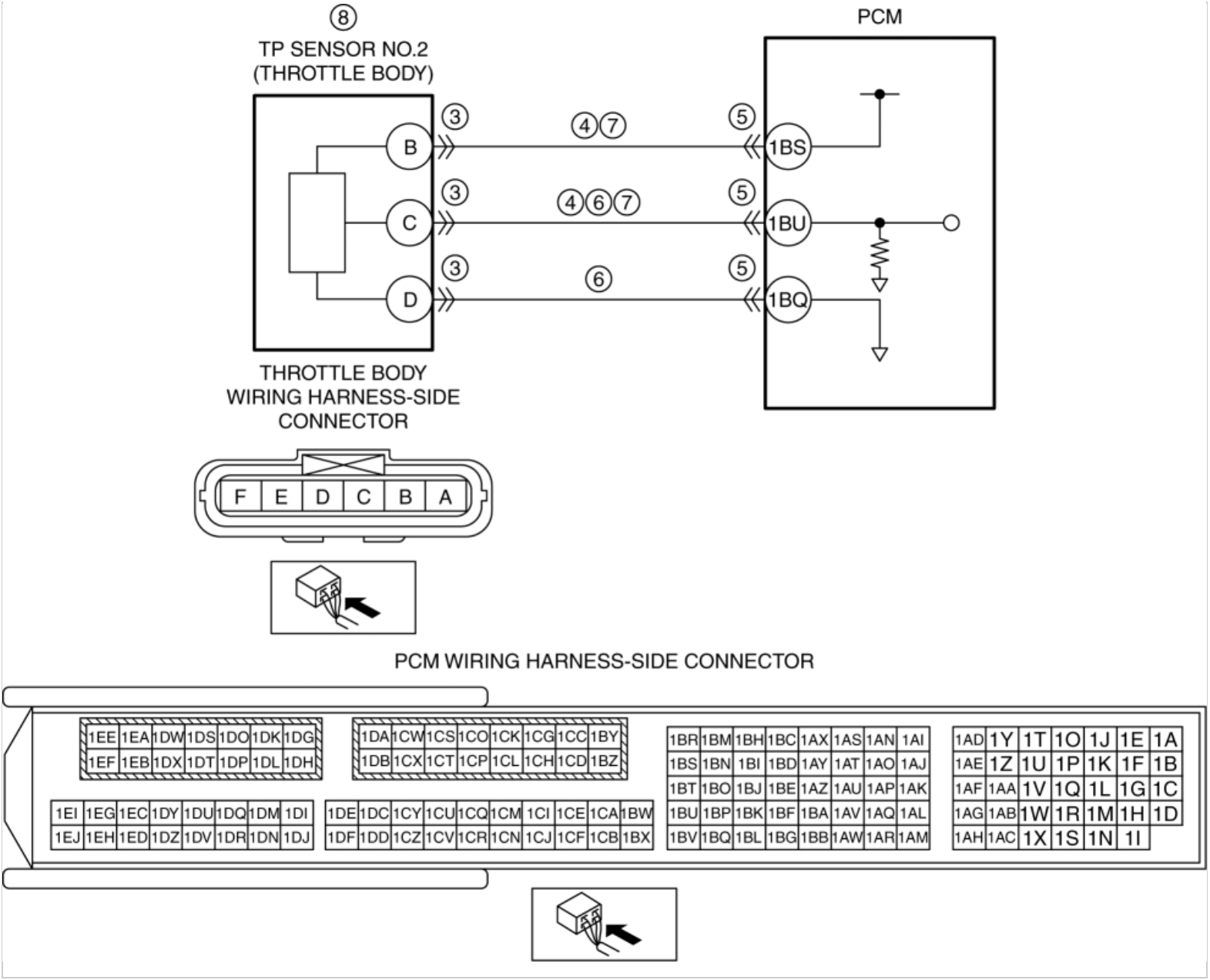

CAUTION:

- Verify the malfunction symptom according to not only the PID value but also the symptom troubleshooting.

Related PIDs

Item (definition)	Unit/Condition	Definition	Condition/Specification (Reference)
TP2	V	TP sensor No.2 voltage	• Accelerator pedal released: Approx. 3.92 V • Accelerator pedal fully depressed: Approx. 0.41 V
	%	Throttle valve position No.2	• Accelerator pedal released: Approx. 22% • Accelerator pedal fully depressed: Approx. 82%

Diagnostic Procedure

STEP	INSPECTION	ACTION

1	**VERIFY FREEZE FRAME DATA (MODE 2)/SNAPSHOT DATA HAS BEEN RECORDED** • Has the FREEZE FRAME DATA (Mode 2)/snapshot data been recorded?	Yes	Go to the next step.
		No	Record the FREEZE FRAME DATA (Mode 2)/snapshot data on the repair order, then go to the next step.
2	**VERIFY RELATED REPAIR INFORMATION AVAILABILITY** • Verify related Service Bulletins and/or on-line repair information availability. • Is any related repair information available?	Yes	Perform repair or diagnosis according to the available repair information. • If the vehicle is not repaired, go to the next step.
		No	Go to the next step.
3	**INSPECT THROTTLE BODY CONNECTOR CONDITION** • Switch the ignition off. • Disconnect the throttle body connector. • Inspect for poor connection (such as damaged/pulled-out pins, corrosion). • Is there any malfunction?	Yes	Repair or replace the connector and/or terminals, then go to Step 9.
		No	Go to the next step.
4	**INSPECT TP SENSOR NO.2 CIRCUIT FOR SHORT TO GROUND** • Verify that the throttle body connector is disconnected. • Inspect for continuity between the following terminals (wiring harness-side) and body ground: ▪ Throttle body terminal B ▪ Throttle body terminal C • Is there continuity?	Yes	If the short to ground circuit could be detected in the wiring harness: • Refer to the wiring diagram and verify whether or not there is a common connector between the following terminals: ▪ Throttle body terminal B—PCM terminal 1BS ▪ Throttle body terminal C—PCM terminal 1BU **If there is a common connector:** ▪ Determine the malfunctioning part by inspecting the common connector and the terminal for corrosion, damage, or pin disconnection, and the common wiring harness for a short to ground. ▪ Repair or replace the malfunctioning part. **If there is no common connector:** ▪ Repair or replace the wiring harness which has a short to ground. If the short to ground circuit could not be detected in the wiring harness: • Replace the PCM (short to ground in the PCM internal circuit). (See **PCM REMOVAL/INSTALLATION [SKYACTIV-G 2.0, SKYACTIV-G 2.5]**.) Go to Step 9.
		No	Go to the next step.
5	**INSPECT PCM CONNECTOR CONDITION** • Disconnect the PCM connector. • Inspect for poor connection (such as	Yes	Repair or replace the connector and/or terminals, then go to Step 9.
		No	Go to the next step.

	damaged/pulled-out pins, corrosion). • Is there any malfunction?		
6	**INSPECT TP SENSOR NO.2 SIGNAL CIRCUIT AND GROUND CIRCUIT FOR SHORT TO EACH OTHER** • Verify that the throttle body and PCM connectors are disconnected. • Inspect for continuity between throttle body terminals C and D (wiring harness-side). • Is there continuity?	Yes	Refer to the wiring diagram and verify whether or not there is a common connector between the following terminals: • Throttle body terminal C—PCM terminal 1BU • Throttle body terminal D—PCM terminal 1BQ **If there is a common connector:** • Determine the malfunctioning part by inspecting the common connector and the terminal for corrosion, damage, or pin disconnection, and the common wiring harness for a short to each other. • Repair or replace the malfunctioning part. **If there is no common connector:** • Repair or replace the wiring harness which has a short to each other. Go to Step 9.
		No	Go to the next step.
7	**INSPECT TP SENSOR NO.2 CIRCUIT FOR OPEN CIRCUIT** • Verify that the throttle body and PCM connectors are disconnected. • Inspect for continuity between the following terminals (wiring harness-side): ▪ Throttle body terminal B—PCM terminal 1BS ▪ Throttle body terminal C—PCM terminal 1BU • Is there continuity?	Yes	Go to the next step.
		No	Refer to the wiring diagram and verify whether or not there is a common connector between the following terminals: • Throttle body terminal B—PCM terminal 1BS • Throttle body terminal C—PCM terminal 1BU **If there is a common connector:** • Determine the malfunctioning part by inspecting the common connector and the terminal for corrosion, damage, or pin disconnection, and the common wiring harness for an open circuit. • Repair or replace the malfunctioning part. **If there is no common connector:** • Repair or replace the wiring harness which has an open circuit. Go to Step 9.
8	**INSPECT TP SENSOR NO.2** • Reconnect all disconnected connectors. • Inspect the TP sensor No.2. (See **THROTTLE POSITION (TP) SENSOR INSPECTION [SKYACTIV-G 2.0, SKYACTIV-G 2.5]**.) • Is there any malfunction?	Yes	Replace the throttle body, then go to the next step. (See **INTAKE-AIR SYSTEM REMOVAL/INSTALLATION [SKYACTIV-G 2.0, SKYACTIV-G 2.5]**.)
		No	Go to the next step.
9	**VERIFY DTC TROUBLESHOOTING COMPLETED**	Yes	Repeat the inspection from Step 1.

	• Always reconnect all disconnected connectors. • Clear the DTC from the PCM memory using the M-MDS. (See **AFTER REPAIR PROCEDURE [SKYACTIV-G 2.0, SKYACTIV-G 2.5]**.) • Perform the KOEO or KOER self test. (See **KOEO/KOER SELF TEST [SKYACTIV-G 2.0, SKYACTIV-G 2.5]**.) • Is the same DTC present?		• If the malfunction recurs, replace the PCM. (See **PCM REMOVAL/INSTALLATION [SKYACTIV-G 2.0, SKYACTIV-G 2.5]**.) Go to the next step.
		No	Go to the next step.
10	**VERIFY AFTER REPAIR PROCEDURE** • Perform the “AFTER REPAIR PROCEDURE”. (See **AFTER REPAIR PROCEDURE [SKYACTIV-G 2.0, SKYACTIV-G 2.5]**.) • Are any DTCs present?	Yes	Go to the applicable DTC inspection. (See **DTC TABLE [SKYACTIV-G 2.0, SKYACTIV-G 2.5]**.)
		No	DTC troubleshooting completed.

2014 - Mazda3 - Engine

DTC P0223:00 [SKYACTIV-G 2.0, SKYACTIV-G 2.5]

DTC P0223:00	TP sensor No.2 circuit high input
DETECTION CONDITION	• If the PCM detects that the TP sensor No.2 voltage at the PCM terminal 1BU is **above 4.9 V**, the PCM determines that the TP sensor No.2 circuit has a malfunction. **Diagnostic support note** • This is a continuous monitor (CCM). • The check engine light illuminates if the PCM detects the above malfunction condition during the first drive cycle. • FREEZE FRAME DATA (Mode 2)/Snapshot data is available. • DTC is stored in the PCM memory.
FAIL-SAFE FUNCTION	• Restricts the upper limit of the engine speed.
POSSIBLE CAUSE	• Throttle body connector or terminals malfunction • PCM connector or terminals malfunction • TP sensor No.2 malfunction • Short to power supply in wiring harness between throttle body terminal C and PCM terminal 1BU • Open circuit in wiring harness between throttle body terminal D and PCM terminal 1BQ • PCM malfunction

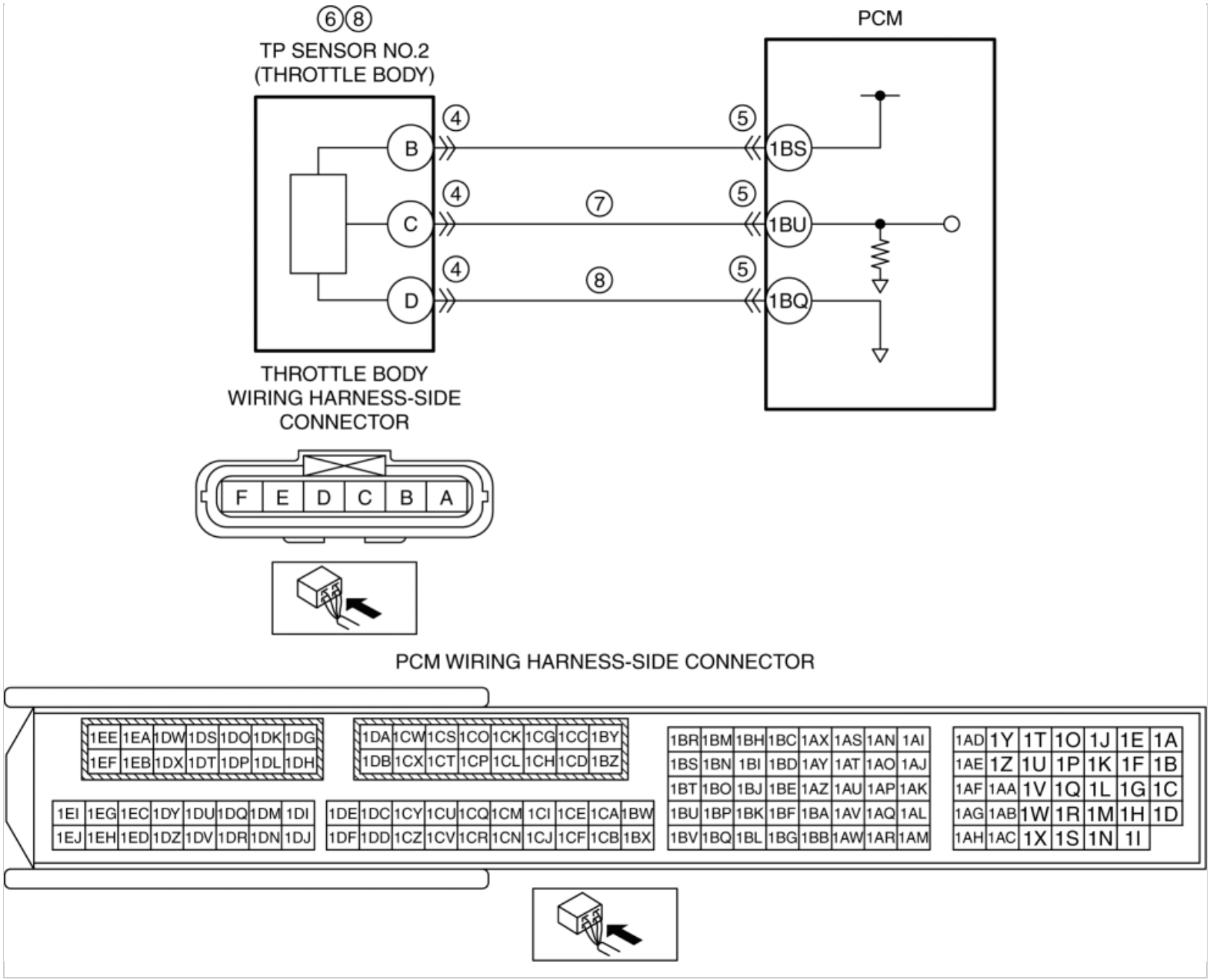

CAUTION:

- Verify the malfunction symptom according to not only the PID value but also the symptom troubleshooting.

Related PIDs

Item (definition)	Unit/Condition	Definition	Condition/Specification (Reference)
TP2	V	TP sensor No.2 voltage	• Accelerator pedal released: Approx. 3.92 V • Accelerator pedal fully depressed: Approx. 0.41 V
	%	Throttle valve position No.2	• Accelerator pedal released: Approx. 22% • Accelerator pedal fully depressed: Approx. 82%

Diagnostic Procedure

STEP	INSPECTION	ACTION

1	**VERIFY FREEZE FRAME DATA (MODE 2)/SNAPSHOT DATA HAS BEEN RECORDED** • Has the FREEZE FRAME DATA (Mode 2)/snapshot data been recorded?	Yes	Go to the next step.
		No	Record the FREEZE FRAME DATA (Mode 2)/snapshot data on the repair order, then go to the next step.
2	**VERIFY RELATED REPAIR INFORMATION AVAILABILITY** • Verify related Service Bulletins and/or on-line repair information availability. • Is any related repair information available?	Yes	Perform repair or diagnosis according to the available repair information. • If the vehicle is not repaired, go to the next step.
		No	Go to the next step.
3	**DETERMINE IF TP SENSOR NO.2 OR WIRING HARNESS MALFUNCTION** • Access the TP2 PID using the M-MDS. (See **ON-BOARD DIAGNOSTIC TEST [SKYACTIV-G 2.0, SKYACTIV-G 2.5]**.) • Verify the TP2 PID value. • Is the TP2 PID value **5 V** or **B+**?	Yes	Go to Step 7.
		No	Go to the next step.
4	**INSPECT THROTTLE BODY CONNECTOR CONDITION** • Switch the ignition off. • Disconnect the throttle body connector. • Inspect for poor connection (such as damaged/pulled-out pins, corrosion). • Is there any malfunction?	Yes	Repair or replace the connector and/or terminals, then go to Step 9.
		No	Go to the next step.
5	**INSPECT PCM CONNECTOR CONDITION** • Disconnect the PCM connector. • Inspect for poor connection (such as damaged/pulled-out pins, corrosion). • Is there any malfunction?	Yes	Repair or replace the connector and/or terminals, then go to Step 9.
		No	Go to the next step.
6	**INSPECT TP SENSOR NO.2** • Reconnect all disconnected connectors. • Inspect the TP sensor No.2. (See **THROTTLE POSITION (TP) SENSOR INSPECTION [SKYACTIV-G 2.0, SKYACTIV-G 2.5]**.) • Is there any malfunction?	Yes	Replace the throttle body, then go to Step 9. (See **INTAKE-AIR SYSTEM REMOVAL/INSTALLATION [SKYACTIV-G 2.0, SKYACTIV-G 2.5]**.)
		No	Go to Step 9.
7	**INSPECT TP SENSOR NO.2 SIGNAL CIRCUIT FOR SHORT TO POWER SUPPLY** • Switch the ignition off. • Disconnect the throttle body connector. • Access the TP2 PID using the M-MDS.	Yes	Refer to the wiring diagram and verify whether or not there is a common connector between throttle body terminal C and PCM terminal 1BU. **If there is a common connector:** • Determine the malfunctioning part by inspecting the common connector and the terminal for corrosion, damage, or pin disconnection, and the common wiring harness for a short to power supply.

	(See **ON-BOARD DIAGNOSTIC TEST [SKYACTIV-G 2.0, SKYACTIV-G 2.5]**.) • Verify the TP2 PID value. • Is the TP2 PID value **5 V** or **B+**?		• Repair or replace the malfunctioning part. **If there is no common connector:** • Repair or replace the wiring harness which has a short to power supply. Go to Step 9.
		No	Go to the next step.
8	**INSPECT TP SENSOR NO.2 GROUND CIRCUIT FOR OPEN CIRCUIT** • Verify that the throttle body connector is disconnected. • Switch the ignition off. • Disconnect the PCM connector. • Inspect for continuity between throttle body terminal D (wiring harness-side) and PCM terminal 1BQ (wiring harness-side). • Is there continuity?	Yes	Replace the throttle body, then go to the next step. (See **INTAKE-AIR SYSTEM REMOVAL/INSTALLATION [SKYACTIV-G 2.0, SKYACTIV-G 2.5]**.)
		No	Refer to the wiring diagram and verify whether or not there is a common connector between throttle body terminal D and PCM terminal 1BQ. **If there is a common connector:** • Determine the malfunctioning part by inspecting the common connector and the terminal for corrosion, damage, or pin disconnection, and the common wiring harness for an open circuit. • Repair or replace the malfunctioning part. **If there is no common connector:** • Repair or replace the wiring harness which has an open circuit. Go to the next step.
9	**VERIFY DTC TROUBLESHOOTING COMPLETED** • Always reconnect all disconnected connectors. • Clear the DTC from the PCM memory using the M-MDS. (See **AFTER REPAIR PROCEDURE [SKYACTIV-G 2.0, SKYACTIV-G 2.5]**.) • Perform the KOEO or KOER self test. (See **KOEO/KOER SELF TEST [SKYACTIV-G 2.0, SKYACTIV-G 2.5]**.) • Is the same DTC present?	Yes	Repeat the inspection from Step 1. • If the malfunction recurs, replace the PCM. (See **PCM REMOVAL/INSTALLATION [SKYACTIV-G 2.0, SKYACTIV-G 2.5]**.) Go to the next step.
		No	Go to the next step.
10	**VERIFY AFTER REPAIR PROCEDURE** • Perform the “AFTER REPAIR PROCEDURE”. (See **AFTER REPAIR PROCEDURE [SKYACTIV-G 2.0, SKYACTIV-G 2.5]**.) • Are any DTCs present?	Yes	Go to the applicable DTC inspection. (See **DTC TABLE [SKYACTIV-G 2.0, SKYACTIV-G 2.5]**.)
		No	DTC troubleshooting completed.

2014 - Mazda3 - Engine

DTC P025B:00 [SKYACTIV-G 2.0, SKYACTIV-G 2.5]

DTC P025B:00	Fuel pump control module circuit range/performance problem
DETECTION CONDITION	• When any of the following conditions is met: ▪ The temperature in the fuel pump control module is too high. ▪ Output duty ratio signal received from PCM is in error. ▪ Output signal from fuel pump control module is erratic (noise overlap). **Diagnostic support note** • This is a continuous monitor (CCM). • The check engine light does not illuminate. • FREEZE FRAME DATA (Mode 2) is not available. • Snapshot data is available. • DTC is stored in the PCM memory.
FAIL-SAFE FUNCTION	• Stops fuel pump control
POSSIBLE CAUSE	• Fuel pump control module connector or terminals malfunction • PCM connector or terminals malfunction • Short to ground in wiring harness between fuel pump control module terminal 1B and PCM terminal 2AE • Short to power supply in wiring harness between fuel pump control module terminal 1B and PCM terminal 2AE • Open circuit in wiring harness between fuel pump control module terminal 1B and PCM terminal 2AE • Fuel pump control module malfunction • PCM malfunction

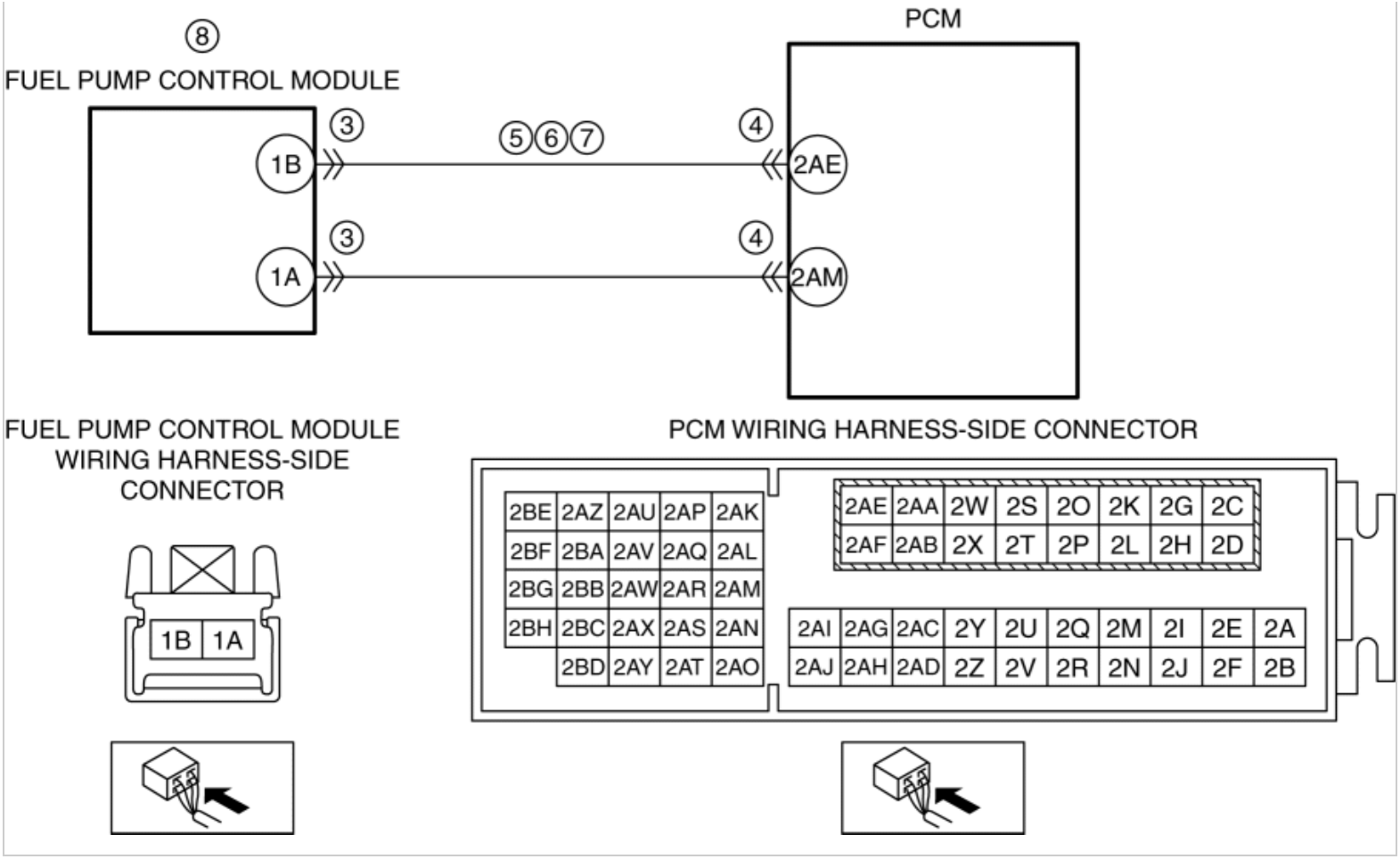

Diagnostic Procedure

STEP	INSPECTION		ACTION
1	**VERIFY FREEZE FRAME DATA (MODE 2)/SNAPSHOT DATA HAS BEEN RECORDED** • Has the FREEZE FRAME DATA (Mode 2)/snapshot data been recorded?	Yes	Go to the next step.
		No	Record the FREEZE FRAME DATA (Mode 2)/snapshot data on the repair order, then go to the next step.
2	**VERIFY RELATED REPAIR INFORMATION AVAILABILITY** • Verify related Service Bulletins and/or on-line repair information availability. • Is any related repair information available?	Yes	Perform repair or diagnosis according to the available repair information. • If the vehicle is not repaired, go to the next step.
		No	Go to the next step.
3	**INSPECT FUEL PUMP CONTROL MODULE CONNECTOR CONDITION** • Switch the ignition off. • Disconnect the fuel pump control module connector. • Inspect for poor connection (such as damaged/pulled-out pins, corrosion). • Is there any malfunction?	Yes	Repair or replace the connector and/or terminals, then go to Step 9.
		No	Go to the next step.

4	**INSPECT PCM CONNECTOR CONDITION** • Disconnect the PCM connector. • Inspect for poor connection (such as damaged/pulled-out pins, corrosion). • Is there any malfunction?	Yes	Repair or replace the connector and/or terminals, then go to Step 9.
		No	Go to the next step.
5	**INSPECT FUEL PUMP CONTROL MODULE SIGNAL CIRCUIT FOR SHORT TO GROUND** • Verify that the fuel pump control module and PCM connectors are disconnected. • Inspect for continuity between fuel pump control module terminal 1B (wiring harness-side) and body ground. • Is there continuity?	Yes	Refer to the wiring diagram and verify whether or not there is a common connector between fuel pump control module terminal 1B and PCM terminal 2AE. **If there is a common connector:** • Determine the malfunctioning part by inspecting the common connector and the terminal for corrosion, damage, or pin disconnection, and the common wiring harness for a short to ground. • Repair or replace the malfunctioning part. **If there is no common connector:** • Repair or replace the wiring harness which has a short to ground. Go to Step 9.
		No	Go to the next step.
6	**INSPECT FUEL PUMP CONTROL MODULE SIGNAL CIRCUIT FOR SHORT TO POWER SUPPLY** • Verify that the fuel pump control module and PCM connectors are disconnected. • Switch the ignition ON (engine off). **NOTE:** • Another DTC may be stored by the PCM detecting an open circuit. • Measure the voltage at the fuel pump control module terminal 1B (wiring harness-side). • Is the voltage **0 V**?	Yes	Go to the next step.
		No	Refer to the wiring diagram and verify whether or not there is a common connector between fuel pump control module terminal 1B and PCM terminal 2AE. **If there is a common connector:** • Determine the malfunctioning part by inspecting the common connector and the terminal for corrosion, damage, or pin disconnection, and the common wiring harness for a short to power supply. • Repair or replace the malfunctioning part. **If there is no common connector:** • Repair or replace the wiring harness which has a short to power supply. Go to Step 9.
7	**INSPECT FUEL PUMP CONTROL MODULE SIGNAL CIRCUIT FOR OPEN CIRCUIT** • Verify that the fuel pump control module and PCM connectors are disconnected. • Switch the ignition off. • Inspect for continuity between fuel pump control module	Yes	Go to the next step.
		No	Refer to the wiring diagram and verify whether or not there is a common connector between fuel pump control module terminal 1B and PCM terminal 2AE. **If there is a common connector:** • Determine the malfunctioning part by inspecting the common connector and the terminal for

	terminal 1B (wiring harness-side) and PCM terminal 2AE (wiring harness-side). • Is there continuity?		corrosion, damage, or pin disconnection, and the common wiring harness for an open circuit. • Repair or replace the malfunctioning part. **If there is no common connector:** • Repair or replace the wiring harness which has an open circuit. Go to Step 9.
8	**INSPECT FUEL PUMP CONTROL MODULE** • Reconnect all disconnected connectors. • Inspect the fuel pump control module. (See **FUEL PUMP CONTROL MODULE INSPECTION [SKYACTIV-G 2.0, SKYACTIV-G 2.5]**.) • Is there any malfunction?	Yes	Replace the fuel pump control module, then go to the next step. (See **FUEL PUMP CONTROL MODULE REMOVAL/INSTALLATION [SKYACTIV-G 2.0, SKYACTIV-G 2.5]**.)
		No	Go to the next step.
9	**VERIFY DTC TROUBLESHOOTING COMPLETED** • Always reconnect all disconnected connectors. • Clear the DTC from the PCM memory using the M-MDS. (See **AFTER REPAIR PROCEDURE [SKYACTIV-G 2.0, SKYACTIV-G 2.5]**.) • Perform the KOEO or KOER self test. (See **KOEO/KOER SELF TEST [SKYACTIV-G 2.0, SKYACTIV-G 2.5]**.) • Is the same DTC present?	Yes	Repeat the inspection from Step 1. • If the malfunction recurs, replace the PCM. (See **PCM REMOVAL/INSTALLATION [SKYACTIV-G 2.0, SKYACTIV-G 2.5]**.) Go to the next step.
		No	Go to the next step.
10	**VERIFY AFTER REPAIR PROCEDURE** • Perform the “AFTER REPAIR PROCEDURE”. (See **AFTER REPAIR PROCEDURE [SKYACTIV-G 2.0, SKYACTIV-G 2.5]**.) • Are any DTCs present?	Yes	Go to the applicable DTC inspection. (See **DTC TABLE [SKYACTIV-G 2.0, SKYACTIV-G 2.5]**.)
		No	DTC troubleshooting completed.

2014 - Mazda3 - Engine

DTC P025C:00 [SKYACTIV-G 2.0, SKYACTIV-G 2.5]

DTC P025C:00	Fuel pump control module result of on-board diagnostic test low input
DETECTION CONDITION	• Result of on-board test cannot be received from fuel pump control module (voltage is too low). **Diagnostic support note** • This is a continuous monitor (CCM). • The check engine light does not illuminate. • FREEZE FRAME DATA (Mode 2) is not available. • Snapshot data is available. • DTC is stored in the PCM memory.
FAIL-SAFE FUNCTION	Not applicable
POSSIBLE CAUSE	• Fuel pump control module connector or terminals malfunction • PCM connector or terminals malfunction • Short to ground in wiring harness between fuel pump control module terminal 1A and PCM terminal 2AM • Open circuit in wiring harness between fuel pump control module terminal 1A and PCM terminal 2AM • Fuel pump control module malfunction • PCM malfunction

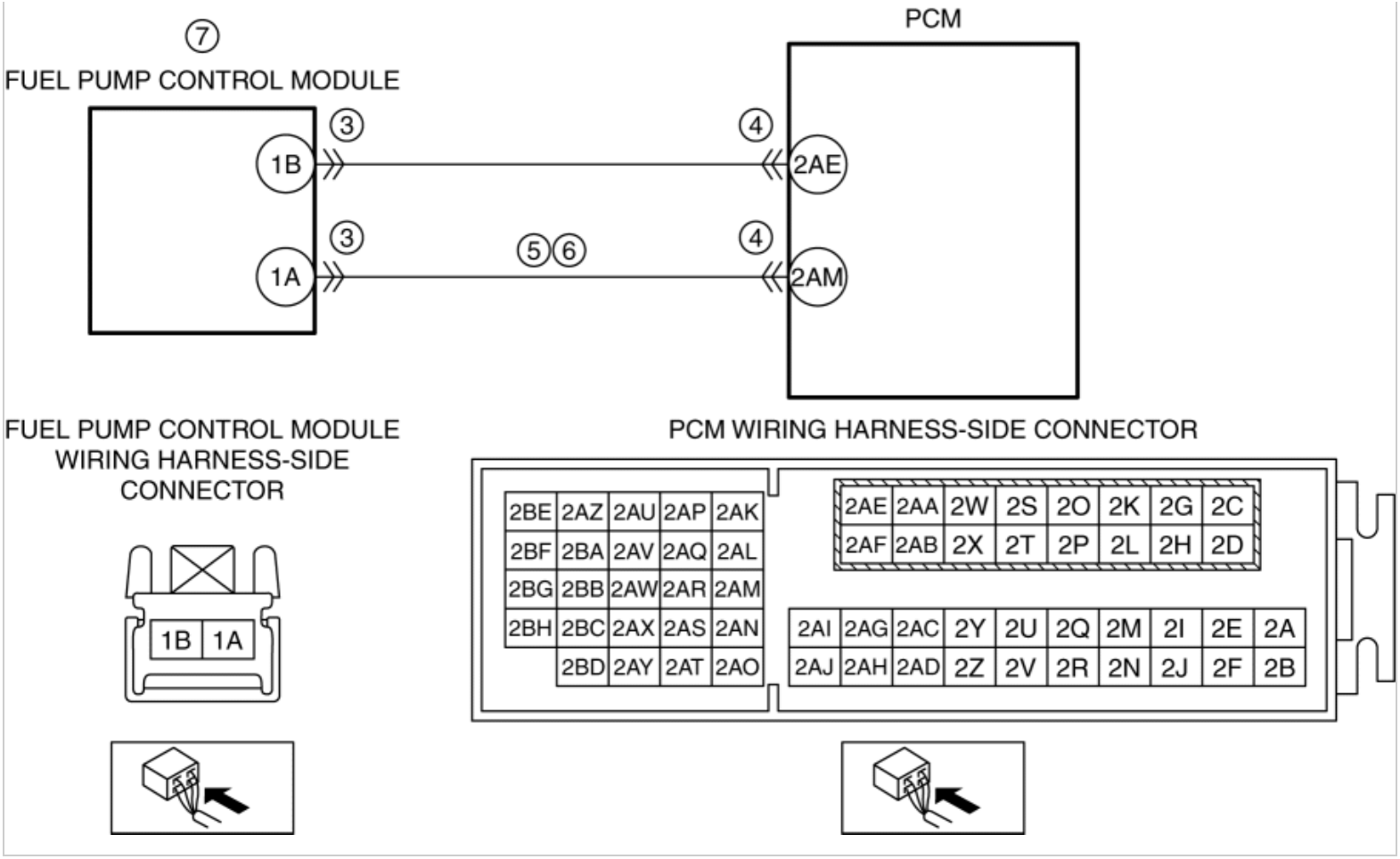

Diagnostic Procedure

STEP	INSPECTION		ACTION
1	**VERIFY FREEZE FRAME DATA (MODE 2)/SNAPSHOT DATA HAS BEEN RECORDED** • Has the FREEZE FRAME DATA (Mode 2)/snapshot data been recorded?	Yes	Go to the next step.
		No	Record the FREEZE FRAME DATA (Mode 2)/snapshot data on the repair order, then go to the next step.
2	**VERIFY RELATED REPAIR INFORMATION AVAILABILITY** • Verify related Service Bulletins and/or on-line repair information availability. • Is any related repair information available?	Yes	Perform repair or diagnosis according to the available repair information. • If the vehicle is not repaired, go to the next step.
		No	Go to the next step.
3	**INSPECT FUEL PUMP CONTROL MODULE CONNECTOR CONDITION** • Switch the ignition off. • Disconnect the fuel pump control module connector. • Inspect for poor connection (such as damaged/pulled-out pins, corrosion). • Is there any malfunction?	Yes	Repair or replace the connector and/or terminals, then go to Step 8.
		No	Go to the next step.

4	**INSPECT PCM CONNECTOR CONDITION** • Disconnect the PCM connector. • Inspect for poor connection (such as damaged/pulled-out pins, corrosion). • Is there any malfunction?	Yes	Repair or replace the connector and/or terminals, then go to Step 8.
		No	Go to the next step.
5	**INSPECT FUEL PUMP CONTROL MODULE SIGNAL CIRCUIT FOR SHORT TO GROUND** • Verify that the fuel pump control module and PCM connectors are disconnected. • Inspect for continuity between fuel pump control module terminal 1A (wiring harness-side) and body ground. • Is there continuity?	Yes	Refer to the wiring diagram and verify whether or not there is a common connector between fuel pump control module terminal 1A and PCM terminal 2AM. **If there is a common connector:** • Determine the malfunctioning part by inspecting the common connector and the terminal for corrosion, damage, or pin disconnection, and the common wiring harness for a short to ground. • Repair or replace the malfunctioning part. **If there is no common connector:** • Repair or replace the wiring harness which has a short to ground. Go to Step 8.
		No	Go to the next step.
6	**INSPECT FUEL PUMP CONTROL MODULE SIGNAL CIRCUIT FOR OPEN CIRCUIT** • Verify that the fuel pump control module and PCM connectors are disconnected. • Inspect for continuity between fuel pump control module terminal 1A (wiring harness-side) and PCM terminal 2AM (wiring harness-side). • Is there continuity?	Yes	Go to the next step.
		No	Refer to the wiring diagram and verify whether or not there is a common connector between fuel pump control module terminal 1A and PCM terminal 2AM. **If there is a common connector:** • Determine the malfunctioning part by inspecting the common connector and the terminal for corrosion, damage, or pin disconnection, and the common wiring harness for an open circuit. • Repair or replace the malfunctioning part. **If there is no common connector:** • Repair or replace the wiring harness which has an open circuit. Go to Step 8.
7	**INSPECT FUEL PUMP CONTROL MODULE** • Reconnect all disconnected connectors. • Inspect the fuel pump control module. (See **FUEL PUMP CONTROL MODULE INSPECTION [SKYACTIV-G 2.0, SKYACTIV-G 2.5]**.) • Is there any malfunction?	Yes	Replace the fuel pump control module, then go to the next step. (See **FUEL PUMP CONTROL MODULE REMOVAL/INSTALLATION [SKYACTIV-G 2.0, SKYACTIV-G 2.5]**.)
		No	Go to the next step.

8	**VERIFY DTC TROUBLESHOOTING COMPLETED** • Always reconnect all disconnected connectors. • Clear the DTC from the PCM memory using the M-MDS. (See **AFTER REPAIR PROCEDURE [SKYACTIV-G 2.0, SKYACTIV-G 2.5]**.) • Perform the KOEO or KOER self test. (See **KOEO/KOER SELF TEST [SKYACTIV-G 2.0, SKYACTIV-G 2.5]**.) • Is the same DTC present?	Yes	Repeat the inspection from Step 1. • If the malfunction recurs, replace the PCM. (See **PCM REMOVAL/INSTALLATION [SKYACTIV-G 2.0, SKYACTIV-G 2.5]**.) Go to the next step.
		No	Go to the next step.
9	**VERIFY AFTER REPAIR PROCEDURE** • Perform the “AFTER REPAIR PROCEDURE”. (See **AFTER REPAIR PROCEDURE [SKYACTIV-G 2.0, SKYACTIV-G 2.5]**.) • Are any DTCs present?	Yes	Go to the applicable DTC inspection. (See **DTC TABLE [SKYACTIV-G 2.0, SKYACTIV-G 2.5]**.)
		No	DTC troubleshooting completed.

2014 - Mazda3 - Engine

DTC P025D:00 [SKYACTIV-G 2.0, SKYACTIV-G 2.5]

DTC P025D:00	Fuel pump control module result of on-board diagnostic test high input
DETECTION CONDITION	• Result of on-board test cannot be received from fuel pump control module (voltage is too high). **Diagnostic support note** • This is a continuous monitor (CCM). • The check engine light does not illuminate. • FREEZE FRAME DATA (Mode 2) is not available. • Snapshot data is available. • DTC is stored in the PCM memory.
FAIL-SAFE FUNCTION	Not applicable
POSSIBLE CAUSE	• Fuel pump control module connector or terminals malfunction • PCM connector or terminals malfunction • Short to power supply in wiring harness between fuel pump control module terminal 1A and PCM terminal 2AM • Open circuit in wiring harness between fuel pump control module terminal 1A and PCM terminal 2AM • Fuel pump control module malfunction • PCM malfunction

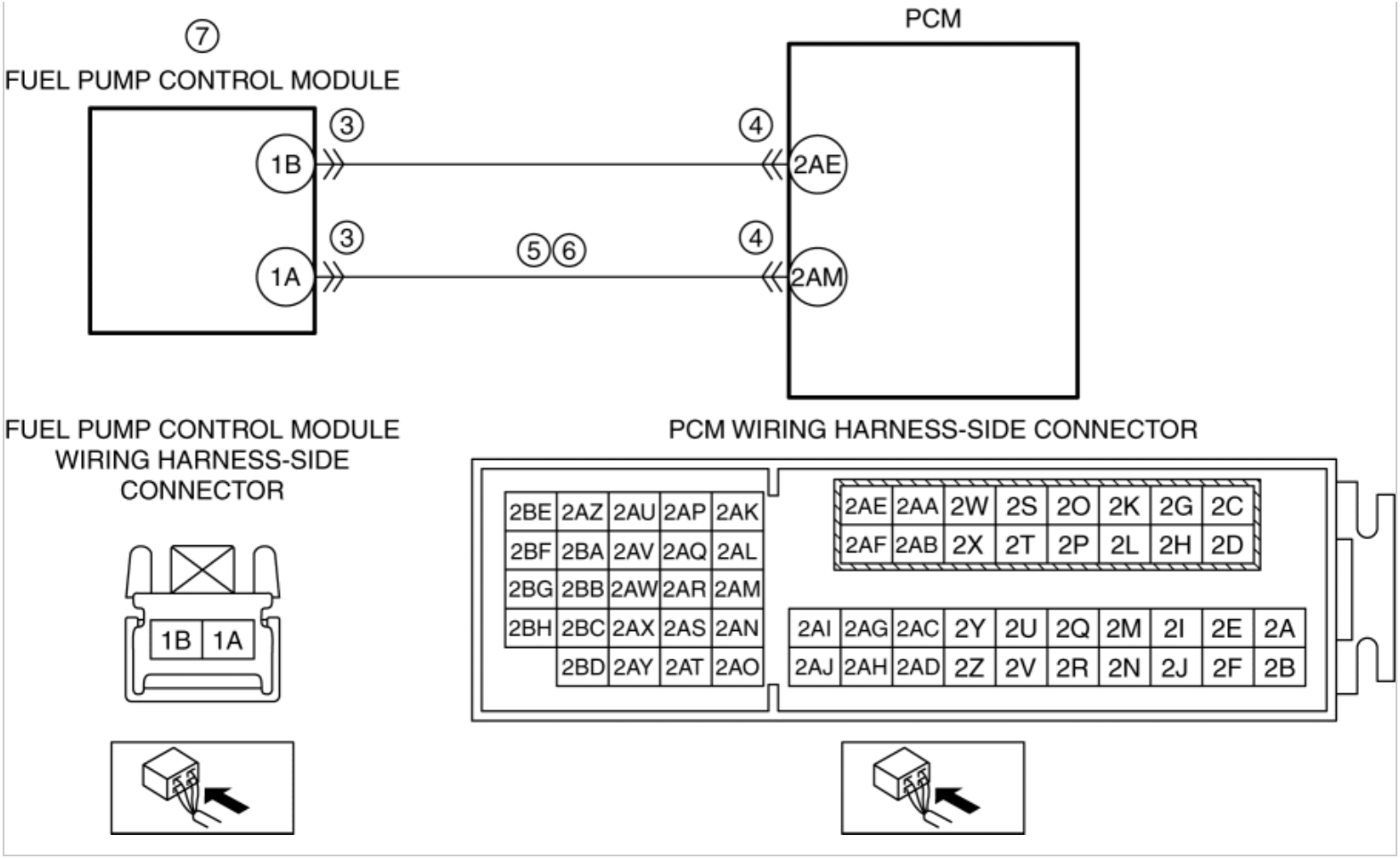

Diagnostic Procedure

STEP	INSPECTION		ACTION
1	**VERIFY FREEZE FRAME DATA (MODE 2)/SNAPSHOT DATA HAS BEEN RECORDED** • Has the FREEZE FRAME DATA (Mode 2)/snapshot data been recorded?	Yes	Go to the next step.
		No	Record the FREEZE FRAME DATA (Mode 2)/snapshot data on the repair order, then go to the next step.
2	**VERIFY RELATED REPAIR INFORMATION AVAILABILITY** • Verify related Service Bulletins and/or on-line repair information availability. • Is any related repair information available?	Yes	Perform repair or diagnosis according to the available repair information. • If the vehicle is not repaired, go to the next step.
		No	Go to the next step.
3	**INSPECT FUEL PUMP CONTROL MODULE CONNECTOR CONDITION** • Switch the ignition off. • Disconnect the fuel pump control module connector. • Inspect for poor connection (such as damaged/pulled-out pins, corrosion). • Is there any malfunction?	Yes	Repair or replace the connector and/or terminals, then go to Step 8.
		No	Go to the next step.

4	**INSPECT PCM CONNECTOR CONDITION** • Disconnect the PCM connector. • Inspect for poor connection (such as damaged/pulled-out pins, corrosion). • Is there any malfunction?	Yes	Repair or replace the connector and/or terminals, then go to Step 8.
		No	Go to the next step.
5	**INSPECT FUEL PUMP CONTROL MODULE SIGNAL CIRCUIT FOR SHORT TO POWER SUPPLY** • Verify that the fuel pump control module and PCM connectors are disconnected. • Switch the ignition ON (engine off). **NOTE:** • Another DTC may be stored by the PCM detecting an open circuit. • Measure the voltage at the fuel pump control module terminal 1A (wiring harness-side). • Is the voltage **0 V**?	Yes	Go to the next step.
		No	Refer to the wiring diagram and verify whether or not there is a common connector between fuel pump control module terminal 1A and PCM terminal 2AM. **If there is a common connector:** • Determine the malfunctioning part by inspecting the common connector and the terminal for corrosion, damage, or pin disconnection, and the common wiring harness for a short to power supply. • Repair or replace the malfunctioning part. **If there is no common connector:** • Repair or replace the wiring harness which has a short to power supply. Go to Step 8.
6	**INSPECT FUEL PUMP CONTROL MODULE SIGNAL CIRCUIT FOR OPEN CIRCUIT** • Verify that the fuel pump control module and PCM connectors are disconnected. • Switch the ignition off. • Inspect for continuity between fuel pump control module terminal 1A (wiring harness-side) and PCM terminal 2AM (wiring harness-side). • Is there continuity?	Yes	Go to the next step.
		No	Refer to the wiring diagram and verify whether or not there is a common connector between fuel pump control module terminal 1A and PCM terminal 2AM. **If there is a common connector:** • Determine the malfunctioning part by inspecting the common connector and the terminal for corrosion, damage, or pin disconnection, and the common wiring harness for an open circuit. • Repair or replace the malfunctioning part. **If there is no common connector:** • Repair or replace the wiring harness which has an open circuit. Go to Step 8.
7	**INSPECT FUEL PUMP CONTROL MODULE** • Reconnect all disconnected connectors. • Inspect the fuel pump control module. (See **FUEL PUMP CONTROL MODULE INSPECTION [SKYACTIV-G 2.0, SKYACTIV-G 2.5]**.)	Yes	Replace the fuel pump control module, then go to the next step. (See **FUEL PUMP CONTROL MODULE REMOVAL/INSTALLATION [SKYACTIV-G 2.0, SKYACTIV-G 2.5]**.)
		No	Go to the next step.

	• Is there any malfunction?		
8	**VERIFY DTC TROUBLESHOOTING COMPLETED** • Always reconnect all disconnected connectors. • Clear the DTC from the PCM memory using the M-MDS. (See **AFTER REPAIR PROCEDURE [SKYACTIV-G 2.0, SKYACTIV-G 2.5]**.) • Perform the KOEO or KOER self test. (See **KOEO/KOER SELF TEST [SKYACTIV-G 2.0, SKYACTIV-G 2.5]**.) • Is the same DTC present?	Yes	Repeat the inspection from Step 1. • If the malfunction recurs, replace the PCM. (See **PCM REMOVAL/INSTALLATION [SKYACTIV-G 2.0, SKYACTIV-G 2.5]**.) Go to the next step.
		No	Go to the next step.
9	**VERIFY AFTER REPAIR PROCEDURE** • Perform the “AFTER REPAIR PROCEDURE”. (See **AFTER REPAIR PROCEDURE [SKYACTIV-G 2.0, SKYACTIV-G 2.5]**.) • Are any DTCs present?	Yes	Go to the applicable DTC inspection. (See **DTC TABLE [SKYACTIV-G 2.0, SKYACTIV-G 2.5]**.)
		No	DTC troubleshooting completed.

2014 - Mazda3 - Engine

DTC P0300:00 [SKYACTIV-G 2.0, SKYACTIV-G 2.5]

NOTE:

- To determine the malfunctioning part, proceed with the diagnostics from "Function Inspection Using M-MDS".

Details On DTCs

DESCRIPTION	Random misfire detected	
DETECTION CONDITION	Determination conditions	• Any one of the following conditions is met: ▪ The misfire rate for **every 200 rotations** of the crankshaft exceeds the specified value (misfire which may damage catalytic converter). ▪ The misfire rate for **every 1,000 rotations** of the crankshaft exceeds the specified value (misfire going against emission regulations).
	Preconditions	• Battery voltage: **9—18 V**[*1] • Engine speed: **500—6,700 rpm**[*1] (U.S.A. and CANADA) • Engine speed: **500—4,500 rpm**[*1] (except U.S.A. and CANADA) • Engine coolant temperature: **−10 °C {14 °F} or more**[*1] (U.S.A. and CANADA) • Engine coolant temperature: **20 °C {68 °F} or more**[*1] (except U.S.A. and CANADA) • Not cranking (U.S.A. and CANADA) • Not stalling (U.S.A. and CANADA) • Fuel-cut control not implemented • Crankshaft installation tolerance learning completed • Engine condition is stabilized (not directly after gear change) • [*1]: Value can be verified by displaying PIDs using M-MDS
	Malfunction determination period	• 200 rotations of crankshaft (misfire which may damage catalytic converter) • 1,000 rotations of crankshaft (misfire going against emission regulations)
	Drive cycle	• **2**
	Self test type	• CMDTC self test
	Sensor used	• CKP sensor • MAF sensor • MAP sensor
FAIL-SAFE FUNCTION	• Limits intake air amount • Implement fuel-cut control (if the catalytic converter may be damaged, perform fuel-cut on cylinder misfiring the most).	
VEHICLE STATUS WHEN DTCs ARE OUTPUT	• Misfiring which may damage catalytic converter (number of drive cycles: 1): ▪ Check engine light flashes and pending code is recorded • Drive cycle directly after above drive cycle (number of drive cycles: 2): ▪ Malfunction determined: check engine light is illuminated	

	Normal is determined: Pending code cleared • Rough idling, poor acceleration, stalling
POSSIBLE CAUSE	• Improper operation of ignition system ▪ Spark plug malfunction ▪ Ignition coil related wiring harness or connector malfunction ▪ Ignition coil malfunction • Fuel injector malfunction ▪ Improper operation of fuel injector ▪ Fuel injector related wiring harness malfunction • Erratic signal to PCM ▪ CKP sensor signal malfunction ▪ ECT sensor No.1 signal malfunction ▪ MAF sensor signal malfunction ▪ MAP sensor signal malfunction ▪ IAT sensor No.1 signal malfunction ▪ APP sensor signal malfunction ▪ TP sensor signal malfunction ▪ VSS signal malfunction ▪ Related connector or terminals malfunction ▪ Related wiring harness malfunction • Poor drive belt assembly or adhesion of oil • Drive belt auto tensioner malfunction • Air leakage from intake air system (between intake manifold and cylinder head) • Engine malfunction ▪ Insufficient engine compression ▪ Engine coolant leakage to combustion chamber • PCM malfunction

System Wiring Diagram

- Not applicable

Function Explanation (DTC Detection Outline)

- The PCM detects the crankshaft rotation speed based on the crankshaft position sensor signal. If there is a small amount of fluctuation in crankshaft rotation speed due to the effect of combustion of each cylinder while the engine is rotating and a misfire occurs in any of the pistons, the crankshaft rotation speed will change suddenly. The PCM adds the number of changes in sudden rotation speed (misfire rate) to each specified crankshaft rotation speed, and if the misfire rate exceeds a certain value, a DTC is recorded.

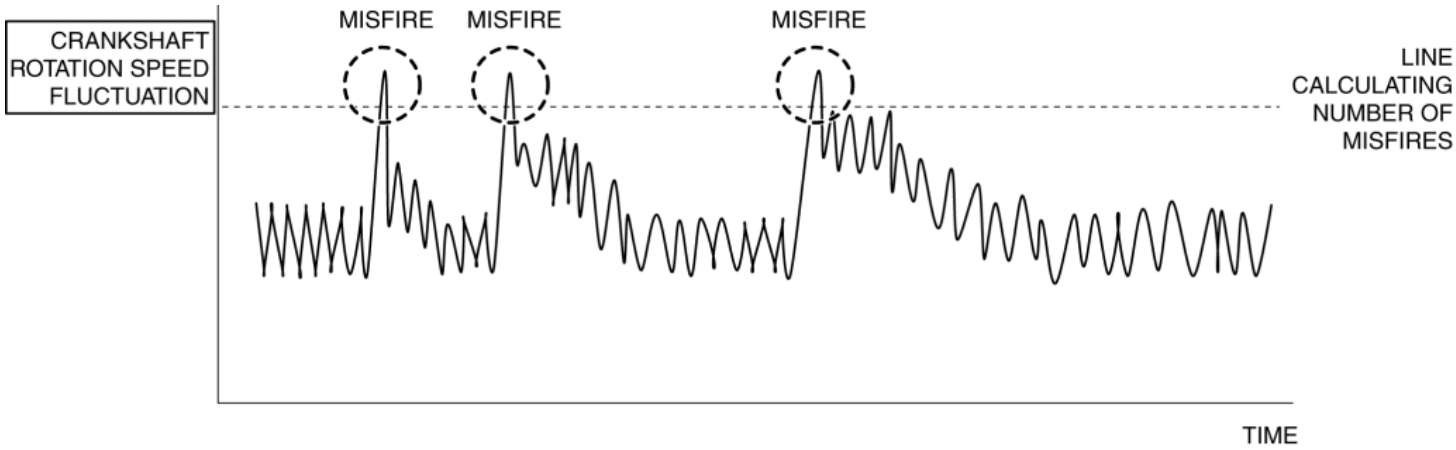

Repeatability Verification Procedure

- Drive the vehicle at a speed of **40 km/h {25 mph} or more**.
- Shift to 3rd gear and rapidly accelerate the vehicle to **60 km/h {37 mph}** (to execute misfire monitor).
- Release the accelerator pedal and decelerate the vehicle to **40 km/h {25 mph}**.
- Repeat Step 1 to 3 operations **above 5 times**.

  NOTE:

  - Match the engine coolant temperature in the recorded FREEZE FRAME DATA (Mode 2)/snapshot data, the vehicle speed, and engine speed values to the best extent possible while driving the vehicle.
- Try to reproduce the malfunction by driving the vehicle for **5 min** based on the values in the FREEZE FRAME DATA (Mode 2)/snapshot data.

PID Item/Simulation Item Used In Diagnosis

PID/DATA monitor item table—: Not applicable

Item	Definition	Unit	Condition/Specification
APP1	Accelerator pedal opening angle (absolute value) input from APP sensor No.1	%	• Accelerator pedal released: Approx. 15% • Accelerator pedal fully depressed: Approx. 82%
	APP sensor No.1 voltage	V	• Accelerator pedal released: Approx. 0.75 V • Accelerator pedal fully depressed: Approx. 4.1 V
APP2	Accelerator pedal opening angle (absolute value) input from APP sensor No.2	%	• Accelerator pedal released: Approx. 7.45% • Accelerator pedal fully depressed: Approx. 41%
	APP sensor No.2 voltage	V	• Accelerator pedal released: Approx. 0.38 V • Accelerator pedal fully depressed: Approx. 2.05 V
ECT	Engine coolant temperature	°C, °F	• Displays ECT
			• ECT is 20 °C {68 °F}: Approx. 3.10 V • ECT is 40 °C {104 °F}: Approx. 2.16 V

	ECT sensor No.1 voltage	V	• ECT is 60 °C {140 °F}: Approx. 1.40 V • ECT is 80 °C {176 °F}: Approx. 0.87 V • ECT is 100 °C {212 °F}: Approx. 0.54 V
IAT	Intake air temperature (No.1)	°C, °F	• Displays IAT (No.1)
	IAT sensor No.1 voltage	V	• IAT is 20 °C {68 °F}: Approx. 2.70 V • IAT is 40 °C {104 °F}: Approx. 1.80 V • IAT is 60 °C {140 °F}: Approx. 1.20 V
MAF	Mass air flow	g/Sec	• Displays MAF
	MAF sensor voltage	V	• Ignition switched ON (engine off) (MAF: 0.59 g/s {0.078 lb/min}): Approx. 0.72 V • Idle (after warm up) (MAF: 2.17 g/s {0.287 lb/min}): Approx. 0.86 V • Racing (engine speed is 2,000 rpm) (MAF: 4.73 g/s {0.626 lb/min}): Approx. 1.07 V
MAP	Manifold absolute pressure	KPa {MPa}, mBar {Bar}, psi, in H20	• Displays MAP
	MAP sensor voltage	V	• Ignition switched ON (engine off) (MAP:101 kPa {1.03 kgf/cm^2, 14.6 psi}): Approx. 4.07 V • Idle (after warm up) (MAP: 33 kPa {0.34 kgf/cm^2, 4.8 psi}): Approx. 1.34 V • Racing (engine speed is 2,000 rpm) (MAP: 26 kPa {0.27 kgf/cm^2, 3.8 psi}): Approx. 1.05 V
MF_CAT1	Number of misfires in No.1 cylinder leading to catalytic converter temperature increase (catalytic converter temperature increases due to fuel combustion around catalytic converter after misfire)	—	• Displays number of misfires corresponding to possible catalytic converter damage (No.1 cylinder)
MF_CAT_2	Number of misfires in No.2 cylinder leading to catalytic converter temperature increase (catalytic converter temperature increases due to fuel combustion around catalytic converter after misfire)	—	• Displays number of misfires corresponding to possible catalytic converter damage (No.2 cylinder)
MF_CAT_3	Number of misfires in No.3 cylinder leading to catalytic converter temperature increase (catalytic converter temperature increases due to fuel combustion around catalytic converter after misfire)	—	• Displays number of misfires corresponding to possible catalytic converter damage (No.3 cylinder)
MF_CAT_4	Number of misfires in No.4 cylinder leading to catalytic converter temperature increase (catalytic converter temperature increases due to fuel combustion around catalytic converter after misfire)	—	• Displays number of misfires corresponding to possible catalytic converter damage (No.4 cylinder)
MF_EMI1	Number of misfires in No.1 cylinder under conditions required by emission regulations	—	• Displays number of misfires possibly affecting emission (No.1 cylinder)

MF_EMI_2	Number of misfires in No.2 cylinder under conditions required by emission regulations	—	• Displays number of misfires possibly affecting emission (No.2 cylinder)
MF_EMI_3	Number of misfires in No.3 cylinder under conditions required by emission regulations	—	• Displays number of misfires possibly affecting emission (No.3 cylinder)
MF_EMI_4	Number of misfires in No.4 cylinder under conditions required by emission regulations	—	• Displays number of misfires possibly affecting emission (No.4 cylinder)
RPM	Engine speed	RPM	• Displays engine speed
TP_REL	Throttle valve opening angle (relative value) with value at throttle valve fully open timing as the start point	%	• Accelerator pedal released: Approx. 12% • Accelerator pedal fully depressed: Approx. 82%
VSS	Vehicle speed	KPH, MPH	• Displays vehicle speed

Function Inspection Using M-MDS

STEP	INSPECTION	RESULTS	ACTION
1	**PURPOSE: VERIFY RELATED REPAIR INFORMATION AVAILABILITY** • Verify related Service Bulletins and/or on-line repair information availability. • Is any related repair information available?	Yes	Perform repair or diagnosis according to the available repair information. • If the vehicle is not repaired, go to the next step.
		No	Go to the next step.
2	**PURPOSE: IDENTIFY TRIGGER DTC FOR FREEZE FRAME DATA (MODE 2)** • Is the DTC P0300:00 on FREEZE FRAME DATA (Mode 2)?	Yes	Go to the next step.
		No	Go to the troubleshooting procedure for DTC on FREEZE FRAME DATA (Mode 2). (See **DTC TABLE [SKYACTIV-G 2.0, SKYACTIV-G 2.5]**.)
3	**PURPOSE: RECORD VEHICLE STATUS AT TIME OF DTC DETECTION TO UTILIZE WITH REPEATABILITY VERIFICATION** • Has the FREEZE FRAME DATA (Mode 2)/snapshot data been recorded?	Yes	Go to the next step.
		No	Record the FREEZE FRAME DATA (Mode 2)/snapshot data on the repair order, then go to the next step. **NOTE:** • Recording can be facilitated using the screen capture function of the PC.
4	**PURPOSE: VERIFY RELATED PENDING CODE AND/OR DTC** • Switch the ignition off, then ON (engine off). • Perform the Pending Trouble Code Access Procedure and DTC Reading Procedure. (See **ON-BOARD DIAGNOSTIC TEST [SKYACTIV-G 2.0, SKYACTIV-G 2.5]**.) • Are any other PENDING CODEs and/or DTCs present?	Yes	Go to the applicable PENDING CODE or DTC inspection. (See **DTC TABLE [SKYACTIV-G 2.0, SKYACTIV-G 2.5]**.)
		No	Go to the next step.
5	**PURPOSE: VERIFY IF THERE IS PID ITEM CAUSING DRASTIC CHANGES OF ACCELERATION FLUCTUATION BY INPUT SIGNAL TO PCM** • Start the engine. • Access the following PIDs using the M-MDS: (See **ON-BOARD DIAGNOSTIC TEST [SKYACTIV-G 2.0, SKYACTIV-G 2.5]**	Yes	Inspect the suspected sensor and related wiring harness. • If there is any malfunction: ▪ Repair or replace the malfunctioning part. ▪ Go to the

	.) ▪ APP1 ▪ APP2 ▪ ECT ▪ IAT ▪ MAF ▪ MAP ▪ RPM ▪ TP_REL ▪ VSS • Is there a PID item affected by acceleration fluctuation?		troubleshooting procedure to perform the procedure from Step 10. • If there is no malfunction: ▪ Go to the next step.
		No	Go to the next step.
6	**PURPOSE: RECORD NUMBER OF CURRENT MISFIRES FOR USE WITH MISFIRE INSPECTION** • Display the misfire rate and record the number of misfires. ▪ Access the following PIDs using the M-MDS (See **ON-BOARD DIAGNOSTIC TEST [SKYACTIV-G 2.0, SKYACTIV-G 2.5]**.) (See **PCM INSPECTION [SKYACTIV-G 2.0, SKYACTIV-G 2.5]**.) • MF_CAT1 • MF_CAT_2 • MF_CAT_3 • MF_CAT_4 • MF_EMI1 • MF_EMI_2 • MF_EMI_3 • MF_EMI_4	—	Go to the next step.
7	**PURPOSE: VERIFY IF MISFIRE CAUSE IS BAD SPARK PLUGS** • Switch the spark plugs on a cylinder that is misfiring and a cylinder that is not misfiring. (See **SPARK PLUG REMOVAL/INSTALLATION [SKYACTIV-G 2.0, SKYACTIV-G 2.5]**.) • Start the engine. • Verify all accessory loads (A/C, headlights, blower fan, rear window defroster) are off. • Under no-load conditions (P or N position (ATX)/neutral (MTX), increase the engine speed to **3,000 rpm**. • Display the misfire rate and record the number of misfires. ▪ Access the following PIDs using the M-MDS (See **ON-BOARD DIAGNOSTIC TEST [SKYACTIV-G 2.0, SKYACTIV-G 2.5]**.) (See **PCM INSPECTION [SKYACTIV-G 2.0, SKYACTIV-G 2.5]**.) • MF_CAT1 • MF_CAT_2 • MF_CAT_3 • MF_CAT_4 • MF_EMI1 • MF_EMI_2 • MF_EMI_3	Yes	Go to the troubleshooting procedure to perform the procedure from Step 1.
		No	Go to the next step.

	• MF_EMI_4 • Is there a change from the recorded number of misfires?		
8	**PURPOSE: VERIFY IF MISFIRE CAUSE IS BAD IGNITION COIL** • Switch the ignition coils on a cylinder that is misfiring and a cylinder that is not misfiring. (See **IGNITION COIL/ION SENSOR REMOVAL/INSTALLATION [SKYACTIV-G 2.0, SKYACTIV-G 2.5]**.) • Start the engine. • Verify all accessory loads (A/C, headlights, blower fan, rear window defroster) are off. • Under no-load conditions (P or N position (ATX)/neutral (MTX), increase the engine speed to **3,000 rpm**. • Display the misfire rate and record the number of misfires. ▪ Access the following PIDs using the M-MDS (See **ON-BOARD DIAGNOSTIC TEST [SKYACTIV-G 2.0, SKYACTIV-G 2.5]**.) (See **PCM INSPECTION [SKYACTIV-G 2.0, SKYACTIV-G 2.5]**.) • MF_CAT1 • MF_CAT_2 • MF_CAT_3 • MF_CAT_4 • MF_EMI1 • MF_EMI_2 • MF_EMI_3 • MF_EMI_4 • Is there a change from the recorded number of misfires?	Yes	Go to the troubleshooting procedure to perform the procedure from Step 2.
		No	Go to the troubleshooting procedure to perform the procedure from Step 3.

Troubleshooting Diagnostic Procedure

Intention of troubleshooting procedure

- Step 1—2
  - Perform an ignition system parts inspection.
- Step 3
  - Perform a fuel injector control system inspection.
- Step 4—9
  - Perform an inspection of parts which may be affected by misfire except for ignition-related parts and fuel injection control-related parts.
- Step 10—11
  - Verify that primary malfunction is resolved and there are no other malfunctions.

STEP	INSPECTION	RESULTS	ACTION
1	**PURPOSE: DETERMINE INTEGRITY OF SPARK PLUG** • Inspect the spark plug. (See **SPARK PLUG INSPECTION [SKYACTIV-G 2.0, SKYACTIV-G 2.5]**.) • Is there any malfunction?	Yes	Replace the spark plug, then go to Step 10. (See **SPARK PLUG REMOVAL/INSTALLATION [SKYACTIV-G 2.0, SKYACTIV-G 2.5]**.)
		No	Go to the next step.
2	**PURPOSE: DETERMINE INTEGRITY OF IGNITION COIL** • Inspect the ignition coil.	Yes	Replace the ignition coil/ion sensor, then go to Step 10.

	(See **IGNITION COIL INSPECTION [SKYACTIV-G 2.0, SKYACTIV-G 2.5]**.) • Is there any malfunction?		(See **IGNITION COIL/ION SENSOR REMOVAL/INSTALLATION [SKYACTIV-G 2.0, SKYACTIV-G 2.5]**.)
		No	Go to the next step.
3	**PURPOSE: DETERMINE INTEGRITY OF FUEL INJECTOR** • Inspect the fuel injector. (See **FUEL INJECTOR INSPECTION [SKYACTIV-G 2.0, SKYACTIV-G 2.5]**.) • Is there any malfunction?	Yes	Replace the fuel injector, then go to Step 10. (See **FUEL INJECTOR REMOVAL/INSTALLATION [SKYACTIV-G 2.0, SKYACTIV-G 2.5]**.)
		No	Go to the next step.
4	**PURPOSE: VERIFY IF MALFUNCTION RELATED TO INTAKE-AIR SYSTEM IS CAUSE OF MISFIRE** • Visually inspect for loose, cracked or damaged hoses on intake air system. • Is there any malfunction?	Yes	Repair or replace the malfunctioning part according to the inspection results, then go to Step 10.
		No	Go to the next step.
5	**PURPOSE: VERIFY IF POOR DRIVE BELT ASSEMBLY IS CAUSE OF MISFIRE** • Verify the condition of the drive belt assembly. (See **DRIVE BELT INSPECTION [SKYACTIV-G 2.0, SKYACTIV-G 2.5]**.) • Is there any malfunction?	Yes	Assemble drive belt correctly, then go to Step 10. (See **DRIVE BELT REMOVAL/INSTALLATION [SKYACTIV-G 2.0, SKYACTIV-G 2.5]**.)
		No	Go to the next step.
6	**PURPOSE: VERIFY IF FOREIGN MATTER ON DRIVE BELT IS CAUSE OF MISFIRE** • Verify if oil is on the drive belt. • Is there foreign matter on the drive belt?	Yes	Remove the foreign matter on the drive belt, then go to Step 10.
		No	Go to the next step.
7	**PURPOSE: DETERMINE INTEGRITY OF DRIVE BELT AUTO TENSIONER** • Inspect the drive belt auto tensioner. (See **DRIVE BELT AUTO TENSIONER INSPECTION [SKYACTIV-G 2.0, SKYACTIV-G 2.5]**.) • Is there any malfunction?	Yes	Replace the drive belt auto tensioner, then go to Step 10. (See **DRIVE BELT AUTO TENSIONER REMOVAL/INSTALLATION [SKYACTIV-G 2.0, SKYACTIV-G 2.5]**.)
		No	Go to the next step.
8	**PURPOSE: VERIFY IF MALFUNCTION RELATED TO ENGINE COMPRESSION IS CAUSE OF MISFIRE** • Inspect the engine compression. (See **COMPRESSION INSPECTION [SKYACTIV-G 2.0, SKYACTIV-G 2.5]**.) • Are compression pressures within specification? **Specification:** • Compression [SKYACTIV-G 2.0] ▪ Standard: **885 kPa {9.02 kgf/cm^2, 128 psi} (300 rpm)** ▪ Minimum: **708 kPa {7.22 kgf/cm^2, 103 psi} (300 rpm)** ▪ Maximum difference between cylinders: **150 kPa {1.53 kgf/cm^2, 21.8 psi}** (**300 rpm**) • Compression [SKYACTIV-G 2.5] ▪ Standard: **954 kPa {9.73 kgf/cm^2, 138 psi} (300 rpm)** ▪ Minimum: **763 kPa {7.78 kgf/cm^2, 111 psi} (300 rpm)** ▪ Maximum difference between cylinders: **161 kPa {1.64 kgf/cm^2, 23.4 psi}** (**300 rpm**) **NOTE:**	Yes	Go to the next step.
		No	Replace or overhaul the engine, then go to Step 10.

	• Because the SKYACTIV-G 2.0 and SKYACTIV-G 2.5 retards the intake valve closing timing, compression pressure is low.		
9	**PURPOSE: VERIFY IF MALFUNCTION RELATED TO SEALING OF ENGINE UNIT (COMBUSTION CHAMBER AND ENGINE COOLANT PASSAGE) IS CAUSE OF MISFIRE** • Perform the “ENGINE COOLANT LEAKAGE INSPECTION”. (See **ENGINE COOLANT LEAKAGE INSPECTION [SKYACTIV-G 2.0, SKYACTIV-G 2.5]**.) • Does the radiator cap tester needle drop even though there is no engine coolant leakage from the radiator or the hoses?	Yes	Engine coolant leakage from the engine (between the combustion chamber and the engine coolant passage) may have occurred. • Verify the conditions of the gasket and the cylinder head. ▪ If there is any malfunction: • Repair or replace the malfunctioning part according to the inspection results, then go to the next step.
		No	Go to the next step.
10	**PURPOSE: VERIFICATION OF VEHICLE REPAIR COMPLETION** • Always reconnect all disconnected connectors. • Clear the DTC from the PCM memory using the M-MDS. (See **CLEARING DTC [SKYACTIV-G 2.0, SKYACTIV-G 2.5]**.) • Implement the repeatability verification procedure. (See **Repeatability Verification Procedure**.) • Perform the Pending Trouble Code Access Procedure. (See **ON-BOARD DIAGNOSTIC TEST [SKYACTIV-G 2.0, SKYACTIV-G 2.5]**.) • Is the PENDING CODE for this DTC present?	Yes	Repeat the inspection from Step 1. • If the malfunction recurs, replace the PCM. (See **PCM REMOVAL/INSTALLATION [SKYACTIV-G 2.0, SKYACTIV-G 2.5]**.) Go to the next step.
		No	Go to the next step.
11	**PURPOSE: VERIFY IF THERE IS ANY OTHER MALFUNCTION** • Is any other DTC or pending code stored?	Yes	Go to the applicable DTC inspection. (See **DTC TABLE [SKYACTIV-G 2.0, SKYACTIV-G 2.5]**.)
		No	DTC troubleshooting completed.

2014 - Mazda3 - Engine

DTC P0301:00, P0302:00, P0303:00, P0304:00 [SKYACTIV-G 2.0, SKYACTIV-G 2.5]

NOTE:

- To determine the malfunctioning part, proceed with the diagnostics from "Function Inspection Using M-MDS".

Details On DTCs

DESCRIPTION	P0301:00: Cylinder No.1 misfire detected P0302:00: Cylinder No.2 misfire detected P0303:00: Cylinder No.3 misfire detected P0304:00: Cylinder No.4 misfire detected	
DETECTION CONDITION	Determination conditions	• Any one of the following conditions is met: ▪ The misfire rate of specific cylinders for **every 200 rotations** of the crankshaft exceeds the specified value (misfire which may damage catalytic converter). ▪ The misfire rate of specific cylinders for **every 1,000 rotations** of the crankshaft exceeds the specified value (misfire going against emission regulations).
	Preconditions	• Battery voltage: **9—18 V**[*1] • Engine speed: **500—6,700 rpm**[*1] (U.S.A. and CANADA) • Engine speed: **500—4,500 rpm**[*1] (except U.S.A. and CANADA) • Engine coolant temperature: **−10 °C {14 °F} or more**[*1] (U.S.A. and CANADA) • Engine coolant temperature: **20 °C {68 °F} or more**[*1] (except U.S.A. and CANADA) • Not cranking (U.S.A. and CANADA) • Not stalling (U.S.A. and CANADA) • Fuel-cut control not implemented • Crankshaft installation tolerance learning completed • Engine condition is stabilized (not directly after gear change) • [*1]: Value can be verified by displaying PIDs using M-MDS
	Malfunction determination period	• 200 rotations of crankshaft (misfire which may damage catalytic converter) • 1,000 rotations of crankshaft (misfire going against emission regulations)
	Drive cycle	• **2**
	Self test type	• CMDTC self test
	Sensor used	• CKP sensor • MAF sensor • MAP sensor
FAIL-SAFE FUNCTION	• Limits intake air amount • Implement fuel-cut control (if the catalytic converter may be damaged, perform fuel-cut on cylinder misfiring the most).	

VEHICLE STATUS WHEN DTCs ARE OUTPUT	Misfiring which may damage catalytic converter (number of drive cycles: 1): ▪ Check engine light flashes and pending code is recorded • Drive cycle directly after above drive cycle (number of drive cycles: 2): ▪ Malfunction determined: check engine light is illuminated ▪ Normal is determined: Pending code cleared • Rough idling, poor acceleration, stalling
POSSIBLE CAUSE	• Improper operation of ignition system ▪ Spark plug malfunction ▪ Ignition coil related wiring harness or connector malfunction ▪ Ignition coil malfunction • Fuel injector malfunction ▪ Improper operation of fuel injector ▪ Fuel injector related wiring harness malfunction • Erratic signal to PCM ▪ CKP sensor signal malfunction ▪ ECT sensor No.1 signal malfunction ▪ MAF sensor signal malfunction ▪ MAP sensor signal malfunction ▪ IAT sensor No.1 signal malfunction ▪ APP sensor signal malfunction ▪ TP sensor signal malfunction ▪ VSS signal malfunction ▪ Related connector or terminals malfunction ▪ Related wiring harness malfunction • Poor drive belt assembly or adhesion of oil • Drive belt auto tensioner malfunction • Air leakage from intake air system (between intake manifold and cylinder head) • Engine malfunction ▪ Insufficient engine compression ▪ Engine coolant leakage to combustion chamber • PCM malfunction

System Wiring Diagram

- Not applicable

Function Explanation (DTC Detection Outline)

- The PCM detects the crankshaft rotation speed based on the crankshaft position sensor signal. If there is a small amount of fluctuation in crankshaft rotation speed due to the effect of combustion of each cylinder while the engine is rotating and a misfire occurs in any of the pistons, the crankshaft rotation speed will change suddenly. The PCM adds the number of changes in sudden rotation speed (misfire rate) to each specified crankshaft rotation speed, and if the misfire rate exceeds a certain value, a DTC is recorded.

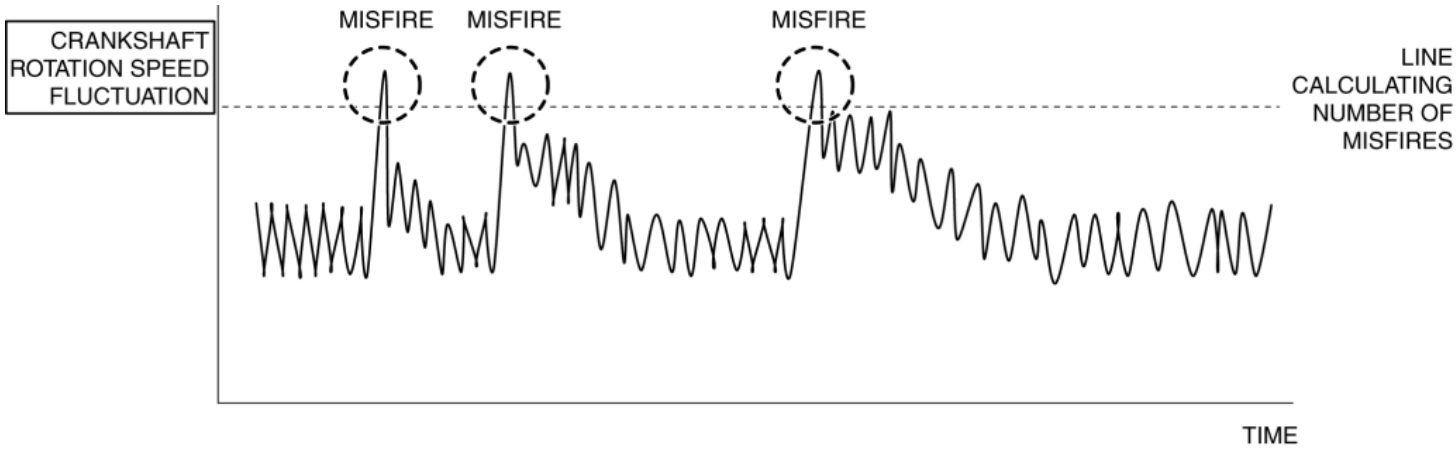

Repeatability Verification Procedure

- Drive the vehicle at a speed of **40 km/h {25 mph} or more**.
- Shift to 3rd gear and rapidly accelerate the vehicle to **60 km/h {37 mph}** (to execute misfire monitor).
- Release the accelerator pedal and decelerate the vehicle to **40 km/h {25 mph}**.
- Repeat Step 1 to 3 operations **above 5 times**.

  NOTE:

  - Match the engine coolant temperature in the recorded FREEZE FRAME DATA (Mode 2)/snapshot data, the vehicle speed, and engine speed values to the best extent possible while driving the vehicle.
- Try to reproduce the malfunction by driving the vehicle for **5 min** based on the values in the FREEZE FRAME DATA (Mode 2)/snapshot data.

PID Item/Simulation Item Used In Diagnosis

PID/DATA monitor item table—: Not applicable

Item	Definition	Unit	Condition/Specification
APP1	Accelerator pedal opening angle (absolute value) input from APP sensor No.1	%	• Accelerator pedal released: Approx. 15% • Accelerator pedal fully depressed: Approx. 82%
	APP sensor No.1 voltage	V	• Accelerator pedal released: Approx. 0.75 V • Accelerator pedal fully depressed: Approx. 4.1 V
APP2	Accelerator pedal opening angle (absolute value) input from APP sensor No.2	%	• Accelerator pedal released: Approx. 7.45% • Accelerator pedal fully depressed: Approx. 41%
	APP sensor No.2 voltage	V	• Accelerator pedal released: Approx. 0.38 V • Accelerator pedal fully depressed: Approx. 2.05 V
ECT	Engine coolant temperature	°C, °F	• Displays ECT
			• ECT is 20 °C {68 °F}: Approx. 3.10 V • ECT is 40 °C {104 °F}: Approx. 2.16 V

	ECT sensor No.1 voltage	V	• ECT is 60 °C {140 °F}: Approx. 1.40 V • ECT is 80 °C {176 °F}: Approx. 0.87 V • ECT is 100 °C {212 °F}: Approx. 0.54 V
IAT	Intake air temperature (No.1)	°C, °F	• Displays IAT (No.1)
	IAT sensor No.1 voltage	V	• IAT is 20 °C {68 °F}: Approx. 2.70 V • IAT is 40 °C {104 °F}: Approx. 1.80 V • IAT is 60 °C {140 °F}: Approx. 1.20 V
MAF	Mass air flow	g/Sec	• Displays MAF
	MAF sensor voltage	V	• Ignition switched ON (engine off) (MAF: 0.59 g/s {0.078 lb/min}): Approx. 0.72 V • Idle (after warm up) (MAF: 2.17 g/s {0.287 lb/min}): Approx. 0.86 V • Racing (engine speed is 2,000 rpm) (MAF: 4.73 g/s {0.626 lb/min}): Approx. 1.07 V
MAP	Manifold absolute pressure	KPa {MPa}, mBar {Bar}, psi, in H20	• Displays MAP
	MAP sensor voltage	V	• Ignition switched ON (engine off) (MAP:101 kPa {1.03 kgf/cm^2, 14.6 psi}): Approx. 4.07 V • Idle (after warm up) (MAP: 33 kPa {0.34 kgf/cm^2, 4.8 psi}): Approx. 1.34 V • Racing (engine speed is 2,000 rpm) (MAP: 26 kPa {0.27 kgf/cm^2, 3.8 psi}): Approx. 1.05 V
MF_CAT1	Number of misfires in No.1 cylinder leading to catalytic converter temperature increase (catalytic converter temperature increases due to fuel combustion around catalytic converter after misfire)	—	• Displays number of misfires corresponding to possible catalytic converter damage (No.1 cylinder)
MF_CAT_2	Number of misfires in No.2 cylinder leading to catalytic converter temperature increase (catalytic converter temperature increases due to fuel combustion around catalytic converter after misfire)	—	• Displays number of misfires corresponding to possible catalytic converter damage (No.2 cylinder)
MF_CAT_3	Number of misfires in No.3 cylinder leading to catalytic converter temperature increase (catalytic converter temperature increases due to fuel combustion around catalytic converter after misfire)	—	• Displays number of misfires corresponding to possible catalytic converter damage (No.3 cylinder)
MF_CAT_4	Number of misfires in No.4 cylinder leading to catalytic converter temperature increase (catalytic converter temperature increases due to fuel combustion around catalytic converter after misfire)	—	• Displays number of misfires corresponding to possible catalytic converter damage (No.4 cylinder)
MF_EMI1	Number of misfires in No.1 cylinder under conditions required by emission regulations	—	• Displays number of misfires possibly affecting emission (No.1 cylinder)

MF_EMI_2	Number of misfires in No.2 cylinder under conditions required by emission regulations	—	• Displays number of misfires possibly affecting emission (No.2 cylinder)
MF_EMI_3	Number of misfires in No.3 cylinder under conditions required by emission regulations	—	• Displays number of misfires possibly affecting emission (No.3 cylinder)
MF_EMI_4	Number of misfires in No.4 cylinder under conditions required by emission regulations	—	• Displays number of misfires possibly affecting emission (No.4 cylinder)
RPM	Engine speed	RPM	• Displays engine speed
TP_REL	Throttle valve opening angle (relative value) with value at throttle valve fully open timing as the start point	%	• Accelerator pedal released: Approx. 12% • Accelerator pedal fully depressed: Approx. 82%
VSS	Vehicle speed	KPH, MPH	• Displays vehicle speed

Function Inspection Using M-MDS

STEP	INSPECTION	RESULTS	ACTION
1	**PURPOSE: VERIFY RELATED REPAIR INFORMATION AVAILABILITY** • Verify related Service Bulletins and/or on-line repair information availability. • Is any related repair information available?	Yes	Perform repair or diagnosis according to the available repair information. • If the vehicle is not repaired, go to the next step.
		No	Go to the next step.
2	**PURPOSE: IDENTIFY TRIGGER DTC FOR FREEZE FRAME DATA (MODE 2)** • Is the DTC P0301:00, P0302:00, P0303:00 or P0304:00 on FREEZE FRAME DATA (Mode 2)?	Yes	Go to the next step.
		No	Go to the troubleshooting procedure for DTC on FREEZE FRAME DATA (Mode 2). (See **DTC TABLE [SKYACTIV-G 2.0, SKYACTIV-G 2.5]**.)
3	**PURPOSE: RECORD VEHICLE STATUS AT TIME OF DTC DETECTION TO UTILIZE WITH REPEATABILITY VERIFICATION** • Has the FREEZE FRAME DATA (Mode 2)/snapshot data been recorded?	Yes	Go to the next step.
		No	Record the FREEZE FRAME DATA (Mode 2)/snapshot data on the repair order, then go to the next step. **NOTE:** • Recording can be facilitated using the screen capture function of the PC.
4	**PURPOSE: VERIFY RELATED PENDING CODE AND/OR DTC** • Switch the ignition off, then ON (engine off). • Perform the Pending Trouble Code Access Procedure and DTC Reading Procedure. (See **ON-BOARD DIAGNOSTIC TEST [SKYACTIV-G 2.0, SKYACTIV-G 2.5]**.) • Are any other PENDING CODEs and/or DTCs present?	Yes	Go to the applicable PENDING CODE or DTC inspection. (See **DTC TABLE [SKYACTIV-G 2.0, SKYACTIV-G 2.5]**.)
		No	Go to the next step.
5	**PURPOSE: VERIFY IF THERE IS PID ITEM CAUSING DRASTIC CHANGES OF ACCELERATION FLUCTUATION BY INPUT SIGNAL TO PCM** • Start the engine. • Access the following PIDs using the M-MDS: (See **ON-BOARD DIAGNOSTIC TEST [SKYACTIV-G 2.0, SKYACTIV-G 2.5]**	Yes	Inspect the suspected sensor and related wiring harness. • If there is any malfunction: ▪ Repair or replace the malfunctioning part. ▪ Go to the

	.) ▪ APP1 ▪ APP2 ▪ ECT ▪ IAT ▪ MAF ▪ MAP ▪ RPM ▪ TP_REL ▪ VSS • Is there a PID item affected by acceleration fluctuation?		troubleshooting procedure to perform the procedure from Step 10. • If there is no malfunction: ▪ Go to the next step.
		No	Go to the next step.
6	**PURPOSE: RECORD NUMBER OF CURRENT MISFIRES FOR USE WITH MISFIRE INSPECTION** • Display the misfire rate and record the number of misfires. ▪ Access the following PIDs using the M-MDS (See **ON-BOARD DIAGNOSTIC TEST [SKYACTIV-G 2.0, SKYACTIV-G 2.5]**.) (See **PCM INSPECTION [SKYACTIV-G 2.0, SKYACTIV-G 2.5]**.) • MF_CAT1 • MF_CAT_2 • MF_CAT_3 • MF_CAT_4 • MF_EMI1 • MF_EMI_2 • MF_EMI_3 • MF_EMI_4	—	Go to the next step.
7	**PURPOSE: VERIFY IF MISFIRE CAUSE IS BAD SPARK PLUGS** • Switch the spark plugs on a cylinder that is misfiring and a cylinder that is not misfiring. (See **SPARK PLUG REMOVAL/INSTALLATION [SKYACTIV-G 2.0, SKYACTIV-G 2.5]**.) • Start the engine. • Verify all accessory loads (A/C, headlights, blower fan, rear window defroster) are off. • Under no-load conditions (P or N position (ATX)/neutral (MTX), increase the engine speed to **3,000 rpm**. • Display the misfire rate and record the number of misfires. ▪ Access the following PIDs using the M-MDS (See **ON-BOARD DIAGNOSTIC TEST [SKYACTIV-G 2.0, SKYACTIV-G 2.5]**.) (See **PCM INSPECTION [SKYACTIV-G 2.0, SKYACTIV-G 2.5]**.) • MF_CAT1 • MF_CAT_2 • MF_CAT_3 • MF_CAT_4 • MF_EMI1 • MF_EMI_2 • MF_EMI_3	Yes	Go to the troubleshooting procedure to perform the procedure from Step 1.
		No	Go to the next step.

	• MF_EMI_4 • Is there a change from the recorded number of misfires?		
8	**PURPOSE: VERIFY IF MISFIRE CAUSE IS BAD IGNITION COIL** • Switch the ignition coils on a cylinder that is misfiring and a cylinder that is not misfiring. (See **IGNITION COIL/ION SENSOR REMOVAL/INSTALLATION [SKYACTIV-G 2.0, SKYACTIV-G 2.5]**.) • Start the engine. • Verify all accessory loads (A/C, headlights, blower fan, rear window defroster) are off. • Under no-load conditions (P or N position (ATX)/neutral (MTX), increase the engine speed to **3,000 rpm**. • Display the misfire rate and record the number of misfires. ▪ Access the following PIDs using the M-MDS (See **ON-BOARD DIAGNOSTIC TEST [SKYACTIV-G 2.0, SKYACTIV-G 2.5]**.) (See **PCM INSPECTION [SKYACTIV-G 2.0, SKYACTIV-G 2.5]**.) • MF_CAT1 • MF_CAT_2 • MF_CAT_3 • MF_CAT_4 • MF_EMI1 • MF_EMI_2 • MF_EMI_3 • MF_EMI_4 • Is there a change from the recorded number of misfires?	Yes	Go to the troubleshooting procedure to perform the procedure from Step 2.
		No	Go to the troubleshooting procedure to perform the procedure from Step 3.

Troubleshooting Diagnostic Procedure

Intention of troubleshooting procedure

- Step 1—2
  - Perform an ignition system parts inspection.
- Step 3
  - Perform a fuel injector control system inspection.
- Step 4—9
  - Perform an inspection of parts which may be affected by misfire except for ignition-related parts and fuel injection control-related parts.
- Step 10—11
  - Verify that primary malfunction is resolved and there are no other malfunctions.

STEP	INSPECTION	RESULTS	ACTION
1	**PURPOSE: DETERMINE INTEGRITY OF SPARK PLUG** • Inspect the spark plug. (See **SPARK PLUG INSPECTION [SKYACTIV-G 2.0, SKYACTIV-G 2.5]**.) • Is there any malfunction?	Yes	Replace the spark plug, then go to Step 10. (See **SPARK PLUG REMOVAL/INSTALLATION [SKYACTIV-G 2.0, SKYACTIV-G 2.5]**.)
		No	Go to the next step.
2	**PURPOSE: DETERMINE INTEGRITY OF IGNITION COIL** • Inspect the ignition coil.	Yes	Replace the ignition coil/ion sensor, then go to Step 10.

	(See **IGNITION COIL INSPECTION [SKYACTIV-G 2.0, SKYACTIV-G 2.5]**.) • Is there any malfunction?		(See **IGNITION COIL/ION SENSOR REMOVAL/INSTALLATION [SKYACTIV-G 2.0, SKYACTIV-G 2.5]**.)
		No	Go to the next step.
3	**PURPOSE: DETERMINE INTEGRITY OF FUEL INJECTOR** • Inspect the fuel injector. (See **FUEL INJECTOR INSPECTION [SKYACTIV-G 2.0, SKYACTIV-G 2.5]**.) • Is there any malfunction?	Yes	Replace the fuel injector, then go to Step 10. (See **FUEL INJECTOR REMOVAL/INSTALLATION [SKYACTIV-G 2.0, SKYACTIV-G 2.5]**.)
		No	Go to the next step.
4	**PURPOSE: VERIFY IF MALFUNCTION RELATED TO INTAKE-AIR SYSTEM IS CAUSE OF MISFIRE** • Visually inspect for loose, cracked or damaged hoses on intake air system. • Is there any malfunction?	Yes	Repair or replace the malfunctioning part according to the inspection results, then go to Step 10.
		No	Go to the next step.
5	**PURPOSE: VERIFY IF POOR DRIVE BELT ASSEMBLY IS CAUSE OF MISFIRE** • Verify the condition of the drive belt assembly. (See **DRIVE BELT INSPECTION [SKYACTIV-G 2.0, SKYACTIV-G 2.5]**.) • Is there any malfunction?	Yes	Assemble drive belt correctly, then go to Step 10. (See **DRIVE BELT REMOVAL/INSTALLATION [SKYACTIV-G 2.0, SKYACTIV-G 2.5]**.)
		No	Go to the next step.
6	**PURPOSE: VERIFY IF FOREIGN MATTER ON DRIVE BELT IS CAUSE OF MISFIRE** • Verify if oil is on the drive belt. • Is there foreign matter on the drive belt?	Yes	Remove the foreign matter on the drive belt, then go to Step 10.
		No	Go to the next step.
7	**PURPOSE: DETERMINE INTEGRITY OF DRIVE BELT AUTO TENSIONER** • Inspect the drive belt auto tensioner. (See **DRIVE BELT AUTO TENSIONER INSPECTION [SKYACTIV-G 2.0, SKYACTIV-G 2.5]**.) • Is there any malfunction?	Yes	Replace the drive belt auto tensioner, then go to Step 10. (See **DRIVE BELT AUTO TENSIONER REMOVAL/INSTALLATION [SKYACTIV-G 2.0, SKYACTIV-G 2.5]**.)
		No	Go to the next step.
8	**PURPOSE: VERIFY IF MALFUNCTION RELATED TO ENGINE COMPRESSION IS CAUSE OF MISFIRE** • Inspect the engine compression. (See **COMPRESSION INSPECTION [SKYACTIV-G 2.0, SKYACTIV-G 2.5]**.) • Are compression pressures within specification? **Specification:** • Compression [SKYACTIV-G 2.0] ▪ Standard: **885 kPa {9.02 kgf/cm^2, 128 psi} (300 rpm)** ▪ Minimum: **708 kPa {7.22 kgf/cm^2, 103 psi} (300 rpm)** ▪ Maximum difference between cylinders: **150 kPa {1.53 kgf/cm^2, 21.8 psi}** (**300 rpm**) • Compression [SKYACTIV-G 2.5] ▪ Standard: **954 kPa {9.73 kgf/cm^2, 138 psi} (300 rpm)** ▪ Minimum: **763 kPa {7.78 kgf/cm^2, 111 psi} (300 rpm)** ▪ Maximum difference between cylinders: **161 kPa {1.64 kgf/cm^2, 23.4 psi}** (**300 rpm**) **NOTE:**	Yes	Go to the next step.
		No	Replace or overhaul the engine, then go to Step 10.

	• Because the SKYACTIV-G 2.0 and SKYACTIV-G 2.5 retards the intake valve closing timing, compression pressure is low.		
9	**PURPOSE: VERIFY IF MALFUNCTION RELATED TO SEALING OF ENGINE UNIT (COMBUSTION CHAMBER AND ENGINE COOLANT PASSAGE) IS CAUSE OF MISFIRE** • Perform the “ENGINE COOLANT LEAKAGE INSPECTION”. (See **ENGINE COOLANT LEAKAGE INSPECTION [SKYACTIV-G 2.0, SKYACTIV-G 2.5]**.) • Does the radiator cap tester needle drop even though there is no engine coolant leakage from the radiator or the hoses?	Yes	Engine coolant leakage from the engine (between the combustion chamber and the engine coolant passage) may have occurred. • Verify the conditions of the gasket and the cylinder head. ▪ If there is any malfunction: • Repair or replace the malfunctioning part according to the inspection results, then go to the next step.
		No	Go to the next step.
10	**PURPOSE: VERIFICATION OF VEHICLE REPAIR COMPLETION** • Always reconnect all disconnected connectors. • Clear the DTC from the PCM memory using the M-MDS. (See **CLEARING DTC [SKYACTIV-G 2.0, SKYACTIV-G 2.5]**.) • Implement the repeatability verification procedure. (See **Repeatability Verification Procedure**.) • Perform the Pending Trouble Code Access Procedure. (See **ON-BOARD DIAGNOSTIC TEST [SKYACTIV-G 2.0, SKYACTIV-G 2.5]**.) • Is the PENDING CODE/DTC P0301:00, P0302:00, P0303:00 or P0304:00 also present?	Yes	Repeat the inspection from Step 1. • If the malfunction recurs, replace the PCM. (See **PCM REMOVAL/INSTALLATION [SKYACTIV-G 2.0, SKYACTIV-G 2.5]**.) Go to the next step.
		No	Go to the next step.
11	**PURPOSE: VERIFY IF THERE IS ANY OTHER MALFUNCTION** • Is any other DTC or pending code stored?	Yes	Go to the applicable DTC inspection. (See **DTC TABLE [SKYACTIV-G 2.0, SKYACTIV-G 2.5]**.)
		No	DTC troubleshooting completed.

2014 - Mazda3 - Engine

DTC P0327:00 [SKYACTIV-G 2.0, SKYACTIV-G 2.5]

DTC P0327:00	KS circuit low input
DETECTION CONDITION	• The PCM monitors input signal from the KS. If the input voltage is low for **5 s**, the PCM determines that the KS circuit has a malfunction. **Diagnostic support note** • This is a continuous monitor (CCM). • The check engine light illuminates if the PCM detects the above malfunction condition during the first drive cycle. • FREEZE FRAME DATA (Mode 2)/Snapshot data is available. • DTC is stored in the PCM memory.
FAIL-SAFE FUNCTION	• Sets the knocking spark retard correction value of the ignition control to the fixed value.

POSSIBLE CAUSE	• KS connector or terminals malfunction
	• KS malfunction
	• Short to ground in wiring harness between the following terminals:
	  ▪ KS terminal A—PCM terminal 1H
	  ▪ KS terminal B—PCM terminal 1D
	• PCM connector or terminals malfunction
	• KS circuits are shorted to each other
	• Open circuit in wiring harness between the following terminals:
	  ▪ KS terminal A—PCM terminal 1H
	  ▪ KS terminal B—PCM terminal 1D
	• PCM malfunction

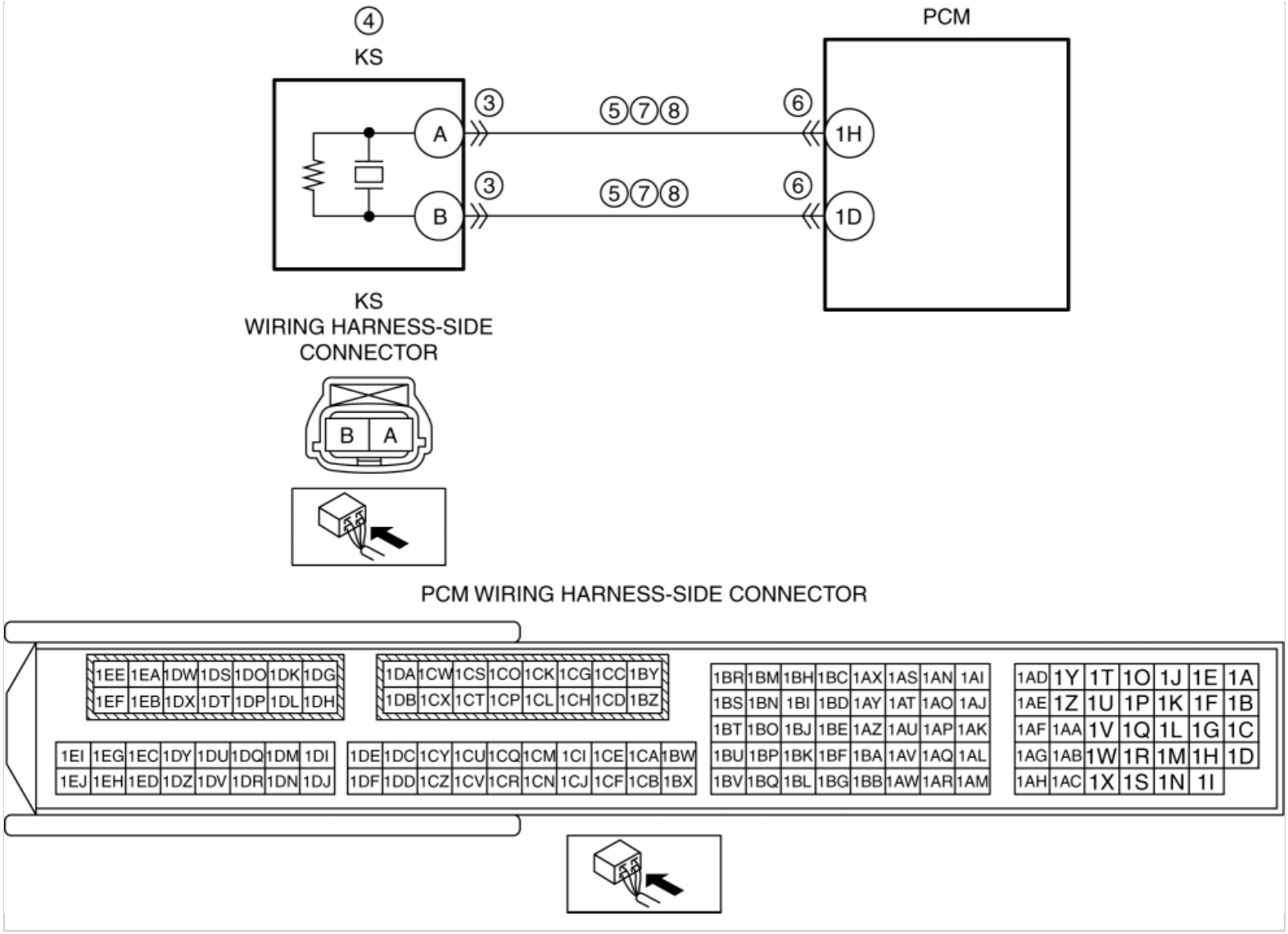

Diagnostic Procedure

STEP	INSPECTION		ACTION
1	**VERIFY FREEZE FRAME DATA (MODE 2)/SNAPSHOT DATA HAS BEEN RECORDED** • Has the FREEZE FRAME DATA (Mode 2)/snapshot data been recorded?	Yes	Go to the next step.
		No	Record the FREEZE FRAME DATA (Mode 2)/snapshot data on the repair order, then go to the next step.
2	**VERIFY RELATED REPAIR INFORMATION AVAILABILITY** • Verify related Service Bulletins and/or on-line repair information availability. • Is any related repair information available?	Yes	Perform repair or diagnosis according to the available repair information. • If the vehicle is not repaired, go to the next step.
		No	Go to the next step.
3	**INSPECT KS CONNECTOR CONDITION** • Switch the ignition off. • Disconnect the KS connector.	Yes	Repair or replace the connector and/or terminals, then go to Step 9.
		No	Go to the next step.

	• Inspect for poor connection (such as damaged/pulled-out pins, corrosion). • Is there any malfunction?		
4	**INSPECT KS** • Inspect the KS. (See **KNOCK SENSOR (KS) INSPECTION [SKYACTIV-G 2.0, SKYACTIV-G 2.5]**.) • Is there any malfunction?	Yes	Replace the KS, then go to Step 9. (See **KNOCK SENSOR (KS) REMOVAL/INSTALLATION [SKYACTIV-G 2.0, SKYACTIV-G 2.5]**.)
		No	Go to the next step.
5	**INSPECT KS CIRCUIT FOR SHORT TO GROUND** • Verify that the KS connector is disconnected. • Inspect for continuity between the following terminals (wiring harness-side) and body ground: ▪ KS terminal A ▪ KS terminal B • Is there continuity?	Yes	If the short to ground circuit could be detected in the wiring harness: • Refer to the wiring diagram and verify whether or not there is a common connector between the following terminals: ▪ KS terminal A—PCM terminal 1H ▪ KS terminal B—PCM terminal 1D **If there is a common connector:** ▪ Determine the malfunctioning part by inspecting the common connector and the terminal for corrosion, damage, or pin disconnection, and the common wiring harness for a short to ground. ▪ Repair or replace the malfunctioning part. **If there is no common connector:** ▪ Repair or replace the wiring harness which has a short to ground. If the short to ground circuit could not be detected in the wiring harness: • Replace the PCM (short to ground in the PCM internal circuit). (See **PCM REMOVAL/INSTALLATION [SKYACTIV-G 2.0, SKYACTIV-G 2.5]**.) Go to Step 9.
		No	Go to the next step.
6	**INSPECT PCM CONNECTOR CONDITION** • Disconnect the PCM connector. • Inspect for poor connection (such as damaged/pulled-out pins, corrosion). • Is there any malfunction?	Yes	Repair or replace the connector and/or terminals, then go to Step 9.
		No	Go to the next step.
7	**INSPECT KS CIRCUITS FOR SHORT TO EACH OTHER** • Verify that the KS and PCM connectors are disconnected. • Inspect for continuity between KS terminals A and B (wiring harness-side).	Yes	Refer to the wiring diagram and verify whether or not there is a common connector between the following terminals: • KS terminal A—PCM terminal 1H • KS terminal B—PCM terminal 1D **If there is a common connector:** • Determine the malfunctioning part by inspecting the common connector and the terminal for corrosion, damage, or pin disconnection, and the common wiring harness for a short to each

	Is there continuity?		other. • Repair or replace the malfunctioning part. **If there is no common connector:** • Repair or replace the wiring harness which has a short to each other. Go to Step 9.
		No	Go to the next step.
8	**INSPECT KS CIRCUIT FOR OPEN CIRCUIT** • Verify that the KS and PCM connectors are disconnected. • Inspect for continuity between the following terminals (wiring harness-side): ▪ KS terminal A—PCM terminal 1H ▪ KS terminal B—PCM terminal 1D • Is there continuity?	Yes	Go to the next step.
		No	Refer to the wiring diagram and verify whether or not there is a common connector between the following terminals: • KS terminal A—PCM terminal 1H • KS terminal B—PCM terminal 1D **If there is a common connector:** • Determine the malfunctioning part by inspecting the common connector and the terminal for corrosion, damage, or pin disconnection, and the common wiring harness for an open circuit. • Repair or replace the malfunctioning part. **If there is no common connector:** • Repair or replace the wiring harness which has an open circuit. Go to the next step.
9	**VERIFY DTC TROUBLESHOOTING COMPLETED** • Always reconnect all disconnected connectors. • Clear the DTC from the PCM memory using the M-MDS. (See **AFTER REPAIR PROCEDURE [SKYACTIV-G 2.0, SKYACTIV-G 2.5]**.) • Perform the KOEO or KOER self test. (See **KOEO/KOER SELF TEST [SKYACTIV-G 2.0, SKYACTIV-G 2.5]**.) • Is the same DTC present?	Yes	Repeat the inspection from Step 1. • If the malfunction recurs, replace the PCM. (See **PCM REMOVAL/INSTALLATION [SKYACTIV-G 2.0, SKYACTIV-G 2.5]**.) Go to the next step.
		No	Go to the next step.
10	**VERIFY AFTER REPAIR PROCEDURE** • Perform the “AFTER REPAIR PROCEDURE”. (See **AFTER REPAIR PROCEDURE [SKYACTIV-G 2.0, SKYACTIV-G 2.5]**.) • Are any DTCs present?	Yes	Go to the applicable DTC inspection. (See **DTC TABLE [SKYACTIV-G 2.0, SKYACTIV-G 2.5]**.)
		No	DTC troubleshooting completed.

2014 - Mazda3 - Engine

DTC P0328:00 [SKYACTIV-G 2.0, SKYACTIV-G 2.5]

DTC P0328:00	KS circuit high input
DETECTION CONDITION	• The PCM monitors input signal from the KS. If the input voltage is high for **5 s**, the PCM determines that the KS circuit has a malfunction. **Diagnostic support note** • This is a continuous monitor (CCM). • The check engine light illuminates if the PCM detects the above malfunction condition during the first drive cycle. • FREEZE FRAME DATA (Mode 2)/Snapshot data is available. • DTC is stored in the PCM memory.
FAIL-SAFE FUNCTION	• Sets the knocking spark retard correction value of the ignition control to the fixed value.

POSSIBLE CAUSE	• KS connector or terminals malfunction
	• KS malfunction
	• PCM connector or terminals malfunction
	• Short to power supply in wiring harness between the following terminals:
	  ▪ KS terminal A—PCM terminal 1H
	  ▪ KS terminal B—PCM terminal 1D
	• KS circuits are shorted to each other
	• Open circuit in wiring harness between the following terminals:
	  ▪ KS terminal A—PCM terminal 1H
	  ▪ KS terminal B—PCM terminal 1D
	• PCM malfunction

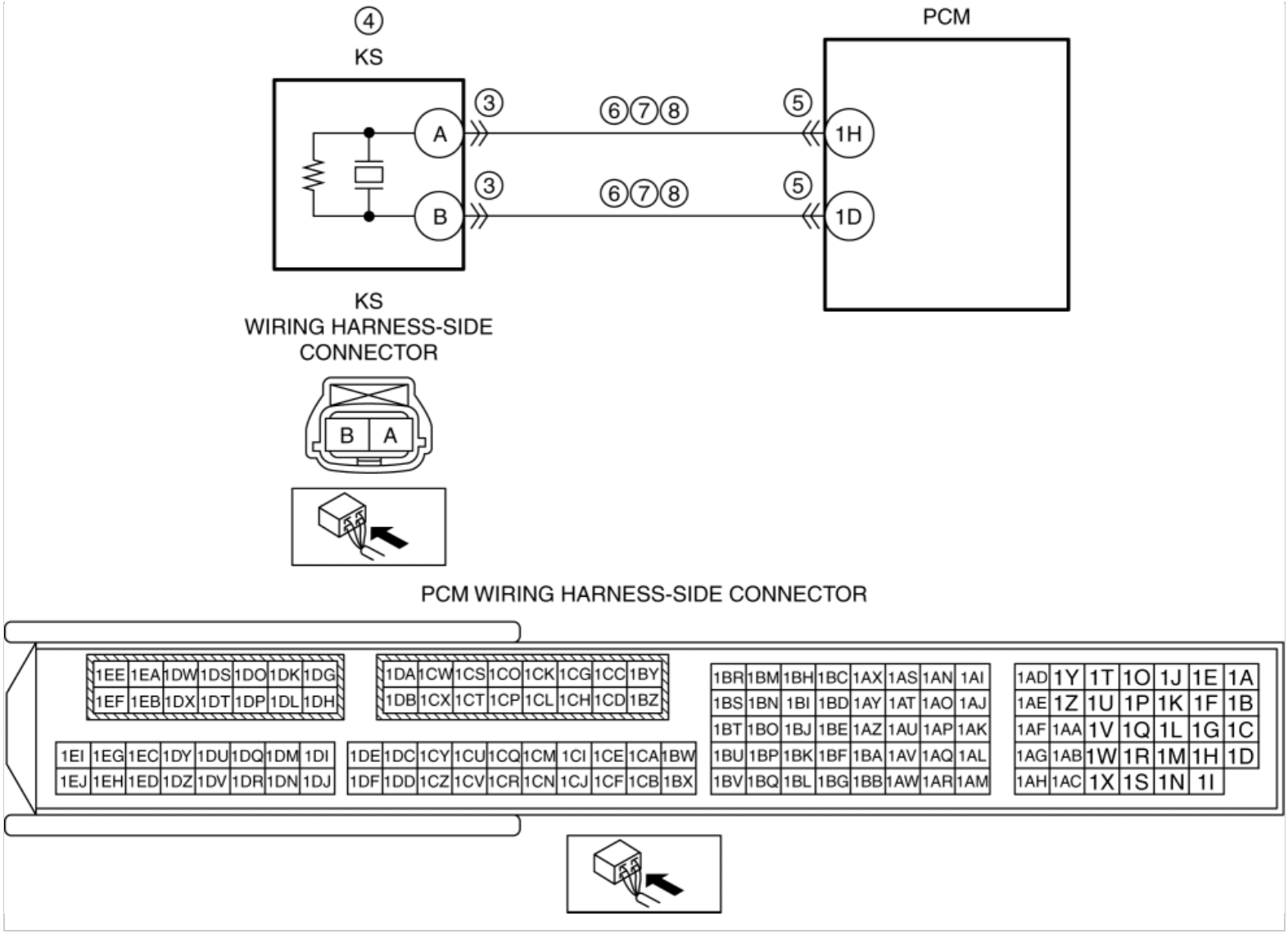

Diagnostic Procedure

STEP	INSPECTION		ACTION
1	**VERIFY FREEZE FRAME DATA (MODE 2)/SNAPSHOT DATA HAS BEEN RECORDED** • Has the FREEZE FRAME DATA (Mode 2)/snapshot data been recorded?	Yes	Go to the next step.
		No	Record the FREEZE FRAME DATA (Mode 2)/snapshot data on the repair order, then go to the next step.
2	**VERIFY RELATED REPAIR INFORMATION AVAILABILITY** • Verify related Service Bulletins and/or on-line repair information availability. • Is any related repair information available?	Yes	Perform repair or diagnosis according to the available repair information. • If the vehicle is not repaired, go to the next step.
		No	Go to the next step.
3	**INSPECT KS CONNECTOR CONDITION** • Switch the ignition off. • Disconnect the KS connector.	Yes	Repair or replace the connector and/or terminals, then go to Step 9.
		No	Go to the next step.

	• Inspect for poor connection (such as damaged/pulled-out pins, corrosion). • Is there any malfunction?		
4	**INSPECT KS** • Inspect the KS. (See **KNOCK SENSOR (KS) INSPECTION [SKYACTIV-G 2.0, SKYACTIV-G 2.5]**.) • Is there any malfunction?	Yes	Replace the KS, then go to Step 9. (See **KNOCK SENSOR (KS) REMOVAL/INSTALLATION [SKYACTIV-G 2.0, SKYACTIV-G 2.5]**.)
		No	Go to the next step.
5	**INSPECT PCM CONNECTOR CONDITION** • Disconnect the PCM connector. • Inspect for poor connection (such as damaged/pulled-out pins, corrosion). • Is there any malfunction?	Yes	Repair or replace the connector and/or terminals, then go to Step 9.
		No	Go to the next step.
6	**INSPECT KS CIRCUIT FOR SHORT TO POWER SUPPLY** • Verify that the KS and PCM connectors are disconnected. • Switch the ignition ON (engine off). **NOTE:** • Another DTC may be stored by the PCM detecting an open circuit. • Measure the voltage at the following terminals (wiring harness-side): ▪ KS terminal A ▪ KS terminal B • Is the voltage **0 V**?	Yes	Go to the next step.
		No	Refer to the wiring diagram and verify whether or not there is a common connector between the following terminals: • KS terminal A—PCM terminal 1H • KS terminal B—PCM terminal 1D **If there is a common connector:** • Determine the malfunctioning part by inspecting the common connector and the terminal for corrosion, damage, or pin disconnection, and the common wiring harness for a short to power supply. • Repair or replace the malfunctioning part. **If there is no common connector:** • Repair or replace the wiring harness which has a short to power supply. Go to Step 9.
7	**INSPECT KS CIRCUITS FOR SHORT TO EACH OTHER** • Verify that the KS and PCM connectors are disconnected. • Switch the ignition off. • Inspect for continuity between KS terminals A	Yes	Refer to the wiring diagram and verify whether or not there is a common connector between the following terminals: • KS terminal A—PCM terminal 1H • KS terminal B—PCM terminal 1D **If there is a common connector:** • Determine the malfunctioning part by inspecting the common

	and B (wiring harness-side). • Is there continuity?		connector and the terminal for corrosion, damage, or pin disconnection, and the common wiring harness for a short to each other. • Repair or replace the malfunctioning part. **If there is no common connector:** • Repair or replace the wiring harness which has a short to each other. Go to Step 9.
		No	Go to the next step.
8	**INSPECT KS CIRCUIT FOR OPEN CIRCUIT** • Verify that the KS and PCM connectors are disconnected. • Inspect for continuity between the following terminals (wiring harness-side): ▪ KS terminal A—PCM terminal 1H ▪ KS terminal B—PCM terminal 1D • Is there continuity?	Yes	Go to the next step.
		No	Refer to the wiring diagram and verify whether or not there is a common connector between the following terminals: • KS terminal A—PCM terminal 1H • KS terminal B—PCM terminal 1D **If there is a common connector:** • Determine the malfunctioning part by inspecting the common connector and the terminal for corrosion, damage, or pin disconnection, and the common wiring harness for an open circuit. • Repair or replace the malfunctioning part. **If there is no common connector:** • Repair or replace the wiring harness which has an open circuit. Go to the next step.
9	**VERIFY DTC TROUBLESHOOTING COMPLETED** • Always reconnect all disconnected connectors. • Clear the DTC from the PCM memory using the M-MDS. (See **AFTER REPAIR PROCEDURE [SKYACTIV-G 2.0, SKYACTIV-G 2.5]**.) • Perform the KOEO or KOER self test. (See **KOEO/KOER SELF TEST [SKYACTIV-G 2.0, SKYACTIV-G 2.5]**.) • Is the same DTC present?	Yes	Repeat the inspection from Step 1. • If the malfunction recurs, replace the PCM. (See **PCM REMOVAL/INSTALLATION [SKYACTIV-G 2.0, SKYACTIV-G 2.5]**.) Go to the next step.
		No	Go to the next step.
10	**VERIFY AFTER REPAIR PROCEDURE** • Perform the “AFTER REPAIR PROCEDURE”. (See **AFTER REPAIR PROCEDURE [SKYACTIV-G 2.0, SKYACTIV-G 2.5]**.) • Are any DTCs present?	Yes	Go to the applicable DTC inspection. (See **DTC TABLE [SKYACTIV-G 2.0, SKYACTIV-G 2.5]**.)
		No	DTC troubleshooting completed.

2014 - Mazda3 - Engine

DTC P0335:00 [SKYACTIV-G 2.0, SKYACTIV-G 2.5]

DTC P0335:00	CKP sensor circuit problem
DETECTION CONDITION	• There is no CKP sensor signal input while the exhaust camshaft rotates **5 times**. • The CKP sensor input signal pattern, received while the crankshaft rotates **10 times**, is incorrect. **Diagnostic support note** • This is a continuous monitor (CCM). • The check engine light illuminates if the PCM detects the above malfunction condition during the first drive cycle. • FREEZE FRAME DATA (Mode 2)/Snapshot data is available. • DTC is stored in the PCM memory.
FAIL-SAFE FUNCTION	• Stops fuel injection • Stops ignition
POSSIBLE CAUSE	• CKP sensor connector or terminals malfunction • Short to ground in wiring harness between the following terminals: ▪ CKP sensor terminal A—PCM terminal 1BN ▪ CKP sensor terminal C—PCM terminal 1AD • PCM connector or terminals malfunction • Short to power supply in wiring harness between CKP sensor terminal C and PCM terminal 1AD • CKP sensor circuits are shorted to each other • Open circuit in wiring harness between the following terminals: ▪ CKP sensor terminal A—PCM terminal 1BN ▪ CKP sensor terminal C—PCM terminal 1AD ▪ CKP sensor terminal B—PCM terminal 1AH • CKP sensor malfunction ▪ CKP sensor is dirty ▪ CKP sensor pulse wheel malfunction • PCM malfunction

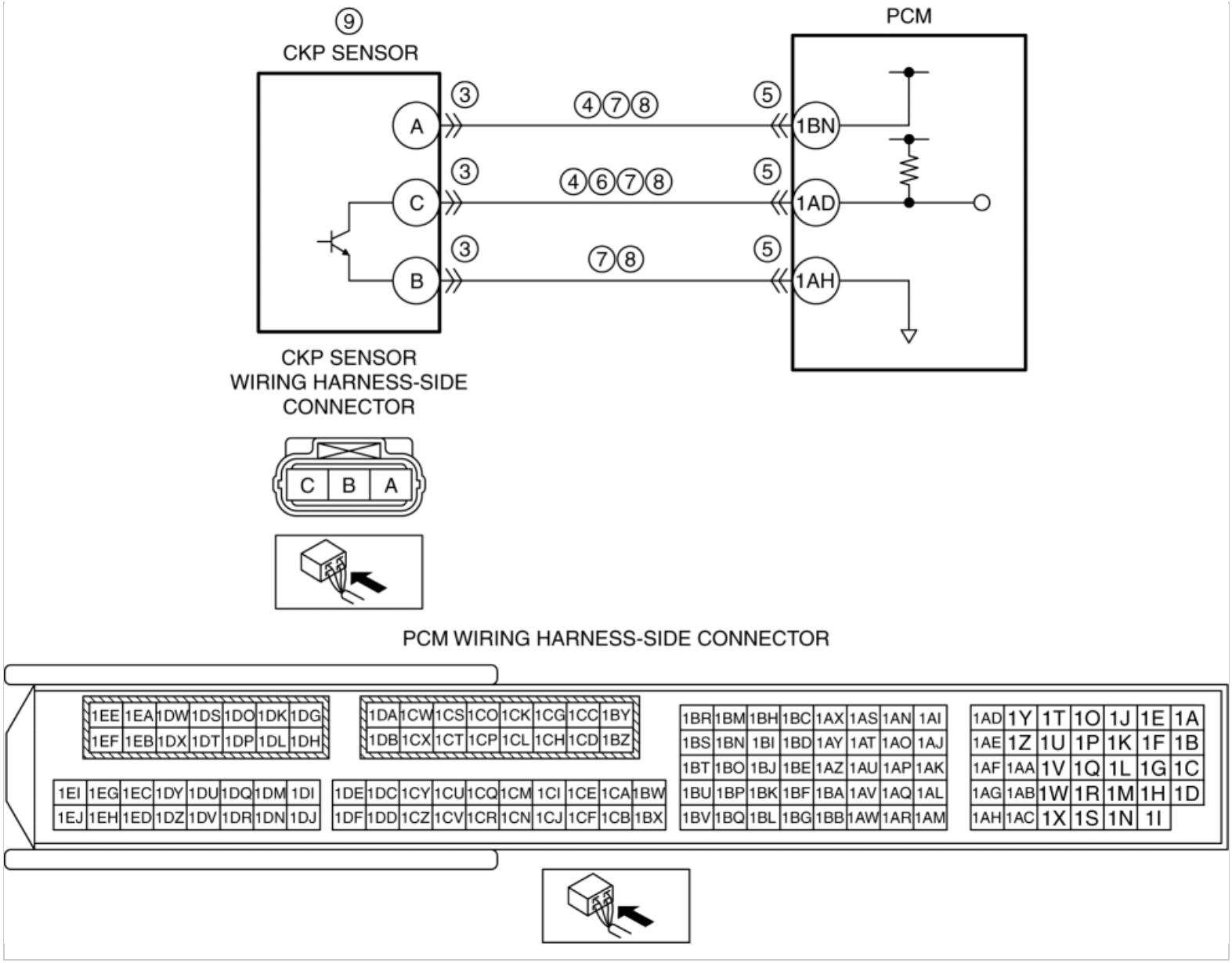

Diagnostic Procedure

STEP	INSPECTION		ACTION
1	**VERIFY FREEZE FRAME DATA (MODE 2)/SNAPSHOT DATA HAS BEEN RECORDED** • Has the FREEZE FRAME DATA (Mode 2)/snapshot data been recorded?	Yes	Go to the next step.
		No	Record the FREEZE FRAME DATA (Mode 2)/snapshot data on the repair order, then go to the next step.
2	**VERIFY RELATED REPAIR INFORMATION AVAILABILITY** • Verify related Service Bulletins and/or on-line repair information availability. • Is any related repair information available?	Yes	Perform repair or diagnosis according to the available repair information. • If the vehicle is not repaired, go to the next step.
		No	Go to the next step.
3	**INSPECT CKP SENSOR CONNECTOR CONDITION**	Yes	Repair or replace the connector and/or terminals, then go to Step 10.

	• Switch the ignition off. • Disconnect the CKP sensor connector. • Inspect for poor connection (such as damaged/pulled-out pins, corrosion). • Is there any malfunction?	No	Go to the next step.
4	**INSPECT CKP SENSOR CIRCUIT FOR SHORT TO GROUND** • Verify that the CKP sensor connector is disconnected. • Inspect for continuity between the following terminals (wiring harness-side) and body ground: ▪ CKP sensor terminal A ▪ CKP sensor terminal C • Is there continuity?	Yes	If the short to ground circuit could be detected in the wiring harness: • Refer to the wiring diagram and verify whether or not there is a common connector between the following terminals: ▪ CKP sensor terminal A—PCM terminal 1BN ▪ CKP sensor terminal C—PCM terminal 1AD **If there is a common connector:** ▪ Determine the malfunctioning part by inspecting the common connector and the terminal for corrosion, damage, or pin disconnection, and the common wiring harness for a short to ground. ▪ Repair or replace the malfunctioning part. **If there is no common connector:** ▪ Repair or replace the wiring harness which has a short to ground. If the short to ground circuit could not be detected in the wiring harness: • Replace the PCM (short to ground in the PCM internal circuit). (See **PCM REMOVAL/INSTALLATION [SKYACTIV-G 2.0, SKYACTIV-G 2.5]**.) Go to Step 10.
		No	Go to the next step.
5	**INSPECT PCM CONNECTOR CONDITION** • Disconnect the PCM connector. • Inspect for poor connection (such as damaged/pulled-out pins, corrosion). • Is there any malfunction?	Yes	Repair or replace the connector and/or terminals, then go to Step 10.
		No	Go to the next step.
6	**INSPECT CKP SENSOR SIGNAL CIRCUIT FOR SHORT TO POWER SUPPLY** • Verify that the CKP sensor and PCM connectors are disconnected. • Switch the ignition ON (engine off). **NOTE:** • Another DTC may be stored by the	Yes	Go to the next step.
		No	Refer to the wiring diagram and verify whether or not there is a common connector between CKP sensor terminal C and PCM terminal 1AD. **If there is a common connector:** • Determine the malfunctioning part by inspecting the common connector and the terminal for corrosion, damage, or pin disconnection, and the common wiring harness for a short to power supply. • Repair or replace the malfunctioning part. **If there is no common connector:**

	PCM detecting an open circuit. • Measure the voltage at the CKP sensor terminal C (wiring harness-side). • Is the voltage **0 V**?		• Repair or replace the wiring harness which has a short to power supply. Go to Step 10.
7	**INSPECT CKP SENSOR CIRCUITS FOR SHORT TO EACH OTHER** • Verify that the CKP sensor and PCM connectors are disconnected. • Switch the ignition off. • Inspect for continuity between CKP sensor terminals A, C and B (wiring harness-side). • Is there continuity?	Yes	Refer to the wiring diagram and verify whether or not there is a common connector between the following terminals: • CKP sensor terminal A—PCM terminal 1BN • CKP sensor terminal C—PCM terminal 1AD • CKP sensor terminal B—PCM terminal 1AH **If there is a common connector:** • Determine the malfunctioning part by inspecting the common connector and the terminal for corrosion, damage, or pin disconnection, and the common wiring harness for a short to each other. • Repair or replace the malfunctioning part. **If there is no common connector:** • Repair or replace the wiring harness which has a short to each other. Go to Step 10.
		No	Go to the next step.
8	**INSPECT CKP SENSOR CIRCUIT FOR OPEN CIRCUIT** • Verify that the CKP sensor and PCM connectors are disconnected. • Inspect for continuity between the following terminals (wiring harness-side): ▪ CKP sensor terminal A—PCM terminal 1BN ▪ CKP sensor terminal C—PCM terminal 1AD ▪ CKP sensor terminal B—PCM terminal 1AH • Is there continuity?	Yes	Go to the next step.
		No	Refer to the wiring diagram and verify whether or not there is a common connector between the following terminals: • CKP sensor terminal A—PCM terminal 1BN • CKP sensor terminal C—PCM terminal 1AD • CKP sensor terminal B—PCM terminal 1AH **If there is a common connector:** • Determine the malfunctioning part by inspecting the common connector and the terminal for corrosion, damage, or pin disconnection, and the common wiring harness for an open circuit. • Repair or replace the malfunctioning part. **If there is no common connector:** • Repair or replace the wiring harness which has an open circuit. Go to Step 10.
9	**INSPECT CKP SENSOR**	Yes	Replace the CKP sensor, then go to the next step.

	• Inspect the CKP sensor. (See **CRANKSHAFT POSITION (CKP) SENSOR INSPECTION [SKYACTIV-G 2.0, SKYACTIV-G 2.5]**.) • Is there any malfunction?		(See **CRANKSHAFT POSITION (CKP) SENSOR REMOVAL/INSTALLATION [SKYACTIV-G 2.0, SKYACTIV-G 2.5]**.)
		No	Go to the next step.
10	**VERIFY DTC TROUBLESHOOTING COMPLETED** • Always reconnect all disconnected connectors. • Clear the DTC from the PCM memory using the M-MDS. (See **AFTER REPAIR PROCEDURE [SKYACTIV-G 2.0, SKYACTIV-G 2.5]**.) • Start the engine and race it. • Perform the KOER self test. (See **KOEO/KOER SELF TEST [SKYACTIV-G 2.0, SKYACTIV-G 2.5]**.) • Is the same DTC present?	Yes	Repeat the inspection from Step 1. • If the malfunction recurs, replace the PCM. (See **PCM REMOVAL/INSTALLATION [SKYACTIV-G 2.0, SKYACTIV-G 2.5]**.) Go to the next step.
		No	Go to the next step.
11	**VERIFY AFTER REPAIR PROCEDURE** • Perform the “AFTER REPAIR PROCEDURE”. (See **AFTER REPAIR PROCEDURE [SKYACTIV-G 2.0, SKYACTIV-G 2.5]**.) • Are any DTCs present?	Yes	Go to the applicable DTC inspection. (See **DTC TABLE [SKYACTIV-G 2.0, SKYACTIV-G 2.5]**.)
		No	DTC troubleshooting completed.

2014 - Mazda3 - Engine

DTC P0340:00 [SKYACTIV-G 2.0, SKYACTIV-G 2.5]

DTC P0340:00	Intake CMP sensor circuit problem
DETECTION CONDITION	• The intake CMP sensor input signal pattern, received while the crankshaft rotates **24 times**, is incorrect. **Diagnostic support note** • This is a continuous monitor (CCM). • The check engine light illuminates if the PCM detects the above malfunction condition during the first drive cycle. • FREEZE FRAME DATA (Mode 2)/Snapshot data is available. • DTC is stored in the PCM memory.
FAIL-SAFE FUNCTION	• Set the electric variable valve timing control to the maximum cam retard mode.

POSSIBLE CAUSE	• Intake CMP sensor connector or terminals malfunction
	• Short to ground or open circuit in intake CMP sensor power supply circuit
	  ▪ Short to ground in wiring harness between ENGINE1 15 A fuse and intake CMP sensor terminal C
	  ▪ ENGINE1 15 A fuse malfunction
	  ▪ Open circuit in wiring harness between main relay terminal D and intake CMP sensor terminal C
	• Short to ground in wiring harness between intake CMP sensor terminal A and PCM terminal 1Y
	• PCM connector or terminals malfunction
	• Short to power supply in wiring harness between intake CMP sensor terminal A and PCM terminal 1Y
	• Intake CMP sensor signal circuit and ground circuit are shorted to each other
	• Open circuit in wiring harness between the following terminals:
	  ▪ Intake CMP sensor terminal A—PCM terminal 1Y
	  ▪ Intake CMP sensor terminal B—PCM terminal 1AC
	• Intake CMP sensor malfunction
	  ▪ Intake CMP sensor is dirty
	  ▪ Intake CMP sensor pulse wheel malfunction
	  ▪ Damage to the detection area of the intake CMP sensor
	• CKP sensor connector or terminals malfunction
	• Loose timing chain or improper valve timing
	• PCM malfunction

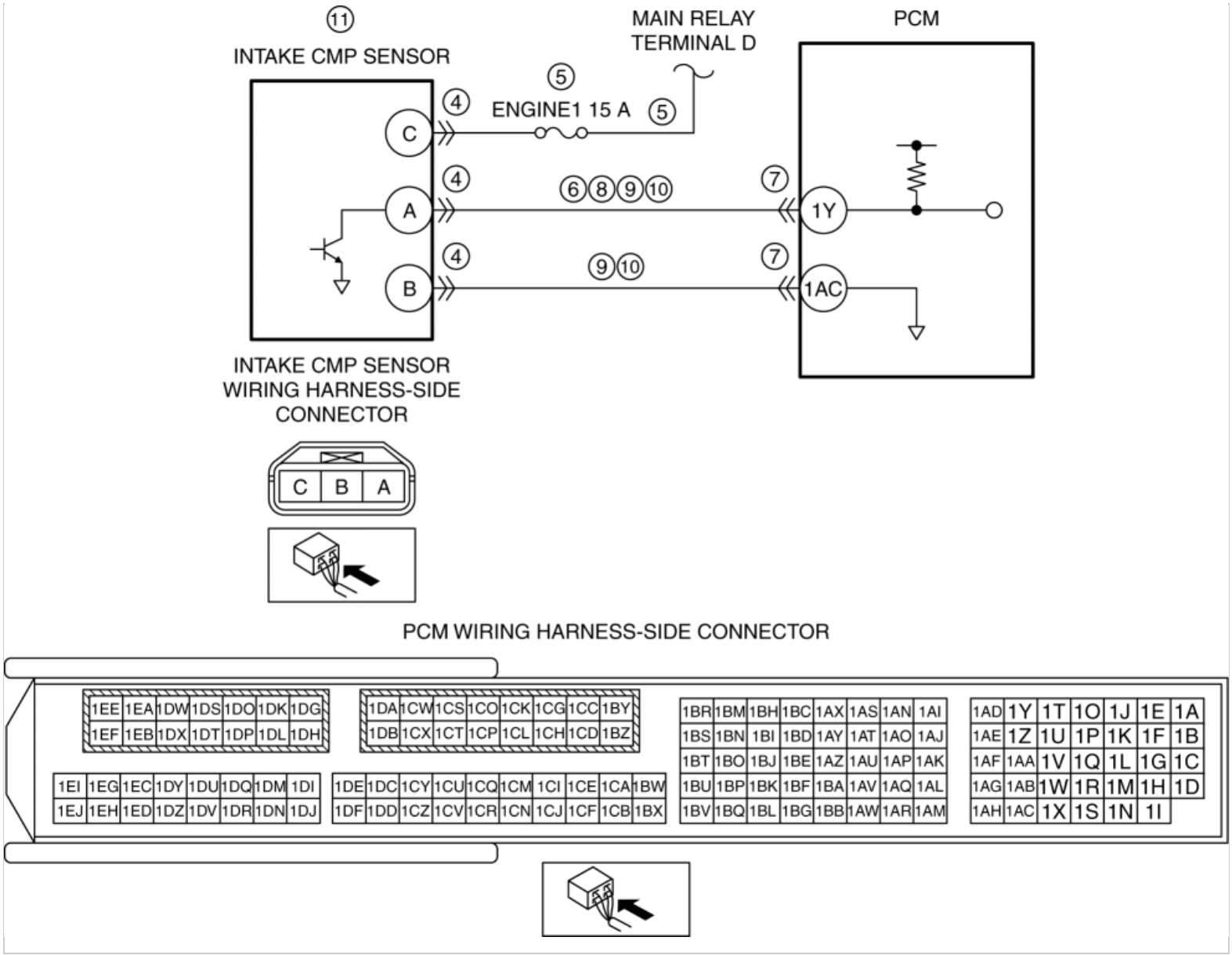

Diagnostic Procedure

STEP	INSPECTION		ACTION
1	**VERIFY FREEZE FRAME DATA (MODE 2)/SNAPSHOT DATA HAS BEEN RECORDED** • Has the FREEZE FRAME DATA (Mode 2)/snapshot data been recorded?	Yes	Go to the next step.
		No	Record the FREEZE FRAME DATA (Mode 2)/snapshot data on the repair order, then go to the next step.
2	**VERIFY RELATED REPAIR INFORMATION AVAILABILITY** • Verify related Service Bulletins and/or on-line repair information availability. • Is any related repair information available?	Yes	Perform repair or diagnosis according to the available repair information. • If the vehicle is not repaired, go to the next step.
		No	Go to the next step.
3	**VERIFY RELATED PENDING CODE AND/OR DTC**	Yes	Go to the applicable PENDING CODE or DTC inspection. (See **DTC TABLE [SKYACTIV-G 2.0, SKYACTIV-G 2.5]**.)

	Switch the ignition off, then ON (engine off). • Perform the Pending Trouble Code Access Procedure and DTC Reading Procedure. (See **ON-BOARD DIAGNOSTIC TEST [SKYACTIV-G 2.0, SKYACTIV-G 2.5]**.) • Are any other PENDING CODEs and/or DTCs present?		
		No	Go to the next step.
4	**INSPECT INTAKE CMP SENSOR CONNECTOR CONDITION** • Switch the ignition off. • Disconnect the intake CMP sensor connector. • Inspect for poor connection (such as damaged/pulled-out pins, corrosion). • Is there any malfunction?	Yes	Repair or replace the connector and/or terminals, then go to Step 14.
		No	Go to the next step.
5	**INSPECT INTAKE CMP SENSOR POWER SUPPLY CIRCUIT FOR SHORT TO GROUND OR OPEN CIRCUIT** • Verify that the intake CMP sensor connector is disconnected. • Switch the ignition ON (engine off). **NOTE:** • Another DTC may be stored by the PCM detecting an open circuit. • Measure the voltage at the intake CMP sensor terminal C (wiring harness-side). • Is the voltage **B+**?	Yes	Go to the next step.
		No	Inspect the ENGINE1 15 A fuse. • If the fuse is blown: ▪ Refer to the wiring diagram and verify whether or not there is a common connector between ENGINE1 15 A fuse and intake CMP sensor terminal C. **If there is a common connector:** • Determine the malfunctioning part by inspecting the common connector and the terminal for corrosion, damage, or pin disconnection, and the common wiring harness for a short to ground. • Repair or replace the malfunctioning part. **If there is no common connector:** • Repair or replace the wiring harness which has a short to ground. • Replace the fuse. • If the fuse is damaged: ▪ Replace the fuse. • If the fuse is normal: ▪ Refer to the wiring diagram and verify whether or not there is a common connector between main relay terminal D and intake CMP sensor terminal C.

			If there is a common connector: • Determine the malfunctioning part by inspecting the common connector and the terminal for corrosion, damage, or pin disconnection, and the common wiring harness for an open circuit. • Repair or replace the malfunctioning part. **If there is no common connector:** • Repair or replace the wiring harness which has an open circuit. Go to Step 14.
6	**INSPECT INTAKE CMP SENSOR SIGNAL CIRCUIT FOR SHORT TO GROUND** • Verify that the intake CMP sensor connector is disconnected. • Switch the ignition off. • Inspect for continuity between intake CMP sensor terminal A (wiring harness-side) and body ground. • Is there continuity?	Yes	If the short to ground circuit could be detected in the wiring harness: • Refer to the wiring diagram and verify whether or not there is a common connector between intake CMP sensor terminal A and PCM terminal 1Y. **If there is a common connector:** ▪ Determine the malfunctioning part by inspecting the common connector and the terminal for corrosion, damage, or pin disconnection, and the common wiring harness for a short to ground. ▪ Repair or replace the malfunctioning part. **If there is no common connector:** ▪ Repair or replace the wiring harness which has a short to ground. If the short to ground circuit could not be detected in the wiring harness: • Replace the PCM (short to ground in the PCM internal circuit). (See **PCM REMOVAL/INSTALLATION [SKYACTIV-G 2.0, SKYACTIV-G 2.5]**.) Go to Step 14.
		No	Go to the next step.
7	**INSPECT PCM CONNECTOR CONDITION** • Disconnect the PCM connector. • Inspect for poor connection (such as damaged/pulled-out pins, corrosion). • Is there any malfunction?	Yes	Repair or replace the connector and/or terminals, then go to Step 14.
		No	Go to the next step.
8	**INSPECT INTAKE CMP SENSOR SIGNAL CIRCUIT FOR SHORT TO POWER SUPPLY** • Verify that the intake CMP sensor and PCM connectors are disconnected. • Switch the ignition ON (engine off).	Yes	Go to the next step.
		No	Refer to the wiring diagram and verify whether or not there is a common connector between intake CMP sensor terminal A and PCM terminal 1Y. **If there is a common connector:** • Determine the malfunctioning part by inspecting the common connector and the terminal for corrosion, damage, or pin

	NOTE: • Another DTC may be stored by the PCM detecting an open circuit. • Measure the voltage at the intake CMP sensor terminal A (wiring harness-side). • Is the voltage **0 V**?		disconnection, and the common wiring harness for a short to power supply. • Repair or replace the malfunctioning part. **If there is no common connector:** • Repair or replace the wiring harness which has a short to power supply. Go to Step 14.
9	**INSPECT INTAKE CMP SENSOR SIGNAL CIRCUIT AND GROUND CIRCUIT FOR SHORT TO EACH OTHER** • Verify that the intake CMP sensor and PCM connectors are disconnected. • Switch the ignition off. • Inspect for continuity between intake CMP sensor terminals A and B (wiring harness-side). • Is there continuity?	Yes	Refer to the wiring diagram and verify whether or not there is a common connector between the following terminals: • Intake CMP sensor terminal A—PCM terminal 1Y • Intake CMP sensor terminal B—PCM terminal 1AC **If there is a common connector:** • Determine the malfunctioning part by inspecting the common connector and the terminal for corrosion, damage, or pin disconnection, and the common wiring harness for a short to each other. • Repair or replace the malfunctioning part. **If there is no common connector:** • Repair or replace the wiring harness which has a short to each other. Go to Step 14.
		No	Go to the next step.
10	**INSPECT INTAKE CMP SENSOR CIRCUIT FOR OPEN CIRCUIT** • Verify that the intake CMP sensor and PCM connectors are disconnected. • Inspect for continuity between the following terminals (wiring harness-side): ▪ Intake CMP sensor terminal A—PCM terminal 1Y ▪ Intake CMP sensor terminal B—PCM terminal 1AC	Yes	Go to the next step.
		No	Refer to the wiring diagram and verify whether or not there is a common connector between the following terminals: • Intake CMP sensor terminal A—PCM terminal 1Y • Intake CMP sensor terminal B—PCM terminal 1AC **If there is a common connector:** • Determine the malfunctioning part by inspecting the common connector and the terminal for corrosion, damage, or pin disconnection, and the common wiring harness for an open circuit. • Repair or replace the malfunctioning part. **If there is no common connector:** • Repair or replace the wiring harness which has an open circuit. Go to Step 14.

	• Is there continuity?		
11	**INSPECT INTAKE CMP SENSOR** • Inspect the intake CMP sensor. (See **CAMSHAFT POSITION (CMP) SENSOR INSPECTION [SKYACTIV-G 2.0, SKYACTIV-G 2.5]**.) • Is there any malfunction?	Yes	Replace the intake CMP sensor, then go to Step 14. (See **CAMSHAFT POSITION (CMP) SENSOR REMOVAL/INSTALLATION [SKYACTIV-G 2.0, SKYACTIV-G 2.5]**.)
		No	Go to the next step.
12	**INSPECT CKP SENSOR CONNECTOR CONDITION** • Switch the ignition off. • Disconnect the CKP sensor connector. • Inspect for poor connection (such as damaged/pulled-out pins, corrosion). • Is there any malfunction?	Yes	Repair or replace the connector and/or terminals, then go to Step 14.
		No	Go to the next step.
13	**VERIFY ASSEMBLY CONDITION OF TIMING CHAIN** • Verify the condition of the timing chain assembly (intake valve timing, looseness, jumping). (See **TIMING CHAIN REMOVAL/INSTALLATION [SKYACTIV-G 2.0, SKYACTIV-G 2.5]**.) • Is there any malfunction?	Yes	Repair or replace the malfunctioning part. Assemble the timing chain using the correct timing, then go to the the next step. (See **TIMING CHAIN REMOVAL/INSTALLATION [SKYACTIV-G 2.0, SKYACTIV-G 2.5]**.)
		No	Go to the next step.
14	**VERIFY DTC TROUBLESHOOTING COMPLETED** • Always reconnect all disconnected connectors. • Clear the DTC from the PCM memory using the M-MDS. (See **AFTER REPAIR PROCEDURE [SKYACTIV-G 2.0, SKYACTIV-G 2.5]**.) • Start the engine and race it. • Perform the KOER self test. (See **KOEO/KOER SELF TEST [SKYACTIV-G 2.0, SKYACTIV-G 2.5]**.) • Is the same DTC present?	Yes	Repeat the inspection from Step 1. • If the malfunction recurs, replace the PCM. (See **PCM REMOVAL/INSTALLATION [SKYACTIV-G 2.0, SKYACTIV-G 2.5]**.) Go to the next step.
		No	Go to the next step.
15	**VERIFY AFTER REPAIR PROCEDURE** • Perform the “AFTER REPAIR PROCEDURE”. (See **AFTER REPAIR**	Yes	Go to the applicable DTC inspection. (See **DTC TABLE [SKYACTIV-G 2.0, SKYACTIV-G 2.5]**.)
		No	DTC troubleshooting completed.

	PROCEDURE [SKYACTIV-G 2.0, SKYACTIV-G 2.5].) • Are any DTCs present?		

2014 - Mazda3 - Engine

DTC P0365:00 [SKYACTIV-G 2.0, SKYACTIV-G 2.5]

DTC P0365:00	Exhaust CMP sensor circuit problem
DETECTION CONDITION	• The exhaust CMP sensor input signal pattern, received while the crankshaft rotates **24 times**, is incorrect. • Cylinder identification is not completed while the crankshaft rotates **15 times**. **Diagnostic support note** • This is a continuous monitor (CCM). • The check engine light illuminates if the PCM detects the above malfunction condition during the first drive cycle. • FREEZE FRAME DATA (Mode 2)/Snapshot data is available. • DTC is stored in the PCM memory.
FAIL-SAFE FUNCTION	• Stops fuel injection • Stops ignition

POSSIBLE CAUSE	• Exhaust CMP sensor connector or terminals malfunction
	• Short to ground or open circuit in exhaust CMP sensor power supply circuit
	  ▪ Short to ground in wiring harness between ENGINE2 15 A fuse and exhaust CMP sensor terminal C
	  ▪ ENGINE2 15 A fuse malfunction
	  ▪ Open circuit in wiring harness between main relay terminal D and exhaust CMP sensor terminal C
	• Short to ground in wiring harness between exhaust CMP sensor terminal A and PCM terminal 1T
	• PCM connector or terminals malfunction
	• Short to power supply in wiring harness between exhaust CMP sensor terminal A and PCM terminal 1T
	• Exhaust CMP sensor signal circuit and ground circuit are shorted to each other
	• Open circuit in wiring harness between the following terminals:
	  ▪ Exhaust CMP sensor terminal A—PCM terminal 1T
	  ▪ Exhaust CMP sensor terminal B—PCM terminal 1X
	• Exhaust CMP sensor malfunction
	  ▪ Exhaust CMP sensor is dirty
	  ▪ Exhaust CMP sensor pulse wheel malfunction
	• CKP sensor connector or terminals malfunction
	• Loose timing chain or improper valve timing
	• PCM malfunction

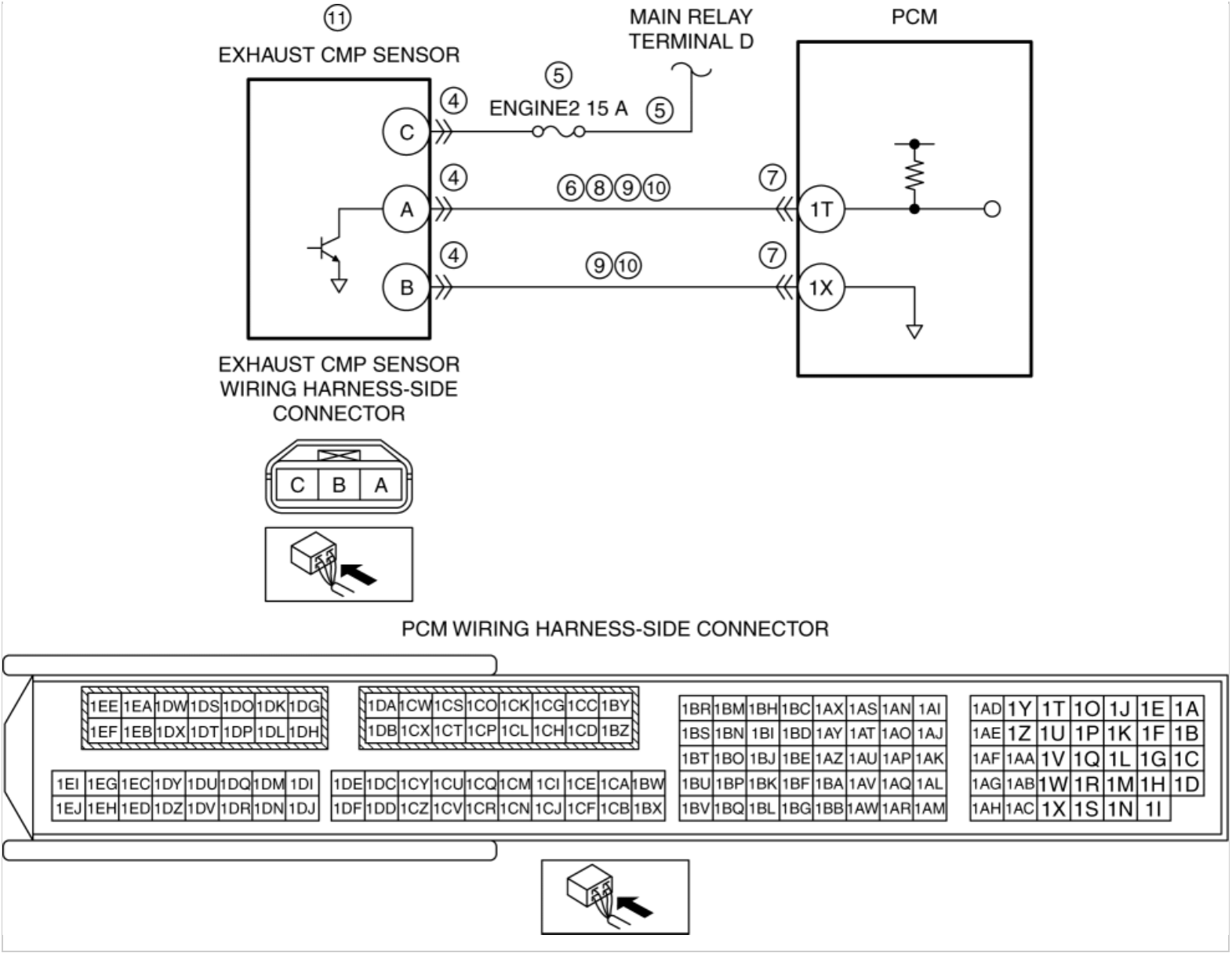

Diagnostic Procedure

STEP	INSPECTION		ACTION
1	**VERIFY FREEZE FRAME DATA (MODE 2)/SNAPSHOT DATA HAS BEEN RECORDED** • Has the FREEZE FRAME DATA (Mode 2)/snapshot data been recorded?	Yes	Go to the next step.
		No	Record the FREEZE FRAME DATA (Mode 2)/snapshot data on the repair order, then go to the next step.
2	**VERIFY RELATED REPAIR INFORMATION AVAILABILITY** • Verify related Service Bulletins and/or on-line repair information availability. • Is any related repair information available?	Yes	Perform repair or diagnosis according to the available repair information. • If the vehicle is not repaired, go to the next step.
		No	Go to the next step.
3	**VERIFY RELATED PENDING CODE AND/OR DTC**	Yes	Go to the applicable PENDING CODE or DTC inspection. (See **DTC TABLE [SKYACTIV-G 2.0, SKYACTIV-G 2.5]**.)

	Switch the ignition off, then ON (engine off). • Perform the Pending Trouble Code Access Procedure and DTC Reading Procedure. (See **ON-BOARD DIAGNOSTIC TEST [SKYACTIV-G 2.0, SKYACTIV-G 2.5]**.) • Are any other PENDING CODEs and/or DTCs present?		
		No	Go to the next step.
4	**INSPECT EXHAUST CMP SENSOR CONNECTOR CONDITION** • Switch the ignition off. • Disconnect the exhaust CMP sensor connector. • Inspect for poor connection (such as damaged/pulled-out pins, corrosion). • Is there any malfunction?	Yes	Repair or replace the connector and/or terminals, then go to Step 14.
		No	Go to the next step.
5	**INSPECT EXHAUST CMP SENSOR POWER SUPPLY CIRCUIT FOR SHORT TO GROUND OR OPEN CIRCUIT** • Verify that the exhaust CMP sensor connector is disconnected. • Switch the ignition ON (engine off). **NOTE:** • Another DTC may be stored by the PCM detecting an open circuit. • Measure the voltage at the exhaust CMP sensor terminal C (wiring harness-side). • Is the voltage **B+**?	Yes	Go to the next step.
		No	Inspect the ENGINE2 15 A fuse. • If the fuse is blown: ▪ Refer to the wiring diagram and verify whether or not there is a common connector between ENGINE2 15 A fuse and exhaust CMP sensor terminal C. **If there is a common connector:** • Determine the malfunctioning part by inspecting the common connector and the terminal for corrosion, damage, or pin disconnection, and the common wiring harness for a short to ground. • Repair or replace the malfunctioning part. **If there is no common connector:** • Repair or replace the wiring harness which has a short to ground. • Replace the fuse. • If the fuse is damaged: ▪ Replace the fuse. • If the fuse is normal: ▪ Refer to the wiring diagram and verify whether or not there is a common connector between main relay terminal D and exhaust CMP sensor terminal

			C. **If there is a common connector:** • Determine the malfunctioning part by inspecting the common connector and the terminal for corrosion, damage, or pin disconnection, and the common wiring harness for an open circuit. • Repair or replace the malfunctioning part. **If there is no common connector:** • Repair or replace the wiring harness which has an open circuit. Go to Step 14.
6	**INSPECT EXHAUST CMP SENSOR SIGNAL CIRCUIT FOR SHORT TO GROUND** • Verify that the exhaust CMP sensor connector is disconnected. • Switch the ignition off. • Inspect for continuity between exhaust CMP sensor terminal A (wiring harness-side) and body ground. • Is there continuity?	Yes	If the short to ground circuit could be detected in the wiring harness: • Refer to the wiring diagram and verify whether or not there is a common connector between exhaust CMP sensor terminal A and PCM terminal 1T. **If there is a common connector:** ▪ Determine the malfunctioning part by inspecting the common connector and the terminal for corrosion, damage, or pin disconnection, and the common wiring harness for a short to ground. ▪ Repair or replace the malfunctioning part. **If there is no common connector:** ▪ Repair or replace the wiring harness which has a short to ground. If the short to ground circuit could not be detected in the wiring harness: • Replace the PCM (short to ground in the PCM internal circuit). (See **PCM REMOVAL/INSTALLATION [SKYACTIV-G 2.0, SKYACTIV-G 2.5]**.) Go to Step 14.
		No	Go to the next step.
7	**INSPECT PCM CONNECTOR CONDITION** • Disconnect the PCM connector. • Inspect for poor connection (such as damaged/pulled-out pins, corrosion). • Is there any malfunction?	Yes	Repair or replace the connector and/or terminals, then go to Step 14.
		No	Go to the next step.
8	**INSPECT EXHAUST CMP SENSOR SIGNAL CIRCUIT FOR SHORT TO POWER SUPPLY** • Verify that the exhaust CMP sensor and PCM connectors are disconnected.	Yes	Go to the next step.
		No	Refer to the wiring diagram and verify whether or not there is a common connector between exhaust CMP sensor terminal A and PCM terminal 1T. **If there is a common connector:**

	• Switch the ignition ON (engine off). **NOTE:** • Another DTC may be stored by the PCM detecting an open circuit. • Measure the voltage at the exhaust CMP sensor terminal A (wiring harness-side). • Is the voltage **0 V**?		• Determine the malfunctioning part by inspecting the common connector and the terminal for corrosion, damage, or pin disconnection, and the common wiring harness for a short to power supply. • Repair or replace the malfunctioning part. **If there is no common connector:** • Repair or replace the wiring harness which has a short to power supply. Go to Step 14.
9	**INSPECT EXHAUST CMP SENSOR SIGNAL CIRCUIT AND GROUND CIRCUIT FOR SHORT TO EACH OTHER** • Verify that the exhaust CMP sensor and PCM connectors are disconnected. • Switch the ignition off. • Inspect for continuity between exhaust CMP sensor terminals A and B (wiring harness-side). • Is there continuity?	Yes	Refer to the wiring diagram and verify whether or not there is a common connector between the following terminals: • Exhaust CMP sensor terminal A—PCM terminal 1T • Exhaust CMP sensor terminal B—PCM terminal 1X **If there is a common connector:** • Determine the malfunctioning part by inspecting the common connector and the terminal for corrosion, damage, or pin disconnection, and the common wiring harness for a short to each other. • Repair or replace the malfunctioning part. **If there is no common connector:** • Repair or replace the wiring harness which has a short to each other. Go to Step 14.
		No	Go to the next step.
10	**INSPECT EXHAUST CMP SENSOR CIRCUIT FOR OPEN CIRCUIT** • Verify that the exhaust CMP sensor and PCM connectors are disconnected. • Inspect for continuity between the following terminals (wiring harness-side): ▪ Exhaust CMP sensor terminal A—PCM terminal 1T ▪ Exhaust CMP sensor terminal B—PCM terminal 1X	Yes	Go to the next step.
		No	Refer to the wiring diagram and verify whether or not there is a common connector between the following terminals: • Exhaust CMP sensor terminal A—PCM terminal 1T • Exhaust CMP sensor terminal B—PCM terminal 1X **If there is a common connector:** • Determine the malfunctioning part by inspecting the common connector and the terminal for corrosion, damage, or pin disconnection, and the common wiring harness for an open circuit. • Repair or replace the malfunctioning part. **If there is no common connector:** • Repair or replace the wiring harness which has an open circuit. Go to Step 14.

	• Is there continuity?		
11	**INSPECT EXHAUST CMP SENSOR** • Inspect the exhaust CMP sensor. (See **CAMSHAFT POSITION (CMP) SENSOR INSPECTION [SKYACTIV-G 2.0, SKYACTIV-G 2.5]**.) • Is there any malfunction?	Yes	Replace the exhaust CMP sensor, then go to Step 14. (See **CAMSHAFT POSITION (CMP) SENSOR REMOVAL/INSTALLATION [SKYACTIV-G 2.0, SKYACTIV-G 2.5]**.)
		No	Go to the next step.
12	**INSPECT CKP SENSOR CONNECTOR CONDITION** • Switch the ignition off. • Disconnect the CKP sensor connector. • Inspect for poor connection (such as damaged/pulled-out pins, corrosion). • Is there any malfunction?	Yes	Repair or replace the connector and/or terminals, then go to Step 14.
		No	Go to the next step.
13	**VERIFY ASSEMBLY CONDITION OF TIMING CHAIN** • Verify the condition of the timing chain assembly (exhaust valve timing, looseness, jumping). (See **TIMING CHAIN REMOVAL/INSTALLATION [SKYACTIV-G 2.0, SKYACTIV-G 2.5]**.) • Is there any malfunction?	Yes	Repair or replace the malfunctioning part. Assemble the timing chain using the correct timing, then go to the the next step. (See **TIMING CHAIN REMOVAL/INSTALLATION [SKYACTIV-G 2.0, SKYACTIV-G 2.5]**.)
		No	Go to the next step.
14	**VERIFY DTC TROUBLESHOOTING COMPLETED** • Always reconnect all disconnected connectors. • Clear the DTC from the PCM memory using the M-MDS. (See **AFTER REPAIR PROCEDURE [SKYACTIV-G 2.0, SKYACTIV-G 2.5]**.) • Start the engine and race it. • Perform the KOER self test. (See **KOEO/KOER SELF TEST [SKYACTIV-G 2.0, SKYACTIV-G 2.5]**.) • Is the same DTC present?	Yes	Repeat the inspection from Step 1. • If the malfunction recurs, replace the PCM. (See **PCM REMOVAL/INSTALLATION [SKYACTIV-G 2.0, SKYACTIV-G 2.5]**.) Go to the next step.
		No	Go to the next step.
15	**VERIFY AFTER REPAIR PROCEDURE** • Perform the “AFTER REPAIR PROCEDURE”. (See **AFTER REPAIR PROCEDURE [SKYACTIV-G**	Yes	Go to the applicable DTC inspection. (See **DTC TABLE [SKYACTIV-G 2.0, SKYACTIV-G 2.5]**.)
		No	DTC troubleshooting completed.

	2.0, SKYACTIV-G 2.5].) • Are any DTCs present?		

2014 - Mazda3 - Engine

DTC P0421:00 [SKYACTIV-G 2.0, SKYACTIV-G 2.5]

NOTE:

- To determine the malfunctioning part, proceed with the diagnostics from "Function Inspection Using M-MDS".

Details On DTCs

DESCRIPTION	Catalytic converter system	
DETECTION CONDITION	Determination conditions	• The fuel amount*1 supplied to the catalyst, from an HO2S output voltage of around **0 V** and until increasing to the specified value or more after recovery from fuel cut control, decreases below the specified value. However, determination must have been performed **11 times or more** after resetting battery and clearing DTCs. • *1: The estimated value is calculated based on the A/F sensor signal.
	Preconditions	• Catalytic converter is activated sufficiently. • HO2S is activated sufficiently. • The following DTCs are not detected: ▪ Misfire: P0300:00, P0301:00, P0302:00, P0303:00, P0304:00 ▪ Fuel injection correction: P0171:00, P0172:00, P2096:00, P2097:00 ▪ A/F sensor: P0130:00, P0131:00, P0132:00, P0133:00, P0134:00, P064D:00, P2237:00, P2243:00, P2251:00 ▪ HO2S: P0137:00, P0138:00, P013A:00, P0140:00 ▪ A/F sensor heater: P0031:00, P0032:00 ▪ HO2S heater: P0037:00, P0038:00
	Drive cycle	• **1** (U.S.A.) • **2** (except U.S.A.)
	Self test type	• CMDTC self test
	Sensor used	• A/F sensor, HO2S
FAIL-SAFE FUNCTION	• Not applicable	
VEHICLE STATUS WHEN DTCs ARE OUTPUT	• Illuminates check engine light.	
POSSIBLE CAUSE	• HO2S malfunction ▪ HO2S loose • A/F sensor malfunction ▪ A/F sensor loose ▪ Exhaust system leakage	

	▪ A/F sensor deterioration • TWC deterioration or malfunction • PCM malfunction

System Wiring Diagram

- Not applicable

Function Explanation (DTC Detection Outline)

- If the fuel amount*1 supplied to the catalyst, from the period of recovery by fuel cut control until the HO2S indicates a rich signal (**0.2 V or more**), is less than the specified value, the PCM determines catalytic converter deterioration and stores a DTC.
- *1: The estimated value is calculated based on the A/F sensor signal.

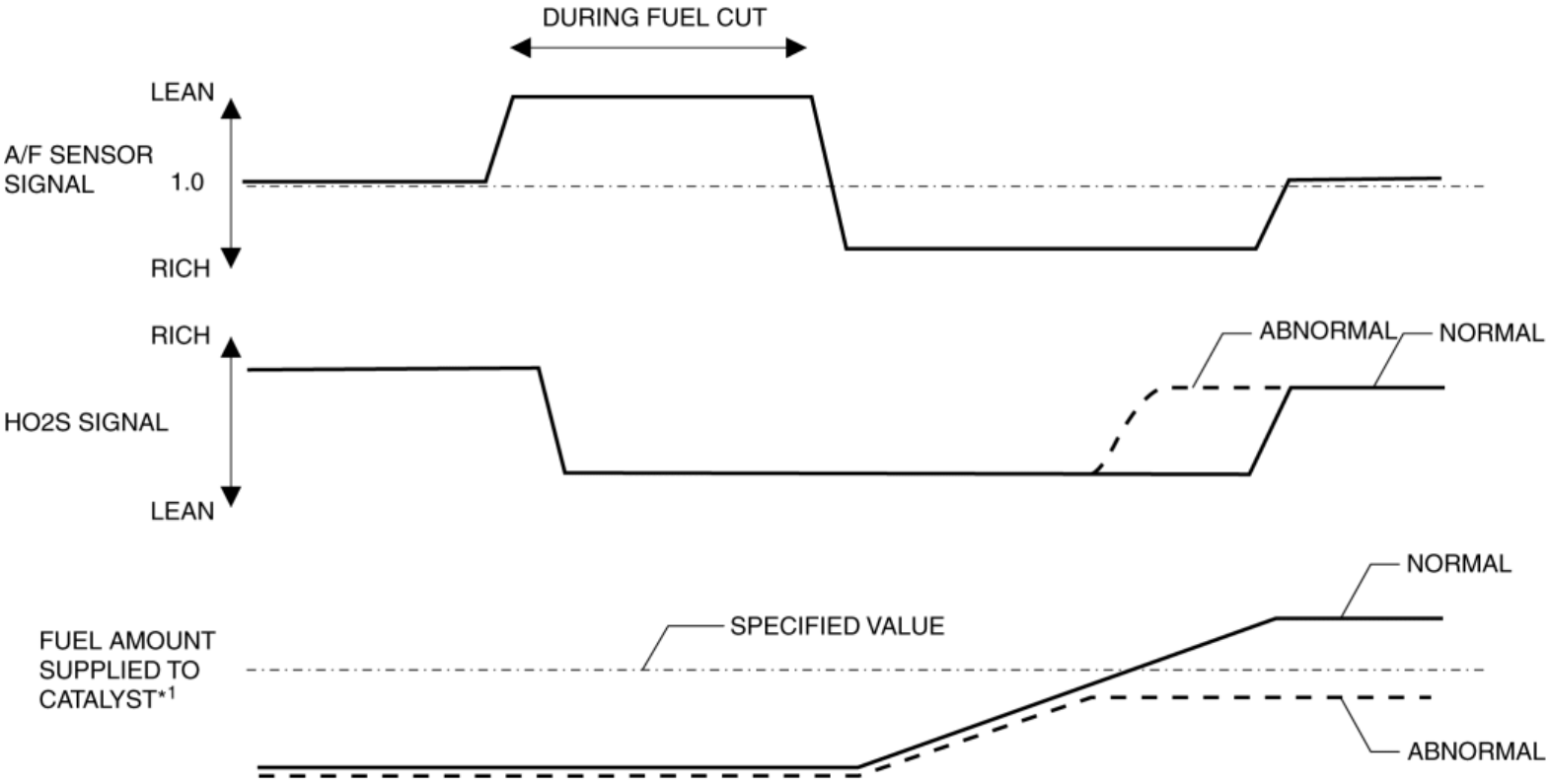

*1: THE ESTIMATED VALUE IS CALCULATED BASED ON THE A/F SENSOR SIGNAL.

Repeatability Verification Procedure

- Start the engine and leave it idling for **1 min**.
- Drive the vehicle normally for **15 min**. After that, shift to 3rd gear and maintain the vehicle speed at **approx. 40 km/h {25 mph}**.
- Accelerate the vehicle to **60 km/h {37 mph}** while in 3rd gear.
- Release the accelerator pedal and decelerate the vehicle to **40 km/h {25 mph}**.
- Accelerate the vehicle to **60 km/h {37 mph}** again while in 3rd gear.
- Drive the vehicle for **20 s** at a speed of **50 km/h {31 mph}** while in 3rd gear.
- Repeat Step 4 to 6 operations above **20 times**.

  NOTE:

- Match the engine coolant temperature in the recorded FREEZE FRAME DATA (Mode 2)/snapshot data, the vehicle speed, and engine speed values to the best extent possible while driving the vehicle.

- Try to reproduce the malfunction by driving the vehicle for **5 min** based on the values in the FREEZE FRAME DATA (Mode 2)/snapshot data.

PID Item/Simulation Item Used In Diagnosis

PID/DATA monitor item table

Item	Definition	Unit	Condition/Specification
O2S11	A/F sensor current	µA	• Idle (after warm up): Approx. −39 µA • Deceleration fuel cut (accelerator pedal released from engine speed of 4,000 rpm or more): Approx. 3.84 mA
O2S12	HO2S voltage	V	• Idle (after warm up): 0—1.0 V • Deceleration fuel cut (accelerator pedal released from engine speed of 4,000 rpm or more): Approx. 0 V

Function Inspection Using M-MDS

STEP	INSPECTION	RESULTS	ACTION
1	**PURPOSE: VERIFY RELATED REPAIR INFORMATION AVAILABILITY** • Verify related Service Bulletins and/or on-line repair information availability. • Is any related repair information available?	Yes	Perform repair or diagnosis according to the available repair information. • If the vehicle is not repaired, go to the next step.
		No	Go to the next step.
2	**PURPOSE: IDENTIFY TRIGGER DTC FOR FREEZE FRAME DATA (MODE 2)** • Is the DTC P0421:00 on FREEZE FRAME DATA (Mode 2)?	Yes	Go to the next step.
		No	Go to the troubleshooting procedure for DTC on FREEZE FRAME DATA (Mode 2). (See **DTC TABLE [SKYACTIV-G 2.0, SKYACTIV-G 2.5]**.)
3	**PURPOSE: RECORD VEHICLE STATUS AT TIME OF DTC DETECTION TO UTILIZE WITH REPEATABILITY VERIFICATION** • Has the FREEZE FRAME DATA (Mode 2)/snapshot data been recorded?	Yes	Go to the next step.
		No	Record the FREEZE FRAME DATA (Mode 2)/snapshot data on the repair order, then go to the next step. **NOTE:** • Recording can be facilitated using the screen capture function of the PC.
4	**PURPOSE: VERIFY RELATED PENDING CODE AND/OR DTC**	Yes	Go to the applicable PENDING

	Switch the ignition off, then ON (engine off). • Perform the Pending Trouble Code Access Procedure and DTC Reading Procedure. (See **ON-BOARD DIAGNOSTIC TEST [SKYACTIV-G 2.0, SKYACTIV-G 2.5]**.) • Are any other PENDING CODEs and/or DTCs present?		CODE or DTC inspection. (See **DTC TABLE [SKYACTIV-G 2.0, SKYACTIV-G 2.5]**.) Go to the next step.
		No	Go to the next step.
5	**PURPOSE: VERIFY A/F SENSOR AND HO2S INPUT SIGNAL** • Start the engine and warm it up completely. • Access the following PIDs using the M-MDS: (See **ON-BOARD DIAGNOSTIC TEST [SKYACTIV-G 2.0, SKYACTIV-G 2.5]**.) ▪ O2S11 ▪ O2S12 • Drive the vehicle under the following conditions. **WARNING:** • When the M-MDS is used to observe monitor system status while driving, be sure to have another technician with you, or record the data in the M-MDS using the PID/DATA MONITOR AND RECORD capturing function and inspect later. • While performing this step, always operate the vehicle in a safe and lawful manner. ▪ After increasing the engine speed to **3,000 rpm**, decelerate using engine braking. • Is the displayed PID value as follows? ▪ O2S11: **0.25 mA or more** ▪ O2S12: **0.3 V or less**	Yes	Go to the troubleshooting procedure to perform the procedure from Step 3.
		No	Go to the next step.
6	**INSPECT RELATED SENSOR WIRING HARNESS AND CONNECTOR** • Access the following PIDs using the M-MDS: (See **ON-BOARD DIAGNOSTIC TEST [SKYACTIV-G 2.0, SKYACTIV-G 2.5]**.) ▪ O2S11 ▪ O2S12 • When the PCM, A/F sensor and HO2S are shaken, does the PID value include a PID item which has changed?	Yes	Inspect the related wiring harness and connector. • Repair or replace the malfunctioning part. Go to the troubleshooting procedure to perform the procedure from Step 8.
		No	Go to the troubleshooting procedure to perform the procedure from Step 1.

Troubleshooting Diagnostic Procedure

Intention of troubleshooting procedure

- Step 1—2
  - Perform inspection of HO2S and A/F sensor signal related parts.
- Step 3—7
  - Perform inspection of each separate part.
- Step 8—9
  - Verify that the primary malfunction is resolved and there are no other malfunctions.

STEP	INSPECTION	RESULTS	ACTION
1	**PURPOSE: INSPECT INSTALLATION OF HO2S** • Inspect installation of HO2S. • Is the HO2S installed securely?	Yes	Go to the next step.
		No	Retighten the HO2S, then go to Step 8. (See **HEATED OXYGEN SENSOR (HO2S) REMOVAL/INSTALLATION [SKYACTIV-G 2.0, SKYACTIV-G 2.5]**.)
2	**PURPOSE: INSPECT INSTALLATION OF A/F SENSOR** • Inspect installation of A/F sensor. • Is the A/F sensor installed securely?	Yes	Replace the A/F sensor and/or HO2S, then go to Step 8. (See **AIR FUEL RATIO (A/F) SENSOR REMOVAL/INSTALLATION [SKYACTIV-G 2.0, SKYACTIV-G 2.5]**.) (See **HEATED OXYGEN SENSOR (HO2S) REMOVAL/INSTALLATION [SKYACTIV-G 2.0, SKYACTIV-G 2.5]**.)
		No	Retighten the A/F sensor, then go to Step 8. (See **AIR FUEL RATIO (A/F) SENSOR REMOVAL/INSTALLATION [SKYACTIV-G 2.0, SKYACTIV-G 2.5]**.)
3	**PURPOSE: INSPECT INSTALLATION OF HO2S** • Inspect installation of HO2S. • Is the HO2S installed securely?	Yes	Go to the next step.
		No	Retighten the HO2S, then go to Step 8. (See **HEATED OXYGEN SENSOR (HO2S) REMOVAL/INSTALLATION [SKYACTIV-G 2.0, SKYACTIV-G 2.5]**.)
4	**PURPOSE: INSPECT INSTALLATION OF A/F SENSOR** • Inspect installation of A/F sensor. • Is the A/F sensor installed securely?	Yes	Go to the next step.
		No	Retighten the A/F sensor, then go to Step 8. (See **AIR FUEL RATIO (A/F) SENSOR REMOVAL/INSTALLATION [SKYACTIV-G 2.0, SKYACTIV-G 2.5]**.)
5	**PURPOSE: INSPECT EXHAUST SYSTEM FOR LEAKAGE** • Visually inspect for exhaust gas leakage from the exhaust system. • Is there any malfunction?	Yes	Repair or replace the malfunctioning part according to the inspection results, then go to Step 8.
		No	Go to the next step.
6	**PURPOSE: VERIFY IF OTHER DTCs ARE DISPLAYED** • Reconnect all disconnected connectors. • Clear the DTC from the PCM memory using the M-MDS. (See **CLEARING DTC [SKYACTIV-G 2.0, SKYACTIV-G 2.5]**.) • Implement the repeatability verification procedure. (See **Repeatability Verification Procedure**.) • Perform the Pending Trouble Code Access Procedure and DTC Reading Procedure. (See **ON-BOARD DIAGNOSTIC TEST [SKYACTIV-G 2.0, SKYACTIV-G 2.5]**.) • Are any other PENDING CODEs and/or DTCs present?	Yes	Go to the applicable PENDING CODE or DTC inspection. (See **DTC TABLE [SKYACTIV-G 2.0, SKYACTIV-G 2.5]**.) Go to the next step.
		No	Go to the next step.
7	**PURPOSE: VERIFY CATALYTIC CONVERTER MALFUNCTION** • Clear the DTC from the PCM memory using the M-MDS. (See **CLEARING DTC [SKYACTIV-G 2.0, SKYACTIV-G 2.5]**.) • Implement the repeatability verification	Yes	Replace the TWC, then go to the next step. (See **EXHAUST SYSTEM REMOVAL/INSTALLATION [SKYACTIV-G 2.0, SKYACTIV-G 2.5]**.)
		No	DTC troubleshooting completed.

	procedure. (See **Repeatability Verification Procedure**.) • Perform the Pending Trouble Code Access Procedure and DTC Reading Procedure. (See **ON-BOARD DIAGNOSTIC TEST [SKYACTIV-G 2.0, SKYACTIV-G 2.5]**.) • Is DTC P0421:00 or pending code displayed?		
8	**PURPOSE: VERIFICATION OF VEHICLE REPAIR COMPLETION** • Always reconnect all disconnected connectors. • Clear the DTC from the PCM memory using the M-MDS. (See **CLEARING DTC [SKYACTIV-G 2.0, SKYACTIV-G 2.5]**.) • Implement the repeatability verification procedure. (See **Repeatability Verification Procedure**.) • Perform the Pending Trouble Code Access Procedure and DTC Reading Procedure. (See **ON-BOARD DIAGNOSTIC TEST [SKYACTIV-G 2.0, SKYACTIV-G 2.5]**.) • Is DTC P0421:00 or pending code displayed?	Yes	Repeat the inspection from Step 1. • If the malfunction recurs, replace the PCM. (See **PCM REMOVAL/INSTALLATION [SKYACTIV-G 2.0, SKYACTIV-G 2.5]**.) Go to the next step.
		No	Go to the next step.
9	**PURPOSE: VERIFY IF THERE IS ANY OTHER MALFUNCTION** • Is any other DTC or pending code stored?	Yes	Go to the applicable DTC inspection. (See **DTC TABLE [SKYACTIV-G 2.0, SKYACTIV-G 2.5]**.)
		No	DTC troubleshooting completed.

2014 - Mazda3 - Engine

DTC P0442:00, P0455:00, P0456:00 [SKYACTIV-G 2.0, SKYACTIV-G 2.5]

NOTE:

- To determine the malfunctioning part, proceed with the diagnostics from "Function Inspection Using M-MDS".

Details On DTCs

DESCRIPTION	P0442:00 • Evaporative gas leakage (leakage amount: low) P0455:00 • Evaporative gas leakage (leakage amount: large) P0456:00 • Evaporative gas leakage (leakage amount: extremely low)	
DETECTION CONDITION	Determination conditions	P0442:00 • Hole of **0.04 in (1.0 mm) or more** in evaporative gas passage
		P0455:00 • Hole of **0.09 in (2.25 mm) or more** in evaporative gas passage
		P0456:00 • Hole of **0.02 in (0.5 mm) or more** in evaporative gas passage
	Preconditions	P0442:00, P0455:00 • Period ignition is switched off before engine starts: **120 min or more** • Engine coolant temperature at engine start: **2—43 °C {36—109 °F}** *1 • Time elapsed from engine start: **6—90 min** • Fuel level in fuel tank: **10—90 %** *1 • Desired ambient air temperature: **4.4—43.3 °C {40—109 °F}** *1 • Barometric pressure: **72.23 kPa {0.7365 kgf/cm^2, 10.48 psi} or more** *1 • Charging efficiency: **3—65 %** *1 • Vehicle speed: **64—144 km/h {40.0—89.4 mph}** *1 P0456:00 • Engine coolant temperature at engine start: **2—43 °C {36—109 °F}** *1 • Intake air temperature at engine start: **7 °C {13 °F} or more** higher than engine coolant temperature at engine start *1 • Time elapsed from engine start: **15—90 min** • Fuel level in fuel tank: **10—90 %** *1 • Desired ambient air temperature: **5—37 °C {41—98 °F}** *1 • Barometric pressure: **72.35 kPa {0.7378 kgf/cm^2, 10.49 psi} or more** *1 • Battery voltage: **above 10 V** *1 • The following DTCs are not detected: ▪ Fuel tank pressure sensor: P0451:00, P0452:00, P0453:00

		▪ Purge solenoid valve: P0443:00 ▪ CV solenoid valve: P0446:00 ▪ EVAP monitor: P0442:00, P0455:00, P0457:00, P144A:00, P1450:00 ▪ Fuel gauge sender unit: P0460:00, P0461:00, P0462:00, P0463:00 • *1: Value can be verified by displaying PIDs using M-MDS
	Malfunction determination period	• **75 s period**
	Drive cycle	• 1
	Self test type	• CMDTC self test
	Sensor used	• Fuel tank pressure sensor
FAIL-SAFE FUNCTION	• Not applicable	
VEHICLE STATUS WHEN DTCs ARE OUTPUT	• Illuminates check engine light.	
POSSIBLE CAUSE	• Missing or loose fuel filler cap • Fuel filler cap malfunction • Fuel tank pressure sensor malfunction • CV solenoid valve malfunction • Purge solenoid valve malfunction • Evaporative gas passage malfunction ▪ Improper connection of evaporative hose ▪ Evaporative hose damaged • Charcoal canister malfunction • Catch tank malfunction • Fuel pump unit loose • Fuel tank malfunction • PCM malfunction	

System Wiring Diagram

- Not applicable

Function Explanation (DTC Detection Outline)

- The pressure change of the evaporative gas passage is measured using barometric pressure and intake manifold vacuum to detect evaporative gas leakage. The PCM introduces barometric pressure or intake manifold vacuum into the evaporative gas passage by opening/closing the purge solenoid valve and CV solenoid valve, and measures the pressure change using the fuel tank pressure sensor.

  P0455:00

- The PCM closes the CV solenoid valve while the vehicle is being driven, and seals the fuel tank. The PCM introduces intake manifold vacuum into the fuel tank and measures the pressure change of the fuel tank using the fuel tank pressure sensor by opening the purge solenoid valve after sealing the fuel tank. If the pressure of the fuel tank does not reach the target value after the specified time has elapsed since the pressure was measured, the PCM determines that there is an evaporative gas leakage. If the PCM determines that refueling is not performed before the engine starts according to the result of the refuel determination, DTC P0455:00 is stored (if the PCM determines that refueling is performed, DTC P0457:00 is stored).
- If the fuel tank level increases after the engine starts, the PCM determines that refueling was performed by comparing the fuel tank level before one drive cycle with the fuel tank level after engine start.

  P0442:00

- The PCM closes the purge solenoid valve after diagnosing (normal) DTC P0455:00, and seals the fuel tank. The pressure change of the

fuel tank is measured by the fuel tank pressure sensor after the fuel tank is sealed. The PCM determines a temporary malfunction if the pressure change is the specified value or more after the specified time has elapsed since the pressure was measured. If the CV solenoid valve is open after determining a temporary malfunction and the pressure change (increase) of the fuel tank is the specified value or less, the PCM determines that there is an evaporative gas leakage and a DTC is stored.

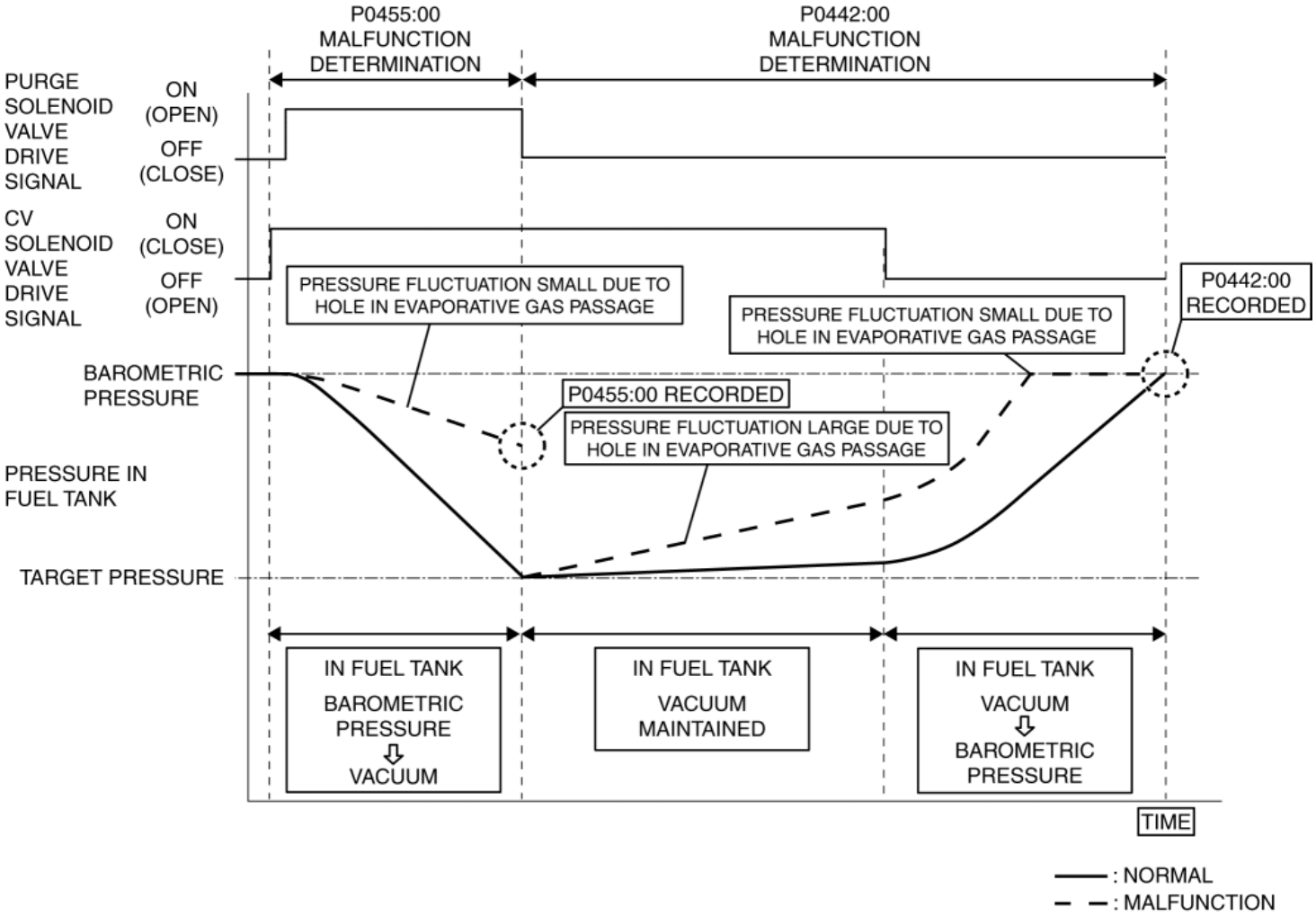

P0456:00

- After the engine stops with the preconditions met, the PCM closes the CV solenoid valve and seals the fuel tank. The pressure change of the fuel tank is measured by the fuel tank pressure sensor after the fuel tank is sealed. The PCM determines a temporary malfunction when the pressure change is the specified value or less after the specified time has elapsed since the pressure was measured. If the CV solenoid valve is open after determining a temporary malfunction and the pressure change of the fuel tank is the specified value or less, the PCM determines that there is an evaporative gas leakage and a DTC is stored.

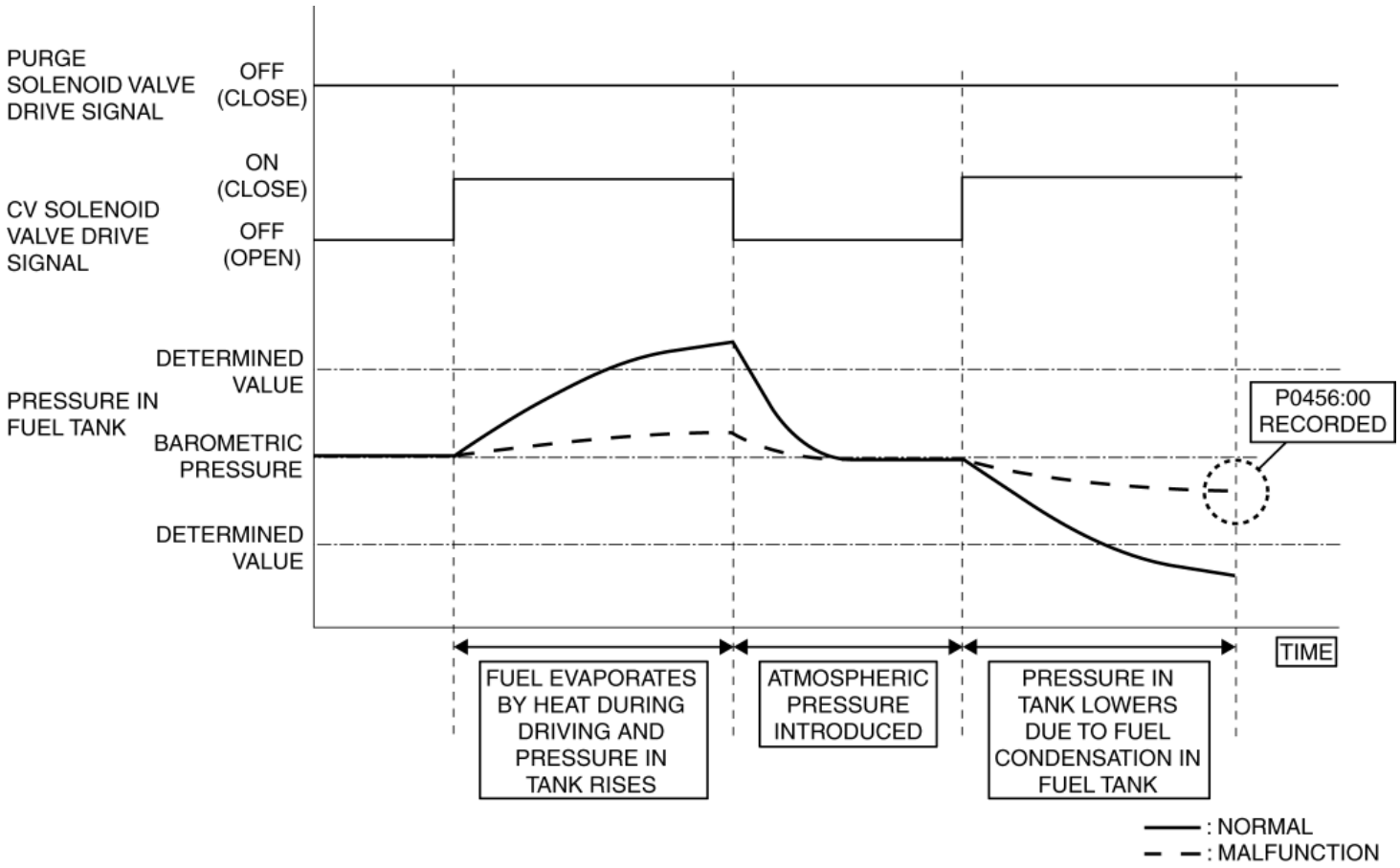

Repeatability Verification Procedure

P0442:00, P0455:00

- Set the remaining fuel quantity in the fuel tank between **30—85 %**.
- Start the engine and switch the ignition off after **5 s** have elapsed.
- Leave the vehicle for **6 hours or more**.
- Start the engine and leave it idling for **2 min**.
- Drive the vehicle for **30 min** at a speed of **50 km/h {31 mph} or more** (to increase temperature in fuel tank and generate evaporative gas).

NOTE:

- If driving the vehicle for **30 min** at a speed of **50 km/h {31 mph} or more** is not feasible, the vehicle can be driven for a continuous **15 min or more** with the engine coolant temperature at **80 °C {176 °F} or more**.

P0456:00

- Set the remaining fuel quantity in the fuel tank between **30—85 %**.
- Verify that OBD-II information (such as FREEZE FRAME DATA (Mode 2)) has been obtained and recorded.
- Clear the DTC from the PCM memory using the M-MDS. (See **CLEARING DTC [SKYACTIV-G 2.0, SKYACTIV-G 2.5]**.)
- Start the engine and switch the ignition off after **5 s** have elapsed.
- Leave the vehicle for **6 hours or more**.
- Start the engine and leave it idling for **2 min**.
- Drive the vehicle for **30 min** at a speed of **50 km/h {31 mph} or more** (to increase temperature in fuel tank and generate evaporative gas).

NOTE:

- If driving the vehicle for **30 min** at a speed of **50 km/h {31 mph} or more** is not feasible, the vehicle can be driven for a continuous **15 min or more** with the engine coolant temperature at **80 °C {176 °F} or more**.

- Stop the engine.
- Leave the vehicle for **1 hours or more**.

PID Item/Simulation Item Used In Diagnosis

PID/DATA monitor item table

Item	Definition	Unit	Condition/Specification
BARO	Actually measured barometric pressure input from barometric pressure sensor built into PCM	KPa {MPa}, mBar {Bar}, psi, in H20	• Displays BARO
	BARO sensor voltage	V	• Ignition switched ON (at sea level): Approx. 4.08 V
EVAPCP	Purge solenoid valve control duty value	%	• Idle (after warm up): Approx. 0% • Racing (Engine speed 2,000 rpm): 4.3 —35% • Racing (Engine speed 4,000 rpm): Approx. 66%
EVAPCV	CV solenoid valve operation status	Off/On	• Simulation item (EVAPCV) is ON: On
FCL	Check fuel cap warning light illumination status	Off/On	• Check fuel cap warning light not illuminated: Off • Check fuel cap warning light illuminated: On
FTP	Fuel tank pressure	Pa {KPa} {MPa}, mBar {Bar}, psi, in H20	• Displays fuel tank pressure
	Fuel tank pressure sensor voltage	V	• Fuel tank pressure is equal to barometric pressure: Approx. 2.6 V

Function Inspection Using M-MDS

STEP	INSPECTION	RESULTS	ACTION
1	**PURPOSE: VERIFY RELATED REPAIR INFORMATION AVAILABILITY** • Verify related Service Bulletins and/or on-line repair information availability. • Is any related repair information available?	Yes	Perform repair or diagnosis according to the available repair information. • If the vehicle is not repaired, go to the next step.
		No	Go to the next step.
2	**PURPOSE: RECORD VEHICLE STATUS AT TIME OF DTC DETECTION TO UTILIZE WITH REPEATABILITY VERIFICATION** • Has the FREEZE FRAME DATA (Mode 2)/snapshot data been recorded?	Yes	Go to the next step.
		No	Record the FREEZE FRAME DATA (Mode 2)/snapshot data on the repair order, then go to the next step. **NOTE:** • Recording can be facilitated using the screen capture function of the PC.
3	**PURPOSE: VERIFY IF DIAGNOSTIC RESULT IS AFFECTED BY MALFUNCTION OF CONTROL PART REQUIRED FOR DIAGNOSIS** • Perform the Pending Trouble Code Access Procedure and DTC Reading Procedure. (See **ON-BOARD DIAGNOSTIC TEST [SKYACTIV-G 2.0, SKYACTIV-G 2.5]**.) • Is the PENDING CODE/DTC P0443:00, P0446:00, P0451:00, P0452:00 or P0453:00 also present?	Yes	Go to the applicable PENDING CODE or DTC inspection. (See **DTC P0443:00 [SKYACTIV-G 2.0, SKYACTIV-G 2.5]**.) (See **DTC P0446:00 [SKYACTIV-G 2.0, SKYACTIV-G 2.5]**.) (See **DTC P0451:00 [SKYACTIV-G 2.0, SKYACTIV-G 2.5]**.) (See **DTC P0452:00 [SKYACTIV-G 2.0, SKYACTIV-G 2.5]**.) (See **DTC P0453:00 [SKYACTIV-G 2.0, SKYACTIV-G 2.5]**.)

		No	P0442:00 or P0455:00 is diagnosed: • Go to the next step. P0456:00 is diagnosed: • Go to Step 5.
4	**PURPOSE: INSPECTION OF EVAPORATIVE GAS LEAKAGE** • Perform the Evaporative Emission (EVAP) System Leak Inspection. (See **ENGINE CONTROL SYSTEM OPERATION INSPECTION [SKYACTIV-G 2.0, SKYACTIV-G 2.5]**.) • Is evaporative gas leakage detected?	Yes	Go to Step 6.
		No	Go to Step 9.
5	**PURPOSE: INSPECTION OF EVAPORATIVE GAS LEAKAGE** • Perform the smoke test using the tester (134-01049). • Is evaporative gas leakage detected?	Yes	Go to the next step.
		No	Go to Step 9.
6	**PURPOSE: VERIFY FUEL FILLER CAP MALFUNCTION** • Access the FCL PID using the M-MDS. (See **ON-BOARD DIAGNOSTIC TEST [SKYACTIV-G 2.0, SKYACTIV-G 2.5]**.) • Is the FCL PID value On?	Yes	Go to the troubleshooting procedure to perform the procedure from Step 1.
		No	Go to the next step.
7	**PURPOSE: SPECIFY LOCATION OF EVAPORATIVE GAS LEAKAGE (FUEL TANK SIDE)** • Disconnect the evaporative hose of the following: (See **QUICK RELEASE CONNECTOR (EMISSION SYSTEM) REMOVAL/INSTALLATION [SKYACTIV-G 2.0, SKYACTIV-G 2.5]**.) ▪ Between charcoal canister and purge solenoid valve (charcoal canister side) ▪ Between charcoal canister and CV solenoid valve (charcoal canister side) • Plug the charcoal canister. • Open the fuel-filler cap. • Access the following PIDs using the M-MDS: (See **ON-BOARD DIAGNOSTIC TEST [SKYACTIV-G 2.0, SKYACTIV-G 2.5]**.) ▪ BARO ▪ FTP • Does the FTP PID value correspond to the BARO PID value?	Yes	Go to the next step.
		No	Go to the troubleshooting procedure to perform the procedure from Step 3.
8	**PURPOSE: SPECIFY LOCATION OF EVAPORATIVE GAS LEAKAGE (CHARCOAL CANISTER SIDE)** • Reconnect all the removed parts. • Disconnect the evaporative hose of the following: (See **QUICK RELEASE CONNECTOR (EMISSION SYSTEM) REMOVAL/INSTALLATION [SKYACTIV-G 2.0, SKYACTIV-G 2.5]**.) ▪ Between charcoal canister and purge solenoid valve (purge solenoid valve side) ▪ Between charcoal canister and CV solenoid valve (CV solenoid valve side) • Plug the evaporative hoses (purge solenoid valve side and CV solenoid valve side). • Access the following PIDs using the M-MDS: (See **ON-BOARD DIAGNOSTIC TEST [SKYACTIV-G 2.0, SKYACTIV-G 2.5]**.) ▪ BARO ▪ FTP	Yes	Go to the next step.
		No	Go to the troubleshooting procedure to perform the procedure from Step 6.

	• Does the FTP PID value correspond to the BARO PID value?		
9	**PURPOSE: DETERMINE IF MALFUNCTION CAUSED BY CONTROL PART (PURGE SOLENOID VALVE) REQUIRED FOR DIAGNOSIS** • Reconnect all the removed parts. • Start the engine and idle it. • Access the EVAPCP PID using the M-MDS. (See **ON-BOARD DIAGNOSTIC TEST [SKYACTIV-G 2.0, SKYACTIV-G 2.5]**.) • Is the EVAPCP PID value normal? (See **PCM INSPECTION [SKYACTIV-G 2.0, SKYACTIV-G 2.5]**.)	Yes	Go to the next step.
		No	Go to the troubleshooting procedure to perform the procedure from Step 9.
10	**PURPOSE: DETERMINE IF MALFUNCTION CAUSED BY CONTROL PART (CV SOLENOID VALVE) REQUIRED FOR DIAGNOSIS** • Start the engine and idle it. • Access the EVAPCV PID using the M-MDS. (See **ON-BOARD DIAGNOSTIC TEST [SKYACTIV-G 2.0, SKYACTIV-G 2.5]**.) • Is the EVAPCV PID value normal? (See **PCM INSPECTION [SKYACTIV-G 2.0, SKYACTIV-G 2.5]**.)	Yes	Go to the next step.
		No	Go to the troubleshooting procedure to perform the procedure from Step 10.
11	**PURPOSE: DETERMINE IF MALFUNCTION CAUSED BY CONTROL PART (FUEL TANK PRESSURE SENSOR) REQUIRED FOR DIAGNOSIS** • Start the engine and idle it. • Access the FTP PID using the M-MDS. (See **ON-BOARD DIAGNOSTIC TEST [SKYACTIV-G 2.0, SKYACTIV-G 2.5]**.) • Is the FTP PID value normal? (See **PCM INSPECTION [SKYACTIV-G 2.0, SKYACTIV-G 2.5]**.)	Yes	Go to the troubleshooting procedure to perform the procedure from Step 1.
		No	Go to the troubleshooting procedure to perform the procedure from Step 11.

Troubleshooting Diagnostic Procedure

Intention of troubleshooting procedure

- Step 1—2
  - Inspect for evaporative gas leakage from the fuel-filler opening.
- Step 3—5
  - Inspect for evaporative gas leakage from the fuel tank side.
- Step 6—8
  - Inspect for evaporative gas leakage from the charcoal canister side.
- Step 9—11
  - Inspect control parts for normal operation.
- Step 12—13
  - Verify that the primary malfunction is resolved and there are no other malfunctions.

STEP	INSPECTION	RESULTS	ACTION
1	**PURPOSE: INSPECTION OF EVAPORATIVE GAS LEAKAGE FROM FUEL-FILLER CAP** • Verify that the fuel-filler cap is completely closed. • Is the fuel-filler cap completely closed?	Yes	Go to the next step.
		No	Close the fuel-filler cap completely, then go to Step 12.
2	**PURPOSE: DETERMINE INTEGRITY OF FUEL FILLER CAP** • Inspect the fuel filler cap.	Yes	Replace the fuel filler cap, then go to Step 12. (See **FUEL-FILLER PIPE REMOVAL/INSTALLATION [SKYACTIV-**

	Is there any malfunction?		G 2.0, SKYACTIV-G 2.5].)
		No	Go to the next step.
3	**PURPOSE: INSPECTION OF EVAPORATIVE GAS LEAKAGE FROM EVAPORATIVE GAS PASSAGE** • Verify the hoses between the following parts, pipe connection condition, and that there is no cracking or damage. ▪ Between fuel tank and charcoal canister • Is there any malfunction?	Yes	Repair or replace the malfunctioning part according to the inspection results, then go to Step 12.
		No	Go to the next step.
4	**PURPOSE: INSPECTION OF EVAPORATIVE GAS LEAKAGE CAUSED BY POOR INSTALLATION OF FUEL PUMP** • Verify the fuel pump unit installation condition (clearance between affixing surfaces, installation angle). (See **FUEL PUMP UNIT REMOVAL/INSTALLATION [SKYACTIV-G 2.0, SKYACTIV-G 2.5]**.) • Is the fuel pump unit installed securely?	Yes	Go to the next step.
		No	Retighten the fuel pump unit, then go to Step 12. (See **FUEL PUMP UNIT REMOVAL/INSTALLATION [SKYACTIV-G 2.0, SKYACTIV-G 2.5]**.)
5	**PURPOSE: DETERMINE INTEGRITY OF FUEL TANK** • Inspect the fuel tank. (See **FUEL TANK INSPECTION [SKYACTIV-G 2.0, SKYACTIV-G 2.5]**.) • Is there any malfunction?	Yes	Replace the fuel tank, then go to Step 12. (See **FUEL TANK REMOVAL/INSTALLATION [SKYACTIV-G 2.0, SKYACTIV-G 2.5]**.)
		No	Go to the next step.
6	**PURPOSE: INSPECTION OF EVAPORATIVE GAS LEAKAGE FROM EVAPORATIVE GAS PASSAGE** • Verify the hoses between the following parts, pipe connection condition, and that there is no cracking or damage. ▪ Between charcoal canister and catch tank ▪ Between charcoal canister and CV solenoid valve ▪ Between catch tank and purge solenoid valve ▪ Between purge solenoid valve and intake manifold • Is there any malfunction?	Yes	Repair or replace the malfunctioning part according to the inspection results, then go to Step 12.
		No	Go to the next step.
7	**PURPOSE: DETERMINE INTEGRITY OF CHARCOAL CANISTER** • Inspect the charcoal canister. (See **CHARCOAL CANISTER INSPECTION [SKYACTIV-G 2.0, SKYACTIV-G 2.5]**.) • Is there any malfunction?	Yes	Replace the charcoal canister, then go to Step 12. (See **CHARCOAL CANISTER REMOVAL/INSTALLATION [SKYACTIV-G 2.0, SKYACTIV-G 2.5]**.)
		No	Go to the next step.
8	**PURPOSE: DETERMINE INTEGRITY OF CATCH TANK** • Inspect the catch tank. (See **CATCH TANK INSPECTION [SKYACTIV-G 2.0, SKYACTIV-G 2.5]**.) • Is there any malfunction?	Yes	Replace the catch tank, then go to Step 12. (See **PURGE SOLENOID VALVE REMOVAL/INSTALLATION [SKYACTIV-G 2.0, SKYACTIV-G 2.5]**.)
		No	Go to the next step.
9	**PURPOSE: DETERMINE INTEGRITY OF PURGE SOLENOID VALVE** • Inspect the purge solenoid valve. (See **PURGE SOLENOID VALVE INSPECTION [SKYACTIV-G 2.0, SKYACTIV-G 2.5]**.) • Is there any malfunction?	Yes	Replace the purge solenoid valve, then go to Step 12. (See **PURGE SOLENOID VALVE REMOVAL/INSTALLATION [SKYACTIV-G 2.0, SKYACTIV-G 2.5]**.)
		No	Go to the next step.
10	**PURPOSE: DETERMINE INTEGRITY OF CV SOLENOID VALVE** • Inspect the CV solenoid valve. (See **CANISTER VENT (CV) SOLENOID VALVE INSPECTION [SKYACTIV-G 2.0, SKYACTIV-G 2.5]**.) • Is there any malfunction?	Yes	Replace the CV solenoid valve, then go to Step 12. (See **CANISTER VENT (CV) SOLENOID VALVE REMOVAL/INSTALLATION [SKYACTIV-G 2.0, SKYACTIV-G 2.5]**.)
		No	Go to the next step.

11	**PURPOSE: DETERMINE INTEGRITY OF FUEL TANK PRESSURE SENSOR** • Inspect the fuel tank pressure sensor. (See **FUEL TANK PRESSURE SENSOR INSPECTION [SKYACTIV-G 2.0, SKYACTIV-G 2.5]**.) • Is there any malfunction?	Yes	Replace the charcoal canister, then go to the next step. (See **CHARCOAL CANISTER REMOVAL/INSTALLATION [SKYACTIV-G 2.0, SKYACTIV-G 2.5]**.)
		No	Go to the next step.
12	**PURPOSE: VERIFICATION OF VEHICLE REPAIR COMPLETION** • Reconnect all the removed parts. • Clear the DTC from the PCM memory using the M-MDS. (See **CLEARING DTC [SKYACTIV-G 2.0, SKYACTIV-G 2.5]**.) • Implement the repeatability verification procedure. (See **Repeatability Verification Procedure**.) • Perform the DTC Reading Procedure. (See **ON-BOARD DIAGNOSTIC TEST [SKYACTIV-G 2.0, SKYACTIV-G 2.5]**.) • Is the same DTC present?	Yes	Repeat the inspection from Step 1 of the troubleshooting diagnostic procedure. • If the malfunction recurs, replace the PCM. (See **PCM REMOVAL/INSTALLATION [SKYACTIV-G 2.0, SKYACTIV-G 2.5]**.) Go to the next step.
		No	Go to the next step.
13	**PURPOSE: VERIFY IF THERE IS ANY OTHER MALFUNCTION** • Is any other DTC or pending code stored?	Yes	Go to the applicable DTC inspection. (See **DTC TABLE [SKYACTIV-G 2.0, SKYACTIV-G 2.5]**.)
		No	DTC troubleshooting completed.

2014 - Mazda3 - Engine

DTC P0443:00 [SKYACTIV-G 2.0, SKYACTIV-G 2.5]

DTC P0443:00	Purge solenoid valve circuit problem
DETECTION CONDITION	• The purge control voltage at the PCM terminal 1AI is low or high relative to the PCM control condition. **Diagnostic support note** • This is a continuous monitor (CCM). • The check engine light illuminates if the PCM detects the above malfunction condition in two consecutive drive cycles or in one drive cycle while the DTC for the same malfunction has been stored in the PCM. • PENDING CODE is available if the PCM detects the above malfunction condition during first drive cycle. • FREEZE FRAME DATA (Mode 2)/Snapshot data is available. • DTC is stored in the PCM memory.
FAIL-SAFE FUNCTION	Not applicable

POSSIBLE CAUSE	• Purge solenoid valve connector or terminals malfunction
	• Short to ground or open circuit in purge solenoid valve power supply circuit
	  ▪ Short to ground in wiring harness between ENGINE2 15 A fuse and purge solenoid valve terminal B
	  ▪ ENGINE2 15 A fuse malfunction
	  ▪ Open circuit in wiring harness between main relay terminal D and purge solenoid valve terminal B
	• PCM connector or terminals malfunction
	• Short to ground in wiring harness between purge solenoid valve terminal A and PCM terminal 1AI
	• Short to power supply in wiring harness between purge solenoid valve terminal A and PCM terminal 1AI
	• Open circuit in wiring harness between purge solenoid valve terminal A and PCM terminal 1AI
	• Purge solenoid valve malfunction
	• PCM malfunction

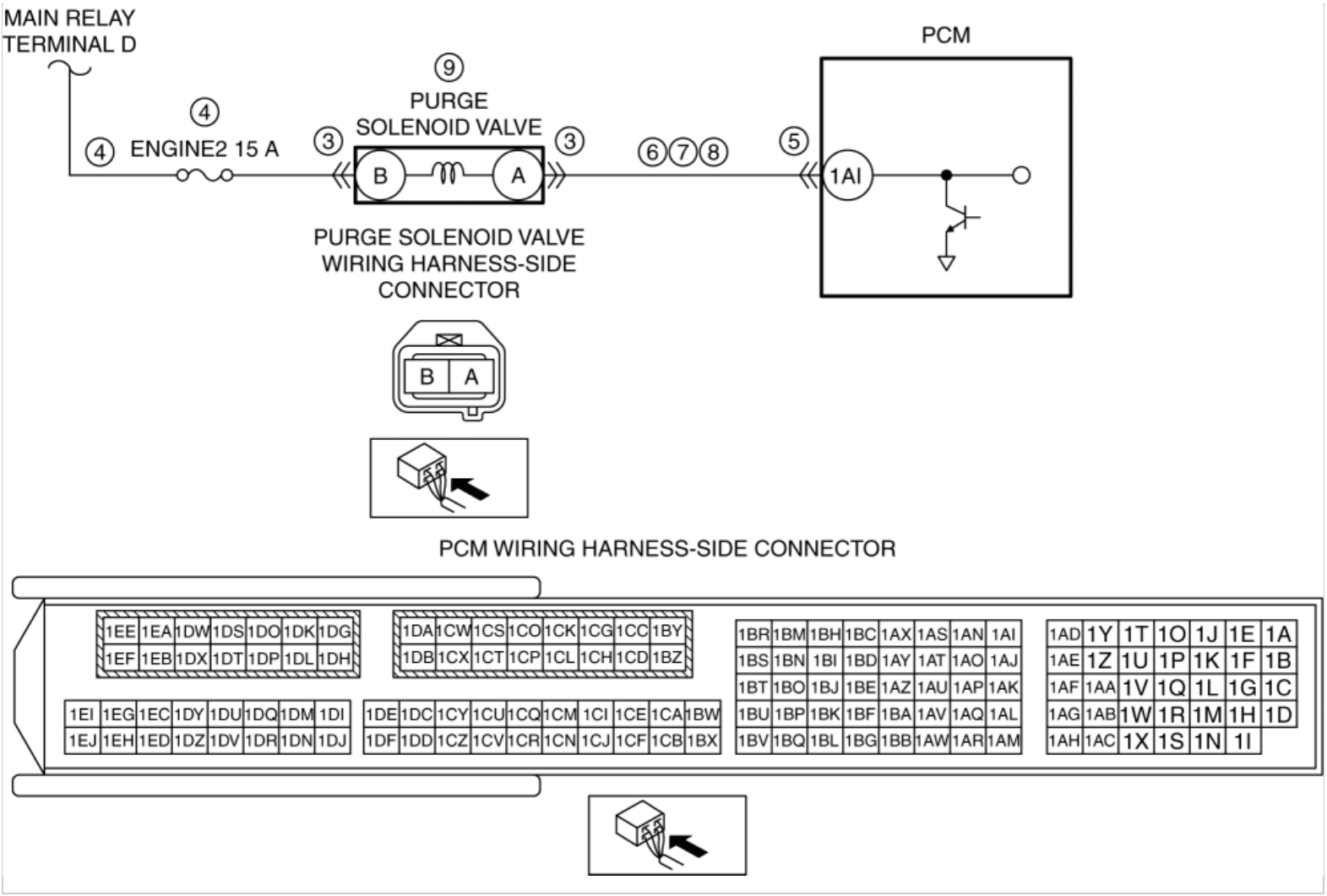

Diagnostic Procedure

STEP	INSPECTION		ACTION
1	**VERIFY FREEZE FRAME DATA (MODE 2)/SNAPSHOT DATA HAS BEEN RECORDED** • Has the FREEZE FRAME DATA (Mode 2)/snapshot data been recorded?	Yes	Go to the next step.
		No	Record the FREEZE FRAME DATA (Mode 2)/snapshot data on the repair order, then go to the next step.
2	**VERIFY RELATED REPAIR INFORMATION AVAILABILITY** • Verify related Service Bulletins and/or on-line repair information availability. • Is any related repair information available?	Yes	Perform repair or diagnosis according to the available repair information. • If the vehicle is not repaired, go to the next step.
		No	Go to the next step.
3	**INSPECT PURGE SOLENOID VALVE CONNECTOR CONDITION** • Switch the ignition off. • Disconnect the purge solenoid valve connector. • Inspect for poor connection (such as damaged/pulled-out pins, corrosion).	Yes	Repair or replace the connector and/or terminals, then go to Step 10.
		No	Go to the next step.

	Is there any malfunction?		
4	**INSPECT PURGE SOLENOID VALVE POWER SUPPLY CIRCUIT FOR SHORT TO GROUND OR OPEN CIRCUIT** • Verify that the purge solenoid valve connector is disconnected. • Switch the ignition ON (engine off). **NOTE:** • Another DTC may be stored by the PCM detecting an open circuit. • Measure the voltage at the purge solenoid valve terminal B (wiring harness-side). • Is the voltage **B+**?	Yes	Go to the next step.
		No	Inspect the ENGINE2 15 A fuse. • If the fuse is blown: ▪ Refer to the wiring diagram and verify whether or not there is a common connector between ENGINE2 15 A fuse and purge solenoid valve terminal B. **If there is a common connector:** • Determine the malfunctioning part by inspecting the common connector and the terminal for corrosion, damage, or pin disconnection, and the common wiring harness for a short to ground. • Repair or replace the malfunctioning part. **If there is no common connector:** • Repair or replace the wiring harness which has a short to ground. • Replace the fuse. • If the fuse is damaged: ▪ Replace the fuse. • If the fuse is normal: ▪ Refer to the wiring diagram and verify whether or not there is a common connector between main relay terminal D and purge solenoid valve terminal B. **If there is a common connector:** • Determine the malfunctioning part by inspecting the common connector and the terminal for corrosion, damage, or pin disconnection, and the common wiring harness for an open circuit. • Repair or replace the malfunctioning part. **If there is no common connector:** • Repair or replace the wiring harness which has an open circuit. Go to Step 10.
5	**INSPECT PCM CONNECTOR CONDITION** • Switch the ignition off.	Yes	Repair or replace the connector and/or terminals, then go to Step 10.

	• Disconnect the PCM connector. • Inspect for poor connection (such as damaged/pulled-out pins, corrosion). • Is there any malfunction?	No	Go to the next step.
6	**INSPECT PURGE SOLENOID VALVE CONTROL CIRCUIT FOR SHORT TO GROUND** • Verify that the purge solenoid valve and PCM connectors are disconnected. • Inspect for continuity between purge solenoid valve terminal A (wiring harness-side) and body ground. • Is there continuity?	Yes	Refer to the wiring diagram and verify whether or not there is a common connector between purge solenoid valve terminal A and PCM terminal 1AI. **If there is a common connector:** • Determine the malfunctioning part by inspecting the common connector and the terminal for corrosion, damage, or pin disconnection, and the common wiring harness for a short to ground. • Repair or replace the malfunctioning part. **If there is no common connector:** • Repair or replace the wiring harness which has a short to ground. Go to Step 10.
		No	Go to the next step.
7	**INSPECT PURGE SOLENOID VALVE CONTROL CIRCUIT FOR SHORT TO POWER SUPPLY** • Verify that the purge solenoid valve and PCM connectors are disconnected. • Switch the ignition ON (engine off). **NOTE:** • Another DTC may be stored by the PCM detecting an open circuit. • Measure the voltage at the purge solenoid valve terminal A (wiring harness-side). • Is the voltage **0 V**?	Yes	Go to the next step.
		No	Refer to the wiring diagram and verify whether or not there is a common connector between purge solenoid valve terminal A and PCM terminal 1AI. **If there is a common connector:** • Determine the malfunctioning part by inspecting the common connector and the terminal for corrosion, damage, or pin disconnection, and the common wiring harness for a short to power supply. • Repair or replace the malfunctioning part. **If there is no common connector:** • Repair or replace the wiring harness which has a short to power supply. Go to Step 10.
8	**INSPECT PURGE SOLENOID VALVE CONTROL CIRCUIT FOR OPEN CIRCUIT** • Verify that the purge solenoid valve and PCM connectors are disconnected. • Switch the ignition off. • Inspect for continuity between purge solenoid valve terminal A (wiring harness-side) and PCM terminal 1AI (wiring harness-side). • Is there continuity?	Yes	Go to the next step.
		No	Refer to the wiring diagram and verify whether or not there is a common connector between purge solenoid valve terminal A and PCM terminal 1AI. **If there is a common connector:** • Determine the malfunctioning part by inspecting the common connector and the terminal for corrosion, damage, or pin disconnection, and the common wiring harness for an open circuit. • Repair or replace the malfunctioning part. **If there is no common connector:** • Repair or replace the wiring harness which has an open circuit. Go to Step 10.
	INSPECT PURGE SOLENOID VALVE		

9	• Inspect the purge solenoid valve. (See **PURGE SOLENOID VALVE INSPECTION [SKYACTIV-G 2.0, SKYACTIV-G 2.5]**.) • Is there any malfunction?	Yes	Replace the purge solenoid valve, then go to the next step. (See **PURGE SOLENOID VALVE REMOVAL/INSTALLATION [SKYACTIV-G 2.0, SKYACTIV-G 2.5]**.)
		No	Go to the next step.
10	**VERIFY DTC TROUBLESHOOTING COMPLETED** • Always reconnect all disconnected connectors. • Clear the DTC from the PCM memory using the M-MDS. (See **AFTER REPAIR PROCEDURE [SKYACTIV-G 2.0, SKYACTIV-G 2.5]**.) • Perform the KOER self test. (See **KOEO/KOER SELF TEST [SKYACTIV-G 2.0, SKYACTIV-G 2.5]**.) • Is the PENDING CODE for this DTC present?	Yes	Repeat the inspection from Step 1. • If the malfunction recurs, replace the PCM. (See **PCM REMOVAL/INSTALLATION [SKYACTIV-G 2.0, SKYACTIV-G 2.5]**.) Go to the next step.
		No	Go to the next step.
11	**VERIFY AFTER REPAIR PROCEDURE** • Perform the “AFTER REPAIR PROCEDURE”. (See **AFTER REPAIR PROCEDURE [SKYACTIV-G 2.0, SKYACTIV-G 2.5]**.) • Are any DTCs present?	Yes	Go to the applicable DTC inspection. (See **DTC TABLE [SKYACTIV-G 2.0, SKYACTIV-G 2.5]**.)
		No	DTC troubleshooting completed.

2014 - Mazda3 - Engine

DTC P0446:00 [SKYACTIV-G 2.0, SKYACTIV-G 2.5]

DTC P0446:00	CV solenoid valve control circuit problem
DETECTION CONDITION	• The PCM monitors the CV solenoid valve circuit for an electrical failure. The test fails when the signal moves outside the minimum or maximum allowable calibrated parameters for a specified canister vent duty cycle by the PCM command. **Diagnostic support note** • This is a continuous monitor (CCM). • The check engine light illuminates if the PCM detects the above malfunction condition during the first drive cycle. • FREEZE FRAME DATA (Mode 2)/Snapshot data is available. • DTC is stored in the PCM memory.
FAIL-SAFE FUNCTION	Not applicable

POSSIBLE CAUSE	• CV solenoid valve connector or terminals malfunction
	• Short to ground or open circuit in CV solenoid valve power supply circuit
	  ▪ Short to ground in wiring harness between ENGINE1 15 A fuse and CV solenoid valve terminal A
	  ▪ ENGINE1 15 A fuse malfunction
	  ▪ Open circuit in wiring harness between main relay terminal D and CV solenoid valve terminal A
	• PCM connector or terminals malfunction
	• Short to ground in wiring harness between CV solenoid valve terminal B and PCM terminal 2BF
	• Short to power supply in wiring harness between CV solenoid valve terminal B and PCM terminal 2BF
	• Open circuit in wiring harness between CV solenoid valve terminal B and PCM terminal 2BF
	• CV solenoid valve malfunction
	• PCM malfunction

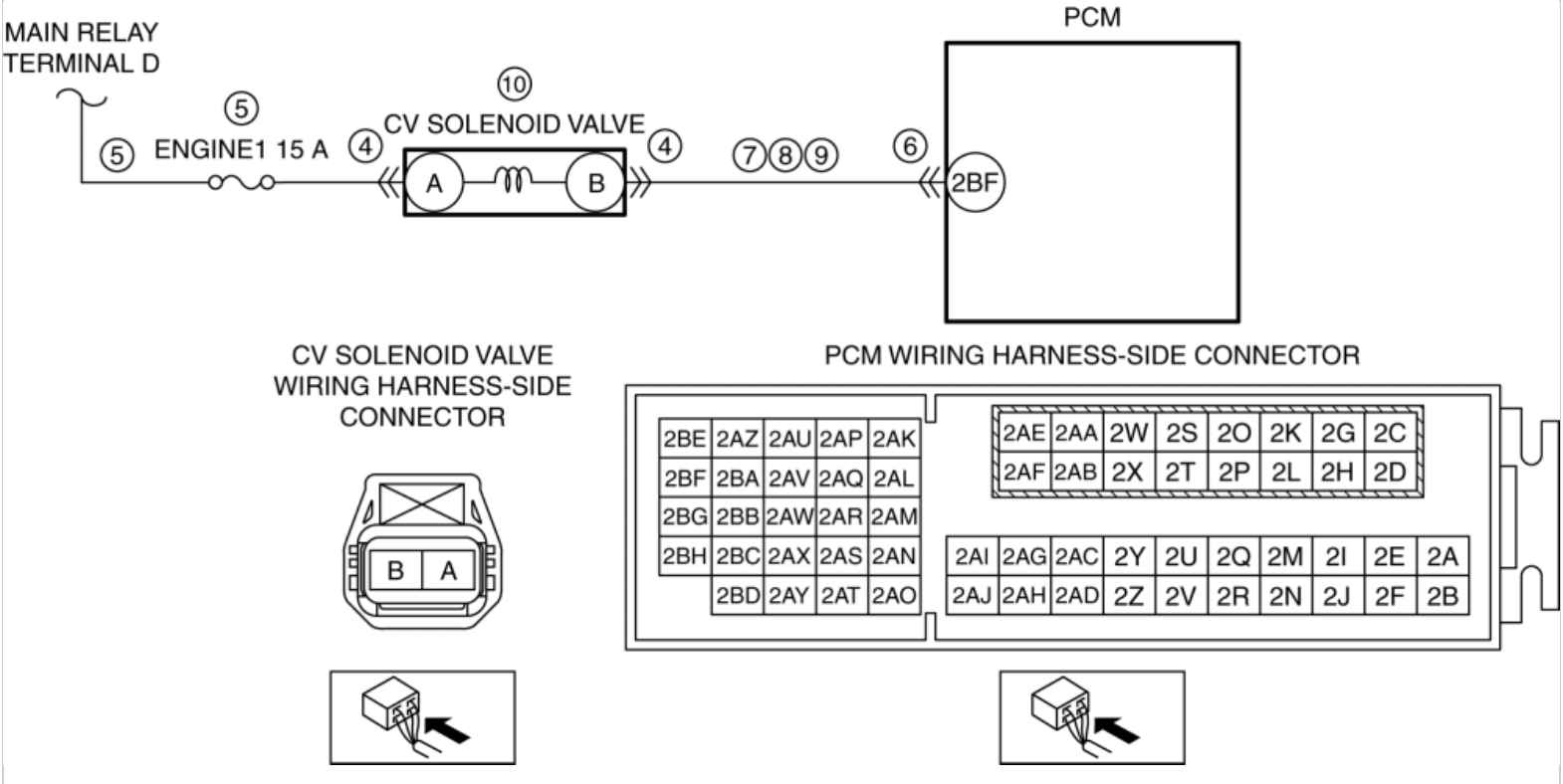

Diagnostic Procedure

STEP	INSPECTION		ACTION
1	**VERIFY FREEZE FRAME DATA (MODE 2)/SNAPSHOT DATA HAS BEEN RECORDED** • Has the FREEZE FRAME DATA (Mode 2)/snapshot data been recorded?	Yes	Go to the next step.
		No	Record the FREEZE FRAME DATA (Mode 2)/snapshot data on the repair order, then go to the next step.
2	**VERIFY RELATED REPAIR INFORMATION AVAILABILITY** • Verify related Service Bulletins and/or on-line repair information availability. • Is any related repair information available?	Yes	Perform repair or diagnosis according to the available repair information. • If the vehicle is not repaired, go to the next step.
		No	Go to the next step.
3	**VERIFY RELATED PENDING CODE AND/OR DTC** • Switch the ignition off, then ON (engine off). • Perform the Pending Trouble Code Access Procedure and DTC Reading Procedure. (See **ON-BOARD DIAGNOSTIC TEST [SKYACTIV-G 2.0, SKYACTIV-G 2.5]**.) • Are any other PENDING CODEs and/or DTCs present?	Yes	Go to the applicable PENDING CODE or DTC inspection. (See **DTC TABLE [SKYACTIV-G 2.0, SKYACTIV-G 2.5]**.)
		No	Go to the next step.
4	**INSPECT CV SOLENOID VALVE CONNECTOR CONDITION** • Switch the ignition off. • Disconnect the CV solenoid	Yes	Repair or replace the connector and/or terminals, then go to Step 11.
		No	Go to the next step.

	valve connector. • Inspect for poor connection (such as damaged/pulled-out pins, corrosion). • Is there any malfunction?		
5	**INSPECT CV SOLENOID VALVE POWER SUPPLY CIRCUIT FOR SHORT TO GROUND OR OPEN CIRCUIT** • Verify that the CV solenoid valve connector is disconnected. • Switch the ignition ON (engine off). **NOTE:** • Another DTC may be stored by the PCM detecting an open circuit. • Measure the voltage at the CV solenoid valve terminal A (wiring harness-side). • Is the voltage **B+**?	Yes	Go to the next step.
		No	Inspect the ENGINE1 15 A fuse. • If the fuse is blown: ▪ Refer to the wiring diagram and verify whether or not there is a common connector between ENGINE1 15 A fuse and CV solenoid valve terminal A. **If there is a common connector:** • Determine the malfunctioning part by inspecting the common connector and the terminal for corrosion, damage, or pin disconnection, and the common wiring harness for a short to ground. • Repair or replace the malfunctioning part. **If there is no common connector:** • Repair or replace the wiring harness which has a short to ground. • Replace the fuse. • If the fuse is damaged: ▪ Replace the fuse. • If the fuse is normal: ▪ Refer to the wiring diagram and verify whether or not there is a common connector between main relay terminal D and CV solenoid valve terminal A. **If there is a common connector:** • Determine the malfunctioning part by inspecting the common connector and the terminal for corrosion, damage, or pin disconnection, and the common wiring harness for an open circuit. • Repair or replace the malfunctioning part. **If there is no common connector:** • Repair or replace the wiring harness which has an open circuit.

			Go to Step 11.
6	**INSPECT PCM CONNECTOR CONDITION** • Switch the ignition off. • Disconnect the PCM connector. • Inspect for poor connection (such as damaged/pulled-out pins, corrosion). • Is there any malfunction?	Yes	Repair or replace the connector and/or terminals, then go to Step 11.
		No	Go to the next step.
7	**INSPECT CV SOLENOID VALVE CONTROL CIRCUIT FOR SHORT TO GROUND** • Verify that the CV solenoid valve and PCM connectors are disconnected. • Inspect for continuity between CV solenoid valve terminal B (wiring harness-side) and body ground. • Is there continuity?	Yes	Refer to the wiring diagram and verify whether or not there is a common connector between CV solenoid valve terminal B and PCM terminal 2BF. **If there is a common connector:** • Determine the malfunctioning part by inspecting the common connector and the terminal for corrosion, damage, or pin disconnection, and the common wiring harness for a short to ground. • Repair or replace the malfunctioning part. **If there is no common connector:** • Repair or replace the wiring harness which has a short to ground. Go to Step 11.
		No	Go to the next step.
8	**INSPECT CV SOLENOID VALVE CONTROL CIRCUIT FOR SHORT TO POWER SUPPLY** • Verify that the CV solenoid valve and PCM connectors are disconnected. • Switch the ignition ON (engine off). **NOTE:** • Another DTC may be stored by the PCM detecting an open circuit. • Measure the voltage at the CV solenoid valve terminal B (wiring harness-side). • Is the voltage **0 V**?	Yes	Go to the next step.
		No	Refer to the wiring diagram and verify whether or not there is a common connector between CV solenoid valve terminal B and PCM terminal 2BF. **If there is a common connector:** • Determine the malfunctioning part by inspecting the common connector and the terminal for corrosion, damage, or pin disconnection, and the common wiring harness for a short to power supply. • Repair or replace the malfunctioning part. **If there is no common connector:** • Repair or replace the wiring harness which has a short to power supply. Go to Step 11.
9	**INSPECT CV SOLENOID VALVE CONTROL CIRCUIT FOR OPEN CIRCUIT** • Verify that the CV solenoid valve and PCM connectors are disconnected. • Switch the ignition off. • Inspect for continuity between CV solenoid valve terminal B (wiring harness-side) and PCM terminal 2BF (wiring harness-side). • Is there continuity?	Yes	Go to the next step.
		No	Refer to the wiring diagram and verify whether or not there is a common connector between CV solenoid valve terminal B and PCM terminal 2BF. **If there is a common connector:** • Determine the malfunctioning part by inspecting the common connector and the terminal for corrosion, damage, or pin disconnection, and the common wiring harness for an open circuit. • Repair or replace the malfunctioning part. **If there is no common connector:** • Repair or replace the wiring harness which has an open circuit.

			Go to Step 11.
10	**INSPECT CV SOLENOID VALVE** • Inspect the CV solenoid valve. (See **CANISTER VENT (CV) SOLENOID VALVE INSPECTION [SKYACTIV-G 2.0, SKYACTIV-G 2.5]**.) • Is there any malfunction?	Yes	Replace the CV solenoid valve, then go to the next step. (See **CANISTER VENT (CV) SOLENOID VALVE REMOVAL/INSTALLATION [SKYACTIV-G 2.0, SKYACTIV-G 2.5]**.)
		No	Go to the next step.
11	**VERIFY DTC TROUBLESHOOTING COMPLETED** • Always reconnect all disconnected connectors. • Clear the DTC from the PCM memory using the M-MDS. (See **AFTER REPAIR PROCEDURE [SKYACTIV-G 2.0, SKYACTIV-G 2.5]**.) • Start the engine and warm it up completely. • Perform the KOER self test. (See **KOEO/KOER SELF TEST [SKYACTIV-G 2.0, SKYACTIV-G 2.5]**.) • Is the same DTC present?	Yes	Repeat the inspection from Step 1. • If the malfunction recurs, replace the PCM. (See **PCM REMOVAL/INSTALLATION [SKYACTIV-G 2.0, SKYACTIV-G 2.5]**.) Go to the next step.
		No	Go to the next step.
12	**VERIFY AFTER REPAIR PROCEDURE** • Perform the “AFTER REPAIR PROCEDURE”. (See **AFTER REPAIR PROCEDURE [SKYACTIV-G 2.0, SKYACTIV-G 2.5]**.) • Are any DTCs present?	Yes	Go to the applicable DTC inspection. (See **DTC TABLE [SKYACTIV-G 2.0, SKYACTIV-G 2.5]**.)
		No	DTC troubleshooting completed.

2014 - Mazda3 - Engine

DTC P0451:00 [SKYACTIV-G 2.0, SKYACTIV-G 2.5]

NOTE:

- To determine the malfunctioning part, proceed with the diagnostics from "Function Inspection Using M-MDS".

Details On DTCs

DESCRIPTION	Fuel tank pressure sensor: sensor characteristic malfunction	
DETECTION CONDITION	Determination conditions	• The fuel tank pressure sensor input voltage is the threshold or more.

	Preconditions	• Battery voltage: **above 8 V**[*1]
		• Period ignition is switched off before engine starts: **120 min or more**
		• Purge solenoid valve not operating
		• The following DTCs are not detected:
		  ▪ Purge solenoid valve: P0443:00
		  ▪ Evaporative passage blockage: P1450:00
		• [*1]: Value can be verified by displaying PIDs using M-MDS

	Malfunction determination period	• During one drive cycle
	Drive cycle	• 1
	Self test type	• CMDTC self test
	Sensor used	• Fuel tank pressure sensor
FAIL-SAFE FUNCTION	• Not applicable	
VEHICLE STATUS WHEN DTCs ARE OUTPUT	• Illuminates check engine light.	
POSSIBLE CAUSE	• Fuel tank pressure sensor connector or terminals malfunction • PCM connector or terminals malfunction • Fuel tank pressure sensor malfunction • Charcoal canister malfunction • CV solenoid valve malfunction • Evaporative chamber malfunction • PCM malfunction	

System Wiring Diagram

- Not applicable

Function Explanation (DTC Detection Outline)

- The PCM detects the pressure of the fuel tank based on the fuel tank pressure sensor signal. The PCM determines a fuel tank pressure sensor signal error based on the condition in which the fuel tank pressure sensor voltage continues to be the specified value or more, and stores a DTC.

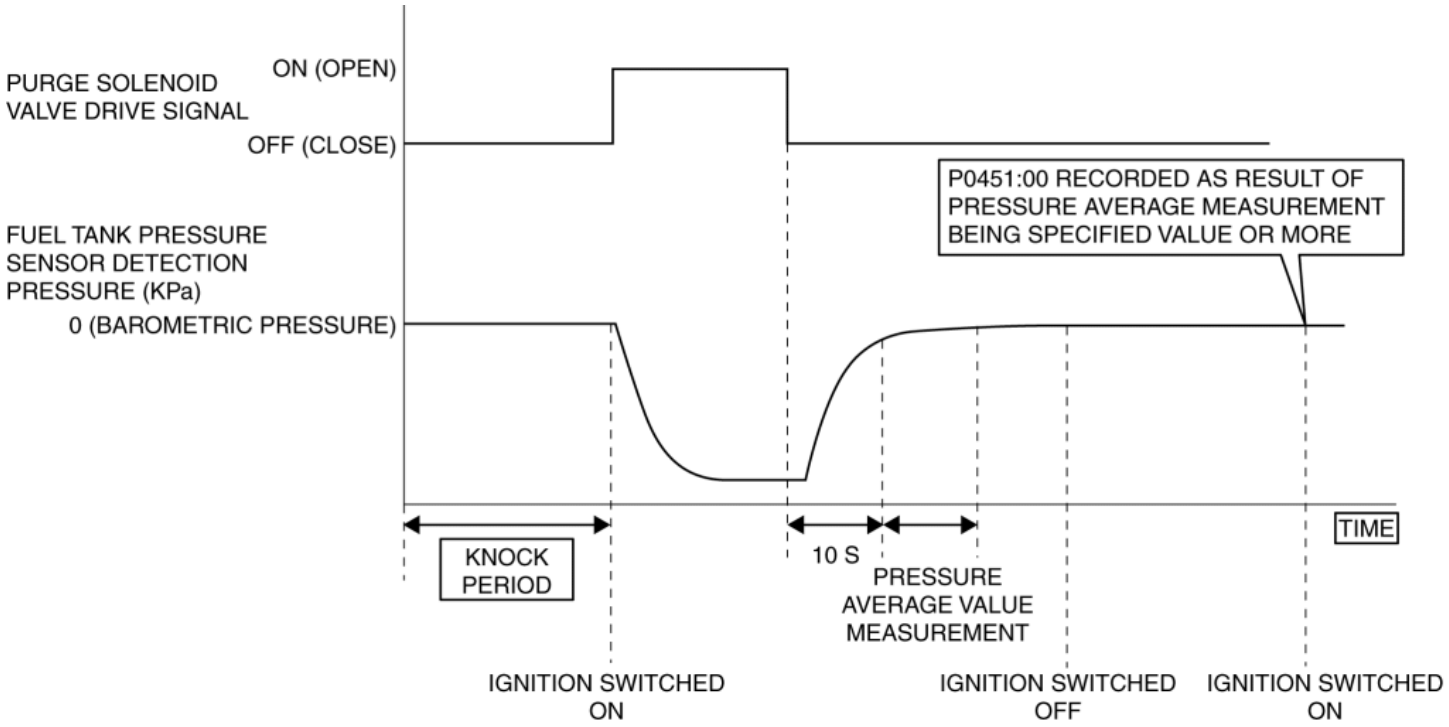

Repeatability Verification Procedure

- Switch the ignition off.
- Leave the vehicle for **2 hours or more**.
- Start the engine and leave it idling for **1 min**.

PID Item/Simulation Item Used In Diagnosis

PID/DATA monitor item table

Item	Definition	Unit	Condition/Specification
AAT	Ambient air temperature	°C, °F	• Displays ambient air temperature
FTP	Fuel tank pressure	Pa {KPa} {MPa}, mBar {Bar}, psi, in H20	• Displays fuel tank pressure
	Fuel tank pressure sensor voltage	V	• Fuel tank pressure is equal to barometric pressure: Approx. 2.6 V

Function Inspection Using M-MDS

STEP	INSPECTION	RESULTS	ACTION
1	**PURPOSE: VERIFY RELATED REPAIR INFORMATION AVAILABILITY** • Verify related Service Bulletins and/or on-line repair information availability. • Is any related repair information available?	Yes	Perform repair or diagnosis according to the available repair information. • If the vehicle is not repaired, go to the next step.

		No	Go to the next step.
2	**PURPOSE: RECORD VEHICLE STATUS AT TIME OF DTC DETECTION TO UTILIZE WITH REPEATABILITY VERIFICATION** • Has the FREEZE FRAME DATA (Mode 2)/snapshot data been recorded?	Yes	Go to the next step.
		No	Record the FREEZE FRAME DATA (Mode 2)/snapshot data on the repair order, then go to the next step. **NOTE:** • Recording can be facilitated using the screen capture function of the PC.
3	**PURPOSE: VERIFY IF FUEL TANK PRESSURE SENSOR HAS MALFUNCTION** • Perform the Pending Trouble Code Access Procedure and DTC Reading Procedure. (See **ON-BOARD DIAGNOSTIC TEST [SKYACTIV-G 2.0, SKYACTIV-G 2.5]**.) • Is the PENDING CODE/DTC P0452:00, P0453:00 or P0454:00 also present?	Yes	The possibility of a fuel tank pressure sensor malfunction is high. • Go to the applicable PENDING CODE or DTC inspection. (See **DTC P0452:00 [SKYACTIV-G 2.0, SKYACTIV-G 2.5]**.) (See **DTC P0453:00 [SKYACTIV-G 2.0, SKYACTIV-G 2.5]**.) (See **DTC P0454:00 [SKYACTIV-G 2.0, SKYACTIV-G 2.5]**.)
		No	Go to the next step.
4	**PURPOSE: INSPECTION OF CLOGGING BETWEEN FUEL TANK PRESSURE SENSOR AND FUEL TANK** • Perform the Pending Trouble Code Access Procedure and DTC Reading Procedure. (See **ON-BOARD DIAGNOSTIC TEST [SKYACTIV-G 2.0, SKYACTIV-G 2.5]**.) • Is the PENDING CODE/DTC P144A:00 also present?	Yes	The possibility of clogging between fuel tank pressure sensor and fuel tank is high. • Go to the applicable PENDING CODE or DTC inspection. (See **DTC P144A:00 [SKYACTIV-G 2.0, SKYACTIV-G 2.5]**.)
		No	Go to the next step.
5	**PURPOSE: VERIFY IF CV SOLENOID VALVE HAS MALFUNCTION** • Perform the Pending Trouble Code Access Procedure and DTC Reading Procedure. (See **ON-BOARD DIAGNOSTIC TEST [SKYACTIV-G 2.0, SKYACTIV-G 2.5]**.) • Is the PENDING CODE/DTC P0446:00 also present?	Yes	The possibility of a CV solenoid valve malfunction is high. • Go to the applicable PENDING CODE or DTC inspection. (See **DTC P0446:00 [SKYACTIV-G 2.0, SKYACTIV-G 2.5]**.)
		No	Go to the next step.
6	**PURPOSE: VERIFY IF FUEL TANK PRESSURE IS STUCK TO EITHER LOW OR HIGH PRESSURE SIDE** • Start the engine and idle it. • Access the FTP PID using the M-MDS. (See **ON-BOARD DIAGNOSTIC TEST [SKYACTIV-G 2.0, SKYACTIV-G 2.5]**.) • Is the FTP PID value **0.424 kPa {0.00432 kgf/cm^2, 0.0615 psi} or more**?	Yes	The possibility that the fuel tank pressure is stuck to the high pressure side is high. • Go to the next step.
		No	The possibility that the fuel tank pressure is stuck to the low pressure side is high. • Go to the troubleshooting procedure to perform the procedure from Step 3.
7	**PURPOSE: VERIFY IF MALFUNCTION CAUSE IS FREEZING OF FUEL TANK PRESSURE SENSOR BY VERIFYING AMBIENT TEMPERATURE** • Start the engine and idle it. • Access the AAT PID using the M-MDS. (See **ON-BOARD DIAGNOSTIC TEST [SKYACTIV-G 2.0, SKYACTIV-G 2.5]**.) • Is the AAT PID value **0 °C {32 °F} or less**?	Yes	The possibility of a malfunction caused by freezing of the fuel tank pressure sensor is high. • Go to the troubleshooting procedure to perform the procedure from Step 1.
		No	Go to the troubleshooting procedure to perform the procedure from Step 2.

Troubleshooting Diagnostic Procedure

Intention of troubleshooting procedure

- Step 1
  - Visually verify that there are no traces of freezing on the fuel tank pressure sensor.
- Step 2
  - Inspect the charcoal canister for clogging.
- Step 3
  - Perform a unit inspection of the CV solenoid valve.
- Step 4
  - Verify that there is no breakage or clogging in the evaporative hose.
- Step 5
  - Inspect the evaporative chamber for clogging.
- Step 6
  - Perform a unit inspection of the fuel tank pressure sensor.
- Step 7—8
  - Verify that the primary malfunction is resolved and there are no other malfunctions.

STEP	INSPECTION	RESULTS	ACTION
1	**PURPOSE: VISUALLY VERIFY THAT THERE ARE NO TRACES OF FREEZING ON THE FUEL TANK PRESSURE SENSOR** • Visually inspect for fuel tank pressure sensor. • Can traces of freezing be verified on the fuel tank pressure sensor?	Yes	Evaporative gas freezes when the ambient temperature is low, and it is highly possible that the fuel tank pressure sensor measurement is affected because the vehicle was not refueled appropriately. • Replace the fuel, then go to Step 7.
		No	Go to Step 6.
2	**PURPOSE: INSPECTION OF CHARCOAL CANISTER FOR CLOGGING** • Inspect for clogging in the charcoal canister. (See **CHARCOAL CANISTER INSPECTION [SKYACTIV-G 2.0, SKYACTIV-G 2.5]**.) • Is there any malfunction?	Yes	Replace the charcoal canister, then go to Step 7. (See **CHARCOAL CANISTER REMOVAL/INSTALLATION [SKYACTIV-G 2.0, SKYACTIV-G 2.5]**.)
		No	Go to the next step.
3	**PURPOSE: DETERMINE INTEGRITY OF CV SOLENOID VALVE** • Inspect the CV solenoid valve. (See **CANISTER VENT (CV) SOLENOID VALVE INSPECTION [SKYACTIV-G 2.0, SKYACTIV-G 2.5]**.) • Is there any malfunction?	Yes	Replace the CV solenoid valve, then go to Step 7. (See **CANISTER VENT (CV) SOLENOID VALVE REMOVAL/INSTALLATION [SKYACTIV-G 2.0, SKYACTIV-G 2.5]**.)
		No	Go to the next step.
4	**PURPOSE: INSPECTION OF EVAPORATIVE HOSE FOR BREAKAGE OR CLOGGING** • Inspect for breakage or clogging in the evaporative hose (hose between evaporative chamber and atmosphere). • Is there any malfunction?	Yes	Repair or replace the malfunctioning part according to the inspection results, then go to Step 7.
		No	Go to the next step.
5	**PURPOSE: INSPECTION OF EVAPORATIVE CHAMBER FOR CLOGGING** • Inspect for clogging in the evaporative chamber. (See **EVAPORATIVE CHAMBER INSPECTION [SKYACTIV-G 2.0, SKYACTIV-G 2.5]**.) • Is there any malfunction?	Yes	Replace the evaporative chamber, then go to Step 7. (See **EVAPORATIVE CHAMBER REMOVAL/INSTALLATION [SKYACTIV-G 2.0, SKYACTIV-G 2.5]**.)
		No	Go to the next step.

6	**PURPOSE: DETERMINE INTEGRITY OF FUEL TANK PRESSURE SENSOR** • Inspect the fuel tank pressure sensor. (See **FUEL TANK PRESSURE SENSOR INSPECTION [SKYACTIV-G 2.0, SKYACTIV-G 2.5]**.) • Is there any malfunction?	Yes	Replace the charcoal canister, then go to the next step. (See **CHARCOAL CANISTER REMOVAL/INSTALLATION [SKYACTIV-G 2.0, SKYACTIV-G 2.5]**.)
		No	Go to the next step.
7	**PURPOSE: VERIFICATION OF VEHICLE REPAIR COMPLETION** • Reconnect all the removed parts. • Clear the DTC from the PCM memory using the M-MDS. (See **CLEARING DTC [SKYACTIV-G 2.0, SKYACTIV-G 2.5]**.) • Implement the repeatability verification procedure. (See **Repeatability Verification Procedure**.) • Perform the DTC Reading Procedure. (See **ON-BOARD DIAGNOSTIC TEST [SKYACTIV-G 2.0, SKYACTIV-G 2.5]**.) • Is the same DTC present?	Yes	Repeat the inspection from Step 1 of the troubleshooting diagnostic procedure. • If the malfunction recurs, replace the PCM. (See **PCM REMOVAL/INSTALLATION [SKYACTIV-G 2.0, SKYACTIV-G 2.5]**.) Go to the next step.
		No	Go to the next step.
8	**PURPOSE: VERIFY IF THERE IS ANY OTHER MALFUNCTION** • Is any other DTC or pending code stored?	Yes	Go to the applicable DTC inspection. (See **DTC TABLE [SKYACTIV-G 2.0, SKYACTIV-G 2.5]**.)
		No	DTC troubleshooting completed.

2014 - Mazda3 - Engine

DTC P0452:00 [SKYACTIV-G 2.0, SKYACTIV-G 2.5]

DTC P0452:00	Fuel tank pressure sensor low input
DETECTION CONDITION	• The PCM monitors the EVAP control system fuel tank pressure sensor input signal to the PCM. The test fails when the signal average drops below a minimum allowable calibrated parameter. **Diagnostic support note** • This is a continuous monitor (CCM). • The check engine light illuminates if the PCM detects the above malfunction condition during the first drive cycle. • FREEZE FRAME DATA (Mode 2)/Snapshot data is available. • DTC is stored in the PCM memory.
FAIL-SAFE FUNCTION	Not applicable
POSSIBLE CAUSE	• Fuel tank pressure sensor connector or terminals malfunction • PCM connector or terminals malfunction • Short to ground in wiring harness between the following terminals: ▪ Fuel tank pressure sensor terminal A—PCM terminal 2BB ▪ Fuel tank pressure sensor terminal C—PCM terminal 2Y • Fuel tank pressure sensor signal circuit and ground circuit are shorted to each other • Open circuit in wiring harness between the following terminals: ▪ Fuel tank pressure sensor terminal A—PCM terminal 2BB ▪ Fuel tank pressure sensor terminal C—PCM terminal 2Y • Fuel tank pressure sensor malfunction • PCM malfunction

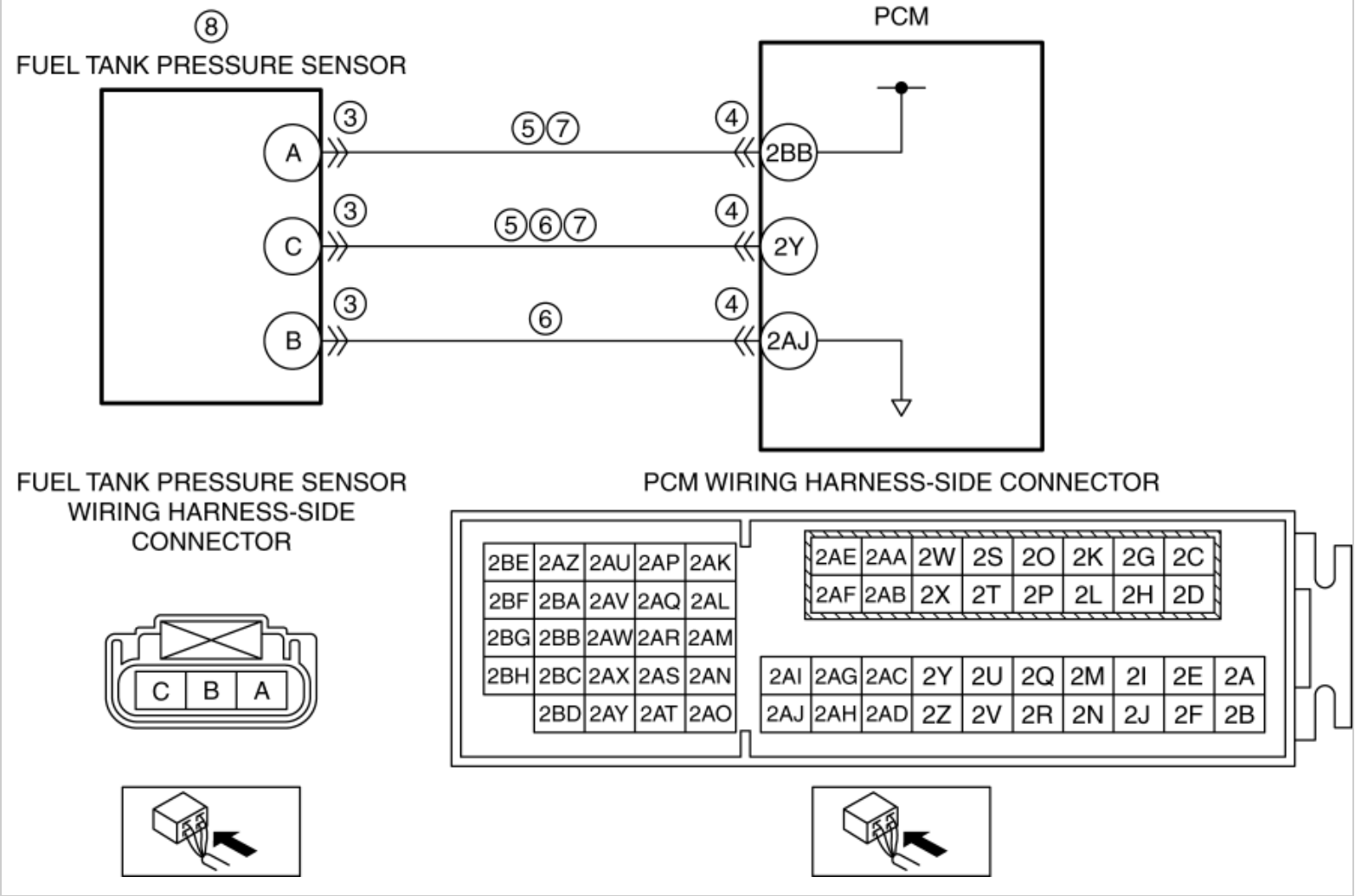

Diagnostic Procedure

STEP	INSPECTION		ACTION
1	**VERIFY FREEZE FRAME DATA (MODE 2)/SNAPSHOT DATA HAS BEEN RECORDED** • Has the FREEZE FRAME DATA (Mode 2)/snapshot data been recorded?	Yes	Go to the next step.
		No	Record the FREEZE FRAME DATA (Mode 2)/snapshot data on the repair order, then go to the next step.
2	**VERIFY RELATED REPAIR INFORMATION AVAILABILITY** • Verify related Service Bulletins and/or on-line repair information availability. • Is any related repair information available?	Yes	Perform repair or diagnosis according to the available repair information. • If the vehicle is not repaired, go to the next step.
		No	Go to the next step.
3	**INSPECT FUEL TANK PRESSURE SENSOR CONNECTOR CONDITION** • Switch the ignition off. • Disconnect the fuel tank pressure sensor	Yes	Repair or replace the connector and/or terminals, then go to Step 9.
		No	Go to the next step.

	connector. • Inspect for poor connection (such as damaged/pulled-out pins, corrosion). • Is there any malfunction?		
4	**INSPECT PCM CONNECTOR CONDITION** • Disconnect the PCM connector. • Inspect for poor connection (such as damaged/pulled-out pins, corrosion). • Is there any malfunction?	Yes	Repair or replace the connector and/or terminals, then go to Step 9.
		No	Go to the next step.
5	**INSPECT FUEL TANK PRESSURE SENSOR SIGNAL CIRCUIT FOR SHORT TO GROUND** • Verify that the fuel tank pressure sensor and PCM connectors are disconnected. • Inspect for continuity between the following terminals (wiring harness-side) and body ground: ▪ Fuel tank pressure sensor terminal A ▪ Fuel tank pressure sensor terminal C • Is there continuity?	Yes	Refer to the wiring diagram and verify whether or not there is a common connector between the following terminals: • Fuel tank pressure sensor terminal A—PCM terminal 2BB • Fuel tank pressure sensor terminal C—PCM terminal 2Y **If there is a common connector:** • Determine the malfunctioning part by inspecting the common connector and the terminal for corrosion, damage, or pin disconnection, and the common wiring harness for a short to ground. • Repair or replace the malfunctioning part. **If there is no common connector:** • Repair or replace the wiring harness which has a short to ground. Go to Step 9.
		No	Go to the next step.
6	**INSPECT FUEL TANK PRESSURE SENSOR SIGNAL CIRCUIT AND GROUND CIRCUIT FOR SHORT TO EACH OTHER** • Verify that the fuel tank pressure sensor and PCM connectors are disconnected. • Inspect for continuity between fuel tank pressure sensor terminals C and B (wiring harness-side). • Is there continuity?	Yes	Refer to the wiring diagram and verify whether or not there is a common connector between the following terminals: • Fuel tank pressure sensor terminal C—PCM terminal 2Y • Fuel tank pressure sensor terminal B—PCM terminal 2AJ **If there is a common connector:** • Determine the malfunctioning part by inspecting the common connector and the terminal for corrosion, damage, or pin disconnection, and the common wiring harness for a short to each other. • Repair or replace the malfunctioning part. **If there is no common connector:** • Repair or replace the wiring harness which has a short

			to each other. Go to Step 9.
		No	Go to the next step.
7	**INSPECT FUEL TANK PRESSURE SENSOR CIRCUIT FOR OPEN CIRCUIT** • Verify that the fuel tank pressure sensor and PCM connectors are disconnected. • Inspect for continuity between the following terminals (wiring harness-side): ▪ Fuel tank pressure sensor terminal A—PCM terminal 2BB ▪ Fuel tank pressure sensor terminal C—PCM terminal 2Y • Is there continuity?	Yes	Go to the next step.
		No	Refer to the wiring diagram and verify whether or not there is a common connector between the following terminals: • Fuel tank pressure sensor terminal A—PCM terminal 2BB • Fuel tank pressure sensor terminal C—PCM terminal 2Y **If there is a common connector:** • Determine the malfunctioning part by inspecting the common connector and the terminal for corrosion, damage, or pin disconnection, and the common wiring harness for an open circuit. • Repair or replace the malfunctioning part. **If there is no common connector:** • Repair or replace the wiring harness which has an open circuit. Go to Step 9.
8	**INSPECT FUEL TANK PRESSURE SENSOR** • Inspect the fuel tank pressure sensor. (See **FUEL TANK PRESSURE SENSOR INSPECTION [SKYACTIV-G 2.0, SKYACTIV-G 2.5]**.) • Is there any malfunction?	Yes	Replace the charcoal canister, then go to the next step. (See **CHARCOAL CANISTER REMOVAL/INSTALLATION [SKYACTIV-G 2.0, SKYACTIV-G 2.5]**.)
		No	Go to the next step.
9	**VERIFY DTC TROUBLESHOOTING COMPLETED** • Always reconnect all disconnected connectors. • Clear the DTC from the PCM memory using the M-MDS. (See **AFTER REPAIR PROCEDURE [SKYACTIV-G 2.0, SKYACTIV-G 2.5]**.) • Perform the KOEO or KOER self test. (See **KOEO/KOER SELF TEST [SKYACTIV-G 2.0,**	Yes	Repeat the inspection from Step 1. • If the malfunction recurs, replace the PCM. (See **PCM REMOVAL/INSTALLATION [SKYACTIV-G 2.0, SKYACTIV-G 2.5]**.) Go to the next step.
		No	Go to the next step.

	SKYACTIV-G 2.5].) • Is the same DTC present?		
10	**VERIFY AFTER REPAIR PROCEDURE** • Perform the “AFTER REPAIR PROCEDURE”. (See **AFTER REPAIR PROCEDURE [SKYACTIV-G 2.0, SKYACTIV-G 2.5]**.) • Are any DTCs present?	Yes	Go to the applicable DTC inspection. (See **DTC TABLE [SKYACTIV-G 2.0, SKYACTIV-G 2.5]**.)
		No	DTC troubleshooting completed.

2014 - Mazda3 - Engine

DTC P0453:00 [SKYACTIV-G 2.0, SKYACTIV-G 2.5]

DTC P0453:00	Fuel tank pressure sensor high input
DETECTION CONDITION	• The PCM monitors the EVAP control system fuel tank pressure sensor input signal to the PCM. The test fails when the signal average jumps above a maximum allowable calibrated parameter. **Diagnostic support note** • This is a continuous monitor (CCM). • The check engine light illuminates if the PCM detects the above malfunction condition during the first drive cycle. • FREEZE FRAME DATA (Mode 2)/Snapshot data is available. • DTC is stored in the PCM memory.
FAIL-SAFE FUNCTION	Not applicable
POSSIBLE CAUSE	• Fuel tank pressure sensor connector or terminals malfunction • PCM connector or terminals malfunction • Fuel tank pressure sensor malfunction • Short to power supply in wiring harness between fuel tank pressure sensor terminal C and PCM terminal 2Y • Fuel tank pressure sensor power supply circuit and signal circuit are shorted to each other • Short to power supply in wiring harness between fuel tank pressure sensor terminal A and PCM terminal 2BB • Open circuit in wiring harness between fuel tank pressure sensor terminal B and PCM terminal 2AJ • PCM malfunction

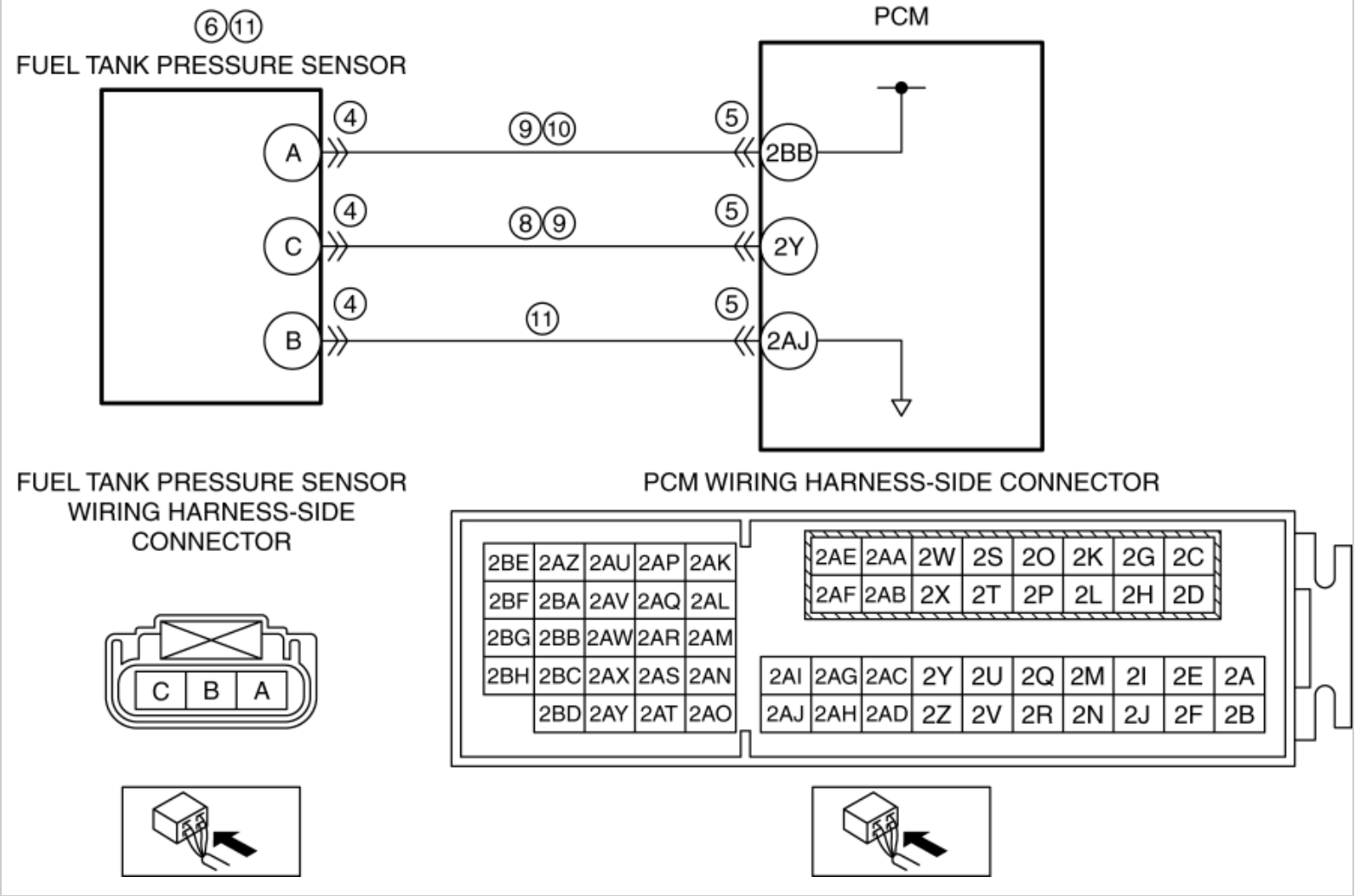

CAUTION:

- Verify the malfunction symptom according to not only the PID value but also the symptom troubleshooting.

Related PIDs

Item (definition)	Unit/Condition	Definition	Condition/Specification (Reference)
FTP	KPa {MPa}, mBar {Bar}, psi, in H20	Fuel tank pressure	• Displays fuel tank pressure
	V	Fuel tank pressure sensor voltage	• Fuel tank pressure is equal to barometric pressure: Approx. 2.6 V

Diagnostic Procedure

STEP	INSPECTION		ACTION
1	**VERIFY FREEZE FRAME DATA (MODE 2)/SNAPSHOT DATA HAS BEEN RECORDED** • Has the FREEZE FRAME DATA (Mode 2)/snapshot data been recorded?	Yes	Go to the next step.
		No	Record the FREEZE FRAME DATA (Mode 2)/snapshot data on the repair order, then go to the next step.

2	**VERIFY RELATED REPAIR INFORMATION AVAILABILITY** • Verify related Service Bulletins and/or on-line repair information availability. • Is any related repair information available?	Yes	Perform repair or diagnosis according to the available repair information. • If the vehicle is not repaired, go to the next step.
		No	Go to the next step.
3	**DETERMINE IF FUEL TANK PRESSURE SENSOR OR WIRING HARNESS MALFUNCTION** • Access the FTP PID using the M-MDS. (See **ON-BOARD DIAGNOSTIC TEST [SKYACTIV-G 2.0, SKYACTIV-G 2.5]**.) • Verify the FTP PID value. • Is the FTP PID value **5 V** or **B+**?	Yes	Go to Step 7.
		No	Go to the next step.
4	**INSPECT FUEL TANK PRESSURE SENSOR CONNECTOR CONDITION** • Switch the ignition off. • Disconnect the fuel tank pressure sensor connector. • Inspect for poor connection (such as damaged/pulled-out pins, corrosion). • Is there any malfunction?	Yes	Repair or replace the connector and/or terminals, then go to Step 12.
		No	Go to the next step.
5	**INSPECT PCM CONNECTOR CONDITION** • Disconnect the PCM connector. • Inspect for poor connection (such as damaged/pulled-out pins, corrosion). • Is there any malfunction?	Yes	Repair or replace the connector and/or terminals, then go to Step 12.
		No	Go to the next step.
6	**INSPECT FUEL TANK PRESSURE SENSOR** • Inspect the fuel tank pressure sensor. (See **FUEL TANK PRESSURE SENSOR INSPECTION [SKYACTIV-G 2.0, SKYACTIV-G 2.5]**.) • Is there any malfunction?	Yes	Replace the charcoal canister, then go to Step 12. (See **CHARCOAL CANISTER REMOVAL/INSTALLATION [SKYACTIV-G 2.0, SKYACTIV-G 2.5]**.)
		No	Go to Step 12.
7	**DETERMINE IF FUEL TANK PRESSURE SENSOR SIGNAL CIRCUIT OR FUEL TANK PRESSURE SENSOR GROUND CIRCUIT MALFUNCTION** • Switch the ignition off. • Disconnect the fuel tank pressure sensor connector.	Yes	Go to the next step.
		No	Go to Step 10.

	• Access the FTP PID using the M-MDS. (See **ON-BOARD DIAGNOSTIC TEST [SKYACTIV-G 2.0, SKYACTIV-G 2.5]**.) • Verify the FTP PID value. • Is the FTP PID value **5 V** or **B+**?		
8	**INSPECT FUEL TANK PRESSURE SENSOR SIGNAL CIRCUIT FOR TO POWER SUPPY** • Verify that the fuel tank pressure sensor connector is disconnected. • Switch the ignition off. • Disconnect the PCM connector. • Switch the ignition ON (engine off). **NOTE:** • Another DTC may be stored by the PCM detecting an open circuit. • Measure the voltage at the fuel tank pressure sensor terminal C (wiring harness-side). • Is the voltage **0 V**?	Yes	Go to the next step.
		No	Refer to the wiring diagram and verify whether or not there is a common connector between fuel tank pressure sensor terminal C and PCM terminal 2Y. **If there is a common connector:** • Determine the malfunctioning part by inspecting the common connector and the terminal for corrosion, damage, or pin disconnection, and the common wiring harness for a short to power supply. • Repair or replace the malfunctioning part. **If there is no common connector:** • Repair or replace the wiring harness which has a short to power supply. Go to Step 12.
9	**INSPECT FUEL TANK PRESSURE SENSOR POWER SUPPLY CIRCUIT AND SIGNAL CIRCUIT FOR SHORT TO EACH OTHER** • Verify that the fuel tank pressure sensor and PCM connectors are disconnected. • Inspect for continuity between fuel tank pressure sensor terminal A and C (wiring harness-side). • Is there continuity?	Yes	Refer to the wiring diagram and verify whether or not there is a common connector between the following terminals: • Fuel tank pressure sensor terminal A—PCM terminal 2BB • Fuel tank pressure sensor terminal C—PCM terminal 2Y **If there is a common connector:** • Determine the malfunctioning part by inspecting the common connector and the terminal for corrosion, damage, or pin disconnection, and the common wiring harness for a short to each other. • Repair or replace the malfunctioning part. **If there is no common connector:** • Repair or replace the wiring harness which has a short to each other. Go to Step 12.
		No	Replace the PCM, then go to the Step 12. **PCM REMOVAL/INSTALLATION [SKYACTIV-G 2.0, SKYACTIV-G**

			(See **2.5]**.)
10	**INSPECT FUEL TANK PRESSURE SENSOR POWER SUPPLY CIRCUIT FOR SHORT TO POWER SUPPLY** • Verify that the fuel tank pressure sensor connector is disconnected. • Switch the ignition ON (engine off). **NOTE:** • Another DTC may be stored by the PCM detecting an open circuit. • Measure the voltage at the fuel tank pressure sensor terminal A (wiring harness-side). • Is the voltage **5 V**?	Yes	Go to the next step.
		No	Refer to the wiring diagram and verify whether or not there is a common connector between fuel tank pressure sensor terminal A and PCM terminal 2BB. **If there is a common connector:** • Determine the malfunctioning part by inspecting the common connector and the terminal for corrosion, damage, or pin disconnection, and the common wiring harness for a short to power supply. • Repair or replace the malfunctioning part. **If there is no common connector:** • Repair or replace the wiring harness which has a short to power supply. Go to Step 12.
11	**INSPECT FUEL TANK PRESSURE SENSOR GROUND CIRCUIT FOR OPEN CIRCUIT** • Verify that the fuel tank pressure sensor connector is disconnected. • Switch the ignition off. • Disconnect the PCM connector. • Inspect for continuity between fuel tank pressure sensor terminal B (wiring harness-side) and PCM terminal 2AJ (wiring harness-side). • Is there continuity?	Yes	Replace the charcoal canister, then go to the next step. (See **CHARCOAL CANISTER REMOVAL/INSTALLATION [SKYACTIV-G 2.0, SKYACTIV-G 2.5]**.)
		No	Refer to the wiring diagram and verify whether or not there is a common connector between fuel tank pressure sensor terminal B and PCM terminal 2AJ. **If there is a common connector:** • Determine the malfunctioning part by inspecting the common connector and the terminal for corrosion, damage, or pin disconnection, and the common wiring harness for an open circuit. • Repair or replace the malfunctioning part. **If there is no common connector:** • Repair or replace the wiring harness which has an open circuit. Go to the next step.
12	**VERIFY DTC TROUBLESHOOTING COMPLETED** • Always reconnect all disconnected connectors. • Clear the DTC from the PCM memory using the M-MDS. (See **AFTER REPAIR PROCEDURE [SKYACTIV-G 2.0, SKYACTIV-G 2.5]**.) • Perform the KOEO or KOER self test.	Yes	Repeat the inspection from Step 1. • If the malfunction recurs, replace the PCM. (See **PCM REMOVAL/INSTALLATION [SKYACTIV-G 2.0, SKYACTIV-G 2.5]**.) Go to the next step.
		No	Go to the next step.

	(See **KOEO/KOER SELF TEST [SKYACTIV-G 2.0, SKYACTIV-G 2.5]**.) • Is the same DTC present?		
13	**VERIFY AFTER REPAIR PROCEDURE** • Perform the “AFTER REPAIR PROCEDURE”. (See **AFTER REPAIR PROCEDURE [SKYACTIV-G 2.0, SKYACTIV-G 2.5]**.) • Are any DTCs present?	Yes	Go to the applicable DTC inspection. (See **DTC TABLE [SKYACTIV-G 2.0, SKYACTIV-G 2.5]**.)
		No	DTC troubleshooting completed.

2014 - Mazda3 - Engine

DTC P0454:00 [SKYACTIV-G 2.0, SKYACTIV-G 2.5]

DTC P0454:00	Fuel tank pressure sensor intermittent malfunction

DETECTION CONDITION	• Any one of the following conditions is met:
	  ▪ The difference between the currently detected fuel tank pressure sensor input voltage and the previously detected input voltage is large.
	  ▪ The input voltage of the fuel tank pressure sensor remains low or high.
	Diagnostic support note
	• This is a continuous monitor (CCM).
	• The check engine light illuminates if the PCM detects the above malfunction condition during the first drive cycle.
	• FREEZE FRAME DATA (Mode 2)/Snapshot data is available.
	• DTC is stored in the PCM memory.

FAIL-SAFE FUNCTION	Not applicable
POSSIBLE CAUSE	• Wiring harness malfunction between PCM and fuel tank pressure sensor • Fuel tank pressure sensor malfunction ▪ Intermittent open or short circuit in the fuel tank pressure sensor or fuel tank pressure sensor signal • PCM malfunction
SYSTEM WIRING DIAGRAM	Not applicable

Diagnostic Procedure

STEP	INSPECTION	ACTION

1	**VERIFY FREEZE FRAME DATA (MODE 2)/SNAPSHOT DATA HAS BEEN RECORDED** • Has the FREEZE FRAME DATA (Mode 2)/snapshot data been recorded?	Yes	Go to the next step.
		No	Record the FREEZE FRAME DATA (Mode 2)/snapshot data on the repair order, then go to the next step.
2	**VERIFY RELATED REPAIR INFORMATION AVAILABILITY** • Verify related Service Bulletins and/or on-line repair information availability. • Is any related repair information available?	Yes	Perform repair or diagnosis according to the available repair information. • If the vehicle is not repaired, go to the next step.
		No	Go to the next step.
3	**VERIFY RELATED PENDING CODE AND/OR DTC** • Switch the ignition off, then ON (engine off). • Perform the Pending Trouble Code Access Procedure and DTC Reading Procedure. (See **ON-BOARD DIAGNOSTIC TEST [SKYACTIV-G 2.0, SKYACTIV-G 2.5]**.) • Are any other PENDING CODEs and/or DTCs present?	Yes	Go to the applicable PENDING CODE or DTC inspection. (See **DTC TABLE [SKYACTIV-G 2.0, SKYACTIV-G 2.5]**.)
		No	Go to the next step.
4	**INSPECT FUEL TANK PRESSURE SENSOR** • Switch the ignition off. • Inspect the fuel tank pressure sensor. (See **FUEL TANK PRESSURE SENSOR INSPECTION [SKYACTIV-G 2.0, SKYACTIV-G 2.5]**.) • Is there any malfunction?	Yes	Replace the charcoal canister, then go to the next step. (See **CHARCOAL CANISTER REMOVAL/INSTALLATION [SKYACTIV-G 2.0, SKYACTIV-G 2.5]**.)
		No	Intermittent concern exists. • Perform the “INTERMITTENT CONCERN TROUBLESHOOTING” procedure. (See **INTERMITTENT CONCERN TROUBLESHOOTING [SKYACTIV-G 2.0, SKYACTIV-G 2.5]**.)
5	**VERIFY DTC TROUBLESHOOTING COMPLETED** • Always reconnect all disconnected connectors. • Clear the DTC from the PCM	Yes	Replace the PCM, then go to the next step. (See **PCM REMOVAL/INSTALLATION [SKYACTIV-G 2.0, SKYACTIV-G 2.5]**.)
		No	Go to the next step.

	memory using the M-MDS. (See **AFTER REPAIR PROCEDURE [SKYACTIV-G 2.0, SKYACTIV-G 2.5]**.) • Perform the KOER self test. (See **KOEO/KOER SELF TEST [SKYACTIV-G 2.0, SKYACTIV-G 2.5]**.) • Is the same DTC present?		
6	**VERIFY AFTER REPAIR PROCEDURE** • Perform the “AFTER REPAIR PROCEDURE”. (See **AFTER REPAIR PROCEDURE [SKYACTIV-G 2.0, SKYACTIV-G 2.5]**.) • Are any DTCs present?	Yes	Go to the applicable DTC inspection. (See **DTC TABLE [SKYACTIV-G 2.0, SKYACTIV-G 2.5]**.)
		No	DTC troubleshooting completed.

2014 - Mazda3 - Engine

DTC P0457:00 [SKYACTIV-G 2.0, SKYACTIV-G 2.5]

NOTE:

- To determine the malfunctioning part, proceed with the diagnostics from "Function Inspection Using M-MDS".

Details On DTCs

DESCRIPTION	Fuel-filler cap installation malfunction	
DETECTION CONDITION	Determination conditions	• Hole of **0.09 in (2.25 mm) or more** in evaporative gas passage
	Preconditions	• Period ignition is switched off before engine starts: **120 min or more** • Engine coolant temperature at engine start: **1.67—43.00 °C {35.1—109.0 °F}** *1 • Time elapsed from engine start: **5.5—90 min** • Fuel level in fuel tank: **10—90 %** *1 • Desired ambient air temperature: **4.4—43.3 °C {40—109 °F}** *1 • Barometric pressure: **72.23 kPa {0.7365 kgf/cm^2, 10.48 psi} or more** *1 • Charging efficiency: **3—65 %** *1 • Vehicle speed: **64—144.8 km/h {40.00—89.97 mph}** *1 • When refueling (determines that refueling was performed by comparing fuel tank level before one drive cycle with fuel tank level at engine start) • *1: Value can be verified by displaying PIDs using M-MDS
	Drive cycle	• 1
	Self test type	• CMDTC self test
	Sensor used	• Fuel tank pressure sensor
FAIL-SAFE FUNCTION	• Not applicable	
VEHICLE STATUS WHEN DTCs ARE OUTPUT	• Illuminates check fuel cap warning light (DTC P0457:00 detected). • Illuminates check engine light (after two drive cycle since P0457:00 was detected).	
POSSIBLE CAUSE	• Missing or loose fuel filler cap • Fuel filler cap malfunction • PCM malfunction	

System Wiring Diagram

- Not applicable

Function Explanation (DTC Detection Outline)

- The PCM closes the purge solenoid valve and CV solenoid valve while the vehicle is being driven, and seals the fuel tank. By opening the purge solenoid valve after sealing the fuel tank, evaporative gas in the fuel tank is inducted into the intake manifold, fuel tank

pressure is reduced, and the pressure change of the fuel tank is measured by the fuel tank pressure sensor. If the pressure of the fuel tank does not reach the target vacuum after the specified time has elapsed since the pressure was measured, the PCM determines that there is an evaporative gas leakage. If the PCM determines that refueling was performed before the engine starts, according to the result of the refueling determination, the PCM determines that the fuel-filler cap is open and stores DTC P0457:00 (if PCM determines that refueling is not performed, it stores DTC P0455:00).

- If the fuel tank level increases after the engine starts, the PCM determines that refueling is performed by comparing the fuel tank level before one drive cycle with the fuel tank level after engine start.

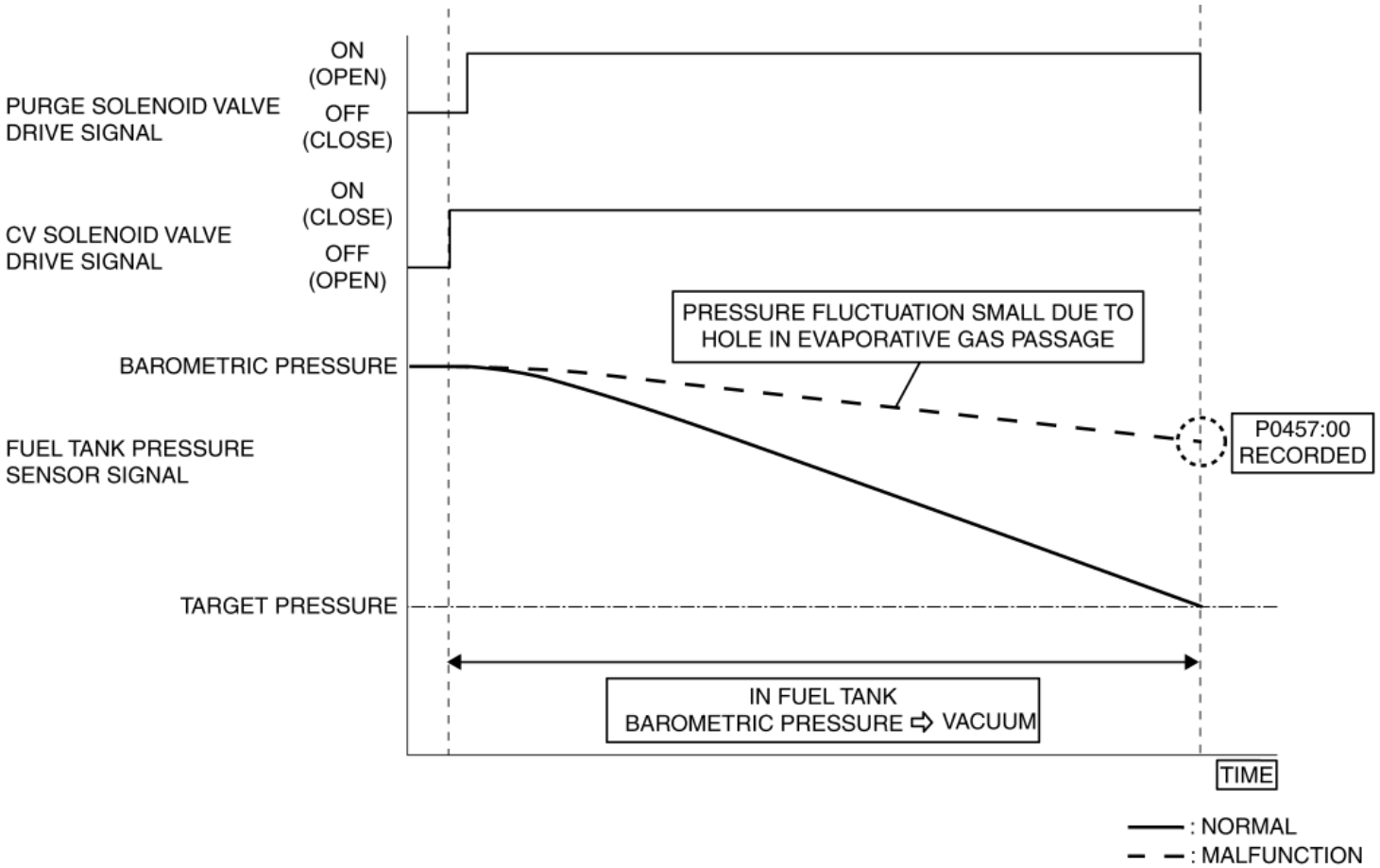

Repeatability Verification Procedure

- Set the remaining fuel quantity in the fuel tank between **30—85 %**.
- Verify that OBD-II information (such as FREEZE FRAME DATA (Mode 2)) has been obtained and recorded.
- Clear the DTC from the PCM memory using the M-MDS. (See **CLEARING DTC [SKYACTIV-G 2.0, SKYACTIV-G 2.5]**.)
- Start the engine and switch the ignition off after **5 s** have elapsed.
- Leave the vehicle for **6 hours or more**.
- Start the engine and leave it idling for **2 min**.
- Drive the vehicle for **30 min** at a speed of **50 km/h {31 mph} or more** (to increase temperature in fuel tank and generate evaporative gas).

  NOTE:

  - If driving the vehicle for **30 min** at a speed of **50 km/h {31 mph} or more** is not feasible, the vehicle can be driven for a continuous **15 min or more** with the engine coolant temperature at **80 °C {176 °F} or more**.
- Stop the engine.
- Leave the vehicle for **1 hours or more**.

PID Item/Simulation Item Used In Diagnosis

PID/DATA monitor item table

Item	Definition	Unit	Condition/Specification
FCL	Check fuel cap warning light illumination status	Off/On	• Check fuel cap warning light not illuminated: Off • Check fuel cap warning light illuminated: On

Function Inspection Using M-MDS

STEP	INSPECTION	RESULTS	ACTION
1	**PURPOSE: VERIFY RELATED REPAIR INFORMATION AVAILABILITY** • Verify related Service Bulletins and/or on-line repair information availability. • Is any related repair information available?	Yes	Perform repair or diagnosis according to the available repair information. • If the vehicle is not repaired, go to the next step.
		No	Go to the next step.
2	**PURPOSE: RECORD VEHICLE STATUS AT TIME OF DTC DETECTION TO UTILIZE WITH REPEATABILITY VERIFICATION** • Has the FREEZE FRAME DATA (Mode 2)/snapshot data been recorded?	Yes	Go to the next step.
		No	Record the FREEZE FRAME DATA (Mode 2)/snapshot data on the repair order, then go to the next step. **NOTE:** • Recording can be facilitated using the screen capture function of the PC.
3	**PURPOSE: VERIFY FUEL FILLER CAP MALFUNCTION** • Access the FCL PID using the M-MDS. (See **ON-BOARD DIAGNOSTIC TEST [SKYACTIV-G 2.0, SKYACTIV-G 2.5]**.) • Is the FCL PID value On?	Yes	Go to the troubleshooting procedure to perform the procedure from Step 1.
		No	Go to the troubleshooting procedure to perform the procedure from Step 2.

Troubleshooting Diagnostic Procedure

Intention of troubleshooting procedure

- Step 1
  - Verify that the driver forgot to close the fuel-filler cap.
- Step 2
  - Perform a unit inspection of the fuel filler cap.
- Step 3—4
  - Verify that the primary malfunction is resolved and there are no other malfunctions.

STEP	INSPECTION	RESULTS	ACTION
1	**PURPOSE: INSPECTION OF EVAPORATIVE GAS LEAKAGE FROM FUEL-FILLER CAP** • Verify that the fuel-filler cap is completely closed. • Is the fuel-filler cap completely closed?	Yes	Go to the next step.
		No	Close the fuel-filler cap completely, then go to Step 3.
2	**PURPOSE: DETERMINE INTEGRITY OF FUEL FILLER CAP** • Inspect the fuel filler cap. • Is there any malfunction?	Yes	Replace the fuel filler cap, then go to the next step. (See **FUEL-FILLER PIPE REMOVAL/INSTALLATION [SKYACTIV-G 2.0, SKYACTIV-G 2.5]**.)
		No	Go to the next step.

3	**PURPOSE: VERIFICATION OF VEHICLE REPAIR COMPLETION** • Reconnect all the removed parts. • Clear the DTC from the PCM memory using the M-MDS. (See **CLEARING DTC [SKYACTIV-G 2.0, SKYACTIV-G 2.5]**.) • Implement the repeatability verification procedure. (See **Repeatability Verification Procedure**.) • Perform the DTC Reading Procedure. (See **ON-BOARD DIAGNOSTIC TEST [SKYACTIV-G 2.0, SKYACTIV-G 2.5]**.) • Is the same DTC present?	Yes	Repeat the inspection from Step 1 of the troubleshooting diagnostic procedure. • If the malfunction recurs, replace the PCM. (See **PCM REMOVAL/INSTALLATION [SKYACTIV-G 2.0, SKYACTIV-G 2.5]**.) Go to the next step.
		No	Go to the next step.
4	**PURPOSE: VERIFY IF THERE IS ANY OTHER MALFUNCTION** • Is any other DTC or pending code stored?	Yes	Go to the applicable DTC inspection. (See **DTC TABLE [SKYACTIV-G 2.0, SKYACTIV-G 2.5]**.)
		No	DTC troubleshooting completed.

2014 - Mazda3 - Engine

DTC P0460:00 [SKYACTIV-G 2.0, SKYACTIV-G 2.5]

DTC P0460:00	Fuel level sensor circuit malfunction
DETECTION CONDITION	• The PCM monitors the fuel tank level sensor output signal. If the difference between maximum and minimum value of input signal is **25 % or more** for **14 s**, the PCM determines that there is a fuel level sensor circuit malfunction. **Diagnostic support note** • This is a continuous monitor (CCM). • The check engine light illuminates if the PCM detects the above malfunction condition in two consecutive drive cycles or in one drive cycle while the DTC for the same malfunction has been stored in the PCM. • PENDING CODE is available if the PCM detects the above malfunction condition during first drive cycle. • FREEZE FRAME DATA (Mode 2)/Snapshot data is available. • DTC is stored in the PCM memory.
FAIL-SAFE FUNCTION	Not applicable

POSSIBLE CAUSE	• Instrument cluster malfunction
	  ▪ Incorrectly installed fuel gauge
	  ▪ Fuel level input signal circuit malfunction
	• Fuel gauge sender unit malfunction
	• PCM malfunction

SYSTEM WIRING DIAGRAM	Not applicable

Diagnostic Procedure

STEP	INSPECTION		ACTION
1	**VERIFY FREEZE FRAME DATA (MODE 2)/SNAPSHOT DATA HAS BEEN RECORDED** • Has the FREEZE FRAME DATA (Mode 2)/snapshot data been recorded?	Yes	Go to the next step.
		No	Record the FREEZE FRAME DATA (Mode 2)/snapshot data on the repair order, then go to the next step.
2	**VERIFY RELATED REPAIR INFORMATION AVAILABILITY** • Verify related Service Bulletins and/or on-line repair information availability. • Is any related repair information available?	Yes	Perform repair or diagnosis according to the available repair information. • If the vehicle is not repaired, go to the next step.
		No	Go to the next step.
3	**VERIFY RELATED PENDING CODE AND/OR DTC** • Switch the ignition off, then ON (engine off). • Perform the Pending Trouble Code Access Procedure and DTC Reading Procedure. (See **ON-BOARD DIAGNOSTIC TEST [SKYACTIV-G 2.0, SKYACTIV-G 2.5]**.) • Are any other PENDING CODEs and/or DTCs present?	Yes	Go to the applicable PENDING CODE or DTC inspection. (See **DTC TABLE [SKYACTIV-G 2.0, SKYACTIV-G 2.5]**.)
		No	Go to the next step.
4	**INSPECT NON-GENUINE ACCESSORY FOR MALFUNCTION** • Remove any non-genuine accessory. • Clear the DTC from the PCM memory using the M-MDS. (See **AFTER REPAIR PROCEDURE [SKYACTIV-G 2.0, SKYACTIV-G 2.5]**.) • Perform the KOER self test. (See **KOEO/KOER SELF TEST [SKYACTIV-G 2.0, SKYACTIV-G 2.5]**.) • Is the PENDING CODE for this DTC present?	Yes	Go to the next step.
		No	Explain to the customer that the vehicle is normal. • Go to Step 8.
5	**VERIFY STORED DTC IN INSTRUMENT CLUSTER**	Yes	Go to the applicable DTC inspection.

	• Switch the ignition off, then ON (engine off). • Retrieve the instrument cluster DTC using the M-MDS. (See **DTC INSPECTION [INSTRUMENT CLUSTER]**.) • Are any DTCs present?		(See **DTC TABLE [INSTRUMENT CLUSTER]**.)
		No	Go to the next step.
6	**INSPECT FUEL GAUGE SENDER UNIT** • Switch the ignition off. • Inspect the fuel gauge sender unit. (See **FUEL GAUGE SENDER UNIT INSPECTION**.) • Is there any malfunction?	Yes	Replace the fuel gauge sender unit, then go to the next step. (See **FUEL PUMP UNIT DISASSEMBLY/ASSEMBLY [SKYACTIV-G 2.0, SKYACTIV-G 2.5]**.)
		No	Go to the next step.
7	**VERIFY DTC TROUBLESHOOTING COMPLETED** • Always reconnect all disconnected connectors. • Clear the DTC from the PCM memory using the M-MDS. (See **AFTER REPAIR PROCEDURE [SKYACTIV-G 2.0, SKYACTIV-G 2.5]**.) • Perform the KOER self test. (See **KOEO/KOER SELF TEST [SKYACTIV-G 2.0, SKYACTIV-G 2.5]**.) • Is the PENDING CODE for this DTC present?	Yes	Repeat the inspection from Step 1. • If the malfunction recurs, replace the PCM. (See **PCM REMOVAL/INSTALLATION [SKYACTIV-G 2.0, SKYACTIV-G 2.5]**.) Go to the next step.
		No	Go to the next step.
8	**VERIFY AFTER REPAIR PROCEDURE** • Perform the “AFTER REPAIR PROCEDURE”. (See **AFTER REPAIR PROCEDURE [SKYACTIV-G 2.0, SKYACTIV-G 2.5]**.) • Are any DTCs present?	Yes	Go to the applicable DTC inspection. (See **DTC TABLE [SKYACTIV-G 2.0, SKYACTIV-G 2.5]**.)
		No	DTC troubleshooting completed.

DTC P0460:00 [SKYACTIV-G 2.0, SKYACTIV-G 2.5]

2014 - Mazda3 - Engine

DTC P0461:00 [SKYACTIV-G 2.0, SKYACTIV-G 2.5]

DTC P0461:00	Fuel gauge sender unit circuit range/performance problem
DETECTION CONDITION	• The change in the remaining fuel quantity in the fuel tank is **less than 5 %** when the amount of fuel consumption by fuel injection reaches **25 L {26 US qt, 22 Imp qt}**. **Diagnostic support note** • This is a continuous monitor (CCM). • The check engine light illuminates if the PCM detects the above malfunction condition in two consecutive drive cycles or in one drive cycle while the DTC for the same malfunction has been stored in the PCM. • PENDING CODE is available if the PCM detects the above malfunction condition during first drive cycle. • FREEZE FRAME DATA (Mode 2)/Snapshot data is available. • DTC is stored in the PCM memory.
FAIL-SAFE FUNCTION	Not applicable
POSSIBLE CAUSE	• Fuel gauge sender unit malfunction • Instrument cluster malfunction • PCM malfunction
SYSTEM WIRING DIAGRAM	Not applicable

Diagnostic Procedure

STEP	INSPECTION		ACTION
1	**VERIFY FREEZE FRAME DATA (MODE 2)/SNAPSHOT DATA HAS BEEN RECORDED**	Yes	Go to the next step.

	Has the FREEZE FRAME DATA (Mode 2)/snapshot data been recorded?	No	Record the FREEZE FRAME DATA (Mode 2)/snapshot data on the repair order, then go to the next step.
2	**VERIFY RELATED REPAIR INFORMATION AVAILABILITY** • Verify related Service Bulletins and/or on-line repair information availability. • Is any related repair information available?	Yes	Perform repair or diagnosis according to the available repair information. • If the vehicle is not repaired, go to the next step.
		No	Go to the next step.
3	**INSPECT FUEL GAUGE SENDER UNIT** • Inspect the fuel gauge sender unit. (See **FUEL GAUGE SENDER UNIT INSPECTION**.) • Is there any malfunction?	Yes	Replace the fuel gauge sender unit, then go to Step 5. (See **FUEL PUMP UNIT DISASSEMBLY/ASSEMBLY [SKYACTIV-G 2.0, SKYACTIV-G 2.5]**.)
		No	Go to the next step.
4	**INSPECT INSTRUMENT CLUSTER** • Inspect the instrument cluster. (See **INSTRUMENT CLUSTER INSPECTION**.) • Is there any malfunction?	Yes	Replace the instrument cluster, then go to the next step. (See **INSTRUMENT CLUSTER REMOVAL/INSTALLATION**.)
		No	Go to the next step.
5	**VERIFY DTC TROUBLESHOOTING COMPLETED** • Always reconnect all disconnected connectors. • Clear the DTC from the PCM memory using the M-MDS. (See **AFTER REPAIR PROCEDURE [SKYACTIV-G 2.0, SKYACTIV-G 2.5]**.) • Start the engine and warm it up completely. **CAUTION:** • While performing this step, always operate the vehicle in a safe and lawful manner. • When the M-MDS is used to observe monitor system status while driving, be sure to have another technician with you, or record the data in the M-MDS using the PID/DATA MONITOR AND	Yes	Repeat the inspection from Step 1. • If the malfunction recurs, replace the PCM. (See **PCM REMOVAL/INSTALLATION [SKYACTIV-G 2.0, SKYACTIV-G 2.5]**.) Go to the next step.
		No	Go to the next step.

	RECORD capturing function and inspect later. • Drive the vehicle under the snapshot data condition. • Perform the Pending Trouble Code Access Procedure. (See **ON-BOARD DIAGNOSTIC TEST [SKYACTIV-G 2.0, SKYACTIV-G 2.5]**.) • Is the PENDING CODE for this DTC present?		
6	**VERIFY AFTER REPAIR PROCEDURE** • Perform the “AFTER REPAIR PROCEDURE”. (See **AFTER REPAIR PROCEDURE [SKYACTIV-G 2.0, SKYACTIV-G 2.5]**.) • Are any DTCs present?	Yes	Go to the applicable DTC inspection. (See **DTC TABLE [SKYACTIV-G 2.0, SKYACTIV-G 2.5]**.)
		No	DTC troubleshooting completed.

2014 - Mazda3 - Engine

DTC P0462:00 [SKYACTIV-G 2.0, SKYACTIV-G 2.5]

DTC P0462:00	Fuel gauge sender unit circuit low input
DETECTION CONDITION	• The PCM monitors the fuel level signal and fuel gauge sender unit output voltage from the instrument cluster. If the PCM detects a fuel level or fuel gauge sender unit output voltage that is too low, the PCM determines that the fuel gauge sender unit circuit has a malfunction. **Diagnostic support note** • This is a continuous monitor (CCM). • The check engine light illuminates if the PCM detects the above malfunction condition in two consecutive drive cycles or in one drive cycle while the DTC for the same malfunction has been stored in the PCM. • PENDING CODE is available if the PCM detects the above malfunction condition during first drive cycle. • FREEZE FRAME DATA (Mode 2)/Snapshot data is available. • DTC is stored in the PCM memory.
FAIL-SAFE FUNCTION	Not applicable
POSSIBLE CAUSE	• Fuel gauge sender unit connector or terminals malfunction • Rear body control module (RBCM) connector or terminals malfunction • Short to ground in wiring harness between fuel gauge sender unit terminal D and rear body control module (RBCM) terminal 3I • Fuel gauge sender unit signal circuit and ground circuit are shorted to each other • Fuel gauge sender unit malfunction • Rear body control module (RBCM) malfunction • Instrument cluster malfunction • PCM malfunction

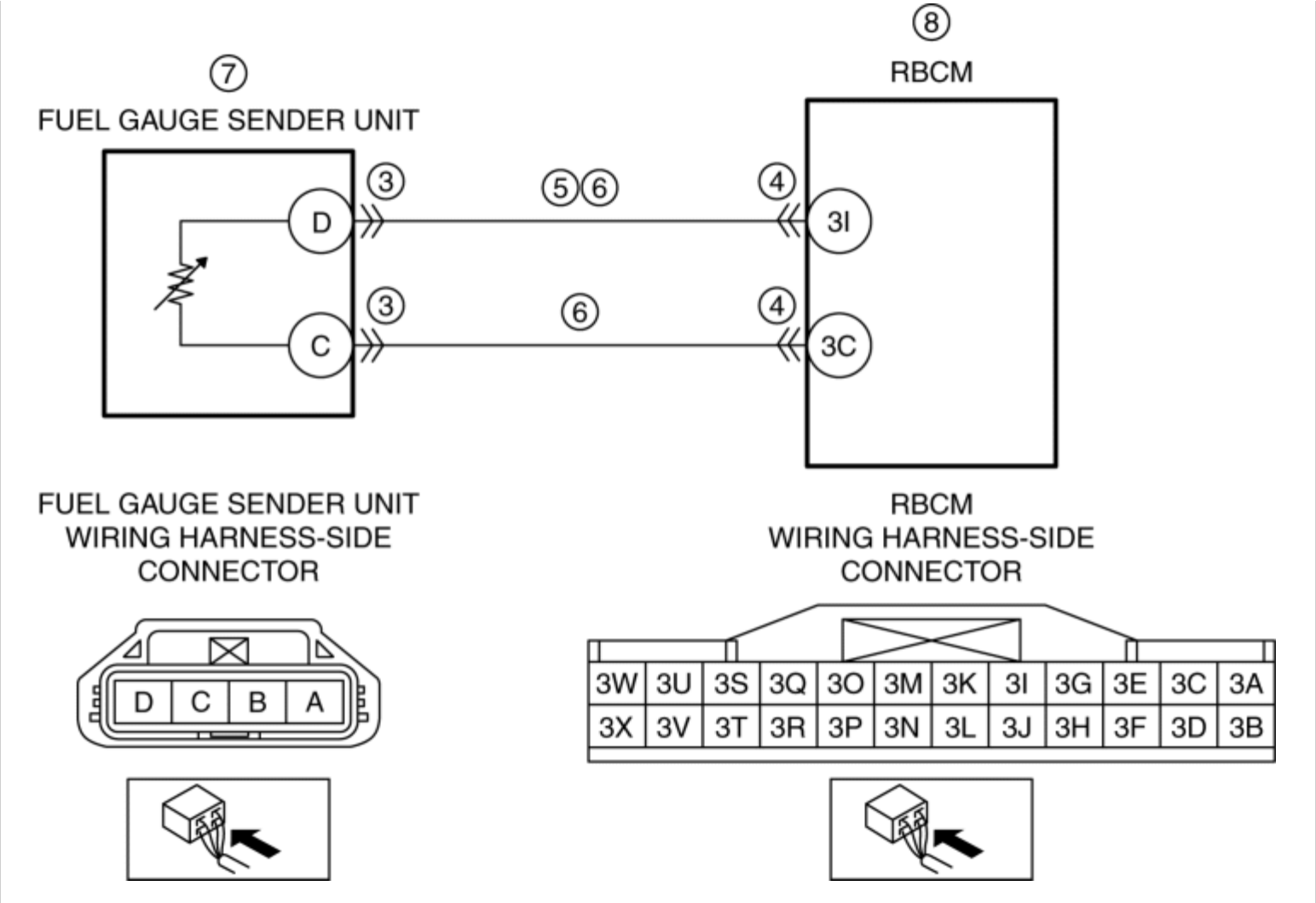

Diagnostic Procedure

STEP	INSPECTION		ACTION
1	**VERIFY FREEZE FRAME DATA (MODE 2)/SNAPSHOT DATA HAS BEEN RECORDED** • Has the FREEZE FRAME DATA (Mode 2)/snapshot data been recorded?	Yes	Go to the next step.
		No	Record the FREEZE FRAME DATA (Mode 2)/snapshot data on the repair order, then go to the next step.
2	**VERIFY RELATED REPAIR INFORMATION AVAILABILITY** • Verify related Service Bulletins and/or on-line repair information availability. • Is any related repair information available?	Yes	Perform repair or diagnosis according to the available repair information. • If the vehicle is not repaired, go to the next step.
		No	Go to the next step.

3	**INSPECT FUEL GAUGE SENDER UNIT CONNECTOR CONDITION** • Switch the ignition off. • Disconnect the fuel gauge sender unit connector. • Inspect for poor connection (such as damaged/pulled-out pins, corrosion). • Is there any malfunction?	Yes	Repair or replace the connector and/or terminals, then go to Step 10.
		No	Go to the next step.
4	**INSPECT REAR BODY CONTROL MODULE (RBCM) CONNECTOR CONDITION** • Disconnect the rear body control module (RBCM) connector. • Inspect for poor connection (such as damaged/pulled-out pins, corrosion). • Is there any malfunction?	Yes	Repair or replace the connector and/or terminals, then go to Step 10.
		No	Go to the next step.
5	**INSPECT FUEL GAUGE SENDER UNIT SIGNAL CIRCUIT FOR SHORT TO GROUND** • Verify that the fuel gauge sender unit and rear body control module (RBCM) connectors are disconnected. • Inspect for continuity between fuel gauge sender unit terminal D (wiring harness-side) and body ground. • Is there continuity?	Yes	Refer to the wiring diagram and verify whether or not there is a common connector between fuel gauge sender unit terminal D and rear body control module (RBCM) terminal 3I. **If there is a common connector:** • Determine the malfunctioning part by inspecting the common connector and the terminal for corrosion, damage, or pin disconnection, and the common wiring harness for a short to ground. • Repair or replace the malfunctioning part. **If there is no common connector:** • Repair or replace the wiring harness which has a short to ground. Go to Step 10.
		No	Go to the next step.
6	**INSPECT FUEL GAUGE SENDER**	Yes	Refer to the wiring diagram and verify whether or not there

	UNIT SIGNAL CIRCUIT AND GROUND CIRCUIT FOR SHORT TO EACH OTHER • Verify that the fuel gauge sender unit and rear body control module (RBCM) connectors are disconnected. • Inspect for continuity between fuel gauge sender unit terminals D and C (wiring harness-side). • Is there continuity?		is a common connector between the following terminals: • Fuel gauge sender unit terminal D—Rear body control module (RBCM) terminal 3I • Fuel gauge sender unit terminal C—Rear body control module (RBCM) terminal 3C **If there is a common connector:** • Determine the malfunctioning part by inspecting the common connector and the terminal for corrosion, damage, or pin disconnection, and the common wiring harness for a short to each other. • Repair or replace the malfunctioning part. **If there is no common connector:** • Repair or replace the wiring harness which has a short to each other. Go to Step 10.
		No	Go to the next step.
7	**INSPECT FUEL GAUGE SENDER UNIT** • Inspect the fuel gauge sender unit. (See **FUEL GAUGE SENDER UNIT INSPECTION**.) • Is there any malfunction?	Yes	Replace the fuel gauge sender unit, then go to Step 10. (See **FUEL PUMP UNIT DISASSEMBLY/ASSEMBLY [SKYACTIV-G 2.0, SKYACTIV-G 2.5]**.)
		No	Go to the next step.
8	**INSPECT REAR BODY CONTROL MODULE (RBCM)** • Inspect the rear body control module (RBCM). (See **REAR BODY CONTROL MODULE (RBCM) INSPECTION**.) • Is there any malfunction?	Yes	Replace the rear body control module (RBCM), then go to Step 10. (See **REAR BODY CONTROL MODULE (RBCM) REMOVAL/INSTALLATION**.)
		No	Go to the next step.
9	**INSPECT INSTRUMENT CLUSTER** • Inspect the instrument cluster.	Yes	Replace the instrument cluster, then go to the next step. (See **INSTRUMENT CLUSTER REMOVAL/INSTALLATION**.)

	(See **INSTRUMENT CLUSTER INSPECTION**.) • Is there any malfunction?	No	Go to the next step.
10	**VERIFY DTC TROUBLESHOOTING COMPLETED** • Always reconnect all disconnected connectors. • Clear the DTC from the PCM memory using the M-MDS. (See **AFTER REPAIR PROCEDURE [SKYACTIV-G 2.0, SKYACTIV-G 2.5]**.) • Perform the KOEO or KOER self test. (See **KOEO/KOER SELF TEST [SKYACTIV-G 2.0, SKYACTIV-G 2.5]**.) • Is the PENDING CODE for this DTC present?	Yes	Repeat the inspection from Step 1. • If the malfunction recurs, replace the PCM. (See **PCM REMOVAL/INSTALLATION [SKYACTIV-G 2.0, SKYACTIV-G 2.5]**.) Go to the next step.
		No	Go to the next step.
11	**VERIFY AFTER REPAIR PROCEDURE** • Perform the “AFTER REPAIR PROCEDURE”. (See **AFTER REPAIR PROCEDURE [SKYACTIV-G 2.0, SKYACTIV-G 2.5]**.) • Are any DTCs present?	Yes	Go to the applicable DTC inspection. (See **DTC TABLE [SKYACTIV-G 2.0, SKYACTIV-G 2.5]**.)
		No	DTC troubleshooting completed.

2014 - Mazda3 - Engine

DTC P0463:00 [SKYACTIV-G 2.0, SKYACTIV-G 2.5]

DTC P0463:00	Fuel gauge sender unit circuit high input
DETECTION CONDITION	• The PCM monitors the fuel level signal and fuel gauge sender unit output voltage from the instrument cluster. If the PCM detects a fuel level or fuel gauge sender unit output voltage that is too high, the PCM determines that the fuel gauge sender unit circuit has a malfunction. **Diagnostic support note** • This is a continuous monitor (CCM). • The check engine light illuminates if the PCM detects the above malfunction condition in two consecutive drive cycles or in one drive cycle while the DTC for the same malfunction has been stored in the PCM. • PENDING CODE is available if the PCM detects the above malfunction condition during first drive cycle. • FREEZE FRAME DATA (Mode 2)/Snapshot data is available. • DTC is stored in the PCM memory.
FAIL-SAFE FUNCTION	Not applicable
POSSIBLE CAUSE	• Fuel gauge sender unit connector or terminals malfunction • Rear body control module (RBCM) connector or terminals malfunction • Short to power supply in wiring harness between fuel gauge sender unit terminal D and rear body control module (RBCM) terminal 3I • Open circuit in wiring harness between the following terminals: ▪ Fuel gauge sender unit terminal D—Rear body control module (RBCM) terminal 3I ▪ Fuel gauge sender unit terminal C—Rear body control module (RBCM) terminal 3C • Fuel gauge sender unit malfunction • Rear body control module (RBCM) malfunction • Instrument cluster malfunction

	• PCM malfunction

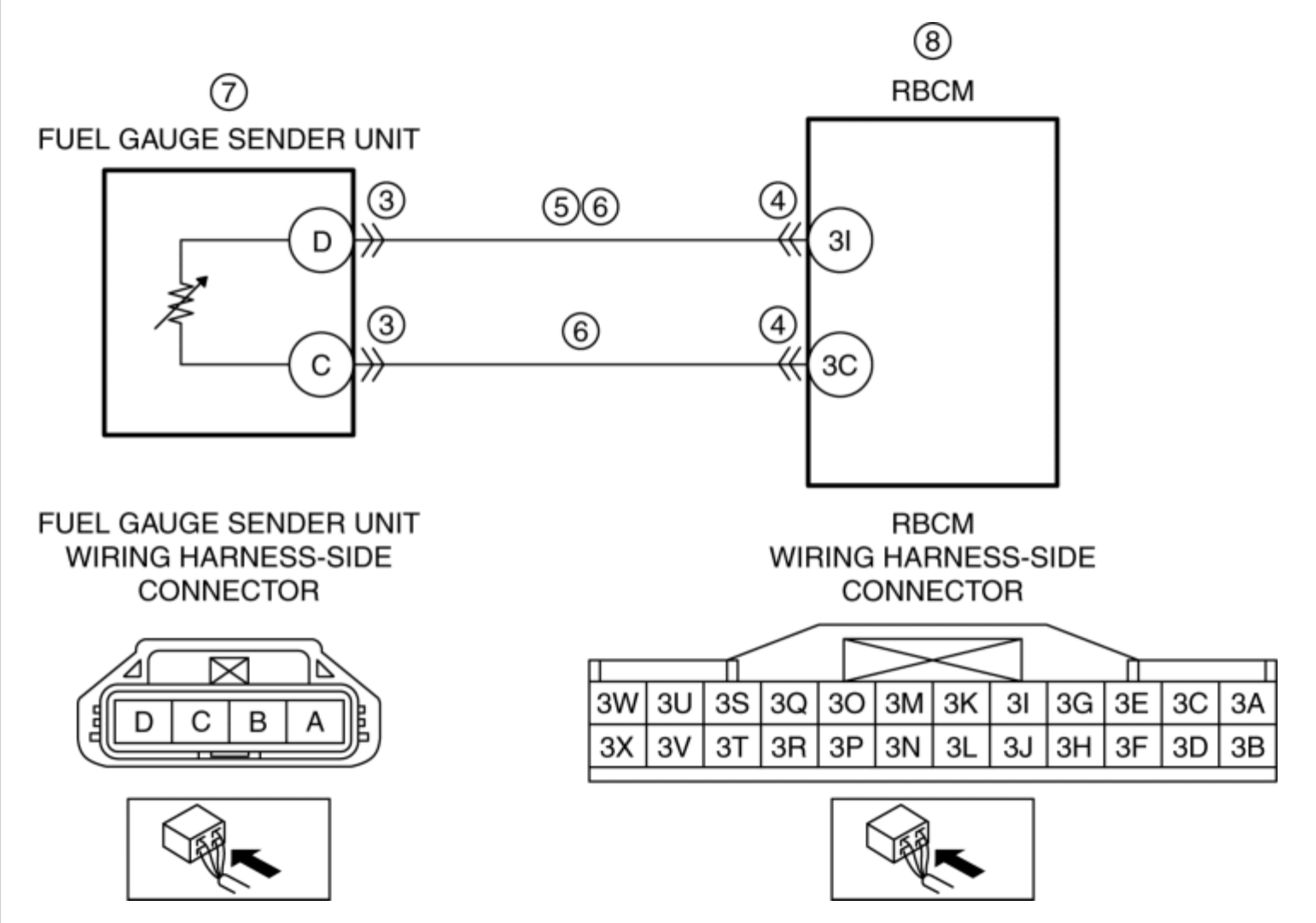

Diagnostic Procedure

STEP	INSPECTION		ACTION
1	**VERIFY FREEZE FRAME DATA (MODE 2)/SNAPSHOT DATA HAS BEEN RECORDED** • Has the FREEZE FRAME DATA (Mode 2)/snapshot data been recorded?	Yes	Go to the next step.
		No	Record the FREEZE FRAME DATA (Mode 2)/snapshot data on the repair order, then go to the next step.
2	**VERIFY RELATED REPAIR INFORMATION AVAILABILITY** • Verify related Service Bulletins and/or on-line repair information availability. • Is any related repair	Yes	Perform repair or diagnosis according to the available repair information. • If the vehicle is not repaired, go to the next step.
		No	Go to the next step.

	information available?		
3	**INSPECT FUEL GAUGE SENDER UNIT CONNECTOR CONDITION** • Switch the ignition off. • Disconnect the fuel gauge sender unit connector. • Inspect for poor connection (such as damaged/pulled-out pins, corrosion). • Is there any malfunction?	Yes	Repair or replace the connector and/or terminals, then go to Step 10.
		No	Go to the next step.
4	**INSPECT REAR BODY CONTROL MODULE (RBCM) CONNECTOR CONDITION** • Disconnect the rear body control module (RBCM) connector. • Inspect for poor connection (such as damaged/pulled-out pins, corrosion). • Is there any malfunction?	Yes	Repair or replace the connector and/or terminals, then go to Step 10.
		No	Go to the next step.
5	**INSPECT FUEL GAUGE SENDER UNIT SIGNAL CIRCUIT FOR SHORT TO POWER SUPPLY** • Verify that the fuel gauge sender unit and rear body control module (RBCM) connectors are disconnected. • Switch the ignition ON (engine off). **NOTE:** • Another DTC may be stored by the PCM detecting an open circuit. • Measure the voltage at the fuel gauge sender unit terminal D (wiring	Yes	Go to the next step.
		No	Refer to the wiring diagram and verify whether or not there is a common connector between fuel gauge sender unit terminal D and rear body control module (RBCM) terminal 3I. **If there is a common connector:** • Determine the malfunctioning part by inspecting the common connector and the terminal for corrosion, damage, or pin disconnection, and the common wiring harness for a short to power supply. • Repair or replace the malfunctioning part. **If there is no common connector:** • Repair or replace the wiring harness which has a short to power supply. Go to Step 10.

	harness-side). • Is the voltage **0 V**?		
6	**INSPECT FUEL GAUGE SENDER UNIT CIRCUIT FOR OPEN CIRCUIT** • Verify that the fuel gauge sender unit and rear body control module (RBCM) connectors are disconnected. • Switch the ignition off. • Inspect for continuity between the following terminals (wiring harness-side): ▪ Fuel gauge sender unit terminal D—Rear body control module (RBCM) terminal 3I ▪ Fuel gauge sender unit terminal C—Rear body control module (RBCM) terminal 3C • Is there continuity?	Yes	Go to the next step.
		No	Refer to the wiring diagram and verify whether or not there is a common connector between the following terminals: • Fuel gauge sender unit terminal D—Rear body control module (RBCM) terminal 3I • Fuel gauge sender unit terminal C—Rear body control module (RBCM) terminal 3C **If there is a common connector:** • Determine the malfunctioning part by inspecting the common connector and the terminal for corrosion, damage, or pin disconnection, and the common wiring harness for an open circuit. • Repair or replace the malfunctioning part. **If there is no common connector:** • Repair or replace the wiring harness which has an open circuit. Go to Step 10.
7	**INSPECT FUEL GAUGE SENDER UNIT** • Inspect the fuel gauge sender unit. (See **FUEL GAUGE SENDER UNIT INSPECTION**.) • Is there any malfunction?	Yes	Replace the fuel gauge sender unit, then go to Step 10. (See **FUEL PUMP UNIT DISASSEMBLY/ASSEMBLY [SKYACTIV-G 2.0, SKYACTIV-G 2.5]**.)
		No	Go to the next step.
8	**INSPECT REAR BODY CONTROL MODULE (RBCM)**	Yes	Replace the rear body control module (RBCM), then go

	• Inspect the rear body control module (RBCM). (See **REAR BODY CONTROL MODULE (RBCM) INSPECTION**.) • Is there any malfunction?		to Step 10. (See **REAR BODY CONTROL MODULE (RBCM) REMOVAL/INSTALLATION**.)
		No	Go to the next step.
9	**INSPECT INSTRUMENT CLUSTER** • Inspect the instrument cluster. (See **INSTRUMENT CLUSTER INSPECTION**.) • Is there any malfunction?	Yes	Replace the instrument cluster, then go to the next step. (See **INSTRUMENT CLUSTER REMOVAL/INSTALLATION**.)
		No	Go to the next step.
10	**VERIFY DTC TROUBLESHOOTING COMPLETED** • Always reconnect all disconnected connectors. • Clear the DTC from the PCM memory using the M-MDS. (See **AFTER REPAIR PROCEDURE [SKYACTIV-G 2.0, SKYACTIV-G 2.5]**.) • Perform the KOEO or KOER self test. (See **KOEO/KOER SELF TEST [SKYACTIV-G 2.0, SKYACTIV-G 2.5]**.) • Is the PENDING CODE for this DTC present?	Yes	Repeat the inspection from Step 1. • If the malfunction recurs, replace the PCM. (See **PCM REMOVAL/INSTALLATION [SKYACTIV-G 2.0, SKYACTIV-G 2.5]**.) Go to the next step.
		No	Go to the next step.
11	**VERIFY AFTER REPAIR PROCEDURE** • Perform the “AFTER REPAIR PROCEDURE”. (See **AFTER REPAIR PROCEDURE [SKYACTIV-G 2.0, SKYACTIV-G 2.5]**.) • Are any DTCs present?	Yes	Go to the applicable DTC inspection. (See **DTC TABLE [SKYACTIV-G 2.0, SKYACTIV-G 2.5]**.)
		No	DTC troubleshooting completed.

2014 - Mazda3 - Engine

DTC P0480:00 [SKYACTIV-G 2.0, SKYACTIV-G 2.5]

DTC P0480:00	Cooling fan relay No.1 control circuit malfunction
DETECTION CONDITION	• The cooling fan relay No.1 control voltage at the PCM terminal 2AU is low or cooling fan relay No.1 control current is high for a continuous **5 s** relative to the PCM control signal. **Diagnostic support note** • This is a continuous monitor (other). • The check engine light does not illuminate. • FREEZE FRAME DATA (Mode 2) is not available. • Snapshot data is available. • DTC is stored in the PCM memory.
FAIL-SAFE FUNCTION	Not applicable

POSSIBLE CAUSE	• Cooling fan relay No.1 malfunction
	• Short to ground or open circuit in cooling fan relay No.1 power supply circuit
	  ▪ Short to ground in wiring harness between ENGINE3 15 A fuse and cooling fan relay No.1 terminal A
	  ▪ ENGINE3 15 A fuse malfunction
	  ▪ Open circuit in wiring harness between main relay terminal D and cooling fan relay No.1 terminal A
	• Short to ground in wiring harness between cooling fan relay No.1 terminal E and PCM terminal 2AU
	• PCM connector or terminals malfunction
	• Short to power supply in wiring harness between cooling fan relay No.1 terminal E and PCM terminal 2AU
	• Open circuit in wiring harness between cooling fan relay No.1 terminal E and PCM terminal 2AU
	• PCM malfunction

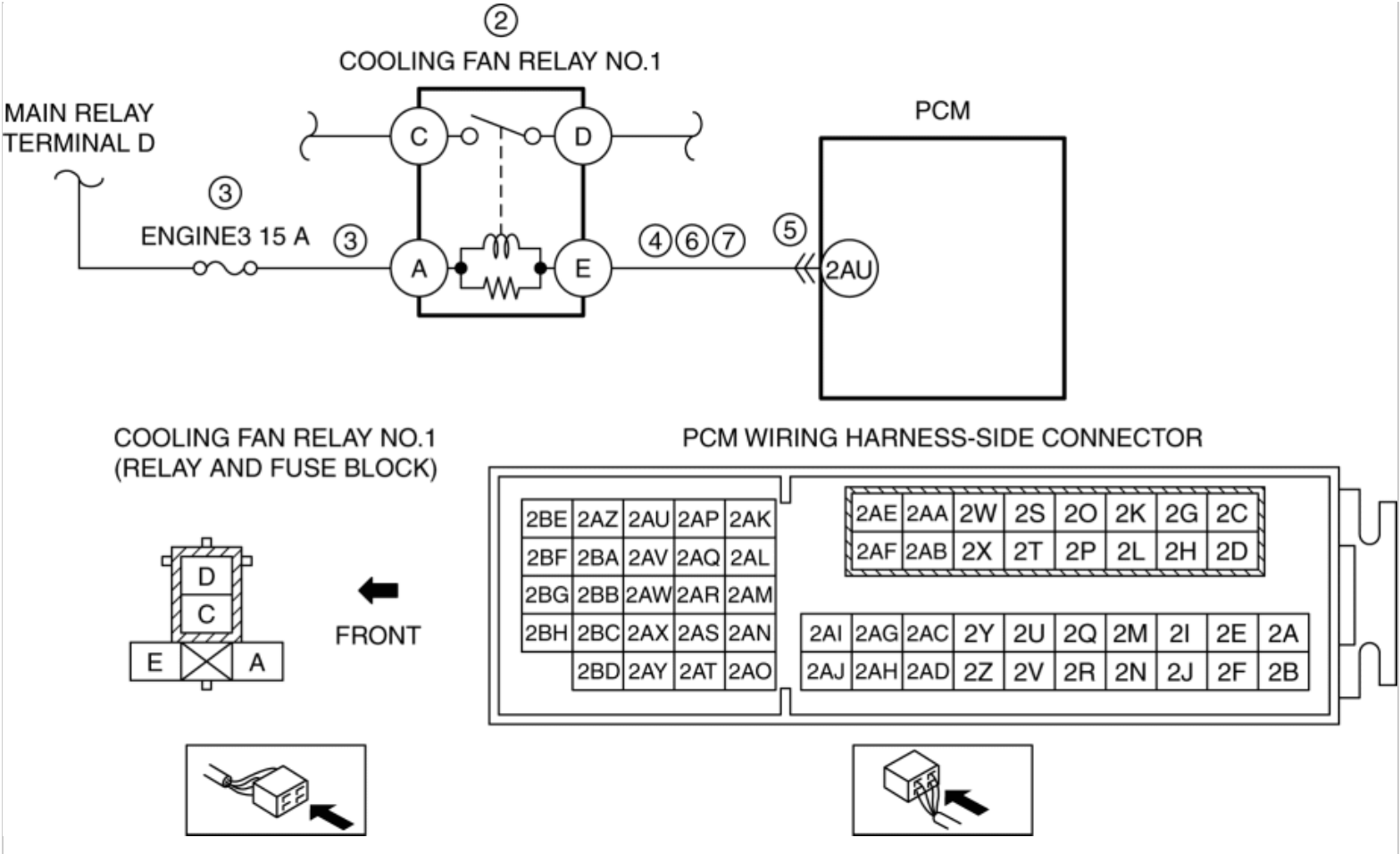

Diagnostic Procedure

STEP	INSPECTION		ACTION
1	**VERIFY RELATED REPAIR INFORMATION AVAILABILITY** • Verify related Service Bulletins and/or on-line repair information availability. • Is any related repair information available?	Yes	Perform repair or diagnosis according to the available repair information. • If the vehicle is not repaired, go to the next step.
		No	Go to the next step.
2	**INSPECT COOLING FAN RELAY NO.1** • Switch the ignition off. • Remove the cooling fan relay No.1. • Inspect the cooling fan relay No.1. (See **RELAY INSPECTION**.) • Is there any malfunction?	Yes	Replace the cooling fan relay No.1, then go to Step 8.
		No	Go to the next step.
3	**INSPECT COOLING FAN RELAY NO.1 POWER SUPPLY CIRCUIT FOR SHORT TO GROUND OR OPEN CIRCUIT** • Cooling fan relay No.1 is	Yes	Go to the next step.
		No	Inspect the ENGINE3 15 A fuse.

removed.

- Switch the ignition ON (engine off).
- Measure the voltage at the cooling fan relay No.1 terminal A (wiring harness-side).
- Is the voltage **B+**?

- If the fuse is blown:
  - Refer to the wiring diagram and verify whether or not there is a common connector between ENGINE3 15 A fuse and cooling fan relay No.1 terminal A.

    If there is a common connector:

    - Determine the malfunctioning part by inspecting the common connector and the terminal for corrosion, damage, or pin disconnection, and the common wiring harness for a short to ground.
    - Repair or replace the malfunctioning part.

    If there is no common connector:

    - Repair or replace the wiring harness which has a short to ground.
    - Replace the fuse.
- If the fuse is damaged:
  - Replace the fuse.
- If the fuse is normal:
  - Refer to the wiring diagram and verify whether or not there is a common connector between main relay terminal D and cooling fan relay No.1 terminal A.

    If there is a common connector:

    - Determine the malfunctioning part by inspecting the common connector and the terminal for corrosion, damage, or pin disconnection, and the common wiring harness for an open circuit.
    - Repair or replace the malfunctioning part.

    If there is no common connector:

    - Repair or replace the wiring harness which has an open circuit.

			Go to Step 8.
4	**INSPECT COOLING FAN RELAY NO.1 SIGNAL CIRCUIT FOR SHORT TO GROUND** • Cooling fan relay No.1 is removed. • Switch the ignition off. • Inspect for continuity between cooling fan relay No.1 terminal E (wiring harness-side) and body ground. • Is there continuity?	Yes	If the short to ground circuit could be detected in the wiring harness: • Refer to the wiring diagram and verify whether or not there is a common connector between cooling fan relay No.1 terminal E and PCM terminal 2AU. **If there is a common connector:** ▪ Determine the malfunctioning part by inspecting the common connector and the terminal for corrosion, damage, or pin disconnection, and the common wiring harness for a short to ground. ▪ Repair or replace the malfunctioning part. **If there is no common connector:** ▪ Repair or replace the wiring harness which has a short to ground. If the short to ground circuit could not be detected in the wiring harness: • Replace the PCM (short to ground in the PCM internal circuit). (See **PCM REMOVAL/INSTALLATION [SKYACTIV-G 2.0, SKYACTIV-G 2.5]**.) Go to Step 8.
		No	Go to the next step.
5	**INSPECT PCM CONNECTOR CONDITION** • Disconnect the PCM connector. • Inspect for poor connection (such as damaged/pulled-out pins, corrosion). • Is there any malfunction?	Yes	Repair or replace the connector and/or terminals, then go to Step 8.
		No	Go to the next step.
6	**INSPECT COOLING FAN RELAY NO.1 SIGNAL CIRCUIT FOR SHORT TO POWER SUPPLY** • Cooling fan relay No.1 is removed. • Verify that the PCM connector is disconnected. • Switch the ignition ON (engine off). **NOTE:** • Another DTC may be stored by the PCM detecting an open circuit. • Measure the voltage at the	Yes	Go to the next step.
		No	Refer to the wiring diagram and verify whether or not there is a common connector between cooling fan relay No.1 terminal E and PCM terminal 2AU. **If there is a common connector:** • Determine the malfunctioning part by inspecting the common connector and the terminal for corrosion, damage, or pin disconnection, and the common wiring harness for a short to power supply. • Repair or replace the malfunctioning part. **If there is no common connector:** • Repair or replace the wiring harness which has a short to power supply. Go to Step 8.

	cooling fan relay No.1 terminal E (wiring harness-side). • Is the voltage **0 V**?		
7	**INSPECT COOLING FAN RELAY NO.1 SIGNAL CIRCUIT FOR OPEN CIRCUIT** • Cooling fan relay No.1 is removed. • Verify that the PCM connector is disconnected. • Switch the ignition off. • Inspect for continuity between cooling fan relay No.1 terminal E (wiring harness-side) and PCM terminal 2AU (wiring harness-side). • Is there continuity?	Yes	Go to the next step.
		No	Refer to the wiring diagram and verify whether or not there is a common connector between cooling fan relay No.1 terminal E and PCM terminal 2AU. **If there is a common connector:** • Determine the malfunctioning part by inspecting the common connector and the terminal for corrosion, damage, or pin disconnection, and the common wiring harness for an open circuit. • Repair or replace the malfunctioning part. **If there is no common connector:** • Repair or replace the wiring harness which has an open circuit. Go to the next step.
8	**VERIFY DTC TROUBLESHOOTING COMPLETED** • Always reconnect all disconnected connectors. • Clear the DTC from the PCM memory using the M-MDS. (See **AFTER REPAIR PROCEDURE [SKYACTIV-G 2.0, SKYACTIV-G 2.5]**.) • Perform the KOEO or KOER self test. (See **KOEO/KOER SELF TEST [SKYACTIV-G 2.0, SKYACTIV-G 2.5]**.) • Is the same DTC present?	Yes	Repeat the inspection from Step 1. • If the malfunction recurs, replace the PCM. (See **PCM REMOVAL/INSTALLATION [SKYACTIV-G 2.0, SKYACTIV-G 2.5]**.) Go to the next step.
		No	Go to the next step.
9	**VERIFY AFTER REPAIR PROCEDURE** • Perform the “AFTER REPAIR PROCEDURE”. (See **AFTER REPAIR PROCEDURE [SKYACTIV-G 2.0, SKYACTIV-G 2.5]**.) • Are any DTCs present?	Yes	Go to the applicable DTC inspection. (See **DTC TABLE [SKYACTIV-G 2.0, SKYACTIV-G 2.5]**.)
		No	DTC troubleshooting completed.

2014 - Mazda3 - Engine

DTC P0482:00 [SKYACTIV-G 2.0, SKYACTIV-G 2.5]

DTC P0482:00	Cooling fan relay No.2 and No.3 control circuit malfunction
DETECTION CONDITION	• The cooling fan relay No.2 and No.3 control voltage at the PCM terminal 2AV is low or cooling fan relay No.2 and No.3 control current is high for a continuous **5 s** relative to the PCM control signal. **Diagnostic support note** • This is a continuous monitor (other). • The check engine light does not illuminate. • FREEZE FRAME DATA (Mode 2) is not available. • Snapshot data is available. • DTC is stored in the PCM memory.
FAIL-SAFE FUNCTION	Not applicable
POSSIBLE CAUSE	• Cooling fan relay No.2 and/or No.3 malfunction • Short to ground or open circuit in cooling fan relay No.2 and/or No.3 power supply circuit ▪ Short to ground in wiring harness between the following terminals: • ENGINE3 15 A fuse—Cooling fan relay No.2 terminal A • ENGINE3 15 A fuse—Cooling fan relay No.3 terminal A ▪ ENGINE3 15 A fuse malfunction ▪ Open circuit in wiring harness between the following terminals: • Main relay terminal D—Cooling fan relay No.2 terminal A • Main relay terminal D—Cooling fan relay No.3 terminal A • Short to ground in wiring harness between the following terminals: ▪ Cooling fan relay No.2 terminal E—PCM terminal 2AV ▪ Cooling fan relay No.3 terminal E—PCM terminal 2AV

- PCM connector or terminals malfunction
- Short to power supply in wiring harness between the following terminals:
    - Cooling fan relay No.2 terminal E—PCM terminal 2AV
    - Cooling fan relay No.3 terminal E—PCM terminal 2AV
- Open circuit in wiring harness between the following terminals:
    - Cooling fan relay No.2 terminal E—PCM terminal 2AV
    - Cooling fan relay No.3 terminal E—PCM terminal 2AV
- PCM malfunction

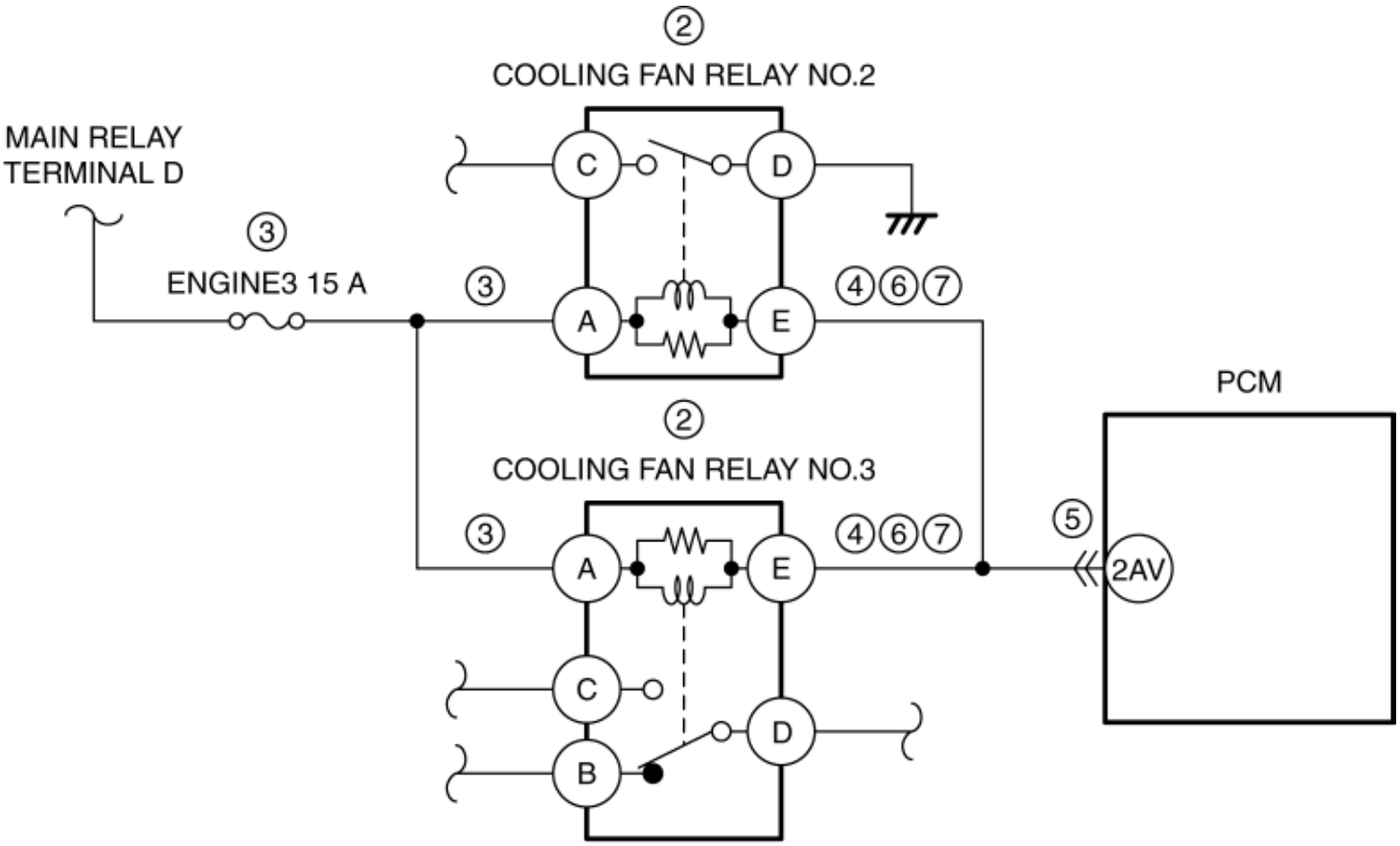

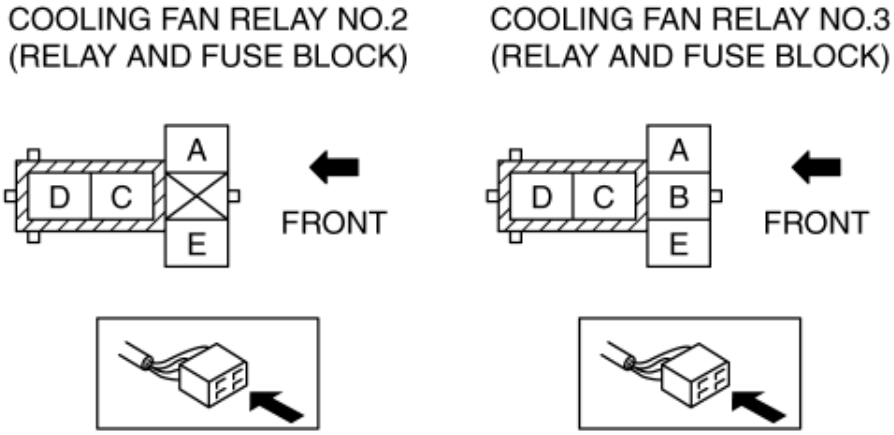

PCM WIRING HARNESS-SIDE CONNECTOR

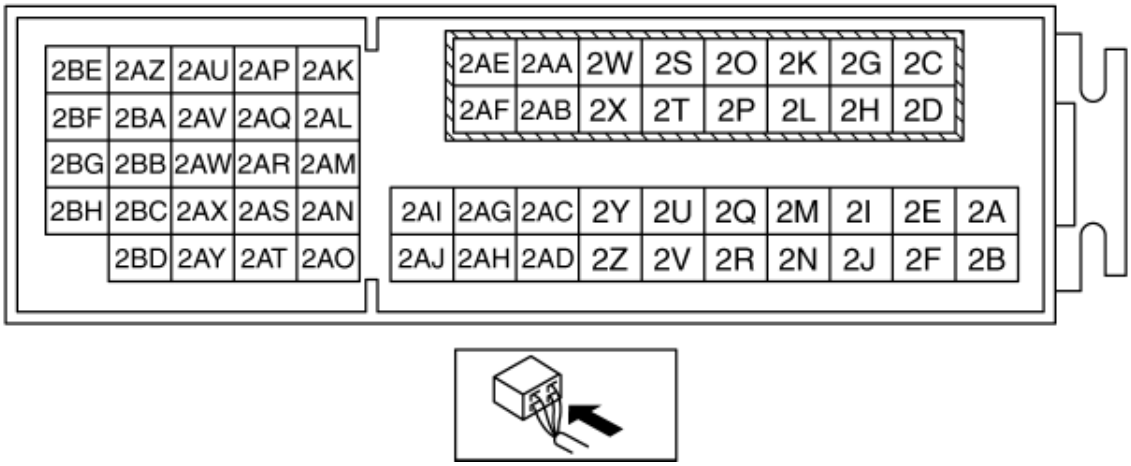

Diagnostic Procedure

STEP	INSPECTION		ACTION
1	**VERIFY RELATED REPAIR INFORMATION AVAILABILITY** • Verify related Service Bulletins and/or on-line repair information availability. • Is any related repair information available?	Yes	Perform repair or diagnosis according to the available repair information. • If the vehicle is not repaired, go to the next step.
		No	Go to the next step.
2	**INSPECT COOLING FAN RELAY NO.2 AND NO.3** • Switch the ignition off. • Remove the cooling fan relay No.2 and No.3. • Inspect the cooling fan relay No.2 and No.3. (See **RELAY INSPECTION**.) • Is there any malfunction?	Yes	Replace the cooling fan relay No.2 and/or No.3, then go to Step 8.
		No	Go to the next step.
3	**INSPECT COOLING FAN RELAY NO.2 AND NO.3 POWER SUPPLY CIRCUIT FOR SHORT TO GROUND OR OPEN CIRCUIT** • Cooling fan relay No.2 and No.3 are removed. • Switch the ignition ON (engine off). • Measure the voltage at the following terminals (wiring harness-side): ▪ Cooling fan relay No.2 terminal A ▪ Cooling fan relay No.3 terminal A • Is the voltage **B+**?	Yes	Go to the next step.
		No	Inspect the ENGINE3 15 A fuse. • If the fuse is blown: ▪ Refer to the wiring diagram and verify whether or not there is a common connector between the following terminals: • ENGINE3 15 A fuse—Cooling fan relay No.2 terminal A • ENGINE3 15 A fuse—Cooling fan relay No.3 terminal A **If there is a common connector:** • Determine the malfunctioning part by inspecting the common connector and

the terminal for corrosion, damage, or pin disconnection, and the common wiring harness for a short to ground.

- Repair or replace the malfunctioning part.

If there is no common connector:

- Repair or replace the wiring harness which has a short to ground.
- Replace the fuse.

- If the fuse is damaged:
  - Replace the fuse.
- If the fuse is normal:
  - Refer to the wiring diagram and verify whether or not there is a common connector between the following terminals:
    - Main relay terminal D—Cooling fan relay No.2 terminal A
    - Main relay terminal D—Cooling fan relay No.3 terminal A

If there is a common connector:

- Determine the malfunctioning part by inspecting the common connector and

			the terminal for corrosion, damage, or pin disconnection, and the common wiring harness for an open circuit. • Repair or replace the malfunctioning part. **If there is no common connector:** • Repair or replace the wiring harness which has an open circuit. Go to Step 8.
4	**INSPECT COOLING FAN RELAY NO.2 AND NO.3 SIGNAL CIRCUIT FOR SHORT TO GROUND** • Cooling fan relay No.2 and No.3 are removed. • Switch the ignition off. • Inspect for continuity between the following terminals (wiring harness-side) and body ground: ▪ Cooling fan relay No.2 terminal E ▪ Cooling fan relay No.3 terminal E • Is there continuity?	Yes	If the short to ground circuit could be detected in the wiring harness: • Refer to the wiring diagram and verify whether or not there is a common connector between the following terminals: ▪ Cooling fan relay No.2 terminal E—PCM terminal 2AV ▪ Cooling fan relay No.3 terminal E—PCM terminal 2AV **If there is a common connector:** ▪ Determine the malfunctioning part by inspecting the common connector and the terminal for corrosion, damage, or pin disconnection, and the common wiring harness for a short to ground. ▪ Repair or replace the malfunctioning part. **If there is no common connector:** ▪ Repair or replace the wiring harness which has a short to ground. If the short to ground circuit could not be detected in the wiring

			harness: • Replace the PCM (short to ground in the PCM internal circuit). (See **PCM REMOVAL/INSTALLATION [SKYACTIV-G 2.0, SKYACTIV-G 2.5]**.) Go to Step 8.
		No	Go to the next step.
5	**INSPECT PCM CONNECTOR CONDITION** • Disconnect the PCM connector. • Inspect for poor connection (such as damaged/pulled-out pins, corrosion). • Is there any malfunction?	Yes	Repair or replace the connector and/or terminals, then go to Step 8.
		No	Go to the next step.
6	**INSPECT COOLING FAN RELAY NO.2 AND NO.3 SIGNAL CIRCUIT FOR SHORT TO POWER SUPPLY** • Cooling fan relay No.2 and No.3 are removed. • Verify that the PCM connector is disconnected. • Switch the ignition ON (engine off). **NOTE:** • Another DTC may be stored by the PCM detecting an open circuit. • Measure the voltage at the following terminals (wiring harness-side): ▪ Cooling fan relay No.2 terminal E ▪ Cooling fan relay No.3	Yes	Go to the next step.
		No	Refer to the wiring diagram and verify whether or not there is a common connector between the following terminals: • Cooling fan relay No.2 terminal E—PCM terminal 2AV • Cooling fan relay No.3 terminal E—PCM terminal 2AV **If there is a common connector:** • Determine the malfunctioning part by inspecting the common connector and the terminal for corrosion, damage, or pin disconnection, and the common wiring harness for a short to power supply. • Repair or replace the malfunctioning part. **If there is no common connector:** • Repair or replace the wiring harness which has a short to power supply. Go to Step 8.

	terminal E • Is the voltage **0 V**?		
7	**INSPECT COOLING FAN RELAY NO.2 AND NO.3 SIGNAL CIRCUIT FOR OPEN CIRCUIT** • Cooling fan relay No.2 and No.3 are removed. • Verify that the PCM connector is disconnected. • Switch the ignition off. • Inspect for continuity between the following terminals (wiring harness-side): ▪ Cooling fan relay No.2 terminal E—PCM terminal 2AV ▪ Cooling fan relay No.3 terminal E—PCM terminal 2AV • Is there continuity?	Yes	Go to the next step.
		No	Refer to the wiring diagram and verify whether or not there is a common connector between the following terminals: • Cooling fan relay No.2 terminal E—PCM terminal 2AV • Cooling fan relay No.3 terminal E—PCM terminal 2AV **If there is a common connector:** • Determine the malfunctioning part by inspecting the common connector and the terminal for corrosion, damage, or pin disconnection, and the common wiring harness for an open circuit. • Repair or replace the malfunctioning part. **If there is no common connector:** • Repair or replace the wiring harness which has an open circuit. Go to the next step.
8	**VERIFY DTC TROUBLESHOOTING COMPLETED** • Always reconnect all disconnected connectors. • Clear the DTC from the PCM memory using the M-MDS. (See **AFTER REPAIR PROCEDURE [SKYACTIV-G 2.0, SKYACTIV-G 2.5]**.) • Perform the KOEO or KOER self test. (See **KOEO/KOER SELF TEST [SKYACTIV-G 2.0, SKYACTIV-G 2.5]**.) • Is the same DTC present?	Yes	Repeat the inspection from Step 1. • If the malfunction recurs, replace the PCM. (See **PCM REMOVAL/INSTALLATION [SKYACTIV-G 2.0, SKYACTIV-G 2.5]**.) Go to the next step.
		No	Go to the next step.

9	**VERIFY AFTER REPAIR PROCEDURE** • Perform the “AFTER REPAIR PROCEDURE”. (See **AFTER REPAIR PROCEDURE [SKYACTIV-G 2.0, SKYACTIV-G 2.5]**.) • Are any DTCs present?	Yes	Go to the applicable DTC inspection. (See **DTC TABLE [SKYACTIV-G 2.0, SKYACTIV-G 2.5]**.)
		No	DTC troubleshooting completed.

2014 - Mazda3 - Engine

DTC P0500:00 [SKYACTIV-G 2.0, SKYACTIV-G 2.5]

DTC P0500:00	VSS circuit problem
DETECTION CONDITION	• An error in the wheel speed signal from the DSC HU/CM is detected by CAN when the following conditions are met: ▪ Neutral switch and CPP switch: OFF (MTX) ▪ Shift position: except P or N position (ATX) ▪ Absolute load: **above 40 %** ▪ Engine speed: **above 2,000 rpm** ▪ Brake switch: OFF **Diagnostic support note** • This is a continuous monitor (CCM). • The check engine light illuminates if the PCM detects the above malfunction condition in two consecutive drive cycles or in one drive cycle while the DTC for the same malfunction has been stored in the PCM. • PENDING CODE is available if the PCM detects the above malfunction condition during first drive cycle. • FREEZE FRAME DATA (Mode 2)/Snapshot data is available. • DTC is stored in the PCM memory.
FAIL-SAFE FUNCTION	• Fixes the vehicle speed for the control at **0 km/h {0 mph}**.
POSSIBLE CAUSE	• DSC HU/CM malfunction • Front ABS wheel-speed sensor malfunction • PCM malfunction
SYSTEM WIRING DIAGRAM	Not applicable

CAUTION:

- Verify the malfunction symptom according to not only the PID value but also the symptom troubleshooting.

Related PIDs

Item (definition)	Unit/Condition	Definition	Condition/Specification (Reference)
LOAD	%	Ratio of actual amount of intake air to the maximum air charging amount (mass volume) of cylinder	• Idle (after warm up): Approx. 17.64% • Racing (engine speed is 2,000 rpm): Approx. 14.51% • Racing (engine speed is 4,000 rpm): Approx. 21.17%
RPM	RPM	Engine speed	• Displays engine speed

Diagnostic Procedure

STEP	INSPECTION		ACTION
1	**VERIFY FREEZE FRAME DATA (MODE 2)/SNAPSHOT DATA HAS BEEN RECORDED** • Has the FREEZE FRAME DATA (Mode 2)/snapshot data been recorded?	Yes	Go to the next step.
		No	Record the FREEZE FRAME DATA (Mode 2)/snapshot data on the repair order, then go to the next step.
2	**VERIFY RELATED REPAIR INFORMATION AVAILABILITY** • Verify related Service Bulletins and/or on-line repair information availability. • Is any related repair information available?	Yes	Perform repair or diagnosis according to the available repair information. • If the vehicle is not repaired, go to the next step.

		No	Go to the next step.
3	**VERIFY STORED DTC IN DSC HU/CM** • Retrieve the DSC HU/CM DTC using the M-MDS. (See **ON-BOARD DIAGNOSIS [DYNAMIC STABILITY CONTROL (DSC)]**.) • Are any DTCs present?	Yes	Go to the applicable DTC inspection. (See **ON-BOARD DIAGNOSIS [DYNAMIC STABILITY CONTROL (DSC)]**.)
		No	Go to the next step.
4	**VERIFY DTC TROUBLESHOOTING COMPLETED** • Always reconnect all disconnected connectors. • Clear the DTC from the PCM memory using the M-MDS. (See **AFTER REPAIR PROCEDURE [SKYACTIV-G 2.0, SKYACTIV-G 2.5]**.) • Access the RPM and LOAD PIDs using the M-MDS. (See **ON-BOARD DIAGNOSTIC TEST [SKYACTIV-G 2.0, SKYACTIV-G 2.5]**.) **CAUTION:** • While performing this step, always operate the vehicle in a safe and lawful manner. • When the M-MDS is used to observe monitor system status while driving, be sure to have another technician with you, or record the data in the M-MDS using the PID/DATA MONITOR AND RECORD capturing function and inspect later. • Drive the vehicle under the following conditions for **14 s**. ▪ Absolute load: **above 40 %** ▪ Engine speed: **above 2,000 rpm** • Perform the Pending Trouble Code Access Procedure. (See **ON-BOARD DIAGNOSTIC TEST [SKYACTIV-G 2.0, SKYACTIV-G 2.5]**.) • Is the PENDING CODE for this DTC present?	Yes	Replace the PCM, then go to the next step. (See **PCM REMOVAL/INSTALLATION [SKYACTIV-G 2.0, SKYACTIV-G 2.5]**.)
		No	Go to the next step.
5	**VERIFY AFTER REPAIR PROCEDURE** • Perform the “AFTER REPAIR PROCEDURE”. (See **AFTER REPAIR PROCEDURE [SKYACTIV-G 2.0, SKYACTIV-G 2.5]**.)	Yes	Go to the applicable DTC inspection. (See **DTC TABLE [SKYACTIV-G 2.0,**

	• Are any DTCs present?		**SKYACTIV-G 2.5]**.)
		No	DTC troubleshooting completed.

2014 - Mazda3 - Engine

DTC P0504:00 [SKYACTIV-G 2.0, SKYACTIV-G 2.5]

DTC P0504:00	Brake switch circuit problem
DETECTION CONDITION	• The condition in which the brake switch No.1 and No.2 signals are both on or off for **3 s or more** is repeated five times when performing the brake operation. **Diagnostic support note** • This is a continuous monitor (other). • The check engine light illuminates if the PCM detects the above malfunction condition during the first drive cycle. • FREEZE FRAME DATA (Mode 2)/Snapshot data is available. • DTC is stored in the PCM memory.
FAIL-SAFE FUNCTION	Not applicable

POSSIBLE CAUSE	**CAUTION:**
	• Inspect the brake switch with it installed to the brake pedal, otherwise the brake switch may not operate normally. If the brake switch is removed from the brake pedal, replace the brake switch with a new one.
	• Brake switch connector or terminals malfunction
	• Short to ground or open circuit in brake switch No.1 power supply circuit
	  ▪ Short to ground in wiring harness between MAIN 200 A fuse and brake switch terminal A
	  ▪ MAIN 200 A fuse and/or STOP 10 A fuse malfunction
	  ▪ Open circuit in wiring harness between battery positive terminal and brake switch terminal A
	• Open circuit in wiring harness between brake switch terminal B and body ground
	• Short to ground in wiring harness between the following terminals:
	  ▪ Brake switch terminal D—PCM terminal 2G
	  ▪ Brake switch terminal C—PCM terminal 2R
	• PCM connector or terminals malfunction
	• Short to power supply in wiring harness between the following terminals:
	  ▪ Brake switch terminal D—PCM terminal 2G
	  ▪ Brake switch terminal C—PCM terminal 2R

	Open circuit in wiring harness between the following terminals: ▪ Brake switch terminal D—PCM terminal 2G ▪ Brake switch terminal C—PCM terminal 2R • Brake switch malfunction • PCM malfunction

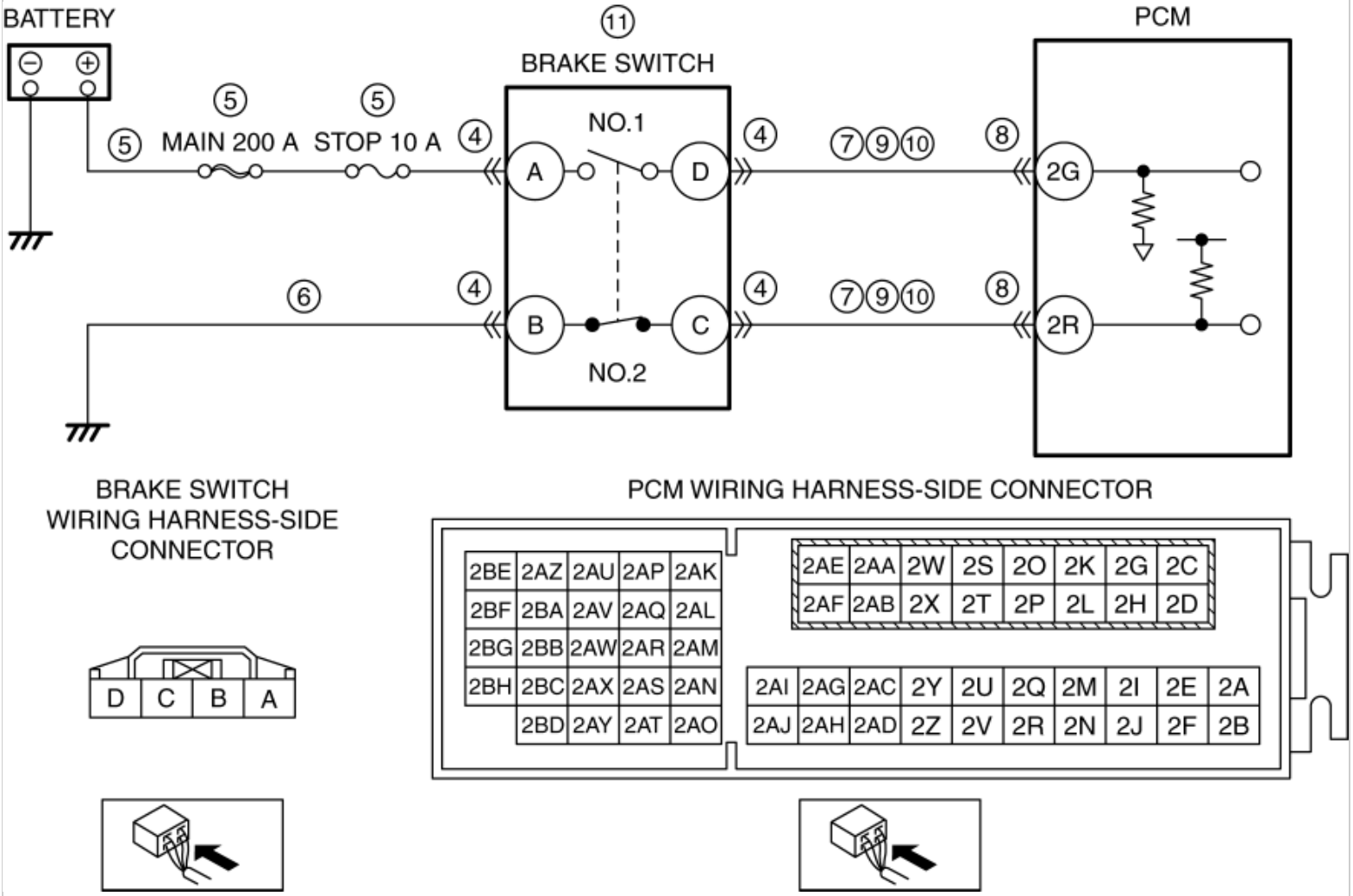

Diagnostic Procedure

STEP	INSPECTION		ACTION
1	**VERIFY FREEZE FRAME DATA (MODE 2)/SNAPSHOT DATA HAS BEEN RECORDED** • Has the FREEZE FRAME DATA (Mode 2)/snapshot data been recorded?	Yes	Go to the next step.
		No	Record the FREEZE FRAME DATA (Mode 2)/snapshot data on the repair order, then go to the next step.
2	**VERIFY RELATED REPAIR INFORMATION AVAILABILITY** • Verify related Service Bulletins and/or on-line repair information	Yes	Perform repair or diagnosis according to the available repair information. • If the vehicle is not repaired, go to the next step.

	availability. • Is any related repair information available?	No	Go to the next step.
3	**VERIFY RELATED PENDING CODE AND/OR DTC** • Switch the ignition off, then ON (engine off). • Perform the Pending Trouble Code Access Procedure and DTC Reading Procedure. (See **ON-BOARD DIAGNOSTIC TEST [SKYACTIV-G 2.0, SKYACTIV-G 2.5]**.) • Is the PENDING CODE/DTC P0703:00 also present?	Yes	Go to the applicable PENDING CODE or DTC inspection. (See **DTC P0703:00 [SKYACTIV-G 2.0, SKYACTIV-G 2.5]**.)
		No	Go to the next step.
4	**INSPECT BRAKE SWITCH CONNECTOR CONDITION** • Switch the ignition off. • Disconnect the brake switch connector. • Inspect for poor connection (such as damaged/pulled-out pins, corrosion). • Is there any malfunction?	Yes	Repair or replace the connector and/or terminals, then go to Step 12.
		No	Go to the next step.
5	**INSPECT BRAKE SWITCH NO.1 POWER SUPPLY CIRCUIT FOR SHORT TO GROUND OR OPEN CIRCUIT** • Verify that the brake switch connector is disconnected. • Measure the voltage at the brake switch terminal A (wiring harness-side). • Is the voltage **B+**?	Yes	Go to the next step.
		No	Inspect the MAIN 200 A fuse and STOP 10 A fuse. • If the fuse is blown: ▪ Refer to the wiring diagram and verify whether or not there is a common connector between MAIN 200 A fuse and brake switch terminal A. **If there is a common connector:** • Determine the malfunctioning part by inspecting the common connector and the terminal for corrosion, damage, or pin disconnection, and the common wiring harness for a short

			to ground. • Repair or replace the malfunctioning part. **If there is no common connector:** • Repair or replace the wiring harness which has a short to ground. • Replace the fuse. • If the fuse is damaged: ▪ Replace the fuse. • If all fuses are normal: ▪ Refer to the wiring diagram and verify whether or not there is a common connector between battery positive terminal and brake switch terminal A. **If there is a common connector:** • Determine the malfunctioning part by inspecting the common connector and the terminal for corrosion, damage, or pin disconnection, and the common wiring harness for an open circuit. • Repair or replace the malfunctioning part. **If there is no common connector:** • Repair or replace the wiring harness which has an open circuit. Go to Step 12.
6	**INSPECT BRAKE SWITCH NO.2 GROUND CIRCUIT FOR OPEN CIRCUIT** • Verify that the brake switch connector is disconnected. • Inspect for continuity	Yes	Go to the next step.
		No	Refer to the wiring diagram and verify whether or not there is a common connector between brake switch terminal B and body ground. **If there is a common connector:**

	between brake switch terminal B (wiring harness-side) and body ground. • Is there continuity?		• Determine the malfunctioning part by inspecting the common connector and the terminal for corrosion, damage, or pin disconnection, and the common wiring harness for an open circuit. • Repair or replace the malfunctioning part. **If there is no common connector:** • Inspect for the following: ▪ Open circuit between brake switch and body ground ▪ Loose or lifting ground point • Repair or replace the malfunctioning part. Go to Step 12.
7	**INSPECT BRAKE SWITCH CIRCUIT FOR SHORT TO GROUND** • Verify that the brake switch connector is disconnected. • Inspect for continuity between the following terminals (wiring harness-side) and body ground: ▪ Brake switch terminal D ▪ Brake switch terminal C • Is there continuity?	Yes	If the short to ground circuit could be detected in the wiring harness: • Refer to the wiring diagram and verify whether or not there is a common connector between the following terminals: ▪ Brake switch terminal D—PCM terminal 2G ▪ Brake switch terminal C—PCM terminal 2R **If there is a common connector:** ▪ Determine the malfunctioning part by inspecting the common connector and the terminal for corrosion, damage, or pin disconnection, and the common wiring harness for a short to ground. ▪ Repair or replace the malfunctioning part. **If there is no common connector:** ▪ Repair or replace the wiring harness which has a short to ground. If the short to ground circuit could not be detected in the wiring harness: • Replace the PCM (short to ground in the PCM internal circuit). (See **PCM REMOVAL/INSTALLATION [SKYACTIV-G 2.0, SKYACTIV-G 2.5]**.) Go to Step 12.
		No	Go to the next step.

8	**INSPECT PCM CONNECTOR CONDITION** • Disconnect the PCM connector. • Inspect for poor connection (such as damaged/pulled-out pins, corrosion). • Is there any malfunction?	Yes	Repair or replace the connector and/or terminals, then go to Step 12.
		No	Go to the next step.
9	**INSPECT BRAKE SWITCH CIRCUIT FOR SHORT TO POWER SUPPLY** • Verify that the brake switch and PCM connectors are disconnected. • Switch the ignition ON (engine off). **NOTE:** • Another DTC may be stored by the PCM detecting an open circuit. • Measure the voltage at the following terminals (wiring harness-side): ▪ Brake switch terminal D ▪ Brake switch terminal C • Is the voltage **0 V**?	Yes	Go to the next step.
		No	Refer to the wiring diagram and verify whether or not there is a common connector between the following terminals: • Brake switch terminal D—PCM terminal 2G • Brake switch terminal C—PCM terminal 2R **If there is a common connector:** • Determine the malfunctioning part by inspecting the common connector and the terminal for corrosion, damage, or pin disconnection, and the common wiring harness for a short to power supply. • Repair or replace the malfunctioning part. **If there is no common connector:** • Repair or replace the wiring harness which has a short to power supply. Go to Step 12.
10	**INSPECT BRAKE SWITCH CIRCUIT FOR OPEN CIRCUIT** • Verify that the brake switch and PCM connectors are disconnected. • Switch the ignition off. • Inspect for continuity between the following terminals (wiring harness-side): ▪ Brake switch	Yes	Go to the next step.
		No	Refer to the wiring diagram and verify whether or not there is a common connector between the following terminals: • Brake switch terminal D—PCM terminal 2G • Brake switch terminal C—PCM terminal 2R **If there is a common connector:** • Determine the malfunctioning part by inspecting the common connector and the terminal for corrosion, damage, or pin disconnection, and the common wiring harness for an open circuit.

	terminal D—PCM terminal 2G ▪ Brake switch terminal C—PCM terminal 2R • Is there continuity?		• Repair or replace the malfunctioning part. **If there is no common connector:** • Repair or replace the wiring harness which has an open circuit. Go to Step 12.
11	**INSPECT BRAKE SWITCH** • Inspect the brake switch. (See **BRAKE SWITCH INSPECTION**.) • Is there any malfunction?	Yes	Replace the brake switch, then go to the next step. (See **BRAKE PEDAL REMOVAL/INSTALLATION**.)
		No	Go to the next step.
12	**VERIFY DTC TROUBLESHOOTING COMPLETED** • Always reconnect all disconnected connectors. • Clear the DTC from the PCM memory using the M-MDS. (See **AFTER REPAIR PROCEDURE [SKYACTIV-G 2.0, SKYACTIV-G 2.5]**.) • Switch the ignition ON (engine off). • After depressing the brake pedal for **3 s or more**, perform the operation of depressing and releasing the brake pedal **5 times**. • Perform the DTC Reading Procedure. (See **ON-BOARD DIAGNOSTIC TEST [SKYACTIV-G 2.0, SKYACTIV-G 2.5]**.) • Is the same DTC present?	Yes	Repeat the inspection from Step 1. • If the malfunction recurs, replace the PCM. (See **PCM REMOVAL/INSTALLATION [SKYACTIV-G 2.0, SKYACTIV-G 2.5]**.) Go to the next step.
		No	Go to the next step.
13	**VERIFY AFTER REPAIR PROCEDURE** • Perform the “AFTER REPAIR PROCEDURE”. (See **AFTER REPAIR PROCEDURE [SKYACTIV-G 2.0, SKYACTIV-G 2.5]**.) • Are any DTCs present?	Yes	Go to the applicable DTC inspection. (See **DTC TABLE [SKYACTIV-G 2.0, SKYACTIV-G 2.5]**.)
		No	DTC troubleshooting completed.

DTC P0504:00 [SKYACTIV-G 2.0, SKYACTIV-G 2.5]

2014 - Mazda3 - Engine

DTC P0506:00, P151B:00 [SKYACTIV-G 2.0, SKYACTIV-G 2.5]

DTC P0506:00	IAC system RPM lower than expected
DTC P151B:00	IAC system problem
DETECTION CONDITION	**DTC P0506:00** • The actual idle speed is lower than expected by **100 rpm** for **14 s**, when the brake pedal is depressed (brake switch is on). **NOTE:** • If the atmospheric pressure is **less than 72.3 kPa {0.737 kgf/cm^2, 10.5 psi}** or the intake air temperature is **below −10 °C {14 °F}**, the PCM cancels the diagnosis of DTC P0506:00. **Diagnostic support note** • This is a continuous monitor (CCM). • The check engine light illuminates if the PCM detects the above malfunction condition in two consecutive drive cycles or in one drive cycle while the DTC for the same malfunction has been stored in the PCM. • PENDING CODE is available if the PCM detects the above malfunction condition during first drive cycle. • FREEZE FRAME DATA (Mode 2)/Snapshot data is available. • DTC is stored in the PCM memory. **DTC P151B:00** • The PCM cannot control the idle speed toward the target idle speed during the KOER self test. **Diagnostic support note** • The check engine light does not illuminate. • FREEZE FRAME DATA (Mode 2) is not available. • Snapshot data is available.

	DTC is stored in the PCM memory.
FAIL-SAFE FUNCTION	Not applicable
POSSIBLE CAUSE	• A/C magnetic clutch malfunction • Drive-by-wire control system malfunction • Malfunction in injection amount measurement system (refer to DTC P0101:00) • Purge solenoid valve malfunction • Air cleaner element restricted • Throttle body passage blockage • Engine malfunction ▪ Insufficient engine compression • Generator control circuit malfunction • PCM malfunction
SYSTEM WIRING DIAGRAM	Not applicable

CAUTION:

- Verify the malfunction symptom according to not only the PID value but also the symptom troubleshooting.

Related PIDs

Item (definition)	Unit/Condition	Definition	Condition/Specification (Reference)
ALTF	%	Field coil current control signal output to generator	• Ignition switched ON (engine off): 0% • Idle: Approx. 42% • Racing (Engine speed is 2,000 rpm): Approx. 29%
ALTT V	V	Generator output voltage	• Idle (no E/L): Approx. 14 V (This is internal calculation value and differs from terminal voltage)
	V	TP sensor No.1 voltage	• Accelerator pedal released: Approx. 1.11 V

TP1			• Accelerator pedal fully depressed: Approx. 4.59 V
	%	Throttle valve position No.1	• Accelerator pedal released: Approx. 22% • Accelerator pedal fully depressed: Approx. 92%
TP2	V	TP sensor No.2 voltage	• Accelerator pedal released: Approx. 3.92 V • Accelerator pedal fully depressed: Approx. 0.41 V
	%	Throttle valve position No.2	• Accelerator pedal released: Approx. 22% • Accelerator pedal fully depressed: Approx. 82%

Diagnostic Procedure

STEP	INSPECTION		ACTION
1	**VERIFY FREEZE FRAME DATA (MODE 2)/SNAPSHOT DATA HAS BEEN RECORDED** • Has the FREEZE FRAME DATA (Mode 2)/snapshot data been recorded?	Yes	Go to the next step.
		No	Record the FREEZE FRAME DATA (Mode 2)/snapshot data on the repair order, then go to the next step.
2	**VERIFY RELATED REPAIR INFORMATION AVAILABILITY** • Verify related Service Bulletins and/or on-line repair information availability. • Is any related repair information available?	Yes	Perform repair or diagnosis according to the available repair information. • If the vehicle is not repaired, go to the next step.
		No	Go to the next step.
3	**VERIFY RELATED PENDING CODE AND/OR DTC** • Switch the ignition off, then ON (engine off). • Perform the Pending Trouble Code Access Procedure and DTC Reading Procedure. (See **ON-BOARD DIAGNOSTIC TEST [SKYACTIV-G 2.0, SKYACTIV-G 2.5]**.) • Are any other PENDING CODEs and/or	Yes	Go to the applicable PENDING CODE or DTC inspection. (See **DTC TABLE [SKYACTIV-G 2.0, SKYACTIV-G 2.5]**.)
		No	Go to the next step.

	DTCs present?		
4	**INSPECT A/C MAGNETIC CLUTCH OPERATION** • Turn the fan switch off. • Is the magnetic clutch still on?	Yes	Perform the symptom troubleshooting "NO.24 A/C IS ALWAYS ON OR A/C COMPRESSOR RUNS CONTINUOUSLY". (See **NO.24 A/C IS ALWAYS ON OR A/C COMPRESSOR RUNS CONTINUOUSLY [SKYACTIV-G 2.0, SKYACTIV-G 2.5]**.)
		No	Go to the next step.
5	**INSPECT DRIVE-BY-WIRE CONTROL SYSTEM MALFUNCTION** • Perform the Drive-by-wire Control System Inspection. (See **ENGINE CONTROL SYSTEM OPERATION INSPECTION [SKYACTIV-G 2.0, SKYACTIV-G 2.5]**.) • Is there any malfunction?	Yes	Repair or replace the malfunctioning part according to the inspection results, then go to Step 11.
		No	Go to the next step.
6	**INSPECT PURGE SOLENOID VALVE** • Inspect the purge solenoid valve. (See **PURGE SOLENOID VALVE INSPECTION [SKYACTIV-G 2.0, SKYACTIV-G 2.5]**.) • Is there any malfunction?	Yes	Replace the purge solenoid valve, then go to Step 11. (See **PURGE SOLENOID VALVE REMOVAL/INSTALLATION [SKYACTIV-G 2.0, SKYACTIV-G 2.5]**.)
		No	Go to the next step.
7	**INSPECT AIR CLEANER ELEMENT** • Remove the air cleaner element with the engine is running. • Does the engine speed increase?	Yes	Clean or replace the air cleaner element, then go to Step 11.
		No	Go to the next step.
8	**INSPECT THROTTLE BODY PASSAGE** • Visually inspect the throttle body passage. • Is the throttle body passage dirty and/or restricted?	Yes	Clean or replace the throttle body passage, then go to Step 11. (See **INTAKE-AIR SYSTEM REMOVAL/INSTALLATION [SKYACTIV-G 2.0, SKYACTIV-G 2.5]**.)
		No	Go to the next step.
9	**INSPECT ENGINE COMPRESSION** • Inspect the engine compression. (See **COMPRESSION INSPECTION [SKYACTIV-G 2.0, SKYACTIV-G 2.5]**.)	Yes	Go to the next step.
		No	Repair or replace the malfunctioning part according to the inspection results, then go to Step 11.

	Are compression pressures within specification?
	
	Specification:
	
	• Compression [SKYACTIV-G 2.0]
	  ▪ Standard: **885 kPa {9.02 kgf/cm^2, 128 psi} (300 rpm)**
	  ▪ Minimum: **708 kPa {7.22 kgf/cm^2, 103 psi} (300 rpm)**
	  ▪ Maximum difference between cylinders: **150 kPa {1.53 kgf/cm^2, 21.8 psi}** (**300 rpm**)
	• Compression [SKYACTIV-G 2.5]
	  ▪ Standard: **954 kPa {9.73 kgf/cm^2, 138 psi} (300 rpm)**
	  ▪ Minimum: **763 kPa {7.78 kgf/cm^2, 111 psi} (300 rpm)**
	  ▪ Maximum difference between cylinders: **161 kPa {1.64 kgf/cm^2, 23.4 psi}** (**300 rpm**)
	
	NOTE:
	
	• Because the SKYACTIV-G 2.0 and SKYACTIV-G 2.5 retards the intake valve closing timing, compression pressure is low.		

10	**INSPECT GENERATOR CONTROL CIRCUIT FOR SHORT TO POWER SUPPLY** • Apply the electrical load (such as blower fan, rear window defroster, or headlight). • Does the engine speed increase?	Yes	Go to the next step.
		No	Repair or replace the malfunctioning part according to the inspection results, then go to the next step.
11	**VERIFY DTC TROUBLESHOOTING COMPLETED** • Always reconnect all disconnected connectors. • Clear the DTC from the PCM memory using the M-MDS.	Yes	Repeat the inspection from Step 1. • If the malfunction recurs, replace the PCM. (See **PCM**

	(See **AFTER REPAIR PROCEDURE [SKYACTIV-G 2.0, SKYACTIV-G 2.5]**.) • Start the engine and warm it up completely. • Depress the brake pedal for **14 s or more**. • Perform the KOER self test. (See **KOEO/KOER SELF TEST [SKYACTIV-G 2.0, SKYACTIV-G 2.5]**.) • Perform the Pending Trouble Code Access Procedure. (See **ON-BOARD DIAGNOSTIC TEST [SKYACTIV-G 2.0, SKYACTIV-G 2.5]**.) • Is the PENDING CODE and/or DTC for this DTC present?		**REMOVAL/INSTALLATION [SKYACTIV-G 2.0, SKYACTIV-G 2.5]**.) Go to the next step.
		No	Go to the next step.
12	**VERIFY AFTER REPAIR PROCEDURE** • Perform the “AFTER REPAIR PROCEDURE”. (See **AFTER REPAIR PROCEDURE [SKYACTIV-G 2.0, SKYACTIV-G 2.5]**.) • Are any DTCs present?	Yes	Go to the applicable DTC inspection. (See **DTC TABLE [SKYACTIV-G 2.0, SKYACTIV-G 2.5]**.)
		No	DTC troubleshooting completed.

2014 - Mazda3 - Engine

DTC P0507:00 [SKYACTIV-G 2.0, SKYACTIV-G 2.5]

DTC P0507:00	IAC system RPM higher than expected
DETECTION CONDITION	• The actual idle speed is higher than expected by **200 rpm** for **14 s**, when the brake pedal is depressed (brake switch is on). **NOTE:** ▪ If the atmospheric pressure is **less than 72.3 kPa {0.737 kgf/cm^2, 10.5 psi}** or the intake air temperature is **below −10 °C {14 °F}**, the PCM cancels the diagnosis of DTC P0507:00. **Diagnostic support note** • This is a continuous monitor (CCM). • The check engine light illuminates if the PCM detects the above malfunction condition in two consecutive drive cycles or in one drive cycle while the DTC for the same malfunction has been stored in the PCM. • PENDING CODE is available if the PCM detects the above malfunction condition during first drive cycle. • FREEZE FRAME DATA (Mode 2)/Snapshot data is available. • DTC is stored in the PCM memory.
FAIL-SAFE FUNCTION	Not applicable
POSSIBLE CAUSE	• Vacuum hose not installed correctly • Drive-by-wire control system malfunction ▪ Throttle valve malfunction (stuck open) • Malfunction in injection amount measurement system (refer to DTC P0101:00) • Purge solenoid valve malfunction (stuck open) (in this case, the PCM records DTC P0443:00.) • PCM malfunction

SYSTEM WIRING DIAGRAM	Not applicable

Diagnostic Procedure

STEP	INSPECTION		ACTION
1	**VERIFY FREEZE FRAME DATA (MODE 2)/SNAPSHOT DATA HAS BEEN RECORDED** • Has the FREEZE FRAME DATA (Mode 2)/snapshot data been recorded?	Yes	Go to the next step.
		No	Record the FREEZE FRAME DATA (Mode 2)/snapshot data on the repair order, then go to the next step.
2	**VERIFY RELATED REPAIR INFORMATION AVAILABILITY** • Verify related Service Bulletins and/or on-line repair information availability. • Is any related repair information available?	Yes	Perform repair or diagnosis according to the available repair information. • If the vehicle is not repaired, go to the next step.
		No	Go to the next step.
3	**VERIFY RELATED PENDING CODE AND/OR DTC** • Switch the ignition off, then ON (engine off). • Perform the Pending Trouble Code Access Procedure and DTC Reading Procedure. (See **ON-BOARD DIAGNOSTIC TEST [SKYACTIV-G 2.0, SKYACTIV-G 2.5]**.) • Are any other PENDING CODEs and/or DTCs present?	Yes	Go to the applicable PENDING CODE or DTC inspection. (See **DTC TABLE [SKYACTIV-G 2.0, SKYACTIV-G 2.5]**.)
		No	Go to the next step.
4	**INSPECT VACUUM HOSE CONNECTION** • Visually inspect the vacuum hoses connection. (See **INTAKE-AIR SYSTEM VACUUM HOSE ROUTING DIAGRAM [SKYACTIV-G 2.0, SKYACTIV-G 2.5]**.) • Is there any malfunction?	Yes	Reconnect the vacuum hoses correctly, then go to Step 6.
		No	Go to the next step.
5	**INSPECT DRIVE-BY-WIRE CONTROL SYSTEM MALFUNCTION** • Perform the Drive-by-wire Control System Inspection.	Yes	Repair or replace the malfunctioning part according to the inspection results, then go to the next step.

	(See **ENGINE CONTROL SYSTEM OPERATION INSPECTION [SKYACTIV-G 2.0, SKYACTIV-G 2.5]**.) • Is there any malfunction?	No	Go to the next step.
6	**VERIFY DTC TROUBLESHOOTING COMPLETED** • Always reconnect all disconnected connectors. • Clear the DTC from the PCM memory using the M-MDS. (See **AFTER REPAIR PROCEDURE [SKYACTIV-G 2.0, SKYACTIV-G 2.5]**.) • Start the engine and warm it up completely. • Depress the brake pedal for **14 s or more.** • Perform the Pending Trouble Code Access Procedure. (See **ON-BOARD DIAGNOSTIC TEST [SKYACTIV-G 2.0, SKYACTIV-G 2.5]**.) • Is the PENDING CODE for this DTC present?	Yes	Repeat the inspection from Step 1. • If the malfunction recurs, replace the PCM. (See **PCM REMOVAL/INSTALLATION [SKYACTIV-G 2.0, SKYACTIV-G 2.5]**.) Go to the next step.
		No	Go to the next step.
7	**VERIFY AFTER REPAIR PROCEDURE** • Perform the “AFTER REPAIR PROCEDURE”. (See **AFTER REPAIR PROCEDURE [SKYACTIV-G 2.0, SKYACTIV-G 2.5]**.) • Are any DTCs present?	Yes	Go to the applicable DTC inspection. (See **DTC TABLE [SKYACTIV-G 2.0, SKYACTIV-G 2.5]**.)
		No	DTC troubleshooting completed.

2014 - Mazda3 - Engine

DTC P050A:00 [SKYACTIV-G 2.0, SKYACTIV-G 2.5]

NOTE:

- To determine the malfunctioning part, proceed with the diagnostics from "Function Inspection Using M-MDS".

Details On DTCs

DESCRIPTION	Cold start IAC system performance problem	
DETECTION CONDITION	Determination conditions	• The difference between the actual engine speed and the target engine speed is **100 rpm or more**.
	Preconditions	• Engine speed: **500 rpm or more**[*1] • Engine coolant temperature: **0—45 °C {32—113 °F}**[*1] • Catalytic converter estimated temperature: **380 °C {716 °F} or less**[*1] • Vehicle speed: **0 km/h {0 mph}**[*1] • The following DTCs are not detected: ▪ ECT sensor No.1 malfunction: P0116:00, P0117:00, P0118:00 ▪ MAP sensor malfunction: P0069:00, P0107:00, P0108:00 ▪ BARO sensor malfunction: P2228:00, P2229:00 ▪ Instrument cluster malfunction: P2610:00 • [*1]: Value can be verified by displaying PIDs using M-MDS

	Malfunction determination period	• **9 s** period
	Drive cycle	• 2
	Self test type	• CMDTC self test
	Sensor used	• CKP sensor • ECT sensor No.1
FAIL-SAFE FUNCTION	• Limits intake air amount • Stops high pressure fuel pump control	
VEHICLE STATUS WHEN DTCs ARE OUTPUT	• Illuminates check engine light.	
POSSIBLE CAUSE	• Air suction in intake air system • Drive-by-wire control system malfunction • Throttle valve malfunction • PCM malfunction	

System Wiring Diagram

- Not applicable

Function Explanation (DTC Detection Outline)

- The PCM calculates the target engine speed appropriate to the engine conditions relative to the actual engine speed based on the CKP sensor signal and provides feedback to the drive-by-wire control (idling speed control). If the actual engine speed is **lower or higher than 100 rpm** relative to the target engine speed during cold-engine idling, the PCM determines a malfunction in the idling speed control, and stores a DTC.

Repeatability Verification Procedure

- Warm up the engine to allow the engine coolant temperature to reach **80 °C {176 °F} or more**.
- Start the engine and leave it idling for **1 min**.

PID Item/Simulation Item Used In Diagnosis

PID/DATA monitor item table

Item	Definition	Unit	Condition/Specification
ETC_ACT	Actual throttle valve opening angle	°	**Ignition switched ON (engine off)** • Accelerator pedal released: Approx. 12.89 ° • Accelerator pedal fully depressed: Approx. 86.03 ° **Idle (after warm up)** • Accelerator pedal released: Approx. 3.2 °

Function Inspection Using M-MDS

STEP	INSPECTION	RESULTS	ACTION
1	**PURPOSE: VERIFY RELATED REPAIR INFORMATION AVAILABILITY** • Verify related Service Bulletins and/or on-line repair information availability. • Is any related repair information available?	Yes	Perform repair or diagnosis according to the available repair information. • If the vehicle is not repaired, go to the next step.
		No	Go to the next step.
2	**PURPOSE: IDENTIFY TRIGGER DTC FOR FREEZE FRAME DATA (MODE 2)** • Is the DTC P050A:00 on FREEZE FRAME DATA (Mode 2)?	Yes	Go to the next step.
		No	Go to the troubleshooting procedure for DTC on FREEZE FRAME DATA (Mode 2). (See **DTC TABLE [SKYACTIV-G 2.0, SKYACTIV-G 2.5]**.)
3	**PURPOSE: RECORD VEHICLE STATUS AT TIME OF DTC DETECTION TO UTILIZE WITH REPEATABILITY VERIFICATION** • Has the FREEZE FRAME DATA (Mode 2)/snapshot data been recorded?	Yes	Go to the next step.
		No	Record the FREEZE FRAME DATA (Mode 2)/snapshot data on the repair order, then go to the next step. **NOTE:**

			Recording can be facilitated using the screen capture function of the PC.
4	**PURPOSE: VERIFY RELATED PENDING CODE AND/OR DTC** • Switch the ignition off, then ON (engine off). • Perform the Pending Trouble Code Access Procedure and DTC Reading Procedure. (See **ON-BOARD DIAGNOSTIC TEST [SKYACTIV-G 2.0, SKYACTIV-G 2.5]**.) • Are any other PENDING CODEs and/or DTCs present?	Yes	Go to the applicable PENDING CODE or DTC inspection. (See **DTC TABLE [SKYACTIV-G 2.0, SKYACTIV-G 2.5]**.) Go to the next step.
		No	Go to the next step.
5	**PURPOSE: VERIFICATION IF MALFUNCTION CAUSED BY THROTTLE VALVE** • Switch the ignition ON (engine off). • Access the ETC_ACT PID using the M-MDS. (See **ON-BOARD DIAGNOSTIC TEST [SKYACTIV-G 2.0, SKYACTIV-G 2.5]**.) • While gradually depressing the accelerator pedal, verify that PID monitor ETC_ACT value increases. • Does the monitor value change according to the amount the accelerator pedal is depressed?	Yes	Go to the troubleshooting procedure to perform the procedure from Step 1.
		No	Go to the troubleshooting procedure to perform the procedure from Step 2.

Troubleshooting Diagnostic Procedure

Intention of troubleshooting procedure

- Step 1
  - Perform an intake air system parts inspection.
- Step 2
  - Perform a throttle valve related inspection.
- Step 3—4
  - Verify that the primary malfunction is resolved and there are no other malfunctions.

STEP	INSPECTION	RESULTS	ACTION
1	**PURPOSE: INSPECT INTAKE AIR SYSTEM FOR AIR SUCTION** • Inspect the following parts of the intake air system for looseness, damage, and loss. ▪ Between air cleaner and throttle body ▪ Between throttle body and intake manifold • Is there any malfunction?	Yes	Repair or replace the malfunctioning part according to the inspection results, then go to Step 3.
		No	Go to the next step.
2	**PURPOSE: DETERMINE INTEGRITY OF THROTTLE VALVE** • Inspect the throttle valve. (See **THROTTLE BODY INSPECTION [SKYACTIV-G 2.0, SKYACTIV-G 2.5]**.) • Perform the Electronic Control Throttle Operation Inspection. (See **ENGINE CONTROL SYSTEM OPERATION INSPECTION [SKYACTIV-G 2.0, SKYACTIV-G 2.5]**.) • Is there any malfunction?	Yes	Replace the throttle body, then go to the next step. (See **INTAKE-AIR SYSTEM REMOVAL/INSTALLATION [SKYACTIV-G 2.0, SKYACTIV-G 2.5]**.)
		No	Clean the throttle valve, then go to the next step. (See **INTAKE-AIR SYSTEM REMOVAL/INSTALLATION [SKYACTIV-G 2.0, SKYACTIV-G 2.5]**.)
3	**PURPOSE: VERIFICATION OF VEHICLE REPAIR COMPLETION** • Always reconnect all disconnected connectors. • Clear the DTC from the PCM memory using the M-MDS. (See **CLEARING DTC [SKYACTIV-G 2.0, SKYACTIV-G 2.5]**.) • Implement the repeatability verification procedure. (See **Repeatability Verification Procedure**.) • Perform the Pending Trouble Code Access Procedure.	Yes	Repeat the inspection from Step 1. • If the malfunction recurs, replace the PCM. (See **PCM REMOVAL/INSTALLATION [SKYACTIV-G 2.0, SKYACTIV-G 2.5]**.) Go to the next step.
		No	Go to the next step.

	(See **ON-BOARD DIAGNOSTIC TEST [SKYACTIV-G 2.0, SKYACTIV-G 2.5]**.) • Is the PENDING CODE for this DTC present?		
4	**PURPOSE: VERIFY IF THERE IS ANY OTHER MALFUNCTION** • Is any other DTC or pending code stored?	Yes	Go to the applicable DTC inspection. (See **DTC TABLE [SKYACTIV-G 2.0, SKYACTIV-G 2.5]**.)
		No	DTC troubleshooting completed.

2014 - Mazda3 - Engine

DTC P050B:00 [SKYACTIV-G 2.0, SKYACTIV-G 2.5]

DTC P050B:00	Cold start ignition timing performance problem
DETECTION CONDITION	• PCM internal RAM malfunction. **Diagnostic support note** • This is a continuous monitor (cold start emission reduction strategy monitoring). • The check engine light illuminates if the PCM detects the above malfunction condition in two consecutive drive cycles or in one drive cycle while the DTC for the same malfunction has been stored in the PCM. • PENDING CODE is available if the PCM detects the above malfunction condition during first drive cycle. • FREEZE FRAME DATA (Mode 2)/Snapshot data is available. • DTC is stored in the PCM memory.
FAIL-SAFE FUNCTION	Not applicable
POSSIBLE CAUSE	• PCM internal RAM malfunction
SYSTEM WIRING DIAGRAM	Not applicable

Diagnostic Procedure

STEP	INSPECTION		ACTION
1	**IDENTIFY TRIGGER DTC FOR FREEZE FRAME DATA (MODE 2)** • Perform the Freeze Frame PID Data Access Procedure. (See **ON-BOARD DIAGNOSTIC TEST**	Yes	Go to the next step.
		No	Go to the troubleshooting procedure for DTC on FREEZE FRAME DATA (Mode 2).

	[SKYACTIV-G 2.0, SKYACTIV-G 2.5].) • Is the DTC P050B:00 on FREEZE FRAME DATA (Mode 2)?		(See **DTC TABLE [SKYACTIV-G 2.0, SKYACTIV-G 2.5]**.)
2	**VERIFY FREEZE FRAME DATA (MODE 2)/SNAPSHOT DATA AND DIAGNOSTIC MONITORING TEST RESULTS HAVE BEEN RECORDED** • Have the FREEZE FRAME DATA (Mode 2)/snapshot data and DIAGNOSTIC MONITORING TEST RESULTS (cold start emission reduction strategy monitoring related) been recorded?	Yes	Go to the next step.
		No	Record the FREEZE FRAME DATA (Mode 2)/snapshot data and DIAGNOSTIC MONITORING TEST RESULTS on the repair order, then go to the next step.
3	**VERIFY RELATED REPAIR INFORMATION AVAILABILITY** • Verify related Service Bulletins and/or on-line repair information availability. • Is any related repair information available?	Yes	Perform repair or diagnosis according to the available repair information. • If the vehicle is not repaired, go to the next step.
		No	Go to the next step.
4	**VERIFY DTC TROUBLESHOOTING COMPLETED** • Clear the DTC from the PCM memory using the M-MDS. (See **AFTER REPAIR PROCEDURE [SKYACTIV-G 2.0, SKYACTIV-G 2.5]**.) • Start the engine and warm it up completely. • Perform the Pending Trouble Code Access Procedure. (See **ON-BOARD DIAGNOSTIC TEST [SKYACTIV-G 2.0, SKYACTIV-G 2.5]**.) • Is the PENDING CODE for this DTC present?	Yes	Replace the PCM, then go to the next step. (See **PCM REMOVAL/INSTALLATION [SKYACTIV-G 2.0, SKYACTIV-G 2.5]**.)
		No	Go to the next step.
5	**VERIFY AFTER REPAIR PROCEDURE** • Perform the “AFTER REPAIR PROCEDURE”. (See **AFTER REPAIR PROCEDURE [SKYACTIV-G 2.0, SKYACTIV-G 2.5]**.) • Are any DTCs present?	Yes	Go to the applicable DTC inspection. (See **DTC TABLE [SKYACTIV-G 2.0, SKYACTIV-G 2.5]**.)
		No	DTC troubleshooting completed.

DTC P050B:00 [SKYACTIV-G 2.0, SKYACTIV-G 2.5]

2014 - Mazda3 - Engine

DTC P0520:00 [SKYACTIV-G 2.0, SKYACTIV-G 2.5]

DTC P0520:00	Oil pressure switch circuit problem
DETECTION CONDITION	• The oil pressure switch is off for a continuous **5 s** even though the engine is stopped. **Diagnostic support note** • This is a continuous monitor (other). • The check engine light does not illuminate. • FREEZE FRAME DATA (Mode 2) is not available. • Snapshot data is available. • DTC is stored in the PCM memory.
FAIL-SAFE FUNCTION	Not applicable
POSSIBLE CAUSE	• Oil pressure switch connector or terminals malfunction • PCM connector or terminals malfunction • Open circuit in wiring harness between oil pressure switch terminal A and PCM terminal 1P • Oil pressure switch malfunction • PCM malfunction

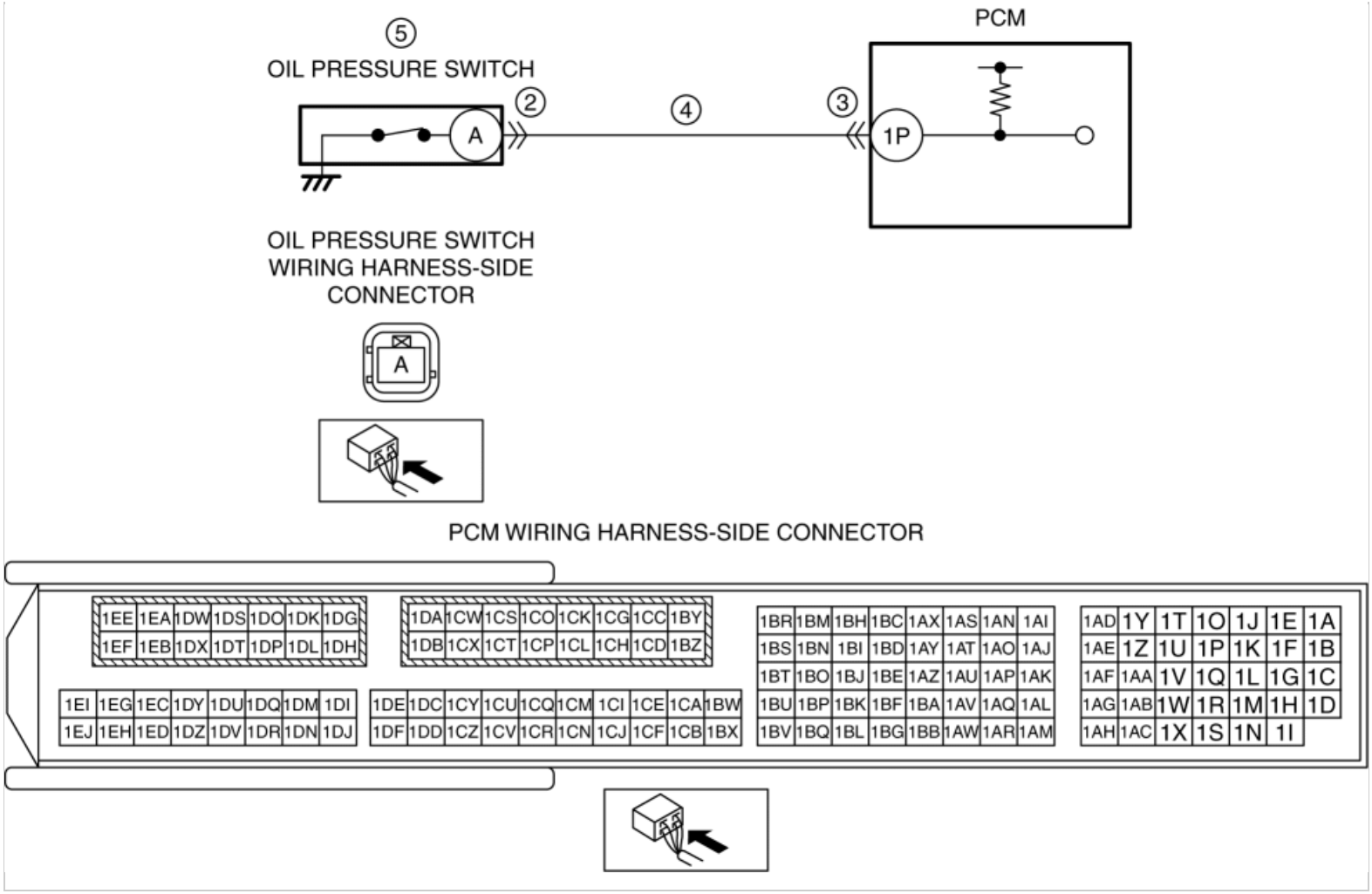

Diagnostic Procedure

STEP	INSPECTION		ACTION
1	**VERIFY RELATED REPAIR INFORMATION AVAILABILITY** • Verify related Service Bulletins and/or on-line repair information availability. • Is any related repair information available?	Yes	Perform repair or diagnosis according to the available repair information. • If the vehicle is not repaired, go to the next step.
		No	Go to the next step.
2	**INSPECT OIL PRESSURE SWITCH CONNECTOR CONDITION** • Switch the ignition off. • Disconnect the oil pressure switch connector. • Inspect for poor connection (such as damaged/pulled-out pins, corrosion). • Is there any malfunction?	Yes	Repair or replace the connector and/or terminals, then go to Step 6.
		No	Go to the next step.
3	**INSPECT PCM CONNECTOR CONDITION** • Disconnect the PCM connector. • Inspect for poor connection (such as damaged/pulled-out pins, corrosion). • Is there any malfunction?	Yes	Repair or replace the connector and/or terminals, then go to Step 6.
		No	Go to the next step.

4	**INSPECT OIL PRESSURE SWITCH SIGNAL CIRCUIT FOR OPEN CIRCUIT** • Verify that the oil pressure switch and PCM connectors are disconnected. • Inspect for continuity between oil pressure switch terminal A (wiring harness-side) and PCM terminal 1P (wiring harness-side). • Is there continuity?	Yes	Go to the next step.
		No	Refer to the wiring diagram and verify whether or not there is a common connector between oil pressure switch terminal A and PCM terminal 1P. **If there is a common connector:** • Determine the malfunctioning part by inspecting the common connector and the terminal for corrosion, damage, or pin disconnection, and the common wiring harness for an open circuit. • Repair or replace the malfunctioning part. **If there is no common connector:** • Repair or replace the wiring harness which has an open circuit. Go to Step 6.
5	**INSPECT OIL PRESSURE SWITCH** • Inspect for continuity between oil pressure switch terminal A (part-side) and body ground. • Is there continuity?	Yes	Go to the next step.
		No	Replace the oil pressure switch, then go to the next step. (See **ENGINE OIL SOLENOID VALVE REMOVAL/INSTALLATION [SKYACTIV-G 2.0, SKYACTIV-G 2.5]**.)
6	**VERIFY DTC TROUBLESHOOTING COMPLETED** • Always reconnect all disconnected connectors. • Clear the DTC from the PCM memory using the M-MDS. (See **AFTER REPAIR PROCEDURE [SKYACTIV-G 2.0, SKYACTIV-G 2.5]**.) • Perform the KOEO self test. (See **KOEO/KOER SELF TEST [SKYACTIV-G 2.0, SKYACTIV-G 2.5]**.) • Is the same DTC present?	Yes	Repeat the inspection from Step 1. • If the malfunction recurs, replace the PCM. (See **PCM REMOVAL/INSTALLATION [SKYACTIV-G 2.0, SKYACTIV-G 2.5]**.) Go to the next step.
		No	Go to the next step.
7	**VERIFY AFTER REPAIR PROCEDURE** • Perform the “AFTER REPAIR PROCEDURE”. (See **AFTER REPAIR PROCEDURE [SKYACTIV-G 2.0, SKYACTIV-G 2.5]**.) • Are any DTCs present?	Yes	Go to the applicable DTC inspection. (See **DTC TABLE [SKYACTIV-G 2.0, SKYACTIV-G 2.5]**.)
		No	DTC troubleshooting completed.

2014 - Mazda3 - Engine

DTC P0524:00 [SKYACTIV-G 2.0, SKYACTIV-G 2.5]

DTC P0524:00	Engine oil pressure too low
DETECTION CONDITION	• The oil pressure switch is on for a continuous **5 s** with the following condition met: (engine oil warning light illuminates when **1 s** has elapsed) ▪ When engine speed is **above 650 rpm** and engine coolant temperature is **30 °C {86 °F} or less** ▪ When engine speed is **above 1,500 rpm** and engine coolant temperature is **68 °C {154 °F} or less** ▪ When engine speed is **above 2,500 rpm** and engine coolant temperature is **68 °C {154 °F} or more** **Diagnostic support note** • This is a continuous monitor (other). • The check engine light does not illuminate. • FREEZE FRAME DATA (Mode 2) is not available. • Snapshot data is available. • DTC is stored in the PCM memory.
FAIL-SAFE FUNCTION	Not applicable
POSSIBLE CAUSE	• Engine oil leakage • Improper engine oil level • Oil pressure switch connector or terminals malfunction • Short to ground in wiring harness between oil pressure switch terminal A and PCM terminal 1P • PCM connector or terminals malfunction • Oil pressure switch malfunction • Oil pump malfunction • PCM malfunction

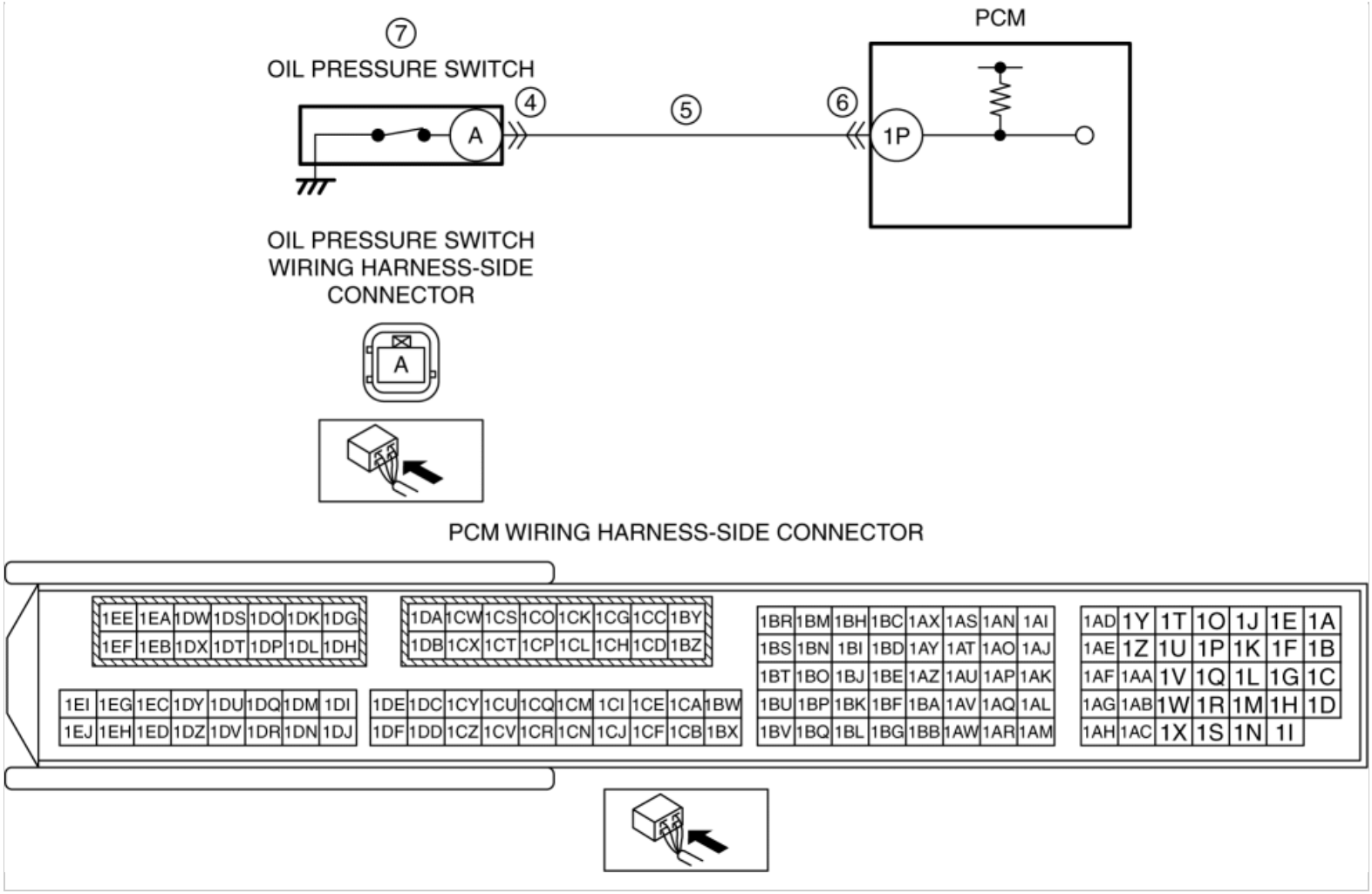

Diagnostic Procedure

STEP	INSPECTION		ACTION
1	**VERIFY RELATED REPAIR INFORMATION AVAILABILITY** • Verify related Service Bulletins and/or on-line repair information availability. • Is any related repair information available?	Yes	Perform repair or diagnosis according to the available repair information. • If the vehicle is not repaired, go to the next step.
		No	Go to the next step.
2	**INSPECT ENGINE OIL LEAKAGE** • Start the engine. • Verify that there is no engine oil leakage in the hydraulic circuit. • Is there any leakage?	Yes	Repair or replace the malfunctioning part according to the inspection results, then add genuine motor oil. Go to Step 8.
		No	Go to the next step.
3	**INSPECT ENGINE OIL LEVEL** • Inspect the engine oil level. (See **ENGINE OIL LEVEL INSPECTION [SKYACTIV-G 2.0, SKYACTIV-G 2.5]**.) • Is the engine oil level sufficient?	Yes	Go to the next step.
		No	Add genuine motor oil, then go to the next step. (See **ENGINE OIL REPLACEMENT [SKYACTIV-G 2.0, SKYACTIV-G 2.5]**.)

4	**INSPECT OIL PRESSURE SWITCH CONNECTOR CONDITION** • Switch the ignition off. • Disconnect the oil pressure switch connector. • Inspect for poor connection (such as damaged/pulled-out pins, corrosion). • Is there any malfunction?	Yes	Repair or replace the connector and/or terminals, then go to Step 8.
		No	Go to the next step.
5	**INSPECT OIL PRESSURE SWITCH CONTROL CIRCUIT FOR SHORT TO GROUND** • Verify that the oil pressure switch connector is disconnected. • Inspect for continuity between oil pressure switch terminal A (wiring harness-side) and body ground. • Is there continuity?	Yes	If the short to ground circuit could be detected in the wiring harness: • Refer to the wiring diagram and verify whether or not there is a common connector between oil pressure switch terminal A and PCM terminal 1P. **If there is a common connector:** ▪ Determine the malfunctioning part by inspecting the common connector and the terminal for corrosion, damage, or pin disconnection, and the common wiring harness for a short to ground. ▪ Repair or replace the malfunctioning part. **If there is no common connector:** ▪ Repair or replace the wiring harness which has a short to ground. If the short to ground circuit could not be detected in the wiring harness: • Replace the PCM (short to ground in the PCM internal circuit). (See **PCM REMOVAL/INSTALLATION [SKYACTIV-G 2.0, SKYACTIV-G 2.5]**.) Go to Step 8.
		No	Go to the next step.
6	**INSPECT PCM CONNECTOR CONDITION** • Disconnect the PCM connector. • Inspect for poor connection (such as damaged/pulled-out pins, corrosion). • Is there any malfunction?	Yes	Repair or replace the connector and/or terminals, then go to Step 8.
		No	Go to the next step.
7	**INSPECT ENGINE OIL PRESSURE** • Inspect the engine oil pressure. (See **OIL PRESSURE INSPECTION [SKYACTIV-G 2.0, SKYACTIV-G 2.5]**.) • Is there any malfunction?	Yes	Replace the oil pump, then go to the next step. (See **OIL PUMP REMOVAL/INSTALLATION [SKYACTIV-G 2.0, SKYACTIV-G 2.5]**.)
		No	Replace the oil pressure switch, then go to the next step. (See **ENGINE OIL SOLENOID VALVE REMOVAL/INSTALLATION [SKYACTIV-G 2.0, SKYACTIV-G 2.5]**.)
8	**VERIFY DTC TROUBLESHOOTING COMPLETED** • Always reconnect all disconnected connectors. • Clear the DTC from the PCM memory using the M-	Yes	Repeat the inspection from Step 1. • If the malfunction recurs, replace the PCM. (See **PCM REMOVAL/INSTALLATION [SKYACTIV-G 2.0, SKYACTIV-G 2.5]**.) Go to the next step.

	MDS. (See **AFTER REPAIR PROCEDURE [SKYACTIV-G 2.0, SKYACTIV-G 2.5]**.) • Start the engine. • Increase and keep the engine speed at **2,500 rpm** for **5 s**. • Perform the DTC Reading Procedure. (See **ON-BOARD DIAGNOSTIC TEST [SKYACTIV-G 2.0, SKYACTIV-G 2.5]**.) • Is the same DTC present?		
		No	Go to the next step.
9	**VERIFY AFTER REPAIR PROCEDURE** • Perform the “AFTER REPAIR PROCEDURE”. (See **AFTER REPAIR PROCEDURE [SKYACTIV-G 2.0, SKYACTIV-G 2.5]**.) • Are any DTCs present?	Yes	Go to the applicable DTC inspection. (See **DTC TABLE [SKYACTIV-G 2.0, SKYACTIV-G 2.5]**.)
		No	DTC troubleshooting completed.

2014 - Mazda3 - Engine

DTC P0532:00 [SKYACTIV-G 2.0, SKYACTIV-G 2.5]

DTC P0532:00	Refrigerant pressure sensor circuit low input
DETECTION CONDITION	• The PCM monitors input voltage from the refrigerant pressure sensor. If the input voltage at the PCM terminal 2AX is **below 0.1 V** for **5 s**, the PCM determines that the refrigerant pressure sensor circuit has a malfunction. **Diagnostic support note** • This is a continuous monitor (other). • The check engine light does not illuminate. • FREEZE FRAME DATA (Mode 2) is not available. • Snapshot data is available. • DTC is stored in the PCM memory.
FAIL-SAFE FUNCTION	Not applicable
POSSIBLE CAUSE	• Refrigerant pressure sensor connector or terminals malfunction • Short to ground in wiring harness between the following terminals: ▪ Refrigerant pressure sensor terminal A—PCM terminal 2BB ▪ Refrigerant pressure sensor terminal B—PCM terminal 2AX • PCM connector or terminals malfunction • Refrigerant pressure sensor signal circuit and ground circuit are shorted to each other • Open circuit in wiring harness between refrigerant pressure sensor terminal A and PCM terminal 2BB • Refrigerant pressure sensor malfunction • PCM malfunction

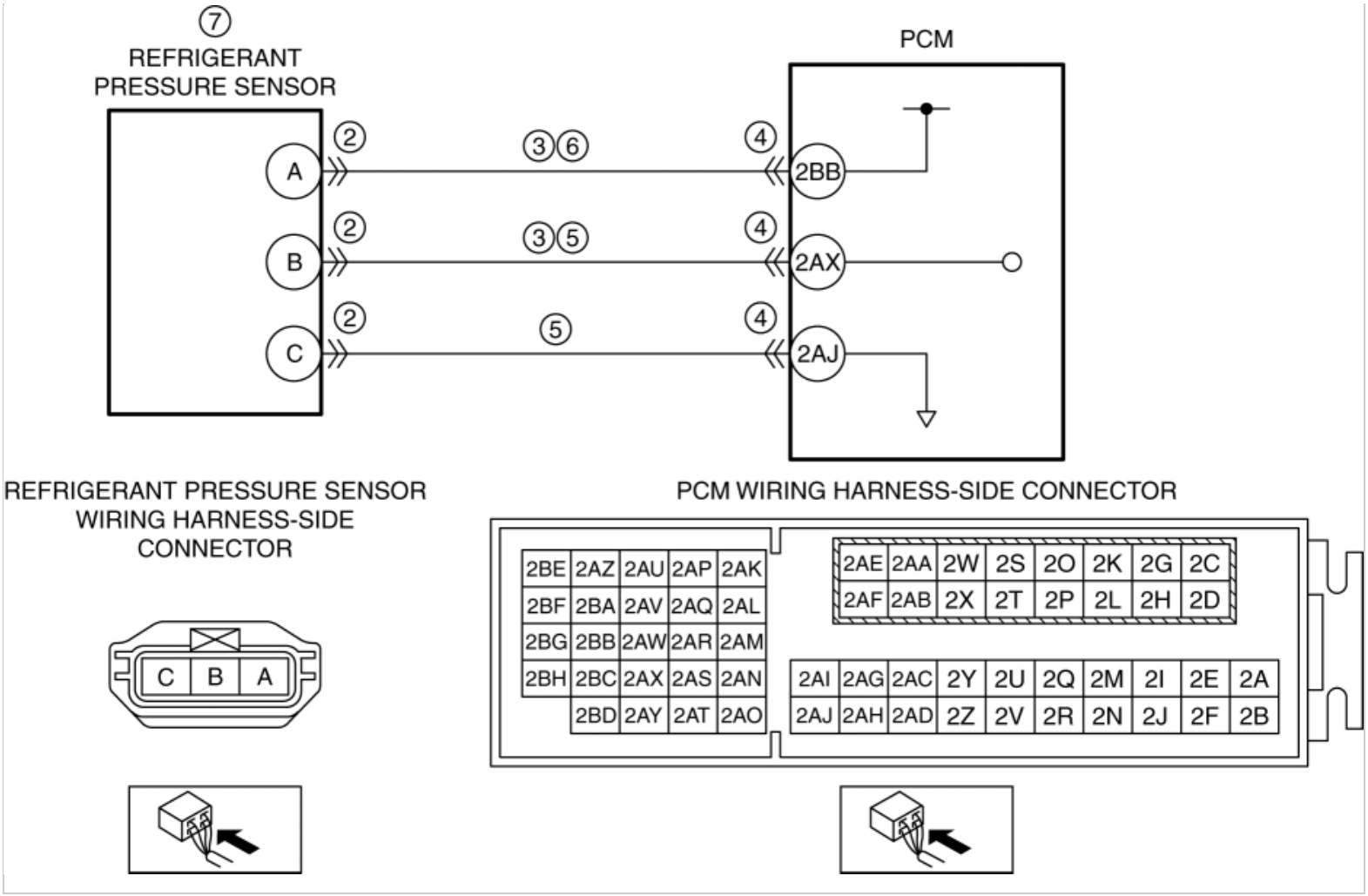

Diagnostic Procedure

STEP	INSPECTION		ACTION
1	**VERIFY RELATED REPAIR INFORMATION AVAILABILITY** • Verify related Service Bulletins and/or on-line repair information availability. • Is any related repair information available?	Yes	Perform repair or diagnosis according to the available repair information. • If the vehicle is not repaired, go to the next step.
		No	Go to the next step.
2	**INSPECT REFRIGERANT PRESSURE SENSOR CONNECTOR CONDITION** • Switch the ignition off. • Disconnect the refrigerant pressure sensor connector. • Inspect for poor connection (such as damaged/pulled-out pins, corrosion). • Is there any malfunction?	Yes	Repair or replace the connector and/or terminals, then go to Step 8.
		No	Go to the next step.
3	**INSPECT REFRIGERANT PRESSURE SENSOR CIRCUIT FOR SHORT TO GROUND** • Verify that the refrigerant	Yes	If the short to ground circuit could be detected in the wiring harness: • Refer to the wiring diagram and verify whether or not there is a common connector between the

	pressure sensor connector is disconnected. • Inspect for continuity between the following terminals (wiring harness-side) and body ground: ▪ Refrigerant pressure sensor terminal A ▪ Refrigerant pressure sensor terminal B • Is there continuity?		following terminals: ▪ Refrigerant pressure sensor terminal A—PCM terminal 2BB ▪ Refrigerant pressure sensor terminal B—PCM terminal 2AX **If there is a common connector:** ▪ Determine the malfunctioning part by inspecting the common connector and the terminal for corrosion, damage, or pin disconnection, and the common wiring harness for a short to ground. ▪ Repair or replace the malfunctioning part. **If there is no common connector:** ▪ Repair or replace the wiring harness which has a short to ground. If the short to ground circuit could not be detected in the wiring harness: • Replace the PCM (short to ground in the PCM internal circuit). (See **PCM REMOVAL/INSTALLATION [SKYACTIV-G 2.0, SKYACTIV-G 2.5]**.) Go to Step 8.
		No	Go to the next step.
4	**INSPECT PCM CONNECTOR CONDITION** • Disconnect the PCM connector. • Inspect for poor connection (such as damaged/pulled-out pins, corrosion). • Is there any malfunction?	Yes	Repair or replace the connector and/or terminals, then go to Step 8.
		No	Go to the next step.
5	**INSPECT REFRIGERANT PRESSURE SENSOR SIGNAL CIRCUIT AND GROUND CIRCUIT FOR SHORT TO EACH OTHER** • Verify that the refrigerant pressure sensor and PCM connectors are disconnected. • Inspect for continuity between refrigerant pressure sensor terminals B and C (wiring harness-side). • Is there continuity?	Yes	Refer to the wiring diagram and verify whether or not there is a common connector between the following terminals: • Refrigerant pressure sensor terminal B—PCM terminal 2AX • Refrigerant pressure sensor terminal C—PCM terminal 2AJ **If there is a common connector:** • Determine the malfunctioning part by inspecting the common connector and the terminal for corrosion, damage, or pin disconnection, and the common wiring harness for a short to each other. • Repair or replace the malfunctioning part. **If there is no common connector:** • Repair or replace the wiring harness which has a

			short to each other. Go to Step 8.
		No	Go to the next step.
6	**INSPECT REFRIGERANT PRESSURE SENSOR POWER SUPPLY CIRCUIT FOR OPEN CIRCUIT** • Verify that the refrigerant pressure sensor and PCM connectors are disconnected. • Inspect for continuity between refrigerant pressure sensor terminal A (wiring harness-side) and PCM terminal 2BB (wiring harness-side). • Is there continuity?	Yes	Go to the next step.
		No	Refer to the wiring diagram and verify whether or not there is a common connector between refrigerant pressure sensor terminal A and PCM terminal 2BB. **If there is a common connector:** • Determine the malfunctioning part by inspecting the common connector and the terminal for corrosion, damage, or pin disconnection, and the common wiring harness for an open circuit. • Repair or replace the malfunctioning part. **If there is no common connector:** • Repair or replace the wiring harness which has an open circuit. Go to Step 8.
7	**INSPECT REFRIGERANT PRESSURE SENSOR** • Reconnect all disconnected connectors. • Inspect the refrigerant pressure sensor. (See **REFRIGERANT PRESSURE SENSOR INSPECTION [MANUAL AIR CONDITIONER]**.) (See **REFRIGERANT PRESSURE SENSOR INSPECTION [FULL-AUTO AIR CONDITIONER]**.) • Is there any malfunction?	Yes	Replace the refrigerant pressure sensor, then go to the next step. (See **REFRIGERANT PRESSURE SENSOR REMOVAL/INSTALLATION [MANUAL AIR CONDITIONER]**.) (See **REFRIGERANT PRESSURE SENSOR REMOVAL/INSTALLATION [FULL-AUTO AIR CONDITIONER]**.)
		No	Go to the next step.
8	**VERIFY DTC TROUBLESHOOTING COMPLETED** • Always reconnect all disconnected connectors. • Clear the DTC from the PCM memory using the M-MDS. (See **AFTER REPAIR PROCEDURE [SKYACTIV-G 2.0, SKYACTIV-G 2.5]**.) • Perform the KOEO or KOER self test. (See **KOEO/KOER SELF TEST [SKYACTIV-G 2.0, SKYACTIV-G 2.5]**.) • Is the same DTC present?	Yes	Repeat the inspection from Step 1. • If the malfunction recurs, replace the PCM. (See **PCM REMOVAL/INSTALLATION [SKYACTIV-G 2.0, SKYACTIV-G 2.5]**.) Go to the next step.
		No	Go to the next step.
9	**VERIFY AFTER REPAIR PROCEDURE** • Perform the “AFTER REPAIR	Yes	Go to the applicable DTC inspection. **DTC TABLE [SKYACTIV-G 2.0, SKYACTIV-G 2.5]**

	PROCEDURE”. (See **AFTER REPAIR PROCEDURE [SKYACTIV-G 2.0, SKYACTIV-G 2.5]**.) • Are any DTCs present?		(See .)
		No	DTC troubleshooting completed.

2014 - Mazda3 - Engine

DTC P0533:00 [SKYACTIV-G 2.0, SKYACTIV-G 2.5]

DTC P0533:00	Refrigerant pressure sensor circuit high input
DETECTION CONDITION	• The PCM monitors input voltage from the refrigerant pressure sensor. If the input voltage at the PCM terminal 2AX is **above 4.9 V** for **5 s**, the PCM determines that the refrigerant pressure sensor circuit has a malfunction. **Diagnostic support note** • This is a continuous monitor (other). • The check engine light does not illuminate. • FREEZE FRAME DATA (Mode 2) is not available. • Snapshot data is available. • DTC is stored in the PCM memory.
FAIL-SAFE FUNCTION	Not applicable

POSSIBLE CAUSE	• Refrigerant pressure sensor connector or terminals malfunction
	• PCM connector or terminals malfunction
	• Refrigerant pressure sensor malfunction
	• Short to power supply in wiring harness between refrigerant pressure sensor terminal B and PCM terminal 2AX
	• Open circuit in wiring harness between the following terminals:
	  ▪ Refrigerant pressure sensor terminal B—PCM terminal 2AX
	  ▪ Refrigerant pressure sensor terminal C—PCM terminal 2AJ
	• PCM malfunction

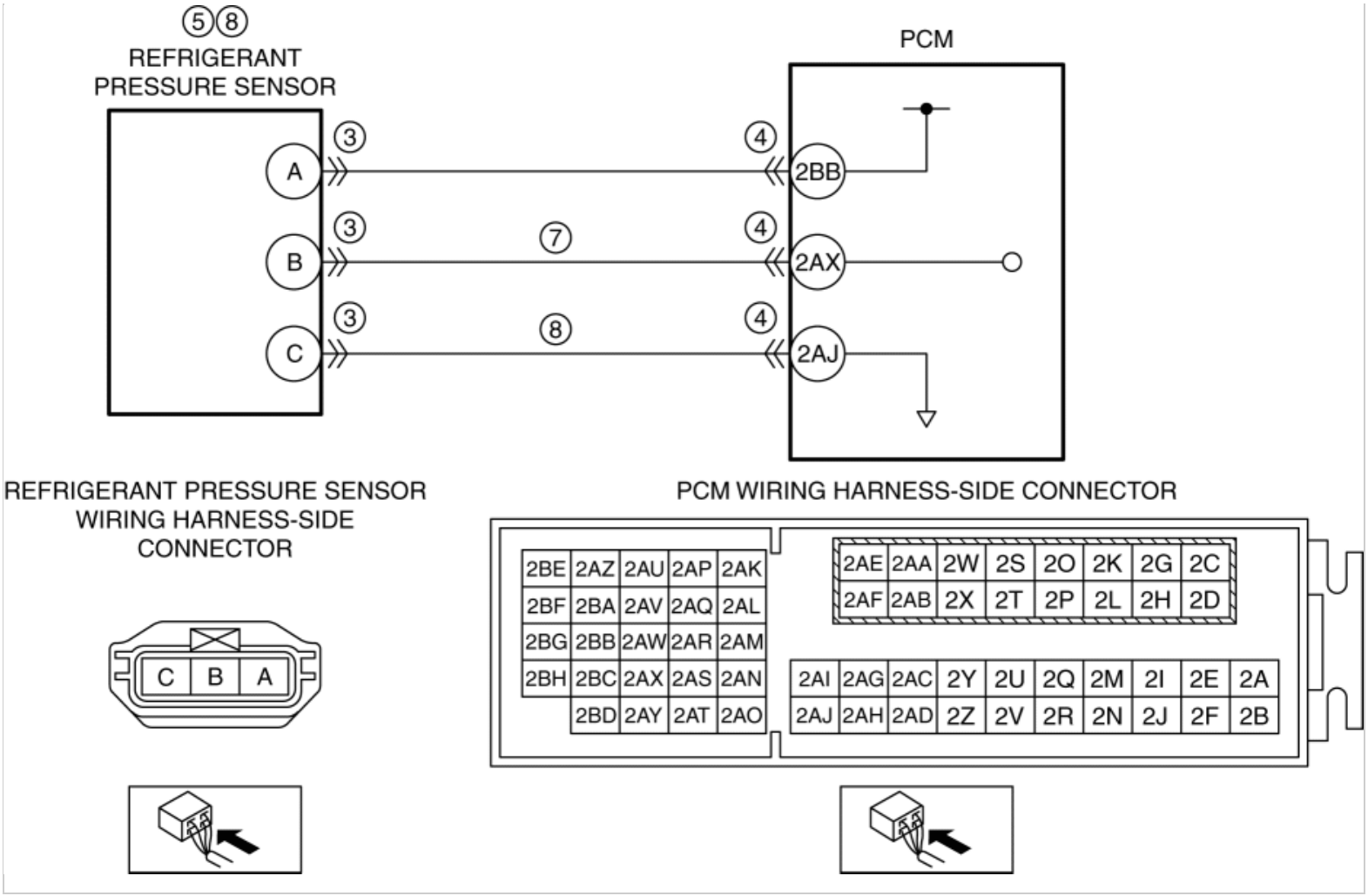

CAUTION:

- Verify the malfunction symptom according to not only the PID value but also the symptom troubleshooting.

Related PIDs

Item (definition)	Unit/Condition	Definition	Condition/Specification (Reference)
AC_PRES	KPa {MPa}, mBar {Bar}, psi, in H20	Refrigerant pressure input from refrigerant pressure sensor	• Displays refrigerant pressure
	V	Refrigerant pressure sensor voltage	• Refrigerant pressure is 1.0 MPa {10 kgf/cm^2, 145 psi}: Approx. 1.58 V • Refrigerant pressure is 1.1 MPa {11 kgf/cm^2, 160 psi}: Approx. 1.75 V • Refrigerant pressure is 1.2 MPa {12 kgf/cm^2, 174 psi}: Approx. 1.88 V

Diagnostic Procedure

STEP	INSPECTION		ACTION
1	**VERIFY RELATED REPAIR INFORMATION AVAILABILITY**	Yes	Perform repair or diagnosis according to the available repair information.

	• Verify related Service Bulletins and/or on-line repair information availability. • Is any related repair information available?		• If the vehicle is not repaired, go to the next step.
		No	Go to the next step.
2	**DETERMINE IF REFRIGERANT PRESSURE SENSOR OR WIRING HARNESS MALFUNCTION** • Access the AC_PRES PID using the M-MDS. (See **ON-BOARD DIAGNOSTIC TEST [SKYACTIV-G 2.0, SKYACTIV-G 2.5]**.) • Verify the AC_PRES PID value. • Is the AC_PRES PID value **5 V** or **B+**?	Yes	Go to Step 6.
		No	Go to the next step.
3	**INSPECT REFRIGERANT PRESSURE SENSOR CONNECTOR CONDITION** • Switch the ignition off. • Disconnect the refrigerant pressure sensor connector. • Inspect for poor connection (such as damaged/pulled-out pins, corrosion). • Is there any malfunction?	Yes	Repair or replace the connector and/or terminals, then go to Step 9.
		No	Go to the next step.
4	**INSPECT PCM CONNECTOR CONDITION** • Disconnect the PCM connector. • Inspect for poor connection (such as damaged/pulled-out pins, corrosion). • Is there any malfunction?	Yes	Repair or replace the connector and/or terminals, then go to Step 9.
		No	Go to the next step.
5	**INSPECT REFRIGERANT PRESSURE SENSOR** • Reconnect all disconnected connectors. • Inspect the refrigerant pressure sensor. (See **REFRIGERANT PRESSURE SENSOR INSPECTION [MANUAL AIR CONDITIONER]**.) (See **REFRIGERANT PRESSURE SENSOR INSPECTION [FULL-AUTO AIR CONDITIONER]**.) • Is there any malfunction?	Yes	Replace the refrigerant pressure sensor, then go to Step 9. (See **REFRIGERANT PRESSURE SENSOR REMOVAL/INSTALLATION [MANUAL AIR CONDITIONER]**.) (See **REFRIGERANT PRESSURE SENSOR REMOVAL/INSTALLATION [FULL-AUTO AIR CONDITIONER]**.)
		No	Go to Step 9.
6	**DETERMINE IF REFRIGERANT PRESSURE SENSOR SIGNAL CIRCUIT OR REFRIGERANT PRESSURE SENSOR GROUND CIRCUIT MALFUNCTION** • Switch the ignition off. • Disconnect the refrigerant pressure sensor connector.	Yes	Go to the next step.
		No	Go to Step 8.

	• Access the AC_PRES PID using the M-MDS. (See **ON-BOARD DIAGNOSTIC TEST [SKYACTIV-G 2.0, SKYACTIV-G 2.5]**.) • Verify the AC_PRES PID value. • Is the AC_PRES PID value **5 V** or **B+**?		
7	**INSPECT REFRIGERANT PRESSURE SENSOR SIGNAL CIRCUIT FOR OPEN CIRCUIT** • Verify that the refrigerant pressure sensor connector is disconnected. • Switch the ignition off. • Disconnect the PCM connector. • Inspect for continuity between refrigerant pressure sensor terminal B (wiring harness-side) and PCM terminal 2AX (wiring harness-side). • Is there continuity?	Yes	Refer to the wiring diagram and verify whether or not there is a common connector between refrigerant pressure sensor terminal B and PCM terminal 2AX. **If there is a common connector:** • Determine the malfunctioning part by inspecting the common connector and the terminal for corrosion, damage, or pin disconnection, and the common wiring harness for a short to power supply. • Repair or replace the malfunctioning part. **If there is no common connector:** • Repair or replace the wiring harness which has a short to power supply. Go to Step 9.
		No	Refer to the wiring diagram and verify whether or not there is a common connector between refrigerant pressure sensor terminal B and PCM terminal 2AX. **If there is a common connector:** • Determine the malfunctioning part by inspecting the common connector and the terminal for corrosion, damage, or pin disconnection, and the common wiring harness for an open circuit. • Repair or replace the malfunctioning part. **If there is no common connector:** • Repair or replace the wiring harness which has an open circuit. Go to Step 9.
8	**INSPECT REFRIGERANT PRESSURE SENSOR GROUND CIRCUIT FOR OPEN CIRCUIT** • Verify that the refrigerant pressure sensor connector is disconnected. • Switch the ignition off. • Disconnect the PCM connector. • Inspect for continuity between refrigerant pressure sensor terminal C (wiring harness-side) and PCM terminal 2AJ (wiring harness-side). • Is there continuity?	Yes	Replace the refrigerant pressure sensor, then go to the next step. (See **REFRIGERANT PRESSURE SENSOR REMOVAL/INSTALLATION [MANUAL AIR CONDITIONER]**.) (See **REFRIGERANT PRESSURE SENSOR REMOVAL/INSTALLATION [FULL-AUTO AIR CONDITIONER]**.)
		No	Refer to the wiring diagram and verify whether or not there is a common connector between refrigerant pressure sensor terminal C and PCM terminal 2AJ. **If there is a common connector:** • Determine the malfunctioning part by inspecting the common connector and the terminal for corrosion, damage, or pin disconnection, and the

			common wiring harness for an open circuit. • Repair or replace the malfunctioning part. **If there is no common connector:** • Repair or replace the wiring harness which has an open circuit. Go to the next step.
9	**VERIFY DTC TROUBLESHOOTING COMPLETED** • Always reconnect all disconnected connectors. • Clear the DTC from the PCM memory using the M-MDS. (See **AFTER REPAIR PROCEDURE [SKYACTIV-G 2.0, SKYACTIV-G 2.5]**.) • Perform the KOEO or KOER self test. (See **KOEO/KOER SELF TEST [SKYACTIV-G 2.0, SKYACTIV-G 2.5]**.) • Is the same DTC present?	Yes	Repeat the inspection from Step 1. • If the malfunction recurs, replace the PCM. (See **PCM REMOVAL/INSTALLATION [SKYACTIV-G 2.0, SKYACTIV-G 2.5]**.) Go to the next step.
		No	Go to the next step.
10	**VERIFY AFTER REPAIR PROCEDURE** • Perform the “AFTER REPAIR PROCEDURE”. (See **AFTER REPAIR PROCEDURE [SKYACTIV-G 2.0, SKYACTIV-G 2.5]**.) • Are any DTCs present?	Yes	Go to the applicable DTC inspection. (See **DTC TABLE [SKYACTIV-G 2.0, SKYACTIV-G 2.5]**.)
		No	DTC troubleshooting completed.

2014 - Mazda3 - Engine

DTC P057F:00 [SKYACTIV-G 2.0, SKYACTIV-G 2.5]

NOTE:

- To determine the malfunctioning part, proceed with the diagnostics from "Function Inspection Using M-MDS".

Details On DTCs

DESCRIPTION	Power system: Battery deterioration	
DETECTION CONDITION	Determination conditions	• The battery charge/discharge flow exceeds the specification.
	Preconditions	• Not applicable
	Drive cycle	• **1**
	Self test type	• CMDTC self test
	Sensor used	• Current sensor
FAIL-SAFE FUNCTION	• Inhibits the i-ELOOP control.	
VEHICLE STATUS WHEN DTCs ARE OUTPUT	• Illuminates master warning light • The engine cannot be started or the engine may stall due to battery voltage decrease.	
POSSIBLE CAUSE	• Battery malfunction • Current sensor malfunction • Front body control module (FBCM) malfunction • PCM malfunction	

System Wiring Diagram

- Not applicable

Function Explanation (DTC Detection Outline)

- The battery assures voltage for engine starting and for the vehicle's electrical devices when the vehicle is being driven. If the frequency of battery charging/discharging is high, the battery will deteriorate which could result in poor engine startability and the loss of assured supply voltage to the vehicle’s electrical load.
- The current sensor sends a battery charge/discharge value to the PCM via the front body control module (FBCM). If the accumulated charge/discharge value exceeds the specified value, the PCM determines battery deterioration. In this case, the PCM determines a malfunction in a battery-related part and stores a DTC.

Repeatability Verification Procedure

- Start the engine.

PID Item/Simulation Item Used In Diagnosis

PID/DATA monitor item table

Item	Definition	Unit	Condition/Specification
BATT_DAY	Number of days elapsed since current sensor initialization	—	• Displays vehicle battery days in service.

Function Inspection Using M-MDS

STEP	INSPECTION	RESULTS	ACTION
1	**VERIFY RELATED REPAIR INFORMATION AVAILABILITY** • Verify related Service Bulletins and/or on-line repair information availability. • Is any related repair information available?	Yes	Perform repair or diagnosis according to the available repair information. • If the vehicle is not repaired, go to the next step.
		No	Go to the next step.
2	**PURPOSE: VERIFY IF BATTERY VOLTAGE IS FALSELY RECOGNIZED**	Yes	Go to the applicable PENDING CODE or DTC

	BY DTC RELATED CURRENT SENSOR • Switch the ignition off, then ON (engine off). • Perform the Pending Trouble Code Access Procedure and DTC Reading Procedure. (See **ON-BOARD DIAGNOSTIC TEST [SKYACTIV-G 2.0, SKYACTIV-G 2.5]**.) • Is the PENDING CODE/DTC P058A:00 also present?		inspection. (See **DTC P058A:00 [SKYACTIV-G 2.0, SKYACTIV-G 2.5]**.) Go to the next step.
		No	Go to the next step.
3	**PURPOSE: VERIFY IF BATTERY VOLTAGE IS FALSELY RECOGNIZED BY DTC RELATED CAN OR LIN COMMUNICATION** • Perform the PCM and front body control module (FBCM) DTC inspection using the M-MDS. (See **ON-BOARD DIAGNOSTIC TEST [SKYACTIV-G 2.0, SKYACTIV-G 2.5]**.) (See **DTC INSPECTION [FRONT BODY CONTROL MODULE (FBCM)]**.) • Are DTCs related CAN or LIN communication recorded?	Yes	Repair or replace the malfunctioning part according to the applicable DTC troubleshooting. (See **DTC TABLE [SKYACTIV-G 2.0, SKYACTIV-G 2.5]**.) (See **DTC TABLE [FRONT BODY CONTROL MODULE (FBCM)]**.) Go to the next step
		No	Go to the next step
4	**PURPOSE: VERIFY IF A MALFUNCTION OCCURRED DUE TO FAILURE OF PERFORMING THE BATTERY INITIAL SETTING** • Access the BATT_DAY PID using the M-MDS. (See **ON-BOARD DIAGNOSTIC TEST [SKYACTIV-G 2.0, SKYACTIV-G 2.5]**.) • Has it only been a	Yes	Verify the battery replacement record (servicing record or consultation with customer), and if it can be determined that the battery initial setting was not performed, perform the battery initial setting. (See **BATTERY REMOVAL/INSTALLATION [SKYACTIV-G 2.0, SKYACTIV-G 2.5]**.) Go to the troubleshooting procedure to perform the procedure from Step 2.
		No	Go to the troubleshooting procedure to perform the procedure from Step 1.

	short while since the battery was replaced?		

Troubleshooting Diagnostic Procedure

Intention of troubleshooting procedure

- Step 1
  - Replace the battery.
- Step 2—3
  - Verify that the primary malfunction is resolved and there are no other malfunctions.

STEP	INSPECTION	RESULTS	ACTION
1	**PURPOSE: REPLACE THE BATTERY** • Replace the battery. (See **BATTERY REMOVAL/INSTALLATION [SKYACTIV-G 2.0, SKYACTIV-G 2.5]**.) • Perform the Operation After Replacing Battery (With i-ELOOP).	—	Go to the next step.
2	**PURPOSE: VERIFICATION OF VEHICLE REPAIR COMPLETION** • Always reconnect all disconnected connectors. • Clear the DTC from the PCM memory using the M-MDS. (See **CLEARING DTC [SKYACTIV-G 2.0, SKYACTIV-G 2.5]**.) • Implement the repeatability verification procedure. (See **Repeatability Verification Procedure**.) • Perform the DTC Reading Procedure. (See **ON-BOARD DIAGNOSTIC TEST [SKYACTIV-G 2.0, SKYACTIV-G 2.5]**.)	Yes	Perform the Operation After Replacing Battery (With i-ELOOP). (See **BATTERY REMOVAL/INSTALLATION [SKYACTIV-G 2.0, SKYACTIV-G 2.5]**.) Repeat the inspection from Step 2. • If the malfunction recurs, replace the PCM. (See **PCM REMOVAL/INSTALLATION [SKYACTIV-G 2.0, SKYACTIV-G 2.5]**.) Go to the next step.
		No	Go to the next step.

	• Is the same DTC present?		
3	**PURPOSE: VERIFY IF THERE IS ANY OTHER MALFUNCTION** • Is any other DTC or pending code stored?	Yes	Go to the applicable DTC inspection. (See **DTC TABLE [SKYACTIV-G 2.0, SKYACTIV-G 2.5]**.)
		No	DTC troubleshooting completed.

2014 - Mazda3 - Engine

DTC P058A:00 [SKYACTIV-G 2.0, SKYACTIV-G 2.5]

NOTE:

- To determine the malfunctioning part, proceed with the diagnostics from "Function Inspection Using M-MDS".

Details On DTCs

DESCRIPTION	Current sensor: Function malfunction	
DETECTION CONDITION	Determination conditions	• Error signal from the current sensor is received.
	Preconditions	• Not applicable
	Malfunction determination period	• **5 s** period
	Drive cycle	• 2
	Self test type	• CMDTC self test
	Sensor used	• Current sensor
FAIL-SAFE FUNCTION	• Inhibits the i-ELOOP control.	
VEHICLE STATUS WHEN DTCs ARE OUTPUT	• Illuminates master warning light • A warning message is displayed on the center display. (Type A instrument cluster) • Illuminates charging system warning light. (Type B or type C instrument cluster) • The engine cannot be started or the engine may stall due to battery voltage decrease.	
POSSIBLE CAUSE	• Connector or terminal malfunction of the following parts: ▪ Current sensor ▪ Front body control module (FBCM) ▪ PCM • Short to ground or open circuit in current sensor power supply circuit ▪ Short to ground in wiring harness between battery positive terminal and current sensor terminal A ▪ MAIN 200 A fuse and/or ENG+B 7.5 A fuse malfunction ▪ Open circuit in wiring harness between battery positive terminal and current sensor terminal A • Short to ground in wiring harness between the following terminals: ▪ Current sensor terminal B—Front body control module (FBCM) terminal 2E ▪ Front body control module (FBCM) terminal 2P—PCM terminal 2AK ▪ Front body control module (FBCM) terminal 2N—PCM terminal 2AL • Short to power supply in wiring harness between the following terminals: ▪ Battery positive terminal—Current sensor terminal A	

	▪ Current sensor terminal B—Front body control module (FBCM) terminal 2E ▪ Front body control module (FBCM) terminal 2P—PCM terminal 2AK ▪ Front body control module (FBCM) terminal 2N—PCM terminal 2AL • Open circuit in wiring harness between the following terminals: ▪ Current sensor terminal B—Front body control module (FBCM) terminal 2E ▪ Front body control module (FBCM) terminal 2P—PCM terminal 2AK ▪ Front body control module (FBCM) terminal 2N—PCM terminal 2AL • Current sensor malfunction • Front body control module (FBCM) malfunction • PCM malfunction

System Wiring Diagram

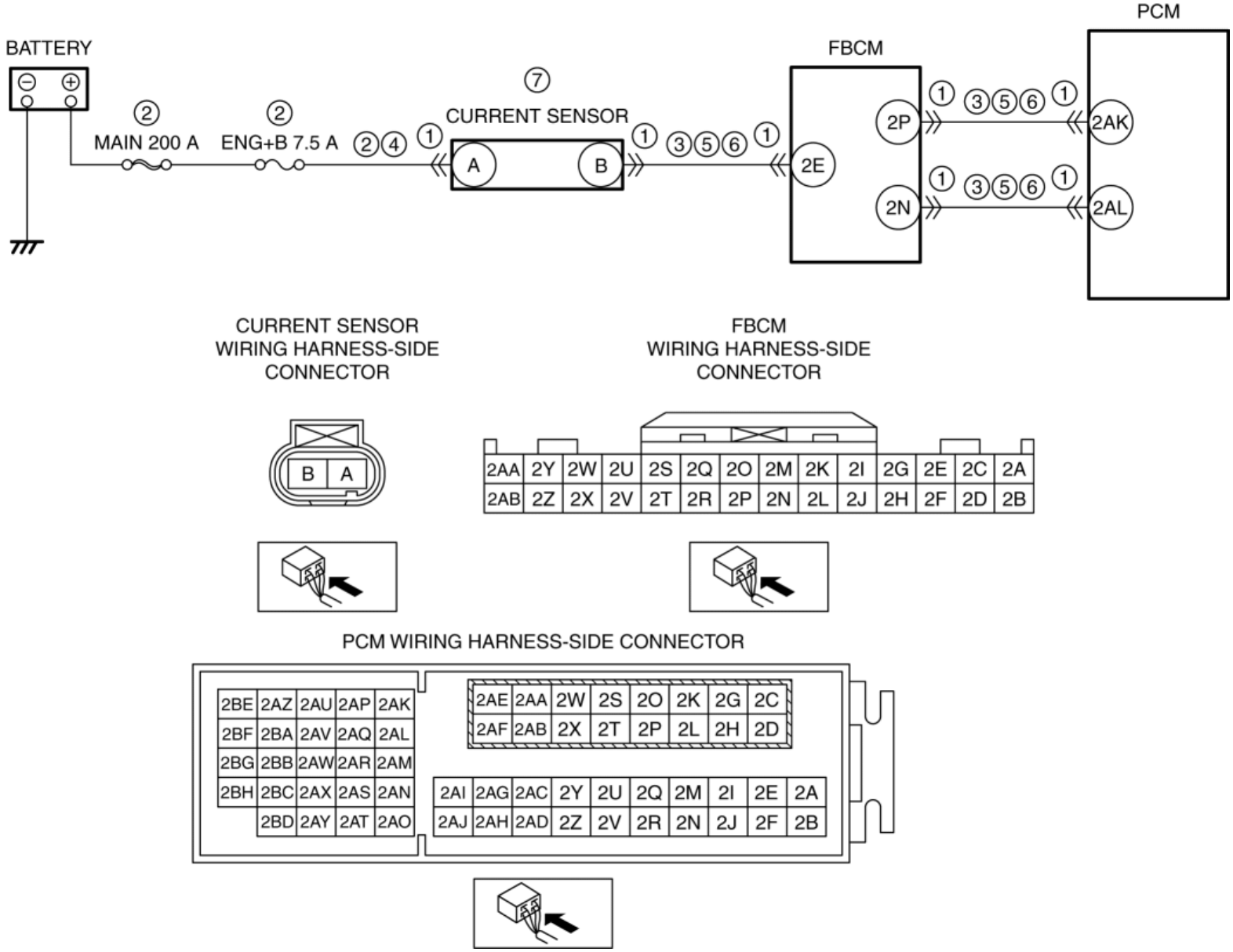

Function Explanation (DTC Detection Outline)

- The current sensor detects the battery condition and sends the battery condition signal to the PCM via the FBCM. The PCM receives the battery condition signal from the current sensor and controls the battery. If the current sensor malfunctions, the battery is constantly charged because battery control is lost, which could cause the fuel economy to worsen.
- The current sensor performs self-diagnosis on the battery voltage, battery fluid temperature and internal circuit, and if the PCM receives a malfunction signal from the current sensor, it stores a DTC.

Repeatability Verification Procedure

- Start the engine.
- Wait for **10 s** (idle).

PID Item/Simulation Item Used In Diagnosis

- Not applicable

Function Inspection Using M-MDS

STEP	INSPECTION	RESULTS	ACTION
1	**VERIFY RELATED REPAIR INFORMATION AVAILABILITY** • Verify related Service Bulletins and/or on-line repair information availability. • Is any related repair information available?	Yes	Perform repair or diagnosis according to the available repair information. • If the vehicle is not repaired, go to the next step.
		No	Go to the next step.
2	**PURPOSE: VERIFY IF CURRENT SENSOR MALFUNCTION IS FALSELY RECOGNIZED BY DTC RELATED CAN OR LIN COMMUNICATION** • Switch the ignition off, then ON (engine off). • Perform the PCM and front body control module (FBCM) DTC inspection using the M-MDS. (See **ON-BOARD DIAGNOSTIC TEST [SKYACTIV-G 2.0, SKYACTIV-G 2.5]**.) (See **DTC INSPECTION [FRONT BODY CONTROL MODULE (FBCM)]**.) • Are DTCs related CAN or LIN communication recorded?	Yes	Repair or replace the malfunctioning part according to the applicable DTC troubleshooting. (See **DTC TABLE [SKYACTIV-G 2.0, SKYACTIV-G 2.5]**.) (See **DTC TABLE [FRONT BODY CONTROL MODULE (FBCM)]**.) Go to the next step.
		No	Go to the next step.
3	**PURPOSE: VERIFY IF CURRENT SENSOR MALFUNCTION IS FALSELY RECOGNIZED BY DTC RELATED TO FRONT BODY CONTROL MODULE (FBCM)** • Perform the front body control module (FBCM) DTC inspection using the M-MDS. (See **DTC INSPECTION [FRONT BODY CONTROL MODULE (FBCM)]**.) • Are any DTCs present?	Yes	Go to the applicable DTC inspection. (See **DTC TABLE [FRONT BODY CONTROL MODULE (FBCM)]**.) Go to the troubleshooting procedure to perform the procedure from Step 1.
		No	Go to the troubleshooting procedure to perform the procedure from Step 1.

Troubleshooting Diagnostic Procedure

Intention of troubleshooting procedure

- Step 1—6
  - Perform inspection of each signal transmission system.

Step 7

- Perform a unit inspection of the current sensor.

- Step 8—9
  - Verify that the primary malfunction is resolved and there are no other malfunctions.

STEP	INSPECTION	RESULTS	ACTION

1	**PURPOSE: VERIFY IF CONNECTOR DAMAGE OF EACH PART AFFECTS DIAGNOSTIC RESULTS**
	NOTE:
	• Always disconnect current sensor connector before disconnecting the negative battery cable.
	• Switch the ignition off.
	• Disconnect the connector of the following parts.
	  ▪ Current sensor
	  ▪ Front body control module (FBCM)
	  ▪ PCM
	• Inspect for poor connection (such as damaged/pulled-out pins, corrosion).
	• Is there any malfunction?
		Yes	Repair or replace the connector and/or terminals, then go to Step 8.

		No	Go to the next step.

2	**PURPOSE: VERIFY IF OPEN CIRCUIT OR SHORT TO GROUND IN CURRENT SENSOR POWER SUPPLY CIRCUIT AFFECTS DIAGNOSTIC RESULTS**
	• Verify that the current sensor, front body control module (FBCM) and PCM connectors are disconnected.
	• Measure the voltage at the current sensor terminal A (wiring harness-side).
	• Is the voltage **0 V**?
		Yes	Inspect the MAIN 200 A fuse and ENG+B 7.5 A fuse.
			• If the fuse is blown:
			  ▪ Refer to the wiring diagram and verify whether or not there is a common connector between battery positive terminal and current sensor terminal A.
			  If there is a common connector:
			  • Determine the malfunctioning part by inspecting the common connector and the terminal for corrosion, damage, or pin disconnection, and the common wiring harness for a short to ground.
			  • Repair or replace the malfunctioning part.
			  If there is no common connector:
			  • Repair or replace the wiring harness which has a short to ground.
			  • Replace the malfunctioning fuse.
			• If the fuse is damaged:
			  ▪ Replace the malfunctioning fuse.
			• If all fuses are normal:
			  ▪ Refer to the wiring diagram and verify whether or not there is a common

			connector between battery positive terminal and current sensor terminal A. **If there is a common connector:** • Determine the malfunctioning part by inspecting the common connector and the terminal for corrosion, damage, or pin disconnection, and the common wiring harness for an open circuit. • Repair or replace the malfunctioning part. **If there is no common connector:** • Repair or replace the wiring harness which has an open circuit. Go to Step 8.
		No	Go to the next step.
3	**PURPOSE: VERIFY IF SHORT TO GROUND IN EACH WIRING HARNESS AFFECTS DIAGNOSTIC RESULTS** • Verify that the current sensor, front body control module (FBCM) and PCM connectors are disconnected. • Inspect for continuity between the following terminals (wiring harness-side) and body ground: ▪ Current sensor terminal B ▪ Front body control module (FBCM) terminal 2P ▪ Front body control module (FBCM) terminal 2N • Is there continuity?	Yes	Refer to the wiring diagram and verify whether or not there is a common connector between the following terminals: • Current sensor terminal B—Front body control module (FBCM) terminal 2E • Front body control module (FBCM) terminal 2P—PCM terminal 2AK • Front body control module (FBCM) terminal 2N—PCM terminal 2AL **If there is a common connector:** • Determine the malfunctioning part by inspecting the common connector and the terminal for corrosion, damage, or pin disconnection, and the common wiring harness for a short to ground. • Repair or replace the malfunctioning part. **If there is no common connector:** • Repair or replace the wiring harness which has a short to ground. Go to Step 8.
		No	Go to the next step.
4	**PURPOSE: VERIFY IF SHORT TO POWER SUPPLY IN CURRENT SENSOR POWER SUPPLY CIRCUIT AFFECTS DIAGNOSTIC RESULTS** • Verify that the current sensor, front body control module (FBCM) and PCM connectors are disconnected. • Switch the ignition ON (engine off). **NOTE:** ▪ Another DTC may be stored by the PCM detecting an open circuit. • Measure the voltage at the current sensor terminal A (wiring harness-	Yes	Refer to the wiring diagram and verify whether or not there is a common connector between battery positive terminal and current sensor terminal A. **If there is a common connector:** • Determine the malfunctioning part by inspecting the common connector and the terminal for corrosion, damage, or pin disconnection, and the common wiring harness for a short to power supply. • Repair or replace the malfunctioning part. **If there is no common connector:** • Repair or replace the wiring harness which has a short to power supply. Go to Step 8.

	side). • Is the voltage **above B+**?	No	Go to the next step.
5	**PURPOSE: VERIFY IF SHORT TO POWER SUPPLY IN EACH WIRING HARNESS AFFECTS DIAGNOSTIC RESULTS** • Verify that the current sensor, front body control module (FBCM) and PCM connectors are disconnected. • Measure the voltage at the following terminals (wiring harness-side): ▪ Current sensor terminal B ▪ Front body control module (FBCM) terminal 2P ▪ Front body control module (FBCM) terminal 2N • Is the voltage **0 V**?	Yes	Refer to the wiring diagram and verify whether or not there is a common connector between the following terminals: • Current sensor terminal B—Front body control module (FBCM) terminal 2E • Front body control module (FBCM) terminal 2P—PCM terminal 2AK • Front body control module (FBCM) terminal 2N—PCM terminal 2AL **If there is a common connector:** • Determine the malfunctioning part by inspecting the common connector and the terminal for corrosion, damage, or pin disconnection, and the common wiring harness for a short to power supply. • Repair or replace the malfunctioning part. **If there is no common connector:** • Repair or replace the wiring harness which has a short to power supply. Go to Step 8.
		No	Go to the next step.
6	**PURPOSE: VERIFY IF OPEN CIRCUIT IN EACH WIRING HARNESS AFFECTS DIAGNOSTIC RESULTS** • Verify that the current sensor, front body control module (FBCM) and PCM connectors are disconnected. • Switch the ignition off. • Inspect for continuity between the following terminals (wiring harness-side): ▪ Current sensor terminal B—Front body control module (FBCM) terminal 2E ▪ Front body control module (FBCM) terminal 2P—PCM terminal 2AK ▪ Front body control module (FBCM) terminal 2N—PCM terminal 2AL • Is there continuity?	Yes	Go to the next step.
		No	Refer to the wiring diagram and verify whether or not there is a common connector between the following terminals: • Current sensor terminal B—Front body control module (FBCM) terminal 2E • Front body control module (FBCM) terminal 2P—PCM terminal 2AK • Front body control module (FBCM) terminal 2N—PCM terminal 2AL **If there is a common connector:** • Determine the malfunctioning part by inspecting the common connector and the terminal for corrosion, damage, or pin disconnection, and the common wiring harness for an open circuit. • Repair or replace the malfunctioning part. **If there is no common connector:** • Repair or replace the wiring harness which has an open circuit. Go to Step 8.
7	**PURPOSE: DETERMINE INTEGRITY OF CURRENT SENSOR** • Inspect the current sensor. (See **CURRENT SENSOR INSPECTION [SKYACTIV-G 2.0, SKYACTIV-G 2.5]**.) • Is there any malfunction?	Yes	Replace the current sensor, then go to the next step. (See **CURRENT SENSOR REMOVAL/INSTALLATION [SKYACTIV-G 2.0, SKYACTIV-G 2.5]**.)
		No	Go to the next step.
8	**PURPOSE: VERIFICATION OF VEHICLE REPAIR COMPLETION** • Always reconnect all disconnected connectors.	Yes	Repeat the inspection from Step 1. • If the malfunction recurs, replace the PCM. (See **PCM REMOVAL/INSTALLATION [SKYACTIV-G 2.0,**

	• Clear the DTC from the PCM memory using the M-MDS. (See **CLEARING DTC [SKYACTIV-G 2.0, SKYACTIV-G 2.5]**.) • Implement the repeatability verification procedure. (See **Repeatability Verification Procedure**.) • Perform the Pending Trouble Code Access Procedure. (See **ON-BOARD DIAGNOSTIC TEST [SKYACTIV-G 2.0, SKYACTIV-G 2.5]**.) • Is the PENDING CODE for this DTC present?		**SKYACTIV-G 2.5]**.) Go to the next step.
		No	Go to the next step.
9	**PURPOSE: VERIFY IF THERE IS ANY OTHER MALFUNCTION** • Is any other DTC or pending code stored?	Yes	Go to the applicable DTC inspection. (See **DTC TABLE [SKYACTIV-G 2.0, SKYACTIV-G 2.5]**.)
		No	DTC troubleshooting completed.

2014 - Mazda3 - Engine

DTC P059F:00 [SKYACTIV-G 2.0, SKYACTIV-G 2.5]

DTC P059F:00	Active air shutter: Opening angle abnormality (spinning free)
DETECTION CONDITION	• Active air shutter opening angle is certain value or more. **Diagnostic support note** • This is a continuous monitor (other). • The check engine light does not illuminate. • PENDING CODE is available if the PCM detects the above malfunction condition during first drive cycle. • FREEZE FRAME DATA (Mode 2) is not available. • Snapshot data is available. • DTC is stored in the PCM memory.
FAIL-SAFE FUNCTION	• Performs fully open/closed position learning function three times.
POSSIBLE CAUSE	• Active air shutter malfunction • PCM malfunction
SYSTEM WIRING DIAGRAM	Not applicable

Diagnostic Procedure

STEP	INSPECTION		ACTION
1	**VERIFY FREEZE FRAME DATA (MODE 2)/SNAPSHOT DATA HAS BEEN RECORDED** • Has the FREEZE FRAME DATA (Mode 2)/snapshot data been recorded?	Yes	Go to the next step.
		No	Record the FREEZE FRAME DATA (Mode 2)/snapshot data on the repair order, then go to the next step.
2	**VERIFY RELATED REPAIR INFORMATION AVAILABILITY**	Yes	Perform repair or diagnosis according to the

	• Verify related Service Bulletins and/or on-line repair information availability. • Is any related repair information available?		available repair information. • If the vehicle is not repaired, go to the next step.
		No	Go to the next step.
3	**VERIFY IF DIAGNOSTIC RESULT IS AFFECTED BY DTC RELATED TO ACTIVE AIR SHUTTER** • Switch the ignition off, then ON (engine off). • Perform the Pending Trouble Code Access Procedure and DTC Reading Procedure. (See **ON-BOARD DIAGNOSTIC TEST [SKYACTIV-G 2.0, SKYACTIV-G 2.5]**.) • Is the PENDING CODE/DTC U0284:00 also present?	Yes	Go to the applicable PENDING CODE or DTC inspection. (See **DTC U0284:00 [SKYACTIV-G 2.0, SKYACTIV-G 2.5]**.)
		No	Go to the next step.
4	**INSPECT ACTIVE AIR SHUTTER** • Inspect the active air shutter. (See **ACTIVE AIR SHUTTER INSPECTION**.) • Is there any malfunction?	Yes	Replace the active air shutter, then go to the next step. (See **ACTIVE AIR SHUTTER REMOVAL/INSTALLATION**.)
		No	Go to the next step.
5	**VERIFY DTC TROUBLESHOOTING COMPLETED** • Always reconnect all disconnected connectors. • Clear the DTC from the PCM memory using the M-MDS. (See **CLEARING DTC [SKYACTIV-G 2.0, SKYACTIV-G 2.5]**.) • Start the engine. • Drive the vehicle at **10 km/h {6.2 mph} or more** for **approx. 1 min**. • Perform the Pending Trouble Code Access Procedure. (See **ON-BOARD DIAGNOSTIC TEST [SKYACTIV-G 2.0, SKYACTIV-G 2.5]**.)	Yes	Repeat the inspection from Step 1. • If the malfunction recurs, replace the PCM. (See **PCM REMOVAL/INSTALLATION [SKYACTIV-G 2.0, SKYACTIV-G 2.5]**.) Go to the next step.
		No	Go to the next step.

	Is the PENDING CODE and/or DTC for this DTC present?		
6	**VERIFY AFTER REPAIR PROCEDURE** • Perform the “AFTER REPAIR PROCEDURE”. (See **AFTER REPAIR PROCEDURE [SKYACTIV-G 2.0, SKYACTIV-G 2.5]**.) • Are any DTCs present?	Yes	Go to the applicable DTC inspection. (See **DTC TABLE [SKYACTIV-G 2.0, SKYACTIV-G 2.5]**.)
		No	DTC troubleshooting completed.

2014 - Mazda3 - Engine

DTC P05A0:00 [SKYACTIV-G 2.0, SKYACTIV-G 2.5]

DTC P05A0:00	Active air shutter: Opening angle abnormality (sticking)
DETECTION CONDITION	• Active air shutter opening angle is certain value or less while intake air temperature is **5 °C {41 °F} or more**. **Diagnostic support note** • This is a continuous monitor (other). • The check engine light does not illuminate. • PENDING CODE is available if the PCM detects the above malfunction condition during first drive cycle. • FREEZE FRAME DATA (Mode 2) is not available. • Snapshot data is available. • DTC is stored in the PCM memory.
FAIL-SAFE FUNCTION	• Performs fully open/closed position learning function three times.
POSSIBLE CAUSE	• Foreign matter caught in active air shutter • Active air shutter malfunction • PCM malfunction
SYSTEM WIRING DIAGRAM	Not applicable

Diagnostic Procedure

STEP	INSPECTION		ACTION
1	**VERIFY FREEZE FRAME DATA (MODE 2)/SNAPSHOT DATA HAS BEEN RECORDED** • Has the FREEZE FRAME DATA (Mode 2)/snapshot data been recorded?	Yes	Go to the next step.
		No	Record the FREEZE FRAME DATA (Mode 2)/snapshot data on the repair order, then go to the next step.

2	**VERIFY RELATED REPAIR INFORMATION AVAILABILITY** • Verify related Service Bulletins and/or on-line repair information availability. • Is any related repair information available?	Yes	Perform repair or diagnosis according to the available repair information. • If the vehicle is not repaired, go to the next step.
		No	Go to the next step.
3	**VERIFY IF DIAGNOSTIC RESULT IS AFFECTED BY DTC RELATED TO ACTIVE AIR SHUTTER** • Switch the ignition off, then ON (engine off). • Perform the Pending Trouble Code Access Procedure and DTC Reading Procedure. (See **ON-BOARD DIAGNOSTIC TEST [SKYACTIV-G 2.0, SKYACTIV-G 2.5]**.) • Is the PENDING CODE/DTC U0284:00 also present?	Yes	Go to the applicable PENDING CODE or DTC inspection. (See **DTC U0284:00 [SKYACTIV-G 2.0, SKYACTIV-G 2.5]**.)
		No	Go to the next step.
4	**VERIFY IF FOREIGN MATTER IS LODGED** • Verify if the active air shutter has lodged foreign matter. • Has the active air shutter lodged any foreign matter?	Yes	Remove the foreign matter, then go to Step 6.
		No	Go to the next step.
5	**INSPECT ACTIVE AIR SHUTTER** • Inspect the active air shutter. (See **ACTIVE AIR SHUTTER INSPECTION**.) • Is there any malfunction?	Yes	Replace the active air shutter, then go to the next step. (See **ACTIVE AIR SHUTTER REMOVAL/INSTALLATION**.)
		No	Go to the next step.
6	**VERIFY DTC TROUBLESHOOTING COMPLETED** • Always reconnect all disconnected connectors. • Clear the DTC from the PCM memory using the M-MDS. (See **CLEARING DTC [SKYACTIV-G 2.0, SKYACTIV-G 2.5]**.) • Start the engine. • Drive the vehicle at **10 km/h**	Yes	Repeat the inspection from Step 1. • If the malfunction recurs, replace the PCM. (See **PCM REMOVAL/INSTALLATION [SKYACTIV-G 2.0, SKYACTIV-G 2.5]**.) Go to the next step.
		No	Go to the next step.

	{6.2 mph} or more for **approx. 1 min**. • Perform the Pending Trouble Code Access Procedure. (See **ON-BOARD DIAGNOSTIC TEST [SKYACTIV-G 2.0, SKYACTIV-G 2.5]**.) • Is the PENDING CODE and/or DTC for this DTC present?		
7	**VERIFY AFTER REPAIR PROCEDURE** • Perform the “AFTER REPAIR PROCEDURE”. (See **AFTER REPAIR PROCEDURE [SKYACTIV-G 2.0, SKYACTIV-G 2.5]**.) • Are any DTCs present?	Yes	Go to the applicable DTC inspection. (See **DTC TABLE [SKYACTIV-G 2.0, SKYACTIV-G 2.5]**.)
		No	DTC troubleshooting completed.

2014 - Mazda3 - Engine

DTC P05A3:00 [SKYACTIV-G 2.0, SKYACTIV-G 2.5]

DTC P05A3:00	Active air shutter: Actuator internal malfunction

DETECTION CONDITION	• Any of the following conditions is met:
	  ▪ Internal circuit of active air shutter actuator is malfunctioning
	  ▪ Active air shutter Hall sensor is malfunctioning
	Diagnostic support note
	• This is a continuous monitor (other).
	• The check engine light does not illuminate.
	• PENDING CODE is available if the PCM detects the above malfunction condition during first drive cycle.
	• FREEZE FRAME DATA (Mode 2) is not available.
	• Snapshot data is available.
	• DTC is stored in the PCM memory.

FAIL-SAFE FUNCTION	• Turns master warning light on. • Stops active air shutter control
POSSIBLE CAUSE	• Active air shutter malfunction • PCM malfunction
SYSTEM WIRING DIAGRAM	Not applicable

Diagnostic Procedure

STEP	INSPECTION		ACTION
1	**VERIFY FREEZE FRAME DATA (MODE 2)/SNAPSHOT DATA HAS BEEN RECORDED** • Has the FREEZE FRAME DATA	Yes	Go to the next step.

	(Mode 2)/snapshot data been recorded?	No	Record the FREEZE FRAME DATA (Mode 2)/snapshot data on the repair order, then go to the next step.
2	**VERIFY RELATED REPAIR INFORMATION AVAILABILITY** • Verify related Service Bulletins and/or on-line repair information availability. • Is any related repair information available?	Yes	Perform repair or diagnosis according to the available repair information. • If the vehicle is not repaired, go to the next step.
		No	Go to the next step.
3	**VERIFY IF DIAGNOSTIC RESULT IS AFFECTED BY DTC RELATED TO ACTIVE AIR SHUTTER** • Switch the ignition off, then ON (engine off). • Perform the Pending Trouble Code Access Procedure and DTC Reading Procedure. (See **ON-BOARD DIAGNOSTIC TEST [SKYACTIV-G 2.0, SKYACTIV-G 2.5]**.) • Is the PENDING CODE/DTC U0284:00 also present?	Yes	Go to the applicable PENDING CODE or DTC inspection. (See **DTC U0284:00 [SKYACTIV-G 2.0, SKYACTIV-G 2.5]**.)
		No	Go to the next step.
4	**INSPECT ACTIVE AIR SHUTTER** • Inspect the active air shutter. (See **ACTIVE AIR SHUTTER INSPECTION**.) • Is there any malfunction?	Yes	Replace the active air shutter, then go to the next step. (See **ACTIVE AIR SHUTTER REMOVAL/INSTALLATION**.)
		No	Go to the next step.
5	**VERIFY DTC TROUBLESHOOTING COMPLETED** • Always reconnect all disconnected connectors. • Clear the DTC from the PCM memory using the M-MDS. (See **CLEARING DTC [SKYACTIV-G 2.0, SKYACTIV-G 2.5]**.) • Start the engine. • Drive the vehicle at **10 km/h {6.2 mph} or more** for **approx. 1 min**. • Perform the Pending Trouble	Yes	Repeat the inspection from Step 1. • If the malfunction recurs, replace the PCM. (See **PCM REMOVAL/INSTALLATION [SKYACTIV-G 2.0, SKYACTIV-G 2.5]**.) Go to the next step.
		No	Go to the next step.

	Code Access Procedure and DTC Reading Procedure. (See **ON-BOARD DIAGNOSTIC TEST [SKYACTIV-G 2.0, SKYACTIV-G 2.5]**.) • Is DTC P05A3:00 or pending code displayed?		
6	**VERIFY AFTER REPAIR PROCEDURE** • Perform the “AFTER REPAIR PROCEDURE”. (See **AFTER REPAIR PROCEDURE [SKYACTIV-G 2.0, SKYACTIV-G 2.5]**.) • Are any DTCs present?	Yes	Go to the applicable DTC inspection. (See **DTC TABLE [SKYACTIV-G 2.0, SKYACTIV-G 2.5]**.)
		No	DTC troubleshooting completed.

2014 - Mazda3 - Engine

DTC P05C0:00 [SKYACTIV-G 2.0, SKYACTIV-G 2.5]

DTC P05C0:00	Active air shutter: Actuator temperature abnormality
DETECTION CONDITION	• Internal temperature of active air shutter actuator is certain value or more. **Diagnostic support note** • This is a continuous monitor (other). • The check engine light does not illuminate. • FREEZE FRAME DATA (Mode 2) is not available. • Snapshot data is available. • DTC is stored in the PCM memory.
FAIL-SAFE FUNCTION	• Turns master warning light on. • Stops active air shutter control.
POSSIBLE CAUSE	• Engine overheating • Active air shutter malfunction • PCM malfunction
SYSTEM WIRING DIAGRAM	Not applicable

Diagnostic Procedure

STEP	INSPECTION		ACTION
1	**VERIFY FREEZE FRAME DATA (MODE 2)/SNAPSHOT DATA HAS BEEN RECORDED** • Has the FREEZE FRAME DATA (Mode 2)/snapshot data been recorded?	Yes	Go to the next step.
		No	Record the FREEZE FRAME DATA (Mode 2)/snapshot data on the repair order, then go to the next step.
	VERIFY RELATED REPAIR INFORMATION		

2	**AVAILABILITY** • Verify related Service Bulletins and/or on-line repair information availability. • Is any related repair information available?	Yes	Perform repair or diagnosis according to the available repair information. • If the vehicle is not repaired, go to the next step.
		No	Go to the next step.
3	**VERIFY IF DIAGNOSTIC RESULT IS AFFECTED BY DTC RELATED TO ACTIVE AIR SHUTTER** • Switch the ignition off, then ON (engine off). • Perform the Pending Trouble Code Access Procedure and DTC Reading Procedure. (See **ON-BOARD DIAGNOSTIC TEST [SKYACTIV-G 2.0, SKYACTIV-G 2.5]**.) • Is the PENDING CODE/DTC U0284:00 also present?	Yes	Go to the applicable PENDING CODE or DTC inspection. (See **DTC U0284:00 [SKYACTIV-G 2.0, SKYACTIV-G 2.5]**.)
		No	Go to the next step.
4	**VERIFY ENGINE CONDITION** • Verify the engine condition. • Is the engine overheating?	Yes	Perform the symptom troubleshooting “NO.17 COOLING SYSTEM CONCERNS-OVERHEATING”. (See **NO.17 COOLING SYSTEM CONCERNS-OVERHEATING [SKYACTIV-G 2.0, SKYACTIV-G 2.5]**.)
		No	Go to the next step.
5	**INSPECT ACTIVE AIR SHUTTER** • Inspect the active air shutter. (See **ACTIVE AIR SHUTTER INSPECTION**.) • Is there any malfunction?	Yes	Replace the active air shutter, then go to the next step. (See **ACTIVE AIR SHUTTER REMOVAL/INSTALLATION**.)
		No	Go to the next step.
6	**VERIFY DTC TROUBLESHOOTING COMPLETED** • Always reconnect all disconnected connectors. • Clear the DTC from the PCM memory using the M-MDS. (See **CLEARING DTC [SKYACTIV-G 2.0, SKYACTIV-G 2.5]**.) • Start the engine.	Yes	Repeat the inspection from Step 1. • If the malfunction recurs, replace the PCM. (See **PCM REMOVAL/INSTALLATION [SKYACTIV-G 2.0, SKYACTIV-G 2.5]**.) Go to the next step.

	• Drive the vehicle at **10 km/h {6.2 mph} or more** for **approx. 1 min**. • Perform the DTC Reading Procedure. (See **ON-BOARD DIAGNOSTIC TEST [SKYACTIV-G 2.0, SKYACTIV-G 2.5]**.) • Is the same DTC present?	No	Go to the next step.
7	**VERIFY AFTER REPAIR PROCEDURE** • Perform the “AFTER REPAIR PROCEDURE”. (See **AFTER REPAIR PROCEDURE [SKYACTIV-G 2.0, SKYACTIV-G 2.5]**.) • Are any DTCs present?	Yes	Go to the applicable DTC inspection. (See **DTC TABLE [SKYACTIV-G 2.0, SKYACTIV-G 2.5]**.)
		No	DTC troubleshooting completed.

2014 - Mazda3 - Engine

DTC P0600:00 [SKYACTIV-G 2.0, SKYACTIV-G 2.5]

DTC P0600:00	Serial communication link
DETECTION CONDITION	• PCM internal malfunction. **Diagnostic support note** • This is a continuous monitor (CCM). • The check engine light illuminates if the PCM detects the above malfunction condition during the first drive cycle. • FREEZE FRAME DATA (Mode 2)/Snapshot data is available. • DTC is stored in the PCM memory.
FAIL-SAFE FUNCTION	Not applicable
POSSIBLE CAUSE	• PCM malfunction
SYSTEM WIRING DIAGRAM	Not applicable

Diagnostic Procedure

STEP	INSPECTION		ACTION
1	**VERIFY FREEZE FRAME DATA (MODE 2)/SNAPSHOT DATA HAS BEEN RECORDED** • Has the FREEZE FRAME DATA (Mode 2)/snapshot data been recorded?	Yes	Go to the next step.
		No	Record the FREEZE FRAME DATA (Mode 2)/snapshot data on the repair order, then go to the next step.
2	**VERIFY RELATED REPAIR INFORMATION AVAILABILITY** • Verify related Service Bulletins and/or on-line repair information availability. • Is any related repair	Yes	Perform repair or diagnosis according to the available repair information. • If the vehicle is not repaired, go to the next step.

	information available?	No	Go to the next step.
3	**PERFORM DTC INSPECTION AND VERIFY IF MALFUNCTIONING PART IS PCM** • Clear the DTC from the PCM memory using the M-MDS. (See **AFTER REPAIR PROCEDURE [SKYACTIV-G 2.0, SKYACTIV-G 2.5]**.) • Start the engine and warm it up completely. • Perform the KOEO or KOER self test. (See **KOEO/KOER SELF TEST [SKYACTIV-G 2.0, SKYACTIV-G 2.5]**.) • Is the same DTC present?	Yes	Replace the PCM, then go to the next step. (See **PCM REMOVAL/INSTALLATION [SKYACTIV-G 2.0, SKYACTIV-G 2.5]**.)
		No	Go to the next step.
4	**VERIFY AFTER REPAIR PROCEDURE** • Perform the “AFTER REPAIR PROCEDURE”. (See **AFTER REPAIR PROCEDURE [SKYACTIV-G 2.0, SKYACTIV-G 2.5]**.) • Are any DTCs present?	Yes	Go to the applicable DTC inspection. (See **DTC TABLE [SKYACTIV-G 2.0, SKYACTIV-G 2.5]**.)
		No	DTC troubleshooting completed.

2014 - Mazda3 - Engine

DTC P0601:00 [SKYACTIV-G 2.0, SKYACTIV-G 2.5]

DTC P0601:00	PCM memory check sum error
DETECTION CONDITION	• PCM internal memory check sum error. **Diagnostic support note** • This is a continuous monitor (CCM). • The check engine light illuminates if the PCM detects the above malfunction condition during the first drive cycle. • FREEZE FRAME DATA (Mode 2)/Snapshot data is available. • DTC is stored in the PCM memory.
FAIL-SAFE FUNCTION	• Restricts the upper limit of the engine speed. • Stops the drive-by-wire control (throttle valve is open at **approx. 8 °** by return spring force).
POSSIBLE CAUSE	• PCM connector or terminals malfunction • PCM malfunction ▪ PCM internal memory malfunction
SYSTEM WIRING DIAGRAM	Not applicable

Diagnostic Procedure

STEP	INSPECTION		ACTION
1	**VERIFY FREEZE FRAME DATA (MODE 2)/SNAPSHOT DATA HAS BEEN RECORDED** • Has the FREEZE FRAME DATA (Mode 2)/snapshot data been recorded?	Yes	Go to the next step.
		No	Record the FREEZE FRAME DATA (Mode 2)/snapshot data on the repair order, then go to the next step.
2	**VERIFY RELATED REPAIR INFORMATION AVAILABILITY**	Yes	Perform repair or diagnosis according to the

	• Verify related Service Bulletins and/or on-line repair information availability. • Is any related repair information available?		available repair information. • If the vehicle is not repaired, go to the next step.
		No	Go to the next step.
3	**INSPECT PCM CONNECTOR CONDITION** • Switch the ignition off. • Disconnect the PCM connector. • Inspect for poor connection (such as damaged/pulled-out pins, corrosion). • Is there any malfunction?	Yes	Repair or replace the connector and/or terminals, then go to the next step.
		No	Go to the next step.
4	**VERIFY DTC TROUBLESHOOTING COMPLETED** • Always reconnect all disconnected connectors. • Clear the DTC from the PCM memory using the M-MDS. (See **AFTER REPAIR PROCEDURE [SKYACTIV-G 2.0, SKYACTIV-G 2.5]**.) • Perform the KOEO or KOER self test. (See **KOEO/KOER SELF TEST [SKYACTIV-G 2.0, SKYACTIV-G 2.5]**.) • Is the same DTC present?	Yes	Replace the PCM, then go to the next step. (See **PCM REMOVAL/INSTALLATION [SKYACTIV-G 2.0, SKYACTIV-G 2.5]**.)
		No	Go to the next step.
5	**VERIFY AFTER REPAIR PROCEDURE** • Perform the “AFTER REPAIR PROCEDURE”. (See **AFTER REPAIR PROCEDURE [SKYACTIV-G 2.0, SKYACTIV-G 2.5]**.) • Are any DTCs present?	Yes	Go to the applicable DTC inspection. (See **DTC TABLE [SKYACTIV-G 2.0, SKYACTIV-G 2.5]**.)
		No	DTC troubleshooting completed.

2014 - Mazda3 - Engine

DTC P0602:00 [SKYACTIV-G 2.0, SKYACTIV-G 2.5]

DTC P0602:00	PCM programming error
DETECTION CONDITION	• No configuration data in the PCM. **Diagnostic support note** • This is a continuous monitor (CCM). • The check engine light illuminates if the PCM detects the above malfunction condition during the first drive cycle. • FREEZE FRAME DATA (Mode 2)/Snapshot data is available. • DTC is stored in the PCM memory.
FAIL-SAFE FUNCTION	Not applicable
POSSIBLE CAUSE	• Configuration has not been completed • PCM connector or terminals malfunction • PCM malfunction
SYSTEM WIRING DIAGRAM	Not applicable

Diagnostic Procedure

STEP	INSPECTION		ACTION
1	**VERIFY FREEZE FRAME DATA (MODE 2)/SNAPSHOT DATA HAS BEEN RECORDED** • Has the FREEZE FRAME DATA (Mode 2)/snapshot data been recorded?	Yes	Go to the next step.
		No	Record the FREEZE FRAME DATA (Mode 2)/snapshot data on the repair order, then go to the next step.
2	**VERIFY RELATED REPAIR INFORMATION AVAILABILITY** • Verify related Service Bulletins	Yes	Perform repair or diagnosis according to the available repair information.

	and/or on-line repair information availability. • Is any related repair information available?		• If the vehicle is not repaired, go to the next step.
		No	Go to the next step.
3	**PERFORM PCM CONFIGURATION (USING READ/WRITE FUNCTION)** • Perform the PCM configuration (using read/write function). (See **PCM CONFIGURATION (USING READ/WRITE FUNCTION) [SKYACTIV-G 2.0, SKYACTIV-G 2.5]**.) • Clear the DTC from the PCM memory using the M-MDS. (See **AFTER REPAIR PROCEDURE [SKYACTIV-G 2.0, SKYACTIV-G 2.5]**.) • Perform the KOEO or KOER self test. (See **KOEO/KOER SELF TEST [SKYACTIV-G 2.0, SKYACTIV-G 2.5]**.) • Is the same DTC present?	Yes	Go to the next step.
		No	Go to Step 6.
4	**INSPECT PCM CONNECTOR CONDITION** • Switch the ignition off. • Disconnect the PCM connector. • Inspect for poor connection (such as damaged/pulled-out pins, corrosion). • Is there any malfunction?	Yes	Repair or replace the connector and/or terminals, then go to the next step.
		No	Perform the PCM configuration (using read/write function) again. (See **PCM CONFIGURATION (USING READ/WRITE FUNCTION) [SKYACTIV-G 2.0, SKYACTIV-G 2.5]**.) • If the malfunction recurs, perform the PCM configuration (using as-built data). (See **PCM CONFIGURATION (USING AS-BUILT DATA) [SKYACTIV-G 2.0, SKYACTIV-G 2.5]**.) Go to the next step.
5	**VERIFY DTC TROUBLESHOOTING COMPLETED** • Always reconnect all disconnected connectors.	Yes	Replace the PCM, then go to the next step. (See **PCM REMOVAL/INSTALLATION [SKYACTIV-**

	• Clear the DTC from the PCM memory using the M-MDS. (See **AFTER REPAIR PROCEDURE [SKYACTIV-G 2.0, SKYACTIV-G 2.5]**.) • Perform the KOEO or KOER self test. (See **KOEO/KOER SELF TEST [SKYACTIV-G 2.0, SKYACTIV-G 2.5]**.) • Is the same DTC present?		**G 2.0, SKYACTIV-G 2.5]**.)
		No	Go to the next step.
6	**VERIFY AFTER REPAIR PROCEDURE** • Perform the “AFTER REPAIR PROCEDURE”. (See **AFTER REPAIR PROCEDURE [SKYACTIV-G 2.0, SKYACTIV-G 2.5]**.) • Are any DTCs present?	Yes	Go to the applicable DTC inspection. (See **DTC TABLE [SKYACTIV-G 2.0, SKYACTIV-G 2.5]**.)
		No	DTC troubleshooting completed.

2014 - Mazda3 - Engine

DTC P0604:00 [SKYACTIV-G 2.0, SKYACTIV-G 2.5]

DTC P0604:00	PCM RAM error
DETECTION CONDITION	• PCM internal RAM malfunction. **Diagnostic support note** • This is a continuous monitor (CCM). • The check engine light illuminates if the PCM detects the above malfunction condition during the first drive cycle. • FREEZE FRAME DATA (Mode 2)/Snapshot data is available. • DTC is stored in the PCM memory.
FAIL-SAFE FUNCTION	• Restricts the upper limit of the engine speed. • Stops the drive-by-wire control (throttle valve is open at **approx. 8 °** by return spring force).
POSSIBLE CAUSE	• PCM connector or terminals malfunction • PCM malfunction ▪ PCM internal RAM malfunction
SYSTEM WIRING DIAGRAM	Not applicable

Diagnostic Procedure

STEP	INSPECTION		ACTION
1	**VERIFY FREEZE FRAME DATA (MODE 2)/SNAPSHOT DATA HAS BEEN RECORDED** • Has the FREEZE FRAME DATA (Mode 2)/snapshot data been recorded?	Yes	Go to the next step.
		No	Record the FREEZE FRAME DATA (Mode 2)/snapshot data on the repair order, then go to the next step.
2	**VERIFY RELATED REPAIR INFORMATION AVAILABILITY**	Yes	Perform repair or diagnosis according to the

	• Verify related Service Bulletins and/or on-line repair information availability. • Is any related repair information available?		available repair information. • If the vehicle is not repaired, go to the next step.
		No	Go to the next step.
3	**INSPECT PCM CONNECTOR CONDITION** • Switch the ignition off. • Disconnect the PCM connector. • Inspect for poor connection (such as damaged/pulled-out pins, corrosion). • Is there any malfunction?	Yes	Repair or replace the connector and/or terminals, then go to the next step.
		No	Go to the next step.
4	**VERIFY DTC TROUBLESHOOTING COMPLETED** • Always reconnect all disconnected connectors. • Clear the DTC from the PCM memory using the M-MDS. (See **AFTER REPAIR PROCEDURE [SKYACTIV-G 2.0, SKYACTIV-G 2.5]**.) • Perform the KOEO or KOER self test. (See **KOEO/KOER SELF TEST [SKYACTIV-G 2.0, SKYACTIV-G 2.5]**.) • Is the same DTC present?	Yes	Replace the PCM, then go to the next step. (See **PCM REMOVAL/INSTALLATION [SKYACTIV-G 2.0, SKYACTIV-G 2.5]**.)
		No	Go to the next step.
5	**VERIFY AFTER REPAIR PROCEDURE** • Perform the “AFTER REPAIR PROCEDURE”. (See **AFTER REPAIR PROCEDURE [SKYACTIV-G 2.0, SKYACTIV-G 2.5]**.) • Are any DTCs present?	Yes	Go to the applicable DTC inspection. (See **DTC TABLE [SKYACTIV-G 2.0, SKYACTIV-G 2.5]**.)
		No	DTC troubleshooting completed.

2014 - Mazda3 - Engine

DTC P0606:00 [SKYACTIV-G 2.0, SKYACTIV-G 2.5]

DTC P0606:00	PCM processor error
DETECTION CONDITION	• PCM internal CPU malfunction. **Diagnostic support note** • This is a continuous monitor (CCM). • The check engine light illuminates if the PCM detects the above malfunction condition during the first drive cycle. • FREEZE FRAME DATA (Mode 2)/Snapshot data is available. • DTC is stored in the PCM memory.
FAIL-SAFE FUNCTION	• Restricts the upper limit of the engine speed. • Stops the drive-by-wire control (throttle valve is open at **approx. 8 °** by return spring force).
POSSIBLE CAUSE	• PCM connector or terminals malfunction • PCM malfunction ▪ PCM internal CPU malfunction
SYSTEM WIRING DIAGRAM	Not applicable

Diagnostic Procedure

STEP	INSPECTION		ACTION
1	**VERIFY FREEZE FRAME DATA (MODE 2)/SNAPSHOT DATA HAS BEEN RECORDED** • Has the FREEZE FRAME DATA (Mode 2)/snapshot data been recorded?	Yes	Go to the next step.
		No	Record the FREEZE FRAME DATA (Mode 2)/snapshot data on the repair order, then go to the next step.
2	**VERIFY RELATED REPAIR INFORMATION AVAILABILITY**	Yes	Perform repair or diagnosis according to the

	• Verify related Service Bulletins and/or on-line repair information availability. • Is any related repair information available?		available repair information. • If the vehicle is not repaired, go to the next step.
		No	Go to the next step.
3	**INSPECT PCM CONNECTOR CONDITION** • Switch the ignition off. • Disconnect the PCM connector. • Inspect for poor connection (such as damaged/pulled-out pins, corrosion). • Is there any malfunction?	Yes	Repair or replace the connector and/or terminals, then go to the next step.
		No	Go to the next step.
4	**VERIFY DTC TROUBLESHOOTING COMPLETED** • Always reconnect all disconnected connectors. • Clear the DTC from the PCM memory using the M-MDS. (See **AFTER REPAIR PROCEDURE [SKYACTIV-G 2.0, SKYACTIV-G 2.5]**.) • Perform the KOEO or KOER self test. (See **KOEO/KOER SELF TEST [SKYACTIV-G 2.0, SKYACTIV-G 2.5]**.) • Is the same DTC present?	Yes	Replace the PCM, then go to the next step. (See **PCM REMOVAL/INSTALLATION [SKYACTIV-G 2.0, SKYACTIV-G 2.5]**.)
		No	Go to the next step.
5	**VERIFY AFTER REPAIR PROCEDURE** • Perform the “AFTER REPAIR PROCEDURE”. (See **AFTER REPAIR PROCEDURE [SKYACTIV-G 2.0, SKYACTIV-G 2.5]**.) • Are any DTCs present?	Yes	Go to the applicable DTC inspection. (See **DTC TABLE [SKYACTIV-G 2.0, SKYACTIV-G 2.5]**.)
		No	DTC troubleshooting completed.

2014 - Mazda3 - Engine

DTC P0607:00 [SKYACTIV-G 2.0, SKYACTIV-G 2.5]

DTC P0607:00	Control module performance problem
DETECTION CONDITION	• PCM internal malfunction. **Diagnostic support note** • This is a continuous monitor (CCM). • The check engine light illuminates if the PCM detects the above malfunction condition during the first drive cycle. • FREEZE FRAME DATA (Mode 2)/Snapshot data is not available. • DTC is stored in the PCM memory.
FAIL-SAFE FUNCTION	Not applicable
POSSIBLE CAUSE	• PCM internal malfunction
SYSTEM WIRING DIAGRAM	Not applicable

Diagnostic Procedure

STEP	INSPECTION		ACTION
1	**VERIFY FREEZE FRAME DATA (MODE 2)/SNAPSHOT DATA HAS BEEN RECORDED** • Has the FREEZE FRAME DATA (Mode 2)/snapshot data been recorded?	Yes	Go to the next step.
		No	Record the FREEZE FRAME DATA (Mode 2)/snapshot data on the repair order, then go to the next step.
2	**VERIFY RELATED REPAIR INFORMATION AVAILABILITY** • Verify related Service Bulletins and/or on-line repair information availability. • Is any related repair	Yes	Perform repair or diagnosis according to the available repair information. • If the vehicle is not repaired, go to the next step.

	information available?	No	Go to the next step.
3	**VERIFY DTC TROUBLESHOOTING COMPLETED** • Clear the DTC from the PCM memory using the M-MDS. (See **AFTER REPAIR PROCEDURE [SKYACTIV-G 2.0, SKYACTIV-G 2.5]**.) • Perform the KOEO or KOER self test. (See **KOEO/KOER SELF TEST [SKYACTIV-G 2.0, SKYACTIV-G 2.5]**.) • Is the same DTC present?	Yes	Replace the PCM, then go to the next step. (See **PCM REMOVAL/INSTALLATION [SKYACTIV-G 2.0, SKYACTIV-G 2.5]**.)
		No	Go to the next step.
4	**VERIFY AFTER REPAIR PROCEDURE** • Perform the “AFTER REPAIR PROCEDURE”. (See **AFTER REPAIR PROCEDURE [SKYACTIV-G 2.0, SKYACTIV-G 2.5]**.) • Are any DTCs present?	Yes	Go to the applicable DTC inspection. (See **DTC TABLE [SKYACTIV-G 2.0, SKYACTIV-G 2.5]**.)
		No	DTC troubleshooting completed.

2014 - Mazda3 - Engine

DTC P0610:00 [SKYACTIV-G 2.0, SKYACTIV-G 2.5]

DTC P0610:00	PCM vehicle configuration error
DETECTION CONDITION	• PCM data configuration error. **Diagnostic support note** • This is a continuous monitor (CCM). • The check engine light illuminates if the PCM detects the above malfunction condition during the first drive cycle. • FREEZE FRAME DATA (Mode 2)/Snapshot data is available. • DTC is stored in the PCM memory.
FAIL-SAFE FUNCTION	Not applicable
POSSIBLE CAUSE	• Configuration procedure has not been completed • PCM connector or terminals malfunction • PCM malfunction
SYSTEM WIRING DIAGRAM	Not applicable

Diagnostic Procedure

STEP	INSPECTION		ACTION
1	**VERIFY FREEZE FRAME DATA (MODE 2)/SNAPSHOT DATA HAS BEEN RECORDED** • Has the FREEZE FRAME DATA (Mode 2)/snapshot data been recorded?	Yes	Go to the next step.
		No	Record the FREEZE FRAME DATA (Mode 2)/snapshot data on the repair order, then go to the next step.
2	**VERIFY RELATED REPAIR INFORMATION AVAILABILITY** • Verify related Service Bulletins	Yes	Perform repair or diagnosis according to the available repair information.

	and/or on-line repair information availability. • Is any related repair information available?		• If the vehicle is not repaired, go to the next step.
		No	Go to the next step.
3	**PERFORM PCM CONFIGURATION (USING READ/WRITE FUNCTION)** • Perform the PCM configuration (using read/write function). (See **PCM CONFIGURATION (USING READ/WRITE FUNCTION) [SKYACTIV-G 2.0, SKYACTIV-G 2.5]**.) • Clear the DTC from the PCM memory using the M-MDS. (See **AFTER REPAIR PROCEDURE [SKYACTIV-G 2.0, SKYACTIV-G 2.5]**.) • Perform the KOEO or KOER self test. (See **KOEO/KOER SELF TEST [SKYACTIV-G 2.0, SKYACTIV-G 2.5]**.) • Is the same DTC present?	Yes	Go to the next step.
		No	Go to Step 6.
4	**INSPECT PCM CONNECTOR CONDITION** • Switch the ignition off. • Disconnect the PCM connector. • Inspect for poor connection (such as damaged/pulled-out pins, corrosion). • Is there any malfunction?	Yes	Repair or replace the connector and/or terminals, then go to the next step.
		No	Perform the PCM configuration (using read/write function) again. (See **PCM CONFIGURATION (USING READ/WRITE FUNCTION) [SKYACTIV-G 2.0, SKYACTIV-G 2.5]**.) • If the malfunction recurs, perform the PCM configuration (using as-built data). (See **PCM CONFIGURATION (USING AS-BUILT DATA) [SKYACTIV-G 2.0, SKYACTIV-G 2.5]**.) Go to the next step.
5	**VERIFY DTC TROUBLESHOOTING COMPLETED** • Always reconnect all disconnected connectors.	Yes	Replace the PCM, then go to the next step. (See **PCM REMOVAL/INSTALLATION [SKYACTIV-**

	• Clear the DTC from the PCM memory using the M-MDS. (See **AFTER REPAIR PROCEDURE [SKYACTIV-G 2.0, SKYACTIV-G 2.5]**.) • Perform the KOEO or KOER self test. (See **KOEO/KOER SELF TEST [SKYACTIV-G 2.0, SKYACTIV-G 2.5]**.) • Is the same DTC present?		**G 2.0, SKYACTIV-G 2.5]**.)
		No	Go to the next step.
6	**VERIFY AFTER REPAIR PROCEDURE** • Perform the “AFTER REPAIR PROCEDURE”. (See **AFTER REPAIR PROCEDURE [SKYACTIV-G 2.0, SKYACTIV-G 2.5]**.) • Are any DTCs present?	Yes	Go to the applicable DTC inspection. (See **DTC TABLE [SKYACTIV-G 2.0, SKYACTIV-G 2.5]**.)
		No	DTC troubleshooting completed.

2014 - Mazda3 - Engine

DTC P061B:00 [SKYACTIV-G 2.0, SKYACTIV-G 2.5]

DTC P061B:00	Internal control module torque calculation performance problem
DETECTION CONDITION	• Indicates an error occurred in the PCM. • There is a malfunction in the sensor input signal to the PCM. **Diagnostic support note** • This is a continuous monitor (CCM). • The check engine light illuminates if the PCM detects the above malfunction condition during the first drive cycle. • FREEZE FRAME DATA (Mode 2)/Snapshot data is available. • DTC is stored in the PCM memory.
FAIL-SAFE FUNCTION	• Restricts the upper limit of the engine speed.
POSSIBLE CAUSE	• PCM connector or terminals malfunction • PCM malfunction
SYSTEM WIRING DIAGRAM	Not applicable

Diagnostic Procedure

STEP	INSPECTION		ACTION
1	**VERIFY FREEZE FRAME DATA (MODE 2)/SNAPSHOT DATA HAS BEEN RECORDED** • Has the FREEZE FRAME DATA (Mode 2)/snapshot data been recorded?	Yes	Go to the next step.
		No	Record the FREEZE FRAME DATA (Mode 2)/snapshot data on the repair order, then go to the next step.
2	**VERIFY RELATED REPAIR INFORMATION AVAILABILITY** • Verify related Service Bulletins	Yes	Perform repair or diagnosis according to the available repair information.

	and/or on-line repair information availability. • Is any related repair information available?		• If the vehicle is not repaired, go to the next step.
		No	Go to the next step.
3	**VERIFY RELATED PENDING CODE AND/OR DTC** • Switch the ignition off, then ON (engine off). • Perform the Pending Trouble Code Access Procedure and DTC Reading Procedure. (See **ON-BOARD DIAGNOSTIC TEST [SKYACTIV-G 2.0, SKYACTIV-G 2.5]**.) • Are any other PENDING CODEs and/or DTCs present?	Yes	Go to the applicable PENDING CODE or DTC inspection. (See **DTC TABLE [SKYACTIV-G 2.0, SKYACTIV-G 2.5]**.)
		No	Go to the next step.
4	**INSPECT PCM CONNECTOR CONDITION** • Switch the ignition off. • Disconnect the PCM connector. • Inspect for poor connection (such as damaged/pulled-out pins, corrosion). • Is there any malfunction?	Yes	Repair or replace the connector and/or terminals, then go to the next step.
		No	Go to the next step.
5	**VERIFY DTC TROUBLESHOOTING COMPLETED** • Always reconnect all disconnected connectors. • Clear the DTC from the PCM memory using the M-MDS. (See **AFTER REPAIR PROCEDURE [SKYACTIV-G 2.0, SKYACTIV-G 2.5]**.) • Perform the KOEO or KOER self test. (See **KOEO/KOER SELF TEST [SKYACTIV-G 2.0, SKYACTIV-G 2.5]**.) • Is the same DTC present?	Yes	Replace the PCM, then go to the next step. (See **PCM REMOVAL/INSTALLATION [SKYACTIV-G 2.0, SKYACTIV-G 2.5]**.)
		No	Go to the next step.
6	**VERIFY AFTER REPAIR PROCEDURE** • Perform the “AFTER REPAIR PROCEDURE”.	Yes	Go to the applicable DTC inspection. (See **DTC TABLE [SKYACTIV-G 2.0, SKYACTIV-G**

	(See **AFTER REPAIR PROCEDURE [SKYACTIV-G 2.0, SKYACTIV-G 2.5]**.) • Are any DTCs present?		**2.5]**.)
		No	DTC troubleshooting completed.

2014 - Mazda3 - Engine

DTC P061D:00 [SKYACTIV-G 2.0, SKYACTIV-G 2.5]

DTC P061D:00	Internal control module engine air mass performance problem
DETECTION CONDITION	• Indicates an error occurred in the PCM. **Diagnostic support note** • This is a continuous monitor (CCM). • The check engine light illuminates if the PCM detects the above malfunction condition during the first drive cycle. • FREEZE FRAME DATA (Mode 2)/Snapshot data is available. • DTC is stored in the PCM memory.
FAIL-SAFE FUNCTION	• Restricts the upper limit of the engine speed.
POSSIBLE CAUSE	• PCM connector or terminals malfunction • Software incompatibility issue • PCM malfunction
SYSTEM WIRING DIAGRAM	Not applicable

Diagnostic Procedure

STEP	INSPECTION		ACTION
1	**VERIFY FREEZE FRAME DATA (MODE 2)/SNAPSHOT DATA HAS BEEN RECORDED** • Has the FREEZE FRAME DATA (Mode 2)/snapshot data been recorded?	Yes	Go to the next step.
		No	Record the FREEZE FRAME DATA (Mode 2)/snapshot data on the repair order, then go to the next step.
2	**VERIFY RELATED REPAIR INFORMATION AVAILABILITY** • Verify related Service Bulletins	Yes	Perform repair or diagnosis according to the available repair information.

	and/or on-line repair information availability. • Is any related repair information available?		• If the vehicle is not repaired, go to the next step.
		No	Go to the next step.
3	**INSPECT PCM CONNECTOR CONDITION** • Switch the ignition off. • Disconnect the PCM connector. • Inspect for poor connection (such as damaged/pulled-out pins, corrosion). • Is there any malfunction?	Yes	Repair or replace the connector and/or terminals, then go to Step 5.
		No	Go to the next step.
4	**INSPECT PCM FOR LATEST CALIBRATION** • Reconnect all disconnected connectors. • Program the PCM to the latest calibration. • Use the customer information to recreate the concern. • Perform the KOEO or KOER self test. (See **KOEO/KOER SELF TEST [SKYACTIV-G 2.0, SKYACTIV-G 2.5]**.) • Is the same DTC present?	Yes	Replace the PCM, then go to the next step. (See **PCM REMOVAL/INSTALLATION [SKYACTIV-G 2.0, SKYACTIV-G 2.5]**.)
		No	Go to the next step.
5	**VERIFY DTC TROUBLESHOOTING COMPLETED** • Always reconnect all disconnected connectors. • Clear the DTC from the PCM memory using the M-MDS. (See **AFTER REPAIR PROCEDURE [SKYACTIV-G 2.0, SKYACTIV-G 2.5]**.) • Perform the KOEO or KOER self test. (See **KOEO/KOER SELF TEST [SKYACTIV-G 2.0, SKYACTIV-G 2.5]**.) • Is the same DTC present?	Yes	Repeat the inspection from Step 1. • If the malfunction recurs, replace the PCM. (See **PCM REMOVAL/INSTALLATION [SKYACTIV-G 2.0, SKYACTIV-G 2.5]**.) Go to the next step.
		No	Go to the next step.

6	**VERIFY AFTER REPAIR PROCEDURE** • Perform the “AFTER REPAIR PROCEDURE”. (See **AFTER REPAIR PROCEDURE [SKYACTIV-G 2.0, SKYACTIV-G 2.5]**.) • Are any DTCs present?	Yes	Go to the applicable DTC inspection. (See **DTC TABLE [SKYACTIV-G 2.0, SKYACTIV-G 2.5]**.)
		No	DTC troubleshooting completed.

2014 - Mazda3 - Engine

DTC P061F:00 [SKYACTIV-G 2.0, SKYACTIV-G 2.5]

DTC P061F:00	Internal control module throttle valve actuator controller performance problem

DETECTION CONDITION	• When any of the following conditions is met:
	  ▪ Start stop unit internal malfunction
	  ▪ CAN communication line malfunction between start stop unit and PCM
	  ▪ PCM internal malfunction
	Diagnostic support note
	• This is a continuous monitor (other).
	• The check engine light does not illuminate.
	• FREEZE FRAME DATA (Mode 2) is not available.
	• Snapshot data is available.
	• DTC is stored in the PCM memory.

FAIL-SAFE FUNCTION	Not applicable

POSSIBLE CAUSE	• CAN communication line malfunction between start stop unit and PCM
	  ▪ Start stop unit terminal 2M—Front body control module (FBCM) terminal 2K
	  ▪ Start stop unit terminal 2O—Front body control module (FBCM) terminal 2I
	  ▪ Front body control module (FBCM) terminal 2P—PCM terminal 2AK
	  ▪ Front body control module (FBCM) terminal 2N—PCM terminal 2AL
	• Start stop unit connector or terminals malfunction
	• PCM connector or terminals malfunction
	• Start stop unit malfunction
	• PCM malfunction

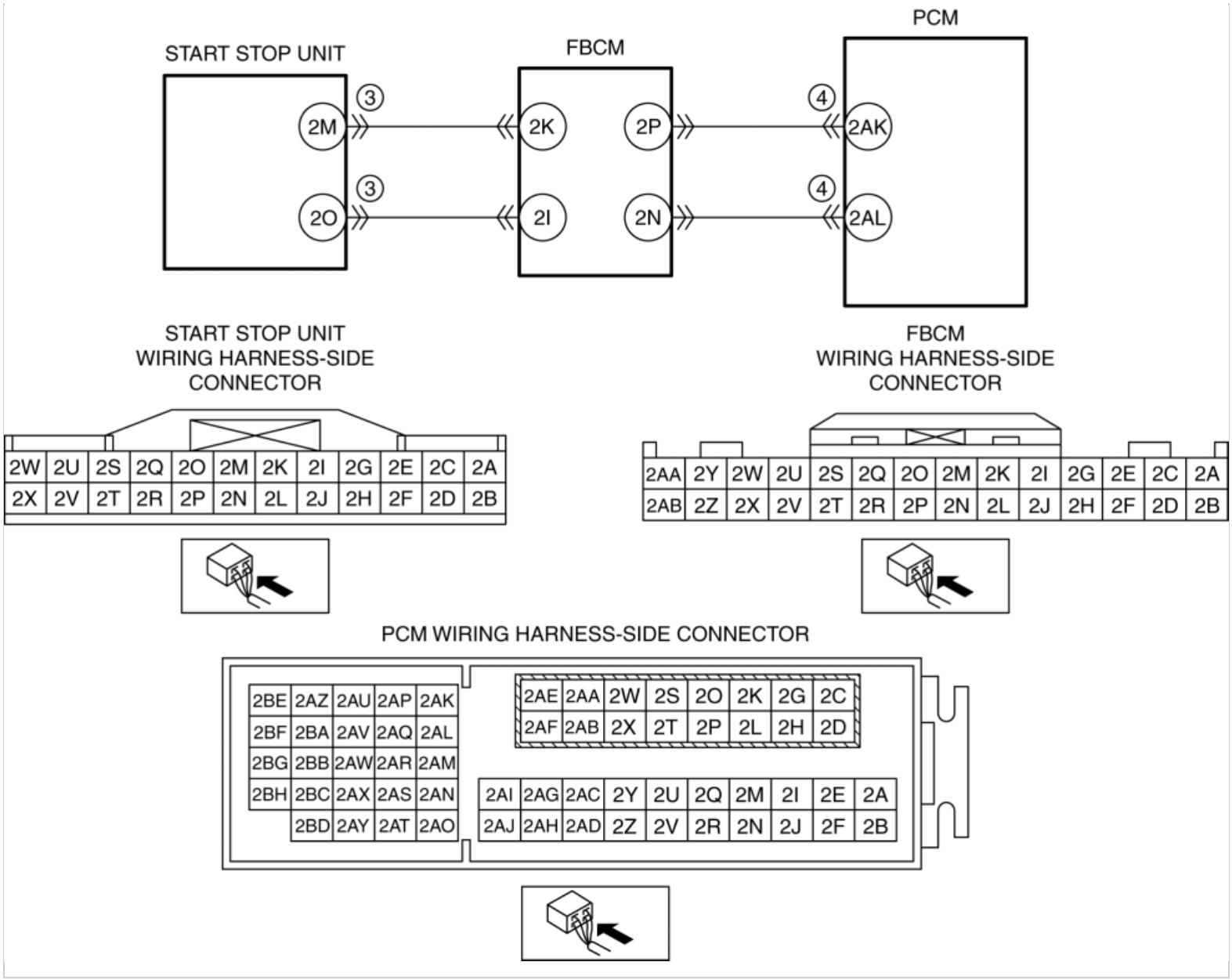

Diagnostic Procedure

STEP	INSPECTION		ACTION
1	**VERIFY RELATED REPAIR INFORMATION AVAILABILITY** • Verify related Service Bulletins and/or on-line repair information availability. • Is any related repair information available?	Yes	Perform repair or diagnosis according to the available repair information. • If the vehicle is not repaired, go to the next step.
		No	Go to the next step.
2	**VERIFY RELATED PENDING CODE AND/OR DTC** • Switch the ignition off, then ON (engine off). • Perform the Pending Trouble Code Access Procedure and DTC Reading Procedure. (See **ON-BOARD DIAGNOSTIC TEST [SKYACTIV-G 2.0, SKYACTIV-G 2.5]**.) • Are any other PENDING CODEs and/or DTCs present?	Yes	Go to the applicable PENDING CODE or DTC inspection. (See **DTC TABLE [SKYACTIV-G 2.0, SKYACTIV-G 2.5]**.)
		No	Go to the next step.

3	**INSPECT START STOP UNIT CONNECTOR CONDITION** • Switch the ignition off. • Disconnect the start stop unit connector. • Inspect for poor connection (such as damaged/pulled-out pins, corrosion). • Is there any malfunction?	Yes	Repair or replace the connector and/or terminals, then go to Step 5.
		No	Go to the next step.
4	**INSPECT PCM CONNECTOR CONDITION** • Disconnect the PCM connector. • Inspect for poor connection (such as damaged/pulled-out pins, corrosion). • Is there any malfunction?	Yes	Repair or replace the connector and/or terminals, then go to the next step.
		No	Go to the next step.
5	**VERIFY DTC TROUBLESHOOTING COMPLETED** • Always reconnect all disconnected connectors. • Clear the DTC from the PCM memory using the M-MDS. (See **AFTER REPAIR PROCEDURE [SKYACTIV-G 2.0, SKYACTIV-G 2.5]**.) • Perform the KOEO or KOER self test. (See **KOEO/KOER SELF TEST [SKYACTIV-G 2.0, SKYACTIV-G 2.5]**.) • Is the same DTC present?	Yes	Repeat the inspection from Step 1. • If the malfunction recurs, replace the PCM. (See **PCM REMOVAL/INSTALLATION [SKYACTIV-G 2.0, SKYACTIV-G 2.5]**.) Go to the next step.
		No	Go to the next step.
6	**VERIFY AFTER REPAIR PROCEDURE** • Perform the “AFTER REPAIR PROCEDURE”. (See **AFTER REPAIR PROCEDURE [SKYACTIV-G 2.0, SKYACTIV-G 2.5]**.) • Are any DTCs present?	Yes	Go to the applicable DTC inspection. (See **DTC TABLE [SKYACTIV-G 2.0, SKYACTIV-G 2.5]**.)
		No	DTC troubleshooting completed.

2014 - Mazda3 - Engine

DTC P0628:00 [SKYACTIV-G 2.0, SKYACTIV-G 2.5]

DTC P0628:00	Fuel pump control module circuit low input
DETECTION CONDITION	• When the PCM outputs a duty signal to the fuel pump control module, the difference in voltage between fuel pump unit terminals A and B is **less than 1.5 V** for a continuous **5 s**. **Diagnostic support note** • This is a continuous monitor (CCM). • The check engine light does not illuminate. • FREEZE FRAME DATA (Mode 2) is not available. • Snapshot data is available. • DTC is stored in the PCM memory.
FAIL-SAFE FUNCTION	Not applicable
POSSIBLE CAUSE	• Fuel pump unit connector or terminals malfunction • Fuel pump unit malfunction • Fuel pump control module connector or terminals malfunction • Short to ground in wiring harness between fuel pump unit terminal A and fuel pump control module terminal 2C • Open circuit in wiring harness between the following terminals: ▪ Fuel pump unit terminal A—Fuel pump control module terminal 2C ▪ Fuel pump unit terminal B—Fuel pump control module terminal 2D • Fuel pump control module malfunction • PCM malfunction

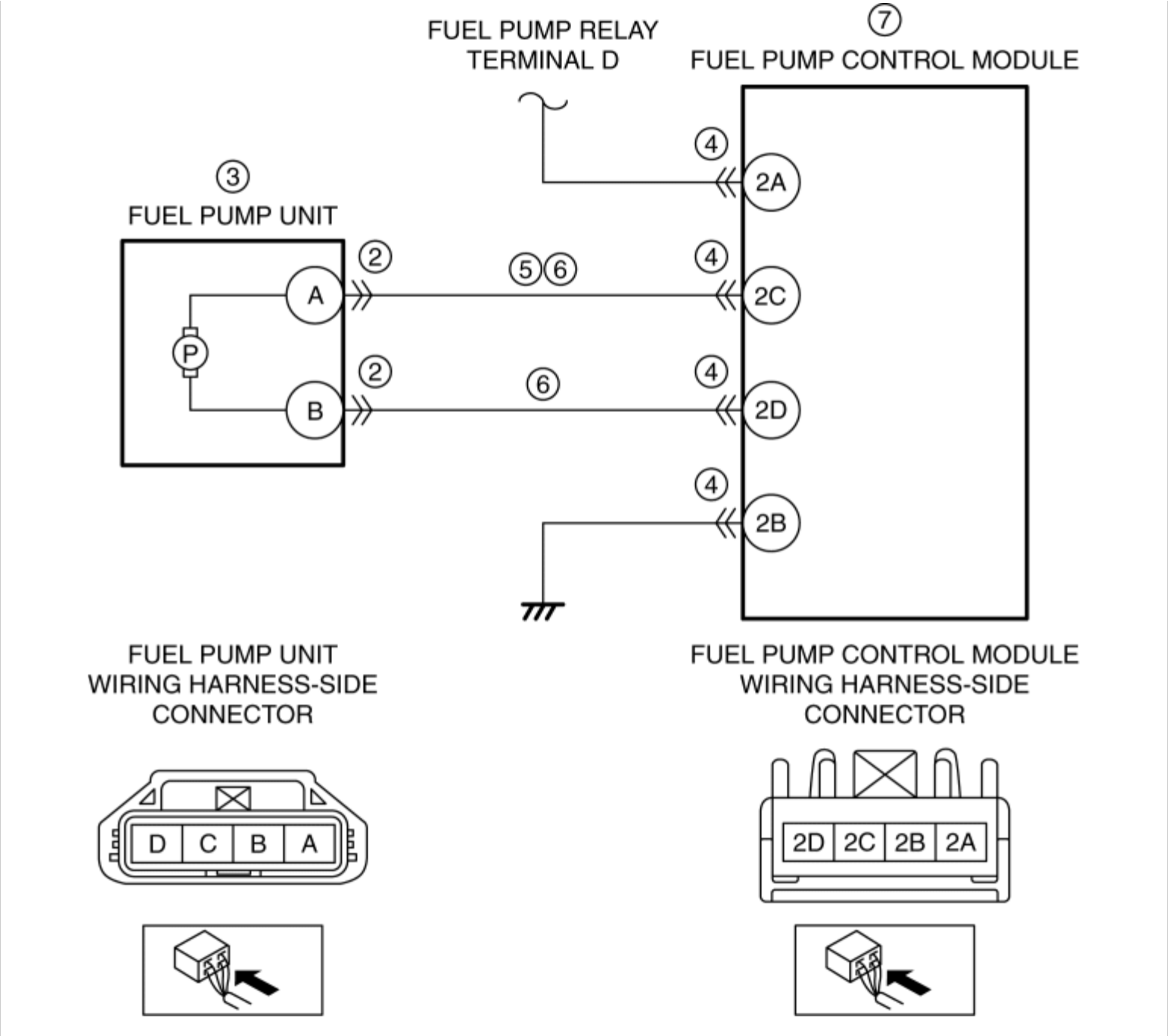

Diagnostic Procedure

STEP	INSPECTION		ACTION
1	**VERIFY RELATED REPAIR INFORMATION AVAILABILITY** • Verify related Service Bulletins and/or on-line repair information availability. • Is any related repair information available?	Yes	Perform repair or diagnosis according to the available repair information. • If the vehicle is not repaired, go to the next step.
		No	Go to the next step.

2	**INSPECT FUEL PUMP UNIT CONNECTOR CONDITION** • Switch the ignition off. • Disconnect the fuel pump unit connector. • Inspect for poor connection (such as damaged/pulled-out pins, corrosion). • Is there any malfunction?	Yes	Repair or replace the connector and/or terminals, then go to Step 8.
		No	Go to the next step.
3	**INSPECT FUEL PUMP UNIT** • Inspect the fuel pump unit. (See **FUEL PUMP UNIT INSPECTION [SKYACTIV-G 2.0, SKYACTIV-G 2.5]**.) • Is there any malfunction?	Yes	Replace the fuel pump unit, then go to Step 8. (See **FUEL PUMP UNIT REMOVAL/INSTALLATION [SKYACTIV-G 2.0, SKYACTIV-G 2.5]**.)
		No	Go to the next step.
4	**INSPECT FUEL PUMP CONTROL MODULE CONNECTOR CONDITION** • Disconnect the fuel pump control module connector. • Inspect for poor connection (such as damaged/pulled-out pins, corrosion). • Is there any malfunction?	Yes	Repair or replace the connector and/or terminals, then go to Step 8.
		No	Go to the next step.
5	**INSPECT FUEL PUMP UNIT CONTROL CIRCUIT FOR SHORT TO GROUND** • Verify that the fuel pump unit and fuel pump control module connectors are disconnected. • Inspect for continuity between fuel pump unit terminal A (wiring harness-side) and body ground. • Is there continuity?	Yes	Refer to the wiring diagram and verify whether or not there is a common connector between fuel pump unit terminal A and fuel pump control module terminal 2C. **If there is a common connector:** • Determine the malfunctioning part by inspecting the common connector and the terminal for corrosion, damage, or pin disconnection, and the common wiring harness for a short to ground. • Repair or replace the malfunctioning part. **If there is no common connector:**

			• Repair or replace the wiring harness which has a short to ground. Go to Step 8.
		No	Go to the next step.
6	**INSPECT FUEL PUMP UNIT CIRCUIT FOR OPEN CIRCUIT** • Verify that the fuel pump unit and fuel pump control module connectors are disconnected. • Inspect for continuity between the following terminals (wiring harness-side): ▪ Fuel pump unit terminal A—Fuel pump control module terminal 2C ▪ Fuel pump unit terminal B—Fuel pump control module terminal 2D • Is there continuity?	Yes	Go to the next step.
		No	Refer to the wiring diagram and verify whether or not there is a common connector between the following terminals: • Fuel pump unit terminal A—Fuel pump control module terminal 2C • Fuel pump unit terminal B—Fuel pump control module terminal 2D **If there is a common connector:** • Determine the malfunctioning part by inspecting the common connector and the terminal for corrosion, damage, or pin disconnection, and the common wiring harness for an open circuit. • Repair or replace the malfunctioning part. **If there is no common connector:** • Repair or replace the wiring harness which has an open circuit. Go to Step 8.
7	**INSPECT FUEL PUMP CONTROL MODULE** • Inspect the fuel pump control module. (See **FUEL PUMP CONTROL MODULE INSPECTION [SKYACTIV-G 2.0, SKYACTIV-G 2.5]**.) • Is there any malfunction?	Yes	Replace the fuel pump control module, then go to the next step. (See **FUEL PUMP CONTROL MODULE REMOVAL/INSTALLATION [SKYACTIV-G 2.0, SKYACTIV-G 2.5]**.)
		No	Go to the next step.

8	**VERIFY DTC TROUBLESHOOTING COMPLETED** • Always reconnect all disconnected connectors. • Clear the DTC from the PCM memory using the M-MDS. (See **AFTER REPAIR PROCEDURE [SKYACTIV-G 2.0, SKYACTIV-G 2.5]**.) • Perform the KOEO or KOER self test. (See **KOEO/KOER SELF TEST [SKYACTIV-G 2.0, SKYACTIV-G 2.5]**.) • Is the same DTC present?	Yes	Repeat the inspection from Step 1. • If the malfunction recurs, replace the PCM. (See **PCM REMOVAL/INSTALLATION [SKYACTIV-G 2.0, SKYACTIV-G 2.5]**.) Go to the next step.
		No	Go to the next step.
9	**VERIFY AFTER REPAIR PROCEDURE** • Perform the “AFTER REPAIR PROCEDURE”. (See **AFTER REPAIR PROCEDURE [SKYACTIV-G 2.0, SKYACTIV-G 2.5]**.) • Are any DTCs present?	Yes	Go to the applicable DTC inspection. (See **DTC TABLE [SKYACTIV-G 2.0, SKYACTIV-G 2.5]**.)
		No	DTC troubleshooting completed.

2014 - Mazda3 - Engine

DTC P0629:00 [SKYACTIV-G 2.0, SKYACTIV-G 2.5]

DTC P0629:00	Fuel pump control module circuit high input
DETECTION CONDITION	• The PCM detects over-current during the fuel pump control module control. **Diagnostic support note** • This is a continuous monitor (CCM). • The check engine light does not illuminate. • FREEZE FRAME DATA (Mode 2) is not available. • Snapshot data is available. • DTC is stored in the PCM memory.
FAIL-SAFE FUNCTION	• Stops fuel pump control
POSSIBLE CAUSE	• Fuel pump unit connector or terminals malfunction • Fuel pump unit malfunction • Fuel pump control module connector or terminals malfunction • Short to power supply in wiring harness between the following terminals: ▪ Fuel pump unit terminal A—Fuel pump control module terminal 2C ▪ Fuel pump unit terminal B—Fuel pump control module terminal 2D • Fuel pump control module malfunction • PCM malfunction

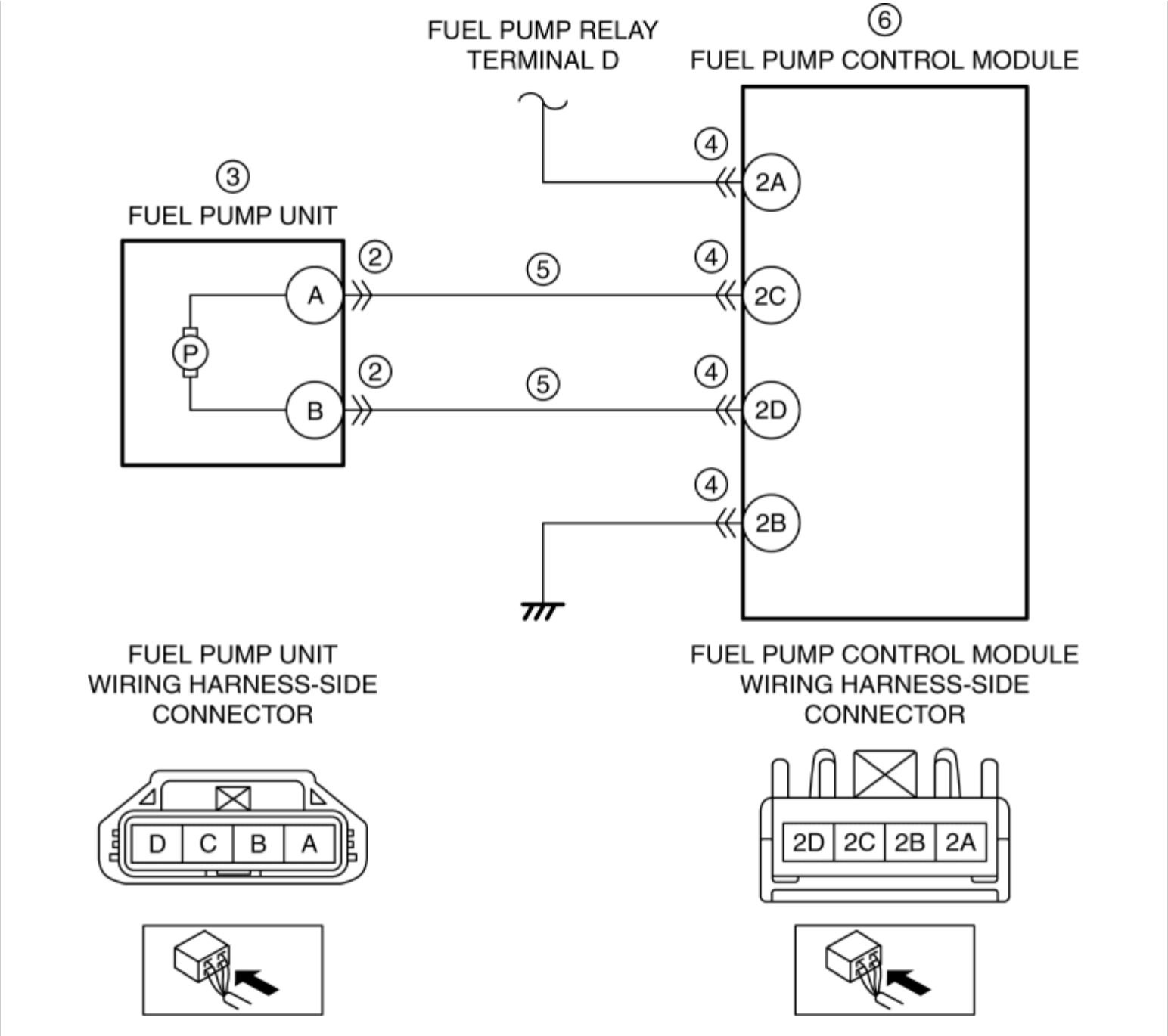

Diagnostic Procedure

STEP	INSPECTION		ACTION
1	**VERIFY RELATED REPAIR INFORMATION AVAILABILITY** • Verify related Service Bulletins and/or on-line repair information availability. • Is any related repair information available?	Yes	Perform repair or diagnosis according to the available repair information. • If the vehicle is not repaired, go to the next step.
		No	Go to the next step.

2	**INSPECT FUEL PUMP UNIT CONNECTOR CONDITION** • Switch the ignition off. • Disconnect the fuel pump unit connector. • Inspect for poor connection (such as damaged/pulled-out pins, corrosion). • Is there any malfunction?	Yes	Repair or replace the connector and/or terminals, then go to Step 7.
		No	Go to the next step.
3	**INSPECT FUEL PUMP UNIT** • Inspect the fuel pump unit. (See **FUEL PUMP UNIT INSPECTION [SKYACTIV-G 2.0, SKYACTIV-G 2.5]**.) • Is there any malfunction?	Yes	Replace the fuel pump unit, then go to Step 7. (See **FUEL PUMP UNIT REMOVAL/INSTALLATION [SKYACTIV-G 2.0, SKYACTIV-G 2.5]**.)
		No	Go to the next step.
4	**INSPECT FUEL PUMP CONTROL MODULE CONNECTOR CONDITION** • Disconnect the fuel pump control module connector. • Inspect for poor connection (such as damaged/pulled-out pins, corrosion). • Is there any malfunction?	Yes	Repair or replace the connector and/or terminals, then go to Step 7.
		No	Go to the next step.
5	**INSPECT FUEL PUMP UNIT CIRCUIT FOR SHORT TO POWER SUPPLY** • Verify that the fuel pump unit and fuel pump control module connectors are disconnected. • Switch the ignition ON (engine off). • Measure the voltage at the following terminals (wiring harness-side): ▪ Fuel pump	Yes	Go to the next step.
		No	Refer to the wiring diagram and verify whether or not there is a common connector between the following terminals: • Fuel pump unit terminal A—Fuel pump control module terminal 2C • Fuel pump unit terminal B—Fuel pump control module terminal 2D **If there is a common connector:** • Determine the malfunctioning part by inspecting the common connector and

	unit terminal A ▪ Fuel pump unit terminal B • Is the voltage **0 V**?		the terminal for corrosion, damage, or pin disconnection, and the common wiring harness for a short to power supply. • Repair or replace the malfunctioning part. **If there is no common connector:** • Repair or replace the wiring harness which has a short to power supply. Go to Step 7.
6	**INSPECT FUEL PUMP CONTROL MODULE** • Inspect the fuel pump control module. (See **FUEL PUMP CONTROL MODULE INSPECTION [SKYACTIV-G 2.0, SKYACTIV-G 2.5]**.) • Is there any malfunction?	Yes	Replace the fuel pump control module, then go to the next step. (See **FUEL PUMP CONTROL MODULE REMOVAL/INSTALLATION [SKYACTIV-G 2.0, SKYACTIV-G 2.5]**.)
		No	Go to the next step.
7	**VERIFY DTC TROUBLESHOOTING COMPLETED** • Always reconnect all disconnected connectors. • Clear the DTC from the PCM memory using the M-MDS. (See **AFTER REPAIR PROCEDURE [SKYACTIV-G 2.0, SKYACTIV-G 2.5]**.) • Perform the KOEO or KOER self test. (See **KOEO/KOER SELF TEST [SKYACTIV-G 2.0, SKYACTIV-G 2.5]**.) • Is the same DTC present?	Yes	Repeat the inspection from Step 1. • If the malfunction recurs, replace the PCM. (See **PCM REMOVAL/INSTALLATION [SKYACTIV-G 2.0, SKYACTIV-G 2.5]**.) Go to the next step.
		No	Go to the next step.
8	**VERIFY AFTER REPAIR PROCEDURE** • Perform the “AFTER REPAIR PROCEDURE”. (See **AFTER REPAIR PROCEDURE [SKYACTIV-G 2.0, SKYACTIV-G 2.5]**.)	Yes	Go to the applicable DTC inspection. (See **DTC TABLE [SKYACTIV-G 2.0, SKYACTIV-G 2.5]**.)
		No	DTC troubleshooting completed.

	• Are any DTCs present?		

2014 - Mazda3 - Engine

DTC P0638:00 [SKYACTIV-G 2.0, SKYACTIV-G 2.5]

DTC P0638:00	Throttle valve actuator control range/performance problem
DETECTION CONDITION	• The PCM compares the actual TP with the target TP. If the difference is more than the threshold value, the PCM determines that there is a throttle valve actuator control range/performance problem. **Diagnostic support note** • This is a continuous monitor (CCM). • The check engine light illuminates if the PCM detects the above malfunction condition during the first drive cycle. • FREEZE FRAME DATA (Mode 2)/Snapshot data is available. • DTC is stored in the PCM memory.
FAIL-SAFE FUNCTION	• Restricts the upper limit of the engine speed. • Stops the drive-by-wire control (throttle valve is open at **approx. 8 °** by return spring force).
POSSIBLE CAUSE	• Throttle body connector or terminals malfunction • Short to ground in wiring harness between the following terminals: ▪ Throttle body terminal E—PCM terminal 1CG ▪ Throttle body terminal F—PCM terminal 1CC • PCM connector or terminals malfunction • Short to power supply in wiring harness between the following terminals: ▪ Throttle body terminal E—PCM terminal 1CG ▪ Throttle body terminal F—PCM terminal 1CC • Open circuit in wiring harness between the following terminals: ▪ Throttle body terminal E—PCM terminal 1CG ▪ Throttle body terminal F—PCM terminal 1CC • Throttle valve actuator malfunction • Throttle valve malfunction • PCM malfunction

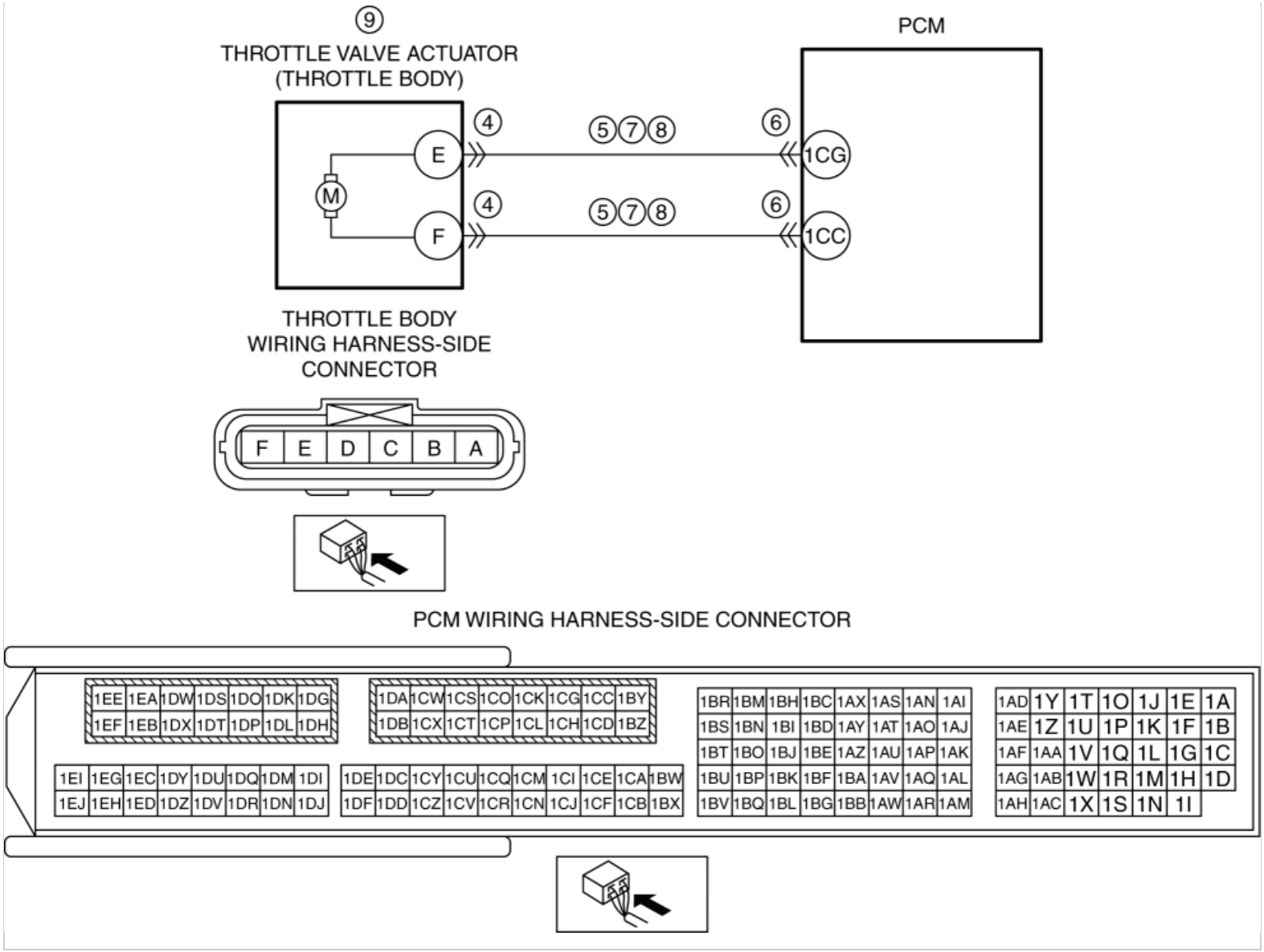

Diagnostic Procedure

STEP	INSPECTION		ACTION
1	**IDENTIFY TRIGGER DTC FOR FREEZE FRAME DATA (MODE 2)** • Perform the Freeze Frame PID Data Access Procedure. (See **ON-BOARD DIAGNOSTIC TEST [SKYACTIV-G 2.0, SKYACTIV-G 2.5]**.) • Is the DTC P0638:00 on FREEZE FRAME DATA (Mode 2)?	Yes	Go to the next step.
		No	Go to the troubleshooting procedure for DTC on FREEZE FRAME DATA (Mode 2). (See **DTC TABLE [SKYACTIV-G 2.0, SKYACTIV-G 2.5]**.)
2	**VERIFY FREEZE FRAME DATA (MODE 2)/SNAPSHOT DATA HAS BEEN RECORDED** • Has the FREEZE FRAME DATA (Mode 2)/snapshot data been recorded?	Yes	Go to the next step.
		No	Record the FREEZE FRAME DATA (Mode 2)/snapshot data on the repair order, then go to the next step.

3	**VERIFY RELATED REPAIR INFORMATION AVAILABILITY** • Verify related Service Bulletins and/or on-line repair information availability. • Is any related repair information available?	Yes	Perform repair or diagnosis according to the available repair information. • If the vehicle is not repaired, go to the next step.
		No	Go to the next step.
4	**INSPECT THROTTLE BODY CONNECTOR CONDITION** • Switch the ignition off. • Disconnect the throttle body connector. • Inspect for poor connection (such as damaged/pulled-out pins, corrosion). • Is there any malfunction?	Yes	Repair or replace the connector and/or terminals, then go to Step 10.
		No	Go to the next step.
5	**INSPECT THROTTLE VALVE ACTUATOR CIRCUIT FOR SHORT TO GROUND** • Verify that the throttle body connector is disconnected. • Inspect for continuity between the following terminals (wiring harness-side) and body ground: ▪ Throttle body terminal E ▪ Throttle body terminal F • Is there continuity?	Yes	If the short to ground circuit could be detected in the wiring harness: • Refer to the wiring diagram and verify whether or not there is a common connector between the following terminals: ▪ Throttle body terminal E—PCM terminal 1CG ▪ Throttle body terminal F—PCM terminal 1CC **If there is a common connector:** ▪ Determine the malfunctioning part by inspecting the common connector and the terminal for corrosion, damage, or pin disconnection, and the common wiring harness for a short to ground. ▪ Repair or replace the malfunctioning part. **If there is no common connector:** ▪ Repair or replace the wiring harness which has a short to ground. If the short to ground circuit could not be detected in the wiring harness: • Replace the PCM (short to ground in the PCM internal circuit). (See **PCM REMOVAL/INSTALLATION [SKYACTIV-G 2.0, SKYACTIV-G 2.5]**.) Go to Step 10.
		No	Go to the next step.
6	**INSPECT PCM CONNECTOR CONDITION** • Disconnect the PCM connector. • Inspect for poor connection (such as damaged/pulled-out pins, corrosion). • Is there any malfunction?	Yes	Repair or replace the connector and/or terminals, then go to Step 10.
		No	Go to the next step.
7	**INSPECT THROTTLE VALVE ACTUATOR CIRCUIT FOR SHORT TO POWER SUPPLY**	Yes	Go to the next step.

	• Verify that the throttle body and PCM connectors are disconnected. • Switch the ignition ON (engine off). **NOTE:** • Another DTC may be stored by the PCM detecting an open circuit. • Measure the voltage at the following terminals (wiring harness-side): ▪ Throttle body terminal E—PCM terminal 1CG ▪ Throttle body terminal F—PCM terminal 1CC • Is the voltage **0 V**?	No	Refer to the wiring diagram and verify whether or not there is a common connector between the following terminals: • Throttle body terminal E—PCM terminal 1CG • Throttle body terminal F—PCM terminal 1CC **If there is a common connector:** • Determine the malfunctioning part by inspecting the common connector and the terminal for corrosion, damage, or pin disconnection, and the common wiring harness for a short to power supply. • Repair or replace the malfunctioning part. **If there is no common connector:** • Repair or replace the wiring harness which has a short to power supply. Go to Step 10.
8	**INSPECT THROTTLE VALVE ACTUATOR CIRCUIT FOR OPEN CIRCUIT** • Verify that the throttle body and PCM connectors are disconnected. • Switch the ignition off. • Inspect for continuity between the following terminals (wiring harness-side): ▪ Throttle body terminal E—PCM terminal 1CG ▪ Throttle body terminal F—PCM terminal 1CC • Is there continuity?	Yes	Go to the next step.
		No	Refer to the wiring diagram and verify whether or not there is a common connector between the following terminals: • Throttle body terminal E—PCM terminal 1CG • Throttle body terminal F—PCM terminal 1CC **If there is a common connector:** • Determine the malfunctioning part by inspecting the common connector and the terminal for corrosion, damage, or pin disconnection, and the common wiring harness for an open circuit. • Repair or replace the malfunctioning part. **If there is no common connector:** • Repair or replace the wiring harness which has an open circuit. Go to Step 10.
9	**INSPECT THROTTLE VALVE** • Perform the Electronic Control Throttle Operation Inspection. (See **ENGINE CONTROL**	Yes	Replace the throttle body, then go to the next step. (See **INTAKE-AIR SYSTEM REMOVAL/INSTALLATION [SKYACTIV-G 2.0, SKYACTIV-G 2.5]**.)
		No	Go to the next step.

	SYSTEM OPERATION INSPECTION [SKYACTIV-G 2.0, SKYACTIV-G 2.5].) • Is there any malfunction?		
10	**VERIFY DTC TROUBLESHOOTING COMPLETED** • Always reconnect all disconnected connectors. • Clear the DTC from the PCM memory using the M-MDS. (See **AFTER REPAIR PROCEDURE [SKYACTIV-G 2.0, SKYACTIV-G 2.5]**.) • Perform the KOEO or KOER self test. (See **KOEO/KOER SELF TEST [SKYACTIV-G 2.0, SKYACTIV-G 2.5]**.) • Is the same DTC present?	Yes	Repeat the inspection from Step 1. • If the malfunction recurs, replace the PCM. (See **PCM REMOVAL/INSTALLATION [SKYACTIV-G 2.0, SKYACTIV-G 2.5]**.) Go to the next step.
		No	Go to the next step.
11	**VERIFY AFTER REPAIR PROCEDURE** • Perform the “AFTER REPAIR PROCEDURE”. (See **AFTER REPAIR PROCEDURE [SKYACTIV-G 2.0, SKYACTIV-G 2.5]**.) • Are any DTCs present?	Yes	Go to the applicable DTC inspection. (See **DTC TABLE [SKYACTIV-G 2.0, SKYACTIV-G 2.5]**.)
		No	DTC troubleshooting completed.

2014 - Mazda3 - Engine

DTC P064D:00 [SKYACTIV-G 2.0, SKYACTIV-G 2.5]

Details On DTCs

DESCRIPTION	Internal control module A/F sensor processor performance problem	
DETECTION CONDITION	Determination conditions	• Malfunction in A/F sensor signal circuit in PCM occurs.
	Preconditions	• Battery voltage: **11—18 V**[*1] • [*1]: Value can be verified by displaying PIDs using M-MDS
	Malfunction determination period	• **0.1 s** period
	Drive cycle	• 1
	Self test type	• CMDTC self test, KOER self test
	Sensor used	• PCM
FAIL-SAFE FUNCTION	• Not applicable	
VEHICLE STATUS WHEN DTCs ARE OUTPUT	• Illuminates check engine light.	
POSSIBLE CAUSE	• PCM malfunction	

System Wiring Diagram

- Not applicable

Function Explanation (DTC Detection Outline)

- If there is communication error between the A/F signal control driver and the CPU, the PCM stores a DTC.

Repeatability Verification Procedure

- Warm up the engine to allow the engine coolant temperature to reach **80 °C {176 °F} or more**.
- Start the engine and leave it idling for **1 min**.

  NOTE:

  - Match the engine coolant temperature in the recorded FREEZE FRAME DATA (Mode 2)/snapshot data, the vehicle speed, and engine speed values to the best extent possible while driving the vehicle.
- Try to reproduce the malfunction by driving the vehicle for **5 min** based on the values in the FREEZE FRAME DATA (Mode 2)/snapshot data.

PID Item/Simulation Item Used In Diagnosis

- Not applicable

Troubleshooting Diagnostic Procedure

Intention of troubleshooting procedure

- Step 2
  - Verify if malfunctioning part is PCM.
- Step 3
  - Verify that there are no other malfunctions.

STEP	INSPECTION	RESULTS	ACTION
1	**PURPOSE: VERIFY RELATED REPAIR INFORMATION AVAILABILITY** • Verify related Service Bulletins and/or on-line repair information availability. • Is any related repair information available?	Yes	Perform repair or diagnosis according to the available repair information. • If the vehicle is not repaired, go to the next step.
		No	Go to the next step.
2	**PURPOSE: PERFORM DTC INSPECTION AND VERIFY IF MALFUNCTIONING PART IS PCM**	Yes	Replace the PCM, then go to the next

	• Clear the DTC from the PCM memory using the M-MDS. (See **CLEARING DTC [SKYACTIV-G 2.0, SKYACTIV-G 2.5]**.) • Perform the KOER self test. (See **KOEO/KOER SELF TEST [SKYACTIV-G 2.0, SKYACTIV-G 2.5]**.) • Is the same DTC present?		step. (See **PCM REMOVAL/INSTALLATION [SKYACTIV-G 2.0, SKYACTIV-G 2.5]**.)
		No	Go to the next step.
3	**PURPOSE: VERIFY IF THERE IS ANY OTHER MALFUNCTION** • Is any other DTC or pending code stored?	Yes	Go to the applicable DTC inspection. (See **DTC TABLE [SKYACTIV-G 2.0, SKYACTIV-G 2.5]**.)
		No	DTC troubleshooting completed.

2014 - Mazda3 - Engine

DTC P0685:00 [SKYACTIV-G 2.0, SKYACTIV-G 2.5]

DTC P0685:00	Main relay control circuit open
DETECTION CONDITION	• The period of time in which the PCM power supply remains on after the ignition is switched off is not within the specified time. **Diagnostic support note** • This is a continuous monitor (CCM). • The check engine light illuminates if the PCM detects the above malfunction condition in two consecutive drive cycles or in one drive cycle while the DTC for the same malfunction has been stored in the PCM. • PENDING CODE is available if the PCM detects the above malfunction condition during first drive cycle. • FREEZE FRAME DATA (Mode 2)/Snapshot data is available. • DTC is stored in the PCM memory.
FAIL-SAFE FUNCTION	Not applicable

POSSIBLE CAUSE	• Main relay malfunction
	• Short to ground or open circuit in main relay power supply circuit:
	  ▪ Short to ground in wiring harness between MAIN 200 A fuse and main relay terminal C
	  ▪ MAIN 200 A fuse and/or ENG.MAIN 40 A fuse malfunction
	  ▪ Open circuit in wiring harness between battery positive terminal and main relay terminal C
	• ENGINE2 15 A fuse malfunction
	• Short to ground in wiring harness between the following terminals:
	  ▪ Main relay terminal D—PCM terminal 2S
	  ▪ Main relay terminal D—PCM terminal 2T
	• PCM connector or terminals malfunction
	• Open circuit in wiring harness between PCM terminal 1BZ and body ground
	• Open circuit in wiring harness between PCM terminal 2AA and body ground
	• Open circuit in wiring harness between the following terminals:
	  ▪ Main relay terminal D—PCM terminal 2S
	  ▪ Main relay terminal D—PCM terminal 2T
	• PCM malfunction

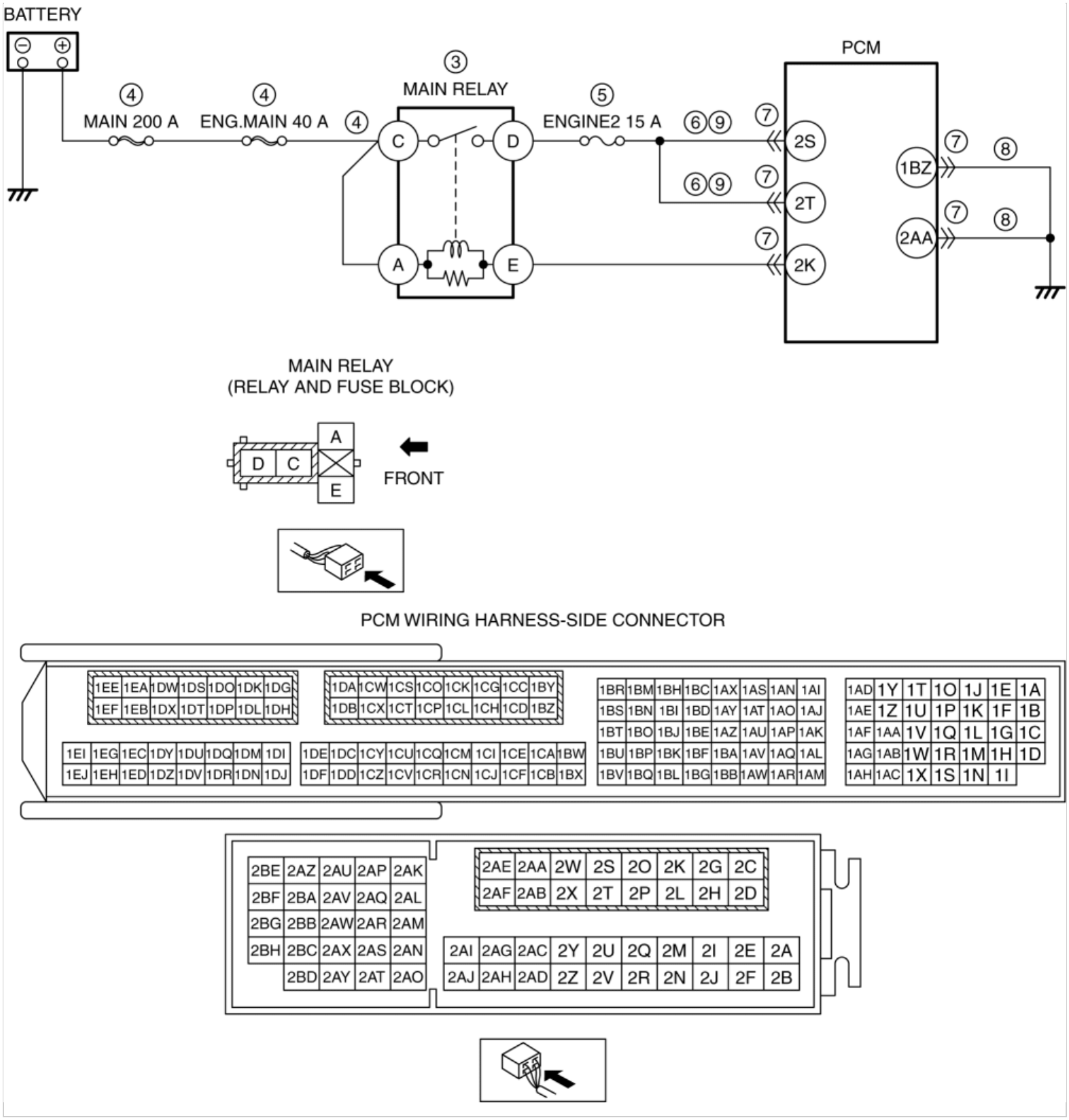

Diagnostic Procedure

STEP	INSPECTION		ACTION
1	**VERIFY FREEZE FRAME DATA (MODE 2)/SNAPSHOT DATA HAS BEEN RECORDED** • Has the FREEZE FRAME DATA (Mode 2)/snapshot	Yes	Go to the next step.
		No	Record the FREEZE FRAME DATA (Mode 2)/snapshot data on the repair order, then go to the next step.

	data been recorded?		
2	**VERIFY RELATED REPAIR INFORMATION AVAILABILITY** • Verify related Service Bulletins and/or on-line repair information availability. • Is any related repair information available?	Yes	Perform repair or diagnosis according to the available repair information. • If the vehicle is not repaired, go to the next step.
		No	Go to the next step.
3	**INSPECT MAIN RELAY** • Switch the ignition off. • Remove the main relay. • Inspect the main relay. (See **RELAY INSPECTION**.) • Is there any malfunction?	Yes	Replace the main relay, then go to Step 10.
		No	Go to the next step.
4	**INSPECT MAIN RELAY POWER SUPPLY CIRCUIT FOR SHORT TO GROUND OR OPEN CIRCUIT** • Main relay is removed. • Measure the voltage at the main relay terminal C (wiring harness-side). • Is the voltage **B+**?	Yes	Go to the next step.
		No	Inspect the MAIN 200 A fuse and ENG.MAIN 40 A fuse. • If the fuse is blown: ▪ Refer to the wiring diagram and verify whether or not there is a common connector between MAIN 200 A fuse and main relay terminal C. **If there is a common connector:** • Determine the malfunctioning part by inspecting the common connector and the terminal for corrosion, damage, or pin disconnection, and the common wiring harness for a short to ground. • Repair or replace the malfunctioning part. **If there is no common connector:** • Repair or replace the wiring harness which has a short to ground. • Replace the fuse. • If the fuse is damaged: ▪ Replace the fuse. • If all fuses are normal: ▪ Refer to the wiring diagram and verify whether or not there is a common connector between battery positive terminal and main relay terminal C. **If there is a common connector:** • Determine the malfunctioning part by inspecting the common connector and the terminal for corrosion, damage, or pin disconnection, and the common wiring harness for an open circuit. • Repair or replace the malfunctioning part.

			If there is no common connector: • Repair or replace the wiring harness which has an open circuit. Go to Step 10.
5	**INSPECT ENGINE2 15 A FUSE** • Remove the ENGINE2 15 A fuse. • Inspect the ENGINE2 15 A fuse. • Is there any malfunction?	Yes	If the fuse is blown: • Refer to the wiring diagram and verify whether or not there is a common connector between the following terminals: ▪ Main relay terminal D—PCM terminal 2S ▪ Main relay terminal D—PCM terminal 2T **If there is a common connector:** ▪ Determine the malfunctioning part by inspecting the common connector and the terminal for corrosion, damage, or pin disconnection, and the common wiring harness for a short to ground. ▪ Repair or replace the malfunctioning part. **If there is no common connector:** ▪ Repair or replace the wiring harness which has a short to ground. ▪ Replace the fuse. If the fuse is damaged: • Replace the fuse. Go to Step 10.
		No	Reinstall the ENGINE2 15 A fuse, then go to the next step.
6	**INSPECT PCM POWER SUPPLY CIRCUIT FOR SHORT TO GROUND** • Main relay is removed. • Inspect for continuity between main relay terminal D (wiring harness-side) and body ground. • Is there continuity?	Yes	If the short to ground circuit could be detected in the wiring harness: • Refer to the wiring diagram and verify whether or not there is a common connector between the following terminals: ▪ Main relay terminal D—PCM terminal 2S ▪ Main relay terminal D—PCM terminal 2T **If there is a common connector:** ▪ Determine the malfunctioning part by inspecting the common connector and the terminal for corrosion, damage, or pin disconnection, and the common wiring harness for a short to ground. ▪ Repair or replace the malfunctioning part. **If there is no common connector:** ▪ Repair or replace the wiring harness which has a short to ground. If the short to ground circuit could not be detected in the wiring harness: • Replace the PCM (short to ground in the PCM internal circuit). (See **PCM REMOVAL/INSTALLATION [SKYACTIV-G 2.0, SKYACTIV-G 2.5]**.) Go to Step 10.
		No	Go to the next step.
7	**INSPECT PCM CONNECTOR CONDITION** • Disconnect the PCM	Yes	Repair or replace the connector and/or terminals, then go to Step 10.
		No	Go to the next step.

	connector. • Inspect for poor connection (such as damaged/pulled-out pins, corrosion). • Is there any malfunction?		
8	**INSPECT PCM GROUND CIRCUIT FOR OPEN CIRCUIT** • Main relay is removed. • Verify that the PCM connector is disconnected. • Inspect for continuity between the following harnesses: ▪ PCM terminal 1BZ (wiring harness-side)—Body ground ▪ PCM terminal 2AA (wiring harness-side)—Body ground • Is there continuity?	Yes	Go to the next step.
		No	Refer to the wiring diagram and verify whether or not there is a common connector between the following terminals: • PCM terminal 1BZ (wiring harness-side)—Body ground • PCM terminal 2AA (wiring harness-side)—Body ground **If there is a common connector:** • Determine the malfunctioning part by inspecting the common connector and the terminal for corrosion, damage, or pin disconnection, and the common wiring harness for an open circuit. • Repair or replace the malfunctioning part. **If there is no common connector:** • Inspect for the following: ▪ Open circuit between PCM and body ground ▪ Loose or lifting ground point • Repair or replace the malfunctioning part. Go to Step 10.
9	**INSPECT PCM POWER SUPPLY CIRCUIT FOR OPEN CIRCUIT** • Main relay is removed. • Verify that the PCM connector is disconnected. • Inspect for continuity between the following terminals (wiring harness-side): ▪ Main relay terminal D—PCM terminal 2S ▪ Main relay terminal D—PCM terminal 2T • Is there continuity?	Yes	Go to the next step.
		No	Refer to the wiring diagram and verify whether or not there is a common connector between the following terminals: • Main relay terminal D—PCM terminal 2S • Main relay terminal D—PCM terminal 2T **If there is a common connector:** • Determine the malfunctioning part by inspecting the common connector and the terminal for corrosion, damage, or pin disconnection, and the common wiring harness for an open circuit. • Repair or replace the malfunctioning part. **If there is no common connector:** • Repair or replace the wiring harness which has an open circuit. Go to the next step.
10	**VERIFY DTC TROUBLESHOOTING COMPLETED** • Always reconnect all	Yes	Repeat the inspection from Step 1. • If the malfunction recurs, replace the PCM.

	disconnected connectors. • Clear the DTC from the PCM memory using the M-MDS. (See **AFTER REPAIR PROCEDURE [SKYACTIV-G 2.0, SKYACTIV-G 2.5]**.) • Start the engine and warm it up completely. • Perform the Pending Trouble Code Access Procedure. (See **ON-BOARD DIAGNOSTIC TEST [SKYACTIV-G 2.0, SKYACTIV-G 2.5]**.) • Is the PENDING CODE for this DTC present?		(See **PCM REMOVAL/INSTALLATION [SKYACTIV-G 2.0, SKYACTIV-G 2.5]**.) Go to the next step.
		No	Go to the next step.
11	**VERIFY AFTER REPAIR PROCEDURE** • Perform the “AFTER REPAIR PROCEDURE”. (See **AFTER REPAIR PROCEDURE [SKYACTIV-G 2.0, SKYACTIV-G 2.5]**.) • Are any DTCs present?	Yes	Go to the applicable DTC inspection. (See **DTC TABLE [SKYACTIV-G 2.0, SKYACTIV-G 2.5]**.)
		No	DTC troubleshooting completed.

2014 - Mazda3 - Engine

DTC P06B8:00 [SKYACTIV-G 2.0, SKYACTIV-G 2.5]

DTC P06B8:00	Internal control module non-volatile RAM error
DETECTION CONDITION	• PCM internal EEPROM malfunction. **Diagnostic support note** • This is a continuous monitor (other). • The check engine light illuminates if the PCM detects the above malfunction condition during the first drive cycle. • FREEZE FRAME DATA (Mode 2)/Snapshot data is available. • DTC is stored in the PCM memory.
FAIL-SAFE FUNCTION	Not applicable
POSSIBLE CAUSE	• PCM connector or terminals malfunction • PCM internal EEPROM malfunction
SYSTEM WIRING DIAGRAM	Not applicable

Diagnostic Procedure

STEP	INSPECTION		ACTION
1	**VERIFY FREEZE FRAME DATA (MODE 2)/SNAPSHOT DATA HAS BEEN RECORDED** • Has the FREEZE FRAME DATA (Mode 2)/snapshot data been recorded?	Yes	Go to the next step.
		No	Record the FREEZE FRAME DATA (Mode 2)/snapshot data on the repair order, then go to the next step.
2	**VERIFY RELATED REPAIR INFORMATION AVAILABILITY** • Verify related Service Bulletins and/or on-line repair information availability.	Yes	Perform repair or diagnosis according to the available repair information. • If the vehicle is not repaired, go to the next step.

	• Is any related repair information available?	No	Go to the next step.
3	**INSPECT PCM CONNECTOR CONDITION** • Switch the ignition off. • Disconnect the PCM connector. • Inspect for poor connection (such as damaged/pulled-out pins, corrosion). • Is there any malfunction?	Yes	Repair or replace the connector and/or terminals, then go to the next step.
		No	Go to the next step.
4	**VERIFY DTC TROUBLESHOOTING COMPLETED** • Always reconnect all disconnected connectors. • Clear the DTC from the PCM memory using the M-MDS. (See **AFTER REPAIR PROCEDURE [SKYACTIV-G 2.0, SKYACTIV-G 2.5]**.) • Perform the KOEO or KOER self test. (See **KOEO/KOER SELF TEST [SKYACTIV-G 2.0, SKYACTIV-G 2.5]**.) • Is the same DTC present?	Yes	Replace the PCM, then go to the next step. (See **PCM REMOVAL/INSTALLATION [SKYACTIV-G 2.0, SKYACTIV-G 2.5]**.)
		No	Go to the next step.
5	**VERIFY AFTER REPAIR PROCEDURE** • Perform the “AFTER REPAIR PROCEDURE”. (See **AFTER REPAIR PROCEDURE [SKYACTIV-G 2.0, SKYACTIV-G 2.5]**.) • Are any DTCs present?	Yes	Go to the applicable DTC inspection. (See **DTC TABLE [SKYACTIV-G 2.0, SKYACTIV-G 2.5]**.)
		No	DTC troubleshooting completed.

2014 - Mazda3 - Engine

DTC P06DA:00 [SKYACTIV-G 2.0, SKYACTIV-G 2.5]

DTC P06DA:00	Engine oil solenoid valve circuit problem
DETECTION CONDITION	• The engine oil solenoid valve control current is high or the control voltage at the PCM terminal 1AS is low relative to the PCM control condition. **Diagnostic support note** • This is a continuous monitor (other). • The check engine light does not illuminate. • FREEZE FRAME DATA (Mode 2) is not available. • Snapshot data is available. • DTC is stored in the PCM memory.
FAIL-SAFE FUNCTION	• Inhibits the engine oil control.

POSSIBLE CAUSE	• Engine oil solenoid valve connector or terminals malfunction
	• Short to ground or open circuit in engine oil solenoid valve power supply circuit
	  ▪ Short to ground in wiring harness between ENGINE2 15 A fuse and engine oil solenoid valve terminal A
	  ▪ ENGINE2 15 A fuse malfunction
	  ▪ Open circuit in wiring harness between main relay terminal D and engine oil solenoid valve terminal A
	• Short to ground in wiring harness between engine oil solenoid valve terminal B and PCM terminal 1AS
	• PCM connector or terminals malfunction
	• Short to power supply in wiring harness between engine oil solenoid valve terminal B and PCM terminal 1AS
	• Open circuit in wiring harness between engine oil solenoid valve terminal B and PCM terminal 1AS
	• Engine oil solenoid valve malfunction
	• PCM malfunction

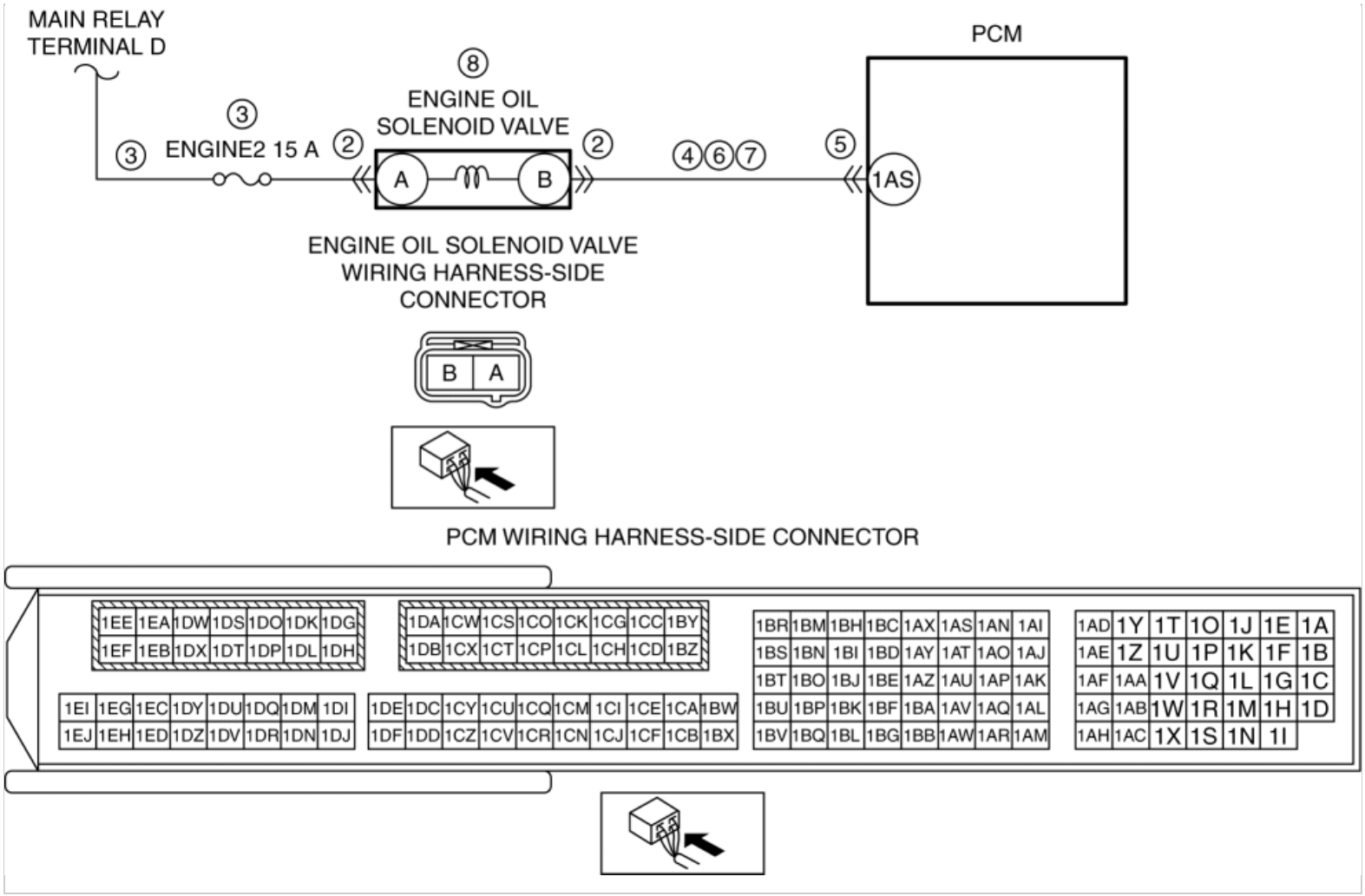

Diagnostic Procedure

STEP	INSPECTION		ACTION
1	**VERIFY RELATED REPAIR INFORMATION AVAILABILITY** • Verify related Service Bulletins and/or on-line repair information availability. • Is any related repair information available?	Yes	Perform repair or diagnosis according to the available repair information. • If the vehicle is not repaired, go to the next step.
		No	Go to the next step.
2	**INSPECT ENGINE OIL SOLENOID VALVE CONNECTOR CONDITION** • Switch the ignition off. • Disconnect the engine oil solenoid valve connector. • Inspect for poor connection (such as damaged/pulled-out pins, corrosion). • Is there any malfunction?	Yes	Repair or replace the connector and/or terminals, then go to Step 9.
		No	Go to the next step.
3	**INSPECT ENGINE OIL SOLENOID VALVE POWER SUPPLY CIRCUIT FOR SHORT TO GROUND OR OPEN CIRCUIT** • Verify that the engine oil solenoid valve connector is disconnected.	Yes	Go to the next step.
		No	Inspect the ENGINE2 15 A fuse. • If the fuse is blown:

	• Switch the ignition ON (engine off). **NOTE:** • Another DTC may be stored by the PCM detecting an open circuit. • Measure the voltage at the engine oil solenoid valve terminal A (wiring harness-side). • Is the voltage **B+**?		▪ Refer to the wiring diagram and verify whether or not there is a common connector between ENGINE2 15 A fuse and engine oil solenoid valve terminal A. **If there is a common connector:** • Determine the malfunctioning part by inspecting the common connector and the terminal for corrosion, damage, or pin disconnection, and the common wiring harness for a short to ground. • Repair or replace the malfunctioning part. **If there is no common connector:** • Repair or replace the wiring harness which has a short to ground. • Replace the fuse. • If the fuse is damaged: ▪ Replace the fuse. • If the fuse is normal: ▪ Refer to the wiring diagram and verify whether or not there is a common connector between main relay terminal D and engine oil solenoid valve terminal A. **If there is a common connector:** • Determine the malfunctioning part by inspecting the common connector and the terminal for corrosion, damage, or pin disconnection, and the common wiring harness for an open circuit. • Repair or replace the malfunctioning part. **If there is no common connector:** • Repair or replace the wiring harness which has an open circuit. Go to Step 9.
4	**INSPECT ENGINE OIL SOLENOID VALVE CONTROL CIRCUIT FOR SHORT TO GROUND** • Verify that the engine oil solenoid valve connector is disconnected. • Switch the ignition off. • Inspect for continuity between engine oil solenoid valve terminal B (wiring harness-side) and body ground.	Yes	If the short to ground circuit could be detected in the wiring harness: • Refer to the wiring diagram and verify whether or not there is a common connector between engine oil solenoid valve terminal B and PCM terminal 1AS. **If there is a common connector:** ▪ Determine the malfunctioning part by inspecting the common connector and the terminal for corrosion, damage, or pin

	• Is there continuity?		disconnection, and the common wiring harness for a short to ground. ▪ Repair or replace the malfunctioning part. **If there is no common connector:** ▪ Repair or replace the wiring harness which has a short to ground. If the short to ground circuit could not be detected in the wiring harness: • Replace the PCM (short to ground in the PCM internal circuit). (See **PCM REMOVAL/INSTALLATION [SKYACTIV-G 2.0, SKYACTIV-G 2.5]**.) Go to Step 9.
		No	Go to the next step.
5	**INSPECT PCM CONNECTOR CONDITION** • Disconnect the PCM connector. • Inspect for poor connection (such as damaged/pulled-out pins, corrosion). • Is there any malfunction?	Yes	Repair or replace the connector and/or terminals, then go to Step 9.
		No	Go to the next step.
6	**INSPECT ENGINE OIL SOLENOID VALVE CONTROL CIRCUIT FOR SHORT TO POWER SUPPLY** • Verify that the engine oil solenoid valve and PCM connectors are disconnected. • Switch the ignition ON (engine off). **NOTE:** • Another DTC may be stored by the PCM detecting an open circuit. • Measure the voltage at the engine oil solenoid valve terminal B (wiring harness-side). • Is the voltage **0 V**?	Yes	Go to the next step.
		No	Refer to the wiring diagram and verify whether or not there is a common connector between engine oil solenoid valve terminal B and PCM terminal 1AS. **If there is a common connector:** • Determine the malfunctioning part by inspecting the common connector and the terminal for corrosion, damage, or pin disconnection, and the common wiring harness for a short to power supply. • Repair or replace the malfunctioning part. **If there is no common connector:** • Repair or replace the wiring harness which has a short to power supply. Go to Step 9.
7	**INSPECT ENGINE OIL SOLENOID VALVE CONTROL CIRCUIT FOR OPEN CIRCUIT** • Verify that the engine oil solenoid valve and PCM connectors are disconnected. • Switch the ignition off. • Inspect for continuity between engine oil solenoid valve terminal B (wiring harness-side) and PCM terminal 1AS (wiring harness-side). • Is there continuity?	Yes	Go to the next step.
		No	Refer to the wiring diagram and verify whether or not there is a common connector between engine oil solenoid valve terminal B and PCM terminal 1AS. **If there is a common connector:** • Determine the malfunctioning part by inspecting the common connector and the terminal for corrosion, damage, or pin disconnection, and the common wiring harness for an open circuit. • Repair or replace the malfunctioning part. **If there is no common connector:** • Repair or replace the wiring harness which has an open

			circuit. Go to Step 9.
8	**INSPECT ENGINE OIL SOLENOID VALVE** • Inspect the engine oil solenoid valve. (See **ENGINE OIL SOLENOID VALVE INSPECTION [SKYACTIV-G 2.0, SKYACTIV-G 2.5]**.) • Is there any malfunction?	Yes	Replace the engine oil solenoid valve, then go to the next step. (See **ENGINE OIL SOLENOID VALVE REMOVAL/INSTALLATION [SKYACTIV-G 2.0, SKYACTIV-G 2.5]**.)
		No	Go to the next step.
9	**VERIFY DTC TROUBLESHOOTING COMPLETED** • Always reconnect all disconnected connectors. • Clear the DTC from the PCM memory using the M-MDS. (See **AFTER REPAIR PROCEDURE [SKYACTIV-G 2.0, SKYACTIV-G 2.5]**.) • Perform the KOER self test. (See **KOEO/KOER SELF TEST [SKYACTIV-G 2.0, SKYACTIV-G 2.5]**.) • Is the same DTC present?	Yes	Repeat the inspection from Step 1. • If the malfunction recurs, replace the PCM. (See **PCM REMOVAL/INSTALLATION [SKYACTIV-G 2.0, SKYACTIV-G 2.5]**.) Go to the next step.
		No	Go to the next step.
10	**VERIFY AFTER REPAIR PROCEDURE** • Perform the “AFTER REPAIR PROCEDURE”. (See **AFTER REPAIR PROCEDURE [SKYACTIV-G 2.0, SKYACTIV-G 2.5]**.) • Are any DTCs present?	Yes	Go to the applicable DTC inspection. (See **DTC TABLE [SKYACTIV-G 2.0, SKYACTIV-G 2.5]**.)
		No	DTC troubleshooting completed.

2014 - Mazda3 - Engine

DTC P0703:00 [SKYACTIV-G 2.0, SKYACTIV-G 2.5]

DTC P0703:00	Brake switch input circuit problem
DETECTION CONDITION	• The brake switch does not switch even though the vehicle is stopped **8 times** repeatedly from a vehicle speed of **30 km/h {19 mph} or more**. **Diagnostic support note** • This is a continuous monitor (CCM). • The check engine light illuminates if the PCM detects the above malfunction condition in two consecutive drive cycles or in one drive cycle while the DTC for the same malfunction has been stored in the PCM. • PENDING CODE is available if the PCM detects the above malfunction condition during first drive cycle. • FREEZE FRAME DATA (Mode 2)/Snapshot data is available. • DTC is stored in the PCM memory.
FAIL-SAFE FUNCTION	Not applicable
POSSIBLE CAUSE	**CAUTION:** • Inspect the brake switch with it installed to the brake pedal, otherwise the brake switch may not operate normally. If the brake switch is removed from the brake pedal, replace the brake switch with a new one. • Brake switch connector or terminals malfunction • Short to ground or open circuit in brake switch No.1 power supply circuit ▪ Short to ground in wiring harness between MAIN 200 A fuse and brake switch terminal A ▪ MAIN 200 A fuse and/or STOP 10 A fuse malfunction ▪ Open circuit in wiring harness between battery positive terminal and brake switch terminal A • Short to ground in wiring harness between brake switch terminal D and PCM terminal 2G • PCM connector or terminals malfunction • Short to power supply in wiring harness between brake switch terminal D and PCM terminal 2G • Open circuit in wiring harness between brake switch terminal D and PCM terminal 2G • Brake switch No.1 malfunction • PCM malfunction

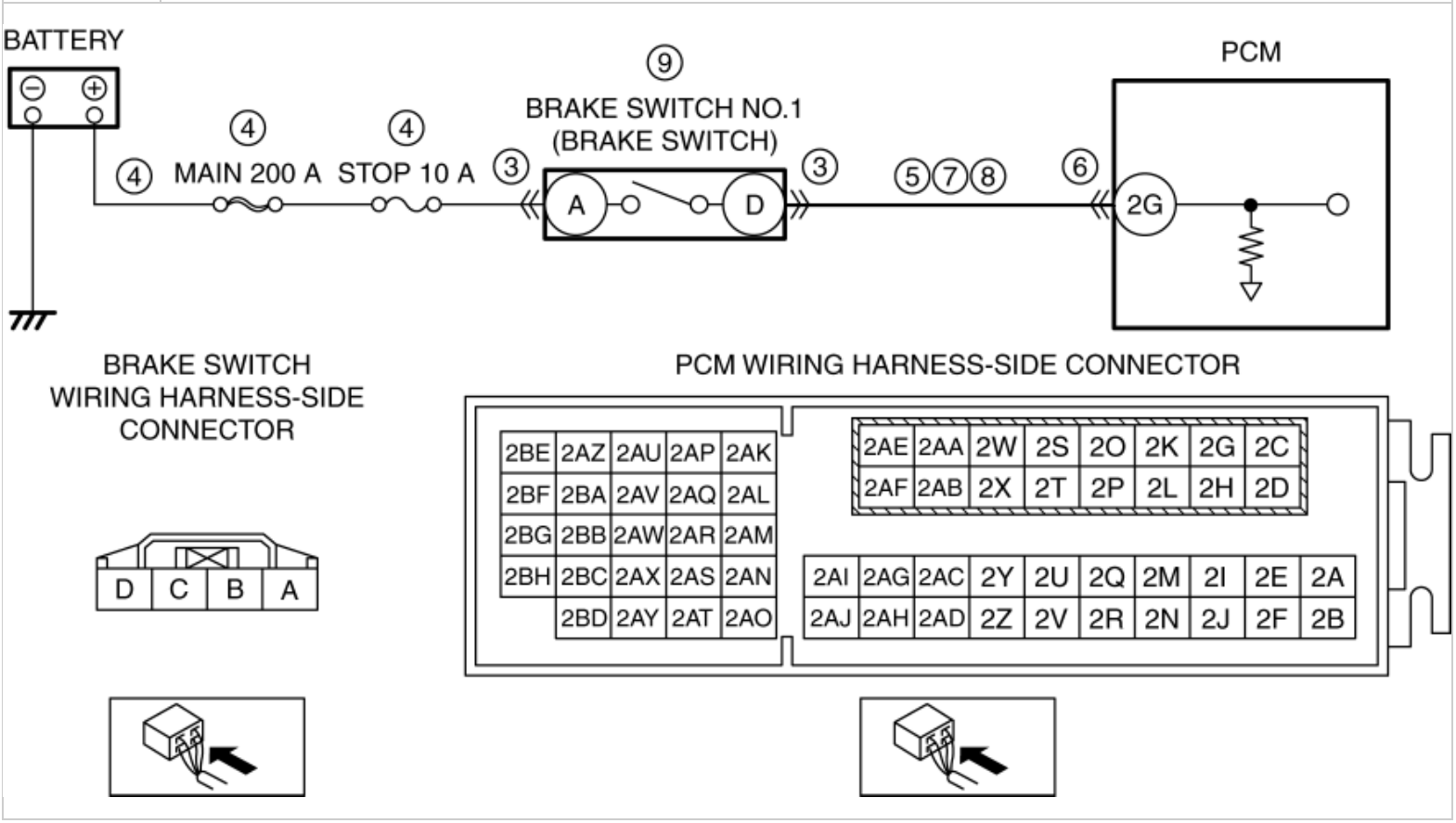

Diagnostic Procedure

STEP	INSPECTION		ACTION
1	**VERIFY FREEZE FRAME DATA (MODE 2)/SNAPSHOT DATA HAS BEEN RECORDED** • Has the FREEZE FRAME DATA (Mode 2)/snapshot data been recorded?	Yes	Go to the next step.
		No	Record the FREEZE FRAME DATA (Mode 2)/snapshot data on the repair order, then go to the next step.
2	**VERIFY RELATED REPAIR INFORMATION AVAILABILITY** • Verify related Service Bulletins and/or on-line repair information availability. • Is any related repair information available?	Yes	Perform repair or diagnosis according to the available repair information. • If the vehicle is not repaired, go to the next step.
		No	Go to the next step.
3	**INSPECT BRAKE SWITCH CONNECTOR CONDITION** • Switch the ignition off. • Disconnect the brake switch connector. • Inspect for poor connection (such as damaged/pulled-out pins, corrosion). • Is there any malfunction?	Yes	Repair or replace the connector and/or terminals, then go to Step 10.
		No	Go to the next step.

4	**INSPECT BRAKE SWITCH NO.1 POWER SUPPLY CIRCUIT FOR SHORT TO GROUND OR OPEN CIRCUIT** • Verify that the brake switch connector is disconnected. • Measure the voltage at the brake switch terminal A (wiring harness-side). • Is the voltage **B+**?	Yes	Go to the next step.
		No	Inspect the MAIN 200 A fuse and STOP 10 A fuse. • If the fuse is blown: ▪ Refer to the wiring diagram and verify whether or not there is a common connector between MAIN 200 A fuse and brake switch terminal A. **If there is a common connector:** • Determine the malfunctioning part by inspecting the common connector and the terminal for corrosion, damage, or pin disconnection, and the common wiring harness for a short to ground. • Repair or replace the malfunctioning part. **If there is no common connector:** • Repair or replace the wiring harness which has a short to ground. • Replace the fuse. • If the fuse is damaged: ▪ Replace the fuse. • If all fuses are normal: ▪ Refer to the wiring diagram and verify whether or not there is a common connector between battery positive terminal and brake switch terminal A. **If there is a**

			common connector: • Determine the malfunctioning part by inspecting the common connector and the terminal for corrosion, damage, or pin disconnection, and the common wiring harness for an open circuit. • Repair or replace the malfunctioning part. **If there is no common connector:** • Repair or replace the wiring harness which has an open circuit. Go to Step 10.
5	**INSPECT BRAKE SWITCH NO.1 SIGNAL CIRCUIT FOR SHORT TO GROUND** • Verify that the brake switch connector is disconnected. • Inspect for continuity between brake switch terminal D (wiring harness-side) and body ground. • Is there continuity?	Yes	If the short to ground circuit could be detected in the wiring harness: • Refer to the wiring diagram and verify whether or not there is a common connector between brake switch terminal D and PCM terminal 2G. **If there is a common connector:** ▪ Determine the malfunctioning part by inspecting the common connector and the terminal for corrosion, damage, or pin disconnection, and the common wiring harness for a short to ground. ▪ Repair or replace the malfunctioning part. **If there is no common connector:** ▪ Repair or replace the wiring harness which has a short to ground. If the short to ground circuit could not be detected in the wiring

			harness: • Replace the PCM (short to ground in the PCM internal circuit). (See **PCM REMOVAL/INSTALLATION [SKYACTIV-G 2.0, SKYACTIV-G 2.5]**.) Go to Step 10.
		No	Go to the next step.
6	**INSPECT PCM CONNECTOR CONDITION** • Disconnect the PCM connector. • Inspect for poor connection (such as damaged/pulled-out pins, corrosion). • Is there any malfunction?	Yes	Repair or replace the connector and/or terminals, then go to Step 10.
		No	Go to the next step.
7	**INSPECT BRAKE SWITCH NO.1 SIGNAL CIRCUIT FOR SHORT TO POWER SUPPLY** • Verify that the brake switch and PCM connectors are disconnected. • Switch the ignition ON (engine off). **NOTE:** • Another DTC may be stored by the PCM detecting an open circuit. • Measure the voltage at the brake switch terminal D (wiring harness-side). • Is the voltage **0 V**?	Yes	Go to the next step.
		No	Refer to the wiring diagram and verify whether or not there is a common connector between brake switch terminal D and PCM terminal 2G. **If there is a common connector:** • Determine the malfunctioning part by inspecting the common connector and the terminal for corrosion, damage, or pin disconnection, and the common wiring harness for a short to power supply. • Repair or replace the malfunctioning part. **If there is no common connector:** • Repair or replace the wiring harness which has a short to power supply. Go to Step 10.
8	**INSPECT BRAKE SWITCH NO.1 SIGNAL CIRCUIT FOR OPEN CIRCUIT** • Verify that the brake switch and PCM connectors are disconnected. • Switch the ignition off. • Inspect for continuity between brake switch terminal D (wiring harness-side) and PCM terminal 2G (wiring harness-side). • Is there continuity?	Yes	Go to the next step.
		No	Refer to the wiring diagram and verify whether or not there is a common connector between brake switch terminal D and PCM terminal 2G. **If there is a common connector:** • Determine the malfunctioning part by inspecting the common connector and the terminal for corrosion, damage, or pin disconnection, and the common wiring harness for an open circuit. • Repair or replace the malfunctioning part. **If there is no common connector:** • Repair or replace the wiring harness which has an open circuit.

			Go to Step 10.
9	**INSPECT BRAKE SWITCH** • Inspect the brake switch. (See **BRAKE SWITCH INSPECTION**.) • Is there any malfunction?	Yes	Replace the brake switch, then go to the next step. (See **BRAKE PEDAL REMOVAL/INSTALLATION**.)
		No	Go to the next step.
10	**VERIFY DTC TROUBLESHOOTING COMPLETED** • Always reconnect all disconnected connectors. • Clear the DTC from the PCM memory using the M-MDS. (See **AFTER REPAIR PROCEDURE [SKYACTIV-G 2.0, SKYACTIV-G 2.5]**.) **CAUTION:** • While performing this step, always operate the vehicle in a safe and lawful manner. • When the M-MDS is used to observe monitor system status while driving, be sure to have another technician with you, or record the data in the M-MDS using the PID/DATA MONITOR AND RECORD capturing function and inspect later. • Drive the vehicle at a vehicle speed of **30 km/h {19 mph} or more 8 times**. • Perform the Pending Trouble Code Access Procedure. (See **ON-BOARD DIAGNOSTIC TEST [SKYACTIV-G 2.0, SKYACTIV-G 2.5]**.) • Is the PENDING CODE for this	Yes	Repeat the inspection from Step 1. • If the malfunction recurs, replace the PCM. (See **PCM REMOVAL/INSTALLATION [SKYACTIV-G 2.0, SKYACTIV-G 2.5]**.) Go to the next step.
		No	Go to the next step.

	DTC present?		
11	**VERIFY AFTER REPAIR PROCEDURE** • Perform the “AFTER REPAIR PROCEDURE”. (See **AFTER REPAIR PROCEDURE [SKYACTIV-G 2.0, SKYACTIV-G 2.5]**.) • Are any DTCs present?	Yes	Go to the applicable DTC inspection. (See **DTC TABLE [SKYACTIV-G 2.0, SKYACTIV-G 2.5]**.)
		No	DTC troubleshooting completed.

2014 - Mazda3 - Engine

DTC P0704:00 [SKYACTIV-G 2.0, SKYACTIV-G 2.5]

DTC P0704:00	CPP switch input circuit problem
DETECTION CONDITION	• The PCM monitors changes in input voltage from the CPP switch. If the PCM does not detect a voltage change while the vehicle runs with vehicle speed **above 30 km/h {19 mph}** and stops **8 times** alternately, the PCM determines that the CPP switch circuit has a malfunction. **Diagnostic support note** • This is a continuous monitor (CCM). • The check engine light illuminates if the PCM detects the above malfunction condition in two consecutive drive cycles or in one drive cycle while the DTC for the same malfunction has been stored in the PCM. • PENDING CODE is available if the PCM detects the above malfunction condition during first drive cycle. • FREEZE FRAME DATA (Mode 2)/Snapshot data is available. • DTC is stored in the PCM memory.
FAIL-SAFE FUNCTION	Not applicable
POSSIBLE CAUSE	**CAUTION:** • Inspect the CPP switch with it installed to the clutch pedal, otherwise the CPP switch may not operate normally after inspection. If the CPP switch is removed from the clutch pedal, replace the CPP switch with a new one. • CPP switch connector or terminals malfunction • Foreign object lodged between clutch switch plunger and clutch pedal contact surface • CPP switch malfunction • Open circuit in wiring harness between CPP switch terminal B and body ground • Short to ground in wiring harness between CPP switch terminal A and PCM terminal 2J • PCM connector or terminals malfunction • Open circuit in wiring harness between CPP switch terminal A and PCM terminal 2J • Driver continues to depress clutch pedal causing mistaken detection by PCM • PCM malfunction

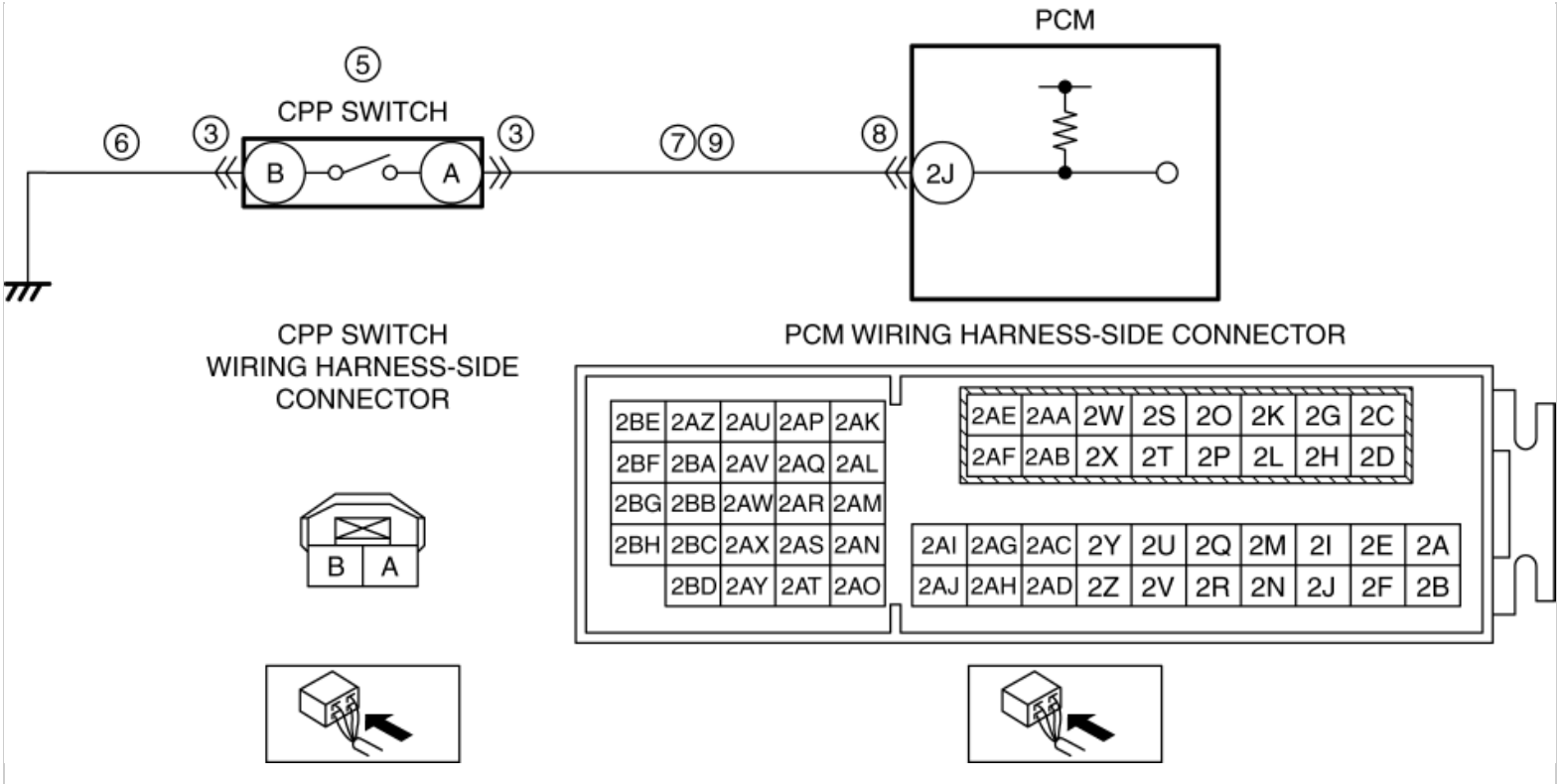

Diagnostic Procedure

STEP	INSPECTION		ACTION
1	**VERIFY FREEZE FRAME DATA (MODE 2)/SNAPSHOT DATA HAS BEEN RECORDED** • Has the FREEZE FRAME DATA (Mode 2)/snapshot data been recorded?	Yes	Go to the next step.
		No	Record the FREEZE FRAME DATA (Mode 2)/snapshot data on the repair order, then go to the next step.
2	**VERIFY RELATED REPAIR INFORMATION AVAILABILITY** • Verify related Service Bulletins and/or on-line repair information availability. • Is any related repair information available?	Yes	Perform repair or diagnosis according to the available repair information. • If the vehicle is not repaired, go to the next step.
		No	Go to the next step.
3	**INSPECT CPP SWITCH CONNECTOR CONDITION** • Switch the ignition off. • Disconnect the CPP switch connector. • Inspect for poor connection (such as damaged/pulled-out pins, corrosion). • Is there any malfunction?	Yes	Repair or replace the connector and/or terminals, then go to Step 11.
		No	Go to the next step.
4	**VERIFY IF MALFUNCTION OCCURS DUE TO FOREIGN OBJECT LODGED BETWEEN CLUTCH SWITCH PLUNGER AND CLUTCH PEDAL CONTACT SURFACE** • Visually verify the area between the clutch switch plunger and clutch pedal contact surface.	Yes	Remove the foreign object, then go to the next step.
		No	Go to the next step.

	• Is there a lodged foreign object?		
5	**INSPECT CPP SWITCH** • Inspect the CPP switch. (See **CLUTCH PEDAL POSITION (CPP) SWITCH INSPECTION [SKYACTIV-G 2.0, SKYACTIV-G 2.5]**.) • Is there any malfunction?	Yes	Replace the CPP switch, then go to Step 11. (See **CLUTCH PEDAL POSITION SWITCH REMOVAL/INSTALLATION [C66M-R]**.)
		No	Go to the next step.
6	**INSPECT CPP SWITCH GROUND CIRCUIT FOR OPEN CIRCUIT** • Verify that the CPP switch connector is disconnected. • Inspect for continuity between CPP switch terminal B (wiring harness-side) and body ground. • Is there continuity?	Yes	Go to the next step.
		No	Refer to the wiring diagram and verify whether or not there is a common connector between CPP switch terminal B and body ground. **If there is a common connector:** • Determine the malfunctioning part by inspecting the common connector and the terminal for corrosion, damage, or pin disconnection, and the common wiring harness for an open circuit. • Repair or replace the malfunctioning part. **If there is no common connector:** • Inspect for the following: ▪ Open circuit between CPP switch and body ground ▪ Loose or lifting ground point • Repair or replace the malfunctioning part. Go to Step 11.
7	**INSPECT CPP SWITCH SIGNAL CIRCUIT FOR SHORT TO GROUND** • Verify that the CPP switch connector is disconnected. • Inspect for continuity between CPP switch terminal A (wiring harness-side) and body ground. • Is there continuity?	Yes	If the short to ground circuit could be detected in the wiring harness: • Refer to the wiring diagram and verify whether or not there is a common connector between CPP switch terminal A and PCM terminal 2J. **If there is a common connector:** ▪ Determine the malfunctioning part by inspecting the common connector and the terminal for corrosion, damage, or pin disconnection, and the common wiring harness for a short to ground. ▪ Repair or replace the malfunctioning part. **If there is no common connector:** ▪ Repair or replace the wiring harness which has a short to ground. If the short to ground circuit could not be detected in the wiring harness: • Replace the PCM (short to ground in the PCM internal circuit).

			(See **PCM REMOVAL/INSTALLATION [SKYACTIV-G 2.0, SKYACTIV-G 2.5]**.) Go to Step 11.
		No	Go to the next step.
8	**INSPECT PCM CONNECTOR CONDITION** • Disconnect the PCM connector. • Inspect for poor connection (such as damaged/pulled-out pins, corrosion). • Is there any malfunction?	Yes	Repair or replace the connector and/or terminals, then go to Step 11.
		No	Go to the next step.
9	**INSPECT CPP SWITCH SIGNAL CIRCUIT FOR OPEN CIRCUIT** • Verify that the CPP switch and PCM connectors are disconnected. • Inspect for continuity between CPP switch terminal A (wiring harness-side) and PCM terminal 2J (wiring harness-side). • Is there continuity?	Yes	Go to the next step.
		No	Refer to the wiring diagram and verify whether or not there is a common connector between CPP switch terminal A and PCM terminal 2J. **If there is a common connector:** • Determine the malfunctioning part by inspecting the common connector and the terminal for corrosion, damage, or pin disconnection, and the common wiring harness for an open circuit. • Repair or replace the malfunctioning part. **If there is no common connector:** • Repair or replace the wiring harness which has an open circuit. Go to Step 11.
10	**VERIFY THAT THERE IS NO PROBLEM WITH CUSTOMER CLUTCH PEDAL OPERATION** • Is the clutch pedal depressed after operating the shift lever during a traffic jam?	Yes	Explain to the customer that it is necessary to remove the foot from the clutch pedal completely after operating the shift lever. Go to the next step.
		No	Go to the next step.
11	**VERIFY DTC TROUBLESHOOTING COMPLETED** • Always reconnect all disconnected connectors. • Clear the DTC from the PCM memory using the M-MDS. (See **AFTER REPAIR PROCEDURE [SKYACTIV-G 2.0, SKYACTIV-G 2.5]**.) • Operate the clutch pedal while driving the vehicle **above 30 km/h {19 mph}** and stopping **8 times** alternately. • Perform the Pending Trouble Code Access Procedure. (See **ON-BOARD DIAGNOSTIC TEST [SKYACTIV-G 2.0, SKYACTIV-G 2.5]**.) • Is the PENDING CODE for this DTC present?	Yes	Repeat the inspection from Step 1. • If the malfunction recurs, replace the PCM. (See **PCM REMOVAL/INSTALLATION [SKYACTIV-G 2.0, SKYACTIV-G 2.5]**.) Go to the next step.
		No	Go to the next step.

12	**VERIFY AFTER REPAIR PROCEDURE** • Perform the “AFTER REPAIR PROCEDURE”. (See **AFTER REPAIR PROCEDURE [SKYACTIV-G 2.0, SKYACTIV-G 2.5]**.) • Are any DTCs present?	Yes	Go to the applicable DTC inspection. (See **DTC TABLE [SKYACTIV-G 2.0, SKYACTIV-G 2.5]**.)
		No	DTC troubleshooting completed.

2014 - Mazda3 - Engine

DTC P0850:00 [SKYACTIV-G 2.0, SKYACTIV-G 2.5]

DTC P0850:00	Neutral switch input circuit problem
DETECTION CONDITION	• The PCM monitors changes in input voltage from the neutral switch. If the PCM does not detect a voltage change while driving the vehicle at a vehicle speed **above 30 km/h {19 mph}** and the clutch pedal is pressed and released **10 times** repeatedly, the PCM determines that the neutral switch circuit has a malfunction. **Diagnostic support note** • This is a continuous monitor (CCM). • The check engine light illuminates if the PCM detects the above malfunction condition in two consecutive drive cycles or in one drive cycle while the DTC for the same malfunction has been stored in the PCM. • PENDING CODE is available if the PCM detects the above malfunction condition during first drive cycle. • FREEZE FRAME DATA (Mode 2)/Snapshot data is available. • DTC is stored in the PCM memory.
FAIL-SAFE FUNCTION	Not applicable
POSSIBLE CAUSE	• Neutral switch connector or terminals malfunction • Neutral switch malfunction • Open circuit in wiring harness between neutral switch terminal B and body ground • Short to ground in wiring harness between neutral switch terminal A and PCM terminal 1K • PCM connector or terminals malfunction • Open circuit in wiring harness between neutral switch terminal A and PCM terminal 1K • PCM malfunction

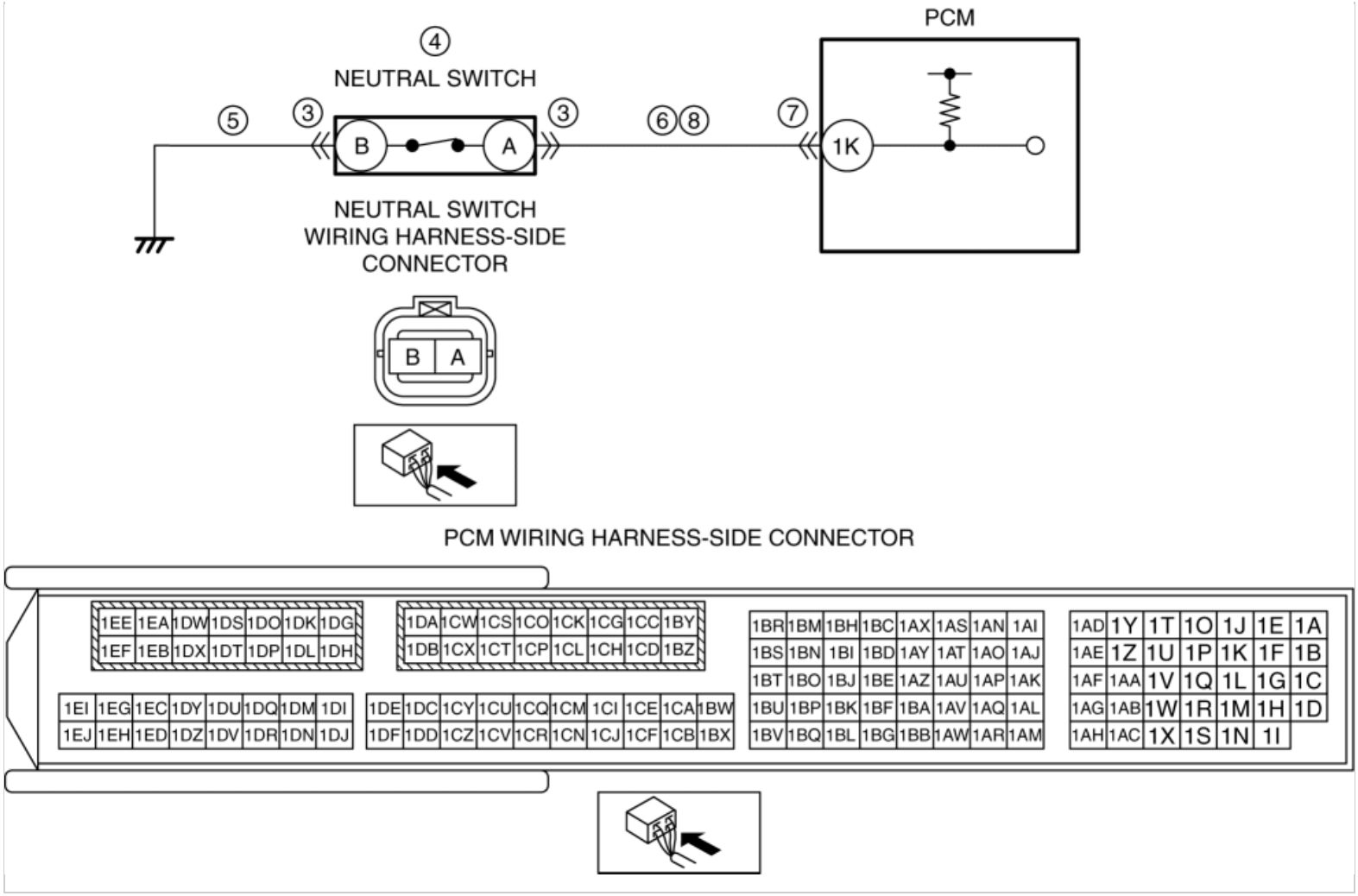

Diagnostic Procedure

STEP	INSPECTION		ACTION
1	**VERIFY FREEZE FRAME DATA (MODE 2)/SNAPSHOT DATA HAS BEEN RECORDED** • Has the FREEZE FRAME DATA (Mode 2)/snapshot data been recorded?	Yes	Go to the next step.
		No	Record the FREEZE FRAME DATA (Mode 2)/snapshot data on the repair order, then go to the next step.
2	**VERIFY RELATED REPAIR INFORMATION AVAILABILITY** • Verify related Service Bulletins and/or on-line repair information availability. • Is any related repair information available?	Yes	Perform repair or diagnosis according to the available repair information. • If the vehicle is not repaired, go to the next step.
		No	Go to the next step.
3	**INSPECT NEUTRAL SWITCH CONNECTOR CONDITION** • Switch the ignition off. • Disconnect the neutral switch connector. • Inspect for poor connection (such as damaged/pulled-out pins, corrosion). • Is there any malfunction?	Yes	Repair or replace the connector and/or terminals, then go to Step 9.
		No	Go to the next step.

4	**INSPECT NEUTRAL SWITCH** • Inspect the neutral switch. (See **NEUTRAL SWITCH INSPECTION [SKYACTIV-G 2.0, SKYACTIV-G 2.5]**.) • Is there any malfunction?	Yes	Replace the neutral switch, then go to Step 9. (See **NEUTRAL SWITCH REMOVAL/INSTALLATION [C66M-R]**.)
		No	Go to the next step.
5	**INSPECT NEUTRAL SWITCH GROUND CIRCUIT FOR OPEN CIRCUIT** • Verify that the neutral switch connector is disconnected. • Inspect for continuity between neutral switch terminal B (wiring harness-side) and body ground. • Is there continuity?	Yes	Go to the next step.
		No	Refer to the wiring diagram and verify whether or not there is a common connector between neutral switch terminal B and body ground. **If there is a common connector:** • Determine the malfunctioning part by inspecting the common connector and the terminal for corrosion, damage, or pin disconnection, and the common wiring harness for an open circuit. • Repair or replace the malfunctioning part. **If there is no common connector:** • Inspect for the following: ▪ Open circuit between neutral switch and body ground ▪ Loose or lifting ground point • Repair or replace the malfunctioning part. Go to Step 9.
6	**INSPECT NEUTRAL SWITCH SIGNAL CIRCUIT FOR SHORT TO GROUND** • Verify that the neutral switch connector is disconnected. • Inspect for continuity between neutral switch terminal A (wiring harness-side) and body ground. • Is there continuity?	Yes	If the short to ground circuit could be detected in the wiring harness: • Refer to the wiring diagram and verify whether or not there is a common connector between neutral switch terminal A and PCM terminal 1K. **If there is a common connector:** ▪ Determine the malfunctioning part by inspecting the common connector and the terminal for corrosion, damage, or pin disconnection, and the common wiring harness for a short to ground. ▪ Repair or replace the malfunctioning part. **If there is no common connector:** ▪ Repair or replace the wiring harness which has a short to ground. If the short to ground circuit could not be detected in the wiring harness: • Replace the PCM (short to ground in the PCM internal circuit). (See **PCM REMOVAL/INSTALLATION [SKYACTIV-G 2.0, SKYACTIV-G 2.5]**.) Go to Step 9.
		No	Go to the next step.
7	**INSPECT PCM CONNECTOR CONDITION** • Disconnect the PCM connector.	Yes	Repair or replace the connector and/or terminals, then go to Step 9.

	• Inspect for poor connection (such as damaged/pulled-out pins, corrosion). • Is there any malfunction?	No	Go to the next step.
8	**INSPECT NEUTRAL SWITCH SIGNAL CIRCUIT FOR OPEN CIRCUIT** • Verify that the neutral switch and PCM connectors are disconnected. • Inspect for continuity between neutral switch terminal A (wiring harness-side) and PCM terminal 1K (wiring harness-side). • Is there continuity?	Yes	Go to the next step.
		No	Refer to the wiring diagram and verify whether or not there is a common connector between neutral switch terminal A and PCM terminal 1K. **If there is a common connector:** • Determine the malfunctioning part by inspecting the common connector and the terminal for corrosion, damage, or pin disconnection, and the common wiring harness for an open circuit. • Repair or replace the malfunctioning part. **If there is no common connector:** • Repair or replace the wiring harness which has an open circuit. Go to the next step.
9	**VERIFY DTC TROUBLESHOOTING COMPLETED** • Always reconnect all disconnected connectors. • Clear the DTC from the PCM memory using the M-MDS. (See **AFTER REPAIR PROCEDURE [SKYACTIV-G 2.0, SKYACTIV-G 2.5]**.) • Drive the vehicle **above 30 km/h {19 mph}** and stop the vehicle. • Depress and release the clutch pedal **more than 10 times** during drive cycle. • Perform the Pending Trouble Code Access Procedure. (See **ON-BOARD DIAGNOSTIC TEST [SKYACTIV-G 2.0, SKYACTIV-G 2.5]**.) • Is the PENDING CODE for this DTC present?	Yes	Repeat the inspection from Step 1. • If the malfunction recurs, replace the PCM. (See **PCM REMOVAL/INSTALLATION [SKYACTIV-G 2.0, SKYACTIV-G 2.5]**.) Go to the next step.
		No	Go to the next step.
10	**VERIFY AFTER REPAIR PROCEDURE** • Perform the “AFTER REPAIR PROCEDURE”. (See **AFTER REPAIR PROCEDURE [SKYACTIV-G 2.0, SKYACTIV-G 2.5]**.) • Are any DTCs present?	Yes	Go to the applicable DTC inspection. (See **DTC TABLE [SKYACTIV-G 2.0, SKYACTIV-G 2.5]**.)
		No	DTC troubleshooting completed.

2014 - Mazda3 - Engine

DTC P0A12:00 [SKYACTIV-G 2.0, SKYACTIV-G 2.5]

NOTE:

- To determine the malfunctioning part, proceed with the diagnostics from "Function Inspection Using M-MDS".

Details On DTCs

DESCRIPTION	DC-DC converter: low input/output	
DETECTION CONDITION	Determination conditions	• Any one of the following conditions is met: ▪ Any DC-DC converter terminal value, either 3A or 4A, is specified value or less ▪ Ignition switch ON condition detected by DC-DC converter and PCM differ
	Preconditions	• Not applicable
	Drive cycle	• **1**
	Self test type	• CMDTC self test
	Sensor used	• Not applicable
FAIL-SAFE FUNCTION	• Depending on the type of malfunction, any of the following controls may be implemented. ▪ Transition to i-ELOOP bypass mode. ▪ i-ELOOP bypass mode inhibited.	
VEHICLE STATUS WHEN DTCs ARE OUTPUT	• A warning message is displayed on the center display. (Type A instrument cluster) • Illuminates charging system warning light. (Type B or type C instrument cluster) • If the vehicle continues to be driven while the DTC is detected the battery will be depleted. ▪ A malfunction occurs with an electrical device and the vehicle stops. • The following vehicle conditions differ depending on the type of malfunction:	

	▪ Pre-charge warning is displayed.
POSSIBLE CAUSE	• Connector or terminal malfunction of the following parts: ▪ PCM ▪ Generator ▪ Battery ▪ Capacitor (i-ELOOP) ▪ DC-DC converter ▪ Electric load part connected to C/U IG1 15 A fuse • Malfunction in the following fuses: ▪ STARTER 250 A fuse • Short to ground in wiring harness between the following terminals: ▪ Capacitor (i-ELOOP) terminal 2A—Generator terminal 1A ▪ Capacitor (i-ELOOP) terminal 3A—DC-DC converter terminal 3A ▪ Battery positive terminal—DC-DC converter terminal 4A ▪ IG1 relay terminal C—DC-DC converter terminal 1H (DTC P1628:11 may be detected simultaneously) ▪ IG1 relay terminal C—Generator terminal 2C (DTC P1628:11, P2503:00 may be detected simultaneously) ▪ Electric load part connected to C/U IG1 15 A fuse—C/U IG1 15 A fuse • Open circuit in wiring harness between the following terminals: ▪ Capacitor (i-ELOOP) terminal 2A—Generator terminal 1A ▪ Capacitor (i-ELOOP) terminal 3A—DC-DC converter terminal 3A ▪ Battery positive terminal—DC-DC converter terminal 4A ▪ IG1 relay terminal C—DC-DC converter terminal 1H (DTC P1628:11 may be detected simultaneously) ▪ Electric load part connected to C/U IG1 15 A fuse—C/U IG1 15 A fuse • DC-DC converter malfunction • PCM malfunction

System Wiring Diagram

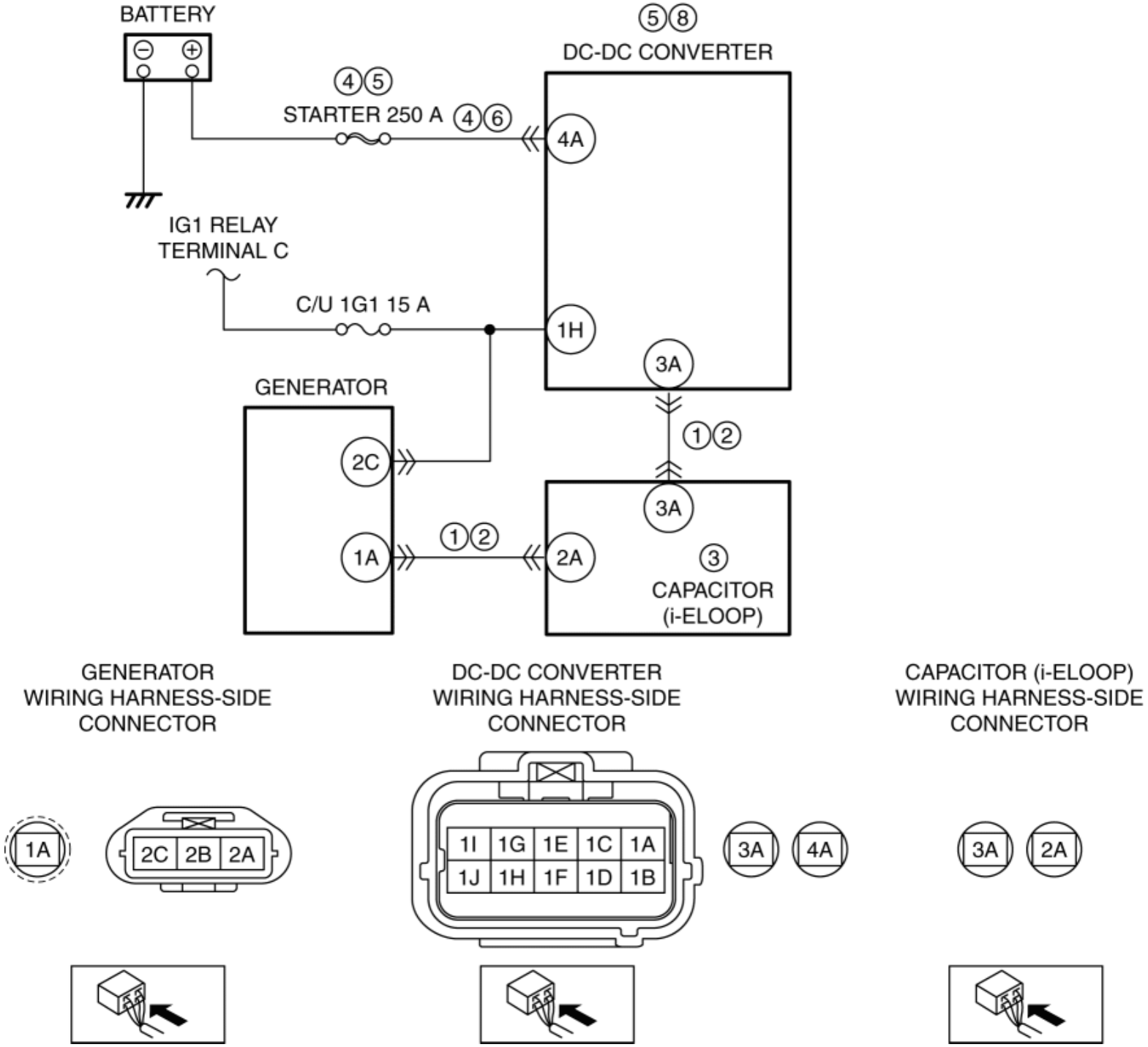

Function Explanation (DTC Detection Outline)

- When the charge/discharge circuit for the power supplying the vehicle is normal, the vehicle will operate normally.In this diagnostic, a malfunction in the DC-DC converter output line is detected, and verification of vehicle malfunctions/safety assurance is performed.

Repeatability Verification Procedure

- Clear the DTC from the PCM memory using the M-MDS. (See **CLEARING DTC [SKYACTIV-G 2.0, SKYACTIV-G 2.5]**.)
- Start the engine.

- Leave for **180 s** while idling with no electrical load.
- Leave for **30 s** while idling with high electrical load.

PID Item/Simulation Item Used In Diagnosis

- Not applicable

Function Inspection Using M-MDS

STEP	INSPECTION	RESULTS	ACTION
1	**VERIFY RELATED REPAIR INFORMATION AVAILABILITY** • Verify related Service Bulletins and/or on-line repair information availability. • Is any related repair information available?	Yes	Perform repair or diagnosis according to the available repair information. • If the vehicle is not repaired, go to the next step.
		No	Go to the next step.
2	**PURPOSE: VERIFY IF POWER SUPPLY IS AFFECTED BY DTC RELATED TO DC-DC CONVERTER** • Switch the ignition off, then ON (engine off). • Perform the DC-DC converter DTC inspection using the M-MDS. (See **DTC INSPECTION [i-ELOOP]**.) • Is the PENDING CODE/DTC U3000:49 also present?	Yes	Go to the applicable PENDING CODE or DTC inspection. (See **DTC U3000:49 [i-ELOOP]**.) Go to the next step.
		No	Go to the next step.
3	**PURPOSE: VERIFY IF POWER SUPPLY IS AFFECTED BY DTC RELATED TO DC-DC CONVERTER** • Perform the DC-DC converter DTC inspection using the M-MDS. (See **DTC INSPECTION [i-ELOOP]**.) • Is the PENDING CODE/DTC P1628:11 also present?	Yes	Go to the applicable PENDING CODE or DTC inspection. (See **DTC P1628:11 [i-ELOOP]**.) Go to the next step.
		No	Go to the next step.
4	**PURPOSE: DETERMINE IF MALFUNCTION CAUSED BY DC-DC CONVERTER** • Start the engine. • Is “i-ELOOP charging. Stop the vehicle and wait a minute” displayed in the LCD?	Yes	Go to the troubleshooting procedure to perform the procedure from Step 1.
		No	Go to the next step.
5	**PURPOSE: DETERMINE LOCATION OF MALFUNCTION OCCURRENCE FROM BLOWN STARTER 250 A FUSE** • Switch the ignition off. • Inspect the STARTER 250 A fuse.	Yes	Go to the troubleshooting procedure to perform the procedure from Step 4.
		No	Go to the troubleshooting procedure to perform the procedure from Step 6.

	Is the STARTER 250 A fuse blown?		

Troubleshooting Diagnostic Procedure

Intention of troubleshooting procedure

- Step 1—3
  - Verifying malfunction related to DC-DC converter 3A terminal
- Step 4—6
  - Verifying malfunction related to DC-DC converter 4A terminal
- Step 7—8
  - Verifying/replacing malfunctioning part
- Step 9—10
  - Verify that primary malfunction is resolved and there are no other malfunctions.

STEP	INSPECTION	RESULTS	ACTION
1	**PURPOSE: VERIFY IF SHORT TO GROUND IN EACH WIRING HARNESS AFFECTS DIAGNOSTIC RESULTS** • Switch the ignition off. • Remove the service plug. (See **SERVICE PLUG DISCONNECTION/CONNECTION [i-ELOOP]**.) • Disconnect the connector of the following parts. ▪ Generator ▪ DC-DC converter ▪ Capacitor (i-ELOOP) • Inspect for continuity between the following terminals (wiring harness-side) and body ground: ▪ Generator terminal 1A ▪ Capacitor (i-ELOOP) terminal 2A ▪ Capacitor (i-ELOOP) terminal 3A ▪ DC-DC	Yes	Refer to the wiring diagram and verify whether or not there is a common connector between the following terminals: • Capacitor (i-ELOOP) terminal 2A—Generator terminal 1A • Capacitor (i-ELOOP) terminal 3A—DC-DC converter terminal 3A **If there is a common connector:** • Determine the malfunctioning part by inspecting the common connector and the terminal for corrosion, damage, or pin disconnection, and the common wiring harness for a short to ground. • Repair or replace the malfunctioning part. **If there is no common connector:** • Repair or replace the wiring harness which has a short to ground. Go to Step 3.
		No	Go to the next step.

	converter terminal 3A • Is there continuity?		
2	**PURPOSE: VERIFY IF OPEN CIRCUIT IN EACH WIRING HARNESS AFFECTS DIAGNOSTIC RESULTS** • Verify that the generator, capacitor (i-ELOOP), and DC-DC converter connectors are disconnected. • Inspect for continuity between the following terminals (wiring harness-side): ▪ Capacitor (i-ELOOP) terminal 2A—Generator terminal 1A ▪ Capacitor (i-ELOOP) terminal 3A—DC-DC converter terminal 3A • Is there continuity?	Yes	Go to Step 6.
		No	Refer to the wiring diagram and verify whether or not there is a common connector between the following terminals: • Capacitor (i-ELOOP) terminal 2A—Generator terminal 1A • Capacitor (i-ELOOP) terminal 3A—DC-DC converter terminal 3A **If there is a common connector:** • Determine the malfunctioning part by inspecting the common connector and the terminal for corrosion, damage, or pin disconnection, and the common wiring harness for an open circuit. • Repair or replace the malfunctioning part. **If there is no common connector:** • Repair or replace the wiring harness which has an open circuit. Go to the next step.
3	**PURPOSE: VERIFICATION OF VEHICLE REPAIR COMPLETION** • Always reconnect all disconnected connectors. • Reinstall the service plug. (See **SERVICE PLUG DISCONNECTION/CONNECTION [i-ELOOP]**.) • Start the engine. • Is "i-ELOOP charging? Stop the vehicle and wait a minute" displayed in the LCD, and the master warning light illuminated after **approx. 3 min**?	Yes	**NOTE:** • A fuse is blown in the capacitor (i-ELOOP) due to excess current can be considered. Replace the capacitor (i-ELOOP). (See **CAPACITOR (i-ELOOP) REMOVAL/INSTALLATION [i-ELOOP]**.) Go to Step 9.
		No	Go to Step 9.
4	**PURPOSE: VERIFY IF SHORT TO GROUND IN EACH WIRING HARNESS AFFECTS DIAGNOSTIC RESULTS** • Switch the ignition off. • Remove the service plug. (See **SERVICE PLUG DISCONNECTION/CONNECTION [i-ELOOP]**.) • Disconnect the DC-DC converter	Yes	Refer to the wiring diagram and verify whether or not there is a common connector between the following terminals: • Battery positive terminal—DC-DC converter terminal 4A **If there is a common connector:** • Determine the malfunctioning part by inspecting the common connector and the terminal for corrosion, damage, or

	connector. • Inspect for continuity between the following terminals (wiring harness-side) and body ground: ▪ DC-DC converter terminal 4A • Is there continuity?		pin disconnection, and the common wiring harness for a short to ground. • Repair or replace the malfunctioning part. **If there is no common connector:** • Repair or replace the wiring harness which has a short to ground. Replace the STARTER 250 A fuse. Go to Step 9.
		No	Go to the next step.
5	**PURPOSE: VERIFICATION OF VEHICLE REPAIR COMPLETION** • Repelace the STARTER 250 A fuse. • Always reconnect all disconnected connectors. • Reinstall the service plug. (See **SERVICE PLUG DISCONNECTION/CONNECTION [i-ELOOP]**.) • Start the engine. • Inspect the STARTER 250 A fuse. • Is the STARTER 250 A fuse blown?	Yes	Replace the STARTER 250 A fuse and DC-DC converter. (See **DC-DC CONVERTER REMOVAL/INSTALLATION [i-ELOOP]**.) Go to Step 9.
		No	Go to Step 9.
6	**PURPOSE: VERIFY IF OPEN CIRCUIT IN EACH WIRING HARNESS AFFECTS DIAGNOSTIC RESULTS** • Switch the ignition off. • Remove the service plug. (See **SERVICE PLUG DISCONNECTION/CONNECTION [i-ELOOP]**.) • Disconnect the DC-DC converter connector. • Inspect for continuity between the following terminals (wiring harness-side): ▪ Battery positive terminal—DC-DC converter terminal 4A • Is there continuity?	Yes	Go to the next step.
		No	Refer to the wiring diagram and verify whether or not there is a common connector between the following terminals: • Battery positive terminal—DC-DC converter terminal 4A **If there is a common connector:** • Determine the malfunctioning part by inspecting the common connector and the terminal for corrosion, damage, or pin disconnection, and the common wiring harness for an open circuit. • Repair or replace the malfunctioning part. **If there is no common connector:** • Repair or replace the wiring harness which has an open circuit. Go to the next step.
	PURPOSE: VERIFY IF MALFUNCTION		

7	**OCCURRING IS CAUSED BY WIRING HARNESS/CONNECTOR LOSS** • Have all the wiring harnesses/connectors which can be considered the cause of DTC P0A12:00 been inspected?	Yes	Go to the next step.
		No	Inspect all the related wiring harnesses/connectors. **If there is a malfunction** • Repair or replace the connector and/or terminals, then go to Step 9. **If there is no malfunction** • Go to the next step.
8	**PURPOSE: VERIFY DC-DC CONVERTER REPLACEMENT RECORD** • Is the DC-DC converter being replaced within the troubleshooting diagnostic procedure this time?	Yes	Replace the PCM. (See **PCM REMOVAL/INSTALLATION [SKYACTIV-G 2.0, SKYACTIV-G 2.5]**.) Go to the next step.
		No	Replace the DC-DC converter. (See **DC-DC CONVERTER REMOVAL/INSTALLATION [i-ELOOP]**.) Go to the next step.
9	**PURPOSE: VERIFICATION OF VEHICLE REPAIR COMPLETION** • Always reconnect all disconnected connectors. • Reinstall the service plug. (See **SERVICE PLUG DISCONNECTION/CONNECTION [i-ELOOP]**.) • Clear the DTC from the PCM memory using the M-MDS. (See **CLEARING DTC [SKYACTIV-G 2.0, SKYACTIV-G 2.5]**.) • Implement the repeatability verification procedure. (See **Repeatability Verification Procedure**.) • Perform the DTC Reading Procedure. (See **ON-BOARD DIAGNOSTIC TEST [SKYACTIV-G 2.0, SKYACTIV-G 2.5]**.) • Is the same DTC present?	Yes	Repeat the inspection from Step 7.
		No	Go to the next step.
10	**PURPOSE: VERIFY IF THERE IS ANY OTHER MALFUNCTION** • Is any other DTC or pending code stored?	Yes	Go to the applicable DTC inspection. (See **DTC TABLE [SKYACTIV-G 2.0, SKYACTIV-G 2.5]**.)
		No	DTC troubleshooting completed.

DTC P0A12:00 [SKYACTIV-G 2.0, SKYACTIV-G 2.5]

2014 - Mazda3 - Engine

DTC P0A8D:00 [SKYACTIV-G 2.0, SKYACTIV-G 2.5]

NOTE:

- To determine the malfunctioning part, proceed with the diagnostics from "Function Inspection Using M-MDS".

Details On DTCs

DESCRIPTION	Power supply system circuit low input	
DETECTION CONDITION	Determination conditions	• Any one of the following conditions is met: ▪ PCM terminal voltage is **6.2 V or less** when engine starts. ▪ Battery internal resistance is specified value or more. ▪ Battery voltage is **11 V or less** after 30 s since system began switch to relay mode
	Preconditions	• Not applicable
	Drive cycle	• 1
	Self test type	• CMDTC self test
	Sensor used	• Current sensor
FAIL-SAFE FUNCTION	• Inhibits the i-ELOOP control.	
VEHICLE STATUS WHEN DTCs ARE OUTPUT	• Illuminates master warning light. • The engine cannot be started or the engine may stall due to battery voltage decrease.	
	• Battery malfunction • Connector or terminal malfunction of the following parts: ▪ Battery ▪ Current sensor	

POSSIBLE CAUSE	▪ PCM ▪ Capacitor (i-ELOOP) ▪ DC-DC converter • Malfunction in the following fuses: ▪ C/U IG1 15 A fuse • Short to ground in wiring harness between the following terminals: ▪ IG1 relay terminal C—DC-DC converter terminal 1H ▪ DC-DC converter terminal 3A—Capacitor (i-ELOOP) terminal 3A • Open circuit in wiring harness between the following terminals: ▪ IG1 relay terminal C—DC-DC converter terminal 1H ▪ DC-DC converter terminal 3A—Capacitor (i-ELOOP) terminal 3A • Current sensor malfunction • Front body control module (FBCM) malfunction • DC-DC converter malfunction • PCM malfunction

System Wiring Diagram

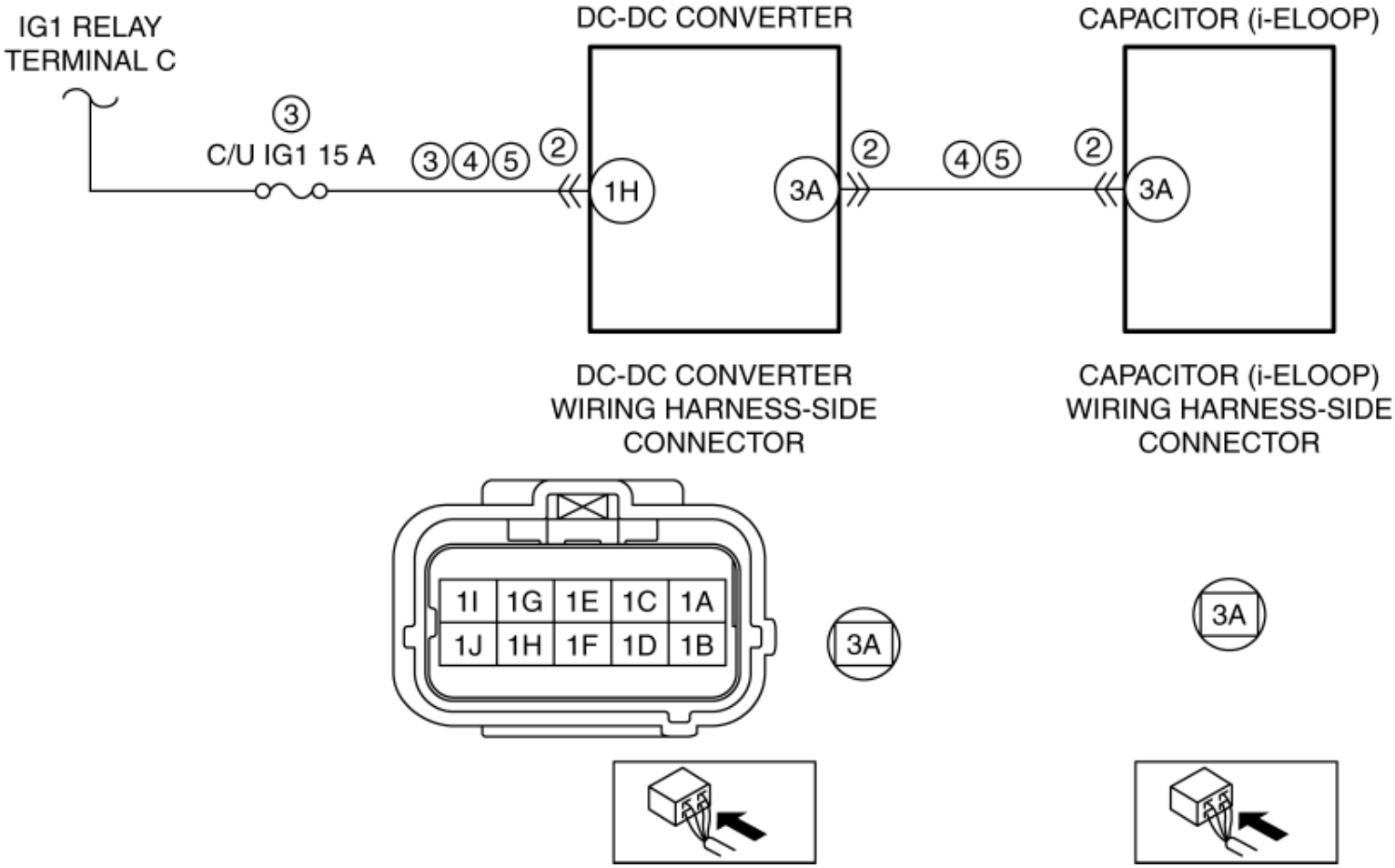

Function Explanation (DTC Detection Outline)

- The PCM assures engine startability and power during driving based on control of the battery related parts.
- The PCM detects the battery voltage during engine starting and the battery internal resistance based on the current sensor signal, and if the battery voltage during engine starting is low or the battery internal resistance is high, it determines that there is a malfunction in the battery related parts and stores a DTC.

Repeatability Verification Procedure

- Start the engine.
- After leaving for **30 s** with the engine idling and no electrical load, leave for **60 s** at the maximum electrical load (**50 A or more**).

PID Item/Simulation Item Used In Diagnosis

PID/DATA monitor item table

Item	Definition	Unit	Condition/Specification

BATT_CUR	Battery current	A	• Displays battery charge/discharge current value
VPWR	Battery positive voltage	V	• Displays battery voltage

Function Inspection Using M-MDS

STEP	INSPECTION	RESULTS	ACTION
1	**VERIFY RELATED REPAIR INFORMATION AVAILABILITY** • Verify related Service Bulletins and/or on-line repair information availability. • Is any related repair information available?	Yes	Perform repair or diagnosis according to the available repair information. • If the vehicle is not repaired, go to the next step.
		No	Go to the next step.
2	**PURPOSE: VERIFY IF POWER SUPPLY IS AFFECTED BY DTC RELATED TO DC-DC CONVERTER** • Switch the ignition off, then ON (engine off). • Perform the DC-DC converter DTC inspection using the M-MDS. (See **DTC INSPECTION [i-ELOOP]**.) • Are any DTCs present?	Yes	Repair or replace the malfunctioning part according to the applicable DTC troubleshooting. (See **DTC TABLE [i-ELOOP]**.) Go to the next step.
		No	Go to the next step.
3	**PURPOSE: VERIFY IF BATTERY VOLTAGE IS FALSELY RECOGNIZED BY DTC RELATED CURRENT SENSOR** • Perform the Pending Trouble Code Access Procedure and DTC Reading Procedure. (See **ON-BOARD DIAGNOSTIC TEST [SKYACTIV-G 2.0, SKYACTIV-G 2.5]**.) • Is the PENDING CODE/DTC P058A:00 also present?	Yes	Go to the applicable PENDING CODE or DTC inspection. (See **DTC P058A:00 [SKYACTIV-G 2.0, SKYACTIV-G 2.5]**.) Go to the next step.
		No	Go to the next step.
4	**PURPOSE: VERIFY IF BATTERY VOLTAGE IS FALSELY RECOGNIZED BY DTC RELATED CAN OR LIN COMMUNICATION** • Perform the PCM and front body control module (FBCM) DTC inspection using the M-MDS. (See **ON-BOARD DIAGNOSTIC TEST [SKYACTIV-G 2.0, SKYACTIV-G 2.5]**.) (See **DTC INSPECTION [FRONT BODY CONTROL MODULE (FBCM)]**.) • Are DTCs related CAN or LIN communication	Yes	Repair or replace the malfunctioning part according to the applicable DTC troubleshooting. (See **DTC TABLE [SKYACTIV-G 2.0, SKYACTIV-G 2.5]**.) (See **DTC TABLE [FRONT BODY CONTROL MODULE (FBCM)]**.) Go to the next troubleshooting procedure to perform the procedure from step 1.

	recorded?	No	Go to the next troubleshooting procedure to perform the procedure from step 1.

Troubleshooting Diagnostic Procedure

Intention of troubleshooting procedure

- Step 1
  - Perform a unit inspection of the battery.
- Step 2—5
  - Perform the inspection for each power supply line.
- Step 6—7
  - Verify that the primary malfunction is resolved and there are no other malfunctions.

STEP	INSPECTION	RESULTS	ACTION
1	**PURPOSE: DETERMINE INTEGRITY OF BATTERY** • Inspect the battery. (See **BATTERY INSPECTION [SKYACTIV-G 2.0, SKYACTIV-G 2.5]**.) • Is there any malfunction?	Yes	Replace the battery, then go to Step 6. (See **BATTERY REMOVAL/INSTALLATION [SKYACTIV-G 2.0, SKYACTIV-G 2.5]**.)
		No	Go to the next step.
2	**PURPOSE: VERIFY IF CONNECTOR DAMAGE OF EACH PART AFFECTS DIAGNOSTIC RESULTS** • Switch the ignition off. • Remove the service plug. (See **SERVICE PLUG DISCONNECTION/CONNECTION [i-ELOOP]**.) • Disconnect the connector of the following parts. ▪ Battery ▪ Current sensor ▪ PCM ▪ Capacitor (i-ELOOP)	Yes	Repair or replace the connector and/or terminals, then go to Step 6.
		No	Go to the next step.

	▪ DC-DC converter • Inspect for poor connection (such as damaged/pulled-out pins, corrosion). • Is there any malfunction?		
3	**PURPOSE: INSPECT FUSE** • Remove the following fuses: ▪ C/U IG1 15 A fuse • Inspect the following fuses: ▪ C/U IG1 15 A fuse • Are all the fuses normal?	Yes	Install all the removed fuses, then go to the next step.
		No	If the fuse is blown: • Refer to the wiring diagram and verify whether or not there is a common connector between IG1 relay terminal C and DC-DC converter terminal 1H. **If there is a common connector:** ▪ Determine the malfunctioning part by inspecting the common connector and the terminal for corrosion, damage, or pin disconnection, and the common wiring harness for a short to ground. ▪ Repair or replace the malfunctioning part. **If there is no common connector:** ▪ Repair or replace the wiring harness which has a short to ground. ▪ Replace the malfunctioning fuse. If the fuse is damaged: • Replace the malfunctioning fuse. Go to Step 6.
4	**PURPOSE: VERIFY IF SHORT TO GROUND IN EACH WIRING HARNESS AFFECTS DIAGNOSTIC RESULTS** • Verify that the battery,	Yes	Refer to the wiring diagram and verify whether or not there is a common connector between the following terminals:

	current sensor, PCM, capacitor (i-ELOOP), and DC-DC converter connectors are disconnected. • Remove the IG1 relay. • Inspect for continuity between the following terminals (wiring harness-side) and body ground: ▪ IG1 relay terminal C ▪ DC-DC converter terminal 3A • Is there continuity?		• IG1 relay terminal C—DC-DC converter terminal 1H • DC-DC converter terminal 3A—Capacitor (i-ELOOP) terminal 3A **If there is a common connector:** • Determine the malfunctioning part by inspecting the common connector and the terminal for corrosion, damage, or pin disconnection, and the common wiring harness for a short to ground. • Repair or replace the malfunctioning part. **If there is no common connector:** • Repair or replace the wiring harness which has a short to ground. Go to Step 6.
		No	Go to the next step.
5	**PURPOSE: VERIFY IF OPEN CIRCUIT IN EACH WIRING HARNESS AFFECTS DIAGNOSTIC RESULTS** • IG1 relay is removed. • Verify that the battery, current sensor, PCM, capacitor (i-ELOOP), and DC-DC converter connectors are disconnected. • Inspect for continuity between the following terminals (wiring harness-side): ▪ IG1 relay terminal C—DC-DC converter terminal 1H ▪ DC-DC converter terminal 3A—Capacitor (i-ELOOP) terminal 3A • Is there continuity?	Yes	Go to the next step.
		No	Refer to the wiring diagram and verify whether or not there is a common connector between the following terminals: • IG1 relay terminal C—DC-DC converter terminal 1H • DC-DC converter terminal 3A—Capacitor (i-ELOOP) terminal 3A **If there is a common connector:** • Determine the malfunctioning part by inspecting the common connector and the terminal for corrosion, damage, or pin disconnection, and the common wiring harness for an open circuit. • Repair or replace the malfunctioning part. **If there is no common connector:** • Repair or replace the wiring harness which has an open circuit. Go to the next step.
6	**PURPOSE: VERIFICATION OF VEHICLE REPAIR COMPLETION**	Yes	Repeat the inspection from Step 1.

	• Always reconnect all disconnected connectors. • Reinstall the service plug. (See **SERVICE PLUG DISCONNECTION/CONNECTION [i-ELOOP]**.) • Clear the DTC from the PCM memory using the M-MDS. (See **CLEARING DTC [SKYACTIV-G 2.0, SKYACTIV-G 2.5]**.) • Implement the repeatability verification procedure. (See **Repeatability Verification Procedure**.) • Perform the DTC Reading Procedure. (See **ON-BOARD DIAGNOSTIC TEST [SKYACTIV-G 2.0, SKYACTIV-G 2.5]**.) • Is the same DTC present?		• If the malfunction recurs, replace the PCM. (See **PCM REMOVAL/INSTALLATION [SKYACTIV-G 2.0, SKYACTIV-G 2.5]**.) Go to the next step.
		No	Go to the next step.
7	**PURPOSE: VERIFY IF THERE IS ANY OTHER MALFUNCTION** • Is any other DTC or pending code stored?	Yes	Go to the applicable DTC inspection. (See **DTC TABLE [SKYACTIV-G 2.0, SKYACTIV-G 2.5]**.)
		No	DTC troubleshooting completed.

2014 - Mazda3 - Engine

DTC P0A8F:00 [SKYACTIV-G 2.0, SKYACTIV-G 2.5]

NOTE:

- To determine the malfunctioning part, proceed with the diagnostics from "Function Inspection Using M-MDS".

Details On DTCs

DESCRIPTION	Power system: Low input	
DETECTION CONDITION	Determination conditions	• Any one of the following conditions is met: ▪ Battery voltage is **11 V or less** when ignition is switched off after leaving vehicle for **30 days or more**. ▪ Battery voltage is **11 V or less** for a continuous **5 days** when ignition is switched off.
	Preconditions	• Difference in battery voltage for **30 min** since ignition was switched off is specified value or less • Electrical current from battery for **30 min** since ignition was switched off is within specified value
	Drive cycle	• **2**
	Self test type	• CMDTC self test
	Sensor used	• Current sensor
FAIL-SAFE FUNCTION	• Inhibits the i-ELOOP control.	
VEHICLE STATUS WHEN DTCs ARE OUTPUT	• Illuminates master warning light. • The engine cannot be started or the engine may stall due to battery voltage decrease.	

POSSIBLE CAUSE	• Battery malfunction • Current sensor malfunction • Front body control module (FBCM) malfunction • PCM malfunction

System Wiring Diagram

- Not applicable

Function Explanation (DTC Detection Outline)

- The battery assures voltage for engine starting and while the vehicle is being driven. (Addition necessary for both domestic and overseas)
- The PCM determines a dendrite malfunction by the condition in which the battery voltage value continues to be low for the specified time. In this case, the PCM determines a malfunction in a battery-related part and stores a DTC.

Repeatability Verification Procedure

- Start the engine

PID Item/Simulation Item Used In Diagnosis

- Not applicable

Function Inspection Using M-MDS

STEP	INSPECTION	RESULTS	ACTION
1	**VERIFY RELATED REPAIR INFORMATION AVAILABILITY** • Verify related Service Bulletins and/or on-line repair information availability. • Is any related repair information available?	Yes	Perform repair or diagnosis according to the available repair information. • If the vehicle is not repaired, go to the next step.
		No	Go to the next step.
	PURPOSE: VERIFY IF BATTERY VOLTAGE IS		

2	**FALSELY RECOGNIZED BY DTC RELATED CURRENT SENSOR** • Switch the ignition off, then ON (engine off). • Perform the Pending Trouble Code Access Procedure and DTC Reading Procedure. (See **ON-BOARD DIAGNOSTIC TEST [SKYACTIV-G 2.0, SKYACTIV-G 2.5]**.) • Is the PENDING CODE/DTC P058A:00 also present?	Yes	Go to the applicable PENDING CODE or DTC inspection. (See **DTC P058A:00 [SKYACTIV-G 2.0, SKYACTIV-G 2.5]**.) Go to the next step.
		No	Go to the next step.
3	**PURPOSE: VERIFY IF BATTERY VOLTAGE IS FALSELY RECOGNIZED BY DTC RELATED CAN OR LIN COMMUNICATION** • Perform the PCM and front body control module (FBCM) DTC inspection using the M-MDS. (See **ON-BOARD DIAGNOSTIC TEST [SKYACTIV-G 2.0, SKYACTIV-G 2.5]**.) (See **DTC INSPECTION [FRONT BODY CONTROL MODULE (FBCM)]**.) • Are DTCs related CAN or LIN communication recorded?	Yes	Repair or replace the malfunctioning part according to the applicable DTC troubleshooting. (See **DTC TABLE [SKYACTIV-G 2.0, SKYACTIV-G 2.5]**.) (See **DTC TABLE [FRONT BODY CONTROL MODULE (FBCM)]**.) Go to the next step.
		No	Go to the next step.
4	**PURPOSE: VERIFY DTC** • Retrieve the PCM DTC using the M-MDS. (See **ON-BOARD DIAGNOSTIC TEST [SKYACTIV-G 2.0, SKYACTIV-G 2.5]**.) • Is the DTC P058A:00 also present?	Yes	Replace the battery. (See **BATTERY REMOVAL/INSTALLATION [SKYACTIV-G 2.0, SKYACTIV-G 2.5]**.) Go to the troubleshooting procedure to perform the procedure from Step 2.
		No	Go to the troubleshooting procedure to perform the procedure from Step 1.

Troubleshooting Diagnostic Procedure

Intention of troubleshooting procedure

- Step 1
  - Perform a unit inspection of the battery.
- Step 2—3

- Verify that primary malfunction is resolved and there are no other malfunctions.

STEP	INSPECTION	RESULTS	ACTION
1	**PURPOSE: DETERMINE INTEGRITY OF BATTERY** • Inspect the battery. (See **BATTERY INSPECTION [SKYACTIV-G 2.0, SKYACTIV-G 2.5]**.) • Is there any malfunction?	Yes	Replace the battery, then go to the next step. (See **BATTERY REMOVAL/INSTALLATION [SKYACTIV-G 2.0, SKYACTIV-G 2.5]**.)
		No	Go to the next step.
2	**PURPOSE: VERIFICATION OF VEHICLE REPAIR COMPLETION** • Always reconnect all disconnected connectors. • Clear the DTC from the PCM memory using the M-MDS. (See **CLEARING DTC [SKYACTIV-G 2.0, SKYACTIV-G 2.5]**.) • Implement the repeatability verification procedure. (See **Repeatability Verification Procedure**.) • Perform the Pending Trouble Code Access Procedure. (See **ON-BOARD DIAGNOSTIC TEST [SKYACTIV-G 2.0, SKYACTIV-G 2.5]**.) • Is the PENDING CODE for this DTC present?	Yes	Repeat the inspection from Step 1. • If the malfunction recurs, replace the PCM. (See **PCM REMOVAL/INSTALLATION [SKYACTIV-G 2.0, SKYACTIV-G 2.5]**.) Go to the next step.
		No	Go to the next step.
3	**PURPOSE: VERIFY IF THERE IS ANY OTHER MALFUNCTION** • Is any other DTC or pending code stored?	Yes	Go to the applicable DTC inspection. (See **DTC TABLE [SKYACTIV-G 2.0, SKYACTIV-G 2.5]**.)
		No	DTC troubleshooting completed.

DTC P0A8F:00 [SKYACTIV-G 2.0, SKYACTIV-G 2.5]

2014 - Mazda3 - Engine

DTC P0A94:00 [SKYACTIV-G 2.0, SKYACTIV-G 2.5]

NOTE:

- To determine the malfunctioning part, proceed with the diagnostics from "Function Inspection Using M-MDS".

Details On DTCs

DESCRIPTION	DC-DC converter: control circuit signal error	
DETECTION CONDITION	Determination conditions	**With i-ELOOP** • Internal malfunction signal from DC-DC converter is received. • Condition in which DC-DC converter output voltage, based on demand voltage of PCM, is low continues. • When PCM outputs drive command signal for each type of relay in DC-DC converter, relay condition signal returned from DC-DC converter differs from drive command, or not returned
	Preconditions	• Not applicable
	Drive cycle	• 1
	Self test type	• CMDTC self test
	Sensor used	• Not applicable
FAIL-SAFE FUNCTION	• The following fail-safe differ depending on the type of malfunction ▪ Transition to i-ELOOP bypass mode. ▪ i-ELOOP bypass mode inhibited.	
VEHICLE STATUS WHEN DTCs ARE OUTPUT	• The following vehicle conditions differ depending on the type of malfunction ▪ Illuminates master warning light ▪ Illuminates charging system warning light ▪ The pre-charge mode is implemented after the engine is started.	
	With i-ELOOP • Connector or terminal malfunction of the following parts: ▪ PCM	

POSSIBLE CAUSE	▪ Battery ▪ DC-DC converter • Short to ground in wiring harness between the following terminals: ▪ DC-DC converter terminal 1G—PCM terminal 2W ▪ DC-DC converter terminal 1I—PCM terminal 2L • Open circuit in wiring harness between the following terminals: ▪ DC-DC converter terminal 1G—PCM terminal 2W ▪ DC-DC converter terminal 1I—PCM terminal 2L • DC-DC converter malfunction (DTC U3000:49 may be detected simultaneously) • PCM malfunction

System Wiring Diagram

With i-ELOOP

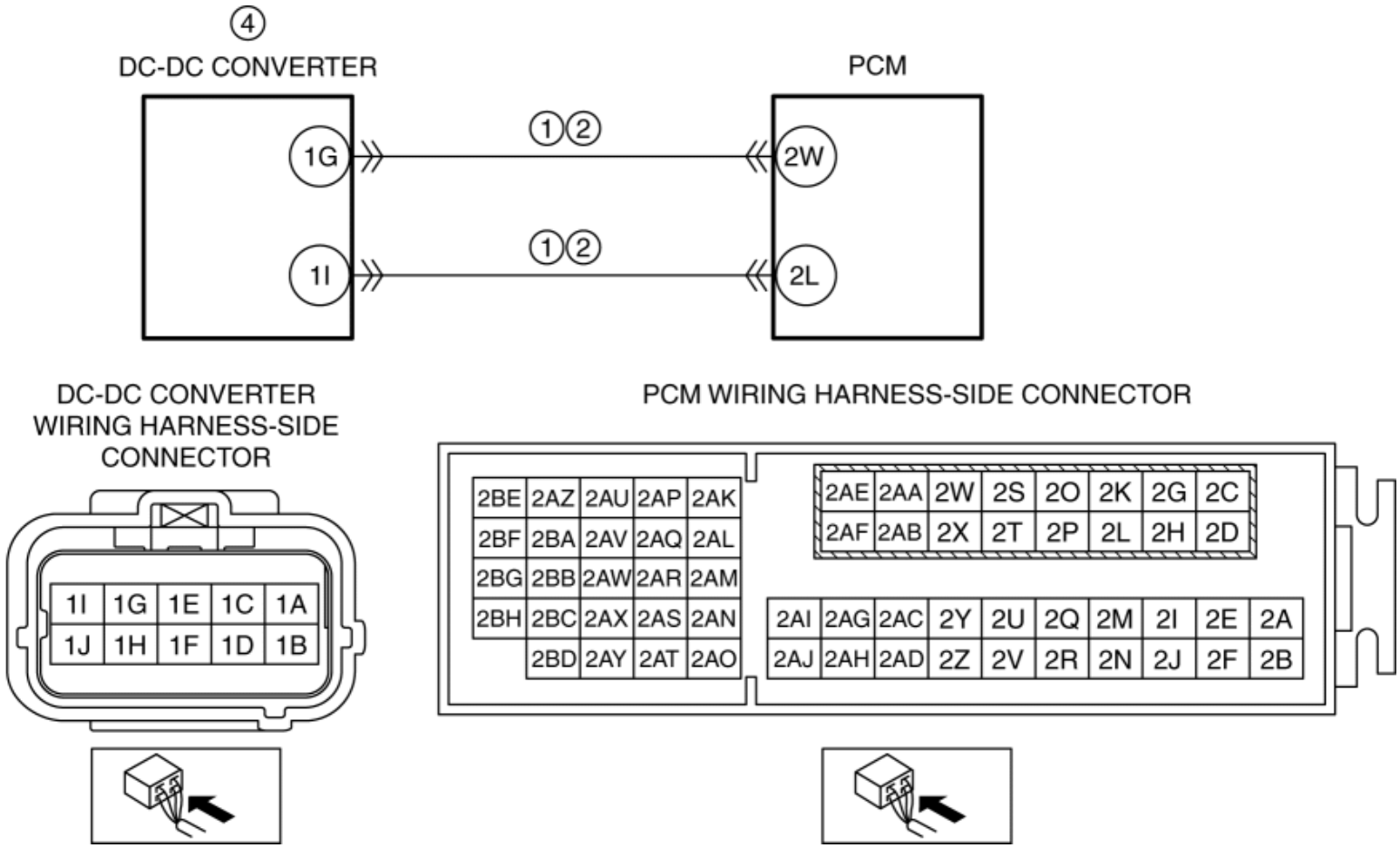

Function Explanation (DTC Detection Outline)

With i-ELOOP

- With the DC-DC converter function, the PCM performs malfunction determination, and verification of vehicle malfunctions/safety assurance is performed.
    - The DC-DC converter is equipped with a voltage lowering function which supplies power to the **12 V** line from the **25 V** line. If this function does not operate, it may not be possible to supply power to the vehicle's electrical devices. In this diagnostic, the system detects whether the DC-DC converter can respond to the command voltage from the PCM, or it detects a malfunction in the voltage lowering circuit based on the on-board diagnostic of the DC-DC converter.
    - The DC-DC converter is equipped with a discharge circuit which discharges a certain amount of capacitor (i-ELOOP) voltage when the ignition is switched off. If this function does not operate, the capacitor (i-ELOOP) may deteriorate. In this diagnostic, a discharge circuit malfunction condition is detected in the DC-DC converter, and a malfunction is determined by the PCM.
    - The DC-DC converter is equipped with a bypass circuit which supplies voltage generated by the generator to the **12 V** line. If this function does not operate, a power supply shortage may occur. In this diagnostic, a bypass circuit malfunction condition is detected in the DC-DC converter, and a malfunction is determined by the PCM. In addition, a malfunction is determined by the PCM from a mismatch with the response signal of the DC-DC converter in relation to the bypass relay drive command signal from the PCM.
    - The DC-DC converter monitors the input/output voltage and the output current, and the PCM performs charge/discharge control of the generator based on each of the signals to assure the vehicle's power supply. If the output current of the DC-DC converter exceeds the assurance value of the internal circuit, or each input/output value indicates an abnormal value, normal supply of electricity may not be possible. In this diagnostic, each input/output terminal of the DC-DC converter is detected as an abnormal value/exceeding assurance value, and a malfunction is determined by the PCM.

Repeatability Verification Procedure

With i-ELOOP

- Clear the DTC from the PCM memory using the M-MDS. (See **CLEARING DTC [SKYACTIV-G 2.0, SKYACTIV-G 2.5]**.)
- Start the engine.
- Leave for **30 s** while idling with no electrical load.
- Leave for **30 s** while idling with high electrical load.

PID Item/Simulation Item Used In Diagnosis

- Not applicable

Function Inspection Using M-MDS

STEP	INSPECTION	RESULTS	ACTION
1	**VERIFY RELATED REPAIR INFORMATION AVAILABILITY**	Yes	Perform repair or diagnosis according to the

	Verify related Service Bulletins and/or on-line repair information availability. • Is any related repair information available?		available repair information. • If the vehicle is not repaired, go to the next step.
		No	Go to the next step.
2	**PURPOSE: VERIFY IF POWER SUPPLY IS AFFECTED BY DTC RELATED TO DC-DC CONVERTER** • Switch the ignition off, then ON (engine off). • Perform the DC-DC converter DTC inspection using the M-MDS. (See **DTC INSPECTION [i-ELOOP]**.) • Is the PENDING CODE/DTC U3000:49 also present?	Yes	Go to the applicable PENDING CODE or DTC inspection. (See **DTC U3000:49 [i-ELOOP]**.) Go to the next step.
		No	Go to the next step.
3	**PURPOSE: VERIFY IF POWER SUPPLY IS AFFECTED BY DTC RELATED TO PCM** • Perform the Pending Trouble Code Access Procedure and DTC Reading Procedure. (See **ON-BOARD DIAGNOSTIC TEST [SKYACTIV-G 2.0, SKYACTIV-G 2.5]**.) • Is the PENDING CODE/DTC P0A12:00 also present?	Yes	Go to the applicable PENDING CODE or DTC inspection. (See **DTC P0A12:00 [SKYACTIV-G 2.0, SKYACTIV-G 2.5]**.) Go to the next step.
		No	Go to the next step.
4	**PURPOSE: DETERMINE IF MALFUNCTION CAUSED BY DC-DC CONVERTER** • Start the engine. • Is illuminate the master warning light?	Yes	Go to the troubleshooting procedure to perform the procedure from Step 1.
		No	Go to the troubleshooting procedure to perform the procedure from Step 3.

Troubleshooting Diagnostic Procedure

Intention of troubleshooting procedure

- Step 1—2
  - Verifying malfunction related to DC-DC converter 1G or 1I terminal
- Step 3—4
  - Verifying/replacing malfunctioning part
- Step 5—6
  - Verify that primary malfunction is resolved and there are no other malfunctions.

STEP	INSPECTION	RESULTS	ACTION
1	**PURPOSE: VERIFY IF SHORT TO GROUND IN EACH WIRING HARNESS AFFECTS DIAGNOSTIC RESULTS**	Yes	Refer to the wiring diagram and verify whether or not there is a common connector between the following terminals:

	Switch the ignition off. • Remove the service plug. (See **SERVICE PLUG DISCONNECTION/CONNECTION [i-ELOOP]**.) • Disconnect the connector of the following parts. ▪ PCM ▪ DC-DC converter • Inspect for continuity between the following terminals (wiring harness-side) and body ground: ▪ DC-DC converter terminal 1G ▪ DC-DC converter terminal 1I • Is there continuity?		PCM terminal 2W—DC-DC converter terminal 1G • PCM terminal 2L—DC-DC converter terminal 1I **If there is a common connector:** • Determine the malfunctioning part by inspecting the common connector and the terminal for corrosion, damage, or pin disconnection, and the common wiring harness for a short to ground. • Repair or replace the malfunctioning part. **If there is no common connector:** • Repair or replace the wiring harness which has a short to ground. Go to Step 5.
		No	Go to the next step.
2	**PURPOSE: VERIFY IF OPEN CIRCUIT IN EACH WIRING HARNESS AFFECTS DIAGNOSTIC RESULTS** • Verify that the DC-DC converter and PCM connectors are disconnected. • Inspect for continuity between the following terminals (wiring harness-side): ▪ PCM terminal 2W—DC-DC converter terminal 1G ▪ PCM terminal 2L—DC-DC converter terminal 1I • Is there continuity?	Yes	Replace the DC-DC converter. (See **DC-DC CONVERTER REMOVAL/INSTALLATION [i-ELOOP]**.) Go to Step 5.
		No	Refer to the wiring diagram and verify whether or not there is a common connector between the following terminals: • PCM terminal 2W—DC-DC converter terminal 1G • PCM terminal 2L—DC-DC converter terminal 1I **If there is a common connector:** • Determine the malfunctioning part by inspecting the common connector and the terminal for corrosion, damage, or pin disconnection, and the common wiring harness for an open circuit. • Repair or replace the malfunctioning part. **If there is no common connector:** • Repair or replace the wiring harness which has an open circuit. Go to Step 5.
3	**PURPOSE: VERIFY IF MALFUNCTION OCCURRING IS CAUSED BY WIRING HARNESS/CONNECTOR LOSS** • Have all the wiring	Yes	Go to the next step.
		No	Inspect all the related wiring harnesses/connectors.

	harnesses/connectors which can be considered the cause of DTC P0A94:00 been inspected?		**If there is a malfunction** • Repair or replace the connector and/or terminals, then go to Step 5. **If there is no malfunction** • Go to the next step.
4	**PURPOSE: VERIFY DC-DC CONVERTER REPLACEMENT RECORD** • Is the DC-DC converter being replaced within the troubleshooting diagnostic procedure this time?	Yes	Replace the PCM. (See **PCM REMOVAL/INSTALLATION [SKYACTIV-G 2.0, SKYACTIV-G 2.5]**.) Go to the next step.
		No	Replace the DC-DC converter. (See **DC-DC CONVERTER REMOVAL/INSTALLATION [i-ELOOP]**.) Go to the next step.
5	**PURPOSE: VERIFICATION OF VEHICLE REPAIR COMPLETION** • Always reconnect all disconnected connectors. • Reinstall the service plug. (See **SERVICE PLUG DISCONNECTION/CONNECTION [i-ELOOP]**.) • Clear the DTC from the PCM memory using the M-MDS. (See **CLEARING DTC [SKYACTIV-G 2.0, SKYACTIV-G 2.5]**.) • Implement the repeatability verification procedure. (See **Repeatability Verification Procedure**.) • Perform the DTC Reading Procedure. (See **ON-BOARD DIAGNOSTIC TEST [SKYACTIV-G 2.0, SKYACTIV-G 2.5]**.) • Is the same DTC present?	Yes	Repeat the inspection from Step 3.
		No	Go to the next step.
6	**PURPOSE: VERIFY IF THERE IS ANY OTHER MALFUNCTION** • Is any other DTC or pending code stored?	Yes	Go to the applicable DTC inspection. (See **DTC TABLE [SKYACTIV-G 2.0, SKYACTIV-G 2.5]**.)
		No	DTC troubleshooting completed.

DTC P0A94:00 [SKYACTIV-G 2.0, SKYACTIV-G 2.5]

2014 - Mazda3 - Engine

DTC P111A:00 [SKYACTIV-G 2.0, SKYACTIV-G 2.5]

DTC P111A:00	Engine coolant temperature is high
DETECTION CONDITION	• The engine coolant temperature is **122 °C {252 °F} or more**. **Diagnostic support note** • This is a continuous monitor (other). • The check engine light does not illuminate. • FREEZE FRAME DATA (Mode 2) is not available. • Snapshot data is available. • DTC is stored in the PCM memory.
FAIL-SAFE FUNCTION	• Limits intake air amount
POSSIBLE CAUSE	• Cooling system malfunction • High engine speed condition continues • ECT sensor malfunction • PCM malfunction

Diagnostic Procedure

STEP	INSPECTION		ACTION
1	**VERIFY RELATED REPAIR INFORMATION AVAILABILITY** • Verify related Service Bulletins and/or on-line repair information availability. • Is any related repair information available?	Yes	Perform repair or diagnosis according to the available repair information. • If the vehicle is not repaired, go to the next step.
		No	Go to the next step.
2	**VERIFY RELATED PENDING CODE AND/OR DTC** • Switch the ignition off, then ON (engine	Yes	Go to the applicable PENDING CODE or DTC inspection.

	off). • Perform the Pending Trouble Code Access Procedure and DTC Reading Procedure. (See **ON-BOARD DIAGNOSTIC TEST [SKYACTIV-G 2.0, SKYACTIV-G 2.5]**.) • Are any other PENDING CODEs and/or DTCs present?		(See **DTC TABLE [SKYACTIV-G 2.0, SKYACTIV-G 2.5]**.)
		No	Go to the next step.
3	**INSPECT VEHICLE CONDITION FOR EFFECT ON MALFUNCTION** • Verify how the customer drives the vehicle by asking the customer the following: ▪ Engine speed is high and remains high for continuous long periods like when climbing a long steep grade. • Is the engine generating excessive heat when driven?	Yes	Go to the next step.
		No	Go to Step 5.
4	**DETERMINE IF MALFUNCTION CAUSE IS OVERHEATING OR OTHER** • Access the ECT PID using the M-MDS. (See **ON-BOARD DIAGNOSTIC TEST [SKYACTIV-G 2.0, SKYACTIV-G 2.5]**.) **CAUTION:** • While performing this step, always operate the vehicle in a safe and lawful manner. • When the M-MDS is used to observe monitor system status while driving, be sure to have another technician with you, or record the data in the M-MDS using the PID/DATA MONITOR AND RECORD capturing function and inspect later. • Is the ECT PID value **less than 122 °C {252 °F}** while the vehicle is driven on a flat road?	Yes	Explain to the customer that the vehicle is normal. Go to Step 6.
		No	The cause of this concern could be from the cooling system overheating. • Perform the symptom troubleshooting “NO.17 COOLING SYSTEM CONCERNS-OVERHEATING”. (See **NO.17 COOLING SYSTEM CONCERNS-OVERHEATING [SKYACTIV-G 2.0, SKYACTIV-G 2.5]**.)

5	**INSPECT ECT SENSOR** • Inspect the ECT sensor. (See **ENGINE COOLANT TEMPERATURE (ECT) SENSOR INSPECTION [SKYACTIV-G 2.0, SKYACTIV-G 2.5]**.) • Is there any malfunction?	Yes	Replace the ECT sensor, then go to the next step. (See **ENGINE COOLANT TEMPERATURE (ECT) SENSOR REMOVAL/INSTALLATION [SKYACTIV-G 2.0, SKYACTIV-G 2.5]**.)
		No	Go to the next step.
6	**VERIFY DTC TROUBLESHOOTING COMPLETED** • Always reconnect all disconnected connectors. • Clear the DTC from the PCM memory using the M-MDS. (See **AFTER REPAIR PROCEDURE [SKYACTIV-G 2.0, SKYACTIV-G 2.5]**.) • Start the engine and warm it up completely. • Drive the vehicle. • Perform the DTC Reading Procedure. (See **ON-BOARD DIAGNOSTIC TEST [SKYACTIV-G 2.0, SKYACTIV-G 2.5]**.) • Is the same DTC present?	Yes	Repeat the inspection from Step 1. • If the malfunction recurs, replace the PCM. (See **PCM REMOVAL/INSTALLATION [SKYACTIV-G 2.0, SKYACTIV-G 2.5]**.) Go to the next step.
		No	Go to the next step.
7	**VERIFY AFTER REPAIR PROCEDURE** • Perform the “AFTER REPAIR PROCEDURE”. (See **AFTER REPAIR PROCEDURE [SKYACTIV-G 2.0, SKYACTIV-G 2.5]**.) • Are any DTCs present?	Yes	Go to the applicable DTC inspection. (See **DTC TABLE [SKYACTIV-G 2.0, SKYACTIV-G 2.5]**.)
		No	DTC troubleshooting completed.

2014 - Mazda3 - Engine

DTC P117A:00 [SKYACTIV-G 2.0, SKYACTIV-G 2.5]

DTC P117A:00	Engine oil temperature is high

DETECTION CONDITION	• Any one of the following conditions is met:
	  ▪ With the transmission in 5th gear or lower gear, an engine speed of **6,100 rpm** (SKYACTIV-G 2.0)/**5,800 rpm** (SKYACTIV-G 2.5) **or more** continues for **6 min**.
	  ▪ The estimated engine oil temperature **exceeds 140 °C {284 °F}** continues for **6 min** (with active air shutter).
	Diagnostic support note
	• This is a continuous monitor (other).
	• The check engine light does not illuminate.
	• FREEZE FRAME DATA (Mode 2) is not available.
	• Snapshot data is available.
	• DTC is stored in the PCM memory.

FAIL-SAFE FUNCTION	• Limits intake air amount
POSSIBLE CAUSE	• High engine speed condition continues • Active air shutter close malfunction (with active air shutter) • PCM malfunction

Diagnostic Procedure

STEP	INSPECTION		ACTION
1	**VERIFY RELATED REPAIR INFORMATION AVAILABILITY** • Verify related Service Bulletins and/or on-line repair information	Yes	Perform repair or diagnosis according to the available repair information. • If the vehicle is not repaired, go to the next step.

	availability. • Is any related repair information available?	No	Go to the next step.
2	**VERIFY RELATED PENDING CODE AND/OR DTC** • Switch the ignition off, then ON (engine off). • Perform the Pending Trouble Code Access Procedure and DTC Reading Procedure. (See **ON-BOARD DIAGNOSTIC TEST [SKYACTIV-G 2.0, SKYACTIV-G 2.5]**.) • Is the PENDING CODE/DTC P0335:00, P059F:00, P05A0:00, P05A3:00, P05C0:00 or U0284:00 also present?	Yes	Go to the applicable PENDING CODE or DTC inspection. (See **DTC P0335:00 [SKYACTIV-G 2.0, SKYACTIV-G 2.5]**.) (See **DTC P059F:00 [SKYACTIV-G 2.0, SKYACTIV-G 2.5]**.) (See **DTC P05A0:00 [SKYACTIV-G 2.0, SKYACTIV-G 2.5]**.) (See **DTC P05A3:00 [SKYACTIV-G 2.0, SKYACTIV-G 2.5]**.) (See **DTC P05C0:00 [SKYACTIV-G 2.0, SKYACTIV-G 2.5]**.) (See **DTC U0284:00 [SKYACTIV-G 2.0, SKYACTIV-G 2.5]**.)
		No	Go to the next step.
3	**INSPECT VEHICLE CONDITION FOR EFFECT ON MALFUNCTION** • Verify how the customer drives the vehicle by asking the customer the following: • Does the engine speed exceed **6,100 rpm** (SKYACTIV-G 2.0)/**5,800 rpm** (SKYACTIV-G 2.5) for **6 min or more** while driving in 5th gear or lower gear?	Yes	Explain to the customer that the vehicle is normal (performs control to protect the engine due to continuous engine speed exceeding **6,100 rpm** (SKYACTIV-G 2.0)/**5,800 rpm** (SKYACTIV-G 2.5) for **6 min or more** while in 5th gear or lower gear). If there is a concern with customer's driving, provide the customer some pertinent advice (such as gear selection, how to use manual mode). Go to the next step.
		No	Go to the next step.
4	**VERIFY DTC TROUBLESHOOTING COMPLETED** • Always reconnect all disconnected connectors. • Clear the DTC from the PCM memory using the M-MDS. (See **AFTER REPAIR PROCEDURE [SKYACTIV-G 2.0, SKYACTIV-G 2.5]**.) • Start the engine and	Yes	Repeat the inspection from Step 1. • If the malfunction recurs, replace the PCM. (See **PCM REMOVAL/INSTALLATION [SKYACTIV-G 2.0, SKYACTIV-G 2.5]**.) Go to the next step.
		No	Go to the next step.

	warm it up completely. • Drive the vehicle. • Perform the DTC Reading Procedure. (See **ON-BOARD DIAGNOSTIC TEST [SKYACTIV-G 2.0, SKYACTIV-G 2.5]**.) • Is the same DTC present?		
5	**VERIFY AFTER REPAIR PROCEDURE** • Perform the “AFTER REPAIR PROCEDURE”. (See **AFTER REPAIR PROCEDURE [SKYACTIV-G 2.0, SKYACTIV-G 2.5]**.) • Are any DTCs present?	Yes	Go to the applicable DTC inspection. (See **DTC TABLE [SKYACTIV-G 2.0, SKYACTIV-G 2.5]**.)
		No	DTC troubleshooting completed.

2014 - Mazda3 - Engine

DTC P1260:00 [SKYACTIV-G 2.0, SKYACTIV-G 2.5]

DTC P1260:00	Immobilizer system problem
DETECTION CONDITION	• The start stop unit detects an immobilizer system malfunction. **Diagnostic support note** • This is a continuous monitor (other). • The check engine light does not illuminate. • FREEZE FRAME DATA (Mode 2) is not available. • Snapshot data is available. • DTC is not stored in the PCM memory.
FAIL-SAFE FUNCTION	Not applicable
POSSIBLE CAUSE	• Immobilizer system malfunction
SYSTEM WIRING DIAGRAM	Not applicable

Diagnostic Procedure

STEP	INSPECTION		ACTION
1	**VERIFY RELATED REPAIR INFORMATION AVAILABILITY** • Verify related Service Bulletins and/or on-line repair information availability. • Is any related repair information available?	Yes	Perform repair or diagnosis according to the available repair information. • If the vehicle is not repaired, go to the next step.
		No	Go to the next step.
2	**VERIFY IMMOBILIZER SYSTEM DTC** • Verify the immobilizer system DTC.	Yes	Go to the applicable DTC inspection. (See **DTC TABLE [IMMOBILIZER SYSTEM]**.)

	(See **DTC INSPECTION [IMMOBILIZER SYSTEM]**.) • Are any DTCs present?	No	DTC troubleshooting completed.

2014 - Mazda3 - Engine

DTC P130C:00 [SKYACTIV-G 2.0, SKYACTIV-G 2.5]

NOTE:

- To determine the malfunctioning part, proceed with the diagnostics from “Function Inspection Using M-MDS”.

Details On DTCs

DESCRIPTION	Pre-ignition detected	
DETECTION CONDITION	Determination conditions	• Pre-ignition is detected a few times continuously.
	Preconditions	• Engine coolant temperature: **80 °C {176 °F} or more**[*1] [*1]: Value can be verified by displaying the PIDs using the M-MDS.
	Malfunction determination period	• Not applicable
	Drive cycle	• 1
	Self test type	• CMDTC self test, KOER self test
	Sensor used	• Ion sensor
FAIL-SAFE FUNCTION	• Not applicable	
VEHICLE STATUS WHEN DTCs ARE OUTPUT	• Illuminates the check engine light	
POSSIBLE CAUSE	• Fuel having octane rating lower than specified fuel is used • Carbon accumulated in combustion chamber • PCM malfunction	

System Wiring Diagram

- Not applicable

Function Explanation (DTC Detection Outline)

- The PCM detects pre-ignition for each cylinder based on the ion sensor signal. If pre-ignition is detected continuously, even though pre-ignition is detected and engine output is restricted by the fuel injection control and the variable valve timing control, the PCM stores a DTC.

Repeatability Verification Procedure

- Start the engine and warm it up completely (engine coolant temperature is increased to **80 °C {176 °F} or more**).
- Wait for **1 min** (idle).

PID Item/Simulation Item Used In Diagnosis

PID/DATA monitor item table

Item (definition)	Unit/Condition	Definition	Condition/Specification (Reference)
ECT	°C, °F	Engine coolant temperature	• Displays ECT
	V	ECT sensor No.1 voltage	• ECT is 20 °C {68 °F}: Approx. 3.10 V • ECT is 40 °C {104 °F}: Approx. 2.16 V • ECT is 60 °C {140 °F}: Approx. 1.40 V • ECT is 80 °C {176 °F}: Approx. 0.87 V • ECT is 100 °C {212 °F}: Approx. 0.54 V

Function Inspection Using M-MDS

Diagnostic Procedure

STEP	INSPECTION		ACTION
1	**PURPOSE: VERIFY RELATED REPAIR INFORMATION AVAILABILITY** • Verify related Service Bulletins and/or on-line repair information availability. • Is any related repair information available?	Yes	Perform repair or diagnosis according to the available repair information. • If the vehicle is not repaired, go to the next step.
		No	Go to the next step.
2	**PURPOSE: RECORD VEHICLE STATUS AT TIME OF DTC DETECTION TO UTILIZE WITH REPEATABILITY VERIFICATION** • Has the FREEZE FRAME DATA (Mode 2)/snapshot data been recorded?	Yes	Go to the next step.
		No	Record the FREEZE FRAME DATA (Mode 2)/snapshot data on the repair order, then go to the next step. **NOTE:** • Recording can be facilitated using the screen capture function of the PC.
3	**PURPOSE: VERIFY IF DIAGNOSTIC RESULT IS AFFECTED BY DTC OCCURRING FROM FUEL SYSTEM OR VARIABLE VALVE TIMING SYSTEM RELATED PART** • Perform the Pending Trouble Code Access Procedure and DTC Reading Procedure. (See **ON-BOARD DIAGNOSTIC TEST [SKYACTIV-G 2.0, SKYACTIV-G 2.5]**.) • Is a DTC related to a fuel system or variable valve timing system part stored?	Yes	Go to the applicable PENDING CODE or DTC inspection. (See **DTC TABLE [SKYACTIV-G 2.0, SKYACTIV-G 2.5]**.)
		No	Go to the troubleshooting procedure to perform the procedure from Step 1.

Troubleshooting Diagnostic Procedure

Intention of troubleshooting procedure

- Step 1—2
  - Drain the fuel, add the specified fuel, and verify the malfunctioning location.
- Step 3—4

- Verify that the primary malfunction is resolved and there are no other malfunctions.

Diagnostic Procedure

STEP	INSPECTION		ACTION
1	**VERIFY IF MALFUNCTION CAUSED BY ABNORMAL FUEL** • Switch the ignition off. • Drain the fuel and add the specified fuel. (See **FUEL DRAINING PROCEDURE [SKYACTIV-G 2.0, SKYACTIV-G 2.5]**.)	—	Go to the next step.
2	**VERIFY IF MALFUNCTION CAUSE WAS CORRECTED BY REFUELING** • Clear the DTC from the PCM memory using the M-MDS. (See **CLEARING DTC [SKYACTIV-G 2.0, SKYACTIV-G 2.5]**.) • Perform the KOER self test. (See **KOEO/KOER SELF TEST [SKYACTIV-G 2.0, SKYACTIV-G 2.5]**.) • Is the same DTC present?	Yes	**NOTE:** • A malfunction has occurred because carbon has accumulated in combustion chamber. Overhaul the engine and remove the carbon in the combustion chamber. Go to the next step.
		No	Go to Step 4.
3	**VERIFY DTC TROUBLESHOOTING COMPLETED** • Always reconnect all disconnected connectors. • Clear the DTC from the PCM memory using the M-MDS. (See **CLEARING DTC [SKYACTIV-G 2.0, SKYACTIV-G 2.5]**.) • Perform the KOER self test. (See **KOEO/KOER SELF TEST [SKYACTIV-G 2.0, SKYACTIV-G 2.5]**.) • Is the same DTC present?	Yes	Repeat the inspection from Step 1. • If the malfunction recurs, replace the PCM. (See **PCM REMOVAL/INSTALLATION [SKYACTIV-G 2.0, SKYACTIV-G 2.5]**.) Go to the next step.
		No	Go to the next step.
4	**VERIFY AFTER REPAIR PROCEDURE**	Yes	Go to the applicable DTC inspection.

	• Perform the “AFTER REPAIR PROCEDURE”. (See **AFTER REPAIR PROCEDURE [SKYACTIV-G 2.0, SKYACTIV-G 2.5]**.) • Are any DTCs present?		(See **DTC TABLE [SKYACTIV-G 2.0, SKYACTIV-G 2.5]**.)
		No	DTC troubleshooting completed.

2014 - Mazda3 - Engine

DTC P1380:00 [SKYACTIV-G 2.0, SKYACTIV-G 2.5]

DTC P1380:00	Electric variable valve timing control circuit problem
DETECTION CONDITION	• A malfunction is detected in the results of the on-board diagnostic test received from the electric variable valve timing driver. **Diagnostic support note** • This is a continuous monitor (CCM). • The check engine light does not illuminate. • FREEZE FRAME DATA (Mode 2) is not available. • Snapshot data is available. • DTC is stored in the PCM memory.
FAIL-SAFE FUNCTION	• Stops activation of the electric variable valve timing driver.
POSSIBLE CAUSE	• Electric variable valve timing motor/driver connectors or terminals malfunction • Short to ground in wiring harness between electric variable valve timing motor/driver terminal 1A and PCM terminal 1AE • PCM connector or terminals malfunction • Short to power supply in wiring harness between electric variable valve timing motor/driver terminal 1A and PCM terminal 1AE • Open circuit in wiring harness between electric variable valve timing motor/driver terminal 1A and PCM terminal 1AE • Electric variable valve timing driver malfunction • Electric variable valve timing motor malfunction • PCM malfunction

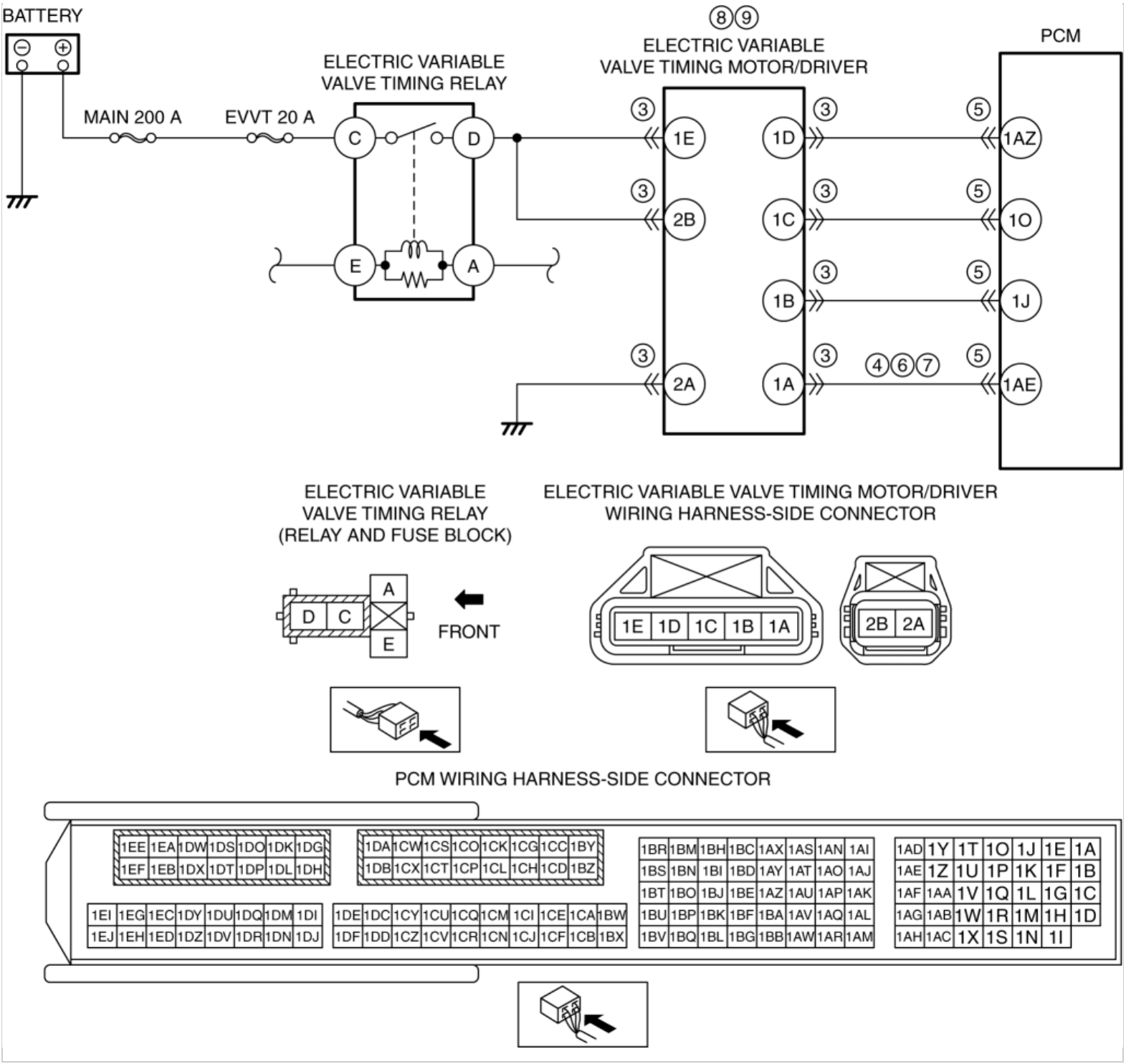

CAUTION:

- Verify the malfunction symptom according to not only the PID value but also the symptom troubleshooting.

Related PIDs

Item (definition)	Unit/Condition	Definition	Condition/Specification (Reference)
VT IN_ACT	°	Actual intake valve timing	• Displays actual intake valve timing
VT IN_DES	°	Desired intake valve timing	• Displays desired intake valve timing

Diagnostic Procedure

STEP	INSPECTION		ACTION
1	**VERIFY FREEZE FRAME DATA (MODE 2)/SNAPSHOT DATA HAS BEEN RECORDED** • Has the FREEZE FRAME DATA (Mode 2)/snapshot data been recorded?	Yes	Go to the next step.
		No	Record the FREEZE FRAME DATA (Mode 2)/snapshot data on the repair order, then go to the next step.
2	**VERIFY RELATED REPAIR INFORMATION AVAILABILITY** • Verify related Service Bulletins and/or on-line repair information availability. • Is any related repair information available?	Yes	Perform repair or diagnosis according to the available repair information. • If the vehicle is not repaired, go to the next step.
		No	Go to the next step.
3	**INSPECT ELECTRIC VARIABLE VALVE TIMING MOTOR/DRIVER CONNECTOR CONDITION** • Switch the ignition off. • Disconnect the electric variable valve timing motor/driver connector. • Inspect for poor connection (such as damaged/pulled-out pins, corrosion). • Is there any malfunction?	Yes	Repair or replace the connector and/or terminals, then go to Step 10.
		No	Go to the next step.
4	**INSPECT ELECTRIC VARIABLE VALVE TIMING MOTOR/DRIVER SIGNAL CIRCUIT FOR SHORT TO GROUND** • Verify that the electric variable valve timing motor/driver connector is disconnected. • Inspect for continuity between electric variable valve timing motor/driver terminal 1A (wiring harness-side) and body ground. • Is there continuity?	Yes	If the short to ground circuit could be detected in the wiring harness: • Refer to the wiring diagram and verify whether or not there is a common connector between electric variable valve timing motor/driver terminal 1A and PCM terminal 1AE. **If there is a common connector:** ▪ Determine the malfunctioning part by inspecting the common connector and the terminal for corrosion, damage, or pin disconnection, and the common wiring harness for a short to ground. ▪ Repair or replace the malfunctioning part. **If there is no common connector:** ▪ Repair or replace the wiring harness which has a short to ground. If the short to ground circuit could not be detected in the wiring harness: • Replace the PCM (short to ground in the PCM internal circuit). (See **PCM REMOVAL/INSTALLATION [SKYACTIV-G 2.0, SKYACTIV-G 2.5]**.) Go to Step 10.
		No	Go to the next step.
5	**INSPECT PCM CONNECTOR CONDITION** • Disconnect the PCM connector. • Inspect for poor connection (such as damaged/pulled-out pins, corrosion). • Is there any malfunction?	Yes	Repair or replace the connector and/or terminals, then go to Step 10.
		No	Go to the next step.
6	**INSPECT ELECTRIC VARIABLE VALVE TIMING MOTOR/DRIVER SIGNAL CIRCUIT FOR SHORT TO POWER SUPPLY**	Yes	Go to the next step.

	• Verify that the electric variable valve timing motor/driver and PCM connectors are disconnected. • Switch the ignition ON (engine off). **NOTE:** • Another DTC may be stored by the PCM detecting an open circuit. • Measure the voltage at the electric variable valve timing motor/driver terminal 1A (wiring harness-side). • Is the voltage **0 V**?	No	Refer to the wiring diagram and verify whether or not there is a common connector between electric variable valve timing motor/driver terminal 1A and PCM terminal 1AE. **If there is a common connector:** • Determine the malfunctioning part by inspecting the common connector and the terminal for corrosion, damage, or pin disconnection, and the common wiring harness for a short to power supply. • Repair or replace the malfunctioning part. **If there is no common connector:** • Repair or replace the wiring harness which has a short to power supply. Go to Step 10.
7	**INSPECT ELECTRIC VARIABLE VALVE TIMING MOTOR/DRIVER SIGNAL CIRCUIT FOR OPEN CIRCUIT** • Verify that the electric variable valve timing motor/driver and PCM connectors are disconnected. • Switch the ignition off. • Inspect for continuity between electric variable valve timing motor/driver terminal 1A (wiring harness-side) and PCM terminal 1AE (wiring harness-side). • Is there continuity?	Yes	Go to the next step.
		No	Refer to the wiring diagram and verify whether or not there is a common connector between electric variable valve timing motor/driver terminal 1A and PCM terminal 1AE. **If there is a common connector:** • Determine the malfunctioning part by inspecting the common connector and the terminal for corrosion, damage, or pin disconnection, and the common wiring harness for an open circuit. • Repair or replace the malfunctioning part. **If there is no common connector:** • Repair or replace the wiring harness which has an open circuit. Go to Step 10.
8	**INSPECT ELECTRIC VARIABLE VALVE TIMING DRIVER** • Inspect the electric variable valve timing driver. (See **ELECTRIC VARIABLE VALVE TIMING MOTOR/DRIVER INSPECTION [SKYACTIV-G 2.0, SKYACTIV-G 2.5]**.) • Is there any malfunction?	Yes	Replace the electric variable valve timing motor/driver, then go to Step 10. (See **ELECTRIC VARIABLE VALVE TIMING MOTOR/DRIVER REMOVAL/INSTALLATION [SKYACTIV-G 2.0, SKYACTIV-G 2.5]**.)
		No	Go to the next step.
9	**INSPECT ELECTRIC VARIABLE VALVE TIMING MOTOR** • Inspect the electric variable valve timing motor. (See **ELECTRIC VARIABLE VALVE TIMING MOTOR/DRIVER INSPECTION [SKYACTIV-G 2.0, SKYACTIV-G 2.5]**.) • Is there any malfunction?	Yes	Replace the electric variable valve timing motor/driver, then go to the next step. (See **ELECTRIC VARIABLE VALVE TIMING MOTOR/DRIVER REMOVAL/INSTALLATION [SKYACTIV-G 2.0, SKYACTIV-G 2.5]**.)
		No	Go to the next step.
10	**VERIFY DTC TROUBLESHOOTING COMPLETED** • Always reconnect all disconnected connectors. • Clear the DTC from the PCM memory using the M-MDS. (See **AFTER REPAIR PROCEDURE [SKYACTIV-G 2.0, SKYACTIV-G 2.5]**.) • Perform the KOER self test.	Yes	Repeat the inspection from Step 1. • If the malfunction recurs, replace the PCM. (See **PCM REMOVAL/INSTALLATION [SKYACTIV-G 2.0, SKYACTIV-G 2.5]**.) Go to the next step.
		No	Go to the next step.

	(See **KOEO/KOER SELF TEST [SKYACTIV-G 2.0, SKYACTIV-G 2.5]**.) • Is the same DTC present?		
11	**VERIFY AFTER REPAIR PROCEDURE** • Perform the “AFTER REPAIR PROCEDURE”. (See **AFTER REPAIR PROCEDURE [SKYACTIV-G 2.0, SKYACTIV-G 2.5]**.) • Are any DTCs present?	Yes	Go to the applicable DTC inspection. (See **DTC TABLE [SKYACTIV-G 2.0, SKYACTIV-G 2.5]**.)
		No	DTC troubleshooting completed.

2014 - Mazda3 - Engine

DTC P144A:00 [SKYACTIV-G 2.0, SKYACTIV-G 2.5]

NOTE:

- To determine the malfunctioning part, proceed with the diagnostics from "Function Inspection Using M-MDS".

Details On DTCs

DESCRIPTION	Evaporator system: clogging between fuel tank and fuel tank pressure sensor	
DETECTION CONDITION	Determination conditions	• The following conditions are all met while the vehicle is being driven: ▪ If negative pressure is inducted to the fuel tank via the intake manifold by the operation of the purge solenoid valve with the fuel tank in a sealed condition and the target negative pressure is reached within a shorter period of time than the estimated time. ▪ When the barometric pressure in the fuel tank is fixed and the purge solenoid valve is opened/closed, the negative pressure fluctuation in the fuel tank generates negative pressure exceeding the threshold.
	Preconditions	• Period ignition is switched off before engine is started: **120 min or more** • Engine coolant temperature at engine start: **1.67—43.33 °C {35.1—109.9 °F}** *1 • Time elapsed from engine start: **5.5—90 min** • Fuel level in fuel tank: **10—90 %** *1 • Desired ambient air temperature: **4.4—43.3 °C {40—109 °F}** *1 • Barometric pressure: **72.23 Pa {7.365 kgf/m^2, 0.01048 psi} or more** *1 • Charging efficiency: **3—65 %** *1 • Vehicle speed: **64—144.8 km/h {40.00—89.97 mph}** *1 • Purge flow amount: **15 l/min or more** • *1: Value can be verified by displaying PIDs using M-MDS
	Malfunction determination period	• **75 s period**
	Drive cycle	• 1
	Self test type	• CMDTC self test
	Sensor used	• Fuel tank pressure sensor
FAIL-SAFE FUNCTION	• Not applicable	
VEHICLE STATUS WHEN DTCs ARE OUTPUT	• Illuminates check engine light.	
	• Erratic signal to PCM ▪ Fuel tank pressure sensor signal malfunction • Fuel gauge sender unit malfunction • Fuel tank pressure sensor malfunction	

POSSIBLE CAUSE	• Clogging between fuel tank and fuel tank pressure sensor • Fuel shut-off valve malfunction • Rollover valve malfunction • Purge solenoid valve malfunction • PCM malfunction

System Wiring Diagram

- Not applicable

Function Explanation (DTC Detection Outline)

- The PCM closes the purge solenoid valve and CV solenoid valve while the vehicle is being driven and seals the fuel tank. Then, gas in the fuel tank is inducted into the intake manifold and the pressure in the fuel tank is decreased by opening the purge solenoid valve, and the pressure change in the fuel tank is measured using the fuel tank pressure sensor. If the pressure in the fuel tank decreases below the target negative pressure during the specified period from the pressure measurement (malfunction determination time (1)), positive pressure is inducted to the fuel tank via the intake manifold by closing the purge solenoid valve and opening the CV solenoid valve. After positive pressure is inducted to the fuel tank, the fuel tank is sealed, opening/closing of the purge solenoid valve is performed repeatedly, and the pressure change in the fuel tank is monitored at that time (malfunction determination time (2)). If the amount of pressure change veers towards negative pressure exceeding the malfunction determination threshold, the PCM determines that there is clogging between the fuel tank pressure sensor and fuel tank, and stores a DTC.

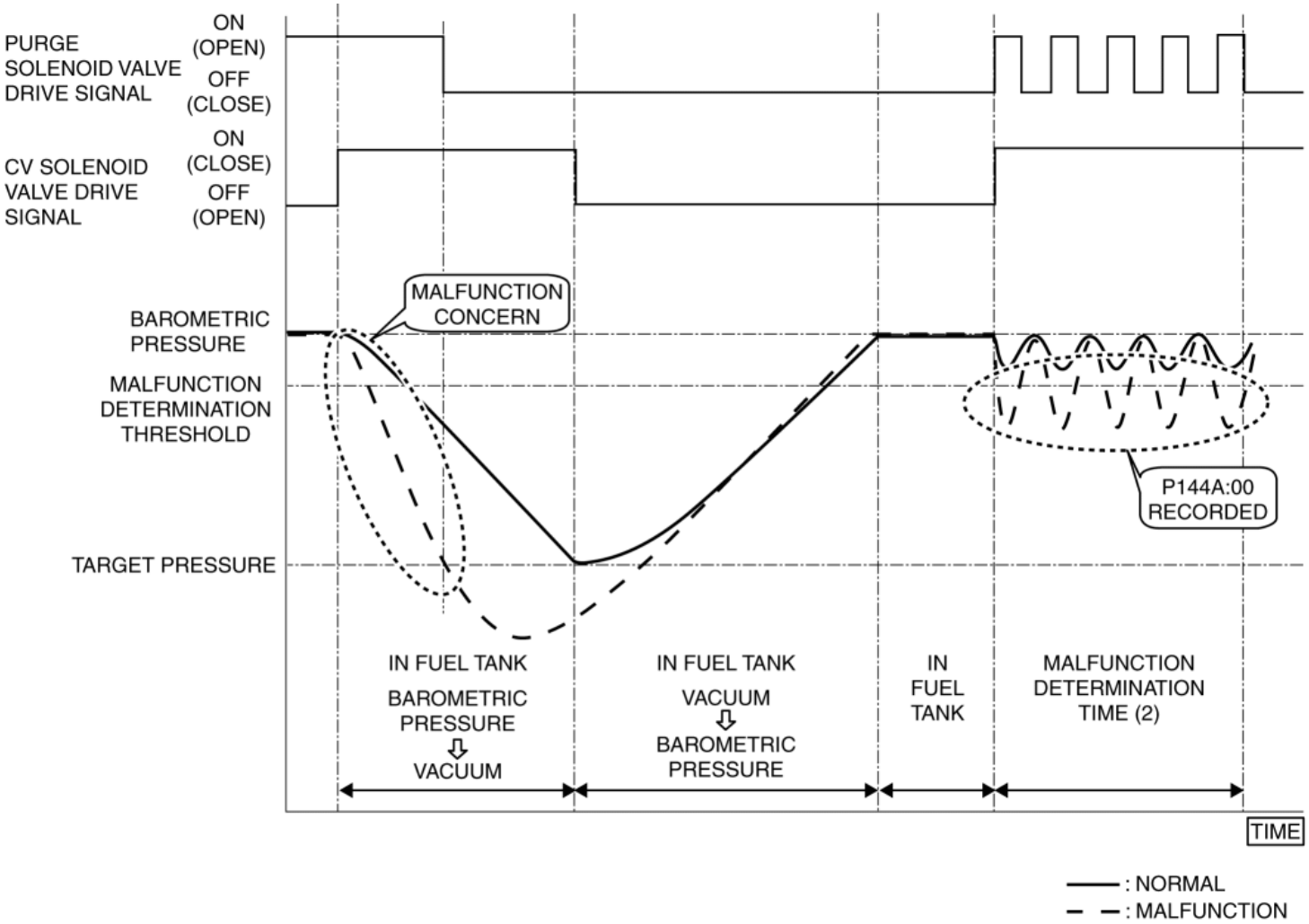

Repeatability Verification Procedure

- Set the remaining fuel quantity in the fuel tank between **30—85 %**.
- Verify that OBD-II information (such as FREEZE FRAME DATA (Mode 2)) has been obtained and recorded.

- Clear the DTC from the PCM memory using the M-MDS. (See **CLEARING DTC [SKYACTIV-G 2.0, SKYACTIV-G 2.5]**.)
- Start the engine and switch the ignition off after **5 s** have elapsed.
- Leave the vehicle for **6 hours or more**.
- Start the engine and leave it idling for **2 min**.
- Drive the vehicle for **30 min** at a speed of **50 km/h {31 mph} or more** (to increase temperature in fuel tank and generate evaporative gas).

  NOTE:

  - If driving the vehicle for **30 min** at a speed of **50 km/h {31 mph} or more** is not feasible, the vehicle can be driven for a continuous **15 min or more** with the engine coolant temperature at **80 °C {176 °F} or more**.
- Stop the engine.
- Leave the vehicle for **1 hours or more**.

PID Item/Simulation Item Used In Diagnosis

PID/DATA monitor item table

Item	Definition	Unit	Condition/Specification
FTP	Fuel tank pressure	Pa {KPa} {MPa}, mBar {Bar}, psi, in H20	• Displays fuel tank pressure
	Fuel tank pressure sensor voltage	V	• Fuel tank pressure is equal to barometric pressure: Approx. 2.6 V

Simulation item table

Item	Definition	Unit	Operation
EVAPCP	Purge solenoid valve control signal	%	• Changes % and forcibly drives/stops purge solenoid valve.
EVAPCV	CV solenoid valve control signal	Off/On	• Selects Off/On to forcibly drive/stop the CV solenoid valve.

Function Inspection Using M-MDS

STEP	INSPECTION	RESULTS	ACTION
1	**PURPOSE: VERIFY RELATED REPAIR INFORMATION AVAILABILITY** • Verify related Service Bulletins and/or on-line repair information availability. • Is any related repair information available?	Yes	Perform repair or diagnosis according to the available repair information. • If the vehicle is not repaired, go to the next step.
		No	Go to the next step.
2	**PURPOSE: RECORD VEHICLE STATUS AT TIME OF DTC DETECTION TO UTILIZE WITH REPEATABILITY VERIFICATION** • Has the FREEZE FRAME DATA (Mode 2)/snapshot data been recorded?	Yes	Go to the next step.
		No	Record the FREEZE FRAME DATA (Mode 2)/snapshot data on the repair order, then go to the next step. **NOTE:** • Recording can be facilitated using the screen capture function of the PC.
3	**PURPOSE: VERIFY IF FUEL GAUGE SENDER UNIT HAS MALFUNCTION** • Perform the Pending Trouble Code Access Procedure and DTC Reading Procedure. (See **ON-BOARD DIAGNOSTIC TEST [SKYACTIV-G 2.0, SKYACTIV-G 2.5]**.)	Yes	Perform the DTC troubleshooting for the fuel gauge sender unit first because the fuel gauge sender unit cannot detect the fuel tank level and determines that a malfunction is occurring. (See **DTC P0460:00 [SKYACTIV-G 2.0, SKYACTIV-G 2.5]**.)

	• Is the PENDING CODE/DTC P0460:00, P0461:00, P0462:00 or P0463:00 also present?		(See **DTC P0461:00 [SKYACTIV-G 2.0, SKYACTIV-G 2.5]**.) (See **DTC P0462:00 [SKYACTIV-G 2.0, SKYACTIV-G 2.5]**.) (See **DTC P0463:00 [SKYACTIV-G 2.0, SKYACTIV-G 2.5]**.)
		No	Go to the next step.
4	**PURPOSE: VERIFY FUEL TANK PRESSURE SENSOR MEASURED CORRECTLY** • Start the engine and idle it. • Access the following simulation items using the M-MDS: (See **ON-BOARD DIAGNOSTIC TEST [SKYACTIV-G 2.0, SKYACTIV-G 2.5]**.) ▪ EVAPCP ▪ EVAPCV • Change to the following conditions using the simulation function. ▪ EVAPCP: **100 %** ▪ EVAPCV: On • Access the FTP PID using the M-MDS. (See **ON-BOARD DIAGNOSTIC TEST [SKYACTIV-G 2.0, SKYACTIV-G 2.5]**.) • Does the negative pressure change when racing the engine?	Yes	The fuel tank pressure sensor measures correctly. • Go to the next step.
		No	The possibility of a fuel tank pressure sensor malfunction is high. • Go to the troubleshooting procedure to perform the procedure from Step 1.
5	**PURPOSE: VERIFY IF PURGE SOLENOID VALVE IS STUCK OPEN** • Perform the following procedure to induct barometric pressure to the fuel tank. ▪ Access the following simulation items using the M-MDS: (See **ON-BOARD DIAGNOSTIC TEST [SKYACTIV-G 2.0, SKYACTIV-G 2.5]**.) • EVAPCP • EVAPCV ▪ Change to the following conditions using the simulation function. • EVAPCP: **0 %** • EVAPCV: Off ▪ Access the FTP PID using the M-MDS. (See **ON-BOARD DIAGNOSTIC TEST [SKYACTIV-G 2.0, SKYACTIV-G 2.5]**.) **NOTE:** • The displayed PID value is as follows: ▪ BARO: **approx. 2.6 V** (barometric pressure) • Perform the following procedure to force drive the CV solenoid valve. ▪ Access the following simulation items using the M-MDS: (See **ON-BOARD DIAGNOSTIC TEST [SKYACTIV-G 2.0, SKYACTIV-G 2.5]**.) • EVAPCP • EVAPCV ▪ Change to the following conditions using the	Yes	The possibility of a stuck purge solenoid valve open is high. • Go to the troubleshooting procedure to perform the procedure from Step 2.
		No	The possibility of clogging between fuel tank pressure sensor and fuel tank is high. • Go to the troubleshooting procedure to perform the procedure from Step 3.

	simulation function. • EVAPCP: **0 %** • EVAPCV: On • Access the FTP PID using the M-MDS. (See **ON-BOARD DIAGNOSTIC TEST [SKYACTIV-G 2.0, SKYACTIV-G 2.5]**.) • Is the FTP PID value negative pressure?		

Troubleshooting Diagnostic Procedure

Intention of troubleshooting procedure

- Step 1
  - Perform a PCM input signal part-related inspection.
- Step 2
  - Perform a unit inspection of the purge solenoid valve.
- Step 3—5
  - Inspect for clogging between fuel tank pressure sensor and fuel tank.
- Step 6—7
  - Verify that the primary malfunction is resolved and there are no other malfunctions.

STEP	INSPECTION	RESULTS	ACTION
1	**PURPOSE: DETERMINE INTEGRITY OF FUEL TANK PRESSURE SENSOR** • Inspect the fuel tank pressure sensor. (See **FUEL TANK PRESSURE SENSOR INSPECTION [SKYACTIV-G 2.0, SKYACTIV-G 2.5]**.) • Is there any malfunction?	Yes	Replace the charcoal canister, then go to Step 6. (See **CHARCOAL CANISTER REMOVAL/INSTALLATION [SKYACTIV-G 2.0, SKYACTIV-G 2.5]**.)
		No	Go to the next step.
2	**PURPOSE: DETERMINE INTEGRITY OF PURGE SOLENOID VALVE** • Inspect the purge solenoid valve. (See **PURGE SOLENOID VALVE INSPECTION [SKYACTIV-G 2.0, SKYACTIV-G 2.5]**.) • Is there any malfunction?	Yes	Replace the purge solenoid valve, then go to Step 6. (See **PURGE SOLENOID VALVE REMOVAL/INSTALLATION [SKYACTIV-G 2.0, SKYACTIV-G 2.5]**.)
		No	Go to the next step.
3	**PURPOSE: VERIFY IF THERE IS CLOGGING BETWEEN FUEL TANK PRESSURE SENSOR AND FUEL TANK** • Verify the following passage hoses, pipe connection condition, and that there is no clogging. ▪ Between fuel tank pressure sensor and fuel shut-off valve • Is there any poor connection or clogging?	Yes	Repair or replace the malfunctioning part according to the inspection results, then go to Step 6.
		No	Go to the next step.
4	**PURPOSE: DETERMINE INTEGRITY OF FUEL SHUT-OFF VALVE** • Inspect the fuel shut-off valve. (See **FUEL TANK INSPECTION [SKYACTIV-G 2.0, SKYACTIV-G 2.5]**.) • Is there any malfunction?	Yes	Replace the fuel tank, then go to Step 6. (See **FUEL TANK REMOVAL/INSTALLATION [SKYACTIV-G 2.0, SKYACTIV-G 2.5]**.)
		No	Go to the next step.
5	**PURPOSE: DETERMINE INTEGRITY OF ROLLOVER VALVE** • Inspect the rollover valve. (See **FUEL TANK INSPECTION [SKYACTIV-G 2.0, SKYACTIV-G 2.5]**.) • Is there any malfunction?	Yes	Replace the fuel tank, then go to the next step. (See **FUEL TANK REMOVAL/INSTALLATION [SKYACTIV-G 2.0, SKYACTIV-G 2.5]**.)
		No	Go to the next step.

6	**PURPOSE: VERIFICATION OF VEHICLE REPAIR COMPLETION** • Reconnect all the removed parts. • Clear the DTC from the PCM memory using the M-MDS. (See **CLEARING DTC [SKYACTIV-G 2.0, SKYACTIV-G 2.5]**.) • Implement the repeatability verification procedure. (See **Repeatability Verification Procedure**.) • Perform the DTC Reading Procedure. (See **ON-BOARD DIAGNOSTIC TEST [SKYACTIV-G 2.0, SKYACTIV-G 2.5]**.) • Is the same DTC present?	Yes	Repeat the inspection from Step 1 of the troubleshooting diagnostic procedure. • If the malfunction recurs, replace the PCM. (See **PCM REMOVAL/INSTALLATION [SKYACTIV-G 2.0, SKYACTIV-G 2.5]**.) Go to the next step.
		No	Go to the next step.
7	**PURPOSE: VERIFY IF THERE IS ANY OTHER MALFUNCTION** • Is any other DTC or pending code stored?	Yes	Go to the applicable DTC inspection. (See **DTC TABLE [SKYACTIV-G 2.0, SKYACTIV-G 2.5]**.)
		No	DTC troubleshooting completed.

2014 - Mazda3 - Engine

DTC P1450:00 [SKYACTIV-G 2.0, SKYACTIV-G 2.5]

NOTE:

- To determine the malfunctioning part, proceed with the diagnostics from "Function Inspection Using M-MDS".

Details On DTCs

DESCRIPTION	Evaporator system: abnormal negative pressure in fuel tank	
DETECTION CONDITION	Determination conditions	• Target negative pressure exceeding the specified time or more is generated from negative pressure inducted to the fuel tank by the operation of the purge solenoid valve after the fuel tank is sealed (CV solenoid valve ON).
	Preconditions	• Period ignition is switched off before engine is started: **120 min or more** • Engine coolant temperature at engine start: **1.67—43.33 °C {35.1—109.9 °F}** *1 • Time elapsed from engine start: **5.5—90 min** • Fuel level in fuel tank: **10—90 %** *1 • Desired ambient air temperature: **4.4—43.3 °C {40—109 °F}** *1 • Barometric pressure: **72.23 Pa {7.365 kgf/m^2, 0.01048 psi} or more** *1 • Charging efficiency: **3—65 %** *1 • Vehicle speed: **64—144.8 km/h {40.00—89.97 mph}** *1 • Purge flow amount: **15 l/min or more** • *1: Value can be verified by displaying PIDs using M-MDS
	Malfunction determination period	• **75 s period**
	Drive cycle	• 1
	Self test type	• CMDTC self test
	Sensor used	• Fuel tank pressure sensor
FAIL-SAFE FUNCTION	• Not applicable	
VEHICLE STATUS WHEN DTCs ARE OUTPUT	• Illuminates check engine light.	

POSSIBLE CAUSE	• Fuel tank pressure sensor malfunction
	• Restriction between charcoal canister and release-side passage
	  ▪ CV solenoid valve malfunction
	  ▪ Evaporative chamber malfunction
	  ▪ Charcoal canister malfunction
	• Clogging between fuel tank and fuel tank pressure sensor
	• Purge solenoid valve malfunction	

	• PCM malfunction

System Wiring Diagram

- Not applicable

Function Explanation (DTC Detection Outline)

- The PCM closes the purge solenoid valve and CV solenoid valve while the vehicle is being driven and seals the fuel tank. Then, the evaporative gas in the fuel tank is inducted into the intake manifold and the pressure in the fuel tank is decreased by opening the purge solenoid valve, and the pressure change of the fuel tank is measured using the fuel tank pressure sensor. If the pressure in the fuel tank decreases below the target negative pressure for the specified period from the pressure measurement, the PCM determines that abnormal negative pressure in the fuel tank is being generated and stores a DTC.

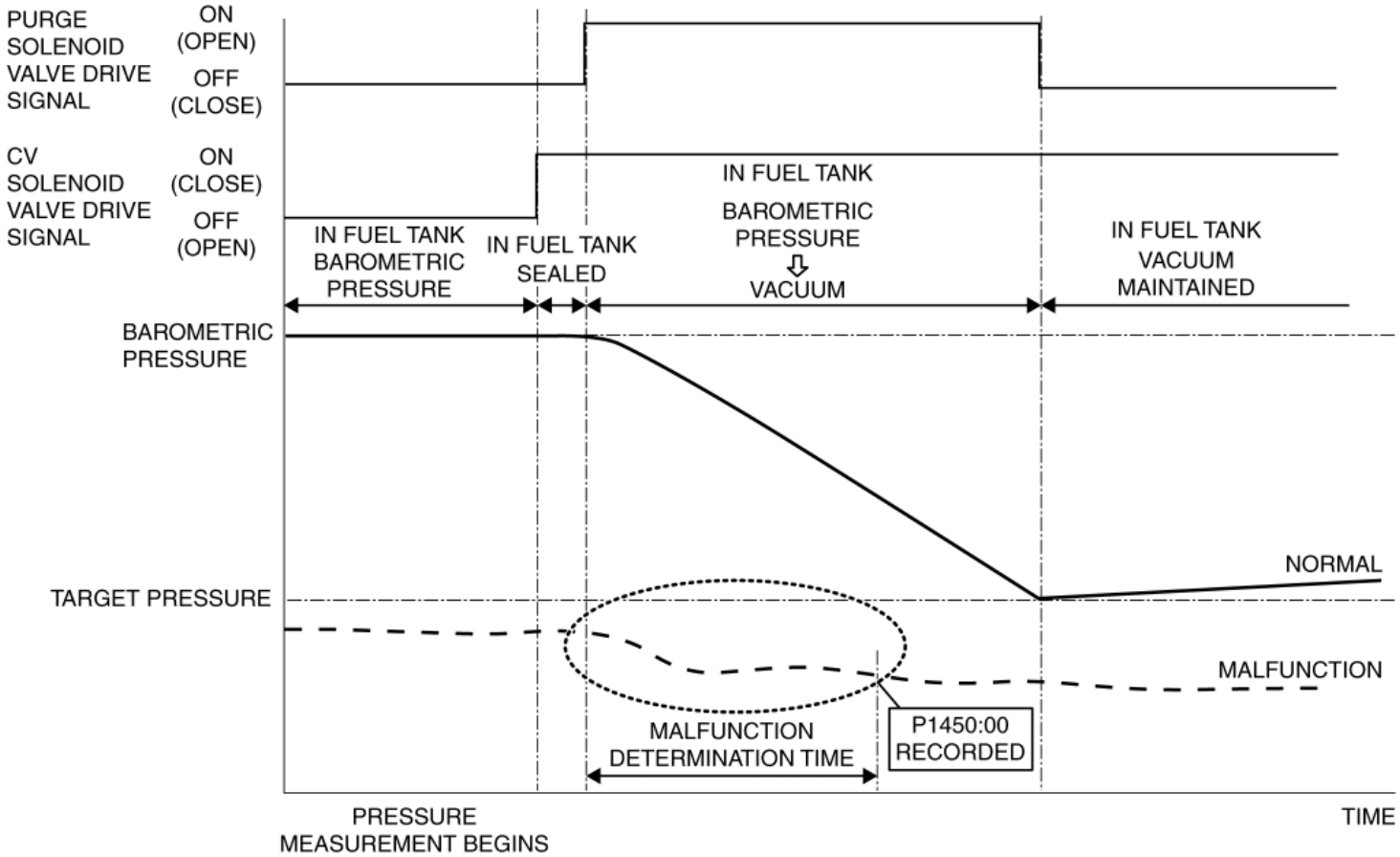

Repeatability Verification Procedure

- Set the remaining fuel quantity in the fuel tank between **30—85 %**.
- Verify that OBD-II information (such as FREEZE FRAME DATA (Mode 2)) has been obtained and recorded.
- Clear the DTC from the PCM memory using the M-MDS. (See **CLEARING DTC [SKYACTIV-G 2.0, SKYACTIV-G 2.5]**.)
- Start the engine and switch the ignition off after **5 s** have elapsed.
- Leave the vehicle for **6 hours or more**.
- Start the engine and leave it idling for **2 min**.
- Drive the vehicle for **30 min** at a speed of **50 km/h {31 mph} or more** (to increase temperature in fuel tank and generate evaporative gas).

  NOTE:

  - If driving the vehicle for **30 min** at a speed of **50 km/h {31 mph} or more** is not feasible, the vehicle can be driven for a continuous **15 min or more** with the engine coolant temperature at **80 °C {176 °F} or more**.

- Stop the engine.

- Leave the vehicle for **1 hours or more**.

PID Item/Simulation Item Used In Diagnosis

PID/DATA monitor item table

Item	Definition	Unit	Condition/Specification
FTP	Fuel tank pressure	Pa {KPa} {MPa}, mBar {Bar}, psi, in H20	• Displays fuel tank pressure
	Fuel tank pressure sensor voltage	V	• Fuel tank pressure is equal to barometric pressure: Approx. 2.6 V

Simulation item table

Item	Definition	Unit	Operation
EVAPCP	Purge solenoid valve control signal	%	• Changes % and forcibly drives/stops purge solenoid valve.
EVAPCV	CV solenoid valve control signal	Off/On	• Selects Off/On to forcibly drive/stop the CV solenoid valve.

Function Inspection Using M-MDS

STEP	INSPECTION	RESULTS	ACTION
1	**PURPOSE: VERIFY RELATED REPAIR INFORMATION AVAILABILITY** • Verify related Service Bulletins and/or on-line repair information availability. • Is any related repair information available?	Yes	Perform repair or diagnosis according to the available repair information. • If the vehicle is not repaired, go to the next step.
		No	Go to the next step.
2	**PURPOSE: RECORD VEHICLE STATUS AT TIME OF DTC DETECTION TO UTILIZE WITH REPEATABILITY VERIFICATION** • Has the FREEZE FRAME DATA (Mode 2)/snapshot data been recorded?	Yes	Go to the next step.
		No	Record the FREEZE FRAME DATA (Mode 2)/snapshot data on the repair order, then go to the next step. **NOTE:** • Recording can be facilitated using the screen capture function of the PC.
3	**PURPOSE: INSPECTION OF CLOGGING BETWEEN FUEL TANK PRESSURE SENSOR AND FUEL TANK** • Perform the Pending Trouble Code Access Procedure and DTC Reading Procedure. (See **ON-BOARD DIAGNOSTIC TEST [SKYACTIV-G 2.0, SKYACTIV-G 2.5]**.) • Is the PENDING CODE/DTC P144A:00 also present?	Yes	The possibility of clogging between fuel tank pressure sensor and fuel tank is high. • Go to the applicable PENDING CODE or DTC inspection. (See **DTC P144A:00 [SKYACTIV-G 2.0, SKYACTIV-G 2.5]**.)
		No	Go to the next step.
4	**PURPOSE: VERIFY FUEL TANK PRESSURE SENSOR MEASURED CORRECTLY** • Start the engine and idle it. • Access the following simulation items using the M-MDS: (See **ON-BOARD DIAGNOSTIC TEST [SKYACTIV-G 2.0, SKYACTIV-G 2.5]**.)	Yes	Go to the next step.
		No	Go to the troubleshooting procedure to perform the procedure from Step 1.

	EVAPCP ▪ EVAPCV • Change to the following conditions using the simulation function. ▪ EVAPCP: **100 %** ▪ EVAPCV: On • Access the FTP PID using the M-MDS. (See **ON-BOARD DIAGNOSTIC TEST [SKYACTIV-G 2.0, SKYACTIV-G 2.5]**.) • Does the negative pressure change when racing the engine?		
5	**PURPOSE: VERIFY IF ATMOSPHERE BETWEEN CV SOLENOID VALVE AND ATMOSPHERE CAN RELEASE** • Access the following simulation items using the M-MDS: (See **ON-BOARD DIAGNOSTIC TEST [SKYACTIV-G 2.0, SKYACTIV-G 2.5]**.) ▪ EVAPCP ▪ EVAPCV • Change to the following conditions using the simulation function. ▪ EVAPCP: **0 %** ▪ EVAPCV: Off • Access the FTP PID using the M-MDS. (See **ON-BOARD DIAGNOSTIC TEST [SKYACTIV-G 2.0, SKYACTIV-G 2.5]**.) • Is the displayed PID value as follows? ▪ BARO: **approx. 2.6 V** (barometric pressure)	Yes	Go to the next step.
		No	Go to the troubleshooting procedure to perform the procedure from Step 2.
6	**PURPOSE: VERIFY IF PURGE SOLENOID VALVE IS STUCK OPEN** • Access the following simulation items using the M-MDS: (See **ON-BOARD DIAGNOSTIC TEST [SKYACTIV-G 2.0, SKYACTIV-G 2.5]**.) ▪ EVAPCP ▪ EVAPCV • Change to the following conditions using the simulation function. ▪ EVAPCP: **0 %** ▪ EVAPCV: On • Access the FTP PID using the M-MDS. (See **ON-BOARD DIAGNOSTIC TEST [SKYACTIV-G 2.0, SKYACTIV-G 2.5]**.) • Is the FTP PID value negative pressure?	Yes	Go to the troubleshooting procedure to perform the procedure from Step 6.
		No	Go to the troubleshooting procedure to perform the procedure from Step 1.

Troubleshooting Diagnostic Procedure

Intention of troubleshooting procedure

- Step 1
  - Perform a PCM input signal part-related inspection.
- Step 2—5
  - Verify if there is restriction in atmosphere release passage.
- Step 6

- Perform the inspection for a purge solenoid valve stuck open.

- Step 7—8
  - Verify that the primary malfunction is resolved and there are no other malfunctions.

STEP	INSPECTION	RESULTS	ACTION
1	**PURPOSE: DETERMINE INTEGRITY OF FUEL TANK PRESSURE SENSOR** • Inspect the fuel tank pressure sensor. (See **FUEL TANK PRESSURE SENSOR INSPECTION [SKYACTIV-G 2.0, SKYACTIV-G 2.5]**.) • Is there any malfunction?	Yes	Replace the charcoal canister, then go to Step 7. (See **CHARCOAL CANISTER REMOVAL/INSTALLATION [SKYACTIV-G 2.0, SKYACTIV-G 2.5]**.)
		No	Go to the next step.
2	**PURPOSE: DETERMINE INTEGRITY OF CV SOLENOID VALVE** • Inspect the CV solenoid valve. (See **CANISTER VENT (CV) SOLENOID VALVE INSPECTION [SKYACTIV-G 2.0, SKYACTIV-G 2.5]**.) • Is there any malfunction?	Yes	Replace the CV solenoid valve, then go to Step 7. (See **CANISTER VENT (CV) SOLENOID VALVE REMOVAL/INSTALLATION [SKYACTIV-G 2.0, SKYACTIV-G 2.5]**.)
		No	Go to the next step.

3	**PURPOSE: VERIFY IF THERE IS RESTRICTION BETWEEN CHARCOAL CANISTER AND ATMOSPHERE RELEASE PASSAGE**
	• Verify the following passage hoses, pipe connection condition, and that there is no restriction.
	  ▪ Between charcoal canister and CV solenoid valve
	  ▪ Between CV solenoid valve and evaporative chamber
	  ▪ Between evaporative chamber and atmosphere release
	• Is there any poor connection or restriction?
		Yes	Repair or replace the malfunctioning part according to the inspection results, then go to Step 7.

		No	Go to the next step.
4	**PURPOSE: DETERMINE INTEGRITY OF EVAPORATIVE CHAMBER** • Inspect the evaporative chamber. (See **EVAPORATIVE CHAMBER INSPECTION [SKYACTIV-G 2.0, SKYACTIV-G 2.5]**.) • Is there any malfunction?	Yes	Replace the evaporative chamber, then go to Step 7. (See **EVAPORATIVE CHAMBER REMOVAL/INSTALLATION [SKYACTIV-G 2.0, SKYACTIV-G 2.5]**.)
		No	Go to the next step.
5	**PURPOSE: DETERMINE INTEGRITY OF CHARCOAL CANISTER** • Inspect the charcoal canister. (See **CHARCOAL CANISTER INSPECTION [SKYACTIV-G 2.0, SKYACTIV-G 2.5]**.) • Is there any malfunction?	Yes	Replace the charcoal canister, then go to Step 7. (See **CHARCOAL CANISTER REMOVAL/INSTALLATION [SKYACTIV-G 2.0, SKYACTIV-G 2.5]**.)
		No	Go to the next step.
6	**PURPOSE: DETERMINE INTEGRITY OF PURGE SOLENOID VALVE** • Inspect the purge solenoid valve. (See **PURGE SOLENOID VALVE INSPECTION [SKYACTIV-G 2.0, SKYACTIV-G 2.5]**.) • Is there any malfunction?	Yes	Replace the purge solenoid valve, then go to the next step. (See **PURGE SOLENOID VALVE REMOVAL/INSTALLATION [SKYACTIV-G 2.0, SKYACTIV-G 2.5]**.)
		No	Go to the next step.

7	**PURPOSE: VERIFICATION OF VEHICLE REPAIR COMPLETION**
	• Reconnect all the removed parts.
	• Clear the DTC from the PCM memory using the M-MDS.
	(See **CLEARING DTC [SKYACTIV-G 2.0, SKYACTIV-G 2.5]**.)
	• Implement the repeatability verification procedure.
	(See **Repeatability Verification Procedure**.)
	• Perform the DTC Reading Procedure.
		Yes	Repeat the inspection from Step 1 of the troubleshooting diagnostic procedure.
			  • If the malfunction recurs, replace the PCM.
			  (See **PCM REMOVAL/INSTALLATION [SKYACTIV-G 2.0, SKYACTIV-G 2.5]**.)
			Go to the next step.

	(See **ON-BOARD DIAGNOSTIC TEST [SKYACTIV-G 2.0, SKYACTIV-G 2.5]**.) • Is the same DTC present?	No	Go to the next step.
8	**PURPOSE: VERIFY IF THERE IS ANY OTHER MALFUNCTION** • Is any other DTC or pending code stored?	Yes	Go to the applicable DTC inspection. (See **DTC TABLE [SKYACTIV-G 2.0, SKYACTIV-G 2.5]**.)
		No	DTC troubleshooting completed.

2014 - Mazda3 - Engine

DTC P1794:00 [SKYACTIV-G 2.0, SKYACTIV-G 2.5]

NOTE:

- To determine the malfunctioning part, proceed with the diagnostics from "Function Inspection Using M-MDS".

Details On DTCs

DESCRIPTION	Capacitor (i-ELOOP) system: Capacitor (i-ELOOP) malfunction	

DETECTION CONDITION	Determination conditions	• Capacitor malfunction determined
		  • Any one of the following conditions is met:
		  ▪ Capacitor (i-ELOOP) internal resistance exceeds the specification.
		  ▪ Capacitor (i-ELOOP) capacitance exceeds the specification.
		  ▪ Capacitor (i-ELOOP) voltage exceeds the specification.
		• Capacitor (i-ELOOP) deterioration determined
		  • Any one of the following conditions is met:
		  ▪ Capacitor (i-ELOOP) internal resistance exceeds the specification.
		  ▪ Capacitor (i-ELOOP) capacitance is less the than specification.
		• Over-charge determined

		• Capacitor (i-ELOOP) voltage exceeds the specification.
	Preconditions	• Not applicable
	Drive cycle	• 1
	Self test type	• CMDTC self test
	Sensor used	• DC-DC converter
FAIL-SAFE FUNCTION	• Inhibits the i-ELOOP control.	
VEHICLE STATUS WHEN DTCs ARE OUTPUT	• The following vehicle conditions differ depending on the type of malfunction ▪ Master warning light is illuminated (illumination during bypass mode by i-ELOOP) ▪ Charging system warning light is illuminated (illumination while generator output is inhibited) ▪ Pre-charge warning is displayed after the engine is started.	
POSSIBLE CAUSE	• Engagement malfunction in capacitor (i-ELOOP), DC-DC converter • Capacitor (i-ELOOP) malfunction ▪ Capacitor (i-ELOOP) deterioration • Generator overcharge (in this case, PCM detects DTC P2504:00) • DC-DC converter malfunction • PCM malfunction	

System Wiring Diagram

- Not applicable

Function Explanation (DTC Detection Outline)

- The capacitor (i-ELOOP) can store generated electrical energy from the generator efficiently.
- The electrical energy stored during deceleration fuel-cut is used during driving, which reduces the power generating load on the generator and the amount of fuel consumption.
- If a malfunction occurs with the capacitor (i-ELOOP), constant charging takes place by operation of the bypass mode which could cause the fuel economy to worsen.
- In this diagnostic, the internal resistance/capacitance is calculated from the capacitor (i-ELOOP)

voltage value and charge/discharge current value, and the PCM determines that there is a malfunction in the battery-related parts by the internal resistance/capacitance/capacitor (i-ELOOP) voltage exceeding the specified value, and it stores a DTC.

Repeatability Verification Procedure

- Start the engine.(no electrical load)
- Depress the accelerator pedal to increase the engine speed to **3,000 rpm**.
- Release the accelerator pedal to idle the engine.
- Stop the engine.
- Switch the ignition on and wait for **1 min**.
- Switch the ignition off and wait for **20 min**.
- Switch the ignition on.

PID Item/Simulation Item Used In Diagnosis

PID/DATA monitor item table

Item	Definition	Unit	Condition/Specification
CAP_SYS_10	Open circuit in capacitor (i-ELOOP) (power cannot be supplied from capacitor)	Off/On	• Open circuit status in capacitor (i-ELOOP) is normal: Off • Open circuit status in capacitor (i-ELOOP) is not normal: On
CAP_SYS 13	Capacitor (i-ELOOP) capacitance malfunction	Off/On	• Capacitor (i-ELOOP) capacitance status is not normal: On • Capacitor (i-ELOOP) capacitance status is normal: Off
CAP_SYS 14	Capacitor (i-ELOOP) capacitance deterioration	Off/On	• Capacitor (i-ELOOP) capacitance status deteriorates: On • Capacitor (i-ELOOP) capacitance status is normal: Off
CAP_SYS 15	Capacitor (i-ELOOP) internal resistance malfunction	Off/On	• Internal resistance status in capacitor (i-ELOOP) is not normal: On • Internal resistance status in

			capacitor (i-ELOOP) is normal: Off
CAP_SYS 16	Capacitor (i-ELOOP) internal resistance deterioration	Off/On	• Internal resistance status in capacitor (i-ELOOP) deteriorates: On • Internal resistance status in capacitor (i-ELOOP) is normal: Off

Function Inspection Using M-MDS

STEP	INSPECTION	RESULTS	ACTION
1	**VERIFY RELATED REPAIR INFORMATION AVAILABILITY** • Verify related Service Bulletins and/or on-line repair information availability. • Is any related repair information available?	Yes	Perform repair or diagnosis according to the available repair information. • If the vehicle is not repaired, go to the next step.
		No	Go to the next step.
2	**PURPOSE: VERIFY IF POWER SUPPLY IS AFFECTED BY DTC RELATED TO DC-DC CONVERTER** • Switch the ignition off, then ON (engine off). • Perform the DC-DC converter DTC inspection using the M-MDS. (See **DTC INSPECTION [i-ELOOP]**.) • Are any DTCs present?	Yes	Repair or replace the malfunctioning part according to the applicable DTC troubleshooting. (See **DTC TABLE [i-ELOOP]**.)
		No	Go to the next step.
3	**PURPOSE: VERIFY IF DIAGNOSTIC RESULT IS AFFECTED BY DTC RELATED TO GENERATOR OVERCHARGE** • Perform the Pending Trouble Code Access Procedure and DTC Reading Procedure. (See **ON-BOARD DIAGNOSTIC TEST [SKYACTIV-G 2.0, SKYACTIV-G 2.5]**.) • Is the PENDING CODE/DTC P2504:00 also present?	Yes	Go to the applicable PENDING CODE or DTC inspection. (See **DTC P2504:00 [SKYACTIV-G 2.0, SKYACTIV-G 2.5]**.)
		No	Go to the next step.

4	**PURPOSE: DETERMINE IF THE MALFUNCTION IS CAUSED BY CAPACITOR (i-ELOOP) BY VERIFYING THE PID RELATED TO THE CAPACITOR (i-ELOOP)** • Access the following PIDs using the M-MDS (See **ON-BOARD DIAGNOSTIC TEST [SKYACTIV-G 2.0, SKYACTIV-G 2.5]**.) ▪ CAP_SYS_10 ▪ CAP_SYS 13 ▪ CAP_SYS 14 ▪ CAP_SYS 15 ▪ CAP_SYS 16 • Are all of the PID item “CAP_SYS_10, CAP_SYS 13, CAP_SYS 14, CAP_SYS 15, CAP_SYS 16” values off?	Yes	**NOTE:** • If excessive voltage is applied to the capacitor (i-ELOOP), all the PIDs displayed in Step 4 indicate "Off", and the PCM determines a capacitor (i-ELOOP) malfunction and stores DTC P1794:00. Replace the capacitor (i-ELOOP). (See **CAPACITOR (i-ELOOP) REMOVAL/INSTALLATION [i-ELOOP]**.) Go to the troubleshooting procedure to perform the procedure from Step 2.
		No	Go to the next step.
5	**PURPOSE: DETERMINE IF THE MALFUNCTION IS CAUSED BY CAPACITOR (i-ELOOP) BY VERIFYING THE PID RELATED TO THE CAPACITOR (i-ELOOP)** • Are all of the PID item “CAP_SYS_10, CAP_SYS 13” values on?	Yes	Replace the capacitor (i-ELOOP). (See **CAPACITOR (i-ELOOP) REMOVAL/INSTALLATION [i-ELOOP]**.) Go to the troubleshooting procedure to perform the procedure from Step 2.
		No	Go to the troubleshooting procedure to perform the procedure from Step 1.

Troubleshooting Diagnostic Procedure

Intention of troubleshooting procedure

- Step 1
  - Verify the engagement condition of each part.
- Step 2—3
  - Verify that the primary malfunction is resolved and there are no other malfunctions.

STEP	INSPECTION	RESULTS	ACTION
1	**PURPOSE: VERIFY IF MALFUNCTION CAUSED BY ENGAGEMENT MALFUNCTION OF EACH PART**	Yes	Go to the next step.

	• Switch the ignition off. • Remove the service plug. (See **SERVICE PLUG DISCONNECTION/CONNECTION [i-ELOOP]**.) • Verify that the following parts are engaged correctly. ▪ DC-DC converter (See **DC-DC CONVERTER REMOVAL/INSTALLATION [i-ELOOP]**.) ▪ Capacitor (i-ELOOP) (See **CAPACITOR (i-ELOOP) REMOVAL/INSTALLATION [i-ELOOP]**.) • Is the engagement condition of each part normal?	No	Tighten the DC-DC converter or capacitor (i-ELOOP) properly, then go to the next step.
2	**PURPOSE: VERIFICATION OF VEHICLE REPAIR COMPLETION** • Always reconnect all disconnected connectors. • Reinstall the service plug. (See **SERVICE PLUG DISCONNECTION/CONNECTION [i-ELOOP]**.) • Clear the DTC from the PCM memory using the M-MDS. (See **CLEARING DTC [SKYACTIV-G 2.0, SKYACTIV-G 2.5]**.) • Implement the repeatability verification procedure. (See **Repeatability Verification Procedure**.) • Perform the DTC Reading Procedure. (See **ON-BOARD DIAGNOSTIC TEST [SKYACTIV-G 2.0, SKYACTIV-G 2.5]**.) • Is the same DTC present?	Yes	Replace the capacitor (i-ELOOP) and verify that the repairs have been completed in Step 2. (See **CAPACITOR (i-ELOOP) REMOVAL/INSTALLATION [i-ELOOP]**.) • If the malfunction recurs, replace the PCM. (See **PCM REMOVAL/INSTALLATION [SKYACTIV-G 2.0, SKYACTIV-G 2.5]**.) Go to the next step.
		No	Go to the next step.
3	**PURPOSE: VERIFY IF THERE IS ANY OTHER MALFUNCTION** • Is any other DTC or pending code stored?	Yes	Go to the applicable DTC inspection. (See **DTC TABLE [SKYACTIV-G 2.0, SKYACTIV-G 2.5]**.)

		No	DTC troubleshooting completed.

2014 - Mazda3 - Engine

DTC P2090:00 [SKYACTIV-G 2.0, SKYACTIV-G 2.5]

DTC P2090:00	OCV circuit low input
DETECTION CONDITION	• The OCV control voltage relative to the PCM control is too low. **Diagnostic support note** • This is a continuous monitor (CCM). • The check engine light illuminates if the PCM detects the above malfunction condition during the first drive cycle. • FREEZE FRAME DATA (Mode 2)/Snapshot data is available. • DTC is stored in the PCM memory.
FAIL-SAFE FUNCTION	• Set the exhaust variable valve timing control to the maximum advanced position.
POSSIBLE CAUSE	• OCV connector or terminals malfunction • Short to ground or open circuit in OCV power supply circuit ▪ Short to ground in wiring harness between ENGINE2 15 A fuse and OCV terminal B ▪ ENGINE2 15 A fuse malfunction ▪ Open circuit in wiring harness between main relay terminal D and OCV terminal B • Short to ground in wiring harness between OCV terminal A and PCM terminal 1AN • PCM connector or terminals malfunction • Open circuit in wiring harness between OCV terminal A and PCM terminal 1AN • OCV malfunction • PCM malfunction

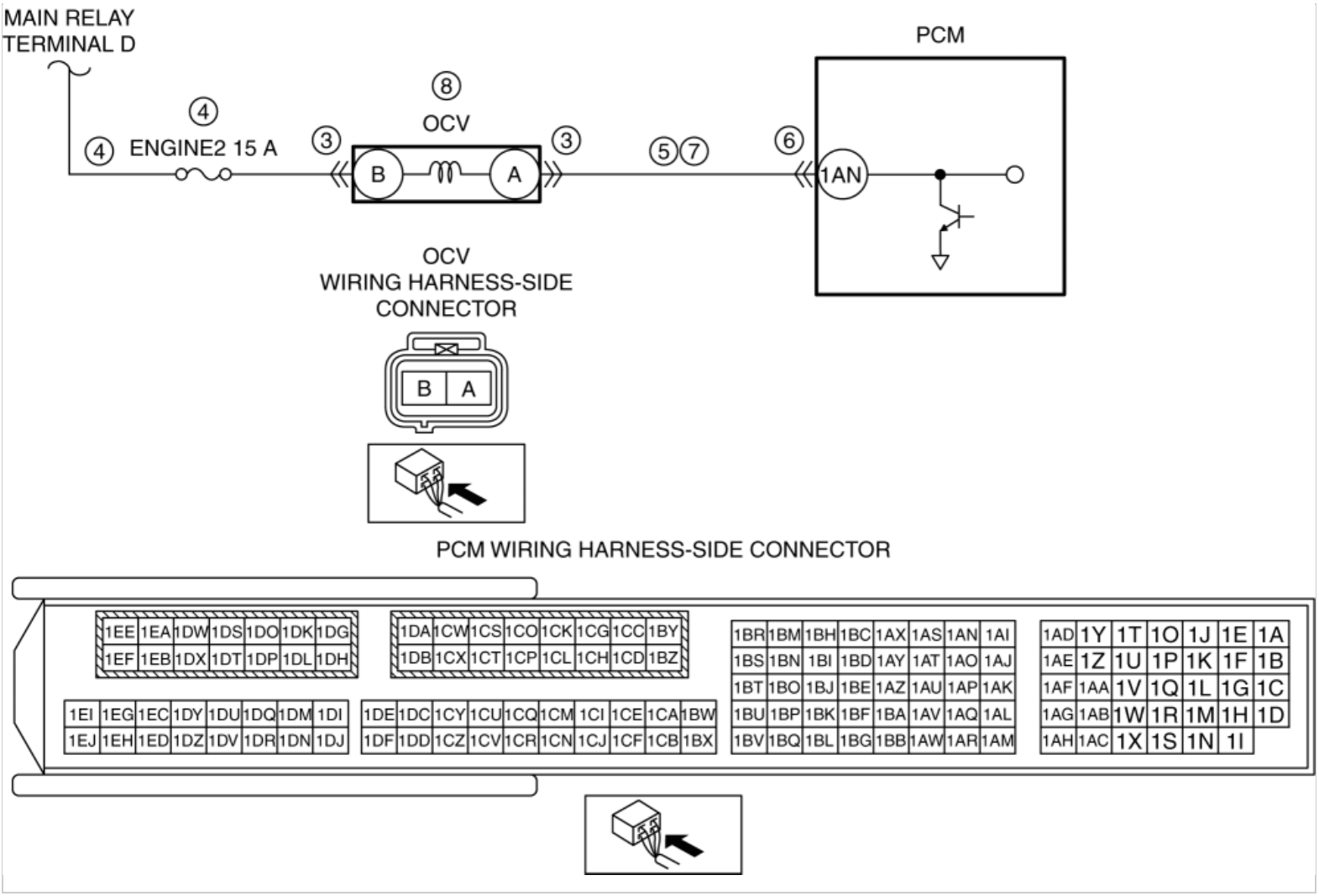

Diagnostic Procedure

STEP	INSPECTION		ACTION
1	**VERIFY FREEZE FRAME DATA (MODE 2)/SNAPSHOT DATA HAS BEEN RECORDED** • Has the FREEZE FRAME DATA (Mode 2)/snapshot data been recorded?	Yes	Go to the next step.
		No	Record the FREEZE FRAME DATA (Mode 2)/snapshot data on the repair order, then go to the next step.
2	**VERIFY RELATED REPAIR INFORMATION AVAILABILITY** • Verify related Service Bulletins and/or on-line repair information availability. • Is any related repair information available?	Yes	Perform repair or diagnosis according to the available repair information. • If the vehicle is not repaired, go to the next step.
		No	Go to the next step.
3	**INSPECT OCV CONNECTOR CONDITION** • Switch the ignition off. • Disconnect the OCV connector. • Inspect for poor connection (such as damaged/pulled-out pins, corrosion).	Yes	Repair or replace the connector and/or terminals, then go to Step 9.
		No	Go to the next step.

	• Is there any malfunction?		
4	**INSPECT OCV POWER SUPPLY CIRCUIT FOR SHORT TO GROUND OR OPEN CIRCUIT** • Verify that the OCV connector is disconnected. • Switch the ignition ON (engine off). **NOTE:** • Another DTC may be stored by the PCM detecting an open circuit. • Measure the voltage at the OCV terminal B (wiring harness-side). • Is the voltage **B+**?	Yes	Go to the next step.
		No	Inspect the ENGINE2 15 A fuse. • If the fuse is blown: ▪ Refer to the wiring diagram and verify whether or not there is a common connector between ENGINE2 15 A fuse and OCV terminal B. **If there is a common connector:** • Determine the malfunctioning part by inspecting the common connector and the terminal for corrosion, damage, or pin disconnection, and the common wiring harness for a short to ground. • Repair or replace the malfunctioning part. **If there is no common connector:** • Repair or replace the wiring harness which has a short to ground. • Replace the fuse. • If the fuse is damaged: ▪ Replace the fuse. • If the fuse is normal: ▪ Refer to the wiring diagram and verify whether or not there is a common connector between main relay terminal D and OCV terminal B. **If there is a common connector:** • Determine the malfunctioning part by inspecting the common connector and the terminal for corrosion, damage, or pin disconnection, and the common wiring harness for an open circuit. • Repair or replace the malfunctioning part. **If there is no common connector:** • Repair or replace the wiring harness which has an open circuit. Go to Step 9.
5	**INSPECT OCV SIGNAL CIRCUIT FOR SHORT TO GROUND** • Verify that the OCV connector is disconnected. • Switch the ignition off.	Yes	If the short to ground circuit could be detected in the wiring harness: • Refer to the wiring diagram and verify whether or not there is a common connector between OCV terminal A and PCM terminal 1AN. **If there is a common connector:**

	• Inspect for continuity between OCV terminal A (wiring harness-side) and body ground. • Is there continuity?		▪ Determine the malfunctioning part by inspecting the common connector and the terminal for corrosion, damage, or pin disconnection, and the common wiring harness for a short to ground. ▪ Repair or replace the malfunctioning part. **If there is no common connector:** ▪ Repair or replace the wiring harness which has a short to ground. If the short to ground circuit could not be detected in the wiring harness: • Replace the PCM (short to ground in the PCM internal circuit). (See **PCM REMOVAL/INSTALLATION [SKYACTIV-G 2.0, SKYACTIV-G 2.5]**.) Go to Step 9.
		No	Go to the next step.
6	**INSPECT PCM CONNECTOR CONDITION** • Disconnect the PCM connector. • Inspect for poor connection (such as damaged/pulled-out pins, corrosion). • Is there any malfunction?	Yes	Repair or replace the connector and/or terminals, then go to Step 9.
		No	Go to the next step.
7	**INSPECT OCV SIGNAL CIRCUIT FOR OPEN CIRCUIT** • Verify that the OCV and PCM connectors are disconnected. • Inspect for continuity between OCV terminal A (wiring harness-side) and PCM terminal 1AN (wiring harness-side). • Is there continuity?	Yes	Go to the next step.
		No	Refer to the wiring diagram and verify whether or not there is a common connector between OCV terminal A and PCM terminal 1AN. **If there is a common connector:** • Determine the malfunctioning part by inspecting the common connector and the terminal for corrosion, damage, or pin disconnection, and the common wiring harness for an open circuit. • Repair or replace the malfunctioning part. **If there is no common connector:** • Repair or replace the wiring harness which has an open circuit. Go to Step 9.
8	**INSPECT OCV** • Inspect the OCV. (See **OIL CONTROL VALVE (OCV) INSPECTION [SKYACTIV-G 2.0, SKYACTIV-G 2.5]**.) • Is there any malfunction?	Yes	Replace the OCV, then go to the next step. (See **OIL CONTROL VALVE (OCV) REMOVAL/INSTALLATION [SKYACTIV-G 2.0, SKYACTIV-G 2.5]**.)
		No	Go to the next step.
9	**VERIFY DTC TROUBLESHOOTING COMPLETED** • Always reconnect all disconnected connectors. • Clear the DTC from the PCM memory using the M-MDS. (See **AFTER REPAIR PROCEDURE [SKYACTIV-G 2.0,**	Yes	Repeat the inspection from Step 1. • If the malfunction recurs, replace the PCM. (See **PCM REMOVAL/INSTALLATION [SKYACTIV-G 2.0, SKYACTIV-G 2.5]**.) Go to the next step.

	SKYACTIV-G 2.5].) • Perform the KOER self test. (See **KOEO/KOER SELF TEST [SKYACTIV-G 2.0, SKYACTIV-G 2.5]**.) • Is the same DTC present?	No	Go to the next step.
10	**VERIFY AFTER REPAIR PROCEDURE** • Perform the “AFTER REPAIR PROCEDURE”. (See **AFTER REPAIR PROCEDURE [SKYACTIV-G 2.0, SKYACTIV-G 2.5]**.) • Are any DTCs present?	Yes	Go to the applicable DTC inspection. (See **DTC TABLE [SKYACTIV-G 2.0, SKYACTIV-G 2.5]**.)
		No	DTC troubleshooting completed.

2014 - Mazda3 - Engine

DTC P2091:00 [SKYACTIV-G 2.0, SKYACTIV-G 2.5]

DTC P2091:00	OCV circuit high input
DETECTION CONDITION	• The OCV control voltage relative to the PCM control is too high. **Diagnostic support note** • This is a continuous monitor (CCM). • The check engine light illuminates if the PCM detects the above malfunction condition during the first drive cycle. • FREEZE FRAME DATA (Mode 2)/Snapshot data is available. • DTC is stored in the PCM memory.
FAIL-SAFE FUNCTION	• Set the exhaust variable valve timing control to the maximum advanced position.
POSSIBLE CAUSE	• OCV connector or terminals malfunction • PCM connector or terminals malfunction • Short to power supply in wiring harness between OCV terminal A and PCM terminal 1AN • OCV malfunction • PCM malfunction

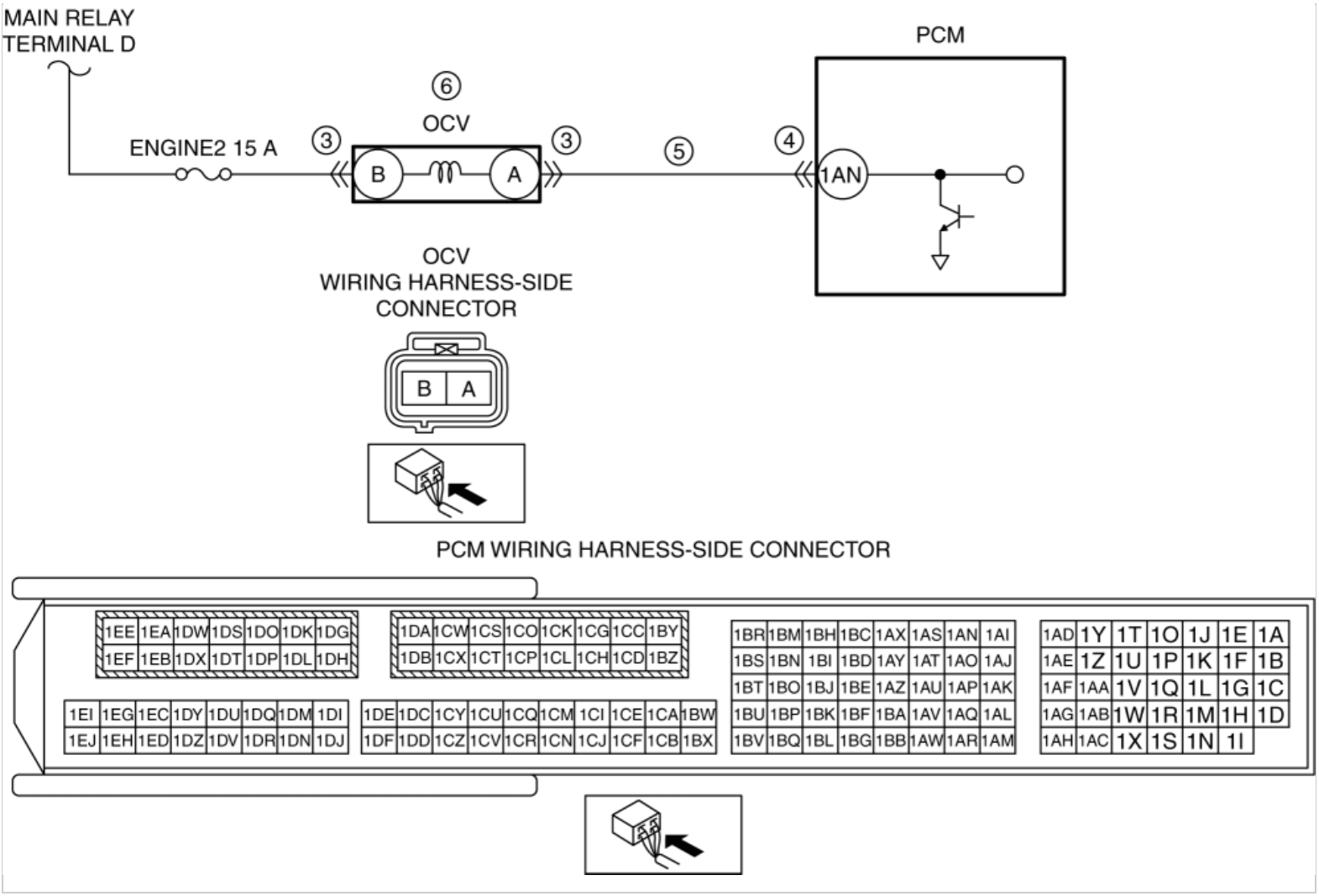

Diagnostic Procedure

STEP	INSPECTION		ACTION
1	**VERIFY FREEZE FRAME DATA (MODE 2)/SNAPSHOT DATA HAS BEEN RECORDED** • Has the FREEZE FRAME DATA (Mode 2)/snapshot data been recorded?	Yes	Go to the next step.
		No	Record the FREEZE FRAME DATA (Mode 2)/snapshot data on the repair order, then go to the next step.
2	**VERIFY RELATED REPAIR INFORMATION AVAILABILITY** • Verify related Service Bulletins and/or on-line repair information availability. • Is any related repair information available?	Yes	Perform repair or diagnosis according to the available repair information. • If the vehicle is not repaired, go to the next step.
		No	Go to the next step.
3	**INSPECT OCV CONNECTOR CONDITION** • Switch the ignition off. • Disconnect the OCV connector. • Inspect for poor connection (such as	Yes	Repair or replace the connector and/or terminals, then go to Step 7.
		No	Go to the next step.

	damaged/pulled-out pins, corrosion). • Is there any malfunction?		
4	**INSPECT PCM CONNECTOR CONDITION** • Disconnect the PCM connector. • Inspect for poor connection (such as damaged/pulled-out pins, corrosion). • Is there any malfunction?	Yes	Repair or replace the connector and/or terminals, then go to Step 7.
		No	Go to the next step.
5	**INSPECT OCV CONTROL CIRCUIT FOR SHORT TO POWER SUPPLY** • Verify that the OCV and PCM connectors are disconnected. • Switch the ignition ON (engine off). **NOTE:** • Another DTC may be stored by the PCM detecting an open circuit. • Measure the voltage at the OCV terminal A (wiring harness-side). • Is the voltage **0 V**?	Yes	Go to the next step.
		No	Refer to the wiring diagram and verify whether or not there is a common connector between OCV terminal A and PCM terminal 1AN. **If there is a common connector:** • Determine the malfunctioning part by inspecting the common connector and the terminal for corrosion, damage, or pin disconnection, and the common wiring harness for a short to power supply. • Repair or replace the malfunctioning part. **If there is no common connector:** • Repair or replace the wiring harness which has a short to power supply. Go to Step 7.
6	**INSPECT OCV** • Inspect the OCV. (See **OIL CONTROL VALVE (OCV) INSPECTION [SKYACTIV-G 2.0, SKYACTIV-G 2.5]**.) • Is there any malfunction?	Yes	Replace the OCV, then go to the next step. (See **OIL CONTROL VALVE (OCV) REMOVAL/INSTALLATION [SKYACTIV-G 2.0, SKYACTIV-G 2.5]**.)
		No	Go to the next step.
7	**VERIFY DTC TROUBLESHOOTING COMPLETED** • Always reconnect all disconnected connectors. • Clear the DTC from the PCM memory using the M-MDS. (See **AFTER REPAIR PROCEDURE [SKYACTIV-G 2.0, SKYACTIV-G 2.5]**.) • Perform the KOER self test. (See **KOEO/KOER SELF TEST [SKYACTIV-G 2.0, SKYACTIV-G 2.5]**.)	Yes	Repeat the inspection from Step 1. • If the malfunction recurs, replace the PCM. (See **PCM REMOVAL/INSTALLATION [SKYACTIV-G 2.0, SKYACTIV-G 2.5]**.) Go to the next step.
		No	Go to the next step.

	• Is the same DTC present?		
8	**VERIFY AFTER REPAIR PROCEDURE** • Perform the “AFTER REPAIR PROCEDURE”. (See **AFTER REPAIR PROCEDURE [SKYACTIV-G 2.0, SKYACTIV-G 2.5]**.) • Are any DTCs present?	Yes	Go to the applicable DTC inspection. (See **DTC TABLE [SKYACTIV-G 2.0, SKYACTIV-G 2.5]**.)
		No	DTC troubleshooting completed.

2014 - Mazda3 - Engine

DTC P2096:00, P2097:00 [SKYACTIV-G 2.0, SKYACTIV-G 2.5]

NOTE:

- To determine the malfunctioning part, proceed with the diagnostics from "Function Inspection Using M-MDS".

Details On DTCs

DESCRIPTION	HO2S fuel injection control system: • P2096:00: Air fuel too lean • P2097:00: Air fuel too rich	
DETECTION CONDITION	Determination conditions	• P2096:00: Depending on the correction deviation of the A/F sensor, a condition in which the fuel feedback correction amount (SHRTFT12) for the HO2S is the specified value (**2 %**) or more and the sum (SHRTFT12+LONGFT12) of the fuel feedback correction amount and the fuel learning correction amount is the specified value (**2.3—2.5 %**) or more continues for a period of **25 s**.
		• P2097:00: Depending on the correction deviation of the A/F sensor, a condition in which the fuel feedback correction amount (SHRTFT12) for the HO2S is the specified value (**−2 %**) or less and the sum (SHRTFT12+LONGFT12) of the fuel feedback correction amount and the fuel learning correction amount is the specified value (**−2.5— −2.3 %**) or less continues for a period of **25 s**.
	Preconditions	• HO2S estimated temperature: **above 450 °C {842 °F}**
	Malfunction determination period	• **25 s** period
	Drive cycle	• **2**
	Self test type	• CMDTC self test
	Sensor used	• HO2S
FAIL-SAFE FUNCTION	• Not applicable	
VEHICLE STATUS WHEN DTCs ARE OUTPUT	• Illuminates check engine light.	
	• Erratic signal to PCM ▪ ECT sensor No.1 signal malfunction ▪ MAF sensor signal malfunction ▪ MAP sensor signal malfunction ▪ IAT sensor No.2 signal malfunction ▪ Related connector or terminals malfunction ▪ Related wiring harness malfunction • Improper operation of electric variable valve timing control system ▪ Electric variable valve timing driver malfunction ▪ Electric variable valve timing motor malfunction	

POSSIBLE CAUSE	▪ Electric variable valve timing actuator malfunction • Improper operation of hydraulic variable valve timing control system • Air suction in intake air system • Poor fuel quality • HO2S malfunction ▪ HO2S loose • A/F sensor malfunction ▪ A/F sensor loose ▪ Exhaust system leakage ▪ A/F sensor deterioration • Fuel leakage or restriction in fuel line • Fuel injector malfunction ▪ Improper operation of fuel injector ▪ Fuel injector related wiring harness malfunction • Improper operation of purge control system ▪ Purge solenoid valve malfunction ▪ Purge solenoid hoses improper connection • MAP sensor malfunction • MAF sensor malfunction • Air cleaner element restricted • PCM malfunction

System Wiring Diagram

- Not applicable

Function Explanation (DTC Detection Outline)

- The PCM detects the oxygen concentration passing through the catalyst by the HO2S signal and performs fuel injection amount correction to maintain optimum purification conditions in the catalyst. To maintain optimum purification conditions in the catalyst, the fuel injection correction has a “Feedback correction amount” which performs correction according to the driving conditions relative to the previously set air/fuel ratio, and a “Learning correction amount” which corrects for deterioration over time.
- “Fuel feedback correction amount (SHRTFT12)” and “Fuel learning correction amount (LONGFT12)” can be verified from the M-MDS PID item.

P2096:00

- If a condition in which the feedback correction amount from the HO2S signal is large (fuel injection amount being increased) continues for the specified time (**25 s**), the PCM determines a feedback correction amount malfunction and stores a DTC.
- A condition in which the fuel feedback correction amount (SHRTFT12) for the HO2S is the specified value (**2 %**) or more and the sum (SHRTFT12+LONGFT12) of the fuel feedback correction amount and the fuel learning correction amount is the specified value (**2.3—2.5 %**) or more continues for a period of **25 s**.

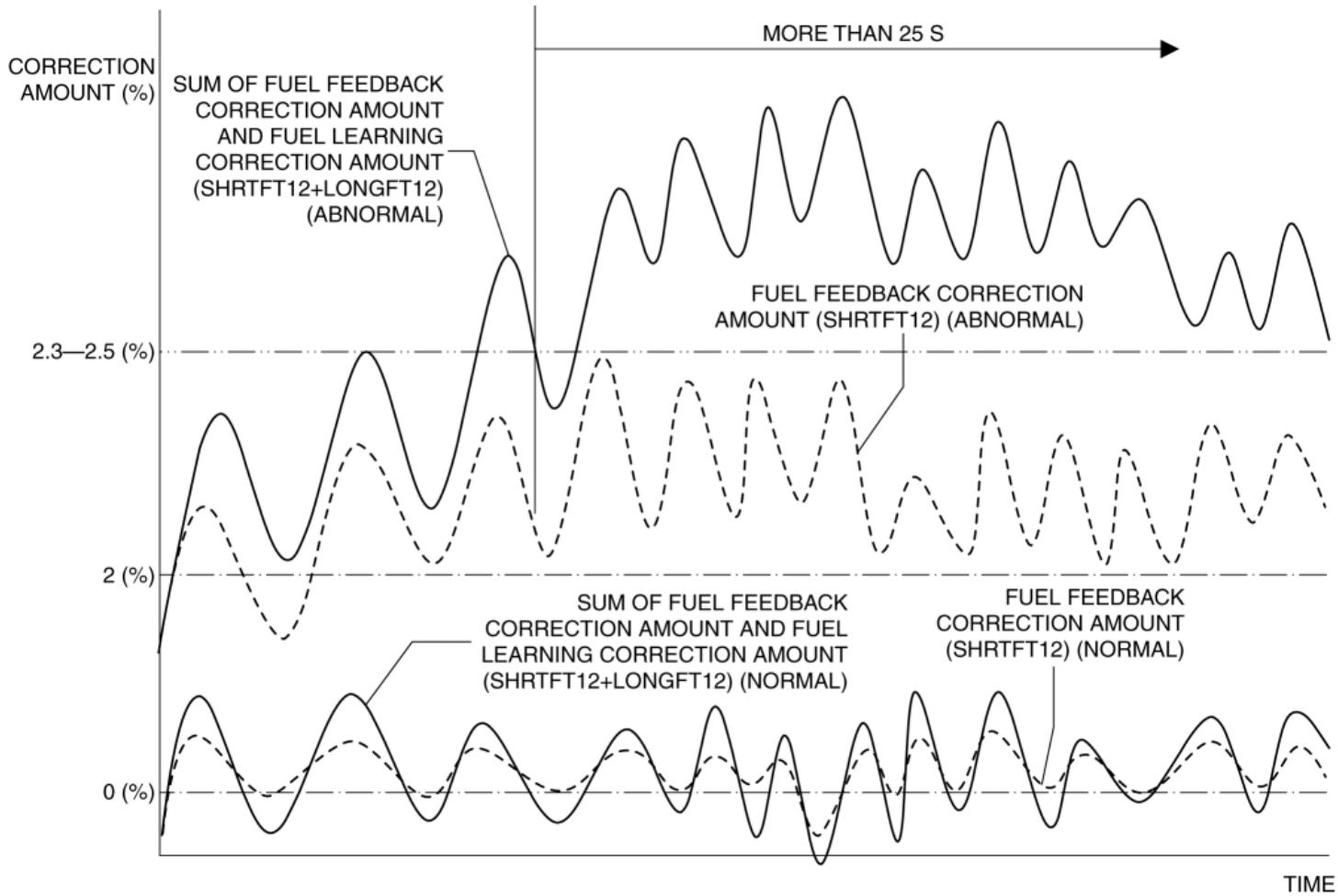

P2097:00

- If a condition in which the feedback correction amount from the HO2S signal is small (fuel injection amount being decreased) continues for the specified time (**25 s**), the PCM determines a feedback correction amount malfunction and stores a DTC.
- A condition in which the fuel feedback correction amount (SHRTFT12) for the HO2S is the specified value (**−2 %**) or less and the sum (SHRTFT12+LONGFT12) of the fuel feedback correction amount and the fuel learning correction amount is the specified value (**−2.5—−2.3 %**) or less continues for a period of **25 s**.

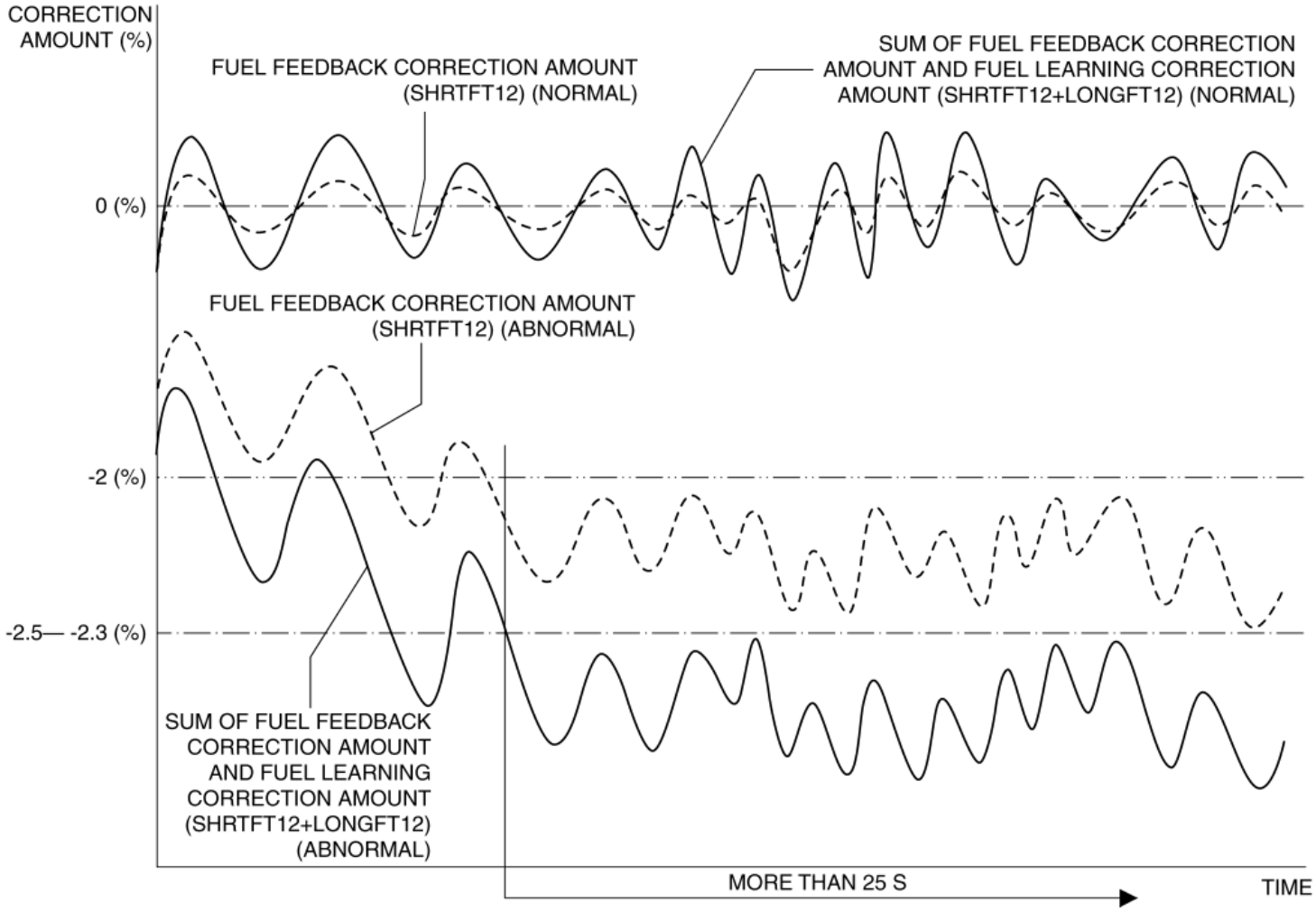

Repeatability Verification Procedure

- Warm up the engine to allow the engine coolant temperature to reach **80 °C {176 °F} or more**.
- Shift to 3rd gear and drive the vehicle for **20 min** at an engine speed of **1,500 rpm or more** and a vehicle speed of **50 km/h {31 mph} or more**.

  NOTE:

  - Match the engine coolant temperature in the recorded FREEZE FRAME DATA (Mode 2)/snapshot data, the vehicle speed, and engine speed values to the best extent possible while driving the vehicle.
- Try to reproduce the malfunction by driving the vehicle for **5 min** based on the values in the FREEZE FRAME DATA (Mode 2)/snapshot data.

PID Item/Simulation Item Used In Diagnosis

PID/DATA monitor item table—: Not applicable

Item	Definition	Unit	Condition/Specification
EQ_RAT11	Excess air factor (estimated value) to theoretical air/fuel ratio (14.7) by fuel feedback control	—	• Idle (after warm up): Approx. 1
O2S11	A/F sensor current	µA	• Idle (after warm up): Approx. −39 µA • Deceleration fuel cut (accelerator pedal released from engine speed of 4,000 rpm or more): Approx. 3.84 mA
O2S12	HO2S voltage	V	• Idle (after warm up): 0—1.0 V • Deceleration fuel cut (accelerator pedal released from engine

			speed of 4,000 rpm or more): Approx. 0 V

Simulation item table

Item	Definition	Unit	Operation
EVAPCP	Purge solenoid valve control signal	%	• Changes % and forcibly drives/stops purge solenoid valve.
INJ_1	Fuel injector No.1	OFF	• Select OFF to forcibly stop fuel injector No.1.
INJ_2	Fuel injector No.2	OFF	• Select OFF to forcibly stop fuel injector No.2.
INJ_3	Fuel injector No.3	OFF	• Select OFF to forcibly stop fuel injector No.3.
INJ_4	Fuel injector No.4	OFF	• Select OFF to forcibly stop fuel injector No.4.

Function Inspection Using M-MDS

STEP	INSPECTION	RESULTS	ACTION
1	**PURPOSE: VERIFY RELATED REPAIR INFORMATION AVAILABILITY** • Verify related Service Bulletins and/or on-line repair information availability. • Is any related repair information available?	Yes	Perform repair or diagnosis according to the available repair information. • If the vehicle is not repaired, go to the next step.
		No	Go to the next step.
2	**PURPOSE: IDENTIFY TRIGGER DTC FOR FREEZE FRAME DATA (MODE 2)** • Is the DTC P2096:00 or P2097:00 on FREEZE FRAME DATA (Mode 2)?	Yes	Go to the next step.
		No	Go to the troubleshooting procedure for DTC on FREEZE FRAME DATA (Mode 2). (See **DTC TABLE [SKYACTIV-G 2.0, SKYACTIV-G 2.5]**.)
3	**PURPOSE: RECORD VEHICLE STATUS AT TIME OF DTC DETECTION TO UTILIZE WITH REPEATABILITY VERIFICATION** • Has the FREEZE FRAME DATA (Mode 2)/snapshot data been recorded?	Yes	Go to the next step.
		No	Record the FREEZE FRAME DATA (Mode 2)/snapshot data on the repair order, then go to the next step. **NOTE:** • Recording can be facilitated using the screen capture function of the PC.
4	**PURPOSE: VERIFICATION IF MALFUNCTION CAUSED BY LACK OF FUEL** • Verify the snapshot data FLI. (See **ON-BOARD DIAGNOSTIC TEST [SKYACTIV-G 2.0, SKYACTIV-G 2.5]**.) • Is the snapshot data FLI **5% or less**?	Yes	Refill the fuel. Go to the troubleshooting procedure to perform the procedure from Step 13.
		No	Go to the next step.
5	**PURPOSE: VERIFY DTCs FOR FUEL PRESSURE SENSOR** • Switch the ignition off, then ON (engine off).	Yes	Go to the applicable DTC inspection.

	• Perform the Pending Trouble Code Access Procedure and DTC Reading Procedure. (See **ON-BOARD DIAGNOSTIC TEST [SKYACTIV-G 2.0, SKYACTIV-G 2.5]**.) • Is the PENDING CODE/DTC P0088:00, P0192:00 or P0193:00 also present?		(See **DTC P0088:00 [SKYACTIV-G 2.0, SKYACTIV-G 2.5]**.) (See **DTC P0192:00 [SKYACTIV-G 2.0, SKYACTIV-G 2.5]**.) (See **DTC P0193:00 [SKYACTIV-G 2.0, SKYACTIV-G 2.5]**.) Go to the next step.
		No	Go to the next step.
6	**PURPOSE: VERIFY DTCs FOR ELECTRIC VARIABLE VALVE TIMING CONTROL SYSTEM AND HYDRAULIC VARIABLE VALVE TIMING** • Perform the Pending Trouble Code Access Procedure and DTC Reading Procedure. (See **ON-BOARD DIAGNOSTIC TEST [SKYACTIV-G 2.0, SKYACTIV-G 2.5]**.) • Is the PENDING CODE/DTC P0010:00, P0011:00, P0012:00, P0014:00, P0015:00, P1380:00, P2090:00 or P2091:00 also present?	Yes	Go to the applicable DTC inspection. (See **DTC P0010:00 [SKYACTIV-G 2.0, SKYACTIV-G 2.5]**.) (See **DTC P0011:00, P0012:00 [SKYACTIV-G 2.0, SKYACTIV-G 2.5]**.) (See **DTC P0014:00 [SKYACTIV-G 2.0, SKYACTIV-G 2.5]**.) (See **DTC P0015:00 [SKYACTIV-G 2.0, SKYACTIV-G 2.5]**.) (See **DTC P1380:00 [SKYACTIV-G 2.0, SKYACTIV-G 2.5]**.) (See **DTC P2090:00 [SKYACTIV-G 2.0, SKYACTIV-G 2.5]**.) (See **DTC P2091:00 [SKYACTIV-G 2.0, SKYACTIV-G 2.5]**.) Go to the next step.
		No	Go to the next step.
7	**PURPOSE: VERIFY DTCs FOR MISFIRE** • Perform the Pending Trouble Code Access Procedure and DTC Reading Procedure. (See **ON-BOARD DIAGNOSTIC TEST [SKYACTIV-G 2.0, SKYACTIV-G 2.5]**.) • Is the PENDING CODE/DTC P0300:00, P0301:00, P0302:00, P0303:00 or P0304:00 also present?	Yes	Go to the applicable DTC inspection. (See **DTC P0300:00 [SKYACTIV-G 2.0, SKYACTIV-G 2.5]**.) (See **DTC P0301:00, P0302:00, P0303:00, P0304:00 [SKYACTIV-G 2.0, SKYACTIV-G 2.5]**.) Go to the next step.
		No	Go to the next step.
8	**PURPOSE: VERIFY A/F SENSOR AND HO2S INPUT SIGNAL** • Start the engine and warm it up completely. • Access the following PIDs using the M-MDS: (See **ON-BOARD DIAGNOSTIC TEST [SKYACTIV-G 2.0, SKYACTIV-G 2.5]**.) ▪ O2S11 ▪ O2S12 • Drive the vehicle under the following conditions. **WARNING:** • When the M-MDS is used to observe monitor system status while driving, be sure to have another technician with you, or record the data in the M-MDS using the PID/DATA MONITOR AND RECORD capturing function and inspect later. • While performing this step, always operate the vehicle in a safe and lawful manner. ▪ After increasing the engine speed to **3,000 rpm**, decelerate using engine braking.	Yes	Go to Step 10.
		No	Go to the next step.

	• Is the displayed PID value as follows? ▪ O2S11: **0.25 mA or more** ▪ O2S12: **0.3 V or less**		
9	**INSPECT RELATED SENSOR WIRING HARNESS AND CONNECTOR** • Access the following PIDs using the M-MDS: (See **ON-BOARD DIAGNOSTIC TEST [SKYACTIV-G 2.0, SKYACTIV-G 2.5]**.) ▪ O2S11 ▪ O2S12 • When the PCM, A/F sensor and HO2S are shaken, does the PID value include a PID item which has changed?	Yes	Inspect the related wiring harness and connector. • Repair or replace the malfunctioning part. Go to the troubleshooting procedure to perform the procedure from Step 13.
		No	Go to the troubleshooting procedure to perform the procedure from Step 1.
10	**PURPOSE: VERIFY IF MALFUNCTION CAUSED BY FUEL INJECTOR IMPROPER OPERATION** • Start the engine and idle it. • Access the following simulation items using the M-MDS: (See **ON-BOARD DIAGNOSTIC TEST [SKYACTIV-G 2.0, SKYACTIV-G 2.5]**.) ▪ INJ_1 ▪ INJ_2 ▪ INJ_3 ▪ INJ_4 • Using the simulation function, can the change in engine speed be verified when operation of each of the fuel injectors is stopped?	Yes	Go to the next step.
		No	Go to the troubleshooting procedure to perform the procedure from Step 3.
11	**PURPOSE: VERIFY IF MALFUNCTION CAUSED BY PURGE SOLENOID VALVE IMPROPER OPERATION** • Start the engine and idle it. • Access the EQ_RAT11 PID and simulation item EVAPCP using the M-MDS. (See **ON-BOARD DIAGNOSTIC TEST [SKYACTIV-G 2.0, SKYACTIV-G 2.5]**.) • Using the simulation function, does the EQ_RAT11 PID value change when the purge solenoid valve is opened/closed?	Yes	Go to the troubleshooting procedure to perform the procedure from Step 5.
		No	Go to the troubleshooting procedure to perform the procedure from Step 4.

Troubleshooting Diagnostic Procedure

Intention of troubleshooting procedure

- Step 1—2
  - Perform inspection of HO2S and A/F sensor signal related parts.
- Step 3
  - Perform a fuel injector control system inspection.
- Step 4
  - Perform a purge control system inspection.
- Step 5—6
  - Perform inspection of fuel line.
- Step 7—12
  - Perform inspection of each separate part.
- Step 13—14
  - Verify that the primary malfunction is resolved and there are no other malfunctions.

STEP	INSPECTION	RESULTS	ACTION
1	**PURPOSE: INSPECT INSTALLATION OF HO2S** • Inspect installation of HO2S. • Is the HO2S installed securely?	Yes	Go to the next step.
		No	Retighten the HO2S, then go to Step 13. (See **HEATED OXYGEN SENSOR (HO2S) REMOVAL/INSTALLATION [SKYACTIV-G 2.0, SKYACTIV-G 2.5]**.)
2	**PURPOSE: INSPECT INSTALLATION OF A/F SENSOR** • Inspect installation of A/F sensor. • Is the A/F sensor installed securely?	Yes	Replace the A/F sensor and/or HO2S, then go to Step 13. (See **AIR FUEL RATIO (A/F) SENSOR REMOVAL/INSTALLATION [SKYACTIV-G 2.0, SKYACTIV-G 2.5]**.) (See **HEATED OXYGEN SENSOR (HO2S) REMOVAL/INSTALLATION [SKYACTIV-G 2.0, SKYACTIV-G 2.5]**.)
		No	Retighten the A/F sensor, then go to Step 13. (See **AIR FUEL RATIO (A/F) SENSOR REMOVAL/INSTALLATION [SKYACTIV-G 2.0, SKYACTIV-G 2.5]**.)
3	**PURPOSE: INSPECT FUEL INJECTOR OPERATION** • In Step 10 of the function inspection using the M-MDS, perform a fail-safe injector operation inspection on the cylinders in which engine speed fluctuation could not be verified. (See **ENGINE CONTROL SYSTEM OPERATION INSPECTION [SKYACTIV-G 2.0, SKYACTIV-G 2.5]**.) • Is there any malfunction?	Yes	Repair or replace the malfunctioning part according to the inspection results, then go to Step 13. (See **FUEL INJECTOR REMOVAL/INSTALLATION [SKYACTIV-G 2.0, SKYACTIV-G 2.5]**.)
		No	Go to the next step.
4	**PURPOSE: DETERMINE INTEGRITY OF PURGE SOLENOID VALVE** • Inspect the purge solenoid valve. (See **PURGE SOLENOID VALVE INSPECTION [SKYACTIV-G 2.0, SKYACTIV-G 2.5]**.) • Is there any malfunction?	Yes	Replace the purge solenoid valve, then go to Step 13. (See **PURGE SOLENOID VALVE REMOVAL/INSTALLATION [SKYACTIV-G 2.0, SKYACTIV-G 2.5]**.)
		No	Go to the next step.
5	**PURPOSE: VERIFY IF MALFUNCTION RELATED TO FUEL LEAK FROM FUEL SYSTEM AFFECTS DIAGNOSTIC RESULTS** • Visually inspect for leakage from fuel line between fuel distributor and fuel pump. • Is there any leakage?	Yes	Repair or replace the malfunctioning part according to the inspection results, then go to Step 13.
		No	Go to the next step.
6	**PURPOSE: INSPECT FUEL LINE (LOW-SIDE)** • Inspect for leakage or restriction in the fuel line (low-side). • Is there any malfunction?	Yes	Repair or replace the malfunctioning part according to the inspection results, then go to Step 13.
		No	Go to the next step.
7	**PURPOSE: INSPECT INSTALLATION OF HO2S** • Inspect installation of HO2S. • Is the HO2S installed securely?	Yes	Go to the next step.
		No	Retighten the HO2S, then go to Step 13. (See **HEATED OXYGEN SENSOR (HO2S) REMOVAL/INSTALLATION [SKYACTIV-G 2.0, SKYACTIV-G 2.5]**.)
8	**PURPOSE: INSPECT INSTALLATION OF A/F SENSOR** • Inspect installation of A/F sensor. • Is the A/F sensor installed securely?	Yes	Go to the next step.
		No	Retighten the A/F sensor, then go to Step 13. (See **AIR FUEL RATIO (A/F) SENSOR REMOVAL/INSTALLATION [SKYACTIV-G 2.0, SKYACTIV-G 2.5]**.)
	PURPOSE: INSPECT EXHAUST SYSTEM FOR LEAKAGE		

9	• Verify the exhaust gas leakage from the exhaust system. (between A/F sensor and HO2S) • Is there any malfunction?	Yes	Repair or replace the malfunctioning part according to the inspection results, then go to Step 13.
		No	Go to the next step.
10	**PURPOSE: DETERMINE INTEGRITY OF MAP SENSOR** • Reconnect all disconnected connectors. • Inspect the MAP sensor. (See **MANIFOLD ABSOLUTE PRESSURE (MAP) SENSOR INSPECTION [SKYACTIV-G 2.0, SKYACTIV-G 2.5]**.) • Is there any malfunction?	Yes	Replace the MAP sensor/IAT sensor No.2, then go to Step 13. (See **MANIFOLD ABSOLUTE PRESSURE (MAP) SENSOR/INTAKE AIR TEMPERATURE (IAT) SENSOR NO.2 REMOVAL/INSTALLATION [SKYACTIV-G 2.0, SKYACTIV-G 2.5]**.)
		No	Go to the next step.
11	**PURPOSE: DETERMINE INTEGRITY OF MAF SENSOR** • Inspect the MAF sensor. (See **MASS AIR FLOW (MAF) SENSOR INSPECTION [SKYACTIV-G 2.0, SKYACTIV-G 2.5]**.) • Is there any malfunction?	Yes	Replace the MAF sensor/IAT sensor No.1, then go to Step 13. (See **MASS AIR FLOW (MAF) SENSOR/INTAKE AIR TEMPERATURE (IAT) SENSOR NO.1 REMOVAL/INSTALLATION [SKYACTIV-G 2.0, SKYACTIV-G 2.5]**.)
		No	Go to the next step.
12	**PURPOSE: AIR CLEANER ELEMENT** • Remove the air cleaner element with the engine is running. (See **AIR CLEANER ELEMENT REMOVAL/INSTALLATION [SKYACTIV-G 2.0, SKYACTIV-G 2.5]**.) • Does the engine speed increase?	Yes	Inspect the air cleaner element. (See **AIR CLEANER ELEMENT INSPECTION [SKYACTIV-G 2.0, SKYACTIV-G 2.5]**.) • If there is any malfunction: ▪ Clean or replace the air cleaner element, then go to Step 13. (See **AIR CLEANER ELEMENT REMOVAL/INSTALLATION [SKYACTIV-G 2.0, SKYACTIV-G 2.5]**.) • If there is no malfunction: ▪ Go to the next step.
		No	Go to the next step.
13	**PURPOSE: VERIFICATION OF VEHICLE REPAIR COMPLETION** • Always reconnect all disconnected connectors. • Clear the DTC from the PCM memory using the M-MDS. (See **CLEARING DTC [SKYACTIV-G 2.0, SKYACTIV-G 2.5]**.) • Implement the repeatability verification procedure. (See **Repeatability Verification Procedure**.) • Perform the Pending Trouble Code Access Procedure. (See **ON-BOARD DIAGNOSTIC TEST [SKYACTIV-G 2.0, SKYACTIV-G 2.5]**.) • Is the PENDING CODE/DTC P2096:00 or P2097:00 also present?	Yes	Repeat the inspection from Step 1. • If the malfunction recurs, replace the PCM. (See **PCM REMOVAL/INSTALLATION [SKYACTIV-G 2.0, SKYACTIV-G 2.5]**.) Go to the next step.
		No	Go to the next step.
14	**PURPOSE: VERIFY IF THERE IS ANY OTHER MALFUNCTION** • Is any other DTC or pending code stored?	Yes	Go to the applicable DTC inspection. (See **DTC TABLE [SKYACTIV-G 2.0, SKYACTIV-G 2.5]**.)
		No	DTC troubleshooting completed.

2014 - Mazda3 - Engine

DTC P2101:00 [SKYACTIV-G 2.0, SKYACTIV-G 2.5]

DTC P2101:00	Throttle valve actuator control motor circuit range/performance problem
DETECTION CONDITION	• The PCM turns the main relay on, but if the input voltage is **6.0 V or less**, then the PCM determines that the main relay control circuit voltage is low. • There is a system error in the electrical throttle control system of the PCM. **Diagnostic support note** • This is a continuous monitor (CCM). • The check engine light illuminates if the PCM detects the above malfunction condition during the first drive cycle. • FREEZE FRAME DATA (Mode 2)/Snapshot data is available. • DTC is stored in the PCM memory.
FAIL-SAFE FUNCTION	• Restricts the upper limit of the engine speed. • Stops the drive-by-wire control (throttle valve is open at **approx. 8 °** by return spring force).

POSSIBLE CAUSE	• Short to ground or open circuit in main relay power supply circuit:
	  ▪ MAIN 200 A fuse and/or ENG.MAIN 40 A fuse malfunction
	• ENGINE2 15 A fuse malfunction
	• Short to ground in wiring harness between the following terminals:
	  ▪ Main relay terminal D—PCM terminal 1CK
	  ▪ Main relay terminal D—PCM terminal 2S
	  ▪ Main relay terminal E—PCM terminal 2K
	• PCM connector or terminals malfunction
	• Open circuit in wiring harness between the following terminals:
	  ▪ Main relay terminal D—PCM terminal 1CK
	  ▪ Main relay terminal D—PCM terminal 2S
	  ▪ Main relay terminal E—PCM terminal 2K
	• Throttle valve actuator and/or related circuit malfunction
	• Throttle valve actuator malfunction
	• PCM malfunction

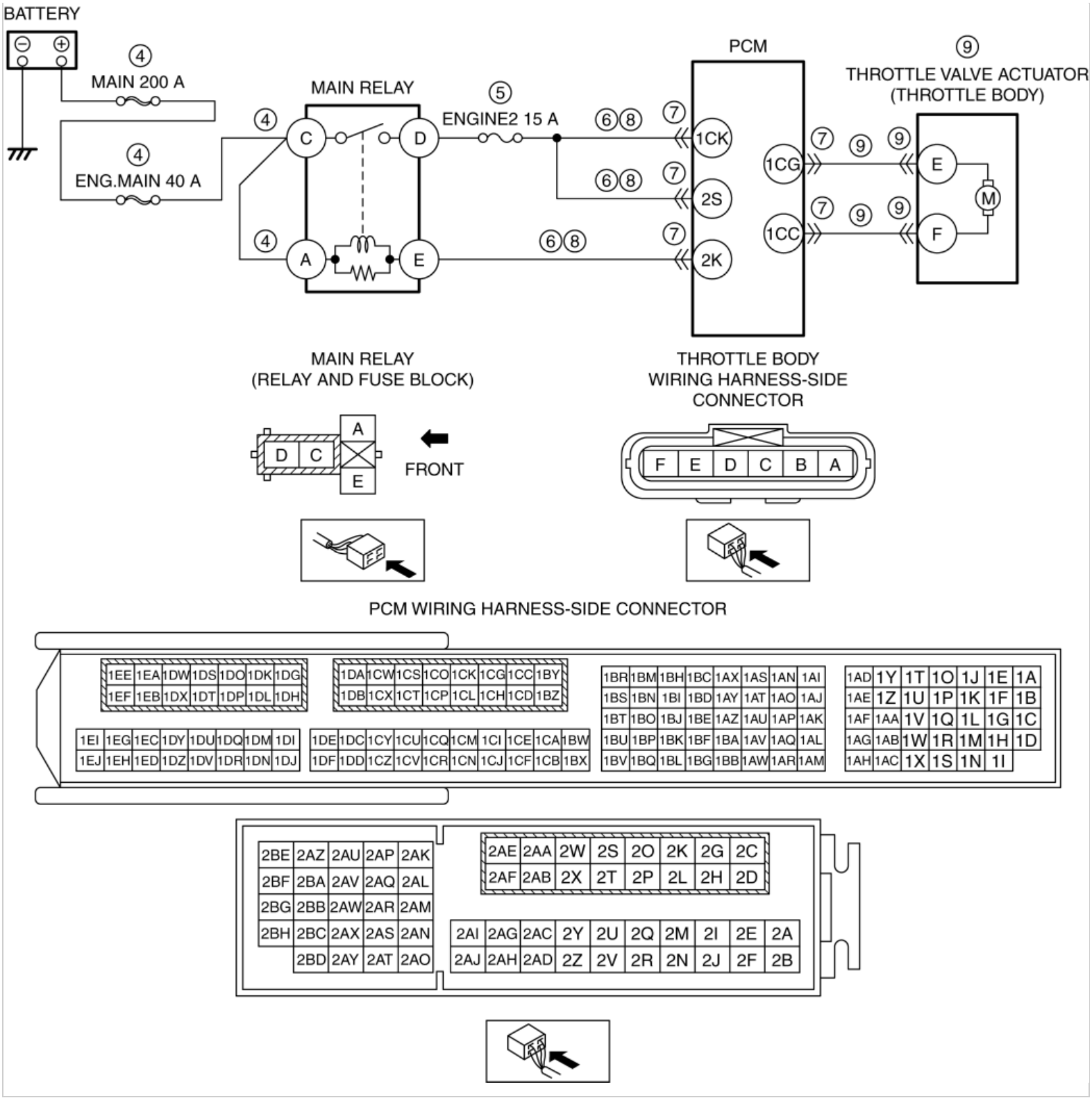

Diagnostic Procedure

STEP	INSPECTION		ACTION
1	**VERIFY FREEZE FRAME DATA (MODE 2)/SNAPSHOT DATA HAS BEEN RECORDED** • Has the FREEZE FRAME DATA (Mode 2)/snapshot data been recorded?	Yes	Go to the next step.
		No	Record the FREEZE FRAME DATA (Mode 2)/snapshot data on the repair order, then go to the next step.
	VERIFY RELATED REPAIR		

2	**INFORMATION AVAILABILITY** • Verify related Service Bulletins and/or on-line repair information availability. • Is any related repair information available?	Yes	Perform repair or diagnosis according to the available repair information. • If the vehicle is not repaired, go to the next step.
		No	Go to the next step.
3	**VERIFY RELATED PENDING CODE AND/OR DTC** • Switch the ignition off, then ON (engine off). • Perform the Pending Trouble Code Access Procedure and DTC Reading Procedure. (See **ON-BOARD DIAGNOSTIC TEST [SKYACTIV-G 2.0, SKYACTIV-G 2.5]**.) • Are any other PENDING CODEs and/or DTCs present?	Yes	Go to the applicable PENDING CODE or DTC inspection. (See **DTC TABLE [SKYACTIV-G 2.0, SKYACTIV-G 2.5]**.)
		No	Go to the next step.
4	**INSPECT MAIN RELAY POWER SUPPLY CIRCUIT FOR SHORT TO GROUND OR OPEN CIRCUIT** • Switch the ignition off. • Remove the main relay. • Measure the voltage at the following terminals (wiring harness-side): ▪ Main relay terminal C ▪ Main relay terminal A • Is the voltage **B+**?	Yes	Go to the next step.
		No	Inspect the MAIN 200 A fuse and ENG.MAIN 40 A fuse. • If the fuse is blown: ▪ Refer to the wiring diagram and verify whether or not there is a common connector between the following terminals: • MAIN 200 A fuse—Main relay terminal C • MAIN 200 A fuse—Main relay terminal A **If there is a common connector:** • Determine the malfunctioning part by inspecting the common connector and the terminal for corrosion, damage, or pin disconnection, and the common wiring harness for a short to ground. • Repair or replace the malfunctioning part. **If there is no common connector:** • Repair or replace the wiring harness which has a short to ground. • Replace the fuse. • If the fuse is damaged: ▪ Replace the fuse. • If all fuses are normal: ▪ Refer to the wiring diagram and verify whether or not there is a common connector between the following terminals: • Battery positive terminal—Main relay terminal C • Battery positive terminal—Main relay terminal A **If there is a common connector:** • Determine the malfunctioning part by

			inspecting the common connector and the terminal for corrosion, damage, or pin disconnection, and the common wiring harness for an open circuit. • Repair or replace the malfunctioning part. **If there is no common connector:** • Repair or replace the wiring harness which has an open circuit. Go to Step 10.
5	**INSPECT ENGINE2 15 A FUSE** • Remove the ENGINE2 15 A fuse. • Inspect the ENGINE2 15 A fuse. • Is there any malfunction?	Yes	If the fuse is blown: • Refer to the wiring diagram and verify whether or not there is a common connector between the following terminals: ▪ Main relay terminal D—PCM terminal 1CK ▪ Main relay terminal D—PCM terminal 2S **If there is a common connector:** ▪ Determine the malfunctioning part by inspecting the common connector and the terminal for corrosion, damage, or pin disconnection, and the common wiring harness for a short to ground. ▪ Repair or replace the malfunctioning part. **If there is no common connector:** ▪ Repair or replace the wiring harness which has a short to ground. ▪ Replace the fuse. If the fuse is damaged: • Replace the fuse. Go to Step 10.
		No	Reinstall the ENGINE2 15 A fuse, then go to the next step.
6	**INSPECT MAIN RELAY CIRCUIT FOR SHORT TO GROUND** • Main relay is removed. • Inspect for continuity between the following terminals (wiring harness-side) and body ground: ▪ Main relay terminal D ▪ Main relay terminal E • Is there continuity?	Yes	If the short to ground circuit could be detected in the wiring harness: • Refer to the wiring diagram and verify whether or not there is a common connector between the following terminals: ▪ Main relay terminal D—PCM terminal 1CK ▪ Main relay terminal D—PCM terminal 2S ▪ Main relay terminal E—PCM terminal 2K **If there is a common connector:** ▪ Determine the malfunctioning part by inspecting the common connector and the terminal for corrosion, damage, or pin disconnection, and the common wiring harness for a short to ground. ▪ Repair or replace the malfunctioning part. **If there is no common connector:** ▪ Repair or replace the wiring harness which has a short to ground. If the short to ground circuit could not be detected in the wiring harness: • Replace the PCM (short to ground in the PCM internal circuit). (See **PCM REMOVAL/INSTALLATION [SKYACTIV-G 2.0, SKYACTIV-G 2.5]**.) Go to Step 10.

		No	Go to the next step.
7	**INSPECT PCM CONNECTOR CONDITION** • Disconnect the PCM connector. • Inspect for poor connection (such as damaged/pulled-out pins, corrosion). • Is there any malfunction?	Yes	Repair or replace the connector and/or terminals, then go to Step 10.
		No	Go to the next step.
8	**INSPECT MAIN RELAY CIRCUIT FOR OPEN CIRCUIT** • Main relay is removed. • Verify that the PCM connector is disconnected. • Inspect for continuity between the following terminals (wiring harness-side): ▪ Main relay terminal D—PCM terminal 1CK ▪ Main relay terminal D—PCM terminal 2S ▪ Main relay terminal E—PCM terminal 2K • Is there continuity?	Yes	Go to the next step.
		No	Refer to the wiring diagram and verify whether or not there is a common connector between the following terminals: • Main relay terminal D—PCM terminal 1CK • Main relay terminal D—PCM terminal 2S • Main relay terminal E—PCM terminal 2K **If there is a common connector:** • Determine the malfunctioning part by inspecting the common connector and the terminal for corrosion, damage, or pin disconnection, and the common wiring harness for an open circuit. • Repair or replace the malfunctioning part. **If there is no common connector:** • Repair or replace the wiring harness which has an open circuit. Go to Step 10.
9	**INSPECT THROTTLE VALVE ACTUATOR** • Inspect the throttle valve actuator. (See **ENGINE CONTROL SYSTEM OPERATION INSPECTION [SKYACTIV-G 2.0, SKYACTIV-G 2.5]**.) (See **THROTTLE BODY INSPECTION [SKYACTIV-G 2.0, SKYACTIV-G 2.5]**.) • Is there any malfunction?	Yes	Inspect the throttle valve actuator related circuits and connectors. • If there is any malfunction: ▪ Repair or replace the malfunctioning part according to the inspection results. • If there is no malfunction: ▪ Replace the throttle body. (See **INTAKE-AIR SYSTEM REMOVAL/INSTALLATION [SKYACTIV-G 2.0, SKYACTIV-G 2.5]**.) Go to the next step.
		No	Go to the next step.
10	**VERIFY DTC TROUBLESHOOTING COMPLETED** • Always reconnect all disconnected connectors. • Clear the DTC from the PCM memory using the M-MDS. (See **AFTER REPAIR PROCEDURE [SKYACTIV-G**	Yes	Repeat the inspection from Step 1. • If the malfunction recurs, replace the PCM. (See **PCM REMOVAL/INSTALLATION [SKYACTIV-G 2.0, SKYACTIV-G 2.5]**.) Go to the next step.
		No	Go to the next step.

	2.0, SKYACTIV-G 2.5].) • Perform the KOEO self test. (See **KOEO/KOER SELF TEST [SKYACTIV-G 2.0, SKYACTIV-G 2.5]**.) • Is the same DTC present?		
11	**VERIFY AFTER REPAIR PROCEDURE** • Perform the “AFTER REPAIR PROCEDURE”. (See **AFTER REPAIR PROCEDURE [SKYACTIV-G 2.0, SKYACTIV-G 2.5]**.) • Are any DTCs present?	Yes	Go to the applicable DTC inspection. (See **DTC TABLE [SKYACTIV-G 2.0, SKYACTIV-G 2.5]**.)
		No	DTC troubleshooting completed.

2014 - Mazda3 - Engine

DTC P2107:00 [SKYACTIV-G 2.0, SKYACTIV-G 2.5]

DTC P2107:00	Throttle valve actuator control module processor error
DETECTION CONDITION	• PCM internal malfunction. **Diagnostic support note** • This is a continuous monitor (CCM). • The check engine light illuminates if the PCM detects the above malfunction condition during the first drive cycle. • FREEZE FRAME DATA (Mode 2)/Snapshot data is available. • DTC is stored in the PCM memory.
FAIL-SAFE FUNCTION	• Restricts the upper limit of the engine speed. • Stops the drive-by-wire control (throttle valve is open at **approx. 8 °** by return spring force).
POSSIBLE CAUSE	• Throttle body connector or terminals malfunction • PCM connector or terminals malfunction • Throttle body circuits are shorted to each other • PCM malfunction ▪ Throttle valve actuator control module internal processor malfunction

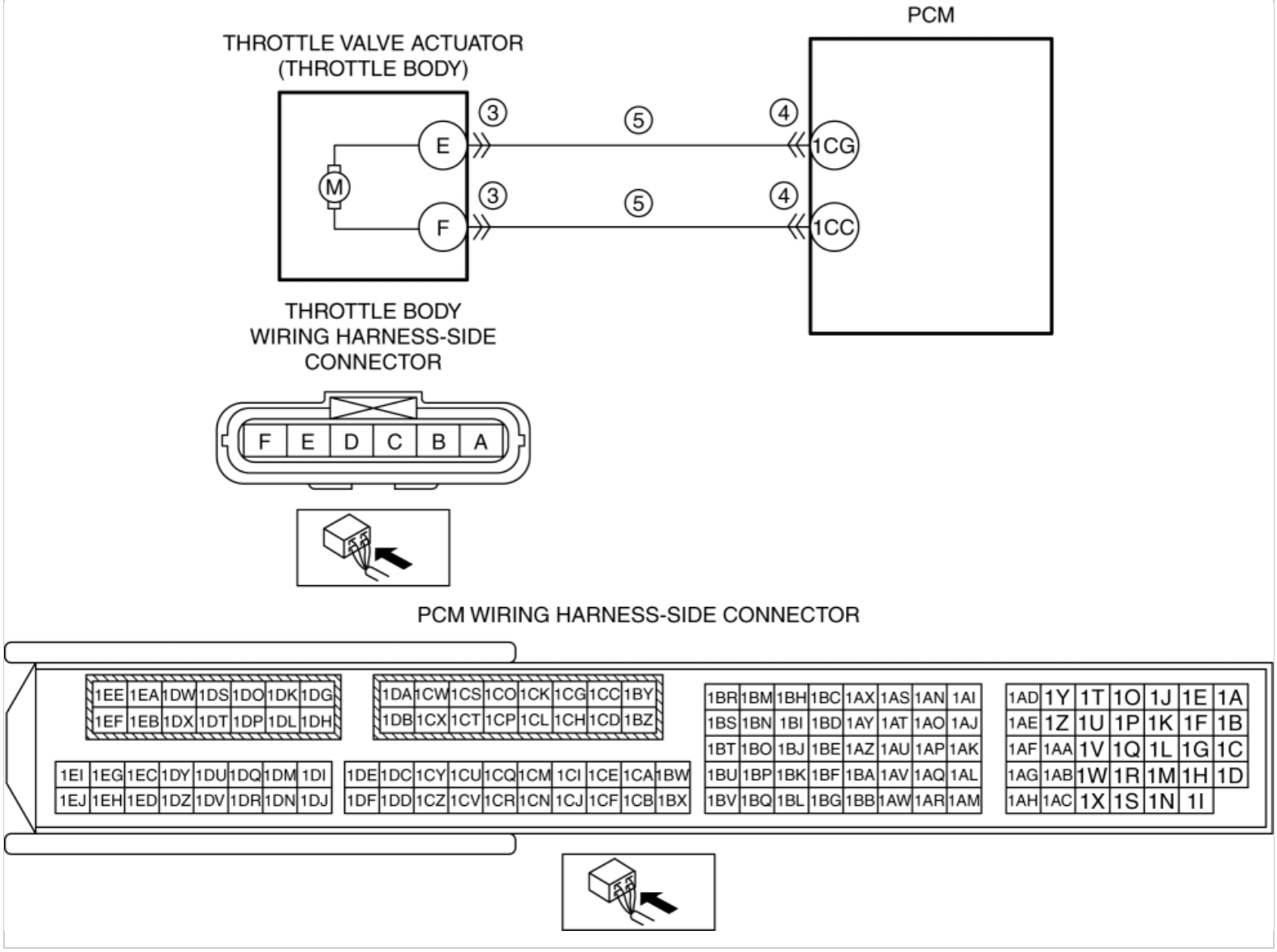

Diagnostic Procedure

STEP	INSPECTION		ACTION
1	**VERIFY FREEZE FRAME DATA (MODE 2)/SNAPSHOT DATA HAS BEEN RECORDED** • Has the FREEZE FRAME DATA (Mode 2)/snapshot data been recorded?	Yes	Go to the next step.
		No	Record the FREEZE FRAME DATA (Mode 2)/snapshot data on the repair order, then go to the next step.
2	**VERIFY RELATED REPAIR INFORMATION AVAILABILITY** • Verify related Service Bulletins and/or on-line repair information availability. • Is any related repair information available?	Yes	Perform repair or diagnosis according to the available repair information. • If the vehicle is not repaired, go to the next step.
		No	Go to the next step.
3	**INSPECT THROTTLE BODY CONNECTOR CONDITION** • Switch the ignition off.	Yes	Repair or replace the connector and/or terminals, then go to Step 6.
		No	Go to the next step.

	Disconnect the throttle body connector. • Inspect for poor connection (such as damaged/pulled-out pins, corrosion). • Is there any malfunction?		
4	**INSPECT PCM CONNECTOR CONDITION** • Disconnect the PCM connector. • Inspect for poor connection (such as damaged/pulled-out pins, corrosion). • Is there any malfunction?	Yes	Repair or replace the connector and/or terminals, then go to Step 6.
		No	Go to the next step.
5	**INSPECT THROTTLE VALVE ACTUATOR CIRCUITS FOR SHORT TO EACH OTHER** • Verify that the throttle body and PCM connectors are disconnected. • Inspect for continuity between throttle body terminals E and F (wiring harness-side). • Is there continuity?	Yes	Refer to the wiring diagram and verify whether or not there is a common connector between the following terminals: • Throttle body terminal E—PCM terminal 1CG • Throttle body terminal F—PCM terminal 1CC **If there is a common connector:** • Determine the malfunctioning part by inspecting the common connector and the terminal for corrosion, damage, or pin disconnection, and the common wiring harness for a short to each other. • Repair or replace the malfunctioning part. **If there is no common connector:** • Repair or replace the wiring harness which has a short to each other. Go to the next step.
		No	Go to the next step.
6	**VERIFY DTC TROUBLESHOOTING COMPLETED** • Always reconnect all disconnected connectors. • Clear the DTC from the PCM memory using the M-MDS. (See **AFTER REPAIR PROCEDURE [SKYACTIV-G 2.0, SKYACTIV-G 2.5]**.) • Perform the KOEO or KOER self test. (See **KOEO/KOER SELF TEST [SKYACTIV-G 2.0, SKYACTIV-G 2.5]**.) • Is the same DTC present?	Yes	Repeat the inspection from Step 1. • If the malfunction recurs, replace the PCM. (See **PCM REMOVAL/INSTALLATION [SKYACTIV-G 2.0, SKYACTIV-G 2.5]**.) Go to the next step.
		No	Go to the next step.
7	**VERIFY AFTER REPAIR PROCEDURE**	Yes	Go to the applicable DTC inspection.

	• Perform the “AFTER REPAIR PROCEDURE”. (See **AFTER REPAIR PROCEDURE [SKYACTIV-G 2.0, SKYACTIV-G 2.5]**.) • Are any DTCs present?		(See **DTC TABLE [SKYACTIV-G 2.0, SKYACTIV-G 2.5]**.)
		No	DTC troubleshooting completed.

2014 - Mazda3 - Engine

DTC P2109:00 [SKYACTIV-G 2.0, SKYACTIV-G 2.5]

DTC P2109:00	TP sensor minimum stop range/performance problem
DETECTION CONDITION	• If the fully-close throttle position is **5.1 ° or lower**, or **15.9 ° or more** (even though fully-closed throttle position learning is finished), the PCM determines there is a malfunction. **Diagnostic support note** • This is a continuous monitor (CCM). • The check engine light illuminates if the PCM detects the above malfunction condition during the first drive cycle. • FREEZE FRAME DATA (Mode 2)/Snapshot data is available. • DTC is stored in the PCM memory.
FAIL-SAFE FUNCTION	• Restricts the upper limit of the engine speed. • Stops the drive-by-wire control (throttle valve is open at **approx. 8 °** by return spring force).
POSSIBLE CAUSE	• Throttle body connector or terminals malfunction • Short to ground in wiring harness between the following terminals: ▪ Throttle body terminal E—PCM terminal 1CG ▪ Throttle body terminal F—PCM terminal 1CC • PCM connector or terminals malfunction • Short to power supply in wiring harness between the following terminals: ▪ Throttle body terminal E—PCM terminal 1CG ▪ Throttle body terminal F—PCM terminal 1CC • Open circuit in wiring harness between the following terminals: ▪ Throttle body terminal E—PCM terminal 1CG ▪ Throttle body terminal F—PCM terminal 1CC • Throttle valve malfunction • Throttle valve actuator malfunction • PCM malfunction

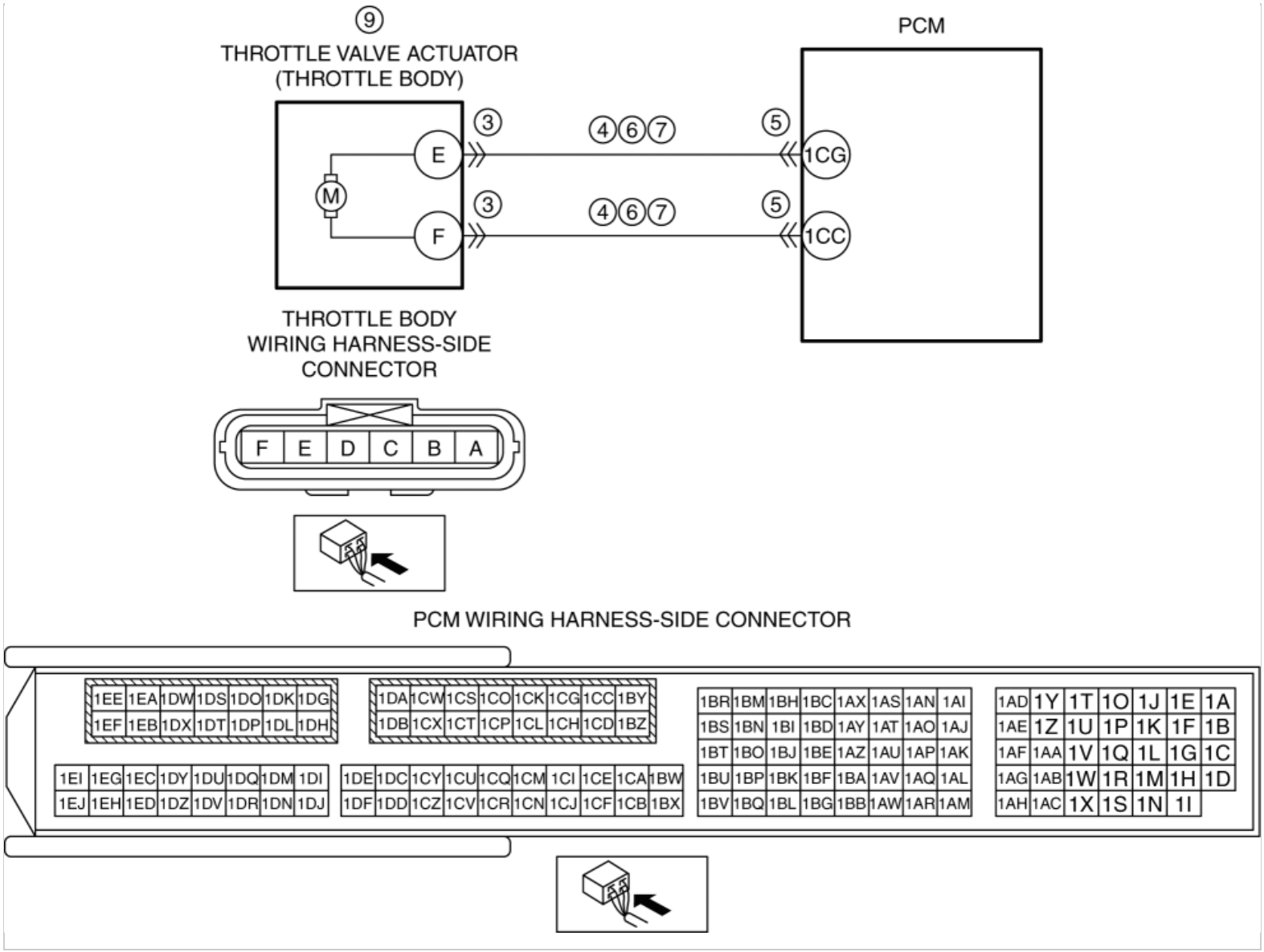

Diagnostic Procedure

STEP	INSPECTION		ACTION
1	**VERIFY FREEZE FRAME DATA (MODE 2)/SNAPSHOT DATA HAS BEEN RECORDED** • Has the FREEZE FRAME DATA (Mode 2)/snapshot data been recorded?	Yes	Go to the next step.
		No	Record the FREEZE FRAME DATA (Mode 2)/snapshot data on the repair order, then go to the next step.
2	**VERIFY RELATED REPAIR INFORMATION AVAILABILITY** • Verify related Service Bulletins and/or on-line repair information availability. • Is any related repair information available?	Yes	Perform repair or diagnosis according to the available repair information. • If the vehicle is not repaired, go to the next step.
		No	Go to the next step.
3	**INSPECT THROTTLE BODY CONNECTOR CONDITION** • Switch the ignition off.	Yes	Repair or replace the connector and/or terminals, then go to Step 10.
		No	Go to the next step.

	• Disconnect the throttle body connector. • Inspect for poor connection (such as damaged/pulled-out pins, corrosion). • Is there any malfunction?		
4	**INSPECT THROTTLE VALVE ACTUATOR CIRCUIT FOR SHORT TO GROUND** • Verify that the throttle body connector is disconnected. • Inspect for continuity between the following terminals (wiring harness-side) and body ground: ▪ Throttle body terminal E ▪ Throttle body terminal F • Is there continuity?	Yes	If the short to ground circuit could be detected in the wiring harness: • Refer to the wiring diagram and verify whether or not there is a common connector between the following terminals: ▪ Throttle body terminal E—PCM terminal 1CG ▪ Throttle body terminal F—PCM terminal 1CC **If there is a common connector:** ▪ Determine the malfunctioning part by inspecting the common connector and the terminal for corrosion, damage, or pin disconnection, and the common wiring harness for a short to ground. ▪ Repair or replace the malfunctioning part. **If there is no common connector:** ▪ Repair or replace the wiring harness which has a short to ground. If the short to ground circuit could not be detected in the wiring harness: • Replace the PCM (short to ground in the PCM internal circuit). (See **PCM REMOVAL/INSTALLATION [SKYACTIV-G 2.0, SKYACTIV-G 2.5]**.) Go to Step 10.
		No	Go to the next step.
5	**INSPECT PCM CONNECTOR CONDITION** • Disconnect the PCM connector. • Inspect for poor connection (such as damaged/pulled-out pins, corrosion). • Is there any malfunction?	Yes	Repair or replace the connector and/or terminals, then go to Step 10.
		No	Go to the next step.
6	**INSPECT THROTTLE VALVE ACTUATOR CIRCUIT FOR SHORT TO POWER SUPPLY** • Verify that the throttle body and PCM connectors are disconnected. • Switch the ignition ON (engine off). **NOTE:** • Another DTC may be stored by the PCM detecting	Yes	Go to the next step.
		No	Refer to the wiring diagram and verify whether or not there is a common connector between the following terminals: • Throttle body terminal E—PCM terminal 1CG • Throttle body terminal F—PCM terminal 1CC **If there is a common connector:** • Determine the malfunctioning part by inspecting the common connector and the terminal for corrosion, damage, or pin disconnection, and the common wiring harness for a short to power supply. • Repair or replace the malfunctioning part.

	an open circuit. • Measure the voltage at the following terminals (wiring harness-side): ▪ Throttle body terminal E—PCM terminal 1CG ▪ Throttle body terminal F—PCM terminal 1CC • Is the voltage **0 V**?		**If there is no common connector:** • Repair or replace the wiring harness which has a short to power supply. Go to Step 10.
7	**INSPECT THROTTLE VALVE ACTUATOR CIRCUIT FOR OPEN CIRCUIT** • Verify that the throttle body and PCM connectors are disconnected. • Switch the ignition off. • Inspect for continuity between the following terminals (wiring harness-side): ▪ Throttle body terminal E—PCM terminal 1CG ▪ Throttle body terminal F—PCM terminal 1CC • Is there continuity?	Yes	Go to the next step.
		No	Refer to the wiring diagram and verify whether or not there is a common connector between the following terminals: • Throttle body terminal E—PCM terminal 1CG • Throttle body terminal F—PCM terminal 1CC **If there is a common connector:** • Determine the malfunctioning part by inspecting the common connector and the terminal for corrosion, damage, or pin disconnection, and the common wiring harness for an open circuit. • Repair or replace the malfunctioning part. **If there is no common connector:** • Repair or replace the wiring harness which has an open circuit. Go to Step 10.
8	**INSPECT THROTTLE VALVE** • Perform the Electronic Control Throttle Operation Inspection. (See **ENGINE CONTROL SYSTEM OPERATION INSPECTION [SKYACTIV-G 2.0, SKYACTIV-G 2.5]**.) • Is there any malfunction?	Yes	Repair or replace the malfunctioning part according to the inspection results, then go to Step 10.
		No	Go to the next step.
9	**INSPECT THROTTLE VALVE ACTUATOR** • Inspect the throttle valve actuator. (See **THROTTLE BODY INSPECTION [SKYACTIV-G 2.0, SKYACTIV-G 2.5]**.) • Is there any malfunction?	Yes	Repair or replace the malfunctioning part according to the inspection results, then go to the next step.
		No	Go to the next step.

10	**VERIFY DTC TROUBLESHOOTING COMPLETED** • Always reconnect all disconnected connectors. • Clear the DTC from the PCM memory using the M-MDS. (See **AFTER REPAIR PROCEDURE [SKYACTIV-G 2.0, SKYACTIV-G 2.5]**.) • Perform the KOEO or KOER self test. (See **KOEO/KOER SELF TEST [SKYACTIV-G 2.0, SKYACTIV-G 2.5]**.) • Is the same DTC present?	Yes	Repeat the inspection from Step 1. • If the malfunction recurs, replace the PCM. (See **PCM REMOVAL/INSTALLATION [SKYACTIV-G 2.0, SKYACTIV-G 2.5]**.) Go to the next step.
		No	Go to the next step.
11	**VERIFY AFTER REPAIR PROCEDURE** • Perform the “AFTER REPAIR PROCEDURE”. (See **AFTER REPAIR PROCEDURE [SKYACTIV-G 2.0, SKYACTIV-G 2.5]**.) • Are any DTCs present?	Yes	Go to the applicable DTC inspection. (See **DTC TABLE [SKYACTIV-G 2.0, SKYACTIV-G 2.5]**.)
		No	DTC troubleshooting completed.

2014 - Mazda3 - Engine

DTC P2110:00 [SKYACTIV-G 2.0, SKYACTIV-G 2.5]

DTC P2110:00	Throttle valve actuator control system-forced limited RPM
DETECTION CONDITION	• PCM internal malfunction. **Diagnostic support note** • This is a continuous monitor (CCM). • The check engine light illuminates if the PCM detects the above malfunction condition during the first drive cycle. • FREEZE FRAME DATA (Mode 2)/Snapshot data is available. • DTC is stored in the PCM memory.
FAIL-SAFE FUNCTION	• Restricts the upper limit of the engine speed. • Stops the drive-by-wire control (throttle valve is open at **approx. 8 °** by return spring force).
POSSIBLE CAUSE	• Throttle body malfunction • PCM malfunction ▪ Throttle valve actuator control module internal processor error (built-into PCM) ▪ Fuel injector control driver internal processor error (built-into PCM)
SYSTEM WIRING DIAGRAM	Not applicable

Diagnostic Procedure

STEP	INSPECTION		ACTION
1	**VERIFY FREEZE FRAME DATA (MODE 2)/SNAPSHOT DATA HAS BEEN RECORDED** • Has the FREEZE FRAME DATA (Mode 2)/snapshot data been	Yes	Go to the next step.
		No	Record the FREEZE FRAME DATA (Mode 2)/snapshot data on the repair order, then go to

	recorded?		the next step.
2	**VERIFY RELATED REPAIR INFORMATION AVAILABILITY** • Verify related Service Bulletins and/or on-line repair information availability. • Is any related repair information available?	Yes	Perform repair or diagnosis according to the available repair information. • If the vehicle is not repaired, go to the next step.
		No	Go to the next step.
3	**VERIFY RELATED PENDING CODE AND/OR DTC** • Switch the ignition off, then ON (engine off). • Perform the Pending Trouble Code Access Procedure and DTC Reading Procedure. (See **ON-BOARD DIAGNOSTIC TEST [SKYACTIV-G 2.0, SKYACTIV-G 2.5]**.) • Are any other PENDING CODEs and/or DTCs present?	Yes	Go to the applicable PENDING CODE or DTC inspection. (See **DTC TABLE [SKYACTIV-G 2.0, SKYACTIV-G 2.5]**.)
		No	Go to the next step.
4	**INSPECT THROTTLE BODY** • Inspect the throttle body. (See **THROTTLE BODY INSPECTION [SKYACTIV-G 2.0, SKYACTIV-G 2.5]**.) • Is there any malfunction?	Yes	Replace the throttle body, then go to the next step. (See **INTAKE-AIR SYSTEM REMOVAL/INSTALLATION [SKYACTIV-G 2.0, SKYACTIV-G 2.5]**.)
		No	Go to the next step.
5	**VERIFY DTC TROUBLESHOOTING COMPLETED** • Always reconnect all disconnected connectors. • Clear the DTC from the PCM memory using the M-MDS. (See **AFTER REPAIR PROCEDURE [SKYACTIV-G 2.0, SKYACTIV-G 2.5]**.) • Perform the KOER self test. (See **KOEO/KOER SELF TEST [SKYACTIV-G 2.0, SKYACTIV-G 2.5]**.) • Is the same DTC present?	Yes	Repeat the inspection from Step 1. • If the malfunction recurs, replace the PCM. (See **PCM REMOVAL/INSTALLATION [SKYACTIV-G 2.0, SKYACTIV-G 2.5]**.) Go to the next step.
		No	Go to the next step.

6	**VERIFY AFTER REPAIR PROCEDURE** • Perform the “AFTER REPAIR PROCEDURE”. (See **AFTER REPAIR PROCEDURE [SKYACTIV-G 2.0, SKYACTIV-G 2.5]**.) • Are any DTCs present?	Yes	Go to the applicable DTC inspection. (See **DTC TABLE [SKYACTIV-G 2.0, SKYACTIV-G 2.5]**.)
		No	DTC troubleshooting completed.

2014 - Mazda3 - Engine

DTC P2112:00 [SKYACTIV-G 2.0, SKYACTIV-G 2.5]

DTC P2112:00	Throttle valve actuator motor current range/performance problem
DETECTION CONDITION	• The throttle valve actuator control duty ratio is **95 % or more** with the ignition switched ON (engine on). **Diagnostic support note** • This is a continuous monitor (CCM). • The check engine light illuminates if the PCM detects the above malfunction condition during the first drive cycle. • FREEZE FRAME DATA (Mode 2)/Snapshot data is available. • DTC is stored in the PCM memory.
FAIL-SAFE FUNCTION	• Restricts the upper limit of the engine speed. • Stops the drive-by-wire control (throttle valve is open at **approx. 8 °** by return spring force).
POSSIBLE CAUSE	• Throttle body connector or terminals malfunction • PCM connector or terminals malfunction • Open circuit in wiring harness between the following terminals: ▪ Throttle body terminal E—PCM terminal 1CG ▪ Throttle body terminal F—PCM terminal 1CC • Throttle valve malfunction • Throttle valve actuator malfunction • PCM malfunction ▪ Throttle valve actuator control module malfunction (built-into PCM)

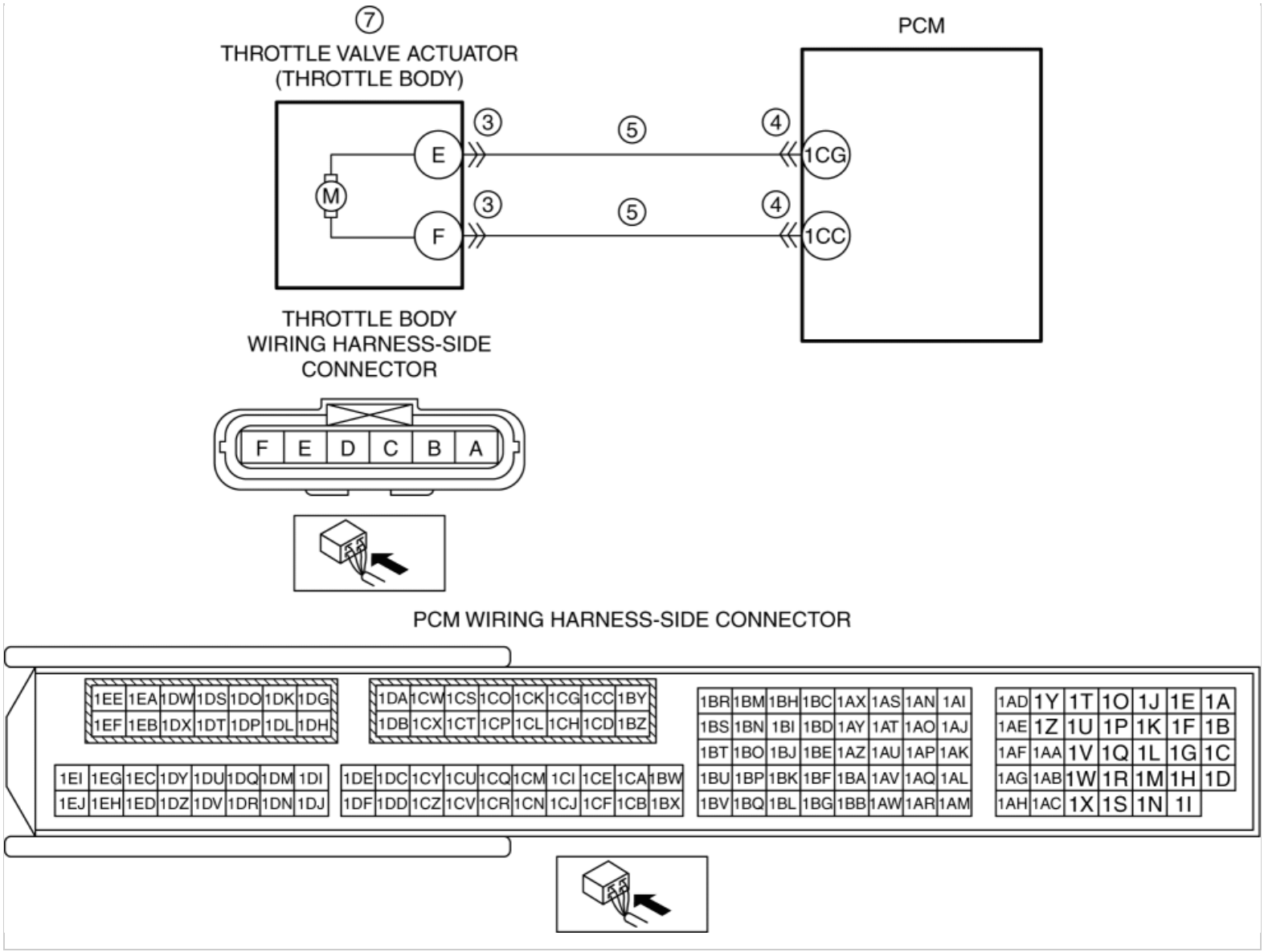

Diagnostic Procedure

STEP	INSPECTION		ACTION
1	**VERIFY FREEZE FRAME DATA (MODE 2)/SNAPSHOT DATA HAS BEEN RECORDED** • Has the FREEZE FRAME DATA (Mode 2)/snapshot data been recorded?	Yes	Go to the next step.
		No	Record the FREEZE FRAME DATA (Mode 2)/snapshot data on the repair order, then go to the next step.
2	**VERIFY RELATED REPAIR INFORMATION AVAILABILITY** • Verify related Service Bulletins and/or on-line repair information availability. • Is any related repair information available?	Yes	Perform repair or diagnosis according to the available repair information. • If the vehicle is not repaired, go to the next step.
		No	Go to the next step.
3	**INSPECT THROTTLE BODY CONNECTOR CONDITION** • Switch the ignition off.	Yes	Repair or replace the connector and/or terminals, then go to Step 8.
		No	Go to the next step.

	• Disconnect the throttle body connector. • Inspect for poor connection (such as damaged/pulled-out pins, corrosion). • Is there any malfunction?		
4	**INSPECT PCM CONNECTOR CONDITION** • Disconnect the PCM connector. • Inspect for poor connection (such as damaged/pulled-out pins, corrosion). • Is there any malfunction?	Yes	Repair or replace the connector and/or terminals, then go to Step 8.
		No	Go to the next step.
5	**INSPECT THROTTLE VALVE ACTUATOR CIRCUIT FOR OPEN CIRCUIT** • Verify that the throttle body and PCM connectors are disconnected. • Inspect for continuity between the following terminals (wiring harness-side): ▪ Throttle body terminal E—PCM terminal 1CG ▪ Throttle body terminal F—PCM terminal 1CC • Is there continuity?	Yes	Go to the next step.
		No	Refer to the wiring diagram and verify whether or not there is a common connector between the following terminals: • Throttle body terminal E—PCM terminal 1CG • Throttle body terminal F—PCM terminal 1CC **If there is a common connector:** • Determine the malfunctioning part by inspecting the common connector and the terminal for corrosion, damage, or pin disconnection, and the common wiring harness for an open circuit. • Repair or replace the malfunctioning part. **If there is no common connector:** • Repair or replace the wiring harness which has an open circuit. Go to Step 8.
6	**INSPECT THROTTLE VALVE** • Perform the Electronic Control Throttle Operation Inspection. (See **ENGINE CONTROL SYSTEM OPERATION INSPECTION [SKYACTIV-G 2.0, SKYACTIV-G 2.5]**.) • Is there any malfunction?	Yes	Repair or replace the malfunctioning part according to the inspection results, then go to Step 8.
		No	Go to the next step.
7	**INSPECT THROTTLE VALVE ACTUATOR** • Inspect the throttle valve actuator. (See **THROTTLE BODY INSPECTION [SKYACTIV-G 2.0, SKYACTIV-G 2.5]**.) • Is there any malfunction?	Yes	Repair or replace the malfunctioning part according to the inspection results, then go to the next step.
		No	Go to the next step.
8	**VERIFY DTC TROUBLESHOOTING COMPLETED** • Always reconnect all disconnected connectors.	Yes	Repeat the inspection from Step 1. • If the malfunction recurs, replace the PCM.

	• Clear the DTC from the PCM memory using the M-MDS. (See **AFTER REPAIR PROCEDURE [SKYACTIV-G 2.0, SKYACTIV-G 2.5]**.) • Perform the KOER self test. (See **KOEO/KOER SELF TEST [SKYACTIV-G 2.0, SKYACTIV-G 2.5]**.) • Is the same DTC present?		(See **PCM REMOVAL/INSTALLATION [SKYACTIV-G 2.0, SKYACTIV-G 2.5]**.) Go to the next step.
		No	Go to the next step.
9	**VERIFY AFTER REPAIR PROCEDURE** • Perform the “AFTER REPAIR PROCEDURE”. (See **AFTER REPAIR PROCEDURE [SKYACTIV-G 2.0, SKYACTIV-G 2.5]**.) • Are any DTCs present?	Yes	Go to the applicable DTC inspection. (See **DTC TABLE [SKYACTIV-G 2.0, SKYACTIV-G 2.5]**.)
		No	DTC troubleshooting completed.

2014 - Mazda3 - Engine

DTC P2119:00 [SKYACTIV-G 2.0, SKYACTIV-G 2.5]

DTC P2119:00	Throttle valve actuator control throttle body range/performance problem
DETECTION CONDITION	• The PCM compares the actual TP with initial setting TP when the ignition is switched off. If the actual TP is higher than the initial setting TP, the PCM determines that there is a throttle valve return spring malfunction. **Diagnostic support note** • This is a continuous monitor (CCM). • The check engine light illuminates if the PCM detects the above malfunction condition during the first drive cycle. • FREEZE FRAME DATA (Mode 2)/Snapshot data is available. • DTC is stored in the PCM memory.
FAIL-SAFE FUNCTION	• Restricts the upper limit of the engine speed.
POSSIBLE CAUSE	• Throttle body connector or terminals malfunction • PCM connector or terminals malfunction • Drive-by-wire control malfunction • Throttle body (return spring) malfunction • PCM malfunction
SYSTEM WIRING DIAGRAM	Not applicable

Diagnostic Procedure

STEP	INSPECTION		ACTION
1	**VERIFY FREEZE FRAME DATA (MODE 2)/SNAPSHOT DATA HAS BEEN RECORDED**	Yes	Go to the next step.

	Has the FREEZE FRAME DATA (Mode 2)/snapshot data been recorded?	No	Record the FREEZE FRAME DATA (Mode 2)/snapshot data on the repair order, then go to the next step.
2	**VERIFY RELATED REPAIR INFORMATION AVAILABILITY** • Verify related Service Bulletins and/or on-line repair information availability. • Is any related repair information available?	Yes	Perform repair or diagnosis according to the available repair information. • If the vehicle is not repaired, go to the next step.
		No	Go to the next step.
3	**VERIFY RELATED PENDING CODE AND/OR DTC** • Switch the ignition off, then ON (engine off). • Perform the Pending Trouble Code Access Procedure and DTC Reading Procedure. (See **ON-BOARD DIAGNOSTIC TEST [SKYACTIV-G 2.0, SKYACTIV-G 2.5]**.) • Are any other PENDING CODEs and/or DTCs present?	Yes	Go to the applicable PENDING CODE or DTC inspection. (See **DTC TABLE [SKYACTIV-G 2.0, SKYACTIV-G 2.5]**.)
		No	Go to the next step.
4	**INSPECT THROTTLE BODY CONNECTOR CONDITION** • Switch the ignition off. • Disconnect the throttle body connector. • Inspect for poor connection (such as damaged/pulled-out pins, corrosion). • Is there any malfunction?	Yes	Repair or replace the connector and/or terminals, then go to Step 8.
		No	Go to the next step.
5	**INSPECT PCM CONNECTOR CONDITION** • Disconnect the PCM connector. • Inspect for poor connection (such as damaged/pulled-out pins, corrosion). • Is there any malfunction?	Yes	Repair or replace the connector and/or terminals, then go to Step 8.
		No	Go to the next step.
6	**INSPECT DRIVE-BY-WIRE CONTROL SYSTEM OPERATION** • Perform the Drive-by-wire Control System Inspection.	Yes	Repair or replace the malfunctioning part according to the inspection results, then go to Step 8.

	(See **ENGINE CONTROL SYSTEM OPERATION INSPECTION [SKYACTIV-G 2.0, SKYACTIV-G 2.5]**.) • Is there any malfunction?	No	Go to the next step.
7	**INSPECT THROTTLE BODY** • Inspect the throttle body. (See **THROTTLE BODY INSPECTION [SKYACTIV-G 2.0, SKYACTIV-G 2.5]**.) • Is there any malfunction?	Yes	Replace the throttle body, then go to the next step. (See **INTAKE-AIR SYSTEM REMOVAL/INSTALLATION [SKYACTIV-G 2.0, SKYACTIV-G 2.5]**.)
		No	Go to the next step.
8	**VERIFY DTC TROUBLESHOOTING COMPLETED** • Always reconnect all disconnected connectors. • Clear the DTC from the PCM memory using the M-MDS. (See **AFTER REPAIR PROCEDURE [SKYACTIV-G 2.0, SKYACTIV-G 2.5]**.) • Switch the ignition ON (engine off) and wait for **1 min or more**. • Switch the ignition off. • Perform the KOER self test. (See **KOEO/KOER SELF TEST [SKYACTIV-G 2.0, SKYACTIV-G 2.5]**.) • Is the same DTC present?	Yes	Repeat the inspection from Step 1. • If the malfunction recurs, replace the PCM. (See **PCM REMOVAL/INSTALLATION [SKYACTIV-G 2.0, SKYACTIV-G 2.5]**.) Go to the next step.
		No	Go to the next step.
9	**VERIFY AFTER REPAIR PROCEDURE** • Perform the “AFTER REPAIR PROCEDURE”. (See **AFTER REPAIR PROCEDURE [SKYACTIV-G 2.0, SKYACTIV-G 2.5]**.) • Are any DTCs present?	Yes	Go to the applicable DTC inspection. (See **DTC TABLE [SKYACTIV-G 2.0, SKYACTIV-G 2.5]**.)
		No	DTC troubleshooting completed.

2014 - Mazda3 - Engine

DTC P2122:00 [SKYACTIV-G 2.0, SKYACTIV-G 2.5]

DTC P2122:00	APP sensor No.1 circuit low input
DETECTION CONDITION	• The PCM monitors the input voltage from APP sensor No.1. If the input voltage at the PCM terminal 2AN is **less than 0.1 V**, the PCM determines that the APP sensor No.1 circuit input voltage is low. **Diagnostic support note** • This is a continuous monitor (CCM). • The check engine light illuminates if the PCM detects the above malfunction condition during the first drive cycle. • FREEZE FRAME DATA (Mode 2)/Snapshot data is available. • DTC is stored in the PCM memory.
FAIL-SAFE FUNCTION	• Regulates the upper limit of the APP sensor output.
POSSIBLE CAUSE	• APP sensor connector or terminals malfunction • Short to ground in wiring harness between the following terminals: ▪ APP sensor terminal A—PCM terminal 2AR ▪ APP sensor terminal B—PCM terminal 2AN • PCM connector or terminals malfunction • APP sensor No.1 signal circuit and ground circuit are shorted to each other • Open circuit in wiring harness between the following terminals: ▪ APP sensor terminal A—PCM terminal 2AR ▪ APP sensor terminal B—PCM terminal 2AN • APP sensor No.1 malfunction • PCM malfunction

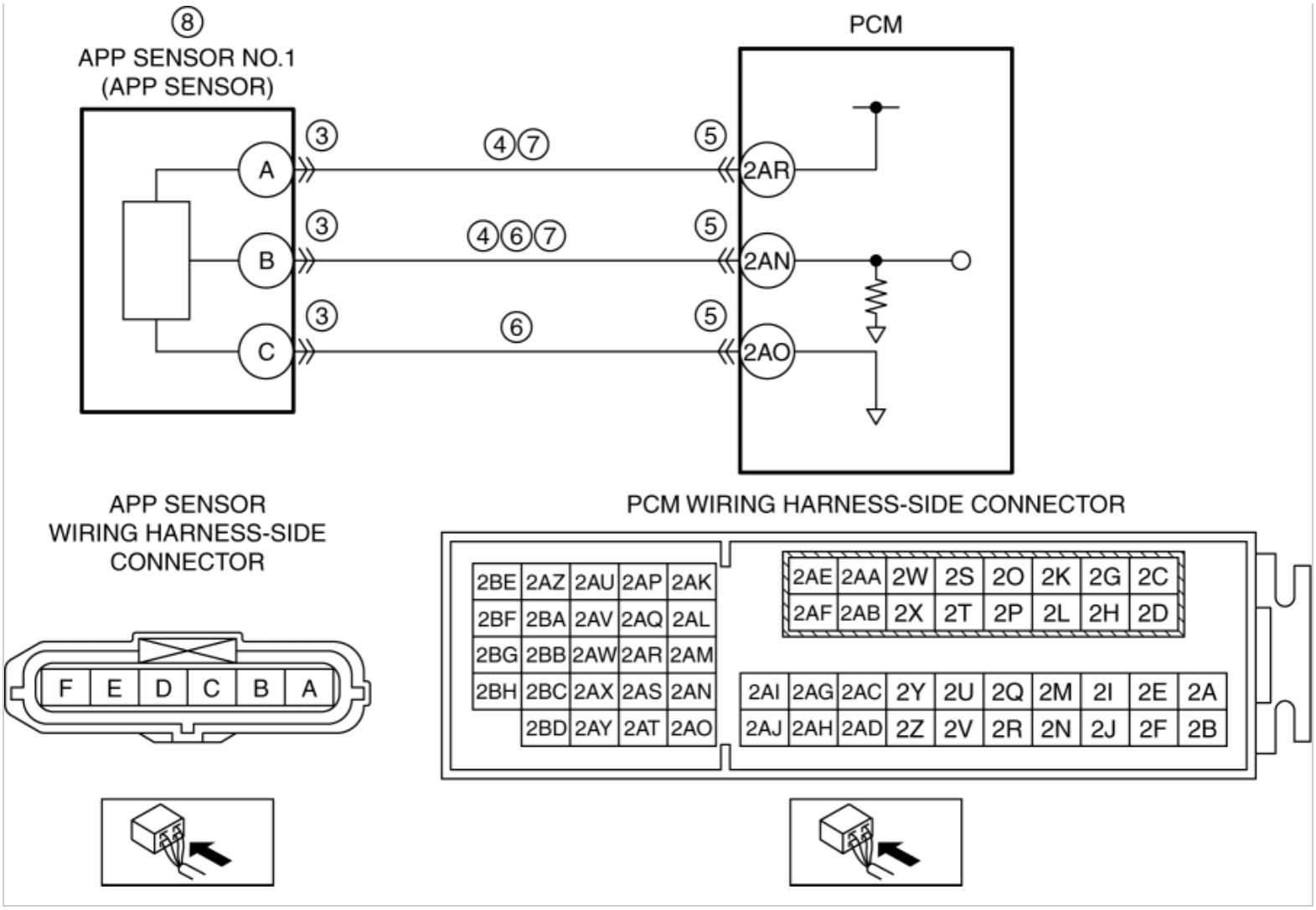

CAUTION:

- Verify the malfunction symptom according to not only the PID value but also the symptom troubleshooting.

Related PIDs

Item (definition)	Unit/Condition	Definition	Condition/Specification (Reference)
APP1	%	Accelerator pedal opening angle (absolute value) input from APP sensor No.1	• Accelerator pedal released: Approx. 15% • Accelerator pedal fully depressed: Approx. 82%
	V	APP sensor No.1 voltage	• Accelerator pedal released: Approx. 0.75 V • Accelerator pedal fully depressed: Approx. 4.1 V
	%	Accelerator pedal opening angle (absolute value) input from APP sensor No.2	• Accelerator pedal released: Approx. 7.45% • Accelerator pedal fully depressed: Approx. 41%

APP2			
	V	APP sensor No.2 voltage	• Accelerator pedal released: Approx. 0.38 V • Accelerator pedal fully depressed: Approx. 2.05 V

Diagnostic Procedure

STEP	INSPECTION		ACTION
1	**VERIFY FREEZE FRAME DATA (MODE 2)/SNAPSHOT DATA HAS BEEN RECORDED** • Has the FREEZE FRAME DATA (Mode 2)/snapshot data been recorded?	Yes	Go to the next step.
		No	Record the FREEZE FRAME DATA (Mode 2)/snapshot data on the repair order, then go to the next step.
2	**VERIFY RELATED REPAIR INFORMATION AVAILABILITY** • Verify related Service Bulletins and/or on-line repair information availability. • Is any related repair information available?	Yes	Perform repair or diagnosis according to the available repair information. • If the vehicle is not repaired, go to the next step.
		No	Go to the next step.
3	**INSPECT APP SENSOR CONNECTOR CONDITION** • Switch the ignition off. • Disconnect the APP sensor connector. • Inspect for poor connection (such as damaged/pulled-out pins, corrosion). • Is there any malfunction?	Yes	Repair or replace the connector and/or terminals, then go to Step 9.
		No	Go to the next step.
4	**INSPECT APP SENSOR NO.1 CIRCUIT FOR SHORT TO GROUND** • Verify that the APP sensor connector is disconnected. • Inspect for continuity between the following terminals (wiring harness-side) and body ground: ▪ APP sensor terminal A ▪ APP sensor terminal	Yes	If the short to ground circuit could be detected in the wiring harness: • Refer to the wiring diagram and verify whether or not there is a common connector between the following terminals: ▪ APP sensor terminal A—PCM terminal 2AR ▪ APP sensor terminal B—PCM terminal 2AN **If there is a common connector:** ▪ Determine the malfunctioning part by inspecting the common connector and the terminal for corrosion, damage, or pin disconnection, and the common wiring harness for a short to ground. ▪ Repair or replace the malfunctioning

	B • Is there continuity?		part. **If there is no common connector:** ▪ Repair or replace the wiring harness which has a short to ground. If the short to ground circuit could not be detected in the wiring harness: • Replace the PCM (short to ground in the PCM internal circuit). (See **PCM REMOVAL/INSTALLATION [SKYACTIV-G 2.0, SKYACTIV-G 2.5]**.) Go to Step 9.
		No	Go to the next step.
5	**INSPECT PCM CONNECTOR CONDITION** • Disconnect the PCM connector. • Inspect for poor connection (such as damaged/pulled-out pins, corrosion). • Is there any malfunction?	Yes	Repair or replace the connector and/or terminals, then go to Step 9.
		No	Go to the next step.
6	**INSPECT APP SENSOR NO.1 SIGNAL CIRCUIT AND GROUND CIRCUIT FOR SHORT TO EACH OTHER** • Verify that the APP sensor and PCM connectors are disconnected. • Inspect for continuity between APP sensor terminals B and C (wiring harness-side). • Is there continuity?	Yes	Refer to the wiring diagram and verify whether or not there is a common connector between the following terminals: • APP sensor terminal B—PCM terminal 2AN • APP sensor terminal C—PCM terminal 2AO **If there is a common connector:** • Determine the malfunctioning part by inspecting the common connector and the terminal for corrosion, damage, or pin disconnection, and the common wiring harness for a short to each other. • Repair or replace the malfunctioning part. **If there is no common connector:** • Repair or replace the wiring harness which has a short to each other. Go to Step 9.
		No	Go to the next step.
7	**INSPECT APP SENSOR NO.1 CIRCUIT FOR OPEN CIRCUIT** • Verify that the APP sensor and PCM connectors are disconnected. • Inspect for continuity between the following	Yes	Go to the next step.
		No	Refer to the wiring diagram and verify whether or not there is a common connector between the following terminals: • APP sensor terminal A—PCM terminal 2AR • APP sensor terminal B—PCM terminal 2AN

	terminals (wiring harness-side): ▪ APP sensor terminal A—PCM terminal 2AR ▪ APP sensor terminal B—PCM terminal 2AN • Is there continuity?		**If there is a common connector:** • Determine the malfunctioning part by inspecting the common connector and the terminal for corrosion, damage, or pin disconnection, and the common wiring harness for an open circuit. • Repair or replace the malfunctioning part. **If there is no common connector:** • Repair or replace the wiring harness which has an open circuit. Go to Step 9.
8	**INSPECT APP SENSOR NO.1** • Reconnect all disconnected connectors. • Inspect the APP sensor No.1. (See **ACCELERATOR PEDAL POSITION (APP) SENSOR INSPECTION [SKYACTIV-G 2.0, SKYACTIV-G 2.5]**.) • Is there any malfunction?	Yes	Replace the accelerator pedal, then go to the next step. (See **ACCELERATOR PEDAL REMOVAL/INSTALLATION [SKYACTIV-G 2.0, SKYACTIV-G 2.5]**.)
		No	Go to the next step.
9	**VERIFY DTC TROUBLESHOOTING COMPLETED** • Always reconnect all disconnected connectors. • Clear the DTC from the PCM memory using the M-MDS. (See **AFTER REPAIR PROCEDURE [SKYACTIV-G 2.0, SKYACTIV-G 2.5]**.) • Perform the KOEO or KOER self test. (See **KOEO/KOER SELF TEST [SKYACTIV-G 2.0, SKYACTIV-G 2.5]**.) • Is the same DTC present?	Yes	Repeat the inspection from Step 1. • If the malfunction recurs, replace the PCM. (See **PCM REMOVAL/INSTALLATION [SKYACTIV-G 2.0, SKYACTIV-G 2.5]**.) Go to the next step.
		No	Go to the next step.
10	**VERIFY AFTER REPAIR PROCEDURE** • Perform the “AFTER REPAIR PROCEDURE”. (See **AFTER REPAIR PROCEDURE [SKYACTIV-G 2.0, SKYACTIV-G 2.5]**.) • Are any DTCs present?	Yes	Go to the applicable DTC inspection. (See **DTC TABLE [SKYACTIV-G 2.0, SKYACTIV-G 2.5]**.)
		No	DTC troubleshooting completed.

2014 - Mazda3 - Engine

DTC P2123:00 [SKYACTIV-G 2.0, SKYACTIV-G 2.5]

DTC P2123:00	APP sensor No.1 circuit high input
DETECTION CONDITION	• The PCM monitors the input voltage from APP sensor No.1. If the input voltage at the PCM terminal 2AN is **above 4.9 V**, the PCM determines that the APP sensor No.1 circuit input voltage is high. **Diagnostic support note** • This is a continuous monitor (CCM). • The check engine light illuminates if the PCM detects the above malfunction condition during the first drive cycle. • FREEZE FRAME DATA (Mode 2)/Snapshot data is available. • DTC is stored in the PCM memory.
FAIL-SAFE FUNCTION	• Regulates the upper limit of the APP sensor output.
POSSIBLE CAUSE	• APP sensor connector or terminals malfunction • PCM connector or terminals malfunction • APP sensor No.1 malfunction • Short to power supply in wiring harness between APP sensor terminal B and PCM terminal 2AN • Open circuit in wiring harness between APP sensor terminal C and PCM terminal 2AO • PCM malfunction

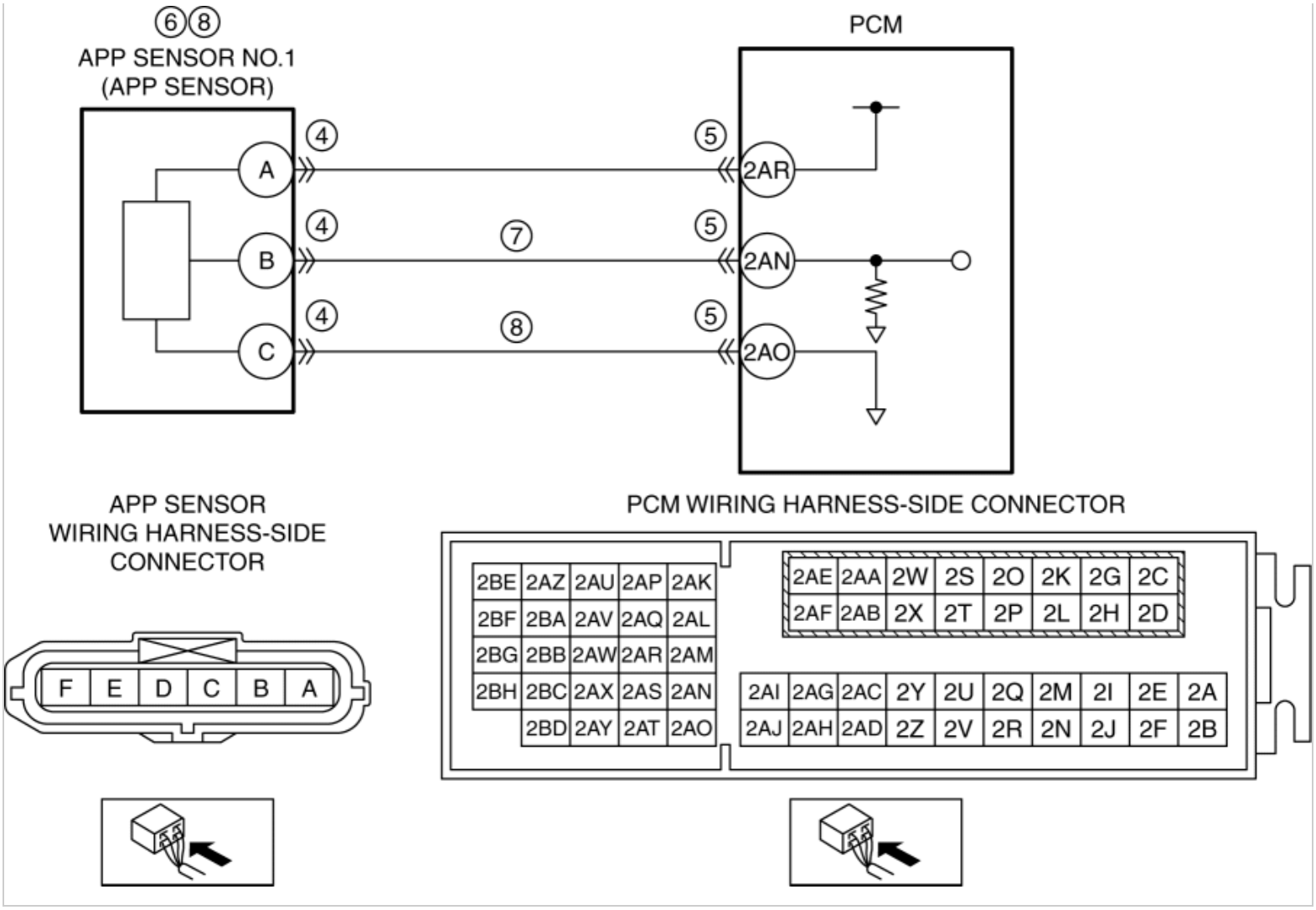

CAUTION:

- Verify the malfunction symptom according to not only the PID value but also the symptom troubleshooting.

Related PIDs

Item (definition)	Unit/Condition	Definition	Condition/Specification (Reference)
APP1	%	Accelerator pedal opening angle (absolute value) input from APP sensor No.1	• Accelerator pedal released: Approx. 15% • Accelerator pedal fully depressed: Approx. 82%
	V	APP sensor No.1 voltage	• Accelerator pedal released: Approx. 0.75 V • Accelerator pedal fully depressed: Approx. 4.1 V
	%	Accelerator pedal opening angle (absolute value) input from APP sensor No.2	• Accelerator pedal released: Approx. 7.45% • Accelerator pedal fully depressed: Approx. 41%

APP2			
	V	APP sensor No.2 voltage	• Accelerator pedal released: Approx. 0.38 V • Accelerator pedal fully depressed: Approx. 2.05 V

Diagnostic Procedure

STEP	INSPECTION		ACTION
1	**VERIFY FREEZE FRAME DATA (MODE 2)/SNAPSHOT DATA HAS BEEN RECORDED** • Has the FREEZE FRAME DATA (Mode 2)/snapshot data been recorded?	Yes	Go to the next step.
		No	Record the FREEZE FRAME DATA (Mode 2)/snapshot data on the repair order, then go to the next step.
2	**VERIFY RELATED REPAIR INFORMATION AVAILABILITY** • Verify related Service Bulletins and/or on-line repair information availability. • Is any related repair information available?	Yes	Perform repair or diagnosis according to the available repair information. • If the vehicle is not repaired, go to the next step.
		No	Go to the next step.
3	**DETERMINE IF APP SENSOR NO.1 OR WIRING HARNESS MALFUNCTION** • Access the APP1 PID using the M-MDS. (See **ON-BOARD DIAGNOSTIC TEST [SKYACTIV-G 2.0, SKYACTIV-G 2.5]**.) • Verify the APP1 PID value. • Is the APP1 PID value **5 V** or **B+**?	Yes	Go to Step 7.
		No	Go to the next step.
4	**INSPECT APP SENSOR CONNECTOR CONDITION** • Switch the ignition off. • Disconnect the APP sensor connector. • Inspect for poor connection (such as damaged/pulled-out pins, corrosion). • Is there any malfunction?	Yes	Repair or replace the connector and/or terminals, then go to Step 9.
		No	Go to the next step.
5	**INSPECT PCM CONNECTOR CONDITION** • Disconnect the PCM connector. • Inspect for poor connection (such as damaged/pulled-out pins, corrosion).	Yes	Repair or replace the connector and/or terminals, then go to Step 9.
		No	Go to the next step.

	• Is there any malfunction?		
6	**INSPECT APP SENSOR NO.1** • Reconnect all disconnected connectors. • Inspect the APP sensor No.1. (See **ACCELERATOR PEDAL POSITION (APP) SENSOR INSPECTION [SKYACTIV-G 2.0, SKYACTIV-G 2.5]**.) • Is there any malfunction?	Yes	Replace the accelerator pedal, then go to Step 9. (See **ACCELERATOR PEDAL REMOVAL/INSTALLATION [SKYACTIV-G 2.0, SKYACTIV-G 2.5]**.)
		No	Go to Step 9.
7	**INSPECT APP SENSOR NO.1 SIGNAL CIRCUIT FOR SHORT TO POWER SUPPLY** • Switch the ignition off. • Disconnect the APP sensor connector. • Access the APP1 PID using the M-MDS. (See **ON-BOARD DIAGNOSTIC TEST [SKYACTIV-G 2.0, SKYACTIV-G 2.5]**.) • Verify the APP1 PID value. • Is the APP1 PID value **5 V** or **B+**?	Yes	Refer to the wiring diagram and verify whether or not there is a common connector between APP sensor terminal B and PCM terminal 2AN. **If there is a common connector:** • Determine the malfunctioning part by inspecting the common connector and the terminal for corrosion, damage, or pin disconnection, and the common wiring harness for a short to power supply. • Repair or replace the malfunctioning part. **If there is no common connector:** • Repair or replace the wiring harness which has a short to power supply. Go to Step 9.
		No	Go to the next step.
8	**INSPECT APP SENSOR NO.1 GROUND CIRCUIT FOR OPEN CIRCUIT** • Verify that the APP sensor connector is disconnected. • Switch the ignition off. • Disconnect the PCM connector. • Inspect for continuity between APP sensor terminal C (wiring harness-side) and PCM terminal 2AO (wiring harness-side). • Is there continuity?	Yes	Replace the accelerator pedal, then go to the next step. (See **ACCELERATOR PEDAL REMOVAL/INSTALLATION [SKYACTIV-G 2.0, SKYACTIV-G 2.5]**.)
		No	Refer to the wiring diagram and verify whether or not there is a common connector between APP sensor terminal C and PCM terminal 2AO. **If there is a common connector:** • Determine the malfunctioning part by inspecting the common connector and the terminal for corrosion, damage, or pin disconnection, and the common wiring harness for an open circuit. • Repair or replace the malfunctioning part. **If there is no common connector:** • Repair or replace the wiring harness which has an open circuit. Go to the next step.
9	**VERIFY DTC TROUBLESHOOTING COMPLETED** • Always reconnect all disconnected connectors.	Yes	Repeat the inspection from Step 1. • If the malfunction recurs, replace the PCM.

	• Clear the DTC from the PCM memory using the M-MDS. (See **AFTER REPAIR PROCEDURE [SKYACTIV-G 2.0, SKYACTIV-G 2.5]**.) • Perform the KOEO or KOER self test. (See **KOEO/KOER SELF TEST [SKYACTIV-G 2.0, SKYACTIV-G 2.5]**.) • Is the same DTC present?		(See **PCM REMOVAL/INSTALLATION [SKYACTIV-G 2.0, SKYACTIV-G 2.5]**.) Go to the next step.
		No	Go to the next step.
10	**VERIFY AFTER REPAIR PROCEDURE** • Perform the “AFTER REPAIR PROCEDURE”. (See **AFTER REPAIR PROCEDURE [SKYACTIV-G 2.0, SKYACTIV-G 2.5]**.) • Are any DTCs present?	Yes	Go to the applicable DTC inspection. (See **DTC TABLE [SKYACTIV-G 2.0, SKYACTIV-G 2.5]**.)
		No	DTC troubleshooting completed.

2014 - Mazda3 - Engine

DTC P2127:00 [SKYACTIV-G 2.0, SKYACTIV-G 2.5]

DTC P2127:00	APP sensor No.2 circuit low input
DETECTION CONDITION	• The PCM monitors the input voltage from APP sensor No.2. If the input voltage at the PCM terminal 2AS is **less than 0.1 V**, the PCM determines that the APP sensor No.2 circuit has a malfunction. **Diagnostic support note** • This is a continuous monitor (CCM). • The check engine light illuminates if the PCM detects the above malfunction condition during the first drive cycle. • FREEZE FRAME DATA (Mode 2)/Snapshot data is available. • DTC is stored in the PCM memory.
FAIL-SAFE FUNCTION	• Regulates the upper limit of the APP sensor output.
POSSIBLE CAUSE	• APP sensor connector or terminals malfunction • Short to ground in wiring harness between the following terminals: ▪ APP sensor terminal F—PCM terminal 2AW ▪ APP sensor terminal E—PCM terminal 2AS • PCM connector or terminals malfunction • APP sensor No.2 signal circuit and ground circuit are shorted to each other • Open circuit in wiring harness between the following terminals: ▪ APP sensor terminal F—PCM terminal 2AW ▪ APP sensor terminal E—PCM terminal 2AS • APP sensor No.2 malfunction • PCM malfunction

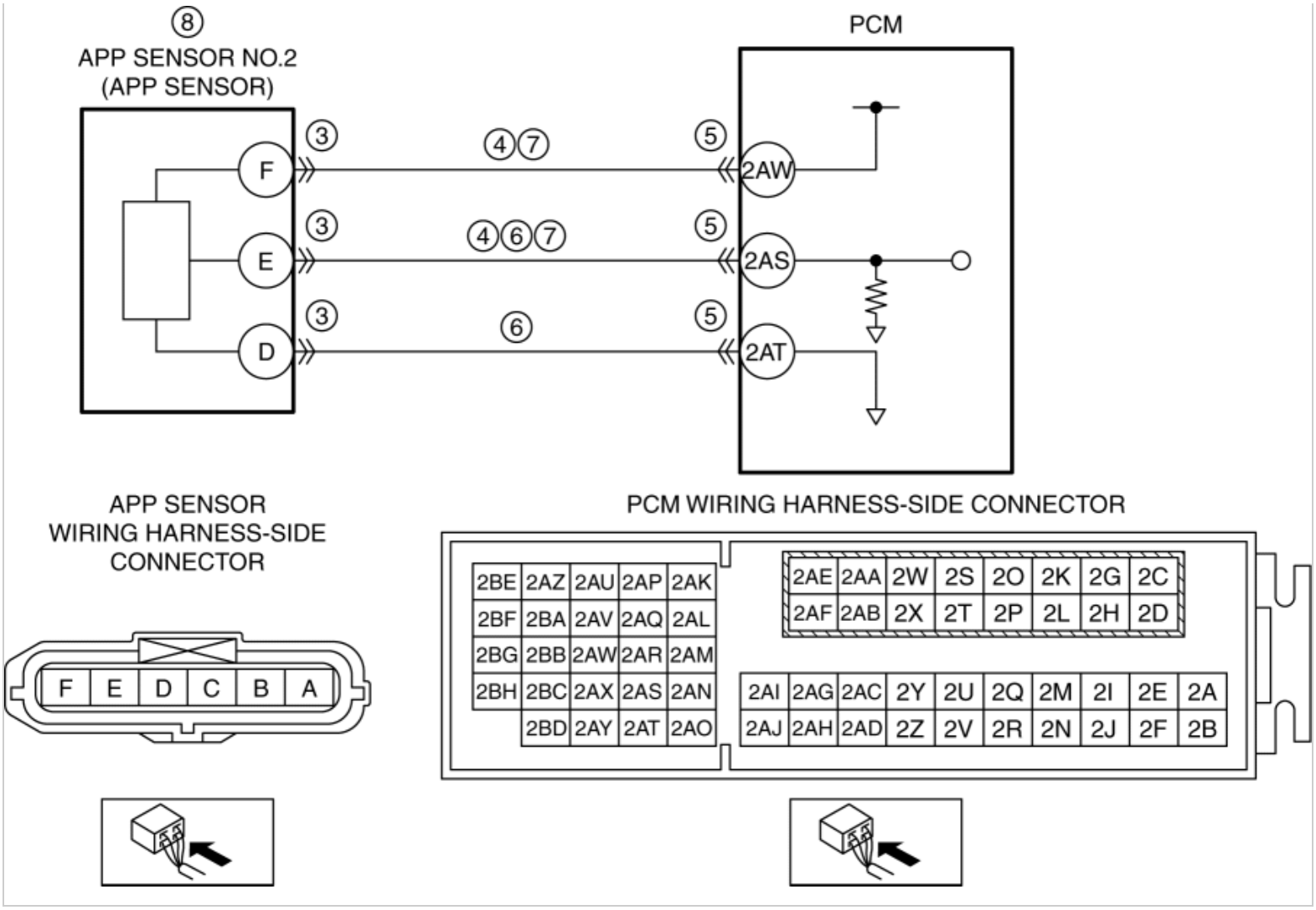

CAUTION:

- Verify the malfunction symptom according to not only the PID value but also the symptom troubleshooting.

Related PIDs

Item (definition)	Unit/Condition	Definition	Condition/Specification (Reference)
APP1	%	Accelerator pedal opening angle (absolute value) input from APP sensor No.1	• Accelerator pedal released: Approx. 15% • Accelerator pedal fully depressed: Approx. 82%
	V	APP sensor No.1 voltage	• Accelerator pedal released: Approx. 0.75 V • Accelerator pedal fully depressed: Approx. 4.1 V
	%	Accelerator pedal opening angle (absolute value) input from APP sensor No.2	• Accelerator pedal released: Approx. 7.45% • Accelerator pedal fully depressed: Approx. 41%

APP2			
	V	APP sensor No.2 voltage	• Accelerator pedal released: Approx. 0.38 V • Accelerator pedal fully depressed: Approx. 2.05 V

Diagnostic Procedure

STEP	INSPECTION		ACTION
1	**VERIFY FREEZE FRAME DATA (MODE 2)/SNAPSHOT DATA HAS BEEN RECORDED** • Has the FREEZE FRAME DATA (Mode 2)/snapshot data been recorded?	Yes	Go to the next step.
		No	Record the FREEZE FRAME DATA (Mode 2)/snapshot data on the repair order, then go to the next step.
2	**VERIFY RELATED REPAIR INFORMATION AVAILABILITY** • Verify related Service Bulletins and/or on-line repair information availability. • Is any related repair information available?	Yes	Perform repair or diagnosis according to the available repair information. • If the vehicle is not repaired, go to the next step.
		No	Go to the next step.
3	**INSPECT APP SENSOR CONNECTOR CONDITION** • Switch the ignition off. • Disconnect the APP sensor connector. • Inspect for poor connection (such as damaged/pulled-out pins, corrosion). • Is there any malfunction?	Yes	Repair or replace the connector and/or terminals, then go to Step 9.
		No	Go to the next step.
4	**INSPECT APP SENSOR NO.2 CIRCUIT FOR SHORT TO GROUND** • Verify that the APP sensor connector is disconnected. • Inspect for continuity between the following terminals (wiring harness-side) and body ground: ▪ APP sensor terminal F ▪ APP sensor terminal	Yes	If the short to ground circuit could be detected in the wiring harness: • Refer to the wiring diagram and verify whether or not there is a common connector between the following terminals: ▪ APP sensor terminal F—PCM terminal 2AW ▪ APP sensor terminal E—PCM terminal 2AS **If there is a common connector:** ▪ Determine the malfunctioning part by inspecting the common connector and the terminal for corrosion, damage, or pin disconnection, and the common wiring harness for a short to ground. ▪ Repair or replace the malfunctioning

	E • Is there continuity?		part. **If there is no common connector:** ▪ Repair or replace the wiring harness which has a short to ground. If the short to ground circuit could not be detected in the wiring harness: • Replace the PCM (short to ground in the PCM internal circuit). (See **PCM REMOVAL/INSTALLATION [SKYACTIV-G 2.0, SKYACTIV-G 2.5]**.) Go to Step 9.
		No	Go to the next step.
5	**INSPECT PCM CONNECTOR CONDITION** • Disconnect the PCM connector. • Inspect for poor connection (such as damaged/pulled-out pins, corrosion). • Is there any malfunction?	Yes	Repair or replace the connector and/or terminals, then go to Step 9.
		No	Go to the next step.
6	**INSPECT APP SENSOR NO.2 SIGNAL CIRCUIT AND GROUND CIRCUIT FOR SHORT TO EACH OTHER** • Verify that the APP sensor and PCM connectors are disconnected. • Inspect for continuity between APP sensor terminals E and D (wiring harness-side). • Is there continuity?	Yes	Refer to the wiring diagram and verify whether or not there is a common connector between the following terminals: • APP sensor terminal E—PCM terminal 2AS • APP sensor terminal D—PCM terminal 2AT **If there is a common connector:** • Determine the malfunctioning part by inspecting the common connector and the terminal for corrosion, damage, or pin disconnection, and the common wiring harness for a short to each other. • Repair or replace the malfunctioning part. **If there is no common connector:** • Repair or replace the wiring harness which has a short to each other. Go to Step 9.
		No	Go to the next step.
7	**INSPECT APP SENSOR NO.2 CIRCUIT FOR OPEN CIRCUIT** • Verify that the APP sensor and PCM connectors are disconnected. • Inspect for continuity between the following	Yes	Go to the next step.
		No	Refer to the wiring diagram and verify whether or not there is a common connector between the following terminals: • APP sensor terminal F—PCM terminal 2AW • APP sensor terminal E—PCM terminal 2AS

	terminals (wiring harness-side): ▪ APP sensor terminal F—PCM terminal 2AW ▪ APP sensor terminal E—PCM terminal 2AS • Is there continuity?		**If there is a common connector:** • Determine the malfunctioning part by inspecting the common connector and the terminal for corrosion, damage, or pin disconnection, and the common wiring harness for an open circuit. • Repair or replace the malfunctioning part. **If there is no common connector:** • Repair or replace the wiring harness which has an open circuit. Go to Step 9.
8	**INSPECT APP SENSOR NO.2** • Reconnect all disconnected connectors. • Inspect the APP sensor No.2. (See **ACCELERATOR PEDAL POSITION (APP) SENSOR INSPECTION [SKYACTIV-G 2.0, SKYACTIV-G 2.5]**.) • Is there any malfunction?	Yes	Replace the accelerator pedal, then go to the next step. (See **ACCELERATOR PEDAL REMOVAL/INSTALLATION [SKYACTIV-G 2.0, SKYACTIV-G 2.5]**.)
		No	Go to the next step.
9	**VERIFY DTC TROUBLESHOOTING COMPLETED** • Always reconnect all disconnected connectors. • Clear the DTC from the PCM memory using the M-MDS. (See **AFTER REPAIR PROCEDURE [SKYACTIV-G 2.0, SKYACTIV-G 2.5]**.) • Perform the KOEO or KOER self test. (See **KOEO/KOER SELF TEST [SKYACTIV-G 2.0, SKYACTIV-G 2.5]**.) • Is the same DTC present?	Yes	Repeat the inspection from Step 1. • If the malfunction recurs, replace the PCM. (See **PCM REMOVAL/INSTALLATION [SKYACTIV-G 2.0, SKYACTIV-G 2.5]**.) Go to the next step.
		No	Go to the next step.
10	**VERIFY AFTER REPAIR PROCEDURE** • Perform the “AFTER REPAIR PROCEDURE”. (See **AFTER REPAIR PROCEDURE [SKYACTIV-G 2.0, SKYACTIV-G 2.5]**.) • Are any DTCs present?	Yes	Go to the applicable DTC inspection. (See **DTC TABLE [SKYACTIV-G 2.0, SKYACTIV-G 2.5]**.)
		No	DTC troubleshooting completed.

2014 - Mazda3 - Engine

DTC P2128:00 [SKYACTIV-G 2.0, SKYACTIV-G 2.5]

DTC P2128:00	APP sensor No.2 circuit high input
DETECTION CONDITION	• The PCM monitors the input voltage from APP sensor No.2. If the input voltage at the PCM terminal 2AS is **more than 4.9 V**, the PCM determines that the APP sensor No.2 circuit has a malfunction. **Diagnostic support note** • This is a continuous monitor (CCM). • The check engine light illuminates if the PCM detects the above malfunction condition during the first drive cycle. • FREEZE FRAME DATA (Mode 2)/Snapshot data is available. • DTC is stored in the PCM memory.
FAIL-SAFE FUNCTION	• Regulates the upper limit of the APP sensor output.
POSSIBLE CAUSE	• APP sensor connector or terminals malfunction • PCM connector or terminals malfunction • APP sensor No.2 malfunction • Short to power supply in wiring harness between APP sensor terminal E and PCM terminal 2AS • Open circuit in wiring harness between APP sensor terminal D and PCM terminal 2AT • PCM malfunction

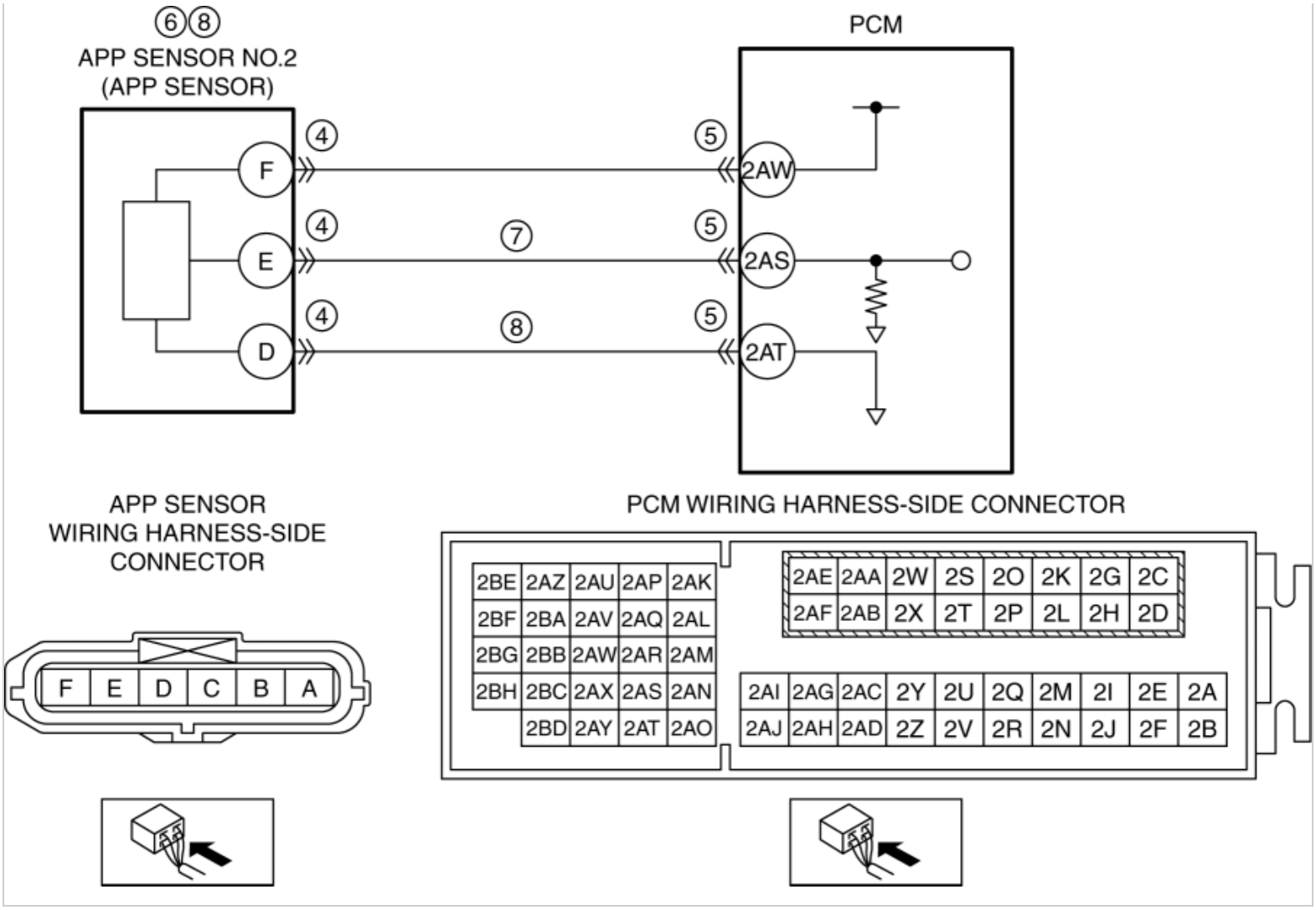

CAUTION:

- Verify the malfunction symptom according to not only the PID value but also the symptom troubleshooting.

Related PIDs

Item (definition)	Unit/Condition	Definition	Condition/Specification (Reference)
APP1	%	Accelerator pedal opening angle (absolute value) input from APP sensor No.1	• Accelerator pedal released: Approx. 15% • Accelerator pedal fully depressed: Approx. 82%
	V	APP sensor No.1 voltage	• Accelerator pedal released: Approx. 0.75 V • Accelerator pedal fully depressed: Approx. 4.1 V
	%	Accelerator pedal opening angle (absolute value) input from APP sensor No.2	• Accelerator pedal released: Approx. 7.45% • Accelerator pedal fully depressed: Approx. 41%

APP2			
	V	APP sensor No.2 voltage	• Accelerator pedal released: Approx. 0.38 V • Accelerator pedal fully depressed: Approx. 2.05 V

Diagnostic Procedure

STEP	INSPECTION		ACTION
1	**VERIFY FREEZE FRAME DATA (MODE 2)/SNAPSHOT DATA HAS BEEN RECORDED** • Has the FREEZE FRAME DATA (Mode 2)/snapshot data been recorded?	Yes	Go to the next step.
		No	Record the FREEZE FRAME DATA (Mode 2)/snapshot data on the repair order, then go to the next step.
2	**VERIFY RELATED REPAIR INFORMATION AVAILABILITY** • Verify related Service Bulletins and/or on-line repair information availability. • Is any related repair information available?	Yes	Perform repair or diagnosis according to the available repair information. • If the vehicle is not repaired, go to the next step.
		No	Go to the next step.
3	**DETERMINE IF APP SENSOR NO.2 OR WIRING HARNESS MALFUNCTION** • Access the APP2 PID using the M-MDS. (See **ON-BOARD DIAGNOSTIC TEST [SKYACTIV-G 2.0, SKYACTIV-G 2.5]**.) • Verify the APP2 PID value. • Is the APP2 PID value **5 V** or **B+**?	Yes	Go to Step 7.
		No	Go to the next step.
4	**INSPECT APP SENSOR CONNECTOR CONDITION** • Switch the ignition off. • Disconnect the APP sensor connector. • Inspect for poor connection (such as damaged/pulled-out pins, corrosion). • Is there any malfunction?	Yes	Repair or replace the connector and/or terminals, then go to Step 9.
		No	Go to the next step.
5	**INSPECT PCM CONNECTOR CONDITION** • Disconnect the PCM connector. • Inspect for poor connection (such as damaged/pulled-out pins, corrosion).	Yes	Repair or replace the connector and/or terminals, then go to Step 9.
		No	Go to the next step.

	• Is there any malfunction?		
6	**INSPECT APP SENSOR NO.2** • Reconnect all disconnected connectors. • Inspect the APP sensor No.2. (See **ACCELERATOR PEDAL POSITION (APP) SENSOR INSPECTION [SKYACTIV-G 2.0, SKYACTIV-G 2.5]**.) • Is there any malfunction?	Yes	Replace the accelerator pedal, then go to Step 9. (See **ACCELERATOR PEDAL REMOVAL/INSTALLATION [SKYACTIV-G 2.0, SKYACTIV-G 2.5]**.)
		No	Go to Step 9.
7	**INSPECT APP SENSOR NO.2 SIGNAL CIRCUIT FOR SHORT TO POWER SUPPLY** • Switch the ignition off. • Disconnect the APP sensor connector. • Access the APP2 PID using the M-MDS. (See **ON-BOARD DIAGNOSTIC TEST [SKYACTIV-G 2.0, SKYACTIV-G 2.5]**.) • Verify the APP2 PID value. • Is the APP2 PID value **5 V** or **B+**?	Yes	Refer to the wiring diagram and verify whether or not there is a common connector between APP sensor terminal E and PCM terminal 2AS. **If there is a common connector:** • Determine the malfunctioning part by inspecting the common connector and the terminal for corrosion, damage, or pin disconnection, and the common wiring harness for a short to power supply. • Repair or replace the malfunctioning part. **If there is no common connector:** • Repair or replace the wiring harness which has a short to power supply. Go to Step 9.
		No	Go to the next step.
8	**INSPECT APP SENSOR NO.2 GROUND CIRCUIT FOR OPEN CIRCUIT** • Verify that the APP sensor connector is disconnected. • Switch the ignition off. • Disconnect the PCM connector. • Inspect for continuity between APP sensor terminal D (wiring harness-side) and PCM terminal 2AT (wiring harness-side). • Is there continuity?	Yes	Replace the accelerator pedal, then go to the next step. (See **ACCELERATOR PEDAL REMOVAL/INSTALLATION [SKYACTIV-G 2.0, SKYACTIV-G 2.5]**.)
		No	Refer to the wiring diagram and verify whether or not there is a common connector between APP sensor terminal D and PCM terminal 2AT. **If there is a common connector:** • Determine the malfunctioning part by inspecting the common connector and the terminal for corrosion, damage, or pin disconnection, and the common wiring harness for an open circuit. • Repair or replace the malfunctioning part. **If there is no common connector:** • Repair or replace the wiring harness which has an open circuit. Go to the next step.
9	**VERIFY DTC TROUBLESHOOTING COMPLETED** • Always reconnect all disconnected connectors.	Yes	Repeat the inspection from Step 1. • If the malfunction recurs, replace the PCM.

	• Clear the DTC from the PCM memory using the M-MDS. (See **AFTER REPAIR PROCEDURE [SKYACTIV-G 2.0, SKYACTIV-G 2.5]**.) • Perform the KOEO or KOER self test. (See **KOEO/KOER SELF TEST [SKYACTIV-G 2.0, SKYACTIV-G 2.5]**.) • Is the same DTC present?		(See **PCM REMOVAL/INSTALLATION [SKYACTIV-G 2.0, SKYACTIV-G 2.5]**.) Go to the next step.
		No	Go to the next step.
10	**VERIFY AFTER REPAIR PROCEDURE** • Perform the “AFTER REPAIR PROCEDURE”. (See **AFTER REPAIR PROCEDURE [SKYACTIV-G 2.0, SKYACTIV-G 2.5]**.) • Are any DTCs present?	Yes	Go to the applicable DTC inspection. (See **DTC TABLE [SKYACTIV-G 2.0, SKYACTIV-G 2.5]**.)
		No	DTC troubleshooting completed.

2014 - Mazda3 - Engine

DTC P2135:00 [SKYACTIV-G 2.0, SKYACTIV-G 2.5]

DTC P2135:00	TP sensor No.1/No.2 voltage correlation problem
DETECTION CONDITION	• The PCM compares the input voltage from TP sensor No.1 with the input voltage from TP sensor No.2. If the difference is more than the specification, the PCM determines that there is a TP sensor No.1/No.2 voltage correlation problem. **Diagnostic support note** • This is a continuous monitor (CCM). • The check engine light illuminates if the PCM detects the above malfunction condition during the first drive cycle. • FREEZE FRAME DATA (Mode 2)/Snapshot data is available. • DTC is stored in the PCM memory.
FAIL-SAFE FUNCTION	• Restricts the upper limit of the engine speed. • Stops the drive-by-wire control (throttle valve is open at **approx. 8 °** by return spring force).
POSSIBLE CAUSE	• Throttle body connector or terminals malfunction • PCM connector or terminals malfunction • TP sensor No.1 malfunction • TP sensor No.2 malfunction • PCM malfunction
SYSTEM WIRING DIAGRAM	Not applicable

CAUTION:

- Verify the malfunction symptom according to not only the PID value but also the symptom troubleshooting.

Related PIDs

Item (definition)	Unit/Condition	Definition	Condition/Specification (Reference)
TP1	V	TP sensor No.1 voltage	• Accelerator pedal released: Approx. 1.11 V • Accelerator pedal fully depressed: Approx. 4.59 V
	%	Throttle valve position No.1	• Accelerator pedal released: Approx. 22% • Accelerator pedal fully depressed: Approx. 92%
TP2	V	TP sensor No.2 voltage	• Accelerator pedal released: Approx. 3.92 V • Accelerator pedal fully depressed: Approx. 0.41 V
	%	Throttle valve position No.2	• Accelerator pedal released: Approx. 22% • Accelerator pedal fully depressed: Approx. 82%

Diagnostic Procedure

STEP	INSPECTION		ACTION
1	**VERIFY FREEZE FRAME DATA (MODE 2)/SNAPSHOT DATA HAS BEEN RECORDED** • Has the FREEZE FRAME DATA (Mode 2)/snapshot data been recorded?	Yes	Go to the next step.
		No	Record the FREEZE FRAME DATA (Mode 2)/snapshot data on the repair order, then go to the next step.
2	**VERIFY RELATED REPAIR INFORMATION AVAILABILITY** • Verify related Service Bulletins and/or on-line repair information availability. • Is any related repair information available?	Yes	Perform repair or diagnosis according to the available repair information. • If the vehicle is not repaired, go to the next step.
		No	Go to the next step.
3	**VERIFY RELATED PENDING CODE AND/OR DTC** • Switch the ignition off, then ON	Yes	Go to the applicable PENDING CODE or DTC inspection.

	(engine off). • Perform the Pending Trouble Code Access Procedure and DTC Reading Procedure. (See **ON-BOARD DIAGNOSTIC TEST [SKYACTIV-G 2.0, SKYACTIV-G 2.5]**.) • Is the PENDING CODE/DTC P0122:00, P0123:00, P0222:00 or P0223:00 also present?		(See **DTC P0122:00 [SKYACTIV-G 2.0, SKYACTIV-G 2.5]**.) (See **DTC P0123:00 [SKYACTIV-G 2.0, SKYACTIV-G 2.5]**.) (See **DTC P0222:00 [SKYACTIV-G 2.0, SKYACTIV-G 2.5]**.) (See **DTC P0223:00 [SKYACTIV-G 2.0, SKYACTIV-G 2.5]**.)
		No	Go to the next step.
4	**INSPECT THROTTLE BODY CONNECTOR CONDITION** • Switch the ignition off. • Disconnect the throttle body connector. • Inspect for poor connection (such as damaged/pulled-out pins, corrosion). • Is there any malfunction?	Yes	Repair or replace the connector and/or terminals, then go to Step 7.
		No	Go to the next step.
5	**INSPECT PCM CONNECTOR CONDITION** • Disconnect the PCM connector. • Inspect for poor connection (such as damaged/pulled-out pins, corrosion). • Is there any malfunction?	Yes	Repair or replace the connector and/or terminals, then go to Step 7.
		No	Go to the next step.
6	**INSPECT TP SENSOR NO.1 AND NO.2** • Reconnect all disconnected connectors. • Inspect the TP sensor No.1 and No.2. (See **THROTTLE POSITION (TP) SENSOR INSPECTION [SKYACTIV-G 2.0, SKYACTIV-G 2.5]**.) • Is there any malfunction?	Yes	Replace the throttle body, then go to the next step. (See **INTAKE-AIR SYSTEM REMOVAL/INSTALLATION [SKYACTIV-G 2.0, SKYACTIV-G 2.5]**.)
		No	Go to the next step.
7	**VERIFY DTC TROUBLESHOOTING COMPLETED** • Always reconnect all disconnected connectors. • Clear the DTC from the PCM memory using the M-MDS. (See **AFTER REPAIR PROCEDURE**	Yes	Repeat the inspection from Step 1. • If the malfunction recurs, replace the PCM. (See **PCM REMOVAL/INSTALLATION [SKYACTIV-G 2.0, SKYACTIV-G**

	[SKYACTIV-G 2.0, SKYACTIV-G 2.5].) • Perform the KOEO or KOER self test. (See **KOEO/KOER SELF TEST [SKYACTIV-G 2.0, SKYACTIV-G 2.5]**.) • Is the same DTC present?		**2.5]**.) Go to the next step.
		No	Go to the next step.
8	**VERIFY AFTER REPAIR PROCEDURE** • Perform the “AFTER REPAIR PROCEDURE”. (See **AFTER REPAIR PROCEDURE [SKYACTIV-G 2.0, SKYACTIV-G 2.5]**.) • Are any DTCs present?	Yes	Go to the applicable DTC inspection. (See **DTC TABLE [SKYACTIV-G 2.0, SKYACTIV-G 2.5]**.)
		No	DTC troubleshooting completed.

2014 - Mazda3 - Engine

DTC P2138:00 [SKYACTIV-G 2.0, SKYACTIV-G 2.5]

DTC P2138:00	APP sensor No.1/No.2 voltage correlation problem
DETECTION CONDITION	• The PCM compares the input voltage from APP sensor No.1 with the input voltage from APP sensor No.2. If the difference is more than the specification, the PCM determines that there is an APP sensor No.1/No.2 angle correlation problem. **Diagnostic support note** • This is a continuous monitor (CCM). • The check engine light illuminates if the PCM detects the above malfunction condition during the first drive cycle. • FREEZE FRAME DATA (Mode 2)/Snapshot data is available. • DTC is stored in the PCM memory.
FAIL-SAFE FUNCTION	• Restricts the upper limit of the engine speed. • Stops the drive-by-wire control (throttle valve is open at **approx. 8 °** by return spring force).
POSSIBLE CAUSE	• APP sensor connector or terminals malfunction • PCM connector or terminals malfunction • APP sensor No.1 malfunction • APP sensor No.2 malfunction • PCM malfunction
SYSTEM WIRING DIAGRAM	Not applicable

CAUTION:

- Verify the malfunction symptom according to not only the PID value but also the symptom troubleshooting.

Related PIDs

Item (definition)	Unit/Condition	Definition	Condition/Specification (Reference)
APP1	%	Accelerator pedal opening angle (absolute value) input from APP sensor No.1	• Accelerator pedal released: Approx. 15% • Accelerator pedal fully depressed: Approx. 82%
	V	APP sensor No.1 voltage	• Accelerator pedal released: Approx. 0.75 V • Accelerator pedal fully depressed: Approx. 4.1 V
APP2	%	Accelerator pedal opening angle (absolute value) input from APP sensor No.2	• Accelerator pedal released: Approx. 7.45% • Accelerator pedal fully depressed: Approx. 41%
	V	APP sensor No.2 voltage	• Accelerator pedal released: Approx. 0.38 V • Accelerator pedal fully depressed: Approx. 2.05 V

Diagnostic Procedure

STEP	INSPECTION		ACTION
1	**VERIFY FREEZE FRAME DATA (MODE 2)/SNAPSHOT DATA HAS BEEN RECORDED** • Has the FREEZE FRAME DATA (Mode 2)/snapshot data been recorded?	Yes	Go to the next step.
		No	Record the FREEZE FRAME DATA (Mode 2)/snapshot data on the repair order, then go to the next step.
2	**VERIFY RELATED REPAIR INFORMATION AVAILABILITY** • Verify related Service Bulletins and/or on-line repair information	Yes	Perform repair or diagnosis according to the available repair information. • If the vehicle is not repaired,

	availability. • Is any related repair information available?		go to the next step.
		No	Go to the next step.
3	**VERIFY RELATED PENDING CODE AND/OR DTC** • Switch the ignition off, then ON (engine off). • Perform the Pending Trouble Code Access Procedure and DTC Reading Procedure. (See **ON-BOARD DIAGNOSTIC TEST [SKYACTIV-G 2.0, SKYACTIV-G 2.5]**.) • Is the PENDING CODE/DTC P2122:00, P2123:00, P2127:00 or P2128:00 also present?	Yes	Go to the applicable PENDING CODE or DTC inspection. (See **DTC P2122:00 [SKYACTIV-G 2.0, SKYACTIV-G 2.5]**.) (See **DTC P2123:00 [SKYACTIV-G 2.0, SKYACTIV-G 2.5]**.) (See **DTC P2127:00 [SKYACTIV-G 2.0, SKYACTIV-G 2.5]**.) (See **DTC P2128:00 [SKYACTIV-G 2.0, SKYACTIV-G 2.5]**.)
		No	Go to the next step.
4	**INSPECT APP SENSOR CONNECTOR CONDITION** • Switch the ignition off. • Disconnect the APP sensor connector. • Inspect for poor connection (such as damaged/pulled-out pins, corrosion). • Is there any malfunction?	Yes	Repair or replace the connector and/or terminals, then go to Step 7.
		No	Go to the next step.
5	**INSPECT PCM CONNECTOR CONDITION** • Disconnect the PCM connector. • Inspect for poor connection (such as damaged/pulled-out pins, corrosion). • Is there any malfunction?	Yes	Repair or replace the connector and/or terminals, then go to Step 7.
		No	Go to the next step.
6	**INSPECT APP SENSOR NO.1 AND NO.2** • Reconnect all disconnected connectors. • Inspect the APP sensor No.1 and No.2. (See **ACCELERATOR PEDAL POSITION (APP) SENSOR INSPECTION [SKYACTIV-G 2.0, SKYACTIV-G 2.5]**.) • Is there any malfunction?	Yes	Replace the accelerator pedal, then go to the next step. (See **ACCELERATOR PEDAL REMOVAL/INSTALLATION [SKYACTIV-G 2.0, SKYACTIV-G 2.5]**.)
		No	Go to the next step.
	VERIFY DTC TROUBLESHOOTING COMPLETED		

7	• Always reconnect all disconnected connectors. • Clear the DTC from the PCM memory using the M-MDS. (See **AFTER REPAIR PROCEDURE [SKYACTIV-G 2.0, SKYACTIV-G 2.5]**.) • Perform the KOEO or KOER self test. (See **KOEO/KOER SELF TEST [SKYACTIV-G 2.0, SKYACTIV-G 2.5]**.) • Is the same DTC present?	Yes	Repeat the inspection from Step 1. • If the malfunction recurs, replace the PCM. (See **PCM REMOVAL/INSTALLATION [SKYACTIV-G 2.0, SKYACTIV-G 2.5]**.) Go to the next step.
		No	Go to the next step.
8	**VERIFY AFTER REPAIR PROCEDURE** • Perform the “AFTER REPAIR PROCEDURE”. (See **AFTER REPAIR PROCEDURE [SKYACTIV-G 2.0, SKYACTIV-G 2.5]**.) • Are any DTCs present?	Yes	Go to the applicable DTC inspection. (See **DTC TABLE [SKYACTIV-G 2.0, SKYACTIV-G 2.5]**.)
		No	DTC troubleshooting completed.

2014 - Mazda3 - Engine

DTC P2183:00 [SKYACTIV-G 2.0, SKYACTIV-G 2.5]

NOTE:

- To determine the malfunctioning part, proceed with the diagnostics from "Function Inspection Using M-MDS".

Details On DTCs

DESCRIPTION	ECT sensor No.2 circuit range/performance problem	
DETECTION CONDITION	Determination conditions	• When the ECT sensor No.2 detected temperature is **approx. 12.1 °C {21.8 °F}** higher than the IAT sensor No.1, or the ECT sensor No.2 detected temperature is **approx. −14.3 °C {−25.7 °F}** less than the IAT sensor No.1 with the ignition switched ON, the PCM detects a circuit range/performance problem.
	Preconditions	• Before starting the engine, leave the vehicle with the engine turned off for **6 hours or more**. • The following DTCs are not detected: ▪ IAT sensor No.1: P0112:00, P0113:00 ▪ ECT sensor No.2: P2184:00, P2185:00
	Drive cycle	• 2
	Self test type	• CMDTC self test
	Sensor used	• IAT sensor No.1 • ECT sensor No.2
FAIL-SAFE FUNCTION	• Not applicable	
VEHICLE STATUS WHEN DTCs	• Illuminates check engine light.	

ARE OUTPUT	
POSSIBLE CAUSE	• ECT sensor No.2 connector or terminals malfunction • MAF sensor/IAT sensor No.1 connector or terminals malfunction • PCM connector or terminals malfunction • ECT sensor No.2 malfunction • IAT sensor No.1 malfunction • PCM malfunction

System Wiring Diagram

- Not applicable

Function Explanation (DTC Detection Outline)

- The PCM compares the signals of ECT sensor No.2 and IAT sensor No.1 to detect a malfunction in the ECT sensor No.2. If the difference between the engine coolant temperature (ECT sensor No. 2 signal) and the intake air temperature (IAT sensor No.1 signal) is high, the PCM determines a malfunction in ECT sensor No.2, and stores a DTC.

Repeatability Verification Procedure

- Warm up the engine to allow the engine coolant temperature to reach **80 °C {176 °F} or more**.
- Start the engine and leave it idling for **1 min**.

PID Item/Simulation Item Used In Diagnosis

PID/DATA monitor item table

Item	Definition	Unit	Condition/Specification
ECT2_V	ECT sensor No.2 voltage	V	• ECT is 20 °C {68 °F}: Approx. 3.10 V • ECT is 40 °C {104 °F}: Approx. 2.16 V • ECT is 60 °C {140 °F}: Approx. 1.40 V • ECT is 80 °C {176 °F}: Approx. 0.87 V • ECT is 100 °C {212 °F}: Approx. 0.54 V

IAT	Intake air temperature (No.1)	°C, °F	• Displays IAT (No.1)
	IAT sensor No.1 voltage	V	• IAT is 20 °C {68 °F}: Approx. 2.70 V • IAT is 40 °C {104 °F}: Approx. 1.80 V • IAT is 60 °C {140 °F}: Approx. 1.20 V

Function Inspection Using M-MDS

STEP	INSPECTION	RESULTS	ACTION
1	**PURPOSE: VERIFY RELATED REPAIR INFORMATION AVAILABILITY** • Verify related Service Bulletins and/or on-line repair information availability. • Is any related repair information available?	Yes	Perform repair or diagnosis according to the available repair information. • If the vehicle is not repaired, go to the next step.
		No	Go to the next step.
2	**PURPOSE: RECORD VEHICLE STATUS AT TIME OF DTC DETECTION TO UTILIZE WITH REPEATABILITY VERIFICATION** • Has the FREEZE FRAME DATA (Mode 2)/snapshot data been recorded?	Yes	Go to the next step.
		No	Record the FREEZE FRAME DATA (Mode 2)/snapshot data on the repair order, then go to the next step. **NOTE:** • Recording can be facilitated using the screen capture function of the PC.
3	**PURPOSE: VERIFY CONNECTOR CONNECTIONS** • Start the engine. • Access the following PIDs using the M-MDS: (See **ON-BOARD DIAGNOSTIC TEST [SKYACTIV-G 2.0, SKYACTIV-G 2.5]**.) ▪ ECT2_V ▪ IAT • Does the PID value fluctuate when the following connectors are shaken?	Yes	Repair or replace the applicable connector parts. Go to the troubleshooting procedure to perform the procedure from Step 3.
		No	Go to the troubleshooting procedure to perform the procedure from Step 1.

	▪ ECT sensor No.2 ▪ IAT sensor No.1 ▪ PCM		

Troubleshooting Diagnostic Procedure

Intention of troubleshooting procedure

- Step 1
  - Perform a unit inspection of the ECT sensor No.2.
- Step 2
  - Perform a unit inspection of the IAT sensor No.1.
- Step 3—4
  - Verify that the primary malfunction is resolved and there are no other malfunctions.

STEP	INSPECTION	RESULTS	ACTION
1	**PURPOSE: DETERMINE INTEGRITY OF ECT SENSOR NO.2** • Inspect the ECT sensor No.2. (See **ENGINE COOLANT TEMPERATURE (ECT) SENSOR INSPECTION [SKYACTIV-G 2.0, SKYACTIV-G 2.5]**.) • Is there any malfunction?	Yes	Replace the ECT sensor No.2, then go to Step 3. (See **ENGINE COOLANT TEMPERATURE (ECT) SENSOR REMOVAL/INSTALLATION [SKYACTIV-G 2.0, SKYACTIV-G 2.5]**.)
		No	Go to the next step.
2	**PURPOSE: DETERMINE INTEGRITY OF IAT SENSOR NO.1** • Inspect the IAT sensor No.1. (See **INTAKE AIR TEMPERATURE (IAT) SENSOR INSPECTION [SKYACTIV-G 2.0, SKYACTIV-G 2.5]**.) • Is there any malfunction?	Yes	Replace the MAF sensor/IAT sensor No.1, then go to the next step. (See **MASS AIR FLOW (MAF) SENSOR/INTAKE AIR TEMPERATURE (IAT) SENSOR NO.1 REMOVAL/INSTALLATION [SKYACTIV-G 2.0, SKYACTIV-G 2.5]**.)
		No	Go to the next step.
3	**PURPOSE: VERIFICATION OF VEHICLE REPAIR COMPLETION**	Yes	Repeat the inspection from Step 1.

	• Always reconnect all disconnected connectors. • Clear the DTC from the PCM memory using the M-MDS. (See **CLEARING DTC [SKYACTIV-G 2.0, SKYACTIV-G 2.5]**.) • Implement the repeatability verification procedure. (See **Repeatability Verification Procedure**.) • Perform the Pending Trouble Code Access Procedure. (See **ON-BOARD DIAGNOSTIC TEST [SKYACTIV-G 2.0, SKYACTIV-G 2.5]**.) • Is the PENDING CODE for this DTC present?		• If the malfunction recurs, replace the PCM. (See **PCM REMOVAL/INSTALLATION [SKYACTIV-G 2.0, SKYACTIV-G 2.5]**.) Go to the next step.
		No	Go to the next step.
4	**PURPOSE: VERIFY IF THERE IS ANY OTHER MALFUNCTION** • Is any other DTC or pending code stored?	Yes	Go to the applicable DTC inspection. (See **DTC TABLE [SKYACTIV-G 2.0, SKYACTIV-G 2.5]**.)
		No	DTC troubleshooting completed.

2014 - Mazda3 - Engine

DTC P2184:00 [SKYACTIV-G 2.0, SKYACTIV-G 2.5]

DTC P2184:00	ECT sensor No.2 circuit low input
DETECTION CONDITION	• The PCM monitors the ECT sensor No.2 signal. If the PCM detects that the ECT sensor No.2 voltage at the PCM terminal 2F is **below 0.16 V** for **5 s**, the PCM determines that the ECT sensor No.2 circuit has a malfunction. **Diagnostic support note** • This is a continuous monitor (engine cooling system). • The check engine light illuminates if the PCM detects the above malfunction condition in two consecutive drive cycles or in one drive cycle while the DTC for the same malfunction has been stored in the PCM. • PENDING CODE is available if the PCM detects the above malfunction condition during first drive cycle. • FREEZE FRAME DATA (Mode 2)/Snapshot data is available. • DTC is stored in the PCM memory.
FAIL-SAFE FUNCTION	Not applicable
POSSIBLE CAUSE	• ECT sensor No.2 connector or terminals malfunction • ECT sensor No.2 malfunction • PCM connector or terminals malfunction • Short to ground in wiring harness between ECT sensor No.2 terminal A and PCM terminal 2F • ECT sensor No.2 signal circuit and ground circuit are shorted to each other • PCM malfunction

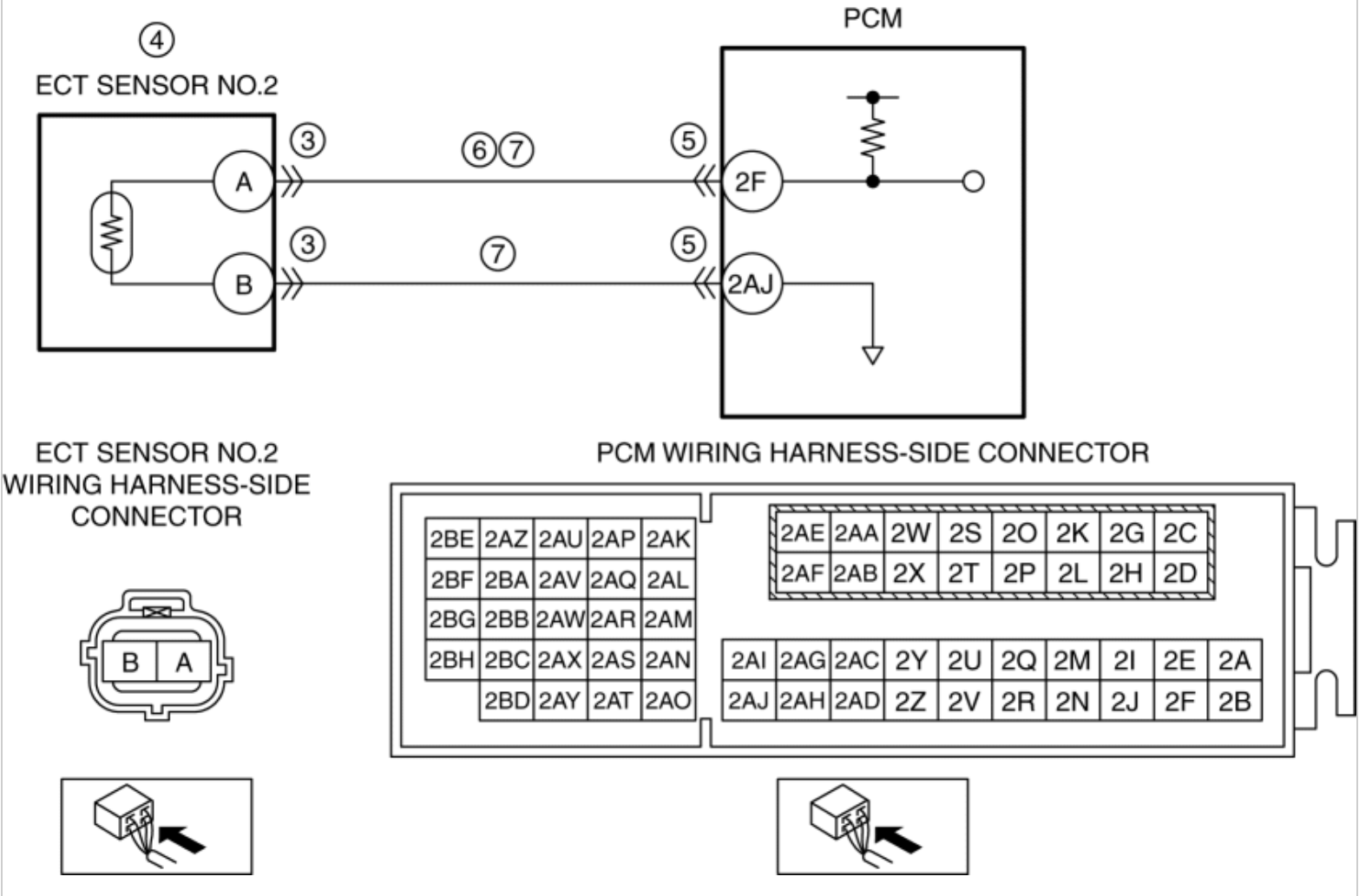

CAUTION:

- Verify the malfunction symptom according to not only the PID value but also the symptom troubleshooting.

Related PIDs

Item (definition)	Unit/Condition	Definition	Condition/Specification (Reference)
ECT2_V	V	ECT sensor No.2 voltage	• ECT is 20 °C {68 °F}: Approx. 3.10 V • ECT is 40 °C {104 °F}: Approx. 2.16 V • ECT is 60 °C {140 °F}: Approx. 1.40 V • ECT is 80 °C {176 °F}: Approx. 0.87 V • ECT is 100 °C {212 °F}: Approx. 0.54 V

Diagnostic Procedure

STEP	INSPECTION		ACTION
1	**VERIFY FREEZE FRAME DATA (MODE 2)/SNAPSHOT DATA AND DIAGNOSTIC**	Yes	Go to the next step.

	MONITORING TEST RESULTS HAVE BEEN RECORDED • Have the FREEZE FRAME DATA (Mode 2)/snapshot data and DIAGNOSTIC MONITORING TEST RESULTS (engine cooling system related) been recorded?	No	Record the FREEZE FRAME DATA (Mode 2)/snapshot data and DIAGNOSTIC MONITORING TEST RESULTS on the repair order, then go to the next step.
2	**VERIFY RELATED REPAIR INFORMATION AVAILABILITY** • Verify related Service Bulletins and/or on-line repair information availability. • Is any related repair information available?	Yes	Perform repair or diagnosis according to the available repair information. • If the vehicle is not repaired, go to the next step.
		No	Go to the next step.
3	**INSPECT ECT SENSOR NO.2 CONNECTOR CONDITION** • Switch the ignition off. • Disconnect the ECT sensor No.2 connector. • Inspect for poor connection (such as damaged/pulled-out pins, corrosion). • Is there any malfunction?	Yes	Repair or replace the connector and/or terminals, then go to Step 8.
		No	Go to the next step.
4	**DETERMINE IF ECT SENSOR NO.2 OR WIRING HARNESS MALFUNCTION** • Reconnect all disconnected connectors. • Access the ECT2_V PID using the M-MDS. (See **ON-BOARD DIAGNOSTIC TEST [SKYACTIV-G 2.0, SKYACTIV-G 2.5]**.) • Verify the ECT2_V PID value when disconnecting the ECT sensor No.2 connector. • Does the ECT2_V PID value change?	Yes	Replace the ECT sensor No.2, then go to Step 8. (See **ENGINE COOLANT TEMPERATURE (ECT) SENSOR REMOVAL/INSTALLATION [SKYACTIV-G 2.0, SKYACTIV-G 2.5]**.)
		No	Go to the next step.
5	**INSPECT PCM CONNECTOR CONDITION** • Switch the ignition off. • Disconnect the PCM connector. • Inspect for poor connection (such as damaged/pulled-out pins, corrosion). • Is there any malfunction?	Yes	Repair or replace the connector and/or terminals, then go to Step 8.
		No	Go to the next step.
	INSPECT ECT SENSOR NO.2 SIGNAL		

6	**CIRCUIT FOR SHORT TO GROUND** • Verify that the PCM connector is disconnected. • Disconnect the ECT sensor No.2 connector. • Inspect for continuity between ECT sensor No.2 terminal A (wiring harness-side) and body ground. • Is there continuity?	Yes	Refer to the wiring diagram and verify whether or not there is a common connector between ECT sensor No.2 terminal A and PCM terminal 2F. **If there is a common connector:** • Determine the malfunctioning part by inspecting the common connector and the terminal for corrosion, damage, or pin disconnection, and the common wiring harness for a short to ground. • Repair or replace the malfunctioning part. **If there is no common connector:** • Repair or replace the wiring harness which has a short to ground. Go to Step 8.
		No	Go to the next step.
7	**INSPECT ECT SENSOR NO.2 SIGNAL CIRCUIT AND GROUND CIRCUIT FOR SHORT TO EACH OTHER** • Verify that the ECT sensor No.2 and PCM connectors are disconnected. • Inspect for continuity between ECT sensor No.2 terminals A and B (wiring harness-side). • Is there continuity?	Yes	Refer to the wiring diagram and verify whether or not there is a common connector between the following terminals: • ECT sensor No.2 terminal A—PCM terminal 2F • ECT sensor No.2 terminal B—PCM terminal 2AJ **If there is a common connector:** • Determine the malfunctioning part by inspecting the common connector and the terminal for corrosion, damage, or pin disconnection, and the common wiring harness for a short to each other. • Repair or replace the malfunctioning part. **If there is no common connector:** • Repair or replace the wiring harness which has a short to each other. Go to the next step.
		No	Go to the next step.
8	**VERIFY DTC TROUBLESHOOTING COMPLETED** • Always reconnect all disconnected connectors. • Clear the DTC from the PCM memory using the M-MDS. (See **AFTER REPAIR PROCEDURE [SKYACTIV-G 2.0, SKYACTIV-G 2.5]**.)	Yes	Repeat the inspection from Step 1. • If the malfunction recurs, replace the PCM. (See **PCM REMOVAL/INSTALLATION [SKYACTIV-G 2.0, SKYACTIV-G 2.5]**.) Go to the next step.

	• Perform the KOEO or KOER self test. (See **KOEO/KOER SELF TEST [SKYACTIV-G 2.0, SKYACTIV-G 2.5]**.) • Is the PENDING CODE for this DTC present?	No	Go to the next step.
9	**VERIFY AFTER REPAIR PROCEDURE** • Perform the “AFTER REPAIR PROCEDURE”. (See **AFTER REPAIR PROCEDURE [SKYACTIV-G 2.0, SKYACTIV-G 2.5]**.) • Are any DTCs present?	Yes	Go to the applicable DTC inspection. (See **DTC TABLE [SKYACTIV-G 2.0, SKYACTIV-G 2.5]**.)
		No	DTC troubleshooting completed.

2014 - Mazda3 - Engine

DTC P2185:00 [SKYACTIV-G 2.0, SKYACTIV-G 2.5]

DTC P2185:00	ECT sensor No.2 circuit high input
DETECTION CONDITION	• The PCM monitors the ECT sensor No.2 signal. If the PCM detects that the ECT sensor No.2 voltage at the PCM terminal 2F is **above 4.92 V** for **5 s**, the PCM determines that the ECT sensor No.2 circuit has a malfunction. **Diagnostic support note** • This is a continuous monitor (engine cooling system). • The check engine light illuminates if the PCM detects the above malfunction condition in two consecutive drive cycles or in one drive cycle while the DTC for the same malfunction has been stored in the PCM. • PENDING CODE is available if the PCM detects the above malfunction condition during first drive cycle. • FREEZE FRAME DATA (Mode 2)/Snapshot data is available. • DTC is stored in the PCM memory.
FAIL-SAFE FUNCTION	Not applicable
POSSIBLE CAUSE	• ECT sensor No.2 connector or terminals malfunction • ECT sensor No.2 malfunction • PCM connector or terminals malfunction • Short to power supply in wiring harness between ECT sensor No.2 terminal A and PCM terminal 2F • Open circuit in wiring harness between the following terminals: ▪ ECT sensor No.2 terminal A—PCM terminal 2F ▪ ECT sensor No.2 terminal B—PCM terminal 2AJ • PCM malfunction

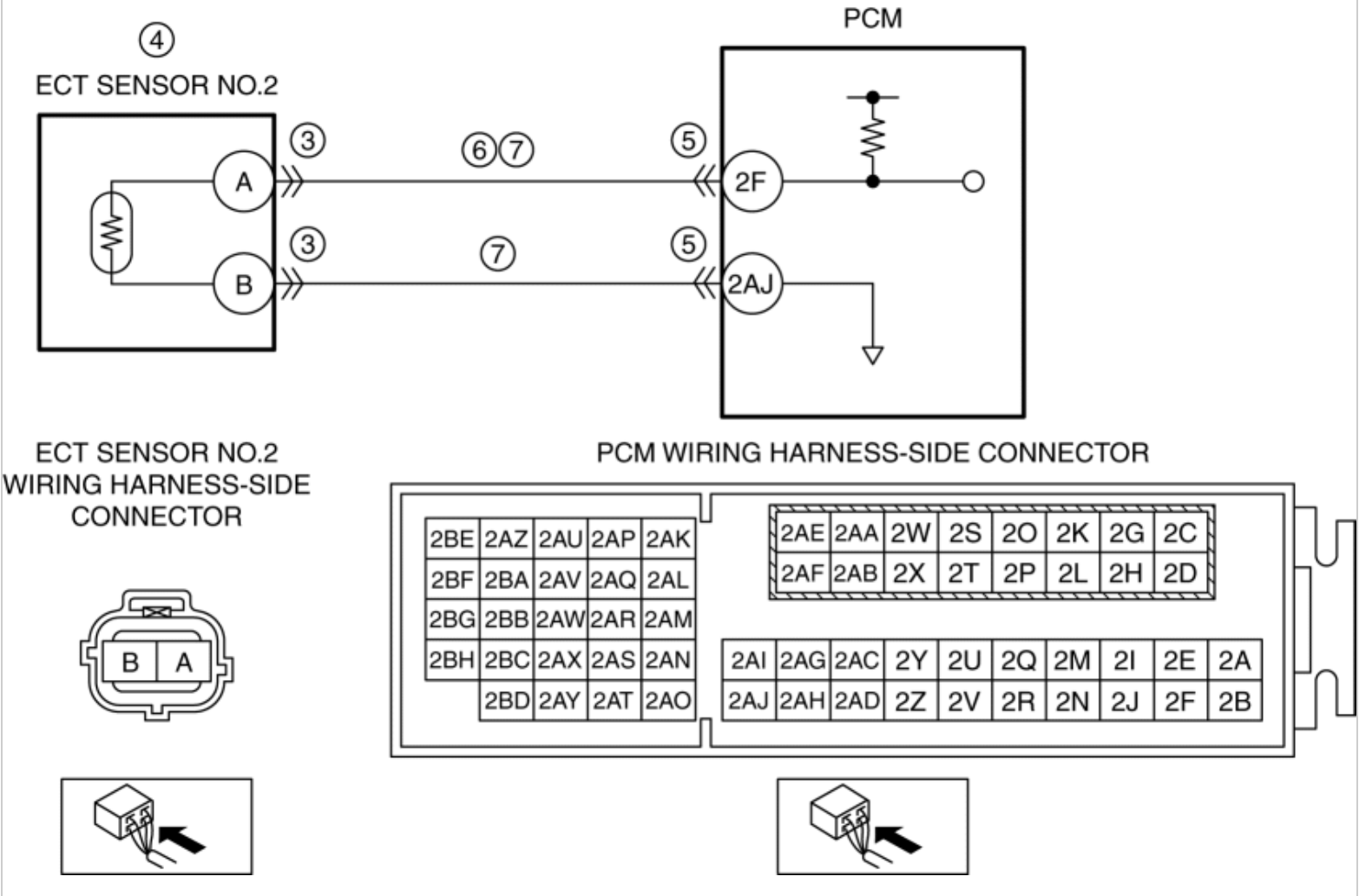

CAUTION:

- Verify the malfunction symptom according to not only the PID value but also the symptom troubleshooting.

Related PIDs

Item (definition)	Unit/Condition	Definition	Condition/Specification (Reference)
ECT2_V	V	ECT sensor No.2 voltage	• ECT is 20 °C {68 °F}: Approx. 3.10 V • ECT is 40 °C {104 °F}: Approx. 2.16 V • ECT is 60 °C {140 °F}: Approx. 1.40 V • ECT is 80 °C {176 °F}: Approx. 0.87 V • ECT is 100 °C {212 °F}: Approx. 0.54 V

Diagnostic Procedure

STEP	INSPECTION		ACTION
1	**VERIFY FREEZE FRAME DATA (MODE 2)/SNAPSHOT DATA AND DIAGNOSTIC**	Yes	Go to the next step.

	MONITORING TEST RESULTS HAVE BEEN RECORDED • Have the FREEZE FRAME DATA (Mode 2)/snapshot data and DIAGNOSTIC MONITORING TEST RESULTS (engine cooling system related) been recorded?	No	Record the FREEZE FRAME DATA (Mode 2)/snapshot data and DIAGNOSTIC MONITORING TEST RESULTS on the repair order, then go to the next step.
2	**VERIFY RELATED REPAIR INFORMATION AVAILABILITY** • Verify related Service Bulletins and/or on-line repair information availability. • Is any related repair information available?	Yes	Perform repair or diagnosis according to the available repair information. • If the vehicle is not repaired, go to the next step.
		No	Go to the next step.
3	**INSPECT ECT SENSOR NO.2 CONNECTOR CONDITION** • Switch the ignition off. • Disconnect the ECT sensor No.2 connector. • Inspect for poor connection (such as damaged/pulled-out pins, corrosion). • Is there any malfunction?	Yes	Repair or replace the connector and/or terminals, then go to Step 8.
		No	Go to the next step.
4	**DETERMINE IF ECT SENSOR NO.2 OR WIRING HARNESS MALFUNCTION** • Verify that the ECT sensor No.2 connector is disconnected. • Access the ECT2_V PID using the M-MDS. (See **ON-BOARD DIAGNOSTIC TEST [SKYACTIV-G 2.0, SKYACTIV-G 2.5]**.) • Connect a jumper wire between ECT sensor No.2 terminals A and B (wiring harness-side). • Verify the ECT2_V PID value. • Is the voltage **4.95 V or below**?	Yes	Replace the ECT sensor No.2, then go to Step 8. (See **ENGINE COOLANT TEMPERATURE (ECT) SENSOR REMOVAL/INSTALLATION [SKYACTIV-G 2.0, SKYACTIV-G 2.5]**.)
		No	Go to the next step.
5	**INSPECT PCM CONNECTOR CONDITION** • Switch the ignition off. • Disconnect the PCM connector. • Inspect for poor connection (such as damaged/pulled-out pins, corrosion). • Is there any malfunction?	Yes	Repair or replace the connector and/or terminals, then go to Step 8.
		No	Go to the next step.

6	**INSPECT ECT SENSOR NO.2 SIGNAL CIRCUIT FOR SHORT TO POWER SUPPLY** • Verify that the ECT sensor No.2 and PCM connectors are disconnected. • Switch the ignition ON (engine off). **NOTE:** • Another DTC may be stored by the PCM detecting an open circuit. • Measure the voltage at the ECT sensor No.2 terminal A (wiring harness-side). • Is the voltage **0 V**?	Yes	Go to the next step.
		No	Refer to the wiring diagram and verify whether or not there is a common connector between ECT sensor No.2 terminal A and PCM terminal 2F. **If there is a common connector:** • Determine the malfunctioning part by inspecting the common connector and the terminal for corrosion, damage, or pin disconnection, and the common wiring harness for a short to power supply. • Repair or replace the malfunctioning part. **If there is no common connector:** • Repair or replace the wiring harness which has a short to power supply. Go to Step 8.
7	**INSPECT ECT SENSOR NO.2 CIRCUIT FOR OPEN CIRCUIT** • Verify that the ECT sensor No.2 and PCM connectors are disconnected. • Switch the ignition off. • Inspect for continuity between the following terminals (wiring harness-side): ▪ ECT sensor No.2 terminal A—PCM terminal 2F ▪ ECT sensor No.2 terminal B—PCM terminal 2AJ • Is there continuity?	Yes	Go to the next step.
		No	Refer to the wiring diagram and verify whether or not there is a common connector between the following terminals: • ECT sensor No.2 terminal A—PCM terminal 2F • ECT sensor No.2 terminal B—PCM terminal 2AJ **If there is a common connector:** • Determine the malfunctioning part by inspecting the common connector and the terminal for corrosion, damage, or pin disconnection, and the common wiring harness for an open circuit. • Repair or replace the malfunctioning part. **If there is no common connector:** • Repair or replace the wiring harness which has an open circuit. Go to the next step.
8	**VERIFY DTC TROUBLESHOOTING COMPLETED** • Always reconnect all disconnected connectors. • Clear the DTC from the PCM memory using the M-MDS. (See **AFTER REPAIR PROCEDURE [SKYACTIV-G 2.0, SKYACTIV-G**	Yes	Repeat the inspection from Step 1. • If the malfunction recurs, replace the PCM. (See **PCM REMOVAL/INSTALLATION [SKYACTIV-G 2.0, SKYACTIV-G 2.5]**.) Go to the next step.

	2.5].) • Perform the KOEO or KOER self test. (See **KOEO/KOER SELF TEST [SKYACTIV-G 2.0, SKYACTIV-G 2.5]**.) • Is the PENDING CODE for this DTC present?	No	Go to the next step.
9	**VERIFY AFTER REPAIR PROCEDURE** • Perform the “AFTER REPAIR PROCEDURE”. (See **AFTER REPAIR PROCEDURE [SKYACTIV-G 2.0, SKYACTIV-G 2.5]**.) • Are any DTCs present?	Yes	Go to the applicable DTC inspection. (See **DTC TABLE [SKYACTIV-G 2.0, SKYACTIV-G 2.5]**.)
		No	DTC troubleshooting completed.

2014 - Mazda3 - Engine

DTC P2199:00 [SKYACTIV-G 2.0, SKYACTIV-G 2.5]

DTC P2199:00	IAT sensor No.2 correlation problem
DETECTION CONDITION	• IAT sensor No.1 and IAT sensor No.2 are compared and correlation error occurs. **Diagnostic support note** • This is a continuous monitor (CCM). • The check engine light illuminates if the PCM detects the above malfunction condition in two consecutive drive cycles or in one drive cycle while the DTC for the same malfunction has been stored in the PCM. • PENDING CODE is available if the PCM detects the above malfunction condition during first drive cycle. • FREEZE FRAME DATA (Mode 2)/Snapshot data is available. • DTC is stored in the PCM memory.
FAIL-SAFE FUNCTION	Not applicable
POSSIBLE CAUSE	• MAP sensor/IAT sensor No.2 connector or terminals malfunction • IAT sensor No.1 malfunction • IAT sensor No.2 malfunction • PCM connector or terminals malfunction • PCM malfunction
SYSTEM WIRING DIAGRAM	Not applicable

Diagnostic Procedure

STEP	INSPECTION	ACTION

1	**VERIFY FREEZE FRAME DATA (MODE 2)/SNAPSHOT DATA HAS BEEN RECORDED** • Has the FREEZE FRAME DATA (Mode 2)/snapshot data been recorded?	Yes	Go to the next step.
		No	Record the FREEZE FRAME DATA (Mode 2)/snapshot data on the repair order, then go to the next step.
2	**VERIFY RELATED REPAIR INFORMATION AVAILABILITY** • Verify related Service Bulletins and/or on-line repair information availability. • Is any related repair information available?	Yes	Perform repair or diagnosis according to the available repair information. • If the vehicle is not repaired, go to the next step.
		No	Go to the next step.
3	**INSPECT MAP SENSOR/IAT SENSOR NO.2 CONNECTOR CONDITION** • Switch the ignition off. • Disconnect the MAP sensor/IAT sensor No.2 connector. • Inspect for poor connection (such as damaged/pulled-out pins, corrosion). • Is there any malfunction?	Yes	Repair or replace the connector and/or terminals, then go to Step 7.
		No	Go to the next step.
4	**INSPECT IAT SENSOR NO.1** • Inspect the IAT sensor No.1. (See **INTAKE AIR TEMPERATURE (IAT) SENSOR INSPECTION [SKYACTIV-G 2.0, SKYACTIV-G 2.5]**.) • Is there any malfunction?	Yes	Replace the MAF sensor/IAT sensor No.1, then go to Step 7. (See **MASS AIR FLOW (MAF) SENSOR/INTAKE AIR TEMPERATURE (IAT) SENSOR NO.1 REMOVAL/INSTALLATION [SKYACTIV-G 2.0, SKYACTIV-G 2.5]**.)
		No	Go to the next step.
5	**INSPECT IAT SENSOR NO.2** • Inspect the IAT sensor No.2. (See **INTAKE AIR TEMPERATURE (IAT) SENSOR INSPECTION [SKYACTIV-G 2.0, SKYACTIV-G 2.5]**.) • Is there any malfunction?	Yes	Replace the MAP sensor/IAT sensor No.2, then go to Step 7. (See **MANIFOLD ABSOLUTE PRESSURE (MAP) SENSOR/INTAKE AIR TEMPERATURE (IAT) SENSOR NO.2 REMOVAL/INSTALLATION [SKYACTIV-G 2.0, SKYACTIV-G 2.5]**.)
		No	Go to the next step.
6	**INSPECT PCM CONNECTOR CONDITION** • Disconnect the PCM connector. • Inspect for poor connection (such as	Yes	Repair or replace the connector and/or terminals, then go to the next step.
		No	Go to the next step.

	damaged/pulled-out pins, corrosion). • Is there any malfunction?		
7	**VERIFY DTC TROUBLESHOOTING COMPLETED** • Always reconnect all disconnected connectors. • Clear the DTC from the PCM memory using the M-MDS. (See **AFTER REPAIR PROCEDURE [SKYACTIV-G 2.0, SKYACTIV-G 2.5]**.) **CAUTION:** • While performing this step, always operate the vehicle in a safe and lawful manner. • When the M-MDS is used to observe monitor system status while driving, be sure to have another technician with you, or record the data in the M-MDS using the PID/DATA MONITOR AND RECORD capturing function and inspect later. • Start the engine and run the engine under the FREEZE FRAME DATA (Mode 2) condition. • Perform the Pending Trouble Code Access Procedure. (See **ON-BOARD DIAGNOSTIC TEST [SKYACTIV-G 2.0, SKYACTIV-G 2.5]**.) • Is the PENDING CODE for this DTC present?	Yes	Repeat the inspection from Step 1. • If the malfunction recurs, replace the PCM. (See **PCM REMOVAL/INSTALLATION [SKYACTIV-G 2.0, SKYACTIV-G 2.5]**.) Go to the next step.
		No	Go to the next step.
8	**VERIFY AFTER REPAIR PROCEDURE** • Perform the “AFTER REPAIR PROCEDURE”. (See **AFTER REPAIR PROCEDURE [SKYACTIV-G 2.0, SKYACTIV-G 2.5]**.) • Are any DTCs present?	Yes	Go to the applicable DTC inspection. (See **DTC TABLE [SKYACTIV-G 2.0, SKYACTIV-G 2.5]**.)
		No	DTC troubleshooting completed.

DTC P2199:00 [SKYACTIV-G 2.0, SKYACTIV-G 2.5]

2014 - Mazda3 - Engine

DTC P2228:00 [SKYACTIV-G 2.0, SKYACTIV-G 2.5]

DTC P2228:00	BARO sensor circuit low input
DETECTION CONDITION	• The PCM monitors input voltage from the BARO sensor. If the input voltage is low for **5 s**, the PCM determines that the BARO sensor circuit has a malfunction. **Diagnostic support note** • This is a continuous monitor (CCM). • The check engine light illuminates if the PCM detects the above malfunction condition during the first drive cycle. • FREEZE FRAME DATA (Mode 2)/Snapshot data is available. • DTC is stored in the PCM memory.
FAIL-SAFE FUNCTION	• Fixes the barometric pressure for the engine control at **101.32 kPa {1.0332 kgf/cm^2, 14.695 psi}**.
POSSIBLE CAUSE	• BARO sensor (built-into PCM) malfunction • PCM malfunction
SYSTEM WIRING DIAGRAM	Not applicable

CAUTION:

- Verify the malfunction symptom according to not only the PID value but also the symptom troubleshooting.

Related PIDs

Item (definition)	Unit/Condition	Definition	Condition/Specification (Reference)
	KPa {MPa}, mBar {Bar}, psi, in	Actually measured barometric pressure input from barometric pressure sensor built into	• Displays BARO

BARO	H20	PCM	
	V	BARO sensor voltage	• Ignition switched ON (at sea level): Approx. 4.08 V

Diagnostic Procedure

STEP	INSPECTION		ACTION
1	**VERIFY FREEZE FRAME DATA (MODE 2)/SNAPSHOT DATA HAS BEEN RECORDED** • Has the FREEZE FRAME DATA (Mode 2)/snapshot data been recorded?	Yes	Go to the next step.
		No	Record the FREEZE FRAME DATA (Mode 2)/snapshot data on the repair order, then go to the next step.
2	**VERIFY RELATED REPAIR INFORMATION AVAILABILITY** • Verify related Service Bulletins and/or on-line repair information availability. • Is any related repair information available?	Yes	Perform repair or diagnosis according to the available repair information. • If the vehicle is not repaired, go to the next step.
		No	Go to the next step.
3	**INSPECT BARO SENSOR** • Inspect the BARO sensor. (See **BAROMETRIC PRESSURE (BARO) SENSOR INSPECTION [SKYACTIV-G 2.0, SKYACTIV-G 2.5]**.) • Is there any malfunction?	Yes	Replace the PCM, then go to the next step. (See **PCM REMOVAL/INSTALLATION [SKYACTIV-G 2.0, SKYACTIV-G 2.5]**.)
		No	Go to the next step.
4	**VERIFY DTC TROUBLESHOOTING COMPLETED** • Clear the DTC from the PCM memory using the M-MDS. (See **AFTER REPAIR PROCEDURE [SKYACTIV-G 2.0, SKYACTIV-G 2.5]**.) • Perform the KOEO or KOER self test. (See **KOEO/KOER SELF TEST [SKYACTIV-G 2.0, SKYACTIV-G 2.5]**.) • Is the same DTC present?	Yes	Replace the PCM, then go to the next step. (See **PCM REMOVAL/INSTALLATION [SKYACTIV-G 2.0, SKYACTIV-G 2.5]**.)
		No	Go to the next step.

5	**VERIFY AFTER REPAIR PROCEDURE** • Perform the “AFTER REPAIR PROCEDURE”. (See **AFTER REPAIR PROCEDURE [SKYACTIV-G 2.0, SKYACTIV-G 2.5]**.) • Are any DTCs present?	Yes	Go to the applicable DTC inspection. (See **DTC TABLE [SKYACTIV-G 2.0, SKYACTIV-G 2.5]**.)
		No	DTC troubleshooting completed.

2014 - Mazda3 - Engine

DTC P2229:00 [SKYACTIV-G 2.0, SKYACTIV-G 2.5]

DTC P2229:00	BARO sensor circuit high input
DETECTION CONDITION	• The PCM monitors input voltage from the BARO sensor. If the input voltage is high for **5 s**, the PCM determines that the BARO sensor circuit has a malfunction. **Diagnostic support note** • This is a continuous monitor (CCM). • The check engine light illuminates if the PCM detects the above malfunction condition during the first drive cycle. • FREEZE FRAME DATA (Mode 2)/Snapshot data is available. • DTC is stored in the PCM memory.
FAIL-SAFE FUNCTION	• Fixes the barometric pressure for the engine control at **101.32 kPa {1.0332 kgf/cm^2, 14.695 psi}**.
POSSIBLE CAUSE	• BARO sensor (built-into PCM) malfunction • PCM malfunction
SYSTEM WIRING DIAGRAM	Not applicable

CAUTION:

- Verify the malfunction symptom according to not only the PID value but also the symptom troubleshooting.

Related PIDs

Item (definition)	Unit/Condition	Definition	Condition/Specification (Reference)
	KPa {MPa}, mBar {Bar}, psi, in	Actually measured barometric pressure input from barometric pressure sensor built into	• Displays BARO

BARO	H20	PCM	
	V	BARO sensor voltage	• Ignition switched ON (at sea level): Approx. 4.08 V

Diagnostic Procedure

STEP	INSPECTION		ACTION
1	**VERIFY FREEZE FRAME DATA (MODE 2)/SNAPSHOT DATA HAS BEEN RECORDED** • Has the FREEZE FRAME DATA (Mode 2)/snapshot data been recorded?	Yes	Go to the next step.
		No	Record the FREEZE FRAME DATA (Mode 2)/snapshot data on the repair order, then go to the next step.
2	**VERIFY RELATED REPAIR INFORMATION AVAILABILITY** • Verify related Service Bulletins and/or on-line repair information availability. • Is any related repair information available?	Yes	Perform repair or diagnosis according to the available repair information. • If the vehicle is not repaired, go to the next step.
		No	Go to the next step.
3	**INSPECT BARO SENSOR** • Inspect the BARO sensor. (See **BAROMETRIC PRESSURE (BARO) SENSOR INSPECTION [SKYACTIV-G 2.0, SKYACTIV-G 2.5]**.) • Is there any malfunction?	Yes	Replace the PCM, then go to the next step. (See **PCM REMOVAL/INSTALLATION [SKYACTIV-G 2.0, SKYACTIV-G 2.5]**.)
		No	Go to the next step.
4	**VERIFY DTC TROUBLESHOOTING COMPLETED** • Clear the DTC from the PCM memory using the M-MDS. (See **AFTER REPAIR PROCEDURE [SKYACTIV-G 2.0, SKYACTIV-G 2.5]**.) • Perform the KOEO or KOER self test. (See **KOEO/KOER SELF TEST [SKYACTIV-G 2.0, SKYACTIV-G 2.5]**.) • Is the same DTC present?	Yes	Replace the PCM, then go to the next step. (See **PCM REMOVAL/INSTALLATION [SKYACTIV-G 2.0, SKYACTIV-G 2.5]**.)
		No	Go to the next step.

5	**VERIFY AFTER REPAIR PROCEDURE** • Perform the “AFTER REPAIR PROCEDURE”. (See **AFTER REPAIR PROCEDURE [SKYACTIV-G 2.0, SKYACTIV-G 2.5]**.) • Are any DTCs present?	Yes	Go to the applicable DTC inspection. (See **DTC TABLE [SKYACTIV-G 2.0, SKYACTIV-G 2.5]**.)
		No	DTC troubleshooting completed.

2014 - Mazda3 - Engine

DTC P2237:00 [SKYACTIV-G 2.0, SKYACTIV-G 2.5]

NOTE:

- To determine the malfunctioning part, proceed with the diagnostics from "Function Inspection Using M-MDS".

Details On DTCs

DESCRIPTION	Open circuit between A/F sensor terminal B and PCM terminal 1AG	
DETECTION CONDITION	Determination conditions	• After A/F sensor activation, a condition in which PCM terminal 1AB voltage is within the specified range continues for **5 s or more**.
	Preconditions	• Battery voltage: **11—18 V**[*1] • The following DTC is not detected: ▪ Internal PCM malfunction: P064D:00 • [*1]: Value can be verified by displaying PIDs using M-MDS
	Drive cycle	• 2
	Self test type	• CMDTC self test, KOER self test
	Sensor used	• A/F sensor
FAIL-SAFE FUNCTION	• Fixes duty value of A/F sensor heater • Stops fuel feedback control of A/F sensor	
VEHICLE STATUS WHEN DTCs ARE OUTPUT	• Illuminates check engine light.	
POSSIBLE CAUSE	• A/F sensor connector or terminals malfunction • PCM connector or terminals malfunction • Open circuit in wiring harness between A/F sensor terminal B and PCM terminal 1AG • A/F sensor malfunction • PCM malfunction	

System Wiring Diagram

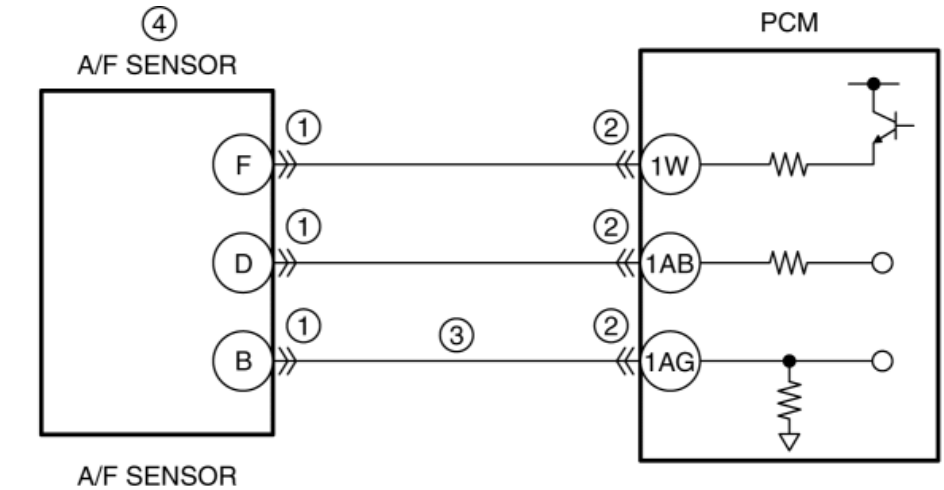

A/F SENSOR
WIRING HARNESS-SIDE
CONNECTOR

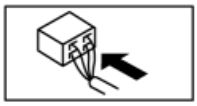

PCM WIRING HARNESS-SIDE CONNECTOR

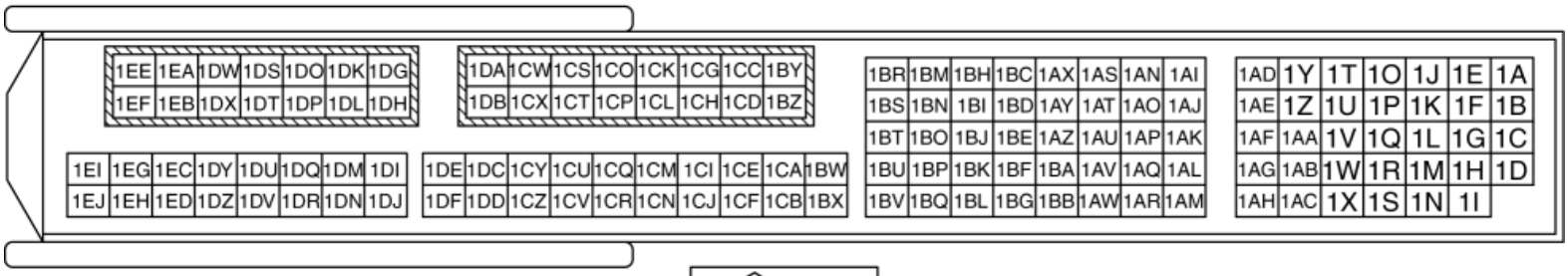

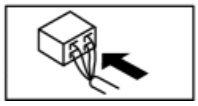

Function Explanation (DTC Detection Outline)

- If a condition in which terminal 1AB remains within the specified range for 5 s or more, the PCM determines an open circuit between A/F sensor terminal B and PCM terminal 1AG and stores a DTC.

Repeatability Verification Procedure

- Warm up the engine to allow the engine coolant temperature to reach **80 °C {176 °F} or more**.
- Start the engine and leave it idling for **1 min**.
- Shift to 2nd gear and drive the vehicle for **1 min** at a speed of **50 km/h {31 mph} or more**.

  NOTE:

  - Match the engine coolant temperature in the recorded FREEZE FRAME DATA (Mode 2)/snapshot data, the vehicle speed, and engine speed values to the best extent possible while driving the vehicle.

- Try to reproduce the malfunction by driving the vehicle for **5 min** based on the values in the FREEZE FRAME DATA (Mode 2)/snapshot data.

PID Item/Simulation Item Used In Diagnosis

PID/DATA monitor item table

Item	Definition	Unit	Condition/Specification
O2S11	A/F sensor current	µA	• Idle (after warm up): Approx. -39 µA • Deceleration fuel cut (accelerator pedal released from engine speed of 4,000 rpm or more): Approx. 3.84 mA

Function Inspection Using M-MDS

STEP	INSPECTION	RESULTS	ACTION
1	**PURPOSE: VERIFY RELATED REPAIR INFORMATION AVAILABILITY** • Verify related Service Bulletins and/or on-line repair information availability. • Is any related repair information available?	Yes	Perform repair or diagnosis according to the available repair information. • If the vehicle is not repaired, go to the next step.
		No	Go to the next step.
2	**PURPOSE: RECORD VEHICLE STATUS AT TIME OF DTC DETECTION TO UTILIZE WITH REPEATABILITY VERIFICATION** • Has the FREEZE FRAME DATA (Mode 2)/snapshot data been recorded?	Yes	Go to the troubleshooting procedure to perform the procedure from step 1.
		No	Record the FREEZE FRAME DATA (Mode 2)/snapshot data on the repair order. **NOTE:** • Recording can be facilitated using the screen capture function of the PC. Go to the troubleshooting procedure to perform the procedure from step 1

Troubleshooting Diagnostic Procedure

Intention of troubleshooting procedure

- Step 1—3
  - Perform an inspection of the A/F sensor and PCM-related connectors and wiring harnesses.
- Step 4
  - Perform a unit inspection of the A/F sensor.
- Step 5—6
  - Verify that the primary malfunction is resolved and there are no other malfunctions.

STEP	INSPECTION	RESULTS	ACTION
1	**PURPOSE: INSPECT A/F SENSOR CONNECTOR CONDITION**	Yes	Replace the A/F sensor, then go to Step 5.

	Switch the ignition off. • Disconnect the A/F sensor connector. • Inspect for poor connection (such as damaged/pulled-out pins, corrosion). • Is there any malfunction?		(See **AIR FUEL RATIO (A/F) SENSOR REMOVAL/INSTALLATION [SKYACTIV-G 2.0, SKYACTIV-G 2.5]**.)
		No	Go to the next step.
2	**PURPOSE: INSPECT PCM CONNECTOR CONDITION** • Disconnect the PCM connector. • Inspect for poor connection (such as damaged/pulled-out pins, corrosion). • Is there any malfunction?	Yes	Replace the PCM, then go to Step 5. (See **PCM REMOVAL/INSTALLATION [SKYACTIV-G 2.0, SKYACTIV-G 2.5]**.)
		No	Go to the next step.
3	**PURPOSE: INSPECT A/F SENSOR CIRCUIT FOR OPEN CIRCUIT** • Verify that the A/F sensor and PCM connectors are disconnected. • Inspect for continuity between A/F sensor terminal B (wiring harness-side) and PCM terminal 1AG (wiring harness-side). • Is there continuity?	Yes	Go to the next step.
		No	Refer to the wiring diagram and verify whether or not there is a common connector between A/F sensor terminal B and PCM terminal 1AG. **If there is a common connector:** • Determine the malfunctioning part by inspecting the common connector and the terminal for corrosion, damage, or pin disconnection, and the common wiring harness for an open circuit. • Repair or replace the malfunctioning part. **If there is no common connector:** • Repair or replace the wiring harness which has an open circuit. Go to Step 5.
4	**PURPOSE: DETERMINE INTEGRITY OF A/F SENSOR** • Start the engine and warm it up completely. • Access the O2S11 PID using the M-MDS. (See **ON-BOARD DIAGNOSTIC TEST [SKYACTIV-G 2.0, SKYACTIV-G 2.5]**.) • Drive the vehicle under the following conditions. **WARNING:** • When the M-MDS is used to observe monitor system status while driving, be sure to have another technician with you, or record the data in the M-MDS using the PID/DATA MONITOR AND RECORD capturing function and inspect later. • While performing this step, always operate the vehicle in a safe and lawful manner. ▪ After increasing the engine speed to **3,000 rpm**, decelerate using engine braking.	Yes	Go to the next step.
		No	Replace the A/F sensor, then go to the next step. (See **AIR FUEL RATIO (A/F) SENSOR REMOVAL/INSTALLATION [SKYACTIV-G 2.0, SKYACTIV-G 2.5]**.)

	• Is the displayed PID value as follows? ▪ O2S11: **0.25 mA or more**		
5	**PURPOSE: VERIFICATION OF VEHICLE REPAIR COMPLETION** • Always reconnect all disconnected connectors. • Clear the DTC from the PCM memory using the M-MDS. (See **CLEARING DTC [SKYACTIV-G 2.0, SKYACTIV-G 2.5]**.) • Perform the KOER self test. (See **KOEO/KOER SELF TEST [SKYACTIV-G 2.0, SKYACTIV-G 2.5]**.) • Is the PENDING CODE for this DTC present?	Yes	Repeat the inspection from Step 1. • If the malfunction recurs, replace the PCM. (See **PCM REMOVAL/INSTALLATION [SKYACTIV-G 2.0, SKYACTIV-G 2.5]**.) Go to the next step.
		No	Go to the next step.
6	**PURPOSE: VERIFY IF THERE IS ANY OTHER MALFUNCTION** • Is any other DTC or pending code stored?	Yes	Go to the applicable DTC inspection. (See **DTC TABLE [SKYACTIV-G 2.0, SKYACTIV-G 2.5]**.)
		No	DTC troubleshooting completed.

2014 - Mazda3 - Engine

DTC P2243:00 [SKYACTIV-G 2.0, SKYACTIV-G 2.5]

NOTE:

- To determine the malfunctioning part, proceed with the diagnostics from "Function Inspection Using M-MDS".

Details On DTCs

DESCRIPTION	A/F sensor reference voltage circuit open	
DETECTION CONDITION	Determination conditions	• A condition in which the PCM terminal 1W voltage is the specified value or more continues for **30 s**.
	Preconditions	• Switch the ignition ON (engine off or on) • Battery voltage: **11—18 V**[*1] • The following DTCs are not detected: ▪ A/F sensor heater: P0031:00, P0032:00 • [*1]: Value can be verified by displaying PIDs using M-MDS
	Malfunction determination period	• **30 s** period
	Drive cycle	• 2
	Self test type	• CMDTC self test, KOER self test
	Sensor used	• A/F sensor
FAIL-SAFE FUNCTION	• Not applicable	
VEHICLE STATUS WHEN DTCs ARE OUTPUT	• Illuminates check engine light.	
POSSIBLE CAUSE	• A/F sensor connector or terminals malfunction • PCM connector or terminals malfunction • Open circuit in wiring harness between A/F sensor terminal F and PCM terminal 1W • A/F sensor malfunction • PCM malfunction	

System Wiring Diagram

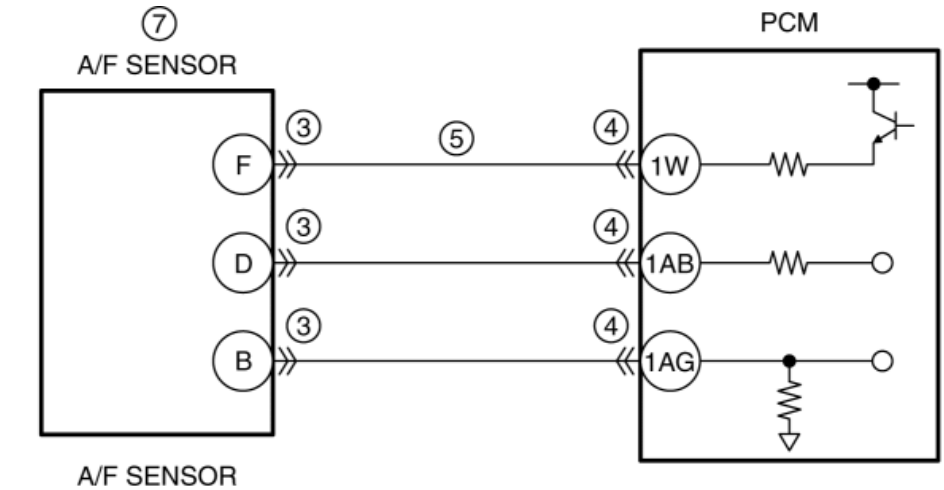

A/F SENSOR
WIRING HARNESS-SIDE
CONNECTOR

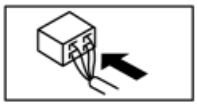

PCM WIRING HARNESS-SIDE CONNECTOR

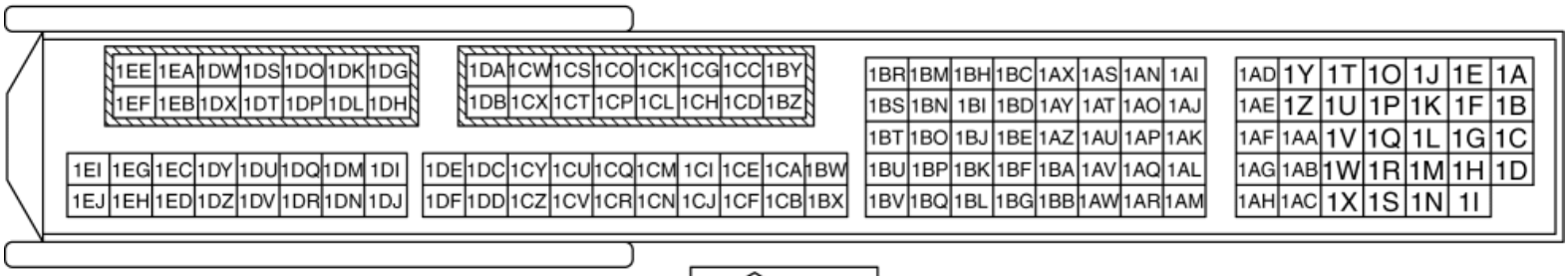

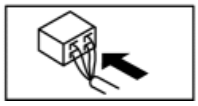

Function Explanation (DTC Detection Outline)

- With an open circuit in the supply voltage line and a condition in which the supply voltage to PCM terminal 1W continues to be supplied, the PCM determines an open circuit in the wiring harness between the A/F sensor and the PCM and stores a DTC.

Repeatability Verification Procedure

- Warm up the engine to allow the engine coolant temperature to reach **80 °C {176 °F} or more**.
- Start the engine and leave it idling for **90 s**.

PID Item/Simulation Item Used In Diagnosis

PID/DATA monitor item table

Item	Definition	Unit	Condition/Specification

O2S11	A/F sensor current	µA	• Idle (after warm up): Approx. -39 µA • Deceleration fuel cut (accelerator pedal released from engine speed of 4,000 rpm or more): Approx. 3.84 mA

Function Inspection Using M-MDS

STEP	INSPECTION	RESULTS	ACTION
1	**PURPOSE: VERIFY RELATED REPAIR INFORMATION AVAILABILITY** • Verify related Service Bulletins and/or on-line repair information availability. • Is any related repair information available?	Yes	Perform repair or diagnosis according to the available repair information. • If the vehicle is not repaired, go to the next step.
		No	Go to the next step.
2	**PURPOSE: RECORD VEHICLE STATUS AT TIME OF DTC DETECTION TO UTILIZE WITH REPEATABILITY VERIFICATION** • Has the FREEZE FRAME DATA (Mode 2)/snapshot data been recorded?	Yes	Go to the next step.
		No	Record the FREEZE FRAME DATA (Mode 2)/snapshot data on the repair order, then go to the next step. **NOTE:** • Recording can be facilitated using the screen capture function of the PC.
3	**PURPOSE: INSPECT A/F SENSOR CONNECTOR CONDITION** • Switch the ignition off. • Disconnect the A/F sensor connector. • Inspect for poor connection (such as damaged/pulled-out pins, corrosion). • Is there any malfunction?	Yes	Replace the A/F sensor. (See **AIR FUEL RATIO (A/F) SENSOR REMOVAL/INSTALLATION [SKYACTIV-G 2.0, SKYACTIV-G 2.5]**.) Go to the troubleshooting procedure to perform the procedure from Step 1.
		No	Go to the next step.
4	**PURPOSE: INSPECT PCM CONNECTOR CONDITION** • Disconnect the PCM connector. • Inspect for poor connection (such as damaged/pulled-out pins, corrosion). • Is there any malfunction?	Yes	Replace the PCM. (See **PCM REMOVAL/INSTALLATION [SKYACTIV-G 2.0, SKYACTIV-G 2.5]**.) Go to the troubleshooting procedure to perform the procedure from Step 1.
		No	Go to the next step.
5	**PURPOSE: INSPECT A/F SENSOR CIRCUIT FOR OPEN CIRCUIT** • Verify that the A/F sensor and PCM connectors are disconnected. • Inspect for continuity between A/F sensor terminal F (wiring harness-side) and PCM terminal 1W (wiring harness-side). • Is there continuity?	Yes	Go to the next step.
		No	Refer to the wiring diagram and verify whether or not there is a common connector between A/F sensor terminal F and PCM terminal 1W. **If there is a common connector:** • Determine the malfunctioning part by inspecting the common connector and the terminal for

			corrosion, damage, or pin disconnection, and the common wiring harness for an open circuit. • Repair or replace the malfunctioning part. **If there is no common connector:** • Repair or replace the wiring harness which has an open circuit. Go to the troubleshooting procedure to perform the procedure from Step 1.
6	**PURPOSE: DETERMINE INTEGRITY OF A/F SENSOR** • Start the engine and warm it up completely. • Access the O2S11 PID using the M-MDS. (See **ON-BOARD DIAGNOSTIC TEST [SKYACTIV-G 2.0, SKYACTIV-G 2.5]**.) • Drive the vehicle under the following conditions. **WARNING:** • When the M-MDS is used to observe monitor system status while driving, be sure to have another technician with you, or record the data in the M-MDS using the PID/DATA MONITOR AND RECORD capturing function and inspect later. • While performing this step, always operate the vehicle in a safe and lawful manner. ▪ After increasing the engine speed to **3,000 rpm**, decelerate using engine braking. • Is the displayed PID value as follows? ▪ O2S11: **0.25 mA or more**	Yes	Go to the troubleshooting procedure to perform the procedure from Step 1.
		No	Go to the next step.
7	**PURPOSE: INSPECT RELATED SENSOR WIRING HARNESS AND CONNECTOR** • Access the O2S11 PID using the M-MDS. (See **ON-BOARD DIAGNOSTIC TEST [SKYACTIV-G 2.0, SKYACTIV-G 2.5]**.) • Does the PID value fluctuate when the PCM and A/F sensor connectors are shaken?	Yes	Inspect the related wiring harness and connector. • Repair or replace the malfunctioning part. Go to the troubleshooting procedure to perform the procedure from Step 1.
		No	Replace the A/F sensor. (See **AIR FUEL RATIO (A/F) SENSOR REMOVAL/INSTALLATION [SKYACTIV-G 2.0, SKYACTIV-G 2.5]**.) Go to the troubleshooting procedure to perform the procedure from Step 1.

Troubleshooting Diagnostic Procedure

Intention of troubleshooting procedure

- Step 1—2
  - Verify that the primary malfunction is resolved and there are no other malfunctions.

STEP	INSPECTION	RESULTS	ACTION
1	**PURPOSE: VERIFICATION OF VEHICLE REPAIR COMPLETION** • Always reconnect all disconnected connectors. • Clear the DTC from the PCM memory using the M-MDS. (See **CLEARING DTC [SKYACTIV-G 2.0, SKYACTIV-G 2.5]**.) • Perform the KOER self test. (See **KOEO/KOER SELF TEST [SKYACTIV-G 2.0, SKYACTIV-G 2.5]**.) • Is the PENDING CODE for this DTC present?	Yes	Repeat the inspection from Step 1. • If the malfunction recurs, replace the PCM. (See **PCM REMOVAL/INSTALLATION [SKYACTIV-G 2.0, SKYACTIV-G 2.5]**.) Go to the next step.
		No	Go to the next step.
2	**PURPOSE: VERIFY IF THERE IS ANY OTHER MALFUNCTION** • Is any other DTC or pending code stored?	Yes	Go to the applicable DTC inspection. (See **DTC TABLE [SKYACTIV-G 2.0, SKYACTIV-G 2.5]**.)
		No	DTC troubleshooting completed.

2014 - Mazda3 - Engine

DTC P2251:00 [SKYACTIV-G 2.0, SKYACTIV-G 2.5]

NOTE:

- To determine the malfunctioning part, proceed with the diagnostics from "Function Inspection Using M-MDS".

Details On DTCs

DESCRIPTION	Open circuit between A/F sensor terminal D and PCM terminal 1AB	
DETECTION CONDITION	Determination conditions	• The following conditions are met: ▪ A/F sensor element impedance is specified value or more ▪ A/F sensor terminal F voltage (B+ terminal) is less than specified value or unstable.
	Preconditions	• Battery voltage: **11—18 V**[*1] • A/F sensor is activated. • The following DTCs are not detected: ▪ A/F sensor terminal F voltage (B+ terminal) is less than specified value: • A/F sensor heater: P0031:00, P0032:00 ▪ A/F sensor terminal F voltage (B+ terminal) is unstable: • Internal PCM malfunction: P064D:00 • [*1]: Value can be verified by displaying PIDs using M-MDS
	Drive cycle	• 2
	Self test type	• CMDTC self test, KOER self test
	Sensor used	• A/F sensor
FAIL-SAFE FUNCTION	• Not applicable	
VEHICLE STATUS WHEN DTCs ARE OUTPUT	• Illuminates check engine light.	
POSSIBLE CAUSE	• A/F sensor connector or terminals malfunction • PCM connector or terminals malfunction • Open circuit in wiring harness between A/F sensor terminal D and PCM terminal 1AB • A/F sensor malfunction	

	PCM malfunction

System Wiring Diagram

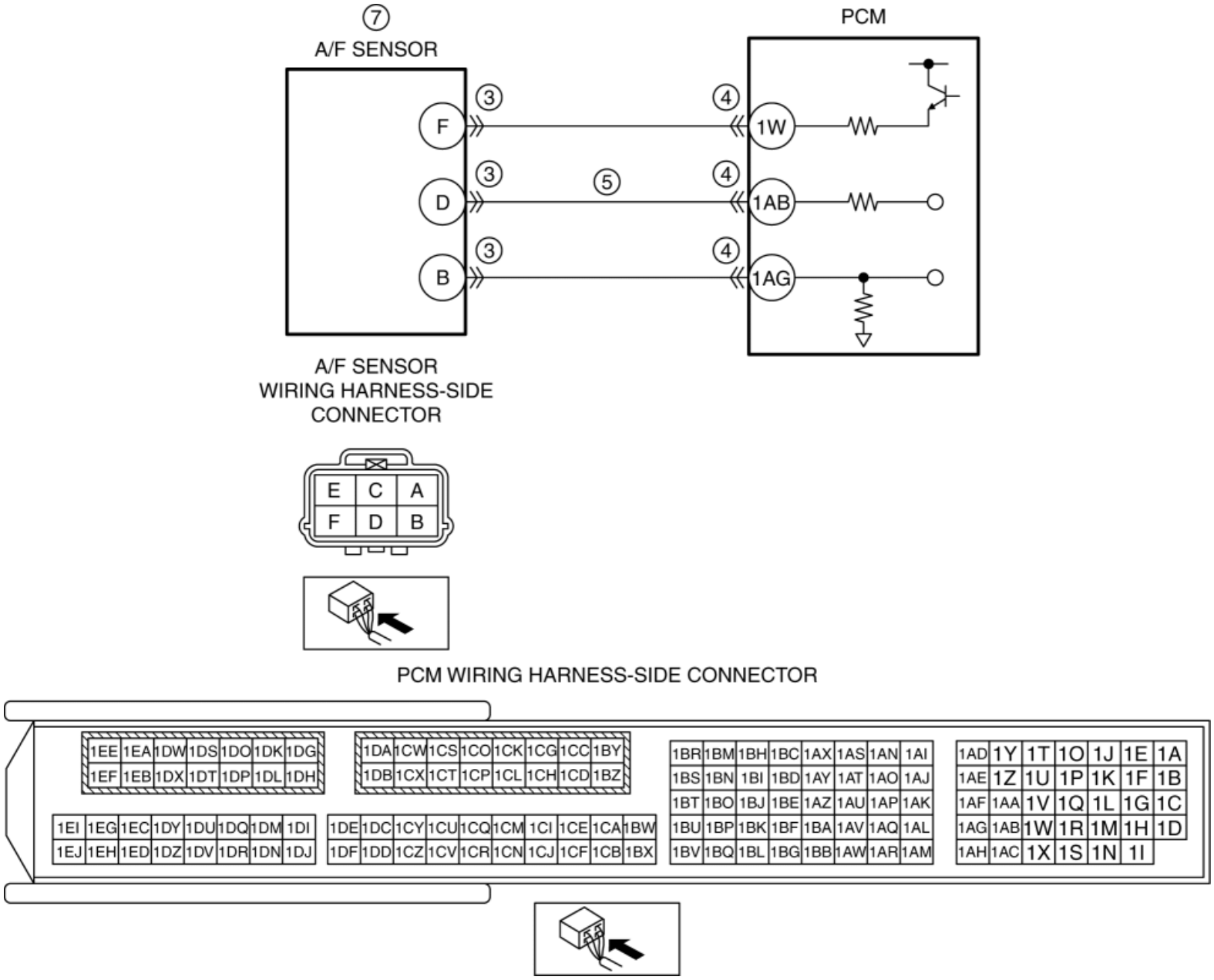

Function Explanation (DTC Detection Outline)

- If the PCM detects an open circuit in the wiring harness between A/F sensor terminal D and PCM terminal 1AB (COM wiring harness), it stores a DTC. In addition, when there is an open circuit in the wiring harness between A/F sensor terminal D and PCM terminal 1AB (COM wiring harness), the A/F sensor terminal F (B+ terminal) becomes unstable. At this time, the PCM determines an open circuit in the wiring harness (COM wiring harness) between A/F sensor terminal D and PCM terminal 1AB and stores a DTC.
- If the A/F sensor does not activate, monitoring cannot occur because the A/F sensor element has an insulation property which keeps it at a specific temperature range or less.

Repeatability Verification Procedure

Warm up the engine to allow the engine coolant temperature to reach **80 °C {176 °F} or more**.

- Start the engine and leave it idling for **1 min**.

  NOTE:

  - Match the engine coolant temperature in the recorded FREEZE FRAME DATA (Mode 2)/snapshot data, the vehicle speed, and engine speed values to the best extent possible while driving the vehicle.

- Try to reproduce the malfunction by driving the vehicle for **5 min** based on the values in the FREEZE FRAME DATA (Mode 2)/snapshot data.

PID Item/Simulation Item Used In Diagnosis

PID/DATA monitor item table

Item	Definition	Unit	Condition/Specification
O2S11	A/F sensor current	µA	• Idle (after warm up): Approx. -39 µA • Deceleration fuel cut (accelerator pedal released from engine speed of 4,000 rpm or more): Approx. 3.84 mA

Function Inspection Using M-MDS

STEP	INSPECTION	RESULTS	ACTION
1	**PURPOSE: VERIFY RELATED REPAIR INFORMATION AVAILABILITY** • Verify related Service Bulletins and/or on-line repair information availability. • Is any related repair information available?	Yes	Perform repair or diagnosis according to the available repair information. • If the vehicle is not repaired, go to the next step.
		No	Go to the next step.
2	**PURPOSE: RECORD VEHICLE STATUS AT TIME OF DTC DETECTION TO UTILIZE WITH REPEATABILITY VERIFICATION** • Has the FREEZE FRAME DATA (Mode 2)/snapshot data been recorded?	Yes	Go to the next step.
		No	Record the FREEZE FRAME DATA (Mode 2)/snapshot data on the repair order, then go to the next step. **NOTE:** • Recording can be facilitated using the screen capture function of the PC.
3	**PURPOSE: INSPECT A/F SENSOR CONNECTOR CONDITION** • Switch the ignition off. • Disconnect the A/F sensor connector. • Inspect for poor connection (such as damaged/pulled-out pins, corrosion). • Is there any malfunction?	Yes	Replace the A/F sensor. (See **AIR FUEL RATIO (A/F) SENSOR REMOVAL/INSTALLATION [SKYACTIV-G 2.0, SKYACTIV-G 2.5]**.) Go to the troubleshooting procedure to perform the procedure from Step 1.
		No	Go to the next step.
4	**PURPOSE: INSPECT PCM CONNECTOR CONDITION** • Disconnect the PCM connector.	Yes	Replace the PCM. (See **PCM REMOVAL/INSTALLATION [SKYACTIV-G**

	• Inspect for poor connection (such as damaged/pulled-out pins, corrosion). • Is there any malfunction?		**2.0, SKYACTIV-G 2.5]**.) Go to the troubleshooting procedure to perform the procedure from Step 1.
		No	Go to the next step.
5	**PURPOSE: INSPECT A/F SENSOR CIRCUIT FOR OPEN CIRCUIT** • Verify that the A/F sensor and PCM connectors are disconnected. • Inspect for continuity between A/F sensor terminal D (wiring harness-side) and PCM terminal 1AB (wiring harness-side). • Is there continuity?	Yes	Go to the next step.
		No	Refer to the wiring diagram and verify whether or not there is a common connector between A/F sensor terminal D and PCM terminal 1AB. **If there is a common connector:** • Determine the malfunctioning part by inspecting the common connector and the terminal for corrosion, damage, or pin disconnection, and the common wiring harness for an open circuit. • Repair or replace the malfunctioning part. **If there is no common connector:** • Repair or replace the wiring harness which has an open circuit. Go to the troubleshooting procedure to perform the procedure from Step 1.
6	**PURPOSE: DETERMINE INTEGRITY OF A/F SENSOR** • Start the engine and warm it up completely. • Access the O2S11 PID using the M-MDS. (See **ON-BOARD DIAGNOSTIC TEST [SKYACTIV-G 2.0, SKYACTIV-G 2.5]**.) • Drive the vehicle under the following conditions. **WARNING:** • When the M-MDS is used to observe monitor system status while driving, be sure to have another technician with you, or record the data in the M-MDS using the PID/DATA MONITOR AND RECORD capturing function and inspect later. • While performing this step, always operate the vehicle in a safe and lawful manner. ▪ After increasing the engine speed to **3,000 rpm**, decelerate using engine braking. • Is the displayed PID value as follows? ▪ O2S11: **0.25 mA or more**	Yes	Go to the troubleshooting procedure to perform the procedure from Step 1.
		No	Go to the next step.
7	**PURPOSE: INSPECT RELATED SENSOR WIRING HARNESS AND CONNECTOR** • Access the O2S11 PID using the M-MDS.	Yes	Inspect the related wiring harness and connector. • Repair or replace the

	(See **ON-BOARD DIAGNOSTIC TEST [SKYACTIV-G 2.0, SKYACTIV-G 2.5]**.) • Does the PID value fluctuate when the PCM and A/F sensor connectors are shaken?		malfunctioning part. Go to the troubleshooting procedure to perform the procedure from Step 1.
		No	Replace the A/F sensor. (See **AIR FUEL RATIO (A/F) SENSOR REMOVAL/INSTALLATION [SKYACTIV-G 2.0, SKYACTIV-G 2.5]**.) Go to the troubleshooting procedure to perform the procedure from Step 1.

Troubleshooting Diagnostic Procedure

Intention of troubleshooting procedure

- Step 1—2
  - Verify that the primary malfunction is resolved and there are no other malfunctions.

STEP	INSPECTION	RESULTS	ACTION
1	**PURPOSE: VERIFICATION OF VEHICLE REPAIR COMPLETION** • Always reconnect all disconnected connectors. • Clear the DTC from the PCM memory using the M-MDS. (See **CLEARING DTC [SKYACTIV-G 2.0, SKYACTIV-G 2.5]**.) • Perform the KOER self test. (See **KOEO/KOER SELF TEST [SKYACTIV-G 2.0, SKYACTIV-G 2.5]**.) • Is the PENDING CODE for this DTC present?	Yes	Repeat the inspection from Step 1. • If the malfunction recurs, replace the PCM. (See **PCM REMOVAL/INSTALLATION [SKYACTIV-G 2.0, SKYACTIV-G 2.5]**.) Go to the next step.
		No	Go to the next step.
2	**PURPOSE: VERIFY IF THERE IS ANY OTHER MALFUNCTION** • Is any other DTC or pending code stored?	Yes	Go to the applicable DTC inspection. (See **DTC TABLE [SKYACTIV-G 2.0, SKYACTIV-G 2.5]**.)
		No	DTC troubleshooting completed.

2014 - Mazda3 - Engine

DTC P2299:00 [SKYACTIV-G 2.0, SKYACTIV-G 2.5]

DTC P2299:00	Accelerator pedal: spring back malfunction

DETECTION CONDITION	• When under the following conditions it is detected that the brake pedal is depressed during driving for the specified time*.
	  ▪ Racing
	  ▪ Engine speed: **875 rpm or more**
	• *: Specified time is **0.6—10 s** according to braking force calculated in PCM.
	Diagnostic support note
	• This is a continuous monitor (other).
	• The check engine light does not illuminate.
	• FREEZE FRAME DATA (Mode 2) is not available.
	• Snapshot data is available.
	• DTC is stored in the PCM memory.

FAIL-SAFE FUNCTION	• Controls the throttle valve so that the engine speed is at specification*. (Brake override system) *: For MTX vehicles, engine speed is **1,200 rpm** when in neutral, and **1,100 rpm** when not in neutral. For ATX vehicles, engine speed is **1,200 rpm** when in N position, and **1,100 rpm** when in D position.
	NOTE: • If the brake override system operates, the PCM detects DTC P2299:00. • Driver depresses accelerator and brake pedals simultaneously (during braking operation using left foot) • Accelerator pedal is pressed in by object such as floor mat • Accelerator pedal sticking • APP sensor signal malfunction ▪ APP sensor malfunction

POSSIBLE CAUSE	▪ Related connector or terminals malfunction ▪ Related wiring harness malfunction • Brake switch signal malfunction ▪ Brake switch malfunction ▪ Related connector or terminals malfunction ▪ Related wiring harness malfunction ▪ Brake pedal malfunction (increase in play due to joint pin wear) • PCM malfunction
SYSTEM WIRING DIAGRAM	Not applicable

CAUTION:

- Verify the malfunction symptom according to not only the PID value but also the symptom troubleshooting.

Related PIDs

Item (definition)	Unit/Condition	Definition	Condition/Specification (Reference)
APP	%	Accelerator pedal opening angle (relative value) with the fully released status as 0% and fully depressed status as 100%	• Accelerator pedal released: Approx. 0% • Accelerator pedal fully depressed: Approx. 100%
BOO	High/Low	Brake switch (No.1 signal) ON/OFF status	• Brake pedal released: Low • Brake pedal fully depressed: High
			• Brake pedal released: Low

BPA	High/Low	Brake switch (No.2 signal) ON/OFF status	• Brake pedal fully depressed: High

Diagnostic Procedure

STEP	INSPECTION		ACTION
1	**VERIFY RELATED REPAIR INFORMATION AVAILABILITY** • Verify related Service Bulletins and/or on-line repair information availability. • Is any related repair information available?	Yes	Perform repair or diagnosis according to the available repair information. • If the vehicle is not repaired, go to the next step.
		No	Go to the next step.
2	**VERIFY DTC REPEATABILITY** • Clear the DTC from the PCM memory using the M-MDS. (See **AFTER REPAIR PROCEDURE [SKYACTIV-G 2.0, SKYACTIV-G 2.5]**.) • Perform the KOER self test. (See **KOEO/KOER SELF TEST [SKYACTIV-G 2.0, SKYACTIV-G 2.5]**.) • Is the same DTC present?	Yes	Go to the next step.
		No	DTC troubleshooting completed. • Explain to the customer that P2299:00 is stored by the brake override system operation.
3	**VERIFY VEHICLE USE CONDITION** • Verify the vehicle use condition. ▪ The floor mat is doubled over ▪ The floor mat is spread against the accelerator pedal ▪ The accelerator and brake pedals are being depressed simultaneously	Yes	**There is a malfunction in a related floor mat** • Explain to the customer that the floor mat may prevent the accelerator pedal from springing back after release, then go to Step 11. **There is a malfunction in the pedal operation** • Give the customer advice on how to depress the accelerator and brake pedals while driving the vehicle, then go to Step 11.
		No	Go to the next step.

	• Are any of the conditions above applicable to the vehicle use condition?		
4	**INSPECT ACCELERATOR PEDAL** • Is the condition of the accelerator pedal one of the following? ▪ Accelerator pedal sticking has occurred when operated ▪ There is evidence of accelerator pedal disassembly	Yes	Replace the accelerator pedal, then go to Step 11. (See **ACCELERATOR PEDAL REMOVAL/INSTALLATION [SKYACTIV-G 2.0, SKYACTIV-G 2.5]**.)
		No	Go to the next step.
5	**VERIFY CURRENT INPUT SIGNAL STATUS OF APP SENSOR** • Access the APP PID using the M-MDS. (See **ON-BOARD DIAGNOSTIC TEST [SKYACTIV-G 2.0, SKYACTIV-G 2.5]**.) • Is the value for PID APP **0 %** when the accelerator pedal is not depressed? • Does the value for PID APP change when the accelerator pedal is continually depressed?	Yes	Go to Step 7.
		No	Go to the next step.
6	**INSPECT APP SENSOR RELATED WIRING HARNESS AND CONNECTOR** • Inspect the wiring harness related to the APP sensor for connector disconnection, short circuit, and poor contact. • Is there any malfunction?	Yes	Repair or replace the malfunctioning part according to the inspection results, then go to Step 11.
		No	APP sensor malfunction. • Replace the accelerator pedal, then go to Step 11. (See **ACCELERATOR PEDAL REMOVAL/INSTALLATION [SKYACTIV-G 2.0, SKYACTIV-G 2.5]**.)
7	**VERIFY CURRENT INPUT SIGNAL STATUS OF BRAKE SWITCH** • Access the following PIDs using the M-MDS:	Yes	Go to Step 10.
		No	Go to the next step.

	(See **ON-BOARD DIAGNOSTIC TEST [SKYACTIV-G 2.0, SKYACTIV-G 2.5]**.) ▪ BOO ▪ BPA • Are all PIDs normal?		
8	**INSPECT BRAKE SWITCH** • Inspect the brake switch. (See **BRAKE SWITCH INSPECTION**.) • Is there any malfunction?	Yes	Replace the brake switch, then go to Step 11. (See **BRAKE PEDAL REMOVAL/INSTALLATION**.)
		No	Go to the next step.
9	**INSPECT BRAKE PEDAL PLAY AMOUNT** • Inspect the brake pedal play amount. (See **BRAKE PEDAL INSPECTION**.) • Is the amount of brake pedal play normal?	Yes	Inspect the wiring harness related to the brake switch for connector disconnection, short circuit, and poor contact. • If there is any malfunction: ▪ Repair or replace the malfunctioning part according to the inspection results, then go to Step 11.
		No	Repair or replace the malfunctioning part according to the inspection results, then go to Step 11.
10	**VERIFY IF A DTC RELATED TO DRIVE-BY-WIRE CONTROL IS DETECTED** • Perform the KOER self test. (See **KOEO/KOER SELF TEST [SKYACTIV-G 2.0, SKYACTIV-G 2.5]**.) • Is a DTC related to the drive-by-wire control present?	Yes	Go to the applicable DTC inspection. (See **DTC TABLE [SKYACTIV-G 2.0, SKYACTIV-G 2.5]**.)
		No	It is possible that the accelerator and brake pedals have been depressed simultaneously. (during braking operation using left foot) • Go to the next step.
11	**VERIFY DTC TROUBLESHOOTING COMPLETED** • Always reconnect all disconnected connectors. • Clear the DTC from the PCM memory using the M-MDS. **AFTER REPAIR PROCEDURE**	Yes	Repeat the inspection from Step 1. • If the malfunction recurs, replace the PCM. (See **PCM REMOVAL/INSTALLATION [SKYACTIV-G 2.0, SKYACTIV-G 2.5]**

	(See **[SKYACTIV-G 2.0, SKYACTIV-G 2.5]**.) • Perform the KOER self test. (See **KOEO/KOER SELF TEST [SKYACTIV-G 2.0, SKYACTIV-G 2.5]**.) • Is the same DTC present?		.) Go to the next step.
		No	Go to the next step.
12	**VERIFY AFTER REPAIR PROCEDURE** • Perform the “AFTER REPAIR PROCEDURE”. (See **AFTER REPAIR PROCEDURE [SKYACTIV-G 2.0, SKYACTIV-G 2.5]**.) • Are any DTCs present?	Yes	Go to the applicable DTC inspection. (See **DTC TABLE [SKYACTIV-G 2.0, SKYACTIV-G 2.5]**.)
		No	DTC troubleshooting completed.

2014 - Mazda3 - Engine

DTC P2302:00 [SKYACTIV-G 2.0, SKYACTIV-G 2.5]

DTC P2302:00	Ion sensor No.1 circuit problem
DETECTION CONDITION	• After the engine is started, when the engine speed is **2,000 rpm or less**, the signal input to the PCM from ion sensor No.1 is in error. **Diagnostic support note** • This is a continuous monitor (other). • The check engine light does not illuminate. • FREEZE FRAME DATA (Mode 2) is not available. • Snapshot data is available. • DTC is stored in the PCM memory.
FAIL-SAFE FUNCTION	Not applicable

POSSIBLE CAUSE	• Cylinder No.1 misfire
	• Ignition coil/ion sensor No.1 connector or terminals malfunction
	• Short to ground or open circuit in ion sensor No.1 power supply circuit
	  ▪ Short to ground in wiring harness between ENGINE2 15 A fuse and ignition coil/ion sensor No.1 terminal A
	  ▪ ENGINE2 15 A fuse malfunction
	  ▪ Open circuit in wiring harness between main relay terminal D and ignition coil/ion sensor No.1 terminal A
	• Open circuit in wiring harness between ignition coil/ion sensor No.1 terminal D and body ground
	• Short to ground in wiring harness between ignition coil/ion sensor No.1 terminal C and PCM terminal 1BK
	• PCM connector or terminals malfunction
	• Short to power supply in wiring harness between ignition coil/ion sensor No.1 terminal C and PCM terminal 1BK
	• Open circuit in wiring harness between ignition coil/ion sensor No.1 terminal C and PCM terminal 1BK
	• Ion sensor No.1 malfunction
	• PCM malfunction

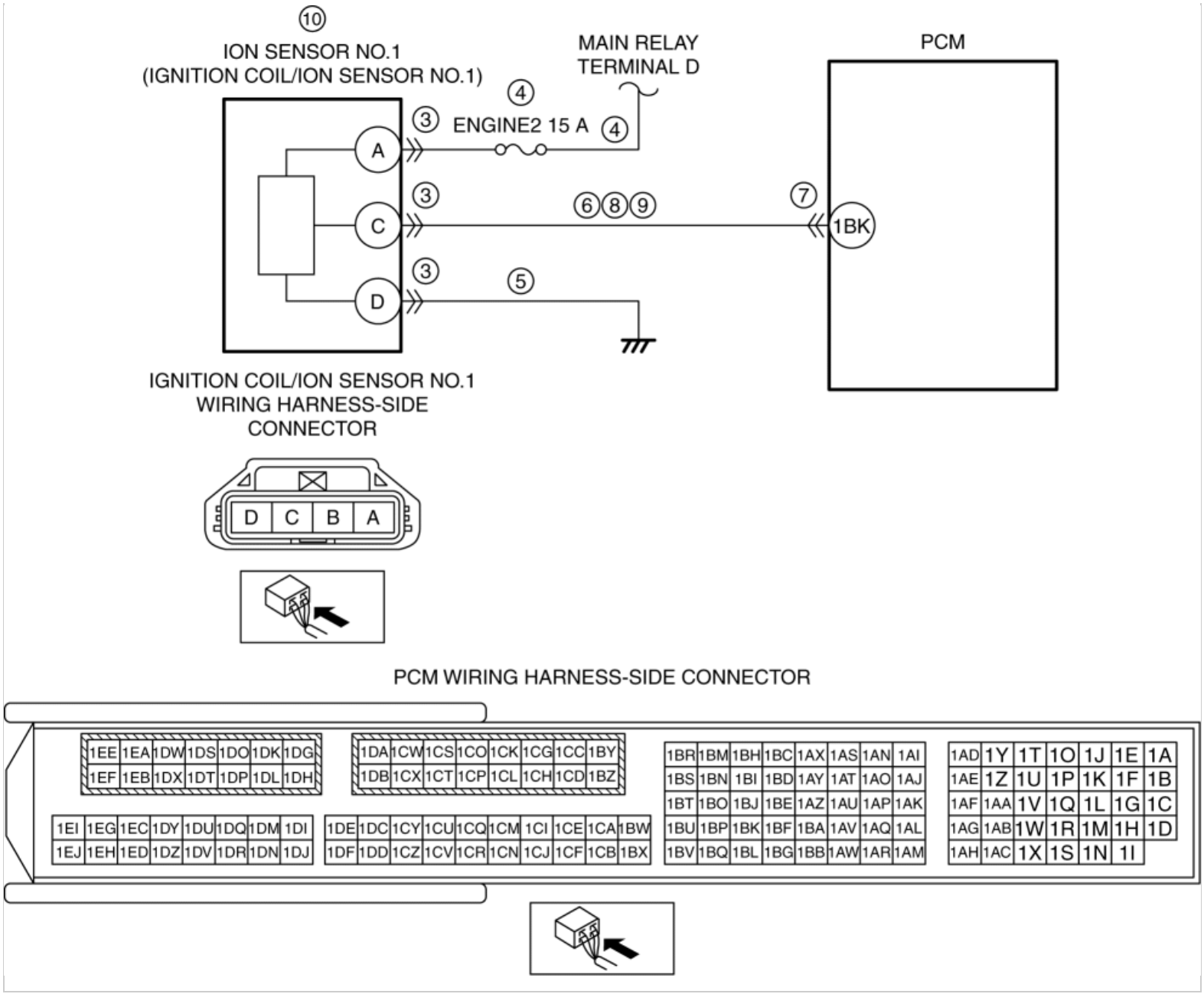

Diagnostic Procedure

STEP	INSPECTION		ACTION
1	**VERIFY RELATED REPAIR INFORMATION AVAILABILITY** • Verify related Service Bulletins and/or on-line repair information availability. • Is any related repair information available?	Yes	Perform repair or diagnosis according to the available repair information. • If the vehicle is not repaired, go to the next step.
		No	Go to the next step.
2	**VERIFY RELATED PENDING CODE AND/OR DTC** • Switch the ignition off, then ON (engine off). • Perform the Pending Trouble Code Access Procedure and DTC Reading Procedure.	Yes	Go to the applicable PENDING CODE or DTC inspection. (See **DTC P0301:00, P0302:00, P0303:00, P0304:00 [SKYACTIV-G 2.0, SKYACTIV-G 2.5]**.)
		No	Go to the next step.

	(See **ON-BOARD DIAGNOSTIC TEST [SKYACTIV-G 2.0, SKYACTIV-G 2.5]**.) • Is the PENDING CODE/DTC P0301:00 also present?		
3	**INSPECT IGNITION COIL/ION SENSOR NO.1 CONNECTOR CONDITION** • Switch the ignition off. • Disconnect the ignition coil/ion sensor No.1 connector. • Inspect for poor connection (such as damaged/pulled-out pins, corrosion). • Is there any malfunction?	Yes	Repair or replace the connector and/or terminals, then go to Step 11.
		No	Go to the next step.
4	**INSPECT ION SENSOR NO.1 POWER SUPPLY CIRCUIT FOR SHORT TO GROUND OR OPEN CIRCUIT** • Verify that the ignition coil/ion sensor No.1 connector is disconnected. • Switch the ignition ON (engine off). **NOTE:** • Another DTC may be stored by the PCM detecting an open circuit. • Measure the voltage at the ignition coil/ion sensor No.1 terminal A (wiring harness-side). • Is the voltage **B+**?	Yes	Go to the next step.
		No	Inspect the ENGINE2 15 A fuse. • If the fuse is blown: ▪ Refer to the wiring diagram and verify whether or not there is a common connector between ENGINE2 15 A fuse and ignition coil/ion sensor No.1 terminal A. **If there is a common connector:** • Determine the malfunctioning part by inspecting the common connector and the terminal for corrosion, damage, or pin disconnection, and the common wiring harness for a short to ground. • Repair or replace the malfunctioning part. **If there is no common connector:** • Repair or replace the wiring harness which has a short to ground. • Replace the fuse. • If the fuse is damaged: ▪ Replace the fuse. • If the fuse is normal: ▪ Refer to the wiring diagram and verify whether or not there is a common connector between main relay terminal D and ignition coil/ion sensor No.1 terminal A. **If there is a common connector:** • Determine the malfunctioning part by inspecting the common

			connector and the terminal for corrosion, damage, or pin disconnection, and the common wiring harness for an open circuit. • Repair or replace the malfunctioning part. **If there is no common connector:** • Repair or replace the wiring harness which has an open circuit. Go to Step 11.
5	**INSPECT ION SENSOR NO.1 GROUND CIRCUIT FOR OPEN CIRCUIT** • Verify that the ignition coil/ion sensor No.1 connector is disconnected. • Switch the ignition off. • Inspect for continuity between ignition coil/ion sensor No.1 terminal D (wiring harness-side) and body ground. • Is there continuity?	Yes	Go to the next step.
		No	Refer to the wiring diagram and verify whether or not there is a common connector between ignition coil/ion sensor No.1 terminal D and body ground. **If there is a common connector:** • Determine the malfunctioning part by inspecting the common connector and the terminal for corrosion, damage, or pin disconnection, and the common wiring harness for an open circuit. • Repair or replace the malfunctioning part. **If there is no common connector:** • Inspect for the following: ▪ Open circuit between ignition coil/ion sensor No.1 and body ground ▪ Loose or lifting ground point • Repair or replace the malfunctioning part. Go to Step 11.
6	**INSPECT ION SENSOR NO.1 SIGNAL CIRCUIT FOR SHORT TO GROUND** • Verify that the ignition coil/ion sensor No.1 connector is disconnected. • Inspect for continuity between ignition coil/ion sensor No.1 terminal C (wiring harness-side) and body ground. • Is there continuity?	Yes	If the short to ground circuit could be detected in the wiring harness: • Refer to the wiring diagram and verify whether or not there is a common connector between ignition coil/ion sensor No.1 terminal C and PCM terminal 1BK. **If there is a common connector:** ▪ Determine the malfunctioning part by inspecting the common connector and the terminal for corrosion, damage, or pin disconnection, and the common wiring harness for a short to ground. ▪ Repair or replace the malfunctioning part. **If there is no common connector:** ▪ Repair or replace the wiring harness which has a short to ground. If the short to ground circuit could not be detected in the wiring harness: • Replace the PCM (short to ground in the PCM internal circuit). (See **PCM REMOVAL/INSTALLATION [SKYACTIV-G 2.0,**

			SKYACTIV-G 2.5].) Go to Step 11.
		No	Go to the next step.
7	**INSPECT PCM CONNECTOR CONDITION** • Disconnect the PCM connector. • Inspect for poor connection (such as damaged/pulled-out pins, corrosion). • Is there any malfunction?	Yes	Repair or replace the connector and/or terminals, then go to Step 11.
		No	Go to the next step.
8	**INSPECT ION SENSOR NO.1 SIGNAL CIRCUIT FOR SHORT TO POWER SUPPLY** • Verify that the ignition coil/ion sensor No.1 and PCM connectors are disconnected. • Switch the ignition ON (engine off). **NOTE:** • Another DTC may be stored by the PCM detecting an open circuit. • Measure the voltage at the ignition coil/ion sensor No.1 terminal C (wiring harness-side). • Is the voltage **0 V**?	Yes	Go to the next step.
		No	Refer to the wiring diagram and verify whether or not there is a common connector between ignition coil/ion sensor No.1 terminal C and PCM terminal 1BK. **If there is a common connector:** • Determine the malfunctioning part by inspecting the common connector and the terminal for corrosion, damage, or pin disconnection, and the common wiring harness for a short to power supply. • Repair or replace the malfunctioning part. **If there is no common connector:** • Repair or replace the wiring harness which has a short to power supply. Go to Step 11.
9	**INSPECT ION SENSOR NO.1 SIGNAL CIRCUIT FOR OPEN CIRCUIT** • Verify that the ignition coil/ion sensor No.1 and PCM connectors are disconnected. • Switch the ignition off. • Inspect for continuity between ignition coil/ion sensor No.1 terminal C (wiring harness-side) and PCM terminal 1BK (wiring harness-side). • Is there continuity?	Yes	Go to the next step.
		No	Refer to the wiring diagram and verify whether or not there is a common connector between ignition coil/ion sensor No.1 terminal C and PCM terminal 1BK. **If there is a common connector:** • Determine the malfunctioning part by inspecting the common connector and the terminal for corrosion, damage, or pin disconnection, and the common wiring harness for an open circuit. • Repair or replace the malfunctioning part. **If there is no common connector:** • Repair or replace the wiring harness which has an open circuit. Go to Step 11.
10	**INSPECT ION SENSOR NO.1** • Inspect the ion sensor No.1. (See **ION SENSOR INSPECTION [SKYACTIV-G 2.0, SKYACTIV-G 2.5]**.) • Is there any malfunction?	Yes	Replace the ignition coil/ion sensor No.1, then go to the next step. (See **IGNITION COIL/ION SENSOR REMOVAL/INSTALLATION [SKYACTIV-G 2.0, SKYACTIV-G 2.5]**.)
		No	Go to the next step.
11	**VERIFY DTC TROUBLESHOOTING COMPLETED** • Always reconnect all disconnected	Yes	Repeat the inspection from Step 1. • If the malfunction recurs, replace the PCM.

	connectors. • Clear the DTC from the PCM memory using the M-MDS. (See **AFTER REPAIR PROCEDURE [SKYACTIV-G 2.0, SKYACTIV-G 2.5]**.) • Perform the KOER self test. (See **KOEO/KOER SELF TEST [SKYACTIV-G 2.0, SKYACTIV-G 2.5]**.) • Is the same DTC present?		(See **PCM REMOVAL/INSTALLATION [SKYACTIV-G 2.0, SKYACTIV-G 2.5]**.) Go to the next step.
		No	Go to the next step.
12	**VERIFY AFTER REPAIR PROCEDURE** • Perform the “AFTER REPAIR PROCEDURE”. (See **AFTER REPAIR PROCEDURE [SKYACTIV-G 2.0, SKYACTIV-G 2.5]**.) • Are any DTCs present?	Yes	Go to the applicable DTC inspection. (See **DTC TABLE [SKYACTIV-G 2.0, SKYACTIV-G 2.5]**.)
		No	DTC troubleshooting completed.

2014 - Mazda3 - Engine

DTC P2305:00 [SKYACTIV-G 2.0, SKYACTIV-G 2.5]

DTC P2305:00	Ion sensor No.2 circuit problem
DETECTION CONDITION	• After the engine is started, when the engine speed is **2,000 rpm or less**, the signal input to the PCM from ion sensor No.2 is in error. **Diagnostic support note** • This is a continuous monitor (other). • The check engine light does not illuminate. • FREEZE FRAME DATA (Mode 2) is not available. • Snapshot data is available. • DTC is stored in the PCM memory.
FAIL-SAFE FUNCTION	Not applicable

POSSIBLE CAUSE	• Cylinder No.2 misfire
	• Ignition coil/ion sensor No.2 connector or terminals malfunction
	• Short to ground or open circuit in ion sensor No.2 power supply circuit
	  ▪ Short to ground in wiring harness between ENGINE2 15 A fuse and ignition coil/ion sensor No.2 terminal A
	  ▪ ENGINE2 15 A fuse malfunction
	  ▪ Open circuit in wiring harness between main relay terminal D and ignition coil/ion sensor No.2 terminal A
	• Open circuit in wiring harness between ignition coil/ion sensor No.2 terminal D and body ground
	• Short to ground in wiring harness between ignition coil/ion sensor No.2 terminal C and PCM terminal 1BF
	• PCM connector or terminals malfunction
	• Short to power supply in wiring harness between ignition coil/ion sensor No.2 terminal C and PCM terminal 1BF
	• Open circuit in wiring harness between ignition coil/ion sensor No.2 terminal C and PCM terminal 1BF
	• Ion sensor No.2 malfunction
	• PCM malfunction

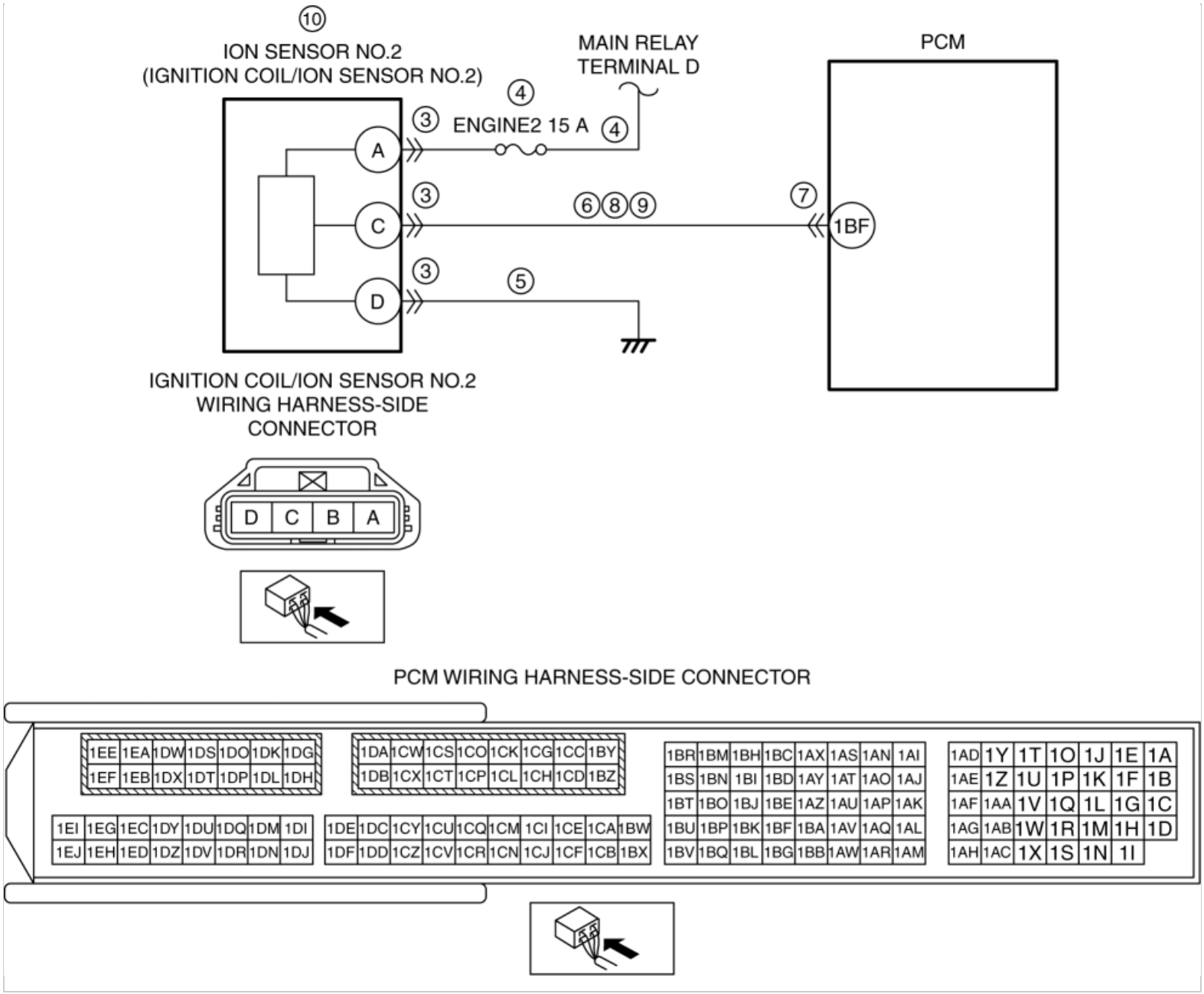

Diagnostic Procedure

STEP	INSPECTION		ACTION
1	**VERIFY RELATED REPAIR INFORMATION AVAILABILITY** • Verify related Service Bulletins and/or on-line repair information availability. • Is any related repair information available?	Yes	Perform repair or diagnosis according to the available repair information. • If the vehicle is not repaired, go to the next step.
		No	Go to the next step.
2	**VERIFY RELATED PENDING CODE AND/OR DTC** • Switch the ignition off, then ON (engine off). • Perform the Pending Trouble Code Access Procedure and DTC Reading Procedure.	Yes	Go to the applicable PENDING CODE or DTC inspection. (See **DTC P0301:00, P0302:00, P0303:00, P0304:00 [SKYACTIV-G 2.0, SKYACTIV-G 2.5]**.)
		No	Go to the next step.

	(See **ON-BOARD DIAGNOSTIC TEST [SKYACTIV-G 2.0, SKYACTIV-G 2.5]**.) • Is the PENDING CODE/DTC P0302:00 also present?		
3	**INSPECT IGNITION COIL/ION SENSOR NO.2 CONNECTOR CONDITION** • Switch the ignition off. • Disconnect the ignition coil/ion sensor No.2 connector. • Inspect for poor connection (such as damaged/pulled-out pins, corrosion). • Is there any malfunction?	Yes	Repair or replace the connector and/or terminals, then go to Step 11.
		No	Go to the next step.
4	**INSPECT ION SENSOR NO.2 POWER SUPPLY CIRCUIT FOR SHORT TO GROUND OR OPEN CIRCUIT** • Verify that the ignition coil/ion sensor No.2 connector is disconnected. • Switch the ignition ON (engine off). **NOTE:** • Another DTC may be stored by the PCM detecting an open circuit. • Measure the voltage at the ignition coil/ion sensor No.2 terminal A (wiring harness-side). • Is the voltage **B+**?	Yes	Go to the next step.
		No	Inspect the ENGINE2 15 A fuse. • If the fuse is blown: ▪ Refer to the wiring diagram and verify whether or not there is a common connector between ENGINE2 15 A fuse and ignition coil/ion sensor No.2 terminal A. **If there is a common connector:** • Determine the malfunctioning part by inspecting the common connector and the terminal for corrosion, damage, or pin disconnection, and the common wiring harness for a short to ground. • Repair or replace the malfunctioning part. **If there is no common connector:** • Repair or replace the wiring harness which has a short to ground. • Replace the fuse. • If the fuse is damaged: ▪ Replace the fuse. • If the fuse is normal: ▪ Refer to the wiring diagram and verify whether or not there is a common connector between main relay terminal D and ignition coil/ion sensor No.2 terminal A. **If there is a common connector:** • Determine the malfunctioning part by inspecting the common

			connector and the terminal for corrosion, damage, or pin disconnection, and the common wiring harness for an open circuit. • Repair or replace the malfunctioning part. **If there is no common connector:** • Repair or replace the wiring harness which has an open circuit. Go to Step 11.
5	**INSPECT ION SENSOR NO.2 GROUND CIRCUIT FOR OPEN CIRCUIT** • Verify that the ignition coil/ion sensor No.2 connector is disconnected. • Switch the ignition off. • Inspect for continuity between ignition coil/ion sensor No.2 terminal D (wiring harness-side) and body ground. • Is there continuity?	Yes	Go to the next step.
		No	Refer to the wiring diagram and verify whether or not there is a common connector between ignition coil/ion sensor No.2 terminal D and body ground. **If there is a common connector:** • Determine the malfunctioning part by inspecting the common connector and the terminal for corrosion, damage, or pin disconnection, and the common wiring harness for an open circuit. • Repair or replace the malfunctioning part. **If there is no common connector:** • Inspect for the following: ▪ Open circuit between ignition coil/ion sensor No.2 and body ground ▪ Loose or lifting ground point • Repair or replace the malfunctioning part. Go to Step 11.
6	**INSPECT ION SENSOR NO.2 SIGNAL CIRCUIT FOR SHORT TO GROUND** • Verify that the ignition coil/ion sensor No.2 connector is disconnected. • Inspect for continuity between ignition coil/ion sensor No.2 terminal C (wiring harness-side) and body ground. • Is there continuity?	Yes	If the short to ground circuit could be detected in the wiring harness: • Refer to the wiring diagram and verify whether or not there is a common connector between ignition coil/ion sensor No.2 terminal C and PCM terminal 1BF. **If there is a common connector:** ▪ Determine the malfunctioning part by inspecting the common connector and the terminal for corrosion, damage, or pin disconnection, and the common wiring harness for a short to ground. ▪ Repair or replace the malfunctioning part. **If there is no common connector:** ▪ Repair or replace the wiring harness which has a short to ground. If the short to ground circuit could not be detected in the wiring harness: • Replace the PCM (short to ground in the PCM internal circuit). (See **PCM REMOVAL/INSTALLATION [SKYACTIV-G 2.0,**

			SKYACTIV-G 2.5].) Go to Step 11.
		No	Go to the next step.
7	**INSPECT PCM CONNECTOR CONDITION** • Disconnect the PCM connector. • Inspect for poor connection (such as damaged/pulled-out pins, corrosion). • Is there any malfunction?	Yes	Repair or replace the connector and/or terminals, then go to Step 11.
		No	Go to the next step.
8	**INSPECT ION SENSOR NO.2 SIGNAL CIRCUIT FOR SHORT TO POWER SUPPLY** • Verify that the ignition coil/ion sensor No.2 and PCM connectors are disconnected. • Switch the ignition ON (engine off). **NOTE:** • Another DTC may be stored by the PCM detecting an open circuit. • Measure the voltage at the ignition coil/ion sensor No.2 terminal C (wiring harness-side). • Is the voltage **0 V**?	Yes	Go to the next step.
		No	Refer to the wiring diagram and verify whether or not there is a common connector between ignition coil/ion sensor No.2 terminal C and PCM terminal 1BF. **If there is a common connector:** • Determine the malfunctioning part by inspecting the common connector and the terminal for corrosion, damage, or pin disconnection, and the common wiring harness for a short to power supply. • Repair or replace the malfunctioning part. **If there is no common connector:** • Repair or replace the wiring harness which has a short to power supply. Go to Step 11.
9	**INSPECT ION SENSOR NO.2 SIGNAL CIRCUIT FOR OPEN CIRCUIT** • Verify that the ignition coil/ion sensor No.2 and PCM connectors are disconnected. • Switch the ignition off. • Inspect for continuity between ignition coil/ion sensor No.2 terminal C (wiring harness-side) and PCM terminal 1BF (wiring harness-side). • Is there continuity?	Yes	Go to the next step.
		No	Refer to the wiring diagram and verify whether or not there is a common connector between ignition coil/ion sensor No.2 terminal C and PCM terminal 1BF. **If there is a common connector:** • Determine the malfunctioning part by inspecting the common connector and the terminal for corrosion, damage, or pin disconnection, and the common wiring harness for an open circuit. • Repair or replace the malfunctioning part. **If there is no common connector:** • Repair or replace the wiring harness which has an open circuit. Go to Step 11.
10	**INSPECT ION SENSOR NO.2** • Inspect the ion sensor No.2. (See **ION SENSOR INSPECTION [SKYACTIV-G 2.0, SKYACTIV-G 2.5]**.) • Is there any malfunction?	Yes	Replace the ignition coil/ion sensor No.2, then go to the next step. (See **IGNITION COIL/ION SENSOR REMOVAL/INSTALLATION [SKYACTIV-G 2.0, SKYACTIV-G 2.5]**.)
		No	Go to the next step.
11	**VERIFY DTC TROUBLESHOOTING COMPLETED** • Always reconnect all disconnected	Yes	Repeat the inspection from Step 1. • If the malfunction recurs, replace the PCM.

	connectors. • Clear the DTC from the PCM memory using the M-MDS. (See **AFTER REPAIR PROCEDURE [SKYACTIV-G 2.0, SKYACTIV-G 2.5]**.) • Perform the KOER self test. (See **KOEO/KOER SELF TEST [SKYACTIV-G 2.0, SKYACTIV-G 2.5]**.) • Is the same DTC present?		(See **PCM REMOVAL/INSTALLATION [SKYACTIV-G 2.0, SKYACTIV-G 2.5]**.) Go to the next step.
		No	Go to the next step.
12	**VERIFY AFTER REPAIR PROCEDURE** • Perform the “AFTER REPAIR PROCEDURE”. (See **AFTER REPAIR PROCEDURE [SKYACTIV-G 2.0, SKYACTIV-G 2.5]**.) • Are any DTCs present?	Yes	Go to the applicable DTC inspection. (See **DTC TABLE [SKYACTIV-G 2.0, SKYACTIV-G 2.5]**.)
		No	DTC troubleshooting completed.

2014 - Mazda3 - Engine

DTC P2308:00 [SKYACTIV-G 2.0, SKYACTIV-G 2.5]

DTC P2308:00	Ion sensor No.3 circuit problem
DETECTION CONDITION	• After the engine is started, when the engine speed is **2,000 rpm or less**, the signal input to the PCM from ion sensor No.3 is in error. **Diagnostic support note** • This is a continuous monitor (other). • The check engine light does not illuminate. • FREEZE FRAME DATA (Mode 2) is not available. • Snapshot data is available. • DTC is stored in the PCM memory.
FAIL-SAFE FUNCTION	Not applicable

POSSIBLE CAUSE	• Cylinder No.3 misfire
	• Ignition coil/ion sensor No.3 connector or terminals malfunction
	• Short to ground or open circuit in ion sensor No.3 power supply circuit
	  ▪ Short to ground in wiring harness between ENGINE2 15 A fuse and ignition coil/ion sensor No.3 terminal A
	  ▪ ENGINE2 15 A fuse malfunction
	  ▪ Open circuit in wiring harness between main relay terminal D and ignition coil/ion sensor No.3 terminal A
	• Open circuit in wiring harness between ignition coil/ion sensor No.3 terminal D and body ground
	• Short to ground in wiring harness between ignition coil/ion sensor No.3 terminal C and PCM terminal 1BA
	• PCM connector or terminals malfunction
	• Short to power supply in wiring harness between ignition coil/ion sensor No.3 terminal C and PCM terminal 1BA
	• Open circuit in wiring harness between ignition coil/ion sensor No.3 terminal C and PCM terminal 1BA
	• Ion sensor No.3 malfunction
	• PCM malfunction

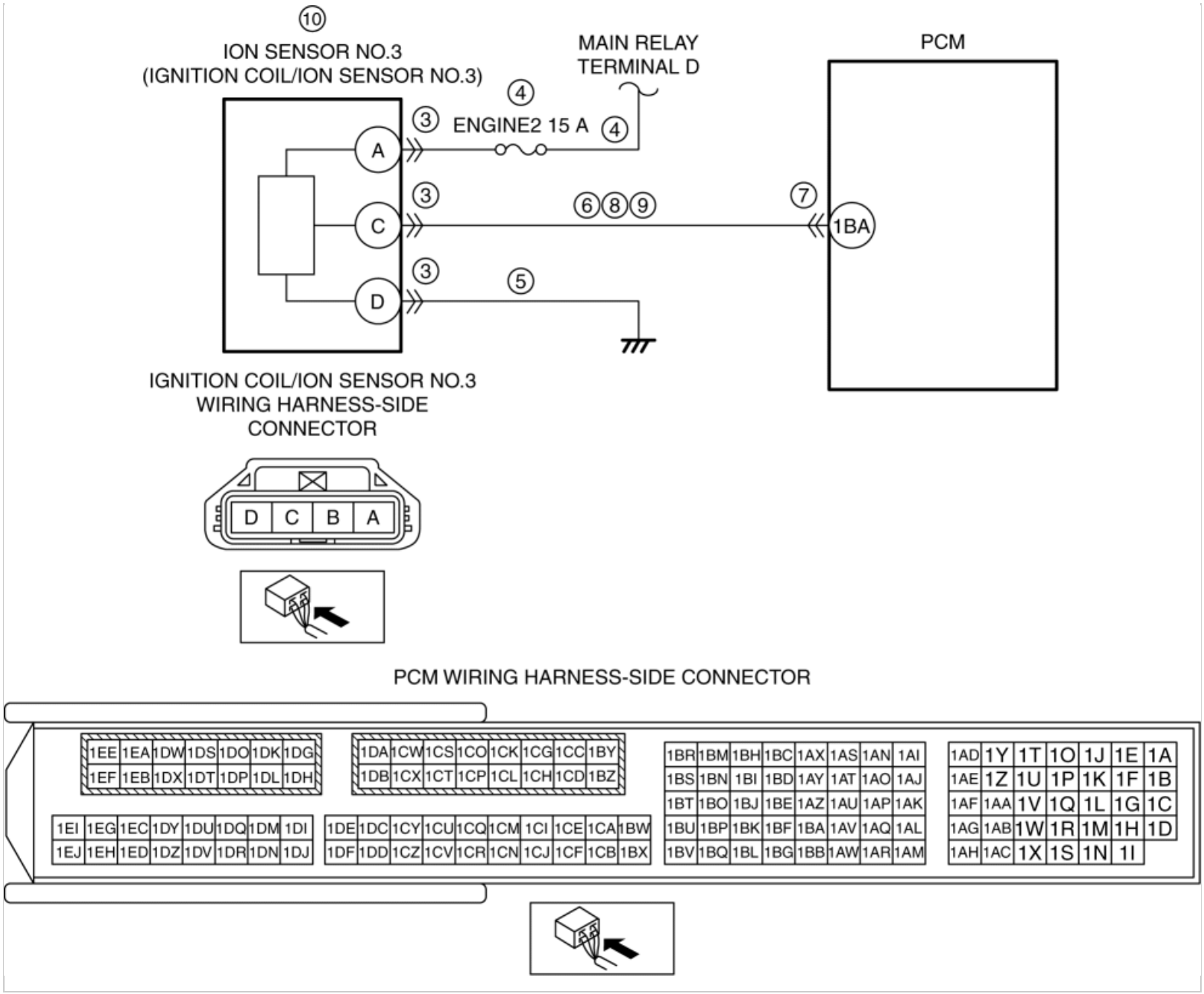

Diagnostic Procedure

STEP	INSPECTION		ACTION
1	**VERIFY RELATED REPAIR INFORMATION AVAILABILITY** • Verify related Service Bulletins and/or on-line repair information availability. • Is any related repair information available?	Yes	Perform repair or diagnosis according to the available repair information. • If the vehicle is not repaired, go to the next step.
		No	Go to the next step.
2	**VERIFY RELATED PENDING CODE AND/OR DTC** • Switch the ignition off, then ON (engine off). • Perform the Pending Trouble Code Access Procedure and DTC Reading Procedure.	Yes	Go to the applicable PENDING CODE or DTC inspection. (See **DTC P0301:00, P0302:00, P0303:00, P0304:00 [SKYACTIV-G 2.0, SKYACTIV-G 2.5]**.)
		No	Go to the next step.

	(See **ON-BOARD DIAGNOSTIC TEST [SKYACTIV-G 2.0, SKYACTIV-G 2.5]**.) • Is the PENDING CODE/DTC P0303:00 also present?		
3	**INSPECT IGNITION COIL/ION SENSOR NO.3 CONNECTOR CONDITION** • Switch the ignition off. • Disconnect the ignition coil/ion sensor No.3 connector. • Inspect for poor connection (such as damaged/pulled-out pins, corrosion). • Is there any malfunction?	Yes	Repair or replace the connector and/or terminals, then go to Step 11.
		No	Go to the next step.
4	**INSPECT ION SENSOR NO.3 POWER SUPPLY CIRCUIT FOR SHORT TO GROUND OR OPEN CIRCUIT** • Verify that the ignition coil/ion sensor No.3 connector is disconnected. • Switch the ignition ON (engine off). **NOTE:** • Another DTC may be stored by the PCM detecting an open circuit. • Measure the voltage at the ignition coil/ion sensor No.3 terminal A (wiring harness-side). • Is the voltage **B+**?	Yes	Go to the next step.
		No	Inspect the ENGINE2 15 A fuse. • If the fuse is blown: ▪ Refer to the wiring diagram and verify whether or not there is a common connector between ENGINE2 15 A fuse and ignition coil/ion sensor No.3 terminal A. **If there is a common connector:** • Determine the malfunctioning part by inspecting the common connector and the terminal for corrosion, damage, or pin disconnection, and the common wiring harness for a short to ground. • Repair or replace the malfunctioning part. **If there is no common connector:** • Repair or replace the wiring harness which has a short to ground. • Replace the fuse. • If the fuse is damaged: ▪ Replace the fuse. • If the fuse is normal: ▪ Refer to the wiring diagram and verify whether or not there is a common connector between main relay terminal D and ignition coil/ion sensor No.3 terminal A. **If there is a common connector:** • Determine the malfunctioning part by inspecting the common

			connector and the terminal for corrosion, damage, or pin disconnection, and the common wiring harness for an open circuit. • Repair or replace the malfunctioning part. **If there is no common connector:** • Repair or replace the wiring harness which has an open circuit. Go to Step 11.
5	**INSPECT ION SENSOR NO.3 GROUND CIRCUIT FOR OPEN CIRCUIT** • Verify that the ignition coil/ion sensor No.3 connector is disconnected. • Switch the ignition off. • Inspect for continuity between ignition coil/ion sensor No.3 terminal D (wiring harness-side) and body ground. • Is there continuity?	Yes	Go to the next step.
		No	Refer to the wiring diagram and verify whether or not there is a common connector between ignition coil/ion sensor No.3 terminal D and body ground. **If there is a common connector:** • Determine the malfunctioning part by inspecting the common connector and the terminal for corrosion, damage, or pin disconnection, and the common wiring harness for an open circuit. • Repair or replace the malfunctioning part. **If there is no common connector:** • Inspect for the following: ▪ Open circuit between ignition coil/ion sensor No.3 and body ground ▪ Loose or lifting ground point • Repair or replace the malfunctioning part. Go to Step 11.
6	**INSPECT ION SENSOR NO.3 SIGNAL CIRCUIT FOR SHORT TO GROUND** • Verify that the ignition coil/ion sensor No.3 connector is disconnected. • Inspect for continuity between ignition coil/ion sensor No.3 terminal C (wiring harness-side) and body ground. • Is there continuity?	Yes	If the short to ground circuit could be detected in the wiring harness: • Refer to the wiring diagram and verify whether or not there is a common connector between ignition coil/ion sensor No.3 terminal C and PCM terminal 1BA. **If there is a common connector:** ▪ Determine the malfunctioning part by inspecting the common connector and the terminal for corrosion, damage, or pin disconnection, and the common wiring harness for a short to ground. ▪ Repair or replace the malfunctioning part. **If there is no common connector:** ▪ Repair or replace the wiring harness which has a short to ground. If the short to ground circuit could not be detected in the wiring harness: • Replace the PCM (short to ground in the PCM internal circuit). (See **PCM REMOVAL/INSTALLATION [SKYACTIV-G 2.0,**

			SKYACTIV-G 2.5].) Go to Step 11.
		No	Go to the next step.
7	**INSPECT PCM CONNECTOR CONDITION** • Disconnect the PCM connector. • Inspect for poor connection (such as damaged/pulled-out pins, corrosion). • Is there any malfunction?	Yes	Repair or replace the connector and/or terminals, then go to Step 11.
		No	Go to the next step.
8	**INSPECT ION SENSOR NO.3 SIGNAL CIRCUIT FOR SHORT TO POWER SUPPLY** • Verify that the ignition coil/ion sensor No.3 and PCM connectors are disconnected. • Switch the ignition ON (engine off). **NOTE:** • Another DTC may be stored by the PCM detecting an open circuit. • Measure the voltage at the ignition coil/ion sensor No.3 terminal C (wiring harness-side). • Is the voltage **0 V**?	Yes	Go to the next step.
		No	Refer to the wiring diagram and verify whether or not there is a common connector between ignition coil/ion sensor No.3 terminal C and PCM terminal 1BA. **If there is a common connector:** • Determine the malfunctioning part by inspecting the common connector and the terminal for corrosion, damage, or pin disconnection, and the common wiring harness for a short to power supply. • Repair or replace the malfunctioning part. **If there is no common connector:** • Repair or replace the wiring harness which has a short to power supply. Go to Step 11.
9	**INSPECT ION SENSOR NO.3 SIGNAL CIRCUIT FOR OPEN CIRCUIT** • Verify that the ignition coil/ion sensor No.3 and PCM connectors are disconnected. • Switch the ignition off. • Inspect for continuity between ignition coil/ion sensor No.3 terminal C (wiring harness-side) and PCM terminal 1BA (wiring harness-side). • Is there continuity?	Yes	Go to the next step.
		No	Refer to the wiring diagram and verify whether or not there is a common connector between ignition coil/ion sensor No.3 terminal C and PCM terminal 1BA. **If there is a common connector:** • Determine the malfunctioning part by inspecting the common connector and the terminal for corrosion, damage, or pin disconnection, and the common wiring harness for an open circuit. • Repair or replace the malfunctioning part. **If there is no common connector:** • Repair or replace the wiring harness which has an open circuit. Go to Step 11.
10	**INSPECT ION SENSOR NO.3** • Inspect the ion sensor No.3. (See **ION SENSOR INSPECTION [SKYACTIV-G 2.0, SKYACTIV-G 2.5]**.) • Is there any malfunction?	Yes	Replace the ignition coil/ion sensor No.3, then go to the next step. (See **IGNITION COIL/ION SENSOR REMOVAL/INSTALLATION [SKYACTIV-G 2.0, SKYACTIV-G 2.5]**.)
		No	Go to the next step.
11	**VERIFY DTC TROUBLESHOOTING COMPLETED** • Always reconnect all disconnected	Yes	Repeat the inspection from Step 1. • If the malfunction recurs, replace the PCM.

	connectors. • Clear the DTC from the PCM memory using the M-MDS. (See **AFTER REPAIR PROCEDURE [SKYACTIV-G 2.0, SKYACTIV-G 2.5]**.) • Perform the KOER self test. (See **KOEO/KOER SELF TEST [SKYACTIV-G 2.0, SKYACTIV-G 2.5]**.) • Is the same DTC present?		(See **PCM REMOVAL/INSTALLATION [SKYACTIV-G 2.0, SKYACTIV-G 2.5]**.) Go to the next step.
		No	Go to the next step.
12	**VERIFY AFTER REPAIR PROCEDURE** • Perform the “AFTER REPAIR PROCEDURE”. (See **AFTER REPAIR PROCEDURE [SKYACTIV-G 2.0, SKYACTIV-G 2.5]**.) • Are any DTCs present?	Yes	Go to the applicable DTC inspection. (See **DTC TABLE [SKYACTIV-G 2.0, SKYACTIV-G 2.5]**.)
		No	DTC troubleshooting completed.

2014 - Mazda3 - Engine

DTC P2311:00 [SKYACTIV-G 2.0, SKYACTIV-G 2.5]

DTC P2311:00	Ion sensor No.4 circuit problem
DETECTION CONDITION	• After the engine is started, when the engine speed is **2,000 rpm or less**, the signal input to the PCM from ion sensor No.4 is in error. **Diagnostic support note** • This is a continuous monitor (other). • The check engine light does not illuminate. • FREEZE FRAME DATA (Mode 2) is not available. • Snapshot data is available. • DTC is stored in the PCM memory.
FAIL-SAFE FUNCTION	Not applicable

POSSIBLE CAUSE	• Cylinder No.4 misfire
	• Ignition coil/ion sensor No.4 connector or terminals malfunction
	• Short to ground or open circuit in ion sensor No.4 power supply circuit
	  ▪ Short to ground in wiring harness between ENGINE2 15 A fuse and ignition coil/ion sensor No.4 terminal A
	  ▪ ENGINE2 15 A fuse malfunction
	  ▪ Open circuit in wiring harness between main relay terminal D and ignition coil/ion sensor No.4 terminal A
	• Open circuit in wiring harness between ignition coil/ion sensor No.4 terminal D and body ground
	• Short to ground in wiring harness between ignition coil/ion sensor No.4 terminal C and PCM terminal 1AV
	• PCM connector or terminals malfunction
	• Short to power supply in wiring harness between ignition coil/ion sensor No.4 terminal C and PCM terminal 1AV
	• Open circuit in wiring harness between ignition coil/ion sensor No.4 terminal C and PCM terminal 1AV
	• Ion sensor No.4 malfunction
	• PCM malfunction

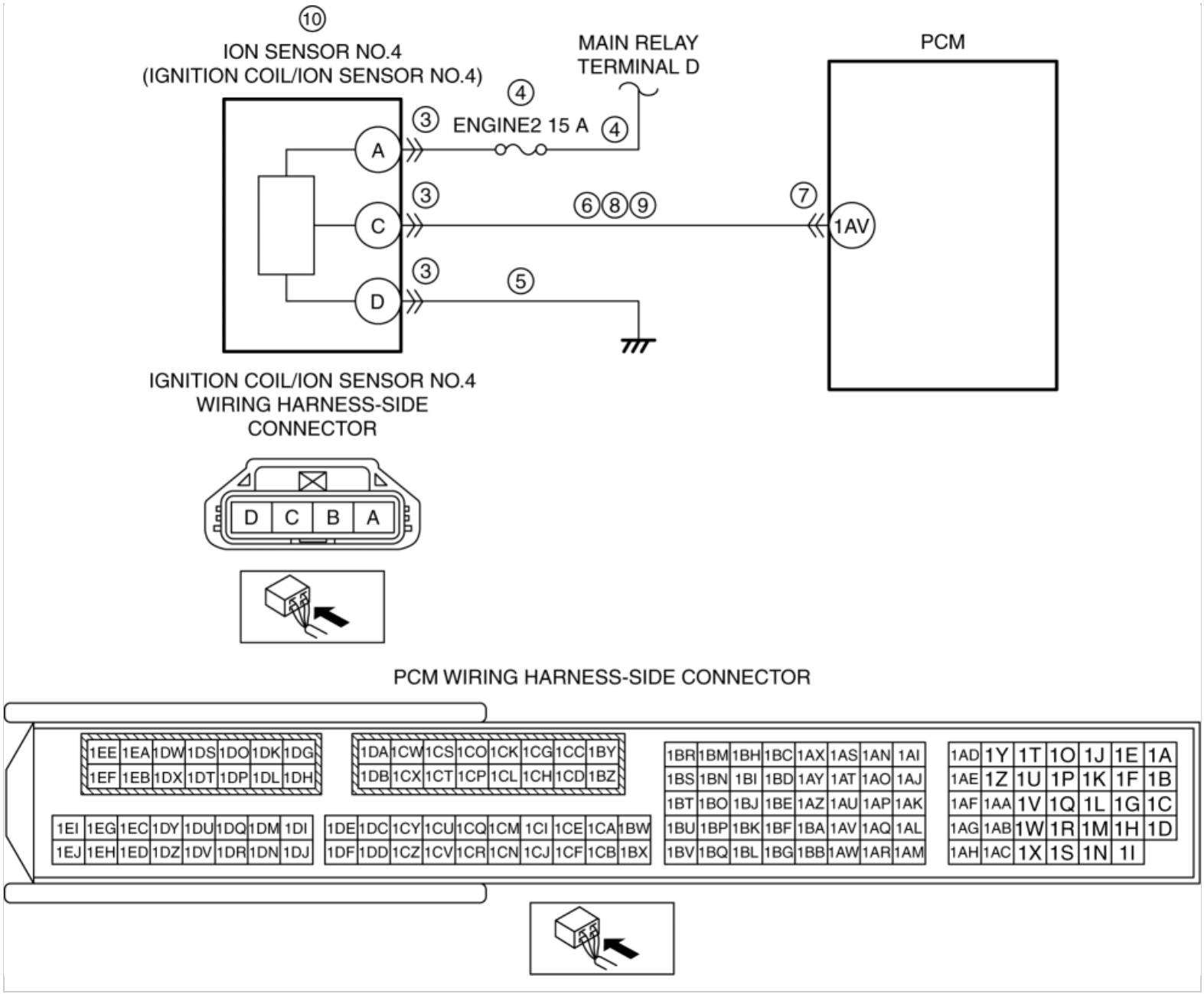

Diagnostic Procedure

STEP	INSPECTION		ACTION
1	**VERIFY RELATED REPAIR INFORMATION AVAILABILITY** • Verify related Service Bulletins and/or on-line repair information availability. • Is any related repair information available?	Yes	Perform repair or diagnosis according to the available repair information. • If the vehicle is not repaired, go to the next step.
		No	Go to the next step.
2	**VERIFY RELATED PENDING CODE AND/OR DTC** • Switch the ignition off, then ON (engine off). • Perform the Pending Trouble Code Access Procedure and DTC Reading Procedure.	Yes	Go to the applicable PENDING CODE or DTC inspection. (See **DTC P0301:00, P0302:00, P0303:00, P0304:00 [SKYACTIV-G 2.0, SKYACTIV-G 2.5]**.)
		No	Go to the next step.

	(See **ON-BOARD DIAGNOSTIC TEST [SKYACTIV-G 2.0, SKYACTIV-G 2.5]**.) • Is the PENDING CODE/DTC P0304:00 also present?		
3	**INSPECT IGNITION COIL/ION SENSOR NO.4 CONNECTOR CONDITION** • Switch the ignition off. • Disconnect the ignition coil/ion sensor No.4 connector. • Inspect for poor connection (such as damaged/pulled-out pins, corrosion). • Is there any malfunction?	Yes	Repair or replace the connector and/or terminals, then go to Step 11.
		No	Go to the next step.
4	**INSPECT ION SENSOR NO.4 POWER SUPPLY CIRCUIT FOR SHORT TO GROUND OR OPEN CIRCUIT** • Verify that the ignition coil/ion sensor No.4 connector is disconnected. • Switch the ignition ON (engine off). **NOTE:** • Another DTC may be stored by the PCM detecting an open circuit. • Measure the voltage at the ignition coil/ion sensor No.4 terminal A (wiring harness-side). • Is the voltage **B+**?	Yes	Go to the next step.
		No	Inspect the ENGINE2 15 A fuse. • If the fuse is blown: ▪ Refer to the wiring diagram and verify whether or not there is a common connector between ENGINE2 15 A fuse and ignition coil/ion sensor No.4 terminal A. **If there is a common connector:** • Determine the malfunctioning part by inspecting the common connector and the terminal for corrosion, damage, or pin disconnection, and the common wiring harness for a short to ground. • Repair or replace the malfunctioning part. **If there is no common connector:** • Repair or replace the wiring harness which has a short to ground. • Replace the fuse. • If the fuse is damaged: ▪ Replace the fuse. • If the fuse is normal: ▪ Refer to the wiring diagram and verify whether or not there is a common connector between main relay terminal D and ignition coil/ion sensor No.4 terminal A. **If there is a common connector:** • Determine the malfunctioning part by inspecting the common

			connector and the terminal for corrosion, damage, or pin disconnection, and the common wiring harness for an open circuit. • Repair or replace the malfunctioning part. **If there is no common connector:** • Repair or replace the wiring harness which has an open circuit. Go to Step 11.
5	**INSPECT ION SENSOR NO.4 GROUND CIRCUIT FOR OPEN CIRCUIT** • Verify that the ignition coil/ion sensor No.4 connector is disconnected. • Switch the ignition off. • Inspect for continuity between ignition coil/ion sensor No.4 terminal D (wiring harness-side) and body ground. • Is there continuity?	Yes	Go to the next step.
		No	Refer to the wiring diagram and verify whether or not there is a common connector between ignition coil/ion sensor No.4 terminal D and body ground. **If there is a common connector:** • Determine the malfunctioning part by inspecting the common connector and the terminal for corrosion, damage, or pin disconnection, and the common wiring harness for an open circuit. • Repair or replace the malfunctioning part. **If there is no common connector:** • Inspect for the following: ▪ Open circuit between ignition coil/ion sensor No.4 and body ground ▪ Loose or lifting ground point • Repair or replace the malfunctioning part. Go to Step 11.
6	**INSPECT ION SENSOR NO.4 SIGNAL CIRCUIT FOR SHORT TO GROUND** • Verify that the ignition coil/ion sensor No.4 connector is disconnected. • Inspect for continuity between ignition coil/ion sensor No.4 terminal C (wiring harness-side) and body ground. • Is there continuity?	Yes	If the short to ground circuit could be detected in the wiring harness: • Refer to the wiring diagram and verify whether or not there is a common connector between ignition coil/ion sensor No.4 terminal C and PCM terminal 1AV. **If there is a common connector:** ▪ Determine the malfunctioning part by inspecting the common connector and the terminal for corrosion, damage, or pin disconnection, and the common wiring harness for a short to ground. ▪ Repair or replace the malfunctioning part. **If there is no common connector:** ▪ Repair or replace the wiring harness which has a short to ground. If the short to ground circuit could not be detected in the wiring harness: • Replace the PCM (short to ground in the PCM internal circuit). (See **PCM REMOVAL/INSTALLATION [SKYACTIV-G 2.0,**

			SKYACTIV-G 2.5].) Go to Step 11.
		No	Go to the next step.
7	**INSPECT PCM CONNECTOR CONDITION** • Disconnect the PCM connector. • Inspect for poor connection (such as damaged/pulled-out pins, corrosion). • Is there any malfunction?	Yes	Repair or replace the connector and/or terminals, then go to Step 11.
		No	Go to the next step.
8	**INSPECT ION SENSOR NO.4 SIGNAL CIRCUIT FOR SHORT TO POWER SUPPLY** • Verify that the ignition coil/ion sensor No.4 and PCM connectors are disconnected. • Switch the ignition ON (engine off). **NOTE:** • Another DTC may be stored by the PCM detecting an open circuit. • Measure the voltage at the ignition coil/ion sensor No.4 terminal C (wiring harness-side). • Is the voltage **0 V**?	Yes	Go to the next step.
		No	Refer to the wiring diagram and verify whether or not there is a common connector between ignition coil/ion sensor No.4 terminal C and PCM terminal 1AV. **If there is a common connector:** • Determine the malfunctioning part by inspecting the common connector and the terminal for corrosion, damage, or pin disconnection, and the common wiring harness for a short to power supply. • Repair or replace the malfunctioning part. **If there is no common connector:** • Repair or replace the wiring harness which has a short to power supply. Go to Step 11.
9	**INSPECT ION SENSOR NO.4 SIGNAL CIRCUIT FOR OPEN CIRCUIT** • Verify that the ignition coil/ion sensor No.4 and PCM connectors are disconnected. • Switch the ignition off. • Inspect for continuity between ignition coil/ion sensor No.4 terminal C (wiring harness-side) and PCM terminal 1AV (wiring harness-side). • Is there continuity?	Yes	Go to the next step.
		No	Refer to the wiring diagram and verify whether or not there is a common connector between ignition coil/ion sensor No.4 terminal C and PCM terminal 1AV. **If there is a common connector:** • Determine the malfunctioning part by inspecting the common connector and the terminal for corrosion, damage, or pin disconnection, and the common wiring harness for an open circuit. • Repair or replace the malfunctioning part. **If there is no common connector:** • Repair or replace the wiring harness which has an open circuit. Go to Step 11.
10	**INSPECT ION SENSOR NO.4** • Inspect the ion sensor No.4. (See **ION SENSOR INSPECTION [SKYACTIV-G 2.0, SKYACTIV-G 2.5]**.) • Is there any malfunction?	Yes	Replace the ignition coil/ion sensor No.4, then go to the next step. (See **IGNITION COIL/ION SENSOR REMOVAL/INSTALLATION [SKYACTIV-G 2.0, SKYACTIV-G 2.5]**.)
		No	Go to the next step.
11	**VERIFY DTC TROUBLESHOOTING COMPLETED** • Always reconnect all disconnected	Yes	Repeat the inspection from Step 1. • If the malfunction recurs, replace the PCM.

	connectors. • Clear the DTC from the PCM memory using the M-MDS. (See **AFTER REPAIR PROCEDURE [SKYACTIV-G 2.0, SKYACTIV-G 2.5]**.) • Perform the KOER self test. (See **KOEO/KOER SELF TEST [SKYACTIV-G 2.0, SKYACTIV-G 2.5]**.) • Is the same DTC present?		(See **PCM REMOVAL/INSTALLATION [SKYACTIV-G 2.0, SKYACTIV-G 2.5]**.) Go to the next step.
		No	Go to the next step.
12	**VERIFY AFTER REPAIR PROCEDURE** • Perform the “AFTER REPAIR PROCEDURE”. (See **AFTER REPAIR PROCEDURE [SKYACTIV-G 2.0, SKYACTIV-G 2.5]**.) • Are any DTCs present?	Yes	Go to the applicable DTC inspection. (See **DTC TABLE [SKYACTIV-G 2.0, SKYACTIV-G 2.5]**.)
		No	DTC troubleshooting completed.

2014 - Mazda3 - Engine

DTC P2502:00 [SKYACTIV-G 2.0, SKYACTIV-G 2.5]

NOTE:

- To determine the malfunctioning part, proceed with the diagnostics from "Function Inspection Using M-MDS".

Details On DTCs (Without i-ELOOP)

DESCRIPTION	Generator system: Malfunction in voltage generated by generator	
DETECTION CONDITION	Determination conditions	• The voltage generated by the generator is **17 V or higher** and the battery voltage is **11 V or less** for a continuous specified time.
	Preconditions	• While engine is running
	Malfunction determination period	• **5 s** period
	Drive cycle	• 1
	Self test type	• CMDTC self test
	Sensor used	• PCM • Generator
FAIL-SAFE FUNCTION	• Generator control is inhibited.	

VEHICLE STATUS WHEN DTCs ARE OUTPUT	• A warning message is displayed on the center display. (Type A instrument cluster)
	• Illuminates charging system warning light. (Type B or type C instrument cluster)
	• If the vehicle continues to be driven while the DTC is detected the battery will be depleted.
	  ▪ A malfunction occurs with an electrical device and the vehicle stops.
	• The following vehicle conditions differ depending on the type of malfunction:
	  ▪ Vehicle shock may occur due to generator load.
	  ▪ Idling feel due to generator-stop may occur.	

POSSIBLE CAUSE	• Poor connection of the following parts:
	  ▪ Battery
	  ▪ Generator
	  ▪ PCM
	• Connector or terminal malfunction of the following parts:
	  ▪ Battery
	  ▪ Generator
	  ▪ PCM
	• Short to ground or open circuit in generator charge/discharge circuit	

	▪ Short to ground in wiring harness between battery positive terminal and generator terminal 1A ▪ STARTER 250 A fuse malfunction ▪ Open circuit in wiring harness between battery positive terminal and generator terminal 1A • Generator malfunction • Battery malfunction • PCM malfunction

System Wiring Diagram (Without i-ELOOP)

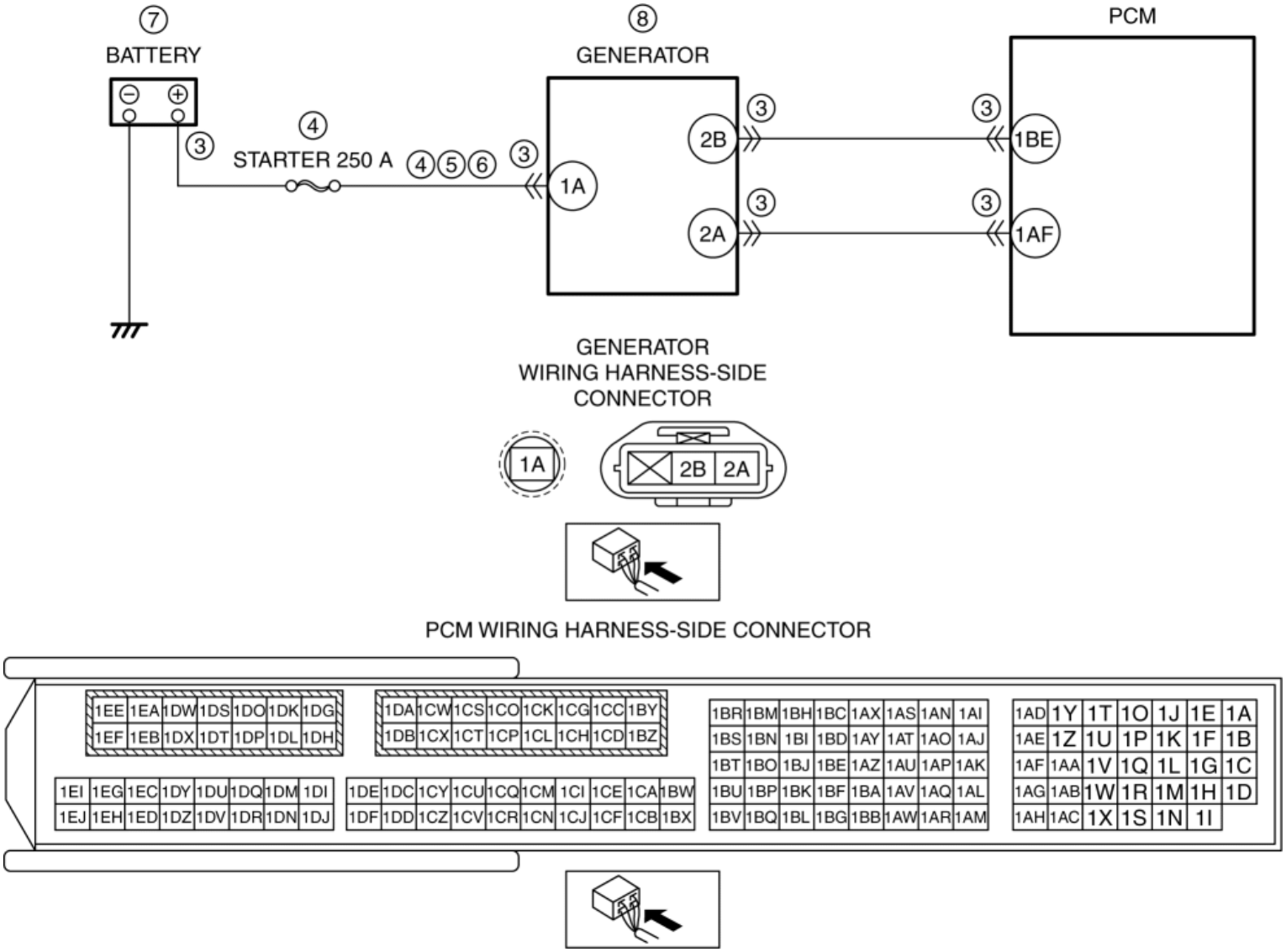

Function Explanation (DTC Detection Outline) (Without i-ELOOP)

- When the charge/discharge circuit for the power supplying the vehicle is normal, the vehicle will operate normally. In this diagnostic, a low vehicle supply voltage is detected even though the generator is generating power, a malfunction in the charge/discharge circuit is detected, and verification of vehicle malfunctions/safety assurance is performed.

Repeatability Verification Procedure (Without i-ELOOP)

- Clear the DTC from the PCM memory using the M-MDS. (See **CLEARING DTC [SKYACTIV-G 2.0, SKYACTIV-G 2.5]**.)
- Start the engine.
- Leave for **180 s** while idling with no electrical load.
- Leave for **30 s** while idling with high electrical load.

PID Item/Simulation Item Used In Diagnosis (Without i-ELOOP)

- Not applicable

Troubleshooting Diagnostic Procedure (Without i-ELOOP)

Intention of troubleshooting procedure

- Step 1—6
  - Perform an inspection of each signal transmission system.
- Step 7
  - Perform the inspection of the part supplied power to the generator.
- Step 8
  - Perform a unit inspection of the generator.
- Step 9—10
  - Verify that the primary malfunction is resolved and there are no other malfunctions.

STEP	INSPECTION	RESULTS	ACTION
1	**PURPOSE: VERIFY RELATED REPAIR INFORMATION AVAILABILITY** • Verify related Service Bulletins and/or on-line repair information availability. • Is any related repair information available?	Yes	Perform repair or diagnosis according to the available repair information. • If the vehicle is not repaired, go to the next step.
		No	Go to the next step.
2	**PURPOSE: VERIFY IF POOR CONNECTION OF EACH PART AFFECTS DIAGNOSTIC RESULTS** • Switch the ignition off. • Inspect the connection condition (part installation condition, connector connection condition) for the following parts: ▪ Battery ▪ Generator ▪ PCM • Is the connection condition (part installation condition, connector connection condition) for each part normal?	Yes	Go to the next step.
		No	Connect each part or the connector correctly, then go to Step 9.
3	**PURPOSE: VERIFY IF CONNECTOR DAMAGE OF EACH PART AFFECTS DIAGNOSTIC RESULTS** • Disconnect the connector of the following parts. ▪ Battery ▪ Generator	Yes	Repair or replace the connector and/or terminals, then go to Step 9.
		No	Go to the next step.

	▪ PCM • Inspect for poor connection (such as damaged/pulled-out pins, corrosion). • Is there any malfunction?		
4	**PURPOSE: INSPECT FUSE** • Remove the STARTER 250 A fuse. • Inspect the STARTER 250 A fuse. • Is there any malfunction?	Yes	If the fuse is blown: • Refer to the wiring diagram and verify whether or not there is a common connector between battery positive terminal and generator terminal 1A. **If there is a common connector:** ▪ Determine the malfunctioning part by inspecting the common connector and the terminal for corrosion, damage, or pin disconnection, and the common wiring harness for a short to ground. ▪ Repair or replace the malfunctioning part. **If there is no common connector:** ▪ Repair or replace the wiring harness which has a short to ground. ▪ Replace the malfunctioning fuse. If the fuse is damaged: • Replace the fuse. Go to Step 9.
		No	Reinstall the STARTER 250 A fuse, then go to the next step.
5	**PURPOSE: VERIFY IF SHORT TO GROUND IN GENERATOR CHARGE/DISCHARGE CIRCUIT AFFECTS DIAGNOSTIC RESULTS** • Verify that the battery, generator and PCM connectors are disconnected. • Inspect for continuity between generator terminal 1A (wiring harness-side) and body ground. • Is there continuity?	Yes	Refer to the wiring diagram and verify whether or not there is a common connector between battery positive terminal and generator terminal 1A. **If there is a common connector:** • Determine the malfunctioning part by inspecting the common connector and the terminal for corrosion, damage, or pin disconnection, and the common wiring harness for a short to ground. • Repair or replace the malfunctioning part. **If there is no common connector:** • Repair or replace the wiring harness which has a short to ground. Go to Step 9.
		No	Go to the next step.
6	**PURPOSE: VERIFY IF OPEN CIRCUIT IN GENERATOR CHARGE/DISCHARGE CIRCUIT AFFECTS DIAGNOSTIC RESULTS** • Verify that the battery, generator and PCM connectors are disconnected. • Inspect for continuity between battery positive terminal (wiring harness-side)	Yes	Go to the next step.
		No	Refer to the wiring diagram and verify whether or not there is a common connector between battery positive terminal and generator terminal 1A. **If there is a common connector:**

	and generator terminal 1A (wiring harness-side). • Is there continuity?		• Determine the malfunctioning part by inspecting the common connector and the terminal for corrosion, damage, or pin disconnection, and the common wiring harness for an open circuit. • Repair or replace the malfunctioning part. **If there is no common connector:** • Repair or replace the wiring harness which has an open circuit. Go to Step 9.
7	**PURPOSE: VERIFY IF DIAGNOSTIC RESULTS ARE AFFECTED BY INSUFFICIENT EXCITATION CURRENT TO GENERATOR DUE TO POWER SUPPLY PART MALFUNCTION** • Inspect the battery. (See **BATTERY INSPECTION [SKYACTIV-G 2.0, SKYACTIV-G 2.5]**.) • Is there any malfunction?	Yes	Replace the battery, then go to Step 9. (See **BATTERY REMOVAL/INSTALLATION [SKYACTIV-G 2.0, SKYACTIV-G 2.5]**.)
		No	Go to the next step.
8	**PURPOSE: DETERMINE INTEGRITY OF GENERATOR** • Inspect the generator. (See **GENERATOR INSPECTION [SKYACTIV-G 2.0, SKYACTIV-G 2.5 (WITHOUT i-ELOOP)]**.) • Is there any malfunction?	Yes	Replace the generator, then go to the next step. (See **GENERATOR REMOVAL/INSTALLATION [SKYACTIV-G 2.0, SKYACTIV-G 2.5 (WITHOUT i-ELOOP)]**.)
		No	Go to the next step.
9	**PURPOSE: VERIFICATION OF VEHICLE REPAIR COMPLETION** • Always reconnect all disconnected connectors. • Clear the DTC from the PCM memory using the M-MDS. (See **CLEARING DTC [SKYACTIV-G 2.0, SKYACTIV-G 2.5]**.) • Implement the repeatability verification procedure. (See **Repeatability Verification Procedure (Without i-ELOOP)**.) • Perform the DTC Reading Procedure. (See **ON-BOARD DIAGNOSTIC TEST [SKYACTIV-G 2.0, SKYACTIV-G 2.5]**.) • Is the same DTC present?	Yes	Repeat the inspection from Step 1. • If the malfunction recurs, replace the PCM. (See **PCM REMOVAL/INSTALLATION [SKYACTIV-G 2.0, SKYACTIV-G 2.5]**.) Go to the next step.
		No	Go to the next step.
10	**PURPOSE: VERIFY IF THERE IS ANY OTHER MALFUNCTION** • Is any other DTC or pending code stored?	Yes	Go to the applicable DTC inspection. (See **DTC TABLE [SKYACTIV-G 2.0, SKYACTIV-G 2.5]**.)
		No	DTC troubleshooting completed.

Details On DTCs (With i-ELOOP)

DESCRIPTION	Generator system: Malfunction in voltage generated by generator	

DETECTION CONDITION	Determination conditions	• Any one of the following conditions is met: ▪ Battery voltage is **11 V or less** and condition in which current sensor detects battery charging for specified period continues ▪ Pre-charge mode is implemented and pre-charge mode is not completed even though specified period has elapsed.
	Preconditions	• All of the following conditions are met: ▪ While engine is running ▪ CAN communication condition related to current sensor is normal ▪ Pre-charge mode is not operating ▪ Bypass mode is not operating
	Malfunction determination period	• Pre-charge mode condition: **3 min** • Other condition: **5 s**
	Drive cycle	• 1
	Self test type	• CMDTC self test
	Sensor used	• Current sensor • Front body control module (FBCM) • PCM • Generator • DC-DC converter
FAIL-SAFE FUNCTION	• Generator control is inhibited.	
VEHICLE STATUS WHEN DTCs ARE OUTPUT	• A warning message is displayed on the center display. (Type A instrument cluster) • Illuminates charging system warning light. (Type B or type C instrument cluster) • If the vehicle continues to be driven while the DTC is detected the battery will be depleted. ▪ A malfunction occurs with an electrical device and the vehicle stops. • The following vehicle conditions differ depending on the type of malfunction: ▪ Vehicle shock may occur due to generator load. ▪ Idling feel due to generator-stop may occur.	
	• Poor connection of the following parts: ▪ Battery ▪ Generator ▪ PCM ▪ Capacitor (i-ELOOP) ▪ DC-DC converter • Connector or terminal malfunction of the following parts: ▪ Battery ▪ Generator ▪ PCM ▪ Capacitor (i-ELOOP)	

POSSIBLE CAUSE	▪ DC-DC converter • STARTER 250 A fuse malfunction • Short to ground in wiring harness between the following terminals: ▪ DC-DC converter terminal 4A—Battery positive terminal ▪ DC-DC converter terminal 3A—Capacitor (i-ELOOP) terminal 3A ▪ DC-DC converter terminal 1I—PCM terminal 2L ▪ Capacitor (i-ELOOP) terminal 2A—Generator terminal 1A • Open circuit in wiring harness between the following terminals: ▪ DC-DC converter terminal 4A—Battery positive terminal ▪ DC-DC converter terminal 3A—Capacitor (i-ELOOP) terminal 3A ▪ DC-DC converter terminal 1I—PCM terminal 2L ▪ Capacitor (i-ELOOP) terminal 2A—Generator terminal 1A • Capacitor (i-ELOOP) malfunction • Generator malfunction • Current sensor malfunction • Front body control module (FBCM) malfunction • DC-DC converter malfunction • PCM malfunction

System Wiring Diagram (With i-ELOOP)

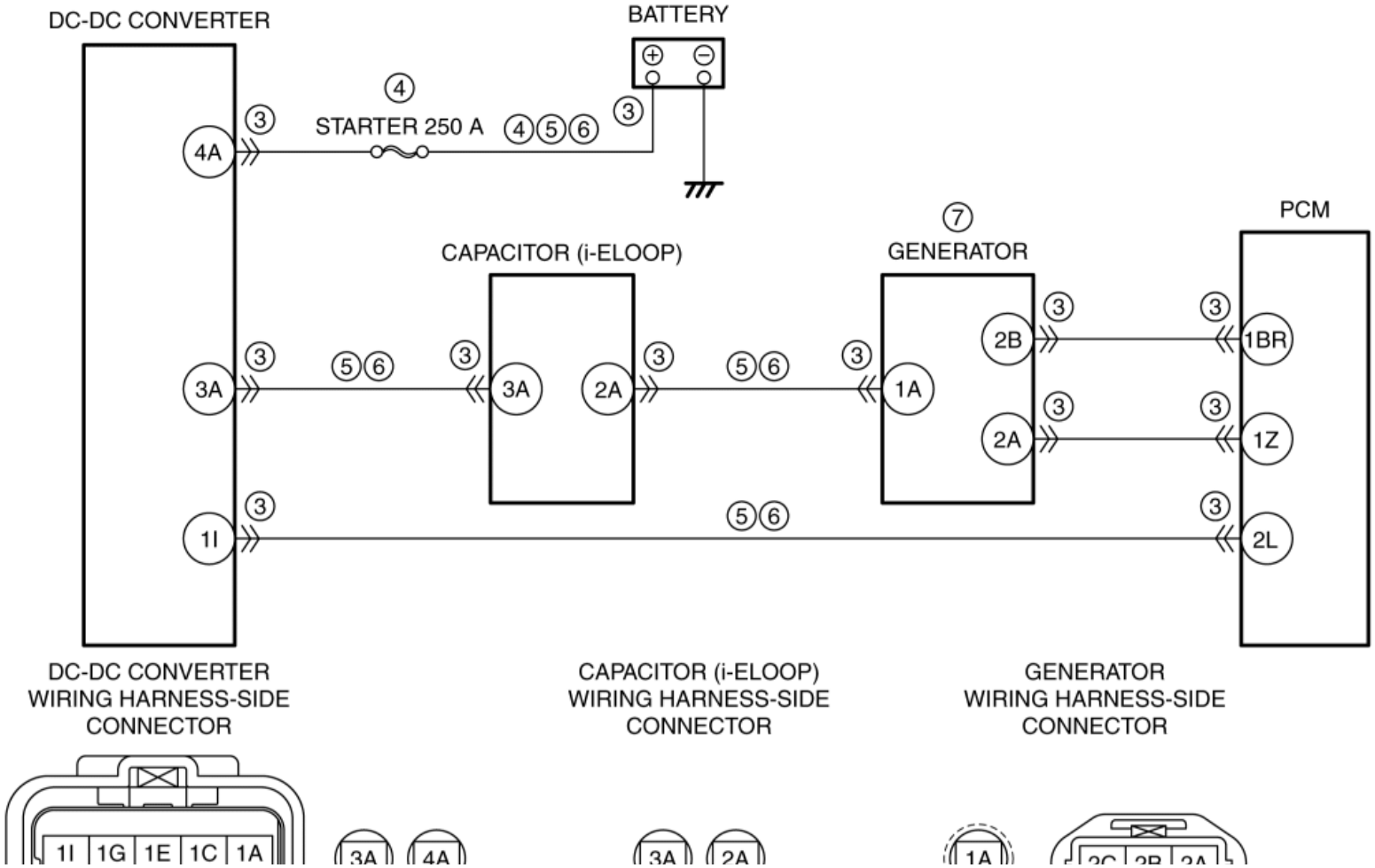

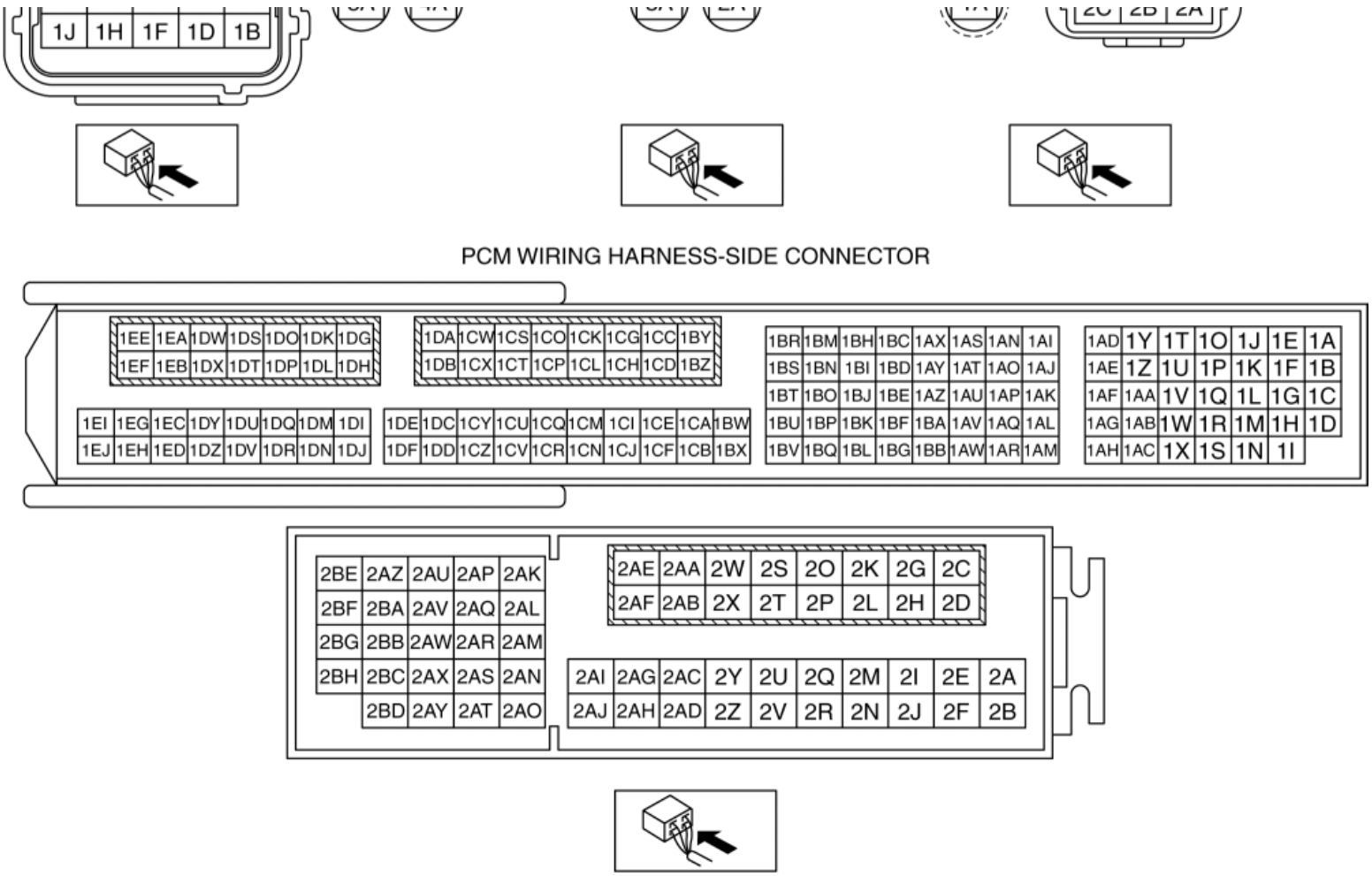

Function Explanation (DTC Detection Outline) (With i-ELOOP)

- When the charge/discharge circuit for the power supplying the vehicle is normal, the vehicle will operate normally. In this diagnostic, a low vehicle supply voltage is detected even though the generator is generating power, a malfunction in the charge/discharge circuit is detected, and verification of vehicle malfunctions/safety assurance is performed.

Repeatability Verification Procedure (With i-ELOOP)

- Clear the DTC from the PCM memory using the M-MDS. (See **CLEARING DTC [SKYACTIV-G 2.0, SKYACTIV-G 2.5]**.)
- Start the engine.
- Leave for **180 s** while idling with no electrical load.
- Leave for **30 s** while idling with high electrical load.

PID Item/Simulation Item Used In Diagnosis (With i-ELOOP)

- Not applicable

Function Inspection Using M-MDS (With i-ELOOP)

STEP	INSPECTION	RESULTS	ACTION
1	**PURPOSE: VERIFY RELATED REPAIR INFORMATION AVAILABILITY**	Yes	Perform repair or diagnosis according to the

	• Verify related Service Bulletins and/or on-line repair information availability. • Is any related repair information available?		available repair information. • If the vehicle is not repaired, go to the next step.
		No	Go to the next step.
2	**PURPOSE: VERIFY THE PRE-CHARGE MODE CONDITION AND DETERMINE THE MALFUNCTION LOCATION** • Start the engine. • Is “i-ELOOP charging Please don’t Drive This will take less than 3 min” displayed in the LCD?	Yes	Go to the next step.
		No	Go to the troubleshooting procedure to perform the procedure from Step 1.
3	**PURPOSE: VERIFY IF GENERATOR VOLTAGE IS FALSELY RECOGNIZED BY DTC RELATED CURRENT SENSOR** • Perform the Pending Trouble Code Access Procedure and DTC Reading Procedure. (See **ON-BOARD DIAGNOSTIC TEST [SKYACTIV-G 2.0, SKYACTIV-G 2.5]**.) • Is the PENDING CODE/DTC P058A:00 also present?	Yes	Repair or replace the malfunctioning part according to the applicable DTC troubleshooting. (See **DTC P058A:00 [SKYACTIV-G 2.0, SKYACTIV-G 2.5]**.) Go to the next step.
		No	Go to the next step.
4	**PURPOSE: VERIFY DTC** • Retrieve the PCM DTCs using the M-MDS. (See **ON-BOARD DIAGNOSTIC TEST [SKYACTIV-G 2.0, SKYACTIV-G 2.5]**.) • Are any DTCs present?	Yes	Go to the applicable DTC inspection. (See **DTC TABLE [SKYACTIV-G 2.0, SKYACTIV-G 2.5]**.) Go to the troubleshooting procedure to perform the procedure from Step 1.
		No	Go to the troubleshooting procedure to perform the procedure from Step 1.

Troubleshooting Diagnostic Procedure (With i-ELOOP)

Intention of troubleshooting procedure

- Step 1
  - Perform inspection of generator voltage.
- Step 2—6
  - Perform inspection of each signal transmission system.
- Step 7
  - Perform a unit inspection of the generator.
- Step 8—10
  - Verify that primary malfunction is resolved and there are no other malfunctions.

STEP	INSPECTION	RESULTS	ACTION
1	**PURPOSE: DETERMINE THE MALFUNCTION CAUSE BY VERIFYING THE OUTPUT VOLTAGE OF GENERATOR TERMINAL 1A.** • Start the engine. • Measure the voltage at the generator terminal 1A (wiring harness-side). • Is the voltage **approx. 0 V**?	Yes	Perform the troubleshooting procedure for DTC P2503:00. (See **DTC P2503:00 [SKYACTIV-G 2.0, SKYACTIV-G 2.5]**.) Go to the next step.
		No	Go to the next step.
	PURPOSE: VERIFY IF POOR CONNECTION		

2	**OF EACH PART AFFECTS DIAGNOSTIC RESULTS** • Switch the ignition off. • Remove the service plug. (See **SERVICE PLUG DISCONNECTION/CONNECTION [i-ELOOP]**.) • Inspect the connection condition (part installation condition, connector connection condition) for the following parts: ▪ Battery ▪ Generator ▪ PCM ▪ Capacitor (i-ELOOP) ▪ DC-DC converter • Is the connection condition (part installation condition, connector connection condition) for each part normal?	Yes	Go to the next step.
		No	Connect each part or the connector correctly, then go to Step 9.
3	**PURPOSE: VERIFY IF CONNECTOR DAMAGE OF EACH PART AFFECTS DIAGNOSTIC RESULTS** • Disconnect the connector of the following parts. ▪ Battery ▪ Generator ▪ PCM ▪ Capacitor (i-ELOOP) ▪ DC-DC converter • Inspect for poor connection (such as damaged/pulled-out pins, corrosion). • Is there any malfunction?	Yes	Repair or replace the connector and/or terminals, then go to Step 9.
		No	Go to the next step.
4	**PURPOSE: INSPECT FUSE** • Remove the STARTER 250 A fuse. • Inspect the STARTER 250 A fuse. • Is there any malfunction?	Yes	If the fuse is blown: • Refer to the wiring diagram and verify whether or not there is a common connector between DC-DC converter terminal 4A and battery positive terminal. **If there is a common connector:** ▪ Determine the malfunctioning part by inspecting the common connector and the terminal for corrosion, damage, or pin disconnection, and the common wiring harness for a short to ground. ▪ Repair or replace the malfunctioning part. **If there is no common connector:** ▪ Repair or replace the wiring harness which has a short to ground.

			▪ Replace the malfunctioning fuse. If the fuse is damaged: • Replace the fuse. Go to Step 9.
		No	Reinstall the STARTER 250 A fuse, then go to the next step.
5	**PURPOSE: VERIFY IF SHORT TO GROUND IN EACH WIRING HARNESS AFFECTS DIAGNOSTIC RESULTS** • Verify that the battery, generator, PCM, capacitor (i-ELOOP), and DC-DC converter connectors are disconnected. • Inspect for continuity between the following terminals (wiring harness-side) and body ground: ▪ DC-DC converter terminal 4A ▪ DC-DC converter terminal 3A ▪ DC-DC converter terminal 1I ▪ Generator terminal 1A • Is there continuity?	Yes	Refer to the wiring diagram and verify whether or not there is a common connector between the following terminals: • DC-DC converter terminal 4A—Battery positive terminal • DC-DC converter terminal 3A—Capacitor (i-ELOOP) terminal 3A • DC-DC converter terminal 1I—PCM terminal 2L • Capacitor (i-ELOOP) terminal 2A—Generator terminal 1A **If there is a common connector:** • Determine the malfunctioning part by inspecting the common connector and the terminal for corrosion, damage, or pin disconnection, and the common wiring harness for a short to ground. • Repair or replace the malfunctioning part. **If there is no common connector:** • Repair or replace the wiring harness which has a short to ground. Go to Step 9.
		No	Go to the next step.
6	**PURPOSE: VERIFY IF OPEN CIRCUIT IN EACH WIRING HARNESS AFFECTS DIAGNOSTIC RESULTS** • Verify that the battery, generator, PCM, capacitor (i-ELOOP), and DC-DC converter connectors are disconnected. • Inspect for continuity between the following terminals (wiring harness-side): ▪ DC-DC converter terminal 4A—Battery positive terminal ▪ DC-DC converter terminal 3A—Capacitor (i-ELOOP) terminal 3A ▪ DC-DC converter terminal 1I—PCM terminal 2L ▪ Capacitor (i-ELOOP) terminal 2A—Generator	Yes	Go to the next step.
		No	Refer to the wiring diagram and verify whether or not there is a common connector between the following terminals: • DC-DC converter terminal 4A—Battery positive terminal • DC-DC converter terminal 3A—Capacitor (i-ELOOP) terminal 3A • DC-DC converter terminal 1I—PCM terminal 2L • Capacitor (i-ELOOP) terminal 2A—Generator terminal 1A **If there is a common connector:** • Determine the malfunctioning part by inspecting the common connector and the terminal for corrosion, damage, or pin disconnection, and the common wiring harness for an open circuit. • Repair or replace the malfunctioning part. **If there is no common connector:** • Repair or replace the wiring harness which has an open circuit. Go to Step 9.

	terminal 1A • Is there continuity?		
7	**PURPOSE: DETERMINE INTEGRITY OF GENERATOR** • Inspect the generator. (See **GENERATOR INSPECTION [SKYACTIV-G 2.0, SKYACTIV-G 2.5 (WITH i-ELOOP)]**.) • Is there any malfunction?	Yes	Replace the generator, then go to the next step. (See **GENERATOR REMOVAL/INSTALLATION [SKYACTIV-G 2.0, SKYACTIV-G 2.5 (WITH i-ELOOP)]**.)
		No	Go to the next step.
8	**PURPOSE: VERIFY CONDITIONS OF BATTERY** • Inspect the battery. (See **BATTERY INSPECTION [SKYACTIV-G 2.0, SKYACTIV-G 2.5]**.)	—	Follow the inspection instructions, then go to the next step.
9	**PURPOSE: VERIFICATION OF VEHICLE REPAIR COMPLETION** • Always reconnect all disconnected connectors. • Reinstall the service plug. (See **SERVICE PLUG DISCONNECTION/CONNECTION [i-ELOOP]**.) • Clear the DTC from the PCM memory using the M-MDS. (See **CLEARING DTC [SKYACTIV-G 2.0, SKYACTIV-G 2.5]**.) • Implement the repeatability verification procedure. (See **Repeatability Verification Procedure (With i-ELOOP)**.) • Perform the DTC Reading Procedure. (See **ON-BOARD DIAGNOSTIC TEST [SKYACTIV-G 2.0, SKYACTIV-G 2.5]**.) • Is the same DTC present?	Yes	Repeat the inspection from Step 1. • If the malfunction recurs, replace the PCM. (See **PCM REMOVAL/INSTALLATION [SKYACTIV-G 2.0, SKYACTIV-G 2.5]**.) Go to the next step.
		No	Go to the next step.
10	**PURPOSE: VERIFY IF THERE IS ANY OTHER MALFUNCTION** • Is any other DTC or pending code stored?	Yes	Go to the applicable DTC inspection. (See **DTC TABLE [SKYACTIV-G 2.0, SKYACTIV-G 2.5]**.)
		No	DTC troubleshooting completed.

2014 - Mazda3 - Engine

DTC P2503:00 [SKYACTIV-G 2.0, SKYACTIV-G 2.5]

NOTE:

- To determine the malfunctioning part, proceed with the diagnostics from "Function Inspection Using M-MDS".

Details On DTCs (Without i-ELOOP)

DESCRIPTION	Generator system: Voltage generated by generator is low	
DETECTION CONDITION	Determination conditions	• A condition continues for a specified period of time in which the target generator output current calculated by the PCM is **20 A or more** and the generator output voltage is **8.5 V or less**.
	Preconditions	• While engine is running
	Malfunction determination period	• **5 s** period
	Drive cycle	• 1
	Self test type	• CMDTC self test
	Sensor used	• PCM • Generator
FAIL-SAFE FUNCTION	• Generator control is inhibited.	
VEHICLE STATUS WHEN DTCs ARE OUTPUT	• A warning message is displayed on the center display. (Type A instrument cluster) • Illuminates charging system warning light. (Type B or type C instrument cluster) • The following vehicle conditions differ depending on the type of malfunction: ▪ Vehicle shock may occur due to generator load. ▪ Idling feel due to generator-stop may occur.	
	• Poor connection of the following parts: ▪ Battery ▪ Generator ▪ PCM • Connector or terminal malfunction of the following parts: ▪ Battery ▪ Generator ▪ PCM	

POSSIBLE CAUSE	STARTER 250 A fuse malfunction
	• Short to ground or open circuit in generator charge/discharge circuit
	  ▪ Short to ground in wiring harness between battery positive terminal and generator terminal 1A
	  ▪ STARTER 250 A fuse malfunction
	  ▪ Open circuit in wiring harness between battery positive terminal and generator terminal 1A
	• Drive belt exceeds limit
	• Battery malfunction
	• Generator malfunction
	• PCM malfunction

System Wiring Diagram (Without i-ELOOP)

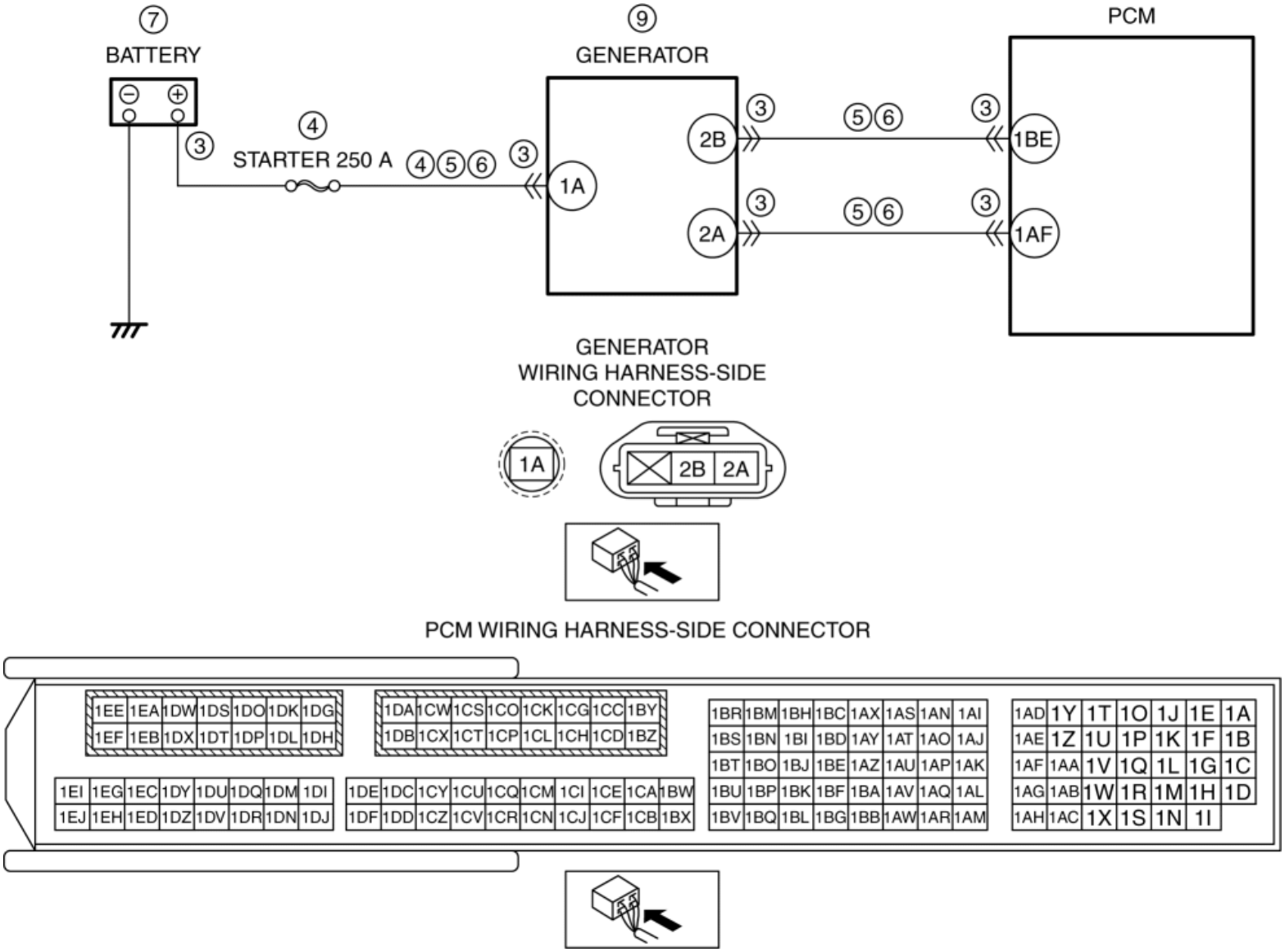

Function Explanation (DTC Detection Outline) (Without i-ELOOP)

- Although a power generation command is made to the generator, a malfunction is diagnosed indicating no output from

the generator, and verification of vehicle malfunctions/safety assurance is performed.

Repeatability Verification Procedure (Without i-ELOOP)

- Clear the DTC from the PCM memory using the M-MDS. (See **CLEARING DTC [SKYACTIV-G 2.0, SKYACTIV-G 2.5]**.)
- Start the engine.
- Leave for **30 s** while idling with high electrical load.

PID Item/Simulation Item Used In Diagnosis (Without i-ELOOP)

- Not applicable

Troubleshooting Diagnostic Procedure (Without i-ELOOP)

Intention of troubleshooting procedure

- Step 1—6
  - Perform an inspection of each signal transmission system.
- Step 7
  - Perform the inspection of the part supplied power to the generator.
- Step 8
  - Perform a generator drive belt related inspection.
- Step 9
  - Perform a unit inspection of the generator.
- Step 10—11
  - Verify that the primary malfunction is resolved and there are no other malfunctions.

STEP	INSPECTION	RESULTS	ACTION
1	**PURPOSE: VERIFY RELATED REPAIR INFORMATION AVAILABILITY** • Verify related Service Bulletins and/or on-line repair information availability. • Is any related repair information available?	Yes	Perform repair or diagnosis according to the available repair information. • If the vehicle is not repaired, go to the next step.
		No	Go to the next step.
2	**PURPOSE: VERIFY IF POOR CONNECTION OF EACH PART AFFECTS DIAGNOSTIC RESULTS** • Switch the ignition off. • Inspect the connection condition (part installation condition, connector connection condition) for the following parts: ▪ Battery ▪ Generator ▪ PCM • Is the connection condition (part installation condition, connector connection condition) for each part	Yes	Go to the next step.
		No	Connect each part or the connector correctly, then go to Step 10.

	normal?		
3	**PURPOSE: VERIFY IF CONNECTOR DAMAGE OF EACH PART AFFECTS DIAGNOSTIC RESULTS** • Disconnect the connector of the following parts. ▪ Battery ▪ Generator ▪ PCM • Inspect for poor connection (such as damaged/pulled-out pins, corrosion). • Is there any malfunction?	Yes	Repair or replace the connector and/or terminals, then go to Step 10.
		No	Go to the next step.
4	**PURPOSE: INSPECT FUSE** • Remove the STARTER 250 A fuse. • Inspect the STARTER 250 A fuse. • Is there any malfunction?	Yes	If the fuse is blown: • Refer to the wiring diagram and verify whether or not there is a common connector between battery positive terminal and generator terminal 1A. **If there is a common connector:** ▪ Determine the malfunctioning part by inspecting the common connector and the terminal for corrosion, damage, or pin disconnection, and the common wiring harness for a short to ground. ▪ Repair or replace the malfunctioning part. **If there is no common connector:** ▪ Repair or replace the wiring harness which has a short to ground. ▪ Replace the malfunctioning fuse. If the fuse is damaged: • Replace the fuse. Go to Step 10.
		No	Reinstall the STARTER 250 A fuse, then go to the next step.
5	**PURPOSE: VERIFY IF SHORT TO GROUND IN GENERATOR CHARGE/DISCHARGE CIRCUIT AFFECTS DIAGNOSTIC RESULTS** • Verify that the battery, generator and PCM connectors are disconnected. • Inspect for continuity between generator terminal 1A (wiring harness-side) and body ground. • Is there continuity?	Yes	Refer to the wiring diagram and verify whether or not there is a common connector between battery positive terminal and generator terminal 1A. **If there is a common connector:** • Determine the malfunctioning part by inspecting the common connector and the terminal for corrosion, damage, or pin disconnection, and the common wiring harness for a short to ground. • Repair or replace the malfunctioning part. **If there is no common connector:** • Repair or replace the wiring harness which has

			a short to ground. Go to Step 10.
		No	Go to the next step.
6	**PURPOSE: VERIFY IF OPEN CIRCUIT IN GENERATOR CHARGE/DISCHARGE CIRCUIT AFFECTS DIAGNOSTIC RESULTS** • Verify that the battery, generator and PCM connectors are disconnected. • Inspect for continuity between battery positive terminal (wiring harness-side) and generator terminal 1A (wiring harness-side). • Is there continuity?	Yes	Go to the next step.
		No	Refer to the wiring diagram and verify whether or not there is a common connector between battery positive terminal and generator terminal 1A. **If there is a common connector:** • Determine the malfunctioning part by inspecting the common connector and the terminal for corrosion, damage, or pin disconnection, and the common wiring harness for an open circuit. • Repair or replace the malfunctioning part. **If there is no common connector:** • Repair or replace the wiring harness which has an open circuit. Go to Step 10.
7	**PURPOSE: VERIFY IF DIAGNOSTIC RESULTS ARE AFFECTED BY INSUFFICIENT EXCITATION CURRENT TO GENERATOR DUE TO POWER SUPPLY PART MALFUNCTION** • Inspect the battery. (See **BATTERY INSPECTION [SKYACTIV-G 2.0, SKYACTIV-G 2.5]**.) • Is there any malfunction?	Yes	Replace the battery, then go to Step 10. (See **BATTERY REMOVAL/INSTALLATION [SKYACTIV-G 2.0, SKYACTIV-G 2.5]**.)
		No	Go to the next step.
8	**PURPOSE: VERIFY IF MALFUNCTION RELATED TO GENERATOR DRIVE BELT AFFECTS DIAGNOSTIC RESULTS** • Inspect the generator drive belt. (See **DRIVE BELT INSPECTION [SKYACTIV-G 2.0, SKYACTIV-G 2.5]**.) • Is the indicator mark on the drive belt auto tensioner within the normal range?	Yes	Go to the next step.
		No	Replace the generator drive belt, then go to Step 10. (See **DRIVE BELT REMOVAL/INSTALLATION [SKYACTIV-G 2.0, SKYACTIV-G 2.5]**.)
9	**PURPOSE: DETERMINE INTEGRITY OF GENERATOR** • Inspect the generator. (See **GENERATOR INSPECTION [SKYACTIV-G 2.0, SKYACTIV-G 2.5 (WITHOUT i-ELOOP)]**.) • Is there any malfunction?	Yes	Replace the generator, then go to the next step. (See **GENERATOR REMOVAL/INSTALLATION [SKYACTIV-G 2.0, SKYACTIV-G 2.5 (WITHOUT i-ELOOP)]**.)
		No	Go to the next step.
10	**PURPOSE: VERIFICATION OF VEHICLE REPAIR COMPLETION** • Always reconnect all disconnected connectors. • Clear the DTC from the PCM memory using the M-MDS. (See **CLEARING DTC [SKYACTIV-G 2.0, SKYACTIV-G 2.5]**.) • Implement the repeatability verification	Yes	Repeat the inspection from Step 1. • If the malfunction recurs, replace the PCM. (See **PCM REMOVAL/INSTALLATION [SKYACTIV-G 2.0, SKYACTIV-G 2.5]**.) Go to the next step.
		No	Go to the next step.

	procedure. (See **Repeatability Verification Procedure (Without i-ELOOP)**.) • Perform the DTC Reading Procedure. (See **ON-BOARD DIAGNOSTIC TEST [SKYACTIV-G 2.0, SKYACTIV-G 2.5]**.) • Is the same DTC present?		
11	**PURPOSE: VERIFY IF THERE IS ANY OTHER MALFUNCTION** • Is any other DTC or pending code stored?	Yes	Go to the applicable DTC inspection. (See **DTC TABLE [SKYACTIV-G 2.0, SKYACTIV-G 2.5]**.)
		No	DTC troubleshooting completed.

Details On DTCs (With i-ELOOP)

DESCRIPTION	Generator system: Voltage generated by generator is low	
DETECTION CONDITION	Determination conditions	• Any one of the following conditions is met: ▪ Field current demand output to generator is normal range and condition in which field current returned from generator is in non-power generation range continues for specified period ▪ Condition in which malfunction status signal from generator is in returned condition continues for specified period
	Preconditions	• All of the following conditions are met: ▪ While engine is running ▪ Three min have elapsed since pre-charge mode starts ▪ Generator switches to default mode (**14.5 V** constant voltage power generation)
	Malfunction determination period	• **5 s** period
	Drive cycle	• 1
	Self test type	• CMDTC self test
	Sensor used	• PCM • Generator
FAIL-SAFE FUNCTION	• Generator control is inhibited.	
VEHICLE STATUS WHEN DTCs ARE OUTPUT	• A warning message is displayed on the center display. (Type A instrument cluster) • Illuminates charging system warning light. (Type B or type C instrument cluster) • The following vehicle conditions differ depending on the type of malfunction ▪ A vehicle shock may occur due to generator load ▪ Idling feel due to generator-stop may occur.	

	▪ i-ELOOP pre-charge mode operates.
POSSIBLE CAUSE	• Poor connection of the following parts: ▪ Generator ▪ PCM ▪ Capacitor (i-ELOOP) • Connector or terminal malfunction of the following parts: ▪ Generator ▪ PCM ▪ Capacitor (i-ELOOP) • MAIN 200 A fuse malfunction • C/U IG1 15 A fuse malfunction • Short to ground in wiring harness between the following terminals: ▪ Battery positive terminal—IG1 relay terminal D ▪ IG1 relay terminal C—Generator terminal 2C ▪ Capacitor (i-ELOOP) terminal 2A—Generator terminal 1A ▪ Generator terminal 2B—PCM terminal 1BR ▪ Generator terminal 2A—PCM terminal 1Z • Open circuit in wiring harness between the following terminals: ▪ Battery positive terminal—IG1 relay terminal D ▪ IG1 relay terminal C—Generator terminal 2C ▪ Capacitor (i-ELOOP) terminal 2A—Generator terminal 1A ▪ Generator terminal 2B—PCM terminal 1BR ▪ Generator terminal 2A—PCM terminal 1Z • Drive belt exceeds limit • Generator malfunction • PCM malfunction

System Wiring Diagram (With i-ELOOP)

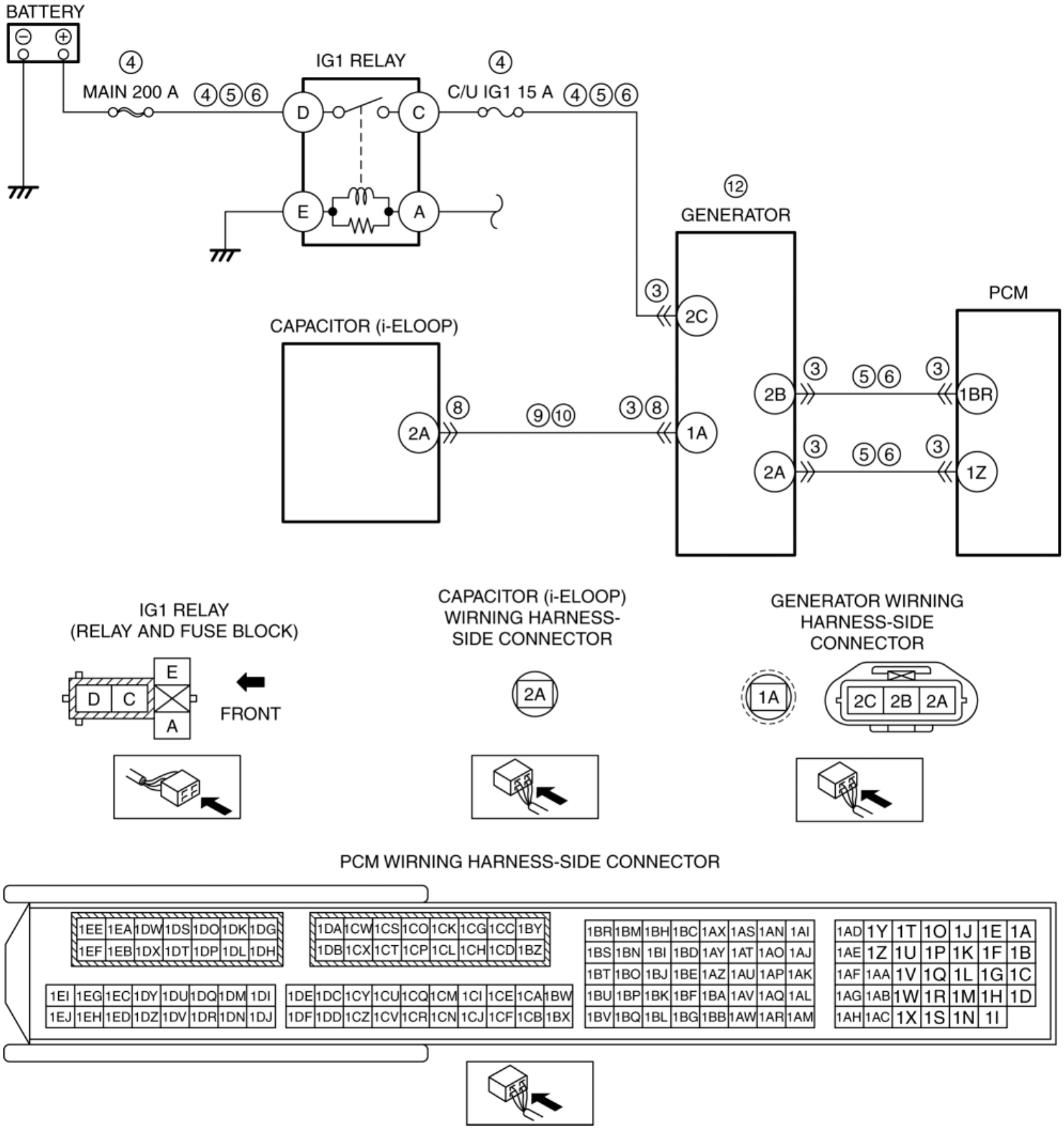

Function Explanation (DTC Detection Outline) (With i-ELOOP)

- The PCM determines that a malfunction occurred based on the condition in which a power generation command is made to the generator but there is no output from the generator, or the generator detected an open/short circuit between the PCM and generator or a power generation command signal abnormality, and verification of vehicle malfunctions/safety assurance is performed.

Repeatability Verification Procedure (With i-ELOOP)

- Clear the DTC from the PCM memory using the M-MDS. (See **CLEARING DTC [SKYACTIV-G 2.0, SKYACTIV-G 2.5]**.)
- Start the engine.
- Leave for **30 s** while idling with high electrical load.

PID Item/Simulation Item Used In Diagnosis (With i-ELOOP)

- Not applicable.

Function Inspection Using M-MDS (With i-ELOOP)

STEP	INSPECTION	RESULTS	ACTION
1	**PURPOSE: VERIFY RELATED REPAIR INFORMATION AVAILABILITY** • Verify related Service Bulletins and/or on-line repair information availability. • Is any related repair information available?	Yes	Perform repair or diagnosis according to the available repair information. • If the vehicle is not repaired, go to the next step.
		No	Go to the next step.
2	**PURPOSE: VERIFY THE PRE-CHARGE MODE CONDITION AND DETERMINE THE MALFUNCTION LOCATION** • Start the engine. • Is "i-ELOOP charging Please don't Drive This will take **less than 3 min**" displayed in the LCD?	Yes	Go to the next step.
		No	Go to the troubleshooting procedure to perform the procedure from Step 1.
3	**PURPOSE: VERIFY IF GENERATOR OUTPUT IS AFFECTED BY DTC OCCURRING FROM DC-DC CONVERTER RELATED PART** • Switch the ignition off, then ON (engine off). • Perform the DC-DC converter DTC inspection using the M-MDS. (See **DTC INSPECTION [i-ELOOP]**.) • Are any DTCs present? **NOTE:** • If DTC P1628:11 is stored, perform the on-board diagnostic function first from DTC P1628:11.	Yes	Repair or replace the malfunctioning part according to the applicable DTC troubleshooting. (See **DTC TABLE [i-ELOOP]**.) Go to the next step.
		No	Go to the next step.
4	**PURPOSE: VERIFY DTC** • Retrieve the PCM DTCs using the M-MDS. (See **ON-BOARD DIAGNOSTIC TEST [SKYACTIV-G 2.0, SKYACTIV-G 2.5]**.) • Are any DTCs present?	Yes	Go to the applicable DTC inspection. (See **DTC TABLE [SKYACTIV-G 2.0, SKYACTIV-G 2.5]**.) Go to the troubleshooting procedure to perform the procedure from Step 1.
		No	Go to the troubleshooting procedure to perform the procedure from Step 1.

Troubleshooting Diagnostic Procedure (With i-ELOOP)

Intention of troubleshooting procedure

- Step 1
  - Perform inspection of generator voltage.
- Step 2—10
  - Perform inspection of each signal transmission system.
  - Perform the inspection of the part supplied power to the generator.
- Step 11
  - Perform a generator drive belt related inspection.
- Step 12
  - Perform a unit inspection of the generator.
- Step 13—15
  - Verify that primary malfunction is resolved and there are no other malfunctions.

STEP	INSPECTION	RESULTS	ACTION
1	**PURPOSE: DETERMINE THE MALFUNCTION CAUSE BY VERIFYING THE OUTPUT VOLTAGE OF GENERATOR TERMINAL 1A.** • Start the engine. • Measure the voltage at the generator terminal 1A (wiring harness-side). • Is the voltage **14—15 V**?	Yes	Go to the next step.
		No	If the voltage is **approx. 0 V**: • Go to Step 7. If the voltage is except for **approx. 0 V**: • Go to the next step.

2	**PURPOSE: VERIFY IF POOR CONNECTION OF EACH PART AFFECTS DIAGNOSTIC RESULTS**
	• Switch the ignition off.
	• Remove the service plug.
	(See **SERVICE PLUG DISCONNECTION/CONNECTION [i-ELOOP]**.)
	• Inspect the connection condition (part installation condition, connector connection condition) for the following parts:
	  ▪ Generator
	  ▪ PCM
	• Is the connection condition (part installation condition, connector connection condition) for each part normal?
		Yes	Go to the next step.

		No	Connect each part or the connector correctly, then go to the next step.

3	**PURPOSE: VERIFY IF CONNECTOR DAMAGE OF EACH PART AFFECTS DIAGNOSTIC RESULTS**
	• Disconnect the connector of the following parts.
	  ▪ Generator
	  ▪ PCM
	• Inspect for poor connection (such as damaged/pulled-out pins, corrosion).
		Yes	Repair or replace the connector and/or terminals, then go to the next step.

		No	Go to the next step.

	• Is there any malfunction?		
4	**PURPOSE: INSPECT FUSE** • Remove the following fuses: ▪ MAIN 200 A fuse ▪ C/U IG1 15 A fuse • Inspect the following fuses: ▪ MAIN 200 A fuse ▪ C/U IG1 15 A fuse • Are all the fuses normal?	Yes	If the fuse is blown: • Refer to the wiring diagram and verify whether or not there is a common connector between the following terminals: ▪ Battery positive terminal—IG1 relay terminal D ▪ IG1 relay terminal C—Generator terminal 2C **If there is a common connector:** ▪ Determine the malfunctioning part by inspecting the common connector and the terminal for corrosion, damage, or pin disconnection, and the common wiring harness for a short to ground. ▪ Repair or replace the malfunctioning part. **If there is no common connector:** ▪ Repair or replace the wiring harness which has a short to ground. ▪ Replace the malfunctioning fuse. If the fuse is damaged: • Replace the malfunctioning fuse. Go to the next step.
		No	Install all the removed fuses, then go to the next step.
5	**PURPOSE: VERIFY IF SHORT TO GROUND IN EACH WIRING HARNESS AFFECTS DIAGNOSTIC RESULTS** • Verify that the generator and PCM connectors are disconnected. • Disconnect the battery positive terminal. • Remove the IG1 relay. • Inspect for continuity between the following terminals (wiring harness-side) and body ground: ▪ IG1 relay terminal D ▪ IG1 relay terminal C ▪ Generator terminal 2B ▪ Generator terminal 2A • Is there continuity?	Yes	Refer to the wiring diagram and verify whether or not there is a common connector between the following terminals: • Battery positive terminal—IG1 relay terminal D • IG1 relay terminal C—Generator terminal 2C • Generator terminal 2B—PCM terminal 1BR • Generator terminal 2A—PCM terminal 1Z **If there is a common connector:** • Determine the malfunctioning part by inspecting the common connector and the terminal for corrosion, damage, or pin disconnection, and the common wiring harness for a short to ground. • Repair or replace the malfunctioning part. **If there is no common connector:** • Repair or replace the wiring harness which has a short to ground. Go to the next step.
		No	Go to the next step.
6	**PURPOSE: VERIFY IF OPEN CIRCUIT IN EACH WIRING HARNESS AFFECTS DIAGNOSTIC RESULTS**	Yes	Go to Step 13.

	• Verify that the battery, generator and PCM connectors are disconnected. • IG1 relay is removed. • Inspect for continuity between the following terminals (wiring harness-side): ▪ Battery positive terminal—IG1 relay terminal D ▪ IG1 relay terminal C—Generator terminal 2C ▪ Generator terminal 2B—PCM terminal 1BR ▪ Generator terminal 2A—PCM terminal 1Z • Is there continuity?	No	Refer to the wiring diagram and verify whether or not there is a common connector between the following terminals: • Battery positive terminal—IG1 relay terminal D • IG1 relay terminal C—Generator terminal 2C • Generator terminal 2B—PCM terminal 1BR • Generator terminal 2A—PCM terminal 1Z **If there is a common connector:** • Determine the malfunctioning part by inspecting the common connector and the terminal for corrosion, damage, or pin disconnection, and the common wiring harness for an open circuit. • Repair or replace the malfunctioning part. **If there is no common connector:** • Repair or replace the wiring harness which has an open circuit. Go to Step 11.
7	**PURPOSE: VERIFY IF POOR CONNECTION OF EACH PART AFFECTS DIAGNOSTIC RESULTS** • Switch the ignition off. • Remove the service plug. (See **SERVICE PLUG DISCONNECTION/CONNECTION [i-ELOOP]**.) • Inspect the connection condition (part installation condition, connector connection condition) for the following parts: ▪ Generator terminal 1A ▪ Capacitor (i-ELOOP) • Is the connection condition (part installation condition, connector connection condition) for each part normal?	Yes	Go to the next step.
		No	Connect each part or the connector correctly, then go to the next step.
8	**PURPOSE: VERIFY IF CONNECTOR DAMAGE OF EACH PART AFFECTS DIAGNOSTIC RESULTS** • Disconnect the connector of the following parts. ▪ Generator terminal 1A ▪ Capacitor (i-ELOOP) • Inspect for poor connection (such as damaged/pulled-out pins, corrosion). • Is there any malfunction?	Yes	Repair or replace the connector and/or terminals, then go to the next step.
		No	Go to the next step.
9	**PURPOSE: VERIFY IF SHORT TO GROUND IN GENERATOR CHARGE/DISCHARGE CIRCUIT AFFECTS DIAGNOSTIC RESULTS**	Yes	Refer to the wiring diagram and verify whether or not there is a common connector between capacitor (i-ELOOP) terminal 2A and generator terminal 1A.

	• Verify that the generator terminal 1A and capacitor (i-ELOOP) connectors are disconnected. • Inspect for continuity between generator terminal 1A (wiring harness-side) and body ground. • Is there continuity?		**If there is a common connector:** • Determine the malfunctioning part by inspecting the common connector and the terminal for corrosion, damage, or pin disconnection, and the common wiring harness for a short to ground. • Repair or replace the malfunctioning part. **If there is no common connector:** • Repair or replace the wiring harness which has a short to ground. Go to the next step.
		No	Go to the next step.
10	**PURPOSE: VERIFY IF OPEN CIRCUIT IN GENERATOR CHARGE/DISCHARGE CIRCUIT AFFECTS DIAGNOSTIC RESULTS** • Verify that the generator terminal 1A and capacitor (i-ELOOP) connectors are disconnected. • Inspect for continuity between capacitor (i-ELOOP) terminal 2A (wiring harness-side) and generator terminal 1A (wiring harness-side). • Is there continuity?	Yes	Go to the next step.
		No	Refer to the wiring diagram and verify whether or not there is a common connector between capacitor (i-ELOOP) terminal 2A and generator terminal 1A. **If there is a common connector:** • Determine the malfunctioning part by inspecting the common connector and the terminal for corrosion, damage, or pin disconnection, and the common wiring harness for an open circuit. • Repair or replace the malfunctioning part. **If there is no common connector:** • Repair or replace the wiring harness which has an open circuit. Go to the next step.
11	**PURPOSE: VERIFY IF MALFUNCTION RELATED TO GENERATOR DRIVE BELT AFFECTS DIAGNOSTIC RESULTS** • Inspect the generator drive belt. (See **DRIVE BELT INSPECTION [SKYACTIV-G 2.0, SKYACTIV-G 2.5]**.) • Is the indicator mark on the drive belt auto tensioner within the normal range?	Yes	Go to the next step.
		No	Replace the generator drive belt, then go to the next step. (See **DRIVE BELT REMOVAL/INSTALLATION [SKYACTIV-G 2.0, SKYACTIV-G 2.5]**.)
12	**PURPOSE: DETERMINE INTEGRITY OF GENERATOR** • Inspect the generator. (See **GENERATOR INSPECTION [SKYACTIV-G 2.0, SKYACTIV-G 2.5 (WITH i-ELOOP)]**.) • Is there any malfunction?	Yes	Replace the generator, then go to the next step. (See **GENERATOR REMOVAL/INSTALLATION [SKYACTIV-G 2.0, SKYACTIV-G 2.5 (WITH i-ELOOP)]**.)
		No	Go to the next step.
13	**PURPOSE: VERIFY CONDITIONS OF BATTERY** • Inspect the battery. (See **BATTERY INSPECTION [SKYACTIV-G 2.0, SKYACTIV-G 2.5]**.)	—	Follow the inspection instructions, then go to the next step.
14	**PURPOSE: VERIFICATION OF VEHICLE REPAIR COMPLETION**	Yes	Repeat the inspection from Step 1.

	• Always reconnect all disconnected connectors. • Reinstall the service plug. (See **SERVICE PLUG DISCONNECTION/CONNECTION [i-ELOOP]**.) • Clear the DTC from the PCM memory using the M-MDS. (See **CLEARING DTC [SKYACTIV-G 2.0, SKYACTIV-G 2.5]**.) • Implement the repeatability verification procedure. (See **Repeatability Verification Procedure (With i-ELOOP)**.) • Perform the DTC Reading Procedure. (See **ON-BOARD DIAGNOSTIC TEST [SKYACTIV-G 2.0, SKYACTIV-G 2.5]**.) • Is the same DTC present?		• If the malfunction recurs, replace the PCM. (See **PCM REMOVAL/INSTALLATION [SKYACTIV-G 2.0, SKYACTIV-G 2.5]**.) Go to the next step.
		No	Go to the next step.
15	**PURPOSE: VERIFY IF THERE IS ANY OTHER MALFUNCTION** • Is any other DTC or pending code stored?	Yes	Go to the applicable DTC inspection. (See **DTC TABLE [SKYACTIV-G 2.0, SKYACTIV-G 2.5]**.)
		No	DTC troubleshooting completed.

2014 - Mazda3 - Engine

DTC P2504:00 [SKYACTIV-G 2.0, SKYACTIV-G 2.5]

NOTE:

- To determine the malfunctioning part, proceed with the diagnostics from "Function Inspection Using M-MDS".

Details On DTCs (Without i-ELOOP)

DESCRIPTION	Generator system: Voltage generated by generator is high	
DETECTION CONDITION	Determination conditions	• The voltage generated by the generator is **18.5 V or higher** or the battery voltage is **16 V or higher** for a continuous specified time.
	Preconditions	• While engine is running
	Malfunction determination period	• **5 s** period
	Drive cycle	• 1
	Self test type	• CMDTC self test
	Sensor used	• PCM • Generator
FAIL-SAFE FUNCTION	• Generator control is inhibited.	
VEHICLE STATUS WHEN DTCs ARE OUTPUT	• A warning message is displayed on the center display. (Type A instrument cluster) • Illuminates charging system warning light. (Type B or type C instrument cluster) • The following vehicle conditions differ depending on the type of malfunction: ▪ Vehicle shock may occur due to generator load. ▪ Idling feel due to generator-stop may occur.	
POSSIBLE CAUSE	• Poor connection of the following parts: ▪ Battery ▪ Generator ▪ PCM • Connector or terminal malfunction of the following parts: ▪ Battery ▪ Generator ▪ PCM • Short to power supply in wiring harness between battery positive terminal and generator terminal 1A • Battery malfunction	

	Generator malfunction • PCM malfunction

System Wiring Diagram (Without i-ELOOP)

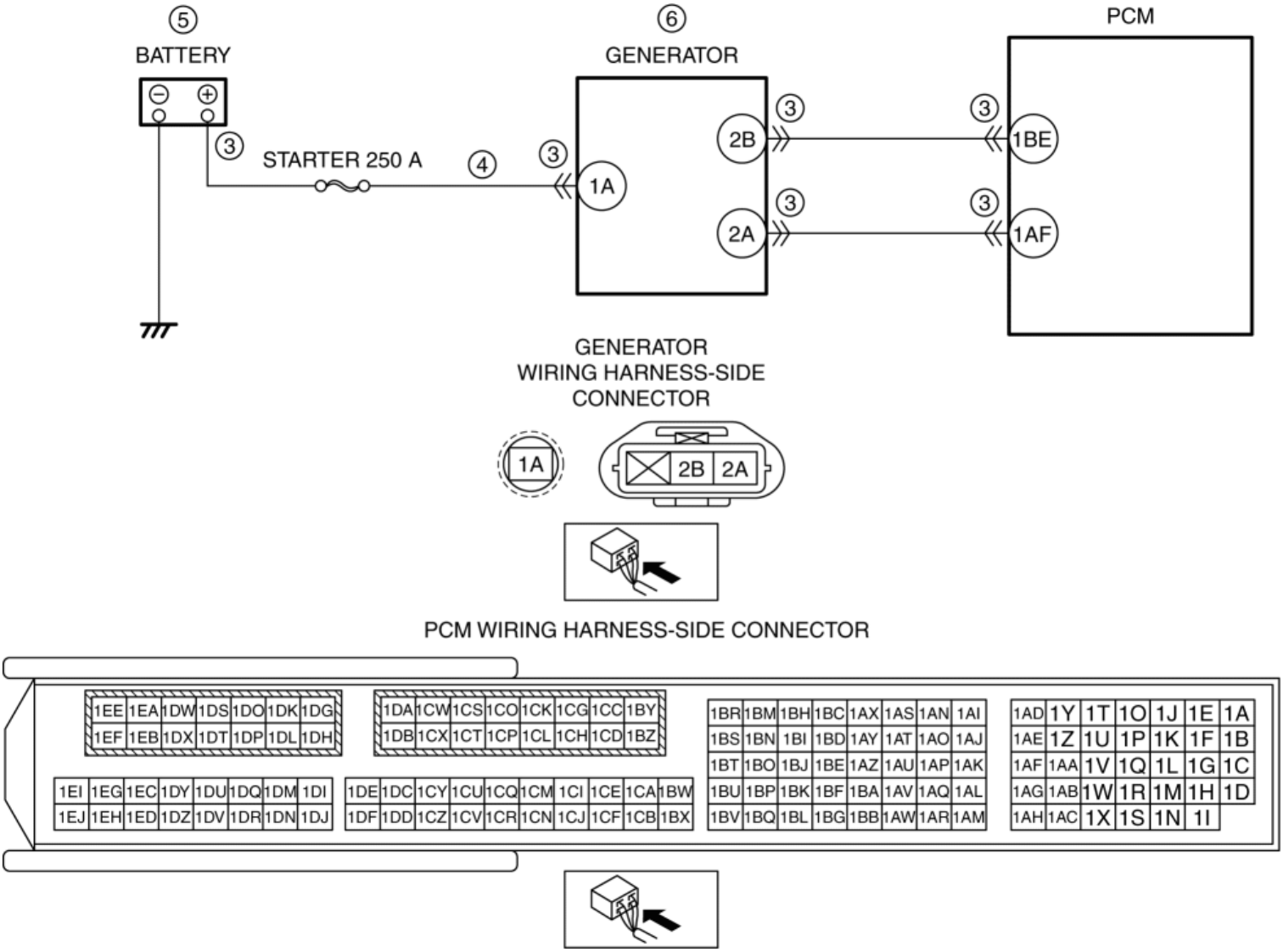

Function Explanation (DTC Detection Outline) (Without i-ELOOP)

- The PCM determines an over-charge malfunction by detecting that the generator terminal voltage or battery terminal voltage are abnormally high, and verification of vehicle malfunctions/safety assurance is performed.

Repeatability Verification Procedure (Without i-ELOOP)

- Clear the DTC from the PCM memory using the M-MDS. (See **CLEARING DTC [SKYACTIV-G 2.0, SKYACTIV-G 2.5]**.)
- Start the engine.
- Leave for **30 s** while idling with no electrical load.
- Leave for **30 s** while idling with high electrical load.

PID Item/Simulation Item Used In Diagnosis (Without i-ELOOP)

- Not applicable

Troubleshooting Diagnostic Procedure (Without i-ELOOP)

Intention of troubleshooting procedure

- Step 1—4
  - Perform an inspection of each signal transmission system.
- Step 5
  - Perform the inspection of the part supplied power to the generator.
- Step 6
  - Perform a unit inspection of the generator.
- Step 7—8
  - Verify that the primary malfunction is resolved and there are no other malfunctions.

STEP	INSPECTION	RESULTS	ACTION
1	**PURPOSE: VERIFY RELATED REPAIR INFORMATION AVAILABILITY** • Verify related Service Bulletins and/or on-line repair information availability. • Is any related repair information available?	Yes	Perform repair or diagnosis according to the available repair information. • If the vehicle is not repaired, go to the next step.
		No	Go to the next step.
2	**PURPOSE: VERIFY IF POOR CONNECTION OF EACH PART AFFECTS DIAGNOSTIC RESULTS** • Switch the ignition off. • Inspect the connection condition (part installation condition, connector connection condition) for the following parts: ▪ Battery ▪ Generator ▪ PCM • Is the connection condition (part installation condition, connector connection condition) for each part normal?	Yes	Go to the next step.
		No	Connect each part or the connector correctly, then go to Step 7.
3	**PURPOSE: VERIFY IF CONNECTOR DAMAGE OF EACH PART AFFECTS DIAGNOSTIC RESULTS** • Disconnect the connector of the following parts. ▪ Battery ▪ Generator ▪ PCM • Inspect for poor connection (such as damaged/pulled-out pins, corrosion). • Is there any malfunction?	Yes	Repair or replace the connector and/or terminals, then go to Step 7.
		No	Go to the next step.
4	**PURPOSE: VERIFY IF SHORT TO POWER SUPPLY IN GENERATOR CHARGE/DISCHARGE CIRCUIT AFFECTS DIAGNOSTIC RESULTS** • Verify that the battery, generator and PCM connectors are disconnected.	Yes	Go to the next step.
		No	Refer to the wiring diagram and verify whether or not there is a common connector between battery positive terminal and generator terminal 1A.

	• Switch the ignition ON (engine off). **NOTE:** • Another DTC may be stored by the PCM detecting an open circuit. • Measure the voltage at the generator terminal 1A (wiring harness-side). • Is the voltage **0 V**?		**If there is a common connector:** • Determine the malfunctioning part by inspecting the common connector and the terminal for corrosion, damage, or pin disconnection, and the common wiring harness for a short to power supply. • Repair or replace the malfunctioning part. **If there is no common connector:** • Repair or replace the wiring harness which has a short to power supply. Go to Step 7.
5	**PURPOSE: VERIFY IF DIAGNOSTIC RESULTS ARE AFFECTED BY INSUFFICIENT EXCITATION CURRENT TO GENERATOR DUE TO POWER SUPPLY PART MALFUNCTION** • Inspect the battery. (See **BATTERY INSPECTION [SKYACTIV-G 2.0, SKYACTIV-G 2.5]**.) • Is there any malfunction?	Yes	Replace the battery, then go to Step 7. (See **BATTERY REMOVAL/INSTALLATION [SKYACTIV-G 2.0, SKYACTIV-G 2.5]**.)
		No	Go to the next step.
6	**PURPOSE: DETERMINE INTEGRITY OF GENERATOR** • Inspect the generator. (See **GENERATOR INSPECTION [SKYACTIV-G 2.0, SKYACTIV-G 2.5 (WITHOUT i-ELOOP)]**.) • Is there any malfunction?	Yes	Replace the generator, then go to the next step. (See **GENERATOR REMOVAL/INSTALLATION [SKYACTIV-G 2.0, SKYACTIV-G 2.5 (WITHOUT i-ELOOP)]**.)
		No	Go to the next step.
7	**PURPOSE: VERIFICATION OF VEHICLE REPAIR COMPLETION** • Always reconnect all disconnected connectors. • Clear the DTC from the PCM memory using the M-MDS. (See **CLEARING DTC [SKYACTIV-G 2.0, SKYACTIV-G 2.5]**.) • Implement the repeatability verification procedure. (See **Repeatability Verification Procedure (Without i-ELOOP)**.) • Perform the DTC Reading Procedure. (See **ON-BOARD DIAGNOSTIC TEST [SKYACTIV-G 2.0, SKYACTIV-G 2.5]**.) • Is the same DTC present?	Yes	Repeat the inspection from Step 1. • If the malfunction recurs, replace the PCM. (See **PCM REMOVAL/INSTALLATION [SKYACTIV-G 2.0, SKYACTIV-G 2.5]**.) Go to the next step.
		No	Go to the next step.
8	**PURPOSE: VERIFY IF THERE IS ANY OTHER MALFUNCTION** • Is any other DTC or pending code stored?	Yes	Go to the applicable DTC inspection. (See **DTC TABLE [SKYACTIV-G 2.0, SKYACTIV-G 2.5]**.)
		No	DTC troubleshooting completed.

Details On DTCs (With i-ELOOP)

DESCRIPTION	Generator system: Voltage generated by generator is high

DETECTION CONDITION	Determination conditions	• Any one of the following conditions is met: ▪ Field current value returned by generator is abnormally larger than field current value demanded of generator, or condition in which battery voltage is **15.9 V or more** continues for specified period ▪ Capacitor (i-ELOOP) voltage is **27.5 V or more**, or condition in which over-voltage notification signal from generator continues for specified period. ▪ Condition in which overheating detection signal output from generator continues for specified period.
	Preconditions	• While engine is running
	Malfunction determination period	• **5 s** period
	Drive cycle	• 1
	Self test type	• CMDTC self test
	Sensor used	• PCM • Generator
FAIL-SAFE FUNCTION	• The PCM outputs a non-power generation demand to the generator and then demands the generator to go into default mode (**14.5 V** constant voltage power generation). If the temperature of the generator exceeds the specified value, the generator itself stops power generation. But, if the internal circuit of the generator is malfunctioning, the generator may not accept the demand from the PCM.	
VEHICLE STATUS WHEN DTCs ARE OUTPUT	• A warning message is displayed on the center display. (Type A instrument cluster) • Illuminates charging system warning light. (Type B or type C instrument cluster) • The following vehicle conditions differ depending on the type of malfunction. ▪ A vehicle shock may occur due to generator load. ▪ Idling feel due to generator-stop may occur.	
POSSIBLE CAUSE	• Poor connection of the following parts: ▪ PCM ▪ Generator ▪ Capacitor (i-ELOOP) ▪ DC-DC converter • Connector or terminal malfunction of the following parts: ▪ PCM ▪ Generator ▪ Capacitor (i-ELOOP) ▪ DC-DC converter • Short to power supply in wiring harness between the following terminals: ▪ DC-DC converter terminal 3A—Capacitor (i-ELOOP) terminal 3A ▪ Capacitor (i-ELOOP) terminal 2A—Generator terminal 1A • Open circuit in wiring harness between capacitor (i-ELOOP) terminal 2A—Generator terminal 1A • Battery malfunction • Capacitor (i-ELOOP) malfunction • DC-DC converter malfunction	

	• Generator malfunction • PCM malfunction

System Wiring Diagram (With i-ELOOP)

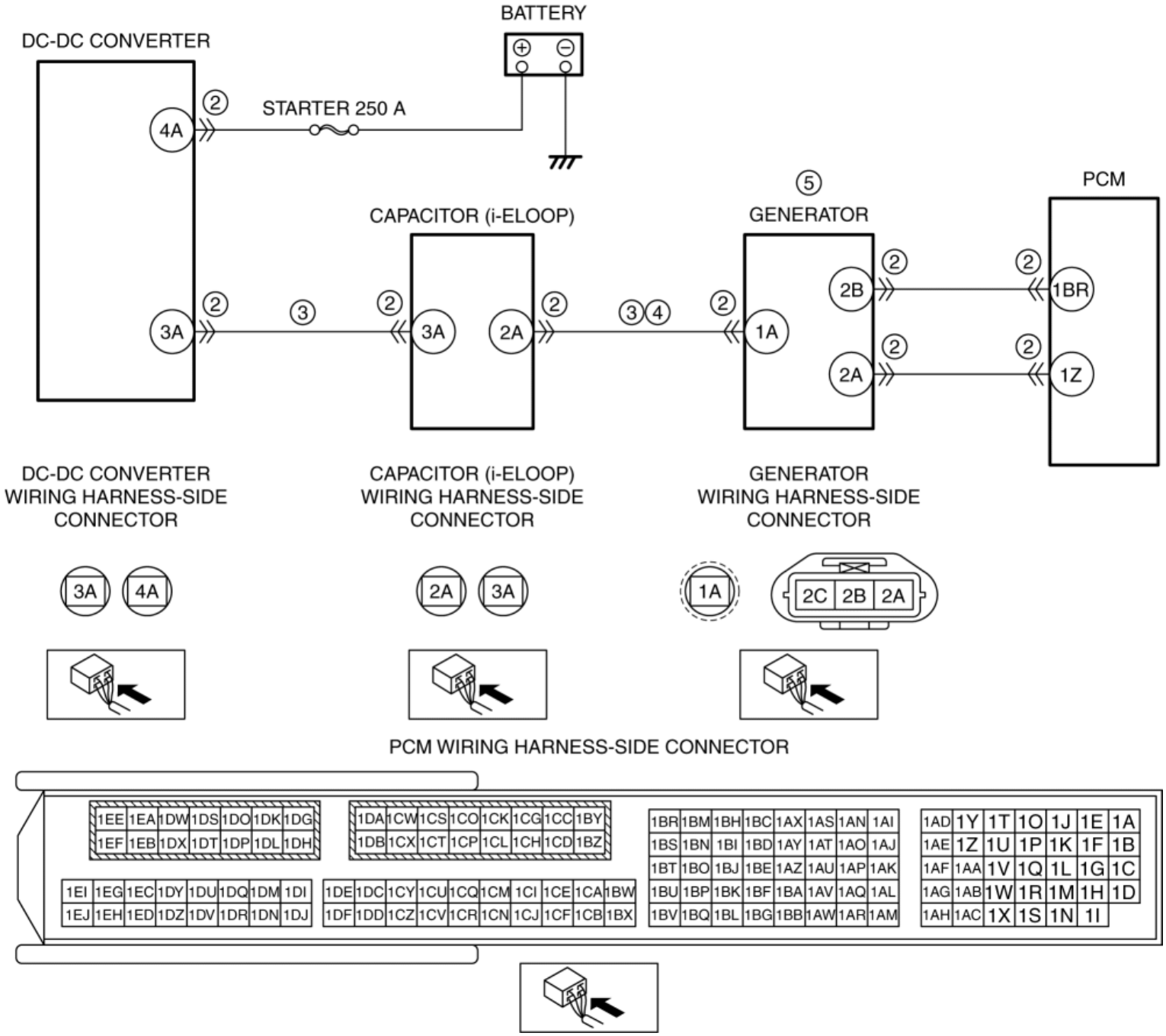

Function Explanation (DTC Detection Outline) (With i-ELOOP)

- If the PCM detects any of the following conditions, it determines that the generator is over-charging and verification of vehicle malfunctions/safety assurance is performed.
    - Vehicle capacitor (i-ELOOP) and battery voltage are specified value or more
    - Large difference between field current value demanded of generator from PCM and field current value returned from generator
    - Signal from generator notifying of malfunction is received

Repeatability Verification Procedure (With i-ELOOP)

- Clear the DTC from the PCM memory using the M-MDS. (See **CLEARING DTC [SKYACTIV-G 2.0, SKYACTIV-G 2.5]**.)
- Start the engine.
- Leave for **30 s** while idling with no electrical load.
- Leave for **30 s** while idling with high electrical load.

PID Item/Simulation Item Used In Diagnosis (With i-ELOOP)

- Not applicable

Function Inspection Using M-MDS (With i-ELOOP)

STEP	INSPECTION	RESULTS	ACTION
1	**PURPOSE: VERIFY RELATED REPAIR INFORMATION AVAILABILITY** • Verify related Service Bulletins and/or on-line repair information availability. • Is any related repair information available?	Yes	Perform repair or diagnosis according to the available repair information. • If the vehicle is not repaired, go to the next step.
		No	Go to the next step.
2	**PURPOSE: VERIFY IF GENERATOR OUTPUT IS AFFECTED BY DTC OCCURRING FROM DC-DC CONVERTER RELATED PART** • Switch the ignition off, then ON (engine off). • Perform the DC-DC converter DTC inspection using the M-MDS. (See **DTC INSPECTION [i-ELOOP]**.) • Are any DTCs present?	Yes	Repair or replace the malfunctioning part according to the applicable DTC troubleshooting. (See **DTC TABLE [i-ELOOP]**.) Go to the next step.
		No	Go to the next step.
3	**PURPOSE: VERIFY DTC** • Retrieve the PCM DTCs using the M-MDS. (See **ON-BOARD DIAGNOSTIC TEST [SKYACTIV-G 2.0, SKYACTIV-G 2.5]**.) • Are any DTCs present?	Yes	Go to the applicable DTC inspection. (See **DTC TABLE [SKYACTIV-G 2.0, SKYACTIV-G 2.5]**.) Go to the troubleshooting procedure to perform the procedure from Step 1.
		No	Go to the troubleshooting procedure to perform the procedure from Step 1.

Troubleshooting Diagnostic Procedure (With i-ELOOP)

Intention of troubleshooting procedure

- Step 1—4
  - Perform inspection of each signal transmission system.
- Step 5
  - Perform a unit inspection of the generator.
- Step 6—8
  - Verify that primary malfunction is resolved and there are no other malfunctions.

STEP	INSPECTION	RESULTS	ACTION
1	**PURPOSE: VERIFY IF POOR CONNECTION OF EACH PART AFFECTS DIAGNOSTIC RESULTS** • Switch the ignition off. • Remove the service plug. (See **SERVICE PLUG DISCONNECTION/CONNECTION [i-ELOOP]**.) • Inspect the connection condition (part installation condition, connector connection condition) for the following parts: ▪ PCM ▪ Generator ▪ Capacitor (i-ELOOP) ▪ DC-DC converter • Is the connection condition (part installation condition, connector connection condition) for each part normal?	Yes	Go to the next step.
		No	Connect each part or the connector correctly, then go to the next step.
2	**PURPOSE: VERIFY IF CONNECTOR DAMAGE OF EACH PART AFFECTS DIAGNOSTIC RESULTS** • Disconnect the connector of the following parts. ▪ PCM ▪ Generator ▪ Capacitor (i-ELOOP) ▪ DC-DC converter • Inspect for poor connection (such as damaged/pulled-out pins, corrosion). • Is there any malfunction?	Yes	Repair or replace the connector and/or terminals, then go to the next step.
		No	Go to the next step.
3	**PURPOSE: VERIFY IF SHORT TO POWER SUPPLY IN EACH WIRING HARNESS AFFECTS DIAGNOSTIC RESULTS** • Verify that the PCM, generator, capacitor (i-ELOOP), and DC-DC converter connectors are disconnected. • Switch the ignition ON (engine off). **NOTE:** • Another DTC may be stored by the PCM detecting an open circuit. • Measure the voltage at the following terminals (wiring harness-side): ▪ Capacitor (i-ELOOP) terminal 3A ▪ Capacitor (i-ELOOP) terminal 2A • Is the voltage **0 V**?	Yes	Go to the next step.
		No	Refer to the wiring diagram and verify whether or not there is a common connector between the following terminals: • DC-DC converter terminal 3A—Capacitor (i-ELOOP) terminal 3A • Capacitor (i-ELOOP) terminal 2A—Generator terminal 1A **If there is a common connector:** • Determine the malfunctioning part by inspecting the common connector and the terminal for corrosion, damage, or pin disconnection, and the common wiring harness for a short to power supply. • Repair or replace the malfunctioning part. **If there is no common connector:** • Repair or replace the wiring harness which has a short to power supply. Go to the next step.

4	**PURPOSE: VERIFY IF OPEN CIRCUIT IN GENERATOR CHARGE/DISCHARGE CIRCUIT AFFECTS DIAGNOSTIC RESULTS** • Verify that the PCM, generator, capacitor (i-ELOOP), and DC-DC converter connectors are disconnected. • Switch the ignition off. • Inspect for continuity between capacitor (i-ELOOP) terminal 2A (wiring harness-side) and generator terminal 1A (wiring harness-side). • Is there continuity?	Yes	Go to the next step.
		No	Refer to the wiring diagram and verify whether or not there is a common connector between capacitor (i-ELOOP) terminal 2A and generator terminal 1A. **If there is a common connector:** • Determine the malfunctioning part by inspecting the common connector and the terminal for corrosion, damage, or pin disconnection, and the common wiring harness for an open circuit. • Repair or replace the malfunctioning part. **If there is no common connector:** • Repair or replace the wiring harness which has an open circuit. Go to the next step.
5	**PURPOSE: DETERMINE INTEGRITY OF GENERATOR** • Inspect the generator. (See **GENERATOR INSPECTION [SKYACTIV-G 2.0, SKYACTIV-G 2.5 (WITH i-ELOOP)]**.) • Is there any malfunction?	Yes	Replace the generator, then go to the next step. (See **GENERATOR REMOVAL/INSTALLATION [SKYACTIV-G 2.0, SKYACTIV-G 2.5 (WITH i-ELOOP)]**.)
		No	Go to the next step.
6	**PURPOSE: VERIFY CONDITIONS OF BATTERY** • Inspect the battery. (See **BATTERY INSPECTION [SKYACTIV-G 2.0, SKYACTIV-G 2.5]**.)	—	Follow the inspection instructions, then go to the next step.
7	**PURPOSE: VERIFICATION OF VEHICLE REPAIR COMPLETION** • Always reconnect all disconnected connectors. • Reinstall the service plug. (See **SERVICE PLUG DISCONNECTION/CONNECTION [i-ELOOP]**.) • Clear the DTC from the PCM memory using the M-MDS. (See **CLEARING DTC [SKYACTIV-G 2.0, SKYACTIV-G 2.5]**.) • Implement the repeatability verification procedure. (See **Repeatability Verification Procedure (With i-ELOOP)**.) • Perform the DTC Reading Procedure. (See **ON-BOARD DIAGNOSTIC TEST [SKYACTIV-G 2.0, SKYACTIV-G 2.5]**.) • Is the same DTC present?	Yes	Repeat the inspection from Step 1. • If the malfunction recurs, replace the PCM. (See **PCM REMOVAL/INSTALLATION [SKYACTIV-G 2.0, SKYACTIV-G 2.5]**.) Go to the next step.
		No	Go to the next step.
8	**PURPOSE: VERIFY IF THERE IS ANY OTHER MALFUNCTION** • Is any other DTC or pending code stored?	Yes	Go to the applicable DTC inspection. (See **DTC TABLE [SKYACTIV-G 2.0, SKYACTIV-G 2.5]**.)
		No	DTC troubleshooting completed.

2014 - Mazda3 - Engine

DTC P2507:00 [SKYACTIV-G 2.0, SKYACTIV-G 2.5]

DTC P2507:00	PCM battery voltage low input
DETECTION CONDITION	• The PCM monitors the voltage of backup battery positive terminal. If the PCM detects that the battery positive terminal voltage is **below 6 V** for **5 s**, the PCM determines that the backup voltage circuit has a malfunction. **Diagnostic support note** • This is a continuous monitor (CCM). • The check engine light illuminates if the PCM detects the above malfunction condition during the first drive cycle. • FREEZE FRAME DATA (Mode 2)/Snapshot data is available. • DTC is stored in the PCM memory.
FAIL-SAFE FUNCTION	Not applicable
POSSIBLE CAUSE	• Battery malfunction • Short to ground or open circuit in backup voltage circuit ▪ Short to ground in wiring harness between MAIN 200 A fuse and PCM terminal 2O ▪ MAIN 200 A fuse and/or ENG+B 7.5 A fuse malfunction ▪ Open circuit in wiring harness between battery positive terminal and PCM terminal 2O • PCM connector or terminals malfunction • PCM malfunction

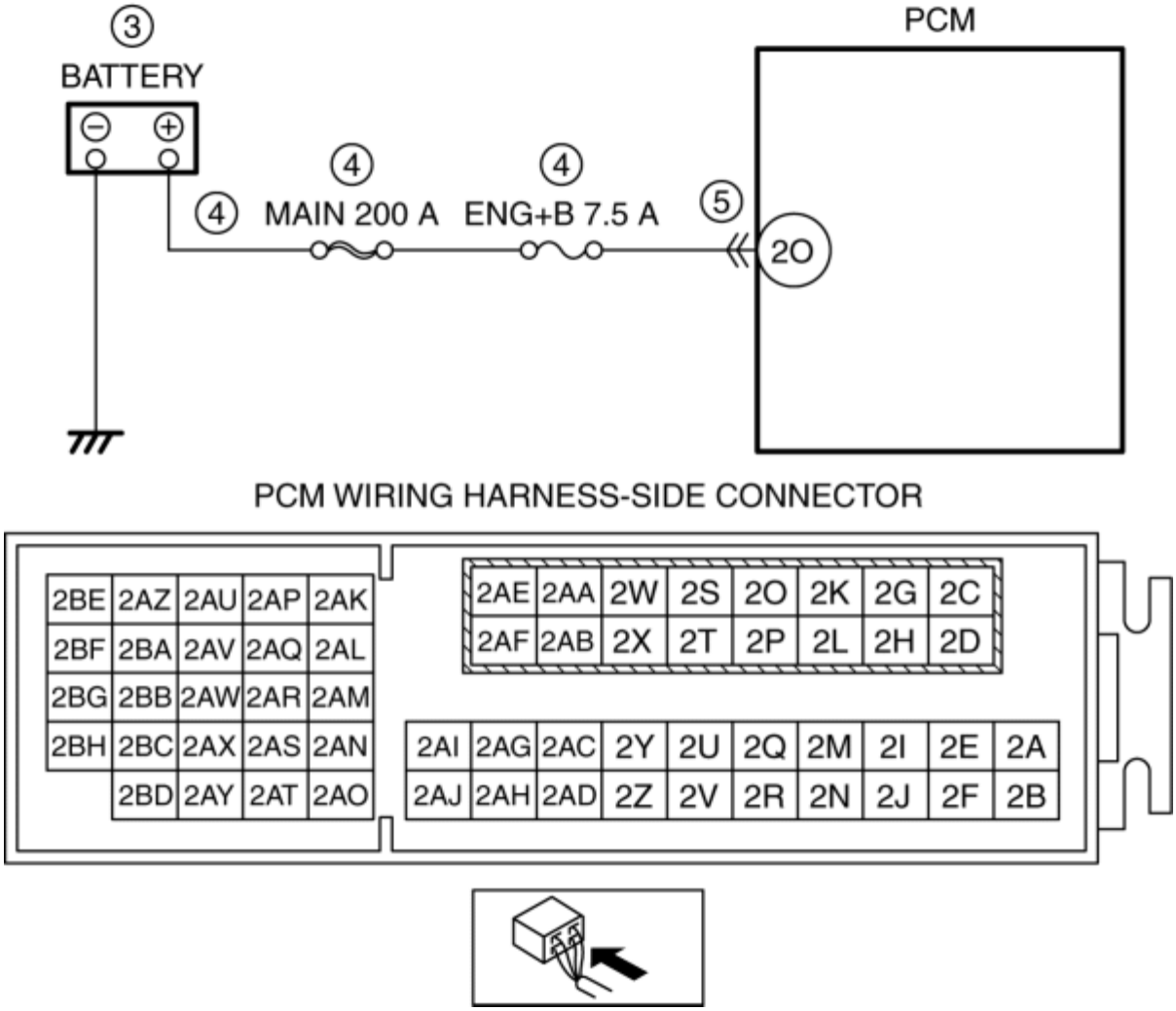

CAUTION:

- Verify the malfunction symptom according to not only the PID value but also the symptom troubleshooting.

Related PIDs

Item (definition)	Unit/Condition	Definition	Condition/Specification (Reference)
VPWR	V	Battery positive voltage	• Displays battery voltage

Diagnostic Procedure

STEP	INSPECTION		ACTION
1	**VERIFY FREEZE FRAME DATA (MODE 2)/SNAPSHOT DATA HAS BEEN RECORDED** • Has the FREEZE FRAME DATA	Yes	Go to the next step.
		No	Record the FREEZE FRAME DATA (Mode 2)/snapshot data on the repair order, then go to the next step.

	(Mode 2)/snapshot data been recorded?		
2	**VERIFY RELATED REPAIR INFORMATION AVAILABILITY** • Verify related Service Bulletins and/or on-line repair information availability. • Is any related repair information available?	Yes	Perform repair or diagnosis according to the available repair information. • If the vehicle is not repaired, go to the next step.
		No	Go to the next step.
3	**INSPECT BATTERY** • Switch the ignition off. • Inspect the battery. (See **BATTERY INSPECTION [SKYACTIV-G 2.0, SKYACTIV-G 2.5]**.) • Is there any malfunction?	Yes	Recharge or replace the battery, then go to Step 6. (See **BATTERY RECHARGING [SKYACTIV-G 2.0, SKYACTIV-G 2.5]**.) (See **BATTERY REMOVAL/INSTALLATION [SKYACTIV-G 2.0, SKYACTIV-G 2.5]**.)
		No	Go to the next step.
4	**INSPECT BACKUP VOLTAGE CIRCUIT FOR SHORT TO GROUND OR OPEN CIRCUIT** • Reconnect all disconnected connectors. • Access the VPWR PID using the M-MDS. (See **ON-BOARD DIAGNOSTIC TEST [SKYACTIV-G 2.0, SKYACTIV-G 2.5]**.) • Verify the VPWR PID value. • Is the VPWR PID value **B+**?	Yes	Go to the next step.
		No	Inspect the MAIN 200 A fuse and ENG+B 7.5 A fuse. • If the fuse is blown: ▪ Refer to the wiring diagram and verify whether or not there is a common connector between MAIN 200 A fuse and PCM terminal 2O. **If there is a common connector:** • Determine the malfunctioning part by inspecting the common

connector and the terminal for corrosion, damage, or pin disconnection, and the common wiring harness for a short to ground.

- Repair or replace the malfunctioning part.

If there is no common connector:

- Repair or replace the wiring harness which has a short to ground.
- Replace the fuse.

- If the fuse is damaged:
  - Replace the fuse.
- If all fuses are normal:
  - Refer to the wiring diagram and verify whether or not there is a common connector between battery positive terminal and PCM terminal 2O.

If there is a common connector:

- Determine the malfunctioning part by inspecting the common connector and the terminal for corrosion, damage, or pin disconnection, and the

			common wiring harness for an open circuit. • Repair or replace the malfunctioning part. **If there is no common connector:** • Repair or replace the wiring harness which has an open circuit. Go to Step 6.
5	**INSPECT PCM CONNECTOR CONDITION** • Switch the ignition off. • Disconnect the PCM connector. • Inspect for poor connection (such as damaged/pulled-out pins, corrosion). • Is there any malfunction?	Yes	Repair or replace the connector and/or terminals, then go to the next step.
		No	Go to the next step.
6	**VERIFY DTC TROUBLESHOOTING COMPLETED** • Always reconnect all disconnected connectors. • Clear the DTC from the PCM memory using the M-MDS. (See **AFTER REPAIR PROCEDURE [SKYACTIV-G 2.0, SKYACTIV-G**	Yes	Repeat the inspection from Step 1. • If the malfunction recurs, replace the PCM. (See **PCM REMOVAL/INSTALLATION [SKYACTIV-G 2.0, SKYACTIV-G 2.5]**.) Go to the next step.
		No	Go to the next step.

	2.5].) • Perform the KOEO or KOER self test. (See **KOEO/KOER SELF TEST [SKYACTIV-G 2.0, SKYACTIV-G 2.5]**.) • Is the same DTC present?		
7	**VERIFY AFTER REPAIR PROCEDURE** • Perform the “AFTER REPAIR PROCEDURE”. (See **AFTER REPAIR PROCEDURE [SKYACTIV-G 2.0, SKYACTIV-G 2.5]**.) • Are any DTCs present?	Yes	Go to the applicable DTC inspection. (See **DTC TABLE [SKYACTIV-G 2.0, SKYACTIV-G 2.5]**.)
		No	DTC troubleshooting completed.

2014 - Mazda3 - Engine

DTC P2610:00 [SKYACTIV-G 2.0, SKYACTIV-G 2.5]

DTC P2610:00	Malfunction in instrument cluster
DETECTION CONDITION	• Malfunction detected in instrument cluster. **Diagnostic support note** • This is a continuous monitor (CCM). • The check engine light illuminates if the PCM detects the above malfunction condition in two consecutive drive cycles or in one drive cycle while the DTC for the same malfunction has been stored in the PCM. • PENDING CODE is available if the PCM detects the above malfunction condition during first drive cycle. • FREEZE FRAME DATA (Mode 2)/Snapshot data is available. • DTC is stored in the PCM memory.
FAIL-SAFE FUNCTION	• The fast idle up correction for the drive-by-wire control is inhibited.
POSSIBLE CAUSE	• Instrument cluster power supply circuit malfunction (in this case, the instrument cluster records DTC U3003:16.) • Instrument cluster malfunction • PCM malfunction
SYSTEM WIRING DIAGRAM	Not applicable

Diagnostic Procedure

STEP	INSPECTION		ACTION
1	**VERIFY FREEZE FRAME DATA (MODE 2)/SNAPSHOT DATA HAS BEEN RECORDED** • Has the FREEZE FRAME DATA	Yes	Go to the next step.
		No	Record the FREEZE FRAME DATA (Mode

	(Mode 2)/snapshot data been recorded?		2)/snapshot data on the repair order, then go to the next step.
2	**VERIFY RELATED REPAIR INFORMATION AVAILABILITY** • Verify related Service Bulletins and/or on-line repair information availability. • Is any related repair information available?	Yes	Perform repair or diagnosis according to the available repair information. • If the vehicle is not repaired, go to the next step.
		No	Go to the next step.
3	**VERIFY STORED DTC IN INSTRUMENT CLUSTER** • Switch the ignition off, then ON (engine off). • Retrieve the instrument cluster DTC using the M-MDS. (See **DTC INSPECTION [INSTRUMENT CLUSTER]**.) • Are any DTCs present?	Yes	Go to the applicable DTC inspection. (See **DTC TABLE [INSTRUMENT CLUSTER]**.)
		No	Go to the next step.
4	**INSPECT INSTRUMENT CLUSTER BACKUP VOLTAGE CIRCUIT** • Switch the ignition off. • Remove the MAIN 200 A fuse and ROOM 15 A fuse. • Inspect the MAIN 200 A fuse and ROOM 15 A fuse. • Is there any malfunction?	Yes	Replace the malfunctioning fuse. Switch the ignition ON (engine on) and wait for **10 s or more**. Switch the ignition off. Go to the next step.
		No	Replace the instrument cluster, then go to the next step. (See **INSTRUMENT CLUSTER REMOVAL/INSTALLATION**.)
5	**VERIFY DTC TROUBLESHOOTING COMPLETED** • Always reconnect all disconnected connectors. • Clear the DTC from the PCM memory using the M-MDS. (See **AFTER REPAIR PROCEDURE [SKYACTIV-G 2.0, SKYACTIV-G 2.5]**.) • Perform the KOER self test. (See **KOEO/KOER SELF TEST [SKYACTIV-G 2.0, SKYACTIV-G**	Yes	Repeat the inspection from Step 1. • If the malfunction recurs, replace the PCM. (See **PCM REMOVAL/INSTALLATION [SKYACTIV-G 2.0, SKYACTIV-G 2.5]**.) Go to the next step.
		No	Go to the next step.

	2.5].) • Is the PENDING CODE for this DTC present?		
6	**VERIFY AFTER REPAIR PROCEDURE** • Perform the “AFTER REPAIR PROCEDURE”. (See **AFTER REPAIR PROCEDURE [SKYACTIV-G 2.0, SKYACTIV-G 2.5]**.) • Are any DTCs present?	Yes	Go to the applicable DTC inspection. (See **DTC TABLE [SKYACTIV-G 2.0, SKYACTIV-G 2.5]**.)
		No	DTC troubleshooting completed.

2014 - Mazda3 - Engine

DTC U0073:00, U0101:00, U0121:00, U0131:00, U0140:00, U0151:00, U0155:00, U0214:00, U0235:00 [SKYACTIV-G 2.0, SKYACTIV-G 2.5]

DTC U0073:00	CAN system communication error (HS CAN)
DETECTION CONDITION	• Malfunction in CAN bus communication line. **Diagnostic support note** • This is a continuous monitor (other). • The check engine light does not illuminate. • FREEZE FRAME DATA (Mode 2) is not available. • Snapshot data is available. • DTC is stored in the PCM memory.
FAIL-SAFE FUNCTION	Not applicable
POSSIBLE CAUSE	• CAN bus communication line malfunction • PCM malfunction
SYSTEM WIRING DIAGRAM	Not applicable

DTC U0101:00	CAN communication: communication error to TCM
DETECTION CONDITION	• Communication error between the PCM and TCM continues for **5 s or more**. **Diagnostic support note** • This is a continuous monitor (other). • The check engine light illuminates if the PCM detects the above malfunction condition during the first drive cycle. • FREEZE FRAME DATA (Mode 2)/Snapshot data is available. • DTC is stored in the PCM memory.

FAIL-SAFE FUNCTION	• Controls the turbine rotation signal at **0**. • Inhibits the AT torque reduction request.
POSSIBLE CAUSE	**NOTE:** • During malfunction diagnosis, first verify the malfunction detection of DTC U0074:00 or U0115:00 for the TCM. • CAN communication line malfunction between PCM and TCM • TCM malfunction • PCM malfunction
SYSTEM WIRING DIAGRAM	Not applicable

DTC U0121:00	CAN communication: communication error to DSC HU/CM
DETECTION CONDITION	• Communication error between the PCM and DSC HU/CM continues for **5 s or more**. **Diagnostic support note** • This is a continuous monitor (other). • The check engine light illuminates if the PCM detects the above malfunction condition during the first drive cycle. • FREEZE FRAME DATA (Mode 2)/Snapshot data is available. • DTC is stored in the PCM memory.
FAIL-SAFE FUNCTION	• Inhibits the DSC control.
POSSIBLE CAUSE	• CAN communication line malfunction between PCM and DSC HU/CM • DSC HU/CM malfunction • PCM malfunction
SYSTEM WIRING DIAGRAM	Not applicable

DTC U0131:00	CAN communication: communication error to EPS control module

DETECTION CONDITION	• Communication error between the PCM and EPS control module continues for **5 s or more**. **Diagnostic support note** • This is a continuous monitor (other). • The check engine light does not illuminate. • FREEZE FRAME DATA (Mode 2) is not available. • Snapshot data is available. • DTC is stored in the PCM memory.
FAIL-SAFE FUNCTION	Not applicable
POSSIBLE CAUSE	• CAN communication line malfunction between PCM and EPS control module • EPS control module malfunction • PCM malfunction
SYSTEM WIRING DIAGRAM	Not applicable

DTC U0140:00	CAN communication: communication error to front body control module (FBCM)
DETECTION CONDITION	• Communication error between the PCM and front body control module (FBCM) continues for **5 s or more**. **Diagnostic support note** • This is a continuous monitor (other). • The check engine light does not illuminate. • FREEZE FRAME DATA (Mode 2) is not available. • Snapshot data is available. • DTC is stored in the PCM memory.
FAIL-SAFE FUNCTION	Not applicable
POSSIBLE CAUSE	• CAN communication line malfunction between PCM and front body control module (FBCM) • Front body control module (FBCM) malfunction

	• PCM malfunction
SYSTEM WIRING DIAGRAM	Not applicable

DTC U0151:00	CAN communication: communication error to SAS control module
DETECTION CONDITION	• Communication error between the PCM and SAS control module continues for **5 s or more**. **Diagnostic support note** • This is a continuous monitor (other). • The check engine light does not illuminate. • FREEZE FRAME DATA (Mode 2) is not available. • Snapshot data is available. • DTC is stored in the PCM memory.
FAIL-SAFE FUNCTION	Not applicable
POSSIBLE CAUSE	• CAN communication line malfunction between PCM and SAS control module • SAS control module malfunction • PCM malfunction
SYSTEM WIRING DIAGRAM	Not applicable

DTC U0155:00	CAN communication: communication error to instrument cluster
DETECTION CONDITION	• Communication error between the PCM and instrument cluster continues for **5 s or more**. **Diagnostic support note** • This is a continuous monitor (other). • The check engine light illuminates if the PCM detects the above malfunction condition during the first drive cycle. • FREEZE FRAME DATA (Mode 2)/Snapshot data is available.

	• DTC is stored in the PCM memory.
FAIL-SAFE FUNCTION	Not applicable
POSSIBLE CAUSE	• CAN communication line malfunction between PCM and instrument cluster • Instrument cluster malfunction • PCM malfunction
SYSTEM WIRING DIAGRAM	Not applicable

DTC U0214:00	CAN communication: communication error to start stop unit
DETECTION CONDITION	• Communication error between the PCM and start stop unit continues for **5 s or more**. **Diagnostic support note** • This is a continuous monitor (other). • The check engine light does not illuminate. • FREEZE FRAME DATA (Mode 2) is not available. • Snapshot data is available. • DTC is stored in the PCM memory.
FAIL-SAFE FUNCTION	Not applicable
POSSIBLE CAUSE	• CAN communication line malfunction between PCM and start stop unit • Start stop unit malfunction • PCM malfunction
SYSTEM WIRING DIAGRAM	Not applicable

DTC U0235:00	CAN communication: communication error to laser sensor
	• Communication error between the PCM and laser sensor

DETECTION CONDITION	continues for **5 s or more**. **Diagnostic support note** • This is a continuous monitor (other). • The check engine light does not illuminate. • FREEZE FRAME DATA (Mode 2) is not available. • Snapshot data is available. • DTC is stored in the PCM memory.
FAIL-SAFE FUNCTION	• The smart city brake support function is cancelled.
POSSIBLE CAUSE	• CAN communication line malfunction between PCM and laser sensor • Laser sensor malfunction • PCM malfunction
SYSTEM WIRING DIAGRAM	Not applicable

Diagnostic Procedure

- Inspect according to the diagnostic procedure in ON-BOARD DIAGNOSTIC [MULTIPLEX COMMUNICATION SYSTEM]. (See **FOREWORD**.)

2014 - Mazda3 - Engine

DTC U0074:00 [SKYACTIV-G 2.0, SKYACTIV-G 2.5]

DTC U0074:00	CAN system communication error (local CAN between PCM and TCM)
DETECTION CONDITION	• Malfunction in CAN bus communication line. **Diagnostic support note** • This is a continuous monitor (other). • The check engine light does not illuminate. • FREEZE FRAME DATA (Mode 2) is not available. • Snapshot data is available. • DTC is stored in the PCM memory.
FAIL-SAFE FUNCTION	Not applicable
POSSIBLE CAUSE	• CAN communication line malfunction between PCM and TCM (local CAN between PCM and TCM) ▪ TCM terminal G—PCM terminal 1A ▪ TCM terminal H—PCM terminal 1B • TCM DTC is stored. • PCM malfunction • TCM malfunction

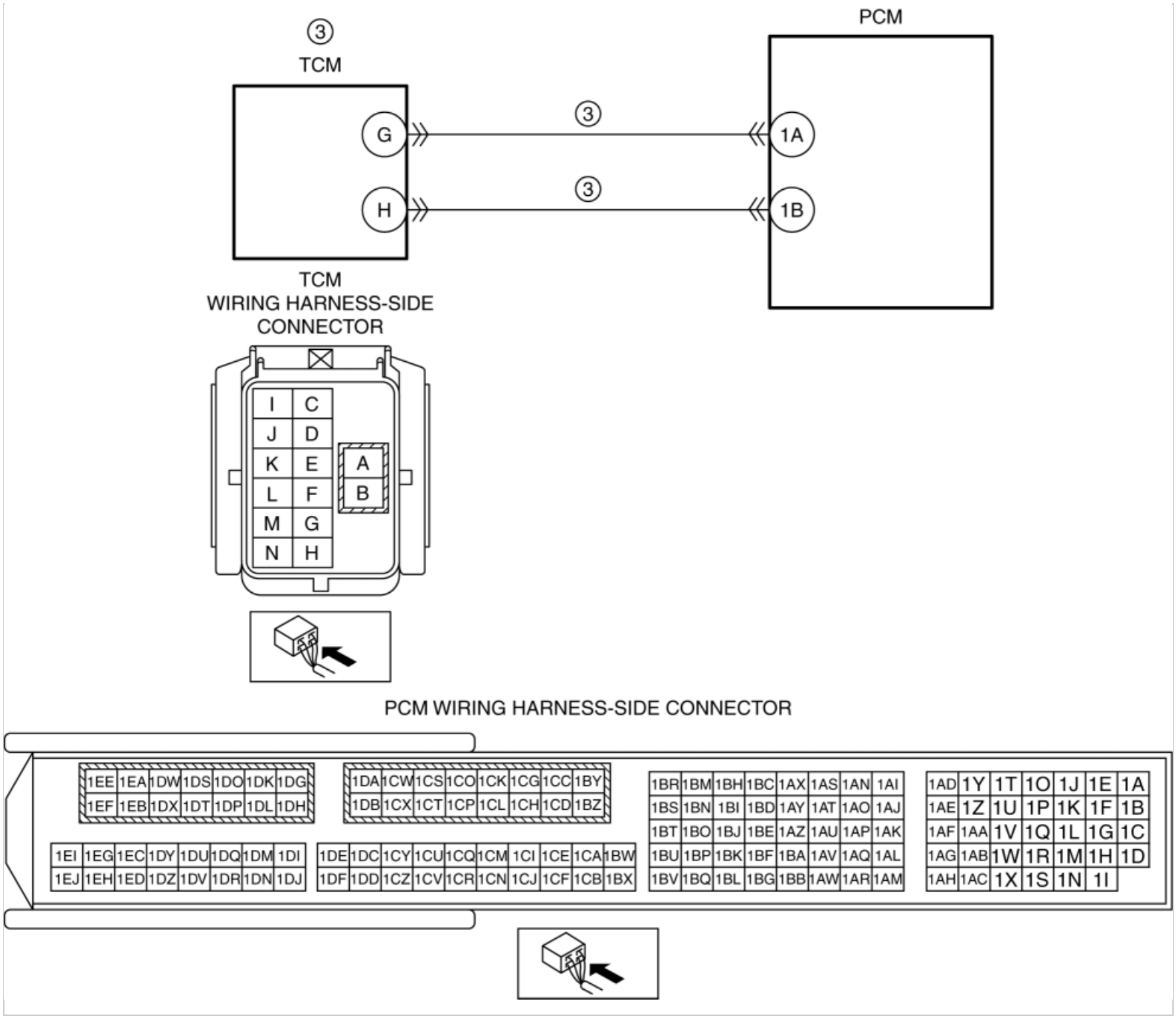

Repeatability Verification Procedure

- Clear the DTC from the PCM memory using the M-MDS. (See **CLEARING DTC [SKYACTIV-G 2.0, SKYACTIV-G 2.5]**.)
- Start the engine.

Diagnostic Procedure

STEP	INSPECTION		ACTION
1	**VERIFY RELATED REPAIR INFORMATION AVAILABILITY** • Verify related Service Bulletins and/or	Yes	Perform repair or diagnosis according to the available repair information. • If the vehicle is not repaired, go to the next step.

	on-line repair information availability. • Is any related repair information available?		
		No	Go to the next step.
2	**VERIFY RELATED PENDING CODE AND/OR DTC** • Switch the ignition off, then ON (engine off). • Perform the Pending Trouble Code Access Procedure and DTC Reading Procedure. (See **ON-BOARD DIAGNOSTIC TEST [SKYACTIV-G 2.0, SKYACTIV-G 2.5]**.) • Are any other PENDING CODEs and/or DTCs present?	Yes	Go to the applicable PENDING CODE or DTC inspection. (See **DTC TABLE [SKYACTIV-G 2.0, SKYACTIV-G 2.5]**.)
		No	Go to the next step.
3	**VERIFY TCM DTC** • Perform the TCM DTC inspection using the M-MDS. (See **ON-BOARD DIAGNOSTIC SYSTEM DTC INSPECTION [FW6A-EL]**.) • Are any DTCs present?	Yes	DTC U0074:00 or U0115:00 is displayed: • CAN communication line can be considered the cause. ▪ Repair or replace the wiring harness between PCM and TCM, then go to the next step. DTC other than U0074:00 and U0115:00 is displayed: • Go to the applicable DTC inspection. (See **ON-BOARD DIAGNOSTIC SYSTEM DTC TABLE [FW6A-EL]**.)
		No	TCM can be considered the cause. • Replace the control valve body, then go to the next step. (See **CONTROL VALVE BODY REMOVAL/INSTALLATION [FW6A-EL]**.)
4	**VERIFY DTC TROUBLESHOOTING COMPLETED** • Clear the DTC from the PCM memory using the M-MDS. (See **CLEARING DTC [SKYACTIV-G 2.0, SKYACTIV-G 2.5]**.) • Implement the repeatability verification procedure. (See **Repeatability Verification Procedure**.) • Perform the DTC Reading Procedure. (See **ON-BOARD DIAGNOSTIC TEST [SKYACTIV-G 2.0, SKYACTIV-G 2.5]**.) • Is the same DTC present?	Yes	Replace the PCM, then go to the next step. (See **PCM REMOVAL/INSTALLATION [SKYACTIV-G 2.0, SKYACTIV-G 2.5]**.)
		No	Go to the next step.
5	**VERIFY AFTER REPAIR PROCEDURE** • Perform the “AFTER REPAIR PROCEDURE”. (See **AFTER REPAIR PROCEDURE [SKYACTIV-G 2.0, SKYACTIV-G 2.5]**.) • Are any DTCs present?	Yes	Go to the applicable DTC inspection. (See **DTC TABLE [SKYACTIV-G 2.0, SKYACTIV-G 2.5]**.)
		No	DTC troubleshooting completed.

2014 - Mazda3 - Engine

DTC U0284:00 [SKYACTIV-G 2.0, SKYACTIV-G 2.5]

DTC U0284:00	LIN communication system: Communication error between active air shutter and PCM
DETECTION CONDITION	• PCM detects a communication error between the PCM and active air shutter. **Diagnostic support note** • This is a continuous monitor (other). • The check engine light does not illuminate. • FREEZE FRAME DATA (Mode 2) is not available. • Snapshot data is available. • DTC is stored in the PCM memory.
FAIL-SAFE FUNCTION	• Stops active air shutter control.

POSSIBLE CAUSE	• LIN communication line malfunction between active air shutter and PCM
	• Active air shutter connector or terminals malfunction
	• Short to ground or open circuit in active air shutter power supply circuit
	  ▪ Short to ground in wiring harness between ENGINE3 15 A fuse and active air shutter terminal A
	  ▪ ENGINE3 15 A fuse malfunction
	  ▪ Open circuit in wiring harness between main relay terminal D and active air shutter terminal A
	• Open circuit in wiring harness between active air shutter terminal D and body ground
	• PCM connector or terminals malfunction
	• Short to ground in wiring harness between active air shutter terminal C and PCM terminal 2Z
	• Short to power supply in wiring harness between active air shutter terminal C and PCM terminal 2Z
	• Open circuit in wiring harness between active air shutter terminal C and PCM terminal 2Z
	• Active air shutter malfunction
	• PCM malfunction

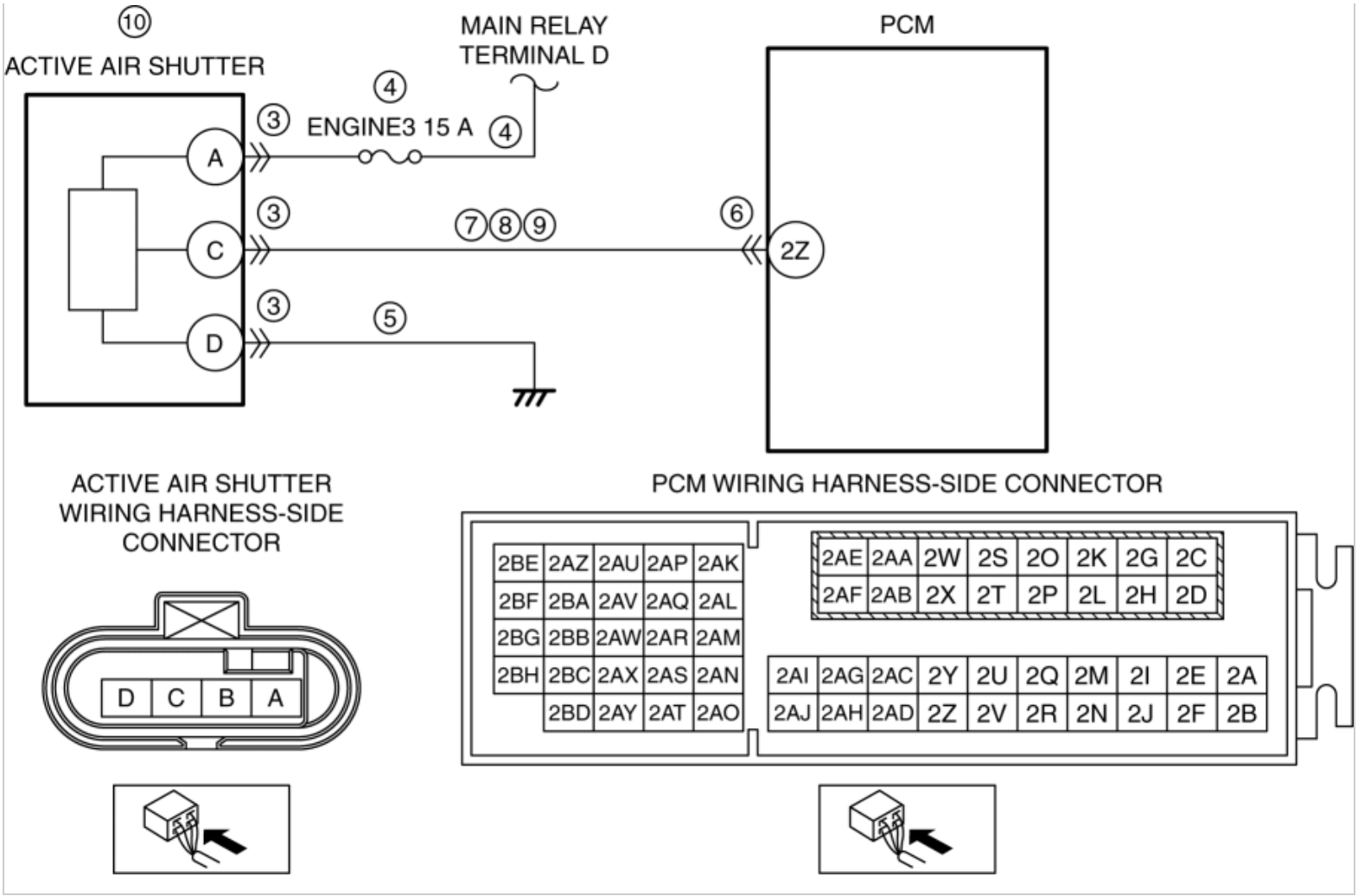

Diagnostic Procedure

STEP	INSPECTION		ACTION
1	**VERIFY FREEZE FRAME DATA (MODE 2)/SNAPSHOT DATA HAS BEEN RECORDED** • Has the FREEZE FRAME DATA (Mode 2)/snapshot data been recorded?	Yes	Go to the next step.
		No	Record the FREEZE FRAME DATA (Mode 2)/snapshot data on the repair order, then go to the next step.
2	**VERIFY RELATED REPAIR INFORMATION AVAILABILITY** • Verify related Service Bulletins and/or on-line repair information availability. • Is any related repair information available?	Yes	Perform repair or diagnosis according to the available repair information. • If the vehicle is not repaired, go to the next step.
		No	Go to the next step.
3	**INSPECT ACTIVE AIR SHUTTER CONNECTOR CONDITION** • Switch the ignition off. • Disconnect the active air shutter connector.	Yes	Repair or replace the connector and/or terminals, then go to Step 11.
		No	Go to the next step.

	• Inspect for poor connection (such as damaged/pulled-out pins, corrosion). • Is there any malfunction?		
4	**INSPECT ACTIVE AIR SHUTTER POWER SUPPLY CIRCUIT FOR SHORT TO GROUND OR OPEN CIRCUIT** • Verify that the active air shutter connector is disconnected. • Switch the ignition ON (engine off). **NOTE:** • Another DTC may be stored by the PCM detecting an open circuit. • Measure the voltage at the active air shutter terminal A (wiring harness-side). • Is the voltage **B+**?	Yes	Go to the next step.
		No	Inspect the ENGINE3 15 A fuse. • If the fuse is blown: ▪ Refer to the wiring diagram and verify whether or not there is a common connector between ENGINE3 15 A fuse and active air shutter terminal A. **If there is a common connector:** • Determine the malfunctioning part by inspecting the common connector and the terminal for corrosion, damage, or pin disconnection, and the common wiring harness for a short to ground. • Repair or replace the malfunctioning part. **If there is no common connector:** • Repair or replace the wiring harness which has a short to ground. • Replace the fuse. • If the fuse is damaged: ▪ Replace the fuse. • If the fuse is normal: ▪ Refer to the wiring diagram and verify whether or not there is a common connector between main relay terminal D and active air shutter terminal A. **If there is a common connector:** • Determine the malfunctioning part by inspecting the common connector and the terminal for corrosion, damage, or pin disconnection, and the common wiring harness for an

			open circuit. • Repair or replace the malfunctioning part. **If there is no common connector:** • Repair or replace the wiring harness which has an open circuit. Go to Step 11.
5	**INSPECT ACTIVE AIR SHUTTER GROUND CIRCUIT FOR OPEN CIRCUIT** • Verify that the active air shutter connector is disconnected. • Switch the ignition off. • Inspect for continuity between active air shutter terminal D (wiring harness-side) and body ground. • Is there continuity?	Yes	Go to the next step.
		No	Refer to the wiring diagram and verify whether or not there is a common connector between active air shutter terminal D and body ground. **If there is a common connector:** • Determine the malfunctioning part by inspecting the common connector and the terminal for corrosion, damage, or pin disconnection, and the common wiring harness for an open circuit. • Repair or replace the malfunctioning part. **If there is no common connector:** • Inspect for the following: ▪ Open circuit between active air shutter and body ground ▪ Loose or lifting ground point • Repair or replace the malfunctioning part. Go to Step 11.
6	**INSPECT PCM CONNECTOR CONDITION** • Disconnect the PCM connector. • Inspect for poor connection (such as damaged/pulled-out pins, corrosion). • Is there any malfunction?	Yes	Repair or replace the connector and/or terminals, then go to Step 11.
		No	Go to the next step.
7	**INSPECT ACTIVE AIR SHUTTER SIGNAL CIRCUIT FOR SHORT TO GROUND** • Verify that the active air shutter and PCM connectors are disconnected. • Inspect for continuity between active air shutter terminal C (wiring harness-side) and body ground. • Is there continuity?	Yes	Refer to the wiring diagram and verify whether or not there is a common connector between active air shutter terminal C and PCM terminal 2Z. **If there is a common connector:** • Determine the malfunctioning part by inspecting the common connector and the terminal for corrosion, damage, or pin disconnection, and the common wiring harness for a short to ground. • Repair or replace the malfunctioning part. **If there is no common connector:**

			Repair or replace the wiring harness which has a short to ground. Go to Step 11.
		No	Go to the next step.
8	**INSPECT ACTIVE AIR SHUTTER SIGNAL CIRCUIT FOR SHORT TO POWER SUPPLY** • Verify that the active air shutter and PCM connectors are disconnected. • Switch the ignition ON (engine off). **NOTE:** • Another DTC may be stored by the PCM detecting an open circuit. • Measure the voltage at the active air shutter terminal C (wiring harness-side). • Is the voltage **0 V**?	Yes	Go to the next step.
		No	Refer to the wiring diagram and verify whether or not there is a common connector between active air shutter terminal C and PCM terminal 2Z. **If there is a common connector:** • Determine the malfunctioning part by inspecting the common connector and the terminal for corrosion, damage, or pin disconnection, and the common wiring harness for a short to power supply. • Repair or replace the malfunctioning part. **If there is no common connector:** • Repair or replace the wiring harness which has a short to power supply. Go to Step 11.
9	**INSPECT ACTIVE AIR SHUTTER SIGNAL CIRCUIT FOR OPEN CIRCUIT** • Verify that the active air shutter and PCM connectors are disconnected. • Switch the ignition off. • Inspect for continuity between active air shutter terminal C (wiring harness-side) and PCM terminal 2Z (wiring harness-side). • Is there continuity?	Yes	Go to the next step.
		No	Refer to the wiring diagram and verify whether or not there is a common connector between active air shutter terminal C and PCM terminal 2Z. **If there is a common connector:** • Determine the malfunctioning part by inspecting the common connector and the terminal for corrosion, damage, or pin disconnection, and the common wiring harness for an open circuit. • Repair or replace the malfunctioning part. **If there is no common connector:** • Repair or replace the wiring harness which has an open circuit. Go to Step 11.
10	**INSPECT ACTIVE AIR SHUTTER** • Inspect the active air shutter. (See **ACTIVE AIR SHUTTER INSPECTION**.) • Is there any malfunction?	Yes	Replace the active air shutter, then go to the next step. (See **ACTIVE AIR SHUTTER REMOVAL/INSTALLATION**.)
		No	Go to the next step.
	VERIFY DTC TROUBLESHOOTING		

11	**COMPLETED** • Always reconnect all disconnected connectors. • Clear the DTC from the PCM memory using the M-MDS. (See **CLEARING DTC [SKYACTIV-G 2.0, SKYACTIV-G 2.5]**.) • Start the engine. • Drive the vehicle at **10 km/h {6.2 mph} or more** for **approx. 1 min**. • Perform the DTC Reading Procedure. (See **ON-BOARD DIAGNOSTIC TEST [SKYACTIV-G 2.0, SKYACTIV-G 2.5]**.) • Is the same DTC present?	Yes	Repeat the inspection from Step 1. • If the malfunction recurs, replace the PCM. (See **PCM REMOVAL/INSTALLATION [SKYACTIV-G 2.0, SKYACTIV-G 2.5]**.) Go to the next step.
		No	Go to the next step.
12	**VERIFY AFTER REPAIR PROCEDURE** • Perform the “AFTER REPAIR PROCEDURE”. (See **AFTER REPAIR PROCEDURE [SKYACTIV-G 2.0, SKYACTIV-G 2.5]**.) • Are any DTCs present?	Yes	Go to the applicable DTC inspection. (See **DTC TABLE [SKYACTIV-G 2.0, SKYACTIV-G 2.5]**.)
		No	DTC troubleshooting completed.

2014 - Mazda3 - Engine

DTC U0298:00 [SKYACTIV-G 2.0, SKYACTIV-G 2.5]

Details On DTCs

DTC U0298:00	CAN communication: communication error to DC-DC converter
DETECTION CONDITION	• PCM detects a communication error between the PCM and DC-DC converter. **Diagnostic support note** • This is a continuous monitor (other). • The check engine light does not illuminate. • FREEZE FRAME DATA (Mode 2) is not available. • Snapshot data is available. • DTC is stored in the PCM memory.
FAIL-SAFE FUNCTION	• Not applicable
VEHICLE STATUS WHEN DTCs ARE OUTPUT	• Illuminates charging system warning light.
POSSIBLE CAUSE	• Communication line between DC-DC converter and PCM malfunction • DC-DC converter malfunction • PCM malfunction
SYSTEM WIRING DIAGRAM	Not applicable

Repeatability Verification Procedure

- Clear the DTC from the PCM memory using the M-MDS. (See **CLEARING DTC [SKYACTIV-G 2.0, SKYACTIV-G 2.5]**.)

- Start the engine.

Diagnostic Procedure

STEP	INSPECTION		ACTION
1	**VERIFY RELATED REPAIR INFORMATION AVAILABILITY** • Verify related Service Bulletins and/or on-line repair information availability. • Is any related repair information available?	Yes	Perform repair or diagnosis according to the available repair information. • If the vehicle is not repaired, go to the next step.
		No	Go to the next step.
2	**INSPECT ACCORDING TO THE DIAGNOSTIC PROCEDURE IN ON-BOARD DIAGNOSTIC [MULTIPLEX COMMUNICATION SYSTEM]** • Inspect according to the diagnostic procedure in ON-BOARD DIAGNOSTIC [MULTIPLEX COMMUNICATION SYSTEM]. (See **FOREWORD**.)	—	Go to the next step.
3	**VERIFY DTC TROUBLESHOOTING COMPLETED** • Always reconnect all disconnected connectors. • Clear the DTC from the PCM memory using the M-MDS. (See **CLEARING DTC [SKYACTIV-G 2.0, SKYACTIV-G 2.5]**.) • Implement the repeatability verification procedure. (See **Repeatability Verification Procedure**.) • Perform the DTC Reading Procedure. (See **ON-BOARD DIAGNOSTIC TEST [SKYACTIV-G 2.0, SKYACTIV-G 2.5]**.) • Is the same DTC present?	Yes	Repeat the inspection from Step 1.
		No	Go to the next step.
4	**VERIFY AFTER REPAIR PROCEDURE** • Perform the “AFTER REPAIR PROCEDURE”. (See **AFTER REPAIR PROCEDURE [SKYACTIV-G 2.0,**	Yes	Go to the applicable DTC inspection. (See **DTC TABLE [SKYACTIV-G**

	SKYACTIV-G 2.5].) • Are any DTCs present?		**2.0, SKYACTIV-G 2.5]**.)
		No	DTC troubleshooting completed.

2014 - Mazda3 - Engine

DTC U0302:00 [SKYACTIV-G 2.0, SKYACTIV-G 2.5]

DTC U0302:00	TCM processor error

DETECTION CONDITION	• When any of the following conditions is met:
	  ▪ CAN communication line malfunction between TCM and PCM
	  ▪ TCM internal malfunction
	Diagnostic support note
	• This is a continuous monitor (other).
	• The check engine light illuminates if the PCM detects the above malfunction condition during the first drive cycle.
	• FREEZE FRAME DATA (Mode 2)/Snapshot data is available.
	• DTC is stored in the PCM memory.

FAIL-SAFE FUNCTION	Not applicable

POSSIBLE CAUSE	• TCM connector or terminals malfunction
	• PCM connector or terminals malfunction
	• CAN communication line malfunction between PCM and TCM (local CAN between PCM and TCM)
	  ▪ TCM terminal G—PCM terminal 1A
	  ▪ TCM terminal H—PCM terminal 1B
	• TCM DTC is stored.
	• CAN drive error (TCM or PCM)
	• PCM malfunction
	• TCM malfunction

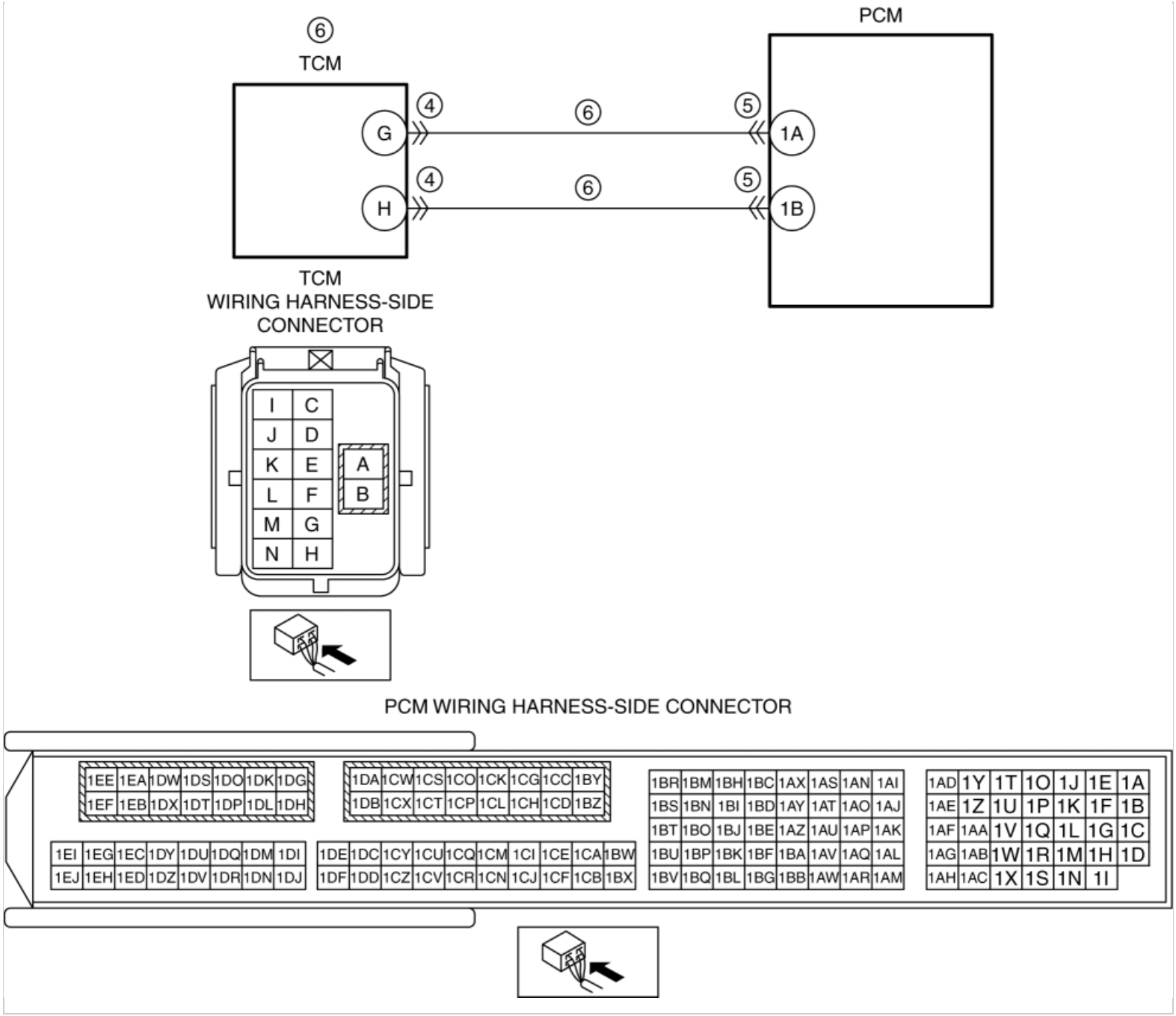

Diagnostic Procedure

STEP	INSPECTION		ACTION
1	**VERIFY FREEZE FRAME DATA (MODE 2)/SNAPSHOT DATA AND DIAGNOSTIC MONITORING TEST RESULTS HAVE BEEN RECORDED** • Have the FREEZE FRAME DATA (Mode 2)/snapshot data and DIAGNOSTIC MONITORING TEST RESULTS (other related) been recorded?	Yes	Go to the next step.
		No	Record the FREEZE FRAME DATA (Mode 2)/snapshot data and DIAGNOSTIC MONITORING TEST RESULTS on the repair order, then go to the next step.
2	**VERIFY RELATED REPAIR INFORMATION AVAILABILITY** • Verify related Service Bulletins and/or on-line repair information availability. • Is any related repair information available?	Yes	Perform repair or diagnosis according to the available repair information. • If the vehicle is not repaired, go to the next step.

		No	Go to the next step.
3	**VERIFY RELATED PENDING CODE AND/OR DTC** • Switch the ignition off, then ON (engine off). • Perform the Pending Trouble Code Access Procedure and DTC Reading Procedure. (See **ON-BOARD DIAGNOSTIC TEST [SKYACTIV-G 2.0, SKYACTIV-G 2.5]**.) • Are any other PENDING CODEs and/or DTCs present?	Yes	Go to the applicable PENDING CODE or DTC inspection. (See **DTC TABLE [SKYACTIV-G 2.0, SKYACTIV-G 2.5]**.)
		No	Go to the next step.
4	**INSPECT TCM CONNECTOR CONDITION** • Switch the ignition off. • Disconnect the TCM connector. • Inspect for poor connection (such as damaged/pulled-out pins, corrosion). • Is there any malfunction?	Yes	Repair or replace the connector and/or terminals, then go to Step 7.
		No	Go to the next step.
5	**INSPECT PCM CONNECTOR CONDITION** • Disconnect the PCM connector. • Inspect for poor connection (such as damaged/pulled-out pins, corrosion). • Is there any malfunction?	Yes	Repair or replace the connector and/or terminals, then go to Step 7.
		No	Go to the next step.
6	**VERIFY TCM DTC** • Perform the TCM DTC inspection using the M-MDS. (See **ON-BOARD DIAGNOSTIC SYSTEM DTC INSPECTION [FW6A-EL]**.) • Are any DTCs present?	Yes	DTC U0074:00 or U0115:00 is displayed: • CAN communication line can be considered the cause. ▪ Repair or replace the wiring harness between PCM and TCM, then go to the next step. DTC other than U0074:00 and U0115:00 is displayed: • Go to the applicable DTC inspection. (See **ON-BOARD DIAGNOSTIC SYSTEM DTC TABLE [FW6A-EL]**.)
		No	TCM can be considered the cause. • Replace the control valve body, then go to the next step. (See **CONTROL VALVE BODY REMOVAL/INSTALLATION [FW6A-EL]**.)
7	**VERIFY DTC TROUBLESHOOTING COMPLETED** • Always reconnect all disconnected connectors. • Clear the DTC from the PCM memory using the M-MDS. (See **AFTER REPAIR PROCEDURE [SKYACTIV-G 2.0, SKYACTIV-G 2.5]**.) • Perform the KOEO or KOER self test. (See **KOEO/KOER SELF TEST [SKYACTIV-G 2.0, SKYACTIV-G 2.5]**.) • Is the same DTC present?	Yes	Repeat the inspection from Step 1. • If the malfunction recurs, replace the PCM. (See **PCM REMOVAL/INSTALLATION [SKYACTIV-G 2.0, SKYACTIV-G 2.5]**.) Go to the next step.
		No	Go to the next step.

8	**VERIFY AFTER REPAIR PROCEDURE** • Perform the “AFTER REPAIR PROCEDURE”. (See **AFTER REPAIR PROCEDURE [SKYACTIV-G 2.0, SKYACTIV-G 2.5]**.) • Are any DTCs present?	Yes	Go to the applicable DTC inspection. (See **DTC TABLE [SKYACTIV-G 2.0, SKYACTIV-G 2.5]**.)
		No	DTC troubleshooting completed.

2014 - Mazda3 - Engine

DTC U0315:00 [SKYACTIV-G 2.0, SKYACTIV-G 2.5]

DTC U0315:00	DSC HU/CM error

DETECTION CONDITION	• When any of the following conditions is met:
	  ▪ CAN communication line malfunction between DSC HU/CM and PCM
	  ▪ DSC HU/CM internal malfunction
	Diagnostic support note
	• This is a continuous monitor (other).
	• The check engine light does not illuminate.
	• FREEZE FRAME DATA (Mode 2) is not available.
	• Snapshot data is available.
	• DTC is stored in the PCM memory.

FAIL-SAFE FUNCTION	Not applicable

POSSIBLE CAUSE	• CAN drive error (DSC HU/CM or PCM)
	• CAN communication line malfunction between DSC HU/CM and PCM
	  ▪ DSC HU/CM terminal AF—Front body control module (FBCM) terminal 2R
	  ▪ DSC HU/CM terminal AC—Front body control module (FBCM) terminal 2L
	  ▪ Front body control module (FBCM) terminal 2P—PCM terminal 2AK
	  ▪ Front body control module (FBCM) terminal 2N—PCM terminal 2AL
	• DSC HU/CM connector or terminals malfunction
	• PCM connector or terminals malfunction
	• DSC HU/CM malfunction

	PCM malfunction

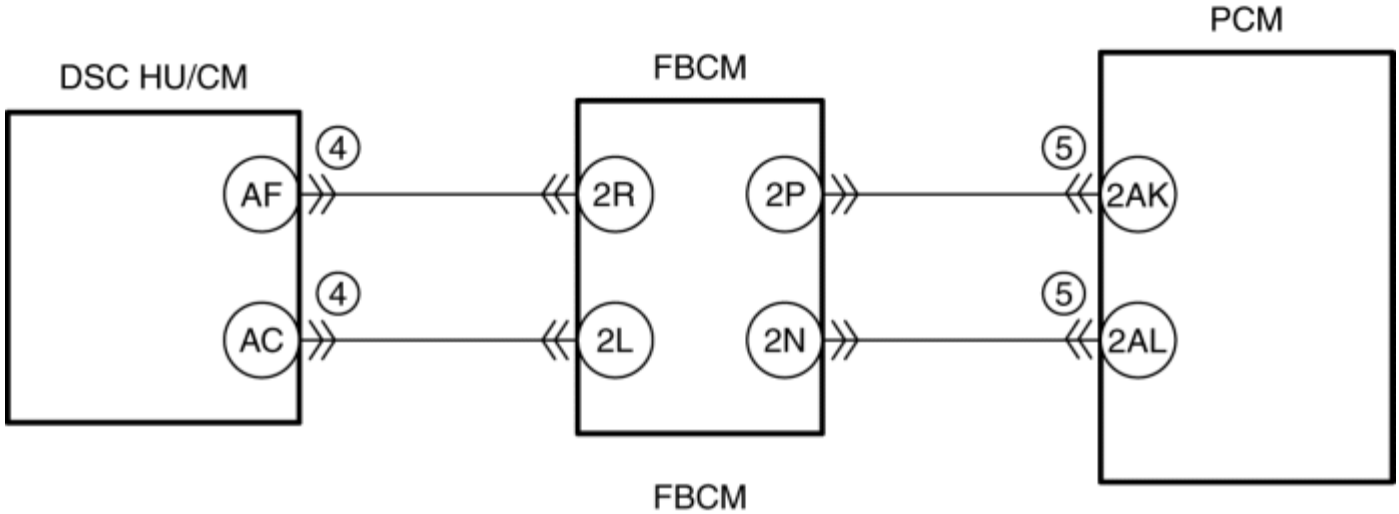

FBCM
WIRING HARNESS-SIDE
CONNECTOR

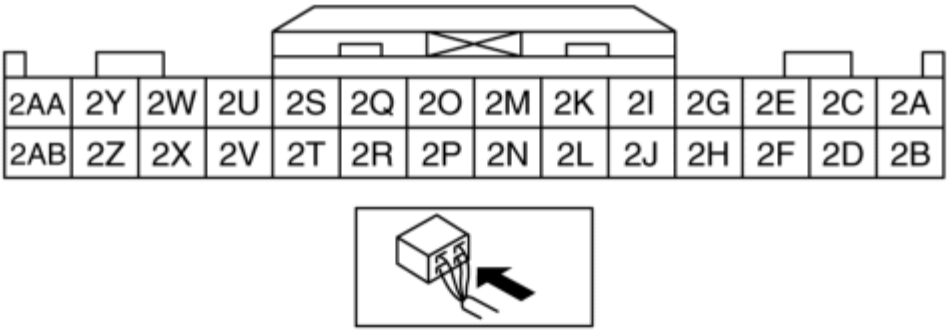

DSC HU/CM WIRING HARNESS-SIDE CONNECTOR

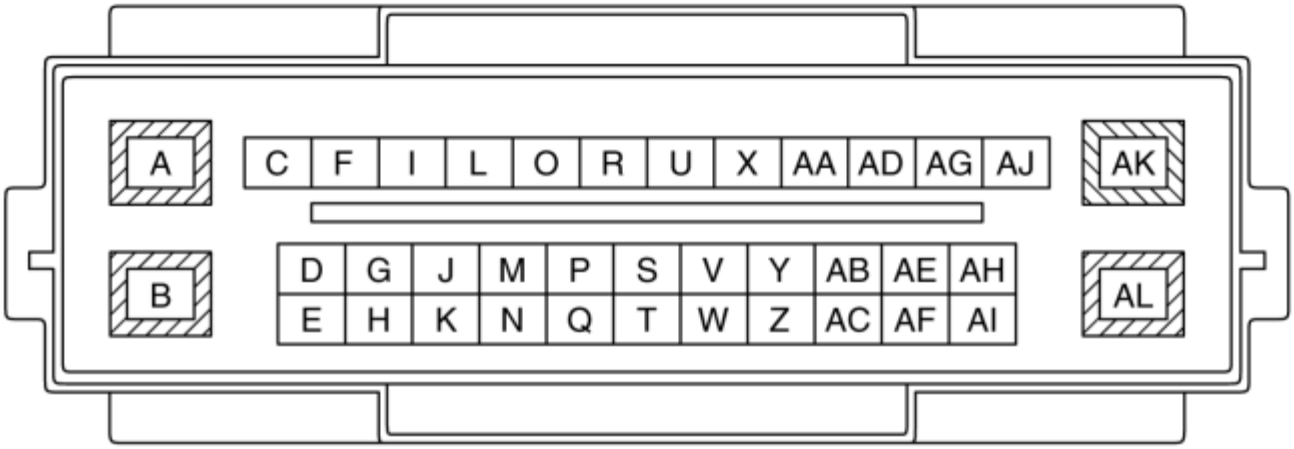

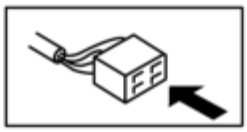

PCM WIRING HARNESS-SIDE CONNECTOR

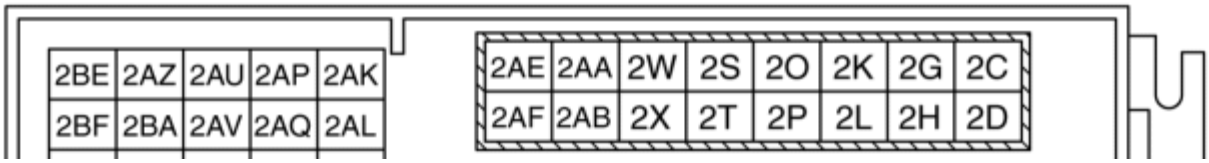

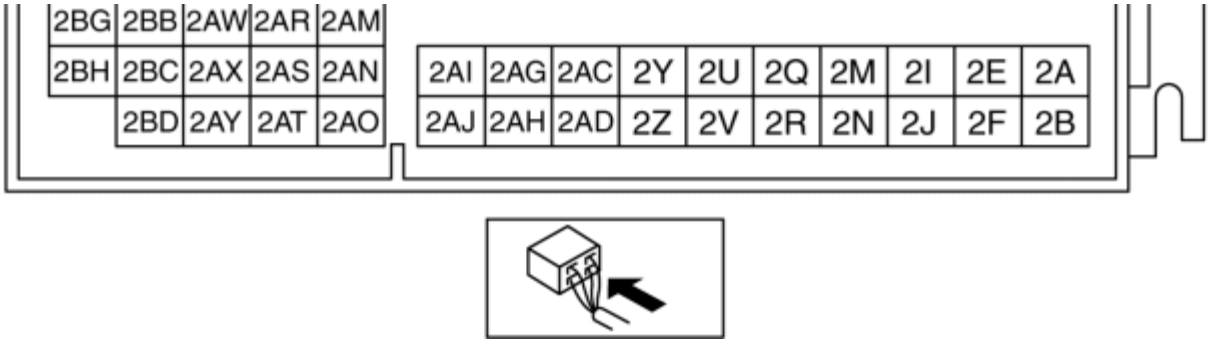

Diagnostic Procedure

STEP	INSPECTION		ACTION
1	**VERIFY RELATED REPAIR INFORMATION AVAILABILITY** • Verify related Service Bulletins and/or on-line repair information availability. • Is any related repair information available?	Yes	Perform repair or diagnosis according to the available repair information. • If the vehicle is not repaired, go to the next step.
		No	Go to the next step.
2	**VERIFY DTC FOR MODULE COMMUNICATION** • Switch the ignition off, then ON (engine off). • Perform the DTC Reading Procedure. (See **ON-BOARD DIAGNOSTIC TEST [SKYACTIV-G 2.0, SKYACTIV-G 2.5]**.) • Are any other PENDING CODEs and/or DTCs present?	Yes	Go to the applicable PENDING CODE or DTC inspection. (See **DTC TABLE [SKYACTIV-G 2.0, SKYACTIV-G 2.5]**.)
		No	Go to the next step.
3	**VERIFY DSC HU/CM DTC** • Perform the DSC HU/CM DTC inspection using the M-MDS. (See **ON-BOARD DIAGNOSIS [DYNAMIC STABILITY CONTROL (DSC)]**.) • Are any DTCs present?	Yes	Go to the applicable DTC inspection. (See **ON-BOARD DIAGNOSIS [DYNAMIC STABILITY CONTROL (DSC)]**.)
		No	Go to the next step.
4	**INSPECT DSC HU/CM CONNECTOR CONDITION** • Switch the ignition off. • Disconnect the DSC HU/CM connector.	Yes	Repair or replace the connector and/or terminals, then go to Step 6.
		No	Go to the next step.

	• Inspect for poor connection (such as damaged/pulled-out pins, corrosion). • Is there any malfunction?		
5	**INSPECT PCM CONNECTOR CONDITION** • Disconnect the PCM connector. • Inspect for poor connection (such as damaged/pulled-out pins, corrosion). • Is there any malfunction?	Yes	Repair or replace the connector and/or terminals, then go to the next step.
		No	Go to the next step.
6	**VERIFY DTC TROUBLESHOOTING COMPLETED** • Always reconnect all disconnected connectors. • Clear the DTC from the PCM memory using the M-MDS. (See **AFTER REPAIR PROCEDURE [SKYACTIV-G 2.0, SKYACTIV-G 2.5]**.) • Perform the KOEO or KOER self test. (See **KOEO/KOER SELF TEST [SKYACTIV-G 2.0, SKYACTIV-G 2.5]**.) • Is the same DTC present?	Yes	Repeat the inspection from Step 1. • If the malfunction recurs, replace the PCM. (See **PCM REMOVAL/INSTALLATION [SKYACTIV-G 2.0, SKYACTIV-G 2.5]**.) Go to the next step.
		No	Go to the next step.
7	**VERIFY AFTER REPAIR PROCEDURE** • Perform the “AFTER REPAIR PROCEDURE”. (See **AFTER REPAIR PROCEDURE [SKYACTIV-G 2.0, SKYACTIV-G 2.5]**.) • Are any DTCs present?	Yes	Go to the applicable DTC inspection. (See **DTC TABLE [SKYACTIV-G 2.0, SKYACTIV-G 2.5]**.)
		No	DTC troubleshooting completed.

2014 - Mazda3 - Engine

DTC U0320:00 [SKYACTIV-G 2.0, SKYACTIV-G 2.5]

DTC U0320:00	EPS control module error

DETECTION CONDITION	• When any of the following conditions is met:
	  ▪ CAN communication line malfunction between EPS control module and PCM
	  ▪ EPS control module internal malfunction
	Diagnostic support note
	• This is a continuous monitor (other).
	• The check engine light does not illuminate.
	• FREEZE FRAME DATA (Mode 2) is not available.
	• Snapshot data is available.
	• DTC is stored in the PCM memory.

FAIL-SAFE FUNCTION	Not applicable

POSSIBLE CAUSE	• CAN drive error (EPS control module or PCM)
	• CAN communication line malfunction between EPS control module and PCM
	  ▪ EPS control module terminal 2B—Front body control module (FBCM) terminal 2K
	  ▪ EPS control module terminal 2D—Front body control module (FBCM) terminal 2I
	  ▪ Front body control module (FBCM) terminal 2P—PCM terminal 2AK
	  ▪ Front body control module (FBCM) terminal 2N—PCM terminal 2AL
	• EPS control module connector or terminals malfunction
	• PCM connector or terminals malfunction
	• EPS control module malfunction
	• PCM malfunction

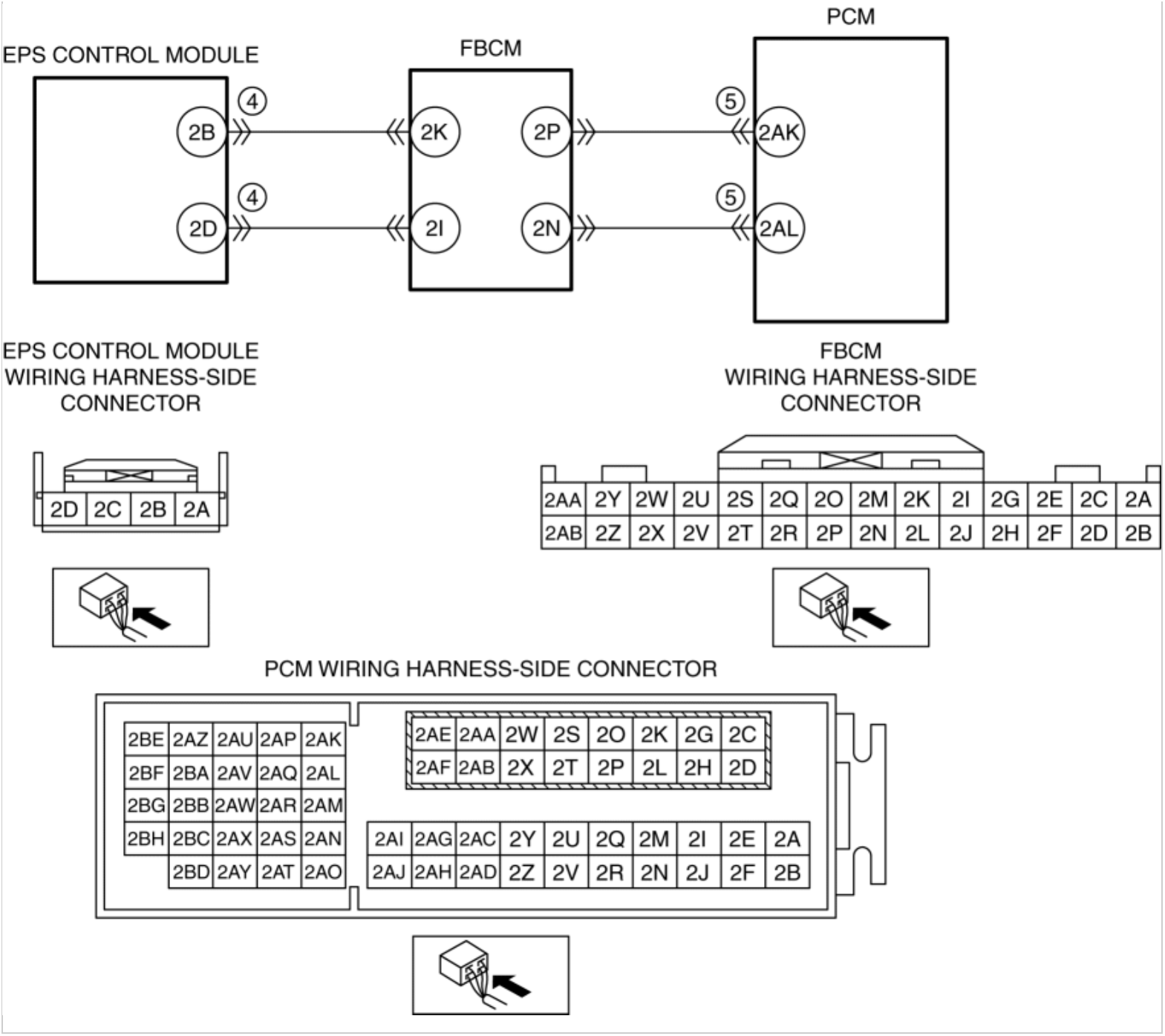

Diagnostic Procedure

STEP	INSPECTION		ACTION
1	**VERIFY RELATED REPAIR INFORMATION AVAILABILITY** • Verify related Service Bulletins and/or on-line repair information availability. • Is any related repair information available?	Yes	Perform repair or diagnosis according to the available repair information. • If the vehicle is not repaired, go to the next step.
		No	Go to the next step.
2	**VERIFY DTC FOR MODULE COMMUNICATION** • Switch the ignition off, then ON (engine off).	Yes	Go to the applicable PENDING CODE or DTC inspection.

	• Perform the DTC Reading Procedure. (See **ON-BOARD DIAGNOSTIC TEST [SKYACTIV-G 2.0, SKYACTIV-G 2.5]**.) • Are any other PENDING CODEs and/or DTCs present?		(See **DTC TABLE [SKYACTIV-G 2.0, SKYACTIV-G 2.5]**.)
		No	Go to the next step.
3	**VERIFY EPS CONTROL MODULE DTC** • Perform the EPS control module DTC inspection using the M-MDS. (See **ELECTRIC POWER STEERING (EPS) ON-BOARD DIAGNOSIS**.) • Are any DTCs present?	Yes	Go to the applicable DTC inspection. (See **ELECTRIC POWER STEERING (EPS) ON-BOARD DIAGNOSIS**.)
		No	Go to the next step.
4	**INSPECT EPS CONTROL MODULE CONNECTOR CONDITION** • Switch the ignition off. • Disconnect the EPS control module connector. • Inspect for poor connection (such as damaged/pulled-out pins, corrosion). • Is there any malfunction?	Yes	Repair or replace the connector and/or terminals, then go to Step 6.
		No	Go to the next step.
5	**INSPECT PCM CONNECTOR CONDITION** • Disconnect the PCM connector. • Inspect for poor connection (such as damaged/pulled-out pins, corrosion). • Is there any malfunction?	Yes	Repair or replace the connector and/or terminals, then go to the next step.
		No	Go to the next step.
6	**VERIFY DTC TROUBLESHOOTING COMPLETED** • Always reconnect all disconnected connectors. • Clear the DTC from the PCM memory using the M-MDS. (See **AFTER REPAIR PROCEDURE [SKYACTIV-G 2.0, SKYACTIV-G 2.5]**.) • Perform the KOEO or KOER self test. (See **KOEO/KOER SELF TEST [SKYACTIV-G 2.0, SKYACTIV-G 2.5]**.) • Is the same DTC present?	Yes	Repeat the inspection from Step 1. • If the malfunction recurs, replace the PCM. (See **PCM REMOVAL/INSTALLATION [SKYACTIV-G 2.0, SKYACTIV-G 2.5]**.) Go to the next step.
		No	Go to the next step.
7	**VERIFY AFTER REPAIR PROCEDURE** • Perform the “AFTER REPAIR PROCEDURE”. (See **AFTER REPAIR PROCEDURE [SKYACTIV-G 2.0, SKYACTIV-G 2.5]**.) • Are any DTCs present?	Yes	Go to the applicable DTC inspection. (See **DTC TABLE [SKYACTIV-G 2.0, SKYACTIV-G 2.5]**.)
		No	DTC troubleshooting completed.

DTC U0320:00 [SKYACTIV-G 2.0, SKYACTIV-G 2.5]

2014 - Mazda3 - Engine

DTC U0323:00 [SKYACTIV-G 2.0, SKYACTIV-G 2.5]

DTC U0323:00	Instrument cluster error

DETECTION CONDITION	• When any of the following conditions is met:
	  ▪ CAN communication line malfunction between instrument cluster and PCM
	  ▪ Instrument cluster internal malfunction
	Diagnostic support note
	• This is a continuous monitor (other).
	• The check engine light does not illuminate.
	• FREEZE FRAME DATA (Mode 2) is not available.
	• Snapshot data is available.
	• DTC is stored in the PCM memory.

FAIL-SAFE FUNCTION	Not applicable

POSSIBLE CAUSE	• CAN drive error (instrument cluster or PCM)
	• CAN communication line malfunction between instrument cluster and PCM
	  ▪ Instrument cluster terminal B—Front body control module (FBCM) terminal 2K
	  ▪ Instrument cluster terminal D—Front body control module (FBCM) terminal 2I
	  ▪ Front body control module (FBCM) terminal 2P—PCM terminal 2AK
	  ▪ Front body control module (FBCM) terminal 2N—PCM terminal 2AL
	• Instrument cluster connector or terminals malfunction
	• PCM connector or terminals malfunction
	• Instrument cluster malfunction
	• PCM malfunction

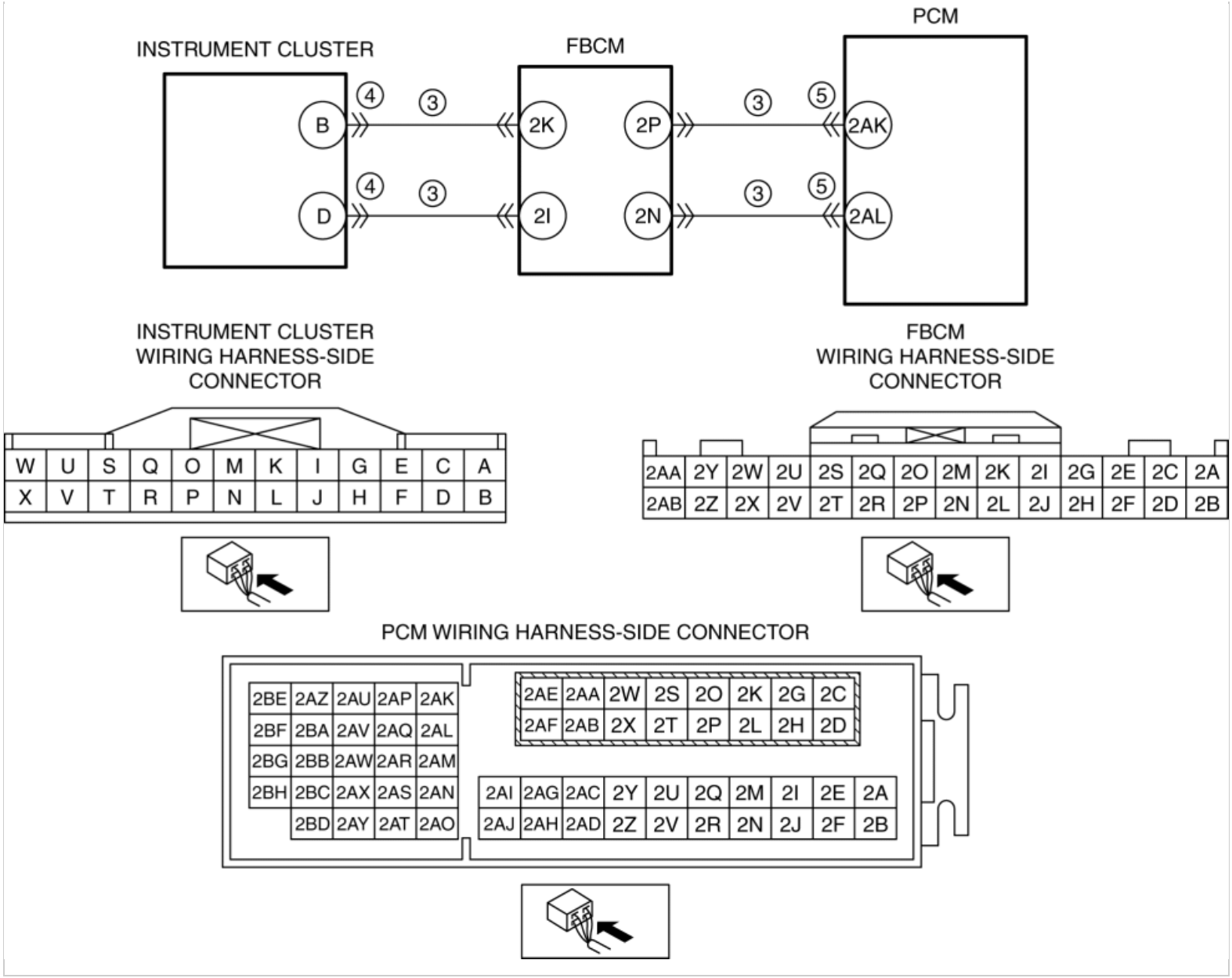

Diagnostic Procedure

STEP	INSPECTION		ACTION
1	**VERIFY RELATED REPAIR INFORMATION AVAILABILITY** • Verify related Service Bulletins and/or on-line repair information availability. • Is any related repair information available?	Yes	Perform repair or diagnosis according to the available repair information. • If the vehicle is not repaired, go to the next step.
		No	Go to the next step.
2	**VERIFY DTC FOR MODULE COMMUNICATION** • Switch the ignition off, then ON (engine off). • Perform the DTC Reading Procedure. (See **ON-BOARD DIAGNOSTIC TEST [SKYACTIV-G 2.0, SKYACTIV-G 2.5]**.) • Are any other PENDING CODEs	Yes	Go to the applicable PENDING CODE or DTC inspection. (See **DTC TABLE [SKYACTIV-G 2.0, SKYACTIV-G 2.5]**.)
		No	Go to the next step.

	and/or DTCs present?		
3	**VERIFY INSTRUMENT CLUSTER DTC** • Perform the instrument cluster DTC inspection using the M-MDS. (See **DTC INSPECTION [INSTRUMENT CLUSTER]**.) • Are any DTCs present?	Yes	DTC U0100:00 is displayed: • CAN communication line can be considered the cause. ▪ Repair or replace the wiring harness between PCM and instrument cluster, then go to Step 6. DTC other than U0100:00 is displayed: • Go to the applicable DTC inspection. (See **DTC TABLE [INSTRUMENT CLUSTER]**.)
		No	Go to the next step.
4	**INSPECT INSTRUMENT CLUSTER CONNECTOR CONDITION** • Switch the ignition off. • Disconnect the instrument cluster connector. • Inspect for poor connection (such as damaged/pulled-out pins, corrosion). • Is there any malfunction?	Yes	Repair or replace the connector and/or terminals, then go to Step 6.
		No	Go to the next step.
5	**INSPECT PCM CONNECTOR CONDITION** • Disconnect the PCM connector. • Inspect for poor connection (such as damaged/pulled-out pins, corrosion). • Is there any malfunction?	Yes	Repair or replace the connector and/or terminals, then go to the next step.
		No	Go to the next step.
6	**VERIFY DTC TROUBLESHOOTING COMPLETED** • Always reconnect all disconnected connectors. • Clear the DTC from the PCM memory using the M-MDS. (See **AFTER REPAIR PROCEDURE [SKYACTIV-G 2.0, SKYACTIV-G 2.5]**.) • Perform the KOEO or KOER self test. (See **KOEO/KOER SELF TEST [SKYACTIV-G 2.0, SKYACTIV-G 2.5]**.) • Is the same DTC present?	Yes	Repeat the inspection from Step 1. • If the malfunction recurs, replace the PCM. (See **PCM REMOVAL/INSTALLATION [SKYACTIV-G 2.0, SKYACTIV-G 2.5]**.) Go to the next step.
		No	Go to the next step.
7	**VERIFY AFTER REPAIR PROCEDURE** • Perform the “AFTER REPAIR PROCEDURE”. (See **AFTER REPAIR PROCEDURE [SKYACTIV-G 2.0, SKYACTIV-G 2.5]**.) • Are any DTCs present?	Yes	Go to the applicable DTC inspection. (See **DTC TABLE [SKYACTIV-G 2.0, SKYACTIV-G 2.5]**.)
		No	DTC troubleshooting completed.

2014 - Mazda3 - Engine

DTC U0336:00 [SKYACTIV-G 2.0, SKYACTIV-G 2.5]

DTC U0336:00	SAS control module error

DETECTION CONDITION	• When any of the following conditions is met:
	  ▪ CAN communication line malfunction between SAS control module and PCM
	  ▪ SAS control module internal malfunction
	Diagnostic support note
	• This is a continuous monitor (other).
	• The check engine light does not illuminate.
	• FREEZE FRAME DATA (Mode 2) is not available.
	• Snapshot data is available.
	• DTC is stored in the PCM memory.

FAIL-SAFE FUNCTION	Not applicable

POSSIBLE CAUSE	• CAN drive error (SAS control module or PCM)
	• CAN communication line malfunction between SAS control module and PCM
	  ▪ SAS control module terminal 3K—Front body control module (FBCM) terminal 2K
	  ▪ SAS control module terminal 3L—Front body control module (FBCM) terminal 2I
	  ▪ Front body control module (FBCM) terminal 2P—PCM terminal 2AK
	  ▪ Front body control module (FBCM) terminal 2N—PCM terminal 2AL
	• SAS control module connector or terminals malfunction
	• PCM connector or terminals malfunction
	• SAS control module malfunction
	• PCM malfunction

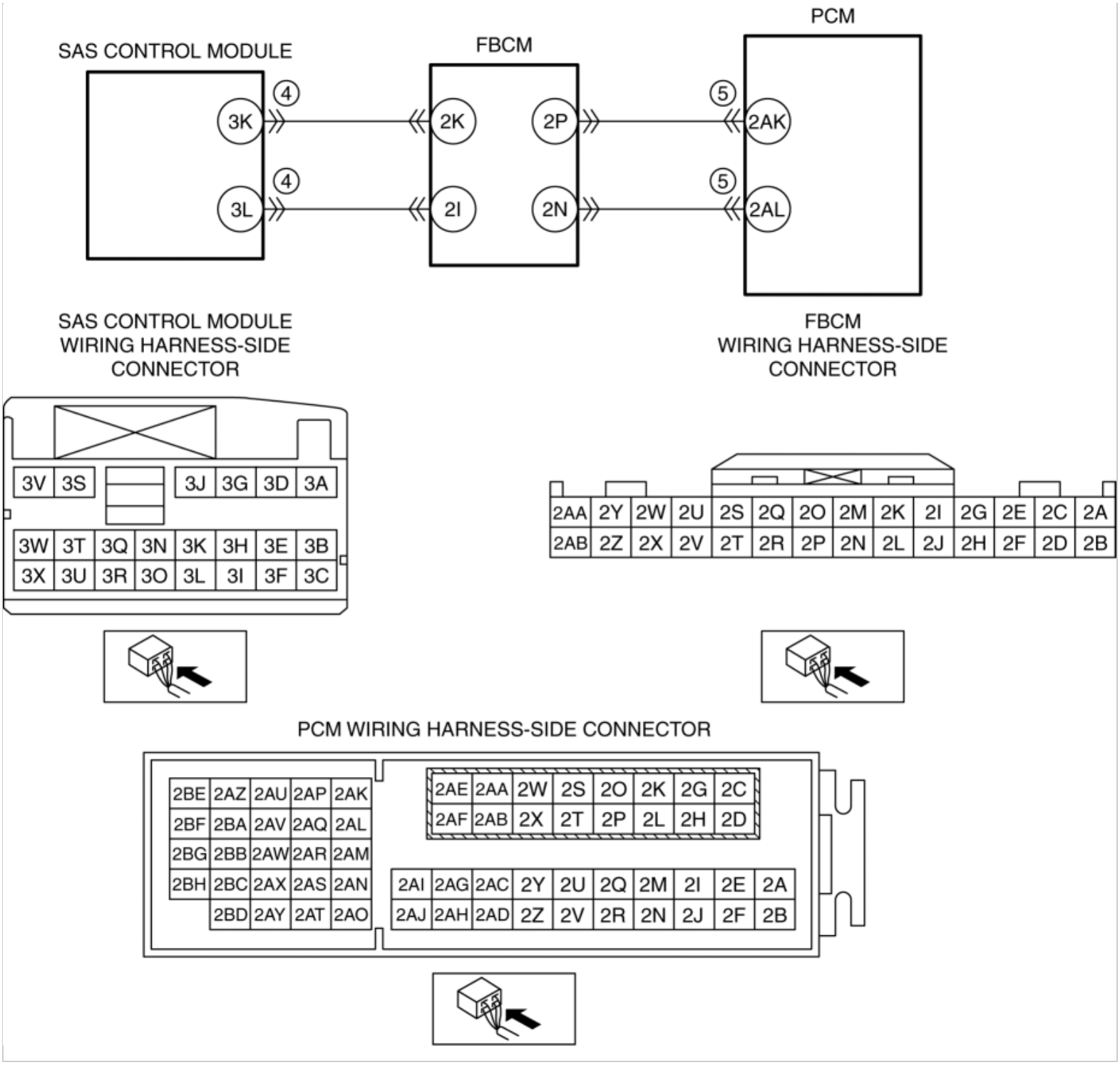

Diagnostic Procedure

STEP	INSPECTION		ACTION
1	**VERIFY RELATED REPAIR INFORMATION AVAILABILITY** • Verify related Service Bulletins and/or on-line repair information availability. • Is any related repair information available?	Yes	Perform repair or diagnosis according to the available repair information. • If the vehicle is not repaired, go to the next step.
		No	Go to the next step.
	VERIFY DTC FOR MODULE COMMUNICATION		

2	• Switch the ignition off, then ON (engine off). • Perform the DTC Reading Procedure. (See **ON-BOARD DIAGNOSTIC TEST [SKYACTIV-G 2.0, SKYACTIV-G 2.5]**.) • Are any other PENDING CODEs and/or DTCs present?	Yes	Go to the applicable PENDING CODE or DTC inspection. (See **DTC TABLE [SKYACTIV-G 2.0, SKYACTIV-G 2.5]**.)
		No	Go to the next step.
3	**VERIFY SAS CONTROL MODULE DTC** • Perform the SAS control module DTC inspection using the M-MDS. (See **DTC INSPECTION [STANDARD DEPLOYMENT CONTROL SYSTEM]**.) (See **DTC INSPECTION [TWO-STEP DEPLOYMENT CONTROL SYSTEM]**.) • Are any DTCs present?	Yes	Go to the applicable DTC inspection. (See **DTC TABLE [STANDARD DEPLOYMENT CONTROL SYSTEM]**.) (See **DTC TABLE [TWO-STEP DEPLOYMENT CONTROL SYSTEM]**.)
		No	Go to the next step.
4	**INSPECT SAS CONTROL MODULE CONNECTOR CONDITION** • Switch the ignition off. • Disconnect the SAS control module connector. • Inspect for poor connection (such as damaged/pulled-out pins, corrosion). • Is there any malfunction?	Yes	Repair or replace the connector and/or terminals, then go to Step 6.
		No	Go to the next step.
5	**INSPECT PCM CONNECTOR CONDITION** • Disconnect the PCM connector. • Inspect for poor connection (such as damaged/pulled-out pins, corrosion). • Is there any malfunction?	Yes	Repair or replace the connector and/or terminals, then go to the next step.
		No	Go to the next step.
6	**VERIFY DTC TROUBLESHOOTING COMPLETED** • Always reconnect all disconnected connectors. • Clear the DTC from the PCM memory using the M-MDS. (See **AFTER REPAIR PROCEDURE [SKYACTIV-G 2.0, SKYACTIV-G 2.5]**.) • Perform the KOEO or KOER self test. (See **KOEO/KOER SELF TEST [SKYACTIV-G 2.0, SKYACTIV-G 2.5]**.) • Is the same DTC present?	Yes	Repeat the inspection from Step 1. • If the malfunction recurs, replace the PCM. (See **PCM REMOVAL/INSTALLATION [SKYACTIV-G 2.0, SKYACTIV-G 2.5]**.) Go to the next step.
		No	Go to the next step.
7	**VERIFY AFTER REPAIR PROCEDURE** • Perform the “AFTER REPAIR PROCEDURE”. (See **AFTER REPAIR PROCEDURE [SKYACTIV-G 2.0, SKYACTIV-G 2.5]**.) • Are any DTCs present?	Yes	Go to the applicable DTC inspection. (See **DTC TABLE [SKYACTIV-G 2.0, SKYACTIV-G 2.5]**.)
		No	DTC troubleshooting completed.

2014 - Mazda3 - Engine

DTC U0338:00 [SKYACTIV-G 2.0, SKYACTIV-G 2.5]

DTC U0338:00	Start stop unit error

DETECTION CONDITION	• When any of the following conditions is met:
	  ▪ CAN communication line malfunction between start stop unit and PCM
	  ▪ Start stop unit internal malfunction
	Diagnostic support note
	• This is a continuous monitor (other).
	• The check engine light does not illuminate.
	• FREEZE FRAME DATA (Mode 2) is not available.
	• Snapshot data is available.
	• DTC is stored in the PCM memory.

FAIL-SAFE FUNCTION	Not applicable

POSSIBLE CAUSE	• CAN drive error (start stop unit or PCM)
	• CAN communication line malfunction between start stop unit and PCM
	  ▪ Start stop unit terminal 2M—Front body control module (FBCM) terminal 2K
	  ▪ Start stop unit terminal 2O—Front body control module (FBCM) terminal 2I
	  ▪ Front body control module (FBCM) terminal 2P—PCM terminal 2AK
	  ▪ Front body control module (FBCM) terminal 2N—PCM terminal 2AL
	• Start stop unit connector or terminals malfunction
	• PCM connector or terminals malfunction
	• Start stop unit malfunction
	• PCM malfunction

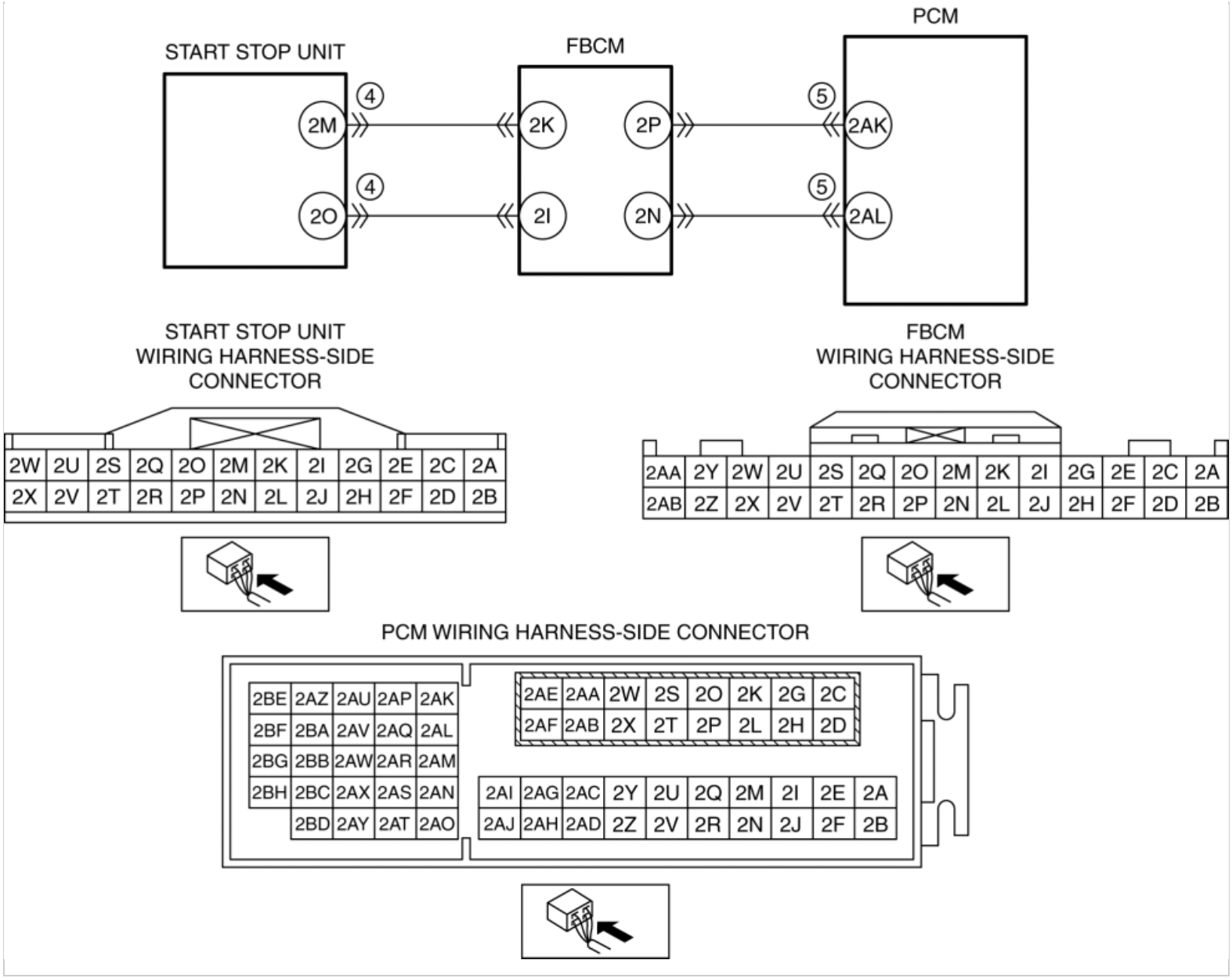

Diagnostic Procedure

STEP	INSPECTION		ACTION
1	**VERIFY RELATED REPAIR INFORMATION AVAILABILITY** • Verify related Service Bulletins and/or on-line repair information availability. • Is any related repair information available?	Yes	Perform repair or diagnosis according to the available repair information. • If the vehicle is not repaired, go to the next step.
		No	Go to the next step.
2	**VERIFY DTC FOR MODULE COMMUNICATION** • Switch the ignition off, then ON (engine off). • Perform the DTC Reading Procedure. (See **ON-BOARD DIAGNOSTIC TEST [SKYACTIV-G 2.0, SKYACTIV-G 2.5]**.) • Are any other PENDING CODEs and/or DTCs present?	Yes	Go to the applicable PENDING CODE or DTC inspection. (See **DTC TABLE [SKYACTIV-G 2.0, SKYACTIV-G 2.5]**.)
		No	Go to the next step.

3	**VERIFY START STOP UNIT DTC** • Perform the start stop unit DTC inspection using the M-MDS. (See **DTC INSPECTION [START STOP UNIT]**.) • Are any DTCs present?	Yes	Go to the applicable DTC inspection. (See **DTC TABLE [START STOP UNIT]**.)
		No	Go to the next step.
4	**INSPECT START STOP UNIT CONNECTOR CONDITION** • Switch the ignition off. • Disconnect the start stop unit connector. • Inspect for poor connection (such as damaged/pulled-out pins, corrosion). • Is there any malfunction?	Yes	Repair or replace the connector and/or terminals, then go to Step 6.
		No	Go to the next step.
5	**INSPECT PCM CONNECTOR CONDITION** • Disconnect the PCM connector. • Inspect for poor connection (such as damaged/pulled-out pins, corrosion). • Is there any malfunction?	Yes	Repair or replace the connector and/or terminals, then go to the next step.
		No	Go to the next step.
6	**VERIFY DTC TROUBLESHOOTING COMPLETED** • Always reconnect all disconnected connectors. • Clear the DTC from the PCM memory using the M-MDS. (See **AFTER REPAIR PROCEDURE [SKYACTIV-G 2.0, SKYACTIV-G 2.5]**.) • Perform the KOEO or KOER self test. (See **KOEO/KOER SELF TEST [SKYACTIV-G 2.0, SKYACTIV-G 2.5]**.) • Is the same DTC present?	Yes	Repeat the inspection from Step 1. • If the malfunction recurs, replace the PCM. (See **PCM REMOVAL/INSTALLATION [SKYACTIV-G 2.0, SKYACTIV-G 2.5]**.) Go to the next step.
		No	Go to the next step.
7	**VERIFY AFTER REPAIR PROCEDURE** • Perform the “AFTER REPAIR PROCEDURE”. (See **AFTER REPAIR PROCEDURE [SKYACTIV-G 2.0, SKYACTIV-G 2.5]**.) • Are any DTCs present?	Yes	Go to the applicable DTC inspection. (See **DTC TABLE [SKYACTIV-G 2.0, SKYACTIV-G 2.5]**.)
		No	DTC troubleshooting completed.

2014 - Mazda3 - Engine

DTC U0433:00 [SKYACTIV-G 2.0, SKYACTIV-G 2.5]

DTC U0433:00	Abnormal message from rear body control module (RBCM)
DETECTION CONDITION	• Correct data cannot be received from rear body control module (RBCM). **Diagnostic support note** • This is a continuous monitor (other). • The check engine light does not illuminate. • FREEZE FRAME DATA (Mode 2)/Snapshot data is not available. • DTC is stored in the PCM memory.
FAIL-SAFE FUNCTION	• Illuminates TCS/DSC indicator light. • Inhibits the TCS (engine control) and DSC controls.
POSSIBLE CAUSE	• CAN communication line malfunction between rear body control module (RBCM) and PCM ▪ Rear body control module (RBCM) terminal 3E—Instrument cluster terminal C ▪ Rear body control module (RBCM) terminal 3G—Instrument cluster terminal E ▪ Instrument cluster terminal B—Front body control module (FBCM) terminal 2K ▪ Instrument cluster terminal D—Front body control module (FBCM) terminal 2I ▪ Front body control module (FBCM) terminal 2P—PCM terminal 2AK ▪ Front body control module (FBCM) terminal 2N—PCM terminal 2AL • PCM connector or terminals malfunction • Instrument cluster connector or terminals malfunction • Rear body control module (RBCM) connector or terminals malfunction • Rear body control module (RBCM) malfunction • Instrument cluster malfunction • PCM malfunction

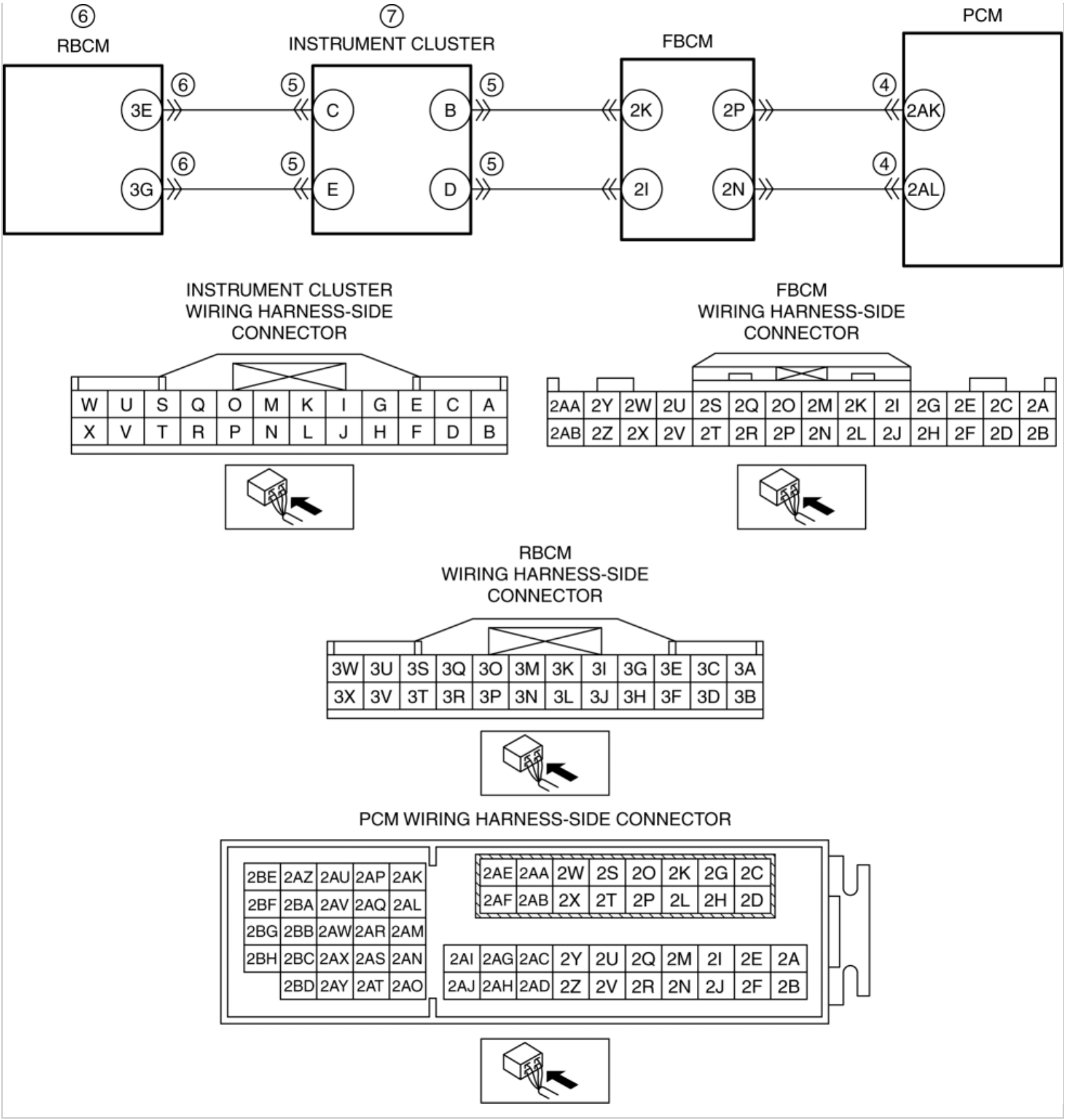

Diagnostic Procedure

STEP	INSPECTION		ACTION
1	**VERIFY RELATED REPAIR INFORMATION AVAILABILITY** • Verify related Service Bulletins and/or on-line repair information	Yes	Perform repair or diagnosis according to the available repair information. • If the vehicle is not repaired, go to the next step.

	availability. • Is any related repair information available?	No	Go to the next step.
2	**VERIFY DTC FOR MODULE COMMUNICATION** • Switch the ignition off, then ON (engine off). • Perform the DTC Reading Procedure. (See **ON-BOARD DIAGNOSTIC TEST [SKYACTIV-G 2.0, SKYACTIV-G 2.5]**.) • Are any other PENDING CODEs and/or DTCs present?	Yes	Go to the applicable PENDING CODE or DTC inspection. (See **DTC TABLE [SKYACTIV-G 2.0, SKYACTIV-G 2.5]**.)
		No	Go to the next step.
3	**VERIFY REAR BODY CONTROL MODULE (RBCM) DTC** • Perform the rear body control module (RBCM) DTC inspection using the M-MDS. (See **DTC INSPECTION [REAR BODY CONTROL MODULE (RBCM)]**.) • Are any DTCs present?	Yes	Go to the applicable DTC inspection. (See **DTC TABLE [REAR BODY CONTROL MODULE (RBCM)]**.)
		No	Go to the next step.
4	**INSPECT PCM CONNECTOR CONDITION** • Switch the ignition off. • Disconnect the PCM connector. • Inspect for poor connection (such as damaged/pulled-out pins, corrosion). • Is there any malfunction?	Yes	Repair or replace the connector and/or terminals, then go to Step 8.
		No	Go to the next step.
5	**INSPECT INSTRUMENT CLUSTER CONNECTOR CONDITION** • Disconnect the instrument cluster connector. • Inspect for poor connection (such as damaged/pulled-out pins, corrosion). • Is there any malfunction?	Yes	Repair or replace the connector and/or terminals, then go to Step 8.
		No	Go to the next step.
6	**INSPECT REAR BODY CONTROL MODULE (RBCM) CONNECTOR CONDITION** • Disconnect the rear body control module (RBCM) connector. • Inspect for poor connection (such as damaged/pulled-out pins, corrosion). • Is there any malfunction?	Yes	Repair or replace the connector and/or terminals, then go to Step 8.
		No	Rear body control module (RBCM) can be considered the cause. • Inspect the rear body control module (RBCM). (See **REAR BODY CONTROL MODULE (RBCM) INSPECTION**.) ▪ If there is any malfunction: • Replace the rear body control module (RBCM), then go to Step 8. (See **REAR BODY CONTROL MODULE (RBCM) REMOVAL/INSTALLATION**.) ▪ If there is no malfunction:

			• Go to the next step.
7	**INSPECT INSTRUMENT CLUSTER** • Inspect the instrument cluster. (See **INSTRUMENT CLUSTER INSPECTION**.) • Is there any malfunction?	Yes	Replace the instrument cluster, then go to the next step. (See **INSTRUMENT CLUSTER REMOVAL/INSTALLATION**.)
		No	Go to the next step.
8	**VERIFY DTC TROUBLESHOOTING COMPLETED** • Always reconnect all disconnected connectors. • Clear the DTC from the PCM memory using the M-MDS. (See **AFTER REPAIR PROCEDURE [SKYACTIV-G 2.0, SKYACTIV-G 2.5]**.) • Perform the KOEO or KOER self test. (See **KOEO/KOER SELF TEST [SKYACTIV-G 2.0, SKYACTIV-G 2.5]**.) • Is the same DTC present?	Yes	Repeat the inspection from Step 1. • If the malfunction recurs, replace the PCM. (See **PCM REMOVAL/INSTALLATION [SKYACTIV-G 2.0, SKYACTIV-G 2.5]**.) Go to the next step.
		No	Go to the next step.
9	**VERIFY AFTER REPAIR PROCEDURE** • Perform the “AFTER REPAIR PROCEDURE”. (See **AFTER REPAIR PROCEDURE [SKYACTIV-G 2.0, SKYACTIV-G 2.5]**.) • Are any DTCs present?	Yes	Go to the applicable DTC inspection. (See **DTC TABLE [SKYACTIV-G 2.0, SKYACTIV-G 2.5]**.)
		No	DTC troubleshooting completed.

2014 - Mazda3 - Engine

DTC U1007:00 [SKYACTIV-G 2.0, SKYACTIV-G 2.5]

DTC U1007:00	CAN/LIN communication system: current sensor information communication error with front body control module (FBCM)
DETECTION CONDITION	• PCM detects a current sensor information communication error from front body control module (FBCM). **Diagnostic support note** • This is a continuous monitor (other). • The check engine light does not illuminate. • FREEZE FRAME DATA (Mode 2) is not available. • Snapshot data is available. • DTC is stored in the PCM memory.
FAIL-SAFE FUNCTION	• Inhibits a part of the generator output control.

POSSIBLE CAUSE	• Communication line between current sensor and front body control module (FBCM) malfunction
	• Communication line between front body control module (FBCM) and PCM malfunction
	• Current sensor connector or terminals malfunction
	• Short to ground or open circuit in current sensor power supply circuit
	  ▪ Short to ground in wiring harness between MAIN 200 A fuse and current sensor terminal A
	  ▪ MAIN 200 A fuse and/or ENG+B 7.5 A fuse malfunction
	  ▪ Open circuit in wiring harness between battery positive terminal and current sensor terminal A
	• Front body control module (FBCM) connector or terminals malfunction
	• Short to ground in wiring harness between current sensor terminal B and front body control module (FBCM) terminal 2E
	• Open circuit in wiring harness between current sensor terminal B and front body control module (FBCM) terminal 2E
	• Current sensor malfunction
	• Front body control module (FBCM) malfunction

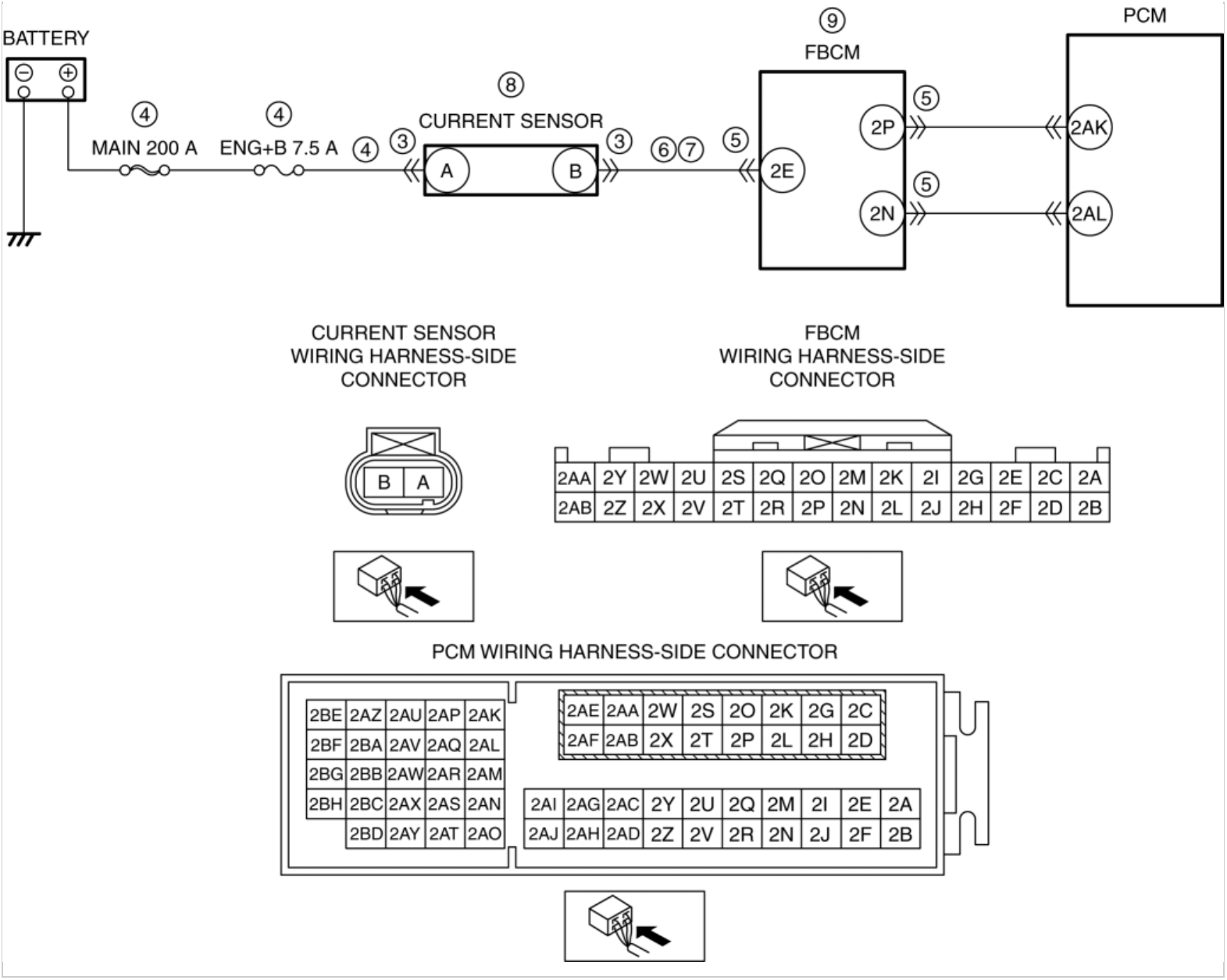

Repeatability Verification Procedure

- Clear the DTC from the PCM memory using the M-MDS. (See **CLEARING DTC [SKYACTIV-G 2.0, SKYACTIV-G 2.5]**.)
- Start the engine.

Diagnostic Procedure

STEP	INSPECTION		ACTION
1	**VERIFY RELATED REPAIR INFORMATION AVAILABILITY** • Verify related Service Bulletins and/or on-line repair information availability. • Is any related repair information available?	Yes	Perform repair or diagnosis according to the available repair information. • If the vehicle is not repaired, go to the next step.
		No	Go to the next step.
	VERIFY RELATED PENDING CODE AND/OR DTC		

2	• Switch the ignition off, then ON (engine off). • Perform the Pending Trouble Code Access Procedure and DTC Reading Procedure. (See **ON-BOARD DIAGNOSTIC TEST [SKYACTIV-G 2.0, SKYACTIV-G 2.5]**.) • Are any other PENDING CODEs and/or DTCs present?	Yes	Go to the applicable PENDING CODE or DTC inspection. (See **DTC TABLE [SKYACTIV-G 2.0, SKYACTIV-G 2.5]**.)
		No	Go to the next step.
3	**INSPECT CURRENT SENSOR CONNECTOR CONDITION** **NOTE:** • Always disconnect current sensor connector before disconnecting the negative battery cable. • Switch the ignition off. • Disconnect the current sensor connector. • Inspect for poor connection (such as damaged/pulled-out pins, corrosion). • Is there any malfunction?	Yes	Repair or replace the connector and/or terminals, then go to Step 10.
		No	Go to the next step.
4	**INSPECT CURRENT SENSOR POWER SUPPLY CIRCUIT FOR SHORT TO GROUND OR OPEN CIRCUIT** • Verify that the current sensor connector is disconnected. • Measure the voltage at the current sensor terminal A (wiring harness-side). • Is the voltage **B+**?	Yes	Go to the next step.
		No	Inspect the MAIN 200 A fuse and ENG+B 7.5 A fuse. • If the fuse is blown: ▪ Refer to the wiring diagram and verify whether or not there is a common connector between MAIN 200 A fuse and current sensor terminal A. **If there is a common connector:** • Determine the malfunctioning part by inspecting the common connector and the terminal for corrosion, damage, or pin disconnection, and the common wiring harness for a short to ground. • Repair or replace the malfunctioning part. **If there is no common connector:** • Repair or replace the wiring harness which has a short to ground. • Replace the fuse. • If the fuse is damaged: ▪ Replace the fuse. • If all fuses are normal: ▪ Refer to the wiring diagram and verify whether or not there is a common connector between battery positive terminal and current sensor terminal A.

			If there is a common connector: • Determine the malfunctioning part by inspecting the common connector and the terminal for corrosion, damage, or pin disconnection, and the common wiring harness for an open circuit. • Repair or replace the malfunctioning part. **If there is no common connector:** • Repair or replace the wiring harness which has an open circuit. Go to Step 10.
5	**INSPECT FRONT BODY CONTROL MODULE (FBCM) CONNECTOR CONDITION** • Disconnect the front body control module (FBCM) connector. • Inspect for poor connection (such as damaged/pulled-out pins, corrosion). • Is there any malfunction?	Yes	Repair or replace the connector and/or terminals, then go to Step 10.
		No	Go to the next step.
6	**INSPECT CURRENT SENSOR SIGNAL CIRCUIT FOR SHORT TO GROUND** • Verify that the current sensor and front body control module (FBCM) connectors are disconnected. • Inspect for continuity between current sensor terminal B (wiring harness-side) and body ground. • Is there continuity?	Yes	Refer to the wiring diagram and verify whether or not there is a common connector between current sensor terminal B and front body control module (FBCM) terminal 2E. **If there is a common connector:** • Determine the malfunctioning part by inspecting the common connector and the terminal for corrosion, damage, or pin disconnection, and the common wiring harness for a short to ground. • Repair or replace the malfunctioning part. **If there is no common connector:** • Repair or replace the wiring harness which has a short to ground. Go to Step 10.
		No	Go to the next step.
7	**INSPECT CURRENT SENSOR SIGNAL CIRCUIT FOR OPEN CIRCUIT** • Verify that the current sensor and front body control module (FBCM) connectors are disconnected. • Inspect for continuity between current sensor terminal B (wiring harness-side) and front body control module (FBCM) terminal 2E (wiring harness-side). • Is there continuity?	Yes	Go to the next step.
		No	Refer to the wiring diagram and verify whether or not there is a common connector between current sensor terminal B and front body control module (FBCM) terminal 2E. **If there is a common connector:** • Determine the malfunctioning part by inspecting the common connector and the terminal for corrosion, damage, or pin disconnection, and the common wiring harness for an open circuit. • Repair or replace the malfunctioning part. **If there is no common connector:** • Repair or replace the wiring harness which has an open circuit. Go to Step 10.

8	**INSPECT CURRENT SENSOR** • Inspect the current sensor. (See **CURRENT SENSOR INSPECTION [SKYACTIV-G 2.0, SKYACTIV-G 2.5]**.) • Is there any malfunction?	Yes	Replace the current sensor, then go to Step 10. (See **CURRENT SENSOR REMOVAL/INSTALLATION [SKYACTIV-G 2.0, SKYACTIV-G 2.5]**.)
		No	Go to the next step.
9	**INSPECT FRONT BODY CONTROL MODULE (FBCM)** • Inspect the front body control module (FBCM). (See **FRONT BODY CONTROL MODULE (FBCM) INSPECTION**.) • Is there any malfunction?	Yes	Replace the front body control module (FBCM), then go to the next step. (See **FRONT BODY CONTROL MODULE (FBCM) REMOVAL/INSTALLATION**.)
		No	Go to the next step.
10	**VERIFY DTC TROUBLESHOOTING COMPLETED** • Always reconnect all disconnected connectors. • Clear the DTC from the PCM memory using the M-MDS. (See **CLEARING DTC [SKYACTIV-G 2.0, SKYACTIV-G 2.5]**.) • Implement the repeatability verification procedure. (See **Repeatability Verification Procedure**.) • Perform the DTC Reading Procedure. (See **ON-BOARD DIAGNOSTIC TEST [SKYACTIV-G 2.0, SKYACTIV-G 2.5]**.) • Is the same DTC present?	Yes	Repeat the inspection from Step 1.
		No	Go to the next step.
11	**VERIFY AFTER REPAIR PROCEDURE** • Perform the “AFTER REPAIR PROCEDURE”. (See **AFTER REPAIR PROCEDURE [SKYACTIV-G 2.0, SKYACTIV-G 2.5]**.) • Are any DTCs present?	Yes	Go to the applicable DTC inspection. (See **DTC TABLE [SKYACTIV-G 2.0, SKYACTIV-G 2.5]**.)
		No	DTC troubleshooting completed.

2014 - Mazda3 - Engine

DTC U2300:00 [SKYACTIV-G 2.0, SKYACTIV-G 2.5]

DTC U2300:00	Global central configuration error

DETECTION CONDITION	• Any of following conditions occurs:
	  ▪ No configuration of the instrument cluster.
	  ▪ The configuration signal with the estimated CAN ID is not sent from the instrument cluster.
	  ▪ The configuration signal value sent via CAN from the instrument cluster is unknown or invalid.
	  ▪ The configuration signal value sent via CAN from the instrument cluster is a value other than the estimated value.
	  ▪ The configuration signal value sent via CAN from the instrument cluster does not match the PCM value.
	Diagnostic support note
	• This is a continuous monitor (other).
	• The check engine light does not illuminate.
	• FREEZE FRAME DATA (Mode 2) is not available.
	• Snapshot data is available.
	• DTC is stored in the PCM memory.

FAIL-SAFE FUNCTION	• Operates by the previously learned configuration value.

POSSIBLE CAUSE	• CAN drive error (instrument cluster or PCM)
	• Configuration data for the instrument cluster is incorrectly set
	• CAN communication line malfunction between instrument cluster and PCM
	  ▪ Instrument cluster terminal B—Front body control module (FBCM) terminal 2K
	  ▪ Instrument cluster terminal D—Front body control module (FBCM) terminal 2I
	  ▪ Front body control module (FBCM) terminal 2P—PCM terminal 2AK
	  ▪ Front body control module (FBCM) terminal 2N—PCM terminal 2AL
	• PCM connector or terminals malfunction
	• Instrument cluster connector or terminals malfunction
	• Instrument cluster loose
	• Instrument cluster malfunction
	• Error in non-volatile memory in PCM
	• PCM malfunction

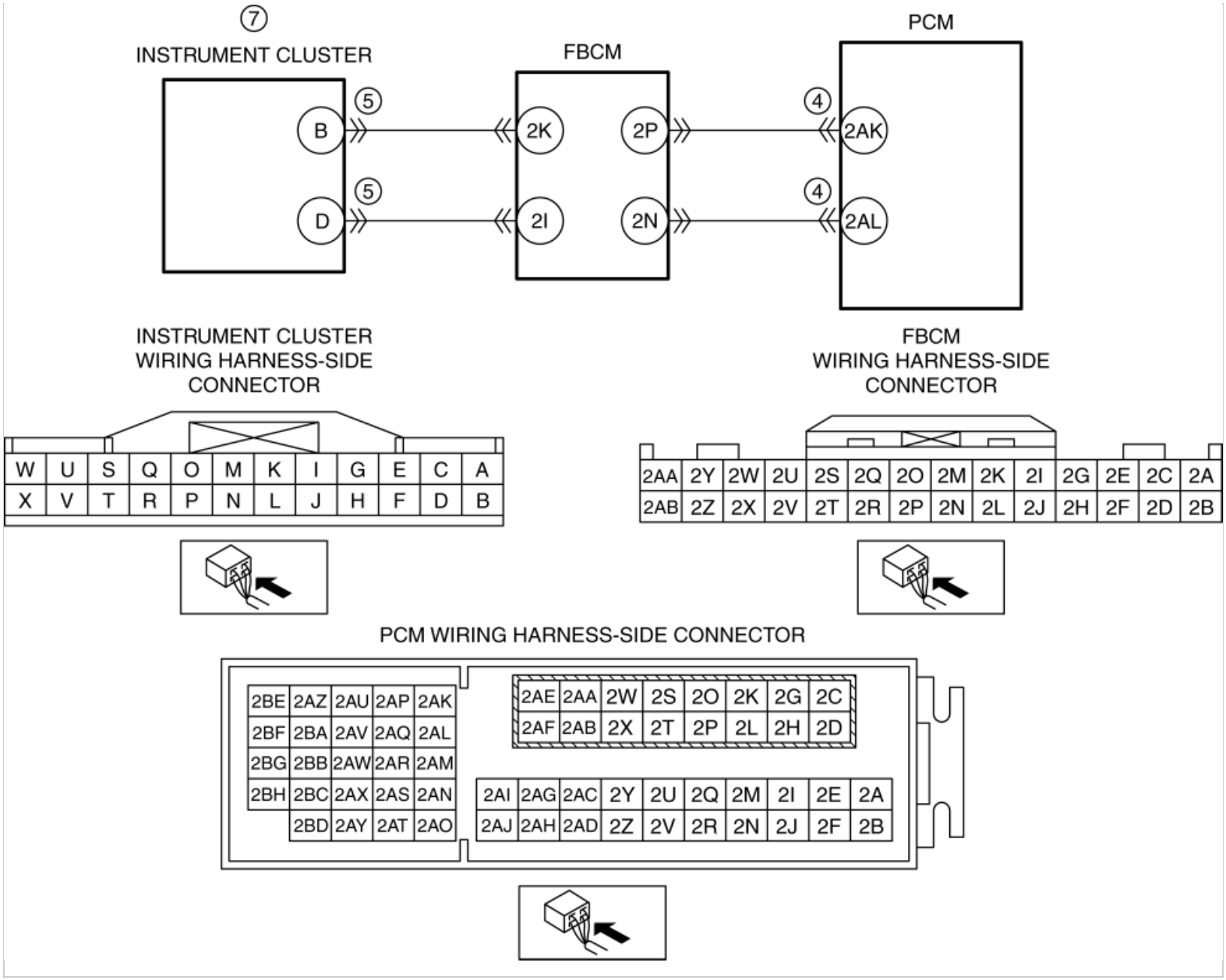

Diagnostic Procedure

STEP	INSPECTION		ACTION
1	**VERIFY RELATED REPAIR INFORMATION AVAILABILITY** • Verify related Service Bulletins and/or on-line repair information availability. • Is any related repair information available?	Yes	Perform repair or diagnosis according to the available repair information. • If the vehicle is not repaired, go to the next step.
		No	Go to the next step.
2	**VERIFY DTC FOR MODULE COMMUNICATION** • Switch the ignition off, then ON (engine off). • Perform the DTC Reading Procedure. (See **ON-BOARD DIAGNOSTIC TEST [SKYACTIV-G 2.0, SKYACTIV-G 2.5]**.)	Yes	Go to the applicable DTC inspection. (See **DTC U0073:00, U0101:00, U0121:00, U0131:00, U0140:00, U0151:00, U0155:00, U0214:00, U0235:00 [SKYACTIV-G 2.0, SKYACTIV-G 2.5]**.)
		No	Go to the next step.

	• Is the DTC U0155:00 also present?		
3	**VERIFY INSTRUMENT CLUSTER DTC** • Perform the instrument cluster DTC inspection using the M-MDS. (See **DTC INSPECTION [INSTRUMENT CLUSTER]**.) • Are any DTCs present?	Yes	Go to the applicable DTC inspection. (See **DTC TABLE [INSTRUMENT CLUSTER]**.)
		No	Go to the next step.
4	**INSPECT PCM CONNECTOR CONDITION** • Switch the ignition off. • Disconnect the PCM connector. • Inspect for poor connection (such as damaged/pulled-out pins, corrosion). • Is there any malfunction?	Yes	Repair or replace the connector and/or terminals, then go to Step 8.
		No	Go to the next step.
5	**INSPECT INSTRUMENT CLUSTER CONNECTOR CONDITION** • Disconnect the instrument cluster connector. • Inspect for poor connection (such as damaged/pulled-out pins, corrosion). • Is there any malfunction?	Yes	Repair or replace the connector and/or terminals, then go to Step 8.
		No	Go to the next step.
6	**INSPECT INSTALLATION OF INSTRUMENT CLUSTER** • Inspect installation of instrument cluster. • Is the instrument cluster installed securely?	Yes	Go to the next step.
		No	Retighten the instrument cluster, then go to Step 8. (See **INSTRUMENT CLUSTER REMOVAL/INSTALLATION**.)
7	**INSPECT INSTRUMENT CLUSTER** • Inspect the instrument cluster. (See **INSTRUMENT CLUSTER INSPECTION**.) • Is there any malfunction?	Yes	Replace the instrument cluster, then go to the next step. (See **INSTRUMENT CLUSTER REMOVAL/INSTALLATION**.)
		No	Go to the next step.
8	**VERIFY DTC TROUBLESHOOTING COMPLETED** • Always reconnect all disconnected connectors. • Clear the DTC from the PCM memory using the M-MDS. (See **AFTER REPAIR PROCEDURE [SKYACTIV-G 2.0, SKYACTIV-G 2.5]**.) • Switch the ignition ON (engine off) and wait for **15 s or more**. • Switch the ignition off. • Wait until the main relay is off (**approx. 1 min**). • Perform the KOER self test. (See **KOEO/KOER SELF TEST**	Yes	Repeat the inspection from Step 1. • If the malfunction recurs, replace the PCM. (See **PCM REMOVAL/INSTALLATION [SKYACTIV-G 2.0, SKYACTIV-G 2.5]**.) Go to the next step.
		No	Go to the next step.

	[SKYACTIV-G 2.0, SKYACTIV-G 2.5].) • Is the same DTC present?		
9	**VERIFY AFTER REPAIR PROCEDURE** • Perform the “AFTER REPAIR PROCEDURE”. (See **AFTER REPAIR PROCEDURE [SKYACTIV-G 2.0, SKYACTIV-G 2.5]**.) • Are any DTCs present?	Yes	Go to the applicable DTC inspection. (See **DTC TABLE [SKYACTIV-G 2.0, SKYACTIV-G 2.5]**.)
		No	DTC troubleshooting completed.

2014 - Mazda3 - Engine

DTC U3000:41 [SKYACTIV-G 2.0, SKYACTIV-G 2.5]

DTC U3000:41	PCM processor error
DETECTION CONDITION	• Communication error in the PCM. **Diagnostic support note** • This is a continuous monitor (other). • The check engine light does not illuminate. • FREEZE FRAME DATA (Mode 2) is not available. • Snapshot data is available. • DTC is not stored in the PCM memory.
FAIL-SAFE FUNCTION	Not applicable
POSSIBLE CAUSE	• PCM internal malfunction
SYSTEM WIRING DIAGRAM	Not applicable

Diagnostic Procedure

STEP	INSPECTION		ACTION
1	**VERIFY RELATED REPAIR INFORMATION AVAILABILITY** • Verify related Service Bulletins and/or on-line repair information availability. • Is any related repair information available?	Yes	Perform repair or diagnosis according to the available repair information. • If the vehicle is not repaired, go to the next step.
		No	Go to the next step.
2	**VERIFY PCM DTC** • Clear the DTC from the PCM memory using the M-MDS. (See **AFTER REPAIR PROCEDURE**	Yes	Replace the PCM, then go to the next step. (See **PCM REMOVAL/INSTALLATION [SKYACTIV-G 2.0, SKYACTIV-G 2.5]**.)

	[SKYACTIV-G 2.0, SKYACTIV-G 2.5].) • Perform the KOEO self test. (See **KOEO/KOER SELF TEST [SKYACTIV-G 2.0, SKYACTIV-G 2.5]**.) • Is the same DTC present?		
		No	Go to the next step.
3	**VERIFY AFTER REPAIR PROCEDURE** • Perform the “AFTER REPAIR PROCEDURE”. (See **AFTER REPAIR PROCEDURE [SKYACTIV-G 2.0, SKYACTIV-G 2.5]**.) • Are any DTCs present?	Yes	Go to the applicable DTC inspection. (See **DTC TABLE [SKYACTIV-G 2.0, SKYACTIV-G 2.5]**.)
		No	DTC troubleshooting completed.

2014 - Mazda3 - Engine

FOREWORD [SKYACTIV-G 2.0, SKYACTIV-G 2.5]

- If there is any vehicle malfunction complaint lodged by a customer, perform malfunction diagnosis according to the troubleshooting procedure.

Troubleshooting Procedure

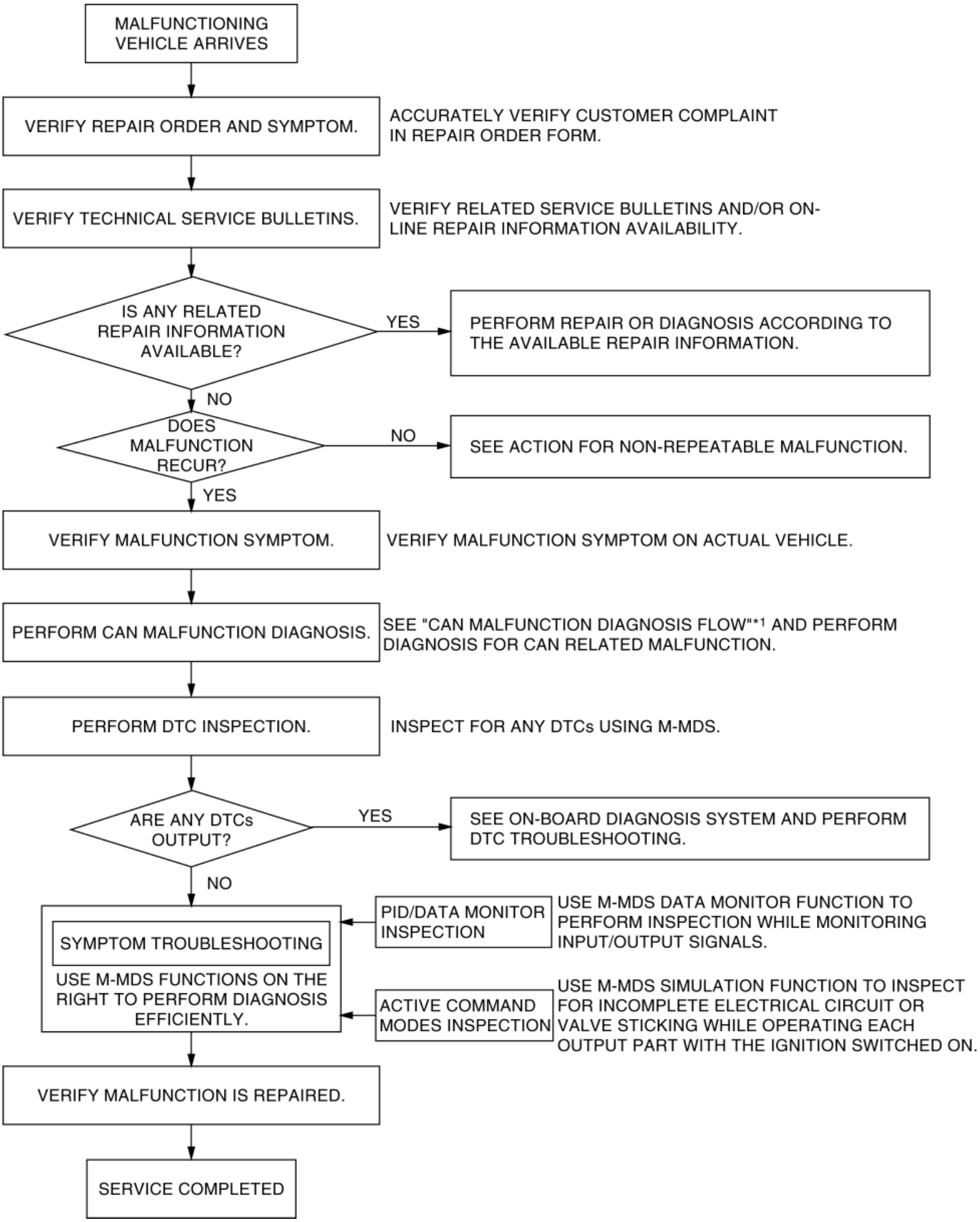
MALFUNCTIONING VEHICLE ARRIVES
VERIFY REPAIR ORDER AND SYMPTOM.
ACCURATELY VERIFY CUSTOMER COMPLAINT IN REPAIR ORDER FORM.
VERIFY TECHNICAL SERVICE BULLETINS.
VERIFY RELATED SERVICE BULLETINS AND/OR ON-LINE REPAIR INFORMATION AVAILABILITY.
IS ANY RELATED REPAIR INFORMATION AVAILABLE?
YES
PERFORM REPAIR OR DIAGNOSIS ACCORDING TO THE AVAILABLE REPAIR INFORMATION.
NO
DOES MALFUNCTION RECUR?
NO
SEE ACTION FOR NON-REPEATABLE MALFUNCTION.
YES
VERIFY MALFUNCTION SYMPTOM.
VERIFY MALFUNCTION SYMPTOM ON ACTUAL VEHICLE.
PERFORM CAN MALFUNCTION DIAGNOSIS.
SEE "CAN MALFUNCTION DIAGNOSIS FLOW"*1 AND PERFORM DIAGNOSIS FOR CAN RELATED MALFUNCTION.
PERFORM DTC INSPECTION.
INSPECT FOR ANY DTCs USING M-MDS.
ARE ANY DTCs OUTPUT?
YES
SEE ON-BOARD DIAGNOSIS SYSTEM AND PERFORM DTC TROUBLESHOOTING.
NO
SYMPTOM TROUBLESHOOTING
USE M-MDS FUNCTIONS ON THE RIGHT TO PERFORM DIAGNOSIS EFFICIENTLY.
PID/DATA MONITOR INSPECTION
USE M-MDS DATA MONITOR FUNCTION TO PERFORM INSPECTION WHILE MONITORING INPUT/OUTPUT SIGNALS.
ACTIVE COMMAND MODES INSPECTION
USE M-MDS SIMULATION FUNCTION TO INSPECT FOR INCOMPLETE ELECTRICAL CIRCUIT OR VALVE STICKING WHILE OPERATING EACH OUTPUT PART WITH THE IGNITION SWITCHED ON.
VERIFY MALFUNCTION IS REPAIRED.
SERVICE COMPLETED

*1

(See CONTROLLER AREA NETWORK (CAN) MALFUNCTION DIAGNOSIS FLOW.)

Repair order form

check sheet

	Repair order	Check with customer	Diagnosis	Repair	Explanation to customer
Date/time					
In-charge					

(s)? Where it occurs. Warning light illumination? Can anyone replicate problem?)

	Registration date:	Date of malfunction occurrence:	Odometer reading km {mph}

bo/ Miller cycle/ LPG/Direct injection) | Transmission (MT/HAT/EC-AT/CVT)

		Driving conditions										
Grade	Occurrence frequency	Fuel	Warm-up condition	Driving operation	Driving posture	Load	Accelerator opening angle	Shift position		Eng RPM	Vehicle speed	Pattern of use
Flat Upgrade Down grade N/A Other	Once/day 2-3 times/day 4-5 times/day Many times/day Once/week 2-3 times/week 4-5 times/week Once/month 2-3 times/month 4-5 times/month Other	Regular High Oct. Diesel LPG Other Fuel gauge F E	Cold Half-warmed Fully warmed N/A Other Water temp. gauge H C	When starting After starting Re-starting (min. after stopped) Idling Racing Accel. from stop Normal driving Deceleration Braking Soft braking Clutch disengage Sudden accel. Light accel. Shifting (km/h {mph} → km/h {mph}) Other	Vehicle stopped Straight-on driving Reversing Right turn Left turn Other	Headlights on Exterior lights on A/C on AUTO °C{°F} Blower: 1 step Blower: 2 steps Blower: 3 steps Blower: 4 steps Power steering lock to lock Rear defrost on Wipers on Audio on Other	0/8 1/8 2/8 3/8 4/8 5/8 6/8 7/8 8/8	MT	1 2 3 4 5 6 N R	Idle Less than 1,000 Less than 1,500 Less than 2,000 Less than 2,500 Less than 3,000 Less than 4,000 Less than 4,500 Less than 5,000 Less than 5,500 Less than 6,000 Less than 6,500 7,000 or more	5 km/h {3 mph} 10 km/h {6.2 mph} 20 km/h {12 mph} 30 km/h {19 mph} 40 km/h {25 mph} 50 km/h {31 mph} 60 km/h {37 mph} 70 km/h {43 mph} 80 km/h {50 mph} 90 km/h {56 mph} 100 km/h {62.1 mph} 110 km/h {68.4 mph} 120 km/h {74.6 mph} 130 km/h {80.8 mph} 140 km/h {87 mph} 150 km/h {93.2 mph} 160 km/h {99.4 mph}	Work_____% Minor use_____% Trips_____% Other_____% Between ENG. start→Stop: Distance, time Approx km {mile} Approx Hrs. No. of occupants: Load condition kg Other
								AT	P R N D S L Hold M (km/h {mph})			

throttle sensor electromotive force, air flow electromotive force, other), maintenance, repair, accident history, installation of commercial devices

Repair order form and malfunction symptom

Customer statement (When? What? What time(
Vehicle body number:
Engine (SOHC/DOHC/RE/DE) (Cab /EGI/ Tur

Environmental conditions		
Weather	Ambient temp.	Drive scenario
Sunny Cloudy Rain Snow High wind Wind gusts N/A Other	-10°C {14°F} or less -10— 0°C {14—32°F} 0—10°C {32—50°F} 10—15°C {50—59°F} 15—20°C {59—58°F} 20—25°C {68—77°F} 25—30°C {77—86°F} 30—35°C {86—95°F} 35—4{0°C {95—104°F} 40—45°C {104—113°F} 45°C {113°F} or more N/A Other	Depart/arrive Traffic jam (city) Standard city street Suburbs Highway Uneven road Dry road surface Wet road surface Snow bound road Icy road Other
DTC, measured data (fuel pressure, intake manifold vacuum, t		

Dealer name:	Vehicle body number:	Odometer reading:
Vehicle-in date:	Estimated repair completion date:	Person in-charge:
Subject (Content):		
Audio memory		

	1	2	3	4	5	6	Fuel level
FM1							E F
FM2							
AM							

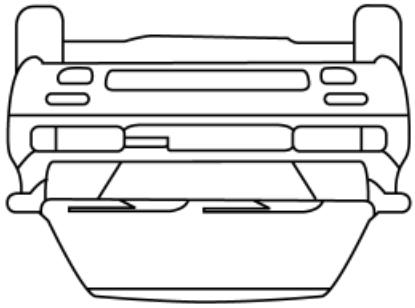

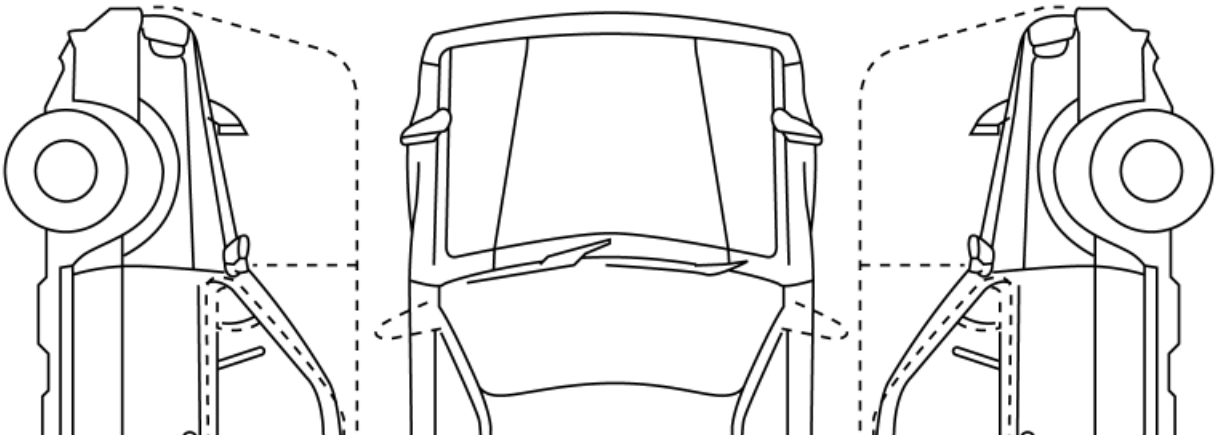

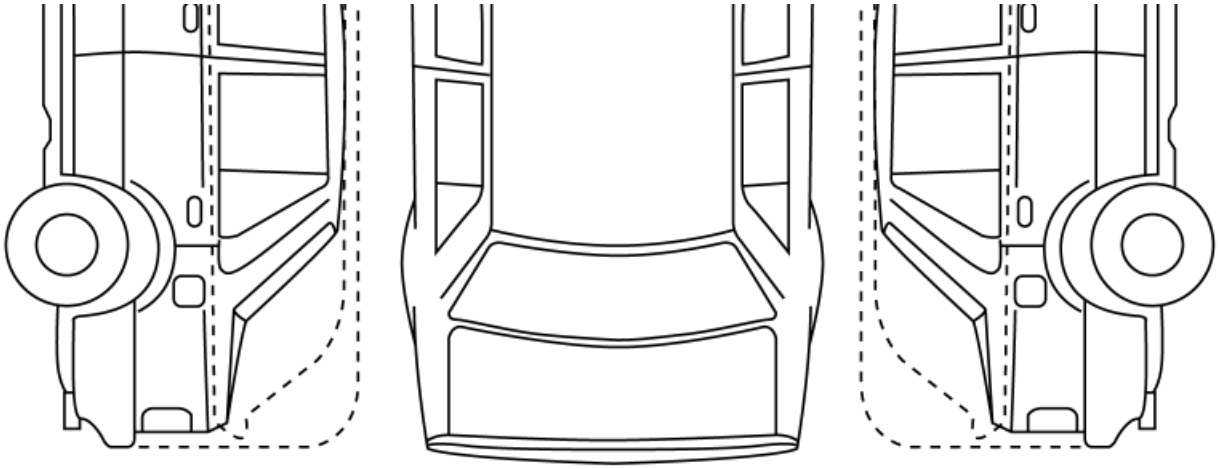

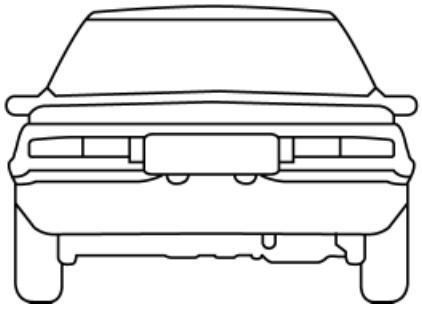

Action for Non-repeatable Malfunction

- If the malfunction does not recur, verify the malfunction cause by performing the following actions:
  - Based on the repair order form, attempt to drive the vehicle or perform tests to replicate the malfunction, record the data (such as PCM circuit voltage) at that time, and detect the malfunction cause.
  - Shake the wiring harness or connector of the electrical component which is suspected to be the cause of the malfunction, and inspect for malfunction or occurrence of any DTCs.

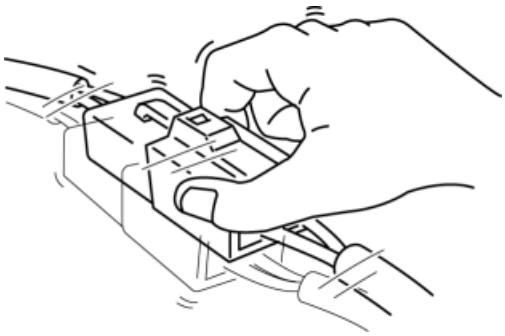

  - Inspect the female terminals on the connector of the electric component which is suspected to be the cause of the malfunction for poor connection.

49 L088 009

2014 - Mazda3 - Engine

SYMPTOM DIAGNOSTIC INDEX [SKYACTIV-G 2.0, SKYACTIV-G 2.5]

- Verify malfunction symptoms using the following diagnostic index, then go to the appropriate troubleshooting chart.

Diagnostic Index—: Not applicable

No.	TROUBLESHOOTING ITEM		DESCRIPTION
1	Blown fuses		—
2	Check engine light illuminates		• Check engine light illuminates incorrectly.
3	Will not crank		• Starter does not work.
4	Hard to start/long crank/erratic start/erratic crank		• Starter cranks engine at normal speed but engine requires excessive cranking time before starting. • Battery is operating normally.
5	Engine stalls	After start/at idle	• Engine stops unexpectedly at idle, after start, or both.
6	Cranks normally but will not start		• Starter cranks engine at normal speed but engine will not run. • Refer to symptom troubleshooting “NO.5 ENGINE STALLS-AFTER START/AT IDLE” if this symptom appears after engine stalls. • Fuel is in tank. • Battery is in normal condition.
7	Engine oil warning light illuminates/message “Engine Oil Pressure Inspection Required” is indicated in LCD		• Engine oil warning light illuminates. • Message “Engine Oil Pressure Inspection Required” is indicated in LCD.
			• Engine speed fluctuates between specified idle speed and lower speed

8	Engine runs rough/rolling idle		and, engine shakes excessively. • Idle speed is too slow and engine shakes excessively.
9	Fast idle/runs on		• Engine speed continues at fast idle after warm-up. • Engine runs after ignition is switched off.
10	Low idle/stalls during deceleration		• Engine stops unexpectedly at beginning of deceleration or recovery from deceleration.
11	Engine stalls/quits	Acceleration/cruise	• Engine stops unexpectedly at beginning of acceleration or during acceleration. • Engine stops unexpectedly while cruising.
	Engine runs rough	Acceleration/cruise	• Engine speed fluctuates during acceleration or cruising.
	Misses	Acceleration/cruise	• Engine misses during acceleration or cruising.
	Buck/jerk	Acceleration/cruise/deceleration	• Vehicle bucks/jerks during acceleration, cruising, or deceleration.
	Hesitation/stumble	Acceleration	• Momentary pause at beginning of acceleration or during acceleration.
	Surges	Acceleration/cruise	• Momentary minor irregularity in engine output.
12	Lack/loss of power	Acceleration/cruise	• Performance is poor under load. (e.g., power down when climbing hills)
13	Knocking/pinging	Acceleration/cruise	• Abnormal combustion occurs under the condition such as the temperature in the combustion chamber is too high resulting in abnormal noise. • Knocking sound occurs from the engine compartment during acceleration.

14	Poor fuel economy		• Fuel economy is unsatisfactory.
15	Emission compliance		• Fails emissions test.
16	High oil consumption/leakage		• Oil consumption is excessive.
17	Cooling system concerns	Overheating	• Engine runs at higher than normal temperature/overheats.
18	Cooling system concerns	Runs cold	• Engine does not reach normal operating temperature.
19	Exhaust smoke		• Blue, black, or white smoke from exhaust system.
20	Fuel odor (in engine compartment)		• Gasoline fuel smell or visible leakage.
21	Engine noise		• Engine noise from under hood.
22	Vibration concerns (engine)		• Vibration from under hood or driveline.
23	A/C does not work sufficiently		• A/C compressor magnetic clutch does not engage when A/C switch is turned on.
24	A/C is always on or A/C compressor runs continuously		• A/C compressor magnetic clutch does not disengage.
25	Exhaust sulphur smell		• Rotten egg smell (sulphur) from exhaust.
26	Fuel refill concerns		• Fuel tank does not fill smoothly.
27	Fuel filling shut off concerns		• Fuel does not shut off properly.
28	Spark plug condition		• Incorrect spark plug condition.
29	ATX concerns	Upshift/downshift/engagement	• ATX concerns not related to engine performance.

2014 - Mazda3 - Engine

CONTROL SYSTEM DEVICE AND CONTROL RELATIONSHIP CHART [SKYACTIV-G 2.0, SKYACTIV-G 2.5]

Item	MAIN RELAY CONTROL	DRIVE-BY-WIRE CONTROL	HYDRAULIC VARIABLE VALVE TIMING CONTROL	ELECTRIC VARIABLE VALVE TIMING CONTROL	FUEL INJECTION CONTROL	FUEL PUMP CONTROL	HIGH PRESSURE FUEL PUMP CONTROL	ELECTRONIC SPARK ADVANCE CONTROL	PURGE CONTROL	A/F SENSOR HEATER CONTROL HO2S HEATER CONTROL	A/C CUT-OFF CONTROL	ELECTRICAL FAN CONTROL	STARTER CUT-OFF CONTROL	GENERATOR CONTROL	ENGINE OIL CONTROL
Input device															
APP sensor No.1, No.2		×	×		×			×	×		×	×			
TP sensor No.1, No.2		×			×						×				
MAF sensor		×	×	×	×		×	×	×	×		×			×
IAT sensor No.1		×		×	×			×	×			×		×	
IAT sensor No.2		×		×	×			×							
MAP sensor		×		×	×			×	×						×
CKP sensor		×	×	×	×	×	×	×	×	×	×	×	×	×	×
Intake CMP sensor		×		×	×			×							
Exhaust CMP sensor		×	×		×		×	×							
ECT sensor No.1		×	×	×	×		×	×	×	×	×	×	×	×	×

Fuel pressure sensor		×			×	×	×								
BARO sensor		×		×	×	×			×			×			
Ion sensor No.1—No.4				×	×										
KS								×							
A/F sensor					×				×						
HO2S					×										
Refrigerant pressure sensor											×	×			
IG1 relay	×		×		×	×		×		×		×	×		
Brake switch (No.1 signal)		×													
Brake switch (No.2 signal)		×													
Transaxle range sensor (ATX)		×			×								×		
Neutral switch (MTX)		×			×			×			×				
CPP switch (MTX)		×			×			×			×				
Starter interlock switch (MTX)													×		
Electric variable valve timing motor/driver				×											
Battery			×			×	×	×	×					×	
Generator (Stator coil)		×													
CAN*1		×			×			×			×	×	×		
ECT sensor No.2	Only used for OBD.														
Fuel tank pressure sensor	Only used for OBD.														
Output device															
Main relay	×														

Throttle valve actuator		×													
Electric variable valve timing motor/driver				×	×										
Electric variable valve timing relay				×											
OCV			×												
Fuel injector No.1—No.4					×										
Fuel injector relay					×										
Fuel pump control module						×									
Fuel pump relay						×									
Spill valve control solenoid valve (High pressure fuel pump)							×								
Ignition coil No.1—No.4								×							
Purge solenoid valve									×						
A/F sensor heater										×					
HO2S heater										×					
A/C relay											×				
Cooling fan relay No.1, No.2, No.3												×			
Starter relay													×		
Generator (Field coil)														×	
Engine oil solenoid valve															×
CV solenoid valve	Only used for OBD.														

*1

TCM (ATX), DSC HU/CM, instrument cluster, start stop unit

CONTROL SYSTEM DEVICE AND CONTROL RELATIONSHIP CHART [SKYACTIV-G 2.0, SKYACTIV-G 2.5]

2014 - Mazda3 - Engine

QUICK DIAGNOSTIC CHART [SKYACTIV-G 2.0, SKYACTIV-G 2.5]

X: Applied

	Possible factor / Troubleshooting item		Starter motor malfunction (mechanical or electrical)	Starter circuit including ignition switch is open	Improper engine oil level	Low or dead battery	Charging system malfunction	Improper engine compression	Improper dipstick	Base engine malfunction	Drive plate (ATX) or flywheel (MTX) is seized	Improper tension or damaged drive belts	Improper engine coolant level	Water and anti-freeze mixture is improper	Cooling system malfunction (such as radiator, hoses,overflow system, thermostat)	Cooling fan system malfunction
1	Blown fuses															
2	Check engine light illuminates															
3	Will not crank		X	X		X	X			X	X					
4	Hard to start/long crank/erratic start/erratic crank		X					X		X						
5	Engine stalls	After start/at idle						X								
6	Cranks normally but will not start							X								
7	Engine oil warning light illuminated/message related to engine hydraulic pressure malfunction indicated in display				X				X	X						
8	Engine runs rough/rolling idle							X								
9	Fast idle/runs on															
10	Low idle/stalls during deceleration							X								
11	Engine stalls/quits	Acceleration/cruise						X								
	Engine runs rough	Acceleration/cruise						X								
	Misses	Acceleration/cruise						X								
	Buck/jerk	Acceleration/cruise/deceleration						X								
	Hesitation/stumble	Acceleration						X								
	Surges	Acceleration/cruise						X								
12	Lack/loss of power	Acceleration/cruise						X								
13	Knocking/pinging	Acceleration/cruise						X								X
14	Poor fuel economy							X					X		X	X
15	Emission compliance							X		X					X	
16	High oil consumption/leakage								X	X						
17	Cooling system concerns	Overheating										X	X	X	X	X
18	Cooling system concerns	Runs cold													X	X
19	Exhaust smoke							X		X					X	
20	Fuel odor (in engine compartment)															
21	Engine noise											X				
22	Vibration concerns (engine)															
23	A/C does not work sufficiently															
24	A/C is always on or A/C compressor runs continuously															
25	Exhaust sulphur smell															
26	Fuel refill concerns															
27	Fuel filling shut off concerns															
28	Spark plug condition							X								
29	ATX concerns	Upshift/downshift/engagement	See Section 05-03 TRANSMISSION/TRANSAXLE, SYMPTOM TROUBLESHOOTING [FW6A-EL]													

X: Applied

	Possible factor / Troubleshooting item		Engine or transaxle mounts are improperly installed	Cooling fan or condenser fan seats improper	Fuel quality	Improper engine oil viscosity	Improper valve timing	Oil leakage	Improper oil or fluid level	Coolant leakage	Electric variable valve timing system malfunction	Hydraulic variable valve timing system malfunction	Engine overheating	Air cleaner element clogged or restricted	Air leakage from intake-air system (loose tubes, cracks, gaskets breakage)	Air suction in intake-air system	Intake-air system restriction
1	Blown fuses																
2	Check engine light illuminates										X	X					
3	Will not crank																
4	Hard to start/long crank/erratic start/erratic crank				X		X							X	X		X
5	Engine stalls	After start/at idle			X						X	X	X		X		X
6	Cranks normally but will not start				X		X						X	X	X		X
7	Engine oil warning light illuminated/message related to engine hydraulic pressure malfunction indicated in display					X		X	X								
8	Engine runs rough/rolling idle				X		X						X		X		X
9	Fast idle/runs on										X	X			X		
10	Low idle/stalls during deceleration						X								X		X
11	Engine stalls/quits	Acceleration/cruise			X		X						X	X			X
	Engine runs rough	Acceleration/cruise			X		X						X	X			X
	Misses	Acceleration/cruise			X		X						X	X			X
	Buck/jerk	Acceleration/cruise/deceleration			X		X						X	X			X
	Hesitation/stumble	Acceleration			X		X						X	X			X
	Surges	Acceleration/cruise			X		X						X	X			X
12	Lack/loss of power	Acceleration/cruise			X		X				X	X	X	X	X		X
13	Knocking/pinging	Acceleration/cruise			X								X		X		
14	Poor fuel economy				X		X							X			
15	Emission compliance				X		X						X	X	X		
16	High oil consumption/leakage					X		X									
17	Cooling system concerns	Overheating								X							
18	Cooling system concerns	Runs cold															
19	Exhaust smoke							X		X				X	X		
20	Fuel odor (in engine compartment)																
21	Engine noise								X								
22	Vibration concerns (engine)		X	X													
23	A/C does not work sufficiently																
24	A/C is always on or A/C compressor runs continuously																
25	Exhaust sulphur smell				X												
26	Fuel refill concerns																
27	Fuel filling shut off concerns																
28	Spark plug condition																
29	ATX concerns	Upshift/downshift/engagement	See Section 05-03 TRANSMISSION/TRANSAXLE, SYMPTOM TROUBLESHOOTING [FW6A-EL]														

X: Applied

X: Applied

	Possible factor / Troubleshooting item		Drive-by-wire control system improper operation	Drive-by-wire control system operates with brake override system	Throttle body malfunction	Vacuum leakage (vacuum hose damage, misrouting)	Ignition coil malfunction (e.g. open, short or cracks)	Initial ignition timing misadjustment (CKP and pulse wheel misadjustment)	Spark plug malfunction	Fuel pump (low-pressure side) malfunction (mechanically or electrically)	Pressure regulator (built-into fuel pump unit at fuel tank)	Inadequate fuel pressure (high-pressure side)	Inadequate fuel pressure (low-pressure side)	Fuel line restricted or clogged
1	Blown fuses													
2	Check engine light illuminates		X											
3	Will not crank													
4	Hard to start/long crank/erratic start/erratic crank		X		X	X	X	X	X	X		X	X	X
5	Engine stalls	After start/at idle	X			X	X			X		X	X	X
6	Cranks normally but will not start		X			X	X		X	X		X	X	X
7	Engine oil warning light illuminated/message related to engine hydraulic pressure malfunction indicated in display													
8	Engine runs rough/rolling idle		X			X	X		X	X		X	X	
9	Fast idle/runs on		X		X									
10	Low idle/stalls during deceleration		X			X						X	X	X
11	Engine stalls/quits	Acceleration/cruise	X		X	X			X	X		X	X	X
	Engine runs rough	Acceleration/cruise	X		X	X			X	X		X	X	X
	Misses	Acceleration/cruise	X		X	X			X	X		X	X	X
	Buck/jerk	Acceleration/cruise/deceleration	X	X	X	X			X	X		X	X	X
	Hesitation/stumble	Acceleration	X	X	X	X			X	X		X	X	X
	Surges	Acceleration/cruise	X	X	X	X			X	X		X	X	X
12	Lack/loss of power	Acceleration/cruise	X	X	X	X	X		X	X		X	X	X
13	Knocking/pinging	Acceleration/cruise	X				X					X	X	
14	Poor fuel economy					X	X		X			X	X	X
15	Emission compliance		X		X	X			X			X	X	
16	High oil consumption/leakage													
17	Cooling system concerns	Overheating												
18	Cooling system concerns	Runs cold												
19	Exhaust smoke						X		X			X	X	
20	Fuel odor (in engine compartment)											X	X	
21	Engine noise					X								
22	Vibration concerns (engine)													
23	A/C does not work sufficiently													
24	A/C is always on or A/C compressor runs continuously													
25	Exhaust sulphur smell					X						X	X	
26	Fuel refill concerns													
27	Fuel filling shut off concerns													
28	Spark plug condition													
29	ATX concerns	Upshift/downshift/engagement	See Section 05-03 TRANSMISSION/TRANSAXLE, SYMPTOM TROUBLESHOOTING [FW6A-EL]											

X: Applied

	Possible factor / Troubleshooting item		Fuel injector malfunction (inoperative)	Fuel filters restricted or clogged	Relief valve malfunction (built-into high pressure fuel pump)	Spill valve control solenoid valve malfunction (built-into high pressure fuel pump)	Fuel leakage at fuel line	High pressure fuel pump malfunction	Incorrect fuel injection timing or amount	Improper air/fuel ratio mixture control	Exhaust system or catalytic converter restriction	Exhaust gas leakage	Catalytic converter malfunction	PCV valve malfunction
1	Blown fuses													
2	Check engine light illuminates		X							X			X	
3	Will not crank													
4	Hard to start/long crank/erratic start/erratic crank		X	X	X	X	X	X	X	X	X			X
5	Engine stalls	After start/at idle	X		X	X	X	X	X	X	X			X
6	Cranks normally but will not start		X		X	X	X	X	X	X	X			X
7	Engine oil warning light illuminated/message related to engine hydraulic pressure malfunction indicated in display													X
8	Engine runs rough/rolling idle		X	X	X	X	X	X			X			X
9	Fast idle/runs on		X			X								
10	Low idle/stalls during deceleration		X		X	X	X	X	X					
11	Engine stalls/quits	Acceleration/cruise	X		X	X		X	X	X	X			X
	Engine runs rough	Acceleration/cruise	X		X	X		X	X	X	X			X
	Misses	Acceleration/cruise	X		X	X		X	X	X	X			X
	Buck/jerk	Acceleration/cruise/deceleration	X		X	X		X	X	X	X			X
	Hesitation/stumble	Acceleration	X		X	X		X	X	X	X			X
	Surges	Acceleration/cruise	X		X	X		X	X	X	X			X
12	Lack/loss of power	Acceleration/cruise			X	X		X	X		X	X		X
13	Knocking/pinging	Acceleration/cruise	X			X			X		X			
14	Poor fuel economy		X	X			X	X	X		X			X
15	Emission compliance		X		X	X		X	X	X	X		X	X
16	High oil consumption/leakage													X
17	Cooling system concerns	Overheating												
18	Cooling system concerns	Runs cold												
19	Exhaust smoke		X						X			X		X
20	Fuel odor (in engine compartment)		X				X							
21	Engine noise													
22	Vibration concerns (engine)													
23	A/C does not work sufficiently													
24	A/C is always on or A/C compressor runs continuously													
25	Exhaust sulphur smell													X
26	Fuel refill concerns													
27	Fuel filling shut off concerns													
28	Spark plug condition													
29	ATX concerns	Upshift/downshift/engagement	See Section 05-03 TRANSMISSION/TRANSAXLE, SYMPTOM TROUBLESHOOTING [FW6A-EL]											

X: Applied

	Possible factor / Troubleshooting item		Constant voltage supply circuit malfunction	Main relay malfunction (mechanically or electrically)	No battery power supply to PCM	Poor PCM ground or vehicle ground (open)	Electrical connector disconnection	ECT sensor or related circuit malfunction	Transaxle range sensor malfunction (ATX)	Brake switch or related circuit malfunction	A/F sensor or HO2S or related circuit malfunction	IAT sensor No.1 (integrated in MAF sensor/ IAT sensor No.1) or related circuit malfunction	Fuel pressure sensor or related circuit malfunction	MAP sensor or related circuit malfunction
1	Blown fuses													
2	Check engine light illuminates						X	X		X	X	X	X	X
3	Will not crank			X										
4	Hard to start/long crank/erratic start/erratic crank							X			X		X	
5	Engine stalls	After start/at idle			X	X		X			X		X	
6	Cranks normally but will not start						X	X			X		X	
7	Engine oil warning light illuminated/message related to engine hydraulic pressure malfunction indicated in display													
8	Engine runs rough/rolling idle						X	X					X	X
9	Fast idle/runs on							X						
10	Low idle/stalls during deceleration							X		X	X		X	
11	Engine stalls/quits	Acceleration/cruise		X				X				X	X	X
	Engine runs rough	Acceleration/cruise		X				X				X	X	X
	Misses	Acceleration/cruise		X				X				X	X	X
	Buck/jerk	Acceleration/cruise/deceleration		X				X				X	X	X
	Hesitation/stumble	Acceleration		X				X				X	X	X
	Surges	Acceleration/cruise		X				X				X	X	X
12	Lack/loss of power	Acceleration/cruise						X				X	X	X
13	Knocking/pinging	Acceleration/cruise										X	X	X
14	Poor fuel economy							X				X	X	X
15	Emission compliance							X			X	X	X	X
16	High oil consumption/leakage													
17	Cooling system concerns	Overheating												
18	Cooling system concerns	Runs cold												
19	Exhaust smoke							X			X	X		X
20	Fuel odor (in engine compartment)													
21	Engine noise													
22	Vibration concerns (engine)													
23	A/C does not work sufficiently													
24	A/C is always on or A/C compressor runs continuously													
25	Exhaust sulphur smell						X							
26	Fuel refill concerns													
27	Fuel filling shut off concerns													
28	Spark plug condition													
29	ATX concerns	Upshift/downshift/engagement	See Section 05-03 TRANSMISSION/TRANSAXLE, SYMPTOM TROUBLESHOOTING [FW6A-EL]											

X: Applied

	Possible factor / Troubleshooting item		Intake CMP sensor damaged (e.g.open or short circuit)	Intake CMP sensor pulse wheel (intake camshaft) damaged	Exhaust CMP sensor damaged (e.g.open or short circuit)	Exhaust CMP sensor pulse wheel (exhaust camshaft) damaged	Improper gap between CKP sensor and pulse wheel	CKP sensor damaged (e.g.open or short circuit)	CKP sensor pulse wheel damaged	CPP switch or related circuit malfunction (MTX)	Neutral switch or related circuit malfunction (MTX)	MAF sensor or related circuit malfunction	KS or related circuit malfunction	TP sensor or related circuit malfunction	APP sensor or related circuit malfunction	Improper vehicle speed signal	Cruise control system operation improper
1	Blown fuses																
2	Check engine light illuminates		X		X		X	X				X	X	X	X	X	
3	Will not crank											X					
4	Hard to start/long crank/erratic start/erratic crank		X	X	X	X	X	X	X			X					
5	Engine stalls	After start/at idle	X	X	X	X	X	X	X			X			X		
6	Cranks normally but will not start		X	X	X	X	X	X	X			X			X		
7	Engine oil warning light illuminated/message related to engine hydraulic pressure malfunction indicated in display																
8	Engine runs rough/rolling idle		X	X	X	X	X	X	X			X			X		
9	Fast idle/runs on									X	X				X		X
10	Low idle/stalls during deceleration		X	X	X	X	X	X	X	X	X	X		X	X		
11	Engine stalls/quits	Acceleration/cruise	X	X	X	X	X	X	X	X	X	X		X	X	X	
	Engine runs rough	Acceleration/cruise	X	X	X	X	X	X	X	X	X	X		X	X	X	
	Misses	Acceleration/cruise	X	X	X	X	X	X	X	X	X	X		X	X	X	
	Buck/jerk	Acceleration/cruise/deceleration	X	X	X	X	X	X	X	X	X	X		X	X	X	
	Hesitation/stumble	Acceleration	X	X	X	X	X	X	X	X	X	X		X	X	X	
	Surges	Acceleration/cruise	X	X	X	X	X	X	X	X	X	X		X	X	X	
12	Lack/loss of power	Acceleration/cruise	X	X	X	X	X	X	X	X	X	X			X	X	
13	Knocking/pinging	Acceleration/cruise	X	X	X	X						X	X		X		
14	Poor fuel economy		X	X	X	X	X	X	X			X			X	X	
15	Emission compliance		X	X	X	X	X	X	X			X		X	X	X	
16	High oil consumption/leakage																
17	Cooling system concerns	Overheating															
18	Cooling system concerns	Runs cold															
19	Exhaust smoke						X					X		X	X	X	
20	Fuel odor (in engine compartment)																
21	Engine noise																
22	Vibration concerns (engine)																
23	A/C does not work sufficiently																
24	A/C is always on or A/C compressor runs continuously														X		
25	Exhaust sulphur smell																
26	Fuel refill concerns																
27	Fuel filling shut off concerns																
28	Spark plug condition																
29	ATX concerns	Upshift/downshift/engagement	See Section 05-03 TRANSMISSION/TRANSAXLE,														

29	ATX concerns	Upshift/downshift/engagement	SYMPTOM TROUBLESHOOTING [FW6A-EL]

X: Applied

	Possible factor / Troubleshooting item		A/C system improper operation	Improper refrigerant charging amount	A/C relay (A/C control signal circuit) malfunction	A/C compressor magnetic clutch malfunction	Clutch slippage (MTX)	ATX related parts malfunction (ATX)	Improper ATF level (ATX)	Brake dragging	Loose parts	Improper balance of wheels and tires	Drive line malfunction	Suspension malfunction	Immobilizer system operating properly	Immobilizer system or related circuit malfunction	Advanced keyless entry system malfunction
1	Blown fuses																
2	Check engine light illuminates																
3	Will not crank														X	X	X
4	Hard to start/long crank/erratic start/erratic crank																
5	Engine stalls	After start/at idle	X	X	X												
6	Cranks normally but will not start																
7	Engine oil warning light illuminated/message related to engine hydraulic pressure malfunction indicated in display																
8	Engine runs rough/rolling idle		X	X	X												
9	Fast idle/runs on				X												
10	Low idle/stalls during deceleration		X			X					X						
11	Engine stalls/quits	Acceleration/cruise	X				X	X			X						
	Engine runs rough	Acceleration/cruise	X				X	X			X						
	Misses	Acceleration/cruise	X				X	X			X						
	Buck/jerk	Acceleration/cruise/deceleration	X				X	X			X						
	Hesitation/stumble	Acceleration	X				X	X			X						
	Surges	Acceleration/cruise	X				X	X			X						
12	Lack/loss of power	Acceleration/cruise	X		X		X			X							
13	Knocking/pinging	Acceleration/cruise															
14	Poor fuel economy		X				X		X	X							
15	Emission compliance																
16	High oil consumption/leakage																
17	Cooling system concerns	Overheating	X	X													
18	Cooling system concerns	Runs cold															
19	Exhaust smoke																
20	Fuel odor (in engine compartment)																
21	Engine noise										X						
22	Vibration concerns (engine)										X	X	X	X			
23	A/C does not work sufficiently		X	X	X	X											
24	A/C is always on or A/C compressor runs continuously		X		X	X											
25	Exhaust sulphur smell																
26	Fuel refill concerns																
27	Fuel filling shut off concerns																
28	Spark plug condition																
29	ATX concerns	Upshift/downshift/engagement	See Section 05-03 TRANSMISSION/TRANSAXLE, SYMPTOM TROUBLESHOOTING [FW6A-EL]														

X: Applied

	Possible factor / Troubleshooting item		Instrument cluster malfunction	Driver-side buckle switch malfunction	Door latch switch or trunk lid latch switch (4SD)/ liftgate latch switch (5HB) malfunction	Hood latch switch malfunction	Battery malfunction (deterioration)	Ambient temperature sensor malfunction	ABS wheel-speed sensor malfunction	Steering angle sensor malfunction	Driver-side air mix actuator malfunction	Climate control unit malfunction	Battery fluid temperature sensor malfunction	Keyless antenna malfunction
1	Blown fuses													
2	Check engine light illuminates													
3	Will not crank													
4	Hard to start/long crank/erratic start/erratic crank													
5	Engine stalls	After start/at idle												
6	Cranks normally but will not start													
7	Engine oil warning light illuminated/message related to engine hydraulic pressure malfunction indicated in display		X											
8	Engine runs rough/rolling idle													
9	Fast idle/runs on													
10	Low idle/stalls during deceleration													
11	Engine stalls/quits	Acceleration/cruise												
	Engine runs rough	Acceleration/cruise												
	Misses	Acceleration/cruise												
	Buck/jerk	Acceleration/cruise/deceleration												
	Hesitation/stumble	Acceleration												
	Surges	Acceleration/cruise												
12	Lack/loss of power	Acceleration/cruise												
13	Knocking/pinging	Acceleration/cruise												
14	Poor fuel economy													
15	Emission compliance													
16	High oil consumption/leakage													
17	Cooling system concerns	Overheating												
18	Cooling system concerns	Runs cold												
19	Exhaust smoke													
20	Fuel odor (in engine compartment)													
21	Engine noise													
22	Vibration concerns (engine)													
23	A/C does not work sufficiently													
24	A/C is always on or A/C compressor runs continuously													
25	Exhaust sulphur smell													
26	Fuel refill concerns													
27	Fuel filling shut off concerns													
28	Spark plug condition													
29	ATX concerns	Upshift/downshift/engagement	See Section 05-03 TRANSMISSION/TRANSAXLE, SYMPTOM TROUBLESHOOTING [FW6A-EL]											

QUICK DIAGNOSTIC CHART [SKYACTIV-G 2.0, SKYACTIV-G 2.5]

2014 - Mazda3 - Engine

NO.1 BLOWN FUSES [SKYACTIV-G 2.0, SKYACTIV-G 2.5]

1	BLOWN FUSES

[TROUBLESHOOTING HINTS]

- Inspect condition of fuse.

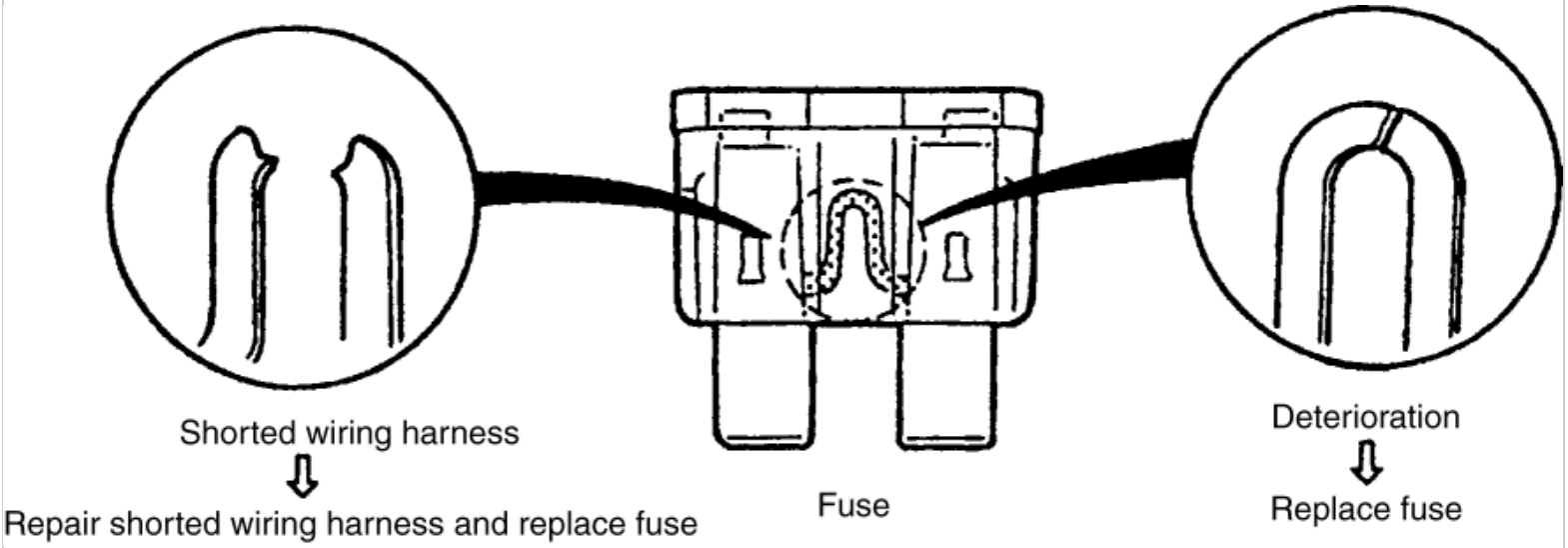

Damaged fuse	Related wiring harness
MAIN	• FAN GE fuse • ADD FAN GE fuse • FUEL PUMP fuse • IG2 fuse • ENG+B fuse • ENG.MAIN fuse • INJECTOR fuse • EVVT fuse
FAN GE	• Cooling fan relay No.1
ADD FAN GE	• Cooling fan relay No.3

ENGINE.IG1	• Fuel pump relay • PCM
FUEL PUMP	• Fuel pump relay
STARTER	• DC-DC converter*2 • Generator*1 • Starter
C/U IG1	• DC-DC converter*2 • Generator*2
IG2	• ACC relay • Starter relay
ENG+B	• Current sensor*2 • PCM
ENG.MAIN	• Main relay
INJECTOR	• Fuel injector relay
EVVT	• Electric variable valve timing relay
ENGINE1	• Electric variable valve timing relay • A/F sensor • HO2S • MAF sensor/IAT sensor No.1 • Intake CMP sensor • CV solenoid valve
ENGINE2	• Fuel injector relay • Purge solenoid valve • OCV • PCM • Engine oil solenoid valve • Exhaust CMP sensor • Ignition coil/ion sensor No.1 • Ignition coil/ion sensor No.2 • Ignition coil/ion sensor No.3 • Ignition coil/ion sensor No.4

ENGINE3	• Cooling fan relay No.1 • Cooling fan relay No.2 • Cooling fan relay No.3 • Active air shutter*2

*1

Vehicles without i-ELOOP

*2

Vehicles with i-ELOOP

2014 - Mazda3 - Engine

NO.2 CHECK ENGINE LIGHT ILLUMINATES [SKYACTIV-G 2.0, SKYACTIV-G 2.5]

2	CHECK ENGINE LIGHT ILLUMINATES
DESCRIPTION	• Check engine light illuminates incorrectly. **NOTE:** • If there is a malfunction in the engine system, the PCM stores a DTC and illuminates the check engine light.
POSSIBLE CAUSE	• Check engine light illuminates for emission-related concern (DTC is stored in PCM) • Short to ground in wiring harness between the following terminals: ▪ Instrument cluster terminal B—Front body control module (FBCM) terminal 2K ▪ Instrument cluster terminal D—Front body control module (FBCM) terminal 2I ▪ Front body control module (FBCM) terminal 2P—PCM terminal 2AK ▪ Front body control module (FBCM) terminal 2N—PCM terminal 2AL • Open circuit in wiring harness between the following terminals: ▪ Instrument cluster terminal B—Front body control module (FBCM) terminal 2K ▪ Instrument cluster terminal D—Front body control module (FBCM) terminal 2I ▪ Front body control module (FBCM) terminal 2P—PCM terminal 2AK ▪ Front body control module (FBCM) terminal 2N—PCM terminal 2AL • Instrument cluster malfunction

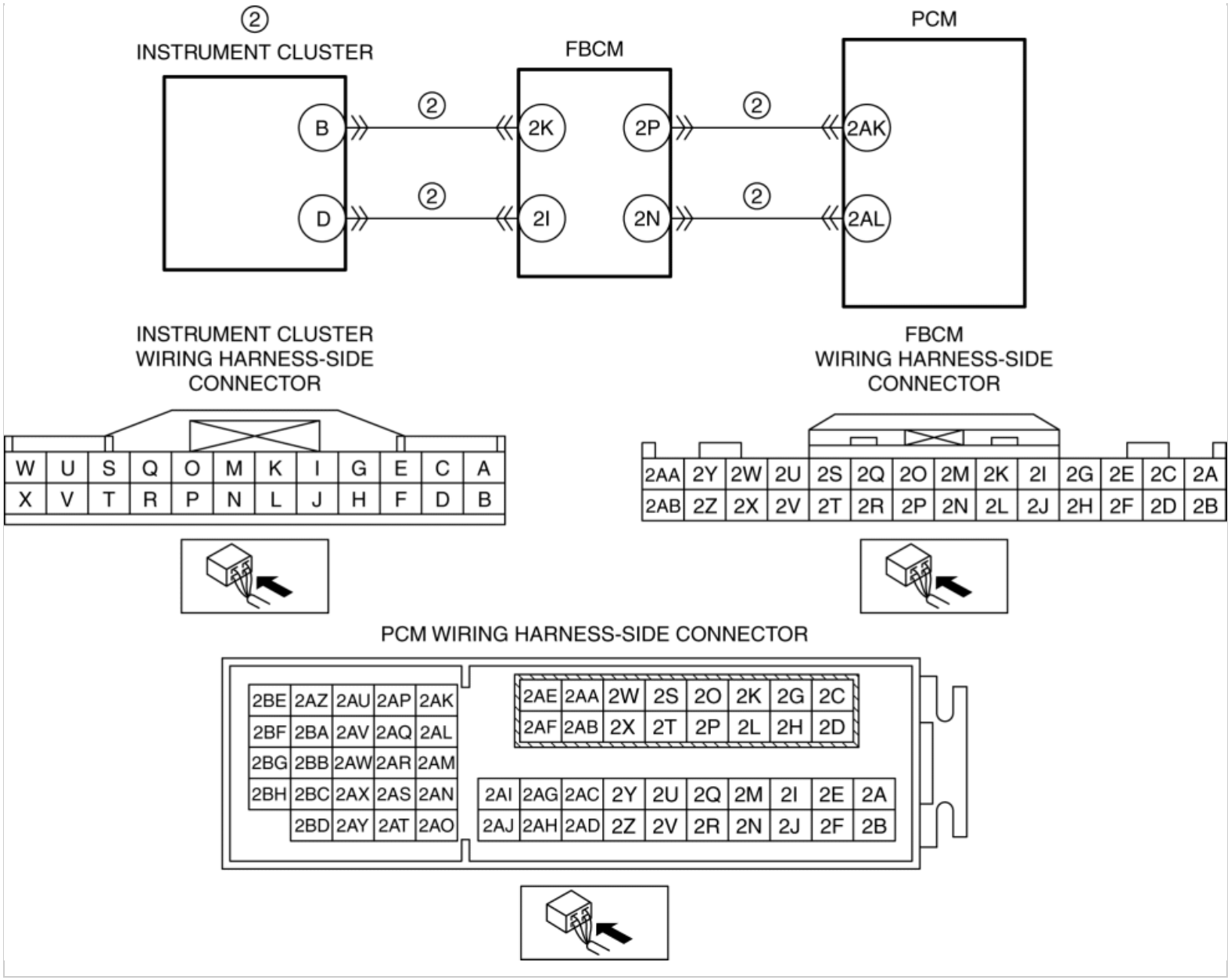

Diagnostic Procedure

STEP	INSPECTION	RESULTS	ACTION
1	**VERIFY PCM DTC** • Retrieve any DTCs using the M-MDS. (See **ON-BOARD DIAGNOSTIC TEST [SKYACTIV-G 2.0, SKYACTIV-G 2.5]**.) • Are any DTCs present?	Yes	Go to the applicable DTC inspection. (See **DTC TABLE [SKYACTIV-G 2.0, SKYACTIV-G 2.5]**.)
		No	Go to the next step.
2	**INSPECT COMMUNICATION LINE BETWEEN PCM AND INSTRUMENT CLUSTER** • Inspect for a short or open circuit between the following terminals: ▪ Instrument	Yes	Inspect the instrument cluster. (See **INSTRUMENT CLUSTER INSPECTION**.) • If there is any malfunction: ▪ Repair or replace the malfunctioning part according to the inspection results, then go to the next step.

	cluster terminal B—Front body control module (FBCM) terminal 2K ▪ Instrument cluster terminal D—Front body control module (FBCM) terminal 2I ▪ Front body control module (FBCM) terminal 2P—PCM terminal 2AK ▪ Front body control module (FBCM) terminal 2N—PCM terminal 2AL • Is the wiring harness normal?		(See **INSTRUMENT CLUSTER REMOVAL/INSTALLATION**.)
		No	Refer to the wiring diagram and verify whether or not there is a common connector between the following terminals: • Instrument cluster terminal B—Front body control module (FBCM) terminal 2K • Instrument cluster terminal D—Front body control module (FBCM) terminal 2I • Front body control module (FBCM) terminal 2P—PCM terminal 2AK • Front body control module (FBCM) terminal 2N—PCM terminal 2AL **If there is a common connector:** • Determine the malfunctioning part by inspecting the common connector and the terminal for corrosion, damage, or pin disconnection, and the common wiring harness for a short to ground or open circuit. • Repair or replace the malfunctioning part. **If there is no common connector:** • Repair or replace the wiring harness which has a short to ground or open circuit.
3	Verify the test results. • If normal, return to the diagnostic index to service any additional symptoms. (See **SYMPTOM DIAGNOSTIC INDEX [SKYACTIV-G 2.0, SKYACTIV-G 2.5]**.) • If the malfunction remains, inspect the related Service Bulletins and/or On-line Repair Information and perform repair or diagnosis. ▪ If the vehicle is repaired, troubleshooting is completed. ▪ If the vehicle is not repaired or additional diagnostic information is not available, reprogram the PCM if a later calibration is available. Retest.		

2014 - Mazda3 - Engine

NO.3 WILL NOT CRANK [SKYACTIV-G 2.0, SKYACTIV-G 2.5]

3	WILL NOT CRANK
DESCRIPTION	• Starter does not work.

POSSIBLE CAUSE	• Poor connection of push button start connector
	• Instrument cluster or related wiring harness malfunction
	• Immobilizer system malfunction
	• PCM continuous memory DTC is stored
	• Open circuit in wiring harness between the following terminals:
	  ▪ Main relay terminal E—PCM terminal 2K
	  ▪ Main relay terminal D—PCM terminal 2S, 1CK
	  ▪ DLC-2—PCM terminal 2AK, 2AL
	• Main relay malfunction (stuck open)
	• Open or poor ground circuit
	• Poor connection of vehicle body ground
	• Battery malfunction
	• Fuse malfunction
	• Starter relay malfunction
	• Starter relay related wiring harness malfunction
	  ▪ Between starter relay terminal E and PCM terminal 2AZ
	  ▪ Between starter relay terminal E and start stop unit terminal 1D
	  ▪ Between start stop unit terminal 2V and starter relay terminal A
	• Following circuit malfunction:
	  ▪ Between battery positive terminal and starter terminal 1A
	  ▪ Between battery positive terminal and starter relay terminal C
	  ▪ Between starter relay terminal D and starter terminal 2A
	• Starter interlock switch and related wiring harness malfunction (MTX)
	• Starting system malfunction
	• Following circuit and/or connector malfunction:
	  ▪ Between push button start terminal A and start stop unit terminal 1AC
	  ▪ Between push button start terminal B and start stop unit terminal 1AE
	  ▪ Between PCM terminal 2AK and start stop unit terminal 2M
	  ▪ Between PCM terminal 2AL and start stop unit terminal 2O
	• Seized engine, flywheel (MTX) or drive plate (ATX)
	• Engine damage during compression due to liquid (such as water, fuel, or engine oil) penetration into cylinder

WARNING:

The following troubleshooting flow chart contains the fuel system diagnosis and repair procedures. Read the following warnings before performing the fuel system services:

- Fuel vapor is hazardous. It can easily ignite, causing serious injury and damage. Always keep sparks and flames away from fuel.
- Fuel line spills and leakage are dangerous. Fuel can ignite and cause serious injury or death and damage. Fuel can also irritate skin and eyes. To prevent this, always complete “BEFORE SERVICE PRECAUTION” and “AFTER SERVICE PRECAUTION” described in this manual. (See **BEFORE SERVICE PRECAUTION [SKYACTIV-G 2.0, SKYACTIV-G 2.5]**.) (See **AFTER SERVICE PRECAUTION [SKYACTIV-G 2.0, SKYACTIV-G 2.5]**.)

CAUTION:

- Disconnecting/connecting the quick release connector without cleaning it may possibly cause damage to the fuel pipe and quick release connector. Always clean the quick release connector joint area before disconnecting/connecting, and make sure that it is free of foreign matter.

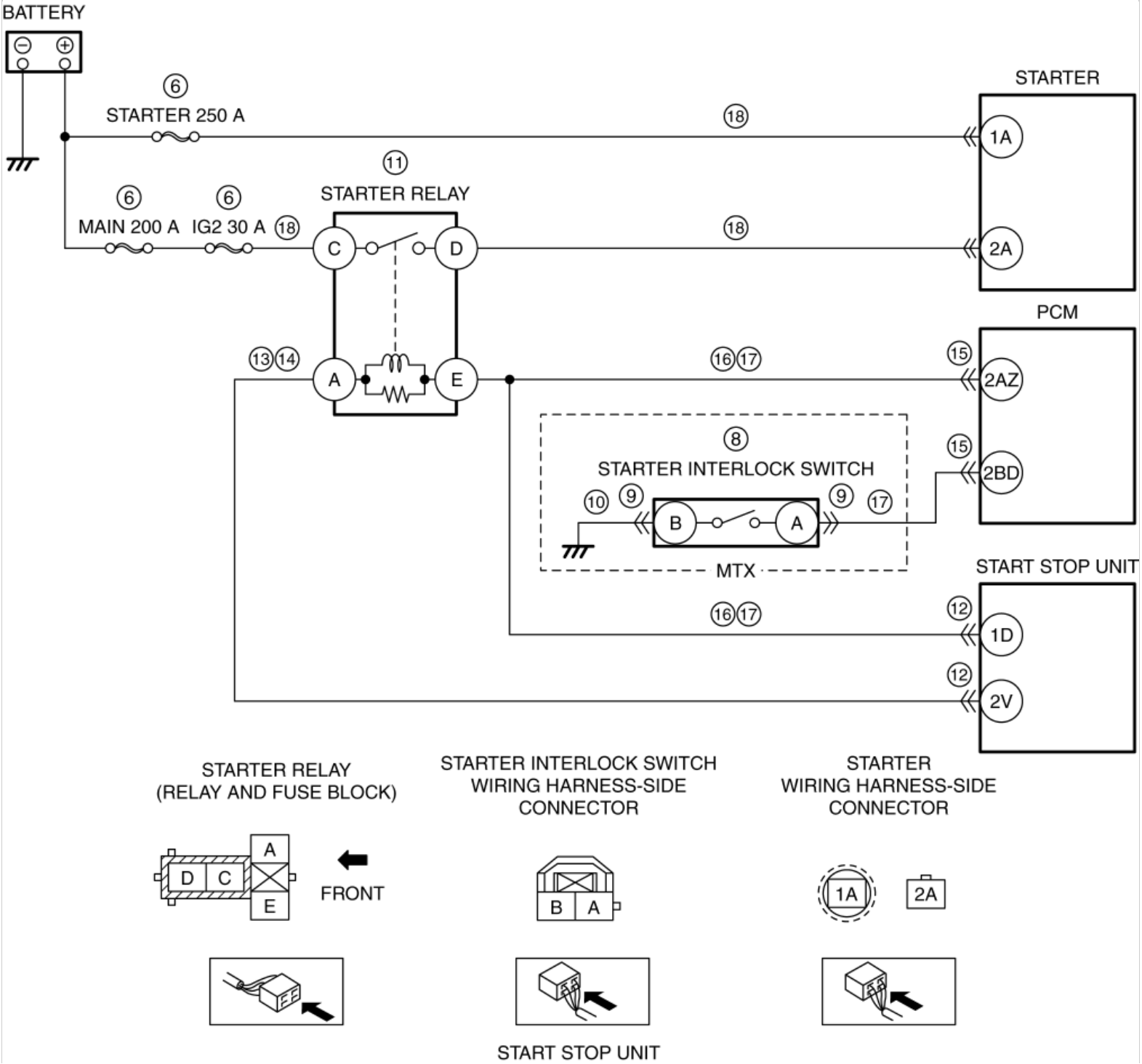

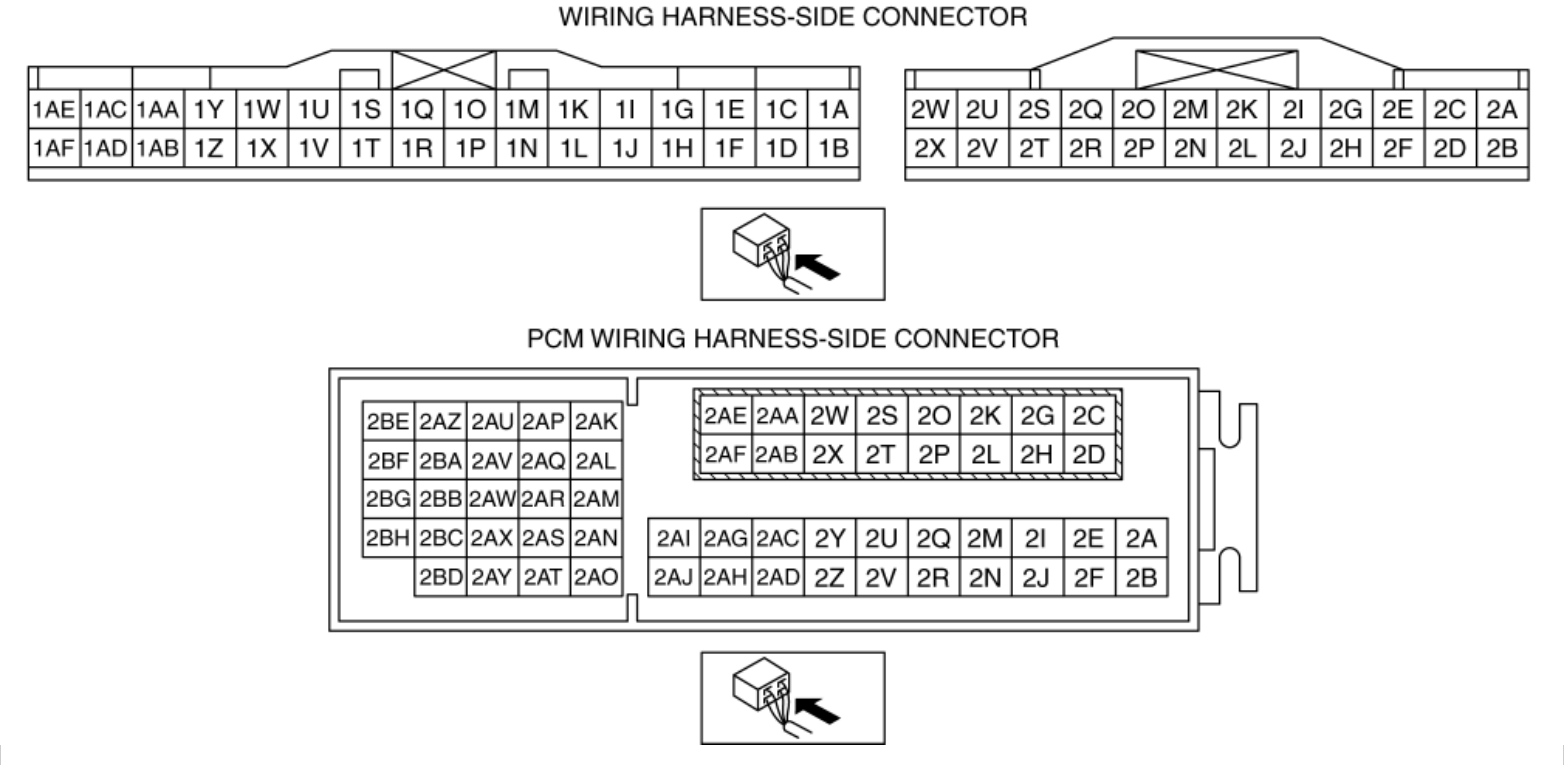

CAUTION:

- Verify the malfunction symptom according to not only the PID value but also the symptom troubleshooting.

Related PIDs

Item (definition)	Unit/Condition	Definition	Condition/Specification (Reference)
VPWR	V	Battery positive voltage	• Displays battery voltage

Diagnostic Procedure

STEP	INSPECTION	RESULTS	ACTION
1	**DETERMINE IF MALFUNCTION CAUSE IS IMMOBILIZER SYSTEM OR OTHER** • Are any of the following conditions present? ▪ Engine does not start completely. ▪ PCM DTC P1260:00 is displayed.	Yes	Both conditions present: • Go to Step 4.
		No	Either or other condition present: • Go to the next step.
2	**INSPECT PUSH BUTTON START CONNECTOR CONNECTION** • Inspect the connection of the push button start connector. • Is the push button start connector securely connected to the coil antenna?	Yes	Go to the next step.
		No	Reconnect the push button start securely, then repeat from Step 1.
3	**DETERMINE IF MALFUNCTION CAUSE IS INSTRUMENT CLUSTER OR OTHER** • Switch the ignition ON (engine off). • Does the security indicator light	Yes	Go to the next step.
		No	Inspect the following wiring harness and connectors: • Instrument cluster terminal B—Front body control

	flash?		module (FBCM) terminal 2K • Instrument cluster terminal D—Front body control module (FBCM) terminal 2I • Front body control module (FBCM) terminal 2P—PCM terminal 2AK • Front body control module (FBCM) terminal 2N—PCM terminal 2AL ▪ If there is any malfunction: • Repair or replace the malfunctioning part according to the inspection results. Inspect the instrument cluster. (See **INSTRUMENT CLUSTER INSPECTION**.) • If there is any malfunction: ▪ Repair or replace the malfunctioning part according to the inspection results. (See **INSTRUMENT CLUSTER REMOVAL/INSTALLATION**.)
4	**VERIFY IMMOBILIZER SYSTEM DTC** • Retrieve the immobilizer system DTC using the M-MDS. (See **DTC INSPECTION [IMMOBILIZER SYSTEM]**.) • Are any DTCs present?	Yes	Go to the applicable DTC inspection. (See **DTC TABLE [IMMOBILIZER SYSTEM]**.)
		No	Go to the next step.
5	**VERIFY PCM DTC** • Retrieve any DTCs using the M-MDS. (See **ON-BOARD DIAGNOSTIC TEST [SKYACTIV-G 2.0, SKYACTIV-G 2.5]**.) • Are any continuous memory DTCs present?	Yes	Continuous memory DTC is displayed: • Go to the applicable DTC inspection. (See **DTC TABLE [SKYACTIV-G 2.0, SKYACTIV-G 2.5]**.) Communication error message is displayed: • Inspect the following: ▪ Open circuit in wiring harness between main relay terminal E and PCM terminal 2K ▪ Open circuit in wiring harness between main relay terminal D and PCM terminal 1CK or 2S ▪ Main relay (stuck open) ▪ Open or short circuit in wiring harness between DLC-2 and PCM terminal 2AK or 2AL ▪ Open or poor ground circuit (PCM terminal 1BZ, 1CL, 1CP, 1CT, 1CX, 1DB, 1DH, 1DL and 2AA) ▪ Poor connection of vehicle body ground • Repair or replace the malfunctioning part according to the inspection results.
		No	Go to the next step.

6	**INSPECT POWER SUPPLY** • Access the VPWR PID using the M-MDS. (See **ON-BOARD DIAGNOSTIC TEST [SKYACTIV-G 2.0, SKYACTIV-G 2.5]**.) • Verify the VPWR PID value. • Is the VPWR PID value **B+**?	Yes	Go to the next step.
		No	Inspect the following: • Battery connection • Battery condition (See **BATTERY INSPECTION [SKYACTIV-G 2.0, SKYACTIV-G 2.5]**.) • Fuse (See **NO.1 BLOWN FUSES [SKYACTIV-G 2.0, SKYACTIV-G 2.5]**.) ▪ If there is any malfunction: • Repair or replace the malfunctioning part according to the inspection results, then repeat this step.
7	**DETERMINE IF MALFUNCTION CAUSE IS STARTER RELAY CONTROL SIGNAL CIRCUIT OR OTHER** • Switch the ignition to START. • Is a clicking sound heard from the starter relay?	Yes	Go to Step 18.
		No	ATX: • Go to Step 11. MTX: • Go to the next step.
8	**DETERMINE IF MALFUNCTION CAUSE IS STARTER INTERLOCK SWITCH OR OTHER** • Switch the ignition off. • Short the starter interlock switch terminals A and B (wiring harness-side) using a jumper wire. • Switch the ignition to START. • Does the engine start?	Yes	Inspect the starter interlock switch. (See **STARTER INTERLOCK SWITCH INSPECTION [SKYACTIV-G 2.0, SKYACTIV-G 2.5]**.) • If there is any malfunction: ▪ Replace the starter interlock switch, then repeat Step 7. (See **STARTER INTERLOCK SWITCH REMOVAL/INSTALLATION [C66M-R]**.) • If there is no malfunction: ▪ Go to the next step.
		No	Go to the next step.
9	**INSPECT STARTER INTERLOCK SWITCH CONNECTOR CONDITION** • Switch the ignition off. • Disconnect the starter interlock switch connector. • Inspect for poor connection (such as damaged/pulled-out pins, corrosion). • Is there any malfunction?	Yes	Repair or replace the connector and/or terminals, then repeat Step 7.
		No	Go to the next step.
10	**INSPECT STARTER INTERLOCK SWITCH GROUND CIRCUIT FOR OPEN CIRCUIT** • Verify that the starter interlock switch connector is disconnected. • Inspect for continuity between starter interlock switch terminal B	Yes	Go to the next step.
		No	Refer to the wiring diagram and verify whether or not there is a common connector between starter interlock switch terminal B and body ground. **If there is a common connector:**

	(wiring harness-side) and body ground. • Is there continuity?		• Determine the malfunctioning part by inspecting the common connector and the terminal for corrosion, damage, or pin disconnection, and the common wiring harness for an open circuit. • Repair or replace the malfunctioning part. **If there is no common connector:** • Inspect for the following: ▪ Open circuit between starter interlock switch and body ground ▪ Loose or lifting ground point • Repair or replace the malfunctioning part. Repeat Step 7.
11	**INSPECT STARTER RELAY** • Switch the ignition off. • Remove the starter relay. • Inspect the starter relay. (See **RELAY INSPECTION**.) • Is there any malfunction?	Yes	Replace the starter relay. Repeat Step 7.
		No	Go to the next step.
12	**INSPECT START STOP UNIT CONNECTOR CONDITION** • Disconnect the start stop unit connector. • Inspect for poor connection (such as damaged/pulled-out pins, corrosion). • Is there any malfunction?	Yes	Repair or replace the connector and/or terminals, then repeat Step 7.
		No	Go to the next step.
13	**INSPECT STARTER RELAY CONTROL CIRCUIT FOR SHORT TO GROUND** • Starter relay is removed. • Verify that the starter interlock switch and start stop unit connectors are disconnected. • Inspect for continuity between starter relay terminal A (wiring harness-side) and body ground. • Is there continuity?	Yes	Refer to the wiring diagram and verify whether or not there is a common connector between starter relay terminal A and start stop unit terminal 2V. **If there is a common connector:** • Determine the malfunctioning part by inspecting the common connector and the terminal for corrosion, damage, or pin disconnection, and the common wiring harness for a short to ground. • Repair or replace the malfunctioning part. **If there is no common connector:** • Repair or replace the wiring harness which has a short to ground. Repeat Step 7.
		No	Go to the next step.
14	**INSPECT STARTER RELAY CONTROL CIRCUIT FOR OPEN CIRCUIT** • Starter relay is removed. • Verify that the starter interlock switch and start stop unit connectors are disconnected. • Inspect for continuity between	Yes	Go to the next step.
		No	Refer to the wiring diagram and verify whether or not there is a common connector between starter relay terminal A and start stop unit terminal 2V. **If there is a common connector:** • Determine the malfunctioning part by inspecting the

	starter relay terminal A (wiring harness-side) and start stop unit terminal 2V (wiring harness-side). • Is there continuity?		common connector and the terminal for corrosion, damage, or pin disconnection, and the common wiring harness for an open circuit. • Repair or replace the malfunctioning part. **If there is no common connector:** • Repair or replace the wiring harness which has an open circuit. Repeat Step 7.
15	**INSPECT PCM CONNECTOR CONDITION** • Disconnect the PCM connector. • Inspect for poor connection (such as damaged/pulled-out pins, corrosion). • Is there any malfunction?	Yes	Repair or replace the connector and/or terminals, then repeat Step 7.
		No	Go to the next step.
16	**INSPECT STARTER RELAY CONTROL CIRCUIT FOR SHORT TO GROUND** • Starter relay is removed. • Verify that the starter interlock switch, start stop unit and PCM connectors are disconnected. • Inspect for continuity between starter relay terminal E (wiring harness-side) and body ground. • Is there continuity?	Yes	Refer to the wiring diagram and verify whether or not there is a common connector between the following terminals: • Starter relay terminal E—PCM terminal 2AZ • Starter relay terminal E—Start stop unit terminal 1D **If there is a common connector:** • Determine the malfunctioning part by inspecting the common connector and the terminal for corrosion, damage, or pin disconnection, and the common wiring harness for a short to ground. • Repair or replace the malfunctioning part. **If there is no common connector:** • Repair or replace the wiring harness which has a short to ground. Repeat Step 7.
		No	Go to the next step.
17	**INSPECT STARTER RELAY CONTROL CIRCUIT FOR OPEN CIRCUIT** • Starter relay is removed. • Verify that the starter interlock switch, start stop unit and PCM connectors are disconnected. • Inspect for continuity between the following terminals (wiring harness-side): ▪ Starter relay terminal E—PCM terminal 2AZ ▪ Starter interlock switch terminal A—PCM terminal 2BD (MTX) ▪ Starter relay terminal E—Start stop unit terminal 1D • Is there continuity?	Yes	Inspect the start stop unit. (See **START STOP UNIT INSPECTION**.) • If there is any malfunction: ▪ Replace the start stop unit, then repeat Step 7. (See **START STOP UNIT REMOVAL/INSTALLATION**.) • If there is no malfunction: ▪ Go to the next step.
		No	Refer to the wiring diagram and verify whether or not there is a common connector between the following terminals: • Starter relay terminal E—PCM terminal 2AZ • Starter interlock switch terminal A—PCM terminal 2BD (MTX) • Starter relay terminal E—Start stop unit terminal 1D **If there is a common connector:** • Determine the malfunctioning part by inspecting the common connector and the terminal for corrosion,

			damage, or pin disconnection, and the common wiring harness for an open circuit. • Repair or replace the malfunctioning part. **If there is no common connector:** • Repair or replace the wiring harness which has an open circuit. Repeat Step 7.
18	**INSPECT WIRING HARNESS OF STARTER POWER SUPPLY CIRCUIT** • Inspect the following circuit: ▪ Between battery positive terminal and starter terminal 1A ▪ Between battery positive terminal and starter relay terminal C ▪ Between starter relay terminal D and starter terminal 2A • Is there any malfunction?	Yes	Repair or replace the suspected wiring harness.
		No	Go to the next step.
19	**INSPECT STARTING SYSTEM** • Inspect the starting system. (See **STARTER INSPECTION [SKYACTIV-G 2.0, SKYACTIV-G 2.5]**.) • Is there any malfunction?	Yes	Repair or replace the malfunctioning part according to the inspection results.
		No	Go to the next step.
20	**INSPECT IMMOBILIZER SYSTEM RELATED CIRCUIT** • Inspect the following wiring harness and connectors: ▪ Between push button start terminal A and start stop unit terminal 1AC ▪ Between push button start terminal B and start stop unit terminal 1AE ▪ Between PCM terminal 2AK and start stop unit terminal 2M ▪ Between PCM terminal 2AL and start stop unit terminal 2O • Is there any malfunction?	Yes	Repair or replace the malfunctioning part according to the inspection results.
		No	Go to the next step.
21	**VERIFY PRESENT MALFUNCTION DTC** • Perform the KOEO self test. (See **KOEO/KOER SELF TEST [SKYACTIV-G 2.0, SKYACTIV-G 2.5]**.) • Are any DTCs present?	Yes	Go to the applicable DTC inspection. (See **DTC TABLE [SKYACTIV-G 2.0, SKYACTIV-G 2.5]**.)
		No	Go to the next step.

22	**DETERMINE IF MALFUNCTION CAUSE IS BASE ENGINE OR OTHER** • Inspect for a seized flywheel (MTX) or drive plate (ATX). • Is the flywheel (MTX) or drive plate (ATX) seized?	Yes	Repair or replace the malfunctioning part according to the inspection results.
		No	Base engine malfunction or engine damage during compression due to liquid (such as water, fuel, or engine oil) penetration into cylinder. • Overhaul or replace the engine.
23	Verify the test results. • If normal, return to the diagnostic index to service any additional symptoms. (See **SYMPTOM DIAGNOSTIC INDEX [SKYACTIV-G 2.0, SKYACTIV-G 2.5]**.) • If the malfunction remains, inspect the related Service Bulletins and/or On-line Repair Information and perform repair or diagnosis. ▪ If the vehicle is repaired, troubleshooting is completed. ▪ If the vehicle is not repaired or additional diagnostic information is not available, reprogram the PCM if a later calibration is available. Retest.		

2014 - Mazda3 - Engine

NO.4 HARD TO START/LONG CRANK/ERRATIC START/ERRATIC CRANK [SKYACTIV-G 2.0, SKYACTIV-G 2.5]

4	HARD TO START/LONG CRANK/ERRATIC START/ERRATIC CRANK
DESCRIPTION	• Starter cranks engine at normal speed but engine requires excessive cranking time before starting. • Battery is operating normally.

	NOTE:
	• If the ignition is not switched off (to LOCK or ACC) after the engine stalls, and then an engine restart is attempted, the PCM corrects the difference between CKP sensor and CMP sensor signals caused by engine stalling, which may result in more time needed to restart the engine.
	• Engine overheating
	• PCM DTC is stored
	• Erratic signal to PCM
	  ▪ ECT sensor No.1 or related circuit malfunction
	  ▪ MAF sensor or related circuit malfunction
	  ▪ MAP sensor or related circuit malfunction
	  ▪ A/F sensor or related circuit malfunction
	  ▪ HO2S or related circuit malfunction
	  ▪ Improper air/fuel mixture ratio control
	• Improper operation of drive-by-wire control system
	• Incorrect fuel injection timing
	• Fuel injector malfunction
	• Purge solenoid valve malfunction
	• Contamination in MAF sensor
	• Under the condition in which the engine starts and stops repeatedly while the vehicle is not driven, the fuel injected prior to complete ignition during engine start may drop into the oil pan from the cylinder and mix with the engine oil. The situation in which excess quantities of fuel continue to be injected due to an engine coolant temperature signal error is the same.
	• Intermittent open circuit in PCM ground circuit

POSSIBLE CAUSE	• Poor fuel quality
	• Fuel leakage
	• Air leakage from intake-air system
	• Intake-air system restriction
	• Vacuum leakage
	• Improper engine oil viscosity
	• Erratic signal from CMP sensor
	  ▪ Loose installation
	  ▪ Damaged trigger wheel (intake camshaft and/or exhaust camshaft)
	  ▪ Open or short circuit in related wiring harness
	• Erratic signal from CKP sensor
	  ▪ Loose installation
	  ▪ Damaged trigger wheel (crankshaft pulley)
	  ▪ Open or short circuit in related wiring harness
	• Inadequate fuel pressure (high or low pressure side)
	  ▪ Fuel pressure sensor malfunction
	  ▪ High pressure fuel pump malfunction
	  ▪ Spill valve control solenoid valve control circuit malfunction (damage to driver in PCM caused by short circuit to ground system)
	  ▪ Spill valve control solenoid valve malfunction (built-into high pressure fuel pump)
	  ▪ Relief valve (built-into high pressure fuel pump) malfunction
	  ▪ Fuel line restriction
	  ▪ Fuel filter clogged (built-into fuel pump unit)
	  ▪ Fuel pump unit malfunction
	• Starting system malfunction
	• Low engine compression
	• Improper intake valve timing
	• Improper exhaust valve timing
	• Improper operation of electric variable valve timing control system
	  ▪ Electric variable valve timing driver malfunction
	  ▪ Electric variable valve timing motor malfunction

	Electric variable valve timing actuator malfunction • Improper operation of hydraulic variable valve timing control system • Spark plug malfunction • Erratic signal to ignition coils • Exhaust system or TWC restriction • PCV valve malfunction • Injector driver (built-into PCM) malfunction
POSSIBLE CAUSE	**WARNING:** The following troubleshooting flow chart contains the fuel system diagnosis and repair procedures. Read the following warnings before performing the fuel system services: • Fuel vapor is hazardous. It can easily ignite, causing serious injury and damage. Always keep sparks and flames away from fuel. • Fuel line spills and leakage are dangerous. Fuel can ignite and cause serious injury or death and damage. Fuel can also irritate skin and eyes. To prevent this, always complete “BEFORE SERVICE PRECAUTION” and “AFTER SERVICE PRECAUTION” described in this manual. (See **BEFORE SERVICE PRECAUTION [SKYACTIV-G 2.0, SKYACTIV-G 2.5]**.) (See **AFTER SERVICE PRECAUTION [SKYACTIV-G 2.0, SKYACTIV-G 2.5]**.) **CAUTION:** • Disconnecting/connecting the quick release connector without cleaning it may possibly cause damage to the fuel pipe and quick release connector. Always clean the quick release connector joint area before disconnecting/connecting, and make sure that it is free of foreign matter.

CAUTION:

- Verify the malfunction symptom according to not only the PID value but also the symptom troubleshooting.

Related PIDs

Item (definition)	Unit/Condition	Definition	Condition/Specification (Reference)
ECT	°C, °F	Engine coolant temperature	• Displays ECT
	V	ECT sensor No.1 voltage	• ECT is 20 °C {68 °F}: Approx. 3.10 V • ECT is 40 °C {104 °F}: Approx. 2.16 V • ECT is 60 °C {140 °F}: Approx. 1.40 V • ECT is 80 °C {176 °F}: Approx. 0.87 V • ECT is 100 °C {212 °F}: Approx. 0.54 V
	KPa {MPa}, mBar		

FUEL_PRES	{Bar}, psi, in H20	Fuel pressure	Displays fuel pressure
	V	Fuel pressure sensor voltage	• Fuel pressure is 3.0 MPa {31 kgf/cm^2, 435 psi}: Approx. 0.92 V • Fuel pressure is 4.8 MPa {49 kgf/cm^2, 696 psi}: Approx. 1.17 V
LOAD	%	Ratio of actual amount of intake air to the maximum air charging amount (mass volume) of cylinder	• Idle (after warm up): Approx. 17.64% • Racing (engine speed is 2,000 rpm): Approx. 14.51% • Racing (engine speed is 4,000 rpm): Approx. 21.17%
LONGFT1	%	Fuel learning correction amount estimated based on A/F sensor signal	• Idle (after warm up): Approx. -2.34% • Racing (engine speed is 2,000 rpm): Approx. -0.78% • Racing (engine speed is 4,000 rpm): Approx. -0.78%
MAF	g/Sec	Mass air flow	• Displays MAF
	V	MAF sensor voltage	• Ignition switched ON (engine off) (MAF: 0.59 g/s {0.078 lb/min}): Approx. 0.72 V • Idle (after warm up) (MAF: 2.17 g/s {0.287 lb/min}): Approx. 0.86 V • Racing (engine speed is 2,000 rpm) (MAF: 4.73 g/s {0.626 lb/min}): Approx. 1.07 V
MAP	KPa {MPa}, mBar {Bar}, psi, in H20	Manifold absolute pressure	• Displays MAP
	V	MAP sensor voltage	• Ignition switched ON (engine off) (MAP:101 kPa {1.03 kgf/cm^2, 14.6 psi}): Approx. 4.07 V • Idle (after warm up) (MAP: 33 kPa {0.34 kgf/cm^2, 4.8 psi}): Approx. 1.34 V • Racing (engine speed is 2,000 rpm) (MAP: 26 kPa {0.27 kgf/cm^2, 3.8 psi}): Approx. 1.05 V
O2S11	µA	A/F sensor current	• Idle (after warm up): Approx. −39 µA • Deceleration fuel cut (accelerator pedal released from engine speed of 4,000 rpm or more): Approx. 3.84 mA
			• Idle (after warm up): 0—1.0 V

O2S12	V	HO2S voltage	• Deceleration fuel cut (accelerator pedal released from engine speed of 4,000 rpm or more): Approx. 0 V
RPM	RPM	Engine speed	• Displays engine speed
SHRTFT1	%	Fuel feedback correction amount estimated based on A/F sensor signal	• Idle (after warm up): Approx. 1.56% • Racing (engine speed is 2,000 rpm): Approx. −3.12% • Racing (engine speed is 4,000 rpm): Approx. −8.59%
TP_REL	%	Throttle valve opening angle (relative value) with value at throttle valve fully open timing as the start point	• Accelerator pedal released: Approx. 12% • Accelerator pedal fully depressed: Approx. 82%
VSS	KPH, MPH	Vehicle speed	• Displays vehicle speed

Diagnostic Procedure

STEP	INSPECTION	RESULTS	ACTION
1	**DETERMINE IF MALFUNCTION CAUSE IS OVERHEATING OR OTHER** • Access the ECT PID using the M-MDS. (See **ON-BOARD DIAGNOSTIC TEST [SKYACTIV-G 2.0, SKYACTIV-G 2.5]**.) **CAUTION:** • While performing this step, always operate the vehicle in a safe and lawful manner. • When the M-MDS is used to observe monitor system status while driving, be sure to have another technician with you, or record the data in the M-MDS using the PID/DATA MONITOR AND RECORD capturing function and inspect later. • Is the ECT PID value **less than 116 °C {241 °F}** during driving?	Yes	Go to the next step.
		No	The cause of this concern could be from the cooling system overheating. • Perform the symptom troubleshooting “NO.17 COOLING SYSTEM CONCERNS-OVERHEATING”. (See **NO.17 COOLING SYSTEM CONCERNS-OVERHEATING [SKYACTIV-G 2.0, SKYACTIV-G 2.5]**.)
2	**VERIFY PCM DTC** • Retrieve any DTCs using the M-MDS. (See **ON-BOARD DIAGNOSTIC TEST [SKYACTIV-G 2.0, SKYACTIV-G 2.5]**.) • Are any DTCs present?	Yes	Go to the applicable DTC inspection. (See **DTC TABLE [SKYACTIV-G 2.0, SKYACTIV-G 2.5]**.)
		No	Go to the next step.

3	**VERIFY CURRENT INPUT SIGNAL STATUS** **CAUTION:** • While performing this step, always operate the vehicle in a safe and lawful manner. • When the M-MDS is used to observe monitor system status while driving, be sure to have another technician with you, or record the data in the M-MDS using the PID/DATA MONITOR AND RECORD capturing function and inspect later. • Access the following PIDs using the M-MDS: (See **ON-BOARD DIAGNOSTIC TEST [SKYACTIV-G 2.0, SKYACTIV-G 2.5]**.) ▪ ECT ▪ MAF ▪ MAP ▪ O2S11 ▪ O2S12 ▪ SHRTFT1 ▪ LONGFT1 • Do the PIDs indicate the correct values under the malfunction condition? (See **PCM INSPECTION [SKYACTIV-G 2.0, SKYACTIV-G 2.5]**.)	Yes	Go to the next step.
		No	ECT PID is not as specified: • Inspect the ECT sensor No.1. (See **ENGINE COOLANT TEMPERATURE (ECT) SENSOR INSPECTION [SKYACTIV-G 2.0, SKYACTIV-G 2.5]**.) MAF PID is not as specified: • Inspect the MAF sensor. (See **MASS AIR FLOW (MAF) SENSOR INSPECTION [SKYACTIV-G 2.0, SKYACTIV-G 2.5]**.) MAP PID is not as specified: • Inspect the MAP sensor. (See **MANIFOLD ABSOLUTE PRESSURE (MAP) SENSOR INSPECTION [SKYACTIV-G 2.0, SKYACTIV-G 2.5]**.) O2S11, SHRTFT1, LONGFT1 PIDs are not as specified: • Inspect the A/F sensor. (See **AIR FUEL RATIO (A/F) SENSOR INSPECTION [SKYACTIV-G 2.0, SKYACTIV-G 2.5]**.) O2S12 PID is not as specified: • Inspect the HO2S. (See **HEATED OXYGEN SENSOR (HO2S) INSPECTION [SKYACTIV-G 2.0, SKYACTIV-G 2.5]**.) Repair or replace the malfunctioning part according to the inspection results. • If the malfunction remains: ▪ Perform the “INTERMITTENT CONCERN TROUBLESHOOTING” procedure. (See **INTERMITTENT CONCERN TROUBLESHOOTING [SKYACTIV-G 2.0, SKYACTIV-G 2.5]**.)
4	**DETERMINE IF MALFUNCTION CAUSE IS DRIVE-BY-WIRE CONTROL SYSTEM OR OTHER** • Will the engine run smoothly at part throttle?	Yes	Go to Step 6.
		No	Go to the next step.
5	**INSPECT DRIVE-BY-WIRE CONTROL SYSTEM OPERATION** • Perform the Electronic Control Throttle Operation Inspection.	Yes	Visually inspect the throttle body (damage/scratching). • If there is any malfunction:

	(See **ENGINE CONTROL SYSTEM OPERATION INSPECTION [SKYACTIV-G 2.0, SKYACTIV-G 2.5]**.) • Does the drive-by-wire control system work properly?		▪ Repair or replace the malfunctioning part according to the inspection results. • If there is no malfunction: ▪ Go to the next step.
		No	Repair or replace the malfunctioning part according to the inspection results.
6	**INSPECT FUEL INJECTOR OPERATION** • Perform the Fuel Injector Operation Inspection. (See **ENGINE CONTROL SYSTEM OPERATION INSPECTION [SKYACTIV-G 2.0, SKYACTIV-G 2.5]**.) • Do the fuel injectors operate properly?	Yes	Go to the next step.
		No	Repair or replace the malfunctioning part according to the inspection results.
7	**INSPECT PURGE CONTROL SYSTEM OPERATION** • Perform the Purge Control System Inspection. (See **ENGINE CONTROL SYSTEM OPERATION INSPECTION [SKYACTIV-G 2.0, SKYACTIV-G 2.5]**.) • Does the purge solenoid valve work properly?	Yes	Go to the next step.
		No	Repair or replace the malfunctioning part according to the inspection results.
8	**INSPECT MAF SENSOR** • Inspect the MAF sensor for the following: ▪ Contamination • Is there any malfunction?	Yes	Repair or replace the malfunctioning part according to the inspection results.
		No	Go to the next step.
9	**INSPECT PCM FOR POOR GROUND** • Verify the PCM ground point condition. • Is there any ground point loose or lifting in the PCM?	Yes	Repair the ground point.
		No	Go to the next step.
10	**INSPECT RELATED PART CONDITION** • Inspect the following: ▪ Fuel quality (proper octane, contamination, winter/summer blend) ▪ Fuel leakage ▪ Intake-air system leakage or restriction ▪ Vacuum leakage ▪ Engine oil viscosity ▪ CKP sensor, intake CMP sensor and exhaust CMP sensor	Yes	Service if necessary. • Repeat this step.
		No	Go to the next step.

	• Installation condition (See **CRANKSHAFT POSITION (CKP) SENSOR REMOVAL/INSTALLATION [SKYACTIV-G 2.0, SKYACTIV-G 2.5]**.) (See **CAMSHAFT POSITION (CMP) SENSOR REMOVAL/INSTALLATION [SKYACTIV-G 2.0, SKYACTIV-G 2.5]**.) • Damaged trigger wheel, intake camshaft and exhaust camshaft • Is there any malfunction?		
11	**INSPECT FUEL PRESSURE (HIGH-SIDE)** • Start the engine and warm it up completely. • Access the FUEL_PRES PID using the M-MDS at idle. (See **ON-BOARD DIAGNOSTIC TEST [SKYACTIV-G 2.0, SKYACTIV-G 2.5]**.) • Is the FUEL_PRES PID value **approx. 3 MPa {31 kgf/cm^2, 435 psi}**?	Yes	Go to Step 15.
		No	Lower than **3 MPa {31 kgf/cm^2, 435 psi}**: • Inspect the following: ▪ Fuel leakage at the fuel line and fuel injector ▪ Fuel pump • Perform the Fuel Pump (Low-pressure Side) Operation Inspection. (See **ENGINE CONTROL SYSTEM OPERATION INSPECTION [SKYACTIV-G 2.0, SKYACTIV-G 2.5]**.) ▪ Fuel pressure sensor (See **FUEL PRESSURE SENSOR INSPECTION [SKYACTIV-G 2.0, SKYACTIV-G 2.5]**.) ▪ High pressure fuel pump (See **HIGH PRESSURE FUEL PUMP INSPECTION [SKYACTIV-G 2.0, SKYACTIV-G 2.5]**.) • If there is any malfunction: ▪ Repair or replace the malfunctioning part according to the inspection results.

			• If there is no malfunction: ▪ Go to Step 14. Higher than **3 MPa {31 kgf/cm^2, 435 psi}**: • Go to the next step.
12	**DETERMINE IF MALFUNCTION CAUSE IS FUEL PRESSURE SENSOR OR HIGH PRESSURE FUEL PUMP** • Is the vehicle acceleration performance normal?	Yes	Go to the next step.
		No	Go to Step 14.
13	**INSPECT FUEL PRESSURE SENSOR** • Inspect the fuel pressure sensor. (See **FUEL PRESSURE SENSOR INSPECTION [SKYACTIV-G 2.0, SKYACTIV-G 2.5]**.) • Is there any malfunction?	Yes	Replace the fuel distributor. (See **FUEL INJECTOR REMOVAL/INSTALLATION [SKYACTIV-G 2.0, SKYACTIV-G 2.5]**.)
		No	Go to Step 15.
14	**INSPECT SPILL VALVE CONTROL SOLENOID VALVE CONTROL CIRCUIT FOR SHORT TO GROUND** • Switch the ignition off. • Disconnect the high pressure fuel pump and PCM connectors. • Inspect for continuity between high pressure fuel pump terminal A (wiring harness-side) and body ground. • Is there continuity?	Yes	Refer to the wiring diagram and verify whether or not there is a common connector between high pressure fuel pump terminal A and PCM terminal 1EE. **If there is a common connector:** • Determine the malfunctioning part by inspecting the common connector and the terminal for corrosion, damage, or pin disconnection, and the common wiring harness for a short to ground. • Repair or replace the malfunctioning part. **If there is no common connector:** • Repair or replace the wiring harness which has a short to ground. If the malfunction remains: • Replace the PCM. (damage to driver in PCM) (See **PCM REMOVAL/INSTALLATION [SKYACTIV-G 2.0, SKYACTIV-G 2.5]**.)
		No	Replace the high pressure fuel pump. (See **HIGH PRESSURE FUEL PUMP REMOVAL/INSTALLATION [SKYACTIV-G 2.0, SKYACTIV-G 2.5]**.)
15	**INSPECT FUEL PRESSURE (LOW-SIDE)** • Connect the fuel pressure gauge between fuel pump and high pressure fuel pump.	Yes	Go to the next step.
		No	Inspect the following:

	Measure the low side fuel pressure. (See **FUEL LINE PRESSURE INSPECTION [SKYACTIV-G 2.0, SKYACTIV-G 2.5]**.) • Is the low side fuel pressure within specification? **Specification:** • **405—485 kPa {4.13—4.94 kgf/cm^2, 58.8—70.3 psi}**		• Fuel line restriction • Fuel filter clogged ▪ If there is any malfunction: • Repair or replace the malfunctioning part according to the inspection results. ▪ If there is no malfunction: • Replace the fuel pump unit. (See **FUEL PUMP UNIT REMOVAL/INSTALLATION [SKYACTIV-G 2.0, SKYACTIV-G 2.5]**.)
16	**INSPECT STARTING SYSTEM** • Inspect the starting system. (See **STARTER INSPECTION [SKYACTIV-G 2.0, SKYACTIV-G 2.5]**.) • Does the starting system work properly?	Yes	Go to the next step.
		No	Repair or replace the malfunctioning part according to the inspection results.
17	**INSPECT ENGINE COMPRESSION** • Measure the compression pressure for each cylinder. (See **COMPRESSION INSPECTION [SKYACTIV-G 2.0, SKYACTIV-G 2.5]**.) • Are compression pressures within specification? **Specification:** • Compression [SKYACTIV-G 2.0] ▪ Standard: **885 kPa {9.02 kgf/cm^2, 128 psi} (300 rpm)** ▪ Minimum: **708 kPa {7.22 kgf/cm^2, 103 psi} (300 rpm)** ▪ Maximum difference between cylinders: **150 kPa {1.53 kgf/cm^2, 21.8 psi}** (**300 rpm**) • Compression [SKYACTIV-G 2.5] ▪ Standard: **954 kPa {9.73 kgf/cm^2, 138 psi} (300 rpm)**	Yes	Go to Step 23.
		No	Go to the next step.

	Minimum: **763 kPa {7.78 kgf/cm , 111 psi} (300 rpm)** ▪ Maximum difference between cylinders: **161 kPa {1.64 kgf/cm^2, 23.4 psi}** (**300 rpm**) **NOTE:** • Because the SKYACTIV-G 2.0 and SKYACTIV-G 2.5 retards the intake valve closing timing, compression pressure is low.		
18	**INSPECT ELECTRIC VARIABLE VALVE TIMING DRIVER** • Inspect the electric variable valve timing driver. (See **ELECTRIC VARIABLE VALVE TIMING MOTOR/DRIVER INSPECTION [SKYACTIV-G 2.0, SKYACTIV-G 2.5]**.) • Is there any malfunction?	Yes	Replace the electric variable valve timing motor/driver. (See **ELECTRIC VARIABLE VALVE TIMING MOTOR/DRIVER REMOVAL/INSTALLATION [SKYACTIV-G 2.0, SKYACTIV-G 2.5]**.)
		No	Go to the next step.
19	**INSPECT ELECTRIC VARIABLE VALVE TIMING MOTOR** • Inspect the electric variable valve timing motor. (See **ELECTRIC VARIABLE VALVE TIMING MOTOR/DRIVER INSPECTION [SKYACTIV-G 2.0, SKYACTIV-G 2.5]**.) • Is there any malfunction?	Yes	Replace the electric variable valve timing motor/driver. (See **ELECTRIC VARIABLE VALVE TIMING MOTOR/DRIVER REMOVAL/INSTALLATION [SKYACTIV-G 2.0, SKYACTIV-G 2.5]**.)
		No	Go to the next step.
20	**INSPECT ELECTRIC VARIABLE VALVE TIMING ACTUATOR** • Inspect the electric variable valve timing actuator. (See **ELECTRIC VARIABLE VALVE TIMING ACTUATOR INSPECTION [SKYACTIV-G 2.0, SKYACTIV-G 2.5]**.) • Is there any malfunction?	Yes	Replace the electric variable valve timing actuator. (See **ELECTRIC VARIABLE VALVE TIMING ACTUATOR, HYDRAULIC VARIABLE VALVE TIMING ACTUATOR REMOVAL/INSTALLATION [SKYACTIV-G 2.0, SKYACTIV-G 2.5]**.)
		No	Go to the next step.
21	**INSPECT HYDRAULIC VARIABLE VALVE TIMING CONTROL SYSTEM OPERATION** • Perform the Hydraulic Variable Valve Timing Control System Operation Inspection. (See **ENGINE CONTROL SYSTEM OPERATION INSPECTION [SKYACTIV-G 2.0, SKYACTIV-G 2.5]**.) • Is there any malfunction?	Yes	Repair or replace the malfunctioning part according to the inspection results.
		No	Go to the next step.
22	**INSPECT FOR MALFUNCTION DUE TO DEVIATED VALVE TIMING** • Inspect the valve timing (timing chain installation condition). (See **TIMING CHAIN REMOVAL/INSTALLATION [SKYACTIV-G 2.0, SKYACTIV-G 2.5]**.)	Yes	Inspect for the following engine internal parts: • Cylinder • Piston ring • Intake valve

	• Is the valve timing normal?		• Exhaust valve • Such as cylinder head gasket ▪ If there is any malfunction: • Repair or replace the malfunctioning part according to the inspection results.
		No	Adjust the valve timing to the correct timing.
23	**INSPECT IGNITION SYSTEM OPERATION** • Perform the Spark Test. (See **ENGINE CONTROL SYSTEM OPERATION INSPECTION [SKYACTIV-G 2.0, SKYACTIV-G 2.5]**.) • Is a strong blue spark visible at each cylinder?	Yes	Go to the next step.
		No	Repair or replace the malfunctioning part according to the inspection results.
24	**INSPECT EXHAUST SYSTEM FOR RESTRICTION** • Inspect for restriction in the exhaust system and the TWC. • Is there any restriction?	Yes	Repair or replace the malfunctioning part according to the inspection results.
		No	Go to the next step.
25	**INSPECT IF MALFUNCTION CAUSE IS PCV VALVE OR INJECTOR DRIVER (PCM INTEGRATED)** • Inspect the PCV valve. (See **POSITIVE CRANKCASE VENTILATION (PCV) VALVE INSPECTION [SKYACTIV-G 2.0, SKYACTIV-G 2.5]**.) • Is there any malfunction?	Yes	Replace the PCV valve. (See **POSITIVE CRANKCASE VENTILATION (PCV) VALVE REMOVAL/INSTALLATION [SKYACTIV-G 2.0, SKYACTIV-G 2.5]**.)
		No	Injector driver malfunction. • Replace the PCM. (See **PCM REMOVAL/INSTALLATION [SKYACTIV-G 2.0, SKYACTIV-G 2.5]**.) If the problem remains, overhaul the engine.
26	Verify the test results. • If normal, return to the diagnostic index to service any additional symptoms. (See **SYMPTOM DIAGNOSTIC INDEX [SKYACTIV-G 2.0, SKYACTIV-G 2.5]**.) • If the malfunction remains, inspect the related Service Bulletins and/or On-line Repair Information and perform repair or diagnosis. ▪ If the vehicle is repaired, troubleshooting is completed. ▪ If the vehicle is not repaired or additional diagnostic information is not available, reprogram the PCM if a later calibration is available. Retest.		

NO.4 HARD TO START/LONG CRANK/ERRATIC START/ERRATIC CRANK [SKYACTIV-G 2.0, SKYACTIV-G 2.5]

2014 - Mazda3 - Engine

NO.5 ENGINE STALLS-AFTER START/AT IDLE [SKYACTIV-G 2.0, SKYACTIV-G 2.5]

5	ENGINE STALLS-AFTER START/AT IDLE
DESCRIPTION	• Engine stops unexpectedly at idle, after start, or both.

	• Engine overheating
	• PCM DTC is stored
	• Erratic signal to PCM
	  ▪ APP sensor or related circuit malfunction
	  ▪ ECT sensor No.1 or related circuit malfunction
	  ▪ MAF sensor or related circuit malfunction
	  ▪ MAP sensor or related circuit malfunction
	  ▪ A/F sensor or related circuit malfunction
	  ▪ HO2S or related circuit malfunction
	  ▪ Improper air/fuel mixture ratio control
	• Improper operation of A/C system
	• Improper operation of drive-by-wire control system
	• Purge solenoid valve malfunction
	• Open circuit in MAF sensor ground circuit
	• Intermittent open circuit in PCM ground circuit
	• Poor fuel quality
	• Air leakage from intake-air system
	• Intake-air system restriction
	• Electrical connector disconnected
	• No battery power supply to PCM or poor ground
	• Fuel leakage

POSSIBLE CAUSE	• Vacuum leakage
	• Erratic signal from CMP sensor
	  ▪ Loose installation
	  ▪ Damaged trigger wheel (intake camshaft and/or exhaust camshaft)
	  ▪ Open or short circuit in related wiring harness
	• No signal from CKP sensor
	  ▪ Loose installation
	  ▪ Damaged trigger wheel (crankshaft pulley)
	  ▪ Open or short circuit in related wiring harness
	• Inadequate fuel pressure (high or low pressure side)
	  ▪ Open or short circuit in the fuel pump (low-side) body or related wiring harness
	  ▪ Fuel pressure sensor or related circuit malfunction
	  ▪ Fuel pump (low-side) body mechanical malfunction
	  ▪ High pressure fuel pump malfunction
	  ▪ Spill valve control solenoid valve control circuit malfunction (damage to driver in PCM caused by short circuit to ground system)
	  ▪ Spill valve control solenoid valve malfunction (built-into high pressure fuel pump)
	  ▪ Relief valve (built-into high pressure fuel pump) malfunction
	  ▪ Fuel line restriction
	  ▪ Fuel filter clogged (built-into fuel pump unit)
	  ▪ Fuel pump unit malfunction
	• Fuel injector malfunction
	• Incorrect fuel injection timing
	• Improper operation of electric variable valve timing control system
	  ▪ Electric variable valve timing driver malfunction
	  ▪ Electric variable valve timing motor malfunction
	  ▪ Electric variable valve timing actuator malfunction
	• Improper operation of hydraulic variable valve timing control system
	• Ignition system malfunction
	• Ignition coil malfunction
	• Low engine compression
	• Improper intake valve timing

	• Improper exhaust valve timing • Exhaust system and/or TWC restricted • PCV valve malfunction • Injector driver (built-into PCM) malfunction
POSSIBLE CAUSE	**WARNING:** The following troubleshooting flow chart contains the fuel system diagnosis and repair procedures. Read the following warnings before performing the fuel system services: • Fuel vapor is hazardous. It can easily ignite, causing serious injury and damage. Always keep sparks and flames away from fuel. • Fuel line spills and leakage are dangerous. Fuel can ignite and cause serious injury or death and damage. Fuel can also irritate skin and eyes. To prevent this, always complete “BEFORE SERVICE PRECAUTION” and “AFTER SERVICE PRECAUTION” described in this manual. (See **BEFORE SERVICE PRECAUTION [SKYACTIV-G 2.0, SKYACTIV-G 2.5]**.) (See **AFTER SERVICE PRECAUTION [SKYACTIV-G 2.0, SKYACTIV-G 2.5]**.) **CAUTION:** • Disconnecting/connecting the quick release connector without cleaning it may possibly cause damage to the fuel pipe and quick release connector. Always clean the quick release connector joint area before disconnecting/connecting, and make sure that it is free of foreign matter.

CAUTION:

- Verify the malfunction symptom according to not only the PID value but also the symptom troubleshooting.

Related PIDs

Item (definition)	Unit/Condition	Definition	Condition/Specification (Reference)
APP1	%	Accelerator pedal opening angle (absolute value) input from APP sensor No.1	• Accelerator pedal released: Approx. 15% • Accelerator pedal fully depressed: Approx. 82%
	V	APP sensor No.1 voltage	• Accelerator pedal released: Approx. 0.75 V • Accelerator pedal fully depressed: Approx. 4.1 V
APP2	%	Accelerator pedal opening angle (absolute value) input from APP sensor No.2	• Accelerator pedal released: Approx. 7.45% • Accelerator pedal fully depressed: Approx. 41%
	V	APP sensor No.2 voltage	• Accelerator pedal released: Approx. 0.38 V • Accelerator pedal fully depressed: Approx. 2.05 V

ECT	°C, °F	Engine coolant temperature	Displays ECT
	V	ECT sensor No.1 voltage	• ECT is 20 °C {68 °F}: Approx. 3.10 V • ECT is 40 °C {104 °F}: Approx. 2.16 V • ECT is 60 °C {140 °F}: Approx. 1.40 V • ECT is 80 °C {176 °F}: Approx. 0.87 V • ECT is 100 °C {212 °F}: Approx. 0.54 V
FUEL_PRES	KPa {MPa}, mBar {Bar}, psi, in H20	Fuel pressure	• Displays fuel pressure
	V	Fuel pressure sensor voltage	• Fuel pressure is 3.0 MPa {31 kgf/cm^2, 435 psi}: Approx. 0.92 V • Fuel pressure is 4.8 MPa {49 kgf/cm^2, 696 psi}: Approx. 1.17 V
LOAD	%	Ratio of actual amount of intake air to the maximum air charging amount (mass volume) of cylinder	• Idle (after warm up): Approx. 17.64% • Racing (engine speed is 2,000 rpm): Approx. 14.51% • Racing (engine speed is 4,000 rpm): Approx. 21.17%
LONGFT1	%	Fuel learning correction amount estimated based on A/F sensor signal	• Idle (after warm up): Approx. -2.34% • Racing (engine speed is 2,000 rpm): Approx. -0.78% • Racing (engine speed is 4,000 rpm): Approx. -0.78%
MAF	g/Sec	Mass air flow	• Displays MAF
	V	MAF sensor voltage	• Ignition switched ON (engine off) (MAF: 0.59 g/s {0.078 lb/min}): Approx. 0.72 V • Idle (after warm up) (MAF: 2.17 g/s {0.287 lb/min}): Approx. 0.86 V • Racing (engine speed is 2,000 rpm) (MAF: 4.73 g/s {0.626 lb/min}): Approx. 1.07 V
MAP	KPa {MPa}, mBar {Bar}, psi, in H20	Manifold absolute pressure	• Displays MAP
	V	MAP sensor voltage	• Ignition switched ON (engine off) (MAP:101 kPa {1.03 kgf/cm^2, 14.6 psi}): Approx. 4.07 V • Idle (after warm up) (MAP: 33 kPa {0.34 kgf/cm^2, 4.8 psi}): Approx. 1.34 V

			• Racing (engine speed is 2,000 rpm) (MAP: 26 kPa {0.27 kgf/cm^2, 3.8 psi}): Approx. 1.05 V
O2S11	µA	A/F sensor current	• Idle (after warm up): Approx. −39 µA • Deceleration fuel cut (accelerator pedal released from engine speed of 4,000 rpm or more): Approx. 3.84 mA
O2S12	V	HO2S voltage	• Idle (after warm up): 0—1.0 V • Deceleration fuel cut (accelerator pedal released from engine speed of 4,000 rpm or more): Approx. 0 V
RPM	RPM	Engine speed	• Displays engine speed
SHRTFT1	%	Fuel feedback correction amount estimated based on A/F sensor signal	• Idle (after warm up): Approx. 1.56% • Racing (engine speed is 2,000 rpm): Approx. −3.12% • Racing (engine speed is 4,000 rpm): Approx. −8.59%
TP_REL	%	Throttle valve opening angle (relative value) with value at throttle valve fully open timing as the start point	• Accelerator pedal released: Approx. 12% • Accelerator pedal fully depressed: Approx. 82%
VPWR	V	Battery positive voltage	• Displays battery voltage
VSS	KPH, MPH	Vehicle speed	• Displays vehicle speed

Diagnostic Procedure

STEP	INSPECTION	RESULTS	ACTION
1	**VERIFY TIMING OCCURRING MALFUNCTION** • Verify the symptom. • Does the malfunction symptom occur just after the engine is started?	Yes	Perform the symptom troubleshooting “NO.4 HARD TO START/LONG CRANK/ERRATIC START/ERRATIC CRANK”. (See **NO.4 HARD TO START/LONG CRANK/ERRATIC START/ERRATIC CRANK [SKYACTIV-G 2.0, SKYACTIV-G 2.5]**.)
		No	Go to the next step.
2	**VERIFY IF MALFUNCTION INCLUDES ROUGH IDLING** • Verify the symptom. • Does the engine idle rough?	Yes	Perform the symptom troubleshooting “NO.8 ENGINE RUNS ROUGH/ROLLING IDLE”. (See **NO.8 ENGINE RUNS ROUGH/ROLLING IDLE [SKYACTIV-G 2.0, SKYACTIV-G 2.5]**.)

		No	Go to the next step.
3	**VERIFY IF MALFUNCTION CAUSE IS OVERHEATING** • Access the ECT PID using the M-MDS. (See **ON-BOARD DIAGNOSTIC TEST [SKYACTIV-G 2.0, SKYACTIV-G 2.5]**.) **CAUTION:** • While performing this step, always operate the vehicle in a safe and lawful manner. • When the M-MDS is used to observe monitor system status while driving, be sure to have another technician with you, or record the data in the M-MDS using the PID/DATA MONITOR AND RECORD capturing function and inspect later. • Is the ECT PID value **less than 116 °C {241 °F}** during driving?	Yes	Go to the next step.
		No	The cause of this concern could be from the cooling system overheating. • Perform the symptom troubleshooting “NO.17 COOLING SYSTEM CONCERNS-OVERHEATING”. (See **NO.17 COOLING SYSTEM CONCERNS-OVERHEATING [SKYACTIV-G 2.0, SKYACTIV-G 2.5]**.)
4	**VERIFY PCM DTC** • Retrieve any DTCs using the M-MDS. (See **ON-BOARD DIAGNOSTIC TEST [SKYACTIV-G 2.0, SKYACTIV-G 2.5]**.) • Are any DTCs present?	Yes	Go to the applicable DTC inspection. (See **DTC TABLE [SKYACTIV-G 2.0, SKYACTIV-G 2.5]**.)
		No	Go to the next step.
5	**VERIFY CURRENT INPUT SIGNAL STATUS** **CAUTION:** • While performing this step, always operate the vehicle in a safe and lawful manner. • When the M-MDS is used to observe monitor system status while driving, be sure to have another technician with you, or record the data in the M-MDS using the PID/DATA MONITOR AND RECORD capturing function and inspect later. • Access the following PIDs using the M-MDS: (See **ON-BOARD DIAGNOSTIC TEST [SKYACTIV-G 2.0, SKYACTIV-G 2.5]**.) ▪ APP1 ▪ APP2 ▪ ECT	Yes	Go to the next step.
		No	APP1, APP2 PIDs are not as specified: • Inspect the APP sensor. (See **ACCELERATOR PEDAL POSITION (APP) SENSOR INSPECTION [SKYACTIV-G 2.0, SKYACTIV-G 2.5]**.) ECT PID is not as specified: • Inspect the ECT sensor No.1. (See **ENGINE COOLANT TEMPERATURE (ECT) SENSOR INSPECTION [SKYACTIV-G 2.0, SKYACTIV-G 2.5]**.) MAF PID is not as specified: • Inspect the MAF sensor. (See **MASS AIR FLOW (MAF) SENSOR INSPECTION [SKYACTIV-G 2.0, SKYACTIV-G 2.5]**.)

	▪ MAF ▪ MAP ▪ O2S11 ▪ O2S12 ▪ SHRTFT1 ▪ LONGFT1 • Do the PIDs indicate the correct values under the malfunction condition? (See **PCM INSPECTION [SKYACTIV-G 2.0, SKYACTIV-G 2.5]**.)		MAP PID is not as specified: • Inspect the MAP sensor. (See **MANIFOLD ABSOLUTE PRESSURE (MAP) SENSOR INSPECTION [SKYACTIV-G 2.0, SKYACTIV-G 2.5]**.) O2S11, SHRTFT1, LONGFT1 PIDs are not as specified: • Inspect the A/F sensor. (See **AIR FUEL RATIO (A/F) SENSOR INSPECTION [SKYACTIV-G 2.0, SKYACTIV-G 2.5]**.) O2S12 PID is not as specified: • Inspect the HO2S. (See **HEATED OXYGEN SENSOR (HO2S) INSPECTION [SKYACTIV-G 2.0, SKYACTIV-G 2.5]**.) Repair or replace the malfunctioning part according to the inspection results. • If the malfunction remains: ▪ Perform the “INTERMITTENT CONCERN TROUBLESHOOTING” procedure. (See **INTERMITTENT CONCERN TROUBLESHOOTING [SKYACTIV-G 2.0, SKYACTIV-G 2.5]**.)
6	**INSPECT PCM POWER SUPPLY VOLTAGE** • Access the VPWR PID using the M-MDS. (See **ON-BOARD DIAGNOSTIC TEST [SKYACTIV-G 2.0, SKYACTIV-G 2.5]**.) • Is the VPWR PID value **B+**?	Yes	Go to the next step.
		No	Repair or replace the wiring harness between main relay terminal D and PCM terminal 2S and 1CK.
7	**INSPECT A/C CUT-OFF CONTROL SYSTEM OPERATION** • Perform the A/C Cut-off Control System Inspection. (See **ENGINE CONTROL SYSTEM OPERATION INSPECTION [SKYACTIV-G 2.0, SKYACTIV-G 2.5]**.) • Does the A/C cut-off operation work properly?	Yes	Go to the next step.
		No	Perform the symptom troubleshooting "NO.23 A/C DOES NOT WORK SUFFICIENTLY" and "NO.24 A/C IS ALWAYS ON OR A/C COMPRESSOR RUNS CONTINUOUSLY". (See **NO.23 A/C DOES NOT WORK SUFFICIENTLY [SKYACTIV-G 2.0, SKYACTIV-G 2.5]**.) (See **NO.24 A/C IS ALWAYS ON OR A/C COMPRESSOR RUNS CONTINUOUSLY [SKYACTIV-G 2.0, SKYACTIV-G 2.5]**.)
8	**DETERMINE IF MALFUNCTION CAUSE IS DRIVE-BY-WIRE CONTROL SYSTEM OR OTHER** • Will the engine run smoothly at part throttle?	Yes	Go to Step 10.

		No	Go to the next step.
9	**INSPECT DRIVE-BY-WIRE CONTROL SYSTEM OPERATION** • Perform the Electronic Control Throttle Operation Inspection. (See **ENGINE CONTROL SYSTEM OPERATION INSPECTION [SKYACTIV-G 2.0, SKYACTIV-G 2.5]**.) • Does the drive-by-wire control system work properly?	Yes	Visually inspect the throttle body (damage/scratching). • If there is any malfunction: ▪ Repair or replace the malfunctioning part according to the inspection results. • If there is no malfunction: ▪ Go to the next step.
		No	Repair or replace the malfunctioning part according to the inspection results.
10	**INSPECT PURGE CONTROL SYSTEM OPERATION** • Perform the Purge Control System Inspection. (See **ENGINE CONTROL SYSTEM OPERATION INSPECTION [SKYACTIV-G 2.0, SKYACTIV-G 2.5]**.) • Does the purge solenoid valve work properly?	Yes	Go to the next step.
		No	Repair or replace the malfunctioning part according to the inspection results.
11	**INSPECT MAF SENSOR GROUND CIRCUIT FOR OPEN CIRCUIT** • Inspect the MAF sensor for the following: ▪ MAF sensor terminal B voltage (ground circuit) • Is there any malfunction?	Yes	Repair or replace the suspected wiring harness.
		No	Go to the next step.
12	**INSPECT PCM FOR POOR GROUND** • Verify the PCM ground point condition. • Is there any ground point loose or lifting in the PCM?	Yes	Repair the ground point.
		No	Go to the next step.
13	**INSPECT RELATED PART CONDITION** • Inspect the following: ▪ Fuel quality (proper octane, contamination, winter/summer blend) ▪ Intake-air system leakage or restriction ▪ Electrical connectors ▪ Poor connection for PCM ground and body ground ▪ Fuel leakage ▪ Vacuum leakage ▪ CKP sensor, intake CMP sensor and	Yes	Service if necessary. • Repeat this step.
		No	Go to the next step.

	exhaust CMP sensor • Installation condition (See **CRANKSHAFT POSITION (CKP) SENSOR REMOVAL/INSTALLATION [SKYACTIV-G 2.0, SKYACTIV-G 2.5]**.) (See **CAMSHAFT POSITION (CMP) SENSOR REMOVAL/INSTALLATION [SKYACTIV-G 2.0, SKYACTIV-G 2.5]**.) • Damaged trigger wheel, intake camshaft and exhaust camshaft • Is there any malfunction?		
14	**INSPECT FUEL PRESSURE (HIGH-SIDE)** • Start the engine and warm it up completely. • Access the FUEL_PRES PID using the M-MDS at idle. (See **ON-BOARD DIAGNOSTIC TEST [SKYACTIV-G 2.0, SKYACTIV-G 2.5]**.) • Is the FUEL_PRES PID value **approx. 3 MPa {31 kgf/cm^2, 435 psi}**?	Yes	Go to Step 18.
		No	Lower than **3 MPa {31 kgf/cm^2, 435 psi}**: • Inspect the following: ▪ Fuel leakage at the fuel line and fuel injector ▪ Fuel pump • Perform the Fuel Pump (Low-pressure Side) Operation Inspection. (See **ENGINE CONTROL SYSTEM OPERATION INSPECTION [SKYACTIV-G 2.0, SKYACTIV-G 2.5]**.) ▪ Fuel pressure sensor (See **FUEL PRESSURE SENSOR INSPECTION [SKYACTIV-G 2.0, SKYACTIV-G 2.5]**.) ▪ High pressure fuel pump (See **HIGH PRESSURE FUEL PUMP INSPECTION [SKYACTIV-G 2.0, SKYACTIV-G 2.5]**.) • If there is any malfunction: ▪ Repair or replace the malfunctioning part

			according to the inspection results. • If there is no malfunction: ▪ Go to Step 17. Higher than **3 MPa {31 kgf/cm^2, 435 psi}**: • Go to the next step.
15	**DETERMINE IF MALFUNCTION CAUSE IS FUEL PRESSURE SENSOR OR HIGH PRESSURE FUEL PUMP** • Is the vehicle acceleration performance normal?	Yes	Go to the next step.
		No	Go to Step 17.
16	**INSPECT FUEL PRESSURE SENSOR** • Inspect the fuel pressure sensor. (See **FUEL PRESSURE SENSOR INSPECTION [SKYACTIV-G 2.0, SKYACTIV-G 2.5]**.) • Is there any malfunction?	Yes	Replace the fuel distributor. (See **FUEL INJECTOR REMOVAL/INSTALLATION [SKYACTIV-G 2.0, SKYACTIV-G 2.5]**.)
		No	Go to Step 18.
17	**INSPECT SPILL VALVE CONTROL SOLENOID VALVE CONTROL CIRCUIT FOR SHORT TO GROUND** • Switch the ignition off. • Disconnect the high pressure fuel pump and PCM connectors. • Inspect for continuity between high pressure fuel pump terminal A (wiring harness-side) and body ground. • Is there continuity?	Yes	Refer to the wiring diagram and verify whether or not there is a common connector between high pressure fuel pump terminal A and PCM terminal 1EE. **If there is a common connector:** • Determine the malfunctioning part by inspecting the common connector and the terminal for corrosion, damage, or pin disconnection, and the common wiring harness for a short to ground. • Repair or replace the malfunctioning part. **If there is no common connector:** • Repair or replace the wiring harness which has a short to ground. If the malfunction remains: • Replace the PCM. (damage to driver in PCM) (See **PCM REMOVAL/INSTALLATION [SKYACTIV-G 2.0, SKYACTIV-G 2.5]**.)
		No	Replace the high pressure fuel pump. (See **HIGH PRESSURE FUEL PUMP REMOVAL/INSTALLATION [SKYACTIV-G 2.0, SKYACTIV-G 2.5]**.)
18	**INSPECT FUEL PRESSURE (LOW-SIDE)** • Connect the fuel pressure gauge between fuel pump and	Yes	Go to the next step.

	high pressure fuel pump. • Measure the low side fuel pressure. (See **FUEL LINE PRESSURE INSPECTION [SKYACTIV-G 2.0, SKYACTIV-G 2.5]**.) • Is the low side fuel pressure within specification? **Specification:** • **405—485 kPa {4.13—4.94 kgf/cm^2, 58.8—70.3 psi}**	No	Inspect the following: • Fuel line restriction • Fuel filter clogged ▪ If there is any malfunction: • Repair or replace the malfunctioning part according to the inspection results. ▪ If there is no malfunction: • Replace the fuel pump unit. (See **FUEL PUMP UNIT REMOVAL/INSTALLATION [SKYACTIV-G 2.0, SKYACTIV-G 2.5]**.)
19	**INSPECT FUEL INJECTOR OPERATION** • Perform the Fuel Injector Operation Inspection. (See **ENGINE CONTROL SYSTEM OPERATION INSPECTION [SKYACTIV-G 2.0, SKYACTIV-G 2.5]**.) • Do the fuel injectors operate properly?	Yes	Go to the next step.
		No	Repair or replace the malfunctioning part according to the inspection results.
20	**INSPECT ENGINE COMPRESSION** • Measure the compression pressure for each cylinder. (See **COMPRESSION INSPECTION [SKYACTIV-G 2.0, SKYACTIV-G 2.5]**.) • Are compression pressures within specification? **Specification:** • Compression [SKYACTIV-G 2.0] ▪ Standard: **885 kPa {9.02 kgf/cm^2, 128 psi} (300 rpm)** ▪ Minimum: **708 kPa {7.22 kgf/cm^2, 103 psi} (300 rpm)** ▪ Maximum difference between cylinders: **150 kPa {1.53 kgf/cm^2, 21.8 psi}** (**300 rpm**) • Compression [SKYACTIV-G 2.5] ▪ Standard: **954 kPa {9.73 kgf/cm^2, 138 psi} (300 rpm)**	Yes	Go to Step 26.
		No	Go to the next step.

	▪ Minimum: **763 kPa {7.78 kgf/cm^2, 111 psi} (300 rpm)** ▪ Maximum difference between cylinders: **161 kPa {1.64 kgf/cm^2, 23.4 psi}** (**300 rpm**) **NOTE:** • Because the SKYACTIV-G 2.0 and SKYACTIV-G 2.5 retards the intake valve closing timing, compression pressure is low.		
21	**INSPECT ELECTRIC VARIABLE VALVE TIMING DRIVER** • Inspect the electric variable valve timing driver. (See **ELECTRIC VARIABLE VALVE TIMING MOTOR/DRIVER INSPECTION [SKYACTIV-G 2.0, SKYACTIV-G 2.5]**.) • Is there any malfunction?	Yes	Replace the electric variable valve timing motor/driver. (See **ELECTRIC VARIABLE VALVE TIMING MOTOR/DRIVER REMOVAL/INSTALLATION [SKYACTIV-G 2.0, SKYACTIV-G 2.5]**.)
		No	Go to the next step.
22	**INSPECT ELECTRIC VARIABLE VALVE TIMING MOTOR** • Inspect the electric variable valve timing motor. (See **ELECTRIC VARIABLE VALVE TIMING MOTOR/DRIVER INSPECTION [SKYACTIV-G 2.0, SKYACTIV-G 2.5]**.) • Is there any malfunction?	Yes	Replace the electric variable valve timing motor/driver. (See **ELECTRIC VARIABLE VALVE TIMING MOTOR/DRIVER REMOVAL/INSTALLATION [SKYACTIV-G 2.0, SKYACTIV-G 2.5]**.)
		No	Go to the next step.
23	**INSPECT ELECTRIC VARIABLE VALVE TIMING ACTUATOR** • Inspect the electric variable valve timing actuator. (See **ELECTRIC VARIABLE VALVE TIMING ACTUATOR INSPECTION [SKYACTIV-G 2.0, SKYACTIV-G 2.5]**.) • Is there any malfunction?	Yes	Replace the electric variable valve timing actuator. (See **ELECTRIC VARIABLE VALVE TIMING ACTUATOR, HYDRAULIC VARIABLE VALVE TIMING ACTUATOR REMOVAL/INSTALLATION [SKYACTIV-G 2.0, SKYACTIV-G 2.5]**.)
		No	Go to the next step.
24	**INSPECT HYDRAULIC VARIABLE VALVE TIMING CONTROL SYSTEM OPERATION** • Perform the Hydraulic Variable Valve Timing Control System Operation Inspection. (See **ENGINE CONTROL SYSTEM OPERATION INSPECTION [SKYACTIV-G 2.0, SKYACTIV-G 2.5]**.) • Is there any malfunction?	Yes	Repair or replace the malfunctioning part according to the inspection results.
		No	Go to the next step.
25	**INSPECT FOR MALFUNCTION DUE TO DEVIATED VALVE TIMING** • Inspect the valve timing (timing chain installation condition). (See **TIMING CHAIN REMOVAL/INSTALLATION [SKYACTIV-G 2.0, SKYACTIV-G 2.5]**.)	Yes	Inspect for the following engine internal parts: • Cylinder • Piston ring

	• Is the valve timing normal?		• Intake valve • Exhaust valve • Such as cylinder head gasket ▪ If there is any malfunction: • Repair or replace the malfunctioning part according to the inspection results.
		No	Adjust the valve timing to the correct timing.
26	**INSPECT IGNITION SYSTEM OPERATION** • Perform the Spark Test. (See **ENGINE CONTROL SYSTEM OPERATION INSPECTION [SKYACTIV-G 2.0, SKYACTIV-G 2.5]**.) • Is a strong blue spark visible at each cylinder?	Yes	Go to the next step.
		No	Repair or replace the malfunctioning part according to the inspection results.
27	**INSPECT EXHAUST SYSTEM FOR RESTRICTION** • Inspect for restriction in the exhaust system and the TWC. • Is there any restriction?	Yes	Repair or replace the malfunctioning part according to the inspection results.
		No	Go to the next step.
28	**INSPECT IF MALFUNCTION CAUSE IS PCV VALVE OR INJECTOR DRIVER (PCM INTEGRATED)** • Inspect the PCV valve. (See **POSITIVE CRANKCASE VENTILATION (PCV) VALVE INSPECTION [SKYACTIV-G 2.0, SKYACTIV-G 2.5]**.) • Is there any malfunction?	Yes	Replace the PCV valve. (See **POSITIVE CRANKCASE VENTILATION (PCV) VALVE REMOVAL/INSTALLATION [SKYACTIV-G 2.0, SKYACTIV-G 2.5]**.)
		No	Injector driver malfunction. • Replace the PCM. (See **PCM REMOVAL/INSTALLATION [SKYACTIV-G 2.0, SKYACTIV-G 2.5]**.) If the problem remains, overhaul the engine.
29	Verify the test results. • If normal, return to the diagnostic index to service any additional symptoms. (See **SYMPTOM DIAGNOSTIC INDEX [SKYACTIV-G 2.0, SKYACTIV-G 2.5]**.) • If the malfunction remains, inspect the related Service Bulletins and/or On-line Repair Information and perform repair or diagnosis. ▪ If the vehicle is repaired, troubleshooting is completed. ▪ If the vehicle is not repaired or additional diagnostic information is not available, reprogram the PCM if a later calibration is available. Retest.		

NO.5 ENGINE STALLS-AFTER START/AT IDLE [SKYACTIV-G 2.0, SKYACTIV-G 2.5]

2014 - Mazda3 - Engine

NO.6 CRANKS NORMALLY BUT WILL NOT START [SKYACTIV-G 2.0, SKYACTIV-G 2.5]

6	CRANKS NORMALLY BUT WILL NOT START
DESCRIPTION	• Starter cranks engine at normal speed but engine will not run. • Refer to symptom troubleshooting “NO.5 ENGINE STALLS-AFTER START/AT IDLE” if this symptom appears after engine stalls. • Fuel is in tank. • Battery is in normal condition.

	• Because engine is started with accelerator pedal fully depressed, it goes into dechoke mode and fuel is not injected
	• Engine overheating
	• PCM DTC is stored
	• Erratic signal to PCM
	  ▪ APP sensor or related circuit malfunction
	  ▪ ECT sensor No.1 or related circuit malfunction
	  ▪ MAF sensor or related circuit malfunction
	  ▪ A/F sensor or related circuit malfunction
	  ▪ HO2S or related circuit malfunction
	  ▪ Improper air/fuel mixture ratio control
	• Power is not supplied from main relay
	• Power is not supplied from fuel injector relay and/or fuel pump relay
	• Improper operation of drive-by-wire control system
	• Purge solenoid valve malfunction
	• No signal from MAF sensor
	• Poor fuel quality
	• Air leakage from intake-air system
	• Intake-air system restriction

POSSIBLE CAUSE	• Electrical connector disconnected
	• No battery power supply to PCM or poor ground
	• Fuse malfunction
	• Fuel leakage
	• Vacuum leakage
	• No signal from CMP sensor
	  ▪ Loose installation
	  ▪ Damaged trigger wheel (exhaust camshaft)
	  ▪ Open or short circuit in related wiring harness
	• No signal from CKP sensor
	  ▪ Loose installation
	  ▪ Damaged trigger wheel (crankshaft pulley)
	  ▪ Open or short circuit in related wiring harness
	• Inadequate fuel pressure (high or low pressure side)
	  ▪ Open or short circuit in the fuel pump (low-side) body or related wiring harness
	  ▪ Fuel pressure sensor or related circuit malfunction
	  ▪ High pressure fuel pump malfunction
	  ▪ Spill valve control solenoid valve control circuit malfunction (damage to driver in PCM caused by short circuit to ground system)
	  ▪ Spill valve control solenoid valve malfunction (built-into high pressure fuel pump)
	  ▪ Fuel line restriction
	  ▪ Fuel filter clogged (built-into fuel pump unit)
	  ▪ Fuel pump (low-side) body mechanical malfunction
	• Incorrect fuel injection timing
	• Fuel injector malfunction
	• Improper intake valve timing
	• Improper exhaust valve timing
	• Improper operation of electric variable valve timing control system
	  ▪ Electric variable valve timing driver malfunction
	  ▪ Electric variable valve timing motor malfunction
	  ▪ Electric variable valve timing actuator malfunction
	• Improper operation of hydraulic variable valve timing control system

	• Low engine compression • Ignition system malfunction • Ignition coil malfunction • Vapor occurs around fuel pump (fuel problem) • Because vapor occurs in high pressure fuel pump, fuel injector cannot adjust fuel injection to correct amount • Exhaust system and/or TWC restricted • PCV valve malfunction • Injector driver (built-into PCM) malfunction
POSSIBLE CAUSE	**WARNING:** The following troubleshooting flow chart contains the fuel system diagnosis and repair procedures. Read the following warnings before performing the fuel system services: • Fuel vapor is hazardous. It can easily ignite, causing serious injury and damage. Always keep sparks and flames away from fuel. • Fuel line spills and leakage are dangerous. Fuel can ignite and cause serious injury or death and damage. Fuel can also irritate skin and eyes. To prevent this, always complete “BEFORE SERVICE PRECAUTION” and “AFTER SERVICE PRECAUTION” described in this manual. (See **BEFORE SERVICE PRECAUTION [SKYACTIV-G 2.0, SKYACTIV-G 2.5]**.) (See **AFTER SERVICE PRECAUTION [SKYACTIV-G 2.0, SKYACTIV-G 2.5]**.) **CAUTION:** • Disconnecting/connecting the quick release connector without cleaning it may possibly cause damage to the fuel pipe and quick release connector. Always clean the quick release connector joint area before disconnecting/connecting, and make sure that it is free of foreign matter.

CAUTION:

- Verify the malfunction symptom according to not only the PID value but also the symptom troubleshooting.

Related PIDs

Item (definition)	Unit/Condition	Definition	Condition/Specification (Reference)
APP1	%	Accelerator pedal opening angle (absolute value) input from APP sensor No.1	• Accelerator pedal released: Approx. 15% • Accelerator pedal fully depressed: Approx. 82%
	V	APP sensor No.1 voltage	• Accelerator pedal released: Approx. 0.75 V • Accelerator pedal fully depressed: Approx. 4.1 V
	%	Accelerator pedal opening angle (absolute value) input from APP sensor No.2	• Accelerator pedal released: Approx. 7.45%

APP2			• Accelerator pedal fully depressed: Approx. 41%
	V	APP sensor No.2 voltage	• Accelerator pedal released: Approx. 0.38 V • Accelerator pedal fully depressed: Approx. 2.05 V
ECT	°C, °F	Engine coolant temperature	• Displays ECT
	V	ECT sensor No.1 voltage	• ECT is 20 °C {68 °F}: Approx. 3.10 V • ECT is 40 °C {104 °F}: Approx. 2.16 V • ECT is 60 °C {140 °F}: Approx. 1.40 V • ECT is 80 °C {176 °F}: Approx. 0.87 V • ECT is 100 °C {212 °F}: Approx. 0.54 V
FUEL_PRES	KPa {MPa}, mBar {Bar}, psi, in H20	Fuel pressure	• Displays fuel pressure
	V	Fuel pressure sensor voltage	• Fuel pressure is 3.0 MPa {31 kgf/cm^2, 435 psi}: Approx. 0.92 V • Fuel pressure is 4.8 MPa {49 kgf/cm^2, 696 psi}: Approx. 1.17 V
LOAD	%	Ratio of actual amount of intake air to the maximum air charging amount (mass volume) of cylinder	• Idle (after warm up): Approx. 17.64% • Racing (engine speed is 2,000 rpm): Approx. 14.51% • Racing (engine speed is 4,000 rpm): Approx. 21.17%
LONGFT1	%	Fuel learning correction amount estimated based on A/F sensor signal	• Idle (after warm up): Approx. -2.34% • Racing (engine speed is 2,000 rpm): Approx. -0.78% • Racing (engine speed is 4,000 rpm): Approx. -0.78%
MAF	g/Sec	Mass air flow	• Displays MAF
	V	MAF sensor voltage	• Ignition switched ON (engine off) (MAF: 0.59 g/s {0.078 lb/min}): Approx. 0.72 V • Idle (after warm up) (MAF: 2.17 g/s {0.287 lb/min}): Approx. 0.86 V • Racing (engine speed is 2,000 rpm) (MAF: 4.73 g/s {0.626 lb/min}): Approx. 1.07 V
			• Idle (after warm up): Approx. −39 μA

O2S11	µA	A/F sensor current	• Deceleration fuel cut (accelerator pedal released from engine speed of 4,000 rpm or more): Approx. 3.84 mA
O2S12	V	HO2S voltage	• Idle (after warm up): 0—1.0 V • Deceleration fuel cut (accelerator pedal released from engine speed of 4,000 rpm or more): Approx. 0 V
RPM	RPM	Engine speed	• Displays engine speed
SHRTFT1	%	Fuel feedback correction amount estimated based on A/F sensor signal	• Idle (after warm up): Approx. 1.56% • Racing (engine speed is 2,000 rpm): Approx. −3.12% • Racing (engine speed is 4,000 rpm): Approx. −8.59%
TP_REL	%	Throttle valve opening angle (relative value) with value at throttle valve fully open timing as the start point	• Accelerator pedal released: Approx. 12% • Accelerator pedal fully depressed: Approx. 82%
VSS	KPH, MPH	Vehicle speed	• Displays vehicle speed

Diagnostic Procedure

STEP	INSPECTION	RESULTS	ACTION
1	**INSPECT VEHICLE CONDITION FOR EFFECT ON MALFUNCTION** • Verify how the customer drives the vehicle by asking the customer the following: ▪ Because engine is started with accelerator pedal fully depressed, it goes into dechoke mode and fuel is not injected • Does the engine start with the accelerator pedal fully depressed?	Yes	Explain to the customer that the vehicle is normal and give them advice on how to start the engine and a specific example of the conditions in which the engine goes into dechoke mode.
		No	Go to the next step.
2	**VERIFY IF MALFUNCTION CAUSE IS OVERHEATING** • Access the ECT PID using the M-MDS. (See **ON-BOARD DIAGNOSTIC TEST [SKYACTIV-G 2.0, SKYACTIV-G 2.5]**.) • Is the ECT PID value **less than 116 °C {241 °F}** during driving?	Yes	Go to the next step.
		No	The cause of this concern could be from the cooling system overheating. • Perform the symptom troubleshooting “NO.17 COOLING SYSTEM CONCERNS-OVERHEATING”. (See **NO.17 COOLING SYSTEM CONCERNS-OVERHEATING [SKYACTIV-G 2.0, SKYACTIV-G 2.5]**.)
	VERIFY PCM DTC		

3	• Retrieve any DTCs using the M-MDS. (See **ON-BOARD DIAGNOSTIC TEST [SKYACTIV-G 2.0, SKYACTIV-G 2.5]**.) • Are any DTCs present?	Yes	Go to the applicable DTC inspection. (See **DTC TABLE [SKYACTIV-G 2.0, SKYACTIV-G 2.5]**.)
		No	Go to the next step.
4	**VERIFY CURRENT INPUT SIGNAL STATUS** **CAUTION:** • While performing this step, always operate the vehicle in a safe and lawful manner. • When the M-MDS is used to observe monitor system status while driving, be sure to have another technician with you, or record the data in the M-MDS using the PID/DATA MONITOR AND RECORD capturing function and inspect later. • Access the following PIDs using the M-MDS: (See **ON-BOARD DIAGNOSTIC TEST [SKYACTIV-G 2.0, SKYACTIV-G 2.5]**.) ▪ APP1 ▪ APP2 ▪ ECT ▪ MAF ▪ O2S11 ▪ O2S12 ▪ SHRTFT1 ▪ LONGFT1 • Do the PIDs indicate the correct values under the malfunction condition? (See **PCM INSPECTION [SKYACTIV-G 2.0, SKYACTIV-G 2.5]**.)	Yes	Go to the next step.
		No	APP1, APP2 PIDs are not as specified: • Inspect the APP sensor. (See **ACCELERATOR PEDAL POSITION (APP) SENSOR INSPECTION [SKYACTIV-G 2.0, SKYACTIV-G 2.5]**.) ECT PID is not as specified: • Inspect the ECT sensor No.1. (See **ENGINE COOLANT TEMPERATURE (ECT) SENSOR INSPECTION [SKYACTIV-G 2.0, SKYACTIV-G 2.5]**.) MAF PID is not as specified: • Inspect the MAF sensor. (See **MASS AIR FLOW (MAF) SENSOR INSPECTION [SKYACTIV-G 2.0, SKYACTIV-G 2.5]**.) O2S11, SHRTFT1, LONGFT1 PIDs are not as specified: • Inspect the A/F sensor. (See **AIR FUEL RATIO (A/F) SENSOR INSPECTION [SKYACTIV-G 2.0, SKYACTIV-G 2.5]**.) O2S12 PID is not as specified: • Inspect the HO2S. (See **HEATED OXYGEN SENSOR (HO2S) INSPECTION [SKYACTIV-G 2.0, SKYACTIV-G 2.5]**.) Repair or replace the malfunctioning part according to the inspection results. • If the malfunction remains: ▪ Perform the “INTERMITTENT CONCERN TROUBLESHOOTING” procedure. (See **INTERMITTENT CONCERN TROUBLESHOOTING [SKYACTIV-G 2.0, SKYACTIV-G 2.5]**.)
5	**DETERMINE IF MALFUNCTION CAUSE IS DRIVE-BY-WIRE CONTROL**	Yes	Go to Step 7.

	SYSTEM OR OTHER • Will the engine run smoothly at part throttle?		
		No	Go to the next step.
6	**INSPECT DRIVE-BY-WIRE CONTROL SYSTEM OPERATION** • Perform the Electronic Control Throttle Operation Inspection. (See **ENGINE CONTROL SYSTEM OPERATION INSPECTION [SKYACTIV-G 2.0, SKYACTIV-G 2.5]**.) • Does the drive-by-wire control system work properly?	Yes	Visually inspect the throttle body (damage/scratching). • If there is any malfunction: ▪ Repair or replace the malfunctioning part according to the inspection results. • If there is no malfunction: ▪ Go to the next step.
		No	Repair or replace the malfunctioning part according to the inspection results.
7	**INSPECT PURGE CONTROL SYSTEM OPERATION** • Perform the Purge Control System Inspection. (See **ENGINE CONTROL SYSTEM OPERATION INSPECTION [SKYACTIV-G 2.0, SKYACTIV-G 2.5]**.) • Does the purge solenoid valve work properly?	Yes	Go to the next step.
		No	Repair or replace the malfunctioning part according to the inspection results.
8	**VERIFY IF MALFUNCTION CAUSE IS MAF SENSOR SIGNAL** **NOTE:** • If the inspection in Step 8 is performed, the PCM detects a DTC and performs fail-safe control. After performing the inspection, clear DTCs using the M-MDS. • Switch the ignition off. • Disconnect the MAF sensor/IAT sensor No.1 connector. • Start the engine. • Does the engine start normally?	Yes	Clean the MAF sensor. Verify that the symptom is solved. • If the symptom remains, inspect the MAF sensor related wiring harness and connector. ▪ If there is any malfunction: • Repair or replace the malfunctioning part according to the inspection results. ▪ If there is no malfunction: • Replace the MAF sensor/IAT sensor No.1. (See **MASS AIR FLOW (MAF) SENSOR/INTAKE AIR TEMPERATURE (IAT) SENSOR NO.1 REMOVAL/INSTALLATION [SKYACTIV-G 2.0, SKYACTIV-G 2.5]**.)
		No	Go to the next step.

9	**INSPECT FUEL INJECTOR RELAY** • Switch the ignition off. • Remove the fuel injector relay. • Inspect the fuel injector relay. (See **RELAY INSPECTION**.) • Is there any malfunction?	Yes	Replace the fuel injector relay.
		No	Reinstall the fuel injector relay, then go to the next step.
10	**INSPECT FUEL PUMP RELAY** • Remove the fuel pump relay. • Inspect the fuel pump relay. (See **RELAY INSPECTION**.) • Is there any malfunction?	Yes	Replace the fuel pump relay.
		No	Inspect for a short or open circuit between the following terminals: • IG1 relay terminal C—PCM terminal 2AQ • Battery positive terminal—PCM terminal 1CO • Battery positive terminal—PCM terminal 1CS • Battery positive terminal—PCM terminal 1CW • Battery positive terminal—PCM terminal 1DA • Battery positive terminal—PCM terminal 1DG • Battery positive terminal—PCM terminal 1DK • Main relay terminal D—Fuel injector relay terminal A • Fuel injector relay terminal E—Body ground ▪ If there is any malfunction: • Repair or replace the malfunctioning part according to the inspection results. ▪ If there is no malfunction: • Reinstall the fuel pump relay, then go to the next step.
11	**INSPECT RELATED PART CONDITION** • Inspect the following: ▪ Fuel quality (proper octane, contamination, winter/summer blend) ▪ Intake-air system leakage or restriction ▪ Electrical connectors ▪ Poor connection for PCM ground and	Yes	Service if necessary. • Repeat this step.
		No	Go to the next step.

	body ground ▪ Fuses ▪ Fuel leakage ▪ Vacuum leakage ▪ CKP sensor and exhaust CMP sensor • Installation condition (See **CRANKSHAFT POSITION (CKP) SENSOR REMOVAL/INSTALLATION [SKYACTIV-G 2.0, SKYACTIV-G 2.5]**.) (See **CAMSHAFT POSITION (CMP) SENSOR REMOVAL/INSTALLATION [SKYACTIV-G 2.0, SKYACTIV-G 2.5]**.) • Damaged trigger wheel exhaust camshaft • Is there any malfunction?		
12	**INSPECT FUEL PRESSURE (HIGH-SIDE)** • Access the FUEL_PRES PID using the M-MDS while cranking the engine. (See **ON-BOARD DIAGNOSTIC TEST [SKYACTIV-G 2.0, SKYACTIV-G 2.5]**.) • Is the FUEL_PRES PID value within specification? **Specification:** • **4—6 MPa {41—61 kgf/cm^2, 581—870 psi}**	Yes	Go to Step 14.
		No	Lower than specification: • Inspect the following: ▪ Fuel leakage at the fuel line and fuel injector ▪ Fuel pump • Perform the Fuel Pump (Low-pressure Side) Operation Inspection. (See **ENGINE CONTROL SYSTEM OPERATION INSPECTION [SKYACTIV-G 2.0, SKYACTIV-G 2.5]**.) ▪ Fuel pressure sensor (See **FUEL PRESSURE SENSOR INSPECTION [SKYACTIV-G 2.0, SKYACTIV-G 2.5]**.) ▪ High pressure fuel pump (See **HIGH PRESSURE FUEL PUMP**

			INSPECTION [SKYACTIV-G 2.0, SKYACTIV-G 2.5].) • If there is any malfunction: ▪ Repair or replace the malfunctioning part according to the inspection results. • If there is no malfunction: ▪ Go to the next step. Higher than specification: • Go to the next step.
13	**INSPECT SPILL VALVE CONTROL SOLENOID VALVE CONTROL CIRCUIT FOR SHORT TO GROUND** • Switch the ignition off. • Disconnect the high pressure fuel pump and PCM connectors. • Inspect for continuity between high pressure fuel pump terminal A (wiring harness-side) and body ground. • Is there continuity?	Yes	Refer to the wiring diagram and verify whether or not there is a common connector between high pressure fuel pump terminal A and PCM terminal 1EE. **If there is a common connector:** • Determine the malfunctioning part by inspecting the common connector and the terminal for corrosion, damage, or pin disconnection, and the common wiring harness for a short to ground. • Repair or replace the malfunctioning part. **If there is no common connector:** • Repair or replace the wiring harness which has a short to ground. If the malfunction remains: • Replace the PCM. (damage to driver in PCM) (See **PCM REMOVAL/INSTALLATION [SKYACTIV-G 2.0, SKYACTIV-G 2.5]**.)
		No	Replace the high pressure fuel pump. (See **HIGH PRESSURE FUEL PUMP REMOVAL/INSTALLATION [SKYACTIV-G 2.0, SKYACTIV-G 2.5]**.)
14	**INSPECT FUEL PRESSURE (LOW-SIDE)** • Connect the fuel pressure gauge between fuel pump and high pressure fuel pump. • Measure the low side fuel pressure. (See **FUEL LINE PRESSURE INSPECTION [SKYACTIV-G 2.0, SKYACTIV-G 2.5]**.) • Is the low side fuel pressure within specification?	Yes	Go to the next step.
		No	Inspect the following: • Fuel line restriction • Fuel filter clogged ▪ If there is any malfunction: • Repair or replace the

	Specification: • **405—485 kPa {4.13—4.94 kgf/cm^2, 58.8—70.3 psi}**		malfunctioning part according to the inspection results. ▪ If there is no malfunction: • Replace the fuel pump unit. (See **FUEL PUMP UNIT REMOVAL/INSTALLATION [SKYACTIV-G 2.0, SKYACTIV-G 2.5]**.)
15	**INSPECT FUEL INJECTOR OPERATION** • Perform the Fuel Injector Operation Inspection. (See **ENGINE CONTROL SYSTEM OPERATION INSPECTION [SKYACTIV-G 2.0, SKYACTIV-G 2.5]**.) • Do the fuel injectors operate properly?	Yes	Go to the next step.
		No	Repair or replace the malfunctioning part according to the inspection results.
16	**INSPECT FUEL TANK** • Inspect the fuel tank. (See **FUEL TANK INSPECTION [SKYACTIV-G 2.0, SKYACTIV-G 2.5]**.) • Is vapor occurring?	Yes	Replace the fuel tank. (See **FUEL TANK REMOVAL/INSTALLATION [SKYACTIV-G 2.0, SKYACTIV-G 2.5]**.)
		No	Go to the next step.
17	**INSPECT HIGH PRESSURE FUEL PUMP** • Inspect the high pressure fuel pump. (See **HIGH PRESSURE FUEL PUMP INSPECTION [SKYACTIV-G 2.0, SKYACTIV-G 2.5]**.) • Is there any malfunction?	Yes	Replace the high pressure fuel pump. (See **HIGH PRESSURE FUEL PUMP REMOVAL/INSTALLATION [SKYACTIV-G 2.0, SKYACTIV-G 2.5]**.)
		No	Go to the next step.
18	**INSPECT ENGINE COMPRESSION** • Measure the compression pressure for each cylinder. (See **COMPRESSION INSPECTION [SKYACTIV-G 2.0, SKYACTIV-G 2.5]**.) • Are compression pressures within specification? **Specification:** • Compression [SKYACTIV-G 2.0] ▪ Standard: **885 kPa {9.02 kgf/cm^2, 128 psi} (300 rpm)** ▪ Minimum: **708 kPa {7.22 kgf/cm^2, 103 psi} (300 rpm)**	Yes	Go to Step 24.
		No	Go to the next step.

	▪ Maximum difference between cylinders: **150 kPa {1.53 kgf/cm^2, 21.8 psi}** (**300 rpm**) • Compression [SKYACTIV-G 2.5] ▪ Standard: **954 kPa {9.73 kgf/cm^2, 138 psi} (300 rpm)** ▪ Minimum: **763 kPa {7.78 kgf/cm^2, 111 psi} (300 rpm)** ▪ Maximum difference between cylinders: **161 kPa {1.64 kgf/cm^2, 23.4 psi}** (**300 rpm**) **NOTE:** • Because the SKYACTIV-G 2.0 and SKYACTIV-G 2.5 retards the intake valve closing timing, compression pressure is low.		
19	**INSPECT ELECTRIC VARIABLE VALVE TIMING DRIVER** • Inspect the electric variable valve timing driver. (See **ELECTRIC VARIABLE VALVE TIMING MOTOR/DRIVER INSPECTION [SKYACTIV-G 2.0, SKYACTIV-G 2.5]**.) • Is there any malfunction?	Yes	Replace the electric variable valve timing motor/driver. (See **ELECTRIC VARIABLE VALVE TIMING MOTOR/DRIVER REMOVAL/INSTALLATION [SKYACTIV-G 2.0, SKYACTIV-G 2.5]**.)
		No	Go to the next step.
20	**INSPECT ELECTRIC VARIABLE VALVE TIMING MOTOR** • Inspect the electric variable valve timing motor. (See **ELECTRIC VARIABLE VALVE TIMING MOTOR/DRIVER INSPECTION [SKYACTIV-G 2.0, SKYACTIV-G 2.5]**.) • Is there any malfunction?	Yes	Replace the electric variable valve timing motor/driver. (See **ELECTRIC VARIABLE VALVE TIMING MOTOR/DRIVER REMOVAL/INSTALLATION [SKYACTIV-G 2.0, SKYACTIV-G 2.5]**.)
		No	Go to the next step.
21	**INSPECT ELECTRIC VARIABLE VALVE TIMING ACTUATOR** • Inspect the electric variable valve timing actuator. (See **ELECTRIC VARIABLE VALVE TIMING ACTUATOR INSPECTION [SKYACTIV-G 2.0, SKYACTIV-G 2.5]**.) • Is there any malfunction?	Yes	Replace the electric variable valve timing actuator. (See **ELECTRIC VARIABLE VALVE TIMING ACTUATOR, HYDRAULIC VARIABLE VALVE TIMING ACTUATOR REMOVAL/INSTALLATION [SKYACTIV-G 2.0, SKYACTIV-G 2.5]**.)
		No	Go to the next step.
22	**INSPECT HYDRAULIC VARIABLE VALVE TIMING CONTROL SYSTEM OPERATION** • Perform the Hydraulic Variable Valve Timing Control System Operation Inspection. (See **ENGINE CONTROL SYSTEM OPERATION INSPECTION [SKYACTIV-G 2.0, SKYACTIV-G 2.5]**.)	Yes	Repair or replace the malfunctioning part according to the inspection results.
		No	Go to the next step.

	• Is there any malfunction?		
23	**INSPECT FOR MALFUNCTION DUE TO DEVIATED VALVE TIMING** • Inspect the valve timing (timing chain installation condition). (See **TIMING CHAIN REMOVAL/INSTALLATION [SKYACTIV-G 2.0, SKYACTIV-G 2.5]**.) • Is the valve timing normal?	Yes	Inspect for the following engine internal parts: • Cylinder • Piston ring • Intake valve • Exhaust valve • Such as cylinder head gasket ▪ If there is any malfunction: • Repair or replace the malfunctioning part according to the inspection results.
		No	Adjust the valve timing to the correct timing.
24	**INSPECT IGNITION SYSTEM OPERATION** **NOTE:** • Because the malfunction may have been resolved by removing the carbon adhered to the spark plug during the spark inspection for the spark plug, verify that the repairs have been completed. • Perform the Spark Test. (See **ENGINE CONTROL SYSTEM OPERATION INSPECTION [SKYACTIV-G 2.0, SKYACTIV-G 2.5]**.) • Is a strong blue spark visible at each cylinder?	Yes	Go to the next step.
		No	Repair or replace the malfunctioning part according to the inspection results.
25	**INSPECT EXHAUST SYSTEM FOR RESTRICTION** • Inspect for restriction in the exhaust system and the TWC. • Is there any restriction?	Yes	Repair or replace the malfunctioning part according to the inspection results.
		No	Go to the next step.
26	**INSPECT IF MALFUNCTION CAUSE IS PCV VALVE OR INJECTOR DRIVER (PCM INTEGRATED)** • Inspect the PCV valve. (See **POSITIVE CRANKCASE VENTILATION (PCV) VALVE INSPECTION [SKYACTIV-G 2.0, SKYACTIV-G 2.5]**.) • Is there any malfunction?	Yes	Replace the PCV valve. (See **POSITIVE CRANKCASE VENTILATION (PCV) VALVE REMOVAL/INSTALLATION [SKYACTIV-G 2.0, SKYACTIV-G 2.5]**.)
		No	Injector driver malfunction. • Replace the PCM. (See **PCM REMOVAL/INSTALLATION [SKYACTIV-G 2.0, SKYACTIV-G 2.5]**.)

			If the problem remains, overhaul the engine.
27	Verify the test results. • If normal, return to the diagnostic index to service any additional symptoms. (See **SYMPTOM DIAGNOSTIC INDEX [SKYACTIV-G 2.0, SKYACTIV-G 2.5]**.) • If the malfunction remains, inspect the related Service Bulletins and/or On-line Repair Information and perform repair or diagnosis. ▪ If the vehicle is repaired, troubleshooting is completed. ▪ If the vehicle is not repaired or additional diagnostic information is not available, reprogram the PCM if a later calibration is available. Retest.		

2014 - Mazda3 - Engine

NO.7 ENGINE OIL WARNING LIGHT ILLUMINATED/MESSAGE RELATED TO ENGINE HYDRAULIC PRESSURE MALFUNCTION INDICATED IN DISPLAY [SKYACTIV-G 2.0, SKYACTIV-G 2.5]

7	ENGINE OIL WARNING LIGHT ILLUMINATED/MESSAGE RELATED TO ENGINE HYDRAULIC PRESSURE MALFUNCTION INDICATED IN DISPLAY
DESCRIPTION	• Engine oil warning light illuminates. • Message related to engine hydraulic pressure malfunction indicated in display.
POSSIBLE CAUSE	• Improper engine oil level • Engine oil leakage • Oil pressure switch connector or terminals malfunction • PCM connector or terminals malfunction • Short to ground in wiring harness between oil pressure switch terminal A and PCM terminal 1P • Open circuit in wiring harness between oil pressure switch terminal A and PCM terminal 1P • Oil pressure switch malfunction • Oil pump malfunction • Instrument cluster malfunction • PCM malfunction

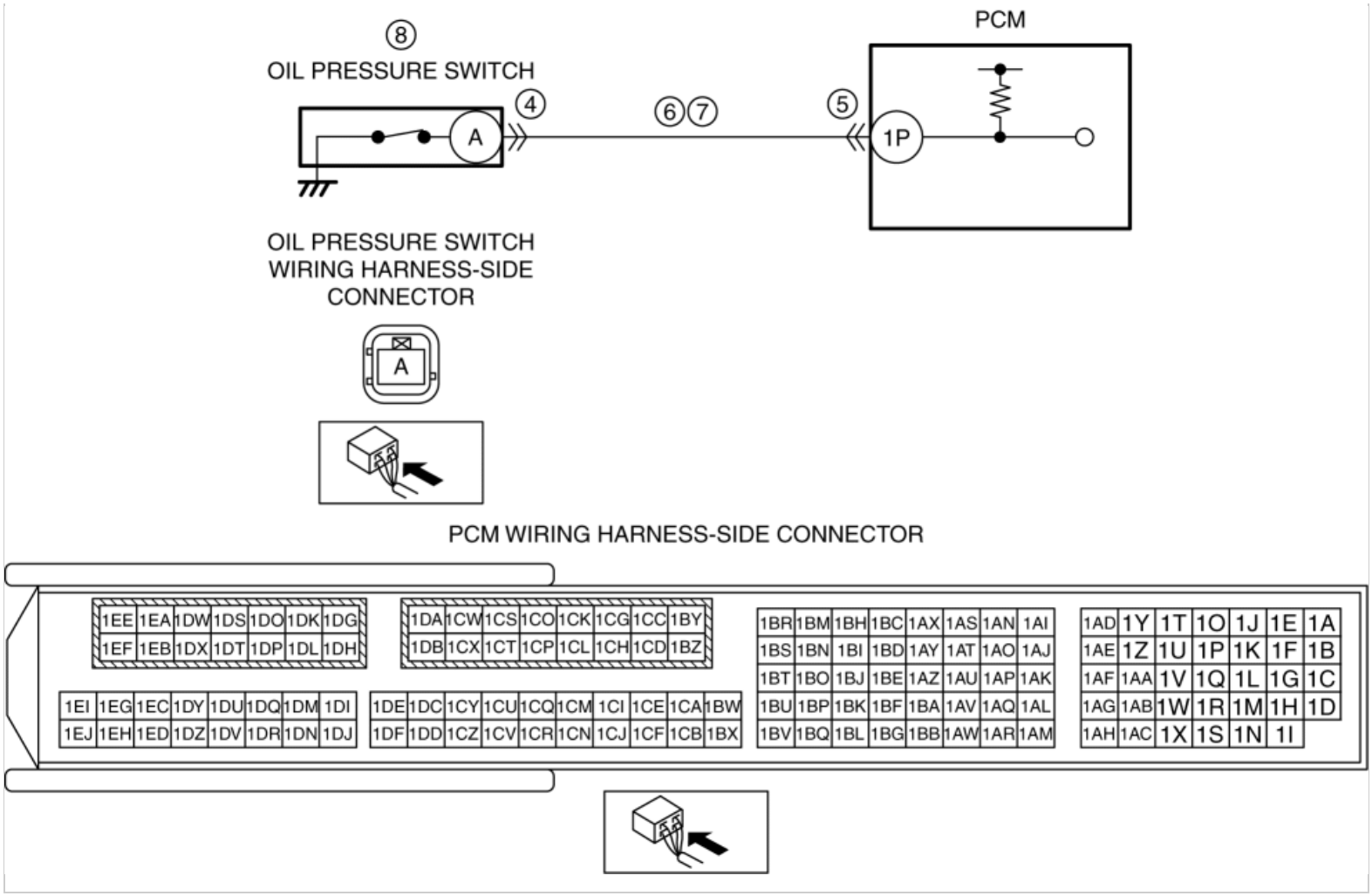

Diagnostic Procedure

STEP	INSPECTION	RESULTS	ACTION
1	**INSPECT ENGINE OIL LEVEL** • Inspect the engine oil level. (See **ENGINE OIL LEVEL INSPECTION [SKYACTIV-G 2.0, SKYACTIV-G 2.5]**.) • Is there any malfunction?	Yes	Engine oil level is below L: • Add genuine motor oil, then go to the next step. Engine oil level is above F: • Replace the engine oil, then go to the next step. (penetration of fuel into engine oil can be considered) (See **ENGINE OIL REPLACEMENT [SKYACTIV-G 2.0, SKYACTIV-G 2.5]**.)
		No	Go to Step 3.
2	**VERIFY IF ENGINE OIL WARNING LIGHT ILLUMINATES** • Start the engine. • Increase and keep the engine speed at **2,500 rpm** for **5 s**. • Does the engine oil warning light illuminate?	Yes	Go to the next step.
		No	Symptom troubleshooting is completed.
3	**VERIFY DTC** • Retrieve the PCM and instrument	Yes	Go to the applicable DTC inspection.

	cluster DTCs using the M-MDS. (See **ON-BOARD DIAGNOSTIC TEST [SKYACTIV-G 2.0, SKYACTIV-G 2.5]**.) (See **DTC INSPECTION [INSTRUMENT CLUSTER]**.) • Are any DTCs present?		(See **DTC TABLE [SKYACTIV-G 2.0, SKYACTIV-G 2.5]**.) (See **DTC TABLE [INSTRUMENT CLUSTER]**.)
		No	Go to the next step.
4	**INSPECT OIL PRESSURE SWITCH CONNECTOR CONDITION** • Switch the ignition off. • Disconnect the oil pressure switch connector. • Inspect for poor connection (such as damaged/pulled-out pins, corrosion). • Is there any malfunction?	Yes	Repair or replace the connector and/or terminals.
		No	Go to the next step.
5	**INSPECT PCM CONNECTOR CONDITION** • Disconnect the PCM connector. • Inspect for poor connection (such as damaged/pulled-out pins, corrosion). • Is there any malfunction?	Yes	Repair or replace the connector and/or terminals.
		No	Go to the next step.
6	**INSPECT OIL PRESSURE SWITCH CONTROL CIRCUIT FOR SHORT TO GROUND** • Verify that the oil pressure switch and PCM connectors are disconnected. • Inspect for continuity between oil pressure switch terminal A (wiring harness-side) and body ground. • Is there continuity?	Yes	Refer to the wiring diagram and verify whether or not there is a common connector between oil pressure switch terminal A and PCM terminal 1P. **If there is a common connector:** • Determine the malfunctioning part by inspecting the common connector and the terminal for corrosion, damage, or pin disconnection, and the common wiring harness for a short to ground. • Repair or replace the malfunctioning part. **If there is no common connector:** • Repair or replace the wiring harness which has a short to ground.
		No	Go to the next step.
7	**INSPECT OIL PRESSURE SWITCH SIGNAL CIRCUIT FOR OPEN CIRCUIT** • Verify that the oil pressure switch and PCM connectors are disconnected. • Inspect for continuity between oil pressure switch terminal A (wiring harness-side) and PCM terminal 1P (wiring harness-side). • Is there continuity?	Yes	Go to the next step.
		No	Refer to the wiring diagram and verify whether or not there is a common connector between oil pressure switch terminal A and PCM terminal 1P. **If there is a common connector:** • Determine the malfunctioning part by inspecting the common connector and the terminal for corrosion, damage, or pin disconnection, and the common wiring harness for an open circuit. • Repair or replace the malfunctioning part. **If there is no common connector:** • Repair or replace the wiring harness which has an open circuit.

8	**INSPECT ENGINE OIL PRESSURE** • Inspect the engine oil pressure. (See **OIL PRESSURE INSPECTION [SKYACTIV-G 2.0, SKYACTIV-G 2.5]**.) • Is there any malfunction?	Yes	Replace the oil pump, then go to the next step. (See **OIL PUMP REMOVAL/INSTALLATION [SKYACTIV-G 2.0, SKYACTIV-G 2.5]**.)
		No	Replace the oil pressure switch, then go to the next step. (See **ENGINE OIL SOLENOID VALVE REMOVAL/INSTALLATION [SKYACTIV-G 2.0, SKYACTIV-G 2.5]**.)
9	Verify the test results. • If normal, return to the diagnostic index to service any additional symptoms. (See **SYMPTOM DIAGNOSTIC INDEX [SKYACTIV-G 2.0, SKYACTIV-G 2.5]**.) • If the malfunction remains, inspect the related Service Bulletins and/or On-line Repair Information and perform repair or diagnosis. ▪ If the vehicle is repaired, troubleshooting is completed. ▪ If the vehicle is not repaired or additional diagnostic information is not available, reprogram the PCM if a later calibration is available. Retest.		

2014 - Mazda3 - Engine

NO.8 ENGINE RUNS ROUGH/ROLLING IDLE [SKYACTIV-G 2.0, SKYACTIV-G 2.5]

8	ENGINE RUNS ROUGH/ROLLING IDLE
DESCRIPTION	• Engine speed fluctuates between specified idle speed and lower speed and, engine shakes excessively. • Idle speed is too slow and engine shakes excessively.

	• Engine overheating
	• PCM DTC is stored
	• Erratic signal to PCM
	  ▪ APP sensor or related circuit malfunction
	  ▪ ECT sensor No.1 or related circuit malfunction
	  ▪ MAF sensor or related circuit malfunction
	  ▪ MAP sensor or related circuit malfunction
	  ▪ A/F sensor or related circuit malfunction
	  ▪ HO2S or related circuit malfunction
	  ▪ Improper air/fuel mixture ratio control operation
	• Improper load signal input
	  ▪ Improper A/C request signal
	• Improper operation of A/C system
	• Improper operation of drive-by-wire control system
	• Incorrect fuel injection timing
	• Unbalanced fuel injection amount for each cylinder
	• Purge solenoid valve malfunction
	• Poor fuel quality
	• Air leakage from intake-air system
	• Intake-air system restriction

POSSIBLE CAUSE	• Electrical connector disconnected
	• Fuel leakage
	• Vacuum leakage
	• Improper engine oil viscosity
	• Erratic or no signal from CMP sensor
	  ▪ Loose installation
	  ▪ Damaged trigger wheel (intake camshaft and/or exhaust camshaft)
	  ▪ Open or short circuit in related wiring harness
	• Erratic signal from CKP sensor
	  ▪ Loose installation
	  ▪ Damaged trigger wheel (crankshaft pulley)
	  ▪ Open or short circuit in related wiring harness
	• Inadequate fuel pressure (high or low pressure side)
	  ▪ Fuel pressure sensor or related circuit malfunction
	  ▪ High pressure fuel pump malfunction
	  ▪ Spill valve control solenoid valve control circuit malfunction (damage to driver in PCM caused by short circuit to ground system)
	  ▪ Spill valve control solenoid valve (built-into high pressure fuel pump) malfunction
	  ▪ Relief valve (built-into high pressure fuel pump) malfunction
	  ▪ Fuel pump (low-side) body mechanical malfunction
	  ▪ Fuel filter clogged (built-into fuel pump unit)
	  ▪ Fuel injector malfunction
	• Improper intake valve timing
	• Improper exhaust valve timing
	• Improper operation of electric variable valve timing control system
	  ▪ Electric variable valve timing driver malfunction
	  ▪ Electric variable valve timing motor malfunction
	  ▪ Electric variable valve timing actuator malfunction
	• Improper operation of hydraulic variable valve timing control system
	• Low engine compression or excessive unbalance for each cylinder
	• Spark plug malfunction
	• Incorrect signal to ignition coil

	• Exhaust system or TWC restricted • PCV valve malfunction • Injector driver (built-into PCM) malfunction
POSSIBLE CAUSE	**WARNING:** The following troubleshooting flow chart contains the fuel system diagnosis and repair procedures. Read the following warnings before performing the fuel system services: • Fuel vapor is hazardous. It can easily ignite, causing serious injury and damage. Always keep sparks and flames away from fuel. • Fuel line spills and leakage are dangerous. Fuel can ignite and cause serious injury or death and damage. Fuel can also irritate skin and eyes. To prevent this, always complete “BEFORE SERVICE PRECAUTION” and “AFTER SERVICE PRECAUTION” described in this manual. (See **BEFORE SERVICE PRECAUTION [SKYACTIV-G 2.0, SKYACTIV-G 2.5]**.) (See **AFTER SERVICE PRECAUTION [SKYACTIV-G 2.0, SKYACTIV-G 2.5]**.) **CAUTION:** • Disconnecting/connecting the quick release connector without cleaning it may possibly cause damage to the fuel pipe and quick release connector. Always clean the quick release connector joint area before disconnecting/connecting, and make sure that it is free of foreign matter.

CAUTION:

- Verify the malfunction symptom according to not only the PID value but also the symptom troubleshooting.

Related PIDs

Item (definition)	Unit/Condition	Definition	Condition/Specification (Reference)
AC_REQ	Off/On	A/C switch status received by PCM via CAN	• A/C switch off: Off • A/C switch on: On
APP1	%	Accelerator pedal opening angle (absolute value) input from APP sensor No.1	• Accelerator pedal released: Approx. 15% • Accelerator pedal fully depressed: Approx. 82%
	V	APP sensor No.1 voltage	• Accelerator pedal released: Approx. 0.75 V • Accelerator pedal fully depressed: Approx. 4.1 V
APP2	%	Accelerator pedal opening angle (absolute value) input from APP sensor No.2	• Accelerator pedal released: Approx. 7.45% • Accelerator pedal fully depressed: Approx. 41%
	V	APP sensor No.2 voltage	• Accelerator pedal released: Approx. 0.38 V

			Accelerator pedal fully depressed: Approx. 2.05 V
ECT	°C, °F	Engine coolant temperature	• Displays ECT
	V	ECT sensor No.1 voltage	• ECT is 20 °C {68 °F}: Approx. 3.10 V • ECT is 40 °C {104 °F}: Approx. 2.16 V • ECT is 60 °C {140 °F}: Approx. 1.40 V • ECT is 80 °C {176 °F}: Approx. 0.87 V • ECT is 100 °C {212 °F}: Approx. 0.54 V
FUEL_PRES	KPa {MPa}, mBar {Bar}, psi, in H20	Fuel pressure	• Displays fuel pressure
	V	Fuel pressure sensor voltage	• Fuel pressure is 3.0 MPa {31 kgf/cm^2, 435 psi}: Approx. 0.92 V • Fuel pressure is 4.8 MPa {49 kgf/cm^2, 696 psi}: Approx. 1.17 V
LOAD	%	Ratio of actual amount of intake air to the maximum air charging amount (mass volume) of cylinder	• Idle (after warm up): Approx. 17.64% • Racing (engine speed is 2,000 rpm): Approx. 14.51% • Racing (engine speed is 4,000 rpm): Approx. 21.17%
LONGFT1	%	Fuel learning correction amount estimated based on A/F sensor signal	• Idle (after warm up): Approx. -2.34% • Racing (engine speed is 2,000 rpm): Approx. -0.78% • Racing (engine speed is 4,000 rpm): Approx. -0.78%
MAF	g/Sec	Mass air flow	• Displays MAF
	V	MAF sensor voltage	• Ignition switched ON (engine off) (MAF: 0.59 g/s {0.078 lb/min}): Approx. 0.72 V • Idle (after warm up) (MAF: 2.17 g/s {0.287 lb/min}): Approx. 0.86 V • Racing (engine speed is 2,000 rpm) (MAF: 4.73 g/s {0.626 lb/min}): Approx. 1.07 V
	KPa {MPa}, mBar {Bar}, psi, in H20	Manifold absolute pressure	• Displays MAP
			• Ignition switched ON (engine off) (MAP:101 kPa {1.03 kgf/cm^2, 14.6 psi}): Approx. 4.07 V

MAP	V	MAP sensor voltage	• Idle (after warm up) (MAP: 33 kPa {0.34 kgf/cm^2, 4.8 psi}): Approx. 1.34 V • Racing (engine speed is 2,000 rpm) (MAP: 26 kPa {0.27 kgf/cm^2, 3.8 psi}): Approx. 1.05 V
O2S11	µA	A/F sensor current	• Idle (after warm up): Approx. −39 µA • Deceleration fuel cut (accelerator pedal released from engine speed of 4,000 rpm or more): Approx. 3.84 mA
O2S12	V	HO2S voltage	• Idle (after warm up): 0—1.0 V • Deceleration fuel cut (accelerator pedal released from engine speed of 4,000 rpm or more): Approx. 0 V
RPM	RPM	Engine speed	• Displays engine speed
SHRTFT1	%	Fuel feedback correction amount estimated based on A/F sensor signal	• Idle (after warm up): Approx. 1.56% • Racing (engine speed is 2,000 rpm): Approx. −3.12% • Racing (engine speed is 4,000 rpm): Approx. −8.59%
TP_REL	%	Throttle valve opening angle (relative value) with value at throttle valve fully open timing as the start point	• Accelerator pedal released: Approx. 12% • Accelerator pedal fully depressed: Approx. 82%
VSS	KPH, MPH	Vehicle speed	• Displays vehicle speed

Diagnostic Procedure

STEP	INSPECTION	RESULTS	ACTION
1	**VERIFY IF MALFUNCTION INCLUDES HARD ENGINE STARTING** • Verify the vehicle engine condition. • Can idling be maintained?	Yes	Go to the next step.
		No	Perform the symptom troubleshooting “NO.5 ENGINE STALLS-AFTER START/AT IDLE”. (See **NO.5 ENGINE STALLS-AFTER START/AT IDLE [SKYACTIV-G 2.0, SKYACTIV-G 2.5]**.)
2	**VERIFY IF MALFUNCTION CAUSE IS OVERHEATING** • Access the ECT PID using the M-MDS. (See **ON-BOARD DIAGNOSTIC TEST [SKYACTIV-G 2.0, SKYACTIV-G 2.5]**.)	Yes	Go to the next step.
		No	The cause of this concern could be from the cooling system overheating.

	CAUTION: • While performing this step, always operate the vehicle in a safe and lawful manner. • When the M-MDS is used to observe monitor system status while driving, be sure to have another technician with you, or record the data in the M-MDS using the PID/DATA MONITOR AND RECORD capturing function and inspect later. • Is the ECT PID value **less than 116 °C {241 °F}** during driving?		Perform the symptom troubleshooting “NO.17 COOLING SYSTEM CONCERNS-OVERHEATING”. (See **NO.17 COOLING SYSTEM CONCERNS-OVERHEATING [SKYACTIV-G 2.0, SKYACTIV-G 2.5]**.)
3	**VERIFY PCM DTC** • Retrieve any DTCs using the M-MDS. (See **ON-BOARD DIAGNOSTIC TEST [SKYACTIV-G 2.0, SKYACTIV-G 2.5]**.) • Are any DTCs present?	Yes	Go to the applicable DTC inspection. (See **DTC TABLE [SKYACTIV-G 2.0, SKYACTIV-G 2.5]**.)
		No	Go to the next step.
4	**VERIFY CURRENT INPUT SIGNAL STATUS** **CAUTION:** • While performing this step, always operate the vehicle in a safe and lawful manner. • When the M-MDS is used to observe monitor system status while driving, be sure to have another technician with you, or record the data in the M-MDS using the PID/DATA MONITOR AND RECORD capturing function and inspect later. • Access the following PIDs using the M-MDS: (See **ON-BOARD DIAGNOSTIC TEST [SKYACTIV-G 2.0, SKYACTIV-G 2.5]**.) ▪ APP1 ▪ APP2 ▪ ECT ▪ MAF ▪ MAP ▪ O2S11 ▪ O2S12	Yes	Go to the next step.
		No	APP1, APP2 PIDs are not as specified: • Inspect the APP sensor. (See **ACCELERATOR PEDAL POSITION (APP) SENSOR INSPECTION [SKYACTIV-G 2.0, SKYACTIV-G 2.5]**.) ECT PID is not as specified: • Inspect the ECT sensor No.1. (See **ENGINE COOLANT TEMPERATURE (ECT) SENSOR INSPECTION [SKYACTIV-G 2.0, SKYACTIV-G 2.5]**.) MAF PID is not as specified: • Inspect the MAF sensor. (See **MASS AIR FLOW (MAF) SENSOR INSPECTION [SKYACTIV-G 2.0, SKYACTIV-G 2.5]**.) MAP PID is not as specified: • Inspect the MAP sensor. (See **MANIFOLD ABSOLUTE PRESSURE (MAP) SENSOR INSPECTION [SKYACTIV-G 2.0, SKYACTIV-G 2.5]**.) O2S11, SHRTFT1, LONGFT1 PIDs are not as specified:

	SHRTFT1 ▪ LONGFT1 • Do the PIDs indicate the correct values under the malfunction condition? (See **PCM INSPECTION [SKYACTIV-G 2.0, SKYACTIV-G 2.5]**.)		• Inspect the A/F sensor. (See **AIR FUEL RATIO (A/F) SENSOR INSPECTION [SKYACTIV-G 2.0, SKYACTIV-G 2.5]**.) O2S12 PID is not as specified: • Inspect the HO2S. (See **HEATED OXYGEN SENSOR (HO2S) INSPECTION [SKYACTIV-G 2.0, SKYACTIV-G 2.5]**.) Repair or replace the malfunctioning part according to the inspection results. • If the malfunction remains: ▪ Perform the “INTERMITTENT CONCERN TROUBLESHOOTING” procedure. (See **INTERMITTENT CONCERN TROUBLESHOOTING [SKYACTIV-G 2.0, SKYACTIV-G 2.5]**.)
5	**DETERMINE IF MALFUNCTION CAUSE IS A/C REQUEST SIGNAL OR OTHER** • Access the AC_REQ PID using the M-MDS. (See **ON-BOARD DIAGNOSTIC TEST [SKYACTIV-G 2.0, SKYACTIV-G 2.5]**.) • Monitor the AC_REQ PID while turning on and off the air conditioner using the switch on the control panel. • Does the AC_REQ PID value change from on to off according to switch control panel?	Yes	Go to the next step.
		No	If the AC_REQ PID is always ON: • Perform the symptom troubleshooting “NO.24 A/C IS ALWAYS ON OR A/C COMPRESSOR RUNS CONTINUOUSLY”. (See **NO.24 A/C IS ALWAYS ON OR A/C COMPRESSOR RUNS CONTINUOUSLY [SKYACTIV-G 2.0, SKYACTIV-G 2.5]**.) If the AC_REQ PID is always OFF: • Perform the symptom troubleshooting “NO.23 A/C DOES NOT WORK SUFFICIENTLY”. (See **NO.23 A/C DOES NOT WORK SUFFICIENTLY [SKYACTIV-G 2.0, SKYACTIV-G 2.5]**.)
6	**INSPECT DRIVE-BY-WIRE CONTROL SYSTEM OPERATION** • Perform the Electronic Control Throttle Operation Inspection. (See **ENGINE CONTROL SYSTEM OPERATION INSPECTION [SKYACTIV-G 2.0, SKYACTIV-G 2.5]**.) • Does the drive-by-wire control system work properly?	Yes	Visually inspect the throttle body (damage/scratching). • If there is any malfunction: ▪ Repair or replace the malfunctioning part according to the inspection results. • If there is no malfunction: ▪ Go to the next step.
		No	Repair or replace the malfunctioning part according to the inspection

			results.
7	**INSPECT FUEL INJECTOR OPERATION** • Perform the Fuel Injector Operation Inspection. (See **ENGINE CONTROL SYSTEM OPERATION INSPECTION [SKYACTIV-G 2.0, SKYACTIV-G 2.5]**.) • Do the fuel injectors operate properly?	Yes	Go to the next step.
		No	Repair or replace the malfunctioning part according to the inspection results.
8	**INSPECT PURGE CONTROL SYSTEM OPERATION** • Perform the Purge Control System Inspection. (See **ENGINE CONTROL SYSTEM OPERATION INSPECTION [SKYACTIV-G 2.0, SKYACTIV-G 2.5]**.) • Does the purge solenoid valve work properly?	Yes	Go to the next step.
		No	Repair or replace the malfunctioning part according to the inspection results.
9	**INSPECT RELATED PART CONDITION** • Inspect the following: ▪ Fuel quality (proper octane, contamination, winter/summer blend) ▪ Intake-air system restriction or leakage ▪ Electrical connectors connection ▪ Fuel leakage in fuel system ▪ Vacuum leakage ▪ Engine oil viscosity ▪ CKP sensor, intake CMP sensor and exhaust CMP sensor • Installation condition (See **CRANKSHAFT POSITION (CKP) SENSOR REMOVAL/INSTALLATION [SKYACTIV-G 2.0, SKYACTIV-G 2.5]**.) (See **CAMSHAFT POSITION (CMP) SENSOR REMOVAL/INSTALLATION [SKYACTIV-G 2.0, SKYACTIV-G 2.5]**.) • Damaged trigger wheel, intake camshaft and exhaust camshaft • Is there any malfunction?	Yes	Service if necessary. • Repeat this step.
		No	Go to the next step.

10	**INSPECT FUEL PRESSURE (HIGH-SIDE)** • Start the engine and warm it up completely. • Access the FUEL_PRES PID using the M-MDS at idle. (See **ON-BOARD DIAGNOSTIC TEST [SKYACTIV-G 2.0, SKYACTIV-G 2.5]**.) • Is the FUEL_PRES PID value **approx. 3 MPa {31 kgf/cm^2, 435 psi}**?	Yes	Go to Step 14.
		No	Lower than **3 MPa {31 kgf/cm^2, 435 psi}**: • Inspect the following: ▪ Fuel leakage at the fuel line and fuel injector ▪ Fuel pump • Perform the Fuel Pump (Low-pressure Side) Operation Inspection. (See **ENGINE CONTROL SYSTEM OPERATION INSPECTION [SKYACTIV-G 2.0, SKYACTIV-G 2.5]**.) ▪ Fuel pressure sensor (See **FUEL PRESSURE SENSOR INSPECTION [SKYACTIV-G 2.0, SKYACTIV-G 2.5]**.) ▪ High pressure fuel pump (See **HIGH PRESSURE FUEL PUMP INSPECTION [SKYACTIV-G 2.0, SKYACTIV-G 2.5]**.) • If there is any malfunction: ▪ Repair or replace the malfunctioning part according to the inspection results. • If there is no malfunction: ▪ Go to Step 13. Higher than **3 MPa {31 kgf/cm^2, 435 psi}**: • Go to the next step.
11	**DETERMINE IF MALFUNCTION CAUSE IS FUEL PRESSURE SENSOR OR HIGH PRESSURE FUEL PUMP** • Is the vehicle acceleration performance normal?	Yes	Go to the next step.
		No	Go to Step 13.
12	**INSPECT FUEL PRESSURE SENSOR** • Inspect the fuel pressure sensor. (See **FUEL PRESSURE SENSOR INSPECTION [SKYACTIV-G 2.0, SKYACTIV-G 2.5]**.)	Yes	Replace the fuel distributor. (See **FUEL INJECTOR REMOVAL/INSTALLATION [SKYACTIV-G 2.0, SKYACTIV-G 2.5]**.)

	Is there any malfunction?	No	Go to Step 14.
13	**INSPECT SPILL VALVE CONTROL SOLENOID VALVE CONTROL CIRCUIT FOR SHORT TO GROUND** • Switch the ignition off. • Disconnect the high pressure fuel pump and PCM connectors. • Inspect for continuity between high pressure fuel pump terminal A (wiring harness-side) and body ground. • Is there continuity?	Yes	Refer to the wiring diagram and verify whether or not there is a common connector between high pressure fuel pump terminal A and PCM terminal 1EE. **If there is a common connector:** • Determine the malfunctioning part by inspecting the common connector and the terminal for corrosion, damage, or pin disconnection, and the common wiring harness for a short to ground. • Repair or replace the malfunctioning part. **If there is no common connector:** • Repair or replace the wiring harness which has a short to ground. If the malfunction remains: • Replace the PCM. (damage to driver in PCM) (See **PCM REMOVAL/INSTALLATION [SKYACTIV-G 2.0, SKYACTIV-G 2.5]**.)
		No	Replace the high pressure fuel pump. (See **HIGH PRESSURE FUEL PUMP REMOVAL/INSTALLATION [SKYACTIV-G 2.0, SKYACTIV-G 2.5]**.)
14	**INSPECT FUEL PRESSURE (LOW-SIDE)** • Connect the fuel pressure gauge between fuel pump and high pressure fuel pump. • Measure the low side fuel pressure. (See **FUEL LINE PRESSURE INSPECTION [SKYACTIV-G 2.0, SKYACTIV-G 2.5]**.) • Is the low side fuel pressure within specification? **Specification:** • **405—485 kPa {4.13—4.94 kgf/cm^2, 58.8—70.3 psi}**	Yes	Go to the next step.
		No	Inspect the following: • Fuel line restriction • Fuel filter clogged ▪ If there is any malfunction: • Repair or replace the malfunctioning part according to the inspection results. ▪ If there is no malfunction: • Replace the fuel pump unit. (See **FUEL PUMP UNIT REMOVAL/INSTALLATION [SKYACTIV-G 2.0, SKYACTIV-G 2.5]**.)

15	**INSPECT ENGINE COMPRESSION** • Measure the compression pressure for each cylinder. (See **COMPRESSION INSPECTION [SKYACTIV-G 2.0, SKYACTIV-G 2.5]**.) • Are compression pressures within specification? **Specification:** • Compression [SKYACTIV-G 2.0] ▪ Standard: **885 kPa {9.02 kgf/cm^2, 128 psi} (300 rpm)** ▪ Minimum: **708 kPa {7.22 kgf/cm^2, 103 psi} (300 rpm)** ▪ Maximum difference between cylinders: **150 kPa {1.53 kgf/cm^2, 21.8 psi}** (**300 rpm**) • Compression [SKYACTIV-G 2.5] ▪ Standard: **954 kPa {9.73 kgf/cm^2, 138 psi} (300 rpm)** ▪ Minimum: **763 kPa {7.78 kgf/cm^2, 111 psi} (300 rpm)** ▪ Maximum difference between cylinders: **161 kPa {1.64 kgf/cm^2, 23.4 psi}** (**300 rpm**) **NOTE:** • Because the SKYACTIV-G 2.0 and SKYACTIV-G 2.5 retards the intake valve closing timing, compression pressure is low.	Yes	Go to Step 21.
		No	Go to the next step.
16	**INSPECT ELECTRIC VARIABLE VALVE TIMING DRIVER** • Inspect the electric variable valve timing driver. (See **ELECTRIC VARIABLE VALVE TIMING MOTOR/DRIVER INSPECTION [SKYACTIV-G 2.0, SKYACTIV-G 2.5]**.) • Is there any malfunction?	Yes	Replace the electric variable valve timing motor/driver. (See **ELECTRIC VARIABLE VALVE TIMING MOTOR/DRIVER REMOVAL/INSTALLATION [SKYACTIV-G 2.0, SKYACTIV-G 2.5]**.)
		No	Go to the next step.
17	**INSPECT ELECTRIC VARIABLE VALVE TIMING MOTOR** • Inspect the electric variable valve timing motor. (See **ELECTRIC VARIABLE VALVE TIMING MOTOR/DRIVER INSPECTION [SKYACTIV-G 2.0, SKYACTIV-G 2.5]**.) • Is there any malfunction?	Yes	Replace the electric variable valve timing motor/driver. (See **ELECTRIC VARIABLE VALVE TIMING MOTOR/DRIVER REMOVAL/INSTALLATION [SKYACTIV-G 2.0, SKYACTIV-G 2.5]**.)
		No	Go to the next step.

18	**INSPECT ELECTRIC VARIABLE VALVE TIMING ACTUATOR** • Inspect the electric variable valve timing actuator. (See **ELECTRIC VARIABLE VALVE TIMING ACTUATOR INSPECTION [SKYACTIV-G 2.0, SKYACTIV-G 2.5]**.) • Is there any malfunction?	Yes	Replace the electric variable valve timing actuator. (See **ELECTRIC VARIABLE VALVE TIMING ACTUATOR, HYDRAULIC VARIABLE VALVE TIMING ACTUATOR REMOVAL/INSTALLATION [SKYACTIV-G 2.0, SKYACTIV-G 2.5]**.)
		No	Go to the next step.
19	**INSPECT HYDRAULIC VARIABLE VALVE TIMING CONTROL SYSTEM OPERATION** • Perform the Hydraulic Variable Valve Timing Control System Operation Inspection. (See **ENGINE CONTROL SYSTEM OPERATION INSPECTION [SKYACTIV-G 2.0, SKYACTIV-G 2.5]**.) • Is there any malfunction?	Yes	Repair or replace the malfunctioning part according to the inspection results.
		No	Go to the next step.
20	**INSPECT FOR MALFUNCTION DUE TO DEVIATED VALVE TIMING** • Inspect the valve timing (timing chain installation condition). (See **TIMING CHAIN REMOVAL/INSTALLATION [SKYACTIV-G 2.0, SKYACTIV-G 2.5]**.) • Is the valve timing normal?	Yes	Inspect for the following engine internal parts: • Cylinder • Piston ring • Intake valve • Exhaust valve • Such as cylinder head gasket ▪ If there is any malfunction: • Repair or replace the malfunctioning part according to the inspection results.
		No	Adjust the valve timing to the correct timing.
21	**INSPECT IGNITION SYSTEM OPERATION** • Perform the Spark Test. (See **ENGINE CONTROL SYSTEM OPERATION INSPECTION [SKYACTIV-G 2.0, SKYACTIV-G 2.5]**.) • Is a strong blue spark visible at each cylinder?	Yes	Go to the next step.
		No	Repair or replace the malfunctioning part according to the inspection results.
22	**INSPECT EXHAUST SYSTEM FOR RESTRICTION** • Inspect for restriction in the exhaust system and the TWC. • Is there any restriction?	Yes	Repair or replace the malfunctioning part according to the inspection results.
		No	Go to the next step.
	INSPECT IF MALFUNCTION CAUSE IS PCV VALVE OR INJECTOR		

23	**DRIVER (PCM INTEGRATED)** • Inspect the PCV valve. (See **POSITIVE CRANKCASE VENTILATION (PCV) VALVE INSPECTION [SKYACTIV-G 2.0, SKYACTIV-G 2.5]**.) • Is there any malfunction?	Yes	Replace the PCV valve. (See **POSITIVE CRANKCASE VENTILATION (PCV) VALVE REMOVAL/INSTALLATION [SKYACTIV-G 2.0, SKYACTIV-G 2.5]**.)
		No	Injector driver malfunction. • Replace the PCM. (See **PCM REMOVAL/INSTALLATION [SKYACTIV-G 2.0, SKYACTIV-G 2.5]**.) If the problem remains, overhaul the engine.
24	Verify the test results. • If normal, return to the diagnostic index to service any additional symptoms. (See **SYMPTOM DIAGNOSTIC INDEX [SKYACTIV-G 2.0, SKYACTIV-G 2.5]**.) • If the malfunction remains, inspect the related Service Bulletins and/or On-line Repair Information and perform repair or diagnosis. ▪ If the vehicle is repaired, troubleshooting is completed. ▪ If the vehicle is not repaired or additional diagnostic information is not available, reprogram the PCM if a later calibration is available. Retest.		

2014 - Mazda3 - Engine

NO.9 FAST IDLE/RUNS ON [SKYACTIV-G 2.0, SKYACTIV-G 2.5]

9	FAST IDLE/RUNS ON
DESCRIPTION	• Engine speed continues at fast idle after warm-up. • Engine runs after ignition is switched off.

POSSIBLE CAUSE	• Cooling system malfunction
	• PCM DTC is stored
	• Accelerator pedal stuck depressed
	• Erratic signal to PCM
	  ▪ APP sensor or related circuit malfunction
	  ▪ Neutral switch or related circuit malfunction (MTX)
	  ▪ Communication error between TCM and PCM (ATX)
	  ▪ A/F sensor or related circuit malfunction
	  ▪ HO2S or related circuit malfunction
	  ▪ Improper air/fuel mixture ratio control operation
	• Improper load signal input
	  ▪ Improper A/C request signal
	• Improper operation of drive-by-wire control system
	• Throttle body malfunction
	• Fuel injector malfunction
	• Spill valve control solenoid valve (built-into high pressure fuel pump) malfunction
	• Improper operation of cruise control system
	• Air leakage from intake-air system
	• Injector driver (built-into PCM) malfunction
	WARNING:
	The following troubleshooting flow chart contains the fuel system diagnosis and repair procedures. Read the following warnings before performing the fuel system services:
	• Fuel vapor is hazardous. It can easily ignite, causing serious injury and damage. Always keep sparks and flames away from fuel.
	• Fuel line spills and leakage are dangerous. Fuel can ignite and cause serious injury or death and damage. Fuel can also irritate skin and eyes. To prevent this, always complete “BEFORE SERVICE PRECAUTION” and “AFTER SERVICE PRECAUTION”

	described in this manual. (See **BEFORE SERVICE PRECAUTION [SKYACTIV-G 2.0, SKYACTIV-G 2.5]**.) (See **AFTER SERVICE PRECAUTION [SKYACTIV-G 2.0, SKYACTIV-G 2.5]**.) **CAUTION:** • Disconnecting/connecting the quick release connector without cleaning it may possibly cause damage to the fuel pipe and quick release connector. Always clean the quick release connector joint area before disconnecting/connecting, and make sure that it is free of foreign matter.

CAUTION:

- Verify the malfunction symptom according to not only the PID value but also the symptom troubleshooting.

Related PIDs

Item (definition)	Unit/Condition	Definition	Condition/Specification (Reference)
AC_REQ	Off/On	A/C switch status received by PCM via CAN	• A/C switch off: Off • A/C switch on: On
APP1	%	Accelerator pedal opening angle (absolute value) input from APP sensor No.1	• Accelerator pedal released: Approx. 15% • Accelerator pedal fully depressed: Approx. 82%
	V	APP sensor No.1 voltage	• Accelerator pedal released: Approx. 0.75 V • Accelerator pedal fully depressed: Approx. 4.1 V
APP2	%	Accelerator pedal opening angle (absolute value) input from APP sensor No.2	• Accelerator pedal released: Approx. 7.45% • Accelerator pedal fully depressed: Approx. 41%
	V	APP sensor No.2 voltage	• Accelerator pedal released: Approx. 0.38 V • Accelerator pedal fully depressed: Approx. 2.05 V
CPP/PNP (MTX)	Off/On	Shift lever position	• Other than neutral: Off • Neutral: On
	°C, °F	Engine coolant temperature	• Displays ECT
			• ECT is 20 °C {68 °F}: Approx. 3.10 V • ECT is 40 °C {104 °F}: Approx. 2.16 V

ECT	V	ECT sensor No.1 voltage	• ECT is 60 °C {140 °F}: Approx. 1.40 V • ECT is 80 °C {176 °F}: Approx. 0.87 V • ECT is 100 °C {212 °F}: Approx. 0.54 V
FUEL_PRES	KPa {MPa}, mBar {Bar}, psi, in H20	Fuel pressure	• Displays fuel pressure
	V	Fuel pressure sensor voltage	• Fuel pressure is 3.0 MPa {31 kgf/cm^2, 435 psi}: Approx. 0.92 V • Fuel pressure is 4.8 MPa {49 kgf/cm^2, 696 psi}: Approx. 1.17 V
LOAD	%	Ratio of actual amount of intake air to the maximum air charging amount (mass volume) of cylinder	• Idle (after warm up): Approx. 17.64% • Racing (engine speed is 2,000 rpm): Approx. 14.51% • Racing (engine speed is 4,000 rpm): Approx. 21.17%
LONGFT1	%	Fuel learning correction amount estimated based on A/F sensor signal	• Idle (after warm up): Approx. -2.34% • Racing (engine speed is 2,000 rpm): Approx. -0.78% • Racing (engine speed is 4,000 rpm): Approx. -0.78%
O2S11	µA	A/F sensor current	• Idle (after warm up): Approx. −39 µA • Deceleration fuel cut (accelerator pedal released from engine speed of 4,000 rpm or more): Approx. 3.84 mA
O2S12	V	HO2S voltage	• Idle (after warm up): 0—1.0 V • Deceleration fuel cut (accelerator pedal released from engine speed of 4,000 rpm or more): Approx. 0 V
RPM	RPM	Engine speed	• Displays engine speed
SHRTFT1	%	Fuel feedback correction amount estimated	• Idle (after warm up): Approx. 1.56% • Racing (engine speed is 2,000

		based on A/F sensor signal	rpm): Approx. −3.12% • Racing (engine speed is 4,000 rpm): Approx. −8.59%
TP_REL	%	Throttle valve opening angle (relative value) with value at throttle valve fully open timing as the start point	• Accelerator pedal released: Approx. 12% • Accelerator pedal fully depressed: Approx. 82%
VSS	KPH, MPH	Vehicle speed	• Displays vehicle speed

Diagnostic Procedure

STEP	INSPECTION	RESULTS	ACTION
1	**INSPECT COOLING SYSTEM FOR MALFUNCTION** • Access the ECT PID using the M-MDS. (See **ON-BOARD DIAGNOSTIC TEST [SKYACTIV-G 2.0, SKYACTIV-G 2.5]**.) • Start the engine and warm it up completely. • Is the ECT PID value between **82—112 °C {180—234 °F}**?	Yes	Go to the next step.
		No	ECT PID value is **higher than 112 °C {234 °F}**: • Perform the symptom troubleshooting "NO.17 COOLING SYSTEM CONCERNS-OVERHEATING". (See **NO.17 COOLING SYSTEM CONCERNS-OVERHEATING [SKYACTIV-G 2.0, SKYACTIV-G 2.5]**.) ECT PID value is **less than 82 °C {180 °F}**: • Perform the symptom troubleshooting "NO.18 COOLING SYSTEM CONCERNS-RUNS COLD". (See **NO.18 COOLING SYSTEM CONCERNS-RUNS COLD [SKYACTIV-G 2.0, SKYACTIV-G 2.5]**.)
2	**VERIFY PCM DTC** • Retrieve any DTCs using the M-MDS. (See **ON-BOARD DIAGNOSTIC TEST [SKYACTIV-G 2.0, SKYACTIV-G 2.5]**.) • Are any DTCs present?	Yes	Go to the applicable DTC inspection. (See **DTC TABLE [SKYACTIV-G 2.0, SKYACTIV-G 2.5]**.)
		No	Go to the next step.
3	**VERIFY CURRENT INPUT SIGNAL STATUS** **CAUTION:** • While performing this step, always operate the vehicle in a safe and lawful manner. • When the M-MDS is used to observe monitor system status while driving, be sure to have another technician with	Yes	Go to the next step.
		No	APP1, APP2 PIDs are not as specified: • Inspect the APP sensor. (See **ACCELERATOR PEDAL POSITION (APP) SENSOR INSPECTION [SKYACTIV-G 2.0, SKYACTIV-G 2.5]**.) CPP/PNP PID is not as specified: (MTX) • Inspect the neutral switch.

	you, or record the data in the M-MDS using the PID/DATA MONITOR AND RECORD capturing function and inspect later. • Access the following PIDs using the M-MDS: (See **ON-BOARD DIAGNOSTIC TEST [SKYACTIV-G 2.0, SKYACTIV-G 2.5]**.) ▪ APP1 ▪ APP2 ▪ CPP/PNP (MTX) ▪ O2S11 ▪ O2S12 ▪ SHRTFT1 ▪ LONGFT1 • Do the PIDs indicate the correct values under the malfunction condition? (See **PCM INSPECTION [SKYACTIV-G 2.0, SKYACTIV-G 2.5]**.)		(See **NEUTRAL SWITCH INSPECTION [SKYACTIV-G 2.0, SKYACTIV-G 2.5]**.) O2S11, SHRTFT1, LONGFT1 PIDs are not as specified: • Inspect the A/F sensor. (See **AIR FUEL RATIO (A/F) SENSOR INSPECTION [SKYACTIV-G 2.0, SKYACTIV-G 2.5]**.) O2S12 PID is not as specified: • Inspect the HO2S. (See **HEATED OXYGEN SENSOR (HO2S) INSPECTION [SKYACTIV-G 2.0, SKYACTIV-G 2.5]**.) Repair or replace the malfunctioning part according to the inspection results. • If the malfunction remains: ▪ Inspect communication error between TCM and PCM. (ATX) • Repair or replace the malfunctioning part according to the inspection results if necessary. ▪ Perform the “INTERMITTENT CONCERN TROUBLESHOOTING” procedure. (See **INTERMITTENT CONCERN TROUBLESHOOTING [SKYACTIV-G 2.0, SKYACTIV-G 2.5]**.)
4	**DETERMINE IF MALFUNCTION CAUSE IS A/C REQUEST SIGNAL OR OTHER** • Access the AC_REQ PID using the M-MDS. (See **ON-BOARD DIAGNOSTIC TEST [SKYACTIV-G 2.0, SKYACTIV-G 2.5]**.) • Monitor the AC_REQ PID while turning on and off the air conditioner using the switch on the control panel. • Does the AC_REQ PID value change from on to off according to switch control panel?	Yes	Go to the next step.
		No	If the AC_REQ PID is always ON: • Perform the symptom troubleshooting “NO.24 A/C IS ALWAYS ON OR A/C COMPRESSOR RUNS CONTINUOUSLY”. (See **NO.24 A/C IS ALWAYS ON OR A/C COMPRESSOR RUNS CONTINUOUSLY [SKYACTIV-G 2.0, SKYACTIV-G 2.5]**.) If the AC_REQ PID is always OFF: • Perform the symptom troubleshooting “NO.23 A/C DOES NOT WORK SUFFICIENTLY”. (See **NO.23 A/C DOES NOT WORK SUFFICIENTLY [SKYACTIV-G 2.0, SKYACTIV-G 2.5]**.)
5	**INSPECT DRIVE-BY-WIRE CONTROL SYSTEM OPERATION**	Yes	Visually inspect the throttle body (damage/scratching).

	• Perform the Electronic Control Throttle Operation Inspection. (See **ENGINE CONTROL SYSTEM OPERATION INSPECTION [SKYACTIV-G 2.0, SKYACTIV-G 2.5]**.) • Does the drive-by-wire control system work properly?		• If there is any malfunction: ▪ Repair or replace the malfunctioning part according to the inspection results. • If there is no malfunction: ▪ Go to the next step.
		No	Repair or replace the malfunctioning part according to the inspection results.
6	**INSPECT FUEL INJECTOR OPERATION** • Perform the Fuel Injector Operation Inspection. (See **ENGINE CONTROL SYSTEM OPERATION INSPECTION [SKYACTIV-G 2.0, SKYACTIV-G 2.5]**.) • Do the fuel injectors operate properly?	Yes	Go to the next step.
		No	Repair or replace the malfunctioning part according to the inspection results.
7	**INSPECT HIGH PRESSURE FUEL PUMP** • Inspect the high pressure fuel pump. (See **HIGH PRESSURE FUEL PUMP INSPECTION [SKYACTIV-G 2.0, SKYACTIV-G 2.5]**.) • Is there any malfunction?	Yes	Replace the high pressure fuel pump. (See **HIGH PRESSURE FUEL PUMP REMOVAL/INSTALLATION [SKYACTIV-G 2.0, SKYACTIV-G 2.5]**.)
		No	Go to the next step.
8	**INSPECT CRUISE CONTROL SYSTEM** • Inspect the operation of cruise control system. • Does the cruise control system work properly?	Yes	Go to the next step.
		No	Repair or replace the malfunctioning part according to the inspection results.
9	**INSPECT INTAKE-AIR SYSTEM FOR AIR LEAKAGE** • Inspect for leakage in intake-air system. • Is there any leakage?	Yes	Repair or replace the malfunctioning part according to the inspection results.
		No	Injector driver malfunction. • Replace the PCM. (See **PCM REMOVAL/INSTALLATION [SKYACTIV-G 2.0, SKYACTIV-G 2.5]**.) If the problem remains, overhaul the engine.
10	Verify the test results. • If normal, return to the diagnostic index to service any additional symptoms. (See **SYMPTOM DIAGNOSTIC INDEX [SKYACTIV-G 2.0, SKYACTIV-G 2.5]**.) • If the malfunction remains, inspect the related Service Bulletins and/or On-line Repair Information and perform repair or diagnosis.		

	▪ If the vehicle is repaired, troubleshooting is completed. ▪ If the vehicle is not repaired or additional diagnostic information is not available, reprogram the PCM if a later calibration is available. Retest.

2014 - Mazda3 - Engine

NO.10 LOW IDLE/STALLS DURING DECELERATION [SKYACTIV-G 2.0, SKYACTIV-G 2.5]

10	LOW IDLE/STALLS DURING DECELERATION
DESCRIPTION	• Engine stops unexpectedly at beginning of deceleration or recovery from deceleration.

	• PCM DTC is stored
	• Erratic signal to PCM
	  ▪ APP sensor or related circuit malfunction
	  ▪ Brake switch or related circuit malfunction
	  ▪ Neutral switch or related circuit malfunction (MTX)
	  ▪ Communication error between TCM and PCM (ATX)
	  ▪ ECT sensor No.1 or related circuit malfunction
	  ▪ MAF sensor or related circuit malfunction
	  ▪ MAP sensor or related circuit malfunction
	  ▪ A/F sensor or related circuit malfunction
	  ▪ HO2S or related circuit malfunction
	  ▪ TP sensor or related circuit malfunction
	  ▪ Generator malfunction (part, system, control malfunction)
	  • Amount of generator voltage is large
	  ▪ Improper air/fuel mixture ratio control
	• Improper operation of A/C magnetic clutch
	• Improper operation of drive-by-wire control system
	• Incorrect fuel injection timing
	• Fuel injector malfunction
	• Purge solenoid valve malfunction
	• Poor fuel quality

POSSIBLE CAUSE	• Air leakage from intake-air system
	• Intake-air system restriction
	• Fuel leakage
	• Vacuum leakage
	• Engine mount installation loose
	• Erratic signal from intake CMP sensor
	  ▪ Loose installation
	  ▪ Damaged trigger wheel (intake camshaft and/or exhaust camshaft)
	  ▪ Open or short circuit in related wiring harness
	• Erratic signal from CKP sensor
	  ▪ Loose installation
	  ▪ Damaged trigger wheel (crankshaft pulley)
	  ▪ Open or short circuit in related wiring harness
	• Inadequate fuel pressure (high or low pressure side)
	  ▪ Fuel pressure sensor or related circuit malfunction
	  ▪ High pressure fuel pump malfunction
	  ▪ Spill valve control solenoid valve control circuit malfunction (damage to driver in PCM caused by short circuit to ground system)
	  ▪ Spill valve control solenoid valve (built-into high pressure fuel pump) malfunction
	  ▪ Relief valve (built-into high pressure fuel pump) malfunction
	  ▪ Fuel line restriction
	  ▪ Fuel filter clogged (built-into fuel pump unit)
	  ▪ Fuel pump unit malfunction
	• TCC mechanism malfunction (ATX)
	• Low engine compression
	• Improper intake valve timing
	• Improper exhaust valve timing
	• Improper operation of electric variable valve timing control system
	  ▪ Electric variable valve timing driver malfunction
	  ▪ Electric variable valve timing motor malfunction
	  ▪ Electric variable valve timing actuator malfunction
	• Improper operation of hydraulic variable valve timing control system

- Injector driver (built-into PCM) malfunction

WARNING:

The following troubleshooting flow chart contains the fuel system diagnosis and repair procedures. Read the following warnings before performing the fuel system services:

- Fuel vapor is hazardous. It can easily ignite, causing serious injury and damage. Always keep sparks and flames away from fuel.
- Fuel line spills and leakage are dangerous. Fuel can ignite and cause serious injury or death and damage. Fuel can also irritate skin and eyes. To prevent this, always complete “BEFORE SERVICE PRECAUTION” and “AFTER SERVICE PRECAUTION” described in this manual. (See **BEFORE SERVICE PRECAUTION [SKYACTIV-G 2.0, SKYACTIV-G 2.5]**.) (See **AFTER SERVICE PRECAUTION [SKYACTIV-G 2.0, SKYACTIV-G 2.5]**.)

CAUTION:

- Disconnecting/connecting the quick release connector without cleaning it may possibly cause damage to the fuel pipe and quick release connector. Always clean the quick release connector joint area before disconnecting/connecting, and make sure that it is free of foreign matter.

CAUTION:

- Verify the malfunction symptom according to not only the PID value but also the symptom troubleshooting.

Related PIDs

Item (definition)	Unit/Condition	Definition	Condition/Specification (Reference)
AC_REQ	Off/On	A/C switch status received by PCM via CAN	• A/C switch off: Off • A/C switch on: On
ALTF	%	Field coil current control signal output to generator	• Ignition switched ON (engine off): 0% • Idle: Approx. 42% • Racing (Engine speed is 2,000 rpm): Approx. 29%
ALTT V	V	Generator output voltage	• Idle (no E/L): Approx. 14 V (This is internal calculation value and differs from terminal voltage)
APP1	%	Accelerator pedal opening angle (absolute value) input from APP sensor No.1	• Accelerator pedal released: Approx. 15% • Accelerator pedal fully depressed: Approx. 82%
	V	APP sensor No.1 voltage	• Accelerator pedal released: Approx. 0.75 V • Accelerator pedal fully depressed: Approx. 4.1 V
		Accelerator pedal opening angle (absolute value) input from	• Accelerator pedal released: Approx. 7.45%

APP2	%	APP sensor No.2	• Accelerator pedal fully depressed: Approx. 41%
	V	APP sensor No.2 voltage	• Accelerator pedal released: Approx. 0.38 V • Accelerator pedal fully depressed: Approx. 2.05 V
BOO	High/Low	Brake switch (No.1 signal) ON/OFF status	• Brake pedal released: Low • Brake pedal fully depressed: High
CPP/PNP (MTX)	Off/On	Shift lever position	• Other than neutral: Off • Neutral: On
ECT	°C, °F	Engine coolant temperature	• Displays ECT
	V	ECT sensor No.1 voltage	• ECT is 20 °C {68 °F}: Approx. 3.10 V • ECT is 40 °C {104 °F}: Approx. 2.16 V • ECT is 60 °C {140 °F}: Approx. 1.40 V • ECT is 80 °C {176 °F}: Approx. 0.87 V • ECT is 100 °C {212 °F}: Approx. 0.54 V
FUEL_PRES	KPa {MPa}, mBar {Bar}, psi, in H20	Fuel pressure	• Displays fuel pressure
	V	Fuel pressure sensor voltage	• Fuel pressure is 3.0 MPa {31 kgf/cm^2, 435 psi}: Approx. 0.92 V • Fuel pressure is 4.8 MPa {49 kgf/cm^2, 696 psi}: Approx. 1.17 V
LOAD	%	Ratio of actual amount of intake air to the maximum air charging amount (mass volume) of cylinder	• Idle (after warm up): Approx. 17.64% • Racing (engine speed is 2,000 rpm): Approx. 14.51% • Racing (engine speed is 4,000 rpm): Approx. 21.17%
LONGFT1	%	Fuel learning correction amount estimated based on A/F sensor signal	• Idle (after warm up): Approx. -2.34% • Racing (engine speed is 2,000 rpm): Approx. -0.78% • Racing (engine speed is 4,000 rpm): Approx. -0.78%
	g/Sec	Mass air flow	• Displays MAF
			• Ignition switched ON (engine off) (MAF: 0.59 g/s

MAF	V	MAF sensor voltage	{0.078 lb/min}): Approx. 0.72 V • Idle (after warm up) (MAF: 2.17 g/s {0.287 lb/min}): Approx. 0.86 V • Racing (engine speed is 2,000 rpm) (MAF: 4.73 g/s {0.626 lb/min}): Approx. 1.07 V
MAP	KPa {MPa}, mBar {Bar}, psi, in H20	Manifold absolute pressure	• Displays MAP
	V	MAP sensor voltage	• Ignition switched ON (engine off) (MAP:101 kPa {1.03 kgf/cm^2, 14.6 psi}): Approx. 4.07 V • Idle (after warm up) (MAP: 33 kPa {0.34 kgf/cm^2, 4.8 psi}): Approx. 1.34 V • Racing (engine speed is 2,000 rpm) (MAP: 26 kPa {0.27 kgf/cm^2, 3.8 psi}): Approx. 1.05 V
O2S11	µA	A/F sensor current	• Idle (after warm up): Approx. −39 µA • Deceleration fuel cut (accelerator pedal released from engine speed of 4,000 rpm or more): Approx. 3.84 mA
O2S12	V	HO2S voltage	• Idle (after warm up): 0—1.0 V • Deceleration fuel cut (accelerator pedal released from engine speed of 4,000 rpm or more): Approx. 0 V
RPM	RPM	Engine speed	• Displays engine speed
SHRTFT1	%	Fuel feedback correction amount estimated based on A/F sensor signal	• Idle (after warm up): Approx. 1.56% • Racing (engine speed is 2,000 rpm): Approx. −3.12% • Racing (engine speed is 4,000 rpm): Approx. −8.59%
TP_REL	%	Throttle valve opening angle (relative value) with value at throttle valve fully open timing as the start point	• Accelerator pedal released: Approx. 12% • Accelerator pedal fully depressed: Approx. 82%
VSS	KPH, MPH	Vehicle speed	• Displays vehicle speed

Diagnostic Procedure

STEP	INSPECTION	RESULTS	ACTION
	VERIFY IF MALFUNCTION INCLUDES HARD ENGINE STARTING		

1	• Is the engine unable to start after it has stalled?	Yes	If the engine is unable to start, perform the symptom troubleshooting “NO.3 WILL NOT CRANK” and “NO.6 CRANKS NORMALLY BUT WILL NOT START”. (See **NO.3 WILL NOT CRANK [SKYACTIV-G 2.0, SKYACTIV-G 2.5]**.) (See **NO.6 CRANKS NORMALLY BUT WILL NOT START [SKYACTIV-G 2.0, SKYACTIV-G 2.5]**.)
		No	Go to the next step.
2	**VERIFY IF MALFUNCTION INCLUDES ROUGH IDLING** • Does the engine idle rough?	Yes	Perform the symptom troubleshooting “NO.8 ENGINE RUNS ROUGH/ROLLING IDLE”. (See **NO.8 ENGINE RUNS ROUGH/ROLLING IDLE [SKYACTIV-G 2.0, SKYACTIV-G 2.5]**.)
		No	Go to the next step.
3	**VERIFY PCM DTC** • Retrieve any DTCs using the M-MDS. (See **ON-BOARD DIAGNOSTIC TEST [SKYACTIV-G 2.0, SKYACTIV-G 2.5]**.) • Are any DTCs present?	Yes	Go to the applicable DTC inspection. (See **DTC TABLE [SKYACTIV-G 2.0, SKYACTIV-G 2.5]**.)
		No	Go to the next step.
4	**VERIFY CURRENT INPUT SIGNAL STATUS** **CAUTION:** • While performing this step, always operate the vehicle in a safe and lawful manner. • When the M-MDS is used to observe monitor system status while driving, be sure to have another technician with you, or record the data in the M-MDS using the PID/DATA MONITOR AND RECORD capturing function and inspect later. • Access the following PIDs using the M-MDS: (See **ON-BOARD DIAGNOSTIC TEST [SKYACTIV-G 2.0, SKYACTIV-G 2.5]**.) ▪ APP1 ▪ APP2 ▪ BOO ▪ CPP/PNP (MTX) ▪ ECT ▪ MAF	Yes	Go to the next step.
		No	APP1, APP2 PIDs are not as specified: • Inspect the APP sensor. (See **ACCELERATOR PEDAL POSITION (APP) SENSOR INSPECTION [SKYACTIV-G 2.0, SKYACTIV-G 2.5]**.) BOO PID is not as specified: • Inspect the brake switch. (See **BRAKE SWITCH INSPECTION**.) CPP/PNP PID is not as specified: (MTX) • Inspect the neutral switch. (See **NEUTRAL SWITCH INSPECTION [SKYACTIV-G 2.0, SKYACTIV-G 2.5]**.) ECT PID is not as specified: • Inspect the ECT sensor No.1. (See **ENGINE COOLANT TEMPERATURE (ECT) SENSOR INSPECTION [SKYACTIV-G 2.0, SKYACTIV-G 2.5]**.)

- MAP
- TP_REL
- O2S11
- O2S12
- SHRTFT1
- LONGFT1
- ALTT V

- Do the PIDs indicate the correct values under the malfunction condition?

  (See **PCM INSPECTION [SKYACTIV-G 2.0, SKYACTIV-G 2.5]**.)

MAF PID is not as specified:

- Inspect the MAF sensor.

  (See **MASS AIR FLOW (MAF) SENSOR INSPECTION [SKYACTIV-G 2.0, SKYACTIV-G 2.5]**.)

MAP PID is not as specified:

- Inspect the MAP sensor.

  (See **MANIFOLD ABSOLUTE PRESSURE (MAP) SENSOR INSPECTION [SKYACTIV-G 2.0, SKYACTIV-G 2.5]**.)

TP_REL PID is not as specified:

- Inspect the TP sensor.

  (See **THROTTLE POSITION (TP) SENSOR INSPECTION [SKYACTIV-G 2.0, SKYACTIV-G 2.5]**.)

O2S11, SHRTFT1, LONGFT1 PIDs are not as specified:

- Inspect the A/F sensor.

  (See **AIR FUEL RATIO (A/F) SENSOR INSPECTION [SKYACTIV-G 2.0, SKYACTIV-G 2.5]**.)

O2S12 PID is not as specified:

- Inspect the HO2S.

  (See **HEATED OXYGEN SENSOR (HO2S) INSPECTION [SKYACTIV-G 2.0, SKYACTIV-G 2.5]**.)

ALTT V PID is not as specified:

- Inspect the generator.

  (See **GENERATOR INSPECTION [SKYACTIV-G 2.0, SKYACTIV-G 2.5 (WITHOUT i-ELOOP)]**.)

Repair or replace the malfunctioning part according to the inspection results.

- If the malfunction remains:
  - Inspect communication error between TCM and PCM. (ATX)
    - Repair or replace the malfunctioning part according to the inspection results if necessary.
  - Perform the “INTERMITTENT CONCERN TROUBLESHOOTING” procedure.

    (See **INTERMITTENT CONCERN**

			TROUBLESHOOTING [SKYACTIV-G 2.0, SKYACTIV-G 2.5].)
5	**DETERMINE IF MALFUNCTION CAUSE IS A/C REQUEST SIGNAL OR OTHER** • Access the AC_REQ PID using the M-MDS. (See **ON-BOARD DIAGNOSTIC TEST [SKYACTIV-G 2.0, SKYACTIV-G 2.5]**.) • Monitor the AC_REQ PID while turning on and off the air conditioner using the switch on the control panel. • Does the AC_REQ PID value change from on to off according to switch control panel?	Yes	Go to the next step.
		No	If the AC_REQ PID is always ON: • Perform the symptom troubleshooting “NO.24 A/C IS ALWAYS ON OR A/C COMPRESSOR RUNS CONTINUOUSLY”. (See **NO.24 A/C IS ALWAYS ON OR A/C COMPRESSOR RUNS CONTINUOUSLY [SKYACTIV-G 2.0, SKYACTIV-G 2.5]**.) If the AC_REQ PID is always OFF: • Perform the symptom troubleshooting “NO.23 A/C DOES NOT WORK SUFFICIENTLY”. (See **NO.23 A/C DOES NOT WORK SUFFICIENTLY [SKYACTIV-G 2.0, SKYACTIV-G 2.5]**.)
6	**DETERMINE IF MALFUNCTION CAUSE IS DRIVE-BY-WIRE CONTROL SYSTEM OR OTHER** • Will the engine run smoothly at part throttle?	Yes	Go to Step 8.
		No	Go to the next step.
7	**INSPECT DRIVE-BY-WIRE CONTROL SYSTEM OPERATION** • Perform the Electronic Control Throttle Operation Inspection. (See **ENGINE CONTROL SYSTEM OPERATION INSPECTION [SKYACTIV-G 2.0, SKYACTIV-G 2.5]**.) • Does the drive-by-wire control system work properly?	Yes	Visually inspect the throttle body (damage/scratching). • If there is any malfunction: ▪ Repair or replace the malfunctioning part according to the inspection results. • If there is no malfunction: ▪ Go to the next step.
		No	Repair or replace the malfunctioning part according to the inspection results.
8	**INSPECT FUEL INJECTOR OPERATION** • Perform the Fuel Injector Operation Inspection. (See **ENGINE CONTROL SYSTEM OPERATION INSPECTION [SKYACTIV-G 2.0, SKYACTIV-G 2.5]**.) • Do the fuel injectors operate properly?	Yes	Go to the next step.
		No	Repair or replace the malfunctioning part according to the inspection results.
9	**INSPECT PURGE CONTROL SYSTEM OPERATION** • Perform the Purge Control System Inspection. (See **ENGINE CONTROL SYSTEM OPERATION INSPECTION [SKYACTIV-G 2.0, SKYACTIV-G 2.5]**.)	Yes	Go to the next step.
		No	Repair or replace the malfunctioning part according to the inspection results.

	• Does the purge solenoid valve work properly?		
10	**INSPECT RELATED PART CONDITION** • Inspect the following: ▪ Fuel quality (proper octane, contamination, winter/summer blend) ▪ Intake-air system restriction ▪ Fuel leakage in fuel system ▪ Vacuum leakage ▪ CKP sensor, intake CMP sensor and exhaust CMP sensor • Installation condition (See **CRANKSHAFT POSITION (CKP) SENSOR REMOVAL/INSTALLATION [SKYACTIV-G 2.0, SKYACTIV-G 2.5]**.) (See **CAMSHAFT POSITION (CMP) SENSOR REMOVAL/INSTALLATION [SKYACTIV-G 2.0, SKYACTIV-G 2.5]**.) • Damaged trigger wheel, intake camshaft and exhaust camshaft • Is there any malfunction?	Yes	Service if necessary. • Repeat this step.
		No	Go to the next step.
11	**INSPECT FUEL PRESSURE (HIGH-SIDE)** • Start the engine and warm it up completely. • Access the FUEL_PRES PID using the M-MDS at idle. (See **ON-BOARD DIAGNOSTIC TEST [SKYACTIV-G 2.0, SKYACTIV-G 2.5]**.) • Is the FUEL_PRES PID value **approx. 3 MPa {31 kgf/cm^2, 435 psi}**?	Yes	Go to Step 15.
		No	Lower than **3 MPa {31 kgf/cm^2, 435 psi}**: • Inspect the following: ▪ Fuel leakage at the fuel line and fuel injector ▪ Fuel pump • Perform the Fuel Pump (Low-pressure Side) Operation Inspection. (See **ENGINE CONTROL SYSTEM OPERATION INSPECTION [SKYACTIV-G 2.0, SKYACTIV-G 2.5]**.)

			▪ Fuel pressure sensor (See **FUEL PRESSURE SENSOR INSPECTION [SKYACTIV-G 2.0, SKYACTIV-G 2.5]**.) ▪ High pressure fuel pump (See **HIGH PRESSURE FUEL PUMP INSPECTION [SKYACTIV-G 2.0, SKYACTIV-G 2.5]**.) • If there is any malfunction: ▪ Repair or replace the malfunctioning part according to the inspection results. • If there is no malfunction: ▪ Go to Step 14. Higher than **3 MPa {31 kgf/cm^2, 435 psi}**: • Go to the next step.
12	**DETERMINE IF MALFUNCTION CAUSE IS FUEL PRESSURE SENSOR OR HIGH PRESSURE FUEL PUMP** • Is the vehicle acceleration performance normal?	Yes	Go to the next step.
		No	Go to Step 14.
13	**INSPECT FUEL PRESSURE SENSOR** • Inspect the fuel pressure sensor. (See **FUEL PRESSURE SENSOR INSPECTION [SKYACTIV-G 2.0, SKYACTIV-G 2.5]**.) • Is there any malfunction?	Yes	Replace the fuel distributor. (See **FUEL INJECTOR REMOVAL/INSTALLATION [SKYACTIV-G 2.0, SKYACTIV-G 2.5]**.)
		No	Go to Step 15.
14	**INSPECT SPILL VALVE CONTROL SOLENOID VALVE CONTROL CIRCUIT FOR SHORT TO GROUND** • Switch the ignition off. • Disconnect the high pressure fuel pump and PCM connectors. • Inspect for continuity between high pressure fuel pump terminal A (wiring harness-side) and body ground. • Is there continuity?	Yes	Refer to the wiring diagram and verify whether or not there is a common connector between high pressure fuel pump terminal A and PCM terminal 1EE. **If there is a common connector:** • Determine the malfunctioning part by inspecting the common connector and the terminal for corrosion, damage, or pin disconnection, and the common wiring harness for a short to ground. • Repair or replace the malfunctioning part. **If there is no common connector:** • Repair or replace the wiring harness which has a short to ground.

			If the malfunction remains: • Replace the PCM. (damage to driver in PCM) (See **PCM REMOVAL/INSTALLATION [SKYACTIV-G 2.0, SKYACTIV-G 2.5]**.)
		No	Replace the high pressure fuel pump. (See **HIGH PRESSURE FUEL PUMP REMOVAL/INSTALLATION [SKYACTIV-G 2.0, SKYACTIV-G 2.5]**.)
15	**INSPECT FUEL PRESSURE (LOW-SIDE)** • Connect the fuel pressure gauge between fuel pump and high pressure fuel pump. • Measure the low side fuel pressure. (See **FUEL LINE PRESSURE INSPECTION [SKYACTIV-G 2.0, SKYACTIV-G 2.5]**.) • Is the low side fuel pressure within specification? **Specification:** • **405—485 kPa {4.13—4.94 kgf/cm^2, 58.8—70.3 psi}**	Yes	Go to the next step.
		No	Inspect the following: • Fuel line restriction • Fuel filter clogged ▪ If there is any malfunction: • Repair or replace the malfunctioning part according to the inspection results. ▪ If there is no malfunction: • Replace the fuel pump unit. (See **FUEL PUMP UNIT REMOVAL/INSTALLATION [SKYACTIV-G 2.0, SKYACTIV-G 2.5]**.)
16	**INSPECT IF MALFUNCTION CAUSE IS ENGINE COMPRESSION OR INJECTOR DRIVER (PCM INTEGRATED)** • Measure the compression pressure for each cylinder. (See **COMPRESSION INSPECTION [SKYACTIV-G 2.0, SKYACTIV-G 2.5]**.) • Are compression pressures within specification? **Specification:** • Compression [SKYACTIV-G 2.0] ▪ Standard: **885 kPa {9.02 kgf/cm^2, 128 psi} (300 rpm)** ▪ Minimum: **708 kPa {7.22 kgf/cm^2, 103 psi} (300 rpm)**	Yes	Go to Step 22.
		No	Go to the next step.

	▪ Maximum difference between cylinders: **150 kPa {1.53 kgf/cm^2, 21.8 psi}** (**300 rpm**) • Compression [SKYACTIV-G 2.5] ▪ Standard: **954 kPa {9.73 kgf/cm^2, 138 psi} (300 rpm)** ▪ Minimum: **763 kPa {7.78 kgf/cm^2, 111 psi} (300 rpm)** ▪ Maximum difference between cylinders: **161 kPa {1.64 kgf/cm^2, 23.4 psi}** (**300 rpm**) **NOTE:** • Because the SKYACTIV-G 2.0 and SKYACTIV-G 2.5 retards the intake valve closing timing, compression pressure is low.		
17	**INSPECT ELECTRIC VARIABLE VALVE TIMING DRIVER** • Inspect the electric variable valve timing driver. (See **ELECTRIC VARIABLE VALVE TIMING MOTOR/DRIVER INSPECTION [SKYACTIV-G 2.0, SKYACTIV-G 2.5]**.) • Is there any malfunction?	Yes	Replace the electric variable valve timing motor/driver. (See **ELECTRIC VARIABLE VALVE TIMING MOTOR/DRIVER REMOVAL/INSTALLATION [SKYACTIV-G 2.0, SKYACTIV-G 2.5]**.)
		No	Go to the next step.
18	**INSPECT ELECTRIC VARIABLE VALVE TIMING MOTOR** • Inspect the electric variable valve timing motor. (See **ELECTRIC VARIABLE VALVE TIMING MOTOR/DRIVER INSPECTION [SKYACTIV-G 2.0, SKYACTIV-G 2.5]**.) • Is there any malfunction?	Yes	Replace the electric variable valve timing motor/driver. (See **ELECTRIC VARIABLE VALVE TIMING MOTOR/DRIVER REMOVAL/INSTALLATION [SKYACTIV-G 2.0, SKYACTIV-G 2.5]**.)
		No	Go to the next step.
19	**INSPECT ELECTRIC VARIABLE VALVE TIMING ACTUATOR** • Inspect the electric variable valve timing actuator. (See **ELECTRIC VARIABLE VALVE TIMING ACTUATOR INSPECTION [SKYACTIV-G 2.0, SKYACTIV-G 2.5]**.) • Is there any malfunction?	Yes	Replace the electric variable valve timing actuator. (See **ELECTRIC VARIABLE VALVE TIMING ACTUATOR, HYDRAULIC VARIABLE VALVE TIMING ACTUATOR REMOVAL/INSTALLATION [SKYACTIV-G 2.0, SKYACTIV-G 2.5]**.)
		No	Go to the next step.
20	**INSPECT HYDRAULIC VARIABLE VALVE TIMING CONTROL SYSTEM OPERATION** • Perform the Hydraulic Variable Valve Timing Control System Operation Inspection. (See **ENGINE CONTROL SYSTEM OPERATION INSPECTION [SKYACTIV-G 2.0, SKYACTIV-G 2.5]**.)	Yes	Repair or replace the malfunctioning part according to the inspection results.
		No	Go to the next step.

	Is there any malfunction?		
21	**INSPECT FOR MALFUNCTION DUE TO DEVIATED VALVE TIMING** • Inspect the valve timing (timing chain installation condition). (See **TIMING CHAIN REMOVAL/INSTALLATION [SKYACTIV-G 2.0, SKYACTIV-G 2.5]**.) • Is the valve timing normal?	Yes	Inspect for the following engine internal parts: • Cylinder • Piston ring • Intake valve • Exhaust valve • Such as cylinder head gasket ▪ If there is any malfunction: • Repair or replace the malfunctioning part according to the inspection results.
		No	Adjust the valve timing to the correct timing.
22	**INSPECT FOR MALFUNCTION DUE TO ENGINE MOUNT INSTALLATION LOOSE** • Verify the engine mount installation condition. • Is the engine mount installation condition normal?	Yes	Go to the next step.
		No	Repair or replace the malfunctioning part according to the inspection results.
23	**INSPECT TCC MECHANISM** • Inspect the TCC mechanism. • Is the TCC mechanism normal?	Yes	Injector driver malfunction. • Replace the PCM. (See **PCM REMOVAL/INSTALLATION [SKYACTIV-G 2.0, SKYACTIV-G 2.5]**.) If the problem remains, overhaul the engine.
		No	Repair or replace the malfunctioning part according to the inspection results.
24	Verify the test results. • If normal, return to the diagnostic index to service any additional symptoms. (See **SYMPTOM DIAGNOSTIC INDEX [SKYACTIV-G 2.0, SKYACTIV-G 2.5]**.) • If the malfunction remains, inspect the related Service Bulletins and/or On-line Repair Information and perform repair or diagnosis. ▪ If the vehicle is repaired, troubleshooting is completed. ▪ If the vehicle is not repaired or additional diagnostic information is not available, reprogram the PCM if a later calibration is available. Retest.		

NO.10 LOW IDLE/STALLS DURING DECELERATION [SKYACTIV-G 2.0, SKYACTIV-G 2.5]

2014 - Mazda3 - Engine

NO.11 ENGINE STALLS/QUITS, ENGINE RUNS ROUGH, MISSES, BUCK/JERK, HESITATION/STUMBLE, SURGES [SKYACTIV-G 2.0, SKYACTIV-G 2.5]

11	ENGINE STALLS/QUITS-ACCELERATION/CRUISE ENGINE RUNS ROUGH-ACCELERATION/CRUISE MISSES-ACCELERATION/CRUISE BUCK/JERK-ACCELERATION/CRUISE/DECELERATION HESITATION/STUMBLE-ACCELERATION SURGES-ACCELERATION/CRUISE
DESCRIPTION	• Engine stops unexpectedly at beginning of acceleration or during acceleration. • Engine stops unexpectedly while cruising. • Engine speed fluctuates during acceleration or cruising. • Engine misses during acceleration or cruising. • Vehicle bucks/jerks during acceleration, cruising, or deceleration. • Momentary pause at beginning of acceleration or during acceleration. • Momentary minor irregularity in engine output.

	• Engine overheating
	• Drive-by-wire control system operates with brake override system
	• PCM DTC is stored
	• Erratic signal to PCM
	  ▪ APP sensor or related circuit malfunction
	  ▪ Neutral switch or related circuit malfunction (MTX)
	  ▪ Communication error between TCM and PCM (ATX)
	  ▪ ECT sensor No.1 or related circuit malfunction
	  ▪ Fuel pressure sensor or related circuit malfunction
	  ▪ IAT sensor No.1 (integrated in MAF sensor/IAT sensor No.1) or related circuit malfunction

POSSIBLE CAUSE	▪ MAF sensor or related circuit malfunction ▪ MAP sensor or related circuit malfunction ▪ A/F sensor or related circuit malfunction ▪ HO2S or related circuit malfunction ▪ Improper air/fuel mixture ratio control operation ▪ Intermittent open or short circuit MAF sensor, APP sensor, TP sensor • Improper operation of A/C system • Improper operation of drive-by-wire control system • Throttle body malfunction • Incorrect fuel injection timing • Fuel injector malfunction • Purge solenoid valve malfunction • Improper A/F sensor signal ▪ A/F sensor malfunction ▪ Open or short circuit in related wiring harness ▪ Loose installation ▪ Exhaust system leakage • Main relay intermittent malfunction • Poor fuel quality • Air leakage from intake-air system • Intake-air system restriction • Air cleaner restriction • Clutch slippage (MTX) • Fuel leakage • Vacuum leakage • Engine mount installation loose • Erratic or no signal from CMP sensor ▪ Loose installation ▪ Damaged trigger wheel (intake camshaft and/or exhaust camshaft) ▪ Open or short circuit in related wiring harness • Erratic signal from CKP sensor

	▪ Loose installation ▪ Damaged trigger wheel (crankshaft pulley) ▪ Open or short circuit in related wiring harness • Inadequate fuel pressure (high or low pressure side) ▪ Fuel pressure sensor malfunction ▪ High pressure fuel pump malfunction ▪ Spill valve control solenoid valve control circuit malfunction (damage to driver in PCM caused by short circuit to ground system) ▪ Spill valve control solenoid valve (built-into high pressure fuel pump) malfunction ▪ Relief valve (built-into high pressure fuel pump) malfunction ▪ Fuel line restricted ▪ Fuel filter clogged (built-into fuel pump unit) ▪ Fuel pump mechanical malfunction
POSSIBLE CAUSE	• Low engine compression • Improper intake valve timing • Improper exhaust valve timing • Improper operation of electric variable valve timing control system ▪ Electric variable valve timing driver malfunction ▪ Electric variable valve timing motor malfunction ▪ Electric variable valve timing actuator malfunction • Improper operation of hydraulic variable valve timing control system • Spark plug malfunction • Exhaust system and/or TWC restriction (PCM DTC is stored.) • PCV valve malfunction • Check valve (two-way) malfunction • Injector driver (built-into PCM) malfunction **WARNING:** The following troubleshooting flow chart contains the fuel system diagnosis and repair procedures. Read the following warnings before performing the fuel system services: • Fuel vapor is hazardous. It can easily ignite, causing serious injury and damage. Always keep sparks and flames away from fuel. • Fuel line spills and leakage are dangerous. Fuel can ignite and cause serious injury or death and damage. Fuel can also irritate skin and eyes. To prevent this, always complete “BEFORE SERVICE PRECAUTION” and “AFTER SERVICE PRECAUTION” described

in this manual. (See **BEFORE SERVICE PRECAUTION [SKYACTIV-G 2.0, SKYACTIV-G 2.5]**.) (See **AFTER SERVICE PRECAUTION [SKYACTIV-G 2.0, SKYACTIV-G 2.5]**.)

CAUTION:

- Disconnecting/connecting the quick release connector without cleaning it may possibly cause damage to the fuel pipe and quick release connector. Always clean the quick release connector joint area before disconnecting/connecting, and make sure that it is free of foreign matter.

CAUTION:

- Verify the malfunction symptom according to not only the PID value but also the symptom troubleshooting.

Related PIDs

Item (definition)	Unit/Condition	Definition	Condition/Specification (Reference)
APP1	%	Accelerator pedal opening angle (absolute value) input from APP sensor No.1	• Accelerator pedal released: Approx. 15% • Accelerator pedal fully depressed: Approx. 82%
	V	APP sensor No.1 voltage	• Accelerator pedal released: Approx. 0.75 V • Accelerator pedal fully depressed: Approx. 4.1 V
APP2	%	Accelerator pedal opening angle (absolute value) input from APP sensor No.2	• Accelerator pedal released: Approx. 7.45% • Accelerator pedal fully depressed: Approx. 41%
	V	APP sensor No.2 voltage	• Accelerator pedal released: Approx. 0.38 V • Accelerator pedal fully depressed: Approx. 2.05 V
CPP/PNP (MTX)	Off/On	Shift lever position	• Other than neutral: Off • Neutral: On
ECT	°C, °F	Engine coolant temperature	• Displays ECT
	V	ECT sensor No.1 voltage	• ECT is 20 °C {68 °F}: Approx. 3.10 V • ECT is 40 °C {104 °F}: Approx. 2.16 V • ECT is 60 °C {140 °F}: Approx. 1.40 V • ECT is 80 °C {176 °F}: Approx. 0.87 V • ECT is 100 °C {212 °F}: Approx. 0.54 V

FUEL_PRES	KPa {MPa}, mBar {Bar}, psi, in H20	Fuel pressure	• Displays fuel pressure
	V	Fuel pressure sensor voltage	• Fuel pressure is 3.0 MPa {31 kgf/cm^2, 435 psi}: Approx. 0.92 V • Fuel pressure is 4.8 MPa {49 kgf/cm^2, 696 psi}: Approx. 1.17 V
IAT	°C, °F	Intake air temperature (No.1)	• Displays IAT (No.1)
	V	IAT sensor No.1 voltage	• IAT is 20 °C {68 °F}: Approx. 2.70 V • IAT is 40 °C {104 °F}: Approx. 1.80 V • IAT is 60 °C {140 °F}: Approx. 1.20 V
LOAD	%	Ratio of actual amount of intake air to the maximum air charging amount (mass volume) of cylinder	• Idle (after warm up): Approx. 17.64% • Racing (engine speed is 2,000 rpm): Approx. 14.51% • Racing (engine speed is 4,000 rpm): Approx. 21.17%
LONGFT1	%	Fuel learning correction amount estimated based on A/F sensor signal	• Idle (after warm up): Approx. -2.34% • Racing (engine speed is 2,000 rpm): Approx. -0.78% • Racing (engine speed is 4,000 rpm): Approx. -0.78%
MAF	g/Sec	Mass air flow	• Displays MAF
	V	MAF sensor voltage	• Ignition switched ON (engine off) (MAF: 0.59 g/s {0.078 lb/min}): Approx. 0.72 V • Idle (after warm up) (MAF: 2.17 g/s {0.287 lb/min}): Approx. 0.86 V • Racing (engine speed is 2,000 rpm) (MAF: 4.73 g/s {0.626 lb/min}): Approx. 1.07 V
MAP	KPa {MPa}, mBar {Bar}, psi, in H20	Manifold absolute pressure	• Displays MAP
	V	MAP sensor voltage	• Ignition switched ON (engine off) (MAP:101 kPa {1.03 kgf/cm^2, 14.6 psi}): Approx. 4.07 V • Idle (after warm up) (MAP: 33 kPa {0.34 kgf/cm^2, 4.8 psi}): Approx. 1.34 V • Racing (engine speed is 2,000 rpm) (MAP: 26 kPa {0.27 kgf/cm^2, 3.8 psi}): Approx. 1.05 V

O2S11	µA	A/F sensor current	• Idle (after warm up): Approx. −39 µA • Deceleration fuel cut (accelerator pedal released from engine speed of 4,000 rpm or more): Approx. 3.84 mA
O2S12	V	HO2S voltage	• Idle (after warm up): 0—1.0 V • Deceleration fuel cut (accelerator pedal released from engine speed of 4,000 rpm or more): Approx. 0 V
RPM	RPM	Engine speed	• Displays engine speed
SHRTFT1	%	Fuel feedback correction amount estimated based on A/F sensor signal	• Idle (after warm up): Approx. 1.56% • Racing (engine speed is 2,000 rpm): Approx. −3.12% • Racing (engine speed is 4,000 rpm): Approx. −8.59%
TP_REL	%	Throttle valve opening angle (relative value) with value at throttle valve fully open timing as the start point	• Accelerator pedal released: Approx. 12% • Accelerator pedal fully depressed: Approx. 82%
VSS	KPH, MPH	Vehicle speed	• Displays vehicle speed

Diagnostic Procedure

STEP	INSPECTION	RESULTS	ACTION
1	**VERIFY IF MALFUNCTION INCLUDES HARD ENGINE STARTING** • Is the engine unable to start after it has stalled? **NOTE:** • If the ignition is not switched off (to LOCK or ACC) after the engine stalls, and then an engine restart is attempted, the PCM corrects the difference between CKP sensor and CMP sensor signals caused by engine stalling, which may result in more time needed to restart the engine.	Yes	If the engine is unable to start, perform the symptom troubleshooting “NO.3 WILL NOT CRANK” and “NO.6 CRANKS NORMALLY BUT WILL NOT START”. (See **NO.3 WILL NOT CRANK [SKYACTIV-G 2.0, SKYACTIV-G 2.5]**.) (See **NO.6 CRANKS NORMALLY BUT WILL NOT START [SKYACTIV-G 2.0, SKYACTIV-G 2.5]**.)
		No	Go to the next step.
2	**VERIFY IF MALFUNCTION INCLUDES ROUGH IDLING** • Does the engine idle rough?	Yes	Perform the symptom troubleshooting “NO.8 ENGINE RUNS ROUGH/ROLLING IDLE”. (See **NO.8 ENGINE RUNS ROUGH/ROLLING IDLE [SKYACTIV-G 2.0, SKYACTIV-G 2.5]**.)
		No	Go to the next step.

3	**VERIFY IF MALFUNCTION CAUSE IS OVERHEATING** • Access the ECT PID using the M-MDS. (See **ON-BOARD DIAGNOSTIC TEST [SKYACTIV-G 2.0, SKYACTIV-G 2.5]**.) **CAUTION:** • While performing this step, always operate the vehicle in a safe and lawful manner. • When the M-MDS is used to observe monitor system status while driving, be sure to have another technician with you, or record the data in the M-MDS using the PID/DATA MONITOR AND RECORD capturing function and inspect later. • Is the ECT PID value **less than 116 °C {241 °F}** during driving?	Yes	Go to the next step.
		No	The cause of this concern could be from the cooling system overheating. • Perform the symptom troubleshooting “NO.17 COOLING SYSTEM CONCERNS-OVERHEATING”. (See **NO.17 COOLING SYSTEM CONCERNS-OVERHEATING [SKYACTIV-G 2.0, SKYACTIV-G 2.5]**.)
4	**VERIFY DRIVE-BY-WIRE CONTROL SYSTEM OPERATES WITH BRAKE OVERRIDE SYSTEM** • Retrieve the PCM DTC using the M-MDS. (See **ON-BOARD DIAGNOSTIC TEST [SKYACTIV-G 2.0, SKYACTIV-G 2.5]**.) • Is the DTC P2299:00 present?	Yes	Go to the applicable DTC inspection. (drive-by-wire control system operates with brake override system.) (See **DTC P2299:00 [SKYACTIV-G 2.0, SKYACTIV-G 2.5]**.)
		No	Go to the next step.
5	**VERIFY PCM DTC** • Retrieve any DTCs using the M-MDS. (See **ON-BOARD DIAGNOSTIC TEST [SKYACTIV-G 2.0, SKYACTIV-G 2.5]**.) • Are any DTCs present?	Yes	Go to the applicable DTC inspection. (See **DTC TABLE [SKYACTIV-G 2.0, SKYACTIV-G 2.5]**.)
		No	Go to the next step.
6	**VERIFY CURRENT INPUT SIGNAL STATUS** **CAUTION:** • While performing this step, always operate the vehicle in a safe and lawful manner. • When the M-MDS is used to observe monitor system status while driving, be sure to have another technician with you, or record the data in the M-MDS using the PID/DATA MONITOR AND RECORD capturing function and inspect later. • Access the following PIDs using the M-MDS: (See **ON-BOARD DIAGNOSTIC TEST [SKYACTIV-G 2.0,**	Yes	Go to the next step.
		No	APP1, APP2 PIDs are not as specified: • Inspect the APP sensor. (See **ACCELERATOR PEDAL POSITION (APP) SENSOR INSPECTION [SKYACTIV-G 2.0, SKYACTIV-G 2.5]**.) CPP/PNP PID is not as specified: (MTX) • Inspect the neutral switch. (See **NEUTRAL SWITCH INSPECTION [SKYACTIV-G 2.0, SKYACTIV-G 2.5]**.)

SKYACTIV-G 2.5].)

- APP1
- APP2
- CPP/PNP (MTX)
- ECT
- FUEL_PRES
- IAT
- MAF
- MAP
- O2S11
- O2S12
- SHRTFT1
- LONGFT1

- Do the PIDs indicate the correct values under the malfunction condition?

  (See **PCM INSPECTION [SKYACTIV-G 2.0, SKYACTIV-G 2.5]**.)

ECT PID is not as specified:

- Inspect the ECT sensor No.1.

  (See **ENGINE COOLANT TEMPERATURE (ECT) SENSOR INSPECTION [SKYACTIV-G 2.0, SKYACTIV-G 2.5]**.)

FUEL_PRES PID is not as specified:

- Inspect the fuel pressure sensor.

  (See **FUEL PRESSURE SENSOR INSPECTION [SKYACTIV-G 2.0, SKYACTIV-G 2.5]**.)

IAT PID is not as specified:

- Inspect the IAT sensor No.1.

  (See **INTAKE AIR TEMPERATURE (IAT) SENSOR INSPECTION [SKYACTIV-G 2.0, SKYACTIV-G 2.5]**.)

MAF PID is not as specified:

- Inspect the MAF sensor.

  (See **MASS AIR FLOW (MAF) SENSOR INSPECTION [SKYACTIV-G 2.0, SKYACTIV-G 2.5]**.)

MAP PID is not as specified:

- Inspect the MAP sensor.

  (See **MANIFOLD ABSOLUTE PRESSURE (MAP) SENSOR INSPECTION [SKYACTIV-G 2.0, SKYACTIV-G 2.5]**.)

O2S11, SHRTFT1, LONGFT1 PIDs are not as specified:

- Inspect the A/F sensor.

  (See **AIR FUEL RATIO (A/F) SENSOR INSPECTION [SKYACTIV-G 2.0, SKYACTIV-G 2.5]**.)

O2S12 PID is not as specified:

- Inspect the HO2S.

  (See **HEATED OXYGEN SENSOR (HO2S) INSPECTION [SKYACTIV-G 2.0, SKYACTIV-G 2.5]**.)

Repair or replace the malfunctioning part according to the inspection results.

- If the malfunction remains:
  - Inspect communication error between TCM and PCM. (ATX)
    - Repair or replace the malfunctioning part

			according to the inspection results if necessary. ▪ Perform the “INTERMITTENT CONCERN TROUBLESHOOTING” procedure. (See **INTERMITTENT CONCERN TROUBLESHOOTING [SKYACTIV-G 2.0, SKYACTIV-G 2.5]**.)
7	**INSPECT A/C CUT-OFF CONTROL SYSTEM OPERATION** • Perform the A/C Cut-off Control System Inspection. (See **ENGINE CONTROL SYSTEM OPERATION INSPECTION [SKYACTIV-G 2.0, SKYACTIV-G 2.5]**.) • Does the A/C cut-off operation work properly?	Yes	Go to the next step.
		No	Perform the symptom troubleshooting "NO.23 A/C DOES NOT WORK SUFFICIENTLY" and "NO.24 A/C IS ALWAYS ON OR A/C COMPRESSOR RUNS CONTINUOUSLY". (See **NO.23 A/C DOES NOT WORK SUFFICIENTLY [SKYACTIV-G 2.0, SKYACTIV-G 2.5]**.) (See **NO.24 A/C IS ALWAYS ON OR A/C COMPRESSOR RUNS CONTINUOUSLY [SKYACTIV-G 2.0, SKYACTIV-G 2.5]**.)
8	**DETERMINE IF MALFUNCTION CAUSE IS DRIVE-BY-WIRE CONTROL SYSTEM OR OTHER** • Will the engine run smoothly at part throttle?	Yes	Go to Step 10.
		No	Go to the next step.
9	**INSPECT DRIVE-BY-WIRE CONTROL SYSTEM OPERATION** • Perform the Electronic Control Throttle Operation Inspection. (See **ENGINE CONTROL SYSTEM OPERATION INSPECTION [SKYACTIV-G 2.0, SKYACTIV-G 2.5]**.) • Does the drive-by-wire control system work properly?	Yes	Visually inspect the throttle body (damage/scratching). • If there is any malfunction: ▪ Repair or replace the malfunctioning part according to the inspection results. • If there is no malfunction: ▪ Go to the next step.
		No	Repair or replace the malfunctioning part according to the inspection results.
10	**INSPECT FUEL INJECTOR OPERATION** • Perform the Fuel Injector Operation Inspection. (See **ENGINE CONTROL SYSTEM OPERATION INSPECTION [SKYACTIV-G 2.0, SKYACTIV-G 2.5]**.) • Do the fuel injectors operate properly?	Yes	Go to the next step.
		No	Repair or replace the malfunctioning part according to the inspection results.
11	**INSPECT PURGE CONTROL SYSTEM OPERATION** • Perform the Purge Control System Inspection. **ENGINE CONTROL SYSTEM OPERATION INSPECTION**	Yes	Go to the next step.
		No	Repair or replace the malfunctioning part according to the inspection

	(See **[SKYACTIV-G 2.0, SKYACTIV-G 2.5]**.) • Does the purge solenoid valve work properly?		results.
12	**INSPECT CURRENT A/F SENSOR SIGNAL** • Inspect the A/F sensor. (See **AIR FUEL RATIO (A/F) SENSOR INSPECTION [SKYACTIV-G 2.0, SKYACTIV-G 2.5]**.) • Is there any malfunction?	Yes	Go to the next step.
		No	Go to Step 14.
13	**DETERMINE IF MALFUNCTION CAUSE IS A/F SENSOR MALFUNCTION OR A/F SENSOR RELATED WIRING HARNESS MALFUNCTION** **NOTE:** • If the inspection in Step 13 is performed, the PCM detects a DTC and performs fail-safe control. After performing the inspection, clear DTCs using the M-MDS. • Switch the ignition off. • Disconnect the A/F sensor connector. • Verify the symptom. • Does the symptom disappear?	Yes	Replace the A/F sensor. (See **AIR FUEL RATIO (A/F) SENSOR REMOVAL/INSTALLATION [SKYACTIV-G 2.0, SKYACTIV-G 2.5]**.)
		No	Inspect the following: • Exhaust system leakage between exhaust manifold and A/F sensor • Loose installation of A/F sensor ▪ If there is any malfunction: • Repair or replace the malfunctioning part according to the inspection results. ▪ If there is no malfunction: • Inspect the A/F sensor signal circuit. • Repair or replace the suspected wiring harness if necessary.
14	**INSPECT MAIN RELAY OPERATION** • Perform the Main Relay Operation Inspection with wiggle the related harness. (See **ENGINE CONTROL SYSTEM OPERATION INSPECTION [SKYACTIV-G 2.0, SKYACTIV-G 2.5]**.) • Does the main relay operate properly?	Yes	Go to the next step.
		No	Repair or replace the malfunctioning part according to the inspection results.
15	**INSPECT RELATED PART CONDITION** • Inspect the following: ▪ Fuel quality (proper octane, contamination, winter/summer blend)	Yes	Service if necessary. • Repeat this step.

	▪ Air leakage from intake-air system ▪ Intake-air system restriction ▪ Air cleaner element ▪ Clutch slippage (MTX) ▪ Fuel leakage from fuel line ▪ Vacuum leakage ▪ Engine mount loose ▪ CKP sensor, intake CMP sensor and exhaust CMP sensor • Installation condition (See **CRANKSHAFT POSITION (CKP) SENSOR REMOVAL/INSTALLATION [SKYACTIV-G 2.0, SKYACTIV-G 2.5]**.) (See **CAMSHAFT POSITION (CMP) SENSOR REMOVAL/INSTALLATION [SKYACTIV-G 2.0, SKYACTIV-G 2.5]**.) • Damaged trigger wheel, intake camshaft and exhaust camshaft • Is there any malfunction?	No	Go to the next step.
16	**INSPECT FUEL PRESSURE (HIGH-SIDE)** • Start the engine and warm it up completely. • Access the FUEL_PRES PID using the M-MDS at idle. (See **ON-BOARD DIAGNOSTIC TEST [SKYACTIV-G 2.0, SKYACTIV-G 2.5]**.) • Is the FUEL_PRES PID value **approx. 3 MPa {31 kgf/cm^2, 435 psi}**?	Yes	Go to Step 18.
		No	Lower than **3 MPa {31 kgf/cm^2, 435 psi}**: • Inspect the following: ▪ Fuel leakage at the fuel line and fuel injector ▪ Fuel pump • Perform the Fuel Pump (Low-pressure Side) Operation Inspection. (See **ENGINE CONTROL SYSTEM OPERATION INSPECTION [SKYACTIV-G 2.0, SKYACTIV-G 2.5]**.)

			▪ Fuel pressure sensor (See **FUEL PRESSURE SENSOR INSPECTION [SKYACTIV-G 2.0, SKYACTIV-G 2.5]**.) ▪ High pressure fuel pump (See **HIGH PRESSURE FUEL PUMP INSPECTION [SKYACTIV-G 2.0, SKYACTIV-G 2.5]**.) • If there is any malfunction: ▪ Repair or replace the malfunctioning part according to the inspection results. • If there is no malfunction: ▪ Go to the next step. Higher than **3 MPa {31 kgf/cm^2, 435 psi}**: • Go to the next step.
17	**INSPECT SPILL VALVE CONTROL SOLENOID VALVE CONTROL CIRCUIT FOR SHORT TO GROUND** • Switch the ignition off. • Disconnect the high pressure fuel pump and PCM connectors. • Inspect for continuity between high pressure fuel pump terminal A (wiring harness-side) and body ground. • Is there continuity?	Yes	Refer to the wiring diagram and verify whether or not there is a common connector between high pressure fuel pump terminal A and PCM terminal 1EE. **If there is a common connector:** • Determine the malfunctioning part by inspecting the common connector and the terminal for corrosion, damage, or pin disconnection, and the common wiring harness for a short to ground. • Repair or replace the malfunctioning part. **If there is no common connector:** • Repair or replace the wiring harness which has a short to ground. If the malfunction remains: • Replace the PCM. (damage to driver in PCM) (See **PCM REMOVAL/INSTALLATION [SKYACTIV-G 2.0, SKYACTIV-G 2.5]**.)
		No	Replace the high pressure fuel pump. (See **HIGH PRESSURE FUEL PUMP REMOVAL/INSTALLATION [SKYACTIV-G 2.0, SKYACTIV-G 2.5]**.)
18	**INSPECT FUEL PRESSURE (LOW-SIDE)** • Connect the fuel pressure gauge between fuel pump and	Yes	Go to the next step.

	high pressure fuel pump. • Measure the low side fuel pressure. (See **FUEL LINE PRESSURE INSPECTION [SKYACTIV-G 2.0, SKYACTIV-G 2.5]**.) • Is the low side fuel pressure within specification? **Specification:** • **405—485 kPa {4.13—4.94 kgf/cm^2, 58.8—70.3 psi}**	No	Inspect the following: • Fuel line restriction • Fuel filter clogged ▪ If there is any malfunction: • Repair or replace the malfunctioning part according to the inspection results. ▪ If there is no malfunction: • Replace the fuel pump unit. (See **FUEL PUMP UNIT REMOVAL/INSTALLATION [SKYACTIV-G 2.0, SKYACTIV-G 2.5]**.)
19	**INSPECT THROTTLE BODY FOR CLOGGING** • Visually inspect the throttle valve. (See **INTAKE-AIR SYSTEM REMOVAL/INSTALLATION [SKYACTIV-G 2.0, SKYACTIV-G 2.5]**.) • Is any foreign matter adhering around the throttle valve?	Yes	Clean the throttle valve.
		No	Go to the next step.
20	**INSPECT ENGINE COMPRESSION** • Measure the compression pressure for each cylinder. (See **COMPRESSION INSPECTION [SKYACTIV-G 2.0, SKYACTIV-G 2.5]**.) • Are compression pressures within specification? **Specification:** • Compression [SKYACTIV-G 2.0] ▪ Standard: **885 kPa {9.02 kgf/cm^2, 128 psi} (300 rpm)** ▪ Minimum: **708 kPa {7.22 kgf/cm^2, 103 psi} (300 rpm)** ▪ Maximum difference between cylinders: **150 kPa {1.53 kgf/cm^2, 21.8 psi}** (**300 rpm**) • Compression [SKYACTIV-G 2.5] ▪ Standard: **954 kPa {9.73 kgf/cm^2, 138 psi} (300 rpm)**	Yes	Go to Step 26.
		No	Go to the next step.

	▪ Minimum: **763 kPa {7.78 kgf/cm^2, 111 psi} (300 rpm)** ▪ Maximum difference between cylinders: **161 kPa {1.64 kgf/cm^2, 23.4 psi}** (**300 rpm**) **NOTE:** • Because the SKYACTIV-G 2.0 and SKYACTIV-G 2.5 retards the intake valve closing timing, compression pressure is low.		
21	**INSPECT ELECTRIC VARIABLE VALVE TIMING DRIVER** • Inspect the electric variable valve timing driver. (See **ELECTRIC VARIABLE VALVE TIMING MOTOR/DRIVER INSPECTION [SKYACTIV-G 2.0, SKYACTIV-G 2.5]**.) • Is there any malfunction?	Yes	Replace the electric variable valve timing motor/driver. (See **ELECTRIC VARIABLE VALVE TIMING MOTOR/DRIVER REMOVAL/INSTALLATION [SKYACTIV-G 2.0, SKYACTIV-G 2.5]**.)
		No	Go to the next step.
22	**INSPECT ELECTRIC VARIABLE VALVE TIMING MOTOR** • Inspect the electric variable valve timing motor. (See **ELECTRIC VARIABLE VALVE TIMING MOTOR/DRIVER INSPECTION [SKYACTIV-G 2.0, SKYACTIV-G 2.5]**.) • Is there any malfunction?	Yes	Replace the electric variable valve timing motor/driver. (See **ELECTRIC VARIABLE VALVE TIMING MOTOR/DRIVER REMOVAL/INSTALLATION [SKYACTIV-G 2.0, SKYACTIV-G 2.5]**.)
		No	Go to the next step.
23	**INSPECT ELECTRIC VARIABLE VALVE TIMING ACTUATOR** • Inspect the electric variable valve timing actuator. (See **ELECTRIC VARIABLE VALVE TIMING ACTUATOR INSPECTION [SKYACTIV-G 2.0, SKYACTIV-G 2.5]**.) • Is there any malfunction?	Yes	Replace the electric variable valve timing actuator. (See **ELECTRIC VARIABLE VALVE TIMING ACTUATOR, HYDRAULIC VARIABLE VALVE TIMING ACTUATOR REMOVAL/INSTALLATION [SKYACTIV-G 2.0, SKYACTIV-G 2.5]**.)
		No	Go to the next step.
24	**INSPECT HYDRAULIC VARIABLE VALVE TIMING CONTROL SYSTEM OPERATION** • Perform the Hydraulic Variable Valve Timing Control System Operation Inspection. (See **ENGINE CONTROL SYSTEM OPERATION INSPECTION [SKYACTIV-G 2.0, SKYACTIV-G 2.5]**.) • Is there any malfunction?	Yes	Repair or replace the malfunctioning part according to the inspection results.
		No	Go to the next step.
25	**INSPECT FOR MALFUNCTION DUE TO DEVIATED VALVE TIMING** • Inspect the valve timing (timing chain installation condition). (See **TIMING CHAIN REMOVAL/INSTALLATION [SKYACTIV-G 2.0, SKYACTIV-G 2.5]**.)	Yes	Inspect for the following engine internal parts: • Cylinder • Piston ring

	• Is the valve timing normal?		• Intake valve • Exhaust valve • Such as cylinder head gasket ▪ If there is any malfunction: • Repair or replace the malfunctioning part according to the inspection results.
		No	Adjust the valve timing to the correct timing.
26	**INSPECT IGNITION SYSTEM OPERATION** • Perform the Spark Test. (See **ENGINE CONTROL SYSTEM OPERATION INSPECTION [SKYACTIV-G 2.0, SKYACTIV-G 2.5]**.) • Is a strong blue spark visible at each cylinder?	Yes	Go to the next step.
		No	Repair or replace the malfunctioning part according to the inspection results.
27	**INSPECT EXHAUST SYSTEM FOR RESTRICTION** • Inspect for restriction in the exhaust system and the TWC. • Is there any restriction?	Yes	Repair or replace the malfunctioning part according to the inspection results.
		No	Go to the next step.
28	**INSPECT IF MALFUNCTION CAUSE IS PCV VALVE OR INJECTOR DRIVER (PCM INTEGRATED)** • Inspect the PCV valve. (See **POSITIVE CRANKCASE VENTILATION (PCV) VALVE INSPECTION [SKYACTIV-G 2.0, SKYACTIV-G 2.5]**.) • Is there any malfunction?	Yes	Replace the PCV valve. (See **POSITIVE CRANKCASE VENTILATION (PCV) VALVE REMOVAL/INSTALLATION [SKYACTIV-G 2.0, SKYACTIV-G 2.5]**.)
		No	Injector driver malfunction. • Replace the PCM. (See **PCM REMOVAL/INSTALLATION [SKYACTIV-G 2.0, SKYACTIV-G 2.5]**.) If the problem remains, overhaul the engine.
29	Verify the test results. • If normal, return to the diagnostic index to service any additional symptoms. (See **SYMPTOM DIAGNOSTIC INDEX [SKYACTIV-G 2.0, SKYACTIV-G 2.5]**.) • If the malfunction remains, inspect the related Service Bulletins and/or On-line Repair Information and perform repair or diagnosis. ▪ If the vehicle is repaired, troubleshooting is completed. ▪ If the vehicle is not repaired or additional diagnostic information is not available, reprogram the PCM if a later calibration is available. Retest.		

NO.11 ENGINE STALLS/QUITS, ENGINE RUNS ROUGH, MISSES, BUCK/JERK, HESITATION/STUMBLE, SURGES [SKYACTIV-G 2.0, SKYACTIV-G 2.5]

2014 - Mazda3 - Engine

NO.12 LACK/LOSS OF POWER-ACCELERATION/CRUISE [SKYACTIV-G 2.0, SKYACTIV-G 2.5]

12	LACK/LOSS OF POWER-ACCELERATION/CRUISE
DESCRIPTION	• Performance is poor under load. (e.g., power down when climbing hills)

	• Engine overheating
	• Drive-by-wire control system operates with brake override system
	• PCM DTC is stored
	• Improper operation of A/C system
	• Improper operation of drive-by-wire control system
	• Throttle body malfunction
	• Incorrect fuel injection timing
	• Fuel injector malfunction
	• Purge solenoid valve malfunction
	• Erratic signal to PCM
	  ▪ APP sensor or related circuit malfunction
	  ▪ Neutral switch or related circuit malfunction (MTX)
	  ▪ Communication error between TCM and PCM (ATX)
	  ▪ ECT sensor No.1 or related circuit malfunction
	  ▪ Fuel pressure sensor or related circuit malfunction
	  ▪ IAT sensor No.1 (integrated in MAF sensor/IAT sensor No.1) or related circuit malfunction
	  ▪ MAF sensor or related circuit malfunction
	  ▪ MAP sensor or related circuit malfunction
	  ▪ A/F sensor or related circuit malfunction
	  ▪ HO2S or related circuit malfunction
	  ▪ Improper air/fuel mixture ratio control operation

POSSIBLE CAUSE	▪ Intermittent open or short circuit MAF sensor, APP sensor, TP sensor • Fuel leakage • Poor fuel quality • Air leakage or restriction in intake-air system • Air cleaner restricted or dirty • Vacuum leakage • Clutch slippage (MTX) • Brake dragging • Tire air pressure malfunction • Erratic or no signal from CMP sensor ▪ Loose installation ▪ Damaged trigger wheel (intake camshaft and/or exhaust camshaft) ▪ Open or short circuit in related wiring harness • Erratic signal from CKP sensor ▪ Loose installation ▪ Damaged trigger wheel (crankshaft pulley) ▪ Open or short circuit in related wiring harness • Inadequate fuel pressure (high or low pressure side) ▪ Fuel pressure sensor malfunction ▪ High pressure fuel pump malfunction ▪ Spill valve control solenoid valve control circuit malfunction (damage to driver in PCM caused by short circuit to ground system) ▪ Spill valve control solenoid valve (built-into high pressure fuel pump) malfunction ▪ Relief valve (built-into high pressure fuel pump) malfunction ▪ Fuel line restricted ▪ Fuel filter clogged (built-into fuel pump unit) ▪ Fuel pump mechanical malfunction • Throttle valve clogged • Low engine compression • Improper intake valve timing • Improper exhaust valve timing • Improper operation of electric variable valve timing control system

	▪ Electric variable valve timing driver malfunction ▪ Electric variable valve timing motor malfunction ▪ Electric variable valve timing actuator malfunction • Improper operation of hydraulic variable valve timing control system • Spark plug malfunction • Incorrect signal to ignition coil • Exhaust system and/or TWC restriction • PCV valve malfunction • Injector driver (built-into PCM) malfunction • ATX internal malfunction (ATX)
POSSIBLE CAUSE	**WARNING:** The following troubleshooting flow chart contains the fuel system diagnosis and repair procedures. Read the following warnings before performing the fuel system services: • Fuel vapor is hazardous. It can easily ignite, causing serious injury and damage. Always keep sparks and flames away from fuel. • Fuel line spills and leakage are dangerous. Fuel can ignite and cause serious injury or death and damage. Fuel can also irritate skin and eyes. To prevent this, always complete “BEFORE SERVICE PRECAUTION” and “AFTER SERVICE PRECAUTION” described in this manual. (See **BEFORE SERVICE PRECAUTION [SKYACTIV-G 2.0, SKYACTIV-G 2.5]**.) (See **AFTER SERVICE PRECAUTION [SKYACTIV-G 2.0, SKYACTIV-G 2.5]**.) **CAUTION:** • Disconnecting/connecting the quick release connector without cleaning it may possibly cause damage to the fuel pipe and quick release connector. Always clean the quick release connector joint area before disconnecting/connecting, and make sure that it is free of foreign matter.

CAUTION:

- Verify the malfunction symptom according to not only the PID value but also the symptom troubleshooting.

Related PIDs

Item (definition)	Unit/Condition	Definition	Condition/Specification (Reference)
APP1	%	Accelerator pedal opening angle (absolute value) input from APP sensor No.1	• Accelerator pedal released: Approx. 15% • Accelerator pedal fully depressed: Approx. 82%
	V	APP sensor No.1 voltage	• Accelerator pedal released: Approx. 0.75 V • Accelerator pedal fully depressed: Approx. 4.1 V

APP2	%	Accelerator pedal opening angle (absolute value) input from APP sensor No.2	• Accelerator pedal released: Approx. 7.45% • Accelerator pedal fully depressed: Approx. 41%
	V	APP sensor No.2 voltage	• Accelerator pedal released: Approx. 0.38 V • Accelerator pedal fully depressed: Approx. 2.05 V
CPP/PNP (MTX)	Off/On	Shift lever position	• Other than neutral: Off • Neutral: On
ECT	°C, °F	Engine coolant temperature	• Displays ECT
	V	ECT sensor No.1 voltage	• ECT is 20 °C {68 °F}: Approx. 3.10 V • ECT is 40 °C {104 °F}: Approx. 2.16 V • ECT is 60 °C {140 °F}: Approx. 1.40 V • ECT is 80 °C {176 °F}: Approx. 0.87 V • ECT is 100 °C {212 °F}: Approx. 0.54 V
FUEL_PRES	KPa {MPa}, mBar {Bar}, psi, in H20	Fuel pressure	• Displays fuel pressure
	V	Fuel pressure sensor voltage	• Fuel pressure is 3.0 MPa {31 kgf/cm^2, 435 psi}: Approx. 0.92 V • Fuel pressure is 4.8 MPa {49 kgf/cm^2, 696 psi}: Approx. 1.17 V
IAT	°C, °F	Intake air temperature (No.1)	• Displays IAT (No.1)
	V	IAT sensor No.1 voltage	• IAT is 20 °C {68 °F}: Approx. 2.70 V • IAT is 40 °C {104 °F}: Approx. 1.80 V • IAT is 60 °C {140 °F}: Approx. 1.20 V
LOAD	%	Ratio of actual amount of intake air to the maximum air charging amount (mass volume) of cylinder	• Idle (after warm up): Approx. 17.64% • Racing (engine speed is 2,000 rpm): Approx. 14.51% • Racing (engine speed is 4,000 rpm): Approx. 21.17%
LONGFT1	%	Fuel learning correction amount estimated based on A/F sensor signal	• Idle (after warm up): Approx. -2.34% • Racing (engine speed is 2,000 rpm): Approx. -0.78%

			• Racing (engine speed is 4,000 rpm): Approx. -0.78%
MAF	g/Sec	Mass air flow	• Displays MAF
	V	MAF sensor voltage	• Ignition switched ON (engine off) (MAF: 0.59 g/s {0.078 lb/min}): Approx. 0.72 V • Idle (after warm up) (MAF: 2.17 g/s {0.287 lb/min}): Approx. 0.86 V • Racing (engine speed is 2,000 rpm) (MAF: 4.73 g/s {0.626 lb/min}): Approx. 1.07 V
MAP	KPa {MPa}, mBar {Bar}, psi, in H20	Manifold absolute pressure	• Displays MAP
	V	MAP sensor voltage	• Ignition switched ON (engine off) (MAP:101 kPa {1.03 kgf/cm^2, 14.6 psi}): Approx. 4.07 V • Idle (after warm up) (MAP: 33 kPa {0.34 kgf/cm^2, 4.8 psi}): Approx. 1.34 V • Racing (engine speed is 2,000 rpm) (MAP: 26 kPa {0.27 kgf/cm^2, 3.8 psi}): Approx. 1.05 V
O2S11	µA	A/F sensor current	• Idle (after warm up): Approx. −39 µA • Deceleration fuel cut (accelerator pedal released from engine speed of 4,000 rpm or more): Approx. 3.84 mA
O2S12	V	HO2S voltage	• Idle (after warm up): 0—1.0 V • Deceleration fuel cut (accelerator pedal released from engine speed of 4,000 rpm or more): Approx. 0 V
RPM	RPM	Engine speed	• Displays engine speed
SHRTFT1	%	Fuel feedback correction amount estimated based on A/F sensor signal	• Idle (after warm up): Approx. 1.56% • Racing (engine speed is 2,000 rpm): Approx. −3.12% • Racing (engine speed is 4,000 rpm): Approx. −8.59%
TP_REL	%	Throttle valve opening angle (relative value) with value at throttle valve fully open timing as the start point	• Accelerator pedal released: Approx. 12% • Accelerator pedal fully depressed: Approx. 82%
VSS	KPH, MPH	Vehicle speed	• Displays vehicle speed

Diagnostic Procedure

STEP	INSPECTION	RESULTS	ACTION
1	**VERIFY IF MALFUNCTION INCLUDES ROUGH IDLING** • Does the engine idle rough?	Yes	Perform the symptom troubleshooting “NO.8 ENGINE RUNS ROUGH/ROLLING IDLE”. (See **NO.8 ENGINE RUNS ROUGH/ROLLING IDLE [SKYACTIV-G 2.0, SKYACTIV-G 2.5]**.)
		No	Go to the next step.
2	**VERIFY IF MALFUNCTION CAUSE IS OVERHEATING** • Access the ECT PID using the M-MDS. (See **ON-BOARD DIAGNOSTIC TEST [SKYACTIV-G 2.0, SKYACTIV-G 2.5]**.) **CAUTION:** • While performing this step, always operate the vehicle in a safe and lawful manner. • When the M-MDS is used to observe monitor system status while driving, be sure to have another technician with you, or record the data in the M-MDS using the PID/DATA MONITOR AND RECORD capturing function and inspect later. • Is the ECT PID value **less than 116 °C {241 °F}** during driving?	Yes	Perform the symptom troubleshooting “NO.17 COOLING SYSTEM CONCERNS-OVERHEATING”. (See **NO.17 COOLING SYSTEM CONCERNS-OVERHEATING [SKYACTIV-G 2.0, SKYACTIV-G 2.5]**.)
		No	Go to the next step.
3	**VERIFY DRIVE-BY-WIRE CONTROL SYSTEM OPERATES WITH BRAKE OVERRIDE SYSTEM** • Retrieve the PCM DTC using the M-MDS. (See **ON-BOARD DIAGNOSTIC TEST [SKYACTIV-G 2.0, SKYACTIV-G 2.5]**.) • Is the DTC P2299:00 present?	Yes	Go to the applicable DTC inspection. (drive-by-wire control system operates with brake override system.) (See **DTC P2299:00 [SKYACTIV-G 2.0, SKYACTIV-G 2.5]**.)
		No	Go to the next step.
4	**VERIFY PCM DTC** • Retrieve any DTCs using the M-MDS. (See **ON-BOARD DIAGNOSTIC TEST [SKYACTIV-G 2.0, SKYACTIV-G 2.5]**.) • Are any DTCs present?	Yes	Go to the applicable DTC inspection. (See **DTC TABLE [SKYACTIV-G 2.0, SKYACTIV-G 2.5]**.)
		No	Go to the next step.
5	**VERIFY CURRENT INPUT SIGNAL STATUS**	Yes	Go to the next step.

CAUTION:

- While performing this step, always operate the vehicle in a safe and lawful manner.
- When the M-MDS is used to observe monitor system status while driving, be sure to have another technician with you, or record the data in the M-MDS using the PID/DATA MONITOR AND RECORD capturing function and inspect later.
- Access the following PIDs using the M-MDS:

  (See **ON-BOARD DIAGNOSTIC TEST [SKYACTIV-G 2.0, SKYACTIV-G 2.5]**.)

  - APP1
  - APP2
  - CPP/PNP (MTX)
  - ECT
  - FUEL_PRES
  - IAT
  - MAF
  - MAP
  - TP_REL
  - O2S11
  - O2S12
  - SHRTFT1
  - LONGFT1
- Do the PIDs indicate the correct values under the malfunction condition?

  (See **PCM INSPECTION [SKYACTIV-G 2.0, SKYACTIV-G 2.5]**.)

No	APP1, APP2 PIDs are not as specified: • Inspect the APP sensor. (See **ACCELERATOR PEDAL POSITION (APP) SENSOR INSPECTION [SKYACTIV-G 2.0, SKYACTIV-G 2.5]**.) CPP/PNP PID is not as specified: (MTX) • Inspect the neutral switch. (See **NEUTRAL SWITCH INSPECTION [SKYACTIV-G 2.0, SKYACTIV-G 2.5]**.) ECT PID is not as specified: • Inspect the ECT sensor No.1. (See **ENGINE COOLANT TEMPERATURE (ECT) SENSOR INSPECTION [SKYACTIV-G 2.0, SKYACTIV-G 2.5]**.) FUEL_PRES PID is not as specified: • Inspect the fuel pressure sensor. (See **FUEL PRESSURE SENSOR INSPECTION [SKYACTIV-G 2.0, SKYACTIV-G 2.5]**.) IAT PID is not as specified: • Inspect the IAT sensor No.1. (See **INTAKE AIR TEMPERATURE (IAT) SENSOR INSPECTION [SKYACTIV-G 2.0, SKYACTIV-G 2.5]**.) MAF PID is not as specified: • Inspect the MAF sensor. (See **MASS AIR FLOW (MAF) SENSOR INSPECTION [SKYACTIV-G 2.0, SKYACTIV-G 2.5]**.) MAP PID is not as specified: • Inspect the MAP sensor. (See **MANIFOLD ABSOLUTE PRESSURE (MAP) SENSOR INSPECTION [SKYACTIV-G 2.0, SKYACTIV-G 2.5]**.) TP_REL PID is not as specified: • Inspect the TP sensor. (See **THROTTLE POSITION (TP) SENSOR INSPECTION [SKYACTIV-G 2.0, SKYACTIV-G 2.5]**.) O2S11, SHRTFT1, LONGFT1 PIDs are not as specified: • Inspect the A/F sensor.

			(See **AIR FUEL RATIO (A/F) SENSOR INSPECTION [SKYACTIV-G 2.0, SKYACTIV-G 2.5]**.) O2S12 PID is not as specified: • Inspect the HO2S. (See **HEATED OXYGEN SENSOR (HO2S) INSPECTION [SKYACTIV-G 2.0, SKYACTIV-G 2.5]**.) Repair or replace the malfunctioning part according to the inspection results. • If the malfunction remains: ▪ Inspect communication error between TCM and PCM. (ATX) • Repair or replace the malfunctioning part according to the inspection results if necessary. ▪ Perform the “INTERMITTENT CONCERN TROUBLESHOOTING” procedure. (See **INTERMITTENT CONCERN TROUBLESHOOTING [SKYACTIV-G 2.0, SKYACTIV-G 2.5]**.)
6	**INSPECT DRIVE-BY-WIRE CONTROL SYSTEM OPERATION** • Perform the Electronic Control Throttle Operation Inspection. (See **ENGINE CONTROL SYSTEM OPERATION INSPECTION [SKYACTIV-G 2.0, SKYACTIV-G 2.5]**.) • Does the drive-by-wire control system work properly?	Yes	Go to the next step.
		No	Repair or replace the malfunctioning part according to the inspection results.
7	**INSPECT FUEL INJECTOR OPERATION** • Perform the Fuel Injector Operation Inspection. (See **ENGINE CONTROL SYSTEM OPERATION INSPECTION [SKYACTIV-G 2.0, SKYACTIV-G 2.5]**.) • Do the fuel injectors operate properly?	Yes	Go to the next step.
		No	Repair or replace the malfunctioning part according to the inspection results.
8	**INSPECT PURGE CONTROL SYSTEM OPERATION** • Perform the Purge Control System Inspection. (See **ENGINE CONTROL SYSTEM OPERATION INSPECTION [SKYACTIV-G 2.0, SKYACTIV-G 2.5]**.) • Does the purge solenoid valve work properly?	Yes	Go to the next step.
		No	Repair or replace the malfunctioning part according to the inspection results.

9	**INSPECT FUEL SYSTEM FOR FUEL LEAKAGE** • Inspect for fuel leakage in the fuel line. • Is there any leakage?	Yes	Repair or replace the malfunctioning part according to the inspection results.
		No	Go to the next step.
10	**INSPECT RELATED PART CONDITION** • Inspect the following: ▪ Fuel quality (proper octane, contamination, winter/summer blend) ▪ Air leakage or restriction in intake-air system ▪ Air cleaner restricted or dirty ▪ Vacuum leakage ▪ Clutch slippage (MTX) ▪ Brake dragging ▪ Tire air pressure ▪ CKP sensor, intake CMP sensor and exhaust CMP sensor • Installation condition (See **CRANKSHAFT POSITION (CKP) SENSOR REMOVAL/INSTALLATION [SKYACTIV-G 2.0, SKYACTIV-G 2.5]**.) (See **CAMSHAFT POSITION (CMP) SENSOR REMOVAL/INSTALLATION [SKYACTIV-G 2.0, SKYACTIV-G 2.5]**.) • Damaged trigger wheel, intake camshaft and exhaust camshaft • Is there any malfunction?	Yes	Service if necessary. • Repeat this step.
		No	Go to the next step.
11	**INSPECT FUEL PRESSURE (HIGH-SIDE)** • Start the engine and warm it up completely. • Access the FUEL_PRES PID using the M-MDS at idle. (See **ON-BOARD DIAGNOSTIC TEST [SKYACTIV-G 2.0, SKYACTIV-G 2.5]**.) • Is the FUEL_PRES PID value **approx. 3 MPa {31**	Yes	Go to Step 13.
		No	Lower than **3 MPa {31 kgf/cm^2, 435 psi}**: • Inspect the following: ▪ Fuel leakage at the fuel line and fuel injector

	kgf/cm^2, 435 psi}?		▪ Fuel pump • Perform the Fuel Pump (Low-pressure Side) Operation Inspection. (See **ENGINE CONTROL SYSTEM OPERATION INSPECTION [SKYACTIV-G 2.0, SKYACTIV-G 2.5]**.) ▪ Fuel pressure sensor (See **FUEL PRESSURE SENSOR INSPECTION [SKYACTIV-G 2.0, SKYACTIV-G 2.5]**.) ▪ High pressure fuel pump (See **HIGH PRESSURE FUEL PUMP INSPECTION [SKYACTIV-G 2.0, SKYACTIV-G 2.5]**.) • If there is any malfunction: ▪ Repair or replace the malfunctioning part according to the inspection results. • If there is no malfunction: ▪ Go to the next step. Higher than **3 MPa {31 kgf/cm^2, 435 psi}**: • Go to the next step.
12	**INSPECT SPILL VALVE CONTROL SOLENOID VALVE CONTROL CIRCUIT FOR SHORT TO GROUND** • Switch the ignition off. • Disconnect the high pressure fuel pump and PCM connectors. • Inspect for continuity between high pressure fuel pump terminal A (wiring harness-side) and body ground. • Is there continuity?	Yes	Refer to the wiring diagram and verify whether or not there is a common connector between high pressure fuel pump terminal A and PCM terminal 1EE. **If there is a common connector:** • Determine the malfunctioning part by inspecting the common connector and the terminal for corrosion, damage, or pin disconnection, and the common wiring harness for a short to ground. • Repair or replace the malfunctioning part. **If there is no common connector:** • Repair or replace the wiring harness which has a short to ground. If the malfunction remains: • Replace the PCM. (damage to driver in PCM)

			(See **PCM REMOVAL/INSTALLATION [SKYACTIV-G 2.0, SKYACTIV-G 2.5]**.)
		No	Replace the high pressure fuel pump. (See **HIGH PRESSURE FUEL PUMP REMOVAL/INSTALLATION [SKYACTIV-G 2.0, SKYACTIV-G 2.5]**.)
13	**INSPECT FUEL PRESSURE (LOW-SIDE)** • Connect the fuel pressure gauge between fuel pump and high pressure fuel pump. • Measure the low side fuel pressure. (See **FUEL LINE PRESSURE INSPECTION [SKYACTIV-G 2.0, SKYACTIV-G 2.5]**.) • Is the low side fuel pressure within specification? **Specification:** • **405—485 kPa {4.13—4.94 kgf/cm^2, 58.8—70.3 psi}**	Yes	Go to the next step.
		No	Inspect the following: • Fuel line restriction • Fuel filter clogged ▪ If there is any malfunction: • Repair or replace the malfunctioning part according to the inspection results. ▪ If there is no malfunction: • Replace the fuel pump unit. (See **FUEL PUMP UNIT REMOVAL/INSTALLATION [SKYACTIV-G 2.0, SKYACTIV-G 2.5]**.)
14	**INSPECT THROTTLE BODY FOR CLOGGING** • Visually inspect the throttle valve. (See **INTAKE-AIR SYSTEM REMOVAL/INSTALLATION [SKYACTIV-G 2.0, SKYACTIV-G 2.5]**.) • Is any foreign matter adhering around the throttle valve?	Yes	Clean the throttle valve.
		No	Go to the next step.
15	**INSPECT ENGINE COMPRESSION** • Measure the compression pressure for each cylinder. (See **COMPRESSION INSPECTION [SKYACTIV-G 2.0, SKYACTIV-G 2.5]**.) • Are compression pressures within specification? **Specification:** • Compression [SKYACTIV-G 2.0] ▪ Standard: **885 kPa {9.02 kgf/cm^2, 128 psi} (300 rpm)**	Yes	Go to Step 21.
		No	Go to the next step.

	▪ Minimum: **708 kPa {7.22 kgf/cm^2, 103 psi} (300 rpm)** ▪ Maximum difference between cylinders: **150 kPa {1.53 kgf/cm^2, 21.8 psi}** (**300 rpm**) • Compression [SKYACTIV-G 2.5] ▪ Standard: **954 kPa {9.73 kgf/cm^2, 138 psi} (300 rpm)** ▪ Minimum: **763 kPa {7.78 kgf/cm^2, 111 psi} (300 rpm)** ▪ Maximum difference between cylinders: **161 kPa {1.64 kgf/cm^2, 23.4 psi}** (**300 rpm**) **NOTE:** • Because the SKYACTIV-G 2.0 and SKYACTIV-G 2.5 retards the intake valve closing timing, compression pressure is low.		
16	**INSPECT ELECTRIC VARIABLE VALVE TIMING DRIVER** • Inspect the electric variable valve timing driver. (See **ELECTRIC VARIABLE VALVE TIMING MOTOR/DRIVER INSPECTION [SKYACTIV-G 2.0, SKYACTIV-G 2.5]**.) • Is there any malfunction?	Yes	Replace the electric variable valve timing motor/driver. (See **ELECTRIC VARIABLE VALVE TIMING MOTOR/DRIVER REMOVAL/INSTALLATION [SKYACTIV-G 2.0, SKYACTIV-G 2.5]**.)
		No	Go to the next step.
17	**INSPECT ELECTRIC VARIABLE VALVE TIMING MOTOR** • Inspect the electric variable valve timing motor. (See **ELECTRIC VARIABLE VALVE TIMING MOTOR/DRIVER INSPECTION [SKYACTIV-G 2.0, SKYACTIV-G 2.5]**.) • Is there any malfunction?	Yes	Replace the electric variable valve timing motor/driver. (See **ELECTRIC VARIABLE VALVE TIMING MOTOR/DRIVER REMOVAL/INSTALLATION [SKYACTIV-G 2.0, SKYACTIV-G 2.5]**.)
		No	Go to the next step.
18	**INSPECT ELECTRIC VARIABLE VALVE TIMING ACTUATOR** • Inspect the electric variable valve timing actuator. (See **ELECTRIC VARIABLE VALVE TIMING ACTUATOR INSPECTION [SKYACTIV-G 2.0, SKYACTIV-G 2.5]**.) • Is there any malfunction?	Yes	Replace the electric variable valve timing actuator. (See **ELECTRIC VARIABLE VALVE TIMING ACTUATOR, HYDRAULIC VARIABLE VALVE TIMING ACTUATOR REMOVAL/INSTALLATION [SKYACTIV-G 2.0, SKYACTIV-G 2.5]**.)
		No	Go to the next step.
19	**INSPECT HYDRAULIC VARIABLE VALVE TIMING CONTROL SYSTEM OPERATION** • Perform the Hydraulic Variable Valve Timing Control System Operation Inspection.	Yes	Repair or replace the malfunctioning part according to the inspection results.
		No	Go to the next step.

	(See **ENGINE CONTROL SYSTEM OPERATION INSPECTION [SKYACTIV-G 2.0, SKYACTIV-G 2.5]**.) • Is there any malfunction?		
20	**INSPECT FOR MALFUNCTION DUE TO DEVIATED VALVE TIMING** • Inspect the valve timing (timing chain installation condition). (See **TIMING CHAIN REMOVAL/INSTALLATION [SKYACTIV-G 2.0, SKYACTIV-G 2.5]**.) • Is the valve timing normal?	Yes	Inspect for the following engine internal parts: • Cylinder • Piston ring • Intake valve • Exhaust valve • Such as cylinder head gasket ▪ If there is any malfunction: • Repair or replace the malfunctioning part according to the inspection results.
		No	Adjust the valve timing to the correct timing.
21	**VERIFY SPARK PLUG CONDITION** • Inspect the spark plug condition. (See **SPARK PLUG INSPECTION [SKYACTIV-G 2.0, SKYACTIV-G 2.5]**.) • Is the spark plug wet, covered with carbon or grayish white?	Yes	Spark plug is wet or covered with carbon: • Perform the Spark Test. (See **ENGINE CONTROL SYSTEM OPERATION INSPECTION [SKYACTIV-G 2.0, SKYACTIV-G 2.5]**.) ▪ Repair or replace the malfunctioning part according to the inspection results. Spark plug is grayish white: • Inspect the fuel injector for restriction. ▪ Repair or replace the malfunctioning part according to the inspection results.
		No	Go to the next step.
22	**INSPECT EXHAUST SYSTEM FOR RESTRICTION** • Inspect for restriction in the exhaust system and the TWC. • Is there any restriction?	Yes	Repair or replace the malfunctioning part according to the inspection results.
		No	Go to the next step.
23	**INSPECT IF MALFUNCTION CAUSE IS PCV VALVE OR INJECTOR DRIVER (PCM INTEGRATED)** • Inspect the PCV valve.	Yes	Replace the PCV valve. (See **POSITIVE CRANKCASE VENTILATION (PCV) VALVE REMOVAL/INSTALLATION [SKYACTIV-G 2.0, SKYACTIV-G 2.5]**.)

	(See **POSITIVE CRANKCASE VENTILATION (PCV) VALVE INSPECTION [SKYACTIV-G 2.0, SKYACTIV-G 2.5]**.) • Is there any malfunction?		
		No	Injector driver malfunction. • Replace the PCM. (See **PCM REMOVAL/INSTALLATION [SKYACTIV-G 2.0, SKYACTIV-G 2.5]**.) If the problem remains, overhaul the engine.
24	Verify the test results. • If normal, return to the diagnostic index to service any additional symptoms. (See **SYMPTOM DIAGNOSTIC INDEX [SKYACTIV-G 2.0, SKYACTIV-G 2.5]**.) • If the malfunction remains, inspect the related Service Bulletins and/or On-line Repair Information and perform repair or diagnosis. ▪ If the vehicle is repaired, troubleshooting is completed. ▪ If the vehicle is not repaired or additional diagnostic information is not available, reprogram the PCM if a later calibration is available. Retest.		

2014 - Mazda3 - Engine

NO.13 KNOCKING/PINGING-ACCELERATION/CRUISE [SKYACTIV-G 2.0, SKYACTIV-G 2.5]

13	KNOCKING/PINGING-ACCELERATION/CRUISE
DESCRIPTION	• Abnormal combustion occurs under the condition such as the temperature in the combustion chamber is too high resulting in abnormal noise. • Knocking sound occurs from the engine compartment during acceleration.

POSSIBLE CAUSE	• Poor fuel quality
	  ▪ Fuel RON is not specified
	  ▪ Excessive cleaning agents added in fuel
	• Poor connection of KS, wiring harness
	• The following information for calculating ignition timing is incorrect:
	  ▪ KS signal
	  ▪ ECT sensor No.1 signal
	  ▪ IAT sensor No.2 (integrated in MAP sensor) signal
	  ▪ MAF sensor signal
	  • Air suction in intake-air system
	  ▪ MAP sensor signal
	• Combustion temperature is high
	  ▪ Cooling system malfunction
	  ▪ Carbon accumulation
	  ▪ Use of non-genuine spark plug
	WARNING:
	The following troubleshooting flow chart contains the fuel system diagnosis and repair procedures. Read the following warnings before performing the fuel system services:
	• Fuel vapor is hazardous. It can easily ignite, causing serious injury and damage. Always keep sparks and flames away from fuel.
	• Fuel line spills and leakage are dangerous. Fuel can ignite and cause serious injury or death and damage. Fuel can also irritate skin and eyes.

	To prevent this, always complete “BEFORE SERVICE PRECAUTION” and “AFTER SERVICE PRECAUTION” described in this manual. (See **BEFORE SERVICE PRECAUTION [SKYACTIV-G 2.0, SKYACTIV-G 2.5]**.) (See **AFTER SERVICE PRECAUTION [SKYACTIV-G 2.0, SKYACTIV-G 2.5]**.) **CAUTION:** • Disconnecting/connecting the quick release connector without cleaning it may possibly cause damage to the fuel pipe and quick release connector. Always clean the quick release connector joint area before disconnecting/connecting, and make sure that it is free of foreign matter.

CAUTION:

- Verify the malfunction symptom according to not only the PID value but also the symptom troubleshooting.

Related PIDs

Item (definition)	Unit/Condition	Definition	Condition/Specification (Reference)
BARO	KPa {MPa}, mBar {Bar}, psi, in H20	Actually measured barometric pressure input from barometric pressure sensor built into PCM	• Displays BARO
	V	BARO sensor voltage	• Ignition switched ON (at sea level): Approx. 4.08 V
ECT	°C, °F	Engine coolant temperature	• Displays ECT
	V	ECT sensor No.1 voltage	• ECT is 20 °C {68 °F}: Approx. 3.10 V • ECT is 40 °C {104 °F}: Approx. 2.16 V • ECT is 60 °C {140 °F}: Approx. 1.40 V • ECT is 80 °C {176 °F}: Approx. 0.87 V • ECT is 100 °C {212 °F}: Approx. 0.54 V
IAT2	°C, °F	Intake air temperature (No.2)	• Displays IAT (No.2)
	V	IAT sensor No.2 voltage	• IAT2 is 20 °C {68 °F}: Approx. 3.57 V • IAT2 is 40 °C {104 °F}: Approx. 2.70 V

			• IAT2 is 60 °C {140 °F}: Approx. 1.87 V
MAF	g/Sec	Mass air flow	• Displays MAF
	V	MAF sensor voltage	• Ignition switched ON (engine off) (MAF: 0.59 g/s {0.078 lb/min}): Approx. 0.72 V • Idle (after warm up) (MAF: 2.17 g/s {0.287 lb/min}): Approx. 0.86 V • Racing (engine speed is 2,000 rpm) (MAF: 4.73 g/s {0.626 lb/min}): Approx. 1.07 V
MAP	KPa {MPa}, mBar {Bar}, psi, in H20	Manifold absolute pressure	• Displays MAP
	V	MAP sensor voltage	• Ignition switched ON (engine off) (MAP:101 kPa {1.03 kgf/cm^2, 14.6 psi}): Approx. 4.07 V • Idle (after warm up) (MAP: 33 kPa {0.34 kgf/cm^2, 4.8 psi}): Approx. 1.34 V • Racing (engine speed is 2,000 rpm) (MAP: 26 kPa {0.27 kgf/cm^2, 3.8 psi}): Approx. 1.05 V

Diagnostic Procedure

STEP	INSPECTION	RESULTS	ACTION
1	**VERIFY PCM DTC** • Retrieve any DTCs using the M-MDS. (See **ON-BOARD DIAGNOSTIC TEST [SKYACTIV-G 2.0, SKYACTIV-G 2.5]**.) • Are any DTCs present?	Yes	Go to the applicable DTC inspection. (See **DTC TABLE [SKYACTIV-G 2.0, SKYACTIV-G 2.5]**.)
		No	Go to the next step.
2	**REPLACE FUEL** • Drain the remaining fuel in the fuel tank	Yes	Symptom troubleshooting completed.

	and add the specified fuel. • Leave idling **for approx. 15 min** to refill the hose with fuel. • Does the symptom disappear?		(If customer has used fuel additive, give them advice not to use it)
		No	Go to the next step.
3	**VERIFY IF MALFUNCTION CAUSE IS OVERHEATING** • Access the ECT PID using the M-MDS. (See **ON-BOARD DIAGNOSTIC TEST [SKYACTIV-G 2.0, SKYACTIV-G 2.5]**.) **CAUTION:** • While performing this step, always operate the vehicle in a safe and lawful manner. • When the M-MDS is used to observe monitor system status while driving, be sure to have another technician with you, or record the data in the M-MDS using the PID/DATA MONITOR AND RECORD capturing function and inspect later. • Is the ECT PID value **less than 116 °C {241 °F}** during driving?	Yes	Go to the next step.
		No	The cause of this concern could be from the cooling system overheating. • Perform the symptom troubleshooting "NO.17 COOLING SYSTEM CONCERNS-OVERHEATING". (See **NO.17 COOLING SYSTEM CONCERNS-OVERHEATING [SKYACTIV-G 2.0, SKYACTIV-G 2.5]**.)
4	**VERIFY SPARK PLUG CONDITION** • Remove all spark plugs. (See **SPARK PLUG REMOVAL/INSTALLATION [SKYACTIV-G 2.0, SKYACTIV-G 2.5]**.) • Inspect the spark plug. (See **SPARK PLUG INSPECTION [SKYACTIV-G 2.0, SKYACTIV-G 2.5]**.) • Is there any malfunction?	Yes	Replace the spark plug. (See **SPARK PLUG REMOVAL/INSTALLATION [SKYACTIV-G 2.0, SKYACTIV-G 2.5]**.)
		No	Go to the next step.
5	**INSPECT INTAKE AIR SYSTEM FOR AIR SUCTION** • Verify if there is air suction into the intake air system (such as between MAF sensor and intake valve, vacuum hose). • Is there any malfunction?	Yes	Repair or replace the malfunctioning part according to the inspection results.
		No	Go to the next step.
6	**INSPECT MAP SENSOR** • Access the following PIDs using the M-	Yes	Go to the next step.

	MDS: (See **ON-BOARD DIAGNOSTIC TEST [SKYACTIV-G 2.0, SKYACTIV-G 2.5]**.) ▪ MAP ▪ BARO • Measure the intake manifold vacuum when idling (no load). (See **INTAKE MANIFOLD VACUUM INSPECTION [SKYACTIV-G 2.0, SKYACTIV-G 2.5]**.) • Does the difference between PIDs BARO and MAP nearly match the intake manifold vacuum value?	No	Replace the MAP sensor/IAT sensor No.2. (See **MANIFOLD ABSOLUTE PRESSURE (MAP) SENSOR/INTAKE AIR TEMPERATURE (IAT) SENSOR NO.2 REMOVAL/INSTALLATION [SKYACTIV-G 2.0, SKYACTIV-G 2.5]**.)
7	**INSPECT MAF SENSOR** • Inspect the MAF sensor. (See **MASS AIR FLOW (MAF) SENSOR INSPECTION [SKYACTIV-G 2.0, SKYACTIV-G 2.5]**.) • Is there any malfunction?	Yes	Replace the MAF sensor/IAT sensor No.1. (See **MASS AIR FLOW (MAF) SENSOR/INTAKE AIR TEMPERATURE (IAT) SENSOR NO.1 REMOVAL/INSTALLATION [SKYACTIV-G 2.0, SKYACTIV-G 2.5]**.)
		No	Go to the next step.
8	**INSPECT IAT SENSOR NO.2** • Inspect the IAT sensor No.2 resistance. (See **INTAKE AIR TEMPERATURE (IAT) SENSOR INSPECTION [SKYACTIV-G 2.0, SKYACTIV-G 2.5]**.) • Is there any malfunction?	Yes	Replace the MAP sensor/IAT sensor No.2. (See **MANIFOLD ABSOLUTE PRESSURE (MAP) SENSOR/INTAKE AIR TEMPERATURE (IAT) SENSOR NO.2 REMOVAL/INSTALLATION [SKYACTIV-G 2.0, SKYACTIV-G 2.5]**.)
		No	Go to the next step.
9	**INSPECT ECT SENSOR NO.1** • Inspect the ECT sensor No.1 resistance. (See **ENGINE COOLANT TEMPERATURE (ECT) SENSOR INSPECTION [SKYACTIV-G 2.0, SKYACTIV-G 2.5]**.) • Is there any malfunction?	Yes	Replace the ECT sensor No.1. (See **ENGINE COOLANT TEMPERATURE (ECT) SENSOR REMOVAL/INSTALLATION [SKYACTIV-G 2.0, SKYACTIV-G 2.5]**.)
		No	Go to the next step.
	INSPECT KS		

10	• Inspect the KS. (See **KNOCK SENSOR (KS) INSPECTION [SKYACTIV-G 2.0, SKYACTIV-G 2.5]**.) • Is there any malfunction?	Yes	Replace the KS, then go to the next step. (See **KNOCK SENSOR (KS) REMOVAL/INSTALLATION [SKYACTIV-G 2.0, SKYACTIV-G 2.5]**.)
		No	Remove the accumulated matter in the cylinder head using the following procedure: • Carbon remover • Overhauling Go to the next step.
11	Verify the test results. • If normal, return to the diagnostic index to service any additional symptoms. (See **SYMPTOM DIAGNOSTIC INDEX [SKYACTIV-G 2.0, SKYACTIV-G 2.5]**.) • If the malfunction remains, inspect the related Service Bulletins and/or On-line Repair Information and perform repair or diagnosis. ▪ If the vehicle is repaired, troubleshooting is completed. ▪ If the vehicle is not repaired or additional diagnostic information is not available, reprogram the PCM if a later calibration is available. Retest.		

2014 - Mazda3 - Engine

NO.14 POOR FUEL ECONOMY [SKYACTIV-G 2.0, SKYACTIV-G 2.5]

14	POOR FUEL ECONOMY
DESCRIPTION	• Fuel economy is unsatisfactory.

	• Engine cooling system malfunction
	• PCM DTC is stored
	• Erratic signal to PCM
	  ▪ APP sensor or related circuit malfunction
	  ▪ ECT sensor No.1 or related circuit malfunction
	  ▪ IAT sensor No.1 (integrated in MAF sensor/IAT sensor No.1) or related circuit malfunction
	  ▪ MAF sensor or related circuit malfunction
	  ▪ MAP sensor or related circuit malfunction
	  ▪ TP sensor or related circuit malfunction
	  ▪ Intermittent open or short circuit MAF sensor, APP sensor, TP sensor
	• Improper operation of cooling fan control system
	• Improper operation of A/C system
	• Incorrect fuel injection timing
	• Fuel injector malfunction
	• Contaminated air cleaner element
	• Air leakage or restriction in intake-air system
	• Poor fuel quality
	• Improper coolant level
	• Clutch slippage (MTX)
	• Improper ATF level (ATX)
	• Brake dragging

POSSIBLE CAUSE	• Tire air pressure malfunction
	• Vacuum leakage
	• Fuel leakage
	• Contamination in MAF sensor
	• Tires, wheels (large size)
	• Change of intake air system components and exhaust system components
	• Engine operation time is longer than traveled distance
	  ▪ Vehicle is driven in congested traffic frequently
	  ▪ Left idling for long periods
	• Amount of fuel injection increases
	  ▪ Overloaded
	  ▪ Frequent acceleration/deceleration
	  ▪ Frequently driving on ascending roads
	  ▪ Travel distance per one drive is short (amount of time for warm-up is long during engine operation)
	  ▪ Improper load signal input
	  • Improper A/C request signal
	• Discharge is high when the vehicle is not used
	  ▪ Driver forgets to switch electronic device off
	  ▪ Electronic device is frequently used with engine stopped (no power generation)
	  ▪ Remote transmitter is left in vehicle with engine stopped (no power generation) (with advanced keyless entry system)
	  ▪ Vehicle left undriven for long periods
	  ▪ Large amount of parasitic draw (especially after-market electronic devices)
	  ▪ Short to power supply in wiring harness between IG1 relay terminal C and PCM terminal 2H
	• Erratic or no signal from CMP sensor
	  ▪ Loose installation
	  ▪ Damaged trigger wheel (intake camshaft and/or exhaust camshaft)
	  ▪ Open or short circuit in related wiring harness
	• Erratic signal from CKP sensor
	  ▪ Loose installation
	  ▪ Damaged trigger wheel (crankshaft pulley)
	  ▪ Open or short circuit in related wiring harness

- Inadequate fuel pressure (high-pressure side)
  - Fuel pressure sensor malfunction
  - High pressure fuel pump malfunction
  - Spill valve control solenoid valve control circuit malfunction (damage to driver in PCM caused by short circuit to ground system)
  - Spill valve control solenoid valve (built-into high pressure fuel pump) malfunction
  - Relief valve (built-into high pressure fuel pump) malfunction
  - Fuel line restricted
  - Fuel pump unit malfunction
- Improper engine compression
- Improper intake valve timing
- Improper exhaust valve timing
- Improper operation of electric variable valve timing control system
  - Electric variable valve timing driver malfunction
  - Electric variable valve timing motor malfunction
  - Electric variable valve timing actuator malfunction
- Improper operation of hydraulic variable valve timing control system
- Spark plug malfunction
- Exhaust system and/or TWC restriction
- PCV valve malfunction
- Injector driver (built-into PCM) malfunction

POSSIBLE CAUSE

WARNING:

The following troubleshooting flow chart contains the fuel system diagnosis and repair procedures. Read the following warnings before performing the fuel system services:

- Fuel vapor is hazardous. It can easily ignite, causing serious injury and damage. Always keep sparks and flames away from fuel.
- Fuel line spills and leakage are dangerous. Fuel can ignite and cause serious injury or death and damage. Fuel can also irritate skin and eyes. To prevent this, always complete “BEFORE SERVICE PRECAUTION” and “AFTER SERVICE PRECAUTION” described in this manual. (See **BEFORE SERVICE PRECAUTION [SKYACTIV-G 2.0, SKYACTIV-G 2.5]**.) (See **AFTER SERVICE PRECAUTION [SKYACTIV-G 2.0, SKYACTIV-G 2.5]**.)

CAUTION:

- Disconnecting/connecting the quick release connector without cleaning it may possibly cause damage to the fuel pipe and quick release connector. Always clean the quick release connector joint area before disconnecting/connecting, and make sure that it is free of foreign matter.

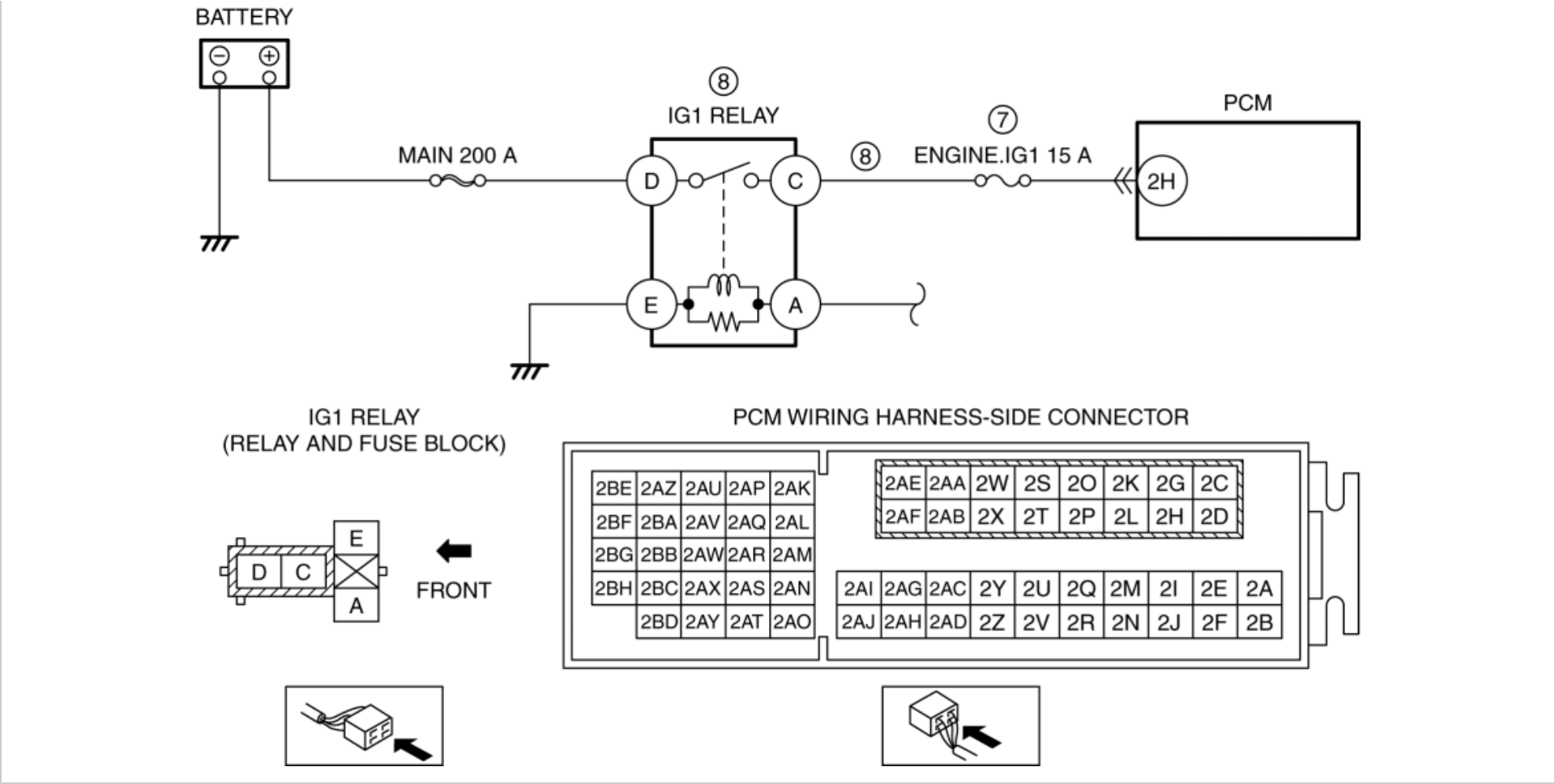

CAUTION:

- Verify the malfunction symptom according to not only the PID value but also the symptom troubleshooting.

Related PIDs

Item (definition)	Unit/Condition	Definition	Condition/Specification (Reference)
AC_REQ	Off/On	A/C switch status received by PCM via CAN	• A/C switch off: Off • A/C switch on: On
APP1	%	Accelerator pedal opening angle (absolute value) input from APP sensor No.1	• Accelerator pedal released: Approx. 15% • Accelerator pedal fully depressed: Approx. 82%

	V	APP sensor No.1 voltage	• Accelerator pedal released: Approx. 0.75 V • Accelerator pedal fully depressed: Approx. 4.1 V
APP2	%	Accelerator pedal opening angle (absolute value) input from APP sensor No.2	• Accelerator pedal released: Approx. 7.45% • Accelerator pedal fully depressed: Approx. 41%
	V	APP sensor No.2 voltage	• Accelerator pedal released: Approx. 0.38 V • Accelerator pedal fully depressed: Approx. 2.05 V
ECT	°C, °F	Engine coolant temperature	• Displays ECT
	V	ECT sensor No.1 voltage	• ECT is 20 °C {68 °F}: Approx. 3.10 V • ECT is 40 °C {104 °F}: Approx. 2.16 V • ECT is 60 °C {140 °F}: Approx. 1.40 V • ECT is 80 °C {176 °F}: Approx. 0.87 V • ECT is 100 °C {212 °F}: Approx. 0.54 V
FUEL_PRES	KPa {MPa}, mBar {Bar}, psi, in H20	Fuel pressure	• Displays fuel pressure
	V	Fuel pressure sensor voltage	• Fuel pressure is 3.0 MPa {31 kgf/cm^2, 435 psi}: Approx. 0.92 V • Fuel pressure is 4.8 MPa {49 kgf/cm^2, 696 psi}: Approx. 1.17 V
IAT	°C, °F	Intake air temperature (No.1)	• Displays IAT (No.1)
	V	IAT sensor No.1 voltage	• IAT is 20 °C {68 °F}: Approx. 2.70 V • IAT is 40 °C {104 °F}: Approx. 1.80 V • IAT is 60 °C {140 °F}: Approx. 1.20 V
LOAD	%	Ratio of actual amount of intake air to the maximum air charging amount (mass volume) of cylinder	• Idle (after warm up): Approx. 17.64% • Racing (engine speed is 2,000 rpm): Approx. 14.51% • Racing (engine speed is 4,000 rpm): Approx. 21.17%
	g/Sec	Mass air flow	• Displays MAF

MAF	V	MAF sensor voltage	• Ignition switched ON (engine off) (MAF: 0.59 g/s {0.078 lb/min}): Approx. 0.72 V • Idle (after warm up) (MAF: 2.17 g/s {0.287 lb/min}): Approx. 0.86 V • Racing (engine speed is 2,000 rpm) (MAF: 4.73 g/s {0.626 lb/min}): Approx. 1.07 V
MAP	KPa {MPa}, mBar {Bar}, psi, in H20	Manifold absolute pressure	• Displays MAP
	V	MAP sensor voltage	• Ignition switched ON (engine off) (MAP:101 kPa {1.03 kgf/cm^2, 14.6 psi}): Approx. 4.07 V • Idle (after warm up) (MAP: 33 kPa {0.34 kgf/cm^2, 4.8 psi}): Approx. 1.34 V • Racing (engine speed is 2,000 rpm) (MAP: 26 kPa {0.27 kgf/cm^2, 3.8 psi}): Approx. 1.05 V
TP_REL	%	Throttle valve opening angle (relative value) with value at throttle valve fully open timing as the start point	• Accelerator pedal released: Approx. 12% • Accelerator pedal fully depressed: Approx. 82%

Diagnostic Procedure

STEP	INSPECTION	RESULTS	ACTION
1	**VERIFY IF MALFUNCTION CAUSED BY ENGINE MALFUNCTION** • Verify the vehicle engine condition. • Can malfunction symptoms other than “NO.14 POOR FUEL ECONOMY” be verified?	Yes	Go to the applicable symptom troubleshooting. (See **SYMPTOM DIAGNOSTIC INDEX [SKYACTIV-G 2.0, SKYACTIV-G 2.5]**.)
		No	Go to the next step.
2	**INSPECT COOLING SYSTEM FOR MALFUNCTION** • Is any cooling system concern (overheating, runs cold) present?	Yes	Perform the applicable symptom troubleshooting. (See **NO.17 COOLING SYSTEM CONCERNS-OVERHEATING [SKYACTIV-G 2.0, SKYACTIV-G 2.5]**.) (See **NO.18 COOLING SYSTEM CONCERNS-RUNS COLD [SKYACTIV-G 2.0, SKYACTIV-G 2.5]**.)
		No	Go to the next step.
3	**VERIFY PCM DTC** • Retrieve any DTCs using the M-MDS. (See **ON-BOARD DIAGNOSTIC TEST [SKYACTIV-G 2.0,**	Yes	Go to the applicable DTC inspection. (See **DTC TABLE [SKYACTIV-G 2.0, SKYACTIV-G 2.5]**.)

	SKYACTIV-G 2.5].) • Are any DTCs present?	No	Go to the next step.
4	**VERIFY CURRENT INPUT SIGNAL STATUS** **CAUTION:** • While performing this step, always operate the vehicle in a safe and lawful manner. • When the M-MDS is used to observe monitor system status while driving, be sure to have another technician with you, or record the data in the M-MDS using the PID/DATA MONITOR AND RECORD capturing function and inspect later. • Access the following PIDs using the M-MDS: (See **ON-BOARD DIAGNOSTIC TEST [SKYACTIV-G 2.0, SKYACTIV-G 2.5]**.) ▪ APP1 ▪ APP2 ▪ ECT ▪ IAT ▪ MAF ▪ MAP ▪ TP_REL • Do the PIDs indicate the correct values under the malfunction condition? (See **PCM INSPECTION [SKYACTIV-G 2.0, SKYACTIV-G 2.5]**.)	Yes	Go to the next step.
		No	APP1, APP2 PIDs are not as specified: • Inspect the APP sensor. (See **ACCELERATOR PEDAL POSITION (APP) SENSOR INSPECTION [SKYACTIV-G 2.0, SKYACTIV-G 2.5]**.) ECT PID is not as specified: • Inspect the ECT sensor No.1. (See **ENGINE COOLANT TEMPERATURE (ECT) SENSOR INSPECTION [SKYACTIV-G 2.0, SKYACTIV-G 2.5]**.) IAT PID is not as specified: • Inspect the IAT sensor No.1. (See **INTAKE AIR TEMPERATURE (IAT) SENSOR INSPECTION [SKYACTIV-G 2.0, SKYACTIV-G 2.5]**.) MAF PID is not as specified: • Inspect the MAF sensor. (See **MASS AIR FLOW (MAF) SENSOR INSPECTION [SKYACTIV-G 2.0, SKYACTIV-G 2.5]**.) MAP PID is not as specified: • Inspect the MAP sensor. (See **MANIFOLD ABSOLUTE PRESSURE (MAP) SENSOR INSPECTION [SKYACTIV-G 2.0, SKYACTIV-G 2.5]**.) TP_REL PID is not as specified: • Inspect the TP sensor. (See **THROTTLE POSITION (TP) SENSOR INSPECTION [SKYACTIV-G 2.0, SKYACTIV-G 2.5]**.) Repair or replace the malfunctioning part according to the inspection results. • If the malfunction remains: ▪ Perform the “INTERMITTENT CONCERN TROUBLESHOOTING” procedure. (See **INTERMITTENT CONCERN TROUBLESHOOTING [SKYACTIV-G 2.0, SKYACTIV-G 2.5]**.)

5	**DETERMINE IF MALFUNCTION CAUSE IS A/C REQUEST SIGNAL OR OTHER** • Access the AC_REQ PID using the M-MDS. (See **ON-BOARD DIAGNOSTIC TEST [SKYACTIV-G 2.0, SKYACTIV-G 2.5]**.) • Monitor the AC_REQ PID while turning on and off the air conditioner using the switch on the control panel. • Does the AC_REQ PID value change from on to off according to switch control panel?	Yes	Go to the next step.
		No	If the AC_REQ PID is always ON: • Perform the symptom troubleshooting “NO.24 A/C IS ALWAYS ON OR A/C COMPRESSOR RUNS CONTINUOUSLY”. (See **NO.24 A/C IS ALWAYS ON OR A/C COMPRESSOR RUNS CONTINUOUSLY [SKYACTIV-G 2.0, SKYACTIV-G 2.5]**.) If the AC_REQ PID is always OFF: • Perform the symptom troubleshooting “NO.23 A/C DOES NOT WORK SUFFICIENTLY”. (See **NO.23 A/C DOES NOT WORK SUFFICIENTLY [SKYACTIV-G 2.0, SKYACTIV-G 2.5]**.)
6	**INSPECT FUEL INJECTOR OPERATION** • Perform the Fuel Injector Operation Inspection. (See **ENGINE CONTROL SYSTEM OPERATION INSPECTION [SKYACTIV-G 2.0, SKYACTIV-G 2.5]**.) • Do the fuel injectors operate properly?	Yes	Go to the next step.
		No	Repair or replace the malfunctioning part according to the inspection results.
7	**INSPECT ENGINE.IG1 15 A FUSE** • Switch the ignition off. • Remove the ENGINE.IG1 15 A fuse. • Inspect the ENGINE.IG1 15 A fuse. • Is there any malfunction?	Yes	If the fuse is blown: • Refer to the wiring diagram and verify whether or not there is a common connector between ENGINE.IG1 15 A fuse and PCM terminal 2H. **If there is a common connector:** ▪ Determine the malfunctioning part by inspecting the common connector and the terminal for corrosion, damage, or pin disconnection, and the common wiring harness for a short to ground. ▪ Repair or replace the malfunctioning part. **If there is no common connector:** ▪ Repair or replace the wiring harness which has a short to ground. ▪ Replace the fuse. If the fuse is damaged: • Replace the fuse.

			Go to the next step.
		No	Reinstall the ENGINE.IG1 15 A fuse, then go to the next step.
8	**INSPECT IG1 RELAY CIRCUIT FOR SHORT TO POWER SUPPLY** • Remove the IG1 relay. • Disconnect the PCM connector. • Measure the voltage at the IG1 relay terminal C (wiring harness-side). • Is the voltage **0 V**?	Yes	Inspect the IG1 relay. (See **RELAY INSPECTION**.) • If there is any malfunction: ▪ Replace the IG1 relay. • If there is no malfunction: ▪ Reconnect all disconnected connectors. ▪ Go to the next step.
		No	Refer to the wiring diagram and verify whether or not there is a common connector between IG1 relay terminal C and PCM terminal 2H. **If there is a common connector:** • Determine the malfunctioning part by inspecting the common connector and the terminal for corrosion, damage, or pin disconnection, and the common wiring harness for a short to power supply. • Repair or replace the malfunctioning part. **If there is no common connector:** • Repair or replace the wiring harness which has a short to power supply.
9	**INSPECT RELATED PART CONDITION** • Inspect the following: ▪ Air cleaner element for contamination ▪ Intake-air system restriction ▪ Fuel quality (proper octane, contamination, winter/summer blend) ▪ Coolant level ▪ Clutch slippage (MTX) ▪ ATF level (ATX) ▪ Brake dragging ▪ Tire air pressure ▪ Vacuum leakage	Yes	Service if necessary. • Repeat this step.
		No	Go to the next step.

- Fuel leakage
- MAF sensor contaminated
- Tires, wheels (large size)
- Change of intake air system components and exhaust system components
- Engine operation time is longer than traveled distance
    - Vehicle is driven in congested traffic frequently
    - Left idling for long periods
- Amount of fuel injection increases
    - Overloaded
    - Frequent acceleration/deceleration
    - Frequently driving on ascending roads
    - Travel distance per one drive is short (amount of time for warm-up is long during engine operation)
    - Improper load signal input
- Discharge is high when the vehicle is not used
    - Driver forgets to switch electronic device off
    - Electronic device is frequently used with engine stopped (no power generation)
    - Remote transmitter is left in vehicle with engine stopped (no power generation) (with advanced keyless entry system)
    - Vehicle left undriven for long periods

	• Large amount of parasitic draw (especially after-market electronic devices) ▪ CKP sensor, intake CMP sensor and exhaust CMP sensor • Installation condition (See **CRANKSHAFT POSITION (CKP) SENSOR REMOVAL/INSTALLATION [SKYACTIV-G 2.0, SKYACTIV-G 2.5]**.) (See **CAMSHAFT POSITION (CMP) SENSOR REMOVAL/INSTALLATION [SKYACTIV-G 2.0, SKYACTIV-G 2.5]**.) • Damaged trigger wheel, intake camshaft and exhaust camshaft • Is there any malfunction?		
10	**INSPECT FUEL PRESSURE (HIGH-SIDE)** • Start the engine and warm it up completely. • Access the FUEL_PRES PID using the M-MDS at idle. (See **ON-BOARD DIAGNOSTIC TEST [SKYACTIV-G 2.0, SKYACTIV-G 2.5]**.) • Is the FUEL_PRES PID value **approx. 3 MPa {31 kgf/cm^2, 435 psi}**?	Yes	Go to Step 14.
		No	Lower than **3 MPa {31 kgf/cm^2, 435 psi}**: • Inspect the following: ▪ Fuel leakage at the fuel line and fuel injector ▪ Fuel pump • Perform the Fuel Pump (Low-pressure Side) Operation Inspection. (See **ENGINE CONTROL SYSTEM OPERATION INSPECTION [SKYACTIV-G 2.0, SKYACTIV-G 2.5]**.) ▪ Fuel pressure sensor (See **FUEL PRESSURE SENSOR INSPECTION [SKYACTIV-G 2.0, SKYACTIV-G 2.5]**.) ▪ High pressure fuel pump (See **HIGH PRESSURE FUEL PUMP**

			INSPECTION [SKYACTIV-G 2.0, SKYACTIV-G 2.5].) • If there is any malfunction: ▪ Repair or replace the malfunctioning part according to the inspection results. • If there is no malfunction: ▪ Go to Step 13. Higher than **3 MPa {31 kgf/cm^2, 435 psi}**: • Go to the next step.
11	**DETERMINE IF MALFUNCTION CAUSE IS FUEL PRESSURE SENSOR OR HIGH PRESSURE FUEL PUMP** • Is the vehicle acceleration performance normal?	Yes	Go to the next step.
		No	Go to Step 13.
12	**INSPECT FUEL PRESSURE SENSOR** • Inspect the fuel pressure sensor. (See **FUEL PRESSURE SENSOR INSPECTION [SKYACTIV-G 2.0, SKYACTIV-G 2.5]**.) • Is there any malfunction?	Yes	Replace the fuel distributor. (See **FUEL INJECTOR REMOVAL/INSTALLATION [SKYACTIV-G 2.0, SKYACTIV-G 2.5]**.)
		No	Go to Step 14.
13	**INSPECT SPILL VALVE CONTROL SOLENOID VALVE CONTROL CIRCUIT FOR SHORT TO GROUND** • Switch the ignition off. • Disconnect the high pressure fuel pump and PCM connectors. • Inspect for continuity between high pressure fuel pump terminal A (wiring harness-side) and body ground. • Is there continuity?	Yes	Refer to the wiring diagram and verify whether or not there is a common connector between high pressure fuel pump terminal A and PCM terminal 1EE. **If there is a common connector:** • Determine the malfunctioning part by inspecting the common connector and the terminal for corrosion, damage, or pin disconnection, and the common wiring harness for a short to ground. • Repair or replace the malfunctioning part. **If there is no common connector:** • Repair or replace the wiring harness which has a short to ground. If the malfunction remains: • Replace the PCM. (damage to driver in PCM) (See **PCM REMOVAL/INSTALLATION [SKYACTIV-G 2.0, SKYACTIV-G 2.5]**.)
		No	Replace the high pressure fuel pump. (See **HIGH PRESSURE FUEL PUMP REMOVAL/INSTALLATION [SKYACTIV-G**

			2.0, SKYACTIV-G 2.5].)
14	**INSPECT FUEL PRESSURE (LOW-SIDE)** • Connect the fuel pressure gauge between fuel pump and high pressure fuel pump. • Measure the low side fuel pressure. (See **FUEL LINE PRESSURE INSPECTION [SKYACTIV-G 2.0, SKYACTIV-G 2.5]**.) • Is the low side fuel pressure within specification? **Specification:** • **405—485 kPa {4.13—4.94 kgf/cm^2, 58.8—70.3 psi}**	Yes	Go to the next step.
		No	Inspect the following: • Fuel line restriction • Fuel filter clogged ▪ If there is any malfunction: • Repair or replace the malfunctioning part according to the inspection results. ▪ If there is no malfunction: • Replace the fuel pump unit. (See **FUEL PUMP UNIT REMOVAL/INSTALLATION [SKYACTIV-G 2.0, SKYACTIV-G 2.5]**.)
15	**INSPECT ENGINE COMPRESSION** • Measure the compression pressure for each cylinder. (See **COMPRESSION INSPECTION [SKYACTIV-G 2.0, SKYACTIV-G 2.5]**.) • Are compression pressures within specification? **Specification:** • Compression [SKYACTIV-G 2.0] ▪ Standard: **885 kPa {9.02 kgf/cm^2, 128 psi} (300 rpm)** ▪ Minimum: **708 kPa {7.22 kgf/cm^2, 103 psi} (300 rpm)** ▪ Maximum difference between cylinders: **150 kPa {1.53 kgf/cm^2, 21.8 psi}** (**300 rpm**) • Compression [SKYACTIV-G 2.5] ▪ Standard: **954 kPa {9.73 kgf/cm^2, 138 psi} (300 rpm)** ▪ Minimum: **763 kPa {7.78 kgf/cm^2, 111 psi} (300 rpm)**	Yes	Go to Step 21.
		No	Go to the next step.

	▪ Maximum difference between cylinders: **161 kPa {1.64 kgf/cm^2, 23.4 psi}** (**300 rpm**) **NOTE:** • Because the SKYACTIV-G 2.0 and SKYACTIV-G 2.5 retards the intake valve closing timing, compression pressure is low.		
16	**INSPECT ELECTRIC VARIABLE VALVE TIMING DRIVER** • Inspect the electric variable valve timing driver. (See **ELECTRIC VARIABLE VALVE TIMING MOTOR/DRIVER INSPECTION [SKYACTIV-G 2.0, SKYACTIV-G 2.5]**.) • Is there any malfunction?	Yes	Replace the electric variable valve timing motor/driver. (See **ELECTRIC VARIABLE VALVE TIMING MOTOR/DRIVER REMOVAL/INSTALLATION [SKYACTIV-G 2.0, SKYACTIV-G 2.5]**.)
		No	Go to the next step.
17	**INSPECT ELECTRIC VARIABLE VALVE TIMING MOTOR** • Inspect the electric variable valve timing motor. (See **ELECTRIC VARIABLE VALVE TIMING MOTOR/DRIVER INSPECTION [SKYACTIV-G 2.0, SKYACTIV-G 2.5]**.) • Is there any malfunction?	Yes	Replace the electric variable valve timing motor/driver. (See **ELECTRIC VARIABLE VALVE TIMING MOTOR/DRIVER REMOVAL/INSTALLATION [SKYACTIV-G 2.0, SKYACTIV-G 2.5]**.)
		No	Go to the next step.
18	**INSPECT ELECTRIC VARIABLE VALVE TIMING ACTUATOR** • Inspect the electric variable valve timing actuator. (See **ELECTRIC VARIABLE VALVE TIMING ACTUATOR INSPECTION [SKYACTIV-G 2.0, SKYACTIV-G 2.5]**.) • Is there any malfunction?	Yes	Replace the electric variable valve timing actuator. (See **ELECTRIC VARIABLE VALVE TIMING ACTUATOR, HYDRAULIC VARIABLE VALVE TIMING ACTUATOR REMOVAL/INSTALLATION [SKYACTIV-G 2.0, SKYACTIV-G 2.5]**.)
		No	Go to the next step.
19	**INSPECT HYDRAULIC VARIABLE VALVE TIMING CONTROL SYSTEM OPERATION** • Perform the Hydraulic Variable Valve Timing Control System Operation Inspection. (See **ENGINE CONTROL SYSTEM OPERATION INSPECTION [SKYACTIV-G 2.0, SKYACTIV-G 2.5]**.) • Is there any malfunction?	Yes	Repair or replace the malfunctioning part according to the inspection results.
		No	Go to the next step.
20	**INSPECT FOR MALFUNCTION DUE TO DEVIATED VALVE TIMING** • Inspect the valve timing (timing chain installation condition). (See **TIMING CHAIN REMOVAL/INSTALLATION [SKYACTIV-G 2.0, SKYACTIV-G 2.5]**.) • Is the valve timing normal?	Yes	Inspect for the following engine internal parts: • Cylinder • Piston ring • Intake valve • Exhaust valve

			• Such as cylinder head gasket ▪ If there is any malfunction: • Repair or replace the malfunctioning part according to the inspection results.
		No	Adjust the valve timing to the correct timing.
21	**INSPECT IGNITION SYSTEM OPERATION** • Perform the Spark Test. (See **ENGINE CONTROL SYSTEM OPERATION INSPECTION [SKYACTIV-G 2.0, SKYACTIV-G 2.5]**.) • Is the strong blue spark visible at each cylinder?	Yes	Go to the next step.
		No	Repair or replace the malfunctioning part according to the inspection results.
22	**INSPECT EXHAUST SYSTEM FOR RESTRICTION** • Inspect for restriction in the exhaust system and the TWC. • Is there any restriction?	Yes	Repair or replace the malfunctioning part according to the inspection results.
		No	Go to the next step.
23	**INSPECT IF MALFUNCTION CAUSE IS PCV VALVE OR INJECTOR DRIVER (PCM INTEGRATED)** • Inspect the PCV valve. (See **POSITIVE CRANKCASE VENTILATION (PCV) VALVE INSPECTION [SKYACTIV-G 2.0, SKYACTIV-G 2.5]**.) • Is there any malfunction?	Yes	Replace the PCV valve. (See **POSITIVE CRANKCASE VENTILATION (PCV) VALVE REMOVAL/INSTALLATION [SKYACTIV-G 2.0, SKYACTIV-G 2.5]**.)
		No	Injector driver malfunction. • Replace the PCM. (See **PCM REMOVAL/INSTALLATION [SKYACTIV-G 2.0, SKYACTIV-G 2.5]**.) If the problem remains, overhaul the engine.
24	Verify the test results. • If normal, return to the diagnostic index to service any additional symptoms. (See **SYMPTOM DIAGNOSTIC INDEX [SKYACTIV-G 2.0, SKYACTIV-G 2.5]**.) • If the malfunction remains, inspect the related Service Bulletins and/or On-line Repair Information and perform repair or diagnosis. ▪ If the vehicle is repaired, troubleshooting is completed. ▪ If the vehicle is not repaired or additional diagnostic information is not available, reprogram the PCM if a later calibration is available. Retest.		

NO.14 POOR FUEL ECONOMY [SKYACTIV-G 2.0, SKYACTIV-G 2.5]

2014 - Mazda3 - Engine

NO.15 EMISSION COMPLIANCE [SKYACTIV-G 2.0, SKYACTIV-G 2.5]

15	EMISSION COMPLIANCE
DESCRIPTION	• Fails emissions test.

POSSIBLE CAUSE	• Engine overheating
	• Cooling system malfunction
	• PCM DTC is stored
	• Incorrect ignition timing
	• Spark plug malfunction
	• Purge solenoid valve malfunction
	• Inadequate fuel pressure
	  ▪ Fuel leakage at the fuel line and/or fuel injector
	  ▪ Fuel pressure sensor or related circuit malfunction
	  ▪ High pressure fuel pump malfunction
	  ▪ Spill valve control solenoid valve control circuit malfunction (damage to driver in PCM caused by short circuit to ground system)
	  ▪ Spill valve control solenoid valve (built-into high pressure fuel pump) malfunction
	  ▪ Relief valve (built-into high pressure fuel pump) malfunction
	  ▪ Fuel line restriction
	  ▪ Fuel pump unit malfunction
	• Air leakage from intake-air system
	• Vacuum lines leakage or blockage
	• Charcoal canister damage
	• Improper engine coolant level
	• Excessive carbon built-up in combustion chamber
	• Improper engine compression
	• Improper intake valve timing
	• Improper exhaust valve timing
	• Exhaust system and/or TWC restriction
	• Exhaust gas leakage from exhaust system

- TWC malfunction (PCM DTC is stored.)
- PCV valve malfunction or incorrect valve installation

WARNING:

The following troubleshooting flow chart contains the fuel system diagnosis and repair procedures. Read the following warnings before performing the fuel system services:

- Fuel vapor is hazardous. It can easily ignite, causing serious injury and damage. Always keep sparks and flames away from fuel.
- Fuel line spills and leakage are dangerous. Fuel can ignite and cause serious injury or death and damage. Fuel can also irritate skin and eyes. To prevent this, always complete “BEFORE SERVICE PRECAUTION” and “AFTER SERVICE PRECAUTION” described in this manual. (See **BEFORE SERVICE PRECAUTION [SKYACTIV-G 2.0, SKYACTIV-G 2.5]**.) (See **AFTER SERVICE PRECAUTION [SKYACTIV-G 2.0, SKYACTIV-G 2.5]**.)

CAUTION:

- Disconnecting/connecting the quick release connector without cleaning it may possibly cause damage to the fuel pipe and quick release connector. Always clean the quick release connector joint area before disconnecting/connecting, and make sure that it is free of foreign matter.

CAUTION:

- Verify the malfunction symptom according to not only the PID value but also the symptom troubleshooting.

Related PIDs

Item (definition)	Unit/Condition	Definition	Condition/Specification (Reference)
FUEL_PRES	KPa {MPa}, mBar {Bar}, psi, in H20	Fuel pressure	• Displays fuel pressure
	V	Fuel pressure sensor voltage	• Fuel pressure is 3.0 MPa {31 kgf/cm^2, 435 psi}: Approx. 0.92 V • Fuel pressure is 4.8 MPa {49 kgf/cm^2, 696 psi}: Approx. 1.17 V
LOAD	%	Ratio of actual amount of intake air to the maximum air charging amount (mass volume) of cylinder	• Idle (after warm up): Approx. 17.64% • Racing (engine speed is 2,000 rpm): Approx. 14.51% • Racing (engine speed is 4,000 rpm): Approx. 21.17%

Diagnostic Procedure

STEP	INSPECTION	RESULTS	ACTION

1	**VERIFY PCM DTC** • Retrieve any DTCs using the M-MDS. (See **ON-BOARD DIAGNOSTIC TEST [SKYACTIV-G 2.0, SKYACTIV-G 2.5]**.) • Are any DTCs present?	Yes	Go to the applicable DTC inspection. (See **DTC TABLE [SKYACTIV-G 2.0, SKYACTIV-G 2.5]**.)
		No	Go to the next step.
2	**VERIFY DRIVE MODE CONDITION** • Verify that the drive mode is completed. • Is the drive mode completed?	Yes	Go to the next step.
		No	Perform the Drive Mode. (See **OBD-II DRIVE MODE [SKYACTIV-G 2.0, SKYACTIV-G 2.5]**.)
3	**INSPECT FOR ANY OTHER MALFUNCTION** • Can malfunction symptoms other than “NO.15 EMISSION COMPLIANCE” be verified?	Yes	Go to the applicable symptom troubleshooting. (See **SYMPTOM DIAGNOSTIC INDEX [SKYACTIV-G 2.0, SKYACTIV-G 2.5]**.)
		No	Go to the next step.
4	**VERIFY CO AND HC CONCENTRATION** • Verify CO and HC concentration. • Is the CO or HC concentration excessive?	Yes	Go to Step 6. **NOTE:** • If the HC concentration is normal and the CO concentration is excessive, a rich A/F can be considered the cause. • If the CO concentration is normal and the HC concentration is excessive, a A/F lean can be considered the cause. • If the CO and HC concentration is excessive, incomplete combustion or a rich A/F can be considered the cause.
		No	Go to the next step.
5	**VERIFY NOx CONCENTRATION** • Verify NOx concentration. • Is the NOx concentration excessive?	Yes	Go to the next step.
		No	Symptom troubleshooting is completed.
6	**VERIFY IF MALFUNCTION CAUSED BY IGNITION TIMING MALFUNCTION** • Inspect the ignition timing. (See **ENGINE TUNE-UP [SKYACTIV-G 2.0, SKYACTIV-G 2.5]**.) • Is there any malfunction?	Yes	Inspect the following: • Spark plug (See **SPARK PLUG INSPECTION [SKYACTIV-G 2.0, SKYACTIV-G 2.5]**.) • Ignition coil/ion sensor No.1 (See **IGNITION COIL INSPECTION [SKYACTIV-G 2.0, SKYACTIV-G 2.5]**.) • Ignition coil/ion sensor No.2

			• Ignition coil/ion sensor No.3 • Ignition coil/ion sensor No.4 ▪ If there is any malfunction: • Repair or replace the malfunctioning part according to the inspection results, then go to Step 18. ▪ If there is no malfunction: • Go to Step 18.
		No	Go to the next step.
7	**INSPECT PURGE CONTROL SYSTEM OPERATION** • Perform the Purge Control System Inspection. (See **ENGINE CONTROL SYSTEM OPERATION INSPECTION [SKYACTIV-G 2.0, SKYACTIV-G 2.5]**.) • Does the purge solenoid valve work properly?	Yes	Go to the next step.
		No	Repair or replace the malfunctioning part according to the inspection results, then go to Step 18.
8	**INSPECT FUEL PRESSURE (HIGH-SIDE)** • Start the engine and warm it up completely. • Access the FUEL_PRES PID using the M-MDS at idle. (See **ON-BOARD DIAGNOSTIC TEST [SKYACTIV-G 2.0, SKYACTIV-G 2.5]**.) • Is the FUEL_PRES PID value **approx. 3 MPa {31 kgf/cm^2, 435 psi}**?	Yes	Go to the next step.
		No	Lower than **3 MPa {31 kgf/cm^2, 435 psi}**: • Inspect the following: ▪ Fuel leakage at the fuel line and fuel injector ▪ Fuel pump • Perform the Fuel Pump (Low-pressure Side) Operation Inspection. (See **ENGINE CONTROL SYSTEM OPERATION INSPECTION [SKYACTIV-G 2.0, SKYACTIV-G 2.5]**.) ▪ Fuel pressure sensor

			(See **FUEL PRESSURE SENSOR INSPECTION [SKYACTIV-G 2.0, SKYACTIV-G 2.5]**.) ▪ High pressure fuel pump (See **HIGH PRESSURE FUEL PUMP INSPECTION [SKYACTIV-G 2.0, SKYACTIV-G 2.5]**.) Higher than **3 MPa {31 kgf/cm^2, 435 psi}**: • Inspect the following: ▪ Fuel line and fuel injector restriction ▪ Fuel pressure sensor (See **FUEL PRESSURE SENSOR INSPECTION [SKYACTIV-G 2.0, SKYACTIV-G 2.5]**.) ▪ High pressure fuel pump (Relief valve clogged) Repair or replace the malfunctioning part according to the inspection results, then go to Step 18.
9	**INSPECT INTAKE-AIR SYSTEM FOR AIR LEAKAGE** • Inspect for leakage in intake-air system. • Is there any leakage?	Yes	Repair or replace the malfunctioning part according to the inspection results, then go to Step 18.
		No	Go to the next step.
10	**INSPECT RESTRICTION IN VENTILATION HOSE** • Inspect for restriction in the ventilation hose. • Is there any restriction?	Yes	Repair or replace the malfunctioning part according to the inspection results, then go to Step 18.
		No	Go to the next step.
11	**VERIFY IF MALFUNCTION CAUSE IS CHARCOAL CANISTER** • Inspect the charcoal canister. (See **CHARCOAL CANISTER INSPECTION [SKYACTIV-G 2.0, SKYACTIV-G 2.5]**.) • Is the charcoal canister damaged?	Yes	Repair or replace the malfunctioning part according to the inspection results, then go to Step 18. (See **CHARCOAL CANISTER REMOVAL/INSTALLATION [SKYACTIV-G 2.0, SKYACTIV-G 2.5]**.)
		No	Go to the next step.
12	**VERIFY IF MALFUNCTION CAUSED BY LACK OF ENGINE COOLANT** • Inspect the engine coolant level. (See **ENGINE COOLANT LEVEL INSPECTION [SKYACTIV-G 2.0, SKYACTIV-G 2.5]**.)	Yes	Add engine coolant and verify that there is no engine coolant leakage. (See **ENGINE COOLANT REPLACEMENT [SKYACTIV-G 2.0, SKYACTIV-G 2.5]**.) (See **ENGINE COOLANT LEAKAGE INSPECTION [SKYACTIV-G 2.0, SKYACTIV-G 2.5]**.) • If there is any malfunction:

	• Is there any malfunction?		▪ Repair or replace the malfunctioning part according to the inspection results, then go to Step 18. • If there is no malfunction: ▪ Go to Step 18.
		No	Go to the next step.
13	**VERIFY CARBON ACCUMULATION CONDITION IN COMBUSTION CHAMBER** • Verify carbon accumulation condition in combustion chamber. • Has carbon accumulated?	Yes	Repair or replace the malfunctioning part according to the inspection results, then go to Step 18.
		No	Go to the next step.
14	**INSPECT ENGINE COMPRESSION** • Measure the compression pressure for each cylinder. (See **COMPRESSION INSPECTION [SKYACTIV-G 2.0, SKYACTIV-G 2.5]**.) • Are compression pressures within specification? **Specification:** • Compression [SKYACTIV-G 2.0] ▪ Standard: **885 kPa {9.02 kgf/cm^2, 128 psi} (300 rpm)** ▪ Minimum: **708 kPa {7.22 kgf/cm^2, 103 psi} (300 rpm)** ▪ Maximum difference between cylinders: **150 kPa {1.53 kgf/cm^2, 21.8 psi}** (**300 rpm**)	Yes	Go to the next step.
		No	Inspect the following: • Damaged valve seat • Worn valve stem and valve guide • Worn or stuck piston ring • Worn piston, piston ring or cylinder • Improper intake valve timing • Improper exhaust valve timing Repair or replace the malfunctioning part according to the inspection results, then go to Step 18.

	• Compression [SKYACTIV-G 2.5] ▪ Standard: **954 kPa {9.73 kgf/cm^2, 138 psi} (300 rpm)** ▪ Minimum: **763 kPa {7.78 kgf/cm^2, 111 psi} (300 rpm)** ▪ Maximum difference between cylinders: **161 kPa {1.64 kgf/cm^2, 23.4 psi}** (**300 rpm**) **NOTE:** • Because the SKYACTIV-G 2.0 and SKYACTIV-G 2.5 retards the intake valve closing timing, compression pressure is low.		
15	**INSPECT TWC FOR RESTRICTION** • Inspect for restriction in the TWC. • Is there any restriction?	Yes	Repair or replace the malfunctioning part according to the inspection results, then go to Step 18. (See **EXHAUST SYSTEM REMOVAL/INSTALLATION [SKYACTIV-G 2.0, SKYACTIV-G 2.5]**.)
		No	Go to the next step.
16	**INSPECT EXHAUST SYSTEM FOR LEAKAGE** • Visually inspect for exhaust gas leakage from the exhaust system. • Is there any malfunction?	Yes	Repair or replace the malfunctioning part according to the inspection results, then go to Step 18.
		No	Go to the next step.
17	**INSPECT PCV VALVE** • Inspect the PCV valve. (See **POSITIVE CRANKCASE VENTILATION (PCV) VALVE INSPECTION [SKYACTIV-G 2.0, SKYACTIV-G 2.5]**.)	Yes	Replace the PCV valve, then go to the next step. (See **POSITIVE CRANKCASE VENTILATION (PCV) VALVE REMOVAL/INSTALLATION [SKYACTIV-G 2.0, SKYACTIV-G 2.5]**.)
		No	Go to the next step.

	• Is there any malfunction?		
18	**VERIFY SYMPTOM TROUBLESHOOTING COMPLETED** • Measure CO, HC, and NOx concentration again. • Is CO, HC, and NOx concentration within specification?	Yes	Symptom troubleshooting is completed.
		No	Repeat the inspection from Step 1.

2014 - Mazda3 - Engine

NO.16 HIGH OIL CONSUMPTION/LEAKAGE [SKYACTIV-G 2.0, SKYACTIV-G 2.5]

16	HIGH OIL CONSUMPTION/LEAKAGE
DESCRIPTION	• Oil consumption is excessive.
POSSIBLE CAUSE	• Improper dipstick • Improper engine oil viscosity • Oil leakage • PCV valve malfunction • Engine internal parts malfunction

Diagnostic Procedure

STEP	INSPECTION	RESULTS	ACTION
1	**INSPECT ENGINE OIL AND RELATED PARTS** • Inspect the following: ▪ Proper dipstick ▪ Proper engine oil viscosity ▪ Engine oil level • Is there any malfunction?	Yes	Service if necessary. • Repeat this step.
		No	Go to the next step.
2	**VISUALLY INSPECT FOR ENGINE OIL LEAKAGE** • Inspect for engine oil leakage outside of the engine. • Is there any leakage?	Yes	Repair or replace the malfunctioning part according to the inspection results.
		No	Go to the next step.
3	**INSPECT IF MALFUNCTION CAUSE IS PCV VALVE OR ENGINE INTERNAL PART**	Yes	Replace the PCV valve.

	• Inspect the PCV valve. (See **POSITIVE CRANKCASE VENTILATION (PCV) VALVE INSPECTION [SKYACTIV-G 2.0, SKYACTIV-G 2.5]**.) • Is there any malfunction?		(See **POSITIVE CRANKCASE VENTILATION (PCV) VALVE REMOVAL/INSTALLATION [SKYACTIV-G 2.0, SKYACTIV-G 2.5]**.)
		No	Inspect the internal engine parts such as valves, valve guides, valve stem seals, cylinder head drain passage, and piston rings. Repair or replace the malfunctioning part according to the inspection results, then install the removed parts.
4	Verify the test results. • If normal, return to the diagnostic index to service any additional symptoms. (See **SYMPTOM DIAGNOSTIC INDEX [SKYACTIV-G 2.0, SKYACTIV-G 2.5]**.) • If the malfunction remains, inspect the related Service Bulletins and/or On-line Repair Information and perform repair or diagnosis. ▪ If the vehicle is repaired, troubleshooting is completed. ▪ If the vehicle is not repaired or additional diagnostic information is not available, reprogram the PCM if a later calibration is available. Retest.		

2014 - Mazda3 - Engine

NO.17 COOLING SYSTEM CONCERNS-OVERHEATING [SKYACTIV-G 2.0, SKYACTIV-G 2.5]

17	COOLING SYSTEM CONCERNS-OVERHEATING
DESCRIPTION	• Engine runs at higher than normal temperature/overheats.

POSSIBLE CAUSE	• Engine heat generation amount is excessive
	  ▪ Engine speed is high and remains high for continuous long periods
	• PCM DTC is stored
	• Improper operation of A/C system
	• Insufficient air blow volume
	  ▪ Cooling fan inoperative
	  ▪ Fan rotation speed decreases (such as generator malfunction) due to battery voltage decrease
	• Cooling system cap malfunction
	• Cooling fan motor assembly malfunction
	• Cooling fan motor connector malfunction
	• Improper indication of low engine coolant temperature indicator light and/or high engine coolant temperature warning light
	  ▪ ECT sensor No.1 malfunction
	  ▪ Instrument cluster malfunction
	• Blown fuse
	• Engine coolant system malfunction
	  ▪ Improper engine coolant level
	  ▪ Engine coolant performance deterioration
	  ▪ Coolant leakage (engine internal, external)
	  ▪ Improper water/anti-freeze mixture
	  ▪ Thermostat malfunction (not fully open)
	  ▪ Radiator malfunction (clogging)
	• Leakage around heater unit in passenger compartment
	• Drive belt damage

CAUTION:

- Verify the malfunction symptom according to not only the PID value but also the symptom troubleshooting.

Related PIDs

Item (definition)	Unit/Condition	Definition	Condition/Specification (Reference)
ECT	°C, °F	Engine coolant temperature	• Displays ECT
	V	ECT sensor No.1 voltage	• ECT is 20 °C {68 °F}: Approx. 3.10 V • ECT is 40 °C {104 °F}: Approx. 2.16 V • ECT is 60 °C {140 °F}: Approx. 1.40 V • ECT is 80 °C {176 °F}: Approx. 0.87 V • ECT is 100 °C {212 °F}: Approx. 0.54 V

Diagnostic Procedure

STEP	INSPECTION	RESULTS	ACTION
1	**INSPECT VEHICLE CONDITION FOR EFFECT ON MALFUNCTION** • Verify how the customer drives the vehicle by asking the customer the following: ▪ Engine speed is high and remains high for continuous long periods like when climbing a long, steep grade. • Is the engine generating excessive heat when driven?	Yes	Explain to the customer that the vehicle is normal and give them advice how to use vehicle and provide a specific example of the conditions in which the engine overheats.
		No	Go to the next step.
2	**VERIFY PCM DTC** • Retrieve any DTCs using the M-MDS. (See **ON-BOARD DIAGNOSTIC TEST [SKYACTIV-G 2.0, SKYACTIV-G 2.5]**.) • Are any DTCs present?	Yes	Go to the applicable DTC inspection. (See **DTC TABLE [SKYACTIV-G 2.0, SKYACTIV-G 2.5]**.)
		No	Go to the next step.
3	**DETERMINE IF MALFUNCTION CAUSE IS A/C SYSTEM OR OTHER** • Start the engine and run it at	Yes	Go to the next step.

	idle speed. • Turn the A/C switch off. • Does the A/C compressor disengaged?	No	Perform the symptom troubleshooting “NO.24 A/C IS ALWAYS ON OR A/C COMPRESSOR RUNS CONTINUOUSLY”. (See **NO.24 A/C IS ALWAYS ON OR A/C COMPRESSOR RUNS CONTINUOUSLY [SKYACTIV-G 2.0, SKYACTIV-G 2.5]**.)
4	**INSPECT ECT SENSOR NO.1 SIGNAL** • Access the ECT PID using the M-MDS. (See **ON-BOARD DIAGNOSTIC TEST [SKYACTIV-G 2.0, SKYACTIV-G 2.5]**.) • Compare the ECT PID and low engine coolant temperature indicator light and high engine coolant temperature warning light operation. • Is the ECT PID value same as indicator/warning light readings?	Yes	Go to the next step.
		No	Inspect the ECT sensor No.1. (See **ENGINE COOLANT TEMPERATURE (ECT) SENSOR INSPECTION [SKYACTIV-G 2.0, SKYACTIV-G 2.5]**.) • If there is any malfunction: ▪ Replace the ECT sensor No.1. (See **ENGINE COOLANT TEMPERATURE (ECT) SENSOR REMOVAL/INSTALLATION [SKYACTIV-G 2.0, SKYACTIV-G 2.5]**.) • If there is no malfunction: ▪ Perform the instrument cluster symptom troubleshooting “LOW ENGINE COOLANT TEMPERATURE INDICATOR LIGHT/HIGH ENGINE COOLANT TEMPERATURE WARNING LIGHT ILLUMINATES OR FLASHES CONTINUOUSLY”. (See **LOW ENGINE COOLANT TEMPERATURE INDICATOR LIGHT/HIGH ENGINE COOLANT TEMPERATURE WARNING LIGHT ILLUMINATES OR FLASHES CONTINUOUSLY [INSTRUMENT CLUSTER]**.)
5	**INSPECT COOLING FAN CONTROL SYSTEM OPERATION** • Perform the Cooling Fan Control System Inspection. (See **ENGINE CONTROL SYSTEM OPERATION INSPECTION [SKYACTIV-G 2.0, SKYACTIV-G 2.5]**.) • Does the cooling fan control	Yes	Go to the next step.
		No	Repair or replace the malfunctioning part according to the inspection results.

	system operate properly?		
6	**INSPECT COOLING SYSTEM CAP** • Inspect the cooling system cap. (See **COOLING SYSTEM CAP INSPECTION [SKYACTIV-G 2.0, SKYACTIV-G 2.5]**.) • Is there any malfunction?	Yes	Replace the cooling system cap.
		No	Go to the next step.
7	**INSPECT RELATED PART CONDITION** • Inspect the following: ▪ Engine coolant level ▪ Engine coolant performance ▪ Water and anti-freeze mixture ▪ Thermostat (not fully open) ▪ Radiator (clogging) ▪ Fuses • Is there any malfunction?	Yes	Service if necessary. • Repeat this step.
		No	Go to the next step.
8	**VERIFY IF MALFUNCTION CAUSED BY LACK OF ENGINE COOLANT** • Inspect the engine coolant level. (See **ENGINE COOLANT LEVEL INSPECTION [SKYACTIV-G 2.0, SKYACTIV-G 2.5]**.) • Is there any malfunction?	Yes	Add engine coolant and verify that there is no engine coolant leakage. (See **ENGINE COOLANT REPLACEMENT [SKYACTIV-G 2.0, SKYACTIV-G 2.5]**.) (See **ENGINE COOLANT LEAKAGE INSPECTION [SKYACTIV-G 2.0, SKYACTIV-G 2.5]**.) • If there is any malfunction: ▪ Repair or replace the malfunctioning part according to the inspection results.
		No	Go to the next step.
9	**DETERMINE IF MALFUNCTION CAUSE IS THERMOSTAT OR OTHER** • Verify the radiator hose tension. **WARNING:**	Yes	Go to Step 11.
		No	Go to the next step.

	To prevent burns, use a cloth with your hand to verify the tension of the radiator hose. • After the engine warms up, does the engine coolant circulate to the radiator hose?		
10	**INSPECT THERMOSTAT** • Inspect the thermostat. (See **THERMOSTAT INSPECTION [SKYACTIV-G 2.0, SKYACTIV-G 2.5]**.) • Is the thermostat normal?	Yes	Inspect the water pump. • If there is any malfunction: ▪ Repair or replace the malfunctioning part according to the inspection results. (See **WATER PUMP REMOVAL/INSTALLATION [SKYACTIV-G 2.0, SKYACTIV-G 2.5]**.)
		No	Replace the thermostat. (See **THERMOSTAT REMOVAL/INSTALLATION [SKYACTIV-G 2.0, SKYACTIV-G 2.5]**.)
11	**INSPECT DRIVE BELT** • Inspect the drive belt. (See **DRIVE BELT INSPECTION [SKYACTIV-G 2.0, SKYACTIV-G 2.5]**.) • Is the indicator mark on the drive belt auto tensioner within the normal range?	Yes	Go to the next step.
		No	Replace the drive belt. (See **DRIVE BELT REMOVAL/INSTALLATION [SKYACTIV-G 2.0, SKYACTIV-G 2.5]**.)
12	**INSPECT RADIATOR FOR CLOGGING** • Inspect for clogging in the radiator. • Is there any malfunction?	Yes	Repair or replace the malfunctioning part according to the inspection results.
		No	Replace the engine coolant. (See **ENGINE COOLANT REPLACEMENT [SKYACTIV-G 2.0, SKYACTIV-G 2.5]**.)
13	Verify the test results. • If normal, return to the diagnostic index to service any additional symptoms. (See **SYMPTOM DIAGNOSTIC INDEX [SKYACTIV-G 2.0, SKYACTIV-G 2.5]**.) • If the malfunction remains, inspect the related Service Bulletins and/or On-line Repair Information and perform repair or diagnosis.		

	▪ If the vehicle is repaired, troubleshooting is completed. ▪ If the vehicle is not repaired or additional diagnostic information is not available, reprogram the PCM if a later calibration is available. Retest.

2014 - Mazda3 - Engine

NO.18 COOLING SYSTEM CONCERNS-RUNS COLD [SKYACTIV-G 2.0, SKYACTIV-G 2.5]

18	COOLING SYSTEM CONCERNS-RUNS COLD
DESCRIPTION	• Engine does not reach normal operating temperature.

POSSIBLE CAUSE	• Improper indication of low engine coolant temperature indicator light and/or high engine coolant temperature warning light
	  ▪ ECT sensor No.1 malfunction
	  ▪ Instrument cluster malfunction
	• Cooling fan system malfunction
	• Condenser fan system malfunction
	• Thermostat malfunction (stuck at fully open)
	• Foreign matter penetration in engine coolant

CAUTION:

- Verify the malfunction symptom according to not only the PID value but also the symptom troubleshooting.

Related PIDs

Item (definition)	Unit/Condition	Definition	Condition/Specification (Reference)
ECT	°C, °F	Engine coolant temperature	• Displays ECT
	V	ECT sensor No.1 voltage	• ECT is 20 °C {68 °F}: Approx. 3.10 V • ECT is 40 °C {104 °F}: Approx. 2.16 V • ECT is 60 °C {140 °F}: Approx. 1.40 V • ECT is 80 °C {176 °F}: Approx. 0.87 V • ECT is 100 °C {212 °F}: Approx. 0.54 V

Diagnostic Procedure

STEP	INSPECTION	RESULTS	ACTION
1	**DETERMINE IF MALFUNCTION CAUSE IS HVAC SYSTEM OR ENGINE** • Is a customer complaint “Lack of passenger compartment heat” only?	Yes	Inspect the A/C heater system. Repair or replace the malfunctioning part according to the inspection results.
		No	Go to the next step.
2	**VERIFY IDLE SPEED** • Does the engine speed continue at fast idle?	Yes	Perform the symptom troubleshooting “NO.9 FAST IDLE/RUNS ON”. (See **NO.9 FAST IDLE/RUNS ON [SKYACTIV-G 2.0, SKYACTIV-G 2.5]**.)
		No	Go to the next step.
3	**INSPECT ECT SENSOR NO.1 SIGNAL** • Access the ECT PID using the M-MDS. (See **ON-BOARD DIAGNOSTIC TEST [SKYACTIV-G 2.0, SKYACTIV-G 2.5]**.) • Compare the ECT PID and low engine coolant temperature indicator light and high engine coolant temperature warning light operation. • Is the ECT PID value same as indicator/warning light readings?	Yes	Go to the next step.
		No	Inspect the ECT sensor No.1. (See **ENGINE COOLANT TEMPERATURE (ECT) SENSOR INSPECTION [SKYACTIV-G 2.0, SKYACTIV-G 2.5]**.) • If there is any malfunction: ▪ Replace the ECT sensor No.1. (See **ENGINE COOLANT TEMPERATURE (ECT) SENSOR REMOVAL/INSTALLATION [SKYACTIV-G 2.0, SKYACTIV-G 2.5]**.) • If there is no malfunction: ▪ Perform the instrument cluster symptom troubleshooting “LOW ENGINE COOLANT TEMPERATURE INDICATOR LIGHT/HIGH ENGINE COOLANT TEMPERATURE WARNING LIGHT ILLUMINATES OR FLASHES CONTINUOUSLY”. (See **LOW ENGINE COOLANT TEMPERATURE**

			INDICATOR LIGHT/HIGH ENGINE COOLANT TEMPERATURE WARNING LIGHT ILLUMINATES OR FLASHES CONTINUOUSLY [INSTRUMENT CLUSTER].)
4	**INSPECT COOLING FAN CONTROL SYSTEM OPERATION** • Perform the Cooling Fan Control System Inspection. (See **ENGINE CONTROL SYSTEM OPERATION INSPECTION [SKYACTIV-G 2.0, SKYACTIV-G 2.5]**.) • Does the cooling fan control system operate properly?	Yes	Go to the next step.
		No	Repair or replace the malfunctioning part according to the inspection results.
5	**INSPECT THERMOSTAT** • Cool down the engine. • Remove the thermostat. (See **THERMOSTAT REMOVAL/INSTALLATION [SKYACTIV-G 2.0, SKYACTIV-G 2.5]**.) • Inspect the thermostat operation. (See **THERMOSTAT INSPECTION [SKYACTIV-G 2.0, SKYACTIV-G 2.5]**.) • Is there any malfunction?	Yes	Replace the thermostat. (See **THERMOSTAT REMOVAL/INSTALLATION [SKYACTIV-G 2.0, SKYACTIV-G 2.5]**.)
		No	Reinstall the thermostat, then go to the next step. (See **THERMOSTAT REMOVAL/INSTALLATION [SKYACTIV-G 2.0, SKYACTIV-G 2.5]**.)
6	**VERIFY THAT NO FOREIGN MATTER IS IN ENGINE COOLANT** • Drain the engine coolant. (See **ENGINE COOLANT REPLACEMENT [SKYACTIV-G 2.0, SKYACTIV-G 2.5]**.) • Has foreign matter penetrated the engine coolant?	Yes	Replace the engine coolant. (See **ENGINE COOLANT REPLACEMENT [SKYACTIV-G 2.0, SKYACTIV-G 2.5]**.)
		No	Go to the next step.
7	Verify the test results. • If normal, return to the diagnostic index to service any additional symptoms.		

(See **SYMPTOM DIAGNOSTIC INDEX [SKYACTIV-G 2.0, SKYACTIV-G 2.5]**.)

- If the malfunction remains, inspect the related Service Bulletins and/or On-line Repair Information and perform repair or diagnosis.
    - If the vehicle is repaired, troubleshooting is completed.
    - If the vehicle is not repaired or additional diagnostic information is not available, reprogram the PCM if a later calibration is available. Retest.

2014 - Mazda3 - Engine

NO.19 EXHAUST SMOKE [SKYACTIV-G 2.0, SKYACTIV-G 2.5]

19	EXHAUST SMOKE
DESCRIPTION	• Blue, black, or white smoke from exhaust system.

POSSIBLE CAUSE	**Blue smoke (Burning oil):**
	• PCV valve malfunction
	• Engine internal oil leakage
	White smoke (Water in combustion):
	• Cooling system malfunction (coolant loss)
	• Engine internal coolant leakage
	Black smoke (Rich fuel mixture):
	• Erratic signal to PCM
	  ▪ APP sensor or related circuit malfunction
	  ▪ ECT sensor No.1 or related circuit malfunction
	  ▪ IAT sensor No.1 (integrated in MAF sensor/IAT sensor No.1) or related circuit malfunction
	  ▪ MAF sensor or related circuit malfunction
	  ▪ MAP sensor or related circuit malfunction
	  ▪ A/F sensor or related circuit malfunction
	  ▪ HO2S or related circuit malfunction
	  ▪ TP sensor or related circuit malfunction
	• Improper fuel injection timing and amount
	• Air cleaner restriction
	• Intake-air system is collapsed or restricted
	• Leakage at engine intake manifold and/or exhaust manifold
	• Inadequate/Excessive fuel pressure
	  ▪ Fuel pressure sensor malfunction
	  ▪ High pressure fuel pump malfunction
	  ▪ Spill valve control solenoid valve control circuit malfunction (damage to driver in PCM caused by short circuit to ground system)
	  ▪ Spill valve control solenoid valve (built-into high pressure fuel pump) malfunction
	  ▪ Relief valve (built-into high pressure fuel pump) malfunction
	  ▪ Fuel line restricted
	  ▪ Fuel pump unit malfunction

- Ignition system malfunction
- Improper engine compression
- Improper intake valve timing
- Improper exhaust valve timing
- Injector driver (built-into PCM) malfunction

WARNING:

The following troubleshooting flow chart contains the fuel system diagnosis and repair procedures. Read the following warnings before performing the fuel system services:

- Fuel vapor is hazardous. It can easily ignite, causing serious injury and damage. Always keep sparks and flames away from fuel.
- Fuel line spills and leakage are dangerous. Fuel can ignite and cause serious injury or death and damage. Fuel can also irritate skin and eyes. To prevent this, always complete “BEFORE SERVICE PRECAUTION” and “AFTER SERVICE PRECAUTION” described in this manual. (See **BEFORE SERVICE PRECAUTION [SKYACTIV-G 2.0, SKYACTIV-G 2.5]**.) (See **AFTER SERVICE PRECAUTION [SKYACTIV-G 2.0, SKYACTIV-G 2.5]**.)

CAUTION:

- Disconnecting/connecting the quick release connector without cleaning it may possibly cause damage to the fuel pipe and quick release connector. Always clean the quick release connector joint area before disconnecting/connecting, and make sure that it is free of foreign matter.

CAUTION:

- Verify the malfunction symptom according to not only the PID value but also the symptom troubleshooting.

Related PIDs

Item (definition)	Unit/Condition	Definition	Condition/Specification (Reference)
APP1	%	Accelerator pedal opening angle (absolute value) input from APP sensor No.1	• Accelerator pedal released: Approx. 15% • Accelerator pedal fully depressed: Approx. 82%
	V	APP sensor No.1 voltage	• Accelerator pedal released: Approx. 0.75 V • Accelerator pedal fully depressed: Approx. 4.1 V
APP2	%	Accelerator pedal opening angle (absolute value) input from APP sensor No.2	• Accelerator pedal released: Approx. 7.45% • Accelerator pedal fully depressed: Approx. 41%
	V	APP sensor No.2 voltage	• Accelerator pedal released: Approx. 0.38 V • Accelerator pedal fully depressed: Approx. 2.05 V
	°C, °F	Engine coolant temperature	• Displays ECT
			• ECT is 20 °C {68 °F}: Approx. 3.10 V

ECT	V	ECT sensor No.1 voltage	ECT is 40 °C {104 °F}: Approx. 2.16 V • ECT is 60 °C {140 °F}: Approx. 1.40 V • ECT is 80 °C {176 °F}: Approx. 0.87 V • ECT is 100 °C {212 °F}: Approx. 0.54 V
FUEL_PRES	KPa {MPa}, mBar {Bar}, psi, in H20	Fuel pressure	• Displays fuel pressure
	V	Fuel pressure sensor voltage	• Fuel pressure is 3.0 MPa {31 kgf/cm^2, 435 psi}: Approx. 0.92 V • Fuel pressure is 4.8 MPa {49 kgf/cm^2, 696 psi}: Approx. 1.17 V
IAT	°C, °F	Intake air temperature (No.1)	• Displays IAT (No.1)
	V	IAT sensor No.1 voltage	• IAT is 20 °C {68 °F}: Approx. 2.70 V • IAT is 40 °C {104 °F}: Approx. 1.80 V • IAT is 60 °C {140 °F}: Approx. 1.20 V
LOAD	%	Ratio of actual amount of intake air to the maximum air charging amount (mass volume) of cylinder	• Idle (after warm up): Approx. 17.64% • Racing (engine speed is 2,000 rpm): Approx. 14.51% • Racing (engine speed is 4,000 rpm): Approx. 21.17%
LONGFT1	%	Fuel learning correction amount estimated based on A/F sensor signal	• Idle (after warm up): Approx. -2.34% • Racing (engine speed is 2,000 rpm): Approx. -0.78% • Racing (engine speed is 4,000 rpm): Approx. -0.78%
MAF	g/Sec	Mass air flow	• Displays MAF
	V	MAF sensor voltage	• Ignition switched ON (engine off) (MAF: 0.59 g/s {0.078 lb/min}): Approx. 0.72 V • Idle (after warm up) (MAF: 2.17 g/s {0.287 lb/min}): Approx. 0.86 V • Racing (engine speed is 2,000 rpm) (MAF: 4.73 g/s {0.626 lb/min}): Approx. 1.07 V
MAP	KPa {MPa}, mBar {Bar}, psi, in H20	Manifold absolute pressure	• Displays MAP
	V		• Switch ignition ON (engine off) (MAP:101 kPa {1.03 kgf/cm^2, 14.6 psi}): Approx. 4.07 V • Idle (after warm up) (MAP: 33 kPa {0.34 kgf/cm^2, 4.8 psi}): Approx. 1.34

			V • Racing (engine speed is 2,000 rpm) (MAP: 26 kPa {0.27 kgf/cm^2, 3.8 psi}): Approx. 1.05 V
O2S11	µA	A/F sensor current	• Idle (after warm up): Approx. −39 µA • Deceleration fuel cut (accelerator pedal released from engine speed of 4,000 rpm or more): Approx. 3.84 mA
O2S12	V	HO2S voltage	• Idle (after warm up): 0—1.0 V • Deceleration fuel cut (accelerator pedal released from engine speed of 4,000 rpm or more): Approx. 0 V
RPM	RPM	Engine speed	• Displays engine speed
SHRTFT1	%	Fuel feedback correction amount estimated based on A/F sensor signal	• Idle (after warm up): Approx. 1.56% • Racing (engine speed is 2,000 rpm): Approx. −3.12% • Racing (engine speed is 4,000 rpm): Approx. −8.59%
TP_REL	%	Throttle valve opening angle (relative value) with value at throttle valve fully open timing as the start point	• Accelerator pedal released: Approx. 12% • Accelerator pedal fully depressed: Approx. 82%
VSS	KPH, MPH	Vehicle speed	• Displays vehicle speed

Diagnostic Procedure

STEP	INSPECTION	RESULTS	ACTION
1	**VERIFY EXHAUST COLOR** • What color is smoke coming from the exhaust system?	Blue	Burning oil is indicated. • Go to the next step.
		White	Water in combustion is indicated. • Go to Step 4.
		Black	Rich fuel mixture is indicated. • Go to Step 5.
2	**INSPECT PCV VALVE** • Inspect the PCV valve. (See **POSITIVE CRANKCASE VENTILATION (PCV) VALVE INSPECTION [SKYACTIV-G 2.0, SKYACTIV-G 2.5]**.) • Is there any malfunction?	Yes	Replace the PCV valve. (See **POSITIVE CRANKCASE VENTILATION (PCV) VALVE REMOVAL/INSTALLATION [SKYACTIV-G 2.0, SKYACTIV-G 2.5]**.)
		No	Go to the next step.
3	**INSPECT ENGINE INTERNAL PARTS** • Inspect for the following	Yes	Repair or replace the malfunctioning part according to the inspection results.

	engine internal parts: ▪ Damaged valve guide, stems or valve seals ▪ Blocked oil drain passage in cylinder head ▪ Piston ring is not seated, seized or worn ▪ Damage cylinder bore • Is there any malfunction?		
		No	Engine internal parts are normal. • If other driveability symptoms are present: ▪ Return to the diagnostic index to service additional symptoms. (See **SYMPTOM DIAGNOSTIC INDEX [SKYACTIV-G 2.0, SKYACTIV-G 2.5]**.)
4	**INSPECT ENGINE FOR ENGINE COOLANT LEAKAGE** • Does the cooling system hold the coolant pressure? (See **ENGINE COOLANT LEAKAGE INSPECTION [SKYACTIV-G 2.0, SKYACTIV-G 2.5]**.)	Yes	Inspect the following: • Cylinder head gasket leakage • Intake manifold gasket leakage • Cracked or porous engine block Repair or replace the malfunctioning part according to the inspection results. • If other driveability symptoms are present: ▪ Return to the diagnostic index to service additional symptoms. (See **SYMPTOM DIAGNOSTIC INDEX [SKYACTIV-G 2.0, SKYACTIV-G 2.5]**.)
		No	Inspect for the cause. Repair or replace the malfunctioning part according to the inspection results.
5	**VERIFY CURRENT INPUT SIGNAL STATUS** **CAUTION:** • While performing this step, always operate the vehicle in a safe and lawful manner. • When the M-MDS is used to observe monitor system status while driving, be sure to have another technician with you, or record the data in the M-MDS using the PID/DATA MONITOR AND RECORD capturing function and	Yes	Go to the next step.
		No	APP1, APP2 PIDs are not as specified: • Inspect the APP sensor. (See **ACCELERATOR PEDAL POSITION (APP) SENSOR INSPECTION [SKYACTIV-G 2.0, SKYACTIV-G 2.5]**.) ECT PID is not as specified: • Inspect the ECT sensor No.1. (See **ENGINE COOLANT TEMPERATURE (ECT) SENSOR INSPECTION [SKYACTIV-G 2.0, SKYACTIV-G 2.5]**.) IAT PID is not as specified: • Inspect the IAT sensor No.1.

	inspect later. • Access the following PIDs using the M-MDS: (See **ON-BOARD DIAGNOSTIC TEST [SKYACTIV-G 2.0, SKYACTIV-G 2.5]**.) ▪ APP1 ▪ APP2 ▪ ECT ▪ IAT ▪ MAF ▪ MAP ▪ TP_REL ▪ O2S11 ▪ O2S12 ▪ SHRTFT1 ▪ LONGFT1 • Monitor the PIDs under the black smoke appeared engine condition. • Do the PIDs indicate normal according to engine conditions? (See **PCM INSPECTION [SKYACTIV-G 2.0, SKYACTIV-G 2.5]**.)		(See **INTAKE AIR TEMPERATURE (IAT) SENSOR INSPECTION [SKYACTIV-G 2.0, SKYACTIV-G 2.5]**.) MAF PID is not as specified: • Inspect the MAF sensor. (See **MASS AIR FLOW (MAF) SENSOR INSPECTION [SKYACTIV-G 2.0, SKYACTIV-G 2.5]**.) MAP PID is not as specified: • Inspect the MAP sensor. (See **MANIFOLD ABSOLUTE PRESSURE (MAP) SENSOR INSPECTION [SKYACTIV-G 2.0, SKYACTIV-G 2.5]**.) TP_REL PID is not as specified: • Inspect the TP sensor. (See **THROTTLE POSITION (TP) SENSOR INSPECTION [SKYACTIV-G 2.0, SKYACTIV-G 2.5]**.) O2S11, SHRTFT1, LONGFT1 PIDs are not as specified: • Inspect the A/F sensor. (See **AIR FUEL RATIO (A/F) SENSOR INSPECTION [SKYACTIV-G 2.0, SKYACTIV-G 2.5]**.) O2S12 PID is not as specified: • Inspect the HO2S. (See **HEATED OXYGEN SENSOR (HO2S) INSPECTION [SKYACTIV-G 2.0, SKYACTIV-G 2.5]**.) Repair or replace the malfunctioning part according to the inspection results. • If the malfunction remains: ▪ Perform the “INTERMITTENT CONCERN TROUBLESHOOTING” procedure. (See **INTERMITTENT CONCERN TROUBLESHOOTING [SKYACTIV-G 2.0, SKYACTIV-G 2.5]**.)
6	**INSPECT FUEL INJECTOR OPERATION** • Perform the Fuel Injector Operation Inspection. (See **ENGINE CONTROL SYSTEM OPERATION INSPECTION [SKYACTIV-G 2.0, SKYACTIV-G 2.5]**.) • Do the fuel injectors operate properly?	Yes	Go to the next step.
		No	Repair or replace the malfunctioning part according to the inspection results.
7	**INSPECT INTAKE AIR SYSTEM** • Inspect the following for intake-air system: ▪ Air cleaner restriction ▪ Collapsed or	Yes	Repair or replace the malfunctioning part according to the inspection results.
		No	Go to the next step.

	restricted air hose ▪ Leakage • Is there any malfunction?		
8	**INSPECT EXHAUST SYSTEM FOR LEAKAGE** • Visually inspect for exhaust leakage from exhaust manifold. • Is there any leakage?	Yes	Repair or replace the malfunctioning part according to the inspection results.
		No	Go to the next step.
9	**INSPECT FUEL PRESSURE (HIGH-SIDE)** • Start the engine and warm it up completely. • Access the FUEL_PRES PID using the M-MDS at idle. (See **ON-BOARD DIAGNOSTIC TEST [SKYACTIV-G 2.0, SKYACTIV-G 2.5]**.) • Is the FUEL_PRES PID value **approx. 3 MPa {31 kgf/cm^2, 435 psi}**?	Yes	Go to Step 13.
		No	Lower than **3 MPa {31 kgf/cm^2, 435 psi}**: • Inspect the following: ▪ Fuel leakage at the fuel line and fuel injector ▪ Fuel pump • Perform the Fuel Pump (Low-pressure Side) Operation Inspection. (See **ENGINE CONTROL SYSTEM OPERATION INSPECTION [SKYACTIV-G 2.0, SKYACTIV-G 2.5]**.) ▪ Fuel pressure sensor (See **FUEL PRESSURE SENSOR INSPECTION [SKYACTIV-G 2.0, SKYACTIV-G 2.5]**.) ▪ High pressure fuel pump (See **HIGH PRESSURE FUEL PUMP INSPECTION [SKYACTIV-G 2.0, SKYACTIV-G 2.5]**.) • If there is any malfunction: ▪ Repair or replace the malfunctioning part according to the inspection results. • If there is no malfunction: ▪ Go to Step 12. Higher than **3 MPa {31 kgf/cm^2, 435 psi}**: • Go to the next step.
10	**DETERMINE IF MALFUNCTION CAUSE IS FUEL PRESSURE SENSOR OR HIGH PRESSURE FUEL PUMP** • Is the vehicle acceleration performance normal?	Yes	Go to the next step.
		No	Go to Step 12.
11	**INSPECT FUEL PRESSURE SENSOR** • Inspect the fuel pressure sensor. (See **FUEL PRESSURE**	Yes	Replace the fuel distributor. (See **FUEL INJECTOR REMOVAL/INSTALLATION [SKYACTIV-G 2.0, SKYACTIV-G 2.5]**.)

	SENSOR INSPECTION [SKYACTIV-G 2.0, SKYACTIV-G 2.5].) • Is there any malfunction?	No	Go to Step 13.
12	**INSPECT SPILL VALVE CONTROL SOLENOID VALVE CONTROL CIRCUIT FOR SHORT TO GROUND** • Switch the ignition off. • Disconnect the high pressure fuel pump and PCM connectors. • Inspect for continuity between high pressure fuel pump terminal A (wiring harness-side) and body ground. • Is there continuity?	Yes	Refer to the wiring diagram and verify whether or not there is a common connector between high pressure fuel pump terminal A and PCM terminal 1EE. **If there is a common connector:** • Determine the malfunctioning part by inspecting the common connector and the terminal for corrosion, damage, or pin disconnection, and the common wiring harness for a short to ground. • Repair or replace the malfunctioning part. **If there is no common connector:** • Repair or replace the wiring harness which has a short to ground. If the malfunction remains: • Replace the PCM. (damage to driver in PCM) (See **PCM REMOVAL/INSTALLATION [SKYACTIV-G 2.0, SKYACTIV-G 2.5]**.)
		No	Replace the high pressure fuel pump. (See **HIGH PRESSURE FUEL PUMP REMOVAL/INSTALLATION [SKYACTIV-G 2.0, SKYACTIV-G 2.5]**.)
13	**INSPECT FUEL PRESSURE (LOW-SIDE)** • Connect the fuel pressure gauge between fuel pump and high pressure fuel pump. • Measure the low side fuel pressure. (See **FUEL LINE PRESSURE INSPECTION [SKYACTIV-G 2.0, SKYACTIV-G 2.5]**.) • Is the low side fuel pressure within specification? **Specification:** • **405—485 kPa {4.13—4.94 kgf/cm^2, 58.8—70.3 psi}**	Yes	Go to the next step.
		No	Inspect the following: • Fuel line restriction • Fuel filter clogged ▪ If there is any malfunction: • Repair or replace the malfunctioning part according to the inspection results. ▪ If there is no malfunction: • Replace the fuel pump unit. (See **FUEL PUMP UNIT REMOVAL/INSTALLATION [SKYACTIV-G 2.0, SKYACTIV-G 2.5]**.)
14	**INSPECT IGNITION SYSTEM OPERATION** **NOTE:** • Because the malfunction may have been resolved by removing the carbon adhered to the spark plug during the spark inspection for the spark	Yes	Go to the next step.
		No	Repair or replace the malfunctioning part according to the inspection results.

	plug, verify that the repairs have been completed. • Perform the Spark Test. (See **ENGINE CONTROL SYSTEM OPERATION INSPECTION [SKYACTIV-G 2.0, SKYACTIV-G 2.5]**.) • Is a strong blue spark visible at each cylinder?		
15	**INSPECT IF MALFUNCTION CAUSE IS ENGINE COMPRESSION OR INJECTOR DRIVER (PCM INTEGRATED)** • Measure the compression pressure for each cylinder. (See **COMPRESSION INSPECTION [SKYACTIV-G 2.0, SKYACTIV-G 2.5]**.) • Are compression pressures within specification? **Specification:** • Compression [SKYACTIV-G 2.0] ▪ Standard: **885 kPa {9.02 kgf/cm^2, 128 psi} (300 rpm)** ▪ Minimum: **708 kPa {7.22 kgf/cm^2, 103 psi} (300 rpm)** ▪ Maximum difference between cylinders: **150 kPa {1.53 kgf/cm^2, 21.8 psi}** (**300 rpm**) • Compression [SKYACTIV-G 2.5] ▪ Standard: **954 kPa {9.73 kgf/cm^2, 138 psi} (300 rpm)**	Yes	Injector driver malfunction. • Replace the PCM. (See **PCM REMOVAL/INSTALLATION [SKYACTIV-G 2.0, SKYACTIV-G 2.5]**.) If the problem remains, overhaul the engine.
		No	Inspect the following: • Damaged valve seat • Worn valve stem and valve guide • Worn or stuck piston ring • Worn piston, piston ring or cylinder • Improper intake valve timing • Improper exhaust valve timing Service if necessary.

	Minimum: **763 kPa {7.78 kgf/cm^2, 111 psi} (300 rpm)** ▪ Maximum difference between cylinders: **161 kPa {1.64 kgf/cm^2, 23.4 psi}** (**300 rpm**) **NOTE:** • Because the SKYACTIV-G 2.0 and SKYACTIV-G 2.5 retards the intake valve closing timing, compression pressure is low.		
16	Verify the test results. • If normal, return to the diagnostic index to service any additional symptoms. (See **SYMPTOM DIAGNOSTIC INDEX [SKYACTIV-G 2.0, SKYACTIV-G 2.5]**.) • If the malfunction remains, inspect the related Service Bulletins and/or On-line Repair Information and perform repair or diagnosis. ▪ If the vehicle is repaired, troubleshooting is completed. ▪ If the vehicle is not repaired or additional diagnostic information is not available, reprogram the PCM if a later calibration is available. Retest.		

2014 - Mazda3 - Engine

NO.20 FUEL ODOR (IN ENGINE COMPARTMENT) [SKYACTIV-G 2.0, SKYACTIV-G 2.5]

20	FUEL ODOR (IN ENGINE COMPARTMENT)
DESCRIPTION	• Gasoline fuel smell or visible leakage.
POSSIBLE CAUSE	• Missing or loose fuel filler cap • Fuel filler cap malfunction (seal malfunction) • Fuel leakage from fuel system • Charcoal canister damage • Improper connection of evaporative related vacuum hoses • Fuel leakage at the fuel injector • Purge solenoid valve malfunction (stuck) **WARNING:** The following troubleshooting flow chart contains the fuel system diagnosis and repair procedures. Read the following warnings before performing the fuel system services: • Fuel vapor is hazardous. It can easily ignite, causing serious injury and damage. Always keep sparks and flames away from fuel. • Fuel line spills and leakage are dangerous. Fuel can ignite and cause serious injury or death and damage. Fuel can also irritate skin and eyes. To prevent this, always complete “BEFORE SERVICE PRECAUTION” and “AFTER SERVICE PRECAUTION” described in this manual. (See **BEFORE SERVICE PRECAUTION [SKYACTIV-G 2.0, SKYACTIV-G 2.5]**.) (See **AFTER SERVICE PRECAUTION [SKYACTIV-G 2.0, SKYACTIV-G 2.5]**.) **CAUTION:** • Disconnecting/connecting the quick release connector without cleaning it may possibly cause damage to the fuel pipe and quick release connector. Always clean the quick release connector joint area before disconnecting/connecting, and make sure that it is free of foreign matter.

CAUTION:

- Verify the malfunction symptom according to not only the PID value but also the symptom troubleshooting.

Related PIDs

Item (definition)	Unit/Condition	Definition	Condition/Specification (Reference)
FUEL_PRES	KPa {MPa}, mBar {Bar}, psi, in H20	Fuel pressure	• Displays fuel pressure
	V	Fuel pressure sensor voltage	• Fuel pressure is 3.0 MPa {31 kgf/cm^2, 435 psi}: Approx. 0.92 V • Fuel pressure is 4.8 MPa {49 kgf/cm^2, 696 psi}: Approx. 1.17 V
LOAD	%	Ratio of actual amount of intake air to the maximum air charging amount (mass volume) of cylinder	• Idle (after warm up): Approx. 17.64% • Racing (engine speed is 2,000 rpm): Approx. 14.51% • Racing (engine speed is 4,000 rpm): Approx. 21.17%

Diagnostic Procedure

STEP	INSPECTION	RESULTS	ACTION
1	**INSPECT FOR MISSING OR LOOSE FUEL FILLER CAP** • Visually inspect if the fuel filler cap is missing or loose. • Is there any malfunction?	Yes	Repair or replace the fuel filler cap.
		No	Go to the next step.
2	**INSPECT VACUUM HOSE CONNECTION** • Inspect the vacuum hose routing.	Yes	Go to the next step.
		No	Reconnect the vacuum hose. (See **INTAKE-AIR SYSTEM VACUUM HOSE ROUTING**

	(See **INTAKE-AIR SYSTEM VACUUM HOSE ROUTING DIAGRAM [SKYACTIV-G 2.0, SKYACTIV-G 2.5]**.) (See **EMISSION SYSTEM LOCATION INDEX [SKYACTIV-G 2.0, SKYACTIV-G 2.5]**.) • Are vacuum hoses routed properly?		**DIAGRAM [SKYACTIV-G 2.0, SKYACTIV-G 2.5]**.) (See **EMISSION SYSTEM LOCATION INDEX [SKYACTIV-G 2.0, SKYACTIV-G 2.5]**.)
3	**INSPECT FUEL SYSTEM FOR FUEL LEAKAGE** • Visually inspect the fuel leakage at the fuel line. • Is there any leakage?	Yes	Repair or replace the malfunctioning part according to the inspection results.
		No	Go to the next step.
4	**INSPECT PURGE SOLENOID VALVE** • Inspect the airflow of purge solenoid valve. (See **PURGE SOLENOID VALVE INSPECTION [SKYACTIV-G 2.0, SKYACTIV-G 2.5]**.) • Is the purge solenoid airflow properly?	Yes	Go to the next step.
		No	Replace the purge solenoid valve. (See **PURGE SOLENOID VALVE REMOVAL/INSTALLATION [SKYACTIV-G 2.0, SKYACTIV-G 2.5]**.)
5	**INSPECT CHARCOAL CANISTER** • Inspect the charcoal canister. (See **CHARCOAL CANISTER INSPECTION [SKYACTIV-G 2.0, SKYACTIV-G 2.5]**.) • Is there cracking or damage in the charcoal canister?	Yes	Repair or replace the malfunctioning part according to the inspection results. (See **CHARCOAL CANISTER REMOVAL/INSTALLATION [SKYACTIV-G 2.0, SKYACTIV-G 2.5]**.)
		No	Remove the fuel injector and visually inspect fuel injector or leakage. (See **FUEL INJECTOR REMOVAL/INSTALLATION [SKYACTIV-G 2.0, SKYACTIV-G 2.5]**.) • If there is any malfunction: ▪ Replace the fuel injector

				if necessary. (See **FUEL INJECTOR REMOVAL/INSTALLATION [SKYACTIV-G 2.0, SKYACTIV-G 2.5]**.)
6	Verify the test results. • If normal, return to the diagnostic index to service any additional symptoms. (See **SYMPTOM DIAGNOSTIC INDEX [SKYACTIV-G 2.0, SKYACTIV-G 2.5]**.) • If the malfunction remains, inspect the related Service Bulletins and/or On-line Repair Information and perform repair or diagnosis. ▪ If the vehicle is repaired, troubleshooting is completed. ▪ If the vehicle is not repaired or additional diagnostic information is not available, reprogram the PCM if a later calibration is available. Retest.			

2014 - Mazda3 - Engine

NO.21 ENGINE NOISE [SKYACTIV-G 2.0, SKYACTIV-G 2.5]

21	ENGINE NOISE
DESCRIPTION	• Engine noise from under hood.
POSSIBLE CAUSE	**Squeal, click or chirp noise:** • Improper engine oil level • Loose installation of solenoid valves • Improper drive belt tension • Generator installation • Auto tensioner bearing malfunction • Splash shield or under cover loose (water splashes on drive belt) **Rumble or grinding sound noise:** • Improper drive belt tension • Loose parts **Hiss sound noise:** • Vacuum leakage • Loose spark plug • Air leakage from the intake-air system **Rattle noise:** • Loose parts **Rap or roar noise:** • Dynamic damper loose • Exhaust system loose • Intake-air system loose **Other noise:** • Electric variable valve timing actuator malfunction

- Hydraulic variable valve timing actuator malfunction
- Timing chain noise
- Hydraulic lash adjuster (HLA) noise

WARNING:

The following troubleshooting flow chart contains the fuel system diagnosis and repair procedures. Read the following warnings before performing the fuel system services:

- Fuel vapor is hazardous. It can easily ignite, causing serious injury and damage. Always keep sparks and flames away from fuel.
- Fuel line spills and leakage are dangerous. Fuel can ignite and cause serious injury or death and damage. Fuel can also irritate skin and eyes. To prevent this, always complete “BEFORE SERVICE PRECAUTION” and “AFTER SERVICE PRECAUTION” described in this manual. (See **BEFORE SERVICE PRECAUTION [SKYACTIV-G 2.0, SKYACTIV-G 2.5]**.) (See **AFTER SERVICE PRECAUTION [SKYACTIV-G 2.0, SKYACTIV-G 2.5]**.)

CAUTION:

- Disconnecting/connecting the quick release connector without cleaning it may possibly cause damage to the fuel pipe and quick release connector. Always clean the quick release connector joint area before disconnecting/connecting, and make sure that it is free of foreign matter.

Diagnostic Procedure

STEP	INSPECTION	RESULTS	ACTION
1	**VERIFY IF THERE IS SQUEAL, CLICK, OR CHIRP SOUND** • Is squeal, click or chirp sound present?	Yes	Inspect the following: • Engine oil level • Solenoid valves installation • Drive belt tension • Generator installation • Auto tensioner bearing damaged • Splash shield or under cover loose Repair or replace the malfunctioning part according to the inspection results.
		No	Go to the next step.
2	**VERIFY IF THERE IS RUMBLE OR GRIND SOUND** • Is rumble or grinding sound present?	Yes	Inspect the following: • Drive belt tension • Loose parts in engine compartment If there is any malfunction:

			• Repair or replace the malfunctioning part according to the inspection results.
		No	Go to the next step.
3	**VERIFY IF THERE IS RATTLE SOUND** • Is rattle sound present?	Yes	Inspect the location of rattle for loose parts. Repair or replace the malfunctioning part according to the inspection results.
		No	Go to the next step.
4	**VERIFY IF THERE IS HISS SOUND** • Is hiss sound present?	Yes	Inspect the following: • Vacuum leakage • Spark plug loose • Intake-air system leakage Repair or replace the malfunctioning part according to the inspection results.
		No	Go to the next step.
5	**VERIFY IF THERE IS RAP OR ROAR SOUND** • Is rap or roar sound present?	Yes	Inspect the following: • Exhaust system installation • Intake-air system installation • Dynamic damper installation Repair or replace the malfunctioning part according to the inspection results.
		No	Go to the next step.
6	**VERIFY IF THERE IS KNOCK SOUND** • Is knocking noise present?	Yes	Perform the symptom troubleshooting “NO.13 KNOCKING/PINGING-ACCELERATION/CRUISE”. (See **NO.13 KNOCKING/PINGING-ACCELERATION/CRUISE [SKYACTIV-G 2.0, SKYACTIV-G 2.5]**.)
		No	If noise comes from engine internal: • Inspect the following: ▪ Timing chain ▪ Hydraulic lash adjuster (HLA) noise

			▪ Electric variable valve timing actuator ▪ Hydraulic variable valve timing actuator ▪ Engine compression • Repair or replace the malfunctioning part according to the inspection results.
7	Verify the test results. • If normal, return to the diagnostic index to service any additional symptoms. (See **SYMPTOM DIAGNOSTIC INDEX [SKYACTIV-G 2.0, SKYACTIV-G 2.5]**.) • If the malfunction remains, inspect the related Service Bulletins and/or On-line Repair Information and perform repair or diagnosis. ▪ If the vehicle is repaired, troubleshooting is completed. ▪ If the vehicle is not repaired or additional diagnostic information is not available, reprogram the PCM if a later calibration is available. Retest.		

2014 - Mazda3 - Engine

NO.22 VIBRATION CONCERNS (ENGINE) [SKYACTIV-G 2.0, SKYACTIV-G 2.5]

22	VIBRATION CONCERNS (ENGINE)
DESCRIPTION	• Vibration from under hood or driveline.
POSSIBLE CAUSE	• Loose attaching bolts or worn parts • Components malfunction such as worn parts

Diagnostic Procedure

STEP	INSPECTION	RESULTS	ACTION
1	**VERIFY PART INSTALLATION CONDITION** • Inspect the following components for loose attaching bolts or worn parts: ▪ Cooling fan ▪ Condenser fan ▪ Drive belt and pulley ▪ Engine mounts ▪ Exhaust system • Is there any malfunction?	Yes	Readjust installation position or retighten the suspect parts. Repair or replace the malfunctioning part according to the inspection results for other parts.
		No	Inspect the following systems: • Wheels • Transmission and mounts • Driveline • Suspension Repair or replace the malfunctioning part according to the inspection results.
2	Verify the test results. • If normal, return to the diagnostic index to service any additional symptoms. (See **SYMPTOM DIAGNOSTIC INDEX [SKYACTIV-G 2.0, SKYACTIV-G 2.5]**.) • If the malfunction remains, inspect the related Service Bulletins and/or On-line Repair Information and perform repair or diagnosis. ▪ If the vehicle is repaired, troubleshooting is completed.		

		▪ If the vehicle is not repaired or additional diagnostic information is not available, reprogram the PCM if a later calibration is available. Retest.

2014 - Mazda3 - Engine

NO.23 A/C DOES NOT WORK SUFFICIENTLY [SKYACTIV-G 2.0, SKYACTIV-G 2.5]

23	A/C DOES NOT WORK SUFFICIENTLY
DESCRIPTION	• A/C compressor magnetic clutch does not engage when A/C switch is turned on.
POSSIBLE CAUSE	• PCM, instrument cluster or climate control unit DTC is stored • Refrigerant pressure sensor malfunction • Improper refrigerant charging amount • Seized A/C compressor • Evaporator temperature sensor malfunction • Open or short circuit in wiring harness between the following terminals: ▪ Evaporator temperature sensor terminal B—Climate control unit terminal H (with manual air conditioner) ▪ Evaporator temperature sensor terminal A—Climate control unit terminal K (with manual air conditioner) ▪ Evaporator temperature sensor terminal B—Climate control unit terminal J (with full-auto air conditioner (single air mix actuator type)) ▪ Evaporator temperature sensor terminal A—Climate control unit terminal E (with full-auto air conditioner (single air mix actuator type)) ▪ Evaporator temperature sensor terminal B—Climate control unit terminal 1L (with full-auto air conditioner (dual air mix actuator type)) ▪ Evaporator temperature sensor terminal A—Climate control unit terminal 1J (with full-auto air conditioner (dual air mix actuator type)) • Instrument cluster malfunction (Does not receive A/C request signal from climate control unit or transmit it to PCM) • Climate control unit malfunction (A/C switch malfunction or climate control unit does not determine A/C request or transmit A/C request signal) • Open circuit in wiring harness between magnetic clutch and body ground • A/C relay stuck open • Open circuit in wiring harness between the following terminals: ▪ Front body control module (FBCM) terminal 1C—A/C relay terminal A ▪ Battery positive terminal—A/C relay terminal C ▪ A/C relay terminal D—Magnetic clutch terminal A ▪ A/C relay terminal E—PCM terminal 2AF

System Wiring Diagram

NO.23 A/C DOES NOT WORK SUFFICIENTLY [SKYACTIV-G 2.0, SKYACTIV-G 2.5]

Vehicles with manual air conditioner

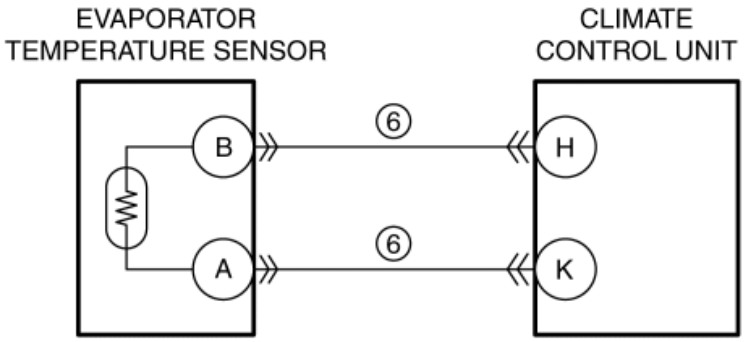

(MANUAL A/C)

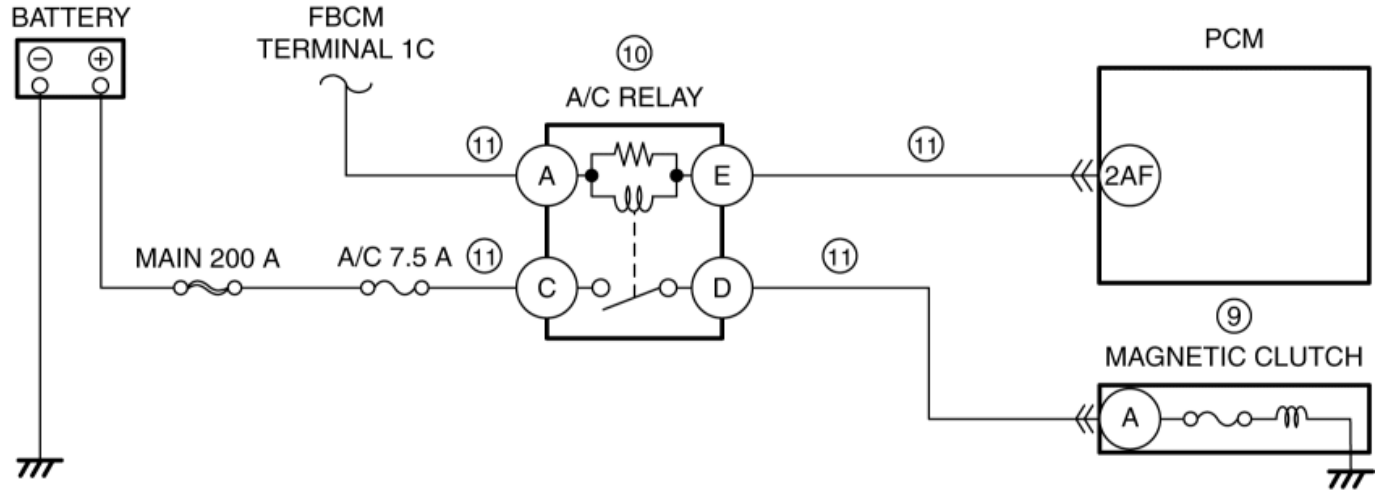

A/C RELAY
(RELAY AND FUSE BLOCK)

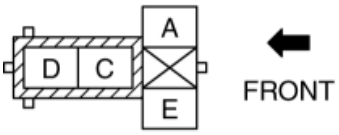

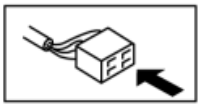

EVAPORATOR TEMPERATURE SENSOR
WIRING HARNESS-SIDE CONNECTOR

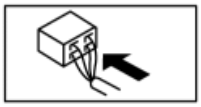

MAGNETIC CLUTCH
WIRING HARNESS-SIDE
CONNECTOR

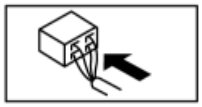

CLIMATE CONTROL UNIT
WIRING HARNESS-SIDE
CONNECTOR

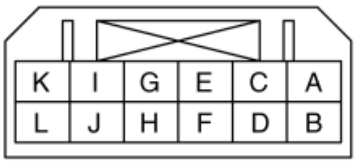

(MANUAL A/C)

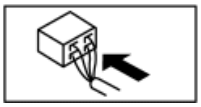

PCM WIRING HARNESS-SIDE CONNECTOR

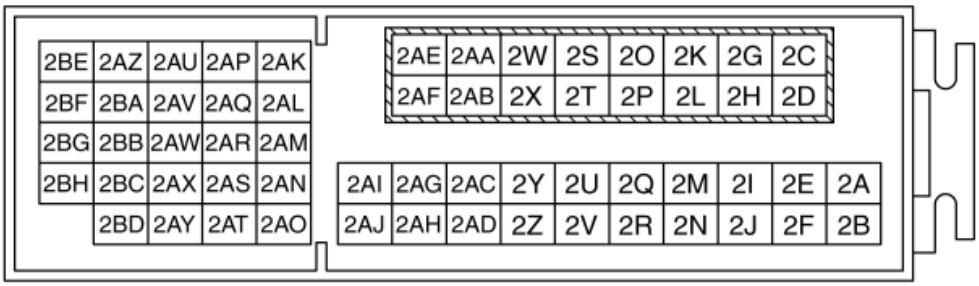

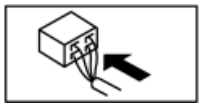

NO.23 A/C DOES NOT WORK SUFFICIENTLY [SKYACTIV-G 2.0, SKYACTIV-G 2.5]

Vehicles with full-auto air conditioner

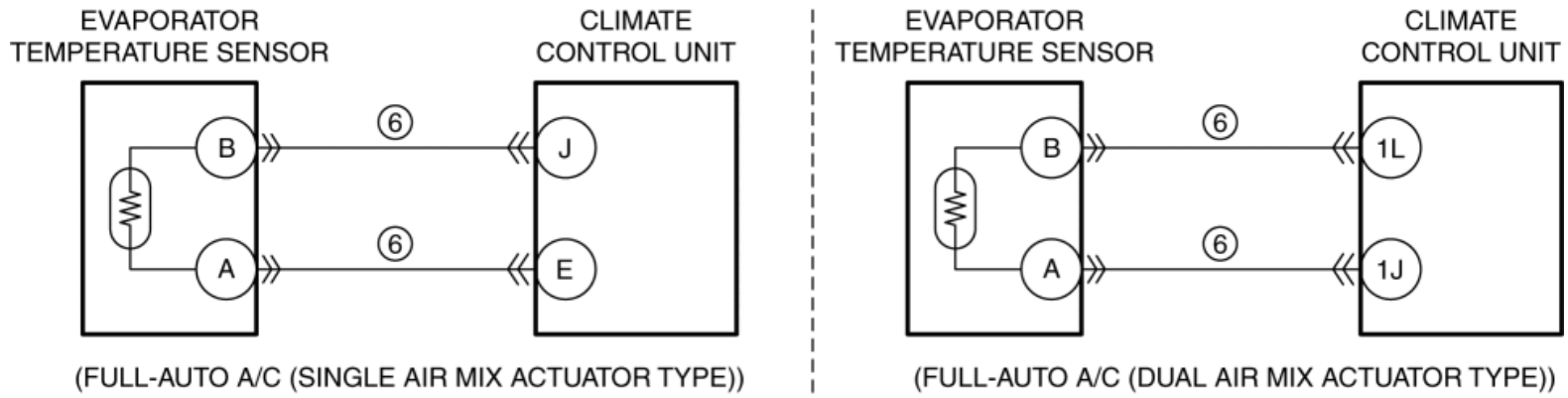

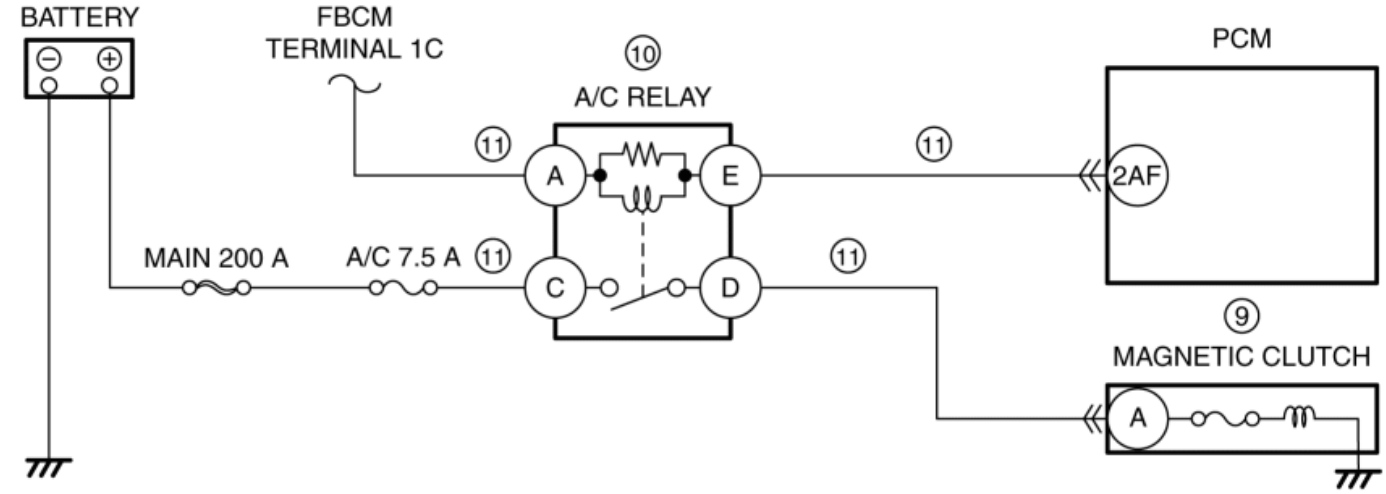

A/C RELAY (RELAY AND FUSE BLOCK)

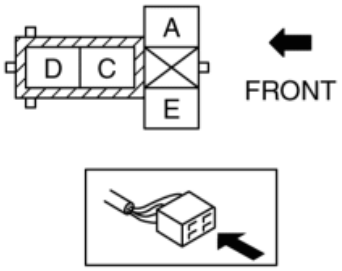

EVAPORATOR TEMPERATURE SENSOR WIRING HARNESS-SIDE CONNECTOR

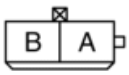

MAGNETIC CLUTCH WIRING HARNESS-SIDE CONNECTOR

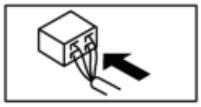

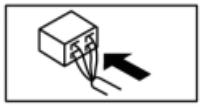

CLIMATE CONTROL UNIT WIRING HARNESS-SIDE CONNECTOR

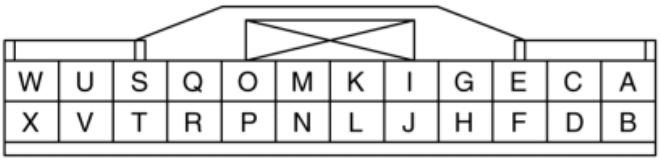

(FULL-AUTO A/C (SINGLE AIR MIX ACTUATOR TYPE))

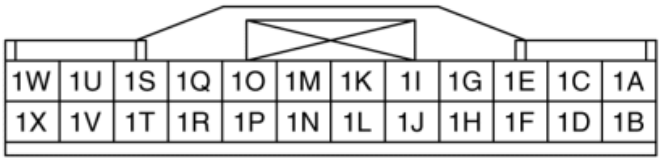

(FULL-AUTO A/C (DUAL AIR MIX ACTUATOR TYPE))

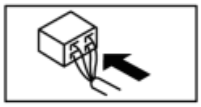

PCM WIRING HARNESS-SIDE CONNECTOR

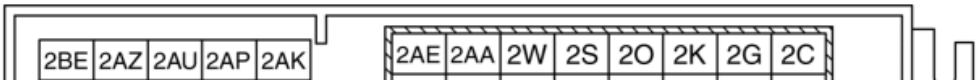

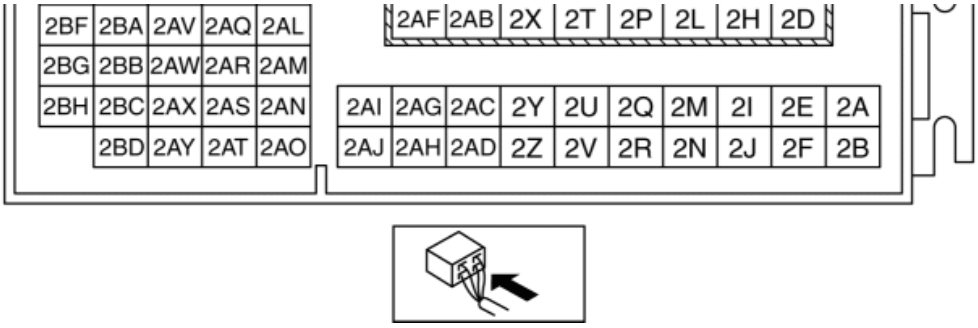

CAUTION:

- Verify the malfunction symptom according to not only the PID value but also the symptom troubleshooting.

Related PIDs

Item (definition)	Unit/Condition	Definition	Condition/Specification (Reference)
AC_REQ	Off/On	A/C switch status received by PCM via CAN	• A/C switch off: Off • A/C switch on: On
ACCS	Off/On	A/C relay status input from A/C relay	• A/C relay off: Off • A/C relay on: On

Diagnostic Procedure

STEP	INSPECTION	RESULTS	ACTION
1	**VERIFY PCM, INSTRUMENT CLUSTER AND CLIMATE CONTROL UNIT DTC** • Retrieve the PCM, instrument cluster and climate control unit DTCs using the M-MDS. (See **ON-BOARD DIAGNOSTIC TEST [SKYACTIV-G 2.0, SKYACTIV-G 2.5]**.) (See **DTC INSPECTION [INSTRUMENT CLUSTER]**.) (See **DTC DISPLAY [FULL-AUTO AIR CONDITIONER]**.) • Are any DTCs present?	Yes	Go to the applicable DTC inspection. (See **DTC TABLE [SKYACTIV-G 2.0, SKYACTIV-G 2.5]**.) (See **DTC TABLE [INSTRUMENT CLUSTER]**.) (See **DTC TABLE [FULL-AUTO AIR CONDITIONER]**.)
		No	Go to the next step.
2	**DETERMINE IF MALFUNCTION CAUSE IS A/C RELAY CONTROL SIGNAL OR A/C REQUEST SIGNAL** • Access the PCM PID ACCS using the M-MDS. (See **ON-BOARD DIAGNOSTIC TEST [SKYACTIV-G 2.0, SKYACTIV-G 2.5]**.) • Start the engine and idle it. • Turn the ACCS PID to ON from OFF using the M-MDS simulation function. • Is the magnetic clutch engaged?	Yes	Go to the next step.
		No	Go to Step 8.

3	**DETERMINE IF MALFUNCTION CAUSE IS REFRIGERANT PRESSURE SENSOR OR OTHER** • Access the PCM PID AC_REQ using the M-MDS. (See **ON-BOARD DIAGNOSTIC TEST [SKYACTIV-G 2.0, SKYACTIV-G 2.5]**.) • Monitor the AC_REQ PID while turning on and off the air conditioner using the switch on the control panel. • Is the AC_REQ PID value normal? (See **PCM INSPECTION [SKYACTIV-G 2.0, SKYACTIV-G 2.5]**.)	Yes	Go to the next step.
		No	Go to Step 5.
4	**INSPECT REFRIGERANT PRESSURE SENSOR** • Inspect the refrigerant pressure sensor. (See **REFRIGERANT PRESSURE SENSOR INSPECTION [MANUAL AIR CONDITIONER]**.) (See **REFRIGERANT PRESSURE SENSOR INSPECTION [FULL-AUTO AIR CONDITIONER]**.) • Is there any malfunction?	Yes	Repair or replace the malfunctioning part according to the inspection results.
		No	Inspect the following: • Refrigerant charging amount • A/C compressor seized Repair or replace the malfunctioning part according to the inspection results if necessary.
5	**DETERMINE IF MALFUNCTION CAUSE IS EVAPORATOR TEMPERATURE SENSOR OR OTHER** • Measure the voltage at the climate control unit terminal H (wiring harness-side). (with manual air conditioner) • Measure the voltage at the climate control unit terminal J (wiring harness-side). (with full-auto air conditioner (single air mix actuator type)) • Measure the voltage at the climate control unit terminal 1L (wiring harness-side). (with full-auto air conditioner (dual air mix actuator type)) • Is the voltage normal? (See **CLIMATE CONTROL UNIT INSPECTION [MANUAL AIR CONDITIONER]**.) (See **CLIMATE CONTROL UNIT INSPECTION [FULL-AUTO AIR CONDITIONER]**.)	Yes	Vehicles with manual air conditioner: • Go to Step 7. Vehicles with full-auto air conditioner: • Go to Step 8.
		No	Go to the next step.
6	**INSPECT EVAPORATOR TEMPERATURE SENSOR** • Inspect the evaporator temperature sensor.	Yes	Replace the evaporator temperature sensor. (See **EVAPORATOR TEMPERATURE SENSOR REMOVAL/INSTALLATION [MANUAL AIR CONDITIONER]**.)

	(See **EVAPORATOR TEMPERATURE SENSOR INSPECTION [MANUAL AIR CONDITIONER]**.) (See **EVAPORATOR TEMPERATURE SENSOR INSPECTION [FULL-AUTO AIR CONDITIONER]**.) • Is there any malfunction?		(See **EVAPORATOR TEMPERATURE SENSOR REMOVAL / INSTALLATION [FULL-AUTO AIR CONDITIONER]**.)
		No	Inspect for a short or open circuit between the following terminals: • Evaporator temperature sensor terminal B—Climate control unit terminal H (with manual air conditioner) • Evaporator temperature sensor terminal A—Climate control unit terminal K (with manual air conditioner) • Evaporator temperature sensor terminal B—Climate control unit terminal J (with full-auto air conditioner (single air mix actuator type)) • Evaporator temperature sensor terminal A—Climate control unit terminal E (with full-auto air conditioner (single air mix actuator type)) • Evaporator temperature sensor terminal B—Climate control unit terminal 1L (with full-auto air conditioner (dual air mix actuator type)) • Evaporator temperature sensor terminal A—Climate control unit terminal 1J (with full-auto air conditioner (dual air mix actuator type)) **If there is any malfunction:** ▪ Refer to the wiring diagram and verify whether or not there is a common connector between the following terminals: • Evaporator temperature sensor terminal B—Climate control unit terminal H (with manual air conditioner) • Evaporator temperature sensor terminal A—Climate control unit terminal K (with manual air conditioner) • Evaporator temperature sensor terminal B—Climate control unit terminal J (with full-auto air conditioner (single air mix actuator type)) • Evaporator temperature sensor terminal A—Climate control unit terminal E (with full-auto air conditioner (single air mix actuator type)) • Evaporator temperature sensor terminal B—

			Climate control unit terminal 1L (with full-auto air conditioner (dual air mix actuator type)) • Evaporator temperature sensor terminal A— Climate control unit terminal 1J (with full-auto air conditioner (dual air mix actuator type)) **If there is a common connector:** • Determine the malfunctioning part by inspecting the common connector and the terminal for corrosion, damage, or pin disconnection, and the common wiring harness for a short or open circuit. • Repair or replace the malfunctioning part. **If there is no common connector:** • Repair or replace the wiring harness which has a short or open circuit.
7	**DETERMINE IF MALFUNCTION CAUSE IS INSTRUMENT CLUSTER OR OTHER** • Verify the information display indication of A/C system while turning on and off the air conditioner using the switch on the control panel. • Does the information display indicate properly?	Yes	Instrument cluster does not receive the A/C request signal from climate control unit or transmit it to PCM. • Replace the instrument cluster. (See **INSTRUMENT CLUSTER REMOVAL/INSTALLATION**.)
		No	A/C switch malfunction, or climate control unit cannot determine the A/C request or transmit the A/C request signal. • Replace the climate control unit. (See **CLIMATE CONTROL UNIT REMOVAL/INSTALLATION [MANUAL AIR CONDITIONER]**.)
8	**DETERMINE IF MALFUNCTION CAUSE IS A/C CONTROL SIGNAL OR MAGNETIC CLUTCH** • Start the engine and idle it. • Access the PCM PID ACCS using the M-MDS.	Yes	Go to the next step.
		No	Go to Step 10.

	(See **ON-BOARD DIAGNOSTIC TEST [SKYACTIV-G 2.0, SKYACTIV-G 2.5]**.) • Turn the ACCS PID to ON from OFF using the M-MDS simulation function. • Measure the voltage at the magnetic clutch terminal A (wiring harness-side). • Is the voltage **10.5 V or more**?		
9	**INSPECT IF MALFUNCTION CAUSE IS MAGNETIC CLUTCH OR MAGNETIC CLUTCH GROUND CIRCUIT** • Switch the ignition off. • Disconnect the magnetic clutch connector. • Inspect for continuity between magnetic clutch terminal A (part-side) and body ground. • Is there continuity?	Yes	Inspect the magnetic clutch. (See **MAGNETIC CLUTCH INSPECTION**.) Replace the magnetic clutch if necessary.
		No	Inspect the A/C compressor. (poor contact to ground) • If there is any malfunction: ▪ Repair or replace the malfunctioning part according to the inspection results. • If there is no malfunction: ▪ Replace the A/C compressor. (internal circuit open)
10	**INSPECT A/C RELAY** • Switch the ignition off. • Remove the A/C relay. • Inspect the A/C relay. (See **RELAY INSPECTION**.) • Is there any malfunction?	Yes	Replace the A/C relay.
		No	Go to the next step.
11	**INSPECT A/C RELAY CONTROL CIRCUIT FOR OPEN CIRCUIT** • A/C relay is removed. • Disconnect the PCM connector. • Inspect for continuity between A/C relay terminal E (wiring harness-side) and PCM terminal 2AF (wiring harness-side). • Is there continuity?	Yes	Inspect for continuity between the following: • Front body control module (FBCM) terminal 1C—A/C relay terminal A • Battery positive terminal—A/C relay terminal C • A/C relay terminal D—Magnetic clutch terminal A Refer to the wiring diagram and verify whether or not there is a common connector between the following terminals: • Front body control module (FBCM) terminal 1C—A/C relay terminal A • Battery positive terminal—A/C relay terminal C • A/C relay terminal D—Magnetic clutch terminal A **If there is a common connector:** • Determine the malfunctioning part by inspecting the common connector and the terminal for corrosion, damage, or pin disconnection, and the common wiring harness for an open circuit. • Repair or replace the malfunctioning part. **If there is no common connector:**

			• Repair or replace the wiring harness which has an open circuit.
		No	Refer to the wiring diagram and verify whether or not there is a common connector between A/C relay terminal E and PCM terminal 2AF. **If there is a common connector:** • Determine the malfunctioning part by inspecting the common connector and the terminal for corrosion, damage, or pin disconnection, and the common wiring harness for an open circuit. • Repair or replace the malfunctioning part. **If there is no common connector:** • Repair or replace the wiring harness which has an open circuit.
12	Verify the test results. • If normal, return to the diagnostic index to service any additional symptoms. (See **SYMPTOM DIAGNOSTIC INDEX [SKYACTIV-G 2.0, SKYACTIV-G 2.5]**.) • If the malfunction remains, inspect the related Service Bulletins and/or On-line Repair Information and perform repair or diagnosis. ▪ If the vehicle is repaired, troubleshooting is completed. ▪ If the vehicle is not repaired or additional diagnostic information is not available, reprogram the PCM if a later calibration is available. Retest.		

2014 - Mazda3 - Engine

NO.24 A/C IS ALWAYS ON OR A/C COMPRESSOR RUNS CONTINUOUSLY [SKYACTIV-G 2.0, SKYACTIV-G 2.5]

24	A/C IS ALWAYS ON OR A/C COMPRESSOR RUNS CONTINUOUSLY
DESCRIPTION	• A/C compressor magnetic clutch does not disengage.
POSSIBLE CAUSE	• PCM, instrument cluster or climate control unit DTC is stored • Short to power supply in wiring harness between A/C relay terminal D and magnetic clutch terminal A • Magnetic clutch engagement is stuck • Climate control unit malfunction (Climate control unit always transmits A/C request signal) • A/C relay is stuck closed • Short to ground in wiring harness between A/C relay terminal E and PCM terminal 2AF

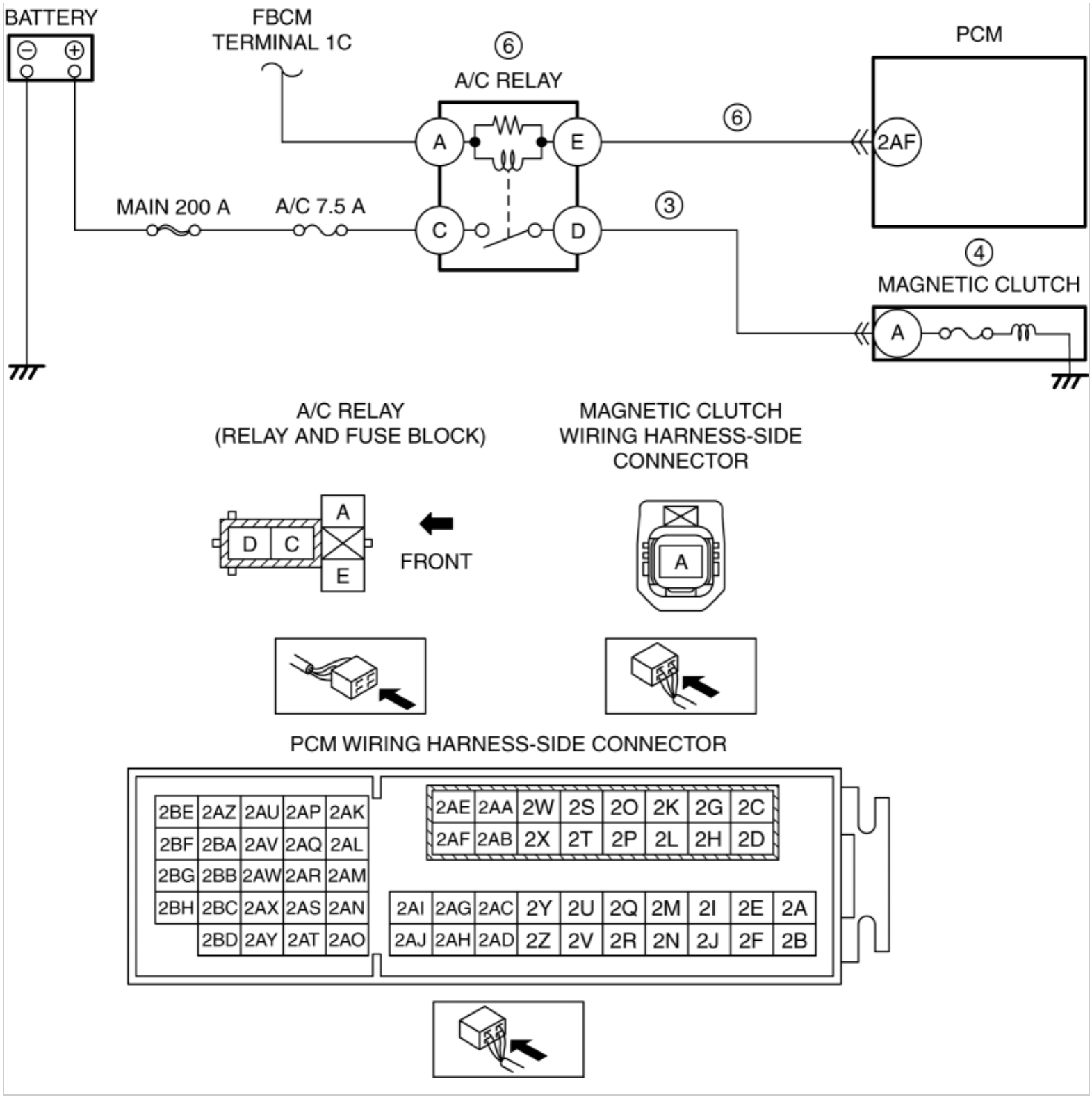

CAUTION:

- Verify the malfunction symptom according to not only the PID value but also the symptom troubleshooting.

Related PIDs

Item (definition)	Unit/Condition	Definition	Condition/Specification (Reference)

ACCS	Off/On	A/C relay status input from A/C relay	• A/C relay off: Off • A/C relay on: On

Diagnostic Procedure

STEP	INSPECTION	RESULTS	ACTION
1	**VERIFY PCM, INSTRUMENT CLUSTER AND CLIMATE CONTROL UNIT DTC** • Retrieve the PCM, instrument cluster and climate control unit DTCs using the M-MDS. (See **ON-BOARD DIAGNOSTIC TEST [SKYACTIV-G 2.0, SKYACTIV-G 2.5]**.) (See **DTC INSPECTION [INSTRUMENT CLUSTER]**.) (See **DTC DISPLAY [FULL-AUTO AIR CONDITIONER]**.) • Are any DTCs present?	Yes	Go to the applicable DTC inspection. (See **DTC TABLE [SKYACTIV-G 2.0, SKYACTIV-G 2.5]**.) (See **DTC TABLE [INSTRUMENT CLUSTER]**.) (See **DTC TABLE [FULL-AUTO AIR CONDITIONER]**.)
		No	Go to the next step.
2	**DETERMINE IF MALFUNCTION CAUSE IS MAGNETIC CLUTCH OR OTHER** • Start the engine and idle it. • Turn the A/C switch on. • Remove the A/C relay. • Does the magnetic clutch disengage?	Yes	Go to Step 5.
		No	Go to the next step.
3	**INSPECT IF MALFUNCTION CAUSE IS MAGNETIC CLUTCH POWER SUPPLY CIRCUIT OR MAGNETIC CLUTCH** • A/C relay is removed. • Switch the ignition off. • Disconnect the magnetic clutch	Yes	Inspect for short to power supply circuit between magnetic clutch terminal A and A/C relay terminal D. • Refer to the wiring diagram and verify whether or not there is a common connector between magnetic clutch terminal A and A/C relay terminal D. **If there is a common connector:** ▪ Determine the malfunctioning

	connector. • Start the engine and idle it. • Does the magnetic clutch disengage?		part by inspecting the common connector and the terminal for corrosion, damage, or pin disconnection, and the common wiring harness for a short to power supply. ▪ Repair or replace the malfunctioning part. **If there is no common connector:** ▪ Repair or replace the wiring harness which has a short to power supply.
		No	Go to the next step.
4	**INSPECT MAGNETIC CLUTCH CLEARANCE** • Verify the magnetic clutch clearance. (See **MAGNETIC CLUTCH ADJUSTMENT**.) • Is the magnetic clutch clearance normal?	Yes	Inspect the magnetic clutch to see if it is stuck. (See **MAGNETIC CLUTCH INSPECTION**.) Replace the magnetic clutch if necessary. (See **MAGNETIC CLUTCH DISASSEMBLY/ASSEMBLY**.)
		No	Adjust the magnetic clutch clearance. (See **MAGNETIC CLUTCH ADJUSTMENT**.)
5	**DETERMINE IF MALFUNCTION CAUSE IS A/C RELAY CONTROL SIGNAL OR A/C REQUEST SIGNAL** • Access the PCM PID ACCS using the M-MDS. (See **ON-BOARD DIAGNOSTIC TEST [SKYACTIV-G 2.0, SKYACTIV-G 2.5]**.) • Monitor the PID ACCS while turning on and off the air conditioner using the switch on the control panel. • Is the ACCS PID value always ON?	Yes	Climate control unit always transmits A/C request signal. • Replace the climate control unit. (See **CLIMATE CONTROL UNIT REMOVAL/INSTALLATION [MANUAL AIR CONDITIONER]**.) (See **CLIMATE CONTROL UNIT REMOVAL/INSTALLATION [FULL-AUTO AIR CONDITIONER]**.)
		No	Go to the next step.
6	**INSPECT A/C RELAY** • Inspect the A/C relay. (See **RELAY INSPECTION**.) • Is there any	Yes	Replace the A/C relay.
		No	Inspect for short to ground circuit between A/C relay terminal E and PCM terminal 2AF. • Refer to the wiring diagram and verify whether or not there is a common connector between

	malfunction?		A/C relay terminal E and PCM terminal 2AF. **If there is a common connector:** ▪ Determine the malfunctioning part by inspecting the common connector and the terminal for corrosion, damage, or pin disconnection, and the common wiring harness for a short to ground. ▪ Repair or replace the malfunctioning part. **If there is no common connector:** ▪ Repair or replace the wiring harness which has a short to ground.
7	Verify the test results. • If normal, return to the diagnostic index to service any additional symptoms. (See **SYMPTOM DIAGNOSTIC INDEX [SKYACTIV-G 2.0, SKYACTIV-G 2.5]**.) • If the malfunction remains, inspect the related Service Bulletins and/or On-line Repair Information and perform repair or diagnosis. ▪ If the vehicle is repaired, troubleshooting is completed. ▪ If the vehicle is not repaired or additional diagnostic information is not available, reprogram the PCM if a later calibration is available. Retest.		

2014 - Mazda3 - Engine

NO.25 EXHAUST SULPHUR SMELL [SKYACTIV-G 2.0, SKYACTIV-G 2.5]

25	EXHAUST SULPHUR SMELL
DESCRIPTION	• Rotten egg smell (sulphur) from exhaust.

POSSIBLE CAUSE	• Electrical connectors are disconnected or connected poorly
	• Vacuum lines are disconnected or connected improperly.
	• Poor fuel quality
	• PCM DTC is stored
	• Inadequate fuel pressure
	  ▪ Fuel pressure sensor malfunction
	  ▪ High pressure fuel pump malfunction
	  ▪ Spill valve control solenoid valve control circuit malfunction (damage to driver in PCM caused by short circuit to ground system)
	  ▪ Spill valve control solenoid valve (built-into high pressure fuel pump) malfunction
	  ▪ Relief valve (built-into high pressure fuel pump) malfunction
	  ▪ Fuel line restricted
	  ▪ Fuel pump unit malfunction
	• Charcoal canister malfunction
	• Fuel tank vent system malfunction
	WARNING:
	The following troubleshooting flow chart contains the fuel system diagnosis and repair procedures. Read the following warnings before performing the fuel system services:
	• Fuel vapor is hazardous. It can easily ignite, causing serious injury and damage. Always keep sparks and flames away from fuel.
	• Fuel line spills and leakage are dangerous. Fuel can ignite and cause serious injury or death and damage. Fuel can also irritate skin and eyes. To prevent this, always complete “BEFORE SERVICE PRECAUTION” and “AFTER SERVICE PRECAUTION” described in this manual. (See **BEFORE SERVICE PRECAUTION [SKYACTIV-G 2.0, SKYACTIV-G 2.5]**.) (See **AFTER SERVICE PRECAUTION [SKYACTIV-G 2.0, SKYACTIV-G 2.5]**.)
	CAUTION:
	• Disconnecting/connecting the quick release connector without cleaning it may possibly cause damage to the fuel pipe and quick release connector. Always clean the quick release connector joint area before disconnecting/connecting, and make sure that it is free of foreign matter.

CAUTION:

- Verify the malfunction symptom according to not only the PID value but also the symptom troubleshooting.

Related PIDs

Item (definition)	Unit/Condition	Definition	Condition/Specification (Reference)
FUEL_PRES	KPa {MPa}, mBar {Bar}, psi, in H20	Fuel pressure	• Displays fuel pressure
	V	Fuel pressure sensor voltage	• Fuel pressure is 3.0 MPa {31 kgf/cm^2, 435 psi}: Approx. 0.92 V • Fuel pressure is 4.8 MPa {49 kgf/cm^2, 696 psi}: Approx. 1.17 V
LOAD	%	Ratio of actual amount of intake air to the maximum air charging amount (mass volume) of cylinder	• Idle (after warm up): Approx. 17.64% • Racing (engine speed is 2,000 rpm): Approx. 14.51% • Racing (engine speed is 4,000 rpm): Approx. 21.17%

Diagnostic Procedure

STEP	INSPECTION	RESULTS	ACTION
1	**VERIFY IF THERE IS POOR DRIVEABILITY OR EXHAUST GAS RELATED MALFUNCTION** • Are any driveability or exhaust smoke concerns present?	Yes	Go to the applicable symptom troubleshooting. (See **SYMPTOM DIAGNOSTIC INDEX [SKYACTIV-G 2.0, SKYACTIV-G 2.5]**.)
		No	Go to the next step.
2	**INSPECT RELATED PART CONDITION** • Inspect the following: ▪ Electrical connections ▪ Vacuum lines ▪ Fuel quality • Is there any malfunction?	Yes	Service if necessary. • Repeat this step.
		No	Go to the next step.
3	**VERIFY PCM DTC** • Retrieve any DTCs using the M-MDS. (See **ON-BOARD DIAGNOSTIC TEST [SKYACTIV-G 2.0, SKYACTIV-G 2.5]**.) • Are any DTCs present?	Yes	Go to the applicable DTC inspection. (See **DTC TABLE [SKYACTIV-G 2.0, SKYACTIV-G 2.5]**.)
		No	Go to the next step.
4	**INSPECT FUEL PRESSURE (HIGH-SIDE)** • Start the engine and warm it up completely. • Access the FUEL_PRES PID using the M-MDS at idle.	Yes	Go to Step 8.
		No	Lower than **3 MPa {31 kgf/cm^2, 435 psi}**: • Inspect the following:

	(See **ON-BOARD DIAGNOSTIC TEST [SKYACTIV-G 2.0, SKYACTIV-G 2.5]**.) • Is the FUEL_PRES PID value **approx. 3 MPa {31 kgf/cm^2, 435 psi}**?		▪ Fuel leakage at the fuel line and fuel injector ▪ Fuel pump • Perform the Fuel Pump (Low-pressure Side) Operation Inspection. (See **ENGINE CONTROL SYSTEM OPERATION INSPECTION [SKYACTIV-G 2.0, SKYACTIV-G 2.5]**.) ▪ Fuel pressure sensor (See **FUEL PRESSURE SENSOR INSPECTION [SKYACTIV-G 2.0, SKYACTIV-G 2.5]**.) ▪ High pressure fuel pump (See **HIGH PRESSURE FUEL PUMP INSPECTION [SKYACTIV-G 2.0, SKYACTIV-G 2.5]**.) • If there is any malfunction: ▪ Repair or replace the malfunctioning part according to the inspection results. • If there is no malfunction: ▪ Go to Step 7. Higher than **3 MPa {31 kgf/cm^2, 435 psi}**: • Go to the next step.
5	**DETERMINE IF MALFUNCTION CAUSE IS FUEL PRESSURE SENSOR OR HIGH PRESSURE FUEL PUMP** • Is the vehicle acceleration performance normal?	Yes	Go to the next step.
		No	Go to Step 7.
6	**INSPECT FUEL PRESSURE SENSOR** • Inspect the fuel pressure sensor. (See **FUEL PRESSURE SENSOR INSPECTION [SKYACTIV-G 2.0, SKYACTIV-G 2.5]**.) • Is there any malfunction?	Yes	Replace the fuel distributor. (See **FUEL INJECTOR REMOVAL/INSTALLATION [SKYACTIV-G 2.0, SKYACTIV-G 2.5]**.)
		No	Go to Step 8.
7	**INSPECT SPILL VALVE CONTROL SOLENOID VALVE CONTROL CIRCUIT FOR SHORT TO GROUND** • Switch the ignition off. • Disconnect the high pressure fuel pump and PCM connectors. • Inspect for continuity between high pressure fuel pump terminal A (wiring harness-side) and body ground. • Is there continuity?	Yes	Refer to the wiring diagram and verify whether or not there is a common connector between high pressure fuel pump terminal A and PCM terminal 1EE. **If there is a common connector:** • Determine the malfunctioning part by inspecting the common connector and the terminal for corrosion, damage, or pin disconnection, and the common wiring harness for a short to ground. • Repair or replace the malfunctioning part. **If there is no common connector:** • Repair or replace the wiring harness which has a short to ground.

			If the malfunction remains: • Replace the PCM. (damage to driver in PCM) (See **PCM REMOVAL/INSTALLATION [SKYACTIV-G 2.0, SKYACTIV-G 2.5]**.)
		No	Replace the high pressure fuel pump. (See **HIGH PRESSURE FUEL PUMP REMOVAL/INSTALLATION [SKYACTIV-G 2.0, SKYACTIV-G 2.5]**.)
8	**INSPECT FUEL PRESSURE (LOW-SIDE)** • Connect the fuel pressure gauge between fuel pump and high pressure fuel pump. • Measure the low side fuel pressure. (See **FUEL LINE PRESSURE INSPECTION [SKYACTIV-G 2.0, SKYACTIV-G 2.5]**.) • Is the low side fuel pressure within specification? **Specification:** • **405—485 kPa {4.13—4.94 kgf/cm^2, 58.8—70.3 psi}**	Yes	Go to the next step.
		No	Inspect the following: • Fuel line restriction • Fuel filter clogged ▪ If there is any malfunction: • Repair or replace the malfunctioning part according to the inspection results. ▪ If there is no malfunction: • Replace the fuel pump unit. (See **FUEL PUMP UNIT REMOVAL/INSTALLATION [SKYACTIV-G 2.0, SKYACTIV-G 2.5]**.)
9	**DETERMINE IF MALFUNCTION CAUSE IS CHARCOAL CANISTER OR FUEL TANK VENT SYSTEM** • Inspect the charcoal canister for fuel saturation. (See **CHARCOAL CANISTER INSPECTION [SKYACTIV-G 2.0, SKYACTIV-G 2.5]**.) • Is there excess amount of liquid fuel present in canister?	Yes	Replace the charcoal canister. (See **CHARCOAL CANISTER REMOVAL/INSTALLATION [SKYACTIV-G 2.0, SKYACTIV-G 2.5]**.)
		No	Inspect the fuel tank vent system. • If the fuel tank vent system is normal: ▪ Suggest trying a different brand since sulfur content can vary in different fuels. • If fuel tank vent system is not normal: ▪ Repair or replace the malfunctioning part according to the inspection results.
10	Verify the test results. • If normal, return to the diagnostic index to service any additional symptoms. (See **SYMPTOM DIAGNOSTIC INDEX [SKYACTIV-G 2.0, SKYACTIV-G 2.5]**.) • If the malfunction remains, inspect the related Service Bulletins and/or On-line Repair Information and perform repair or diagnosis. ▪ If the vehicle is repaired, troubleshooting is completed. ▪ If the vehicle is not repaired or additional diagnostic information is not available, reprogram the PCM if a later calibration is available. Retest.		

NO.25 EXHAUST SULPHUR SMELL [SKYACTIV-G 2.0, SKYACTIV-G 2.5]

2014 - Mazda3 - Engine

NO.26 FUEL REFILL CONCERNS [SKYACTIV-G 2.0, SKYACTIV-G 2.5]

26	FUEL REFILL CONCERNS
DESCRIPTION	• Fuel tank does not fill smoothly.
POSSIBLE CAUSE	• PCM DTC is stored. • Non-return valve malfunction • Check valve (Except U.S.A. And CANADA) • Improper use of fuel nozzle • Inadequate fuel filling speed **WARNING:** • The following troubleshooting flow chart contains the fuel system diagnosis and repair procedures. Read the following warnings before servicing the fuel system: ▪ Fuel vapor is hazardous. It can easily ignite, causing serious injury and damage. Always keep sparks and flames away from fuel. ▪ Fuel line spills and leakage are dangerous. Fuel can ignite and cause serious injuries or death and damage. Fuel can also irritate skin and eyes. To prevent this, always complete “BEFORE SERVICE PRECAUTION” and “AFTER SERVICE PRECAUTION” described in this manual. (See **BEFORE SERVICE PRECAUTION [SKYACTIV-G 2.0, SKYACTIV-G 2.5]**.) (See **AFTER SERVICE PRECAUTION [SKYACTIV-G 2.0, SKYACTIV-G 2.5]**.) **CAUTION:** • Disconnecting/connecting the quick release connector without cleaning it may cause damage to the fuel pipe and the quick release connector. Always clean the quick release connector joint area before disconnecting/connecting, and make sure that it is free of foreign matter.

Diagnostic Procedure

STEP	INSPECTION	ACTION

1	**VERIFY PCM DTC** • Retrieve any DTCs using the M-MDS. (See **ON-BOARD DIAGNOSTIC TEST [SKYACTIV-G 2.0, SKYACTIV-G 2.5]**.) • Are any DTCs present?	Yes	Go to the applicable DTC inspection. (See **DTC TABLE [SKYACTIV-G 2.0, SKYACTIV-G 2.5]**.)
		No	Go to the next step.
2	**DETERMINE IF MALFUNCTION CAUSE IS NON-RETURN VALVE** • Remove the fuel-filler pipe. • Make sure non-return valve is installed properly. • Inspect the non-return valve operation. • Is there any malfunction?	Yes	Non-return valve is installed improperly: • Reinstall the non-return valve to proper position. Non-return valve does not operate properly: • Replace the non-return valve.
		No	Go to the next step.
3	**DETERMINE IF MALFUNCTION CAUSE IS CHECK VALVE** • Inspect the check valve. (See **CHECK VALVE INSPECTION [SKYACTIV-G 2.0, SKYACTIV-G 2.5]**.) • Is there any malfunction?	Yes	Replace the check valve. (See **CHECK VALVE REMOVAL/INSTALLATION [SKYACTIV-G 2.0, SKYACTIV-G 2.5]**.)
		No	Inspect the following: • Improper use of fuel nozzle • Inadequate fuel filling speed Repair or replace the malfunctioning part according to the inspection results.
4	Verify the test results. • If normal, return to the diagnostic index to service any additional symptoms. (See **SYMPTOM DIAGNOSTIC INDEX [SKYACTIV-G 2.0, SKYACTIV-G 2.5]**.) • If the malfunction remains, inspect the related Service Bulletins and/or On-line Repair Information and perform repair or diagnosis. ▪ If the vehicle is repaired, troubleshooting is completed. ▪ If the vehicle is not repaired or additional diagnostic information is not available, reprogram the PCM if a later calibration is available. Retest.		

NO.26 FUEL REFILL CONCERNS [SKYACTIV-G 2.0, SKYACTIV-G 2.5]

2014 - Mazda3 - Engine

NO.27 FUEL FILLING SHUT OFF CONCERNS [SKYACTIV-G 2.0, SKYACTIV-G 2.5]

27	FUEL FILLING SHUT OFF CONCERNS
DESCRIPTION	• Fuel does not shut off properly.
POSSIBLE CAUSE	• PCM DTC is stored. • Nonreturn valve malfunction • Check valve (Except U.S.A. And CANADA) • Fuel nozzle is not inserted correctly. • Fuel nozzle malfunction • Fuel shut-off valve malfunction **WARNING:** • The following troubleshooting flow chart contains the fuel system diagnosis and repair procedures. Read the following warnings before servicing the fuel system: ▪ Fuel vapor is hazardous. It can easily ignite, causing serious injury and damage. Always keep sparks and flames away from fuel. ▪ Fuel line spills and leakage are dangerous. Fuel can ignite and cause serious injuries or death and damage. Fuel can also irritate skin and eyes. To prevent this, always complete “BEFORE SERVICE PRECAUTION” and “AFTER SERVICE PRECAUTION” described in this manual. (See **BEFORE SERVICE PRECAUTION [SKYACTIV-G 2.0, SKYACTIV-G 2.5]**.) (See **AFTER SERVICE PRECAUTION [SKYACTIV-G 2.0, SKYACTIV-G 2.5]**.) **CAUTION:** • Disconnecting/connecting the quick release connector without cleaning it may cause damage to the fuel pipe and the quick release connector. Always clean the quick release connector joint area before disconnecting/connecting, and make sure that it is free of foreign matter.

Diagnostic Procedure

STEP	INSPECTION		ACTION
1	**VERIFY PCM DTC** • Retrieve any DTCs using the M-MDS. (See **ON-BOARD DIAGNOSTIC TEST [SKYACTIV-G 2.0, SKYACTIV-G 2.5]**.) • Are any DTCs present?	Yes	Go to the applicable DTC inspection. (See **DTC TABLE [SKYACTIV-G 2.0, SKYACTIV-G 2.5]**.)
		No	Go to the next step.
2	**DETERMINE IF MALFUNCTION CAUSE IS NON-RETURN VALVE** • Remove the fuel-filler pipe. • Make sure non-return valve is installed properly. • Inspect the non-return valve operation. • Is there any malfunction?	Yes	Non-return valve is installed improperly: • Reinstall the non-return valve to proper position. Non-return valve does not operate properly: • Replace the non-return valve.
		No	Go to the next step.
3	**DETERMINE IF MALFUNCTION CAUSE IS CHECK VALVE** • Inspect the check valve. (See **CHECK VALVE INSPECTION [SKYACTIV-G 2.0, SKYACTIV-G 2.5]**.) • Is there any malfunction?	Yes	Replace the check valve. (See **CHECK VALVE REMOVAL/INSTALLATION [SKYACTIV-G 2.0, SKYACTIV-G 2.5]**.)
		No	Inspect the following: • Improper use of fuel nozzle • Inadequate fuel filling speed Repair or replace the malfunctioning part according to the inspection results.
4	Verify the test results. • If normal, return to the diagnostic index to service any additional symptoms. (See **SYMPTOM DIAGNOSTIC INDEX [SKYACTIV-G 2.0, SKYACTIV-G 2.5]**.) • If the malfunction remains, inspect the related Service Bulletins and/or On-line Repair Information and perform repair or diagnosis. ▪ If the vehicle is repaired, troubleshooting is completed. ▪ If the vehicle is not repaired or additional diagnostic information is not available, reprogram the PCM if a later calibration is available. Retest.		

NO.27 FUEL FILLING SHUT OFF CONCERNS [SKYACTIV-G 2.0, SKYACTIV-G 2.5]

2014 - Mazda3 - Engine

NO.28 SPARK PLUG CONDITION [SKYACTIV-G 2.0, SKYACTIV-G 2.5]

28	SPARK PLUG CONDITION
DESCRIPTION	• Incorrect spark plug condition.
POSSIBLE CAUSE	**NOTE:** • Inspecting the spark plug conditions can determine whether a problem is related to a specific cylinder or possibly all cylinders. **Wet/carbon stuck on specific plug:** • Spark—Weak, not visible • Air/fuel mixture—Excessive fuel injection volume • Compression—No compression, low compression • Malfunction spark plug **Grayish white with specific plug:** • Air/fuel mixture—Insufficient fuel injection volume • Malfunction spark plug **Wet/carbon is stuck on all plugs:** • Spark—Spark weak • Air/fuel mixture—Too rich, excessive fuel line pressure • Erratic signal to PCM ▪ ECT sensor No.1 or related circuit malfunction ▪ MAF sensor or related circuit malfunction ▪ A/F sensor or related circuit malfunction ▪ HO2S or related circuit malfunction • Compression—Low compression • Restriction in intake/exhaust system **Grayish white with all plugs:** • Erratic signal to PCM ▪ ECT sensor No.1 or related circuit malfunction ▪ MAF sensor or related circuit malfunction ▪ A/F sensor or related circuit malfunction ▪ HO2S or related circuit malfunction • Air/fuel mixture—Too lean, insufficient fuel line pressure **WARNING:** • The following troubleshooting flow chart contains the fuel system diagnosis and repair procedures. Read the following warnings before servicing the fuel system:

- Fuel vapor is hazardous. It can easily ignite, causing serious injury and damage. Always keep sparks and flames away from fuel.
- Fuel line spills and leakage are dangerous. Fuel can ignite and cause serious injuries or death and damage. Fuel can also irritate skin and eyes. To prevent this, always complete “BEFORE SERVICE PRECAUTION” and “AFTER SERVICE PRECAUTION” described in this manual. (See **BEFORE SERVICE PRECAUTION [SKYACTIV-G 2.0, SKYACTIV-G 2.5]**.) (See **AFTER SERVICE PRECAUTION [SKYACTIV-G 2.0, SKYACTIV-G 2.5]**.)

CAUTION:

- Disconnecting/connecting the quick release connector without cleaning it may cause damage to the fuel pipe and the quick release connector. Always clean the quick release connector joint area before disconnecting/connecting, and make sure that it is free of foreign matter.

CAUTION:

- Verify the malfunction symptom according to not only the PID value but also the symptom troubleshooting.

Related PIDs

Item (definition)	Unit/Condition	Definition	Condition/Specification (Reference)
ECT	°C, °F	Engine coolant temperature	• Displays ECT
	V	ECT sensor No.1 voltage	• ECT is 20 °C {68 °F}: Approx. 3.10 V • ECT is 40 °C {104 °F}: Approx. 2.16 V • ECT is 60 °C {140 °F}: Approx. 1.40 V • ECT is 80 °C {176 °F}: Approx. 0.87 V • ECT is 100 °C {212 °F}: Approx. 0.54 V
MAF	g/Sec	Mass air flow	• Displays MAF
	V	MAF sensor voltage	• Ignition switched ON (engine off) (MAF: 0.59 g/s {0.078 lb/min}): Approx. 0.72 V • Idle (after warm up) (MAF: 2.17 g/s {0.287 lb/min}): Approx. 0.86 V • Racing (engine speed is 2,000 rpm) (MAF: 4.73 g/s {0.626 lb/min}): Approx. 1.07 V
O2S11	µA	A/F sensor current	• Idle (after warm up): Approx. −39 µA • Deceleration fuel cut (accelerator pedal released from engine speed of 4,000 rpm or more): Approx. 3.84 mA
O2S12	V	HO2S voltage	• Idle (after warm up): 0—1.0 V • Deceleration fuel cut (accelerator pedal released from engine speed of 4,000 rpm or more): Approx. 0 V
RPM	RPM	Engine speed	• Displays engine speed
VSS	KPH, MPH	Vehicle speed	• Displays vehicle speed

Diagnostic Procedure

STEP	INSPECTION	RESULTS	ACTION
1	**VERIFY SPARK PLUG CONDITION** • Remove all spark plugs. (See **SPARK PLUG REMOVAL/INSTALLATION [SKYACTIV-G 2.0, SKYACTIV-G 2.5]**.) • Inspect the spark plug. (See **SPARK PLUG INSPECTION [SKYACTIV-G 2.0, SKYACTIV-G 2.5]**.) • Is there any malfunction?	Yes	Specific plug is wet or covered with carbon: • Go to the next step. Specific plug looks grayish white: • Go to Step 7. All plugs are wet or covered with carbon: • Go to Step 9. All plugs look grayish white: • Go to Step 15.
		No	Symptom troubleshooting completed.
2	**DETERMINE IF MALFUNCTION CAUSE IS ENGINE OIL LOSS OR OTHER** • Are the spark plugs wet/covered with carbon from the engine oil?	Yes	Inspect all areas related to oil, working up and down. Repair or replace the malfunctioning part according to the inspection results.
		No	Go to the next step.
3	**INSPECT SPARK PLUG** • Inspect the spark plugs for the following: ▪ Air gap ▪ Cracked insulator ▪ Heat range ▪ Worn electrode • Is there any malfunction?	Yes	Replace the spark plug. (See **SPARK PLUG REMOVAL/INSTALLATION [SKYACTIV-G 2.0, SKYACTIV-G 2.5]**.)
		No	Go to the next step.
4	**INSPECT ENGINE COMPRESSION** • Inspect the compression pressure at the suspected cylinder. (See **COMPRESSION INSPECTION [SKYACTIV-G 2.0, SKYACTIV-G 2.5]**.) • Are compression pressures within specification? **Specification:** • Compression [SKYACTIV-G 2.0] ▪ Standard: **885 kPa {9.02 kgf/cm^2, 128 psi} (300 rpm)** ▪ Minimum: **708 kPa {7.22 kgf/cm^2,**	Yes	Go to the next step.
		No	Repair or replace the malfunctioning part according to the inspection results.

	103 psi} **(300 rpm)** ▪ Maximum difference between cylinders: **150 kPa {1.53 kgf/cm^2, 21.8 psi}** (**300 rpm**) • Compression [SKYACTIV-G 2.5] ▪ Standard: **954 kPa {9.73 kgf/cm^2, 138 psi} (300 rpm)** ▪ Minimum: **763 kPa {7.78 kgf/cm^2, 111 psi} (300 rpm)** ▪ Maximum difference between cylinders: **161 kPa {1.64 kgf/cm^2, 23.4 psi}** (**300 rpm**) **NOTE:** • Because the SKYACTIV-G 2.0 and SKYACTIV-G 2.5 retards the intake valve closing timing, compression pressure is low.		
5	**INSPECT IGNITION SYSTEM OPERATION** • Reinstall all spark plugs. (See **SPARK PLUG REMOVAL/INSTALLATION [SKYACTIV-G 2.0, SKYACTIV-G 2.5]**.) • Perform the Spark Test at the suspected cylinder. (See **ENGINE CONTROL SYSTEM OPERATION INSPECTION [SKYACTIV-G 2.0, SKYACTIV-G 2.5]**.) • Is a strong blue spark visible (compare with normal cylinder)?	Yes	Go to the next step.
		No	Repair or replace the malfunctioning part according to the inspection results.
6	**INSPECT FUEL LINE PRESSURE** • Inspect the fuel line pressure.	Yes	Inspect the fuel injector for the following: • Injection volume

	(See **FUEL LINE PRESSURE INSPECTION [SKYACTIV-G 2.0, SKYACTIV-G 2.5]**.) • Is the low side fuel pressure within specification? **Specification:** • **405—485 kPa {4.13—4.94 kgf/cm^2, 58.8—70.3 psi}**		• Leakage • Open or short circuit in fuel injector Repair or replace the malfunctioning part according to the inspection results.
		No	Zero or low: • Inspect the fuel pump relay and the fuel pump circuit. (See **RELAY INSPECTION**.) • Inspect the fuel line for restriction. ▪ If there is any malfunction: • Repair or replace the malfunctioning part according to the inspection results. ▪ If there is no malfunction: • Replace the fuel pump unit. (Pressure regulator or fuel pump malfunction) (See **FUEL PUMP UNIT REMOVAL/INSTALLATION [SKYACTIV-G 2.0, SKYACTIV-G 2.5]**.) High: • Replace the fuel pump unit. (Pressure regulator malfunction) (See **FUEL PUMP UNIT REMOVAL/INSTALLATION [SKYACTIV-G 2.0, SKYACTIV-G 2.5]**.)
7	**INSPECT SPARK PLUG** • Inspect the spark plug for the following: ▪ Air gap ▪ Heat range • Is there any malfunction?	Yes	Replace the spark plug. (See **SPARK PLUG REMOVAL/INSTALLATION [SKYACTIV-G 2.0, SKYACTIV-G 2.5]**.)
		No	Go to the next step.
8	**INSPECT FUEL INJECTOR OPERATION** • Perform the Fuel Injector Operation Inspection. (See **ENGINE CONTROL SYSTEM OPERATION INSPECTION [SKYACTIV-G 2.0, SKYACTIV-G 2.5]**.) • Do the fuel injectors operate properly?	Yes	Go to the next step.
		No	Repair or replace the malfunctioning part according to the inspection results.
9	**INSPECT AIR CLEANER ELEMENT** • Is the air cleaner element clean?	Yes	Go to the next step.
		No	Replace the air cleaner element.
10	**VERIFY CURRENT INPUT SIGNAL STATUS** • Access the following PIDs	Yes	Go to the next step.
		No	ECT PID is not as specified:

	using the M-MDS: (See **ON-BOARD DIAGNOSTIC TEST [SKYACTIV-G 2.0, SKYACTIV-G 2.5]**.) ▪ ECT ▪ MAF ▪ O2S11 (When engine can be started) ▪ O2S12 (When engine can be started) • Are the PIDs normal? (See **PCM INSPECTION [SKYACTIV-G 2.0, SKYACTIV-G 2.5]**.)		• Inspect for an intermittent open circuit of the ECT sensor No.1 and the related wiring harness. (See **ENGINE COOLANT TEMPERATURE (ECT) SENSOR INSPECTION [SKYACTIV-G 2.0, SKYACTIV-G 2.5]**.) MAF PID is not as specified: • Inspect for an intermittent open circuit of the MAF sensor and the related wiring harness. (See **MASS AIR FLOW (MAF) SENSOR INSPECTION [SKYACTIV-G 2.0, SKYACTIV-G 2.5]**.) O2S11 PID is not as specified: • Inspect for an intermittent open circuit of the A/F sensor and the related wiring harness. (See **AIR FUEL RATIO (A/F) SENSOR INSPECTION [SKYACTIV-G 2.0, SKYACTIV-G 2.5]**.) O2S12 PID is not as specified: • Inspect for an intermittent open circuit of the HO2S and the related wiring harness. (See **HEATED OXYGEN SENSOR (HO2S) INSPECTION [SKYACTIV-G 2.0, SKYACTIV-G 2.5]**.) Repair or replace the malfunctioning part according to the inspection results.
11	**INSPECT PURGE CONTROL SYSTEM OPERATION** • Perform the Purge Control System Inspection when the engine can be started. (See **ENGINE CONTROL SYSTEM OPERATION INSPECTION [SKYACTIV-G 2.0, SKYACTIV-G 2.5]**.) • Is there any malfunction?	Yes	Repair or replace the malfunctioning part according to the inspection results.
		No	Go to the next step.
12	**INSPECT IGNITION SYSTEM OPERATION** • Perform the Spark Test. (See **ENGINE CONTROL SYSTEM OPERATION INSPECTION [SKYACTIV-G 2.0, SKYACTIV-G 2.5]**.) • Is a strong blue spark visible at each cylinder?	Yes	Go to the next step.
		No	Repair or replace the malfunctioning part according to the inspection results.
13	**INSPECT ENGINE COMPRESSION** • Measure the compression pressure for each cylinder. (See **COMPRESSION INSPECTION [SKYACTIV-G 2.0, SKYACTIV-G 2.5]**.) • Are compression pressures within specification? **Specification:** • Compression [SKYACTIV-G 2.0]	Yes	Go to the next step.
		No	Repair or replace the malfunctioning part according to the inspection results.

	▪ Standard: **885 kPa {9.02 kgf/cm^2, 128 psi} (300 rpm)** ▪ Minimum: **708 kPa {7.22 kgf/cm^2, 103 psi} (300 rpm)** ▪ Maximum difference between cylinders: **150 kPa {1.53 kgf/cm^2, 21.8 psi}** (**300 rpm**) • Compression [SKYACTIV-G 2.5] ▪ Standard: **954 kPa {9.73 kgf/cm^2, 138 psi} (300 rpm)** ▪ Minimum: **763 kPa {7.78 kgf/cm^2, 111 psi} (300 rpm)** ▪ Maximum difference between cylinders: **161 kPa {1.64 kgf/cm^2, 23.4 psi}** (**300 rpm**) **NOTE:** • Because the SKYACTIV-G 2.0 and SKYACTIV-G 2.5 retards the intake valve closing timing, compression pressure is low.		
14	**INSPECT FUEL LINE PRESSURE** • Inspect the fuel line pressure. (See **FUEL LINE PRESSURE INSPECTION [SKYACTIV-G 2.0, SKYACTIV-G 2.5]**.) • Is the low side fuel pressure within specification? **Specification:**	Yes	Visually inspect for deformed exhaust system parts. Repair or replace the malfunctioning part according to the inspection results.
		No	Zero or low: • Inspect the fuel pump relay and the fuel pump circuit. (See **RELAY INSPECTION**.) • Inspect the fuel line for restriction.

	• **405—485 kPa {4.13—4.94 kgf/cm^2, 58.8—70.3 psi}**		▪ If there is any malfunction: • Repair or replace the malfunctioning part according to the inspection results. ▪ If there is no malfunction: • Replace the fuel pump unit. (Pressure regulator or fuel pump malfunction) (See **FUEL PUMP UNIT REMOVAL/INSTALLATION [SKYACTIV-G 2.0, SKYACTIV-G 2.5]**.) High: • Replace the fuel pump unit. (Pressure regulator malfunction) (See **FUEL PUMP UNIT REMOVAL/INSTALLATION [SKYACTIV-G 2.0, SKYACTIV-G 2.5]**.)
15	**VERIFY CURRENT INPUT SIGNAL STATUS** • Access the following PIDs using the M-MDS: (See **ON-BOARD DIAGNOSTIC TEST [SKYACTIV-G 2.0, SKYACTIV-G 2.5]**.) ▪ ECT ▪ MAF ▪ O2S11 (When engine can be started) ▪ O2S12 (When engine can be started) • Are the PIDs normal? (See **PCM INSPECTION [SKYACTIV-G 2.0, SKYACTIV-G 2.5]**.)	Yes	Go to the next step.
		No	ECT PID is not as specified: • Inspect for an intermittent open circuit of the ECT sensor No.1 and the related wiring harness. (See **ENGINE COOLANT TEMPERATURE (ECT) SENSOR INSPECTION [SKYACTIV-G 2.0, SKYACTIV-G 2.5]**.) MAF PID is not as specified: • Inspect for an intermittent open circuit of the MAF sensor and the related wiring harness. (See **MASS AIR FLOW (MAF) SENSOR INSPECTION [SKYACTIV-G 2.0, SKYACTIV-G 2.5]**.) O2S11 PID is not as specified: • Inspect for an intermittent open circuit of the A/F sensor and the related wiring harness. (See **AIR FUEL RATIO (A/F) SENSOR INSPECTION [SKYACTIV-G 2.0, SKYACTIV-G 2.5]**.) O2S12 PID is not as specified: • Inspect for an intermittent open circuit of the HO2S and the related wiring harness. (See **HEATED OXYGEN SENSOR (HO2S) INSPECTION [SKYACTIV-G 2.0, SKYACTIV-G 2.5]**.) Repair or replace the malfunctioning part according to the inspection results.
16	**INSPECT INTAKE-AIR SYSTEM FOR AIR SUCTION** • If the engine cannot be started: ▪ Inspect the intake air system for air leakage.	Yes	Repair or replace the malfunctioning part according to the inspection results.
		No	Go to the next step.

	• If the engine can be started: ▪ Perform the Intake Manifold Vacuum Inspection. (See **ENGINE CONTROL SYSTEM OPERATION INSPECTION [SKYACTIV-G 2.0, SKYACTIV-G 2.5]**.) • Is air being sucked in from intake air system?		
17	**INSPECT FUEL LINE PRESSURE** • Inspect the fuel line pressure. (See **FUEL LINE PRESSURE INSPECTION [SKYACTIV-G 2.0, SKYACTIV-G 2.5]**.) • Is the low side fuel pressure within specification? **Specification:** • **405—485 kPa {4.13—4.94 kgf/cm^2, 58.8—70.3 psi}**	Yes	Inspect the PCM ground condition. Repair or replace the malfunctioning part according to the inspection results.
		No	Zero or low: • Inspect the fuel pump relay and the fuel pump circuit. (See **RELAY INSPECTION**.) • Inspect the fuel line for restriction. ▪ If there is any malfunction: • Repair or replace the malfunctioning part according to the inspection results. ▪ If there is no malfunction: • Replace the fuel pump unit. (Pressure regulator or fuel pump malfunction) (See **FUEL PUMP UNIT REMOVAL/INSTALLATION [SKYACTIV-G 2.0, SKYACTIV-G 2.5]**.) High: • Replace the fuel pump unit. (Pressure regulator malfunction) (See **FUEL PUMP UNIT REMOVAL/INSTALLATION [SKYACTIV-G 2.0, SKYACTIV-G 2.5]**.)
18	Verify the test results. • If normal, return to the diagnostic index to service any additional symptoms. (See **SYMPTOM DIAGNOSTIC INDEX [SKYACTIV-G 2.0, SKYACTIV-G 2.5]**.) • If the malfunction remains, inspect the related Service Bulletins and/or On-line Repair Information and perform repair or diagnosis. ▪ If the vehicle is repaired, troubleshooting is completed.		

		▪ If the vehicle is not repaired or additional diagnostic information is not available, reprogram the PCM if a later calibration is available. Retest.

2014 - Mazda3 - Engine

INTERMITTENT CONCERN TROUBLESHOOTING [SKYACTIV-G 2.0, SKYACTIV-G 2.5]

Vibration Method

- If a malfunction occurs or becomes worse while driving on a rough road or when the engine is vibrating, perform the steps below.

  NOTE:

  - There are several reasons why the vehicle or engine vibration could cause an electrical malfunction. Check the following:
    - Connectors are not fully seated.
    - Wiring harnesses do not have full play.
    - Wires laying across brackets or moving parts.
    - Wires routed too close to hot parts.
  - An improperly routed, improperly clamped, or loose harness can cause a wiring harness to become pinched between parts.
  - The connector joints, points of vibration, and places where the wiring harnesses pass through the firewall and body panels are the major areas to be checked.

Inspection Method for Switch Connectors or Wires

1. Connect the M-MDS to the DLC-2.

2. Switch the ignition ON (engine off).

NOTE:

- If engine starts and runs, perform the following steps during idle.

3. Access the PIDs for the switch you are inspecting.

4. Turn the switch on manually.

5. Slightly shake each connector or wiring harness vertically and horizontally while monitoring the PID.

- If the PID value is unstable, check for a poor connection.

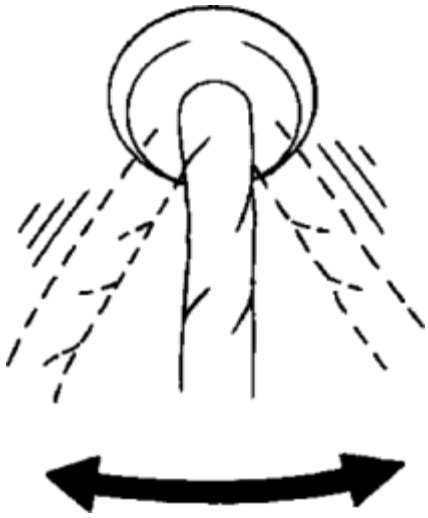

Inspection Method for Sensor Connectors or Wires

1. Connect the M-MDS to the DLC-2.

2. Switch the ignition ON (engine off).

NOTE:

- If the engine starts and runs, perform the following steps during idling.

3. Access the PIDs for the switch you are inspecting.

4. Slightly shake each connector or wiring harness vertically and horizontally while monitoring the PID.

- If the PID value is unstable, check for poor connection.

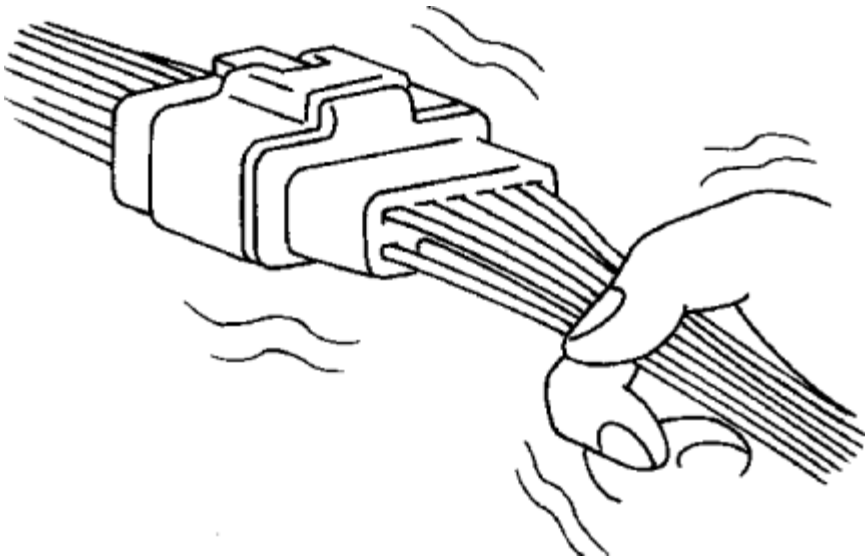

Inspection Method for Sensors

1. Connect the M-MDS to the DLC-2.

2. Switch the ignition ON (engine off).

NOTE:

- If the engine starts and runs, perform the following steps during idle.

3. Access the PIDs for the switch you are inspecting.

4. Shake the sensor slightly with your finger.

- If the PID value is unstable or a malfunction occurs, check for a poor connection or a poorly mounted sensor or both.

Inspection Method for Actuators or Relays

1. Connect the M-MDS to the DLC-2.

2. Switch the ignition ON (engine off).

NOTE:

- If engine starts and runs, perform the following steps during idling.

3. Prepare the output state control function for actuators or relays that you are inspecting.

4. Shake the actuator or relay with your finger for **3 s** after the output state control function is activated.

- If a variable click sound is heard, check for a poor connection or a poorly mounted actuator or both, or the relay.

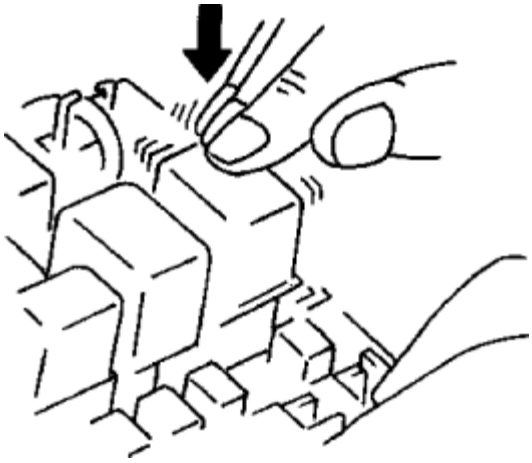

NOTE:

- Shaking the relays too strongly may result in open circuits.

Water Sprinkling Method

If a malfunction occurs only during high humidity or rainy/snowy weather, perform the following steps:

CAUTION:

- Indirectly change the temperature and humidity by spraying water onto the front of the radiator.
- If a vehicle is subject to water leakage, the leakage may damage the control module.

When testing a vehicle with a water leakage problem, special caution must be used.

1. Connect the M-MDS to the DLC-2 if you are inspecting sensors or switches.
2. Switch the ignition ON (engine off).

NOTE:

- If the engine starts and runs, perform the following steps at idle.

3. Access the PIDs for the sensor or the switch if you are inspecting sensors or switches.
4. If you are inspecting the switch, turn it on manually.
5. Spray water onto the vehicle or run it through a car wash.
   - If the PID value is unstable or a malfunction occurs, repair or replace parts if necessary.

2014 - Mazda3 - Engine

ENGINE CONTROL SYSTEM OPERATION INSPECTION [SKYACTIV-G 2.0, SKYACTIV-G 2.5]

Main Relay Operation Inspection

1. Verify that the main relay clicks when the ignition is switched ON and then off.
    - If there is no operation sound, inspect the following:
        - Main relay (See **RELAY INSPECTION**.)
        - Wiring harness and connector between battery and main relay terminal A
        - Wiring harness and connector between PCM terminal 2K and main relay terminal E

Intake Manifold Vacuum Inspection

1. Verify the air intake hoses are installed properly.
2. Start the engine and let it idle.
3. Disconnect the vacuum hose between the intake manifold and purge solenoid valve from the intake manifold side.
4. Connect a vacuum gauge to the intake manifold and measure the intake manifold vacuum.
    - If not within specification, inspect the following:

      Specification
    - −60.0 kPa {−450 mmHg, −17.7 inHg}

NOTE:

- Air suction can be located by the engine speed change when lubricant is sprayed on the area where suction is occurring. Check the following places:
    - Air suction at throttle body, charge air cooler, intake manifold and PCV valve installation points
    - Engine compression (See **COMPRESSION INSPECTION [SKYACTIV-G 2.0, SKYACTIV-G 2.5]**.)

Electric Variable Valve Timing Driver Control System Inspection

1. Connect the M-MDS to the DLC-2.
2. Perform the KOER self test. (See **KOEO/KOER SELF TEST [SKYACTIV-G 2.0, SKYACTIV-G 2.5]**.)
3. Verify that DTC P0010:00 or P1380:00 is not displayed. (See **ON-BOARD DIAGNOSTIC TEST [SKYACTIV-G 2.0, SKYACTIV-G 2.5]**.)
    - If DTC P0010:00 or P1380:00 is displayed, perform the DTC inspection. (See **DTC P0010:00 [SKYACTIV-G 2.0, SKYACTIV-G 2.5]**.) (See **DTC P1380:00 [SKYACTIV-G 2.0, SKYACTIV-G 2.5]**.)
4. Perform the Drive Mode 03 (Variable Valve Timing, A/F Sensor Heater, HO2S Heater, A/F Sensor, HO2S and TWC Repair Verification Drive Mode). (See **OBD-II DRIVE MODE [SKYACTIV-G 2.0, SKYACTIV-G 2.5]**.)
5. Verify that DTC P0011:00 or P0012:00 is not displayed. (See **ON-BOARD DIAGNOSTIC TEST [SKYACTIV-G 2.0, SKYACTIV-G 2.5]**.)
    - If DTC P0011:00 or P0012:00 is displayed, perform the DTC inspection. (See **DTC P0011:00, P0012:00 [SKYACTIV-G 2.0, SKYACTIV-G 2.5]**.)
6. Access the following PCM PIDs using the M-MDS. (See **ON-BOARD DIAGNOSTIC TEST [SKYACTIV-G 2.0, SKYACTIV-G 2.5]**.)
    - VT IN_ACT
    - VT IN_DES

CAUTION:

- While performing this step, always operate the vehicle in a safe and lawful manner.
- When the M-MDS is used to observe monitor system status while driving, be sure to have another technician with you, or record the data in the M-MDS using the PID/DATA MONITOR AND RECORD capturing function and inspect later.

7. Accelerate and decelerate the vehicle, and drive at normal speed, and verify that the data monitor item VT IN_ACT value changes in conjunction with the VT IN_DES value.

- If this change cannot be verified, replace the electric variable valve timing motor/driver.

  (See **ELECTRIC VARIABLE VALVE TIMING MOTOR/DRIVER REMOVAL/INSTALLATION [SKYACTIV-G 2.0, SKYACTIV-G 2.5]**.)

Related PIDs

Item (definition)	Unit/Condition	Definition	Condition/Specification (Reference)
VT IN_ACT	°	Actual intake valve timing	• Displays actual intake valve timing
VT IN_DES	°	Desired intake valve timing	• Displays desired intake valve timing

Engine Oil Solenoid Valve Control System Inspection

1. Connect the M-MDS to the DLC-2.
2. Perform the KOER self test. (See **KOEO/KOER SELF TEST [SKYACTIV-G 2.0, SKYACTIV-G 2.5]**.)
3. Verify that DTC P06DA:00 is not displayed. (See **ON-BOARD DIAGNOSTIC TEST [SKYACTIV-G 2.0, SKYACTIV-G 2.5]**.)
   - If DTC P06DA:00 is displayed, perform the DTC inspection. (See **DTC P06DA:00 [SKYACTIV-G 2.0, SKYACTIV-G 2.5]**.)
4. Inspect the engine oil pressure. (See **OIL PRESSURE INSPECTION [SKYACTIV-G 2.0, SKYACTIV-G 2.5]**.)
   - If the engine oil pressure is not as specified, repair or replace the malfunctioning part according to the inspection results:
5. Access the following PCM PIDs using the M-MDS. (See **ON-BOARD DIAGNOSTIC TEST [SKYACTIV-G 2.0, SKYACTIV-G 2.5]**.)
   - OIL_P_SOL
   - RPM
   - ECT
6. With the engine coolant temperature at **98 °C {208 °F}**, increase the engine speed to **4,000 rpm or higher**, and verify that the oil pressure gauge value changes when the data monitor item OIL_P_SOL value is changed from ON to OFF.
   - If the oil pressure gauge value change cannot be verified, inspect the engine oil solenoid valve. (Perform the Engine Oil Solenoid Valve Operation Inspection.)

     (See **ENGINE OIL SOLENOID VALVE INSPECTION [SKYACTIV-G 2.0, SKYACTIV-G 2.5]**.)

Related PIDs

Item (definition)	Unit/Condition	Definition	Condition/Specification (Reference)
ECT	°C, °F	Engine coolant temperature	• Displays ECT
	V	ECT sensor No.1 voltage	• ECT is 20 °C {68 °F}: Approx. 3.10 V • ECT is 40 °C {104 °F}: Approx. 2.16 V • ECT is 60 °C {140 °F}: Approx. 1.40 V • ECT is 80 °C {176 °F}: Approx. 0.87 V • ECT is 100 °C {212 °F}: Approx. 0.54 V
OIL_P_SOL	Off/On	Engine oil solenoid valve operation status	• ECT below 98 °C {208 °F} and engine speed below 4,000 rpm: On • ECT above 98 °C {208 °F} or engine speed above 4,000 rpm: Off
RPM	RPM	Engine speed	• Displays engine speed

Drive-by-wire Control System Inspection

Engine coolant temperature compensation inspection

1. Connect the M-MDS to the DLC-2.

2. Select the following PIDs: (See **ON-BOARD DIAGNOSTIC TEST [SKYACTIV-G 2.0, SKYACTIV-G 2.5]**.)
   - ECT
   - IAT
   - RPM
3. Verify that the engine is cold, then start the engine.
4. Verify that the engine speed decreases as the engine warms up.
   - If the engine speed does not decrease or decreases slowly, inspect the following:
     - ECT sensor No.1 and related wiring harness (See **ENGINE COOLANT TEMPERATURE (ECT) SENSOR INSPECTION [SKYACTIV-G 2.0, SKYACTIV-G 2.5]**.)
     - Throttle body and related wiring harness (See **THROTTLE BODY INSPECTION [SKYACTIV-G 2.0, SKYACTIV-G 2.5]**.)

Related PIDs

Item (definition)	Unit/Condition	Definition	Condition/Specification (Reference)
ECT	°C, °F	Engine coolant temperature	• Displays ECT
	V	ECT sensor No.1 voltage	• ECT is 20 °C {68 °F}: Approx. 3.10 V • ECT is 40 °C {104 °F}: Approx. 2.16 V • ECT is 60 °C {140 °F}: Approx. 1.40 V • ECT is 80 °C {176 °F}: Approx. 0.87 V • ECT is 100 °C {212 °F}: Approx. 0.54 V
IAT	°C, °F	Intake air temperature (No.1)	• Displays IAT (No.1)
	V	IAT sensor No.1 voltage	• IAT is 20 °C {68 °F}: Approx. 2.70 V • IAT is 40 °C {104 °F}: Approx. 1.80 V • IAT is 60 °C {140 °F}: Approx. 1.20 V
RPM	RPM	Engine speed	• Displays engine speed

Load compensation inspection

1. Start the engine and let it idle.
2. Connect the M-MDS to the DLC-2.
3. Verify that DTC P0506:00 or P0507:00 is not displayed. (See **ON-BOARD DIAGNOSTIC TEST [SKYACTIV-G 2.0, SKYACTIV-G 2.5]**.)
   - If DTC P0506:00 or P0507:00 is displayed, perform the DTC inspection. (See **DTC P0506:00, P151B:00 [SKYACTIV-G 2.0, SKYACTIV-G 2.5]**.) (See **DTC P0507:00 [SKYACTIV-G 2.0, SKYACTIV-G 2.5]**.)
4. Select the RPM PID.

NOTE:

- Excludes temporary idle speed drop just after the loads are turned on.

5. Verify that the engine speed is within specification under each load condition.
   - If the load condition is not as specified, inspect the following:
     - A/C switch and related wiring harness system (A/C request signal is always on or off) (See **NO.23 A/C DOES NOT WORK SUFFICIENTLY [SKYACTIV-G 2.0, SKYACTIV-G 2.5]**.) (See **NO.24 A/C IS ALWAYS ON OR A/C COMPRESSOR RUNS CONTINUOUSLY [SKYACTIV-G 2.0, SKYACTIV-G 2.5]**.)
     - Electrical load
     - Charging system (See **BATTERY INSPECTION [SKYACTIV-G 2.0, SKYACTIV-G 2.5]**.) (See **GENERATOR INSPECTION [SKYACTIV-G 2.0, SKYACTIV-G 2.5 (WITHOUT i-ELOOP)]**.)

Idle-up speed (MTX: Neutral position, ATX: P, N position)

- No load: 500—600 rpm (MTX), 550—650 rpm (ATX)

- A/C on: 650—800 rpm
- Electrical loads on: 600—750 rpm

Related PIDs

Item (definition)	Unit/Condition	Definition	Condition/Specification (Reference)
RPM	RPM	Engine speed	• Displays engine speed

Electronic Control Throttle Operation Inspection

1. Connect the M-MDS to the DLC-2.
2. Perform the KOEO or KOER self test. (See **KOEO/KOER SELF TEST [SKYACTIV-G 2.0, SKYACTIV-G 2.5]**.)
3. Verify that none of the following DTCs are displayed:
   - P0122:00, P0123:00, P0222:00, P0223:00, P0638:00, P2101:00, P2107:00, P2109:00, P2110:00, P2112:00, P2119:00, P2122:00, P2123:00, P2127:00, P2128:00, P2135:00, P2138:00
     - If any one DTC is displayed, perform the DTC inspection. (See **DTC TABLE [SKYACTIV-G 2.0, SKYACTIV-G 2.5]**.)
4. Access the following PCM PIDs using the M-MDS. (See **ON-BOARD DIAGNOSTIC TEST [SKYACTIV-G 2.0, SKYACTIV-G 2.5]**.)
   - ETC_ACT
   - ETC_DSD
5. With the accelerator pedal not depressed and with it depressed to the floor, verify that the data monitor item ETC_ACT value changes in conjunction with the ETC_DSD value.
   - If this change cannot be verified, perform the Resistance Inspection for the throttle body.

     (See **THROTTLE BODY INSPECTION [SKYACTIV-G 2.0, SKYACTIV-G 2.5]**.)

Related PIDs

Item (definition)	Unit/Condition	Definition	Condition/Specification (Reference)
ETC_ACT	°	Actual throttle valve opening angle	**Ignition switched ON (engine off)** • Accelerator pedal released: Approx. 12.89 ° • Accelerator pedal fully depressed: Approx. 86.03 ° **Idle (after warm up)** • Accelerator pedal released: Approx. 3.2 °
ETC_DSD	%	Target throttle valve opening angle (percent)	• Displays target TP opening angle (percent)
	°	Target throttle valve opening angle	• Displays target TP opening angle

Brake override system operation inspection

NOTE:

- If the brake override system operates normally after performing the following inspection, the PCM detects DTC P2299:00.

1. Start the engine and let it idle.
2. Verify that the engine speed becomes **less than 1,200 rpm** under the following conditions.
   - Neutral (MTX)
   - N position (ATX)
   - Engine speed of **3,000 rpm or more** with accelerator pedal depressed
   - Brake pedal depressed
     - If the engine speed becomes **approx. 1,200 rpm**, clear the PCM DTC using the M-MDS. (System operation is normal.)
     - If the engine speed does not become **approx. 1,200 rpm**, inspect for the following parts, then repair or

replace the malfunctioning part:

- APP sensor (See **ACCELERATOR PEDAL POSITION (APP) SENSOR INSPECTION [SKYACTIV-G 2.0, SKYACTIV-G 2.5]**.)
- Neutral switch (MTX) (See **NEUTRAL SWITCH INSPECTION [SKYACTIV-G 2.0, SKYACTIV-G 2.5]**.)
- CPP switch (MTX) (See **CLUTCH PEDAL POSITION (CPP) SWITCH INSPECTION [SKYACTIV-G 2.0, SKYACTIV-G 2.5]**.)
- Brake switch No.1 (See **BRAKE SWITCH INSPECTION**.)
- Brake switch No.2 (See **BRAKE SWITCH INSPECTION**.)
- Communication between PCM and TCM (ATX) (See **FOREWORD**.)

Fuel Injector Operation Inspection

If simulation function of M-MDS is used:

STEP	INSPECTION		ACTION
1	Start the engine and warm it up completely. Access the INJ_1, INJ_2, INJ_3 and INJ_4 PIDs using the M-MDS. (See **ON-BOARD DIAGNOSTIC TEST [SKYACTIV-G 2.0, SKYACTIV-G 2.5]**.) Turn each fuel injector from on to off using the PIDs for each cylinder. Does the engine speed drop?	Yes	Fuel injectors work properly.
		No	Engine speed does not drop an any cylinder: • Go to the next step. Engine speed drops on some cylinders: • Go to Step 4.
2	Perform the Main Relay Operation Inspection. (See**Main Relay Operation Inspection**.) Does the main relay work properly?	Yes	Go to the next step.
		No	Repair or replace the malfunctioning part according to the inspection results.
3	Inspect the fuel injector of the suspected cylinder. (See **FUEL INJECTOR INSPECTION [SKYACTIV-G 2.0, SKYACTIV-G 2.5]**.) Is there any malfunction?	Yes	Replace the fuel injector. (See **FUEL INJECTOR REMOVAL/INSTALLATION [SKYACTIV-G 2.0, SKYACTIV-G 2.5]**.)
		No	Inspect the fuel injector power and/or ground systems related wiring harness and connectors for the suspected cylinder. • If all items normal: ▪ Replace the PCM. (See **PCM REMOVAL/INSTALLATION [SKYACTIV-G 2.0, SKYACTIV-G 2.5]**.) • If not: ▪ Repair or replace the malfunctioning part according to the inspection results.
4	Perform the KOER self test using the M-MDS. (See **KOEO/KOER SELF TEST [SKYACTIV-G 2.0, SKYACTIV-G 2.5]**.) Are the DTCs P0201:00, P0202:00, P0203:00 and/or P0204:00 present?	Yes	Go to the appropriate DTC inspection. (See **DTC P0201:00 [SKYACTIV-G 2.0, SKYACTIV-G 2.5]**.) (See **DTC P0202:00 [SKYACTIV-G 2.0, SKYACTIV-G 2.5]**.) (See **DTC P0203:00 [SKYACTIV-G 2.0, SKYACTIV-G 2.5]**.) (See **DTC P0204:00 [SKYACTIV-G 2.0, SKYACTIV-G 2.5]**.)
		No	Go to the next step.
5	Inspect the fuel injector of the suspected cylinder. (See **FUEL INJECTOR INSPECTION [SKYACTIV-G 2.0, SKYACTIV-G 2.5]**.) Is there any malfunction?	Yes	Replace the fuel injector. (See **FUEL INJECTOR REMOVAL/INSTALLATION [SKYACTIV-G 2.0, SKYACTIV-G 2.5]**.)
		No	Inspect the following for the suspected cylinder:

			• PCM terminals (pulled-out pins, corrosion) • Fuel injector terminals (pulled-out pins, corrosion) • If all items normal: ▪ Replace the PCM. (See **PCM REMOVAL/INSTALLATION [SKYACTIV-G 2.0, SKYACTIV-G 2.5]**.) • If not: ▪ Repair or replace the malfunctioning part according to the inspection results.

If simulation function of M-MDS is not used:

STEP	INSPECTION		ACTION
1	Perform the KOER self test using the M-MDS. (See **KOEO/KOER SELF TEST [SKYACTIV-G 2.0, SKYACTIV-G 2.5]**.) Are the DTCs P0201:00, P0202:00, P0203:00 and/or P0204:00 present?	Yes	Go to the appropriate DTC inspection. (See **DTC P0201:00 [SKYACTIV-G 2.0, SKYACTIV-G 2.5]**.) (See **DTC P0202:00 [SKYACTIV-G 2.0, SKYACTIV-G 2.5]**.) (See **DTC P0203:00 [SKYACTIV-G 2.0, SKYACTIV-G 2.5]**.) (See **DTC P0204:00 [SKYACTIV-G 2.0, SKYACTIV-G 2.5]**.)
		No	Go to the next step.
2	Inspect the fuel injector of the suspected cylinder. (See **FUEL INJECTOR INSPECTION [SKYACTIV-G 2.0, SKYACTIV-G 2.5]**.) Is there any malfunction?	Yes	Replace the fuel injector. (See **FUEL INJECTOR REMOVAL/INSTALLATION [SKYACTIV-G 2.0, SKYACTIV-G 2.5]**.)
		No	Go to the next step.
3	Inspect the following for the suspected cylinder: • Fuel injector power and/or ground system related wiring harnesses and connectors • PCM terminals (pulled-out pins, corrosion) • Fuel injector terminals (pulled-out pins, corrosion) Is there any malfunction?	Yes	Repair or replace the malfunctioning part according to the inspection results.
		No	Replace the PCM. (See **PCM REMOVAL/INSTALLATION [SKYACTIV-G 2.0, SKYACTIV-G 2.5]**.)

Fuel Cut Control System Inspection

NOTE:

- This inspection has to be performed after the Fuel Injector Operation Inspection.

If data monitor function of M-MDS is used:

1. Warm up the engine and idle it.
2. Connect the M-MDS to the DLC-2.
3. Select the RPM and the FUELPW PIDs. (See **ON-BOARD DIAGNOSTIC TEST [SKYACTIV-G 2.0, SKYACTIV-G 2.5]**.)
4. Monitor both PIDs while performing the following steps:

   a. Depress the accelerator pedal and increase the RPM PID to **4,000 rpm**.

   b. Quickly release the accelerator pedal (brake pedal is not depressed) and verify that the FUELPW PID is **0 msec**, and **2—5 msec** when the RPM PID drops **below 1,200 rpm**.

   - If not as specified, inspect the following:
     - ECT sensor No.1 and related wiring harness (See **ENGINE COOLANT TEMPERATURE (ECT) SENSOR INSPECTION [SKYACTIV-G 2.0, SKYACTIV-G 2.5]**.)

Related PIDs

Item (definition)	Unit/Condition	Definition	Condition/Specification (Reference)
FUELPW	Sec	Fuel injection pulse width (fuel injector energization time) output to fuel injector	• Idle (after warm up): Approx. 1.4 ms • Racing (engine speed is 2,000 rpm): Approx. 1.1 ms • Racing (engine speed is 4,000 rpm): Approx. 1.0 ms
RPM	RPM	Engine speed	• Displays engine speed

If data monitor function of M-MDS is not used:

1. Warm up the engine and idle it.
2. Measure the fuel injector control signal wave profile using the oscilloscope while performing the following steps:
   a. Depress the accelerator pedal and increase the engine speed to **4,000 rpm**.
   b. Quickly release the accelerator pedal (brake pedal is not depressed) and verify that the wave profile constant **B+**, and the wave appears when the engine speed drops **below 1,200 rpm**. (See **PCM INSPECTION [SKYACTIV-G 2.0, SKYACTIV-G 2.5]**.)
      - If not as specified, inspect the following:
        - ECT sensor No.1 and related wiring harness (See **ENGINE COOLANT TEMPERATURE (ECT) SENSOR INSPECTION [SKYACTIV-G 2.0, SKYACTIV-G 2.5]**.)

Fuel Pump (Low-pressure Side) Operation Inspection

1. Connect the M-MDS to the DLC-2.
2. Remove the fuel-filler cap.
3. Switch the ignition ON (engine off).
4. Turn the fuel pump relay from off to on using the FP PID and inspect if the operation sound of the fuel pump is heard. (See **ON-BOARD DIAGNOSTIC TEST [SKYACTIV-G 2.0, SKYACTIV-G 2.5]**.)
   - If operation sound is heard, fuel pump is normal.
   - If no operation sound is heard, proceed to the next step.
5. Measure the voltage at the wiring harness side fuel pump unit terminal A with the FP PID turned on.
   - If the voltage is as specified, inspect the following:
     - Fuel pump continuity
     - Fuel pump ground
     - Wiring harness between the fuel pump relay and PCM terminal 2AQ
   - If not as specified, inspect the following:
     - Fuel pump relay (See **RELAY INSPECTION**.)
     - Wiring harness connector (Battery—Fuel pump relay—Fuel pump control module—Fuel pump unit)

   Specification

   - 8.0—11.5 V (Ignition switched ON)

Fuel Pump (Low-pressure Side) Control System Inspection

If simulation function of M-MDS is used:

1. Connect the M-MDS to the DLC-2.
2. Switch the ignition ON (engine off).
3. Select the FP PID. (See **ON-BOARD DIAGNOSTIC TEST [SKYACTIV-G 2.0, SKYACTIV-G 2.5]**.)
4. Turn the fuel pump relay from off to on and inspect if the operation sound of the fuel pump relay is heard.

- If no operation sound is heard, inspect the fuel pump relay. (See **RELAY INSPECTION**.)
- If the fuel pump relay is normal, inspect the following:
    - Wiring harness and connectors (Ignition switch—Fuel pump relay—PCM terminal 2AQ)

If simulation function of M-MDS is not used:

1. Crank the engine and verify that the fuel pump relay operation sound is heard.
2. If the operation sound is not heard, inspect the following:
    - Fuel pump relay (See **RELAY INSPECTION**.)
    - Wiring harness and connectors (Ignition switch—Fuel pump relay—PCM terminal 2AQ)

Spark Test

1. Disconnect the fuel pump relay and fuel injector relay.
2. Verify that each ignition coil and connector is connected properly.
3. Inspect the ignition system in the following procedure:

WARNING:

- High voltage in the ignition system can cause strong electrical shock which can result in serious injury. Avoid direct contact with the vehicle body during the following spark test.

STEP	INSPECTION		ACTION
1	Disconnect the ignition coils from the spark plugs. Remove the spark plugs. (See **SPARK PLUG REMOVAL/INSTALLATION [SKYACTIV-G 2.0, SKYACTIV-G 2.5]**.) Verify that the spark plugs do not have carbon deposits. Is there any malfunction?	Yes	Perform no-load racing at **4,000 rpm** for **2 min**, **2 times** to burn off the carbon deposits. Repeat this step.
		No	Go to the next step.
2	Inspect the spark plugs for damage, wear, and proper plug gap. Is there any malfunction?	Yes	Re-gap or replace the spark plugs, then go to the next step. (See **SPARK PLUG REMOVAL/INSTALLATION [SKYACTIV-G 2.0, SKYACTIV-G 2.5]**.)
		No	Go to the next step.
3	Reconnect the spark plugs to the ignition coil. Ground the spark plugs to the engine. Is a strong blue spark visible at each cylinder while cranking the engine?	Yes	Ignition system is normal.
		No	Some cylinders do not spark: • Go to the next step. All cylinders do not spark: • Go to Step 5.
4	Switch the ignition off. Inspect the wiring harness between the following terminals (wiring harness-side) for an open or short circuit: • Ignition coil/ion sensor No.1 terminal B—PCM terminal 1AY • Ignition coil/ion sensor No.2 terminal B—PCM terminal 1AT • Ignition coil/ion sensor No.3 terminal B—PCM terminal 1AO	Yes	Refer to the wiring diagram and verify whether or not there is a common connector between the following terminals: • Ignition coil/ion sensor No.1 terminal B—PCM terminal 1AY • Ignition coil/ion sensor No.2 terminal B—PCM terminal 1AT • Ignition coil/ion sensor No.3 terminal B—PCM terminal 1AO • Ignition coil/ion sensor No.4 terminal B—PCM terminal 1AJ **If there is a common connector:** • Determine the malfunctioning part by inspecting the common connector and the terminal for corrosion, damage, or pin disconnection, and the common

	Ignition coil/ion sensor No.4 terminal B—PCM terminal 1AJ Is there any malfunction?		wiring harness for an open or short circuit. • Repair or replace the malfunctioning part. **If there is no common connector:** • Repair or replace the wiring harness which has an open or short circuit.
		No	Inspect the ignition coil. (See **IGNITION COIL INSPECTION [SKYACTIV-G 2.0, SKYACTIV-G 2.5]**.) Replace the ignition coil/ion sensor. (See **IGNITION COIL/ION SENSOR REMOVAL/INSTALLATION [SKYACTIV-G 2.0, SKYACTIV-G 2.5]**.)
5	Switch the ignition off. Disconnect the ignition coil/ion sensor connectors. Switch the ignition ON (engine off). Measure the voltage at each ignition coil/ion sensor terminal A (wiring harness-side). Is the voltage **B+**?	Yes	Go to the next step.
		No	Inspect for power supply circuit in wiring harness between ignition switch and ignition coils. Refer to the wiring diagram and verify whether or not there is a common connector between the following terminals: • Main relay terminal D—Ignition coil/ion sensor No.1 terminal A • Main relay terminal D—Ignition coil/ion sensor No.2 terminal A • Main relay terminal D—Ignition coil/ion sensor No.3 terminal A • Main relay terminal D—Ignition coil/ion sensor No.4 terminal A **If there is a common connector:** • Determine the malfunctioning part by inspecting the common connector and the terminal for corrosion, damage, or pin disconnection, and the common wiring harness for a short to power supply. • Repair or replace the malfunctioning part. **If there is no common connector:** • Repair or replace the wiring harness which has a short to power supply.
6	Switch the ignition off. Inspect for continuity between terminal D (wiring harness-side) in each ignition coils and body ground. Is there continuity?	Yes	Go to the next step.
		No	Refer to the wiring diagram and verify whether or not there is a common connector between the following terminals: • Ignition coil/ion sensor No.1 terminal D—Body ground • Ignition coil/ion sensor No.2 terminal D—Body ground • Ignition coil/ion sensor No.3 terminal D—Body ground • Ignition coil/ion sensor No.4 terminal D—Body ground **If there is a common connector:** • Determine the malfunctioning part by inspecting the common connector and the terminal for corrosion, damage, or pin disconnection, and the common wiring harness for an open circuit. • Repair or replace the malfunctioning part. **If there is no common connector:** • Inspect for the following: ▪ Open circuit between ignition coil/ion sensor No.1 and body ground ▪ Open circuit between ignition coil/ion sensor No.2 and body ground ▪ Open circuit between ignition coil/ion sensor No.3 and body ground ▪ Open circuit between ignition coil/ion sensor No.4 and body ground ▪ Loose or lifting ground point • Repair or replace the malfunctioning part.

			Repeat from Step 1.
7	Inspect the connection of PCM and ignition coil/ion sensor connectors. Are the PCM connector or ignition coil/ion sensor connectors poorly connected?	Yes	Repair or replace the connector. Repeat from Step 1.
		No	Go to the next step.
8	Inspect the CKP sensor and crankshaft pulley. (See **CRANKSHAFT POSITION (CKP) SENSOR INSPECTION [SKYACTIV-G 2.0, SKYACTIV-G 2.5]**.) Is there any malfunction?	Yes	Repair or replace the malfunctioning part according to the inspection results. (See **CRANKSHAFT POSITION (CKP) SENSOR REMOVAL/INSTALLATION [SKYACTIV-G 2.0, SKYACTIV-G 2.5]**.)
		No	Inspect for an open or short circuit in wiring harness and connector of the CKP sensor. Repair or replace the malfunctioning part according to the inspection results.

Purge Control System Inspection

If simulation function of M-MDS is used:

1. Start the engine.
2. Disconnect the vacuum hose between the purge solenoid valve and the charcoal canister.
3. Put a finger to the purge solenoid valve and verify that there is no vacuum applied when the engine is cold.
   - If there is a vacuum, inspect the following:
     - Wiring harness and connectors (Purge solenoid valve—PCM terminal 1AI)
     - Purge solenoid valve (stuck open) (See **PURGE SOLENOID VALVE INSPECTION [SKYACTIV-G 2.0, SKYACTIV-G 2.5]**.)
4. Connect the M-MDS to the DLC-2 and verify that DTC P0443:00 is displayed. (See **ON-BOARD DIAGNOSTIC TEST [SKYACTIV-G 2.0, SKYACTIV-G 2.5]**.)
   - Perform the DTC inspection. (See **DTC P0443:00 [SKYACTIV-G 2.0, SKYACTIV-G 2.5]**.)
5. Select the EVAPCP PID.
6. Increase the duty value of the purge solenoid valve to **50 %** and inspect if the operation sound of the valve is heard.
   - If the operation sound is heard, inspect for loose or damaged vacuum hoses. (Intake manifold—Purge solenoid valve—Charcoal canister)
   - If the operation sound is not heard, perform the purge solenoid valve inspection. (See **PURGE SOLENOID VALVE INSPECTION [SKYACTIV-G 2.0, SKYACTIV-G 2.5]**.)
7. Warm up the engine to normal operating temperature.
8. Monitor the EVAPCP PID using the M-MDS, and drive the vehicle **approx. 2000 rpm** for **30 s or more**. (See **ON-BOARD DIAGNOSTIC TEST [SKYACTIV-G 2.0, SKYACTIV-G 2.5]**.)
   - If the EVAPCP PID is **0 %**, inspect the following PIDs:
     - MAF, APP1, APP2, TP_REL and LOAD PIDs (See **PCM INSPECTION [SKYACTIV-G 2.0, SKYACTIV-G 2.5]**.)

Related PIDs

Item (definition)	Unit/Condition	Definition	Condition/Specification (Reference)
APP1	%	Accelerator pedal opening angle (absolute value) input from APP sensor No.1	• Accelerator pedal released: Approx. 15% • Accelerator pedal fully depressed: Approx. 82%
	V	APP sensor No.1 voltage	• Accelerator pedal released: Approx. 0.75 V • Accelerator pedal fully depressed: Approx. 4.1 V
	%	Accelerator pedal opening angle (absolute value) input from APP sensor No.2	• Accelerator pedal released: Approx. 7.45% • Accelerator pedal fully depressed: Approx.

APP2			41%
	V	APP sensor No.2 voltage	• Accelerator pedal released: Approx. 0.38 V • Accelerator pedal fully depressed: Approx. 2.05 V
EVAPCP	%	Purge solenoid valve control duty value	• Idle (after warm up): Approx. 0% • Racing (Engine speed 2,000 rpm): 4.3—35% • Racing (Engine speed 4,000 rpm): Approx. 66%
MAF	g/Sec	Mass air flow	• Displays MAF
	V	MAF sensor voltage	• Ignition switched ON (engine off) (MAF: 0.59 g/s {0.078 lb/min}): Approx. 0.72 V • Idle (after warm up) (MAF: 2.17 g/s {0.287 lb/min}): Approx. 0.86 V • Racing (engine speed is 2,000 rpm) (MAF: 4.73 g/s {0.626 lb/min}): Approx. 1.07 V
LOAD	%	Ratio of actual amount of intake air to the maximum air charging amount (mass volume) of cylinder	• Idle (after warm up): Approx. 17.64% • Racing (engine speed is 2,000 rpm): Approx. 14.51% • Racing (engine speed is 4,000 rpm): Approx. 21.17%
TP_REL	%	Throttle valve opening angle (relative value) with value at throttle valve fully open timing as the start point	• Accelerator pedal released: Approx. 12% • Accelerator pedal fully depressed: Approx. 82%

If simulation function of M-MDS is not used:

1. Start the engine.
2. Disconnect the vacuum hose between the purge solenoid valve and the charcoal canister.
3. Put a finger to the purge solenoid valve and verify that there is no vacuum applied when the engine is cold.
   - If there is a vacuum, inspect the following:
     - Wiring harness and connectors (Purge solenoid valve—PCM terminal 1AI)
     - Purge solenoid valve (See **PURGE SOLENOID VALVE INSPECTION [SKYACTIV-G 2.0, SKYACTIV-G 2.5]**.)
4. Warm up the engine to the normal operating temperature.
5. Stop the engine.
6. Connect the M-MDS to the DLC-2 and verify that DTC P0443:00 is displayed.
   - Perform the DTC inspection. (See **DTC P0443:00 [SKYACTIV-G 2.0, SKYACTIV-G 2.5]**.)
7. Switch the ignition ON (engine off).
8. Select the ECT PID. (See **ON-BOARD DIAGNOSTIC TEST [SKYACTIV-G 2.0, SKYACTIV-G 2.5]**.)
9. Verify that the engine coolant temperature is **above 60 °C {140 °F}**.
   - If the M-MDS indicates that the temperature is **below 60 °C {140 °F}**, perform the ECT sensor No.1 inspection. (See **ENGINE COOLANT TEMPERATURE (ECT) SENSOR INSPECTION [SKYACTIV-G 2.0, SKYACTIV-G 2.5]**.)
10. Set the vehicle on a dynamometer or chassis roller.

WARNING:

- When the dynamometer or chassis roller is operating, there is a possibility that the operator may come into contact with or be caught up in the rotating parts, leading to serious injuries or death. When performing work while the dynamometer or chassis roller is operating, be careful not to contact or be caught up in any of the rotating parts.

11. Drive the vehicle at an engine speed to **approx. 2000 rpm** for **30 s or more**.
12. Put a finger to the purge solenoid valve and verify that there is no vacuum applied during Step 2.

- If there is no vacuum, inspect the following:
  - Wiring harness and connector (Main relay—Purge solenoid valve—PCM terminal 1AI)
  - Purge solenoid valve (See **PURGE SOLENOID VALVE INSPECTION [SKYACTIV-G 2.0, SKYACTIV-G 2.5]**.)
  - MAF, APP1, APP2, TP_REL and LOAD PIDs (See **PCM INSPECTION [SKYACTIV-G 2.0, SKYACTIV-G 2.5]**.)
- If there is vacuum, inspect the following:
  - Vacuum hose (Purge solenoid valve—Charcoal canister)

Related PIDs

Item (definition)	Unit/Condition	Definition	Condition/Specification (Reference)
APP1	%	Accelerator pedal opening angle (absolute value) input from APP sensor No.1	• Accelerator pedal released: Approx. 15% • Accelerator pedal fully depressed: Approx. 82%
	V	APP sensor No.1 voltage	• Accelerator pedal released: Approx. 0.75 V • Accelerator pedal fully depressed: Approx. 4.1 V
APP2	%	Accelerator pedal opening angle (absolute value) input from APP sensor No.2	• Accelerator pedal released: Approx. 7.45% • Accelerator pedal fully depressed: Approx. 41%
	V	APP sensor No.2 voltage	• Accelerator pedal released: Approx. 0.38 V • Accelerator pedal fully depressed: Approx. 2.05 V
ECT	°C, °F	Engine coolant temperature	• Displays ECT
	V	ECT sensor No.1 voltage	• ECT is 20 °C {68 °F}: Approx. 3.10 V • ECT is 40 °C {104 °F}: Approx. 2.16 V • ECT is 60 °C {140 °F}: Approx. 1.40 V • ECT is 80 °C {176 °F}: Approx. 0.87 V • ECT is 100 °C {212 °F}: Approx. 0.54 V
MAF	g/Sec	Mass air flow	• Displays MAF
	V	MAF sensor voltage	• Ignition switched ON (engine off) (MAF: 0.59 g/s {0.078 lb/min}): Approx. 0.72 V • Idle (after warm up) (MAF: 2.17 g/s {0.287 lb/min}): Approx. 0.86 V • Racing (engine speed is 2,000 rpm) (MAF: 4.73 g/s {0.626 lb/min}): Approx. 1.07 V
LOAD	%	Ratio of actual amount of intake air to the maximum air charging amount (mass volume) of cylinder	• Idle (after warm up): Approx. 17.64% • Racing (engine speed is 2,000 rpm): Approx. 14.51% • Racing (engine speed is 4,000 rpm): Approx. 21.17%
TP_REL	%	Throttle valve opening angle (relative value) with value at throttle valve fully open timing as the start point	• Accelerator pedal released: Approx. 12% • Accelerator pedal fully depressed: Approx. 82%

A/C Cut-off Control System Inspection

1. Start the engine.
2. Turn the A/C switch and fan switch on.
3. Verify that the A/C compressor magnetic clutch actuates.
   - If it does not actuate, perform the symptom troubleshooting “NO.23 A/C DOES NOT WORK SUFFICIENTLY“. (See **NO.23 A/C DOES NOT WORK SUFFICIENTLY [SKYACTIV-G 2.0, SKYACTIV-G 2.5]**.)
4. Fully open the throttle valve and verify that the A/C compressor magnetic clutch does not actuate for **2—5 s**.
   - If it actuates, inspect the following:
     - A/C relay (See **RELAY INSPECTION**.)
     - Open or short to ground in wiring harness and connectors (Front body control module (FBCM)—A/C relay—PCM terminal 2AF)
     - A/C related parts
     - APP1, APP2 PIDs (See **PCM INSPECTION [SKYACTIV-G 2.0, SKYACTIV-G 2.5]**.)

Related PIDs

Item (definition)	Unit/Condition	Definition	Condition/Specification (Reference)
APP1	%	Accelerator pedal opening angle (absolute value) input from APP sensor No.1	• Accelerator pedal released: Approx. 15% • Accelerator pedal fully depressed: Approx. 82%
	V	APP sensor No.1 voltage	• Accelerator pedal released: Approx. 0.75 V • Accelerator pedal fully depressed: Approx. 4.1 V
APP2	%	Accelerator pedal opening angle (absolute value) input from APP sensor No.2	• Accelerator pedal released: Approx. 7.45% • Accelerator pedal fully depressed: Approx. 41%
	V	APP sensor No.2 voltage	• Accelerator pedal released: Approx. 0.38 V • Accelerator pedal fully depressed: Approx. 2.05 V

Cooling Fan Control System Inspection

1. Connect the M-MDS to the DLC-2.
2. Start the engine and warm it up to normal operating temperature.
3. Perform the KOER self test. (See **KOEO/KOER SELF TEST [SKYACTIV-G 2.0, SKYACTIV-G 2.5]**.)
4. Verify that DTC P0480:00 or P0482:00 is not shown and the cooling fan operates during the KOER self test.
   - If the DTC P0480:00 or P0482:00 is displayed, perform the DTC inspection. (See **DTC P0480:00 [SKYACTIV-G 2.0, SKYACTIV-G 2.5]**.) (See **DTC P0482:00 [SKYACTIV-G 2.0, SKYACTIV-G 2.5]**.)
   - If the cooling fans do not operate, proceed to the following:
     - Inspect the following parts in the indicated order in accordance with fan operation conditions.
       - Open circuit between cooling fan relay and battery positive terminal
       - Open circuit between cooling fan relay and ground
       - Poor connection of the cooling fan relay
     - If there is no malfunction:
       - Replace the cooling fan component. (See **COOLING FAN MOTOR REMOVAL/INSTALLATION [SKYACTIV-G 2.0, SKYACTIV-G 2.5]**.)

Hydraulic Variable Valve Timing Control System Operation Inspection

When idling cannot be continued

1. Connect the M-MDS to the DLC-2 and verify that DTC P2090:00 or P2091:00 is displayed. (See **ON-BOARD DIAGNOSTIC TEST [SKYACTIV-G 2.0, SKYACTIV-G 2.5]**.)
    - Perform the DTC inspection. (See **DTC P2090:00 [SKYACTIV-G 2.0, SKYACTIV-G 2.5]**.) (See **DTC P2091:00 [SKYACTIV-G 2.0, SKYACTIV-G 2.5]**.)
2. Remove the OCV and verify that the spool valve is at maximum advanced position. (See **OIL CONTROL VALVE (OCV) REMOVAL/INSTALLATION [SKYACTIV-G 2.0, SKYACTIV-G 2.5]**.)
3. Connect the OCV.
4. Switch the ignition ON (engine off).
5. Verify that the spool valve is at the maximum advanced position.
    - If the spool valve is stuck in the retard direction, inspect for the following:
        - Short circuit in wiring harnesses or connectors between OCV and PCM
6. Inspect the hydraulic variable valve timing actuator. (See **HYDRAULIC VARIABLE VALVE TIMING ACTUATOR INSPECTION [SKYACTIV-G 2.0, SKYACTIV-G 2.5]**.)

When idling can be continued

If simulation function of M-MDS is used:

- Warm up the engine to normal operating temperature.
- Connect the M-MDS to the DLC-2.
- Verify that DTC P2090:00 or P2091:00 is displayed. (See **ON-BOARD DIAGNOSTIC TEST [SKYACTIV-G 2.0, SKYACTIV-G 2.5]**.)
    - Perform the DTC inspection. (See **DTC P2090:00 [SKYACTIV-G 2.0, SKYACTIV-G 2.5]**.) (See **DTC P2091:00 [SKYACTIV-G 2.0, SKYACTIV-G 2.5]**.)
- Start the engine and let it idle.
- Select the VT EX_DES PID. (See **ON-BOARD DIAGNOSTIC TEST [SKYACTIV-G 2.0, SKYACTIV-G 2.5]**.)
- Increase the OCV duty value and verify that the engine idles rough or stalls.
    - If as specified, inspect the timing belt component (valve timing deviation). (See **HYDRAULIC VARIABLE VALVE TIMING ACTUATOR INSPECTION [SKYACTIV-G 2.0, SKYACTIV-G 2.5]**.)
    - If not as specified, go to the next step.
- Remove the OCV while the connector is connected. (See **OIL CONTROL VALVE (OCV) REMOVAL/INSTALLATION [SKYACTIV-G 2.0, SKYACTIV-G 2.5]**.)
- Switch the ignition ON (engine off).
- Select the VT EX_DES PID. (See **ON-BOARD DIAGNOSTIC TEST [SKYACTIV-G 2.0, SKYACTIV-G 2.5]**.)
- Increase the OCV duty value and verify that the spool valve operates in the retard direction.
    - If as specified, inspect the following hydraulic passage for restriction and/or leakage:
        - Oil pressure switch—OCV
        - OCV—Exhaust camshaft
        - Exhaust camshaft internal passage
    - If not as specified, inspect the following:
        - OCV operation (See **OIL CONTROL VALVE (OCV) INSPECTION [SKYACTIV-G 2.0, SKYACTIV-G 2.5]**.)
- If they are normal, replace the exhaust camshaft sprocket. (See **ELECTRIC VARIABLE VALVE TIMING ACTUATOR, HYDRAULIC VARIABLE VALVE TIMING ACTUATOR REMOVAL/INSTALLATION [SKYACTIV-G 2.0, SKYACTIV-G 2.5]**.)

If simulation function of M-MDS is not used:

- Connect the M-MDS to the DLC-2 and verify that DTC P2090:00 or P2091:00 is displayed.
    - Perform the DTC inspection. (See **DTC P2090:00 [SKYACTIV-G 2.0, SKYACTIV-G 2.5]**.) (See **DTC P2091:00 [SKYACTIV-G 2.0, SKYACTIV-G 2.5]**.)
- Disconnect the OCV connector.
- Warm up the engine and idle it.

- Apply the battery voltage to the OCV and verify that the engine idles rough or stalls.
    - If the engine idles rough or stalls, inspect the timing belt component (valve timing deviation).
    - If the engine does not idle rough or stalls, go to the next step.
- Remove the OCV and perform the spool valve operation inspection. (See **OIL CONTROL VALVE (OCV) REMOVAL/INSTALLATION [SKYACTIV-G 2.0, SKYACTIV-G 2.5]**.)
    - If not as specified, inspect the following:
        - OCV (See **OIL CONTROL VALVE (OCV) INSPECTION [SKYACTIV-G 2.0, SKYACTIV-G 2.5]**.)
        - Harnesses and connectors between OCV and PCM have an open or short circuit
    - If as specified, inspect the following hydraulic passages for restriction or leakage or both:
        - Oil pressure switch—OCV
        - OCV—Exhaust camshaft
        - Exhaust camshaft internal passage
- If they are normal, replace the exhaust camshaft sprocket. (See **ELECTRIC VARIABLE VALVE TIMING ACTUATOR, HYDRAULIC VARIABLE VALVE TIMING ACTUATOR REMOVAL/INSTALLATION [SKYACTIV-G 2.0, SKYACTIV-G 2.5]**.)

Evaporative Emission (EVAP) System Leak Inspection

- To verify that the problem has been fixed properly after repairs, the run drive cycle or EVAP system leak inspection must be performed.

EVAP system leak inspection using the M-MDS

EVAP system test outline

- The EVAP system test, which can be substituted for the run drive cycle as an EVAP control system repair confirmation method, can detect the small/large leak or blockage without run-drive cycle.

NOTE:

- The M-MDS cannot detect “very small leaks”. To identify the leak point, use the leak tester or ultrasonic leak detector.

EVAP system test description

- The EVAP system test finds gas leaks or blockage in the EVAP system using changes in the fuel tank pressure.
    - This test starts after an on-demand test signal is sent from the M-MDS to the PCM.
    - This test consists of three stages, and each stage is performed automatically as follows:

Stage 1 test (Test for large leaks or blockage)

- The M-MDS sends the stage 1 test start signal to the PCM.

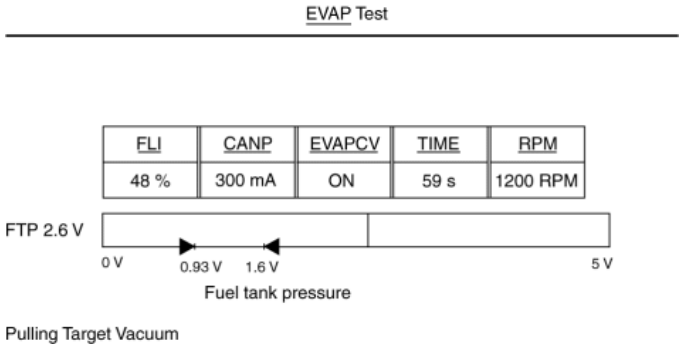

- The PCM controls the CV solenoid valve and the purge solenoid valve to control the fuel tank pressure to the targeted value.
- The M-MDS detects large leaks or purge line blockage if the fuel tank pressure does not arrive at the target vacuum in a specified period of time.

Stage 2 test (Test for small leaks)

- When the fuel tank pressure reaches the targeted pressure during the stage 1 test, the M-MDS sends the stage 2 test signal to the PCM to turn off the purge solenoid valve and maintain the fuel tank pressure.

EVAP Test

FLI	CANP	EVAPCV	TIME	RPM
48 %	0 A	ON	0 s	1240 RPM

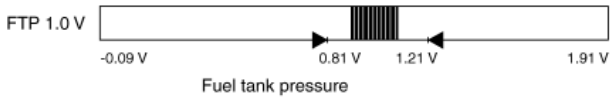

The vacuum bleed down and bleed up rate is in range

- The M-MDS detects a small leak if the fuel tank pressure cannot be maintained within the target for the specified period of time.

Stage 3 test (Test for blockage)

- The M-MDS sends the stage 3 test signal to the PCM to turn off the CV solenoid valve and check for blockage in the EVAP system.

EVAP Test

FLI	CANP	EVAPCV	TIME
48 %	0 A	OFF	58 s

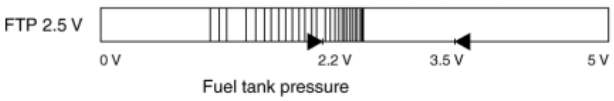

The FTP value is in range.

- The M-MDS detects blockage in the CV solenoid valve or air filter if the fuel tank pressure does not reach the target (atmosphere).

EVAP system malfunction determination

- The M-MDS detects small/large leaks or blockage based on the fuel tank pressure at the end of the EVAP test.

The target vacuum was not obtained during the EVAP test. A large leak or blockage is suspect.

・This result means the fuel tank pressure did not reach the target pressure during the stage 1 test.
— Inspect for large leakage or inspect the purge solenoid valve operation and related hoses.
— Repair or replace any malfunctioning parts.

The target vacuum was not maintained during the EVAP test. A small leak is suspect.

・This result means the fuel tank pressure was not maintained at the target pressure during the stage 2 test.
— Run the EVAP test again after retightening the fuel filler cap.
— If a small leak is suspected again, use the leak tester or ultrasonic leak detector to identify the leak point.
— Repair or replace any malfunctioning parts.

Blockage in EVAP system.

・This result means the fuel tank pressure did not return to atmosphere during the stage 3 test.
— Inspect the CV solenoid, air filter, charcoal canister and related hoses for blockage.

No large leaks or blockage were detected in the EVAP system.

・The M-MDS cannot detect "very small leaks".
— To identify the leak point, use a leak tester or ultrasonic leak detector.

A small leak in the purge solenoid valve is suspect.

・This result means the fuel tank pressure decreases to the minus side during the stage 2 test.
— Inspect the purge solenoid valve. Refer to the workshop manual.

Evaporative system test procedure

- Verify that all PIDs are within the following specifications.

Specification

PID	PID Range
BARO	74.9 kPa {0.764 kgf/cm^2, 10.9 psi} or more
FLI	15—85 %
ECT	ECT minus IAT -10—25 °C {14—77 °F}
IAT	

NOTE:

- To successfully perform this procedure, all PIDs must be within specifications before proceeding to the next step.

- Select the following items from the initialization screen of the M-MDS.
  - Select “Powertrain“.
  - Select “Fuel“.
  - Select “EVAP Test“.

- Verify that the ECT and IAT are within specifications on the confirmation screen. To successfully perform this procedure, the ECT and IAT must be within the specification before proceeding to the next step.
- The fuel Level must be maintained within **15 %—85 %**. The PCM will cancel the EVAP test if the fuel level is **lower than 15 %** or **higher than 85 %**.

- Verify the test results described on the M-MDS and follow the instructions.

EVAP system leak inspection using leak tester

1. Perform the following tester (EVAP System Tester 134-01049A) self-test:

NOTE:

- If the tester does not work correctly during the self-test, refer to the tester operation manual for a more detailed self-test procedure.

a. Verify that the control valve on the panel is in the HOLD position, then open the nitrogen bottle valve.

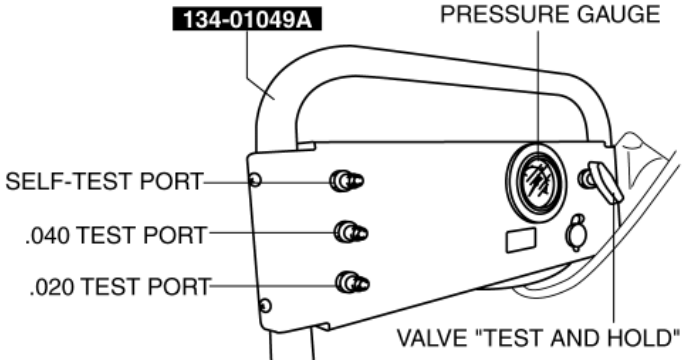

b. Connect the vehicle interface hose (part of tester) to the SELF-TEST port located on the control panel. Hand tighten the fitting (do not overtighten).

c. Turn the control valve to the TEST position.

d. The gauge should read **331—381 mm {13.1—15.0 in}** of water.

- If the gauge is not reading in this range, adjust the pressure by turning the black knob on the low pressure regulator of the nitrogen bottle.

e. Turn the control valve to the HOLD position.

f. Verify that the gauge holds pressure and that the flow meter reads no flow.

1. If there is no drop in pressure and no flow, the tester passes the self-test.
2. If the gauge indication decreases, refer to the tester operation manual.

2. Connect the tester to the vehicle.

a. Verify that the control valve on the panel is in the HOLD position, then open the nitrogen bottle valve.

b. Remove the fuel-filler cap from the vehicle.

- If the fuel-filler cap is not a MAZDA part or equivalent, replace it.

NOTE:

- INSPECT FUEL FILLER CAP AND FILLER NECK
  - Visually inspect for damage, insufficient sealing, rust, cracks or warps of filler cap and filler neck.
  - Repair or replace if necessary.

c. Connect the receiver assembly (tester: 134-01059) to the vehicle cap test hose assembly (part of tester) and the fuel-filler cap from the vehicle.

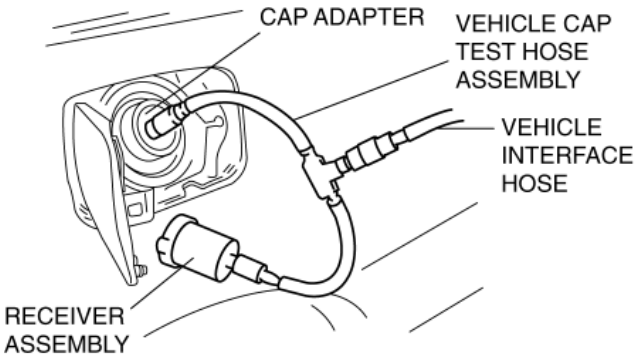

d. Connect the cap adaptor (tester: 134-01058) to the vehicle cap test hose assembly (part of tester) and to the fuel-filler neck.

e. Connect the vehicle interface hose (part of tester) to the center fitting of the vehicle cap test hose component (part of tester).

3. Connect the M-MDS to the DLC-2.

4. Switch the ignition ON (engine off).

5. Using the M-MDS, request the PCM on-board device control (Mode 08) to close the canister vent valve.

NOTE:

- The canister vent valve is closed for **10 min** unless any of the following actions are done:
  - The engine is started.
  - The ignition is switched off.

6. Make sure the control valve on the 134-01049A is in the HOLD position and that the valve on the cylinder for the nitrogen gas is open.

7. Turn the control valve to the open position and let the system fill. You should note a drop in the gauge pressure along with the flow meter being pegged at maximum flow for several minutes depending on how full or empty the fuel tank is, and how long it takes to completely fill and pressurize the evaporative emissions system hoses.

8. If the gauge and the flow meter do not settle to a measurable level after **2—3 min**, then refer to the Mazda Workshop Manual to verify that the canister vent valve is properly closed. If canister vent valve is properly closed, the EVAP system has a large leakage. Check for leakage and repair if necessary.

9. Verify pressure gauge and flow meter reading to determine if there is an evaporative emissions leak:

NO EVAPORATIVE LEAK:

- The flow meter registers “zero flow” and the pressure gauge returns to the preset pressure of **356 mm {14.0 in}** of water (H2O).

EVAPORATIVE LEAK:

- The pressure does not return to the preset level of **356 mm {14.0 in}** of water (H2O) when measuring the flow. See “SETTING LEAK STANDARD FOR TESTING” (.020 to.040 inch H2O) of the Evaporative Emissions Tester operation manual (134-01067).

NOTE:

1. Turn the control valve to the HOLD position, then disconnect the **tester**.

2014 - Mazda3 - Engine

ENGINE LOCATION INDEX [SKYACTIV-G 2.0, SKYACTIV-G 2.5]

ENGINE LOCATION INDEX [SKYACTIV-G 2.0, SKYACTIV-G 2.5]

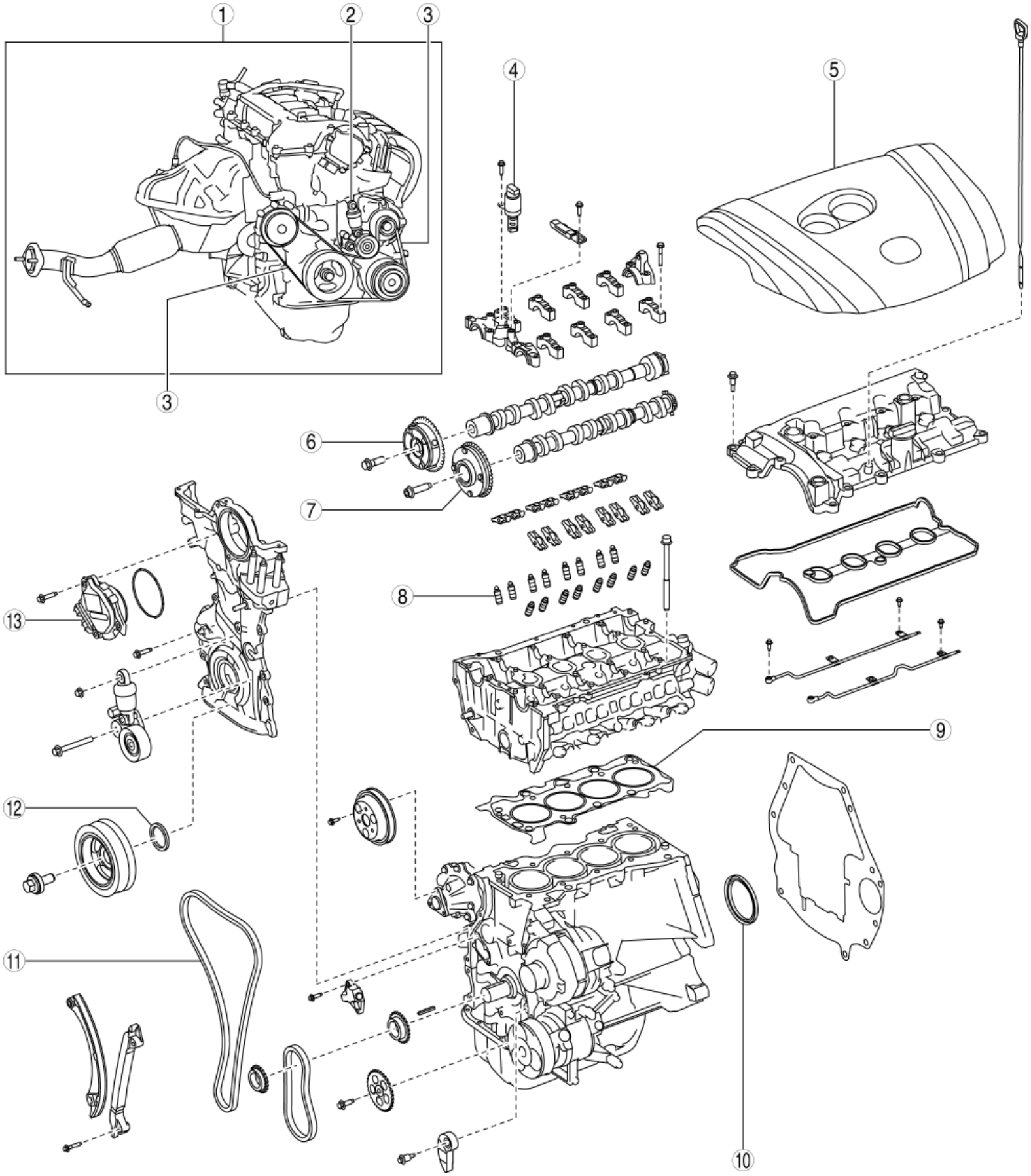

1	Engine

	(See **ENGINE TUNE-UP [SKYACTIV-G 2.0, SKYACTIV-G 2.5]**.) (See **COMPRESSION INSPECTION [SKYACTIV-G 2.0, SKYACTIV-G 2.5]**.) (See **ENGINE MOUNT DISASSEMBLY/ASSEMBLY [SKYACTIV-G 2.0, SKYACTIV-G 2.5]**.) (See **ENGINE REMOVAL/INSTALLATION [SKYACTIV-G 2.0, SKYACTIV-G 2.5]**.) (See **ENGINE DISASSEMBLY/ASSEMBLY [SKYACTIV-G 2.0, SKYACTIV-G 2.5]**.)
2	Drive belt auto tensioner (See **DRIVE BELT AUTO TENSIONER INSPECTION [SKYACTIV-G 2.0, SKYACTIV-G 2.5]**.) (See **DRIVE BELT AUTO TENSIONER REMOVAL/INSTALLATION [SKYACTIV-G 2.0, SKYACTIV-G 2.5]**.)
3	Drive belt (See **DRIVE BELT INSPECTION [SKYACTIV-G 2.0, SKYACTIV-G 2.5]**.) (See **DRIVE BELT REMOVAL/INSTALLATION [SKYACTIV-G 2.0, SKYACTIV-G 2.5]**.)
4	OCV (See **OIL CONTROL VALVE (OCV) INSPECTION [SKYACTIV-G 2.0, SKYACTIV-G 2.5]**.) (See **OIL CONTROL VALVE (OCV) REMOVAL/INSTALLATION [SKYACTIV-G 2.0, SKYACTIV-G 2.5]**.)
5	Plug hole plate (See **PLUG HOLE PLATE REMOVAL/INSTALLATION [SKYACTIV-G 2.0, SKYACTIV-G 2.5]**.)
6	Hydraulic variable valve timing actuator (See **HYDRAULIC VARIABLE VALVE TIMING ACTUATOR INSPECTION [SKYACTIV-G 2.0, SKYACTIV-G 2.5]**.) (See **ELECTRIC VARIABLE VALVE TIMING ACTUATOR, HYDRAULIC VARIABLE VALVE TIMING ACTUATOR REMOVAL/INSTALLATION [SKYACTIV-G 2.0, SKYACTIV-G 2.5]**.)
7	Electric variable valve timing actuator (See **ELECTRIC VARIABLE VALVE TIMING ACTUATOR INSPECTION [SKYACTIV-G 2.0, SKYACTIV-G 2.5]**.) (See **ELECTRIC VARIABLE VALVE TIMING ACTUATOR, HYDRAULIC VARIABLE VALVE TIMING ACTUATOR REMOVAL/INSTALLATION [SKYACTIV-G 2.0, SKYACTIV-G 2.5]**.)
8	Hydraulic lash adjuster (HLA) (See **HYDRAULIC LASH ADJUSTER (HLA) INSPECTION [SKYACTIV-G 2.0, SKYACTIV-G 2.5]**.) (See **HYDRAULIC LASH ADJUSTER (HLA) REMOVAL/INSTALLATION [SKYACTIV-G 2.0, SKYACTIV-G 2.5]**.)
9	Cylinder head gasket (See **CYLINDER HEAD GASKET REPLACEMENT [SKYACTIV-G 2.0, SKYACTIV-G 2.5]**.)
10	Rear oil seal (See **REAR OIL SEAL REPLACEMENT [SKYACTIV-G 2.0, SKYACTIV-G 2.5]**.)
11	Timing chain (See **TIMING CHAIN REMOVAL/INSTALLATION [SKYACTIV-G 2.0, SKYACTIV-G 2.5]**.)
12	Front oil seal (See **FRONT OIL SEAL REPLACEMENT [SKYACTIV-G 2.0, SKYACTIV-G 2.5]**.)
13	Electric variable valve timing motor/driver

(See **ELECTRIC VARIABLE VALVE TIMING MOTOR/DRIVER INSPECTION [SKYACTIV-G 2.0, SKYACTIV-G 2.5]**.)

(See **ELECTRIC VARIABLE VALVE TIMING MOTOR/DRIVER REMOVAL/INSTALLATION [SKYACTIV-G 2.0, SKYACTIV-G 2.5]**.)

2014 - Mazda3 - Engine

ENGINE TUNE-UP [SKYACTIV-G 2.0, SKYACTIV-G 2.5]

Engine Tune-up Preparation

NOTE:

- If the accelerator pedal is depressed continuously for a specified time, the engine speed may decrease to the idle speed. This is due to the fuel cut control operation, which prevents overheating, and it does not indicate a malfunction. The engine speed returns to normal control when the accelerator pedal is released.

1. Connect the M-MDS to the DLC-2.
2. Shift the selector lever (ATX) or shift lever (MTX) to the following position:
    - MTX: Shift lever is in neutral position.
    - ATX: Selector lever is in P or N position.

NOTE:

- The engine coolant temperature and oil temperature can be verified by M-MDS PID “ECT” and “OIL_TEMP”.

3. Run the engine speed at a constant **2,500 to 3,000 rpm** and warm up the engine (engine coolant temperature: **80 °C {176 °F}** or more, oil temperature: **60 °C {140 °F}** or more).
4. Turn off all electrical loads with the engine idling.
5. If the cooling fan is operating, wait until is stops.

Idle Speed Inspection

NOTE:

- The idle speed cannot be adjusted.
- The M-MDS is required to verify the idle speed.

1. Complete the engine tune-up preparation. (See **Engine Tune-up Preparation**.)
2. Verify that the idle speed (M-MDS PID: RPM) is within the specification using the PID/data monitor function of the M-MDS. (See **PCM INSPECTION [SKYACTIV-G 2.0, SKYACTIV-G 2.5]**.)
    - If there is a malfunction, refer to “ENGINE SYMPTOM TROUBLESHOOTING”. (See **SYMPTOM DIAGNOSTIC INDEX [SKYACTIV-G 2.0, SKYACTIV-G 2.5]**.)

      Idle speed (MTX: Neutral position, ATX: P, N position)

- MTX: 500—600 rpm
- ATX: 550—650 rpm

Ignition Timing Inspection

NOTE:

- The ignition timing cannot be adjusted.
- The M-MDS is required to verify the ignition timing.

1. Complete the engine tune-up preparation. (See **Engine Tune-up Preparation**.)

2. Verify the ignition timing (M-MDS PID: SPARKADV) using the PID/data monitor function of the M-MDS. (See **PCM INSPECTION [SKYACTIV-G 2.0, SKYACTIV-G 2.5]**.)

Ignition timing [SKYACTIV-G 2.0]

- MTX: Approx. BTDC 14°
- ATX: Approx. BTDC 12°

Ignition timing [SKYACTIV-G 2.5]

- Approx. BTDC 12°

3. Verify that ignition timing advances when the engine speed increases gradually.

- If there is a malfunction, refer to “ENGINE SYMPTOM TROUBLESHOOTING”. (See **SYMPTOM DIAGNOSTIC INDEX [SKYACTIV-G 2.0, SKYACTIV-G 2.5]**.)

Idle Mixture Inspection

1. Verify that the idle speed and ignition timing are within the specification. (See **Idle Speed Inspection**.) (See **Ignition Timing Inspection**.)

2. Insert an exhaust gas analyzer into the tailpipe.

3. Verify that the CO and HC concentrations are within regulation.

- If there is a malfunction, refer to “ENGINE SYMPTOM TROUBLESHOOTING”. (See **SYMPTOM DIAGNOSTIC INDEX [SKYACTIV-G 2.0, SKYACTIV-G 2.5]**.)
    - If no malfunction is detected, replace the catalytic converter. (See **EXHAUST SYSTEM REMOVAL/INSTALLATION [SKYACTIV-G 2.0, SKYACTIV-G 2.5]**.)

CO concentration

- Within the regulation

HC concentration

- Within the regulation

Idle-up Speed Control Inspection

NOTE:

- The idle speed cannot be adjusted.
- The M-MDS is required to verify the idle speed.

1. Complete the engine tune-up preparation. (See **Engine Tune-up Preparation**.)

2. Verify that the idle speed according to each load (M-MDS PID: RPM) is within the specification using the PID/data monitor function of the M-MDS (except idle speed decrease after applying load). (See **PCM INSPECTION [SKYACTIV-G 2.0, SKYACTIV-G 2.5]**.)

- If the engine speed is not within the specification when a specified load is applied, inspect the related input parts, wiring harnesses, and connectors.

Idle-up speed (MTX: Neutral position, ATX: P, N position)

- A/C on: 650—800 rpm
- Electrical loads on: 600—750 rpm

2014 - Mazda3 - Engine

PLUG HOLE PLATE REMOVAL/INSTALLATION [SKYACTIV-G 2.0, SKYACTIV-G 2.5]

CAUTION:

- If the rubber on only one side of the plug hole plate front is lifted up, it could damage the adapter at the location shown in the figure. When removing the plug hole plate, lift up the rubbers at the same time.

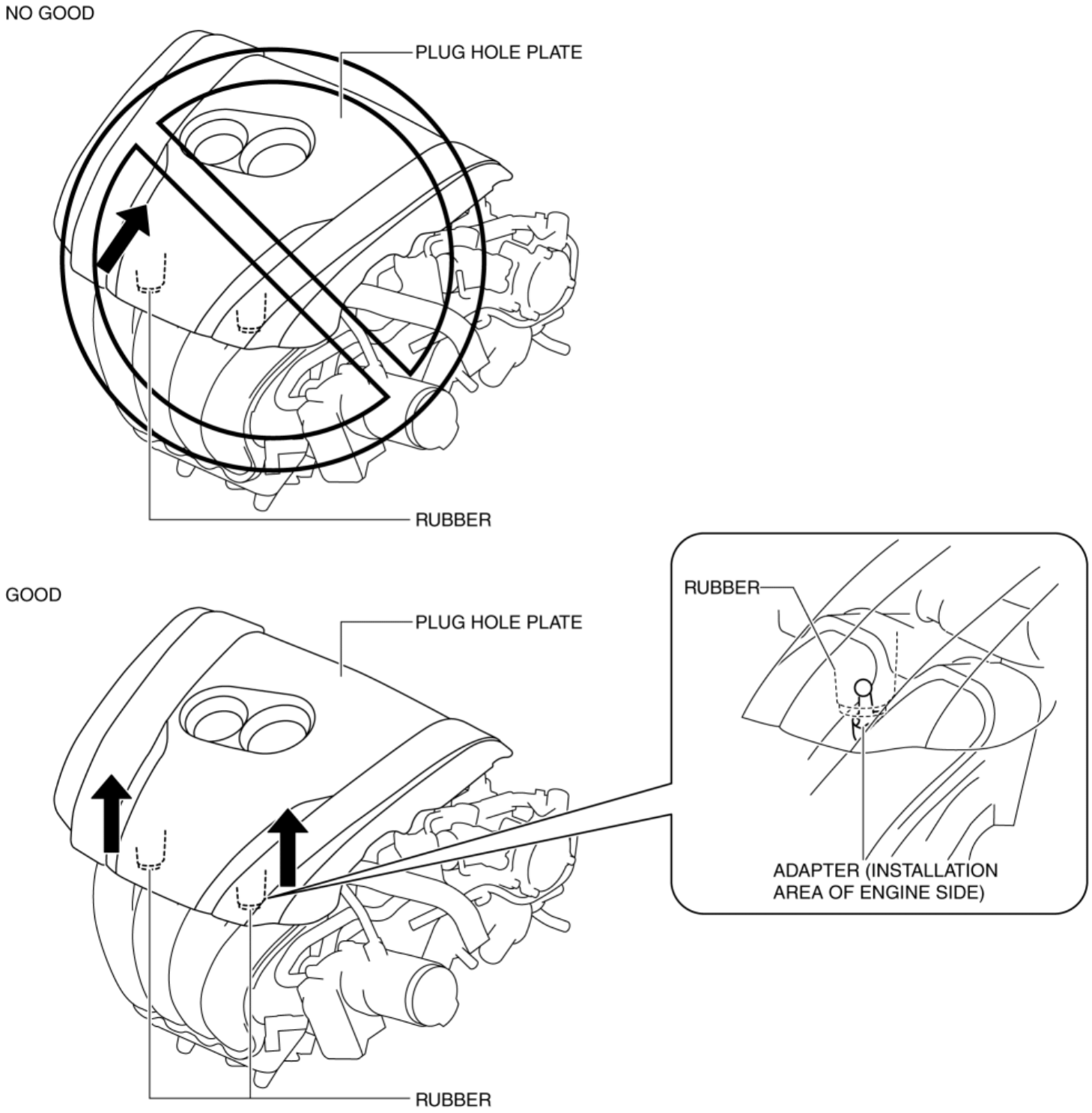

Removal

1. Pull up the front part of the plug hole plate at the same time and remove the rubber from the adapter on the engine side.

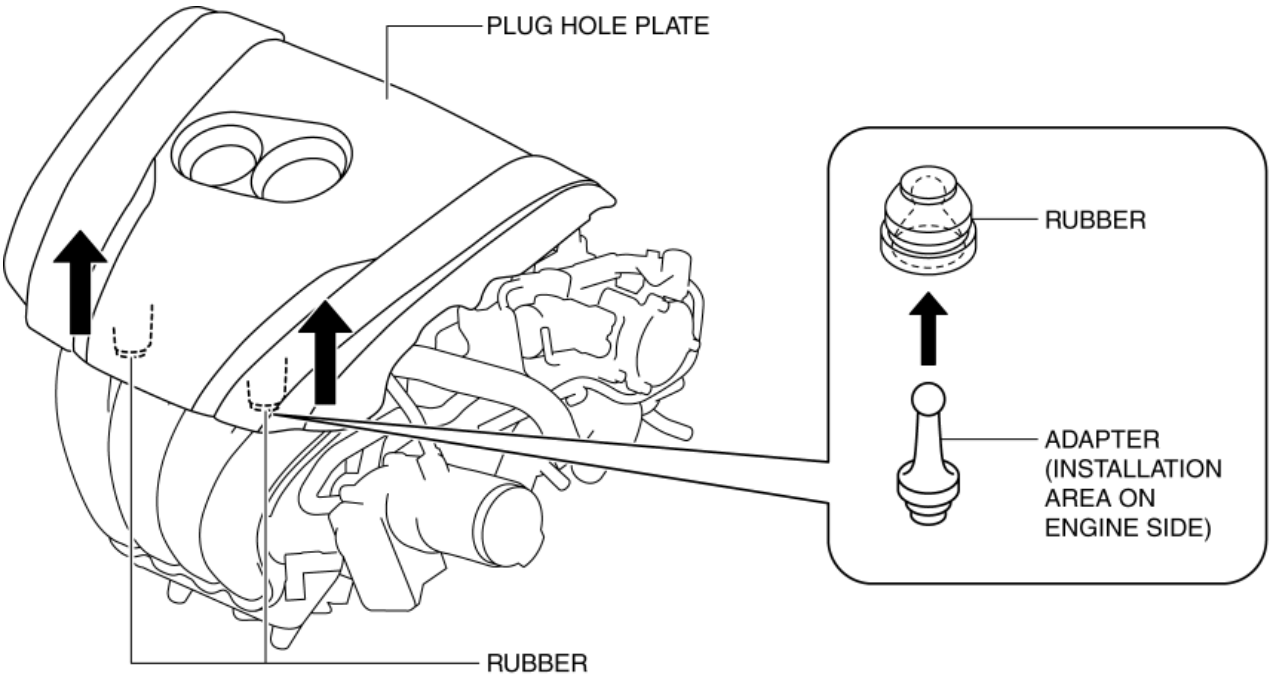

2. Pull up the plug hole plate in the order shown in the figure and remove the adapter from the rubber on the engine side.

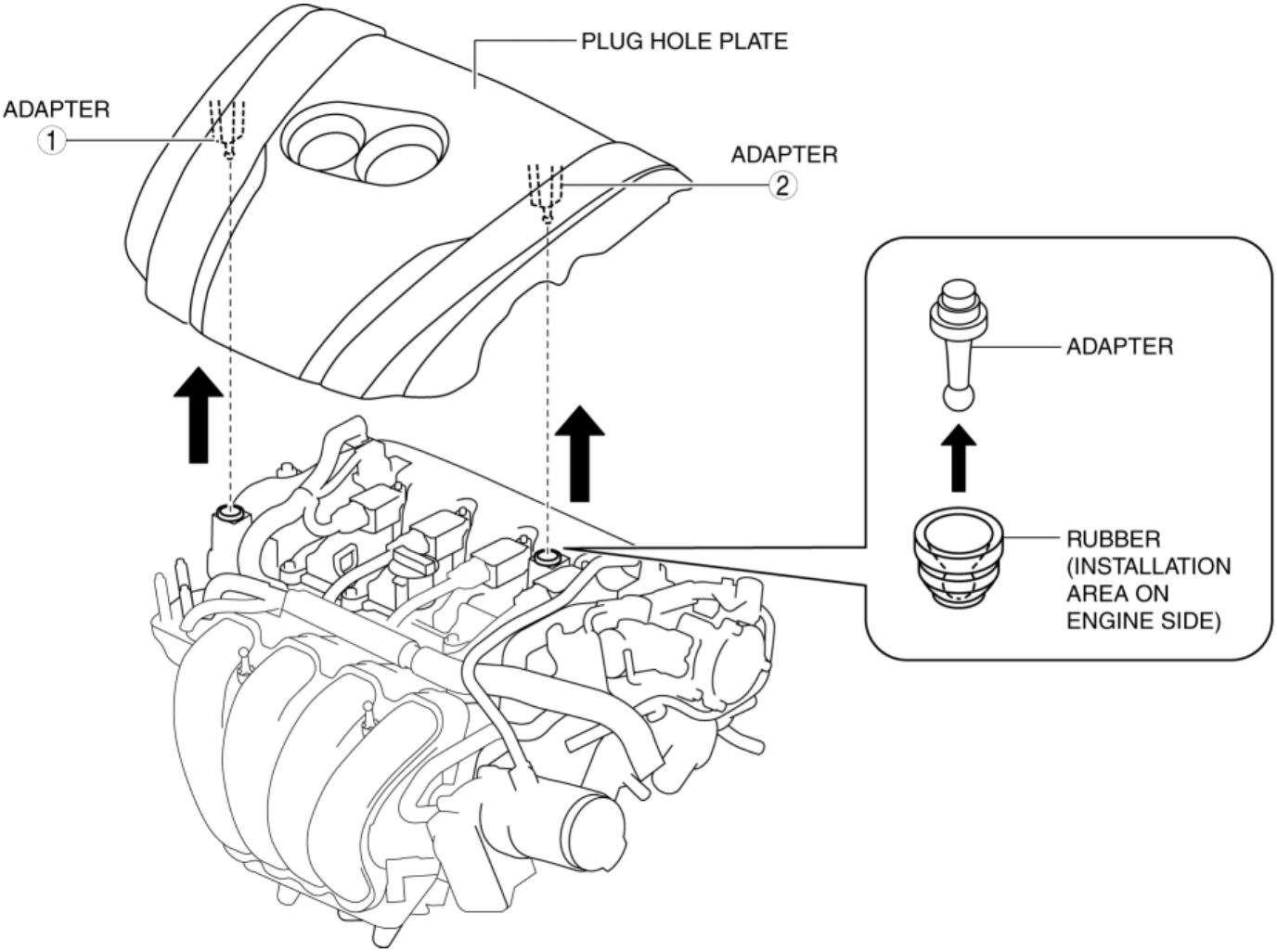

Installation

1. Press the plug hole plate in the order shown in the figure to insert the adapter to the rubber on the engine side.

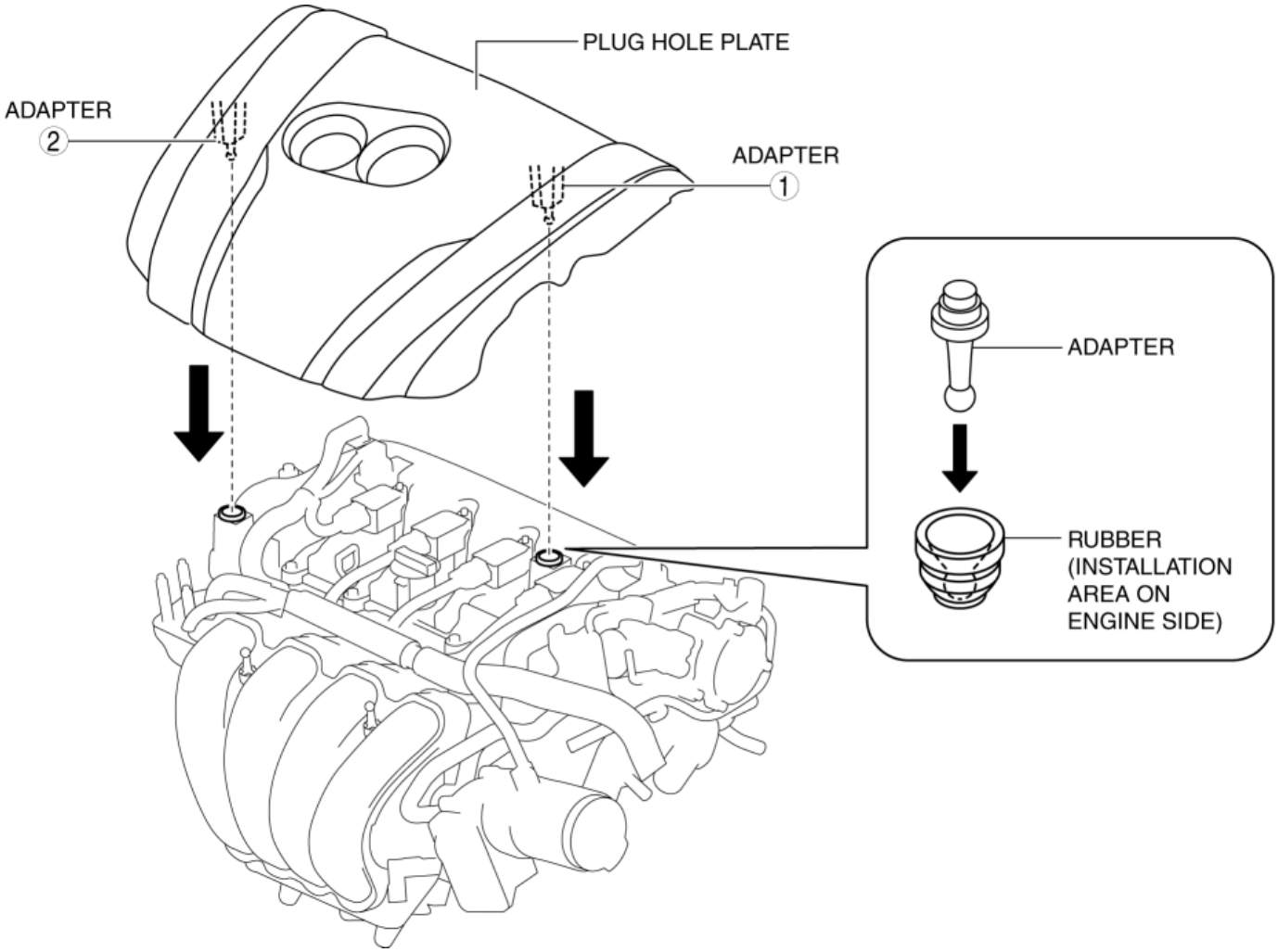

2. Press the front part of the plug hole plate at the same time to insert the rubber to the adapter on the engine side.

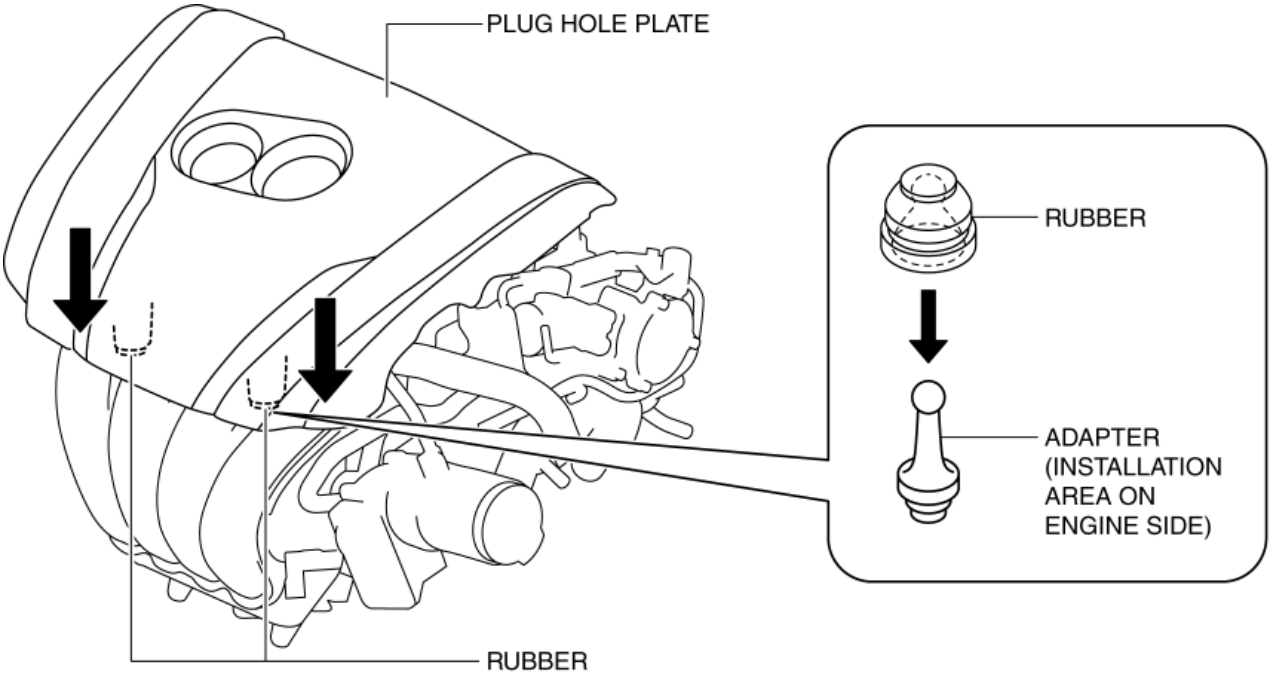

2014 - Mazda3 - Engine

DRIVE BELT INSPECTION [SKYACTIV-G 2.0, SKYACTIV-G 2.5]

Generator Drive Belt

NOTE:

- The generator drive belt deflection/tension inspection is not necessary with the adoption of the drive belt auto tensioner.

1. Verify that the indicator part of the cast hexagon on the drive belt auto tensioner is within the normal range.

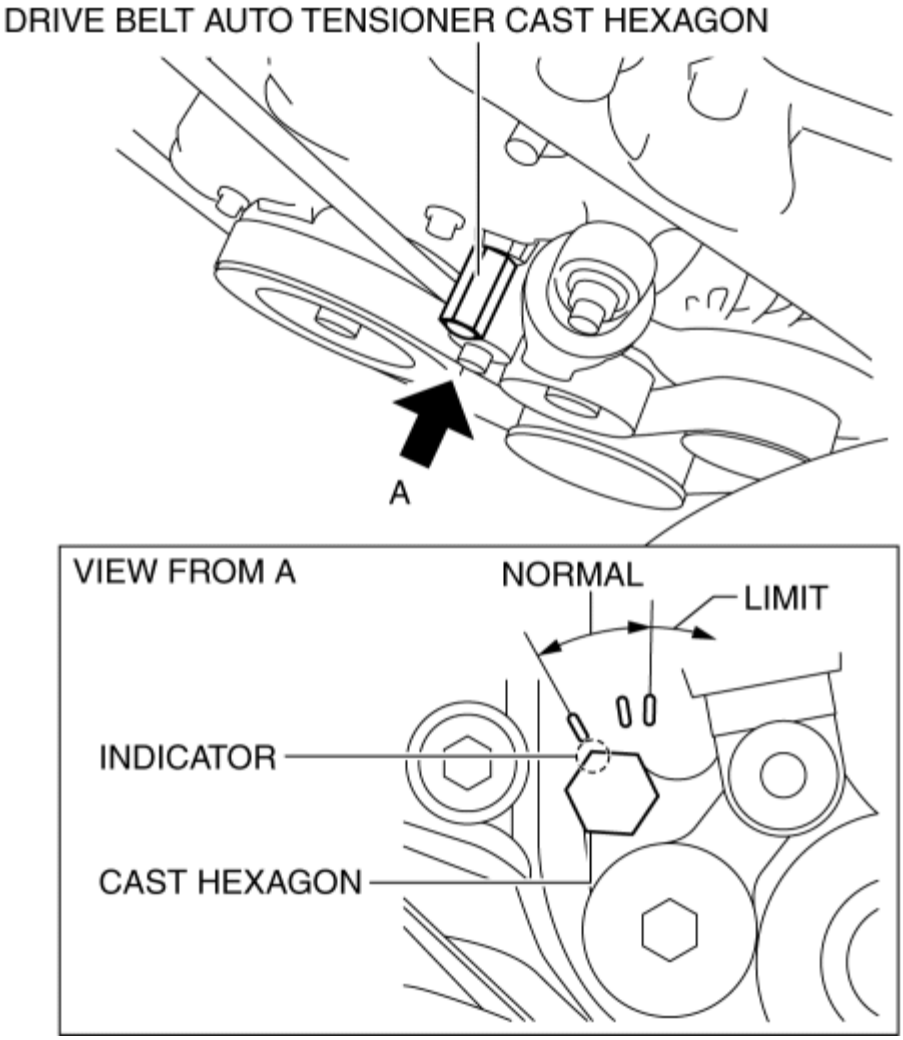

- If it exceeds the limit, replace the drive belt. (See **DRIVE BELT REMOVAL/INSTALLATION [SKYACTIV-G 2.0, SKYACTIV-G 2.5]**.)

Water Pump Drive Belt

NOTE:

- The water pump drive belt deflection/tension inspection is not necessary with the adoption of the stretch-type water pump drive belt.

1. Visually inspect or feel that there is no wear, damage, or cracking on the inside and sides of the entire belt.

    - Even if there is a little wear, damage, or cracking, replace the water pump drive belt. (See **DRIVE BELT REMOVAL/INSTALLATION [SKYACTIV-G 2.0, SKYACTIV-G 2.5]**.)

2. Start the engine to verify that abnormal noise does not occur.

    - If abnormal noise occurs, replace the water pump drive belt. (See **DRIVE BELT REMOVAL/INSTALLATION [SKYACTIV-G 2.0, SKYACTIV-G 2.5]**.)

2014 - Mazda3 - Engine

DRIVE BELT REMOVAL/INSTALLATION [SKYACTIV-G 2.0, SKYACTIV-G 2.5]

WARNING:

- A hot engine can cause severe burns. Turn off the engine and wait until it is cool before servicing.

NOTE:

- Remove/install the drive belt from the underside of the vehicle.

Generator Drive Belt Removal/Installation

CAUTION:

- To prevent damage to the drive belt auto tensioner, do not apply excessive torque after the tensioner moves full-stroke.

1. Remove the splash shield (RH). (See **SPLASH SHIELD REMOVAL/INSTALLATION**.)

2. Insert a wrench onto the cast hexagon on the drive belt auto tensioner and release the tension by slowly turning in the direction shown in the figure.

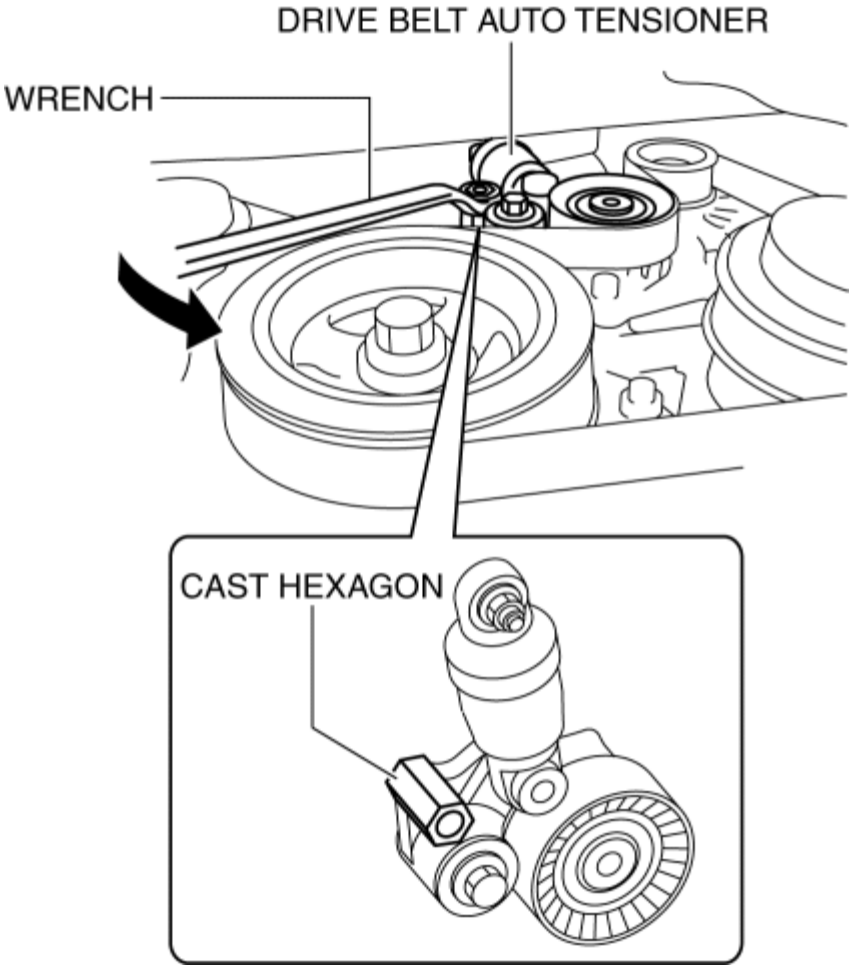

3. Remove the generator drive belt.

4. Install the generator drive belt.

5. Rotate the crankshaft pulley clockwise approx. halfway and verify that the generator drive belt is installed correctly.

- If the rib of the drive belt and the groove of each pulley are not aligned, remove the drive belt and re-install it.

6. Verify that the indicator part of the cast hexagon on the drive belt auto tensioner is within the normal range.(See **DRIVE BELT INSPECTION [SKYACTIV-G 2.0, SKYACTIV-G 2.5]**.)

7. Install the splash shield (RH). (See **SPLASH SHIELD REMOVAL/INSTALLATION**.)

Water Pump Drive Belt

Removal

1. Remove the generator drive belt. (See **Generator Drive Belt Removal/Installation**.)

2. Apply a clean cloth to the water pump drive belt as shown in the figure.

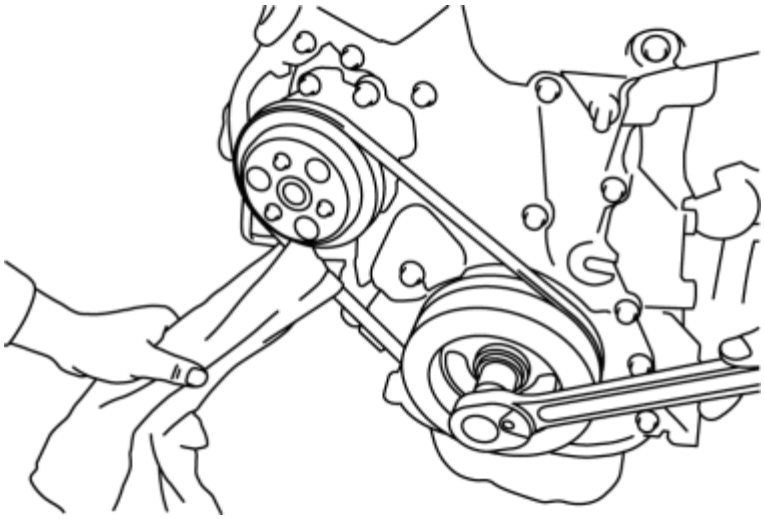

3. Pull the cloth in the direction of the arrow and rotate the crankshaft pulley clockwise.

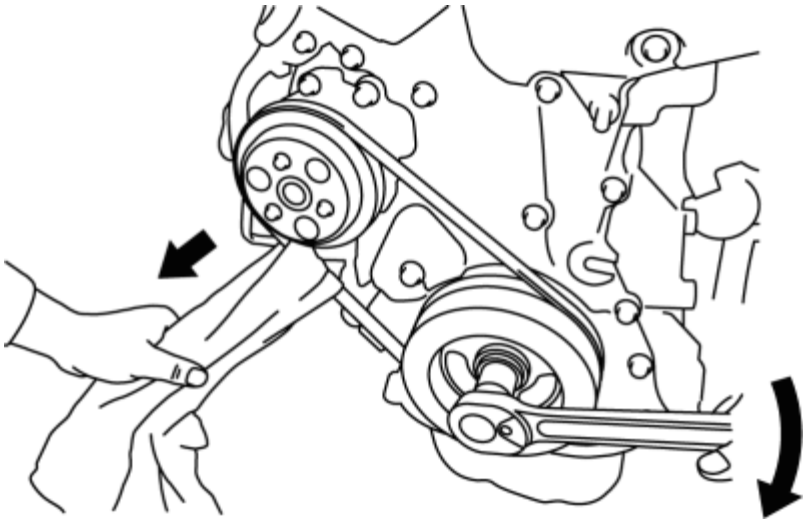

CAUTION:

- To prevent damaging the drive belt, do not stop rotating the crankshaft pulley while performing the removal procedure (with inserted cloth between drive belt and water pump pulley).

NOTE:

- The rib of the drive belt can be slid from the groove of the water pump pulley by rotating the crankshaft pulley while pulling the cloth in the direction of the arrow.

4. Remove the water pump drive belt.

Installation

1. Set one side of the water pump drive belt into the groove of the crankshaft pulley.

2. Set the other side of the water pump drive belt into the groove of the water pump pulley with the smaller circumference.

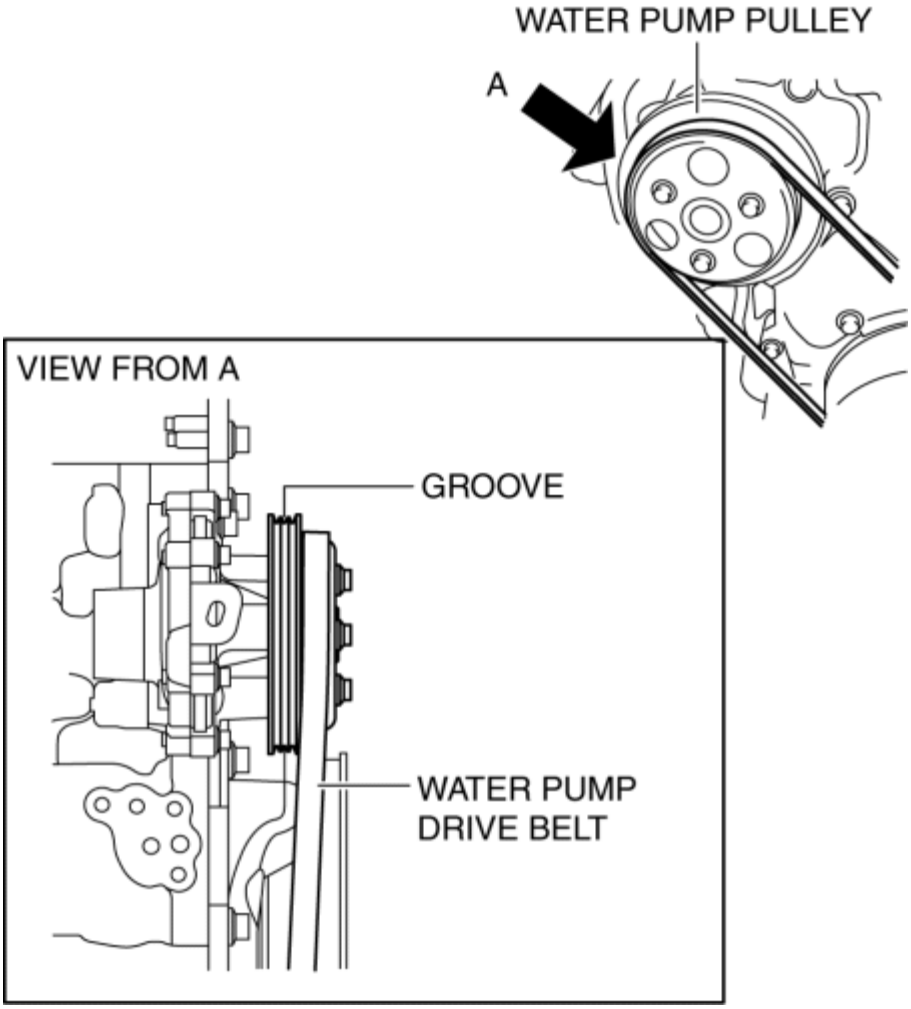

CAUTION:

- Be careful not to get a finger caught in between the drive belt and pulley when performing the following procedure.
- Wearing gloves could result in fingers getting caught between the drive belt and pulley. Do not wear cotton gloves when performing the procedure.

3. Press the drive belt up from the smaller circumference pulley into the groove of the larger circumference pulley, and rotate the crankshaft pulley clockwise.

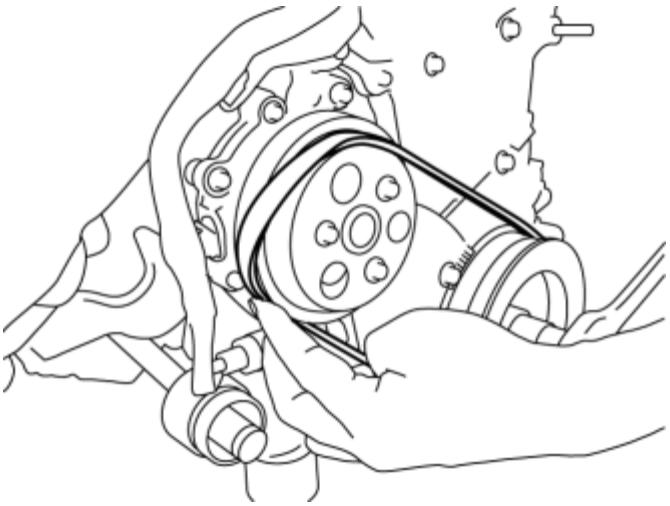

CAUTION:

- To prevent damaging the drive belt, do not stop rotation of the crankshaft pulley while pressing the drive belt up from the height difference of the water pump pulley to the groove of the pulley.

4. After drive belt installation, rotate the crankshaft pulley clockwise approx. halfway and verify that the water pump drive belt is installed correctly.

- If the rib of the drive belt and the groove of the pulley are not aligned, remove the drive belt and re-install it.

5. Install the generator drive belt. (See **Generator Drive Belt Removal/Installation**.)

2014 - Mazda3 - Engine

DRIVE BELT AUTO TENSIONER INSPECTION [SKYACTIV-G 2.0, SKYACTIV-G 2.5]

WARNING:

- A hot engine can cause severe burns. Turn off the engine and wait until it is cool before servicing.

CAUTION:

- If the rubber part of the drive belt auto tensioner is damaged by a screwdriver or other tool, oil in the hydraulic pressure unit could leak and the tensioner may not operate normally. Be careful not to damage the rubber part of the drive belt auto tensioner.

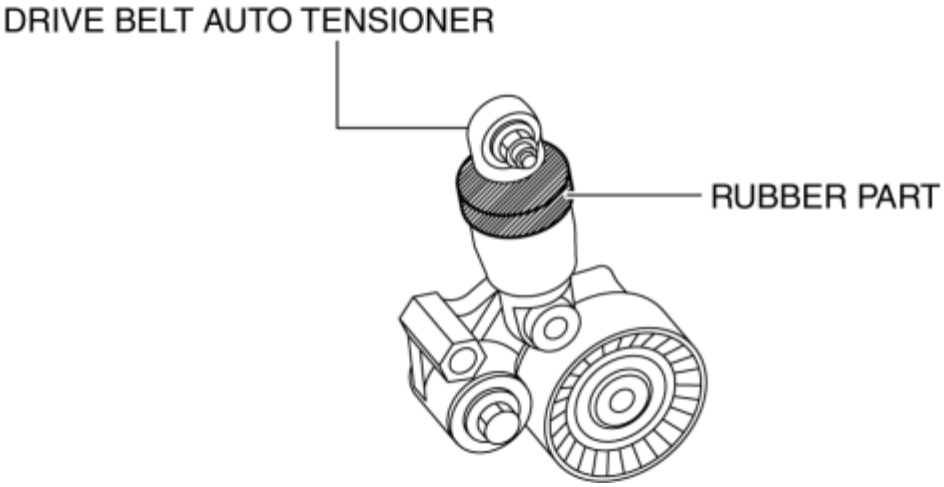

1. Remove the generator drive belt. (See **DRIVE BELT REMOVAL/INSTALLATION [SKYACTIV-G 2.0, SKYACTIV-G 2.5]**.)

CAUTION:

- To prevent damage to the drive belt auto tensioner, do not apply excessive torque after the tensioner moves full-stroke.

2. Insert the wrench onto the cast hexagon on the drive belt auto tensioner, slowly turn it in the direction of the arrow shown in the figure, and fully depress.

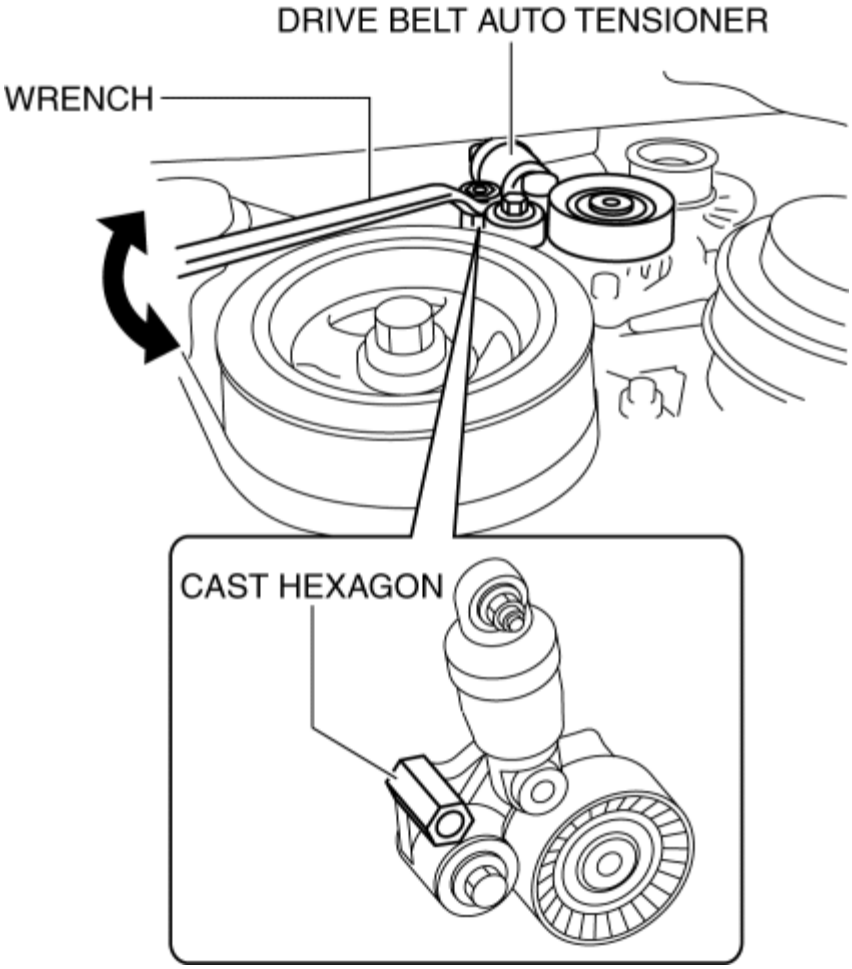

NOTE:

- The drive belt auto tensioner is operated in the direction of the arrow by turning the wrench.

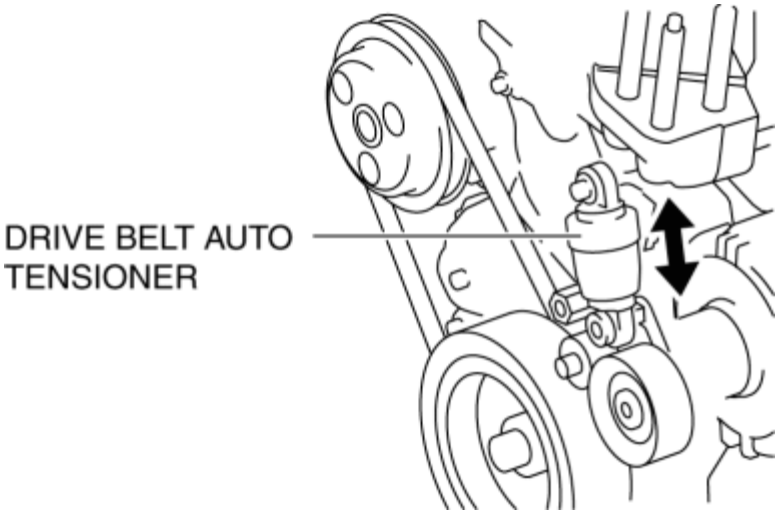

3. Verify that the drive belt auto tensioner moves smoothly in the operational direction.

- If it does not move smoothly, air infiltration into the inner hydraulic pressure unit can be considered. Move the drive belt auto tensioner up and down at full stroke three times to bleed the air.

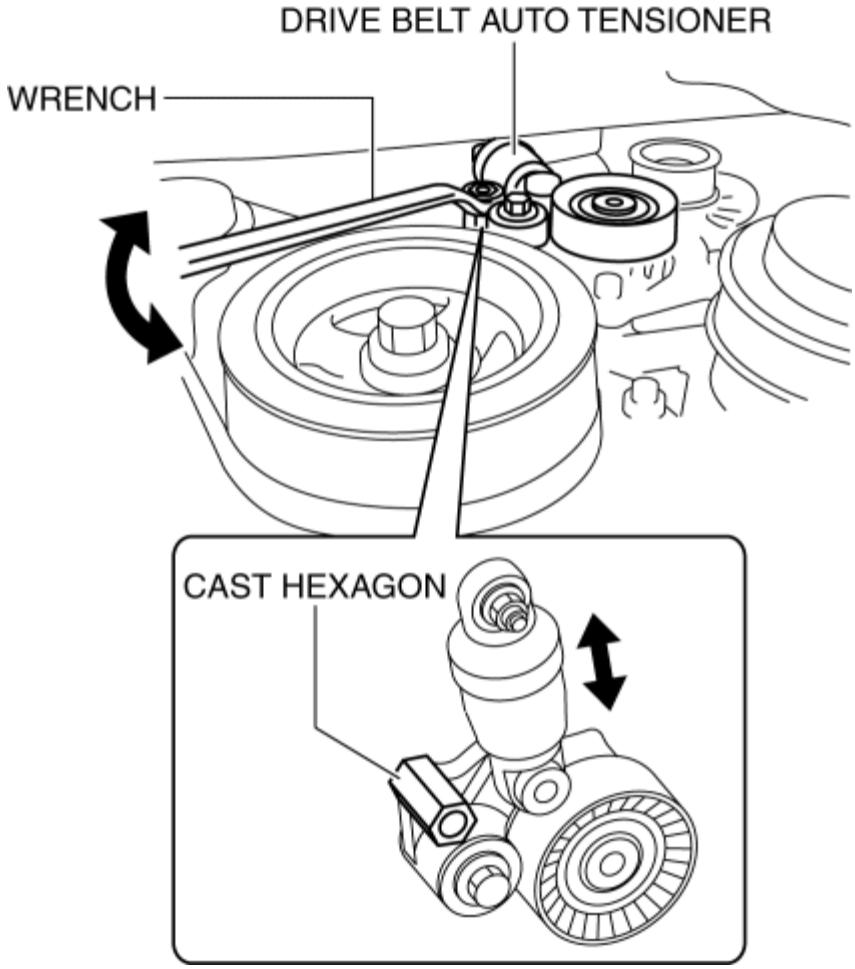

- After bleeding the air, if the drive belt auto tensioner still does not move smoothly when re-inspecting, replace the drive belt auto tensioner. (See **DRIVE BELT AUTO TENSIONER REMOVAL/INSTALLATION [SKYACTIV-G 2.0, SKYACTIV-G 2.5]**).

NOTE:

- By moving the drive belt auto tensioner up and down full-stroke three times, the piston inside the tensioner moves to bleed the air.

4. Turn the drive belt auto tensioner pulley by hand and verify that it rotates smoothly.

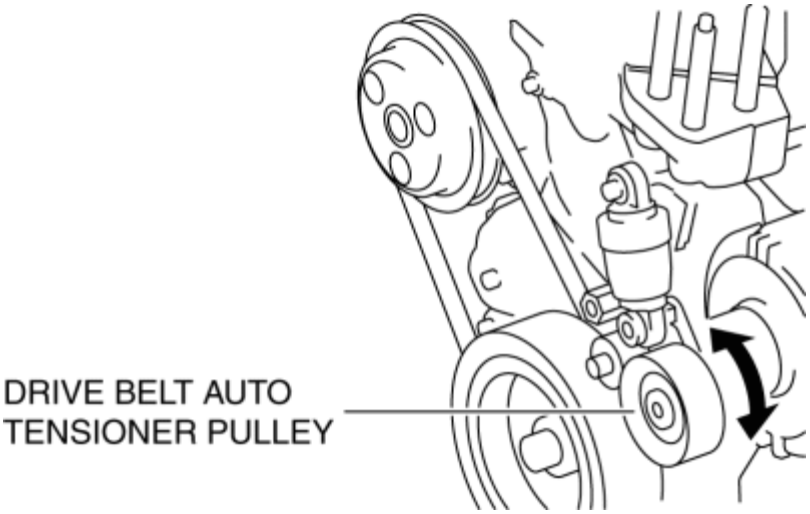

- If it does not move smoothly, replace the drive belt auto tensioner. (See **DRIVE**

BELT AUTO TENSIONER REMOVAL/INSTALLATION [SKYACTIV-G 2.0, SKYACTIV-G 2.5].)

5. Install the generator drive belt. (See **DRIVE BELT REMOVAL/INSTALLATION [SKYACTIV-G 2.0, SKYACTIV-G 2.5]**.)

2014 - Mazda3 - Engine

DRIVE BELT AUTO TENSIONER REMOVAL/INSTALLATION [SKYACTIV-G 2.0, SKYACTIV-G 2.5]

1. Remove the plug hole plate. (See **PLUG HOLE PLATE REMOVAL/INSTALLATION [SKYACTIV-G 2.0, SKYACTIV-G 2.5]**.)

2. Remove the generator drive belt. (See **DRIVE BELT REMOVAL/INSTALLATION [SKYACTIV-G 2.0, SKYACTIV-G 2.5]**.)

3. Remove in the order indicated in the table.

4. Install in the reverse order of removal.

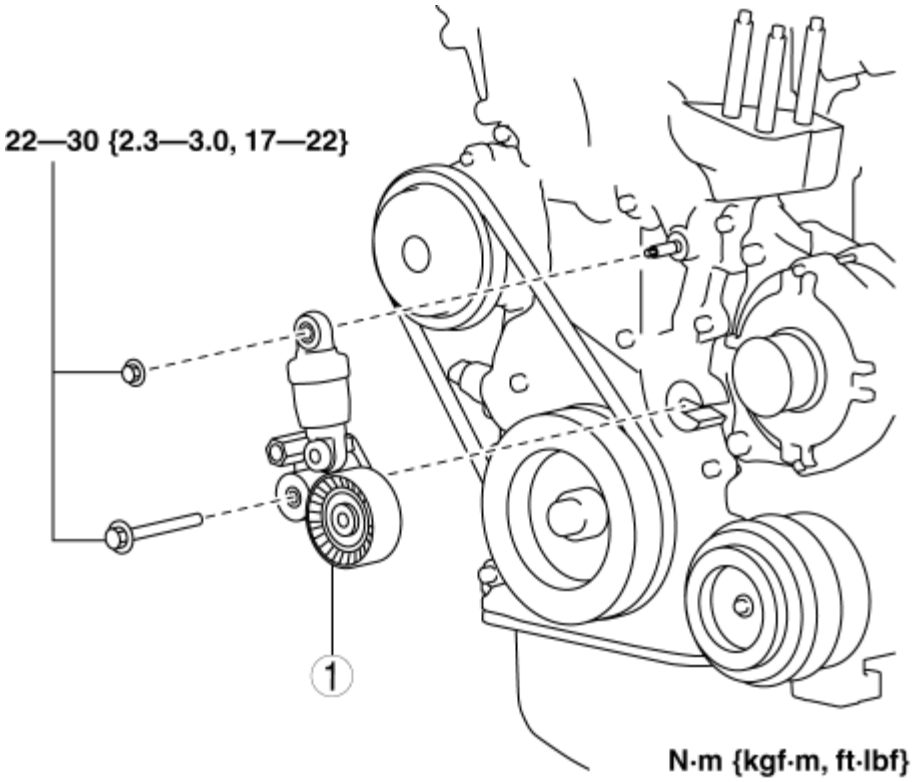

1	Drive belt auto tensioner (See **Drive Belt Auto Tensioner Installation Note**.)

Drive Belt Auto Tensioner Installation Note

CAUTION:

- To allow the drive belt auto tensioner to function correctly, always bleed the air from the

drive belt auto tensioner using the following procedure after assembling the drive belt auto tensioner.

1. Install the drive belt auto tensioner to the engine.

Tightening torque

- 22—30 N·m {2.3—3.0 kgf·m, 17—22 ft·lbf}

CAUTION:

- To prevent damage to the drive belt auto tensioner, do not apply excessive torque after the tensioner moves full-stroke.

2. Insert the wrench onto the cast hexagon on the drive belt auto tensioner, move the drive belt auto tensioner up and down at full-stroke three times to bleed the air.

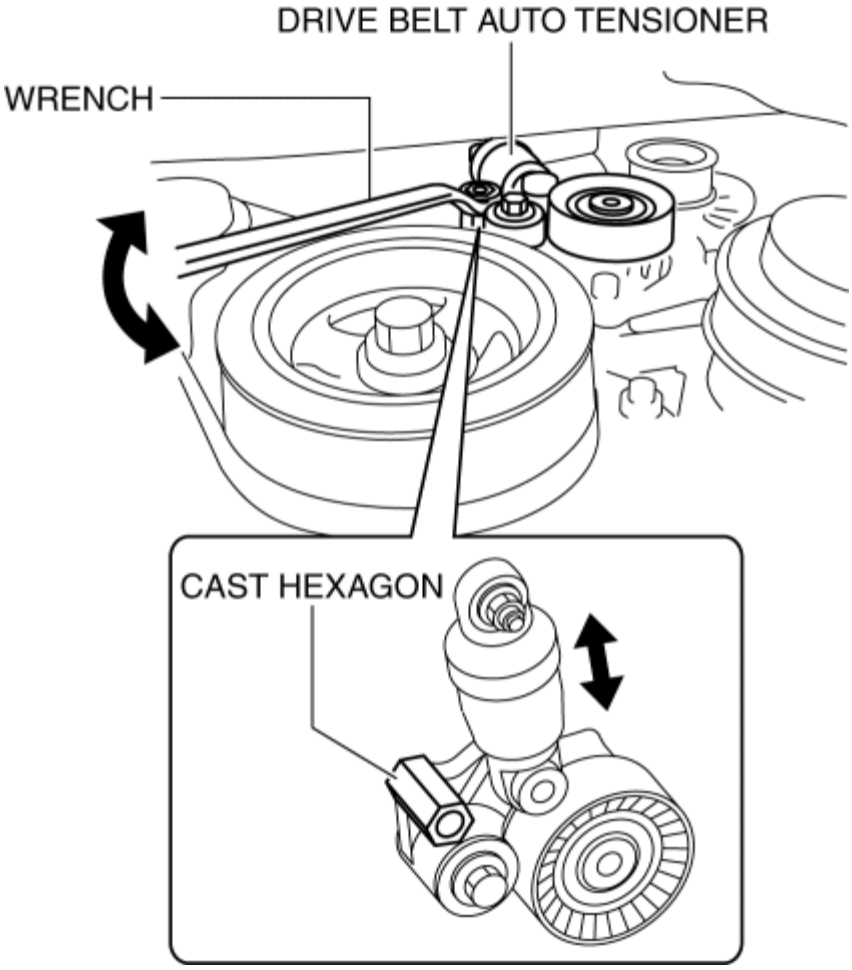

NOTE:

- By moving the drive belt auto tensioner up and down full-stroke three times, the piston inside the tensioner moves to bleed the air.

2014 - Mazda3 - Engine

COMPRESSION INSPECTION [SKYACTIV-G 2.0, SKYACTIV-G 2.5]

WARNING:

- Hot engines and oil can cause severe burns. Be careful not to burn yourself during removal/installation of each component.
- Fuel vapor is hazardous. It can very easily ignite, causing serious injury and damage. Always keep sparks and flames away from fuel.
- Fuel line spills and leakage are dangerous. Fuel can ignite and cause serious injuries or death and damage. Fuel can also irritate skin and eyes. To prevent this, always complete the “Fuel Line Safety Procedure”. (See **BEFORE SERVICE PRECAUTION [SKYACTIV-G 2.0, SKYACTIV-G 2.5]**.)

1. Verify that the battery is fully charged. (See **BATTERY INSPECTION [SKYACTIV-G 2.0, SKYACTIV-G 2.5]**.)
    - Recharge it if necessary. (See **BATTERY RECHARGING [SKYACTIV-G 2.0, SKYACTIV-G 2.5]**.)
2. Warm up the engine to the normal operating temperature.
3. Perform “Fuel Line Safety Procedures”. (See **BEFORE SERVICE PRECAUTION [SKYACTIV-G 2.0, SKYACTIV-G 2.5]**.)
4. Remove the following parts.

    a. Plug hole plate. (See **PLUG HOLE PLATE REMOVAL/INSTALLATION [SKYACTIV-G 2.0, SKYACTIV-G 2.5]**.)

    b. Ignition coil/ion sensors. (See **IGNITION COIL/ION SENSOR REMOVAL/INSTALLATION [SKYACTIV-G 2.0, SKYACTIV-G 2.5]**.)

    c. Spark plugs. (See **SPARK PLUG REMOVAL/INSTALLATION [SKYACTIV-G 2.0, SKYACTIV-G 2.5]**.)

    d. Fuel pump relay

    e. Fuel injector relay
5. Measure the compression pressure using the following procedure.

    a. Press a compression gauge into the spark plug hole.

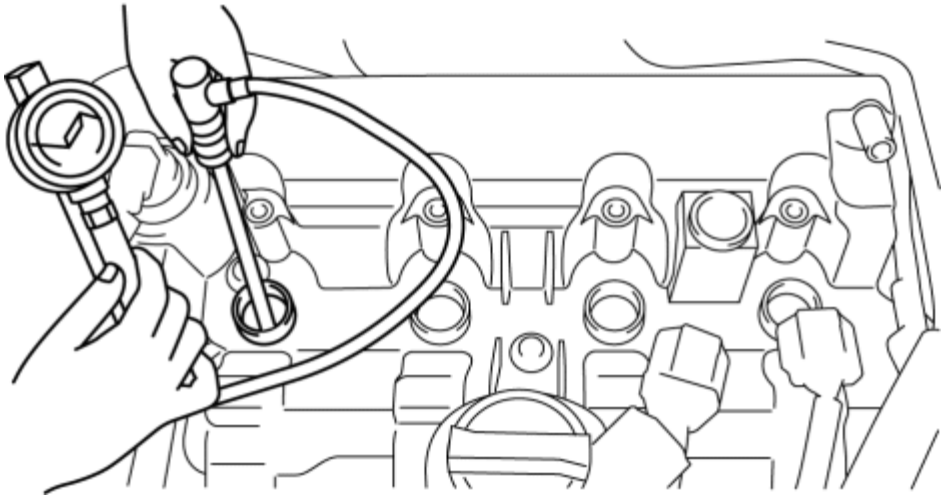

b. Fully depress the accelerator pedal.

c. Crank the engine and measure the compression pressure.

Compression [SKYACTIV-G 2.0]

- Standard: 885 kPa {9.02 kgf/cm^2, 128 psi} [300 rpm]
- Minimum: 708 kPa {7.22 kgf/cm^2, 103 psi} [300 rpm]
- Maximum difference between cylinders: 150 kPa {1.53 kgf/cm^2, 21.8 psi} [300 rpm]

Compression [SKYACTIV-G 2.5]

- Standard: 954 kPa {9.73 kgf/cm^2, 138 psi} [300 rpm]
- Minimum: 763 kPa {7.78 kgf/cm^2, 111 psi} [300 rpm]
- Maximum difference between cylinders: 161 kPa {1.64 kgf/cm^2, 23.4 psi} [300 rpm]

NOTE:

- Because the SKYACTIV-G 2.0 and SKYACTIV-G 2.5 retards the intake valve closing timing, compression pressure is low.

d. Perform Steps (1) to (3) for all cylinders.

e. If the measured value is the threshold or less, or if there is a cylinder which exceeds the specified maximum difference between cylinders, add a small amount of engine oil through the spark plug hole and perform Steps (1) to (3).

- If the pressure increases by adding the engine oil, the piston ring or the cylinder surface is worn, or they are damaged. Perform overhaul servicing.
- If the pressure does not increase, valve seizure, valve attachment malfunction, or pressure leakage from the cylinder head gasket might be occurring. Perform overhaul servicing.

f. If the measured value is high, it is possible that there is an error in the electric variable valve timing system.

6. Remove the compression gauge.

7. Install the following parts.

   a. Fuel injector relay

   b. Fuel pump relay

   c. Spark plugs. (See **SPARK PLUG REMOVAL/INSTALLATION [SKYACTIV-G 2.0, SKYACTIV-G 2.5]**.)

   d. Ignition coil/ion sensors. (See **IGNITION COIL/ION SENSOR REMOVAL/INSTALLATION [SKYACTIV-G 2.0, SKYACTIV-G 2.5]**.)

   e. Plug hole plate. (See **PLUG HOLE PLATE REMOVAL/INSTALLATION [SKYACTIV-G 2.0, SKYACTIV-G 2.5]**.)

2014 - Mazda3 - Engine

ELECTRIC VARIABLE VALVE TIMING MOTOR/DRIVER INSPECTION [SKYACTIV-G 2.0, SKYACTIV-G 2.5]

WARNING:

- A hot engine can cause severe burns. Turn off the engine and wait until it is cool before servicing.

CAUTION:

- Do not disassemble the electric variable valve timing motor/driver because it is a precision unit.
- Do not apply excessive force when rotating the electric variable valve timing motor joint. If it is rotated with excessive force, the electric variable valve timing motor could be damaged.

1. Disconnect the negative battery cable. (See **NEGATIVE BATTERY CABLE DISCONNECTION/CONNECTION [SKYACTIV-G 2.0, SKYACTIV-G 2.5]**.)

2. Remove the plug hole plate. (See **PLUG HOLE PLATE REMOVAL/INSTALLATION [SKYACTIV-G 2.0, SKYACTIV-G 2.5]**.)

3. Remove the electric variable valve timing motor/driver. (See **ELECTRIC VARIABLE VALVE TIMING MOTOR/DRIVER REMOVAL/INSTALLATION [SKYACTIV-G 2.0, SKYACTIV-G 2.5]**.)

4. Rotate the electric variable valve timing motor joint to the left and right by your fingers and verify that it rotates smoothly in **15°** increments.

NOTE:

- Rotate the joint area smoothly using only the tips of your fingers.
- The electric variable valve timing motor joint moves in **15°** increments, and if the joint is moved **24** times, it rotates one full rotation.

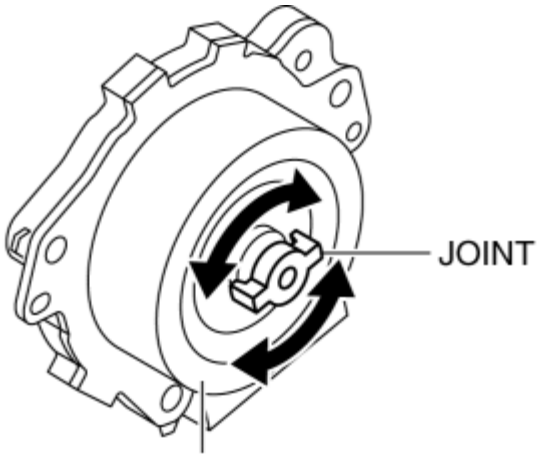

ELECTRIC VARIABLE VALVE TIMING MOTOR

If it does not rotate smoothly, replace the electric variable valve timing motor/driver.(See **ELECTRIC VARIABLE VALVE TIMING MOTOR/DRIVER REMOVAL/INSTALLATION [SKYACTIV-G 2.0, SKYACTIV-G 2.5]**.)

5. Install in the reverse order of removal.

2014 - Mazda3 - Engine

ELECTRIC VARIABLE VALVE TIMING MOTOR/DRIVER REMOVAL/INSTALLATION [SKYACTIV-G 2.0, SKYACTIV-G 2.5]

WARNING:

- A hot engine can cause severe burns. Turn off the engine and wait until it is cool before servicing.

CAUTION:

- Applying excessive force (force of 100 N {10.2 kgf, 22.5 lbf} or more) to the electric variable valve timing motor/driver may cause a malfunction. When servicing, be careful not to apply excessive force to the electric variable valve timing motor/driver using other parts or tools.
- Do not disassemble the electric variable valve timing motor/driver because it is a precision unit.

1. Disconnect the negative battery cable. (See **NEGATIVE BATTERY CABLE DISCONNECTION/CONNECTION [SKYACTIV-G 2.0, SKYACTIV-G 2.5]**.)
2. Remove the plug hole plate. (See **PLUG HOLE PLATE REMOVAL/INSTALLATION [SKYACTIV-G 2.0, SKYACTIV-G 2.5]**.)
3. Remove in the order indicated in the table.
4. Install in the reverse order of removal.

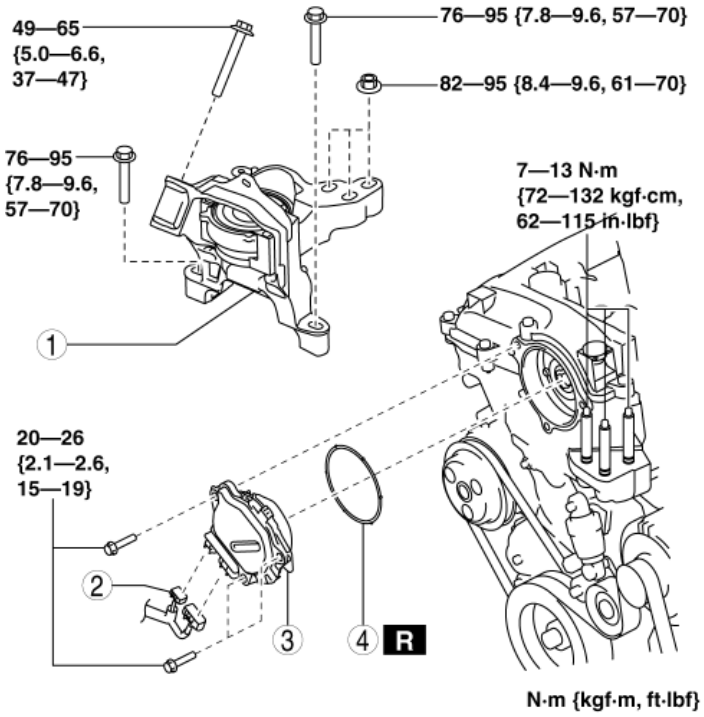

1	No. 3 engine mount (See **No.3 Engine Mount Removal Note**.) (See **No.3 Engine Mount Installation Note**.)
2	Electric variable valve timing motor/driver connector
3	Electric variable valve timing motor/driver (See **Electric Variable Valve Timing Motor/Driver Installation Note**.)
4	O-ring

No.3 Engine Mount Removal Note

1. Remove the clips shown in the figure and set the ground cable aside.

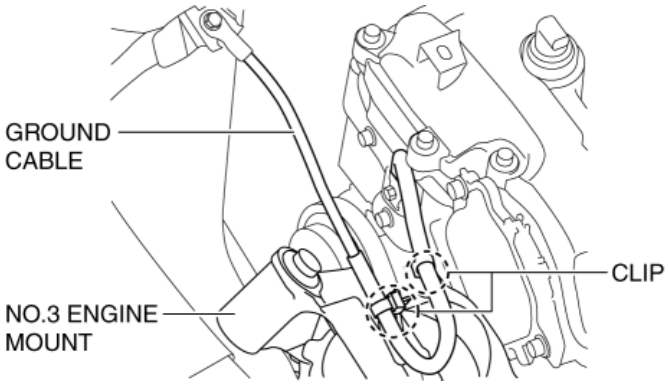

2. Remove the front under cover No.2. (See **FRONT UNDER COVER No.2 REMOVAL/INSTALLATION**.)

CAUTION:

- To prevent deformation of the oil pan, support the engine using the following methods.
  - When using an engine lifter, insert rubber of appropriate size (approx. 20 mm {0.79 in} thickness) between the engine lifter and the oil pan to support the oil pan.
  - When using a garage jack, place rubber of appropriate size (approx. 20 mm {0.79 in} thickness) on a batten which is large enough to cover and support the oil pan.

3. Before removing the No.3 engine mount, support the engine (oil pan) using a commercially available engine lifter or garage jack.

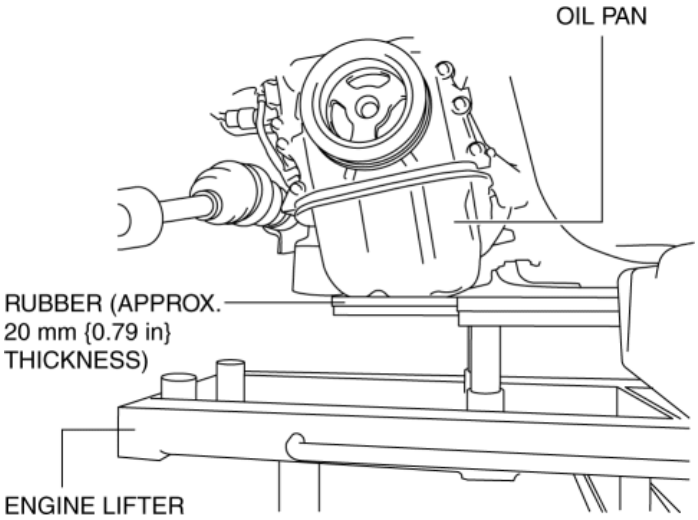

CAUTION:

- Slots have been adopted for the No.3 engine mount installation holes. If the No.3 engine mount is deviated from the original position when installing the No.3 engine mount, engine noise or vibration could increase. Before removing the No.3 engine mount, place alignment marks on the No.3 engine mount and body so that they can be assembled to the same positions as before removal.

4. Place alignment marks on the locations shown in the figure so that they can be assembled to the same positions as before removal.

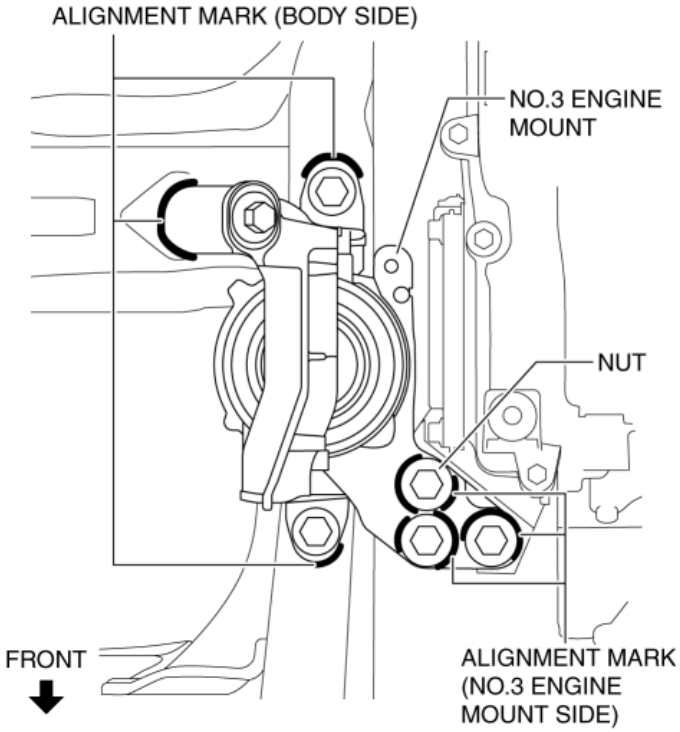

NOTE:

- Paint so that the No.3 engine mount is framed on the body side and the outline of the nut is framed on the No.3 engine mount side.

5. Remove the No. 3 engine mount.

Electric Variable Valve Timing Motor/Driver Installation Note

1. Install a new O-ring to the O-ring installation groove of the engine front cover.

CAUTION:

- To prevent damage to the electric variable valve timing motor/driver, do not apply excessive force (force of 100 N {10.2 kgf, 22.5 lbf} or more) to the shaded areas shown in the figure.

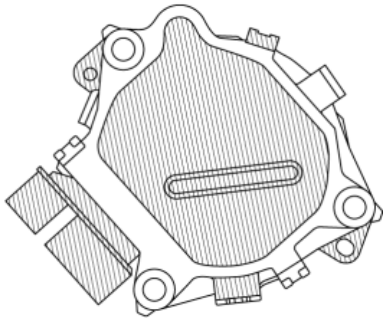

2. Install the electric variable valve timing motor/driver using the following procedures.

NOTE:

- The eccentric shaft on the electric variable valve timing actuator side can be rotated to the left and right.

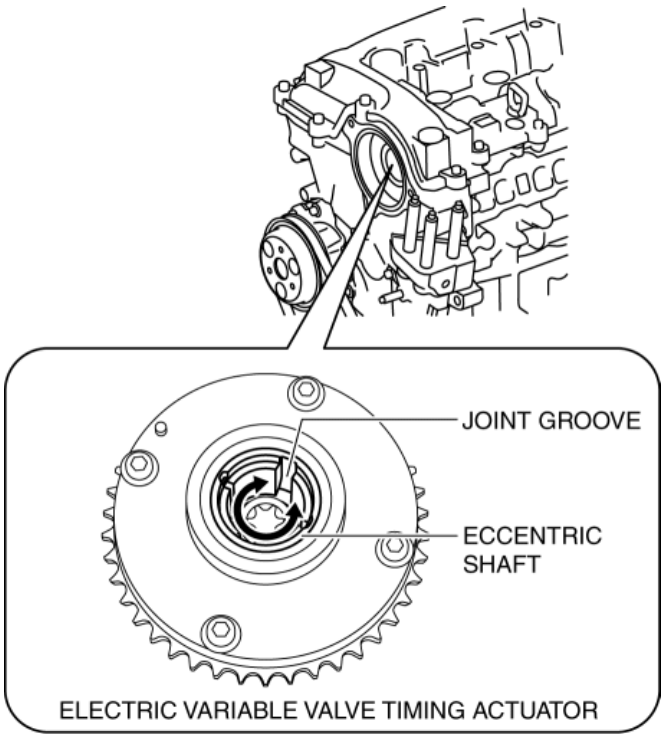

- The electric variable valve timing motor/driver can be assembled with the joint groove of the eccentric shaft in any position, and it will not lead to vehicle damage or performance reduction.

a. Before installation, rotate the joint on the end of the electric variable valve timing motor so that it is aligned to the joint groove on the electric variable valve timing actuator side.

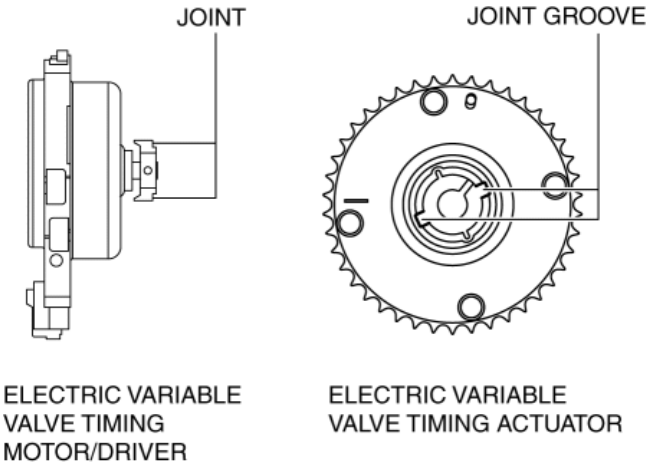

b. Engage the joint on the end of the electric variable valve timing motor with the joint groove on the electric variable valve timing actuator side.

c. Attach the seal surface.

d. Tighten the electric variable valve timing motor/driver installation bolts.

Tightening torque

- 20—26 N·m {2.1—2.6 kgf·m, 15—19 ft·lbf}

No.3 Engine Mount Installation Note

CAUTION:

- If the No.3 engine mount is deviated from the original position when installing the No.3 engine mount, engine noise or vibration could increase. When installing the No.3 engine mount, align the alignment mark placed during removal and install it to the original position.

NOTE:

- When replacing the No.3 engine mount, place a mark at the same position as the one placed before removal.

- If the No.3 engine mount nut is loosened, tighten the engine front cover stud bolts because they may have loosened.

1. Tighten the engine front cover stud bolts.

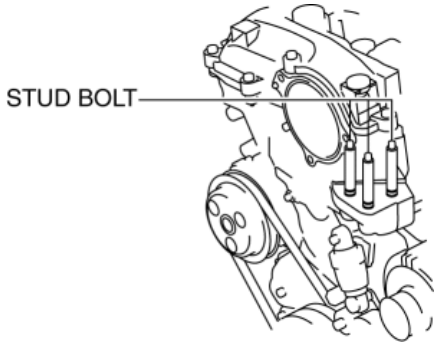

Tightening torque

- 7—13 N·m {72—132 kgf·cm, 62—115 in·lbf}

2. Temporarily tighten the No.3 engine mount installation bolts and nuts using the following procedure:

a. Align the alignment marks on the body side and No.3 engine mount, and temporarily tighten the bolts shown in the figure.

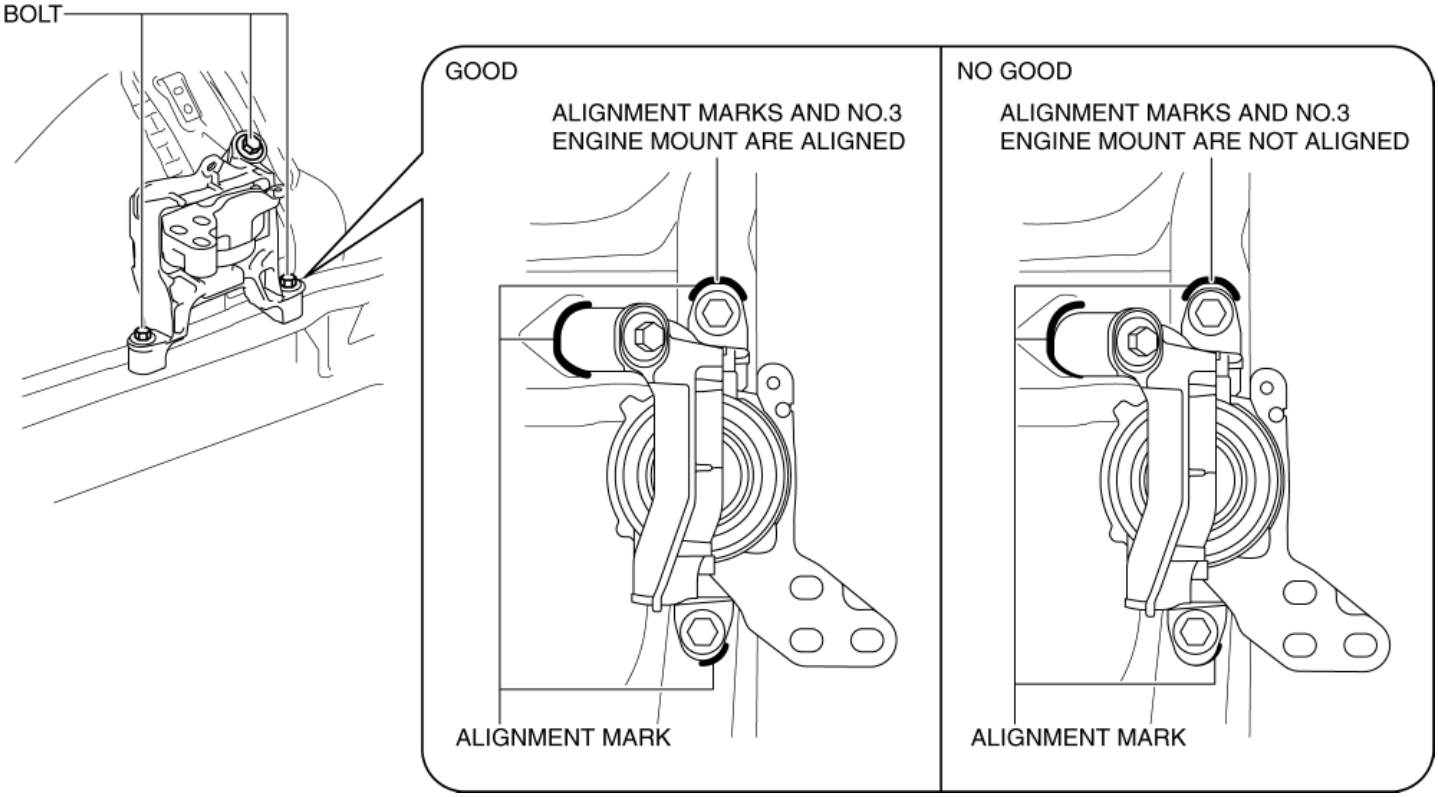

b. Temporarily tighten the nuts shown in the figure while aligning the alignment marks of the No.3 engine mount and nuts.

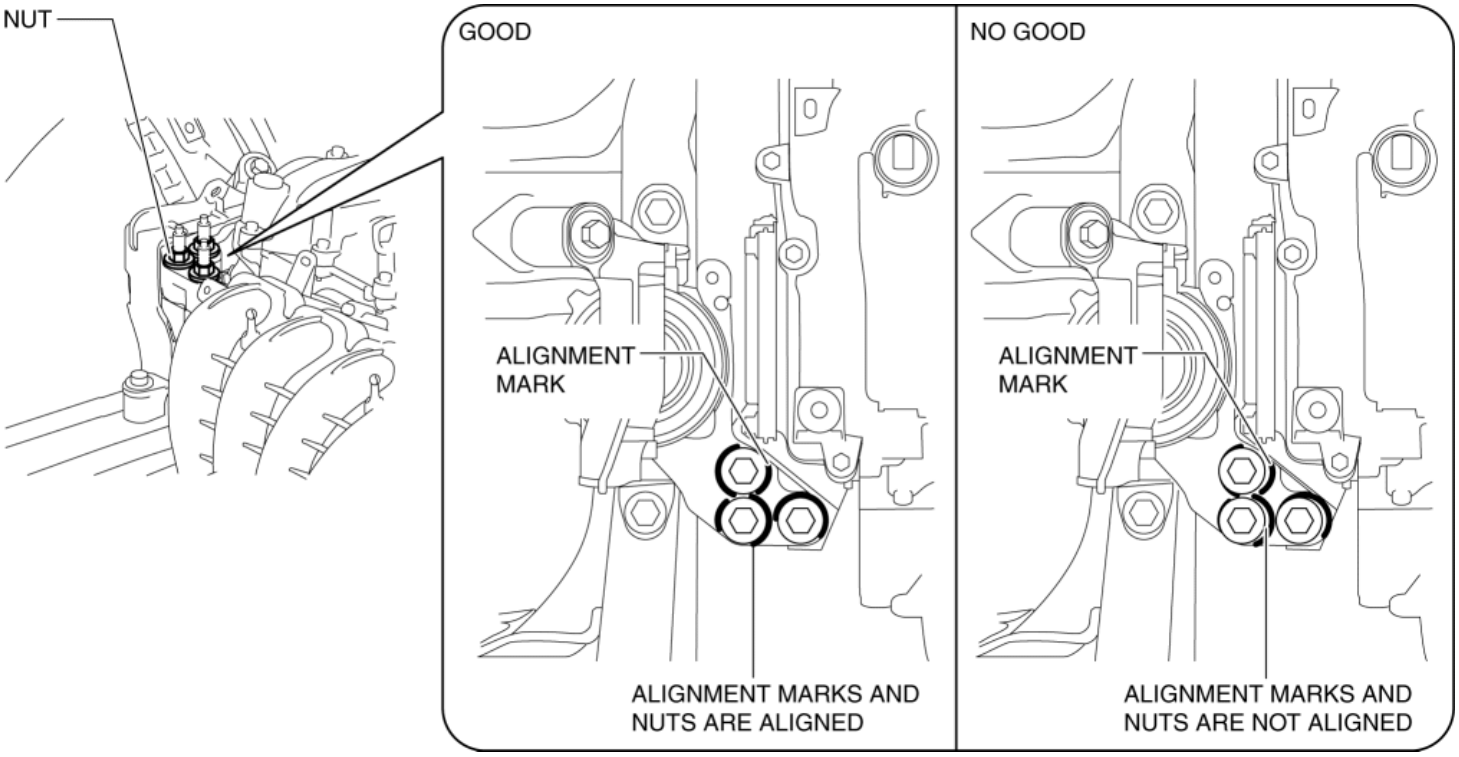

NOTE:

- If the alignment marks are not aligned, align the alignment marks while slightly moving the engine and temporarily tighten the nuts.

3. Tighten the No.3 engine mount installation bolts and nuts in the order shown in the figure.

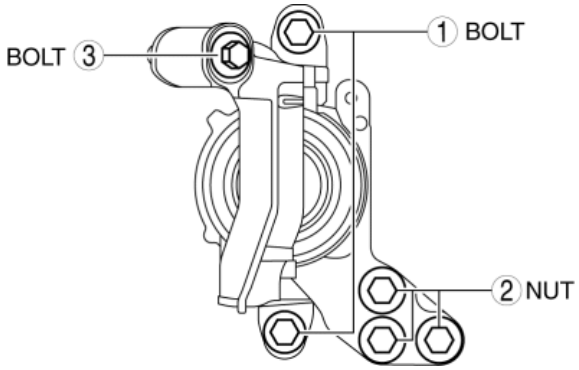

Tightening torque

Installation position	Tightening torque
1	76—95 N·m {7.8—9.6 kgf·m, 57—70 ft·lbf}
2	82—95 N·m {8.4—9.6 kgf·m, 61—70 ft·lbf}
3	49—65 N·m {5.0—6.6 kgf·m, 37—47 ft·lbf}

4. Remove the engine lifter or garage jack.

5. Install in the reverse order of removal.

2014 - Mazda3 - Engine

HYDRAULIC VARIABLE VALVE TIMING ACTUATOR INSPECTION [SKYACTIV-G 2.0, SKYACTIV-G 2.5]

WARNING:

- A hot engine can cause severe burns. Turn off the engine and wait until it is cool before servicing.

CAUTION:

- Do not disassemble the hydraulic variable valve timing actuator because it is a precision unit.

1. Disconnect the negative battery cable. (See **NEGATIVE BATTERY CABLE DISCONNECTION/CONNECTION [SKYACTIV-G 2.0, SKYACTIV-G 2.5]**.)

2. Remove the plug hole plate. (See **PLUG HOLE PLATE REMOVAL/INSTALLATION [SKYACTIV-G 2.0, SKYACTIV-G 2.5]**.)

3. Remove the ignition coil/ion sensors. (See **IGNITION COIL/ION SENSOR REMOVAL/INSTALLATION [SKYACTIV-G 2.0, SKYACTIV-G 2.5]**.)

4. Remove the cylinder head cover. (See **TIMING CHAIN REMOVAL/INSTALLATION [SKYACTIV-G 2.0, SKYACTIV-G 2.5]**.)

5. Verify that the notch of the rotor and projection of the cover on the hydraulic variable valve timing actuator are aligned and fitted.

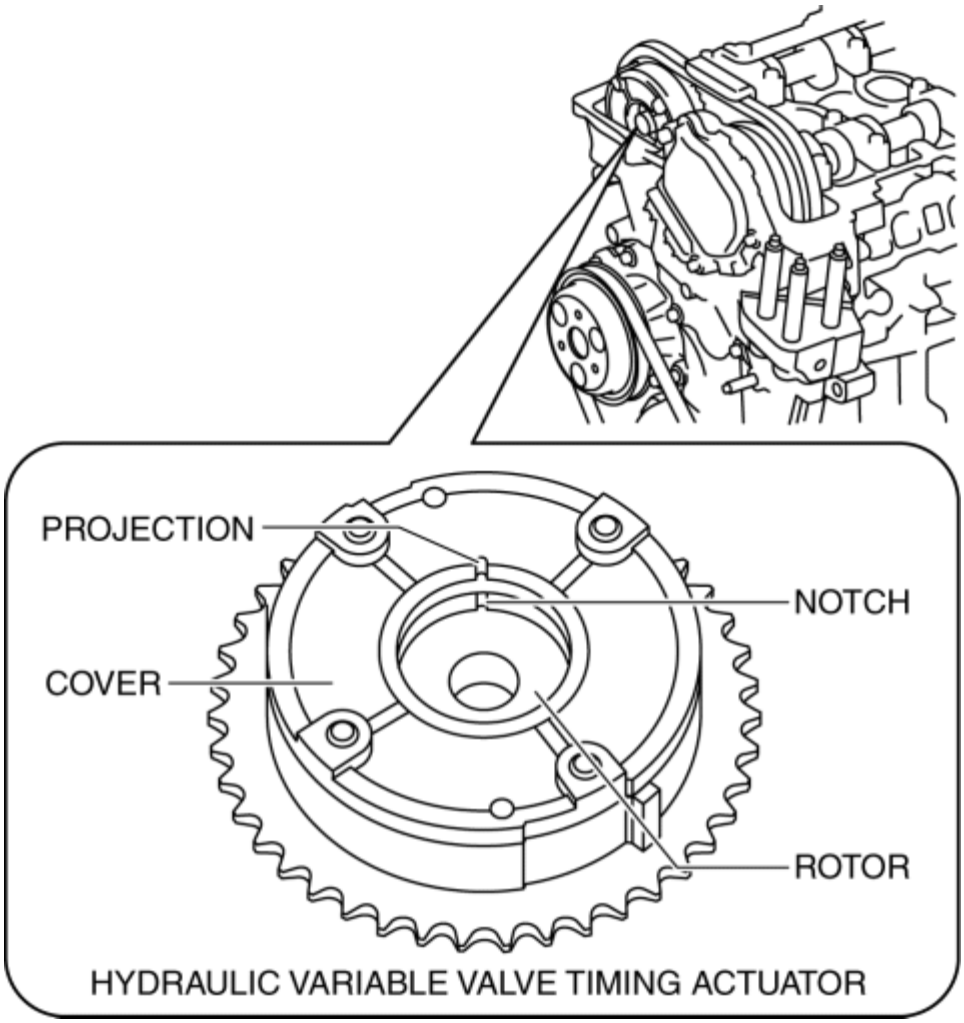

- If the notch of the rotor and projection of the cover are not aligned, rotate the crankshaft in the direction the engine rotates two turns and verify that they are aligned.
    - If the notch of the rotor and projection of the cover are still not aligned, replace the hydraulic variable valve timing actuator. (See **ELECTRIC VARIABLE VALVE TIMING ACTUATOR, HYDRAULIC VARIABLE VALVE TIMING ACTUATOR REMOVAL/INSTALLATION [SKYACTIV-G 2.0, SKYACTIV-G 2.5]**.)
- If, when turning the crankshaft, there is a slapping noise from the hydraulic variable valve timing actuator each time before the cam reaches its maximum lift, it means that the actuator is not secured. Replace the hydraulic variable valve timing actuator. (See **ELECTRIC VARIABLE VALVE TIMING ACTUATOR, HYDRAULIC VARIABLE VALVE TIMING ACTUATOR REMOVAL/INSTALLATION [SKYACTIV-G 2.0, SKYACTIV-G 2.5]**.)

6. Install in the reverse order of removal.

2014 - Mazda3 - Engine

ELECTRIC VARIABLE VALVE TIMING ACTUATOR INSPECTION [SKYACTIV-G 2.0, SKYACTIV-G 2.5]

WARNING:

- A hot engine can cause severe burns. Turn off the engine and wait until it is cool before servicing.

CAUTION:

- Do not disassemble the electric variable valve timing actuator because it is a precision unit.

1. Disconnect the negative battery cable. (See **NEGATIVE BATTERY CABLE DISCONNECTION/CONNECTION [SKYACTIV-G 2.0, SKYACTIV-G 2.5]**.)

2. Remove the plug hole plate. (See **PLUG HOLE PLATE REMOVAL/INSTALLATION [SKYACTIV-G 2.0, SKYACTIV-G 2.5]**.)

3. Remove the electric variable valve timing motor/driver. (See **ELECTRIC VARIABLE VALVE TIMING MOTOR/DRIVER REMOVAL/INSTALLATION [SKYACTIV-G 2.0, SKYACTIV-G 2.5]**.)

4. Rotate the eccentric shaft of the electric variable valve timing actuator by hand and verify that it rotates smoothly.

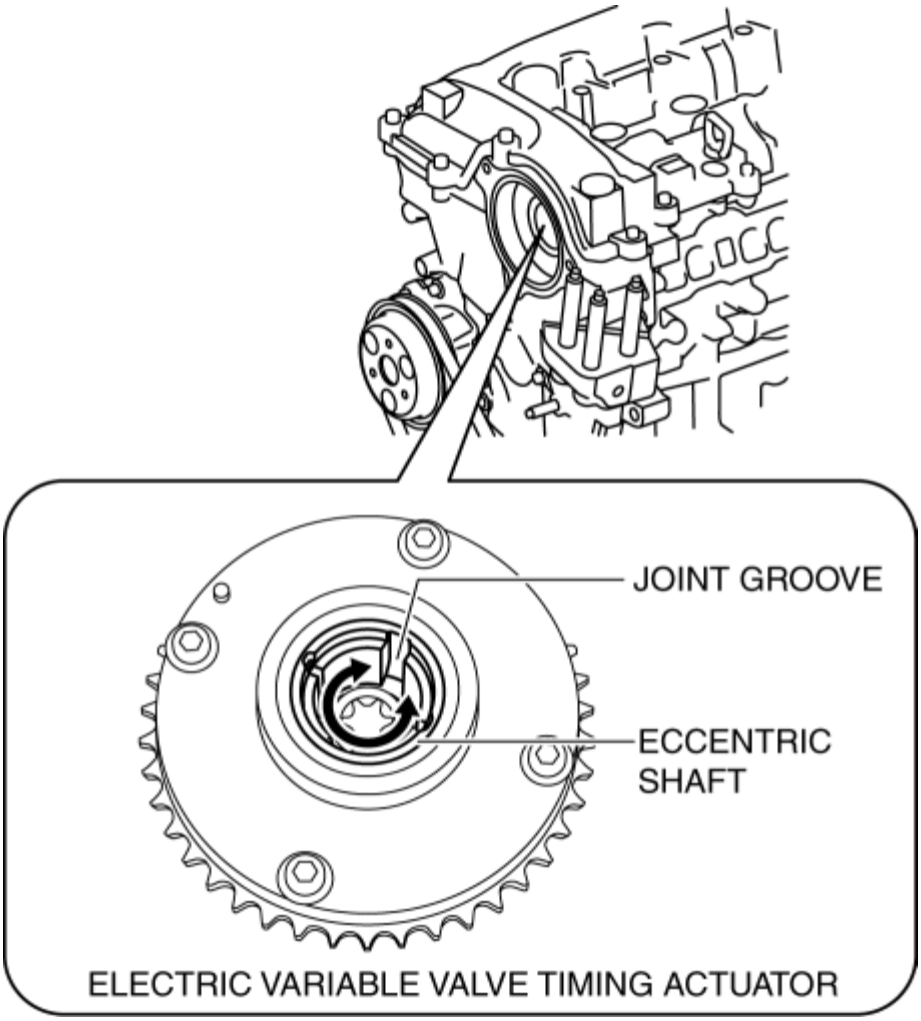

- If it does not rotate smoothly, replace the electric variable valve timing actuator. (See **ELECTRIC VARIABLE VALVE TIMING ACTUATOR, HYDRAULIC VARIABLE VALVE TIMING ACTUATOR REMOVAL/INSTALLATION [SKYACTIV-G 2.0, SKYACTIV-G 2.5]**.)

NOTE:

- Hook a finger onto the joint groove of the eccentric shaft to rotate the shaft easily.
- The eccentric shaft stops rotating at the maximum retard position when it is rotated counterclockwise as viewed from the front, and at the maximum advance position when rotated clockwise.
- The eccentric shaft rotates 15.8 turns from the maximum retard position to the maximum advance position.

5. Install in the reverse order of removal.

2014 - Mazda3 - Engine

ELECTRIC VARIABLE VALVE TIMING ACTUATOR, HYDRAULIC VARIABLE VALVE TIMING ACTUATOR REMOVAL/INSTALLATION [SKYACTIV-G 2.0, SKYACTIV-G 2.5]

WARNING:

- A hot engine can cause severe burns. Turn off the engine and wait until it is cool before servicing.

CAUTION:

- Do not disassemble the electric variable valve timing actuator and hydraulic variable valve timing actuator because they are precision units.
- If the camshaft is rotated with the timing chain removed and the piston at the top dead center position, the valve may contact the piston and the engine could be damaged. When rotating the camshaft with the timing chain removed, rotate it after lowering the piston from the top dead center position.
- When rotating the camshaft using a wrench on the cast hexagon, the wrench may contact the rocker arm and damage the rocker arm. To prevent damage to the rocker arm when holding the camshaft on the cast hexagon, use a wrench on the rear side of the engine as shown in the figure to secure a clearance between the cam.

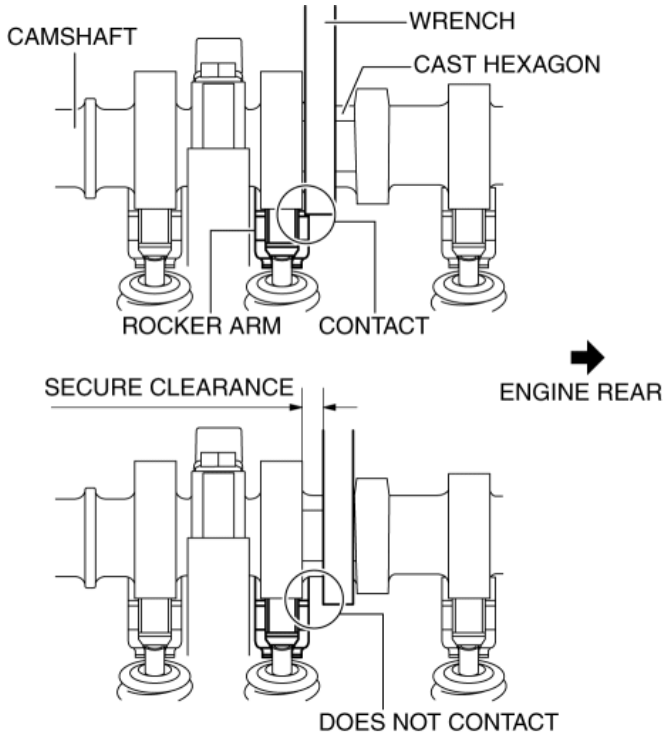

NOTE:

- Width at the cast hexagon of the camshaft is **22—24 mm {0.87—0.94 in}**.

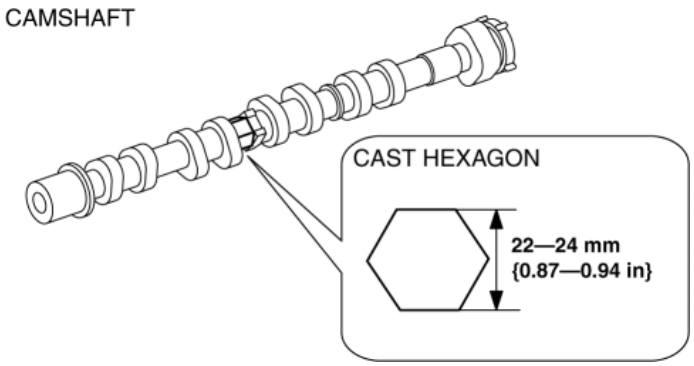

1. Disconnect the negative battery cable. (See **NEGATIVE BATTERY CABLE DISCONNECTION/CONNECTION [SKYACTIV-G 2.0, SKYACTIV-G 2.5]**.)
2. Remove the plug hole plate. (See **PLUG HOLE PLATE REMOVAL/INSTALLATION [SKYACTIV-G 2.0, SKYACTIV-G 2.5]**.)

3. Remove the ignition coil/ion sensors. (See **IGNITION COIL/ION SENSOR REMOVAL/INSTALLATION [SKYACTIV-G 2.0, SKYACTIV-G 2.5]**.)

4. Remove the cylinder head cover. (See **TIMING CHAIN REMOVAL/INSTALLATION [SKYACTIV-G 2.0, SKYACTIV-G 2.5]**.)

5. Remove the front under cover No.2. (See **FRONT UNDER COVER No.2 REMOVAL/INSTALLATION**.)

6. Remove the electric variable valve timing motor/driver. (See **ELECTRIC VARIABLE VALVE TIMING MOTOR/DRIVER REMOVAL/INSTALLATION [SKYACTIV-G 2.0, SKYACTIV-G 2.5]**.)

7. Remove the vacuum pump. (Only when hydraulic variable valve timing actuator is removed.) (See **VACUUM PUMP REMOVAL/INSTALLATION**.)

8. Remove the high pressure fuel pump and rear housing. (Only when hydraulic variable valve timing actuator is removed.) (See **HIGH PRESSURE FUEL PUMP REMOVAL/INSTALLATION [SKYACTIV-G 2.0, SKYACTIV-G 2.5]**.)

9. Remove in the order indicated in the table.

10. Install in the reverse order of removal.

11. Start the engine and inspect the following:

- Ignition timing, idle speed and idle mixture. (See **ENGINE TUNE-UP [SKYACTIV-G 2.0, SKYACTIV-G 2.5]**.)

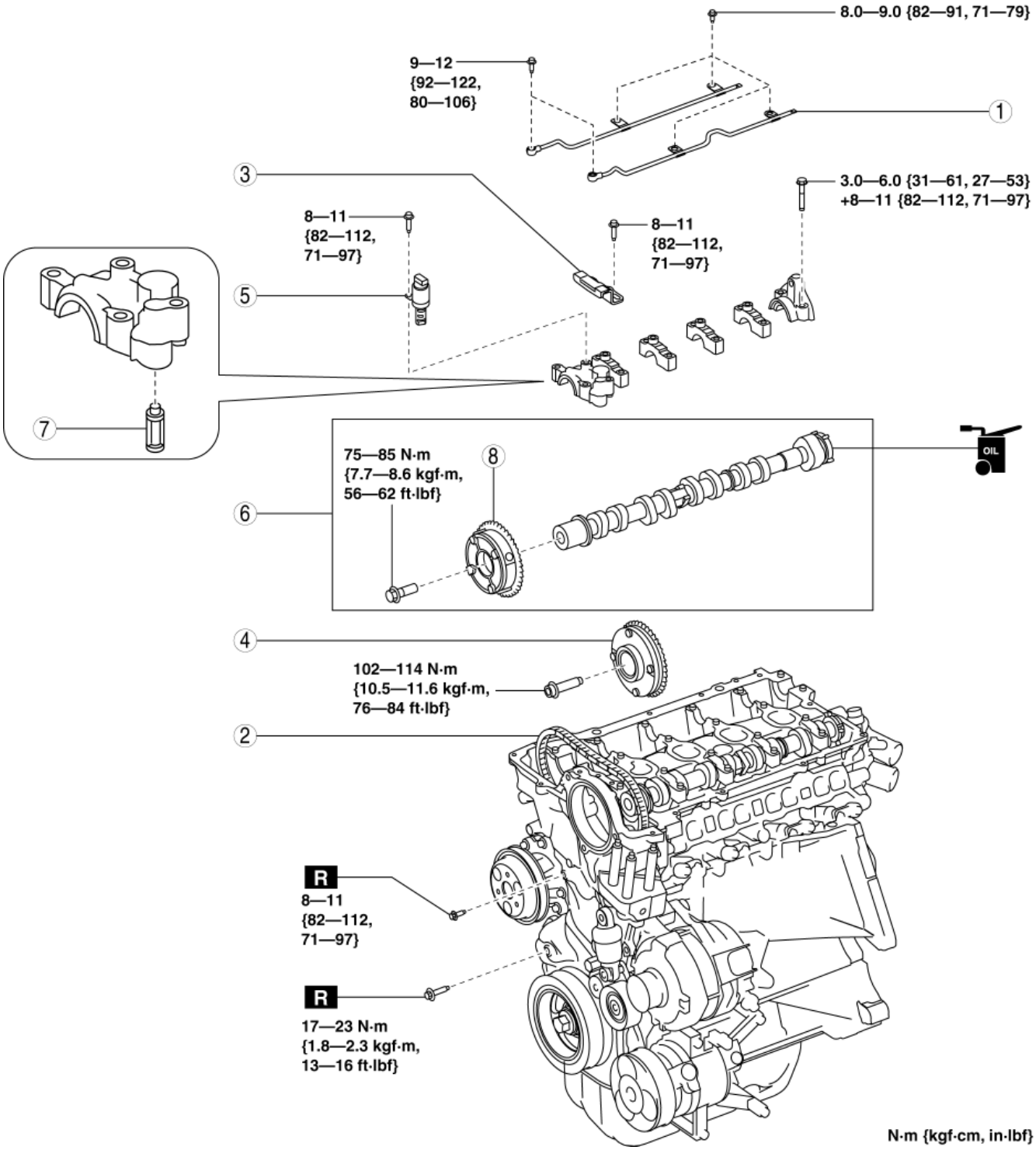

1	Oil shower pipe (See **Oil Shower Pipe Installation Note**.)
2	Timing chain (See **Timing Chain Removal Note**.) (See **Timing Chain Installation Note**.)
3	Chain guide (No.1)
4	Electric variable valve timing actuator (See **Electric Variable Valve Timing Actuator Removal Note**.)

	(See **Electric Variable Valve Timing Actuator Installation Note**.)
5	OCV
6	Hydraulic variable valve timing actuator and exhaust camshaft component (See **Hydraulic Variable Valve Timing Actuator and Exhaust Camshaft Component Removal Note**.) (See **Hydraulic Variable Valve Timing Actuator and Exhaust Camshaft Component Installation Note**.)
7	OCV oil filter
8	Hydraulic variable valve timing actuator (See **Hydraulic Variable Valve Timing Actuator Removal Note**.) (See **Hydraulic Variable Valve Timing Actuator Installation Note**.)

Timing Chain Removal Note

1. Release the tension on the timing chain using the following procedure:

NOTE:

- Release the tension on the timing chain by securing the timing chain tensioner arm through the service hole on the engine front cover.

a. Remove the blind plugs (upper and lower) on the engine front cover service holes.

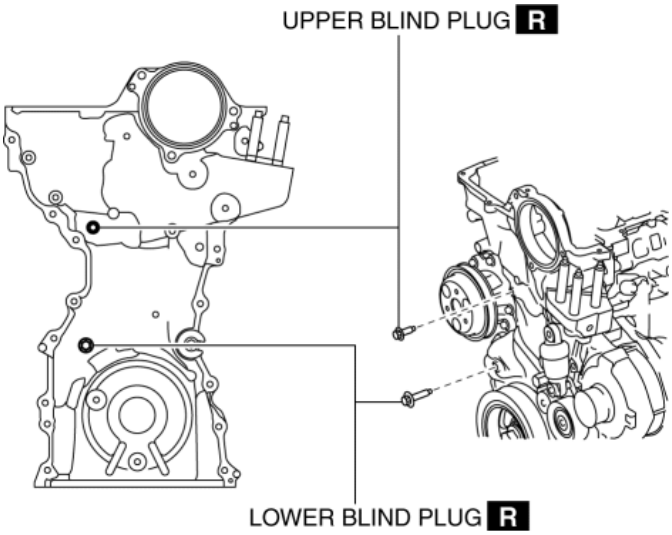

b. Insert an M6 bolt (**35—60 mm {1.4—2.3 in}** length with thread to the end) to the upper service hole and tighten it until it contacts the tensioner arm, then loosen it **approx. 180 degrees** (set the bolt so that it sits slightly in front of the tensioner arm).

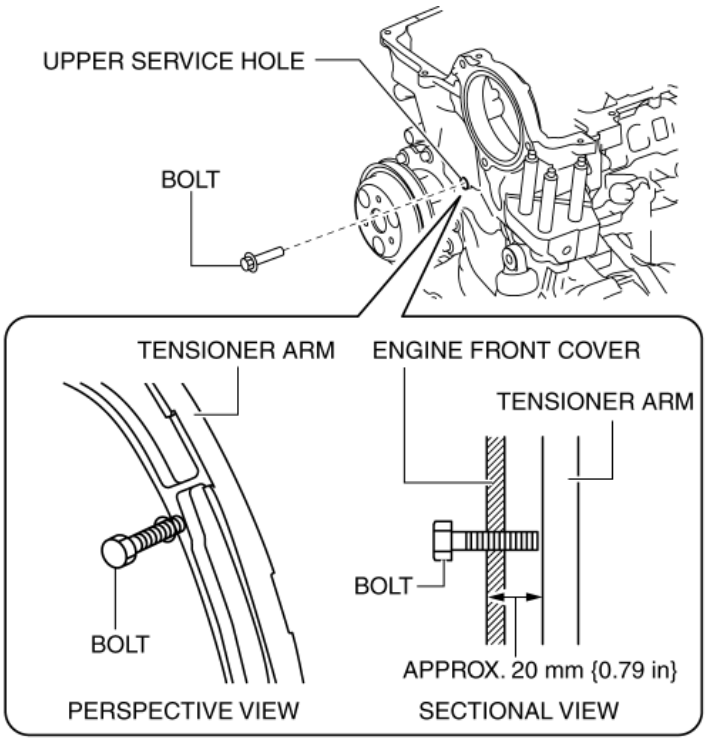

NOTE:

- The bolt contacts the tensioner arm when it is inserted **approx. 20 mm {0.79 in}**.
- Hold the exhaust camshaft using a wrench on the cast hexagon and move it back and forth a few times as shown in the figure. This will drain the oil from the chain tensioner and make the following servicing easier.

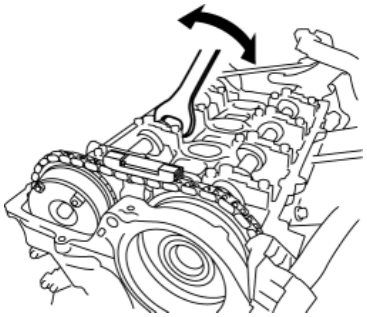

c. Insert a precision screwdriver into the lower service hole.

d. While moving the exhaust camshaft back and forth in the direction of the arrow using a wrench on the cast hexagon, press down the link plate of the timing chain tensioner using a precision screwdriver and release the plunger lock.

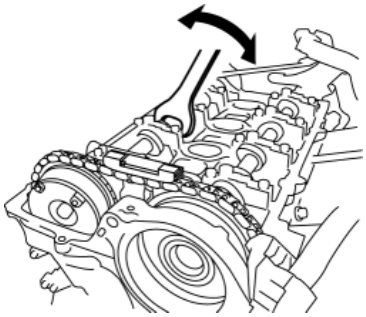

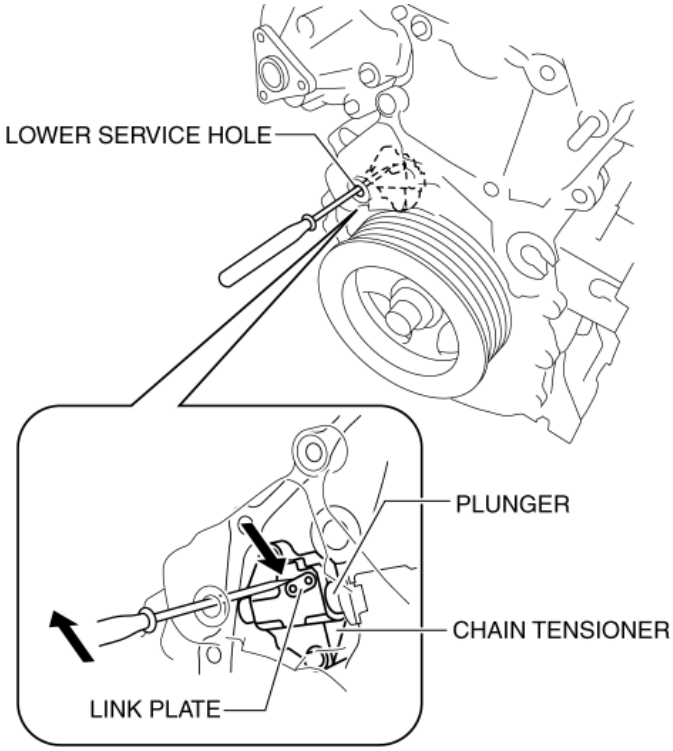

NOTE:

- When moving the exhaust camshaft back and forth, the timing chain pushes the plunger in the chain tensioner making it easier to operate the link plate.

e. With the plunger lock released, rotate the exhaust camshaft clockwise until the timing chain loosens.

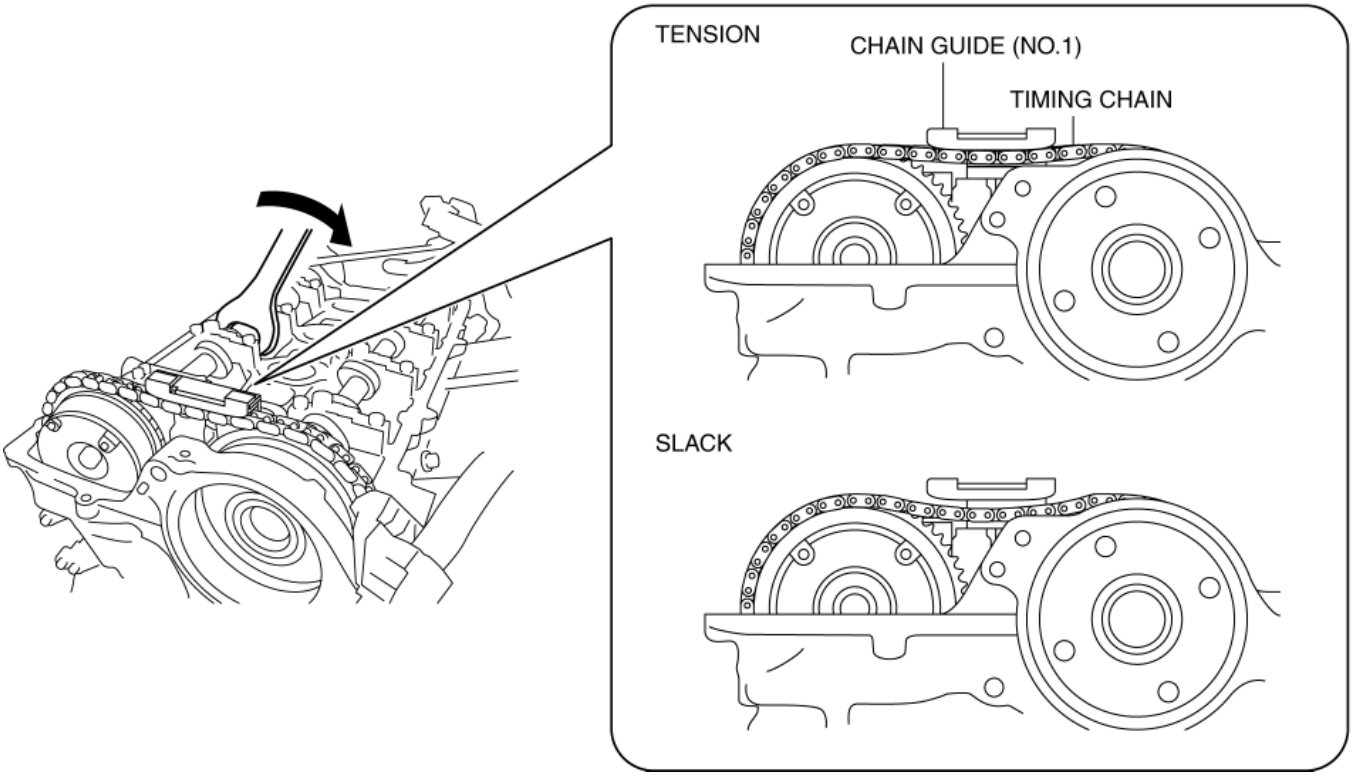

f. With the chain loosened, tighten the M6 bolt in the upper service hole so that the bolt is inserted **approx. 5 mm {0.2 in}** additionally to secure the tensioner arm.

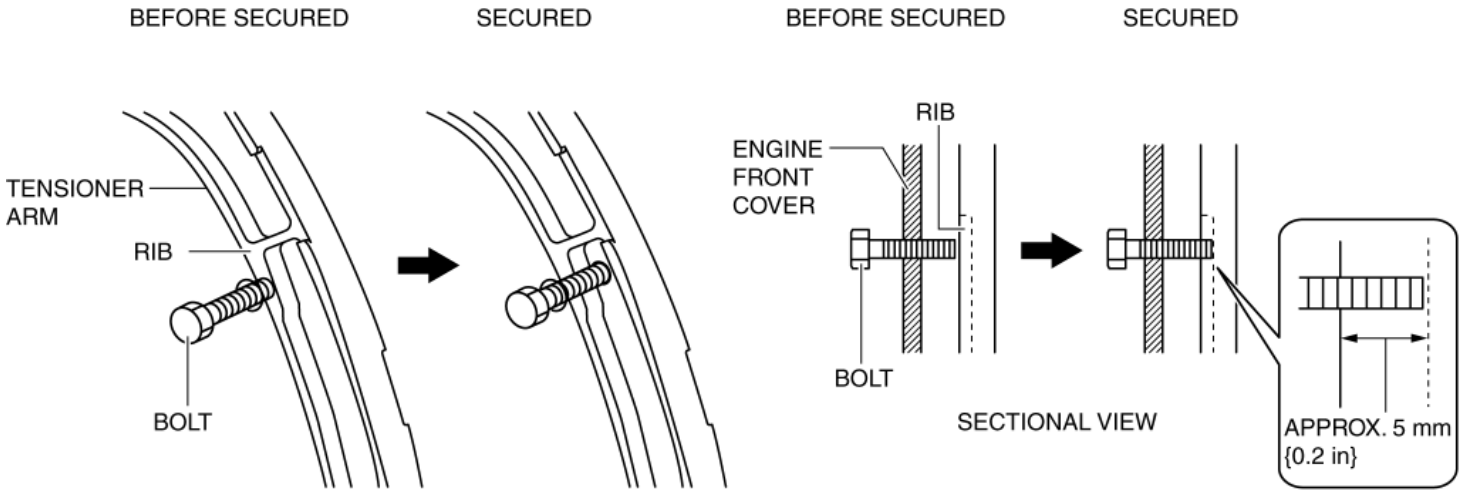

- If the bolt cannot be inserted **approx. 5 mm {0.2 in}**, the plunger lock of the chain tensioner may not release, or the chain may not loosen enough. Return the bolt to the original position and restart the procedure from Step (3).

NOTE:

- By rotating the exhaust camshaft clockwise, the timing chain pushes the tensioner arm and the rib position deviates. The entire tensioner arm can be secured by hooking the bolt onto the deviated rib.

g. After securing the tensioner arm, remove the chain guide (No.1).

Electric Variable Valve Timing Actuator Removal Note

CAUTION:

- Keep the timing chain pulled up during and after the work in which it has been set aside from the sprocket. If the chain falls down, it may disengage from the sprocket on the crankshaft side and deviate, leading to valve timing deviation.
- After servicing, always verify the valve timing.

1. Rotate the crankshaft clockwise so that cylinder No.1 is positioned around before top dead center (TDC) as shown in the figure.

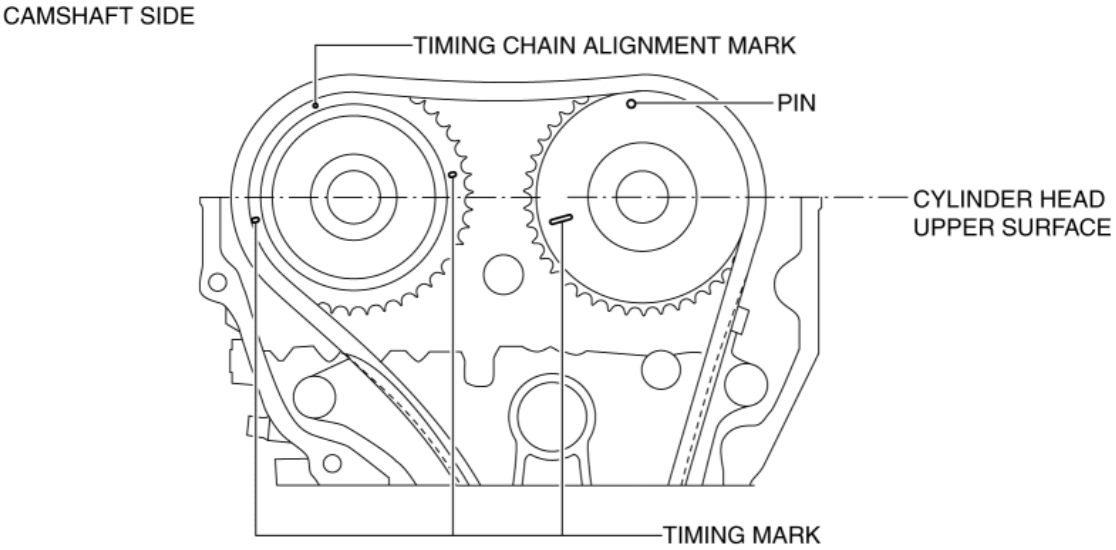

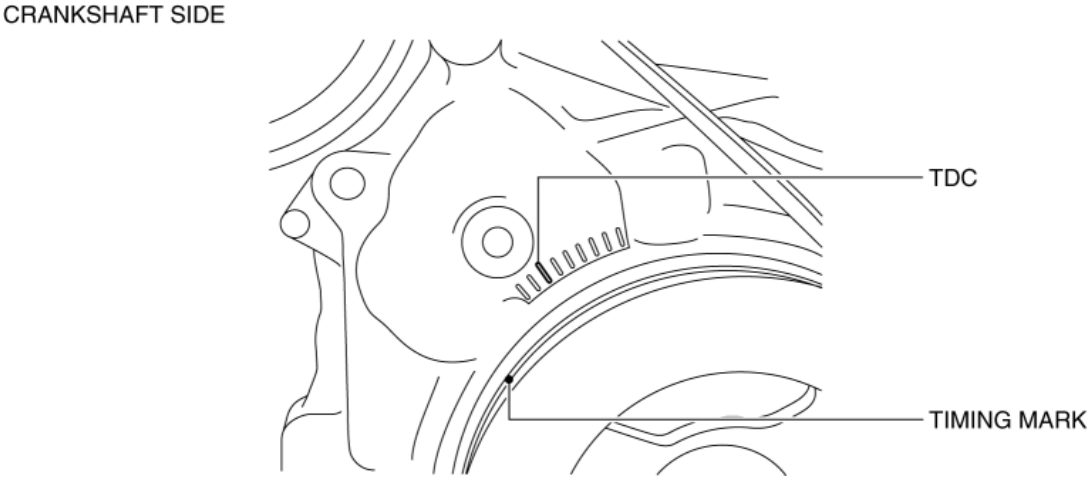

NOTE:

- With cylinder No.1 positioned around before top dead center (TDC), there is no large movement (rotation) of the exhaust camshaft when the timing chain is removed. Therefore, installation of the electric variable valve timing actuator to the camshaft will be easier. (If there is a large movement of the exhaust camshaft, installation of the electric variable valve timing actuator to the camshaft must be performed while loosening the chain by rotating the exhaust camshaft.)

2. Mark the timing chain and each actuator so that they can be reassembled in the same condition as before removal.

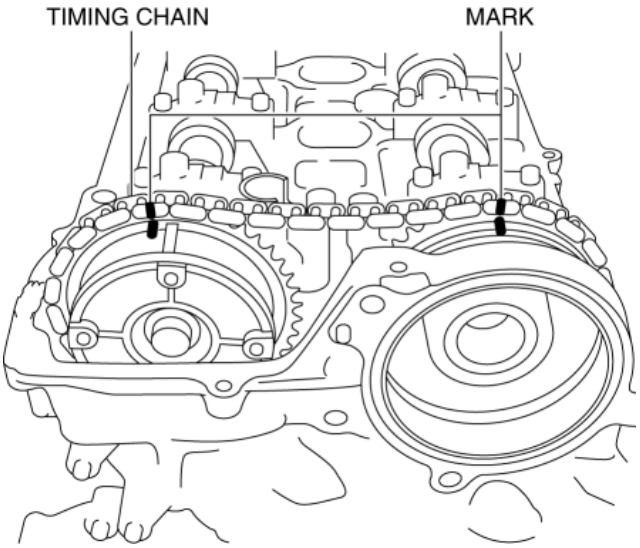

3. Hold the intake camshaft using a wrench on the cast hexagon and remove the electric variable valve timing actuator installation bolt.

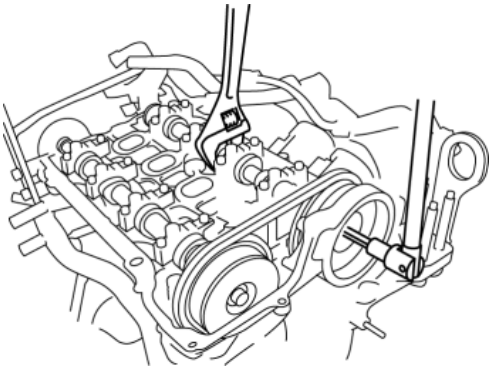

4. Using a screwdriver wrapped in a clean cloth, lightly press the electric variable valve timing actuator to the front and separate the intake camshaft and the actuator.

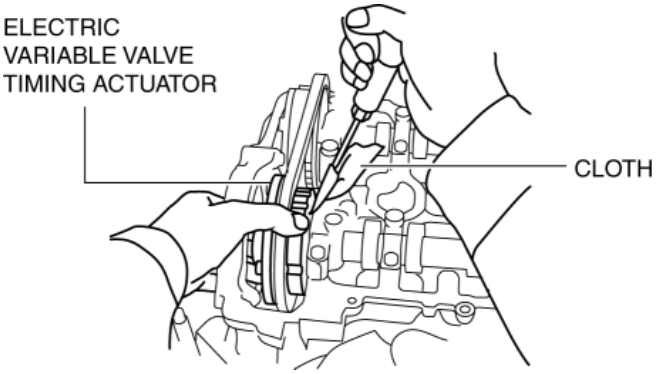

5. Remove the timing chain from the exhaust and intake camshaft sprockets and set is aside, and remove the electric variable valve timing actuator.

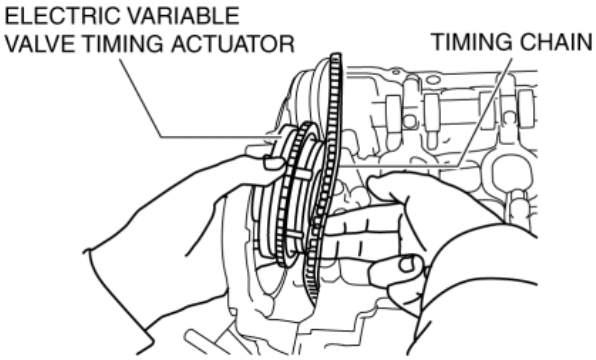

6. Return the timing chain to the exhaust camshaft sprocket, and pull the timing chain up and suspend it using a rope as shown in the figure.

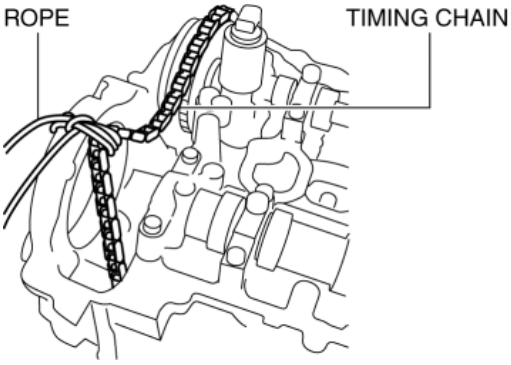

Hydraulic Variable Valve Timing Actuator and Exhaust Camshaft Component Removal Note

CAUTION:

- Keep the timing chain pulled up during and after the work in which it has been set aside from the sprocket. If the chain falls down, it may disengage from the sprocket on the crankshaft side and deviate, leading to valve timing deviation.
- After servicing, always verify the valve timing.

1. Leave the timing chain as it is, which was suspended after electric variable valve timing actuator removal.
2. Temporarily install the cylinder head cover bolt to the position shown in the figure to use it for suspending the timing chain.

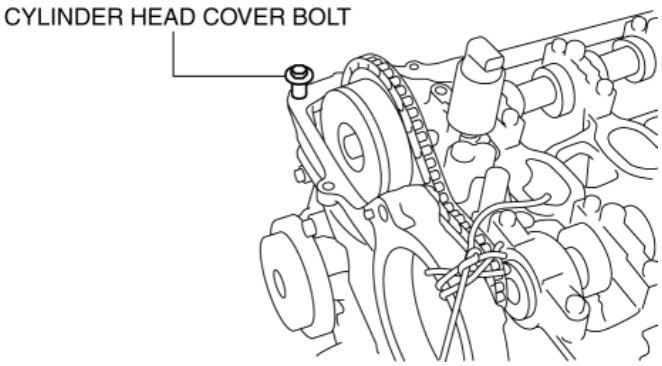

3. Loosen the exhaust-side camshaft cap bolts in two or three passes in the order shown in the figure, and remove the camshaft caps.

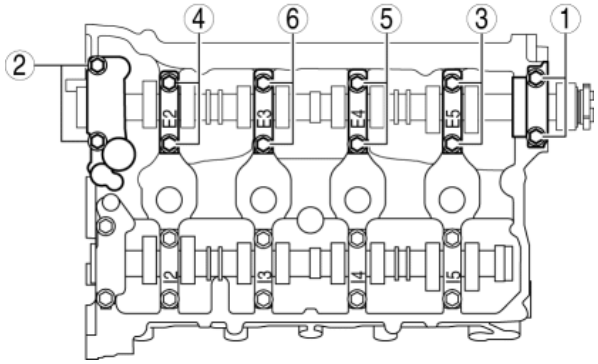

4. While setting the timing chain aside, remove the hydraulic variable valve timing actuator and the exhaust camshaft as a single unit.

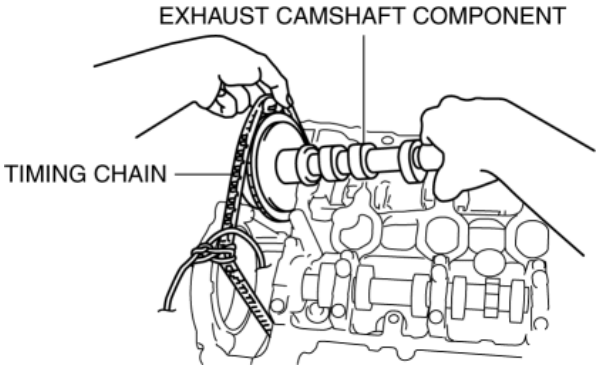

5. Pull up the timing chain and suspend it using a rope as shown in the figure.

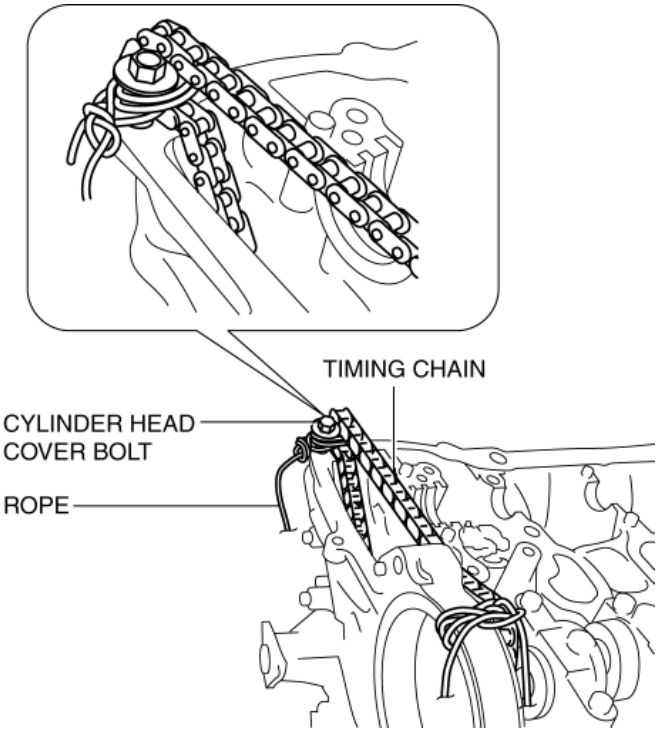

Hydraulic Variable Valve Timing Actuator Removal Note

1. Lock the exhaust camshaft against rotation by holding the exhaust camshaft with a vise and securing the cast hexagon with a wrench.

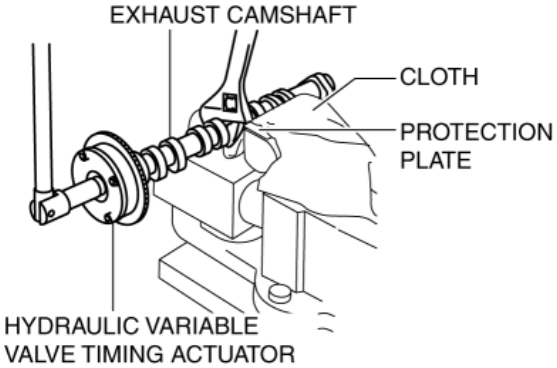

2. Loosen the hydraulic variable valve timing actuator installation bolt and remove the actuator.

Hydraulic Variable Valve Timing Actuator Installation Note

1. When replacing the hydraulic variable valve timing actuator, place a mark at the same position as the one placed before removal.

2. Align the knock pin on the end of the exhaust camshaft with the knock pin installation hole on the actuator side, and temporarily assemble the bolt.

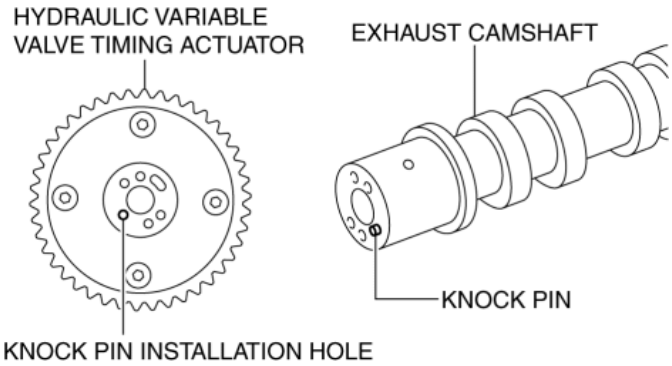

3. Lock the exhaust camshaft against rotation by holding the exhaust camshaft with a vise and securing the cast hexagon with a wrench.

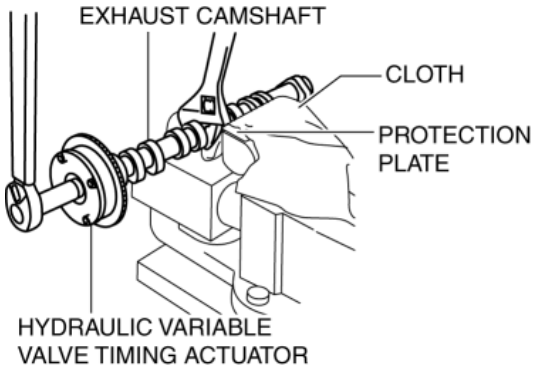

4. Tighten the hydraulic variable valve timing actuator installation bolt.

Tightening torque

- 75—85 N·m {7.7—8.6 kgf·m, 56—62 ft·lbf}

Hydraulic Variable Valve Timing Actuator and Exhaust Camshaft Component Installation Note

1. As shown in the figure, apply gear oil (SAE No. 90 or equivalent) or engine oil to the center area (exhaust side) of each journal of the cylinder head.

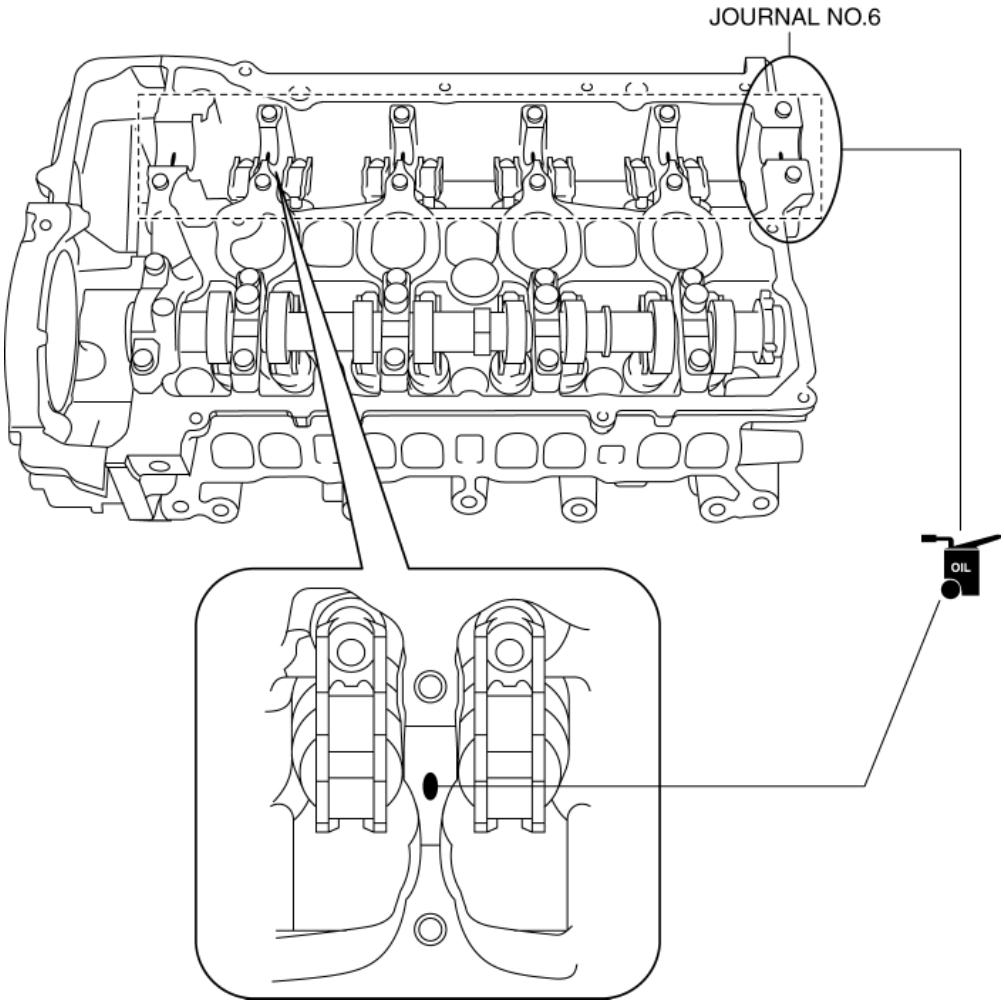

CAUTION:

- Apply 0.05 ml {0.05 cc, 0.003 in^3} or less of oil to journal No.6.

2. Apply gear oil (SAE No. 90 or equivalent) or engine oil to the following locations of the exhaust camshaft.

- Thrust surface of front journal

3. Remove the rope suspending the timing chain on the exhaust side.

4. While aligning the mark on the timing chain placed during removal with the one on the hydraulic variable valve timing actuator, place the

exhaust camshaft component on the cylinder head.

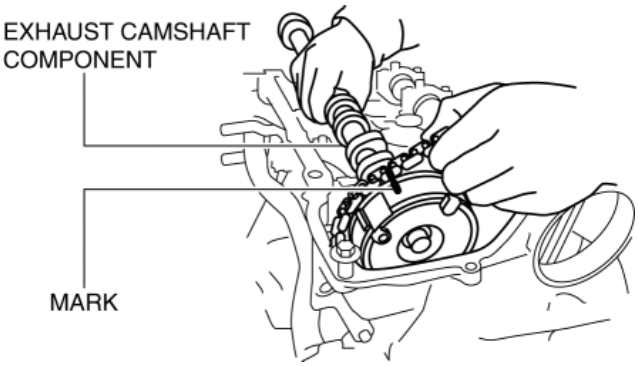

5. As shown in the figure, apply gear oil (SAE No. 90 or equivalent) or engine oil to the center area of each journal of the exhaust camshaft.

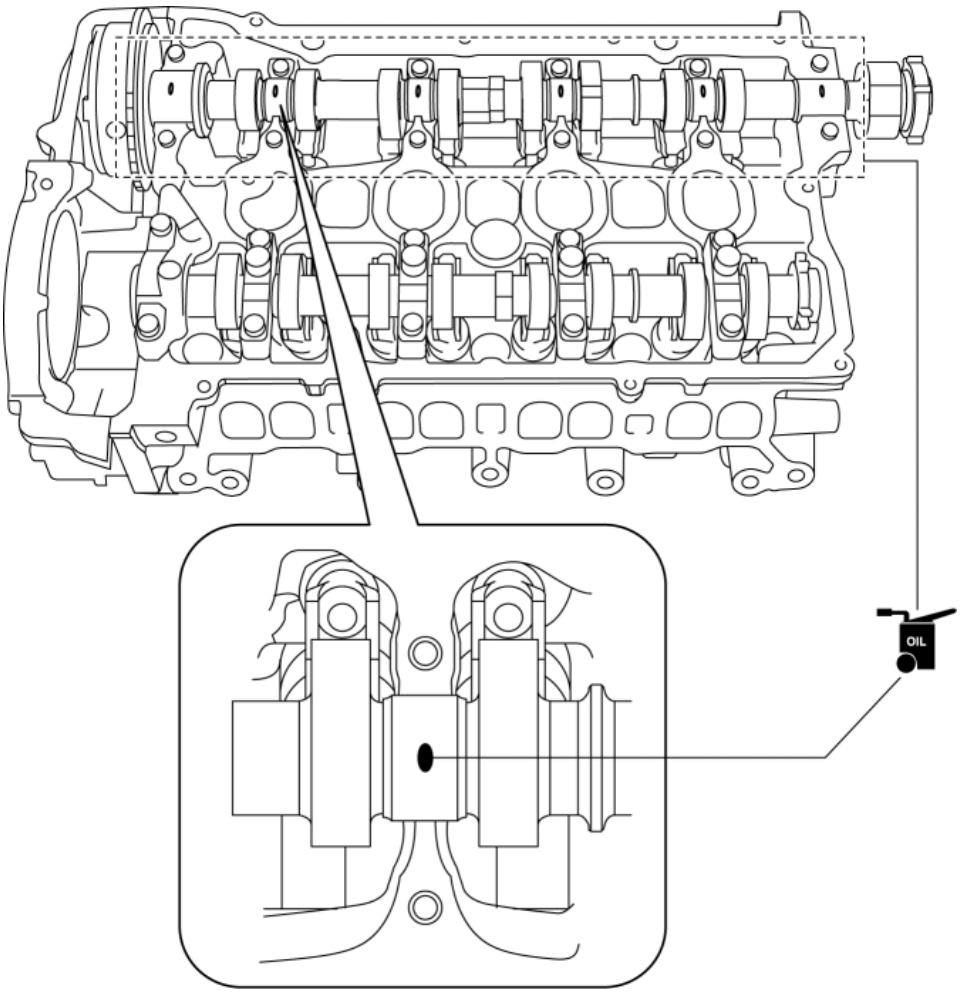

6. Apply adhesive agent (Loctite 962T) around journal No.6 of the cylinder head or the exhaust-side rear camshaft cap.

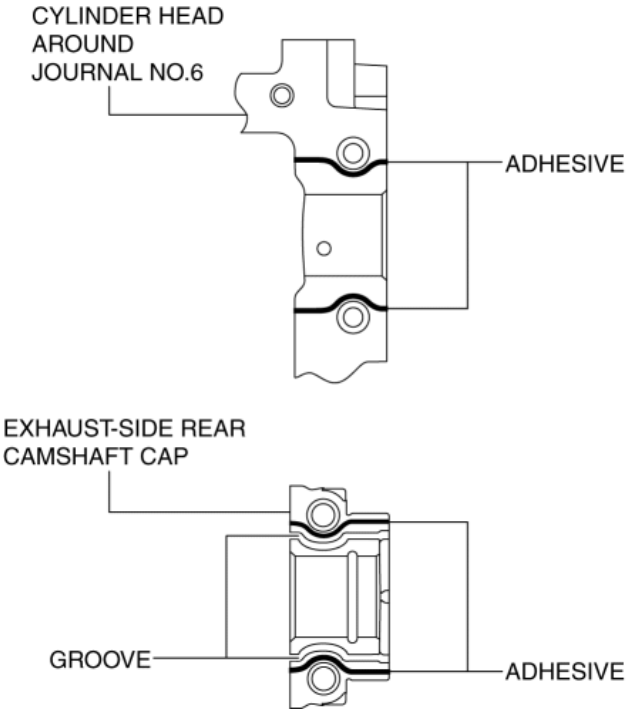

CAUTION:

- Verify that there is no adhesive agent on the journal.

  Adhesive agent bead width

- 0.5—1.5 mm {0.02—0.05 in}

7. Install the camshaft caps in the marked number order, and temporarily tighten the camshaft cap installation bolts in two or three passes evenly.

8. Tighten the camshaft cap installation bolts in two steps in the order shown in the figure.

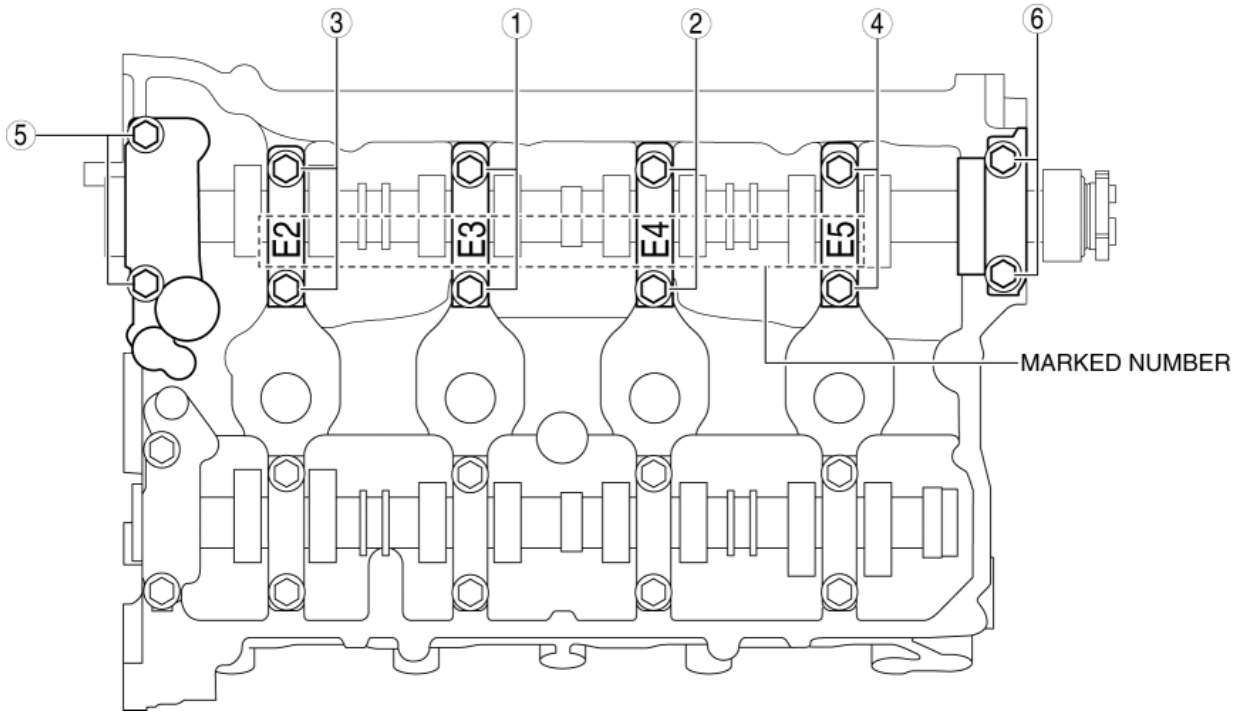

Tightening torque

- Step 1: 3.0—6.0 N·m {31—61 kgf·cm, 27—53 in·lbf}
- Step 2: 8—11 N·m {82—112 kgf·cm, 71—97 in·lbf}

Electric Variable Valve Timing Actuator Installation Note

1. When replacing the electric variable valve timing actuator with a new one, place a mark at the same position as the one placed before removal.

2. Remove the rope suspending the timing chain on the intake side.

3. Remove the timing chain from the exhaust and intake camshaft sprockets and set it aside to the rear, then insert the electric variable valve timing actuator between the engine front cover and the cylinder head.

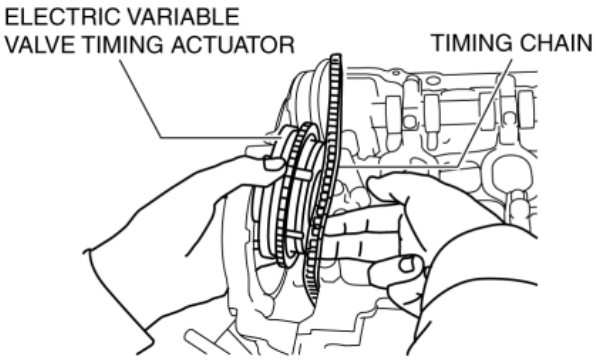

4. Return the timing chain to the exhaust camshaft sprocket.

5. While aligning the mark on the timing chain placed during removal with the one on the electric variable valve timing actuator, engage the chain with the sprocket.

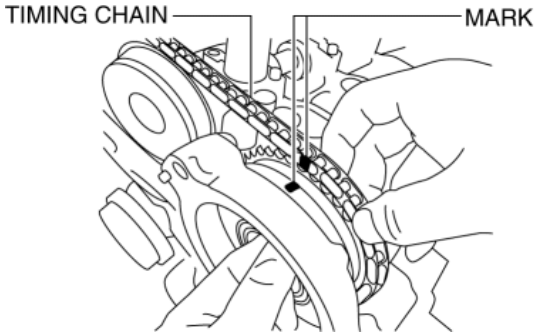

6. Align the knock pin on the end of the intake camshaft with the notch on the actuator side, then assemble the actuator.

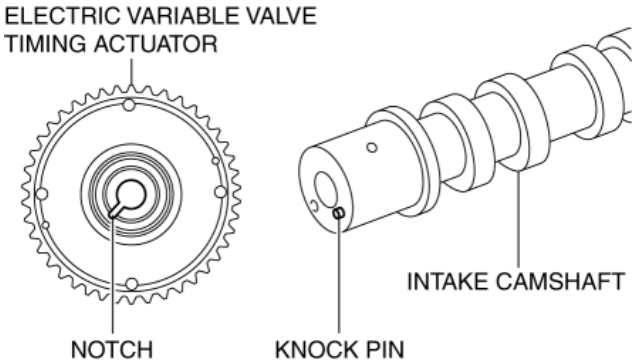

NOTE:

- Adjust the knock pin with the notch while adjusting the knock pin position by rotating the camshaft.

7. Hold the intake camshaft using a wrench on the cast hexagon, and tighten the electric variable valve timing actuator installation bolt.

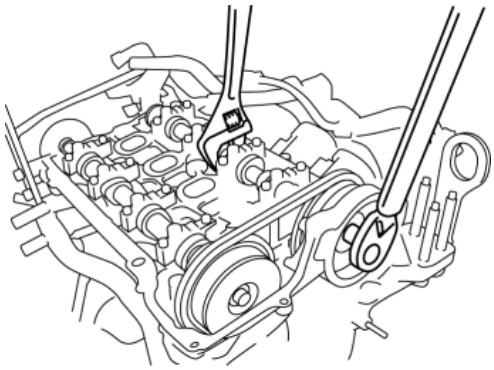

Tightening torque

- 102—114 N·m {10.5—11.6 kgf·m, 76—84 ft·lbf}

Timing Chain Installation Note

1. Install the chain guide (No.1).
2. Remove the bolt securing the tensioner arm and apply tension to the timing chain.
3. Rotate the crankshaft clockwise two turns and verify that the valve timing is correct.

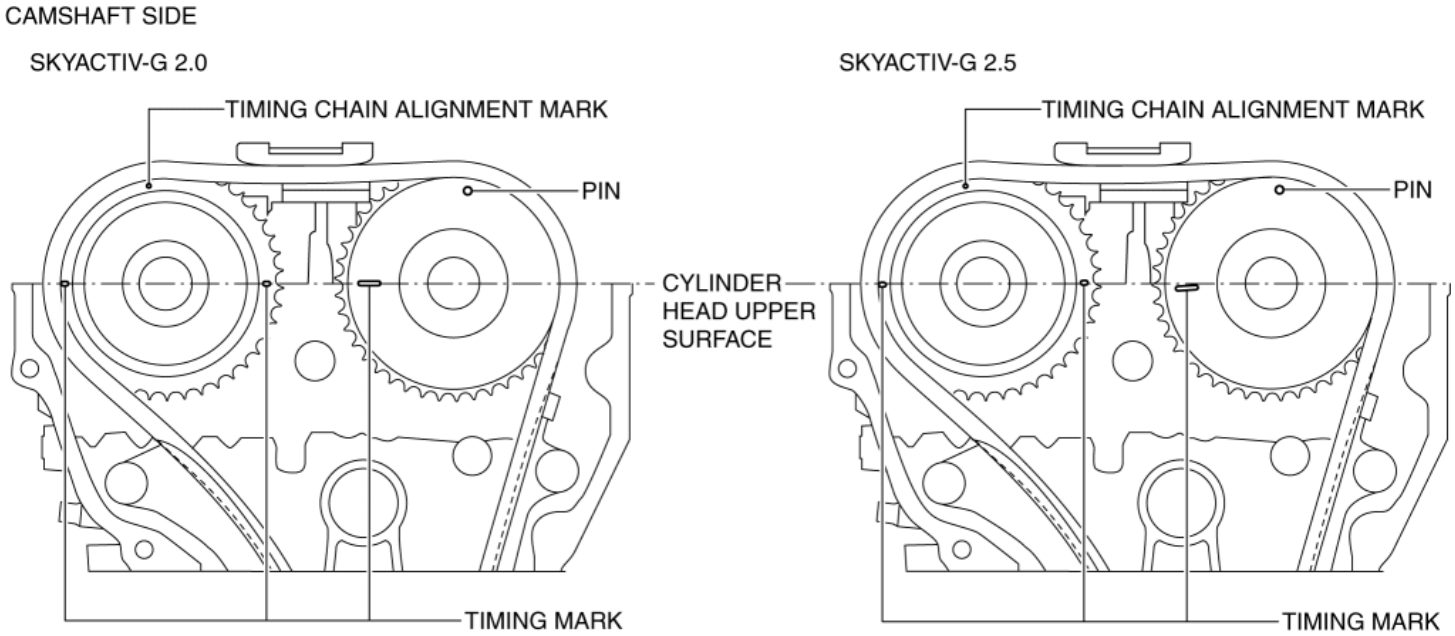

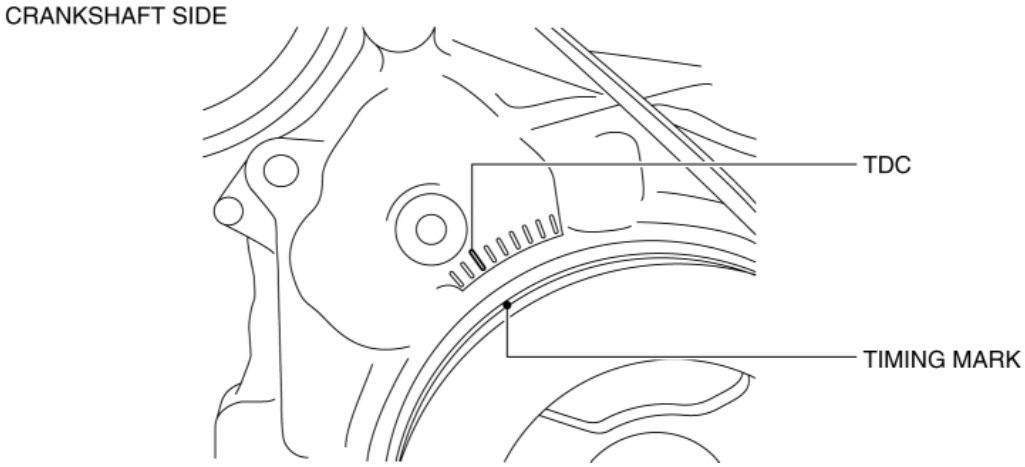

NOTE:

- The timing mark of SKYACTIV-G 2.5 is not completely parallel with the upper surface of the cylinder head.
- If the valve timing is not correct, remove the engine front cover and reassemble the timing chain to each sprocket. (See **TIMING CHAIN REMOVAL/INSTALLATION [SKYACTIV-G 2.0, SKYACTIV-G 2.5]**.)

4. Install the blind plugs (upper and lower) for the engine front cover service holes.

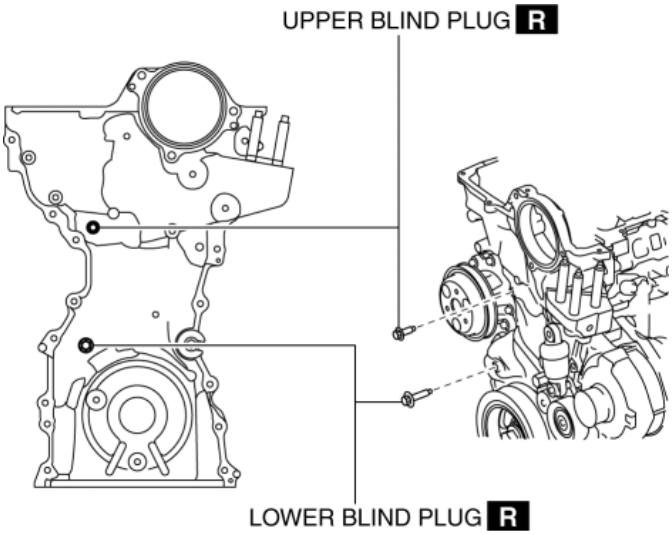

Tightening torque

- Upper: 8—11 N·m {82—112 kgf·cm, 71—97 in·lbf}
- Lower: 17—23 N·m {1.8—2.3 kgf·m, 13—16 ft·lbf}

Oil Shower Pipe Installation Note

1. Install the oil shower pipe in the order shown in the figure.

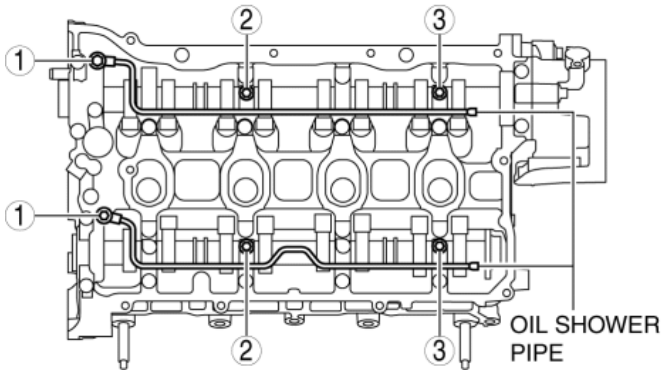

Tightening torque

Installation position	Tightening torque
1	9—12 N·m {92—122 kgf·cm, 80—106 in·lbf}
2, 3	8.0—9.0 N·m {82—91 kgf·cm, 71—79 in·lbf}

2014 - Mazda3 - Engine

OIL CONTROL VALVE (OCV) INSPECTION [SKYACTIV-G 2.0, SKYACTIV-G 2.5]

Coil Resistance Inspection

1. Disconnect the negative battery cable. (See **NEGATIVE BATTERY CABLE DISCONNECTION/CONNECTION [SKYACTIV-G 2.0, SKYACTIV-G 2.5]**.)

2. Remove the plug hole plate. (See **PLUG HOLE PLATE REMOVAL/INSTALLATION [SKYACTIV-G 2.0, SKYACTIV-G 2.5]**.)

3. Disconnect the OCV connector.

4. Measure the resistance between terminals A and B using an ohmmeter.

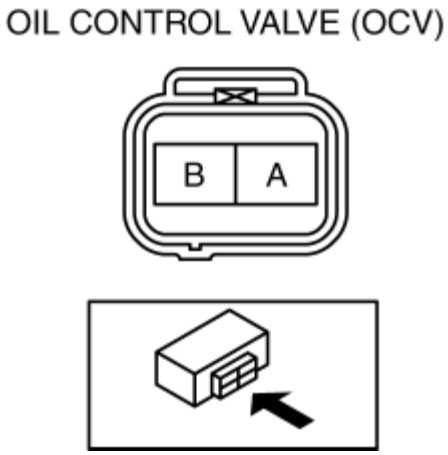

OCV coil resistance

- 6.9—7.5 ohms [20°C {68°F}]
- If not as specified, replace the OCV. (See **OIL CONTROL VALVE (OCV) REMOVAL/INSTALLATION [SKYACTIV-G 2.0, SKYACTIV-G 2.5]**.)

5. Install in the reverse order of removal.

Spool Valve Operation Inspection

1. Disconnect the negative battery cable. (See **NEGATIVE BATTERY CABLE DISCONNECTION/CONNECTION [SKYACTIV-G 2.0, SKYACTIV-G 2.5]**.)

2. Remove the OCV. (See **OIL CONTROL VALVE (OCV) REMOVAL/INSTALLATION [SKYACTIV-G 2.0, SKYACTIV-G 2.5]**.)

3. Verify that the spool valve in the OCV is in the maximum valve timing advance position as indicated in the figure.

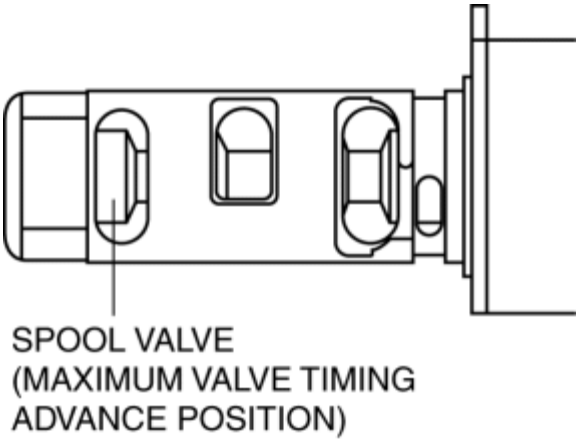

- If not as specified, replace the OCV. (See **OIL CONTROL VALVE (OCV) REMOVAL/INSTALLATION [SKYACTIV-G 2.0, SKYACTIV-G 2.5]**.)

4. Verify that the battery is fully charged. (See **BATTERY INSPECTION [SKYACTIV-G 2.0, SKYACTIV-G 2.5]**.)

- If not as specified, recharge the battery. (See **BATTERY RECHARGING [SKYACTIV-G 2.0, SKYACTIV-G 2.5]**.)

NOTE:

- When applying battery positive voltage between the OCV terminals, the connection can be either of the following:
  - Positive battery cable to terminal A, negative battery cable to terminal B
  - Positive battery cable to terminal B, negative battery cable to terminal A

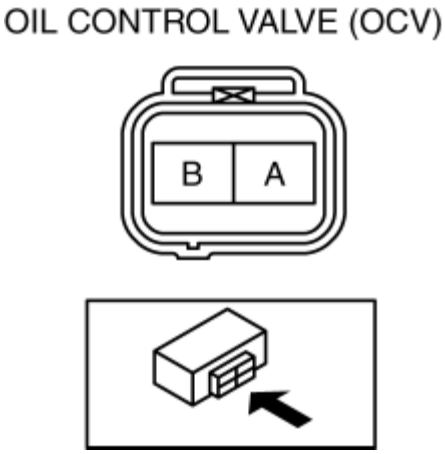

5. Apply battery positive voltage between the OCV terminals and verify that the spool valve operates and moves to the maximum valve timing retard position.

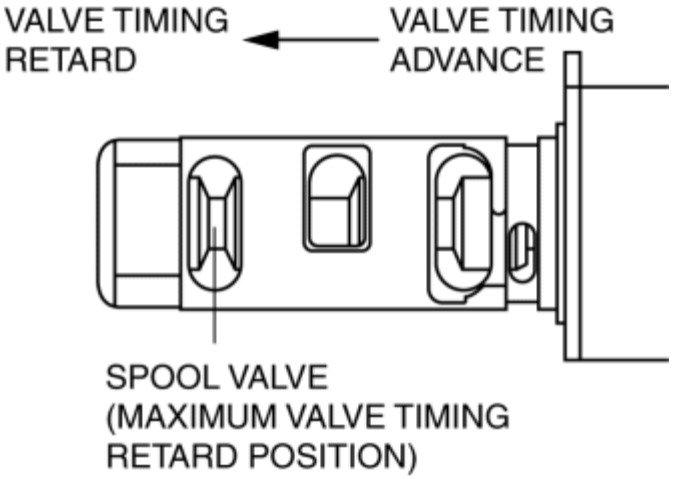

- If not as specified, replace the OCV. (See **OIL CONTROL VALVE (OCV) REMOVAL/INSTALLATION [SKYACTIV-G 2.0, SKYACTIV-G 2.5]**.)

6. Stop applying battery positive voltage and verify that the spool valve returns to the maximum valve timing advance position.

- If not as specified, replace the OCV. (See **OIL CONTROL VALVE (OCV) REMOVAL/INSTALLATION [SKYACTIV-G 2.0, SKYACTIV-G 2.5]**.)

7. Install the OCV. (See **OIL CONTROL VALVE (OCV) REMOVAL/INSTALLATION [SKYACTIV-G 2.0, SKYACTIV-G 2.5]**.)

2014 - Mazda3 - Engine

OIL CONTROL VALVE (OCV) REMOVAL/INSTALLATION [SKYACTIV-G 2.0, SKYACTIV-G 2.5]

WARNING:

- A hot engine can cause severe burns. Turn off the engine and wait until it is cool before servicing.

1. Disconnect the negative battery cable. (See **NEGATIVE BATTERY CABLE DISCONNECTION/CONNECTION [SKYACTIV-G 2.0, SKYACTIV-G 2.5]**.)

2. Remove the plug hole plate. (See **PLUG HOLE PLATE REMOVAL/INSTALLATION [SKYACTIV-G 2.0, SKYACTIV-G 2.5]**.)

3. Remove the ignition coil/ion sensors. (See **IGNITION COIL/ION SENSOR REMOVAL/INSTALLATION [SKYACTIV-G 2.0, SKYACTIV-G 2.5]**.)

4. Remove the cylinder head cover. (See **TIMING CHAIN REMOVAL/INSTALLATION [SKYACTIV-G 2.0, SKYACTIV-G 2.5]**.)

5. Remove in the order indicated in the table.

6. Install in the reverse order of removal.

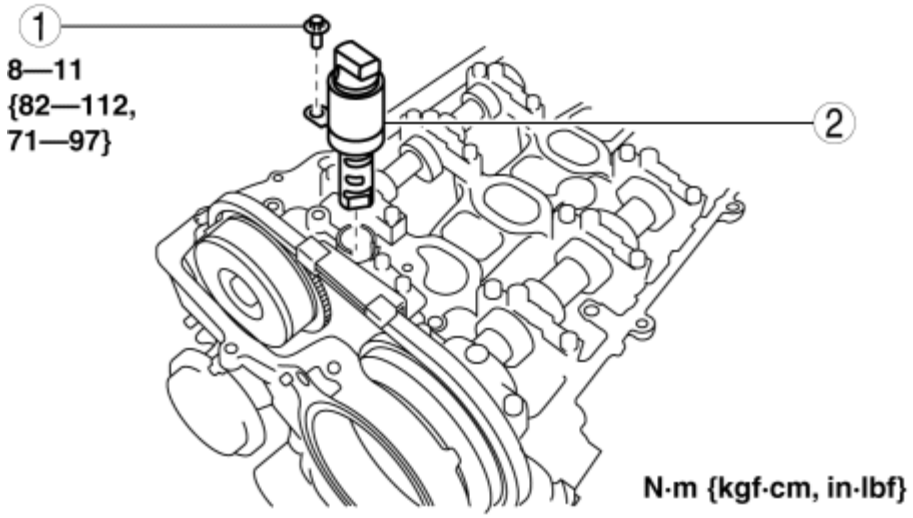

1	OCV installation bolt
2	OCV

OIL CONTROL VALVE (OCV) REMOVAL/INSTALLATION [SKYACTIV-G 2.0, SKYACTIV-G 2.5]

2014 - Mazda3 - Engine

TIMING CHAIN REMOVAL/INSTALLATION [SKYACTIV-G 2.0, SKYACTIV-G 2.5]

WARNING:

- A hot engine can cause severe burns. Turn off the engine and wait until it is cool before servicing.

CAUTION:

- If the camshaft is rotated with the timing chain removed and the piston at the top dead center position, the valve may contact the piston and the engine could be damaged. When rotating the camshaft with the timing chain removed, rotate it after lowering the piston from the top dead center position.
- When rotating the camshaft using a wrench on the cast hexagon, the wrench may contact the rocker arm and damage the rocker arm. To prevent damage to the rocker arm when holding the camshaft on the cast hexagon, use a wrench on the rear side of the engine as shown in the figure to secure a clearance between the cam.

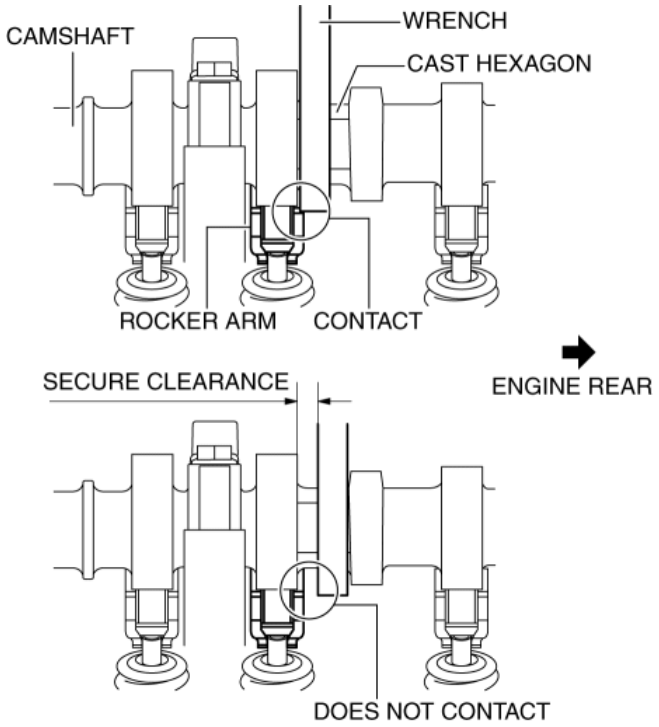

NOTE:

- Width at the cast hexagon of the camshaft is 22—24 mm {0.87—0.94 in}.

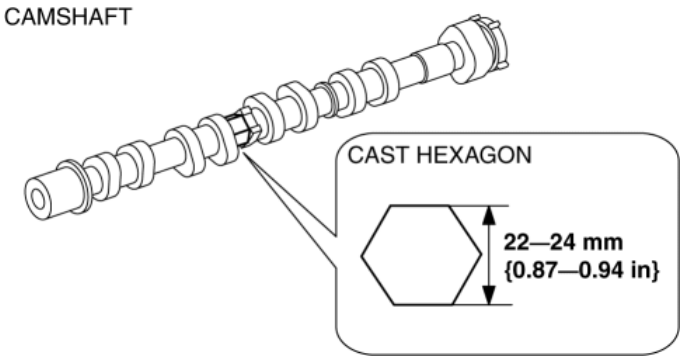

1. Disconnect the negative battery cable. (See **NEGATIVE BATTERY CABLE DISCONNECTION/CONNECTION [SKYACTIV-G 2.0, SKYACTIV-G 2.5]**.)
2. Remove the plug hole plate. (See **PLUG HOLE PLATE REMOVAL/INSTALLATION [SKYACTIV-G 2.0, SKYACTIV-G 2.5]**.)
3. Remove the ignition coil/ion sensors. (See **IGNITION COIL/ION SENSOR REMOVAL/INSTALLATION [SKYACTIV-G 2.0, SKYACTIV-G 2.5]**.)
4. Remove the front under cover No.2. (See **FRONT UNDER COVER No.2 REMOVAL/INSTALLATION**.)
5. Remove the splash shield (RH). (See **SPLASH SHIELD REMOVAL/INSTALLATION**.)

6. Remove the drive belt. (See **DRIVE BELT REMOVAL/INSTALLATION [SKYACTIV-G 2.0, SKYACTIV-G 2.5]**.)
7. Drain the engine oil. (See **ENGINE OIL REPLACEMENT [SKYACTIV-G 2.0, SKYACTIV-G 2.5]**.)
8. Remove the oil pan. (See **OIL PAN REMOVAL/INSTALLATION [SKYACTIV-G 2.0, SKYACTIV-G 2.5]**.)
9. Remove in the order indicated in the table.
10. Install in the reverse order of removal.
11. Refill with the specified type and amount of the engine oil. (See **ENGINE OIL REPLACEMENT [SKYACTIV-G 2.0, SKYACTIV-G 2.5]**.)
12. Start the engine and inspect the following:
    - Leakage of engine oil.
    - Runout and contact of pulley and belt.
    - Ignition timing, idle speed and idle mixture. (See **ENGINE TUNE-UP [SKYACTIV-G 2.0, SKYACTIV-G 2.5]**.)

SKYACTIV-G 2.0

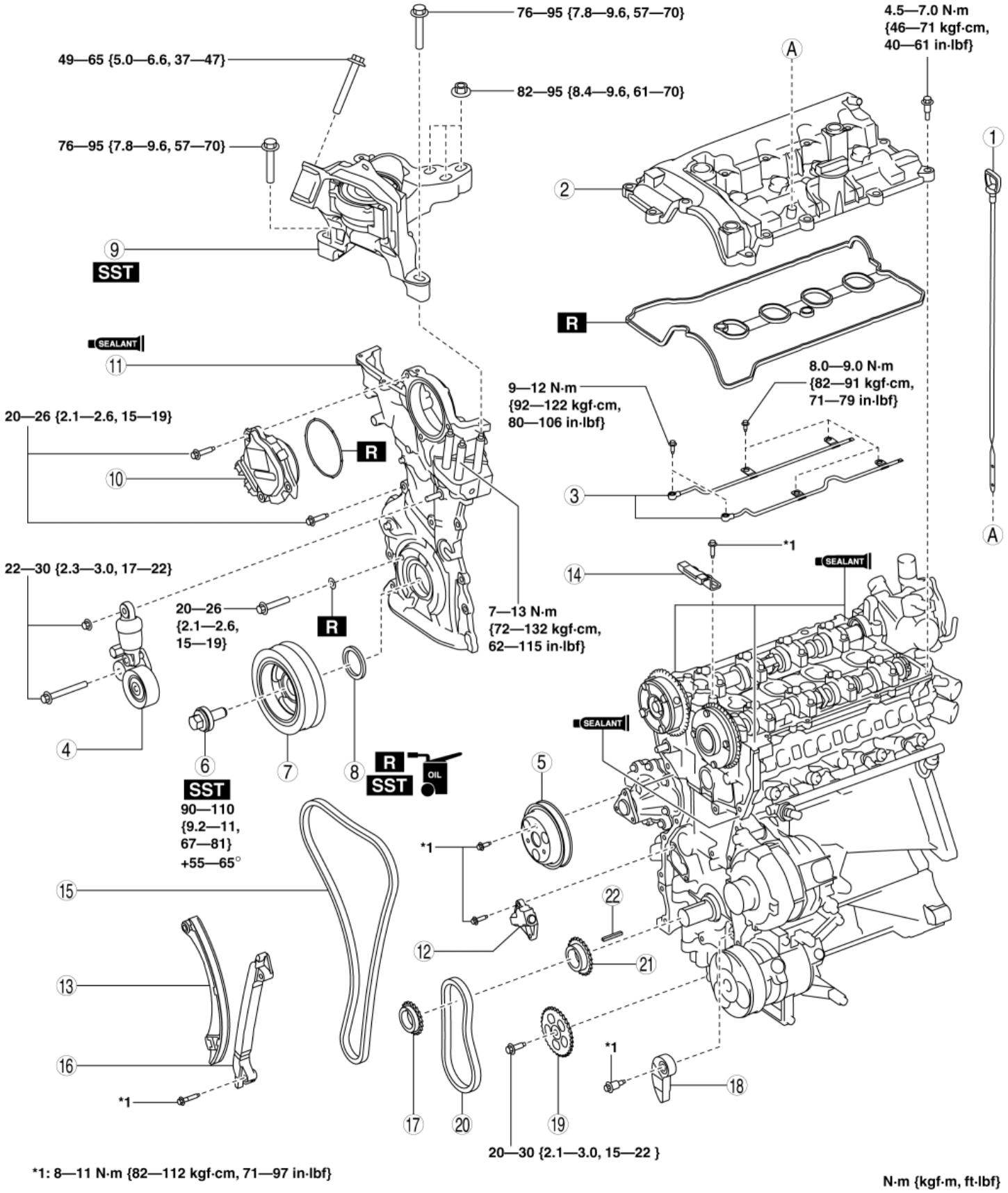

1	Dipstick
2	Cylinder head cover (See **Cylinder Head Cover Removal Note**.)

	(See **Cylinder Head Cover Installation Note**.)
3	Oil shower pipe (See **Oil Shower Pipe Installation Note**.)
4	Drive belt auto tensioner (See **DRIVE BELT AUTO TENSIONER REMOVAL/INSTALLATION [SKYACTIV-G 2.0, SKYACTIV-G 2.5]**.)
5	Water pump pulley (See **Water Pump Pulley Removal Note**.) (See **Water Pump Pulley Installation Note**.)
6	Crankshaft pulley lock bolt (See **Crankshaft Pulley Lock Bolt Removal Note**.) (See **Crankshaft Pulley Lock Bolt Installation Note**.)
7	Crankshaft pulley
8	Front oil seal (See **FRONT OIL SEAL REPLACEMENT [SKYACTIV-G 2.0, SKYACTIV-G 2.5]**.)
9	No.3 engine mount (See **No.3 Engine Mount Removal Note**.) (See **No.3 Engine Mount Installation Note**.)
10	Electric variable valve timing motor/driver (See **Electric Variable Valve Timing Motor/Driver Installation Note**.)
11	Engine front cover (See **Engine Front Cover Removal Note**.) (See **Engine Front Cover Installation Note**.)
12	Chain tensioner (See **Timing Chain Removal Note**.) (See **Timing Chain Installation Note**.)
13	Tensioner arm (See **Timing Chain Removal Note**.) (See **Timing Chain Installation Note**.)
14	Chain guide (No.1) (See **Timing Chain Removal Note**.) (See **Timing Chain Installation Note**.)
15	Timing chain (See **Timing Chain Removal Note**.) (See **Timing Chain Installation Note**.)
16	Chain guide (No.2)
17	Crankshaft sprocket
18	Oil pump chain tensioner
19	Oil pump driven sprocket

	(See **Oil Pump Driven Sprocket Removal Note (SKYACTIV-G 2.0)**.) (See **Oil Pump Driven Sprocket Installation Note (SKYACTIV-G 2.0)**.)
20	Oil pump chain
21	Oil pump drive sprocket
22	Key

SKYACTIV-G 2.5

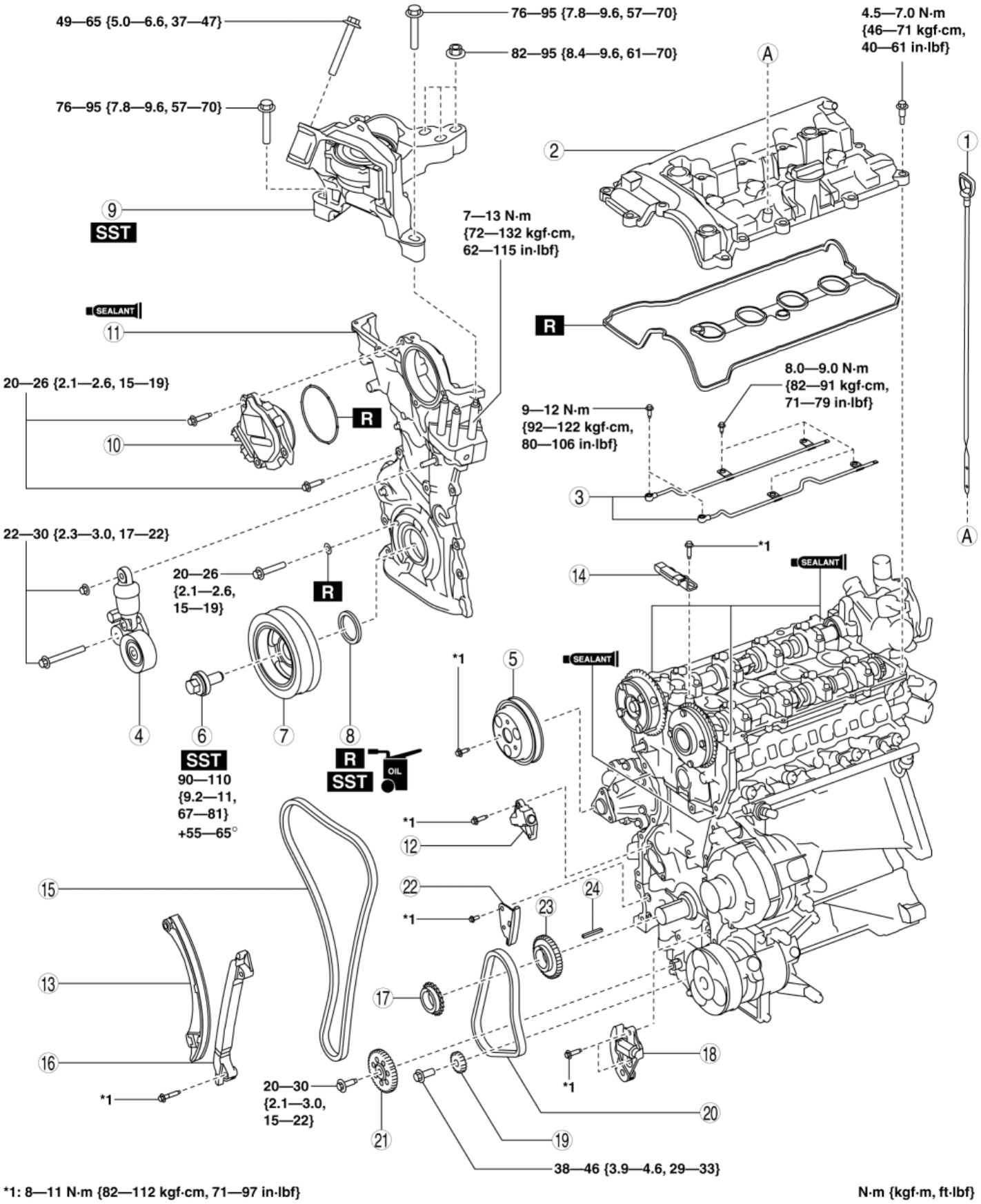

1	Dipstick
2	Cylinder head cover

	(See **Cylinder Head Cover Removal Note**.) (See **Cylinder Head Cover Installation Note**.)
3	Oil shower pipe (See **Oil Shower Pipe Installation Note**.)
4	Drive belt auto tensioner (See **DRIVE BELT AUTO TENSIONER REMOVAL/INSTALLATION [SKYACTIV-G 2.0, SKYACTIV-G 2.5]**.)
5	Water pump pulley (See **Water Pump Pulley Removal Note**.) (See **Water Pump Pulley Installation Note**.)
6	Crankshaft pulley lock bolt (See **Crankshaft Pulley Lock Bolt Removal Note**.) (See **Crankshaft Pulley Lock Bolt Installation Note**.)
7	Crankshaft pulley
8	Front oil seal (See **FRONT OIL SEAL REPLACEMENT [SKYACTIV-G 2.0, SKYACTIV-G 2.5]**.)
9	No.3 engine mount (See **No.3 Engine Mount Removal Note**.) (See **No.3 Engine Mount Installation Note**.)
10	Electric variable valve timing motor/driver (See **Electric Variable Valve Timing Motor/Driver Installation Note**.)
11	Engine front cover (See **Engine Front Cover Removal Note**.) (See **Engine Front Cover Installation Note**.)
12	Chain tensioner (See **Timing Chain Removal Note**.) (See **Timing Chain Installation Note**.)
13	Tensioner arm (See **Timing Chain Removal Note**.) (See **Timing Chain Installation Note**.)
14	Chain guide (No.1) (See **Timing Chain Removal Note**.) (See **Timing Chain Installation Note**.)
15	Timing chain (See **Timing Chain Removal Note**.) (See **Timing Chain Installation Note**.)
16	Chain guide (No.2)
17	Crankshaft sprocket
18	Oil pump chain tensioner (See **Oil Pump Chain Removal Note (SKYACTIV-G 2.5)**.)

	(See **Oil Pump Chain Installation Note (SKYACTIV-G 2.5)**.)
19	Balancer shaft sprocket (See **Oil Pump Chain Removal Note (SKYACTIV-G 2.5)**.) (See **Oil Pump Chain Installation Note (SKYACTIV-G 2.5)**.)
20	Oil pump chain (See **Oil Pump Chain Removal Note (SKYACTIV-G 2.5)**.) (See **Oil Pump Chain Installation Note (SKYACTIV-G 2.5)**.)
21	Oil pump driven sprocket (See **Oil Pump Chain Removal Note (SKYACTIV-G 2.5)**.) (See **Oil Pump Chain Installation Note (SKYACTIV-G 2.5)**.)
22	Oil pump chain guide
23	Oil pump drive sprocket
24	Key

Cylinder Head Cover Removal Note

1. Disconnect the OCV connector.
2. Remove the wiring harness clips secured to the cylinder head cover.
3. Remove the wiring harness clip secured to the intake manifold as shown in the figure, and set the wiring harness aside.

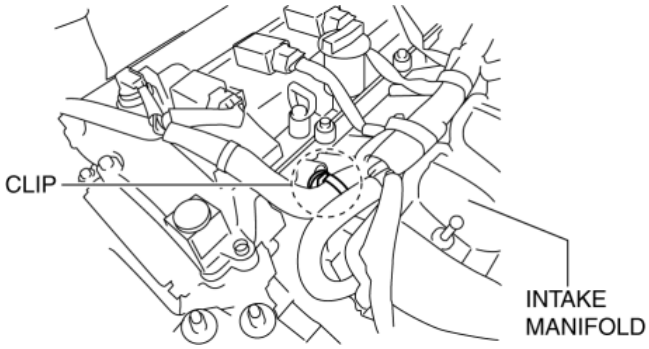

4. Disconnect the ventilation hose.
5. Disconnect the brake vacuum hose from the intake manifold and set it aside.
6. Remove the catch tank with the evaporative hose still connected and set it aside. (SKYACTIV-G 2.5) (See **PURGE SOLENOID VALVE REMOVAL/INSTALLATION [SKYACTIV-G 2.0, SKYACTIV-G 2.5]**.)
7. Remove the cylinder head cover.

Water Pump Pulley Removal Note

CAUTION:

- Be careful not to damage the belt groove and surface of the water pump pulley when using tools, otherwise it will cause wear, breakage, abnormal noise of the drive belt (stretch belt), damage to the pulley, and rust.

1. Align the water pump pulley hole with the water pump hole as shown in the figure.

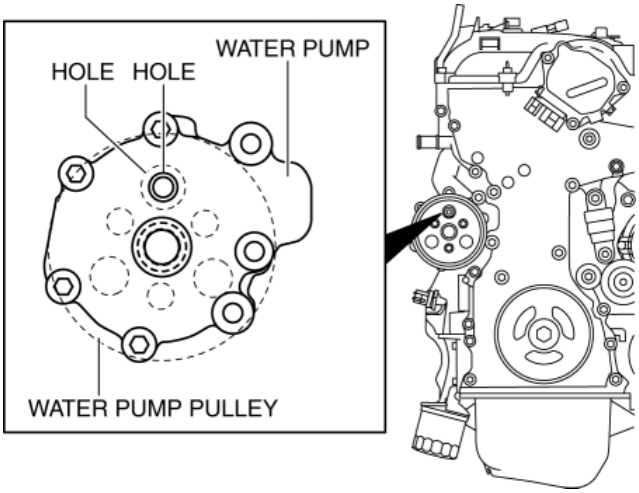

2. Insert an appropriate bolt (length **approx. 70 mm {2.8 in}**) into the water pump hole as shown in the figure, and lock the water pump pulley against rotation.

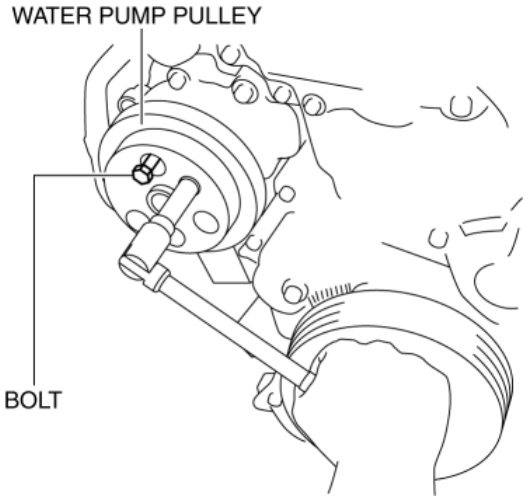

3. Remove the water pump pulley.

4. Remove the bolt used for locking the water pump pulley against rotation.

Crankshaft Pulley Lock Bolt Removal Note

CAUTION:

- To prevent damage to the crankshaft pulley, protect the crankshaft pulley with a clean cloth so that the bar part (205-072) of the **SST** does not contact the crankshaft pulley.
- To prevent damage to the engine front cover, be careful not to allow the tab part (49 B011 105) of the **SST** to get caught between the crankshaft pulley and the engine front cover.

1. Install the **SST** to the crankshaft pulley, and lock the crankshaft against rotation.

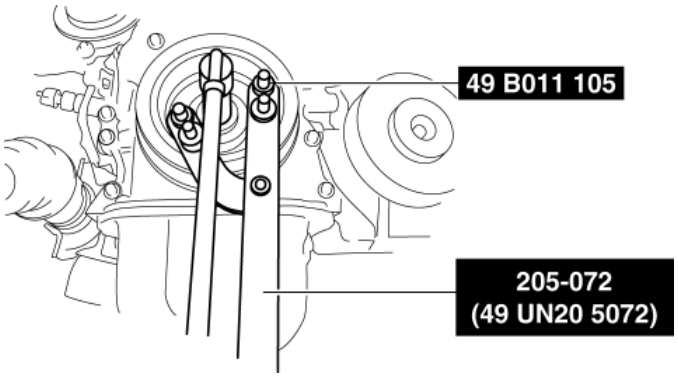

2. Remove the crankshaft pulley lock bolt.

No.3 Engine Mount Removal Note

1. Remove the clips shown in the figure and set the ground cable aside.

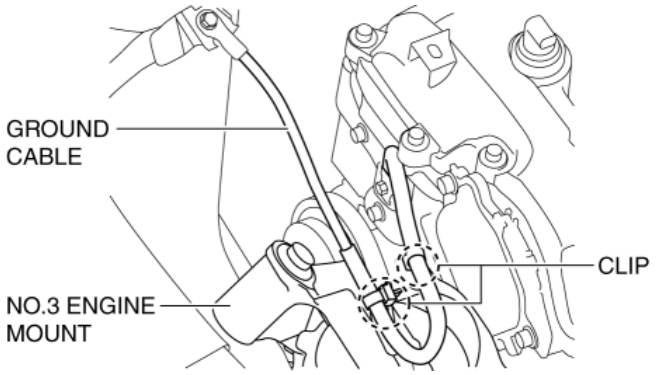

2. Install the **SST** using **part number 99794 1025** or an **M10 x 1.25**, length **25 mm {0.98 in}** bolt as shown in the figure.

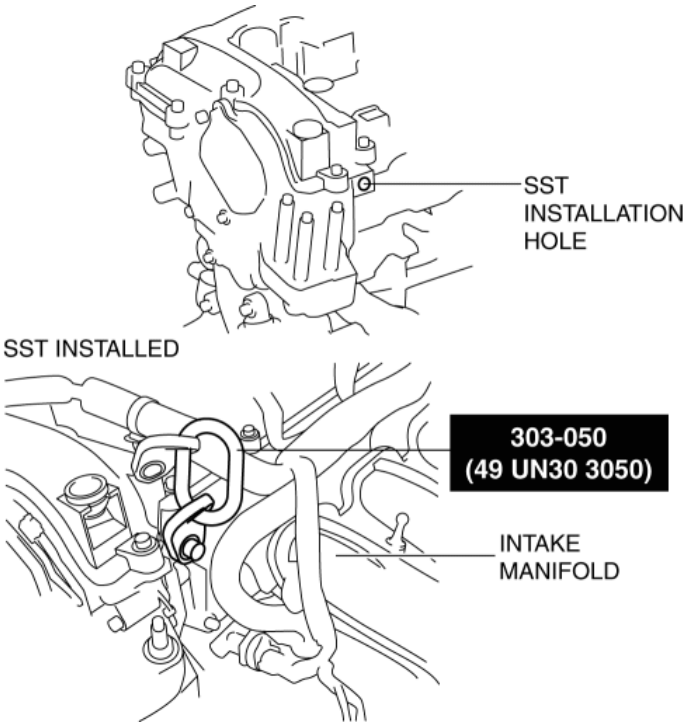

CAUTION:

- Slots have been adopted for the No.3 engine mount installation holes. If the No.3 engine mount is deviated from the original position when installing the No.3 engine mount, engine noise or vibration could increase. Before removing the No.3 engine mount, place alignment marks on the No.3 engine mount and body so that they can be assembled to the same positions as before removal.

3. Place alignment marks on the locations shown in the figure so that they can be assembled to the same positions as before removal.

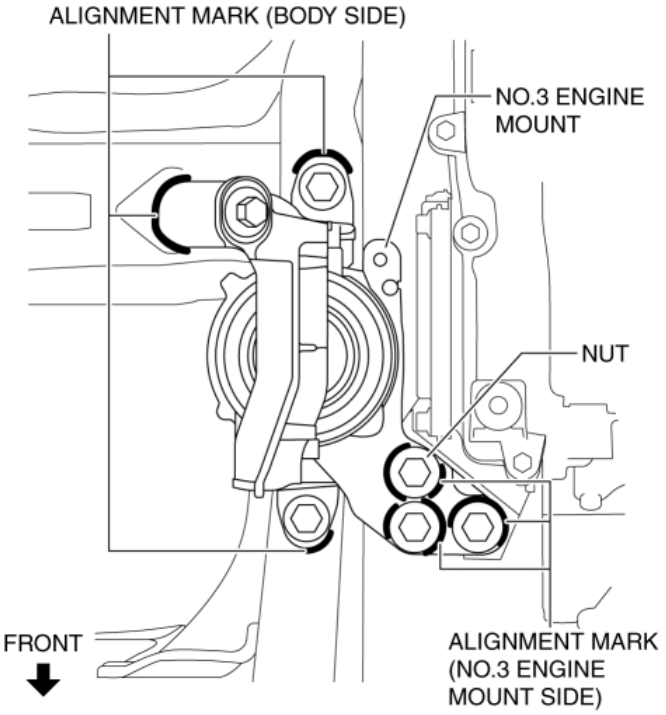

NOTE:

- Paint so that the No.3 engine mount is framed on the body side and the outline of the nut is framed on the No.3 engine mount side.

4. Install the **SST** using the following procedures.

CAUTION:

- Refer to the SST instruction manual for the basic handing procedure.

NOTE:

- Install front foot No. 2 to the left and right front shafts of the **SST**.

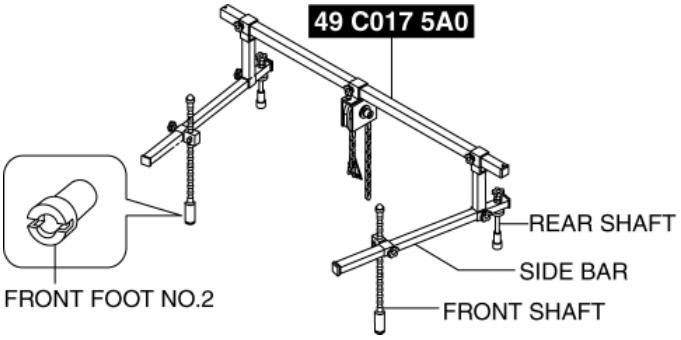

a. Protect the positions shown in the figure using tape.

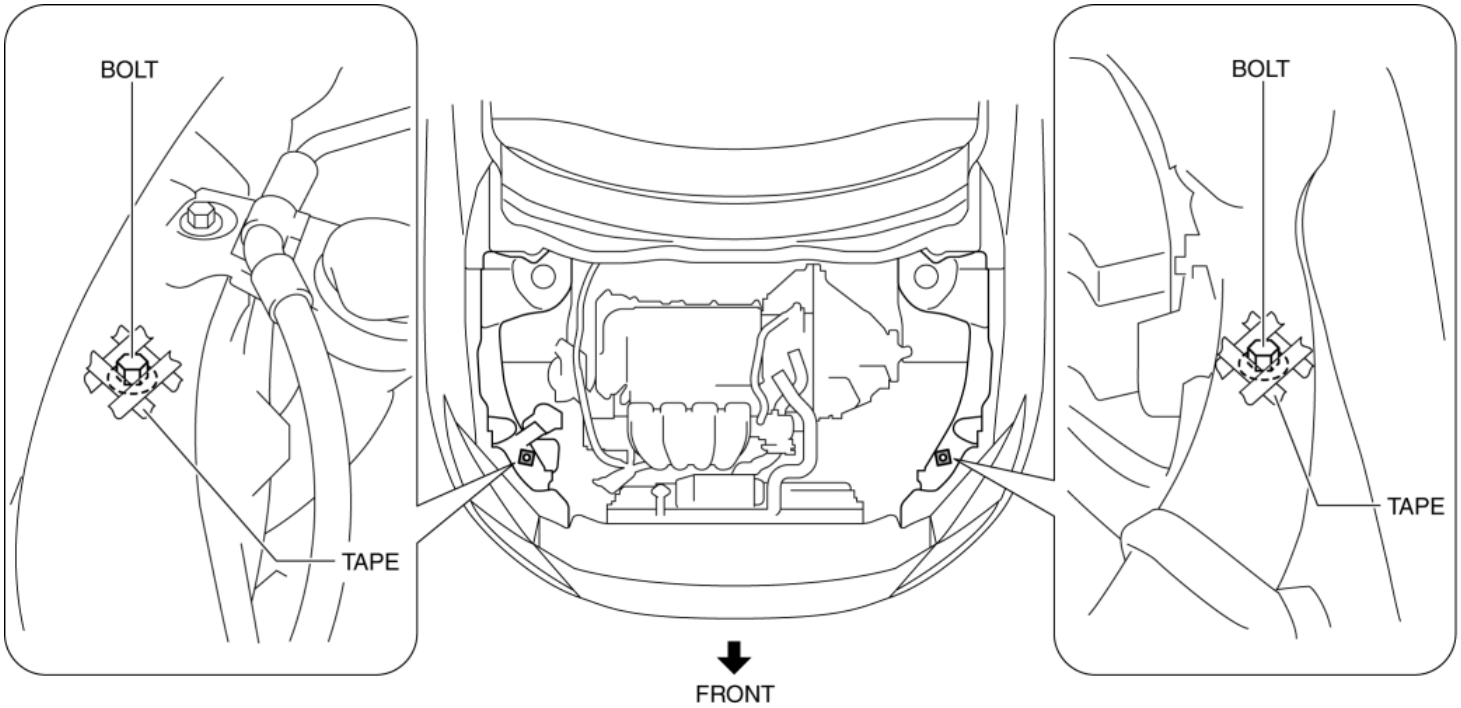

b. As shown in the figure, set the rear shafts of the **SST** to the left and right shock absorber nuts.

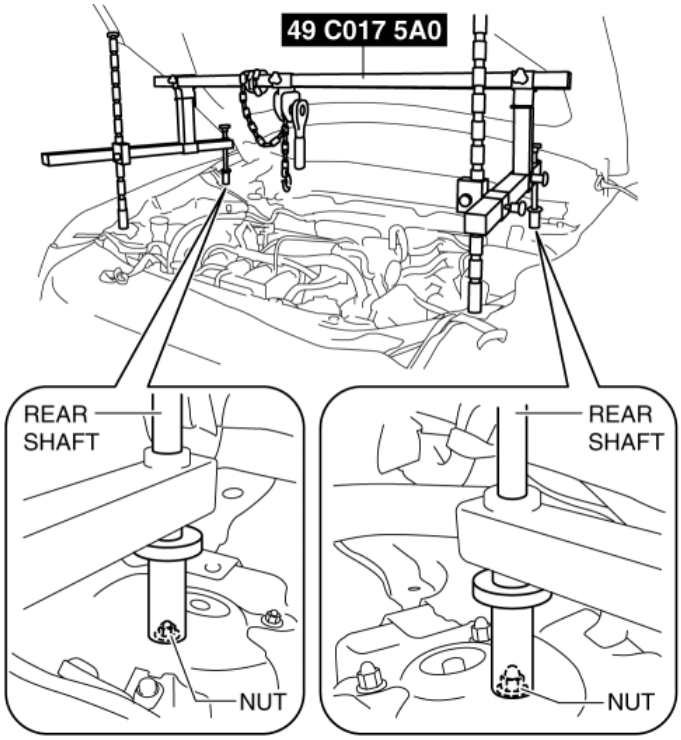

c. As shown in the figure, set the front shafts of the SST to the left and right bolts.

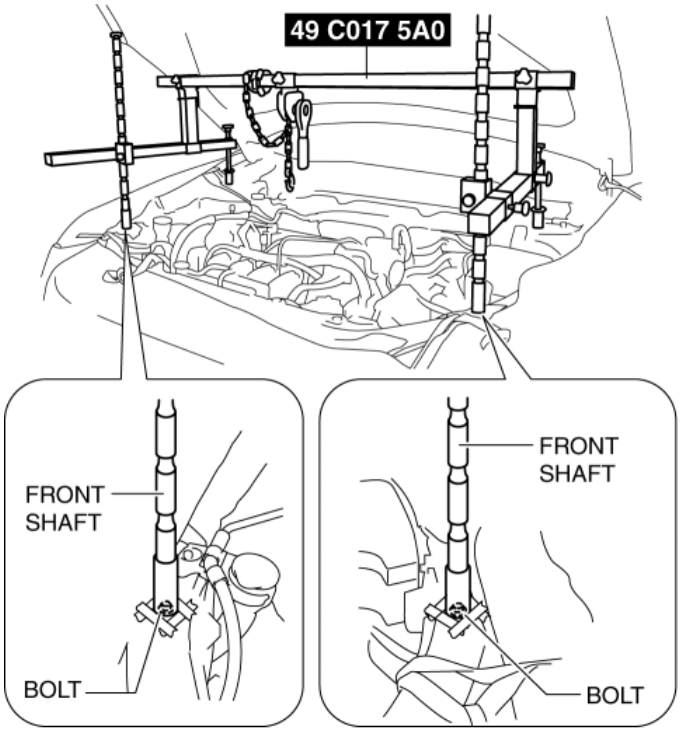

d. Adjust the height of the left and right side bars of the **SST** so that they are leveled, then tighten each part.

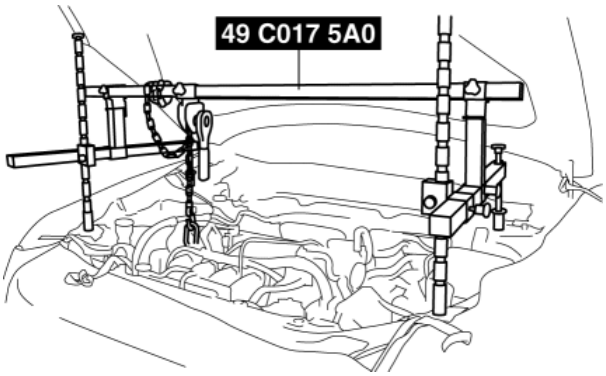

e. Apply tension to the chain to hold the engine.

5. Remove the No.3 engine mount.

Engine Front Cover Removal Note

1. Remove the nut shown in the figure and set the cooler hose (LO) aside.

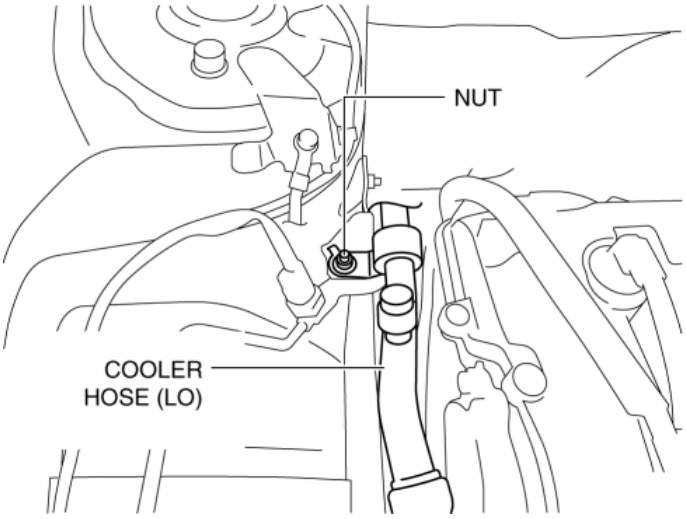

2. Remove the insulator shown in the figure.

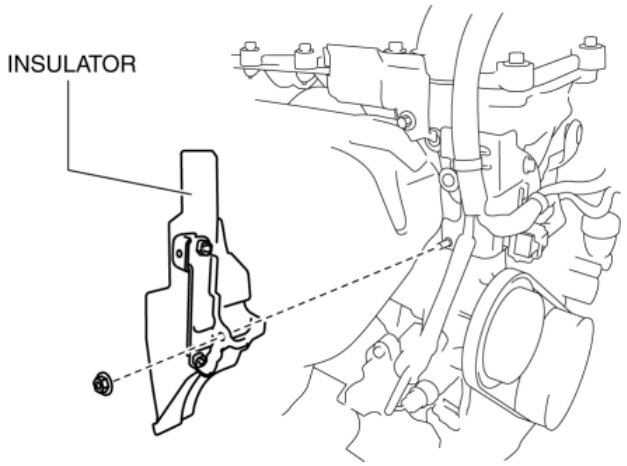

3. Set the ground cable and wiring harness bracket shown in the figure aside.

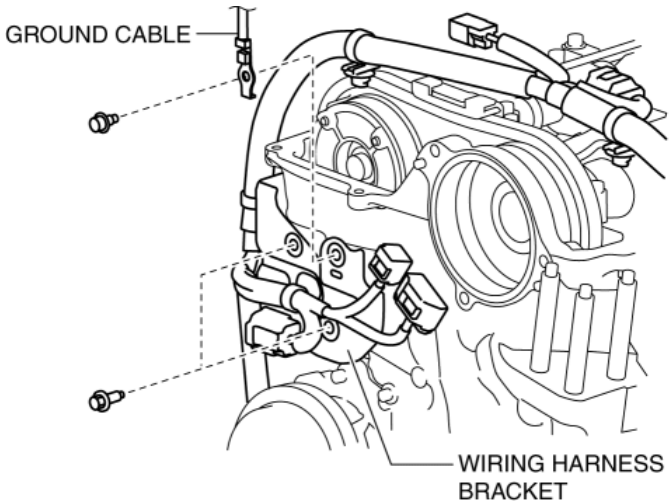

4. Remove the engine front cover installation bolts.

5. Using a screwdriver wrapped in a cloth, peel the sealant away a little at a time, and remove the engine front cover.

CAUTION:

- Do not apply excessive force to the screwdriver. Otherwise, the engine front cover could be damaged.
- Be careful not to scratch or damage the seal surface. Otherwise, it could cause oil leakage.

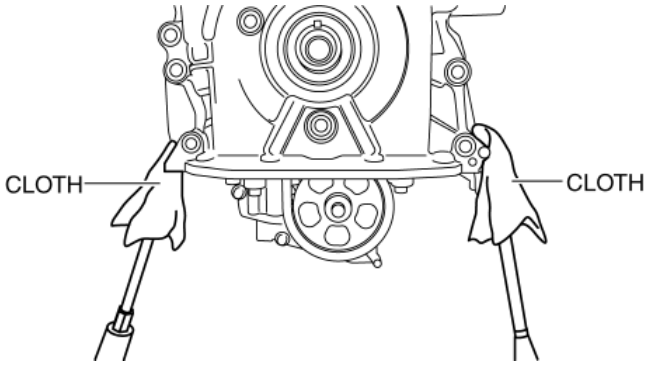

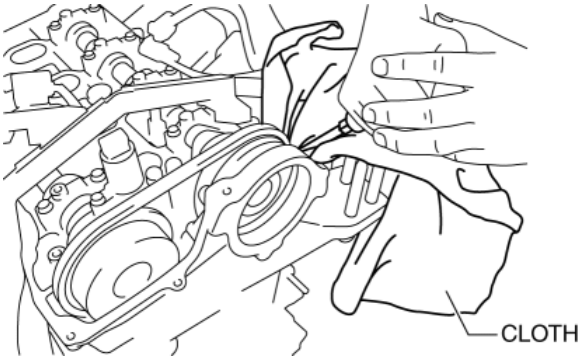

Timing Chain Removal Note

1. Rotate the crankshaft clockwise to align the timing marks and the key position as shown in the figure, and set cylinder No.1 at top dead center (TDC).

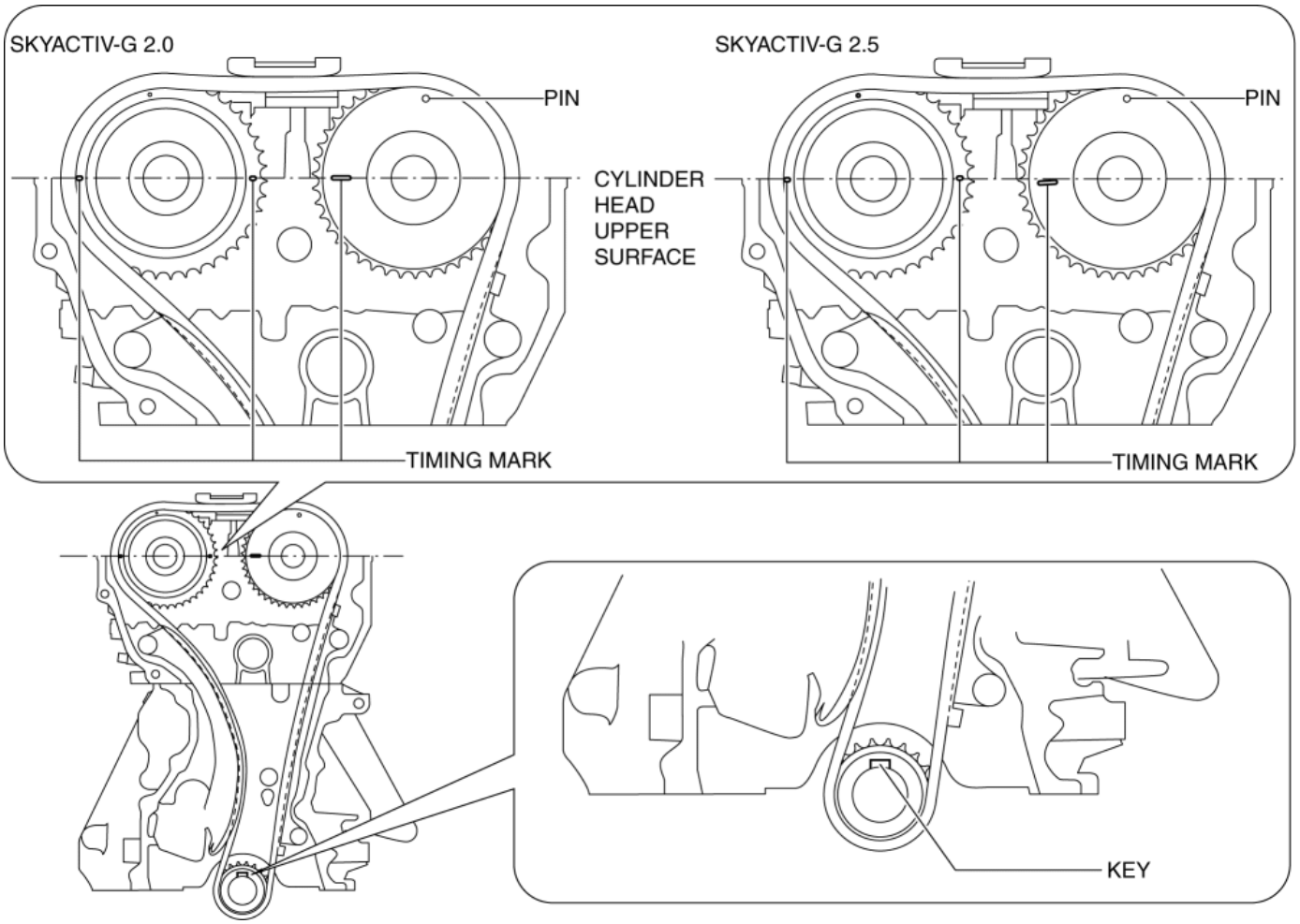

NOTE:

- The timing mark of SKYACTIV-G 2.5 is not completely parallel with the upper surface of the cylinder head.

2. While moving the exhaust camshaft back and forth in the direction of the arrow using a wrench on the cast hexagon, press down the link plate of the timing chain tensioner using a precision screwdriver and release the plunger lock.

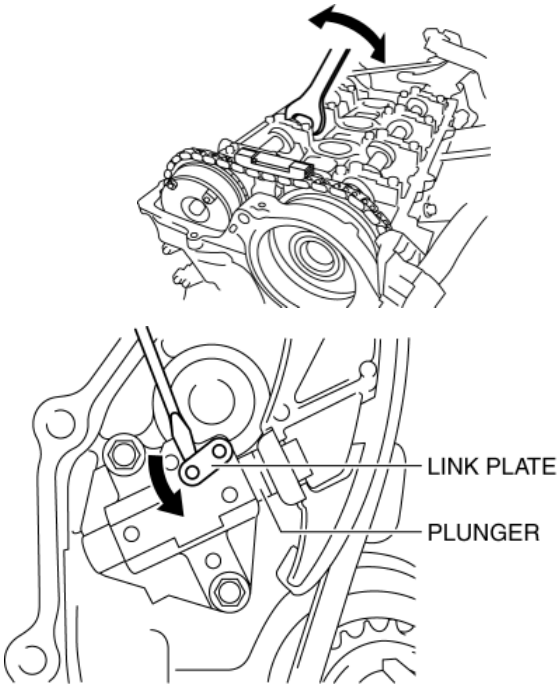

NOTE:

- When moving the exhaust camshaft back and forth, the timing chain pushes the plunger in the chain tensioner making it easier to operate the link plate.

3. Push back the plunger slowly in the direction shown in the figure with the link plate still pushed down.

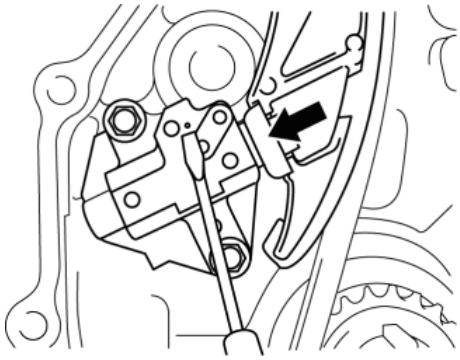

4. Remove the screwdriver from the link plate with the plunger still pushed down.

5. Release the force slightly from the plunger, and move it back and forth **2—3 mm {0.08—0.11 in}**.

6. Insert a wire with an **approx. diameter of 1.5 mm {0.059 in}** or a paper clip where the link plate hole and the tensioner body hole overlap to secure the link plate and lock the plunger.

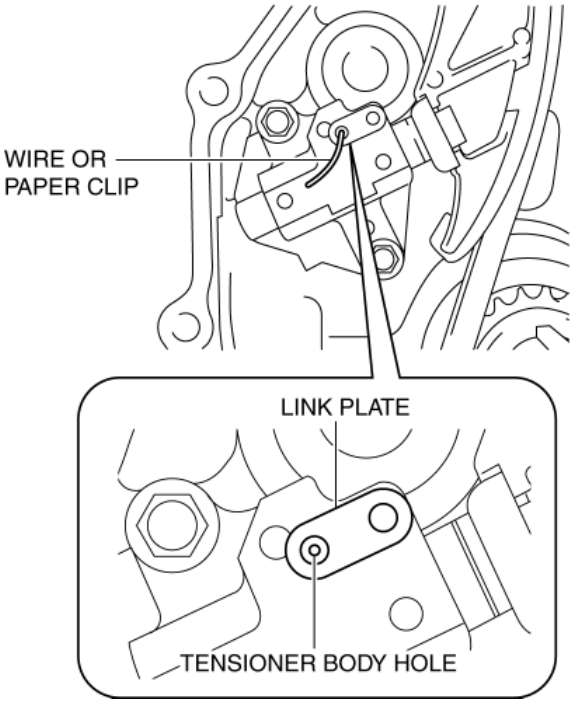

7. Remove the chain tensioner, tensioner arm, and the chain guide (No.1).
8. Remove the timing chain.

Oil Pump Driven Sprocket Removal Note (SKYACTIV-G 2.0)

1. Temporarily assemble the crankshaft pulley lock bolt, and lock the oil pump against rotation as shown in the figure.

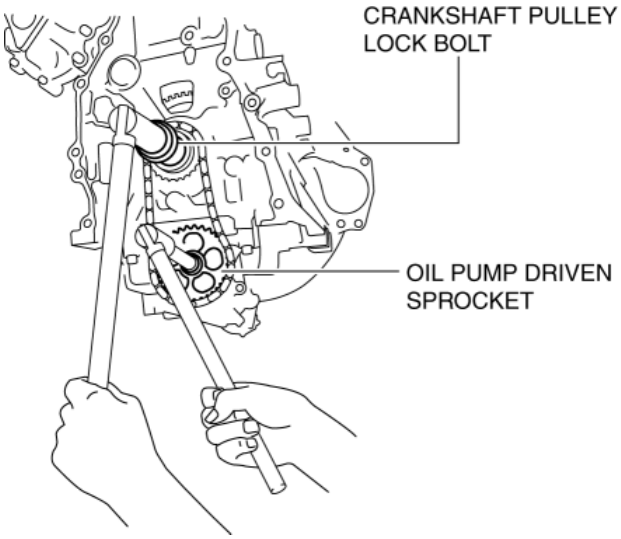

2. Remove the oil pump driven sprocket.
3. Remove the temporarily assembled crankshaft pulley lock bolt.

Oil Pump Chain Removal Note (SKYACTIV-G 2.5)

1. Verify that the balancer shaft sprocket alignment mark and key are aligned to the positions shown in the figure.

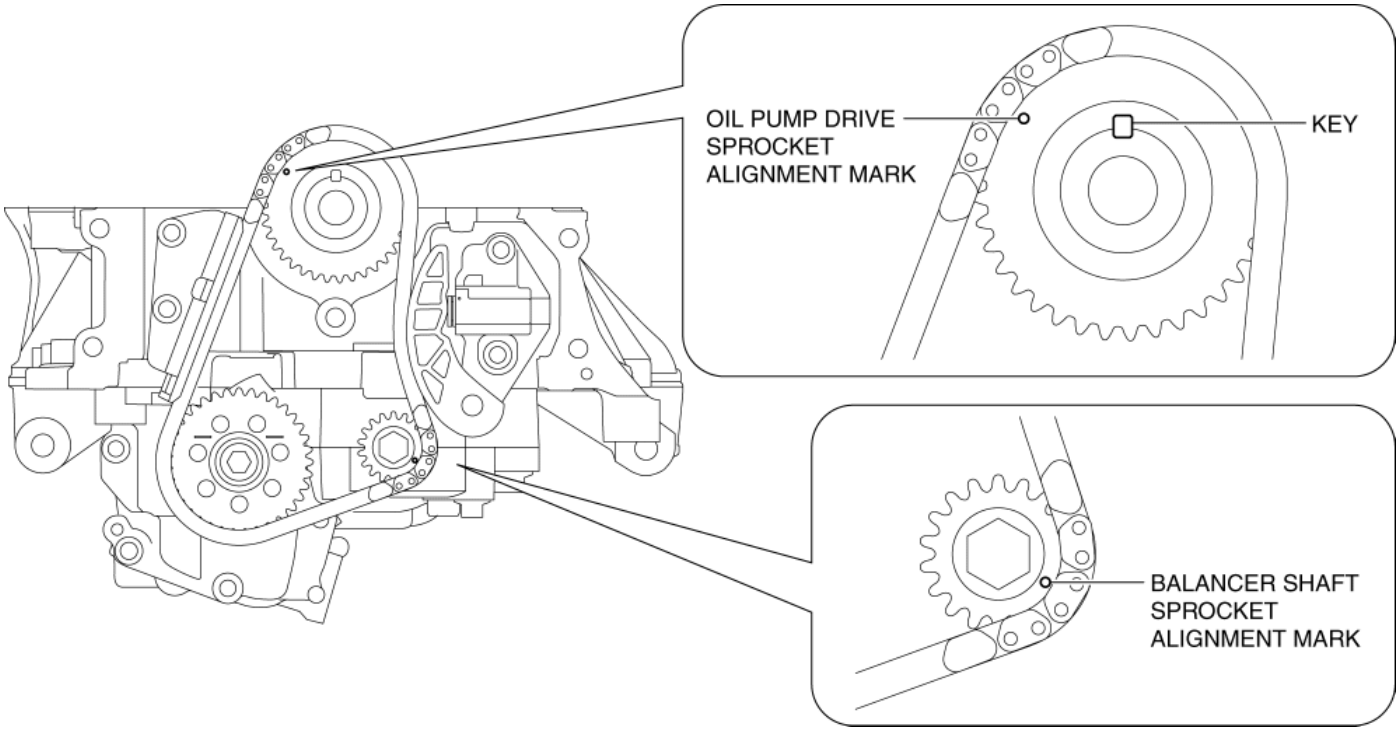

NOTE:

- If they are not in the positions shown in the figure, rotate the crankshaft to set cylinder No.1 to top dead center (TDC).

2. Slightly loosen the balancer shaft sprocket installation bolt using the following procedure:

NOTE:

- At this stage, only loosen the installation bolt, do not remove it. Remove the bolt after removing the oil pump chain tensioner.
- The balancer unit is constructed such that the end of the balancer shaft (No.1) protrudes from the balancer unit case. The balancer shaft (No.1) can be locked against rotation by holding the end using a wrench.

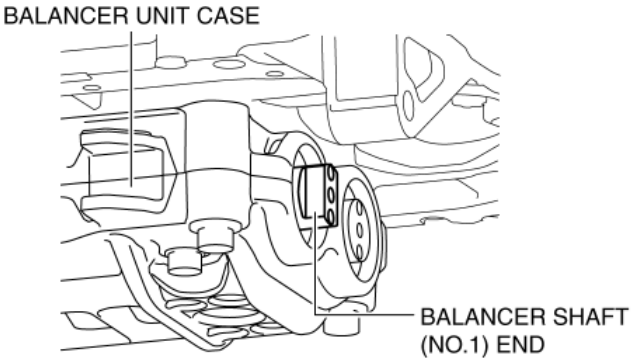

a. Lock the balancer shaft (No.1) against rotation as shown in the figure.

CAUTION:

- To prevent damage to the balancer unit, protect the end of the balancer shaft (No.1) with a rag.

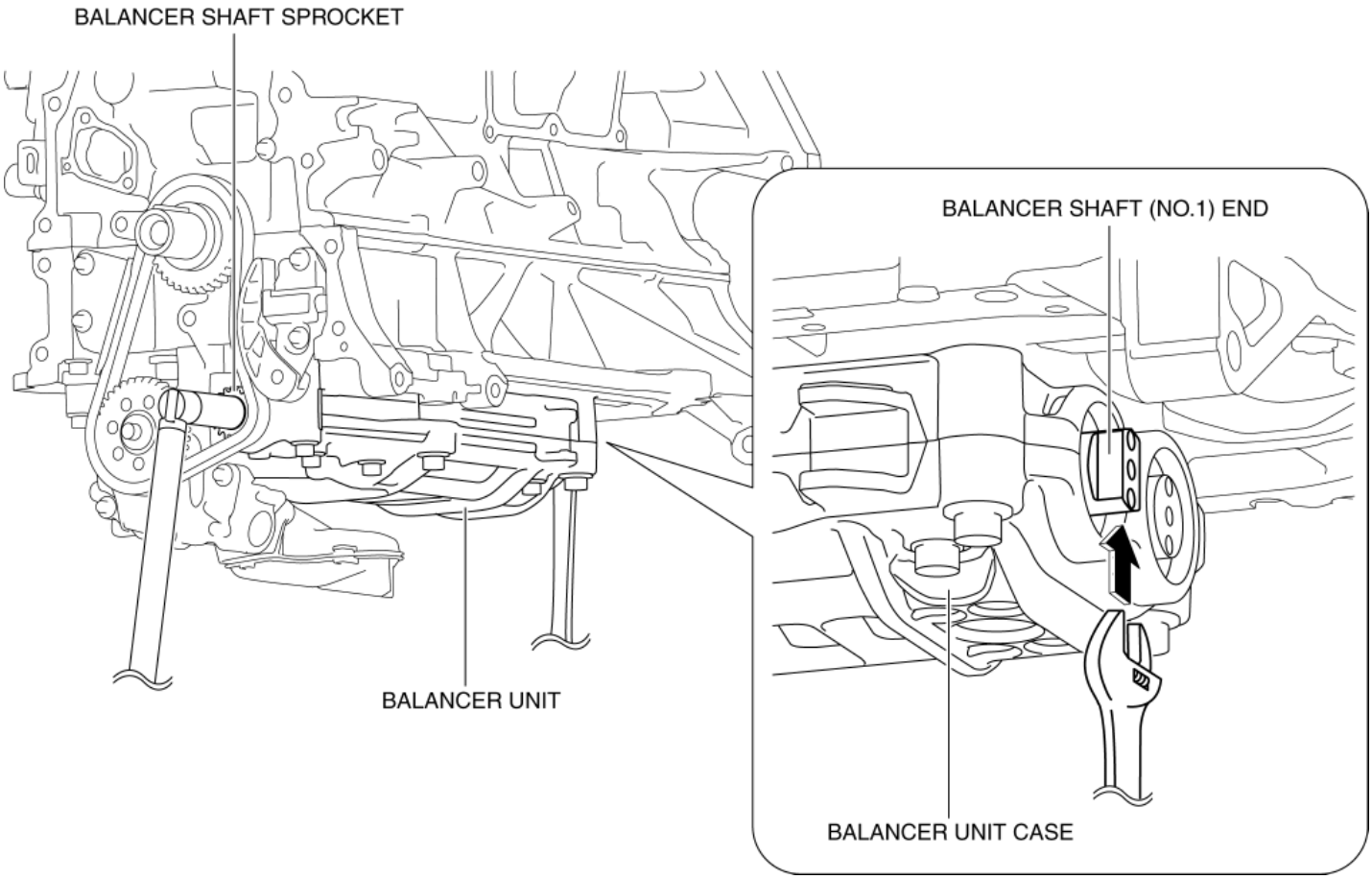

b. Slightly loosen the balancer shaft sprocket installation bolt.

3. Slightly loosen the oil pump driven sprocket installation bolt using the following procedure:

NOTE:

- At this stage, only loosen the installation bolt, do not remove it. Remove the bolt after removing the oil pump chain tensioner.

a. Temporarily assemble the crankshaft pulley lock bolt, and lock the oil pump against rotation as shown in the figure.

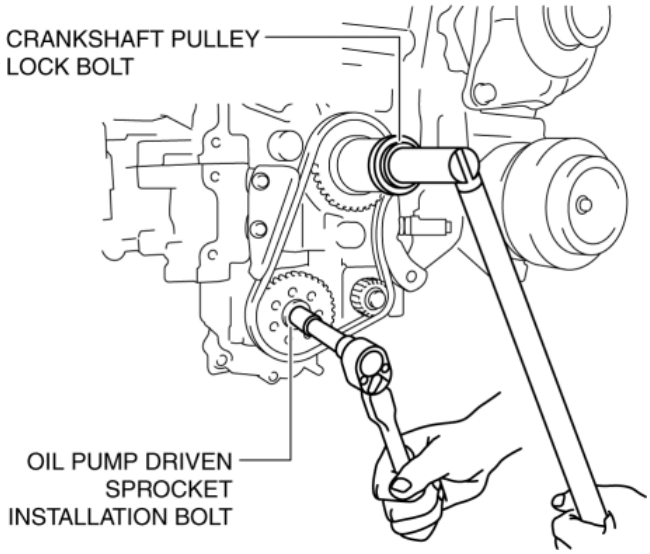

b. Slightly loosen the oil pump driven sprocket installation bolt.

c. Remove the temporarily assembled crankshaft pulley lock bolt.

4. Set a cloth wrapped flathead screwdriver in the gap between the oil pump drive sprocket and the oil pump chain as shown in the figure.

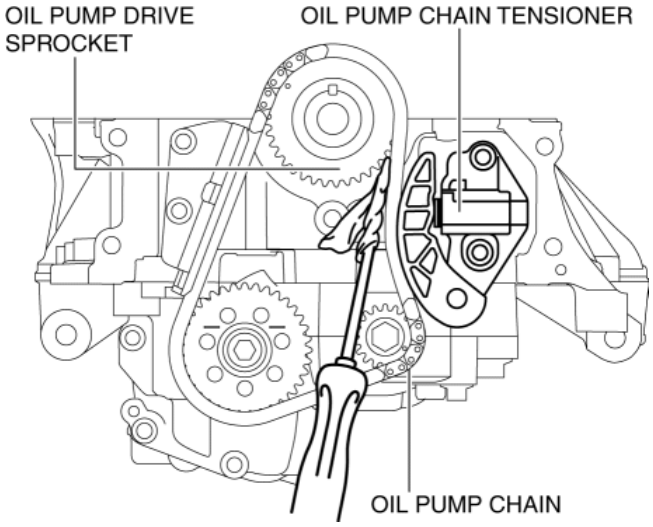

5. Move the screwdriver in the direction of the arrow and press the oil pump chain, and then press on the plunger of the oil pump chain tensioner.

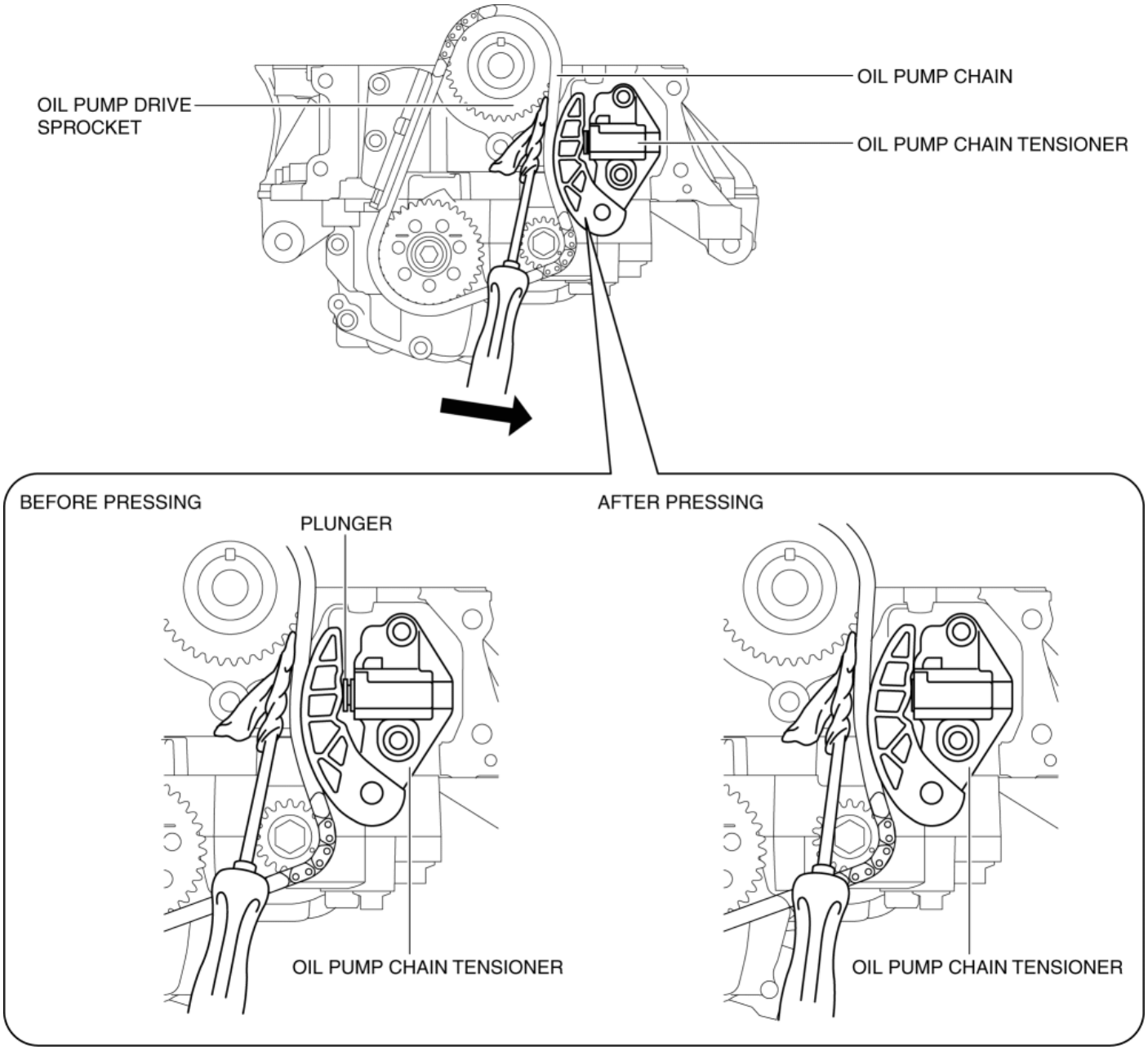

6. Insert a wire with an approx. diameter of 1.4 mm {0.055 in} or a paper clip into the body hole of the oil pump chain tensioner with the plunger pressed.

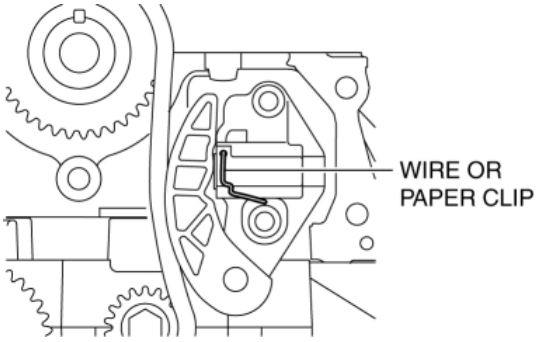

NOTE:

- The wire or paper clip secures the plunger, and the tension can be released.

7. Remove the oil pump chain tensioner.
8. Remove the oil pump chain and balancer shaft sprocket as a single unit.
9. Remove the oil pump driven sprocket.

Oil Pump Driven Sprocket Installation Note (SKYACTIV-G 2.0)

1. Temporarily assemble the crankshaft pulley lock bolt, and lock the oil pump against rotation as shown in the figure.

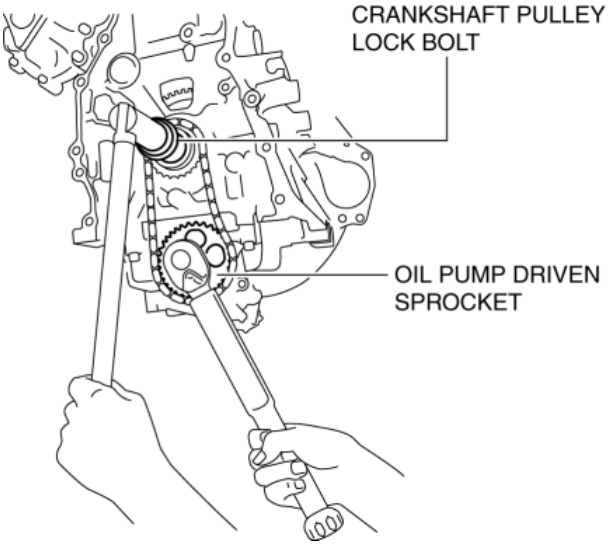

2. Install the oil pump driven sprocket.

   Tightening torque

   - 20—30 N·m {2.1—3.0 kgf·m, 15—22 ft·lbf}

3. Remove the temporarily assembled crankshaft pulley lock bolt.

Oil Pump Chain Installation Note (SKYACTIV-G 2.5)

1. Verify that the key and knock pin are aligned to the positions shown in the figure.

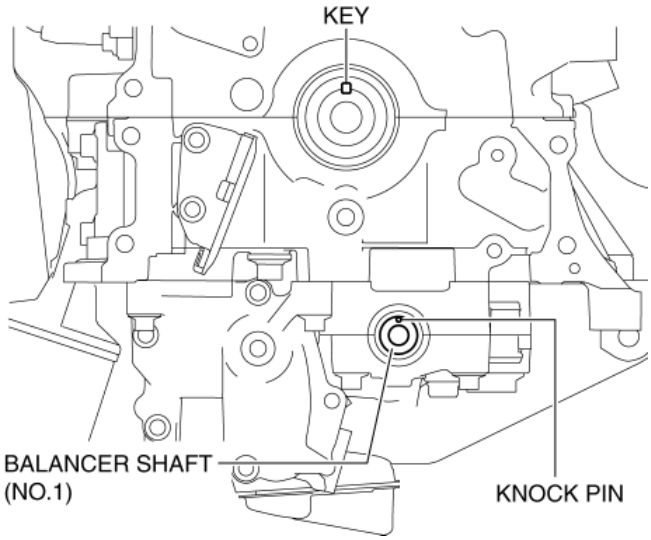

- If they are not in the positions shown in the figure, rotate the crankshaft and balancer shaft (No.1) to set cylinder No.1 to top dead center (TDC).

2. Temporarily assemble the oil pump driven sprocket.

3. Temporarily tighten the oil pump driven sprocket installation bolt.

4. Align the oil pump chain alignment mark with the balancer shaft sprocket alignment mark.

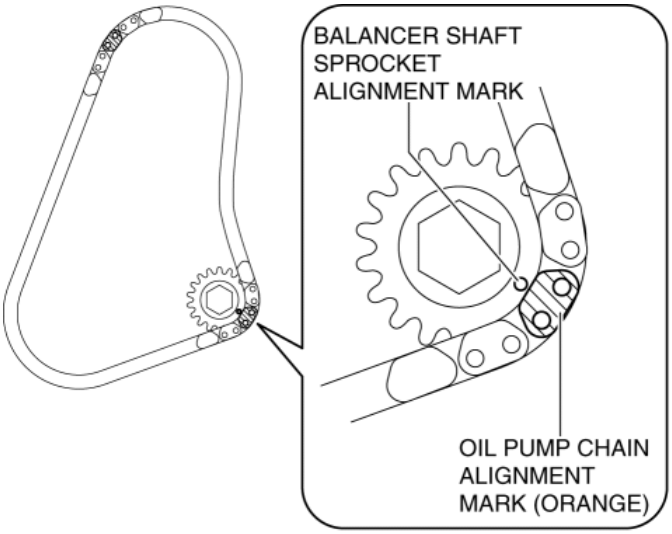

5. Install the oil pump chain and balancer shaft sprocket as a single unit while aligning the alignment marks on each sprocket and oil pump chain as shown in the figure.

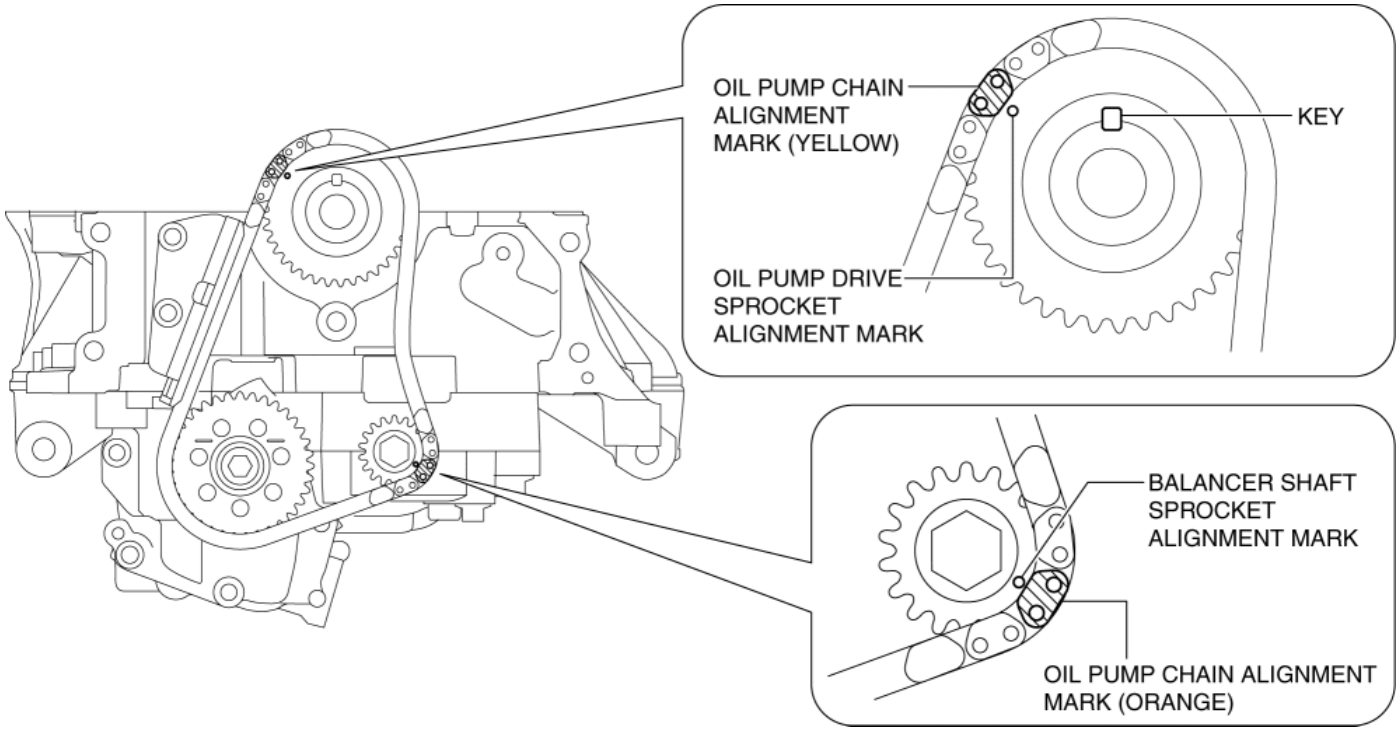

6. Temporarily tighten the balancer shaft sprocket installation bolt.

7. Install the oil pump chain tensioner.

CAUTION:

- At this stage, do not remove the wire or paper clip installed to the oil pump chain tensioner.

8. Tighten the oil pump driven sprocket installation bolt using the following procedure:

   a. Temporarily assemble the crankshaft pulley lock bolt, and lock the oil pump against rotation as shown in the figure.

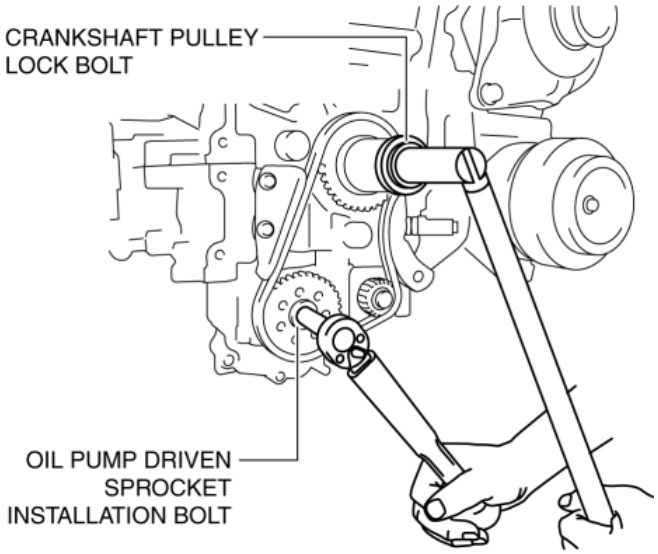

   b. Tighten the oil pump driven sprocket installation bolt.

      Tightening torque

      - 20—30 N·m {2.1—3.0 kgf·m, 15—22 ft·lbf}

   c. Remove the temporarily assembled crankshaft pulley lock bolt.

9. Tighten the balancer shaft sprocket installation bolt using the following procedure:

NOTE:

- The balancer unit is constructed such that the end of the balancer shaft (No.1) protrudes from the balancer unit case. The balancer shaft (No.1) can be locked against rotation by holding the end using a wrench.

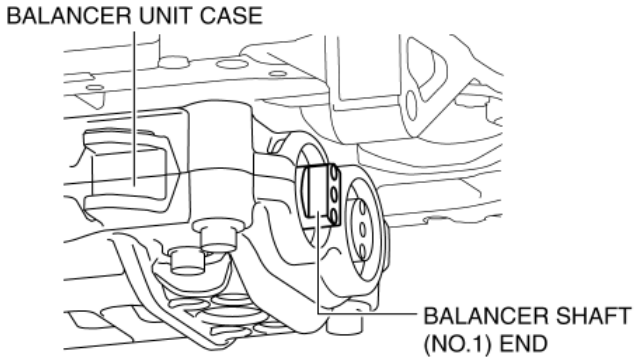

a. Lock the balancer shaft (No.1) against rotation as shown in the figure.

CAUTION:

- To prevent damage to the balancer unit, protect the end of the balancer shaft (No.1) with a rag.

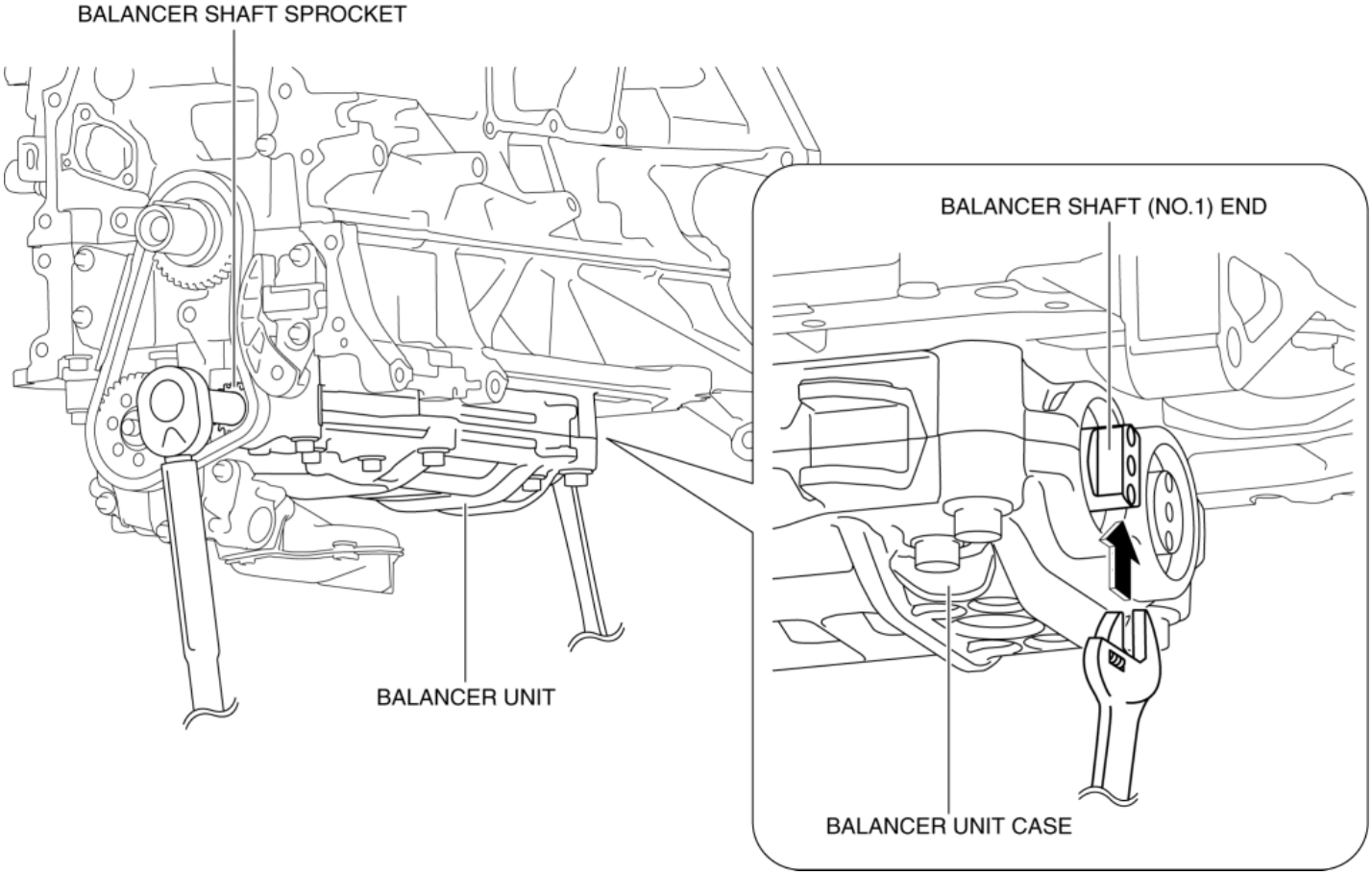

b. Tighten the balancer shaft sprocket installation bolt.

Tightening torque

- 38—46 N·m {3.9—4.6 kgf·m, 29—33 ft·lbf}

10. Remove the wire or paper clip installed to the oil pump chain tensioner and apply tension to the oil pump chain.
    - If a new oil pump chain tensioner is used, remove the installed stopper.

Timing Chain Installation Note

1. Verify that the timing marks and the key are aligned to the position shown in the figure.

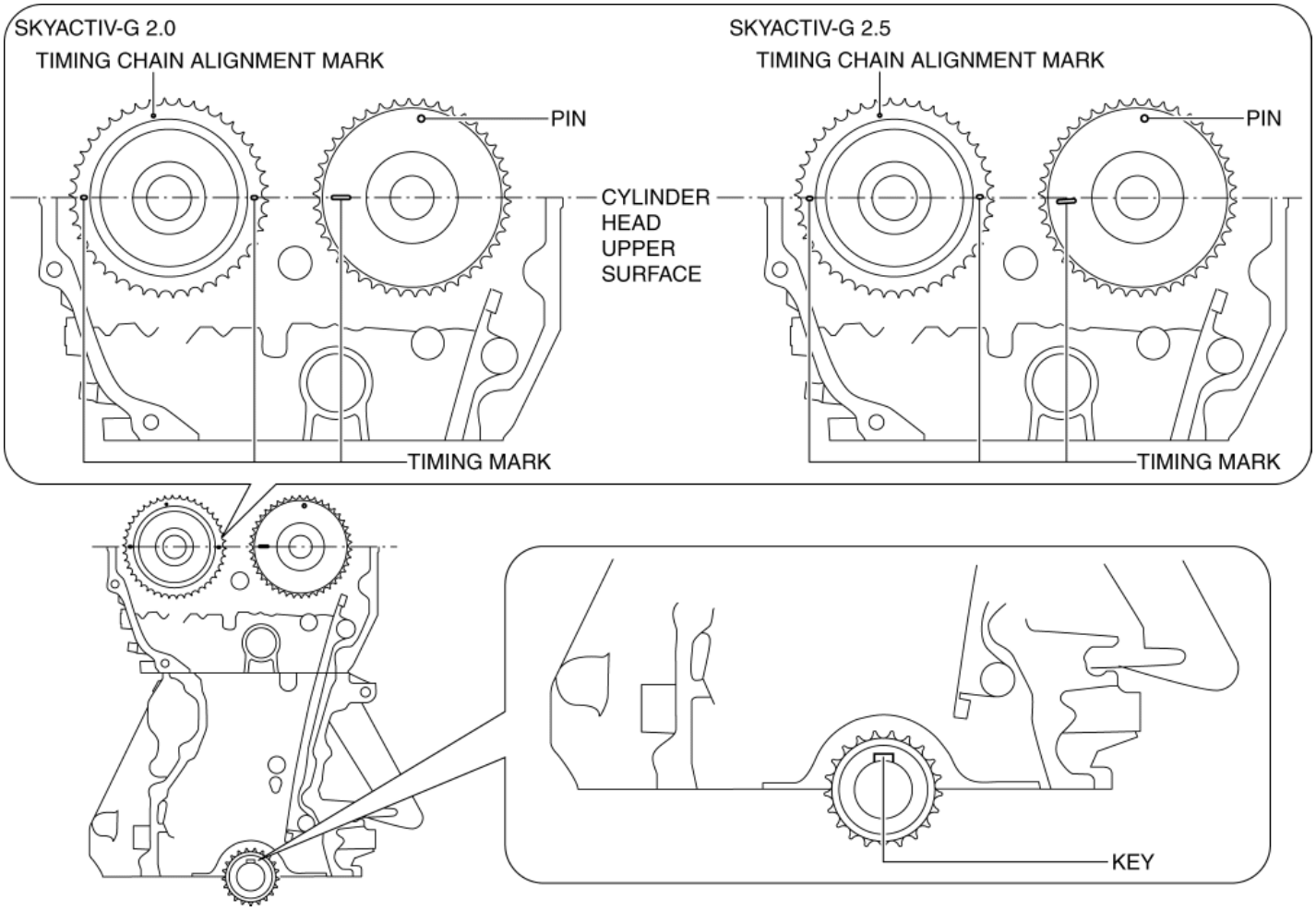

NOTE:

- The timing mark of SKYACTIV-G 2.5 is not completely parallel with the upper surface of the cylinder head.
- If they are not in the position shown in the figure, rotate the camshaft and crankshaft to set the cylinder No.1 top dead center (TDC).

2. Install the timing chain while aligning the marks on each sprocket and the timing chain as shown in the figure.

SKYACTIV-G 2.0

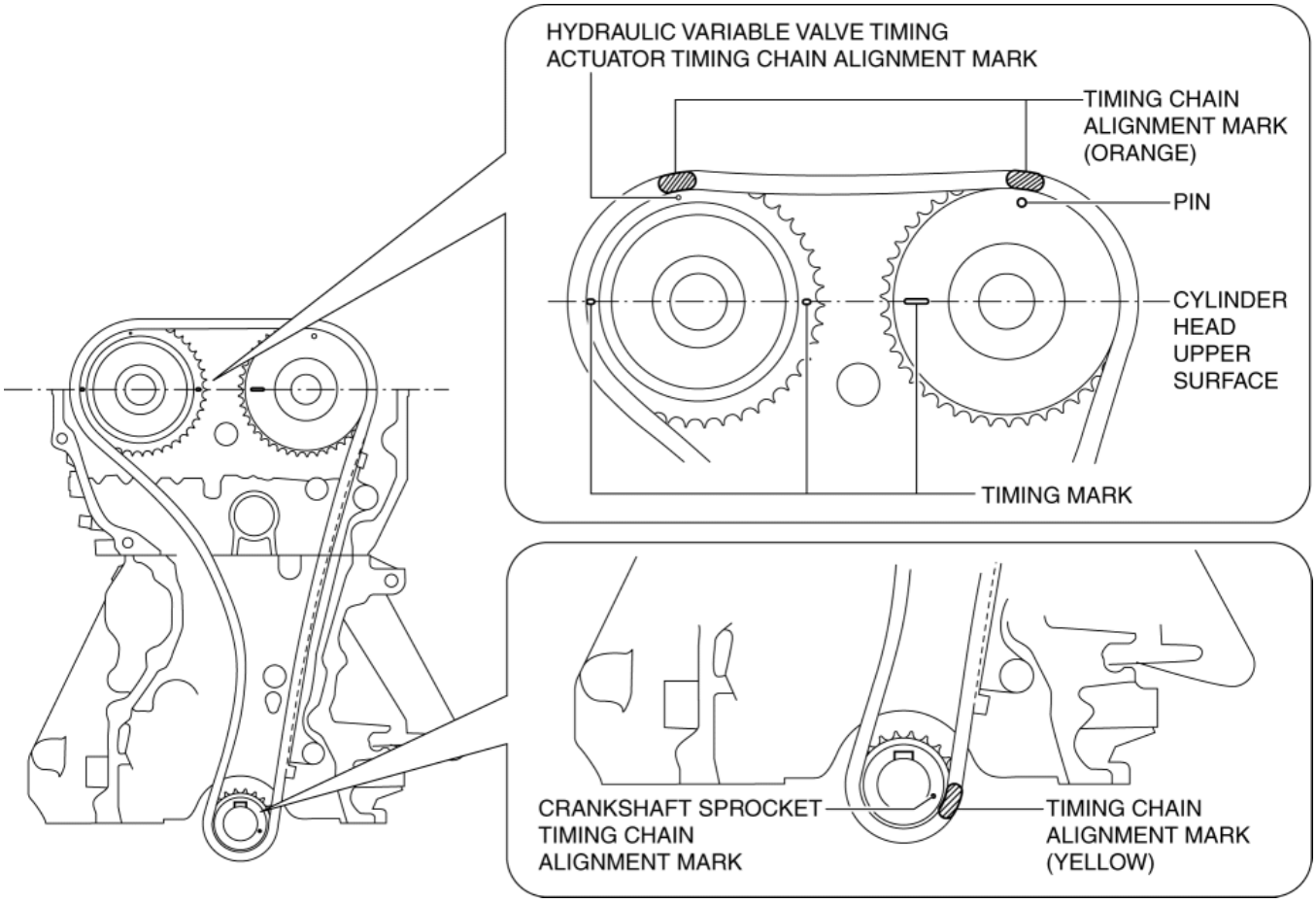

SKYACTIV-G 2.5

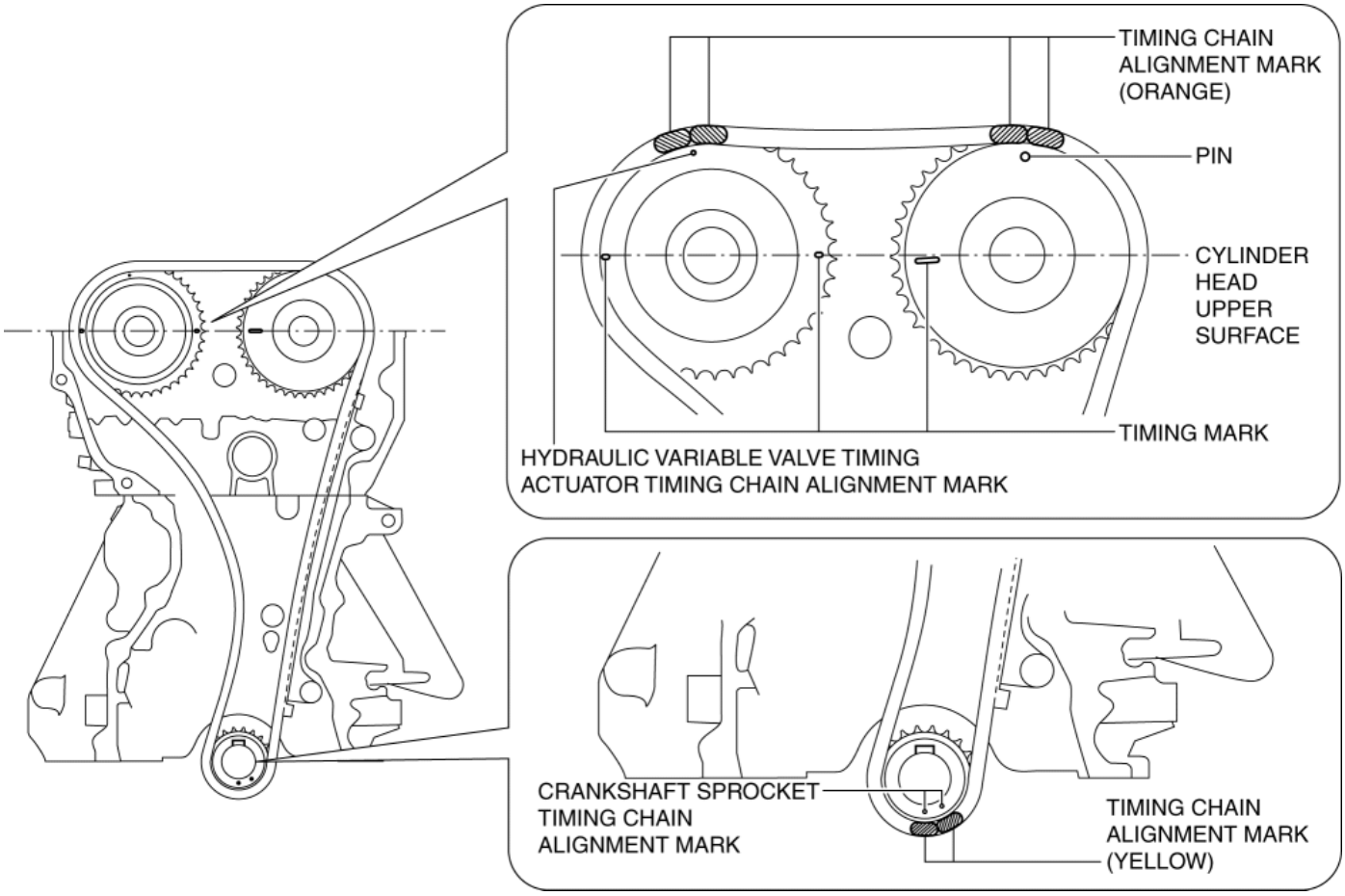

3. Install the chain guide (No.1).

4. Install the tensioner arm.
5. Install the chain tensioner.
6. After installing the chain tensioner, remove the installed wire or paper clip, and then apply tension to the timing chain.
    - If a new chain tensioner is used, remove the installed stopper.

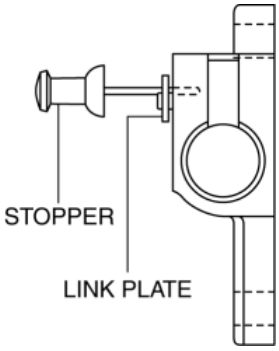

7. Verify that there is no looseness in the timing chain, and re-verify that each sprocket is in the specified location.
8. Rotate the crankshaft clockwise two turns and inspect the valve timing.

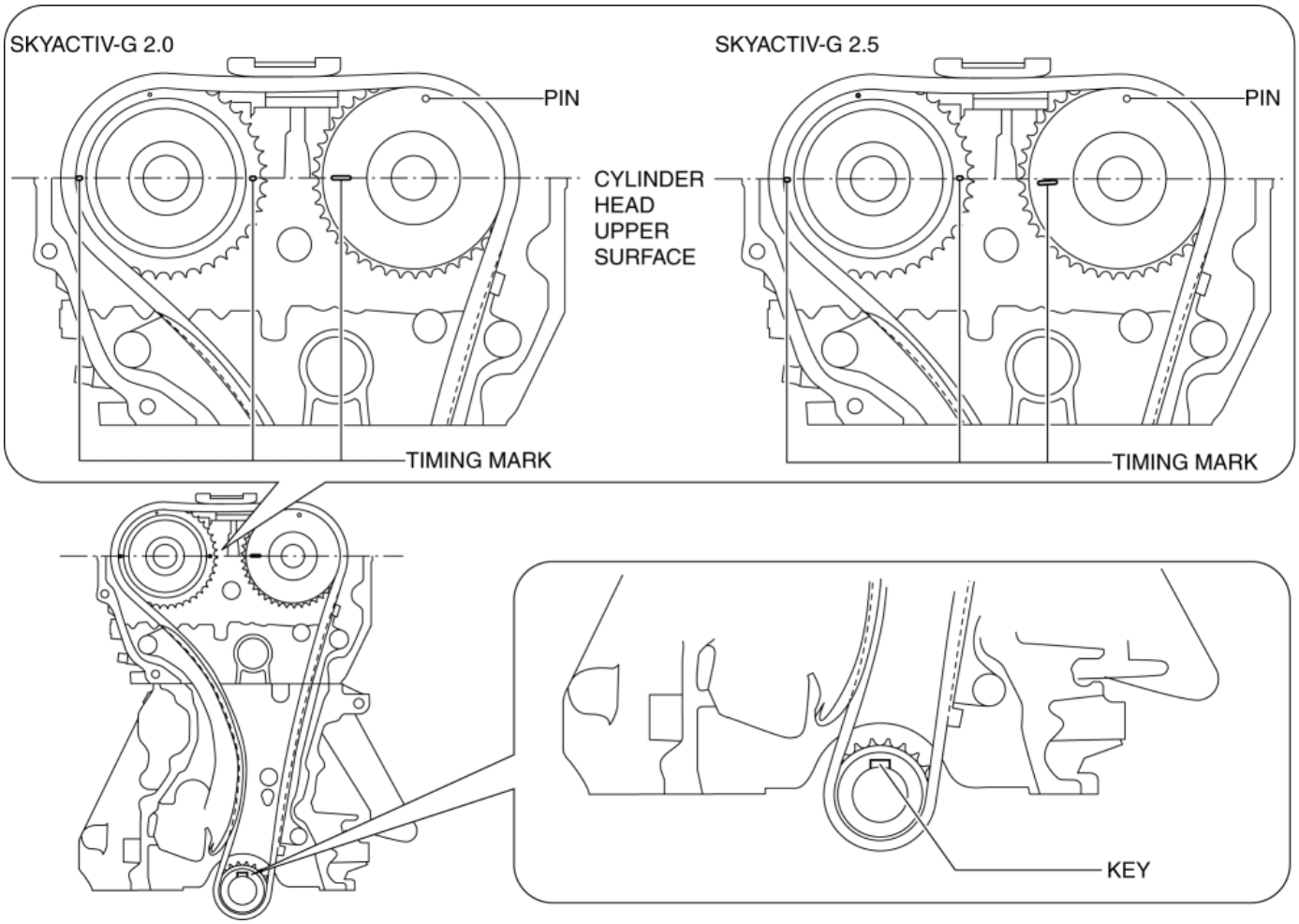

NOTE:

- The timing mark of SKYACTIV-G 2.5 is not completely parallel with the upper surface of the cylinder head.

Engine Front Cover Installation Note

NOTE:

- For a new engine front cover, the positioning pins in the two locations shown in the figure project to the outside of the engine.

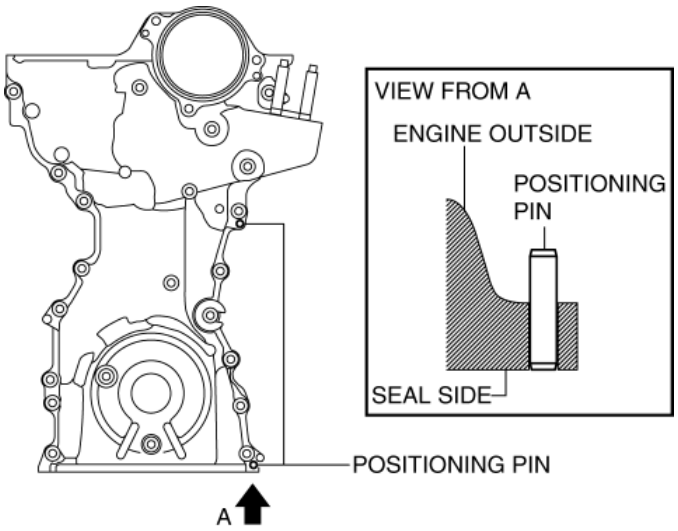

1. If the engine front cover is newly replaced, tap the positioning pins in the two locations to the seal surface side.

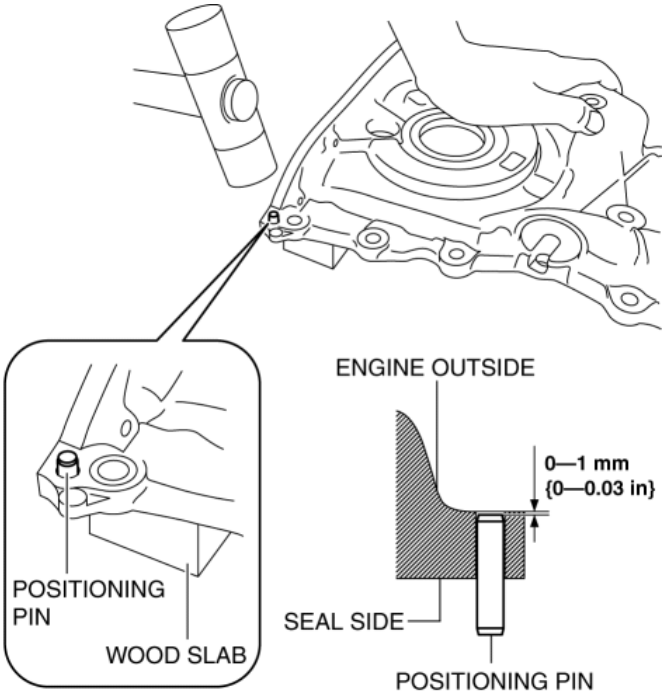

2. Completely clean and remove oil, dirt, sealant or other foreign matter that may be adhering to the engine front cover, cylinder head, and cylinder block.

3. When reusing an engine front cover installation bolts, remove sealant adhering to the bolts.

CAUTION:

- Apply the silicon sealant in a single, unbroken line.
- To prevent silicone sealant from hardening, adhere the engine front cover and the cylinder block firmly within 10 min. after applying silicone sealant. After adhering them, tighten the installation bolts immediately.
- If a bolt with sealant adhering to it is used, it could result in cracks in the cylinder head and cylinder block.

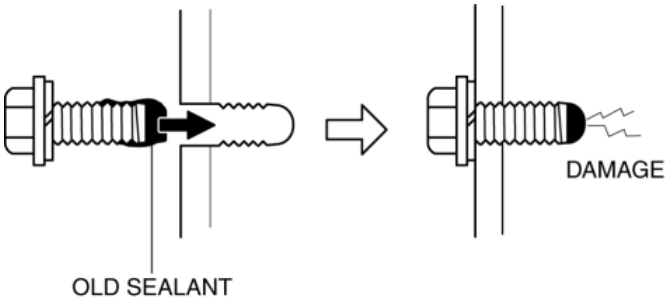

4. Apply silicone sealant to the engine front cover as shown in the figure.

SKYACTIV-G 2.0

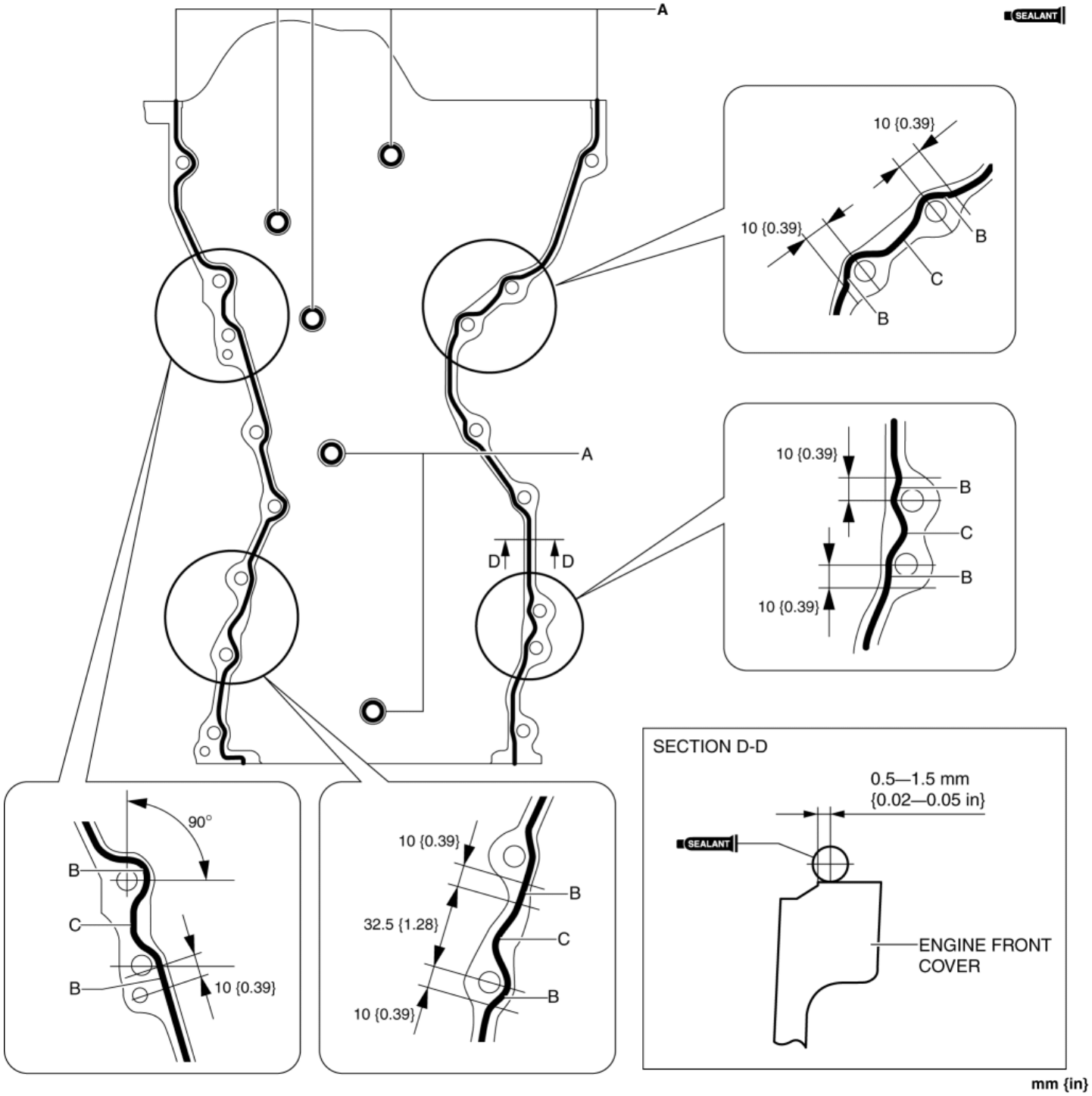

mm {in}

SKYACTIV-G 2.5

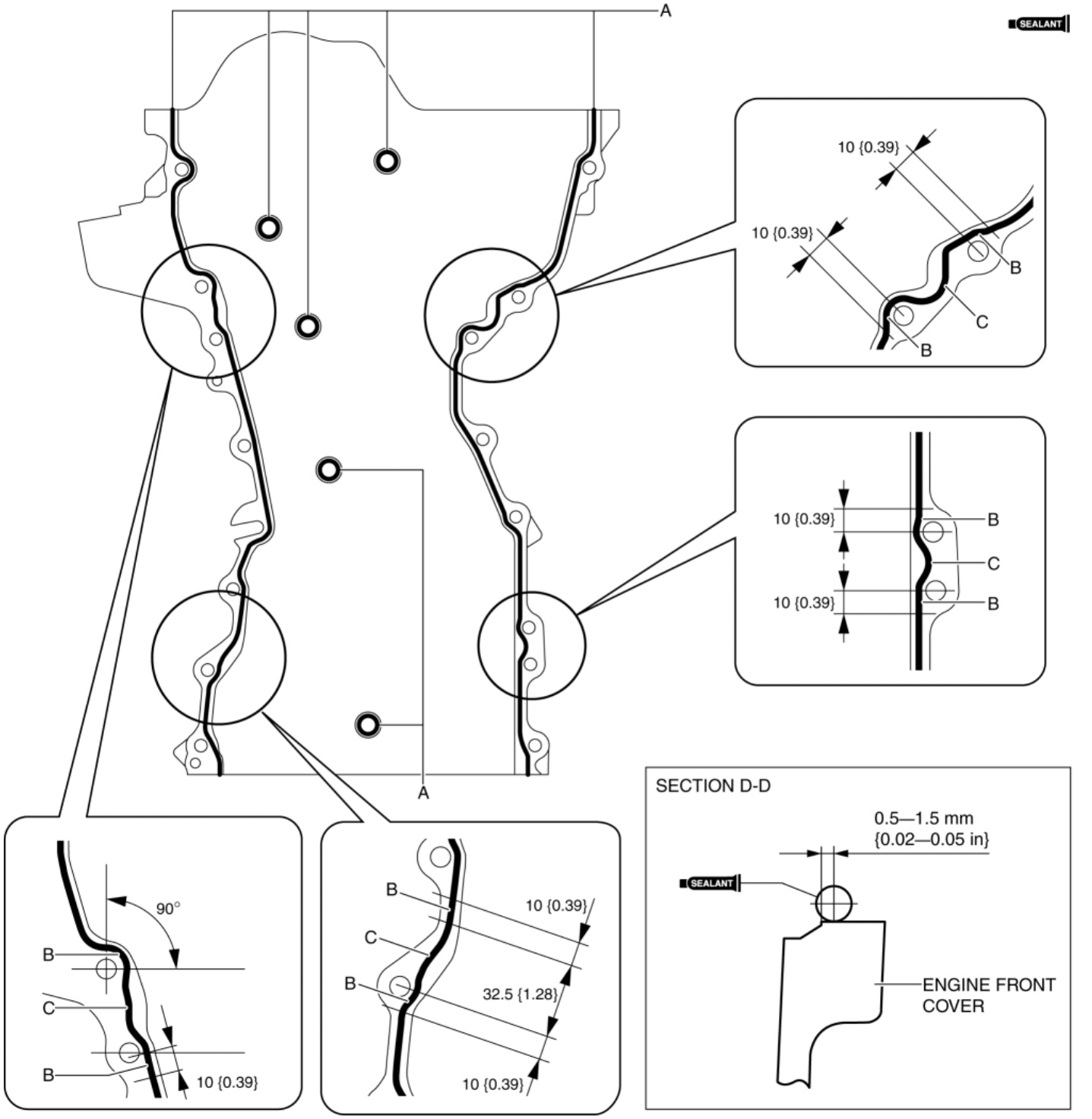

mm {in}

Bead thickness

- A: 2—6 mm {0.1—0.2 in}
- B: 4—6 mm {0.16—0.23 in}
- C: 4—8 mm {0.2—0.3 in}

5. Apply silicone sealant to the areas shown in the figure.

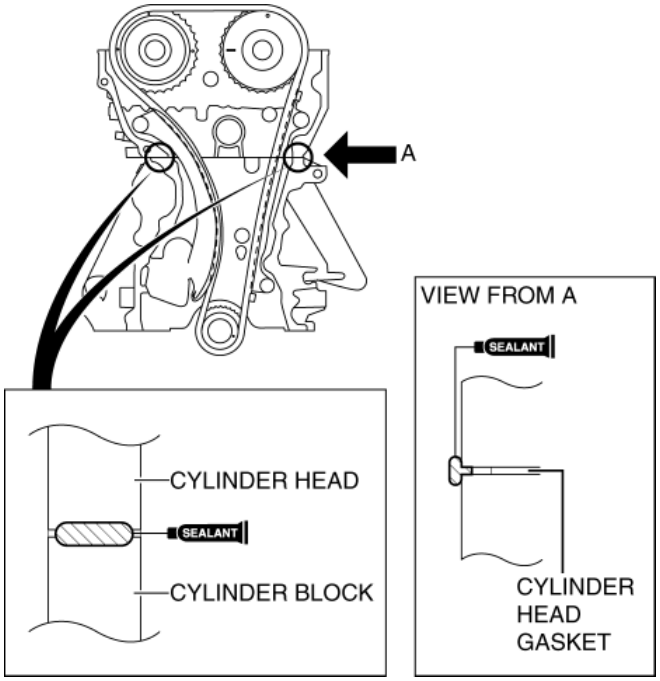

CAUTION:

- Apply the silicone sealant so that it goes into the cylinder head gasket.

6. Install the engine front cover to the engine.

NOTE:

- Temporarily install an appropriate bolt to the drive belt auto tensioner installation bolt hole to prevent:
  - A silicone sealant adhesion malfunction in the drive belt auto tensioner installation bolt hole.
  - A bolt mis-installation due to silicone sealant hardening.

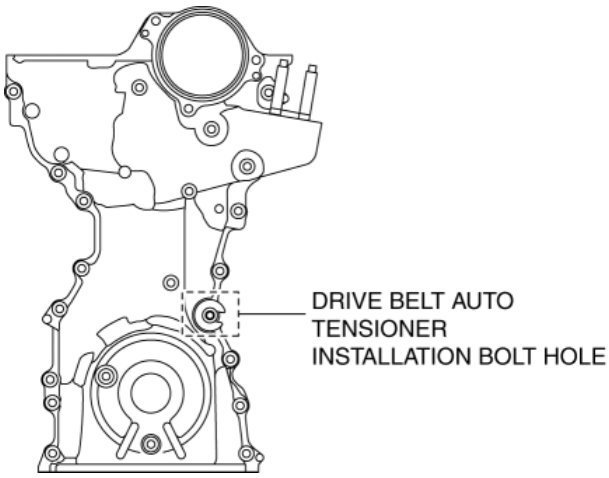

7. Prepare an appropriate **M8 x 1.25** bolt (length **40 mm {1.6 in}**).

CAUTION:

- For the number 10 bolt of the tightening order, install the bolt with new washer.

8. Tighten the engine front cover installation bolts in the order shown in the figure.

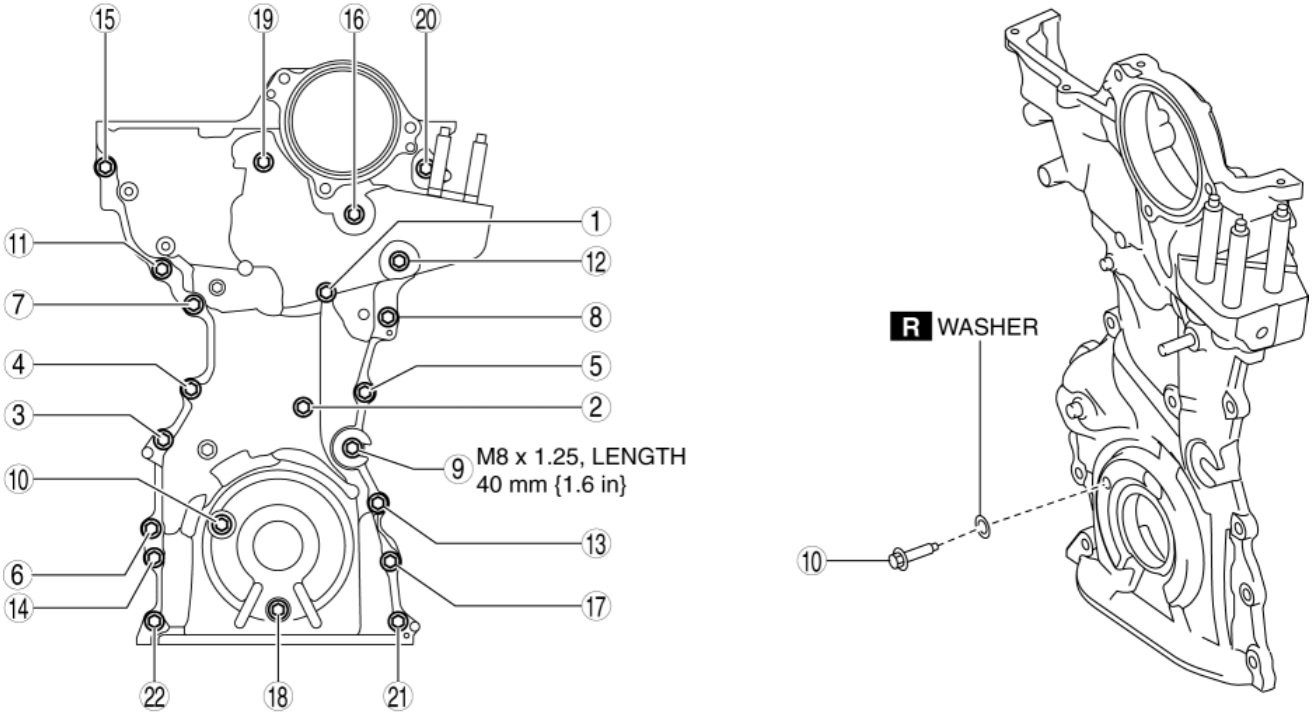

Tightening torque

- 20—26 N·m {2.1—2.6 kgf·m, 15—19 ft·lbf}

9. Remove the bolt installed to the drive belt auto tensioner installation bolt hole when installing the drive belt auto tensioner.

10. Install the ground cable and wiring harness bracket shown in the figure.

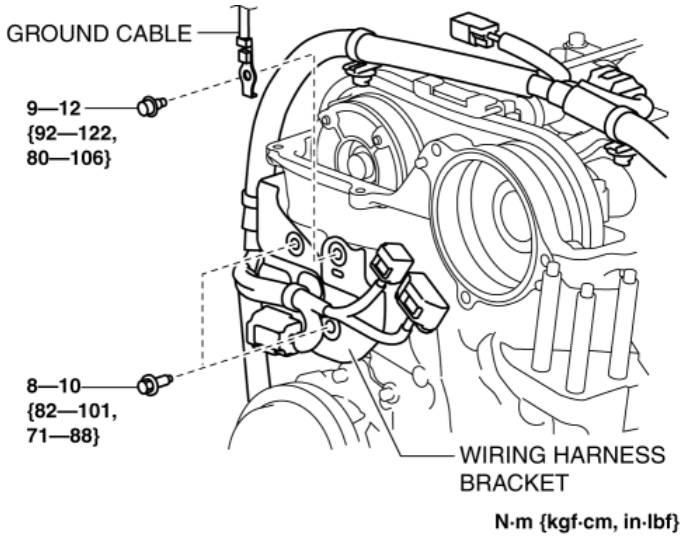

11. Install the insulator shown in the figure.

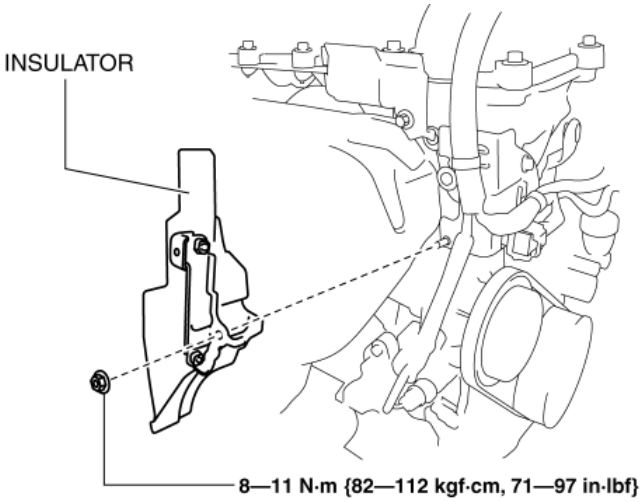

12. Install the cooler hose (LO).

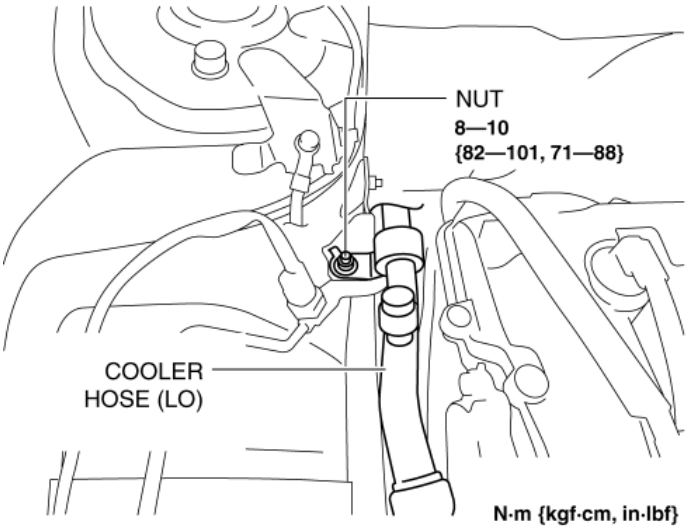

Electric Variable Valve Timing Motor/Driver Installation Note

1. Install a new O-ring to the O-ring installation groove of the engine front cover.

CAUTION:

- To prevent damage to the electric variable valve timing motor/driver, do not apply excessive force (force of 100 N {10.2 kgf, 22.5 lbf} or more) to the shaded areas shown in the figure.

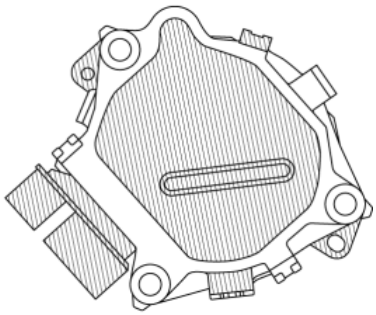

2. Install the electric variable valve timing motor/driver using the following procedures.

NOTE:

- The eccentric shaft on the electric variable valve timing actuator side can be rotated to the left and right.

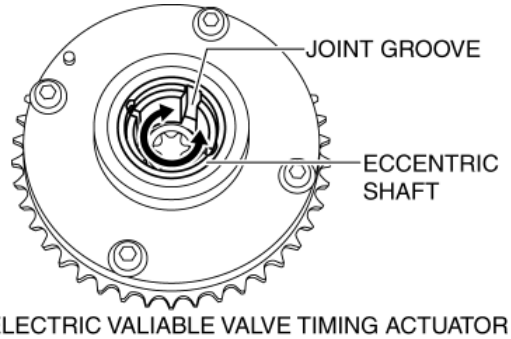

- The electric variable valve timing motor/driver can be assembled with the joint groove of the eccentric shaft in any position, and it will not lead to vehicle damage or performance reduction.

a. Before installation, rotate the joint on the end of the electric variable valve timing motor so that it is aligned to the joint groove on the electric variable valve timing actuator side.

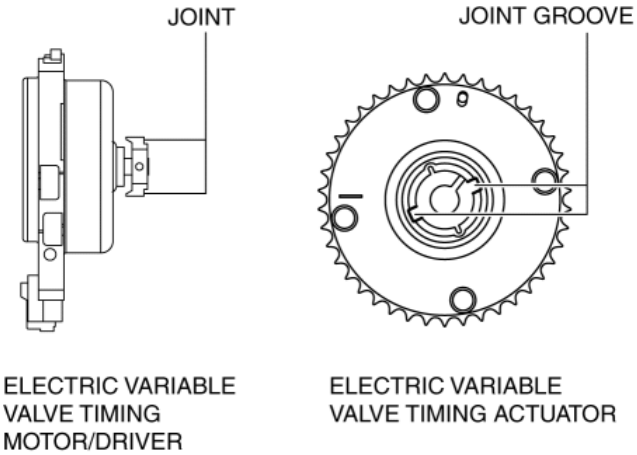

b. Engage the joint on the end of the electric variable valve timing motor with the joint groove on the electric variable valve timing actuator side.

c. Attach the seal surface.

d. Tighten the electric variable valve timing motor/driver installation bolts.

Tightening torque

- 20—26 N·m {2.1—2.6 kgf·m, 15—19 ft·lbf}

No.3 Engine Mount Installation Note

CAUTION:

- If the No.3 engine mount is deviated from the original position when installing the No.3 engine mount, engine noise or vibration could increase. When installing the No.3 engine mount, align the alignment mark placed during removal and install it to the original position.

NOTE:

- When replacing the No.3 engine mount, place a mark at the same position as the one placed before removal.
- If the No.3 engine mount nut is loosened, tighten the engine front cover stud bolts because they may have loosened.

1. Tighten the engine front cover stud bolts.

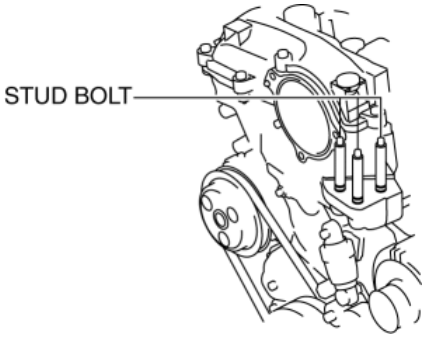

Tightening torque

- 7—13 N·m {72—132 kgf·cm, 62—115 in·lbf}

2. Temporarily tighten the No.3 engine mount installation bolts and nuts using the following procedure:

   a. Align the alignment marks on the body side and No.3 engine mount, and temporarily tighten the bolts shown in the figure.

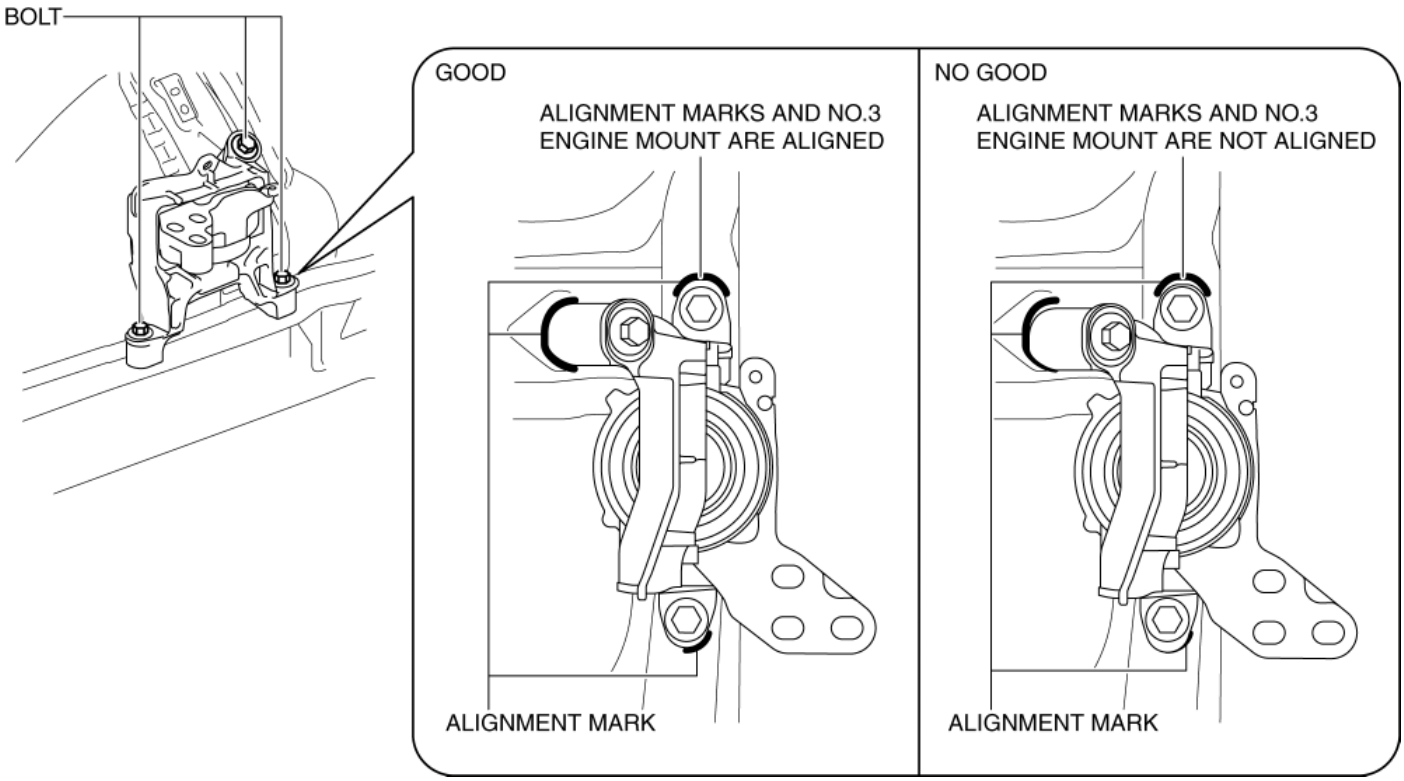

   b. Temporarily tighten the nuts shown in the figure while aligning the alignment marks of the No.3 engine mount and nuts.

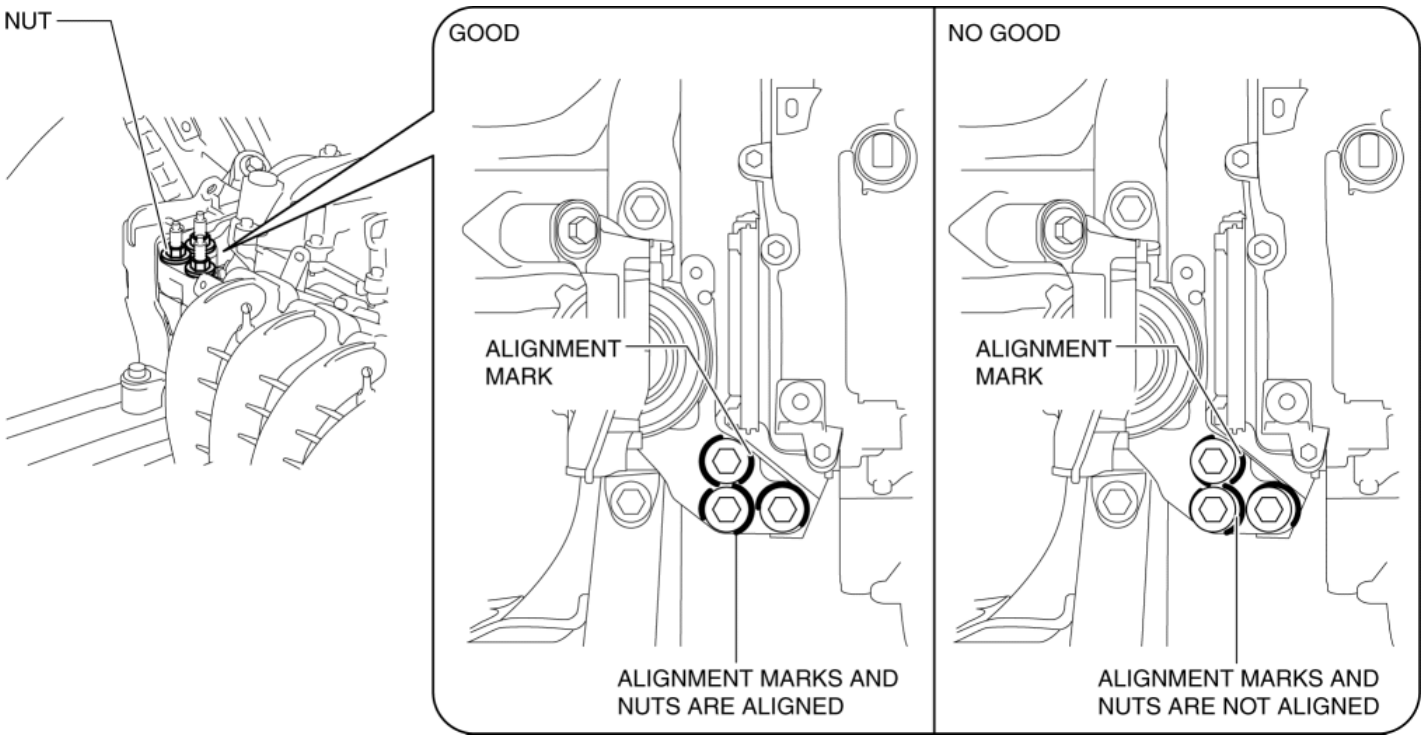

NOTE:

- If the alignment marks are not aligned, align the alignment marks while slightly moving the engine and temporarily tighten the nuts.

3. Tighten the No.3 engine mount installation bolts and nuts in the order as shown in the figure.

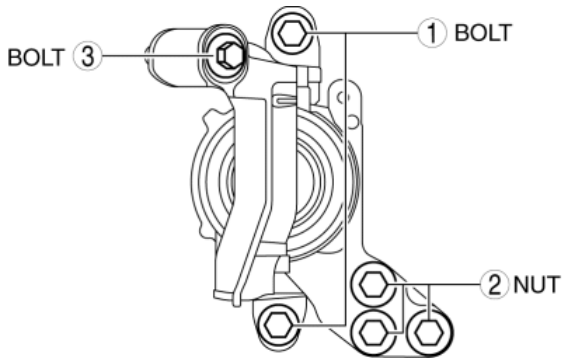

Tightening torque

Installation position	Tightening torque
1	76—95 N·m {7.8—9.6 kgf·m, 57—70 ft·lbf}
2	82—95 N·m {8.4—9.6 kgf·m, 61—70 ft·lbf}
3	49—65 N·m {5.0—6.6 kgf·m, 37—47 ft·lbf}

4. Remove the **SST**.

5. Install the clip of ground cable to the No.3 engine mount.

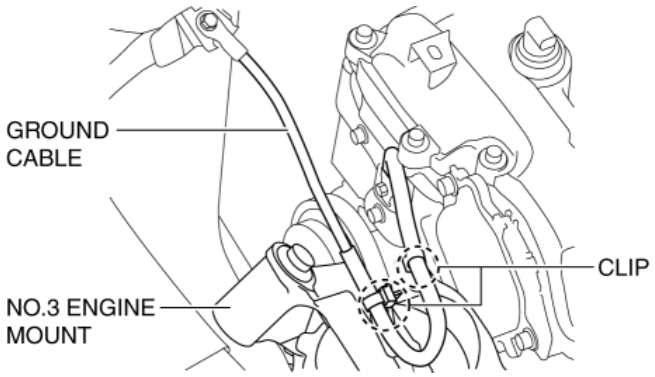

Crankshaft Pulley Lock Bolt Installation Note

CAUTION:

- To prevent damage to the crankshaft pulley, protect the crankshaft pulley with a clean cloth so that the bar part (205-072) of the **SST** does not contact the crankshaft pulley.
- To prevent damage to the engine front cover, be careful not to allow the tab part (49 B011 105) of the **SST** to get caught between the crankshaft pulley and the engine front cover.

1. Install the **SST** on the crankshaft pulley to lock the crankshaft against rotation.

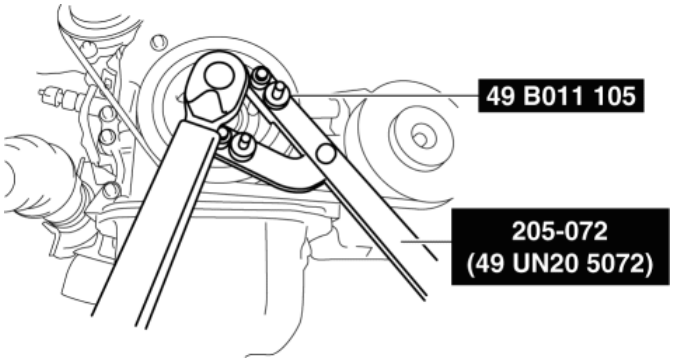

2. Tighten the crankshaft pulley lock bolt in the order shown in the following two steps.

Tightening procedure

- Step 1: 90—110 N·m {9.2—11 kgf·m, 67—81 ft·lbf}
- Step 2: 55—65°

Water Pump Pulley Installation Note

CAUTION:

- Be careful not to damage the belt groove and surface of the water pump pulley when using tools, otherwise it will cause wear, breakage, abnormal noise of the drive belt (stretch belt), damage to the pulley, and rust.

1. Install the water pump pulley to the water pump and temporarily tighten the bolt.
2. Align the water pump pulley hole with the water pump hole as shown in the figure.

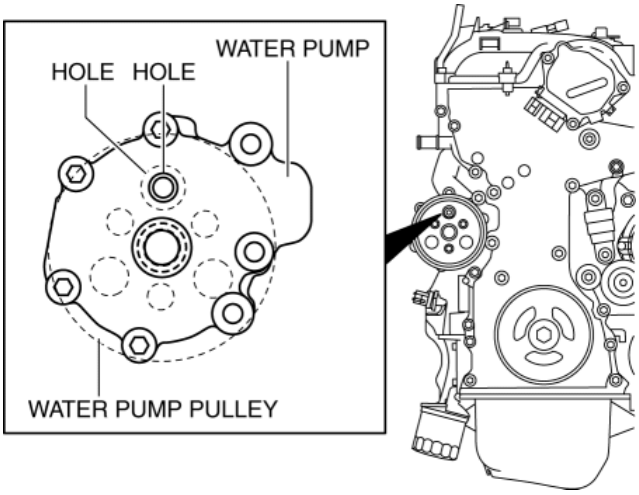

3. Insert an appropriate bolt (length **70 mm {2.8 in}**) into the water pump hole shown in the figure and lock the water pump pulley against rotation.

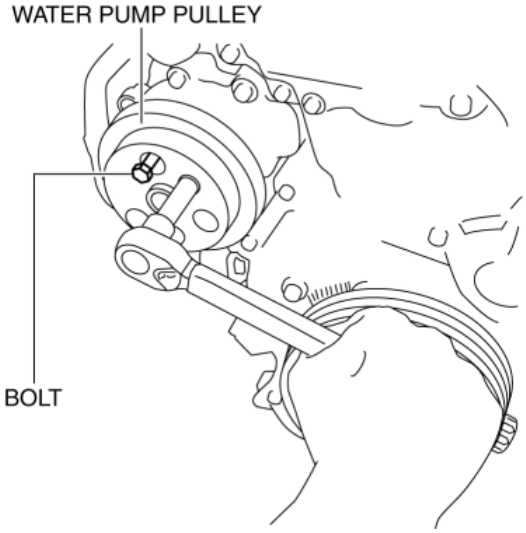

4. Completely tighten the water pump pulley bolt to the specified torque.

   Tightening torque

   - 8—11 N·m {82—112 kgf·cm, 71—97 in·lbf}

5. Remove the bolt used for locking the water pump pulley against rotation.

Oil Shower Pipe Installation Note

1. Install the oil shower pipe in the order shown in the figure.

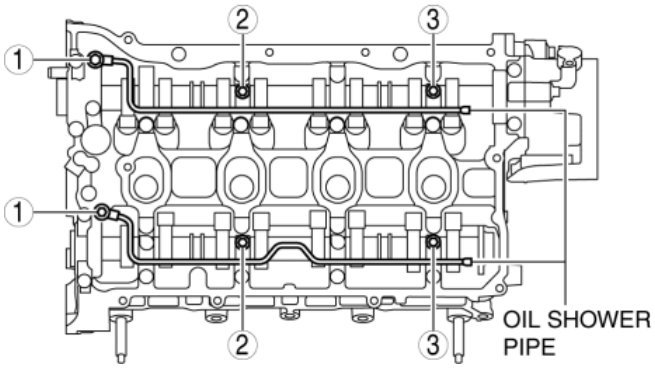

Tightening torque

Installation position	Tightening torque
1	9—12 N·m {92—122 kgf·cm, 80—106 in·lbf}
2, 3	8.0—9.0 N·m {82—91 kgf·cm, 71—79 in·lbf}

Cylinder Head Cover Installation Note

CAUTION:

- To assure the sealing performance of the cylinder head cover, be careful of the following:
  - Verify that the cylinder head cover gasket is inserted into the cylinder head cover groove and install the cylinder head cover.
  - Completely clean and remove oil, dirt, sealant or other foreign matter from the seal surface.
- To prevent silicone sealant from hardening, adhere the cylinder head cover and the cylinder head firmly within 10 min. after applying silicone sealant. After adhering them, tighten the installation bolts immediately.

1. Insert a new cylinder head cover gasket into the cylinder head cover groove.
2. Apply silicone sealant to the areas shown in the figure.

ENGINE FRONT SIDE

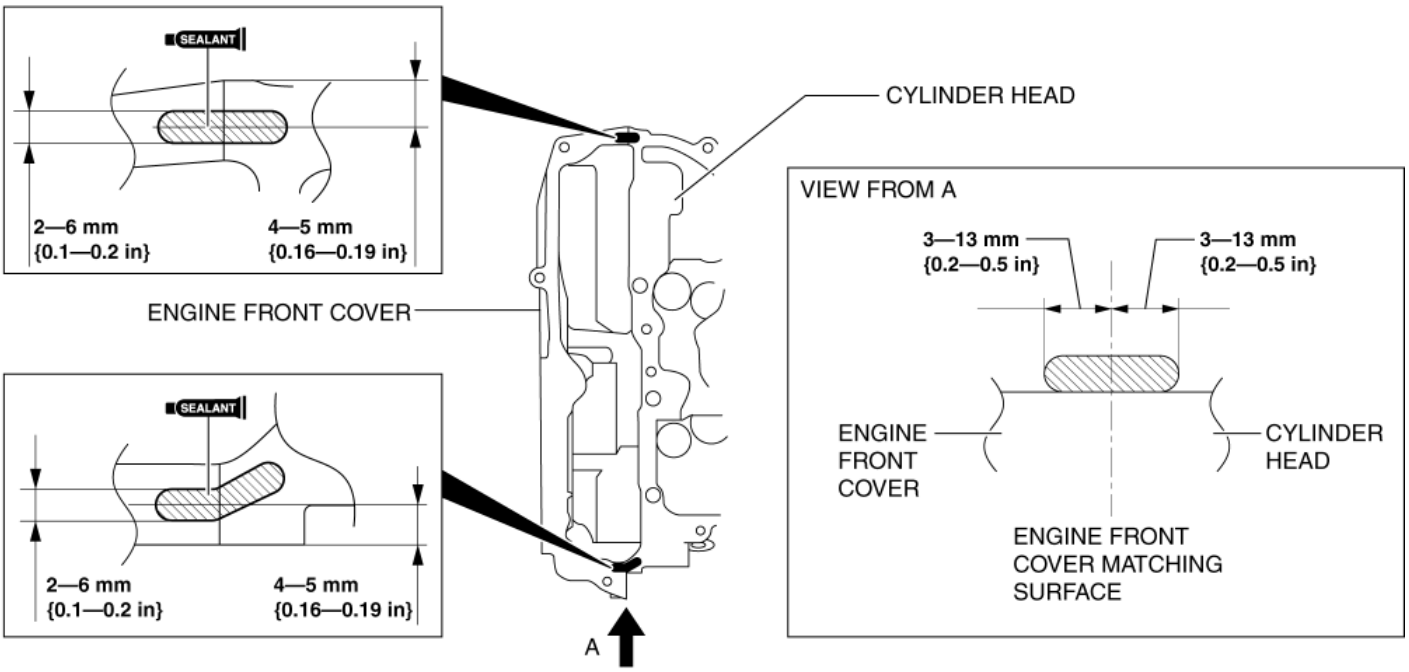

ENGINE REAR SIDE

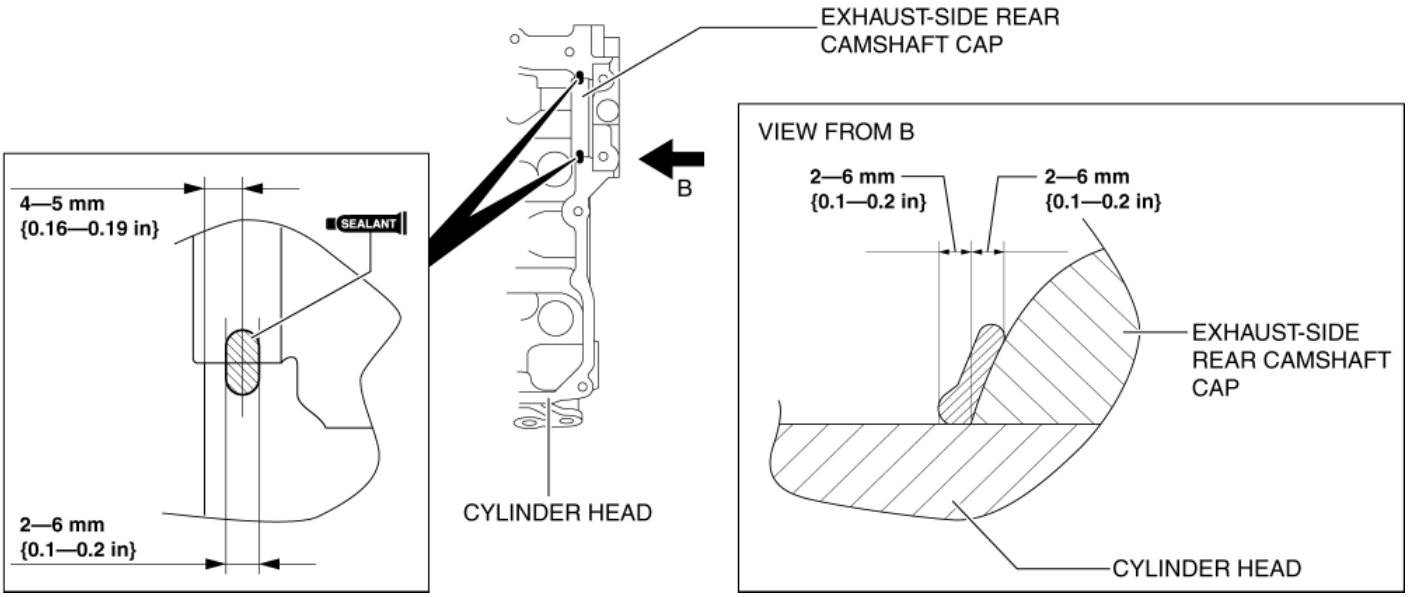

3. Tighten the cylinder cover bolts in the order shown in the figure.

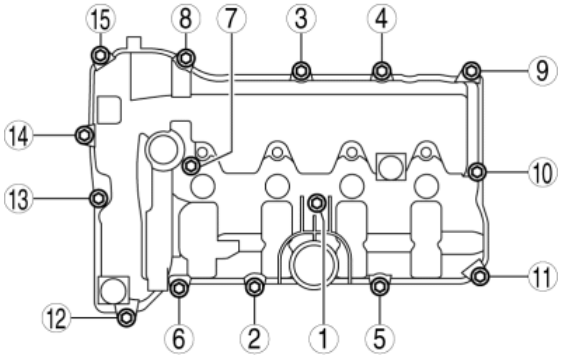

Tightening torque

4.5—7.0 N·m {46—71 kgf·cm, 40—61 in·lbf}

4. Install in the reverse order of removal.

2014 - Mazda3 - Engine

HYDRAULIC LASH ADJUSTER (HLA) INSPECTION [SKYACTIV-G 2.0, SKYACTIV-G 2.5]

HLA Troubleshooting

Item	Occurrence	Possible cause	Action
1	After replacing oil, sound occurs when starting engine	Oil shortage in oil passage	• Maintain the engine speed between 2,000 to 3,000 rpm for approx. 2 s and 10 min*, and verify that the sound disappears. ▪ If the sound disappears, the HLA is normal. ▪ If the sound does not disappear, go to item 5.
2	Sound occurs at instant when engine is started on vehicle left for 1 day		
3	Starter cranked for 3 s or more and sound occurs directly after engine is started	HLA oil shortage	
4	Sound occurs directly after engine is started with newly replaced HLA		
5	Sound occurs continuously for 10 min or more	Insufficient oil pressure	• Inspect the oil pressure. (See **OIL PRESSURE INSPECTION [SKYACTIV-G 2.0, SKYACTIV-G 2.5]**.) ▪ If less than the specification, inspect each part of the engine.
		HLA malfunction	• Inspect the HLA. (See **HLA Inspection**.)
6	Sound occurs during idling after high-speed driving	Incorrect engine oil level	• Inspect the engine oil level. (See **ENGINE OIL LEVEL INSPECTION [SKYACTIV-G 2.0, SKYACTIV-G 2.5]**.)
		Engine oil	• Replace the engine oil. (See **ENGINE**

		deterioration	**OIL REPLACEMENT [SKYACTIV-G 2.0, SKYACTIV-G 2.5]**.)

*

Period of time engine oil flows to the HLA, this value includes tolerance caused by the ambient temperature and the oil used.

HLA Inspection

1. Disconnect the negative battery cable. (See **NEGATIVE BATTERY CABLE DISCONNECTION/CONNECTION [SKYACTIV-G 2.0, SKYACTIV-G 2.5]**.)

2. Remove the plug hole plate. (See **PLUG HOLE PLATE REMOVAL/INSTALLATION [SKYACTIV-G 2.0, SKYACTIV-G 2.5]**.)

3. Remove the ignition coil/ion sensors. (See **IGNITION COIL/ION SENSOR REMOVAL/INSTALLATION [SKYACTIV-G 2.0, SKYACTIV-G 2.5]**.)

4. Remove the cylinder head cover. (See **TIMING CHAIN REMOVAL/INSTALLATION [SKYACTIV-G 2.0, SKYACTIV-G 2.5]**.)

5. Press the rocker arm from above and verify that the HLA does not drop.

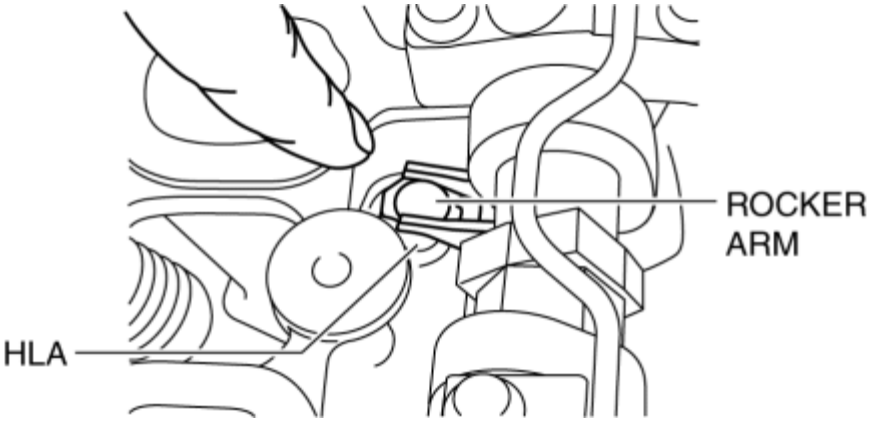

- If the HLA drops, replace the HLA. (See **HYDRAULIC LASH ADJUSTER (HLA) REMOVAL/INSTALLATION [SKYACTIV-G 2.0, SKYACTIV-G 2.5]**.)

6. Install in the reverse order of removal.

2014 - Mazda3 - Engine

HYDRAULIC LASH ADJUSTER (HLA) REMOVAL/INSTALLATION [SKYACTIV-G 2.0, SKYACTIV-G 2.5]

WARNING:

- A hot engine can cause severe burns. Turn off the engine and wait until it is cool before servicing.

CAUTION:

- If the camshaft is rotated with the timing chain removed and the piston at the top dead center position, the valve may contact the piston and the engine could be damaged. When rotating the camshaft with the timing chain removed, rotate it after lowering the piston from the top dead center position.
- When rotating the camshaft using a wrench on the cast hexagon, the wrench may contact the rocker arm and damage the rocker arm. To prevent damage to the rocker arm when holding the camshaft on the cast hexagon, use a wrench on the rear side of the engine as shown in the figure to secure a clearance between the cam.

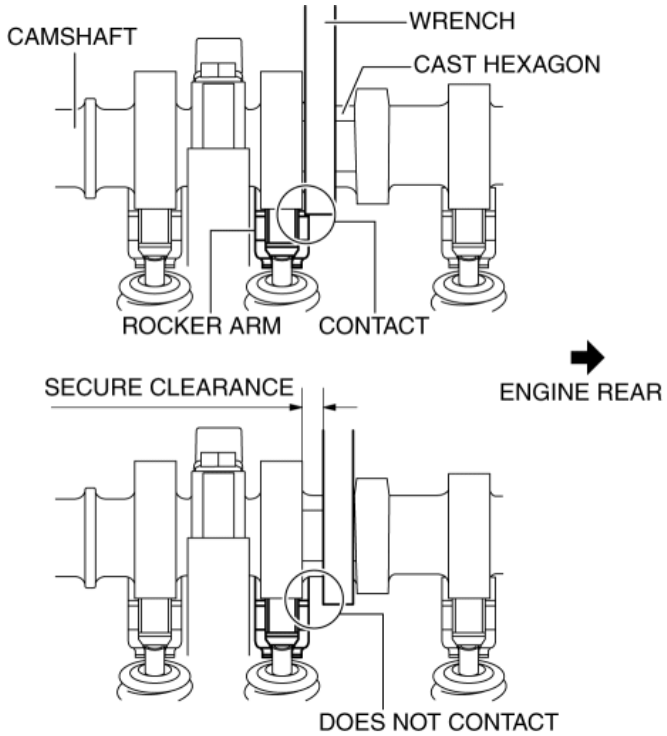

NOTE:

- Width at the cast hexagon of the camshaft is **22—24 mm {0.87—0.94 in}**.

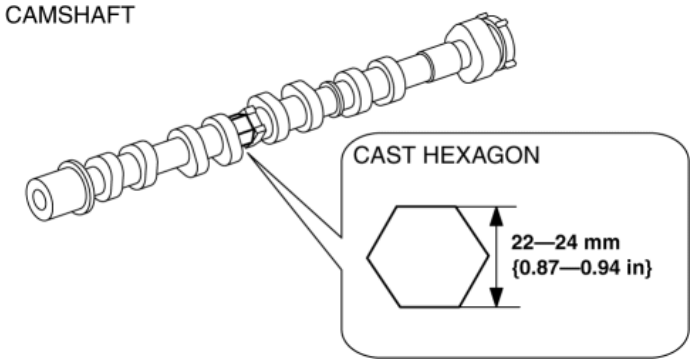

1. Disconnect the negative battery cable. (See **NEGATIVE BATTERY CABLE DISCONNECTION/CONNECTION [SKYACTIV-G 2.0, SKYACTIV-G 2.5]**.)
2. Remove the plug hole plate. (See **PLUG HOLE PLATE REMOVAL/INSTALLATION [SKYACTIV-G 2.0, SKYACTIV-G 2.5]**.)
3. Remove the ignition coil/ion sensors. (See **IGNITION COIL/ION SENSOR REMOVAL/INSTALLATION [SKYACTIV-G 2.0, SKYACTIV-G 2.5]**.)
4. Remove the cylinder head cover. (See **TIMING CHAIN REMOVAL/INSTALLATION [SKYACTIV-G 2.0, SKYACTIV-G 2.5]**.)

5. Remove the front under cover No.2. (See **FRONT UNDER COVER No.2 REMOVAL/INSTALLATION**.)

6. Remove the electric variable valve timing motor/driver. (See **ELECTRIC VARIABLE VALVE TIMING MOTOR/DRIVER REMOVAL/INSTALLATION [SKYACTIV-G 2.0, SKYACTIV-G 2.5]**.)

7. Remove the vacuum pump. (See **VACUUM PUMP REMOVAL/INSTALLATION**.)

8. Remove the high pressure fuel pump and rear housing. (See **HIGH PRESSURE FUEL PUMP REMOVAL/INSTALLATION [SKYACTIV-G 2.0, SKYACTIV-G 2.5]**.)

9. Remove in the order indicated in the table.

10. Install in the reverse order of removal.

11. Start the engine and inspect the following:

- Ignition timing, idle speed and idle mixture. (See **ENGINE TUNE-UP [SKYACTIV-G 2.0, SKYACTIV-G 2.5]**.)

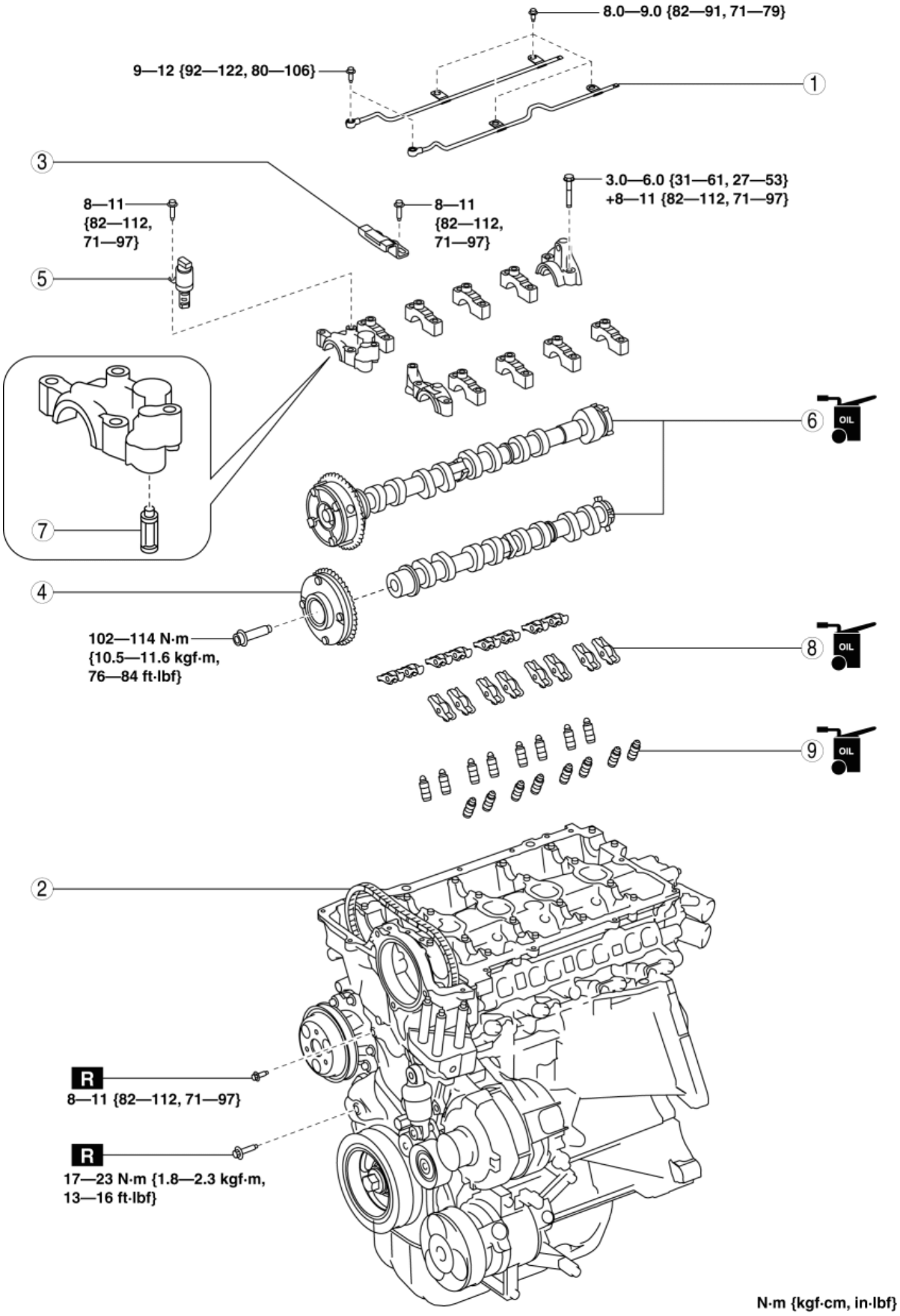

1	Oil shower pipe (See **Oil Shower Pipe Installation Note**.)

2	Timing chain (See **Timing Chain Removal Note**.) (See **Timing Chain Installation Note**.)
3	Chain guide (No.1)
4	Electric variable valve timing actuator (See **Electric Variable Valve Timing Actuator Removal Note**.) (See **Electric Variable Valve Timing Actuator Installation Note**.)
5	OCV
6	Camshaft (See **Camshaft Removal Note**.) (See **Camshaft Installation Note**.)
7	OCV oil filter
8	Rocker arm (See **Rocker Arm Removal Note**.) (See **Rocker Arm Installation Note**.)
9	HLA (See **HLA Removal Note**.) (See **HLA Installation Note**.)

Timing Chain Removal Note

1. Release the tension on the timing chain using the following procedure:

NOTE:

- Release the tension on the timing chain by securing the timing chain tensioner arm through the service hole on the engine front cover.

a. Remove the blind plugs (upper and lower) on the engine front cover service holes.

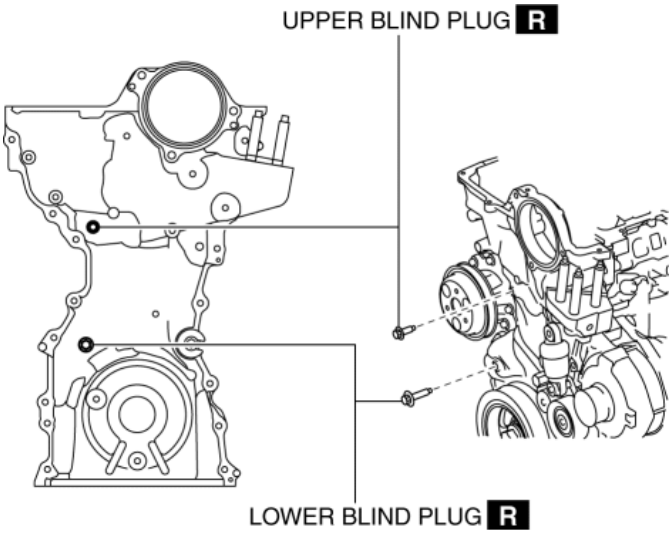

b. Insert an M6 bolt (**35—60 mm {1.4—2.3 in}** length with thread to the end) to the upper service hole and tighten it until it contacts the tensioner arm, then loosen it **approx. 180 degrees** (set the bolt so that it sits slightly in front of the tensioner arm).

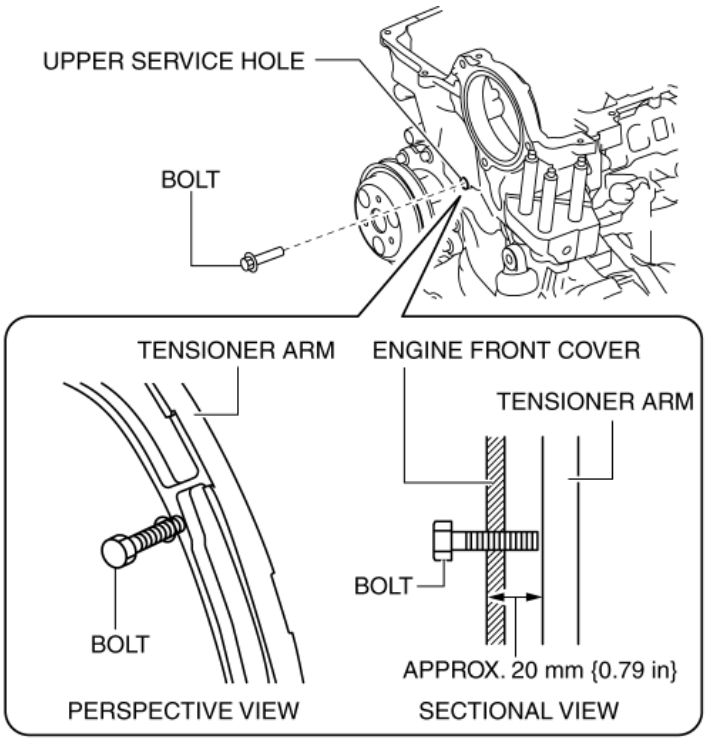

NOTE:

- The bolt contacts the tensioner arm when it is inserted **approx. 20 mm {0.79 in}**.
- Hold the exhaust camshaft using a wrench on the cast hexagon and move it back and forth a few times as shown in the figure. This will drain the oil from the chain tensioner and make the following servicing easier.

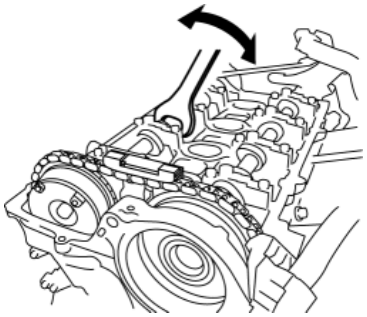

c. Insert a precision screwdriver into the lower service hole.

d. While moving the exhaust camshaft back and forth in the direction of the arrow using a wrench on the cast hexagon, press down the link plate of the timing chain tensioner using a precision screwdriver and release the plunger lock.

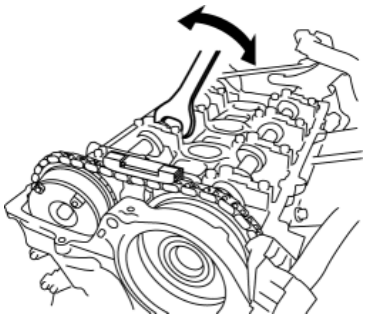

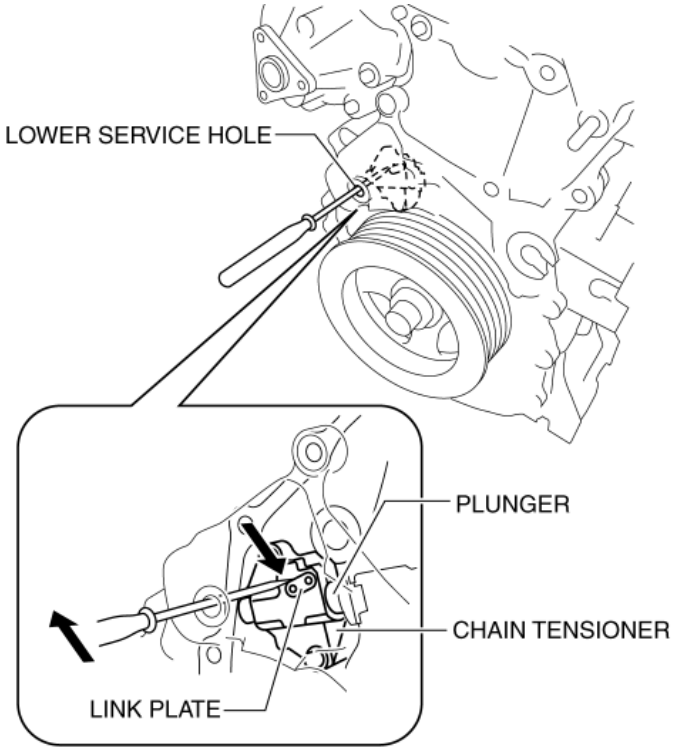

NOTE:

- When moving the exhaust camshaft back and forth, the timing chain pushes the plunger in the chain tensioner making it easier to operate the link plate.

e. With the plunger lock released, rotate the exhaust camshaft clockwise until the timing chain loosens.

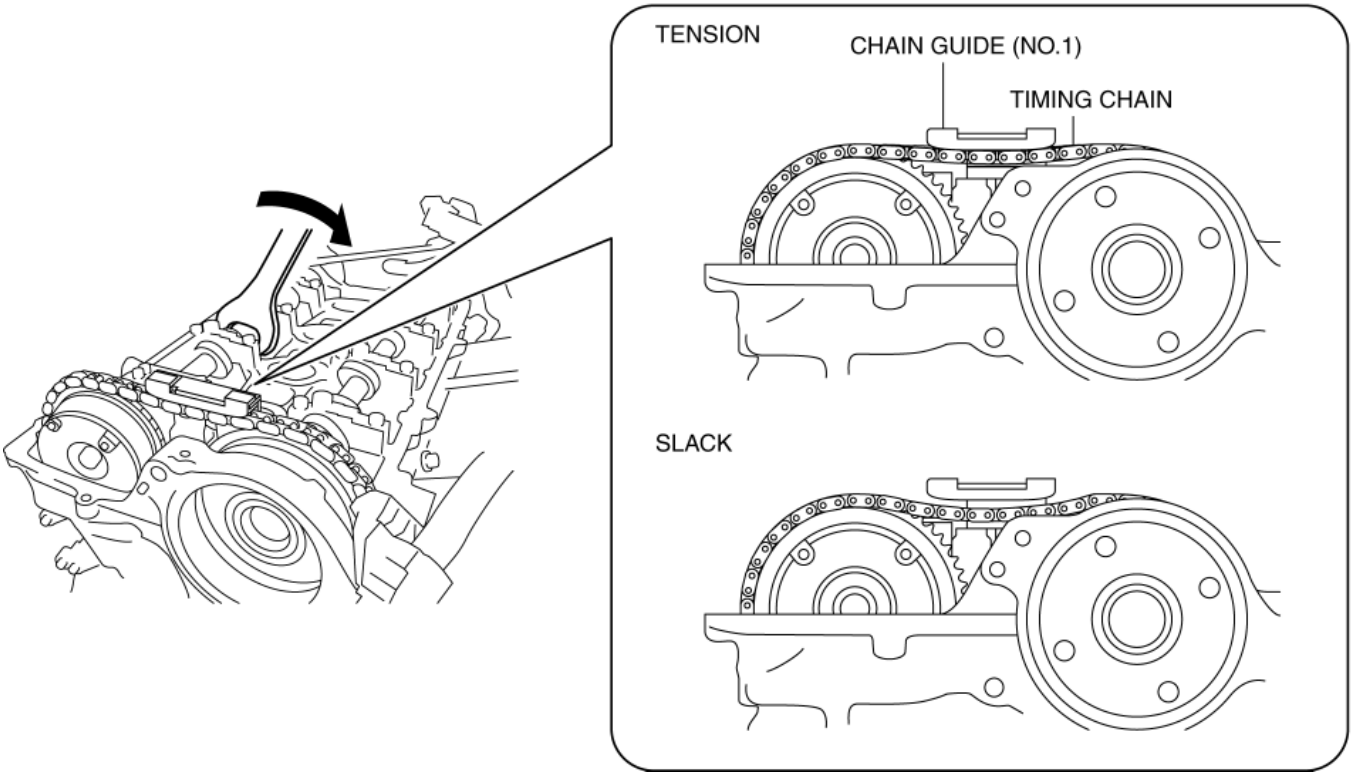

f. With the chain loosened, tighten the M6 bolt in the upper service hole so that the bolt is inserted **approx. 5 mm {0.2 in}** additionally to secure the tensioner arm.

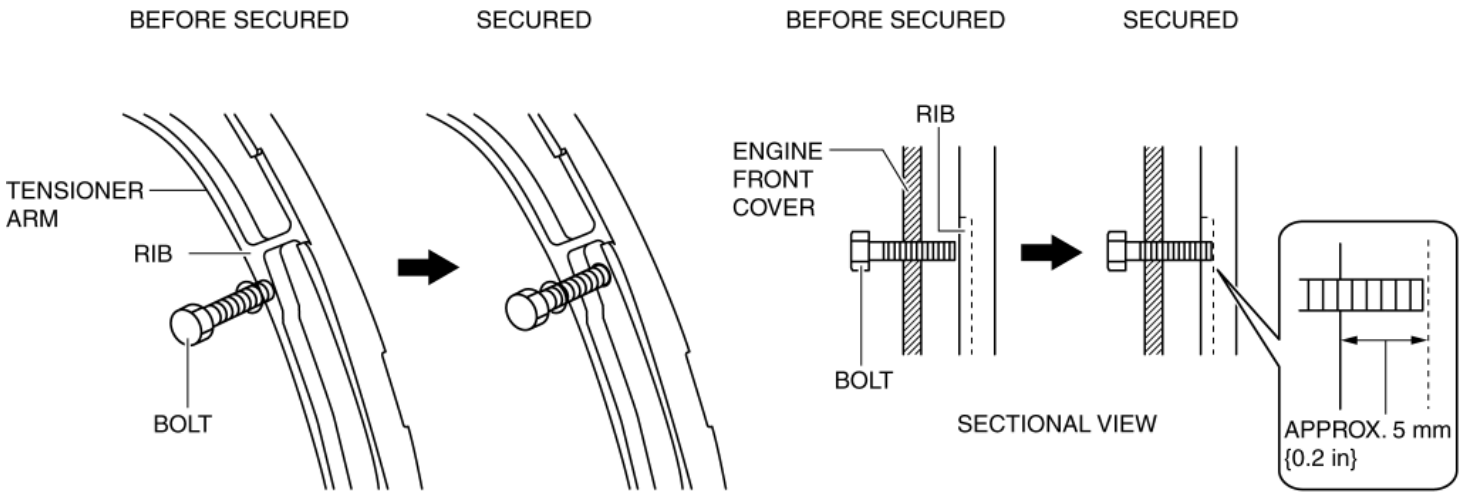

- If the bolt cannot be inserted **approx. 5 mm {0.2 in}**, the plunger lock of the chain tensioner may not release, or the chain may not loosen enough. Return the bolt to the original position and restart the procedure from Step (3).

NOTE:

- By rotating the exhaust camshaft clockwise, the timing chain pushes the tensioner arm and the rib position deviates. The entire tensioner arm can be secured by hooking the bolt onto the deviated rib.

g. After securing the tensioner arm, remove the chain guide (No.1).

Electric Variable Valve Timing Actuator Removal Note

CAUTION:

- Keep the timing chain pulled up during and after the work in which it has been set aside from the sprocket. If the chain falls down, it may disengage from the sprocket on the crankshaft side and deviate, leading to valve timing deviation.
- After servicing, always verify the valve timing.

1. Rotate the crankshaft clockwise so that cylinder No.1 is positioned around before top dead center (TDC) as shown in the figure.

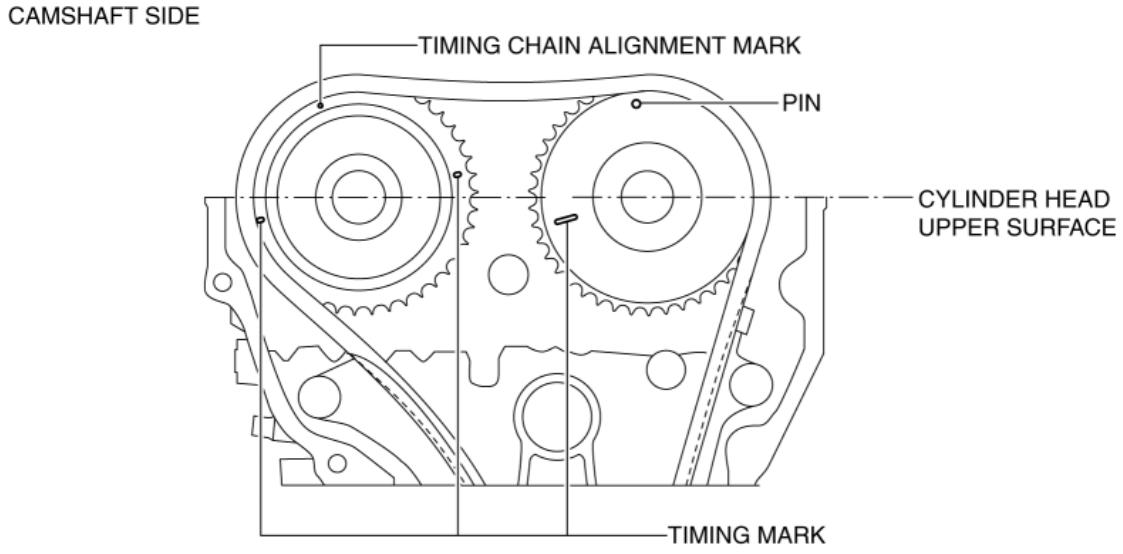

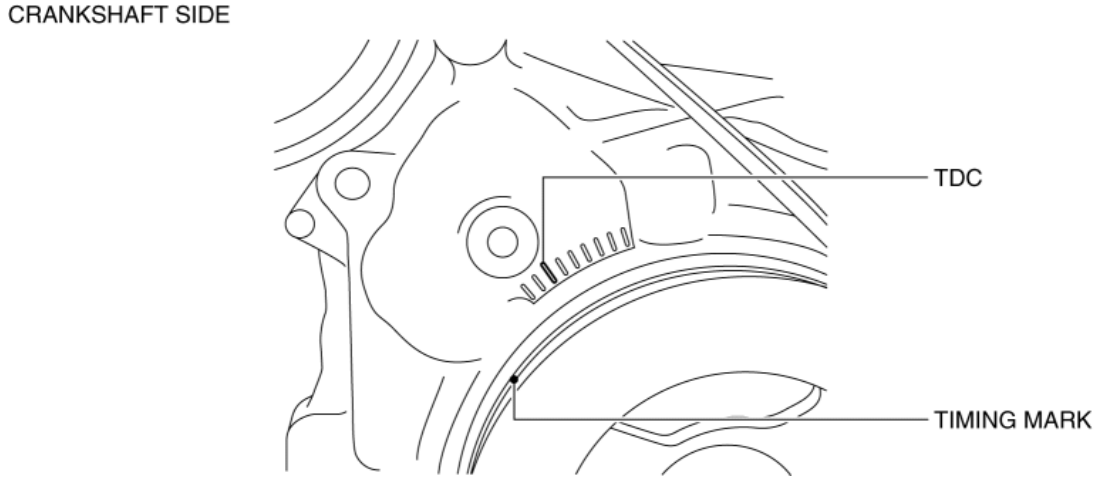

NOTE:

- With cylinder No.1 positioned around before top dead center (TDC), there is no large movement (rotation) of the exhaust camshaft when the timing chain is removed. Therefore, installation of the electric variable valve timing actuator to the camshaft will be easier. (If there is a large movement of the exhaust camshaft, installation of the electric variable valve timing actuator to the camshaft must be performed while loosening the chain by rotating the exhaust camshaft.)

2. Mark the timing chain and each actuator so that they can be reassembled in the same condition as before removal.

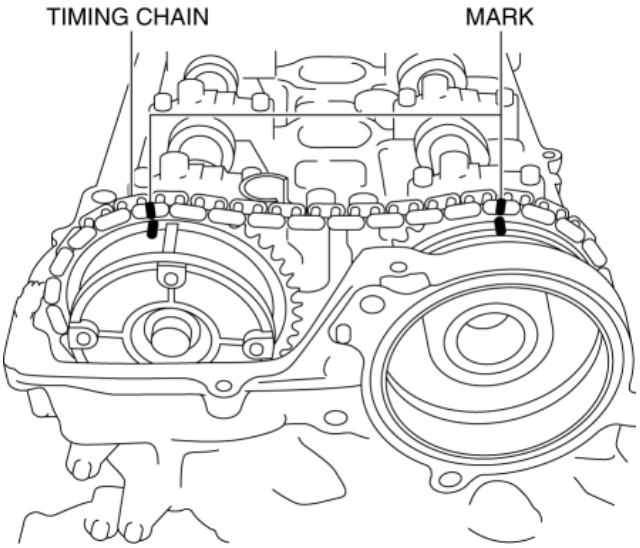

3. Hold the intake camshaft using a wrench on the cast hexagon and remove the electric variable valve timing actuator installation bolt.

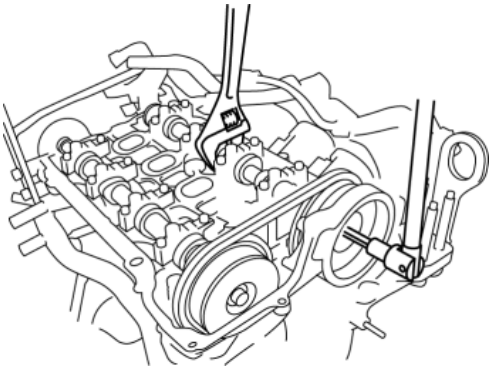

4. Using a screwdriver wrapped in a clean cloth, lightly press the electric variable valve timing actuator to the front and separate the intake camshaft and the actuator.

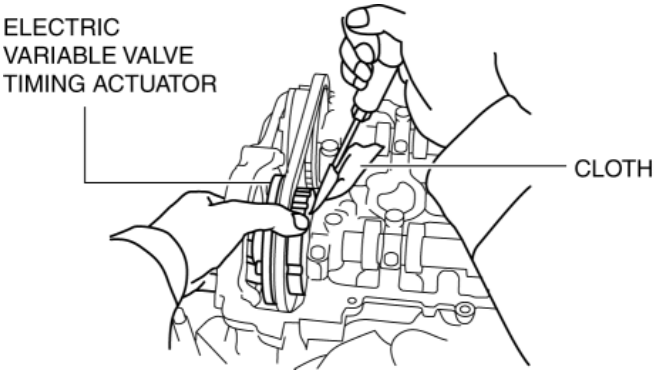

5. Remove the timing chain from the exhaust and intake camshaft sprockets and set is aside, and remove the electric variable valve timing actuator.

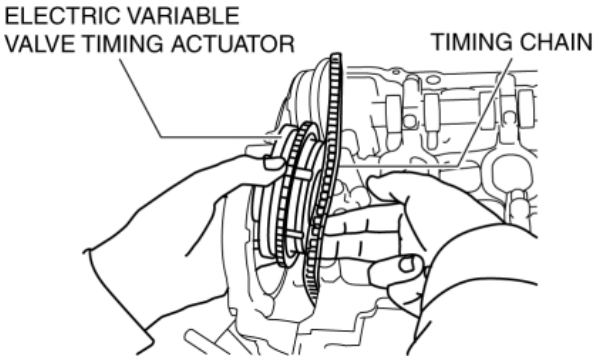

6. Return the timing chain to the exhaust camshaft sprocket, and pull the timing chain up and suspend it using a rope as shown in the figure.

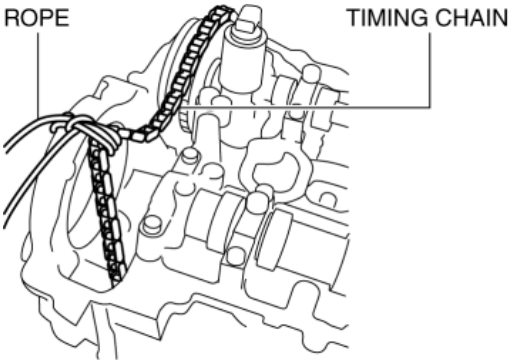

Camshaft Removal Note

CAUTION:

- Keep the timing chain pulled up during and after the work in which it has been set aside from the sprocket. If the chain falls down, it may disengage from the sprocket on the crankshaft side and deviate, leading to valve timing deviation.
- After servicing, always verify the valve timing.

NOTE:

- Remove the exhaust camshaft and the hydraulic variable valve timing actuator as a single unit.

1. Leave the timing chain as it is, which was suspended after electric variable valve timing actuator removal.
2. Temporarily install the cylinder head cover bolt to the position shown in the figure to use it for suspending the timing chain.

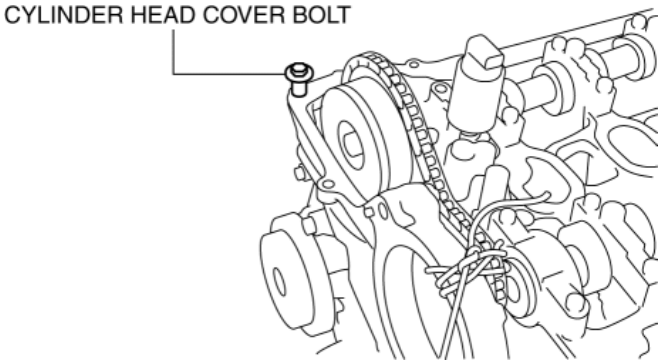

3. Loosen the camshaft cap bolts in two or three passes in the order shown in the figure, and remove the camshaft caps.

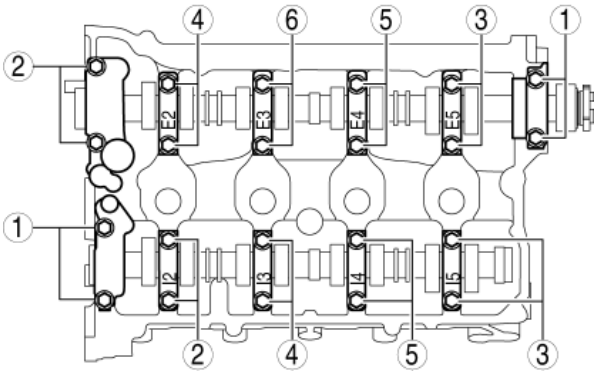

4. Remove the intake camshaft.
5. While setting the timing chain aside, remove the hydraulic variable valve timing actuator and the exhaust camshaft as a single unit.

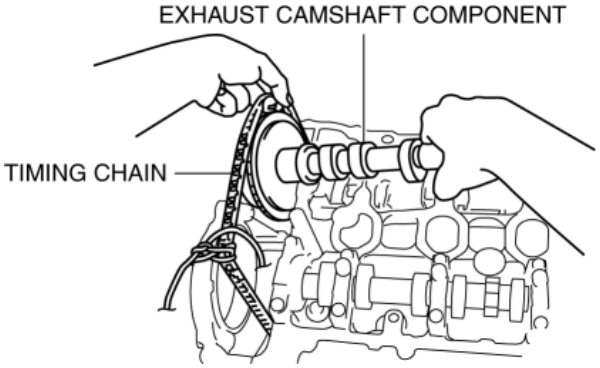

6. Pull up the timing chain and suspend it using a rope as shown in the figure.

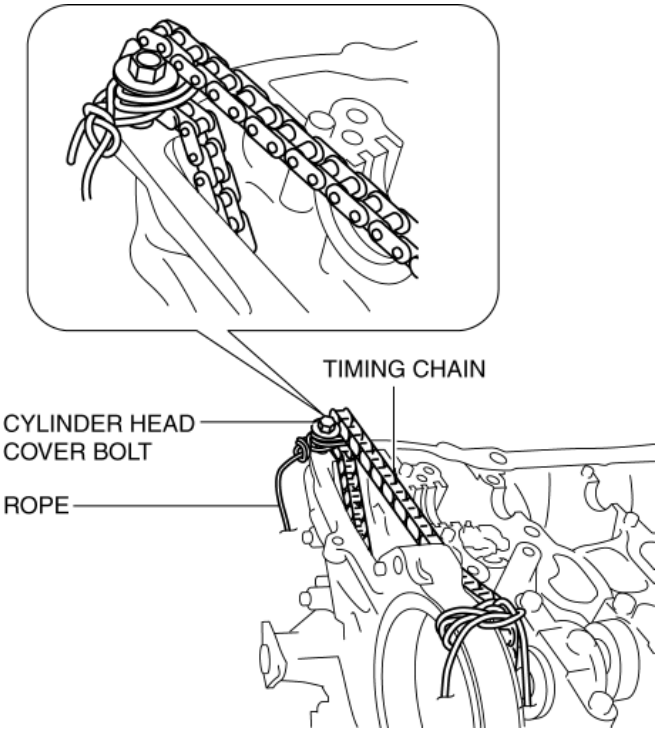

Rocker Arm Removal Note

1. Keep the rocker arms in the order of removal to enable reassembly in their original positions.

HLA Removal Note

1. Keep the HLAs in the order of removal to enable reassembly in their original positions.

HLA Installation Note

1. Perform HLA air bleeding using the following procedure.

   a. Put the HLA in a container filled with engine oil.

   CAUTION:

   - Do not insert the round bar firmly because the check ball spring force is extremely weak.

   b. While lightly pressing the check ball using a round bar (**approx. 1.0 mm {0.039 in}** diameter), bleed air by moving the plunger up and down.

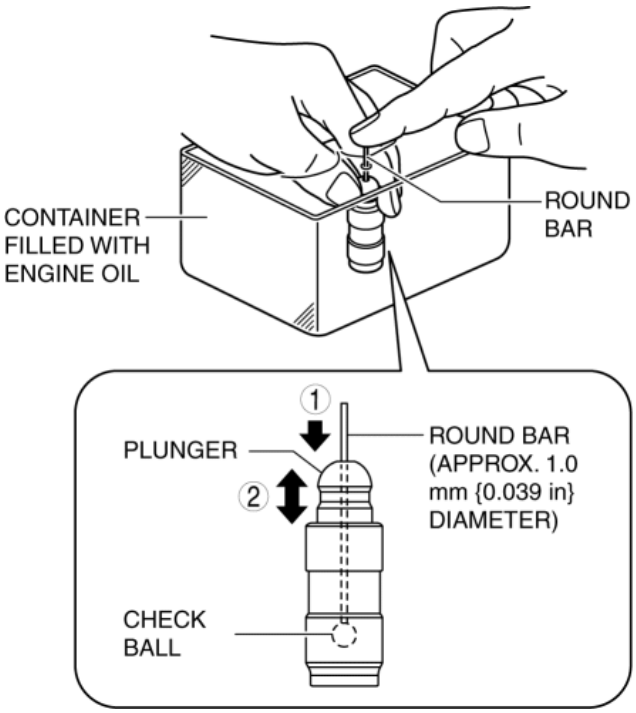

c. Press the end of the plunger in the oil and verify that there is no rebounding feel.

- If rebounding feel cannot be eliminated, replace the HLA.

2. Visually inspect the HLA surface where it contacts the rocker arm for wear or damage.

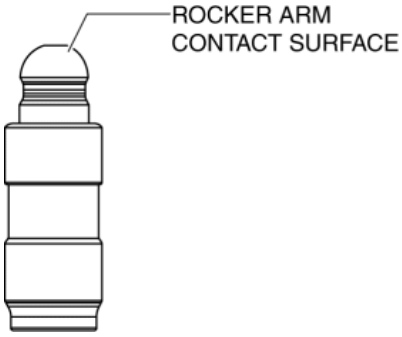

- If there is any malfunction, replace the HLA.

3. Assemble the HLAs to their original positions.

Rocker Arm Installation Note

1. Apply engine oil to the HLAs and the end of the valve stems.

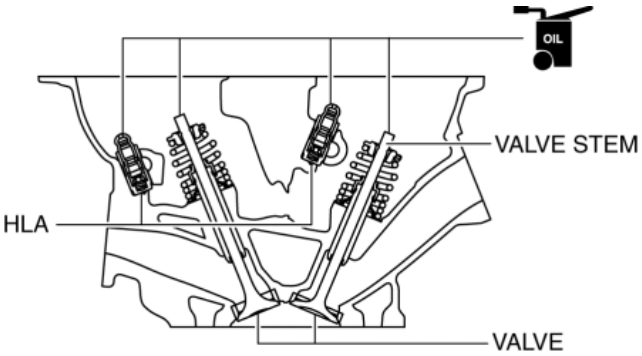

2. Install the rocker arms to the same positions as before removal.

Camshaft Installation Note

1. As shown in the figure, apply gear oil (SAE No. 90 or equivalent) or engine oil to the center area of each journal of the cylinder head.

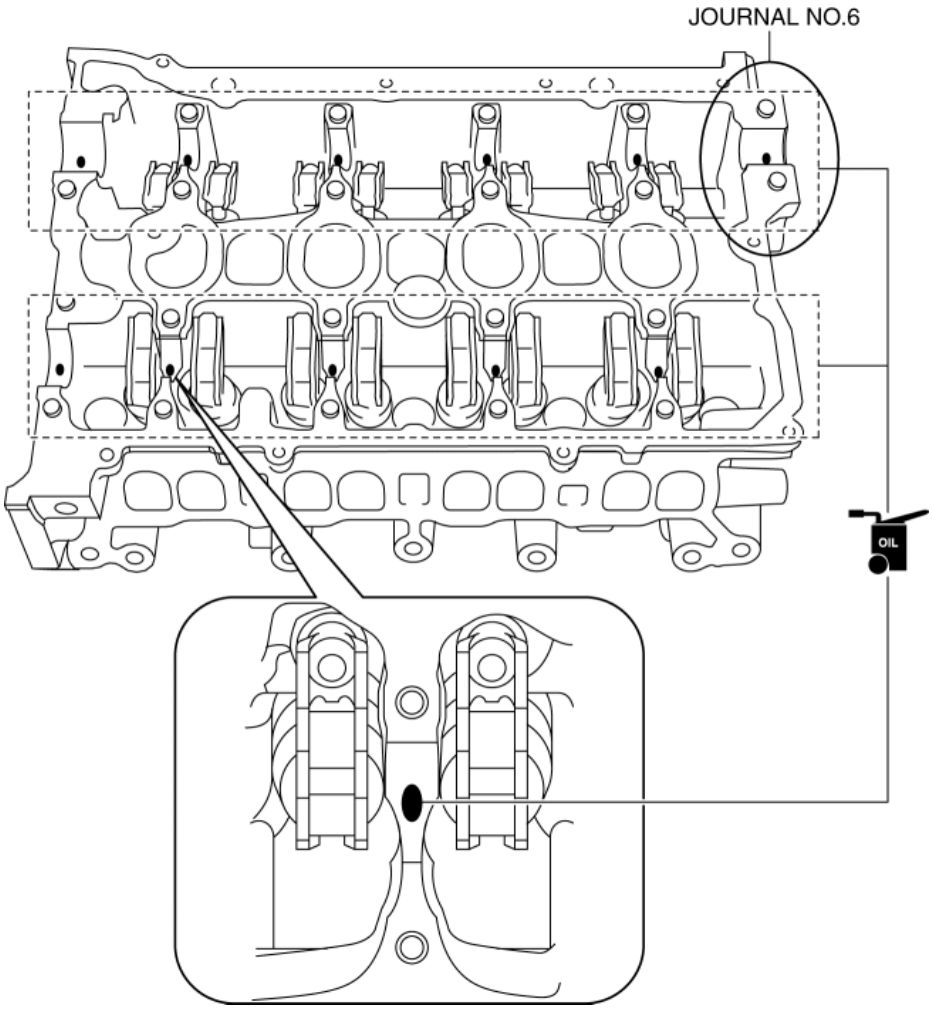

CAUTION:

- Apply 0.05 ml {0.05 cc, 0.003 in^3} or less of oil to journal No.6.

2. Apply gear oil (SAE No. 90 or equivalent) or engine oil to the following locations of each camshaft.

- Thrust surface of front journal

3. As shown in the figure, align the cam position of cylinder No.1 around top dead center (TDC) and place the intake camshaft on the cylinder head.

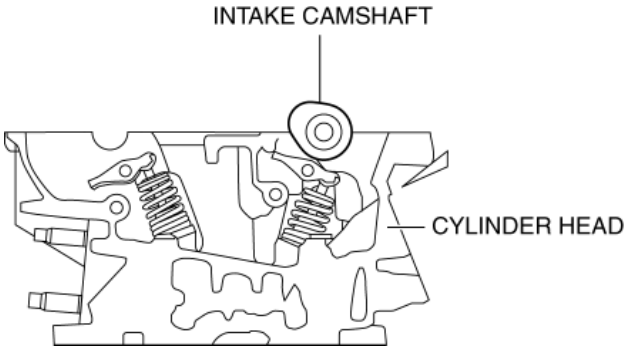

4. Remove the rope suspending the timing chain on the exhaust side.

5. While aligning the mark on the timing chain placed during removal with the one on the hydraulic variable valve timing actuator, place the exhaust camshaft component on the cylinder head.

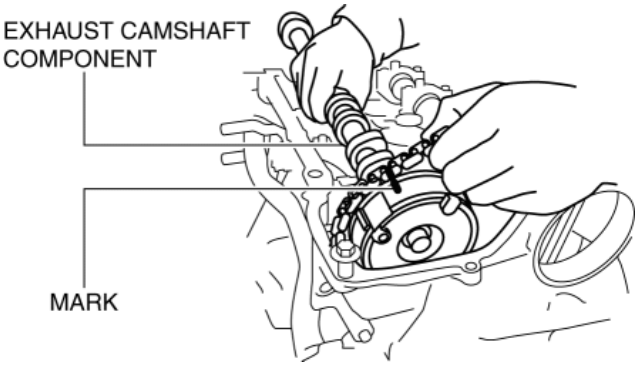

6. As shown in the figure, apply gear oil (SAE No. 90 or equivalent) or engine oil to the center area of each journal of the camshaft.

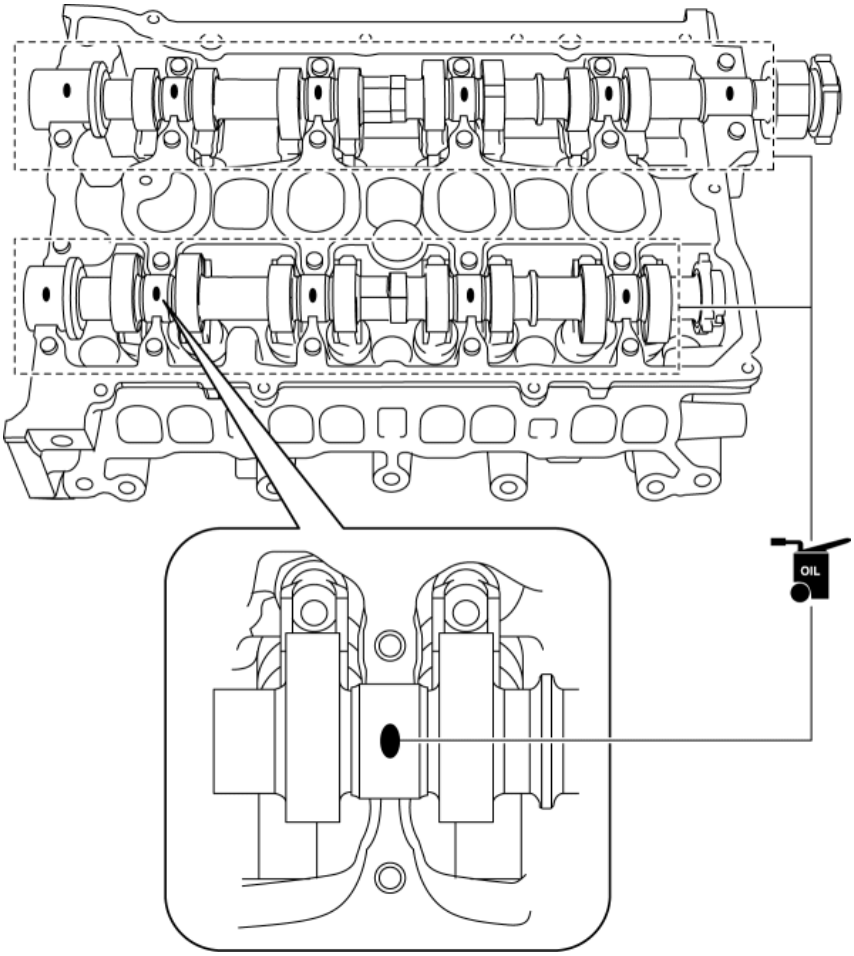

7. Apply adhesive agent (Loctite 962T) around journal No.6 of the cylinder head or the exhaust-side rear camshaft cap.

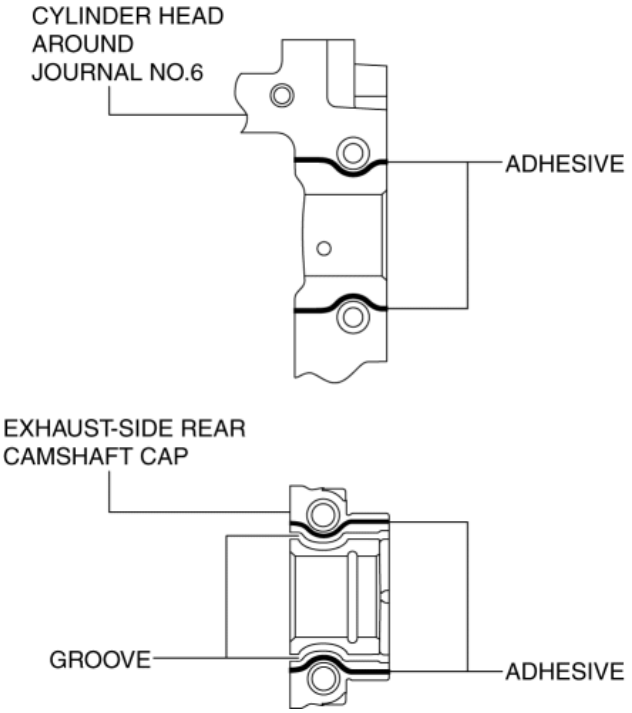

CAUTION:

- Verify that there is no adhesive agent on the journal.

  Adhesive agent bead width

- 0.5—1.5 mm {0.02—0.05 in}

8. Install the camshaft caps in the marked number order, and temporarily tighten the camshaft cap installation bolts in two or three passes evenly.

9. Tighten the camshaft cap installation bolts in two steps in the order shown in the figure.

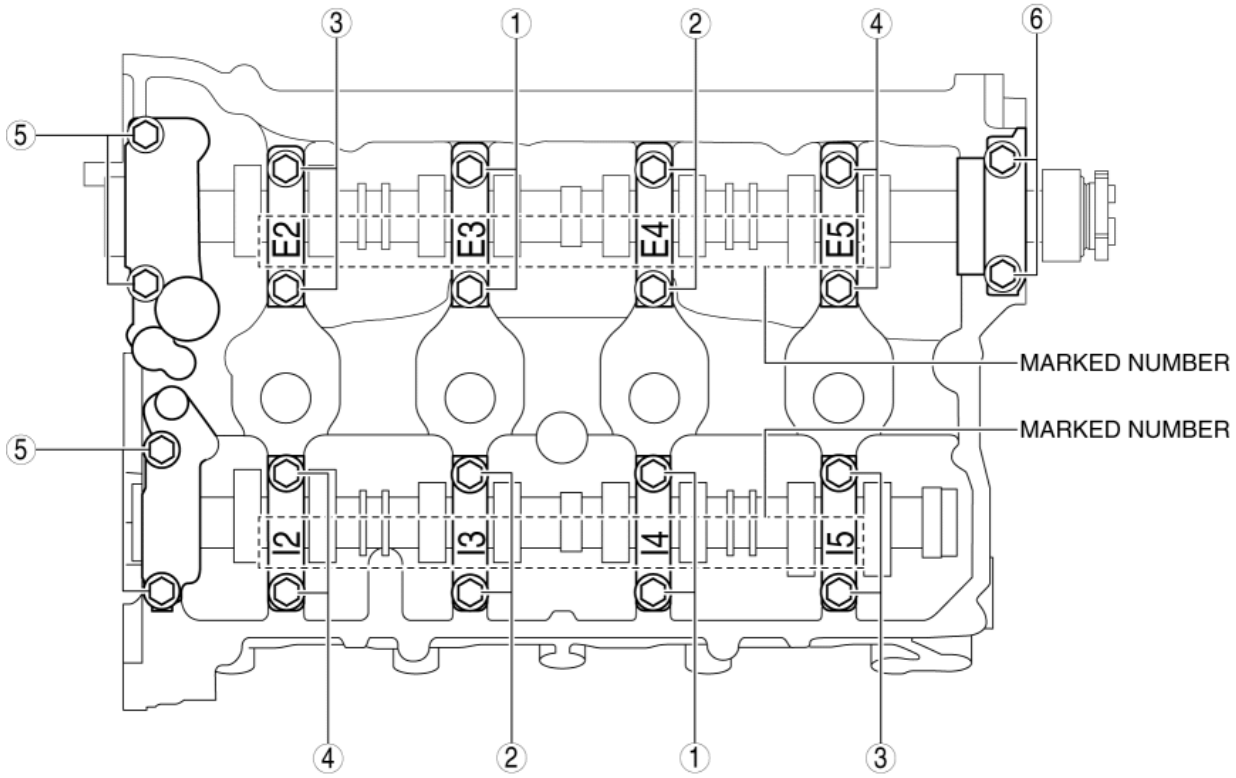

Tightening torque

- Step 1: 3.0—6.0 N·m {31—61 kgf·cm, 27—53 in·lbf}
- Step 2: 8—11 N·m {82—112 kgf·cm, 71—97 in·lbf}

Electric Variable Valve Timing Actuator Installation Note

1. Remove the rope suspending the timing chain on the intake side.

2. Remove the timing chain from the exhaust and intake camshaft sprockets and set it aside to the rear, then insert the electric variable valve timing actuator between the engine front cover and the cylinder head.

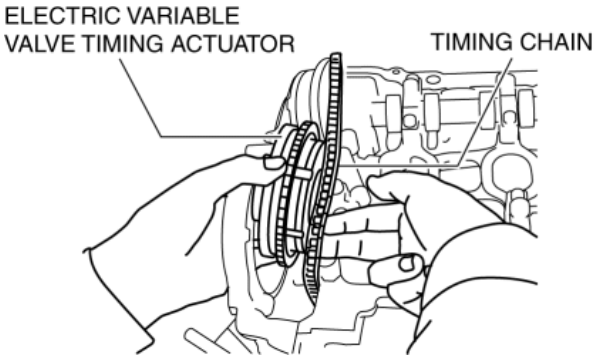

3. Return the timing chain to the exhaust camshaft sprocket.

4. While aligning the mark on the timing chain placed during removal with the one on the electric variable valve timing actuator, engage the chain with the sprocket.

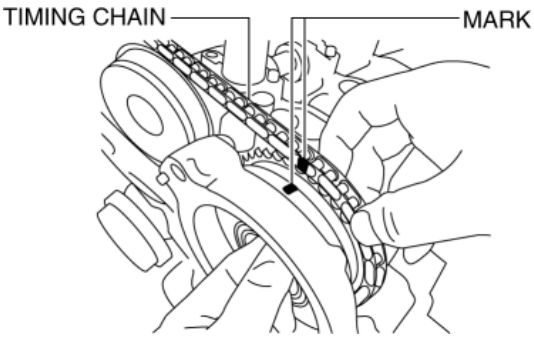

5. Align the knock pin on the end of the intake camshaft with the notch on the actuator side, then assemble the actuator.

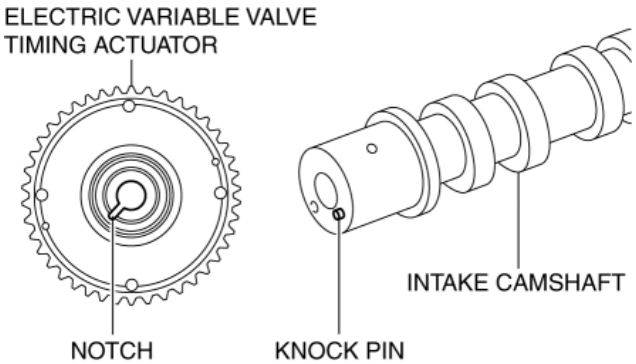

NOTE:

- Adjust the knock pin with the notch while adjusting the knock pin position by rotating the camshaft.

6. Hold the intake camshaft using a wrench on the cast hexagon, and tighten the electric variable valve timing actuator installation bolt.

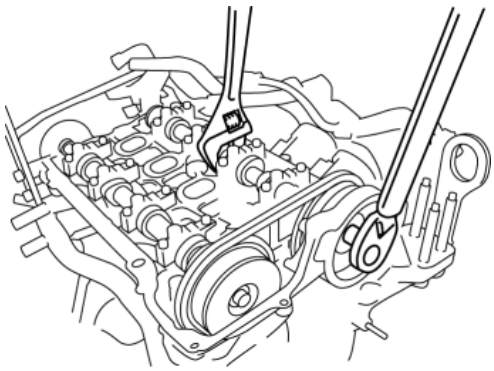

Tightening torque

- 102—114 N·m {10.5—11.6 kgf·m, 76—84 ft·lbf}

Timing Chain Installation Note

1. Install the chain guide (No.1).
2. Remove the bolt securing the tensioner arm and apply tension to the timing chain.
3. Rotate the crankshaft clockwise two turns and verify that the valve timing is correct.

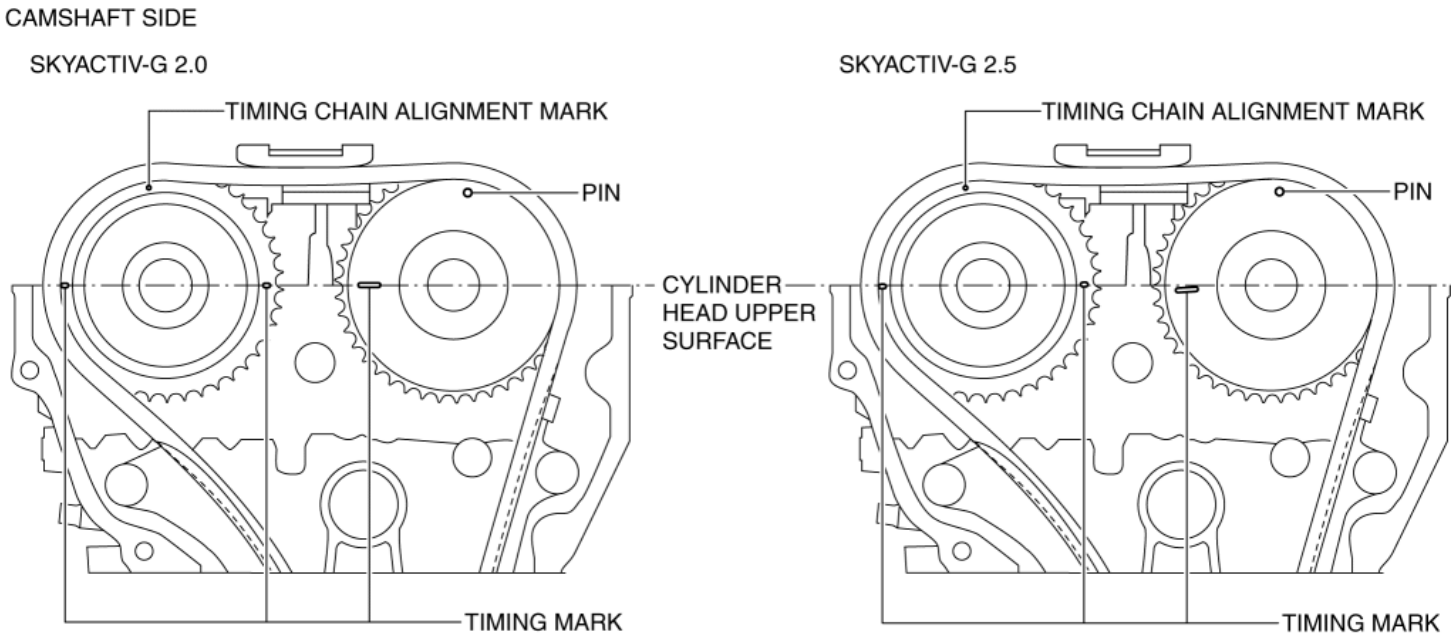

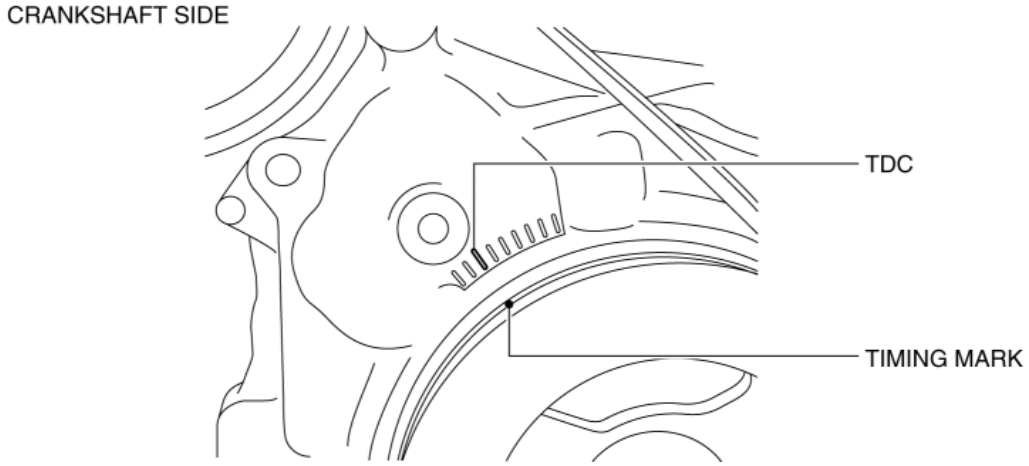

NOTE:

- The timing mark of SKYACTIV-G 2.5 is not completely parallel with the upper surface of the cylinder head.
- If the valve timing is not correct, remove the engine front cover and reassemble the timing chain to each sprocket. (See **TIMING CHAIN REMOVAL/INSTALLATION [SKYACTIV-G 2.0, SKYACTIV-G 2.5]**.)

4. Install the blind plugs (upper and lower) for the engine front cover service holes.

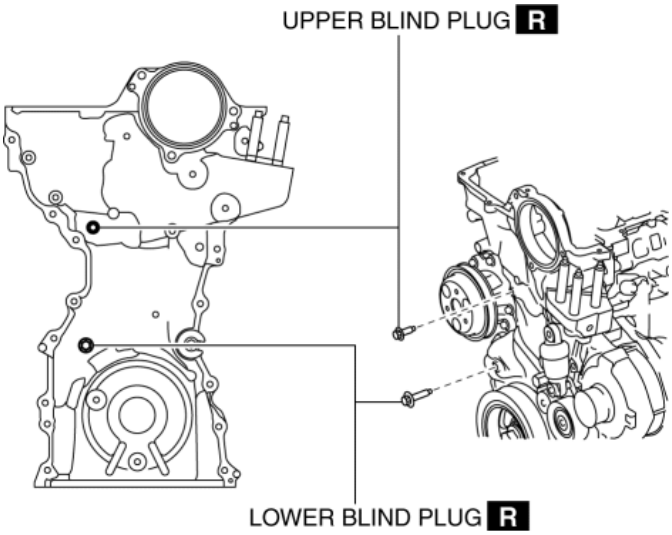

Tightening torque

- Upper: 8—11 N·m {82—112 kgf·cm, 71—97 in·lbf}
- Lower: 17—23 N·m {1.8—2.3 kgf·m, 13—16 ft·lbf}

Oil Shower Pipe Installation Note

1. Install the oil shower pipe in the order shown in the figure.

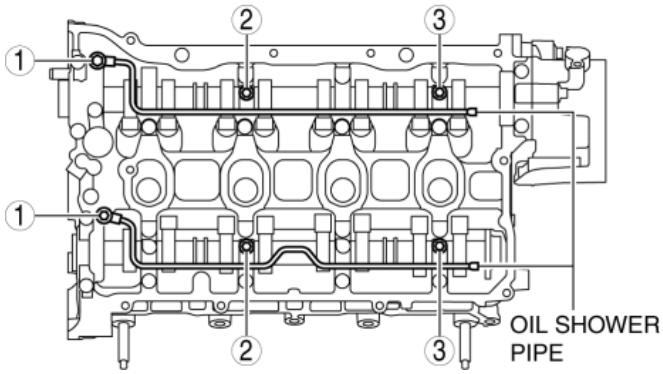

Tightening torque

Installation position	Tightening torque
1	9—12 N·m {92—122 kgf·cm, 80—106 in·lbf}
2, 3	8.0—9.0 N·m {82—91 kgf·cm, 71—79 in·lbf}

2014 - Mazda3 - Engine

CYLINDER HEAD GASKET REPLACEMENT [SKYACTIV-G 2.0, SKYACTIV-G 2.5]

WARNING:

- A hot engine can cause severe burns. Turn off the engine and wait until it is cool before servicing.
- Fuel vapor is hazardous. It can very easily ignite, causing serious injury and damage. Always keep sparks and flames away from fuel.
- Fuel line spills and leakage are dangerous. Fuel can ignite and cause serious injuries or death and damage. Fuel can also irritate skin and eyes. To prevent this, always complete the “Fuel Line Safety Procedure”. (See **BEFORE SERVICE PRECAUTION [SKYACTIV-G 2.0, SKYACTIV-G 2.5]**.)

CAUTION:

- If the camshaft is rotated with the timing chain removed and the piston at the top dead center position, the valve may contact the piston and the engine could be damaged. When rotating the camshaft with the timing chain removed, rotate it after lowering the piston from the top dead center position.

1. Disconnect the negative battery cable. (See **NEGATIVE BATTERY CABLE DISCONNECTION/CONNECTION [SKYACTIV-G 2.0, SKYACTIV-G 2.5]**.)
2. Remove the plug hole plate. (See **PLUG HOLE PLATE REMOVAL/INSTALLATION [SKYACTIV-G 2.0, SKYACTIV-G 2.5]**.)
3. Remove the ignition coil/ion sensors. (See **IGNITION COIL/ION SENSOR REMOVAL/INSTALLATION [SKYACTIV-G 2.0, SKYACTIV-G 2.5]**.)
4. Remove the front under cover No.2. (See **FRONT UNDER COVER No.2 REMOVAL/INSTALLATION**.)
5. Remove the splash shield (RH). (See **SPLASH SHIELD REMOVAL/INSTALLATION**.)
6. Remove the drive belt. (See **DRIVE BELT REMOVAL/INSTALLATION [SKYACTIV-G 2.0, SKYACTIV-G 2.5]**.)
7. Drain the engine oil. (See **ENGINE OIL REPLACEMENT [SKYACTIV-G 2.0, SKYACTIV-G 2.5]**.)
8. Drain the engine coolant. (See **ENGINE COOLANT REPLACEMENT [SKYACTIV-G 2.0, SKYACTIV-G 2.5]**.)
9. Remove the intake manifold. (See **INTAKE-AIR SYSTEM REMOVAL/INSTALLATION [SKYACTIV-G 2.0, SKYACTIV-G 2.5]**.)
10. Set aside the exhaust manifold to the vehicle rear. (See **EXHAUST SYSTEM REMOVAL/INSTALLATION [SKYACTIV-G 2.0, SKYACTIV-G 2.5]**.)
11. Disconnect the radiator hose (upper, lower).
12. Remove the vacuum pump. (See **VACUUM PUMP REMOVAL/INSTALLATION**.)
13. Remove the high pressure fuel pump and rear housing. (See **HIGH PRESSURE FUEL PUMP REMOVAL/INSTALLATION [SKYACTIV-G 2.0, SKYACTIV-G 2.5]**.)
14. Disconnect the heater hose from the water outlet and water inlet pipe.
15. Remove the oil pan. (See **OIL PAN REMOVAL/INSTALLATION [SKYACTIV-G 2.0, SKYACTIV-G 2.5]**.)
16. Remove the timing chain and chain guide. (See **TIMING CHAIN REMOVAL/INSTALLATION [SKYACTIV-G 2.0, SKYACTIV-G 2.5]**.)
17. Remove the OCV. (See **OIL CONTROL VALVE (OCV) REMOVAL/INSTALLATION [SKYACTIV-G 2.0, SKYACTIV-G 2.5]**.)
18. Remove in the order indicated in the table.
19. Install in the reverse order of removal.
20. Refill with the specified type and amount of the engine oil. (See **ENGINE OIL REPLACEMENT [SKYACTIV-G 2.0, SKYACTIV-G 2.5]**.)
21. Refill the engine coolant. (See **ENGINE COOLANT REPLACEMENT [SKYACTIV-G 2.0, SKYACTIV-G 2.5]**.)
22. Start the engine, and inspect and adjust the following:
    - Leakage of engine oil, engine coolant.
    - Runout and contact of pulley and belt.
    - Ignition timing, idle speed and idle mixture. (See **ENGINE TUNE-UP [SKYACTIV-G 2.0, SKYACTIV-G 2.5]**.)
    - Compression pressure (See **COMPRESSION INSPECTION [SKYACTIV-G 2.0, SKYACTIV-G 2.5]**.)

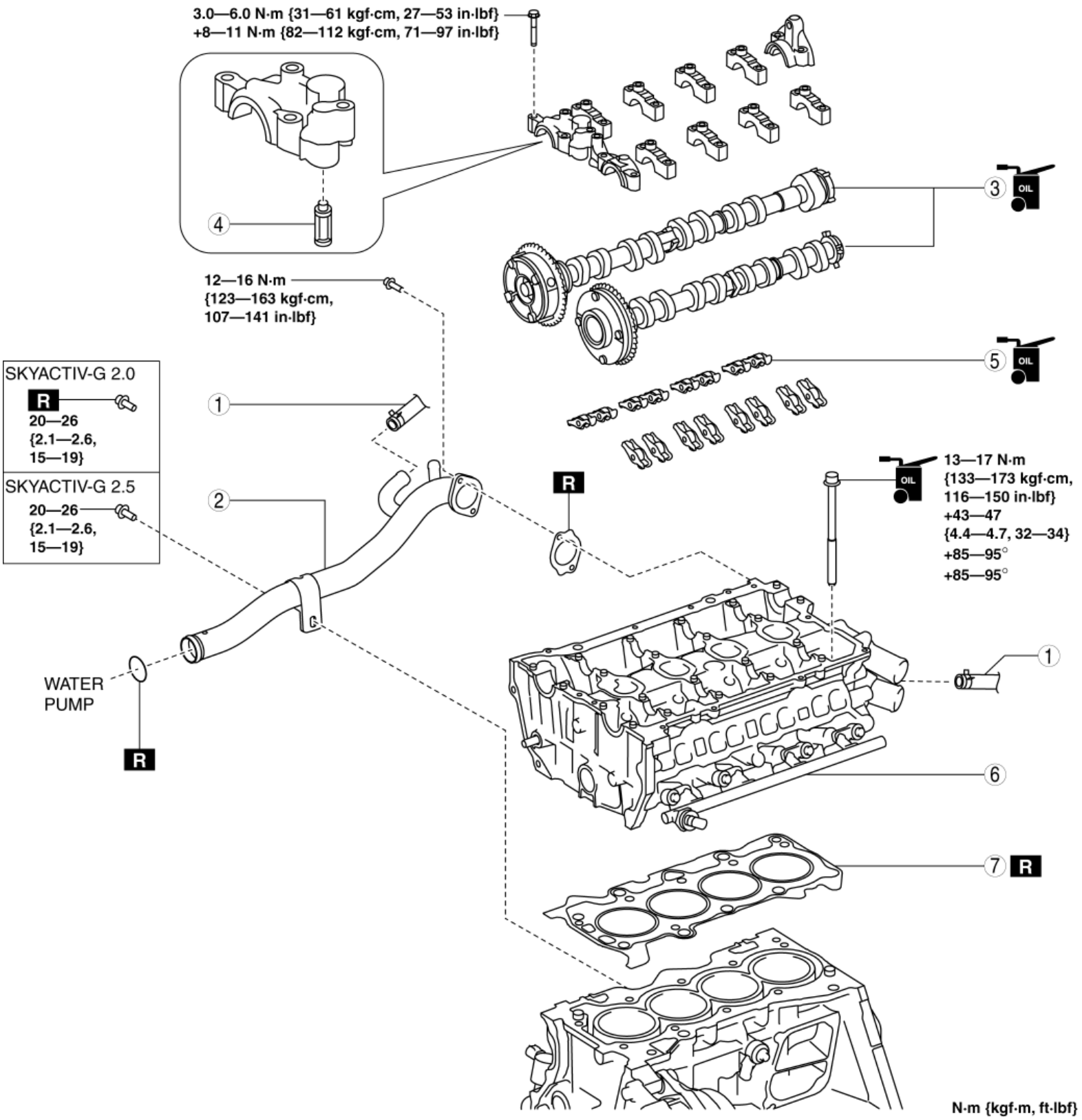

1	Water hose (ATX)
2	Water inlet pipe (See **Water Inlet Pipe Installation Note**.)
3	Camshaft

	(See **Camshaft Removal Note**.) (See **Camshaft Installation Note**.)
4	OCV oil filter
5	Rocker arm (See **Rocker Arm Removal Note**.) (See **Rocker Arm Installation Note**.)
6	Cylinder head (See **Cylinder Head Removal Note**.) (See **Cylinder Head Installation Note**.)
7	Cylinder head gasket

Camshaft Removal Note

1. Loosen the camshaft cap installation bolts in a few passes in the order shown in the figure and remove the camshaft caps.

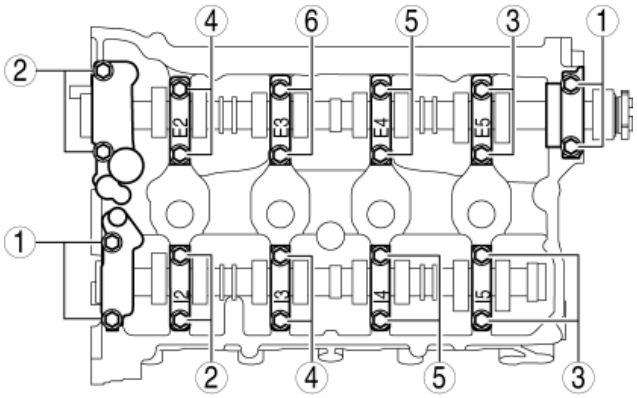

2. Remove the camshaft.

Rocker Arm Removal Note

1. Keep the rocker arms in the order of removal to enable reassembly in their original positions.

Cylinder Head Removal Note

1. Temporarily install the oil pan to support the engine from under the vehicle.

CAUTION:

- To prevent deformation of the oil pan, support the engine using the following methods.
  - When using an engine lifter, insert rubber of appropriate size (approx. 20 mm {0.79 in} thickness) between the engine lifter and the oil pan to support the oil pan.
  - When using a garage jack, place rubber of appropriate size (approx. 20 mm {0.79 in} thickness) on a batten which is large enough to cover and support the oil pan.

2. Support the engine (oil pan) using a commercially available engine lifter or garage jack.

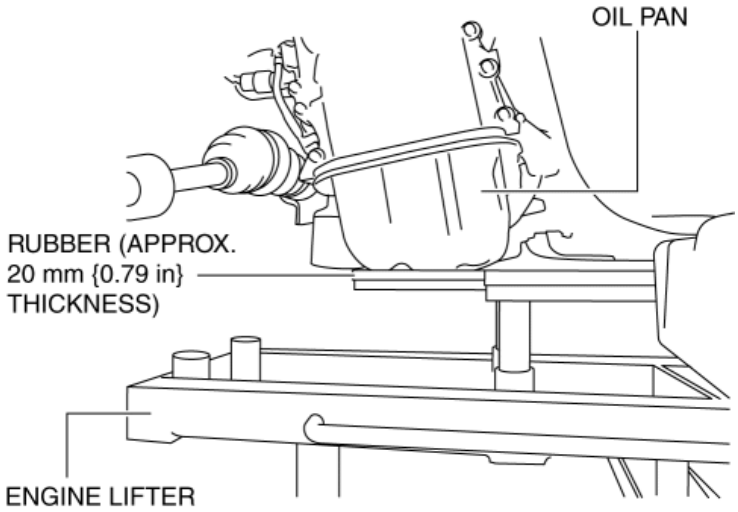

3. Remove the chain on the **SST** that suspended the engine and set it aside.
4. Loosen the cylinder head installation bolts in two or three passes in the order shown in the figure and remove them.

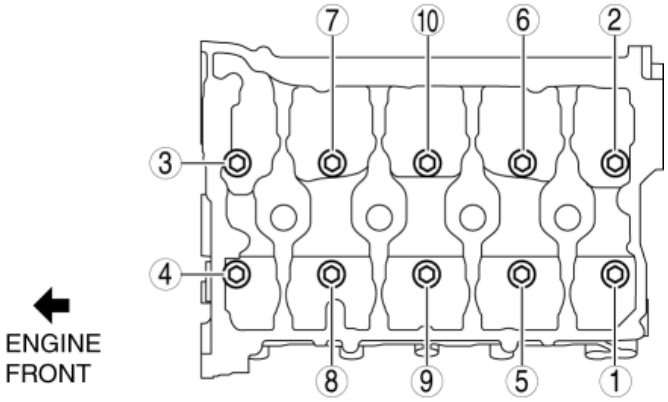

5. Remove the cylinder head.

Cylinder Head Installation Note

CAUTION:

- If the following condition is met, replace the cylinder head bolts.
  - Length exceeds maximum specification

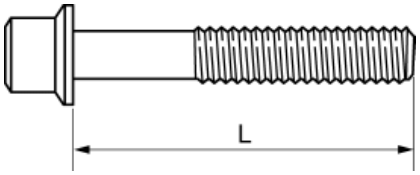

Cylinder head bolt length L

- 145.2—145.8 mm {5.717—5.740 in}

Cylinder head bolt length L maximum

- 146.5 mm {5.767 in}

1. When a cylinder head bolt is reused, apply engine oil to any part of the following:
   - Bolt seating surface
   - Cylinder head seating surface
2. Tighten the cylinder head bolts in the order shown in the following 4 steps.

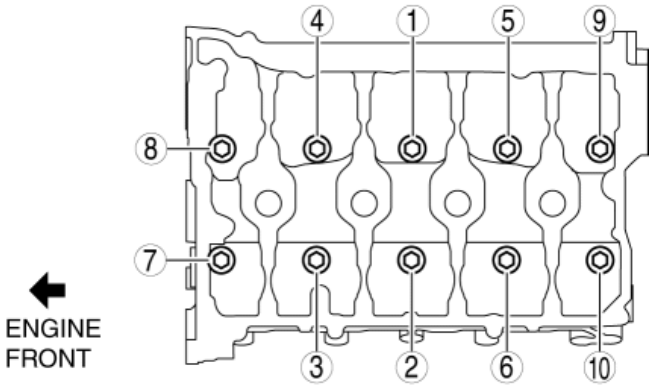

Tightening torque

- Step 1: 13—17 N·m {133—173 kgf·cm, 116—150 in·lbf}
- Step 2: 43—47 N·m {4.4—4.7 kgf·m, 32—34 ft·lbf}
- Step 3: 85—95°
- Step 4: 85—95°

3. Install the chain for the **SST** which was set aside and secure the engine.
4. Remove the engine lifter or garage jack.
5. Remove the temporarily assembled oil pan.

Rocker Arm Installation Note

1. Apply engine oil to the HLAs and the end of the valve stems.

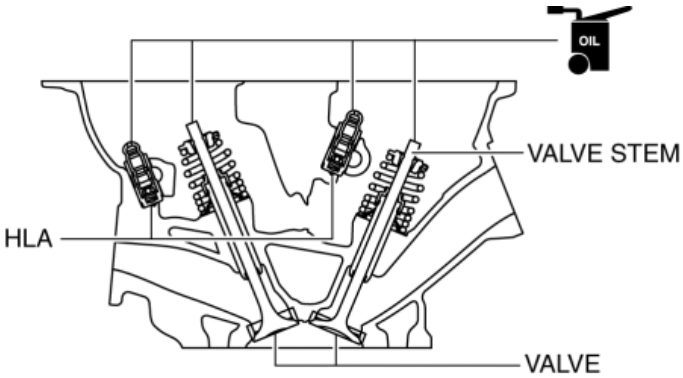

2. Install the rocker arms to the same positions as before removal.

Camshaft Installation Note

1. As shown in the figure, apply gear oil (SAE No. 90 or equivalent) or engine oil to the center area of each journal of the cylinder head.

CAUTION:

- Apply 0.05 ml {0.05 cc, 0.003 in^3} or less of oil to journal No.6.

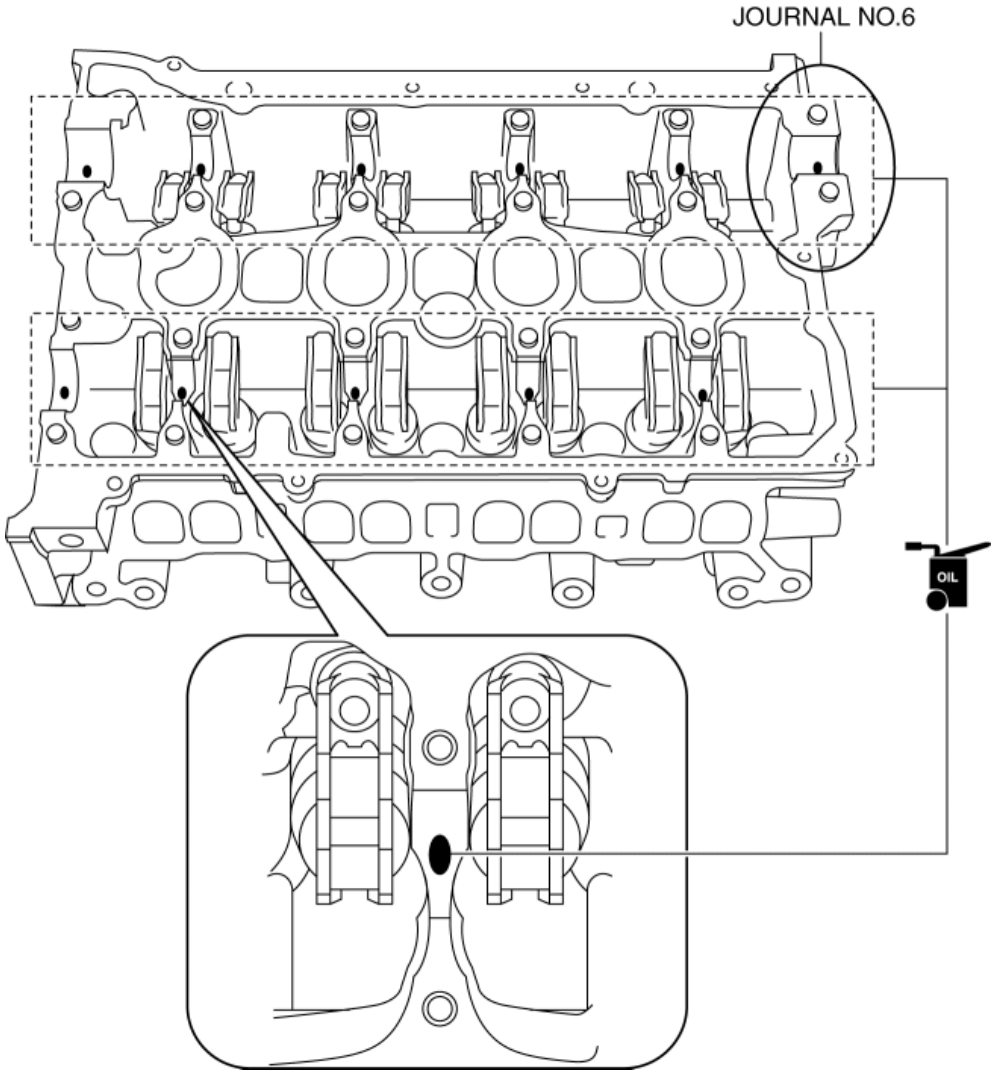

2. Apply gear oil (SAE No. 90 or equivalent) or engine oil to the following locations of each camshaft.

- Thrust surface of front journal

3. Install the camshaft with cylinder No.1 cam aligned to the TDC position as shown in the figure.

SKYACTIV-G 2.0

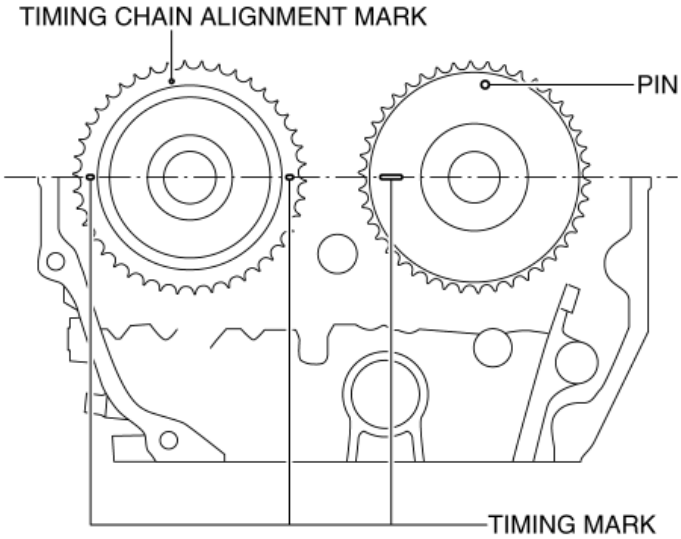

SKYACTIV-G 2.5

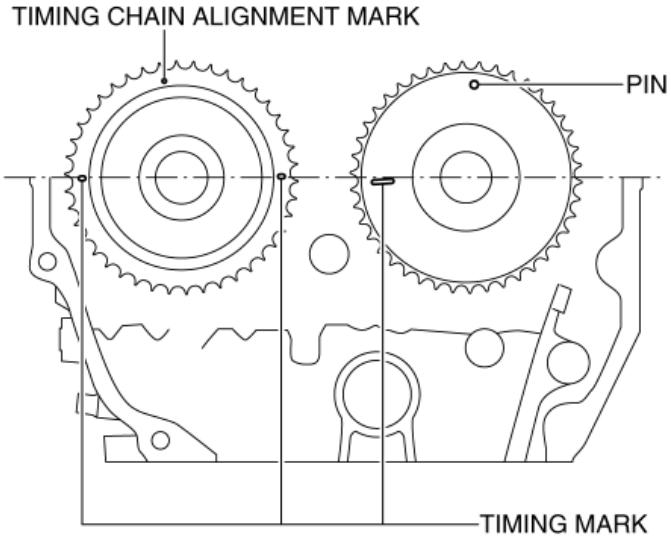

CYLINDER HEAD UPPER SURFACE

NOTE:

- The timing mark of SKYACTIV-G 2.5 is not completely parallel with the upper surface of the cylinder head.

4. As shown in the figure, apply gear oil (SAE No. 90 or equivalent) or engine oil to the center area of each journal of the camshaft.

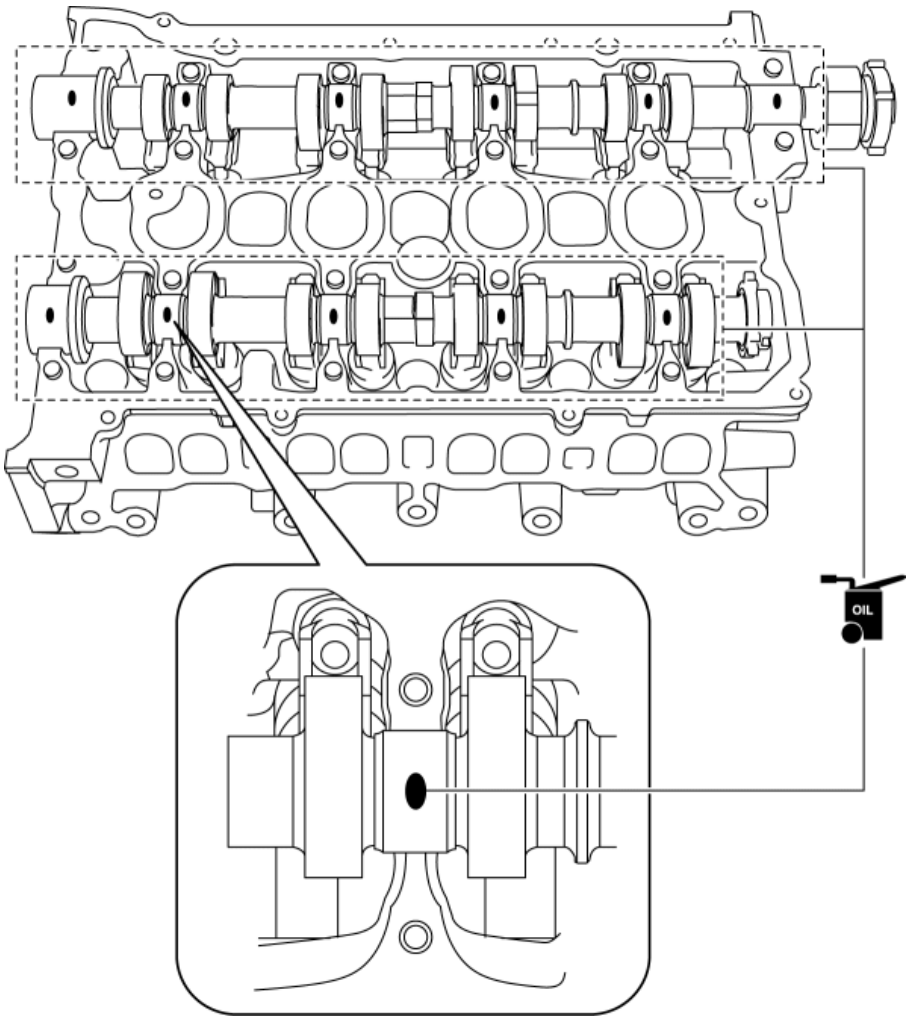

5. Apply adhesive agent (Loctite 962T) around journal No.6 of the cylinder head or the exhaust-side rear camshaft cap.

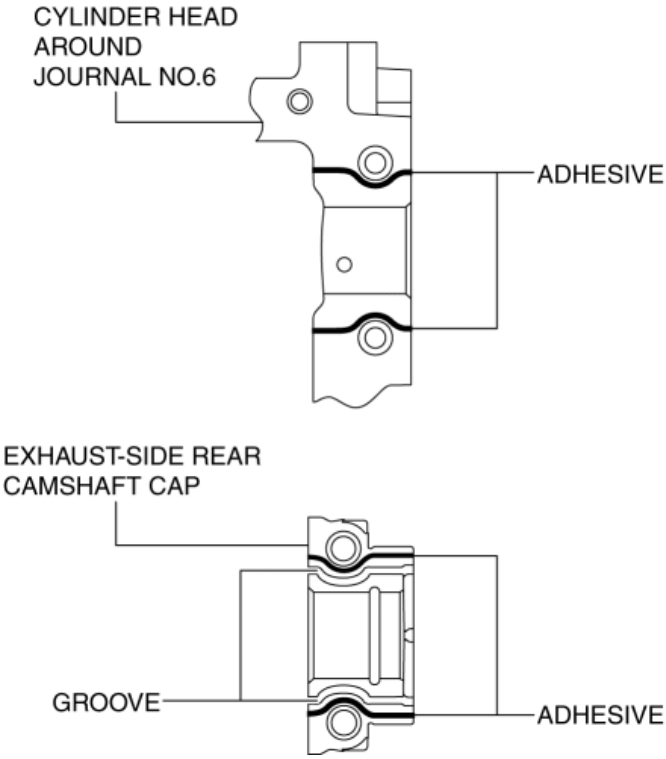

CAUTION:

- Verify that there is no adhesive agent on the journal.

  Adhesive agent bead width

- 0.5—1.5 mm {0.02—0.05 in}

6. Install the camshaft caps in the marked number order, and temporarily tighten the camshaft cap installation bolts in two or three passes evenly.

7. Tighten the camshaft cap installation bolts in two steps in the order shown in the figure.

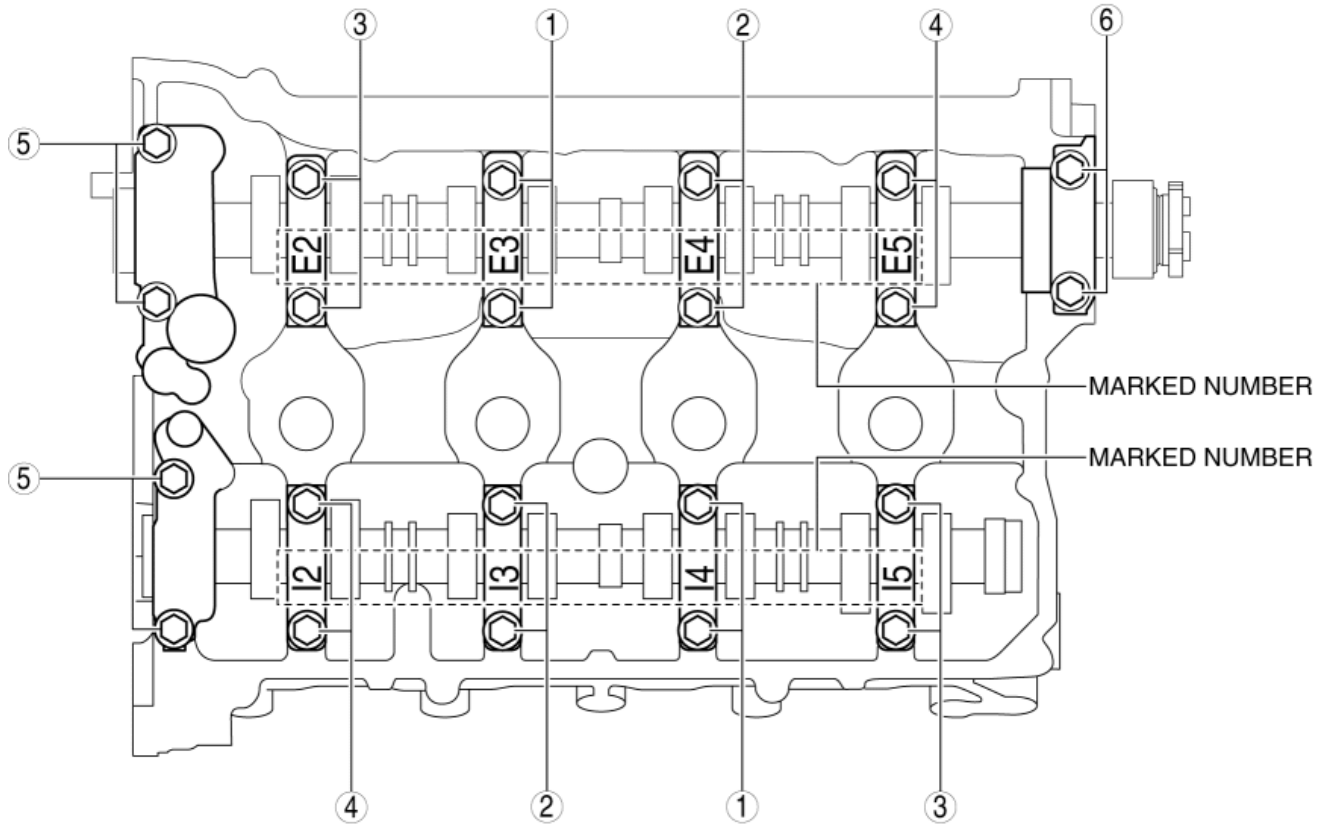

Tightening torque

- Step 1: 3.0—6.0 N·m {31—61 kgf·cm, 27—53 in·lbf}
- Step 2: 8—11 N·m {82—112 kgf·cm, 71—97 in·lbf}

Water Inlet Pipe Installation Note

CAUTION:

- Do not apply oil (such as engine oil, ATF) to the O-ring of the water inlet pipe. Otherwise, the O-ring could swell causing a seal malfunction.

1. Clean away the sealant adhering to the bolt hole on the cylinder block side of the water inlet pipe stay.

2. Apply engine coolant to the O-ring.

3. Install the O-ring to the water inlet pipe.

4. Insert the water inlet pipe into the water pump being careful not to damage the O-ring.

5. Install the water inlet pipe gasket with the gasket projection facing the direction shown in the figure.

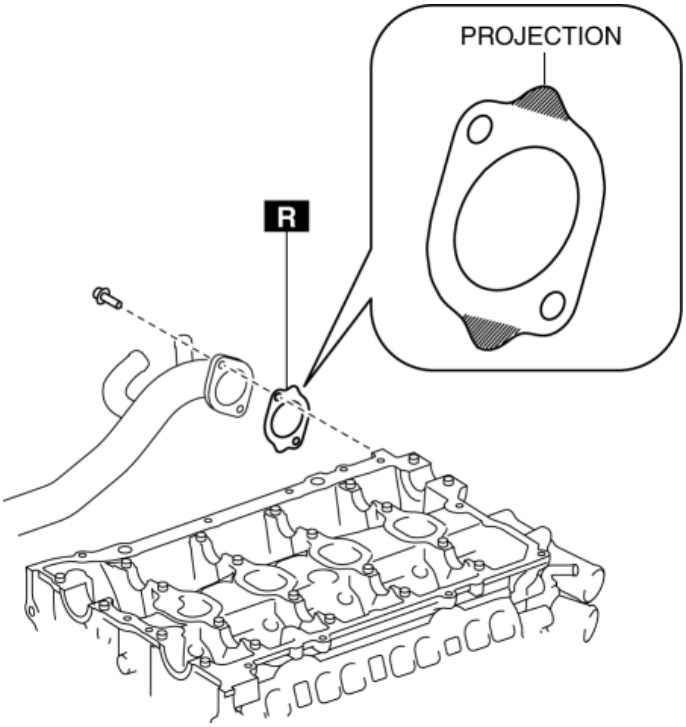

6. Tighten the bolts in the order shown in the figure.

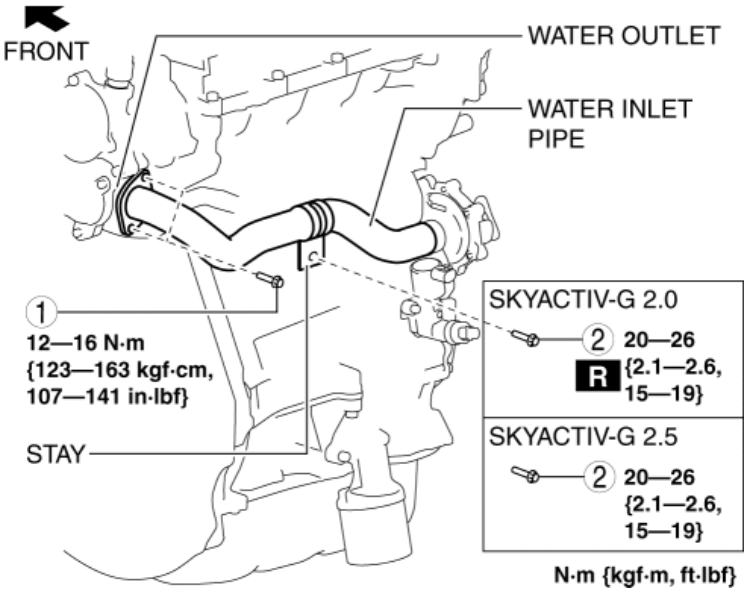

2014 - Mazda3 - Engine

FRONT OIL SEAL REPLACEMENT [SKYACTIV-G 2.0, SKYACTIV-G 2.5]

WARNING:

- A hot engine can cause severe burns. Turn off the engine and wait until it is cool before servicing.

1. Remove the front under cover No.2. (See **FRONT UNDER COVER No.2 REMOVAL/INSTALLATION**.)
2. Remove the splash shield (RH). (See **SPLASH SHIELD REMOVAL/INSTALLATION**.)
3. Remove the drive belt. (See **DRIVE BELT REMOVAL/INSTALLATION [SKYACTIV-G 2.0, SKYACTIV-G 2.5]**.)
4. Remove in the order indicated in the table.
5. Install in the reverse order of removal.

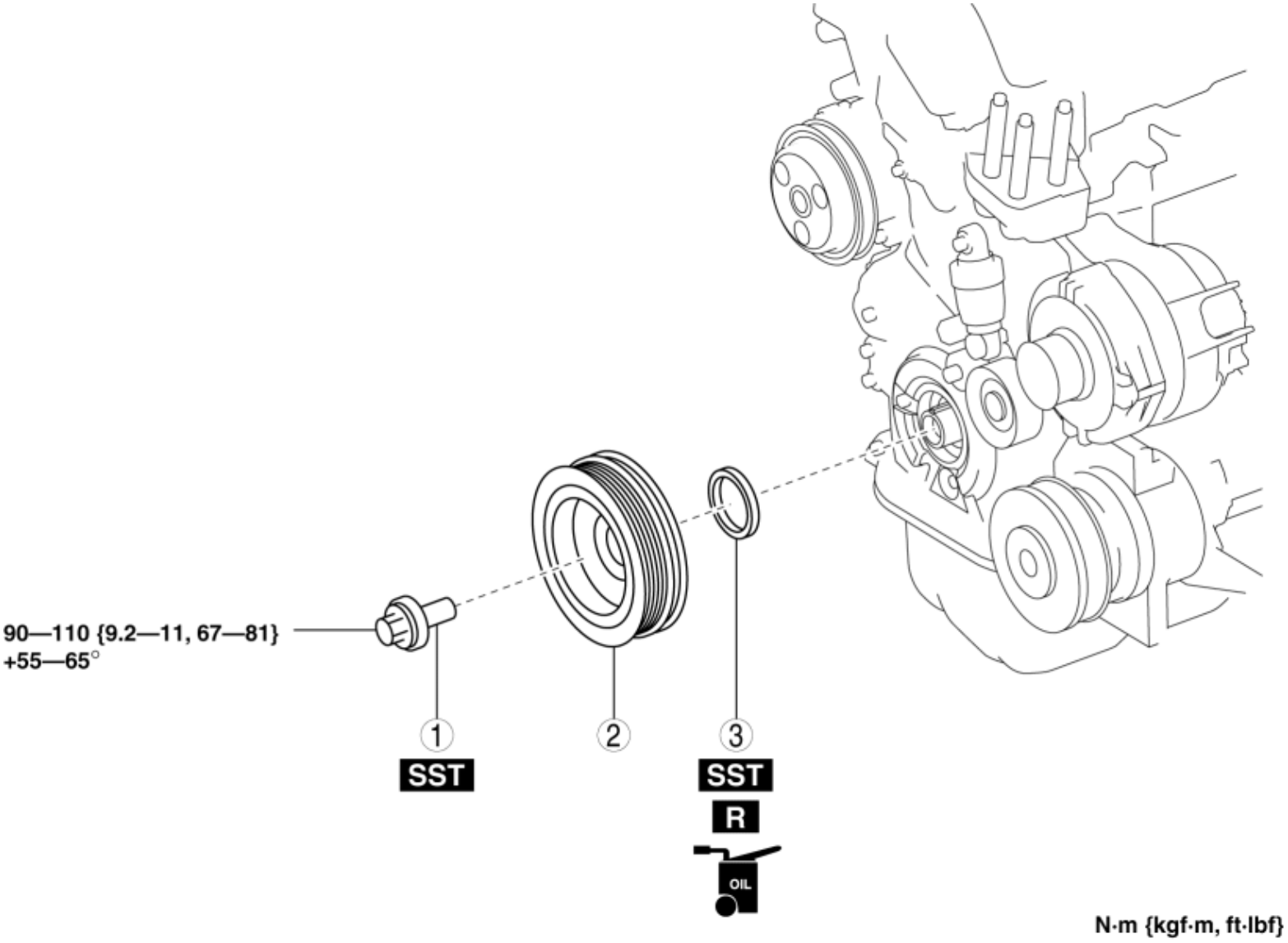

1	Crankshaft pulley lock bolt (See **Crankshaft Pulley Lock Bolt Removal Note**.) (See **Crankshaft Pulley Lock Bolt Installation Note**.)
2	Crankshaft pulley
3	Front oil seal (See **Front Oil Seal Removal Note**.) (See **Front Oil Seal Installation Note**.)

Crankshaft Pulley Lock Bolt Removal Note

CAUTION:

- To prevent damage to the crankshaft pulley, protect the crankshaft pulley with a clean cloth so that the bar part (205-072) of the SST does not contact the crankshaft pulley.
- To prevent damage to the engine front cover, be careful not to allow the tab part (49 B011 105) of the SST to get caught between the crankshaft pulley and the engine front cover.

1. Hold the crankshaft pulley using the **SSTs**.

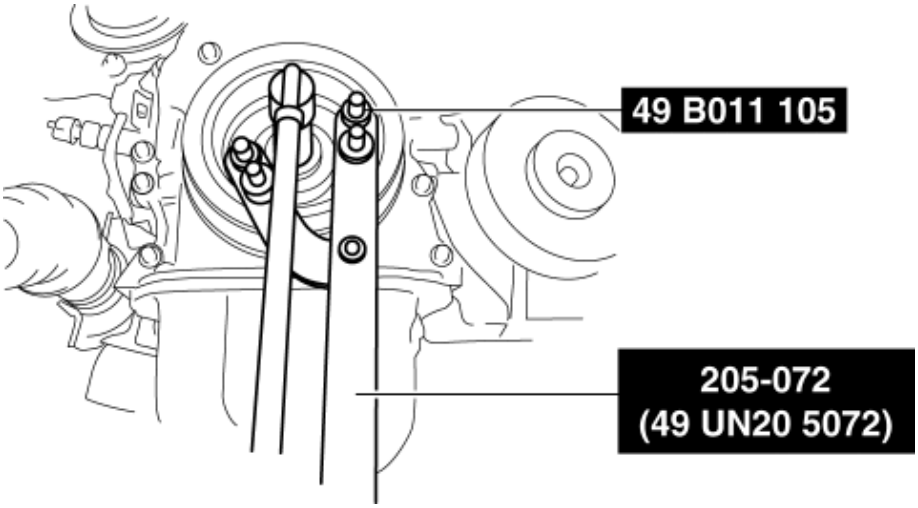

2. Remove the crankshaft pulley lock bolt.

Front Oil Seal Removal Note

1. Cut the oil seal lip using a utility knife.

2. Remove the oil seal using a flathead screwdriver with the tip protected by a clean cloth to prevent damage to the oil seal sliding part of the crankshaft.

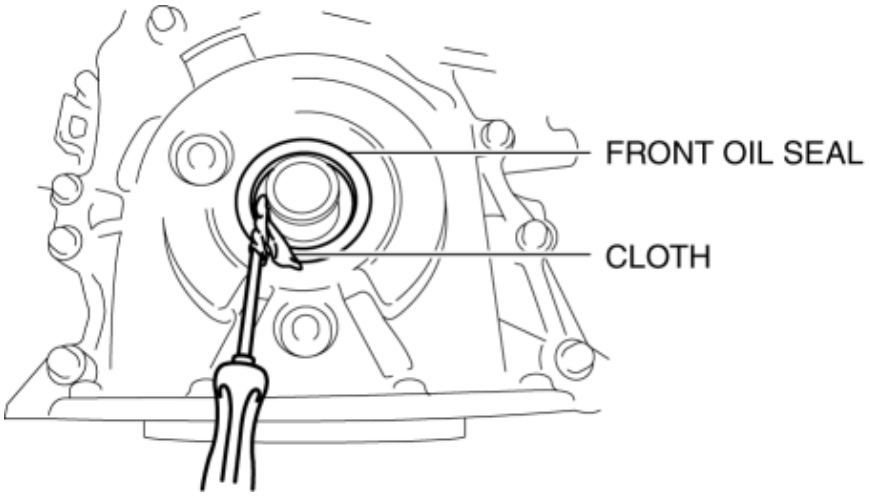

Front Oil Seal Installation Note

1. Apply clean engine oil to the inner surface of a new front oil seal.
2. Insert the front oil seal into the engine front cover by hand.
3. Tap the oil seal in evenly using the **SST** and a hammer.

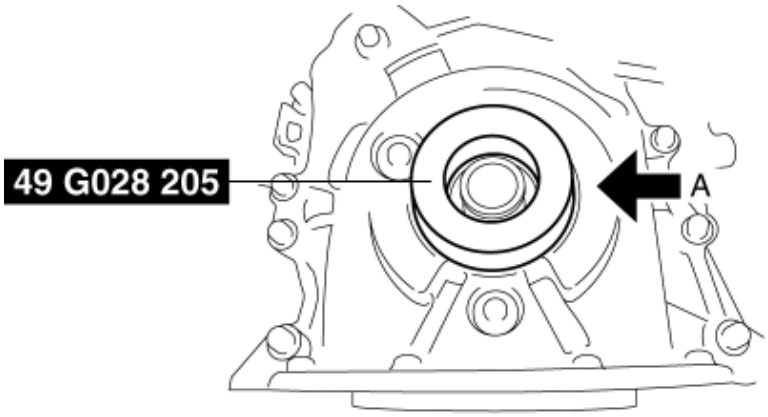

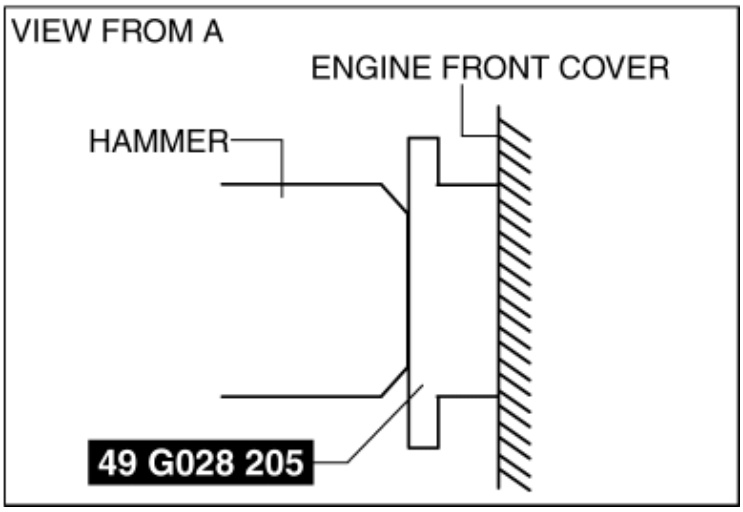

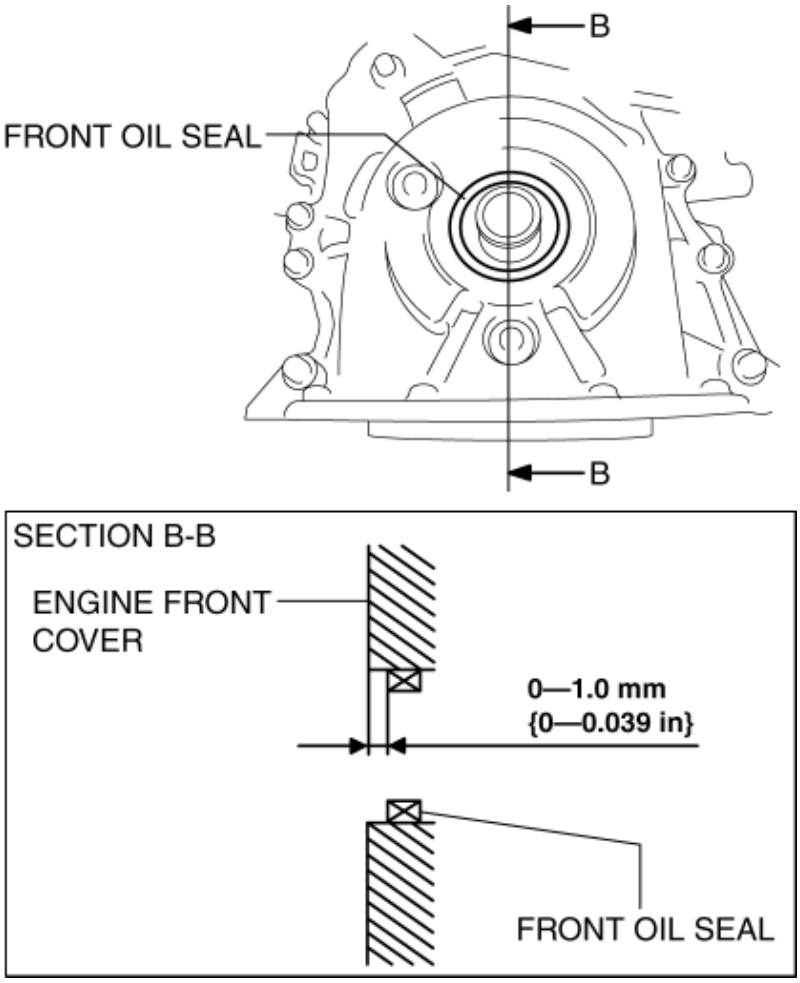

Front oil seal press on amount

- 0—1.0 mm {0—0.039 in}

Crankshaft Pulley Lock Bolt Installation Note

CAUTION:

- To prevent damage to the crankshaft pulley, protect the crankshaft pulley with a clean cloth so that the bar part (205-072) of the SST does not contact the crankshaft pulley.
- To prevent damage to the engine front cover, be careful not to allow the tab part (49 B011 105) of the SST to get caught between the crankshaft pulley and the engine front cover.

1. Hold the crankshaft pulley using the **SSTs**.

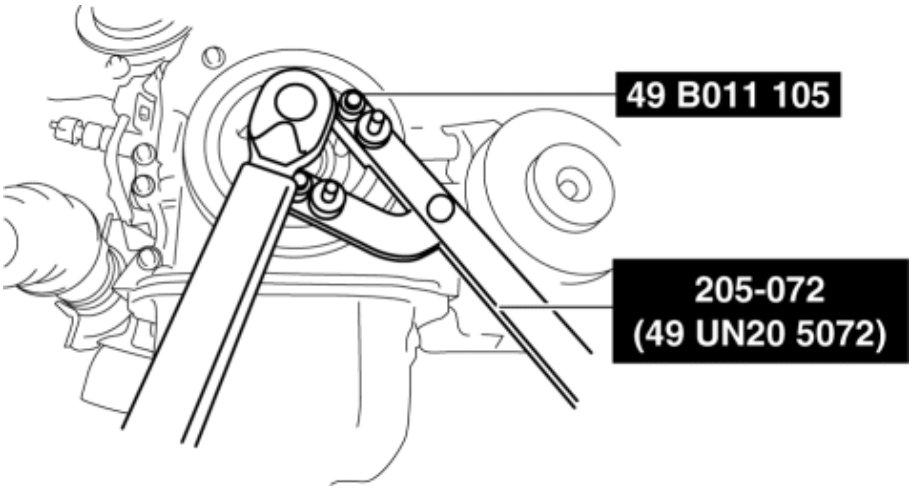

2. Tighten the crankshaft pulley lock bolt in the order shown in the following two steps.

Tightening torque

- Step 1: 90—110 N·m {9.2—11 kgf·m, 67—81 ft·lbf}
- Step 2: 55—65°

2014 - Mazda3 - Engine

REAR OIL SEAL REPLACEMENT [SKYACTIV-G 2.0, SKYACTIV-G 2.5]

1. Remove the transaxle. (See **MANUAL TRANSAXLE REMOVAL/INSTALLATION [C66M-R]** (MTX).) (See **AUTOMATIC TRANSAXLE REMOVAL/INSTALLATION [FW6A-EL]** (ATX).)

2. Remove the flywheel (MTX) or the drive plate (ATX). (See **CLUTCH UNIT REMOVAL/INSTALLATION [C66M-R]** (MTX).) (See **DRIVE PLATE REMOVAL/INSTALLATION [FW6A-EL]** (ATX).)

3. Remove in the order indicated in the table.

4. Install in the reverse order of removal.

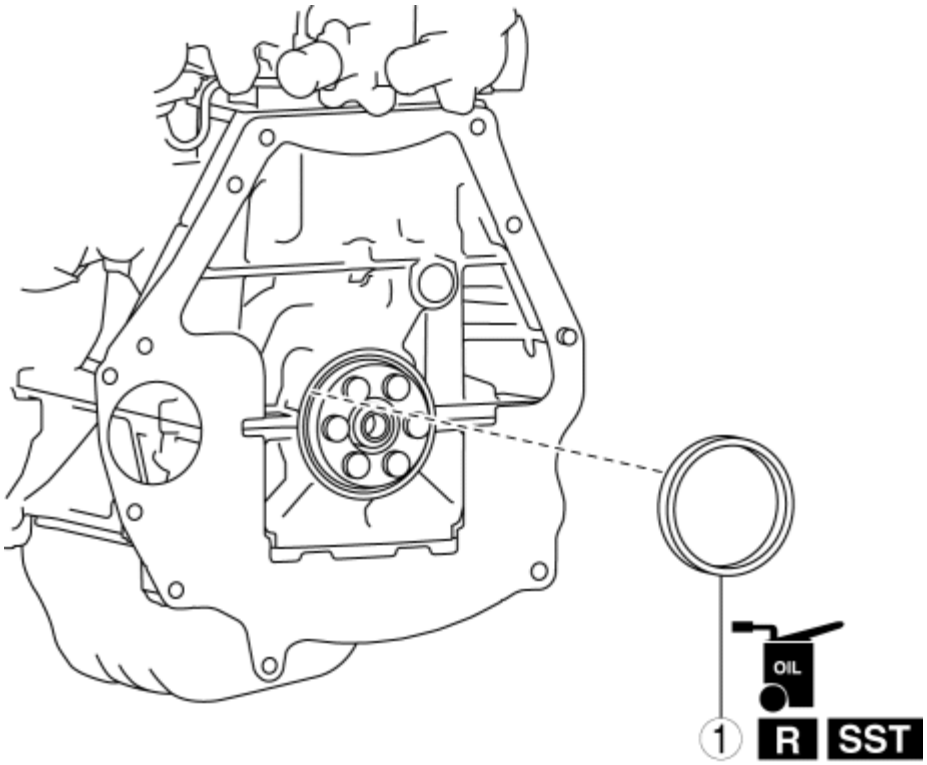

1	Rear oil seal (See **Rear Oil Seal Removal Note**.) (See **Rear Oil Seal Installation Note**.)

Rear Oil Seal Removal Note

1. Cut the oil seal lip using a utility knife.

2. Remove the oil seal using a flathead screwdriver with the tip protected by a clean cloth to prevent damage to the oil seal sliding part of the crankshaft.

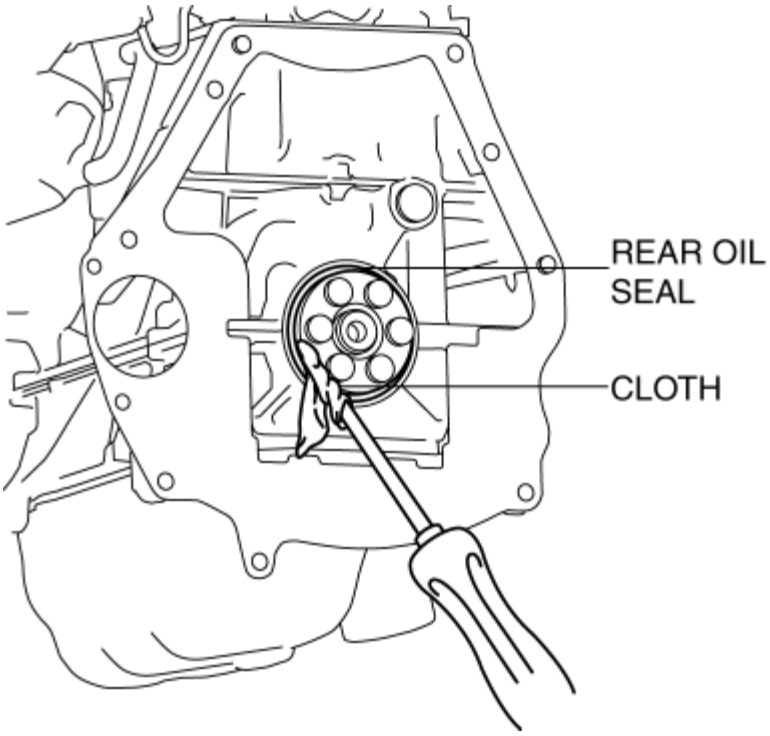

Rear Oil Seal Installation Note

1. Apply clean engine oil to the inner surface of a new rear oil seal.

2. Insert the rear oil seal into the cylinder block by hand.

3. Tap the oil seal in evenly using the **SST** and a hammer.

SKYACTIV-G 2.0

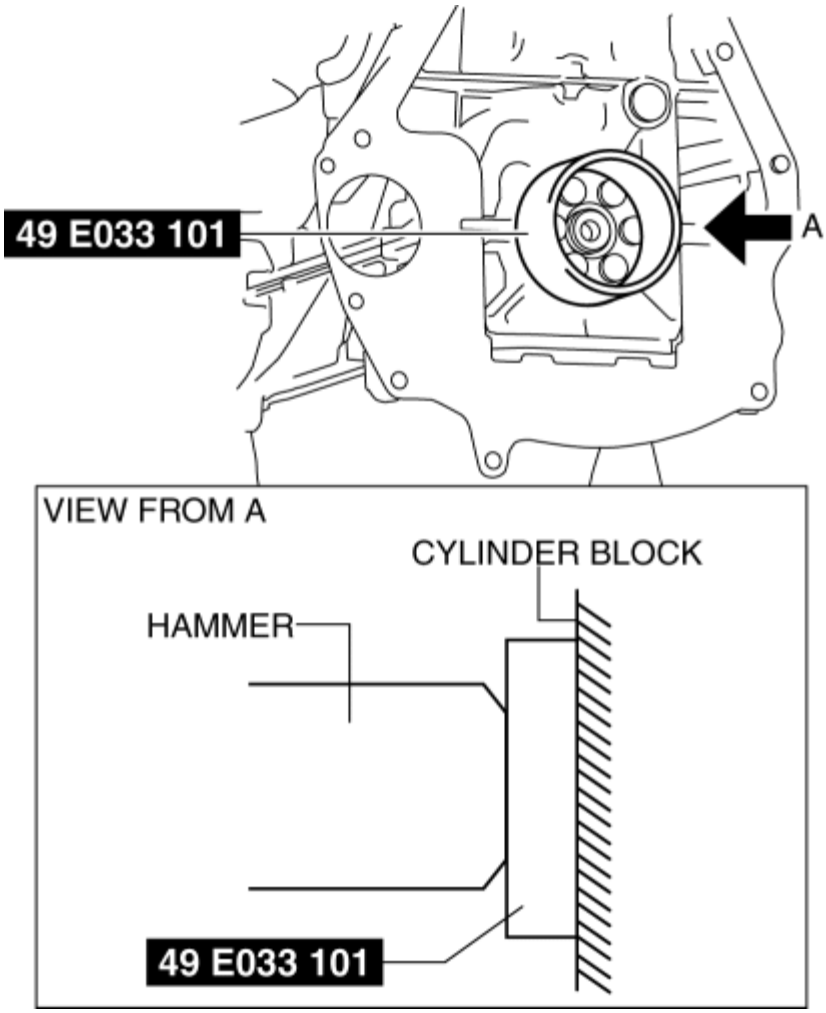

SKYACTIV-G 2.5

REAR OIL SEAL REPLACEMENT [SKYACTIV-G 2.0, SKYACTIV-G 2.5]

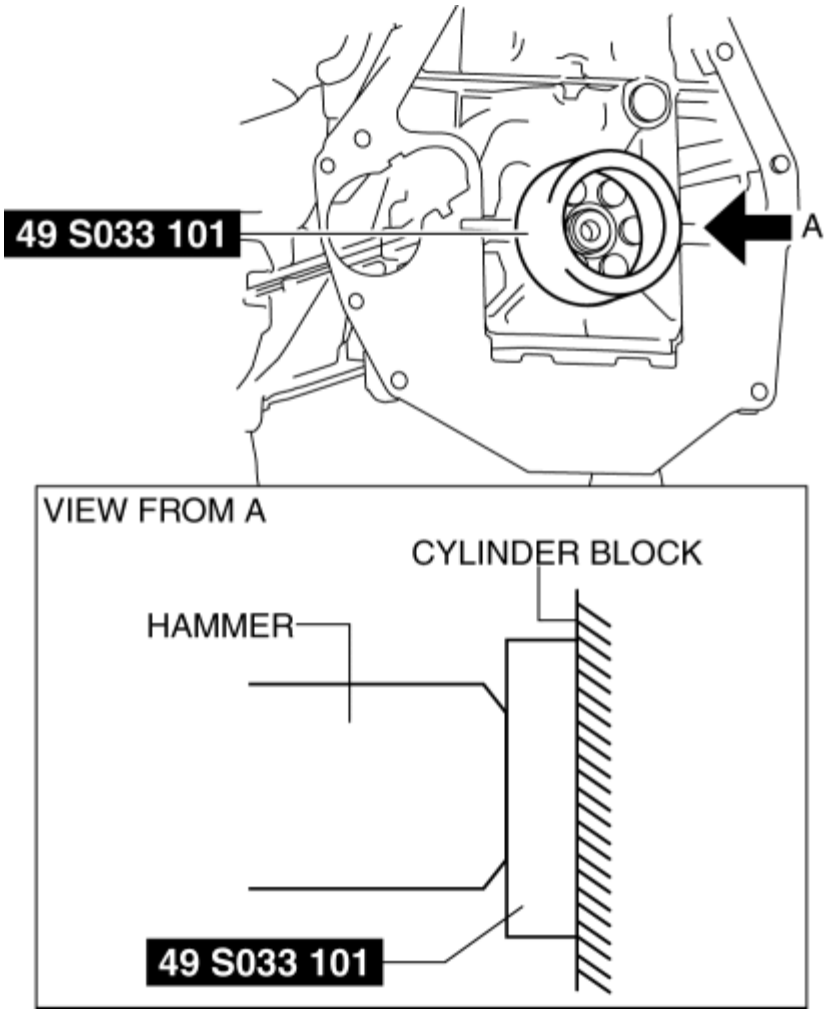

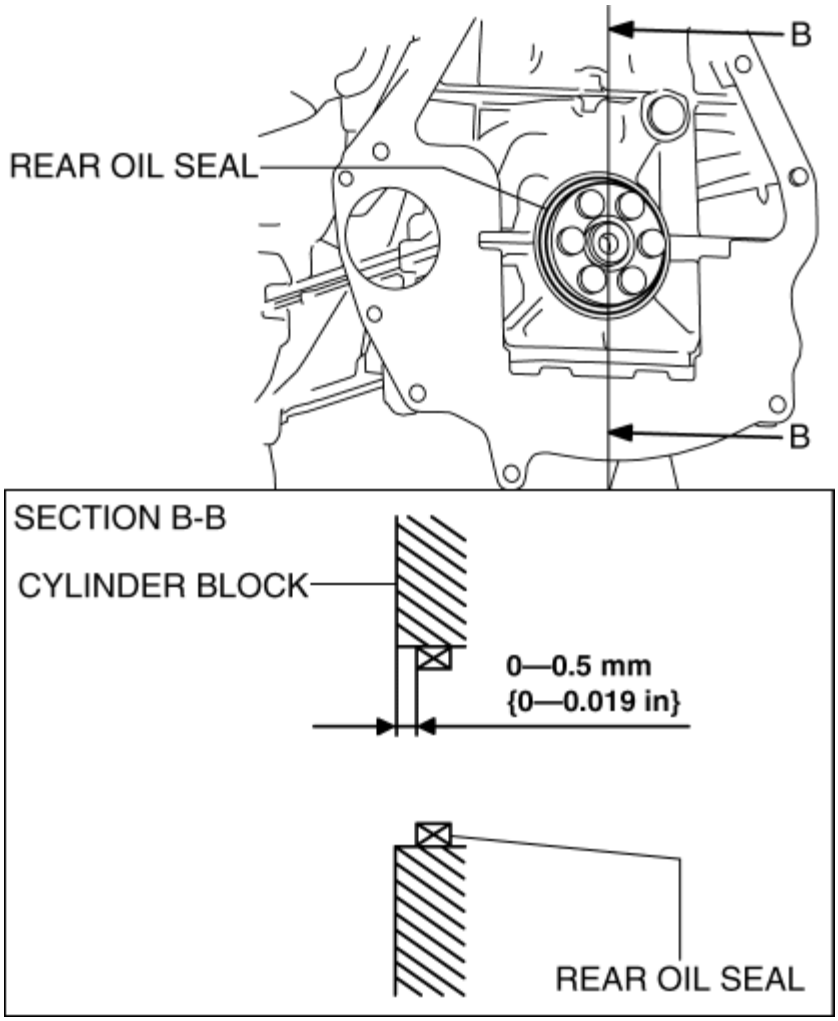

Rear oil seal press on amount

- 0—0.5 mm {0—0.019 in}

2014 - Mazda3 - Engine

ENGINE MOUNT DISASSEMBLY/ASSEMBLY [SKYACTIV-G 2.0, SKYACTIV-G 2.5]

No.1 Engine Mount

1. Remove the front under cover No.2. (See **FRONT UNDER COVER No.2 REMOVAL/INSTALLATION**.)
2. Remove in the order indicated in the table.
3. Install in the reverse order of removal.

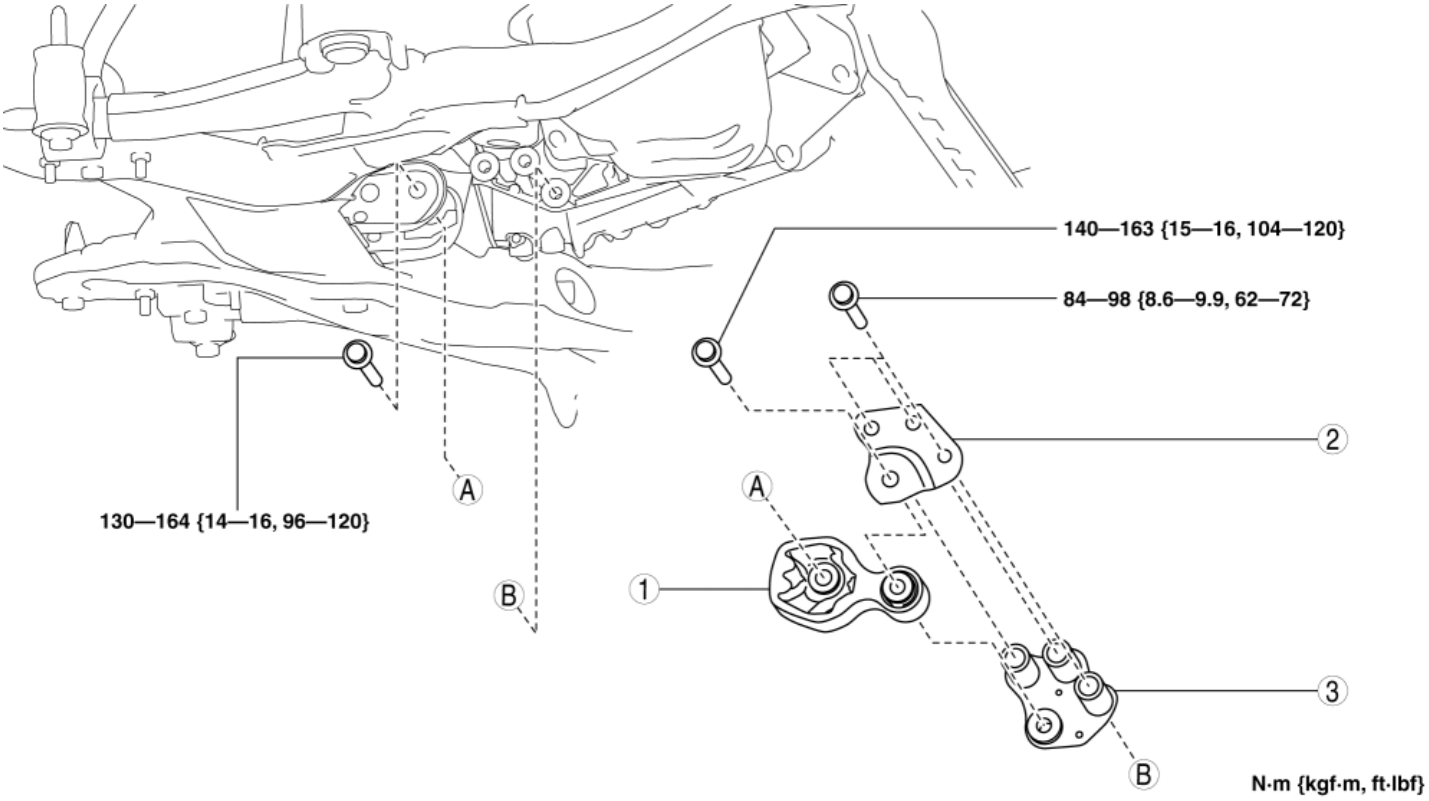

1	No.1 engine mount rubber (See **No.1 engine mount rubber removal note**.) (See **No.1 engine mount installation note**.)
2	Bracket plate (See **No.1 engine mount installation note**.)
3	No.1 engine mount bracket (See **No.1 engine mount installation note**.)

No.1 engine mount rubber removal note

1. Loosen the bolts shown in the figure.

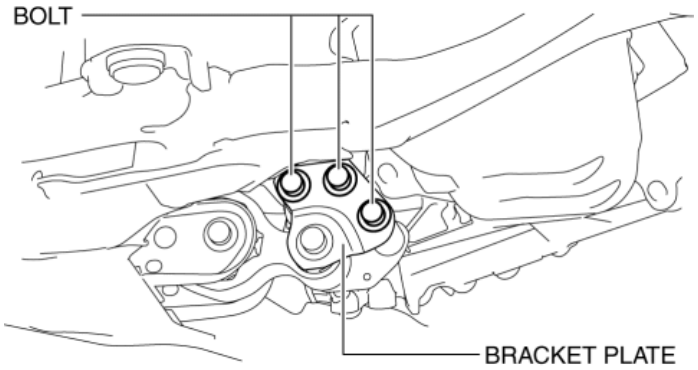

NOTE:

- The bracket plate can move slightly by loosening the bolts shown in the figure and the No.1 engine mount rubber can be easily removed.

2. Remove the No.1 engine mount rubber.

No.1 engine mount installation note

1. Install the No.1 engine mount bracket and bracket plate, and temporarily tighten the bolts shown in the figure.

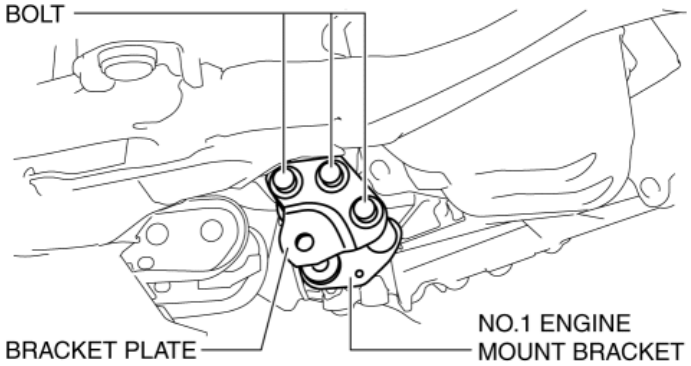

2. Install the No.1 engine mount rubber and temporarily tighten the bolts shown in the figure.

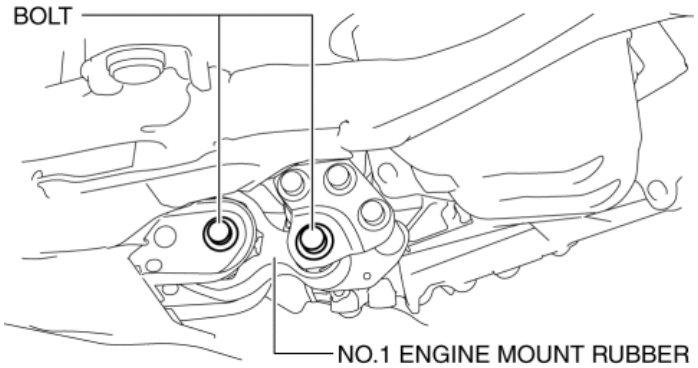

3. Tighten the No.1 engine mount bracket and bracket plate installation bolts in the order shown in the figure.

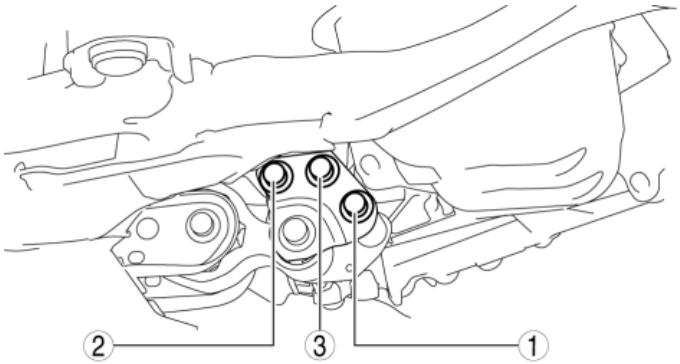

Tightening torque

- 84—98 N·m {8.6—9.9 kgf·m, 62—72 ft·lbf}

4. Tighten the No.1 engine mount rubber installation bolts shown in the figure.

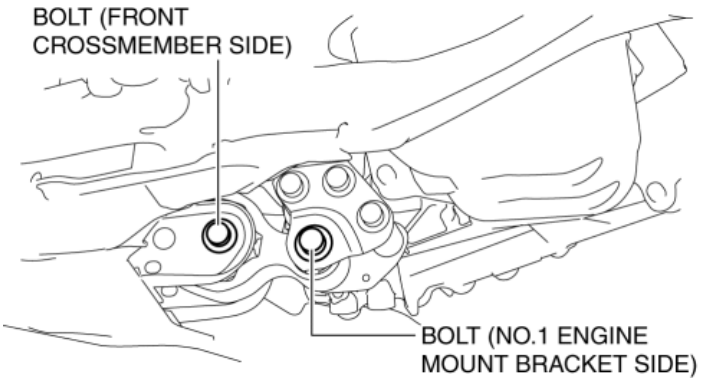

Tightening torque

Installation position	Tightening torque
No.1 engine mount bracket side	140—163 N·m {15—16 kgf·m, 104—120 ft·lbf}
Front crossmember side	130—164 N·m {14—16 kgf·m, 96—120 ft·lbf}

No.3 Engine Mount

CAUTION:

- Slots have been adopted for the No.3 engine mount installation holes. If the No.3 engine mount is deviated from the original position when installing the No.3 engine mount, engine noise or vibration could increase. Before removing the No.3 engine mount, place alignment marks on the No.3 engine mount and body so that they can be assembled to the same positions as before removal.

1. Remove the plug hole plate. (See **PLUG HOLE PLATE REMOVAL/INSTALLATION [SKYACTIV-G 2.0, SKYACTIV-G 2.5]**.)
2. Remove in the order indicated in the table.
3. Install in the reverse order of removal.

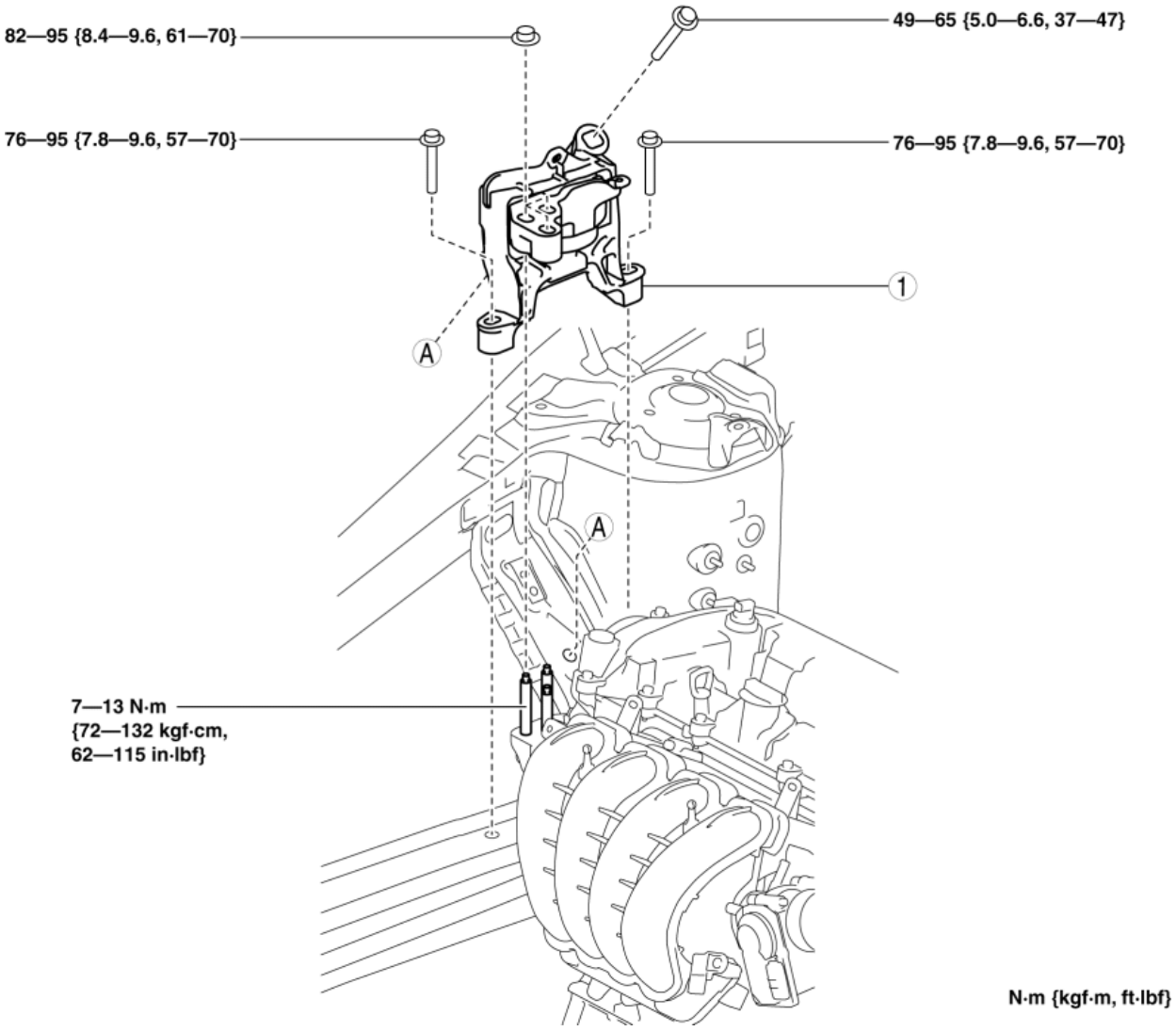

1	No.3 engine mount (See **No.3 engine mount removal note**.) (See **No.3 engine mount installation note**.)

No.3 engine mount removal note

1. Remove the clips shown in the figure and set the ground cable aside.

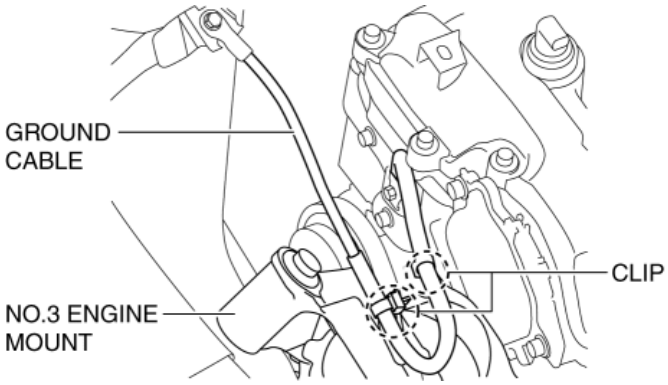

2. Remove the front under cover No.2. (See **FRONT UNDER COVER No.2 REMOVAL/INSTALLATION**.)

CAUTION:

- To prevent deformation of the oil pan, support the engine using the following methods.
  - When using an engine lifter, insert rubber of appropriate size (approx. 20 mm {0.79 in} thickness) between the engine lifter and the oil pan to support the oil pan.
  - When using a garage jack, place rubber of appropriate size (approx. 20 mm {0.79 in} thickness) on a batten which is large enough to cover and support the oil pan.

3. Before removing the No.3 engine mount, support the engine (oil pan) using a commercially available engine lifter or garage jack.

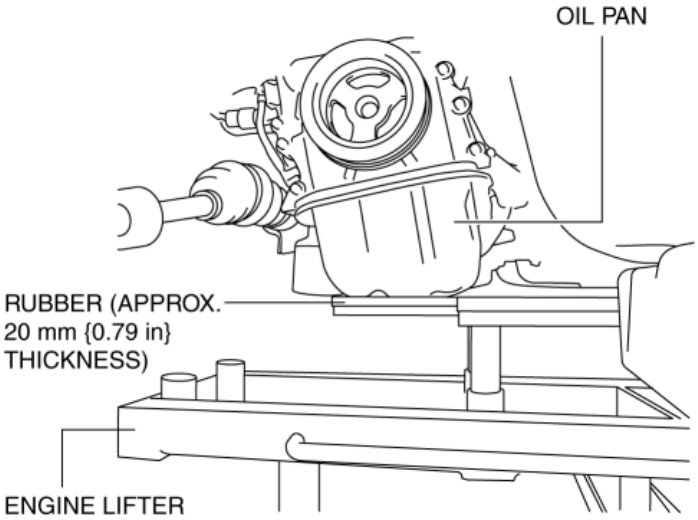

4. Place alignment marks on the locations shown in the figure so that they can be assembled to the same positions as before removal.

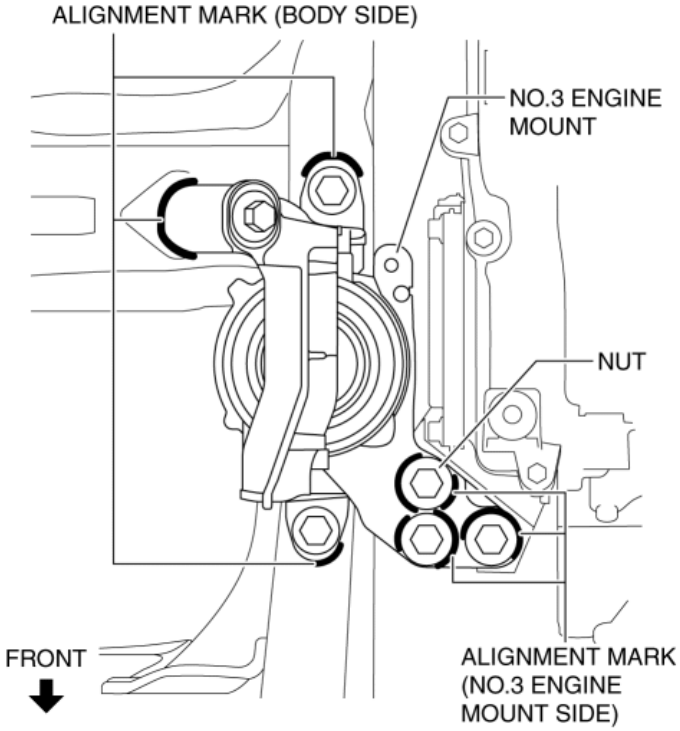

NOTE:

- Paint so that the No.3 engine mount is framed on the body side and the outline of the nut is framed on the No.3 engine mount side.

5. Remove the No.3 engine mount.

No.3 engine mount installation note

NOTE:

- When replacing the No.3 engine mount, place a mark at the same position as the one placed before removal.
- If the No.3 engine mount nut is loosened, tighten the engine front cover stud bolts because they may have loosened.

1. Tighten the engine front cover stud bolts.

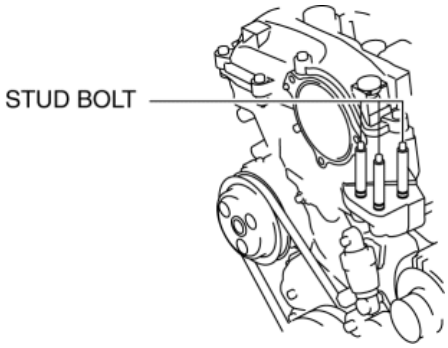

Tightening torque

- 7—13 N·m {72—132 kgf·cm, 62—115 in·lbf}

2. Temporarily tighten the No.3 engine mount installation bolts and nuts using the following procedure:

a. Align the alignment marks on the body side and No.3 engine mount, and temporarily tighten the bolts shown in the figure.

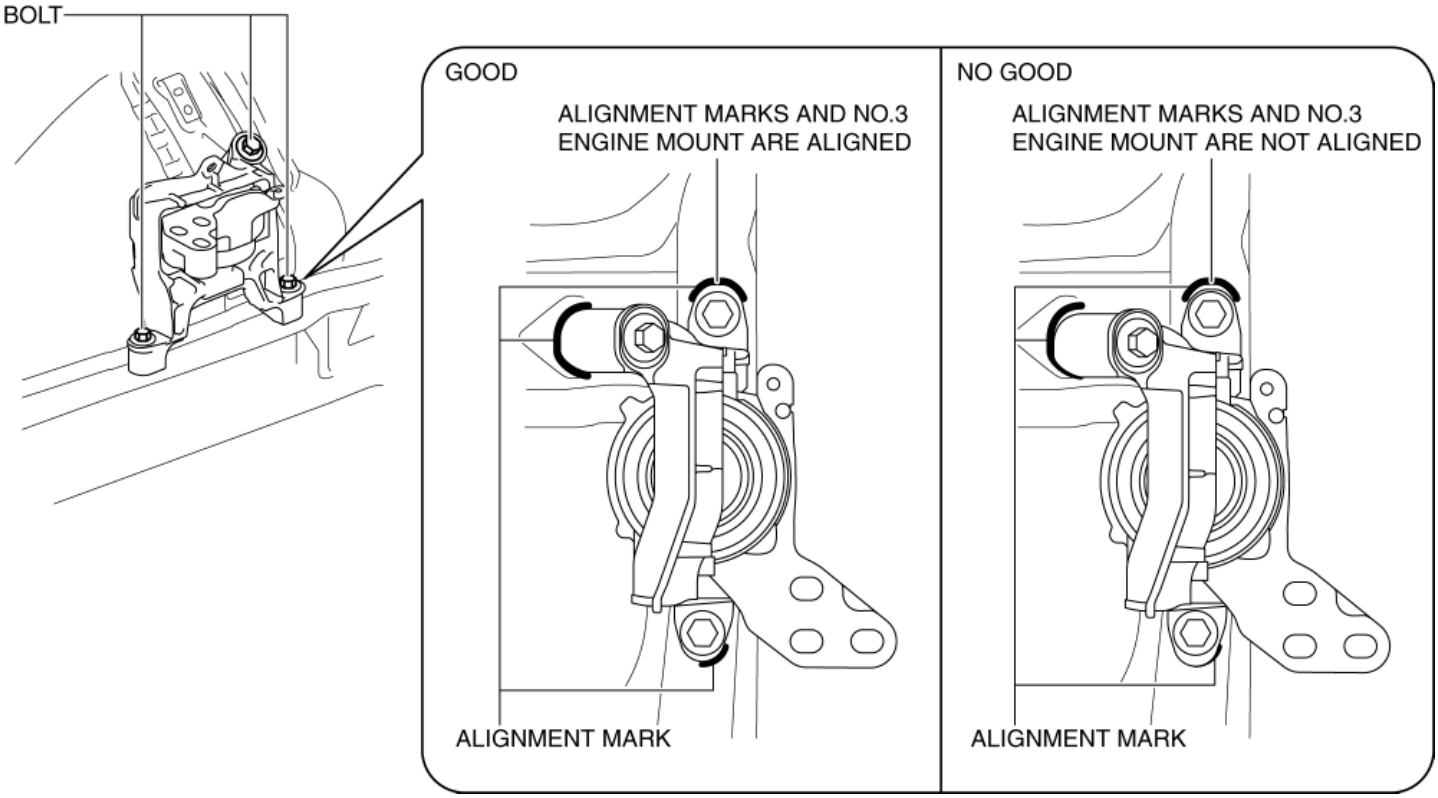

b. Temporarily tighten the nuts shown in the figure while aligning the alignment marks of the No.3 engine mount and nuts.

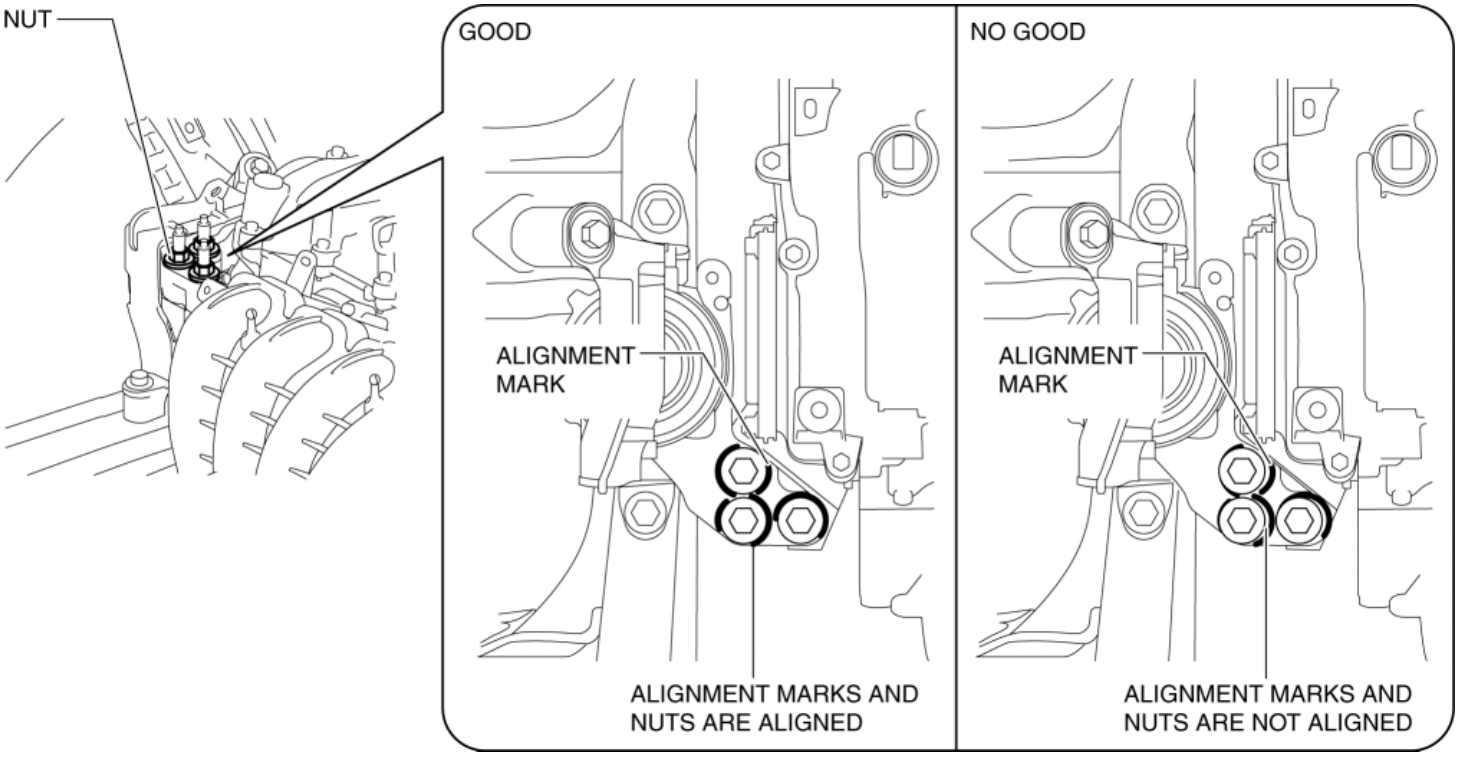

NOTE:

- If the alignment marks are not aligned, align the alignment marks while slightly moving the engine and temporarily tighten the nuts.

3. Tighten the No.3 engine mount installation bolts and nuts in the order shown in the figure.

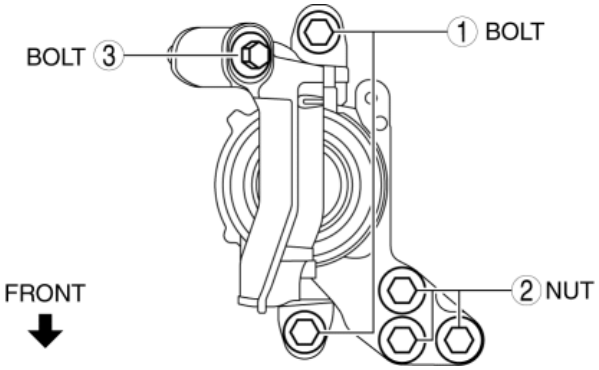

Tightening torque

Installation position	Tightening torque
1	76—95 N·m {7.8—9.6 kgf·m, 57—70 ft·lbf}
2	82—95 N·m {8.4—9.6 kgf·m, 61—70 ft·lbf}
3	49—65 N·m {5.0—6.6 kgf·m, 37—47 ft·lbf}

4. Remove the engine lifter or garage jack.

5. Install in the reverse order of removal.

No.4 Engine Mount

CAUTION:

- Slots have been adopted for the No.4 engine mount bracket installation holes. If the No.4 engine mount bracket is deviated from the original position when installing the No.4 engine mount bracket, engine noise or vibration could increase. Before removing the No.4

engine mount bracket, place alignment marks on the No.4 engine mount bracket so that they can be assembled to the same positions as before removal.

1. Disconnect the negative battery cable. (See **NEGATIVE BATTERY CABLE DISCONNECTION/CONNECTION [SKYACTIV-G 2.0, SKYACTIV-G 2.5]**.)

2. Remove the air cleaner, air hose and fresh air duct as a single unit. (See **INTAKE-AIR SYSTEM REMOVAL/INSTALLATION [SKYACTIV-G 2.0, SKYACTIV-G 2.5]**.)

3. Remove the battery tray and PCM component. (See **BATTERY REMOVAL/INSTALLATION [SKYACTIV-G 2.0, SKYACTIV-G 2.5]**.)

4. Remove in the order indicated in the table.

5. Install in the reverse order of removal.

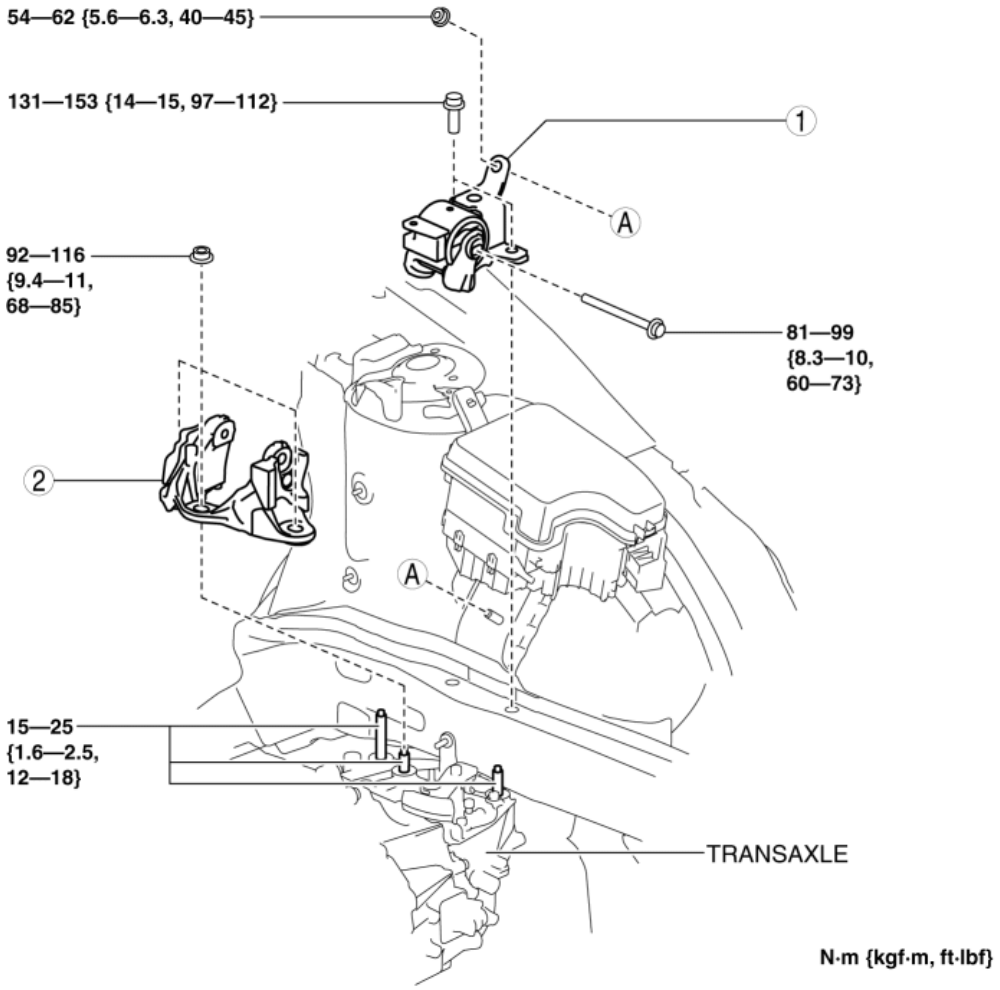

1	No.4 engine mount rubber (See **No.4 engine mount rubber removal note**.) (See **No.4 engine mount rubber installation note**.)
2	No.4 engine mount bracket (See **No.4 engine mount bracket removal note**.) (See **No.4 engine mount bracket installation note**.)

No.4 engine mount rubber removal note

1. Remove the bolt and nut shown in the figure and set the relay and fuse block aside.

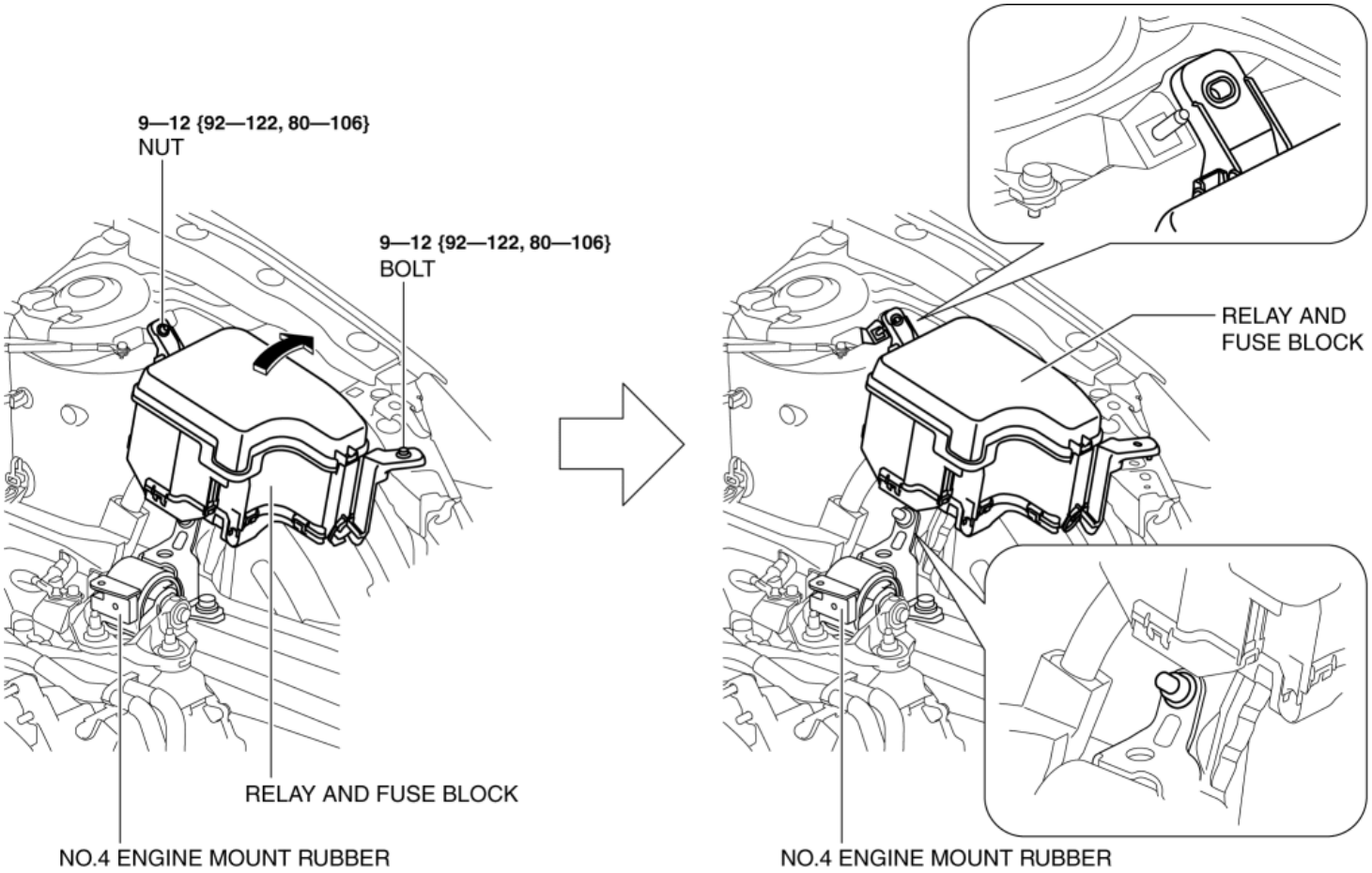

N·m {kgf·cm, in·lbf}

2. Remove the front under cover No.2. (See **FRONT UNDER COVER No.2 REMOVAL/INSTALLATION**.)

CAUTION:

- To prevent damage to the transaxle, support the transaxle using the following methods.
  - MTX: Support the clutch housing using a batten of appropriate size.

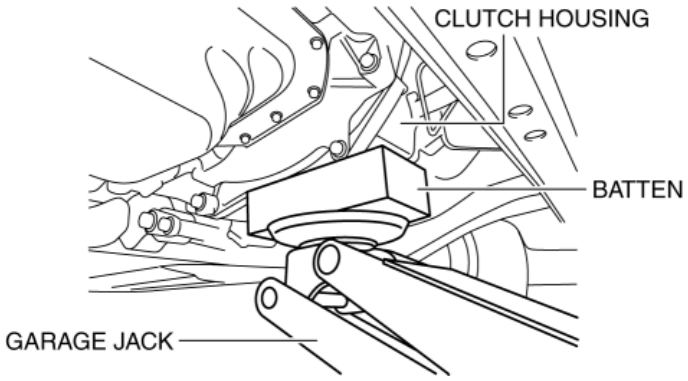

  - ATX: Place rubber of appropriate size (approx. 20 mm {0.79 in} thickness) on a batten which is large enough to cover and support the oil pan.

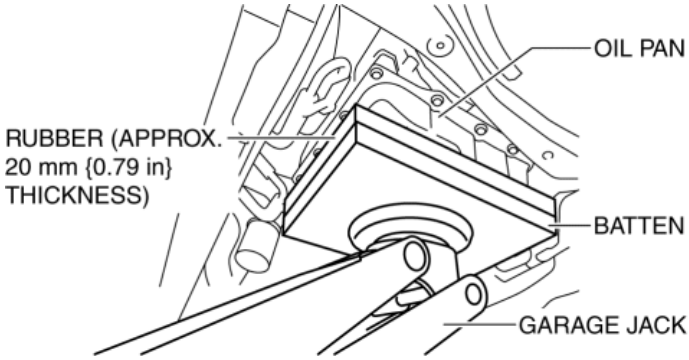

3. Before removing the No.4 engine mount rubber, support the transaxle using a commercially available engine lifter or garage jack.
4. Remove the No.4 engine mount rubber.

No.4 engine mount bracket removal note

1. Remove the bolt shown in the figure and set the ground cable aside.

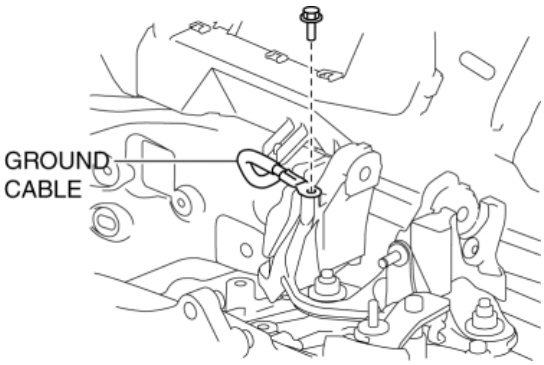

2. Place alignment marks on the locations shown in the figure so that they can be assembled to the same positions as before removal.

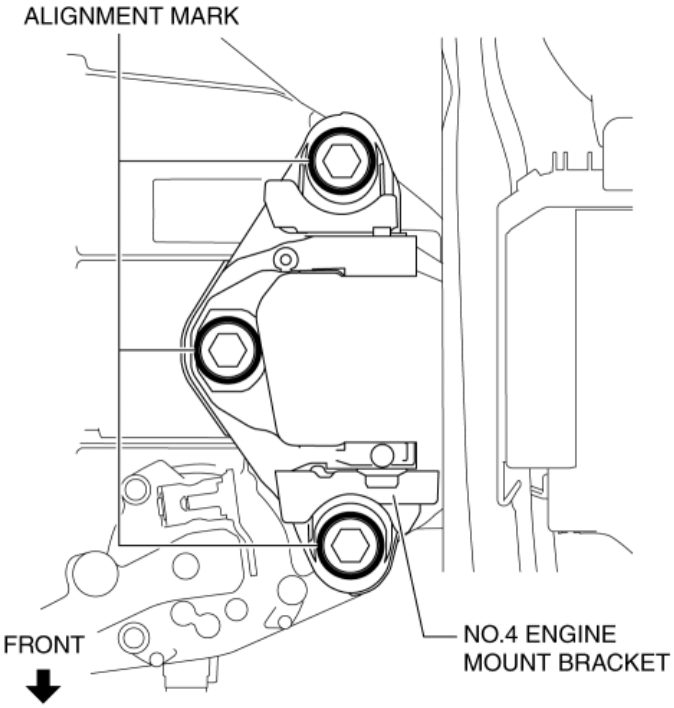

NOTE:

- Paint so that the outline of the nut is framed on the bracket side.

3. Remove the No.4 engine mount bracket.

No.4 engine mount bracket installation note

NOTE:

- When replacing the No.4 engine mount bracket, place a mark at the same position as the one placed before removal.
- If the No.4 engine mount bracket nut is loosened, tighten the transaxle stud bolts because they may have loosened.

1. Tighten the transaxle stud bolts.

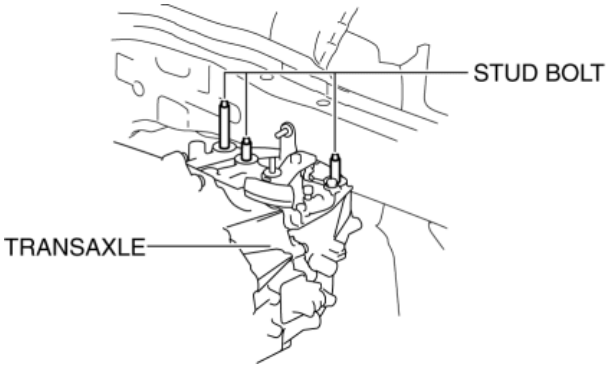

Tightening torque

- 15—25 N·m {1.6—2.5 kgf·m, 12—18 ft·lbf}

2. Align the alignment marks on the No.4 engine mount bracket and nuts, and temporarily tighten the nuts shown in the figure.

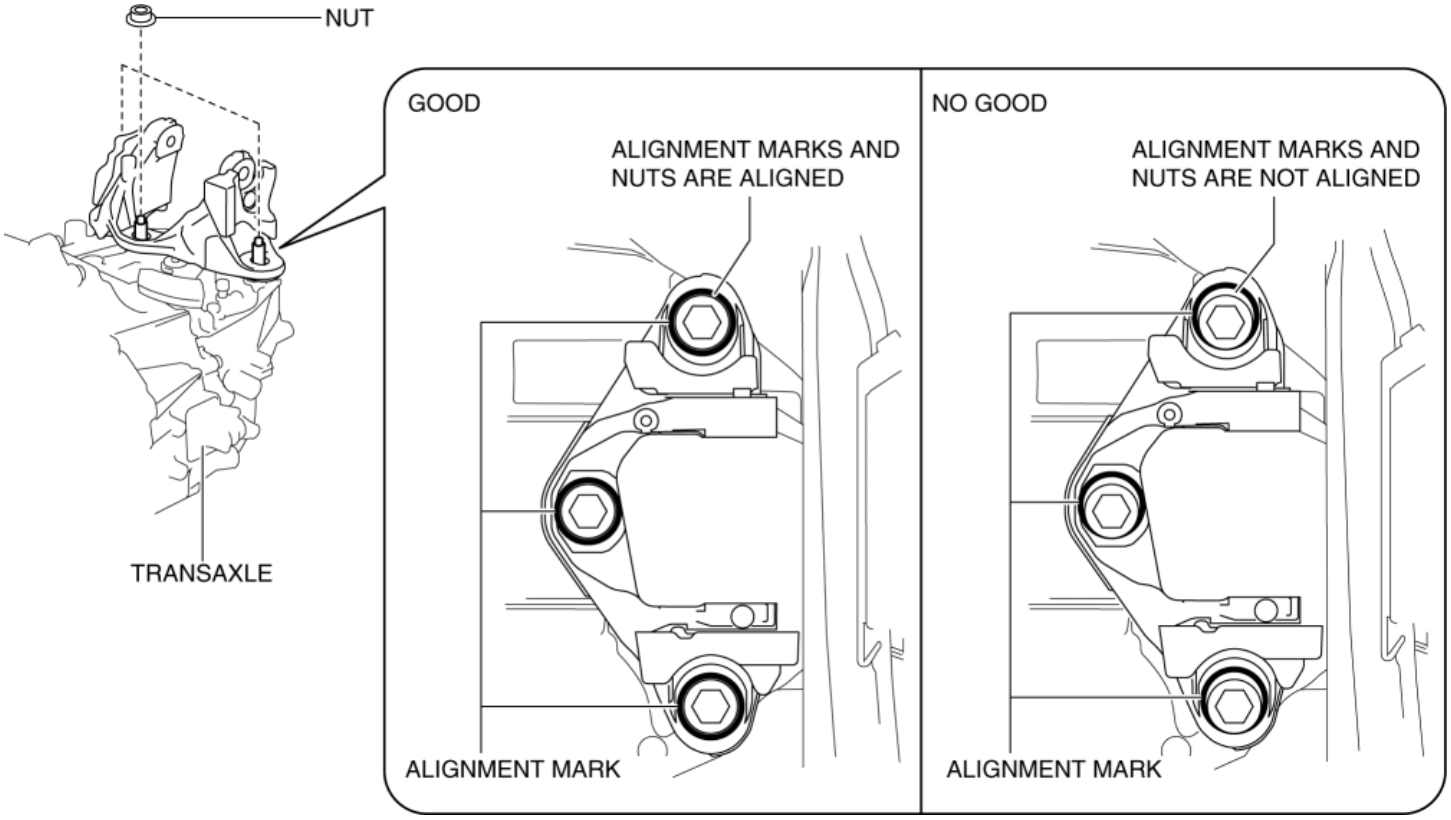

3. Tighten the No.4 engine mount bracket installation nuts in the order shown in the figure.

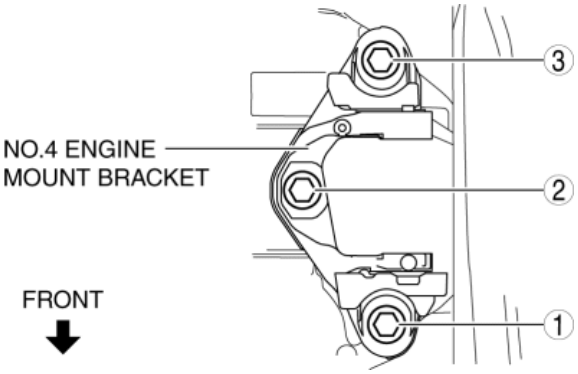

Tightening torque

- 92—116 N·m {9.4—11 kgf·m, 68—85 ft·lbf}

4. Install the ground cable to the No.4 engine mount bracket.

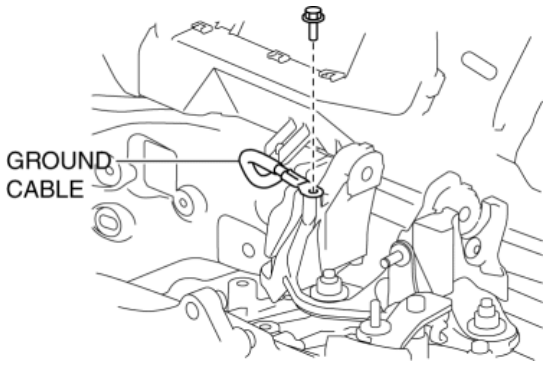

Tightening torque

- 9—12 N·m {92—122 kgf·cm, 80—106 in·lbf}

No.4 engine mount rubber installation note

1. Install the No.4 engine mount rubber and temporarily tighten the bolts and nut shown in the figure.

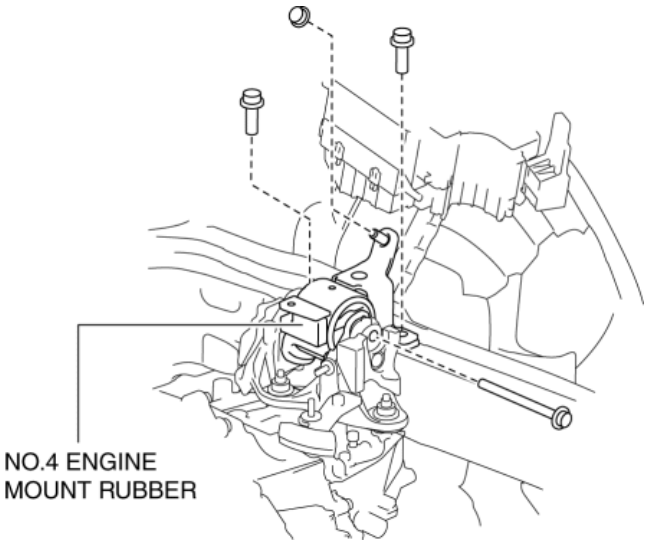

2. Tighten the No.4 engine mount rubber installation bolts and nut in the order shown in the figure.

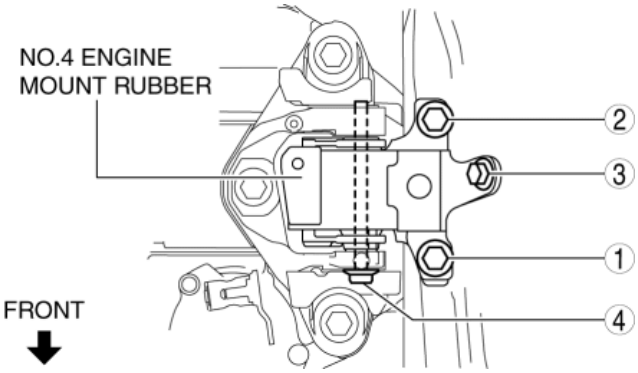

Tightening torque

Installation position	Tightening torque
1, 2	131—153 N·m {14—15 kgf·m, 97—112 ft·lbf}
3	54—62 N·m {5.6—6.3 kgf·m, 40—45 ft·lbf}

4	81—99 N·m {8.3—10 kgf·m, 60—73 ft·lbf}

3. Remove the engine lifter or garage jack.

4. Install in the reverse order of removal.

2014 - Mazda3 - Engine

ENGINE REMOVAL/INSTALLATION [SKYACTIV-G 2.0, SKYACTIV-G 2.5]

WARNING:

- A hot engine can cause severe burns. Turn off the engine and wait until it is cool before servicing.
- Fuel vapor is hazardous. It can very easily ignite, causing serious injury and damage. Always keep sparks and flames away from fuel.
- Fuel line spills and leakage are dangerous. Fuel can ignite and cause serious injuries or death and damage. Fuel can also irritate skin and eyes. To prevent this, always complete the “Fuel Line Safety Procedure”. (See **BEFORE SERVICE PRECAUTION [SKYACTIV-G 2.0, SKYACTIV-G 2.5]**.)

CAUTION:

- Secure the steering wheel using tape or a cable to prevent the steering shaft from rotating after disconnecting the steering shaft. If the steering wheel rotates after the steering shaft and the steering gear and linkage are disconnected, the internal parts of the clock spring could be damaged.
- Applying excessive force (force of 100 N {10.2 kgf, 22.5 lbf} or more) to the electric variable valve timing motor/driver may cause a malfunction. When servicing, be careful not to apply excessive force to the electric variable valve timing motor/driver using other parts or tools.

NOTE:

- Perform the engine and transaxle component removal/installation from below the vehicle.

1. Disconnect the negative battery cable. (See **NEGATIVE BATTERY CABLE DISCONNECTION/CONNECTION [SKYACTIV-G 2.0, SKYACTIV-G 2.5]**.)
2. Remove the plug hole plate. (See **PLUG HOLE PLATE REMOVAL/INSTALLATION [SKYACTIV-G 2.0, SKYACTIV-G 2.5]**.)
3. Remove the air cleaner, air hose and fresh air duct as a single unit. (See **INTAKE-AIR SYSTEM REMOVAL/INSTALLATION [SKYACTIV-G 2.0, SKYACTIV-G 2.5]**.)
4. Remove the bolts, nut and connector shown in the figure, and set the wiring harness aside.

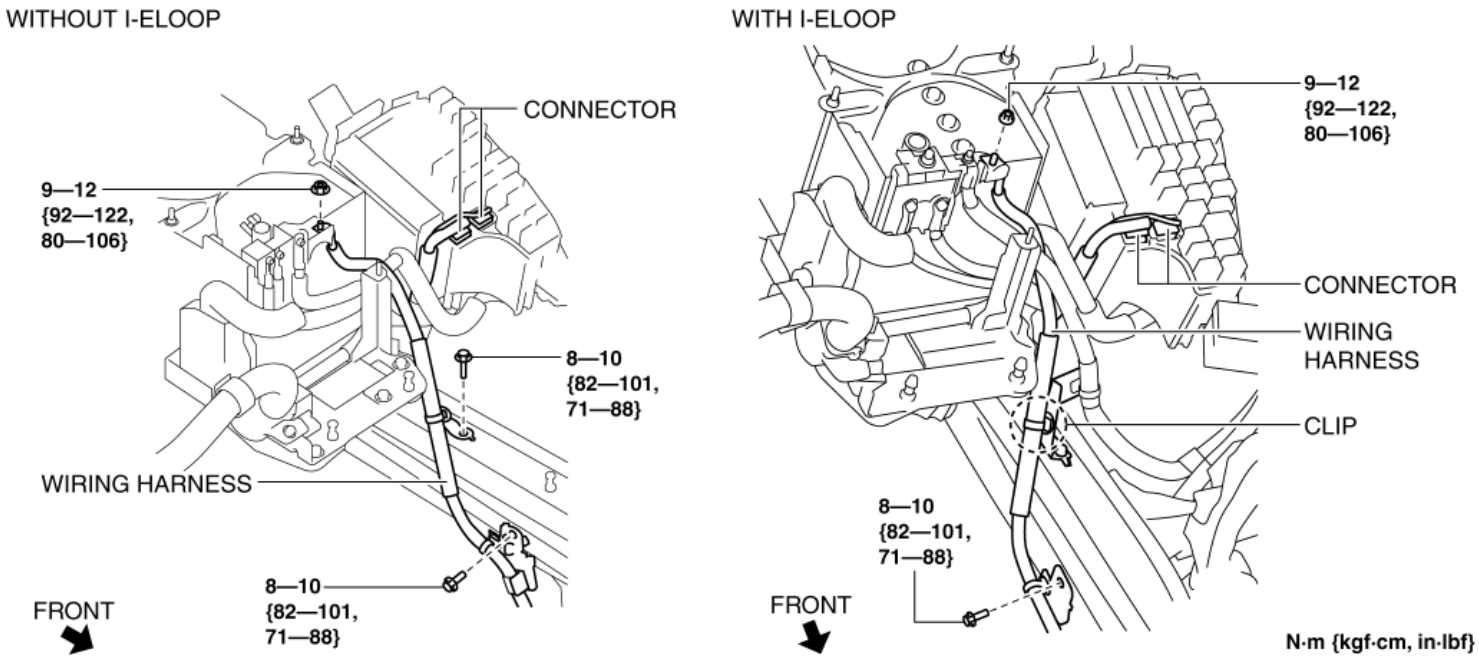

5. Remove the battery tray and PCM component. (See **BATTERY REMOVAL/INSTALLATION [SKYACTIV-G 2.0, SKYACTIV-G 2.5]**.)
6. Remove the front under cover No.1 and No.2. (See **FRONT UNDER COVER No.1 REMOVAL/INSTALLATION**.) (See **FRONT UNDER COVER No.2 REMOVAL/INSTALLATION**.)
7. Remove the splash shield. (See **SPLASH SHIELD REMOVAL/INSTALLATION**.)
8. Drain the engine coolant. (See **ENGINE COOLANT REPLACEMENT [SKYACTIV-G 2.0, SKYACTIV-G 2.5]**.)
9. Drain the transaxle oil (MTX) or ATF (ATX). (See **MANUAL TRANSAXLE OIL REPLACEMENT [C66M-R]**.) (See **AUTOMATIC TRANSAXLE FLUID (ATF) REPLACEMENT [FW6A-EL]**.)
10. Remove the front wheels and tires. (See **GENERAL PROCEDURES (SUSPENSION)**.)

11. Disconnect the selector cable. (ATX) (See **AUTOMATIC TRANSAXLE SHIFT MECHANISM REMOVAL/INSTALLATION**.)

12. Disconnect the control cable. (MTX) (See **MANUAL TRANSAXLE SHIFT MECHANISM REMOVAL/INSTALLATION [C66M-R]**.)

13. Remove the clutch release cylinder with the pipe still connected. (MTX) (See **CLUTCH RELEASE CYLINDER REMOVAL/INSTALLATION [C66M-R]**.)

14. Disconnect the vacuum hose. (See **VACUUM HOSE REMOVAL/INSTALLATION**.)

15. Disconnect evaporative hose No.1 from the engine side. (See **PURGE SOLENOID VALVE REMOVAL/INSTALLATION [SKYACTIV-G 2.0, SKYACTIV-G 2.5]**.)

16. Disconnect the fuel hose from the engine side. (See **QUICK RELEASE CONNECTOR REMOVAL/INSTALLATION [SKYACTIV-G 2.0, SKYACTIV-G 2.5]**.)

17. Disconnect the upper radiator hose. (See **COOLING FAN MOTOR REMOVAL/INSTALLATION [SKYACTIV-G 2.0, SKYACTIV-G 2.5]**.)

18. Disconnect the heater hose. (See **A/C UNIT REMOVAL/INSTALLATION**.)

19. Disconnect the lower radiator hose. (See **RADIATOR REMOVAL/INSTALLATION [SKYACTIV-G 2.0, SKYACTIV-G 2.5]**.)

20. Remove the generator drive belt. (See **DRIVE BELT REMOVAL/INSTALLATION [SKYACTIV-G 2.0, SKYACTIV-G 2.5]**.)

21. Remove the A/C compressor with the cooler hose still connected and secure it using wire or rope so that it is out of the way. (with A/C) (See **A/C COMPRESSOR REMOVAL/INSTALLATION**.)

22. Remove the TWC installation nuts (exhaust manifold side) and secure the TWC using wire or rope so that it is out of the way. (See **EXHAUST SYSTEM REMOVAL/INSTALLATION [SKYACTIV-G 2.0, SKYACTIV-G 2.5]**.)

23. Disconnect the drive shaft from the transaxle side and set the drive shaft out of the way. (See **FRONT DRIVE SHAFT REMOVAL/INSTALLATION**.)

24. Remove the bolt and clips, and set the ground cable aside.

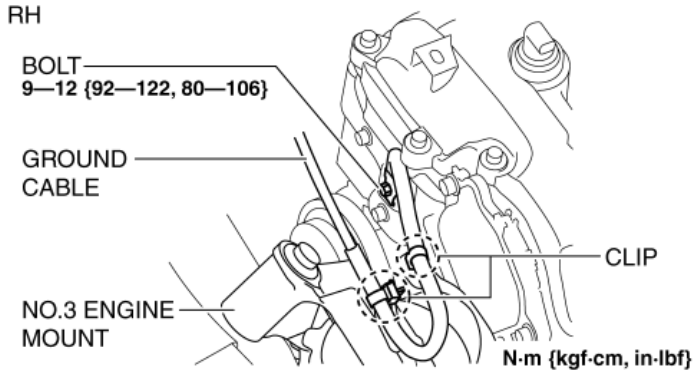

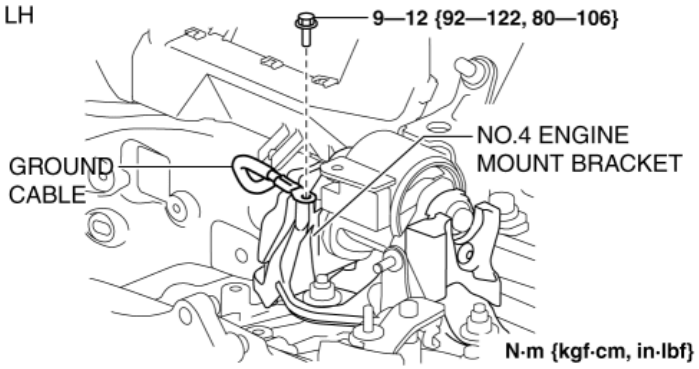

25. Remove in the order indicated in the table.

26. Install in the reverse order of removal.

27. Refill the transaxle oil (MTX) or ATF (ATX). (See **MANUAL TRANSAXLE OIL REPLACEMENT [C66M-R]**.) (See **AUTOMATIC TRANSAXLE FLUID (ATF) REPLACEMENT [FW6A-EL]**.)

28. Refill the engine coolant. (See **ENGINE COOLANT REPLACEMENT [SKYACTIV-G 2.0, SKYACTIV-G 2.5]**.)

29. Start the engine, and inspect and adjust the following:

- Front wheel alignment (See **FRONT WHEEL ALIGNMENT**.)
- Leakage of engine oil, engine coolant, ATF (ATX), transaxle oil (MTX), and fuel.
- Runout and contact of pulley and belt.
- Ignition timing, idle speed and idle mixture. (See **ENGINE TUNE-UP [SKYACTIV-G 2.0, SKYACTIV-G 2.5]**.)

- Engine-driven accessories operation.

NOTE:

- If the engine is overhauled and assembled to the vehicle, perform a road test to verify that there is no abnormal vibration and noise.

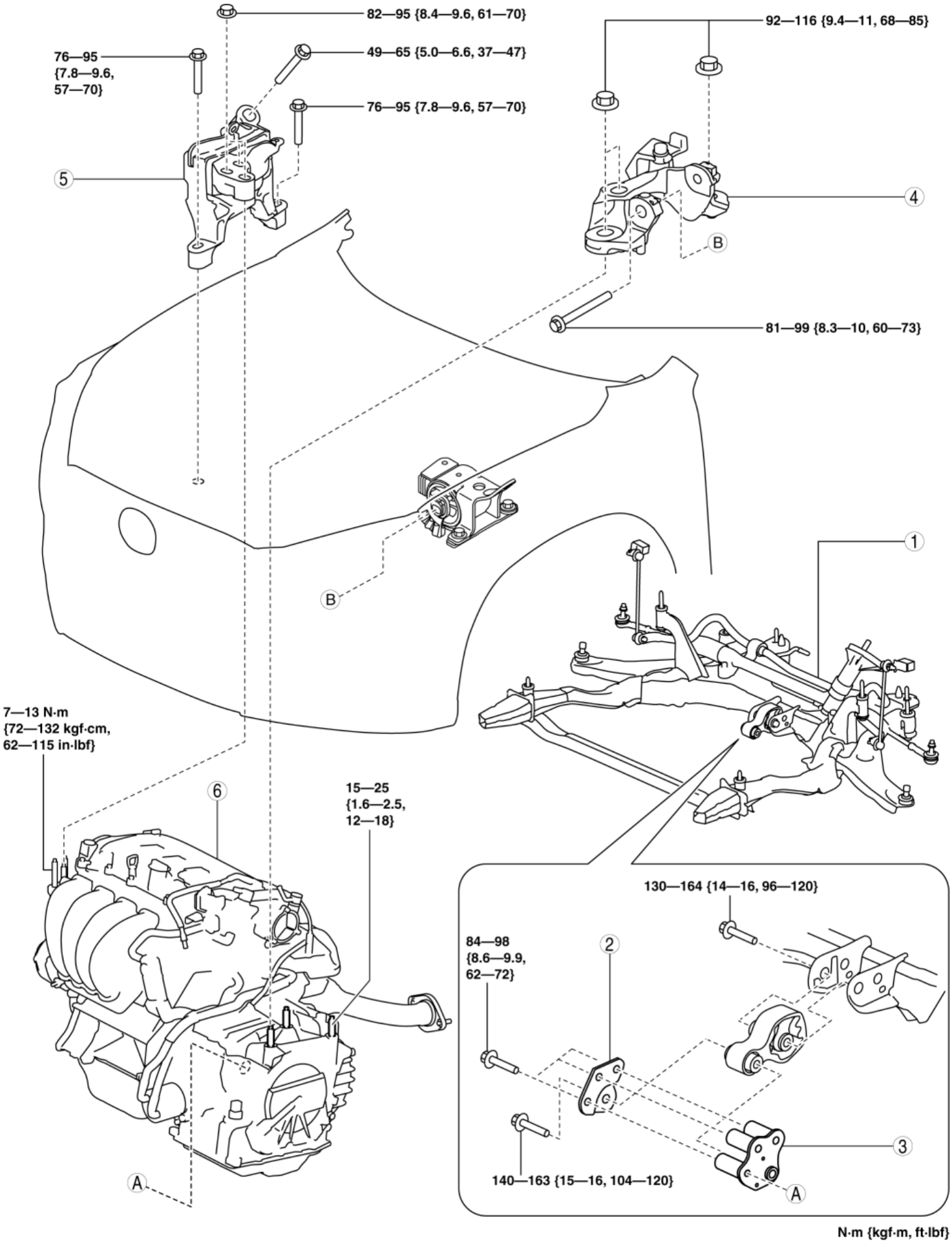
82—95 {8.4—9.6, 61—70}
92—116 {9.4—11, 68—85}
76—95 {7.8—9.6, 57—70}
49—65 {5.0—6.6, 37—47}
76—95 {7.8—9.6, 57—70}
5
4
B
81—99 {8.3—10, 60—73}
B
1
7—13 N·m {72—132 kgf·cm, 62—115 in·lbf}
6
15—25 {1.6—2.5, 12—18}
130—164 {14—16, 96—120}
84—98 {8.6—9.9, 62—72}
2
3
140—163 {15—16, 104—120}
A
A
N·m {kgf·m, ft·lbf}

1	No.1 engine mount rubber, front crossmember component (See **No.1 Engine Mount Rubber, Front Crossmember Component Removal Note**.) (See **Engine Mount Installation Note**.)
2	Bracket plate (See **Engine Mount Installation Note**.)
3	No.1 engine mount bracket (See **Engine Mount Installation Note**.)
4	No.4 engine mount bracket (See **No.3 Engine Mount, No.4 Engine Mount Bracket Removal Note**.) (See **Engine Mount Installation Note**.)
5	No.3 engine mount (See **No.3 Engine Mount, No.4 Engine Mount Bracket Removal Note**.) (See **Engine Mount Installation Note**.)
6	Engine, transaxle

No.1 Engine Mount Rubber, Front Crossmember Component Removal Note

1. Disconnect the service plug. (with i-ELOOP) (See **SERVICE PLUG DISCONNECTION/CONNECTION [i-ELOOP]**.)
2. Disconnect the generator terminal B cable. (with i-ELOOP) (See **GENERATOR REMOVAL/INSTALLATION [SKYACTIV-G 2.0, SKYACTIV-G 2.5 (WITH i-ELOOP)]**.)
3. Remove the clips shown in the figure and set the wiring harness aside. (with i-ELOOP)

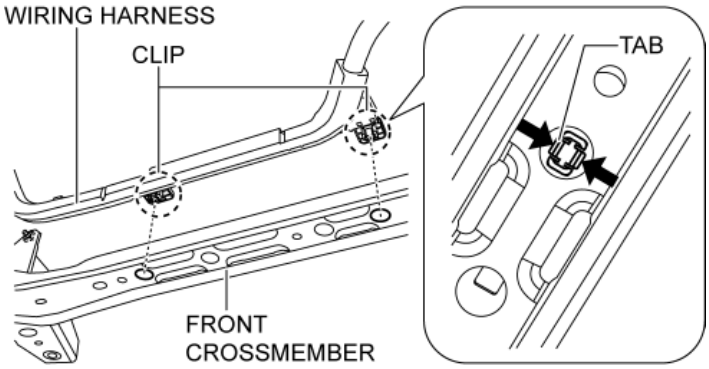

4. Loosen the bolts shown in the figure.

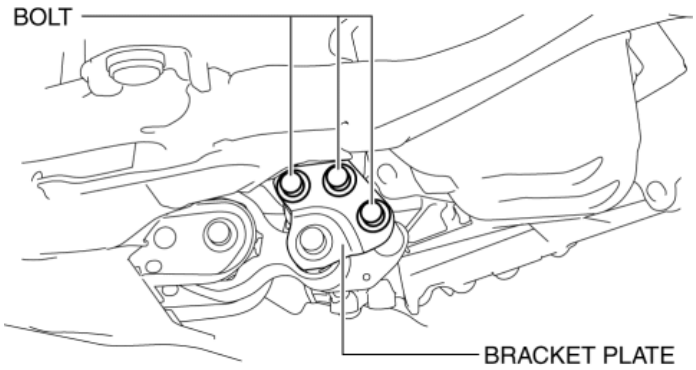

NOTE:

- The bracket plate can move slightly by loosening the bolts shown in the figure and the No.1 engine mount rubber can be

easily removed.

5. Remove the No.1 engine mount rubber and the front crossmember component as a single unit. (See **FRONT CROSSMEMBER REMOVAL / INSTALLATION**.)

No.3 Engine Mount, No.4 Engine Mount Bracket Removal Note

CAUTION:

- When supporting the engine and transaxle, insert rubber of appropriate size (approx. 20 mm {0.79 in} thickness) between the engine lifter and the oil pan, transaxle to prevent deformation of the oil pan and damage of the transaxle.

1. Secure the engine and transaxle using a commercially available engine lifter.

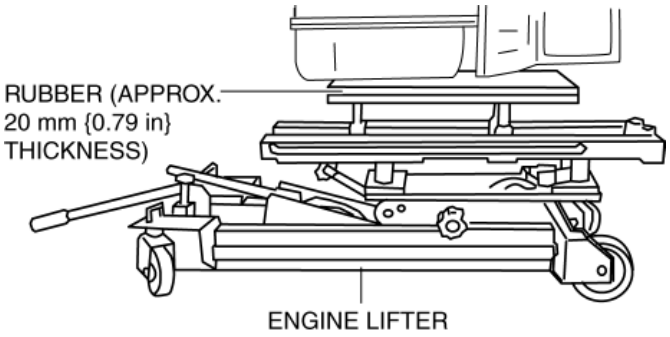

2. Remove the No.4 engine mount bracket.
3. Remove the No.3 engine mount.

Engine Mount Installation Note

CAUTION:

- Slots have been adopted for the No.3 engine mount and No.4 engine mount bracket installation holes. Tighten the installation bolts and nuts so that they are centered on the slots. Otherwise, engine noise or vibration could increase.

NOTE:

- Retighten the engine front cover and transaxle stud bolts when the nuts of No.3 engine mount and No.4 engine mount bracket are loosened.

1. Tighten the engine front cover stud bolts.

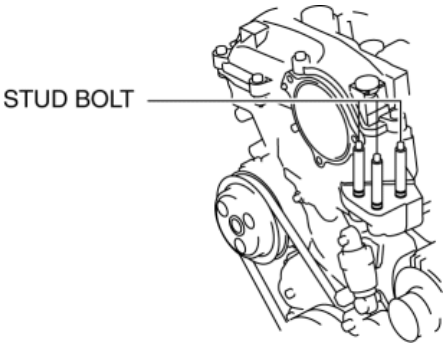

Tightening torque

- 7—13 N·m {72—132 kgf·cm, 62—115 in·lbf}

2. Tighten the transaxle stud bolts.

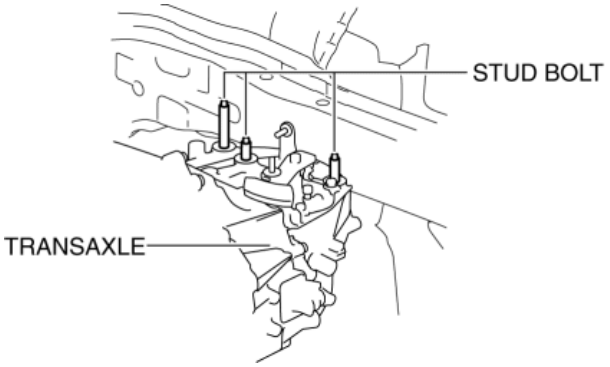

Tightening torque

- 15—25 N·m {1.6—2.5 kgf·m, 12—18 ft·lbf}

CAUTION:

- When supporting the engine and transaxle, insert rubber of appropriate size (approx. 20 mm {0.79 in} thickness) between the engine lifter and the oil pan, transaxle to prevent deformation of the oil pan and damage of the transaxle.

3. Secure the engine and transaxle using a commercially available engine lifter.

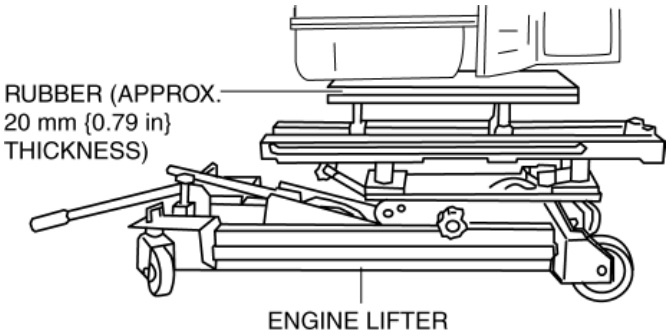

4. Temporarily tighten the No.3 engine mount installation bolts and nuts using the following procedure:

   a. Temporarily tighten the bolts shown in the figure so that they are centered on the No.3 engine mount slots.

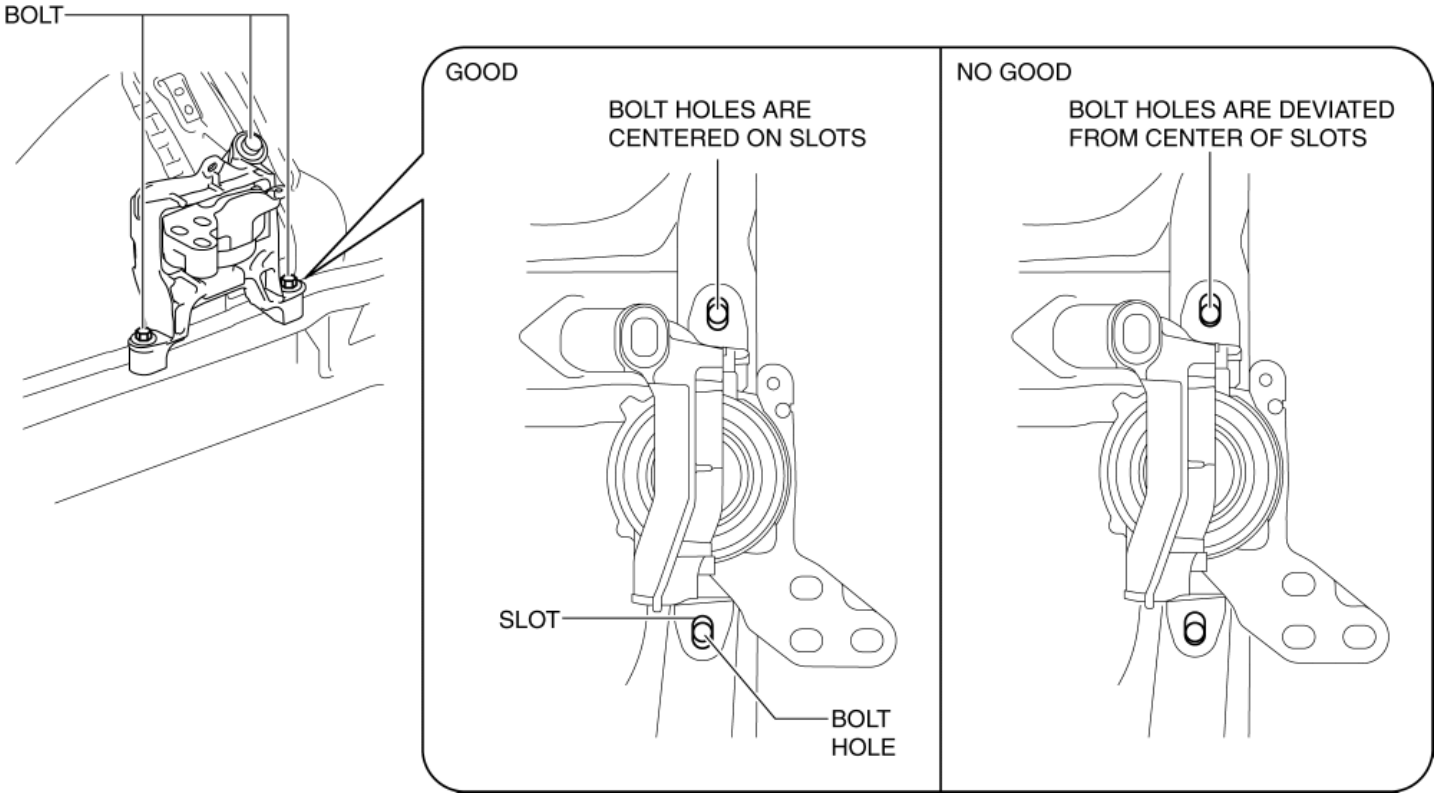

   b. Temporarily tighten the nuts shown in the figure so that the stud bolts of the engine front cover are centered on the No.3 engine mount slots.

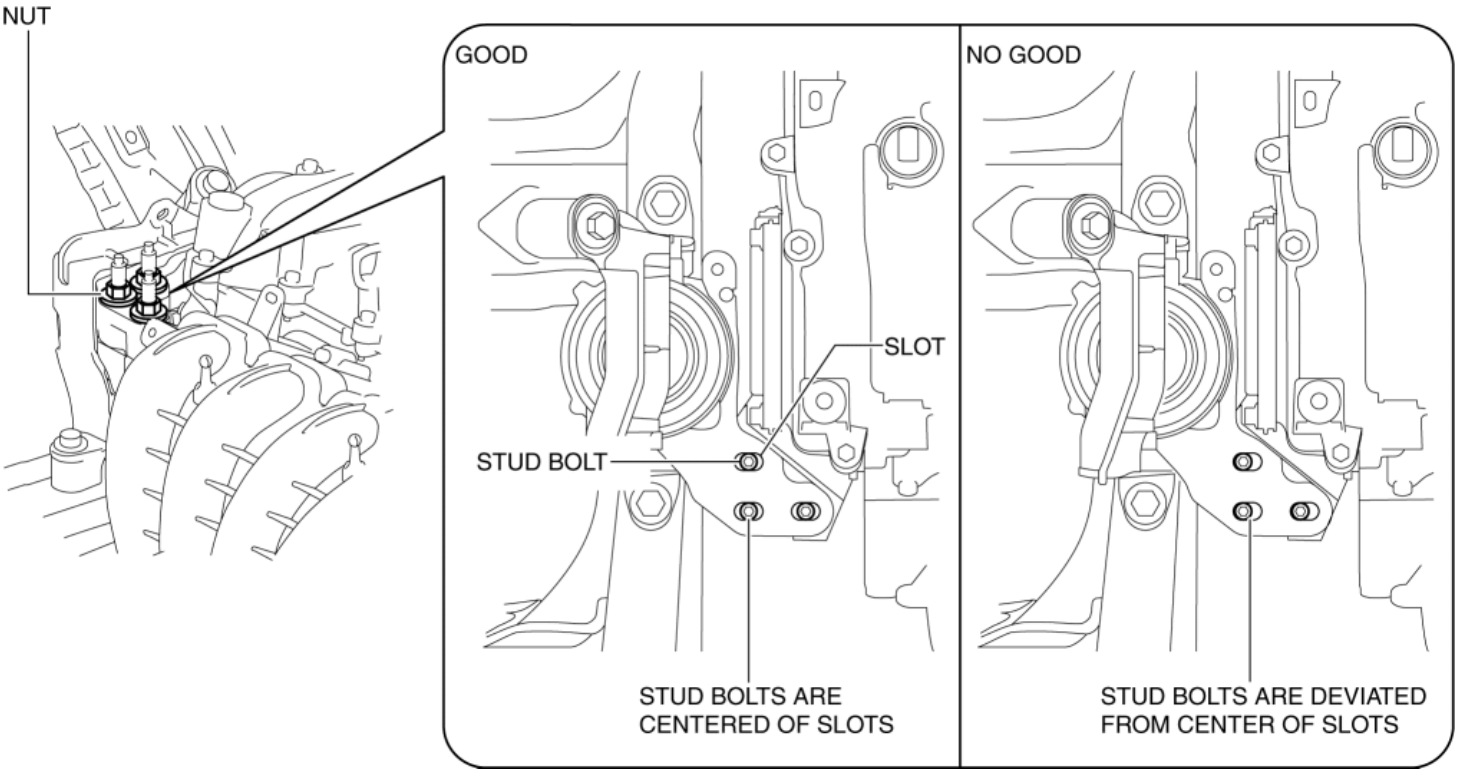

NOTE:

- If the stud bolts are deviated from the center of the slots, align the stud bolts with the center of the slots while slightly moving the engine, and temporarily tighten the installation nuts.

5. Temporarily tighten the No.4 engine mount bracket installation bolt and nuts using the following procedure:

a. Temporarily tighten the bolt shown in the figure.

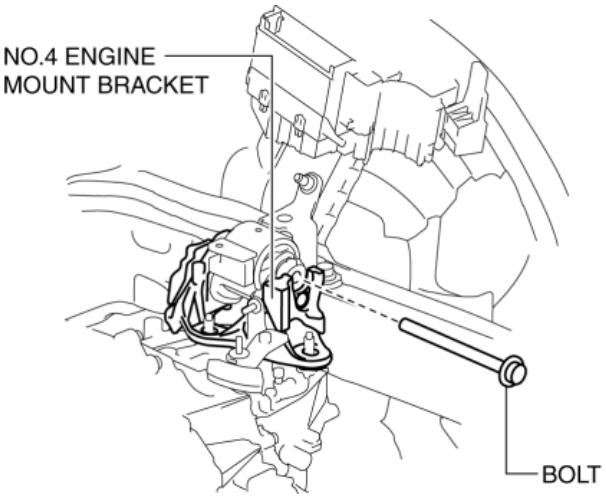

b. Temporarily tighten the nuts shown in the figure so that they are centered on the No.4 engine mount bracket slots.

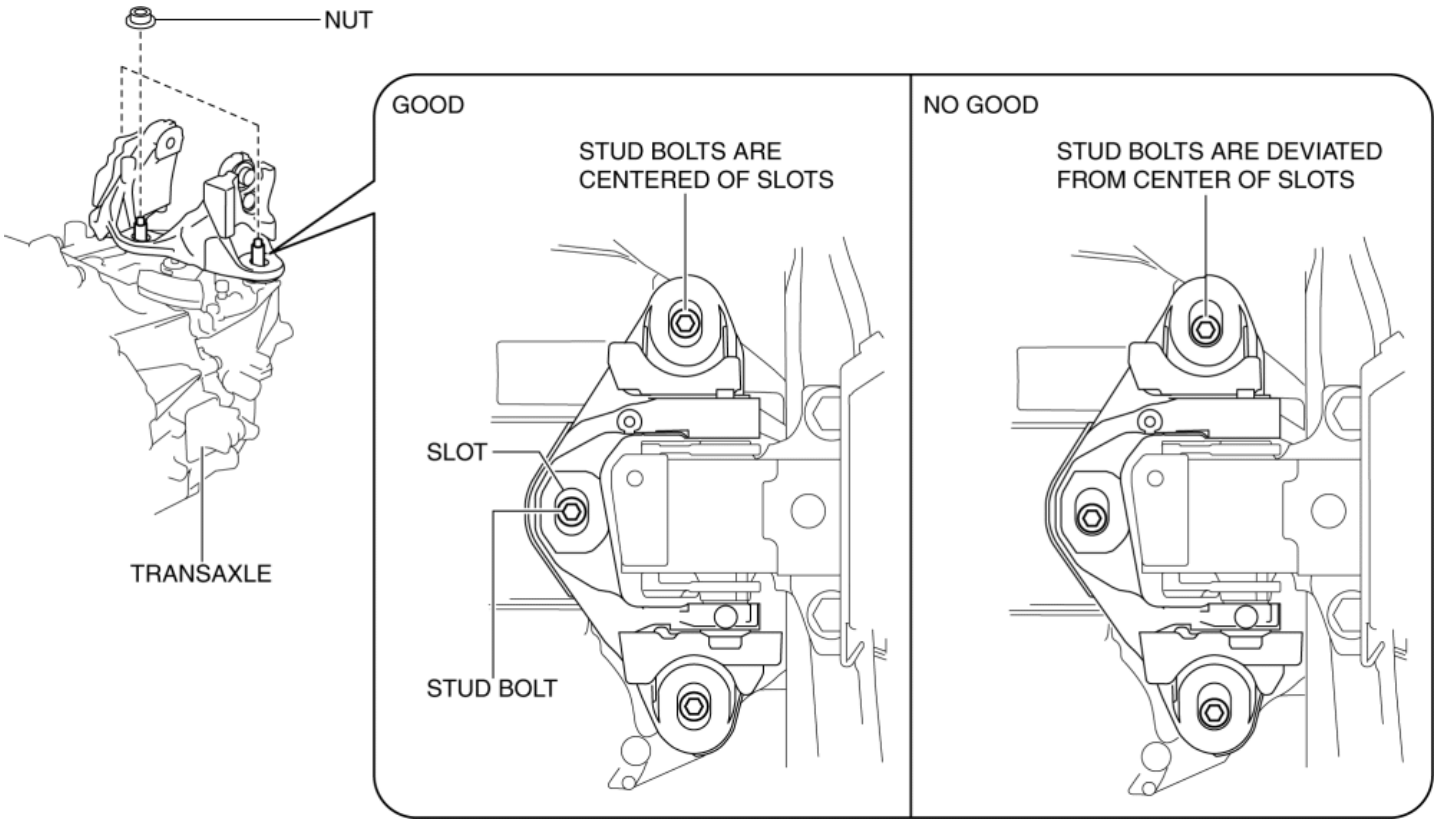

NOTE:

- If the stud bolts are deviated from the center of the slots, align the stud bolts with the center of the slots while slightly moving the transaxle, and temporarily tighten the installation nuts.

6. Install the No.1 engine mount rubber and the front crossmember component as a single unit. (See **FRONT CROSSMEMBER REMOVAL/INSTALLATION**.)

7. Install the No.1 engine mount bracket and bracket plate, and temporarily tighten the bolts shown in the figure.

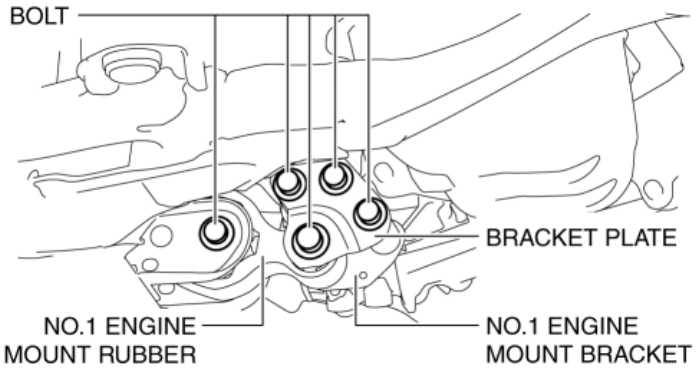

8. Tighten the No.1 engine mount bracket and bracket plate installation bolts in the order shown in the figure.

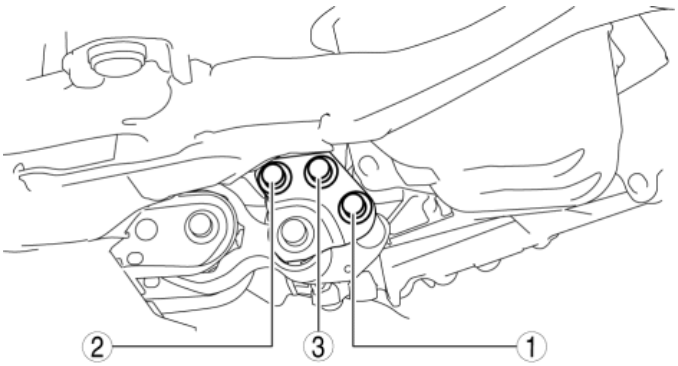

Tightening torque

- 84—98 N·m {8.6—9.9 kgf·m, 62—72 ft·lbf}

9. Tighten the No.3 engine mount installation bolts and nuts in the order shown in the figure.

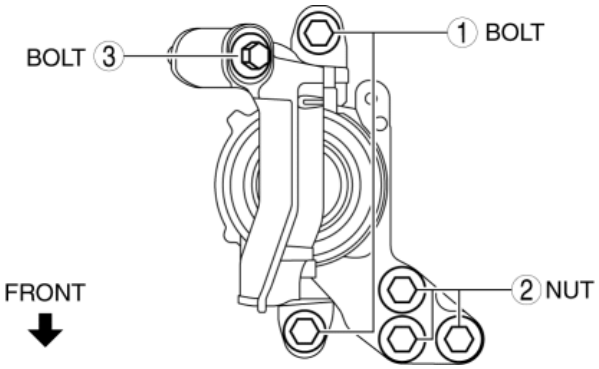

Tightening torque

Installation position	Tightening torque
1	76—95 N·m {7.8—9.6 kgf·m, 57—70 ft·lbf}
2	82—95 N·m {8.4—9.6 kgf·m, 61—70 ft·lbf}
3	49—65 N·m {5.0—6.6 kgf·m, 37—47 ft·lbf}

10. Tighten the No.4 engine mount bracket installation bolt and nuts in the order shown in the figure.

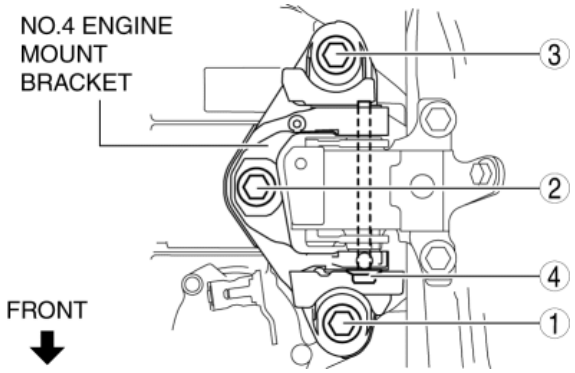

Tightening torque

Installation position	Tightening torque
1, 2, 3	92—116 N·m {9.4—11 kgf·m, 68—85 ft·lbf}
4	81—99 N·m {8.3—10 kgf·m, 60—73 ft·lbf}

11. Tighten the No.1 engine mount rubber installation bolts shown in the figure.

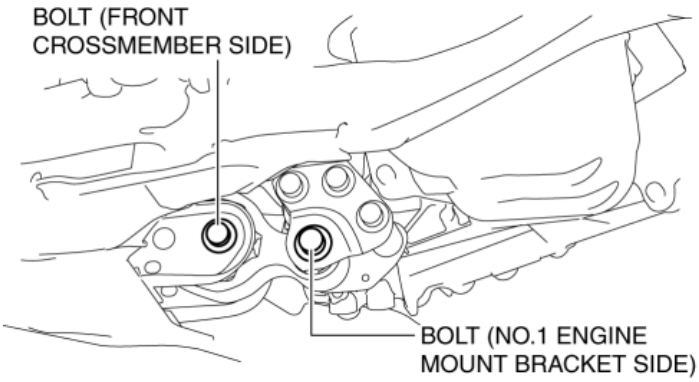

Tightening torque

Installation position	Tightening torque
No.1 engine mount bracket side	140—163 N·m {15—16 kgf·m, 104—120 ft·lbf}
Front crossmember side	130—164 N·m {14—16 kgf·m, 96—120 ft·lbf}

12. Install the clips shown in the figure. (with i-ELOOP)

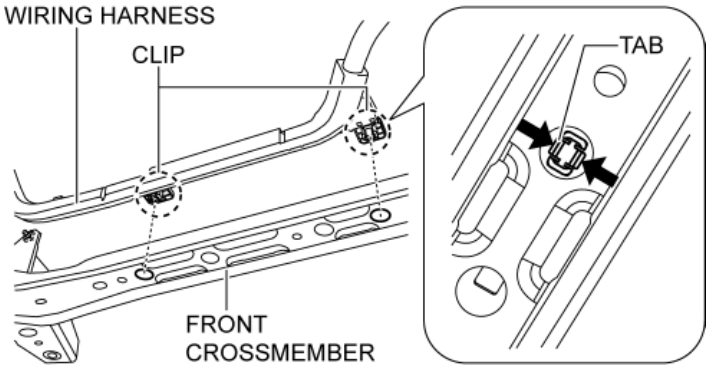

13. Connect the generator terminal B cable. (with i-ELOOP) (See **GENERATOR REMOVAL/INSTALLATION [SKYACTIV-G 2.0, SKYACTIV-G 2.5 (WITH i-ELOOP)]**.)

14. Connect the service plug. (with i-ELOOP) (See **SERVICE PLUG DISCONNECTION/CONNECTION [i-ELOOP]**.)

2014 - Mazda3 - Engine

ENGINE DISASSEMBLY/ASSEMBLY [SKYACTIV-G 2.0, SKYACTIV-G 2.5]

CAUTION:

- When the transaxle is installed, do not suspend the engine. Otherwise, the SST installation area of the cylinder head may be damaged due to excess weight. Only suspend the engine after separating the engine and transaxle.
- Applying excessive force (force of 100 N {10.2 kgf, 22.5 lbf} or more) to the electric variable valve timing motor/driver may cause a malfunction. When servicing, be careful not to apply excessive force to the electric variable valve timing motor/driver using other parts or tools.

1. To enable to install the **SST**, disconnect the clip shown in the figure and set the wiring harness aside.

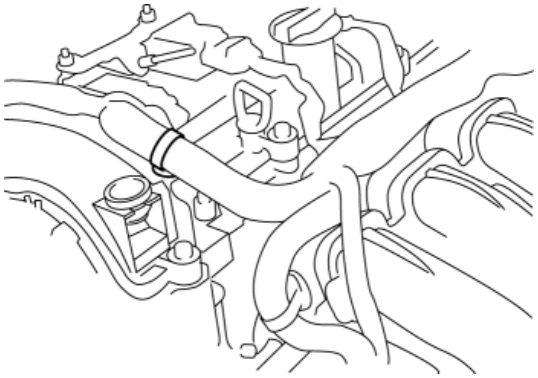

2. Install the **SST** using **part number 99794 1025** or an **M10 x 1.25**, length **25 mm {0.98 in}** bolt as shown in the figure.

Engine front side

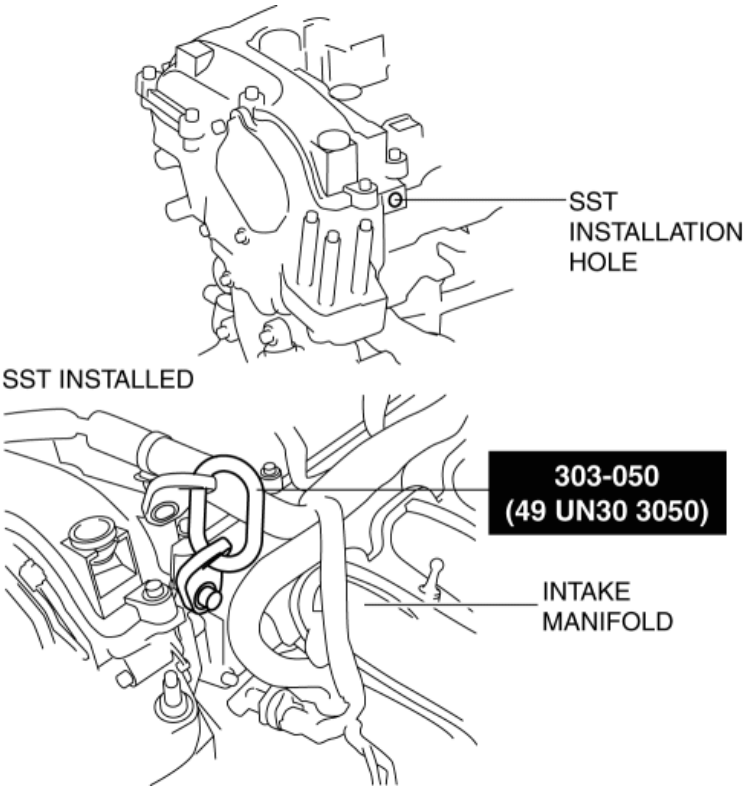

Engine rear side

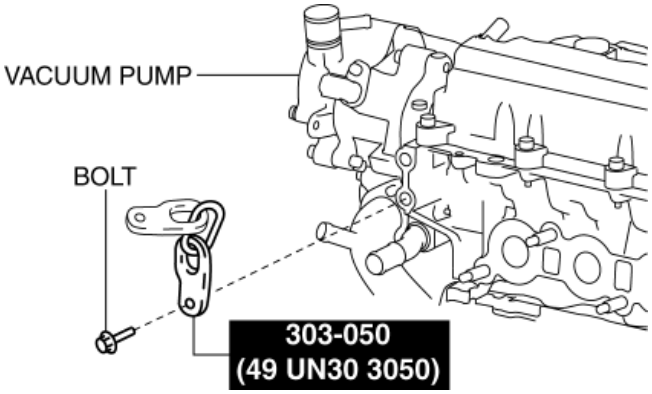

Tightening torque

- 38—51 N·m {3.9—5.2 kgf·m, 29—37 ft·lbf}

3. Engage the hooks of the **SST (49 L017 5A0)** to the **SST (49 UN30 3050)**.

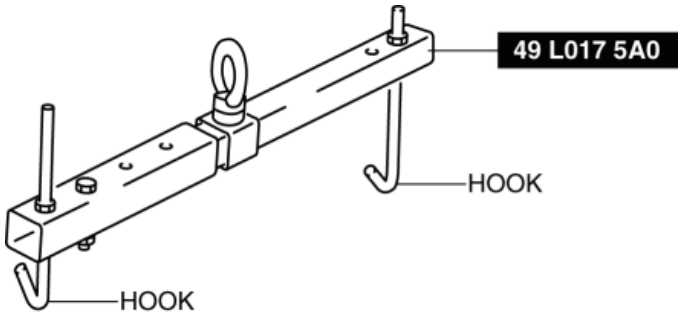

4. To ensure the safety of the work (control engine and transaxle sway), set a hoist as shown in the figure.

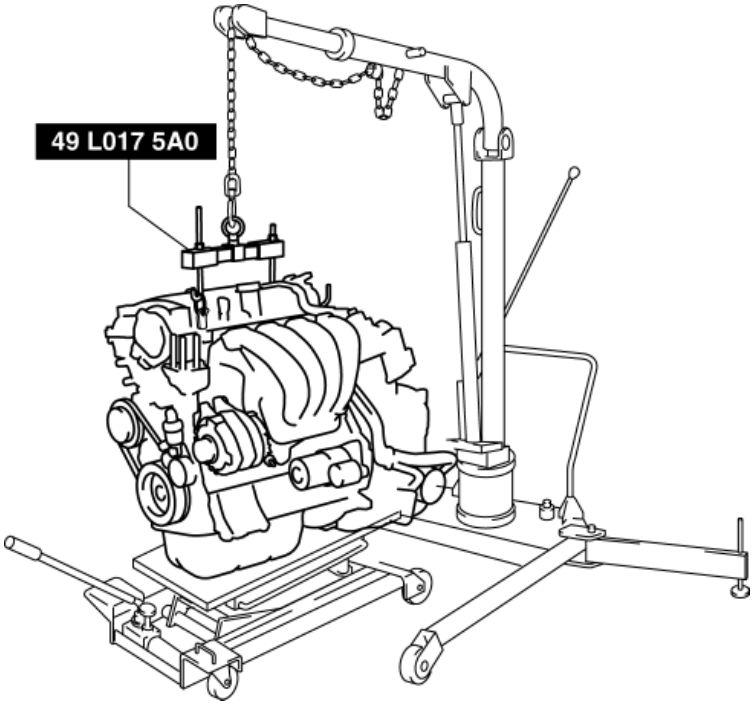

CAUTION:

- Do not lift up the engine.

5. Remove the insulator shown in the figure.

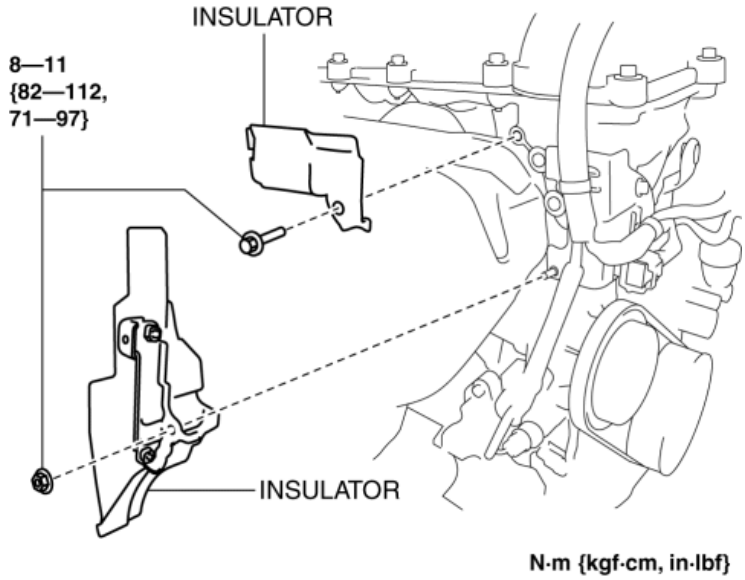

6. Remove the exhaust system. (See **EXHAUST SYSTEM REMOVAL/INSTALLATION [SKYACTIV-G 2.0, SKYACTIV-G 2.5]**.)

7. Remove the bolts in the order shown in the figure, then remove the exhaust manifold bracket.

MTX

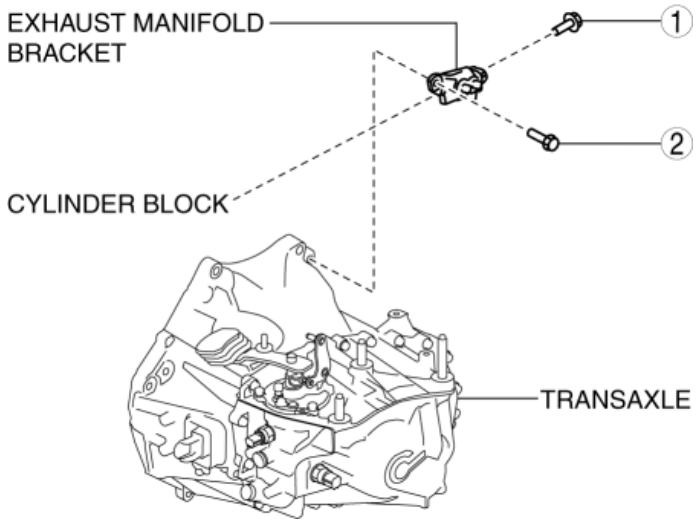

ATX

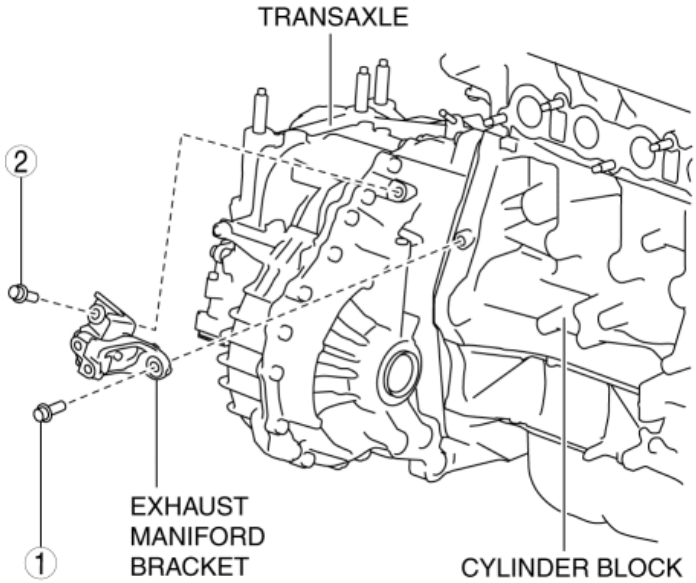

When installing, tighten the bolts in the reverse order of removal.

Tightening torque

- 38—51 N·m {3.9—5.2 kgf·m, 29—37 ft·lbf}

8. Remove the bracket No.1 (drive shaft bracket). (See **FRONT DRIVE SHAFT REMOVAL/INSTALLATION**.)

9. Remove the starter. (See **STARTER REMOVAL/INSTALLATION [SKYACTIV-G 2.0, SKYACTIV-G 2.5]**.)

10. Fix the drive plate using the crankshaft pulley lock bolt. (ATX)

11. Remove the torque converter installation nut from the starter installation hole. (See **AUTOMATIC TRANSAXLE REMOVAL/INSTALLATION [FW6A-EL]**.)

12. Disconnect the engine and transaxle, and lower only the engine from the engine lifter. (See **MANUAL TRANSAXLE REMOVAL/INSTALLATION [C66M-R]** (MTX).) (See **AUTOMATIC TRANSAXLE REMOVAL/INSTALLATION [FW6A-EL]** (ATX).)

13. Remove the generator. (See **GENERATOR REMOVAL/INSTALLATION [SKYACTIV-G 2.0, SKYACTIV-G 2.5 (WITHOUT i-ELOOP)]**.) (See **GENERATOR REMOVAL/INSTALLATION [SKYACTIV-G 2.0, SKYACTIV-G 2.5 (WITH i-ELOOP)]**.)

14. Remove the intake-air system. (See **INTAKE-AIR SYSTEM REMOVAL/INSTALLATION [SKYACTIV-G 2.0, SKYACTIV-G 2.5]**.)

15. Remove the fuel injectors. (See **FUEL INJECTOR REMOVAL/INSTALLATION [SKYACTIV-G 2.0, SKYACTIV-G 2.5]**.)

16. Remove the camshaft position (CMP) sensor. (See **CAMSHAFT POSITION (CMP) SENSOR REMOVAL/INSTALLATION [SKYACTIV-G 2.0, SKYACTIV-G 2.5]**.)

17. Remove the vacuum pump. (See **VACUUM PUMP REMOVAL/INSTALLATION**.)

18. Remove the high pressure fuel pump and rear housing. (See **HIGH PRESSURE FUEL PUMP REMOVAL/INSTALLATION [SKYACTIV-G 2.0, SKYACTIV-G 2.5]**.)

19. Remove the oil filter. (See **OIL FILTER REPLACEMENT [SKYACTIV-G 2.0, SKYACTIV-G 2.5]**.)

20. Remove the engine oil solenoid valve. (See **ENGINE OIL SOLENOID VALVE REMOVAL/INSTALLATION [SKYACTIV-G 2.0, SKYACTIV-G 2.5]**.)

21. Remove the crankshaft position (CKP) sensor. (See **CRANKSHAFT POSITION (CKP) SENSOR REMOVAL/INSTALLATION [SKYACTIV-G 2.0, SKYACTIV-G 2.5]**.)

22. Remove the ignition coil/ion sensors. (See **IGNITION COIL/ION SENSOR REMOVAL/INSTALLATION [SKYACTIV-G 2.0, SKYACTIV-G 2.5]**.)

23. Remove the wiring harness bracket shown in the figure.

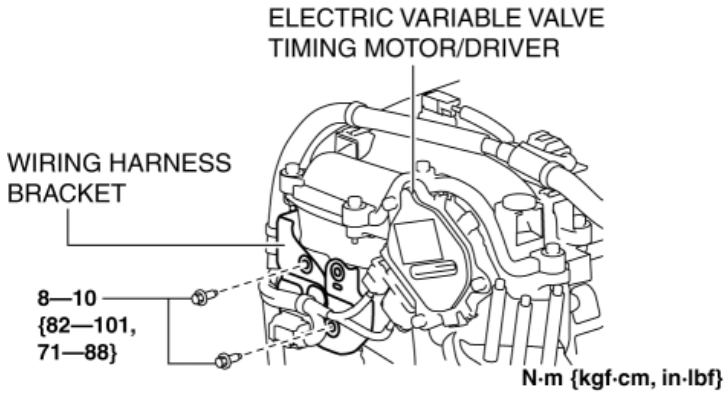

24. Remove the emission harness.

25. Remove the water pump drive belt. (See **DRIVE BELT REMOVAL/INSTALLATION [SKYACTIV-G 2.0, SKYACTIV-G 2.5]**.)

26. Remove the clutch cover and clutch disc. (MTX) (See **CLUTCH UNIT REMOVAL/INSTALLATION [C66M-R]**.)

27. Remove in the order indicated in the table

28. Assemble in the reverse order of disassembly.

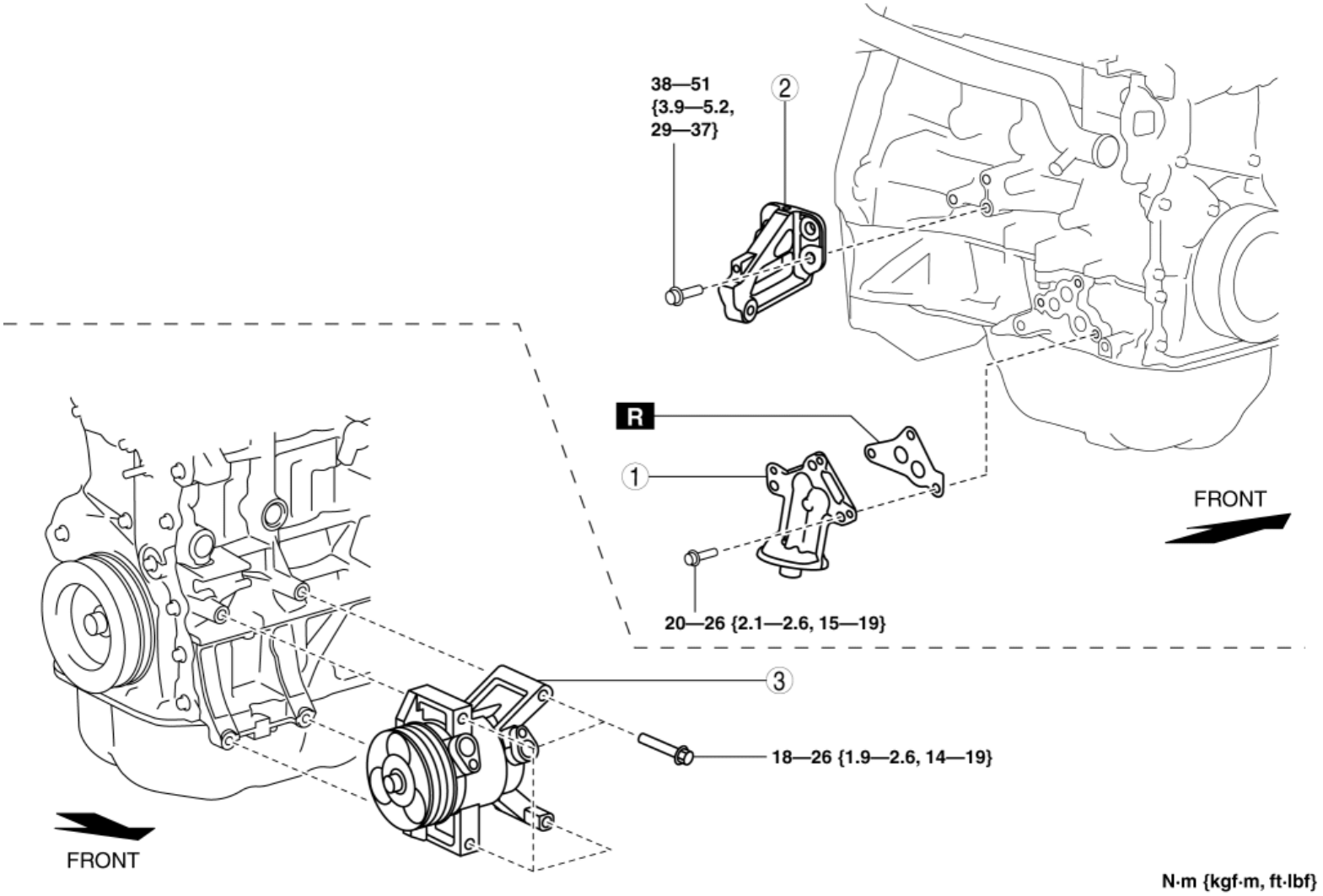

1	Oil filter body (See **Oil Filter Body Installation Note**.)
2	Exhaust manifold bracket (See **Exhaust Manifold Bracket Installation Note**.)
3	A/C compressor* (without A/C)

* **This is the A/C compressor for vehicles without A/C and it functions as the idler of the drive belt. This does not function as the A/C compressor for vehicles with A/C.**

Exhaust Manifold Bracket Installation Note

1. Temporarily tighten the bolt (3) shown in the figure, insert the exhaust manifold bracket from the side, and temporarily install the exhaust manifold bracket.

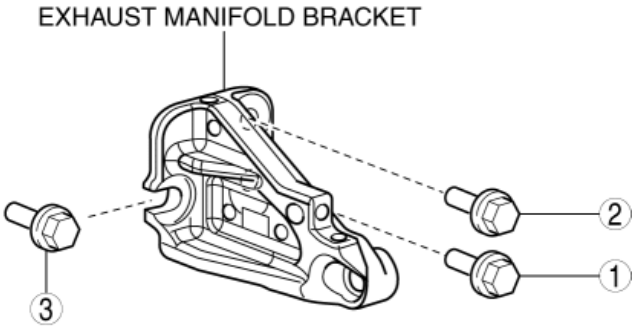

2. Temporarily tighten the bolt (1) shown in the figure.
3. Temporarily tighten the bolt (2) shown in the figure.
4. Tighten the bolt in the order shown in the figure.

Tightening torque

- 38—51 N·m {3.9—5.2 kgf·m, 29—37 ft·lbf}

Oil Filter Body Installation Note

NOTE:

- The tightening order of the three bolts is optional.

1. After tightening the three bolts, tighten the first tightened bolt to the specified tightening torque again.

Tightening torque

- 20—26 N·m {2.1—2.6 kgf·m, 15—19 ft·lbf}

2014 - Mazda3 - Engine

LUBRICATION SYSTEM LOCATION INDEX [SKYACTIV-G 2.0, SKYACTIV-G 2.5]

SKYACTIV-G 2.0

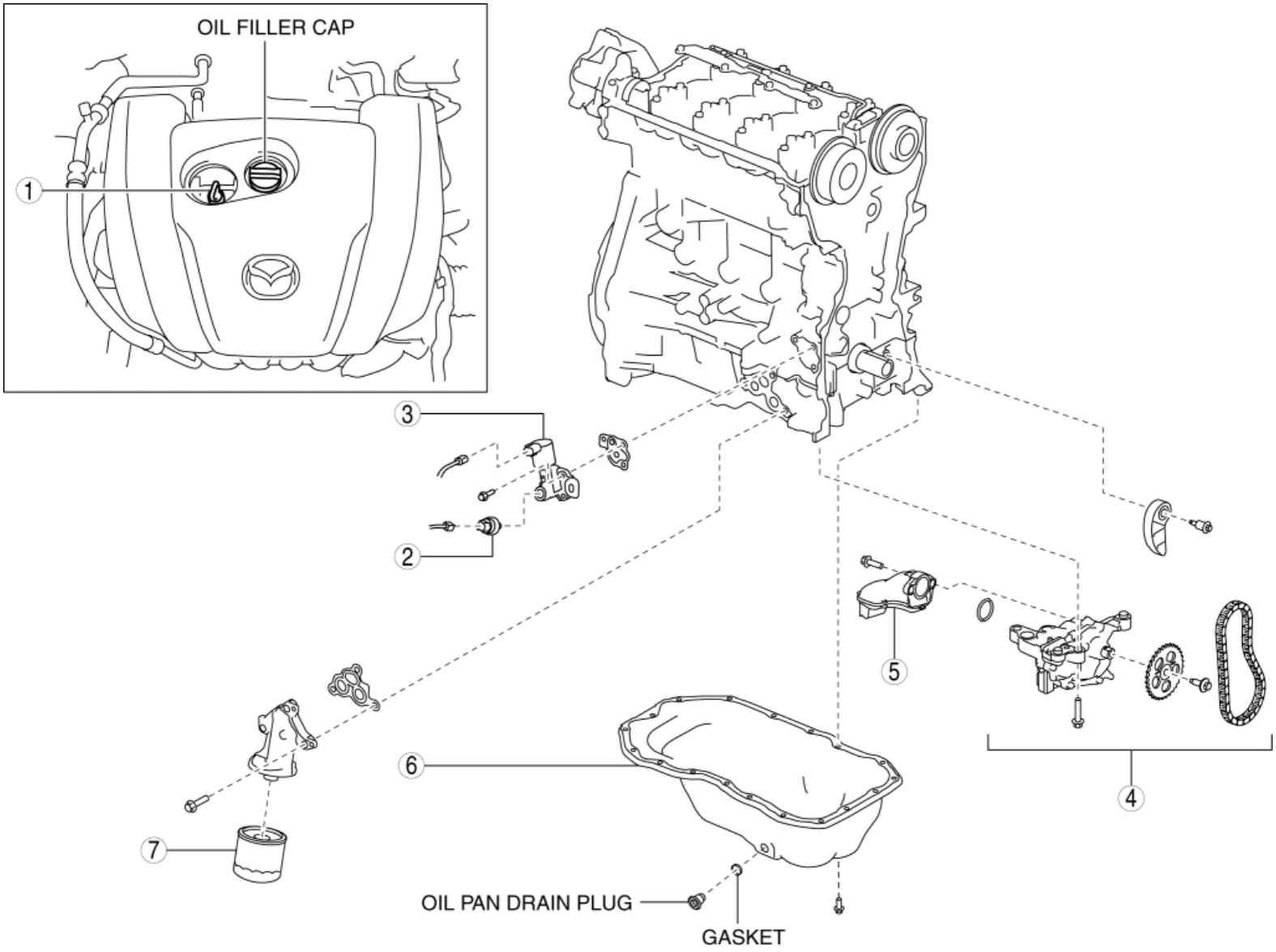

SKYACTIV-G 2.5

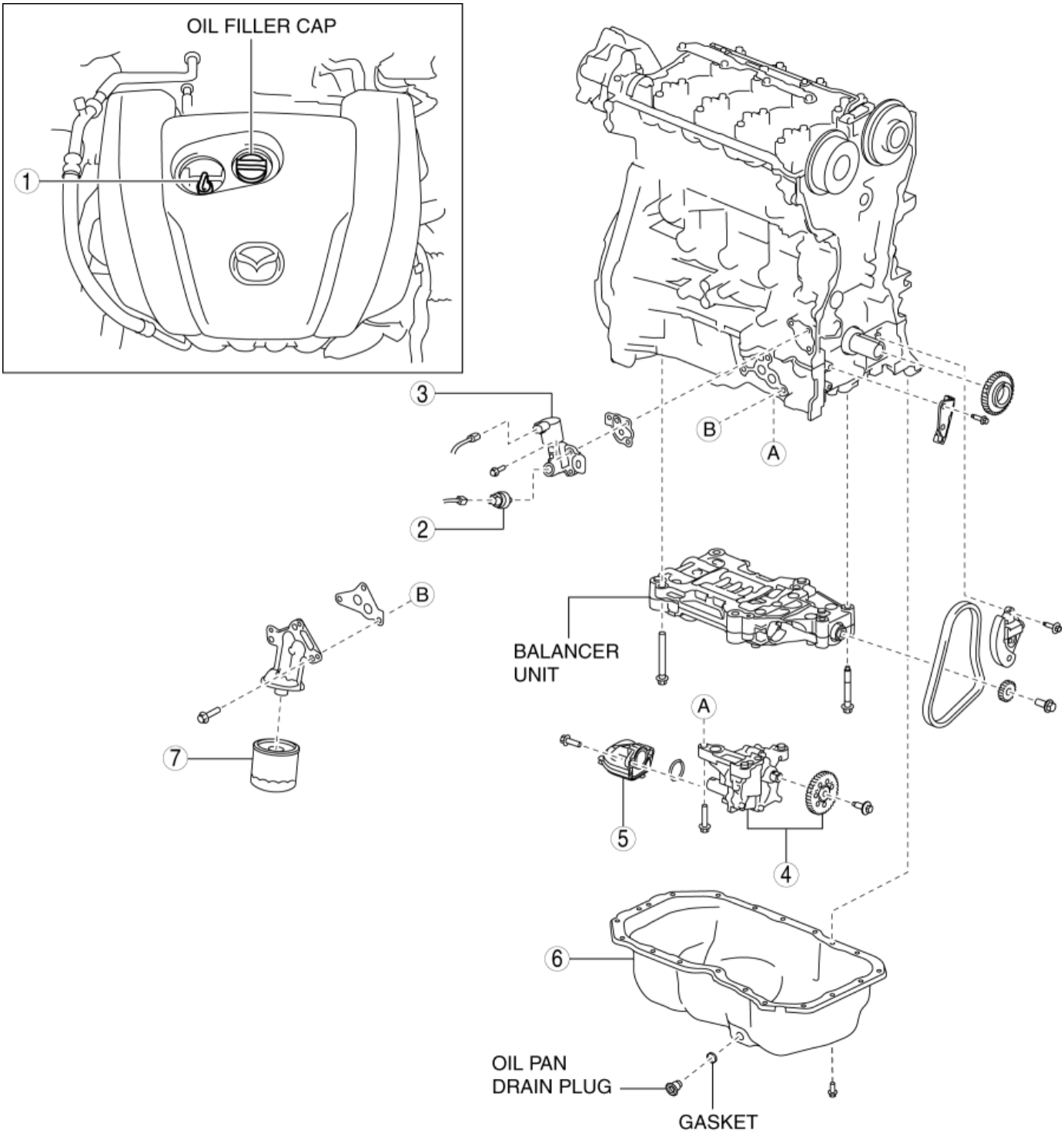

1	Dipstick (See **ENGINE OIL LEVEL INSPECTION [SKYACTIV-G 2.0, SKYACTIV-G 2.5]**.) (See **ENGINE OIL REPLACEMENT [SKYACTIV-G 2.0, SKYACTIV-G 2.5]**.)
2	Oil pressure switch (See **OIL PRESSURE INSPECTION [SKYACTIV-G 2.0, SKYACTIV-G 2.5]**.)
3	Engine oil solenoid valve (See **ENGINE OIL SOLENOID VALVE REMOVAL/INSTALLATION [SKYACTIV-G 2.0, SKYACTIV-G 2.5]**.)

	(See **ENGINE OIL SOLENOID VALVE INSPECTION [SKYACTIV-G 2.0, SKYACTIV-G 2.5]**.)
4	Oil pump component (See **OIL PUMP REMOVAL/INSTALLATION [SKYACTIV-G 2.0, SKYACTIV-G 2.5]**.)
5	Oil strainer (See **OIL PUMP REMOVAL/INSTALLATION [SKYACTIV-G 2.0, SKYACTIV-G 2.5]**.)
6	Oil pan (See **OIL PAN REMOVAL/INSTALLATION [SKYACTIV-G 2.0, SKYACTIV-G 2.5]**.)
7	Oil filter (See **OIL FILTER REPLACEMENT [SKYACTIV-G 2.0, SKYACTIV-G 2.5]**.)

2014 - Mazda3 - Engine

ENGINE OIL LEVEL INSPECTION [SKYACTIV-G 2.0, SKYACTIV-G 2.5]

1. Position the vehicle on level ground.
2. Warm up the engine.
3. Stop the engine and allow **at least 5 min** before continuing.
4. Remove the dipstick, wipe it cleanly, and reinstall it fully.
5. Remove the dipstick and verify that the oil level is between the F and L marks on the dipstick.

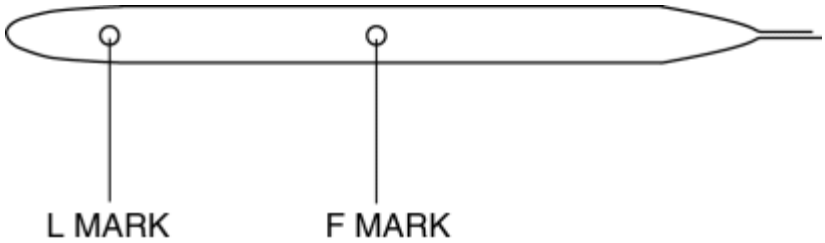

- If the oil level is below or near the L mark, add engine oil. (See **ENGINE OIL REPLACEMENT [SKYACTIV-G 2.0, SKYACTIV-G 2.5]**.)
- If the oil level is above the F mark, penetration of fuel into the engine oil can be considered. Replace the engine oil. (See **ENGINE OIL REPLACEMENT [SKYACTIV-G 2.0, SKYACTIV-G 2.5]**.)

6. Insert the oil level gauge completely until it attaches to the cylinder head cover.

2014 - Mazda3 - Engine

ENGINE OIL REPLACEMENT [SKYACTIV-G 2.0, SKYACTIV-G 2.5]

WARNING:

- Hot engines and engine oil can cause severe burns. Turn off the engine and wait until it and the engine oil have cooled.
- A vehicle that is lifted but not securely supported on safety stands is dangerous. It can slip or fall, causing death or serious injury. Never work around or under a lifted vehicle if it is not securely supported on safety stands.
- Continuous exposure to USED engine oil has caused skin cancer in laboratory mice. Protect your skin by washing with soap and water immediately after working with engine oil.

CAUTION:

- If engine oil is spilled on the exhaust system, wipe it off completely. If you fail to wipe the spilled engine oil, it will produce fumes because of the heat.

1. Position the vehicle on level ground.
2. Remove the oil filler cap.
3. Remove the service hole cover (installed to front under cover No.2) used to drain the engine oil.

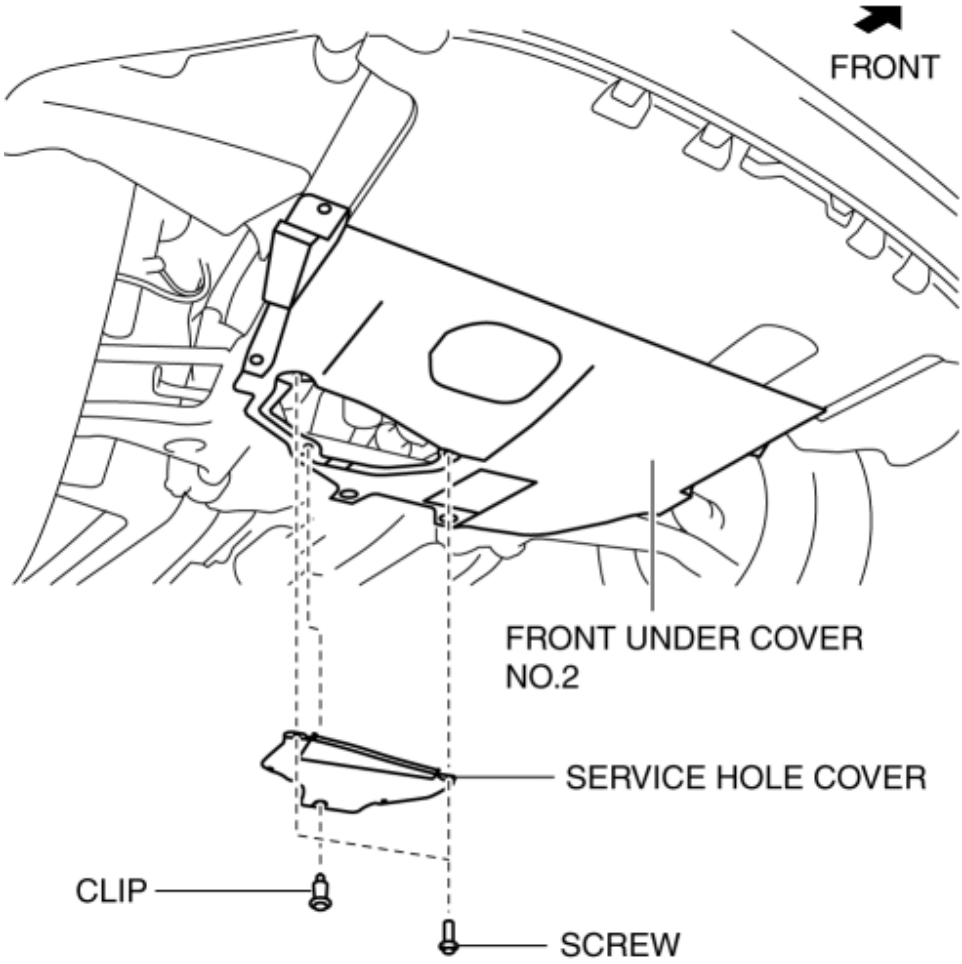

4. Remove the oil pan drain plug.

5. Drain the engine oil into a container.

6. Install the oil pan drain plug with a new gasket.

Oil pan drain plug tightening torque

- 30—41 N·m {3.1—4.1 kgf·m, 23—30 ft·lbf}

NOTE:

- The amount of residual oil in the engine can vary according to factors such as the replacement method and oil temperature. Verify the oil level after engine oil replacement.

7. Refill with the following type and amount of engine oil. **Engine oil specification**

Item	U.S.A., Canada and Puerto Rico	Except U.S.A., Canada and Puerto Rico
Engine		

oil grade	(ILSAC)	API SM or ILSAC
Engine oil viscosity	0W-20	5W-30 (If SAE 5W-30 engine oil is not available, use SAE 5W-20 engine oil.)

Engine oil capacity [SKYACTIV-G 2.0] (approx. quantity)

- Oil replacement: 4.0 L {4.2 US qt, 3.5 Imp qt}
- Oil and oil filter replacement: 4.2 L {4.4 US qt, 3.7 Imp qt}
- Total (dry engine): 4.9 L {5.2 US qt, 4.3 Imp qt}

Engine oil capacity [SKYACTIV-G 2.5] (approx. quantity)

- Oil replacement: 4.3 L {4.5 US qt, 3.8 Imp qt}
- Oil and oil filter replacement: 4.5 L {4.8 US qt, 4.0 Imp qt}
- Total (dry engine): 5.4 L {5.7 US qt, 4.8 Imp qt}

8. Install the oil filler cap.

9. Start the engine and confirm that there is no oil leakage.

- If there is oil leakage, repair or replace the applicable part.

10. Inspect the oil level. (See **ENGINE OIL LEVEL INSPECTION [SKYACTIV-G 2.0, SKYACTIV-G 2.5]**.)

11. Install the service hole cover.

12. If the engine oil is replaced, perform engine oil data reset. (See **ENGINE OIL DATA RESET [SKYACTIV-G 2.0, SKYACTIV-G 2.5]**.)

2014 - Mazda3 - Engine

OIL FILTER REPLACEMENT [SKYACTIV-G 2.0, SKYACTIV-G 2.5]

WARNING:

- Hot engines and engine oil can cause severe burns. Turn off the engine and wait until it and the engine oil have cooled.
- A vehicle that is lifted but not securely supported on safety stands is dangerous. It can slip or fall, causing death or serious injury. Never work around or under a lifted vehicle if it is not securely supported on safety stands.
- Continuous exposure to USED engine oil has caused skin cancer in laboratory mice. Protect your skin by washing with soap and water immediately after working with engine oil.

CAUTION:

- If engine oil is spilled on the exhaust system, wipe it off completely. If you fail to wipe the spilled engine oil, it will produce fumes because of the heat.

1. Remove the service hole cover (installed to front under cover No.2) used to remove the oil filter.

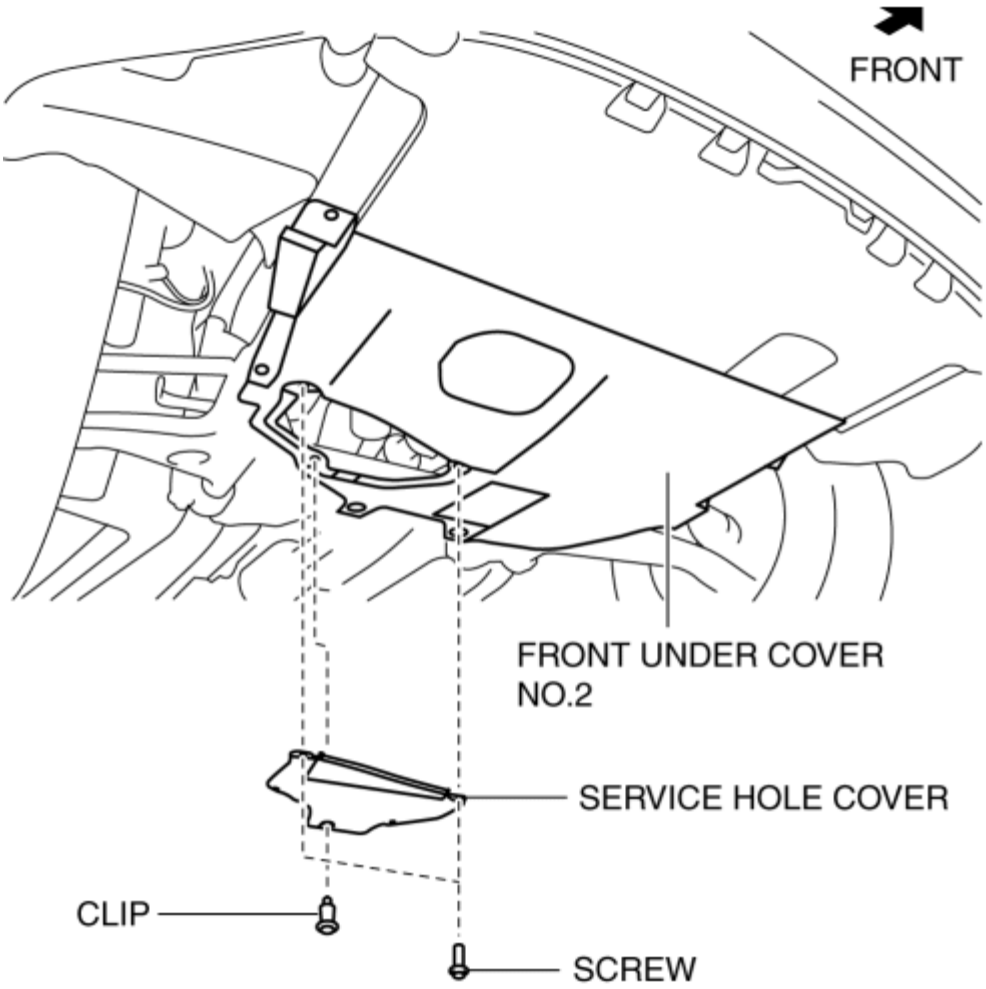

2. Remove the oil filter using the commercially available, cup-type oil filter wrench (**67 mm {2.6 in} diameter, 14 sided**).

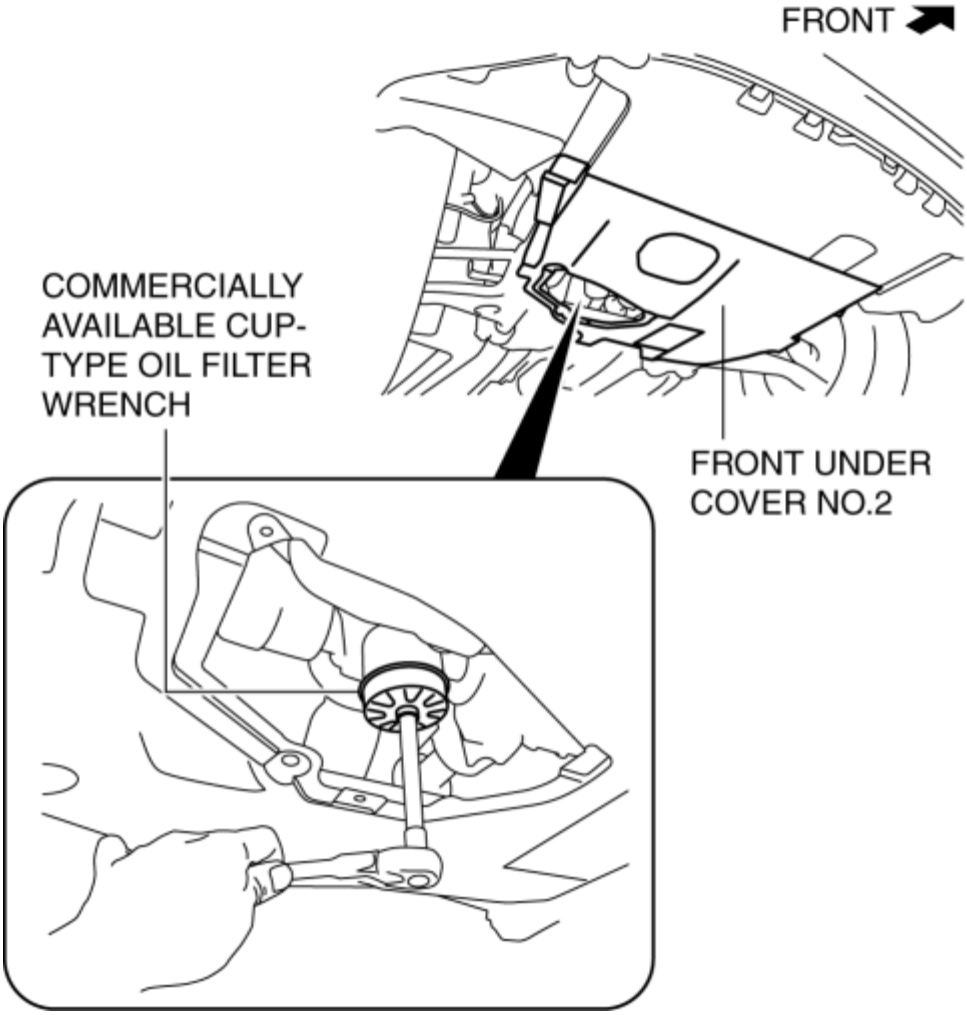

3. Use a clean rag to wipe off the mounting surface.
4. Apply clean engine oil to the O-ring of a new oil filter.
5. Tighten the oil filter according to the instructions on the package or side of the oil filter.

Tightening torque (reference value)

1. 12—16 N·m {123—163 kgf·cm, 107—141 in·lbf}

6. Start the engine and confirm that there is no oil leakage.
   - If there is oil leakage, repair or replace the applicable part.
7. Inspect the oil level. (See **ENGINE OIL LEVEL INSPECTION [SKYACTIV-G 2.0, SKYACTIV-G 2.5]**.)
8. Install the service hole cover.

2014 - Mazda3 - Engine

OIL PRESSURE INSPECTION [SKYACTIV-G 2.0, SKYACTIV-G 2.5]

WARNING:

- Hot engines and engine oil can cause severe burns. Turn off the engine and wait until it and the engine oil have cooled.
- A vehicle that is lifted but not securely supported on safety stands is dangerous. It can slip or fall, causing death or serious injury. Never work around or under a lifted vehicle if it is not securely supported on safety stands.
- Continuous exposure to USED engine oil has caused skin cancer in laboratory mice. Protect your skin by washing with soap and water immediately after working with engine oil.

1. Disconnect the negative battery cable. (See **NEGATIVE BATTERY CABLE DISCONNECTION/CONNECTION [SKYACTIV-G 2.0, SKYACTIV-G 2.5]**.)

2. Remove the front under cover No.2. (See **FRONT UNDER COVER No.2 REMOVAL/INSTALLATION**.)

3. Remove the oil pressure switch. (See **ENGINE OIL SOLENOID VALVE REMOVAL/INSTALLATION [SKYACTIV-G 2.0, SKYACTIV-G 2.5]**.)

NOTE:

- Use the following SSTs in this inspection.

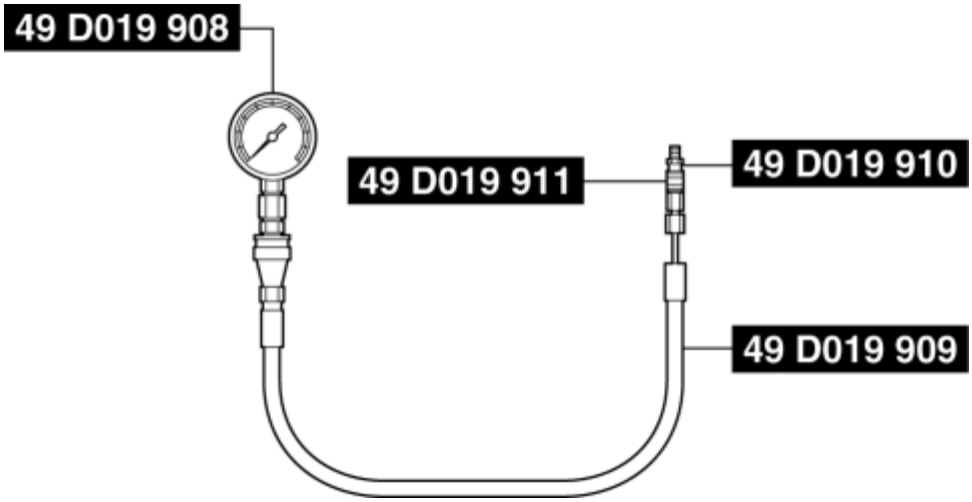

  - **49 D019 908 (gauge)**
  - **49 D019 909 (hose)**
  - **49 D019 910 (adapter)**
  - **49 D019 911 (adapter)**

4. Install the **SSTs** to the oil pressure switch installation hole using the following procedure.

a. Assemble **SSTs 49 D019 908**, **49 D019 909**, and **49 D019 911** outside of the engine compartment beforehand.

b. Install **SST 49 D019 910** to the oil pressure switch installation hole.

c. Install **SST 49 D019 911** to the **SST 49 D019 910**.

5. Connect the negative battery cable. (See **NEGATIVE BATTERY CABLE DISCONNECTION/CONNECTION [SKYACTIV-G 2.0, SKYACTIV-G 2.5]**.)

6. Warm up the engine to normal operating temperature.

7. Run the engine at the specified speed, and note the gauge readings.

- If not within the specification, inspect for the cause and repair or replace if necessary.

NOTE:

- The oil pressure can vary with oil viscosity, temperature and engine speed.

  Oil pressure (reference value) [coolant temperature: 80—90 °C {176—194 °F}]

- Lo: 110—175 kPa {1.13—1.78 kgf/cm^2, 16.0—25.3 psi} [1,500 rpm]

- Hi: 300—430 kPa {3.06—4.38 kgf/cm^2, 43.6—62.3 psi} [4,500 rpm]

8. Stop the engine and wait until it is cools.

9. Disconnect the negative battery cable. (See **NEGATIVE BATTERY CABLE DISCONNECTION/CONNECTION [SKYACTIV-G 2.0, SKYACTIV-G 2.5]**.)

10. Remove the **SSTs.**

11. Install the oil pressure switch. (See **ENGINE OIL SOLENOID VALVE REMOVAL/INSTALLATION [SKYACTIV-G 2.0, SKYACTIV-G 2.5]**.)

12. Connect the negative battery cable. (See **NEGATIVE BATTERY CABLE DISCONNECTION/CONNECTION [SKYACTIV-G 2.0, SKYACTIV-G 2.5]**.)

13. Start the engine and confirm that there is no oil leakage.

- If there is oil leakage, repair or replace the applicable part.

14. Install the front under cover No.2. (See **FRONT UNDER COVER No.2 REMOVAL/INSTALLATION**.)

2014 - Mazda3 - Engine

ENGINE OIL SOLENOID VALVE REMOVAL/INSTALLATION [SKYACTIV-G 2.0, SKYACTIV-G 2.5]

WARNING:

- Hot engines and engine oil can cause severe burns. Turn off the engine and wait until it and the engine oil have cooled.
- A vehicle that is lifted but not securely supported on safety stands is dangerous. It can slip or fall, causing death or serious injury. Never work around or under a lifted vehicle if it is not securely supported on safety stands.
- Continuous exposure to USED engine oil has caused skin cancer in laboratory mice. Protect your skin by washing with soap and water immediately after working with engine oil.

1. Disconnect the negative battery cable. (See **NEGATIVE BATTERY CABLE DISCONNECTION/CONNECTION [SKYACTIV-G 2.0, SKYACTIV-G 2.5]**.)
2. Remove the front under cover No.2. (See **FRONT UNDER COVER No.2 REMOVAL/INSTALLATION**.)
3. Remove the splash shield (RH). (See **SPLASH SHIELD REMOVAL/INSTALLATION**.)
4. Remove in the order indicated in the table.
5. Install in the reverse order of removal.
6. Start the engine and confirm that there is no oil leakage.
    - If there is oil leakage, repair or replace the applicable part.

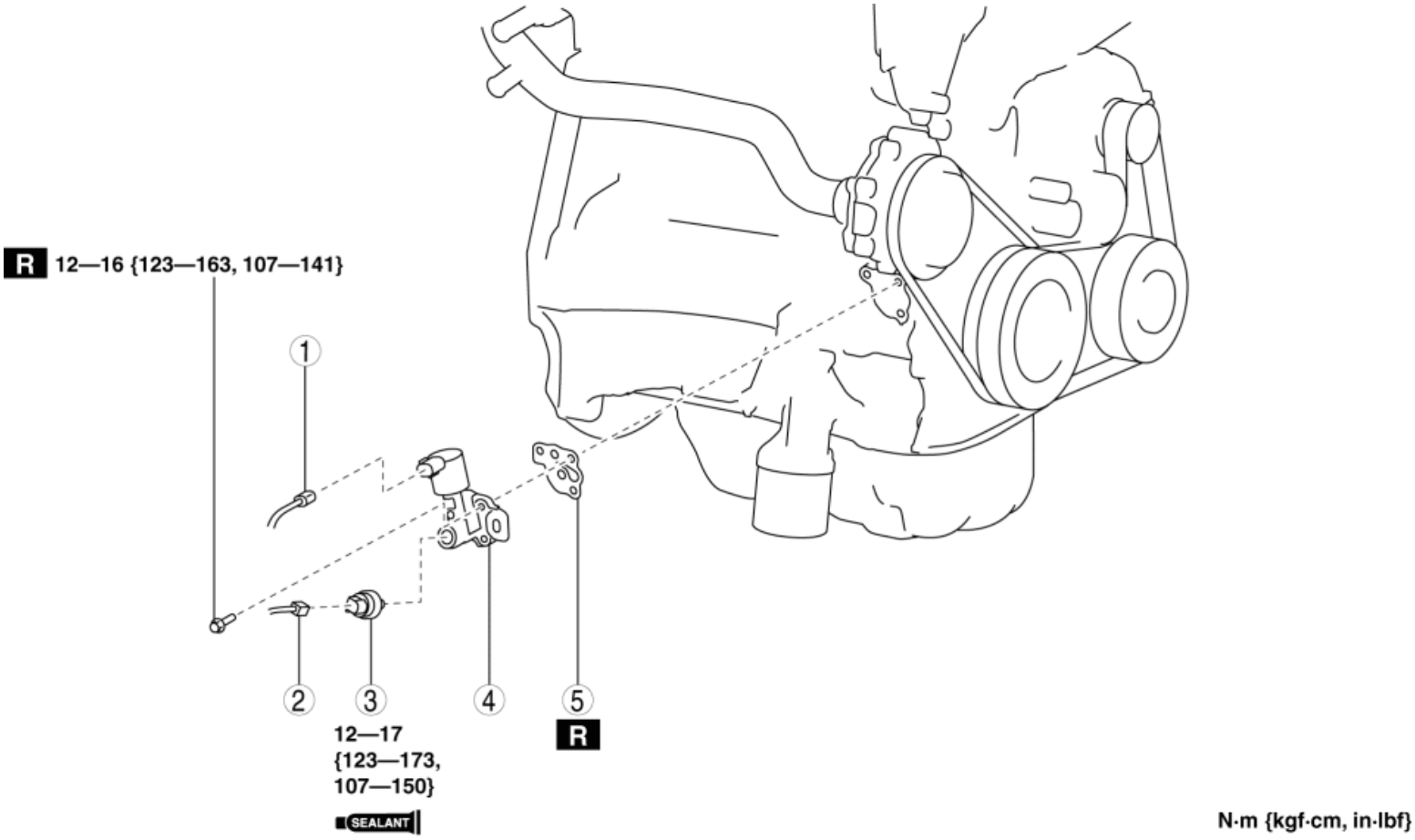

1	Engine oil solenoid valve connector
2	Oil pressure switch connector
3	Oil pressure switch (See **Oil Pressure Switch Installation Note**.)
4	Engine oil solenoid valve (See **Engine Oil Solenoid Valve Removal Note**.) (See **Engine Oil Solenoid Valve Installation Note**.)
5	Gasket

Engine Oil Solenoid Valve Removal Note

1. Cover the area around the engine oil solenoid valve with a rag because a small amount of engine oil will leak from the engine oil solenoid valve installation area.

CAUTION:

- Do not let any leaked engine oil contact the adjacent water pump gasket and O-ring of the water inlet pipe. Otherwise, the gasket could swell causing a seal malfunction.

Engine Oil Solenoid Valve Installation Note

1. After tightening the three bolts shown in the figure, tighten the first tightened bolt to the specified tightening torque again.

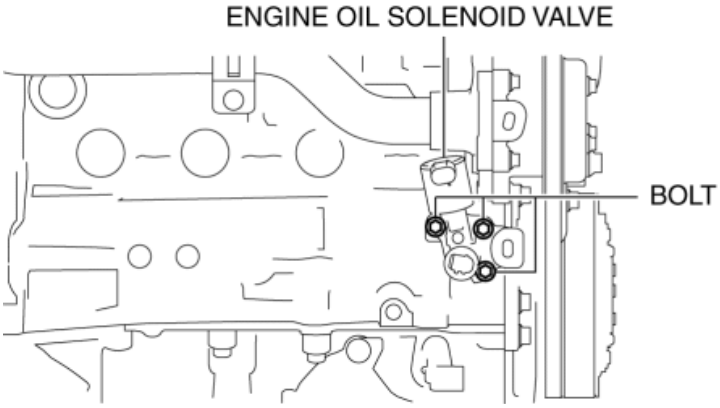

NOTE:

- The tightening order for the three bolts is optional.

  Tightening torque

- 12—16 N·m {123—163 kgf·cm, 107—141 in·lbf}

Oil Pressure Switch Installation Note

CAUTION:

- Verify that there is no sealant between 1.7—2.7 mm {0.07—0.10 in} from the end of the oil pressure switch to prevent a possible operation malfunction.

1. Apply silicone sealant to the oil pressure switch threads as shown in the figure.

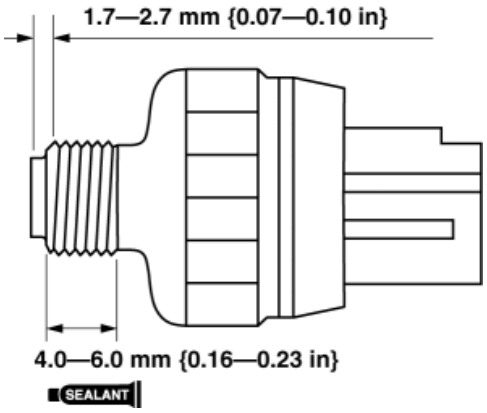

CAUTION:

- Install the oil pressure switch before the applied sealant starts to harden.

2. Install the oil pressure switch.

Tightening torque

- 12—17 N·m {123—173 kgf·cm, 107—150 in·lbf}

2014 - Mazda3 - Engine

ENGINE OIL SOLENOID VALVE INSPECTION [SKYACTIV-G 2.0, SKYACTIV-G 2.5]

Engine Oil Solenoid Valve Operation Inspection

1. Remove the engine oil solenoid valve. (See **ENGINE OIL SOLENOID VALVE REMOVAL/INSTALLATION [SKYACTIV-G 2.0, SKYACTIV-G 2.5]**.)

2. Verify that the battery is fully charged.

3. Connect the battery to the engine oil solenoid valve connector (2 terminals) as shown in the figure.

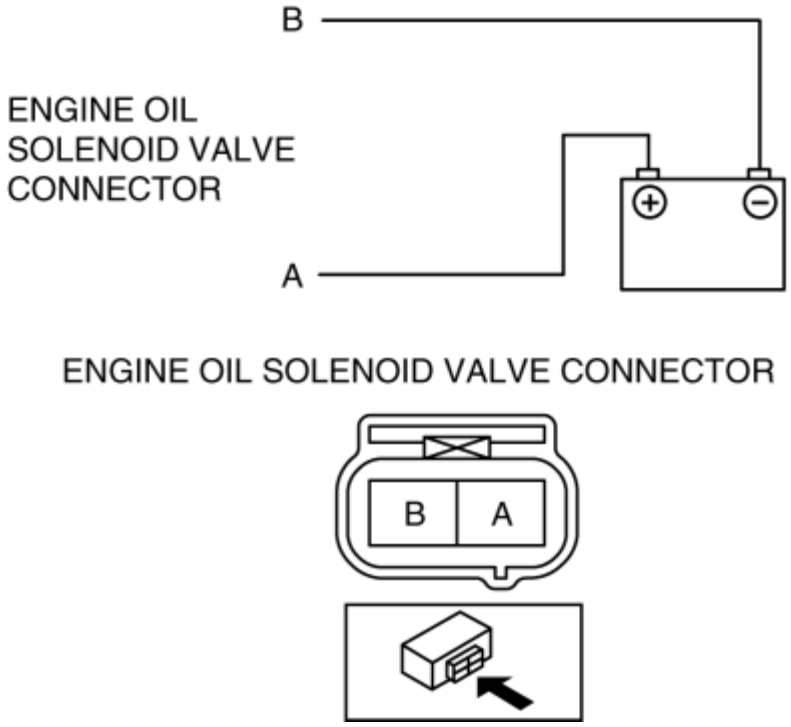

4. Verify that there is an operation sound from the engine oil solenoid valve when applying battery voltage between engine oil solenoid valve connector terminals A and B.

- If the operation sound cannot be heard, replace the engine oil solenoid valve.

NOTE:

- A click sound is heard when the engine oil solenoid valve operates normally.

5. Install the engine oil solenoid valve. (See **ENGINE OIL SOLENOID VALVE REMOVAL/INSTALLATION [SKYACTIV-G 2.0, SKYACTIV-G 2.5]**.)

ENGINE OIL SOLENOID VALVE INSPECTION [SKYACTIV-G 2.0, SKYACTIV-G 2.5]

2014 - Mazda3 - Engine

OIL PAN REMOVAL/INSTALLATION [SKYACTIV-G 2.0, SKYACTIV-G 2.5]

WARNING:

- Hot engines and engine oil can cause severe burns. Turn off the engine and wait until it and the engine oil have cooled.
- A vehicle that is lifted but not securely supported on safety stands is dangerous. It can slip or fall, causing death or serious injury. Never work around or under a lifted vehicle if it is not securely supported on safety stands.
- Continuous exposure to USED engine oil has caused skin cancer in laboratory mice. Protect your skin by washing with soap and water immediately after working with engine oil.

1. Remove the front under cover No.2. (See **FRONT UNDER COVER No.2 REMOVAL/INSTALLATION**.)
2. Drain the engine oil. (See **ENGINE OIL REPLACEMENT [SKYACTIV-G 2.0, SKYACTIV-G 2.5]**.)
3. Remove in the order indicated in the table.
4. Install in the reverse order of removal.
5. Refill with the specified type and amount of the engine oil. (See **ENGINE OIL REPLACEMENT [SKYACTIV-G 2.0, SKYACTIV-G 2.5]**.)
6. Start the engine and confirm that there is no oil leakage.
   - If there is oil leakage, repair or replace the applicable part.
7. Inspect the oil level. (See **ENGINE OIL LEVEL INSPECTION [SKYACTIV-G 2.0, SKYACTIV-G 2.5]**.)

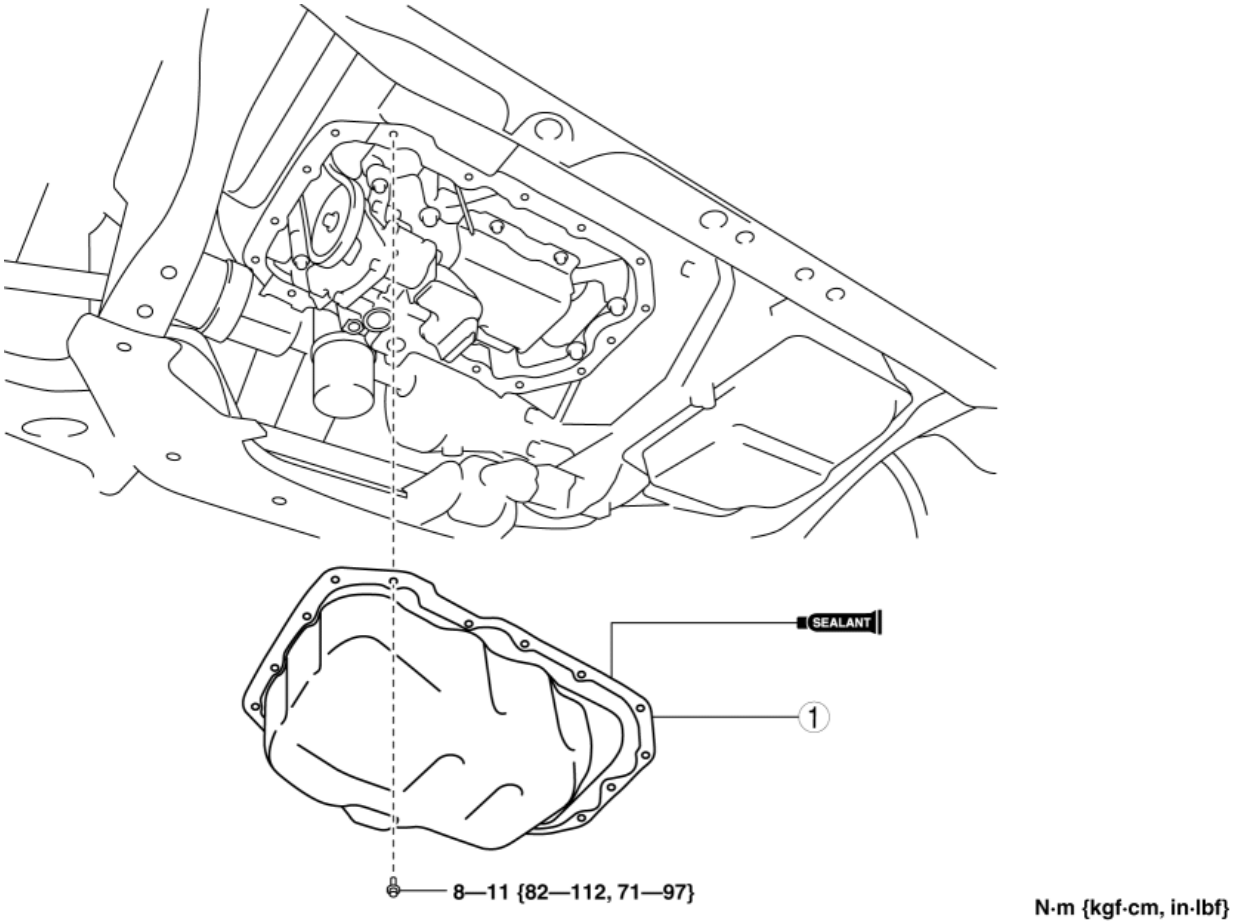

1	Oil pan (See **Oil Pan Removal Note**.)

(See **Oil Pan Installation Note**.)

Oil Pan Removal Note

1. Remove the oil pan using a separator tool.

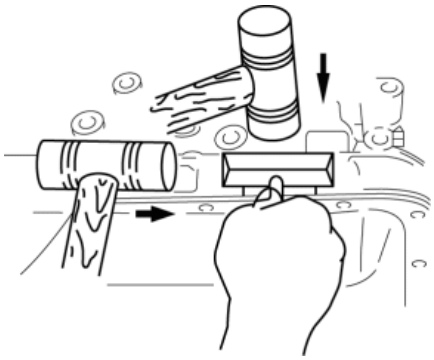

Oil Pan Installation Note

1. Completely clean and remove any oil, dirt, sealant or other foreign matter that may be adhering to the cylinder block and oil pan.
2. When reusing the oil pan installation bolts, clean any old sealant from the bolts.

CAUTION:

1. Apply the silicon sealant in a single, unbroken line around the whole perimeter.
2. To prevent silicone sealant from hardening, adhere the oil pan to the cylinder block within 10 min after silicone sealant is applied. Tighten the installation bolts completely soon after adhering.
3. Using bolts with the old seal adhering could cause cracks in the cylinder block.

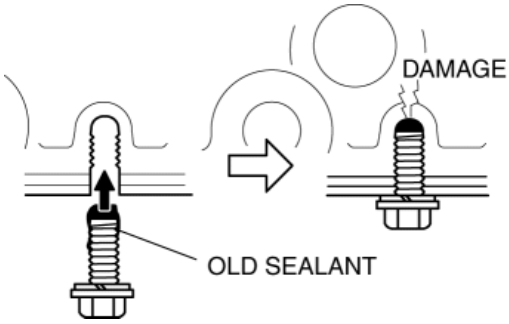

3. Apply silicone sealant to the oil pan along the inside of the bolt holes as shown in the figure.

SKYACTIV-G 2.0

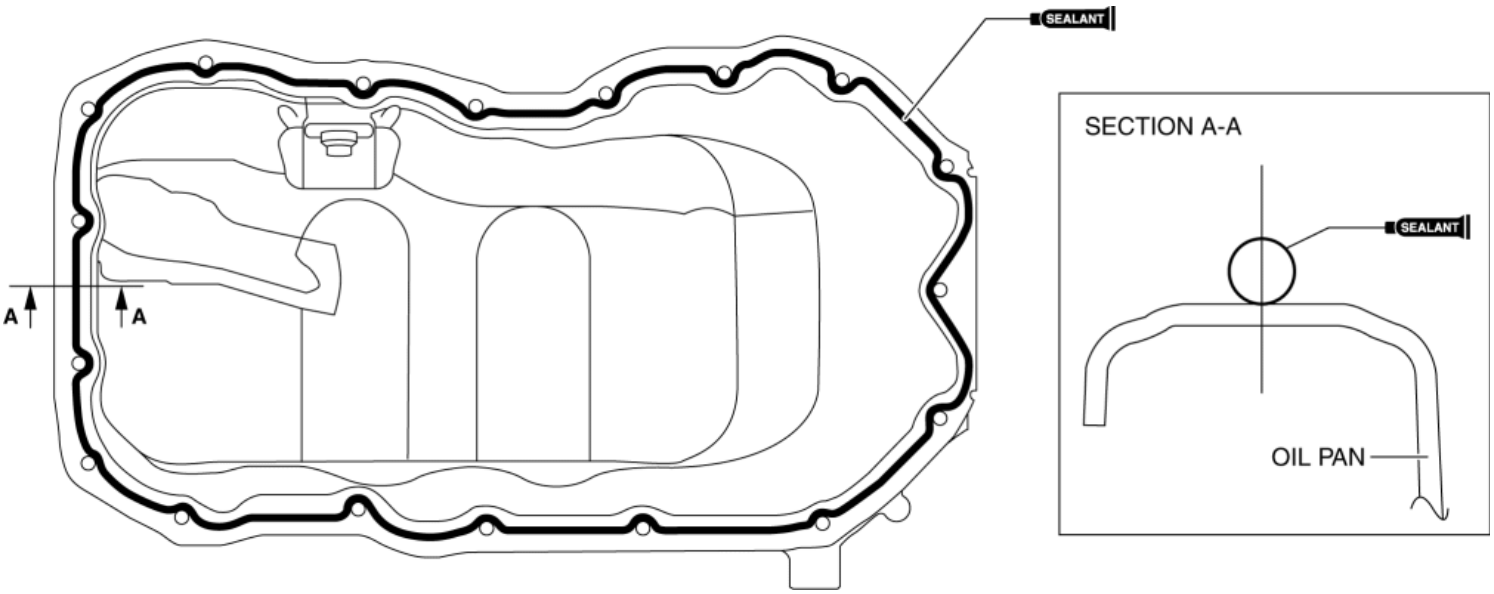

SKYACTIV-G 2.5

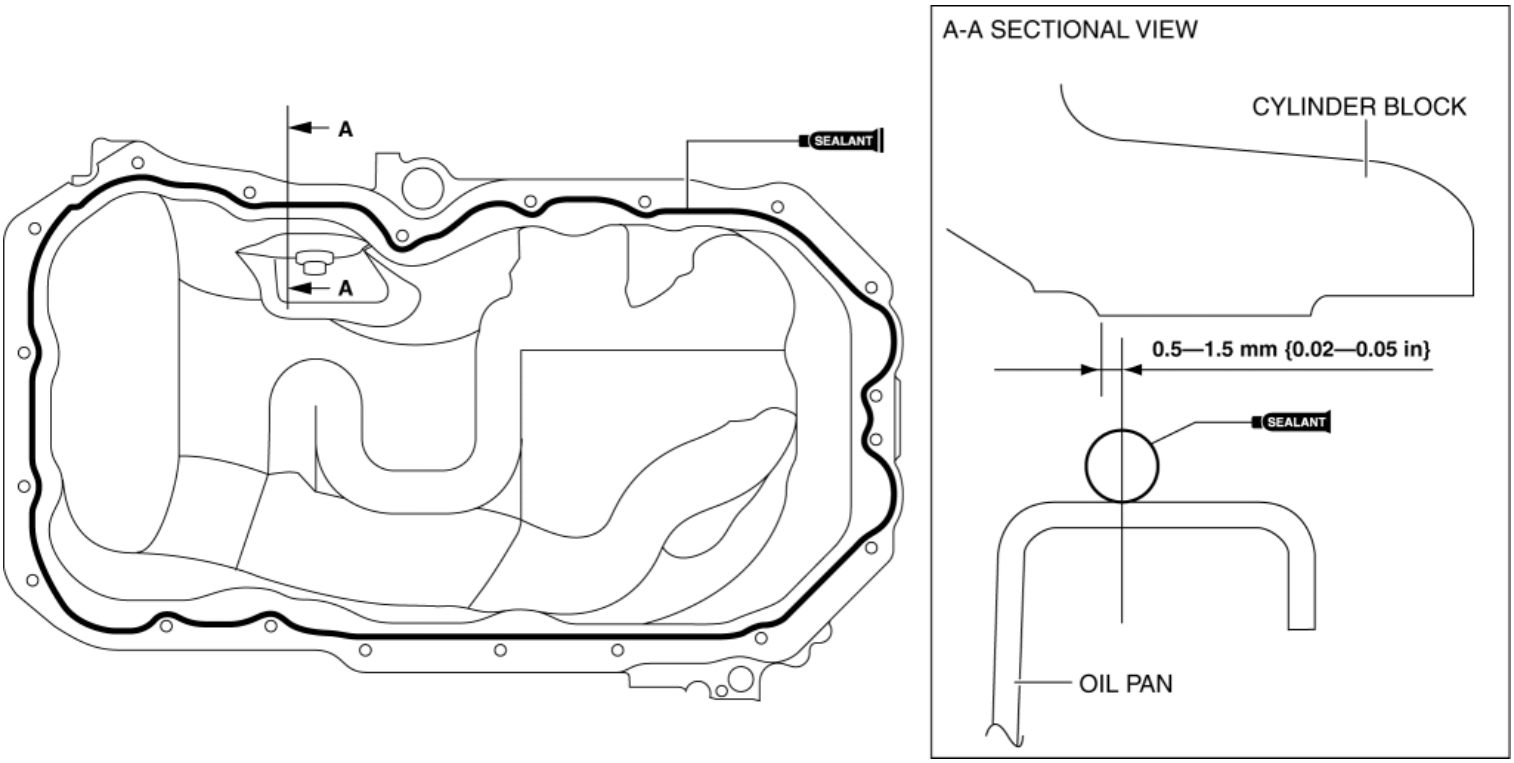

Thickness

1. SKYACTIV-G 2.0: 2.0—6.0 mm {0.08—0.23 in}
2. SKYACTIV-G 2.5: 3.0—7.0 mm {0.12—0.27 in}

4. Install the oil pan using the following procedure:

SKYACTIV-G 2.0

1. Install the oil pan to the cylinder block.
2. Tighten the bolts in the order shown in the figure.

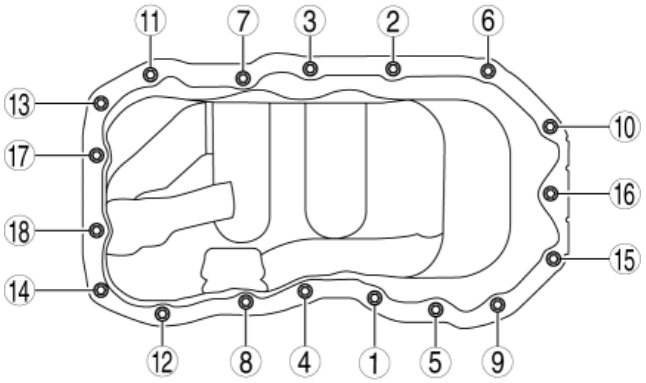

Tightening torque

1. 8—11 N·m {82—112 kgf·cm, 71—97 in·lbf}

SKYACTIV-G 2.5

1. Install the oil pan to the cylinder block.
2. Temporarily tighten the two bolts shown in the figure.

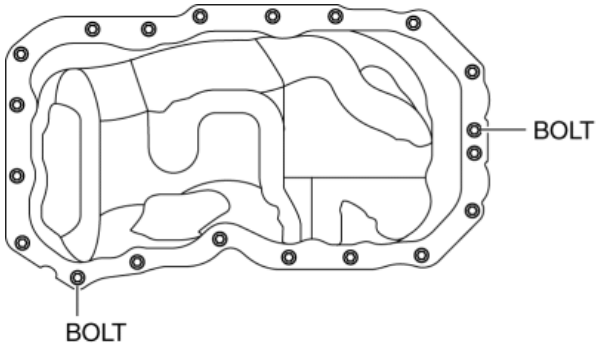

3. Tighten the bolts in the order shown in the figure.

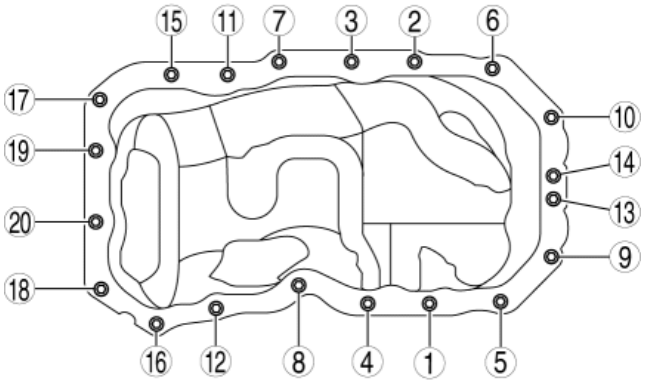

Tightening torque

1. 8—11 N·m {82—112 kgf·cm, 71—97 in·lbf}

2014 - Mazda3 - Engine

OIL PUMP REMOVAL/INSTALLATION [SKYACTIV-G 2.0, SKYACTIV-G 2.5]

WARNING:

- Hot engines and engine oil can cause severe burns. Turn off the engine and wait until it and the engine oil have cooled.
- A vehicle that is lifted but not securely supported on safety stands is dangerous. It can slip or fall, causing death or serious injury. Never work around or under a lifted vehicle if it is not securely supported on safety stands.
- Continuous exposure to USED engine oil has caused skin cancer in laboratory mice. Protect your skin by washing with soap and water immediately after working with engine oil.

CAUTION:

- If the camshaft is rotated with the timing chain removed and the piston at the top dead center position, the valve may contact the piston and the engine could be damaged. When rotating the camshaft with the timing chain removed, rotate it after lowering the piston from the top dead center position.
- When rotating the camshaft using a wrench on the cast hexagon, the wrench may contact the rocker arm and damage the rocker arm. To prevent damage to the rocker arm when holding the camshaft on the cast hexagon, use a wrench on the rear side of the engine as shown in the figure to secure a clearance between the cam.

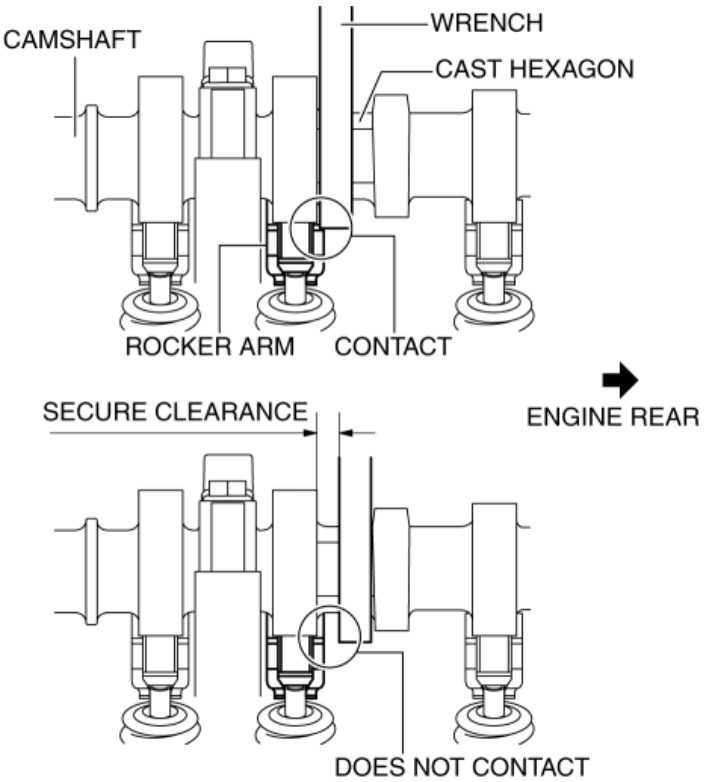

NOTE:

- Width at the cast hexagon of the camshaft is **22—24 mm {0.87—0.94 in}**.

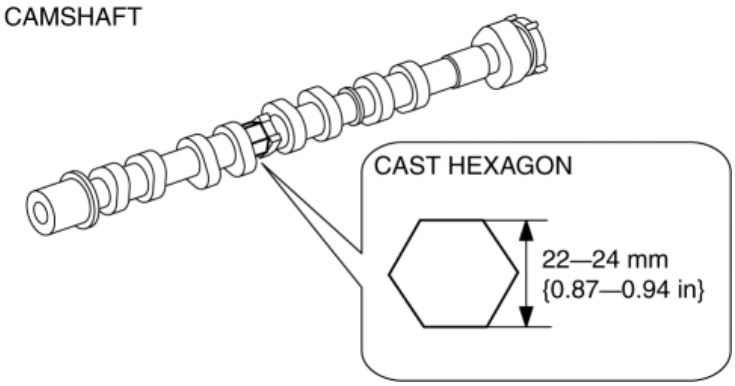

1. Disconnect the negative battery cable. (See **NEGATIVE BATTERY CABLE DISCONNECTION/CONNECTION [SKYACTIV-G 2.0, SKYACTIV-G 2.5]**.)

2. Remove the plug hole plate. (See **PLUG HOLE PLATE REMOVAL/INSTALLATION [SKYACTIV-G 2.0, SKYACTIV-G 2.5]**.)

3. Remove the ignition coil/ion sensors. (See **IGNITION COIL/ION SENSOR REMOVAL/INSTALLATION [SKYACTIV-G 2.0, SKYACTIV-G 2.5]**.)

4. Remove the front under cover No.2. (See **FRONT UNDER COVER No.2 REMOVAL/INSTALLATION**.)

5. Remove the splash shield. (See **SPLASH SHIELD REMOVAL/INSTALLATION**.)

6. Remove the drive belt. (See **DRIVE BELT REMOVAL/INSTALLATION [SKYACTIV-G 2.0, SKYACTIV-G 2.5]**.)

7. Drain the engine oil. (See **ENGINE OIL REPLACEMENT [SKYACTIV-G 2.0, SKYACTIV-G 2.5]**.)

8. Remove the oil pan. (See **OIL PAN REMOVAL/INSTALLATION [SKYACTIV-G 2.0, SKYACTIV-G 2.5]**.)

9. Remove the engine front cover. (See **TIMING CHAIN REMOVAL/INSTALLATION [SKYACTIV-G 2.0, SKYACTIV-G 2.5]**.)

10. Remove in the order indicated in the table.

11. Install in the reverse order of removal.

12. Refill with the specified type and amount of the engine oil. (See **ENGINE OIL REPLACEMENT [SKYACTIV-G 2.0, SKYACTIV-G 2.5]**.)

13. Start the engine and confirm that there is no oil leakage.

    - If there is oil leakage, repair or replace the applicable part.

14. Inspect the oil level. (See **ENGINE OIL LEVEL INSPECTION [SKYACTIV-G 2.0, SKYACTIV-G 2.5]**.)

15. Inspect for the ignition timing and idle speed. (See **ENGINE TUNE-UP [SKYACTIV-G 2.0, SKYACTIV-G 2.5]**.)

16. Inspect the oil pressure. (See **OIL PRESSURE INSPECTION [SKYACTIV-G 2.0, SKYACTIV-G 2.5]**.)

SKYACTIV-G 2.0

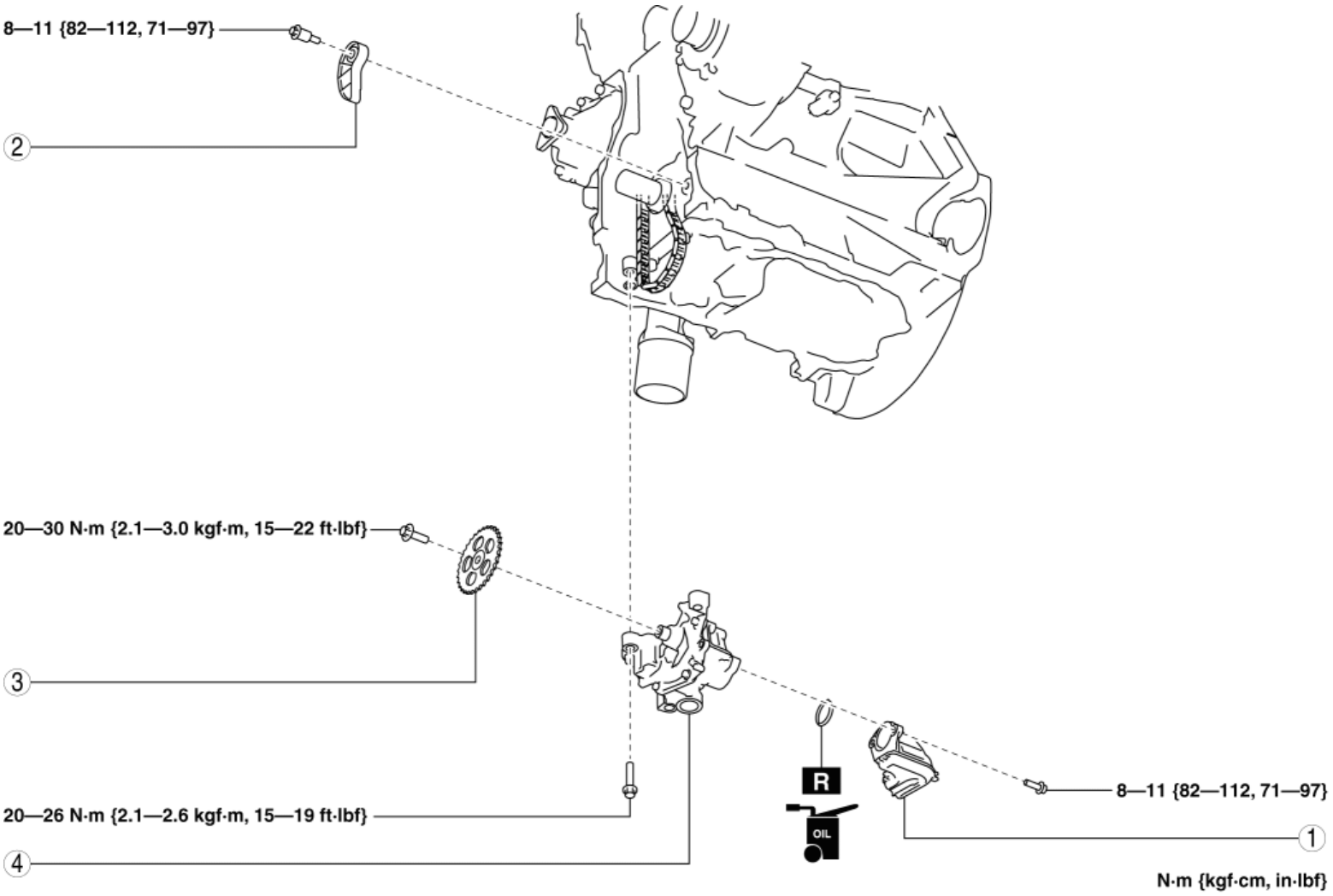

1	Oil strainer
2	Oil pump chain tensioner
3	Oil pump driven sprocket (See **Oil Pump Driven Sprocket Removal Note (SKYACTIV-G 2.0)**.) (See **Oil Pump Driven Sprocket Installation Note (SKYACTIV-G 2.0)**.)
4	Oil pump (See **Oil Pump Installation Note (SKYACTIV-G 2.0)**.)

Oil Pump Driven Sprocket Removal Note (SKYACTIV-G 2.0)

1. Temporarily assemble the crankshaft pulley lock bolt, and lock the oil pump against rotation as shown in the figure.

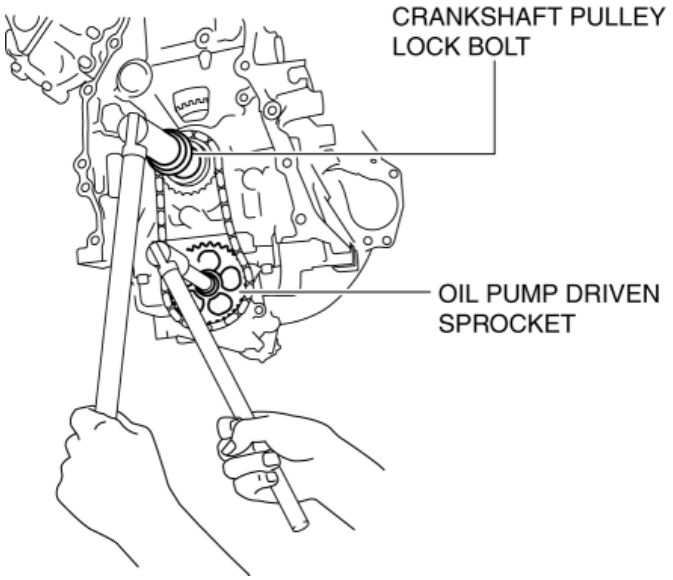

2. Remove the oil pump driven sprocket.

Oil Pump Installation Note (SKYACTIV-G 2.0)

1. Install the oil pump using the following procedure:

   a. Temporarily tighten the **three bolts** shown in the figure.

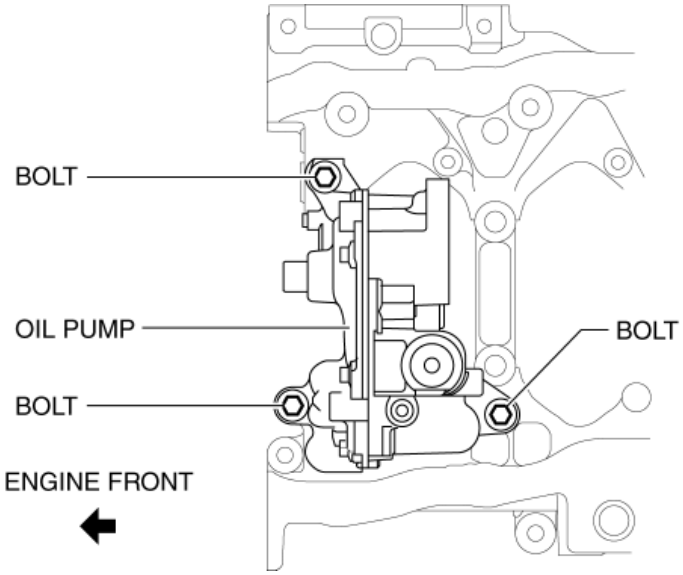

   b. Tighten the **two bolts** shown in the figure to the specified torque.

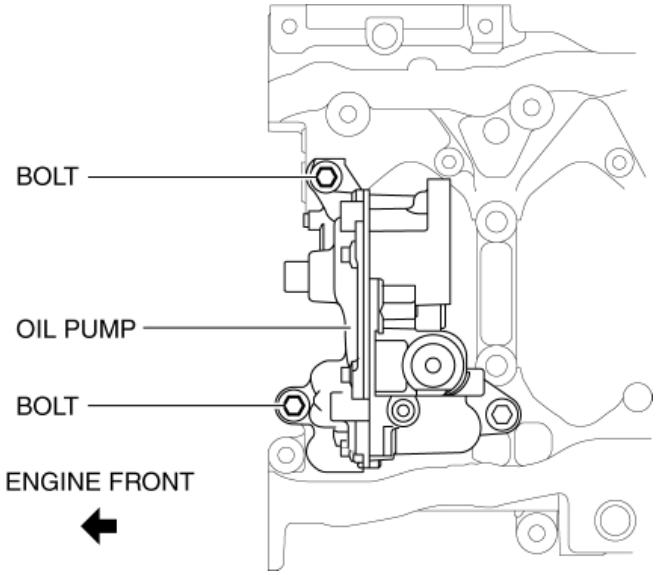

NOTE:

- The tightening order for the two bolts is optional.

  Tightening torque

- 20—26 N·m {2.1—2.6 kgf·m, 15—19 ft·lbf}

c. Finally, tighten the bolt shown in the figure to the specified torque.

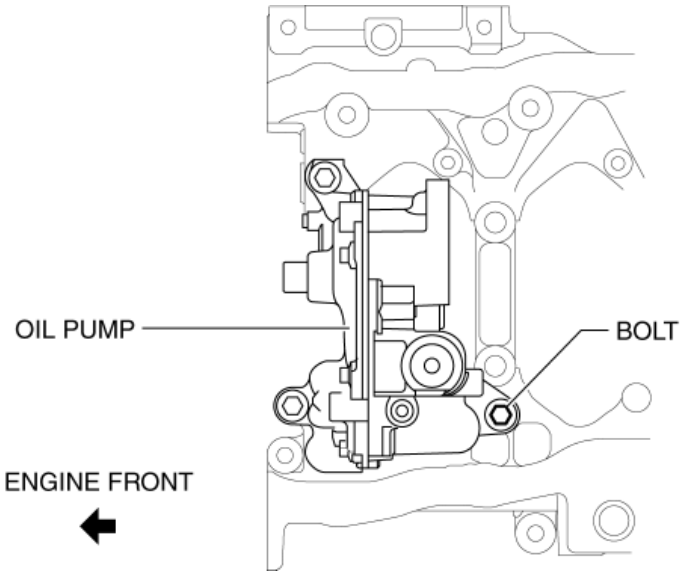

Tightening torque

- 20—26 N·m {2.1—2.6 kgf·m, 15—19 ft·lbf}

Oil Pump Driven Sprocket Installation Note (SKYACTIV-G 2.0)

1. Temporarily assemble the crankshaft pulley lock bolt, and lock the oil pump against rotation as shown in the figure.

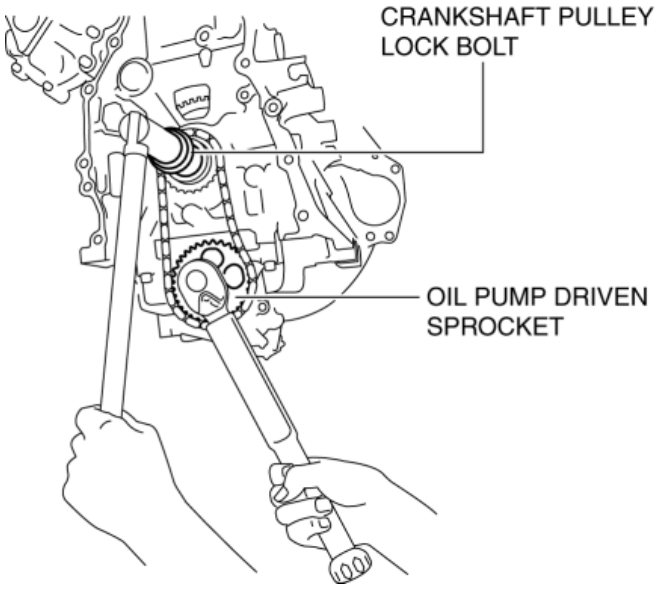

2. Install the oil pump driven sprocket.

Tightening torque

- 20—30 N·m {2.1—3.0 kgf·m, 15—22 ft·lbf}

3. Remove the temporarily assembled crankshaft pulley lock bolt.

SKYACTIV-G 2.5

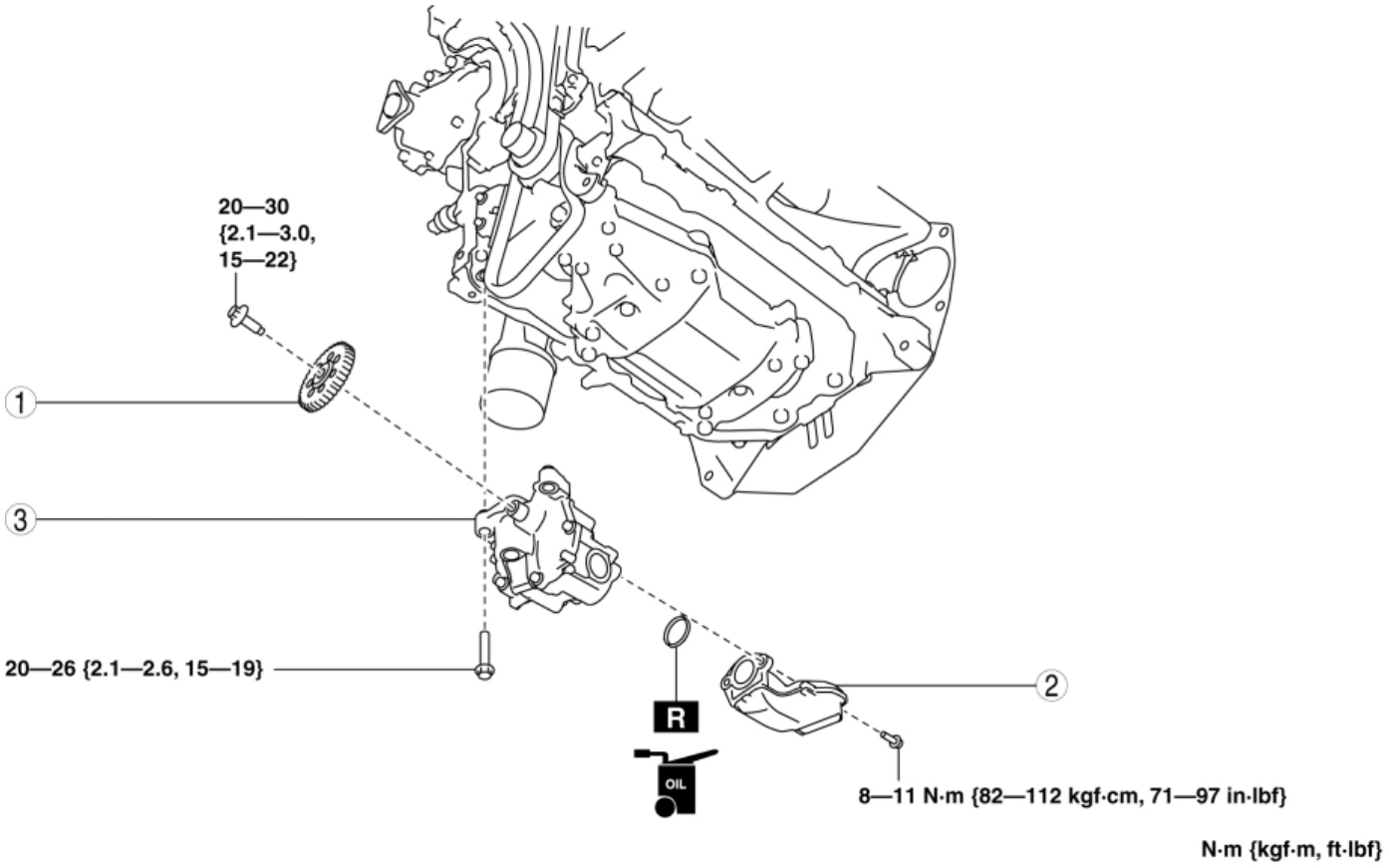

1	Oil pump driven sprocket (See **Oil Pump Driven Sprocket Removal Note (SKYACTIV-G 2.5)**.) (See **Oil Pump Driven Sprocket Installation Note (SKYACTIV-G 2.5)**.)

2	Oil strainer
3	Oil pump (See **Oil Pump Installation Note (SKYACTIV-G 2.5)**.)

Oil Pump Driven Sprocket Removal Note (SKYACTIV-G 2.5)

1. Temporarily assemble the crankshaft pulley lock bolt, and lock the oil pump against rotation as shown in the figure.

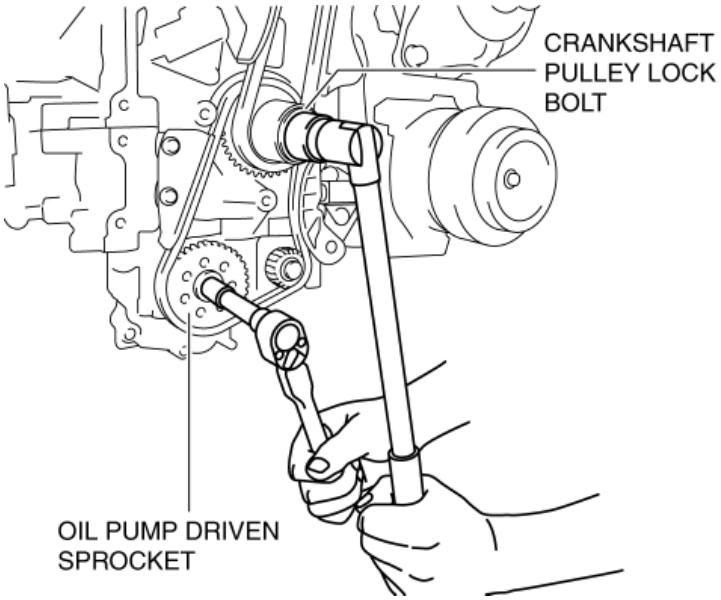

2. Slightly loosen the oil pump driven sprocket installation bolt.

NOTE:

- At this stage, only loosen the oil pump driven sprocket installation bolt, do not remove it. After releasing the tension on the oil pump chain tensioner, completely remove the bolt.

3. Set a cloth wrapped flathead screwdriver in the gap between oil pump drive sprocket and the oil pump chain as shown in the figure.

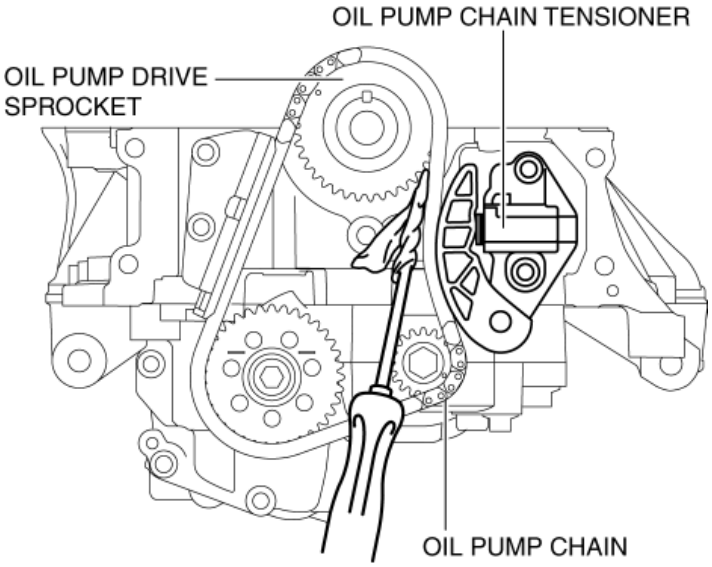

4. Move the screwdriver in the direction of the arrow and press the oil pump chain, and then press in the plunger of the oil pump chain tensioner.

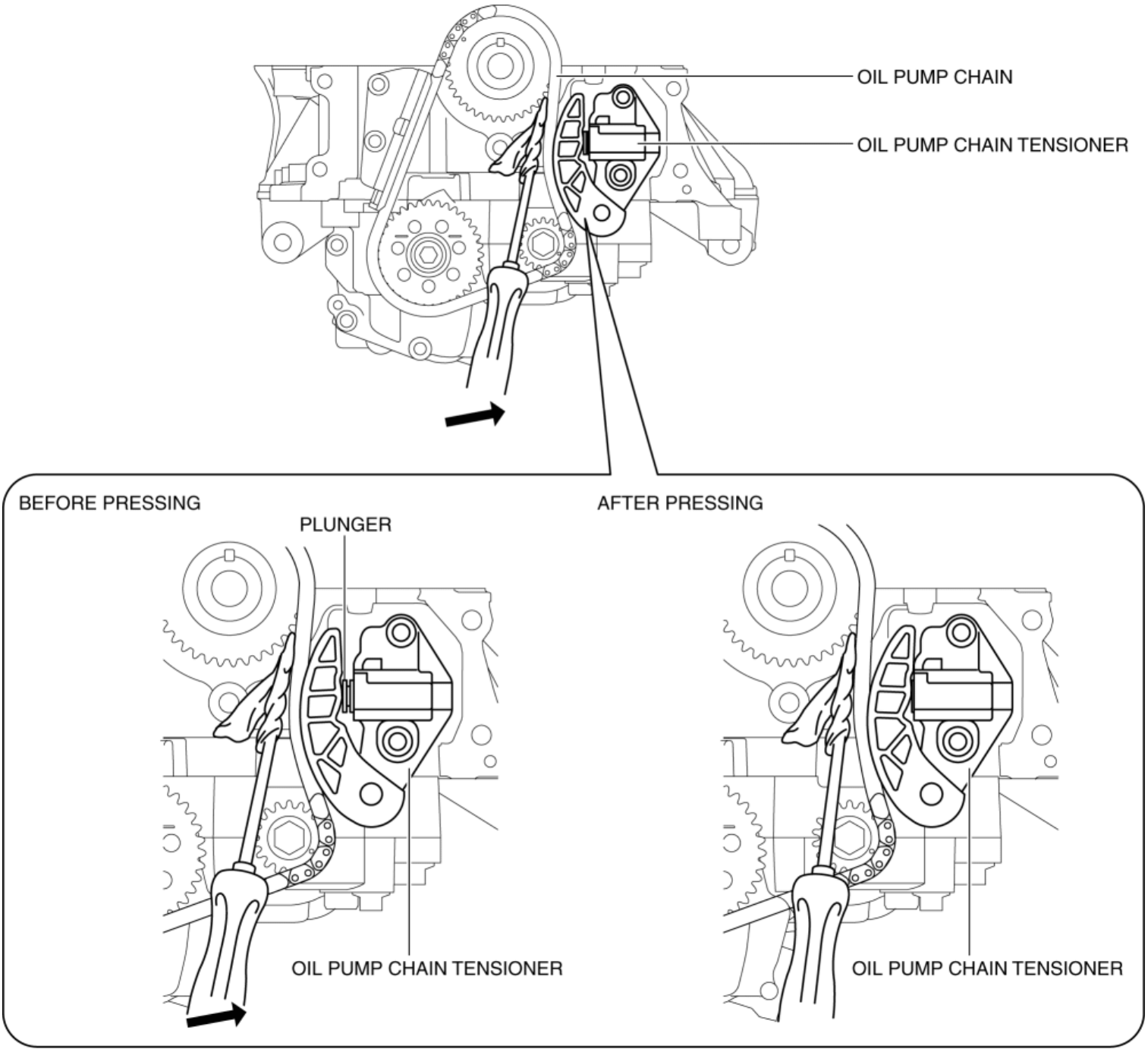

5. Insert a wire with an **approx. diameter of 1.4 mm {0.055 in}** or a paper clip into the body hole of the oil pump chain tensioner with the plunger pressed.

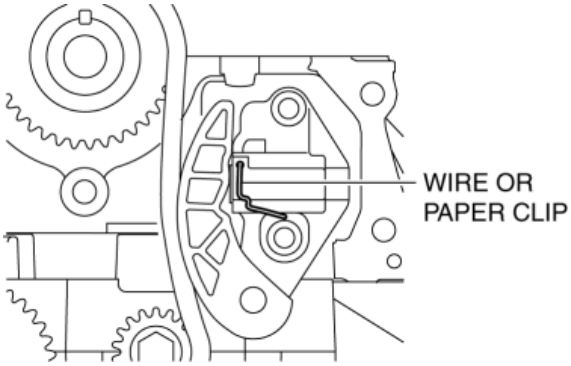

NOTE:

- The wire or paper clip secures the plunger, and the tension can be released.

6. Remove the oil pump driven sprocket installation bolt and oil pump driven sprocket.
7. Set the oil pump chain aside so that it does not obstruct the oil pump removal work.

Oil Pump Installation Note (SKYACTIV-G 2.5)

1. Install the oil pump using the following procedure:

   a. Temporarily tighten the **three bolts** shown in the figure.

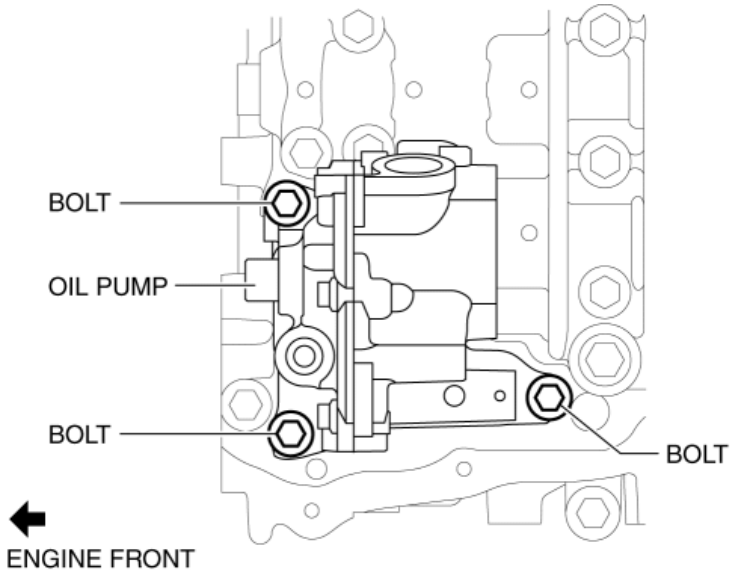

   b. Tighten the **two bolts** shown in the figure to the specified torque.

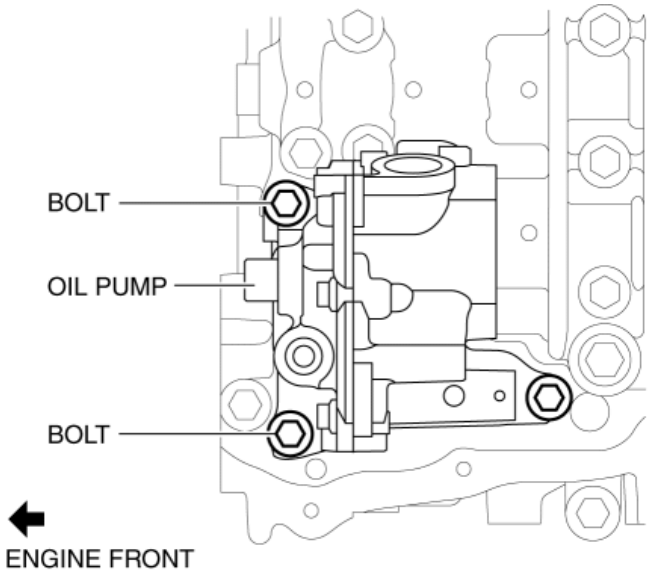

NOTE:

- The tightening order for the two bolts is optional.

  Tightening torque

- 20—26 N·m {2.1—2.6 kgf·m, 15—19 ft·lbf}

   c. Finally, tighten the bolt shown in the figure to the specified torque.

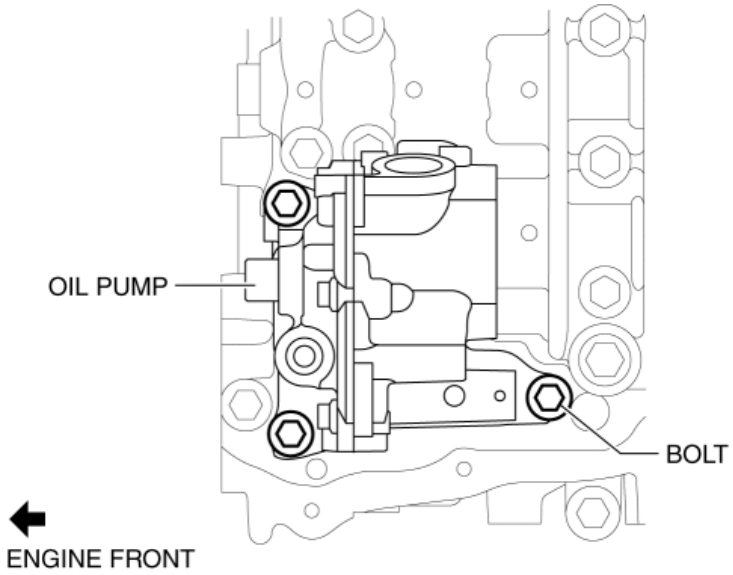

Tightening torque

- 20—26 N·m {2.1—2.6 kgf·m, 15—19 ft·lbf}

Oil Pump Driven Sprocket Installation Note (SKYACTIV-G 2.5)

1. Rotate the crankshaft clockwise to align the key position as shown in the figure.

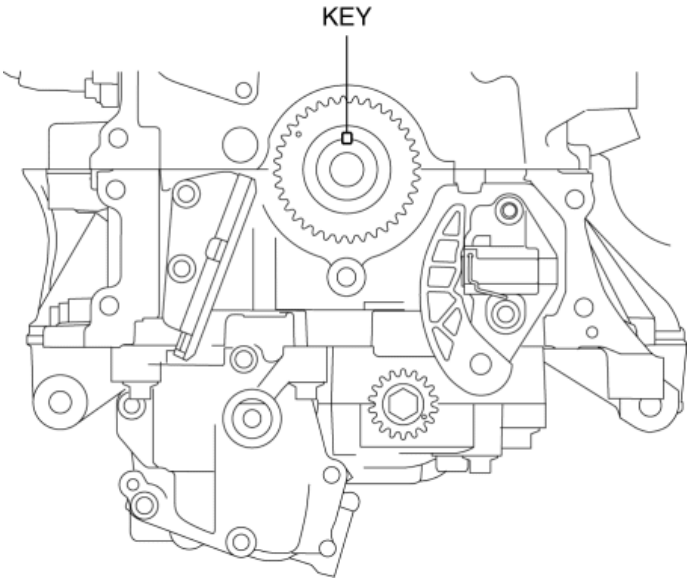

2. Align the oil pump chain alignment marks in two locations with the balancer unit sprocket alignment mark and the oil pump drive sprocket alignment mark as shown in the figure, and install the oil pump chain and oil pump driven sprocket.

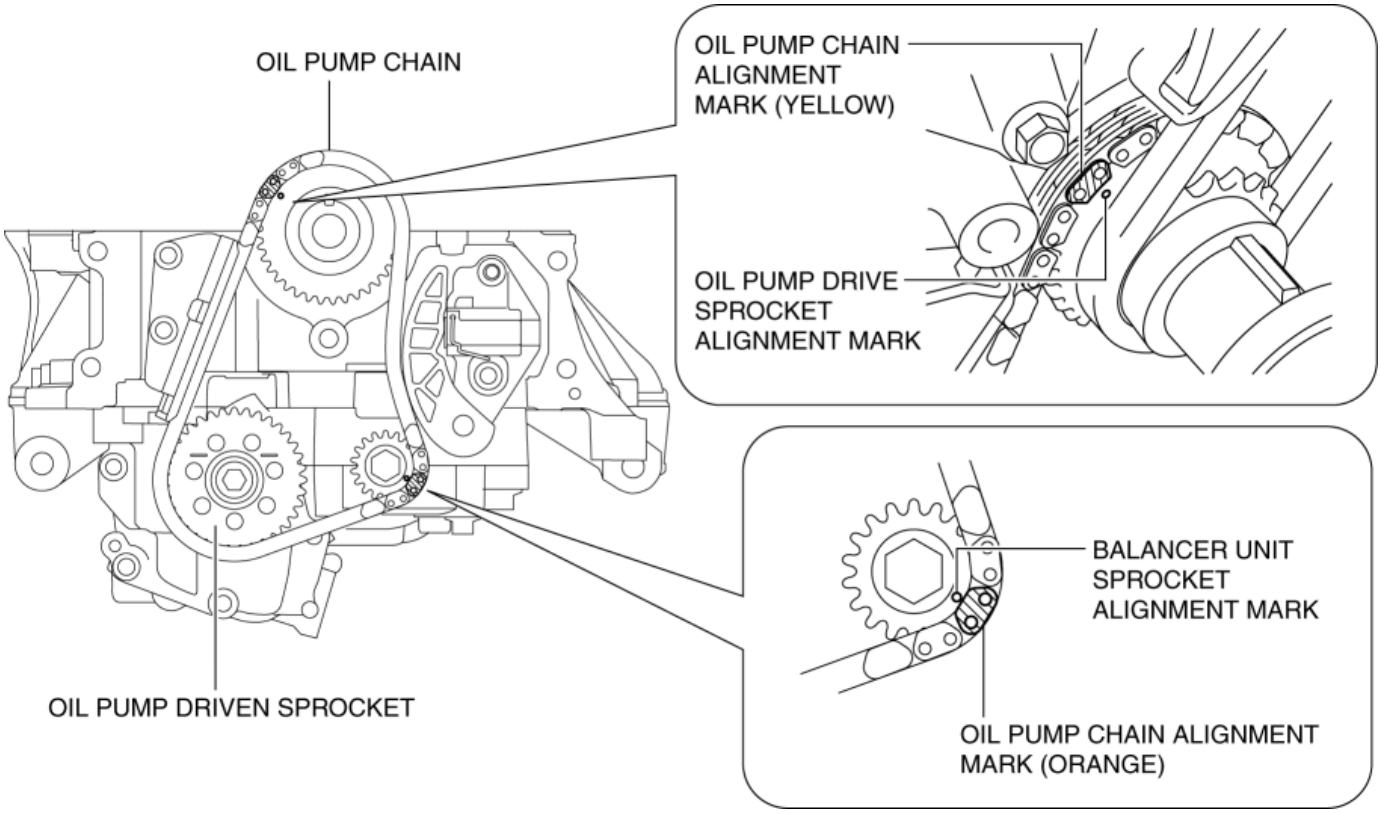

3. Temporarily tighten the oil pump driven sprocket installation bolt.
4. Lock the oil pump against rotation as shown in the figure.

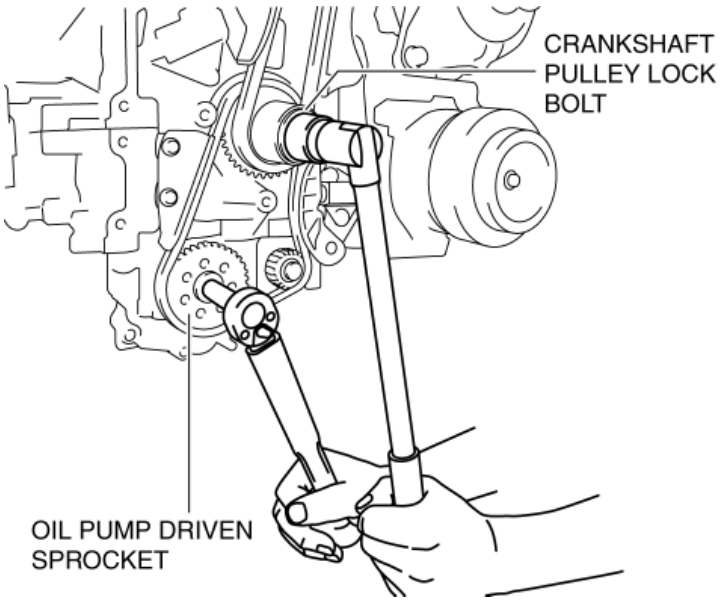

5. Tighten the oil pump driven sprocket installation bolt.

Tightening torque

- 20—30 N·m {2.1—3.0 kgf·m, 15—22 ft·lbf}

6. Remove the temporarily assembled crankshaft pulley lock bolt.
7. Remove the wire or paper clip installed to the oil pump chain tensioner and apply tension to the oil pump chain.
    - If a new oil pump chain tensioner is used, remove the installed stopper.

2014 - Mazda3 - Engine

COOLING SYSTEM LOCATION INDEX [SKYACTIV-G 2.0, SKYACTIV-G 2.5]

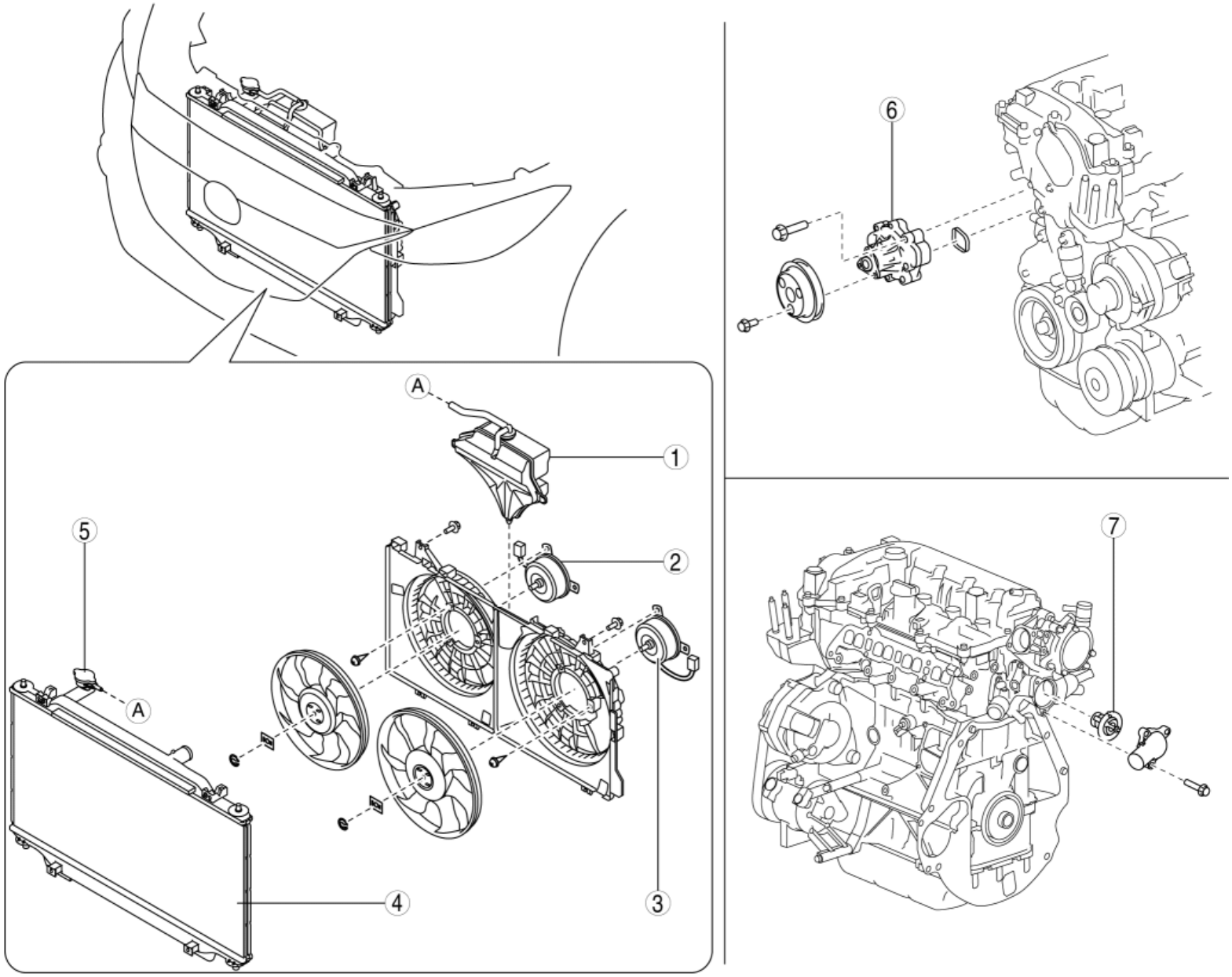

1	Coolant reserve tank (See **ENGINE COOLANT LEVEL INSPECTION [SKYACTIV-G 2.0, SKYACTIV-G 2.5]**.) (See **COOLANT RESERVE TANK REMOVAL/INSTALLATION [SKYACTIV-G 2.0, SKYACTIV-G 2.5]**.)
2	Cooling fan motor No.2 (See **COOLING FAN MOTOR REMOVAL/INSTALLATION [SKYACTIV-G 2.0, SKYACTIV-G 2.5]**.) (See **COOLING FAN MOTOR INSPECTION [SKYACTIV-G 2.0, SKYACTIV-G 2.5]**.)
3	Cooling fan motor No.1

	(See **COOLING FAN MOTOR REMOVAL/INSTALLATION [SKYACTIV-G 2.0, SKYACTIV-G 2.5]**.) (See **COOLING FAN MOTOR INSPECTION [SKYACTIV-G 2.0, SKYACTIV-G 2.5]**.)
4	Radiator (See **ENGINE COOLANT PROTECTION INSPECTION [SKYACTIV-G 2.0, SKYACTIV-G 2.5]**.) (See **ENGINE COOLANT REPLACEMENT [SKYACTIV-G 2.0, SKYACTIV-G 2.5]**.) (See **ENGINE COOLANT LEAKAGE INSPECTION [SKYACTIV-G 2.0, SKYACTIV-G 2.5]**.) (See **RADIATOR REMOVAL/INSTALLATION [SKYACTIV-G 2.0, SKYACTIV-G 2.5]**.)
5	Cooling system cap (See **COOLING SYSTEM CAP INSPECTION [SKYACTIV-G 2.0, SKYACTIV-G 2.5]**.)
6	Water pump (See **WATER PUMP REMOVAL/INSTALLATION [SKYACTIV-G 2.0, SKYACTIV-G 2.5]**.)
7	Thermostat (See **THERMOSTAT REMOVAL/INSTALLATION [SKYACTIV-G 2.0, SKYACTIV-G 2.5]**.) (See **THERMOSTAT INSPECTION [SKYACTIV-G 2.0, SKYACTIV-G 2.5]**.)

2014 - Mazda3 - Engine

COOLING SYSTEM SERVICE WARNINGS [SKYACTIV-G 2.0, SKYACTIV-G 2.5]

WARNING:

- Never remove the cooling system cap or loosen the radiator drain plug while the engine is running, or when the engine and radiator are hot. Scalding engine coolant and steam may shoot out and cause serious injury. It may also damage the engine and cooling system.
- Turn off the engine and wait until it is cool. Even then, be very careful when removing the cap. Wrap a thick cloth around it and slowly turn it counterclockwise to the first stop. Step back while the pressure escapes.
- When you are sure all the pressure is gone, press down on the cap using the cloth, turn it, and remove it.
- Depending on the vehicle, the cooling fan may operate suddenly even when the ignition is off. Therefore, keep hands and tools away from the cooling fan even if the cooling fan is not operating to prevent injury to personnel or damage to the cooling fan. Always disconnect the negative battery cable when servicing the cooling fan or parts near the cooling fan.

2014 - Mazda3 - Engine

ENGINE COOLANT LEVEL INSPECTION [SKYACTIV-G 2.0, SKYACTIV-G 2.5]

WARNING:

- Never remove the cooling system cap or loosen the radiator drain plug while the engine is running, or when the engine and radiator are hot. Scalding engine coolant and steam may shoot out and cause serious injury. It may also damage the engine and cooling system.
- Turn off the engine and wait until it is cool. Even then, be very careful when removing the cap. Wrap a thick cloth around it and slowly turn it counterclockwise to the first stop. Step back while the pressure escapes.
- When you are sure all the pressure is gone, press down on the cap using the cloth, turn it, and remove it.

NOTE:

- If the “FL22” mark is shown on or near the cooling system cap, use Mazda Genuine FL22 engine coolant.

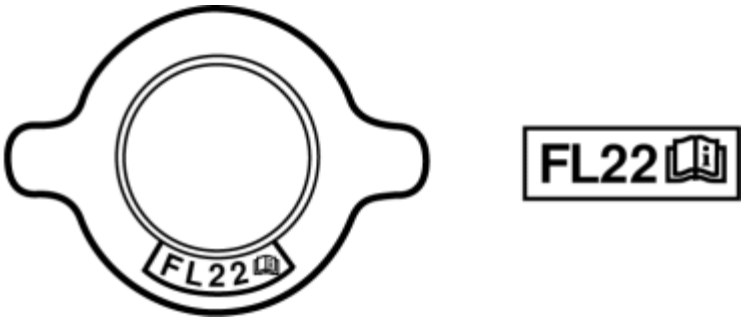

- FL22 type engine coolant is shipped as a diluted solution. Use the solution as is when replacing coolant.

1. Remove the cooling system cap.
2. Verify that the engine coolant is filled close to the top of the radiator filler neck.
    - If the engine coolant level is low, add engine coolant.
3. Verify that the engine coolant level in the coolant reserve tank is between the F and L marks.

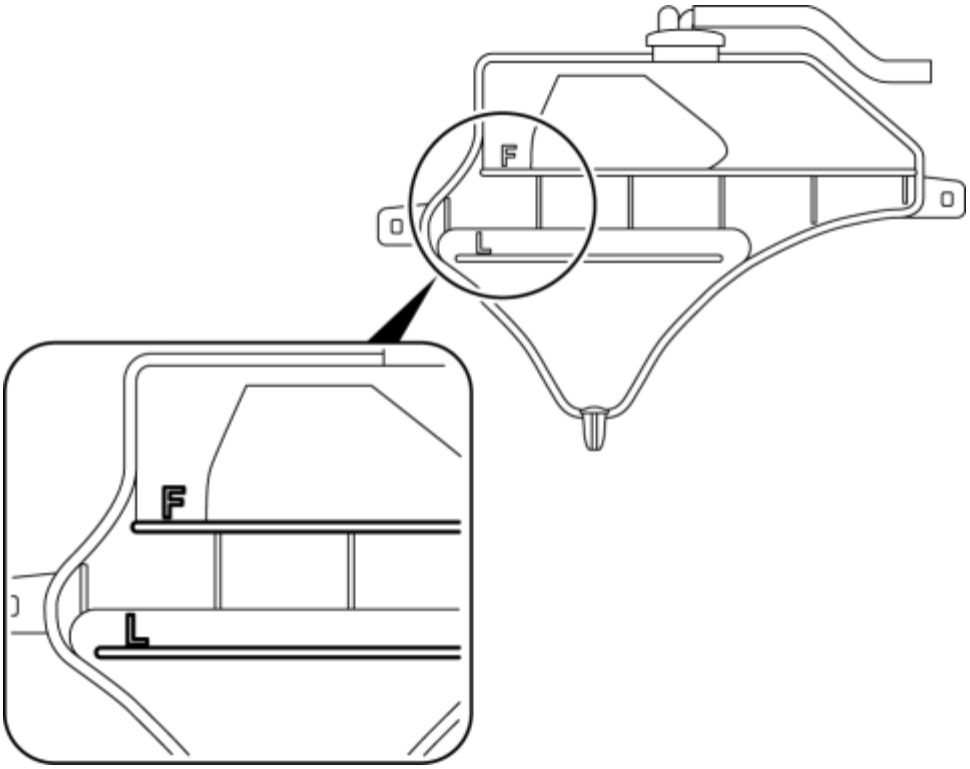

- If the engine coolant level is below the L mark, add engine coolant.

2014 - Mazda3 - Engine

ENGINE COOLANT REPLACEMENT [SKYACTIV-G 2.0, SKYACTIV-G 2.5]

WARNING:

- Never remove the cooling system cap or loosen the radiator drain plug while the engine is running, or when the engine and radiator are hot. Scalding engine coolant and steam may shoot out and cause serious injury. It may also damage the engine and cooling system.
- Turn off the engine and wait until it is cool. Even then, be very careful when removing the cap. Wrap a thick cloth around it and slowly turn it counterclockwise to the first stop. Step back while the pressure escapes.
- When you are sure all the pressure is gone, press down on the cap using the cloth, turn it, and remove it.

CAUTION:

1. Use engine coolant at a concentration that meets the environmental conditions in which the vehicle is driven, otherwise engine damage could occur.
2. The engine has aluminum parts and must be protected by an ethylene-glycol-based coolant to prevent corrosion and freezing.
3. Do not use coolants containing Alcohol, Methanol, Borate or Silicate. These coolants could damage the cooling system.
4. Use only soft (demineralized) water in the coolant mixture. Water that contains minerals will cut down on the coolant's effectiveness.
5. Engine coolant damages paint. If engine coolant does get on a painted surface, rinse it off quickly.

NOTE:

- If the “FL22” mark is shown on or near the cooling system cap, use Mazda Genuine FL22 engine coolant.

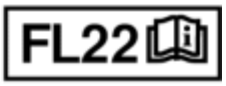

- FL22 type engine coolant is shipped as a diluted solution. Use the solution as is when replacing coolant.

  Engine coolant capacity (approx. quantity)

SKYACTIV-G 2.0 MTX: 6.3 L {6.7 US qt, 5.5 Imp qt}

- SKYACTIV-G 2.0 ATX: 6.5 L {6.9 US qt, 5.7 Imp qt}
- SKYACTIV-G 2.5 ATX: 6.8 L {7.2 US qt, 6.0 Imp qt}

1. Remove the cooling system cap.

2. Remove the service hole cover (installed to front under cover No.1) used to drain the engine coolant.

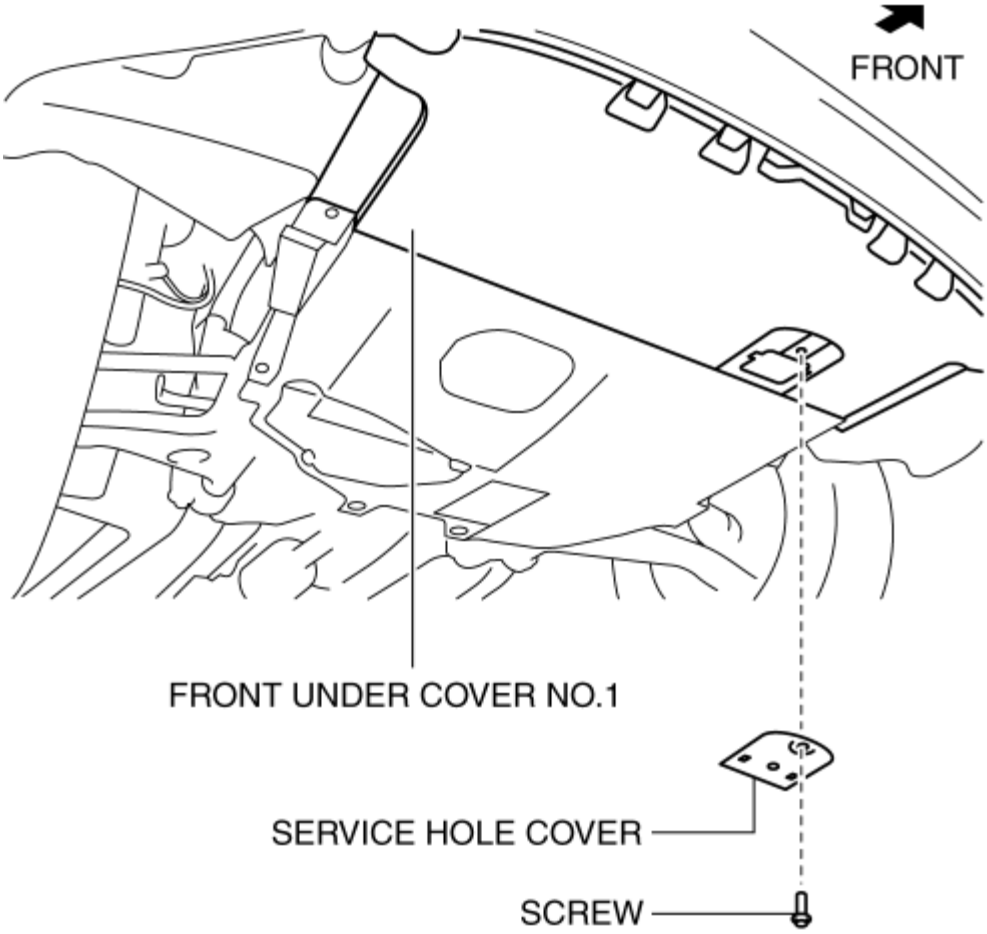

3. Loosen the radiator drain plug and drain the engine coolant into a container.

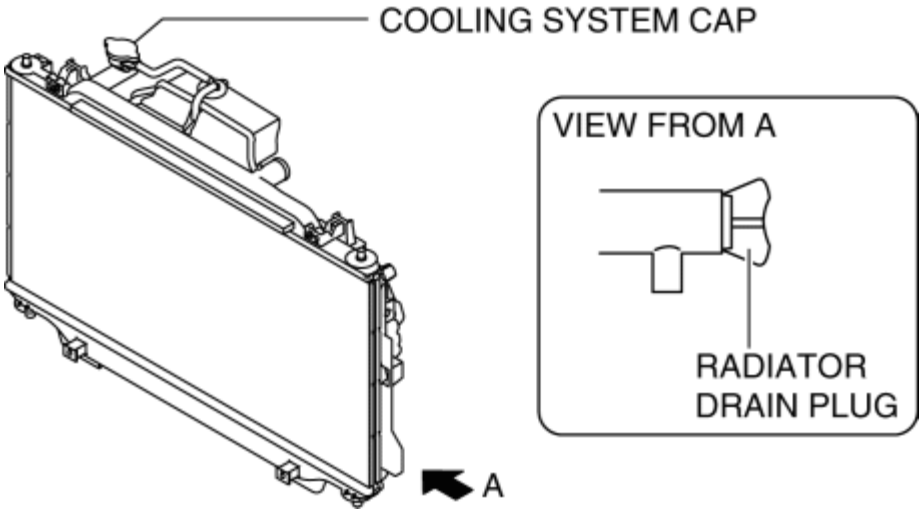

4. Flush the cooling system with water until all traces of color are gone.

5. Let the system drain completely.

6. Tighten the radiator drain plug.

7. Referring to the following chart, select the correct volume percentage of the water and engine coolant. **Antifreeze solution mixture percentage (Except FL22 type engine coolant)**

Engine coolant protection	Volume percentage (%)		Gravity at 20 °C {68 °F}
	Water	Coolant	
Above -16 °C {3 °F}	65	35	1.057
Above -26 °C {-15 °F}	55	45	1.072
Above -40 °C {-40 °F}	45	55	1.086

8. Refill the engine coolant from the radiator filler neck until it is close to the top of the radiator filler neck.

9. Refill the engine coolant into the coolant reserve tank up to the F mark on the tank.

10. Install the cooling system cap.

CAUTION:

- If the high engine coolant temperature warning light flashes, stop the engine to lower the engine coolant temperature and prevent overheating. Then, verify the malfunctioning part and repair or replace it.

11. Start the engine and warm up the engine by idling.

12. After the engine warms up, perform the following steps. At this time, be careful of the engine coolant temperature to prevent overheating.

NOTE:

- If the accelerator pedal is depressed continuously for a specified time, the engine speed may decrease to the idle speed. This is due to the fuel cut control operation, which prevents overheating, and it does not indicate a malfunction.

a. Run the engine at **2,500 rpm** for **5 min**.

b. Maintain the engine speed at **3,000 rpm** for **5 s, and then idle**.

c. Repeat Steps (1), (2) several times.

13. Stop the engine, and inspect the engine coolant level after the engine coolant temperature decreases. If it is low, repeat Steps 8—12.

14. Inspect for engine coolant leakage. (See **ENGINE COOLANT LEAKAGE INSPECTION [SKYACTIV-G 2.0, SKYACTIV-G 2.5]**.)

15. Install the service hole cover.

ENGINE COOLANT REPLACEMENT [SKYACTIV-G 2.0, SKYACTIV-G 2.5]

2014 - Mazda3 - Engine

ENGINE COOLANT PROTECTION INSPECTION [SKYACTIV-G 2.0, SKYACTIV-G 2.5]

1. Measure the engine coolant temperature and specific gravity using a thermometer and a hydrometer.

CAUTION:

- Use engine coolant at a concentration that meets the environmental conditions in which the vehicle is driven, otherwise engine damage could occur.
- The engine has aluminum parts and must be protected by an ethylene-glycol-based coolant to prevent corrosion and freezing.
- Do not use coolants containing Alcohol, Methanol, Borate or Silicate. These coolants could damage the cooling system.
- Use only soft (demineralized) water in the coolant mixture. Water that contains minerals will cut down on the coolant's effectiveness.
- Engine coolant damages paint. If engine coolant does get on a painted surface, rinse it off quickly.

NOTE:

- If the "FL22" mark is shown on or near the cooling system cap, use Mazda Genuine FL22 engine coolant.

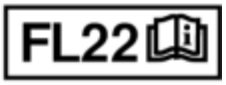

- FL22 type engine coolant is shipped as a diluted solution. Use the solution as is when replacing coolant.

2. Determine the engine coolant protection level by referring to the graph shown in the figure.

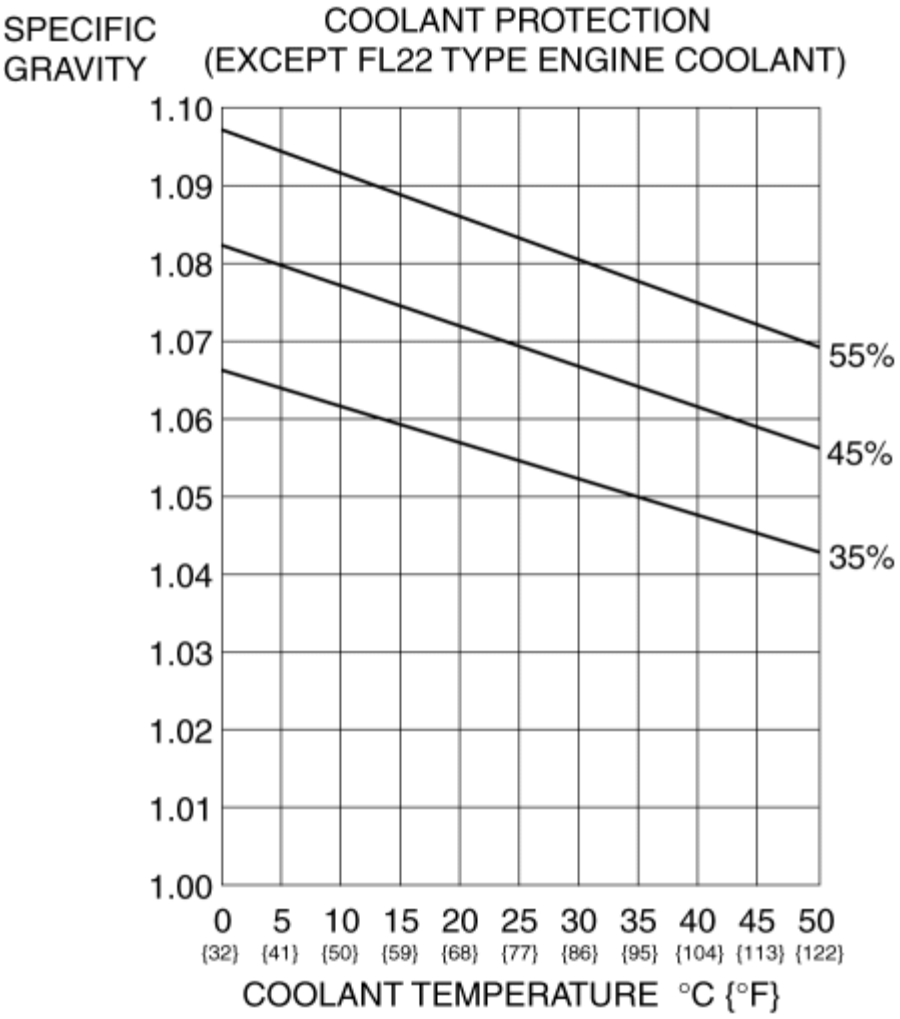

- If the engine coolant protection level is not correct, add water or engine coolant.

2014 - Mazda3 - Engine

ENGINE COOLANT LEAKAGE INSPECTION [SKYACTIV-G 2.0, SKYACTIV-G 2.5]

WARNING:

- Never remove the cooling system cap or loosen the radiator drain plug while the engine is running, or when the engine and radiator are hot. Scalding engine coolant and steam may shoot out and cause serious injury. It may also damage the engine and cooling system.
- Turn off the engine and wait until it is cool. Even then, be very careful when removing the cap. Wrap a thick cloth around it and slowly turn it counterclockwise to the first stop. Step back while the pressure escapes.
- When you are sure all the pressure is gone, press down on the cap using the cloth, turn it, and remove it.

1. Inspect the engine coolant level. (See **ENGINE COOLANT LEVEL INSPECTION [SKYACTIV-G 2.0, SKYACTIV-G 2.5]**.)

2. Remove the cooling system cap.

3. Install the radiator cap tester to the radiator filler neck.

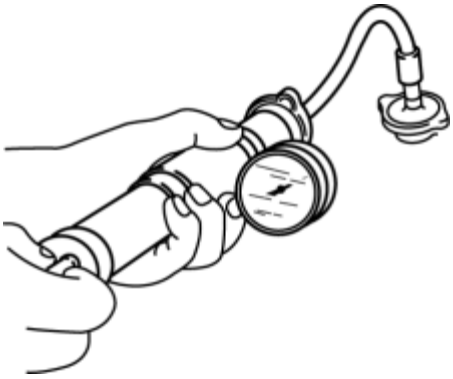

4. Apply pressure using the radiator cap tester.

CAUTION:

- Applying more than 122.6 kPa {1.250 kgf/cm^2, 17.78 psi} can damage the hoses, fittings, and other components, and cause leakage.

  Engine coolant leakage inspection pressure

- 122.6 kPa {1.250 kgf/cm^2, 17.78 psi} [1 min]

5. When pressurizing the cooling system, verify that the pressure is maintained.

- If the gauge needle drops, it may indicate water leakage. Repair or replace the applicable part.

ENGINE COOLANT LEAKAGE INSPECTION [SKYACTIV-G 2.0, SKYACTIV-G 2.5]

2014 - Mazda3 - Engine

COOLING SYSTEM CAP INSPECTION [SKYACTIV-G 2.0, SKYACTIV-G 2.5]

WARNING:

- Never remove the cooling system cap or loosen the radiator drain plug while the engine is running, or when the engine and radiator are hot. Scalding engine coolant and steam may shoot out and cause serious injury. It may also damage the engine and cooling system.
- Turn off the engine and wait until it is cool. Even then, be very careful when removing the cap. Wrap a thick cloth around it and slowly turn it counterclockwise to the first stop. Step back while the pressure escapes.
- When you are sure all the pressure is gone, press down on the cap using the cloth, turn it, and remove it.

1. Clean the cooling system cap and the sealed part.
2. Inspect the cooling system cap for cracks or everted seal.
    - If there is any malfunction, replace the cooling system cap.
3. Attach the cooling system cap to the radiator cap tester.

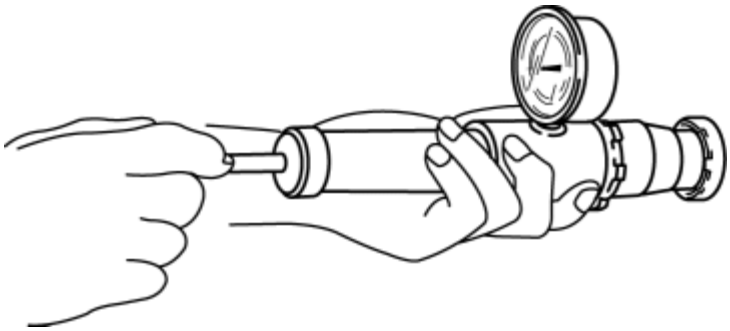

4. Hold the cooling system cap downward and apply pressure gradually. Verify that the pressure is held stable for **10 s.**
    - If the pressure is not held stable, replace the cooling system cap.

    Cooling system cap valve opening pressure

    - 93.2—122.6 kPa {0.951—1.250 kgf/cm^2, 13.6—17.7 psi}

2014 - Mazda3 - Engine

COOLANT RESERVE TANK REMOVAL/INSTALLATION [SKYACTIV-G 2.0, SKYACTIV-G 2.5]

1. Remove in the order indicated in the table.
2. Install in the reverse order of removal.

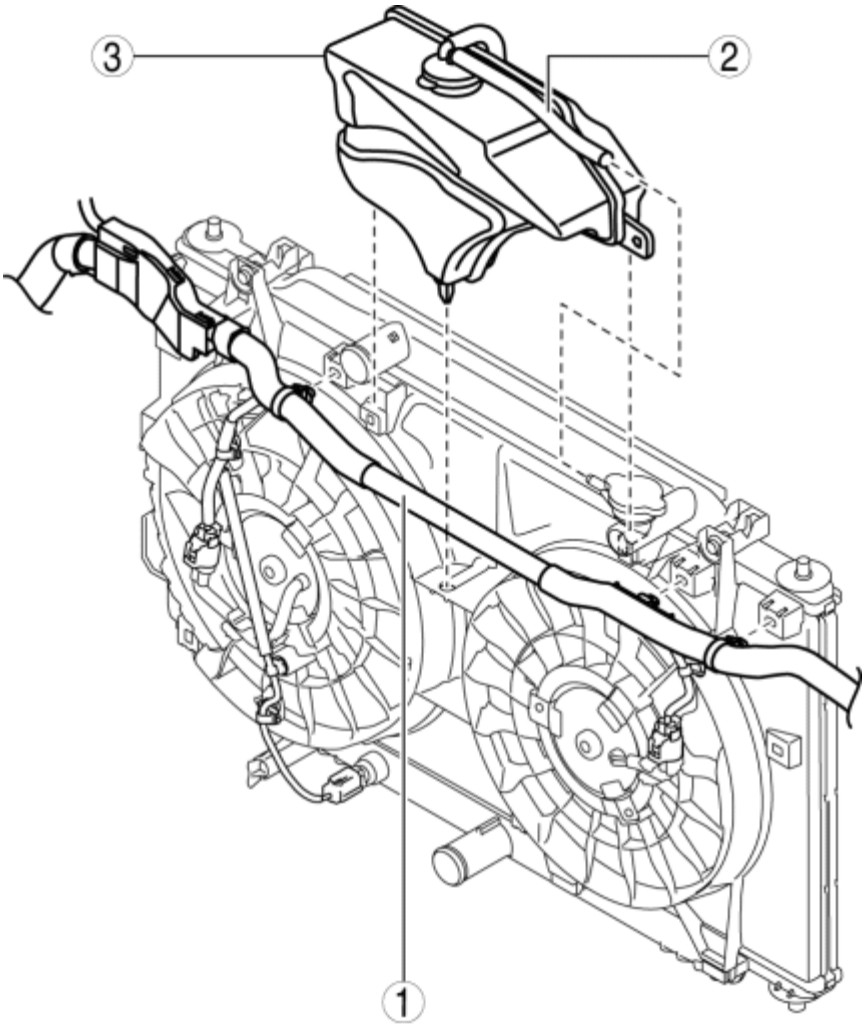

1	Wiring harness
2	Hose
3	Coolant reserve tank (See **Coolant Reserve Tank Removal Note**.)

Coolant Reserve Tank Removal Note

1. Remove the coolant reserve tank from the radiator cowling tabs shown in the figure by lifting them with a flathead screwdriver.

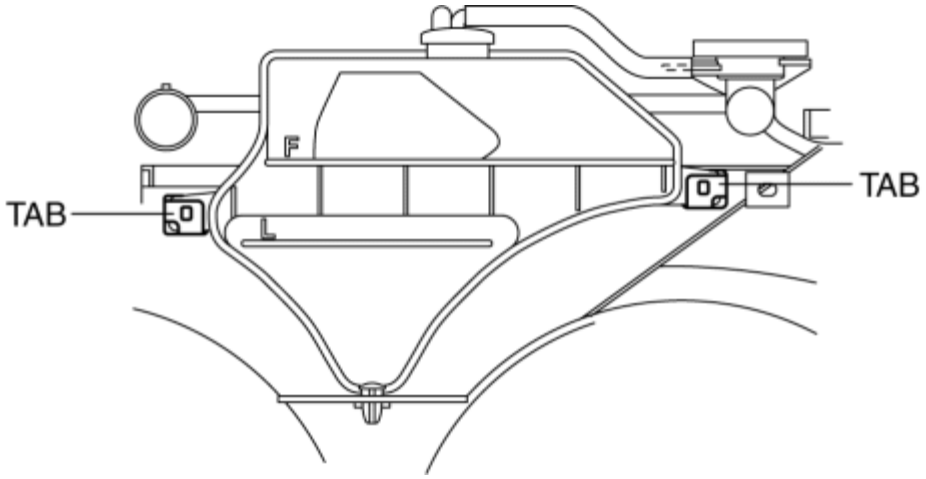

2014 - Mazda3 - Engine

RADIATOR REMOVAL/INSTALLATION [SKYACTIV-G 2.0, SKYACTIV-G 2.5]

WARNING:

- Never remove the cooling system cap or loosen the radiator drain plug while the engine is running, or when the engine and radiator are hot. Scalding engine coolant and steam may shoot out and cause serious injury. It may also damage the engine and cooling system.
- Turn off the engine and wait until it is cool. Even then, be very careful when removing the cap. Wrap a thick cloth around it and slowly turn it counterclockwise to the first stop. Step back while the pressure escapes.
- When you are sure all the pressure is gone, press down on the cap using the cloth, turn it, and remove it.

1. Disconnect the negative battery cable. (See **NEGATIVE BATTERY CABLE DISCONNECTION/CONNECTION [SKYACTIV-G 2.0, SKYACTIV-G 2.5]**.)

2. Remove the front under cover No.1. (See **FRONT UNDER COVER No.1 REMOVAL/INSTALLATION**.)

3. Drain the engine coolant. (See **ENGINE COOLANT REPLACEMENT [SKYACTIV-G 2.0, SKYACTIV-G 2.5]**.)

4. Remove the plug hole plate. (See **PLUG HOLE PLATE REMOVAL/INSTALLATION [SKYACTIV-G 2.0, SKYACTIV-G 2.5]**.)

5. Remove the air cleaner, air hose and fresh air duct component. (See **INTAKE-AIR SYSTEM REMOVAL/INSTALLATION [SKYACTIV-G 2.0, SKYACTIV-G 2.5]**.)

6. Remove the coolant reserve tank. (See **COOLANT RESERVE TANK REMOVAL/INSTALLATION [SKYACTIV-G 2.0, SKYACTIV-G 2.5]**.)

7. Remove the cooling fan component. (See **COOLING FAN MOTOR REMOVAL/INSTALLATION [SKYACTIV-G 2.0, SKYACTIV-G 2.5]**.)

8. Remove in the order indicated in the table.

9. Install in the reverse order of removal.

10. Refill the engine coolant. (See **ENGINE COOLANT REPLACEMENT [SKYACTIV-G 2.0, SKYACTIV-G 2.5]**.)

11. Inspect for engine coolant leakage. (See **ENGINE COOLANT LEAKAGE INSPECTION [SKYACTIV-G 2.0, SKYACTIV-G 2.5]**.)

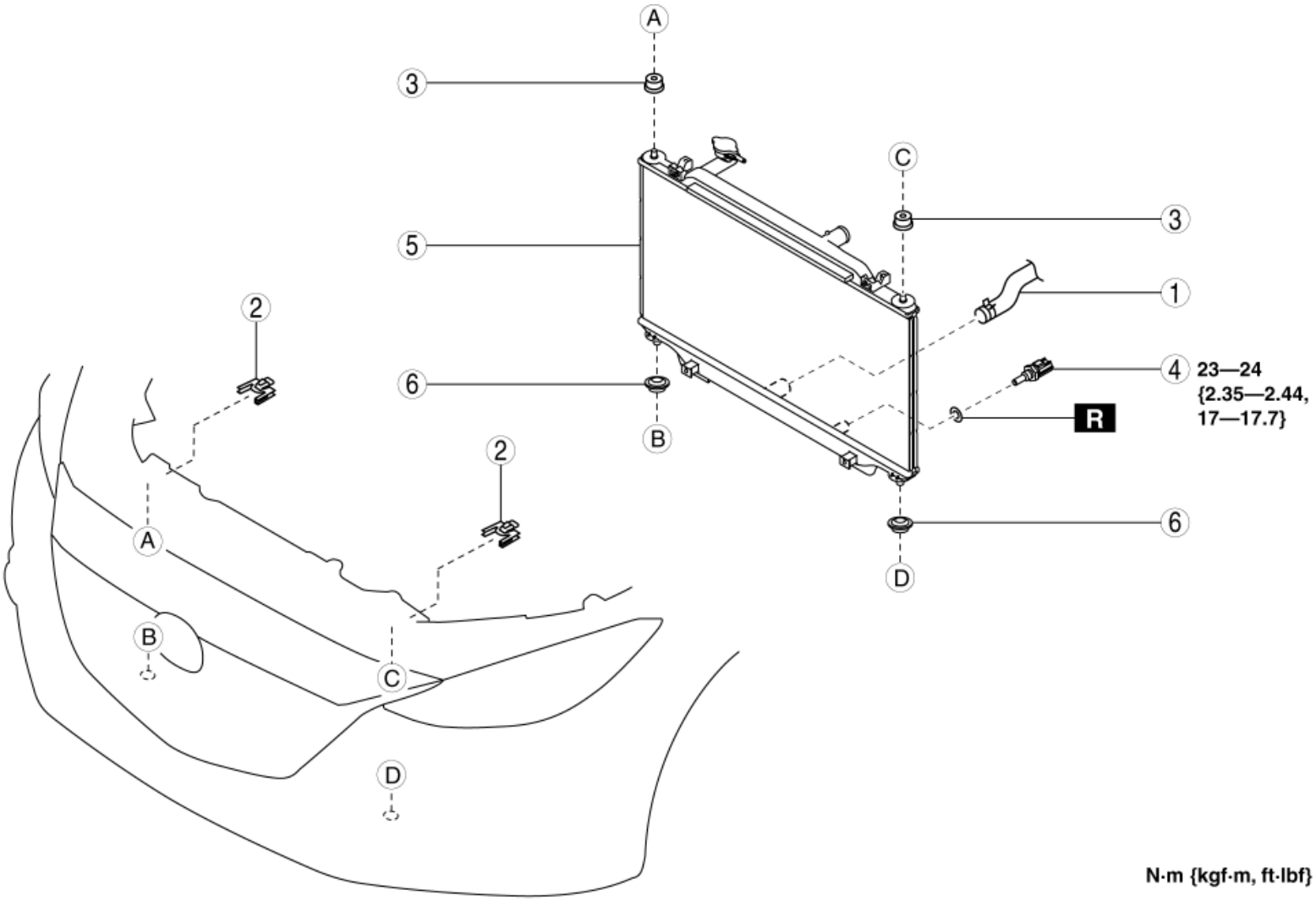

1	Lower radiator hose
2	Upper mount rubber bracket (See **Upper Mount Rubber Bracket Removal Note**.)
3	Upper mount rubber
4	ECT sensor No.2 (if equipped) (See **ENGINE COOLANT TEMPERATURE (ECT) SENSOR REMOVAL/INSTALLATION [SKYACTIV-G 2.0, SKYACTIV-G 2.5]**.)
5	Radiator (See **Radiator Removal Note**.)
6	Lower mount rubber

Upper Mount Rubber Bracket Removal Note

CAUTION:

- To prevent damage to the upper mount rubber bracket tab, do not apply excessive force.

1. While pressing down the upper mount rubber bracket tab lightly in the direction of the arrow shown in the figure, pull out the upper mount rubber bracket toward the vehicle rear.

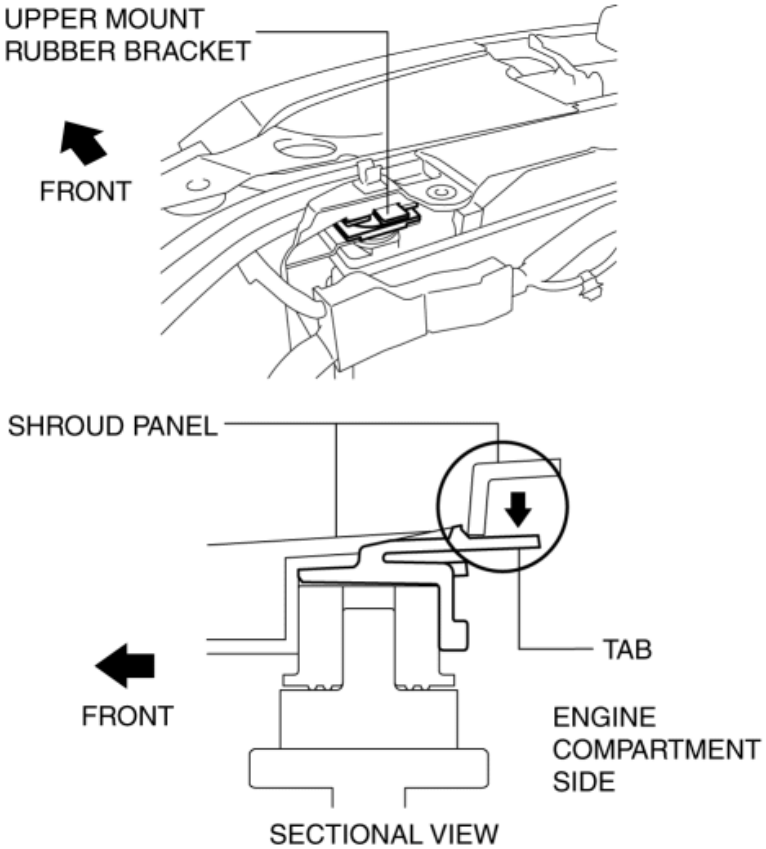

2. Remove the upper mount rubber bracket.

Radiator Removal Note

1. To prevent damage to the radiator core, protect it by covering the radiator surface with cardboard.
2. Lift the radiator and remove it from the radiator installation holes on the shroud panel.
3. Move the radiator and condenser to the engine side. (with A/C)

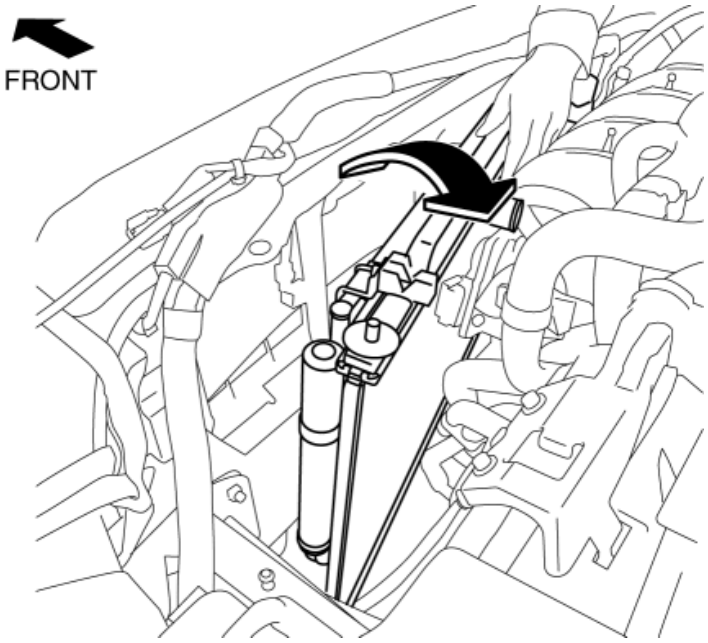

4. Remove the bolts which secure the condenser to the radiator. (with A/C)

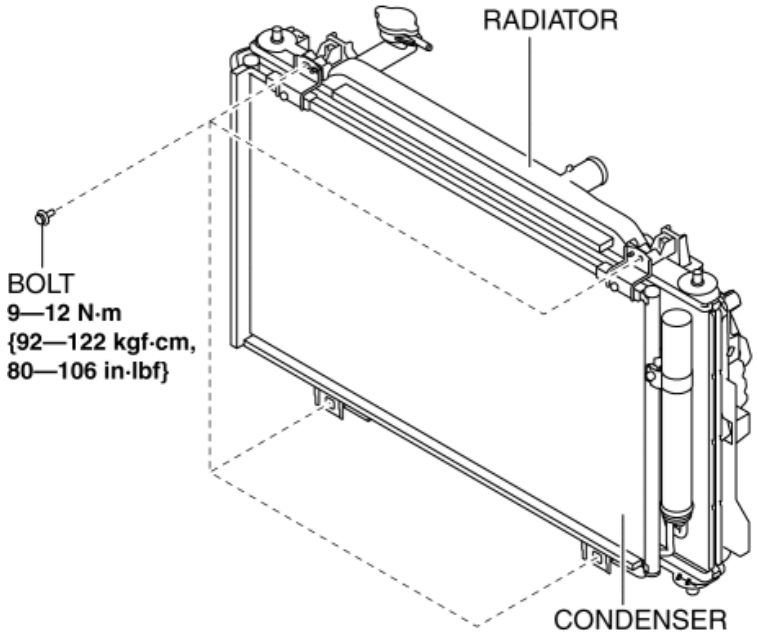

5. Remove the radiator from above the engine compartment.

2014 - Mazda3 - Engine

THERMOSTAT REMOVAL/INSTALLATION [SKYACTIV-G 2.0, SKYACTIV-G 2.5]

WARNING:

- Never remove the cooling system cap or loosen the radiator drain plug while the engine is running, or when the engine and radiator are hot. Scalding engine coolant and steam may shoot out and cause serious injury. It may also damage the engine and cooling system.
- Turn off the engine and wait until it is cool. Even then, be very careful when removing the cap. Wrap a thick cloth around it and slowly turn it counterclockwise to the first stop. Step back while the pressure escapes.
- When you are sure all the pressure is gone, press down on the cap using the cloth, turn it, and remove it.

1. Disconnect the negative battery cable. (See **NEGATIVE BATTERY CABLE DISCONNECTION/CONNECTION [SKYACTIV-G 2.0, SKYACTIV-G 2.5]**.)

2. Drain the engine coolant. (See **ENGINE COOLANT REPLACEMENT [SKYACTIV-G 2.0, SKYACTIV-G 2.5]**.)

3. Remove the plug hole plate. (See **PLUG HOLE PLATE REMOVAL/INSTALLATION [SKYACTIV-G 2.0, SKYACTIV-G 2.5]**.)

4. Remove the air cleaner, air hose and fresh air duct component. (See **INTAKE-AIR SYSTEM REMOVAL/INSTALLATION [SKYACTIV-G 2.0, SKYACTIV-G 2.5]**.)

5. Remove the battery, battery tray and PCM component. (See **BATTERY REMOVAL/INSTALLATION [SKYACTIV-G 2.0, SKYACTIV-G 2.5]**.)

6. Remove in the order indicated in the table.

7. Install in the reverse order of removal.

8. Refill the engine coolant. (See **ENGINE COOLANT REPLACEMENT [SKYACTIV-G 2.0, SKYACTIV-G 2.5]**.)

9. Inspect for engine coolant leakage. (See **ENGINE COOLANT LEAKAGE INSPECTION [SKYACTIV-G 2.0, SKYACTIV-G 2.5]**.)

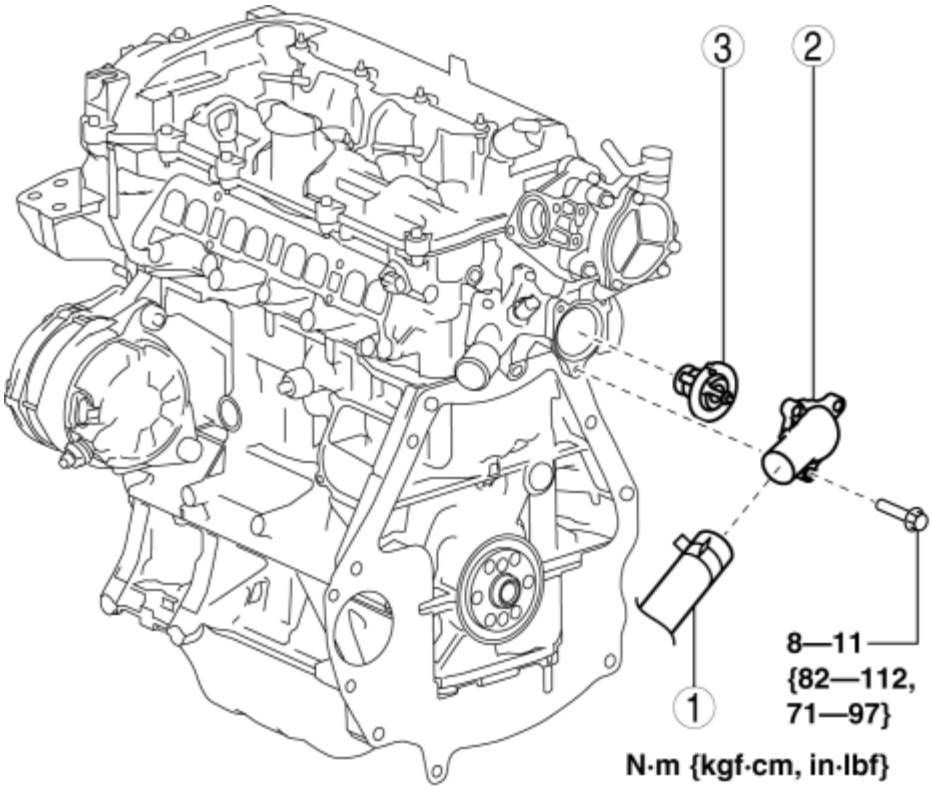

1	Lower radiator hose (Thermostat cover side)
2	Thermostat cover (See **Thermostat Cover Removal Note**.)
3	Thermostat (See **Thermostat Installation Note**.)

Thermostat Cover Removal Note

1. Place rags on the transaxle case around the area under the thermostat cover.

2. Slightly loosen the **three** thermostat cover bolts and use the rags to absorb the draining engine coolant.

CAUTION:

- Do not remove the thermostat cover completely at this time because the engine coolant remaining in the engine will drain out.

3. After the engine coolant stops draining, remove the thermostat cover.

Thermostat Installation Note

CAUTION:

- Do not apply oil (such as engine oil, ATF) to the rubber seal part of the thermostat. Otherwise, the O-ring could swell causing a seal malfunction.

1. Install the thermostat with the jiggle pin aligned with the notch of the water outlet.

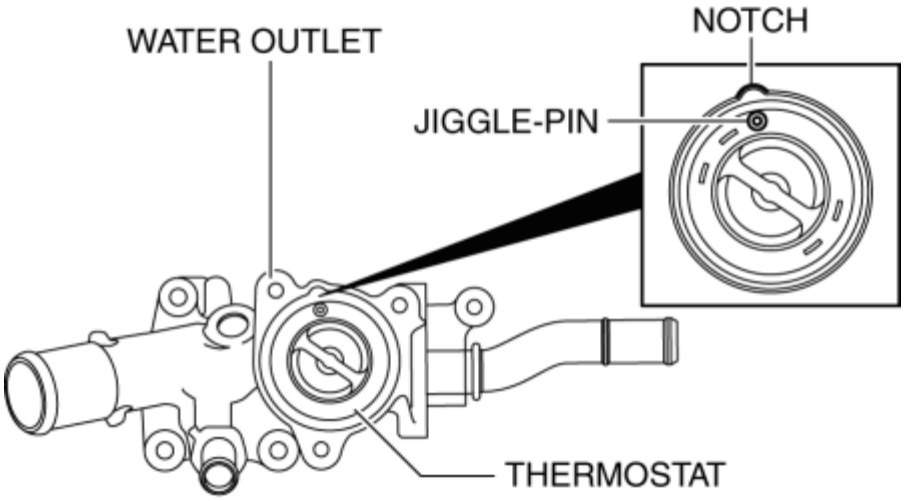

2014 - Mazda3 - Engine

THERMOSTAT INSPECTION [SKYACTIV-G 2.0, SKYACTIV-G 2.5]

1. Remove the thermostat. (See **THERMOSTAT REMOVAL/INSTALLATION [SKYACTIV-G 2.0, SKYACTIV-G 2.5]**.)

2. Visually check that the thermostat valve is closed.

3. Place the thermostat in water.

WARNING:

- During inspection, the thermostat and water are extremely hot and can cause severe burns. Do not touch the thermostat and water.

4. Heat the water and check the following.

- Opening temperature and valve lift
    - If there is a malfunction, replace the thermostat.

Thermostat initial-opening temperature

- U.S.A. and Canada: 80.5—83.5 °C {177—182 °F}
- Except U.S.A. and Canada: 86.5—89.5 °C {188—193 °F}

Thermostat full-open temperature

- 95 °C {203 °F}

Thermostat full-open lift

- 8.5 mm {0.33 in} or more

2014 - Mazda3 - Engine

WATER PUMP REMOVAL/INSTALLATION [SKYACTIV-G 2.0, SKYACTIV-G 2.5]

WARNING:

- Never remove the cooling system cap or loosen the radiator drain plug while the engine is running, or when the engine and radiator are hot. Scalding engine coolant and steam may shoot out and cause serious injury. It may also damage the engine and cooling system.
- Turn off the engine and wait until it is cool. Even then, be very careful when removing the cap. Wrap a thick cloth around it and slowly turn it counterclockwise to the first stop. Step back while the pressure escapes.
- When you are sure all the pressure is gone, press down on the cap using the cloth, turn it, and remove it.

NOTE:

- Do not disassemble the water pump because it is a precision unit.
- Remove/install the water pump pulley and water pump from the underside of the vehicle.

1. Disconnect the negative battery cable. (See **NEGATIVE BATTERY CABLE DISCONNECTION/CONNECTION [SKYACTIV-G 2.0, SKYACTIV-G 2.5]**.)
2. Remove the front under cover No.2. (See **FRONT UNDER COVER No.2 REMOVAL/INSTALLATION**.)
3. Remove the splash shield (RH). (See **SPLASH SHIELD REMOVAL/INSTALLATION**.)
4. Drain the engine coolant. (See **ENGINE COOLANT REPLACEMENT [SKYACTIV-G 2.0, SKYACTIV-G 2.5]**.)
5. Remove the water pump drive belt with the generator drive belt still installed and set it out of the way. (See **DRIVE BELT REMOVAL/INSTALLATION [SKYACTIV-G 2.0, SKYACTIV-G 2.5]**.)
6. Remove in the order indicated in the table.
7. Install in the reverse order of removal.
8. Refill the engine coolant. (See **ENGINE COOLANT REPLACEMENT [SKYACTIV-G 2.0, SKYACTIV-G 2.5]**.)
9. Inspect for engine coolant leakage. (See **ENGINE COOLANT LEAKAGE INSPECTION [SKYACTIV-G 2.0, SKYACTIV-G 2.5]**.)

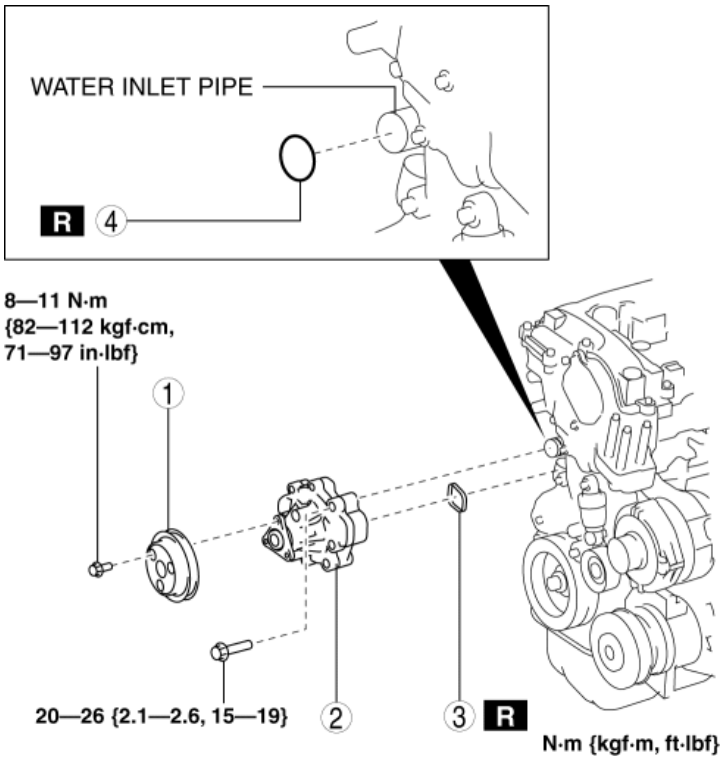

1	Water pump pulley

	(See **Water Pump Pulley Removal Note**.) (See **Water Pump Pulley Installation Note**.)
2	Water pump component (See **Water Pump Component Removal Note**.) (See **Water Pump Component Installation Note**.)
3	Gasket
4	O-ring (See **O-ring Installation Note**.)

Water Pump Pulley Removal Note

CAUTION:

- Be careful not to damage the belt groove and surface of the water pump pulley when using tools, otherwise it will cause wear, breakage, abnormal noise of the drive belt (stretch belt), damage to the pulley, and rust.

1. Align the water pump pulley hole with the water pump hole as shown in the figure.

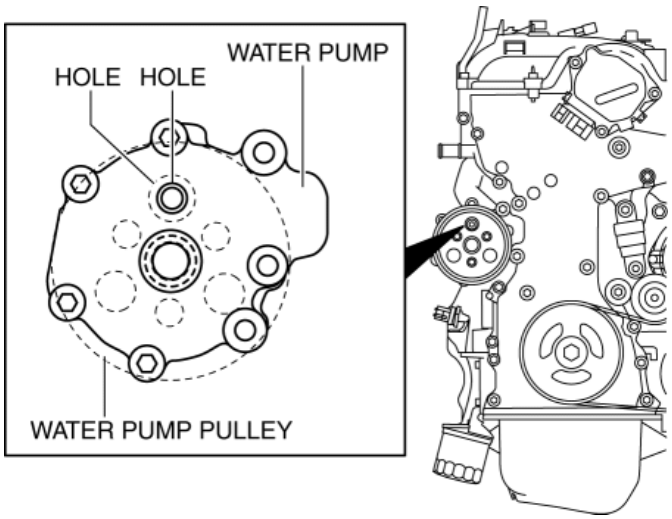

2. Insert an appropriate bolt (**length 70 mm {2.8 in}**) into the water pump hole shown in the figure and lock the water pump pulley against rotation.

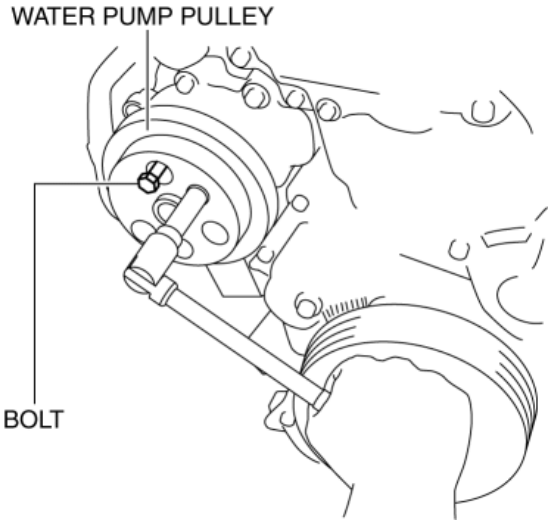

3. Remove the bolt used for locking the water pump pulley against rotation.

Water Pump Component Removal Note

1. Remove the water inlet pipe stay bolt.

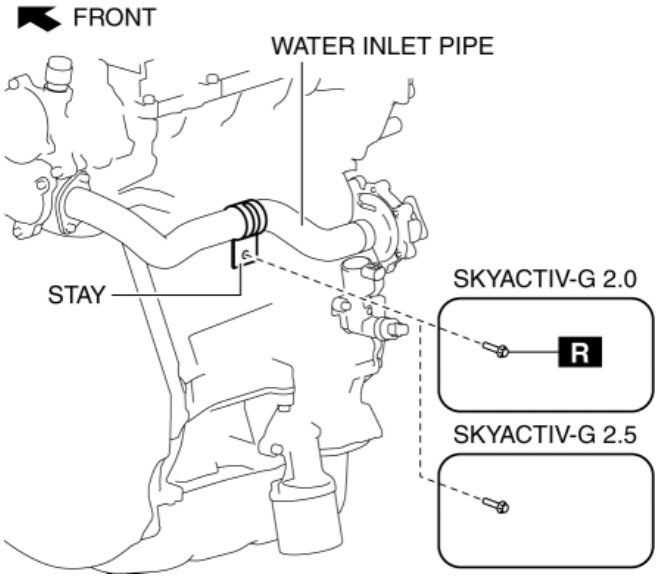

2. Place a container under the engine to collect the engine coolant remaining in the engine.
3. Slightly loosen the three water pump component bolts shown in the figure and collect the draining engine coolant into a container.

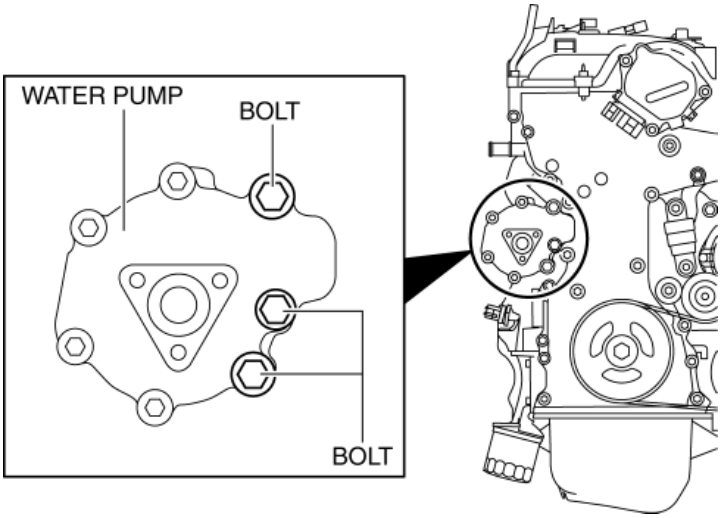

CAUTION:

- Do not remove the water pump component completely at this time because the remaining **approx. 2 L {2 US qt, 2 Imp qt} or less** of engine coolant flowing in the engine will drain out.

4. After the engine coolant stops draining, remove the water pump component.

O-ring Installation Note

CAUTION:

- Do not apply oil (such as engine oil, ATF) to the O-ring of the water inlet pipe. Otherwise, the O-ring could swell causing a seal malfunction.

1. Apply engine coolant to a new O-ring.
2. Install the O-ring to the water inlet pipe.

Water Pump Component Installation Note

CAUTION:

- Assemble the water pump gasket to the correct direction shown in the figure. Otherwise, it could leak engine coolant and damage

the engine.

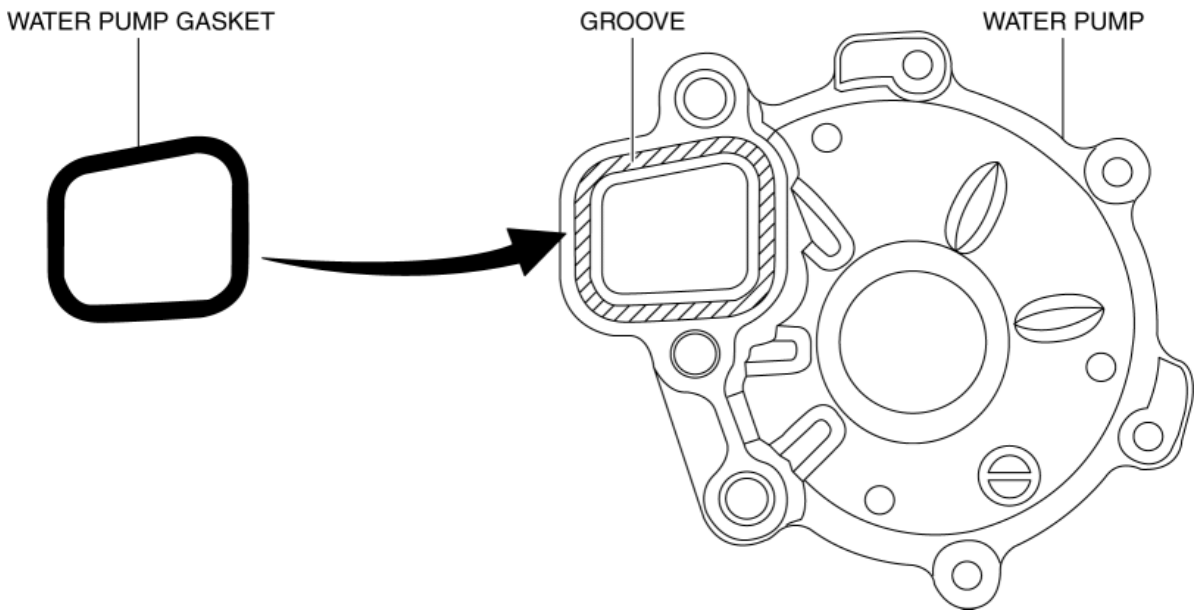

- Do not apply oil (such as engine oil, ATF) to the water pump gasket. Otherwise, the gasket could swell causing a seal malfunction.

1. Insert a new water pump gasket into the water pump groove.
2. Install the water pump.
3. Tighten the bolts in the order shown in the figure.

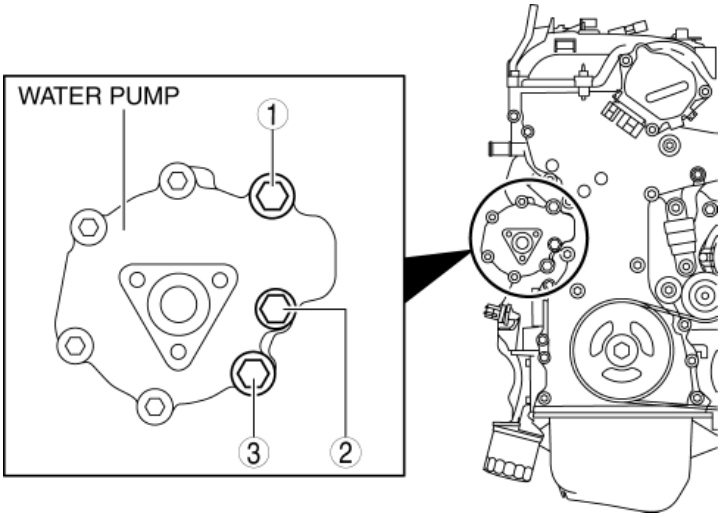

Tightening torque

1. 20—26 N·m {2.1—2.6 kgf·m, 15—19 ft·lbf}

4. Clean away the sealant adhering to the bolt hole on the cylinder block side of the water inlet pipe stay. (SKYACTIV-G 2.0)
5. Remove the engine oil solenoid valve to secure a sufficient space for installing the water inlet pipe stay bolt. (See **ENGINE OIL SOLENOID VALVE REMOVAL/INSTALLATION [SKYACTIV-G 2.0, SKYACTIV-G 2.5]**.)
6. Install the water inlet pipe stay bolt.

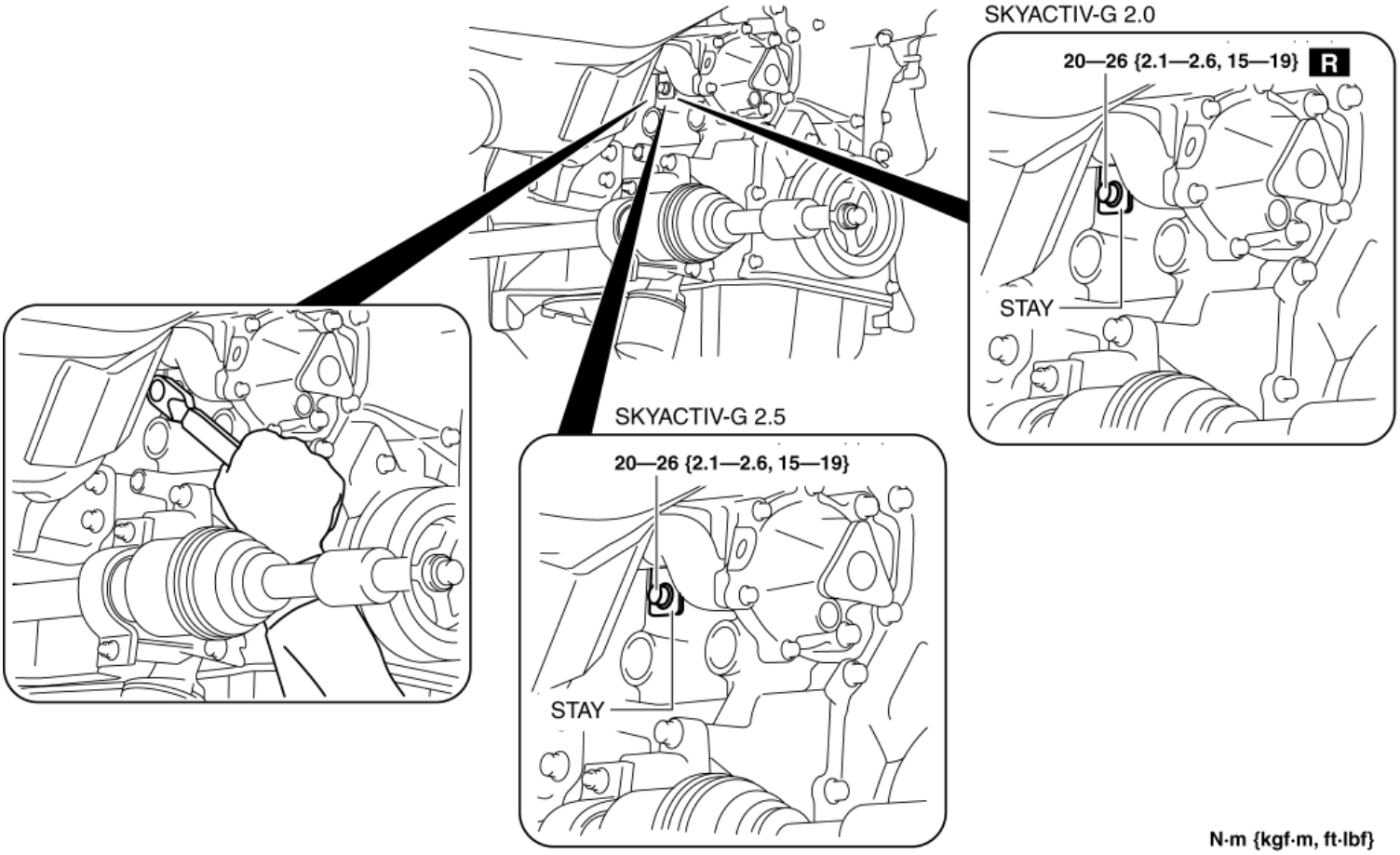

7. Install the engine oil solenoid valve. (See **ENGINE OIL SOLENOID VALVE REMOVAL/INSTALLATION [SKYACTIV-G 2.0, SKYACTIV-G 2.5]**.)

Water Pump Pulley Installation Note

CAUTION:

- Be careful not to damage the belt groove and surface of the water pump pulley when using tools, otherwise it will cause wear, breakage, abnormal noise of the drive belt (stretch belt), damage to the pulley, and rust.

1. Install the water pump pulley to the water pump and temporarily tighten the bolts.
2. Align the water pump pulley hole with the water pump hole as shown in the figure.

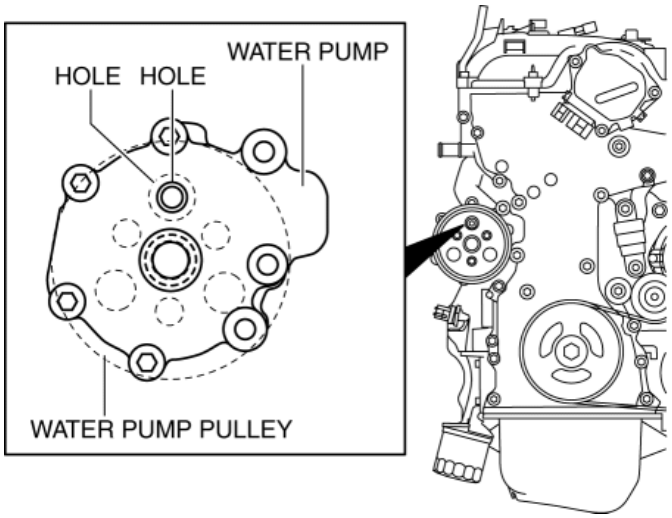

3. Insert an appropriate bolt (**length 70 mm {2.8 in}**) into the water pump hole shown in the figure and lock the water pump pulley against rotation.

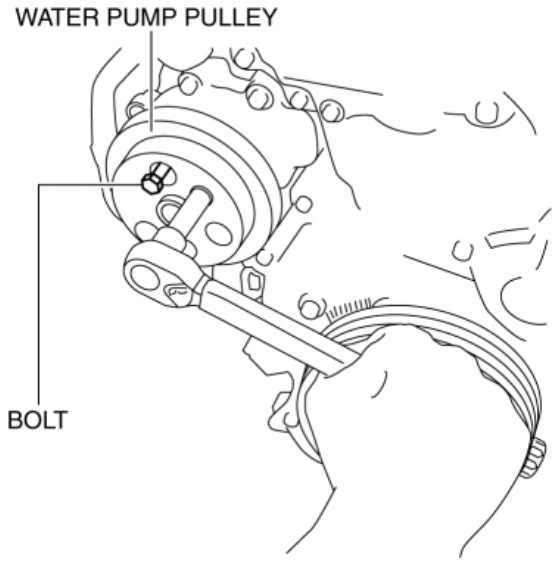

4. Completely tighten the water pump pulley bolt to the specified torque.

Tightening torque

1. 8—11 N·m {82—112 kgf·cm, 71—97 in·lbf}

5. Remove the bolt used for locking the water pump pulley against rotation.

2014 - Mazda3 - Engine

COOLING FAN MOTOR REMOVAL/INSTALLATION [SKYACTIV-G 2.0, SKYACTIV-G 2.5]

WARNING:

- Never remove the cooling system cap or loosen the radiator drain plug while the engine is running, or when the engine and radiator are hot. Scalding engine coolant and steam may shoot out and cause serious injury. It may also damage the engine and cooling system.
- Turn off the engine and wait until it is cool. Even then, be very careful when removing the cap. Wrap a thick cloth around it and slowly turn it counterclockwise to the first stop. Step back while the pressure escapes.
- When you are sure all the pressure is gone, press down on the cap using the cloth, turn it, and remove it.

1. Disconnect the negative battery cable. (See **NEGATIVE BATTERY CABLE DISCONNECTION/CONNECTION [SKYACTIV-G 2.0, SKYACTIV-G 2.5]**.)
2. Drain the engine coolant. (See **ENGINE COOLANT REPLACEMENT [SKYACTIV-G 2.0, SKYACTIV-G 2.5]**.)
3. Remove the plug hole plate. (See **PLUG HOLE PLATE REMOVAL/INSTALLATION [SKYACTIV-G 2.0, SKYACTIV-G 2.5]**.)
4. Remove the air cleaner, air hose and fresh air duct component. (See **INTAKE-AIR SYSTEM REMOVAL/INSTALLATION [SKYACTIV-G 2.0, SKYACTIV-G 2.5]**.)
5. Remove the coolant reserve tank. (See **COOLANT RESERVE TANK REMOVAL/INSTALLATION [SKYACTIV-G 2.0, SKYACTIV-G 2.5]**.)
6. Remove in the order indicated in the table.
7. Install in the reverse order of removal.
8. Refill the engine coolant. (See **ENGINE COOLANT REPLACEMENT [SKYACTIV-G 2.0, SKYACTIV-G 2.5]**.)
9. Inspect for engine coolant leakage. (See **ENGINE COOLANT LEAKAGE INSPECTION [SKYACTIV-G 2.0, SKYACTIV-G 2.5]**.)

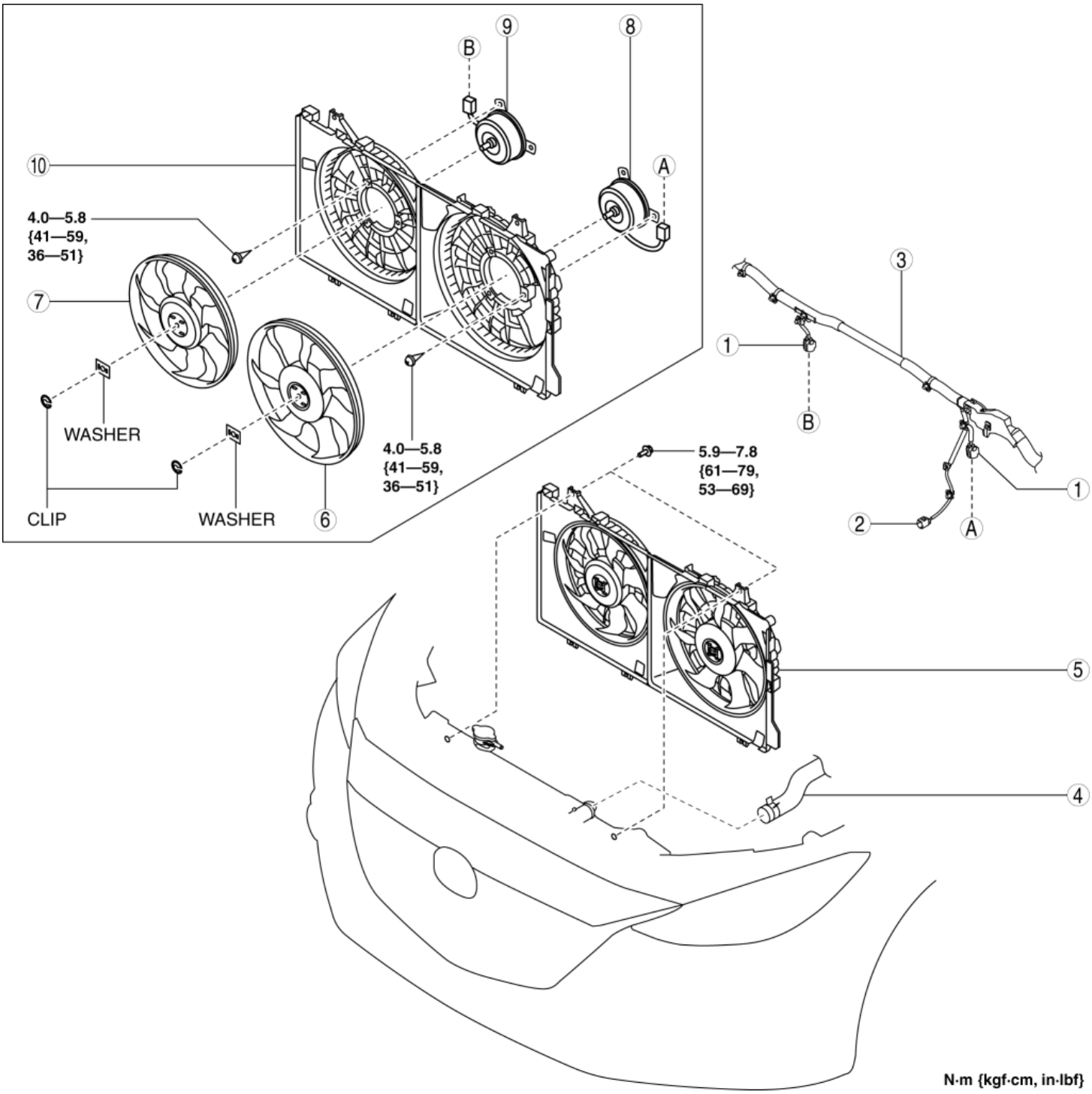

1	Cooling fan motor connector
2	ECT sensor No.2 connector (if equipped)
3	Wiring harness
4	Upper radiator hose (See **Upper Radiator Hose Removal Note**.)
5	Cooling fan component (See **Cooling Fan Component Removal Note**.) (See **Cooling Fan Component Installation Note**.)

6	Cooling fan No.1 (See **Cooling Fan Removal Note**.) (See **Cooling Fan Installation Note**.)
7	Cooling fan No.2 (See **Cooling Fan Removal Note**.) (See **Cooling Fan Installation Note**.)
8	Cooling fan motor No.1
9	Cooling fan motor No.2
10	Radiator cowling

Upper Radiator Hose Removal Note

1. Remove the bracket shown in the figure from the throttle body and set the upper radiator hose aside.

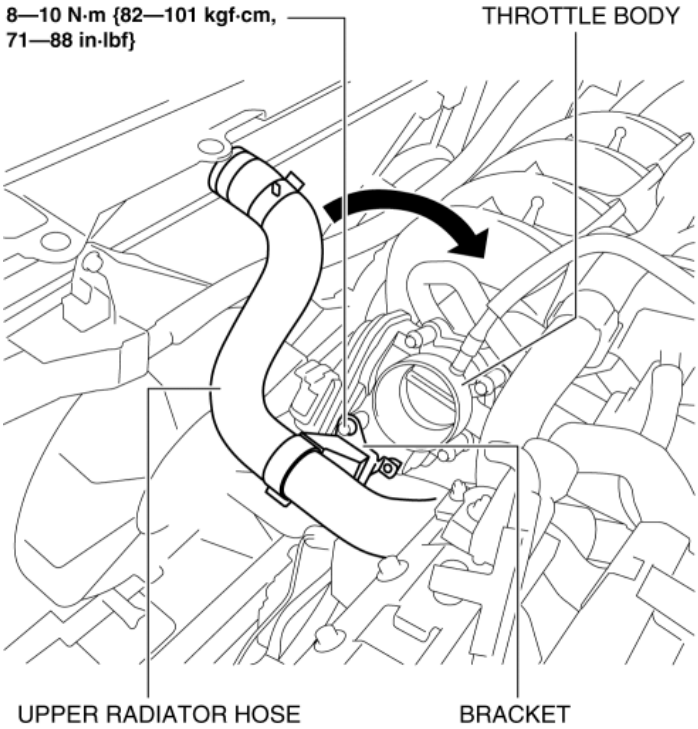

Cooling Fan Component Removal Note

1. Remove the cooling fan component from above the engine compartment.

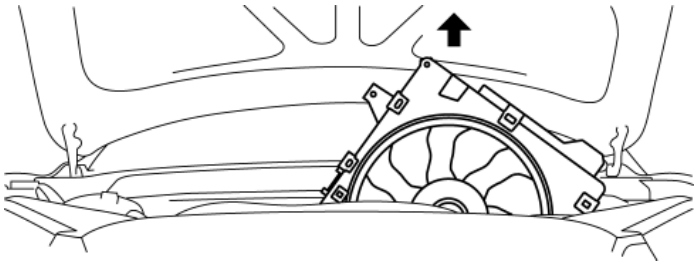

Cooling Fan Removal Note

CAUTION:

- When removing, do not apply excessive force to the clip to prevent damaging the clip.

1. Using a flathead screwdriver wrapped in a rag, slide the clip in the direction of the arrow shown in the figure and remove the clip.

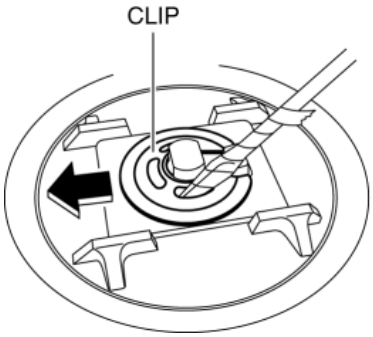

2. Remove the washer.
3. Remove the cooling fan.

Cooling Fan Installation Note

1. Install the washer to the cooling fan.

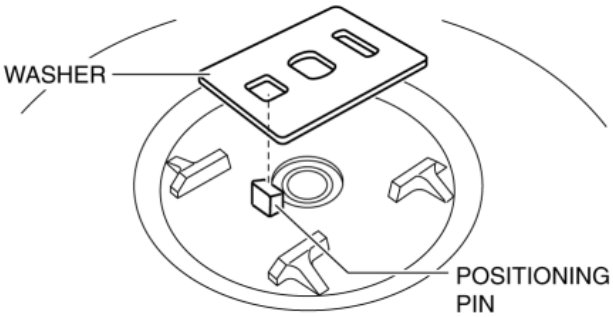

NOTE:

- Installing the washer to the cooling fan facilitates the alignment of the cooling fan motor shaft end to the washer.
- The washer has no designated installation direction.

2. Install the cooling fan and the washer to the cooling fan motor as a single unit.

NOTE:

- Install the washer to the end of the cooling fan motor shaft while aligning the washer hole.
- Press in the cooling fan to the cooling fan motor to the end.

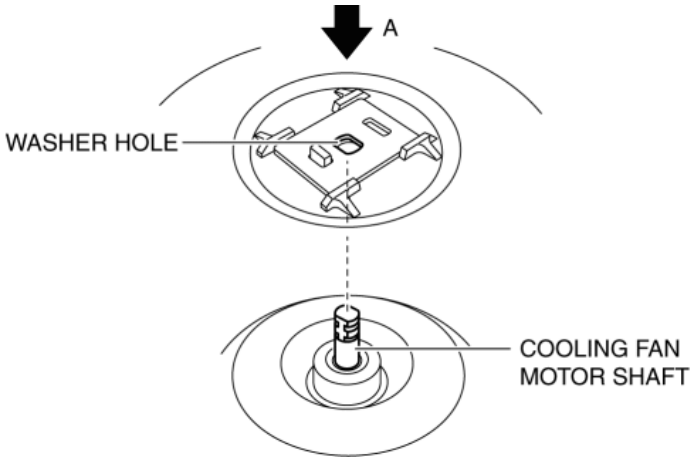

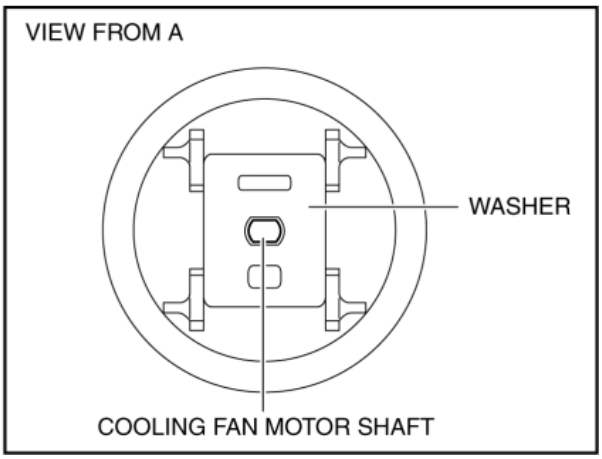

CAUTION:

- When installing, be careful of the following to prevent damaging the clip.
  - Install the clip in the correct direction.

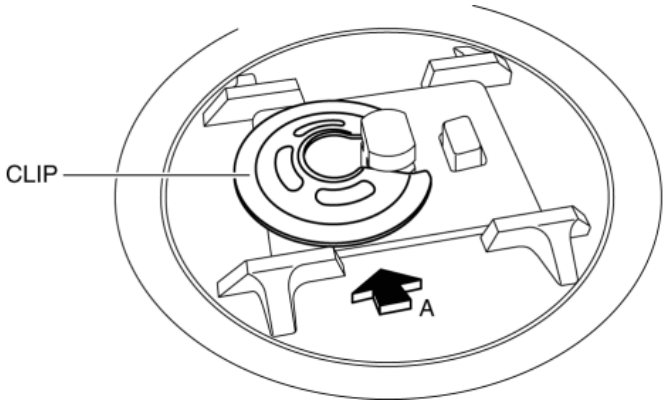

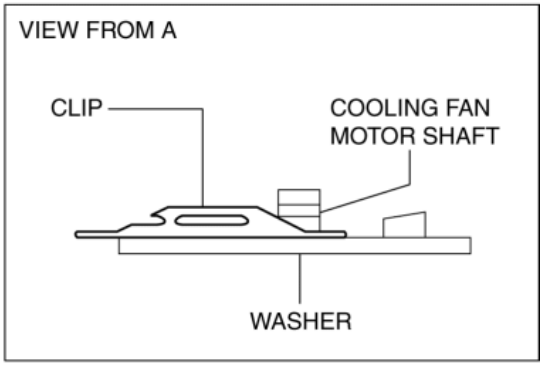

- Do not apply excessive force to the clip.

3. Using needle-nose pliers, slide the clip in the direction of the arrow shown in the figure and install the clip.

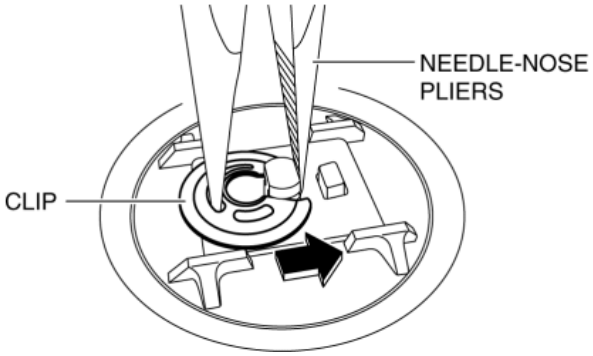

Cooling Fan Component Installation Note

NOTE:

- There are three projections on the cooling fan component.

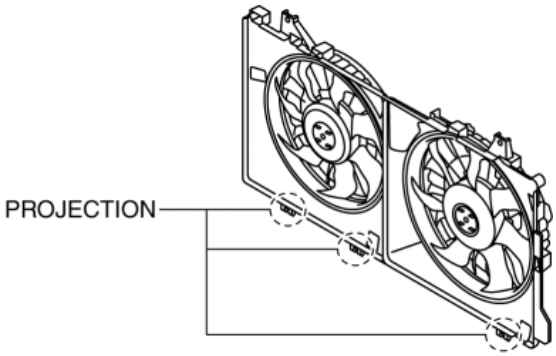

1. Insert the projections of the cooling fan component to the installation locations on the radiator side shown in the figure.

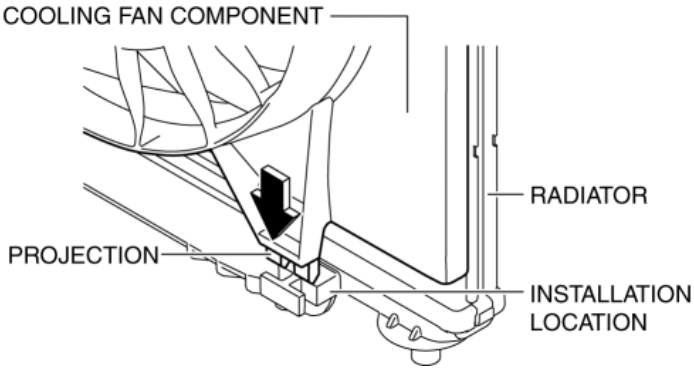

2. Tighten the cooling fan component installation bolts.

Tightening torque

5.9—7.8 N·m {61—79 kgf·cm, 53—69 in·lbf}

2014 - Mazda3 - Engine

COOLING FAN MOTOR INSPECTION [SKYACTIV-G 2.0, SKYACTIV-G 2.5]

Part Inspection

1. Verify that the battery is fully charged. (See **BATTERY INSPECTION [SKYACTIV-G 2.0, SKYACTIV-G 2.5]**.)

2. Disconnect the cooling fan motor connector (2 terminals).

3. Install a tester and battery to the cooling fan motor connector (2 terminals) as shown in the figure.

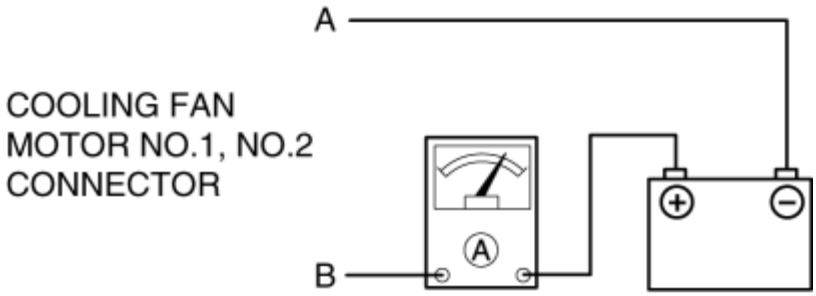

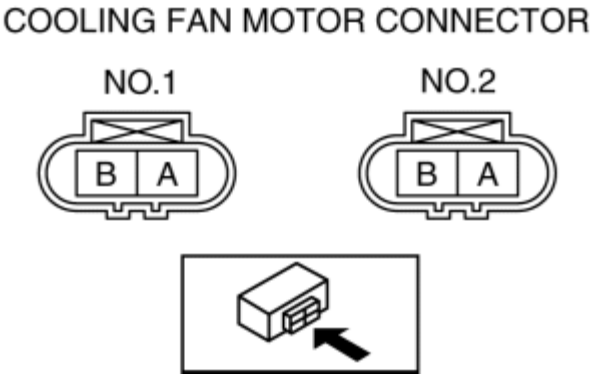

4. Verify that each cooling fan motor operates smoothly at the standard current.

- If there is any malfunction, replace the applicable part.

  Cooling fan motor No.1, No.2 standard current

- No.1: 4.3—8.3 A [12 V]
- No.2: 4.1—8.1 A [12 V]

COOLING FAN MOTOR INSPECTION [SKYACTIV-G 2.0, SKYACTIV-G 2.5]

2014 - Mazda3 - Engine

INTAKE-AIR SYSTEM LOCATION INDEX [SKYACTIV-G 2.0, SKYACTIV-G 2.5]

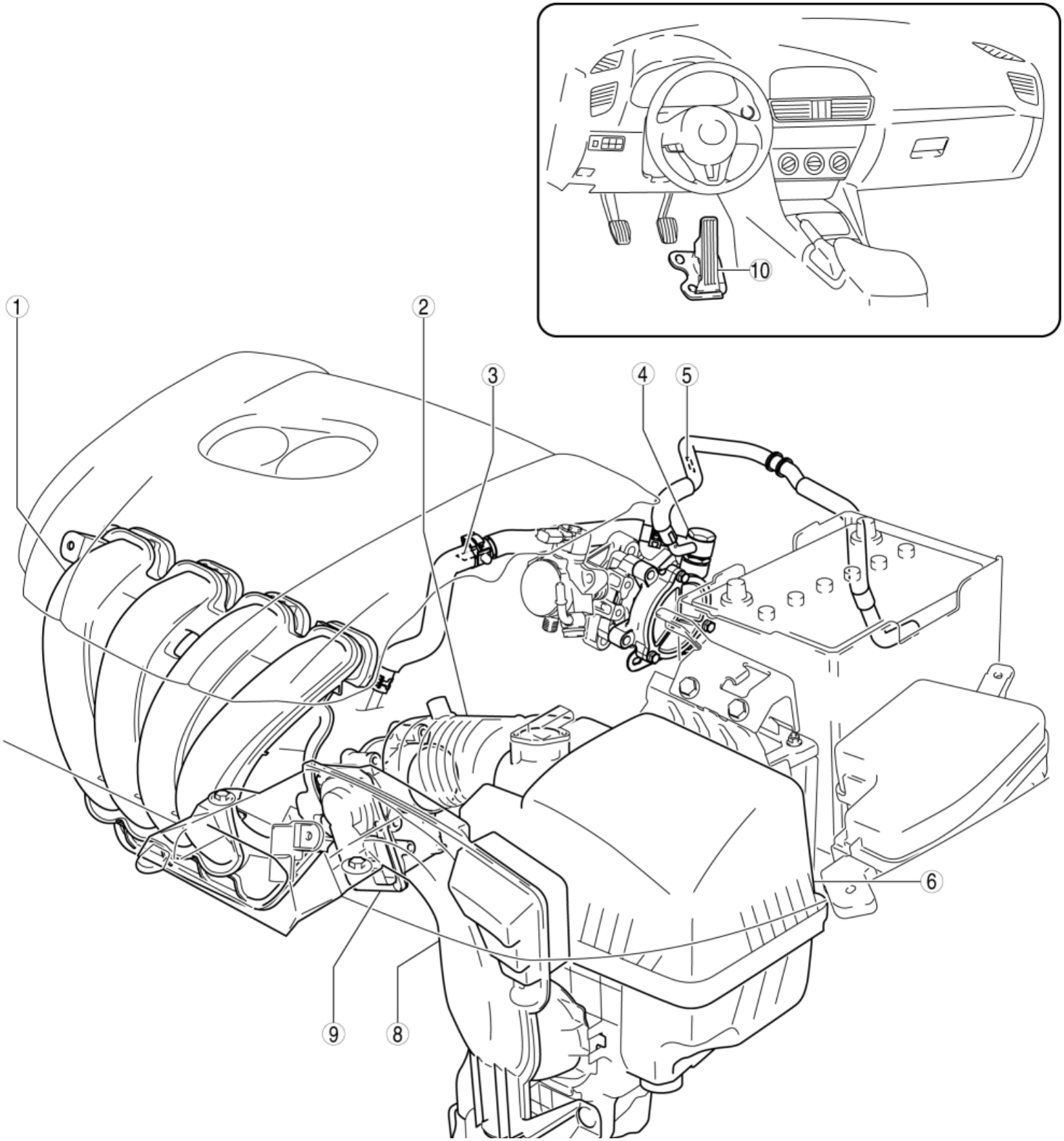

1	Intake manifold (See **INTAKE-AIR SYSTEM REMOVAL/INSTALLATION [SKYACTIV-G 2.0, SKYACTIV-G 2.5]**.) (See **INTAKE MANIFOLD VACUUM INSPECTION [SKYACTIV-G 2.0, SKYACTIV-G 2.5]**.)
2	Air hose (See **INTAKE-AIR SYSTEM REMOVAL/INSTALLATION [SKYACTIV-G 2.0, SKYACTIV-G 2.5]**.)
3	Check valve (between intake manifold and vacuum pump) (See **INTAKE-AIR SYSTEM REMOVAL/INSTALLATION [SKYACTIV-G 2.0, SKYACTIV-G 2.5]**.) (See **CHECK VALVE INSPECTION [SKYACTIV-G 2.0, SKYACTIV-G 2.5]**.)
4	Vacuum pump (See **VACUUM PUMP REMOVAL/INSTALLATION**.) (See **VACUUM PUMP INSPECTION**.)
5	Check valve (between vacuum pump and power brake unit) (See **INTAKE-AIR SYSTEM REMOVAL/INSTALLATION [SKYACTIV-G 2.0, SKYACTIV-G 2.5]**.) (See **CHECK VALVE INSPECTION [SKYACTIV-G 2.0, SKYACTIV-G 2.5]**.)
6	Air cleaner (See **INTAKE-AIR SYSTEM REMOVAL/INSTALLATION [SKYACTIV-G 2.0, SKYACTIV-G 2.5]**.) (See **AIR CLEANER ELEMENT REMOVAL/INSTALLATION [SKYACTIV-G 2.0, SKYACTIV-G 2.5]**.) (See **AIR CLEANER ELEMENT INSPECTION [SKYACTIV-G 2.0, SKYACTIV-G 2.5]**.)
7	Resonance chamber (See **INTAKE-AIR SYSTEM REMOVAL/INSTALLATION [SKYACTIV-G 2.0, SKYACTIV-G 2.5]**.)
8	Fresh-air duct (See **INTAKE-AIR SYSTEM REMOVAL/INSTALLATION [SKYACTIV-G 2.0, SKYACTIV-G 2.5]**.)
9	Throttle body (See **INTAKE-AIR SYSTEM REMOVAL/INSTALLATION [SKYACTIV-G 2.0, SKYACTIV-G 2.5]**.) (See **THROTTLE BODY INSPECTION [SKYACTIV-G 2.0, SKYACTIV-G 2.5]**.)
10	Accelerator pedal (See **ACCELERATOR PEDAL REMOVAL/INSTALLATION [SKYACTIV-G 2.0, SKYACTIV-G 2.5]**.)

2014 - Mazda3 - Engine

INTAKE-AIR SYSTEM VACUUM HOSE ROUTING DIAGRAM [SKYACTIV-G 2.0, SKYACTIV-G 2.5]

INTAKE-AIR SYSTEM VACUUM HOSE ROUTING DIAGRAM [SKYACTIV-G 2.0, SKYACTIV-G 2.5]

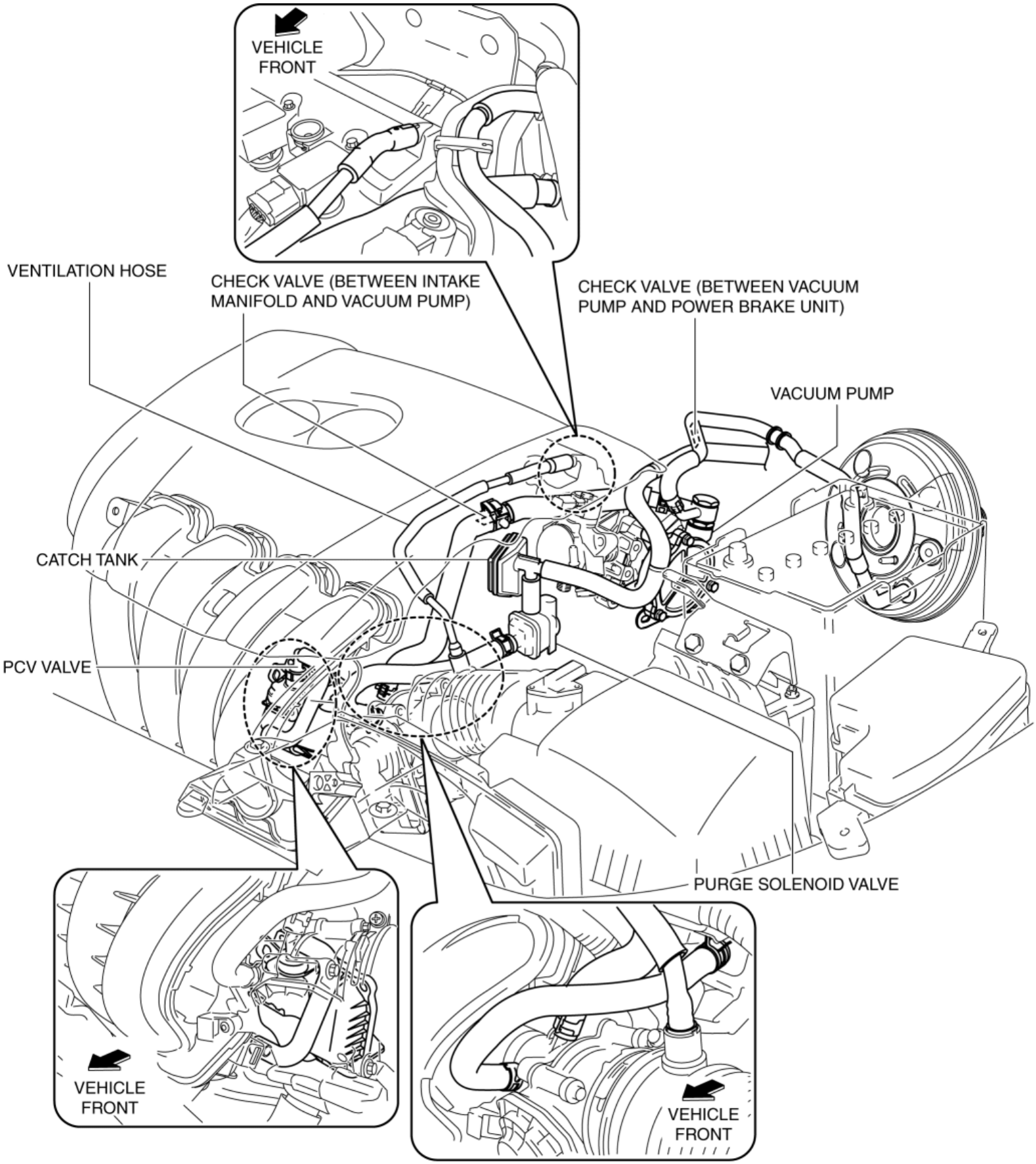

2014 - Mazda3 - Engine

INTAKE-AIR SYSTEM DIAGRAM [SKYACTIV-G 2.0, SKYACTIV-G 2.5]

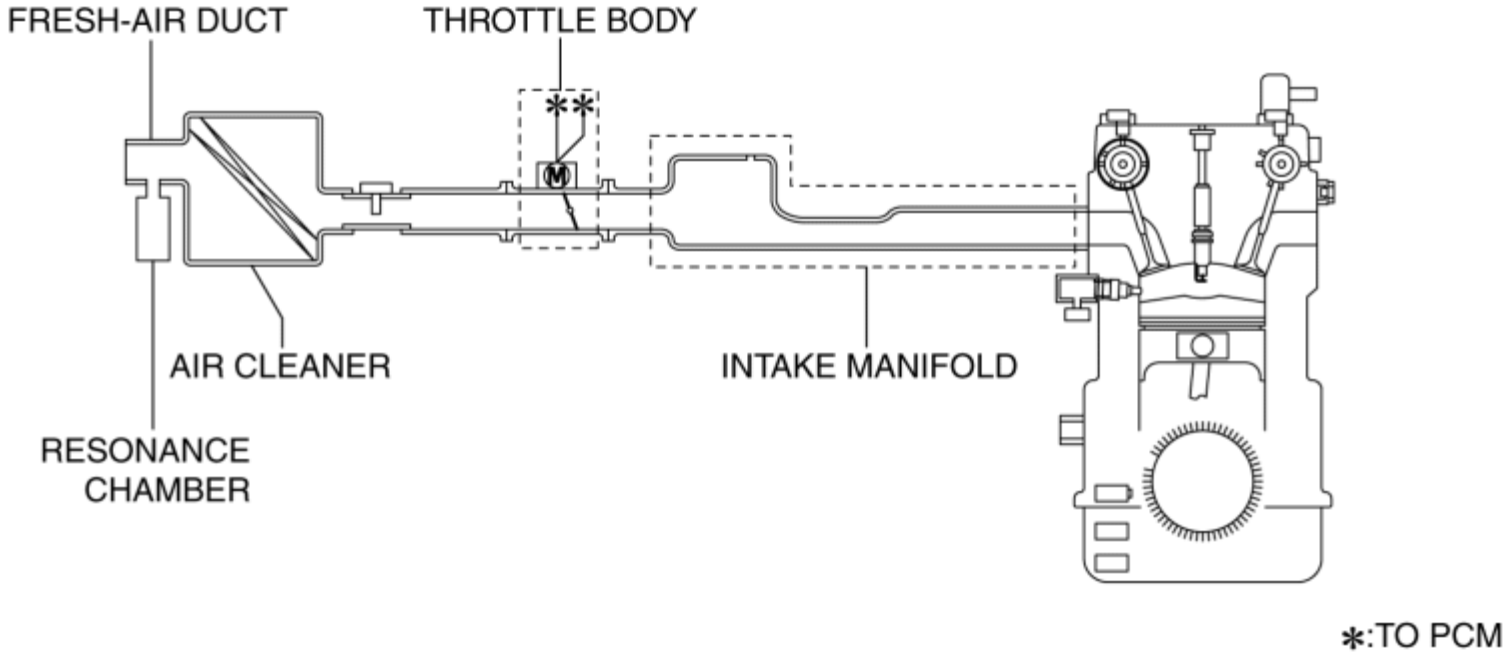

2014 - Mazda3 - Engine

INTAKE MANIFOLD VACUUM INSPECTION [SKYACTIV-G 2.0, SKYACTIV-G 2.5]

1. Disconnect the evaporative hose No.3 (purge solenoid valve side) and install the vacuum gauge. (See **PURGE SOLENOID VALVE REMOVAL/INSTALLATION [SKYACTIV-G 2.0, SKYACTIV-G 2.5]**.)

2. Verify that the intake air hoses are installed securely.

3. Warm up the engine.

4. Measure the intake manifold vacuum while idling (no load) using the vacuum gauge.

- If not within the specification, perform the following inspections.
  - Compression pressure (See **COMPRESSION INSPECTION [SKYACTIV-G 2.0, SKYACTIV-G 2.5]**.)
  - Check valve (between intake manifold and vacuum pump) (See **CHECK VALVE INSPECTION [SKYACTIV-G 2.0, SKYACTIV-G 2.5]**.)
  - Check valve (between vacuum pump and power brake unit) (See **CHECK VALVE INSPECTION [SKYACTIV-G 2.0, SKYACTIV-G 2.5]**.)
  - Air suction
    - Installation areas of each vacuum hose
    - Installation area of throttle body
    - Installation area of fuel injector
    - Installation area of PCV valve
    - Installation area of intake manifold

Standard

- Approx. –60.0 kPa {–450.0 mmHg, –17.7 inHg}

2014 - Mazda3 - Engine

INTAKE-AIR SYSTEM REMOVAL/INSTALLATION [SKYACTIV-G 2.0, SKYACTIV-G 2.5]

WARNING:

- A hot engine and intake air system can cause severe burns. Turn off the engine and wait until they are cool before removing the intake air system.

1. Disconnect the negative battery cable. (See **NEGATIVE BATTERY CABLE DISCONNECTION/CONNECTION [SKYACTIV-G 2.0, SKYACTIV-G 2.5]**.)

2. Remove in the order indicated in the table.

3. Install in the reverse order of removal.

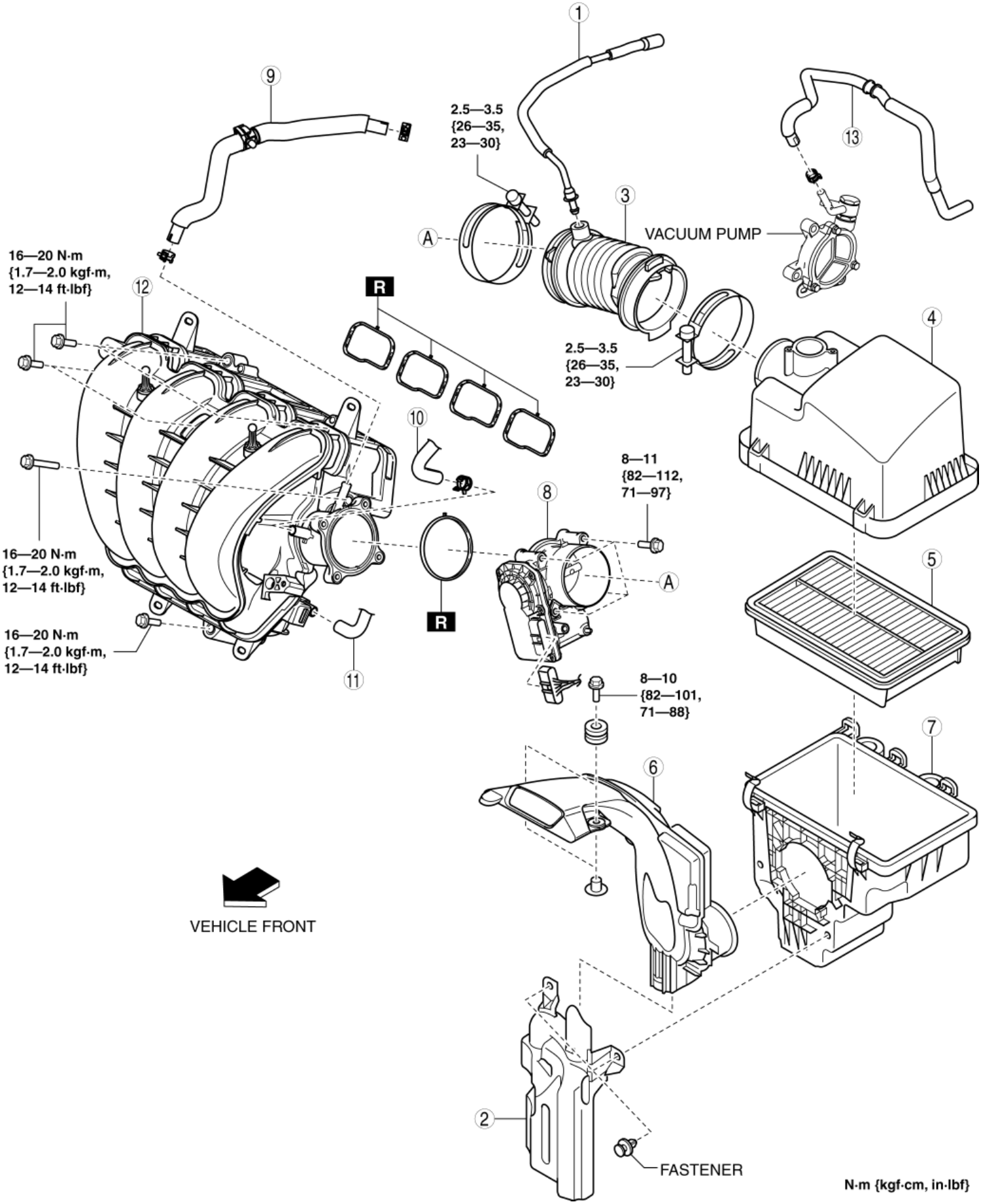
1
9
2.5—3.5
{26—35,
23—30}
13
3
A
VACUUM PUMP
16—20 N·m
{1.7—2.0 kgf·m,
12—14 ft·lbf}
12
R
4
2.5—3.5
{26—35,
23—30}
10
8—11
{82—112,
71—97}
8
16—20 N·m
{1.7—2.0 kgf·m,
12—14 ft·lbf}
A
5
R
16—20 N·m
{1.7—2.0 kgf·m,
12—14 ft·lbf}
11
8—10
{82—101,
71—88}
7
6
VEHICLE FRONT
2
FASTENER
N·m {kgf·cm, in·lbf}

1	Ventilation hose (See **Ventilation Hose Installation Note**.)
2	Resonance chamber (See **Resonance Chamber Removal Note**.)
3	Air hose (See **Air Hose Installation Note**)
4	Air cleaner cover
5	Air cleaner element
6	Fresh-air duct (See **Fresh-air Duct Removal Note**.) (See **Fresh-air Duct Installation Note**.)
7	Air cleaner case (See **Air Cleaner Case Installation Note**.)
8	Throttle body
9	Vacuum hose (between intake manifold and vacuum pump) (See **Vacuum Hose (Between Intake Manifold and Vacuum Pump) Removal Note**.) (See **Vacuum Hose (Between Intake Manifold and Vacuum Pump) Installation Note**.)
10	Evaporative hose (See **Evaporative Hose Installation Note**)
11	PCV hose
12	Intake manifold (See **Intake Manifold Removal Note**)
13	Vacuum hose (between vacuum pump and power brake unit) (See **Vacuum Hose (Between Vacuum Pump and Power Brake Unit) Installation Note**.)

Resonance Chamber Removal Note

1. Remove the MAF sensor/IAT sensor No.1. (See **MASS AIR FLOW (MAF) SENSOR/INTAKE AIR TEMPERATURE (IAT) SENSOR NO.1 REMOVAL/INSTALLATION [SKYACTIV-G 2.0, SKYACTIV-G 2.5]**.)
2. Remove the following parts as a single unit:
   - Air hose
   - Air cleaner cover
   - Air cleaner element
   - Air cleaner case
   - Fresh-air duct
   - Resonance chamber
3. Remove the resonance chamber.

Fresh-air Duct Removal Note

1. Pull out the fresh-air duct while pressing the tab shown in the figure.

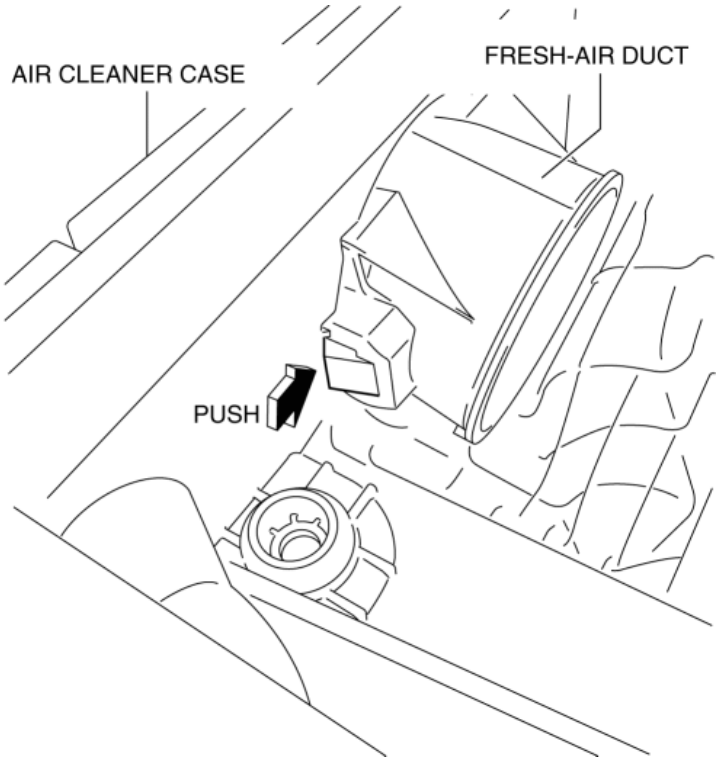

Vacuum Hose (Between Intake Manifold and Vacuum Pump) Removal Note

1. Remove the plug hole plate. (See **PLUG HOLE PLATE REMOVAL/INSTALLATION [SKYACTIV-G 2.0, SKYACTIV-G 2.5]**.)
2. Remove the vacuum hose (between intake manifold and vacuum pump).

Intake Manifold Removal Note

1. Disconnect the MAP sensor/IAT sensor No.2 connector. (See **MANIFOLD ABSOLUTE PRESSURE (MAP) SENSOR/INTAKE AIR TEMPERATURE (IAT) SENSOR NO.2 REMOVAL/INSTALLATION [SKYACTIV-G 2.0, SKYACTIV-G 2.5]**.)
2. Disconnect the harness clip from the intake manifold as shown in the figure.

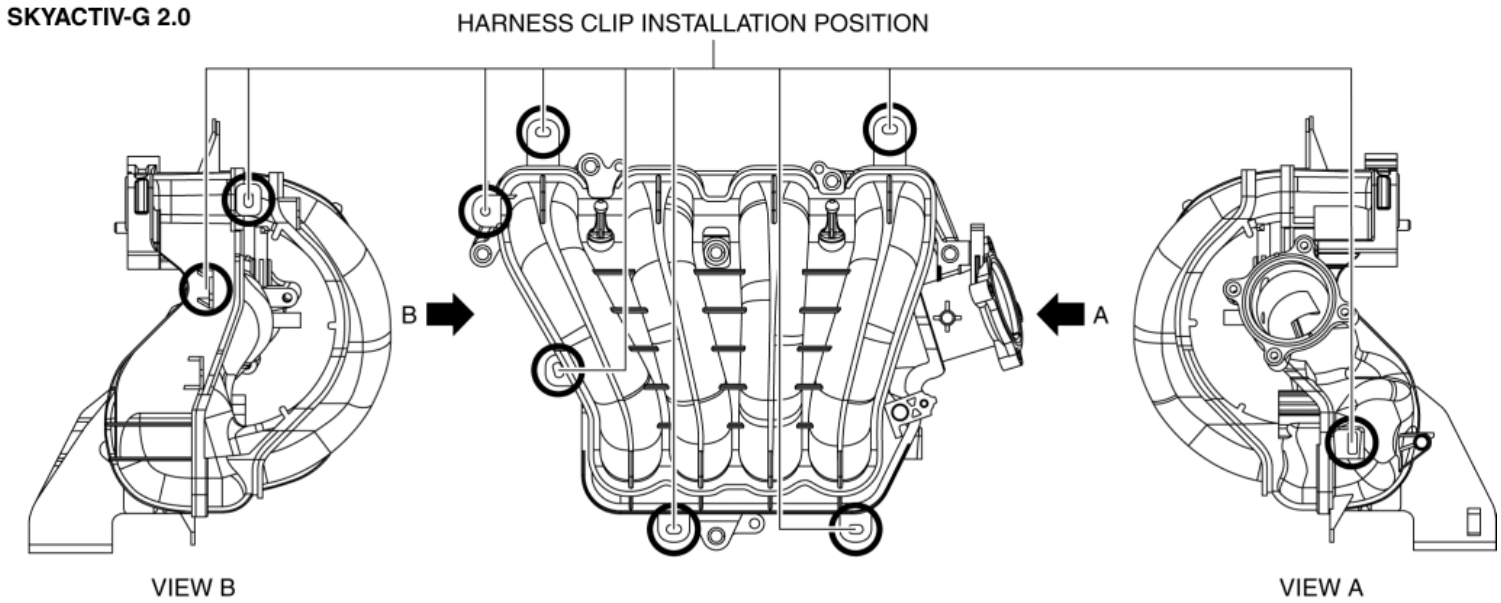

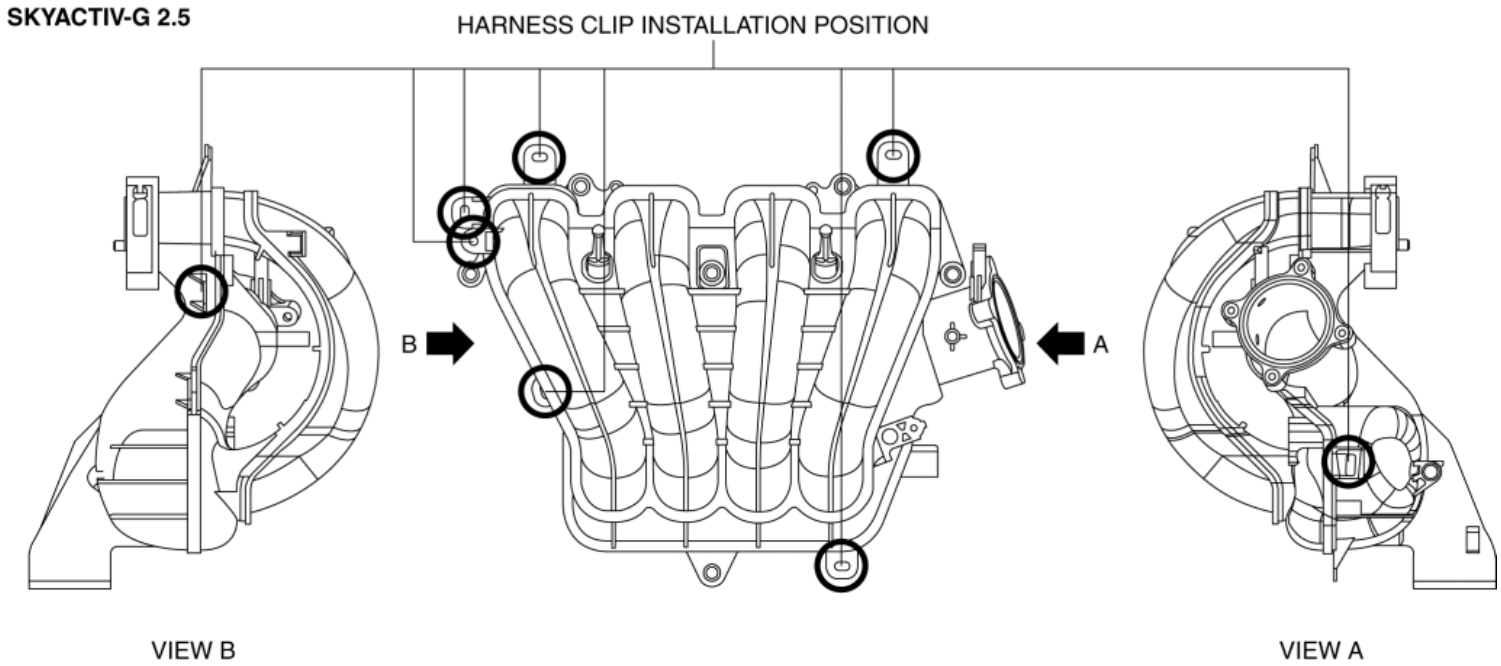

3. Remove the intake manifold.

Vacuum Hose (Between Vacuum Pump and Power Brake Unit) Installation Note

1. Install the vacuum hose (between vacuum pump and power brake unit) as shown in the figure.

Vacuum pump side

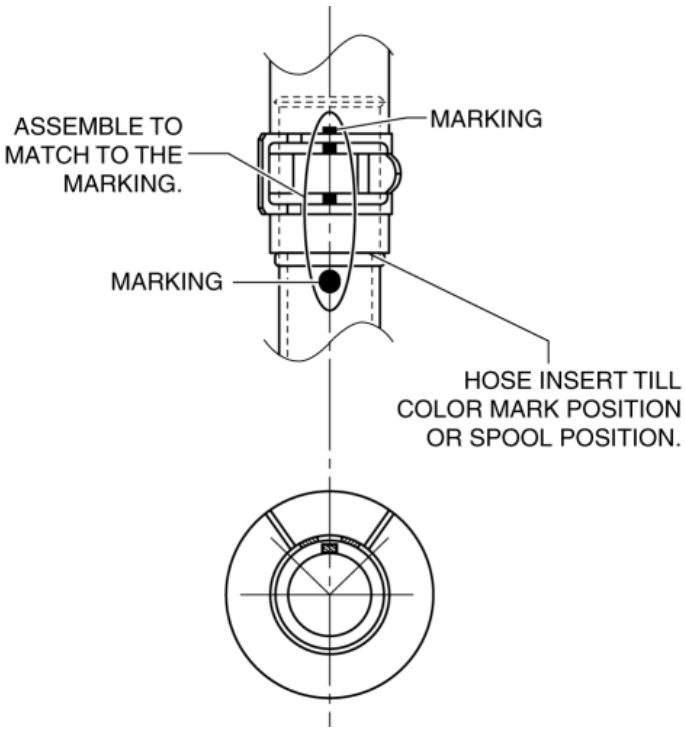

Power brake unit side

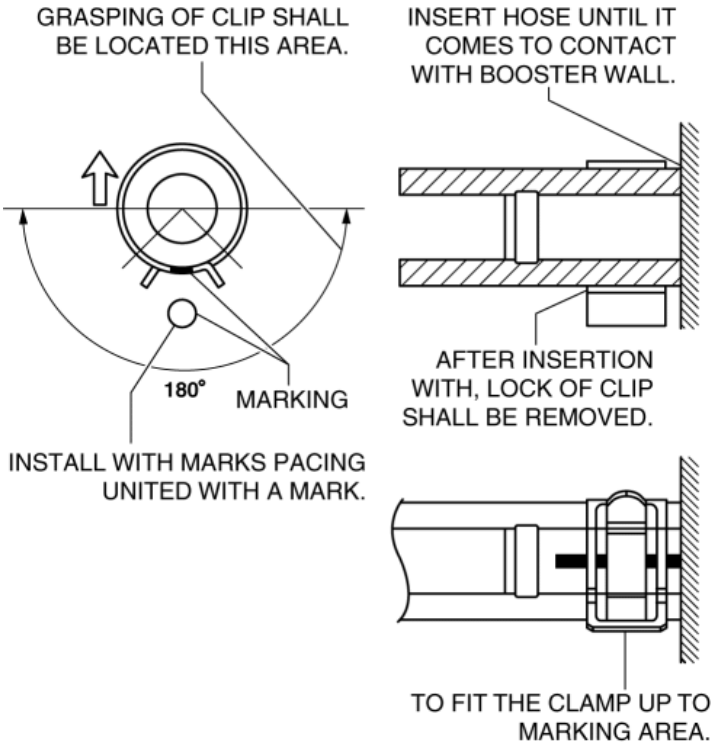

Evaporative Hose Installation Note

1. Install the evaporative hose as shown in the figure.

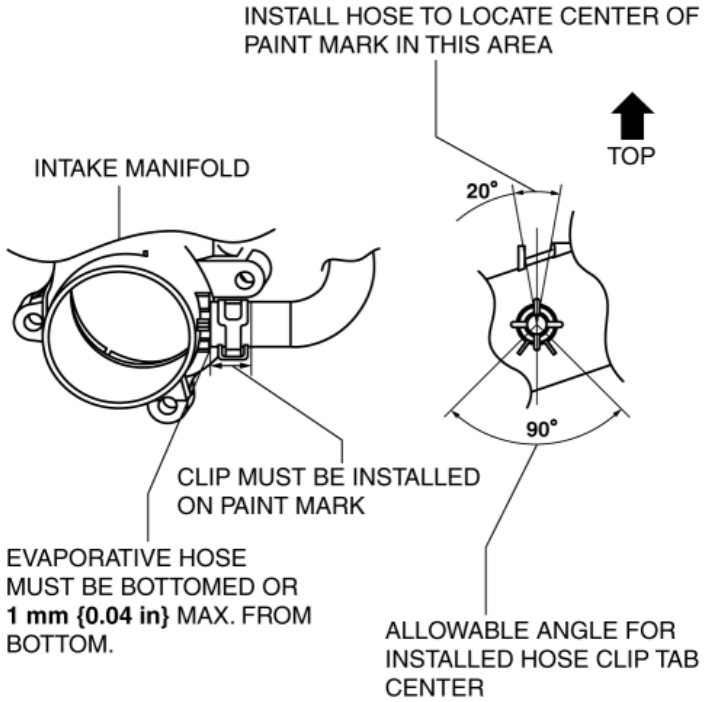

Vacuum Hose (Between Intake Manifold and Vacuum Pump) Installation Note

1. Install the vacuum hose (between intake manifold and vacuum pump) as shown in the figure.

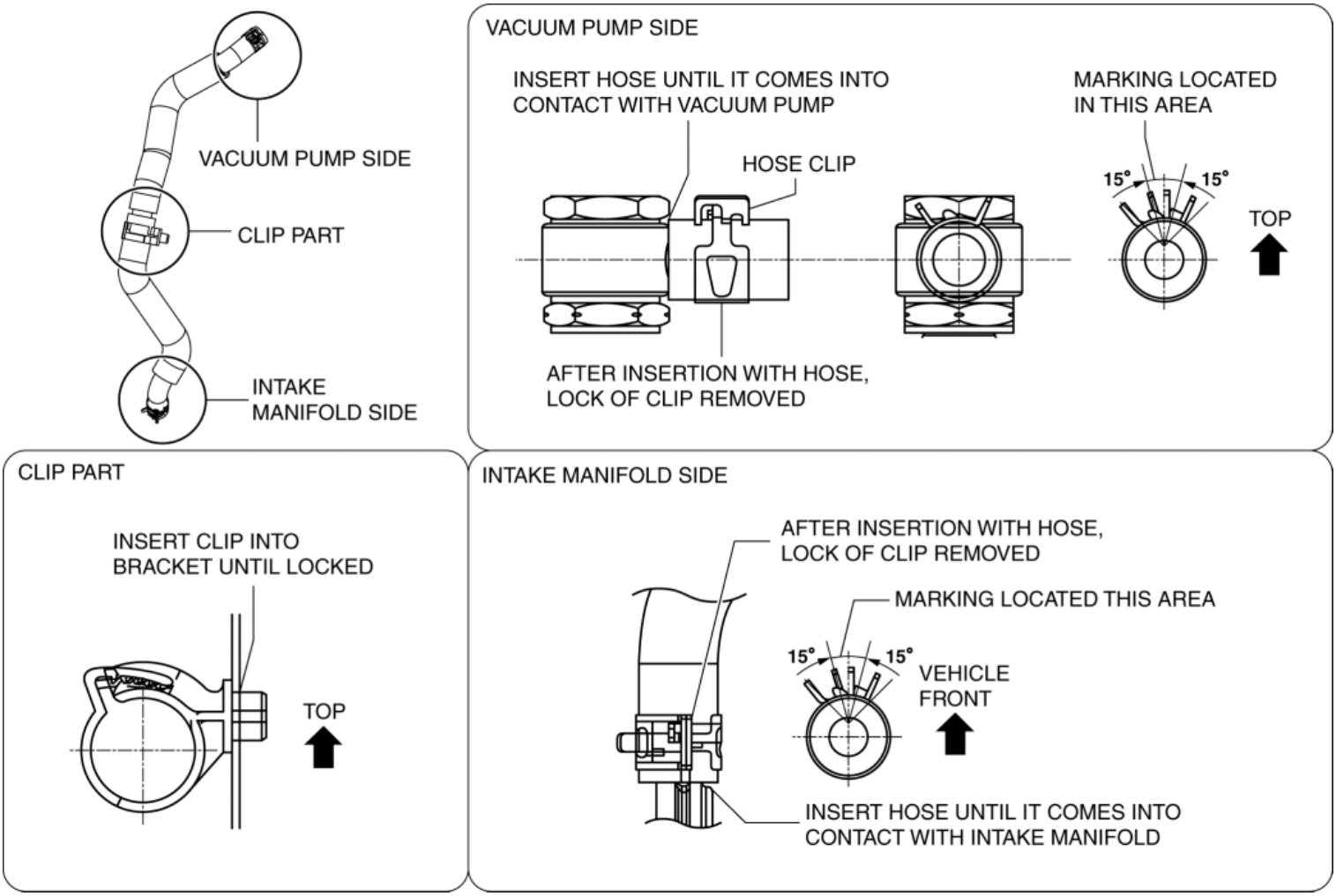

Air Cleaner Case Installation Note

1. Install the air cleaner case as shown in the figure.

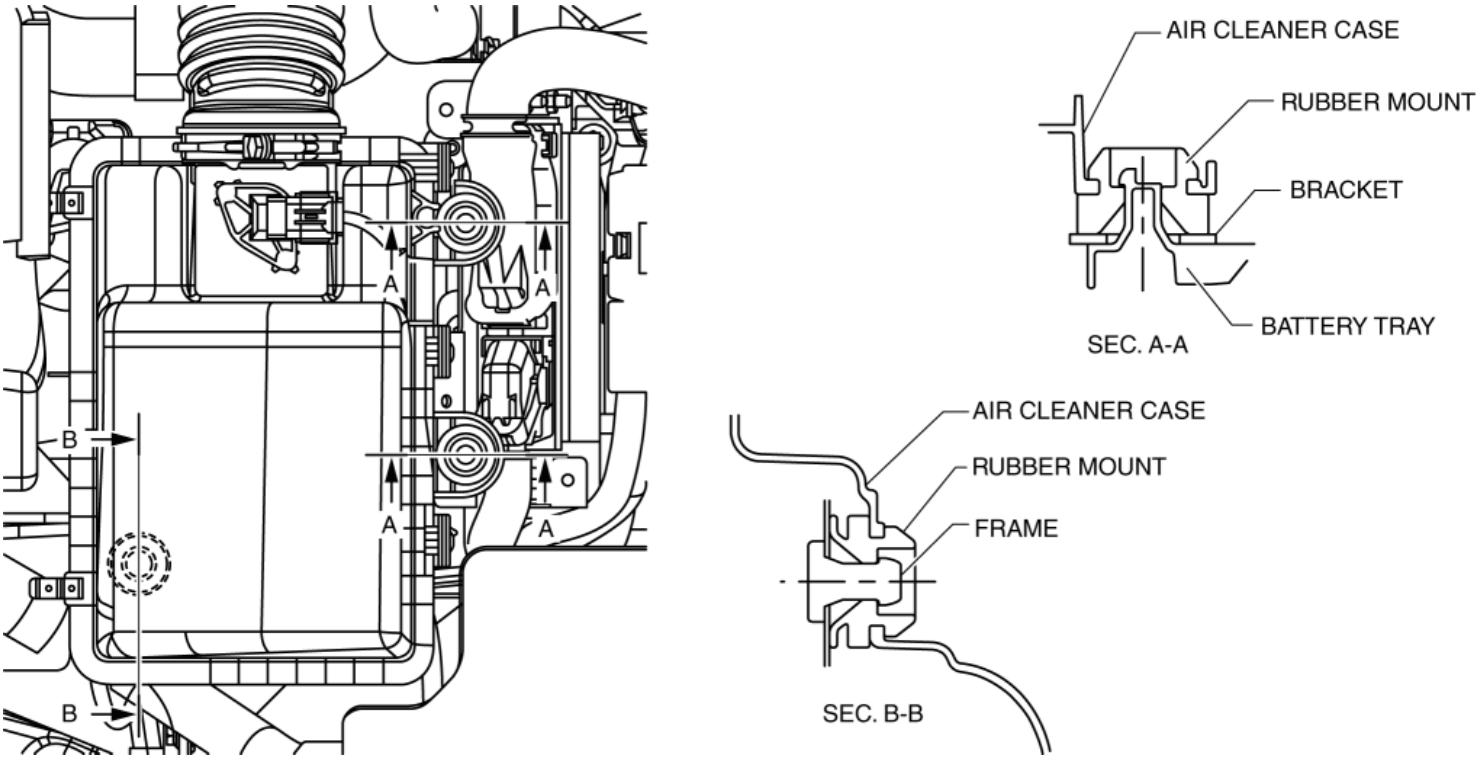

Fresh-air Duct Installation Note

1. Install the fresh-air duct as shown in the figure.

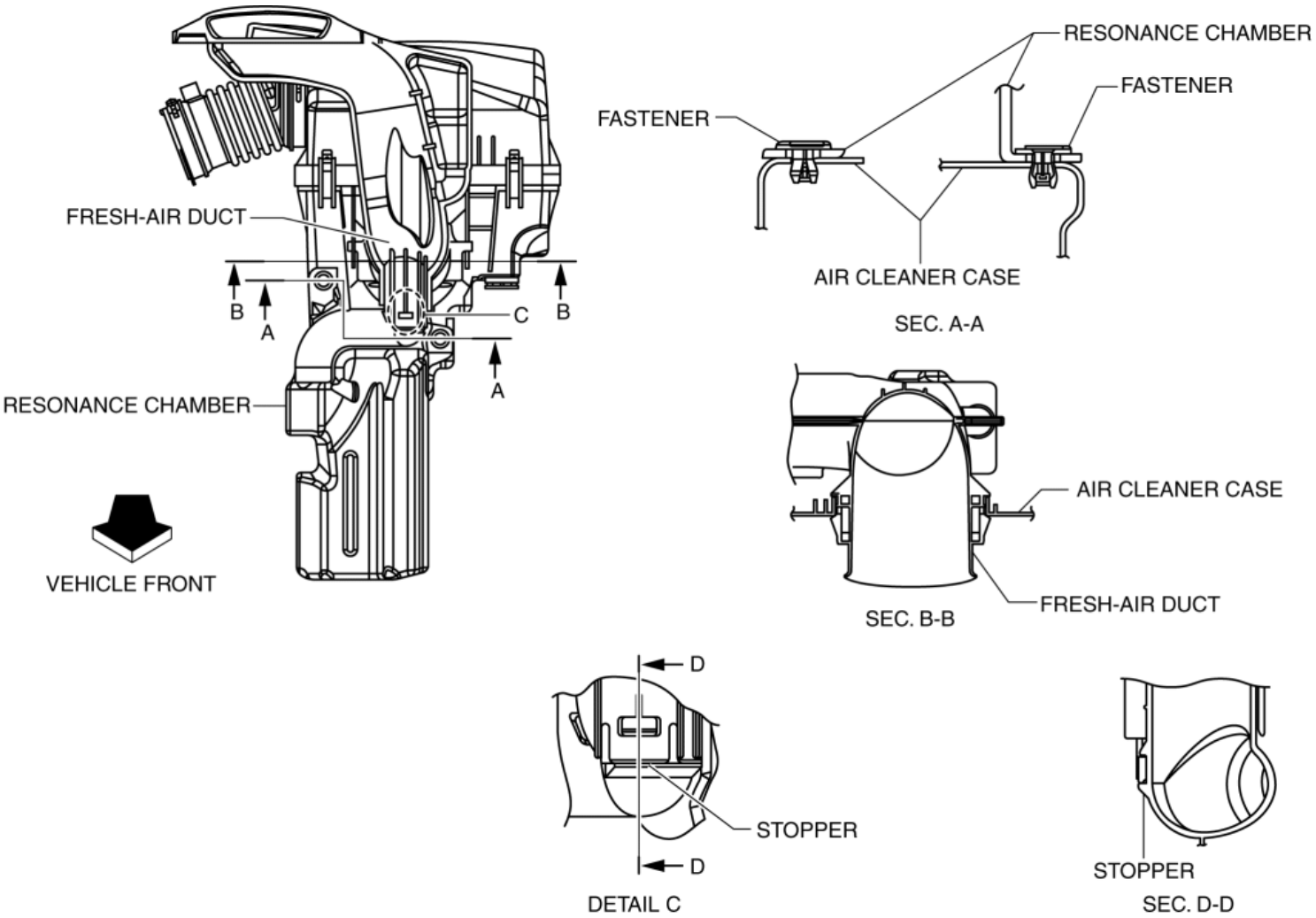

Air Hose Installation Note

1. Install the air hose as shown in the figure.

Throttle body side

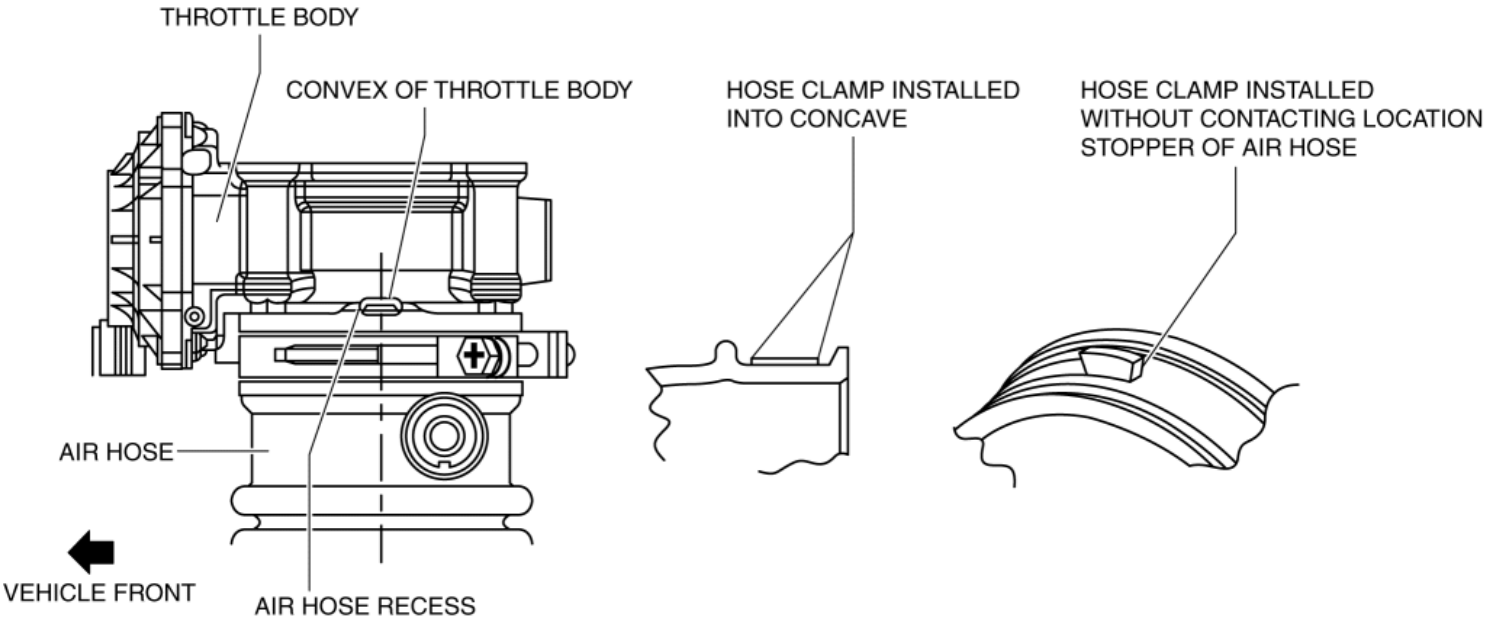

Air cleaner side

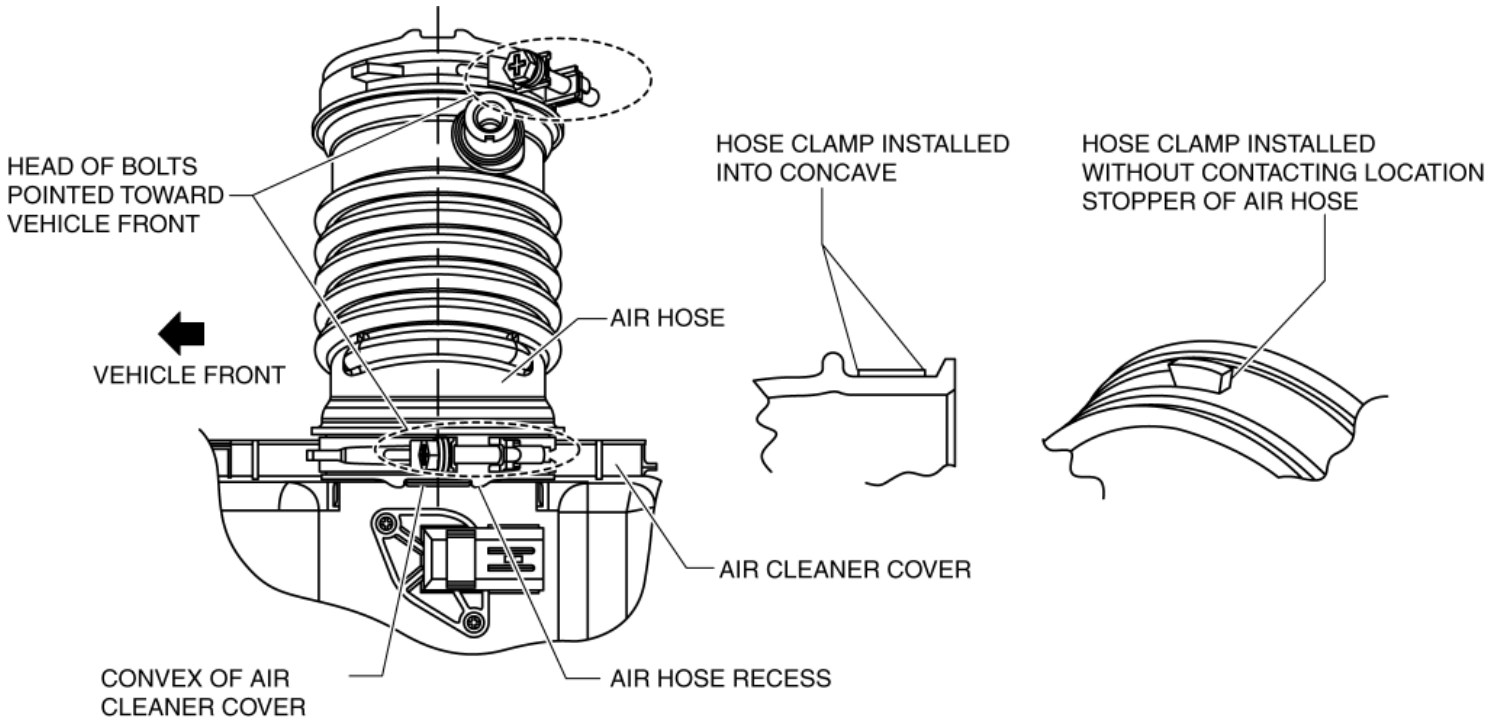

Ventilation Hose Installation Note

1. Install the ventilation hose as shown in the figure.

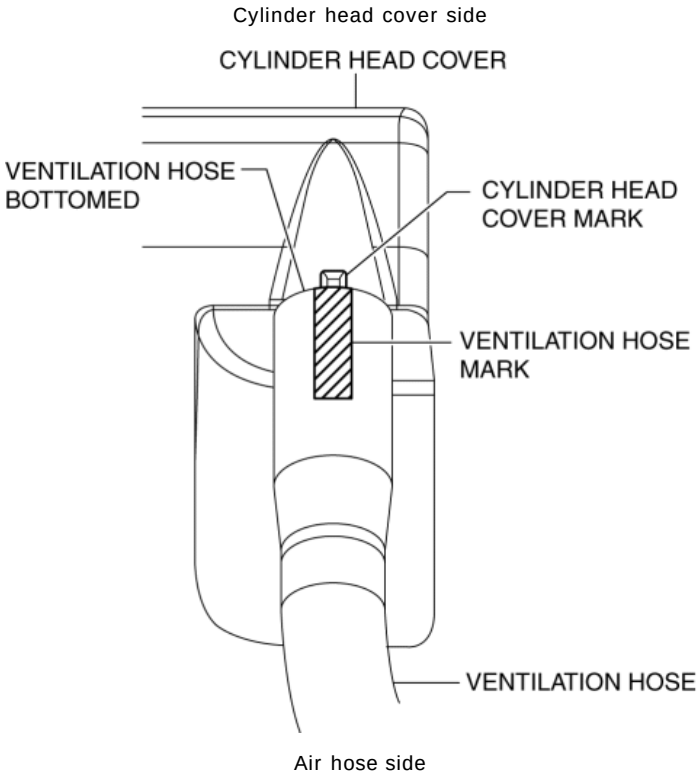

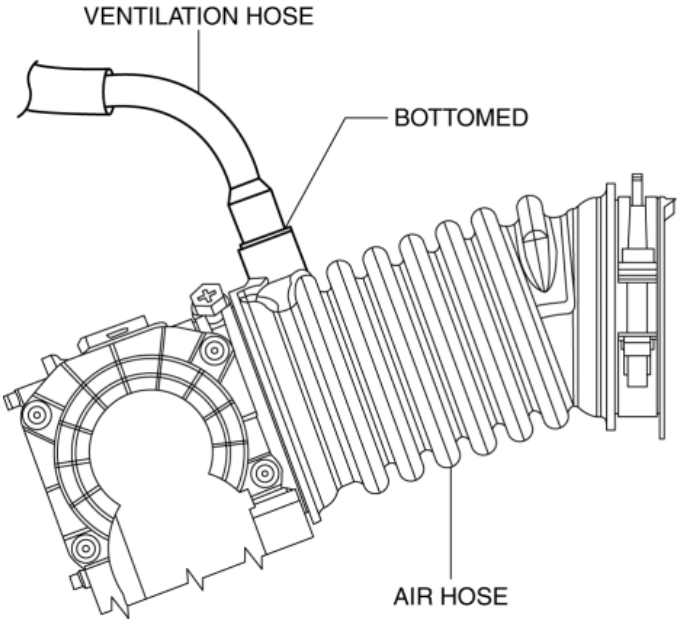
VENTILATION HOSE
BOTTOMED
AIR HOSE

2014 - Mazda3 - Engine

AIR CLEANER ELEMENT REMOVAL/INSTALLATION [SKYACTIV-G 2.0, SKYACTIV-G 2.5]

1. Remove the air cleaner element as shown in the figure.

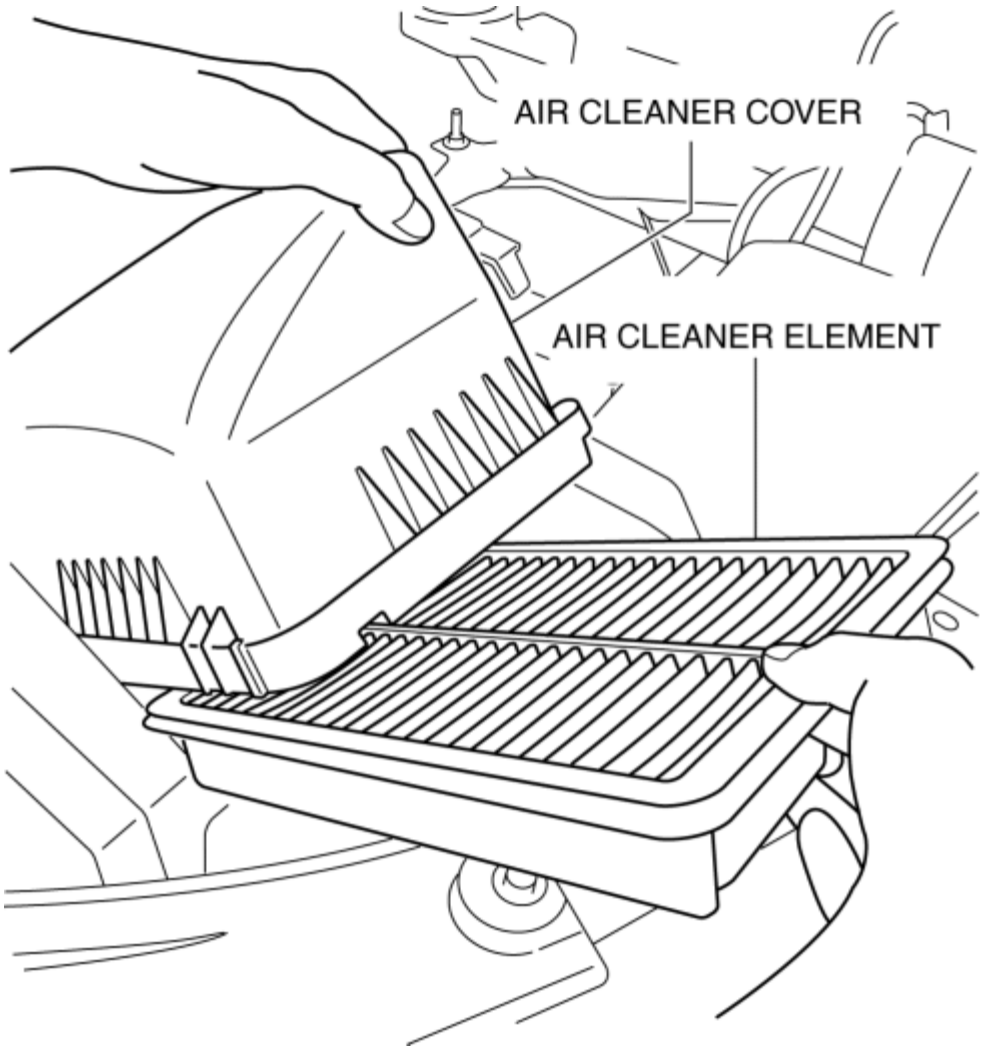

2. Install in the reverse order of removal.

2014 - Mazda3 - Engine

AIR CLEANER ELEMENT INSPECTION [SKYACTIV-G 2.0, SKYACTIV-G 2.5]

1. Remove the air cleaner element. (See **AIR CLEANER ELEMENT REMOVAL/INSTALLATION [SKYACTIV-G 2.0, SKYACTIV-G 2.5]**.)

2. Inspect the following items:

- Has the replacement interval past?
- Is the air cleaner element soiled, damaged, or bent?
- Are the air cleaner case and the air cleaner element correctly sealed?
- Is the correct air cleaner element installed?
    - If there is any abnormality, clean or replace the air cleaner element. (See **AIR CLEANER ELEMENT REMOVAL/INSTALLATION [SKYACTIV-G 2.0, SKYACTIV-G 2.5]**.)

2014 - Mazda3 - Engine

THROTTLE BODY INSPECTION [SKYACTIV-G 2.0, SKYACTIV-G 2.5]

Resistance Inspection

1. Disconnect the negative battery cable. (See **NEGATIVE BATTERY CABLE DISCONNECTION/CONNECTION [SKYACTIV-G 2.0, SKYACTIV-G 2.5]**.)
2. Disconnect the throttle body connector.
3. Measure the resistance between throttle body terminals E and F.

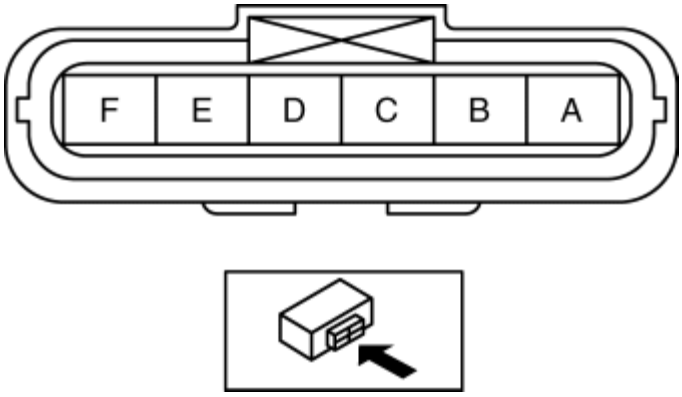

Throttle body resistance

- 0.3—100 ohms [20°C {68 °F}]
- If not as specified, replace the throttle body. (See **INTAKE-AIR SYSTEM REMOVAL/INSTALLATION [SKYACTIV-G 2.0, SKYACTIV-G 2.5]**.)

2014 - Mazda3 - Engine

CHECK VALVE INSPECTION [SKYACTIV-G 2.0, SKYACTIV-G 2.5]

Airflow Inspection

Between intake manifold and vacuum pump

1. Remove the vacuum hose (between intake manifold and vacuum pump). (See **INTAKE-AIR SYSTEM REMOVAL/INSTALLATION [SKYACTIV-G 2.0, SKYACTIV-G 2.5]**.)

2. Blow air into the vacuum hose (between intake manifold and vacuum pump) using your mouth from the vacuum pump side and verify that the air flows to the intake manifold side, then blow air from the intake manifold side and verify that the air does not flow to the vacuum pump side.

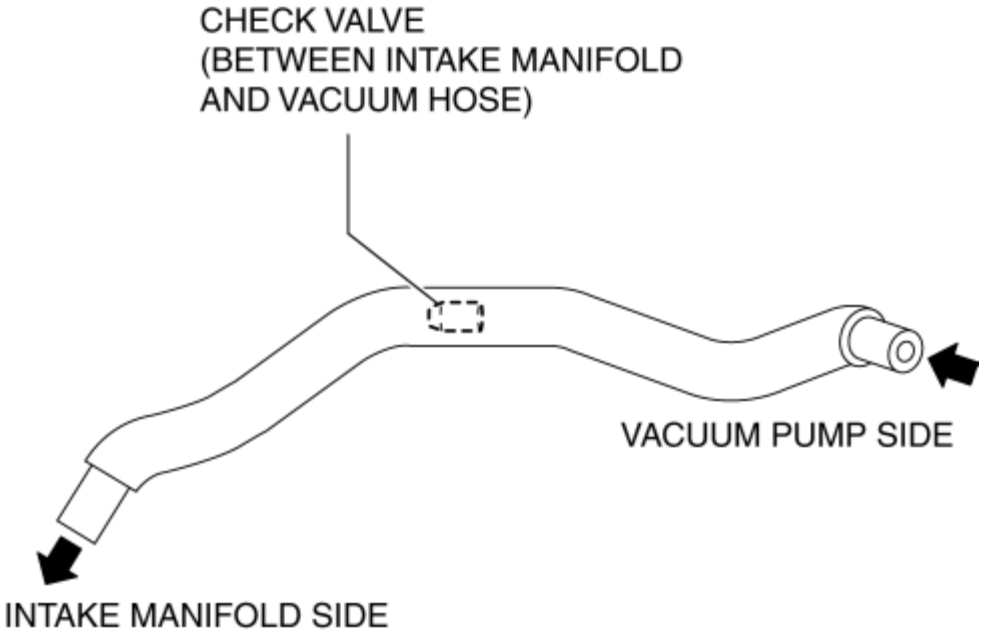

- If there is any malfunction in the check valve (between intake manifold and vacuum pump), replace it with the vacuum hose (between intake manifold and vacuum pump) as a single unit. (See **INTAKE-AIR SYSTEM REMOVAL/INSTALLATION [SKYACTIV-G 2.0, SKYACTIV-G 2.5]**.)

Between vacuum pump and power brake unit

1. Remove the vacuum hose (between vacuum pump and power brake unit). (See **INTAKE-AIR SYSTEM REMOVAL/INSTALLATION [SKYACTIV-G 2.0, SKYACTIV-G 2.5]**.)

2. Blow air into the vacuum hose (between vacuum pump and power brake unit) using your mouth from the power brake unit side and verify that the air flows to the vacuum pump side, then blow air from the vacuum pump side and verify that the air does not flow to the power brake unit side.

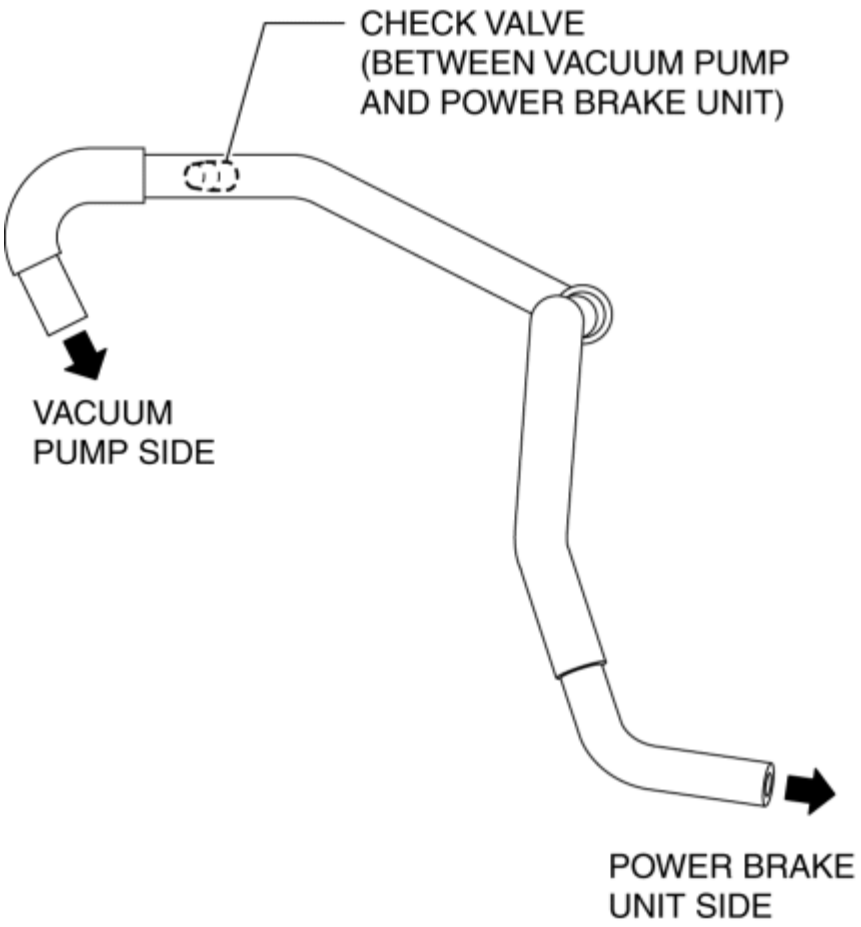

- If there is any malfunction in the check valve (between vacuum pump and power brake unit), replace it with the vacuum hose (between vacuum pump and power brake unit) as a single unit. (See **INTAKE-AIR SYSTEM REMOVAL/INSTALLATION [SKYACTIV-G 2.0, SKYACTIV-G 2.5]**.)

2014 - Mazda3 - Engine

ACCELERATOR PEDAL REMOVAL/INSTALLATION [SKYACTIV-G 2.0, SKYACTIV-G 2.5]

1. Disconnect the negative battery cable. (See **NEGATIVE BATTERY CABLE DISCONNECTION/CONNECTION [SKYACTIV-G 2.0, SKYACTIV-G 2.5]**.)

2. Remove in the order indicated in the table.

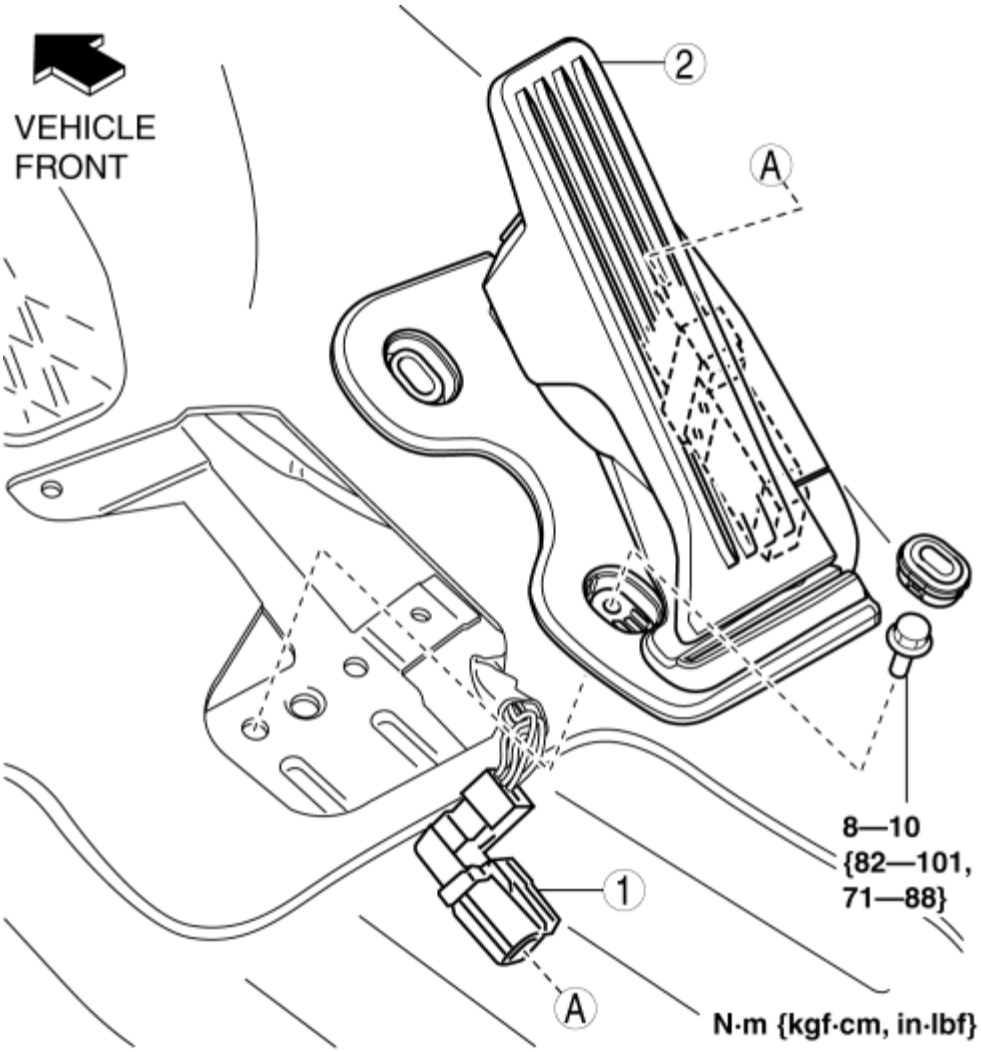

1	APP sensor connector
2	Accelerator pedal

3. Install in the reverse order of removal.

ACCELERATOR PEDAL REMOVAL/INSTALLATION [SKYACTIV-G 2.0, SKYACTIV-G 2.5]

2014 - Mazda3 - Engine

FUEL SYSTEM LOCATION INDEX [SKYACTIV-G 2.0, SKYACTIV-G 2.5]

Engine Compartment Side

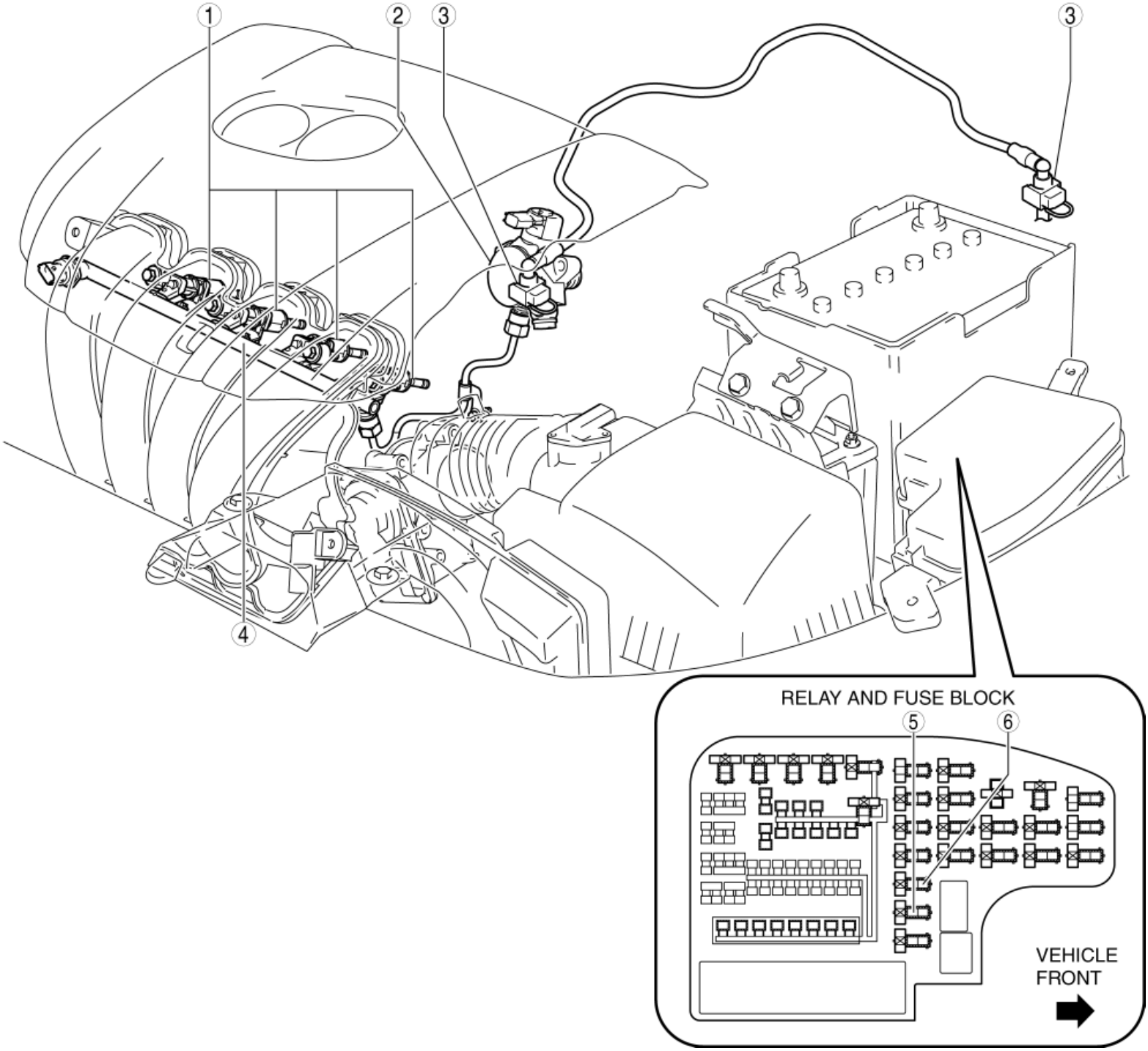

1	Fuel injector

	(See **FUEL INJECTOR REMOVAL/INSTALLATION [SKYACTIV-G 2.0, SKYACTIV-G 2.5]**.) (See **FUEL INJECTOR INSPECTION [SKYACTIV-G 2.0, SKYACTIV-G 2.5]**.)
2	High pressure fuel pump (See **HIGH PRESSURE FUEL PUMP REMOVAL/INSTALLATION [SKYACTIV-G 2.0, SKYACTIV-G 2.5]**.) (See **HIGH PRESSURE FUEL PUMP INSPECTION [SKYACTIV-G 2.0, SKYACTIV-G 2.5]**.)
3	Quick release connector (See **QUICK RELEASE CONNECTOR REMOVAL/INSTALLATION [SKYACTIV-G 2.0, SKYACTIV-G 2.5]**.)
4	Fuel distributor (See **FUEL INJECTOR REMOVAL/INSTALLATION [SKYACTIV-G 2.0, SKYACTIV-G 2.5]**.)
5	Fuel injector relay (See **RELAY INSPECTION**.)
6	Fuel pump relay (See **RELAY INSPECTION**.)

Fuel Tank Side

U.S.A. and CANADA

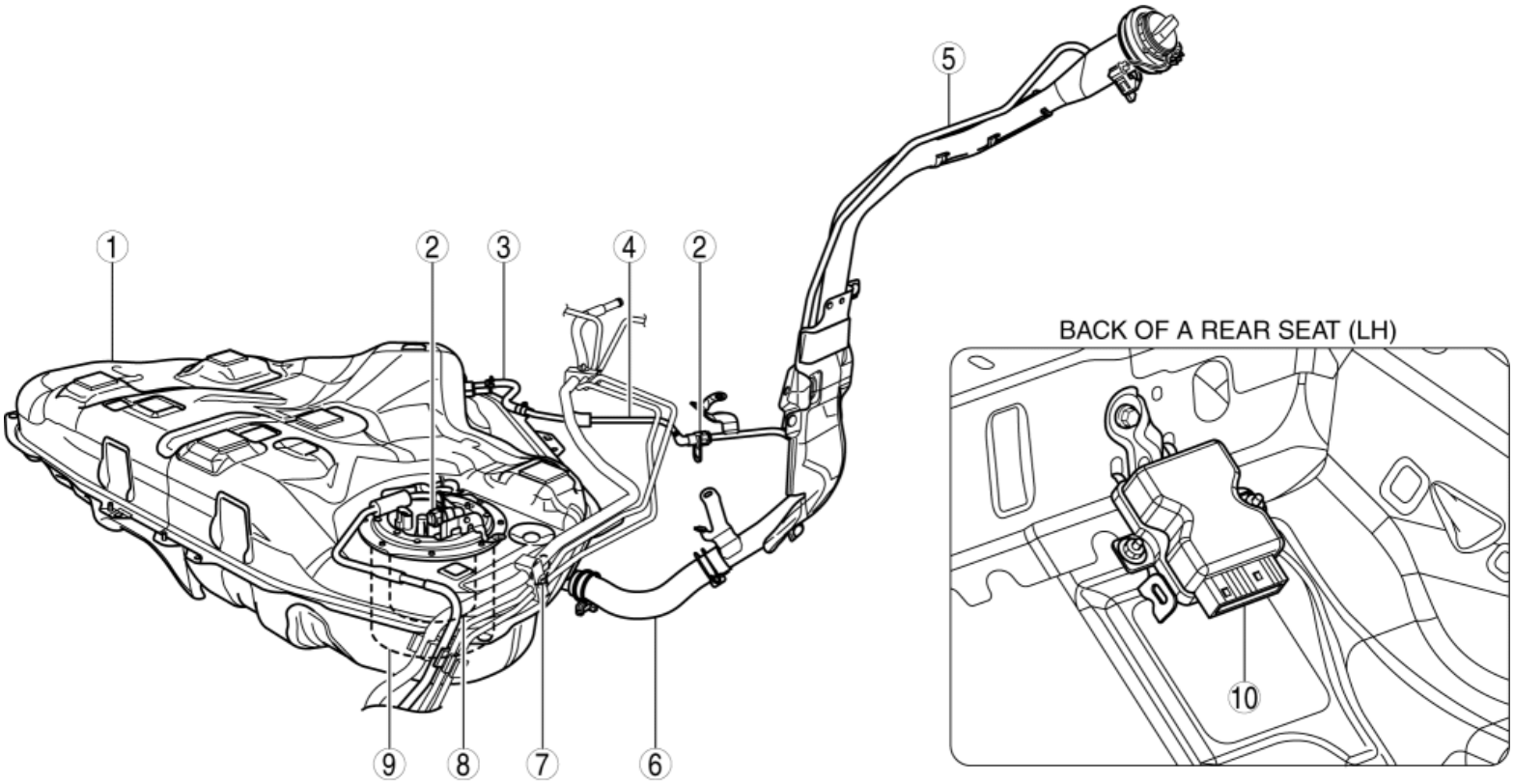

1	Fuel tank (See **FUEL TANK REMOVAL/INSTALLATION [SKYACTIV-G 2.0, SKYACTIV-G 2.5]**.)

	(See **FUEL TANK INSPECTION [SKYACTIV-G 2.0, SKYACTIV-G 2.5]**.)
2	Quick release connector (See **QUICK RELEASE CONNECTOR REMOVAL/INSTALLATION [SKYACTIV-G 2.0, SKYACTIV-G 2.5]**.)
3	Breather hose (See **FUEL TANK REMOVAL/INSTALLATION [SKYACTIV-G 2.0, SKYACTIV-G 2.5]**.)
4	Breather pipe (See **FUEL TANK REMOVAL/INSTALLATION [SKYACTIV-G 2.0, SKYACTIV-G 2.5]**.)
5	Fuel-filler pipe (See **FUEL-FILLER PIPE REMOVAL/INSTALLATION [SKYACTIV-G 2.0, SKYACTIV-G 2.5]**.)
6	Joint hose (See **FUEL TANK REMOVAL/INSTALLATION [SKYACTIV-G 2.0, SKYACTIV-G 2.5]**.)
7	Non-return valve (See **NON-RETURN VALVE INSPECTION [SKYACTIV-G 2.0, SKYACTIV-G 2.5]**.)
8	Fuel filter (high-pressure) (See **FUEL FILTER (HIGH-PRESSURE) REMOVAL/INSTALLATION [SKYACTIV-G 2.0, SKYACTIV-G 2.5]**.)
9	Fuel pump unit (See **FUEL PUMP UNIT REMOVAL/INSTALLATION [SKYACTIV-G 2.0, SKYACTIV-G 2.5]**.) (See **FUEL PUMP UNIT DISASSEMBLY/ASSEMBLY [SKYACTIV-G 2.0, SKYACTIV-G 2.5]**.) (See **FUEL PUMP UNIT INSPECTION [SKYACTIV-G 2.0, SKYACTIV-G 2.5]**.)
10	Fuel pump control module (See **FUEL PUMP CONTROL MODULE REMOVAL/INSTALLATION [SKYACTIV-G 2.0, SKYACTIV-G 2.5]**.) (See **FUEL PUMP CONTROL MODULE INSPECTION [SKYACTIV-G 2.0, SKYACTIV-G 2.5]**.)

Except U.S.A. and CANADA

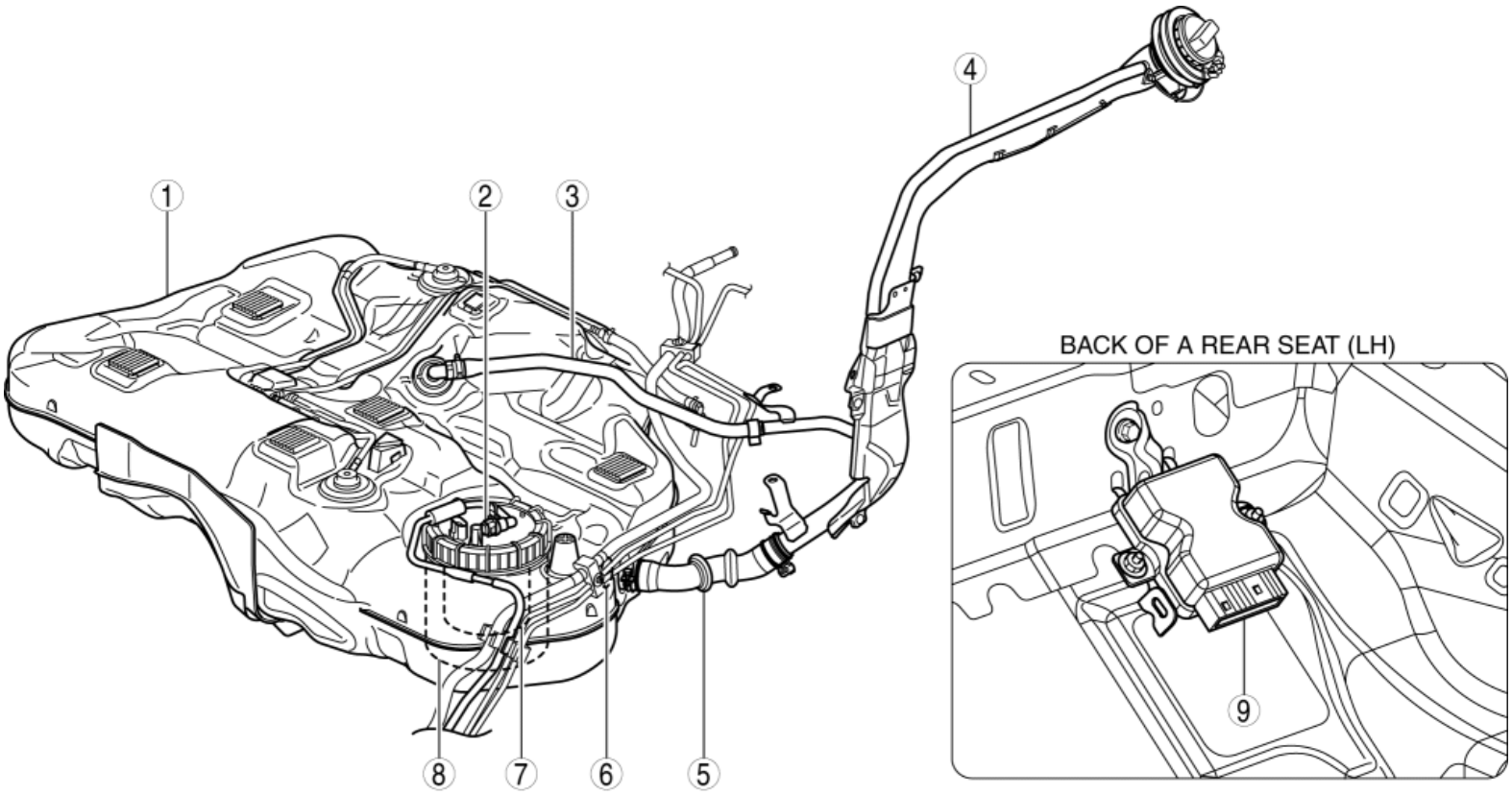

1	Fuel tank (See **FUEL TANK REMOVAL/INSTALLATION [SKYACTIV-G 2.0, SKYACTIV-G 2.5]**.) (See **FUEL TANK INSPECTION [SKYACTIV-G 2.0, SKYACTIV-G 2.5]**.)
2	Quick release connector (See **QUICK RELEASE CONNECTOR REMOVAL/INSTALLATION [SKYACTIV-G 2.0, SKYACTIV-G 2.5]**.)
3	Breather pipe (See **FUEL TANK REMOVAL/INSTALLATION [SKYACTIV-G 2.0, SKYACTIV-G 2.5]**.)
4	Fuel-filler pipe (See **FUEL-FILLER PIPE REMOVAL/INSTALLATION [SKYACTIV-G 2.0, SKYACTIV-G 2.5]**.)
5	Joint hose (See **FUEL TANK REMOVAL/INSTALLATION [SKYACTIV-G 2.0, SKYACTIV-G 2.5]**.)
6	Non-return valve (See **NON-RETURN VALVE INSPECTION [SKYACTIV-G 2.0, SKYACTIV-G 2.5]**.)
7	Fuel filter (high-pressure) (See **FUEL FILTER (HIGH-PRESSURE) REMOVAL/INSTALLATION [SKYACTIV-G 2.0, SKYACTIV-G 2.5]**.)
8	Fuel pump unit (See **FUEL PUMP UNIT REMOVAL/INSTALLATION [SKYACTIV-G 2.0, SKYACTIV-G 2.5]**.) (See **FUEL PUMP UNIT DISASSEMBLY/ASSEMBLY [SKYACTIV-G 2.0, SKYACTIV-G 2.5]**.) (See **FUEL PUMP UNIT INSPECTION [SKYACTIV-G 2.0, SKYACTIV-G 2.5]**.)

9	Fuel pump control module (See **FUEL PUMP CONTROL MODULE REMOVAL/INSTALLATION [SKYACTIV-G 2.0, SKYACTIV-G 2.5]**.) (See **FUEL PUMP CONTROL MODULE INSPECTION [SKYACTIV-G 2.0, SKYACTIV-G 2.5]**.)

2014 - Mazda3 - Engine

FUEL SYSTEM FLOW DIAGRAM [SKYACTIV-G 2.0, SKYACTIV-G 2.5]

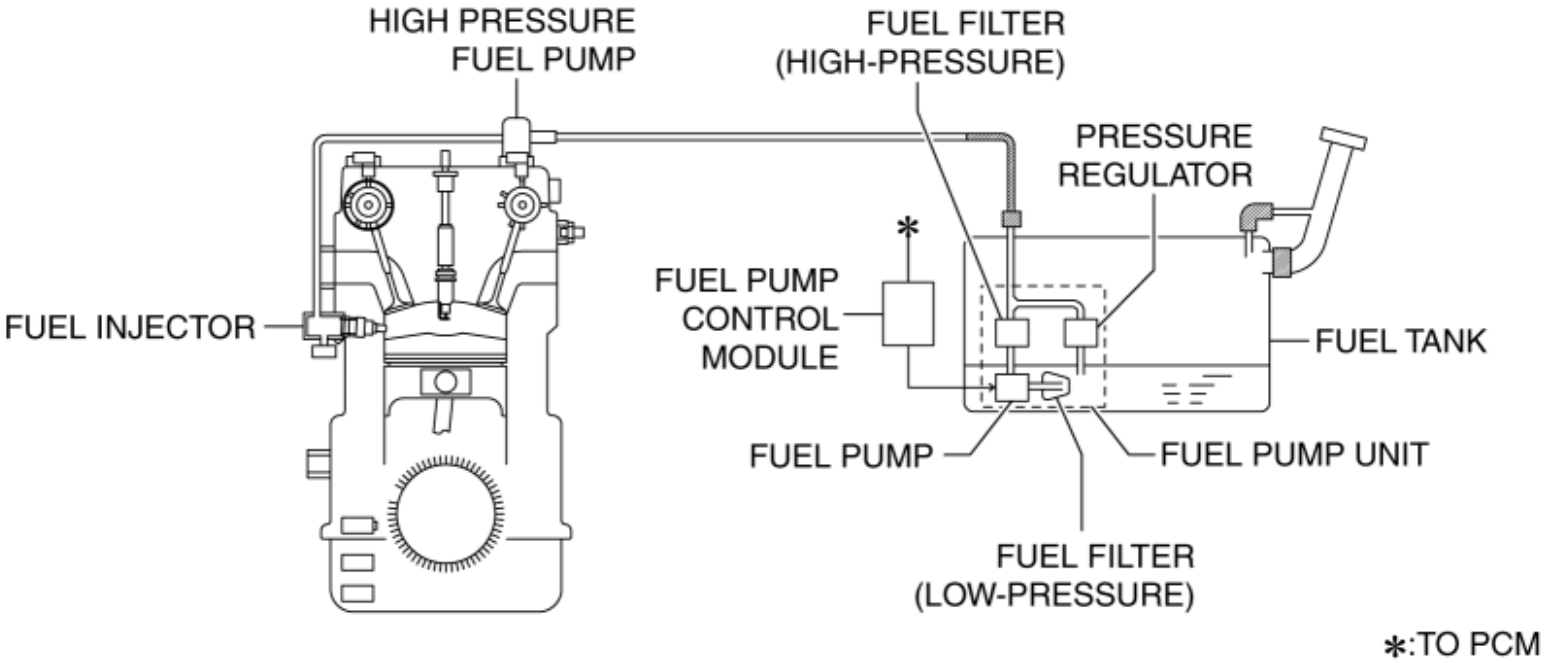

2014 - Mazda3 - Engine

BEFORE SERVICE PRECAUTION [SKYACTIV-G 2.0, SKYACTIV-G 2.5]

WARNING:

- Fuel vapor is hazardous. It can very easily ignite, causing serious injury and damage. Always keep sparks and flames away from fuel.
- Fuel line spills and leakage from the pressurized fuel system are dangerous. Fuel can ignite and cause serious injury or death and damage. Fuel can also irritate skin and eyes. To prevent this, always complete the “Fuel Line Safety Procedure”.
- A person charged with static electricity could cause a fire or explosion, resulting in death or serious injury. Before performing work on the fuel system, discharge static electricity by touching the vehicle body.

Fuel Line Safety Procedure

1. Disconnect the negative battery cable. (See **NEGATIVE BATTERY CABLE DISCONNECTION/CONNECTION [SKYACTIV-G 2.0, SKYACTIV-G 2.5]**.)
2. Remove the fuel-filler cap to release the pressure inside the fuel tank.
3. Remove the fuel pump relay.

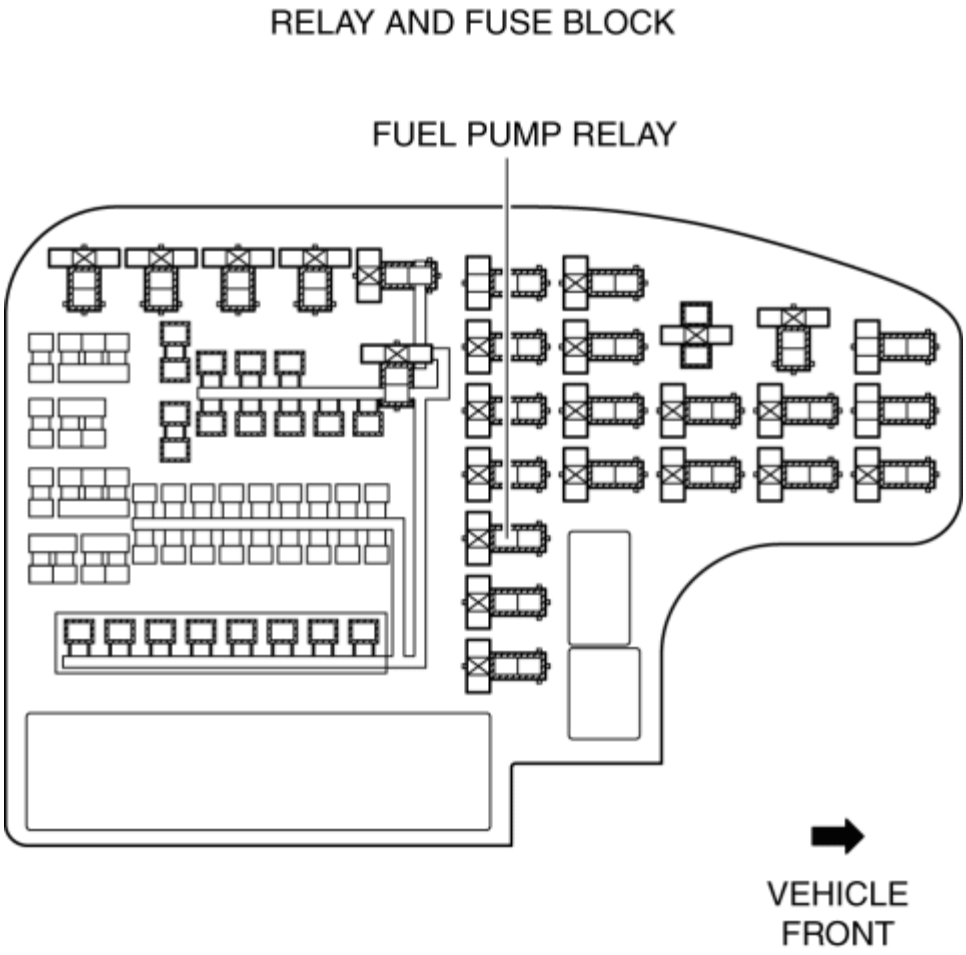

4. Disconnect the high pressure fuel pump connector.

5. Connect the negative battery cable. (See **NEGATIVE BATTERY CABLE DISCONNECTION/CONNECTION [SKYACTIV-G 2.0, SKYACTIV-G 2.5]**.)

6. Start the engine.

7. After the engine stalls, crank the engine 2—3 times.

8. Switch the ignition to off.

9. Disconnect the negative battery cable. (See **NEGATIVE BATTERY CABLE DISCONNECTION/CONNECTION [SKYACTIV-G 2.0, SKYACTIV-G 2.5]**.)

10. Install the fuel pump relay.

11. Connect the high pressure fuel pump connector.

2014 - Mazda3 - Engine

AFTER SERVICE PRECAUTION [SKYACTIV-G 2.0, SKYACTIV-G 2.5]

WARNING:

- Fuel line spills and leakage are dangerous. Fuel can ignite and cause serious injuries or death and damage. When installing the fuel hose, perform “Fuel Leakage Inspection” described below.
- A person charged with static electricity could cause a fire or explosion, resulting in death or serious injury. Before performing work on the fuel system, discharge static electricity by touching the vehicle body.

Fuel Leakage Inspection

Using M-MDS

1. Connect the M-MDS to the DLC-2.
2. Switch the ignition to ON (engine off).
3. Using the simulation function “FP”, start the fuel pump. (See **ON-BOARD DIAGNOSTIC TEST [SKYACTIV-G 2.0, SKYACTIV-G 2.5]**.)
4. Verify that there is no fuel leakage from the pressurized parts.

   Standard

   - There shall be no leakage after 5 min.
5. In the case of fuel leakage, replace the following components and then recheck using the fuel leakage checking procedure.
   - If there is leakage, replace the fuel hoses and clips.
   - If there is damage on the seal on the fuel pipe side, replace the fuel pipe.

Without using M-MDS

1. Disconnect the negative battery cable. (See **NEGATIVE BATTERY CABLE DISCONNECTION/CONNECTION [SKYACTIV-G 2.0, SKYACTIV-G 2.5]**.)
2. Remove the fuel pump relay.

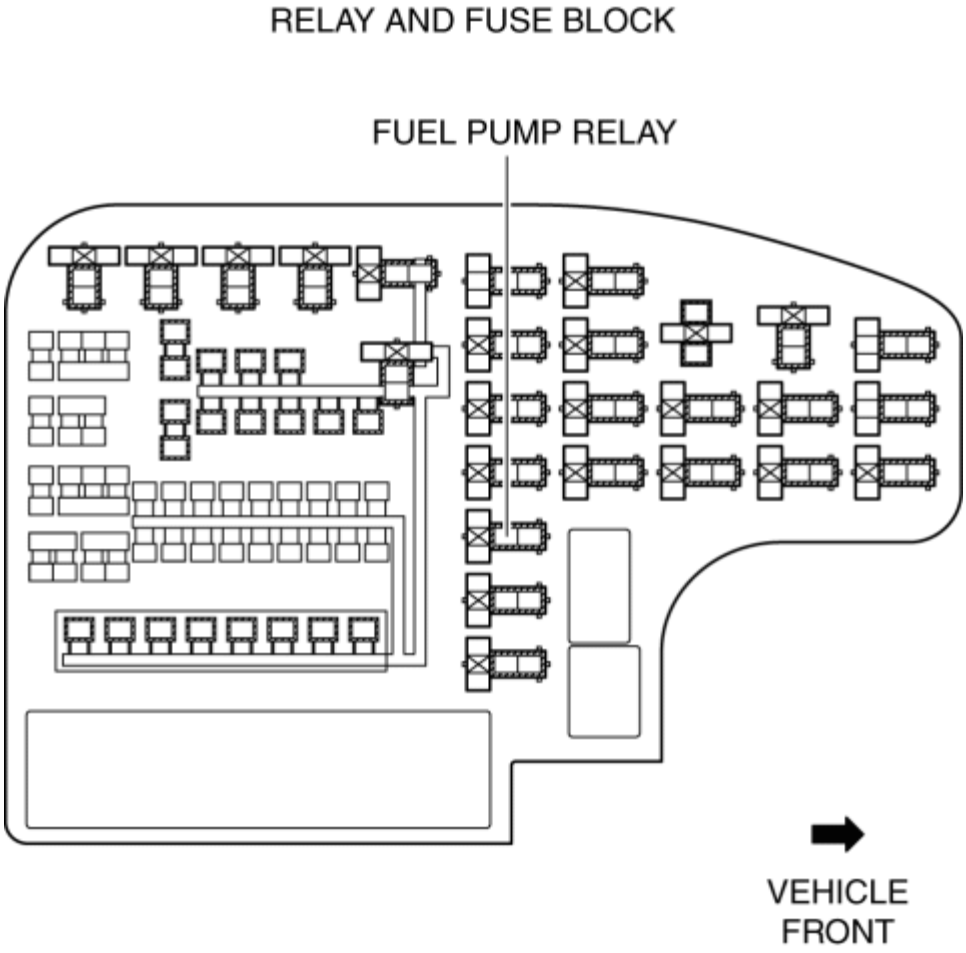

CAUTION:

- Short the specified terminals because shorting the wrong terminal of the relay and fuse block may cause malfunctions.

3. Using a jumper wire, short fuel pump relay terminals C and D in the relay and fuse block.

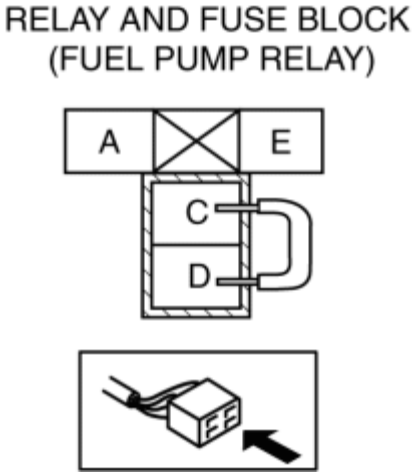

4. Connect the negative battery cable and operate the fuel pump. (See **NEGATIVE BATTERY CABLE DISCONNECTION/CONNECTION [SKYACTIV-G 2.0, SKYACTIV-G 2.5]**.)

5. Verify that there is no fuel leakage from the pressurized parts.

Standard

- There shall be no leakage after 5 min.

6. In the case of fuel leakage, replace the following components and then recheck using the fuel leakage checking procedure.

- If there is leakage, replace the fuel hoses and clips.
- If there is damage on the seal on the fuel pipe side, replace the fuel pipe.

2014 - Mazda3 - Engine

FUEL LINE PRESSURE INSPECTION [SKYACTIV-G 2.0, SKYACTIV-G 2.5]

WARNING:

- Fuel line spills and leakage from the pressurized fuel system are dangerous. Fuel can ignite and cause serious injury or death and damage. To prevent this, complete the following inspection with the engine stopped.
- Fuel is very flammable liquid. If fuel spills or leaks from the pressurized fuel system, it will cause serious injury or death and facility breakage. Fuel can also irritate skin and eyes. To prevent this, always complete the “Fuel Line Safety Procedure”, while referring to the “BEFORE SERVICE PRECAUTION”.
- A person charged with static electricity could cause a fire or explosion, resulting in death or serious injury. Before performing work on the fuel system, discharge static electricity by touching the vehicle body.

CAUTION:

- Disconnecting/connecting the quick release connector without cleaning it may possibly cause damage to the fuel pipe and quick release connector. Always clean the quick release connector joint area before disconnecting/connecting using cloth or soft brush, and make sure that it is free of foreign material.

1. Complete the “BEFORE SERVICE PRECAUTION”. (See **BEFORE SERVICE PRECAUTION [SKYACTIV-G 2.0, SKYACTIV-G 2.5]**.)

2. Disconnect the negative battery cable. (See **NEGATIVE BATTERY CABLE DISCONNECTION/CONNECTION [SKYACTIV-G 2.0, SKYACTIV-G 2.5]**.)

3. Disconnect the quick release connector as shown in the figure. (See **QUICK RELEASE CONNECTOR REMOVAL/INSTALLATION [SKYACTIV-G 2.0, SKYACTIV-G 2.5]**.)

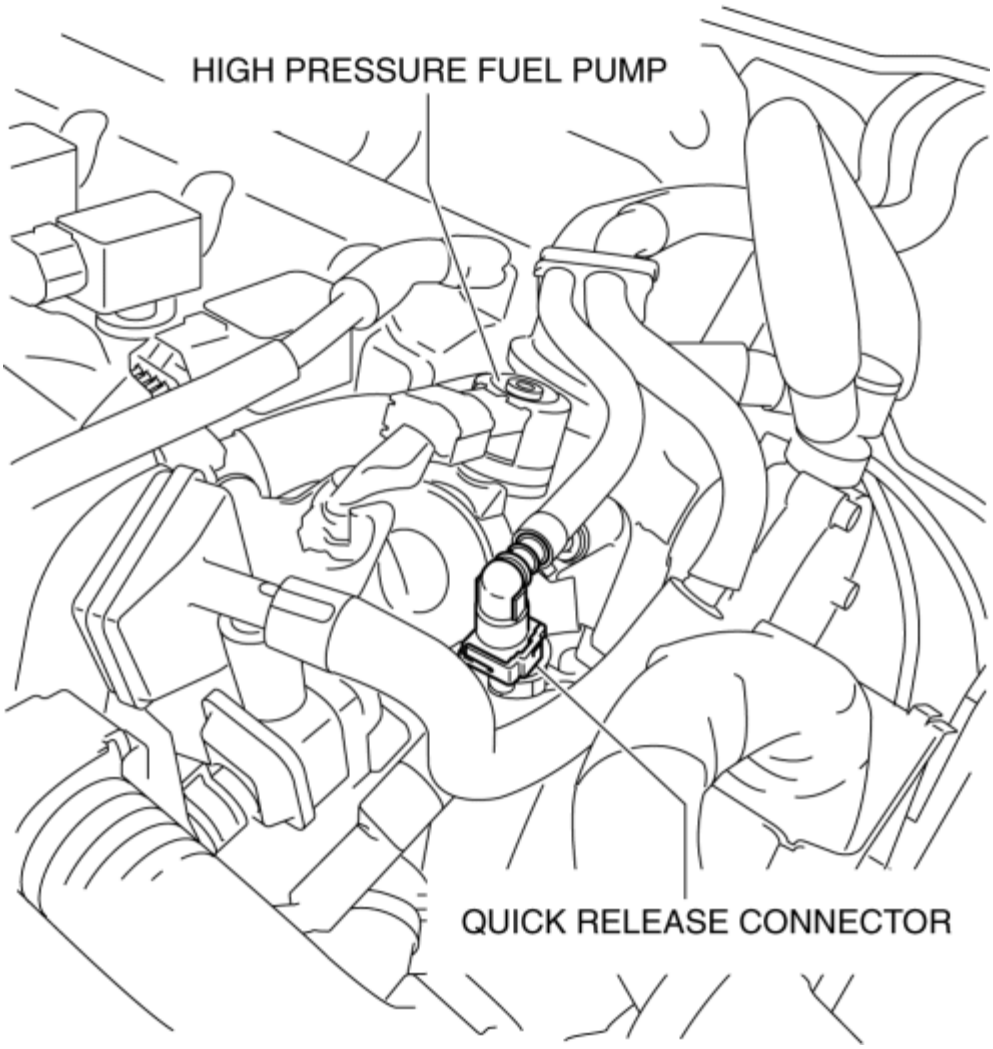

4. Turn the lever of the **SST** parallel to the hose as shown in the figure.

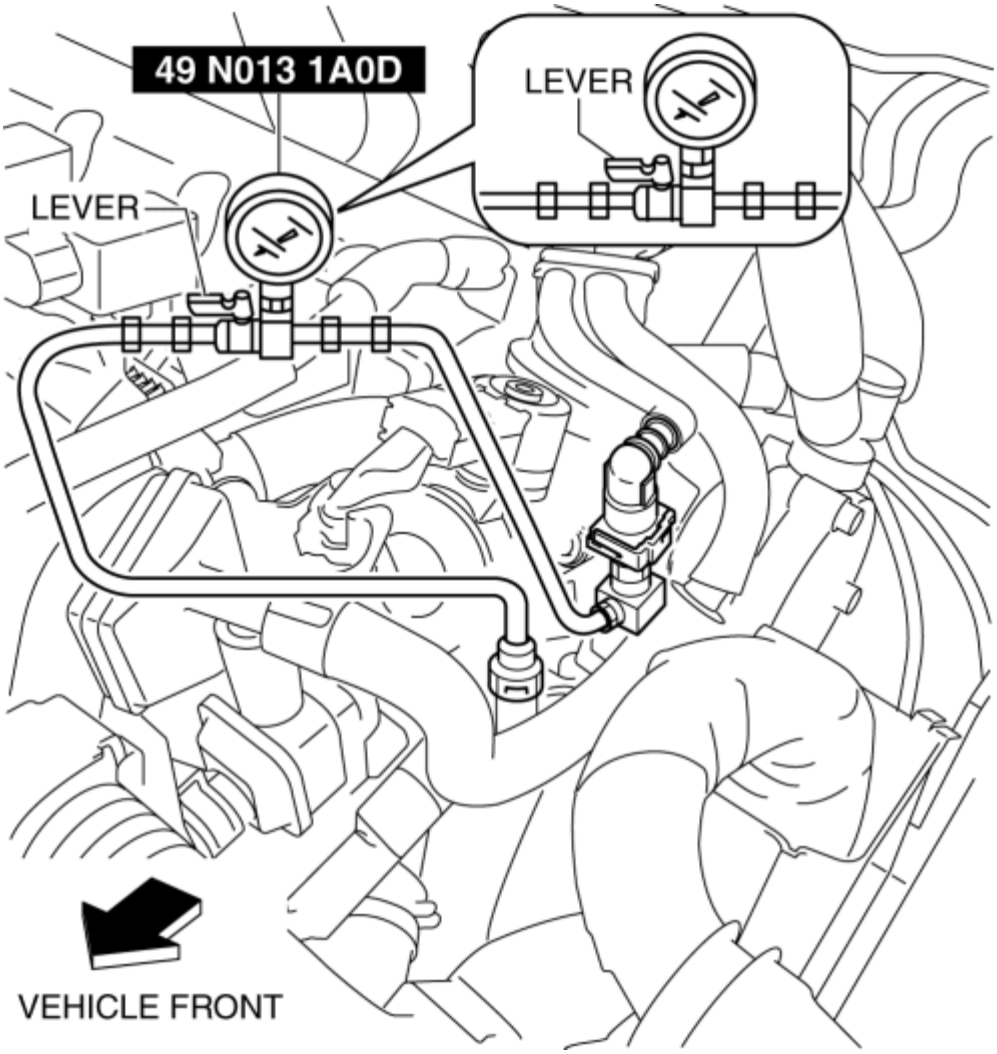

5. Insert the **SST** quick release connector into the fuel pipe until a click is heard.

6. Verify that the quick release connector is firmly connected by pulling it by hand.

7. Start the fuel pump using the following procedure.

Using M-MDS

- Connect the negative battery cable. (See **NEGATIVE BATTERY CABLE DISCONNECTION/CONNECTION [SKYACTIV-G 2.0, SKYACTIV-G 2.5]**.)
- Connect the M-MDS to the DLC-2.
- Using the simulation function “FP”, start the fuel pump. (See **ON-BOARD DIAGNOSTIC TEST [SKYACTIV-G 2.0, SKYACTIV-G 2.5]**.)

Without using M-MDS

- Remove the fuel pump relay.

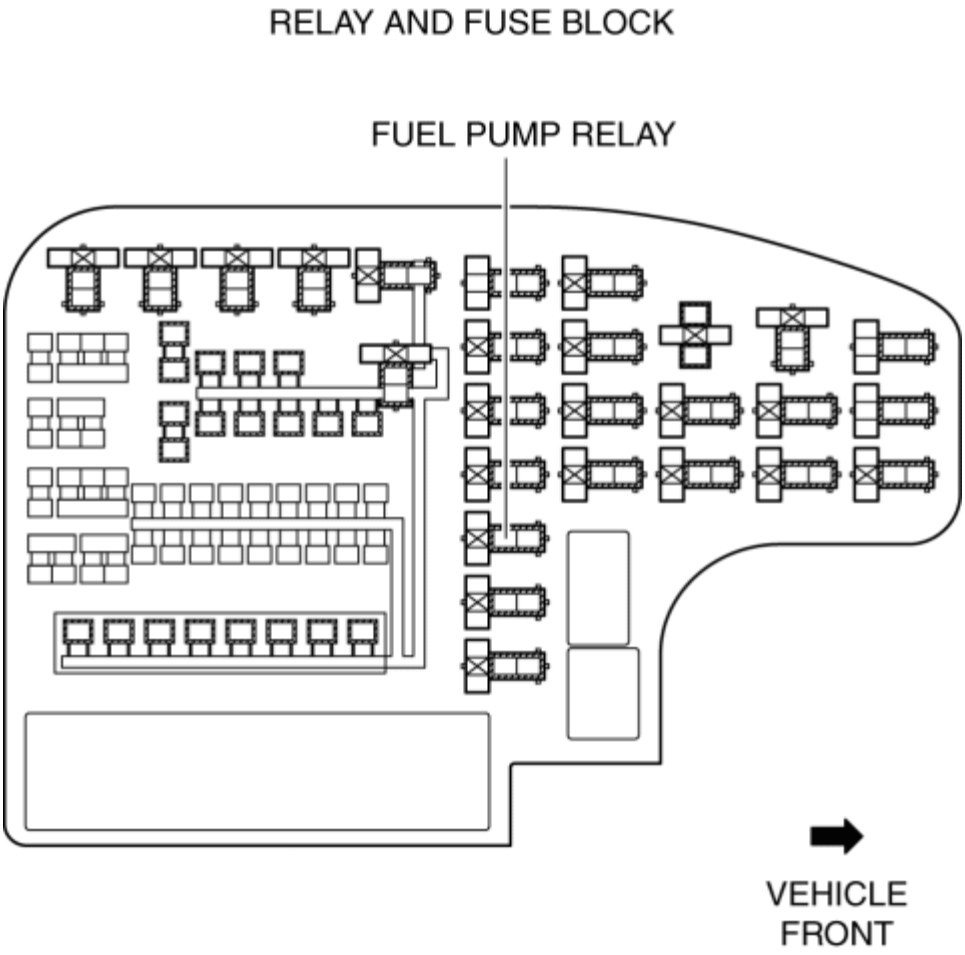

CAUTION:

- Short the specified terminals because shorting the wrong terminal of the relay and fuse block may cause malfunctions.

- Using a jumper wire, short fuel pump relay terminals C and D in the relay and fuse block.

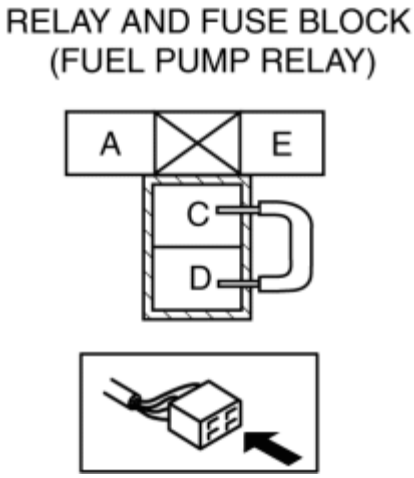

- Connect the negative battery cable and operate the fuel pump. (See **NEGATIVE BATTERY CABLE DISCONNECTION/CONNECTION [SKYACTIV-G 2.0, SKYACTIV-G 2.5]**.)

8. Operate the fuel pump for **10 s**.

9. Measure the fuel line pressure.

- If not within the specification, inspect the following:

  If it less than the specification:

  - Fuel pump unit
  - Fuel line for restriction or leakage

  If it exceeds the specification:

  - Fuel line restriction

Fuel pressure

- 405—485 kPa {4.13—4.94 kgf/cm^2, 58.8—70.3 psi}

10. Stop the fuel pump using the following procedure.

Using M-MDS

- Using the simulation function “FP”, stop the fuel pump. (See **ON-BOARD DIAGNOSTIC TEST [SKYACTIV-G 2.0, SKYACTIV-G 2.5]**.)

Without using M-MDS

- Disconnect the negative battery cable to stop the fuel pump. (See **NEGATIVE BATTERY CABLE DISCONNECTION/CONNECTION [SKYACTIV-G 2.0, SKYACTIV-G 2.5]**.)

11. Measure the fuel hold pressure **after 5 min**.

- If not within the specification, inspect the following:

  - Fuel line leakage

Fuel hold pressure

- 230 kPa {2.35 kgf/cm^2, 33.4 psi} or more

12. Complete the “BEFORE SERVICE PRECAUTION”. (See **BEFORE SERVICE PRECAUTION [SKYACTIV-G 2.0, SKYACTIV-G 2.5]**.)

13. Disconnect the **SST**.

14. Connect the quick release connector. (See **QUICK RELEASE CONNECTOR REMOVAL/INSTALLATION [SKYACTIV-G 2.0, SKYACTIV-G 2.5]**.)

15. Complete the “AFTER SERVICE PRECAUTION”. (See **AFTER SERVICE PRECAUTION [SKYACTIV-G 2.0, SKYACTIV-G 2.5]**.)

2014 - Mazda3 - Engine

FUEL DRAINING PROCEDURE [SKYACTIV-G 2.0, SKYACTIV-G 2.5]

WARNING:

- Fuel is very flammable liquid. If fuel spills or leaks from the pressurized fuel system, it will cause serious injury or death and facility breakage. Fuel can also irritate skin and eyes. To prevent this, always complete the “Fuel Line Safety Procedure”, while referring to the “BEFORE SERVICE PRECAUTION”.
- A person charged with static electricity could cause a fire or explosion, resulting in death or serious injury. Before performing work on the fuel system, discharge static electricity by touching the vehicle body.

Fuel Siphoning Procedure Using Fuel Pump

CAUTION:

- Disconnecting/connecting the quick release connector without cleaning it may possibly cause damage to the fuel pipe and quick release connector. Always clean the quick release connector joint area before disconnecting/connecting using cloth or soft brush, and make sure that it is free of foreign material.

1. Complete the “BEFORE SERVICE PRECAUTION”. (See **BEFORE SERVICE PRECAUTION [SKYACTIV-G 2.0, SKYACTIV-G 2.5]**.)

2. Disconnect the quick release connector as shown in the figure. (See **QUICK RELEASE CONNECTOR REMOVAL/INSTALLATION [SKYACTIV-G 2.0, SKYACTIV-G 2.5]**.)

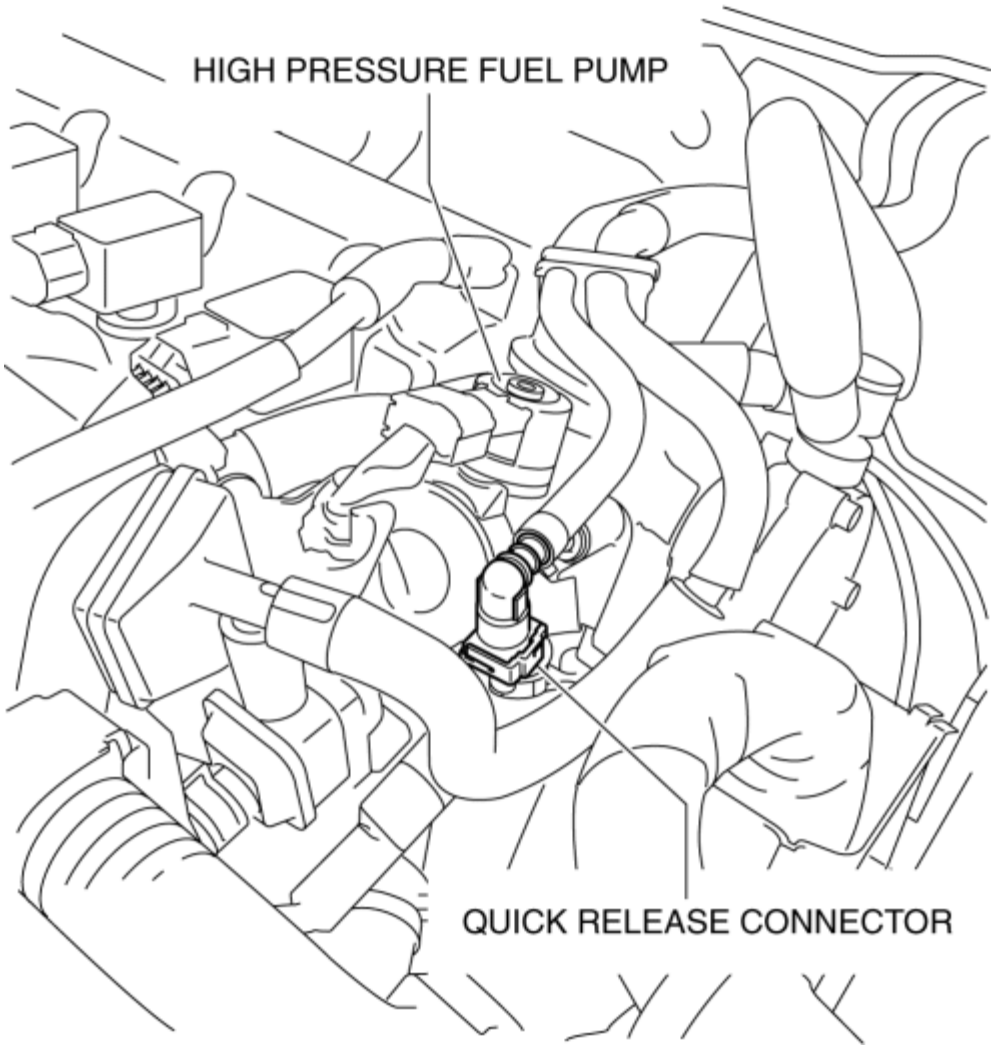

3. Connect a long hose to the disconnected quick release connector and drain the fuel into a container used for collecting gasoline.

4. Drain the fuel from the fuel tank using the following procedure:

CAUTION:

- The fuel pump could be damaged if it is operated while there is no fuel in the fuel tank. Verify the amount of fuel being discharged from the hose and stop operation of the fuel pump when essentially no fuel is being discharged.

Using M-MDS

- Connect the M-MDS to the DLC-2.
- Using the simulation function “FP”, start the fuel pump. (See **ON-BOARD DIAGNOSTIC TEST [SKYACTIV-G 2.0, SKYACTIV-G 2.5]**.)
    - If the fuel pump cannot be operated, remove the fuel using the procedure in the reference. (See **Fuel Siphoning Procedure Not Using Fuel Pump**.)

Without using M-MDS

- Disconnect the negative battery cable. (See **NEGATIVE BATTERY CABLE DISCONNECTION/CONNECTION [SKYACTIV-G 2.0, SKYACTIV-G 2.5]**.)
- Remove the fuel pump relay.

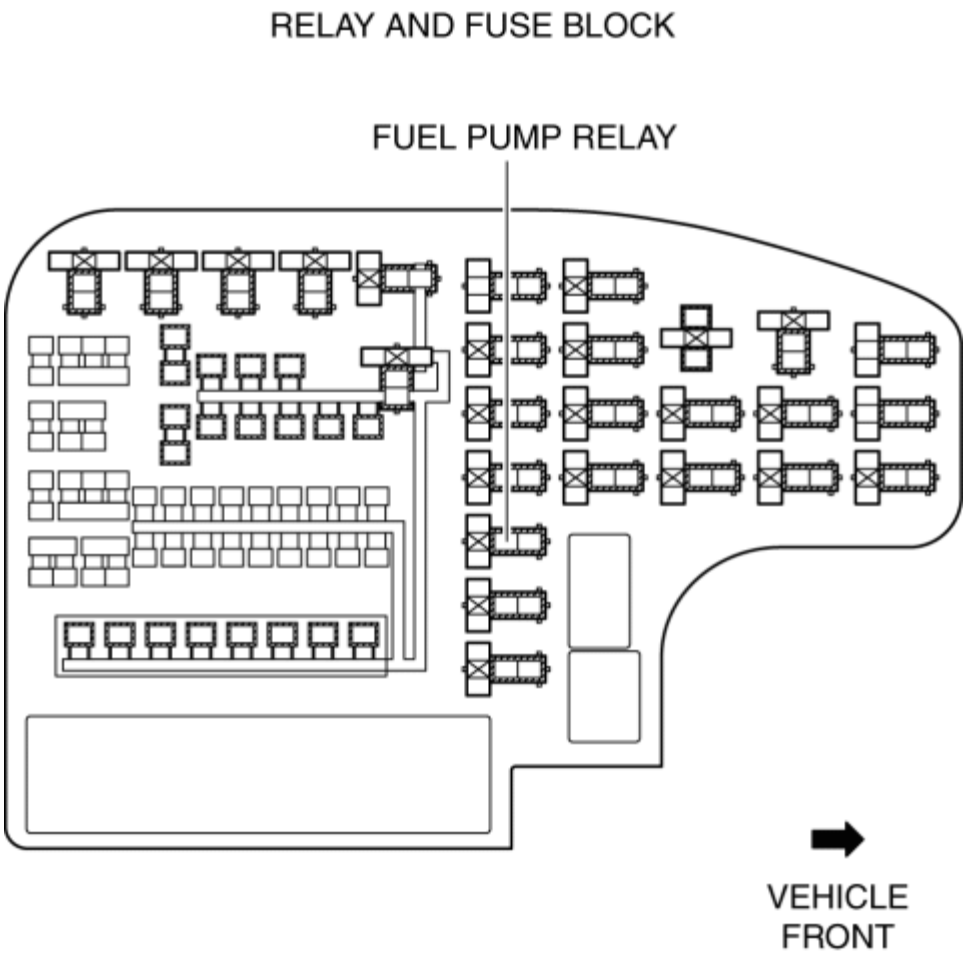

CAUTION:

- Short the specified terminals because shorting the wrong terminal of the relay and fuse block may cause malfunctions.

- Using a jumper wire, short fuel pump relay terminals C and D in the relay and fuse block.

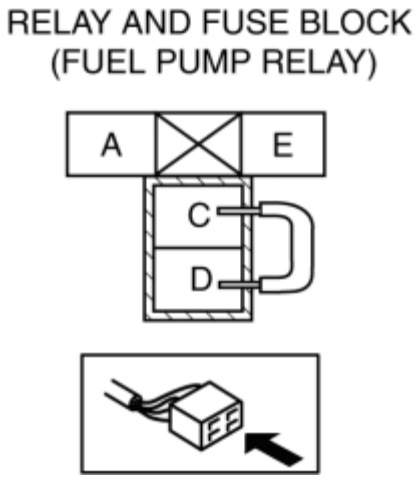

- Connect the negative battery cable and operate the fuel pump. (See **NEGATIVE BATTERY CABLE DISCONNECTION/CONNECTION [SKYACTIV-G 2.0, SKYACTIV-G 2.5]**.)

  - If the fuel pump cannot be operated, remove the fuel using the procedure in the reference. (See **Fuel Siphoning Procedure Not**

Using Fuel Pump.)

5. Stop the fuel pump using the following procedure.

Using M-MDS

- Using the simulation function “FP”, stop the fuel pump. (See **ON-BOARD DIAGNOSTIC TEST [SKYACTIV-G 2.0, SKYACTIV-G 2.5]**.)
- Disconnect the negative battery cable. (See **NEGATIVE BATTERY CABLE DISCONNECTION/CONNECTION [SKYACTIV-G 2.0, SKYACTIV-G 2.5]**.)

Without using M-MDS

- Remove the jumper wire to stop the fuel pump.
- Disconnect the negative battery cable. (See **NEGATIVE BATTERY CABLE DISCONNECTION/CONNECTION [SKYACTIV-G 2.0, SKYACTIV-G 2.5]**.)

Fuel Siphoning Procedure Not Using Fuel Pump

1. Complete the “BEFORE SERVICE PRECAUTION”. (See **BEFORE SERVICE PRECAUTION [SKYACTIV-G 2.0, SKYACTIV-G 2.5]**.)

2. Perform the following procedure (1) to (3) if the fuel gauge value is 3/4 or more. If the fuel gauge value is 3/4 or less, go to Step 3.

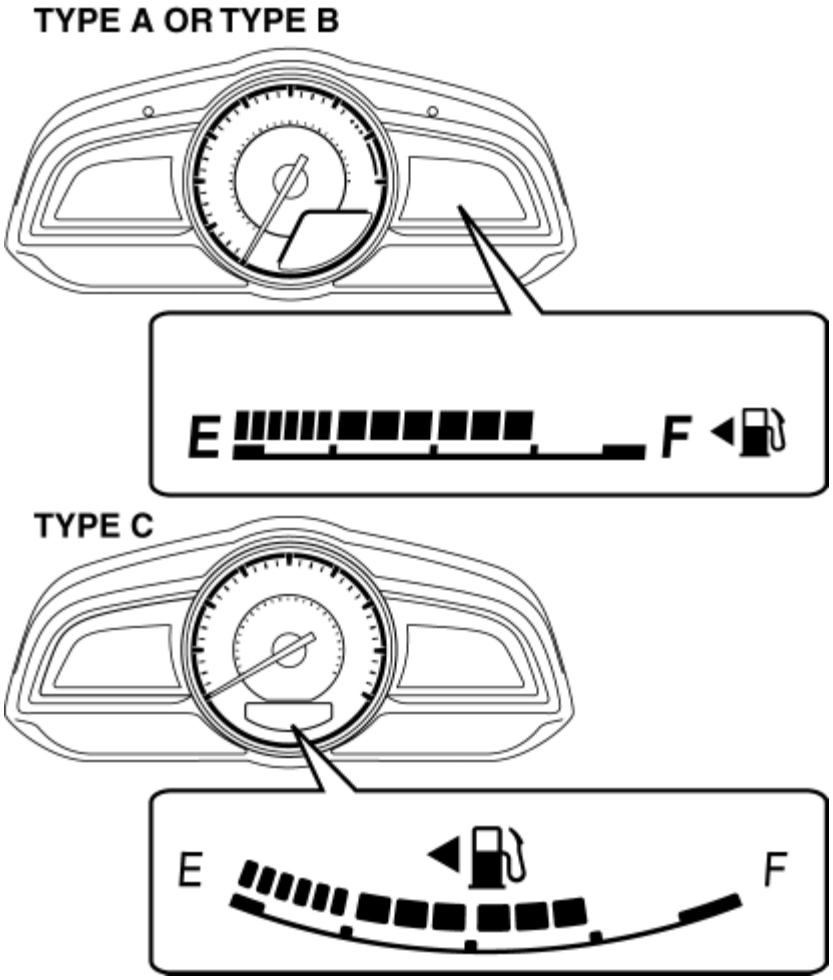

CAUTION:

- If an excessive length of hose is inserted into the fuel-filler pipe, the hose will push the non-return valve and the hose may enter the fuel tank. If the hose enters the fuel tank, the hose may get stuck on the non-return valve when the hose is pulled and the non-return valve could be damaged. Do not insert the hose more than the specified length.
- When removing the hose from the fuel-filler opening, use a rag to prevent fuel spatter.

NOTE:

- Cut the tip of the hose diagonally so that it can be inserted into the fuel-filler pipe smoothly.
- When inserting the hose into the fuel-filler pipe, the hose may get stuck. In such cases, rotate the hose so that the hose can be inserted easily.
- The pump siphons all the fuel that leaked out of the non-return valve and was trapped in the joint hose, then it suctions the air. After siphoning the fuel, wait several seconds until the air is suctioned out, then resume siphoning.
- Cut the tip of the hose diagonally and place a mark at the position of the specified hose insertion length.

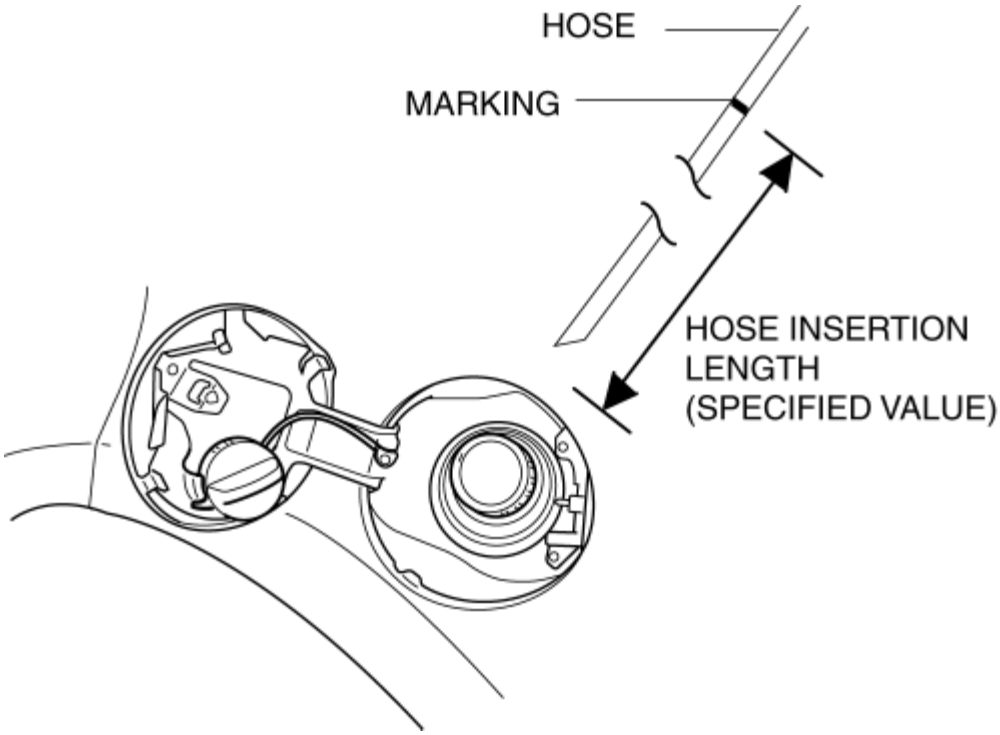

Hose insertion length (specified value)

- **1022 mm {40.24 in}**

Hose type (reference)

- Oil-resistant plastic hose of **10 mm {0.4 in}** outer diam. × **6 mm {0.2 in}** inner diam. or equivalent

- Insert the hose from the fuel-filler opening by rotating it to the marked position.
- Using a pump, siphon the fuel until the fuel gauge value reaches **3/4 or less**.

3. Remove the fuel pump unit. (See **FUEL PUMP UNIT REMOVAL/INSTALLATION [SKYACTIV-G 2.0, SKYACTIV-G 2.5]**.)

4. Drain the fuel.

5. Remove the hose using a rag.

2014 - Mazda3 - Engine

FUEL TANK REMOVAL/INSTALLATION [SKYACTIV-G 2.0, SKYACTIV-G 2.5]

WARNING:

- Fuel is very flammable liquid. If fuel spills or leaks from the pressurized fuel system, it will cause serious injury or death and facility breakage. Fuel can also irritate skin and eyes. To prevent this, always complete the “Fuel Line Safety Procedure”, while referring to the “BEFORE SERVICE PRECAUTION”.
- A person charged with static electricity could cause a fire or explosion, resulting in death or serious injury. Before draining fuel, make sure to discharge static electricity by touching the vehicle body.

CAUTION:

- Disconnecting/connecting the quick release connector without cleaning it may cause damage to the fuel pipe and quick release connector. Always clean the quick release connector joint area before disconnecting/connecting using a cloth or soft brush, and make sure that it is free of foreign material.

1. Level the vehicle.
2. Complete the “BEFORE SERVICE PRECAUTION”. (See **BEFORE SERVICE PRECAUTION [SKYACTIV-G 2.0, SKYACTIV-G 2.5]**.)
3. Drain the fuel. (See **FUEL DRAINING PROCEDURE [SKYACTIV-G 2.0, SKYACTIV-G 2.5]**.)
4. Remove the rear seat cushion. (See **REAR SEAT CUSHION REMOVAL/INSTALLATION**.)
5. Remove the service hole cover.

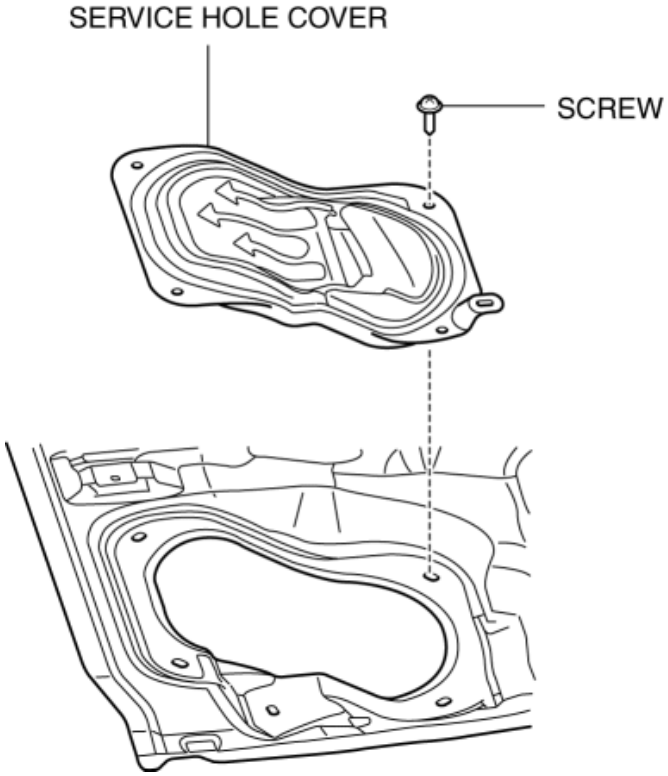

6. Disconnect the following parts:
    - Fuel pump unit connector
    - Quick release connector (See **QUICK RELEASE CONNECTOR REMOVAL/INSTALLATION [SKYACTIV-G 2.0, SKYACTIV-G 2.5]**.)
7. Remove the floor under cover. (See **FLOOR UNDER COVER REMOVAL/INSTALLATION**.)
8. Disconnect the HO2S connector.
9. Remove the TWC and HO2S as a single unit. (See **EXHAUST SYSTEM REMOVAL/INSTALLATION [SKYACTIV-G 2.0, SKYACTIV-G 2.5]**.)
10. Remove in the order indicated in the table.
11. Install in the reverse order of removal.
12. Complete the “AFTER SERVICE PRECAUTION”. (See **AFTER SERVICE PRECAUTION [SKYACTIV-G 2.0, SKYACTIV-G 2.5]**.)

U.S.A. and CANADA

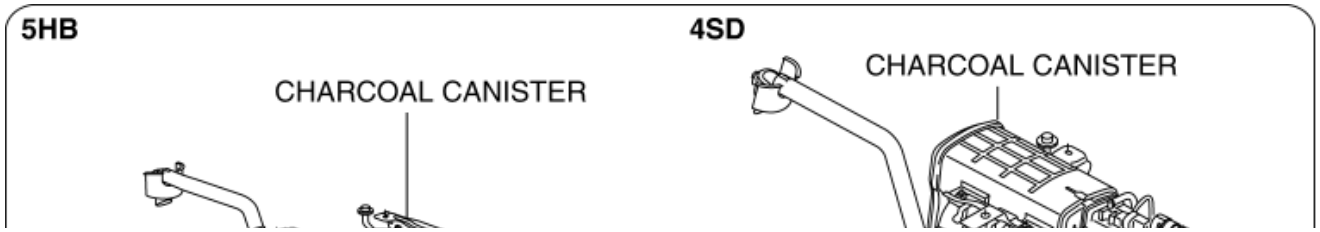

FUEL TANK REMOVAL/INSTALLATION [SKYACTIV-G 2.0, SKYACTIV-G 2.5]

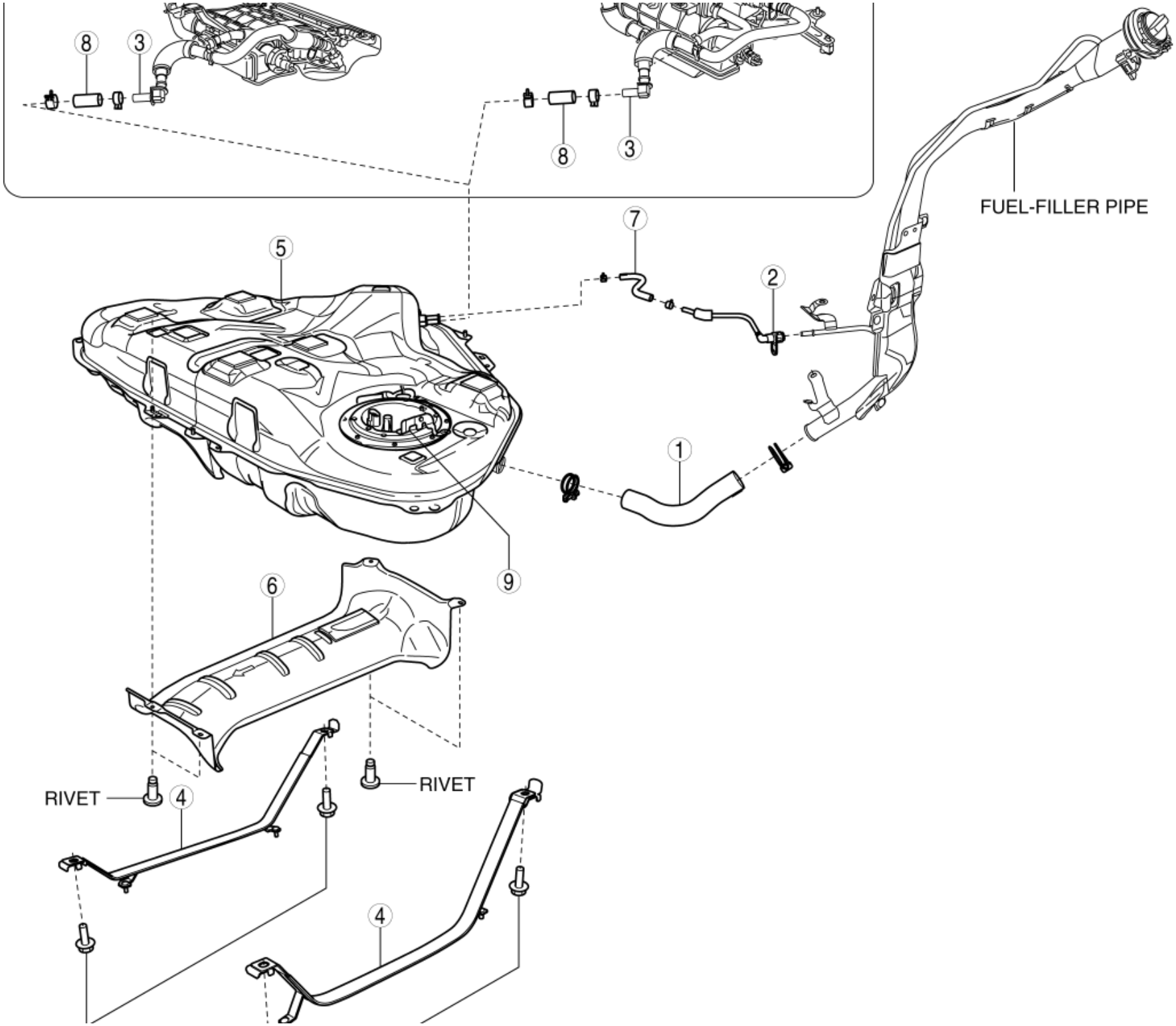

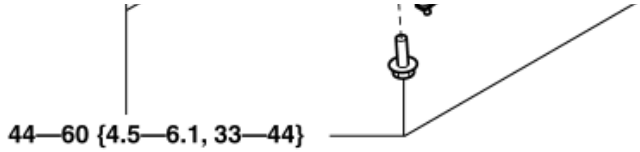

N·m {kgf·m, ft·lbf}

1	Joint hose (See **Joint Hose Installation Note**.)
2	Breather pipe (See **QUICK RELEASE CONNECTOR REMOVAL/INSTALLATION [SKYACTIV-G 2.0, SKYACTIV-G 2.5]**.)
3	Hose
4	Fuel tank strap
5	Fuel tank (See **Fuel Tank Removal Note**.)
6	Fuel tank insulator (See **Fuel Tank Insulator Removal Note**.)
7	Breather hose (See **Breather Hose Installation Note**.)
8	Evaporative hose (See **Evaporative Hose Installation Note**.)
9	Fuel pump unit (See **FUEL PUMP UNIT REMOVAL/INSTALLATION [SKYACTIV-G 2.0, SKYACTIV-G 2.5]**.)

Except U.S.A. and CANADA

FUEL TANK REMOVAL/INSTALLATION [SKYACTIV-G 2.0, SKYACTIV-G 2.5]

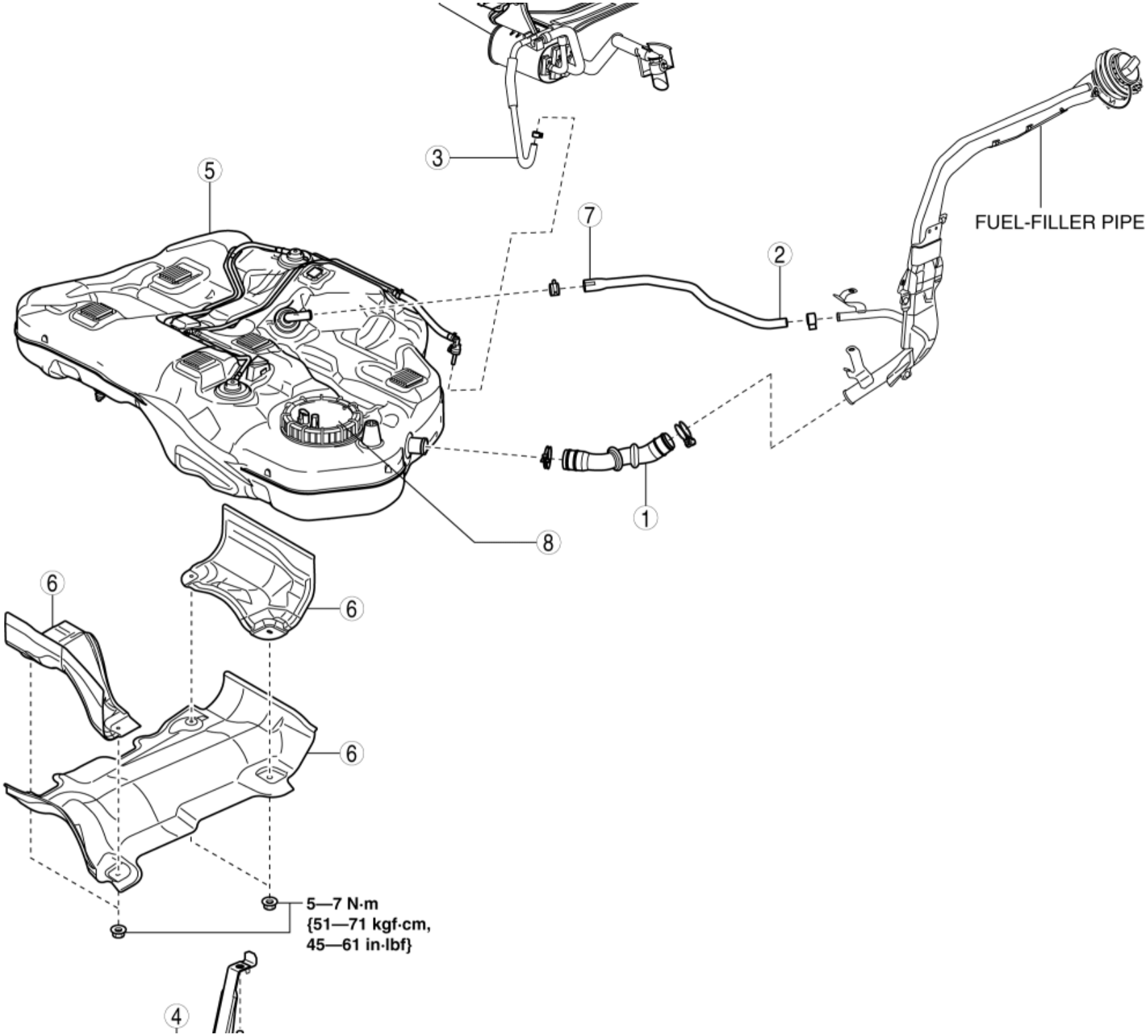

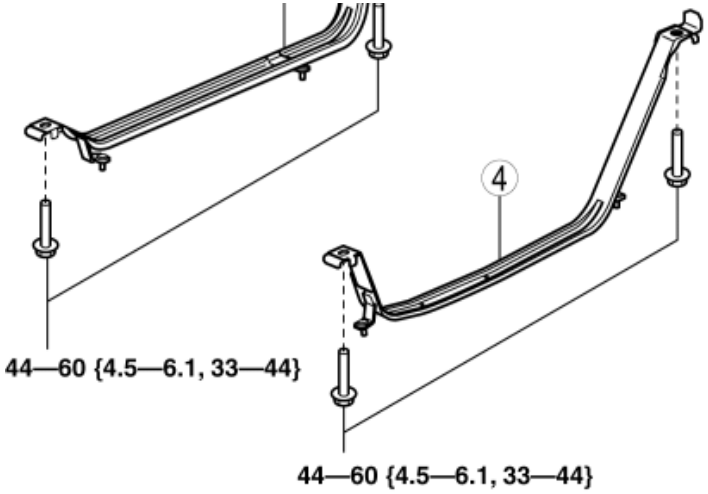

N·m {kgf·m, ft·lbf}

1	Joint hose (See **Joint Hose Installation Note**.)
2	Breather hose (fuel-filler pipe side) (See **Breather Hose Installation Note**.)
3	Evaporative hose (See **Evaporative Hose Installation Note**.)
4	Fuel tank strap
5	Fuel tank (See **Fuel Tank Removal Note**.)
6	Fuel tank insulator
7	Breather hose (fuel tank side) (See **Breather Hose Installation Note**.)
8	Fuel pump unit (See **FUEL PUMP UNIT REMOVAL/INSTALLATION [SKYACTIV-G 2.0, SKYACTIV-G 2.5]**.)

Fuel Tank Removal Note

U.S.A. and CANADA

1. Remove the following parts as single unit:
    - Breather hose
    - Breather pipe
    - Fuel pump unit
    - Fuel tank insulator
    - Fuel tank
2. Remove the fuel tank.

Except U.S.A. and CANADA

1. Disconnect the breather hose from the fuel-filler pipe side.
2. Disconnect the evaporative hose (between charcoal canister and check valve) from the check valve side.
3. Remove the following parts as single unit:
    - Breather hose
    - Evaporative hose
    - Fuel pump unit
    - Fuel tank insulator
    - Fuel tank
4. Remove the fuel tank.

Fuel Tank Insulator Removal Note

NOTE:

- The fuel tank insulator are installed using rivets.

1. Push out the mandrel using a hammer and punch (**2—2.8 mm {0.08—0.11 in}** diameter).

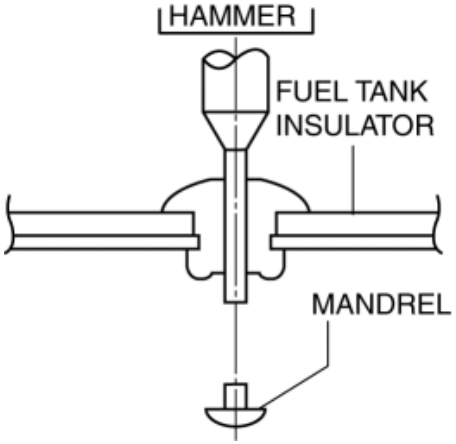

2. Remove the flange using a drill (**5 mm {0.20 in}** drill bit).

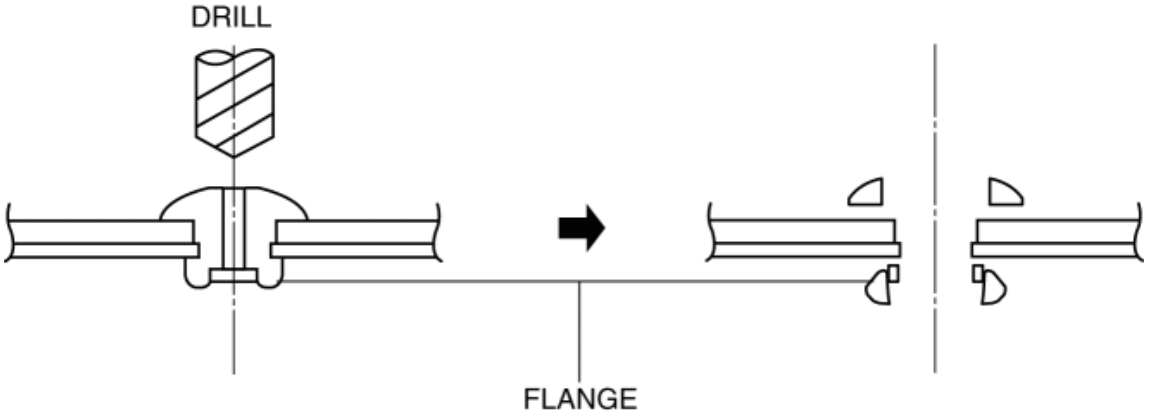

Evaporative Hose Installation Note

1. Install the evaporative hose as shown in the figure.

U.S.A. and CANADA

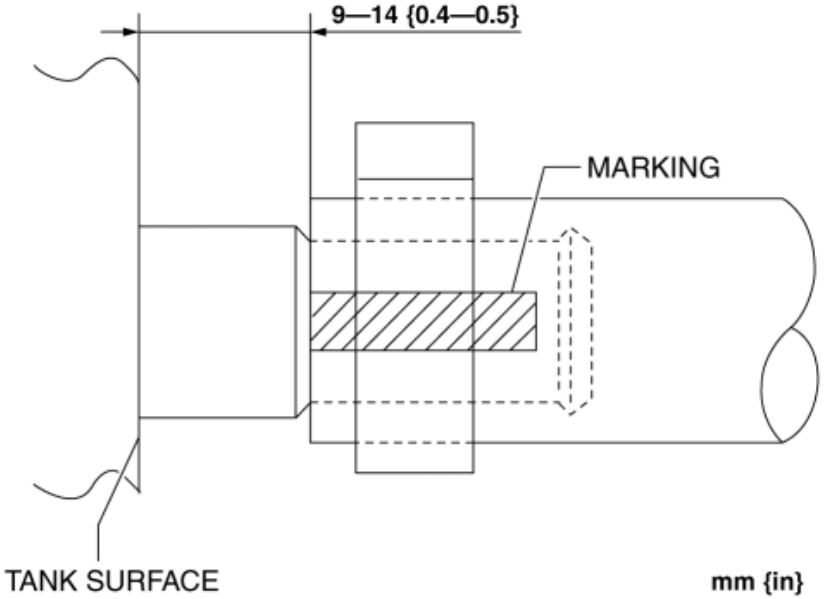

Except U.S.A. and CANADA

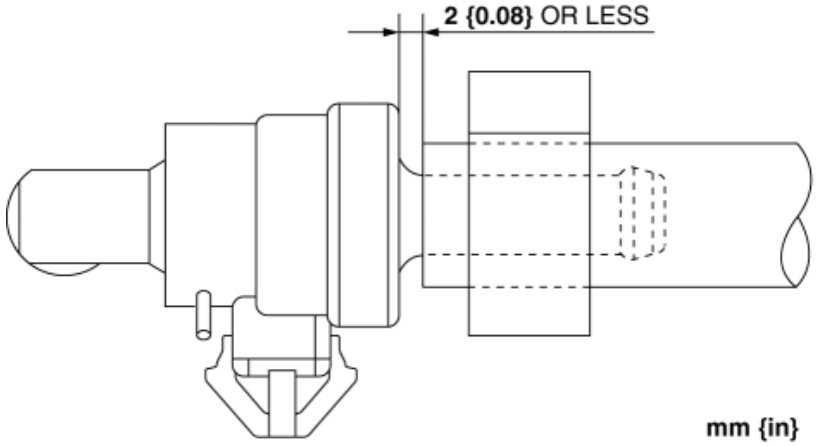

Breather Hose Installation Note

1. Install the breather hose as shown in the figure.

Fuel tank side

- U.S.A. and CANADA

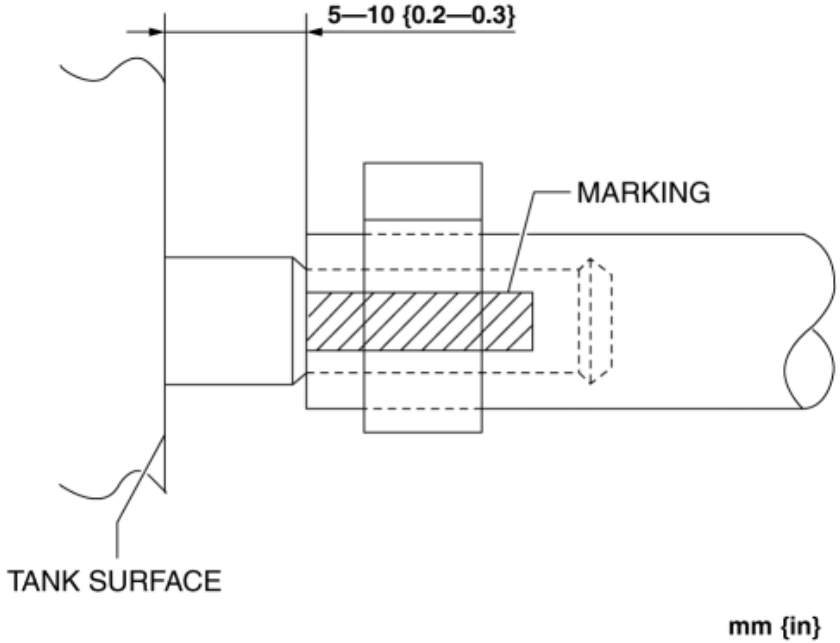

Except U.S.A. and CANADA

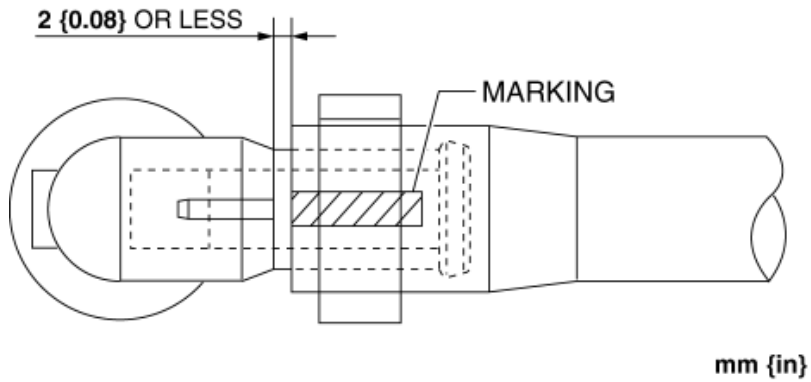

Fuel-filler pipe side

•

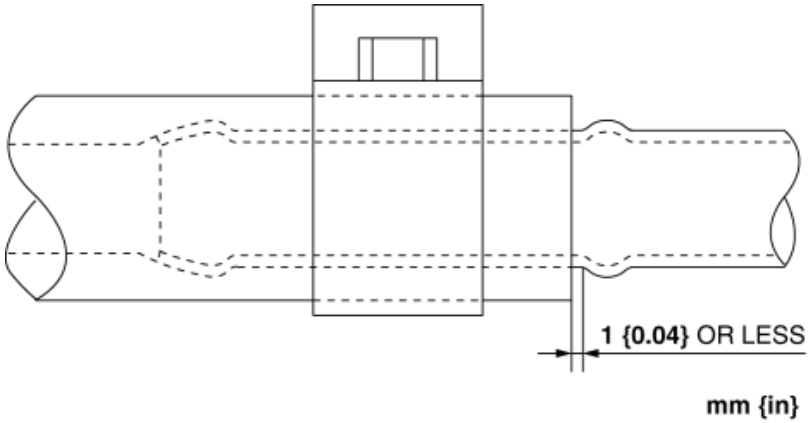

Joint Hose Installation Note

1. Install the joint hose as shown in the figure.

Fuel tank side

- U.S.A. and CANADA

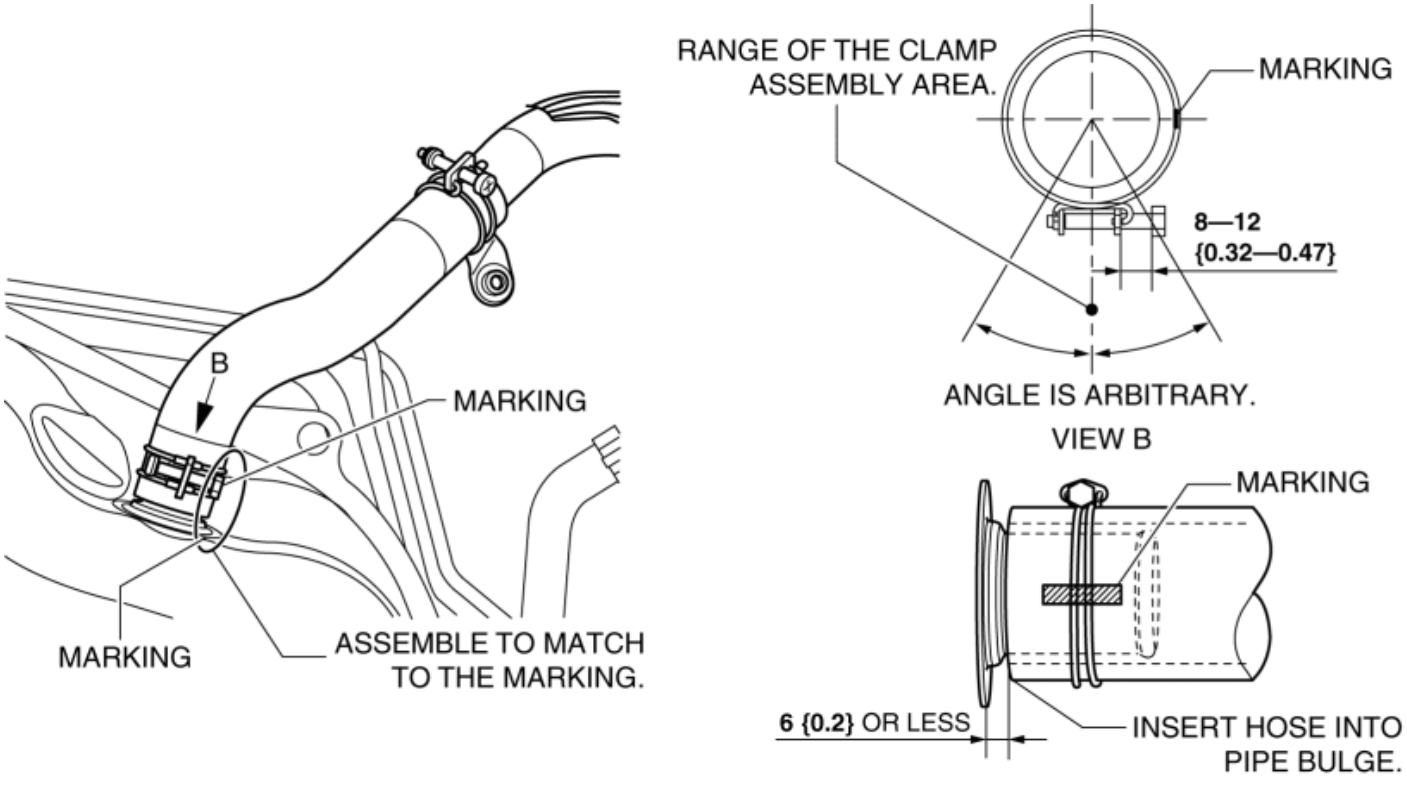

Except U.S.A. and CANADA

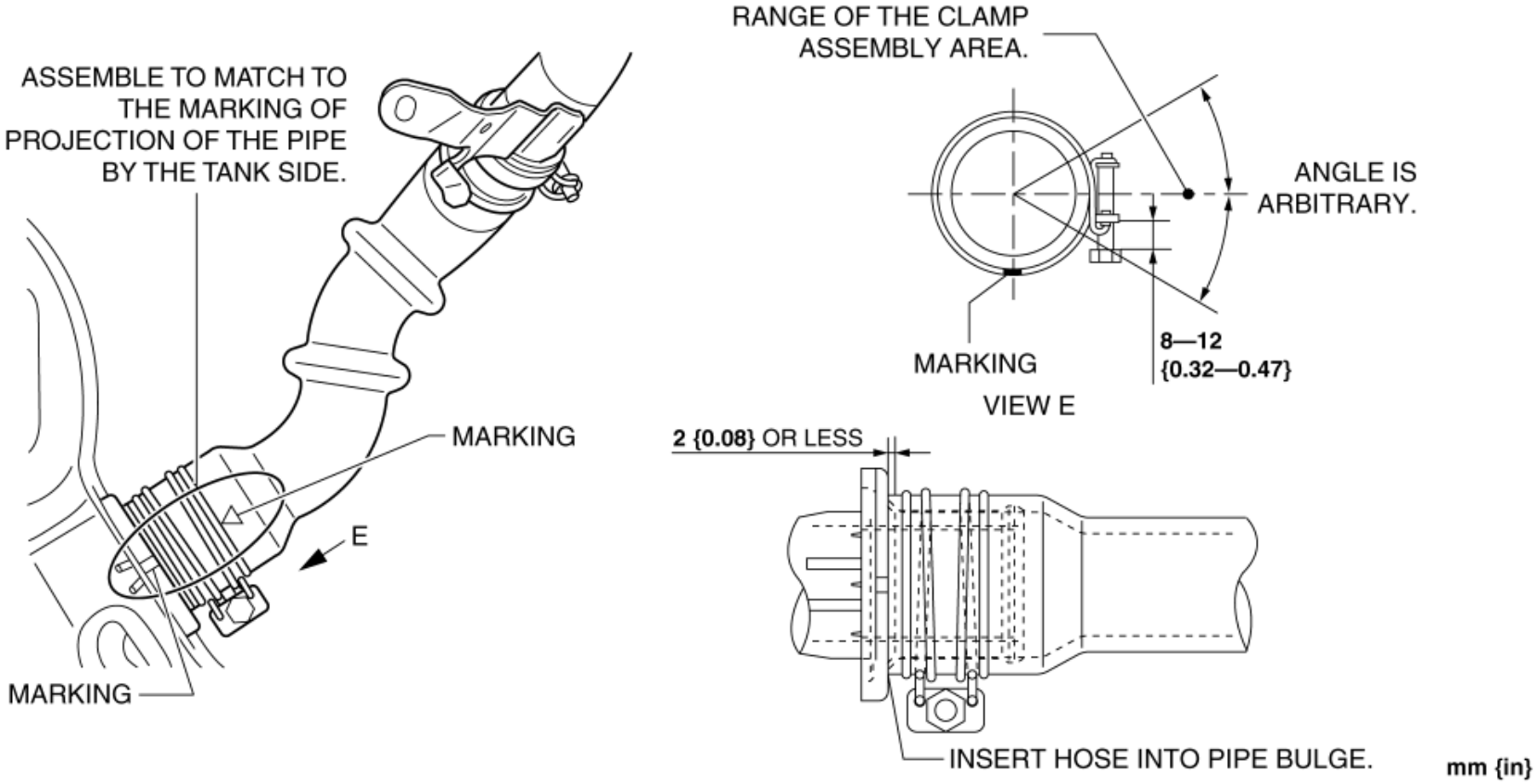

Fuel-filler pipe side

- U.S.A. and CANADA

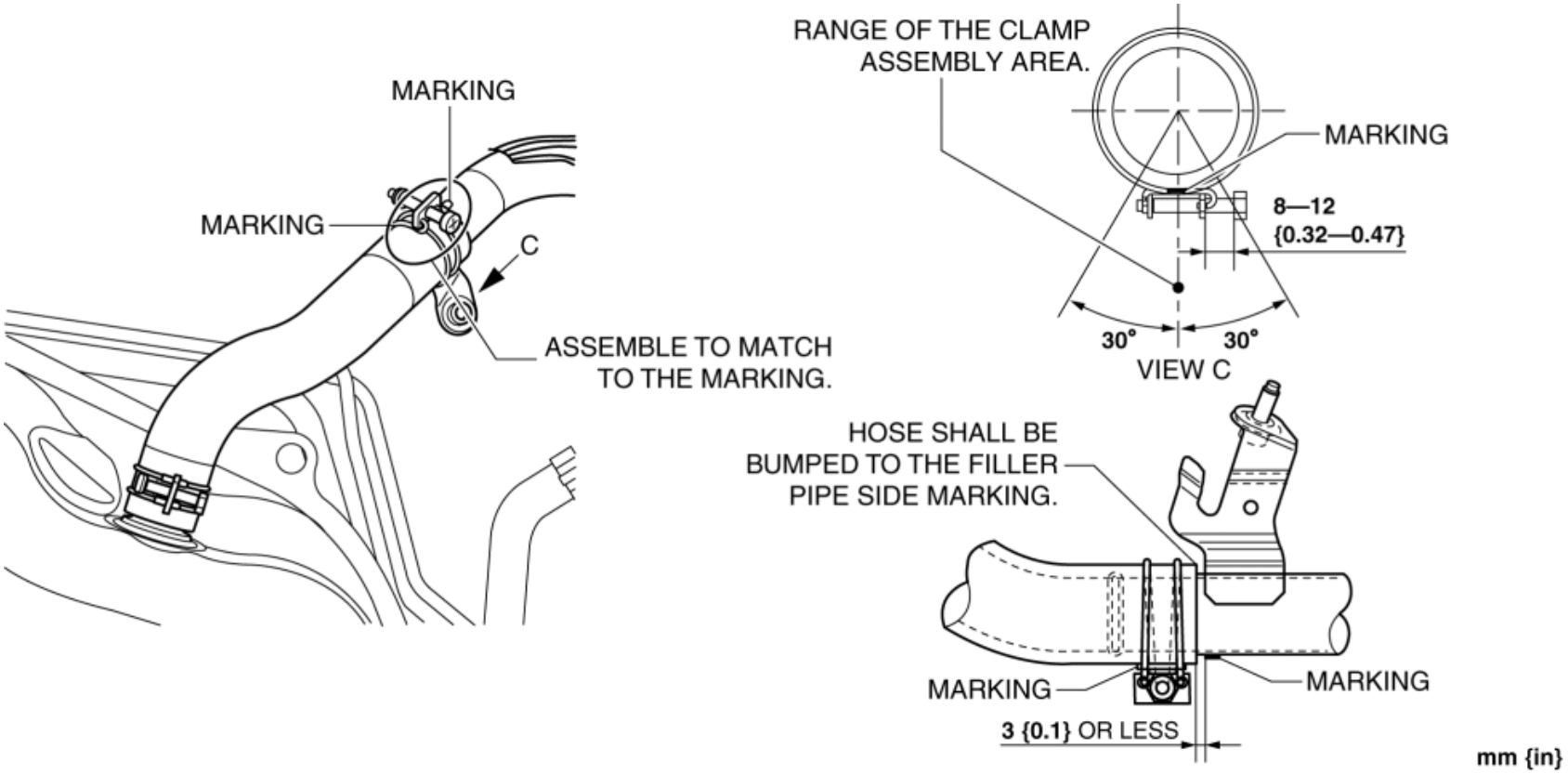

Except U.S.A. and CANADA

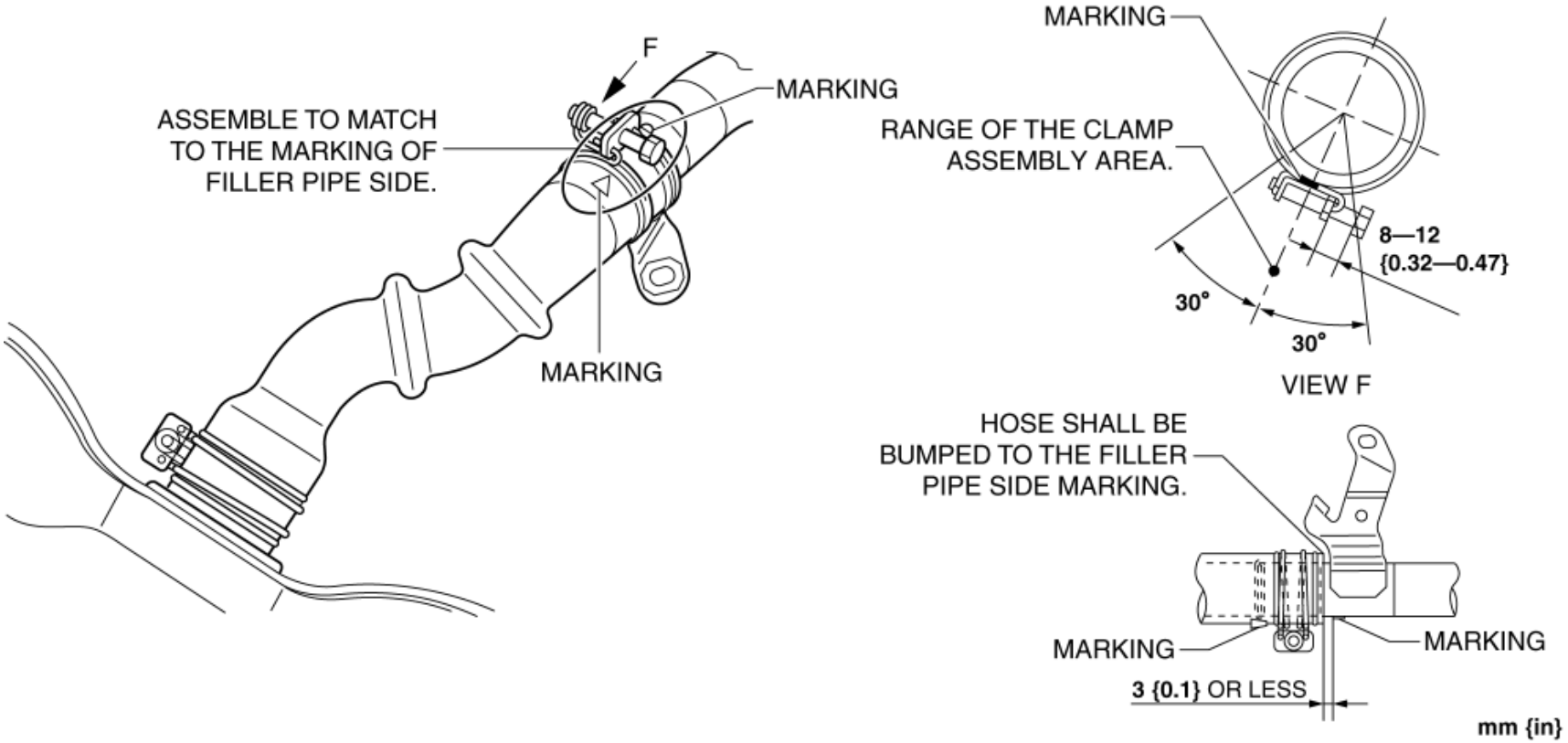
F
MARKING
ASSEMBLE TO MATCH TO THE MARKING OF FILLER PIPE SIDE.
MARKING
MARKING
RANGE OF THE CLAMP ASSEMBLY AREA.
8—12 {0.32—0.47}
30°
30°
VIEW F
HOSE SHALL BE BUMPED TO THE FILLER PIPE SIDE MARKING.
MARKING
MARKING
3 {0.1} OR LESS
mm {in}

2014 - Mazda3 - Engine

FUEL TANK INSPECTION [SKYACTIV-G 2.0, SKYACTIV-G 2.5]

WARNING:

- Fuel is very flammable liquid. If fuel spills or leaks from the pressurized fuel system, it will cause serious injury or death and facility breakage. Fuel can also irritate skin and eyes. To prevent this, always complete the “Fuel Line Safety Procedure”, while referring to the “BEFORE SERVICE PRECAUTION”.
- A person charged with static electricity could cause a fire or explosion, resulting in death or serious injury. Before draining fuel, make sure to discharge static electricity by touching the vehicle body.

NOTE:

- The rollover valve and also fuel tank leakage are inspected in this inspection.

1. Level the vehicle.

2. Complete the “BEFORE SERVICE PRECAUTION”. (See **BEFORE SERVICE PRECAUTION [SKYACTIV-G 2.0, SKYACTIV-G 2.5]**.)

3. Drain the fuel. (See **FUEL DRAINING PROCEDURE [SKYACTIV-G 2.0, SKYACTIV-G 2.5]**.)

4. Remove the fuel tank and fuel pump unit as a single unit. (See **FUEL TANK REMOVAL/INSTALLATION [SKYACTIV-G 2.0, SKYACTIV-G 2.5]**)

5. Perform the following procedure to verify fuel tank airtightness.

   a. Plug the fuel pump unit pipe, and ports B and C.

U.S.A. and CANADA

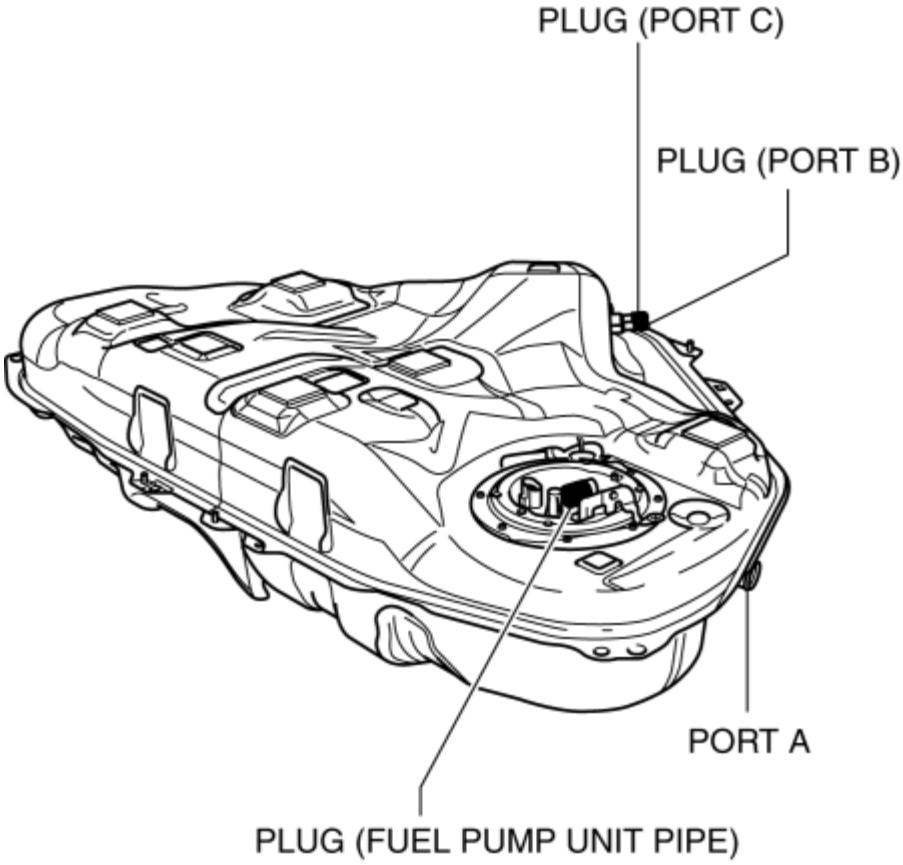

Except U.S.A. and CANADA

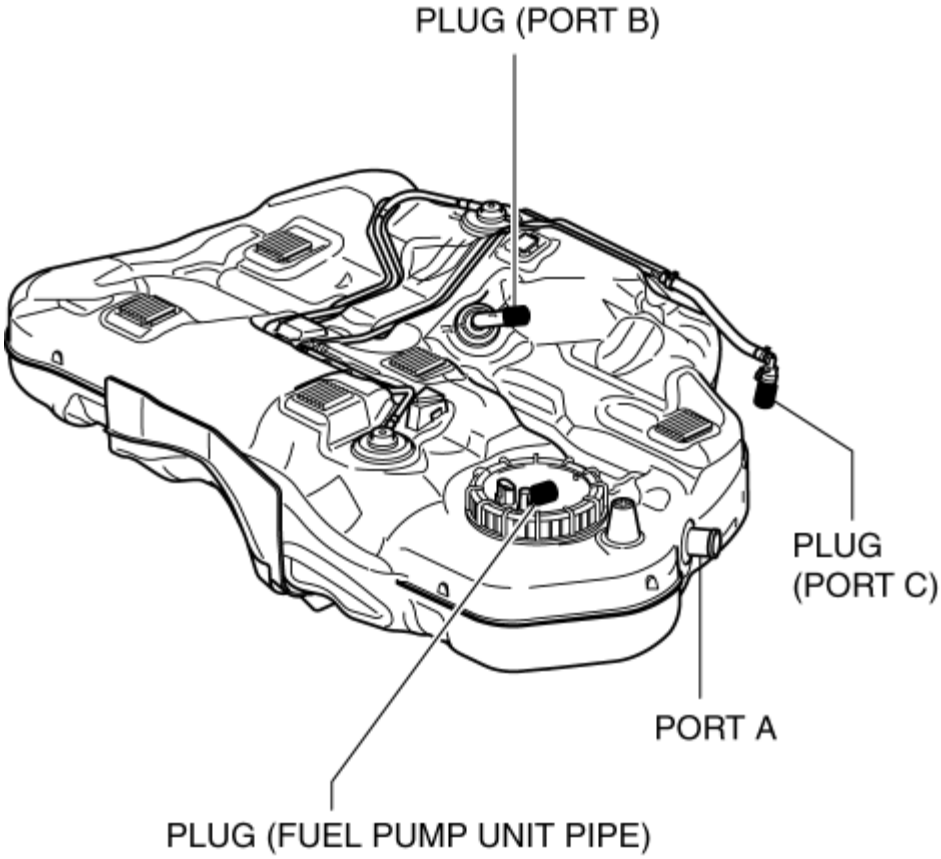

b. Apply pressure of **5.9 kPa {44 mmHg, 1.7 inHg}** to port A and wait for a while.

c. Verify that there is no change in the pressure and no air leakage from the fuel tank.

- If there is air leakage, replace the fuel tank. (See **FUEL TANK REMOVAL/INSTALLATION [SKYACTIV-G 2.0, SKYACTIV-G 2.5]**.)

6. Remove the port C plug

U.S.A. and CANADA

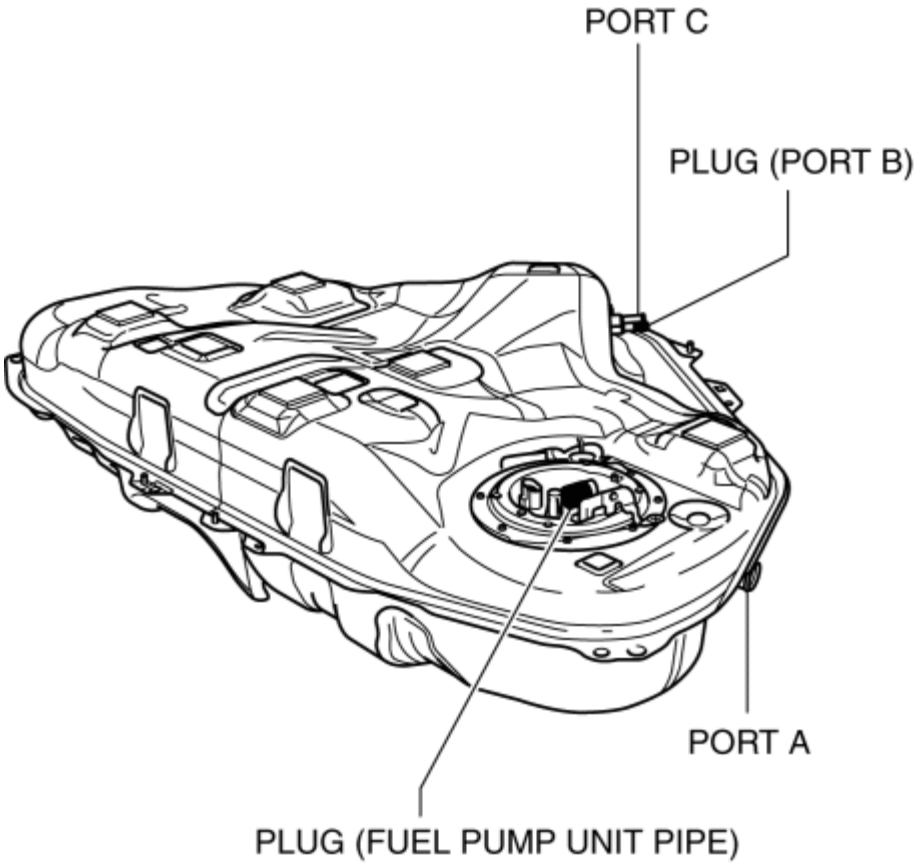

Except U.S.A. and CANADA

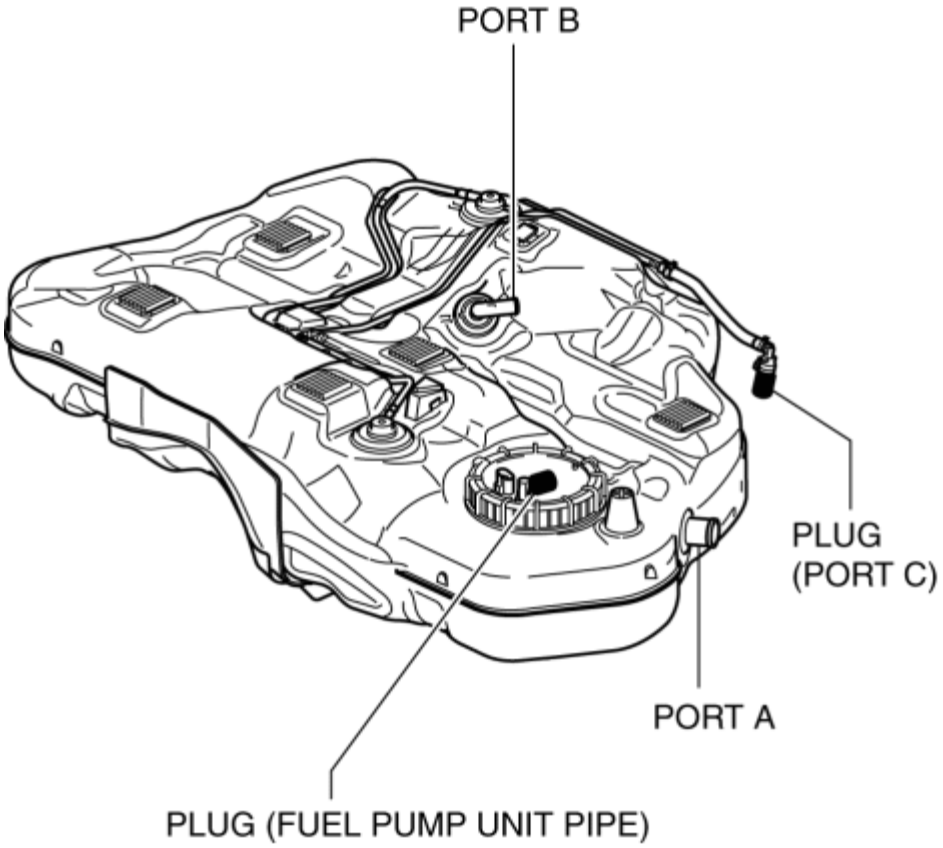

7. Place the fuel tank in a level position.

8. Close port A and apply **5.9 kPa {44 mmHg, 1.7 inHg}** of pressure to port C, and leave it in this condition momentarily.

9. Open port A and verify that the pressure decreases from **5.9 kPa {44 mmHg, 1.7 inHg}**.

- If it cannot be verified, replace the fuel tank. (See **FUEL TANK REMOVAL/INSTALLATION [SKYACTIV-G 2.0, SKYACTIV-G 2.5]**.)

10. Close port A and apply **-2.0 kPa {-15 mmHg, -0.59 inHg}** vacuum to port C, and leave it in this condition momentarily.

11. Open port A and verify that the **-2.0 kPa {-15 mmHg, -0.59 inHg}** negative pressure condition restores to near positive pressure.

- If it cannot be verified, replace the fuel tank. (See **FUEL TANK REMOVAL/INSTALLATION [SKYACTIV-G 2.0, SKYACTIV-G 2.5]**.)

12. Turn the fuel tank upside down.

13. Apply pressure of **5.9 kPa {44 mmHg, 1.7 inHg}** to port A and wait for a while.

U.S.A. and CANADA

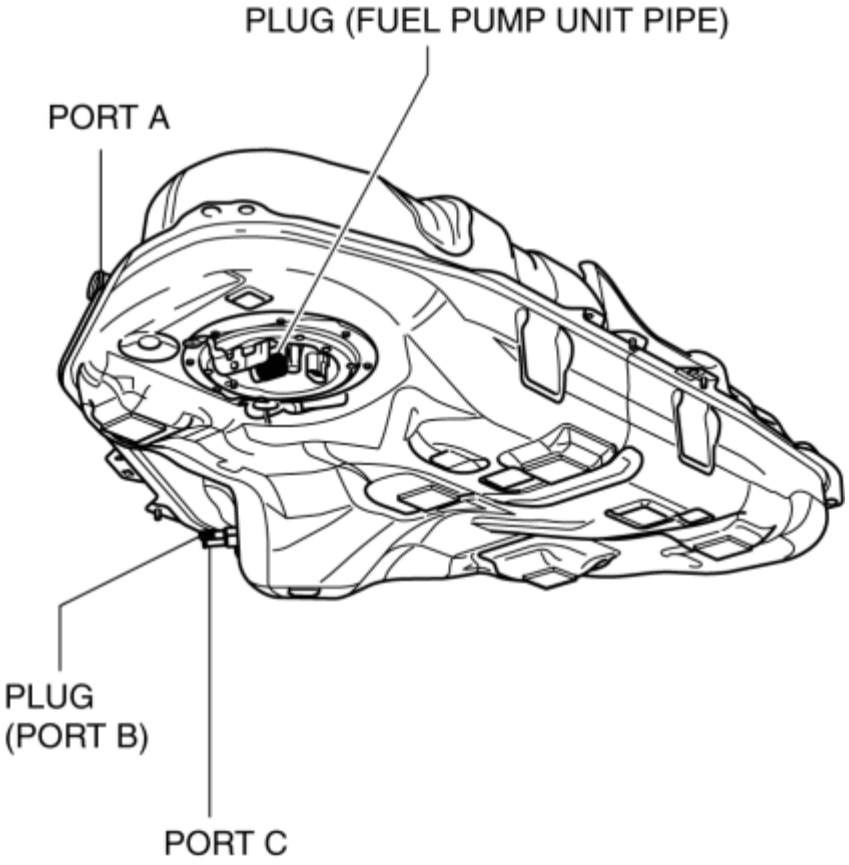

Except U.S.A. and CANADA

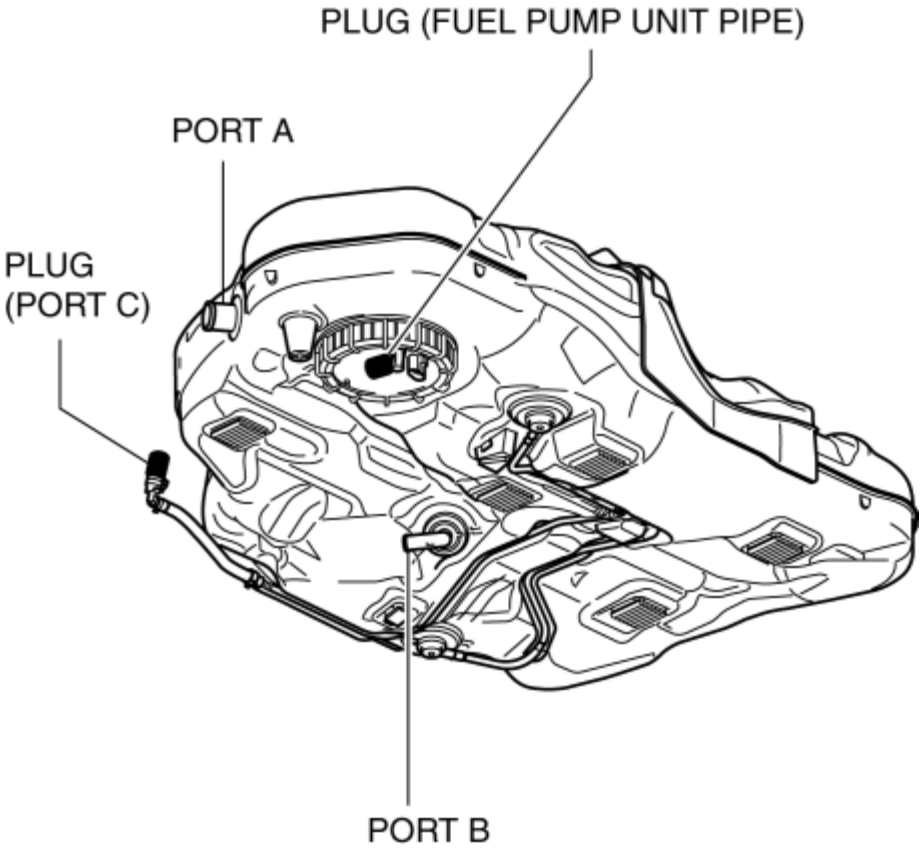

14. Verify that there is no change in the pressure and no air leakage from the port C.

- If there is air leakage, replace the fuel tank. (See **FUEL TANK**

REMOVAL/INSTALLATION [SKYACTIV-G 2.0, SKYACTIV-G 2.5].)

2014 - Mazda3 - Engine

FUEL-FILLER PIPE REMOVAL/INSTALLATION [SKYACTIV-G 2.0, SKYACTIV-G 2.5]

WARNING:

- Fuel is very flammable liquid. If fuel spills or leaks from the pressurized fuel system, it will cause serious injury or death and facility breakage. Fuel can also irritate skin and eyes. To prevent this, always complete the “Fuel Line Safety Procedure”, while referring to the “BEFORE SERVICE PRECAUTION”.
- A person charged with static electricity could cause a fire or explosion, resulting in death or serious injury. Before draining fuel, make sure to discharge static electricity by touching the vehicle body.

CAUTION:

- Disconnecting/connecting the quick release connector without cleaning it may cause damage to the fuel pipe and quick release connector. Always clean the quick release connector joint area before disconnecting/connecting using a cloth or soft brush, and make sure that it is free of foreign material.

1. Level the vehicle.
2. Complete the “BEFORE SERVICE PRECAUTION”. (See **BEFORE SERVICE PRECAUTION [SKYACTIV-G 2.0, SKYACTIV-G 2.5]**.)
3. Drain the fuel. (See **FUEL DRAINING PROCEDURE [SKYACTIV-G 2.0, SKYACTIV-G 2.5]**.)
4. Open the fuel-filler lid.
5. Remove in the order indicated in the table.
6. Install in the reverse order of removal.
7. Complete the “AFTER SERVICE PRECAUTION”. (See **AFTER SERVICE PRECAUTION [SKYACTIV-G 2.0, SKYACTIV-G 2.5]**.)

U.S.A. and CANADA

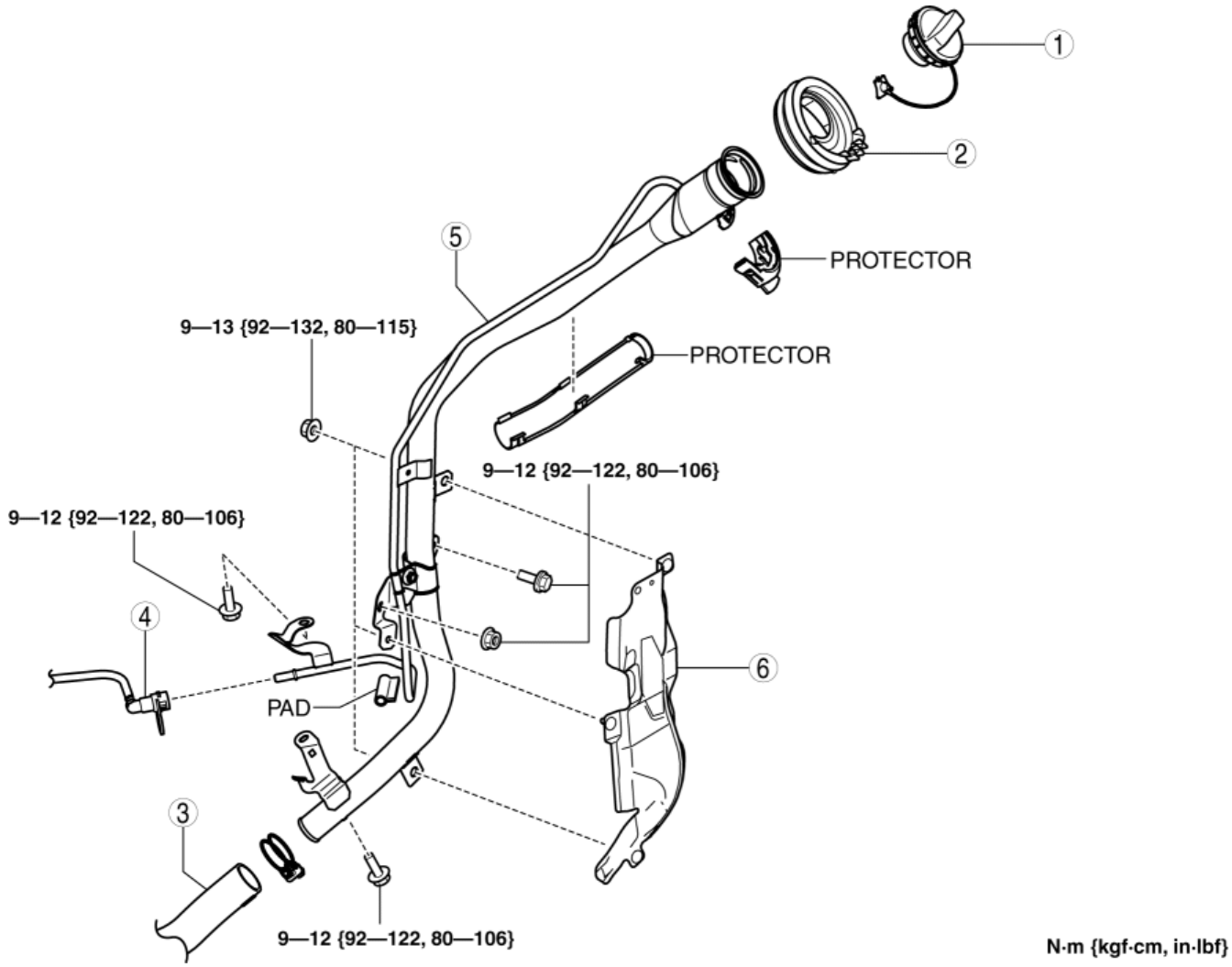

1	Fuel-filler cap
2	Dust cover (See **Dust Cover Removal Note**.)
3	Joint hose (See **Joint Hose Installation Note**.)
4	Quick release connector (See **QUICK RELEASE CONNECTOR REMOVAL/INSTALLATION [SKYACTIV-G 2.0, SKYACTIV-G 2.5]**.)
5	Fuel-filler pipe (See **Fuel-filler Pipe Removal Note**.)
6	Fuel-filler pipe protector

Except U.S.A. and CANADA

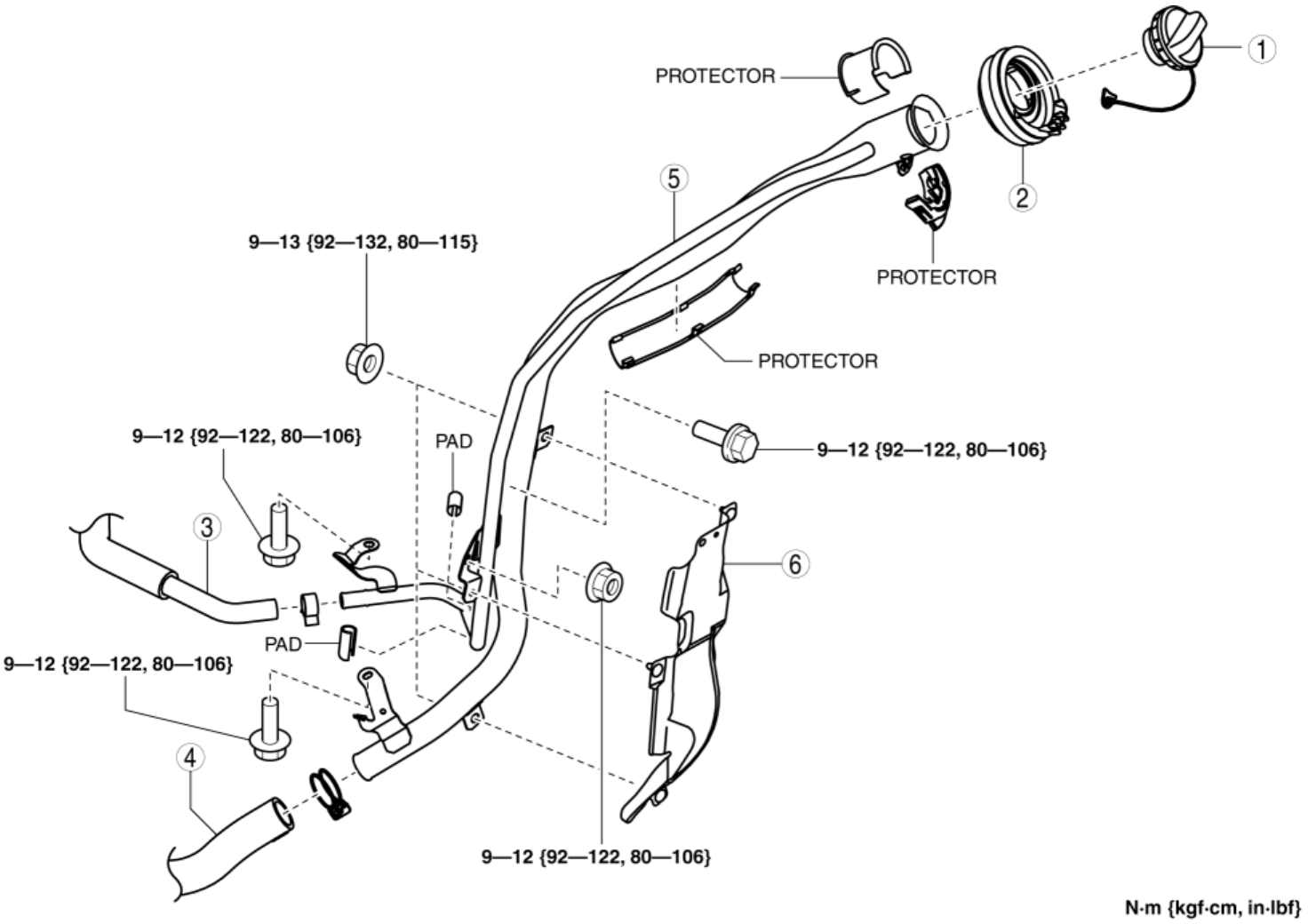

1	Fuel-filler cap
2	Dust cover (See **Dust Cover Removal Note**.)
3	Breather hose (See **Breather Hose Installation Note**.)
4	Joint hose (See **Joint Hose Installation Note**.)
5	Fuel-filler pipe (See **Fuel-filler Pipe Removal Note**.)
6	Fuel-filler pipe protector

Dust Cover Removal Note

1. Remove the rear mudguard (LH). (See **MUDGUARD REMOVAL/INSTALLATION**.)
2. Release the dust cover tab using a flathead screwdriver as shown in the figure.

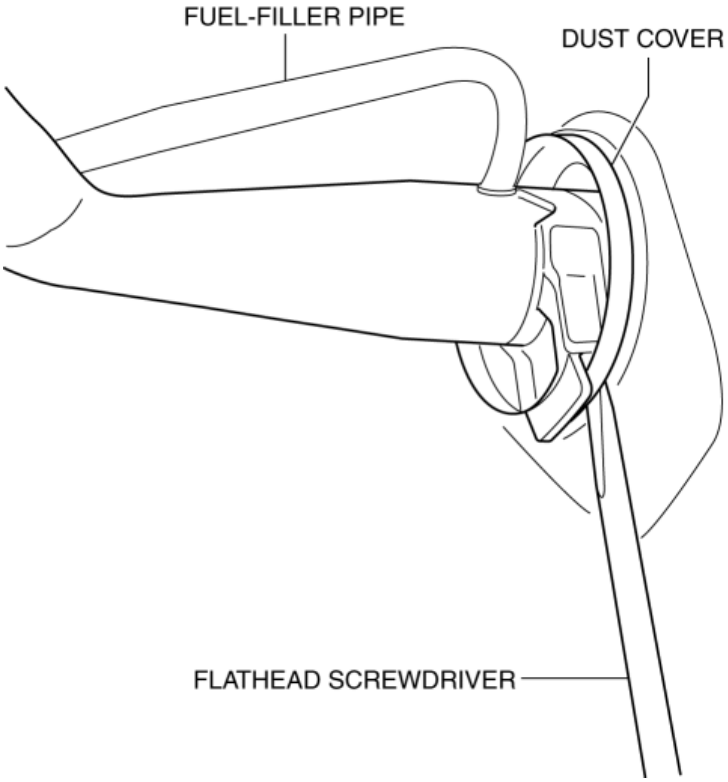

3. Remove the dust cover.

Fuel-filler Pipe Removal Note

1. Remove the rear tire (LH). (See **WHEEL AND TIRE SPECIFICATION**.)
2. Remove the rear crossmember. (See **REAR CROSSMEMBER REMOVAL/INSTALLATION**.)
3. Remove the fuel-filler pipe.

Joint Hose Installation Note

1. Install the joint hose as shown in the figure.

U.S.A. and CANADA

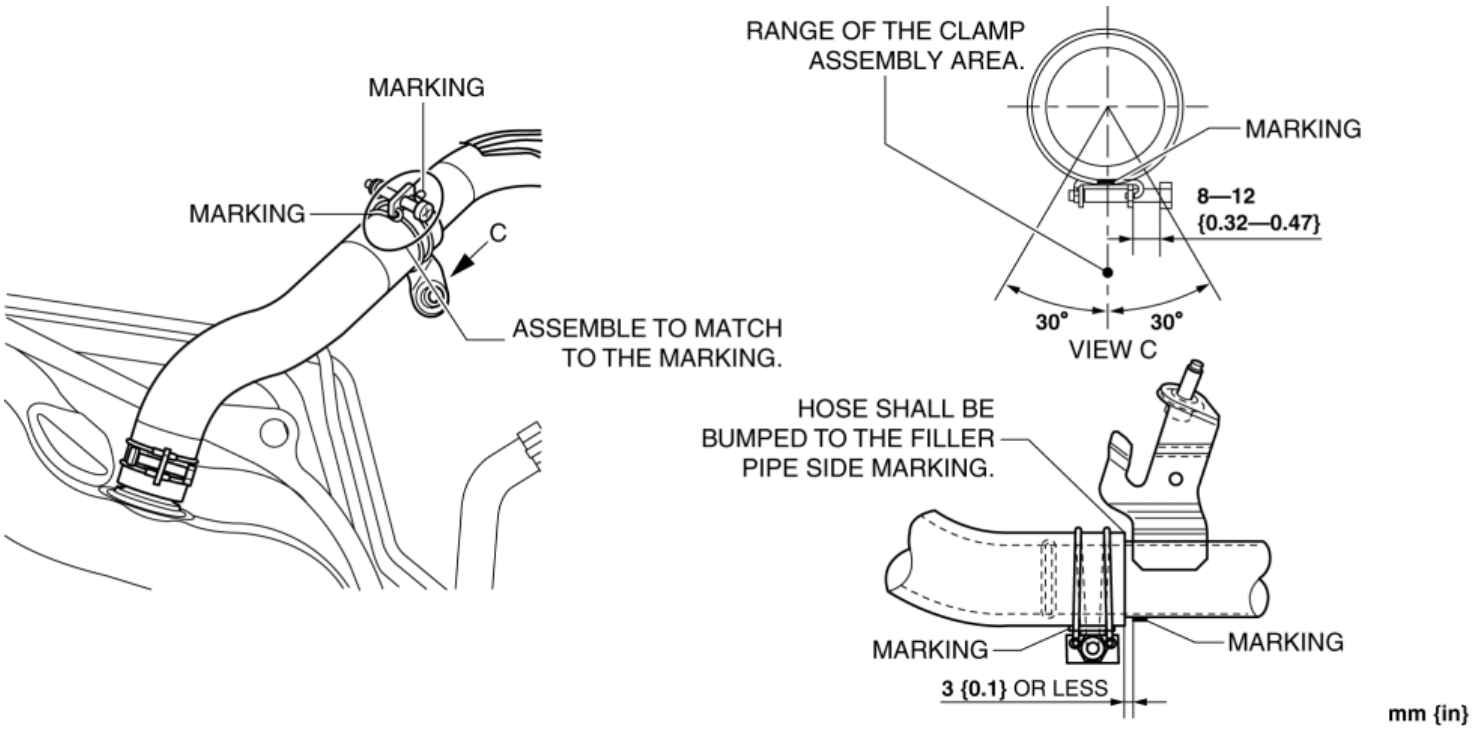

Except U.S.A. and CANADA

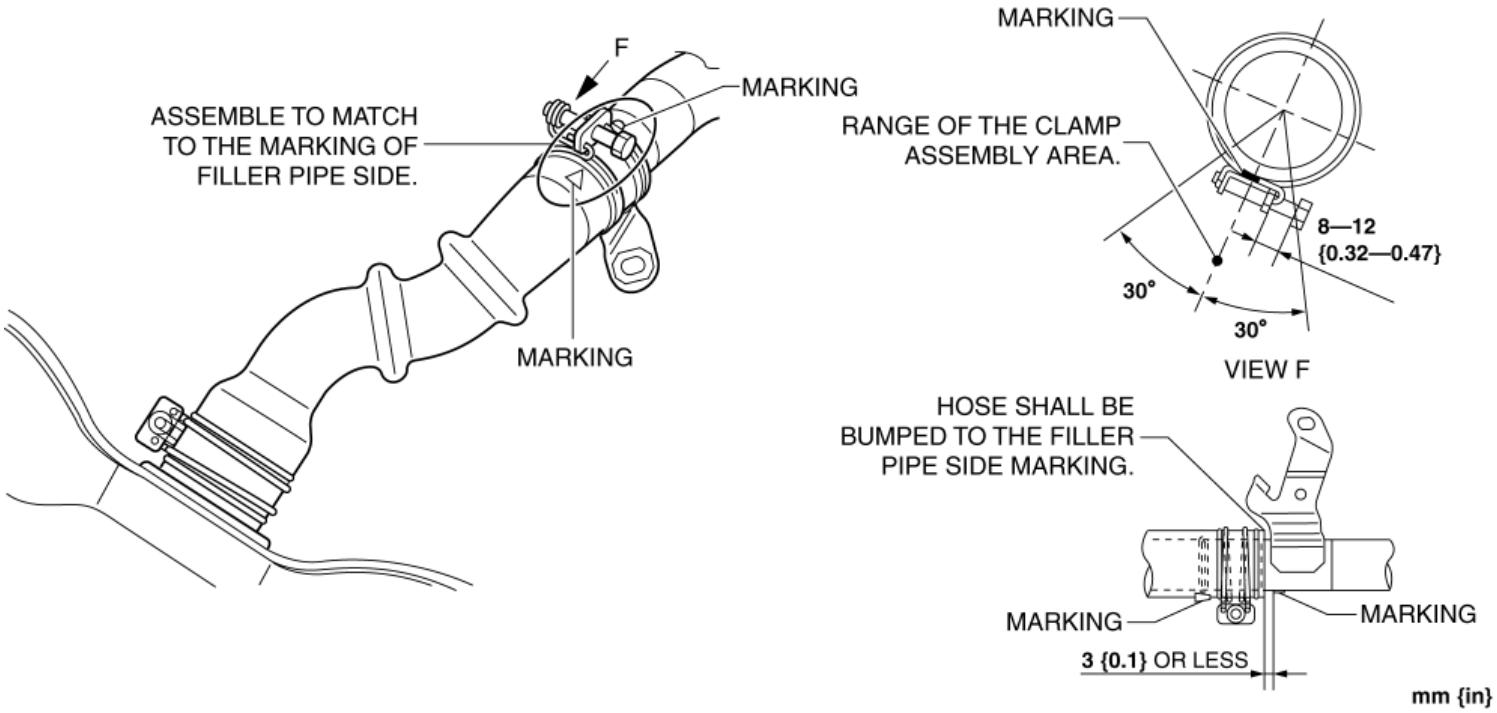

Breather Hose Installation Note

1. Install the breather hose as shown in the figure.

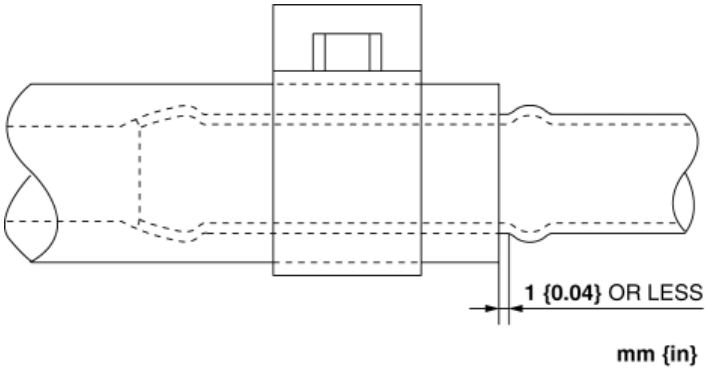
1 {0.04} OR LESS
mm {in}

2014 - Mazda3 - Engine

NON-RETURN VALVE INSPECTION [SKYACTIV-G 2.0, SKYACTIV-G 2.5]

WARNING:

- Fuel is very flammable liquid. If fuel spills or leaks from the pressurized fuel system, it will cause serious injury or death and facility breakage. Fuel can also irritate skin and eyes. To prevent this, always complete the “Fuel Line Safety Procedure”, while referring to the “BEFORE SERVICE PRECAUTION”.
- A person charged with static electricity could cause a fire or explosion, resulting in death or serious injury. Before draining fuel, make sure to discharge static electricity by touching the vehicle body.

1. Complete the “BEFORE SERVICE PRECAUTION”. (See **BEFORE SERVICE PRECAUTION [SKYACTIV-G 2.0, SKYACTIV-G 2.5]**.)

2. Disconnect the negative battery cable. (See **NEGATIVE BATTERY CABLE DISCONNECTION/CONNECTION [SKYACTIV-G 2.0, SKYACTIV-G 2.5]**.)

3. Remove the rear seat cushion. (See **REAR SEAT CUSHION REMOVAL/INSTALLATION**.)

4. Remove the fuel pump unit. (See **FUEL PUMP UNIT REMOVAL/INSTALLATION [SKYACTIV-G 2.0, SKYACTIV-G 2.5]**.)

5. Drain the fuel from the fuel tank to the position where the non-return valve is visible. (See **FUEL DRAINING PROCEDURE [SKYACTIV-G 2.0, SKYACTIV-G 2.5]**.)

NOTE:

- Non-return valve is integrated in the fuel tank.
- The non-return valve is normally closed by the spring force.

6. Verify that the non-return valve is closed.

    - If the non-return valve is stuck open and does not open even when pulled up by a finger, replace the fuel tank. (See **FUEL TANK REMOVAL/INSTALLATION [SKYACTIV-G 2.0, SKYACTIV-G 2.5]**.)

2014 - Mazda3 - Engine

FUEL PUMP UNIT REMOVAL/INSTALLATION [SKYACTIV-G 2.0, SKYACTIV-G 2.5]

WARNING:

- Fuel is very flammable liquid. If fuel spills or leaks from the pressurized fuel system, it will cause serious injury or death and facility breakage. Fuel can also irritate skin and eyes. To prevent this, always complete the “Fuel Line Safety Procedure”, while referring to “BEFORE SERVICE PRECAUTION”.
- A person charged with static electricity could cause a fire or explosion, resulting in death or serious injury. Before draining fuel, make sure to discharge static electricity by touching the vehicle body.

CAUTION:

- Disconnecting/connecting the quick release connector without cleaning it may cause damage to the fuel pipe and quick release connector. Always clean the quick release connector joint area before disconnecting/connecting using a cloth or soft brush, and make sure that it is free of foreign material.

U.S.A. and CANADA

1. Complete the “BEFORE SERVICE PRECAUTION”. (See **BEFORE SERVICE PRECAUTION [SKYACTIV-G 2.0, SKYACTIV-G 2.5]**.)
2. Using the following procedure:

CAUTION:

- Because the fuel surface is higher than the fuel pump unit installation surface, if the set plate is removed, it may result in fuel leakage. If the fuel gauge level indicates 1/2 or more, refer to the fuel draining procedure and drain 20 liters of fuel.

  Fuel gauge indicates 3/4 or more

- Drain the fuel. (See **FUEL DRAINING PROCEDURE [SKYACTIV-G 2.0, SKYACTIV-G 2.5]**.)

  Fuel gauge indicates less than 3/4

- Disconnect the negative battery cable. (See **NEGATIVE BATTERY CABLE DISCONNECTION/CONNECTION [SKYACTIV-G 2.0, SKYACTIV-G 2.5]**.)

3. Remove the rear seat cushion. (See **REAR SEAT CUSHION REMOVAL/INSTALLATION**.)
4. Remove the service hole cover.

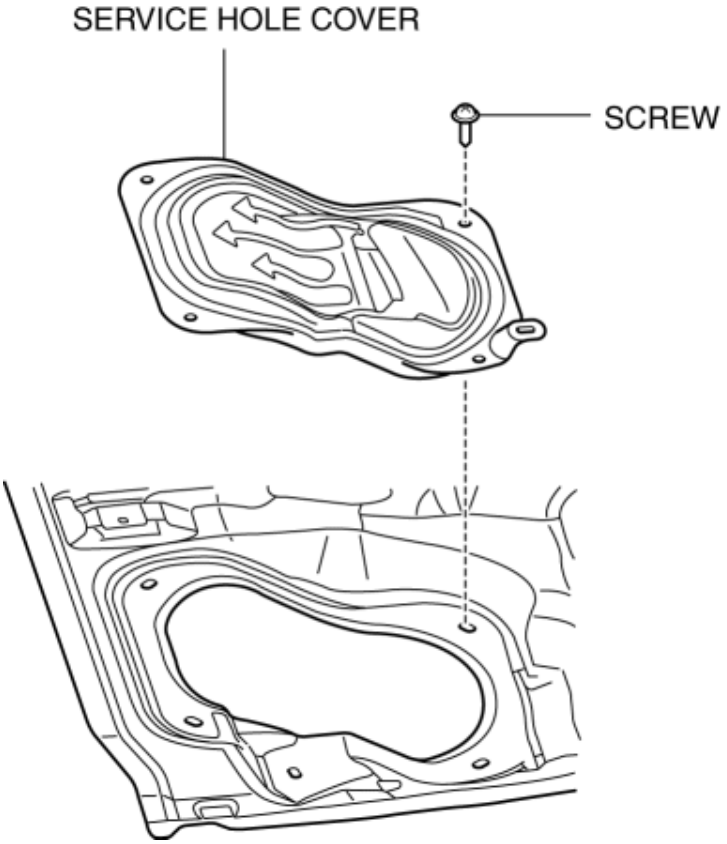

5. Remove in the order indicated in the table.

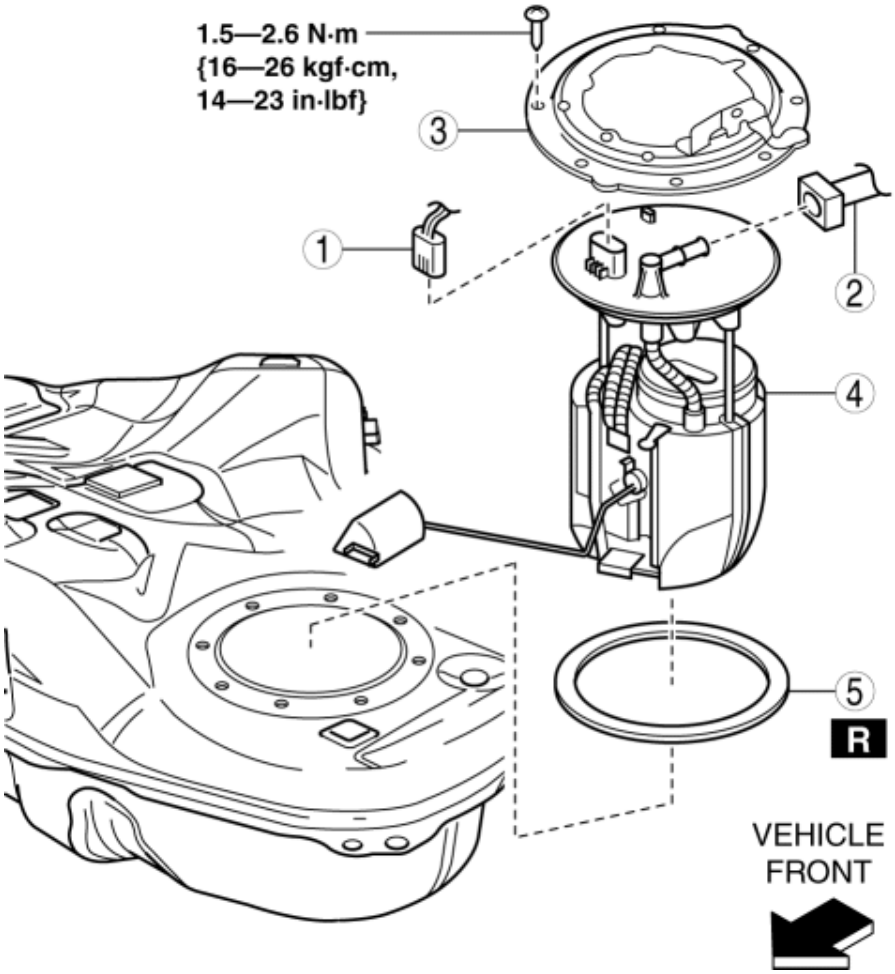

1	Fuel pump unit connector
2	Quick release connector (See **QUICK RELEASE CONNECTOR REMOVAL/INSTALLATION [SKYACTIV-G 2.0, SKYACTIV-G 2.5]**.)
3	Set plate
4	Fuel pump unit
5	Packing

6. Install in the reverse order of removal.

7. Complete the “AFTER SERVICE PRECAUTION”. (See **AFTER SERVICE PRECAUTION [SKYACTIV-G 2.0, SKYACTIV-G 2.5]**.)

Except U.S.A. and CANADA

1. Complete the “BEFORE SERVICE PRECAUTION”. (See **BEFORE SERVICE PRECAUTION [SKYACTIV-G 2.0, SKYACTIV-G 2.5]**.)

2. Using the following procedure:

CAUTION:

- Because the fuel surface is higher than the fuel pump unit installation surface, if the set plate is removed, it may result in fuel leakage. If the fuel gauge level indicates 1/2 or more, refer to the fuel draining procedure and drain 20 liters of fuel.

  Fuel gauge indicates 3/4 or more

- Drain the fuel. (See **FUEL DRAINING PROCEDURE [SKYACTIV-G 2.0, SKYACTIV-G 2.5]**.)

  Fuel gauge indicates less than 3/4

- Disconnect the negative battery cable. (See **NEGATIVE BATTERY CABLE DISCONNECTION/CONNECTION [SKYACTIV-G 2.0, SKYACTIV-G 2.5]**.)

3. Remove the rear seat cushion. (See **REAR SEAT CUSHION REMOVAL/INSTALLATION**.)

4. Remove the service hole cover.

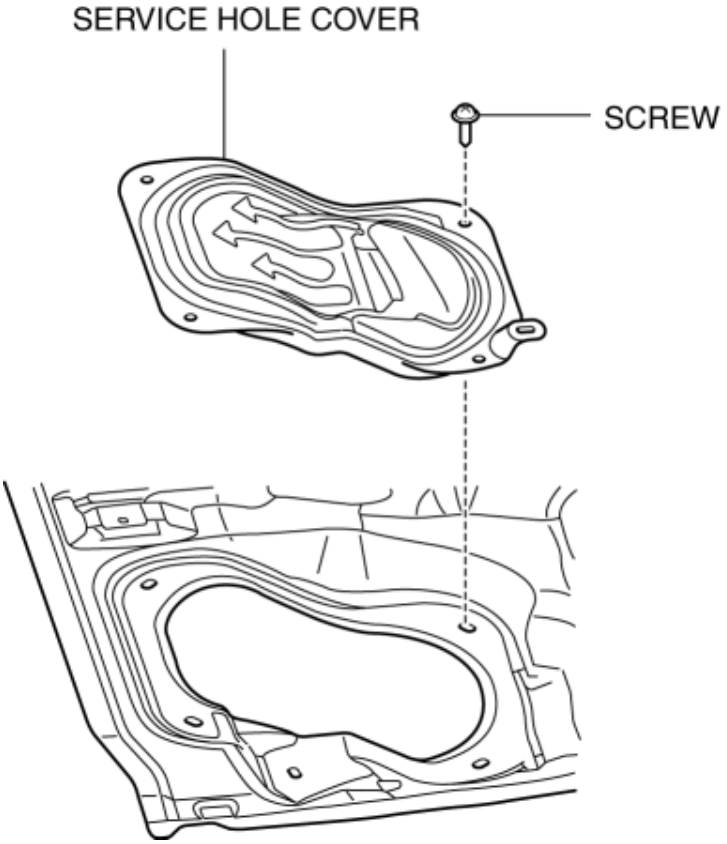

5. Remove in the order indicated in the table.

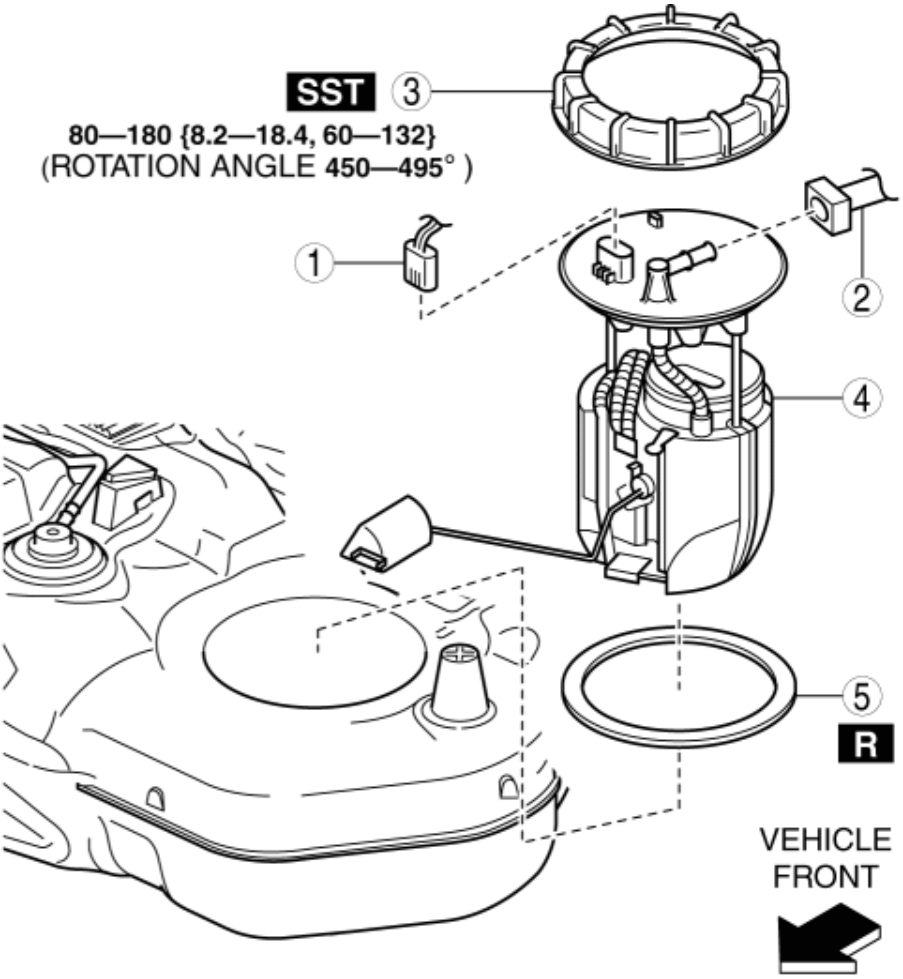

1	Fuel pump unit connector
2	Quick release connector (See **QUICK RELEASE CONNECTOR REMOVAL / INSTALLATION [SKYACTIV-G 2.0, SKYACTIV-G 2.5]**.)
3	Fuel pump cap (See **Fuel pump cap removal note**.) (See **Fuel pump cap installation note**.)
4	Fuel pump unit
5	Packing

6. Install in the reverse order of removal.

7. Complete the “AFTER SERVICE PRECAUTION”. (See **AFTER SERVICE PRECAUTION [SKYACTIV-G 2.0, SKYACTIV-G 2.5]**.)

Fuel pump cap removal note

CAUTION:

- The fuel pump cap could be damaged if the SST is used with any gap between the cap and the SST. Securely attach the SST so that there is no gap between the SST tabs and the side of the cap.

1. Remove the fuel pump cap using the **SST**.

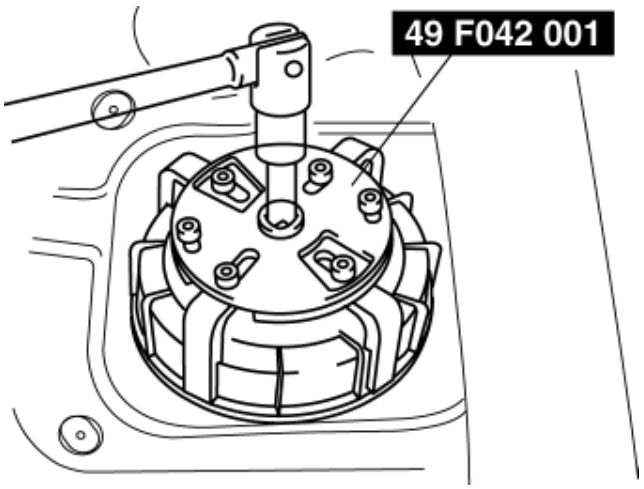

Fuel pump cap installation note

NOTE:

- The fuel pump unit will rotate and cannot be secured in the specified position if there is any gasoline on the gasket. Thoroughly wipe away all gasoline from the gasket.

- Make the markings to be easily visible when the fuel pump cap is installed.
- Marks are provided on the fuel pump unit and fuel tank for correct installation of the fuel pump unit.

1. Mark the fuel pump cap and the fuel tank at the point where the threading of each part begins as shown in the figure.

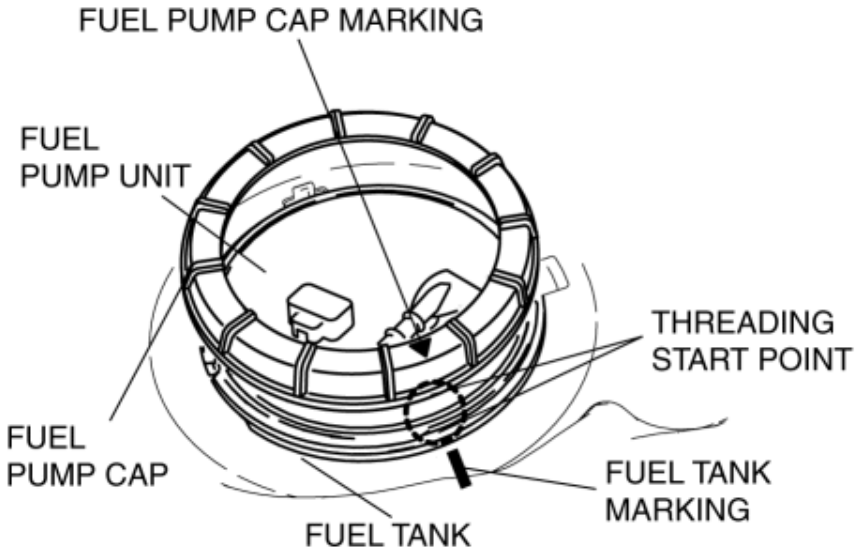

2. Align the fuel tank alignment mark with the fuel pump unit as shown in the figure.

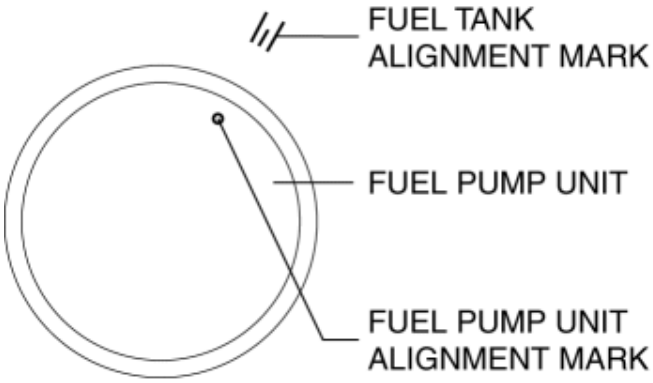

3. Align the fuel tank and fuel pump cap markings.

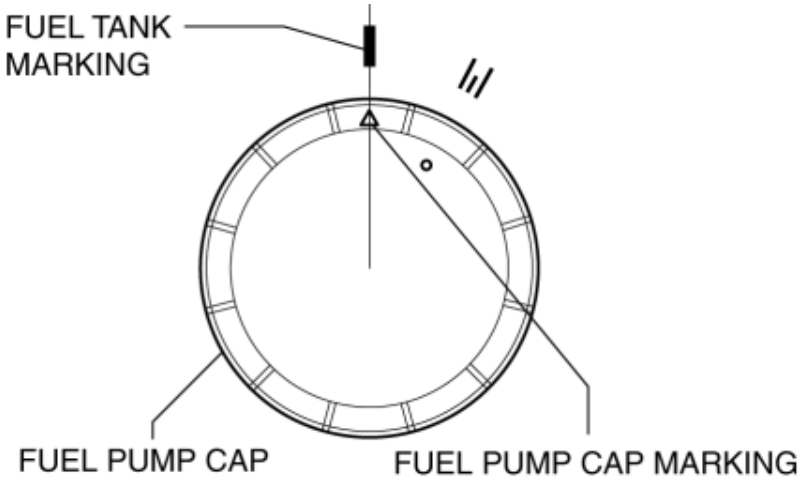

4. Rotate the fuel pump cap counterclockwise until the cap marking is approx. 15° away from the fuel tank marking as shown in the figure.

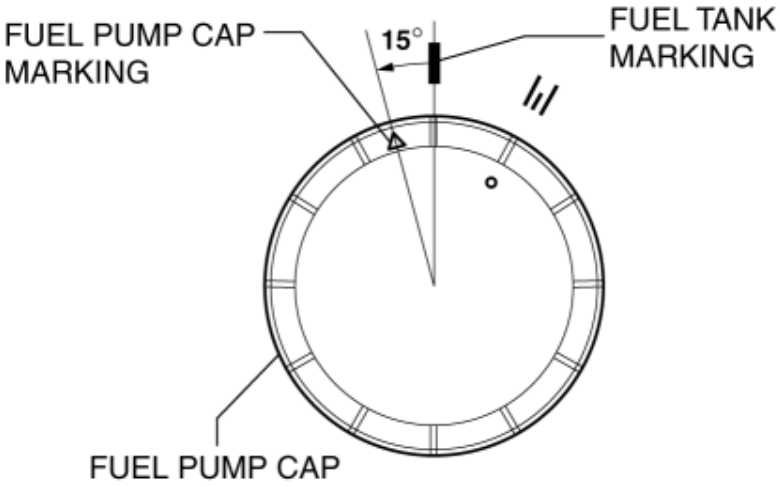

5. While keeping the fuel pump unit from rising up, tighten the fuel pump cap by hand 180 ° clockwise.

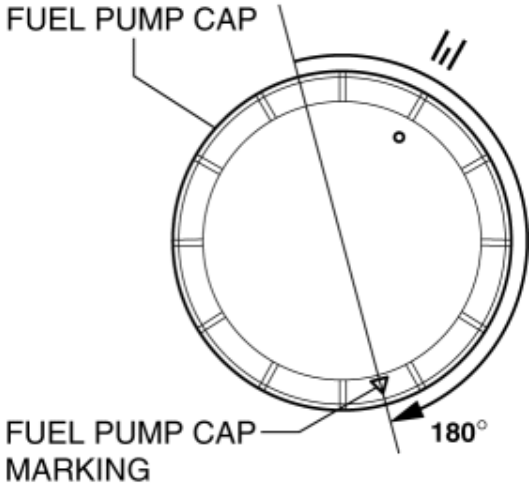

CAUTION:

- The cap could be damaged if the SST is used with any play between the cap and the SST. Securely install the SST so that there is no gap between the SST tabs and the side of the cap.

6. Set the **SST** as shown in the figure.

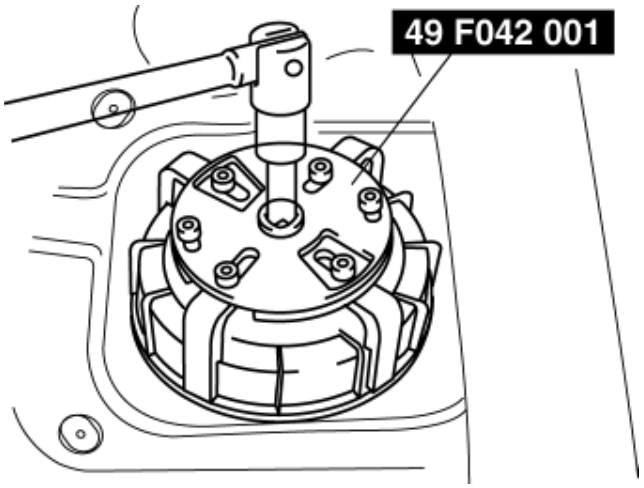

NOTE:

- The total rotation angle is 450—495 °if the approx. 180° from Step 5 is included.

7. Using the SST, tighten the fuel pump cap within the specified rotation angle and cap tightening

torque without shifting the fuel tank and fuel pump unit alignment marks.

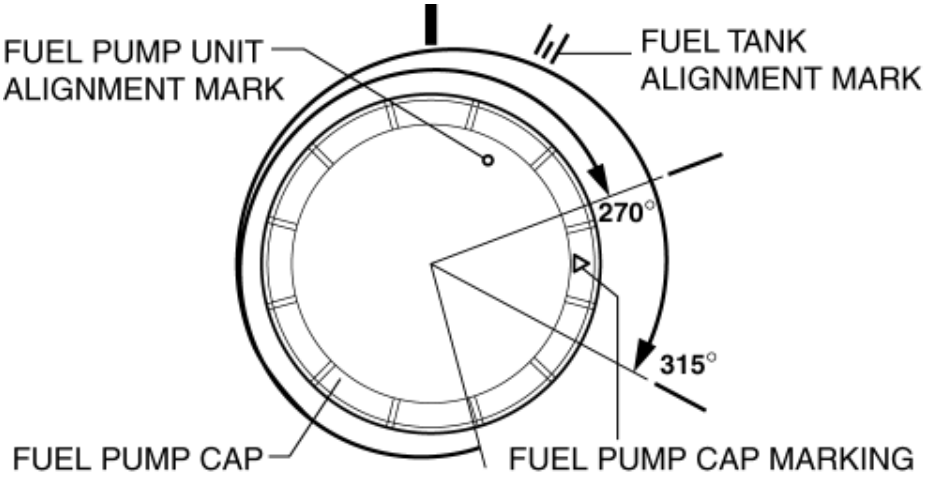

Rotation angle

- 270—315°

Fuel pump cap tightening torque

- 80—90 N·m {8.2—9.1 kgf·m, 59—66 ft·lbf}

NOTE:

- The total rotation angle is 450—495 ° if the approx.180 ° from Step 5 is included.

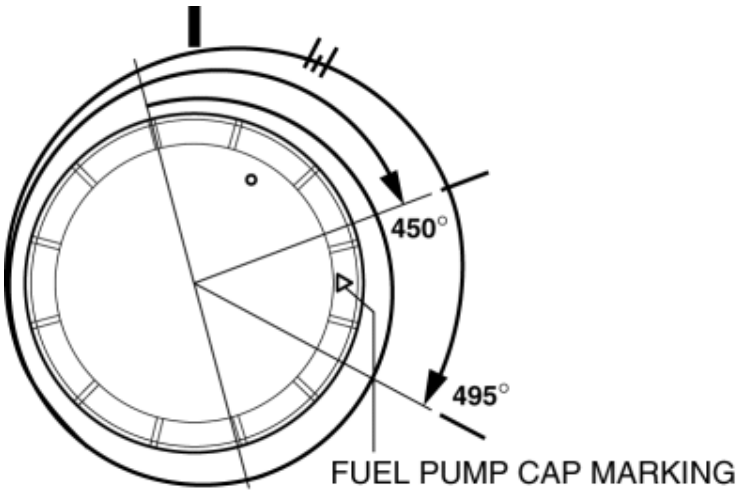

- If the specified tightening torque cannot be obtained, replace the fuel pump cap and gasket.
- If the specified tightening torque cannot be obtained after replacement of the fuel pump cap and gasket, replace the fuel tank.

2014 - Mazda3 - Engine

FUEL PUMP UNIT DISASSEMBLY/ASSEMBLY [SKYACTIV-G 2.0, SKYACTIV-G 2.5]

WARNING:

- Fuel is very flammable liquid. If fuel spills or leaks from the pressurized fuel system, it will cause serious injury or death and facility breakage. Fuel can also irritate skin and eyes. To prevent this, always complete the “Fuel Line Safety Procedure”, while referring to “BEFORE SERVICE PRECAUTION”.
- A person charged with static electricity could cause a fire or explosion, resulting in death or serious injury. Before draining fuel, make sure to discharge static electricity by touching the vehicle body.

CAUTION:

- Disconnecting/connecting the quick release connector without cleaning it may cause damage to the fuel pipe and quick release connector. Always clean the quick release connector joint area before disconnecting/connecting using a cloth or soft brush, and make sure that it is free of foreign material.

1. Complete the “BEFORE SERVICE PRECAUTION”. (See **BEFORE SERVICE PRECAUTION [SKYACTIV-G 2.0, SKYACTIV-G 2.5]**.)

2. Remove the fuel pump unit. (See **FUEL PUMP UNIT REMOVAL/INSTALLATION [SKYACTIV-G 2.0, SKYACTIV-G 2.5]**.)

3. Disassemble in the order indicated in the table.

4. Assemble in the reverse order of disassembly.

5. Install in the reverse order of removal.

6. Complete the “AFTER SERVICE PRECAUTION”. (See **AFTER SERVICE PRECAUTION [SKYACTIV-G 2.0, SKYACTIV-G 2.5]**.)

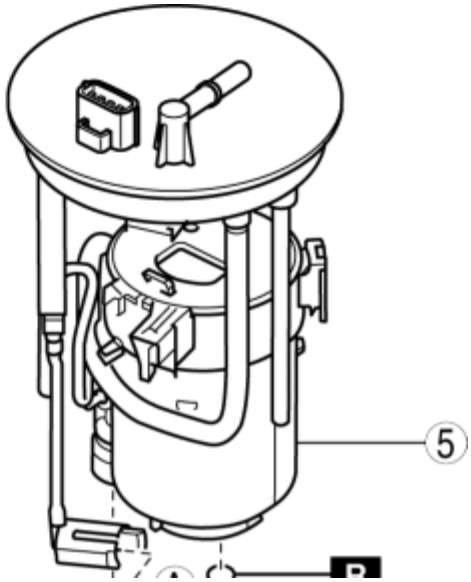

FUEL PUMP UNIT DISASSEMBLY/ASSEMBLY [SKYACTIV-G 2.0, SKYACTIV-G 2.5]

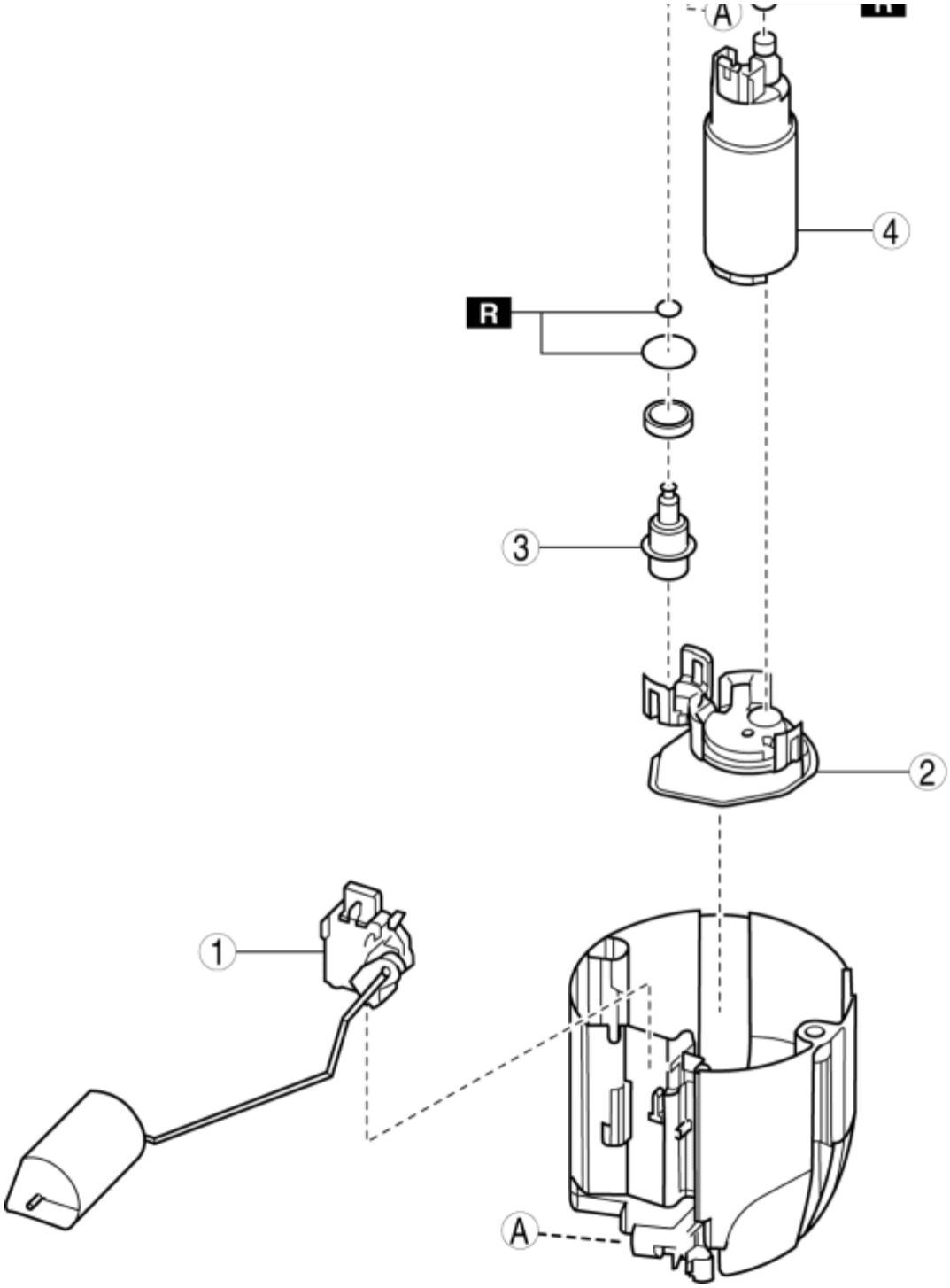

1	Fuel gauge sender unit
2	Fuel filter (low-pressure)
3	Pressure regulator
4	Fuel pump

5	Fuel filter (high-pressure)

2014 - Mazda3 - Engine

FUEL PUMP UNIT INSPECTION [SKYACTIV-G 2.0, SKYACTIV-G 2.5]

Continuity Inspection

1. Disconnect the negative battery cable. (See **NEGATIVE BATTERY CABLE DISCONNECTION/CONNECTION [SKYACTIV-G 2.0, SKYACTIV-G 2.5]**.)
2. Disconnect the fuel pump unit connector.
3. Inspect for continuity between fuel pump unit terminals A—B.

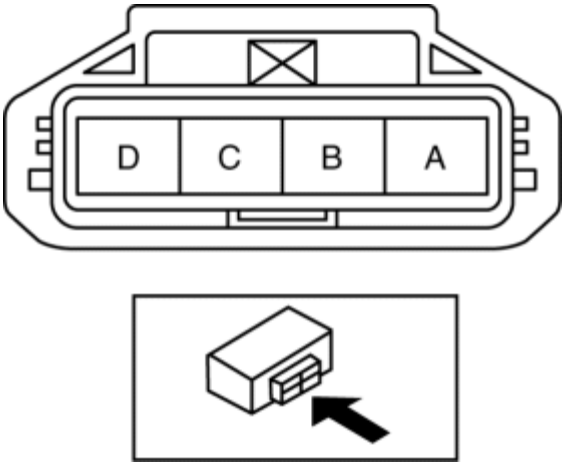

- If there is no continuity, replace the fuel pump unit. (See **FUEL PUMP UNIT REMOVAL/INSTALLATION [SKYACTIV-G 2.0, SKYACTIV-G 2.5]**.)

2014 - Mazda3 - Engine

HIGH PRESSURE FUEL PUMP REMOVAL/INSTALLATION [SKYACTIV-G 2.0, SKYACTIV-G 2.5]

WARNING:

- Fuel is very flammable liquid. If fuel spills or leaks from the pressurized fuel system, it will cause serious injury or death and facility breakage. Fuel can also irritate skin and eyes. To prevent this, always complete the “Fuel Line Safety Procedure”, while referring to “BEFORE SERVICE PRECAUTION”.
- A person charged with static electricity could cause a fire or explosion, resulting in death or serious injury. Before draining fuel, make sure to discharge static electricity by touching the vehicle body.

CAUTION:

- Do not disassemble the high pressure fuel pump.
- Do not damage the sealing surface or the lock part of the fuel pipe.

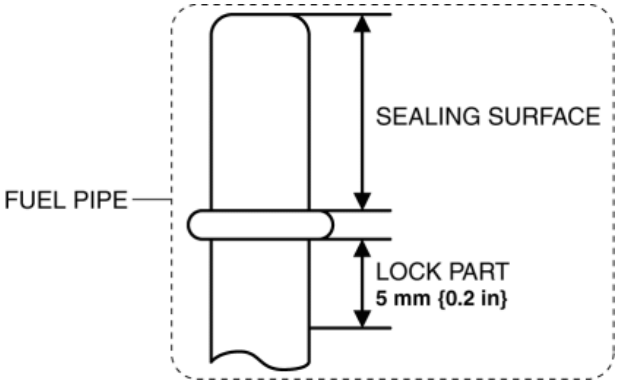

- Damage or deformation to the end of the high pressure line pipe may cause fuel leakage.
- Disconnecting/connecting the quick release connector without cleaning it may cause damage to the fuel pipe and quick release connector. Always clean the quick release connector joint area before disconnecting/connecting using a cloth or soft brush, and make sure that it is free of foreign material.

1. Complete the “BEFORE SERVICE PRECAUTION”. (See **BEFORE SERVICE PRECAUTION [SKYACTIV-G 2.0, SKYACTIV-G 2.5]**.)
2. Disconnect the negative battery cable. (See **NEGATIVE BATTERY CABLE DISCONNECTION/CONNECTION [SKYACTIV-G 2.0, SKYACTIV-G 2.5]**.)
3. Remove the plug hole plate. (See **PLUG HOLE PLATE REMOVAL/INSTALLATION [SKYACTIV-G 2.0, SKYACTIV-G 2.5]**.)
4. Remove the air cleaner and air hose as a single unit. (See **INTAKE-AIR SYSTEM REMOVAL/INSTALLATION [SKYACTIV-G 2.0, SKYACTIV-G 2.5]**.)
5. Disconnect the harness clip as shown in the figure.

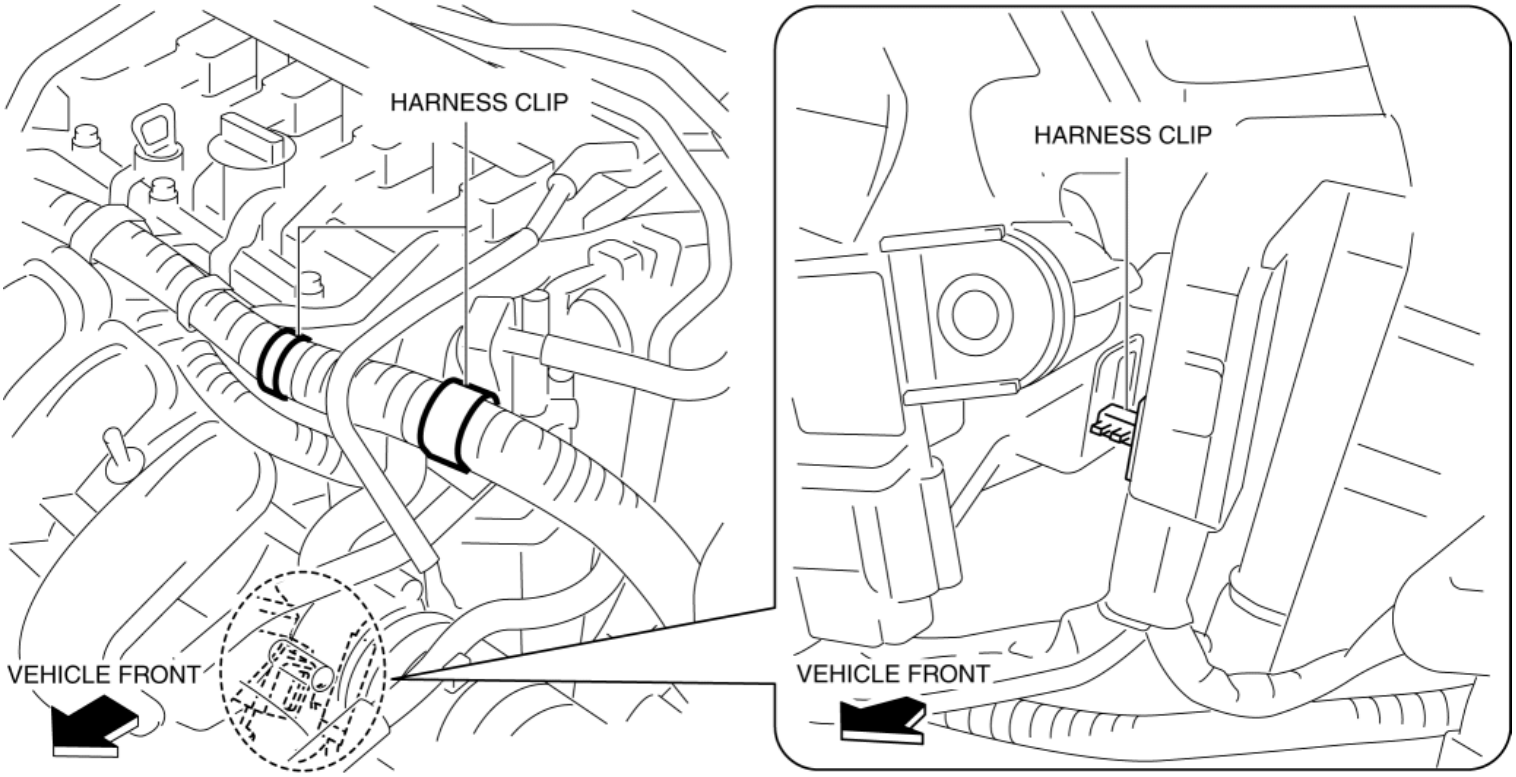

6. Disconnect the hoses as shown in the figure.

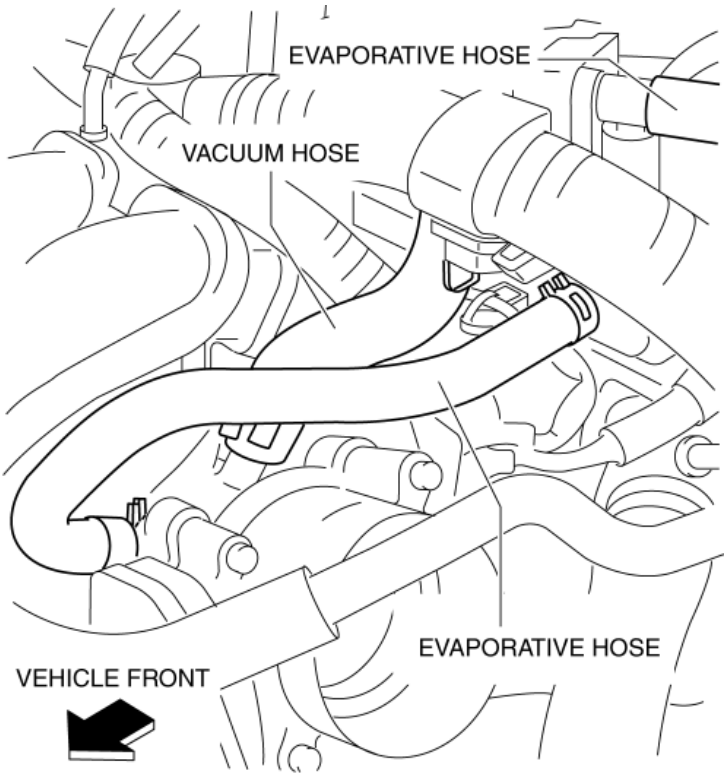

7. Disconnect the following parts connectors.

- Purge solenoid valve
- High pressure fuel pump
- Intake CMP sensor

8. Remove the purge solenoid valve and catch tank and purge solenoid valve bracket as a single unit. (See **PURGE SOLENOID VALVE REMOVAL/INSTALLATION [SKYACTIV-G 2.0, SKYACTIV-G 2.5]**.)

9. Remove in the order indicated in the table.

NOTE:

- Only when the high pressure fuel pump is removed, the rear housing does not have to be removed.

10. Install in the reverse order of removal.

11. Complete the “AFTER SERVICE PRECAUTION”. (See **AFTER SERVICE PRECAUTION [SKYACTIV-G 2.0, SKYACTIV-G 2.5]**.)

12. Complete the “Fuel Leakage Inspection After High Pressure Fuel Pump Installation”. (See **Fuel Leakage Inspection After High Pressure Fuel Pump Installation**.)

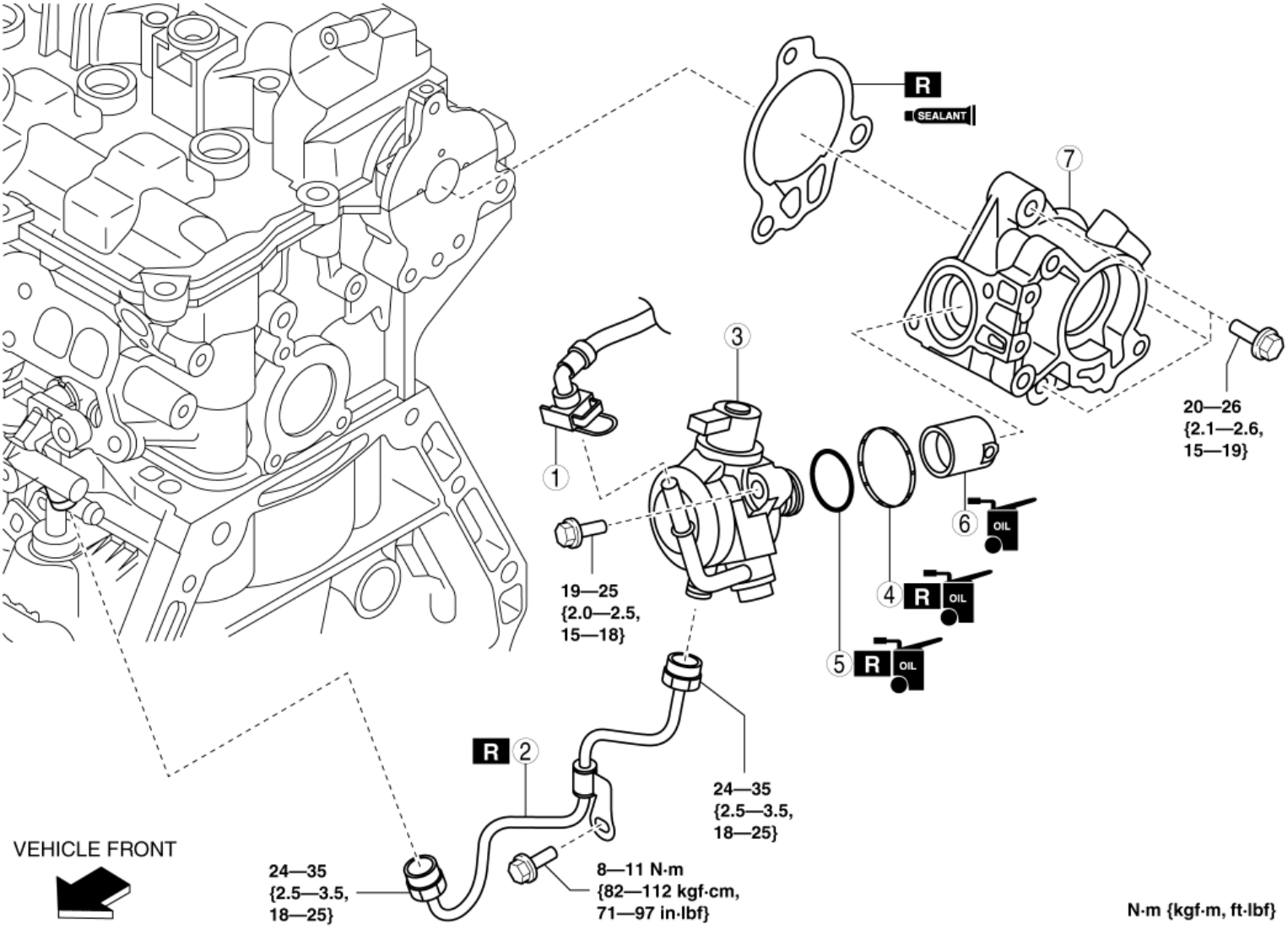

1	Quick release connector (See **QUICK RELEASE CONNECTOR REMOVAL/INSTALLATION [SKYACTIV-G 2.0, SKYACTIV-G 2.5]**.)
2	High pressure fuel pipe (See **High Pressure Fuel Pipe Removal Note**.) (See **High Pressure Fuel Pipe Installation Note**.)
3	High pressure fuel pump (See **High Pressure Fuel Pump Installation Note**.)
4	Seal rubber
5	O-ring
6	Tension collar

7	Rear housing (See **Rear Housing Removal Note**.) (See **Rear Housing Installation Note**.)

High Pressure Fuel Pipe Removal Note

CAUTION:

- When removing the high pressure fuel pipe, the end of the high pressure fuel pipe may be damaged because the clearance between the high pressure fuel pump and the high pressure fuel pipe is small. Be very careful when handling the end of the high pressure fuel pipe so as not to damage it.

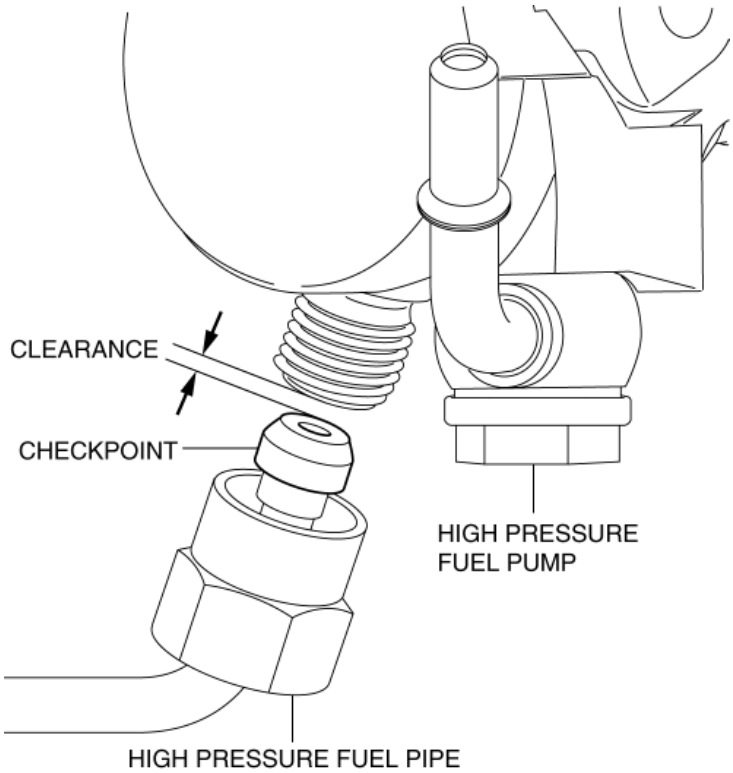

- If the high pressure fuel pump is removed with the high pressure fuel pipe installed, the high pressure fuel pipe and fuel distributor may be damaged because of the excessive force caused by the spring force of the high pressure fuel pump. The high pressure fuel pipe and fuel distributor must be replaced if they are damaged. Always remove the high pressure fuel pipe before removing the high pressure fuel pump.

1. Remove the high pressure fuel pipe.

Rear Housing Removal Note

1. Remove the vacuum pump. (See **VACUUM PUMP REMOVAL/INSTALLATION**.)
2. Remove the rear housing.

Rear Housing Installation Note

NOTE:

- After applying silicone sealant, install the rear housing within 10 min. and then tighten all bolts within 5 min.

1. Apply silicone sealant to the areas shown in the figure.

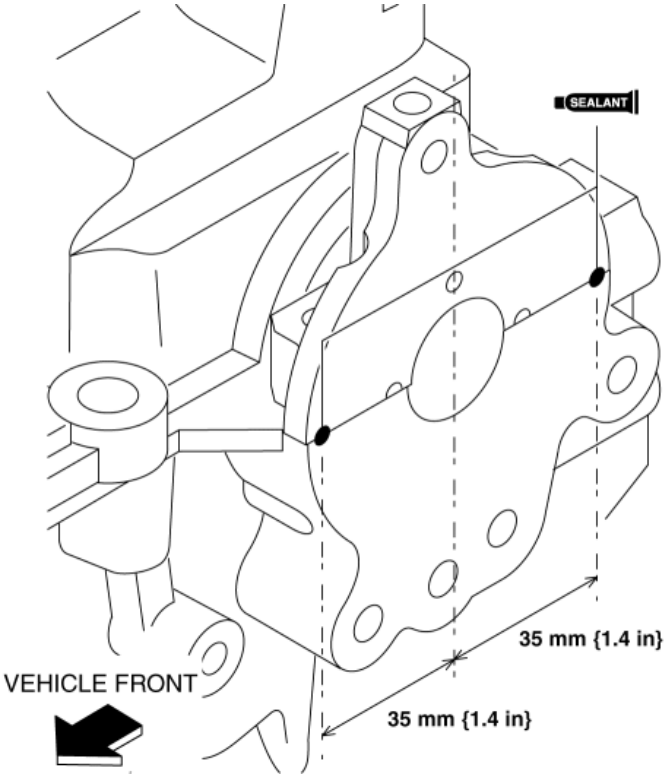

Thickness

- 3.0—7.0 mm {0.12—0.27 in}

2. Install the rear housing.

High Pressure Fuel Pump Installation Note

1. Rotate the crankshaft approx. 90 degrees from TDC of cylinder No.1.

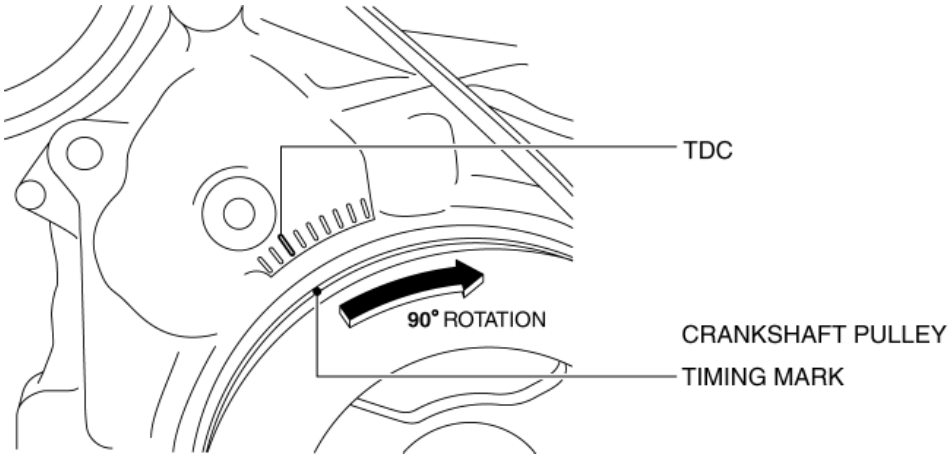

2. Insert the high pressure fuel pump into the rear housing.
3. Press in the high pressure fuel pump until the O-ring cannot be seen.
4. Temporarily tighten the high pressure fuel pump installation bolt on one side until its head contacts the high pressure fuel pump.
5. Tighten the high pressure fuel pump installation bolt which is not tightened in Step 4.

High pressure fuel pump installation bolt tightening torque

- 19—25 N·m {2.0—2.5 kgf·m, 15—18 ft·lbf}

6. Tighten the high pressure fuel pump installation bolt which was tightened in Step 4.

High pressure fuel pump installation bolt tightening torque

- 19—25 N·m {2.0—2.5 kgf·m, 15—18 ft·lbf}

High Pressure Fuel Pipe Installation Note

CAUTION:

- Damage or deformation to the end of the high pressure fuel pipe may cause fuel leakage. When installing the high pressure fuel pipe to the high pressure fuel pump, be very careful while handling the end of the high pressure fuel pipe.
- If parts are exposed to fuel, their function may be decreased or a fire may occur. Always wipe off any leaked fuel using a clean rag.
- Do not let foreign materials enter into the high pressure fuel pipe.
- Install a new high pressure fuel pipe because it cannot be reused.

1. Temporarily tighten the nuts on both ends.
2. Temporarily tighten the high pressure fuel pipe bracket installation bolt.
3. Tighten the nuts on both ends.

   High pressure fuel pipe tightening torque

   - 24—35 N·m {2.5—3.5 kgf·m, 18—25 ft·lbf}

4. Tighten the high pressure fuel pipe bracket installation bolt.

   High pressure fuel pipe bracket installation bolt tightening torque

   - 8—11 N·m {82—112 kgf·cm, 71—97 in·lbf}

Fuel Leakage Inspection After High Pressure Fuel Pump Installation

1. Verify that the high pressure fuel pump is assembled securely.
2. Verify that there is no fuel leakage around the high pressure fuel pump.

2014 - Mazda3 - Engine

HIGH PRESSURE FUEL PUMP INSPECTION [SKYACTIV-G 2.0, SKYACTIV-G 2.5]

NOTE:

- The following values are indicated by relative pressure from the fuel pressure sensor.

1. Verify that the fuel pressure sensor is normal. (See **FUEL PRESSURE SENSOR INSPECTION [SKYACTIV-G 2.0, SKYACTIV-G 2.5]**.)

2. Connect the M-MDS to the DLC-2.

3. Switch the ignition ON (engine off).

4. Select the “FUEL_PRES”, “LOAD” and “RPM” PIDs on the M-MDS. (See **ON-BOARD DIAGNOSTIC TEST [SKYACTIV-G 2.0, SKYACTIV-G 2.5]**.)

CAUTION:

- If the engine is run at a high speed, it could be damaged. When racing the engine, be careful not to increase the engine speed suddenly.

5. Is the “FUEL_PRES” PID value **3.0 MPa {31 kgf/cm^2, 435 psi}** or more while idling.

- If not as specified, replace the high pressure fuel pump. (See **HIGH PRESSURE FUEL PUMP REMOVAL/INSTALLATION [SKYACTIV-G 2.0, SKYACTIV-G 2.5]**.)

2014 - Mazda3 - Engine

QUICK RELEASE CONNECTOR REMOVAL/INSTALLATION [SKYACTIV-G 2.0, SKYACTIV-G 2.5]

WARNING:

- Fuel is very flammable liquid. If fuel spills or leaks from the pressurized fuel system, it will cause serious injury or death and facility breakage. Fuel can also irritate skin and eyes. To prevent this, always complete the “Fuel Line Safety Procedure”, while referring to the “BEFORE SERVICE PRECAUTION”.
- A person charged with static electricity could cause a fire or explosion, resulting in death or serious injury. Before draining fuel, make sure to discharge static electricity by touching the vehicle body.

CAUTION:

- Disconnecting/connecting the quick release connector without cleaning it may cause damage to the fuel pipe and quick release connector. Always clean the quick release connector joint area before disconnecting/connecting using a cloth or soft brush, and make sure that it is free of foreign material.

Quick Release Connector Type

CAUTION:

- Verify the type and location, and install/remove properly.

U.S.A. and CANADA

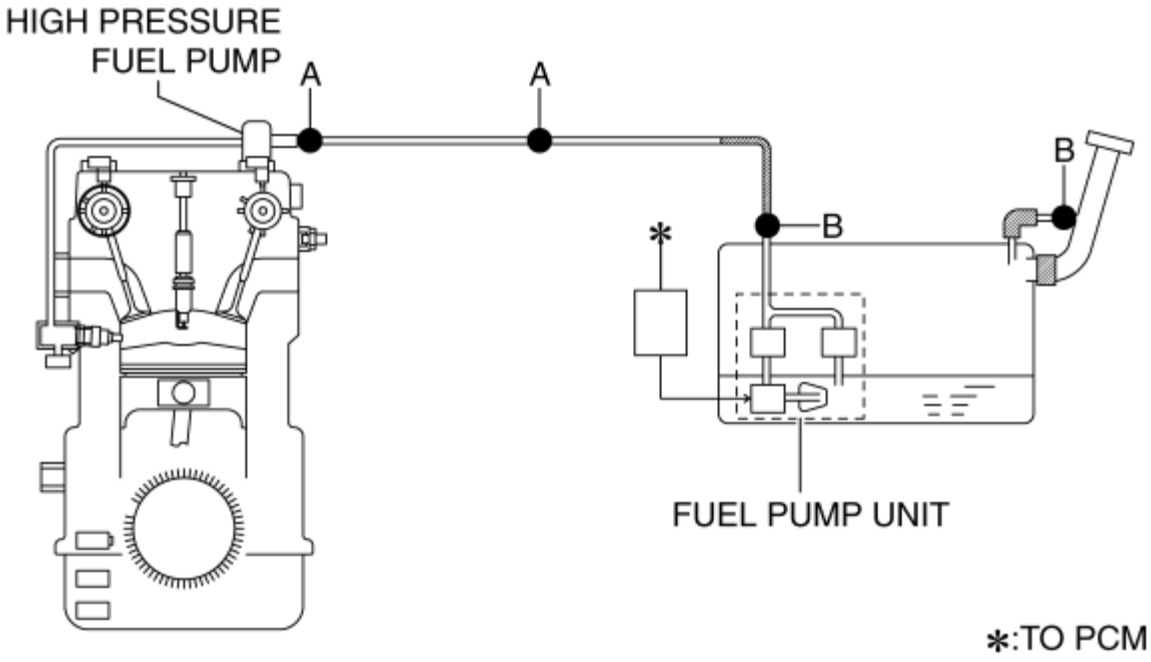

Except U.S.A. and CANADA

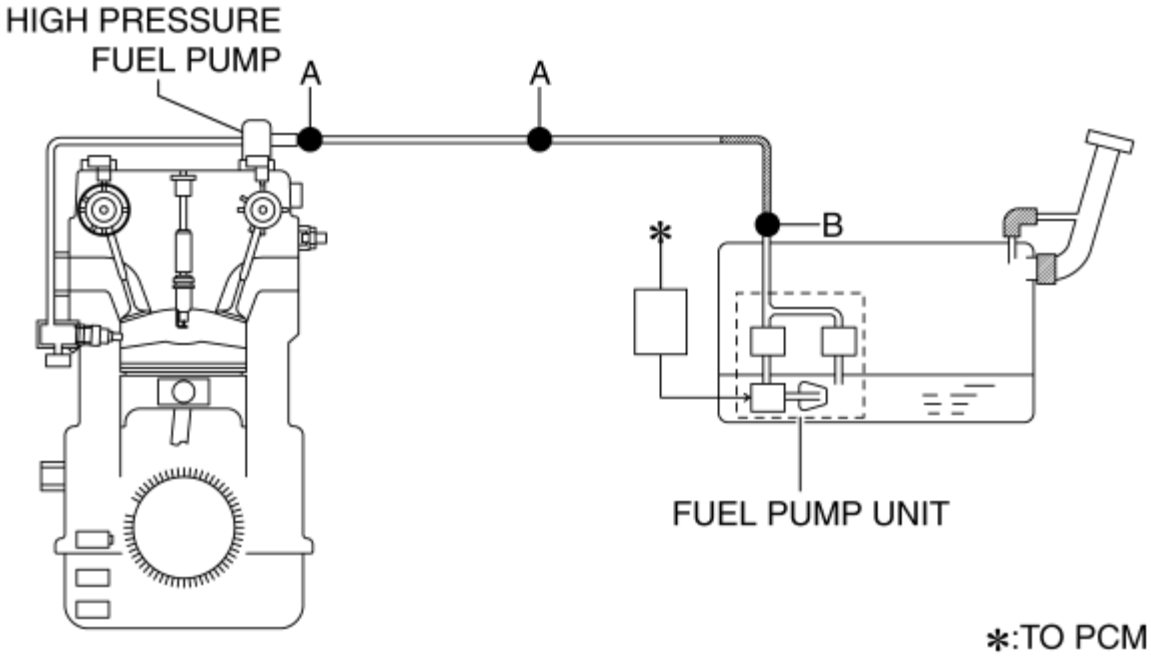

Type A Removal

1. Complete the “BEFORE SERVICE PRECAUTION”. (See **BEFORE SERVICE PRECAUTION [SKYACTIV-G 2.0, SKYACTIV-G 2.5]**.)

2. Move the retainer upward using a small flathead screwdriver or a similar tool.

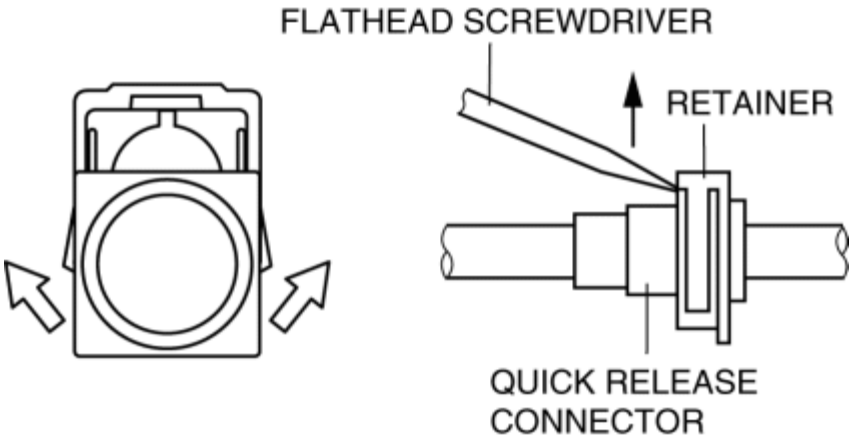

3. Pull out the fuel hose straight from the fuel pipe and disconnect it.

4. Cover the disconnected quick release connector and fuel pipe with vinyl sheeting or a similar material to prevent it from getting scratched or dirty.

Type B Removal

CAUTION:

- Be careful not to damage the pipe when unlocking the retainer.

1. Complete the “BEFORE SERVICE PRECAUTION”. (See **BEFORE SERVICE PRECAUTION**

[SKYACTIV-G 2.0, SKYACTIV-G 2.5].)

2. Insert the SST into the quick release connector.

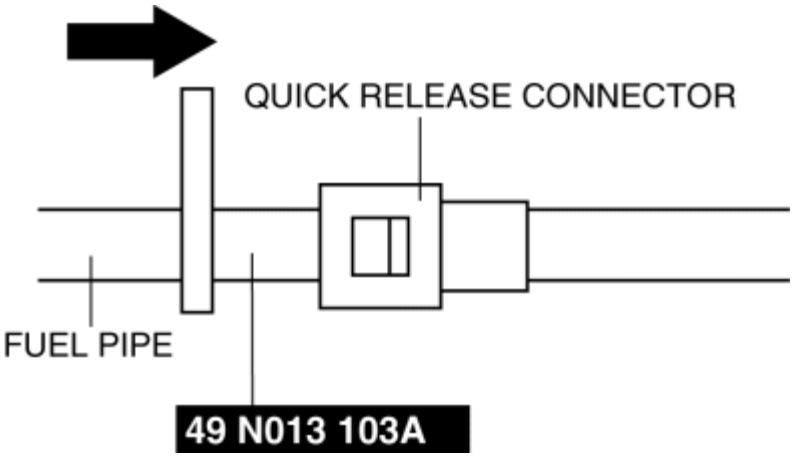

3. Pull the fuel hose straight out from the fuel pipe and disconnect it.

4. Cover the disconnected quick release connector and fuel pipe with vinyl sheeting or a similar material to prevent it from getting scratched or dirty.

Type A Installation

NOTE:

- If the quick release connector O-ring is damaged or has slipped, replace the fuel hose.
- A checker tab is integrated with the quick release connector for new fuel hoses. Remove the checker tab from the quick release connector after the connector is completely engaged with the fuel pipe.

1. Inspect the fuel hose and fuel pipe sealing surface for damage and deformation.
    - If there is any malfunction, replace it with a new one.
2. Apply a small amount of clean engine oil to the sealing surface of the fuel pipe.
3. Install the quick release connector.

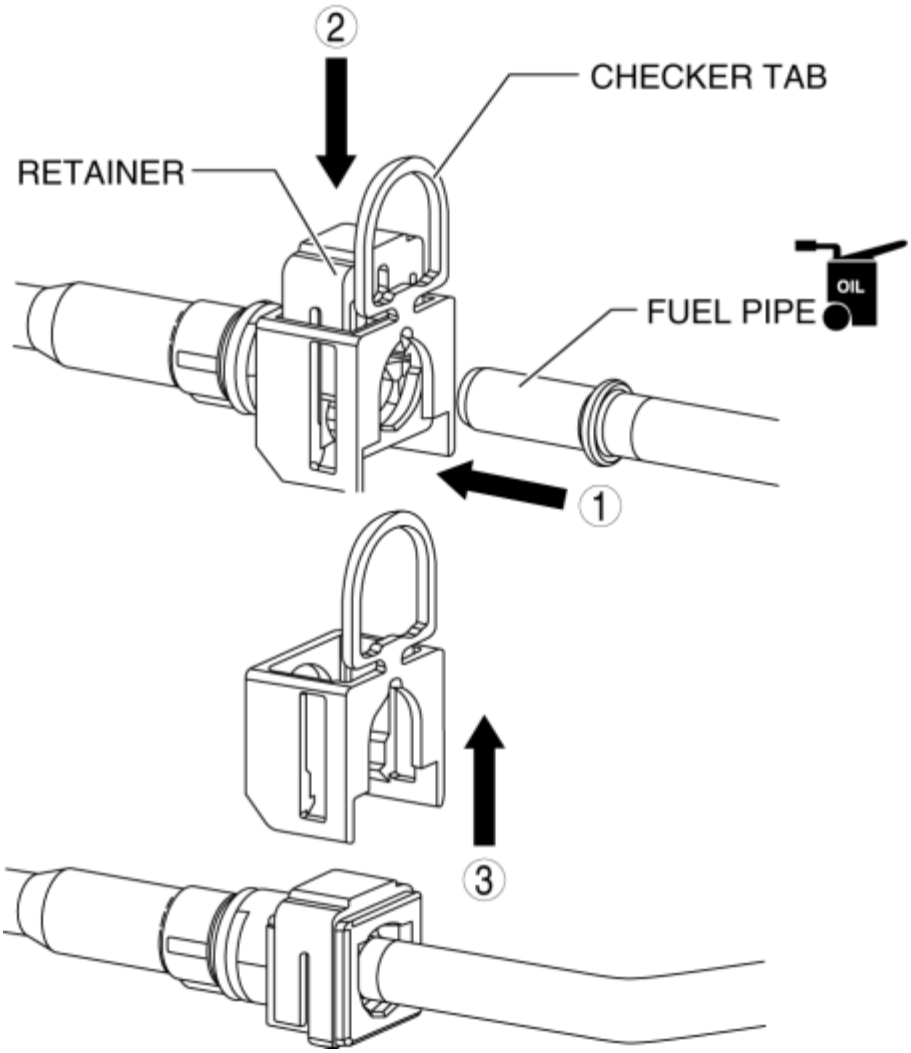

- Insert the fuel pipe straight to the end of the quick release connector.
- Push down the retainer using a finger.
    - If the retainer cannot be pushed down, push the fuel pipe further to the quick release connector.

4. Lightly pull and push the quick release connector a few times by hand, and then verify that it is connected securely.

5. Complete the “AFTER SERVICE PRECAUTION”. (See **AFTER SERVICE PRECAUTION [SKYACTIV-G 2.0, SKYACTIV-G 2.5]**.)

Type B Installation

NOTE:

- If the quick release connector O-ring is damaged or has slipped, replace the piping component.
- A checker tab is integrated with the quick release connector for new fuel hoses and fuel hoses. Remove the checker tab from the quick release connector after the connector is completely engaged with the fuel pipe.

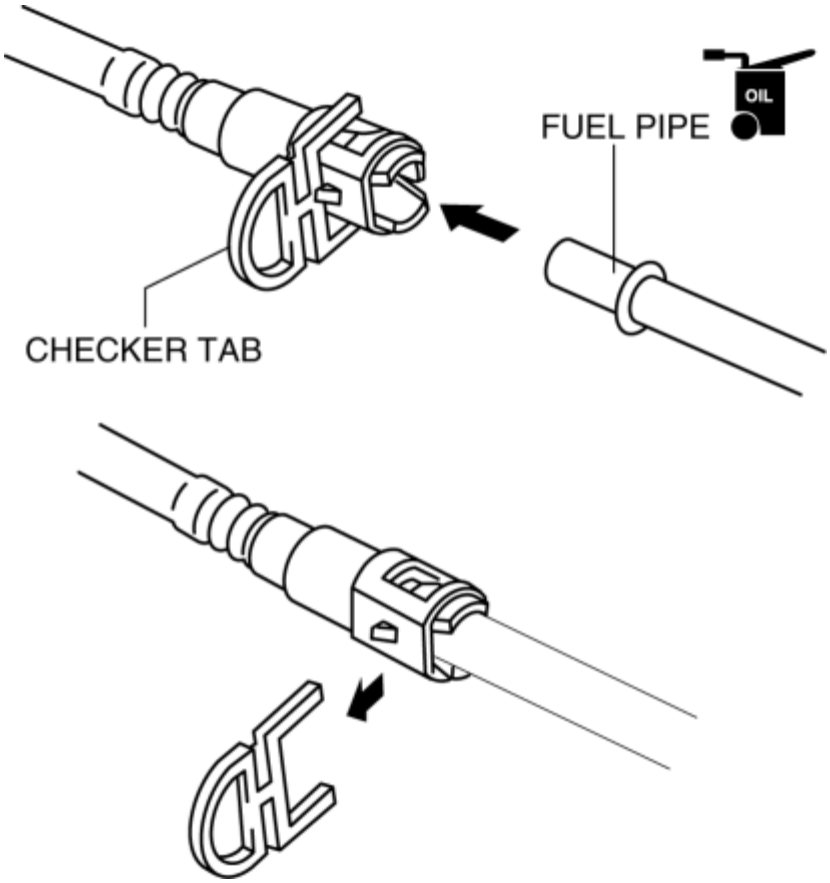

1. Inspect the fuel hose and fuel pipe sealing surface for damage and deformation.
    - If there is any malfunction, replace it with a new one.
2. Apply a small amount of clean engine oil to the sealing surface of the fuel pipe.
3. Install a new retainer to the quick release connector.
4. Reconnect the fuel hose straight to the fuel pipe until a click is heard.
5. Lightly pull and push the quick release connector a few times by hand, and then verify that it is connected securely.
6. Complete the “AFTER SERVICE PRECAUTION”. (See **AFTER SERVICE PRECAUTION [SKYACTIV-G 2.0, SKYACTIV-G 2.5]**.)

2014 - Mazda3 - Engine

FUEL INJECTOR REMOVAL/INSTALLATION [SKYACTIV-G 2.0, SKYACTIV-G 2.5]

WARNING:

- Fuel is very flammable liquid. If fuel spills or leaks from the pressurized fuel system, it will cause serious injury or death and facility breakage. Fuel can also irritate skin and eyes. To prevent this, always complete the “Fuel Line Safety Procedure”, while referring to the “BEFORE SERVICE PRECAUTION”.
- A person charged with static electricity could cause a fire or explosion, resulting in death or serious injury. Before draining fuel, make sure to discharge static electricity by touching the vehicle body.

CAUTION:

- Touching the end of the fuel injector by hand or pressing it to an object may cause a malfunction. Be very careful when handling the end of the fuel injector.
- When the fuel distributor is removed, air tightness of the fuel injector will be lost. Always replace the stopper ring, O-ring, back-up ring, and teflon seal of the fuel injector with new ones.
- Do not remove the fuel pressure sensor from the fuel distributor.

1. Complete the “BEFORE SERVICE PRECAUTION”. (See **BEFORE SERVICE PRECAUTION [SKYACTIV-G 2.0, SKYACTIV-G 2.5]**.)
2. Disconnect the negative battery cable. (See **NEGATIVE BATTERY CABLE DISCONNECTION/CONNECTION [SKYACTIV-G 2.0, SKYACTIV-G 2.5]**.)
3. Remove the plug hole plate. (See **PLUG HOLE PLATE REMOVAL/INSTALLATION [SKYACTIV-G 2.0, SKYACTIV-G 2.5]**.)
4. Remove the intake manifold. (See **INTAKE-AIR SYSTEM REMOVAL/INSTALLATION [SKYACTIV-G 2.0, SKYACTIV-G 2.5]**.)
5. Remove in the order indicated in the table.
6. Install in the reverse order of removal.
7. Complete the “AFTER SERVICE PRECAUTION”. (See **AFTER SERVICE PRECAUTION [SKYACTIV-G 2.0, SKYACTIV-G 2.5]**.)

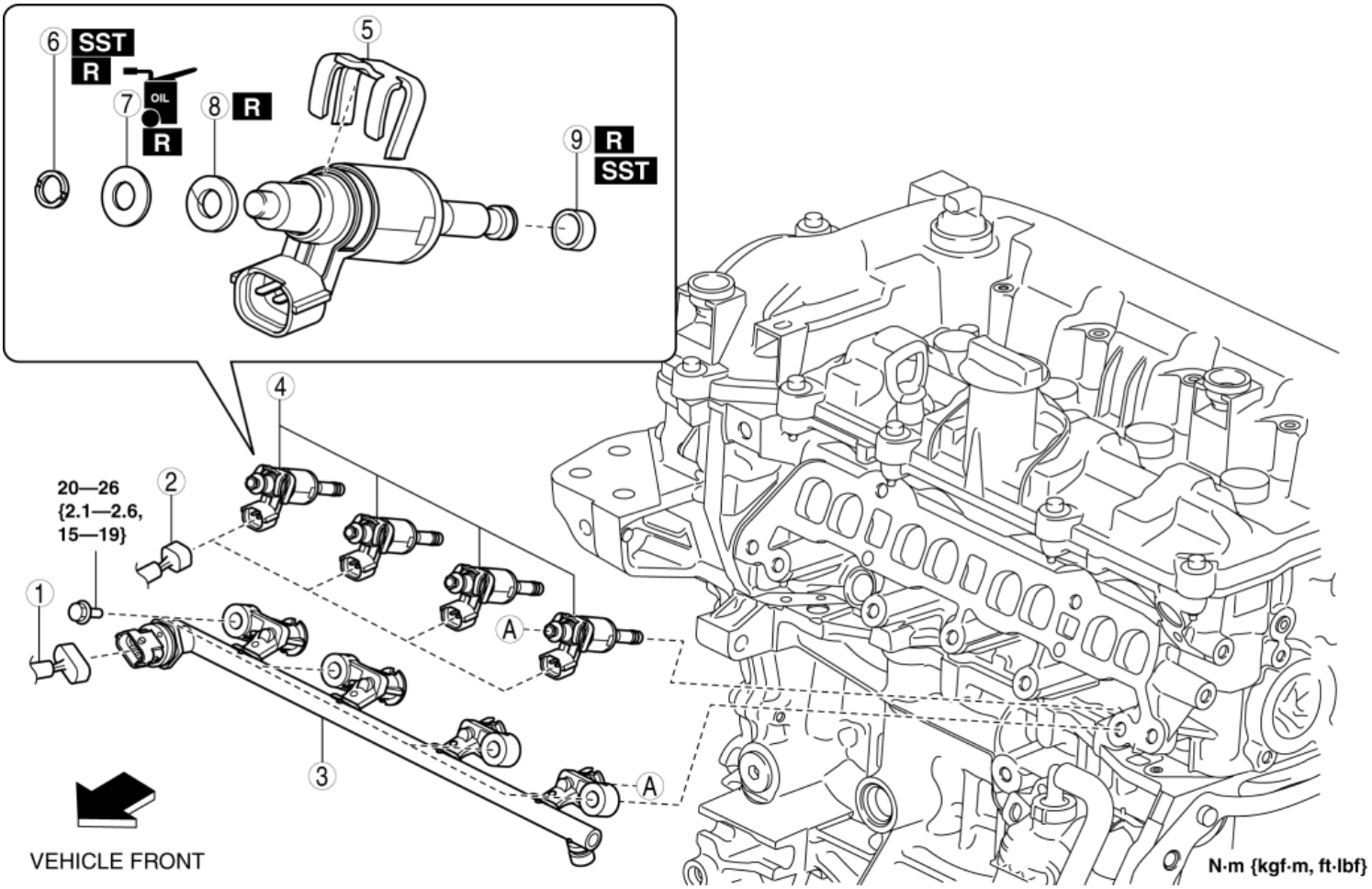

1	Fuel pressure sensor connector
2	Fuel injector connector
3	Fuel distributor (See **Fuel Distributor Removal Note**.) (See **Fuel Distributor Installation Note**.)
4	Fuel injector (See **Fuel Injector Installation Note**.)
5	Spacer
6	Stopper ring (See **Stopper Ring Removal Note**.) (See **Stopper Ring Installation Note**.)
7	O-ring
8	Back-up ring (See **Back-up Ring Installation Note**.)
9	Teflon seal (See **Teflon Seal Removal Note**.) (See **Teflon Seal Installation Note**.)

Fuel Distributor Removal Note

1. Remove the high pressure fuel pipe. (See **HIGH PRESSURE FUEL PUMP REMOVAL/INSTALLATION [SKYACTIV-G 2.0, SKYACTIV-G 2.5]**.)
2. Remove the fuel distributor.

Stopper Ring Removal Note

NOTE:

- When removing the stopper ring, do not damage the fuel injector with the tool.

1. Remove the stopper ring as shown in the figure.

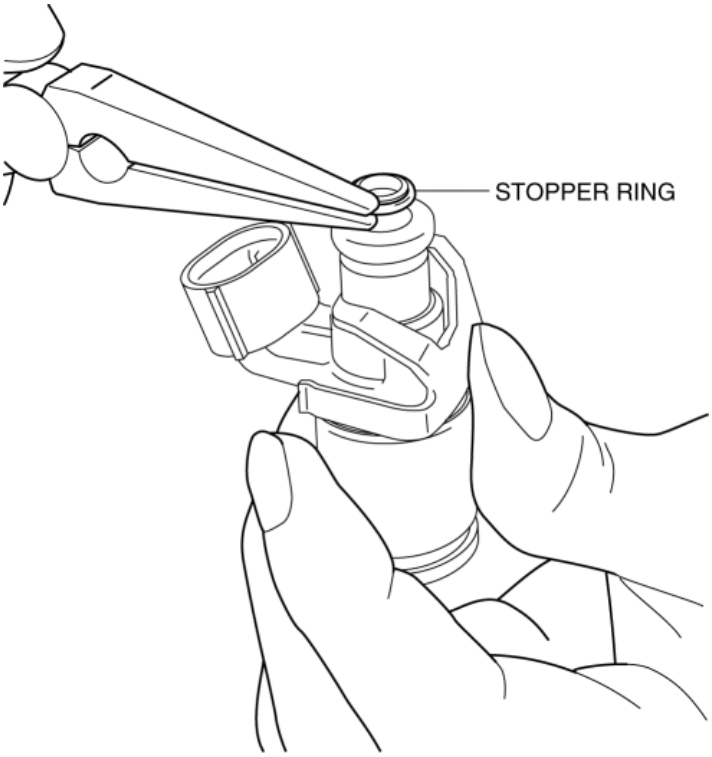

Teflon Seal Removal Note

NOTE:

- When stretching the teflon seal, do not damage the fuel injector with the tool.

1. Stretch the teflon seal as shown in the figure.

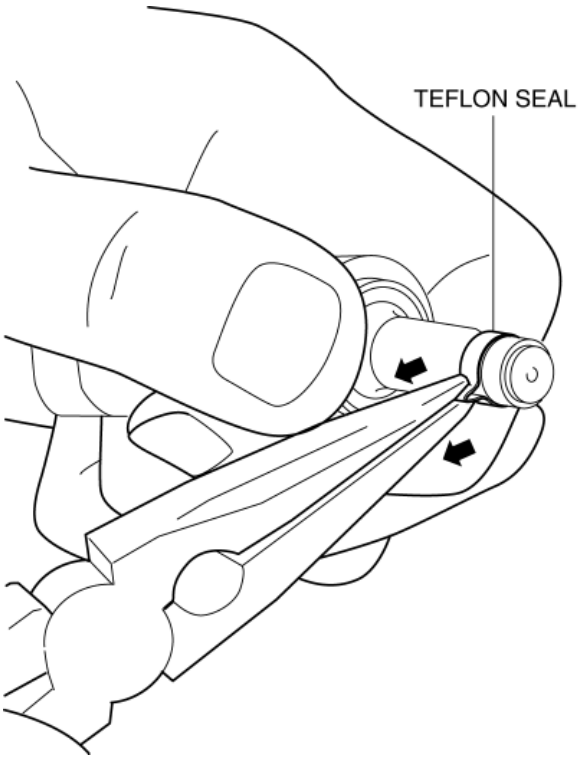

2. Remove the teflon seal as shown in the figure.

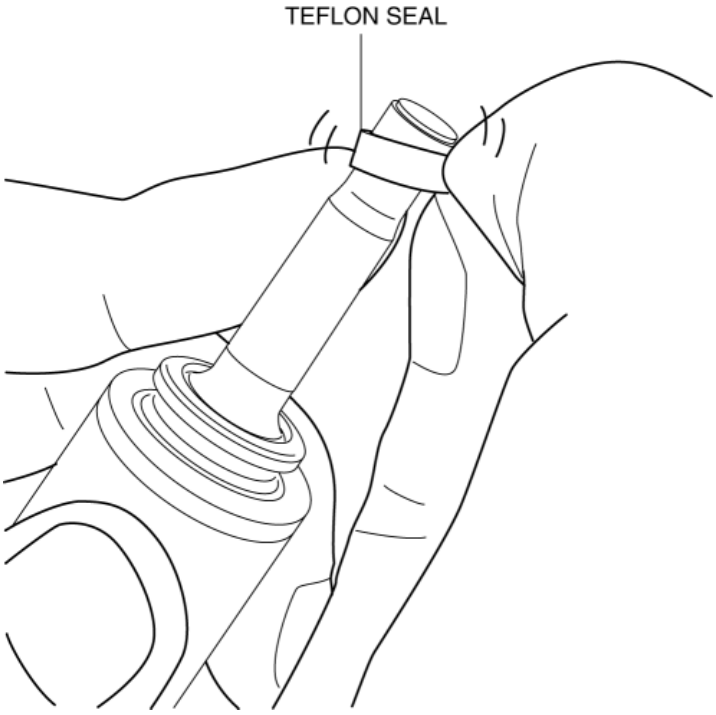

Teflon Seal Installation Note

NOTE:

- 49 D013 102, 49 D013 103, and 49 D013 104 are component parts for 49 D013 1A0.

1. Apply engine oil to the **SST**.

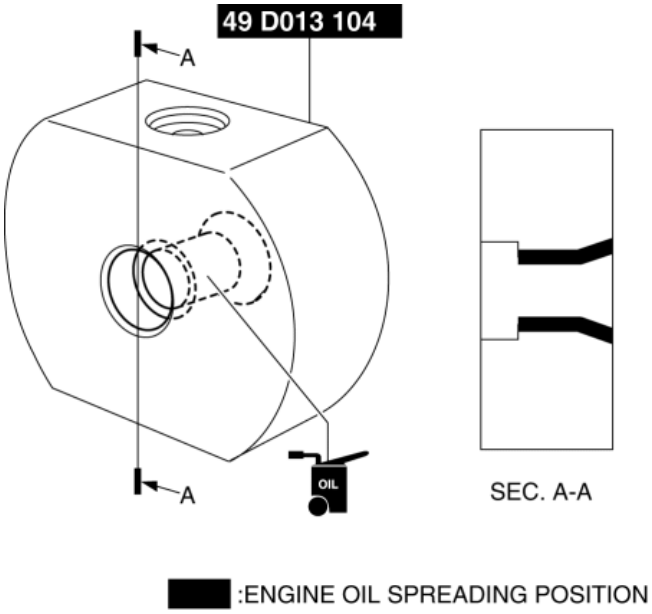

2. Install the **SST** with the mark on the **SST** facing the fuel injector.

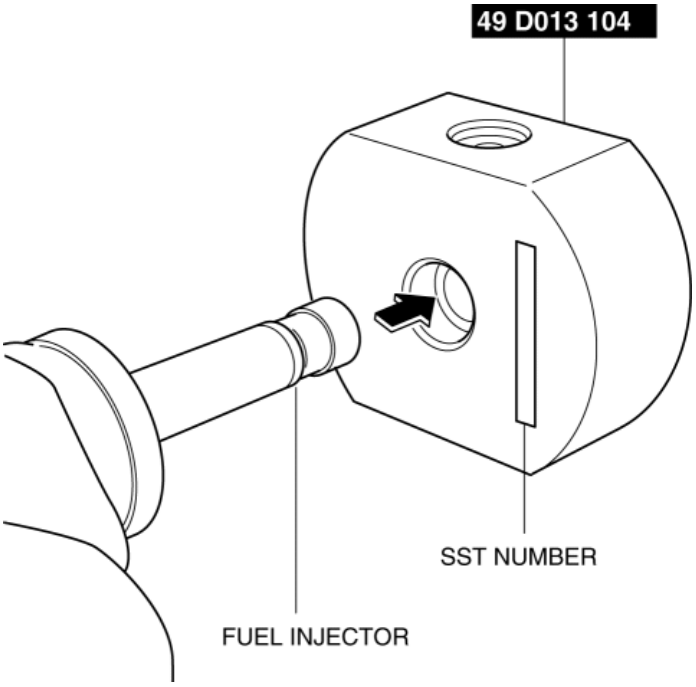

3. Insert a new teflon seal onto the **SST**.

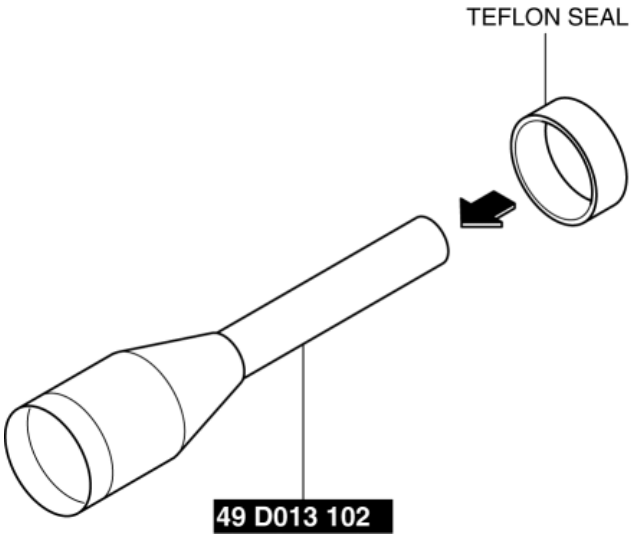

4. Install the **SST** equipped with the teflon seal to the end of the fuel injector.

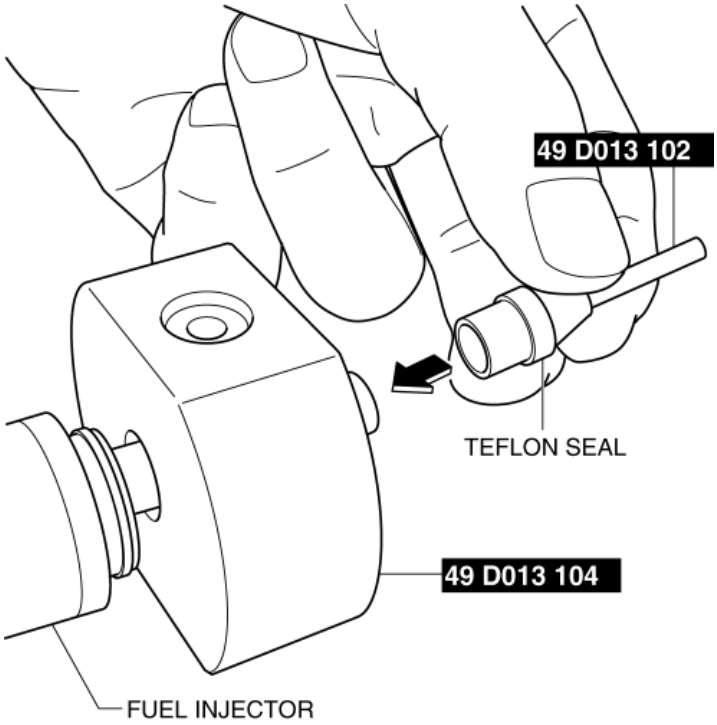

5. Using the **SST**, press on the teflon seal to the fuel injector side.

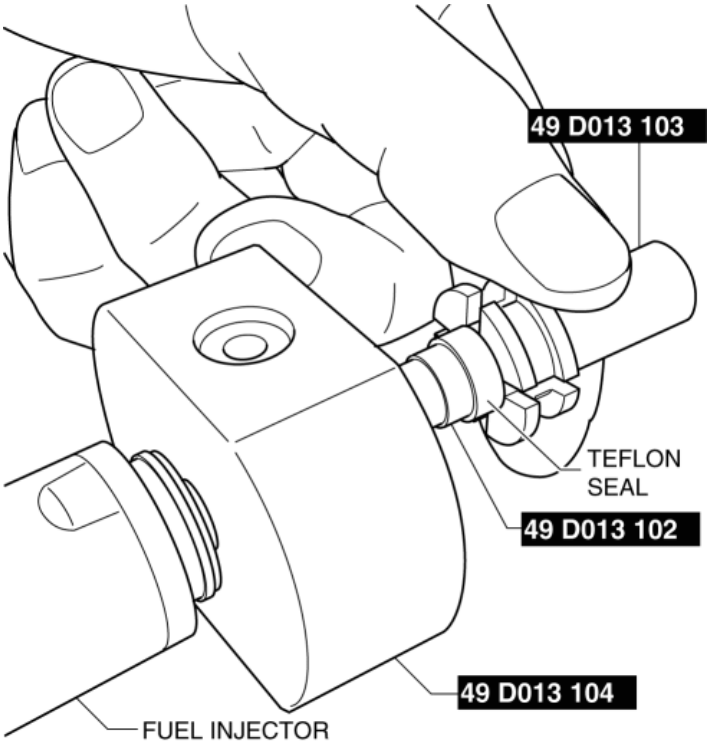

6. Press on the teflon seal to the position indicated in the figure, then remove the **SST**.

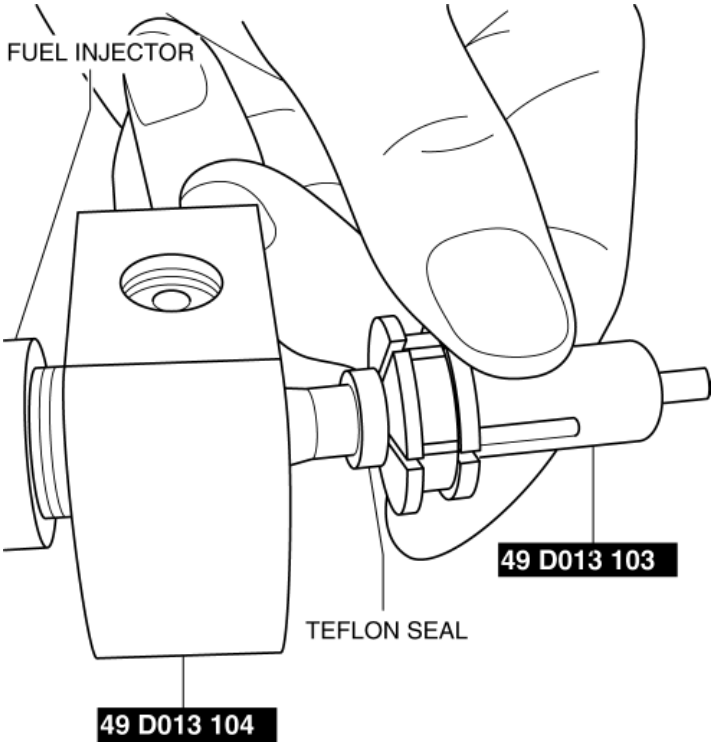

7. Install the teflon seal to the fuel injector by hand and remove the **SST**.

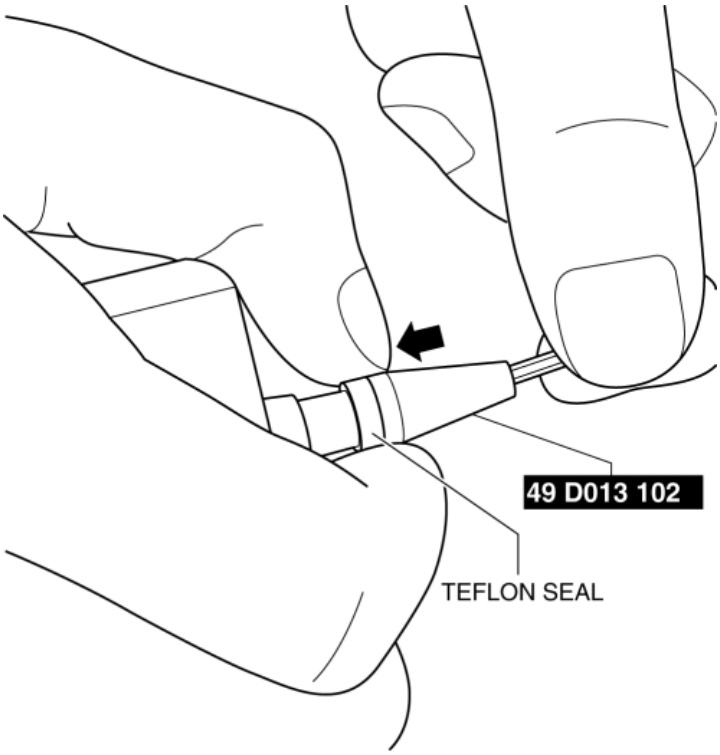

8. Slide the **SST** to the end of the fuel injector.

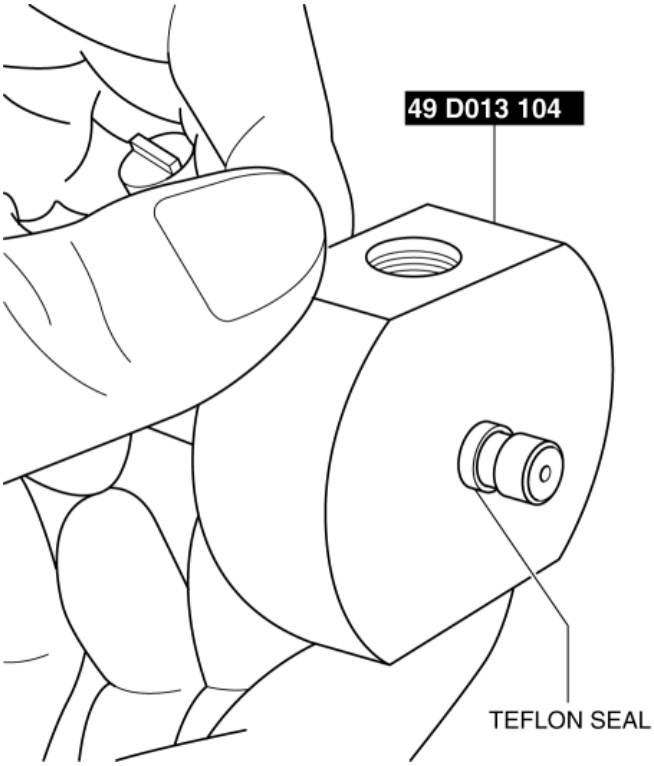

9. Hold the **SST** at the position shown in the figure and correctly position the teflon seal for more than 30 sec.

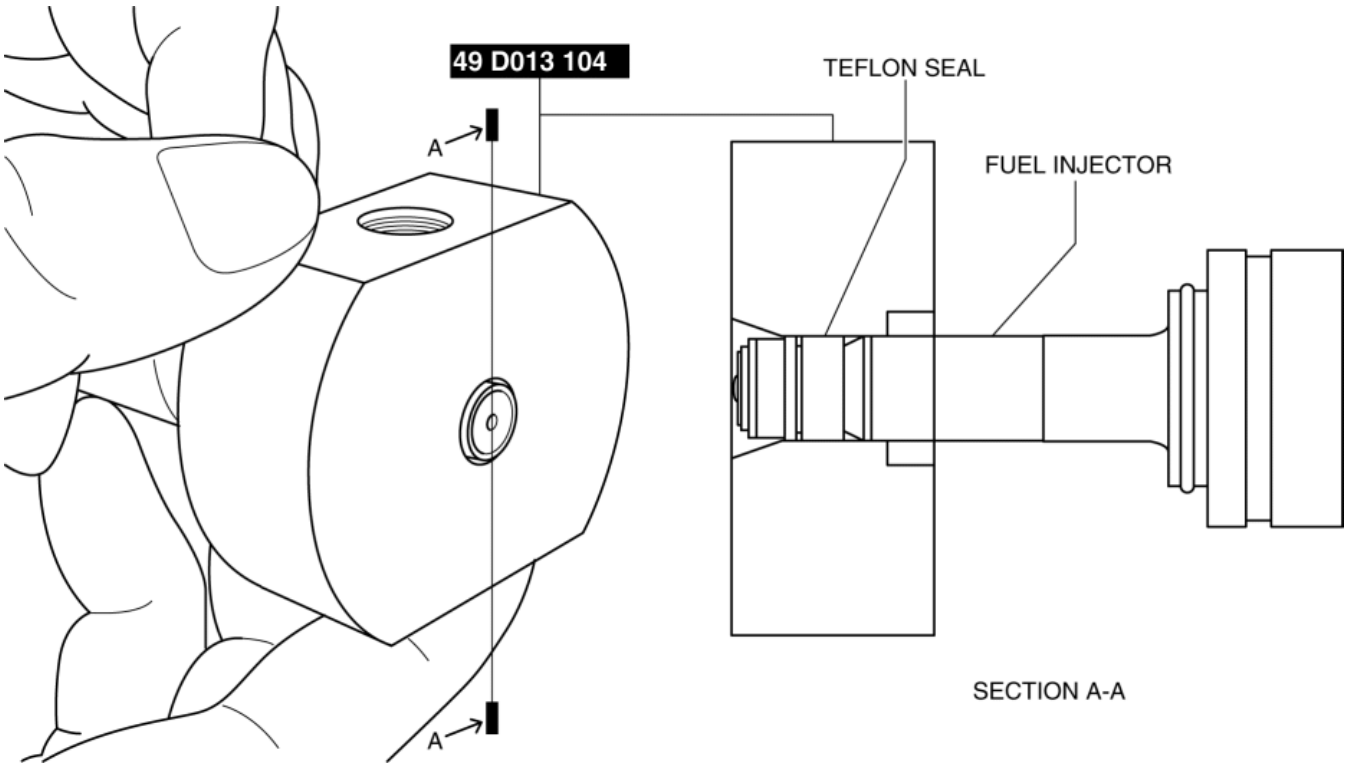

Back-up Ring Installation Note

1. Install the back-up ring being, making sure it is installed in the right direction.

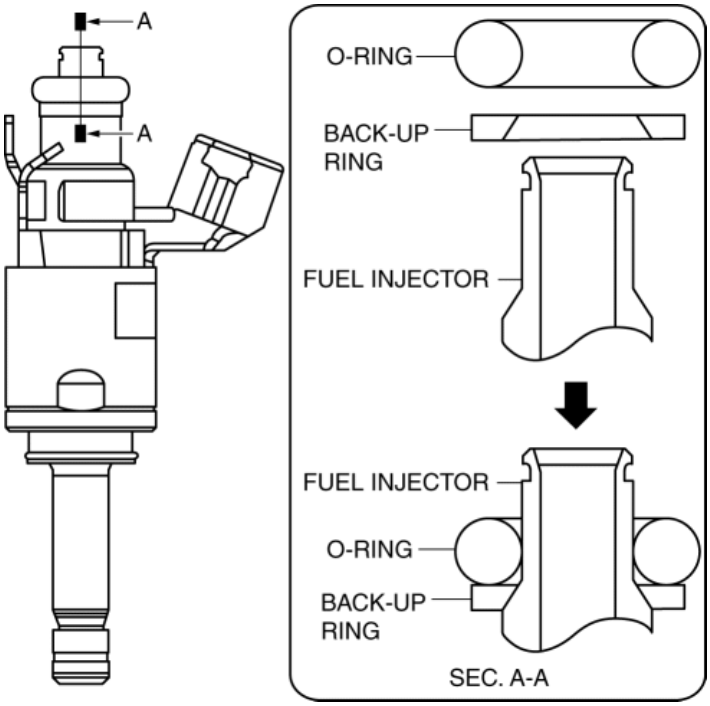

2. After installing the back-up ring, verify that it is installed correctly.

BACK-UP RING

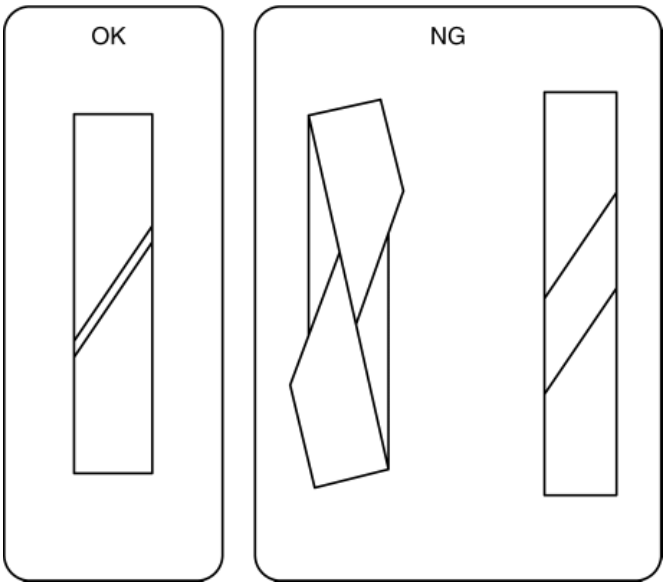

Stopper Ring Installation Note

NOTE:

- Do not insert the stopper ring at an angle, and always press it on straight to the SST.

1. Set a new stopper ring on the **SST** as shown in the figure being careful of the stopper ring orientation, and press down the fuel injector until a click sound is heard.

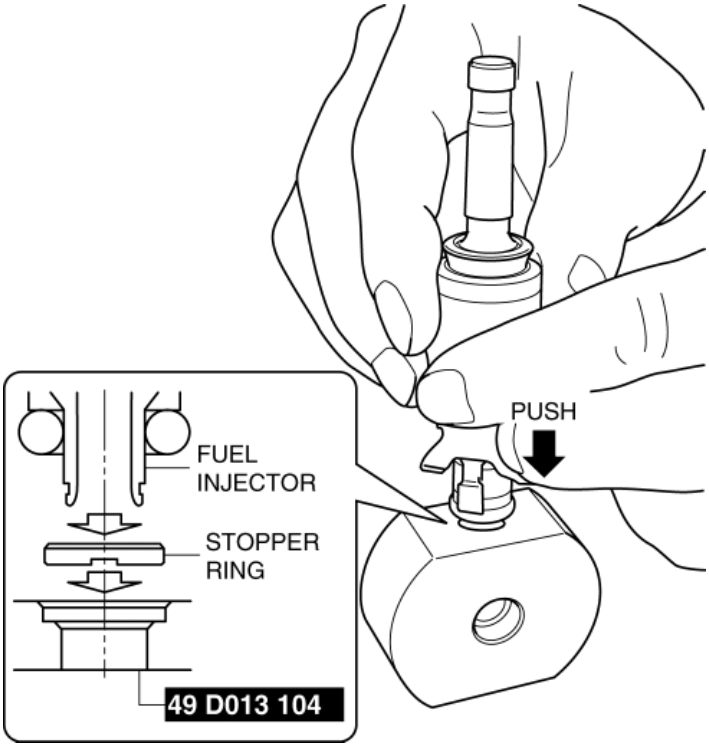

Fuel Injector Installation Note

CAUTION:

- If engine oil is applied to the fuel injector, it could adhere to the injection holes and inhibit the fuel injector function. To prevent this, apply engine oil to the cylinder head side.

1. Apply engine oil to the fuel injector installation holes.
2. Insert the fuel injectors to the installation holes one by one, being careful of the direction the fuel injectors are pointed.

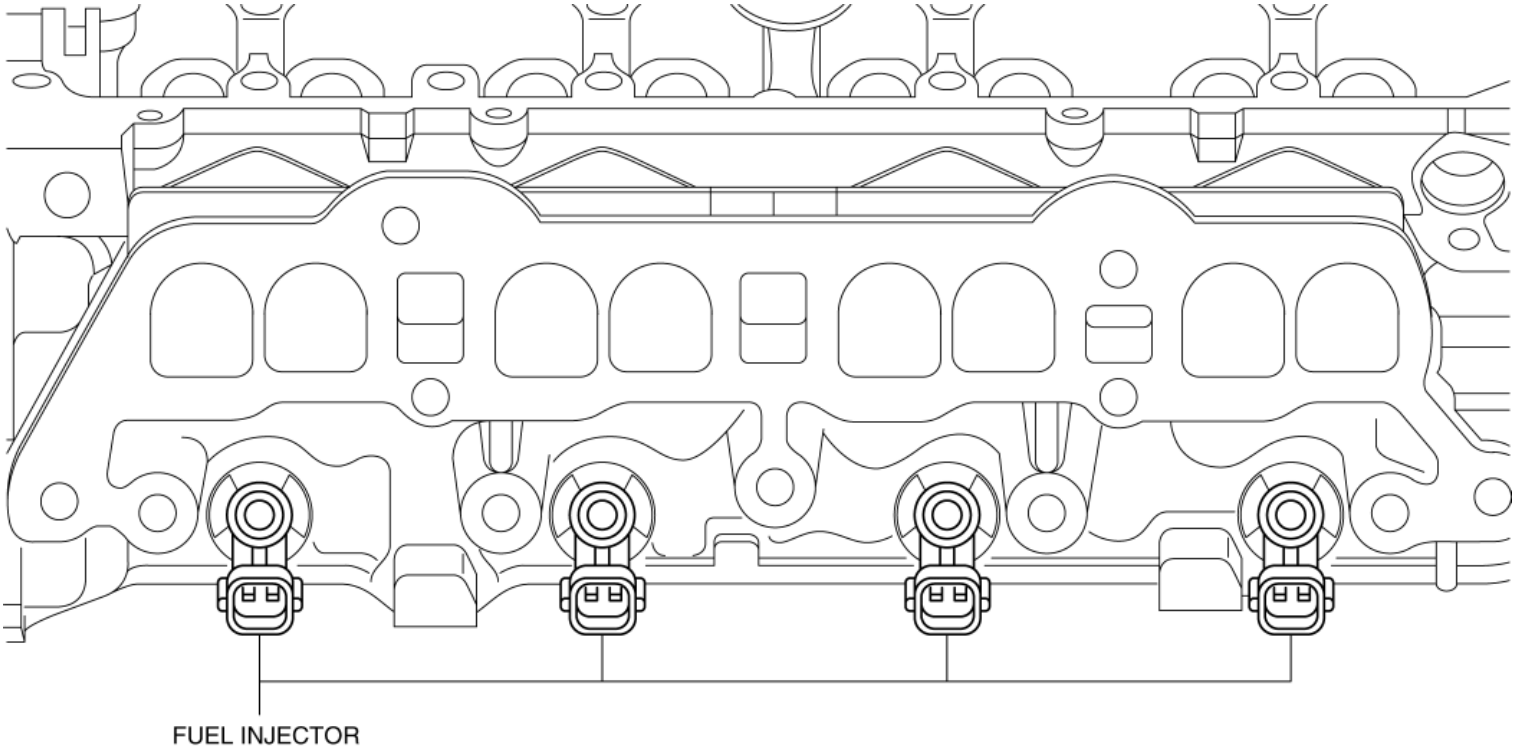

Fuel Distributor Installation Note

1. Install the fuel distributor to the fuel injectors while aligning the projection of the spacer to the notch of the fuel distributor.

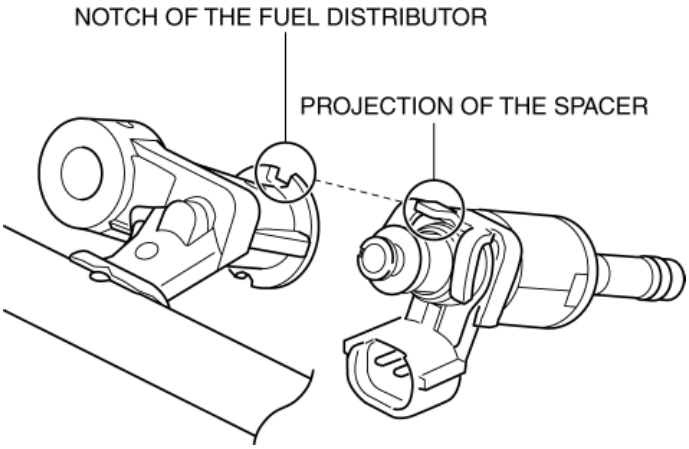

2. Temporarily tighten the fuel distributor installation bolts until their heads contact the fuel distributors.
3. Turn the fuel distributor installation bolts a half a turn in the order shown in the figure.

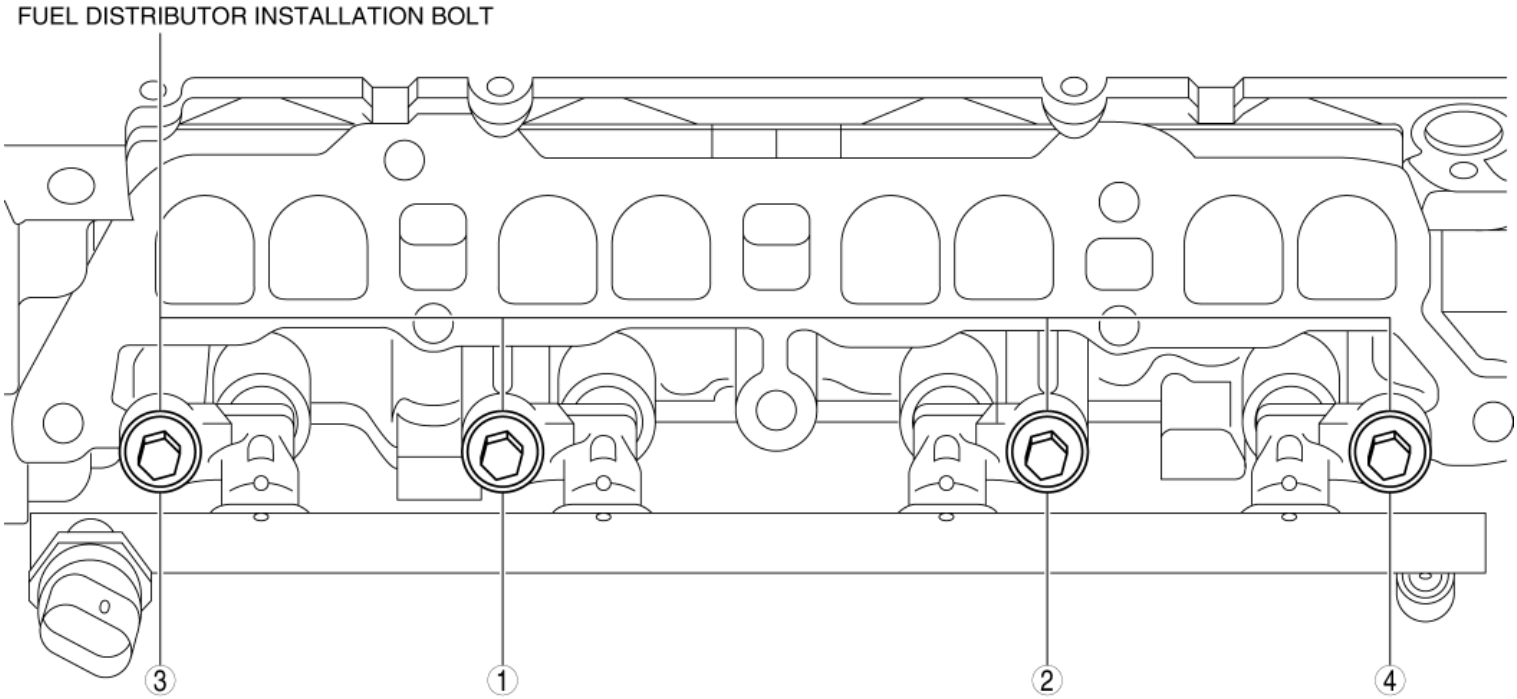

4. Turn the fuel distributor installation bolts another half a turn in the order shown in the figure (one turn including the half turn in Step 3).
5. Tighten the fuel distributor installation bolts in the order shown in the figure.

Fuel distributor installation bolt tightening torque

- 20—26 N·m {2.1—2.6 kgf·m, 15—19 ft·lbf}

2014 - Mazda3 - Engine

FUEL INJECTOR INSPECTION [SKYACTIV-G 2.0, SKYACTIV-G 2.5]

Resistance Inspection

1. Disconnect the negative battery cable. (See **NEGATIVE BATTERY CABLE DISCONNECTION/CONNECTION [SKYACTIV-G 2.0, SKYACTIV-G 2.5]**.)

2. Remove the intake manifold. (See **INTAKE-AIR SYSTEM REMOVAL/INSTALLATION [SKYACTIV-G 2.0, SKYACTIV-G 2.5]**.)

3. Disconnect the fuel injector connector.

4. Inspect the resistance between fuel injector terminals A and B.

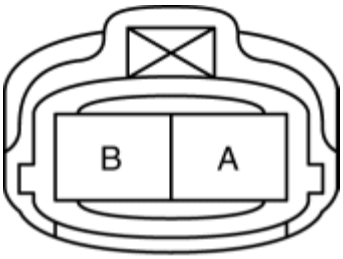

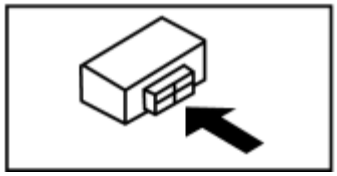

Fuel injector resistance

- 1.74—2.04 ohms [20 °C {68 °F}]
- If not within the specification, replace the fuel injector. (See **FUEL INJECTOR REMOVAL/INSTALLATION [SKYACTIV-G 2.0, SKYACTIV-G 2.5]**.)

2014 - Mazda3 - Engine

FUEL FILTER (HIGH-PRESSURE) REMOVAL/INSTALLATION [SKYACTIV-G 2.0, SKYACTIV-G 2.5]

WARNING:

- Fuel is very flammable liquid. If fuel spills or leaks from the pressurized fuel system, it will cause serious injury or death and facility breakage. Fuel can also irritate skin and eyes. To prevent this, always complete the “Fuel Line Safety Procedure”, while referring to the “BEFORE SERVICE PRECAUTION”.
- A person charged with static electricity could cause a fire or explosion, resulting in death or serious injury. Before draining fuel, make sure to discharge static electricity by touching the vehicle body.

1. Complete the “BEFORE SERVICE PRECAUTION”. (See **BEFORE SERVICE PRECAUTION [SKYACTIV-G 2.0, SKYACTIV-G 2.5]**.)

2. Disconnect the negative battery cable. (See **NEGATIVE BATTERY CABLE DISCONNECTION/CONNECTION [SKYACTIV-G 2.0, SKYACTIV-G 2.5]**.)

3. Remove the rear seat cushion. (See **REAR SEAT CUSHION REMOVAL/INSTALLATION**.)

4. Remove the service hole cover.

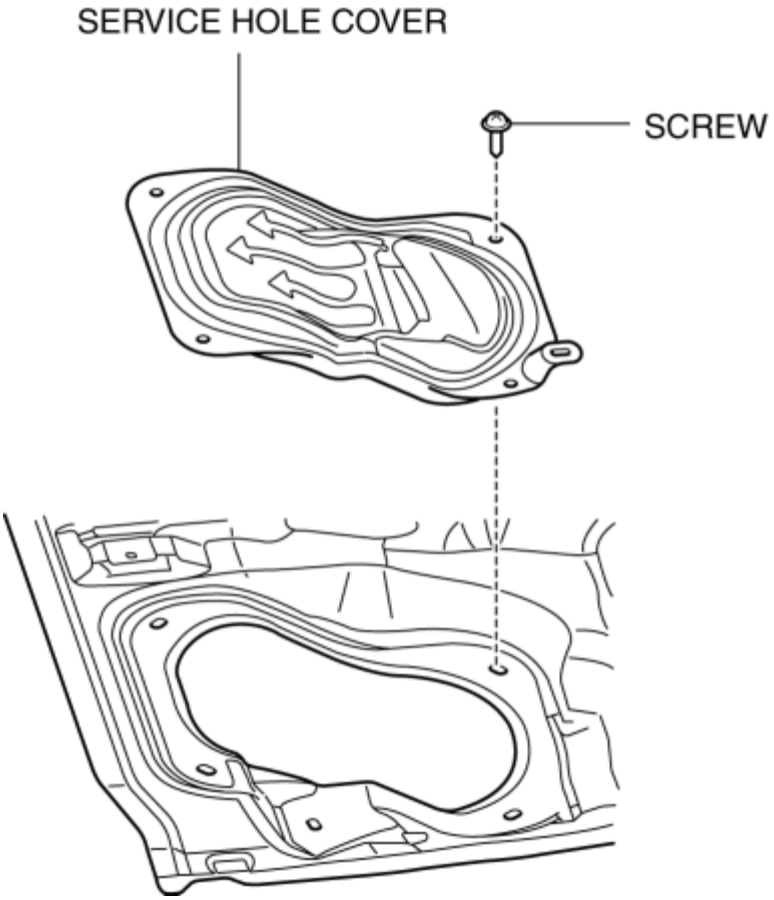

FUEL PUMP UNIT REMOVAL/INSTALLATION [SKYACTIV-G 2.0,

5. Remove the fuel pump unit. (See **SKYACTIV-G 2.5]**.)

6. Remove the fuel filter (high-pressure). (See **FUEL PUMP UNIT DISASSEMBLY/ASSEMBLY [SKYACTIV-G 2.0, SKYACTIV-G 2.5]**.)

7. Install in the reverse order of removal.

8. Complete the “AFTER SERVICE PRECAUTION”. (See **AFTER SERVICE PRECAUTION [SKYACTIV-G 2.0, SKYACTIV-G 2.5]**.)

2014 - Mazda3 - Engine

FUEL PUMP CONTROL MODULE REMOVAL/INSTALLATION [SKYACTIV-G 2.0, SKYACTIV-G 2.5]

1. Disconnect the negative battery cable. (See **NEGATIVE BATTERY CABLE DISCONNECTION/CONNECTION [SKYACTIV-G 2.0, SKYACTIV-G 2.5]**.)

2. Tip the rear seat back (LH). (See **REAR SEAT BACK REMOVAL/INSTALLATION**.)

3. Remove in the order indicated in the table.

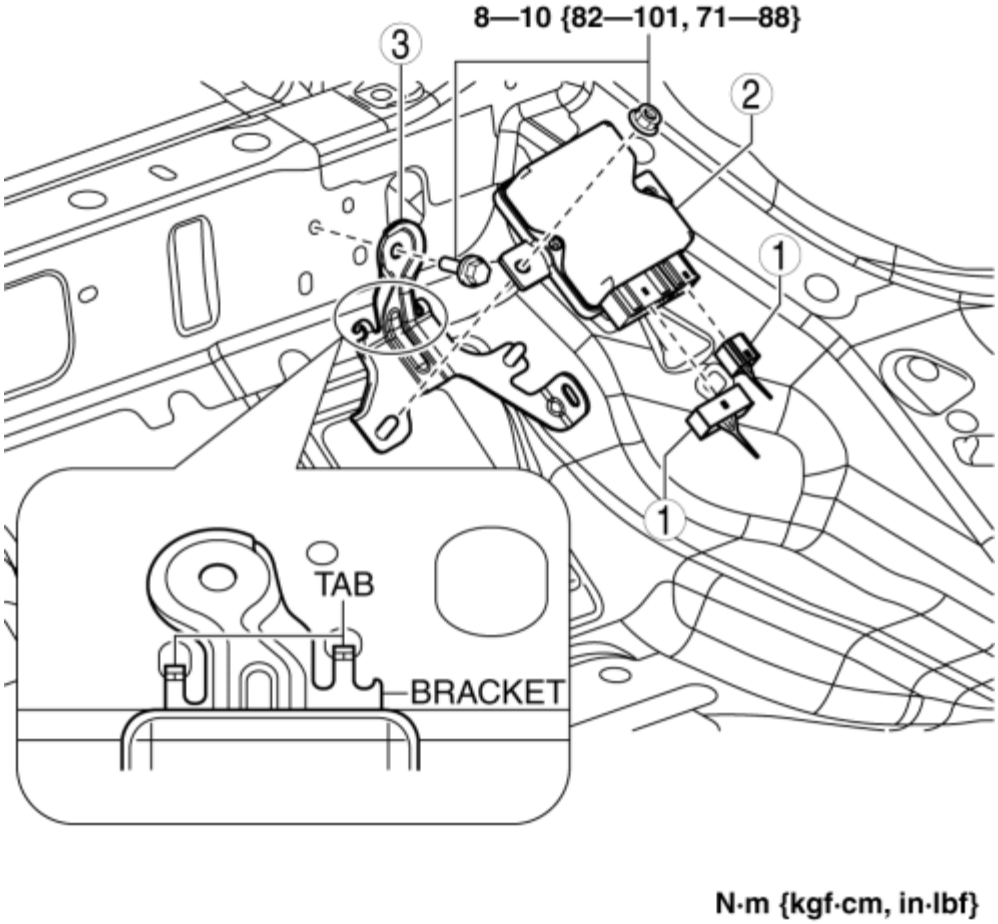

1	Fuel pump control module connector
2	Fuel pump control module
3	Fuel pump control module bracket

4. Install in the reverse order of removal.

FUEL PUMP CONTROL MODULE REMOVAL/INSTALLATION [SKYACTIV-G 2.0, SKYACTIV-G 2.5]

2014 - Mazda3 - Engine

FUEL PUMP CONTROL MODULE INSPECTION [SKYACTIV-G 2.0, SKYACTIV-G 2.5]

1. Perform the KOEO self-test. (See **KOEO/KOER SELF TEST [SKYACTIV-G 2.0, SKYACTIV-G 2.5]**.)

2. Verify that a fuel pump control module related DTC is detected. (See **ON-BOARD DIAGNOSTIC TEST [SKYACTIV-G 2.0, SKYACTIV-G 2.5]**.)

    - If DTCs are detected, repair the malfunctioning part according to the applicable DTC troubleshooting. (See **DTC TABLE [SKYACTIV-G 2.0, SKYACTIV-G 2.5]**.)
    - If a DTC is not detected, go to the next step.

3. Inspect the following:

    - Fuel pump control module damage
    - Fuel pump control module connector damage or corrosion
        - If there is any malfunction, repair or replace the malfunctioning part.

2014 - Mazda3 - Engine

EXHAUST SYSTEM INSPECTION [SKYACTIV-G 2.0, SKYACTIV-G 2.5]

1. Start the engine and inspect each exhaust system component for exhaust gas leakage.
    - If there is leakage, repair or replace the appropriate component. (See **EXHAUST SYSTEM REMOVAL/INSTALLATION [SKYACTIV-G 2.0, SKYACTIV-G 2.5]**.)

2014 - Mazda3 - Engine

EXHAUST SYSTEM REMOVAL/INSTALLATION [SKYACTIV-G 2.0, SKYACTIV-G 2.5]

WARNING:

- A hot engine and exhaust system can cause severe burns. Turn off the engine and wait until they are cool before removing the exhaust system.

1. Disconnect the negative battery cable. (See **NEGATIVE BATTERY CABLE DISCONNECTION/CONNECTION [SKYACTIV-G 2.0, SKYACTIV-G 2.5]**.)
2. Remove in the order indicated in the table.
3. Remove the insulator. (See **Exhaust System Insulator Removal/Installation**.)
4. Install in the reverse order of removal.

Step 1

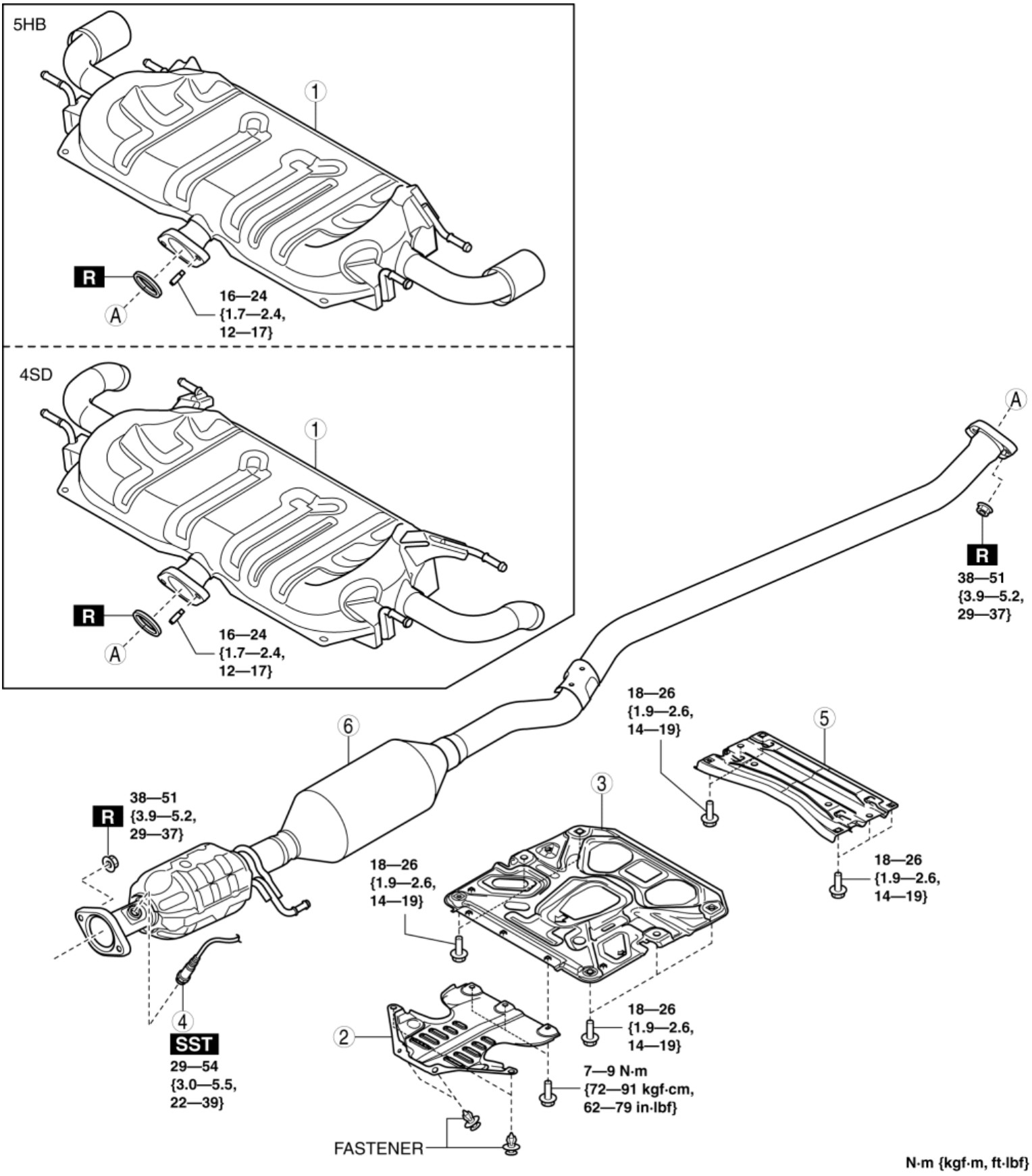

1	Main silencer
2	Insulator

3	Brace bar (See **Brace Bar Removal Note**.)
4	HO2S (See **HEATED OXYGEN SENSOR (HO2S) REMOVAL/INSTALLATION [SKYACTIV-G 2.0, SKYACTIV-G 2.5]**.)
5	Tunnel member
6	TWC

Step 2

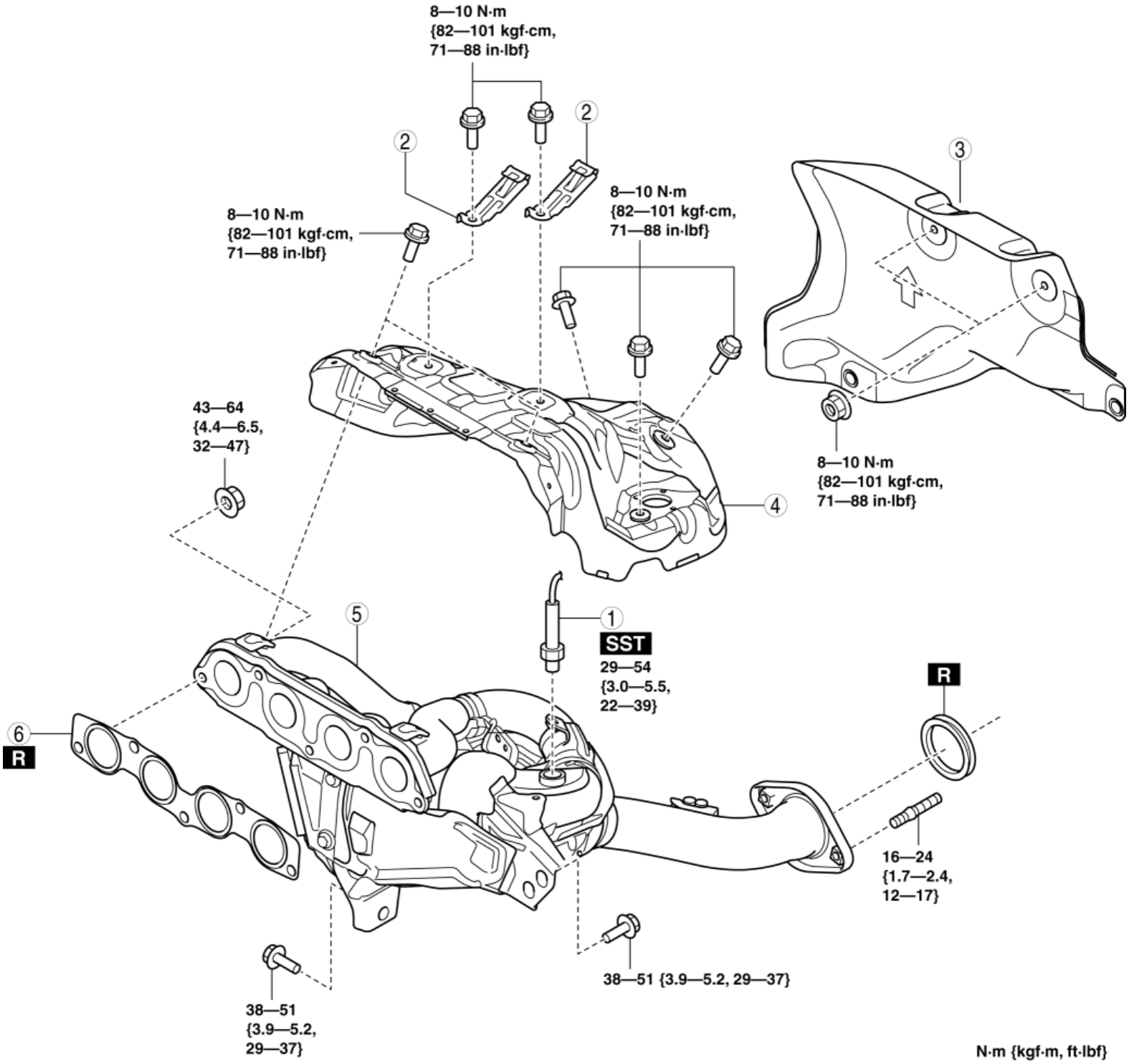

1	A/F sensor (See **AIR FUEL RATIO (A/F) SENSOR REMOVAL/INSTALLATION [SKYACTIV-G 2.0, SKYACTIV-G 2.5]**.)
2	Clip
3	Insulator
4	Exhaust manifold insulator (See **Exhaust Manifold Insulator Removal Note**.) (See **Exhaust Manifold Insulator Installation Note**.)
5	Exhaust manifold (WU-TWC) (See **Exhaust Manifold Removal Note**.) (See **Exhaust Manifold Installation Note**.)
6	Exhaust manifold gasket

Exhaust System Insulator Removal/Installation

1. Remove the exhaust system insulator in the order shown in the figure.
2. Install in the reverse order of removal.

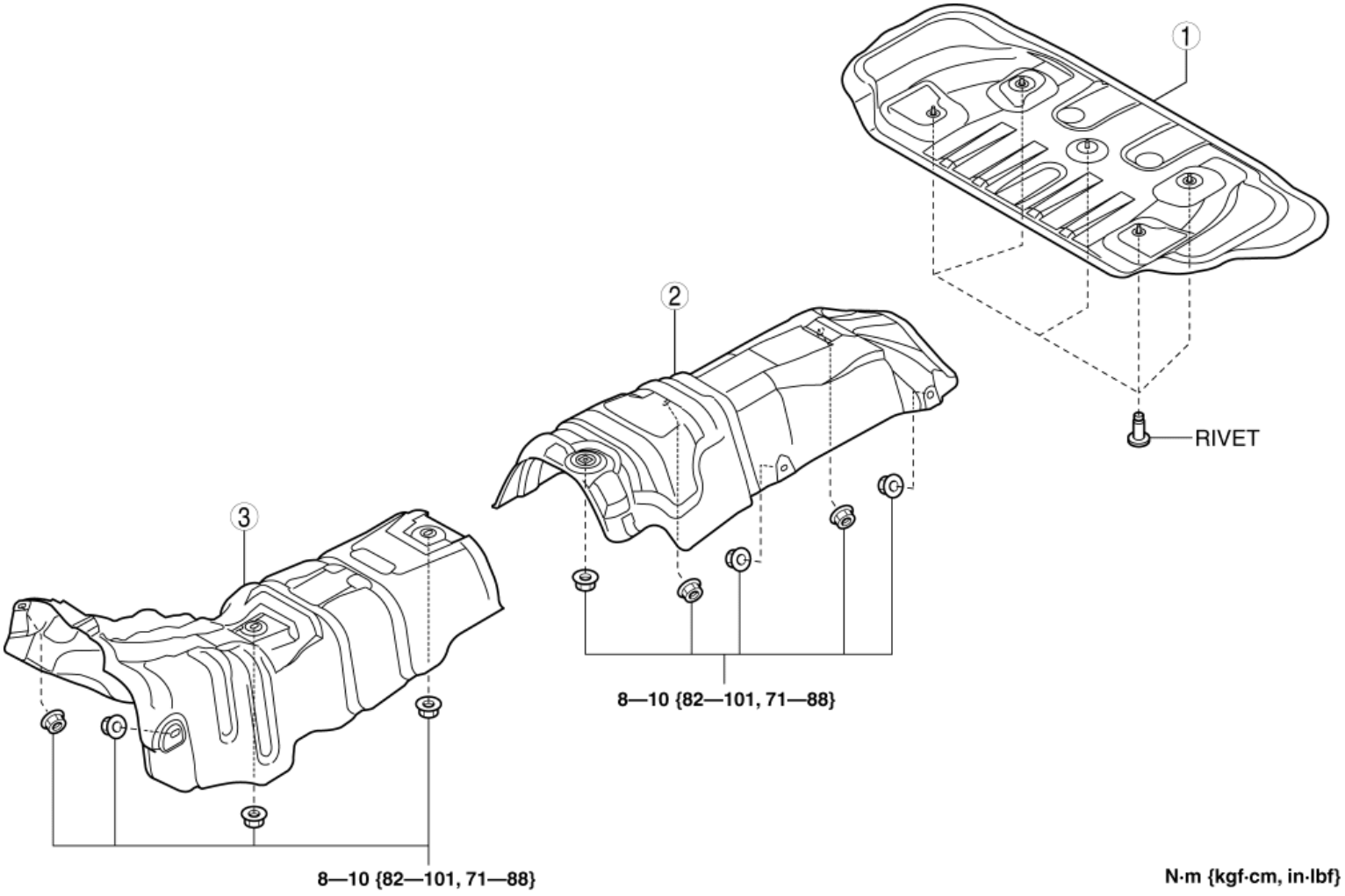

1	Insulator (rear) (See **Insulator (rear) removal note**.)
2	Insulator (middle)
3	Insulator (front)

Insulator (rear) removal note

NOTE:

- The insulator (rear) are installed using rivets.

1. Push out the mandrel using a hammer and punch (**2—2.8 mm {0.08—0.11 in}** diameter).

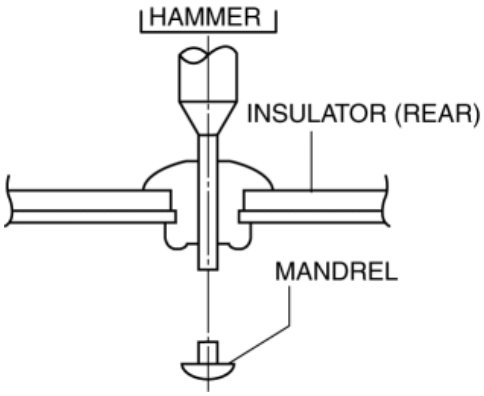

2. Remove the flange using a drill (**5 mm {0.20 in}** drill bit).

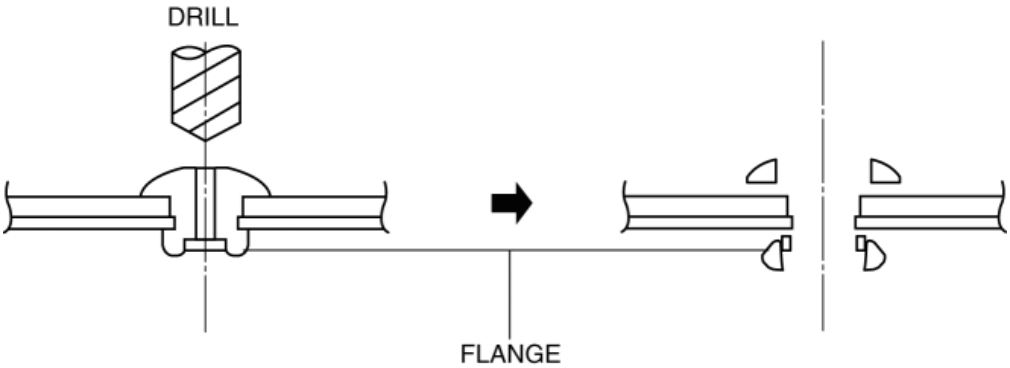

Brace Bar Removal Note

1. Remove the floor under cover. (See **FLOOR UNDER COVER REMOVAL/INSTALLATION**.)
2. Remove the brace bar.

Exhaust Manifold Insulator Removal Note

1. Remove the insulator as shown in the figure.

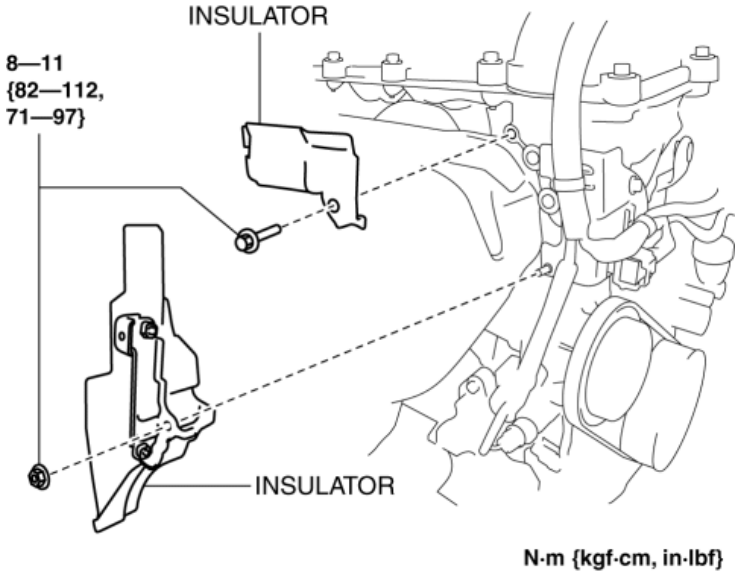

2. Remove the No.1 engine mount rubber. (See **ENGINE REMOVAL/INSTALLATION [SKYACTIV-G 2.0, SKYACTIV-G 2.5]**.)
3. Move the engine.
4. Remove the exhaust manifold insulator.

Exhaust Manifold Removal Note

NOTE:

- When removing the exhaust manifold, the bracket installed under the exhaust manifold does not have to be removed. Remove the exhaust manifold with the bracket installed.

1. Remove the front crossmember. (See **FRONT CROSSMEMBER REMOVAL/INSTALLATION**.)
2. Remove the exhaust manifold.

Exhaust Manifold Installation Note

1. Temporarily tighten the exhaust manifold installation nuts (1) and (2) shown in the figure by hand.

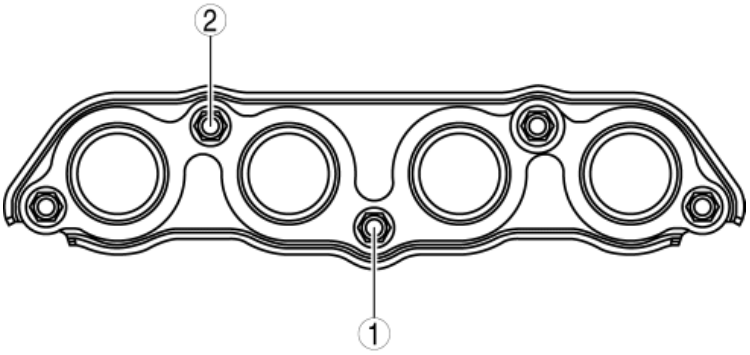

2. Tighten the exhaust manifold installation nuts (1) and (2) shown in the figure to **33—53 N·m {3.4—5.4 kgf·m, 25—39 ft·lbf}**.
3. Temporarily tighten the exhaust manifold installation nuts (3) to (5) shown in the figure by hand.

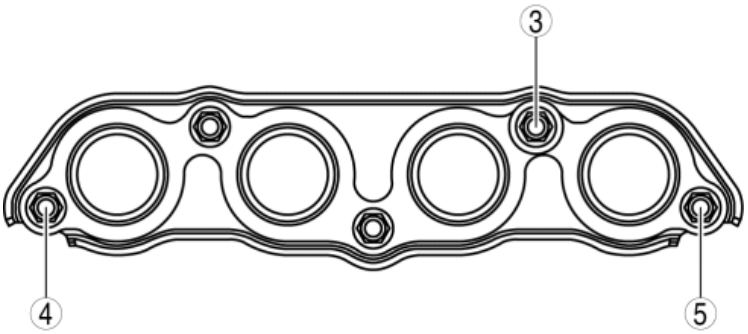

4. Tighten the exhaust manifold installation nuts (3) to (5) shown in the figure.

   Exhaust manifold installation nut tightening torque

   - 43—64 N·m {4.4—6.5 kgf·m, 32—47 ft·lbf}

5. Tighten the exhaust manifold installation nuts (1) and (2) shown in the figure.

   Exhaust manifold installation nut tightening torque

   - 43—64 N·m {4.4—6.5 kgf·m, 32—47 ft·lbf}

6. Temporarily tighten the bolts (6) and (7) shown in the figure.

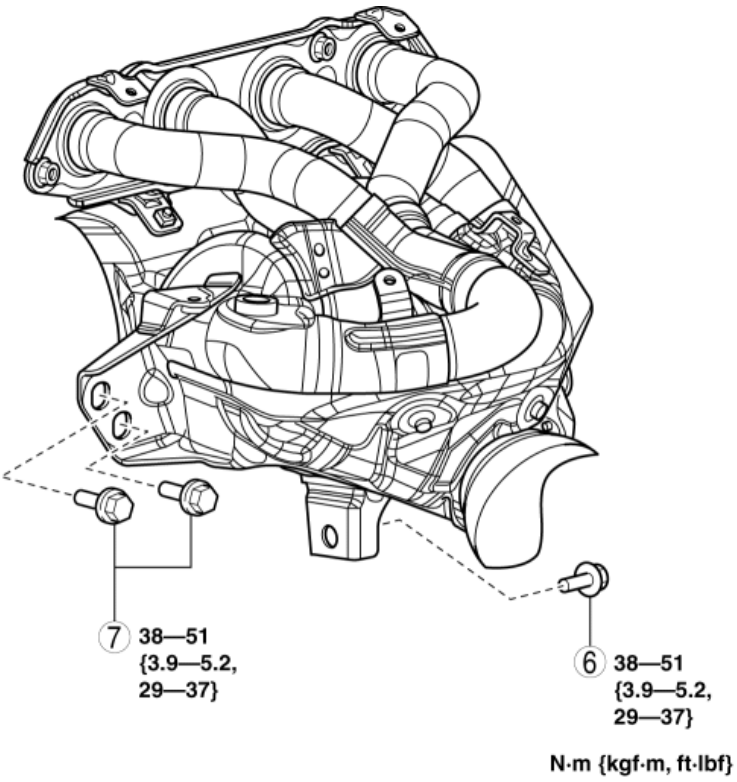

7. Tighten the bolt (6) shown in the figure.

   Exhaust manifold installation bolt tightening torque

   - 38—51 N·m {3.9—5.2 kgf·m, 29—37 ft·lbf}

8. Tighten the bolt (7) shown in the figure.

   Exhaust manifold installation bolt tightening torque

   - 38—51 N·m {3.9—5.2 kgf·m, 29—37 ft·lbf}

Exhaust Manifold Insulator Installation Note

1. Temporarily tighten the exhaust manifold insulator.
2. Tighten the exhaust manifold insulator in the order shown in the figure.

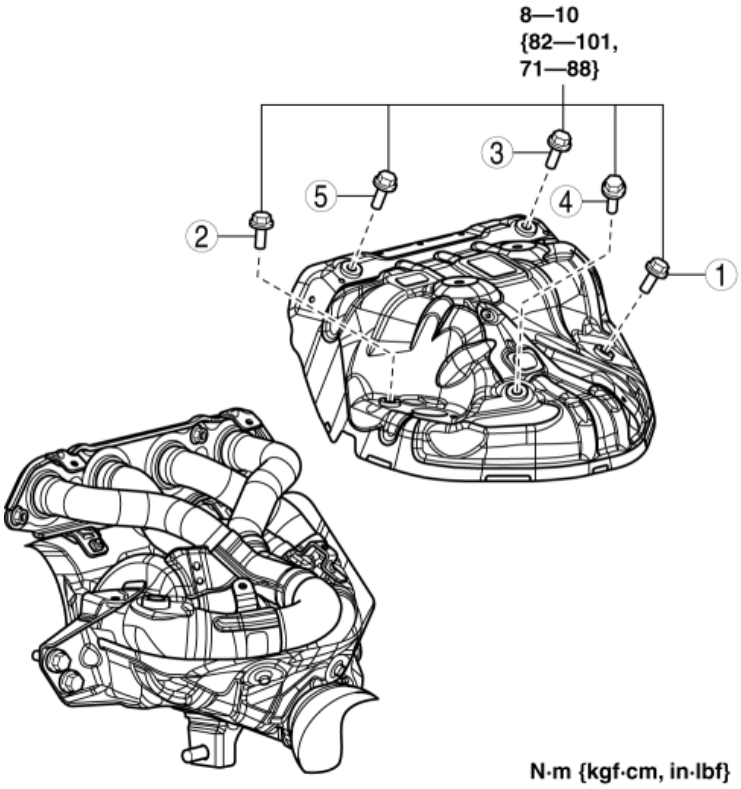

Exhaust manifold insulator tightening torque

- 8—10 N·m {82—101 kgf·cm, 71—88 in·lbf}

2014 - Mazda3 - Engine

EMISSION SYSTEM LOCATION INDEX [SKYACTIV-G 2.0, SKYACTIV-G 2.5]

Engine Compartment Side

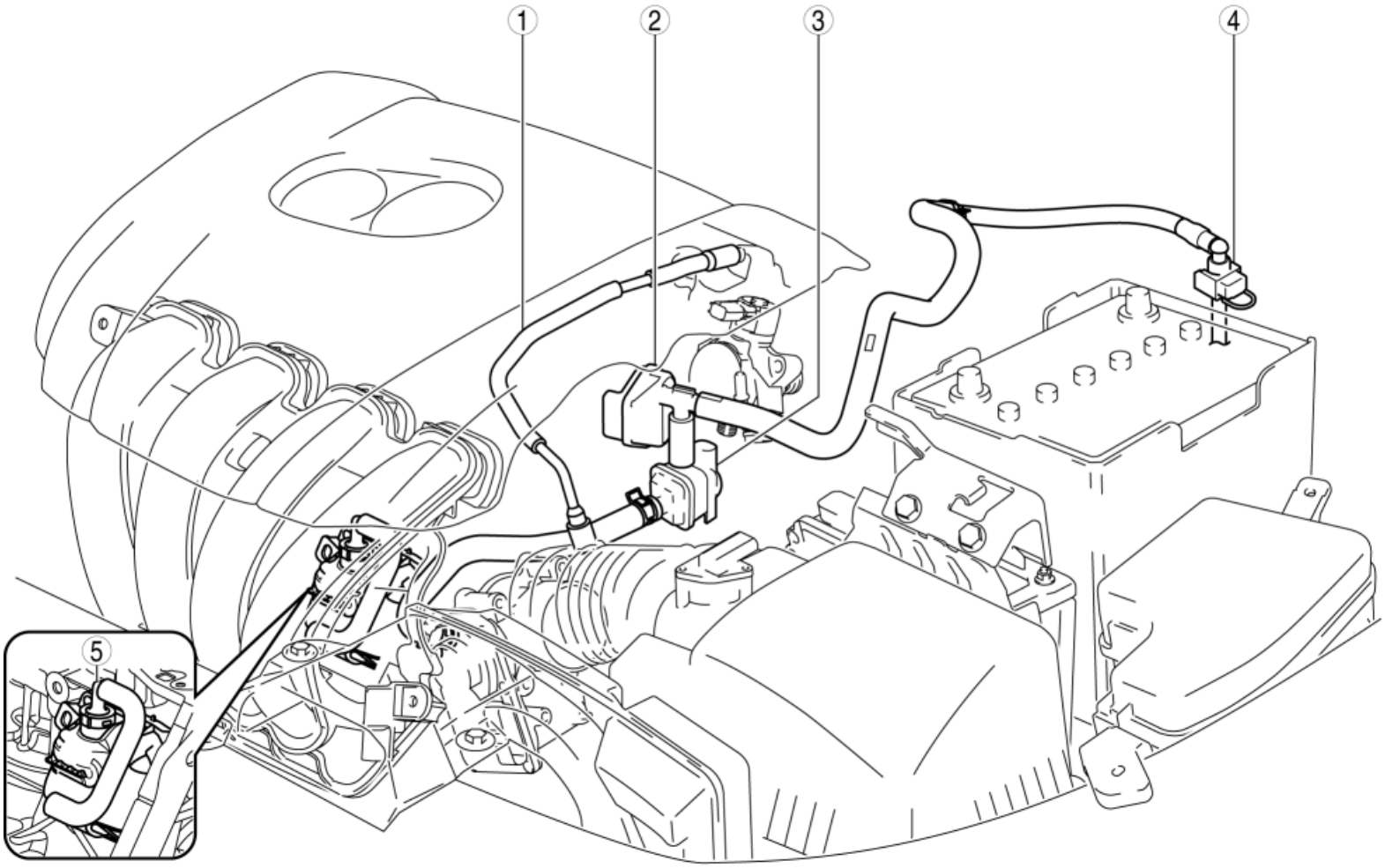

1	Ventilation hose (See **INTAKE-AIR SYSTEM REMOVAL/INSTALLATION [SKYACTIV-G 2.0, SKYACTIV-G 2.5]**.)
2	Catch tank (See **PURGE SOLENOID VALVE REMOVAL/INSTALLATION [SKYACTIV-G 2.0, SKYACTIV-G 2.5]**.) (See **CATCH TANK INSPECTION [SKYACTIV-G 2.0, SKYACTIV-G 2.5]**.)
3	Purge solenoid valve (See **PURGE SOLENOID VALVE REMOVAL/INSTALLATION [SKYACTIV-G 2.0, SKYACTIV-G 2.5]**.) (See **PURGE SOLENOID VALVE INSPECTION [SKYACTIV-G 2.0, SKYACTIV-G 2.5]**.)
4	Quick release connector

	(See **QUICK RELEASE CONNECTOR (EMISSION SYSTEM) REMOVAL/INSTALLATION [SKYACTIV-G 2.0, SKYACTIV-G 2.5]**.)
5	PCV valve (See **POSITIVE CRANKCASE VENTILATION (PCV) VALVE REMOVAL/INSTALLATION [SKYACTIV-G 2.0, SKYACTIV-G 2.5]**.) (See **POSITIVE CRANKCASE VENTILATION (PCV) VALVE INSPECTION [SKYACTIV-G 2.0, SKYACTIV-G 2.5]**.)

Exhaust System Side

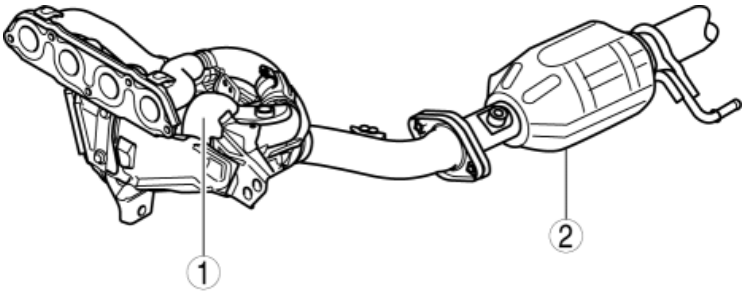

1	WU-TWC (See **EXHAUST SYSTEM REMOVAL/INSTALLATION [SKYACTIV-G 2.0, SKYACTIV-G 2.5]**.) (See **WARM-UP THREE-WAY CATALYTIC CONVERTER (WU-TWC) INSPECTION [SKYACTIV-G 2.0, SKYACTIV-G 2.5]**.)
2	TWC (See **EXHAUST SYSTEM REMOVAL/INSTALLATION [SKYACTIV-G 2.0, SKYACTIV-G 2.5]**.)

Fuel Tank Side

U.S.A. and CANADA (4SD)

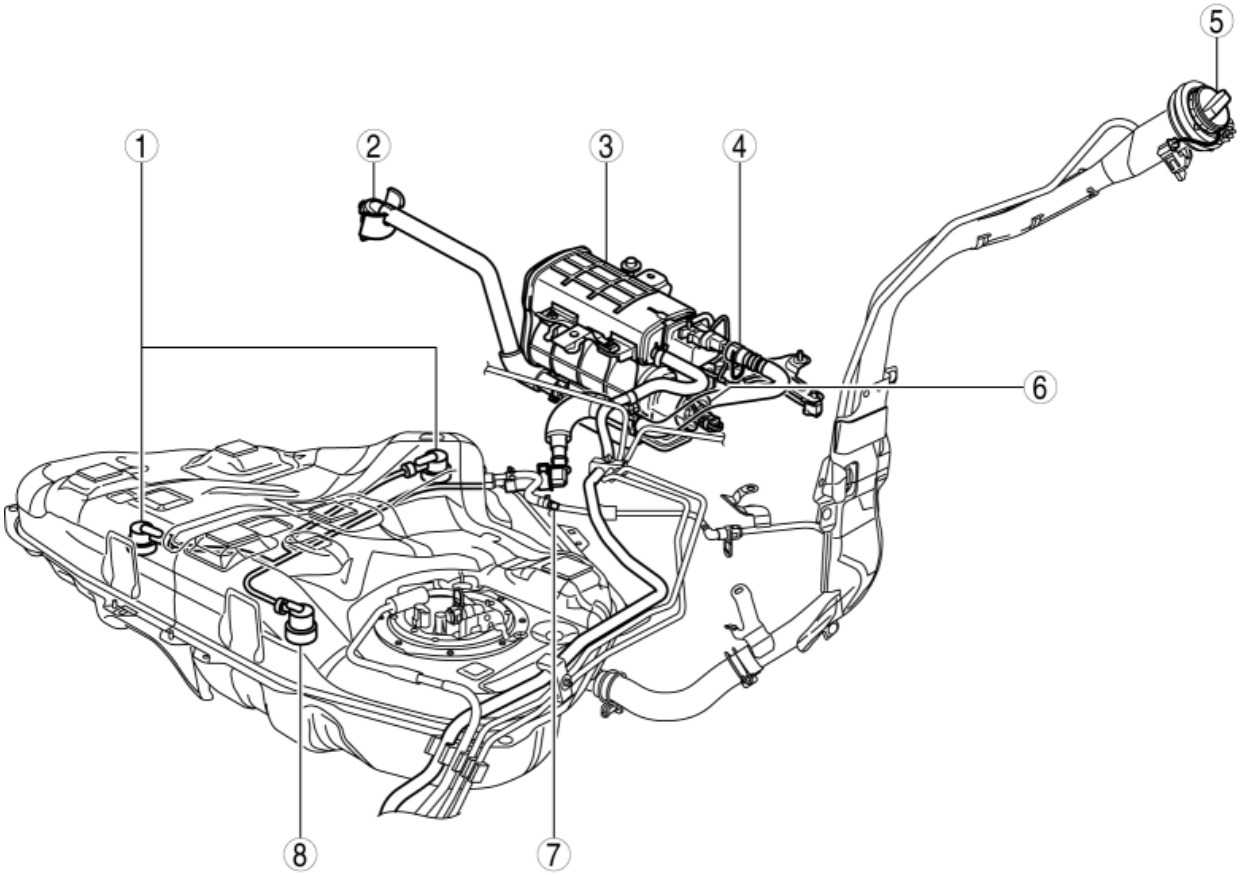

U.S.A. and CANADA (5HB)

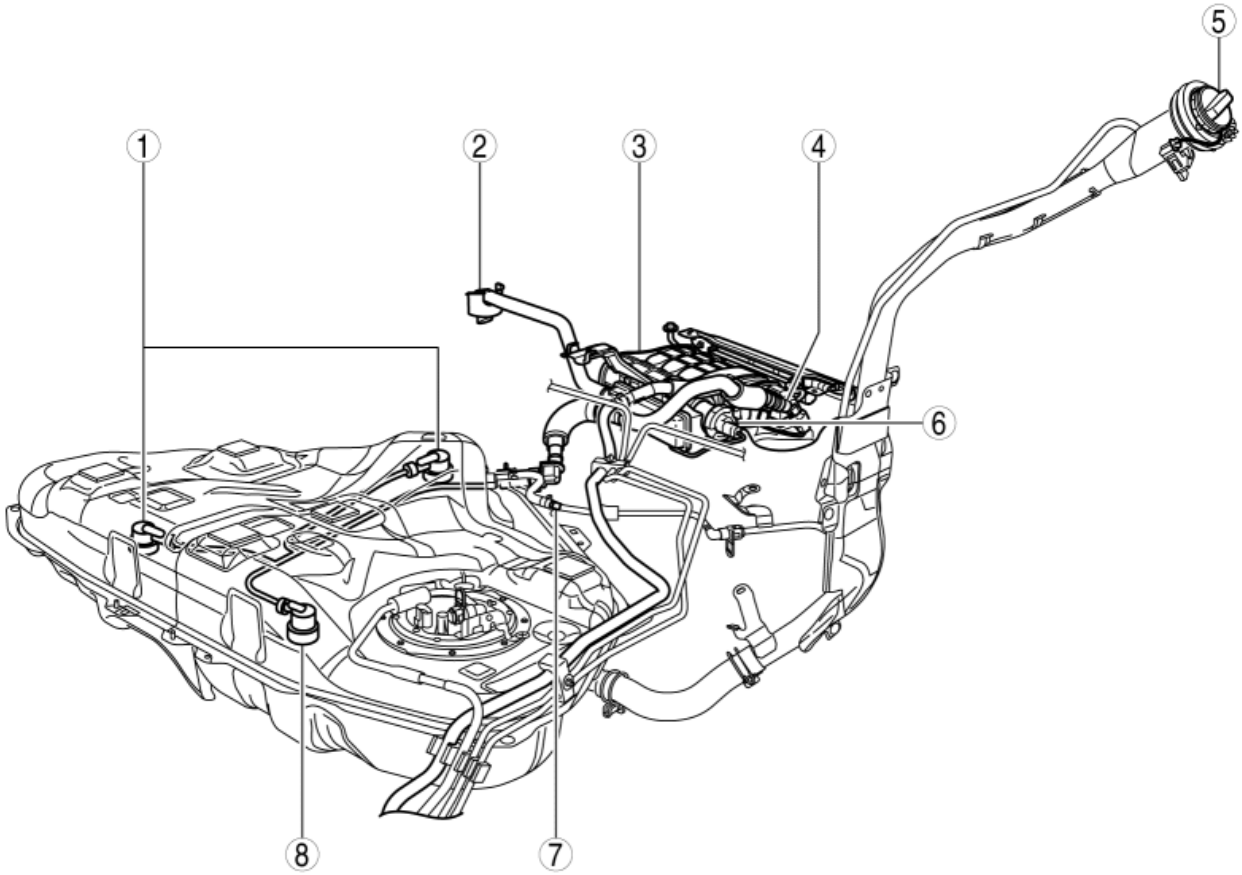

1	Rollover valve

	(See **ROLLOVER VALVE REMOVAL/INSTALLATION [SKYACTIV-G 2.0, SKYACTIV-G 2.5]**.) (See **ROLLOVER VALVE INSPECTION [SKYACTIV-G 2.0, SKYACTIV-G 2.5]**.)
2	Evaporative chamber (See **EVAPORATIVE CHAMBER REMOVAL/INSTALLATION [SKYACTIV-G 2.0, SKYACTIV-G 2.5]**.) (See **EVAPORATIVE CHAMBER INSPECTION [SKYACTIV-G 2.0, SKYACTIV-G 2.5]**.)
3	Charcoal canister (See **CHARCOAL CANISTER REMOVAL/INSTALLATION [SKYACTIV-G 2.0, SKYACTIV-G 2.5]**.) (See **CHARCOAL CANISTER INSPECTION [SKYACTIV-G 2.0, SKYACTIV-G 2.5]**.)
4	Quick release connector (See **QUICK RELEASE CONNECTOR (EMISSION SYSTEM) REMOVAL/INSTALLATION [SKYACTIV-G 2.0, SKYACTIV-G 2.5]**.)
5	Fuel-filler cap (See **FUEL-FILLER PIPE REMOVAL/INSTALLATION [SKYACTIV-G 2.0, SKYACTIV-G 2.5]**.) (See **FUEL-FILLER CAP INSPECTION [SKYACTIV-G 2.0, SKYACTIV-G 2.5]**.)
6	CV solenoid valve (See **CANISTER VENT (CV) SOLENOID VALVE REMOVAL/INSTALLATION [SKYACTIV-G 2.0, SKYACTIV-G 2.5]**.) (See **CANISTER VENT (CV) SOLENOID VALVE INSPECTION [SKYACTIV-G 2.0, SKYACTIV-G 2.5]**.)
7	Check valve (See **CHECK VALVE REMOVAL/INSTALLATION [SKYACTIV-G 2.0, SKYACTIV-G 2.5]**.) (See **CHECK VALVE INSPECTION [SKYACTIV-G 2.0, SKYACTIV-G 2.5]**.)
8	Fuel shut-off valve (See **FUEL SHUT-OFF VALVE REMOVAL/INSTALLATION [SKYACTIV-G 2.0, SKYACTIV-G 2.5]**.) (See **FUEL SHUT-OFF VALVE INSPECTION [SKYACTIV-G 2.0, SKYACTIV-G 2.5]**.)

Except U.S.A. and CANADA

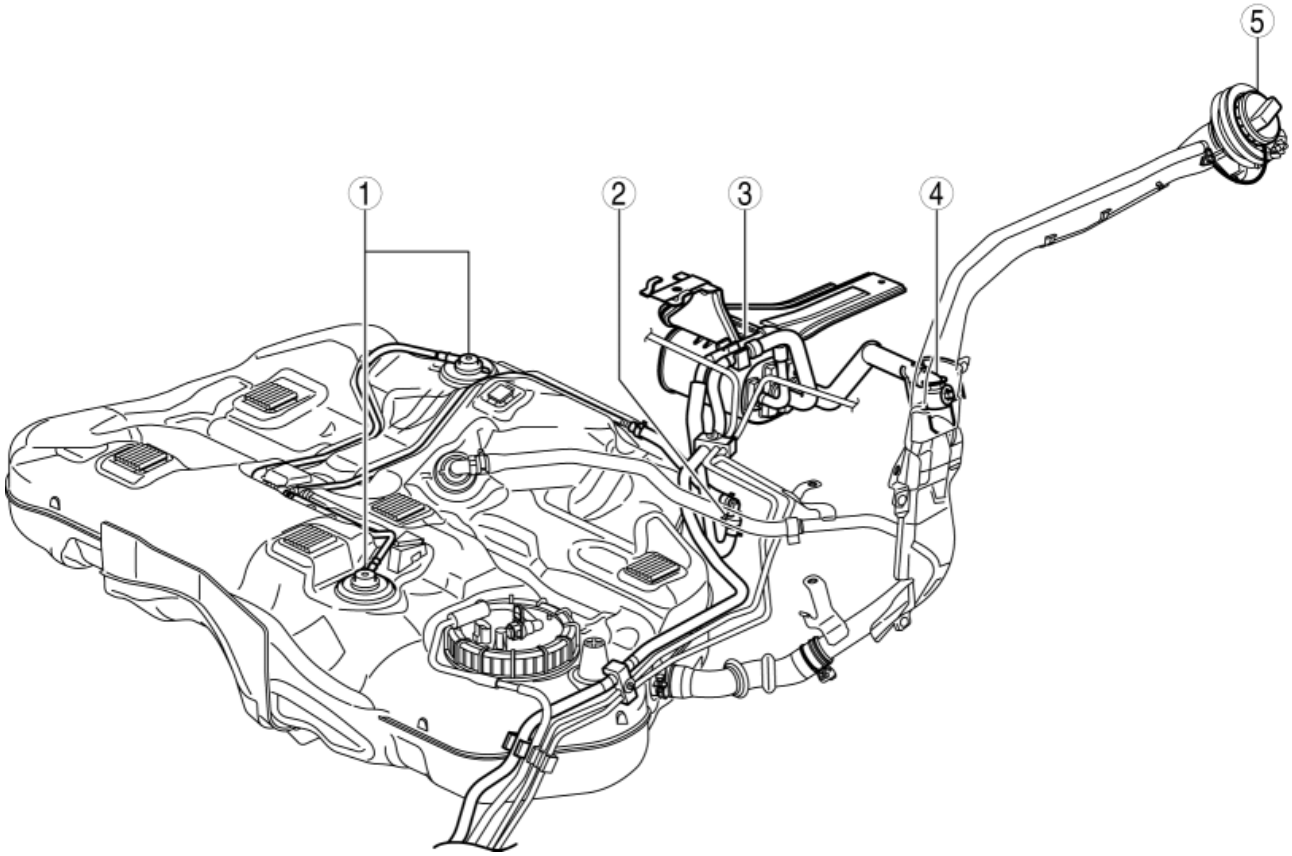

1	Rollover valve (See **ROLLOVER VALVE REMOVAL/INSTALLATION [SKYACTIV-G 2.0, SKYACTIV-G 2.5]**.) (See **ROLLOVER VALVE INSPECTION [SKYACTIV-G 2.0, SKYACTIV-G 2.5]**.)
2	Check valve (See **CHECK VALVE REMOVAL/INSTALLATION [SKYACTIV-G 2.0, SKYACTIV-G 2.5]**.) (See **CHECK VALVE INSPECTION [SKYACTIV-G 2.0, SKYACTIV-G 2.5]**.)
3	Charcoal canister (See **CHARCOAL CANISTER REMOVAL/INSTALLATION [SKYACTIV-G 2.0, SKYACTIV-G 2.5]**.) (See **CHARCOAL CANISTER INSPECTION [SKYACTIV-G 2.0, SKYACTIV-G 2.5]**.)
4	Evaporative chamber (See **EVAPORATIVE CHAMBER REMOVAL/INSTALLATION [SKYACTIV-G 2.0, SKYACTIV-G 2.5]**.) (See **EVAPORATIVE CHAMBER INSPECTION [SKYACTIV-G 2.0, SKYACTIV-G 2.5]**.)
5	Fuel-filler cap (See **FUEL-FILLER PIPE REMOVAL/INSTALLATION [SKYACTIV-G 2.0, SKYACTIV-G 2.5]**.)

2014 - Mazda3 - Engine

EMISSION SYSTEM DIAGRAM [SKYACTIV-G 2.0, SKYACTIV-G 2.5]

U.S.A. And CANADA

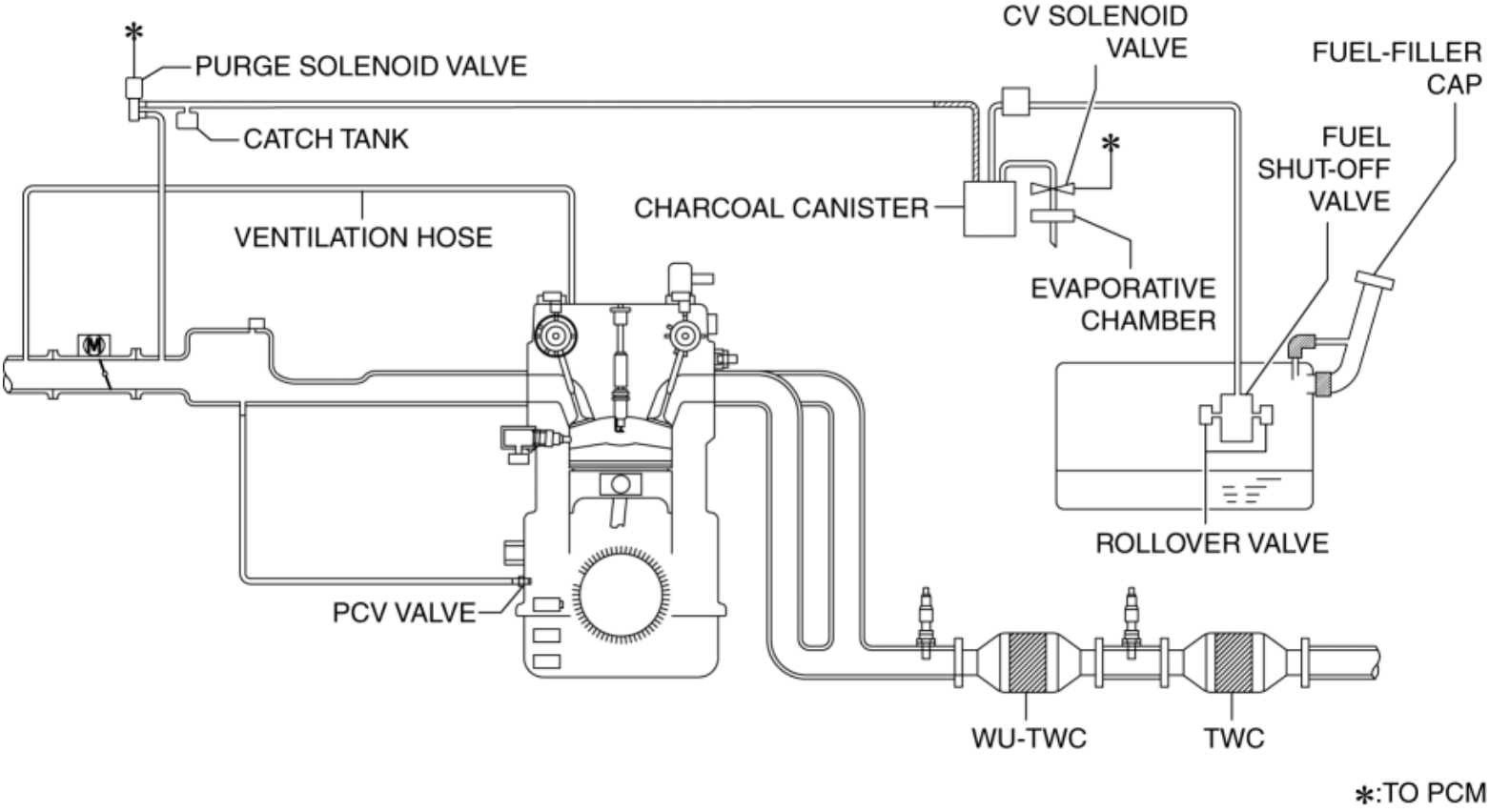

Except U.S.A. And CANADA

EMISSION SYSTEM DIAGRAM [SKYACTIV-G 2.0, SKYACTIV-G 2.5]

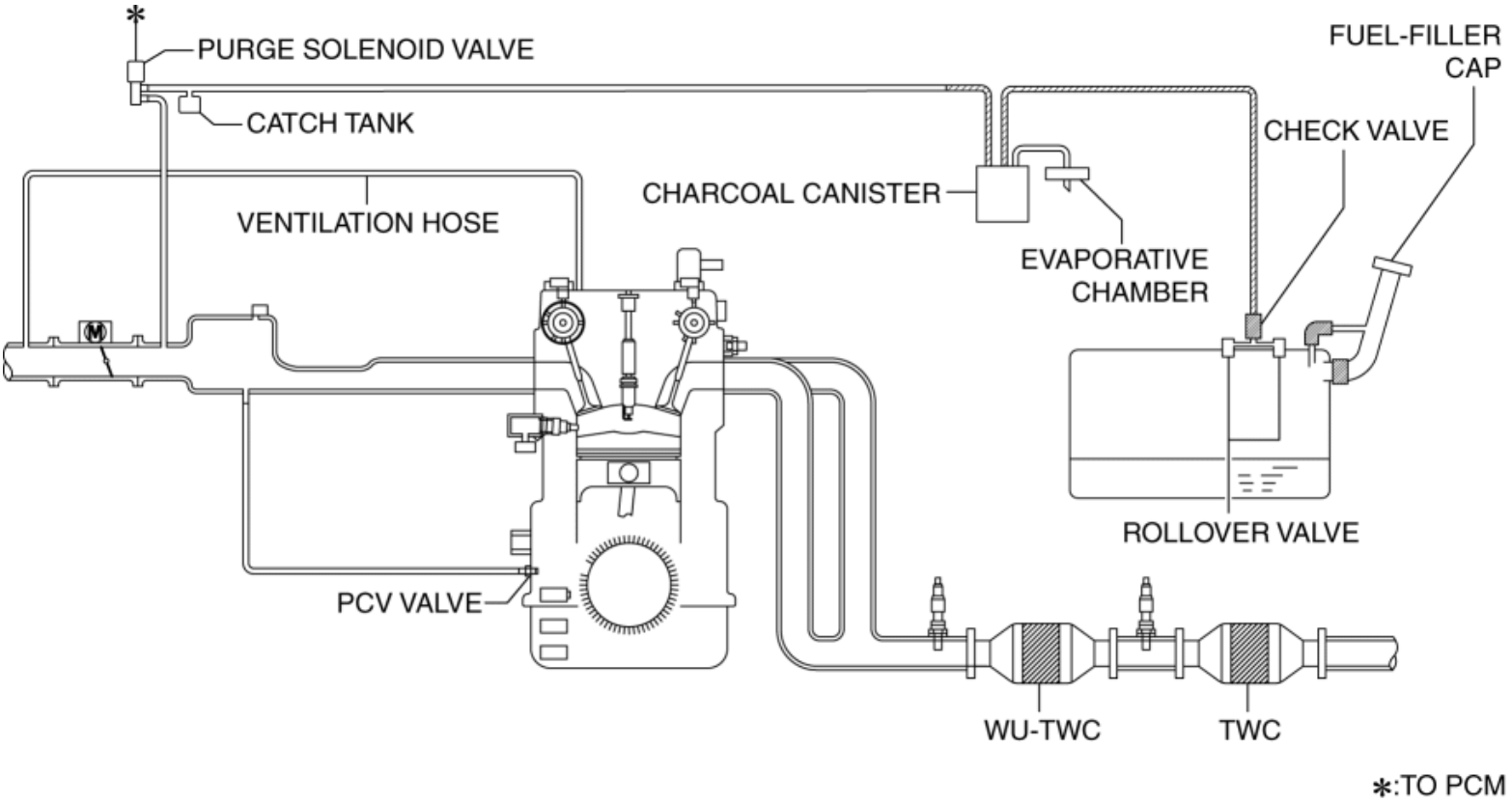

2014 - Mazda3 - Engine

FUEL-FILLER CAP INSPECTION [SKYACTIV-G 2.0, SKYACTIV-G 2.5]

Leakage Inspection

1. Perform the following tester (evaporative emission system tester (134-01049A)) self-test:

NOTE:

- If the tester does not work correctly during self-test, refer to the tester operators manual for more detailed procedures.

a. Verify that the gas cylinder valve is closed and the control valve located on the tester is in the TEST position. All tester displays should be off at this time.

b. Connect the long hose (part of tester) to the tester.

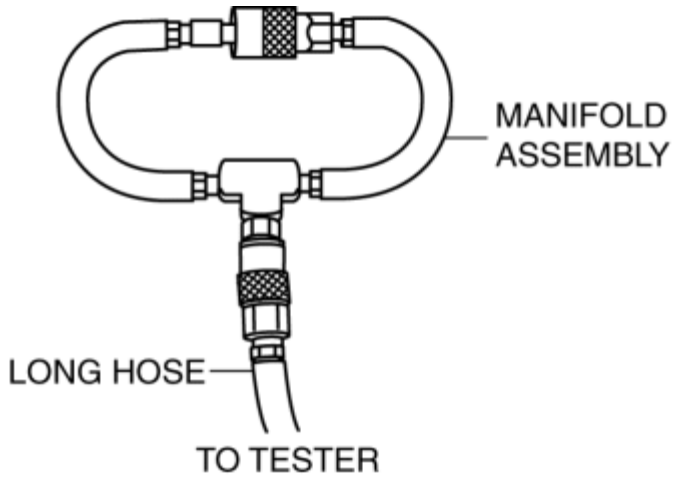

c. Connect the manifold assembly (part of tester) to the long hose as shown.

d. Open the gas cylinder valve and verify the gas cylinder regulator left gauge reads **69—82 kPa {0.71—0.83 kgf/cm^2, 10—12 psi}** (preset at factory).

- If not, refer to the tester operators manual to contact tester manufacturer.

e. Press the ON/OFF switch to turn on the **SST** and make sure the left display reads **0.0**.

f. Turn the control valve on the tester to the FILL position.

g. Verify the left display reading is **within 13.9** to **14.0** in of water.

- If not, adjust the pressure using the regulator knob located on the right side of the tester.

h. Turn the control valve to TEST position and press the START switch.

i. After the **2-min** countdown (left display) is completed, the right display shows the total pressure loss for that period. A **0.5** in of water loss is acceptable on the self-test.

- If the loss is **more than tester0.5** in of water, do one or more self-test. If the failed test repeats, check for leak using the ultrasonic leak detector (part of tester).

2. Press the RESET switch to set the left display reading to **0.0.**

3. Connect the fuel cap receiver assembly (part of tester) to the manifold assembly and fuel-filler cap from the vehicle.

- If the fuel-filler cap is not a genuine part, replace it.

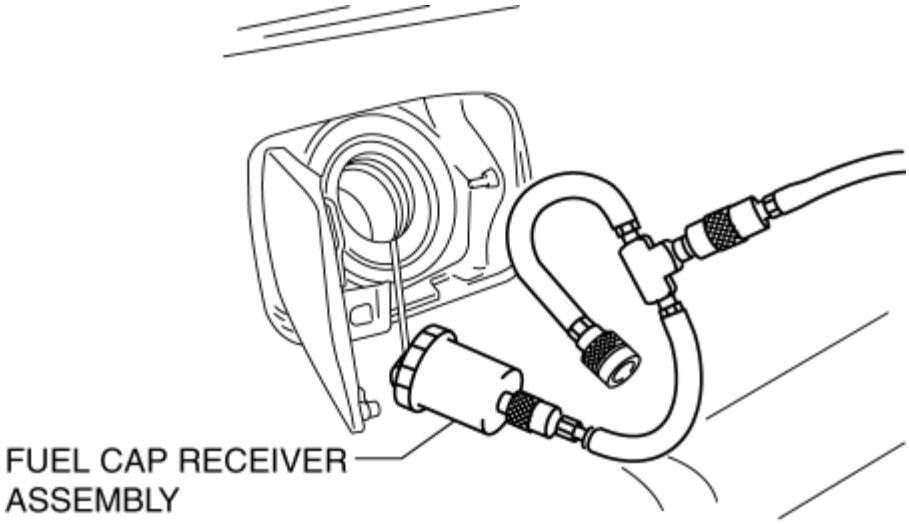

4. Turn the control valve to the FILL position.

5. Wait (**maximum 20 s**) until the left display reads **13.9** to **14.0** in of water.

- If the reading is slightly below the specification, adjust it using the regulator knob.
- If the reading is far below, the fuel-filler cap has a leak. Replace it.

6. Turn the control valve to the TEST position and press the START switch.

7. After the **2-min** countdown (left display) is completed, check the test result (the failed/passed light on the tester).

- If the green light turns on, the fuel-filler cap is normal.
- If the red light turns on, the fuel-filler cap has a leak. Replace it.

8. Close the gas cylinder valve.

9. Turn the control valve to the FILL position.

10. Press the ON/OFF switch to turn off the tester.

2014 - Mazda3 - Engine

CHARCOAL CANISTER REMOVAL/INSTALLATION [SKYACTIV-G 2.0, SKYACTIV-G 2.5]

U.S.A. and CANADA (4SD)

1. Disconnect the negative battery cable. (See **NEGATIVE BATTERY CABLE DISCONNECTION/CONNECTION [SKYACTIV-G 2.0, SKYACTIV-G 2.5]**.)
2. Remove the main silencer. (See **EXHAUST SYSTEM REMOVAL/INSTALLATION [SKYACTIV-G 2.0, SKYACTIV-G 2.5]**.)
3. Remove the rear crossmember. (See **REAR CROSSMEMBER REMOVAL/INSTALLATION**.)
4. Remove in the order indicated in the table.
5. Install in the reverse order of removal.

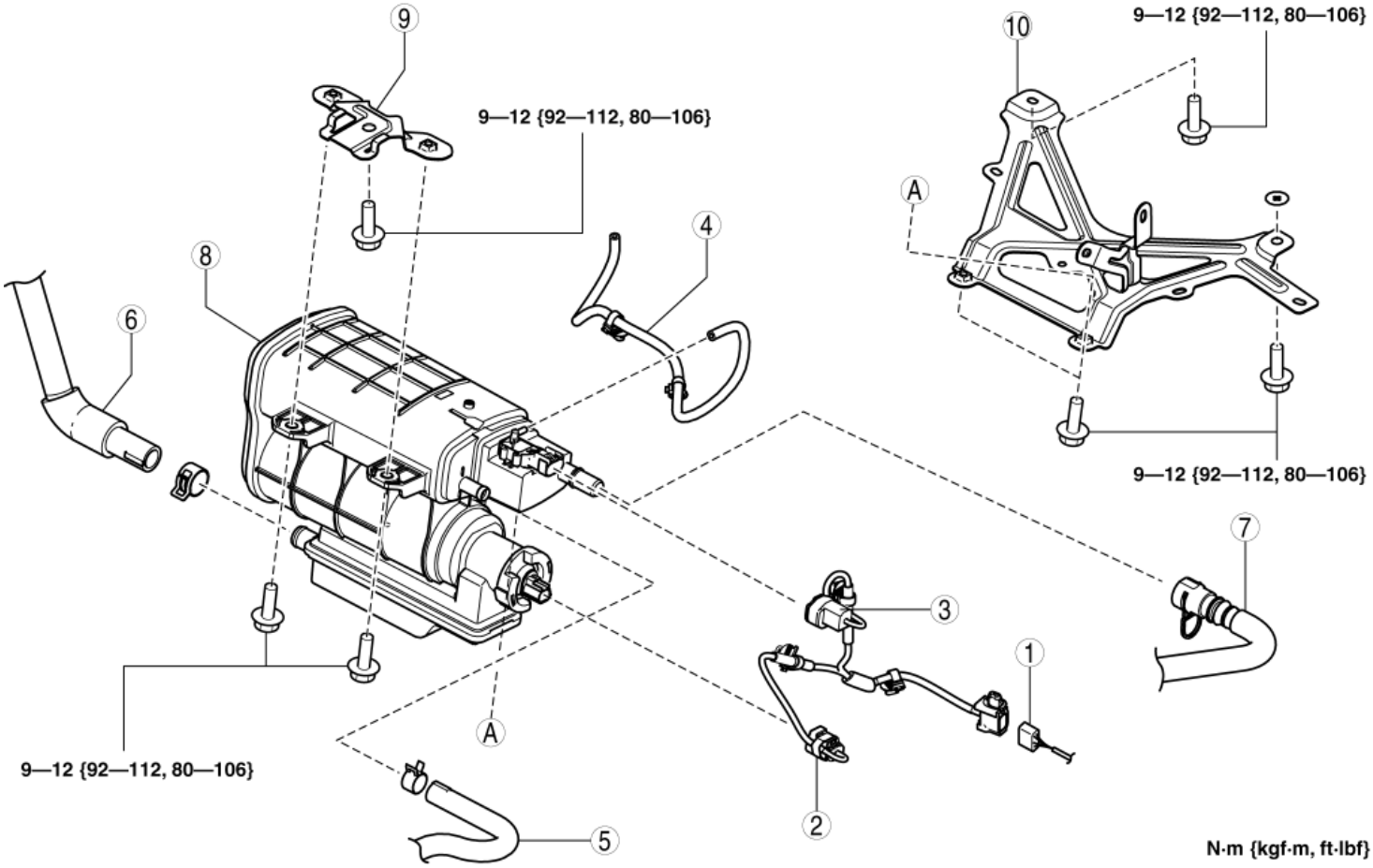

1	Wiring harness connector
2	CV solenoid valve connector
3	Fuel tank pressure sensor connector
4	Evaporative hose No.1 (See **Evaporative hose No.1 installation note**.)
5	Evaporative hose No.2

	(See **Evaporative hose No.2 installation note**.)
6	Evaporative hose No.3 (See **Evaporative hose No.3 installation note**.)
7	Quick release connector (See **QUICK RELEASE CONNECTOR (EMISSION SYSTEM) REMOVAL/INSTALLATION [SKYACTIV-G 2.0, SKYACTIV-G 2.5]**.)
8	Charcoal canister
9	Charcoal canister bracket No.1
10	Charcoal canister bracket No.2

Evaporative hose No.3 installation note

1. Connect the evaporative hose No.3 as shown in the figure.

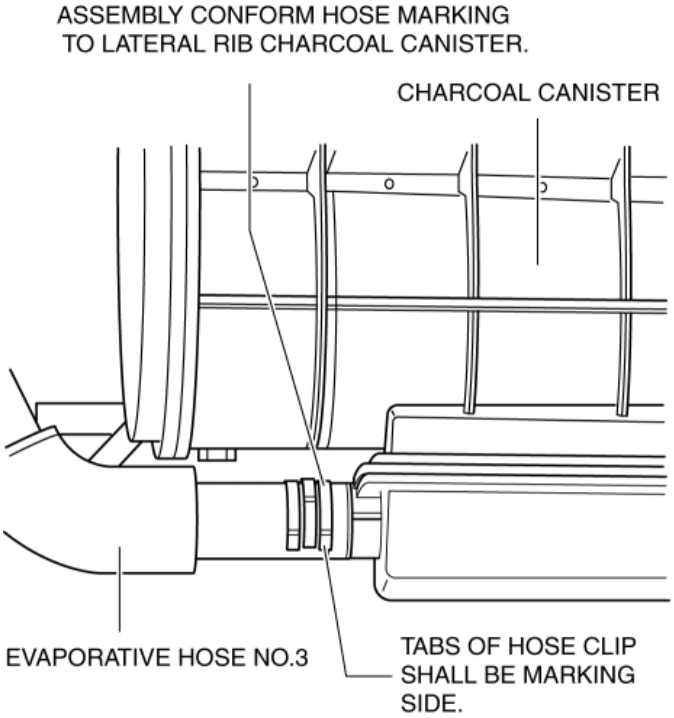

Evaporative hose No.2 installation note

1. Connect the evaporative hose No.2 as shown in the figure.

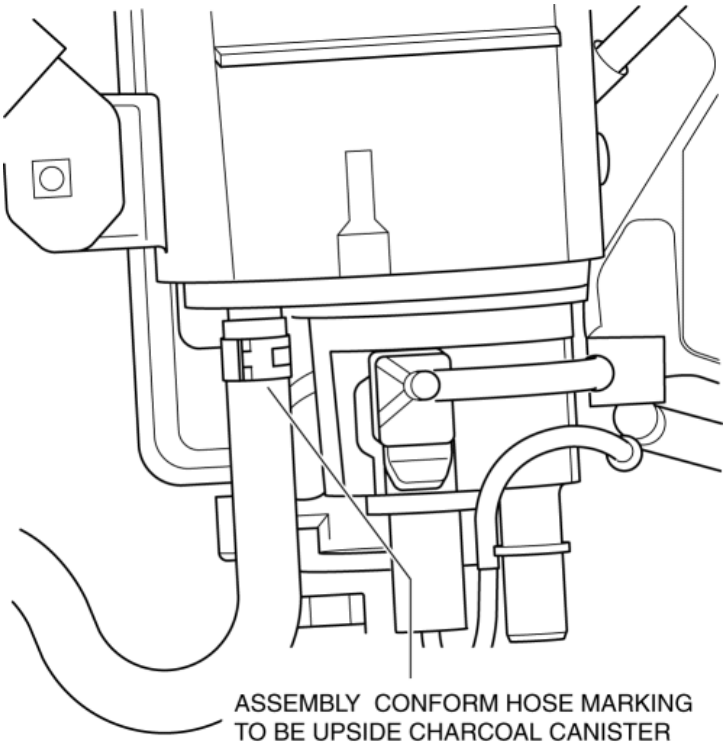

Evaporative hose No.1 installation note

1. Connect the evaporative hose No.1 as shown in the figure.

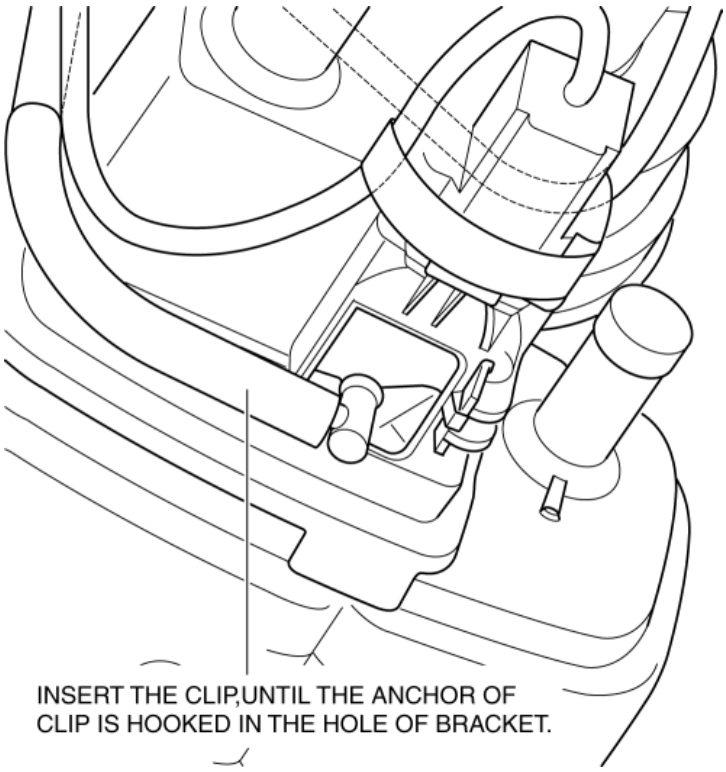

U.S.A. and CANADA (5HB)

1. Disconnect the negative battery cable. (See **NEGATIVE BATTERY CABLE DISCONNECTION/CONNECTION [SKYACTIV-G 2.0, SKYACTIV-G 2.5]**.)

2. Remove the main silencer. (See **EXHAUST SYSTEM REMOVAL/INSTALLATION [SKYACTIV-G 2.0, SKYACTIV-G 2.5]**.)

3. Remove in the order indicated in the table.

4. Install in the reverse order of removal.

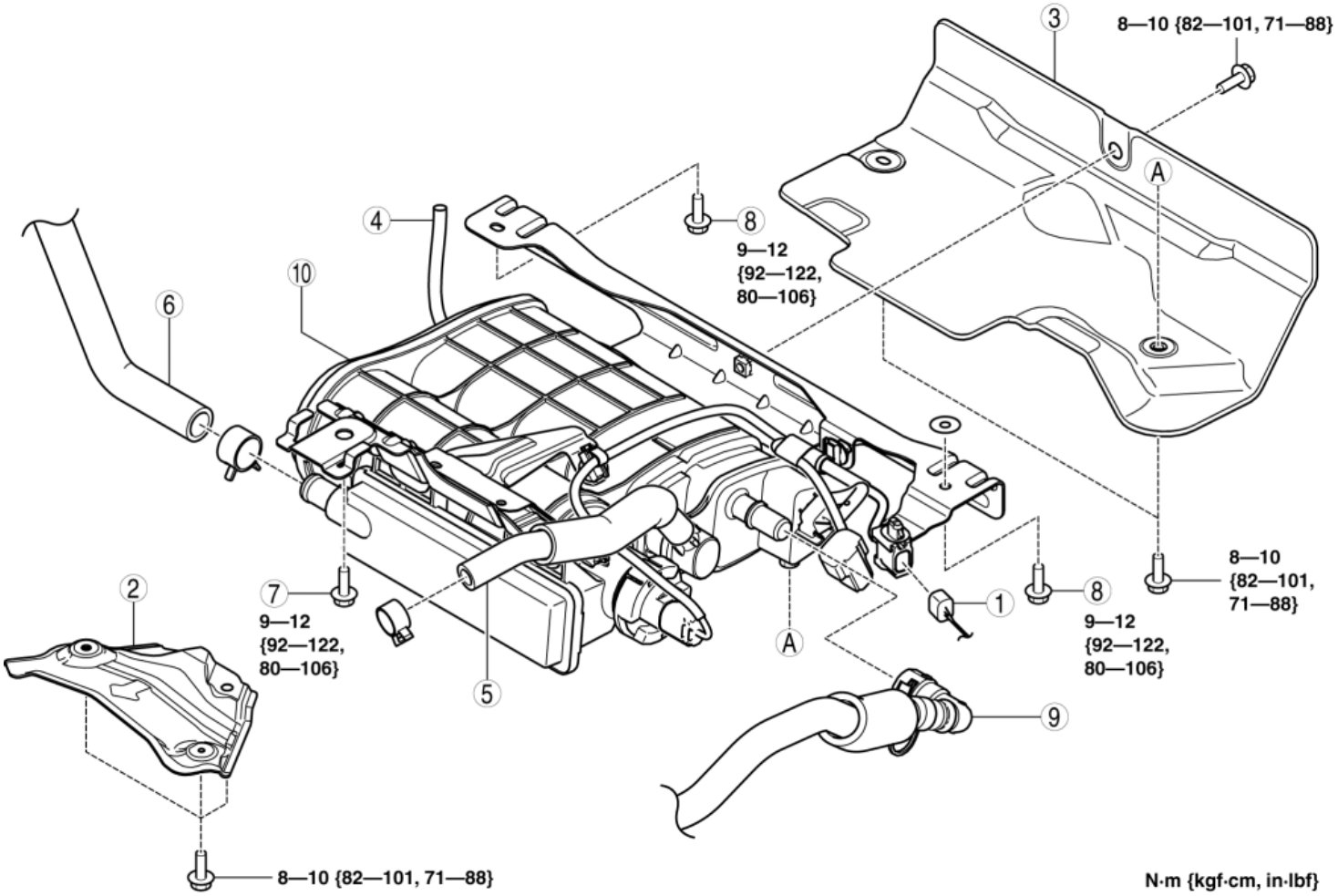

1	Wiring harness connector
2	Protector
3	Charcoal canister insulator
4	Evaporative hose No.1 (body side) (See **Evaporative hose No.1 installation note**.)
5	Evaporative hose No.2 (pipe side) (See **Evaporative hose No.2 installation note**.)
6	Evaporative hose No.3 (See **Evaporative hose No.3 installation note**.)
7	Charcoal canister bracket No.1 installation bolt
8	Charcoal canister bracket No.2 installation bolt
9	Quick release connector (See **Quick release connector disconnection note**.)
10	Charcoal canister assy (See **Charcoal canister assy removal note**.)

Quick release connector disconnection note

1. Move the charcoal canister.

2. Disconnect the quick release connector. (See **QUICK RELEASE CONNECTOR (EMISSION SYSTEM) REMOVAL/INSTALLATION [SKYACTIV-G 2.0, SKYACTIV-G 2.5]**.)

Charcoal canister assy removal note

1. Move the charcoal canister assy as shown in the figure.

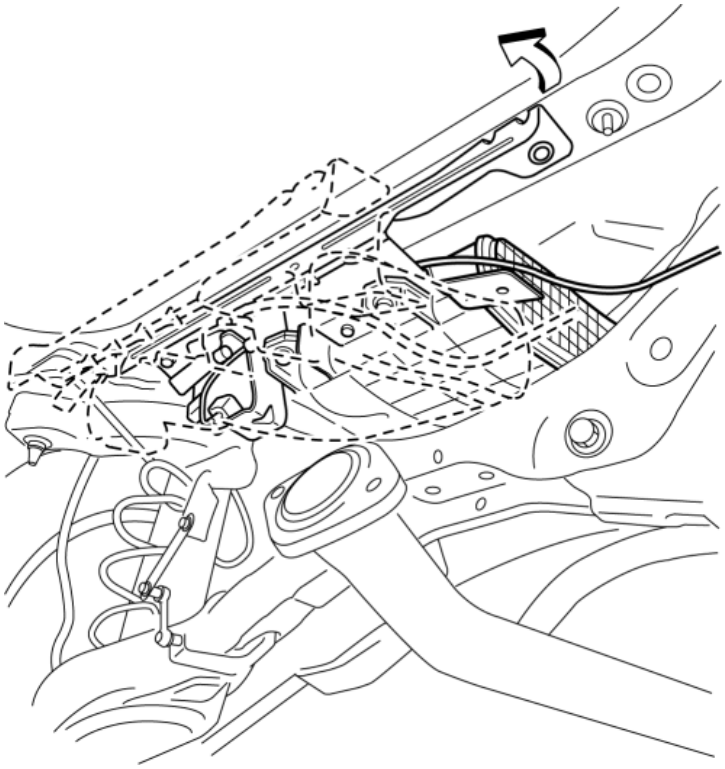

2. Remove the charcoal canister assy as shown in the figure.

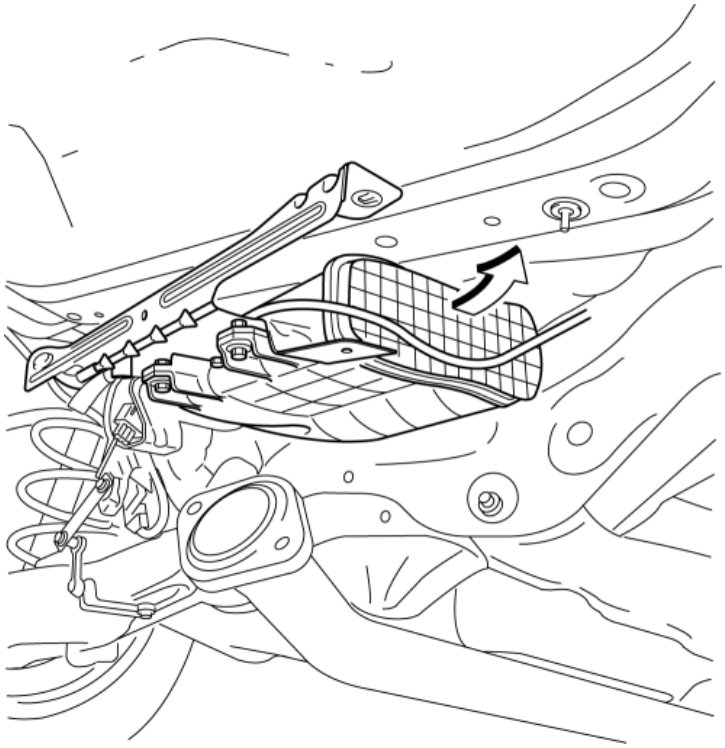

3. Remove in the order indicated in the table.
4. Install in the reverse order of removal.

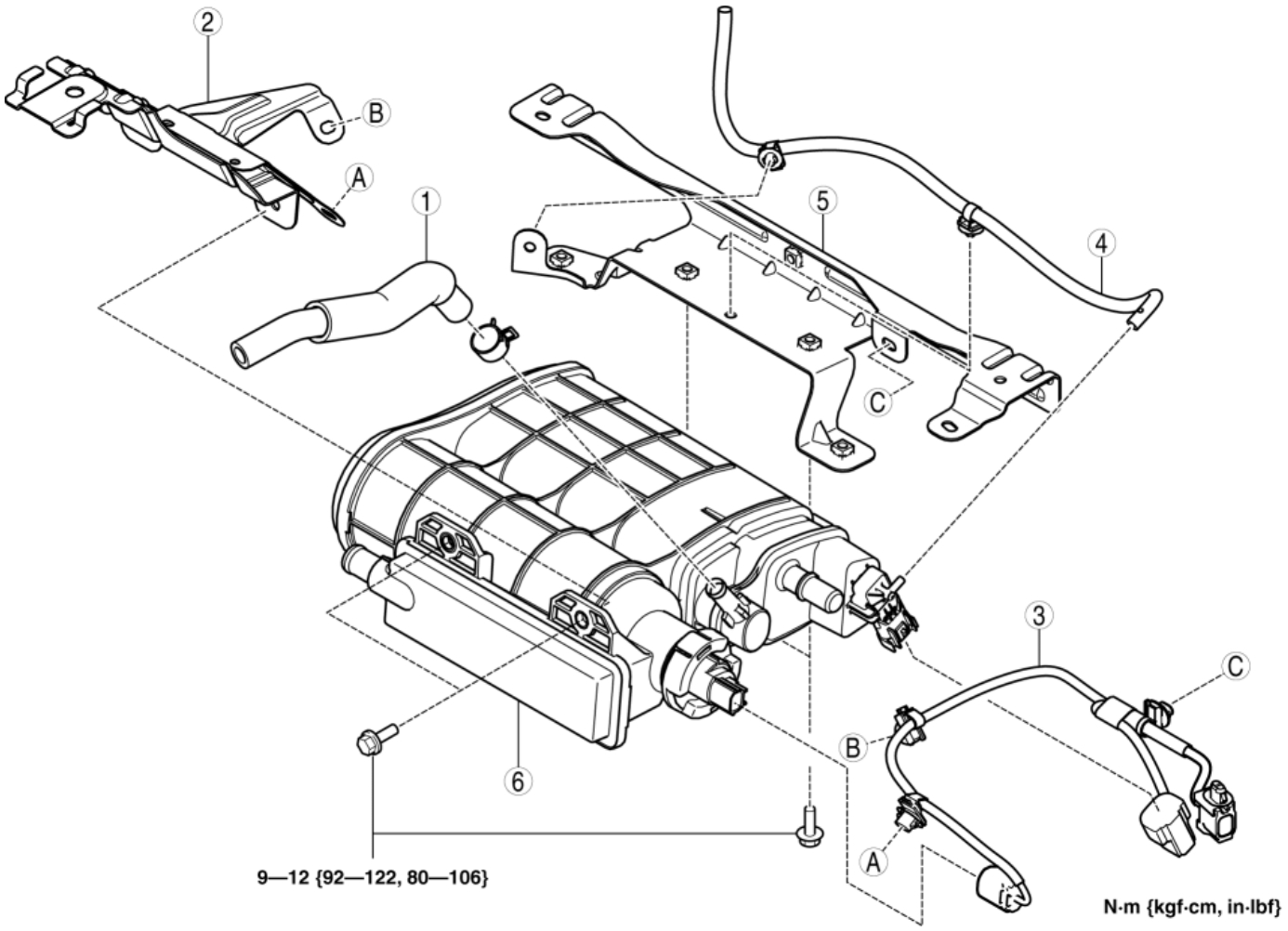

1	Evaporative hose No.2 (charcoal canister side) (See **Evaporative hose No.2 installation note**.)
2	Charcoal canister bracket No.1
3	Wiring harness
4	Evaporative hose No.1 (fuel tank pressure sensor side) (See **Evaporative hose No.1 installation note**.)
5	Charcoal canister bracket No.2
6	Charcoal canister

Evaporative hose No.3 installation note

1. Connect the evaporative hose No.3 as shown in the figure.

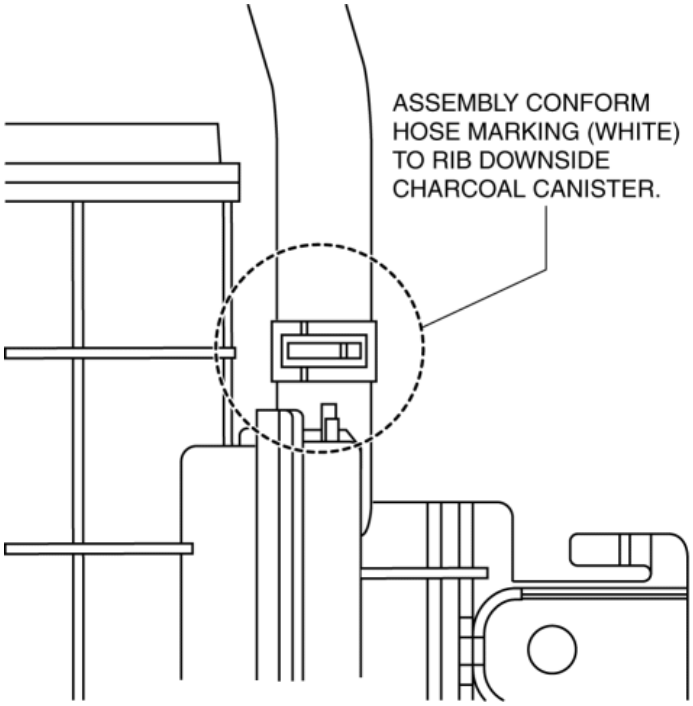

Evaporative hose No.2 installation note

1. Connect the evaporative hose No.2 as shown in the figure.

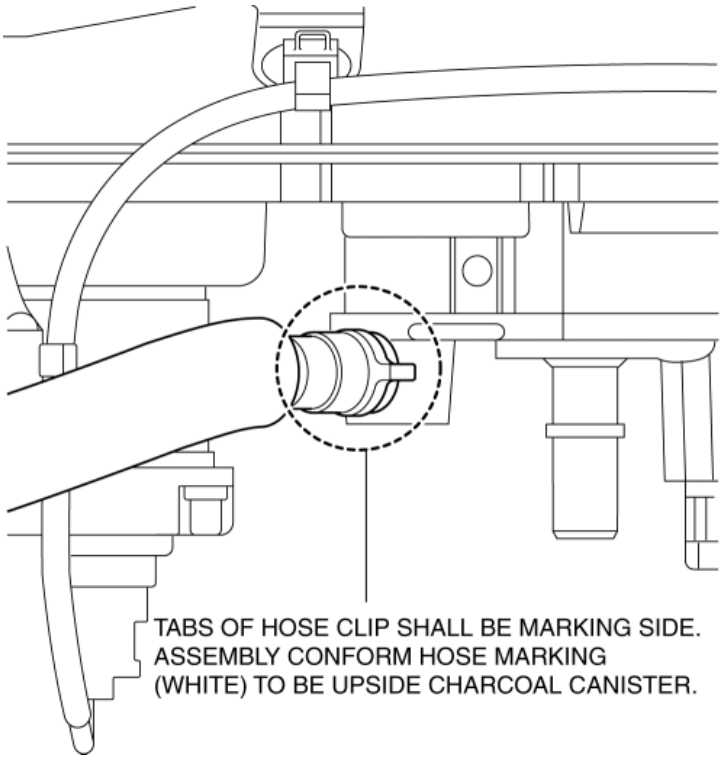

Evaporative hose No.1 installation note

1. Connect the evaporative hose No.1 as shown in the figure.

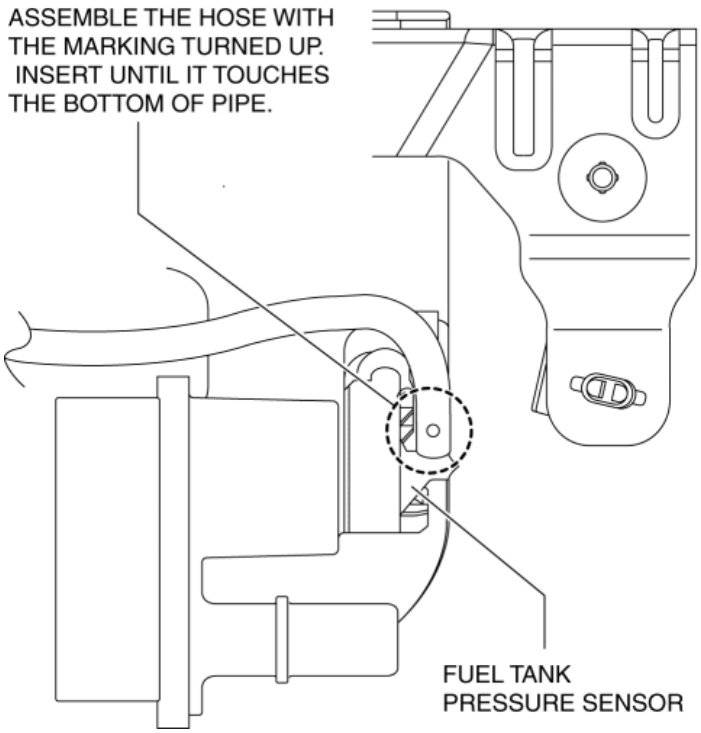

Except U.S.A. and CANADA

1. Remove in the order indicated in the table.
2. Install in the reverse order of removal.

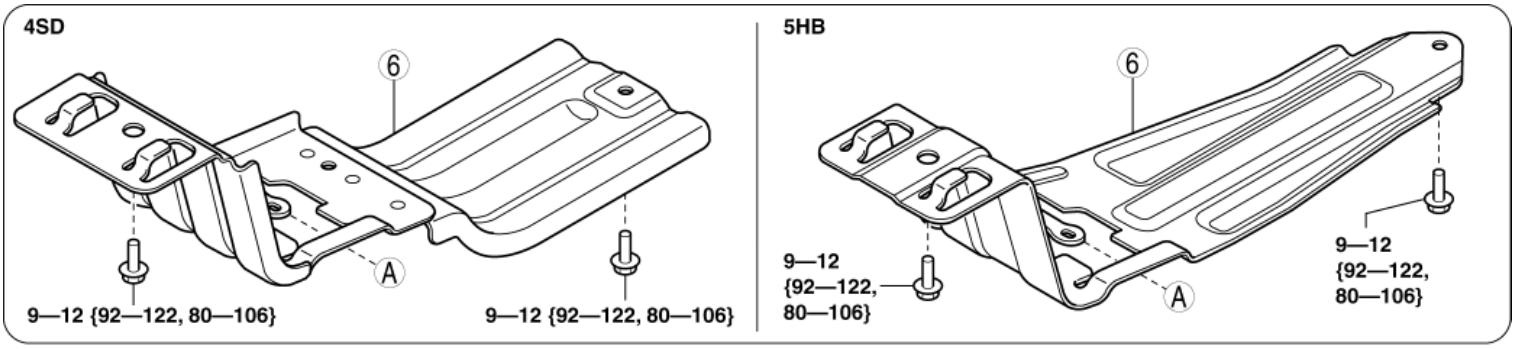

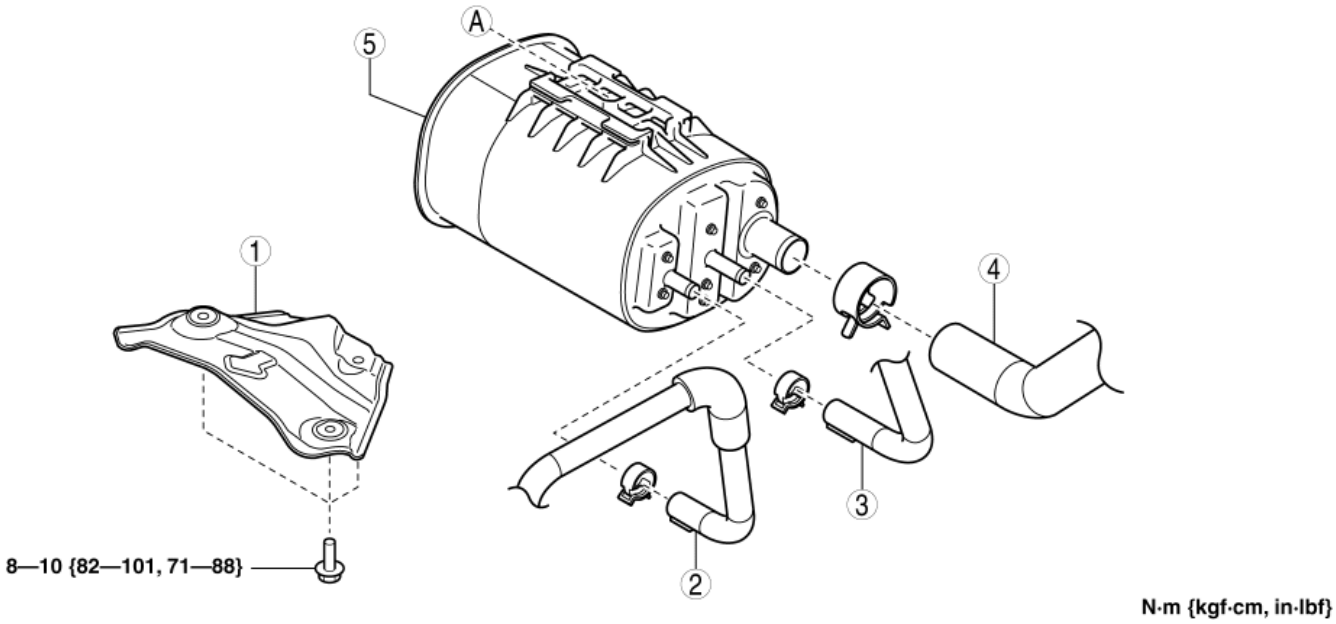

1	Protector
2	Evaporative hose No.1 (See **Evaporative hose No.1 installation note**.)
3	Evaporative hose No.2 (See **Evaporative hose No.2 installation note**.)
4	Evaporative hose No.3 (See **Evaporative hose No.3 installation note**.)
5	Charcoal canister (See **Charcoal canister removal note**.)
6	Charcoal canister bracket

Charcoal canister removal note

1. Release the lock as shown in the figure.

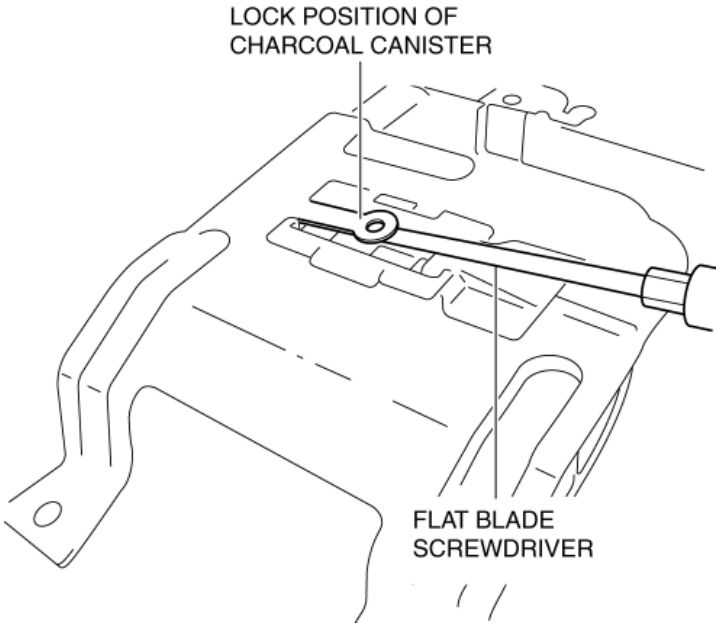

2. Remove the charcoal canister.

Evaporative hose No.3 installation note

1. Connect the evaporative hose No.3 as shown in the figure.

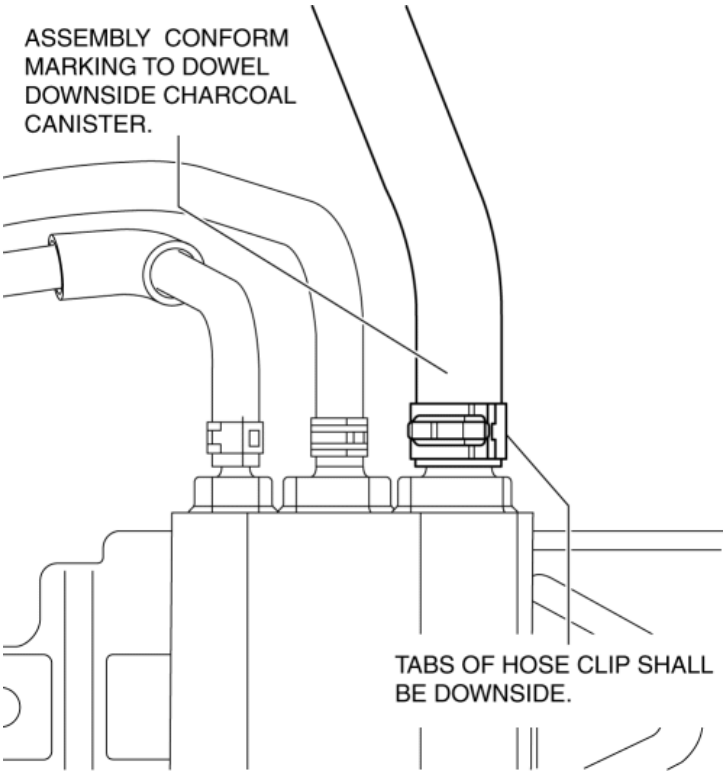

Evaporative hose No.2 installation note

1. Connect the evaporative hose No.2 as shown in the figure.

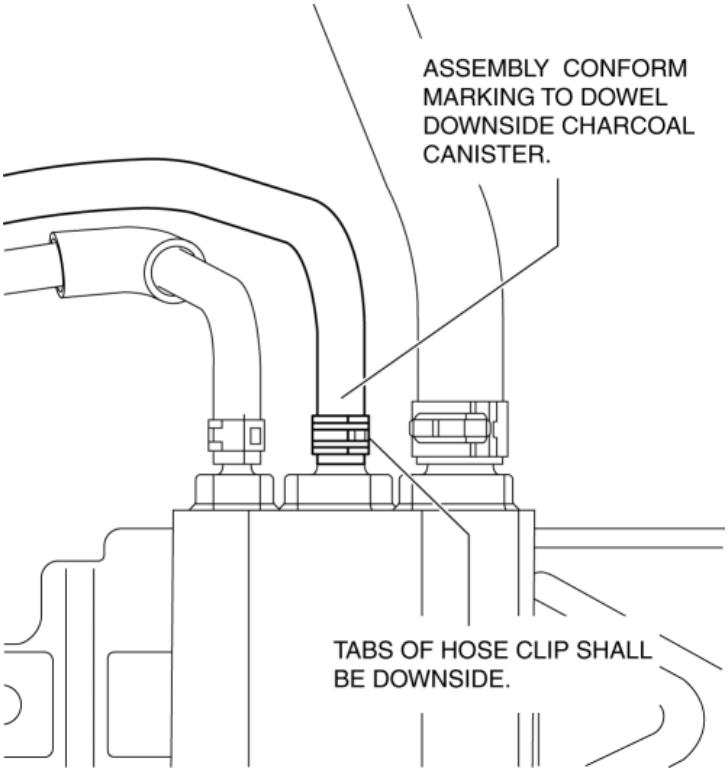

Evaporative hose No.1 installation note

1. Connect the evaporative hose No.1 as shown in the figure.

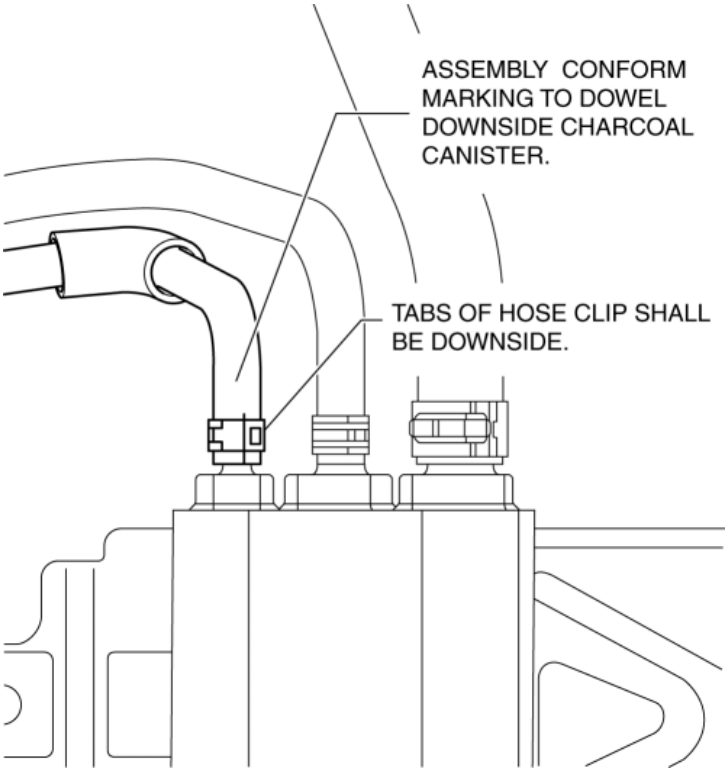

2014 - Mazda3 - Engine

CHARCOAL CANISTER INSPECTION [SKYACTIV-G 2.0, SKYACTIV-G 2.5]

U.S.A. And CANADA

Leakage inspection

1. Perform the following procedures:
    - Do not operate CV solenoid valve.
    - Assemble the hose used for inspection to port A.
    - Cover ports B and C with the caps.

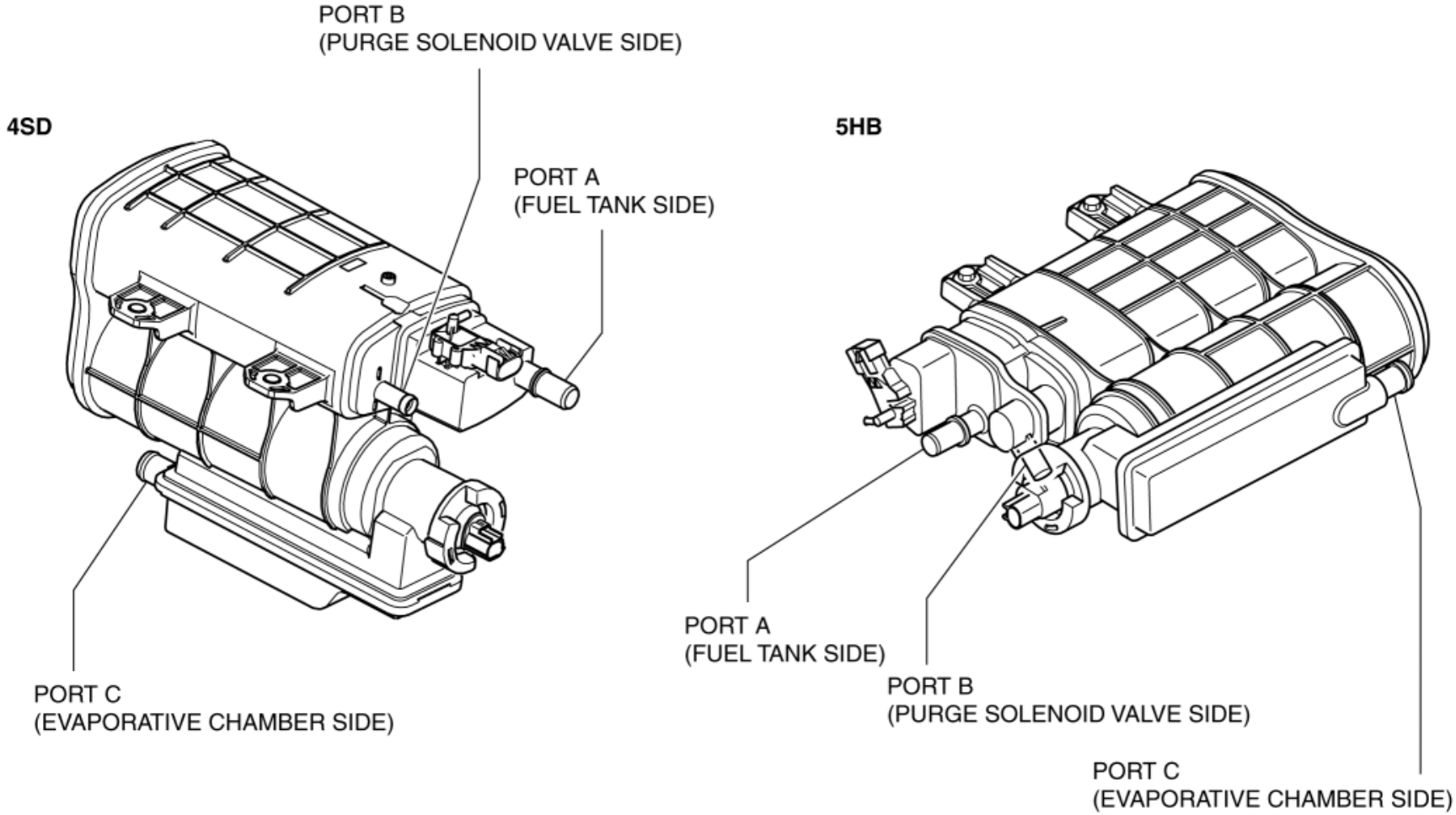

CAUTION:

- Do not apply a pressure 20 kPa {150 mmHg, 5.91 inHg} or more to the charcoal canister for 1 min. or more. Doing so will damage the charcoal canister.

2. Apply pressure (**19.6 kPa {147 mmHg, 5.79 inHg}**) through the hose, and verify that air does not leak from the charcoal canister.

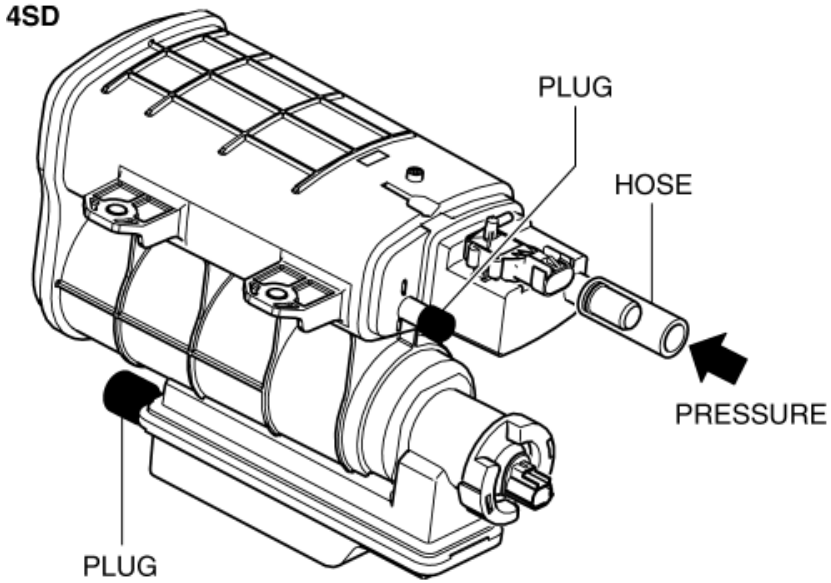

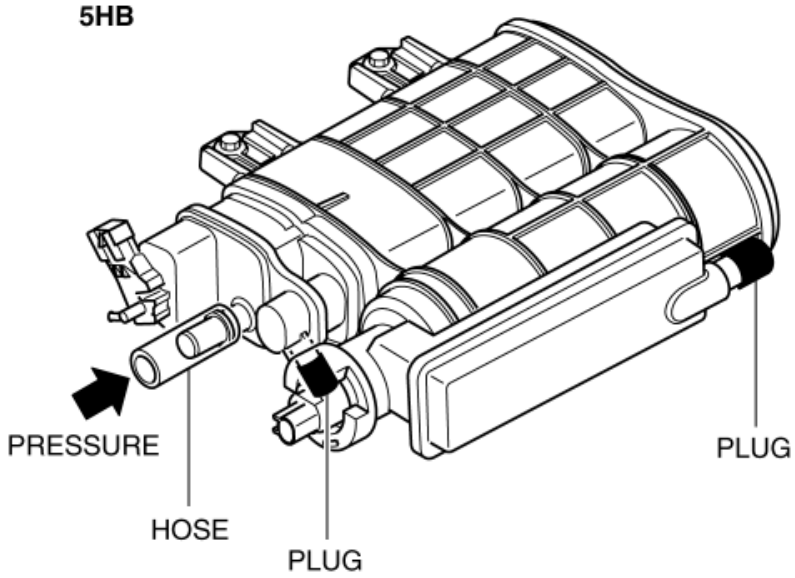

- If there is airflow, replace the charcoal canister. (See **CHARCOAL CANISTER REMOVAL/INSTALLATION [SKYACTIV-G 2.0, SKYACTIV-G 2.5]**.)
- If there is no airflow, perform the following “Airflow Inspection”. (See **Airflow inspection**.)

Airflow inspection

1. Perform the following procedure to verify the charcoal canister airflow.

Between port A and port C

- Plug the port B.

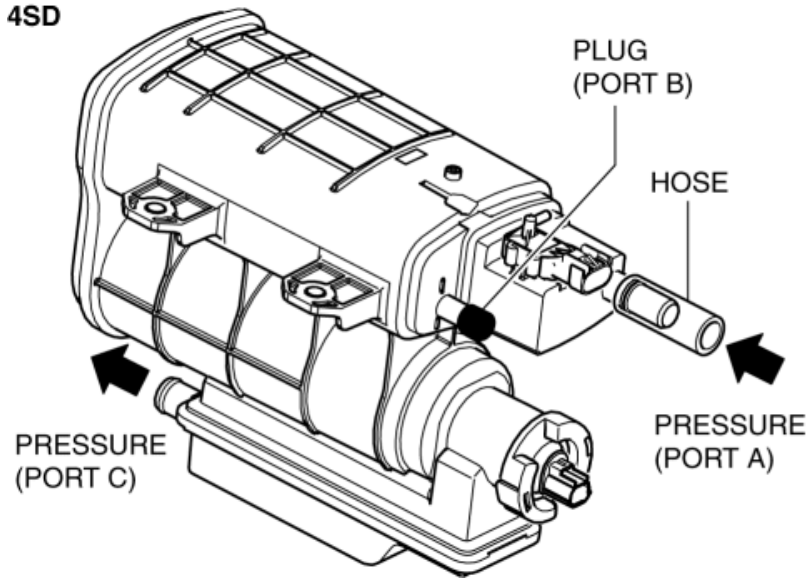

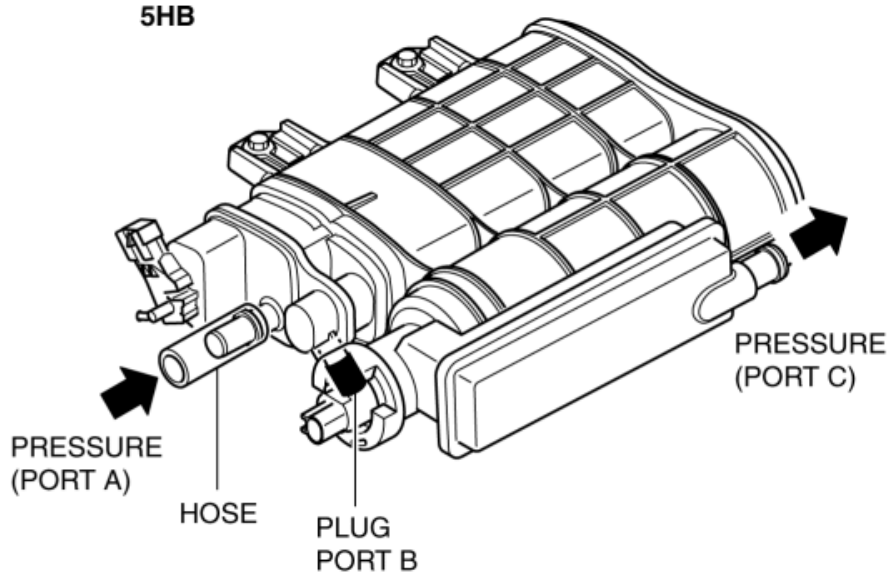

- Apply a pressure of **1.8 kPa {14 mmHg, 0.53 inHg}** to port A.
- Verify that there is airflow from port C.
    - If there is no airflow, replace the charcoal canister. (See **CHARCOAL CANISTER REMOVAL/INSTALLATION [SKYACTIV-G 2.0, SKYACTIV-G 2.5]**.)

Between port B and port C

- Plug the port A.

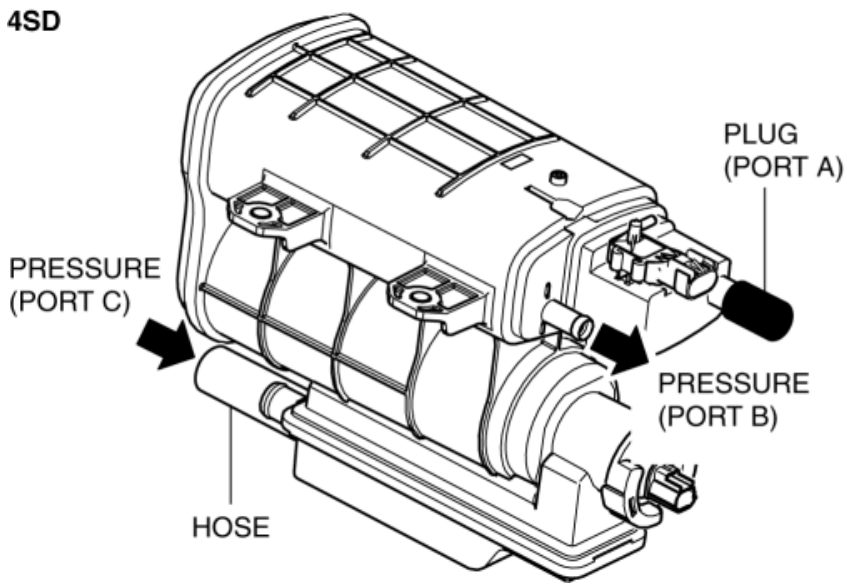

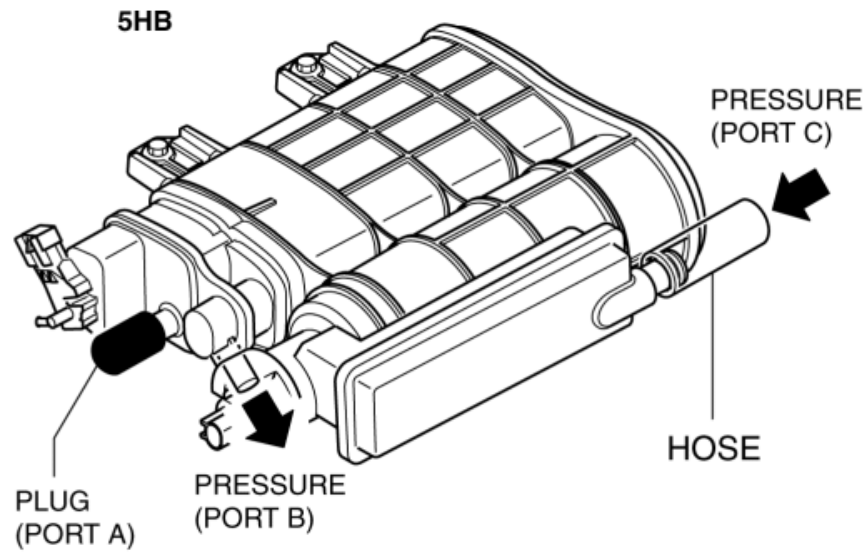

- Apply a pressure of **2.0 kPa {15 mmHg, 0.59 inHg}** to port C.

- Verify that there is airflow from port B.
    - If there is no airflow, replace the charcoal canister. (See **CHARCOAL CANISTER REMOVAL/INSTALLATION [SKYACTIV-G 2.0, SKYACTIV-G 2.5]**.)

Except U.S.A. And CANADA

Leakage inspection

1. Perform the following procedures:
    - Assemble the hose used for inspection to port A.
    - Cover ports B and C with the caps.

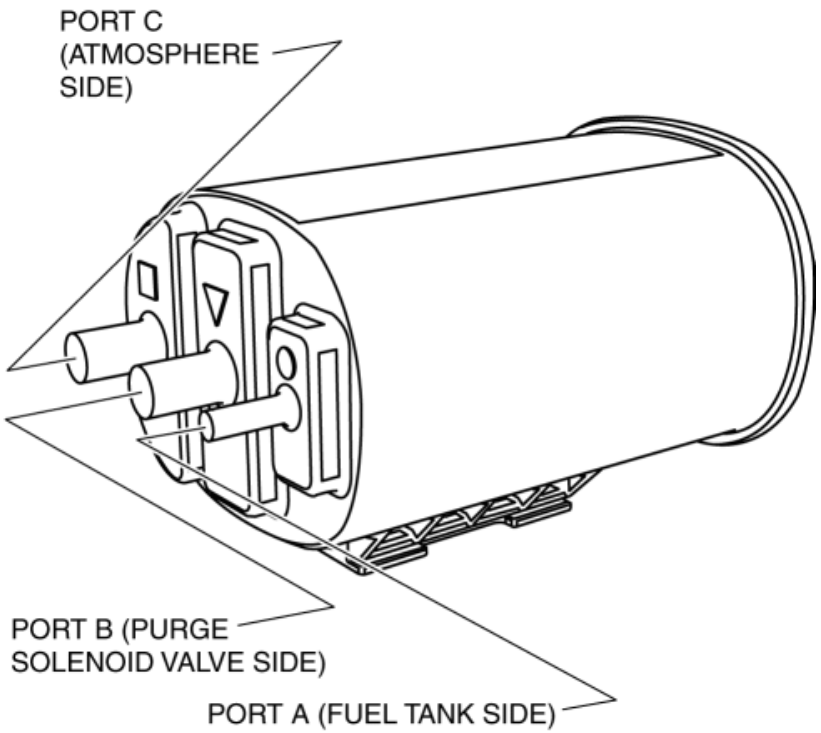

CAUTION:

- Do not apply a pressure 20 kPa {150 mmHg, 5.91 inHg} or more to the charcoal canister for 1 min. or more. Doing so will damage the charcoal canister.

2. Apply pressure (**19.6 kPa {147 mmHg, 5.79 inHg}**) through the hose, and verify that air does not leak from the charcoal canister.

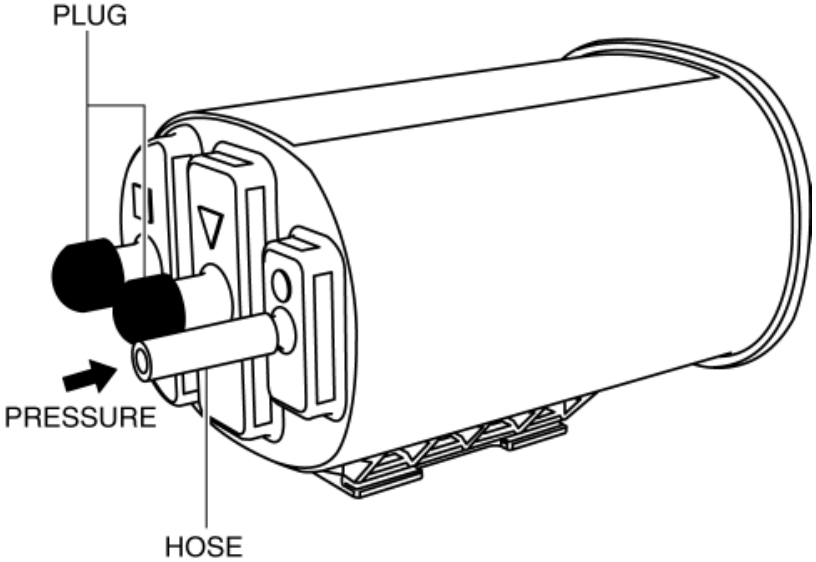

- If there is airflow, replace the charcoal canister. (See **CHARCOAL CANISTER REMOVAL/INSTALLATION [SKYACTIV-G 2.0, SKYACTIV-G 2.5]**.)
- If there is no airflow, perform the following “Airflow Inspection”. (See **Airflow inspection**.)

Airflow inspection

1. Perform the following procedure to verify the charcoal canister airflow.

Between port A and port C

- Plug the port B.

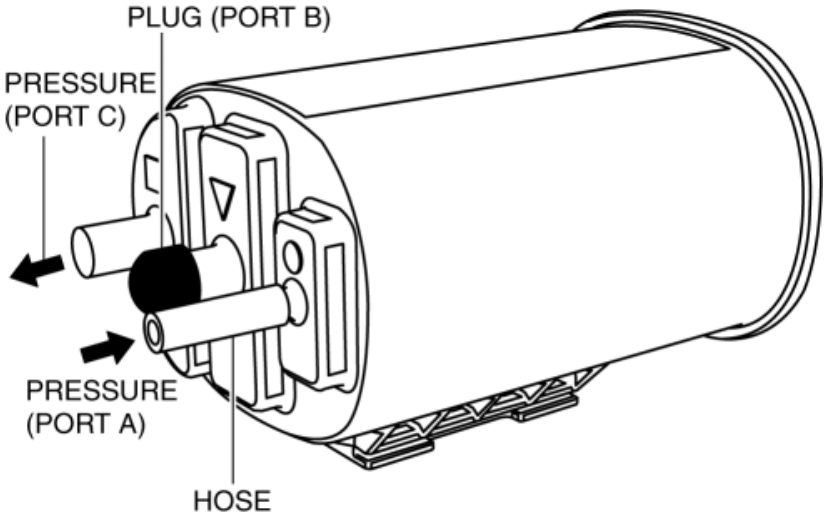

- Apply a pressure of **0.98 kPa {7.4 mmHg, 0.29 inHg}** to port A.
- Verify that there is airflow from port C.
    - If there is no airflow, replace the charcoal canister. (See **CHARCOAL CANISTER REMOVAL/INSTALLATION [SKYACTIV-G 2.0, SKYACTIV-G 2.5]**.)

Between port B and port C

- Plug the port A.

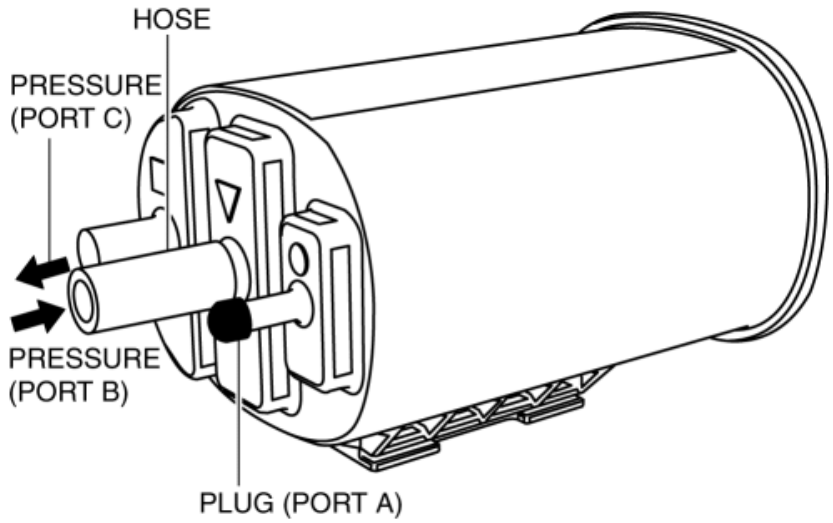

- Apply a pressure of **0.98 kPa {7.4 mmHg, 0.29 inHg}** to port C.
- Verify that there is airflow from port B.
    - If there is no airflow, replace the charcoal canister. (See **CHARCOAL CANISTER REMOVAL/INSTALLATION [SKYACTIV-G 2.0, SKYACTIV-G 2.5]**.)

2014 - Mazda3 - Engine

PURGE SOLENOID VALVE REMOVAL/INSTALLATION [SKYACTIV-G 2.0, SKYACTIV-G 2.5]

1. Disconnect the negative battery cable. (See **NEGATIVE BATTERY CABLE DISCONNECTION/CONNECTION [SKYACTIV-G 2.0, SKYACTIV-G 2.5]**.)

2. Remove the plug hole plate. (See **PLUG HOLE PLATE REMOVAL/INSTALLATION [SKYACTIV-G 2.0, SKYACTIV-G 2.5]**.)

3. Remove the air cleaner and air hose as a single unit. (See **INTAKE-AIR SYSTEM REMOVAL/INSTALLATION [SKYACTIV-G 2.0, SKYACTIV-G 2.5]**.)

4. Disconnect the high pressure fuel pump connector.

5. Disconnect the harness clip as shown in the figure.

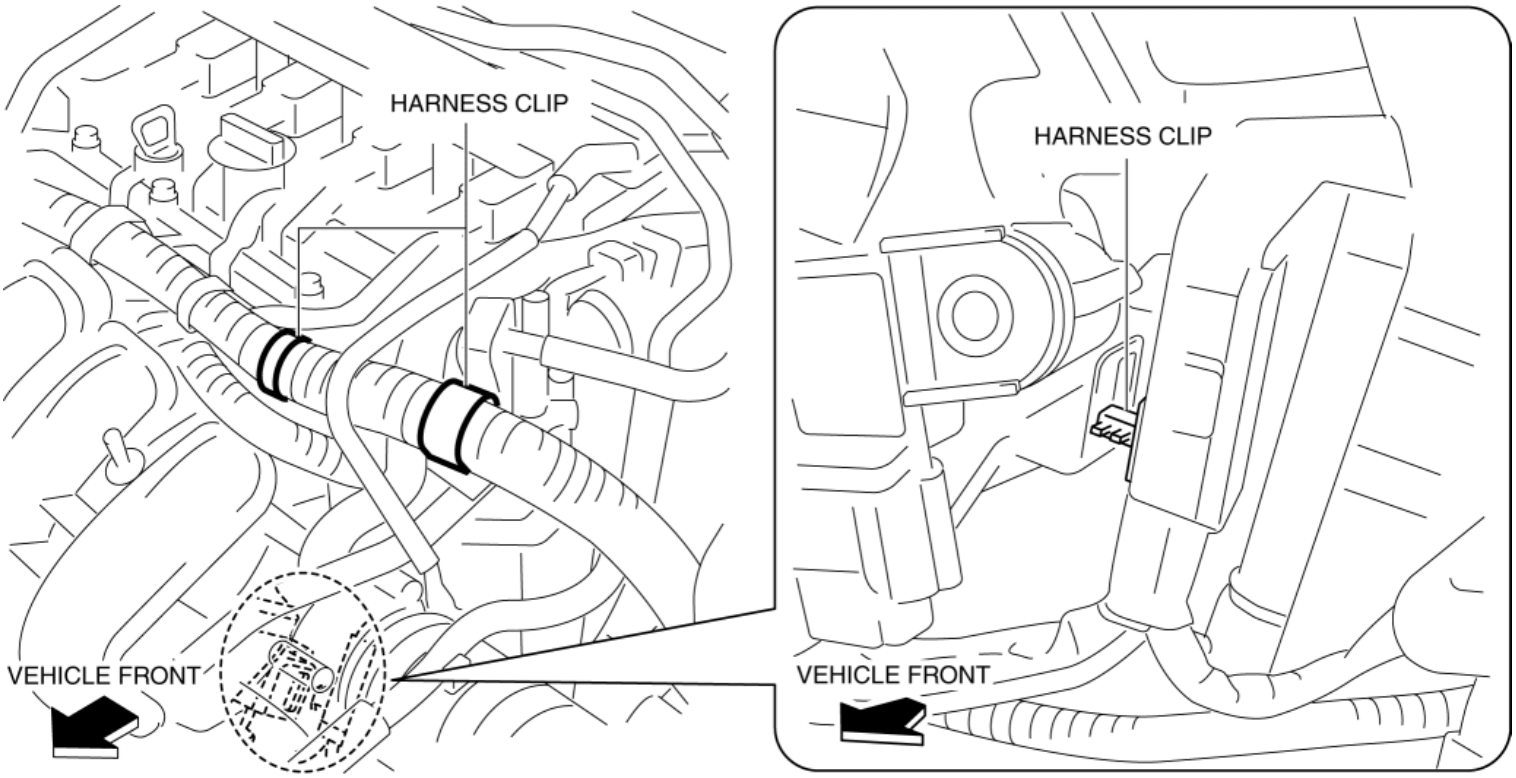

6. Remove in the order indicated in the table.

SKYACTIV-G 2.0

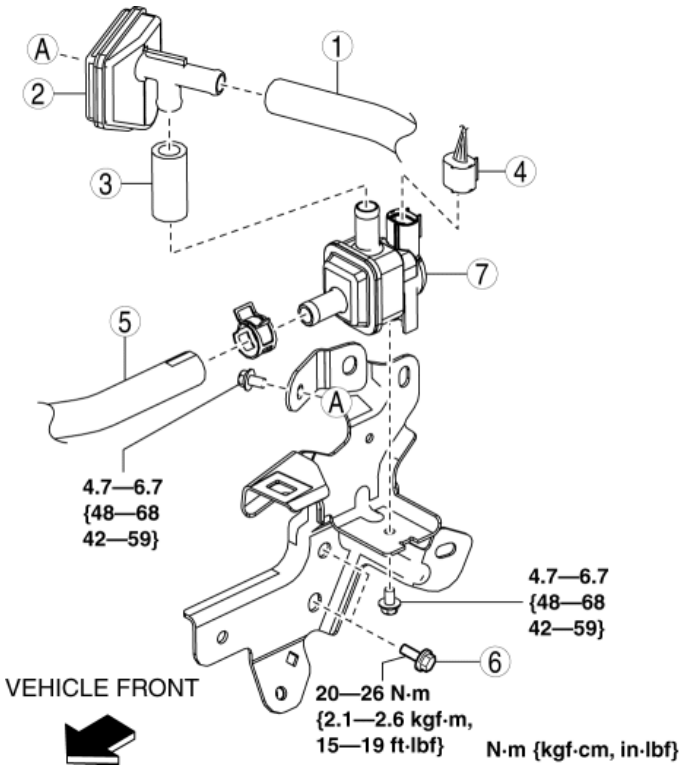

1	Evaporative hose No.1 (See **Evaporative Hose No.1 Installation Note**.)
2	Catch tank
3	Evaporative hose No.2
4	Purge solenoid valve connector
5	Evaporative hose No.3 (See **Evaporative Hose No.3 Installation Note**.)
6	Purge solenoid valve bracket installation bolt
7	Purge solenoid valve (See **Purge Solenoid Valve Installation Note**.)

SKYACTIV-G 2.5

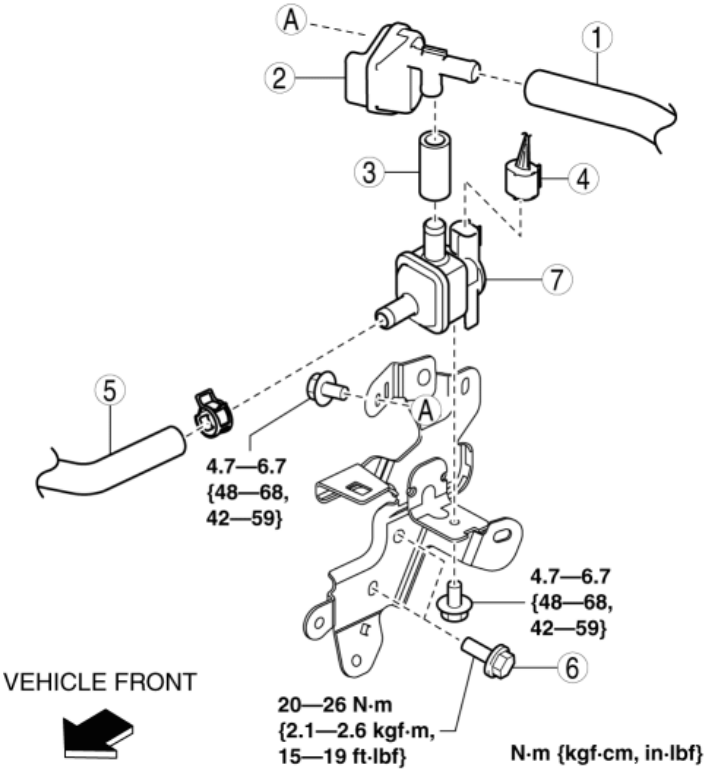

1	Evaporative hose No.1 (See **Evaporative Hose No.1 Installation Note**.)
2	Catch tank
3	Evaporative hose No.2
4	Purge solenoid valve connector
5	Evaporative hose No.3 (See **Evaporative Hose No.3 Installation Note**.)
6	Purge solenoid valve bracket installation bolt
7	Purge solenoid valve (See **Purge Solenoid Valve Installation Note**.)

7. Install in the reverse order of removal.

Purge Solenoid Valve Installation Note

1. Temporarily install the purge solenoid valve to the bracket.
2. Lift up and tighten the purge solenoid valve as shown in the figure.

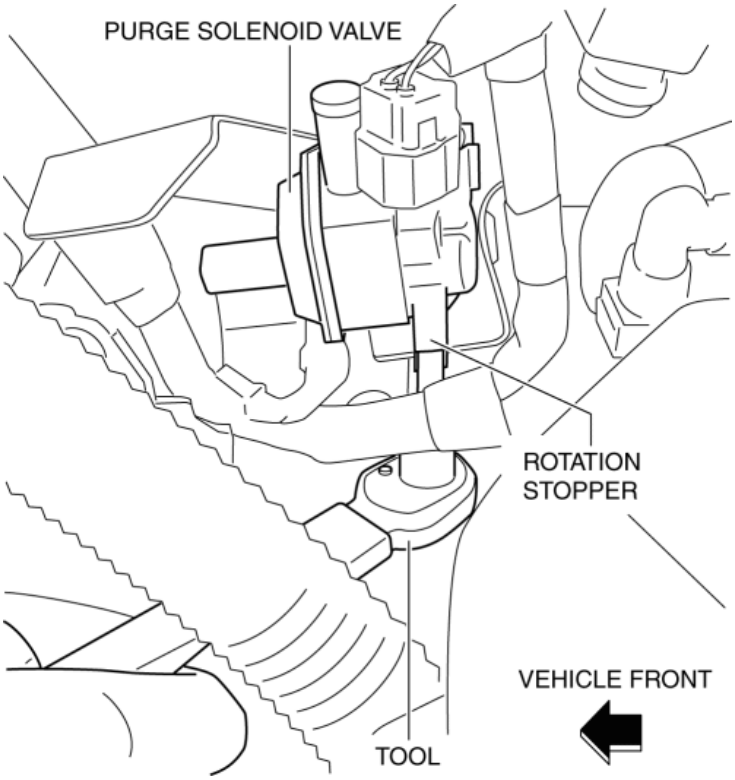

Evaporative Hose No.3 Installation Note

1. Install the evaporative hose No.3 as shown in the figure.

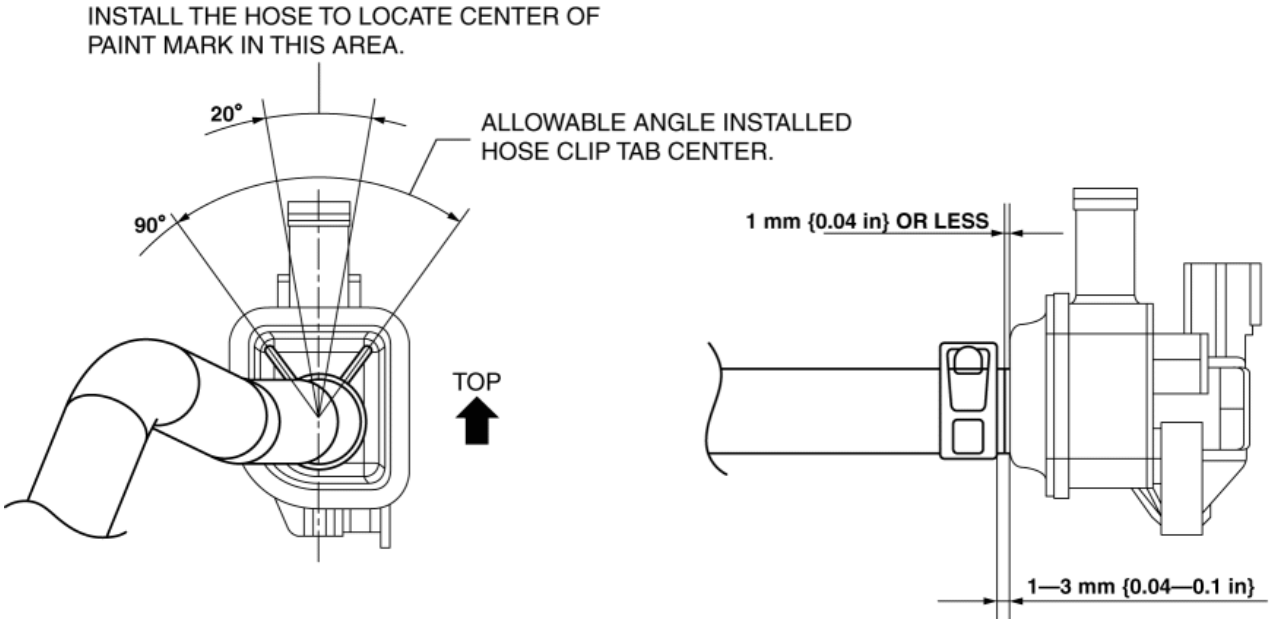

Evaporative Hose No.1 Installation Note

1. Install the evaporative hose No.1 as shown in the figure.

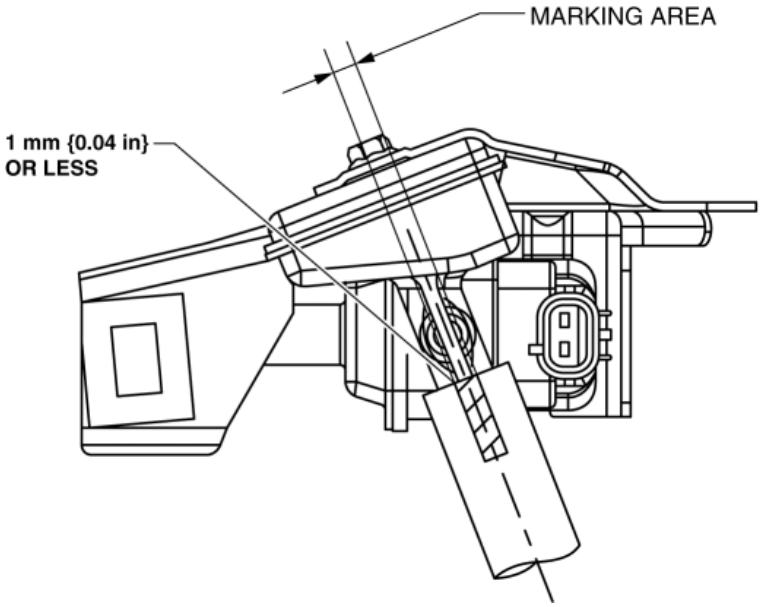
MARKING AREA
1 mm {0.04 in}
OR LESS

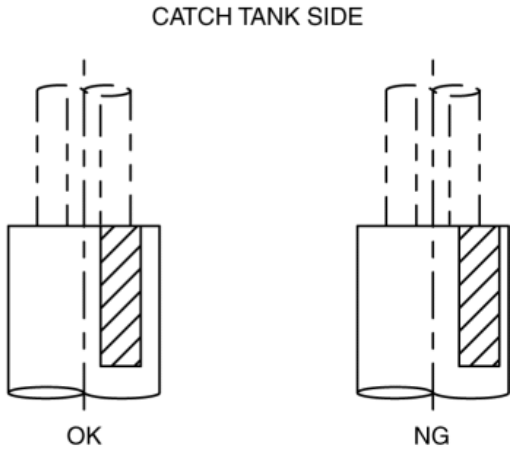
CATCH TANK SIDE
OK
NG

2014 - Mazda3 - Engine

PURGE SOLENOID VALVE INSPECTION [SKYACTIV-G 2.0, SKYACTIV-G 2.5]

Airflow Inspection

1. Disconnect the negative battery cable. (See **NEGATIVE BATTERY CABLE DISCONNECTION/CONNECTION [SKYACTIV-G 2.0, SKYACTIV-G 2.5]**.)

2. Remove the purge solenoid valve. (See **PURGE SOLENOID VALVE REMOVAL/INSTALLATION [SKYACTIV-G 2.0, SKYACTIV-G 2.5]**.)

3. Inspect airflow between the ports under the following conditions.

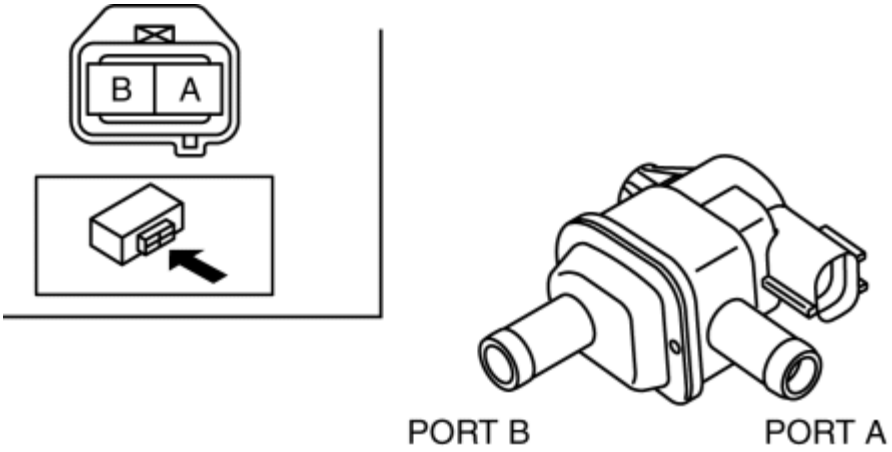

Measured condition	Continuity between ports A—B
When voltage is not applied between terminals A and B	No airflow
When voltage is applied between terminals A and B	Airflow detected

- If not as specified, replace the purge solenoid valve. (See **PURGE SOLENOID VALVE REMOVAL/INSTALLATION [SKYACTIV-G 2.0, SKYACTIV-G 2.5]**.)

2014 - Mazda3 - Engine

CATCH TANK INSPECTION [SKYACTIV-G 2.0, SKYACTIV-G 2.5]

1. Remove the catch tank. (See **PURGE SOLENOID VALVE REMOVAL/INSTALLATION [SKYACTIV-G 2.0, SKYACTIV-G 2.5]**.)

2. Plug the purge solenoid valve side into the catch tank.

SKYACTIV-G 2.0

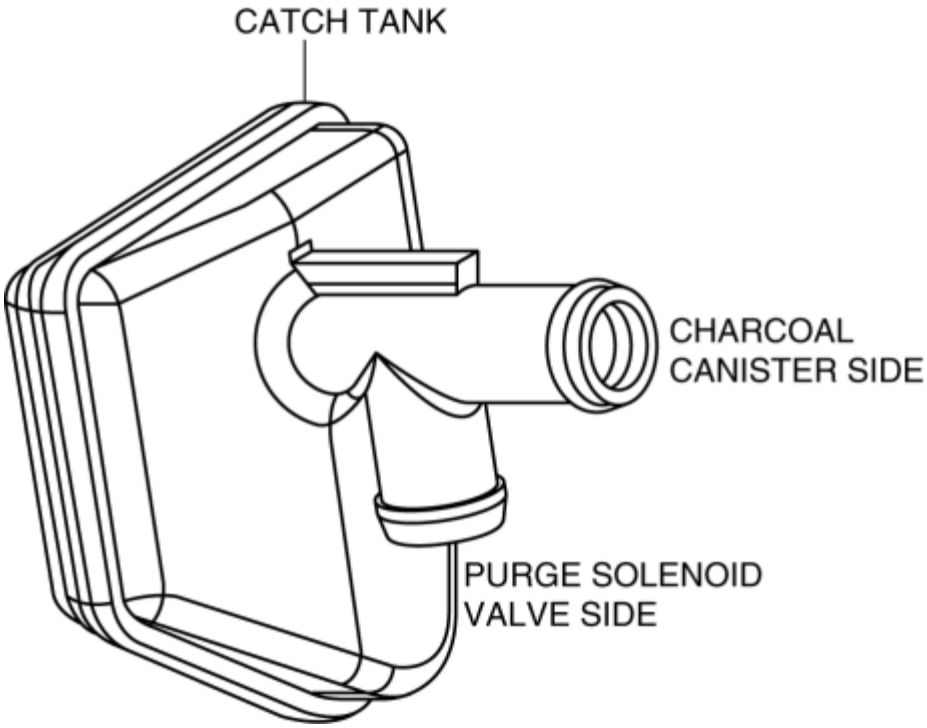

SKYACTIV-G 2.5

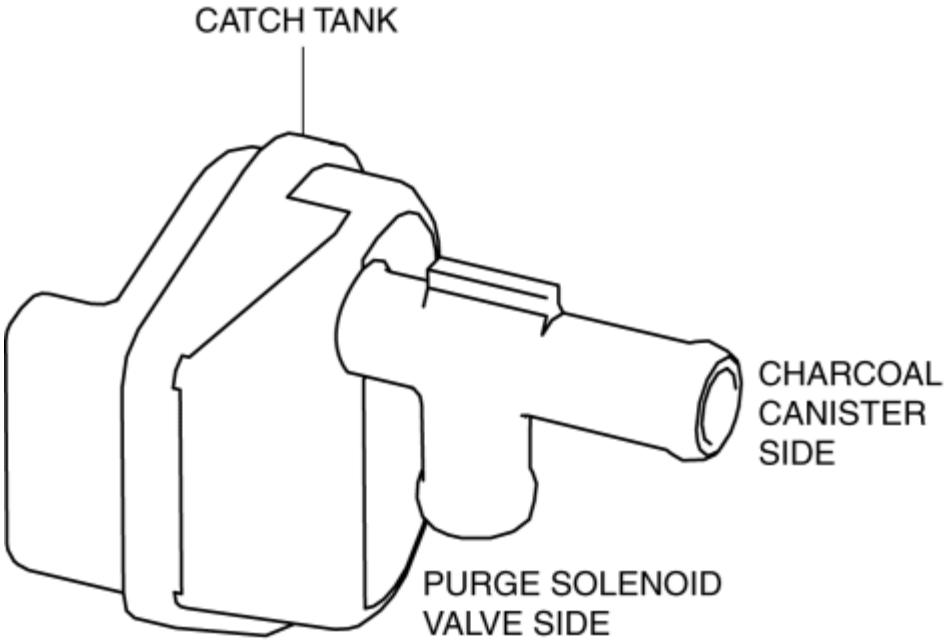

3. Inspect for air leakage when blowing air using your mouth into the charcoal canister side.

- If there is air leakage, replace the catch tank. (See **PURGE SOLENOID VALVE REMOVAL/INSTALLATION [SKYACTIV-G 2.0, SKYACTIV-G 2.5]**.)

2014 - Mazda3 - Engine

POSITIVE CRANKCASE VENTILATION (PCV) VALVE REMOVAL/INSTALLATION [SKYACTIV-G 2.0, SKYACTIV-G 2.5]

1. Disconnect the negative battery cable. (See **NEGATIVE BATTERY CABLE DISCONNECTION/CONNECTION [SKYACTIV-G 2.0, SKYACTIV-G 2.5]**)
2. Remove the intake manifold. (See **INTAKE-AIR SYSTEM REMOVAL/INSTALLATION [SKYACTIV-G 2.0, SKYACTIV-G 2.5]**.)
3. Remove in the order indicated in the table.
4. Install in the reverse order of removal.

SKYACTIV-G 2.0

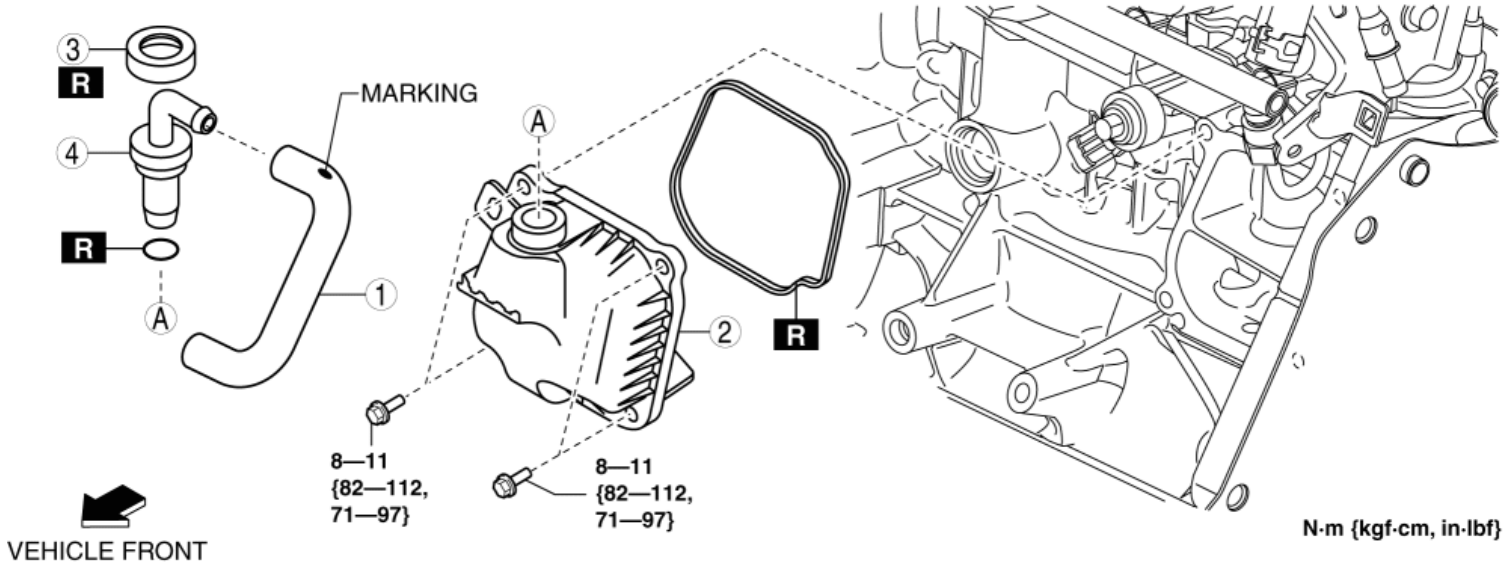

1	PCV hose (See **PCV Hose Installation Note**.)
2	Oil separator
3	Retainer (See **Retainer Removal Note**.) (See **Retainer Installation Note**.)
4	PCV valve

SKYACTIV-G 2.5

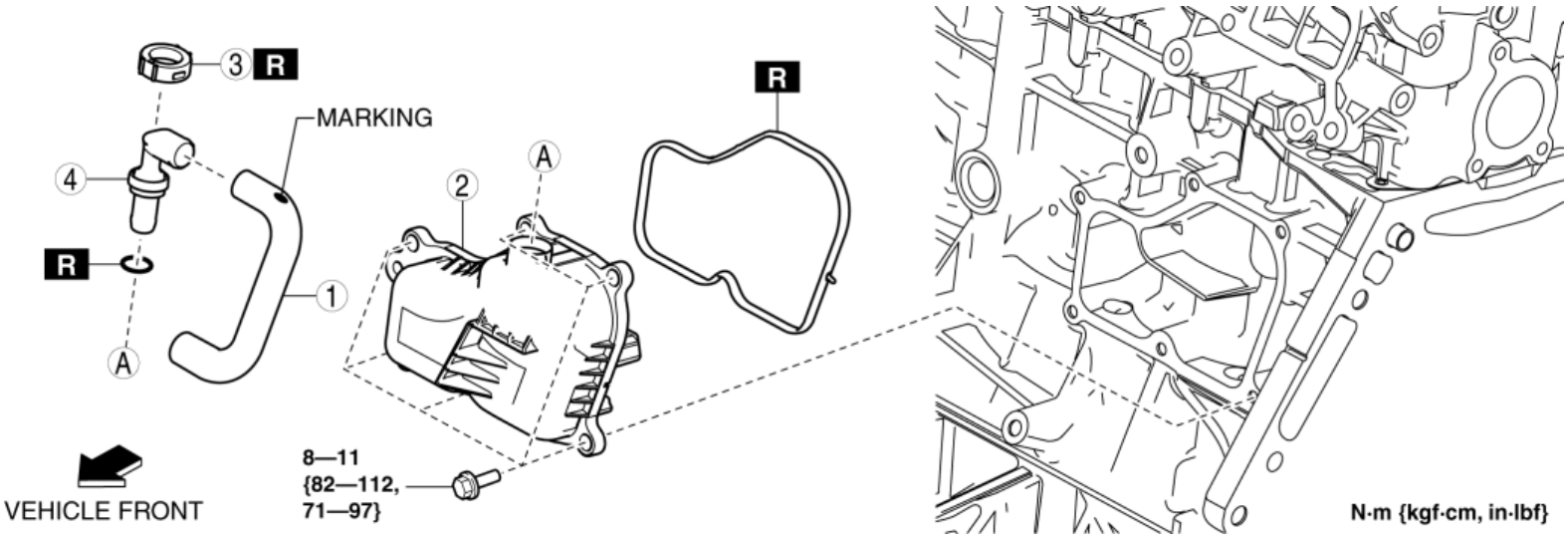

1	PCV hose (See **PCV Hose Installation Note**.)
2	Oil separator
3	Retainer (See **Retainer Removal Note**.) (See **Retainer Installation Note**.)
4	PCV valve

Retainer Removal Note

CAUTION:

- Be sure to follow the removal procedures below to prevent the leakage of blow-by gas caused by the damage to the tab of the oil separator or the oil separator itself.

1. Insert a flat blade screwdriver with its tip wrapped in a shop rag into the gap between the retainer and the oil separator as shown in the figure.

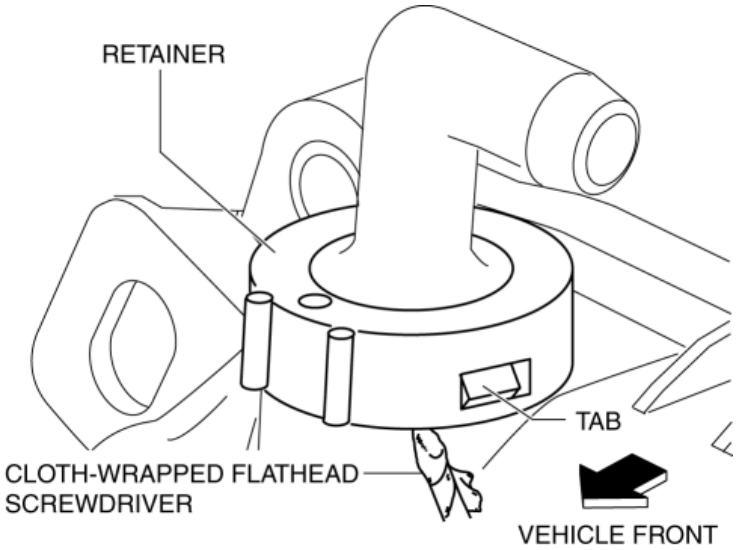

2. Spread the side surface of the retainer outward to dismount it with attention to the tab.

Retainer Installation Note

CAUTION:

- Be sure to replace the old retainer with a new one to prevent the escape of blow-by gas. Reinstalling the old retainer will reduce airtightness.

1. Make sure that the retainer alignment mark is directed as shown in the left diagram before installing the retainer to the oil separator.

SKYACTIV-G 2.0

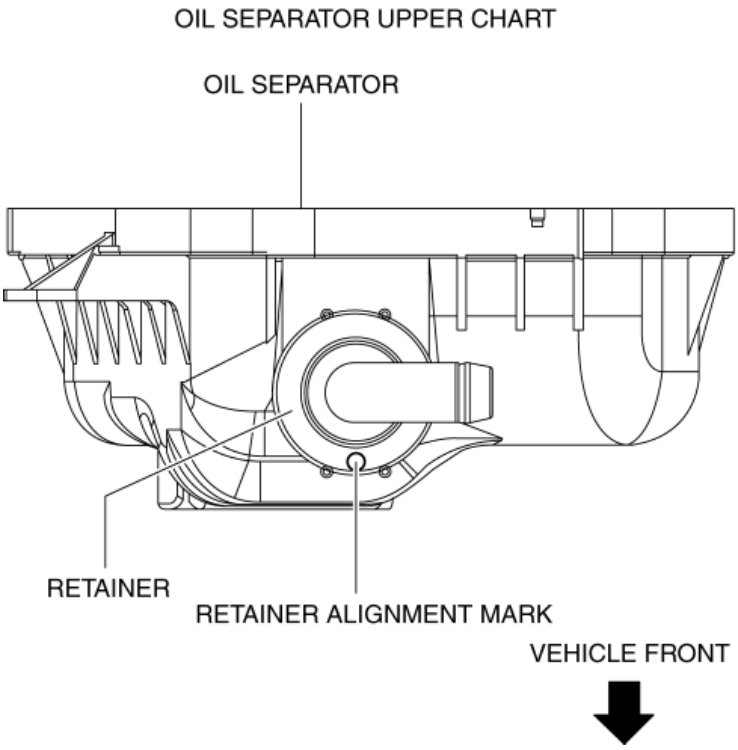

SKYACTIV-G 2.5

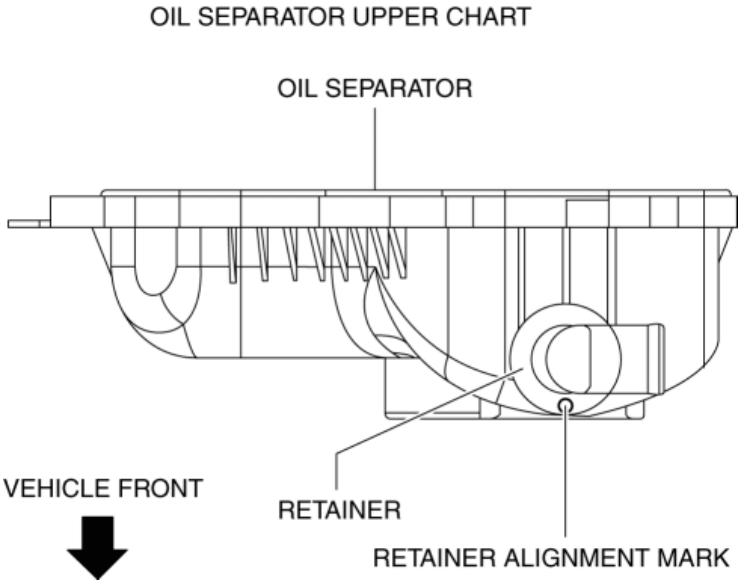

PCV Hose Installation Note

SKYACTIV-G 2.0

1. Install the end of the PCV hose on the marking side to the PCV valve.

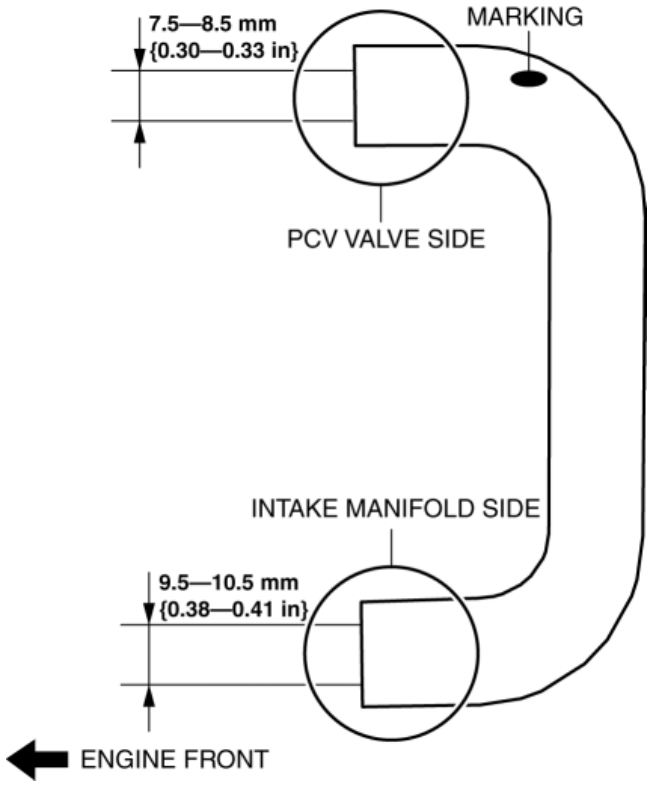

SKYACTIV-G 2.5

1. Install the end of the PCV hose on the marking side to the PCV valve.

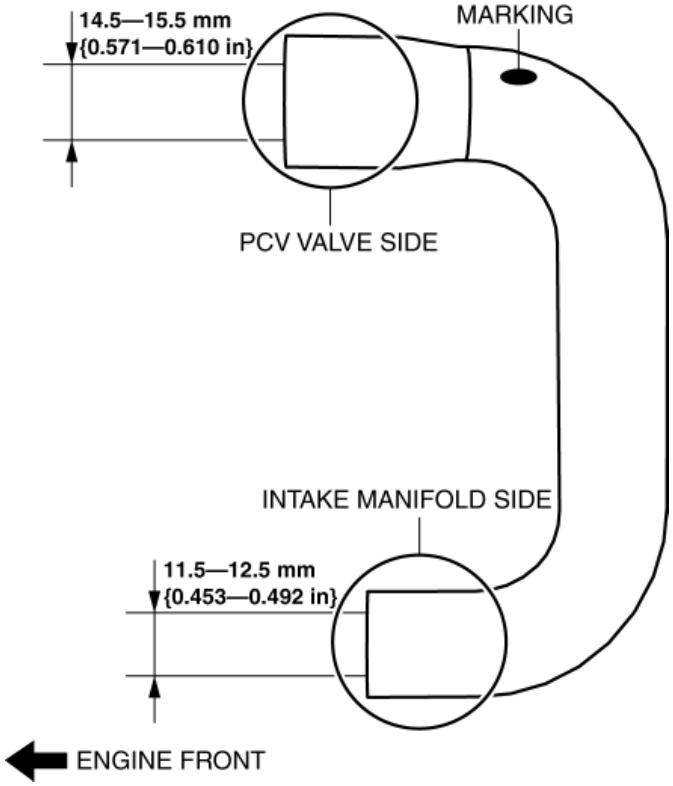

2014 - Mazda3 - Engine

POSITIVE CRANKCASE VENTILATION (PCV) VALVE INSPECTION [SKYACTIV-G 2.0, SKYACTIV-G 2.5]

Airflow Inspection

1. Disconnect the section (A) of ventilation hose shown in the figure.

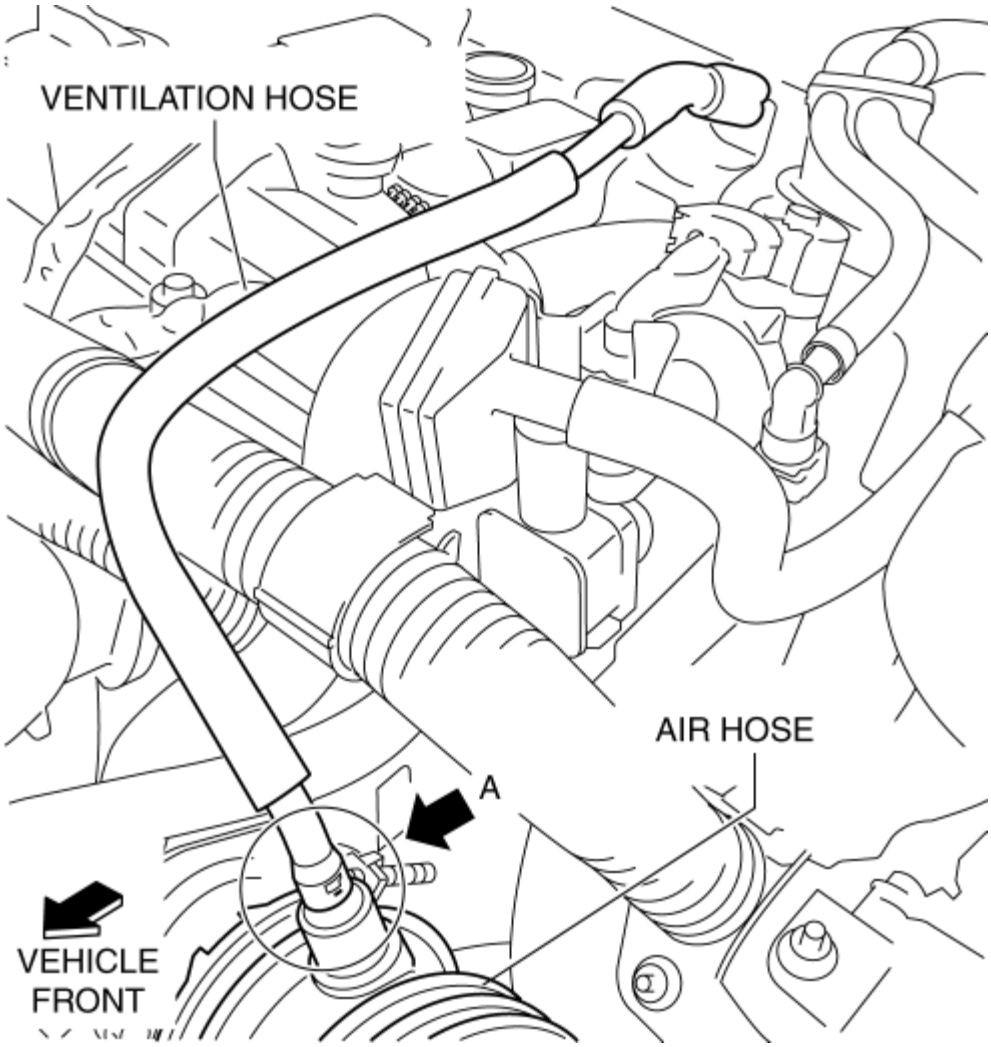

2. Start the engine and verify that vacuum is applied to the end of the disconnected ventilation hose while the engine is idling.

- If vacuum is not applied to the ventilation hose, perform the procedure from Step 3.

NOTE:

- If the PCV valve is operating normally, vacuum occurs in the ventilation hose, however, if

the PCV valve is not operating normally, vacuum does not occur in the ventilation hose because the blow-by gas is circulated to the air hose from the ventilation hose.

- Verify the ventilation hose vacuum as follows:
    - When the tip of your figure is touching the end of the ventilation hose, the tip of your figure is suctioned by the hose.
    - When a thin scrap of paper is contacting the end of the ventilation hose. the paper is suctioned by the hose.

3. Disconnect the negative battery cable. (See **NEGATIVE BATTERY CABLE DISCONNECTION/CONNECTION [SKYACTIV-G 2.0, SKYACTIV-G 2.5]**.)

4. Remove the intake manifold. (See **INTAKE-AIR SYSTEM REMOVAL/INSTALLATION [SKYACTIV-G 2.0, SKYACTIV-G 2.5]**.)

5. Remove the PCV valve and the oil separator as a single unit. (See **POSITIVE CRANKCASE VENTILATION (PCV) VALVE REMOVAL/INSTALLATION [SKYACTIV-G 2.0, SKYACTIV-G 2.5]**.)

6. Verify that there is no airflow when pressure is applied to port B.

SKYACTIV-G 2.0

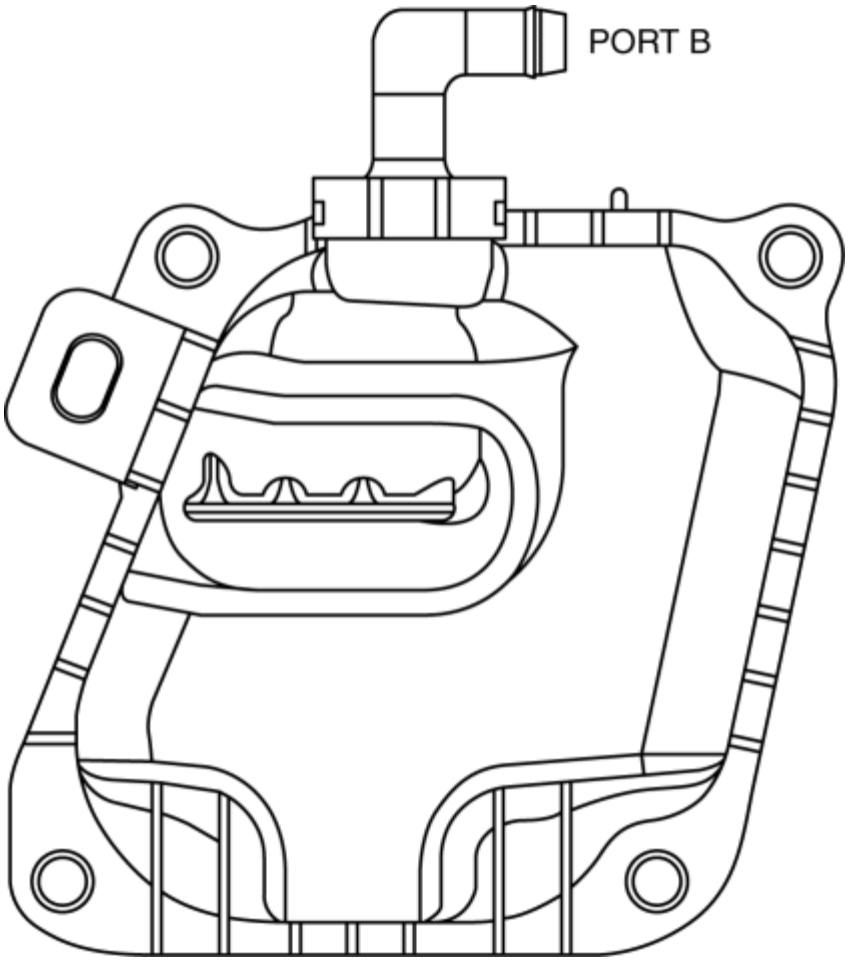

SKYACTIV-G 2.5

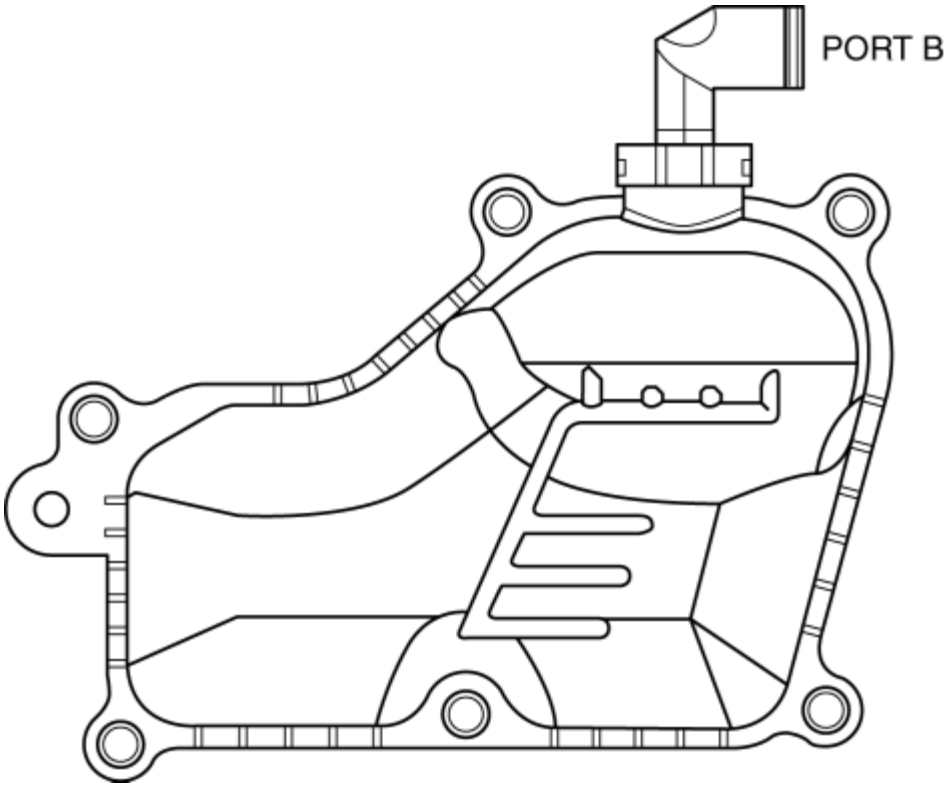

- If there is airflow, replace the PCV valve and the oil separator as a single unit. (See **POSITIVE CRANKCASE VENTILATION (PCV) VALVE REMOVAL/INSTALLATION [SKYACTIV-G 2.0, SKYACTIV-G 2.5]**.)

7. Verify that there is airflow when vacuum is applied to port B.

- If there is no airflow, replace the PCV valve and the oil separator as a single unit. (See **POSITIVE CRANKCASE VENTILATION (PCV) VALVE REMOVAL/INSTALLATION [SKYACTIV-G 2.0, SKYACTIV-G 2.5]**.)

2014 - Mazda3 - Engine

CHECK VALVE REMOVAL/INSTALLATION [SKYACTIV-G 2.0, SKYACTIV-G 2.5]

U.S.A. And CANADA

1. Remove the breather pipe. (See **FUEL TANK REMOVAL/INSTALLATION [SKYACTIV-G 2.0, SKYACTIV-G 2.5]**.)

Except U.S.A. And CANADA

1. Remove in the order indicated in the table.

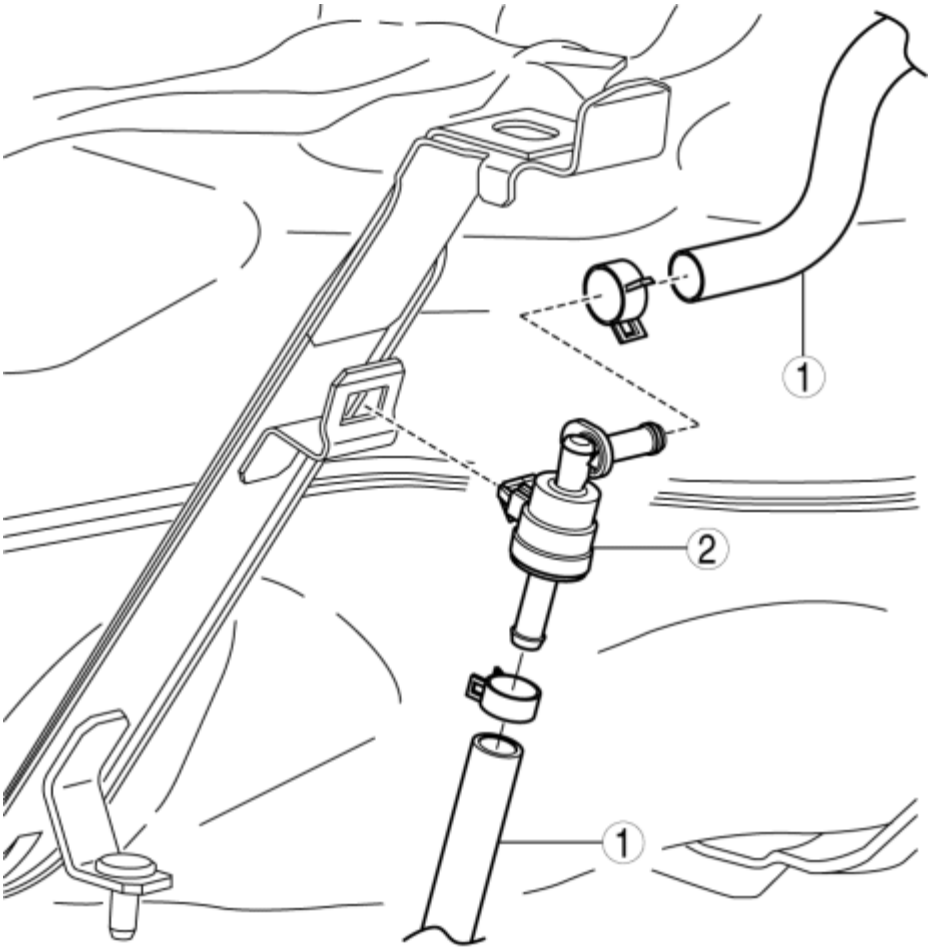

1	Evaporative hose

2	Check valve

2. Install in the reverse order of removal.

2014 - Mazda3 - Engine

CHECK VALVE INSPECTION [SKYACTIV-G 2.0, SKYACTIV-G 2.5]

U.S.A. And CANADA

1. Remove the check valve. (See **FUEL TANK REMOVAL/INSTALLATION [SKYACTIV-G 2.0, SKYACTIV-G 2.5]**.)

2. Verify that there is airflow when positive pressure is applied to port A.

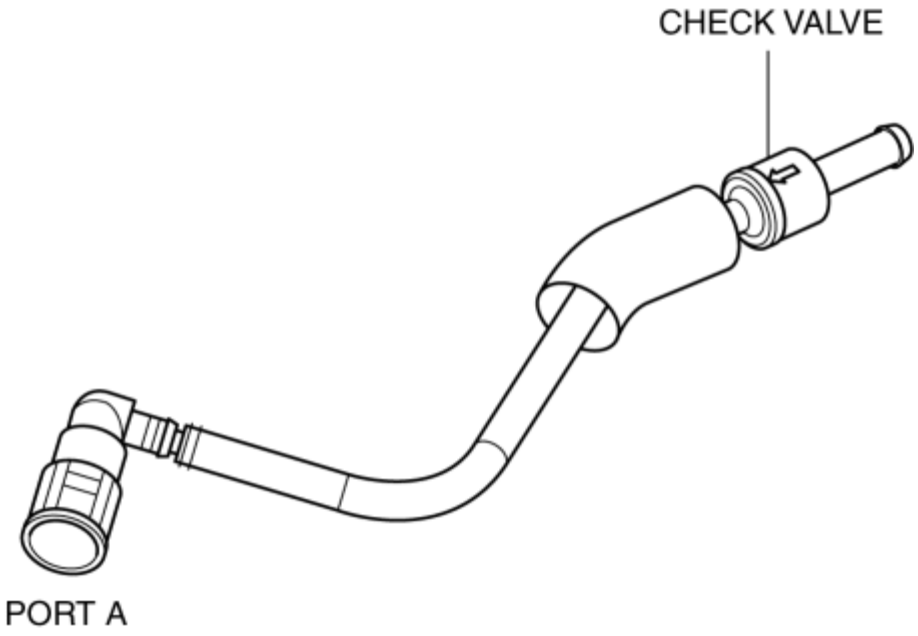

- If there is no airflow, replace the breather pipe. (See **FUEL TANK REMOVAL/INSTALLATION [SKYACTIV-G 2.0, SKYACTIV-G 2.5]**.)

3. Verify that there is airflow when negative pressure is applied to port A.

- If there is no airflow, replace the breather pipe. (See **FUEL TANK REMOVAL/INSTALLATION [SKYACTIV-G 2.0, SKYACTIV-G 2.5]**.)

Except U.S.A. And CANADA

1. Remove the check valve. (See **CHECK VALVE REMOVAL/INSTALLATION [SKYACTIV-G 2.0, SKYACTIV-G 2.5]**.)

2. Verify that there is no airflow when positive pressure is applied to port A.

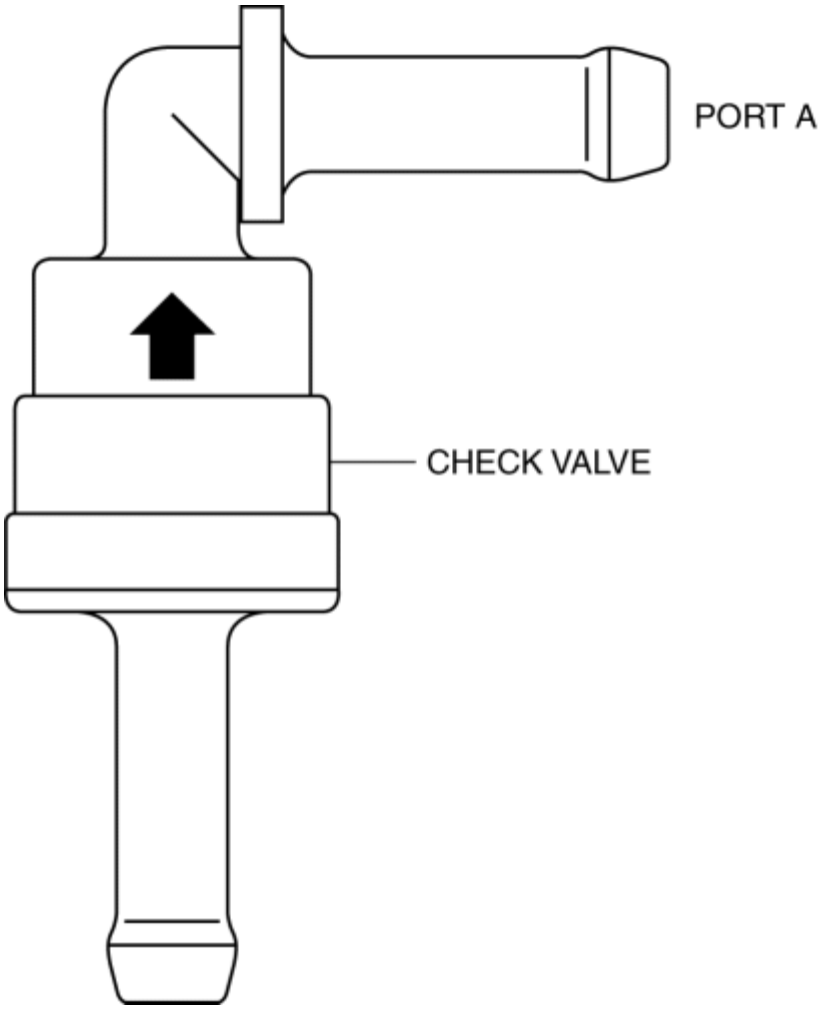

- If there is airflow, replace the check valve. (See **CHECK VALVE REMOVAL/INSTALLATION [SKYACTIV-G 2.0, SKYACTIV-G 2.5]**.)

3. Verify that there is no airflow when negative pressure is applied to port A.

- If there is no airflow, replace the check valve. (See **CHECK VALVE REMOVAL/INSTALLATION [SKYACTIV-G 2.0, SKYACTIV-G 2.5]**.)

2014 - Mazda3 - Engine

WARM-UP THREE-WAY CATALYTIC CONVERTER (WU-TWC) INSPECTION [SKYACTIV-G 2.0, SKYACTIV-G 2.5]

CAUTION:

- Perform the following procedures, DTC P0421:00 is indicated only.

1. Connect the M-MDS to the DLC-2.

2. Start the engine and warm it up to normal operating temperature.

3. Turn off the engine.

4. Verify that the engine compression is within the specification. (See **COMPRESSION INSPECTION [SKYACTIV-G 2.0, SKYACTIV-G 2.5]**.)

    - If the compression pressure is not within the specification, repair or replace the malfunctioning part.

5. Drive the vehicle for **10 min at 65—96 km/h {40—60 mph}** to allow the WU-TWC to reach normal operating temperature.

6. Stop the vehicle and leave it in a safe space.

7. Access Test ID 10:21:80 on the “Diagnostic Monitoring Test Result” function.

8. Verify that the test result is within specification indicated on the M-MDS.

    - If it is not as specified, replace the exhaust manifold. (See **EXHAUST SYSTEM REMOVAL/INSTALLATION [SKYACTIV-G 2.0, SKYACTIV-G 2.5]**.)

2014 - Mazda3 - Engine

ROLLOVER VALVE REMOVAL/INSTALLATION [SKYACTIV-G 2.0, SKYACTIV-G 2.5]

NOTE:

- The rollover valve cannot be removed as it is built into the fuel tank.

1. Remove the fuel tank. (See **FUEL TANK REMOVAL/INSTALLATION [SKYACTIV-G 2.0, SKYACTIV-G 2.5]**.)

2014 - Mazda3 - Engine

ROLLOVER VALVE INSPECTION [SKYACTIV-G 2.0, SKYACTIV-G 2.5]

NOTE:

- The rollover valve cannot be disassembled and inspected as it is built into the fuel tank.

1. Perform the fuel tank inspection. (See **FUEL TANK INSPECTION [SKYACTIV-G 2.0, SKYACTIV-G 2.5]**.)

    - If there is any malfunction, replace the fuel tank. (See **FUEL TANK REMOVAL/INSTALLATION [SKYACTIV-G 2.0, SKYACTIV-G 2.5]**.)

2014 - Mazda3 - Engine

FUEL SHUT-OFF VALVE REMOVAL/INSTALLATION [SKYACTIV-G 2.0, SKYACTIV-G 2.5]

U.S.A. And CANADA

NOTE:

- The fuel shut-off valve cannot be removed as it is built into the fuel tank.

1. Remove the fuel tank. (See **FUEL TANK REMOVAL/INSTALLATION [SKYACTIV-G 2.0, SKYACTIV-G 2.5]**.)

2014 - Mazda3 - Engine

FUEL SHUT-OFF VALVE INSPECTION [SKYACTIV-G 2.0, SKYACTIV-G 2.5]

U.S.A. And CANADA

NOTE:

- The fuel shut-off valve cannot be removed and inspected as it is built into the fuel tank.

1. Perform the fuel tank inspection. (See **FUEL TANK INSPECTION [SKYACTIV-G 2.0, SKYACTIV-G 2.5]**.)
    - If there is any malfunction, replace the fuel tank (See **FUEL TANK REMOVAL/INSTALLATION [SKYACTIV-G 2.0, SKYACTIV-G 2.5]**.)

2014 - Mazda3 - Engine

EVAPORATIVE CHAMBER REMOVAL/INSTALLATION [SKYACTIV-G 2.0, SKYACTIV-G 2.5]

1. Remove in the order indicated in the table.

U.S.A. and CANADA (4SD)

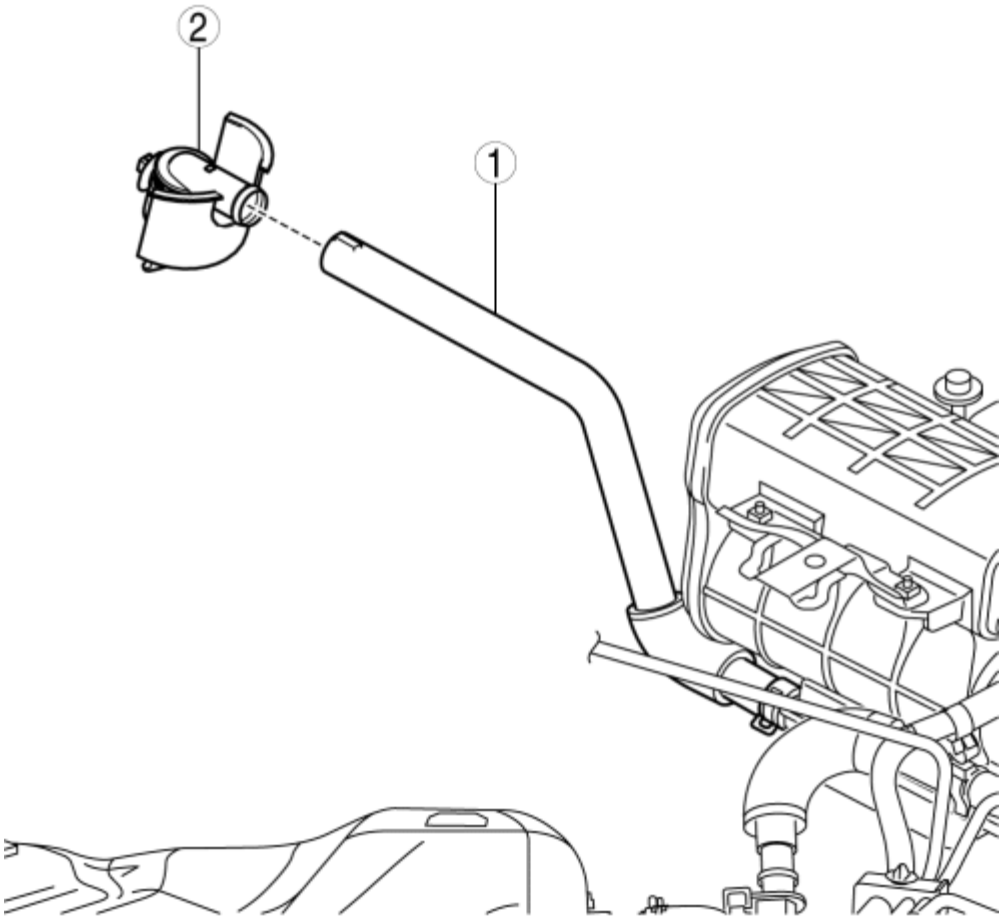

U.S.A. and CANADA (5HB)

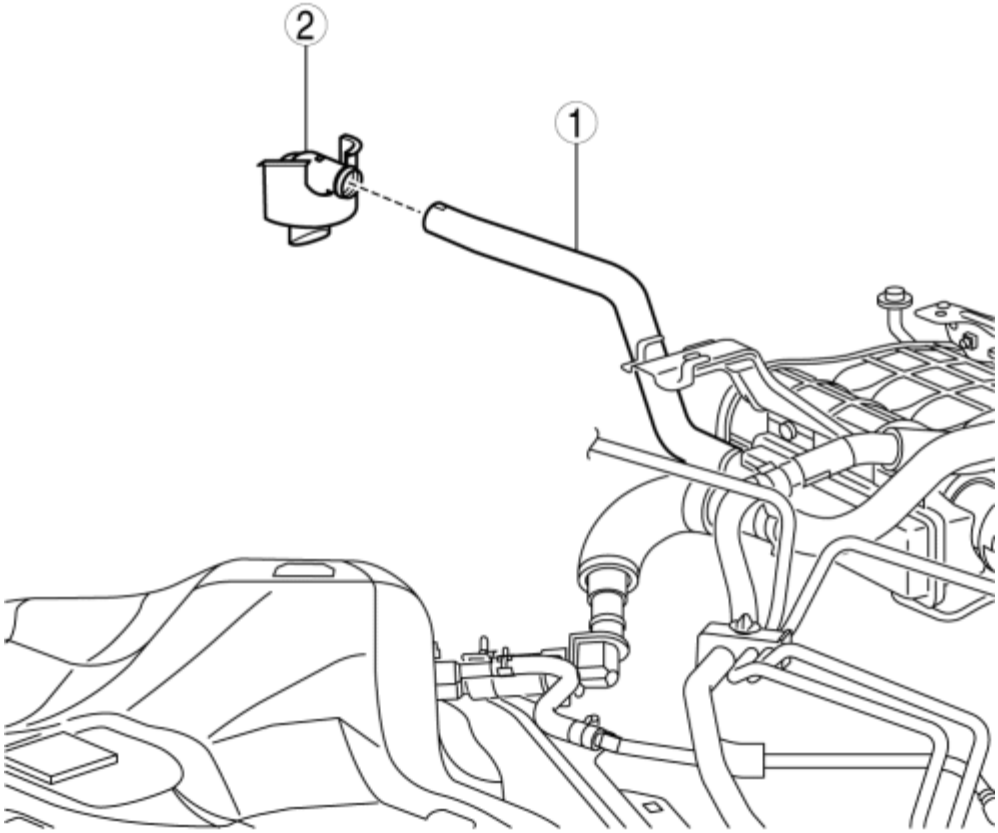

Except U.S.A. and CANADA

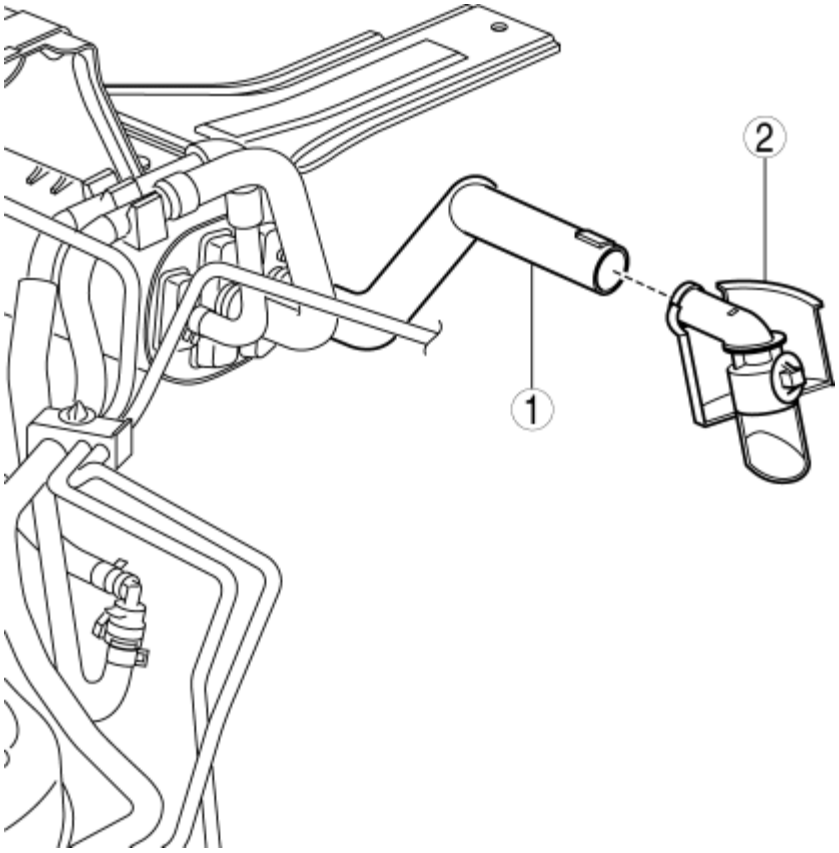

1	Evaporative hose

2	Evaporative chamber

2. Install in the reverse order of removal.

2014 - Mazda3 - Engine

EVAPORATIVE CHAMBER INSPECTION [SKYACTIV-G 2.0, SKYACTIV-G 2.5]

1. Remove the evaporative chamber. (See **EVAPORATIVE CHAMBER REMOVAL/INSTALLATION [SKYACTIV-G 2.0, SKYACTIV-G 2.5]**.)

2. Blow air flow port A and verify that there is air flow.

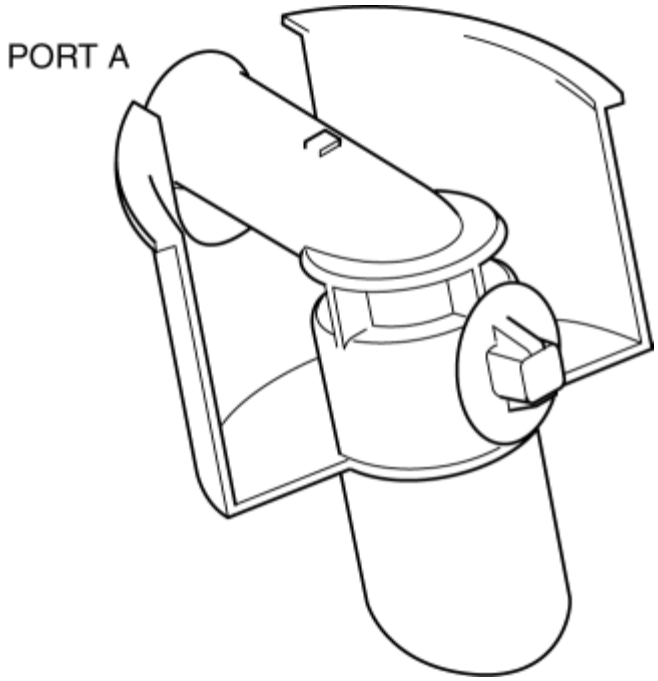

- If there is no air flow, replace the evaporative chamber. (See **EVAPORATIVE CHAMBER REMOVAL/INSTALLATION [SKYACTIV-G 2.0, SKYACTIV-G 2.5]**.)

3. Verify that there is no deformation or cracking of the evaporative chamber.

- If the exterior is no normal, replace the evaporative chamber. (See **EVAPORATIVE CHAMBER REMOVAL/INSTALLATION [SKYACTIV-G 2.0, SKYACTIV-G 2.5]**.)

2014 - Mazda3 - Engine

QUICK RELEASE CONNECTOR (EMISSION SYSTEM) REMOVAL/INSTALLATION [SKYACTIV-G 2.0, SKYACTIV-G 2.5]

Quick Release Connector Type and Position

CAUTION:

- Verify the type and location, and install/remove properly.

U.S.A. and CANADA

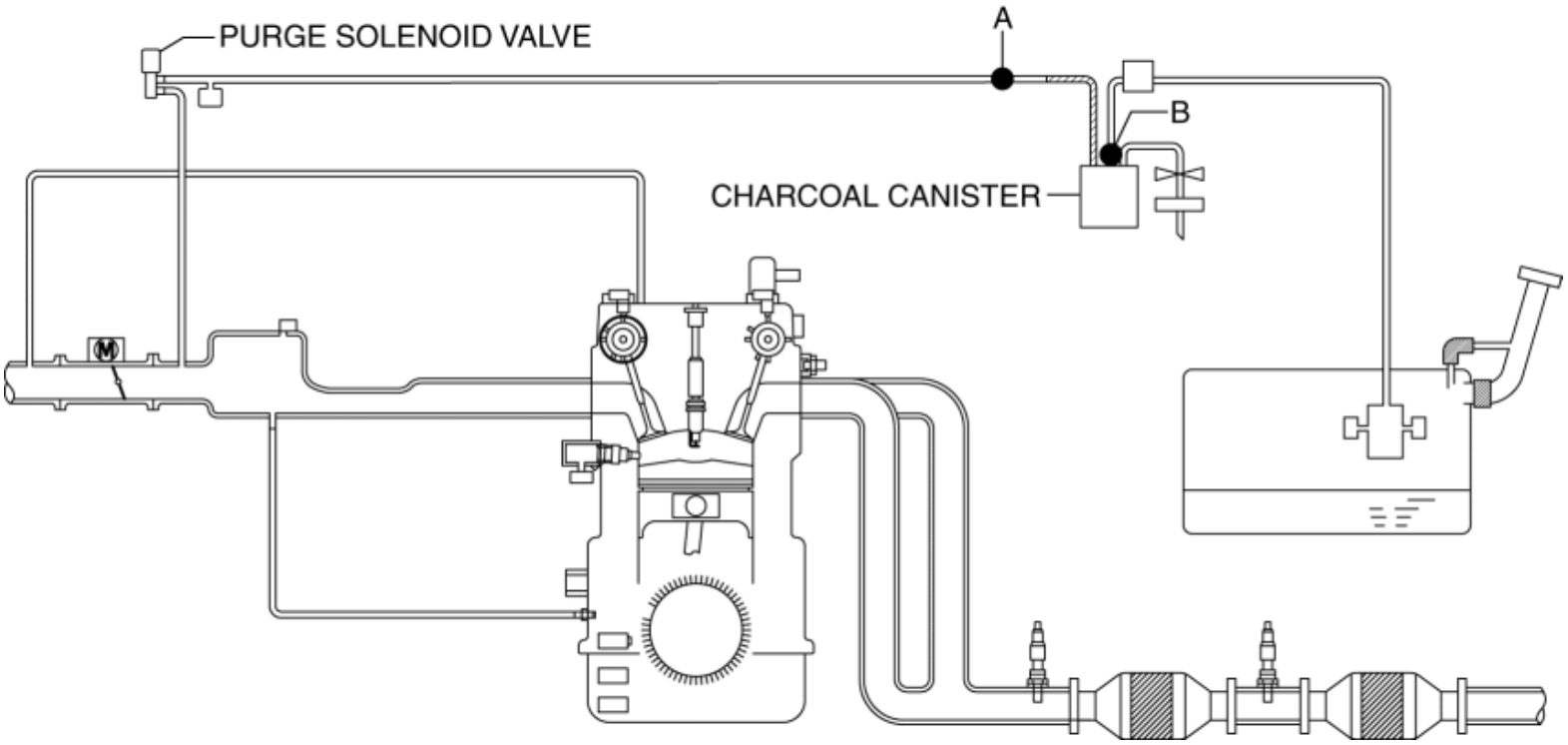

Except U.S.A. and CANADA

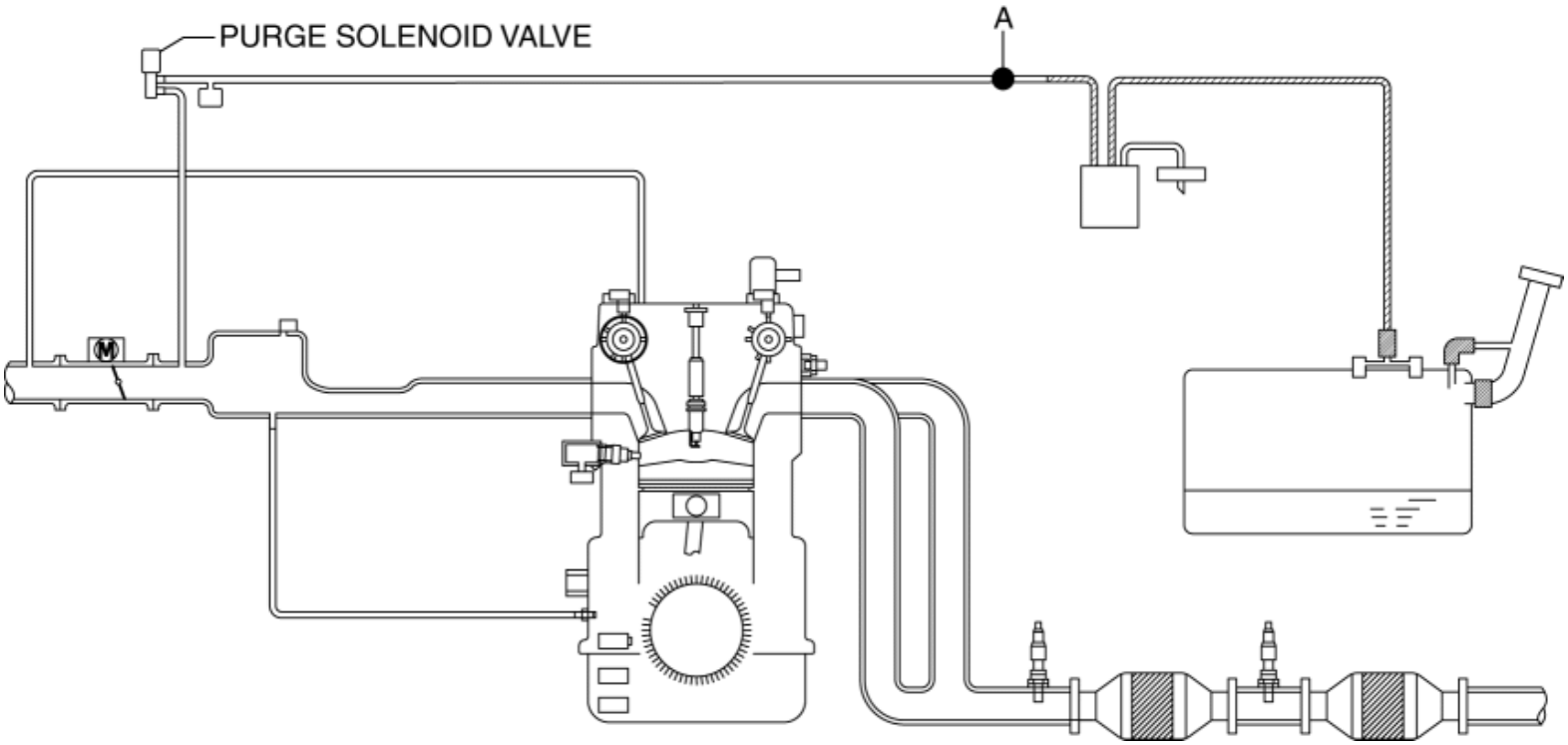

Type A Removal

1. Move the retainer upward using a small flathead screwdriver or a similar tool.

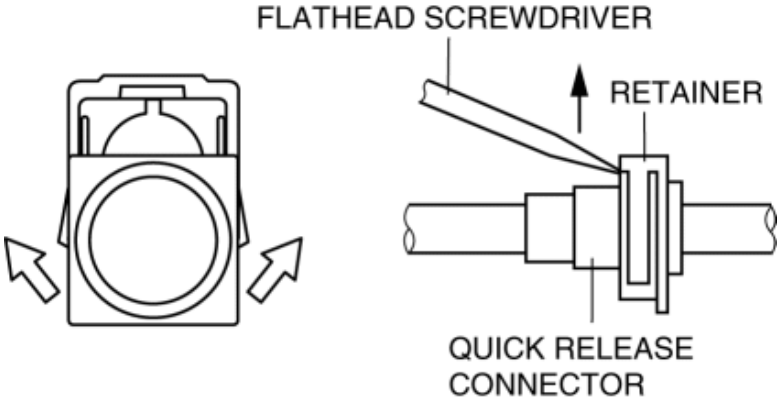

2. Pull out the evaporative hose straight from the evaporative pipe and disconnect it.

3. Cover the disconnected quick release connector and evaporative pipe with vinyl sheeting or a similar material to prevent it from getting scratched or dirty.

Type B Removal

CAUTION:

- Be careful not to damage the evaporative pipe when unlocking the retainer.

NOTE:

- If the quick release connector is removed, replace the retainer with a new one.

1. Set the **SST** parallel to the quick release connector.

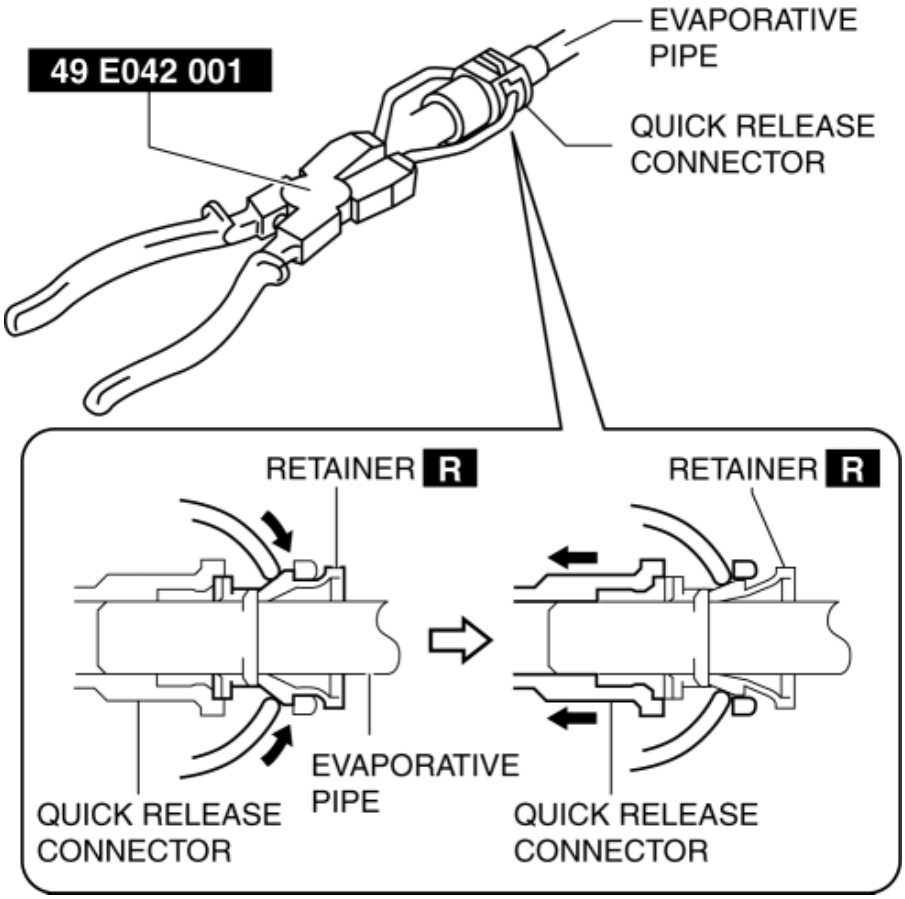

NOTE:

- The quick release connector can be removed by pushing the center of the retainer tabs.
- The retainer is attached to the evaporative pipe even after the connector is disconnected.

2. Hold the center of the retainer tabs with the finger and press the retainer.
3. Pull the connector side and disconnect the quick release connector.
4. Raise a retainer tab using the SST and remove the retainer.

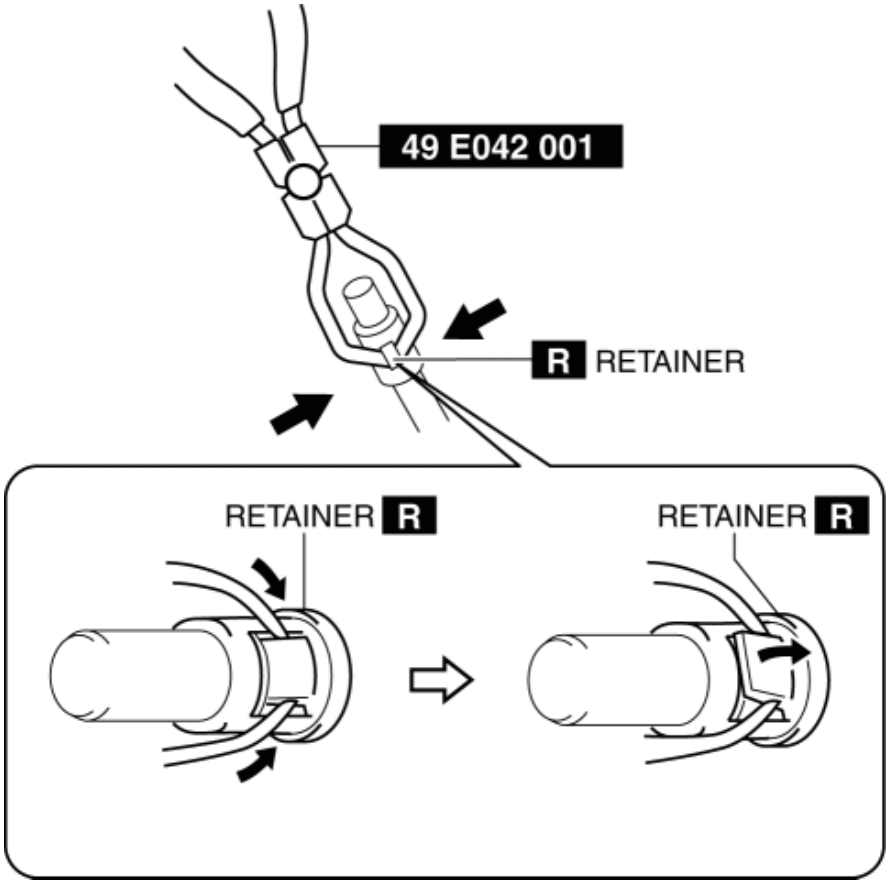

5. Cover the disconnected quick release connector and evaporative pipe with vinyl sheeting or a similar material to prevent it from getting scratched or dirty.

Type A Installation

NOTE:

- If the quick release connector O-ring is damaged or has slipped, replace the evaporative hose.
- A checker tab is integrated with the quick release connector for new evaporative hoses. Remove the checker tab from the quick release connector after the connector is completely engaged with the evaporative pipe.

1. Inspect the evaporative hose and evaporative pipe sealing surface for damage and deformation.
    - If there is any malfunction, replace it with a new one.
2. Apply a small amount of clean engine oil to the sealing surface of the evaporative pipe.
3. Install the quick release connector.

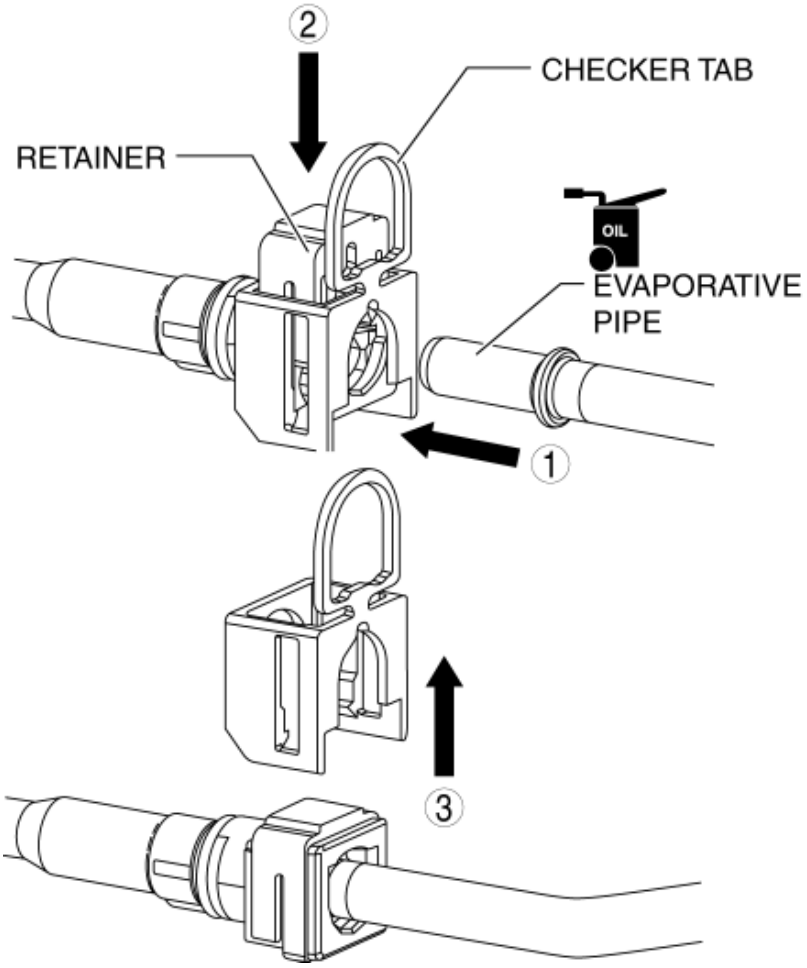

- Insert the evaporative pipe straight to the end of the quick release connector.
- Push down the retainer using a finger.
    - If the retainer cannot be pushed down, push the evaporative pipe further to the quick release connector.

4. Lightly pull and push the quick release connector a few times by hand, and then verify that it is connected securely.

Type B Installation

CAUTION:

- Always replace the retainer with a new one when using SST 49 E042 001, otherwise, evaporative leakage could result.

NOTE:

- If the quick release connector O-ring is damaged or has slipped, replace the piping component.
- A checker tab is integrated with the quick release connector for new evaporative hoses. Remove the checker tab from the quick release connector after the connector is completely engaged with the evaporative pipe.

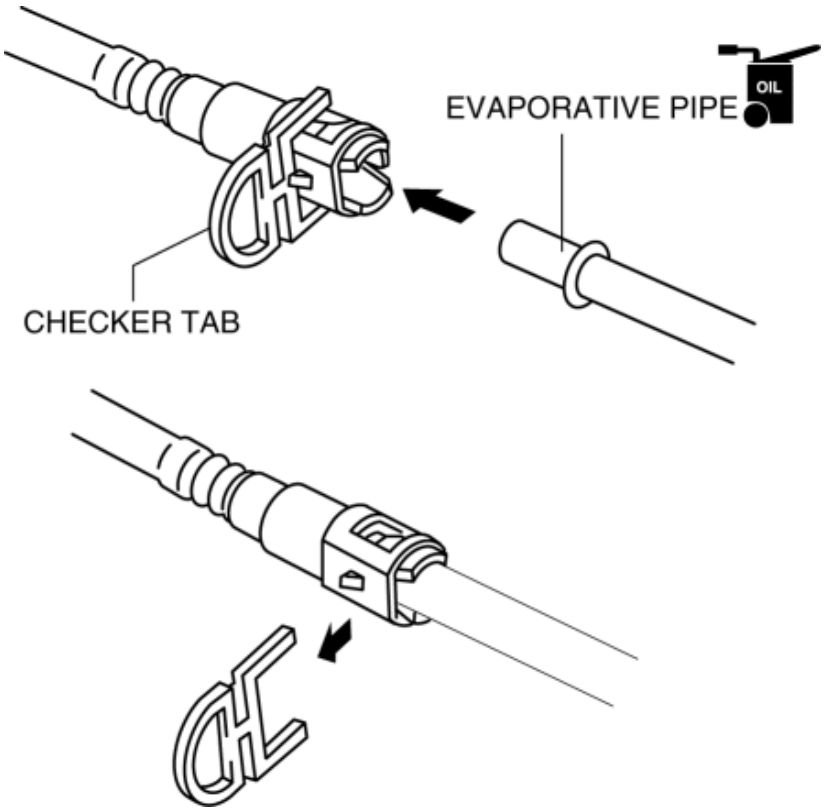

1. Inspect the evaporative hose and evaporative pipe sealing surface for damage and deformation.
    - If there is any malfunction, replace it with a new one.
2. Apply a small amount of clean engine oil to the sealing surface of the evaporative pipe.
3. Install a new retainer to the quick release connector.
4. Reconnect the hose straight to the pipe until a click is heard.
5. Lightly pull and push the quick release connector a few times by hand, and then verify that it is connected securely.

2014 - Mazda3 - Engine

CANISTER VENT (CV) SOLENOID VALVE REMOVAL/INSTALLATION [SKYACTIV-G 2.0, SKYACTIV-G 2.5]

U.S.A. and CANADA

1. Disconnect the negative battery cable. (See **NEGATIVE BATTERY CABLE DISCONNECTION/CONNECTION [SKYACTIV-G 2.0, SKYACTIV-G 2.5]**.)

2. Remove in the order indicated in the table.

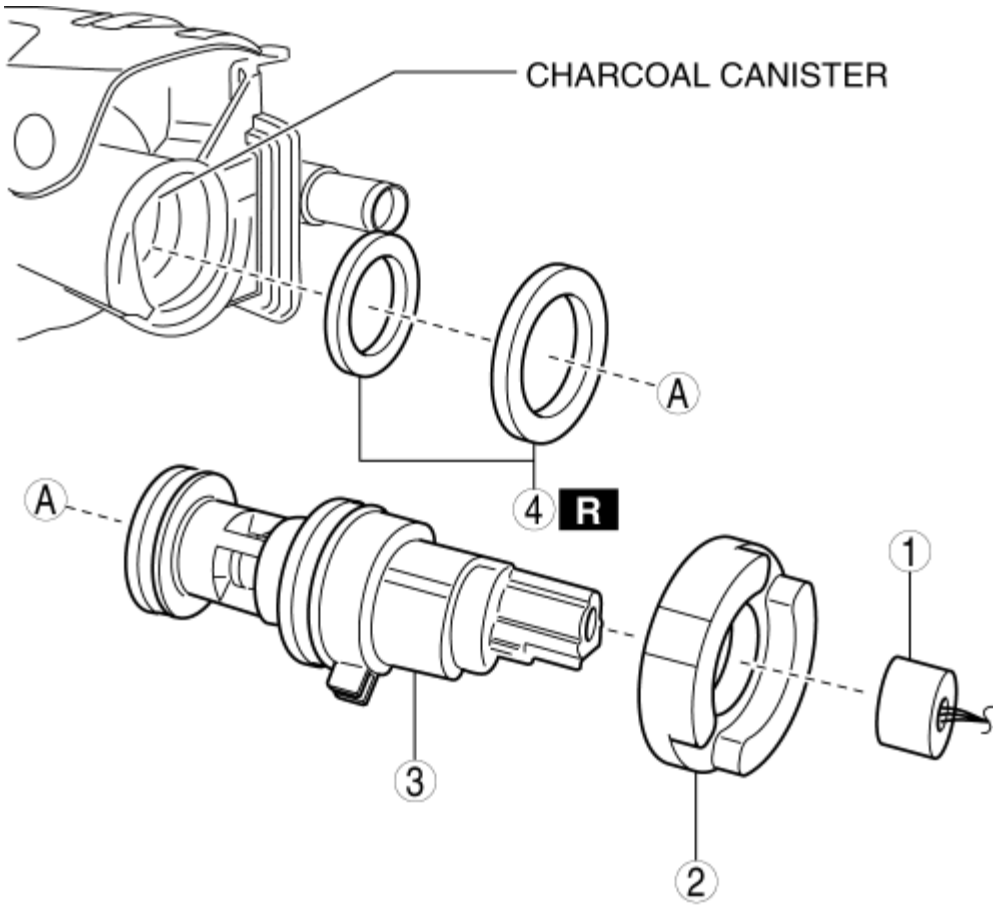

1	CV solenoid valve connector
2	CV solenoid valve cover
3	CV solenoid valve

4	O-ring

3. Install in the reverse order of removal.

2014 - Mazda3 - Engine

CANISTER VENT (CV) SOLENOID VALVE INSPECTION [SKYACTIV-G 2.0, SKYACTIV-G 2.5]

U.S.A. and CANADA

Airflow inspection

1. Disconnect the negative battery cable. (See **NEGATIVE BATTERY CABLE DISCONNECTION/CONNECTION [SKYACTIV-G 2.0, SKYACTIV-G 2.5]**.)

2. Remove the CV solenoid valve. (See **CANISTER VENT (CV) SOLENOID VALVE REMOVAL/INSTALLATION [SKYACTIV-G 2.0, SKYACTIV-G 2.5]**.)

3. Inspect airflow between the ports under the following conditions.

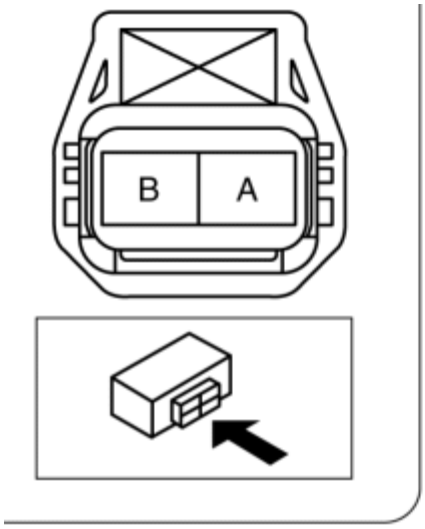

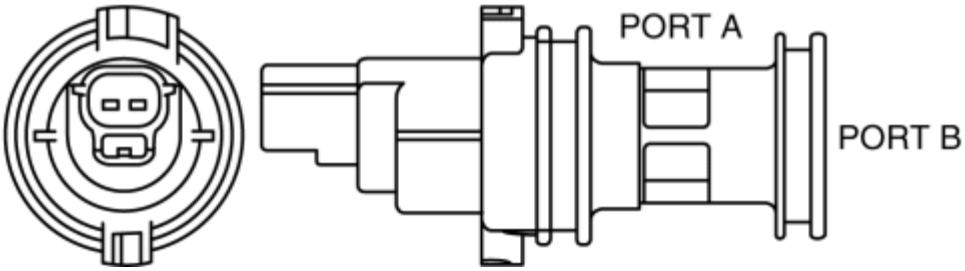

Measured condition	Continuity between A—B

When voltage is not applied between terminals A and B	Airflow detected
When voltage is applied between terminals A and B	No airflow

- If not as specified, replace the CV solenoid valve. (See **CANISTER VENT (CV) SOLENOID VALVE REMOVAL/INSTALLATION [SKYACTIV-G 2.0, SKYACTIV-G 2.5]**.)
- Should assume the voltage **12V** (D.C.).
- Terminals A and B is nonpolar.

2014 - Mazda3 - Engine

CHARGING SYSTEM LOCATION INDEX [SKYACTIV-G 2.0, SKYACTIV-G 2.5 (WITHOUT i-ELOOP)]

NOTE:

- For location index of the generator, DC-DC converter, capacitor (i-ELOOP) on vehicles with i-ELOOP, refer to the i-ELOOP section. (See **CHARGING SYSTEM LOCATION INDEX [SKYACTIV-G 2.0, SKYACTIV-G 2.5 (WITH i-ELOOP)]**.)

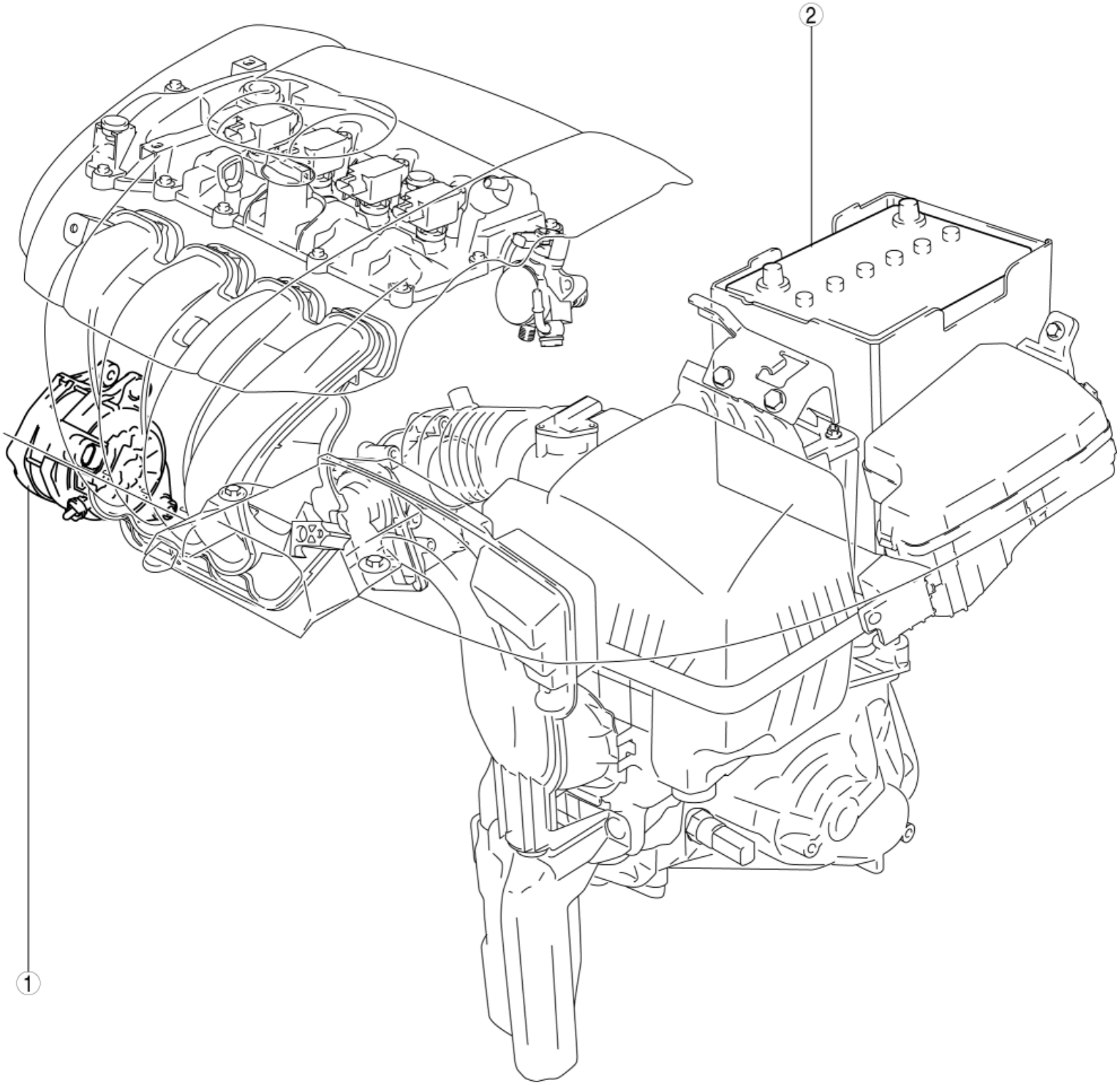

1	Generator (See **GENERATOR REMOVAL/INSTALLATION [SKYACTIV-G 2.0, SKYACTIV-G 2.5 (WITHOUT i-ELOOP)]**.) (See **GENERATOR INSPECTION [SKYACTIV-G 2.0, SKYACTIV-G 2.5 (WITHOUT i-ELOOP)]**.) (See **GENERATOR DISASSEMBLY/ASSEMBLY [SKYACTIV-G 2.0, SKYACTIV-G 2.5 (WITHOUT i-ELOOP)]**.)
2	Battery (See **NEGATIVE BATTERY CABLE DISCONNECTION/CONNECTION [SKYACTIV-G 2.0, SKYACTIV-G 2.5]**.) (See **BATTERY REMOVAL/INSTALLATION [SKYACTIV-G 2.0, SKYACTIV-G 2.5]**.) (See **BATTERY INSPECTION [SKYACTIV-G 2.0, SKYACTIV-G 2.5]**.) (See **BATTERY RECHARGING [SKYACTIV-G 2.0, SKYACTIV-G 2.5]**.)

2014 - Mazda3 - Engine

BATTERY REMOVAL/INSTALLATION [SKYACTIV-G 2.0, SKYACTIV-G 2.5]

Operation After Replacing Battery (With i-ELOOP)

NOTE:

- If the battery charge/discharge flow (number of times battery can operate) exceeds the specification, a DTC is recorded and the master warning light turns on. If the battery charge/discharge flow (number of times battery can operate) exceeds the specification, replace the battery with a new one.
- When replacing the battery, perform the following procedure: When replacing the PCM simultaneously, perform the PCM configuration first. (See **PCM REMOVAL/INSTALLATION [SKYACTIV-G 2.0, SKYACTIV-G 2.5]**.) (See **PCM CONFIGURATION (USING READ/WRITE FUNCTION) [SKYACTIV-G 2.0, SKYACTIV-G 2.5]**.) (See **PCM CONFIGURATION (USING AS-BUILT DATA) [SKYACTIV-G 2.0, SKYACTIV-G 2.5]**.)

Step	Action
1	Switch the ignition ON (engine off).
2	Shift the selector lever to the N position.
3	Perform the following work with the brake pedal depressed. 1. Depress the accelerator pedal for 5 s or more. 2. Verify that the charging system warning light and the master warning light flash. 3. Depress and release the accelerator pedal 3 times. 4. Verify that the charging system warning light illuminates and the master warning light turns off.
4	Switch the ignition off and disconnect the negative battery cable. (See **NEGATIVE BATTERY CABLE DISCONNECTION/CONNECTION [SKYACTIV-G 2.0, SKYACTIV-G 2.5]**.)

Battery Removal/Installation

1. Remove in the order indicated in the table.
2. Install in the reverse order of removal.

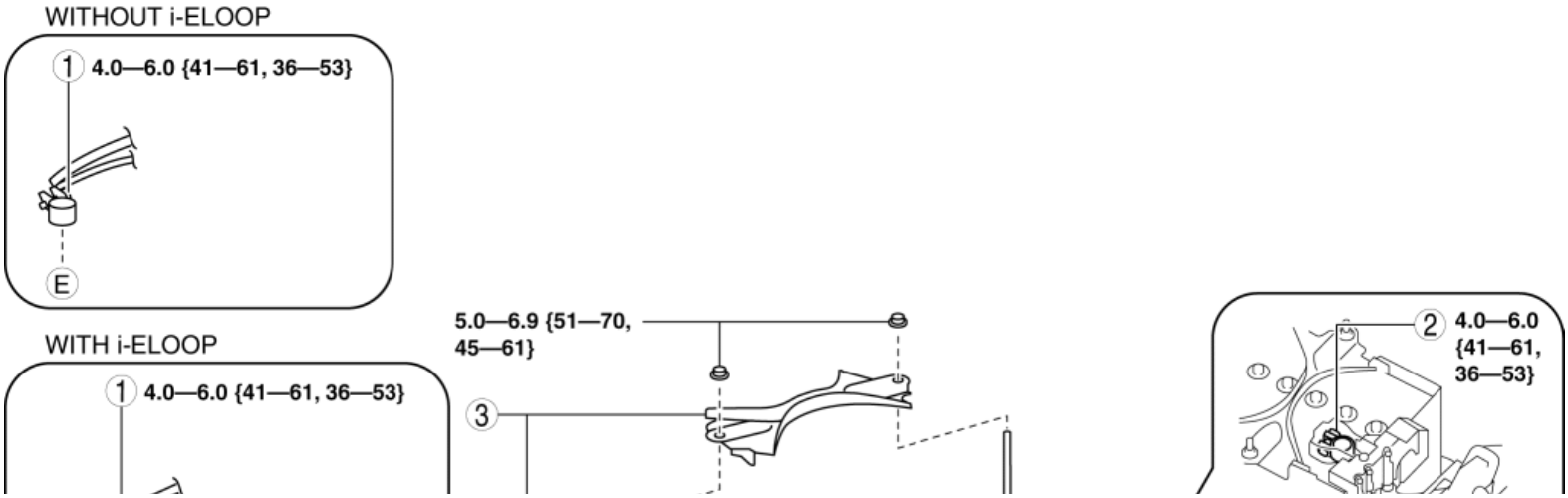

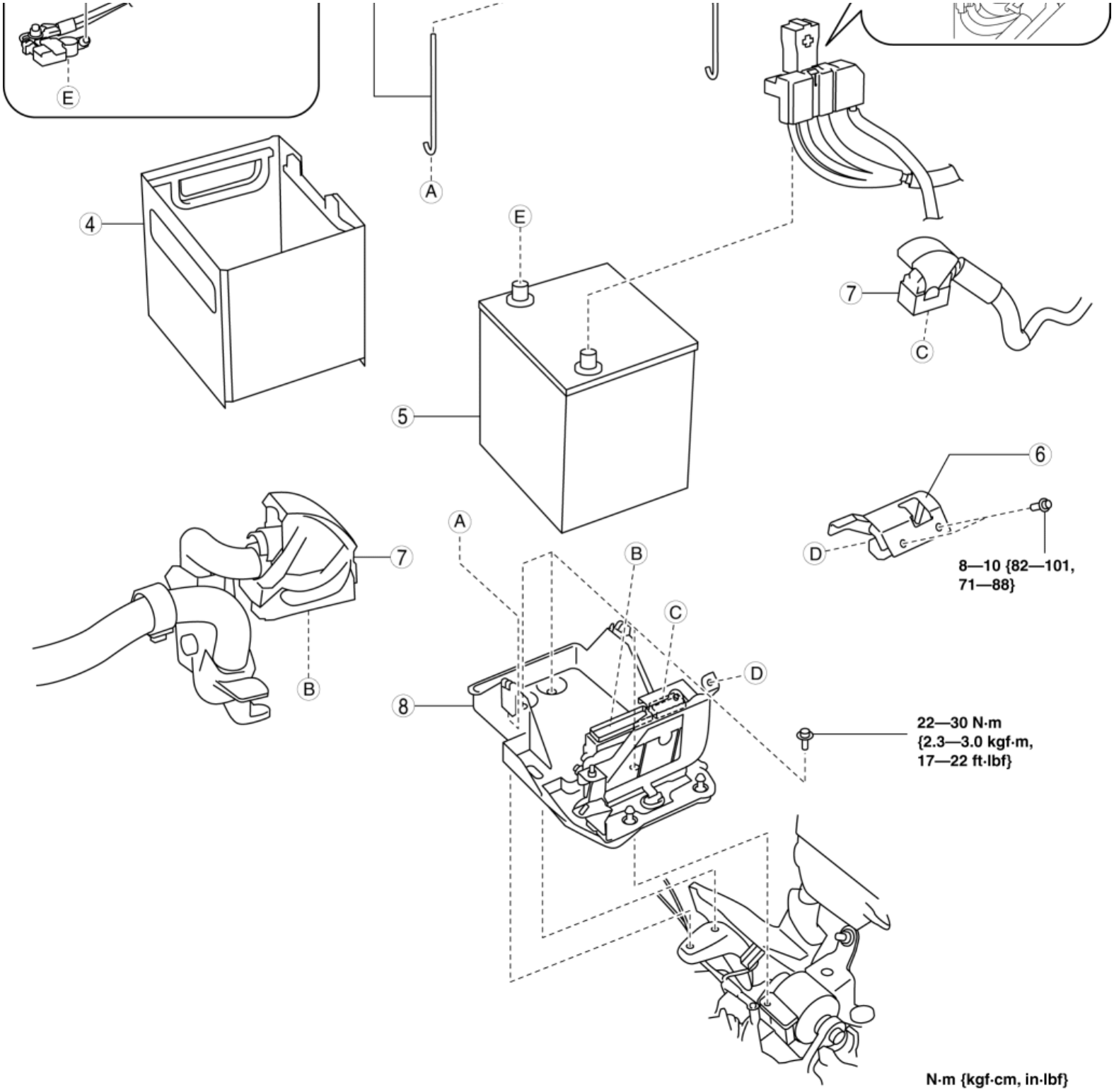

1	Negative battery cable (See **NEGATIVE BATTERY CABLE DISCONNECTION/CONNECTION [SKYACTIV-G 2.0, SKYACTIV-G 2.5]**.)
2	Positive battery cable
3	Battery clamp
4	Battery box **Battery Box Installation Note**

	(See .)
5	Battery (See **Battery Removal Note**.)
6	PCM cover (See **PCM REMOVAL/INSTALLATION [SKYACTIV-G 2.0, SKYACTIV-G 2.5]**.)
7	PCM connector (See **PCM REMOVAL/INSTALLATION [SKYACTIV-G 2.0, SKYACTIV-G 2.5]**.)
8	Battery tray and PCM component (See **Battery Tray and PCM Component Removal Note**.)

Battery Removal Note

CAUTION:

- When removing the battery, do not place the battery on the PCM connector or hit it with the battery. Otherwise, the PCM or PCM connector could be damaged.

Battery Tray and PCM Component Removal Note

1. Remove the air cleaner, air hose and fresh air duct component. (See **INTAKE-AIR SYSTEM REMOVAL/INSTALLATION [SKYACTIV-G 2.0, SKYACTIV-G 2.5]**.)
2. Remove the bolt and nut securing the wiring harness protector to the battery tray.

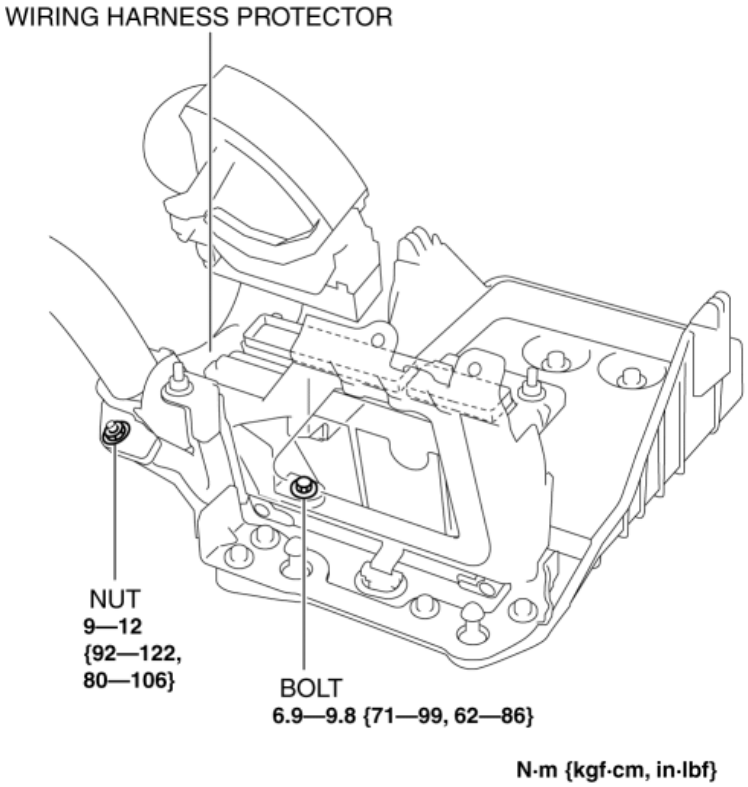

3. Remove the three battery tray bolts so that the battery tray is free to move.
4. Release the wiring harness clips at the three locations shown in the figure and remove the battery tray and PCM component.

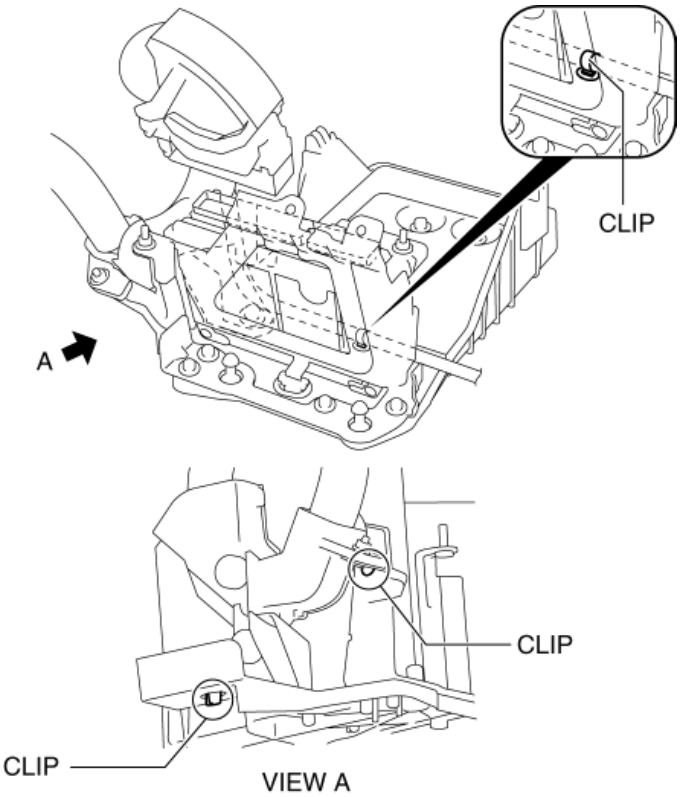

5. When replacing the battery tray with a new one, perform the following procedure:

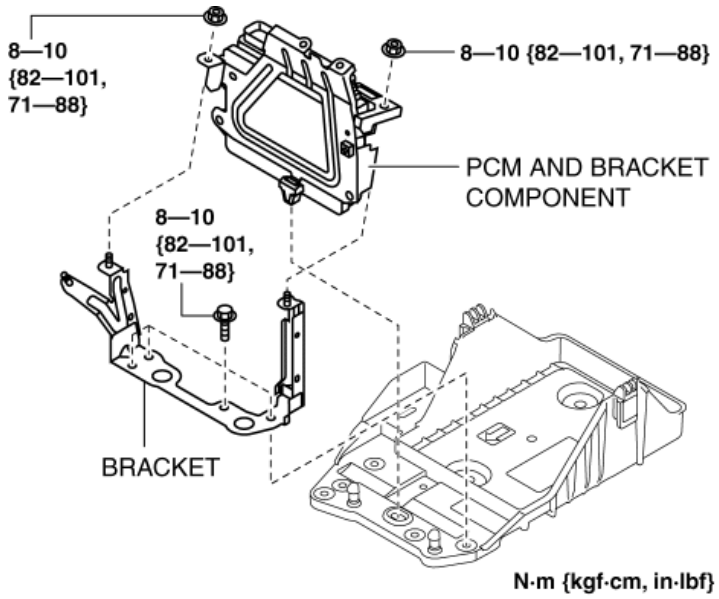

a. Remove the PCM and bracket component.

b. Remove the bracket.

Battery Box Installation Note

1. Install the battery box so that the side with the larger notch is pointed at the engine.

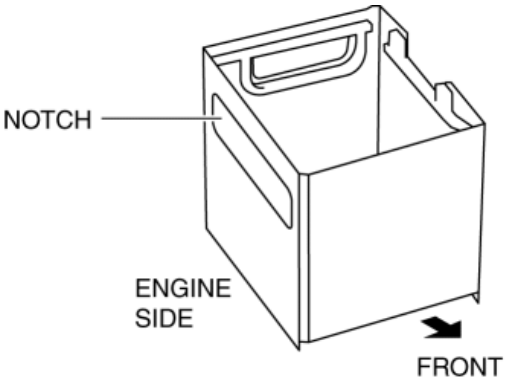
NOTCH
ENGINE
SIDE
FRONT

2014 - Mazda3 - Engine

BATTERY INSPECTION [SKYACTIV-G 2.0, SKYACTIV-G 2.5]

WARNING:

1. Because battery acid is toxic, be careful when handling the battery.
2. Because battery acid is highly corrosive, be careful not to allow it to contact clothing or the vehicle.
3. If battery acid contacts skin, eyes, or clothing, flush it immediately with running water. If the acid gets in the eyes, flush with water for more than 15 min and get prompt medical attention.

Using GR8-1291 (Without i-ELOOP):

(See **GR8-1291 INSTANT TRAINING MODULE (VIDEO)**.)

1. Remove the battery filler caps and check the water level. If necessary, add water to the appropriate level. Reinstall the caps.

2. Attach the small red clamp to the positive battery terminal and the small black clamp to the negative terminal.

3. Select the Battery Test icon in the Main Menu, then press the NEXT key.

4. Test the battery by following the on-screen instructions to enter the appropriate information. Refer to the Mazda GR8-1291 Instruction Manual for more information.

5. After the test, the Control Module displays the test results in a series of screens. The analysis includes the battery state of health (SOH) and state of charge (SOC). Before the Battery Test results are displayed, use the keypad on the Control Module to enter the last 5 digits of the vehicle's VIN and press NEXT to continue.

6. The Mazda GR8-1291 will print out the test results and display one of the eight possible results listed below. Review the results and follow the Action Step for the displayed result.

Battery Tester Display	Action Step
GOOD BATTERY	Return the battery to service.
GOOD - RECHARGE	Fully charge the battery and return it to service.

CHARGE & RETEST	Fully charge the battery and retest. Failure to fully charge the battery before retesting may cause false readings. If CHARGE & RETEST appears again after you fully charge the battery, replace the battery.
REPLACE BATTERY	A REPLACE BATTERY result may also mean a poor connection between the battery and the vehicle. If you tested the battery using the System test, disconnect the battery cables and retest using the Battery Test before replacing it.
BAD CELL - REPLACE	Replace the battery. **WARNING:** • Do not charge the battery. Charging a battery with one or more bad cells could cause an explosion and serious harm to the user.
SIDE POST TEST	Test data was inconclusive using the side post. Retest using side post adapters.
JUMP START POST	Data was inconclusive using the jump start post. Retest at the battery terminals.
24 VOLT BATTERY	24-volt battery detected. You are attempting to test both in-vehicle batteries in a 24-volt system. Disconnect the batteries and test them individually.

Using Electrolyte Specific Gravity Method:

Without i-ELOOP

1. Remove the battery filler caps and check the water level.
   - If necessary, add water to the appropriate level.
2. Measure the electrolyte specific gravity using a hydrometer.
   - If it is less than the specification, recharge the battery. (See **BATTERY RECHARGING [SKYACTIV-G 2.0, SKYACTIV-G 2.5]**.)

     Battery electrolyte specific gravity (Without i-ELOOP)

   - 1.22—1.29 [20 °C {68 °F}]

With i-ELOOP

Purpose	Step	Inspection	Results	Action
Battery examination (verification of dendrite short)	1	Using a hydrometer, measure the electrolyte gravity of all the cells and identify the one with the lowest electrolyte gravity value.	1.25 or more	Battery is normal.
			1.17—1.25	Recharge the battery. (See **BATTERY RECHARGING [SKYACTIV-G 2.0, SKYACTIV-G 2.5]**.)
			Less than 1.17	Replace the battery because it can be determined as a dendrite short. (See **BATTERY REMOVAL/INSTALLATION [SKYACTIV-G 2.0, SKYACTIV-G 2.5]**.)

Using Battery Voltage Method (Without i-ELOOP Only):

1. Inspect the battery as follows after removing the battery filler caps, checking the water level, and adding water to the appropriate level if needed:

Step	Inspection	Results	Action
1	Measure the battery positive voltage.	12.4 V or more	Go to Step 3.
		Less than 12.4 V	Go to the next step.
2	Quick charge for **30 min** and recheck voltage.	12.4 V or more	Go to the next step.
		Less than 12.4 V	Replace the battery.
3	Using the battery load tester, apply load current (see battery load test current) and record battery voltage after **15 s**. Is voltage more than the specification?	Yes	Normal
		No	Replace

			the battery.

Battery load test current

- 55D23L (60 A·h/20HR): 180 A
- 75D23L (65 A·h/20HR): 195 A

Standard specification

Battery temp. (°C {°F})	Minimum voltage (V)
4 {39}	9.3
10 {50}	9.4
16 {61}	9.5
21 {70}	9.6

Parasitic Draw Inspection

(See **GR8-1291 PARASITIC DRAW TESTING INSTANT TRAINING (VIDEO)**.)

1. Verify that the ignition is switched off (lock) and all doors, the hood and the trunk/liftgate are closed.

2. If using a series-type ammeter, continue to Step 3. If using the GR8-1291 Battery Maintenance Station with the inductive amp clamp, skip to Step 6.

3. Disconnect the negative battery cable. (See **NEGATIVE BATTERY CABLE DISCONNECTION/CONNECTION [SKYACTIV-G 2.0, SKYACTIV-G 2.5]**.)

CAUTION:

- Operating electrical loads while the parasitic draw is being measured can damage a series-type ammeter.

4. Connect the meter between the negative battery terminal and negative battery cable. Proceed to Step 10.

5. Select the DMM icon from the main menu.

6. Select the DC Ammeter.

7. Select the 70 AMP MAX range. (measuring milliamps)

8. Connect the amp clamp to the negative battery cable.

9. Monitor the current draw.

NOTE:

- If the battery is not left undisturbed for **10 min or more, but less than 30 min**, the tester will indicate a high value (**approx. 300 mA**).
- If the ignition or any electrical accessory is operated after the tester is connected, the battery must be left undisturbed for **10 min or more, but less than 30 min** from that point.
- For vehicles with the immobilizer system, the system periodically shifts synchronization of the security indicator light flashing. Therefore, **65 mA (0.1 s)** current draw is supplied when the security indicator light is illuminated, and **40 mA (2 s)** current draw is supplied when the security indicator light is not illuminated. In addition, the measuring instrument, which shows the average value, indicates around **55 mA**.

10. Leave the vehicle electrical system undisturbed for **10 min or more, but less than 30 min**, and then measure the parasitic draw.

- If not within specification, measure the parasitic draw while removing the fuses one by one from the inside of the main fuse block and the inside of the fuse block.
- Inspect and repair wiring harnesses and connectors of the fuse where the current draw has decreased.

  Parasitic draw (When the ignition is off (lock), all doors and the hood are closed.)

- 40—65 mA

NOTE:

- If the battery is left for **30 min or more**, a battery parasitic draw value of **25—45 mA** is indicated.

2014 - Mazda3 - Engine

BATTERY RECHARGING [SKYACTIV-G 2.0, SKYACTIV-G 2.5]

Using GR8-1291 (Without i-ELOOP):

(See **GR8-1291 INSTANT TRAINING MODULE (VIDEO)**.)

WARNING:

- Keep all flames away from the battery, otherwise evaporated gas from the battery fluid may catch fire and cause serious injury.

CAUTION:

- Do not leave the battery in the vehicle when recharging. Otherwise, damage to under-hood components from electrolyte overflow, misting or gassing, may occur.

1. Remove the battery. (See **BATTERY REMOVAL/INSTALLATION [SKYACTIV-G 2.0, SKYACTIV-G 2.5]**.)

2. Remove the battery filler caps and check the water level. If necessary, add water to the appropriate level. Reinstall the caps.

3. Attach the large red clamp to the positive battery terminal and the large black clamp to the negative terminal.

4. Select the diagnostic icon in the Main Menu, then press the NEXT key.

5. Follow the on-screen instructions to input the appropriate information. Refer to the Mazda GR8-1291 Instruction Manual for more information.

6. The GR8-1291 will test and charge the battery. Before the diagnostic charging results are displayed, use the keypad on the Control Module to input the last 5 digits of the vehicle's VIN and press NEXT to continue.

7. After the charging is completed, the Mazda GR8-1291 will print out the diagnostic charging results and display one of the following results listed below. Review the results and follow the action step for the displayed result.

Battery Tester Display	Action Step
GOOD BATTERY	Return the battery to service.
REPLACE	Replace the battery.

BATTERY	
BAD CELL - REPLACE	Replace the battery. **WARNING:** • Do not charge the battery. Charging a battery with one or more bad cells could cause an explosion and serious harm to the user.
SIDE POST TEST	Test data was inconclusive using the side post. Retest using side post adapters.
JUMP START POST	Data was inconclusive using the jump start post. Retest at the battery terminals.

Without Using GR8-1291 (Without i-ELOOP):

WARNING:

- Keep all flames away from the battery, otherwise evaporated gas from the battery fluid may catch fire and cause serious injury.
- Remove the battery filler caps when recharging to prevent battery deformation or damage.

CAUTION:

- Do not quick charge for more than 30 min. Otherwise, it will damage the battery.

1. Remove the battery. (See **BATTERY REMOVAL/INSTALLATION [SKYACTIV-G 2.0, SKYACTIV-G 2.5]**.)

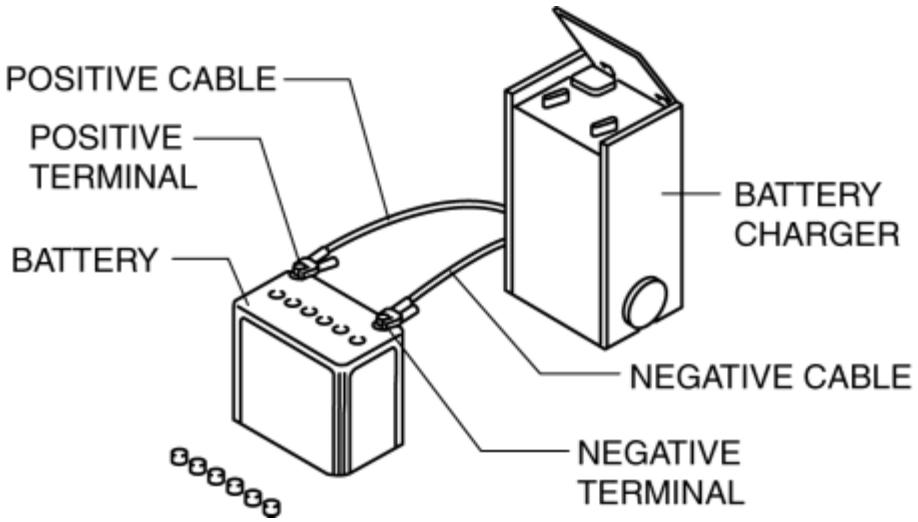

2. Remove the battery filler caps.
3. Connect a battery charger to the battery and adjust the charging current as follows.

Battery slow charge current

- 55D23L (60 A·h/20HR): 4.5—5.5 A

- 75D23L (65 A·h/20HR): 5.0—6.0 A

Battery quick charge current [30 min]

- 55D23L (60 A·h/20HR): 30 A
- 75D23L (65 A·h/20HR): 35 A

4. After the battery is recharged, verify that the voltage is within the specification and remains at the same value for **1 h or more** after the recharging has been completed.

- If not within specification, replace the battery.

Standard voltage

- 12.4 V or more

Without Using GR8-1291 (With i-ELOOP):

WARNING:

- Keep all flames away from the battery and perform the servicing in a well-ventilated area. Otherwise, evaporated gas from the battery could ignite.
- Remove the battery filler caps when recharging to prevent battery deformation or damage.
- Do not perform battery recharging with the battery in the vehicle as it is dangerous.
- When connecting to the battery recharger, make sure the battery cables are connected correctly.

CAUTION:

- After recharging, leave the battery as it is for as long as possible (6 hours or longer recommended) to dissipate the polarization in the battery.

1. Remove the battery. (See **BATTERY REMOVAL/INSTALLATION [SKYACTIV-G 2.0, SKYACTIV-G 2.5]**.)

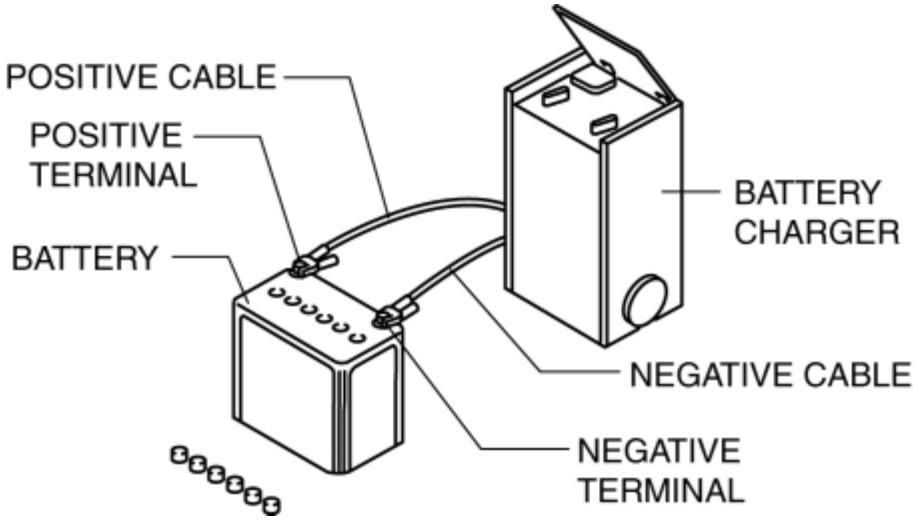

2. Remove the battery filler caps.

3. To prevent loss of battery fluid during recharging, verify the battery fluid level.

Battery fluid level is between upper and lower or less

- Add distilled water to the upper level.

Battery fluid level is between upper and lower or more

- Go to the next step.

4. Connect a battery recharger to the battery and adjust the charging current as follows.

Constant current recharger device available

- Apply a constant current charge so that the recharge current is 10 to 15 A. Perform the battery charge time referring to table (1).

Battery recharge time (Table 1)

Cell with lowest electrolyte gravity	1.24 or more	1.23	1.22	1.21	1.20	1.19	1.18	1.17
Charge time (min)	180	200	220	240	270	290	330	360

No constant current recharger device available

- Adjust the voltage so that the recharge current is 10 to 15 A.

  Verify the current after 30 s have elapsed since the measurement was started because the current is not stabilized after the voltage adjustment.

- Charge the battery for 60 min using current in Step (1).
- Readjust the battery recharger so that the recharge current is 10 to 15 A.
- Charge the battery so that the total time for Step (2) is the time in table (1).

5. Measure electrolyte gravity of all cells.

Cell with lowest electrolyte gravity is less than 1.25

- Replace the battery as battery charge could not be restored. (See **BATTERY REMOVAL/INSTALLATION [SKYACTIV-G 2.0, SKYACTIV-G 2.5]**.)

Cell with lowest electrolyte gravity is 1.25 or more

- Battery charge was restored, therefore install the recharged battery into the vehicle. (See **BATTERY REMOVAL/INSTALLATION [SKYACTIV-G 2.0, SKYACTIV-G 2.5]**.)

2014 - Mazda3 - Engine

NEGATIVE BATTERY CABLE DISCONNECTION/CONNECTION [SKYACTIV-G 2.0, SKYACTIV-G 2.5]

WARNING:

- Before removing the SRS air bag system-related parts, always disconnect the negative battery cable and wait for 1 min. or more to allow the back-up power supply to deplete its stored power. (See **AIR BAG SYSTEM SERVICE WARNINGS [TWO-STEP DEPLOYMENT CONTROL SYSTEM]**.)

Required Procedure After Negative Battery Cable Disconnection/Connection

System name	Conditions after disconnecting the negative battery cable	Required procedure		Reference
		Before disconnecting negative battery cable	After connecting negative battery cable	
Power window system	Reset to initial setting and auto-function is disabled.	–	Perform the power window system initial setting.	(See **POWER WINDOW SYSTEM INITIALIZATION PROCEDURE**.)
Sunroof system	Reset to initial setting and function is disabled.	–	Perform the sunroof system initial setting.	(See **SUNROOF SYSTEM INITIALIZATION PROCEDURE**.)
Clock and audio	Clock display and audio system memory are reset.	Verify the setting content.	Set the verified content before disconnecting negative battery cable.	–
Tire pressure monitoring system (TPMS)	The tire pressure monitoring system detection accuracy decreases.	–	Perform the tire pressure monitoring system initialization.	(See **TIRE PRESSURE MONITORING SYSTEM INITIALIZATION PROCEDURE**.)

Without i-ELOOP

Negative battery cable terminal disconnection

1. Switch the ignition off.
2. Disconnect the negative battery cable terminal.

Negative battery cable terminal connection

CAUTION:

- When tightening the negative battery cable, tighten it to the specified torque. If it is not tightened to the specified torque, the battery charging/discharging may be affected. (See **BATTERY REMOVAL/INSTALLATION [SKYACTIV-G 2.0, SKYACTIV-G 2.5]**.)

1. Perform services required after connecting the negative battery cable terminal. (See **Required Procedure After Negative Battery Cable Disconnection/Connection**.)

With i-ELOOP

Negative battery cable terminal disconnection

1. Switch the ignition off.

CAUTION:

- If the nut for the current sensor is loosened with the negative battery cable terminal connected to the battery, excessive torque will be applied to the negative battery cable terminal and the battery terminal will be damaged. When removing the negative battery cable terminal and current sensor, be careful not to damage the battery terminal.
- Be careful not to contact the positive battery cable terminal.
- Disconnect the current sensor connector before disconnecting the negative battery cable. If the negative battery cable is disconnected first, the PCM may mistakenly recognize a signal from the current sensor causing interference with engine control.

2. Disconnect the current sensor connector.
3. Disconnect the negative battery cable terminal.

- When disconnecting the plastic deformed negative battery cable, expand the gap of the negative battery terminal using a flathead screwdriver, and remove the nut.

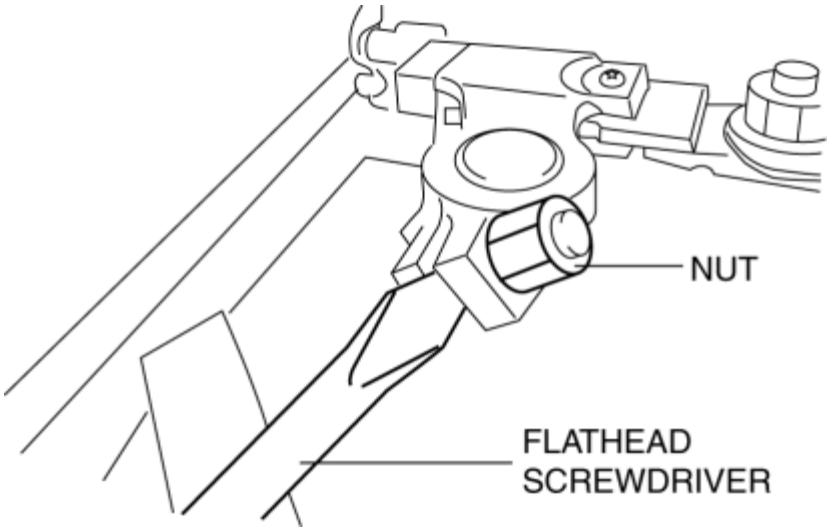

NOTE:

- The negative battery cable nut cannot be removed to prevent it from falling off.

Negative battery cable terminal connection

CAUTION:

- Connect the negative battery cable before connecting the current sensor connector. If the current sensor connector is connected first, the PCM may mistakenly recognize a signal from the current sensor and learn the battery condition incorrectly.
- Verifying the tightness while holding the current sensor may apply excessive force to the terminal and the terminal could loosen, causing poor engine starting. When verifying the tightness of the negative battery cable terminal, only hold the terminal area, not the current sensor.

VERIFICATION OF NEGATIVE BATTERY CABLE TERMINAL TIGHTENING

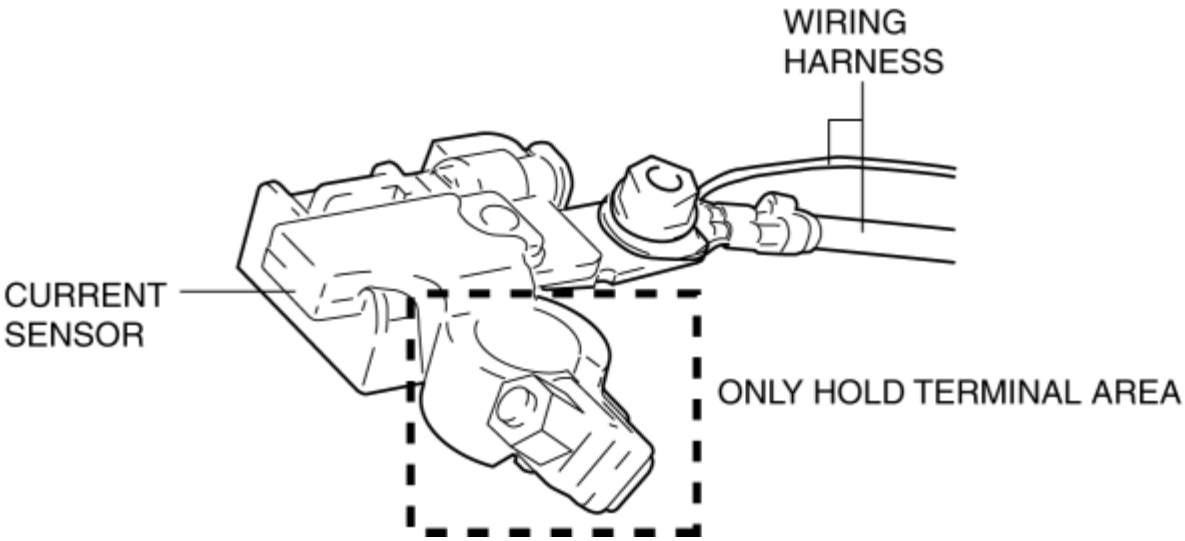

1. Perform services required after connecting the negative battery cable terminal. (See **Required Procedure After Negative Battery Cable Disconnection/Connection**.)

NEGATIVE BATTERY CABLE DISCONNECTION/CONNECTION [SKYACTIV-G 2.0, SKYACTIV-G 2.5]

2014 - Mazda3 - Engine

GENERATOR REMOVAL/INSTALLATION [SKYACTIV-G 2.0, SKYACTIV-G 2.5 (WITHOUT i-ELOOP)]

WARNING:

- Remove and install all parts when the engine is cold, otherwise they can cause severe burns or serious injury.
- When the battery cables are connected, touching the vehicle body with generator terminal B will generate sparks. This can cause personal injury, fire, and damage to the electrical components. Always disconnect the negative battery cable before performing the following operation.

NOTE:

- The i-ELOOP caution label is adhered to the position shown in the figure below on vehicles with i-ELOOP. When determining if a vehicle in for servicing is equipped with i-ELOOP, refer to the i-ELOOP section. (See **GENERATOR REMOVAL/INSTALLATION [SKYACTIV-G 2.0, SKYACTIV-G 2.5 (WITH i-ELOOP)]**.)

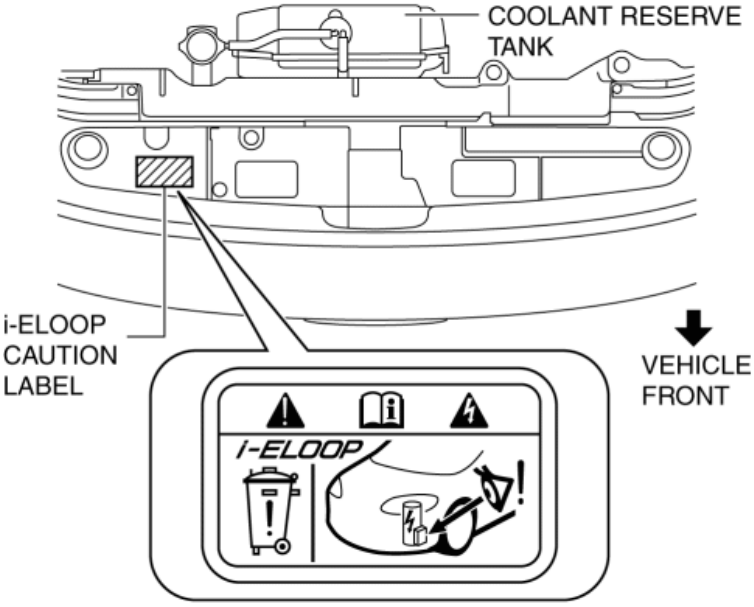

1. Disconnect the negative battery cable. (See **NEGATIVE BATTERY CABLE DISCONNECTION/CONNECTION [SKYACTIV-G 2.0, SKYACTIV-G 2.5]**.)

2. Remove the front under cover No.2. (See **FRONT UNDER COVER No.2 REMOVAL/INSTALLATION**.)

3. Remove the generator drive belt. (See **DRIVE BELT REMOVAL/INSTALLATION [SKYACTIV-G 2.0, SKYACTIV-G 2.5]**.)

4. Remove the A/C compressor with the cooler hose still connected and secure it using wire or rope so that it is out of the way. (with A/C) (See **A/C COMPRESSOR REMOVAL/INSTALLATION**.)

5. Remove in the order indicated in the table.

6. Install in the reverse order of removal.

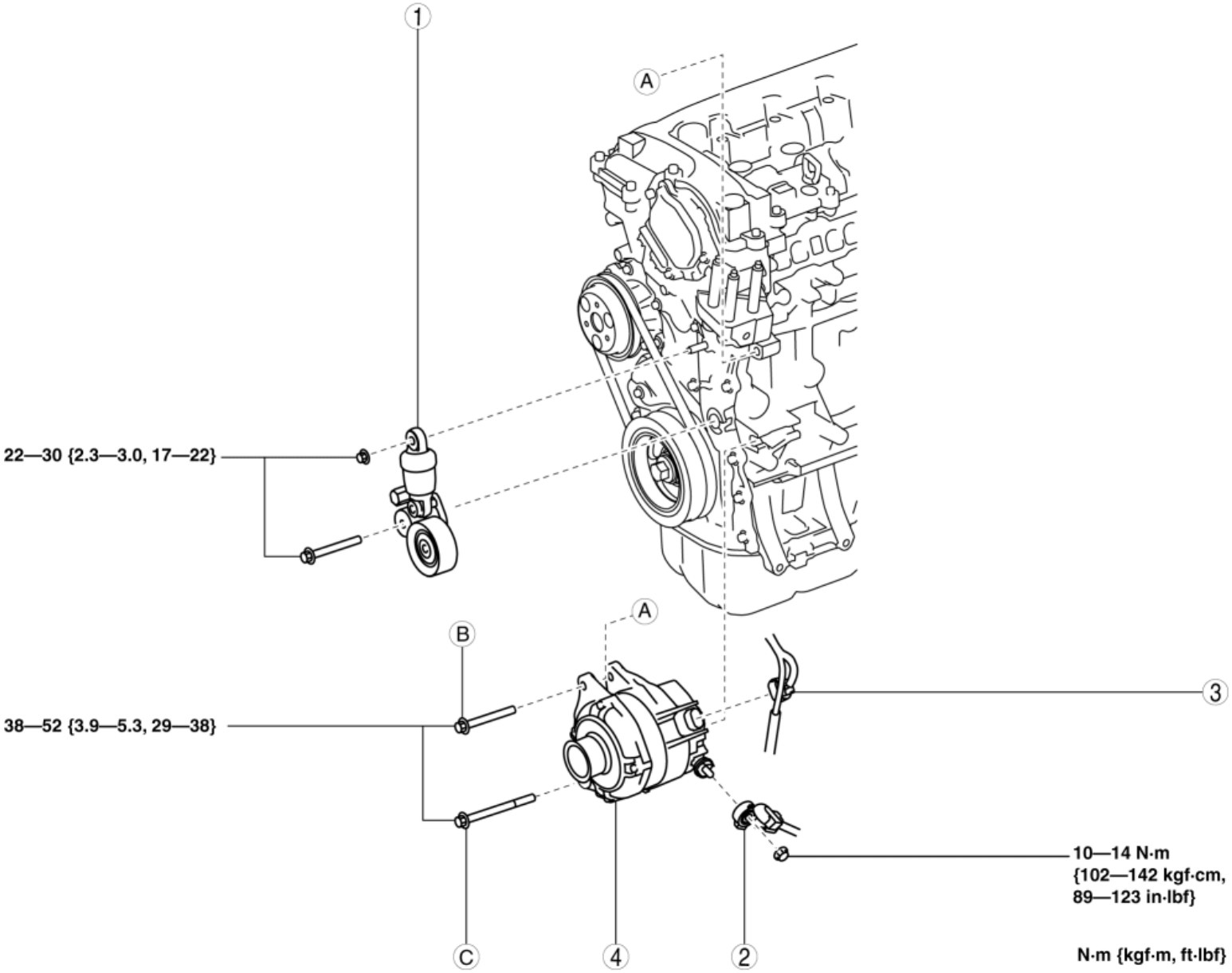

1	Drive belt auto tensioner (See **Drive Belt Auto Tensioner Installation Note**.)
2	Terminal B cable
3	Generator connector
4	Generator (See **Generator Removal Note**.) (See **Generator Installation Note**.)

Generator Removal Note

1. Fully loosen the generator lower bolt and pull it outward until it contacts the body frame.

NOTE:

- The generator can be removed without fully removing the lower bolt from the engine.

2. Remove the generator upper bolt.
3. Remove the generator together with the lower bolt from the engine.
4. Remove the generator from above the engine compartment.

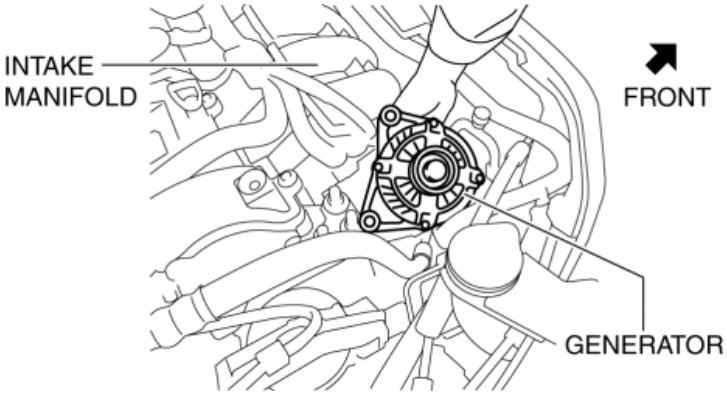

Generator Installation Note

1. To facilitate the installation of the generator to the engine, grasp the spacer in the bolt installation hole using pliers and push it down to the nut side.

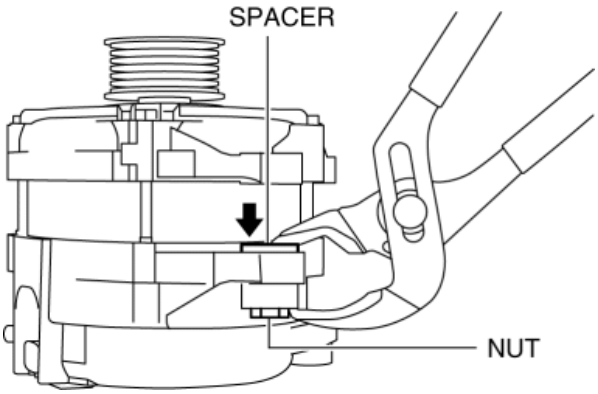

2. Temporarily install the generator to the engine with the bolt C.

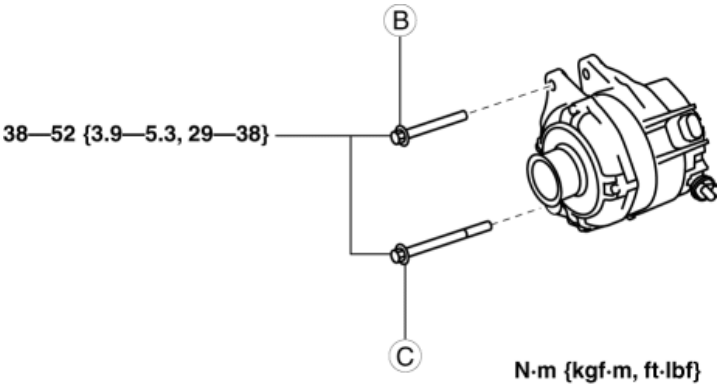

3. Align the generator fixing hole with the engine side hole, then temporarily tighten the generator installation bolt B.
4. Securely tighten the generator installation bolts in the order of B, C.

Drive Belt Auto Tensioner Installation Note

CAUTION:

- To allow the drive belt auto tensioner to function correctly, always bleed the air from the drive belt auto tensioner using the following procedure after assembling the drive belt auto tensioner.

1. Install the drive belt auto tensioner to the engine.

CAUTION:

- To prevent damage to the drive belt auto tensioner, do not apply excessive torque after the tensioner moves full-stroke.

2. Insert the wrench onto the cast hexagon on the drive belt auto tensioner, move the drive belt auto tensioner up and down at full-stroke three times to bleed the air.

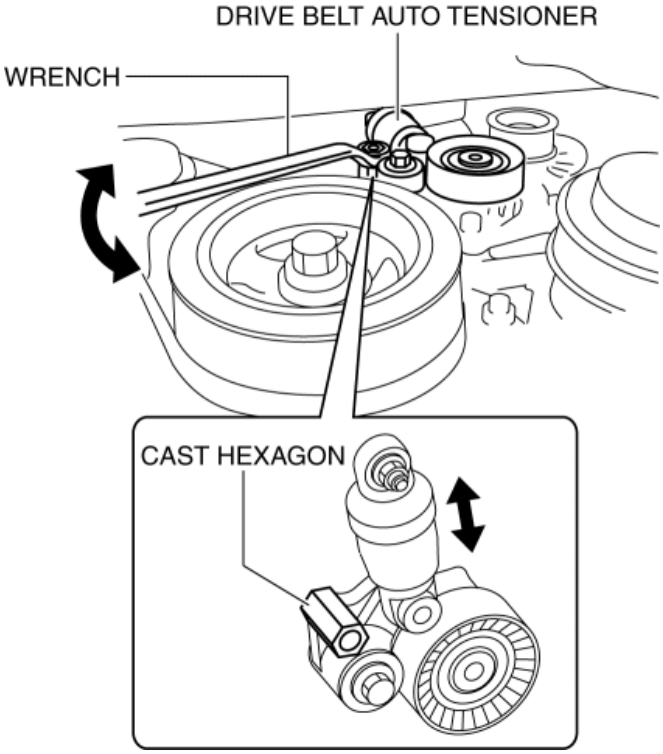

NOTE:

- By moving the drive belt auto tensioner up and down full-stroke three times, the piston inside the tensioner moves to bleed the air.

2014 - Mazda3 - Engine

GENERATOR INSPECTION [SKYACTIV-G 2.0, SKYACTIV-G 2.5 (WITHOUT i-ELOOP)]

CAUTION:

1. Do not apply direct battery positive voltage to generator terminal 2B, otherwise it could cause damage to the internal parts (power transistor) of the generator.

NOTE:

- The i-ELOOP caution label is adhered to the position shown in the figure below on vehicles with i-ELOOP. When determining if a vehicle in for servicing is equipped with i-ELOOP, refer to the i-ELOOP section. (See **GENERATOR INSPECTION [SKYACTIV-G 2.0, SKYACTIV-G 2.5 (WITH i-ELOOP)]**.)

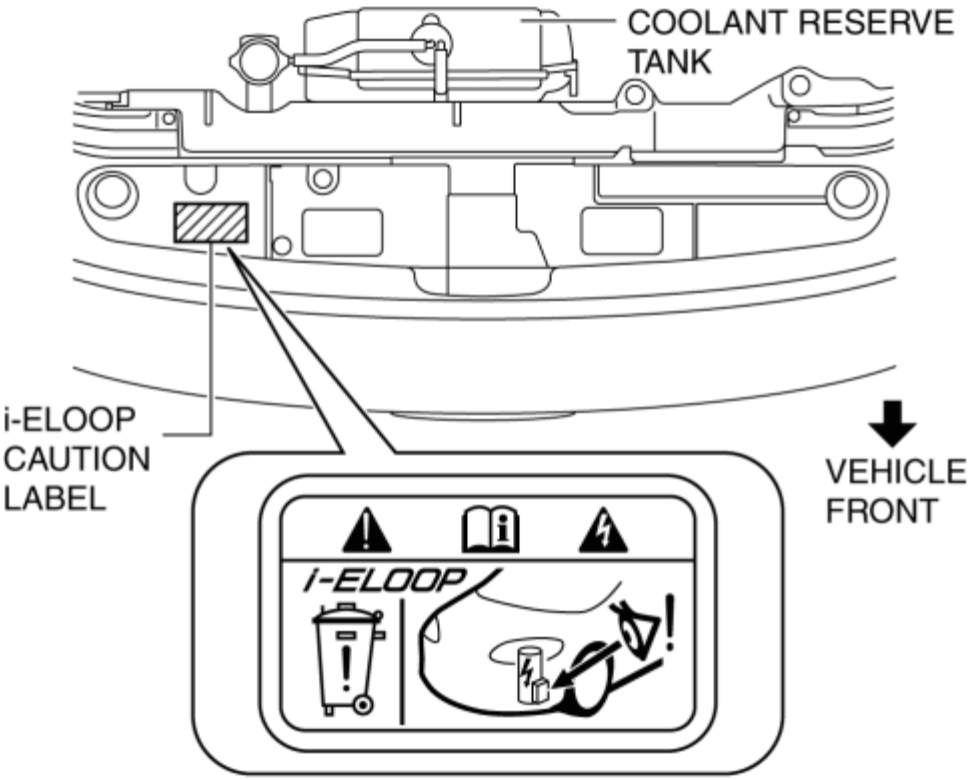

Charging System Warning Light

1. Verify that the battery is fully charged.

2. Verify that the assembly condition of the drive belt is normal. (See **DRIVE BELT INSPECTION [SKYACTIV-G 2.0, SKYACTIV-G 2.5]**.)

3. Switch the ignition ON (engine off), verify that the charging system warning light illuminates.

    - If it does not illuminate, inspect the charging system warning light and the wiring harness.

1. If the charging system warning light and the wiring harness are normal, inspect the PCM.

4. Verify that the charging system warning light turns off after the engine is started.

- If the charging system warning light does not turn off, perform the DTC inspection, then perform troubleshooting according to the corresponding diagnostic procedure. (See **ON-BOARD DIAGNOSTIC TEST [SKYACTIV-G 2.0, SKYACTIV-G 2.5]**.) (See **DTC TABLE [SKYACTIV-G 2.0, SKYACTIV-G 2.5]**.)

Generator

Generator voltage inspection

1. Verify that the battery is fully charged.

2. Verify that the assembly condition of the drive belt is normal. (See **DRIVE BELT INSPECTION [SKYACTIV-G 2.0, SKYACTIV-G 2.5]**.)

3. Turn off all electrical loads.

4. Start the engine.

5. Verify that the generator rotates smoothly without any noise while the engine is running.

- If there is any noise, find the cause and repair or replace the generator.

6. Measure the voltage at each terminal using a tester.

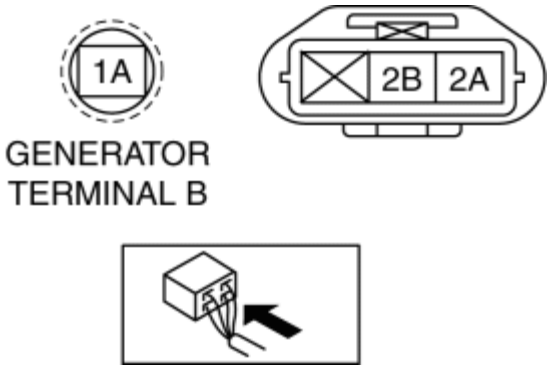

- If not as specified, find the cause and repair or replace the applicable part.

Generator standard voltage [IG-ON]

- Terminal 1A: B+
- Terminal 2A: Approx. 1 V or less
- Terminal 2B: Approx. 0 V

Generator standard voltage [Idle, 20 °C {68 °F}]

- Terminal 1A: 13—15 V
- Terminal 2A: Approx. 3—8 V

- Terminal 2B: Turn the electrical loads (such as headlights, blower motor, rear window defroster, brake lights) on and verify that the voltage reading increases.

Generator current inspection

NOTE:

1. Since the charging current decreases rapidly after starting the engine, carry out the following procedure quickly, and read the maximum current value.

1. Verify that the battery is fully charged.

2. Verify that the assembly condition of the drive belt is normal. (See **DRIVE BELT INSPECTION [SKYACTIV-G 2.0, SKYACTIV-G 2.5]**.)

3. Disconnect the negative battery cable.

4. Connect a tester, which can read **120 A or more**, between generator terminal B and generator terminal B cable.

5. Connect the negative battery cable. (See **NEGATIVE BATTERY CABLE DISCONNECTION/CONNECTION [SKYACTIV-G 2.0, SKYACTIV-G 2.5]**.)

6. Turn off all electrical loads.

7. Start the engine.

8. Increase engine speed to **2,500 rpm.**

NOTE:

1. When the electrical load on the vehicle is low, the specified current cannot be verified although the generator is normal. In this case, increase the electrical load (Leave the headlights turned on for a while, then discharge the battery, or use a similar method.) and recheck.

2. If the generator itself or the ambient temperature are too high, the specified current also cannot be verified. In this case, cool down the generator and recheck.

9. With the electric loads such as headlights, blower motor, rear window defroster, brake lights turned on, verify that the current increases.

1. If not as specified, replace the generator. (See **GENERATOR REMOVAL/INSTALLATION [SKYACTIV-G 2.0, SKYACTIV-G 2.5 (WITHOUT i-ELOOP)]**.)

Generator generated current minimum value (without i-ELOOP)

- 70% of the nominal output current (nominal output current: 100 A)
- [Ambient temp. 20 °C {68 °F}, voltage 13.0—15.0 V, both engine and generator are hot]

Generator Internal Parts

Rotor

1. Measure the resistance between the slip rings using a tester.

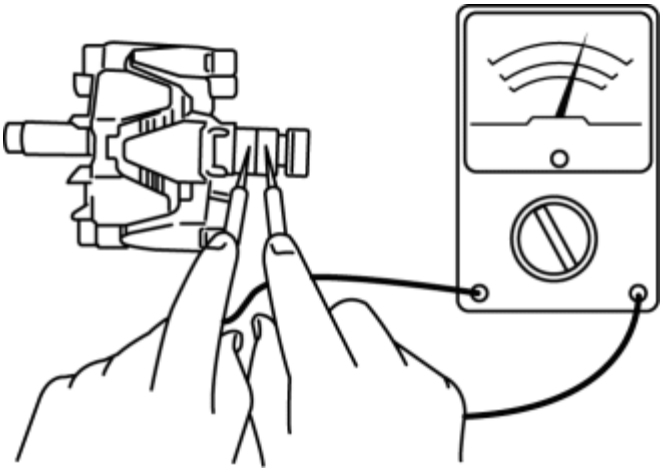

- If not within specification, replace the rotor.

  Generator rotor resistance (between slip rings) [20 °C {68 °F}]

- 1.8—2.1 ohms

2. Verify that there is no continuity between the slip ring and core using a tester.

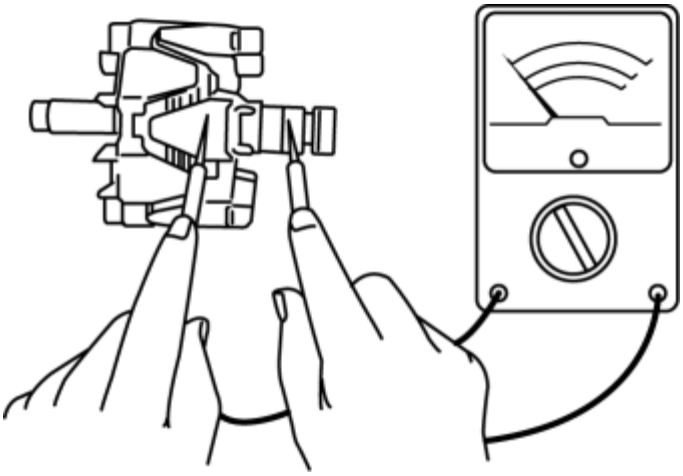

- If there is continuity, replace the rotor.

3. Inspect the slip ring surface condition.

- If the slip ring surface is rough, use a lathe or fine sandpaper to make it smooth.

Stator coil

1. Verify that the continuity is as indicated in the table.

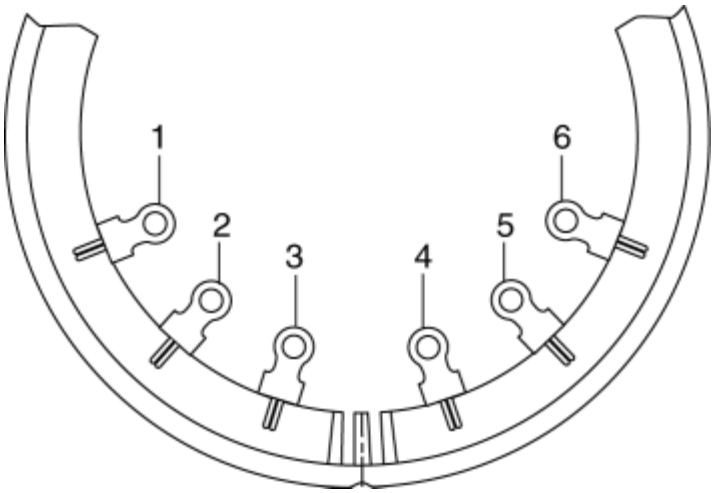

○—○ : Continuity

Terminal					
1	2	3	4	5	6
○—○					
○—○		○			
	○—○				
			○—○		
			○—○		○
				○—○	

- If there is any malfunction, replace the stator.

2. Verify that there is no continuity between the stator coil leads and core using a tester.

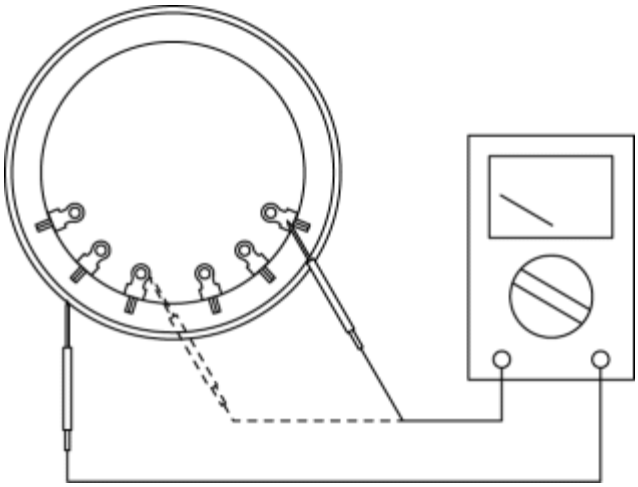

- If there is continuity, replace the stator coil.

Brush

1. Inspect brushes for wear.

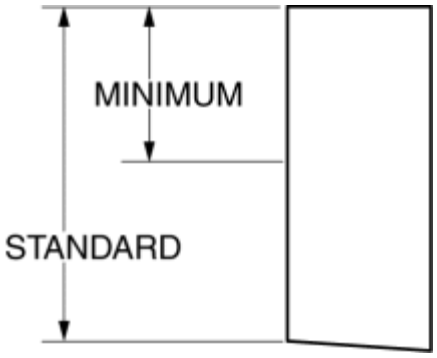

- If any brush is worn almost to or beyond the limit, replace all of the brushes.

  Generator brush length

- Standard: 22.5 mm {0.886 in}
- Minimum: 5.0 mm {0.20 in}

Brush spring

1. Measure the force of the brush spring using a spring pressure gauge.
2. Read the spring pressure gauge at the brush tip projection of **2 mm {0.08 in}.**

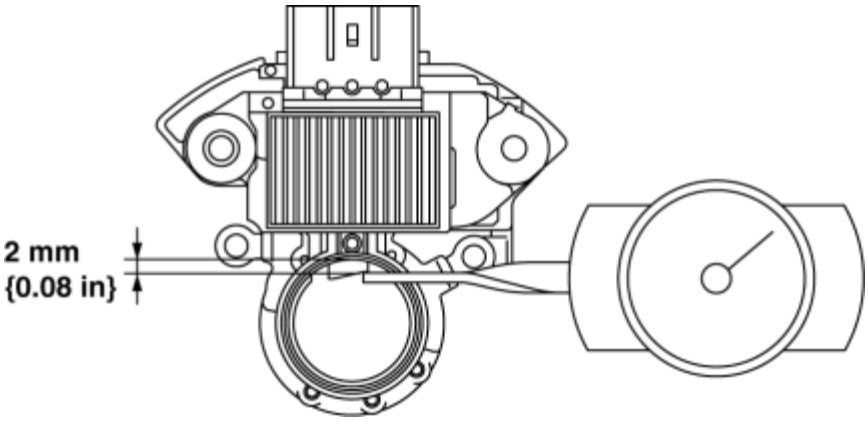

- If not within specification, replace the brush spring.

  Generator brush spring force

- Standard: 4.1—5.3 N {0.42—0.54 kgf, 1.0—1.1 lbf}
- Minimum: 1.7 N {0.17 kgf, 0.38 lbf}

Rectifier (Using an analog circuit tester)

1. Inspect for continuity of the diodes using an analog circuit tester.

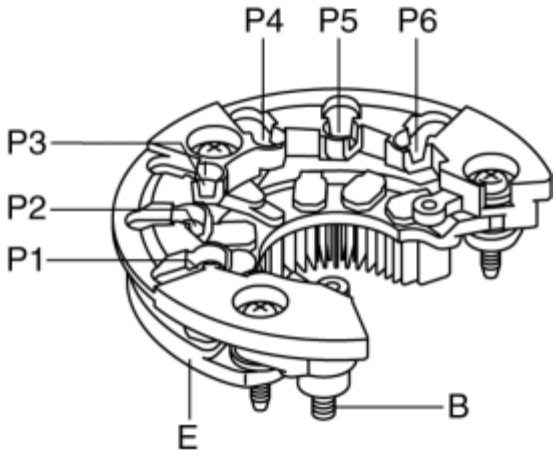

- If not as specified, replace the rectifier.

Specification

Negative	Positive	Continuity
E	P1, P2, P3, P4, P5, P6	Yes
B		No
P1, P2, P3, P4, P5, P6	E	No
	B	Yes

Rectifier (Using a digital circuit tester)

1. Inspect for continuity of the diodes using a digital circuit tester.

- If not as specified, replace the rectifier.

Specification

Negative	Positive	Continuity
E	P1, P2, P3, P4, P5, P6	No
B		Yes
P1, P2, P3, P4, P5, P6	E	Yes
	B	No

Bearing

1. Inspect for abnormal noise, looseness, and sticking.

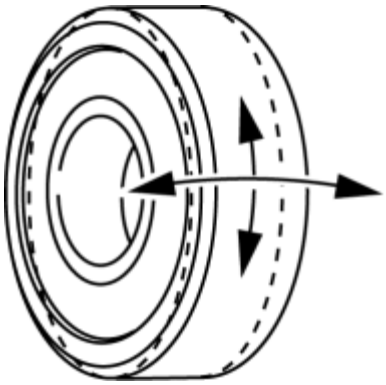

- Replace the bearing if necessary.

2014 - Mazda3 - Engine

GENERATOR DISASSEMBLY/ASSEMBLY [SKYACTIV-G 2.0, SKYACTIV-G 2.5 (WITHOUT i-ELOOP)]

1. Disassemble in the order indicated in the table.
2. Assemble in the reverse order of disassembly.

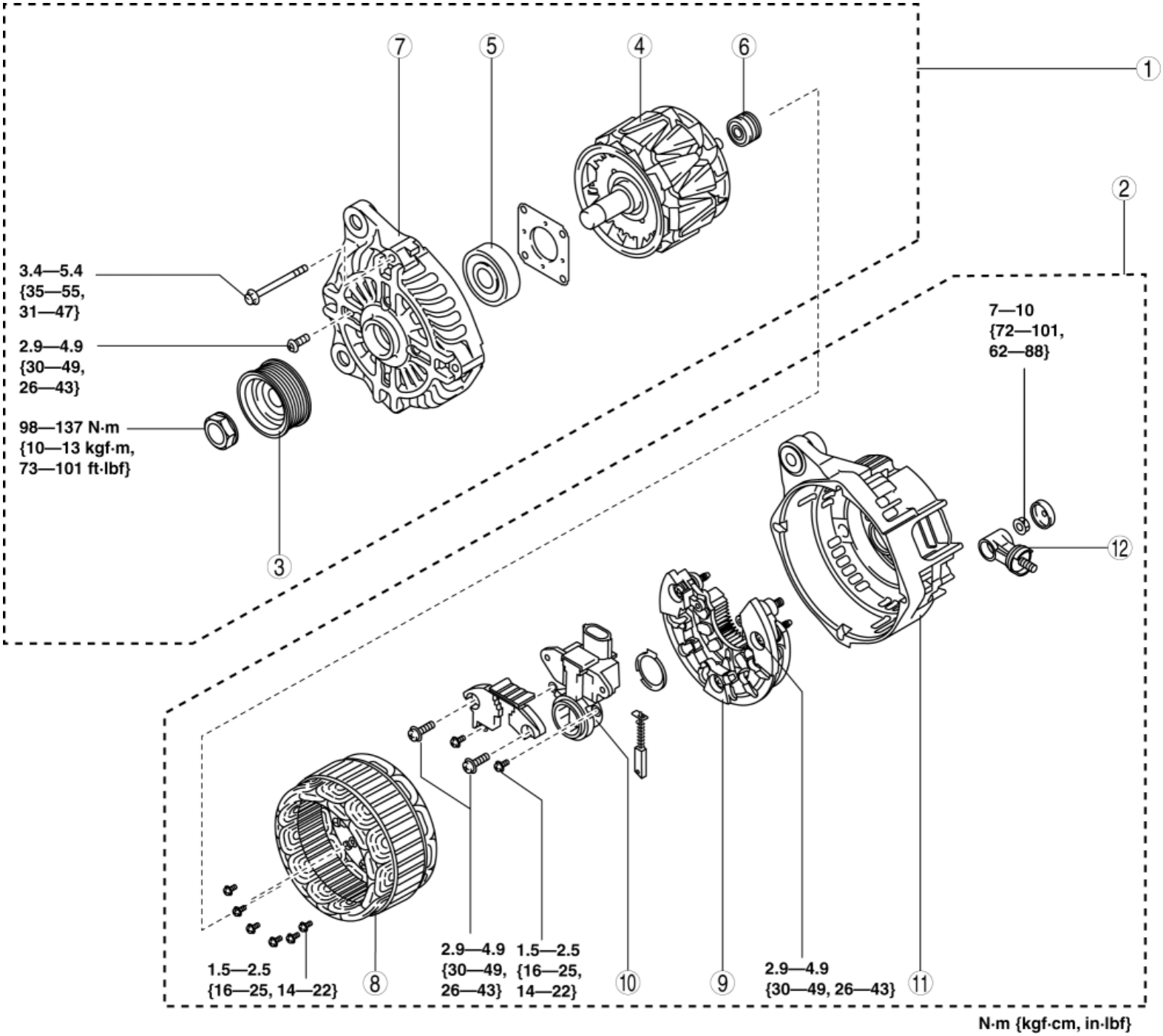

1	Rotor component
2	Stator coil component

3	Pulley
4	Rotor
5	Front bearing
6	Rear bearing
7	Front cover
8	Stator coil (See **Stator Coil Disassembly/Assembly Note**.)
9	Rectifier
10	Regulator component
11	Rear cover
12	Terminal B component

Stator Coil Disassembly/Assembly Note

CAUTION:

- Melt the solder quickly, otherwise the diodes (rectifier) and regulator will be damaged by excessive heat.

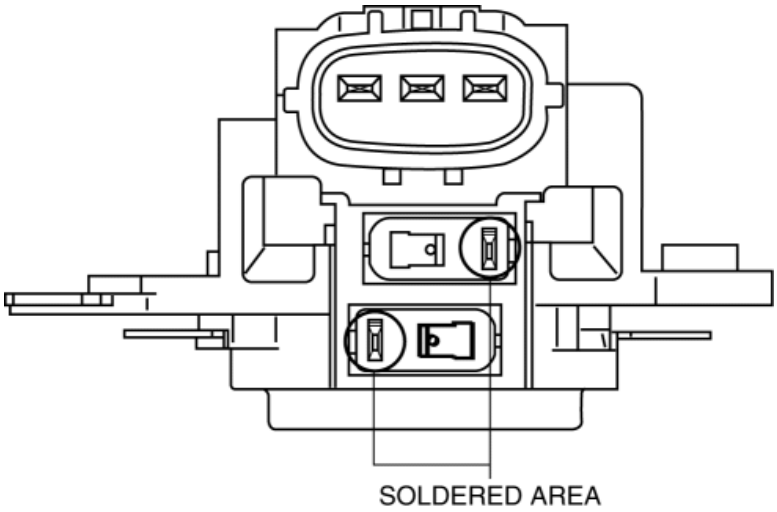

2014 - Mazda3 - Engine

IGNITION SYSTEM LOCATION INDEX [SKYACTIV-G 2.0, SKYACTIV-G 2.5]

IGNITION SYSTEM LOCATION INDEX [SKYACTIV-G 2.0, SKYACTIV-G 2.5]

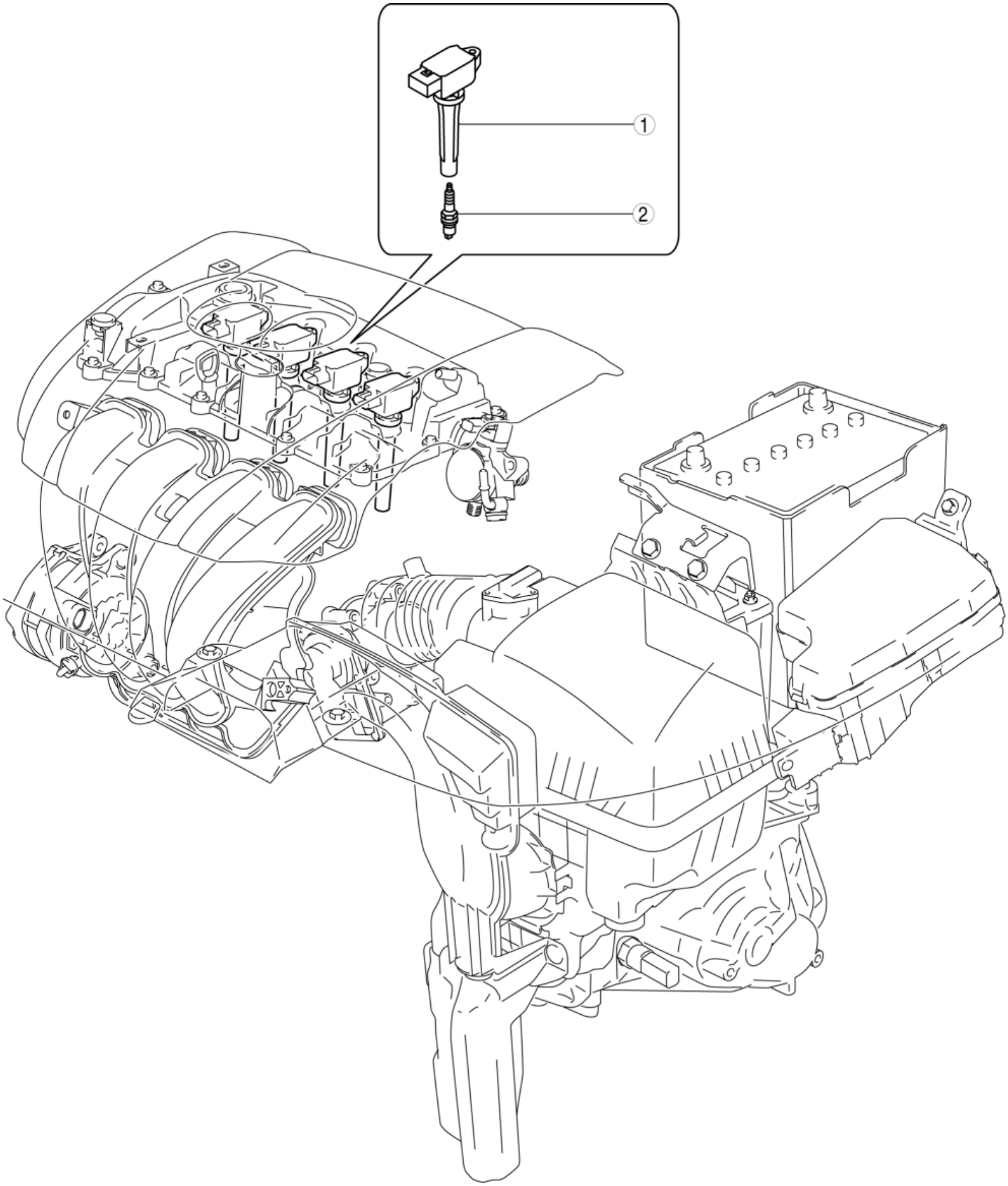

1	Ignition coil/ion sensor (See **IGNITION COIL/ION SENSOR REMOVAL/INSTALLATION [SKYACTIV-G 2.0, SKYACTIV-G 2.5]**.) (See **IGNITION COIL INSPECTION [SKYACTIV-G 2.0, SKYACTIV-G 2.5]**.)
2	Spark plug (See **SPARK PLUG REMOVAL/INSTALLATION [SKYACTIV-G 2.0, SKYACTIV-G 2.5]**.) (See **SPARK PLUG INSPECTION [SKYACTIV-G 2.0, SKYACTIV-G 2.5]**.)

2014 - Mazda3 - Engine

IGNITION COIL/ION SENSOR REMOVAL/INSTALLATION [SKYACTIV-G 2.0, SKYACTIV-G 2.5]

1. Disconnect the negative battery cable. (See **NEGATIVE BATTERY CABLE DISCONNECTION/CONNECTION [SKYACTIV-G 2.0, SKYACTIV-G 2.5]**.)

2. Remove the plug hole plate. (See **PLUG HOLE PLATE REMOVAL/INSTALLATION [SKYACTIV-G 2.0, SKYACTIV-G 2.5]**.)

3. Remove in the order indicated in the table.

4. Install in the reverse order of removal.

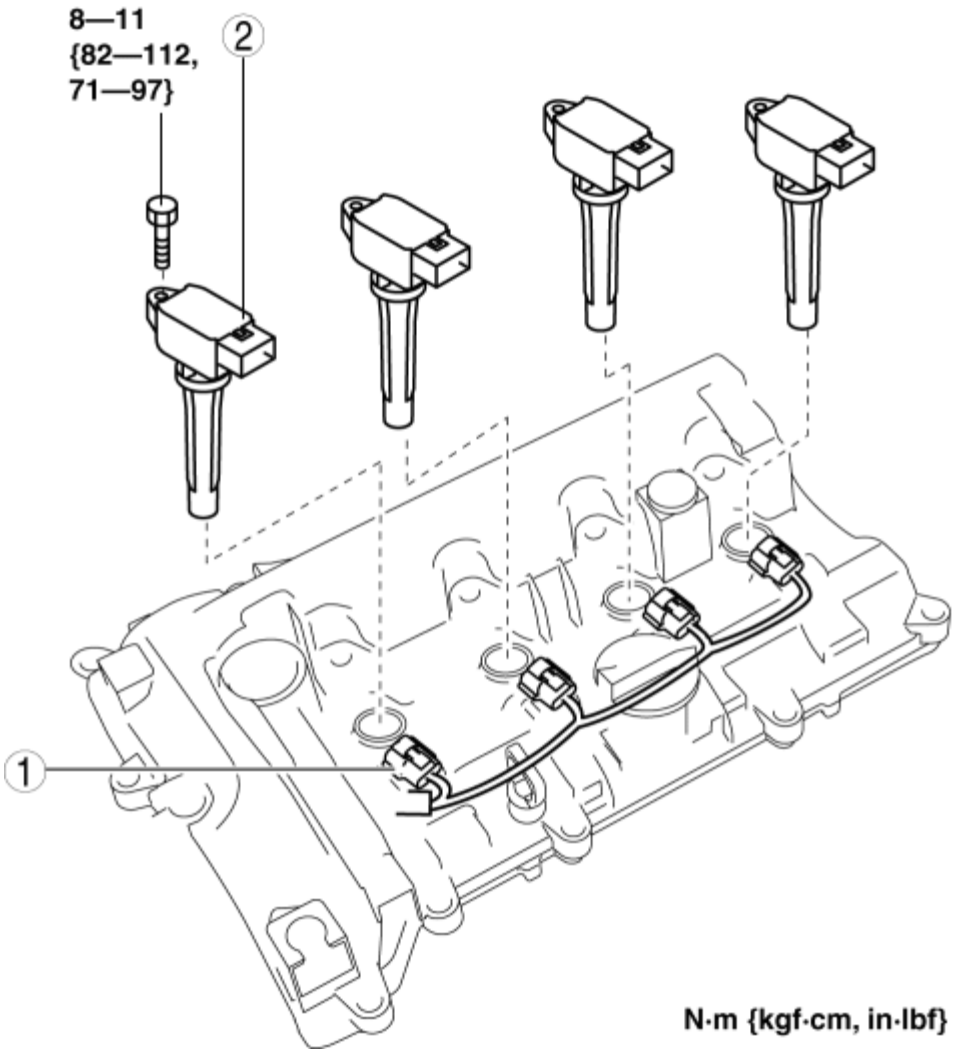

1	Connector
2	Ignition coil/ion sensor

IGNITION COIL/ION SENSOR REMOVAL/INSTALLATION [SKYACTIV-G 2.0, SKYACTIV-G 2.5]

2014 - Mazda3 - Engine

IGNITION COIL INSPECTION [SKYACTIV-G 2.0, SKYACTIV-G 2.5]

Ignition Coil Inspection

1. Perform the spark test and identify the malfunctioning cylinder. (See **ENGINE CONTROL SYSTEM OPERATION INSPECTION [SKYACTIV-G 2.0, SKYACTIV-G 2.5]**.)

2. Replace the ignition coil/ion sensor of the malfunctioning cylinder with that of a normal cylinder, and perform the spark test again. (See **ENGINE CONTROL SYSTEM OPERATION INSPECTION [SKYACTIV-G 2.0, SKYACTIV-G 2.5]**.)

- If the spark is not normal due to a malfunctioning ignition coil/ion sensor, replace that ignition coil/ion sensor.
- It is unlikely that all four ignition coil/ion sensors fail to operate properly. To prevent replacing a normal component, perform the above procedure, identify the malfunctioning ignition coil/ion sensor, and replace it.

2014 - Mazda3 - Engine

SPARK PLUG REMOVAL/INSTALLATION [SKYACTIV-G 2.0, SKYACTIV-G 2.5]

CAUTION:

- If a spark plug that is not as specified is installed, engine performance will be deteriorated. Install only the specified spark plug when replacing.

1. Disconnect the negative battery cable. (See **NEGATIVE BATTERY CABLE DISCONNECTION/CONNECTION [SKYACTIV-G 2.0, SKYACTIV-G 2.5]**.)

2. Remove the plug hole plate. (See **PLUG HOLE PLATE REMOVAL/INSTALLATION [SKYACTIV-G 2.0, SKYACTIV-G 2.5]**.)

3. Remove the ignition coils/ion sensors. (See **IGNITION COIL/ION SENSOR REMOVAL/INSTALLATION [SKYACTIV-G 2.0, SKYACTIV-G 2.5]**.)

4. Remove the spark plugs using a plug-wrench.

5. Install in the reverse order of removal.

Tightening torque

- 15—20 N·m {1.6—2.0 kgf·m, 12—14 ft·lbf}

2014 - Mazda3 - Engine

SPARK PLUG INSPECTION [SKYACTIV-G 2.0, SKYACTIV-G 2.5]

Specification

Spark plug type

- PE5R-18-110, PE5S-18-110

Plug Gap Inspection

CAUTION:

1. To avoid possible damage to the tip, do not adjust the plug gap.
2. To prevent damaging the tip, use a wire type plug gap gauge when inspecting the plug gap.

1. Measure the spark plug gap using a wire type plug gap gauge.
    1. If not within the standard specification, replace the spark plug.

    Spark plug gap

    - Standard: 1.05—1.40 mm {0.0414—0.0551 in}
    - New spark plug (reference): 1.05—1.15 mm {0.0414—0.0452 in}

Cleaning

CAUTION:

1. Carbon may adhere to the tip of the spark plug during vehicle delivery or repeated short distance driving during the winter time. If there is any malfunction such as rough idling or start difficulty due to carbon adhesion causing plug fouling, burn off the carbon by performing no-load racing of the engine.
2. When performing the no-load racing, apply the side brake and foot brake, move the shift lever to neutral (MTX), or the selector lever to P position (ATX) to prevent an accident and serious injury.
3. To avoid possible damage to the spark plug tip, do not use a wire brush for cleaning.

NOTE:

1. To avoid possible damage to the tip, use gasoline to clean the spark plugs after removing dirt.

2. If the accelerator pedal is depressed continuously for a specified time, the engine speed may decrease to the idle speed. This is due to the PCM control operation, which prevents overheating, and it does not indicate a malfunction.

3. Do not perform no-load racing at high engine speed continuously for **10 s or more**.

1. If there is carbon adhering to the spark plug, perform no-load racing at **4,000 rpm** for **2 min**, **2 times**.

Visual Inspection

1. Inspect the following items:

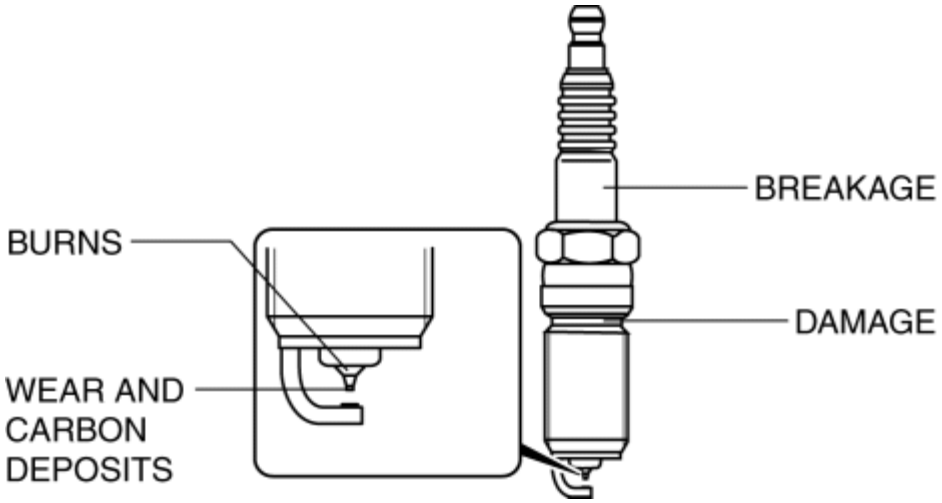

- If any of the following malfunctions are indicated, replace the spark plug.
  - Insulator breakage
  - Worn electrode
  - Damaged gasket
  - Badly burned insulator (sparking side)

Resistance Inspection

1. Measure the resistance of the spark plug using a tester as shown in the figure.

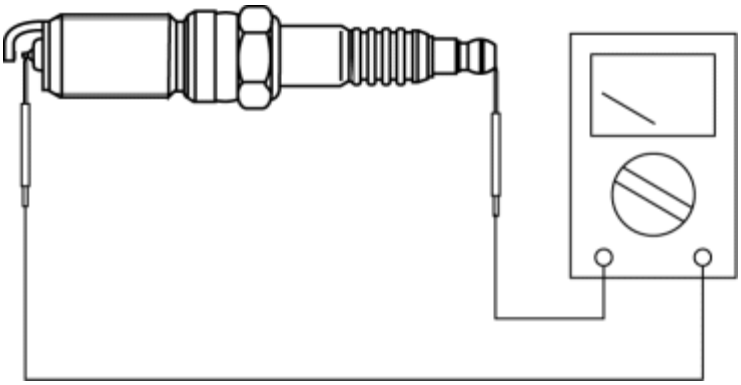

- If not within specification, replace the spark plug.

Spark plug resistance [25°C {77 °F}]

1. 3.0—7.5 kilohms

2014 - Mazda3 - Engine

STARTING SYSTEM LOCATION INDEX [SKYACTIV-G 2.0, SKYACTIV-G 2.5]

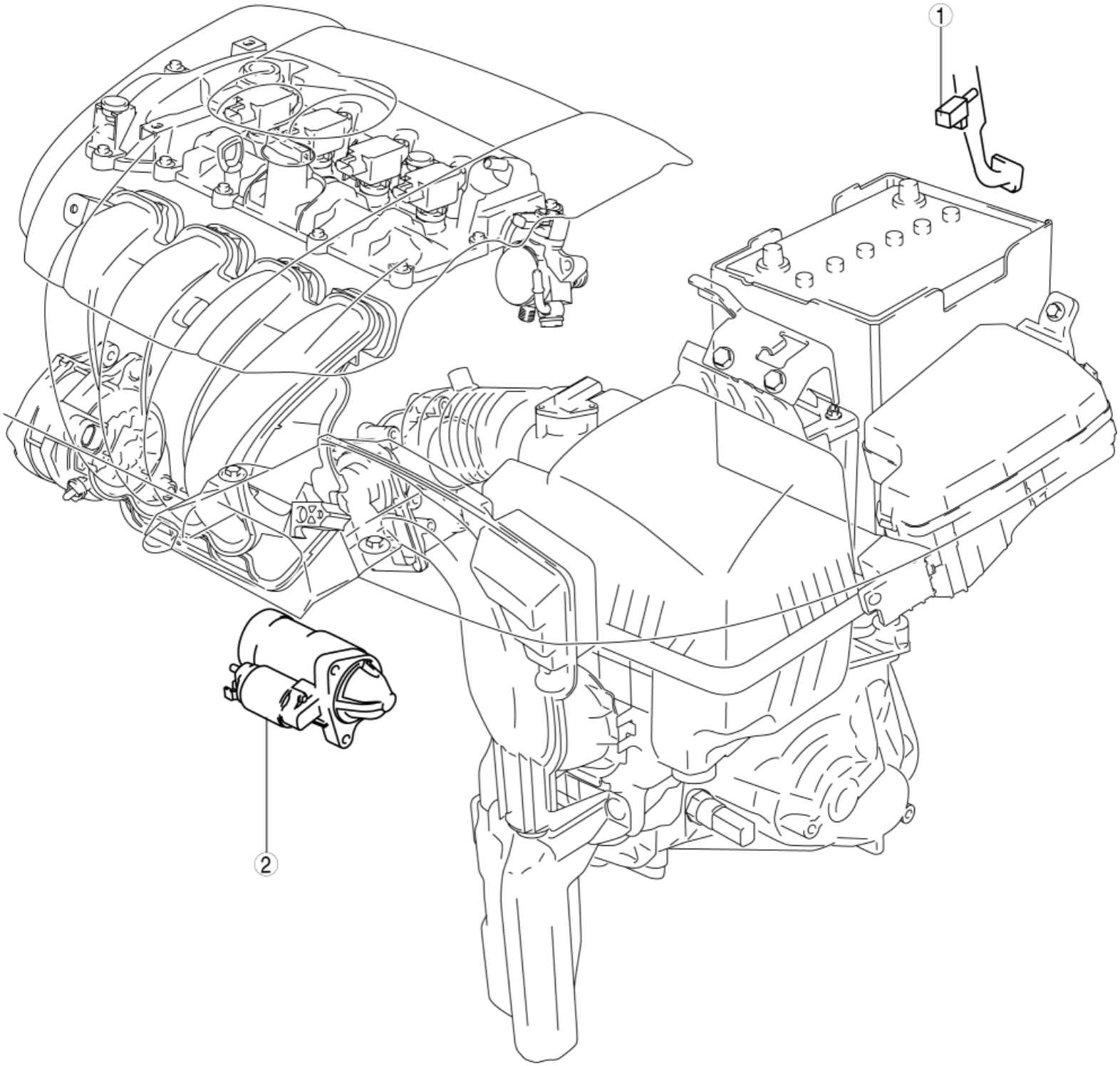

1	Starter interlock switch (MTX) (See **STARTER INTERLOCK SWITCH INSPECTION [SKYACTIV-G 2.0, SKYACTIV-G 2.5]**.)

2	Starter (See **STARTER REMOVAL/INSTALLATION [SKYACTIV-G 2.0, SKYACTIV-G 2.5]**.) (See **STARTER INSPECTION [SKYACTIV-G 2.0, SKYACTIV-G 2.5]**.) (See **STARTER DISASSEMBLY/ASSEMBLY [SKYACTIV-G 2.0, SKYACTIV-G 2.5]**.)

2014 - Mazda3 - Engine

STARTER REMOVAL/INSTALLATION [SKYACTIV-G 2.0, SKYACTIV-G 2.5]

WARNING:

- Remove and install all parts when the engine is cold, otherwise they can cause severe burns or serious injury.
- When the battery cables are connected, touching the vehicle body with starter terminal B will generate sparks. This can cause personal injury, fire, and damage to the electrical components. Always disconnect the negative battery cable before performing the following operation.

1. Disconnect the negative battery cable. (See **NEGATIVE BATTERY CABLE DISCONNECTION/CONNECTION [SKYACTIV-G 2.0, SKYACTIV-G 2.5]**.)
2. Remove the front under cover No.2. (See **FRONT UNDER COVER No.2 REMOVAL/INSTALLATION**.)
3. Remove in the order indicated in the table.
4. Install in the reverse order of removal.

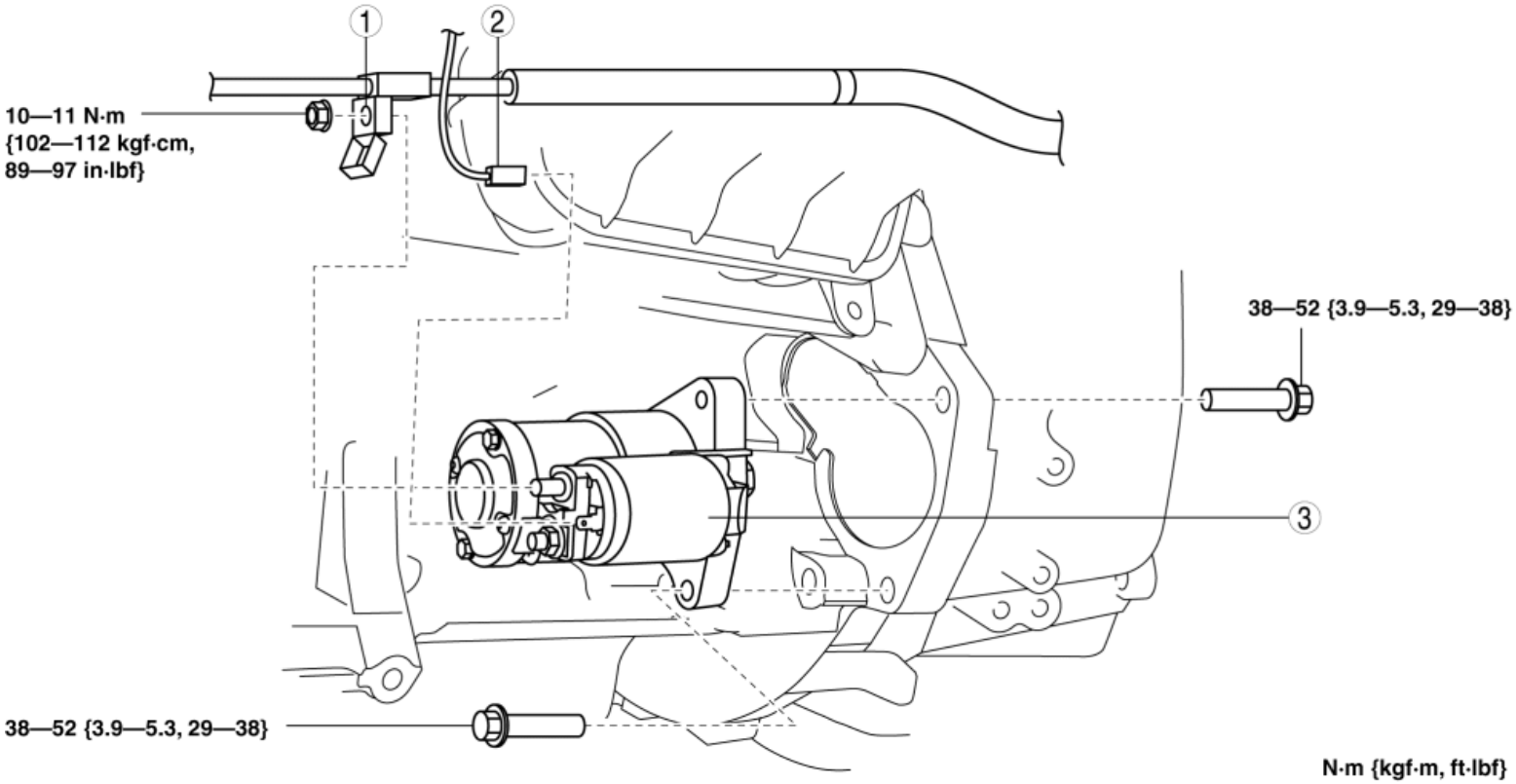

1	Terminal B cable
2	Terminal S connector
3	Starter (See **Starter Installation Note**.)

Starter Installation Note

CAUTION:

- Do not overlap the starter with the end plate (area A shown in figure) when installing. If the starter is not correctly installed, the nut installed to the drive plate may contact the end plate causing abnormal noise (ATX).

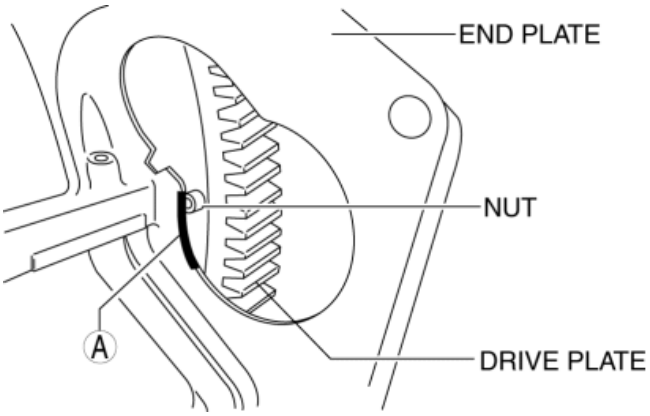

2014 - Mazda3 - Engine

STARTER INSPECTION [SKYACTIV-G 2.0, SKYACTIV-G 2.5]

On-vehicle Inspection

1. Verify that the battery is fully charged.
2. The starter is normal if it rotates smoothly and without any noise when the engine is cranked.
    - If the starter does not operate, inspect the following:
        - Remove the starter, and inspect the starter unit.
        - Inspect the related wiring harnesses, the ignition switch, and the transaxle range switch (ATX) or starter interlock switch (MTX).

No-load Test

1. Verify that the battery is fully charged.
2. Connect the starter, battery, and a tester as shown in the figure.

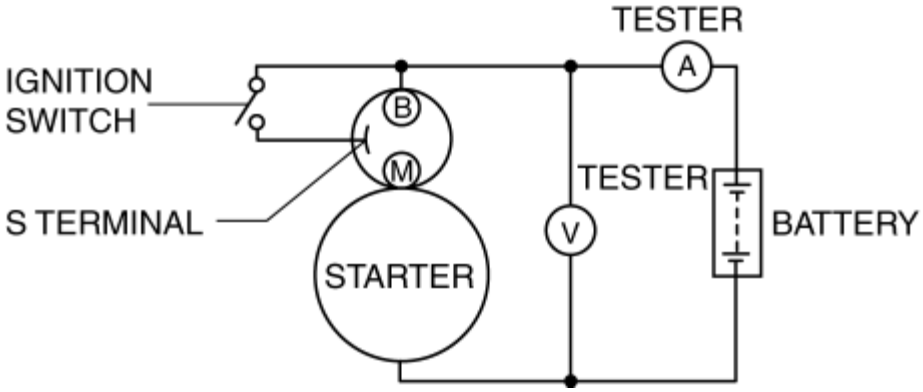

3. Operate the starter and verify that it rotates smoothly.
    - If the starter does not rotate smoothly, inspect the starter unit.
4. Measure the voltage and current while the starter is operating.
    - If not within specification, replace the starter.

      Starter no-load test voltage

    - 11 V

      Starter no-load test current

- SKYACTIV-G 2.0: 95 A or less
- SKYACTIV-G 2.5: 90 A or less

Magnetic Switch Operation Inspection

Pull-out test

NOTE:

- Depending on the battery charge condition, the starter motor pinion may rotate while in an extended state. This is due to current flowing to the starter motor through the pull-in coil to turn the starter motor, and does not indicate an abnormality.

1. Verify that the starter motor pinion is extended while battery positive voltage is connected to terminal S and the starter body is grounded.

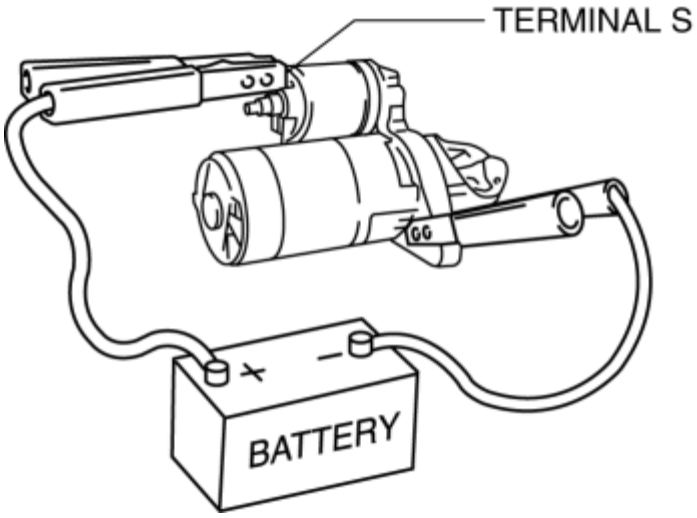

- If the starter motor pinion is not extended, repair or replace the starter.

Return test

1. Disconnect the motor wire from terminal M.
2. Connect battery positive voltage to terminal M and ground the starter body.

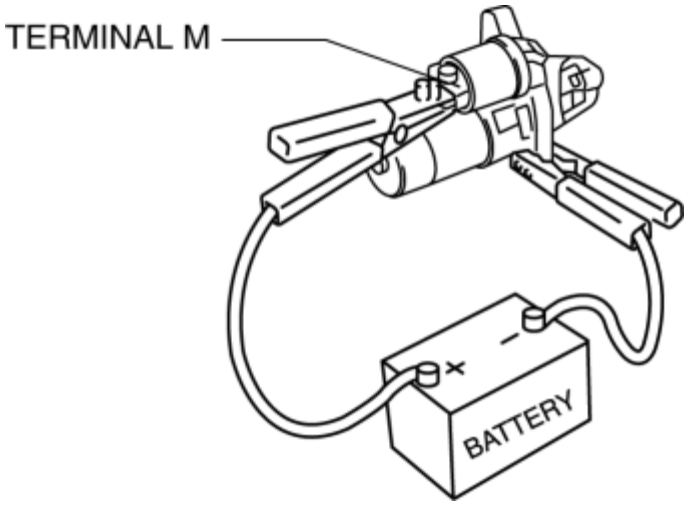

3. Pull out the drive pinion with a screwdriver. Verify that it returns to its original position when released.

- If it does not return, repair or replace the starter.

Pinion Gap Inspection

1. Pull out the drive pinion with the battery positive voltage connected to terminal S and the starter body grounded.

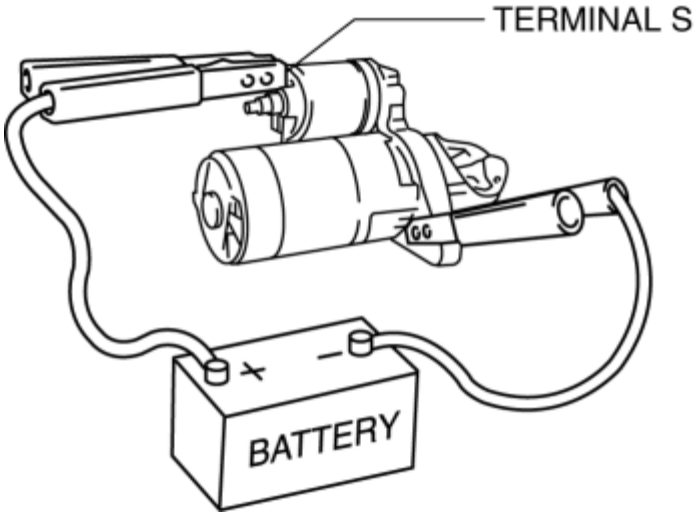

CAUTION:

- Applying power for more than 10 s can damage the starter. Do not apply power for more than 10 s.

2. Measure the pinion gap while the drive pinion is extended.

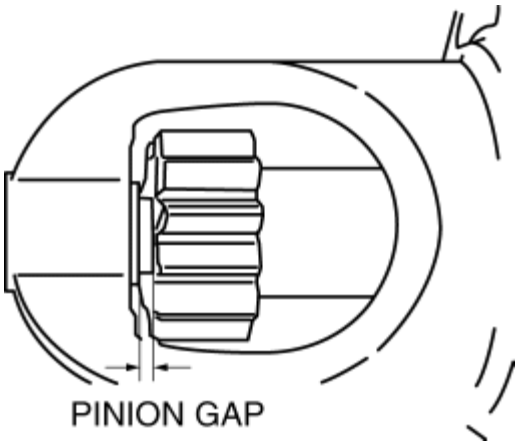

- If not as specified, adjust with an adjustment washer (between drive housing front cover and magnetic switch).

  Starter pinion gap

- 0.5—2.0 mm {0.02—0.07 in}

Starter Inner Parts Inspection

Armature

1. Verify that there is no continuity between the commutator and the core at each segment using a tester.

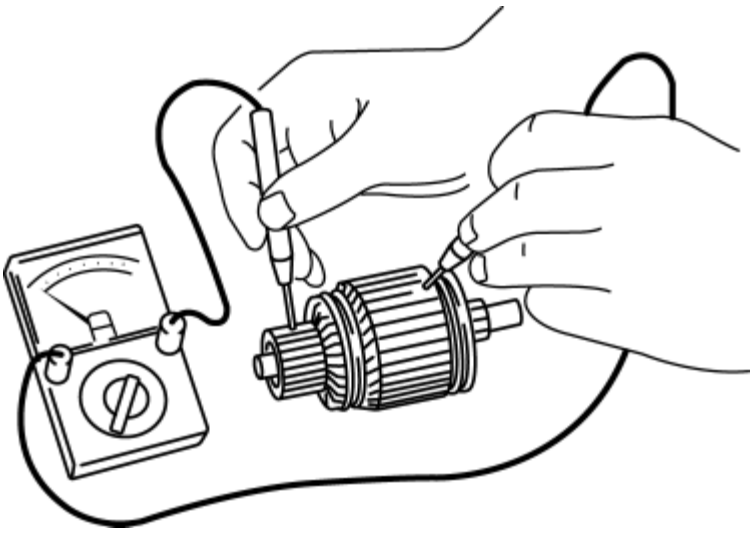

- If there is continuity, replace the armature.

2. Verify that there is no continuity between the commutator and the shaft using a tester.

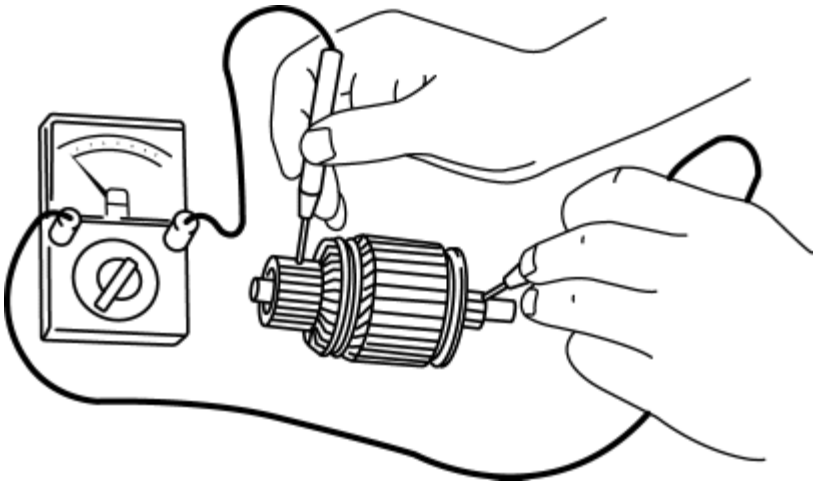

- If there is continuity, replace the armature.

3. Place the armature on V-blocks, and measure the runout using a dial indicator.

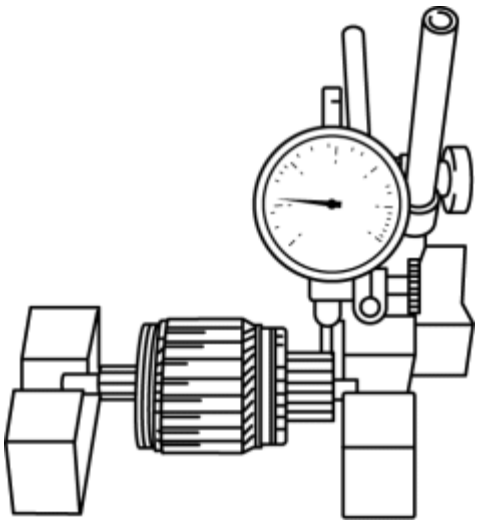

- If not within specification, replace the armature.

  Starter armature runout

- 0.1 mm {0.004 in} max.

4. Measure the commutator diameter.

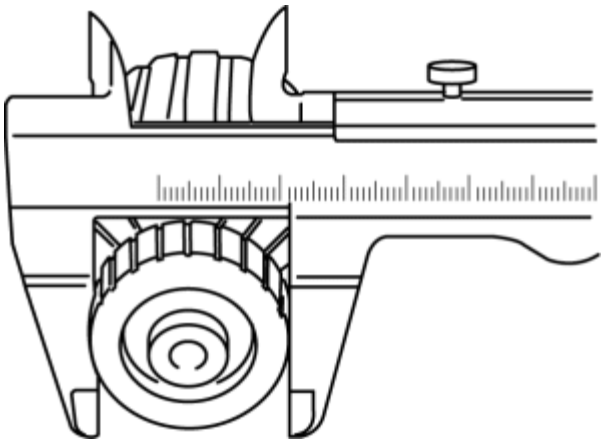

- If not within the minimum specification, replace the armature.

Starter commutator diameter

- Standard: 29.4 mm {1.16 in}
- Minimum: 28.8 mm {1.13 in}

5. Measure the segment groove depth of the commutator.

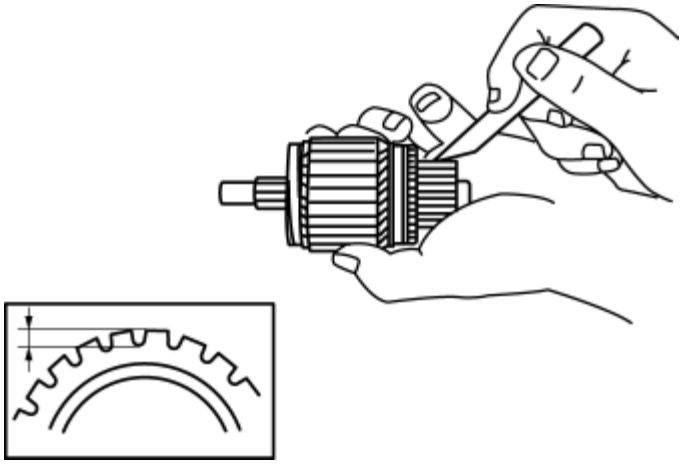

- If not within the minimum specification, undercut the grooves to the standard depth.

Segment groove depth of starter commutator

- Standard: 0.5 mm {0.02 in}
- Minimum: 0.2 mm {0.008 in}

Magnetic switch

1. Inspect for continuity between terminals S and M using a tester.

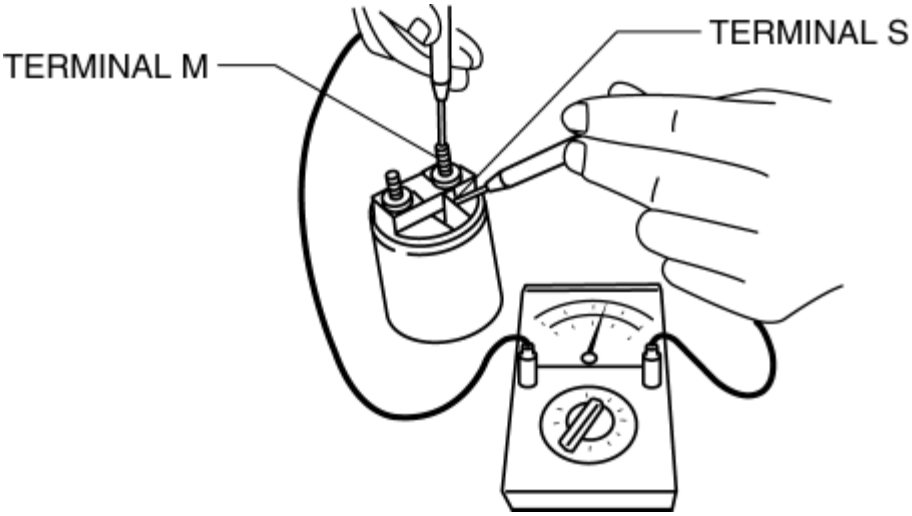

- If there is no continuity, replace the magnetic switch.

2. Inspect for continuity between terminal S and the body using a tester.

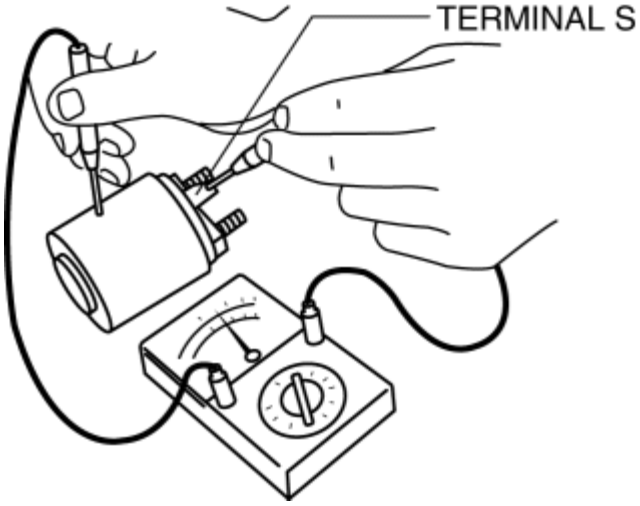

- If there is no continuity, replace the magnetic switch.

3. Verify that there is no continuity between terminals M and B using a tester.

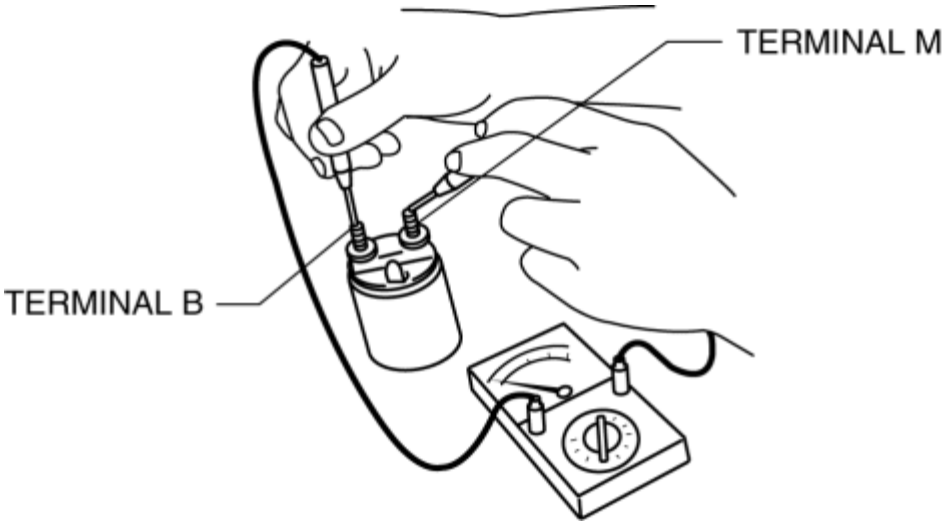

- If there is continuity, replace the magnetic switch.

Brush and brush holder

1. Verify that there is no continuity between each insulated brush and plate using a tester.

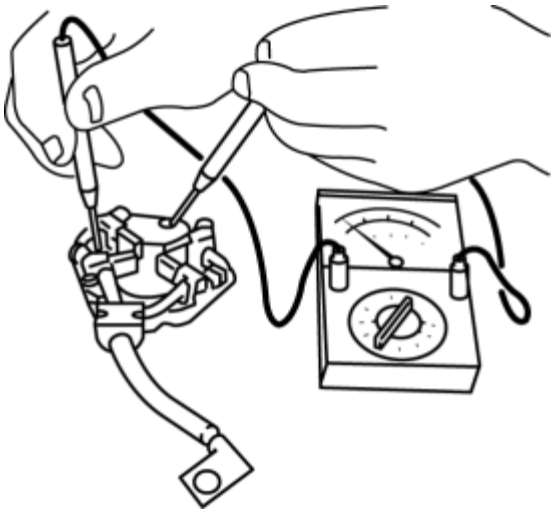

- If there is continuity, replace the brush holder.

2. Measure the brush length.

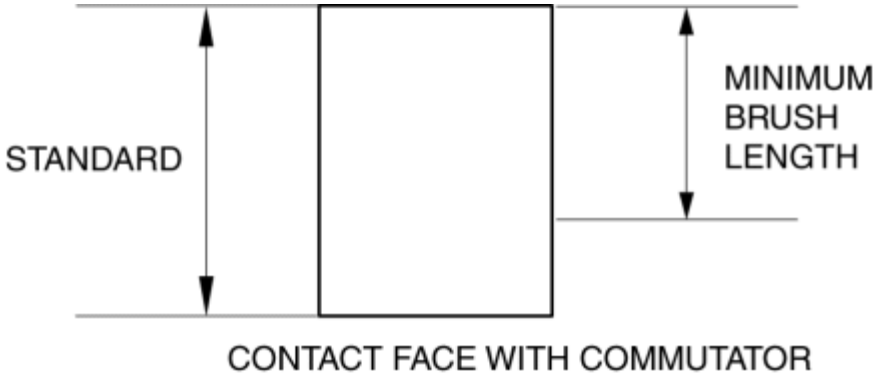

- If any brush is worn almost to or beyond the minimum specification, replace all of the brushes.

  Starter brush length

- Standard: 12.3 mm {0.484 in}
- Minimum: 5.5 mm {0.22 in}

3. Measure the brush spring force using a spring balance.

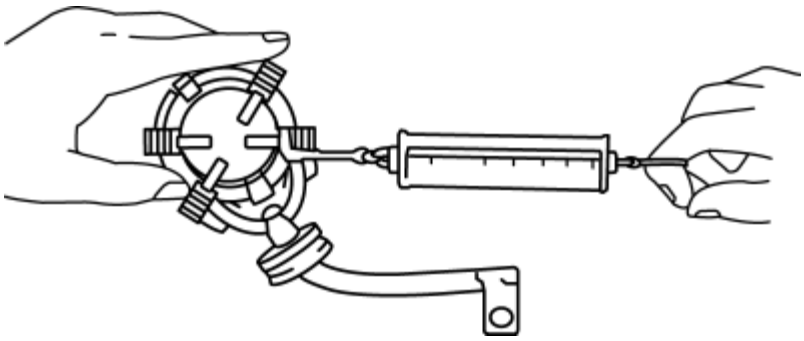

- If not within the minimum specification, replace the brush and brush holder component.

  Starter brush spring force

- Standard: 15.0—20.4 N {1.53—2.08 kgf, 3.38—4.58 lbf}

- Minimum: 2.75 N {0.280 kgf, 0.618 lbf}

2014 - Mazda3 - Engine

STARTER DISASSEMBLY/ASSEMBLY [SKYACTIV-G 2.0, SKYACTIV-G 2.5]

1. Disassemble in the order indicated in the table.
2. Assemble in the reverse order of disassembly.

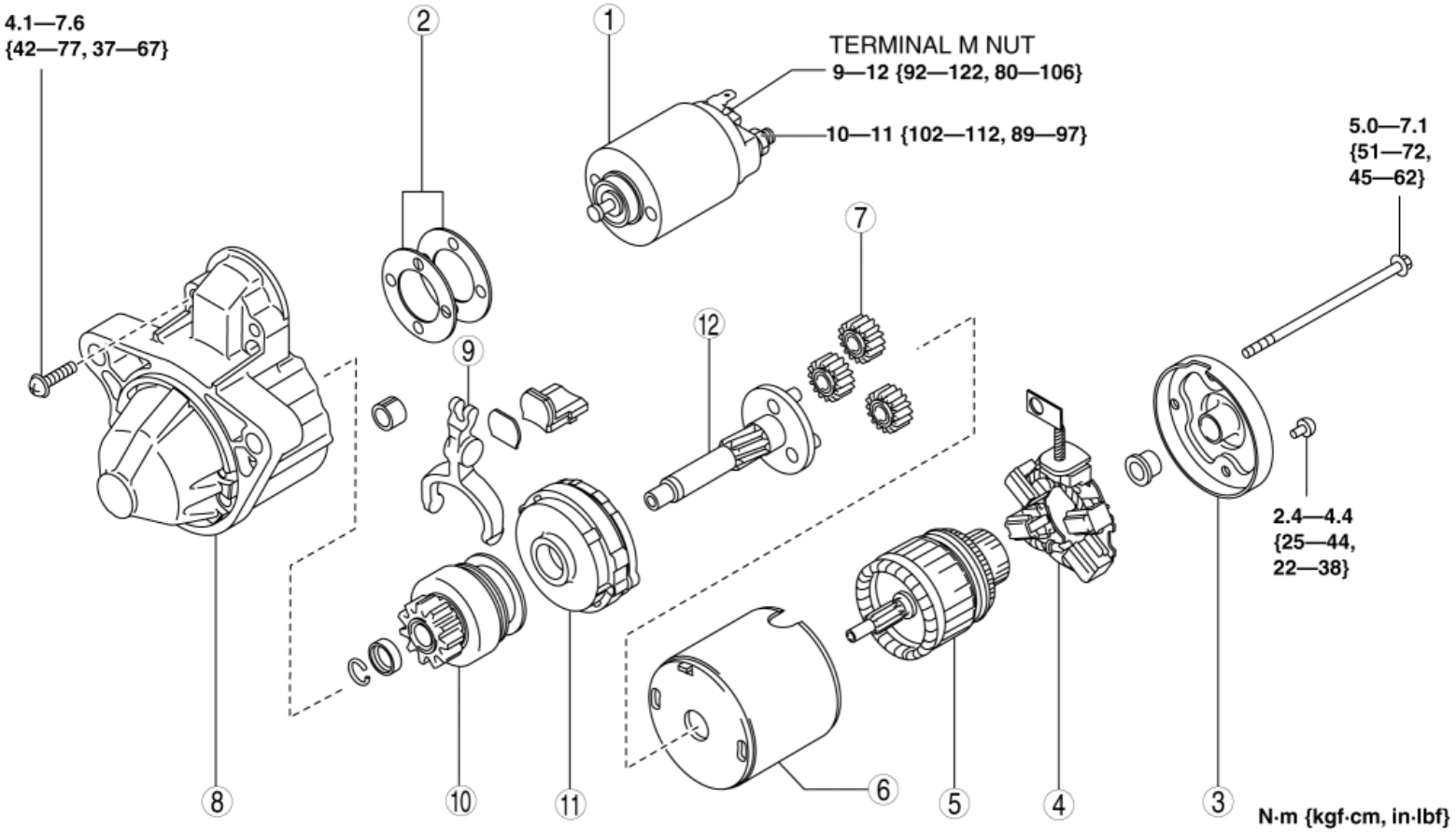

1	Magnetic switch
2	Adjustment washer
3	Rear housing
4	Brush and brush holder
5	Armature
6	Yoke
7	Planetary gear
8	Front cover
9	Lever

10	Drive pinion
11	Internal gear
12	Gear shaft

2014 - Mazda3 - Engine

STARTER INTERLOCK SWITCH INSPECTION [SKYACTIV-G 2.0, SKYACTIV-G 2.5]

CAUTION:

1. Do not reuse the starter interlock switch if it is removed from the vehicle even once. Replace with a new starter interlock switch when installing.

1. Disconnect the negative battery cable. (See **NEGATIVE BATTERY CABLE DISCONNECTION/CONNECTION [SKYACTIV-G 2.0, SKYACTIV-G 2.5]**.)

2. Disconnect the starter interlock switch connector.

3. Verify that the continuity is as indicated in the table using a tester.

○—○ : Continuity

Condition	Terminal	
	A	B
Clutch pedal is depressed	○	○
Clutch pedal is not depressed		

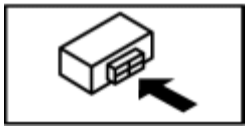

- If the continuity is not as indicated in the table, replace the starter interlock switch.

  (See **CLUTCH PEDAL REMOVAL/INSTALLATION [C66M-R]**.)

2014 - Mazda3 - Engine

CRUISE CONTROL SWITCH INSPECTION [SKYACTIV-G 2.0, SKYACTIV-G 2.5]

1. Disconnect the negative battery cable and wait for **1 min or more**. (See **NEGATIVE BATTERY CABLE DISCONNECTION/CONNECTION [SKYACTIV-G 2.0, SKYACTIV-G 2.5]**.)

2. Remove the driver side air bag module. (See **DRIVER-SIDE AIR BAG MODULE REMOVAL [STANDARD DEPLOYMENT CONTROL SYSTEM]**.) (See **DRIVER-SIDE AIR BAG MODULE INSTALLATION [STANDARD DEPLOYMENT CONTROL SYSTEM]**.) (See **DRIVER-SIDE AIR BAG MODULE REMOVAL [TWO-STEP DEPLOYMENT CONTROL SYSTEM]**.) (See **DRIVER-SIDE AIR BAG MODULE INSTALLATION [TWO-STEP DEPLOYMENT CONTROL SYSTEM]**.)

3. Disconnect the clock spring connector (part wiring harness-side).

4. Measure the resistance between clock spring terminals 3E and 3A (part wiring harness-side) using a tester.

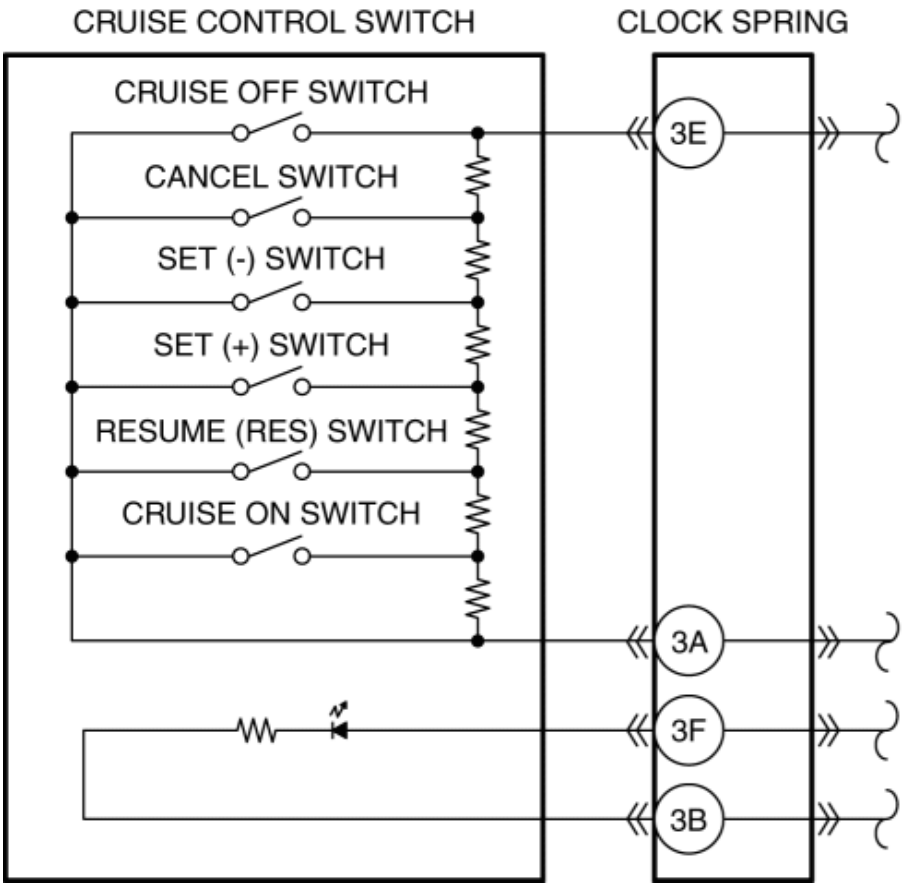

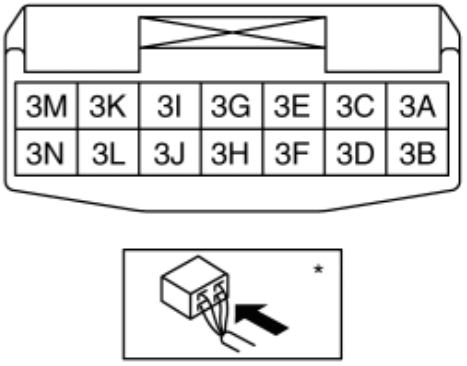

*: PART WIRING HARNESS-SIDE

- If as specified, go to the next step.
- If not as specified, replace the steering switch. (See **STEERING SWITCH REMOVAL/INSTALLATION**.)

Switch condition	Resistance (ohm)

Cruise OFF switch held at on	Continuity
CANCEL switch held at on	Approx. 84.5
SET (−) switch held at on	Approx. 189.5
SET (+) switch held at on	Approx. 326.5
RESUME (RES) switch held at on	Approx. 506.5
Cruise ON switch held at on	Approx. 761.5
Neutral	Approx. 3,311.5

5. Apply battery positive voltage to clock spring terminal 3F (part wiring harness-side), and terminal 3B (part wiring harness-side) to ground.

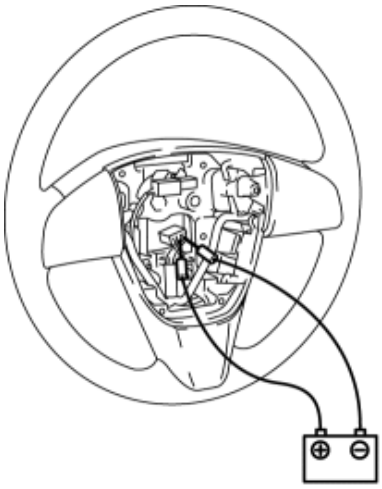

6. Verify that the LED illuminates.

- If the LED does not illuminate, replace the steering switch. (See **STEERING SWITCH REMOVAL/INSTALLATION**.)

2014 - Mazda3 - Engine

DRIVE SELECTION SWITCH INSPECTION [SKYACTIV-G 2.5]

1. Disconnect the negative battery cable. (See **NEGATIVE BATTERY CABLE DISCONNECTION/CONNECTION [SKYACTIV-G 2.0, SKYACTIV-G 2.5]**.)

2. Perform the following procedure to remove the selector lever knob.

NOTE:

- If the servicing is difficult, release the shift lock manually and shift the selector lever to the N position.

a. Insert the tool (width: 6 mm or less, thickness: 1 mm or less) as shown in the figure.

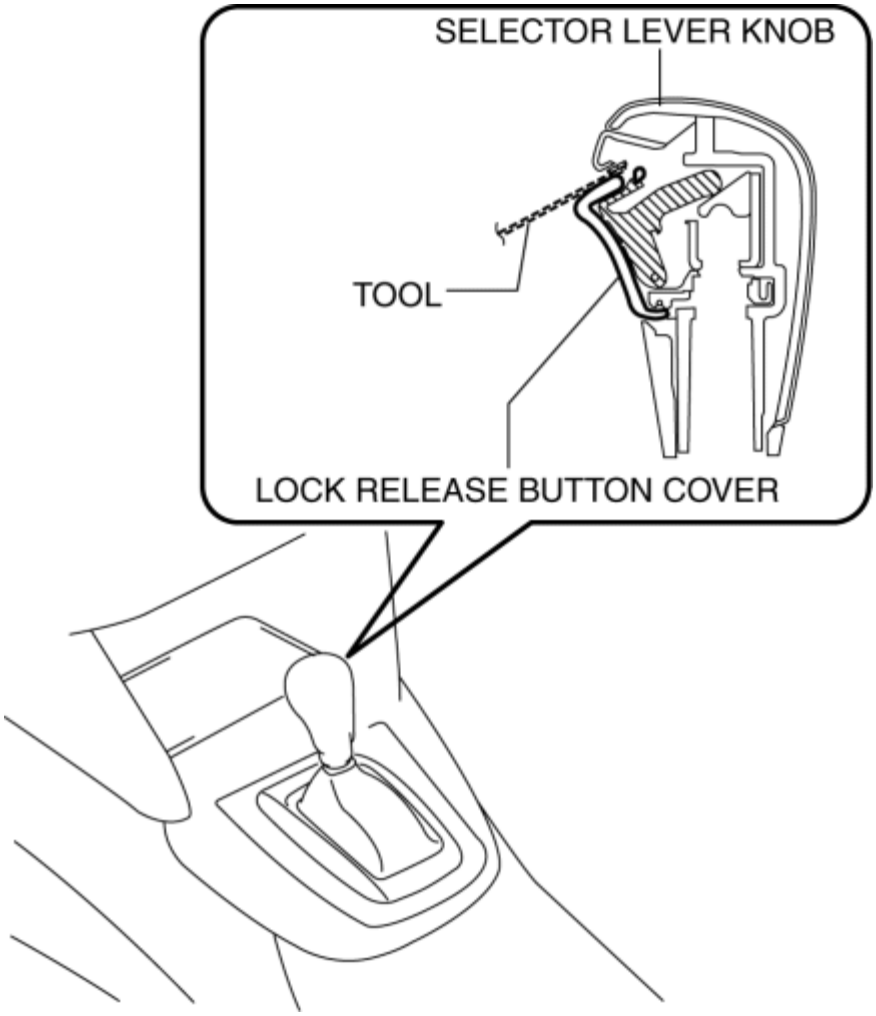

b. Move the tool in the direction of arrow (1) in the figure and detach the hook. Move the lock release button cover in the direction of arrow (2) in the figure and remove it.

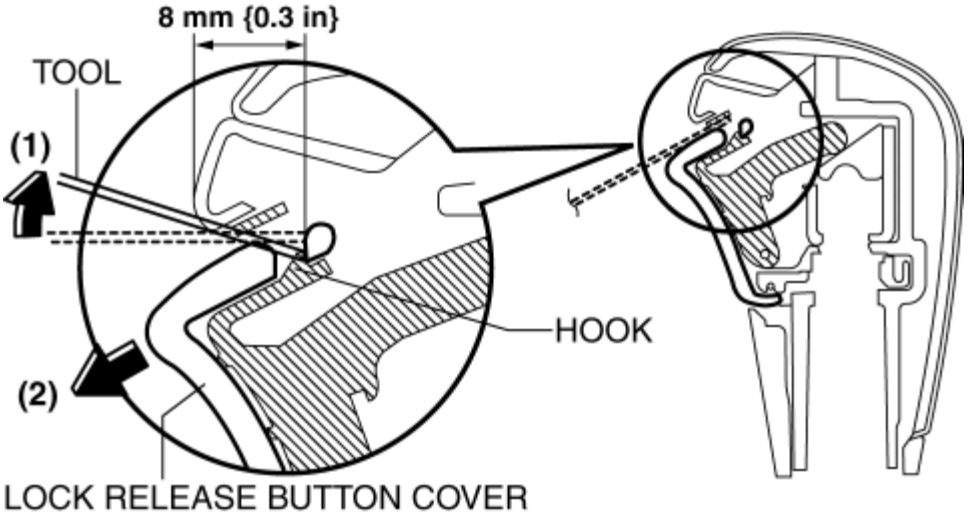

c. Remove the spring.

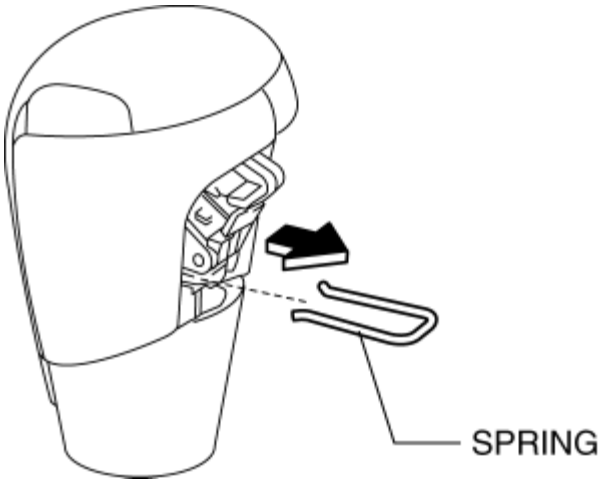

d. Remove the selector lever knob.

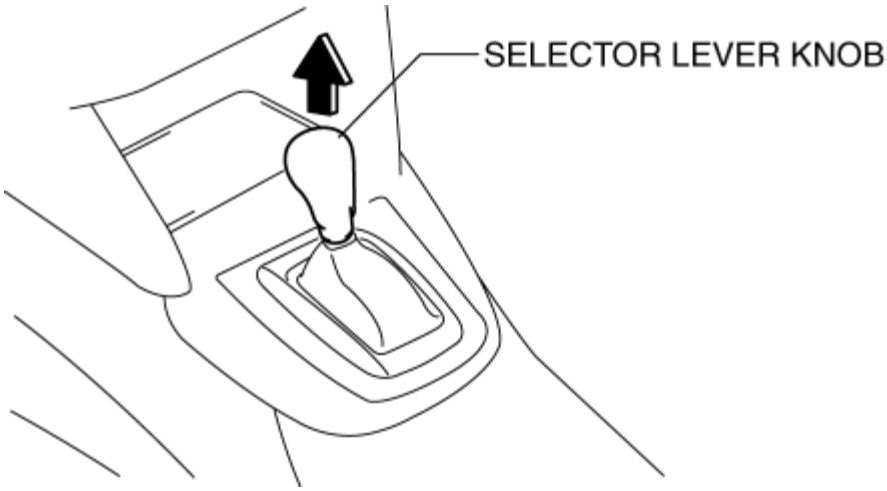

3. Remove the upper panel. (See **UPPER PANEL REMOVAL**.)

4. Remove the shift panel. (See **SHIFT PANEL REMOVAL / INSTALLATION**.)

5. Disconnect the shift panel component connector.

6. Verify that the continuity between shift panel component terminals F and G

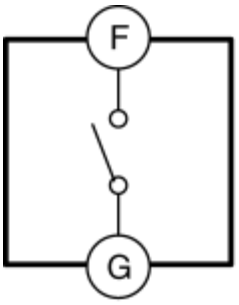

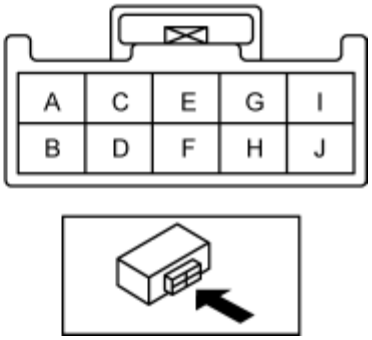

Drive selection switch specification

Test condition	Continuity
Drive selection switch pressed	Continuity
Drive selection switch not pressed	No continuity

2014 - Mazda3 - Engine

CONTROL SYSTEM LOCATION INDEX [SKYACTIV-G 2.0, SKYACTIV-G 2.5]

Engine Compartment

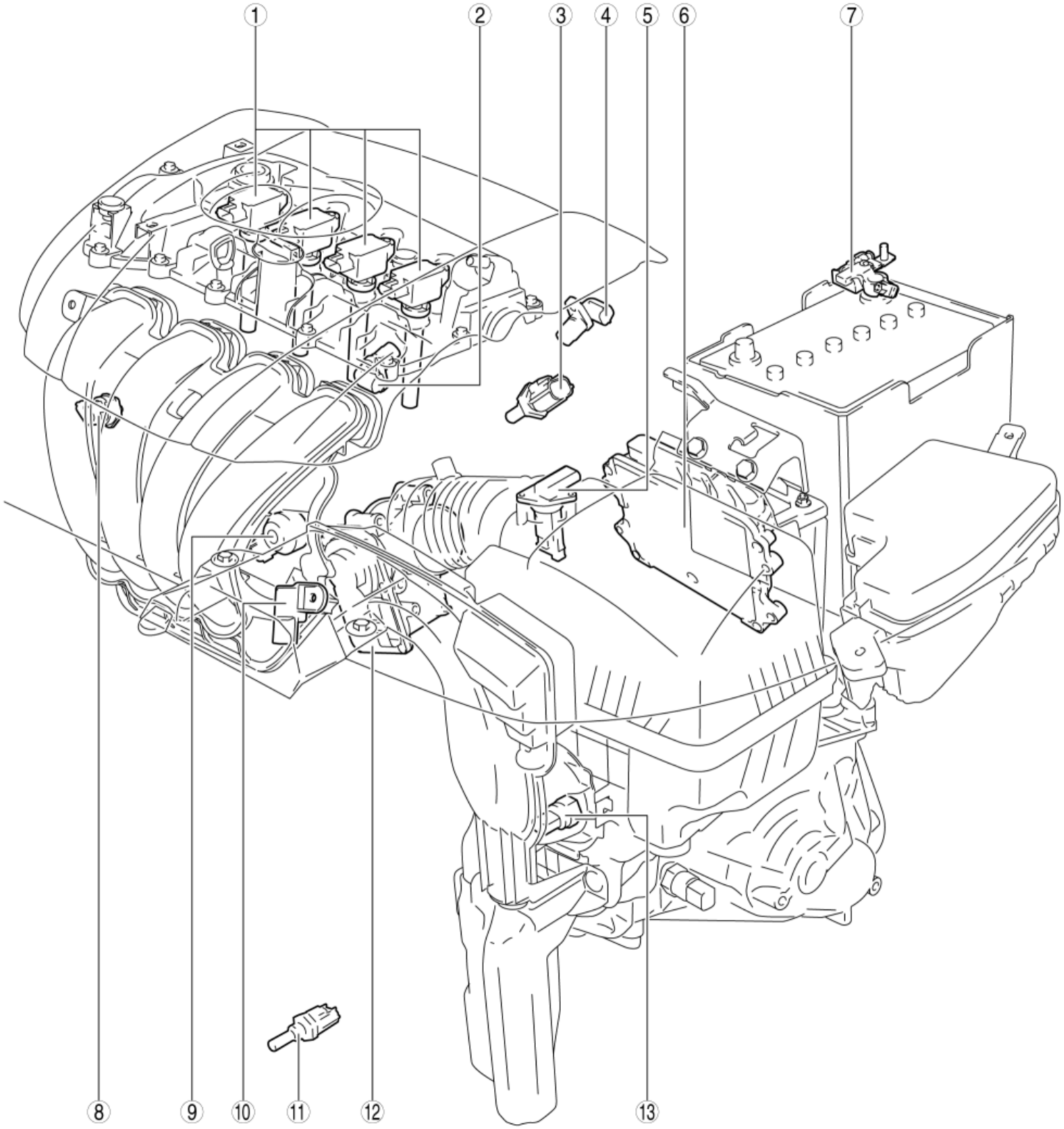

1	Ion sensor (See **ION SENSOR REMOVAL/INSTALLATION [SKYACTIV-G 2.0, SKYACTIV-G 2.5]**.) (See **ION SENSOR INSPECTION [SKYACTIV-G 2.0, SKYACTIV-G 2.5]**.)
2	Intake CMP sensor

	(See **CAMSHAFT POSITION (CMP) SENSOR REMOVAL/INSTALLATION [SKYACTIV-G 2.0, SKYACTIV-G 2.5]**.) (See **CAMSHAFT POSITION (CMP) SENSOR INSPECTION [SKYACTIV-G 2.0, SKYACTIV-G 2.5]**.)
3	ECT sensor No.1 (See **ENGINE COOLANT TEMPERATURE (ECT) SENSOR REMOVAL/INSTALLATION [SKYACTIV-G 2.0, SKYACTIV-G 2.5]**.) (See **ENGINE COOLANT TEMPERATURE (ECT) SENSOR INSPECTION [SKYACTIV-G 2.0, SKYACTIV-G 2.5]**.)
4	Exhaust CMP sensor (See **CAMSHAFT POSITION (CMP) SENSOR REMOVAL/INSTALLATION [SKYACTIV-G 2.0, SKYACTIV-G 2.5]**.) (See **CAMSHAFT POSITION (CMP) SENSOR INSPECTION [SKYACTIV-G 2.0, SKYACTIV-G 2.5]**.)
5	MAF sensor/IAT sensor No.1 (See **MASS AIR FLOW (MAF) SENSOR/INTAKE AIR TEMPERATURE (IAT) SENSOR NO.1 REMOVAL/INSTALLATION [SKYACTIV-G 2.0, SKYACTIV-G 2.5]**.) (See **MASS AIR FLOW (MAF) SENSOR INSPECTION [SKYACTIV-G 2.0, SKYACTIV-G 2.5]**.) (See **INTAKE AIR TEMPERATURE (IAT) SENSOR INSPECTION [SKYACTIV-G 2.0, SKYACTIV-G 2.5]**.)
6	PCM (BARO sensor) (See **PCM REMOVAL/INSTALLATION [SKYACTIV-G 2.0, SKYACTIV-G 2.5]**.) (See **PCM INSPECTION [SKYACTIV-G 2.0, SKYACTIV-G 2.5]**.) (See **PCM CONFIGURATION (USING READ/WRITE FUNCTION) [SKYACTIV-G 2.0, SKYACTIV-G 2.5]**.) (See **PCM CONFIGURATION (USING AS-BUILT DATA) [SKYACTIV-G 2.0, SKYACTIV-G 2.5]**.) (See **BAROMETRIC PRESSURE (BARO) SENSOR REMOVAL/INSTALLATION [SKYACTIV-G 2.0, SKYACTIV-G 2.5]**.) (See **BAROMETRIC PRESSURE (BARO) SENSOR INSPECTION [SKYACTIV-G 2.0, SKYACTIV-G 2.5]**.)
7	Current sensor (with i-ELOOP) (See **CURRENT SENSOR REMOVAL/INSTALLATION [SKYACTIV-G 2.0, SKYACTIV-G 2.5]**.) (See **CURRENT SENSOR INSPECTION [SKYACTIV-G 2.0, SKYACTIV-G 2.5]**.)
8	Fuel pressure sensor (See **FUEL PRESSURE SENSOR REMOVAL/INSTALLATION [SKYACTIV-G 2.0, SKYACTIV-G 2.5]**.) (See **FUEL PRESSURE SENSOR INSPECTION [SKYACTIV-G 2.0, SKYACTIV-G 2.5]**.)
9	KS (See **KNOCK SENSOR (KS) REMOVAL/INSTALLATION [SKYACTIV-G 2.0, SKYACTIV-G 2.5]**.) (See **KNOCK SENSOR (KS) INSPECTION [SKYACTIV-G 2.0, SKYACTIV-G 2.5]**.)
10	MAP sensor/IAT sensor No.2 (See **MANIFOLD ABSOLUTE PRESSURE (MAP) SENSOR/INTAKE AIR TEMPERATURE (IAT) SENSOR NO.2 REMOVAL/INSTALLATION [SKYACTIV-G 2.0, SKYACTIV-G 2.5]**.) (See **INTAKE AIR TEMPERATURE (IAT) SENSOR INSPECTION [SKYACTIV-G 2.0, SKYACTIV-G 2.5]**.) (See **MANIFOLD ABSOLUTE PRESSURE (MAP) SENSOR INSPECTION [SKYACTIV-G 2.0, SKYACTIV-G 2.5]**.)
11	ECT sensor No.2 (U.S.A. and CANADA) (See **ENGINE COOLANT TEMPERATURE (ECT) SENSOR REMOVAL/INSTALLATION [SKYACTIV-G 2.0, SKYACTIV-G 2.5]**.) (See **ENGINE COOLANT TEMPERATURE (ECT) SENSOR INSPECTION [SKYACTIV-G 2.0, SKYACTIV-G 2.5]**.)
12	TP sensor

	(See **THROTTLE POSITION (TP) SENSOR REMOVAL/INSTALLATION [SKYACTIV-G 2.0, SKYACTIV-G 2.5]**.) (See **THROTTLE POSITION (TP) SENSOR INSPECTION [SKYACTIV-G 2.0, SKYACTIV-G 2.5]**.)
13	Neutral switch (MTX) (See **NEUTRAL SWITCH INSPECTION [SKYACTIV-G 2.0, SKYACTIV-G 2.5]**.)

Except Engine Compartment

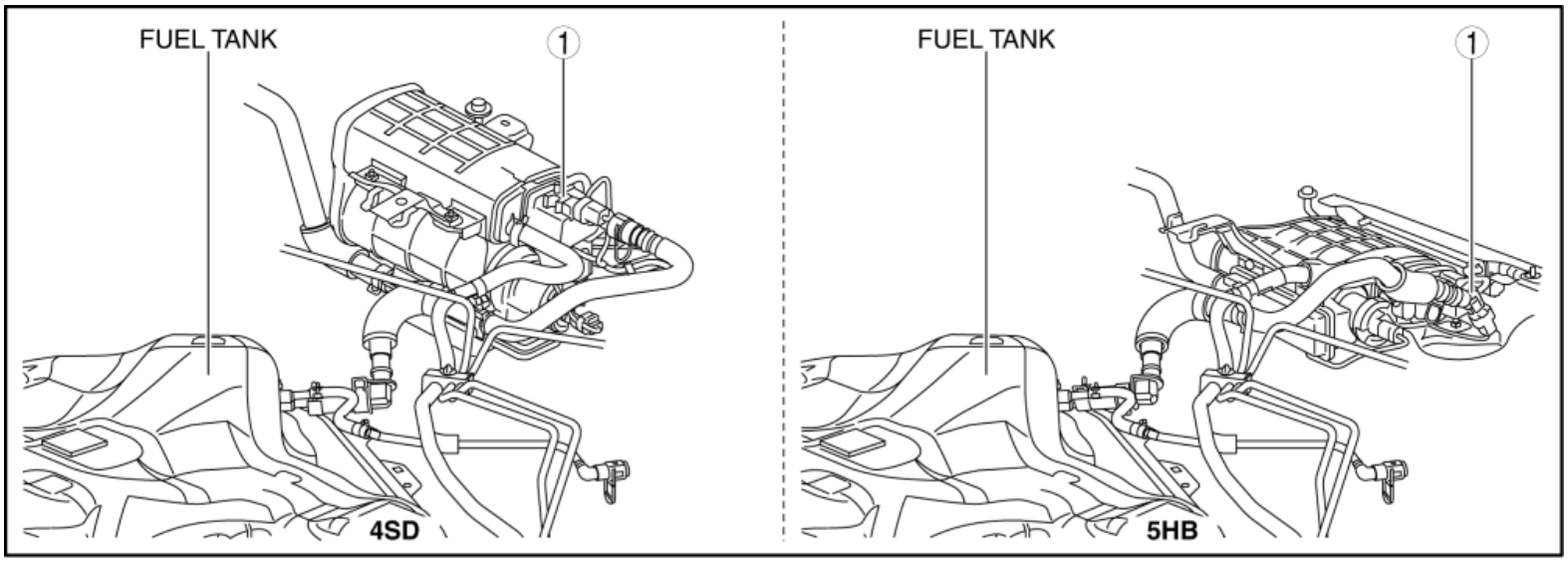

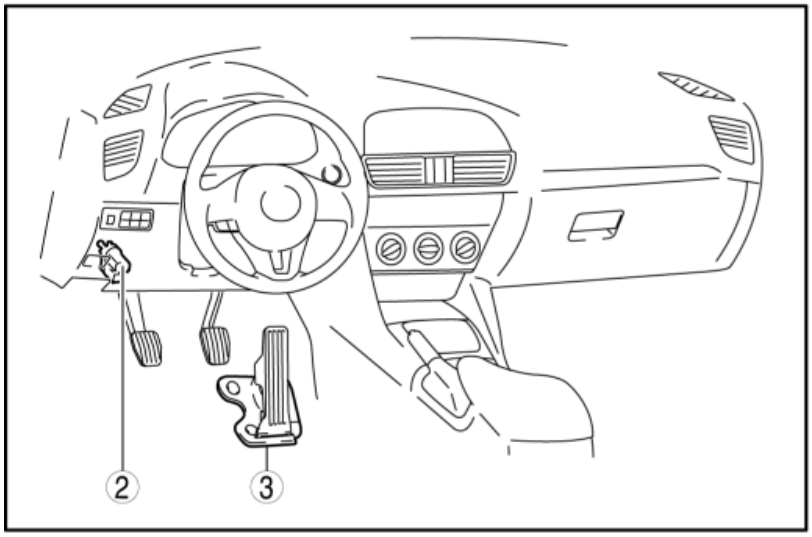

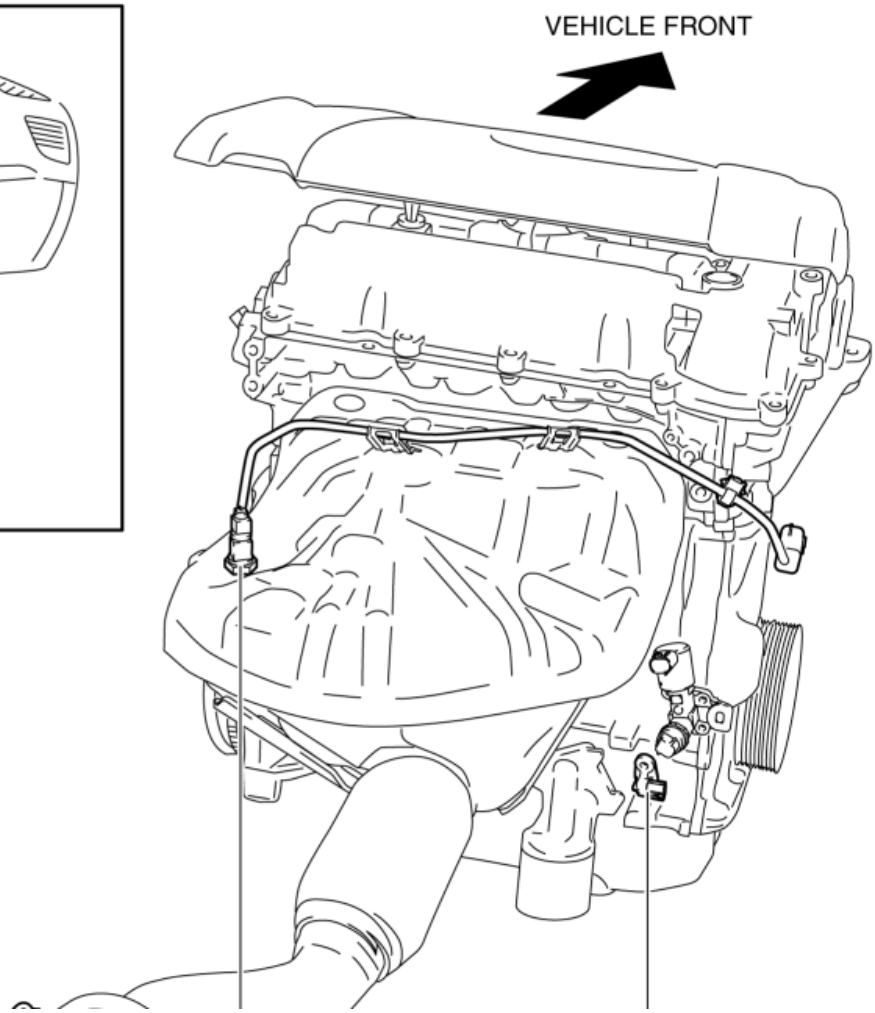

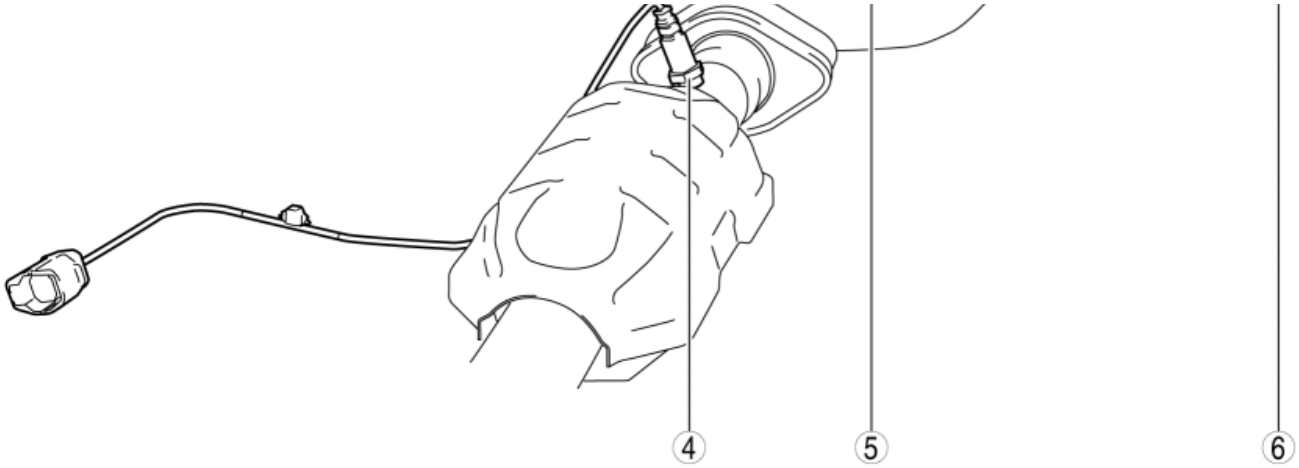

1	Fuel tank pressure sensor (U.S.A. and CANADA) (See **FUEL TANK PRESSURE SENSOR REMOVAL/INSTALLATION [SKYACTIV-G 2.0, SKYACTIV-G 2.5]**.) (See **FUEL TANK PRESSURE SENSOR INSPECTION [SKYACTIV-G 2.0, SKYACTIV-G 2.5]**.)
2	CPP switch (MTX) (See **CLUTCH PEDAL POSITION (CPP) SWITCH INSPECTION [SKYACTIV-G 2.0, SKYACTIV-G 2.5]**.)
3	APP sensor (See **ACCELERATOR PEDAL POSITION (APP) SENSOR REMOVAL/INSTALLATION [SKYACTIV-G 2.0, SKYACTIV-G 2.5]**.) (See **ACCELERATOR PEDAL POSITION (APP) SENSOR INSPECTION [SKYACTIV-G 2.0, SKYACTIV-G 2.5]**.)
4	HO2S (See **HEATED OXYGEN SENSOR (HO2S) REMOVAL/INSTALLATION [SKYACTIV-G 2.0, SKYACTIV-G 2.5]**.) (See **HEATED OXYGEN SENSOR (HO2S) INSPECTION [SKYACTIV-G 2.0, SKYACTIV-G 2.5]**.)
5	A/F sensor (See **AIR FUEL RATIO (A/F) SENSOR REMOVAL/INSTALLATION [SKYACTIV-G 2.0, SKYACTIV-G 2.5]**.) (See **AIR FUEL RATIO (A/F) SENSOR INSPECTION [SKYACTIV-G 2.0, SKYACTIV-G 2.5]**.)
6	CKP sensor (See **CRANKSHAFT POSITION (CKP) SENSOR REMOVAL/INSTALLATION [SKYACTIV-G 2.0, SKYACTIV-G 2.5]**.) (See **CRANKSHAFT POSITION (CKP) SENSOR INSPECTION [SKYACTIV-G 2.0, SKYACTIV-G 2.5]**.)

2014 - Mazda3 - Engine

CONTROL SYSTEM DIAGRAM [SKYACTIV-G 2.0, SKYACTIV-G 2.5]

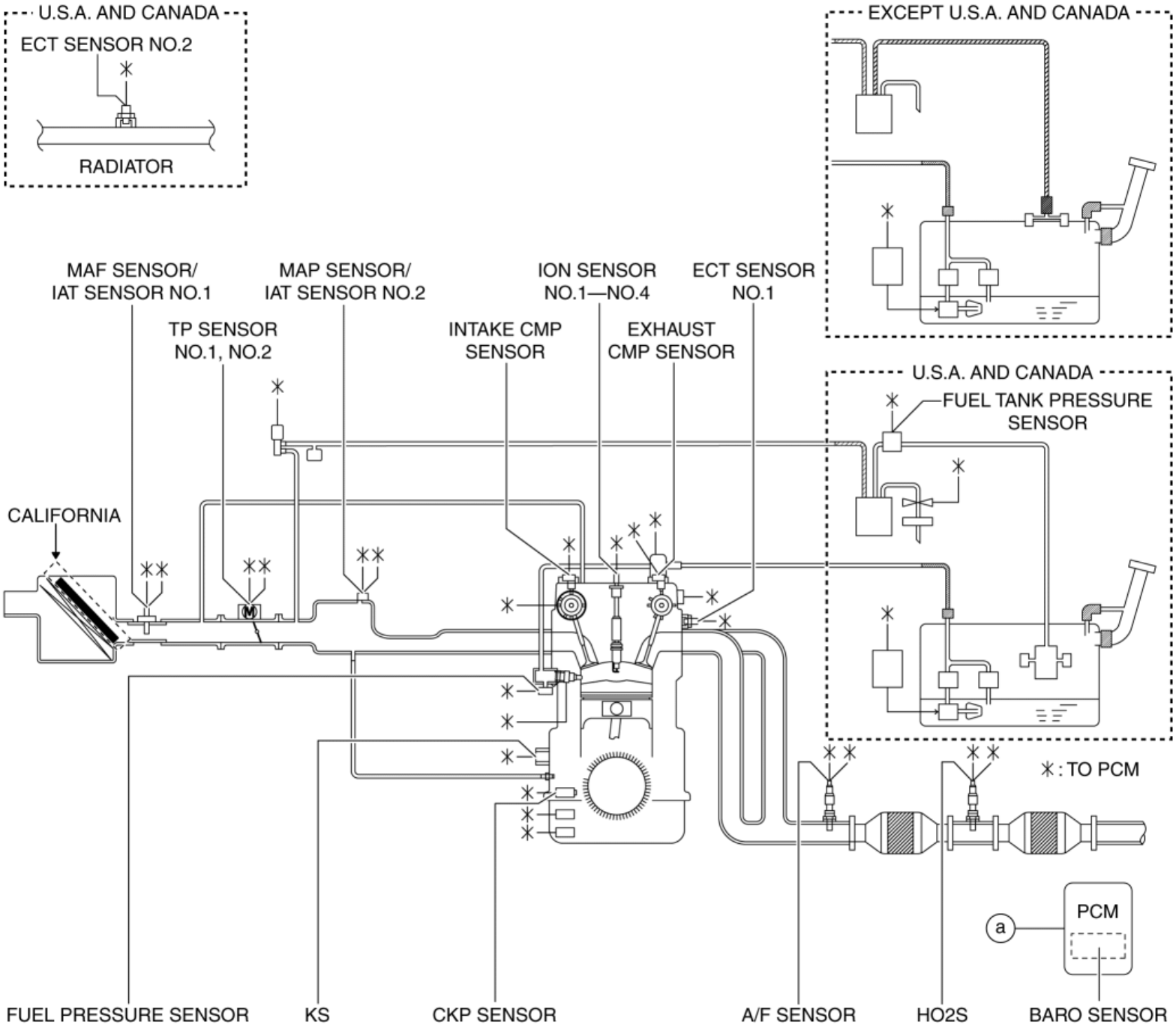

a : APP SENSOR NO.1, NO.2, CPP SWITCH (MTX), NEUTRAL SWITCH (MTX)

2014 - Mazda3 - Engine

CONTROL SYSTEM WIRING DIAGRAM [SKYACTIV-G 2.0, SKYACTIV-G 2.5]

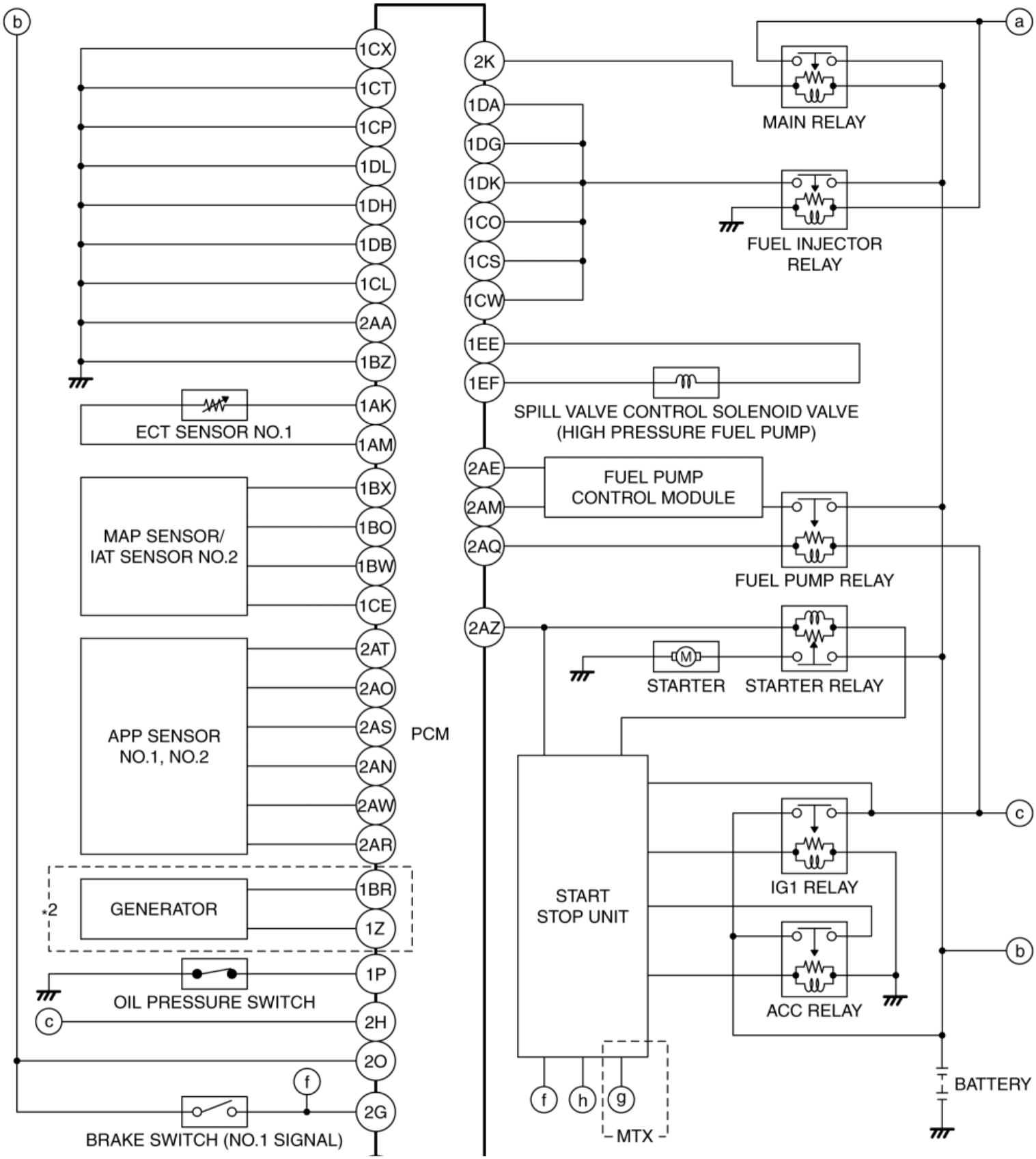

CONTROL SYSTEM WIRING DIAGRAM [SKYACTIV-G 2.0, SKYACTIV-G 2.5]

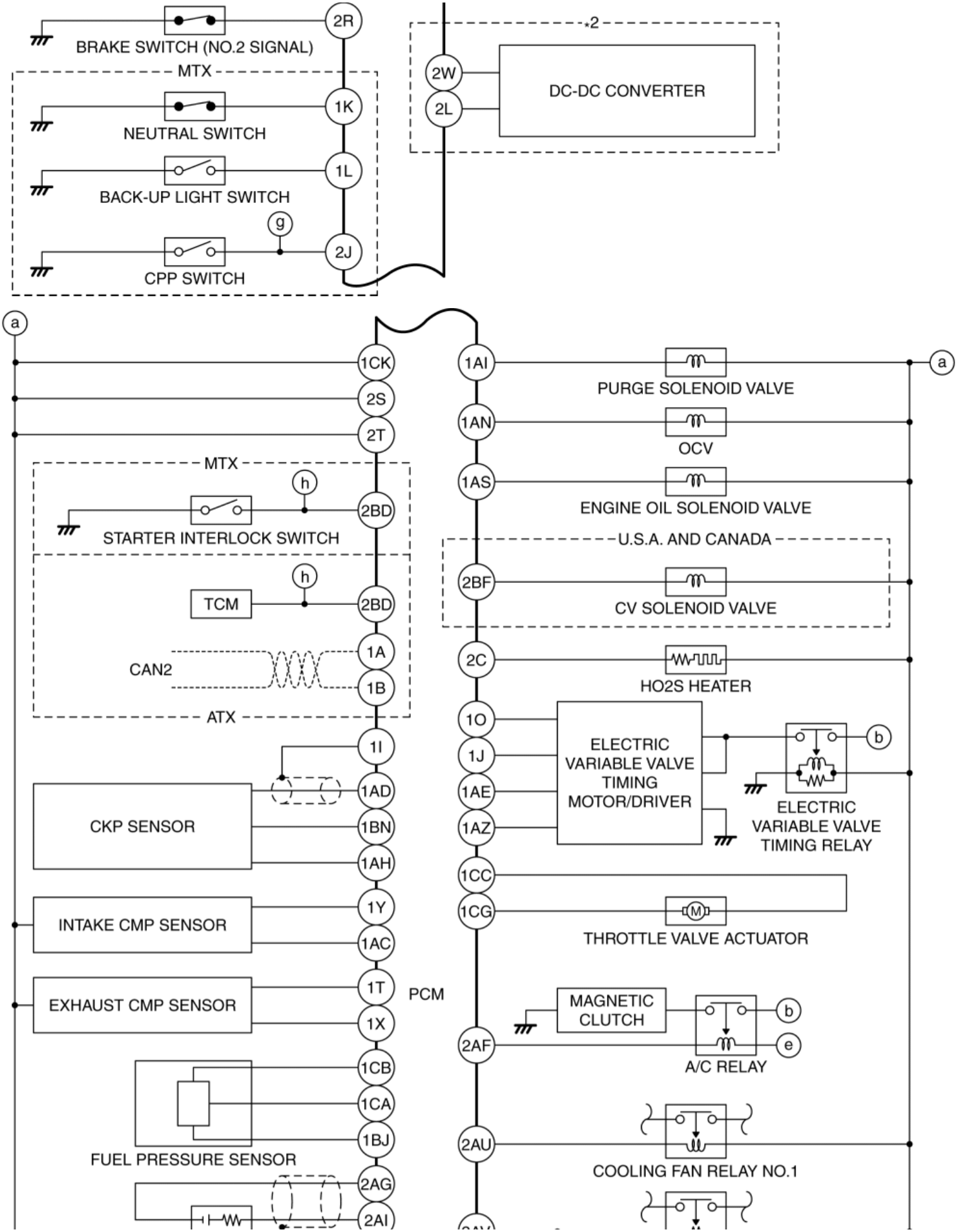

CONTROL SYSTEM WIRING DIAGRAM [SKYACTIV-G 2.0, SKYACTIV-G 2.5]

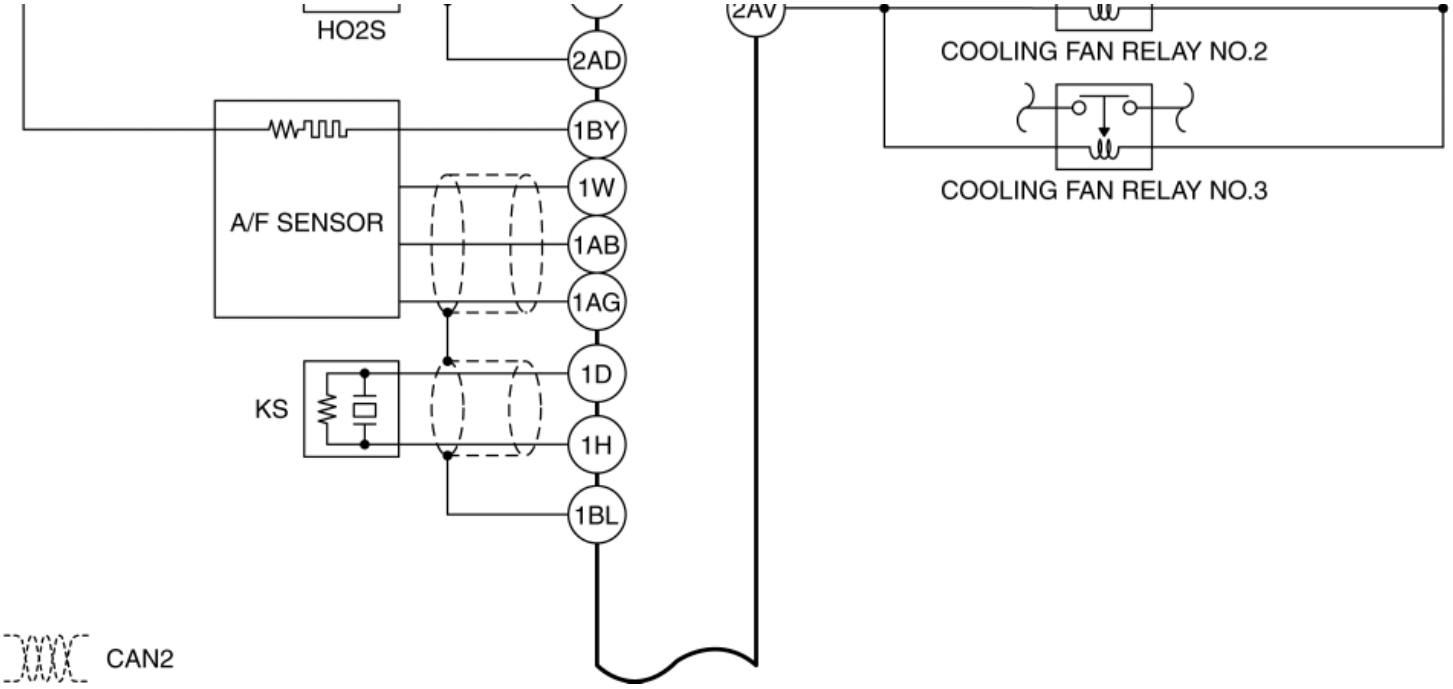

CONTROL SYSTEM WIRING DIAGRAM [SKYACTIV-G 2.0, SKYACTIV-G 2.5]

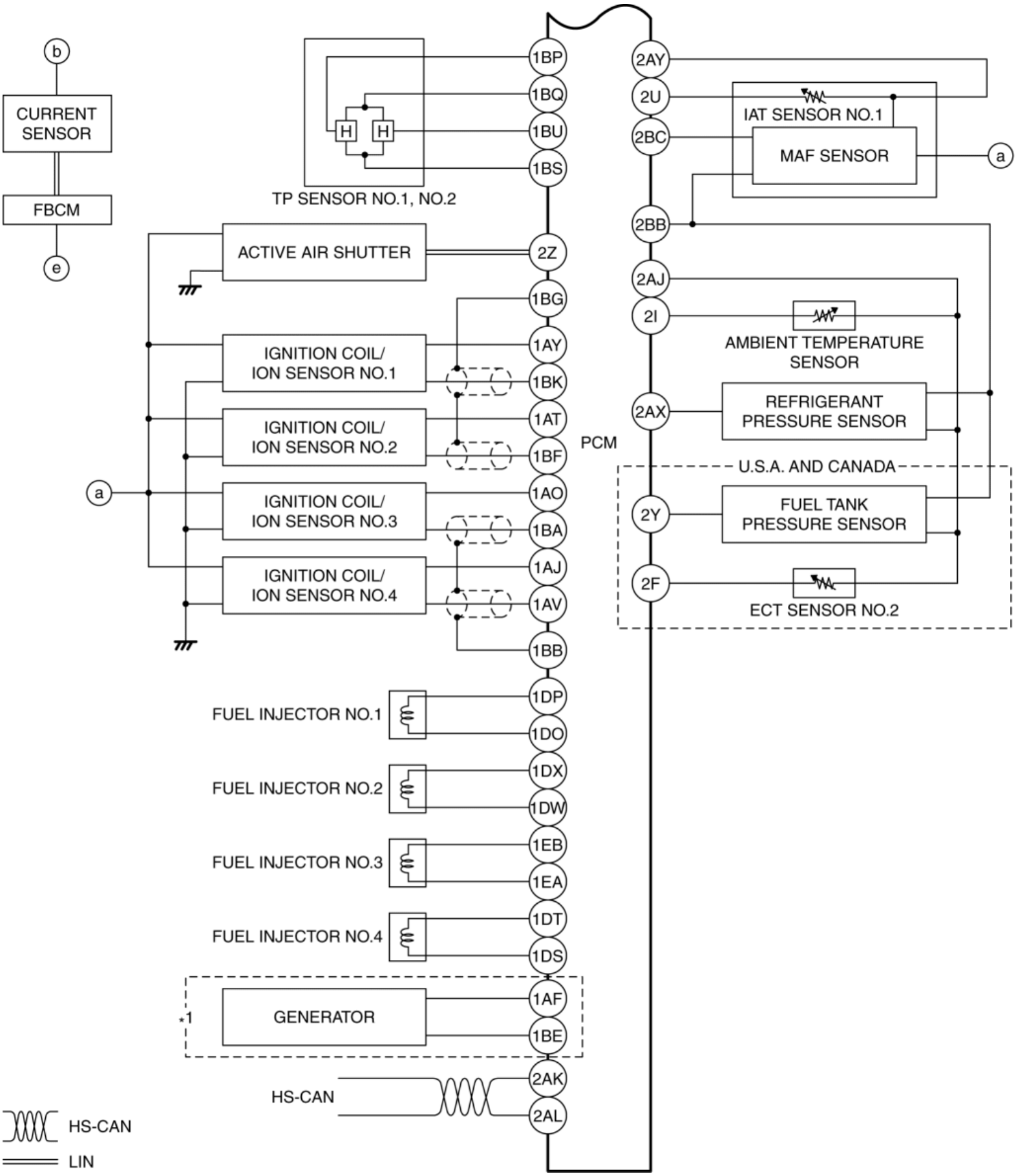

*1

Vehicles without i-ELOOP

*2

Vehicles with i-ELOOP

CONTROL SYSTEM WIRING DIAGRAM [SKYACTIV-G 2.0, SKYACTIV-G 2.5]

2014 - Mazda3 - Engine

PCM REMOVAL/INSTALLATION [SKYACTIV-G 2.0, SKYACTIV-G 2.5]

CAUTION:

- There are two types of PCM settings. If the incorrect PCM is installed, it could cause interference with engine control.
- When replacing the PCM, verify the first four digits of the part number indicated on the PCM label before replacement, and replace the PCM with one having the same part number.

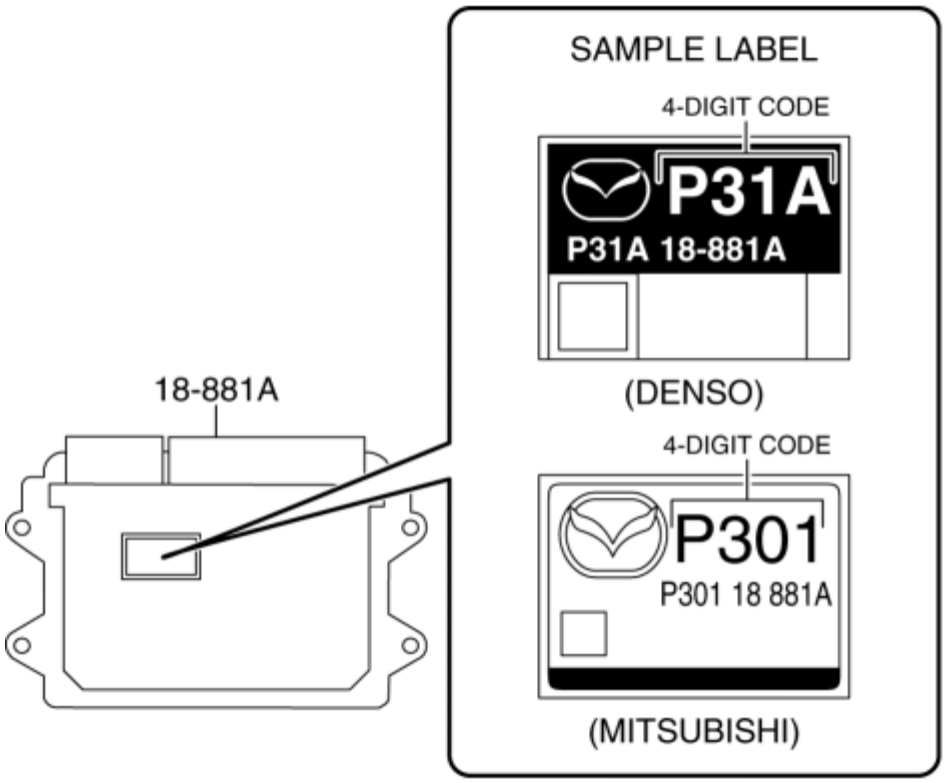

- If configuration and reprogramming is not performed when the PCM is replaced with a new one, the vehicle specification information and PCM software is not stored in the PCM and the system will not operate normally.
- When performing configuration and reprogramming, it is necessary to read the vehicle specification information from the PCM before replacing it. Connect the M-MDS to the vehicle and perform vehicle identification before removing the PCM. The vehicle specification information is temporarily stored in the M-MDS.

NOTE:

- The PCM prior to replacement stores the vehicle specification information.
- A new PCM does not store any vehicle specification information.
- If the vehicle specification information PCM prior to replacement cannot be read, perform

the configuration using As-Built data.

1. Disconnect the negative battery cable. (See **NEGATIVE BATTERY CABLE DISCONNECTION/CONNECTION [SKYACTIV-G 2.0, SKYACTIV-G 2.5]**.)

2. Remove the PCM cover. (See **PCM Cover Installation Note**.)

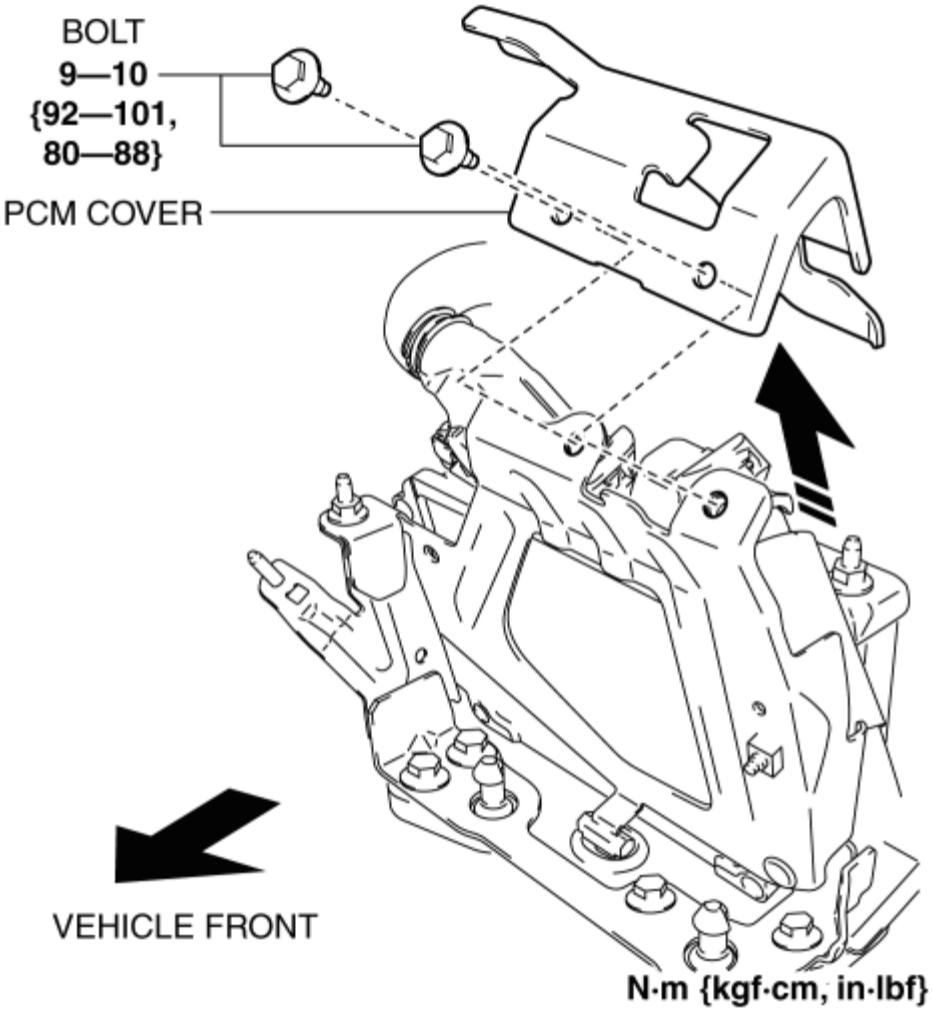

3. Disconnect the PCM connector. (See **PCM Connector Connection Note**.)

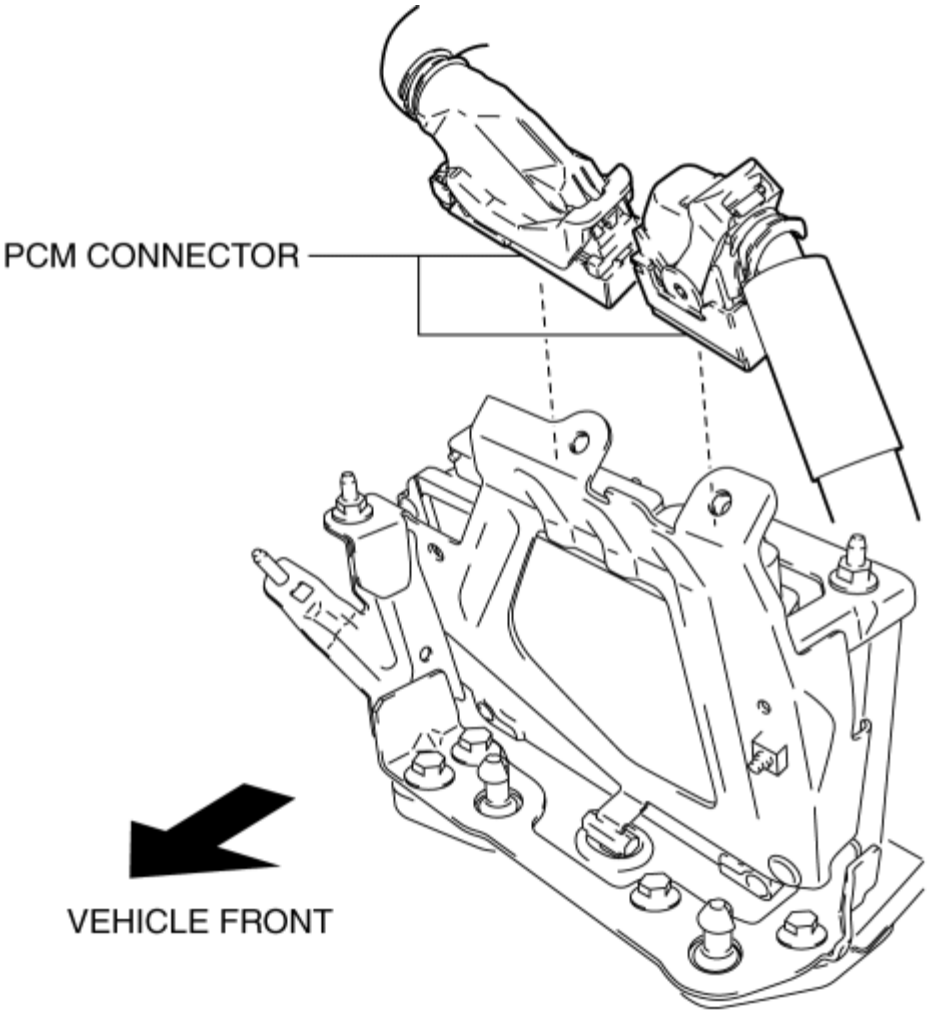

4. Remove the PCM assembly from the battery tray. (See **PCM Assembly Installation Note**.)

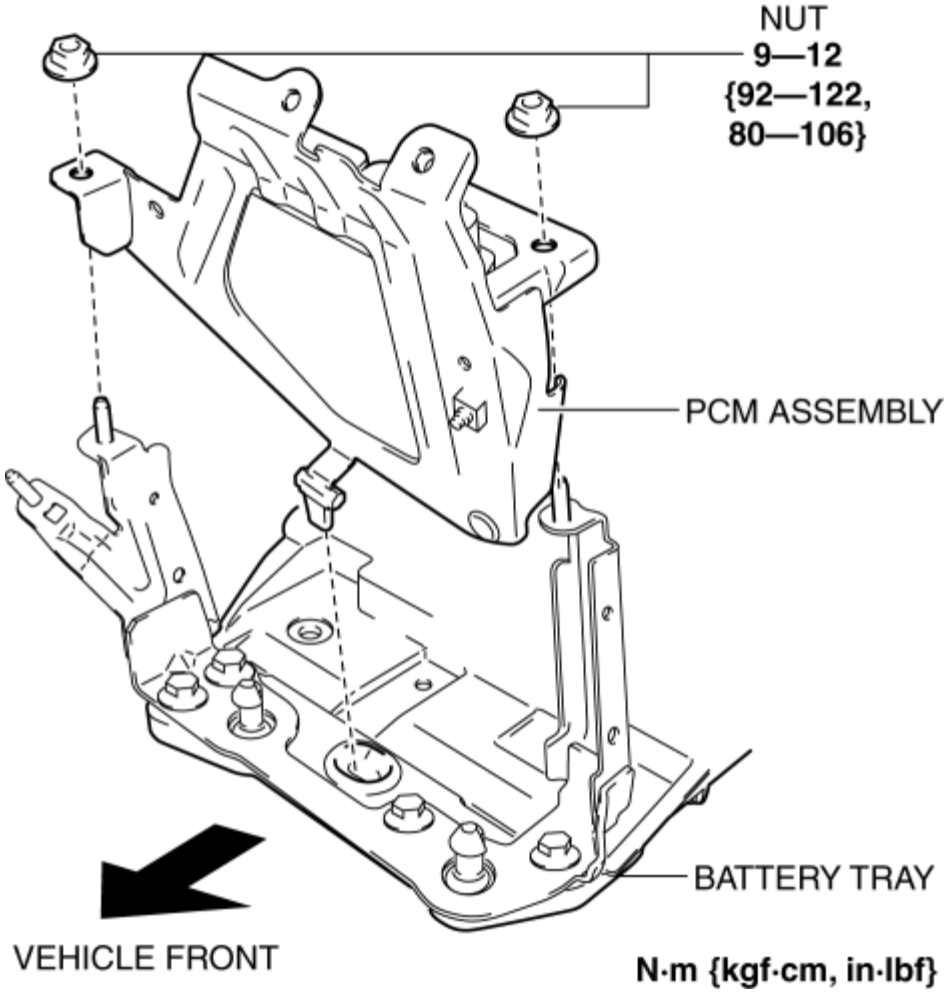

5. Remove the PCM from the PCM bracket.

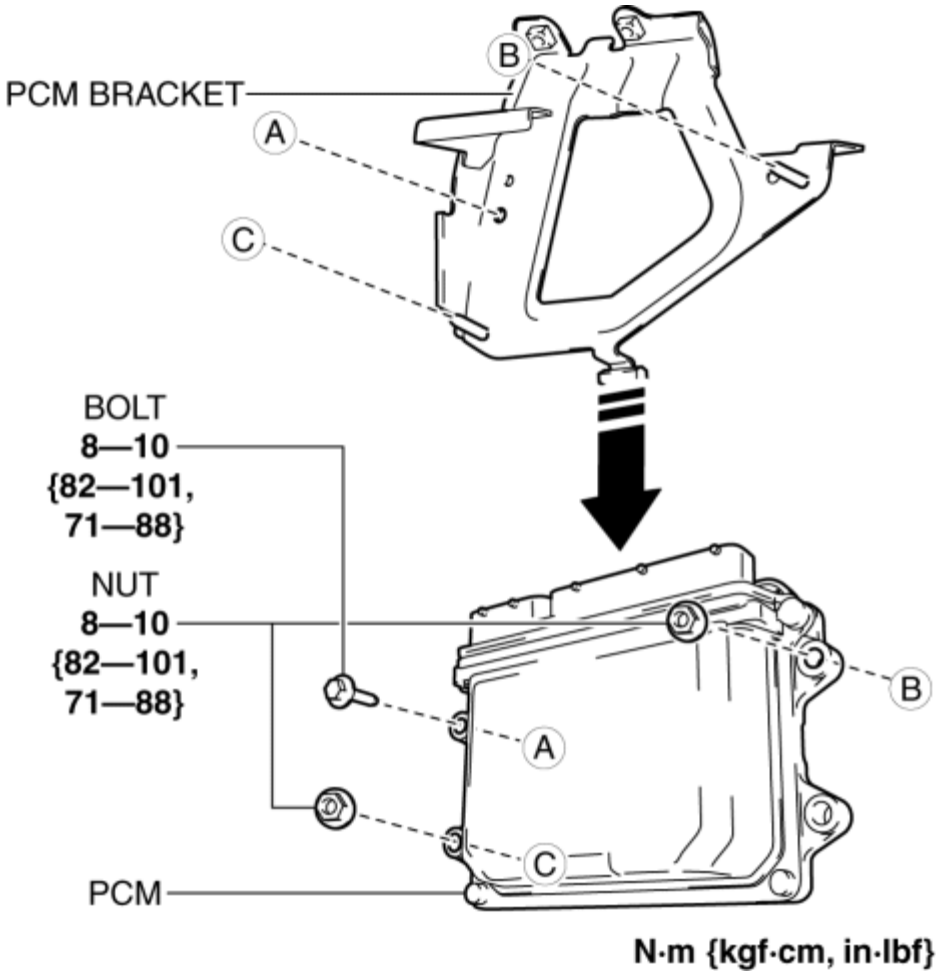

6. Install in the reverse order of removal.

7. When replacing the PCM on the vehicles, perform the following:

NOTE:

- If configuration cannot be performed by reading/writing of the vehicle specification information, perform the configuration using As-Built information after replacing the PCM. (See **PCM CONFIGURATION (USING AS-BUILT DATA) [SKYACTIV-G 2.0, SKYACTIV-G 2.5]**.)
- (1) Perform the PCM configuration. (See **PCM CONFIGURATION (USING READ/WRITE FUNCTION) [SKYACTIV-G 2.0, SKYACTIV-G 2.5]**.)
- (2) Perform the immobilizer system-related part programming. (See **IMMOBILIZER SYSTEM-RELATED PARTS PROGRAMMING**.)

PCM Assembly Installation Note

1. Install the PCM assembly shown in the figure.

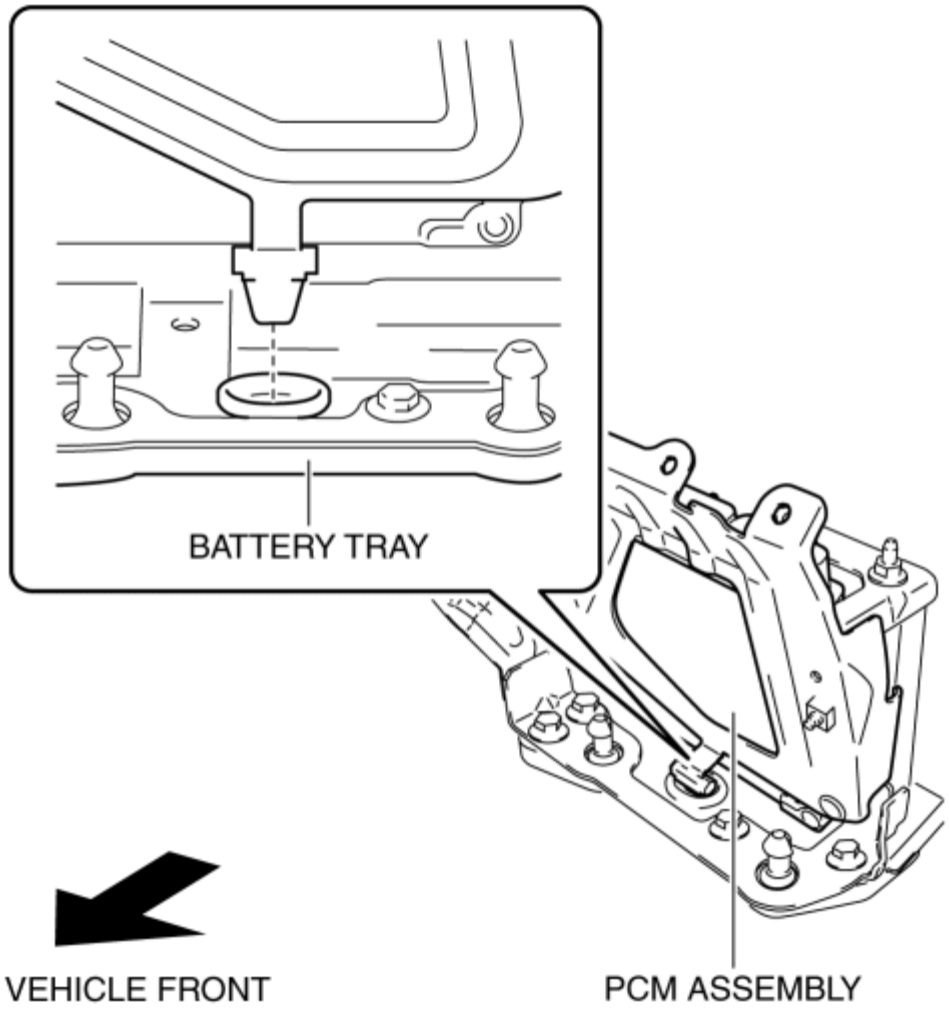

PCM Cover Installation Note

1. Insert the PCM cover end into area A shown in the figure.

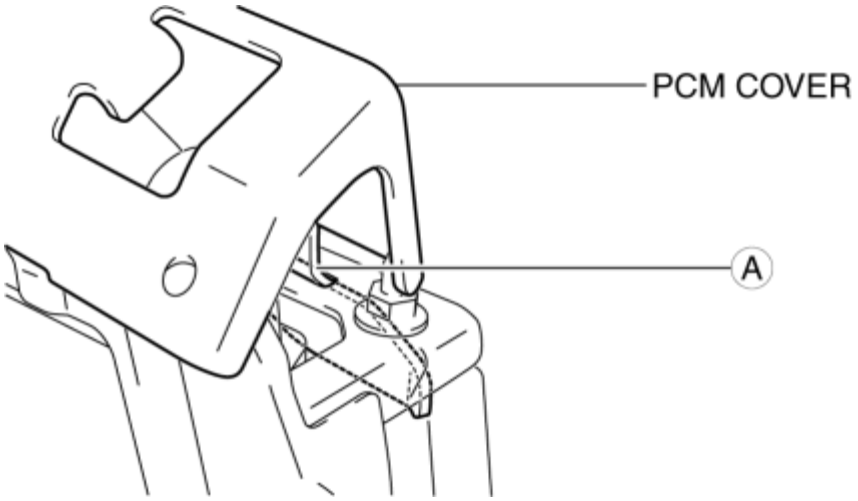

2. Temporarily tighten the two bolts, then completely tighten them.

PCM Connector Connection Note

CAUTION:

- Do not touch the PCM connector terminal. The terminal is extremely thin and can be damaged by touching it.
- If the PCM connector is inserted at an angle and the lever is moved, the connector could be damaged. Verify that the PCM connector is inserted straight.

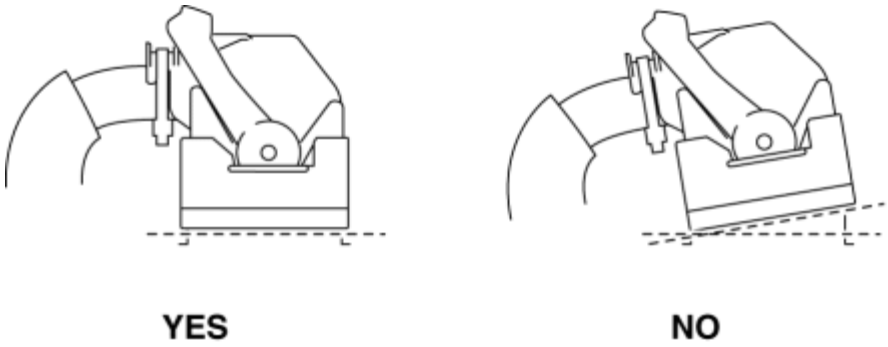

1. Set the PCM connector to the position shown in the figure.

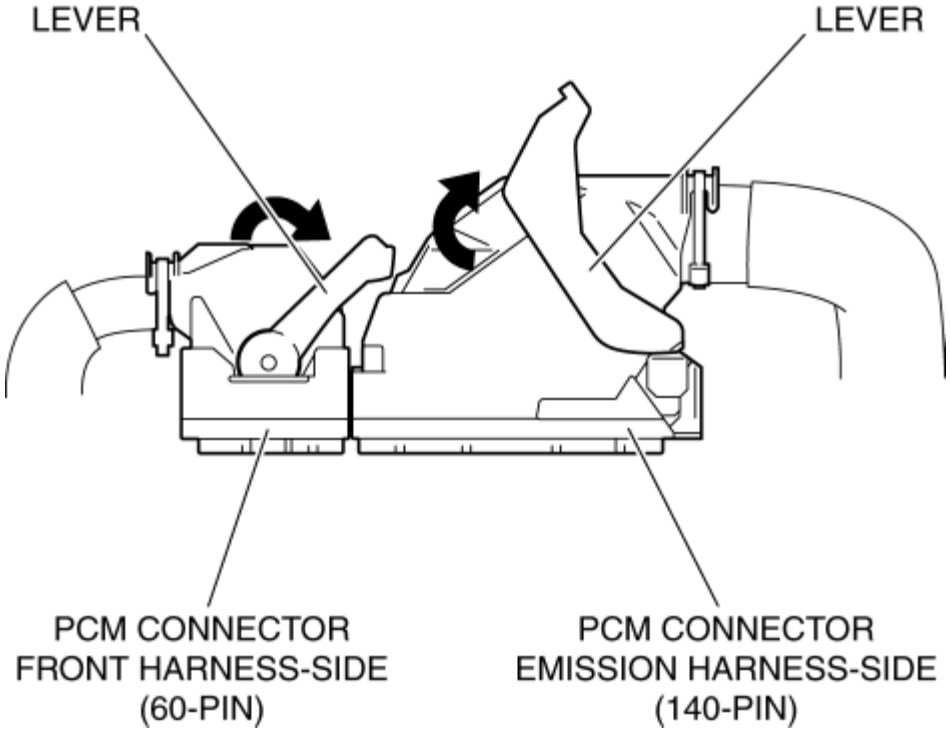

2. Align the PCM connector straight against the connection surface.

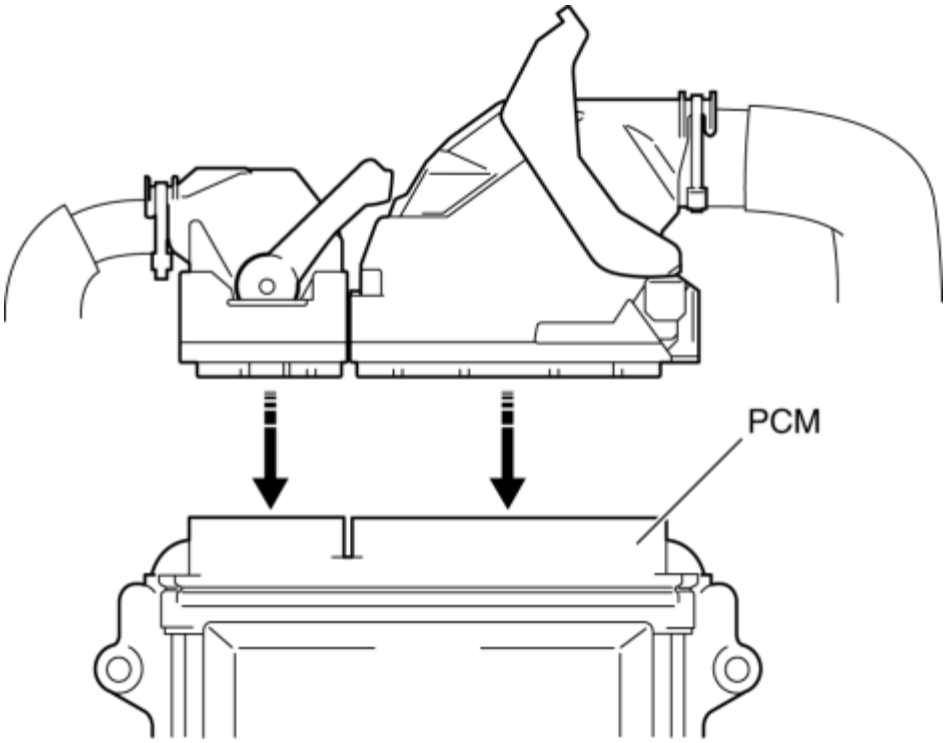

3. Insert the PCM connector straight and press it in until the lever moves up naturally. (Front harness-side connector)

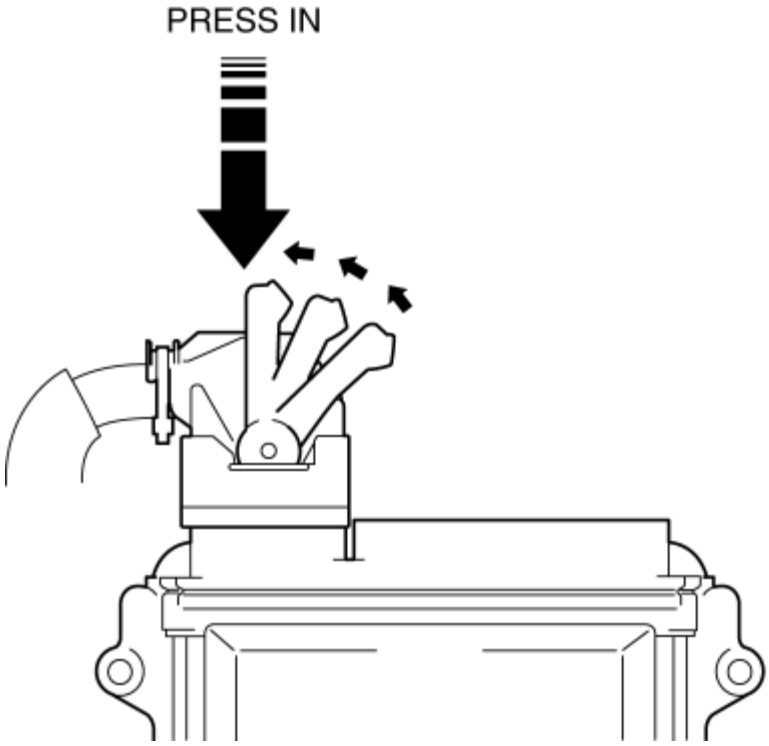

4. Press the PCM connector lever until a click sound is heard.

PCM REMOVAL/INSTALLATION [SKYACTIV-G 2.0, SKYACTIV-G 2.5]

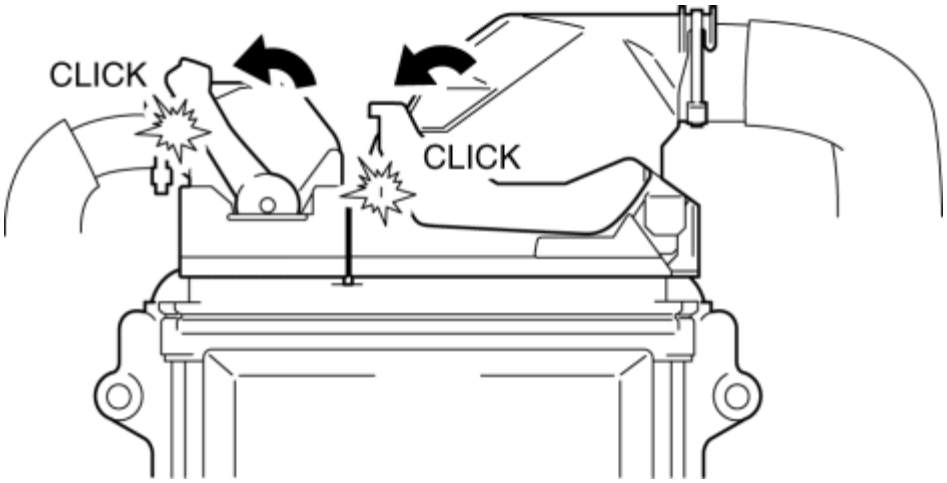

2014 - Mazda3 - Engine

PCM INSPECTION [SKYACTIV-G 2.0, SKYACTIV-G 2.5]

Without Using the M-MDS

NOTE:

- Because the PCM uses a waterproof connector, the inspection for the voltage/wave pattern cannot be performed. The following values are for reference.

Terminal voltage table (Reference)

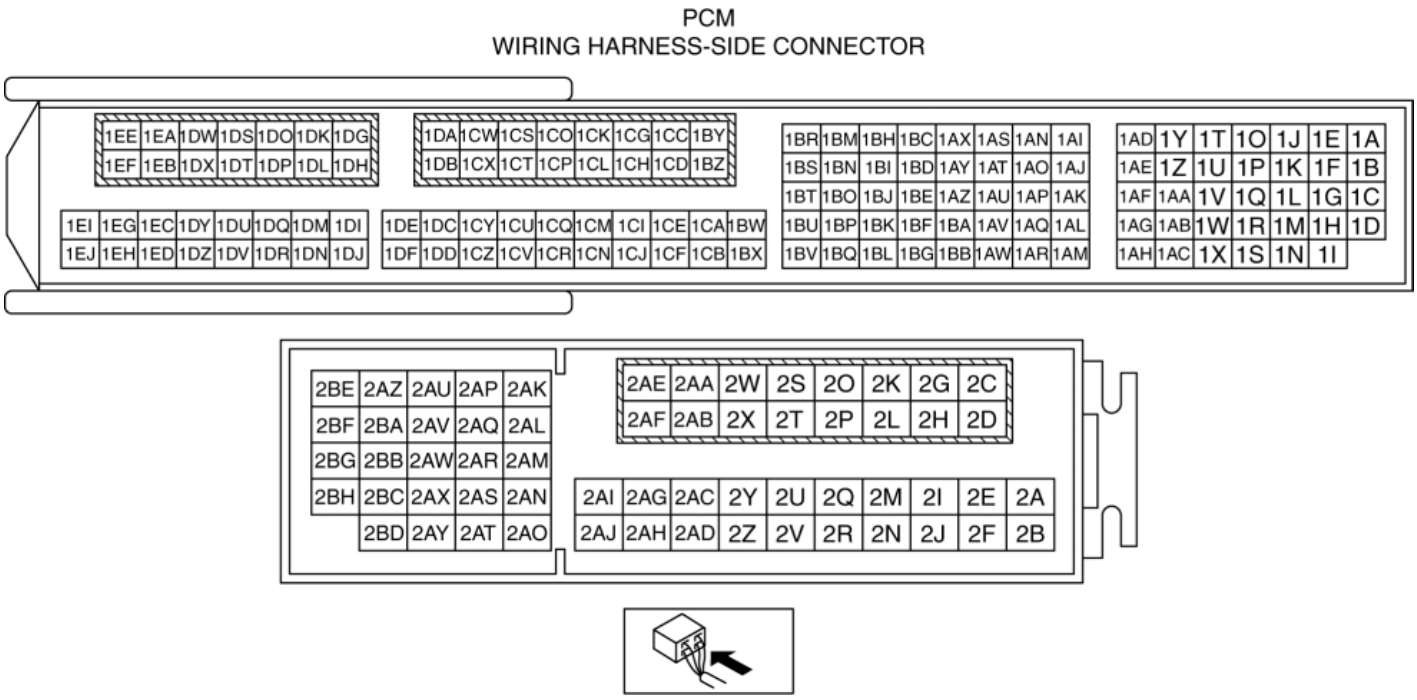

—: Not applicable

Terminal	Signal	Connected to	Test condition	Voltage (V)	inspection item
1A*1	CAN_2H	CAN system related modules	Because this terminal is for CAN, integrity determination by terminal voltage is not possible.		• Related wiring harness
1B*1	CAN_2L	CAN system related modules	Because this terminal is for CAN, integrity determination by terminal voltage is not possible.		• Related wiring harness
1C	—	—	—	—	—
1D	Knocking (–)	KS	Ignition switched ON (engine off) (Use digital type voltmeter, because measurement voltage will be detected less than true voltage when using analog type voltmeter)	Approx. 1.65	• KS • Related wiring harness
1E	—	—	—	—	—
1F	—	—	—	—	—

1G	—	—	—	—	—
1H	Knocking (+)	KS	Ignition switched ON (engine off) (Use digital type voltmeter, because measurement voltage will be detected less than true voltage when using analog type voltmeter)	Approx. 3.38	• KS • Related wiring harness
1I	GND	Sensor shield	Under any condition	Below 1.0	• Related wiring harness
1J	Electric variable valve timing motor (rotation direction)	Electric variable valve timing motor/driver	(See **Electric variable valve timing motor (rotation direction) signal**.)		• Electric variable valve timing motor/driver • Related wiring harness
1K*2	Neutral position	Neutral switch	Shift lever is at neutral position	Below 1.0	• Neutral switch • Related wiring harness
			Shift lever is not at neutral position	B+	
1L*2	Back-up light	Back-up light switch	Shift lever is at R position	Below 1.0	• Back-up light switch • Related wiring harness
			Shift lever is not at R position	B+	
1M	—	—	—	—	—
1N	—	—	—	—	—
1O	Electric variable valve timing motor (rotation pulse)	Electric variable valve timing motor/driver	(See **Electric variable valve timing motor (rotation pulse) signal**.)		• Electric variable valve timing motor/driver • Related wiring harness
1P	Oil pressure	Oil pressure switch	Ignition switched ON (engine off)	Below 1.0	• Oil pressure switch • Related wiring harness
			Idle (after warm up)	B+	
1Q	—	—	—	—	—
1R	—	—	—	—	—
1S	—	—	—	—	—
1T	Exhaust CMP	Exhaust CMP sensor	(See **Exhaust CMP signal**.)		• Exhaust CMP sensor • Related wiring harness
1U	—	—	—	—	—
1V	—	—	—	—	—

1W	A/F	A/F sensor	Idle (after warm up)	Approx. 4.2	• A/F sensor • Related wiring harness
1X	GND	Exhaust CMP sensor	Under any condition	Below 1.0	• Related wiring harness
1Y	Intake CMP	Intake CMP sensor	(See **Intake CMP signal**.)		• Intake CMP sensor • Related wiring harness
1Z*5	Generator output voltage	Generator	(See **Generator output voltage**.)		• Generator • Related wiring harness
1AA	—	—	—	—	—
1AB	A/F	A/F sensor	Idle (after warm up): 0 mA		• A/F sensor • Related wiring harness
1AC	GND	Intake CMP sensor	Under any condition	Below 1.0	• Related wiring harness
1AD	CKP	CKP sensor	(See **CKP signal**.)		• CKP sensor • Related wiring harness
1AE	Electric variable valve timing driver (diagnostic)	Electric variable valve timing motor/driver	(See **Electric variable valve timing driver (diagnostic) signal**.)		• Electric variable valve timing motor/driver • Related wiring harness
1AF*4	Generator output voltage	Generator	(See **Generator output voltage**.)		• Generator • Related wiring harness
1AG	A/F	A/F sensor	Idle (after warm up)	Approx. 3.48	• A/F sensor • Related wiring harness
1AH	GND	CKP sensor	Under any condition	Below 1.0	• Related wiring harness
1AI	Purge control	Purge solenoid valve	(See **Purge control**.)		• Purge solenoid valve • Related wiring harness

1AJ	IGT4	Ignition coil No.4	(See **IGT1, IGT2, IGT3, IGT4 control**.)			• Ignition coil No.4 • Related wiring harness
1AK	ECT	ECT sensor No.1	Ignition switched ON (engine off)	ECT 20 °C {68 °F}	Approx. 3.10	• ECT sensor No.1 • Related wiring harness
				ECT 40 °C {104 °F}	Approx. 2.16	
				ECT 60 °C {140 °F}	Approx. 1.40	
				ECT 80 °C {176 °F}	Approx. 0.87	
				ECT 100 °C {212 °F}	Approx. 0.54	
1AL	—	—	—		—	—
1AM	GND	ECT sensor No.1	Under any condition		Below 1.0	• Related wiring harness
1AN	Hydraulic variable valve timing control	OCV	(See **Hydraulic variable valve timing control signal**.)			• OCV • Related wiring harness
1AO	IGT3	Ignition coil No.3	(See **IGT1, IGT2, IGT3, IGT4 control**.)			• Ignition coil No.3 • Related wiring harness
1AP	—	—	—		—	—
1AQ	—	—	—		—	—
1AR	—	—	—		—	—
1AS	Engine oil control	Engine oil solenoid valve	(See **Engine oil control signal**.)			• Engine oil solenoid valve • Related wiring harness
1AT	IGT2	Ignition coil No.2	(See **IGT1, IGT2, IGT3, IGT4 control**.)			• Ignition coil No.2 • Related wiring harness
1AU	—	—	—		—	—
1AV	Ion (No.4)	Ion sensor No.4	Idle (after warm up)		Approx.	• Ion sensor No.4

				4.55	• Related wiring harness
1AW	—	—	—	—	—
1AX	—	—	—	—	—
1AY	IGT1	Ignition coil No.1	(See **IGT1, IGT2, IGT3, IGT4 control**.)		• Ignition coil No.1 • Related wiring harness
1AZ	Electric variable valve timing control	Electric variable valve timing motor/driver	(See **Electric variable valve timing control signal**.)		• Electric variable valve timing motor/driver • Related wiring harness
1BA	Ion (No.3)	Ion sensor No.3	Idle (after warm up)	Approx. 4.55	• Ion sensor No.3 • Related wiring harness
1BB	GND	Sensor shield	Under any condition	Below 1.0	• Related wiring harness
1BC	—	—	—	—	—
1BD	—	—	—	—	—
1BE*4	Generator field coil control	Generator	(See **Generator field coil control signal**.)		• Generator • Related wiring harness
1BF	Ion (No.2)	Ion sensor No.2	Idle (after warm up)	Approx. 4.55	• Ion sensor No.2 • Related wiring harness
1BG	GND	Sensor shield	Under any condition	Below 1.0	• Related wiring harness
1BH	—	—	—	—	—
1BI	—	—	—	—	—
1BJ	Constant voltage (Vref)	Fuel pressure sensor	Ignition switched ON (engine off)	Approx. 5.0	• Related wiring harness
1BK	Ion (No.1)	Ion sensor No.1	Idle (after warm up)	Approx. 4.55	• Ion sensor No.1 • Related wiring harness
					• Related

1BL	GND	Sensor shield	Under any condition		Below 1.0	wiring harness
1BM	—	—	—		—	—
1BN	Constant voltage (Vref)	CKP sensor	Ignition switched ON (engine off)		Approx. 5.0	• Related wiring harness
1BO	Constant voltage (Vref)	MAP sensor	Ignition switched ON (engine off)		Approx. 5.0	• Related wiring harness
1BP	TP (No.1)	TP sensor No.1	Ignition switched ON (engine off)	Accelerator pedal released	Approx. 1.11	• TP sensor No.1 • Related wiring harness
				Accelerator pedal fully depressed	Approx. 4.59	
1BQ	GND	TP sensor No.1, TP sensor No.2	Under any condition		Below 1.0	• Related wiring harness
1BR*5	Generator field coil control	Generator	(See **Generator field coil control signal**.)			• Generator • Related wiring harness
1BS	Constant voltage (Vref)	TP sensor No.1, TP sensor No.2	Ignition switched ON (engine off)		Approx. 5.0	• Related wiring harness
1BT	—	—	—		—	—
1BU	TP (No.2)	TP sensor No.2	Ignition switched ON (engine off)	Accelerator pedal released	Approx. 3.92	• TP sensor No.2 • Related wiring harness
				Accelerator pedal fully depressed	Approx. 0.41	
1BV	—	—	—		—	—
1BW	MAP	MAP sensor	Ignition switched ON (engine off)		Approx. 4.07	• MAP sensor • Related wiring harness
			Idle (after warm up)		Approx. 1.34	
			Racing (Engine speed: 2,000 rpm)		Approx. 1.05	
1BX	GND	MAP sensor, IAT sensor No.2	Under any condition		Below 1.0	• Related wiring harness
1BY	A/F sensor heater control	A/F sensor heater	(See **A/F sensor heater control signal**.)			• A/F sensor heater • Related wiring harness
1BZ	GND	GND	Under any condition		Below 1.0	• Related wiring harness

1CA	Fuel pressure	Fuel pressure sensor	Ignition switched ON (engine off)		Approx. 1.22	• Fuel pressure sensor • Related wiring harness
			Idle (after warm up)		Approx. 1.06	
1CB	GND	Fuel pressure sensor	Under any condition		Below 1.0	• Related wiring harness
1CC	Drive-by-wire control (–)	Throttle valve actuator	Ignition switched ON (engine off)		Approx. 10.51	• Throttle valve actuator • Related wiring harness
			Idle (after warm up)		B+	
1CD	—	—	—		—	—
1CE	IAT (No.2)	IAT sensor No.2	Ignition switched ON (engine off)	IAT 20 °C {68 °F}	Approx. 3.57	• IAT sensor No.2 • Related wiring harness
				IAT 40 °C {104 °F}	Approx. 2.70	
				IAT 60 °C {140 °F}	Approx. 1.87	
1CF	—	—	—		—	—
1CG	Drive-by-wire control (+)	Throttle valve actuator	(See **Drive-by-wire control (+) signal**.)			• Throttle valve actuator • Related wiring harness
1CH	—	—	—		—	—
1CI	—	—	—		—	—
1CJ	—	—	—		—	—
1CK	Battery voltage	Main relay	Ignition switched ON (engine off)		B+	• Related wiring harness
1CL	GND	GND	Under any condition		Below 1.0	• Related wiring harness
1CM	—	—	—		—	—
1CN	—	—	—		—	—
1CO	Battery voltage	Fuel injector relay	Ignition switched ON (engine off)		B+	• Related wiring harness
1CP	GND	GND	Under any condition		Below 1.0	• Related wiring harness

1CQ	—	—	—	—	—
1CR	—	—	—	—	—
1CS	Battery voltage	Fuel injector relay	Ignition switched ON (engine off)	B+	• Related wiring harness
1CT	GND	GND	Under any condition	Below 1.0	• Related wiring harness
1CU	—	—	—	—	—
1CV	—	—	—	—	—
1CW	Battery voltage	Fuel injector relay	Ignition switched ON (engine off)	B+	• Related wiring harness
1CX	GND	GND	Under any condition	Below 1.0	• Related wiring harness
1CY	—	—	—	—	—
1CZ	—	—	—	—	—
1DA	Battery voltage	Fuel injector relay	Ignition switched ON (engine off)	B+	• Related wiring harness
1DB	GND	GND	Under any condition	Below 1.0	• Related wiring harness
1DC	—	—	—	—	—
1DD	—	—	—	—	—
1DE	—	—	—	—	—
1DF	—	—	—	—	—
1DG	Battery voltage	Fuel injector relay	Ignition switched ON (engine off)	B+	• Related wiring harness
1DH	GND	GND	Under any condition	Below 1.0	• Related wiring harness
1DI	—	—	—	—	—
1DJ	—	—	—	—	—
1DK	Battery voltage	Fuel injector relay	Ignition switched ON (engine off)	B+	• Related wiring harness
1DL	GND	GND	Under any condition	Below 1.0	• Related wiring harness
1DM	—	—	—	—	—

1DN	—	—	—	—	—
1DO	Fuel injection control (–)	Fuel injector No.1	(See **Fuel injection control (-) signal**.)		• Fuel injector No.1 • Related wiring harness
1DP	Fuel injection control (+)	Fuel injector No.1	(See **Fuel injection control (+) signal**.)		• Fuel injector No.1 • Related wiring harness
1DQ	—	—	—	—	—
1DR	—	—	—	—	—
1DS	Fuel injection control (–)	Fuel injector No.4	(See **Fuel injection control (-) signal**.)		• Fuel injector No.4 • Related wiring harness
1DT	Fuel injection control (+)	Fuel injector No.4	(See **Fuel injection control (+) signal**.)		• Fuel injector No.4 • Related wiring harness
1DU	—	—	—	—	—
1DV	—	—	—	—	—
1DW	Fuel injection control (–)	Fuel injector No.2	(See **Fuel injection control (-) signal**.)		• Fuel injector No.2 • Related wiring harness
1DX	Fuel injection control (+)	Fuel injector No.2	(See **Fuel injection control (+) signal**.)		• Fuel injector No.2 • Related wiring harness
1DY	—	—	—	—	—
1DZ	—	—	—	—	—
1EA	Fuel injection control (–)	Fuel injector No.3	(See **Fuel injection control (-) signal**.)		• Fuel injector No.3 • Related wiring harness
1EB	Fuel injection control (+)	Fuel injector No.3	(See **Fuel injection control (+) signal**.)		• Fuel injector No.3 • Related wiring harness
1EC	—	—	—	—	—

1ED	—	—	—		—	—
1EE	High pressure fuel pump control (+)	High pressure fuel pump	(See **High pressure fuel pump control (+) signal**.)			• High pressure fuel pump • Related wiring harness
1EF	High pressure fuel pump control (–)	High pressure fuel pump	(See **High pressure fuel pump control (-) signal**.)			• High pressure fuel pump • Related wiring harness
1EG	—	—	—		—	—
1EH	—	—	—		—	—
1EI	—	—	—		—	—
1EJ	—	—	—		—	—
2A	—	—	—		—	—
2B	—	—	—		—	—
2C	HO2S heater control	HO2S heater	(See **HO2S heater control signal**.)			• HO2S heater • Related wiring harness
2D	—	—	—		—	—
2E	—	—	—		—	—
2F*3	ECT (No.2)	ECT sensor No.2	Ignition switched ON (engine off)	ECT 20 °C {68 °F}	Approx. 3.10	• ECT sensor No.2 • Related wiring harness
				ECT 40 °C {104 °F}	Approx. 2.16	
				ECT 60 °C {140 °F}	Approx. 1.40	
				ECT 80 °C {176 °F}	Approx. 0.87	
				ECT 100 °C {212 °F}	Approx. 0.54	
2G	Brake (No.1)	Brake switch (No.1 signal)	Brake pedal released		Below 1.0	• Brake switch (No.1 signal) • Related wiring harness
			Brake pedal fully depressed		B+	
2H	Ignition (IG1)	IG1 relay	Ignition switched ON (engine off)		B+	• IG1 relay • Related wiring harness

2I	Ambient temperature	Ambient temperature sensor	Ignition switched ON (engine off)	AAT 20 °C {68 °F}	Approx. 2.70	• Ambient temperature sensor • Related wiring harness
				AAT 30 °C {104 °F}	Approx. 1.80	
2J*2	CPP	CPP switch, start stop unit	Clutch pedal fully depressed		Below 1.0	• CPP switch • Start stop unit • Related wiring harness
			Clutch pedal released		B+	
2K	Main relay control	Main relay	Ignition switched ON (engine off)		Approx. 0.8	• Main relay • Related wiring harness
2L*5	DC-DC converter control	DC-DC converter	Idle (after warm up)		0 or B+	• DC-DC converter • Related wiring harness
2M	—	—	—		—	—
2N	—	—	—		—	—
2O	Battery voltage	Battery	Ignition switched ON (engine off)		B+	• Battery • Related wiring harness
2P	—	—	—		—	—
2Q	—	—	—		—	—
2R	Brake (No.2)	Brake switch (No.2 signal)	Brake pedal released		Below 1.0	• Brake switch (No.2 signal) • Related wiring harness
			Brake pedal fully depressed		B+	
2S	Battery voltage	Main relay	Ignition switched ON (engine off)		B+	• Related wiring harness
2T	Battery voltage	Main relay	Ignition switched ON (engine off)		B+	• Related wiring harness
2U	IAT (No.1)	IAT sensor No.1	Ignition switched ON (engine off)	IAT 20 °C {68 °F}	Approx. 2.70	• IAT sensor No.1 • Related wiring harness
				IAT 40 °C {104 °F}	Approx. 1.80	
				IAT 60 °C {140 °F}	Approx. 1.20	
2V	—	—	—		—	—

2W*5	DC-DC converter control	DC-DC converter	Idle (after warm up)	0 or B+	• DC-DC converter • Related wiring harness
2X	—	—	—	—	—
2Y*3	Fuel tank pressure	Fuel tank pressure sensor	Fuel tank pressure is 10 kPa {0.10 kgf/cm2, 1.5 psi} lower than barometric pressure.	Approx. 1.2	• Fuel tank pressure sensor • Related wiring harness
			Fuel tank pressure is equal to barometric pressure.	Approx. 2.6	
			Fuel tank pressure is 6 kPa {0.06 kgf/cm2, 0.9 psi} higher than barometric pressure.	Approx. 3.7	
2Z*5	Active air shutter control (LIN)	Active air shutter	Because this terminal is for LIN, good/no good judgment by terminal voltage is not possible.		• Active air shutter • Related wiring harness
2AA	GND	GND	Under any condition	Below 1.0	• Related wiring harness
2AB	—	—	—	—	—
2AC	—	—	—	—	—
2AD	GND	Sensor shield	Under any condition	Below 1.0	• Related wiring harness
2AE	Fuel pump control	Fuel pump control module	(See **Fuel pump control signal**.)		• Fuel pump control module • Related wiring harness
2AF	A/C cut-off control	A/C relay	A/C relay OFF	B+	• A/C relay • Related wiring harness
			A/C relay ON	Below 1.0	
2AG	HO2S (–)	HO2S	Idle (after warm up)	Approx. 1.65	• HO2S • Related wiring harness
2AH	—	—	—	—	—
2AI	HO2S (+)	HO2S	Idle (after warm up)	Approx. 2.49	• HO2S • Related wiring harness
2AJ	GND	Refrigerant pressure sensor*6, fuel tank pressure sensor, ECT sensor No.2, ambient temperature sensor	Under any condition	Below 1.0	• Related wiring harness

2AK	HS CAN_H	CAN system related modules	Because this terminal is for CAN, integrity determination by terminal voltage is not possible.			• Related wiring harness
2AL	HS CAN_L	CAN system related modules	Because this terminal is for CAN, integrity determination by terminal voltage is not possible.			• Related wiring harness
2AM	Fuel pump control module (diagnostic)	Fuel pump control module	(See **Fuel pump control module (diagnostic) signal**.)			• Fuel pump control module • Related wiring harness
2AN	APP (No.1)	APP sensor No.1	Ignition switched ON (engine off)	Accelerator pedal released	Approx. 0.75	• APP sensor No.1 • Related wiring harness
				Accelerator pedal fully depressed	Approx. 4.1	
2AO	GND	APP sensor No.1	Under any condition		Below 1.0	• Related wiring harness
2AP	—	—	—		—	—
2AQ	Fuel pump control	Fuel pump relay	Ignition switched ON (engine off)		B+	• Fuel pump relay • Related wiring harness
			Idle (after warm up)		Below 1.0	
2AR	Constant voltage (Vref)	APP sensor No.1	Ignition switched ON (engine off)		Approx. 5.0	• Related wiring harness
2AS	APP (No.2)	APP sensor No.2	Ignition switched ON (engine off)	Accelerator pedal released	Approx. 0.38	• APP sensor No.2 • Related wiring harness
				Accelerator pedal fully depressed	Approx. 2.05	
2AT	GND	APP sensor No.2	Under any condition		Below 1.0	• Related wiring harness
2AU	Cooling fan control	Cooling fan relay No.1	Cooling fan operating		Below 1.0	• Cooling fan relay No.1 • Related wiring harness
			Cooling fan not operating		B+	
2AV	Cooling fan control	Cooling fan relay No.2, No.3	Cooling fan operating		Below 1.0	• Cooling fan relay No.2, No.3 • Related wiring harness
			Cooling fan not operating		B+	
2AW	Constant voltage (Vref)	APP sensor No.2	Ignition switched ON (engine off)		Approx. 5.0	• Related wiring harness
			Refrigerant pressure: 1.0 MPa {10 kgf/cm^2, 145 psi}		Approx. 1.58	• Refrigerant pressure

2AX*6	Refrigerant pressure	Refrigerant pressure sensor	Refrigerant pressure: 1.1 MPa {11 kgf/cm^2, 160 psi}		Approx. 1.75	sensor • Related wiring harness
			Refrigerant pressure: 1.2 MPa {12 kgf/cm^2, 174 psi}		Approx. 1.88	
2AY	GND	MAF sensor, IAT sensor No.1	Under any condition		Below 1.0	• Related wiring harness
2AZ	Starter cut-off control	Starter relay, start stop unit	Ignition switched ON (engine off)	**MTX** • Clutch pedal released **ATX** • Selector lever position is not P or N position	B+	• Starter relay • Start stop unit • Related wiring harness
				MTX • Clutch pedal fully depressed **ATX** • Selector lever position is P or N position	Below 1.0	
2BA	—	—	—		—	—
2BB	Constant voltage (Vref)	Refrigerant pressure sensor*6, MAF sensor	Ignition switched ON (engine off)		Approx. 5.0	• Related wiring harness
2BC	MAF	MAF sensor	Ignition switched ON (engine off)		Approx. 0.72	• MAF sensor • Related wiring harness
			Idle (after warm up)		Approx. 0.86	
			Racing (Engine speed: 2,000 rpm)		Approx. 1.07	
2BD	Selector lever position*1	TCM, start stop unit	Selector lever position is not P or N position		B+	• TCM • Start stop unit • Related wiring harness
			Selector lever position is P or N position		Below 1.0	
	Starter interlock*2	Starter interlock switch, start stop unit	Clutch pedal fully depressed		Below 1.0	• Starter interlock switch • Start stop unit • Related wiring harness
			Clutch pedal released		B+	
2BE	—	—	—		—	—
2BF*3	CV solenoid	CV solenoid valve	Ignition switched ON (engine off)		B+	• CV solenoid valve • Related
			Idle (CV solenoid valve not operating)		B+	

	control		Idle (CV solenoid valve operating)	Below 1.0	wiring harness
2BG	—	—	—	—	—
2BH	—	—	—	—	—

*1 **ATX**

*2 **MTX**

*3 **U.S.A. and CANADA**

*4 **Vehicles without i-ELOOP**

*5 **Vehicles with i-ELOOP**

*6 **Vehicles with manual air conditioner**

Inspection Using An Oscilloscope (Reference)

Electric variable valve timing motor (rotation direction) signal

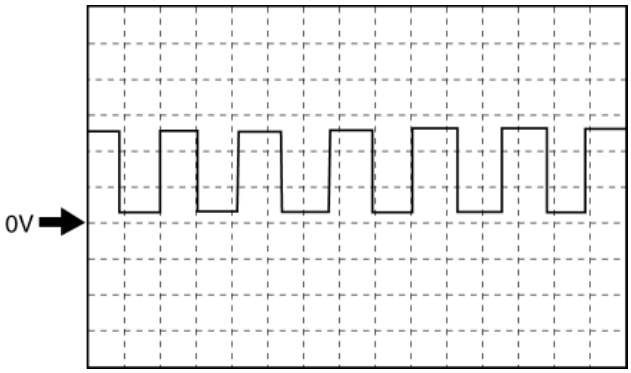

PCM terminals

- 1J(+)—body ground(–)

Oscilloscope setting

- 2 V/DIV (Y), 5 ms/DIV (X), DC range

Vehicle condition

- Idle (after warm up)

Electric variable valve timing motor (rotation pulse) signal

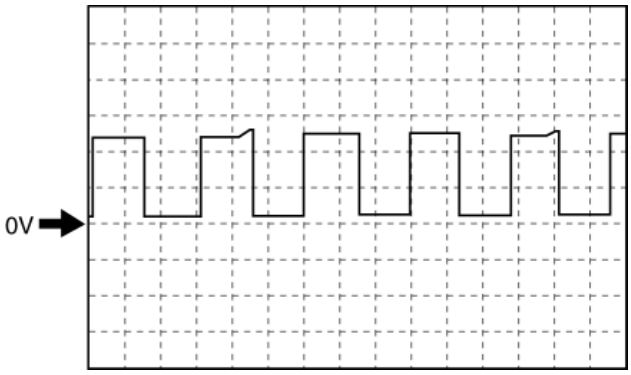

PCM terminals

- 1O(+)—body ground(–)

Oscilloscope setting

- 2 V/DIV (Y), 5 ms/DIV (X), DC range

Vehicle condition

- Idle (after warm up)

Exhaust CMP signal

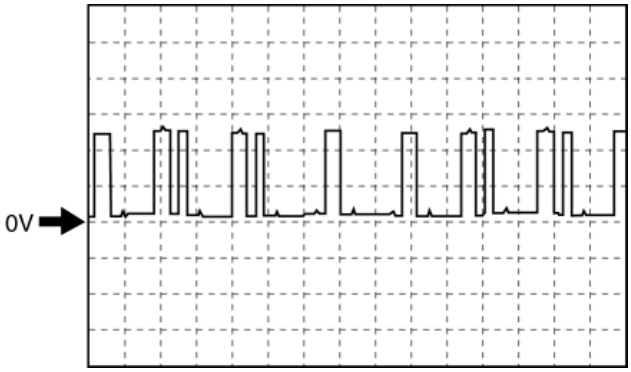

PCM terminals

- 1T(+)—body ground(–)

Oscilloscope setting

- 2 V/DIV (Y), 20 ms/DIV (X), DC range

Vehicle condition

- Idle (after warm up)

Intake CMP signal

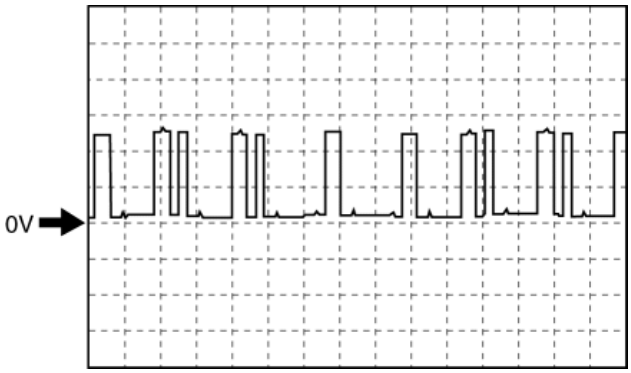

PCM terminals

- 1Y(+)—body ground(–)

Oscilloscope setting

- 2 V/DIV (Y), 20 ms/DIV (X), DC range

Vehicle condition

- Idle (after warm up)

CKP signal

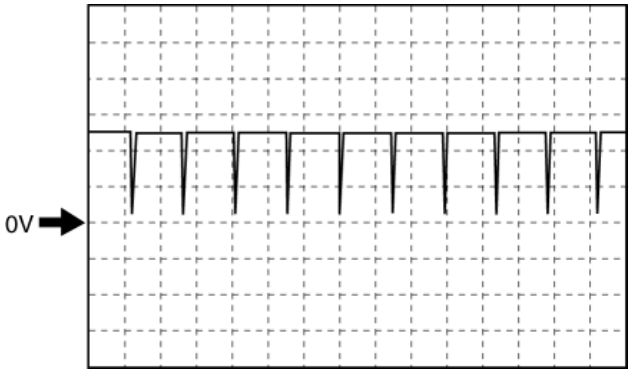

PCM terminals

- 1AD(+)—body ground(–)

Oscilloscope setting

- 2 V/DIV (Y), 1 ms/DIV (X), DC range

Vehicle condition

- Idle (after warm up)

Electric variable valve timing driver (diagnostic) signal

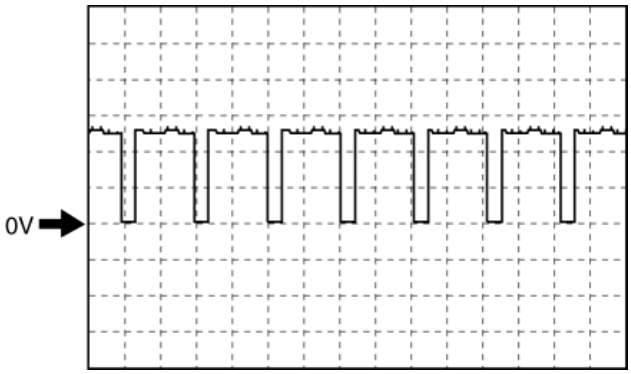

PCM terminals

- 1AE(+)—body ground(–)

Oscilloscope setting

- 2 V/DIV (Y), 100 ms/DIV (X), DC range

Vehicle condition

- Idle (after warm up)

Generator output voltage

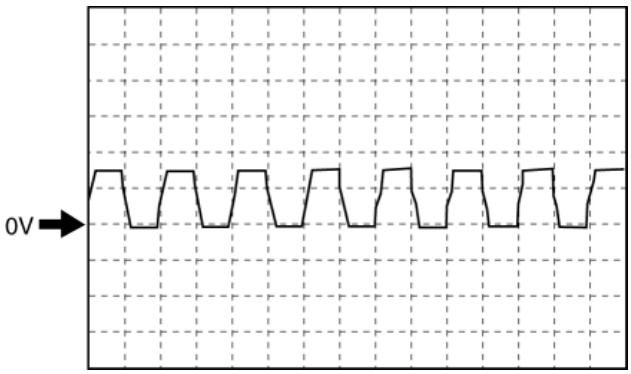

PCM terminals

- 1Z(+)—body ground(–)

- 1AF(+)—body ground(–)

Oscilloscope setting

- 5 V/DIV (Y), 2 ms/DIV (X), DC range

Vehicle condition

- Idle after warm up

Purge control

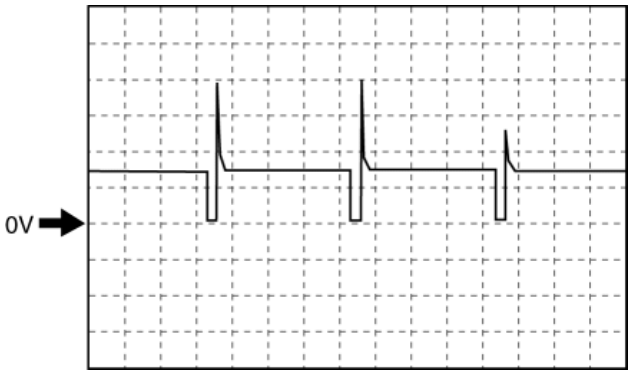

PCM terminals

- 1AI(+)—body ground(–)

Oscilloscope setting

- 10 V/DIV (Y), 50 ms/DIV (X), DC range

Vehicle condition

- Idle after warm up

IGT1, IGT2, IGT3, IGT4 control

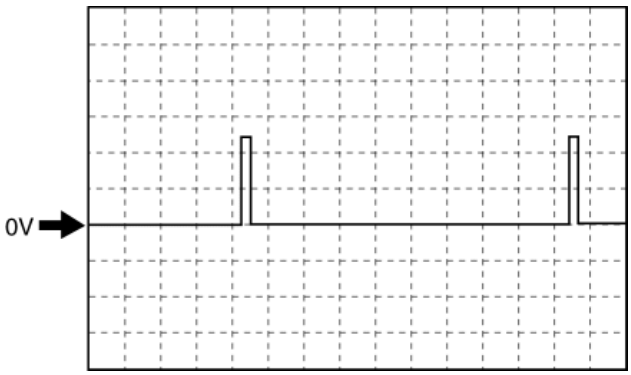

PCM terminals

- IGT1 (ignition coil No.1): 1AY(+)—body ground(–)
- IGT2 (ignition coil No.2): 1AT(+)—body ground(–)
- IGT3 (ignition coil No.3): 1AO(+)—body ground(–)
- IGT4 (ignition coil No.4): 1AJ(+)—body ground(–)

Oscilloscope setting

- 2 V/DIV (Y), 20 ms/DIV (X), DC range

Vehicle condition

- Idle after warm up

Hydraulic variable valve timing control signal

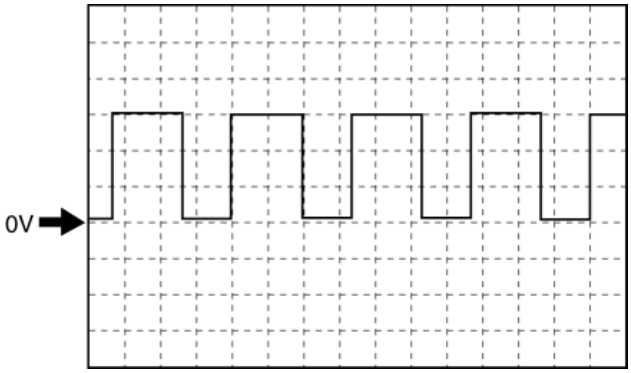

PCM terminals

- 1AN(+)—body ground(–)

Oscilloscope setting

- 5 V/DIV (Y), 1 ms/DIV (X), DC range

Vehicle condition

- Idle after warm up

Engine oil control signal

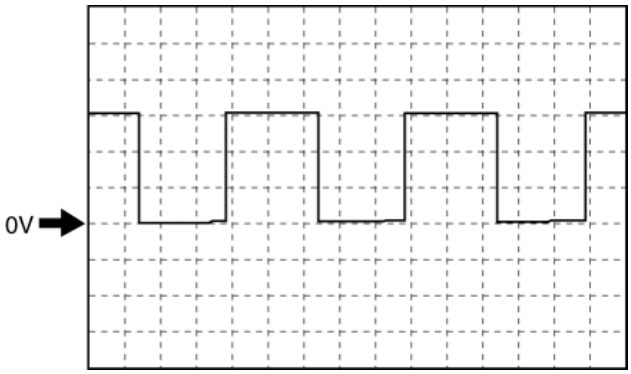

PCM terminals

- 1AS(+)—body ground(–)

Oscilloscope setting

- 5 V/DIV (Y), 1 ms/DIV (X), DC range

Vehicle condition

- Idle after warm up

Electric variable valve timing control signal

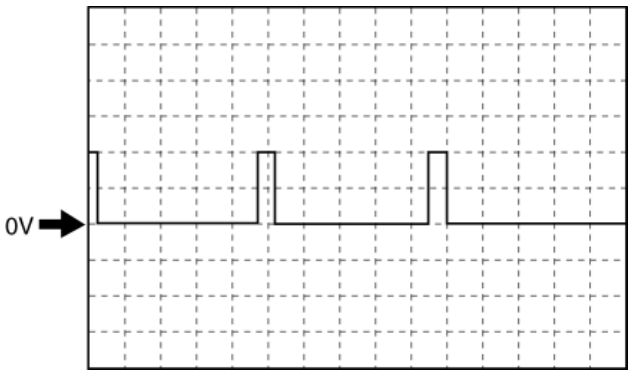

PCM terminals

- 1AZ(+)—body ground(–)

Oscilloscope setting

- 2 V/DIV (Y), 2 ms/DIV (X), DC range

Vehicle condition

- Idle after warm up

Generator field coil control signal

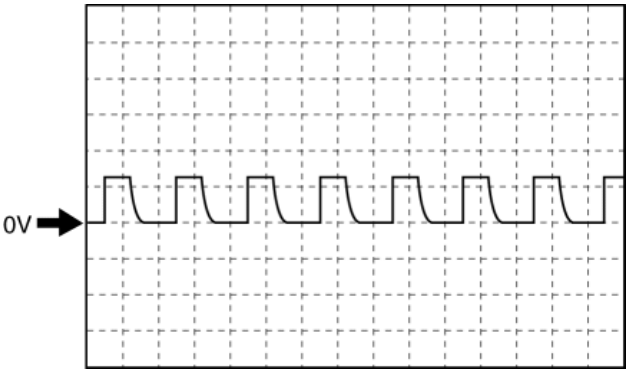

PCM terminals

- 1BE(+)—body ground(–)
- 1BR(+)—body ground(–)

Oscilloscope setting

- 1 V/DIV (Y), 2 ms/DIV (X), DC range

Vehicle condition

- Idle after warm up

A/F sensor heater control signal

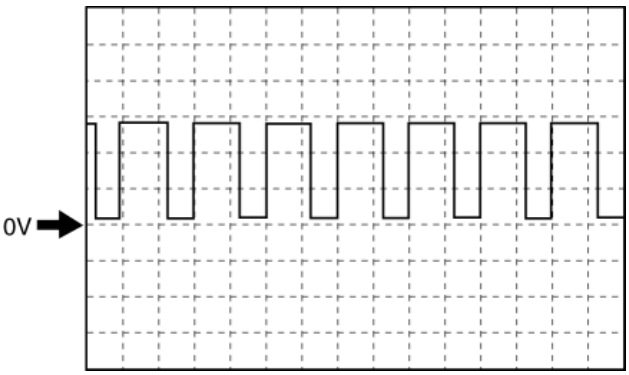

PCM terminals

- 1BY(+)—body ground(–)

Oscilloscope setting

- 5 V/DIV (Y), 50 ms/DIV (X), DC range

Vehicle condition

- Idle after warm up

Drive-by-wire control (+) signal

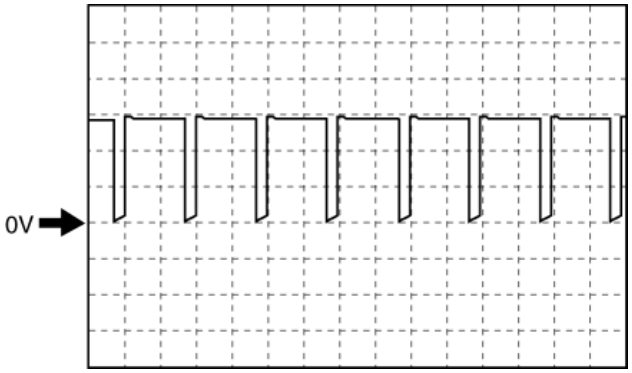

PCM terminals

- 1CG(+)—body ground(–)

Oscilloscope setting

- 5 V/DIV (Y), 1 ms/DIV (X), DC range

Vehicle condition

- Idle after warm up

Fuel injection control (-) signal

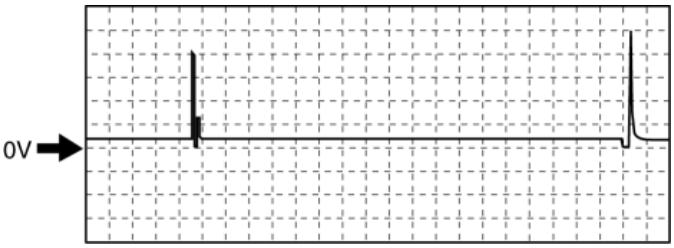

PCM terminals

- Fuel Injection No.1: 1DO(+)—body ground(–)
- Fuel Injection No.2: 1DW(+)—body ground(–)
- Fuel Injection No.3: 1EA(+)—body ground(–)
- Fuel Injection No.4: 1DS(+)—body ground(–)

Oscilloscope setting

- 10 V/DIV (Y), 5 ms/DIV (X), DC range

Vehicle condition

- Idle after warm up

Fuel injection control (+) signal

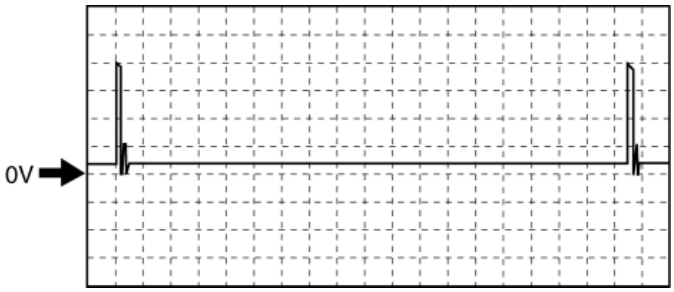

PCM terminals

- Fuel Injection No.1: 1DP(+)—body ground(–)
- Fuel Injection No.2: 1DX(+)—body ground(–)
- Fuel Injection No.3: 1EB(+)—body ground(–)

- Fuel Injection No.4: 1DT(+)—body ground(–)

Oscilloscope setting

- 10 V/DIV (Y), 5 ms/DIV (X), DC range

Vehicle condition

- Idle after warm up

High pressure fuel pump control (+) signal

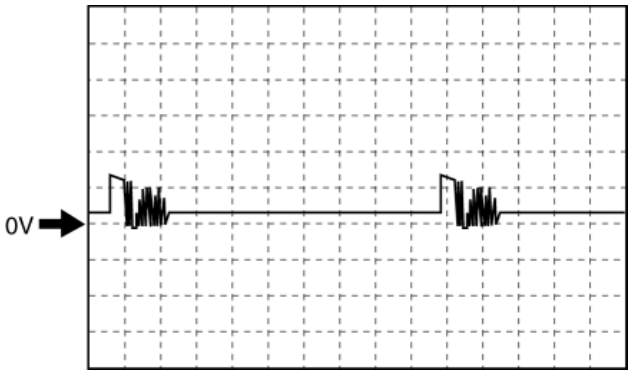

PCM terminals

- 1EE(+)—body ground(–)

Oscilloscope setting

- 10 V/DIV (Y), 5 ms/DIV (X), DC range

Vehicle condition

- Idle after warm up

High pressure fuel pump control (-) signal

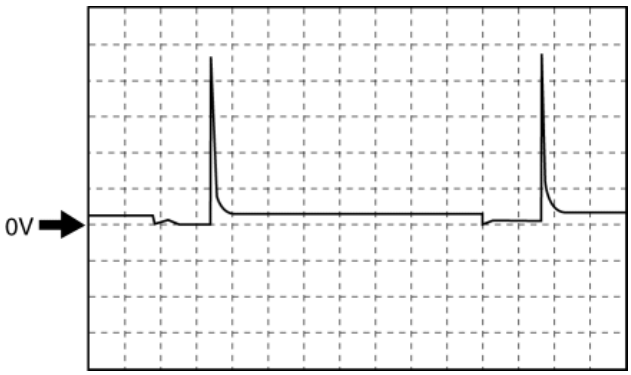

PCM terminals

- 1EF(+)—body ground(–)

Oscilloscope setting

- 10 V/DIV (Y), 5 ms/DIV (X), DC range

Vehicle condition

- Idle after warm up

HO2S heater control signal

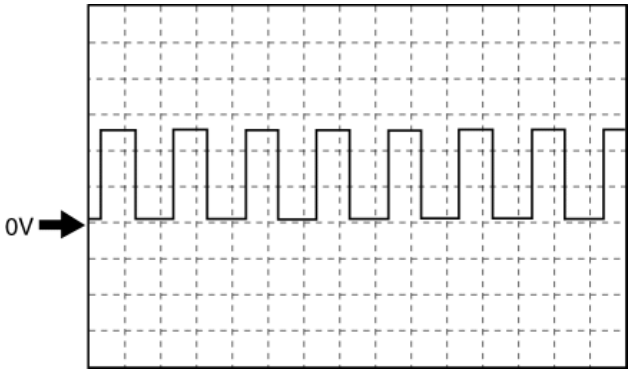

PCM terminals

- 2C(+)—body ground(–)

Oscilloscope setting

- 5 V/DIV (Y), 50 ms/DIV (X), DC range

Vehicle condition

- Idle (immediately after starting engine)

Fuel pump control signal

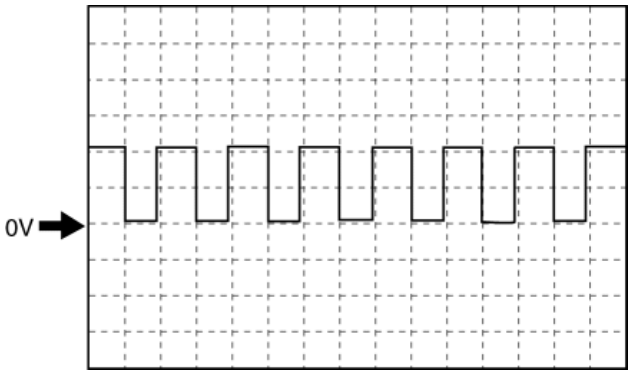

PCM terminals

- 2AE(+)—body ground(–)

Oscilloscope setting

- 5 V/DIV (Y), 2 ms/DIV (X), DC range

Vehicle condition

- Idle after warm up

Fuel pump control module (diagnostic) signal

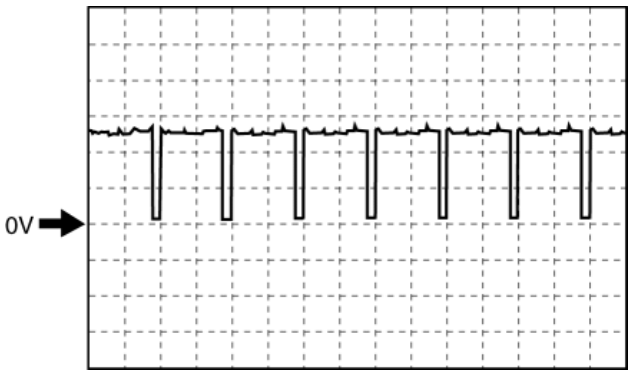

PCM terminals

- 2AM(+)—body ground(–)

Oscilloscope setting

- 2 V/DIV (Y), 50 ms/DIV (X), DC range

Vehicle condition

- Idle after warm up

Using The M-MDS

NOTE:

- PIDs for the following parts are not available on this model. Go to the appropriate part inspection page.
  - Intake CMP sensor and exhaust CMP sensor (See **CAMSHAFT POSITION (CMP) SENSOR INSPECTION [SKYACTIV-G 2.0, SKYACTIV-G 2.5]**.)
  - Main relay (See **RELAY INSPECTION**.)

1. Connect the M-MDS to the DLC-2.
2. Switch the ignition ON (engine off).
3. Measure the PID value.
   - If PID value is not within the specification, follow the instructions in action column.

NOTE:

- The PID/DATA MONITOR function monitors the calculated value of the input/output signals in the PCM. Therefore, an output device malfunction is not directly indicated as a malfunction of the monitored value for the output device. If a monitored value of an output device is out of specification, inspect the monitored value of the input device related to the output control.
- The simulation items that are used in the engine control system operation inspection are as follows.
  - ACCS, AIRSHUT_DSD*, ARPMDES, EVAPCP, EVAPCV, FAN1, FAN3, FP, INJ_1, INJ_2, INJ_3, INJ_4, OIL_P_SOL, Test, VT EX_DES

*

If the active air shutter fully open/closed position learning is not completed, the active air shutter cannot be forcibly operated. When the active air shutter is forcibly operated, perform the active air shutter fully open/closed position learning.

—: Not applicable

Item (definition)	Unit/Condition	Definition	Value type	Condition/Specification (Reference)	PCM terminal
AAT*5	°C, °F	Ambient air temperature	—	• Displays ambient air temperature	2I
AC_PRES*6	KPa {MPa}, mBar {Bar}, psi, in H20	Refrigerant pressure input from refrigerant pressure sensor	Calculation	• Displays refrigerant pressure	2AX
	V	Refrigerant pressure sensor voltage	Input	• Refrigerant pressure is 1.0 MPa {10 kgf/cm^2, 145 psi}: Approx. 1.58 V • Refrigerant pressure is 1.1 MPa {11 kgf/cm^2, 160 psi}: Approx. 1.75 V • Refrigerant pressure is 1.2 MPa {12 kgf/cm^2, 174 psi}: Approx. 1.88 V	
AC_REQ	Off/On	A/C switch status received by PCM via CAN	Input	• A/C switch off: Off • A/C switch on: On	CAN (2AK, 2AL)
ACCS	Off/On	A/C relay status input from A/C relay	Input	• A/C relay off: Off • A/C relay on: On	2AF

AIRSHUT_ACT*1	%	Active air shutter position	Calculation	• Active air shutter position is 0°: 0% • Active air shutter position is 90°: 100%	LIN (2Z)
AIRSHUT_CAL*1	Not Done/Completed	Active air shutter fully open/closed position learning status	Calculation	• Displays active air shutter fully open/closed position learning status	—
ALTF	%	Field coil current control signal output to generator	Calculation	• Ignition switched ON (engine off): 0% • Idle: Approx. 42% • Racing (Engine speed is 2,000 rpm): Approx. 29%	1BR*1, 1BE*2
ALTF_ACT*1	%	Actually measured value of field coil current signal input from generator	Calculation	• Displays actual generator field current control duty value	—
ALTT V*2	V	Generator output voltage	Input	• Idle (no E/L): Approx. 14 V (This is internal calculation value and differs from terminal voltage)	1AF
AMB_TEMP	°C, °F	Actually measured ambient temperature input from ambient temperature sensor	Calculation	• Displays ambient air temperature	2I
APP	%	Accelerator pedal opening angle (relative value) with the fully released status as 0% and fully depressed status as 100%	Calculation	• Accelerator pedal released: Approx. 0% • Accelerator pedal fully depressed: Approx. 100%	—
APP1	%	Accelerator pedal opening angle (absolute value) input from APP sensor No.1	Calculation	• Accelerator pedal released: Approx. 15% • Accelerator pedal fully depressed: Approx. 82%	2AN
	V	APP sensor No.1 voltage	Input	• Accelerator pedal released: Approx. 0.75 V • Accelerator pedal fully depressed: Approx. 4.1 V	
	%	Accelerator pedal opening angle (absolute value) input from APP	Calculation	• Accelerator pedal released: Approx. 7.45% • Accelerator pedal fully depressed: Approx. 41%	

APP2		sensor No.2			2AS
	V	APP sensor No.2 voltage	Input	• Accelerator pedal released: Approx. 0.38 V • Accelerator pedal fully depressed: Approx. 2.05 V	
ARPMDES	RPM	Target engine speed	Calculation	• Displays target engine speed	—
BARO	KPa {MPa}, mBar {Bar}, psi, in H20	Actually measured barometric pressure input from barometric pressure sensor built into PCM	Calculation	• Displays BARO	—
	V	BARO sensor voltage	Input	• Ignition switched ON (at sea level): Approx. 4.08 V	
BATT_CUR*1	A	Battery current	Calculation	• Displays battery charge/discharge current value	CAN (2AK, 2AL)
BATT_DAY*1	—	Number of days elapsed since current sensor initialization	Calculation	• Displays vehicle battery days in service.	CAN (2AK, 2AL)
BATT_RES*1	—	Battery internal resistance (estimated)	Calculation	• Displays battery inferred internal resistance.	CAN (2AK, 2AL)
BATT_SOC*1	%	Battery charge condition (estimated)	Calculation	• Displays battery estimated state of charge.	CAN (2AK, 2AL)
BATT_TEMP*1	°C, °F	Battery temperature	Calculation	• Displays battery fluid temperature	CAN (2AK, 2AL)
BATT_V*1	V	Battery voltage	Calculation	• Displays battery voltage	CAN (2AK, 2AL)
BOO	High/Low	Brake switch (No.1 signal) input status	Calculation	• Brake pedal released: Low • Brake pedal fully depressed: High	2G
BPA	High/Low	Brake switch (No.2 signal) input status	Calculation	• Brake pedal released: Low • Brake pedal fully depressed: High	2R
CAP_SYS_10*1	Off/On	Open circuit in capacitor (i-ELOOP) (power cannot be supplied from capacitor)	Calculation	• Capacitor internal circuit is not open: Off • Capacitor internal circuit is open: On	—

CAP_SYS 13*1	Off/On	Capacitor (i-ELOOP) capacitance malfunction	Calculation	Capacitor (i-ELOOP) capacitance status is not normal: On • Capacitor (i-ELOOP) capacitance status is normal: Off	—
CAP_SYS 14*1	Off/On	Capacitor (i-ELOOP) capacitance deterioration	Calculation	• Capacitor (i-ELOOP) capacitance status deteriorates: On • Capacitor (i-ELOOP) capacitance status is normal: Off	—
CAP_SYS 15*1	Off/On	Capacitor (i-ELOOP) internal resistance malfunction	Calculation	• Internal resistance status in capacitor (i-ELOOP) is not normal: On • Internal resistance status in capacitor (i-ELOOP) is normal: Off	—
CAP_SYS 16*1	Off/On	Capacitor (i-ELOOP) internal resistance deterioration	Calculation	• Internal resistance status in capacitor (i-ELOOP) deteriorates: On • Internal resistance status in capacitor (i-ELOOP) is normal: Off	—
CATT11_DSD	°C, °F	Estimated catalytic converter temperature	Calculation	• Displays estimated catalytic converter temperature	—
CHRGLP	Off/On	Charging system warning light illumination status	Calculation	• Charging system warning light not illuminated: Off • Charging system warning light illuminated: On	—
CPP*3	Off/On	Clutch pedal position	Calculation	• Clutch pedal fully depressed: On • Clutch pedal released: Off	2J
CPP/PNP*3	Off/On	Shift lever position	Calculation	• Other than neutral: Off • Neutral: On	1K
ECT	°C, °F	Engine coolant temperature	Calculation	• Displays ECT	1AK
	V	ECT sensor No.1 voltage	Input	• ECT is 20 °C {68 °F}: Approx. 3.10 V • ECT is 40 °C {104 °F}: Approx. 2.16 V • ECT is 60 °C {140 °F}: Approx. 1.40 V • ECT is 80 °C {176 °F}: Approx. 0.87 V • ECT is 100 °C {212 °F}: Approx. 0.54 V	
				• ECT is 20 °C {68 °F}: Approx. 3.10 V	

ECT2_V*5	V	ECT sensor No.2 voltage	Input	• ECT is 40 °C {104 °F}: Approx. 2.16 V • ECT is 60 °C {140 °F}: Approx. 1.40 V • ECT is 80 °C {176 °F}: Approx. 0.87 V • ECT is 100 °C {212 °F}: Approx. 0.54 V	2F
EQ_RAT11	—	Excess air factor (estimated value) to theoretical air/fuel ratio (14.7) by fuel feedback control	Calculation	• Idle (after warm up): Approx. 1	—
EQ_RAT11_DSD	—	Target excess air factor (estimated value) to theoretical air/fuel ratio (14.7) by fuel feedback control	Calculation	• Indicate target lambda (Excess air factor = supplied air amount / theoretical air/fuel ratio)	—
ETC_ACT	°	Actual throttle valve opening angle	Calculation	**Ignition switched ON (engine off)** • Accelerator pedal released: Approx. 12.89 ° • Accelerator pedal fully depressed: Approx. 86.03 ° **Idle (after warm up)** • Accelerator pedal released: Approx. 3.2 °	—
ETC_DSD	%	Target throttle valve opening angle (percent)	Calculation	• Displays target TP opening angle (percent)	—
	°	Target throttle valve opening angle	Calculation	• Displays target TP opening angle	
EVAPCP	%	Purge solenoid valve control duty value	Calculation	• Idle (after warm up): Approx. 0% • Racing (Engine speed 2,000 rpm): 4.3—35% • Racing (Engine speed 4,000 rpm): Approx. 66%	1AI
EVAPCV*5	Off/On	CV solenoid valve operation status	Calculation	• Simulation item (EVAPCV) is ON: On	2BF
FAN1	Off/On	Cooling fan relay No.1 operation status	Calculation	• Cooling fan relay No.1 off: Off • Cooling fan relay No.1 on: On	2AU

FAN3	Off/On	Cooling fan relay No.2 and No.3 operation status	Calculation	• Cooling fan relay No.2 and No.3 off: Off • Cooling fan relay No.2 and No.3 on: On	2AV
FCL*5	Off/On	Check fuel cap warning light illumination status	Calculation	• Check fuel cap warning light not illuminated: Off • Check fuel cap warning light illuminated: On	—
FIA	—	Fuel injection amount	Calculation	• Displays fuel injection amount	—
FLI	%	Fuel level	Calculation	• Fuel gauge level F: Approx. 100% • Fuel gauge level E: Approx. 0%	CAN (2AK, 2AL)
FP	Off/On	Fuel pump relay operation status	Calculation	• Ignition switched ON (engine off): Off • Cranking: On • Idle (after warm up): On	2AQ
FP_DUTY	%	Fuel pump control module control duty value	Calculation	• Ignition switched ON (engine off): Approx. 55.74% • Cranking: Approx. 95% • Idle (after warm up): Approx. 55.74%	2AE
FTP*5	KPa {MPa}, mBar {Bar}, psi, in H20	Fuel tank pressure	Calculation	• Displays fuel tank pressure	2Y
	V	Fuel tank pressure sensor voltage	Input	• Fuel tank pressure is equal to barometric pressure: Approx. 2.6 V	
FUEL_P_DSD	KPa {MPa}, mBar {Bar}, psi, in H20	Target fuel pressure (high pressure fuel pump)	Calculation	• Displays target fuel pressure (high pressure fuel pump)	—
FUEL_PRES	KPa {MPa}, mBar {Bar}, psi, in H20	Fuel pressure	Calculation	• Displays fuel pressure	1CA
	V	Fuel pressure sensor voltage	Input	• Fuel pressure is 3.0 MPa {31 kgf/cm^2, 435 psi}: Approx. 0.92 V • Fuel pressure is 4.8 MPa {49 kgf/cm^2, 696 psi}: Approx. 1.17 V	
FUELPW	Sec	Fuel injection pulse width (fuel injector energization time) output to fuel injector	Calculation	• Idle (after warm up): Approx. 1.4 ms • Racing (engine speed is 2,000 rpm): Approx. 1.1 ms • Racing (engine speed is 4,000 rpm): Approx. 1.0 ms	No.1:1DO/1DP No.2:1DW/1DX No.3:1EA/1EB No.4:1DS/1DT
		Feedback status of fuel injection control is			

FUELSYS	OL/CL/ OL_Drive/ OL_Fault/ CL_Fault	displayed OL: Feedback control is disabled at cold engine start CL: During feedback control by A/F sensor and HO2S OL_Drive: While feedback control is stopped OL_Fault: Feedback control is disable due to system malfunction CL_Fault: During feedback control with either A/F sensor or HO2S having a malfunction	Calculation	• Idle (after warm up): OL or CL • Racing (engine speed is 2,000 rpm): CL • Deceleration fuel cut (accelerator pedal released from engine speed of 4,000 rpm or more): OL-Drive	—
GEAR*4	Unknown/1st/2nd/3rd/4th/5th/6th/Not in P/Park/Neutral/Drive/Reverse	Gear commanded	Calculation	• Selector lever at P position: Park • Selector lever at R position: Reverse • Selector lever at N position: Neutral • Selector lever is in D or M position while vehicle is stopped: 1st	CAN (2AK, 2AL)
HTR11	Off/On	A/F sensor heater operation status	Calculation	• Ignition switched ON (engine off): Off • Idle (after warm up): On	1BY
	%	A/F sensor heater control duty value	Calculation	• Ignition switched ON (engine off): 0% • Idle (after warm up): Approx. 40%	
HTR12	Off/On	HO2S heater operation status	Calculation	• Ignition switched ON (engine off): Off • Idle (after warm up): On	2C
	%	HO2S heater control duty value	Calculation	• Ignition switched ON (engine off): 0% • Idle (after warm up): Approx. 40%	
IAT	°C, °F	Intake air temperature (No.1)	Calculation	• Displays IAT (No.1)	2U
	V	IAT sensor	Input	• IAT is 20 °C {68 °F}: Approx. 2.70 V • IAT is 40 °C {104 °F}:	

		No.1 voltage		Approx. 1.80 V • IAT is 60 °C {140 °F}: Approx. 1.20 V	
IAT2	°C, °F	Intake air temperature (No.2)	Calculation	• Displays IAT (No.2)	1CE
	V	IAT sensor No.2 voltage	Input	• IAT2 is 20 °C {68 °F}: Approx. 3.57 V • IAT2 is 40 °C {104 °F}: Approx. 2.70 V • IAT2 is 60 °C {140 °F}: Approx. 1.87 V	
INGEAR*3	Off/On	Gears are engaged	Calculation	• When the following conditions are satisfied: On ▪ Other than neutral ▪ Clutch pedal released • Except above: Off	CAN (2AK, 2AL)
ISC_FBK	%	ISC feedback value	Calculation	• Displays ISC feedback value	—
ISC_FBK_LRN	%	Learning value for calculating ISC feedback amount	Calculation	• Displays ISC feedback learning value	—
IVS	Off Idle/Idle	CTP condition	Calculation	• Racing: Off Idle • Idle: Idle	—
KNOCKR	°	Camshaft retard amount when knocking determined	Calculation	• Ignition switched ON (engine off): 0 ° • Idle (after warm up): 0 °	—
LOAD	%	Ratio of actual amount of intake air to the maximum air charging amount (mass volume) of cylinder	Calculation	• Idle (after warm up): Approx. 17.64% • Racing (engine speed is 2,000 rpm): Approx. 14.51% • Racing (engine speed is 4,000 rpm): Approx. 21.17%	—
LONGFT1	%	Fuel learning correction amount estimated based on A/F sensor signal	Calculation	• Idle (after warm up): Approx. -2.34% • Racing (engine speed is 2,000 rpm): Approx. -0.78% • Racing (engine speed is 4,000 rpm): Approx. -0.78%	—
LONGFT12	%	Fuel learning correction amount estimated based on	Calculation	• Idle (after warm up): Approx. 0%	—

		heated oxygen sensor signal			
LOW_OIL	Never Detected/Detected	Engine oil pressure condition Never Detected: Engine oil pressure is high Detected: Engine oil pressure is low	Calculation	• Ignition switched ON (engine off): Detected • Idle (after warm up): Detected • Racing (engine speed is 2,000 rpm): Never Detected	—
M_GEAR*3	Neutral/1st gear/2nd gear/3rd gear/4th gear/5th gear/6th gear/Reverse/Undefined/Auto/In_Progress/YSF/Error	Manual gear position	Calculation	• Displays manual gear position	CAN (2AK, 2AL)
MAF	g/Sec	Mass air flow	Calculation	• Displays MAF	2BC
	V	MAF sensor voltage	Input	• Ignition switched ON (engine off) (MAF: 0.59 g/s {0.078 lb/min}): Approx. 0.72 V • Idle (after warm up) (MAF: 2.17 g/s {0.287 lb/min}): Approx. 0.86 V • Racing (engine speed is 2,000 rpm) (MAF: 4.73 g/s {0.626 lb/min}): Approx. 1.07 V	
MAP	KPa {MPa}, mBar {Bar}, psi, in H20	Manifold absolute pressure	Calculation	• Displays MAP	1BW
	V	MAP sensor voltage	Input	• Ignition switched ON (engine off) (MAP:101 kPa {1.03 kgf/cm^2, 14.6 psi}): Approx. 4.07 V • Idle (after warm up) (MAP: 33 kPa {0.34 kgf/cm^2, 4.8 psi}): Approx. 1.34 V • Racing (engine speed is 2,000 rpm) (MAP: 26 kPa {0.27 kgf/cm^2, 3.8 psi}): Approx. 1.05 V	
MF_CAT1	—	Number of misfires in No.1 cylinder leading to catalytic converter temperature increase (catalytic converter temperature increases due to fuel combustion around catalytic converter after misfire)	Calculation	• Displays number of misfires corresponding to possible catalytic converter damage (No.1 cylinder)	—
		Number of			

MF_CAT_2	—	misfires in No.2 cylinder leading to catalytic converter temperature increase (catalytic converter temperature increases due to fuel combustion around catalytic converter after misfire)	Calculation	• Displays number of misfires corresponding to possible catalytic converter damage (No.2 cylinder)	—
MF_CAT_3	—	Number of misfires in No.3 cylinder leading to catalytic converter temperature increase (catalytic converter temperature increases due to fuel combustion around catalytic converter after misfire)	Calculation	• Displays number of misfires corresponding to possible catalytic converter damage (No.3 cylinder)	—
MF_CAT_4	—	Number of misfires in No.4 cylinder leading to catalytic converter temperature increase (catalytic converter temperature increases due to fuel combustion around catalytic converter after misfire)	Calculation	• Displays number of misfires corresponding to possible catalytic converter damage (No.4 cylinder)	—
MF_CAT_FCC	—	Threshold of malfunction determination for number of misfires (total number in all cylinders) leading to catalytic converter temperature increase	Calculation	• Displays number of misfire determinations (for catalytic converter)	—
MF_CAT_TTL	—	Number of misfires (total number in all cylinders) leading to catalytic converter temperature	Calculation	• Displays number of misfires corresponding to possible catalytic converter damage (total)	—

		increase			
MF_EMI1	—	Number of misfires in No.1 cylinder under conditions required by emission regulations	Calculation	• Displays number of misfires possibly affecting emission (No.1 cylinder)	—
MF_EMI_2	—	Number of misfires in No.2 cylinder under conditions required by emission regulations	Calculation	• Displays number of misfires possibly affecting emission (No.2 cylinder)	—
MF_EMI_3	—	Number of misfires in No.3 cylinder under conditions required by emission regulations	Calculation	• Displays number of misfires possibly affecting emission (No.3 cylinder)	—
MF_EMI_4	—	Number of misfires in No.4 cylinder under conditions required by emission regulations	Calculation	• Displays number of misfires possibly affecting emission (No.4 cylinder)	—
MF_EMI_FCC	—	Threshold of malfunction determination for number of misfires (total number in all cylinders) under conditions required by emission regulations	Calculation	• Displays number of misfire determinations (for emission)	—
MF_EMI_TTL	—	Number of misfires (total number in all cylinders) under conditions required by emission regulations	Calculation	• Displays number of misfires possibly affecting emission (total)	—
MIL	Off/On	Check engine light illumination status	Calculation	• Check engine light not illuminated: Off • Check engine light illuminated: On	—
MIL_DIS	km {mph}, ft, mi	Travelled distance since check engine light illuminated	Calculation	• Displays travelled distance since check engine light illuminated	—
				• Idle (after warm up):	

O2S11	µA	A/F sensor current	Input	Approx. -39 µA • Deceleration fuel cut (accelerator pedal released from engine speed of 4,000 rpm or more): Approx. 3.84 mA	1AB
O2S12	V	HO2S voltage	Input	• Idle (after warm up): 0 —1.0 V • Deceleration fuel cut (accelerator pedal released from engine speed of 4,000 rpm or more): Approx. 0 V	2AI/2AG
OIL_P_SOL	Off/On	Engine oil solenoid valve operation status	Calculation	• ECT below 98 °C {208 °F} and engine speed below 4,000 rpm: On • ECT above 98 °C {208 °F} or engine speed above 4,000 rpm: Off	1AS
OIL_TEMP	°C, °F	Estimated engine oil temperature	Calculation	• Displays estimated engine oil temperature	—
PN_SW*4	Open/Closed	Parking/neutral	Calculation	• Selector lever at P position or N position: Closed • Except above: Open	CAN (2AK, 2AL)
PRE_CHG_DIS*1	km, ft {mi}	Distance at pre-charge	Calculation	• Displays distance at pre-charge	—
RO2FT1	%	Fuel correction amount based on HO2S signal including SHRTFT12 and LONGFT12	Calculation	• Idle (after warm up): Approx. 0.5% • Deceleration fuel cut (accelerator pedal released from engine speed of 4,000 rpm or more): Approx. 3.99%	—
RPM	RPM	Engine speed	Calculation	• Displays engine speed	1AD
SHRTFT1	%	Fuel feedback correction amount estimated based on A/F sensor signal	Calculation	• Idle (after warm up): Approx. 1.56% • Racing (engine speed is 2,000 rpm): Approx. -3.12% • Racing (engine speed is 4,000 rpm): Approx. -8.59%	—
SHRTFT12	%	Fuel feedback correction amount estimated based on HO2S signal	Calculation	• Idle (after warm up): Approx. 0%	—
SPARKADV	°	Ignition timing	Calculation	• Displays ignition timing	—
Test	Off/On	Test mode operation condition due to forced override operation	Calculation	• Test mode off: Off • Test mode on: On	—

TH_M*5	—	Thermostat monitor	Calculation	• Indicates heat radiation ratio (heat radiation when thermostat is malfunctioning/heat radiation when thermostat is normal) when thermostat monitoring is finished	—
TH_M_MAX*5	—	Thermostat monitor max	Calculation	• Indicates upper limit of heat radiation ratio (heat radiation when thermostat is malfunctioning/heat radiation when thermostat is normal) for thermostat monitoring execution	—
TH_M_MIN*5	—	Thermostat monitor min	Calculation	• Indicates lower limit of heat radiation ratio (heat radiation when thermostat is malfunctioning/heat radiation when thermostat is normal) for thermostat monitoring execution	—
TP_REL	%	Throttle valve opening angle (relative value) with value at throttle valve fully open timing as the start point	Calculation	• Accelerator pedal released: Approx. 12% • Accelerator pedal fully depressed: Approx. 82%	—
TP1	V	TP sensor No.1 voltage	Input	• Accelerator pedal released: Approx. 1.11 V • Accelerator pedal fully depressed: Approx. 4.59 V	1BP
	%	Throttle valve position No.1	Calculation	• Accelerator pedal released: Approx. 22% • Accelerator pedal fully depressed: Approx. 92%	
TP2	V	TP sensor No.2 voltage	Input	• Accelerator pedal released: Approx. 3.92 V • Accelerator pedal fully depressed: Approx. 0.41 V	1BU
	%	Throttle valve position No.2	Calculation	• Accelerator pedal released: Approx. 22% • Accelerator pedal fully depressed: Approx. 82%	
TPCT	V	TP sensor No.1 voltage at CTP	Calculation	• Ignition switched ON (engine off): Approx. 0.5 V	—
TPCT2	V	TP sensor No.2 voltage at CTP	Calculation	• Ignition switched ON (engine off): Approx. 4.5 V	—
		Battery			

VPWR	V	positive voltage	Input	• Displays battery voltage	2O
VSS	KPH, MPH	Vehicle speed	Calculation	• Displays vehicle speed	CAN (2AK, 2AL)
VT EX_DES	°	Desired exhaust valve timing	Calculation	• Displays desired exhaust valve timing	—
VT IN_ACT	°	Actual intake valve timing	Calculation	• Displays actual intake valve timing	1Y
VT IN_DES	°	Desired intake valve timing	Calculation	• Displays desired intake valve timing	—
VT_EX_ACT	°	Actual exhaust valve timing	Calculation	• Displays actual exhaust valve timing	1T
VT_EX_DUTY	%	OCV control duty value	Calculation	• Idle (after warm up): Approx. 0% • Racing (engine speed is 2,000 rpm): Approx. 46%	1AN

*1 **Vehicles with i-ELOOP**

*2 **Vehicles without i-ELOOP**

*3 **MTX**

*4 **ATX**

*5 **U.S.A. and CANADA**

*6 **Vehicles with manual air conditioner**

2014 - Mazda3 - Engine

PCM CONFIGURATION (USING READ/WRITE FUNCTION) [SKYACTIV-G 2.0, SKYACTIV-G 2.5]

NOTE:

- When performing configuration, it is necessary to read the vehicle specification information from the PCM before replacing it. Connect the M-MDS to the vehicle and perform vehicle identification before removing the PCM. The vehicle specification information is temporarily stored in the M-MDS.

1. Connect the M-MDS to the DLC-2.

2. After the vehicle is identified, select the following items from the initialization screen of the M-MDS.

    - Select “Module Programming”.

3. Then, select items from the screen menu in the following order.

    - Select “Programmable Module Installation”.
    - Select “PCM”.

4. Perform the configuration according to the directions on the screen.

CAUTION:

- When the configuration is performed, CAN communication between the PCM and control module connected to the CAN line is cut temporarily, and communication error DTCs may be detected. After performing the configuration, verify the DTCs for the control module connected to the CAN line and clear it if any DTC is detected.

5. Verify the DTCs for all of the control modules connected to the CAN line.

    - If any DTC is stored, clear it.
    - If the DTC is cleared, finish the procedure because the configuration has been completed normally.
    - If the DTC remains, perform troubleshooting according to the DTC.

2014 - Mazda3 - Engine

PCM CONFIGURATION (USING AS-BUILT DATA) [SKYACTIV-G 2.0, SKYACTIV-G 2.5]

NOTE:

- If the configuration is performed using As-Built data, the set value of the personalization function is reset to the initial value (condition when shipped from factory). Verify the set value with the customer and perform the personalization function setting after performing the configuration using As-Built data.

1. Connect the M-MDS to the DLC-2.

2. After the vehicle is identified, select the following items from the initialization screen of the M-MDS.

    - Select “Module Programming”.

3. Then, select items from the screen menu in the following order.

    - Select “As-Built”.
    - Select “PCM”.

4. Perform the configuration according to the directions on the screen.

CAUTION:

- When the configuration is performed, CAN communication between the PCM and control module connected to the CAN line is cut temporarily, and communication error DTCs may be detected. After performing the configuration, verify the DTCs for the control module connected to the CAN line and clear it if any DTC is detected.

5. Verify the DTCs for all of the control modules connected to the CAN line.

    - If any DTC is stored, clear it.
    - If the DTC is cleared, finish the procedure because the configuration has been completed normally.
    - If the DTC remains, perform troubleshooting according to the DTC.

2014 - Mazda3 - Engine

CLUTCH PEDAL POSITION (CPP) SWITCH INSPECTION [SKYACTIV-G 2.0, SKYACTIV-G 2.5]

Continuity Inspection

1. Verify that the CPP switch is installed properly. (See **CLUTCH PEDAL POSITION SWITCH REMOVAL/INSTALLATION [C66M-R]**.)

2. Disconnect the negative battery cable. (See **NEGATIVE BATTERY CABLE DISCONNECTION/CONNECTION [SKYACTIV-G 2.0, SKYACTIV-G 2.5]**.)

3. Disconnect the CPP switch connector.

4. Verify that the continuity between CPP switch terminals A and B when the clutch pedal is depressed and when it is released is according to the following table:

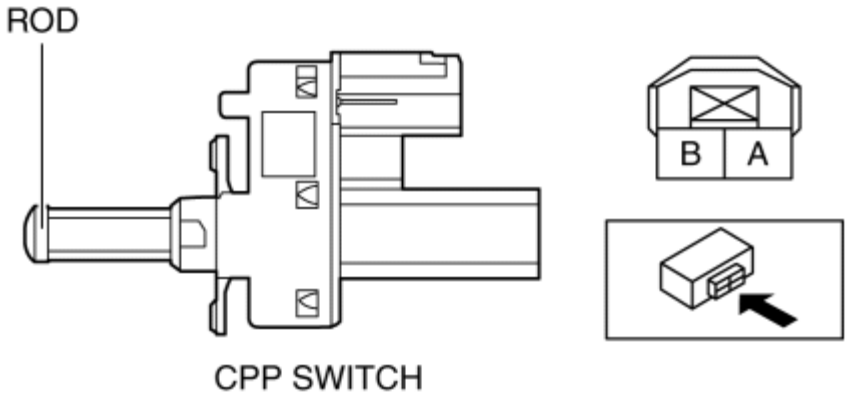

Clutch pedal position	Continuity
Clutch pedal released (Rod is pressed.)	No continuity
Clutch pedal depressed (Rod is not pressed.)	Continuity detected

- If not as verified, replace the CPP switch. (See **CLUTCH PEDAL POSITION SWITCH REMOVAL/INSTALLATION [C66M-R]**.)

2014 - Mazda3 - Engine

NEUTRAL SWITCH INSPECTION [SKYACTIV-G 2.0, SKYACTIV-G 2.5]

Continuity Inspection

1. Disconnect the negative battery cable. (See **NEGATIVE BATTERY CABLE DISCONNECTION/CONNECTION [SKYACTIV-G 2.0, SKYACTIV-G 2.5]**.)
2. Remove the neutral switch. (See **NEUTRAL SWITCH REMOVAL/INSTALLATION [C66M-R]**.)
3. Inspect for continuity between neutral switch terminals A and B.

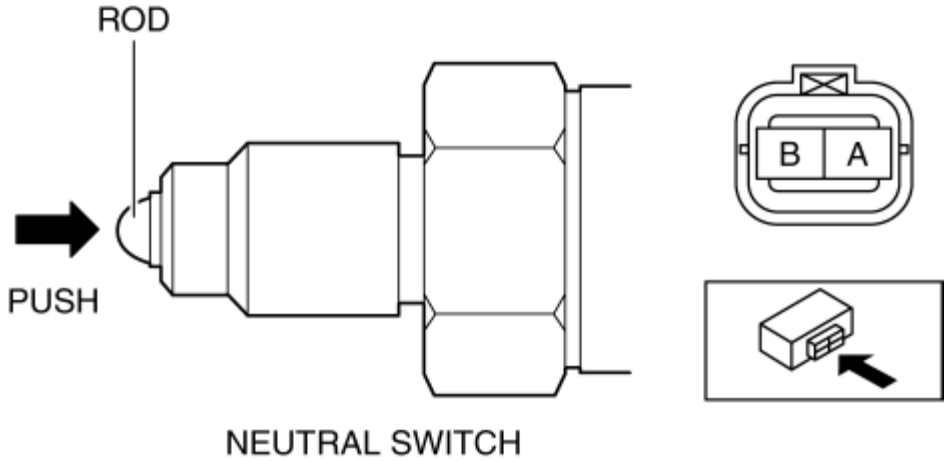

- If not as specified, replace the neutral switch. (See **NEUTRAL SWITCH REMOVAL/INSTALLATION [C66M-R]**.)

Specification

Measured condition	Continuity
Rod pushed	Continuity detected
Rod not pushed	No continuity

2014 - Mazda3 - Engine

ENGINE COOLANT TEMPERATURE (ECT) SENSOR REMOVAL/INSTALLATION [SKYACTIV-G 2.0, SKYACTIV-G 2.5]

WARNING:

- A hot engine can cause severe burns. Turn off the engine and wait until it is cool before removing the ECT sensor.

ECT Sensor No.1

1. Disconnect the negative battery cable. (See **NEGATIVE BATTERY CABLE DISCONNECTION/CONNECTION [SKYACTIV-G 2.0, SKYACTIV-G 2.5]**.)

2. Remove the plug hole plate. (See **PLUG HOLE PLATE REMOVAL/INSTALLATION [SKYACTIV-G 2.0, SKYACTIV-G 2.5]**.)

3. Drain the engine coolant. (See **ENGINE COOLANT REPLACEMENT [SKYACTIV-G 2.0, SKYACTIV-G 2.5]**.)

4. Pull out the evaporative hose No.1 from the catch tank and set it aside.

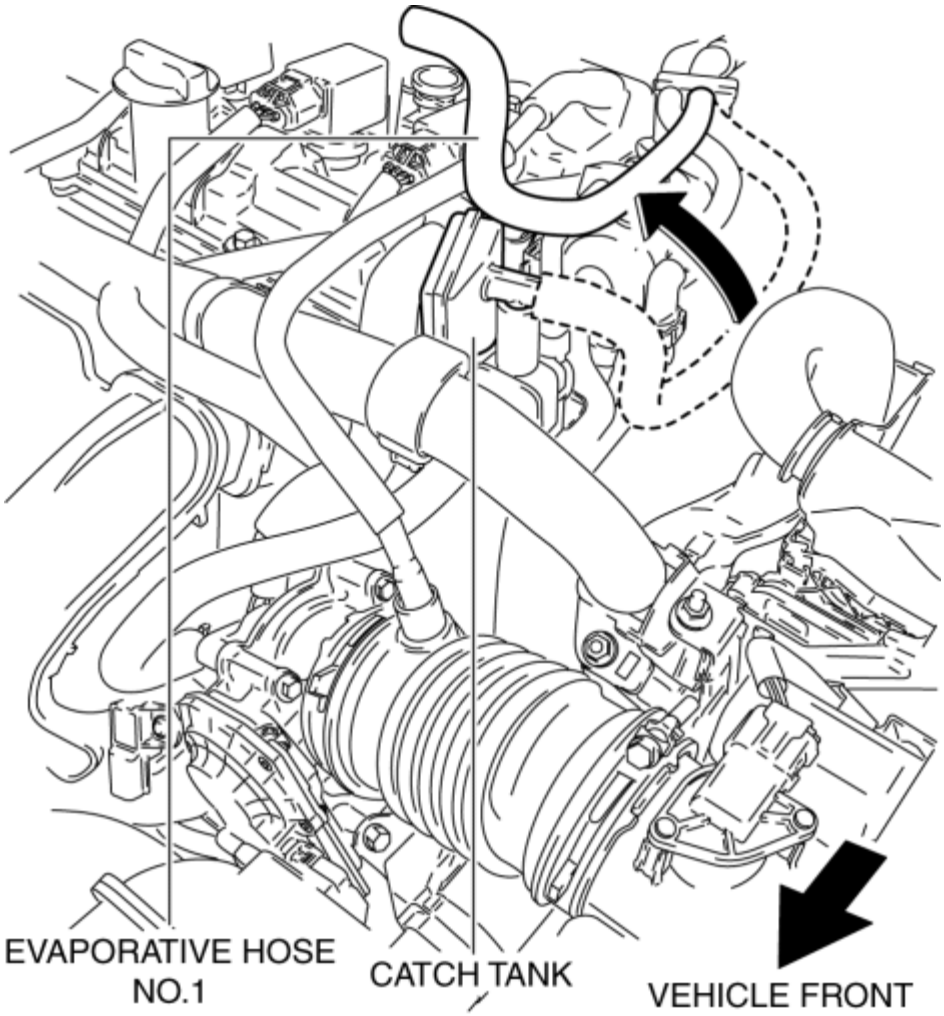

5. Remove the clip from the bracket and loosen the wiring harness.

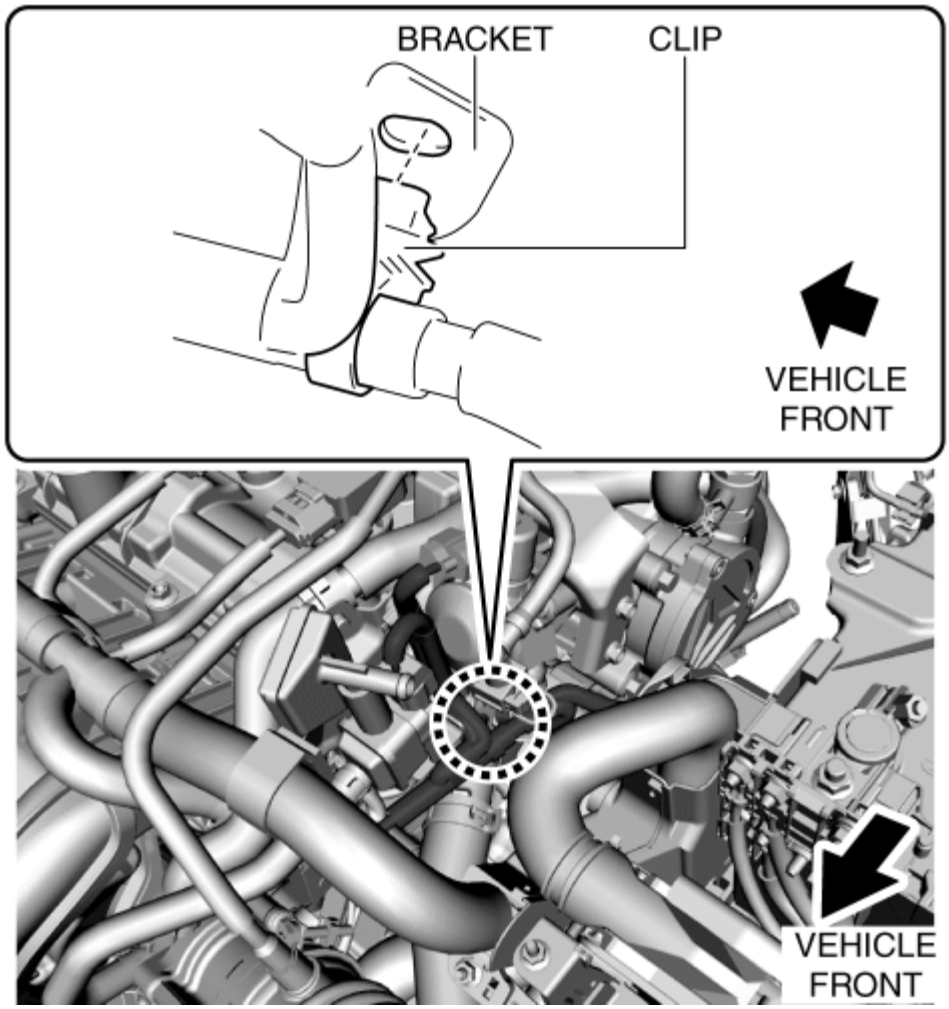

6. Set the wiring harness aside.

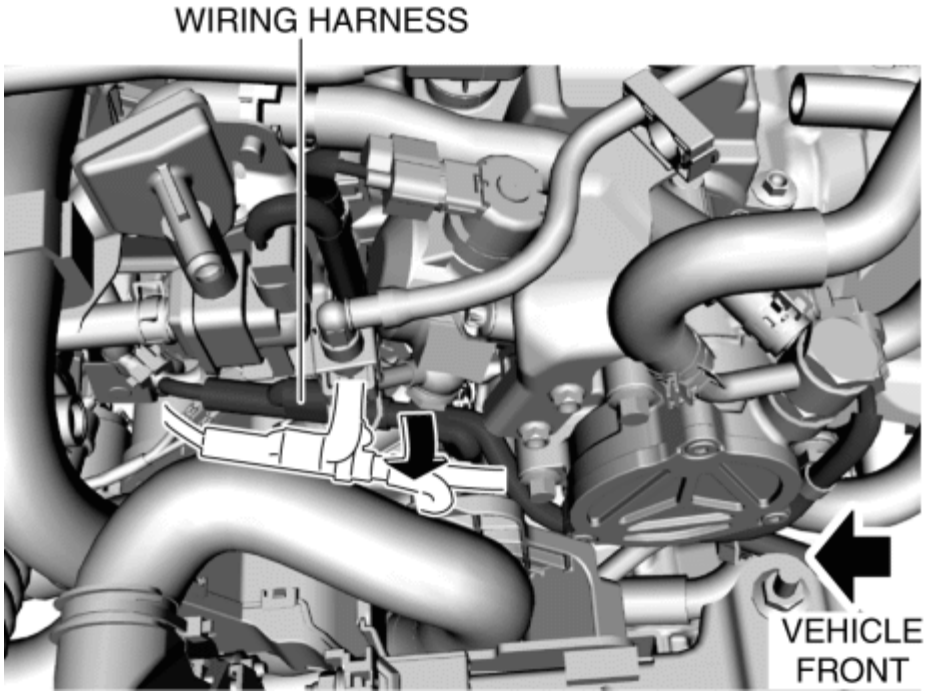

7. Disconnect the ECT sensor No.1 connector.

8. Remove the ECT sensor No.1 using the **SST**.

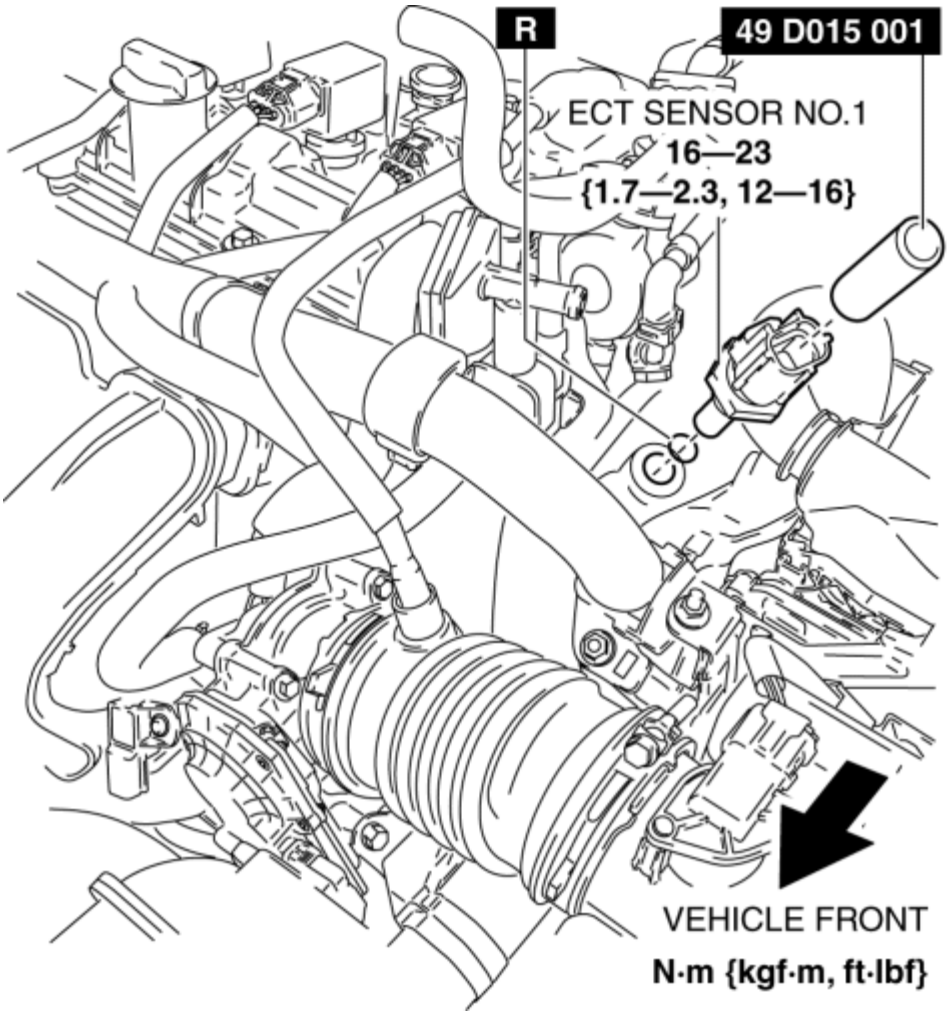

9. Install in the reverse order of removal.

10. Refill the engine coolant. (See **ENGINE COOLANT REPLACEMENT [SKYACTIV-G 2.0, SKYACTIV-G 2.5]**.)

ECT Sensor No.2

1. Disconnect the negative battery cable. (See **NEGATIVE BATTERY CABLE DISCONNECTION/CONNECTION [SKYACTIV-G 2.0, SKYACTIV-G 2.5]**.)

2. Lift up the vehicle.

3. Remove the front under cover No.1. (See **FRONT UNDER COVER No.1 REMOVAL/INSTALLATION**.)

4. Drain the engine coolant. (See **ENGINE COOLANT REPLACEMENT [SKYACTIV-G 2.0, SKYACTIV-G 2.5]**.)

5. Disconnect the ECT sensor No.2 connector.

6. Remove the ECT sensor No.2 using the **SST**.

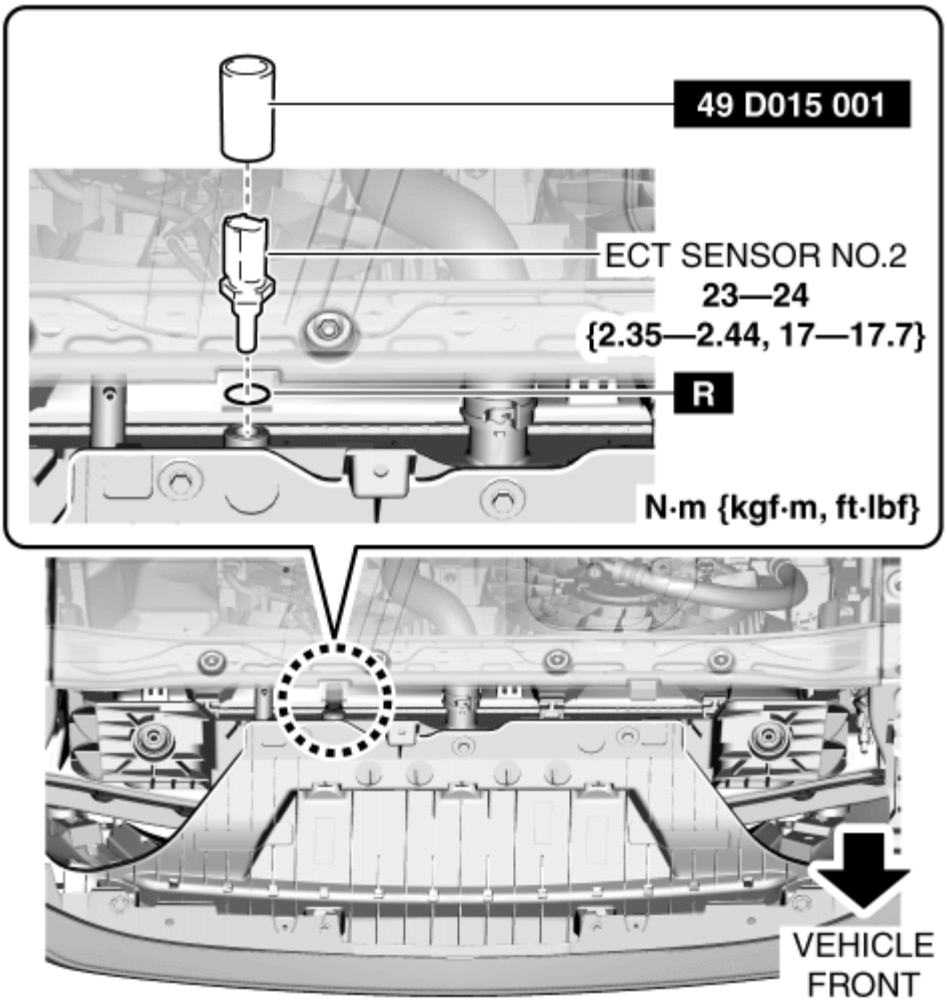

7. Install in the reverse order of removal.

8. Refill the engine coolant. (See **ENGINE COOLANT REPLACEMENT [SKYACTIV-G 2.0, SKYACTIV-G 2.5]**.)

2014 - Mazda3 - Engine

ENGINE COOLANT TEMPERATURE (ECT) SENSOR INSPECTION [SKYACTIV-G 2.0, SKYACTIV-G 2.5]

WARNING:

- A hot engine can cause severe burns. Turn off the engine and wait until it is cool before removing the ECT sensor.

ECT Sensor No.1

Resistance inspection

1. Disconnect the negative battery cable. (See **NEGATIVE BATTERY CABLE DISCONNECTION/CONNECTION [SKYACTIV-G 2.0, SKYACTIV-G 2.5]**.)

2. Remove the plug hole plate. (See **PLUG HOLE PLATE REMOVAL/INSTALLATION [SKYACTIV-G 2.0, SKYACTIV-G 2.5]**.)

3. Drain the engine coolant. (See **ENGINE COOLANT REPLACEMENT [SKYACTIV-G 2.0, SKYACTIV-G 2.5]**.)

4. Pull out the evaporative hose No.1 from the catch tank and set it aside. (See **ENGINE COOLANT TEMPERATURE (ECT) SENSOR REMOVAL/INSTALLATION [SKYACTIV-G 2.0, SKYACTIV-G 2.5]**.)

5. Remove the clip from the bracket and loosen the wiring harness. (See **ENGINE COOLANT TEMPERATURE (ECT) SENSOR REMOVAL/INSTALLATION [SKYACTIV-G 2.0, SKYACTIV-G 2.5]**.)

6. Set the wiring harness aside. (See **ENGINE COOLANT TEMPERATURE (ECT) SENSOR REMOVAL/INSTALLATION [SKYACTIV-G 2.0, SKYACTIV-G 2.5]**.)

7. Disconnect the ECT sensor No.1 connector.

8. Remove the ECT sensor No.1. (See **ENGINE COOLANT TEMPERATURE (ECT) SENSOR REMOVAL/INSTALLATION [SKYACTIV-G 2.0, SKYACTIV-G 2.5]**.)

9. Place the ECT sensor No.1 in water with a thermometer, and heat the water gradually.

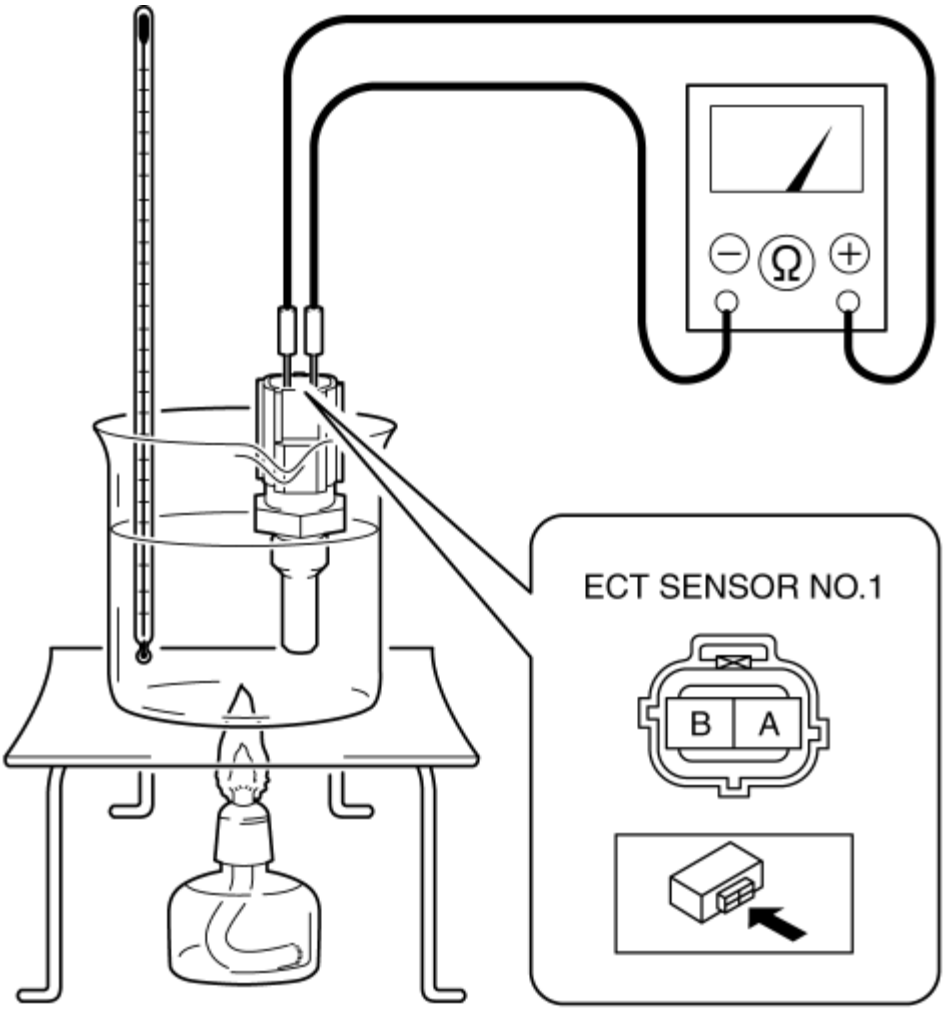

10. Measure the resistance between ECT sensor No.1 terminals A and B.

- If not as specified, replace the ECT sensor No.1. (See **ENGINE COOLANT TEMPERATURE (ECT) SENSOR REMOVAL/INSTALLATION [SKYACTIV-G 2.0, SKYACTIV-G 2.5]**.)

Specification (Reference)

ECT (°C {°F})	Resistance (Kilohms)
20 {68}	Approx. 2.45
80 {176}	Approx. 0.318

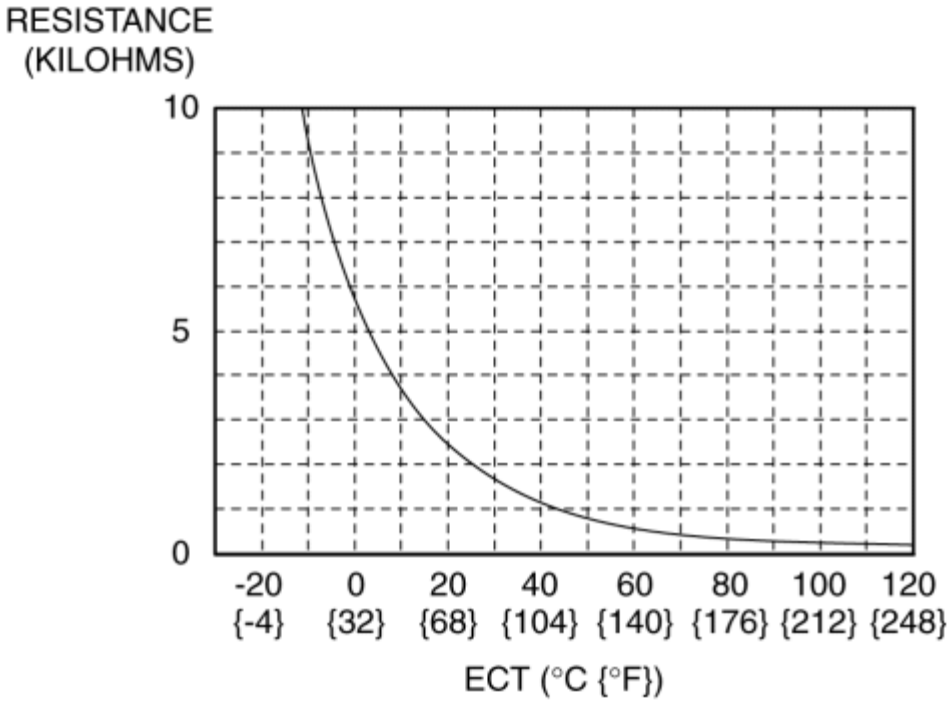

ECT Sensor No.2

Resistance inspection

1. Disconnect the negative battery cable. (See **NEGATIVE BATTERY CABLE DISCONNECTION/CONNECTION [SKYACTIV-G 2.0, SKYACTIV-G 2.5]**.)

2. Remove the front under cover No.1. (See **FRONT UNDER COVER No.1 REMOVAL/INSTALLATION**.)

3. Drain the engine coolant. (See **ENGINE COOLANT REPLACEMENT [SKYACTIV-G 2.0, SKYACTIV-G 2.5]**.)

4. Disconnect the ECT sensor No.2 connector. (See **ENGINE COOLANT TEMPERATURE (ECT) SENSOR REMOVAL/INSTALLATION [SKYACTIV-G 2.0, SKYACTIV-G 2.5]**.)

5. Remove the ECT sensor No.2. (See **ENGINE COOLANT TEMPERATURE (ECT) SENSOR REMOVAL/INSTALLATION [SKYACTIV-G 2.0, SKYACTIV-G 2.5]**.)

6. Place the ECT sensor No.2 in water with a thermometer, and heat the water gradually.

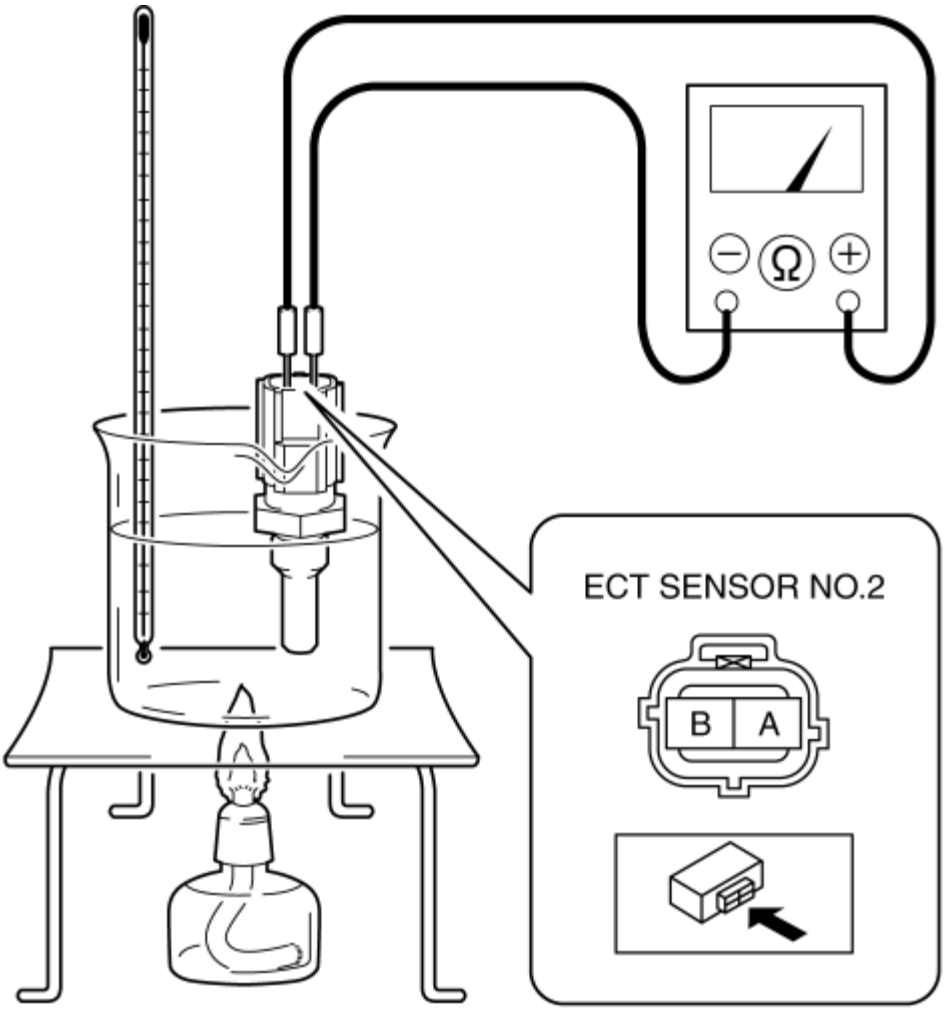

7. Measure the resistance between ECT sensor No.2 terminals A and B.

- If not as specified, replace the ECT sensor No.2. (See **ENGINE COOLANT TEMPERATURE (ECT) SENSOR REMOVAL/INSTALLATION [SKYACTIV-G 2.0, SKYACTIV-G 2.5]**.)

Specification (Reference)

ECT (°C {°F})	Resistance (Kilohms)
20 {68}	Approx. 2.45
80 {176}	Approx. 0.318

ENGINE COOLANT TEMPERATURE (ECT) SENSOR INSPECTION [SKYACTIV-G 2.0, SKYACTIV-G 2.5]

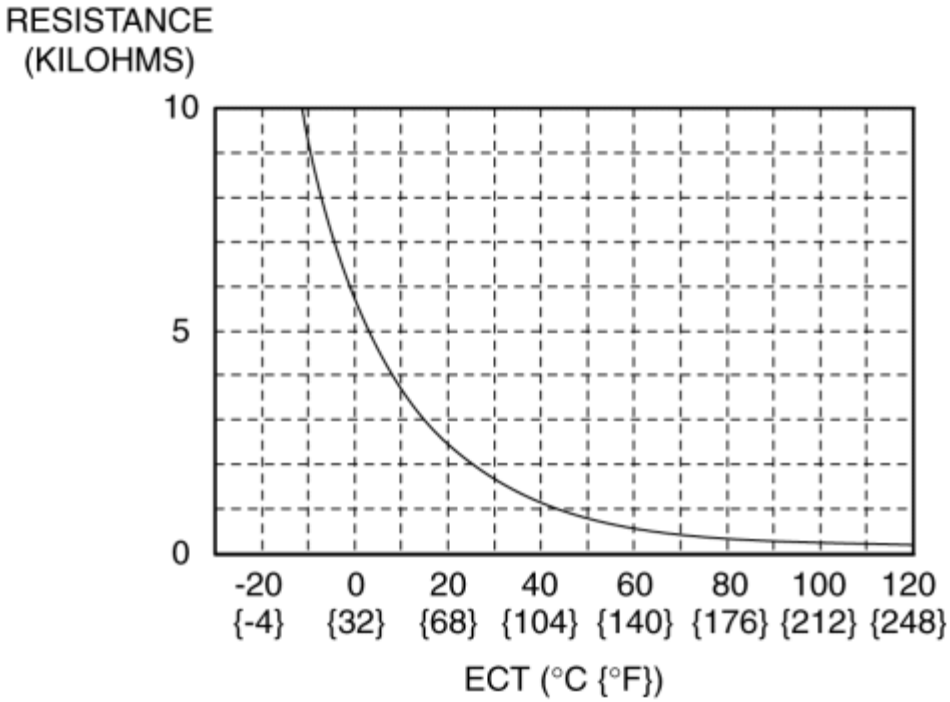

2014 - Mazda3 - Engine

MASS AIR FLOW (MAF) SENSOR/INTAKE AIR TEMPERATURE (IAT) SENSOR NO.1 REMOVAL/INSTALLATION [SKYACTIV-G 2.0, SKYACTIV-G 2.5]

NOTE:

- Because the IAT sensor No.1 is integrated in the MAF sensor, replacing the IAT sensor No.1 includes replacement of the MAF sensor/IAT sensor No.1.

1. Disconnect the negative battery cable. (See **NEGATIVE BATTERY CABLE DISCONNECTION/CONNECTION [SKYACTIV-G 2.0, SKYACTIV-G 2.5]**.)

2. Disconnect the MAF sensor/IAT sensor No.1 connector.

3. Remove the MAF sensor/IAT sensor No.1.

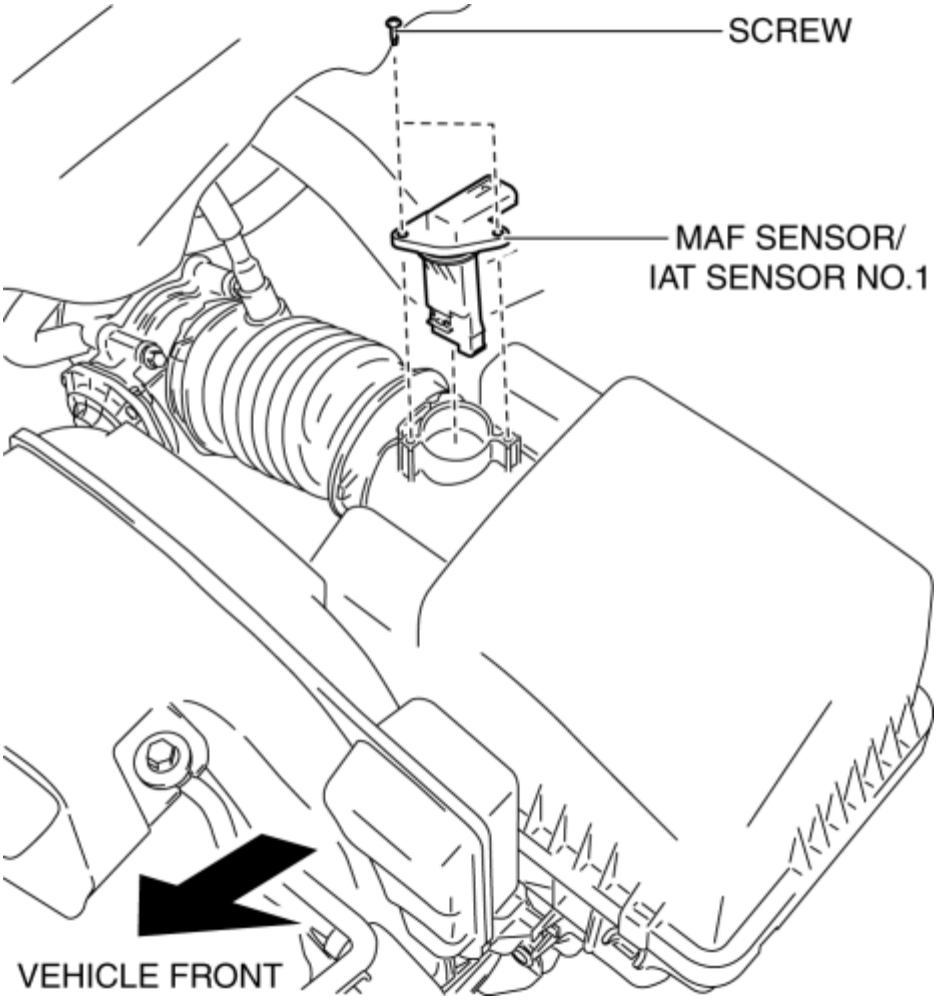

4. Install in the reverse order of removal.

MASS AIR FLOW (MAF) SENSOR/INTAKE AIR TEMPERATURE (IAT) SENSOR NO.1 REMOVAL/INSTALLATION [SKYACTIV-G 2.0, SKYACTIV-G 2....

2014 - Mazda3 - Engine

MASS AIR FLOW (MAF) SENSOR INSPECTION [SKYACTIV-G 2.0, SKYACTIV-G 2.5]

Visual Inspection

1. Disconnect the negative battery cable. (See **NEGATIVE BATTERY CABLE DISCONNECTION/CONNECTION [SKYACTIV-G 2.0, SKYACTIV-G 2.5]**.)

2. Disconnect the MAF sensor/IAT sensor No.1 connector.

3. Remove the MAF sensor/IAT sensor No.1. (See **MASS AIR FLOW (MAF) SENSOR/INTAKE AIR TEMPERATURE (IAT) SENSOR NO.1 REMOVAL/INSTALLATION [SKYACTIV-G 2.0, SKYACTIV-G 2.5]**.)

4. Visually inspect the MAF sensor for the following:

- Damage, cracks, dirt
- Rusted sensor terminal
- Bent sensor terminal
    - If there is any malfunction, repair or replace the MAF sensor/IAT sensor No.1. (See **MASS AIR FLOW (MAF) SENSOR/INTAKE AIR TEMPERATURE (IAT) SENSOR NO.1 REMOVAL/INSTALLATION [SKYACTIV-G 2.0, SKYACTIV-G 2.5]**.)

Voltage Inspection

1. Disconnect the negative battery cable. (See **NEGATIVE BATTERY CABLE DISCONNECTION/CONNECTION [SKYACTIV-G 2.0, SKYACTIV-G 2.5]**.)

2. Remove the MAF sensor/IAT sensor No.1 without disconnecting the connector. (See **MASS AIR FLOW (MAF) SENSOR/INTAKE AIR TEMPERATURE (IAT) SENSOR NO.1 REMOVAL/INSTALLATION [SKYACTIV-G 2.0, SKYACTIV-G 2.5]**.)

3. Reconnect the negative battery cable. (See **NEGATIVE BATTERY CABLE DISCONNECTION/CONNECTION [SKYACTIV-G 2.0, SKYACTIV-G 2.5]**.)

4. Connect the M-MDS to the DLC 2.

5. Switch the ignition ON (engine off).

6. As the air gradually approaches the MAF detection part of the MAF sensor/IAT sensor No.1, verify that the MAF sensor output voltage (PID: MAF) varies. (See **ON-BOARD DIAGNOSTIC TEST [SKYACTIV-G 2.0, SKYACTIV-G 2.5]**.)

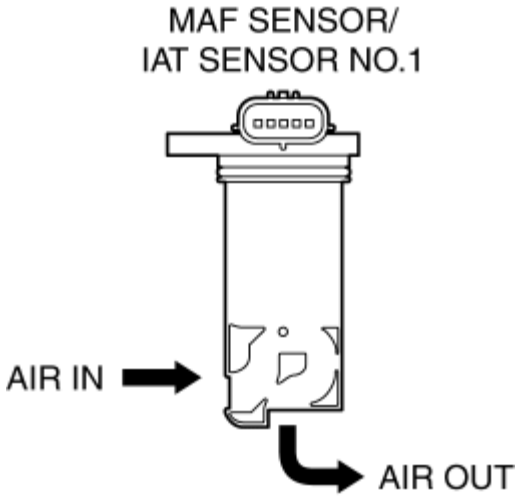

- If not as specified, replace the MAF sensor/IAT sensor No.1. (See **MASS AIR FLOW (MAF) SENSOR/INTAKE AIR TEMPERATURE (IAT) SENSOR NO.1 REMOVAL/INSTALLATION [SKYACTIV-G 2.0, SKYACTIV-G 2.5]**.)

Specification (Reference)

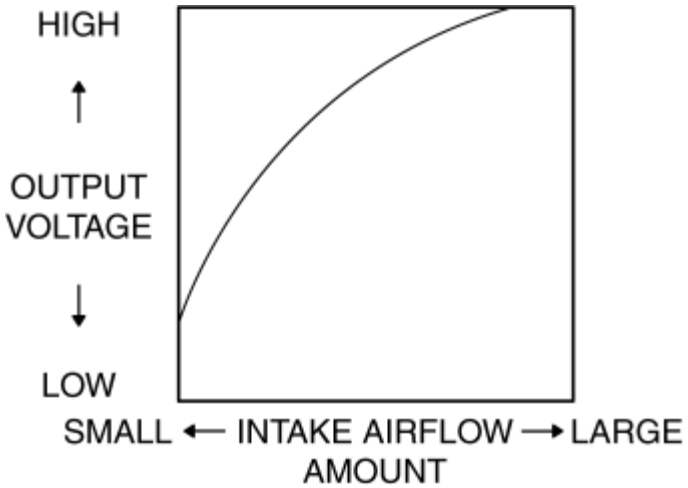

2014 - Mazda3 - Engine

INTAKE AIR TEMPERATURE (IAT) SENSOR INSPECTION [SKYACTIV-G 2.0, SKYACTIV-G 2.5]

IAT Sensor No.1

Resistance inspection

NOTE:

- Because the IAT sensor No.1 is integrated in the MAF sensor, replacing the IAT sensor No.1 includes replacement of the MAF sensor/IAT sensor No.1.

1. Disconnect the negative battery cable. (See **NEGATIVE BATTERY CABLE DISCONNECTION/CONNECTION [SKYACTIV-G 2.0, SKYACTIV-G 2.5]**.)

2. Disconnect the MAF sensor/IAT sensor No.1 connector.

3. Measure the resistance between MAF sensor/IAT sensor No.1 terminals A and B.

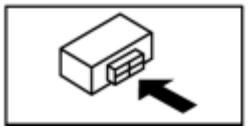

- If not as specified, replace the MAF sensor/IAT sensor No.1. (See **MASS AIR FLOW (MAF) SENSOR/INTAKE AIR TEMPERATURE (IAT) SENSOR NO.1 REMOVAL/INSTALLATION [SKYACTIV-G 2.0, SKYACTIV-G 2.5]**.)

Specification (Reference)

IAT (°C {°F})	Resistance (Kilohms)
−20 {−4}	13.7—16.6
20 {68}	2.49—2.79
60 {140}	0.622—0.703

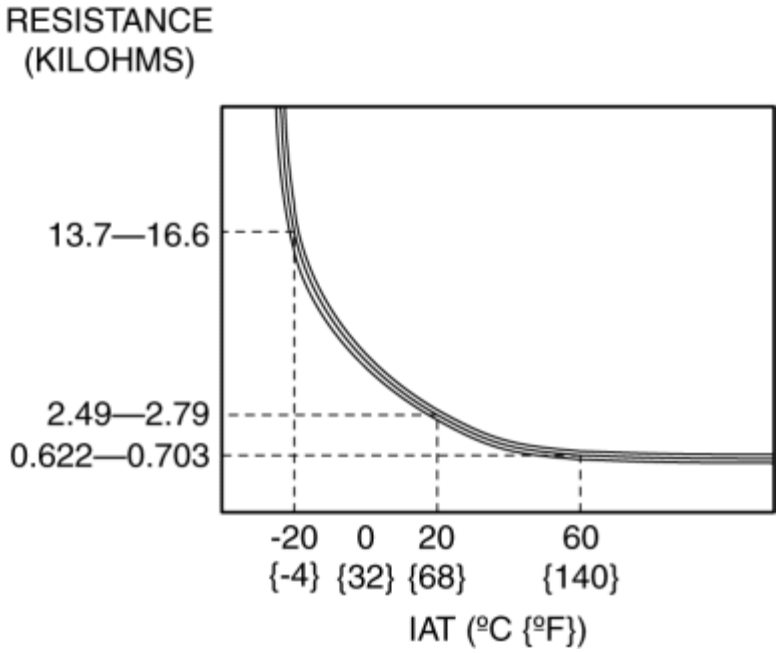

IAT Sensor No.2

Resistance inspection

NOTE:

- Because the IAT sensor No.2 is integrated in the MAP sensor, replacing the IAT sensor No.2 includes replacement of the MAP sensor/IAT sensor No.2.

1. Disconnect the negative battery cable. (See **NEGATIVE BATTERY CABLE DISCONNECTION/CONNECTION [SKYACTIV-G 2.0, SKYACTIV-G 2.5]**.)

2. Disconnect the MAP sensor/IAT sensor No.2 connector.

3. Remove the MAP sensor/IAT sensor No.2. (See **MANIFOLD ABSOLUTE PRESSURE (MAP) SENSOR/INTAKE AIR TEMPERATURE (IAT) SENSOR NO.2 REMOVAL/INSTALLATION [SKYACTIV-G 2.0, SKYACTIV-G 2.5]**.)

4. Measure the resistance between MAP sensor/IAT sensor No.2 terminals A and B.

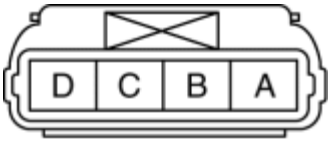

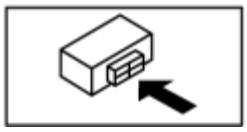

- If not as specified, replace the MAP sensor/IAT sensor No.2. (See **MANIFOLD ABSOLUTE PRESSURE (MAP) SENSOR/INTAKE AIR TEMPERATURE (IAT) SENSOR NO.2 REMOVAL/INSTALLATION [SKYACTIV-G 2.0, SKYACTIV-G 2.5]**.)

Specification (Reference)

IAT (°C {°F})	Resistance (Kilohms)
0 {32}	Approx. 5.9
20 {68}	Approx. 2.5
80 {176}	Approx. 0.323
130 {266}	Approx. 0.0893

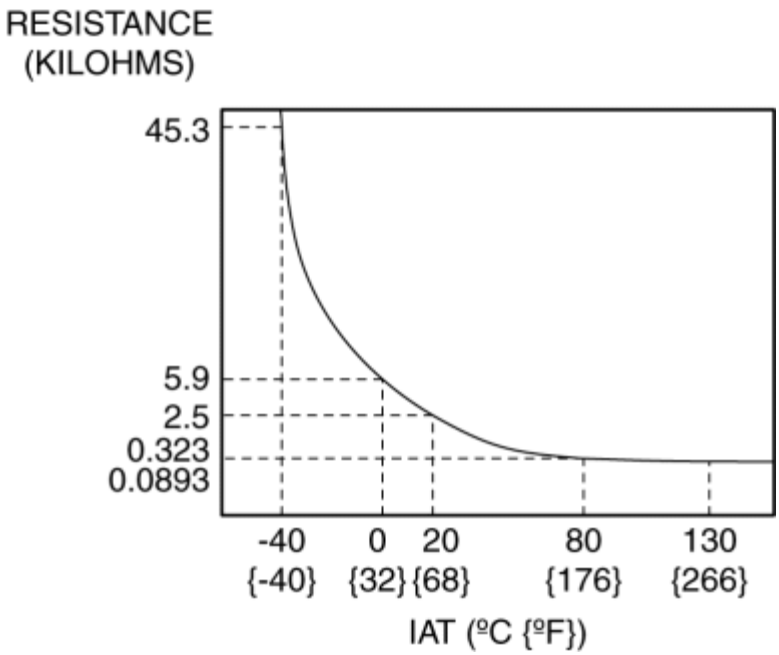

2014 - Mazda3 - Engine

MANIFOLD ABSOLUTE PRESSURE (MAP) SENSOR/INTAKE AIR TEMPERATURE (IAT) SENSOR NO.2 REMOVAL/INSTALLATION [SKYACTIV-G 2.0, SKYACTIV-G 2.5]

NOTE:

- Because the IAT sensor No.2 is integrated in the MAP sensor, replacing the IAT sensor No.2 includes replacement of the MAP sensor/IAT sensor No.2.

1. Disconnect the negative battery cable. (See **NEGATIVE BATTERY CABLE DISCONNECTION/CONNECTION [SKYACTIV-G 2.0, SKYACTIV-G 2.5]**.)

2. Disconnect the MAP sensor/IAT sensor No.2 connector.

3. Remove the MAP sensor/IAT sensor No.2.

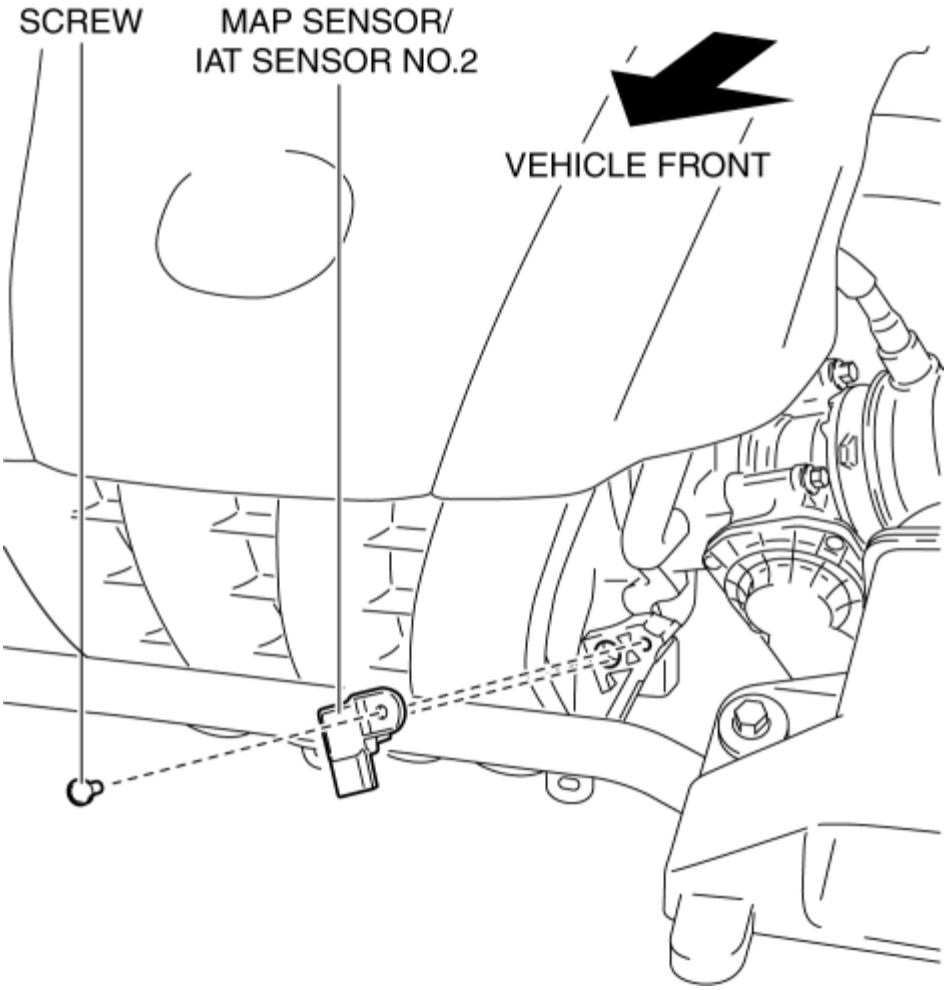

4. Install in the reverse order of removal.

2014 - Mazda3 - Engine

MANIFOLD ABSOLUTE PRESSURE (MAP) SENSOR INSPECTION [SKYACTIV-G 2.0, SKYACTIV-G 2.5]

Voltage Inspection

1. Connect the M-MDS to the DLC 2.
2. Switch the ignition ON (engine off).
3. Verify that the MAP sensor output voltage (PID: MAP) is within the specification. (See **ON-BOARD DIAGNOSTIC TEST [SKYACTIV-G 2.0, SKYACTIV-G 2.5]**.) (See **PCM INSPECTION [SKYACTIV-G 2.0, SKYACTIV-G 2.5]**.)
   - If not within the specification, replace the MAP sensor/IAT sensor No.2. (See **MANIFOLD ABSOLUTE PRESSURE (MAP) SENSOR/INTAKE AIR TEMPERATURE (IAT) SENSOR NO.2 REMOVAL/INSTALLATION [SKYACTIV-G 2.0, SKYACTIV-G 2.5]**.)

Specification (Reference)

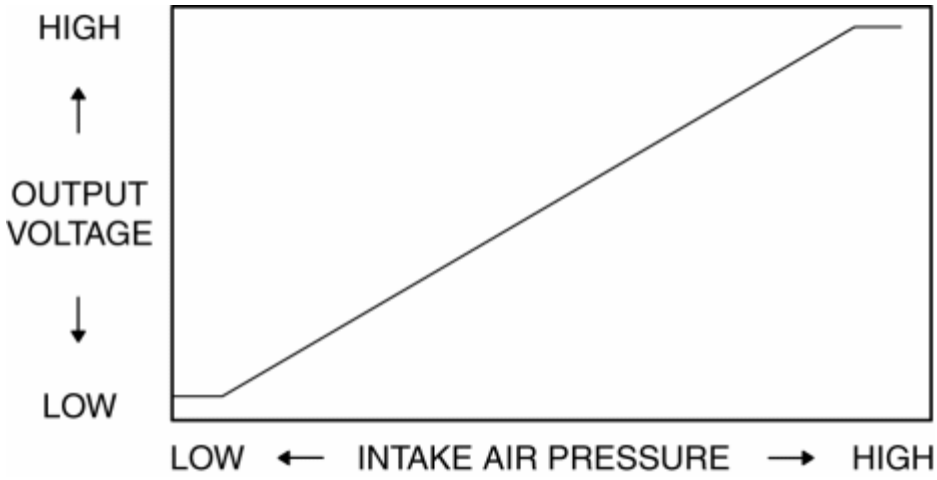

2014 - Mazda3 - Engine

BAROMETRIC PRESSURE (BARO) SENSOR REMOVAL/INSTALLATION [SKYACTIV-G 2.0, SKYACTIV-G 2.5]

NOTE:

- Because the BARO sensor is integrated in the PCM, replacing the BARO sensor includes replacement of the PCM.

1. Remove the PCM. (See **PCM REMOVAL/INSTALLATION [SKYACTIV-G 2.0, SKYACTIV-G 2.5]**.)

2014 - Mazda3 - Engine

BAROMETRIC PRESSURE (BARO) SENSOR INSPECTION [SKYACTIV-G 2.0, SKYACTIV-G 2.5]

Voltage Inspection

NOTE:

- Because the BARO sensor is integrated in the PCM, replacing the BARO sensor includes replacement of the PCM.

1. Connect the M-MDS to the DLC 2.

2. Switch the ignition ON (engine off).

3. Verify that the BARO sensor output voltage (PID: BARO) is within the specification. (See **ON-BOARD DIAGNOSTIC TEST [SKYACTIV-G 2.0, SKYACTIV-G 2.5]**.) (See **PCM INSPECTION [SKYACTIV-G 2.0, SKYACTIV-G 2.5]**.)

   - If not within the specification, replace the PCM. (See **PCM REMOVAL/INSTALLATION [SKYACTIV-G 2.0, SKYACTIV-G 2.5]**.)

Specification (Reference)

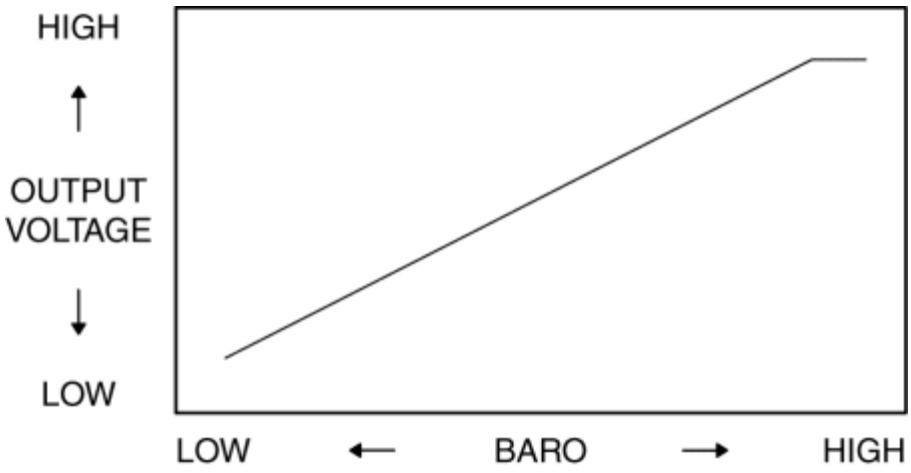

2014 - Mazda3 - Engine

THROTTLE POSITION (TP) SENSOR REMOVAL/INSTALLATION [SKYACTIV-G 2.0, SKYACTIV-G 2.5]

NOTE:

- The TP sensor cannot be removed as a single unit. When replacing the TP sensor, replace it together with the throttle body as a single unit.

1. Remove the throttle body. (See **INTAKE-AIR SYSTEM REMOVAL/INSTALLATION [SKYACTIV-G 2.0, SKYACTIV-G 2.5]**.)

2014 - Mazda3 - Engine

THROTTLE POSITION (TP) SENSOR INSPECTION [SKYACTIV-G 2.0, SKYACTIV-G 2.5]

Voltage Inspection

CAUTION:

- The inspection cannot be performed with this method correctly if there is a malfunction of the APP sensor or throttle valve actuator. Verify that no DTCs related to the APP sensor or throttle valve actuator are stored before the inspection.

NOTE:

- The TP sensor cannot be removed as a single unit. When replacing the TP sensor, replace it together with the throttle body as a single unit.

1. Connect the M-MDS to the DLC 2.

2. Switch the ignition ON (engine off).

3. Verify that the TP sensor output voltage (PID: TP1, TP2) varies according to the accelerator opening angle when the accelerator opening angle is gradually increased. (See **ON-BOARD DIAGNOSTIC TEST [SKYACTIV-G 2.0, SKYACTIV-G 2.5]**.)

    - If verified, go to the next step.
    - If it cannot be verified, replace the throttle body. (See **INTAKE-AIR SYSTEM REMOVAL/INSTALLATION [SKYACTIV-G 2.0, SKYACTIV-G 2.5]**.)

4. Verify that the TP sensor output voltage (PID: TP1, TP2) is within the specification when the accelerator pedal is depressed and not depressed. (See **ON-BOARD DIAGNOSTIC TEST [SKYACTIV-G 2.0, SKYACTIV-G 2.5]**.) (See **PCM INSPECTION [SKYACTIV-G 2.0, SKYACTIV-G 2.5]**.)

    - If not within the specification, replace the throttle body. (See **INTAKE-AIR SYSTEM REMOVAL/INSTALLATION [SKYACTIV-G 2.0, SKYACTIV-G 2.5]**.)

Specification (Reference)

THROTTLE POSITION (TP) SENSOR INSPECTION [SKYACTIV-G 2.0, SKYACTIV-G 2.5]

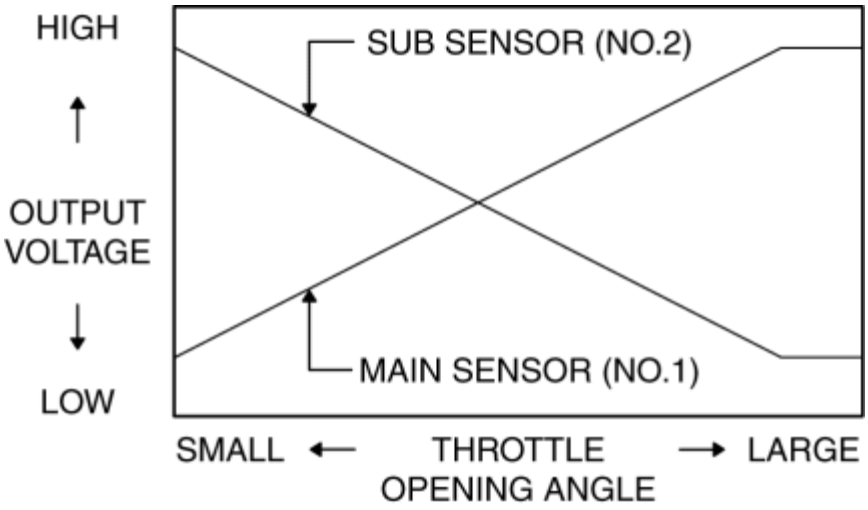

2014 - Mazda3 - Engine

ACCELERATOR PEDAL POSITION (APP) SENSOR REMOVAL/INSTALLATION [SKYACTIV-G 2.0, SKYACTIV-G 2.5]

NOTE:

- Because the APP sensor is integrated in the accelerator pedal, replacing the APP sensor includes replacement of the accelerator pedal.

1. Remove the accelerator pedal. (See **ACCELERATOR PEDAL REMOVAL/INSTALLATION [SKYACTIV-G 2.0, SKYACTIV-G 2.5]**.)

2014 - Mazda3 - Engine

ACCELERATOR PEDAL POSITION (APP) SENSOR INSPECTION [SKYACTIV-G 2.0, SKYACTIV-G 2.5]

Voltage Inspection

NOTE:

- Because the APP sensor is integrated in the accelerator pedal, replacing the APP sensor includes replacement of the accelerator pedal.

1. Connect the M-MDS to the DLC 2.

2. Switch the ignition ON (engine off).

3. Verify that the APP sensor output voltage (PID: APP1, APP2) increases according to the increase in the accelerator opening angle when the accelerator opening angle is gradually increased. (See **ON-BOARD DIAGNOSTIC TEST [SKYACTIV-G 2.0, SKYACTIV-G 2.5]**.)

    - If verified, go to the next step.
    - If it cannot be verified, replace the accelerator pedal. (See **ACCELERATOR PEDAL REMOVAL/INSTALLATION [SKYACTIV-G 2.0, SKYACTIV-G 2.5]**.)

4. Verify that the APP sensor output voltage (PID: APP1, APP2) is within the specification when the accelerator pedal is depressed and not depressed. (See **ON-BOARD DIAGNOSTIC TEST [SKYACTIV-G 2.0, SKYACTIV-G 2.5]**.) (See **PCM INSPECTION [SKYACTIV-G 2.0, SKYACTIV-G 2.5]**.)

    - If not within the specification, replace the accelerator pedal. (See **ACCELERATOR PEDAL REMOVAL/INSTALLATION [SKYACTIV-G 2.0, SKYACTIV-G 2.5]**.)

Specification (Reference)

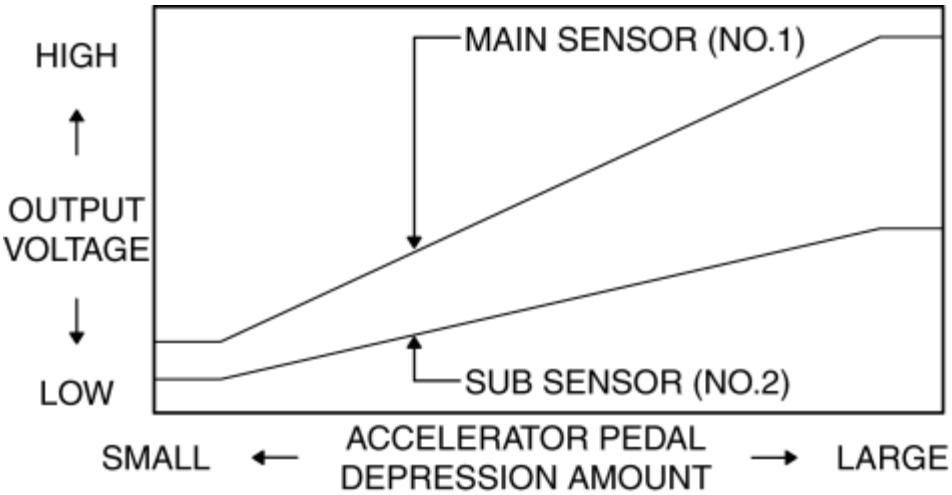

ACCELERATOR PEDAL POSITION (APP) SENSOR INSPECTION [SKYACTIV-G 2.0, SKYACTIV-G 2.5]

2014 - Mazda3 - Engine

FUEL PRESSURE SENSOR REMOVAL/INSTALLATION [SKYACTIV-G 2.0, SKYACTIV-G 2.5]

NOTE:

- The fuel pressure sensor cannot be removed as a single unit. When replacing the fuel pressure sensor, replace it together with the fuel distributor as a single unit.

1. Remove the fuel distributor. (See **FUEL INJECTOR REMOVAL/INSTALLATION [SKYACTIV-G 2.0, SKYACTIV-G 2.5]**.)

2014 - Mazda3 - Engine

FUEL PRESSURE SENSOR INSPECTION [SKYACTIV-G 2.0, SKYACTIV-G 2.5]

Voltage Inspection

NOTE:

- The fuel pressure sensor cannot be removed as a single unit. When replacing the fuel pressure sensor, replace it together with the fuel distributor as a single unit.

1. Connect the M-MDS to the DLC 2.

2. Switch the ignition ON (engine off).

3. Verify that the fuel pressure sensor output voltage (PID: FUEL_PRES) is within the specification. (See **ON-BOARD DIAGNOSTIC TEST [SKYACTIV-G 2.0, SKYACTIV-G 2.5]**.) (See **PCM INSPECTION [SKYACTIV-G 2.0, SKYACTIV-G 2.5]**.)

   - If not within the specification, replace the fuel distributor. (See **FUEL INJECTOR REMOVAL/INSTALLATION [SKYACTIV-G 2.0, SKYACTIV-G 2.5]**.)

Specification (Reference)

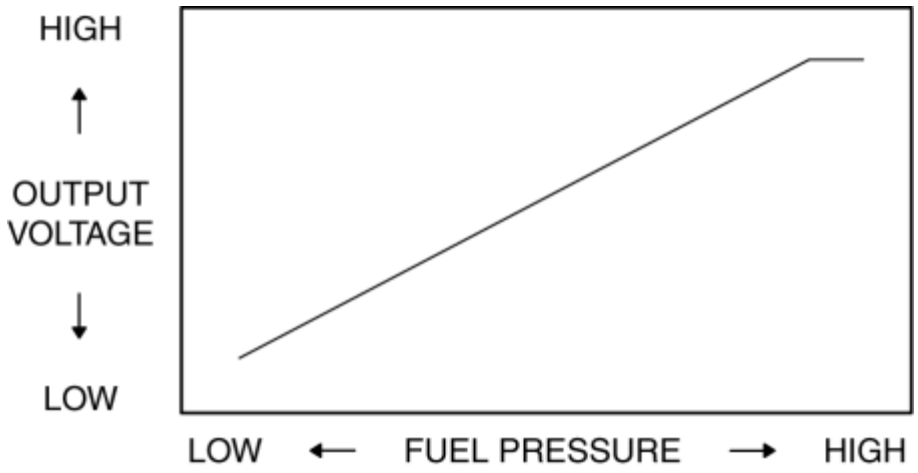

2014 - Mazda3 - Engine

AIR FUEL RATIO (A/F) SENSOR REMOVAL/INSTALLATION [SKYACTIV-G 2.0, SKYACTIV-G 2.5]

WARNING:

- A hot engine and exhaust system can cause severe burns. Turn off the engine and wait until they are cool before removing the exhaust system.

CAUTION:

- Do not allow flammable objects such as the taping for bundling a wiring harness to come into contact with the exhaust manifold and silencer.

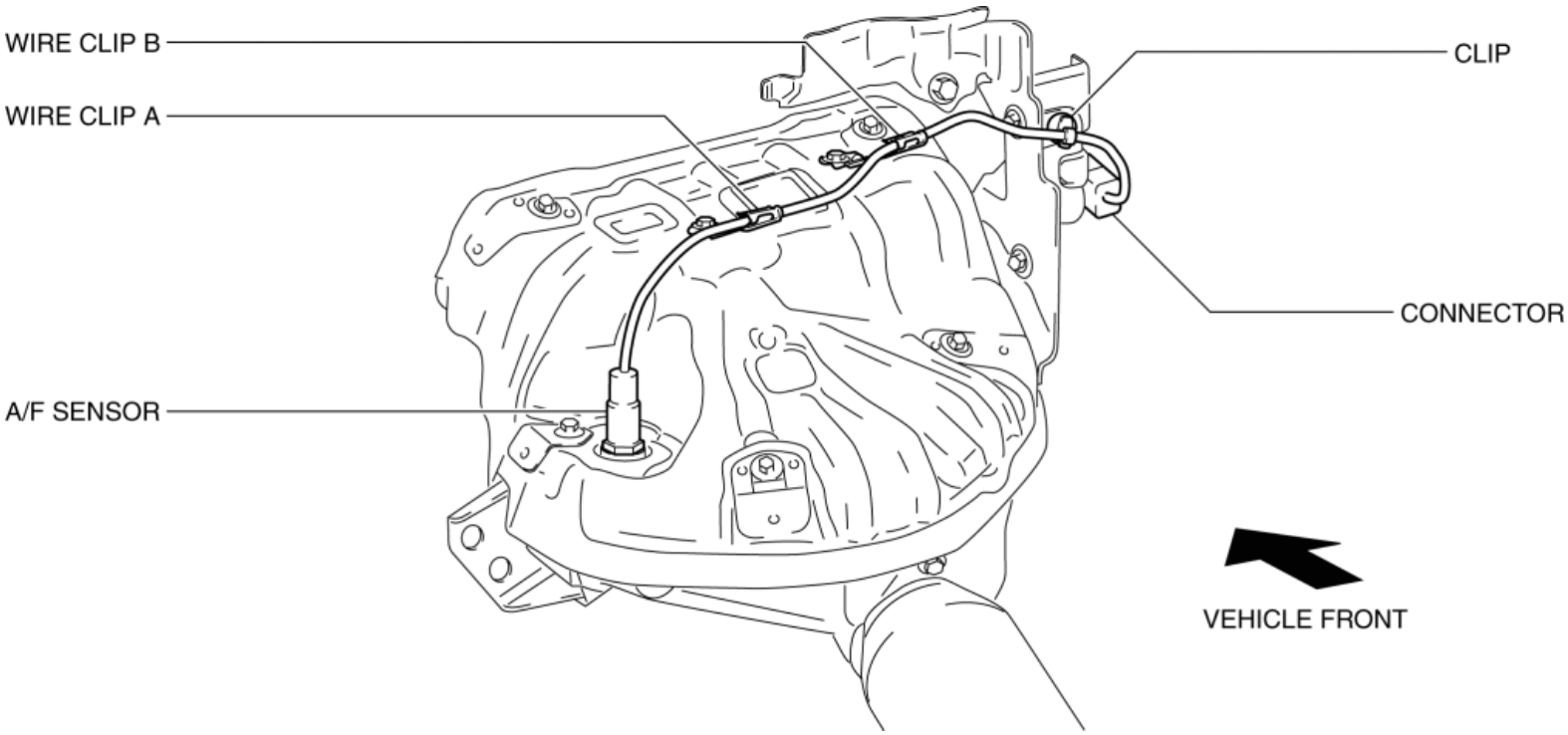

1. Disconnect the negative battery cable. (See **NEGATIVE BATTERY CABLE DISCONNECTION/CONNECTION [SKYACTIV-G 2.0, SKYACTIV-G 2.5]**.)

2. Disconnect the A/F sensor connector.

3. Remove the clip from the bracket.

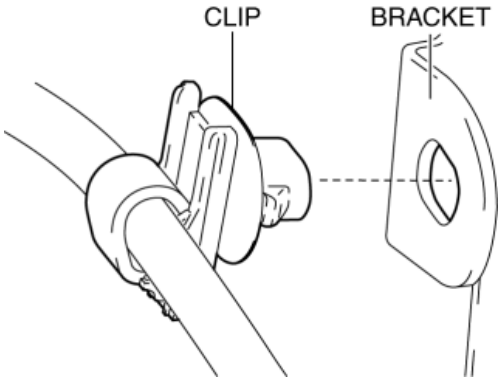

4. Remove the wiring harness from the wire clip A and B. (See **Assembly of Wiring Harness to Wire Clip Note**.)

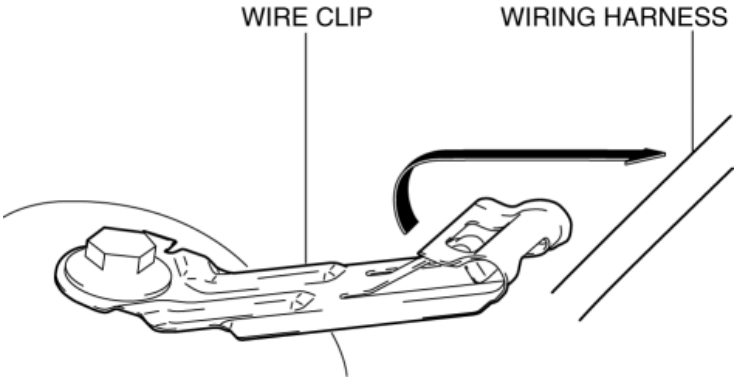

5. Remove the A/F sensor using the **SST**.

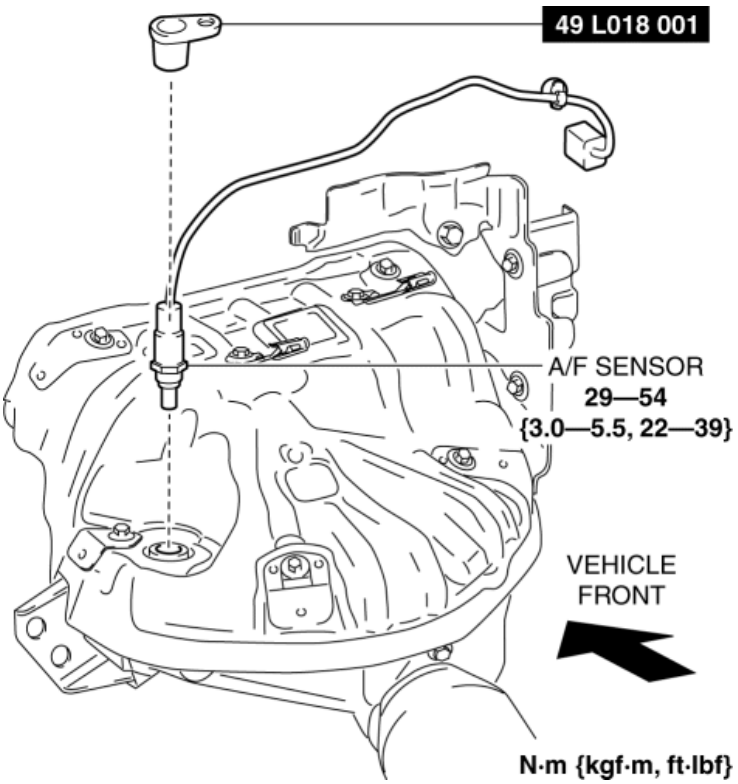

6. Install in the reverse order of removal.

Assembly of Wiring Harness to Wire Clip Note

- Secure the heat shrinkable tube on the wiring harness to wire clip A.

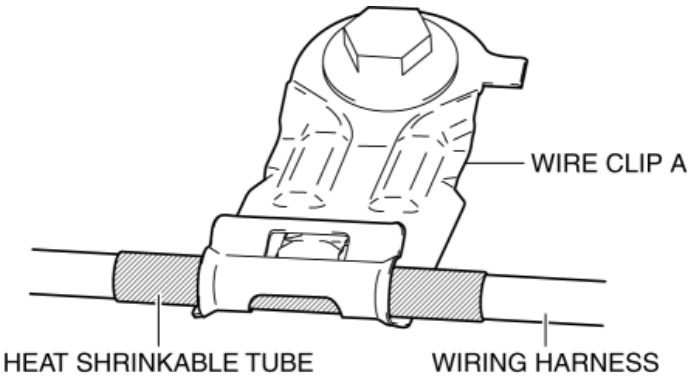

- Secure the wiring harness to wire clip B so that the band on the wiring harness is positioned to the position shown in the figure.

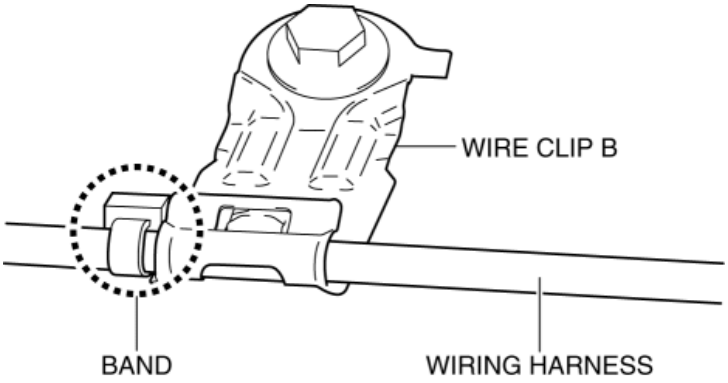
WIRE CLIP B
BAND
WIRING HARNESS

2014 - Mazda3 - Engine

AIR FUEL RATIO (A/F) SENSOR INSPECTION [SKYACTIV-G 2.0, SKYACTIV-G 2.5]

PID/DATA Monitor Inspection (A/F Sensor)

1. Connect the M-MDS to the DLC 2.

2. Start the engine and warm it up completely.

3. Access the following PIDs using the M-MDS. (See **ON-BOARD DIAGNOSTIC TEST [SKYACTIV-G 2.0, SKYACTIV-G 2.5]**.)

   - VSS (Vehicle speed)
   - RPM (Engine speed)
   - O2S11 (A/F sensor output current)

4. Drive the vehicle and decelerate the engine speed by releasing the accelerator pedal fully when the engine speed is **3,000 rpm or more**.

5. Verify that the A/F sensor output current (PID: O2S11) is **0.25 mA or more** while decelerating as shown in the figure.

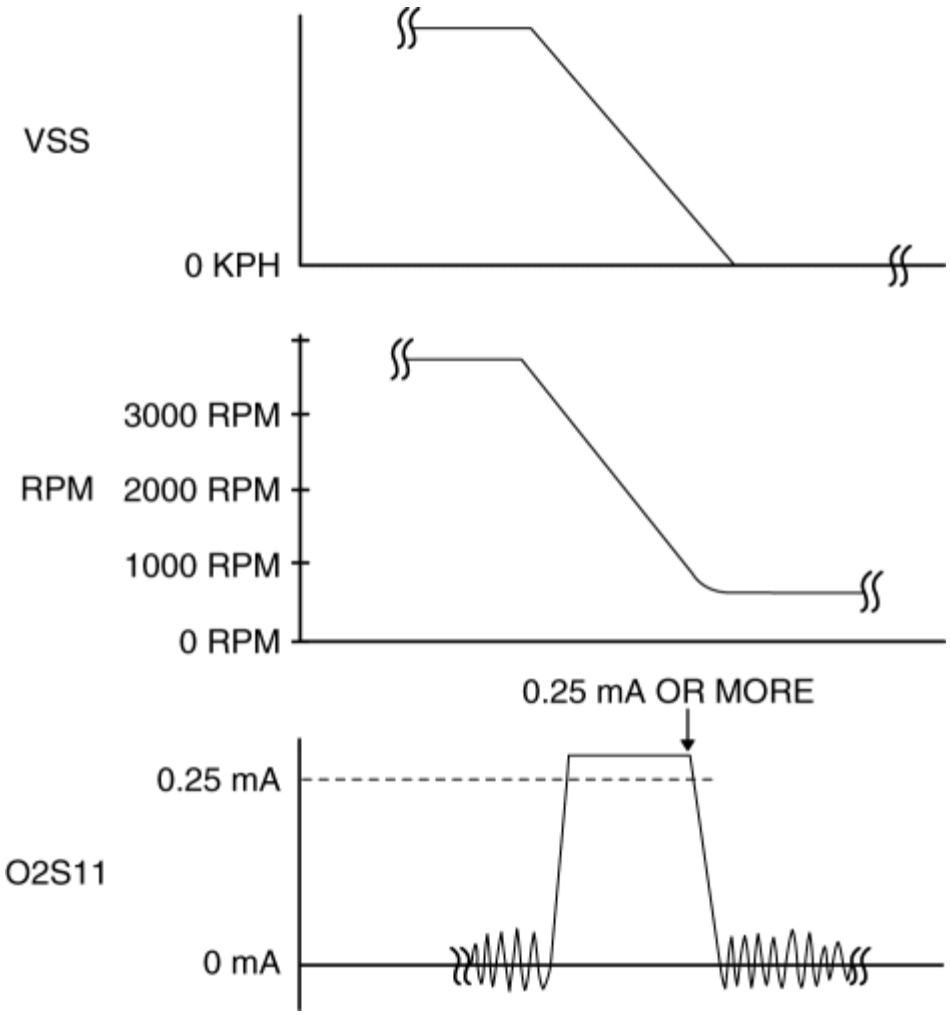

- If not as verified, replace the A/F sensor. (See **AIR FUEL RATIO (A/F) SENSOR REMOVAL/INSTALLATION [SKYACTIV-G 2.0, SKYACTIV-G 2.5]**.)

Resistance Inspection (A/F Sensor Heater)

WARNING:

- A hot engine and exhaust system can cause severe burns. Turn off the engine and wait until they are cool before removing the exhaust system.

1. Disconnect the negative battery cable. (See **NEGATIVE BATTERY CABLE DISCONNECTION/CONNECTION [SKYACTIV-G 2.0, SKYACTIV-G 2.5]**.)

2. Disconnect the A/F sensor connector.

3. Measure the resistance between A/F sensor terminals A and E.

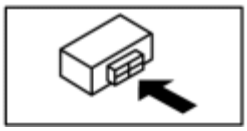

- If not as specified, replace the A/F sensor. (See **AIR FUEL RATIO (A/F) SENSOR REMOVAL/INSTALLATION [SKYACTIV-G 2.0, SKYACTIV-G 2.5]**.)

A/F sensor heater resistance

- 1—10 ohms [normal temperature]

2014 - Mazda3 - Engine

HEATED OXYGEN SENSOR (HO2S) REMOVAL/INSTALLATION [SKYACTIV-G 2.0, SKYACTIV-G 2.5]

WARNING:

- A hot engine and exhaust system can cause severe burns. Turn off the engine and wait until they are cool before removing the exhaust system.

CAUTION:

- Do not allow flammable objects such as the taping for bundling a wiring harness to come into contact with the exhaust manifold and silencer.

NOTE:

- If penetrant lubricating spray penetrates the airflow hole of the HO2S, it could cause interference with the HO2S function.
- When removing the HO2S, wrap a rag around the lower position so that penetrant lubricating spray does not get sprayed into the airflow hole.

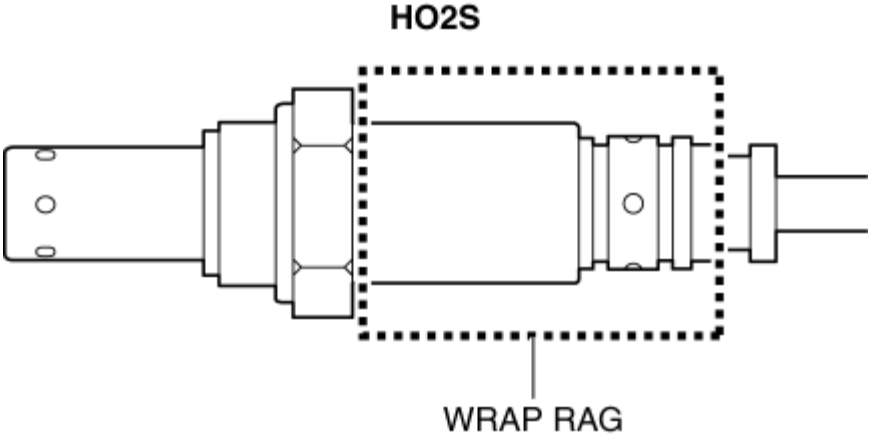

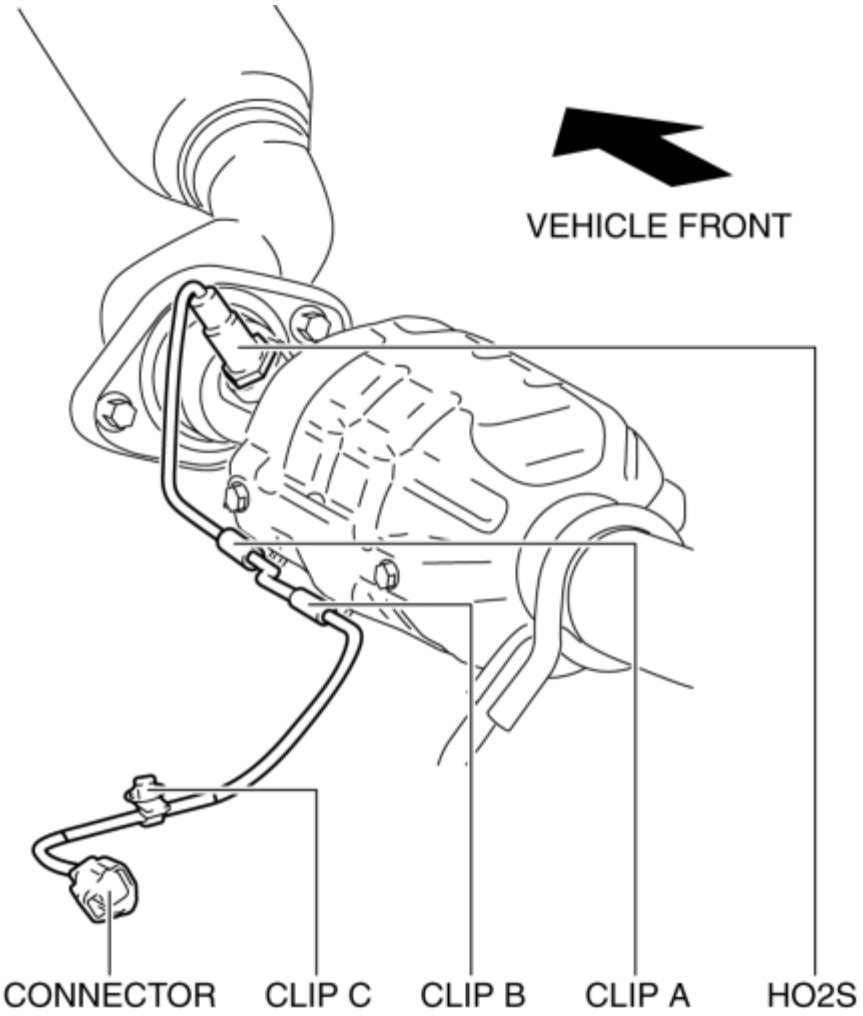

1. Disconnect the negative battery cable. (See **NEGATIVE BATTERY CABLE DISCONNECTION/CONNECTION [SKYACTIV-G 2.0, SKYACTIV-G 2.5]**.)

2. Lift up the vehicle.

3. Remove the floor under cover. (See **FLOOR UNDER COVER REMOVAL/INSTALLATION**.)

4. Disconnect the HO2S connector.

5. Remove the insulator and brace bar. (See **EXHAUST SYSTEM REMOVAL/INSTALLATION [SKYACTIV-G 2.0, SKYACTIV-G 2.5]**.)

6. Remove the clip C from the body.

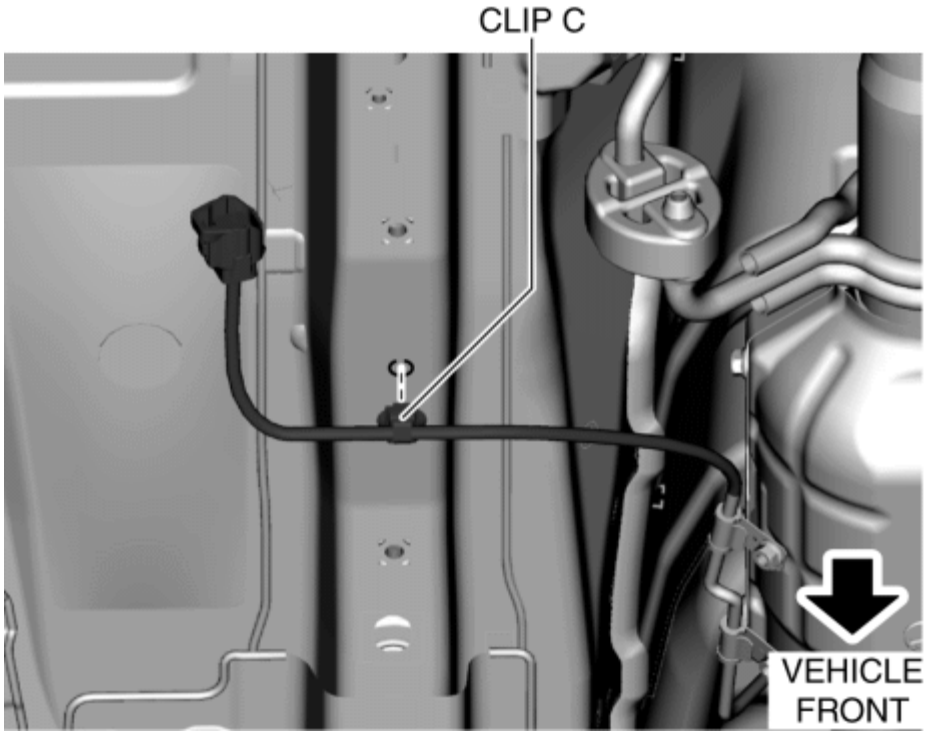

7. Remove the clip A and clip B from the catalytic converter.

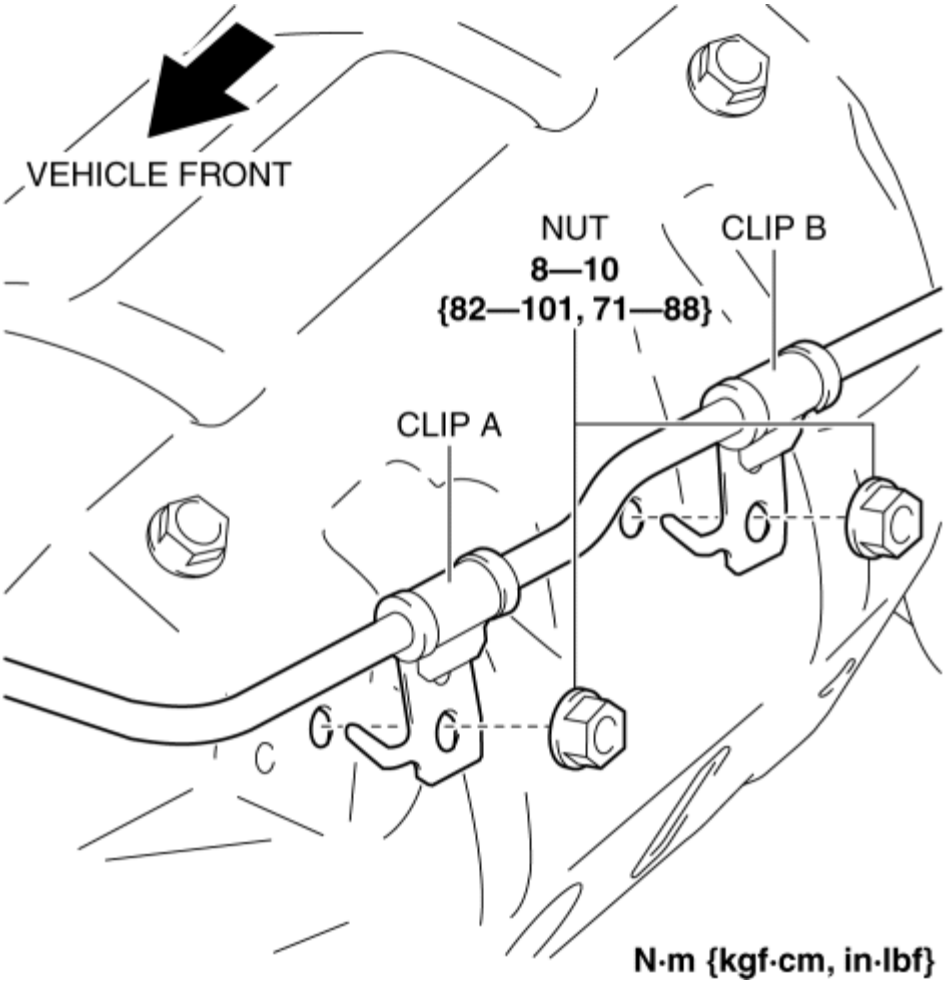

8. Remove the HO2S using the **SST**.

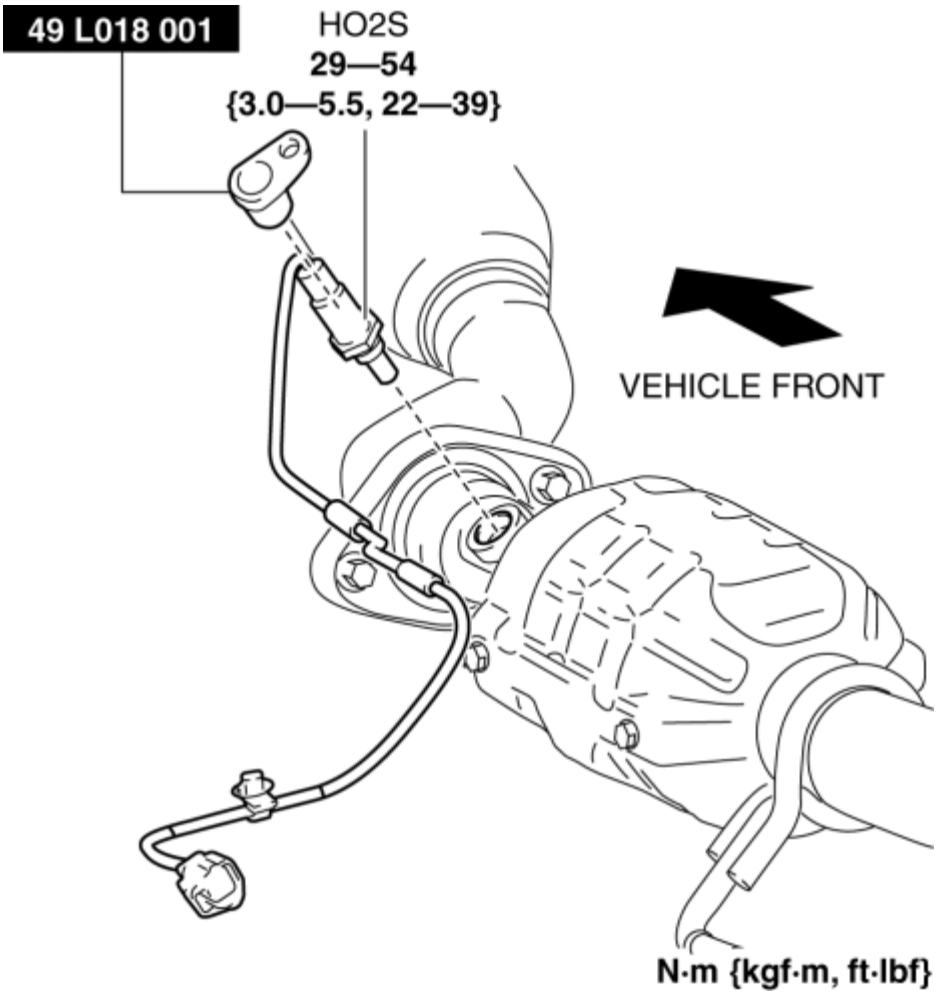

9. Install in the reverse order of removal.

2014 - Mazda3 - Engine

HEATED OXYGEN SENSOR (HO2S) INSPECTION [SKYACTIV-G 2.0, SKYACTIV-G 2.5]

PID/DATA Monitor Inspection (HO2S)

1. Connect the M-MDS to the DLC 2.

2. Start the engine and warm it up completely.

3. Access the following PIDs using the M-MDS. (See **ON-BOARD DIAGNOSTIC TEST [SKYACTIV-G 2.0, SKYACTIV-G 2.5]**.)

   - VSS (Vehicle speed)
   - RPM (Engine speed)
   - O2S12 (HO2S output voltage)

4. Drive the vehicle and decelerate the engine speed by releasing the accelerator pedal fully when the engine speed is **3,000 rpm or more**.

5. Verify that the HO2S output voltage (PID: O2S12) changes as shown in the figure during deceleration. (It outputs **0.6 V or more** once, then **0.3 V or less**.)

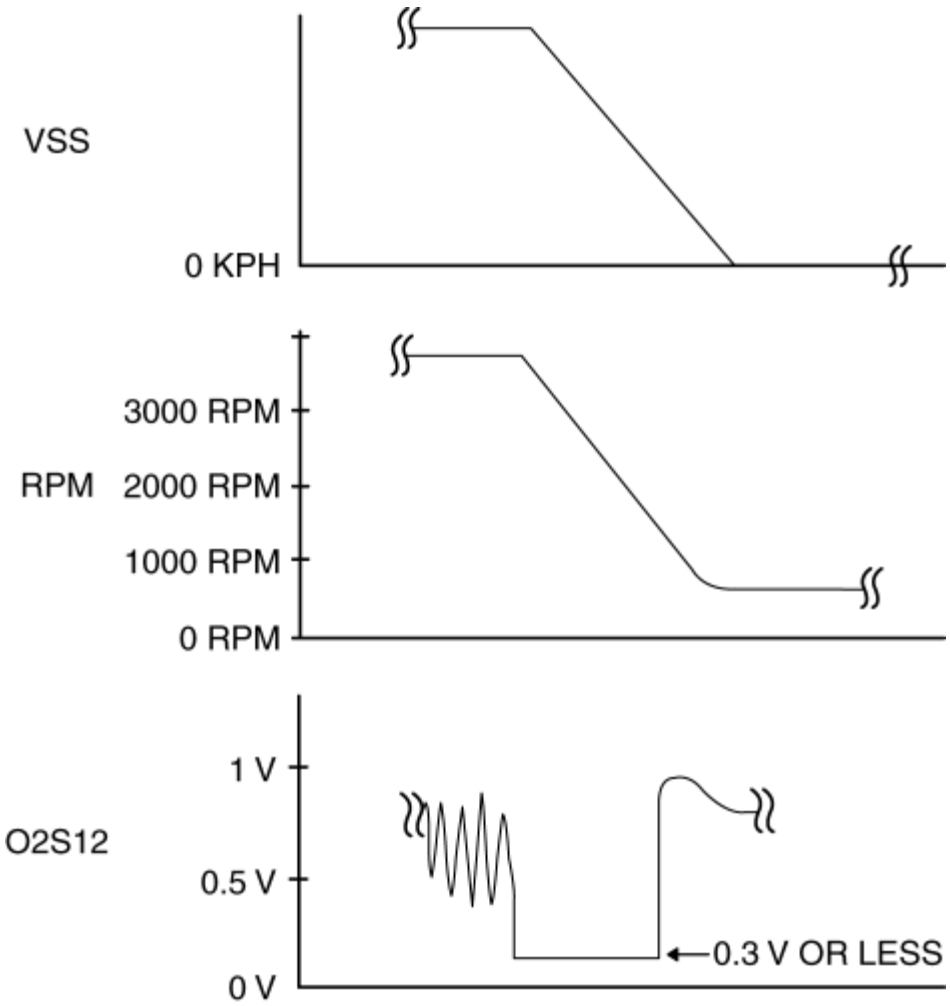

- If not as verified, replace the HO2S. (See **HEATED OXYGEN SENSOR (HO2S) REMOVAL/INSTALLATION [SKYACTIV-G 2.0, SKYACTIV-G 2.5]**.)

Resistance Inspection (HO2S Heater)

WARNING:

- A hot engine and exhaust system can cause severe burns. Turn off the engine and wait until they are cool before removing the exhaust system.

1. Disconnect the negative battery cable. (See **NEGATIVE BATTERY CABLE DISCONNECTION/CONNECTION [SKYACTIV-G 2.0, SKYACTIV-G 2.5]**.)
2. Lift up the vehicle.
3. Remove the floor under cover. (See **FLOOR UNDER COVER REMOVAL/INSTALLATION**.)
4. Disconnect the HO2S connector.
5. Measure the resistance between HO2S terminals C and D.

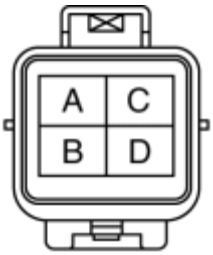

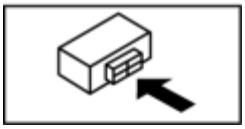

- If not as specified, replace the HO2S. (See **HEATED OXYGEN SENSOR (HO2S) REMOVAL/INSTALLATION [SKYACTIV-G 2.0, SKYACTIV-G 2.5]**.)

HO2S heater resistance

- 2—50 ohms [normal temperature]

2014 - Mazda3 - Engine

CRANKSHAFT POSITION (CKP) SENSOR REMOVAL/INSTALLATION [SKYACTIV-G 2.0, SKYACTIV-G 2.5]

CAUTION:

- When replacing the CKP sensor, make sure there is no foreign matter on it such as metal shavings. If it is installed with foreign matter, the sensor output signal will malfunction resulting from fluctuation in magnetic flux and cause a deterioration in engine control.
- Do not assemble the CKP sensor or change the installation position using any method other than the following. Otherwise, it could negatively affect engine control, such as the ignition timing and fuel injection.

1. Turn the steering wheel to full right lock.

2. Disconnect the negative battery cable. (See **NEGATIVE BATTERY CABLE DISCONNECTION/CONNECTION [SKYACTIV-G 2.0, SKYACTIV-G 2.5]**.)

3. Lift up the vehicle.

4. Perform the following procedure for easier access.

   a. Remove the service hole cover (installed to front under cover No.2) used to remove the oil filter. (See **OIL FILTER REPLACEMENT [SKYACTIV-G 2.0, SKYACTIV-G 2.5]**.)

   b. Remove the front splash shield (RH). (See **SPLASH SHIELD REMOVAL/INSTALLATION**.)

5. Disconnect the CKP sensor connector.

6. Remove the CKP sensor.

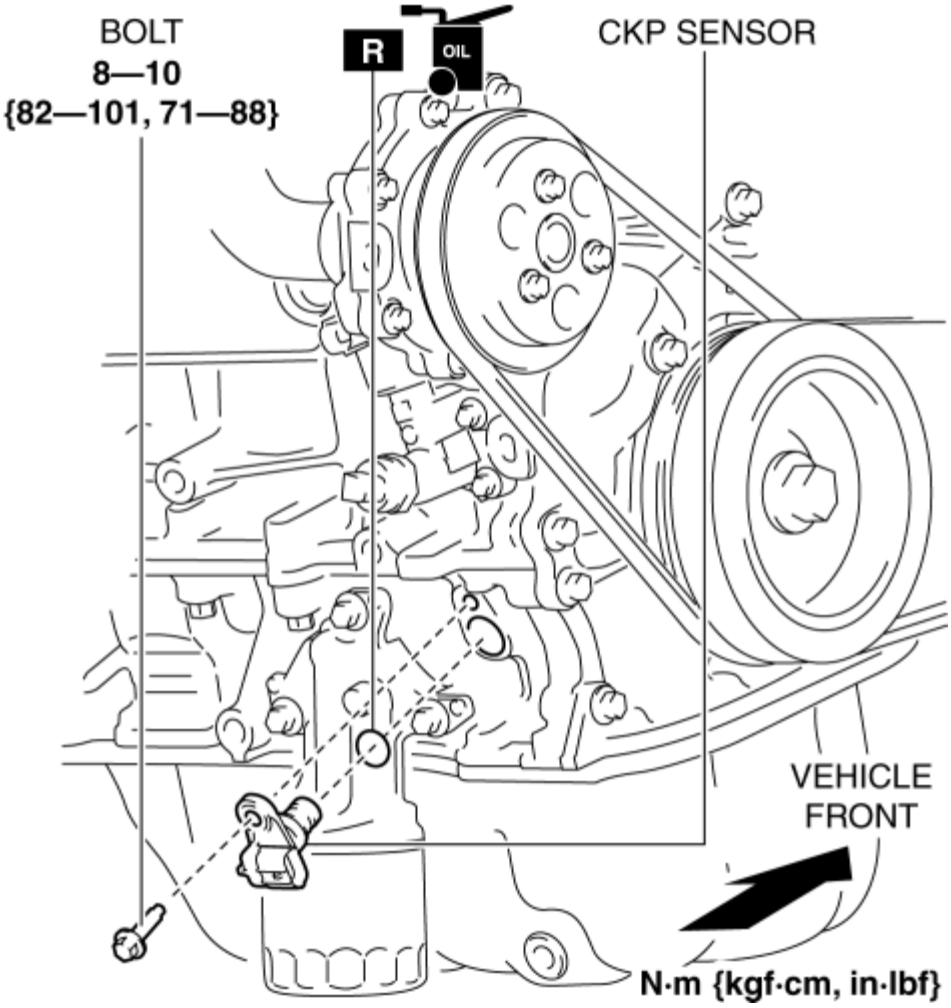

7. Install in the reverse order of removal.

2014 - Mazda3 - Engine

CRANKSHAFT POSITION (CKP) SENSOR INSPECTION [SKYACTIV-G 2.0, SKYACTIV-G 2.5]

Visual Inspection

CAUTION:

- When replacing the CKP sensor, make sure there is no foreign matter on it such as metal shavings. If it is installed with foreign matter, the sensor output signal will malfunction resulting from fluctuation in magnetic flux and cause a deterioration in engine control.

1. Turn the steering wheel to full right lock.

2. Disconnect the negative battery cable. (See **NEGATIVE BATTERY CABLE DISCONNECTION/CONNECTION [SKYACTIV-G 2.0, SKYACTIV-G 2.5]**.)

3. Lift up the vehicle.

4. Perform the following procedure for easier access.

   a. Remove the service hole cover (installed to front under cover No.2) used to remove the oil filter. (See **OIL FILTER REPLACEMENT [SKYACTIV-G 2.0, SKYACTIV-G 2.5]**.)

   b. Remove the front splash shield (RH). (See **SPLASH SHIELD REMOVAL/INSTALLATION**.)

5. Disconnect the CKP sensor connector.

6. Remove the CKP sensor. (See **CRANKSHAFT POSITION (CKP) SENSOR REMOVAL/INSTALLATION [SKYACTIV-G 2.0, SKYACTIV-G 2.5]**.)

7. Verify that there are no metal shavings on the sensor.

   - If there is a malfunction, remove any metal shavings that are adhering.

Voltage Inspection

CAUTION:

- When replacing the CKP sensor, make sure there is no foreign matter on it such as metal shavings. If it is installed with foreign matter, the sensor output signal will malfunction resulting from fluctuation in magnetic flux and cause a deterioration in engine control.
- If the wiring harnesses or waterproof connectors are damaged, water penetrating the connector will cause a sensor malfunction. To prevent this, be careful not to damage wiring harnesses or waterproof connectors.

1. Idle the engine.

2. Measure the CKP sensor output voltage using the oscilloscope.

- If not as specified, replace the CKP sensor. (See **CRANKSHAFT POSITION (CKP) SENSOR REMOVAL/INSTALLATION [SKYACTIV-G 2.0, SKYACTIV-G 2.5]**.)

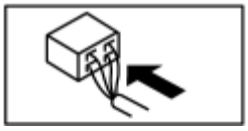

Terminal	Voltage (V)	Condition
A	Approx. 5.0	Under any condition
B	Below 1.0	Under any condition
C	Above 4.5	High output*
	Below 0.8	Low output*

*

Output voltage varies with crankshaft rotation.

2014 - Mazda3 - Engine

CAMSHAFT POSITION (CMP) SENSOR REMOVAL/INSTALLATION [SKYACTIV-G 2.0, SKYACTIV-G 2.5]

CAUTION:

- When replacing the CMP sensor, make sure there is no foreign matter on it such as metal shavings. If it is installed with foreign matter, the sensor output signal will malfunction resulting from fluctuation in magnetic flux and cause a deterioration in engine control.

Intake CMP Sensor

1. Disconnect the negative battery cable. (See **NEGATIVE BATTERY CABLE DISCONNECTION/CONNECTION [SKYACTIV-G 2.0, SKYACTIV-G 2.5]**.)

2. Remove the plug hole plate. (See **PLUG HOLE PLATE REMOVAL/INSTALLATION [SKYACTIV-G 2.0, SKYACTIV-G 2.5]**.)

3. Remove the intake manifold. (See **INTAKE-AIR SYSTEM REMOVAL/INSTALLATION [SKYACTIV-G 2.0, SKYACTIV-G 2.5]**.)

4. Disconnect the intake CMP sensor connector.

5. Remove the intake CMP sensor.

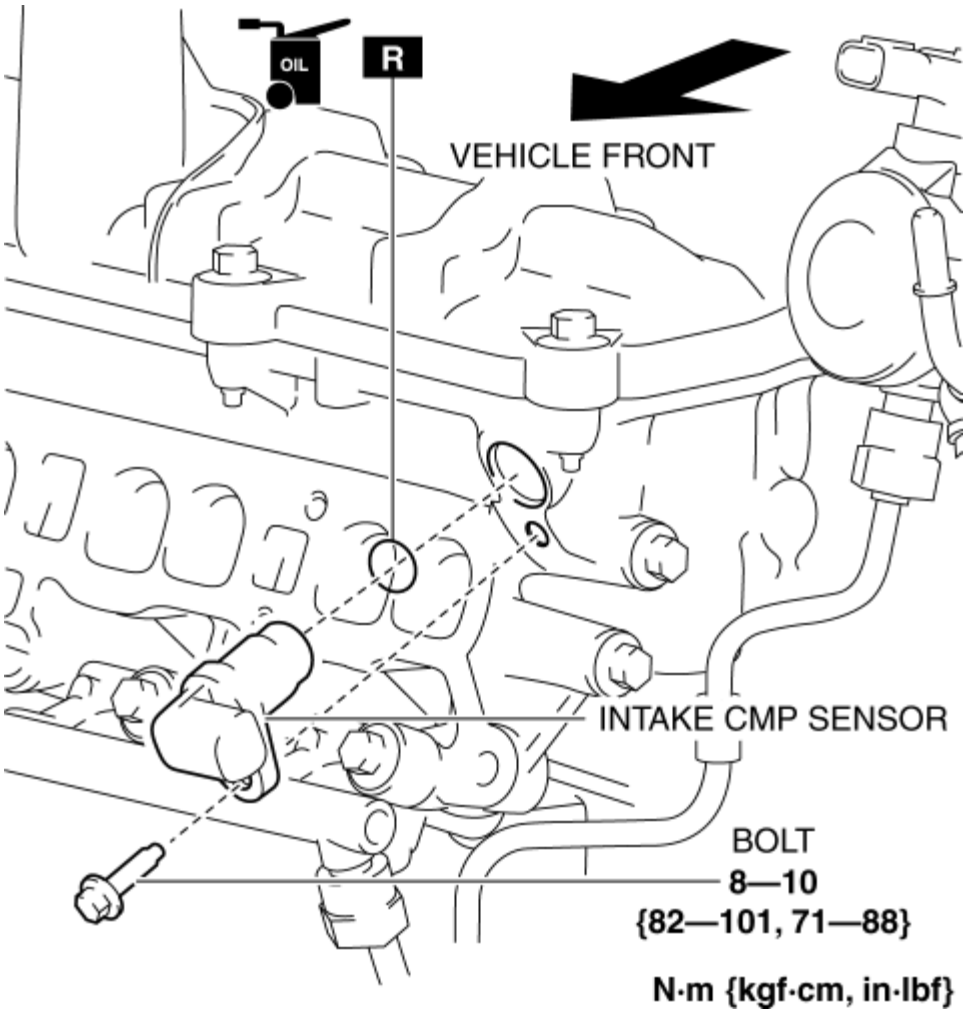

6. Install in the reverse order of removal.

Exhaust CMP Sensor

1. Disconnect the negative battery cable. (See **NEGATIVE BATTERY CABLE DISCONNECTION/CONNECTION [SKYACTIV-G 2.0, SKYACTIV-G 2.5]**.)

2. Disconnect the exhaust CMP sensor connector.

3. Remove the exhaust CMP sensor.

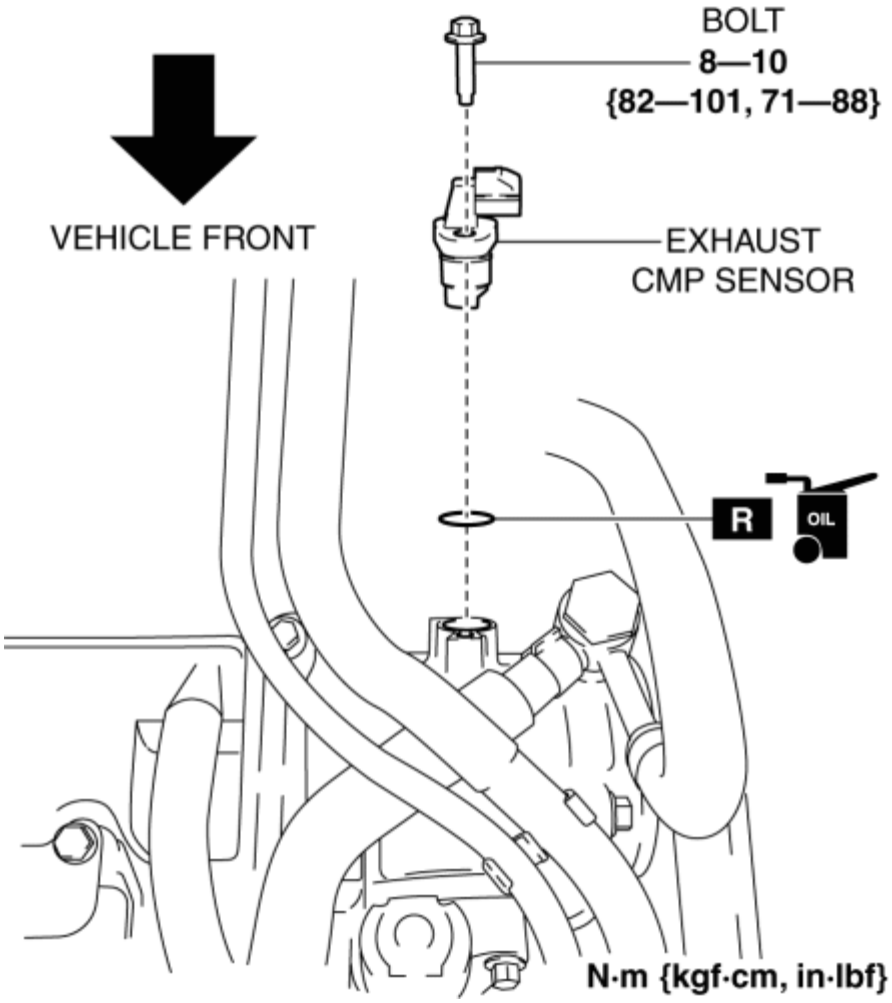

4. Install in the reverse order of removal.

2014 - Mazda3 - Engine

CAMSHAFT POSITION (CMP) SENSOR INSPECTION [SKYACTIV-G 2.0, SKYACTIV-G 2.5]

Intake CMP Sensor

Visual inspection

CAUTION:

- When replacing the CMP sensor, make sure there is no foreign matter on it such as metal shavings. If it is installed with foreign matter, the sensor output signal will malfunction resulting from fluctuation in magnetic flux and cause a deterioration in engine control.

1. Disconnect the negative battery cable. (See **NEGATIVE BATTERY CABLE DISCONNECTION/CONNECTION [SKYACTIV-G 2.0, SKYACTIV-G 2.5]**.)

2. Remove the plug hole plate. (See **PLUG HOLE PLATE REMOVAL/INSTALLATION [SKYACTIV-G 2.0, SKYACTIV-G 2.5]**.)

3. Remove the intake manifold. (See **INTAKE-AIR SYSTEM REMOVAL/INSTALLATION [SKYACTIV-G 2.0, SKYACTIV-G 2.5]**.)

4. Disconnect the intake CMP sensor connector.

5. Remove the intake CMP sensor. (See **CAMSHAFT POSITION (CMP) SENSOR REMOVAL/INSTALLATION [SKYACTIV-G 2.0, SKYACTIV-G 2.5]**.)

6. Verify that there are no metal shavings on the intake CMP sensor.

    - If there is a malfunction, remove any metal shavings that are adhering.

Voltage inspection

CAUTION:

- When replacing the CMP sensor, make sure there is no foreign matter on it such as metal shavings. If it is installed with foreign matter, the sensor output signal will malfunction resulting from fluctuation in magnetic flux and cause a deterioration in engine control.
- If the wiring harnesses or waterproof connectors are damaged, water penetrating the connector will cause a sensor malfunction. To prevent this, be careful not to damage wiring harnesses or waterproof connectors.

1. Idle the engine.

2. Measure the intake CMP sensor output voltage using the oscilloscope.

If not as specified, replace the intake CMP sensor. (See **CAMSHAFT POSITION (CMP) SENSOR REMOVAL/INSTALLATION [SKYACTIV-G 2.0, SKYACTIV-G 2.5]**.)

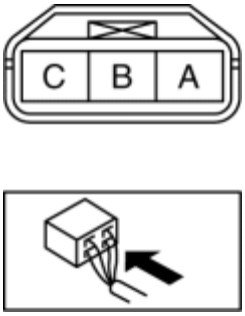

Terminal	Voltage (V)	Condition
A	Above 4.8	High output*
	Below 0.8	Low output*
B	Below 1.0	Under any condition
C	B+	Under any condition

*

Output voltage varies with camshaft rotation.

Exhaust CMP Sensor

Visual inspection

CAUTION:

- When replacing the CMP sensor, make sure there is no foreign matter on it such as metal shavings. If it is installed with foreign matter, the sensor output signal will malfunction resulting from fluctuation in magnetic flux and cause a deterioration in engine control.

1. Disconnect the negative battery cable. (See **NEGATIVE BATTERY CABLE DISCONNECTION/CONNECTION [SKYACTIV-G 2.0, SKYACTIV-G 2.5]**.)

2. Disconnect the exhaust CMP sensor connector.

3. Remove the exhaust CMP sensor. (See **CAMSHAFT POSITION (CMP) SENSOR REMOVAL/INSTALLATION [SKYACTIV-G 2.0, SKYACTIV-G 2.5]**.)

4. Verify that there are no metal shavings on the exhaust CMP sensor.

    - If there is a malfunction, remove any metal shavings that are adhering.

Voltage inspection

CAUTION:

- When replacing the CMP sensor, make sure there is no foreign matter on it such as metal shavings. If it is installed with foreign matter, the sensor output signal will malfunction resulting from fluctuation in magnetic flux and cause a deterioration in engine control.
- If the wiring harnesses or waterproof connectors are damaged, water penetrating the connector will cause a sensor malfunction. To prevent this, be careful not to damage wiring harnesses or waterproof connectors.

1. Idle the engine.
2. Measure the exhaust CMP sensor output voltage using the oscilloscope.
   - If not as specified, replace the exhaust CMP sensor. (See **CAMSHAFT POSITION (CMP) SENSOR REMOVAL/INSTALLATION [SKYACTIV-G 2.0, SKYACTIV-G 2.5]**.)

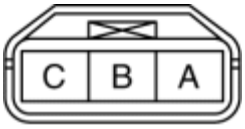

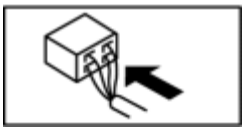

Terminal	Voltage (V)	Condition
A	Above 4.8	High output*
	Below 0.8	Low output*
B	Below 1.0	Under any condition
C	B+	Under any condition

*

Output voltage varies with camshaft rotation.

2014 - Mazda3 - Engine

KNOCK SENSOR (KS) REMOVAL/INSTALLATION [SKYACTIV-G 2.0, SKYACTIV-G 2.5]

1. Disconnect the negative battery cable. (See **NEGATIVE BATTERY CABLE DISCONNECTION/CONNECTION [SKYACTIV-G 2.0, SKYACTIV-G 2.5]**.)
2. Remove the plug hole plate. (See **PLUG HOLE PLATE REMOVAL/INSTALLATION [SKYACTIV-G 2.0, SKYACTIV-G 2.5]**.)
3. Remove the intake manifold. (See **INTAKE-AIR SYSTEM REMOVAL/INSTALLATION [SKYACTIV-G 2.0, SKYACTIV-G 2.5]**.)
4. Disconnect the KS connector.
5. Remove the KS.

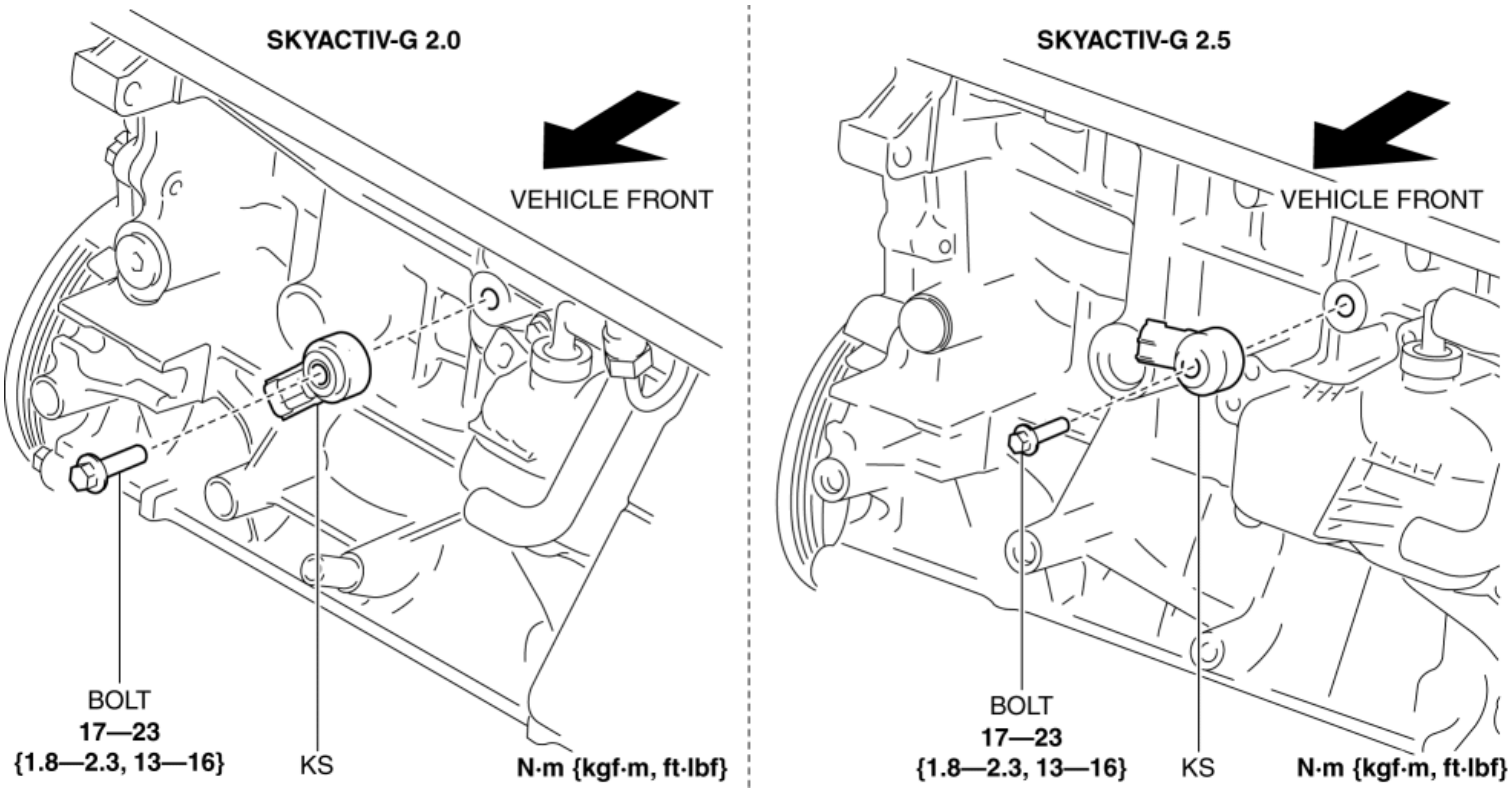

6. Install in the reverse order of removal. (See **KS Installation Note (SKYACTIV-G 2.0)**.) (See **KS Installation Note (SKYACTIV-G 2.5)**.)

KS Installation Note (SKYACTIV-G 2.0)

- Verify that there is no foreign matter caught between the KS unit and cylinder block.
- The direction of the KS connector is within the 90-degree angle range shown in the figure.

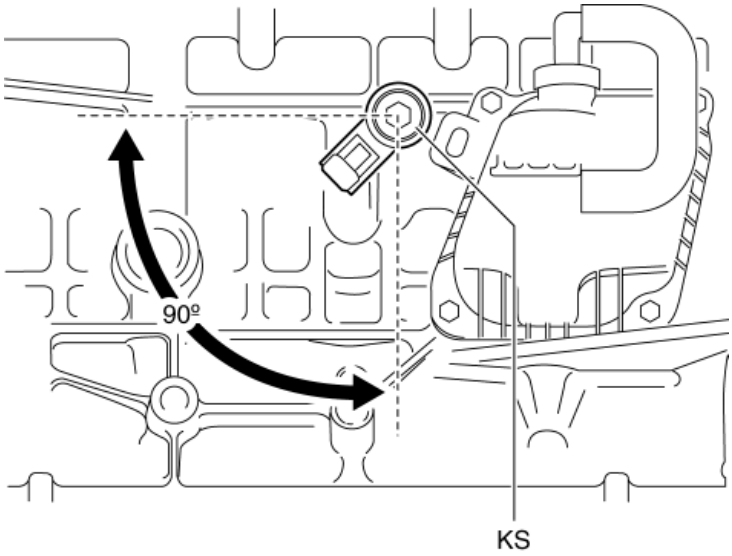

KS Installation Note (SKYACTIV-G 2.5)

- Verify that there is no foreign matter caught between the KS unit and cylinder block.
- The direction of the KS connector is within the 60-degree angle range shown in the figure.

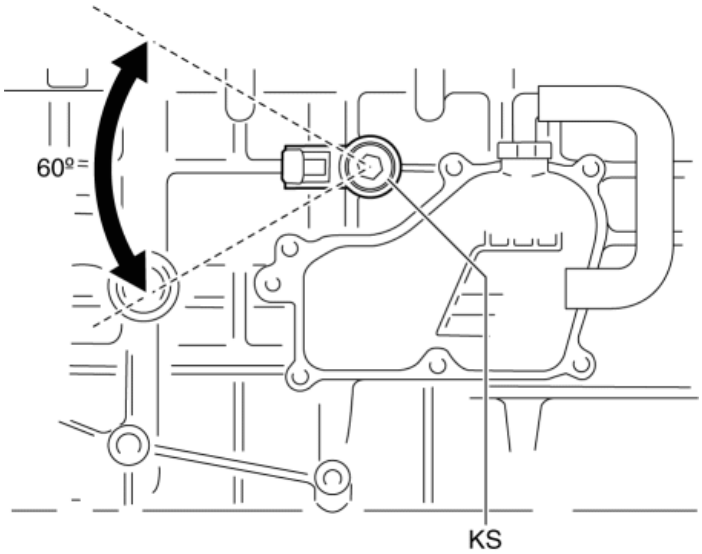

2014 - Mazda3 - Engine

KNOCK SENSOR (KS) INSPECTION [SKYACTIV-G 2.0, SKYACTIV-G 2.5]

Resistance Inspection

1. Disconnect the negative battery cable. (See **NEGATIVE BATTERY CABLE DISCONNECTION/CONNECTION [SKYACTIV-G 2.0, SKYACTIV-G 2.5]**.)

2. Remove the plug hole plate. (See **PLUG HOLE PLATE REMOVAL/INSTALLATION [SKYACTIV-G 2.0, SKYACTIV-G 2.5]**.)

3. Remove the intake manifold. (See **INTAKE-AIR SYSTEM REMOVAL/INSTALLATION [SKYACTIV-G 2.0, SKYACTIV-G 2.5]**.)

4. Disconnect the KS connector.

5. Remove the KS. (See **KNOCK SENSOR (KS) REMOVAL/INSTALLATION [SKYACTIV-G 2.0, SKYACTIV-G 2.5]**.)

6. Measure the resistance between KS terminals A and B.

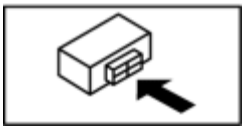

- If not as specified, replace the KS. (See **KNOCK SENSOR (KS) REMOVAL/INSTALLATION [SKYACTIV-G 2.0, SKYACTIV-G 2.5]**.)

  Specification

- 504—616 kilohms [10—30 °C {50—86 °F}]

2014 - Mazda3 - Engine

CURRENT SENSOR REMOVAL/INSTALLATION [SKYACTIV-G 2.0, SKYACTIV-G 2.5]

CAUTION:

- Be careful not to contact the positive battery cable terminal.

Current Sensor Removal

CAUTION:

- If the nut for the current sensor is loosened with the negative battery cable terminal connected to the battery, excessive torque will be applied to the negative battery cable terminal and the battery terminal will be damaged. When removing the negative battery cable terminal and current sensor, be careful not to damage the battery terminal.
- Disconnect the current sensor connector before disconnecting the negative battery cable terminal. If the negative battery cable terminal is disconnected first, the PCM may mistakenly recognize a signal from the current sensor causing interference with engine control.

1. Disconnect the current sensor connector.
2. Disconnect the negative battery cable. (See **NEGATIVE BATTERY CABLE DISCONNECTION/CONNECTION [SKYACTIV-G 2.0, SKYACTIV-G 2.5]**.)
3. Loosen the current sensor nut while fixing the negative battery terminal using a wrench.

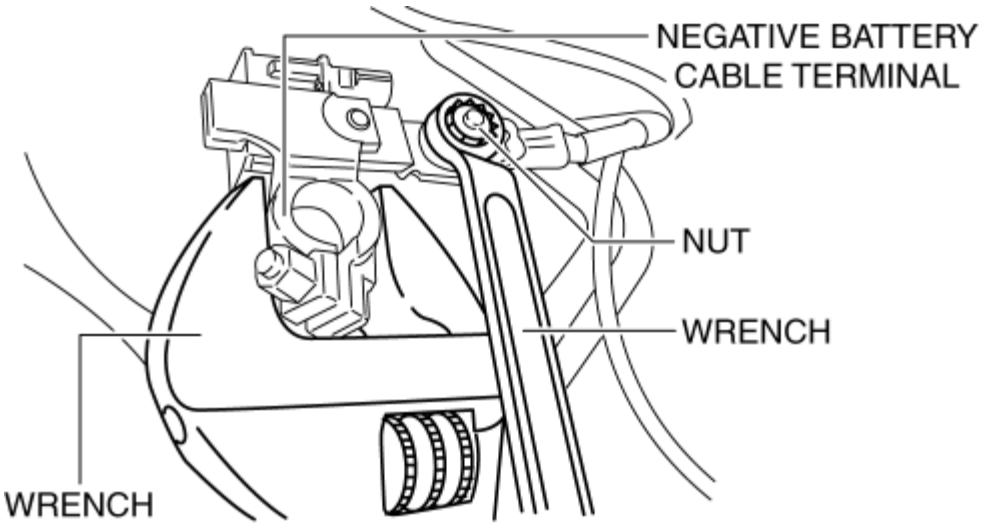

4. Remove the current sensor.

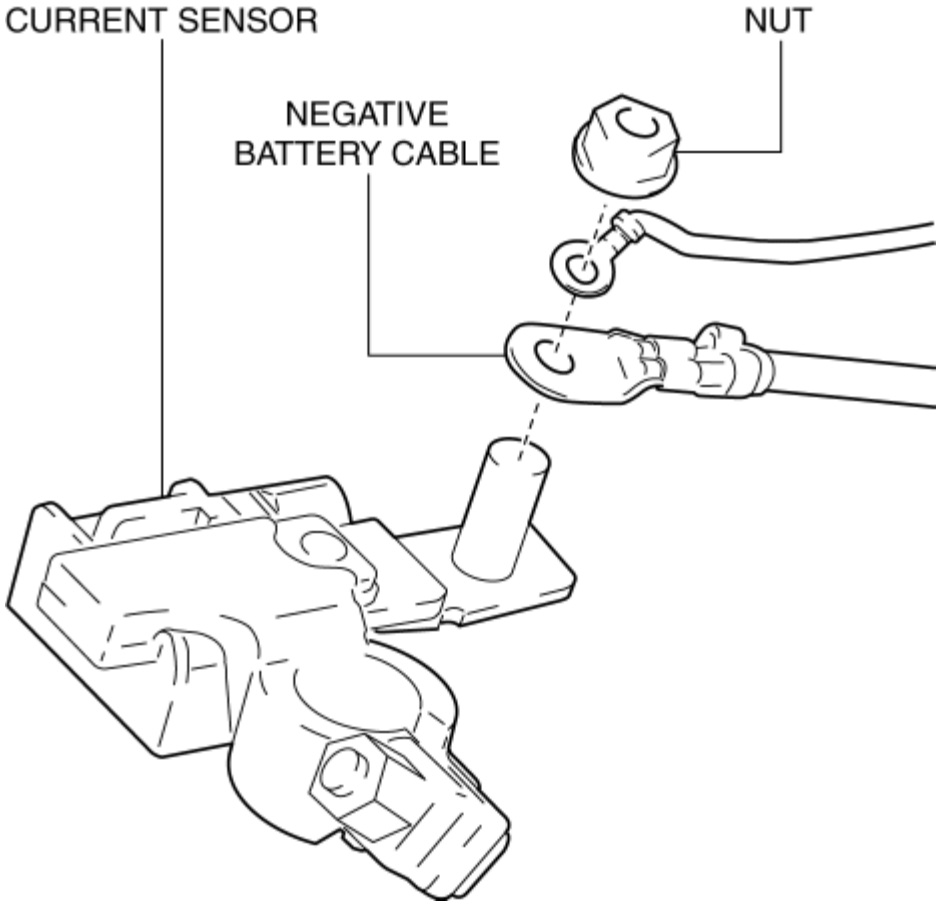

Current Sensor Install

CAUTION:

- Connect the negative battery cable before connecting the current sensor connector. If the current sensor connector is connected first, the PCM may mistakenly recognize a signal from the current sensor and learn the battery condition incorrectly.
- Verifying the tightness while holding the current sensor may apply excessive force to the terminal and the terminal could loosen, causing poor engine starting. When verifying the tightness of the negative battery cable terminal, only hold the terminal area, not the current sensor.

1. Temporarily install the negative battery cable and the current sensor.

2. Tighten the current sensor nut to the specified torque while fixing the negative battery cable terminal using a wrench.

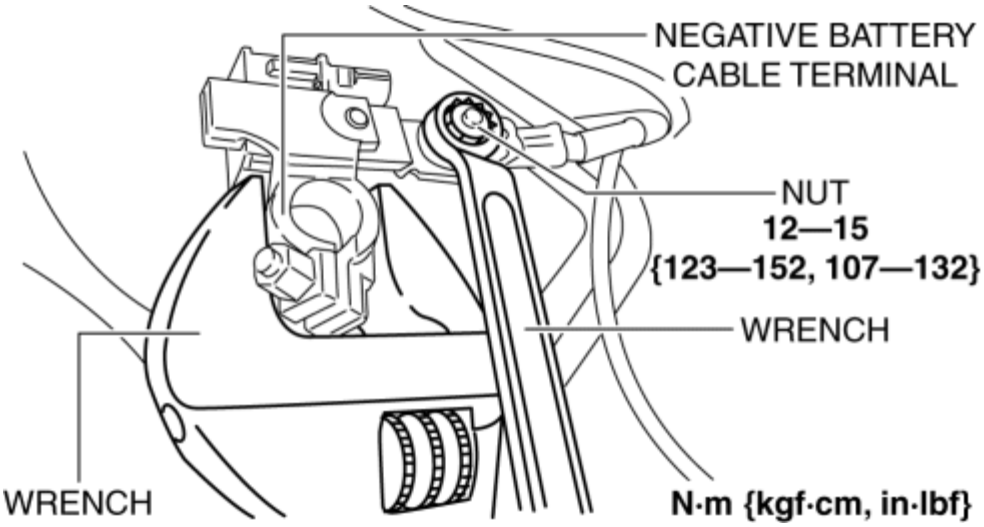

3. Connect the negative battery cable.

4. Connect the current sensor connector.

5. Perform services required after connecting the negative battery cable terminal. (See **NEGATIVE BATTERY CABLE DISCONNECTION/CONNECTION [SKYACTIV-G 2.0, SKYACTIV-G 2.5]**.)

2014 - Mazda3 - Engine

CURRENT SENSOR INSPECTION [SKYACTIV-G 2.0, SKYACTIV-G 2.5]

DTC Inspection

1. Connect the M-MDS to the DLC 2.

2. Perform the DTC inspection using the M-MDS. (See **ON-BOARD DIAGNOSTIC TEST [SKYACTIV-G 2.0, SKYACTIV-G 2.5]**.)

- If any DTC related to the current sensor is present, repair the malfunctioning location according to the applicable DTC troubleshooting. (See **DTC TABLE [SKYACTIV-G 2.0, SKYACTIV-G 2.5]**.)

Visual Inspection

CAUTION:

- If the nut for the current sensor is loosened with the negative battery cable terminal connected to the battery, excessive torque will be applied to the negative battery cable terminal and the battery terminal will be damaged. When removing the negative battery cable terminal and current sensor, be careful not to damage the battery terminal.
- Be careful not to contact the positive battery cable terminal.
- Disconnect the current sensor connector before disconnecting the negative battery cable terminal. If the negative battery cable terminal is disconnected first, the PCM may mistakenly recognize a signal from the current sensor causing interference with engine control.
- Connect the negative battery cable before connecting the current sensor connector. If the current sensor connector is connected first, the PCM may mistakenly recognize a signal from the current sensor and learn the battery condition incorrectly.
- Verifying the tightness while holding the current sensor may apply excessive force to the terminal and the terminal could loosen, causing poor engine starting. When verifying the tightness of the negative battery cable terminal, only hold the terminal area, not the current sensor.

1. Disconnect the current sensor connector.

2. Disconnect the negative battery cable. (See **NEGATIVE BATTERY CABLE DISCONNECTION/CONNECTION [SKYACTIV-G 2.0, SKYACTIV-G 2.5]**.)

3. Remove the current sensor. (See **CURRENT SENSOR REMOVAL/INSTALLATION [SKYACTIV-G 2.0, SKYACTIV-G 2.5]**.)

4. Verify that there is no damage to the current sensor, and no corrosion and damage to the

connector.

- If there is a malfunction, replace the current sensor. (See **CURRENT SENSOR REMOVAL/INSTALLATION [SKYACTIV-G 2.0, SKYACTIV-G 2.5]**.)

2014 - Mazda3 - Engine

FUEL TANK PRESSURE SENSOR REMOVAL/INSTALLATION [SKYACTIV-G 2.0, SKYACTIV-G 2.5]

NOTE:

- The fuel tank pressure sensor cannot be removed as a single unit. When replacing the fuel tank pressure sensor, replace it together with the charcoal canister as a single unit.

1. Remove the charcoal canister. (See **CHARCOAL CANISTER REMOVAL/INSTALLATION [SKYACTIV-G 2.0, SKYACTIV-G 2.5]**.)

2014 - Mazda3 - Engine

FUEL TANK PRESSURE SENSOR INSPECTION [SKYACTIV-G 2.0, SKYACTIV-G 2.5]

Voltage Inspection

NOTE:

- The fuel tank pressure sensor cannot be removed as a single unit. When replacing the fuel tank pressure sensor, replace it together with the charcoal canister as a single unit.

1. Disconnect the negative battery cable. (See **NEGATIVE BATTERY CABLE DISCONNECTION/CONNECTION [SKYACTIV-G 2.0, SKYACTIV-G 2.5]**.)

2. Disconnect the fuel tank pressure sensor connector. (See **CHARCOAL CANISTER REMOVAL/INSTALLATION [SKYACTIV-G 2.0, SKYACTIV-G 2.5]**.)

3. Disconnect the quick release connectors and remove the evaporative hose component (fuel tank side). (See **QUICK RELEASE CONNECTOR REMOVAL/INSTALLATION [SKYACTIV-G 2.0, SKYACTIV-G 2.5]**.) (See **CHARCOAL CANISTER REMOVAL/INSTALLATION [SKYACTIV-G 2.0, SKYACTIV-G 2.5]**.)

4. Switch the ignition ON (engine off).

5. Plug one end of the charcoal canister and verify that the output voltage from the fuel tank pressure sensor changes when pressure is applied from the other end.

    - If not as specified, replace the charcoal canister. (See **CHARCOAL CANISTER REMOVAL/INSTALLATION [SKYACTIV-G 2.0, SKYACTIV-G 2.5]**.)

2014 - Mazda3 - Engine

ENGINE OIL DATA RESET [SKYACTIV-G 2.0, SKYACTIV-G 2.5]

NOTE:

- If the engine oil was replaced with the engine oil maintenance monitor function ON, perform the engine oil data reset to reset the engine oil replacement period calculation data recorded in the PCM regardless of whether or not the wrench mark is illuminated.
- The settings for the engine oil maintenance monitor function can be verified using the M-MDS or the center display (vehicles with center display).

Engine oil data reset procedure

Step	Inspection	Results	Action	Note
1	• Verify the settings for the engine oil maintenance monitor function using the M-MDS. • Is the setting OFF?	Yes	The engine oil data reset is unnecessary.	If the engine oil maintenance monitor function is on, it is necessary to perform the engine oil data reset.
		No	Go to the next step.	
2	• Press and hold the TRIP button with the ignition switched off, then switch it on. • Keep pressing the TRIP button for more than **5 s**. • Does the master warning light flash for a few seconds?	Yes	Engine oil data reset is completed.	The master warning light flashes for a few seconds when the engine oil data reset procedure is completed.
		No	Perform Step 2 again.	

2014 - Mazda3 - Engine

ION SENSOR REMOVAL/INSTALLATION [SKYACTIV-G 2.0, SKYACTIV-G 2.5]

NOTE:

- Because the ion sensor is integrated in the ignition coil, replacing the ion sensor includes replacement of the ignition coil/ion sensor.

1. Remove the ignition coil/ion sensor. (See **IGNITION COIL/ION SENSOR REMOVAL/INSTALLATION [SKYACTIV-G 2.0, SKYACTIV-G 2.5]**.)

2014 - Mazda3 - Engine

ION SENSOR INSPECTION [SKYACTIV-G 2.0, SKYACTIV-G 2.5]

DTC Inspection

1. Connect the M-MDS to the DLC 2.

2. Perform the DTC inspection using the M-MDS. (See **ON-BOARD DIAGNOSTIC TEST [SKYACTIV-G 2.0, SKYACTIV-G 2.5]**.)

- If any DTC related to the ignition coil/ion sensor is present, repair the malfunctioning location according to the applicable DTC troubleshooting. (See **DTC TABLE [SKYACTIV-G 2.0, SKYACTIV-G 2.5]**.)

Visual Inspection

NOTE:

- Because the ion sensor is integrated in the ignition coil, replacing the ion sensor includes replacement of the ignition coil/ion sensor.

1. Disconnect the negative battery cable. (See **NEGATIVE BATTERY CABLE DISCONNECTION/CONNECTION [SKYACTIV-G 2.0, SKYACTIV-G 2.5]**.)

2. Remove the plug hole plate. (See **PLUG HOLE PLATE REMOVAL/INSTALLATION [SKYACTIV-G 2.0, SKYACTIV-G 2.5]**.)

3. Remove the ignition coil/ion sensor. (See **IGNITION COIL/ION SENSOR REMOVAL/INSTALLATION [SKYACTIV-G 2.0, SKYACTIV-G 2.5]**.)

4. Verify that there is no damage to the ignition coil/ion sensor, and no corrosion and damage to the connector.

- If there is a malfunction, replace the ignition coil/ion sensor. (See **IGNITION COIL/ION SENSOR REMOVAL/INSTALLATION [SKYACTIV-G 2.0, SKYACTIV-G 2.5]**.)

2014 - Mazda3 - Engine

ENGINE TECHNICAL DATA [SKYACTIV-G 2.0, SKYACTIV-G 2.5]

Item	Specification
Idle speed (MTX: Neutral position, ATX: P, N position)	MTX: 500—600 rpm ATX: 550—650 rpm
Ignition timing [SKYACTIV-G 2.0]	MTX: Approx. BTDC 14° ATX: Approx. BTDC 12°
Ignition timing [SKYACTIV-G 2.5]	Approx. BTDC 12°
CO concentration	Within the regulation
HC concentration	Within the regulation
Idle-up speed (MTX: Neutral position, ATX: P, N position)	A/C on: 650—800 rpm Electrical loads on: 600—750 rpm
Compression [SKYACTIV-G 2.0]	Standard: 885 kPa {9.02 kgf/cm^2, 128 psi}[300 rpm] Minimum: 708 kPa {7.22 kgf/cm^2, 103 psi}[300 rpm] Maximum difference between cylinders: 150 kPa {1.53 kgf/cm^2, 21.8 psi}[300 rpm]
Compression [SKYACTIV-G 2.5]	Standard: 954 kPa {9.73 kgf/cm^2, 138 psi}[300 rpm] Minimum: 763 kPa {7.78 kgf/cm^2, 111 psi}[300 rpm] Maximum difference between cylinders: 161 kPa {1.64 kgf/cm^2, 23.4 psi}[300 rpm]
OCV coil resistance	6.9—7.5 ohms [20°C {68°F}]
Cylinder head bolt length L	145.2—145.8 mm {5.717—5.740 in}

Cylinder head bolt length L maximum	146.5 mm {5.767 in}
Front oil seal press on amount	0—1.0 mm {0—0.039 in}
Rear oil seal press on amount	0—0.5 mm {0—0.019 in}
Engine oil capacity [SKYACTIV-G 2.0] (approx. quantity)	Oil replacement: 4.0 L {4.2 US qt, 3.5 Imp qt} Oil and oil filter replacement: 4.2 L {4.4 US qt, 3.7 Imp qt} Total (dry engine): 4.9 L {5.2 US qt, 4.3 Imp qt}
Engine oil capacity [SKYACTIV-G 2.5] (approx. quantity)	Oil replacement: 4.3 L {4.5 US qt, 3.8 Imp qt} Oil and oil filter replacement: 4.5 L {4.8 US qt, 4.0 Imp qt} Total (dry engine): 5.4 L {5.7 US qt, 4.8 Imp qt}
Oil pressure (reference value) [coolant temperature: 80—90 °C {176—194 °F}]	Lo: 110—175 kPa {1.13—1.78 kgf/cm^2, 16.0—25.3 psi} [1,500 rpm] Hi: 300—430 kPa {3.06—4.38 kgf/cm^2, 43.6—62.3 psi} [4,500 rpm]
Engine coolant capacity (approx. quantity)	SKYACTIV-G 2.0 MTX: 6.3 L {6.7 US qt, 5.5 Imp qt} SKYACTIV-G 2.0 ATX: 6.5 L {6.9 US qt, 5.7 Imp qt} SKYACTIV-G 2.5 ATX: 6.8 L {7.2 US qt, 6.0 Imp qt}
Cooling system cap valve opening pressure	93.2—122.6 kPa {0.951—1.250 kgf/cm^2, 13.6—17.7 psi}
Thermostat initial-opening temperature	U.S.A. and Canada: 80.5—83.5 °C {177—182 °F} Except U.S.A. and Canada: 86.5—89.5 °C {188—193 °F}
Thermostat full-open temperature	95 °C {203 °F}
Thermostat full-open lift	8.5 mm {0.33 in} or more
Cooling fan motor No.1, No.2 standard current	No.1: 4.3—8.3 A [12 V] No.2: 4.1—8.1 A [12 V]
Throttle body resistance	0.3—100 ohms [20°C {68 °F}]
Fuel pressure	405—485 kPa {4.13—4.94 kgf/cm^2, 58.8—70.3 psi}
Fuel hold pressure	230 kPa {2.35 kgf/cm^2, 33.4 psi} or more

Fuel injector resistance	1.74—2.04 ohms [20 °C {68 °F}]
Battery electrolyte specific gravity (without i-ELOOP)	1.22—1.29 [20 °C {68 °F}]
Battery load test current (without i-ELOOP)	55D23L (60 A·h/20HR): 180 A 75D23L (65 A·h/20HR): 195 A
Parasitic draw (When the ignition is off (lock), all doors and the hood are closed.) (without i-ELOOP)	40—65 mA
Battery slow charge current (without i-ELOOP)	55D23L (60 A·h/20HR): 4.5—5.5 A 75D23L (65 A·h/20HR): 5.0—6.0 A
Battery quick charge current [30 min] (without i-ELOOP)	55D23L (60 A·h/20HR): 30 A 75D23L (65 A·h/20HR): 35 A
Generator standard voltage [IG-ON] (without i-ELOOP)	Terminal 1A: B+ Terminal 2A: Approx. 1 V or less Terminal 2B: Approx. 0 V
Generator standard voltage [Idle, 20 °C {68 °F}] (without i-ELOOP)	Terminal 1A: 13—15 V Terminal 2A: Approx. 3—8 V Terminal 2B: Turn the electrical loads (such as headlights, blower motor, rear window defroster, brake lights) on and verify that the voltage reading increases.
Generator generated current minimum value (without i-ELOOP)	70% of the nominal output current (nominal output current: 100 A) [Ambient temp. 20 °C {68 °F}, voltage 13.0—15.0 V, both engine and generator are hot]
Generator rotor resistance (between slip rings) [20 °C {68 °F}] (without i-ELOOP)	1.8—2.1 ohms
Generator brush length (without i-ELOOP)	Standard: 22.5 mm {0.886 in} Minimum: 5.0 mm {0.20 in}
Generator brush spring force (without i-ELOOP)	Standard: 4.1—5.3 N {0.42—0.54 kgf, 1.0—1.1 lbf} Minimum: 1.7 N {0.17 kgf, 0.38 lbf}

Firing order	1—3—4—2 (all cylinders independent firing)
	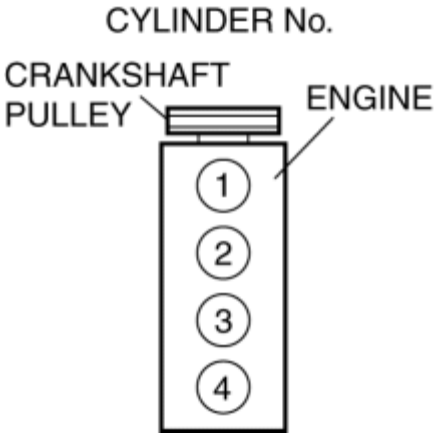
Spark plug type	PE5R-18-110, PE5S-18-110
Spark plug gap	Standard: 1.05—1.40 mm {0.0414—0.0551 in} New spark plug (reference): 1.05—1.15 mm {0.0414—0.0452 in}
Spark plug resistance [25°C {77 °F}]	3.0—7.5 kilohms
Starter no-load test voltage	11 V
Starter no-load test current	SKYACTIV-G 2.0: 95 A or less SKYACTIV-G 2.5: 90 A or less
Starter pinion gap	0.5—2.0 mm {0.02—0.07 in}
Starter armature runout	0.1 mm {0.004 in} max.
Starter commutator diameter	Standard: 29.4 mm {1.16 in} Minimum: 28.8 mm {1.13 in}
Segment groove depth of starter commutator	Standard: 0.5 mm {0.02 in} Minimum: 0.2 mm {0.008 in}
Starter brush length	Standard: 12.3 mm {0.484 in} Minimum: 5.5 mm {0.22 in}
Starter brush spring force	Standard: 15.0—20.4 N {1.53—2.08 kgf, 3.38—4.58 lbf} Minimum: 2.75 N {0.280 kgf, 0.618 lbf}

Engine oil specification

Item	U.S.A., Canada and Puerto Rico	Except U.S.A., Canada and Puerto Rico
Engine oil grade	(ILSAC)	API SERVICE SM SAE 5W-30 ENERGY CONSERVING II (ILSAC)
		API SM or ILSAC
Engine oil viscosity	0W-20	5W-30 (If SAE 5W-30 engine oil is not available, use SAE 5W-20 engine oil.)

< Previous

2014 - Mazda3 - Engine

ENGINE SST [SKYACTIV-G 2.0, SKYACTIV-G 2.5]

1: Mazda SST number

2: Global SST number

Example

1:49 UN20 5072 2:205–072 Holder	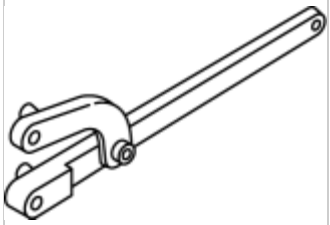

1:49 L088 009 2:– Feeler tool kit		1: 49 UN20 5072 2: 205–072 Holder	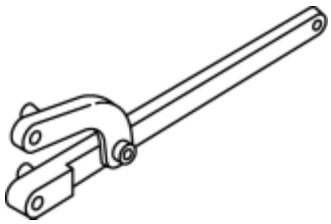	1: 49 B011 105 2: – Adapter	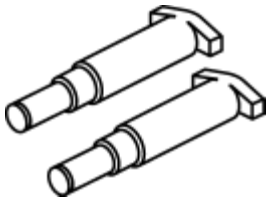
1: 49 UN30 3050 2: 303–050 Engine lifting bracket	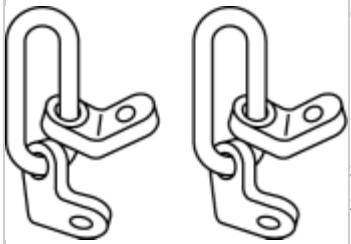	1: 49 C017 5A0 2: – Engine support set	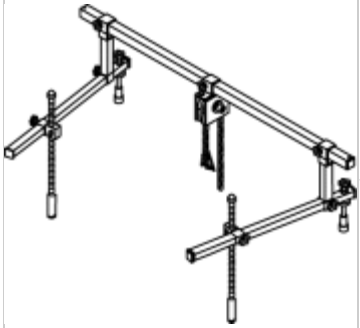	1: 49 L017 5A0 2: – Support hanger	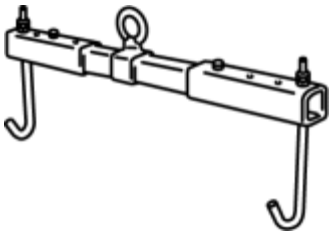
1: 49 G028 205 2: – Oil seal installer		1: 49 E033 101 2: – Dust cover installer		1: 49 S033 101 2: – Dust cover	

	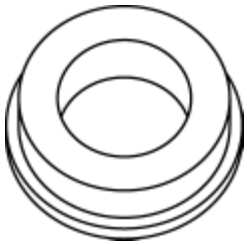		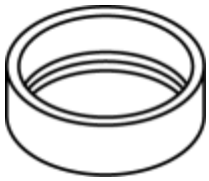	installer	
1: 49 D019 908 2: – Gauge (Part of 49 D019 9A2)	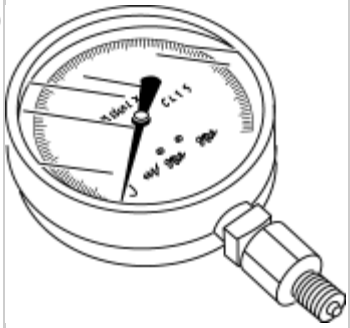	1: 49 D019 909 2: – Hose (Part of 49 D019 9A2)		1: 49 D019 910 2: – Adapter (Part of 49 D019 9A2)	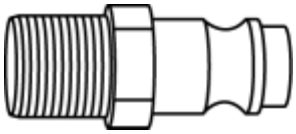
1: 49 D019 911 2: – Adapter (Part of 49 D019 9A2)	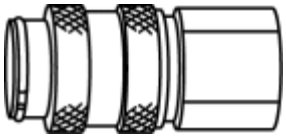	1: 49 F042 001 2: – Wrench		1: 49 N013 103A 2: – Remover (Part of 49 N013 1A0D)	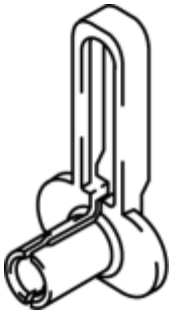
1: 49 N013 1A0D 2: – Fuel pressure gauge set	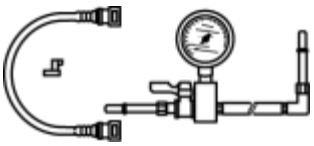	1: 49 D013 1A0 2: – Injector seal installer set	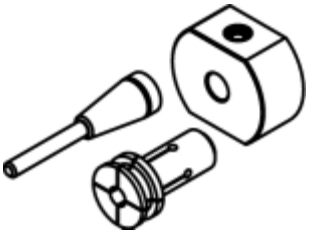	1:49 E042 001 2:– Remover	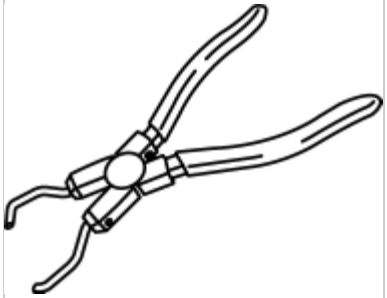
1:49 D015 001 2:– Box wrench	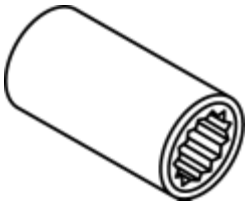	1:49 L018 001 2:– O2 sensor wrench	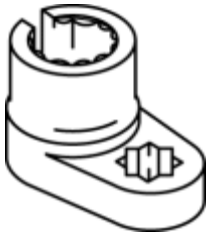	—	

< Previous

ENGINE SST [SKYACTIV-G 2.0, SKYACTIV-G 2.5]

Next >

2014 - Mazda3 - Suspension

TIRE PRESSURE MONITORING SYSTEM (TPMS) WIRING DIAGRAM

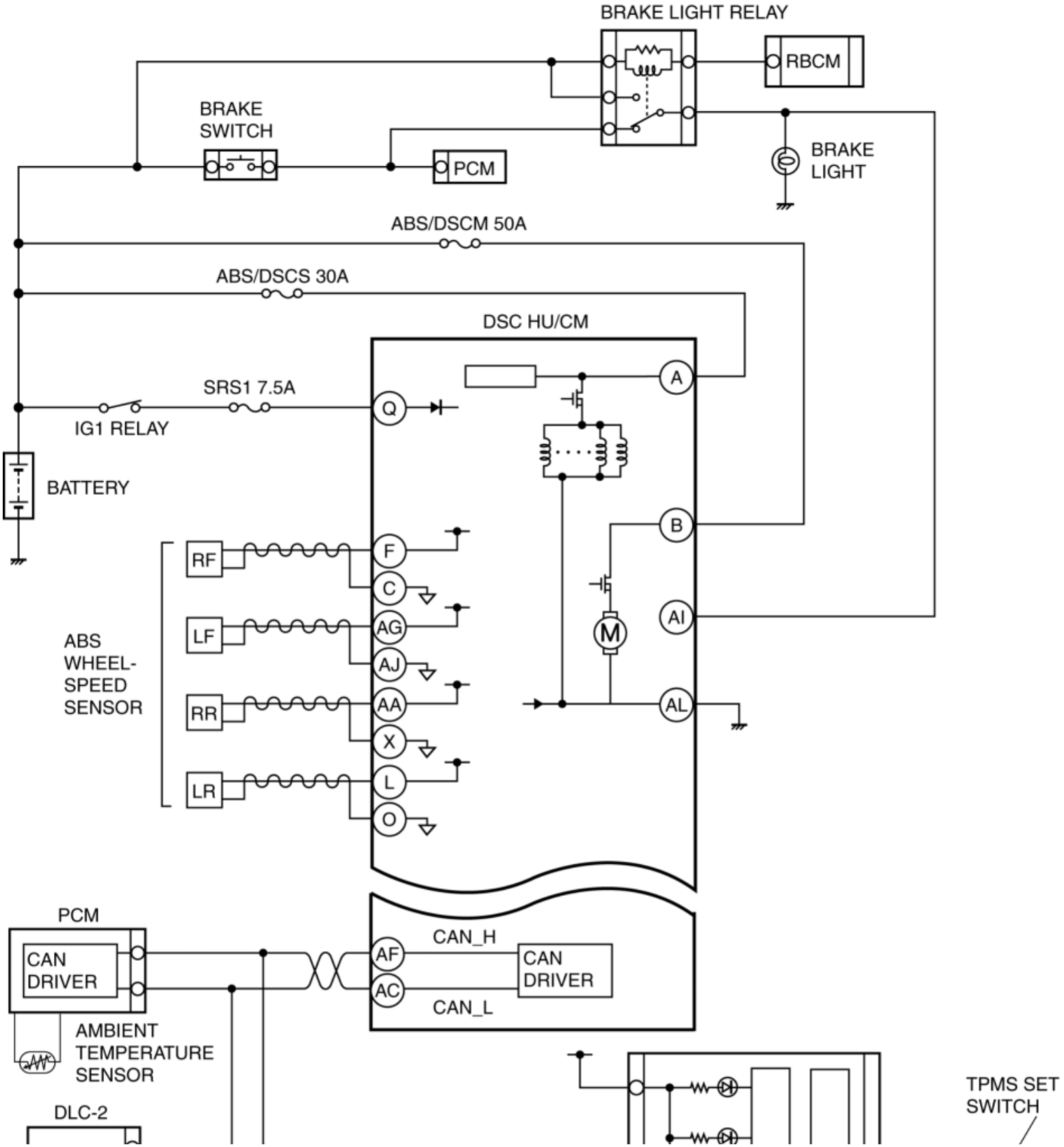

TIRE PRESSURE MONITORING SYSTEM (TPMS) WIRING DIAGRAM

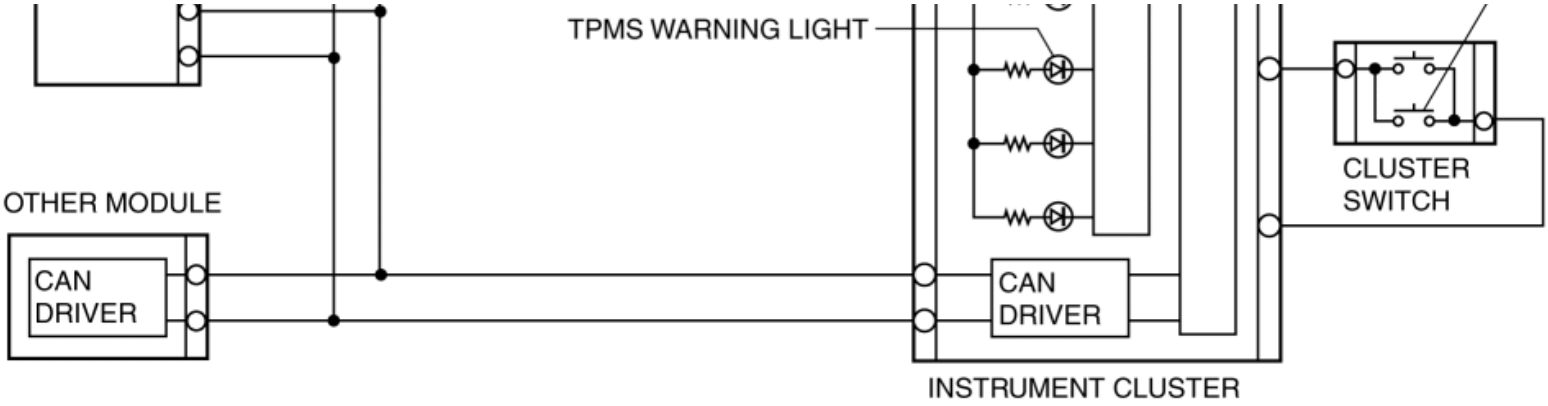

Next >

2014 - Mazda3 - Suspension

FOREWORD

- If there is any vehicle malfunction complaint lodged by a customer, perform malfunction diagnosis according to the troubleshooting procedure.

Troubleshooting Procedure

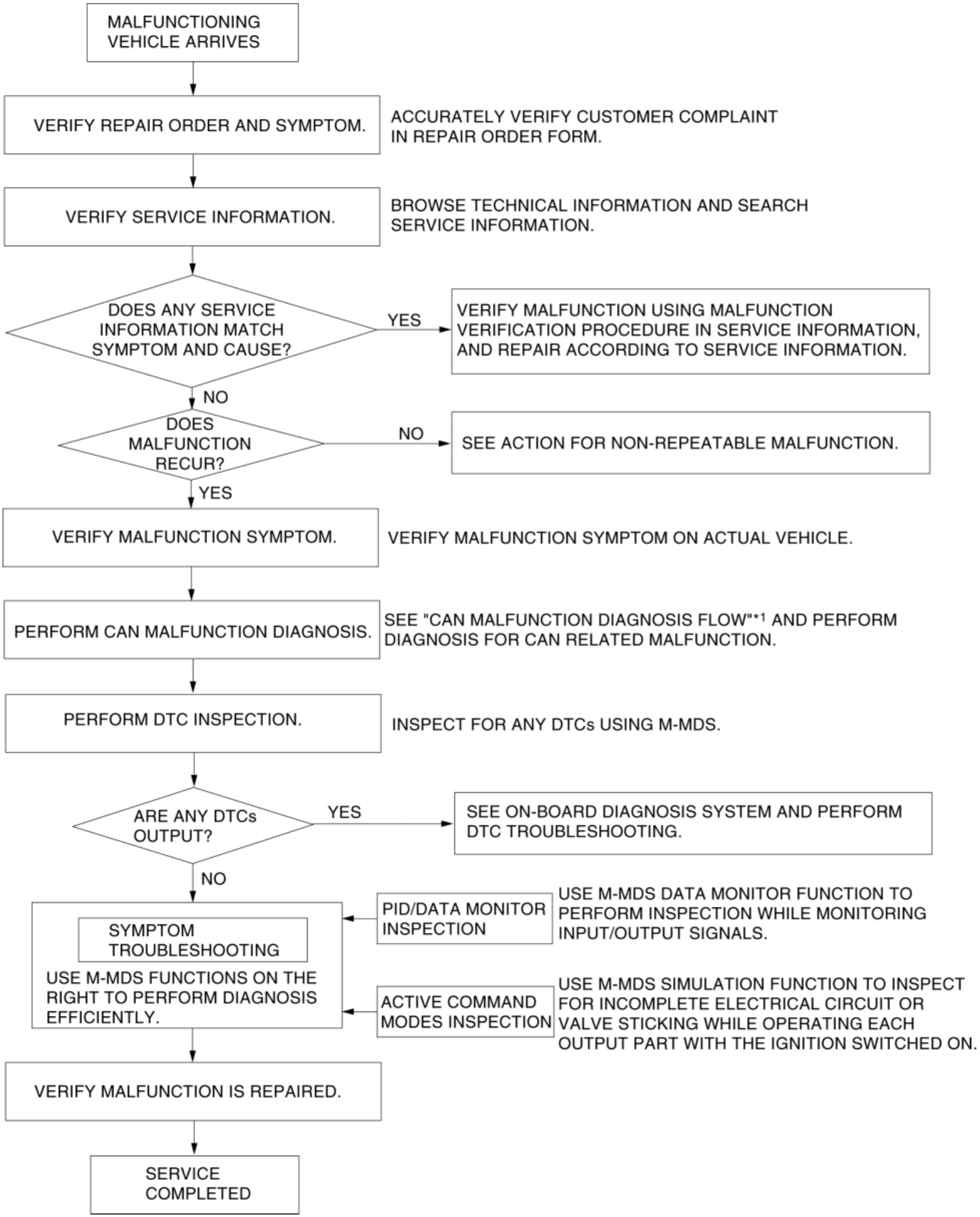
MALFUNCTIONING VEHICLE ARRIVES
VERIFY REPAIR ORDER AND SYMPTOM.
ACCURATELY VERIFY CUSTOMER COMPLAINT IN REPAIR ORDER FORM.
VERIFY SERVICE INFORMATION.
BROWSE TECHNICAL INFORMATION AND SEARCH SERVICE INFORMATION.
DOES ANY SERVICE INFORMATION MATCH SYMPTOM AND CAUSE?
YES
VERIFY MALFUNCTION USING MALFUNCTION VERIFICATION PROCEDURE IN SERVICE INFORMATION, AND REPAIR ACCORDING TO SERVICE INFORMATION.
NO
DOES MALFUNCTION RECUR?
NO
SEE ACTION FOR NON-REPEATABLE MALFUNCTION.
YES
VERIFY MALFUNCTION SYMPTOM.
VERIFY MALFUNCTION SYMPTOM ON ACTUAL VEHICLE.
PERFORM CAN MALFUNCTION DIAGNOSIS.
SEE "CAN MALFUNCTION DIAGNOSIS FLOW"*1 AND PERFORM DIAGNOSIS FOR CAN RELATED MALFUNCTION.
PERFORM DTC INSPECTION.
INSPECT FOR ANY DTCs USING M-MDS.
ARE ANY DTCs OUTPUT?
YES
SEE ON-BOARD DIAGNOSIS SYSTEM AND PERFORM DTC TROUBLESHOOTING.
NO
SYMPTOM TROUBLESHOOTING
USE M-MDS FUNCTIONS ON THE RIGHT TO PERFORM DIAGNOSIS EFFICIENTLY.
PID/DATA MONITOR INSPECTION
USE M-MDS DATA MONITOR FUNCTION TO PERFORM INSPECTION WHILE MONITORING INPUT/OUTPUT SIGNALS.
ACTIVE COMMAND MODES INSPECTION
USE M-MDS SIMULATION FUNCTION TO INSPECT FOR INCOMPLETE ELECTRICAL CIRCUIT OR VALVE STICKING WHILE OPERATING EACH OUTPUT PART WITH THE IGNITION SWITCHED ON.
VERIFY MALFUNCTION IS REPAIRED.
SERVICE COMPLETED

*1

(See CONTROLLER AREA NETWORK (CAN) MALFUNCTION DIAGNOSIS FLOW.)

Action for non-repeatable malfunction

- If the malfunction does not recur, verify the malfunction cause by performing the following actions:
  - Based on the repair order form, attempt to drive the vehicle or perform tests to replicate the malfunction, record the data (such as CAN circuit voltage) at that time, and detect the malfunction cause.
  - Refer to [Determining Open Circuit Location] based on the recorded DTC, shake the wiring harness or connector of the electrical component which is suspected to be the cause of the malfunction, and inspect for any changes in CAN system voltage or occurrence of any DTCs.

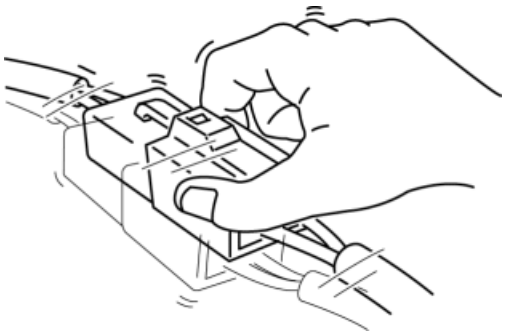

  - Inspect the female terminals on the connector of the electric component which is suspected to be the cause of the malfunction for poor connection.

2014 - Mazda3 - Suspension

TIRE PRESSURE MONITORING SYSTEM (TPMS) ON-BOARD DIAGNOSIS

- For the tire pressure monitoring system on-board diagnostic system, refer to Section 04 as it is controlled by the DSC CM. (See **ON-BOARD DIAGNOSIS [DYNAMIC STABILITY CONTROL (DSC)]**.)

2014 - Mazda3 - Suspension

TIRE PRESSURE MONITORING SYSTEM (TPMS) WIRING DIAGRAM

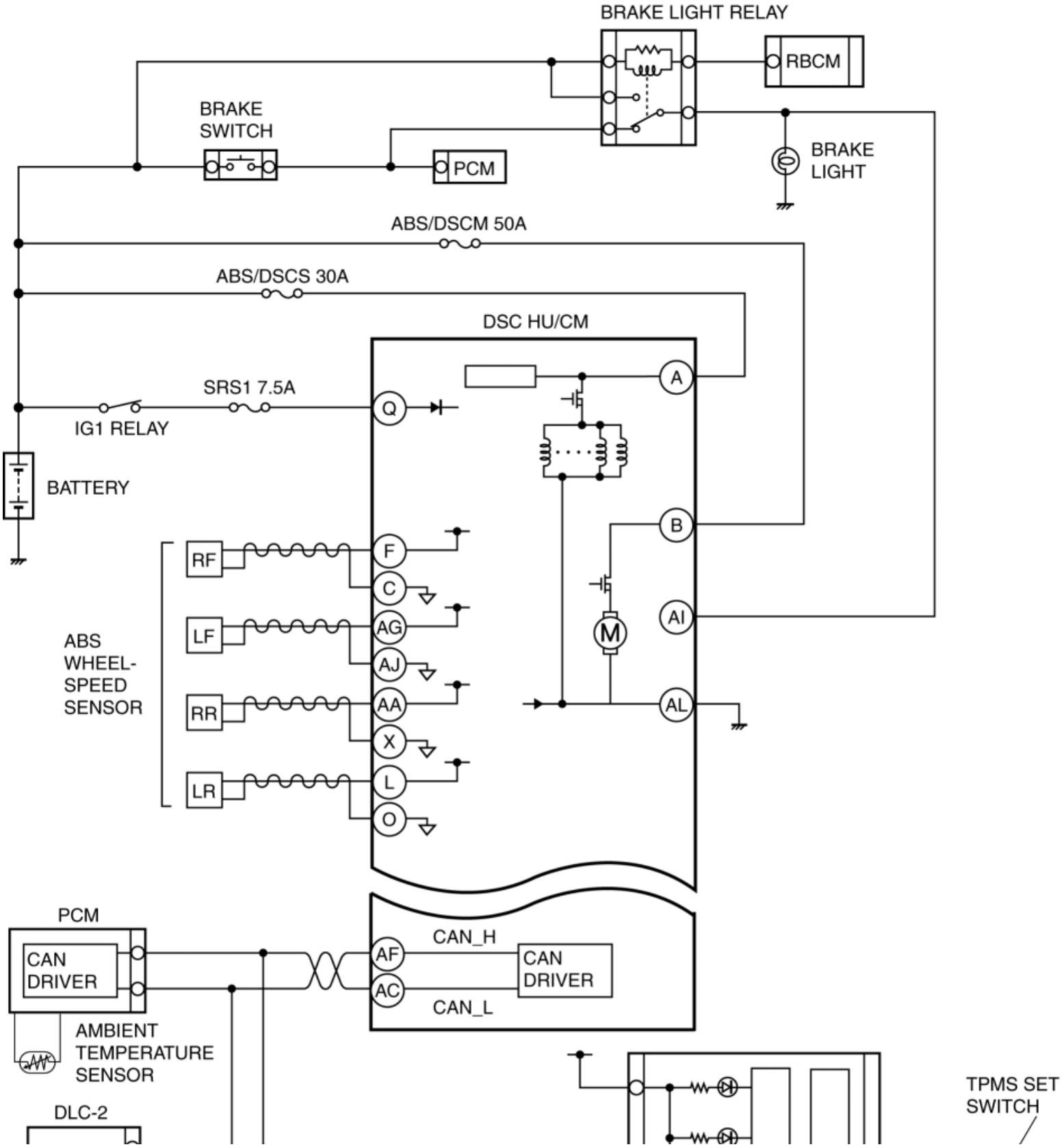

TIRE PRESSURE MONITORING SYSTEM (TPMS) WIRING DIAGRAM

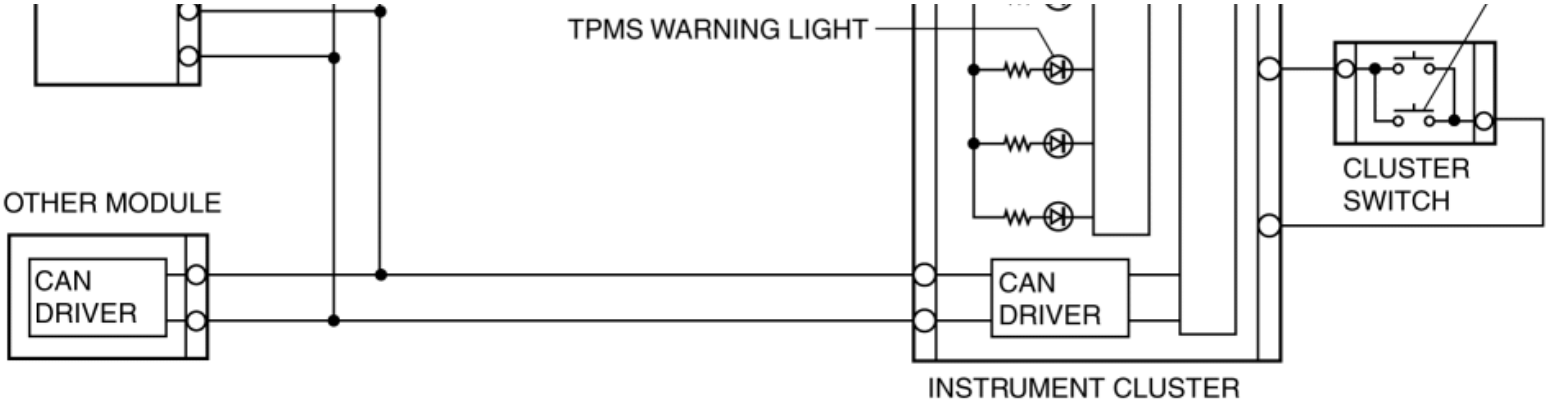

2014 - Mazda3 - Suspension

FOREWORD

- If there is any vehicle malfunction complaint lodged by a customer, perform malfunction diagnosis according to the troubleshooting procedure.

Troubleshooting Procedure

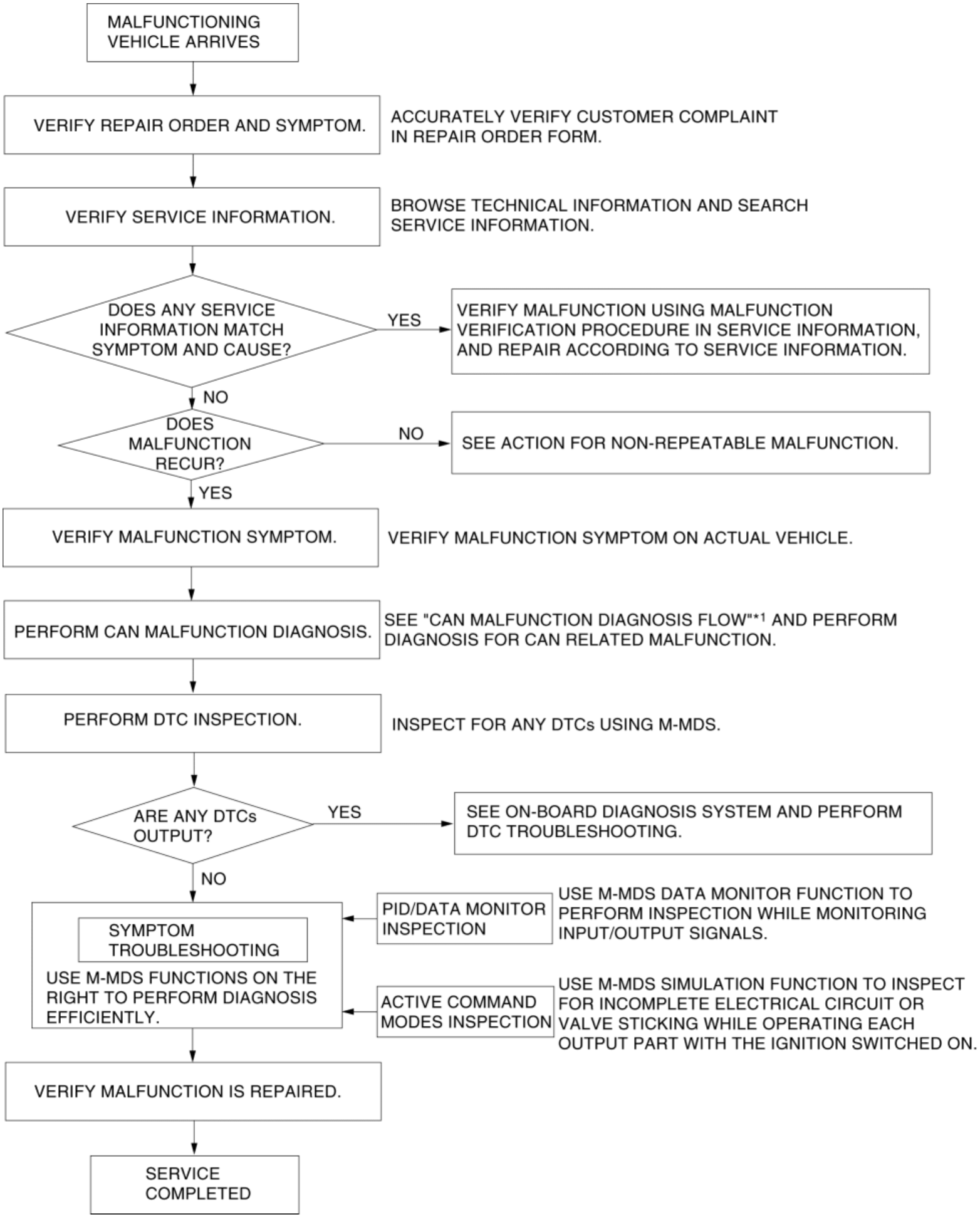
MALFUNCTIONING VEHICLE ARRIVES
VERIFY REPAIR ORDER AND SYMPTOM.
ACCURATELY VERIFY CUSTOMER COMPLAINT IN REPAIR ORDER FORM.
VERIFY SERVICE INFORMATION.
BROWSE TECHNICAL INFORMATION AND SEARCH SERVICE INFORMATION.
DOES ANY SERVICE INFORMATION MATCH SYMPTOM AND CAUSE?
YES
VERIFY MALFUNCTION USING MALFUNCTION VERIFICATION PROCEDURE IN SERVICE INFORMATION, AND REPAIR ACCORDING TO SERVICE INFORMATION.
NO
DOES MALFUNCTION RECUR?
NO
SEE ACTION FOR NON-REPEATABLE MALFUNCTION.
YES
VERIFY MALFUNCTION SYMPTOM.
VERIFY MALFUNCTION SYMPTOM ON ACTUAL VEHICLE.
PERFORM CAN MALFUNCTION DIAGNOSIS.
SEE "CAN MALFUNCTION DIAGNOSIS FLOW"*1 AND PERFORM DIAGNOSIS FOR CAN RELATED MALFUNCTION.
PERFORM DTC INSPECTION.
INSPECT FOR ANY DTCs USING M-MDS.
ARE ANY DTCs OUTPUT?
YES
SEE ON-BOARD DIAGNOSIS SYSTEM AND PERFORM DTC TROUBLESHOOTING.
NO
SYMPTOM TROUBLESHOOTING
USE M-MDS FUNCTIONS ON THE RIGHT TO PERFORM DIAGNOSIS EFFICIENTLY.
PID/DATA MONITOR INSPECTION
USE M-MDS DATA MONITOR FUNCTION TO PERFORM INSPECTION WHILE MONITORING INPUT/OUTPUT SIGNALS.
ACTIVE COMMAND MODES INSPECTION
USE M-MDS SIMULATION FUNCTION TO INSPECT FOR INCOMPLETE ELECTRICAL CIRCUIT OR VALVE STICKING WHILE OPERATING EACH OUTPUT PART WITH THE IGNITION SWITCHED ON.
VERIFY MALFUNCTION IS REPAIRED.
SERVICE COMPLETED

*1

(See CONTROLLER AREA NETWORK (CAN) MALFUNCTION DIAGNOSIS FLOW.)

Action for non-repeatable malfunction

- If the malfunction does not recur, verify the malfunction cause by performing the following actions:
  - Based on the repair order form, attempt to drive the vehicle or perform tests to replicate the malfunction, record the data (such as CAN circuit voltage) at that time, and detect the malfunction cause.
  - Refer to [Determining Open Circuit Location] based on the recorded DTC, shake the wiring harness or connector of the electrical component which is suspected to be the cause of the malfunction, and inspect for any changes in CAN system voltage or occurrence of any DTCs.

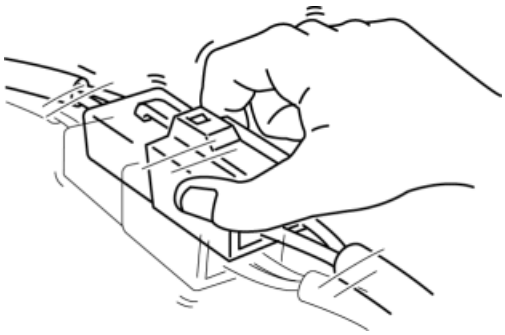

  - Inspect the female terminals on the connector of the electric component which is suspected to be the cause of the malfunction for poor connection.

2014 - Mazda3 - Suspension

SYMPTOM TROUBLESHOOTING

No.	Symptom	Description
1	TPMS warning light illuminates.	The tire pressure monitoring system warning light illuminates according to the decrease in a tire air pressure (tire pressure monitoring system is normal).

2014 - Mazda3 - Suspension

NO.1 TPMS WARNING LIGHT ILLUMINATES

CAUTION:

- The tire pressure monitoring system warning light illuminates according to the decrease in a tire air pressure (tire pressure monitoring system is normal).
- The No.1 TPMS WARNING LIGHT ILLUMINATES the diagnostic procedure if the tire pressure monitoring system warning light illuminated due to a decrease in a tire pressure although the tire pressure monitoring system is normal.

Possible malfunction

- The air pressure of a tire has decreased. (Tire pressure monitoring system normal)

Diagnostic Procedure

Step	Inspection	Results	Action
1	TIRE PRESSURE INSPECTION • Inspect tire pressures while the tires are cold. (See **WHEEL AND TIRE SPECIFICATION**.) • Are the tire pressures at the specification?	Yes	Go to the next step.
		No	Adjust the tire pressures to the specification while the tires are cold.

2	TIRE PRESSURE MONITORING SYSTEM INITIALIZATION
	• Perform tire pressure monitoring system initialization.
	• Connect the M-MDS (IDS) to DLC-2.
	• After the vehicle is identified, select the following items from the initial screen of the IDS.
	  ◦ Select "Chassis"
	  ◦ Select "ABS/DSC"
	  ◦ Select "TPMS Reset"
		Yes	Go to the next step.

		No	Perform the tire pressure monitoring system initialization.

	• Was the tire pressure monitoring system initialization performed?		
3	TIRE PRESSURE MONITORNING SYSTEM WARNING LIGHT VERIFICATION • Drive the vehicle for several minutes after the tire pressure monitoring system warning light turns off. • Does the tire pressure monitoring system warning light illuminate?	Yes	Inspect the tires and wheels for air leakage.
		No	The tire pressure monitoring system is normal.

2014 - Mazda3 - Suspension

GENERAL PROCEDURES (SUSPENSION)

Wheel and Tire Installation

1. When installing the wheels and tires, tighten the wheel nuts to the following tightening torque in the order shown in the figure.

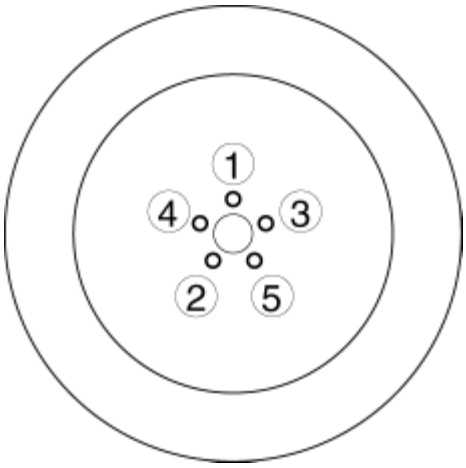

Tightening torque

- **108—147 N·m {12—14 kgf·m, 80—108 ft·lbf}**

Suspension Links Removal/Installation

1. For the joint sections with rubber bushings, raise the vehicle using a lift, and then temporarily tighten the installation bolts and nuts. Lower the vehicle to the ground and tighten them to the specified tightening torque.

Connector Disconnection

1. Disconnect the negative battery cable before performing any work that requires handling of connectors. (See **NEGATIVE BATTERY CABLE DISCONNECTION/CONNECTION [SKYACTIV-G 2.0, SKYACTIV-G 2.5]**.)

Headlight Auto Leveling System Initialization (with discharge headlight system)

1. Initialize the auto leveling sensor, when performing the following services. (See **HEADLIGHT AUTO LEVELING SYSTEM INITIALIZATION**.)

- Removing the auto leveling sensor
- Disconnecting the auto leveling sensor link
- Removing the suspension parts related the vehicle height

2014 - Mazda3 - Suspension

WHEEL ALIGNMENT PRE-INSPECTION

1. Park the vehicle on level ground, in an unloaded condition*, with the wheels straight forward.

*: Unloaded condition, fuel tank is full. Engine coolant and engine oil are at specified level. Spare tire, jack and tools are in designated position.

2. Inspect the tire pressure.

- Adjust to the recommended pressure if necessary. (See **SUSPENSION TECHNICAL DATA**.)

3. Inspect the wheel bearing play.

- Correct if necessary. (See **WHEEL HUB, STEERING KNUCKLE INSPECTION**.)

4. Inspect the wheel runout.

- Correct if necessary. (See **SUSPENSION TECHNICAL DATA**.)

5. Rock the vehicle, and verify that there is no looseness in the steering wheel joint and suspension ball joint.

6. Rock the vehicle, and verify that the shock absorber operates properly.

7. Measure height H from the center of the wheel to the fender brim.

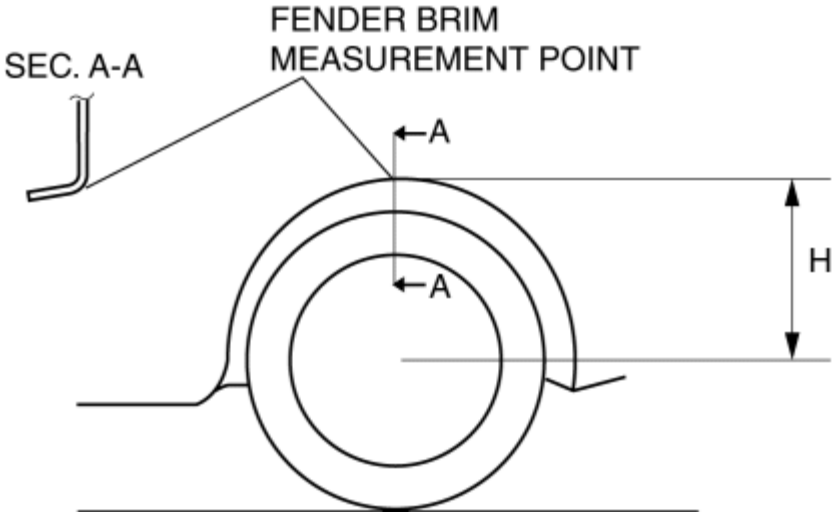

8. Verify that the difference between the left and right dimension H is within the specification.

- If it exceeds the specification, repeat the Step 2—7.

  Standard specification

- 10 mm {0.39 in} or less

WHEEL ALIGNMENT PRE-INSPECTION

2014 - Mazda3 - Suspension

FRONT WHEEL ALIGNMENT

Front wheel alignment (Unloaded)*1

Item			Fuel gauge indication				
			Empty	1/4	1/2	3/4	Full
Maximum steering angle [Tolerance ±3°]		Inner	39°24′				
		Outer	32°12′				
Total toe-in	Tire [Tolerance ±4 {0.2}]	(mm {in})	2.0 {0.079}				
	Rim inner [Tolerance ±3 {0.1}]		Vehicle equipped with 16 inch wheel: 1.3 {0.051} Vehicle equipped with 18 inch wheel: 1.4 {0.055}				
	(degree)		0°11′±0°20′				
Caster angle*2 (Reference value) [Tolerance ±1°]			6°13′	6°17′	6°21′	6°25′	6°29′
Camber angle*2 (Reference value) [Tolerance ±1°]			-0°11′	-0°11′	-0°11′	-0°11′	-0°12′
Steering axis inclination (Reference value)			13°57′	13°59′	13°59′	13°59′	14°00′

*1 **Engine coolant and engine oil are at specified level. Spare tire, jack and tools are in designated position.**

*2 **Difference between left and right must not exceed 1°30′.**

Steering Angle Adjustment

1. Loosen the tie-rod end locknuts.

2. Remove the steering gear boot clamp.

3. Turn the tie rods.

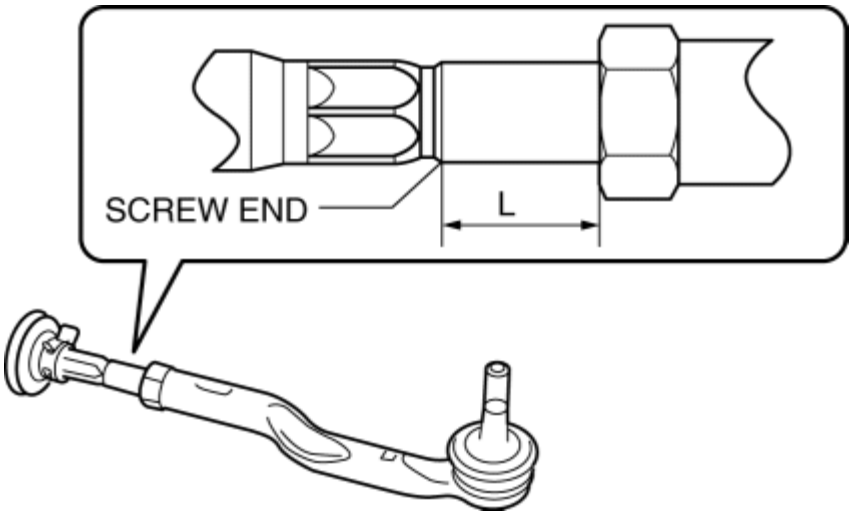

Standard length L

- 8.4—21.4 mm {0.34—0.84 in}

4. Turn the tie rods equally to provide the correct maximum steering angle.

5. Tighten the tie-rod end locknuts.

Tightening torque

- 69—98 N·m {7.1—9.9 kgf·m, 51—72 ft·lbf}

6. Verify that the boot is not twisted, and install the boot clamp.

7. Adjust the toe-in after adjusting the steering angle.

Total Toe-in Adjustment

1. Loosen the locknut of the tie-rod end.

2. Remove the rack boot clamp.

3. Adjust the total toe-in by rotating each tie rod (left and right) in the opposite directions by the same amount respectively.

NOTE:

- If toe-in is measured at the tires, the change on one wheel is **approx. 7 mm {0.3 in}** per one rotation of the tie rod.
- Each tie rod has a right-hand thread. When increasing the toe-in angle, rotate the right tie rod toward the front of the vehicle and rotate the left tie rod toward the rear of the vehicle by the same amount.

4. Tighten the locknut of the tie-rod end.

Tightening torque

- 69—98 N·m {7.1—9.9 kgf·m, 51—72 ft·lbf}

5. Verify that the rack boot does not have any twisting and install the rack boot clamp.

2014 - Mazda3 - Suspension

REAR WHEEL ALIGNMENT

Rear wheel alignment (Unloaded)*1

Item			Fuel gauge indication				
			Empty	1/4	1/2	3/4	Full
Total toe-in	Tire [Tolerance ±4 {0.2}]	(mm {in})	1.9 {0.075}				
	Rim inner [Tolerance ±3 {0.1}]		Vehicle equipped with 16 inch wheel: 1.2 {0.047} Vehicle equipped with 18 inch wheel: 1.3 {0.051}				
	(degree)		0°10′±0°20′				
Camber angle*2 (Reference value) [Tolerance ±1°]			-0°50′	-0°53′	-0°55′	-0°57′	-0°59′
Thrust angle (Reference value) [Tolerance ±0°48′]			0°00′				

*1 **Engine coolant and engine oil are at specified level. Spare tire, jack and tools are in designated position.**

*2 **Difference between left and right must not exceed 1°30′.**

Total Toe-in Adjustment

1. Loosen the installation nut of the adjusting cam bolt.
2. Rotate the adjusting cam bolt in either direction to adjust the toe-in.

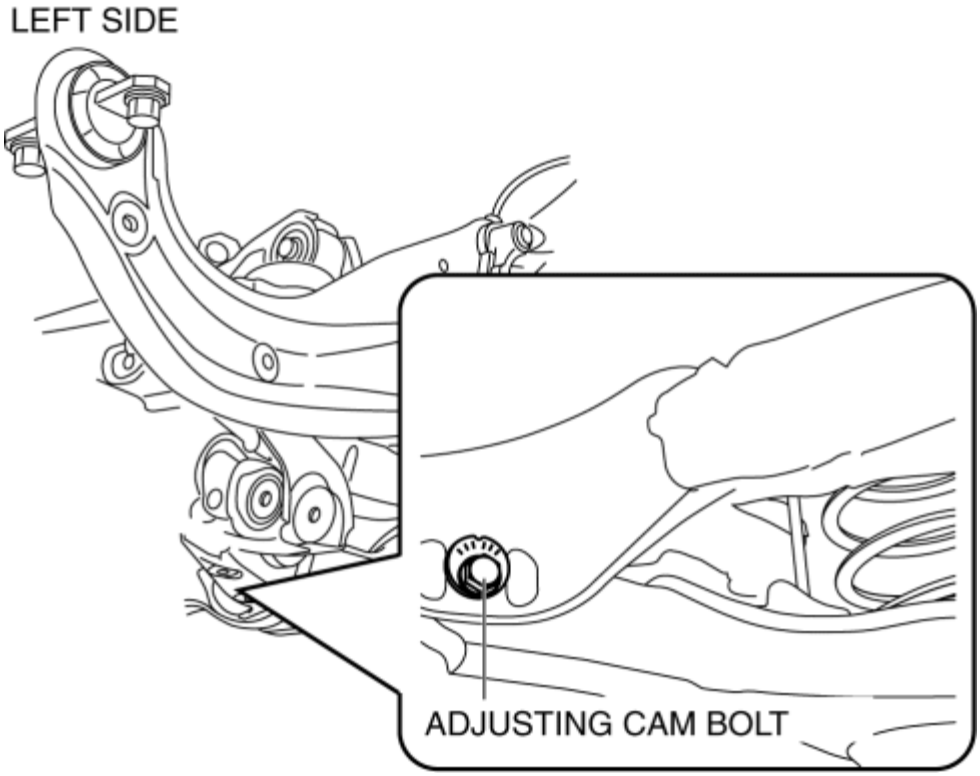

	Left wheel	Right wheel
Toe-out direction	Clockwise	Counterclockwise
Toe-in direction	Counterclockwise	Clockwise

NOTE:

- The rotation direction of the adjusting cam bolt is indicated as viewed from the front of the vehicle.

3. Tighten the nut.

Tightening torque

- 84—101 N·m {8.6—10 kgf·m, 62—74 ft·lbf}

2014 - Mazda3 - Suspension

WHEEL AND TIRE SPECIFICATION

Standard tire and wheel

Item			Specification		
Wheel	Size		16 × 6 1/2J		18 × 7J
	Inset	(mm {in})	50 {2.0}		
	Pitch circle diameter	(mm {in})	114.3 {4.50}		
	Material		Steel	Aluminum alloy	
Tire	Size		P205/60R16 91H		215/45R18 89W
	Air pressure (kPa {psi})	Front	250 {36}		
		Rear	250 {36}		
	Remaining tread	(mm {in})	1.6 {0.063} min.		
Wheel and tire	Lug nut tightening torque	(N·m {kgf·m, ft·lbf})	108—147 {12—14, 80—108}		
	Wheel and tire runout (mm {in})	Radial direction	1.5 {0.059} max.		
		Lateral direction	2.5 {0.098} max.	2.0 {0.079} max.	
	Wheel imbalance	(g {oz})	Knock-type*2: 9.0 {0.32} max.	Adhesive-type*1: 14 {0.49} max. Knock-type*2: 9 {0.32} max.	Adhesive-type*1: 12 {0.42} max. Knock-type*2: 8.0 {0.28} max.

*1

Do not install three or more weights. Do not affix the weights such that they are parallel to each other or overlapping. The total weight of all the weights is 160 g {5.64 oz} or less.

*2

Do not install three or more weights. One weight is 60 g {2.1 oz} or less and two weights are 100 g {3.53 oz} or less.

Temporary spare tire and wheel

Item			Specification
Wheel	Size		16 × 4T
	Inset	(mm {in})	35 {1.4}
	Pitch circle diameter	(mm {in})	114.3 {4.50}
	Material		Steel
Tire	Size		T125/70D16 96M
	Air pressure	(kPa {psi})	420 {60}
	Remaining tread	(mm {in})	1.6 {0.063} min.
Wheel and tire	Lug nut tightening torque	(N·m {kgf·m, ft·lbf})	108—147 {12—14, 80—108}

2014 - Mazda3 - Suspension

WHEEL BALANCE ADJUSTMENT (ALUMINUM ALLOY WHEEL)

CAUTION:

- Adjust the outer wheel balance first, then the inner wheel balance.
- Be careful not to scratch the wheels.

Adhesive-type Balance Weight (Outer)

1. Remove the old balance weight from the wheel.

2. Remove the double-sided adhesive tape remaining on the wheel, then clean and degrease the bonding area.

3. Set the wheel on a wheel balancer, measure the amount of unbalance and the position with the mode set for knock-type balance weight.

4. Multiply the amount of unbalance by **1.6** to obtain the balance weight value.

5. Select a balance weight closest to the weight value and attach the balance weight on the position (outer) indicated by the wheel balancer.

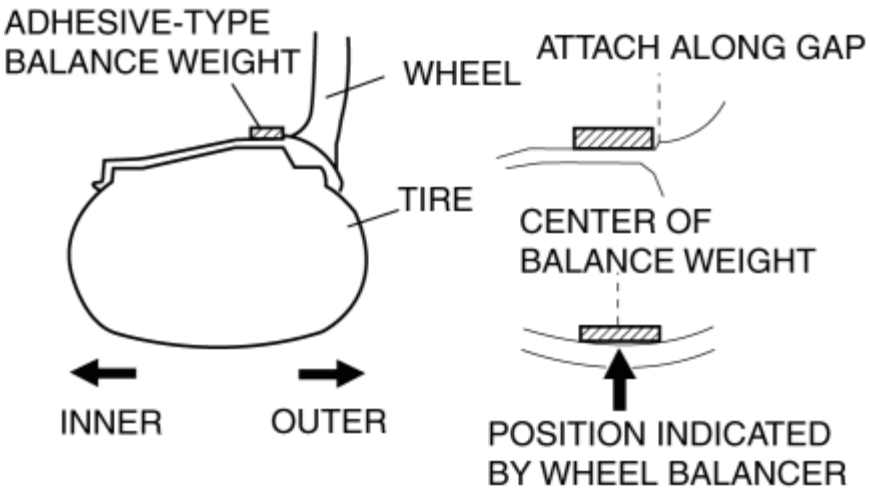

Example calculation of balance weight value

- Indicated amount of unbalance: 23 g {0.81 oz}

  23 g {0.81 oz}×1.6 = 36.8 g {1.30 oz}

- Selected balance weight value: 35 g {1.24 oz}

NOTE:

- When selecting a balance weight, select one closest to the calculated value.

Example: **32.4 g {1.14 oz} = 30 g {1.06 oz}**

CAUTION:

- Use a genuine balance weight or equivalent (steel).
- When attaching the weight, press the weight with a force of 25 N {2.5 kgf, 5.5 lbf} per 5 g for 2 s or more.

6. If attaching two balance weights, position them so that each is on either side of the position indicated by the wheel balancer.

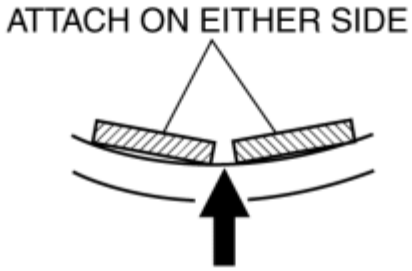

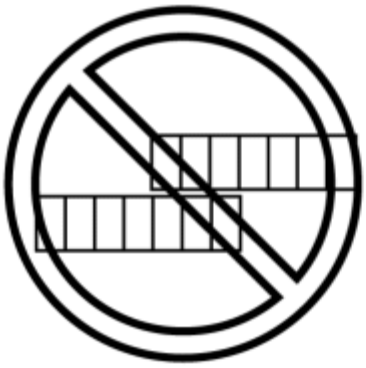

NO GOOD
(PARALLEL TO EACH OTHER)

NO GOOD
(OVERLAPPING)

CAUTION:

- Do not install three or more weights.
- Do not attach weight balances parallel to each other.
- Do not overlap the balance weights.
- Total weight of all weights is 160 g {5.64 oz} or less.

Knock-type Balance Weight (Inner)

1. Measure the amount of unbalance with a wheel balancer.

2. Attach a weight corresponding to the measured weight value on the position (inner) indicated by the wheel balancer.

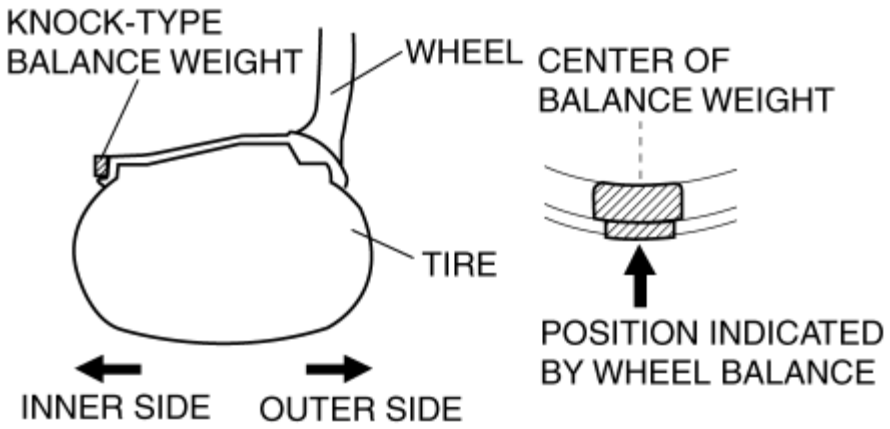

CAUTION:

- Do not attach three or more balance weights.
- One balance weight is 60 g {2.1 oz} or less and two balance weights are 100 g {3.53 oz} or less.

Remaining Amount of Unbalance Confirmation

1. After installing the outer and inner balance weights, operate the wheel balancer again.
2. Confirm that the remaining unbalance does not exceed the following on either side.
   - If the remaining unbalance exceeds the specifications, adjust the wheel balance again.

Specifications

	Outer (Adhesive-type)	Inner (Knock-type)
16 inch wheel	14 g {0.49 oz}	9.0 g {0.32 oz}
18 inch wheel	12 g {0.42 oz}	8.0 g {0.28 oz}

2014 - Mazda3 - Suspension

TIRE PRESSURE MONITORING SYSTEM INITIALIZATION PROCEDURE

- Perform the tire pressure monitoring system initialization when the following operations have been performed:
    - Tire pressures have been adjusted
    - Tires or wheels have been replaced
    - Tires have been rotated
    - DSC HU/CM replaced
    - DSC HU/CM connector disconnected
    - Battery replaced
    - Negative battery cable is disconnected

NOTE:

- The tire pressure monitoring system initialization can be performed using two types of procedures. If the procedure using the M-MDS is used, the mis-use prevention logic is disabled.

Using Tire Pressure Monitoring System Set Switch

1. Park the vehicle on safe, level ground.

2. Adjust all four tire pressures to the specification while the tires are cold. (See **WHEEL AND TIRE SPECIFICATION**.)

CAUTION:

- Cold tires means leaving the vehicle for 1 h or, if the vehicle is driven, do so within 1.6 km {0.99 mile}.

3. Switch the ignition ON (engine off or on).

4. Press and hold the tire pressure monitoring system set switch.

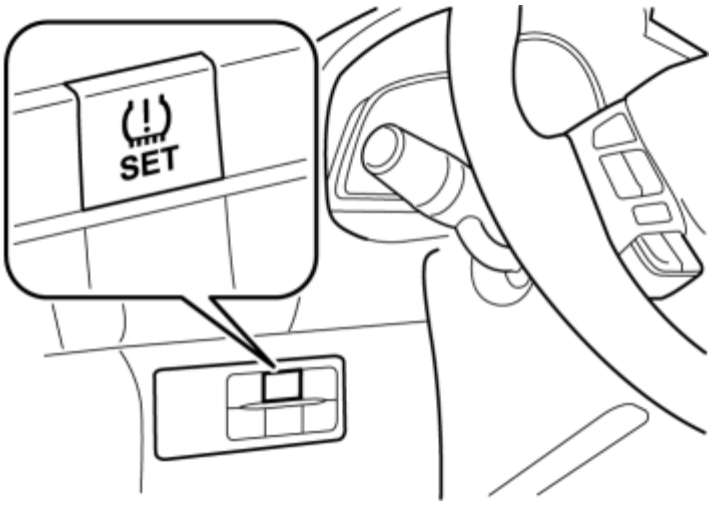

5. Press and hold the tire pressure monitoring system set switch until the tire pressure monitoring system warning light flashes 1 or 2 times and the indicator alarm sounds 1 time.

NOTE:

- When the tire pressure monitoring system initialization is performed, learning initiates. Learning is completed by driving the vehicle for approx. 20 min.
- While the tire pressure monitoring system is undergoing learning, its primary functions do not operate.

Using M-MDS

1. Park the vehicle on safe, level ground.

2. Adjust all four tire pressures to the specification while the tires are cold. (See **WHEEL AND TIRE SPECIFICATION**.)

CAUTION:

- Cold tires means leaving the vehicle for 1 h or, if the vehicle is driven, do so within 1.6 km {0.99 mile}.

3. Connect the M-MDS (IDS) to DLC-2.

4. After the vehicle is identified, select the following items from the initial screen of the IDS.

   a. Select “Chassis”

   b. Select “ABS/DSC”

   c. Select “TPMS Reset”

NOTE:

- When the tire pressure monitoring system initialization is performed, learning initiates. Learning is completed by driving the vehicle for approx. 20 min.
- While the tire pressure monitoring system is undergoing learning, its primary functions do not operate.

TIRE PRESSURE MONITORING SYSTEM INITIALIZATION PROCEDURE

2014 - Mazda3 - Suspension

TIRE PRESSURE MONITORING SYSTEM SET SWITCH REMOVAL/INSTALLATION

NOTE:

- The tire pressure monitoring system (TPMS) set switch is integrated with the cluster switch.
- Refer to CLUSTER SWITCH REMOVAL/INSTALLATION to remove the cluster switch.

1. Remove the cluster switch. (See **CLUSTER SWITCH REMOVAL/INSTALLATION**.)
2. Install in the reverse order of removal.

2014 - Mazda3 - Suspension

TIRE PRESSURE MONITORING SYSTEM SET SWITCH INSPECTION

NOTE:

- The tire pressure monitoring system (TPMS) set switch is integrated with the cluster switch.

1. Remove the cluster switch. (See **CLUSTER SWITCH REMOVAL/INSTALLATION**.)
2. Verify that the resistance between the cluster switch terminals B and C is as indicated in the table.
    - If not as indicated in the table, replace the cluster switch.

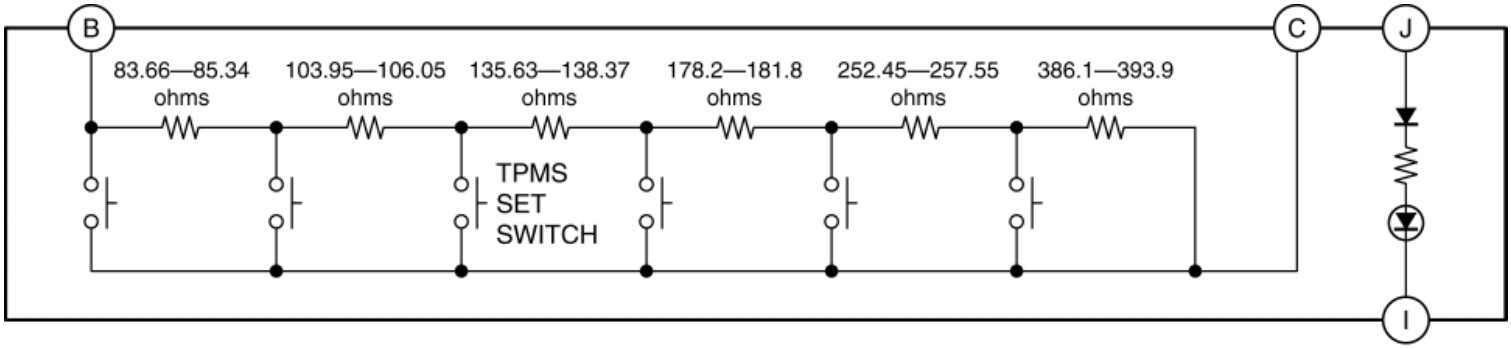

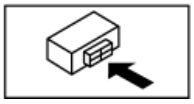

TPMS set switch specification

Terminal	Test condition	Resistance (ohms)
B—C	TPMS set switch pressed	187.61—191.39
	All switches released	1139.99—1163.01

3. Apply battery voltage to cluster switch terminal J, and connect terminal I to ground.
4. Verify that the LED illuminates.
    - If there is any malfunction, replace the cluster switch.

2014 - Mazda3 - Suspension

TIRE PRESSURE MONITORING SYSTEM OPERATION RECORD INSPECTION

Operation record verification procedure

1. Connect the M-MDS to the DLC-2.
2. After vehicle identification, select the following from the M-MDS initialization screen.
   a. Operation Record
3. Then, select the following from the screen menu.
   a. Tire Pressure Monitoring System (TPMS)
4. Display the tire pressure monitoring system (TPMS) operation record according to the screen instructions.

Operation record use example

For a customer who states that the tire pressure monitoring warning light was illuminated, verify if the customer knows how to correctly use the tire pressure monitoring system set switch, and give them advice on how to use it if necessary.

Example

Operation record display

TPMS Learning Reset Button Record

	Last time	2nd time ago	3nd time ago
Elapsed Days	65535 days	65535 days	65535 days
Odometer	0m	0m	0m

TPMS Warning Lamp illumination

	Last time	2nd time ago	3nd time ago
Elapsed Days	4 days	65535 days	65535 days
Odometer	403km	0m	0m
Speed	38KPH	0KPH	0KPH
Maximum Vehicle Speed	Not Supported	0KPH	0KPH

The following can be understood from the operation record display indicated above.

- Tire pressure monitoring system set switch operation record (M-MDS display: TPMS Learning Reset Button Record)
  - Elapsed days displayed is 65,535 (displays if operation record is not recorded), and the tire pressure monitoring system set switch has not been pressed even once.

- Tire pressure monitoring system warning light illumination operation record (M-MDS display: TPMS Warning Lamp illumination)
    - The DSC CM detects a low tire pressure four days ago, and the total traveled distance (M-MDS display: Odometer) at that time was 403 km {250 mile}, and the vehicle speed (M-MDS display: Speed) was 38 km/h {24 mph}.

Based on the above information, provide the following advise, as there is the possibility that the customer does not understand how to correctly use the tire pressure monitoring system set switch.

- If the tire pressure monitoring warning light was illuminated, it will be necessary to adjust the tire pressures on all four tires to the specification and initialize the system by pressing the tire pressure monitoring system set switch. (See **TIRE PRESSURE MONITORING SYSTEM INITIALIZATION PROCEDURE**.)
- If the vehicle is driven at high speed with low tire pressure, there is the danger of a tire rupture occurring.

Reference information regarding operation history of tire pressure monitoring system warning light illumination

The tire pressure monitoring system warning light illumination status and the operation record are as displayed in the table, and if the tire pressure monitoring system warning light is illuminated after flashing due to a system malfunction, the operation record is not recorded.

	TIRE PRESSURE MONITORING SYSTEM WARNING LIGHT	Operation record
Tire pressure decrease	On	Recorded
Tire pressure monitoring system malfunction	Illumination for 1 min after flashing	Not recorded

2014 - Mazda3 - Suspension

FRONT SUSPENSION LOCATION INDEX

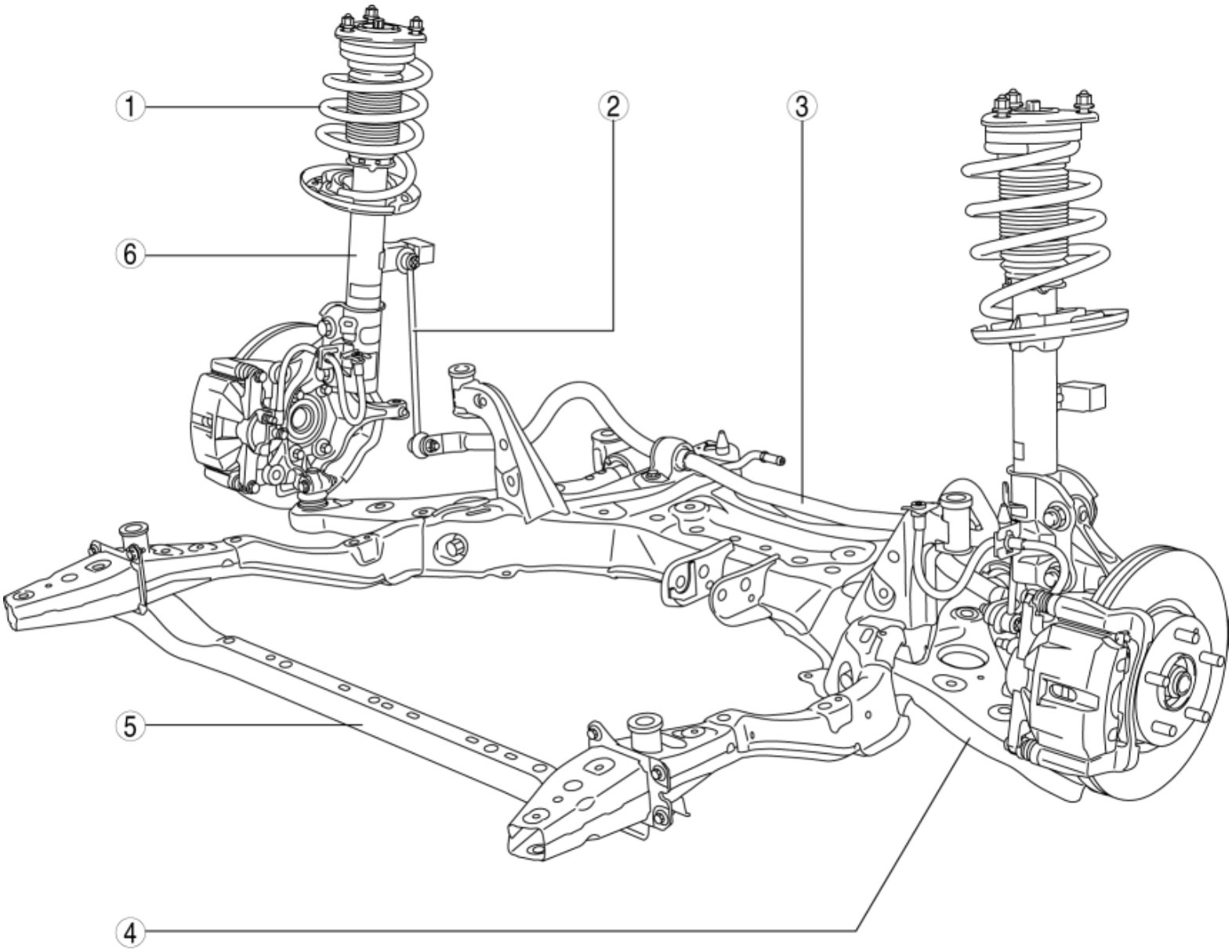

1	Front shock absorber and coil spring (See **FRONT SHOCK ABSORBER AND COIL SPRING REMOVAL/INSTALLATION**.) (See **FRONT SHOCK ABSORBER AND COIL SPRING DISASSEMBLY/ASSEMBLY**.)
2	Front stabilizer control link (See **FRONT STABILIZER REMOVAL/INSTALLATION**.)

	(See **FRONT STABILIZER CONTROL LINK INSPECTION**.)
3	Front stabilizer (See **FRONT STABILIZER REMOVAL/INSTALLATION**.) (See **FRONT STABILIZER CONTROL LINK INSPECTION**.)
4	Front lower arm (See **FRONT LOWER ARM REMOVAL/INSTALLATION**.) (See **FRONT LOWER ARM INSPECTION**.)
5	Front crossmember (See **FRONT CROSSMEMBER REMOVAL/INSTALLATION**.)
6	Front shock absorber (See **FRONT SHOCK ABSORBER INSPECTION**.) (See **FRONT SHOCK ABSORBER DISPOSAL**.)

2014 - Mazda3 - Suspension

FRONT SHOCK ABSORBER AND COIL SPRING REMOVAL/INSTALLATION

CAUTION:

- Performing the following procedures without first removing the front ABS wheel-speed sensor may possibly cause an open circuit in the wiring harness if it is pulled by mistake. Before performing the following procedures, disconnect the front ABS wheel-speed sensor wiring harness (axle side) and fix the wiring harness to an appropriate place where it will not be pulled by mistake while servicing the vehicle.

1. Disconnect the front ABS wheel-speed sensor wiring harness installed to the steering knuckle and set it aside. (See **FRONT ABS WHEEL-SPEED SENSOR REMOVAL/INSTALLATION**.)

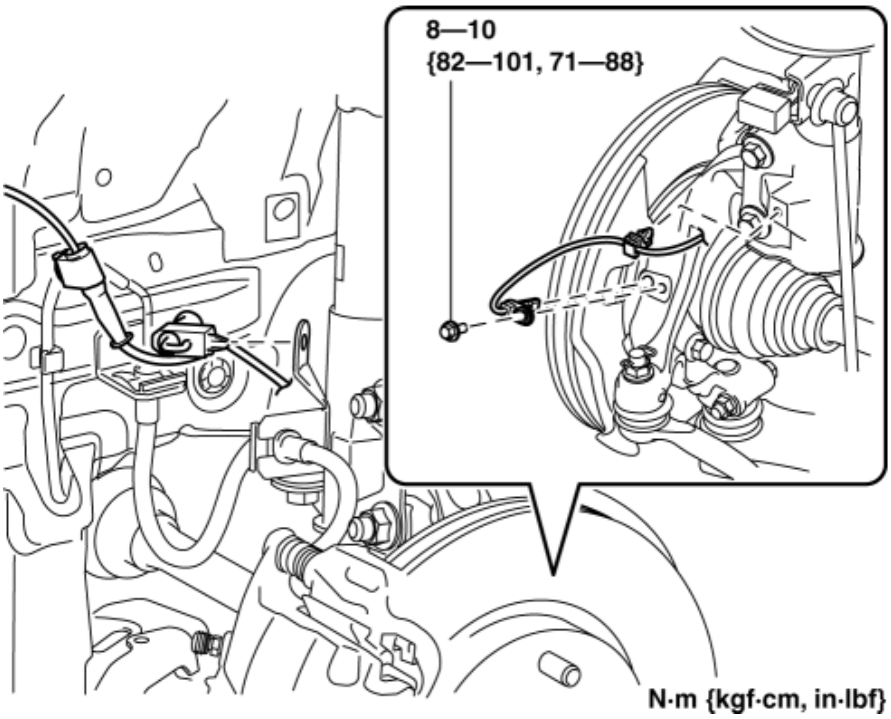

2. Remove in the order indicated in the table.

3. Install in the reverse order of removal.

4. Inspect the wheel alignment and adjust it if necessary. (See **FRONT WHEEL ALIGNMENT**.)

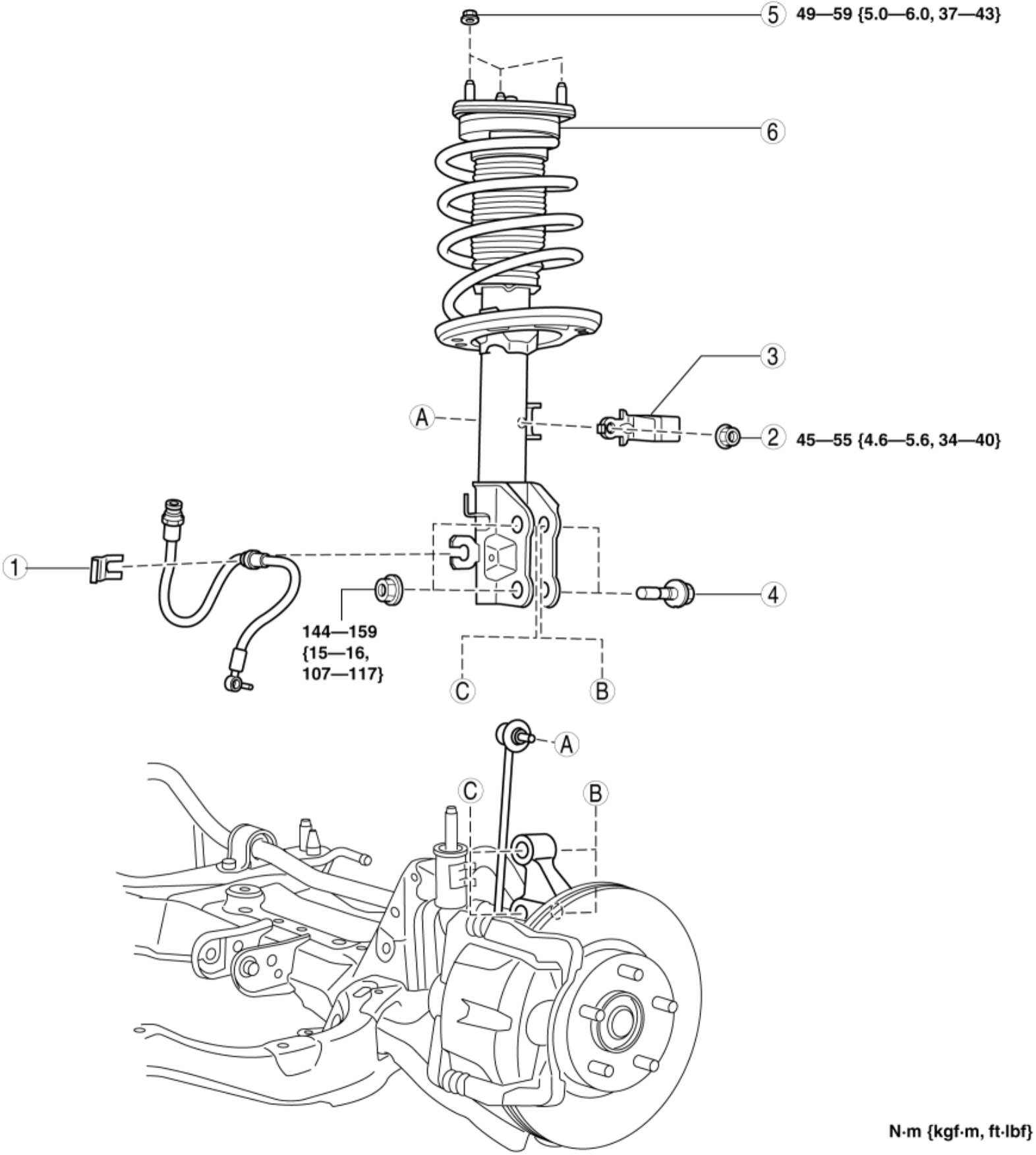

1	Front brake hose clip (See **BRAKE HOSE (FRONT) REMOVAL/INSTALLATION**.)

2	Front stabilizer control link upper nut (See **FRONT STABILIZER REMOVAL/INSTALLATION**.)
3	Dynamic damper (if equipped)
4	Front shock absorber lower bolt (See **Front Shock Absorber Lower Bolt Installation Note**.)
5	Front shock absorber upper nut
6	Front shock absorber and coil spring

Front Shock Absorber Lower Bolt Installation Note

1. Install the steering knuckle to the front shock absorber, insert the bolts from the direction indicated as follows, then tighten them to the specified torque.

- Vehicle right side: Insert the bolts from the vehicle front.
- Vehicle left side: Insert the bolts from the vehicle rear.

2014 - Mazda3 - Suspension

FRONT SHOCK ABSORBER AND COIL SPRING DISASSEMBLY/ASSEMBLY

WARNING:

- Removing/installing the front shock absorber and coil spring is dangerous. The front shock absorber and coil spring could fly off and cause serious injury or death, and damage the vehicle.

1. Remove the front shock absorber and coil spring. (See **FRONT SHOCK ABSORBER AND COIL SPRING REMOVAL/INSTALLATION**.)

2. Remove in the order indicated in the table.

3. Install in the reverse order of removal.

FRONT SHOCK ABSORBER AND COIL SPRING DISASSEMBLY/ASSEMBLY

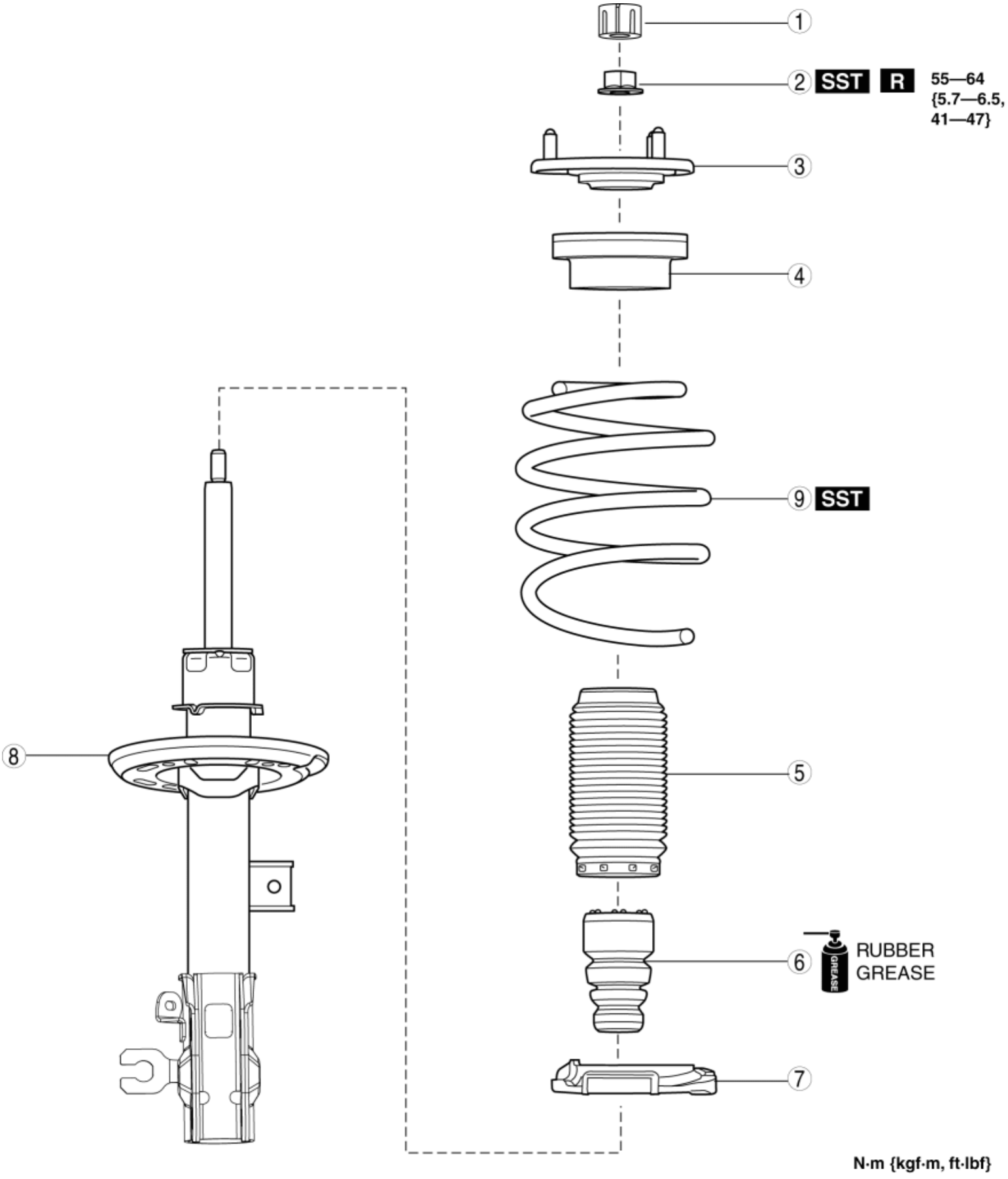

1	Cap

2	Piston rod nut (See **Piston Rod Nut Removal Note**.)
3	Mounting rubber (See **Mounting Rubber Installation Note**.)
4	Bearing
5	Dust boot
6	Bound stopper
7	Lower spring seat
8	Front shock absorber
9	Coil spring (See **Coil Spring Installation Note**.)

Piston Rod Nut Removal Note

WARNING:

- Before removing the piston rod nut, secure the front shock absorber and coil spring in the SST. Otherwise, the coil spring could fly off under tremendous pressure and cause serious injury or death, or damage to vehicle parts.

1. Install the front shock absorber and coil spring to the **SST** according to the following procedures.

NOTE:

- Install the **SST** using a clean rag to prevent the coil spring from being scratched.

a. Set the **SST** attachments (tabs) to the positions shown in the figure.

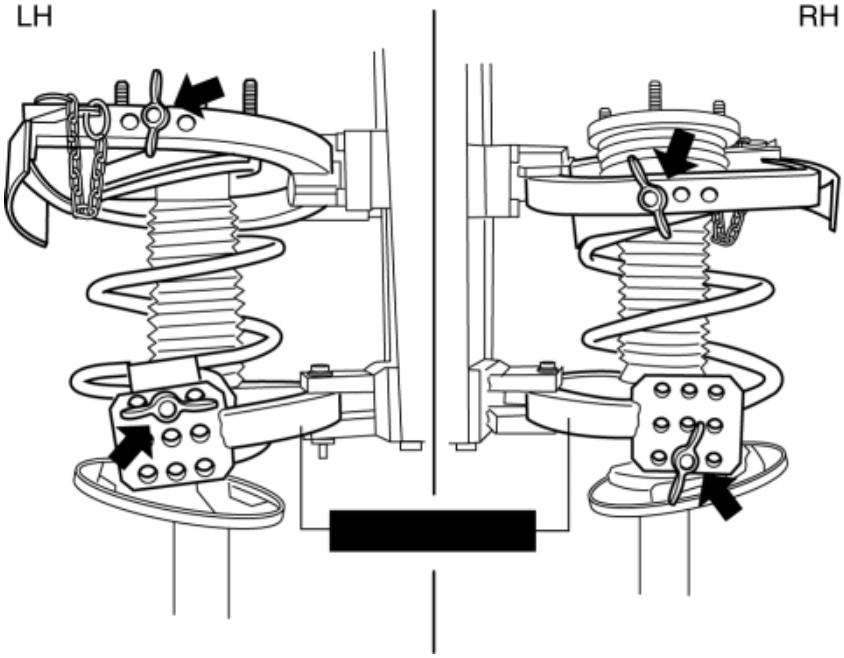

b. Install the front shock absorber and coil spring to the **SST** so that the coil spring is set to the position shown in the figure.

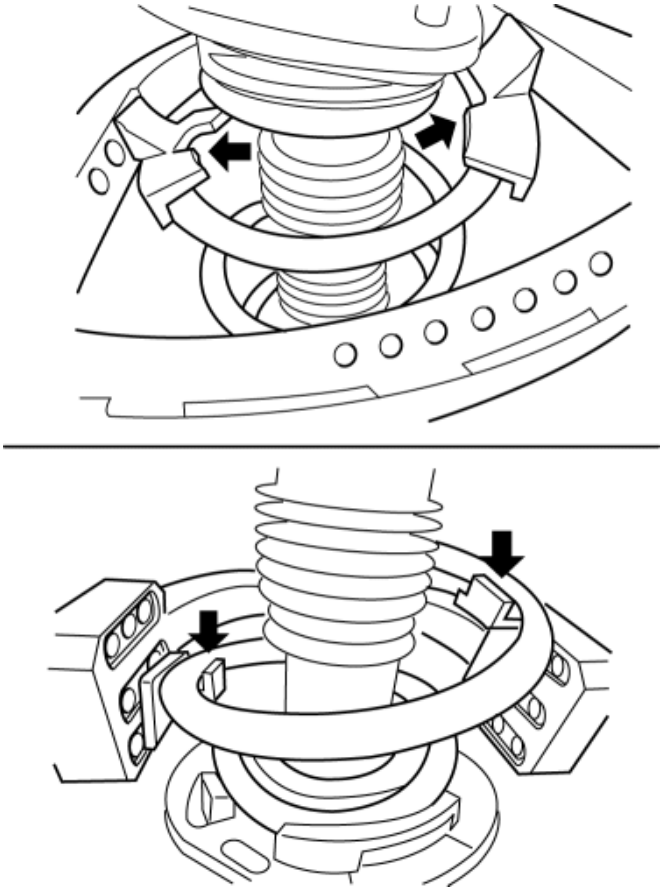

2. Compress the coil spring using the **SST**.
3. Remove the piston rod nut.

Coil Spring Installation Note

1. Compress the coil spring using the **SST**.

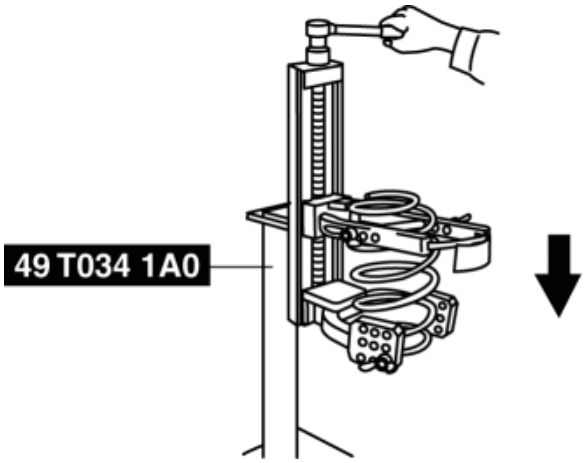

2. Install the front shock absorber so that the lower end of the coil spring is seated on the step of the lower spring seat.

Mounting Rubber Installation Note

1. Install the mounting rubber so that the mounting rubber stud and the front shock absorber bracket are in position A shown in the following figure.

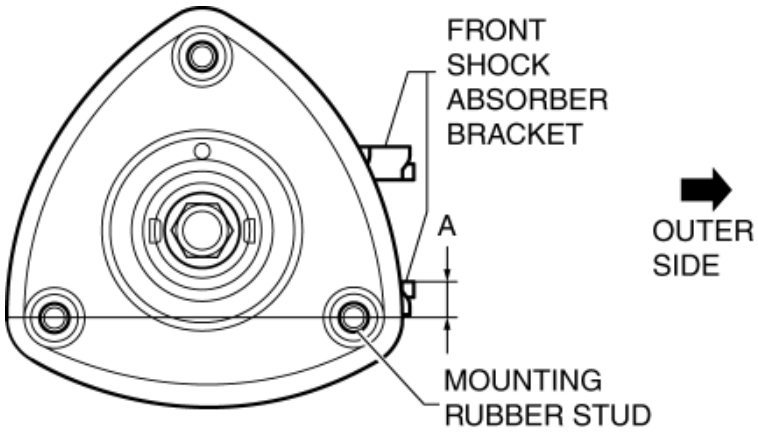

- A: 0°±5°

2014 - Mazda3 - Suspension

FRONT SHOCK ABSORBER INSPECTION

1. Remove the front shock absorber. (See **FRONT SHOCK ABSORBER AND COIL SPRING REMOVAL/INSTALLATION**.) (See **FRONT SHOCK ABSORBER AND COIL SPRING DISASSEMBLY/ASSEMBLY**.)

2. Inspect for damage and oil leakage.

3. Compress and extend the shock absorber piston rod **at least three times** at a steady rate. **From the fourth** compression stroke, verify that the operational force does not change and that there is no unusual noise.

- If there is any malfunction, replace the front shock absorber.

2014 - Mazda3 - Suspension

FRONT SHOCK ABSORBER DISPOSAL

WARNING:

- Whenever drilling into a front shock absorber, wear protective eye wear. The gas in the front shock absorber is pressurized, and could spray metal chips into the eyes and face when drilling.

1. Place the shock absorber on a level surface or with the piston pointing downwards.
2. Drill a **2—3 mm {0.08—0.11 in}** hole at point A shown in the figure so the gas can escape.

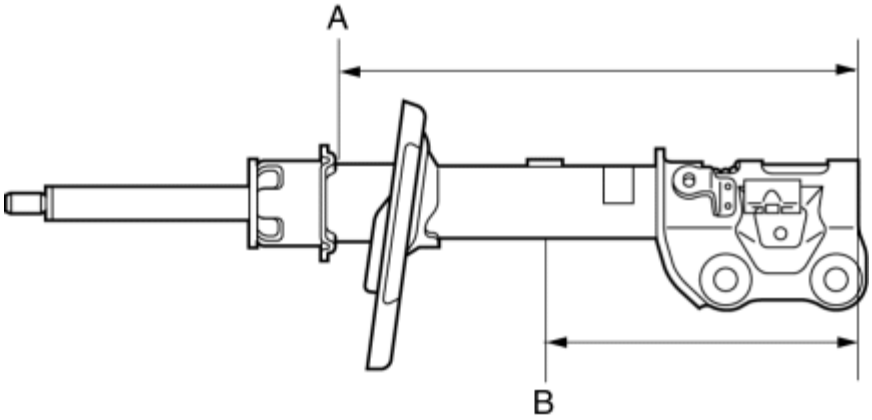

- Point A: **290 mm {11.4 in}**

3. Drill a **2—3 mm {0.08—0.11 in}** hole at the point B shown in the figure to drain the oil.
   - **Point B: 145 mm {5.71 in}**
4. Turn the hole made in Step 3 downwards and drain the oil by pumping the piston rod up and down several times.
5. Cut off the bottom end of the front shock absorber.
6. Dispose of waste oil according to local waste disposal laws.

2014 - Mazda3 - Suspension

FRONT LOWER ARM REMOVAL/INSTALLATION

1. Remove the front under cover No.2. (See **FRONT UNDER COVER No.2 REMOVAL/INSTALLATION**.)
2. Remove in the order indicated in the table.
3. Install in the reverse order of removal.
4. Inspect the wheel alignment and adjust it if necessary. (See **FRONT WHEEL ALIGNMENT**.)

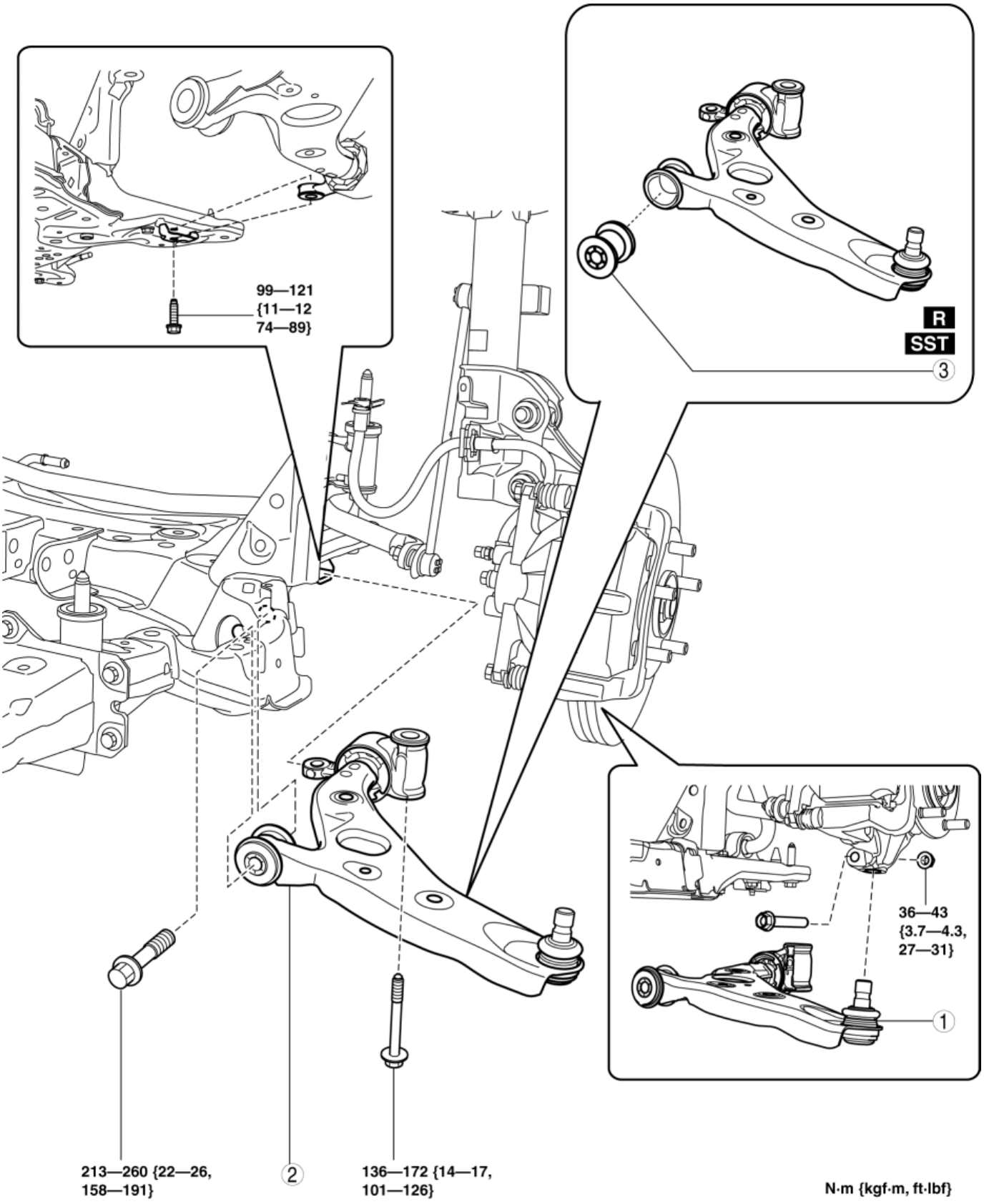

1	Front lower arm ball joint
2	Front lower arm
3	Front lower arm bushing

(See **Front Lower Arm Bushing Removal Note**.)

(See **Front Lower Arm Bushing Installation Note**.)

Front Lower Arm Bushing Removal Note

1. Cut off the entire circumference of the knob on the rear side of the front lower arm bushing using a hacksaw as shown in the figure.

CAUTION:

- When using a hacksaw to cut off the knob on the rear side of the front lower arm bushing, be careful not to scratch or damage the front lower arm.

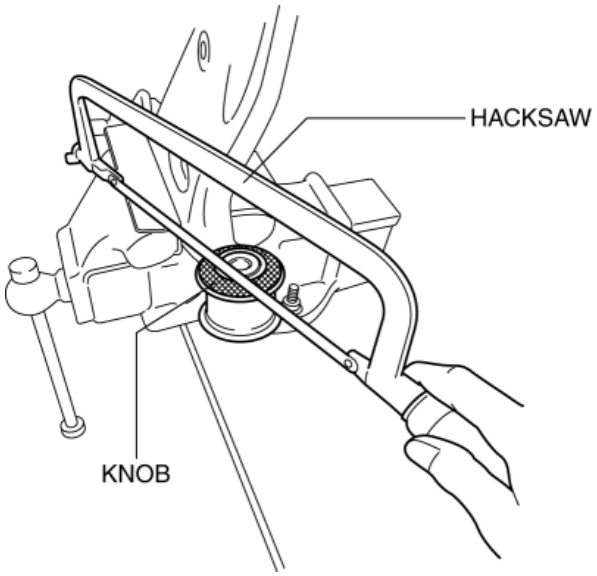

2. Remove the front lower arm bushing using the **SSTs**.

CAUTION:

- Set the **SST(49 U034 204)** as shown in the figure and remove the front lower arm bushing.

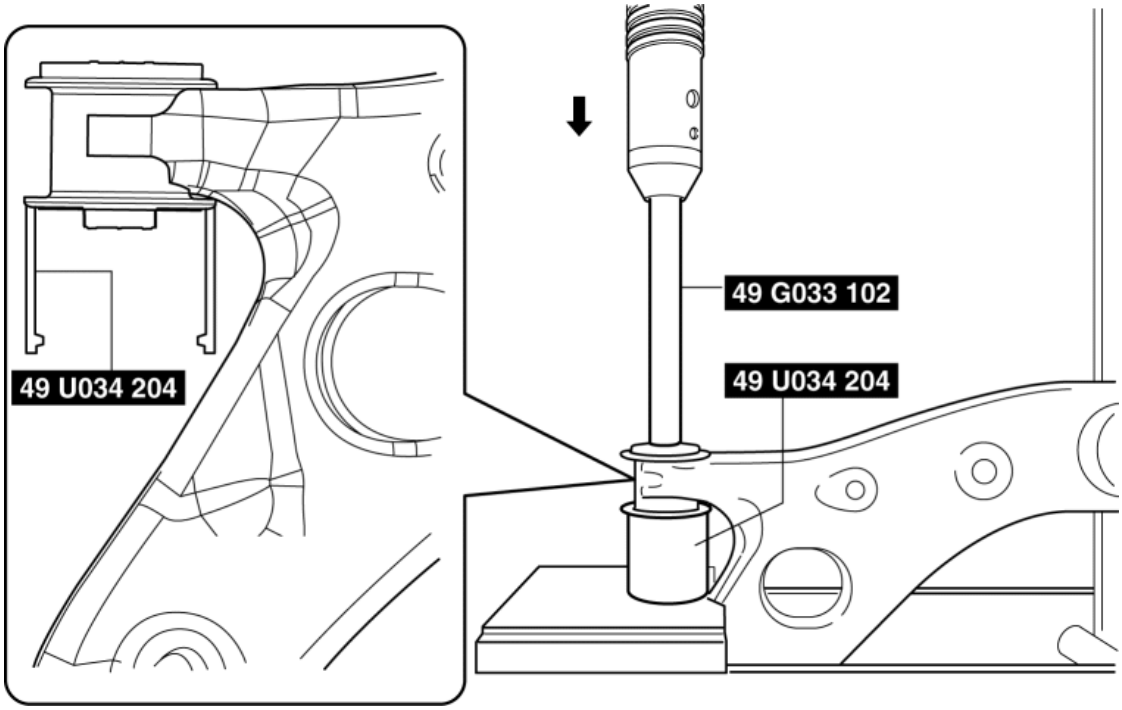

Front Lower Arm Bushing Installation Note

1. Install the front lower arm bushing using the **SSTs**.

CAUTION:

- Set the **SST(49 U034 204)** as shown in the figure and remove the front lower arm bushing.
- Install the front lower arm bushing so that the projection shown in the figure is pointing toward the front of the vehicle.

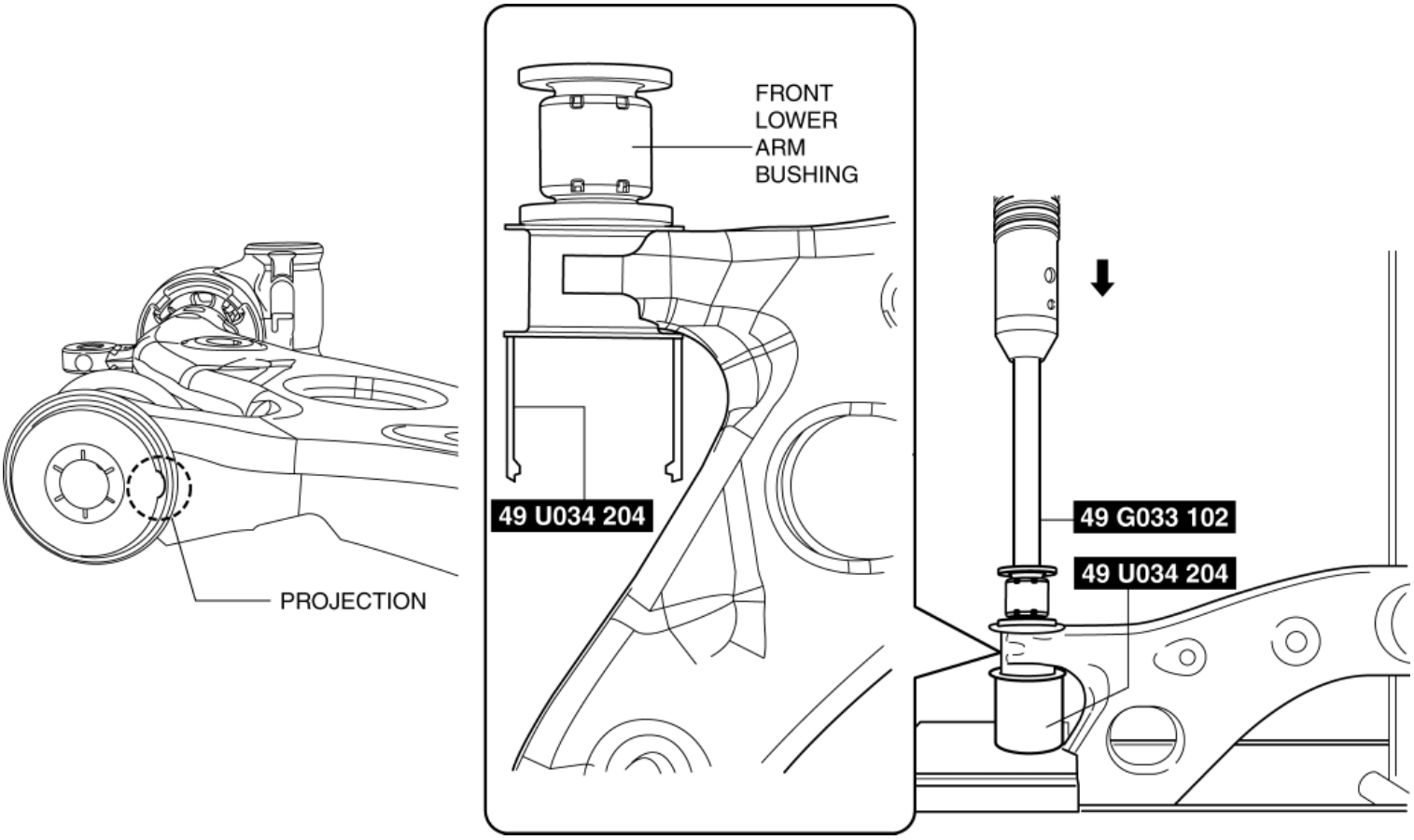

NOTE:

- Applying soapy water to the front lower arm bushing facilitates installation.
- If soapy water gets in the inner pipe of the front lower arm bushing, always wipe it off using a cloth.

2. After installing the front lower arm bushing, verify that it is installed to the position shown in the figure.

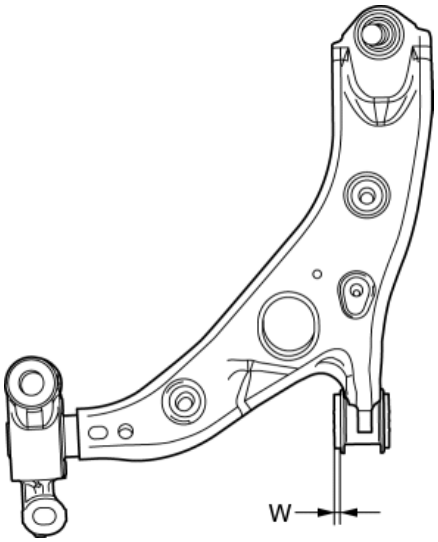

W: 5.8±0.8 mm {0.23±0.03 in}

2014 - Mazda3 - Suspension

FRONT LOWER ARM INSPECTION

1. Remove the front lower arm. (See **FRONT LOWER ARM REMOVAL/INSTALLATION**.)

2. Inspect the front lower arm for bending or damage, and the front lower arm ball joint for excessive looseness.

- If there is any malfunction, replace the front lower arm.

3. Rotate the front lower arm ball joint stud **5 times**. Install the **SST** to the front lower arm ball joint stud, measure the rotational, starting torque using a torque wrench.

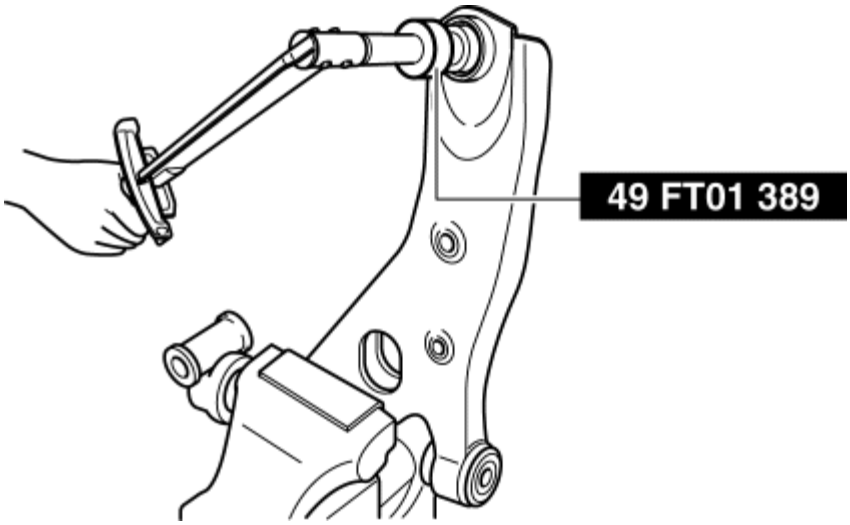

- If not within the specification, replace the front lower arm.

Front lower arm ball joint stud starting torque

- 18 N·m {1.8 kgf·m,13 ft·lbf} max.

Front lower arm ball joint stud rotational torque

- 3.2 N·m {33 kgf·cm,28 in·lbf} max.

2014 - Mazda3 - Suspension

FRONT STABILIZER REMOVAL/INSTALLATION

CAUTION:

- Performing the following procedures without first removing the front ABS wheel-speed sensor may possibly cause an open circuit in the wiring harness if it is pulled by mistake. Before performing the following procedures, disconnect the front ABS wheel-speed sensor wiring harness (axle side) and fix the wiring harness to an appropriate place where it will not be pulled by mistake while servicing the vehicle.
- Secure the steering wheel using tape or a cable to prevent the steering shaft from rotating after disconnecting the steering shaft. If the steering wheel rotates after the steering shaft and the steering gear and linkage are disconnected, the internal parts of the clock spring could be damaged.

1. Remove the joint cover. (See **STEERING WHEEL AND COLUMN REMOVAL/INSTALLATION**.)

2. Disconnect the intermediate shaft from the steering gear and linkage. (See **STEERING WHEEL AND COLUMN REMOVAL/INSTALLATION**.)

3. Disconnect the front ABS wheel-speed sensor wiring harness installed to the steering knuckle and set it aside. (See **FRONT ABS WHEEL-SPEED SENSOR REMOVAL/INSTALLATION**.)

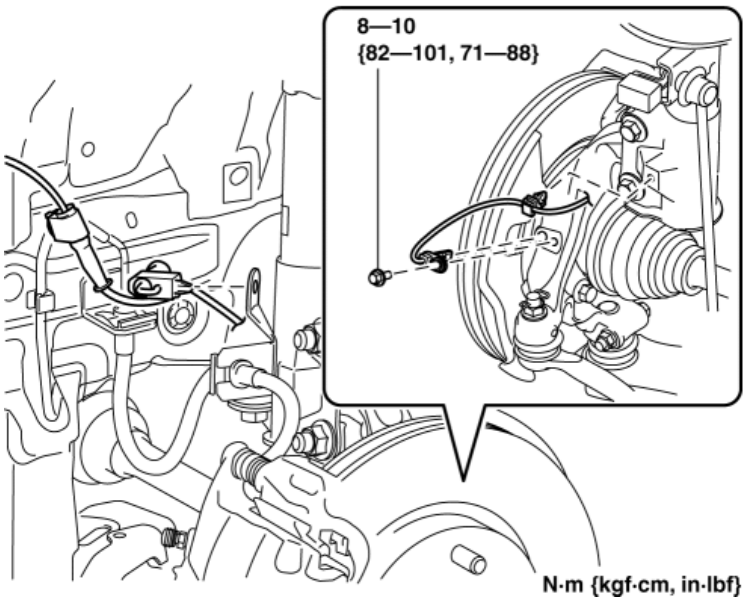

4. Remove in the order indicated in the table.

5. Install in the reverse order of removal.

6. Inspect the wheel alignment and adjust it if necessary. (See **FRONT WHEEL ALIGNMENT**.)

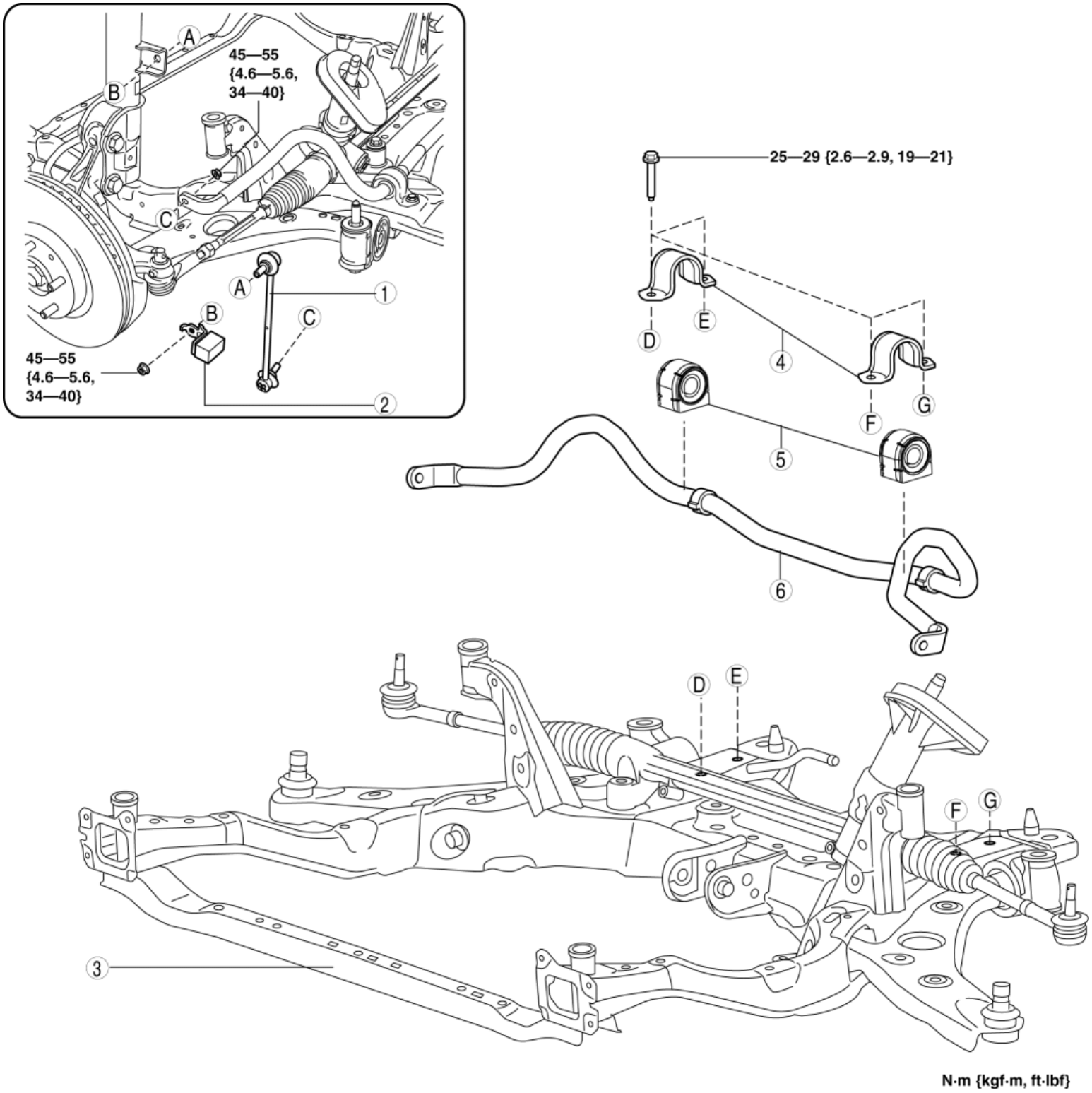

1	Front stabilizer control link
2	Dynamic damper (if equipped)
3	Front crossmember component (See **FRONT CROSSMEMBER REMOVAL/INSTALLATION**.)
4	Front stabilizer bracket (See **Front Stabilizer Bushing, Front Stabilizer Bracket Installation Note**.)

5	Front stabilizer bushing (See **Front Stabilizer Bracket Removal Note**.) (See **Front Stabilizer Bushing, Front Stabilizer Bracket Installation Note**.)
6	Front stabilizer (See **Front Stabilizer Bushing, Front Stabilizer Bracket Installation Note**.)

Front Stabilizer Bracket Removal Note

1. Secure the front stabilizer bracket flange using a vise.

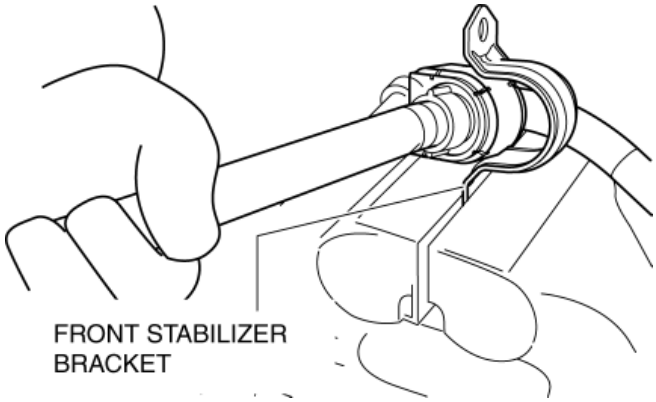

Front Stabilizer Bushing, Front Stabilizer Bracket Installation Note

1. Install the front stabilizer bushing to the front stabilizer with its slit positioned rearward of the vehicle.

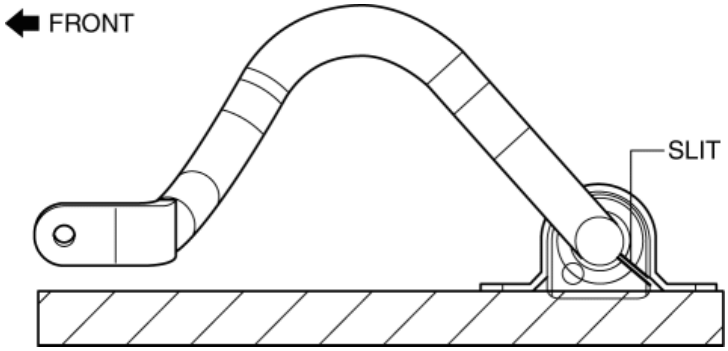

2. Install the front stabilizer bracket to the front stabilizer bushing by hand using the following procedure.
3. If the front stabilizer bracket cannot be installed by hand, install it using a vise.

CAUTION:

- If the front stabilizer bracket is installed using a vise, it could be deformed.
- Set a cylindrically-shaped object as shown in the figure so that pressure is applied to the front stabilizer bracket flange, and install the front stabilizer bracket to the front stabilizer bushing.

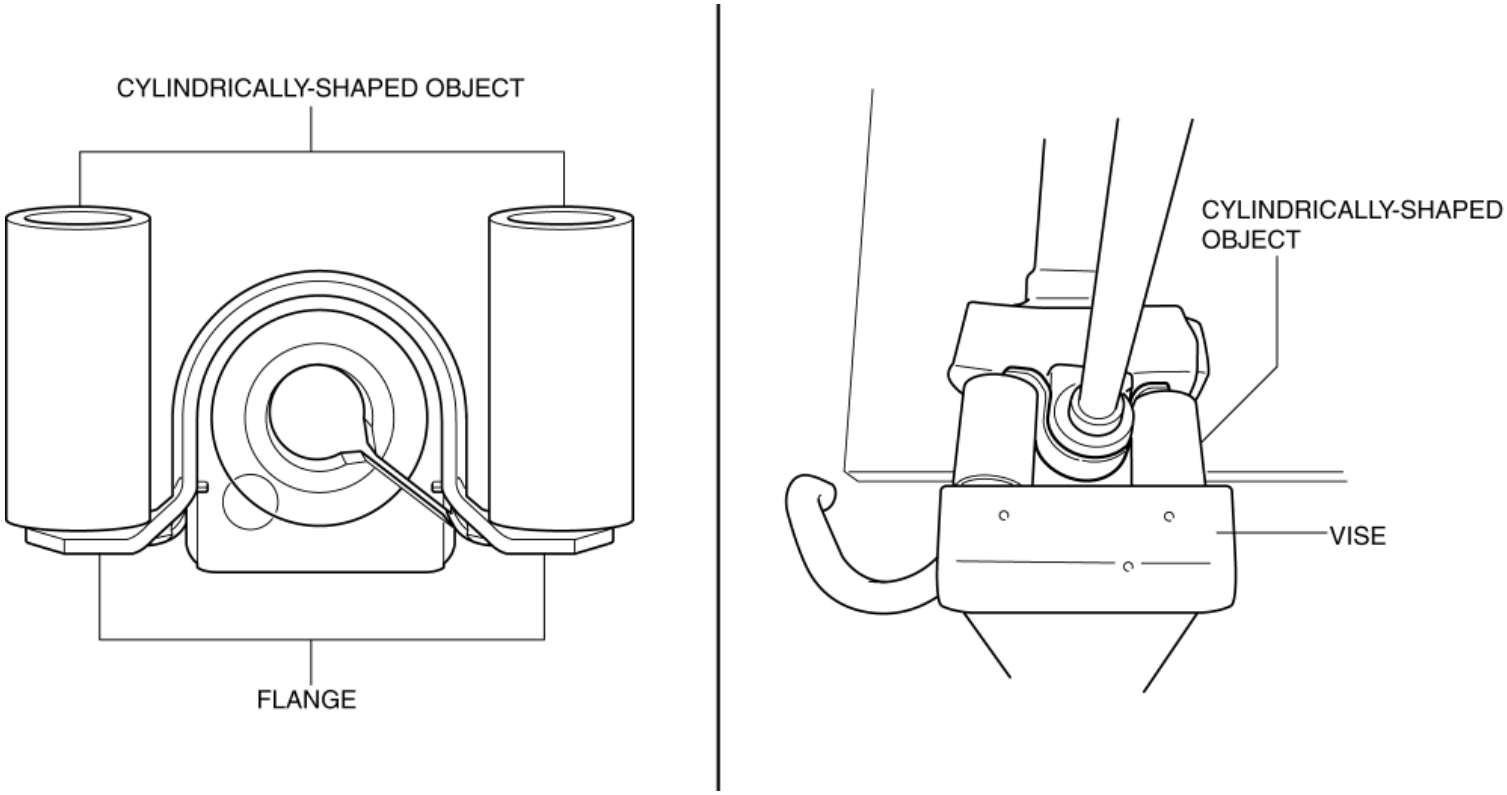

4. During front stabilizer bracket installation, keep the deviation in the positions of the front stabilizer bracket and the front stabilizer bushing within the range shown in the figure.

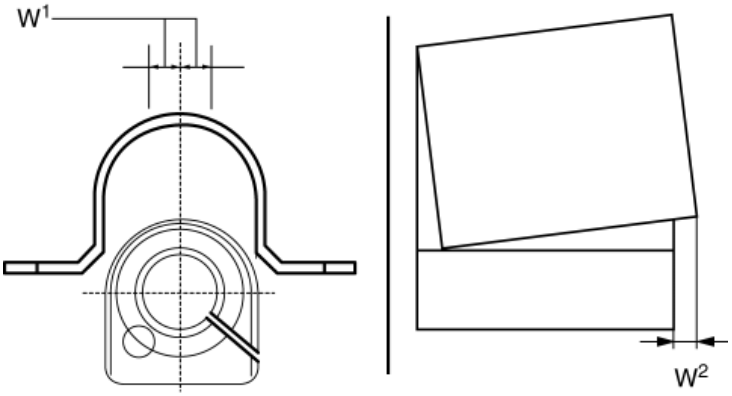

- W^1: 0.5 mm {0.02 in} max.
- W^2: 2 mm {0.08 in} max.

5. After installing the front stabilizer bracket, verify that the positions of the front stabilizer bracket and the front stabilizer bushing are within the range shown in the figure.

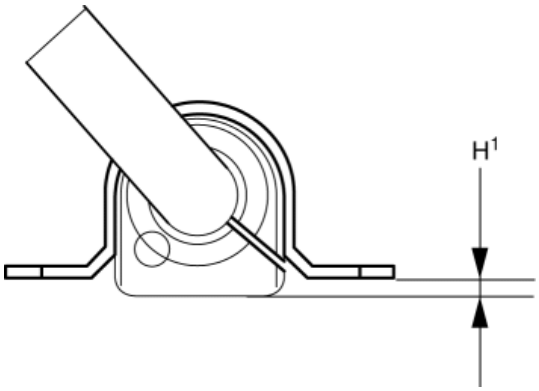

- H^1: 13 mm {0.51 in} max.

6. After installing the front stabilizer bracket, verify that the right and left-side positions of the front stabilizer bracket are within the

range shown in the figure.

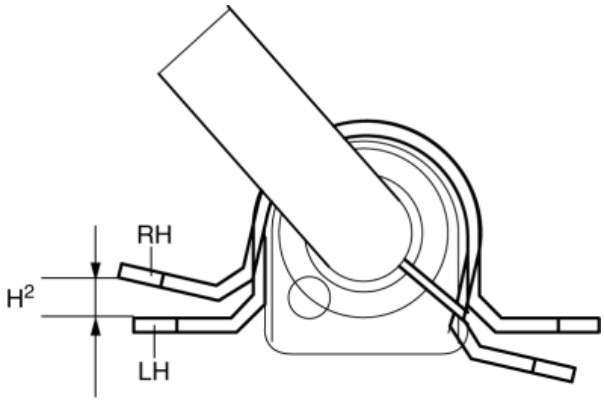

- H^2: 6 mm {0.2 in} max.

7. Place the front stabilizer component on a level workbench, and verify that it is within the range shown in the figure.

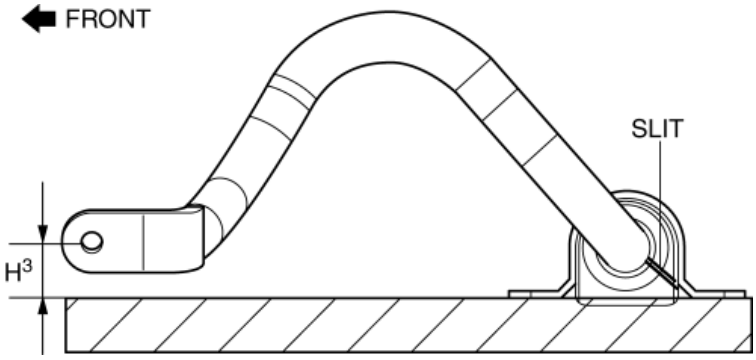

- H^3: 50.4—80.4 mm {1.99—3.16 in}

Front Stabilizer, Front Stabilizer Bushing and Front Stabilizer Bracket Installation Note

1. Temporarily tighten bolts A and B shown in the figure.

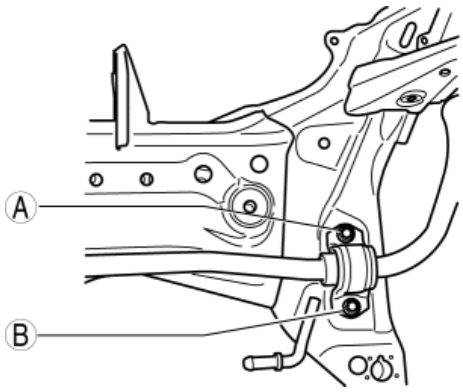

2. Tighten bolt B.

Tightening torque

- 25—29 N·m {2.6—2.9kgf·m, 19—21 ft·lbf}

3. Tighten bolt A.

Tightening torque

- 25—29 N·m {2.6—2.9kgf·m, 19—21 ft·lbf}

4. Tighten bolt B.

Tightening torque

- 25—29 N·m {2.6—2.9kgf·m, 19—21 ft·lbf}

2014 - Mazda3 - Suspension

FRONT STABILIZER CONTROL LINK INSPECTION

1. Remove the front stabilizer control link. (See **FRONT STABILIZER REMOVAL/INSTALLATION**.)

2. Inspect for bending or damage. If there is any malfunction, replace the front stabilizer control link.

3. Rotate the front stabilizer control link ball joint stud **10 times** and shake it side to side **10 times**.

4. Measure the front stabilizer control link ball joint rotational torque using an Allen wrench and a torque wrench.

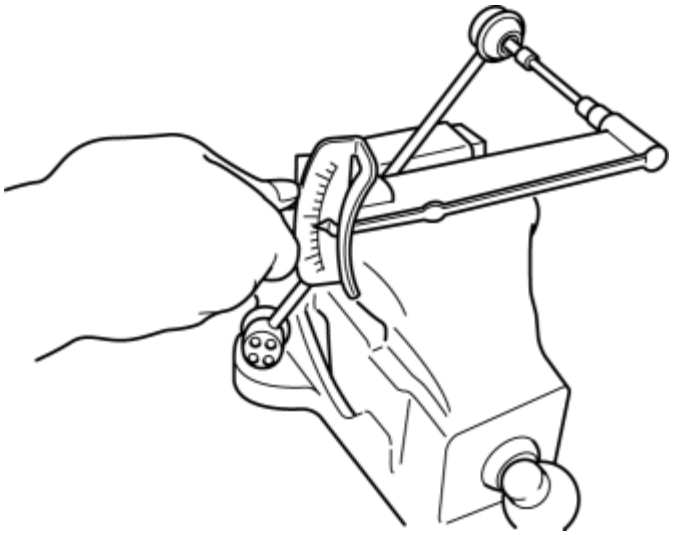

Front stabilizer control link ball joint starting torque

- 0.8—3.5 N·m {8.2—35 kgf·cm, 7.1—30 in·lbf}
- If not within the specification, replace the front stabilizer control link.
- Even when within the specification, if there is excessive play in the front stabilizer control link ball joint, replace the front stabilizer control link.

2014 - Mazda3 - Suspension

FRONT CROSSMEMBER REMOVAL/INSTALLATION

CAUTION:

- Performing the following procedures without first removing the front ABS wheel-speed sensor may possibly cause an open circuit in the harness if it is pulled by mistake. Before performing the following procedures, disconnect the front ABS wheel-speed sensor (axle side) and fix it to an appropriate place where the sensor will not be pulled by mistake while servicing the vehicle.
- Secure the steering wheel using tape or a cable to prevent the steering shaft from rotating after disconnecting the steering shaft. If the steering wheel rotates after the steering shaft and the steering gear and linkage are disconnected, the internal parts of the clock spring could be damaged.

1. Remove the joint cover. (See **STEERING WHEEL AND COLUMN REMOVAL/INSTALLATION**.)

2. Disconnect the intermediate shaft from the steering gear and linkage. (See **STEERING WHEEL AND COLUMN REMOVAL/INSTALLATION**.)

3. Disconnect the front ABS wheel-speed sensor wiring harness installed to the steering knuckle and set it aside. (See **FRONT ABS WHEEL-SPEED SENSOR REMOVAL/INSTALLATION**.)

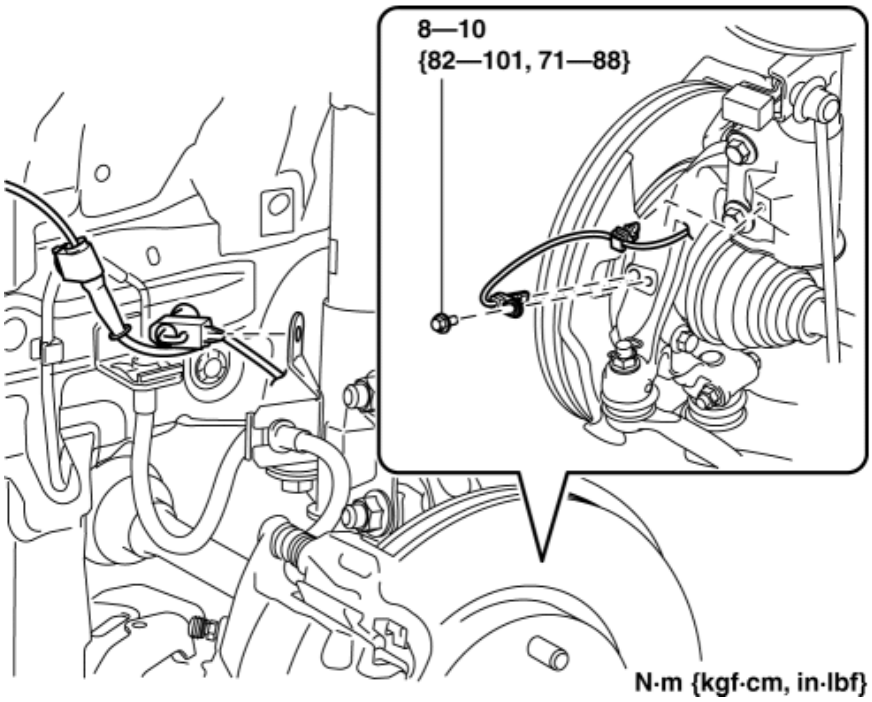

4. Remove the front under cover No.2. (See **FRONT UNDER COVER No.2 REMOVAL/INSTALLATION**.)

5. Disconnect the wiring harness from the front crossmember. (Vehicle with i-ELOOP)

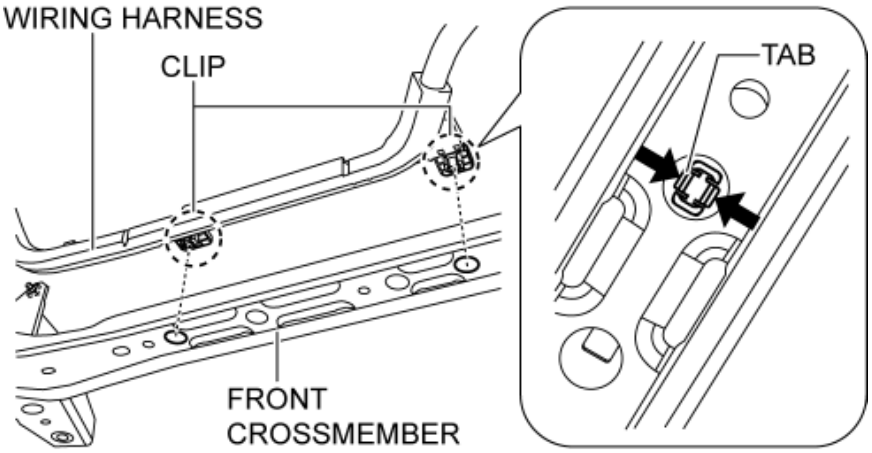

6. Remove the front under cover No.1. (See **FRONT UNDER COVER No.1 REMOVAL/INSTALLATION**.)

7. Remove the splash shield. (See **SPLASH SHIELD REMOVAL/INSTALLATION**.)

8. Set the front mudguard away from the front crossmember and front bumper. (See **MUDGUARD REMOVAL/INSTALLATION**.)

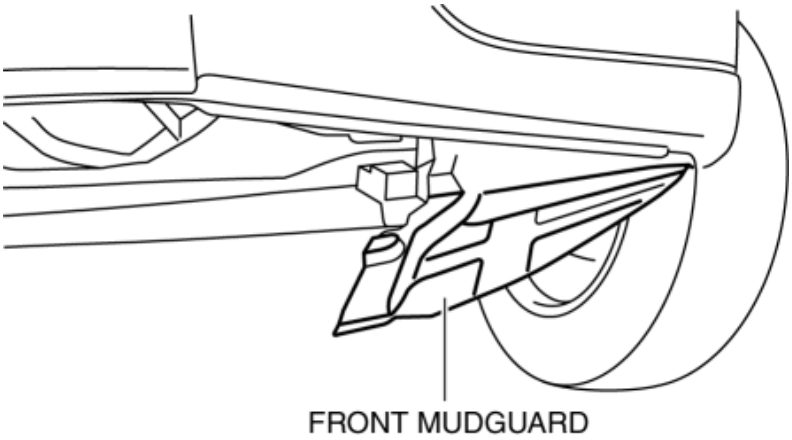

9. Disconnect the front crossmember extension.

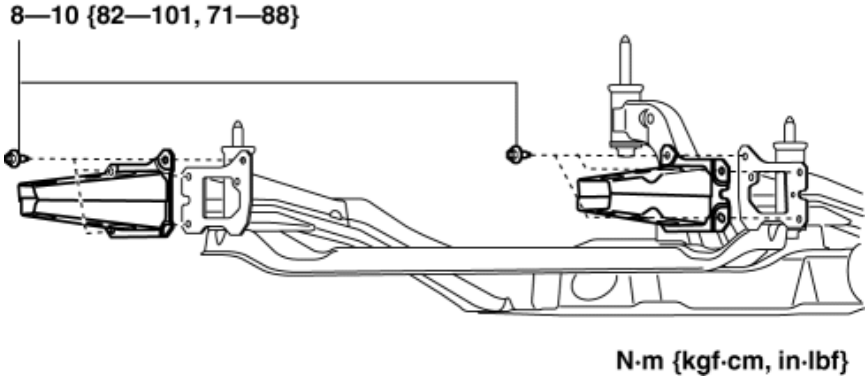

10. Disconnect the front stabilizer control link (front stabilizer side). (See **FRONT STABILIZER REMOVAL/INSTALLATION**.)

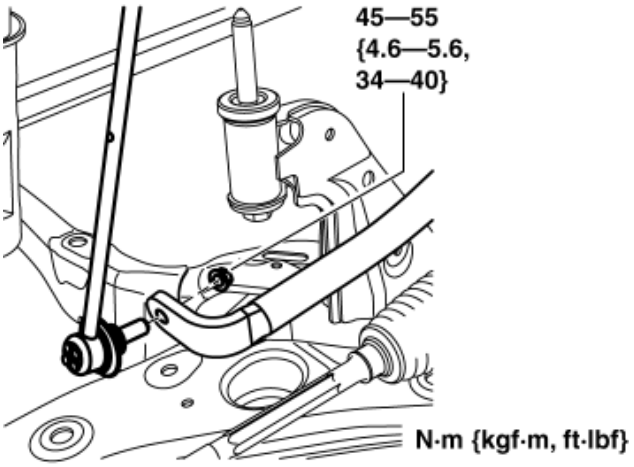

11. Remove the front crossmember insulator.

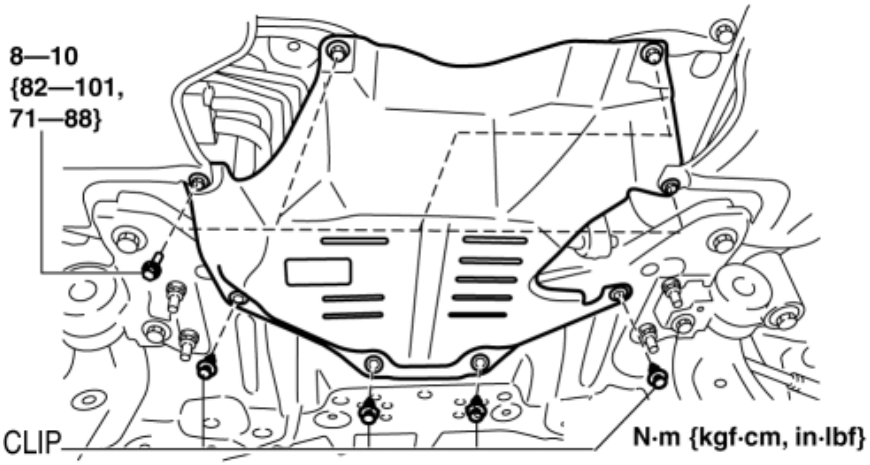

12. Disconnect the hanger rubber from the front crossmember and set it aside.

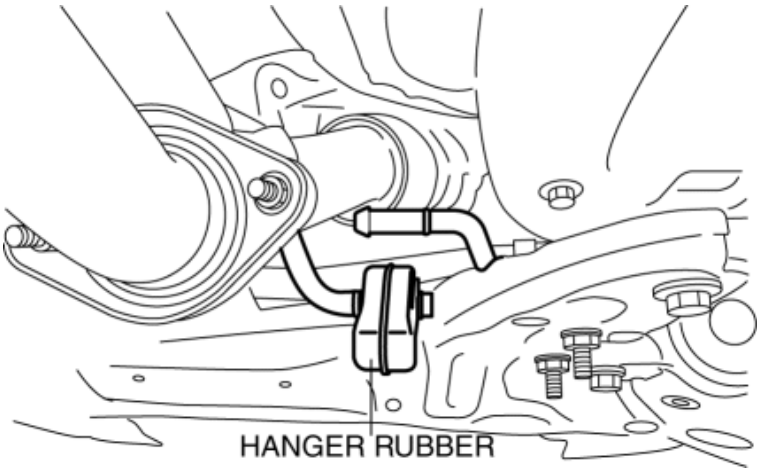

13. Loosen the bolts shown in the figure.

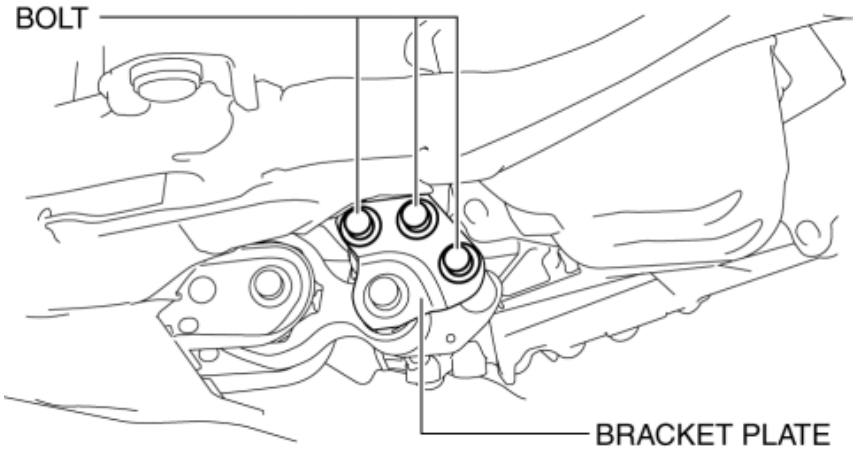

14. Remove the bolt shown in the figure.

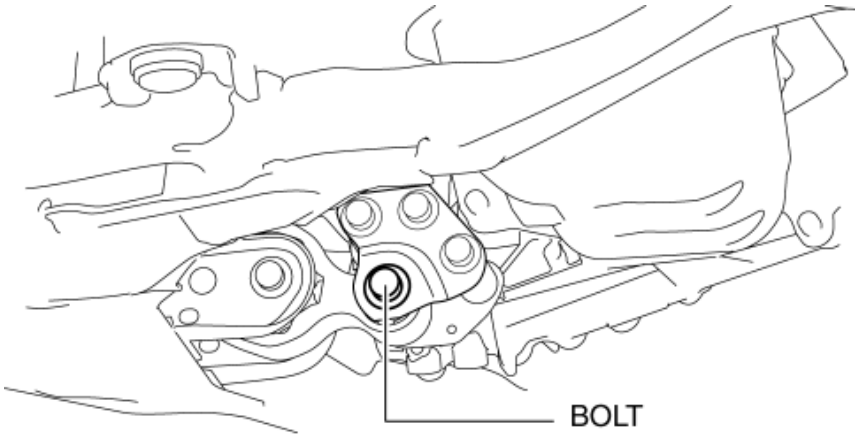

15. Remove the tie-rod end locknut.

Tightening torque

- 47—59 N·m {4.8—6.0 kgf·m, 35—43 ft·lbf}

16. Detach the tie-rod end from the steering knuckle using the **SST**.

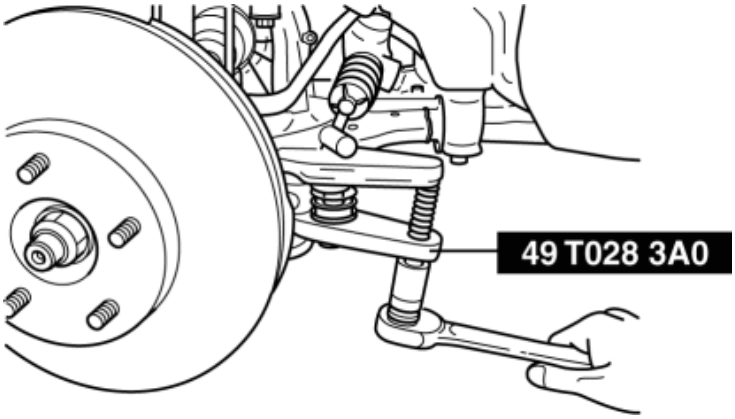

17. Disconnect the front lower arm ball joint.

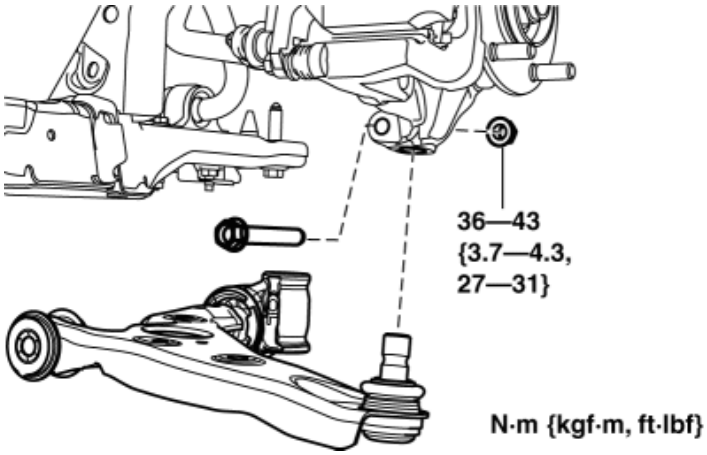

18. Remove in the order indicated in the table.

19. Install in the reverse order of removal.

20. Inspect the wheel alignment and adjust it if necessary. (See **FRONT WHEEL ALIGNMENT**.)

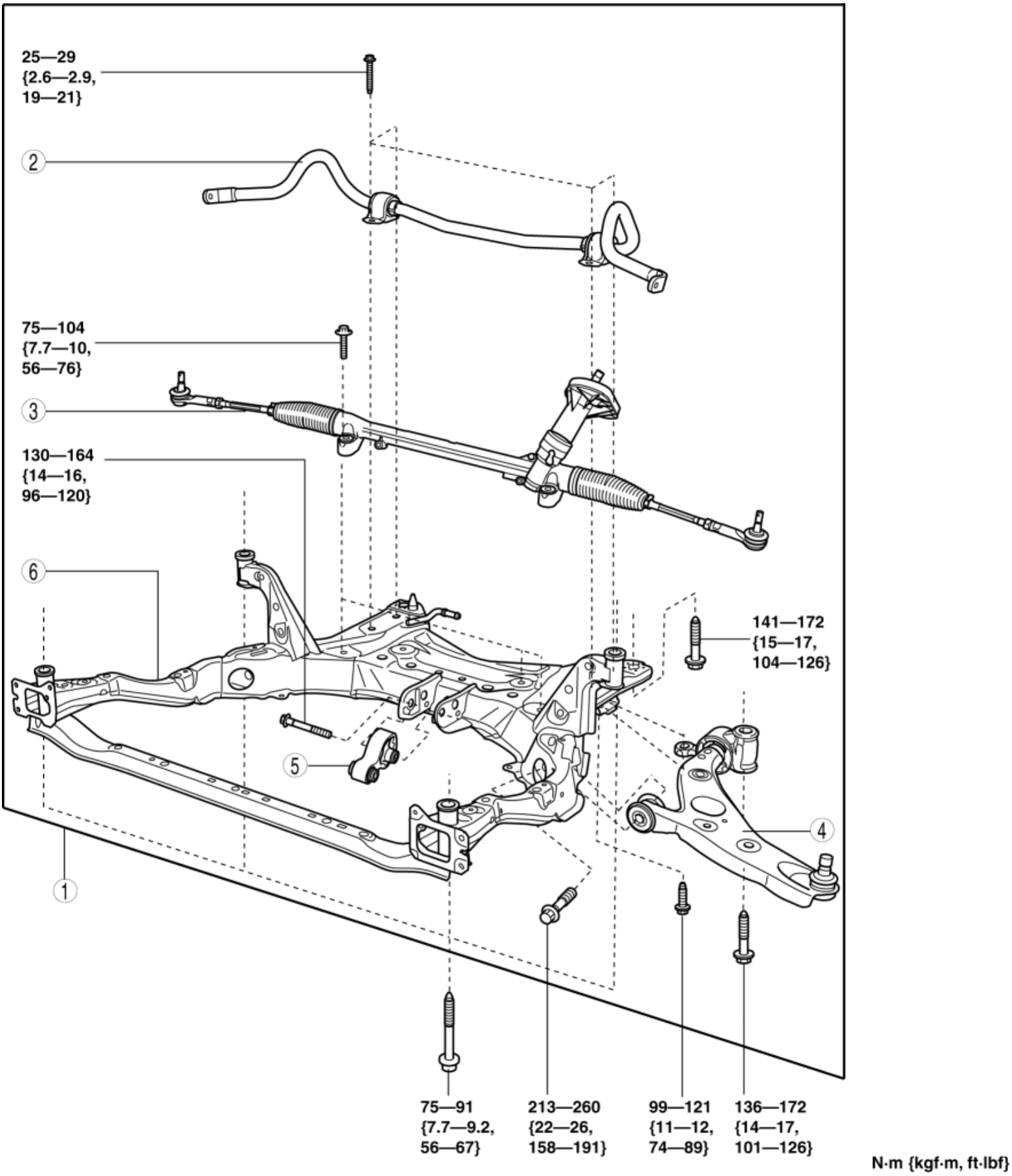

1	Front crossmember component

	(See **Front Crossmember Component Removal Note**.) (See **No.1 Engine Mount Rubber and Front Crossmember Component Installation Note**.)
2	Front stabilizer (See **FRONT STABILIZER REMOVAL/INSTALLATION**.)
3	Steering gear and linkage (See **STEERING GEAR AND LINKAGE REMOVAL/INSTALLATION**.)
4	Front lower arm (See **FRONT LOWER ARM REMOVAL/INSTALLATION**.)
5	No.1 engine mount rubber (See **ENGINE MOUNT DISASSEMBLY/ASSEMBLY [SKYACTIV-G 2.0, SKYACTIV-G 2.5]**.) (See **No.1 Engine Mount Rubber and Front Crossmember Component Installation Note**.)
6	Front crossmember

Front Crossmember Component Removal Note

WARNING:

- Removing the crossmember is dangerous. The crossmember component could fall and cause serious injury or death. Verify that the jack securely supports the crossmember component.

1. Support the front crossmember component using a jack.

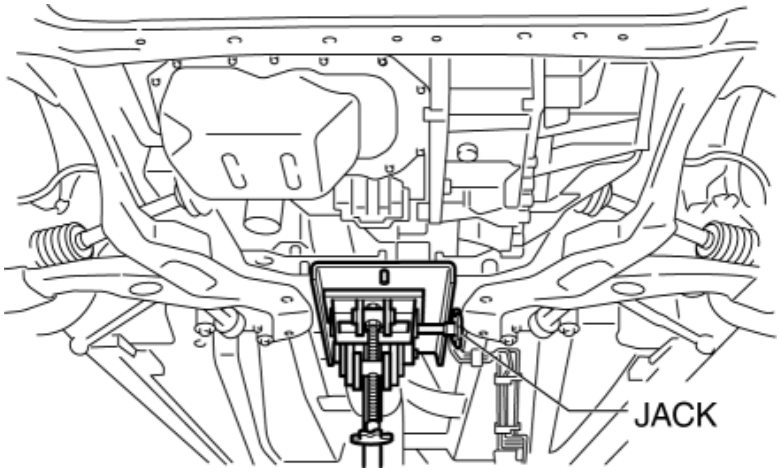

2. Remove the front crossmember installation bolts.

3. Remove the front crossmember, front stabilizer, front lower arm, and steering gear and linkage as a single unit.

No.1 Engine Mount Rubber and Front Crossmember Component Installation Note

1. When installing the front crossmember component to the vehicle, assemble the dust cover to the body-side installation area correctly to prevent water or foreign matter from penetrating. Install the dust cover carefully

so as not to pinch the dust cover sponge to the body-side installation area or put a fold line on the sponge by contact.

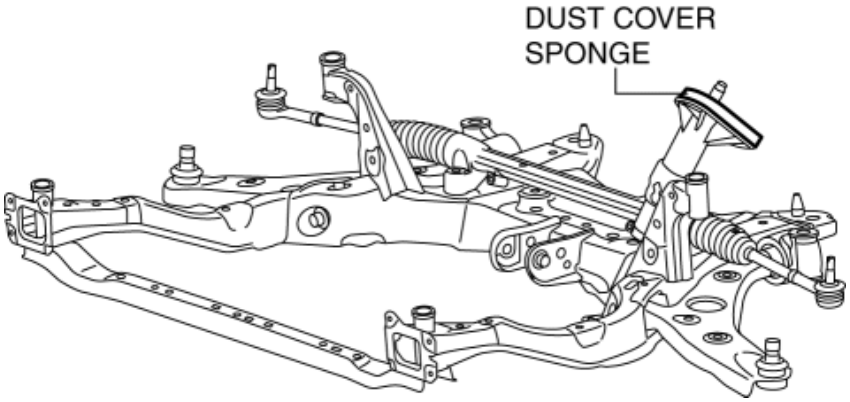

2. Temporarily tighten the bolts shown in the figure.

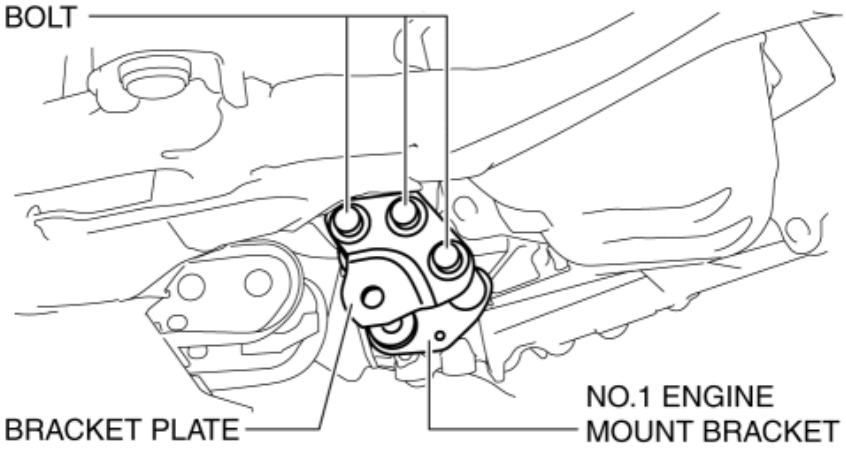

3. Install the No.1 engine mount rubber and temporarily tighten the bolts shown in the figure.

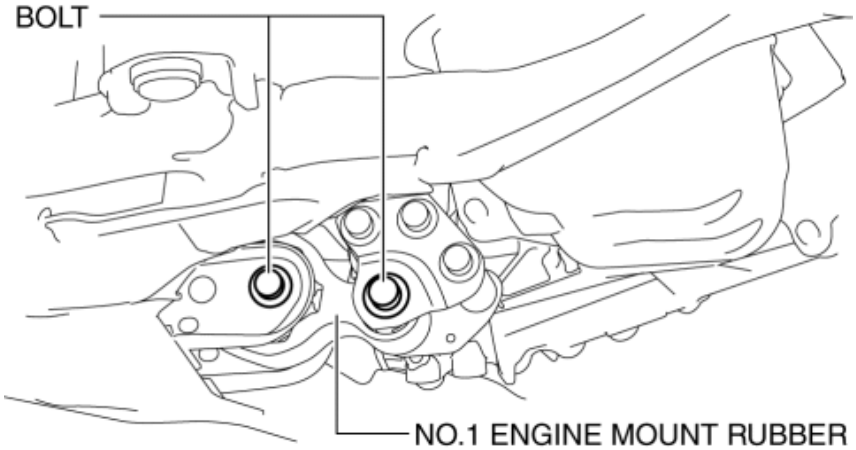

4. Tighten the No.1 engine mount bracket and bracket plate installation bolts in the order shown in the figure.

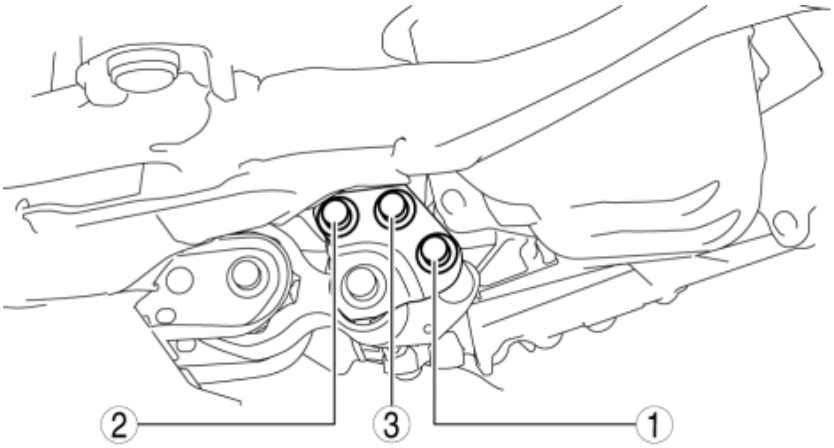

Tightening torque

- 84—98 N·m {8.6—9.9 kgf·m, 62—72 ft·lbf}

5. Tighten the No.1 engine mount rubber installation bolts shown in the figure.

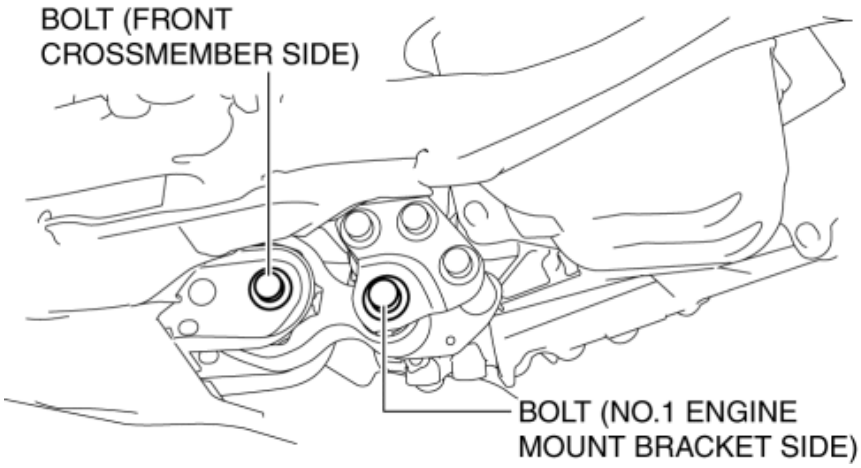

Tightening torque

Installation position	Tightening torque
No.1 engine mount bracket side	140—163 N·m {15—16 kgf·m, 104—120 ft·lbf}
Front crossmember side	130—164 N·m {14—16 kgf·m, 96—120 ft·lbf}

2014 - Mazda3 - Suspension

REAR SUSPENSION LOCATION INDEX

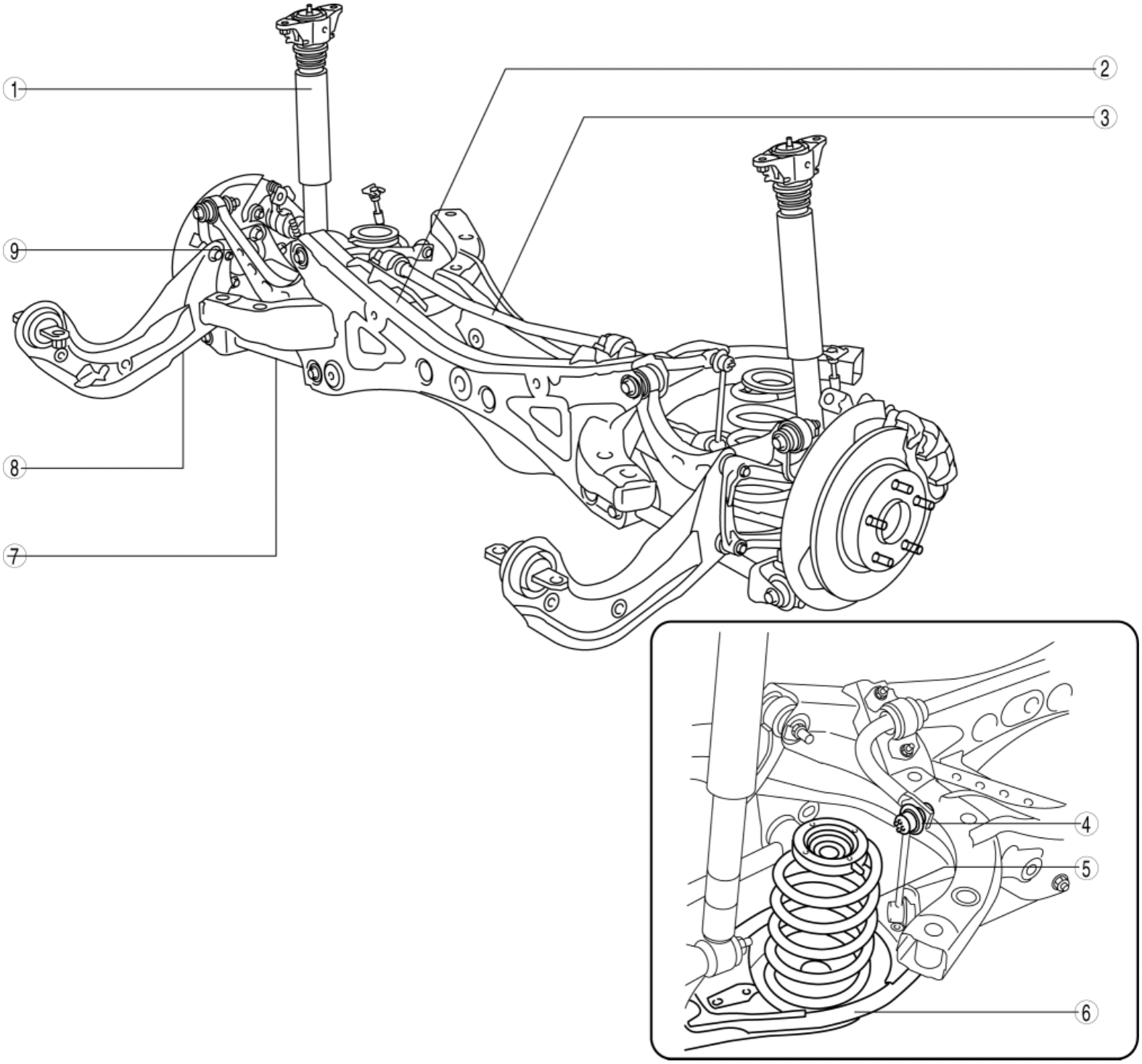

1	Rear shock absorber (See **REAR SHOCK ABSORBER REMOVAL/INSTALLATION**.) (See **REAR SHOCK ABSORBER INSPECTION**.)

	(See **REAR SHOCK ABSORBER DISPOSAL**.)
2	Rear crossmember (See **REAR CROSSMEMBER REMOVAL/INSTALLATION**.)
3	Rear stabilizer (See **REAR STABILIZER REMOVAL/INSTALLATION**.)
4	Rear stabilizer control link (See **REAR STABILIZER CONTROL LINK INSPECTION**.) (See **REAR STABILIZER REMOVAL/INSTALLATION**.)
5	Rear coil spring (See **REAR COIL SPRING REMOVAL/INSTALLATION**.)
6	Rear lower arm (See **REAR LOWER ARM REMOVAL/INSTALLATION**.)
7	Rear lateral link (See **REAR LATERAL LINK REMOVAL/INSTALLATION**.)
8	Rear trailing link (See **REAR TRAILING LINK REMOVAL/INSTALLATION**.)
9	Rear upper arm (See **REAR UPPER ARM REMOVAL/INSTALLATION**.)

2014 - Mazda3 - Suspension

REAR SHOCK ABSORBER REMOVAL/INSTALLATION

1. Remove in the order indicated in the table.
2. Install in the reverse order of removal.

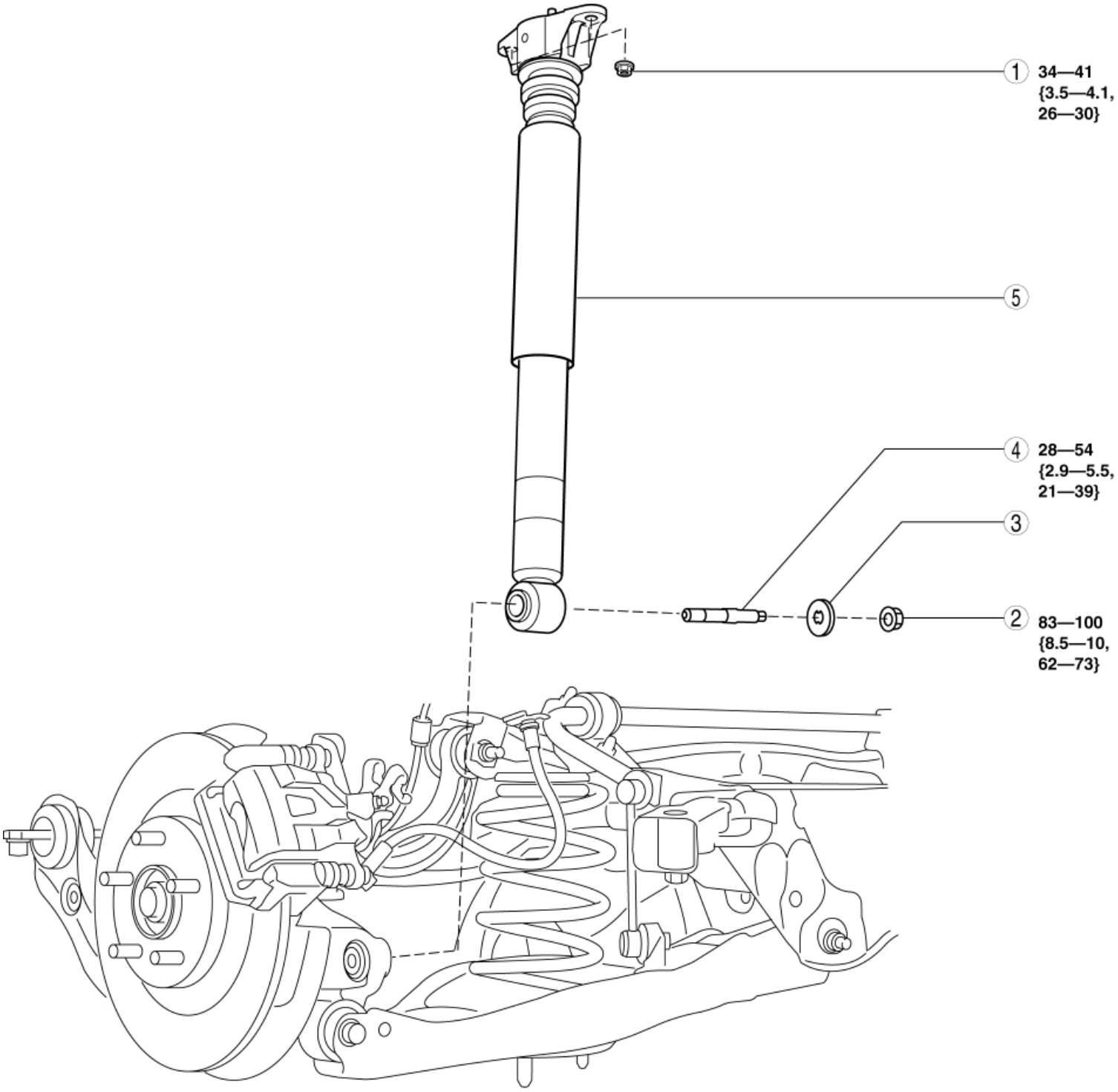

N·m {kgf·m, ft·lbf}

1	Rear shock absorber upper nut (See **Rear Shock Absorber Upper Nut Installation Note**.)
2	Rear shock absorber lower bolt
3	Washer
4	Stud bolt
5	Rear shock absorber

Rear Shock Absorber Upper Nut Installation Note

1. Lift up the rear lower arm using a jack and install the rear shock absorber upper nuts.

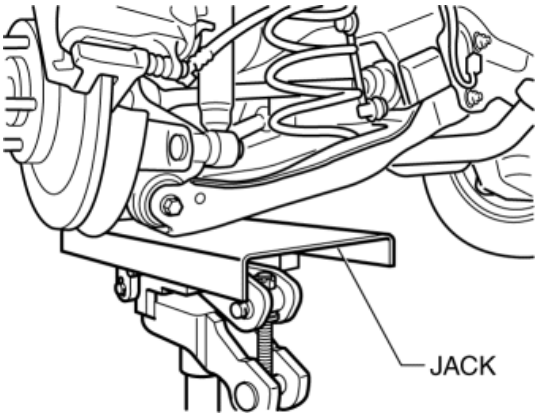

2014 - Mazda3 - Suspension

REAR SHOCK ABSORBER INSPECTION

1. Remove the rear shock absorber. (See **REAR SHOCK ABSORBER REMOVAL/INSTALLATION**.)

2. Inspect for damage and oil leakage.

3. Compress and extend the shock piston at least three times. Verify that the operational force does not change and that there is no unusual noise.

    - If not as specified, replace the rear shock absorber.

2014 - Mazda3 - Suspension

REAR SHOCK ABSORBER DISPOSAL

WARNING:

- Whenever drilling into a rear shock absorber, wear protective eye wear. The gas in the rear shock absorber is pressurized, and could spray metal chips into the eyes and face when drilling.

1. Clamp a rear shock absorber on a flat surface or with the piston pointing downwards.

2. Drill a **2—3 mm {0.08—0.11 in}** hole at a point A from the bottom of the tube, so that the gas can escape.

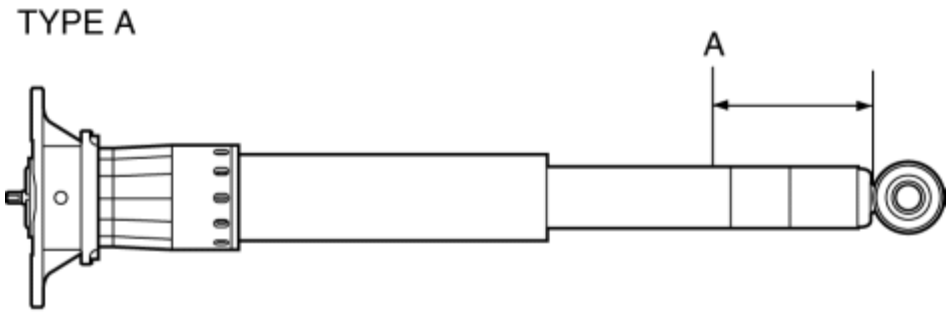

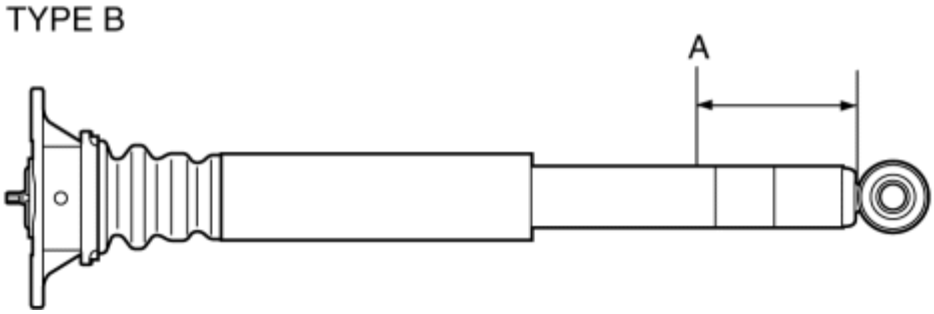

- **Point A: 40—50 mm {1.6—1.9 in}**

3. Turn the hole downwards.

4. The oil can be collected by moving the piston rod several times up and down and cutting the tube at the end.

5. Dispose of waste oil according to the waste disposal law.

2014 - Mazda3 - Suspension

REAR COIL SPRING REMOVAL/INSTALLATION

WARNING:

- Be careful not to allow the coil spring to fly off when removing/installing the coil spring. Otherwise, the coil spring could fly off and cause serious injury or death, or damage to the vehicle.

1. When working on the left side of the vehicle, disconnect the auto leveling sensor link. (With auto leveling sensor) (See **AUTO LEVELING SENSOR REMOVAL/INSTALLATION**.)

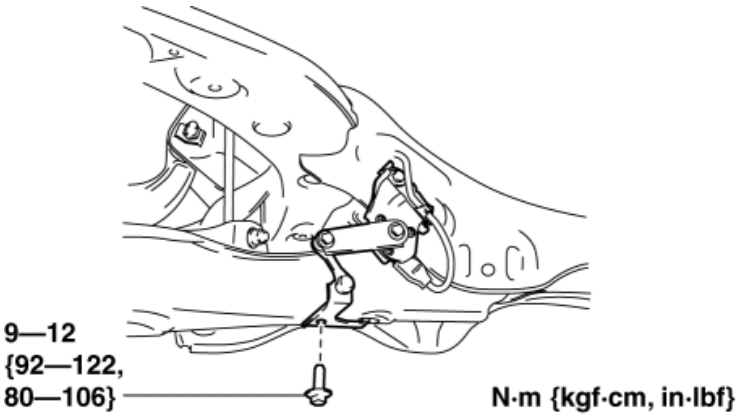

2. Remove in the order indicated in the table.

3. Install in the reverse order of removal.

4. Inspect the wheel alignment and adjust it if necessary. (See **REAR WHEEL ALIGNMENT**.)

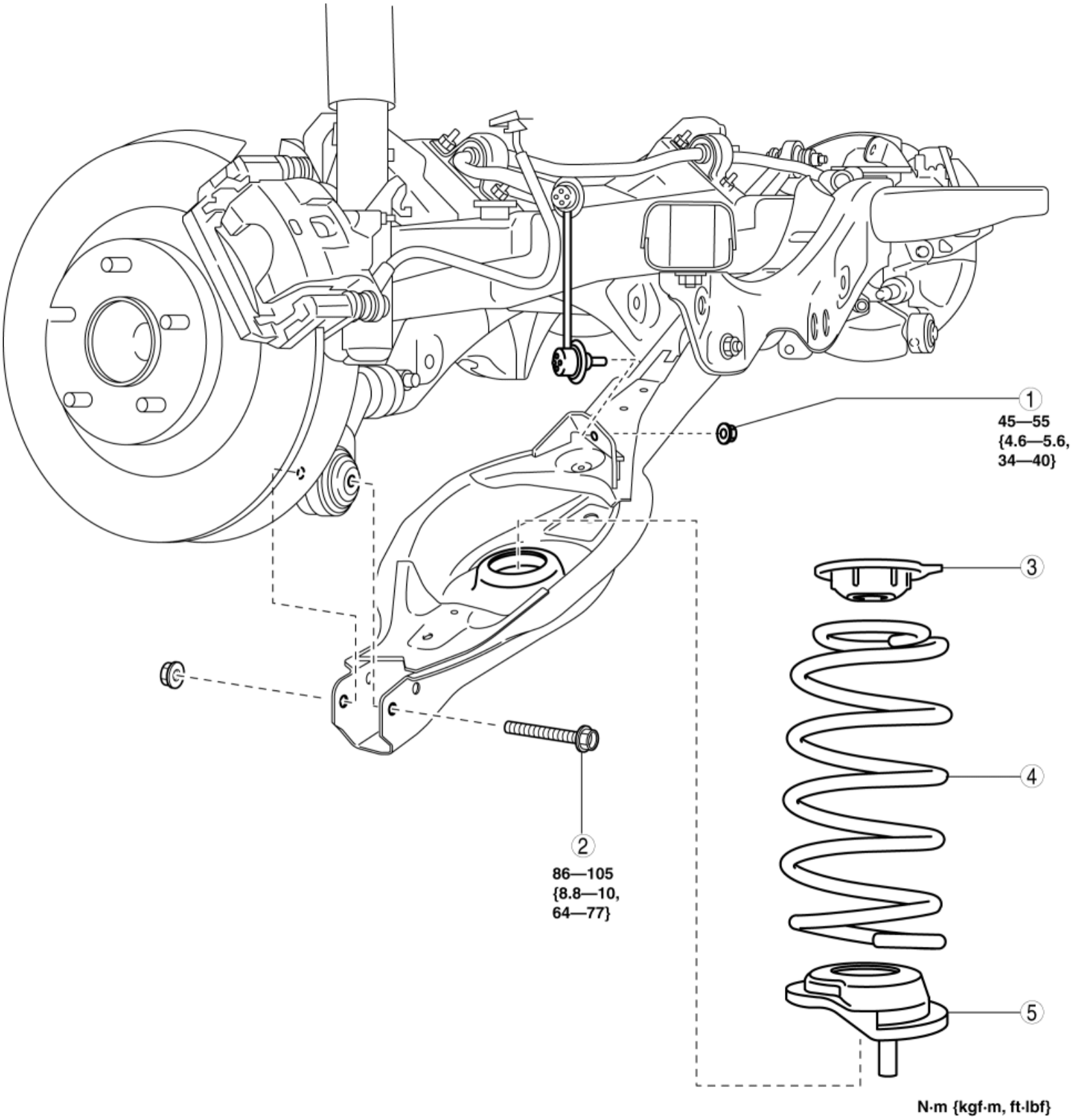

1	Rear stabilizer control link lower side nut
2	Rear lower arm outer bolt (See **Rear Coil Spring Removal Note**.)

3	Upper spring seat rubber
4	Rear coil spring (See **Rear Coil Spring Installation Note**.)
5	Lower spring seat rubber

Rear Coil Spring Removal Note

1. Support the rear lower arm using a jack.

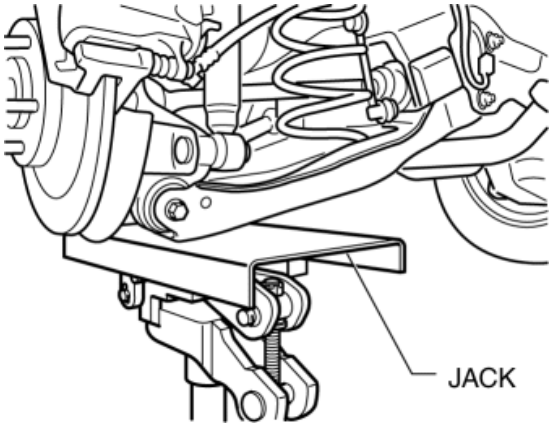

2. Remove the rear lower arm outer bolt.
3. Remove the rear coil spring.

Rear Coil Spring Installation Note

1. Install the rear coil spring so that the yellow paint is pointed upward of the vehicle.

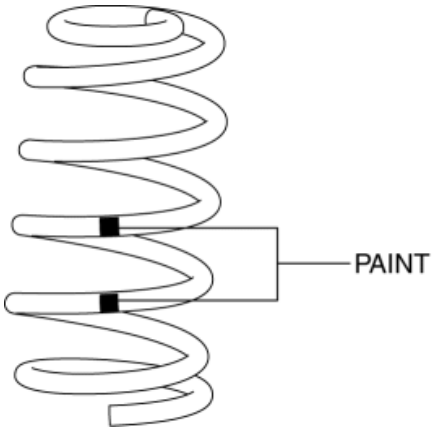

2. Align the upper end of the rear coil spring with the step of the upper spring seat rubber.
3. Align the lower end of the rear coil spring with the step of the lower spring seat rubber.
4. Position the jack under the rear lower arm and jack up slowly.

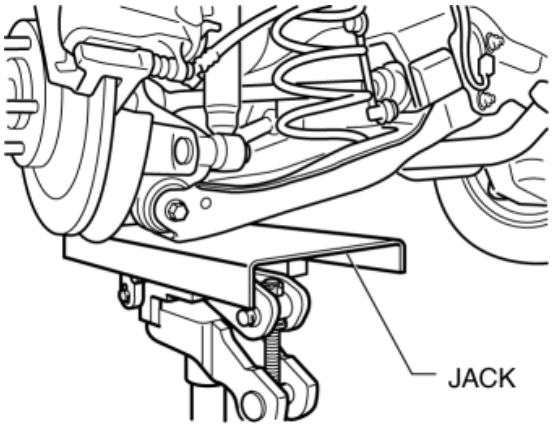

5. Install the rear lower arm outer bolt.

2014 - Mazda3 - Suspension

REAR LOWER ARM REMOVAL/INSTALLATION

WARNING:

- Be careful not to allow the coil spring to fly off when removing/installing the coil spring. Otherwise, the coil spring could fly off and cause serious injury or death, or damage to the vehicle.

1. When working on the left side of the vehicle, disconnect the auto leveling sensor link. (With auto leveling sensor) (See **AUTO LEVELING SENSOR REMOVAL/INSTALLATION**.)

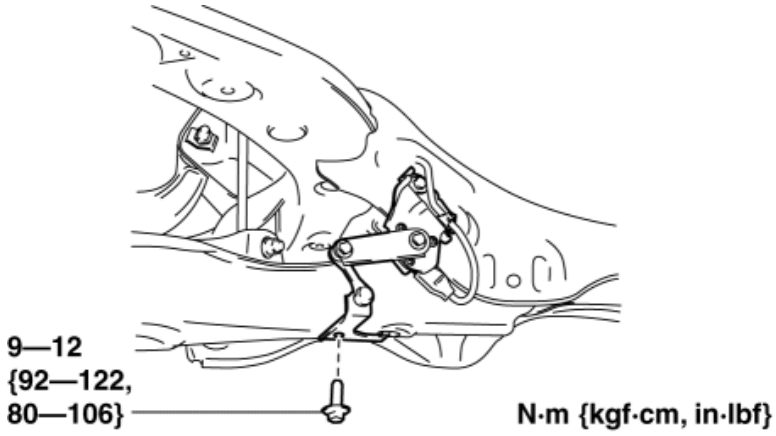

2. Remove in the order indicated in the table.

3. Install in the reverse order of removal.

4. Inspect the wheel alignment and adjust it if necessary. (See **REAR WHEEL ALIGNMENT**.)

REAR LOWER ARM REMOVAL/INSTALLATION

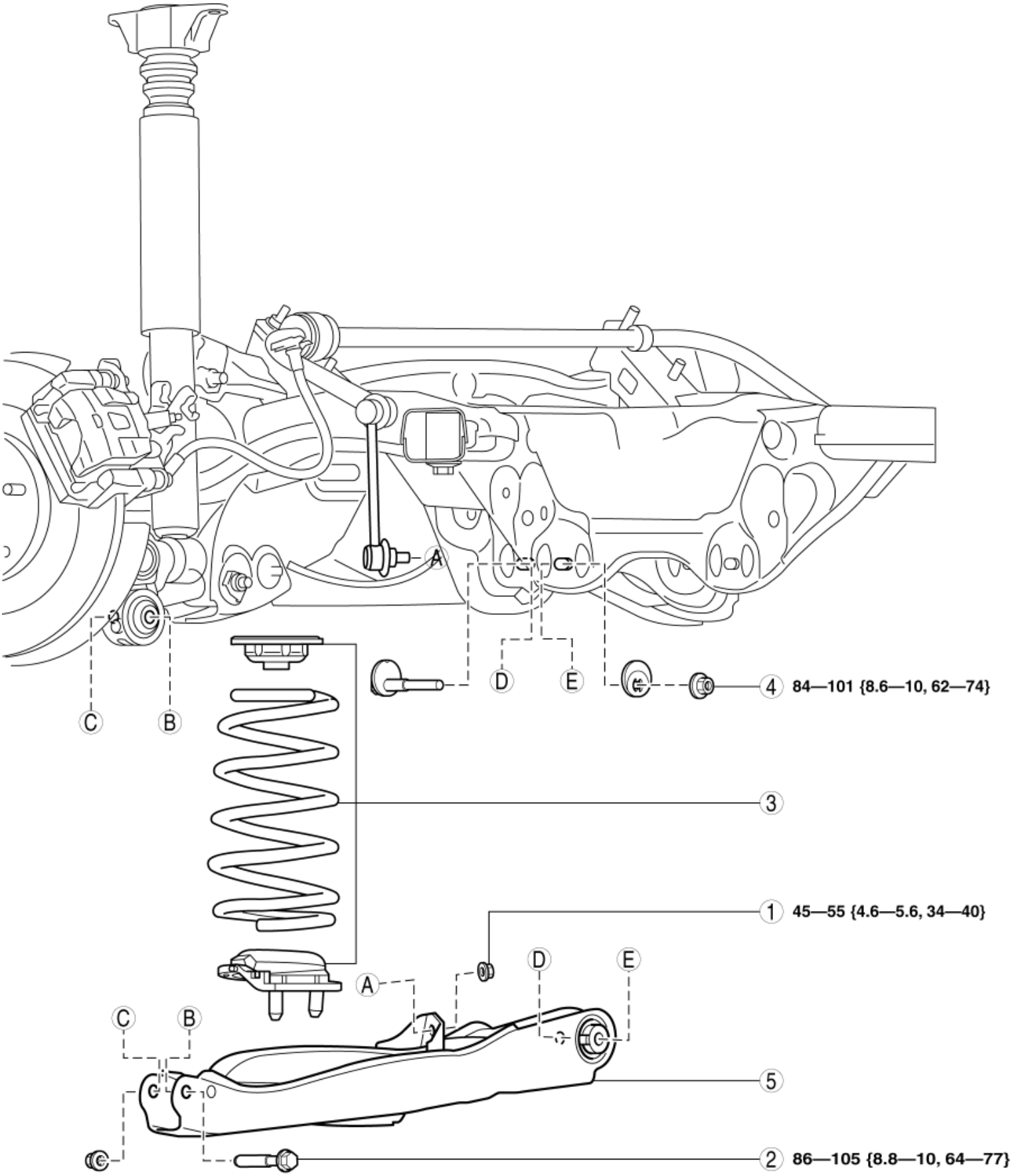

1	Rear stabilizer control link lower side nut (See **REAR STABILIZER REMOVAL/INSTALLATION**.)
2	Rear lower arm outer bolt (See **Rear Lower Arm Outer Bolt Removal Note**.) (See **Rear Lower Arm Outer Bolt Installation Note**.)
3	Rear coil spring component (See **REAR COIL SPRING REMOVAL/INSTALLATION**.)
4	Rear lower arm inner nut
5	Rear lower arm

Rear Lower Arm Outer Bolt Removal Note

1. Support the rear lower arm using a jack.

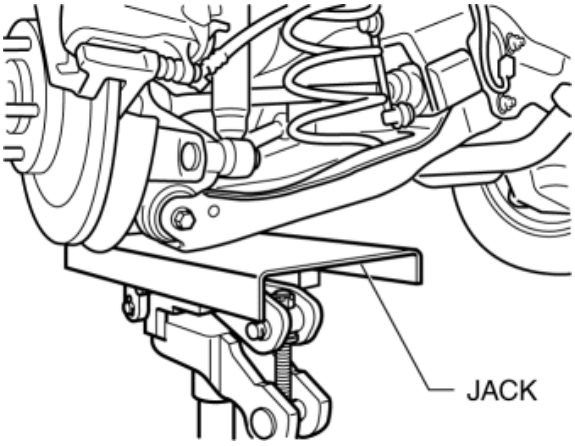

2. Remove the rear lower arm outer bolt.

Rear Lower Arm Outer Bolt Installation Note

1. Install the rear coil spring so that the yellow paint is pointed upward of the vehicle.

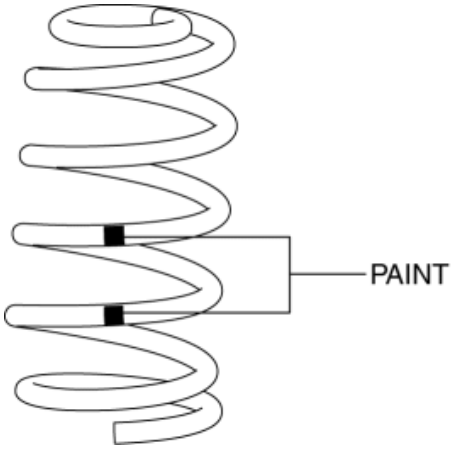

2. Align the upper end of the rear coil spring with the step of the upper spring seat rubber.

3. Align the lower end of the rear coil spring with the step of the lower spring seat rubber.

4. Position the jack under the rear lower arm and jack up slowly.

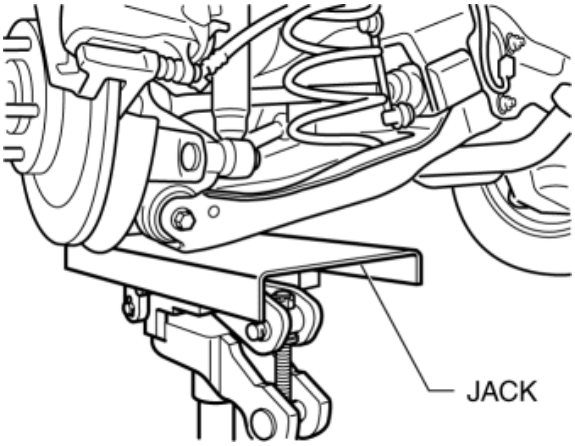

5. Install the lower arm outer bolt.

2014 - Mazda3 - Suspension

REAR UPPER ARM REMOVAL/INSTALLATION

CAUTION:

- Performing the following procedures without first removing the rear ABS wheel-speed sensor may possibly cause an open circuit in the harness if it is pulled by mistake. Before performing the following procedures, disconnect the rear ABS wheel-speed sensor (axle side) and fix it to an appropriate place where the sensor will not be pulled by mistake while servicing the vehicle.

NOTE:

- Mark the position before removing the rear upper arm.
- Align the rear crossmember and rear upper arm markings when installing the rear upper arm.
- Tighten the rear upper arm inner bolt completely before installing the rear crossmember component to the vehicle.

1. Disconnect the auto leveling sensor link. (With auto leveling sensor) (See **AUTO LEVELING SENSOR REMOVAL/INSTALLATION**.)

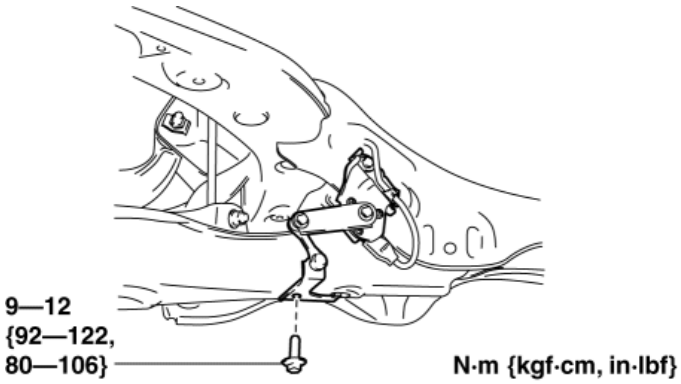

2. Disconnect the wiring harness clips and connector installed to the rear crossmember. (With auto leveling sensor)

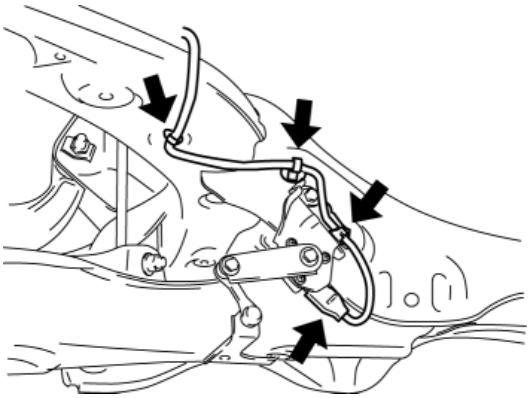

3. Disconnect the rear ABS wheel-speed sensor wiring harness installed to the hub support and set it aside. (See **REAR ABS WHEEL-SPEED SENSOR REMOVAL/INSTALLATION**.)

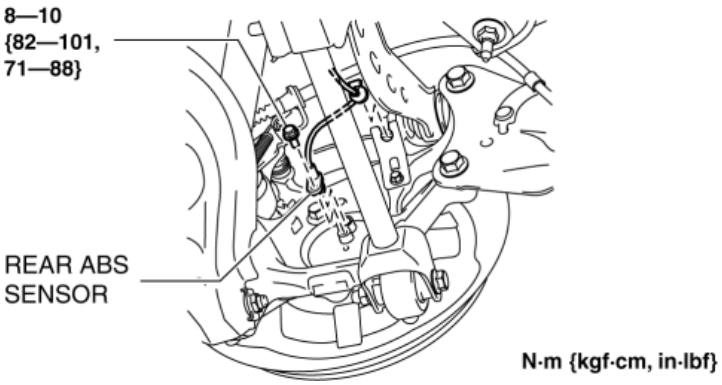

4. Remove the TWC. (See **EXHAUST SYSTEM REMOVAL/INSTALLATION [SKYACTIV-G 2.0, SKYACTIV-G 2.5]**.)

5. Remove the rear coil spring. (See **REAR COIL SPRING REMOVAL/INSTALLATION**.)

6. Set the bracket aside.

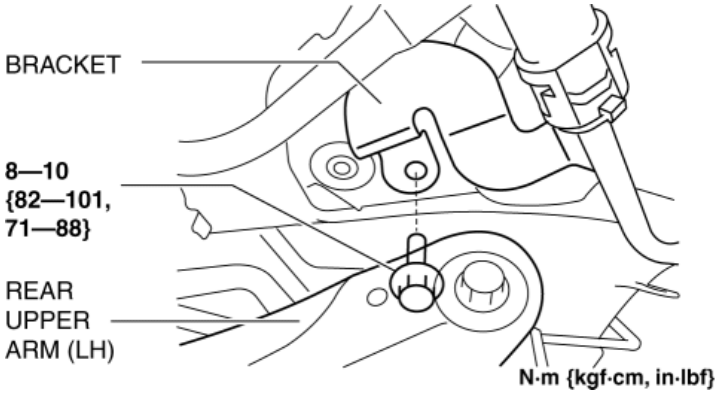

7. Remove in the order indicated in the table.

8. Install in the reverse order of removal.

9. Inspect the wheel alignment and adjust it if necessary. (See **REAR WHEEL ALIGNMENT**.)

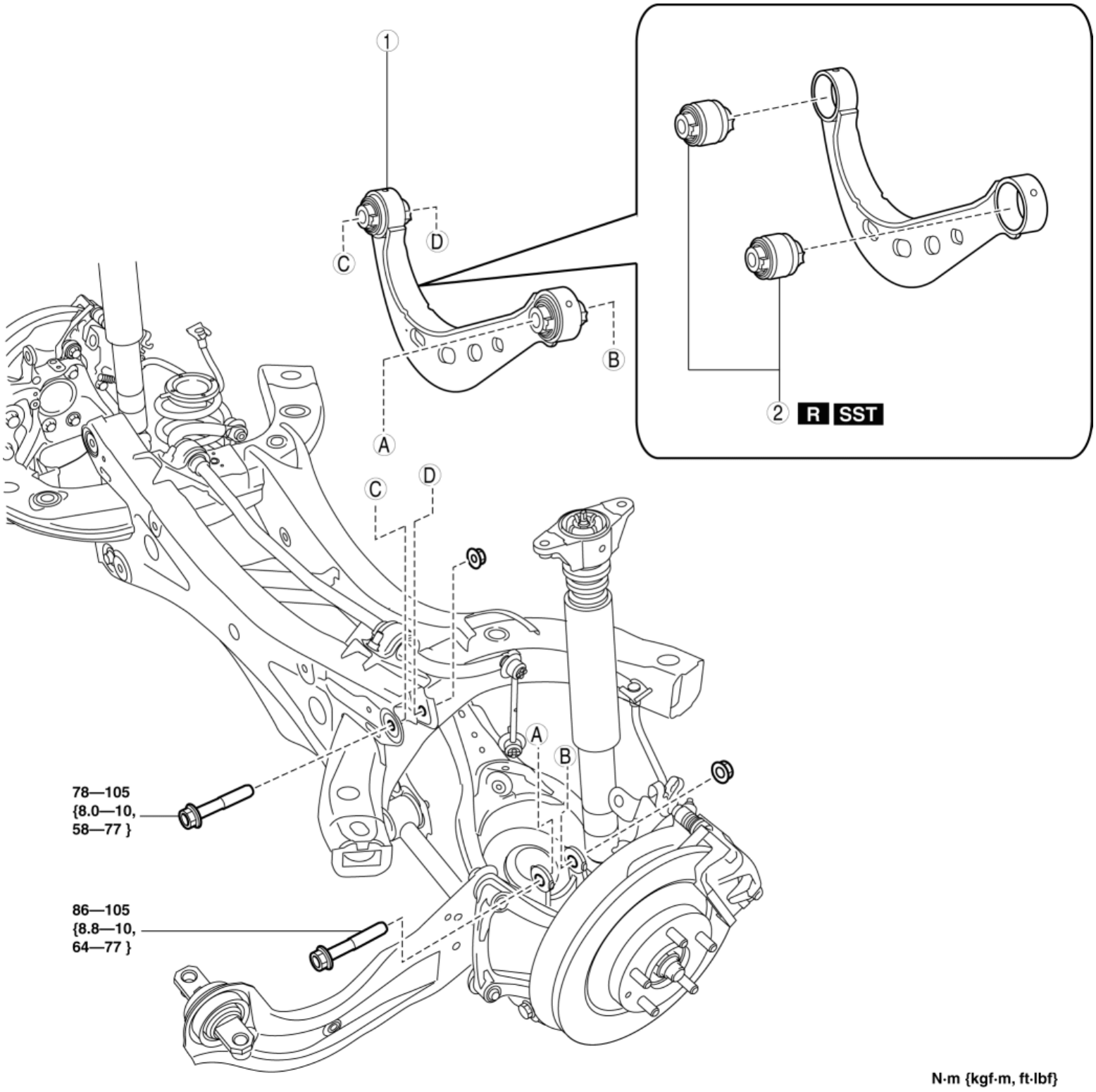

1	Rear upper arm (See **Rear Upper Arm Removal Note**.) (See **Rear Upper Arm Installation Note**.)
2	Rear upper arm bushing (See **Rear Upper Arm Bushing Removal Note**.) (See **Rear Upper Arm Bushing Installation Note**.)

Rear Upper Arm Removal Note

1. Jack up the vehicle to the unloaded condition, and support the rear trailing link component using a jack.

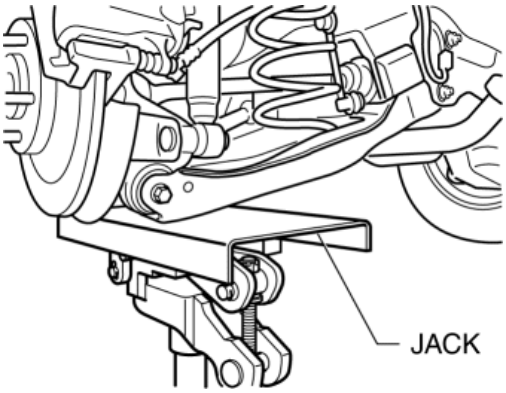

2. Align the rear crossmember component and rear upper arm and mark them.

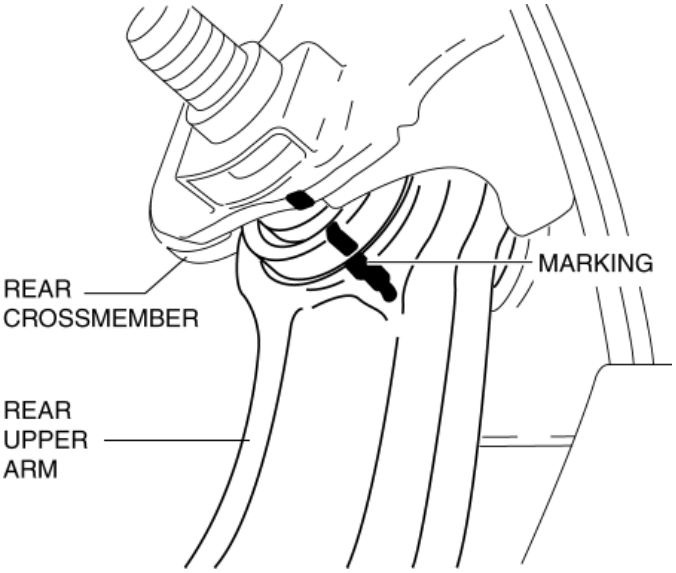

3. Support the rear crossmember component with a jack and remove the rear crossmember installation nuts.

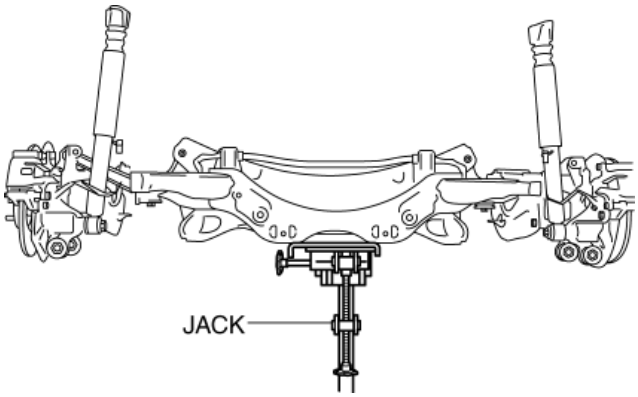

4. Press down on the rear crossmember component slowly until the rear upper arm inside installation bolts can be removed using a jack.

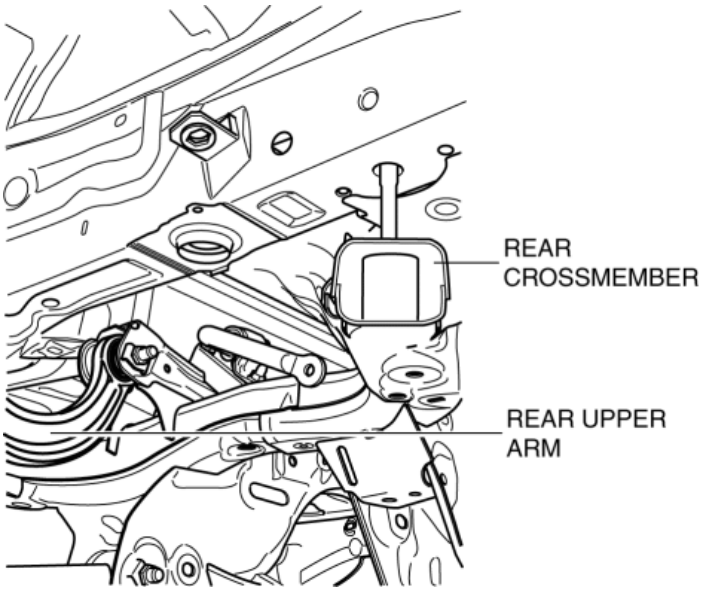

5. Remove the rear upper arm.

Rear Upper Arm Bushing Removal Note

1. Mark the rear upper arm as shown in the figure.

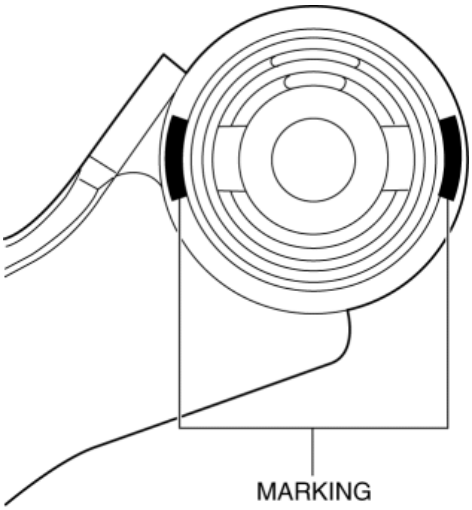

2. Press the rear upper arm bushing out using the **SSTs**.

CAUTION:

- Set using the **SST(49 U027 010)** as shown in the figure to prevent damaging the rear upper arm and rear upper arm bushing and remove the rear upper arm bushing.

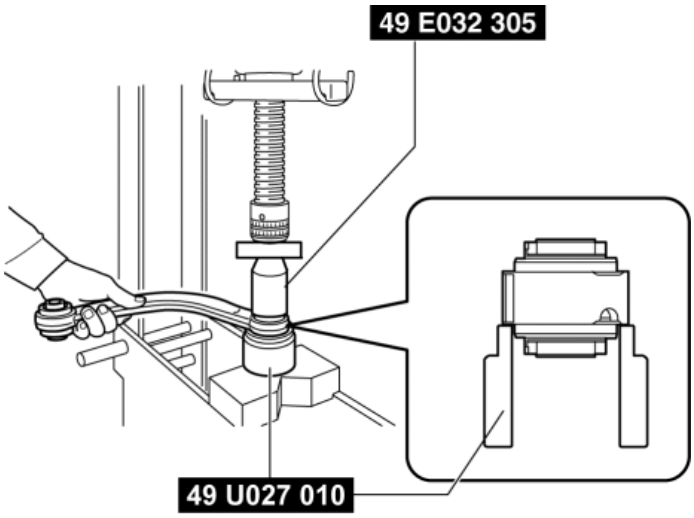

Rear Upper Arm Bushing Installation Note

1. Mark the new rear upper arm bushing as shown in the figure.

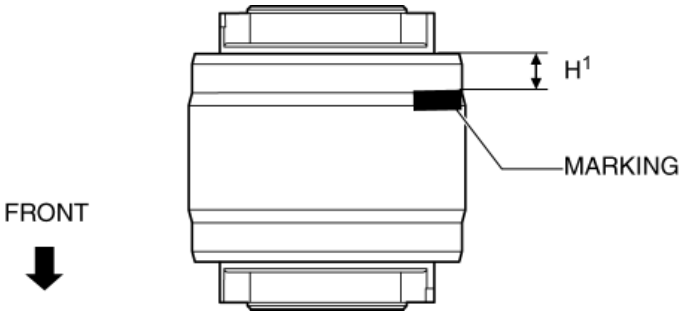

H^1: 5.0 mm {0.20 in}

2. Align the projection of a new rear upper arm bushing with the marks placed during removal.

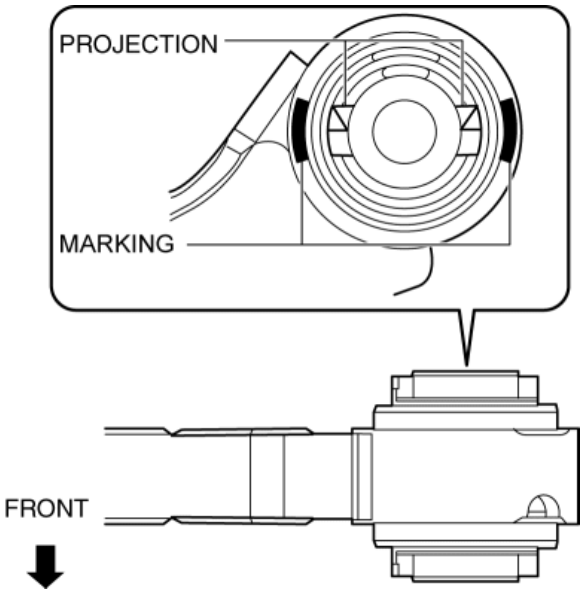

3. Press fit the rear upper arm bushing until the marks placed in Step 1 cannot be seen using the SSTs.

CAUTION:

- Set using the **SST(49 U027 010)** as shown in the figure to prevent damaging the rear upper arm and rear upper arm bushing, and install the rear upper arm bushing.

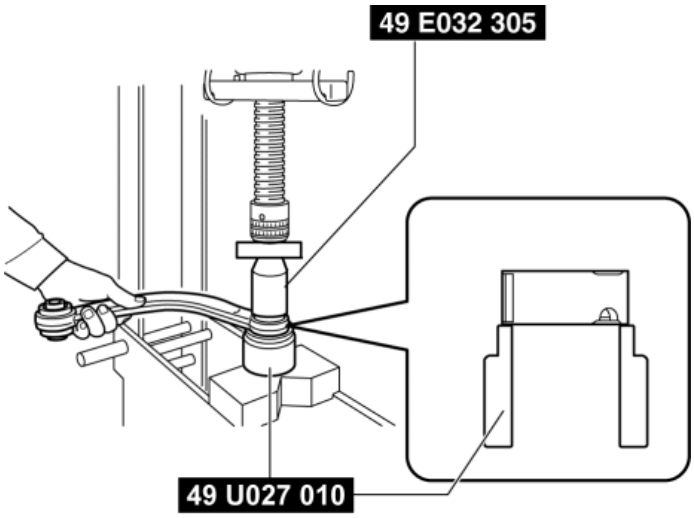

NOTE:

- Be careful when press-fitting the rear upper arm bushing because the bushing height of the inner and outer sides differs.

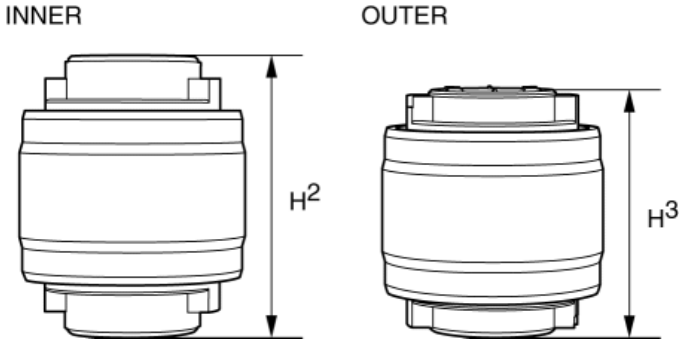

H^2: 49.5 mm {1.95 in} H^3: 44.5 mm {1.75 in}

4. After installing the rear upper arm bushing, verify that it is installed to the position shown in the figure.

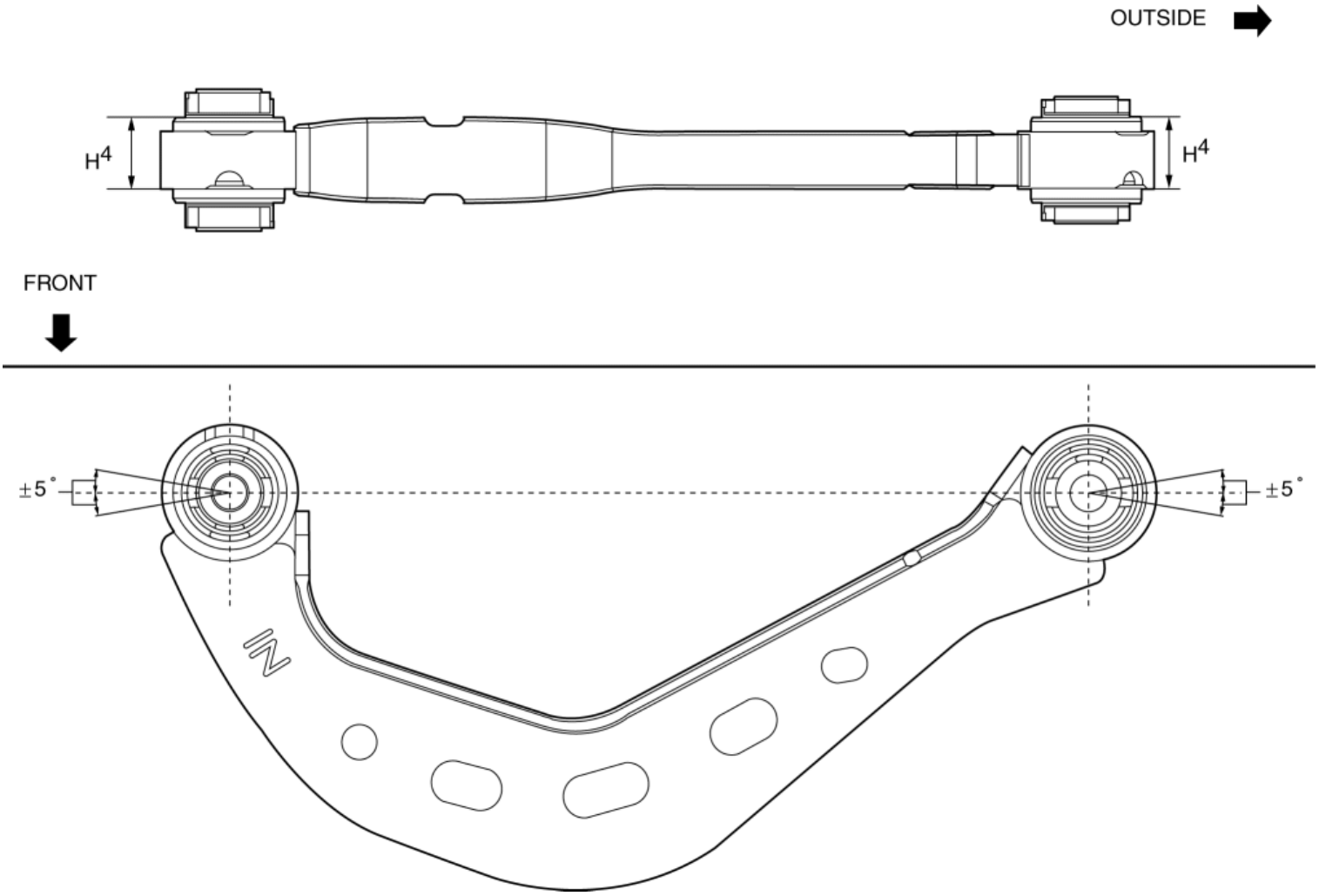

H^4: 25.0±0.6 mm {0.984±0.02 in}

Rear Upper Arm Installation Note

1. Place alignment mark on the new rear upper arm in the same positions as the removed rear upper arm.

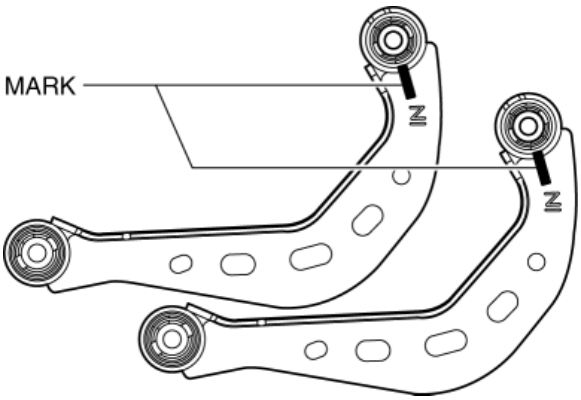

2. Install the rear upper arm.
3. Lift up the rear crossmember component using a jack and install the rear crossmember installation nuts.

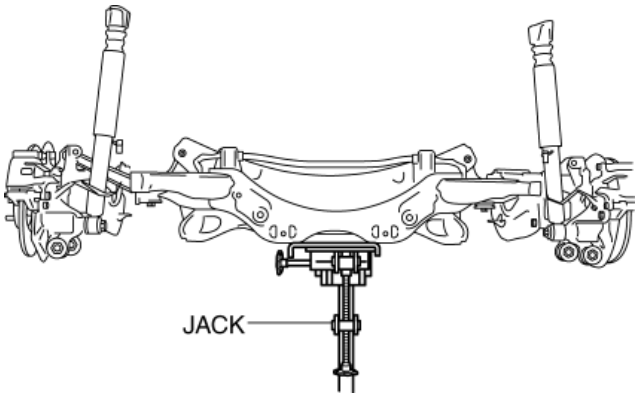

Tightening torque

- 91—111 N·m {9.3—11 kgf·m, 68—81 ft·lbf}

2014 - Mazda3 - Suspension

REAR TRAILING LINK REMOVAL/INSTALLATION

1. Remove the floor under cover. (See **FLOOR UNDER COVER REMOVAL/INSTALLATION**.)
2. Disconnect the rear parking cable. (See **REAR PARKING BRAKE CABLE REMOVAL/INSTALLATION**.)

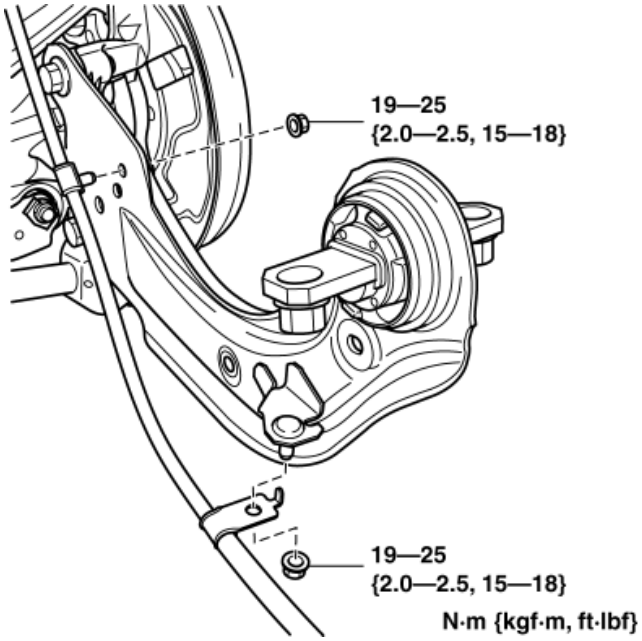

3. Remove in the order indicated in the table.
4. Install in the reverse order of removal.
5. Inspect the wheel alignment and adjust it if necessary. (See **REAR WHEEL ALIGNMENT**.)

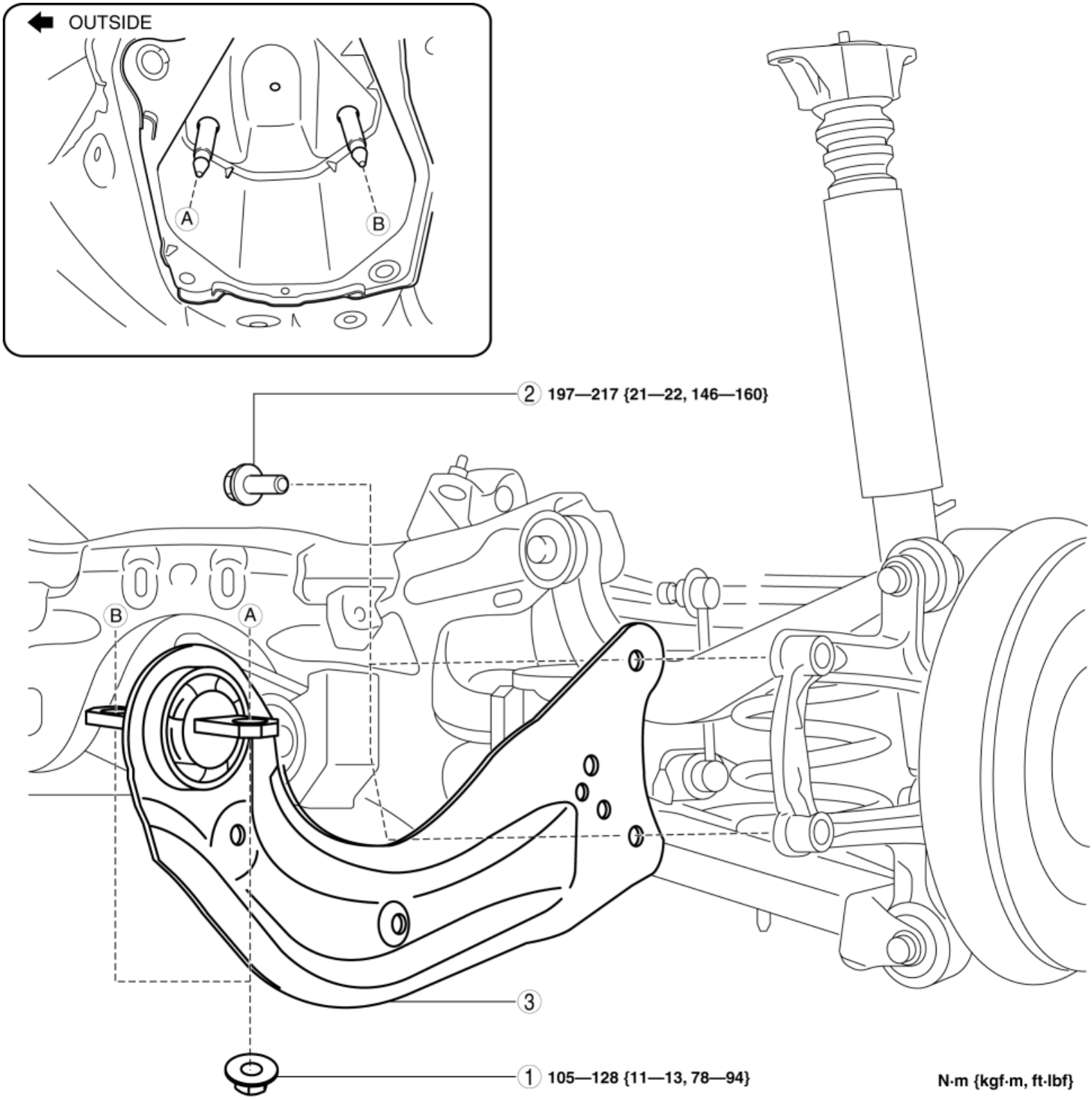

1	Rear trailing link installation nut
2	Rear trailing link installation bolt
3	Rear trailing link (See **Rear Trailing Link Installation Note**.)

Rear Trailing Link Installation Note

1. Install the rear trailing link installation bolts using a jack.

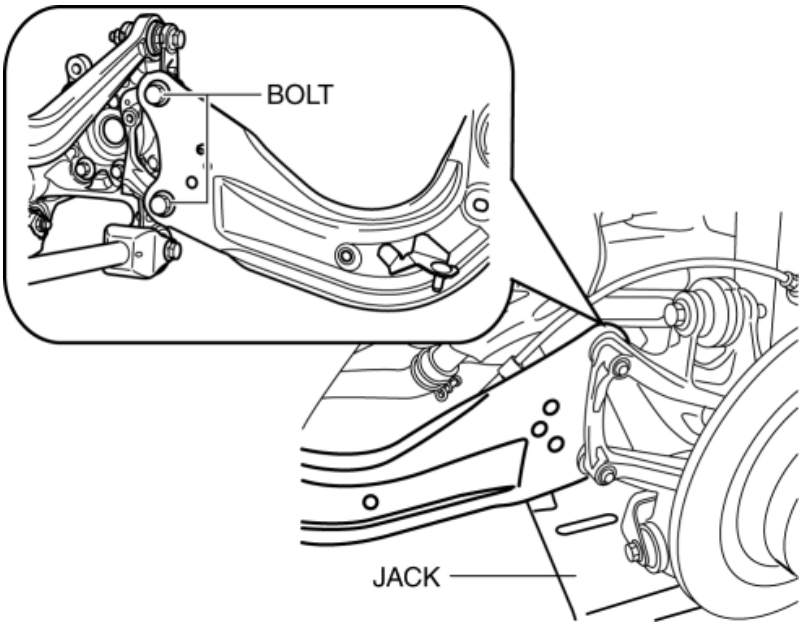

2. Install the rear trailing link installation nut.

2014 - Mazda3 - Suspension

REAR LATERAL LINK REMOVAL/INSTALLATION

1. Disconnect the rear stabilizer control link lower side nut. (See **REAR STABILIZER REMOVAL/INSTALLATION**.)

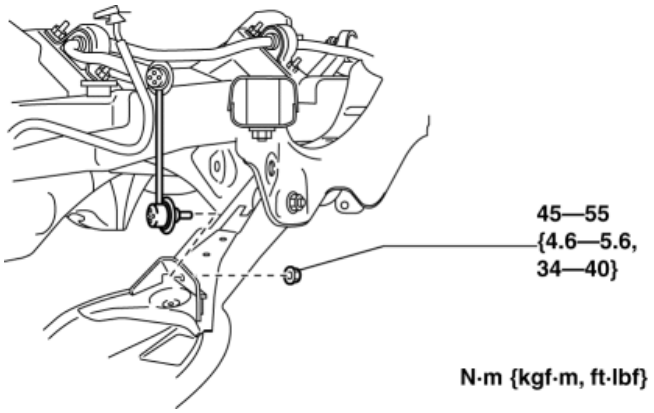

2. Remove in the order indicated in the table.
3. Install in the reverse order of removal.
4. Inspect the wheel alignment and adjust it if necessary. (See **REAR WHEEL ALIGNMENT**.)

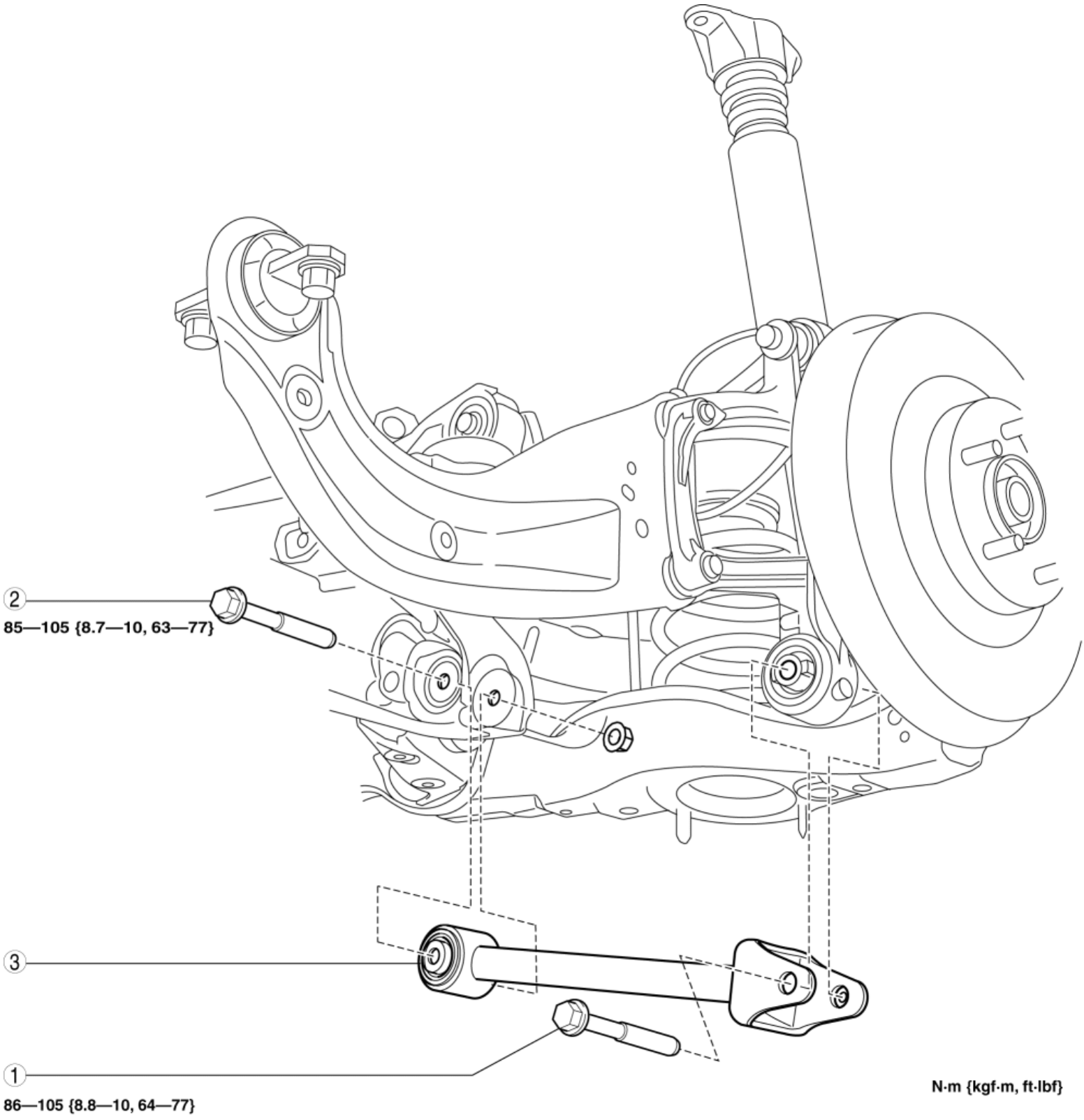

1	Rear lateral link outer bolt
2	Rear lateral link inner bolt
3	Rear lateral link (See **Rear Lateral Link Removal Note**.)

(See **Rear Lateral Link Installation Note**.)

Rear Lateral Link Removal Note

1. Jack up the vehicle to the unloaded condition, and support the rear trailing link component using a jack.

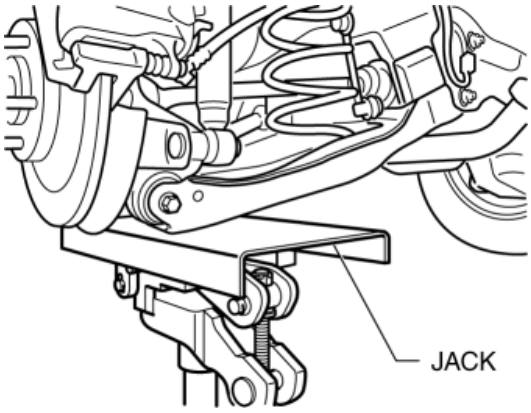

2. Remove the rear lateral link.

Rear Lateral Link Installation Note

1. Jack up the vehicle to the unloaded condition, and support the rear trailing link component using a jack.

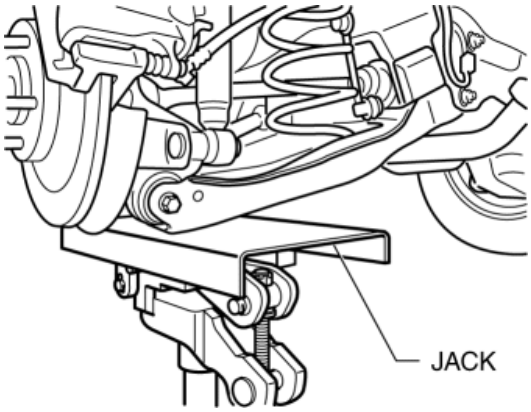

2. Install the rear lateral link.

2014 - Mazda3 - Suspension

REAR STABILIZER REMOVAL/INSTALLATION

1. Remove the rear coil spring. (See **REAR COIL SPRING REMOVAL/INSTALLATION**.)
2. Remove in the order indicated in the table.
3. Install in the reverse order of removal.
4. Inspect the wheel alignment and adjust it if necessary. (See **REAR WHEEL ALIGNMENT**.)

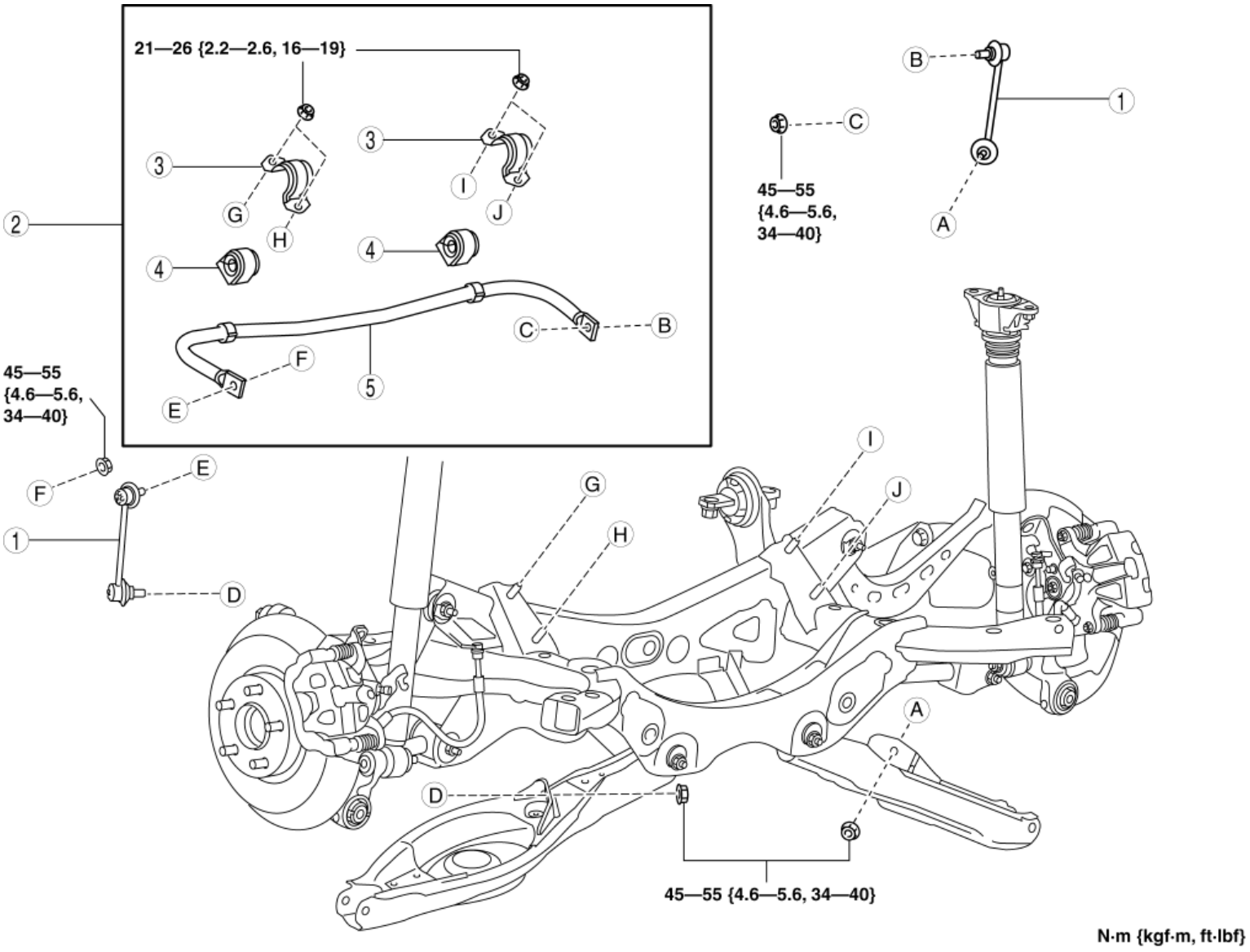

1	Rear stabilizer control link
2	Rear stabilizer component (See **Rear Stabilizer Component Removal Note**.) (See **Rear Stabilizer Component Installation Note**.)
3	Rear stabilizer bracket

	(See **Rear Stabilizer Bushing, Rear Stabilizer Bracket Installation Note**.)
4	Rear stabilizer bushing (See **Rear Stabilizer Bushing, Rear Stabilizer Bracket Installation Note**.)
5	Rear stabilizer

Rear Stabilizer Component Removal Note

1. Remove the rear stabilizer component from the vehicle through the gap created by the removal of the right rear coil spring.

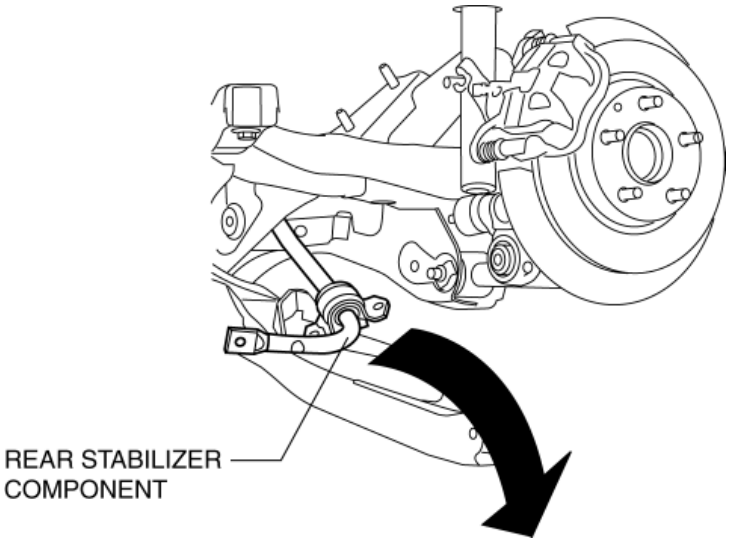

Rear Stabilizer Bracket Removal Note

1. Secure the rear stabilizer bracket flange using a vise.

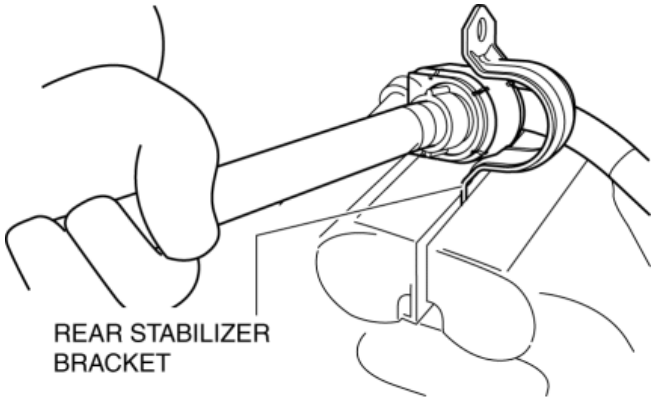

Rear Stabilizer Bushing, Rear Stabilizer Bracket Installation Note

1. Install the rear stabilizer bushing with the slit pointing toward the front of the vehicle.

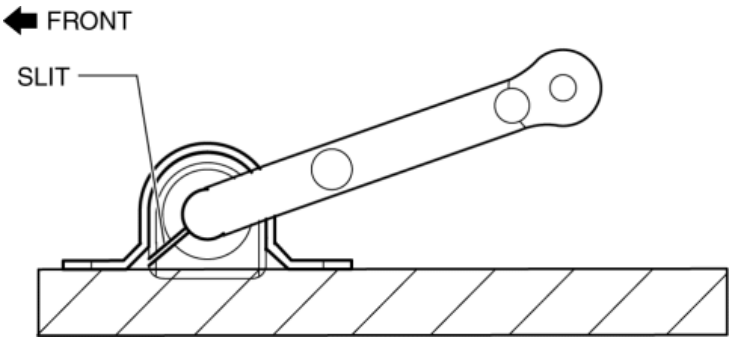

2. Install the rear stabilizer bracket to the front stabilizer bushing by hand using the following procedure.

3. If the rear stabilizer bracket cannot be installed by hand, install it using a vise.

CAUTION:

- If the rear stabilizer bracket is installed using a vise, it could be deformed.
- Set a cylindrically-shaped object as shown in the figure so that pressure is applied to the rear stabilizer bracket flange, and install the rear stabilizer bracket to the rear stabilizer bushing.

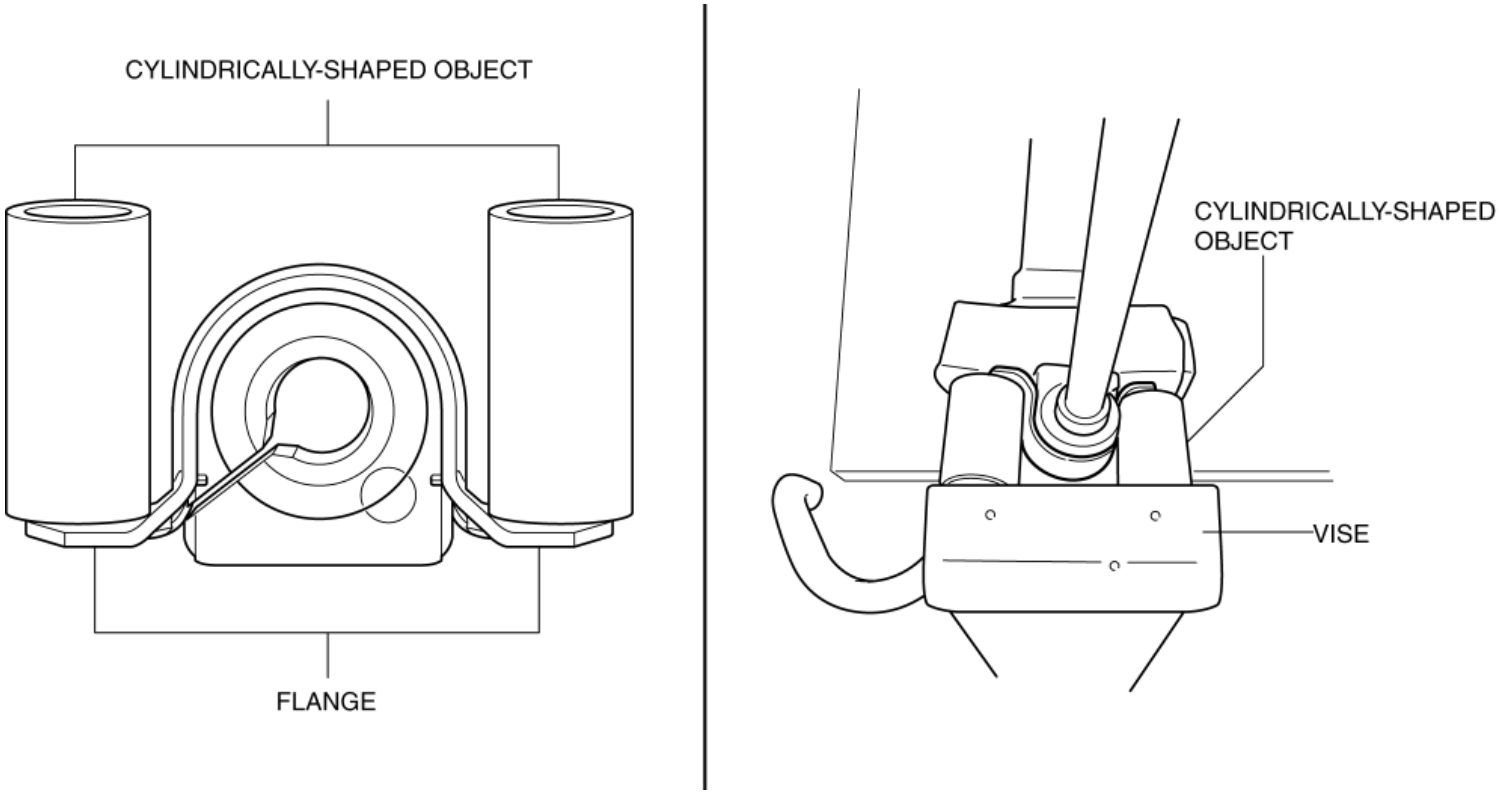

4. During rear stabilizer bracket installation, keep the deviation in the positions of the rear stabilizer bracket and the rear stabilizer bushing within the range shown in the figure.

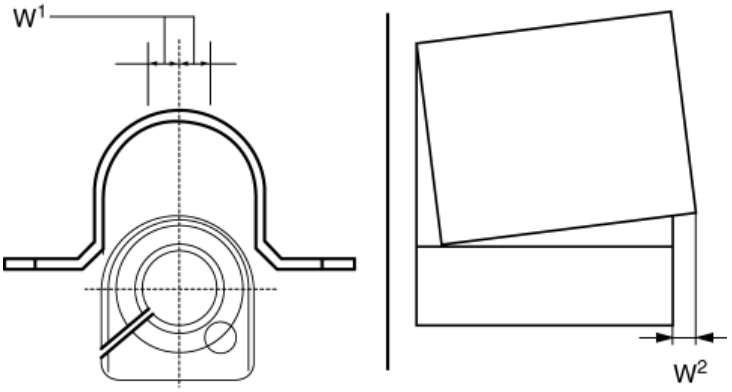

- W^1: 0.5 mm {0.02 in} max.

- W^2: 2 mm {0.08 in} max.

5. After installing the rear stabilizer bracket, verify that the positions of the rear stabilizer bracket and the rear stabilizer bushing are within the range shown in the figure.

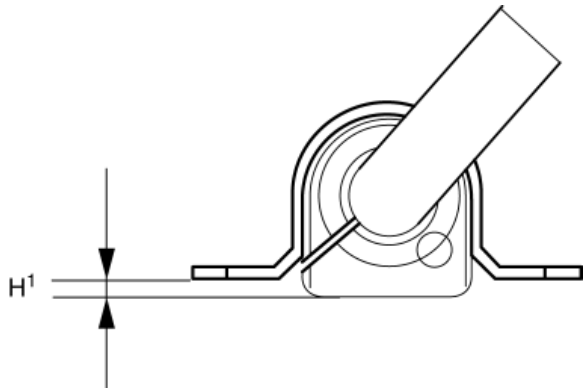

- H^1: 13 mm {0.51 in} max.

6. After installing the rear stabilizer bracket, verify that the right and left-side positions of the rear stabilizer bracket are within the range shown in the figure.

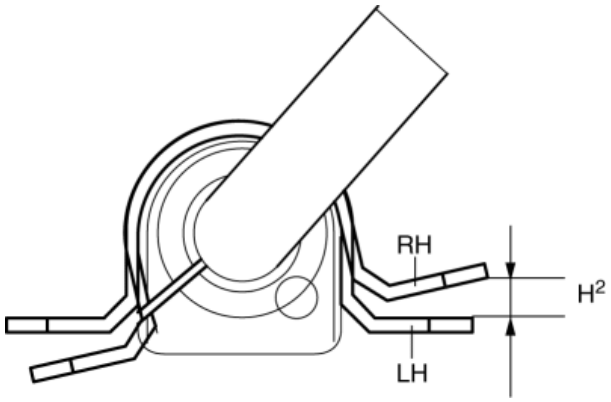

- H^2: 3 mm {0.1 in} max.

7. Place the rear stabilizer component on a level workbench, and verify that it is within the range shown in the figure.

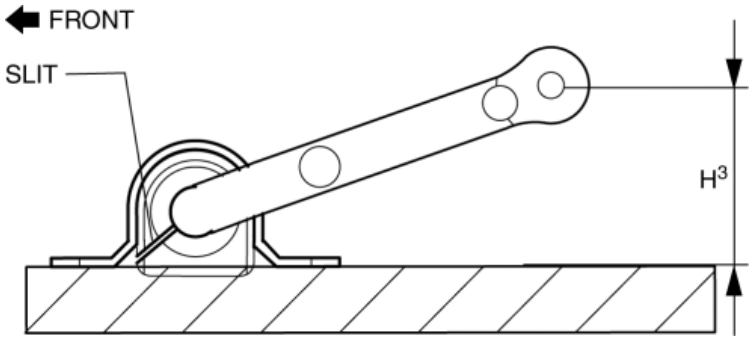

- H^3: 71.6—91.6 mm {2.82—3.61 in}

Rear Stabilizer Component Installation Note

1. Install the rear stabilizer component to the vehicle through the gap created by the removal of the right rear coil spring.

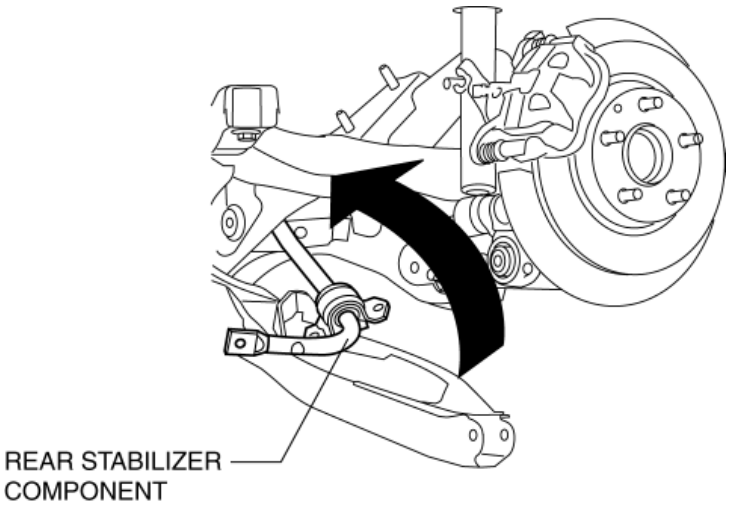

2. Temporarily tighten nuts A and B shown in the figure.

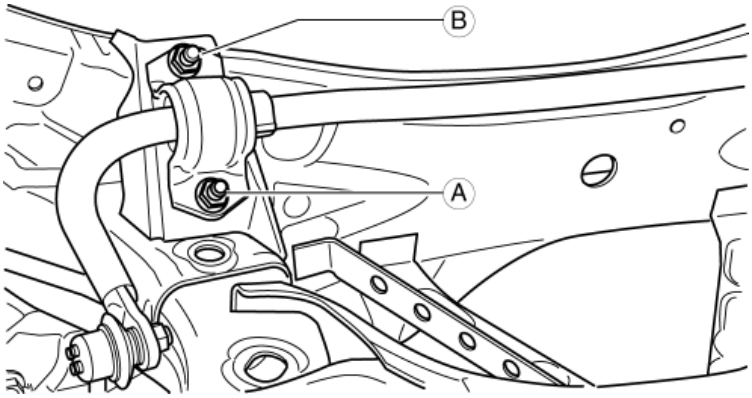

3. Tighten nut A.

Tightening torque

- 21—26 N·m {2.2—2.6 kgf·m, 16—19 ft·lbf}

4. Tighten nut B.

Tightening torque

- 21—26 N·m {2.2—2.6 kgf·m, 16—19 ft·lbf}

5. Tighten nut A.

Tightening torque

- 21—26 N·m {2.2—2.6 kgf·m, 16—19 ft·lbf}

2014 - Mazda3 - Suspension

REAR STABILIZER CONTROL LINK INSPECTION

1. Remove the rear stabilizer control link. (See **REAR STABILIZER REMOVAL/INSTALLATION**.)

2. Inspect for bending or damage. If there is any malfunction, replace the rear stabilizer control link.

3. Rotate the ball joint stud **10 times** and shake it side to side **10 times**.

4. Measure the ball-joint rotational torque using an Allen wrench and a torque wrench.

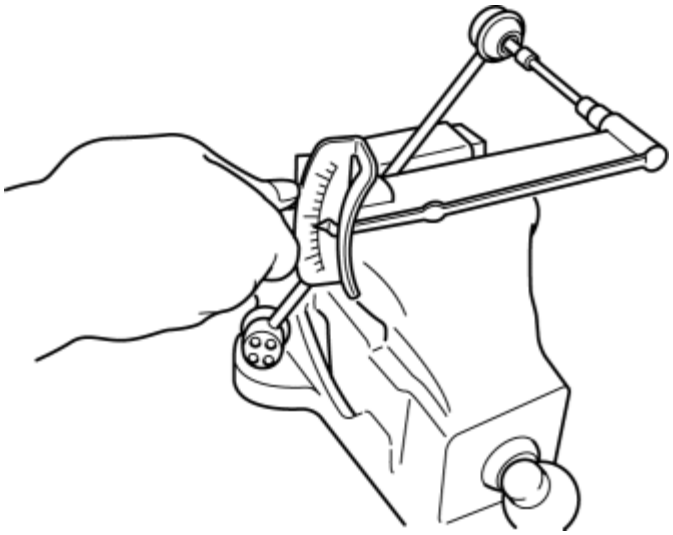

Rear stabilizer control link ball joint starting torque

- 0.8—3.5 N·m {8.2—35 kgf·cm, 7.1—30 in·lbf}
- If not within the specification, replace the rear stabilizer control link.
- Even if within specification, if there is excessive play in the ball joint, replace the rear stabilizer control link.

2014 - Mazda3 - Suspension

REAR CROSSMEMBER REMOVAL/INSTALLATION

WARNING:

1. Verify that the rear crossmember is securely supported by a jack. If the rear crossmember falls off, it can cause serious injury or death, and damage to the vehicle.

CAUTION:

- Performing the following procedures without first removing the rear ABS wheel-speed sensor may possibly cause an open circuit in the harness if it is pulled by mistake. Before performing the following procedures, disconnect the rear ABS wheel-speed sensor (axle side) and fix it to an appropriate place where the sensor will not be pulled by mistake while servicing the vehicle.

NOTE:

- Mark the position before removing the rear upper arm.
- Align the rear crossmember and rear upper arm markings when installing the rear upper arm.
- Tighten the rear upper arm inner bolt completely before installing the rear crossmember component to the vehicle.

1. Disconnect the wiring harness clips and connector installed to the rear crossmember. (With auto leveling sensor)

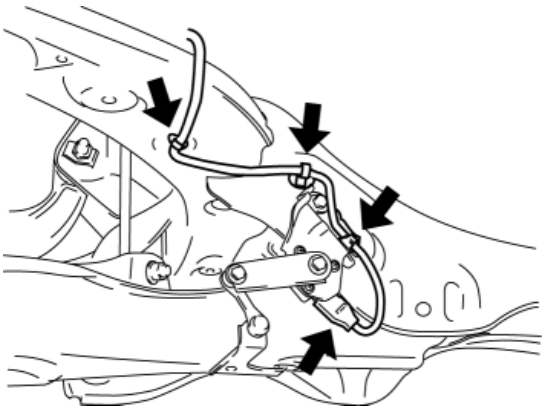

2. Remove the auto leveling sensor. (With auto leveling sensor) (See **AUTO LEVELING SENSOR REMOVAL/INSTALLATION**.)

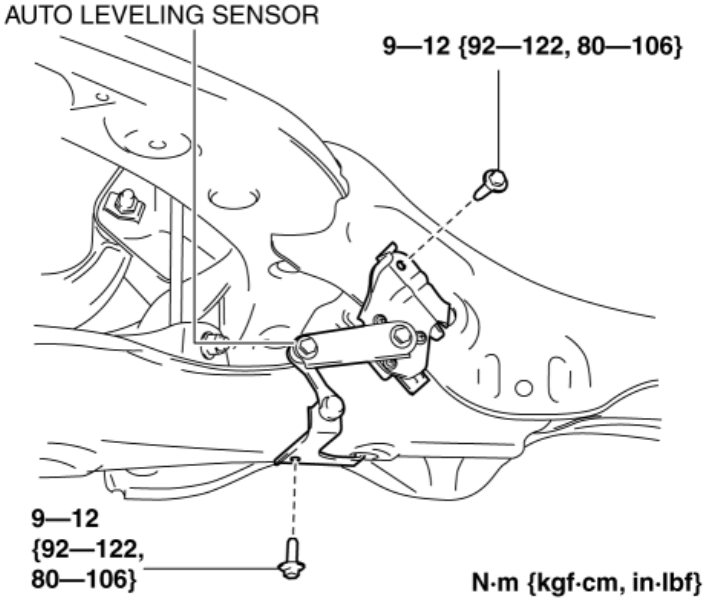

3. Disconnect the rear ABS wheel-speed sensor wiring harness installed to the hub support and set it aside. (See **REAR ABS WHEEL-SPEED SENSOR REMOVAL/INSTALLATION**.)

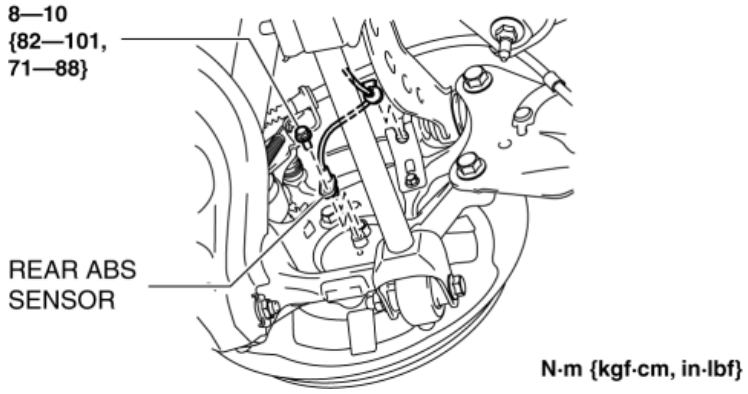

4. Jack up the vehicle to the unloaded condition, and support the rear trailing link component using a jack.

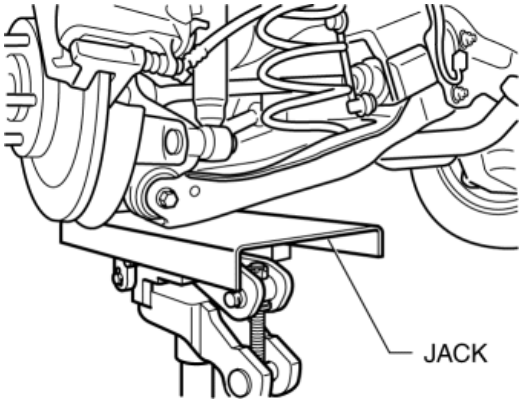

5. Align the rear crossmember component and rear upper arm and mark them.

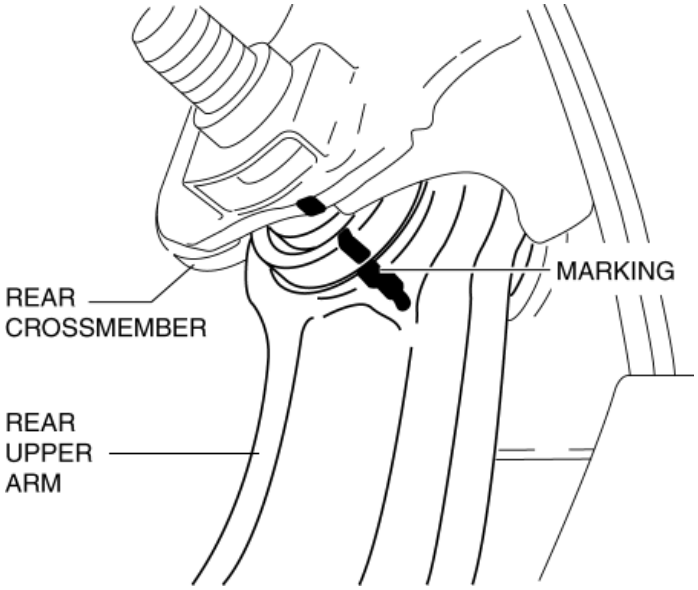

6. Remove the TWC. (See **EXHAUST SYSTEM REMOVAL/INSTALLATION [SKYACTIV-G 2.0, SKYACTIV-G 2.5]**.)

7. Remove the rear lateral link. (See **REAR LATERAL LINK REMOVAL/INSTALLATION**.)

8. Remove the rear coil spring. (See **REAR COIL SPRING REMOVAL/INSTALLATION**.)

9. Remove the rear lower arm. (See **REAR LOWER ARM REMOVAL/INSTALLATION**.)

10. Remove in the order indicated in the table.

11. Install in the reverse order of removal.

12. Inspect the wheel alignment and adjust it if necessary. (See **REAR WHEEL ALIGNMENT**.)

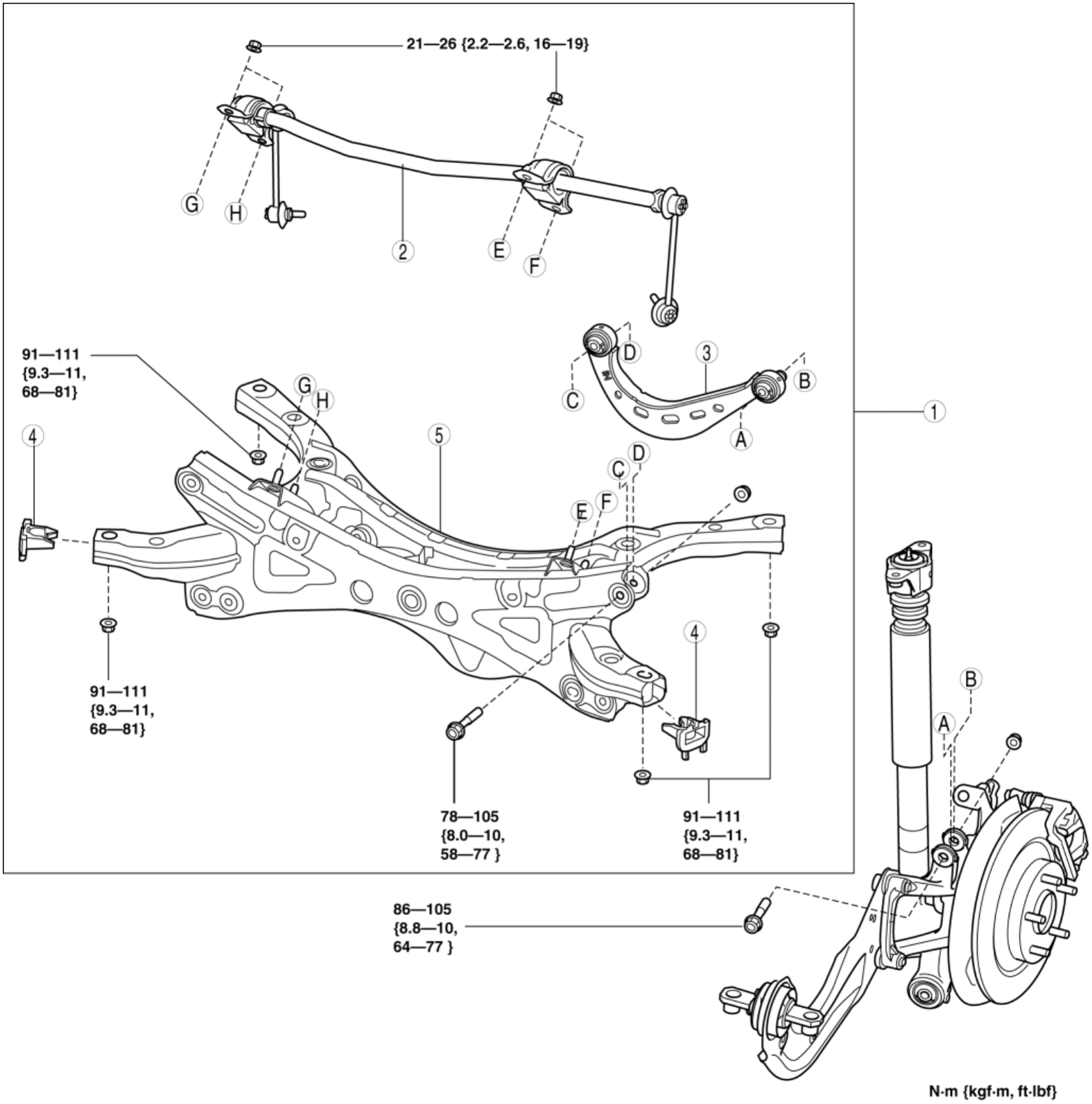

1	Rear crossmember component (See **Rear Crossmember Component Removal Note**.) (See **Rear Crossmember Component Installation Note**.)
2	Rear stabilizer component
	Rear upper arm

3	(See **REAR UPPER ARM REMOVAL/INSTALLATION**.)
4	Rear crossmember mudguard (See **Rear Crossmember Mudguard Installation Note**.)
5	Rear crossmember

Rear Crossmember Component Removal Note

WARNING:

1. Verify that the rear crossmember is securely supported by a jack. If the rear crossmember falls off, it can cause serious injury or death, and damage to the vehicle.

1. Support the rear crossmember with the jack and remove the nuts

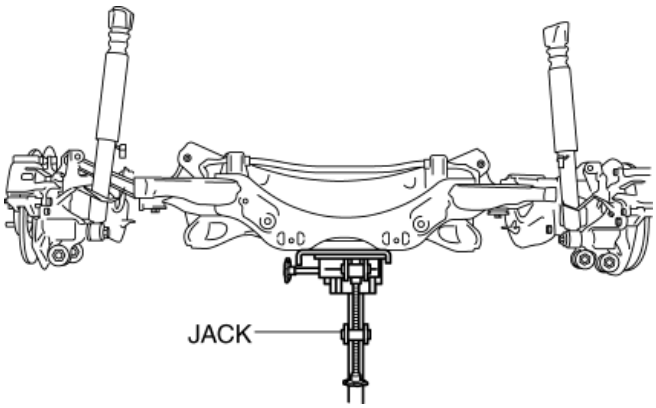

2. Remove the rear crossmember component.

Rear Crossmember Mudguard Installation Note

1. Install with the rear crossmember mudguard projection pointed downward.

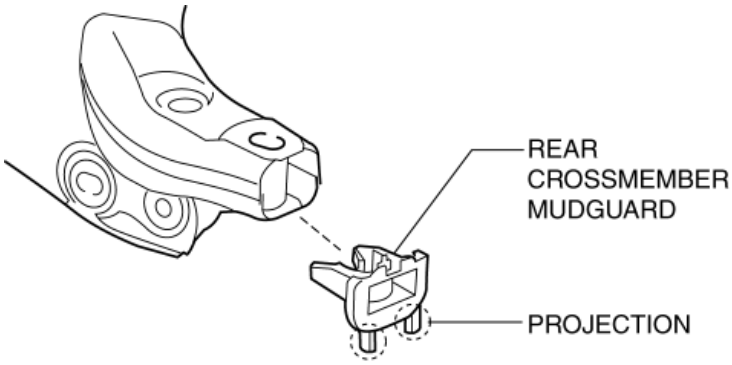

Rear Crossmember Component Installation Note

WARNING:

1. Verify that the rear crossmember is securely supported by a jack. If the rear crossmember falls off, it can cause serious injury or death, and damage to the vehicle.

1. Support the rear crossmember component and install the rear crossmember.

REAR CROSSMEMBER REMOVAL/INSTALLATION

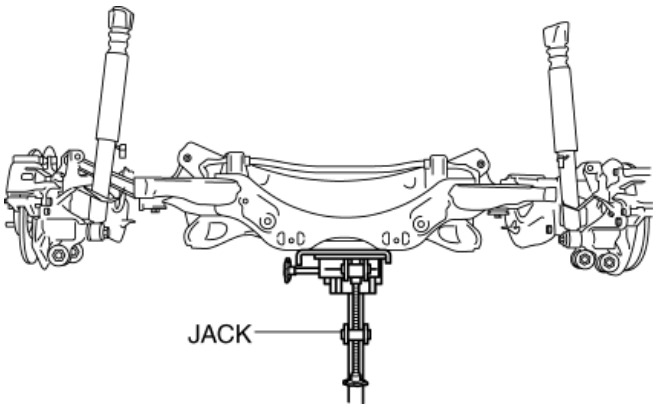

2014 - Mazda3 - Suspension

SUSPENSION TECHNICAL DATA

Front wheel alignment (Unloaded)*1

Item			Fuel gauge indication				
			Empty	1/4	1/2	3/4	Full
Maximum steering angle [Tolerance ±3°]		Inner	39°24′				
		Outer	32°12′				
Total toe-in	Tire [Tolerance ±4 {0.2}]	(mm {in})	2.0 {0.079}				
	Rim inner [Tolerance ±3 {0.1}]		Vehicle equipped with 16 inch wheel: 1.3 {0.051} Vehicle equipped with 18 inch wheel: 1.4 {0.055}				
	(degree)		0°11′±0°20′				
Caster angle*2 (Reference value) [Tolerance ±1°]			6°13′	6°17′	6°21′	6°25′	6°29′
Camber angle*2 (Reference value) [Tolerance ±1°]			-0°11′	-0°11′	-0°11′	-0°11′	-0°12′
Steering axis inclination (Reference value)			13°57′	13°59′	13°59′	13°59′	14°00′

*1 **Engine coolant and engine oil are at specified level. Spare tire, jack and tools are in designated position.**

*2 **Difference between left and right must not exceed 1°30′.**

Rear wheel alignment (Unloaded)*1

	Fuel gauge indication

Item			Empty	1/4	1/2	3/4	Full
Total toe-in	Tire [Tolerance ±4 {0.2}]	(mm {in})	1.9 {0.075}				
	Rim inner [Tolerance ±3 {0.1}]		Vehicle equipped with 16 inch wheel: 1.2 {0.047} Vehicle equipped with 18 inch wheel: 1.3 {0.051}				
		(degree)	0°10′±0°20′				
Camber angle*2 (Reference value) [Tolerance ±1°]			-0°50′	-0°53′	-0°55′	-0°57′	-0°59′
Thrust angle (Reference value) [Tolerance ±0°48′]			0°00′				

*1 **Engine coolant and engine oil are at specified level. Spare tire, jack and tools are in designated position.**

*2 **Difference between left and right must not exceed 1°30′.**

Suspension

Item	Specification
Front lower arm ball joint stud starting torque	18 N·m {1.8 kgf·m, 13 ft·lbf} max.
Front lower arm ball joint stud rotational torque	3.2 N·m {33 kgf·cm, 28 in·lbf} max.
Front stabilizer control link ball joint starting torque	0.8—3.5 N·m {8.2—35 kgf·cm, 7.1—30 in·lbf}
Rear stabilizer control link ball joint starting torque	0.8—3.5 N·m {8.2—35 kgf·cm, 7.1—30 in·lbf}

Standard tire and wheel

Item			Specification	
Wheel	Size		16 × 6 1/2J	18 × 7J
	Inset	(mm {in})	50 {2.0}	
	Pitch circle diameter	(mm {in})	114.3 {4.50}	

	Material		Steel	Aluminum alloy	
Tire	Size		P205/60R16 91H		215/45R18 89W
	Air pressure (kPa {psi})	Front	250 {36}		
		Rear	250 {36}		
	Remaining tread	(mm {in})	1.6 {0.063} min.		
Wheel and tire	Lug nut tightening torque	(N·m {kgf·m, ft·lbf})	108—147 {12—14, 80—108}		
	Wheel and tire runout (mm {in})	Radial direction	1.5 {0.059} max.		
		Lateral direction	2.5 {0.098} max.	2.0 {0.079} max.	
	Wheel imbalance	(g {oz})	Knock-type*2: 9.0 {0.32} max.	Adhesive-type*1: 14 {0.49} max. Knock-type*2: 9 {0.32} max.	Adhesive-type*1: 12 {0.42} max. Knock-type*2: 8.0 {0.28} max.

*1 **Do not install three or more weights. Do not affix the weights such that they are parallel to each other or overlapping. The total weight of all the weights is 160 g {5.64 oz} or less.**

*2 **Do not install three or more weights. One weight is 60 g {2.1 oz} or less and two weights are 100 g {3.53 oz} or less.**

Temporary spare tire and wheel

Item			Specification
Wheel	Size		16 × 4T
	Inset	(mm {in})	35 {1.4}
	Pitch circle diameter	(mm {in})	114.3 {4.50}
	Material		Steel

Tire	Size		T125/70D16 96M
	Air pressure	(kPa {psi})	420 {60}
	Remaining tread	(mm {in})	1.6 {0.063} min.
Wheel and tire	Lug nut tightening torque	(N·m {kgf·m, ft·lbf})	108—147 {12—14, 80—108}

< Previous

2014 - Mazda3 - Suspension

SUSPENSION

49 T034 1A0 Coil spring compressor set	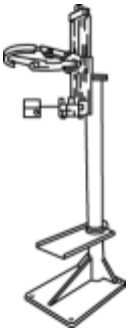	49 T028 3A0 Ball joint puller set	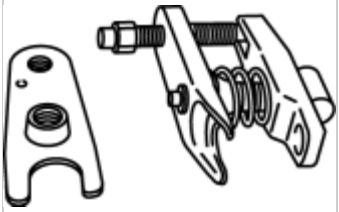	49 G033 102 Handle	
49 U034 204 Dust boot installer	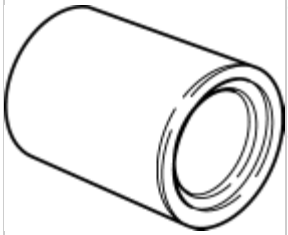	49 FT01 389 Preload adapter	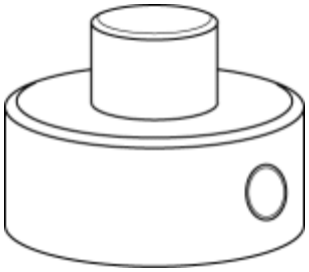	49 E032 305 Slipper seal protector	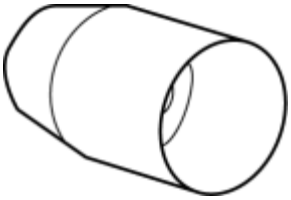
49 U027 010 Bearing Installer	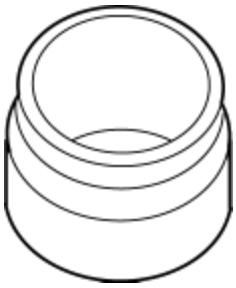	49 L088 009 Feeler tool kit		—	

< Previous

Next >

2014 - Mazda3 - DriveLine/Axle

GENERAL PROCEDURES (FRONT AND REAR AXLES)

Wheel and Tire Installation

1. When installing the wheels and tires, tighten the wheel nuts to the following tightening torque in the order shown in the figure.

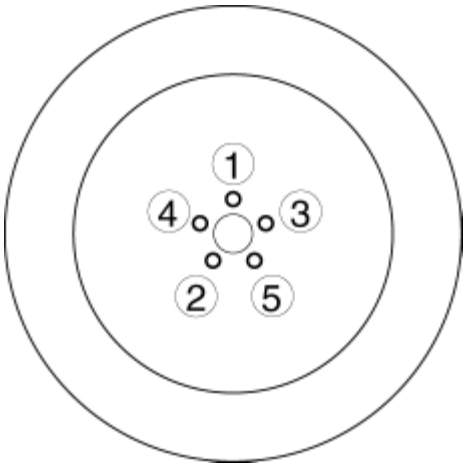

Tightening torque

- 108—147 N·m {12—14 kgf·m, 80—108 ft·lbf}

Suspension Links Removal/Installation

1. For the joint sections with rubber bushings, raise the vehicle using a lift, and then temporarily tighten the installation bolts and nuts. Lower the vehicle to the ground and tighten them to the specified tightening torque.

Connector Disconnection

1. Disconnect the negative battery cable before performing any work that requires handling of connectors. (See **NEGATIVE BATTERY CABLE DISCONNECTION/CONNECTION [SKYACTIV-G 2.0, SKYACTIV-G 2.5]**.)

Next >

2014 - Mazda3 - DriveLine/Axle

FRONT AXLE LOCATION INDEX

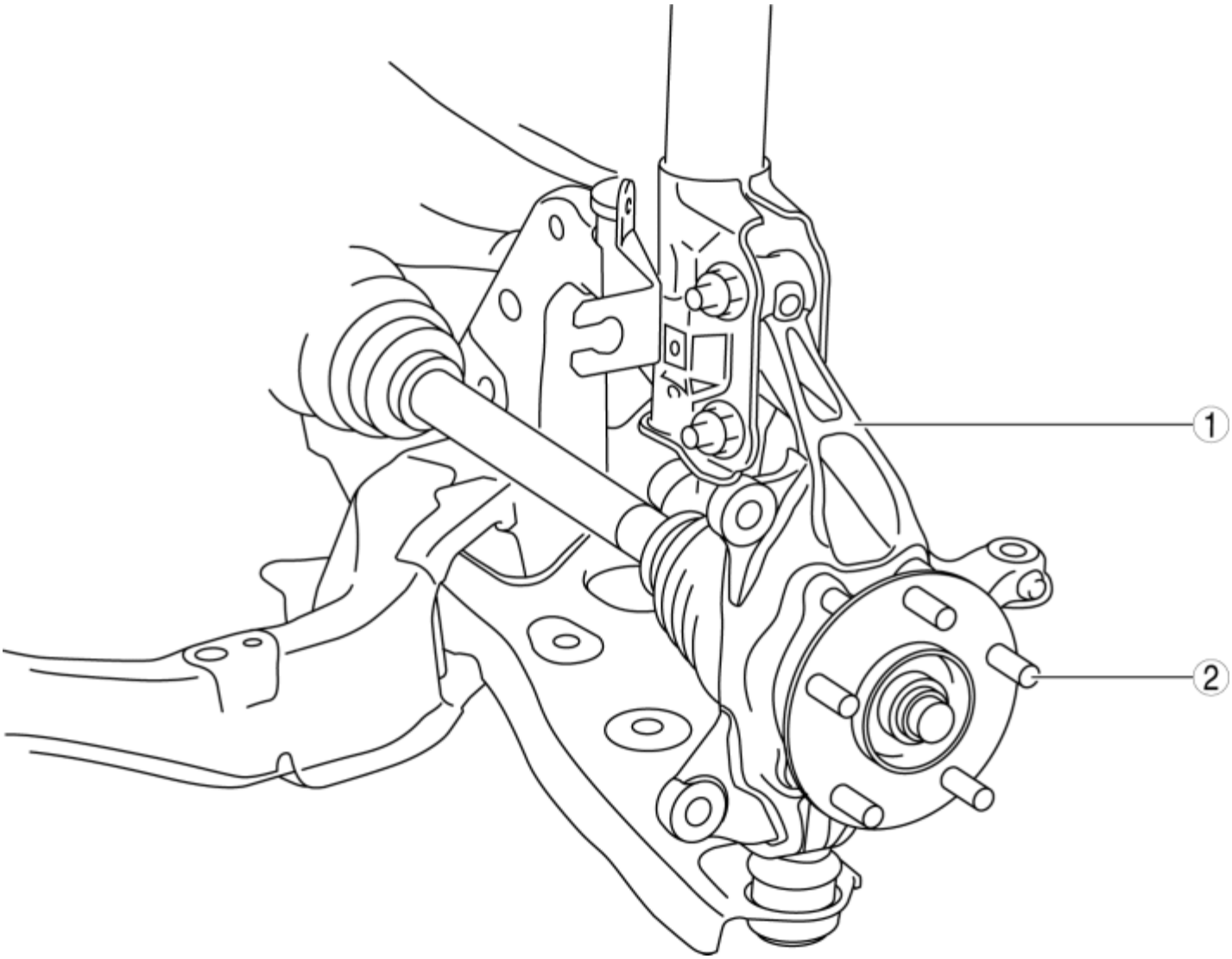

1	Wheel hub, steering knuckle (See **WHEEL HUB, STEERING KNUCKLE INSPECTION**.) (See **WHEEL HUB, STEERING KNUCKLE REMOVAL/INSTALLATION**.)
2	Wheel hub bolt (See **FRONT WHEEL HUB BOLT REPLACEMENT**.)

FRONT AXLE LOCATION INDEX

2014 - Mazda3 - DriveLine/Axle

WHEEL HUB, STEERING KNUCKLE INSPECTION

Wheel Bearing Excessive Play Inspection

1. Remove the brake caliper component and disc plate. (See **WHEEL HUB, STEERING KNUCKLE REMOVAL/INSTALLATION**.)

2. Install the magnetic base and dial gauge as shown in the figure and measure the wheel bearing axial excessive play.

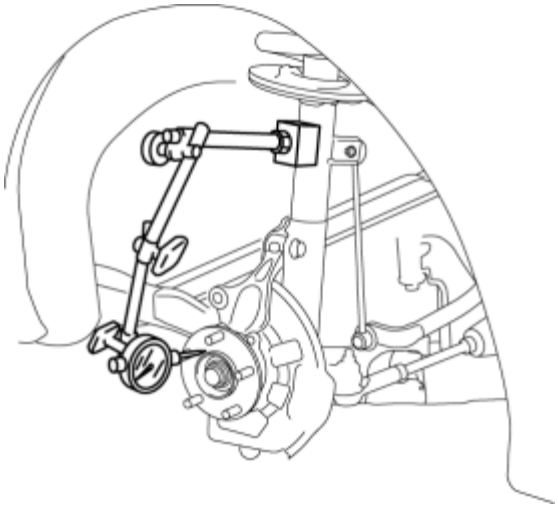

- If it exceeds the maximum specification, replace the wheel hub bearing.

  Front wheel bearing maximum play

- 0.05 mm {0.002 in}

2014 - Mazda3 - DriveLine/Axle

WHEEL HUB, STEERING KNUCKLE REMOVAL/INSTALLATION

CAUTION:

- Performing the following procedures without first removing the ABS wheel-speed sensor may possibly cause an open circuit in the wiring harness if it is pulled by mistake. Before performing the following procedures, disconnect the ABS wheel-speed sensor connector (axle side) and fix the wiring harness to an appropriate place where it will not be pulled by mistake while servicing the vehicle.

1. Remove in the order indicated in the table.
2. Install in the reverse order of removal.
3. After installation, inspect the front wheel alignment and adjust it if necessary. (See **FRONT WHEEL ALIGNMENT**.)

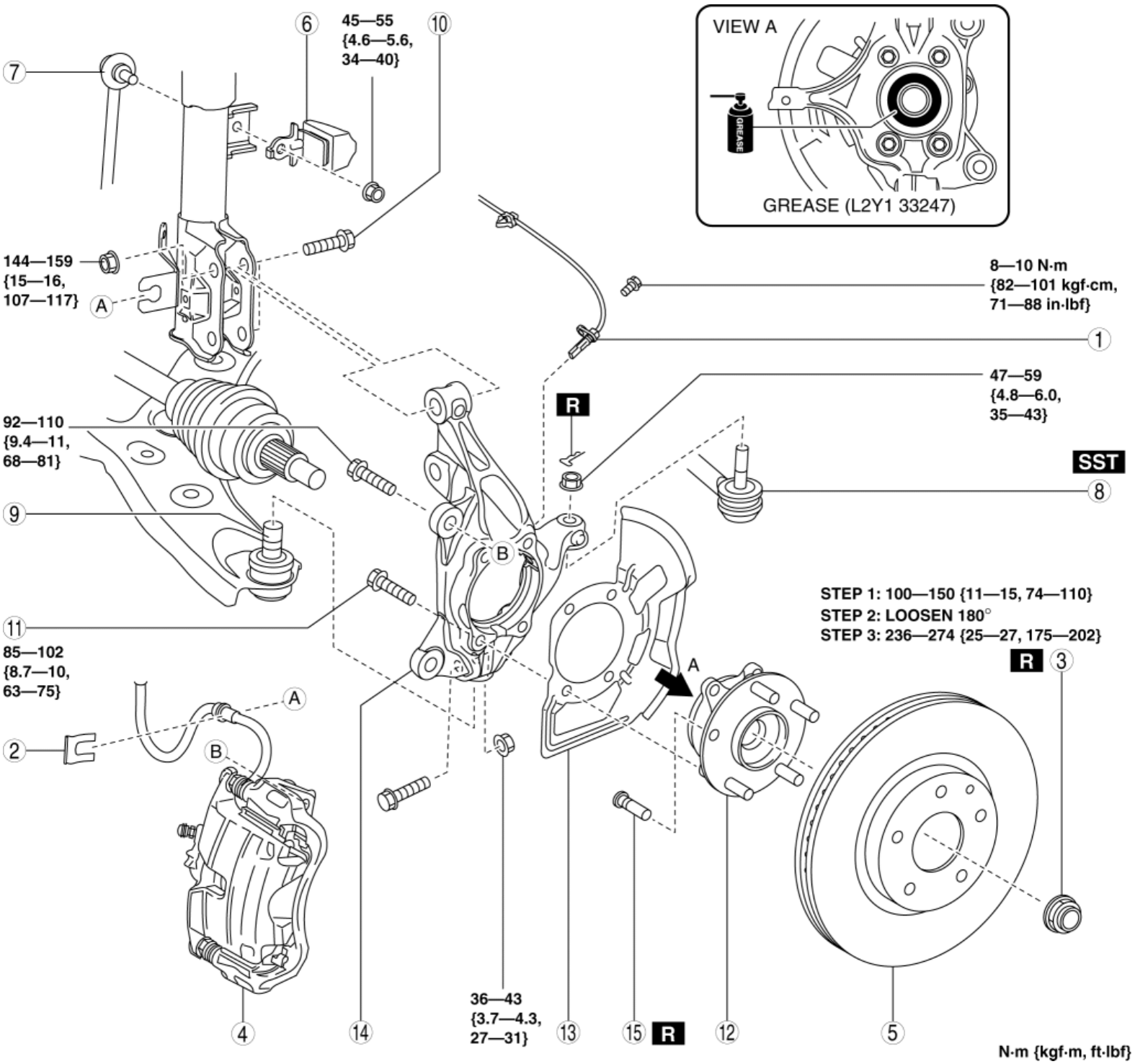

1	ABS wheel-speed sensor
2	Brake hose clip
3	Locknut (See **Locknut Removal Note**.) (See **Locknut Installation Note**.)
4	Brake caliper component (See **Brake Caliper Removal Note**.)

5	Disc plate
6	Dynamic damper (vehicles with dynamic damper)
7	Stabilizer control link (upper side)
8	Tie-rod end ball joint (See **FRONT CROSSMEMBER REMOVAL/INSTALLATION**.)
9	Front lower arm ball joint
10	Front shock absorber bolt (See **Front Shock Absorber Bolt Installation Note**.)
11	Bolt (wheel hub)
12	Wheel hub (See **Wheel Hub Installation Note**.)
13	Dust cover
14	Steering knuckle
15	Wheel hub bolt (See **Wheel Hub Bolt Removal Note**.) (See **Wheel Hub Bolt Installation Note**.)

Locknut Removal Note

1. Remove the locknut.
2. Install a spare nut onto the drive shaft.
3. Tap the nut with a copper hammer and separate the drive shaft from the axle.

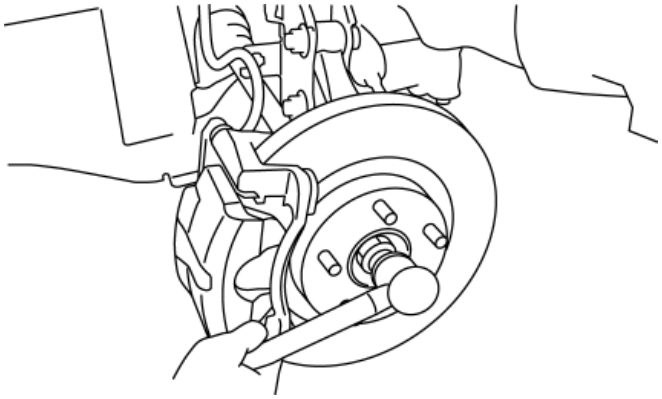

4. Separate the drive shaft from the wheel hub.

Brake Caliper Removal Note

1. Remove the brake caliper component from the steering knuckle and suspend it out of the way using a cable.

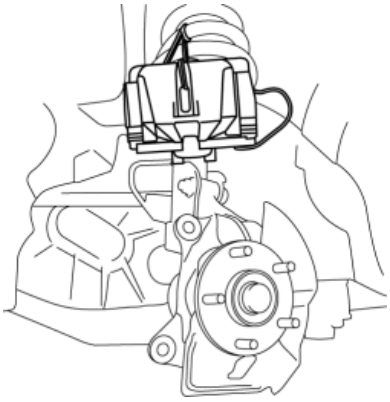

Wheel Hub Bolt Removal Note

NOTE:

- Remove the wheel hub bolt only if there is any malfunction.

1. Remove the wheel hub bolt using a press.

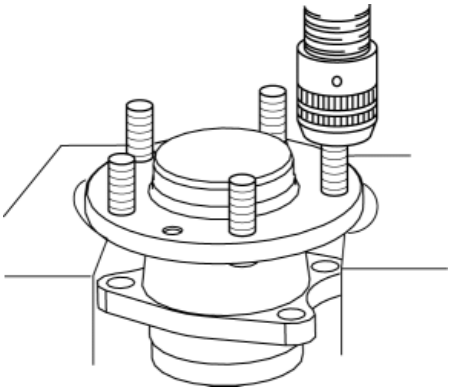

Wheel Hub Bolt Installation Note

1. Install the new wheel hub bolt using a press.

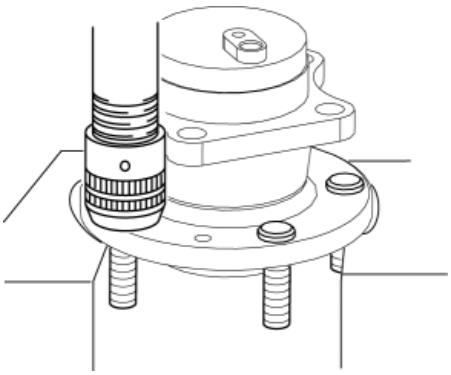

Wheel Hub Installation Note

1. Apply grease (L2Y1 33247) to the wheel bearing inner race and drive shaft contact surface (Area A in figure).

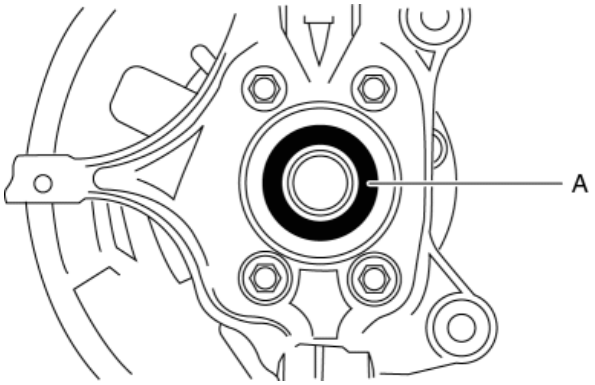

2. Install the wheel hub.

Front Shock Absorber Bolt Installation Note

1. Install the steering knuckle to the front shock absorber, insert the bolts from the direction indicated as follows, then tighten them to the specified torque.

- Vehicle left side: Insert the bolts from the vehicle rear.
- Vehicle right side: Insert the bolts from the vehicle front.

Locknut Installation Note

1. If dust or grease is on the drive shaft thread area, wipe it off with a cloth.

2. After tightening the locknut once at a torque of **100—150 N·m {11—15 kgf·m, 74—110 ft·lbf}**, loosen it **180 degrees** once, and then retighten it at a torque of **236—274 N·m {25—27 kgf·m, 175—202 ft·lbf}**.

2014 - Mazda3 - DriveLine/Axle

FRONT WHEEL HUB BOLT REPLACEMENT

1. Remove the brake caliper component and disc plate. (See **WHEEL HUB, STEERING KNUCKLE REMOVAL/INSTALLATION**.)

2. Remove the wheel hub bolt using the **SST** as shown in the figure.

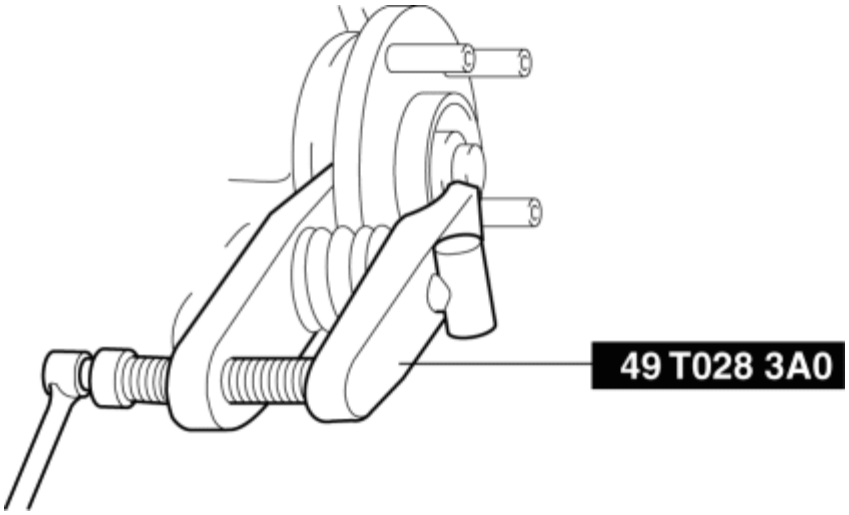

3. Place a new wheel hub bolt in the wheel hub.

4. Install the wheel hub by placing a proper sized washer on the hub, and tightening the nut as shown in the figure.

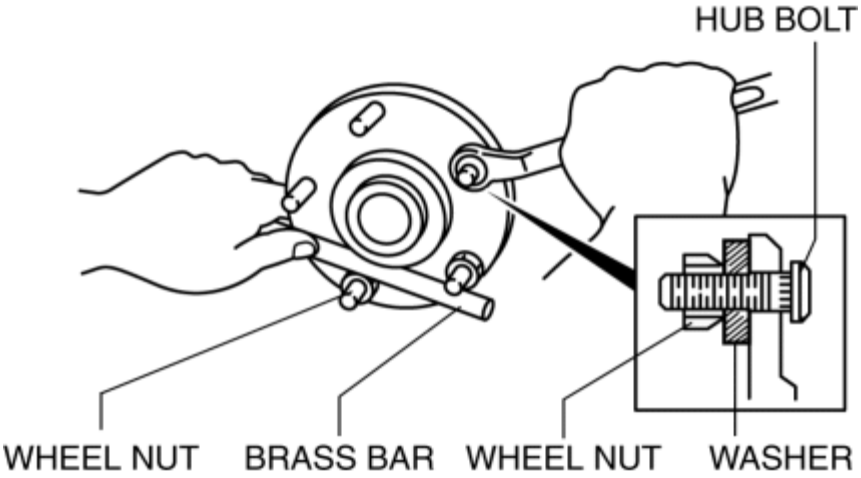

2014 - Mazda3 - DriveLine/Axle

REAR AXLE LOCATION INDEX

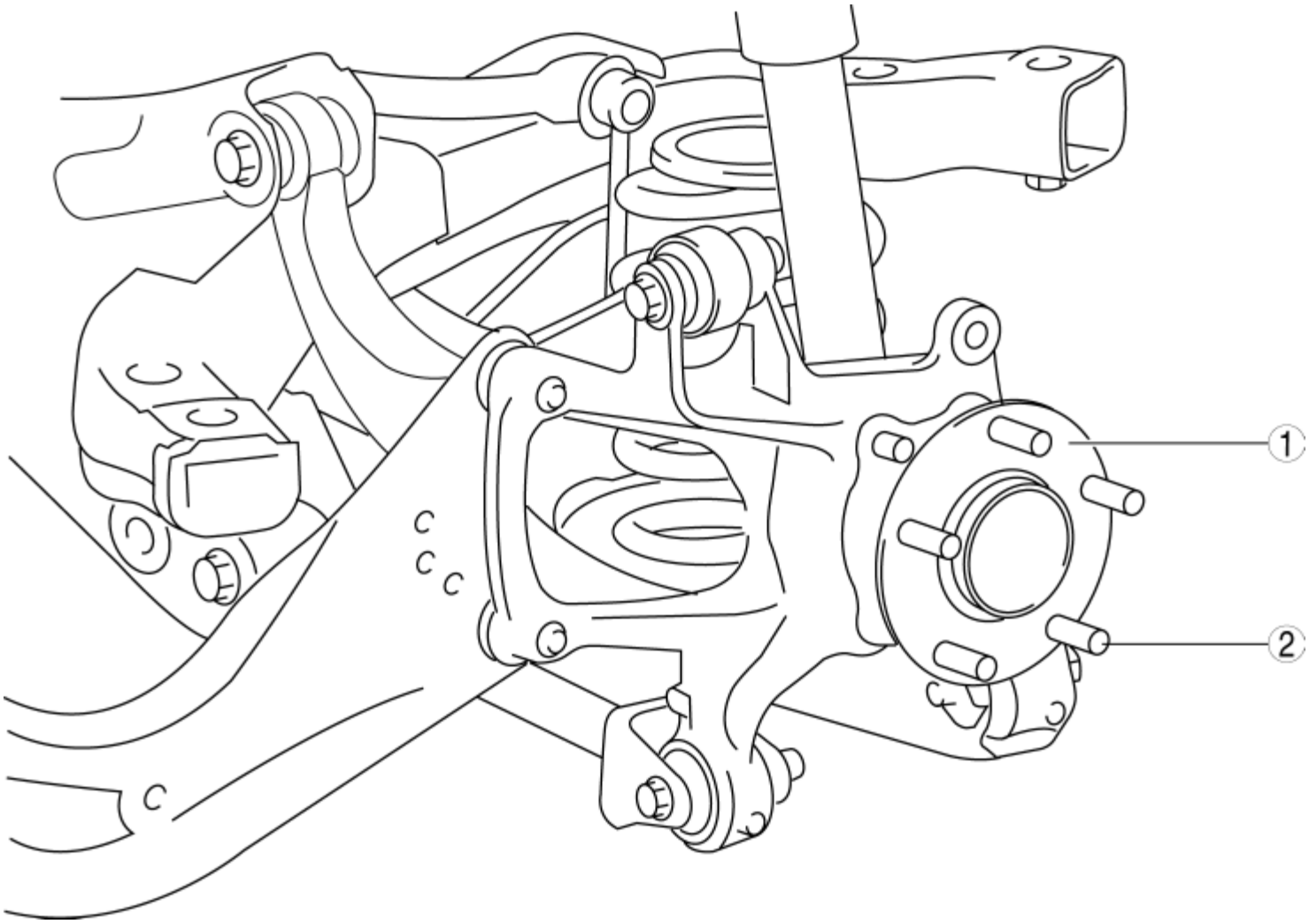

1	Wheel hub component (See **WHEEL HUB COMPONENT INSPECTION**.) (See **WHEEL HUB COMPONENT REMOVAL/INSTALLATION**.)
2	Wheel hub bolt (See **REAR WHEEL HUB BOLT REPLACEMENT**.)

REAR AXLE LOCATION INDEX

2014 - Mazda3 - DriveLine/Axle

WHEEL HUB COMPONENT INSPECTION

Wheel Bearing Excessive Play Inspection

1. Remove the brake caliper component and disc plate. (See **WHEEL HUB COMPONENT REMOVAL/INSTALLATION**.)

2. Install the magnetic base and dial gauge as shown in the figure and measure the wheel bearing axial excessive play.

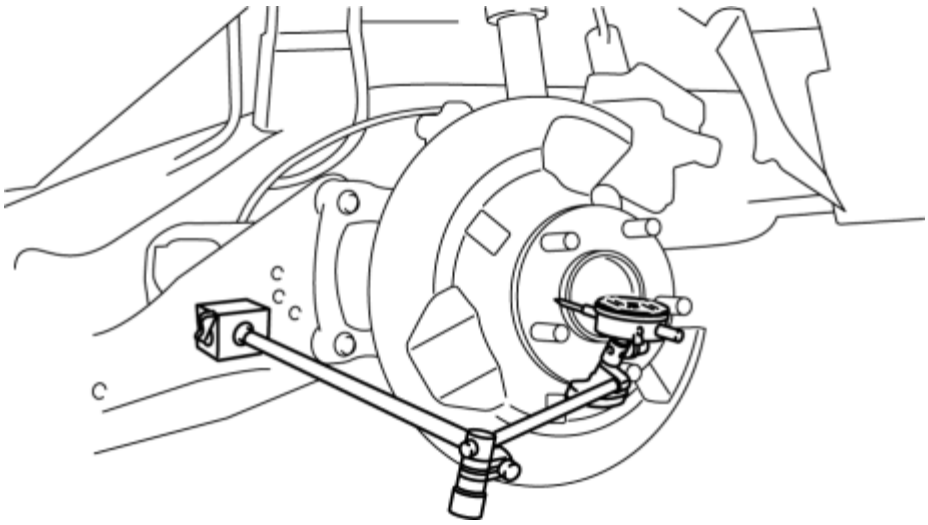

- If it exceeds the maximum specification, replace the wheel hub component.

  Rear wheel bearing maximum play

- 0.05 mm {0.002 in}

2014 - Mazda3 - DriveLine/Axle

WHEEL HUB COMPONENT REMOVAL/INSTALLATION

CAUTION:

- Performing the following procedures without first removing the rear ABS wheel-speed sensor may possibly cause an open circuit in the wiring harness if it is pulled by mistake. Before performing the following procedures, disconnect the rear ABS wheel-speed sensor connector (body side) and fix the wiring harness to an appropriate place where it will not be pulled by mistake while servicing the vehicle.

1. When working on the left side of the vehicle, remove the auto leveling sensor from the rear lower arm. (With headlight auto leveling system) (See **AUTO LEVELING SENSOR REMOVAL/INSTALLATION**.)

2. Remove in the order indicated in the table.

3. Install in the reverse order of removal.

4. Inspect the rear wheel alignment. (See **REAR WHEEL ALIGNMENT**.)

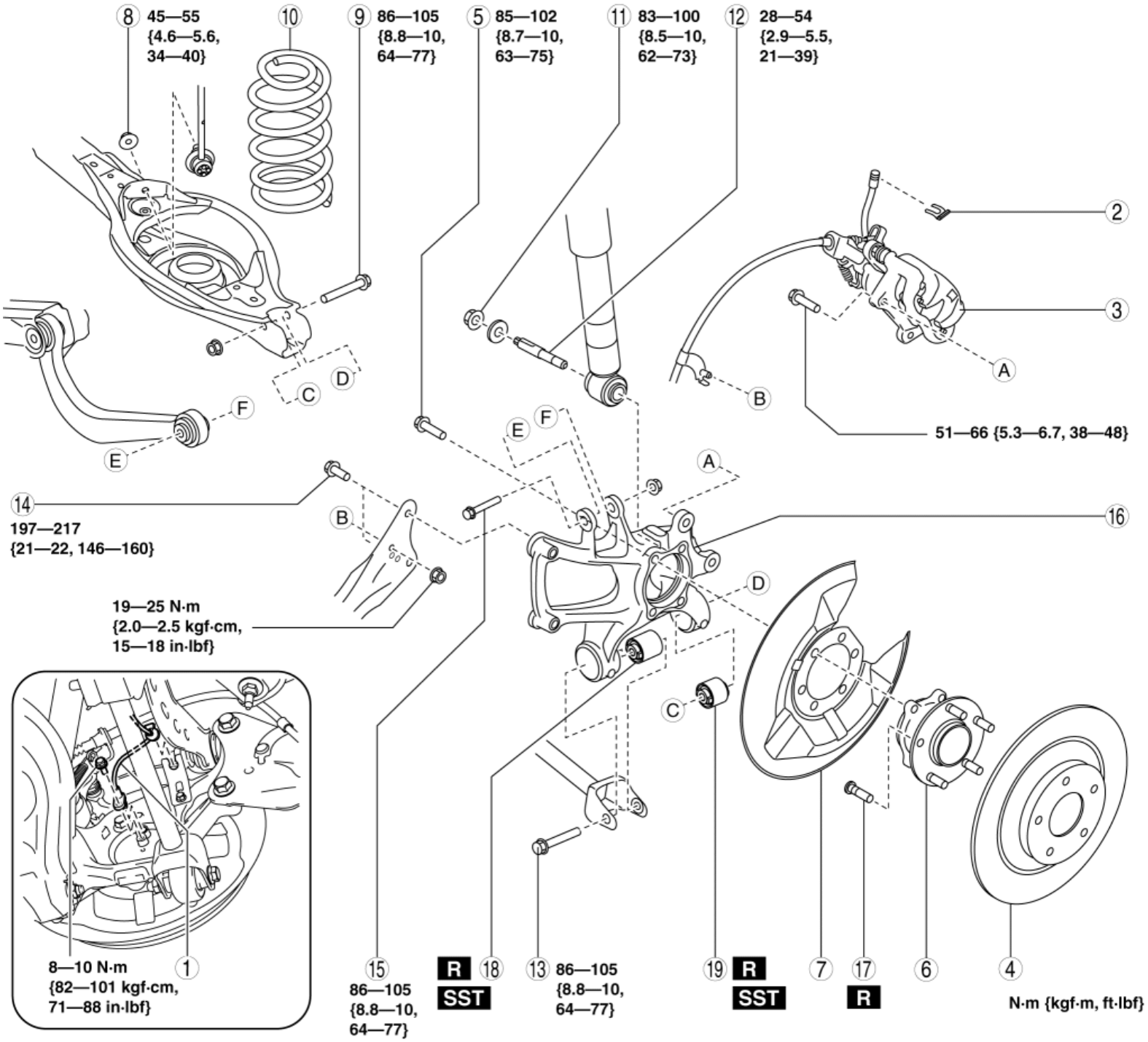

1	Rear ABS wheel-speed sensor
2	Brake hose clip
3	Brake caliper component (See **Brake Caliper Component Removal Note**.)
4	Disc plate
5	Bolt (wheel hub)
6	Wheel hub

7	Dust cover
8	Rear stabilizer control link lower nut
9	Rear lower arm outer bolt (See **Rear Lower Arm Outer Bolt Removal Note**.)
10	Rear coil spring (See **REAR COIL SPRING REMOVAL/INSTALLATION**.)
11	Rear shock absorber lower nut (See **REAR SHOCK ABSORBER REMOVAL/INSTALLATION**.)
12	Stud bolt (See **REAR SHOCK ABSORBER REMOVAL/INSTALLATION**.)
13	Rear lateral link outer bolt (See **REAR LATERAL LINK REMOVAL/INSTALLATION**.)
14	Rear trailing link installation bolt (See **REAR LATERAL LINK REMOVAL/INSTALLATION**.)
15	Rear upper arm outer bolt
16	Hub support
17	Wheel hub bolt (See **Wheel Hub Bolt Removal Note**.) (See **Wheel Hub Bolt Installation Note**.)
18	Hub support bushing (front) (See **Hub Support Bushing (Front) Removal Note**.) (See **Hub Support Bushing (Front) Installation Note**.)
19	Hub support bushing (rear) (See **Hub Support Bushing (Rear) Removal Note**.) (See **Hub Support Bushing (Rear) Installation Note**.)

Brake Caliper Component Removal Note

1. Remove the brake caliper component from the trailing link and suspend it out of the way using a cable.

Rear Lower Arm Outer Bolt Removal Note

1. Support the rear lower arm using a jack.

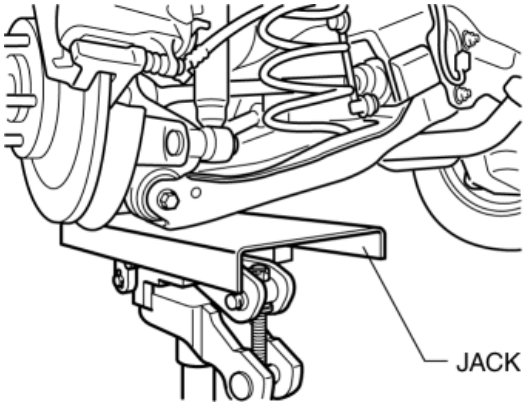

2. Remove the rear lower arm outer bolt.

Wheel Hub Bolt Removal Note

NOTE:

- Remove the wheel hub bolt only if there is any malfunction.

1. Remove the wheel hub bolt using a press.

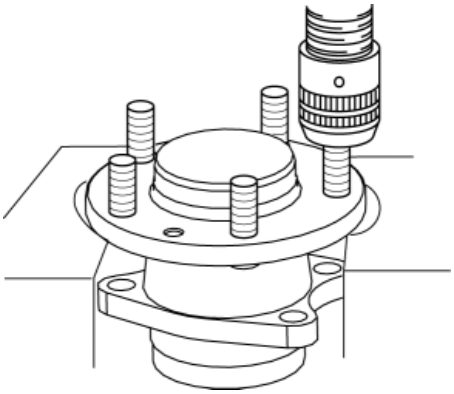

Hub Support Bushing (Front) Removal Note

1. Mark the hub support as shown in the figure.

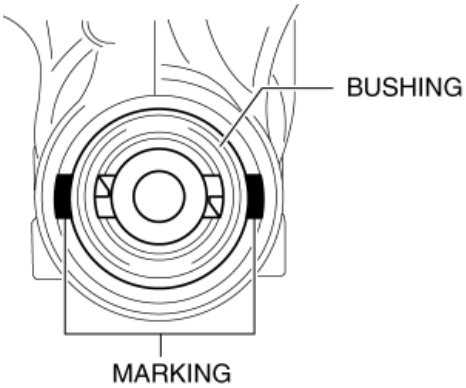

2. Press the rear hub support bushing (front) out using the **SSTs**.

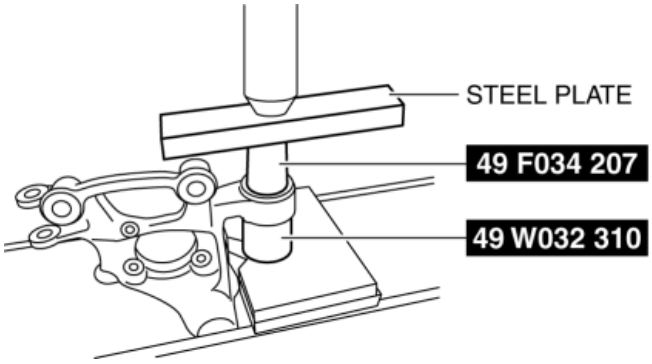

Hub Support Bushing (Rear) Removal Note

1. Mark the hub support as shown in the figure.

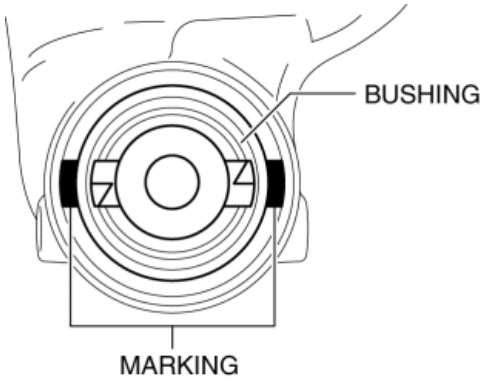

2. Press the rear hub support bushing (rear) out using the **SSTs**.

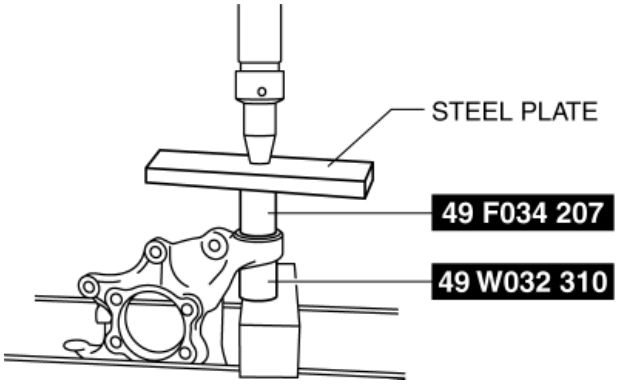

Hub Support Bushing (Rear) Installation Note

1. Align the projection of the bushing with the hub support marking and set a new bushing to the hub support.

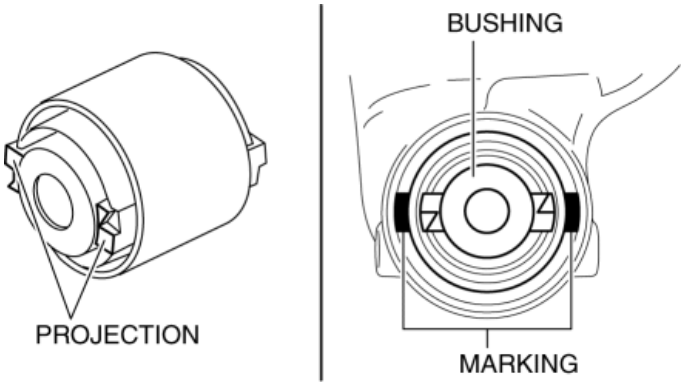

2. Install a new hub support bushing (rear) using the **SSTs**.

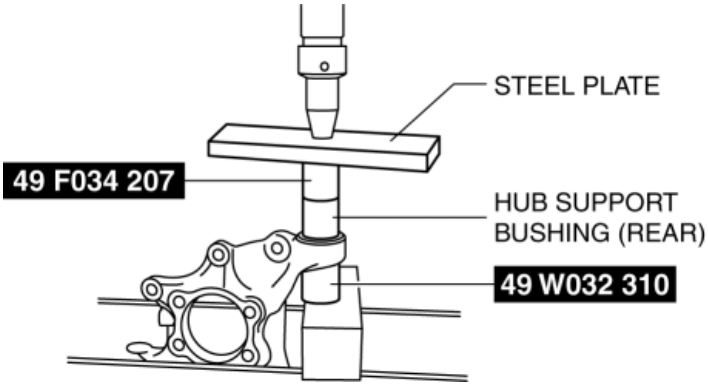

Hub Support Bushing (Front) Installation Note

1. Align the projection of the bushing with the hub support marking and set a new bushing to the hub support.

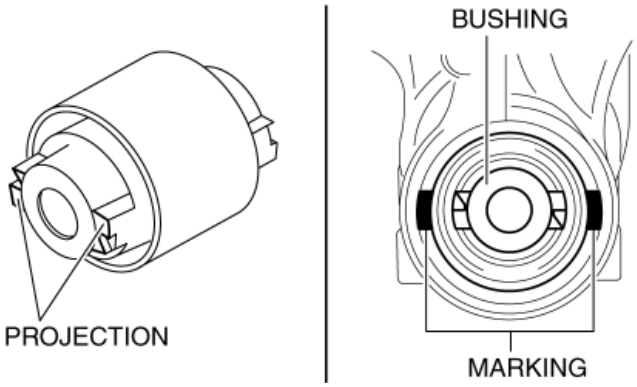

2. Install a new hub support bushing (front) using the **SSTs**.

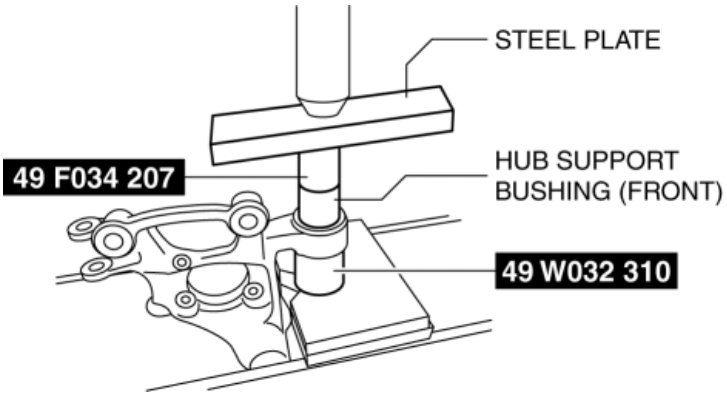

Wheel Hub Bolt Installation Note

1. Install the new wheel hub bolt using a press.

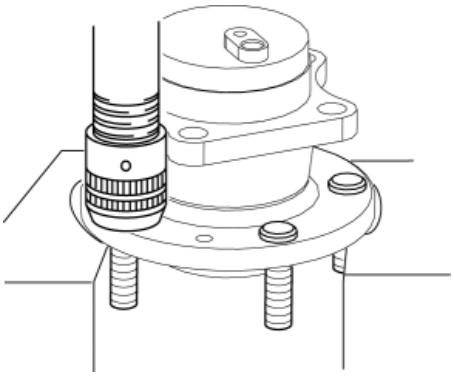

2014 - Mazda3 - DriveLine/Axle

REAR WHEEL HUB BOLT REPLACEMENT

1. Remove the brake caliper component and disc plate. (See **WHEEL HUB COMPONENT REMOVAL/INSTALLATION**.)

2. Remove the wheel hub bolt using the **SST** as shown in the figure.

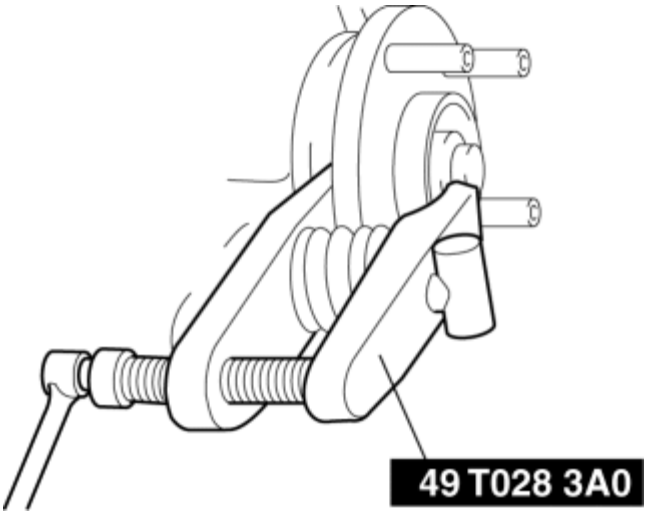

3. Place a new wheel hub bolt in the wheel hub.

4. Install the wheel hub by placing a proper sized washer on the hub, and tightening the nut as shown in the figure.

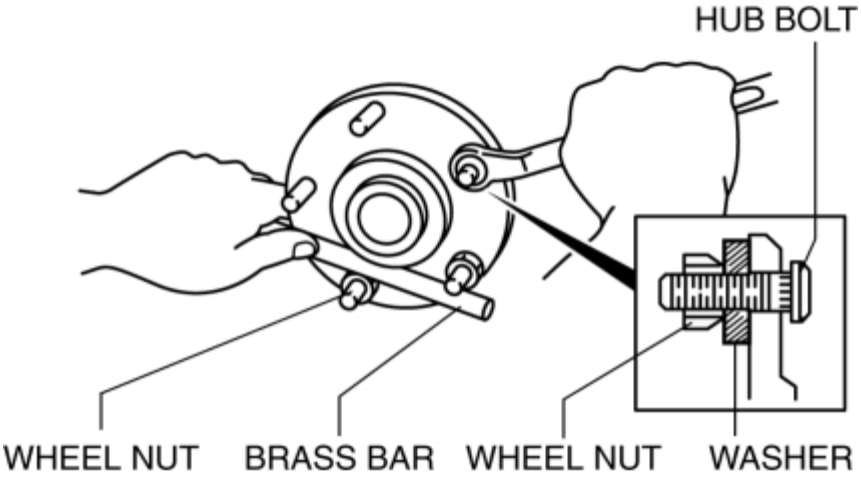

2014 - Mazda3 - DriveLine/Axle

DRIVE SHAFT LOCATION INDEX

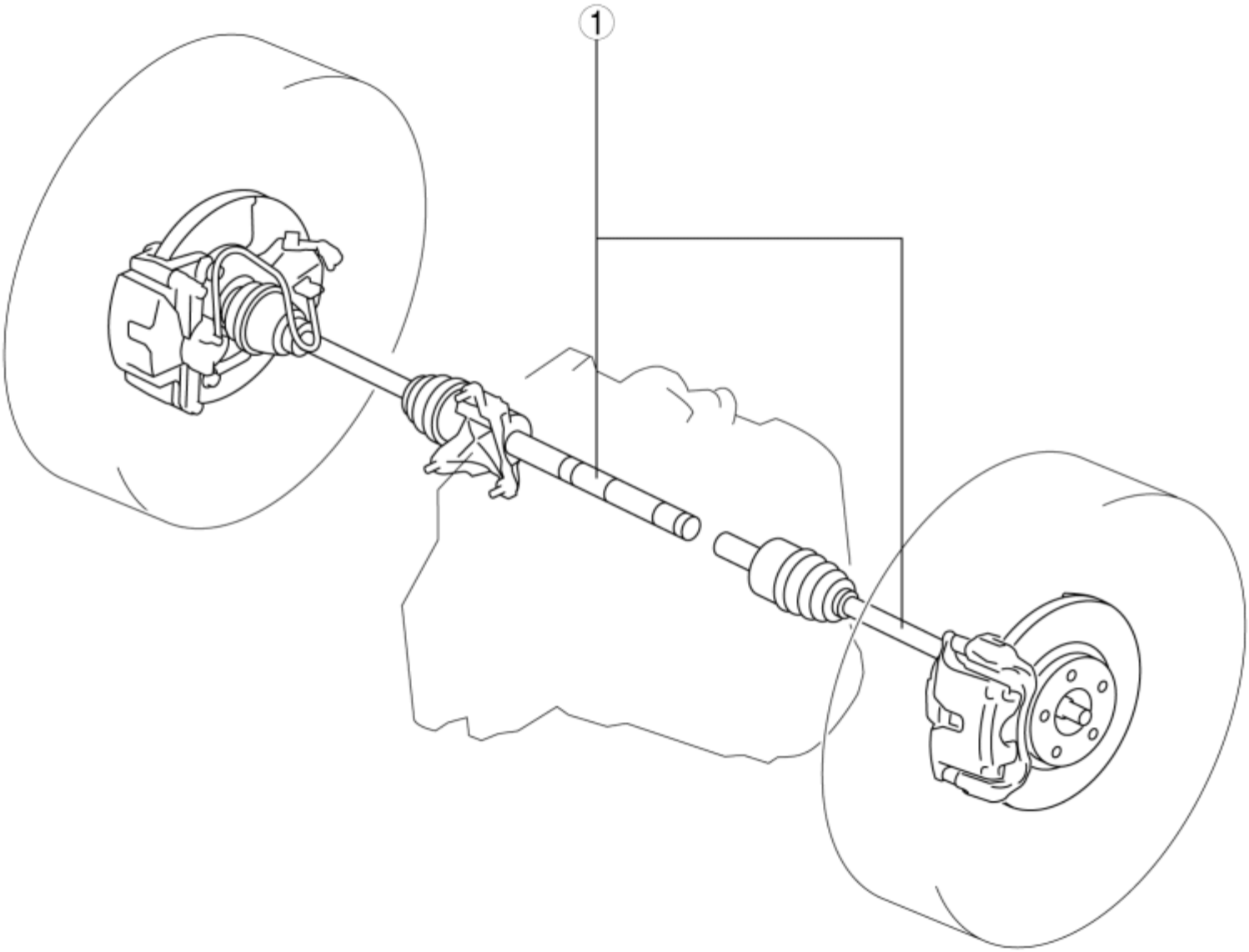

1	Front drive shaft (See **FRONT DRIVE SHAFT INSPECTION**.) (See **FRONT DRIVE SHAFT REMOVAL/INSTALLATION**.) (See **FRONT DRIVE SHAFT (TRIPOD JOINT) DISASSEMBLY/ASSEMBLY**.) (See **FRONT DRIVE SHAFT (DOUBLE OFFSET JOINT) DISASSEMBLY/ASSEMBLY**.)

DRIVE SHAFT LOCATION INDEX

2014 - Mazda3 - DriveLine/Axle

FRONT DRIVE SHAFT INSPECTION

1. Inspect the connections for any looseness.

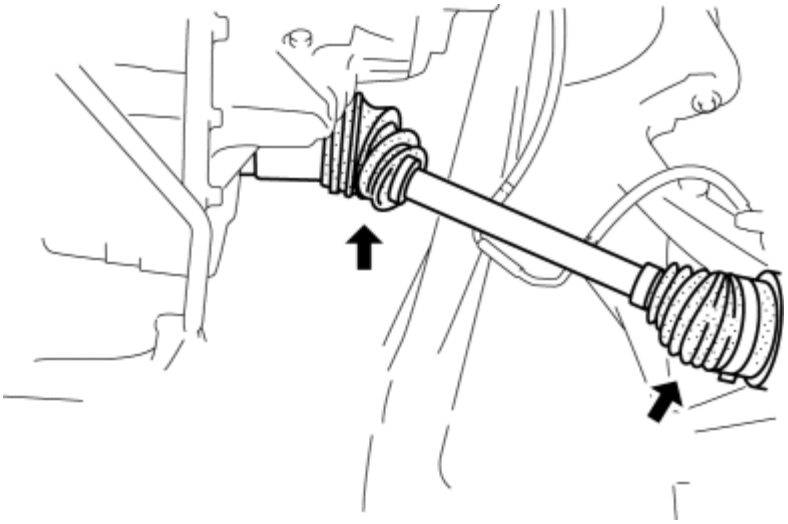

- If there is any malfunction, tighten or replace the applicable part.

2. Inspect the dust boot for damage and cracks.

- If there is any malfunction, replace the applicable part.

3. Move the spline and joint up and down, left and right by hand and verify that there is no excessive play.

- If there is any malfunction, replace the applicable part.

2014 - Mazda3 - DriveLine/Axle

FRONT DRIVE SHAFT REMOVAL/INSTALLATION

CAUTION:

- Performing the following procedures without first removing the ABS wheel-speed sensor may possibly cause an open circuit in the wiring harness if it is pulled by mistake. Before performing the following procedures, disconnect the ABS wheel-speed sensor connector (axle side) and fix the wiring harness to an appropriate place where it will not be pulled by mistake while servicing the vehicle.

1. Remove the front under cover No.2. (See **FRONT UNDER COVER No.2 REMOVAL/INSTALLATION**.)

2. Remove the splash shield. (See **SPLASH SHIELD REMOVAL/INSTALLATION**.)

3. Drain the manual transaxle oil or ATF. (See **MANUAL TRANSAXLE OIL REPLACEMENT [C66M-R]**.) (See **AUTOMATIC TRANSAXLE FLUID (ATF) REPLACEMENT [FW6A-EL]**.)

4. Remove in the order indicated in the table.

5. Install in the reverse order of removal.

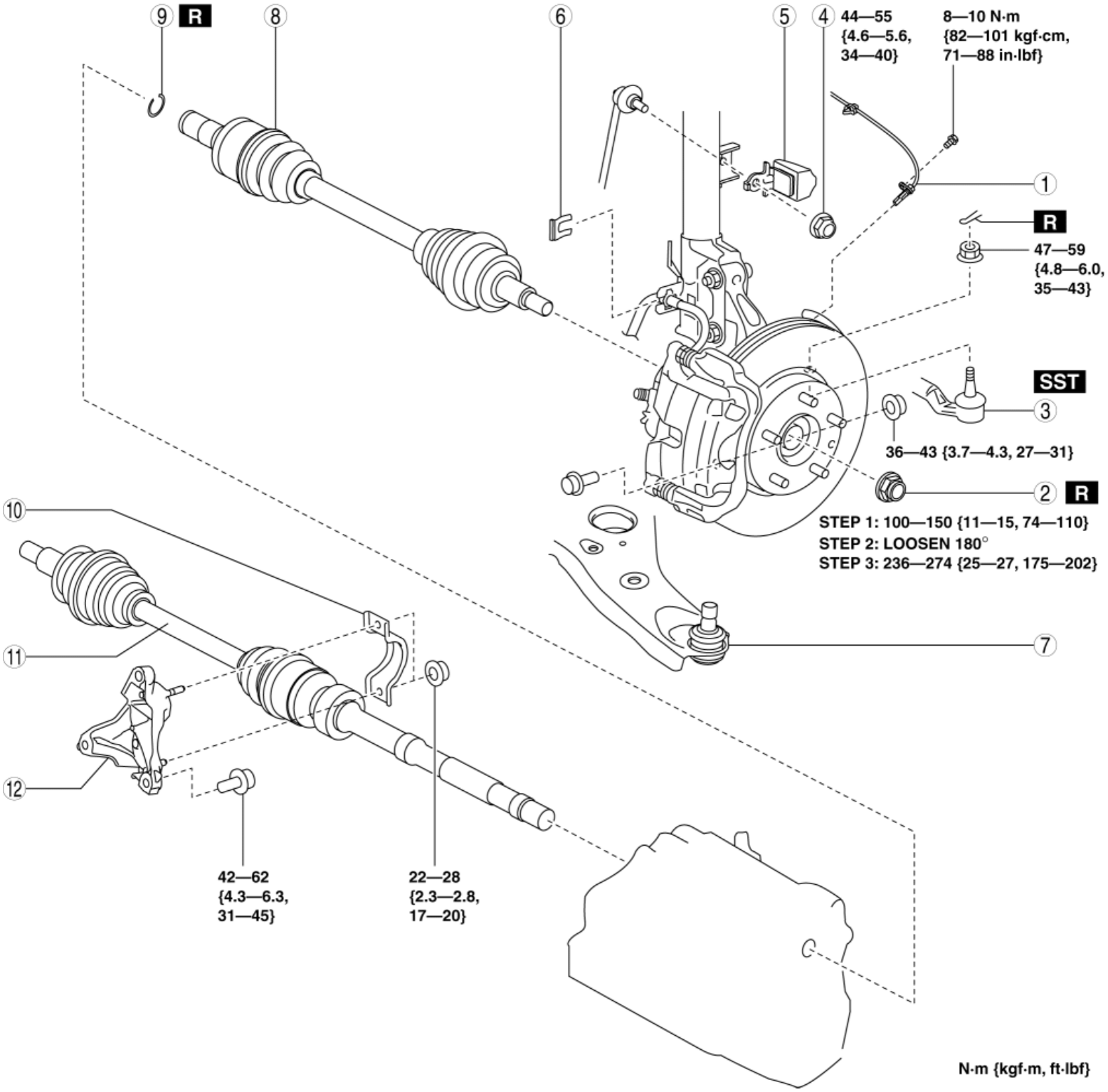

1	ABS wheel-speed sensor
2	Locknut (See **Locknut Installation Note**.)
3	Tie-rod end ball joint (See **FRONT CROSSMEMBER REMOVAL/INSTALLATION**.)
4	Stabilizer control link upper nut

5	Dynamic damper (vehicles with dynamic damper)
6	Brake hose clip
7	Front lower arm ball joint
8	Drive shaft (LH) (See **Drive Shaft Removal Note**.) (See **Drive Shaft (LH) Installation Note**.)
9	Drive shaft clip (See **Drive Shaft Clip Installation Note**.)
10	Bracket No.2 (See **Bracket, Drive Shaft (RH) Installation Note**.)
11	Drive shaft (RH) (See **Bracket, Drive Shaft (RH) Installation Note**.)
12	Bracket No.1 (See **Bracket, Drive Shaft (RH) Installation Note**.)

Drive Shaft Removal Note

1. Install a spare nut onto the drive shaft.
2. Tap the nut with a copper hammer and separate the drive shaft from the axle.

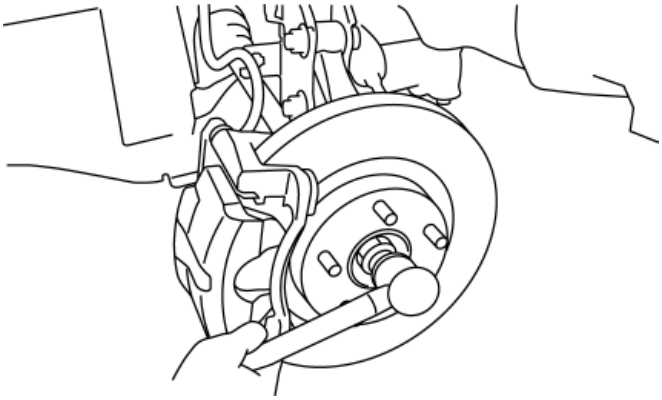

3. Separate the drive shaft from the wheel hub.
4. Separate the drive shaft (LH) from the transaxle using the **SSTs**.

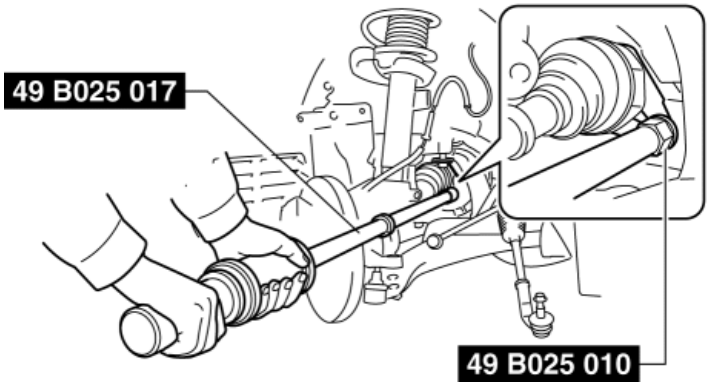

CAUTION:

- The oil seal at the front end of the drive shaft could be damaged. When removing the drive shaft, be careful not to damage the oil seal.

Bracket, Drive Shaft (RH) Installation Note

CAUTION:

- Retighten the bracket No.1 stud bolts when the bracket No.2 nuts are loosened

1. Tighten the bracket No.1 stud bolts.

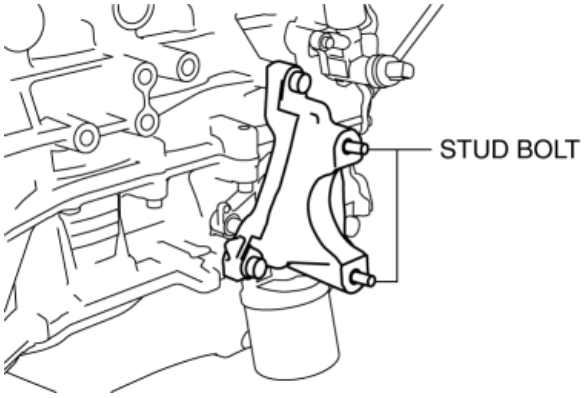

Tightening torque

- 8—11 N·m {82—112 kgf·cm, 71—97 in·lbf}

2. Temporarily tighten the bolts A and B.

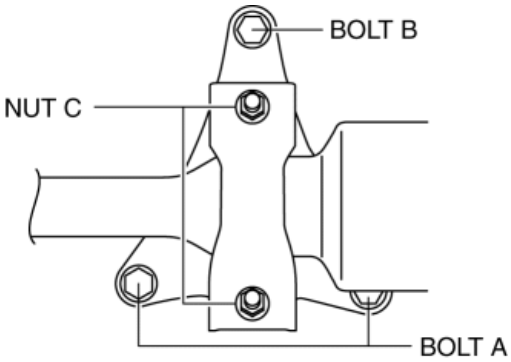

3. Tighten the bolts A, then tighten the bolt B to the specified torque.

Tightening torque

- 42—62 N·m {4.3—6.3 kgf·m, 31—45 ft·lbf}

4. Insert the drive shaft into the transaxle until the drive shaft bearing contacts the bracket stopper.
5. Temporarily tighten the nuts C, then tighten the nuts C to the specified torque.

Tightening torque

- 22—28 N·m {2.3—2.8 kgf·m, 17—20 ft·lbf}

6. Apply transaxle oil to the oil seal lip.
7. Apply grease (L2Y1 33247) to the wheel bearing inner race and drive shaft contact surface (Area A in figure).

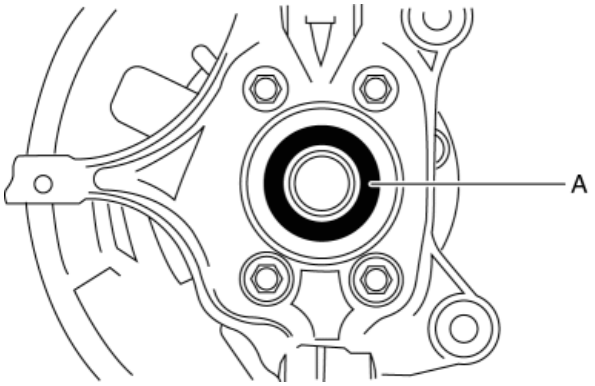

Drive Shaft Clip Installation Note

1. Install a new drive shaft clip to the clip groove at the end of the drive shaft with the clip opening facing upward.

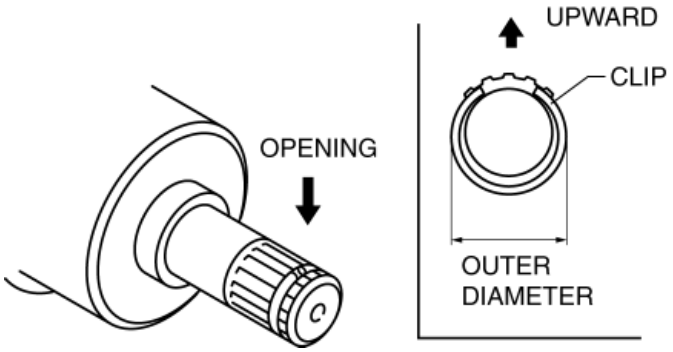

2. After installation, measure the outer diameter.
   - If it exceeds the specification, repeat installation using a new clip.

     Outer diameter
   - SKYACTIV-G 2.0: 31.2 mm {1.23 in}
   - SKYACTIV-G 2.5: 34 mm {1.3 in}

Drive Shaft (LH) Installation Note

CAUTION:

- The sharp edges of the drive shaft can slice or puncture the oil seal. Be careful when installing the drive shaft to the transaxle.

1. Apply transaxle oil to the oil seal lip.
2. Apply grease (L2Y1 33247) to the wheel bearing inner race and drive shaft contact surface (Area A in figure).

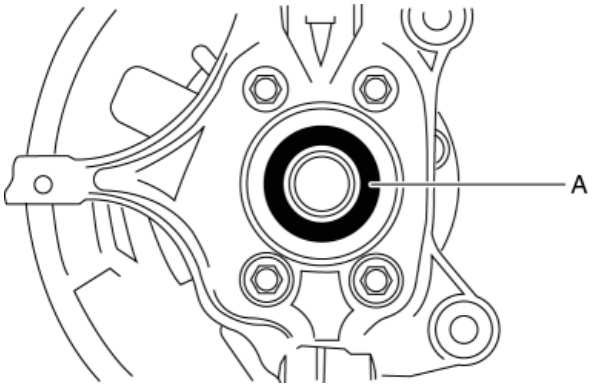

3. Insert the drive shaft into the wheel hub.
4. Install the drive shaft to the transaxle.

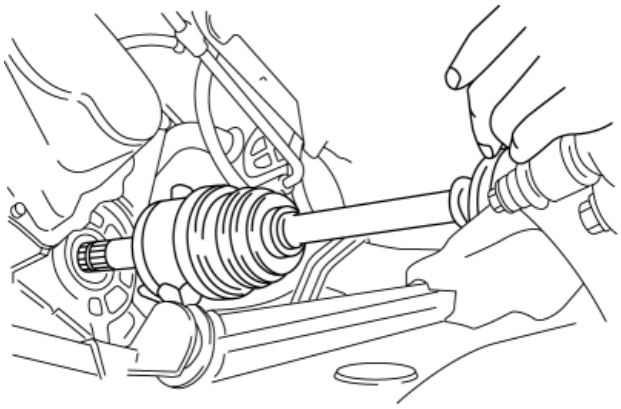

5. After installation, pull the transaxle side outer ring forward to confirm that the drive shaft is securely held by the clip.

Locknut Installation Note

1. If dust or grease is on the drive shaft thread area, wipe it off with a cloth.

2. After tightening the locknut once at a torque of **100—150 N·m {11—15 kgf·m, 74—110 ft·lbf}**, loosen it **180 degrees** once, and then retighten it at a torque of **236—274 N·m {25—27 kgf·m, 175—202 ft·lbf}**.

2014 - Mazda3 - DriveLine/Axle

FRONT DRIVE SHAFT (TRIPOD JOINT) DISASSEMBLY/ASSEMBLY

1. Disassemble in the order shown in the figure.
2. Assemble in the reverse order of disassembly.

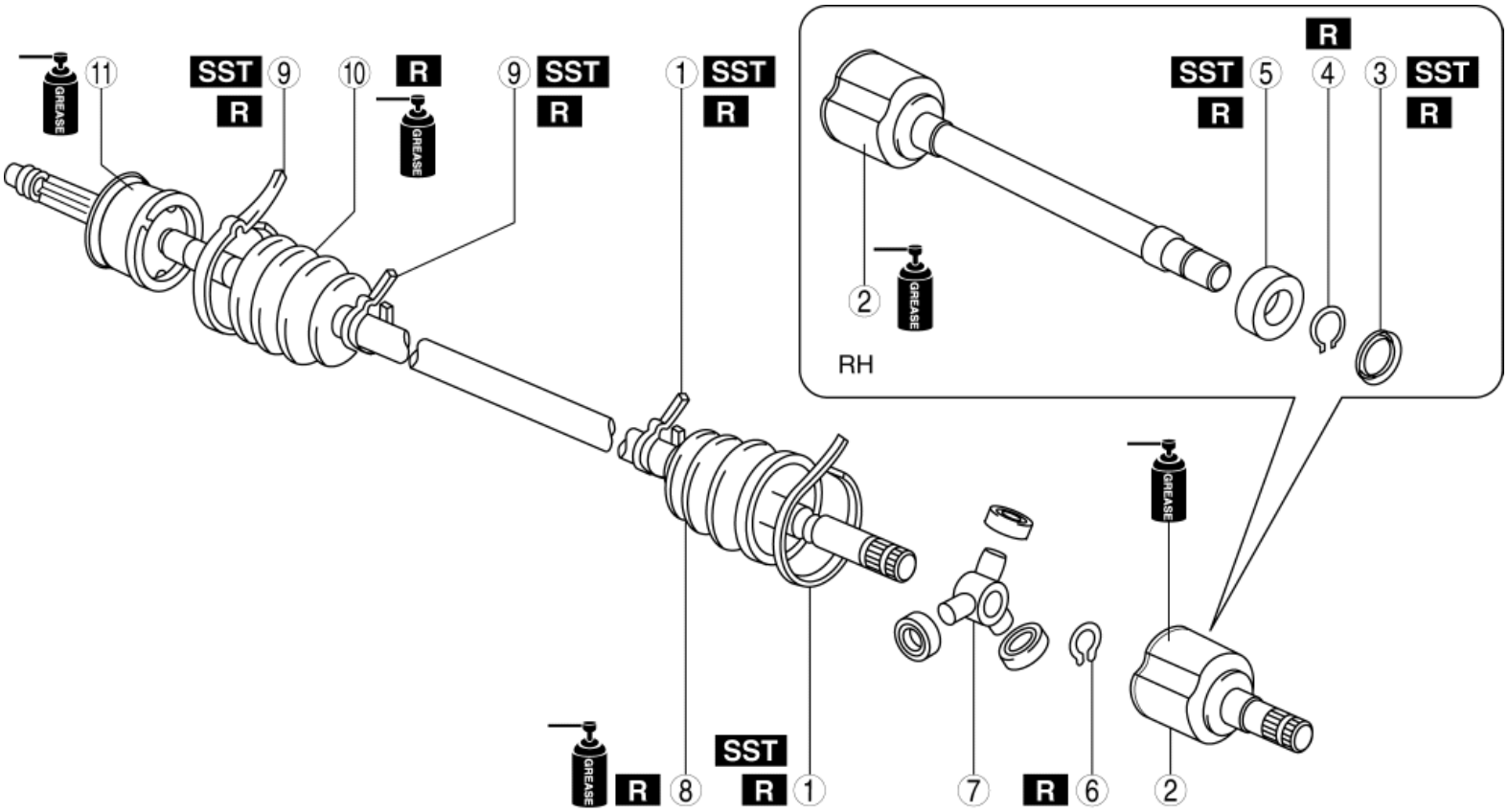

1	Boot band (transaxle side) (See **Boot Band (Transaxle Side) Disassembly Note**.) (See **Boot Band (Transaxle Side) Assembly Note [SKYACTIV-G 2.0]**.) (See **Boot Band (Transaxle Side) Assembly Note [SKYACTIV-G 2.5]**.)
2	Outer ring (See **Outer Ring Disassembly Note**.) (See **Outer Ring Assembly Note**.)
3	Dust cover (See **Dust Cover Disassembly Note**.) (See **Dust Cover Assembly Note**.)
4	Snap ring
5	Bearing

	(See **Bearing Disassembly Note**.) (See **Bearing Assembly Note**.)
6	Snap ring (See **Snap Ring, Tripod Joint Disassembly Note**.) (See **Tripod Joint, Snap Ring Assembly Note**.)
7	Tripod joint (See **Snap Ring, Tripod Joint Disassembly Note**.) (See **Tripod Joint, Snap Ring Assembly Note**.)
8	Boot (transaxle side) (See **Boot (Transaxle Side) Disassembly Note**.) (See **Boot (Transaxle Side) Assembly Note**.)
9	Boot band (wheel side) (See **Boot Band (Wheel Side) Disassembly Note**.) (See **Boot Band (Wheel Side) Assembly Note**.)
10	Boot (wheel side) (See **Boot (Wheel Side) Disassembly Note**.) (See **Boot (Wheel Side) Assembly Note**.)
11	Shaft and ball joint component

Boot Band (Transaxle Side) Disassembly Note

SKYACTIV-G 2.0

1. Using a screwdriver and hammer, lightly tap the lever of the boot band to disconnect the lock clip.

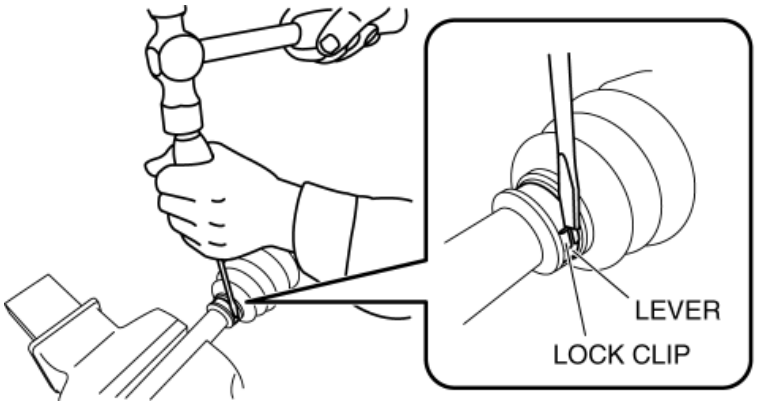

2. Remove the boot band using pliers.

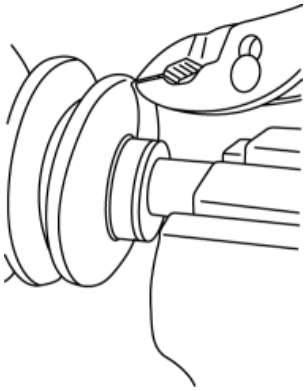

SKYACTIV-G 2.5

1. Remove the boot band using end clamp pliers.

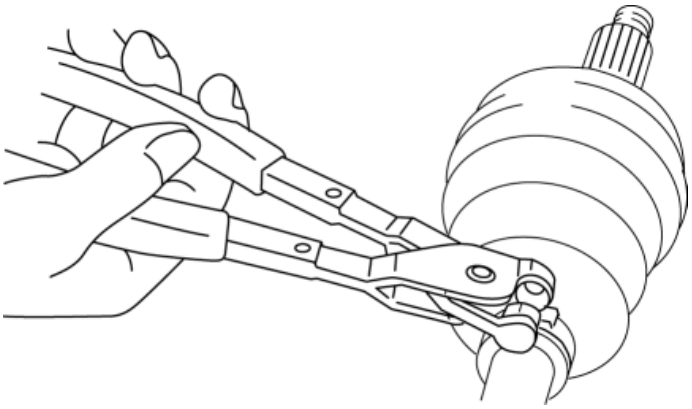

Outer Ring Disassembly Note

1. Place alignment marks on the shaft and outer ring.

CAUTION:

- To prevent part damage, do not use a punch or similar tool to place alignment marks. Use paint.

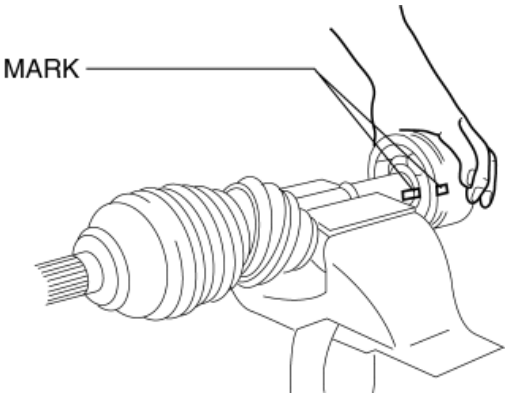

2. Secure the shaft in a vise.

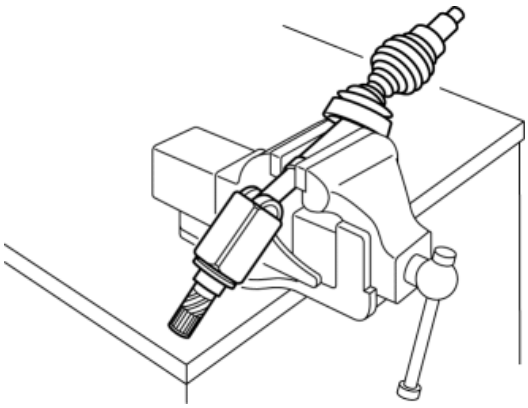

3. Lightly tap the outer ring evenly using a hammer and urethane bar or equivalent, and remove the outer ring from the shaft.

CAUTION:

- When tapping the outer ring lightly using a hammer and urethane bar or equivalent, be careful not to scratch the roller area so as to prevent damage to the part.

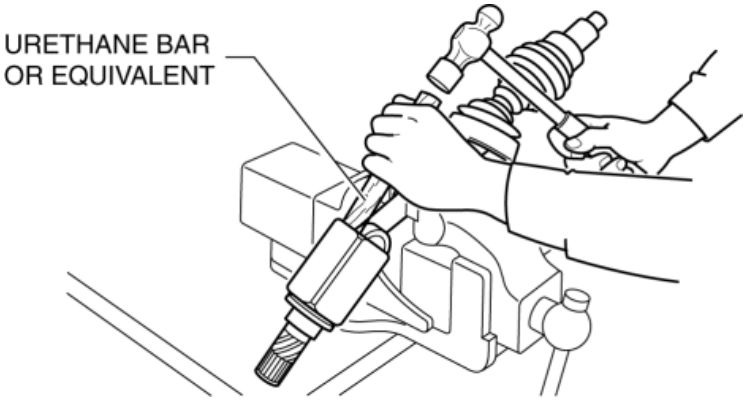

4. Wipe off grease on the outer ring using a clean rag.

Dust Cover Disassembly Note

1. Remove the dust cover using a press and the **SST**.

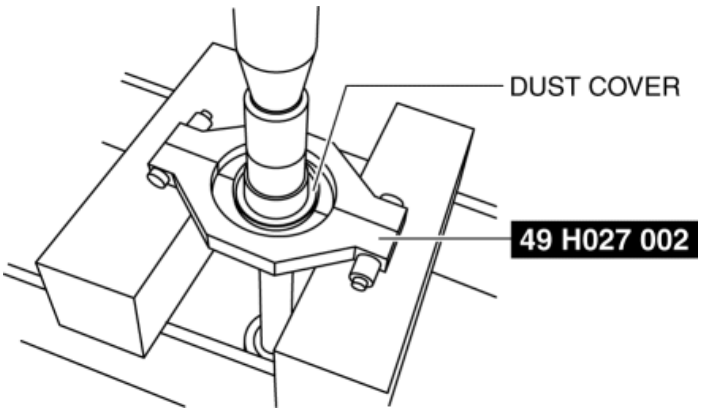

Bearing Disassembly Note

1. Remove the bearing using a press and **SST**.

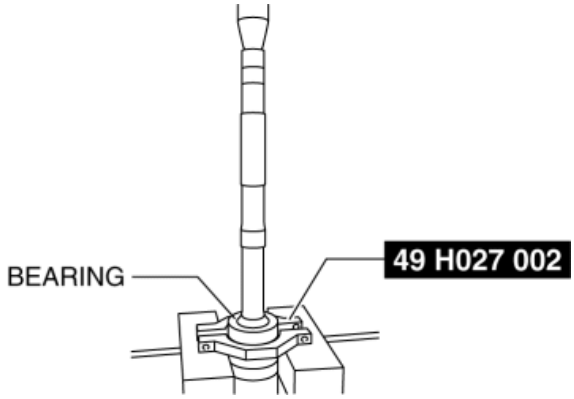

Snap Ring, Tripod Joint Disassembly Note

1. Place alignment marks on the shaft and tripod joint.

CAUTION:

- To prevent damage to parts, do not use a punch or similar tool to place alignment marks. Use paint.

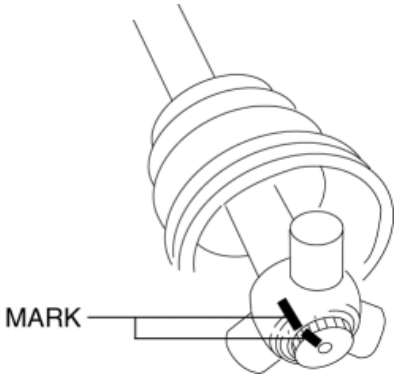

2. Remove the snap ring using snap ring pliers.

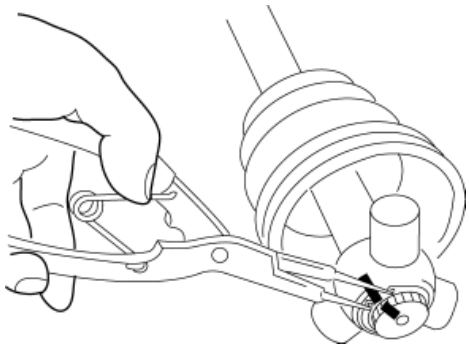

3. Remove the tripod joint from the shaft.

CAUTION:

- When using the hammer and urethane bar or equivalent, be careful not to scratch the roller area so as to prevent damage to the part.

NOTE:

- If the tripod joint cannot be removed from the shaft, lightly tap the tripod joint evenly using a hammer and urethane bar or equivalent, and remove the tripod joint from the shaft.

4. Wipe off grease on the shaft and tripod joint using a clean rag.

Boot (Transaxle Side) Disassembly Note

1. Wrap vinyl tape around the spline area of the shaft to prevent damage to the boot.

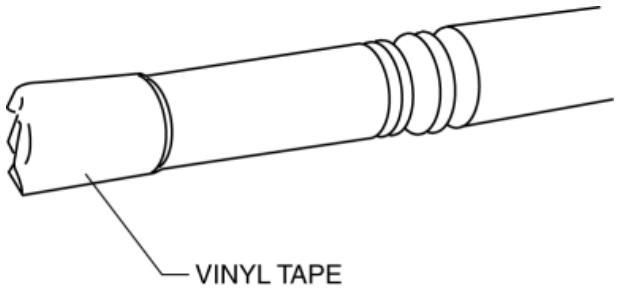

2. Remove the boot (transaxle side).
3. Wipe off grease on the boot (transaxle side) using a clean rag.

Boot Band (Wheel Side) Disassembly Note

1. Remove the boot band using end clamp pliers.

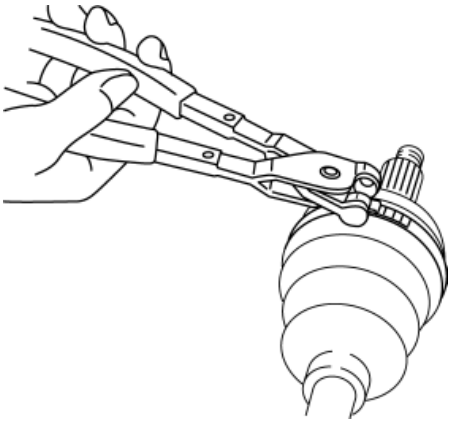

Boot (Wheel Side) Disassembly Note

1. Wrap vinyl tape around the spline area of the shaft to prevent damage to the boot.

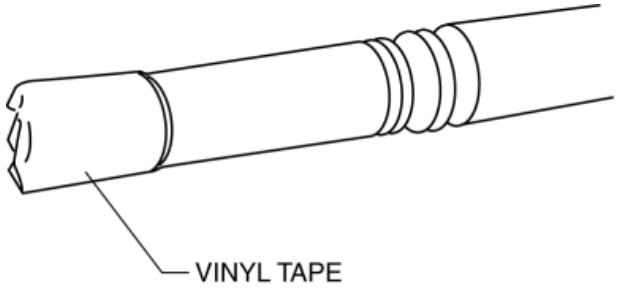

2. Remove the boot (wheel side).
3. Wipe off grease on the boot (wheel side) and ball joint using a clean rag.

Boot (Wheel Side) Assembly Note

NOTE:

- The boot shapes on the wheel side and the transaxle side are different. Do not assemble the wrong boot by mistake.

1. Insert the shaft through the boot (wheel side) with the vinyl tape left wrapped around the spline area of the shaft.
2. Apply the specified grease to the ball joint and boot (wheel side).

NOTE:

- Apply the grease directly from the tube. Do not touch the grease directly with your hand.

Grease amount

- SKYACTIV-G 2.0: 70—90 g {2.5—3.1 oz}
- SKYACTIV-G 2.5: 87—97 g {3.1—3.4 oz}

3. Assemble the boot (wheel side) to the ball joint.

Boot Band (Wheel Side) Assembly Note

1. Adjust opening A of the **SST** to the standard by rotating the adjustment bolt.

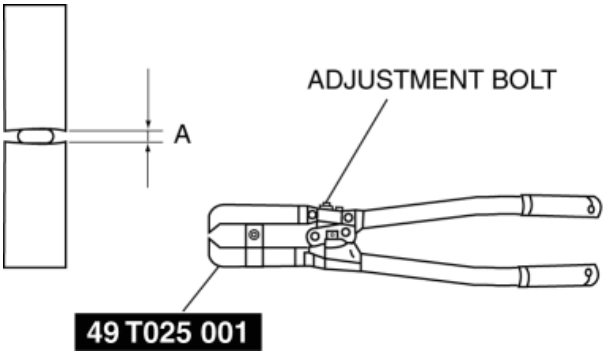

Standard A (SKYACTIV-G 2.0)

- Approx. 4.6 mm {0.18 in}

Standard A (SKYACTIV-G 2.5)

- Large diameter side: Approx. 3.8 mm {0.15 in}
- Small diameter side: Approx. 3.1 mm {0.12 in}

2. Crimp the boot band using the **SST**.

Large diameter side

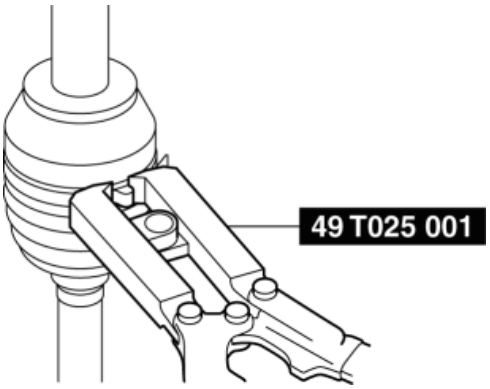

Small diameter side

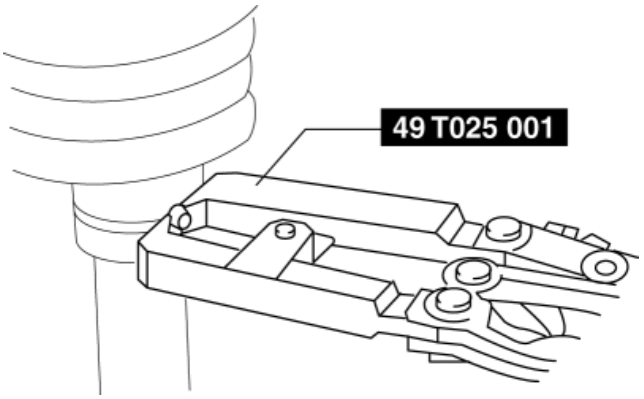

3. Verify that crimp B of the boot band is within the standard.

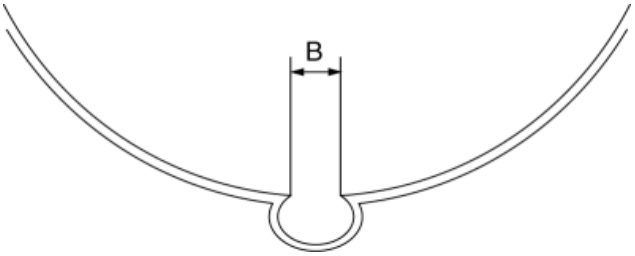

Standard B (SKYACTIV-G 2.0)

- 1.2—4.0 mm {0.05—0.15 in}

Standard B (SKYACTIV-G 2.5)

- Large diameter side: 1.8 mm {0.071 in} or less
- Small diameter side: 1.5 mm {0.059 in} or less
- If crimp B exceeds the standard, decrease opening A of the **SST** and crimp the boot band again.

4. Verify that the boot band does not protrude from the band assembly area.
   - If the boot band protrudes from the assembly area, replace it with a new one and repeat Steps 1 to 3.

Boot (Transaxle Side) Assembly Note

NOTE:

- The boot shapes on the wheel side and the transaxle side are different. Do not assemble the wrong boot by mistake.

1. Insert the shaft through the boot (transaxle side) with the vinyl tape left wrapped around the spline area of the shaft.
2. Remove the vinyl tape wrapped around the spline of the shaft.

Tripod Joint, Snap Ring Assembly Note

1. Assemble the tripod joint with the shaft and tripod joint alignment marks aligned.

CAUTION:

- When tapping the outer ring lightly using a hammer and urethane bar or equivalent, be careful not to scratch the roller area so as to prevent damage to the part.

NOTE:

- If the tripod joint cannot be assembled to the shaft, lightly tap the tripod joint evenly using a hammer and urethane bar or equivalent, and assemble the tripod joint to the shaft.

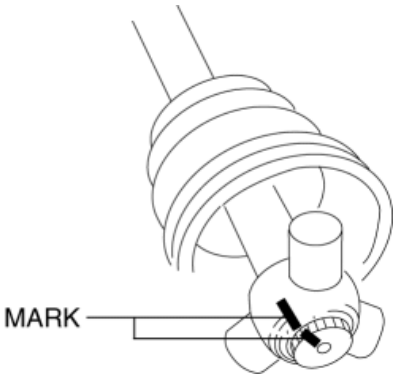

2. Assemble a new snap ring using snap ring pliers.

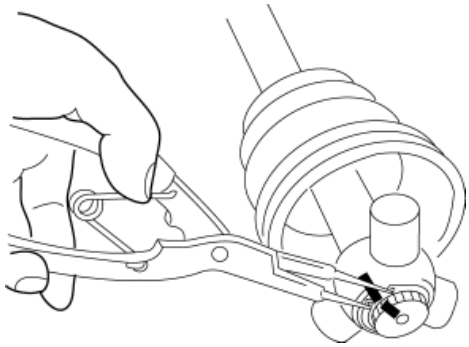

3. Verify that the snap ring is assembled correctly in the groove of the shaft.

Bearing Assembly Note

1. Assemble the new bearing using the **SST** and the press.

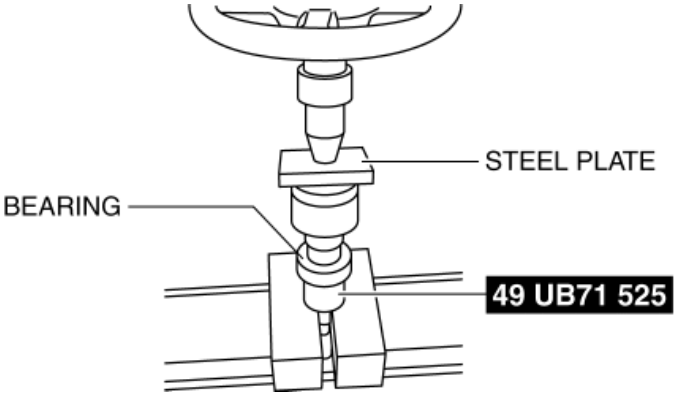

Dust Cover Assembly Note

1. Assemble a new dust cover using the **SST** and the press.

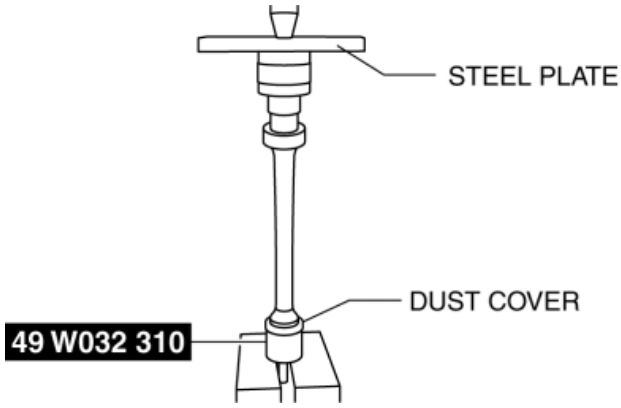

Outer Ring Assembly Note

1. Apply the specified grease to the outer ring and boot (transaxle side).

NOTE:

- Apply the grease from the tube. Do not touch the grease directly with your hand.

  Grease amount

- SKYACTIV-G 2.0: 135—155 g {4.77—5.46 oz}
- SKYACTIV-G 2.5: 124—134 g {4.38—4.72 oz}

2. Secure the outer ring in the vise.

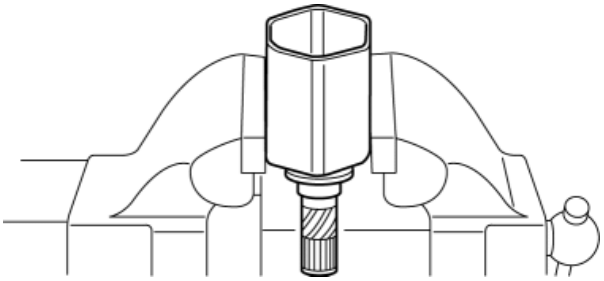

3. After aligning the shaft and outer ring alignment marks, lightly tap the tripod joint evenly using a hammer and urethane bar or equivalent, and insert the outer ring little by little while maintaining the shaft perpendicular.

CAUTION:

- When tapping the outer ring lightly using a hammer and urethane bar or equivalent, be careful not to scratch the roller area so as to prevent damage to the part.
- Be careful that dust and dirt do not get on the inside of the outer ring.

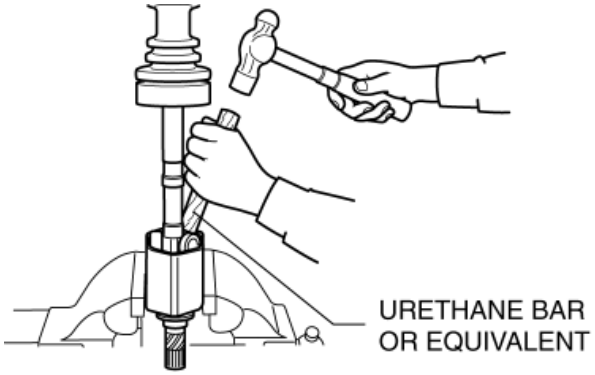

4. Assemble the boot (transaxle side) to the outer ring.

5. Set the drive shaft to the standard length.

Drive shaft full length (standard)

- SKYACTIV-G 2.0 (LH): 660.5—670.5 mm {26.01—26.39 in}
- SKYACTIV-G 2.0 (RH): 1024.9—1034.9 mm {40.351—40.744 in}
- SKYACTIV-G 2.5 (LH): 659.6—669.6 mm {25.97—26.36 in}
- SKYACTIV-G 2.5 (RH): 1021—1031 mm {40.20—40.59 in}

6. Release any trapped air from the boot by carefully lifting up the small end of the boot with a screwdriver wrapped in a clean rag.

NOTE:

- Do not damage the boot. Verify that there is no grease leakage.
- If the boot is deformed, it may not be possible to perform the full-length adjustment of the shaft.

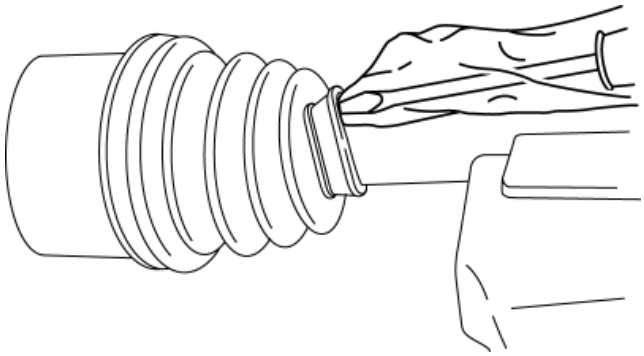

7. Verify that the drive shaft length is within the standard when the inside of the boot is at atmospheric pressure.

- If not within the standard, repeat from Step 5.

Boot Band (Transaxle Side) Assembly Note [SKYACTIV-G 2.0]

WARNING:

- Your hands could be injured while assembling the boot band. Therefore always wear gloves.

1. Apply rust prevention oil to the inside of the boot band.
2. Lock the boot band against rotation using an appropriate tool as shown in the figure.

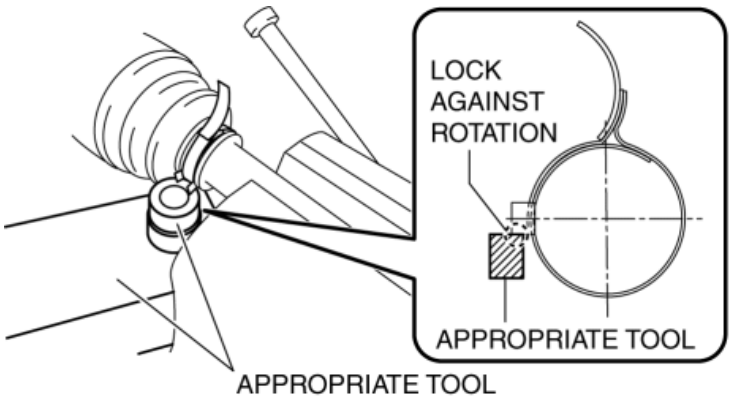

CAUTION:

- Do not put the boot band back to its original position after bending it using pliers because it will damage the boot band.

3. Using a pair of pliers, grip the lever at the base (fulcrum point) and rotate it in the direction of the arrow.

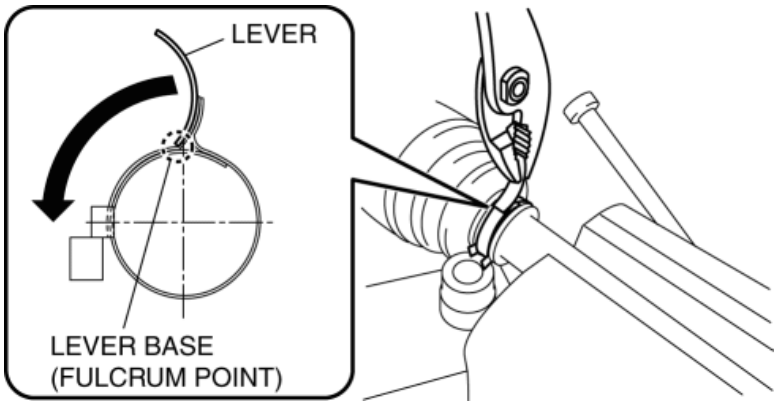

CAUTION:

- If the lever flips back by reactive force, press it back again a maximum of only three times to prevent damage to the boot band.

4. Hold the rotated lever with a finger and temporarily secure the lock clip by squeezing it with a pair of pliers.

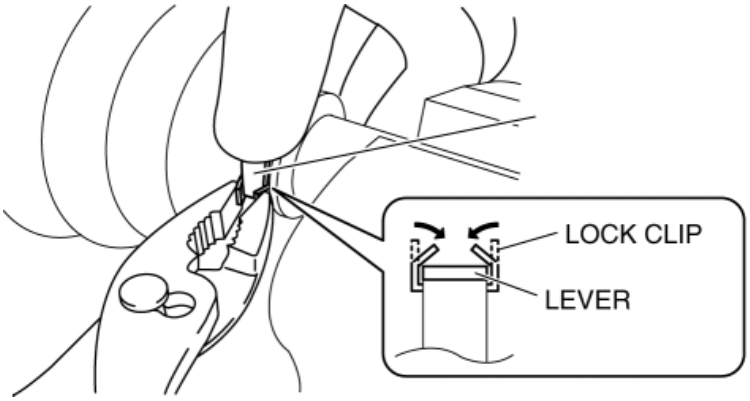

5. Lightly tap the lock clip with a hammer until the gap in the lock clip is **1 mm (0.04 in) or less**.

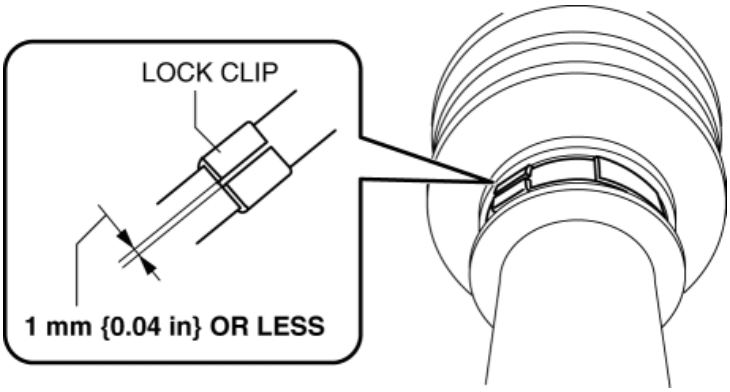

6. After assembling the boot band, perform the following verification.
    - The boot band does not protrude from the band assembly area.
    - The lever is not deformed.
    - The boot and boot band are not damaged.
    - The gap between the boot band and the boot band lever is **1 mm (0.04 in) or less**.

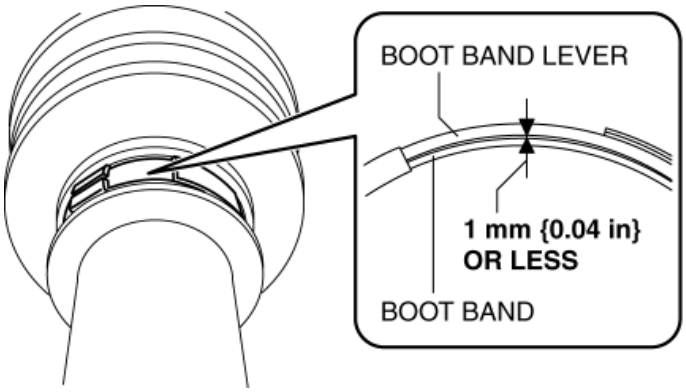

    - If there is any malfunction, replace with a new part.

Boot Band (Transaxle Side) Assembly Note [SKYACTIV-G 2.5]

1. Adjust opening C of the **SST** to the standard by rotating the adjustment bolt.

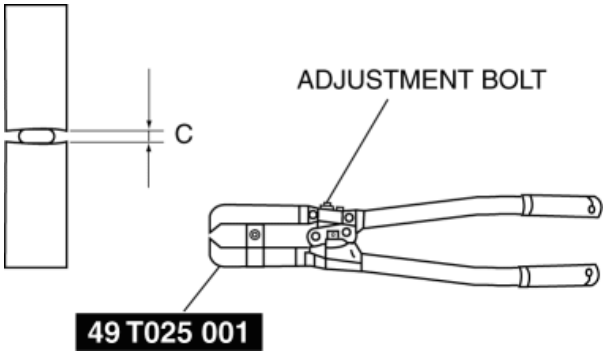

Standard C

- Large diameter side: Approx. 3.8 mm {0.15 in}
- Small diameter side: Approx. 3.1 mm {0.12 in}

2. Crimp the boot band using the **SST**.

Large diameter side

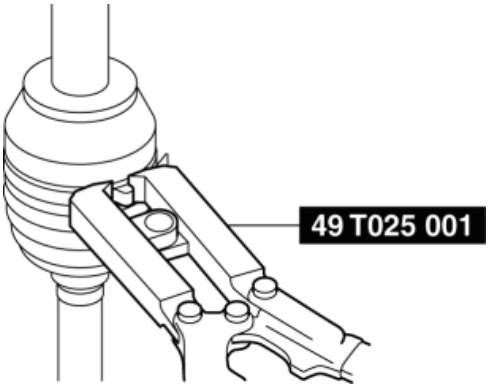

Small diameter side

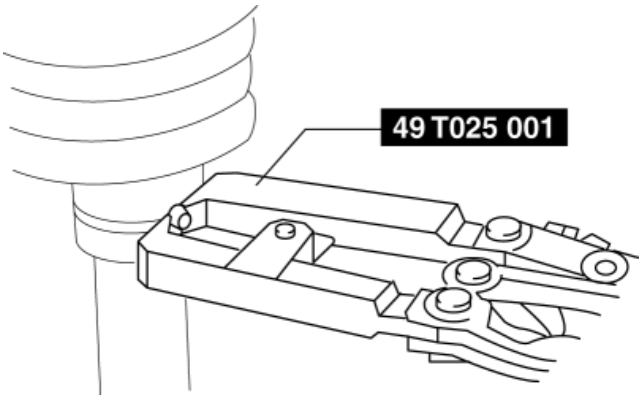

3. Verify that crimp D of the boot band is within the standard.

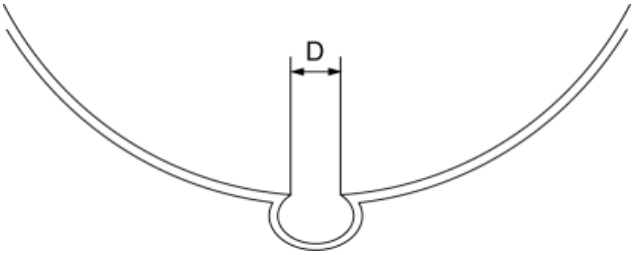

Standard D

- Large diameter side: 1.8 mm {0.071 in} or less
- Small diameter side: 1.5 mm {0.059 in} or less
- If crimp D exceeds the standard, decrease opening C of the **SST** and crimp the boot band again.

4. Verify that the boot band does not protrude from the band assembly area.
    - If the boot band protrudes from the assembly area, replace it with a new one and repeat Steps 1 to 3.

2014 - Mazda3 - DriveLine/Axle

FRONT DRIVE SHAFT (DOUBLE OFFSET JOINT) DISASSEMBLY/ASSEMBLY

1. Disassemble in the order shown in the figure.
2. Assemble in the reverse order of disassembly.

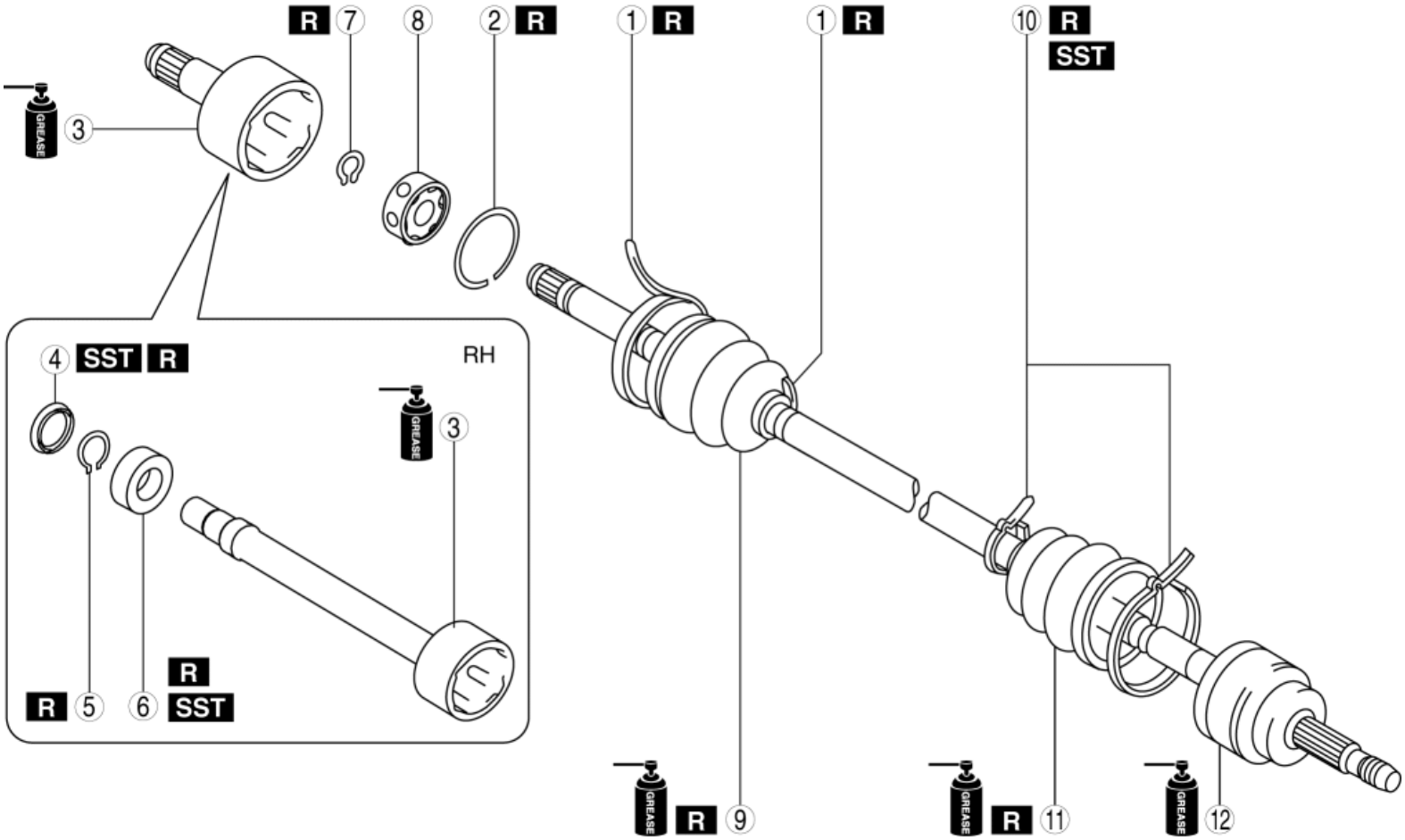

1	Boot band (transaxle side) (See **Boot Band (Transaxle Side) Disassembly Note**.) (See **Boot Band (Transaxle Side) Assembly Note**.)
2	Clip (See **Clip, Outer Ring Disassembly Note**.) (See **Outer Ring, Clip Assembly Note**.)
3	Outer ring (See **Clip, Outer Ring Disassembly Note**.) (See **Outer Ring, Clip Assembly Note**.)
4	Dust cover (See **Dust Cover Disassembly Note**.)

	(See **Dust Cover Assembly Note**.)
5	Snap ring
6	Bearing (See **Bearing Disassembly Note**.) (See **Bearing Assembly Note**.)
7	Snap ring (See **Snap ring, Ball, Inner Ring, Cage Disassembly Note**.) (See **Ball, Inner Ring, Cage, Snap Ring Assembly Note**.)
8	Ball, inner ring, cage (See **Snap ring, Ball, Inner Ring, Cage Disassembly Note**.) (See **Ball, Inner Ring, Cage, Snap Ring Assembly Note**.)
9	Boot (transaxle side) (See **Boot (Transaxle Side) Disassembly Note**.) (See **Boot (Transaxle Side) Assembly Note**.)
10	Boot band (wheel side) (See **Boot Band (Wheel Side) Disassembly Note**.) (See **Boot Band (Wheel Side) Assembly Note**.)
11	Boot (wheel side) (See **Boot (Wheel Side) Disassembly Note**.) (See **Boot (Wheel Side) Assembly Note**.)
12	Shaft and ball joint component

Boot Band (Transaxle Side) Disassembly Note

1. Using a screwdriver and hammer, lightly tap the lever of the boot band to disconnect the lock clip.

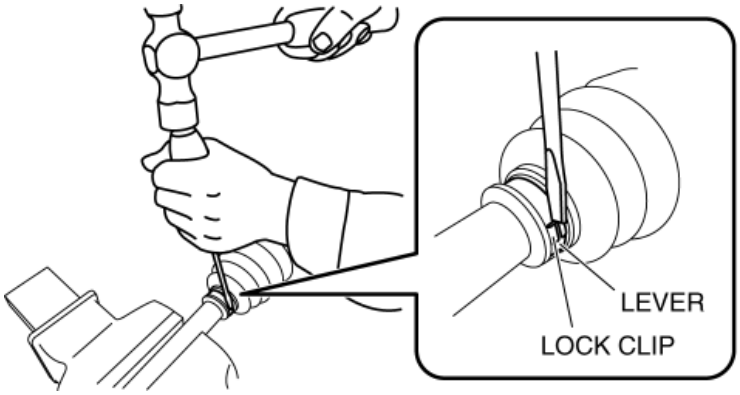

2. Remove the boot band using pliers.

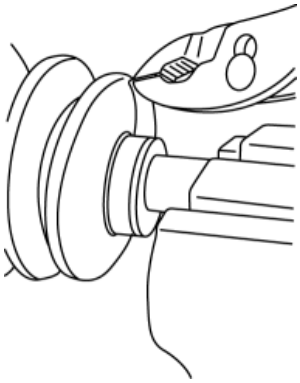

Clip, Outer Ring Disassembly Note

1. Place alignment marks on the shaft and outer ring.

CAUTION:

- To prevent part damage, do not use a punch or similar tool to place alignment marks. Use paint.

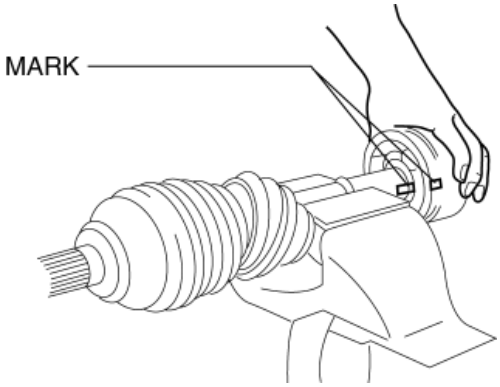

2. Remove the clip using a screwdriver.

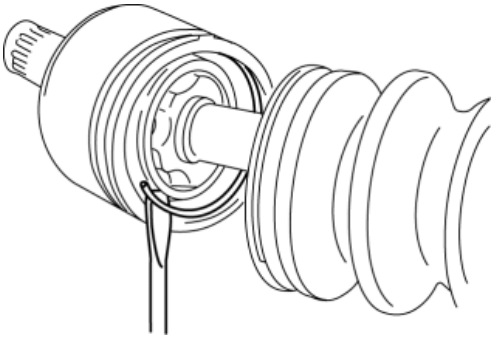

3. Remove the outer ring from the shaft.
4. Wipe off grease on the outer ring using a clean rag.

Dust Cover Disassembly Note

1. Remove the dust cover using a press and the **SST**.

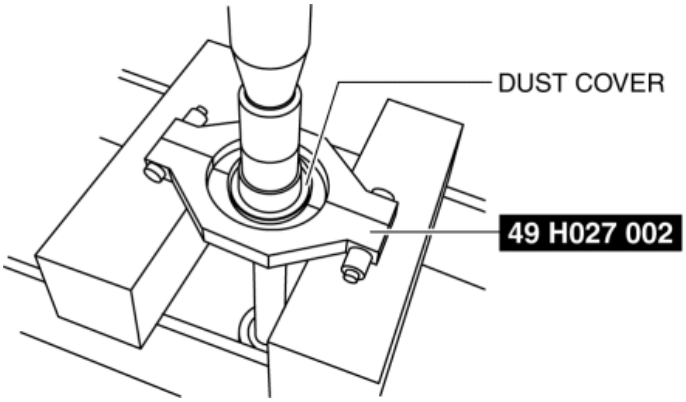

Bearing Disassembly Note

1. Remove the bearing using a press and the **SST**.

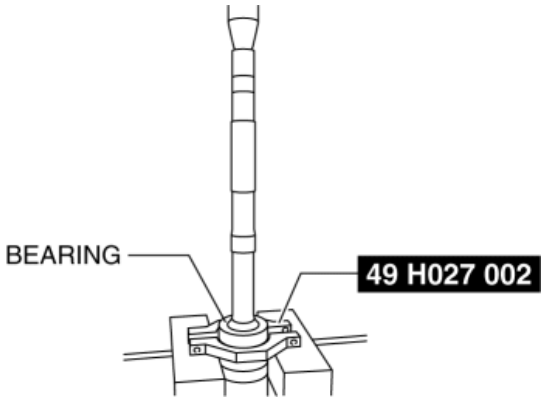

Snap ring, Ball, Inner Ring, Cage Disassembly Note

1. Place alignment marks on the shaft, inner ring, and cage.

CAUTION:

- To prevent part damage, do not use a punch or similar tool to place alignment marks. Use paint.

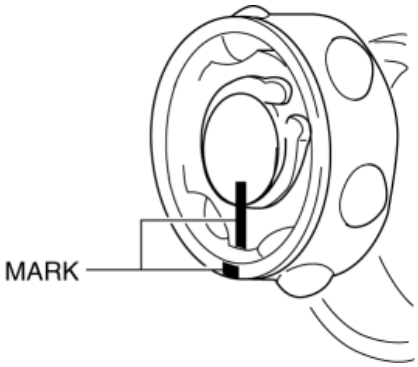

2. Remove the snap ring using snap ring pliers.

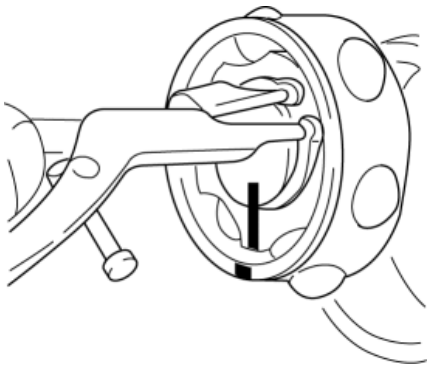

3. Remove the ball, inner ring, and cage from the shaft.

CAUTION:

- When using a hammer and urethane bar or equivalent, be careful not to damage the ball, ball sliding area, and cage.

NOTE:

- If the ball, inner ring, and cage cannot be removed from the shaft, lightly tap the inner ring evenly using a hammer and urethane bar or equivalent, and remove the ball, inner ring, and cage from the shaft.

4. Wipe off grease on the shaft, ball, inner ring, and cage using a clean rag.

Boot (Transaxle Side) Disassembly Note

1. Wrap vinyl tape around the spline area of the shaft to prevent damage to the boot.

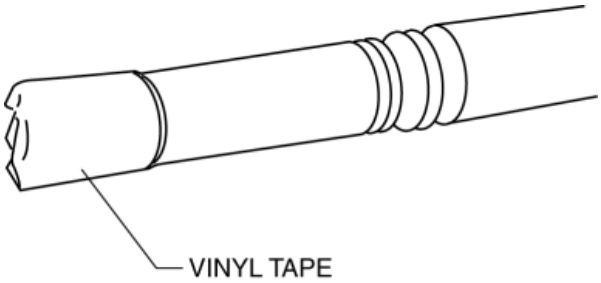

2. Remove the boot (transaxle side).
3. Wipe off grease on the boot (transaxle side) using a clean rag.

Boot Band (Wheel Side) Disassembly Note

1. Remove the boot band using end clamp pliers.

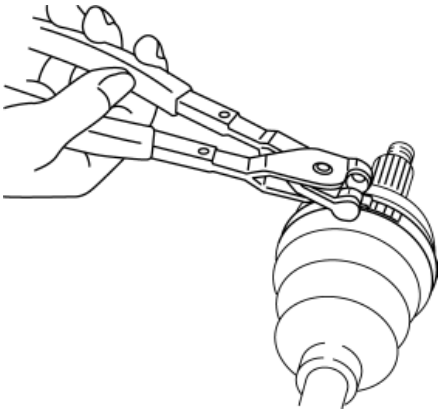

Boot (Wheel Side) Disassembly Note

1. Wrap vinyl tape around the spline area of the shaft to prevent damage to the boot.

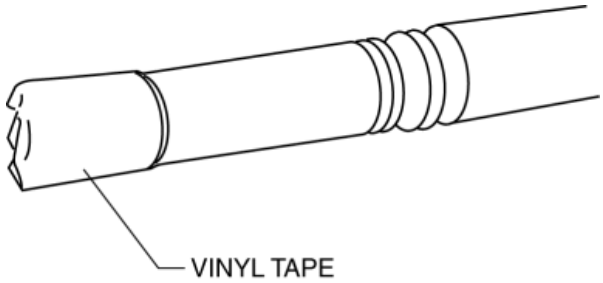

2. Remove the boot (wheel side).
3. Wipe off grease on the boot (wheel side) and ball joint using a clean rag.

Boot (Wheel Side) Assembly Note

NOTE:

- The boot shapes on the wheel side and the transaxle side are different. Do not assemble the wrong boot by mistake.

1. Insert the shaft through the boot (wheel side) with vinyl tape left wrapped around the spline area of the shaft.
2. Apply the specified grease to the ball joint and boot (wheel side).

NOTE:

- Apply the grease from the tube. Do not touch the grease directly with your hand.

  Grease amount

- 90—110 g {3.2—3.8 oz}

3. Assemble the boot (wheel side) to the ball joint.

Boot Band (Wheel Side) Assembly Note

1. Adjust opening A of the **SST** to the standard by rotating the adjustment bolt.

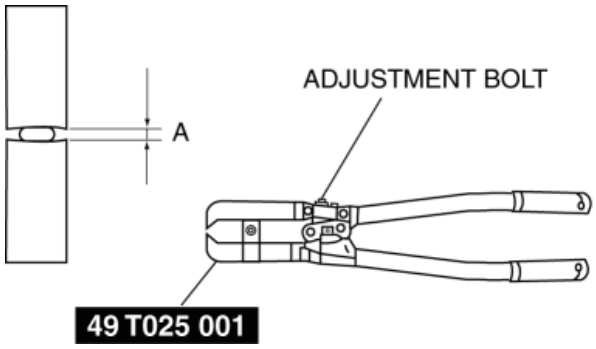

Standard A

- Approx. 4.6 mm {0.18 in}

2. Crimp the boot band using the **SST**.

Large diameter side

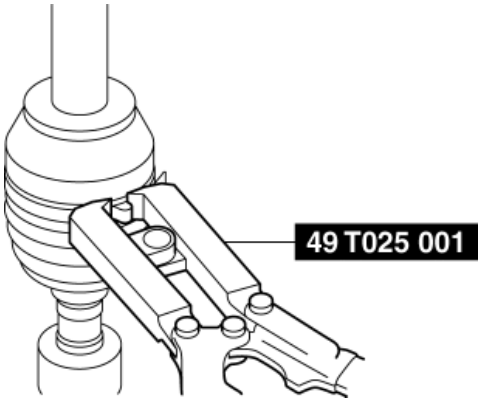

Small diameter side

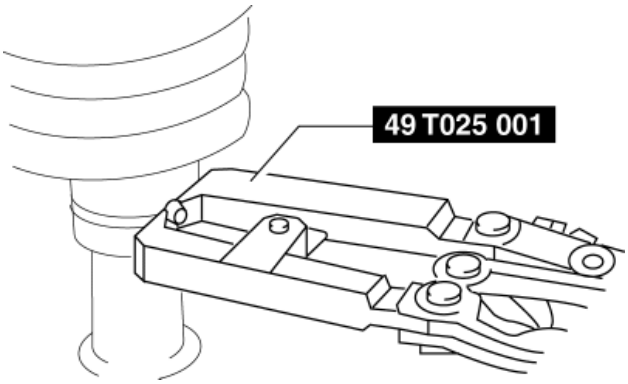

3. Verify that crimp B of the boot band is within the standard.

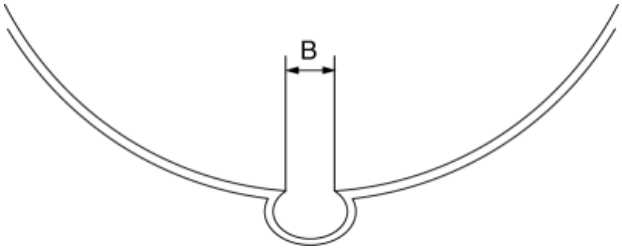

Standard B

- 1.2—4.0 mm {0.05—0.15 in}
- If crimp B exceeds the standard, decrease opening A of the **SST** and crimp the boot band again.
- If crimp B is less than the standard, replace the boot band, increase opening A of the **SST**, and crimp the new boot band.

4. Verify that the boot band does not protrude from the boot band assembly area.
   - If the boot band protrudes from the assembly area, replace it with a new one and repeat Steps 1 to 3.

Boot (Transaxle Side) Assembly Note

NOTE:

- The boot shapes on the wheel side and the transaxle side are different. Do not assemble the wrong boot by mistake.

1. Insert the shaft through the boot (transaxle side) with vinyl tape left wrapped around the spline area of the shaft.
2. Remove vinyl tape wrapped around the spline area of the shaft.

Ball, Inner Ring, Cage, Snap Ring Assembly Note

1. Assemble the shaft, inner ring, and cage with the alignment marks aligned.

CAUTION:

- When using the hammer and urethane bar or equivalent, be careful not to damage the ball, ball sliding area, and cage.

NOTE:

- If the ball, inner ring, and cage cannot be assembled to the shaft, lightly tap the inner ring evenly using a hammer and urethane bar or equivalent, and assemble the ball, inner ring, and cage to shaft.

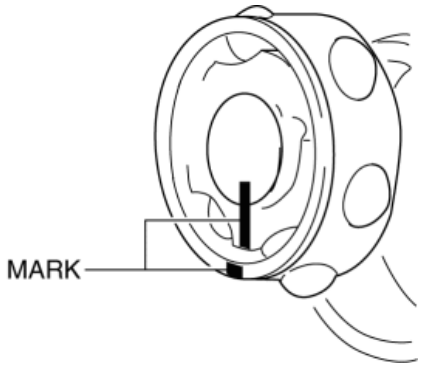

2. Assemble a new snap ring using snap ring pliers.

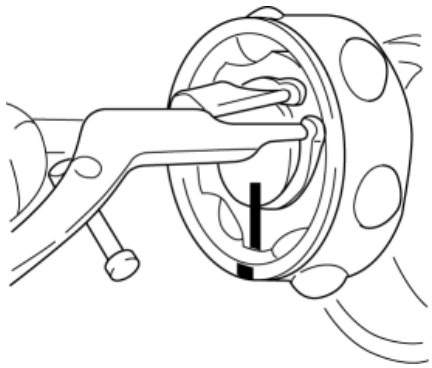

3. Verify that the snap ring is assembled correctly in the groove of the shaft.

Bearing Assembly Note

1. Assemble a new bearing using the **SST** and a press.

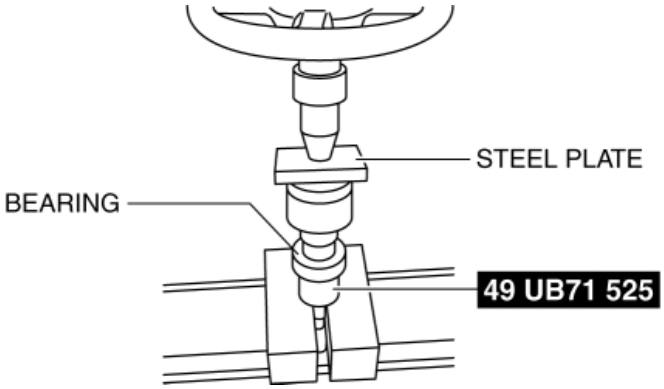

Dust Cover Assembly Note

1. Assemble a new dust cover using the **SST** and a press.

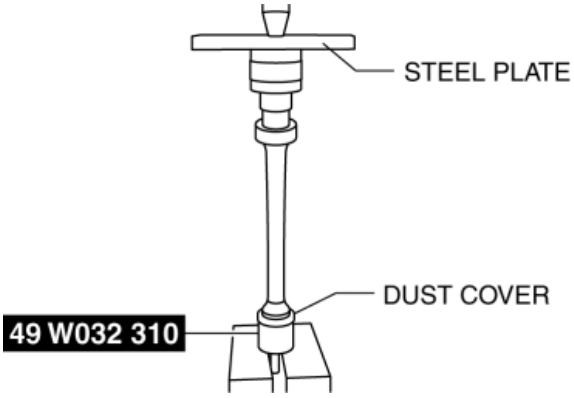

Outer Ring, Clip Assembly Note

1. Apply the specified grease to the outer ring and boot (transaxle side).

NOTE:

- Apply the grease from the tube. Do not touch the grease directly with your hand.

  Grease amount

- 80—100 g {2.9—3.5 oz}

2. Assemble the outer ring with the alignment marks on the shaft and outer ring aligned.

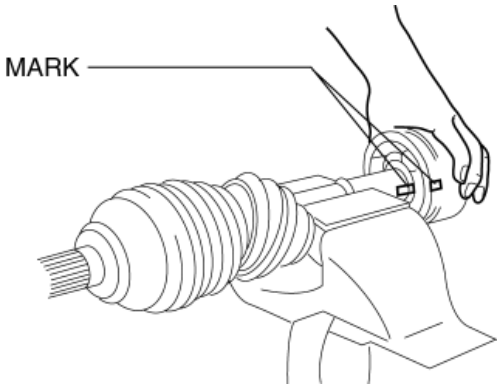

3. Assemble a new clip using a screwdriver.

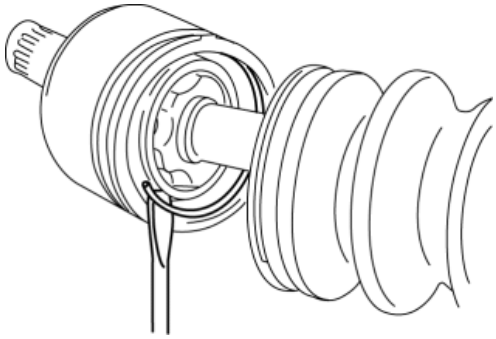

4. Verify that the clip is assembled correctly in the groove of the outer ring.

5. Assemble the boot (transaxle side) to the outer ring.

6. Set the drive shaft length to the standard.

   Drive shaft full length (standard)

- LH: 661.5—671.5 mm {26.05—26.43 in}
- RH: 1024.5—1034.5 mm {40.335—40.728 in}

7. Release any trapped air from the boot by carefully lifting up the small end of the boot with a screwdriver wrapped in a clean rag.

NOTE:

- Do not damage the boot. Verify that there is no grease leakage.
- If the boot is deformed, it may not be possible to perform the full-length adjustment of the shaft.

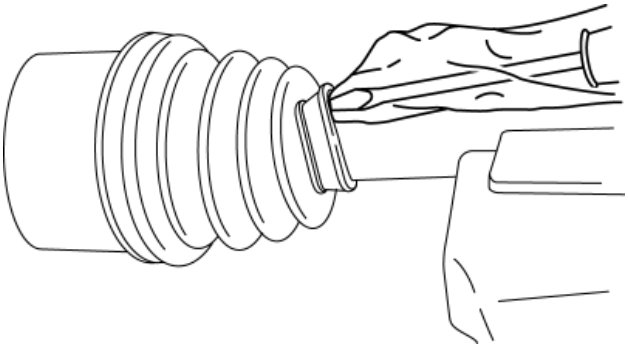

8. Verify that the drive shaft length is within the standard when the inside of the boot is at atmospheric pressure.
   - If not within the standard, repeat from Step 6.

Boot Band (Transaxle Side) Assembly Note

WARNING:

- Your hands could be injured while assembling the boot band. Therefore always wear gloves.

1. Apply rust prevention oil to the inside of the boot band.
2. Lock the boot band against rotation using an appropriate tool as shown in the figure.

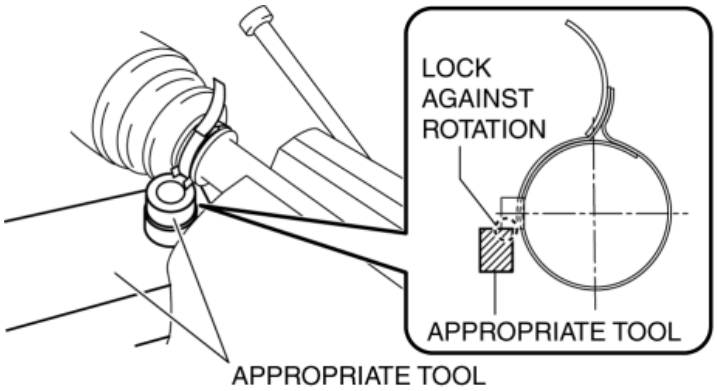

CAUTION:

- Do not put the boot band back to its original position after bending it using pliers because it will damage the boot band.

3. Using a pair of pliers, grip the lever at the base (fulcrum point) and rotate it in the direction of the arrow.

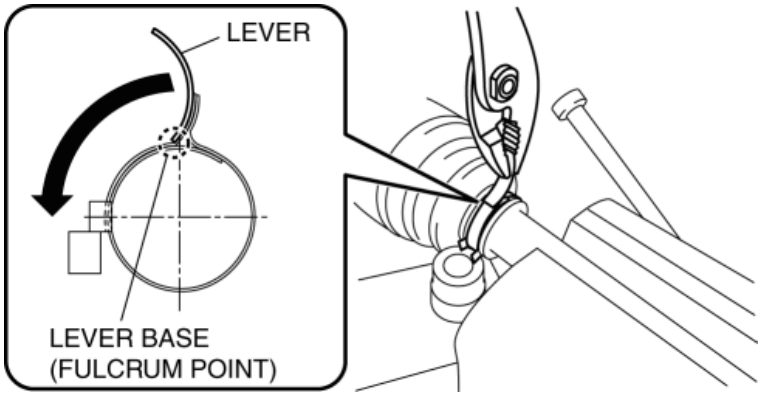

CAUTION:

- If the lever flips back by reactive force, press it back again a maximum of only three times to prevent damage to the boot band.

4. Hold the rotated lever with a finger and temporarily secure the lock clip by squeezing it with a pair of pliers.

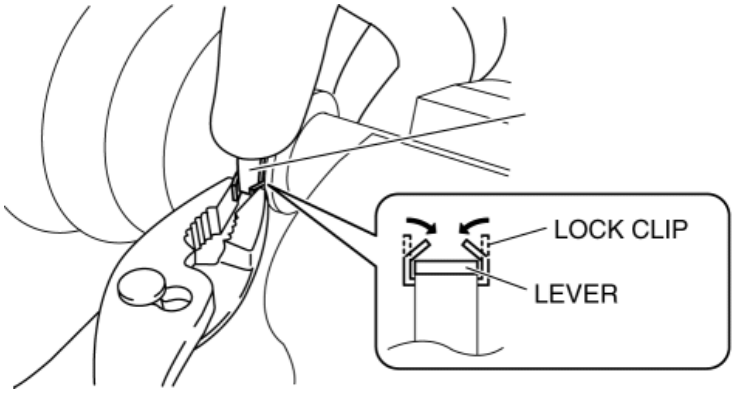

5. Lightly tap the lock clip with a hammer until the gap in the lock clip is **1 mm (0.04 in) or less**.

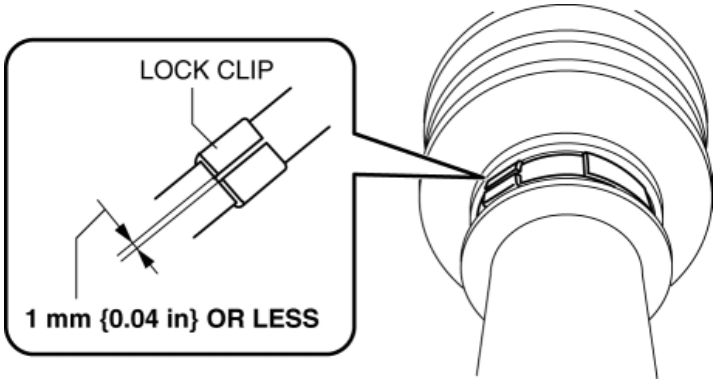

6. After assembling the boot band, perform the following verification.
   - The boot band does not protrude from the band assembly area.
   - The lever is not deformed.
   - The boot and boot band are not damaged.
   - The gap between the boot band and the boot band lever is **1 mm (0.04 in) or less**.

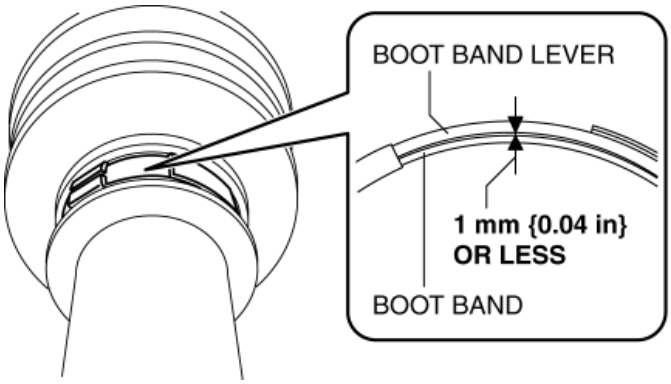

   - If there is any malfunction, replace with a new part.

2014 - Mazda3 - DriveLine/Axle

DRIVELINE/AXLE TECHNICAL DATA

Item			Specification
Front wheel bearing maximum play			0.05 mm {0.002 in}
Rear wheel bearing maximum play			0.05 mm {0.002 in}
Drive shaft full length (standard)	ATX (tripod joint)	LH	SKYACTIV-G 2.0: 660.5—670.5 mm {26.01—26.39 in} SKYACTIV-G 2.5: 659.6—669.6 mm {25.97—26.36 in}
		RH	SKYACTIV-G 2.0: 1024.9—1034.9 mm {40.351—40.744 in} SKYACTIV-G 2.5: 1021—1031 mm {40.20—40.59 in}
	MTX (double offset joint)	LH	661.5—671.5 mm {26.05—26.43 in}
		RH	1024.5—1034.5 mm {40.335—40.728 in}

< Previous

2014 - Mazda3 - DriveLine/Axle

DRIVELINE/AXLE SST

Front and Rear Axle

49 T028 3A0 Ball joint puller set	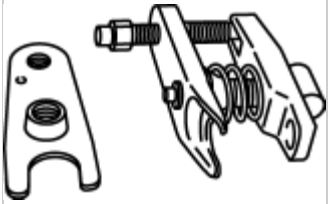	49 U034 204 Installer	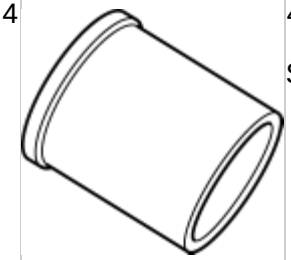	49 W032 310 Support block	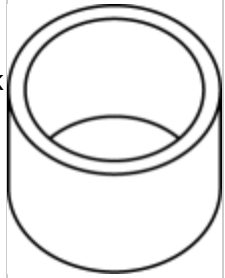

Drive Shaft

49 B025 010 Attachment A	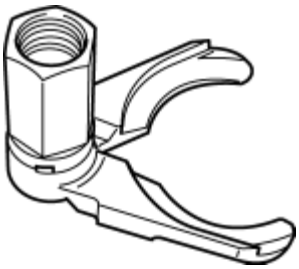	49 B025 017 Sliding hammer	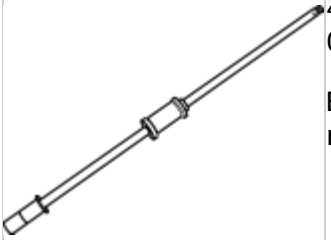	49 H027 002 Bearing remover	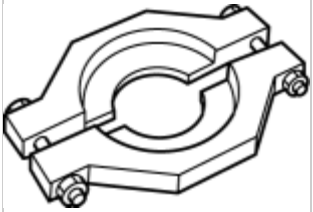
49 T025 001 Boot clamp crimpers	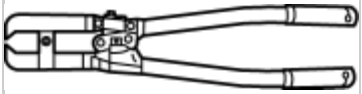	49 UB71 525 Bearing installer	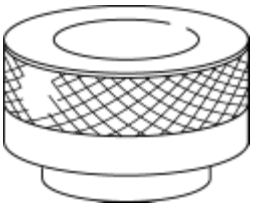	49 W032 310 Support block	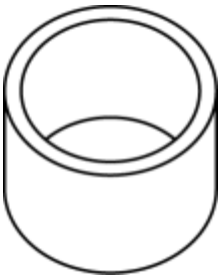

< Previous

Next >

2014 - Mazda3 - Brakes

DYNAMIC STABILITY CONTROL SYSTEM WIRING DIAGRAM [DYNAMIC STABILITY CONTROL (DSC)]

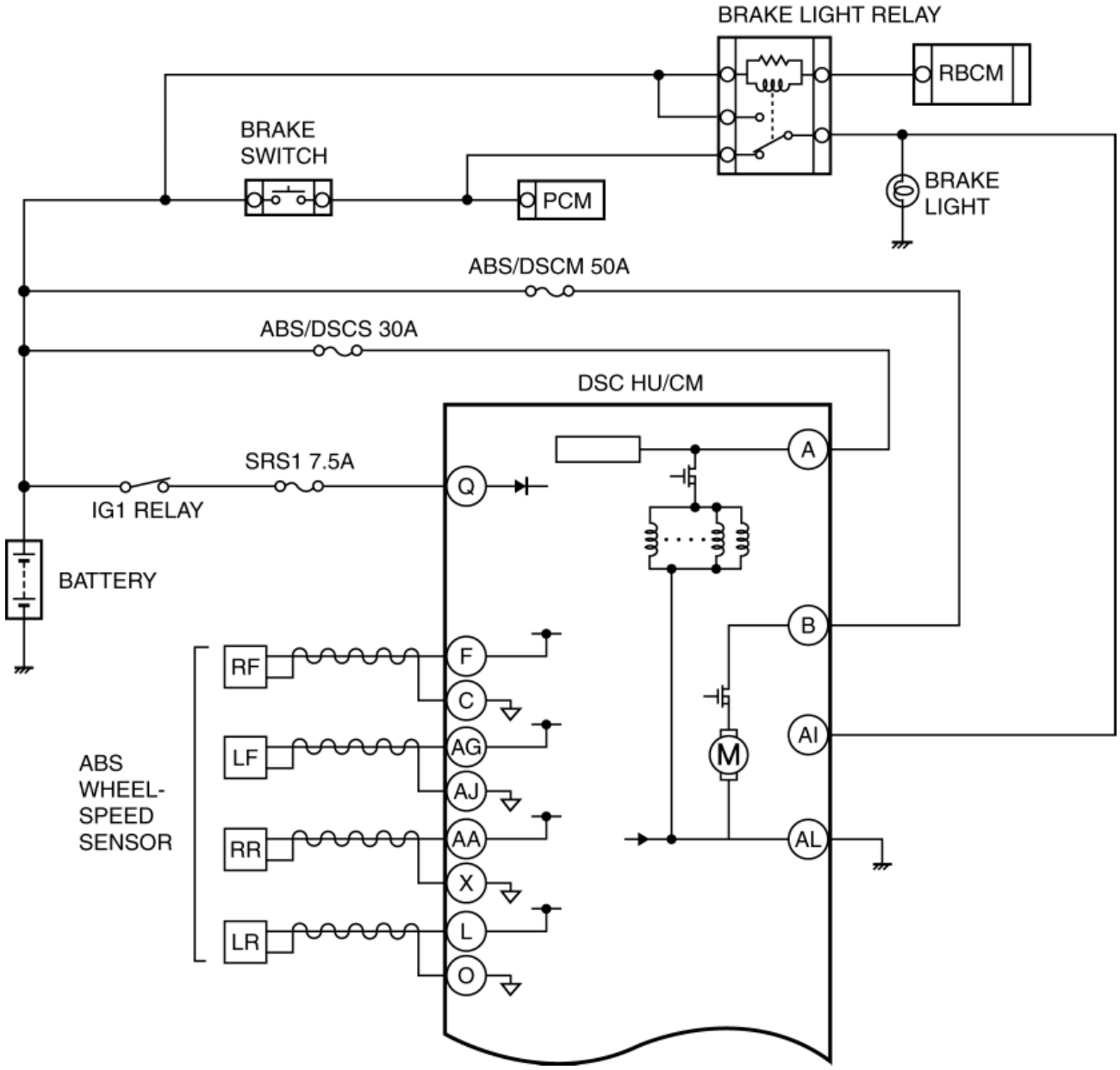

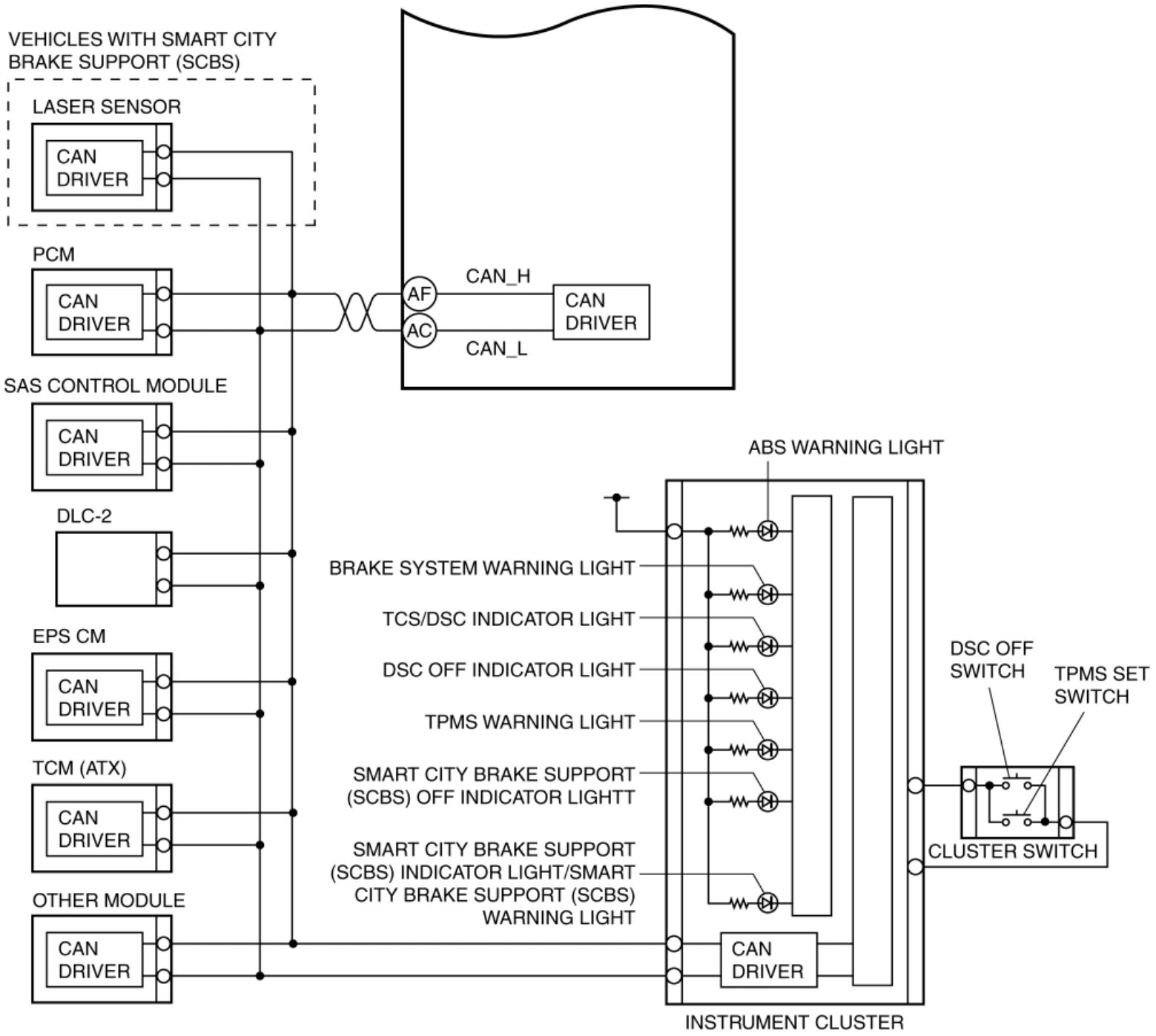
VEHICLES WITH SMART CITY BRAKE SUPPORT (SCBS)
LASER SENSOR
CAN DRIVER
PCM
CAN DRIVER
SAS CONTROL MODULE
CAN DRIVER
DLC-2
EPS CM
CAN DRIVER
TCM (ATX)
CAN DRIVER
OTHER MODULE
CAN DRIVER
AF
AC
CAN_H
CAN_L
CAN DRIVER
ABS WARNING LIGHT
BRAKE SYSTEM WARNING LIGHT
TCS/DSC INDICATOR LIGHT
DSC OFF INDICATOR LIGHT
TPMS WARNING LIGHT
SMART CITY BRAKE SUPPORT (SCBS) OFF INDICATOR LIGHTT
SMART CITY BRAKE SUPPORT (SCBS) INDICATOR LIGHT/SMART CITY BRAKE SUPPORT (SCBS) WARNING LIGHT
CAN DRIVER
INSTRUMENT CLUSTER
DSC OFF SWITCH
TPMS SET SWITCH
CLUSTER SWITCH

Next >

2014 - Mazda3 - Brakes

FOREWORD [DYNAMIC STABILITY CONTROL (DSC)]

- If there is any vehicle malfunction complaint lodged by a customer, perform malfunction diagnosis according to the troubleshooting procedure.

Troubleshooting Procedure

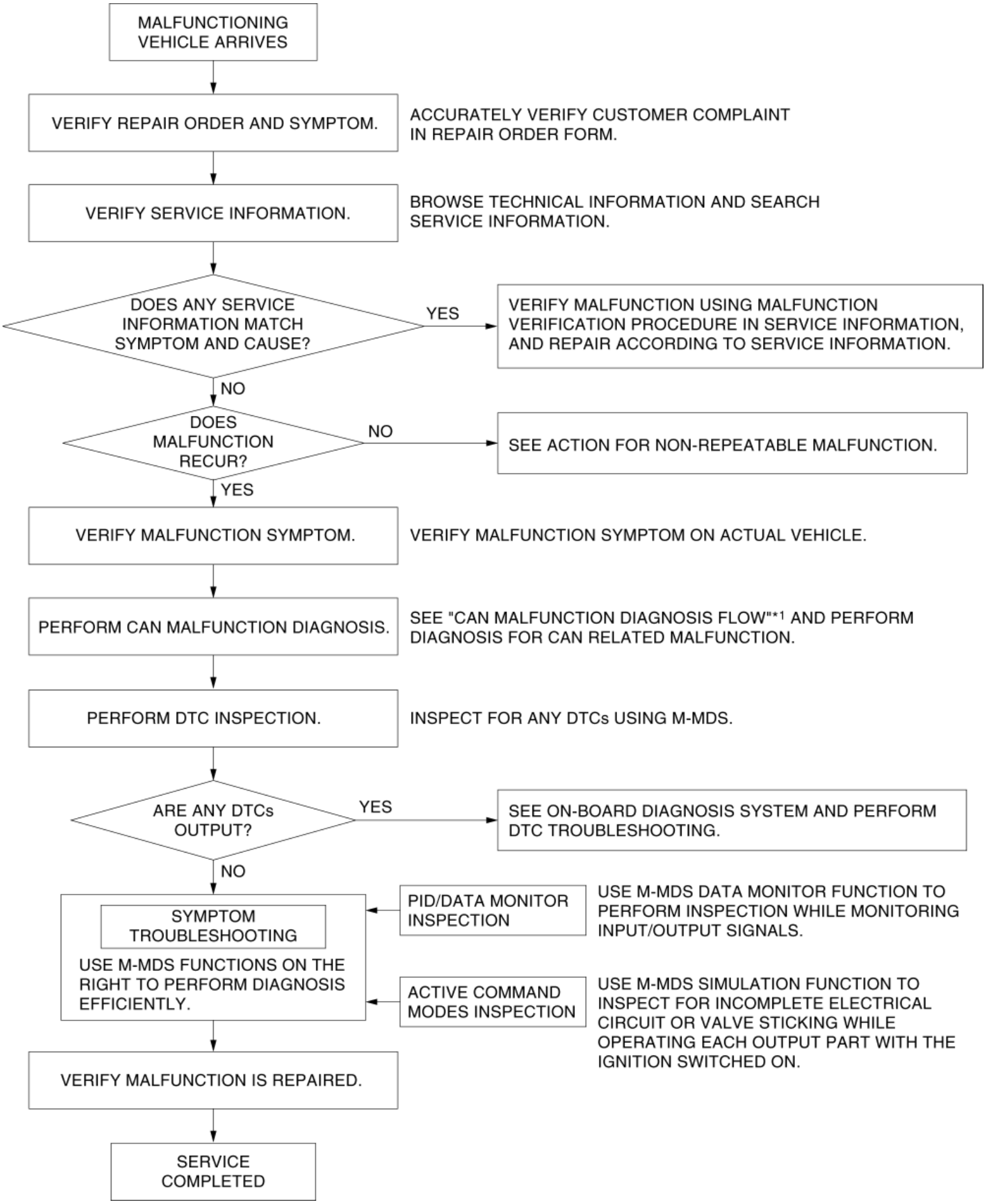
MALFUNCTIONING VEHICLE ARRIVES
VERIFY REPAIR ORDER AND SYMPTOM.
ACCURATELY VERIFY CUSTOMER COMPLAINT IN REPAIR ORDER FORM.
VERIFY SERVICE INFORMATION.
BROWSE TECHNICAL INFORMATION AND SEARCH SERVICE INFORMATION.
DOES ANY SERVICE INFORMATION MATCH SYMPTOM AND CAUSE?
YES
VERIFY MALFUNCTION USING MALFUNCTION VERIFICATION PROCEDURE IN SERVICE INFORMATION, AND REPAIR ACCORDING TO SERVICE INFORMATION.
NO
DOES MALFUNCTION RECUR?
NO
SEE ACTION FOR NON-REPEATABLE MALFUNCTION.
YES
VERIFY MALFUNCTION SYMPTOM.
VERIFY MALFUNCTION SYMPTOM ON ACTUAL VEHICLE.
PERFORM CAN MALFUNCTION DIAGNOSIS.
SEE "CAN MALFUNCTION DIAGNOSIS FLOW"*1 AND PERFORM DIAGNOSIS FOR CAN RELATED MALFUNCTION.
PERFORM DTC INSPECTION.
INSPECT FOR ANY DTCs USING M-MDS.
ARE ANY DTCs OUTPUT?
YES
SEE ON-BOARD DIAGNOSIS SYSTEM AND PERFORM DTC TROUBLESHOOTING.
NO
SYMPTOM TROUBLESHOOTING
USE M-MDS FUNCTIONS ON THE RIGHT TO PERFORM DIAGNOSIS EFFICIENTLY.
PID/DATA MONITOR INSPECTION
USE M-MDS DATA MONITOR FUNCTION TO PERFORM INSPECTION WHILE MONITORING INPUT/OUTPUT SIGNALS.
ACTIVE COMMAND MODES INSPECTION
USE M-MDS SIMULATION FUNCTION TO INSPECT FOR INCOMPLETE ELECTRICAL CIRCUIT OR VALVE STICKING WHILE OPERATING EACH OUTPUT PART WITH THE IGNITION SWITCHED ON.
VERIFY MALFUNCTION IS REPAIRED.
SERVICE COMPLETED

*1

(See CONTROLLER AREA NETWORK (CAN) MALFUNCTION DIAGNOSIS FLOW.)

Action for non-repeatable malfunction

- If the malfunction does not recur, verify the malfunction cause by performing the following actions:
  - Verify that a DTC has been recorded in the memory using the M-MDS. (See **ON-BOARD DIAGNOSIS [DYNAMIC STABILITY CONTROL (DSC)]**.)
  - Perform a simulation test in the simulation mode based on the repair order form, record the data at that time, and detect the malfunction cause.
  - Shake the wiring harness or connector of the electrical component which is suspected to be the cause of the malfunction, and inspect for the occurrence of any malfunction or DTCs.

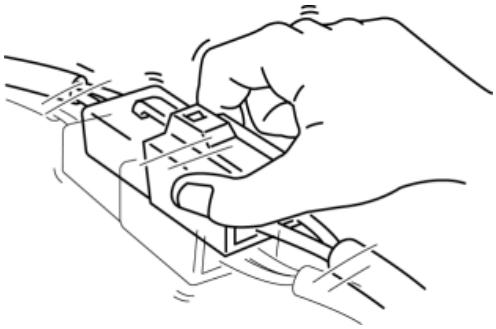

  - Inspect the female terminals for poor connection.

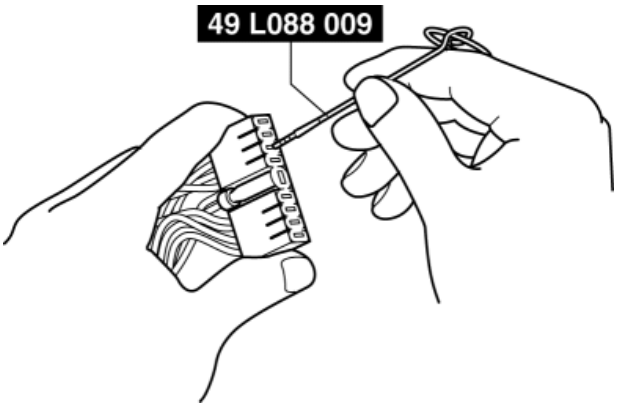

2014 - Mazda3 - Brakes

ON-BOARD DIAGNOSIS [DYNAMIC STABILITY CONTROL (DSC)]

On-Board Diagnostic (OBD) Test Description

- The OBD test inspects the integrity and function of the DSC and outputs the results when requested by the specific tests.
- On-board diagnostic test also:
  - Provides a quick inspection of the DSC usually performed at the start of each diagnostic procedure.
  - Provides verification after repairs to ensure that no other faults occurred during service.
- The OBD test is divided into 3 tests:
  - Read/clear diagnostic results, PID/DATA monitor and record, and active command modes.

Read/clear diagnostic results

- This function allows you to read or clear DTCs in the DSC HU/CM memory.

PID/Data monitor and record

- This function allows you to access certain data values, input signals, calculated values, and system status information.

Active command modes

- This function allows you to control devices through the M-MDS.

Reading DTCs Procedure

CMDTC self test

1. Connect the M-MDS (IDS) to the DLC-2.
2. After the vehicle is identified, select the following items from the initialization screen of the IDS.
   a. Select “Self Test”.
   b. Select “All CMDTCs”.
3. Verify the DTC according to the directions on the screen.
   - If any DTCs are displayed, perform troubleshooting according to the corresponding DTC inspection.
4. After completion of repairs, clear all DTCs stored in the DSC. (See **Clearing DTCs Procedure**.)

ODDTC self test

1. Connect the M-MDS (IDS) to the DLC-2.
2. After the vehicle is identified, select the following items from the initialization screen of the IDS.
   a. Select “Self Test”.
   b. Select “Modules”.
   c. Select “ABS”.
3. Verify the DTC according to the directions on the screen.
   - If any DTCs are displayed, perform troubleshooting according to the corresponding DTC inspection.
4. After completion of repairs, clear all DTCs stored in the DSC. (See **Clearing DTCs Procedure**.)

Clearing DTCs Procedure

CMDTC clearing DTCs procedure

1. Connect the M-MDS (IDS) to the DLC-2.
2. After the vehicle is identified, select the following items from the initialization screen of the IDS.
   a. Select “Self Test”.
   b. Select “All CMDTCs”.
3. Verify the DTC according to the directions on the screen.
4. Press the clear button on the DTC screen to clear the DTC.
5. Switch the ignition off.
6. Switch the ignition ON (engine off) and wait for **5 s or more**.
7. Perform DTC inspection. (See **Reading DTCs Procedure**.)
8. Verify that no DTCs are displayed.

ODDTC clearing DTCs procedure

1. Connect the M-MDS (IDS) to the DLC-2.
2. After the vehicle is identified, select the following items from the initialization screen of the IDS.
   a. Select “Self Test”.

b. Select “Modules”.

c. Select “ABS”.

3. Verify the DTC according to the directions on the screen.
4. Press the clear button on the DTC screen to clear the DTC.
5. Switch the ignition off.
6. Switch the ignition ON (engine off) and wait for **5 s or more**.
7. Perform DTC inspection. (See **Reading DTCs Procedure**.)
8. Verify that no DTCs are displayed.

PID/Data Monitor and Record Procedure

1. Connect the M-MDS (IDS) to the DLC-2.
2. After the vehicle is identified, select the following items from the initialization screen of the IDS.
   a. Select “DataLogger”.
   b. Select “Modules”.
   c. Select “ABS”.
3. Select the applicable PID from the PID table.
4. Verify the PID data according to the directions on the screen.

NOTE:

- The PID/DATA monitor screen function is used for monitoring the calculated value of input/output signals in the module. Therefore, if the monitored value of the output parts is not within the specification, it is necessary to inspect the monitored value of input parts corresponding to the applicable output part control. In addition, because the system does not display an output part malfunction as an abnormality in the monitored value, it is necessary to inspect the output parts individually.

Active Command Modes Procedure

1. Connect the M-MDS (IDS) to the DLC-2.
2. After the vehicle is identified, select the following items from the initialization screen of the IDS.
   a. Select “DataLogger”.
   b. Select “Modules”.
   c. Select “ABS”.
3. Select the simulation items from the PID table.
4. Perform the active command modes function, inspect the operations for each parts.
   - If the operation of output parts cannot be verified after the active command mode inspection is performed, this could indicate the possibility of an open or short circuit, sticking, or operation malfunction in the output parts.

Snapshot Data Access Procedure

1. Connect the M-MDS (IDS) to the DLC-2.
2. After the vehicle is identified, select the following items from the initialization screen of the IDS.
   a. Select “Self Test”.
   b. Select “Modules”.
   c. Select “ABS”.
3. Then, select the “Retrieve CMDTCs” and perform procedures according to directions on the IDS screen.
4. Retrieve the snapshot data according to the directions on the IDS screen.

NOTE:

- Snapshot data appears at the top of the help screen when the displayed DTC is selected.
- The snapshot data stores the currently detected DTC data.

DTC Table

×: Applicable

DTC No.	ABS warning light	Brake system warning light (when parking brake is released)	TCS/DSC indicator light	DSC OFF indicator light	Tire pressure monitoring system warning light *1	Smart city brake support (SCBS) indicator light (amber) *2	Malfunction location	Fail-safe	Drive cycle	Self test type *3	Memory function	Page
B10DF:46	Not illuminated	Not illuminated	Illuminated	Not illuminated	Not illuminated	Illuminated	DSC HU/CM (internal malfunction)	×	Not applicable	C, D	×	(See **DTC B10DF:46/C1A08:1C/U2007:46/U2007:62/U3000:49 [DYNAMIC STABILITY CONTROL (DSC)]**.)
B11D4:08	Not illuminated	Not illuminated	Not illuminated	Not illuminated	Not illuminated	Illuminated	Laser sensor	×	Not applicable	C, D	×	(See **DTC B11D4:08 [DYNAMIC STABILITY CONTROL (DSC)]**.)
C0001:01	Illuminated	Illuminated	Illuminated	Not illuminated	Not illuminated	Illuminated	DSC HU/CM internal malfunction (solenoid valve system)	×	Not applicable	C, D	×	(See **DTC C0001:01/C0002:01/C0003:01/C0004:01/C0010:01/C0011:01/C0014:01/C0015:01/C0018:01/C0019:01/C001C:01/C001D:01 [DYNAMIC STABILITY CONTROL (DSC)]**.)
C0002:01												
C0003:01												
C0004:01												
C0010:01												
C0011:01												

C0014:01												
C0015:01												
C0018:01												
C0019:01												
C001C:01												
C001D:01												
C0020:11	Illuminated	Not illuminated	Illuminated	Not illuminated	Not illuminated	Illuminated	Pump motor, motor relay	×	Not applicable	C, D	×	(See **DTC C0020:11/C0020:12/C0020:13/C0020:71 [DYNAMIC STABILITY CONTROL (DSC)]**.)
C0020:12												
C0020:13												
C0020:71												
C0023:62	Not illuminated	Not illuminated	Not illuminated	Not illuminated	Not illuminated	Illuminated	Brake switch	×	Not applicable	C, D	×	(See **DTC C0023:62/C0040:64 [DYNAMIC STABILITY CONTROL (DSC)]**.)
C0030:07	Illuminated	Not illuminated*4	Illuminated	Not illuminated	Flashes*5	Illuminated	LF ABS sensor rotor	×	Not applicable	C, D	×	(See **DTC C0030:07/C0031:07/C0031:29/C0031:2F/C0031:64/C0033:07/C0034:07/C0034:29/C0034:2F/C0034:64/C0036:07/C0037:07/C0037:29/C0037:2F/C0037:64/C0039:07/C003A:07/C003A:29/C003A:2F/C003A:64 [DYNAMIC STABILITY CONTROL (DSC)]**.)
C0031:07							LF ABS wheel-speed sensor/ABS sensor rotor					
C0031:11	Illuminated	Not illuminated*4	Illuminated	Not illuminated	Flashes*5	Illuminated	LF ABS wheel-speed sensor	×	Not applicable	C, D	×	(See **DTC C0031:11/C0031:15/C0034:11/C0034:15/C0037:11/C0037:15/C003A:11/C003A:15 [DYNAMIC STABILITY CONTROL (DSC)]**.)
C0031:15												
C0031:29	Illuminated	Not illuminated*4	Illuminated	Not illuminated	Flashes*5	Illuminated	LF ABS wheel-speed sensor/ABS sensor rotor	×	Not applicable	C, D	×	(See **DTC C0030:07/C0031:07/C0031:29/C0031:2F/C0031:64/C0033:07/C0034:07/C0034:29/C0034:2F/C0034:64/C0036:07/C0037:07/C0037:29/C0037:2F/C0037:64/C0039:07/C003A:07/C003A:29/C003A:2F/C003A:64 [DYNAMIC STABILITY CONTROL (DSC)]**.)
C0031:2F												
C0031:64												
C0033:07	Illuminated	Not illuminated*4	Illuminated	Not illuminated	Flashes*5	Illuminated	RF ABS sensor rotor	×	Not applicable	C, D	×	(See **DTC C0030:07/C0031:07/C0031:29/C0031:2F/C0031:64/C0033:07/C0034:07/C0034:29/C0034:2F/C0034:64/C0036:07/C0037:07/C0037:29/C0037:2F/C0037:64/C0039:07/C003A:07/C003A:29/C003A:2F/C003A:64 [DYNAMIC STABILITY CONTROL (DSC)]**.)
C0034:07							RF ABS wheel-speed sensor/ABS sensor rotor					
C0034:11	Illuminated	Not illuminated*4	Illuminated	Not illuminated	Flashes*5	Illuminated	RF ABS wheel-speed sensor	×	Not applicable	C, D	×	(See **DTC C0031:11/C0031:15/C0034:11/C0034:15/C0037:11/C0037:15/C003A:11/C003A:15 [DYNAMIC STABILITY CONTROL (DSC)]**.)
C0034:15												
C0034:29	Illuminated	Not illuminated*4	Illuminated	Not illuminated	Flashes*5	Illuminated	RF ABS wheel-speed sensor/ABS sensor rotor	×	Not applicable	C, D	×	(See **DTC C0030:07/C0031:07/C0031:29/C0031:2F/C0031:64/C0033:07/C0034:07/C0034:29/C0034:2F/C0034:64/C0036:07/C0037:07/C0037:29/C0037:2F/C0037:64/C0039:07/C003A:07/C003A:29/C003A:2F/C003A:64 [DYNAMIC STABILITY CONTROL (DSC)]**.)
C0034:2F												
C0034:64												
C0036:07	Illuminated	Not illuminated*4	Illuminated	Not illuminated	Flashes*5	Illuminated	LR ABS sensor rotor	×	Not applicable	C, D	×	(See **DTC C0030:07/C0031:07/C0031:29/C0031:2F/C0031:64/C0033:07/C0034:07/C0034:29/C0034:2F/C0034:64/C0036:07/C0037:07/C0037:29/C0037:2F/C0037:64/C0039:07/C003A:07/C003A:29/C003A:2F/C003A:64 [DYNAMIC STABILITY CONTROL (DSC)]**.)
C0037:07							LR ABS wheel-speed sensor/ABS sensor rotor					
C0037:11	Illuminated	Not illuminated*4	Illuminated	Not illuminated	Flashes*5	Illuminated	LR ABS wheel-speed sensor	×	Not applicable	C, D	×	(See **DTC C0031:11/C0031:15/C0034:11/C0034:15/C0037:11/C0037:15/C003A:11/C003A:15 [DYNAMIC STABILITY CONTROL (DSC)]**.)
C0037:15												
C0037:29	Illuminated	Not illuminated*4	Illuminated	Not illuminated	Flashes*5	Illuminated	LR ABS wheel-speed sensor/ABS sensor rotor	×	Not applicable	C, D	×	(See **DTC C0030:07/C0031:07/C0031:29/C0031:2F/C0031:64/C0033:07/C0034:07/C0034:29/C0034:2F/C0034:64/C0036:07/C0037:07/C0037:29/C0037:2F/C0037:64/C0039:07/C003A:07/C003A:29/C003A:2F/C003A:64 [DYNAMIC STABILITY CONTROL (DSC)]**.)
C0037:2F												
C0037:64												
C0039:07	Illuminated	Not illuminated*4	Illuminated	Not illuminated	Flashes*5	Illuminated	RR ABS sensor rotor	×	Not applicable	C, D	×	(See **DTC C0030:07/C0031:07/C0031:29/C0031:2F/C0031:64/C0033:07/C0034:07/C0034:29/C0034:2F/C0034:64/C0036:07/C0037:07/C0037:29/C0037:2F/C0037:64/C0039:07/C003A:07/C003A:29/C003A:2F/C003A:64 [DYNAMIC STABILITY CONTROL (DSC)]**.)
C003A:07							RR ABS wheel-speed sensor/ABS sensor rotor					
C003A:11	Illuminated	Not illuminated*4	Illuminated	Not illuminated	Flashes*5	Illuminated	RR ABS wheel-speed sensor	×	Not applicable	C, D	×	(See **DTC C0031:11/C0031:15/C0034:11/C0034:15/C0037:11/C0037:15/C003A:11/C003A:15 [DYNAMIC STABILITY CONTROL (DSC)]**.)
C003A:15												
C003A:29	Illuminated	Not illuminated*4	Illuminated	Not illuminated	Flashes*5	Illuminated	RR ABS wheel-speed sensor/ABS sensor rotor	×	Not applicable	C, D	×	(See **DTC C0030:07/C0031:07/C0031:29/C0031:2F/C0031:64/C0033:07/C0034:07/C0034:29/C0034:2F/C0034:64/C0036:07/C0037:07/C0037:29/C0037:2F/C0037:64/C0039:07/C003A:07/C003A:29/C003A:2F/C003A:64 [DYNAMIC STABILITY CONTROL (DSC)]**.)
C003A:2F												
C003A:64												
C0040:64	Not illuminated	Not illuminated	Illuminated	Not illuminated	Flashes*5	Illuminated	Brake switch	×	Not applicable	C, D	×	(See **DTC C0023:62/C0040:64 [DYNAMIC STABILITY CONTROL (DSC)]**.)
C0044:28												

C0044:47	Not illuminated	Not illuminated	Illuminated	Not illuminated	Flashes*5	Illuminated	Brake fluid pressure sensor	×	Not applicable	C, D	×	(See **DTC C0044:28/C0044:47/C0044:49/C0044:51/C0044:54/C0044:64/C0044:8F [DYNAMIC STABILITY CONTROL (DSC)]**.)
C0044:49												
C0044:51												
C0044:54	Not illuminated	Not illuminated	Illuminated	Not illuminated	Flashes*5*6	Illuminated						
C0044:64	Not illuminated	Not illuminated	Illuminated	Not illuminated	Flashes*5	Illuminated						
C0044:8F												
C0051:62	Not illuminated	Not illuminated	Illuminated	Not illuminated	Flashes*5	Illuminated	Steering angle sensor	×	Not applicable	C, D	×	(See **DTC C0051:62/C0051:64/C0051:67/C0051:85 [DYNAMIC STABILITY CONTROL (DSC)]**.)
C0051:64												
C0051:67	Not illuminated	Not illuminated	Illuminated	Not illuminated	Not illuminated	Illuminated	DSC HU/CM system					
C0051:85	Not illuminated	Not illuminated	Illuminated	Not illuminated	Flashes*5	Illuminated	Steering angle sensor					
C0061:28	Not illuminated	Not illuminated	Illuminated	Not illuminated	Flashes*5	Illuminated	SAS control module system	×	Not applicable	C, D	×	(See **DTC C0061:28/C0061:64/C0062:28/C0062:64/C0063:28/C0063:64 [DYNAMIC STABILITY CONTROL (DSC)]**.)
C0061:54	Not illuminated	Not illuminated	Illuminated	Not illuminated	Flashes*5*6	Illuminated	DSC HU/CM system (unperformed initialization procedure)	×	Not applicable	C, D	×	(See **DTC C0061:54/C0062:54/C0063:54 [DYNAMIC STABILITY CONTROL (DSC)]**.)
C0061:64	Not illuminated	Not illuminated	Illuminated	Not illuminated	Flashes*5	Illuminated	SAS control module system	×	Not applicable	C, D	×	(See **DTC C0061:28/C0061:64/C0062:28/C0062:64/C0063:28/C0063:64 [DYNAMIC STABILITY CONTROL (DSC)]**.)
C0062:28	Not illuminated	Not illuminated	Illuminated	Not illuminated	Not illuminated	Not illuminated						
C0062:54	Not illuminated	Not illuminated	Illuminated	Not illuminated	Not illuminated	Not illuminated	DSC HU/CM system (unperformed initialization procedure)	×	Not applicable	C, D	×	(See **DTC C0061:54/C0062:54/C0063:54 [DYNAMIC STABILITY CONTROL (DSC)]**.)
C0062:64	Not illuminated	Not illuminated	Illuminated	Not illuminated	Not illuminated	Not illuminated	SAS control module system	×	Not applicable	C, D	×	(See **DTC C0061:28/C0061:64/C0062:28/C0062:64/C0063:28/C0063:64 [DYNAMIC STABILITY CONTROL (DSC)]**.)
C0062:76	Not illuminated	Not illuminated	Illuminated	Not illuminated	Not illuminated	Not illuminated	SAS control module system	×	Not applicable	C, D	×	(See **DTC C0062:76 [DYNAMIC STABILITY CONTROL (DSC)]**.)
C0063:28	Not illuminated	Not illuminated	Illuminated	Not illuminated	Flashes*5	Illuminated	SAS control module system	×	Not applicable	C, D	×	(See **DTC C0061:28/C0061:64/C0062:28/C0062:64/C0063:28/C0063:64 [DYNAMIC STABILITY CONTROL (DSC)]**.)
C0063:54	Not illuminated	Not illuminated	Illuminated	Not illuminated	Flashes*5*6	Illuminated	DSC HU/CM system (unperformed initialization procedure)	×	Not applicable	C, D	×	(See **DTC C0061:54/C0062:54/C0063:54 [DYNAMIC STABILITY CONTROL (DSC)]**.)
C0063:64	Not illuminated	Not illuminated	Illuminated	Not illuminated	Flashes*5	Illuminated	SAS control module system	×	Not applicable	C, D	×	(See **DTC C0061:28/C0061:64/C0062:28/C0062:64/C0063:28/C0063:64 [DYNAMIC STABILITY CONTROL (DSC)]**.)
C006B:00	Not illuminated	Not illuminated	Illuminated	Not illuminated	Flashes*5	Illuminated	TCS/DSC control system	×	Not applicable	C, D	×	(See **DTC C006B:00/C0072:68 [DYNAMIC STABILITY CONTROL (DSC)]**.)
C0072:68			Not illuminated		Not illuminated	Not illuminated						
C1031:35	Not illuminated	Not illuminated	Not illuminated	Not illuminated	Flashes*5	Not illuminated	Tire pressure monitoring system (TPMS) set switch	×	Not applicable	C, D	×	(See **DTC C1031:35 [DYNAMIC STABILITY CONTROL (DSC)]**.)
C1031:41	Not illuminated	Not illuminated	Not illuminated	Not illuminated	Flashes*5	Not illuminated	Tire pressure monitoring system (TPMS) system	×	Not applicable	C, D	×	(See **DTC C1031:41 [DYNAMIC STABILITY CONTROL (DSC)]**.)
C1031:54												(See **DTC C1031:54 [DYNAMIC STABILITY CONTROL (DSC)]**.)
C1031:68												(See **DTC C1031:68 [DYNAMIC STABILITY CONTROL (DSC)]**.)
C1109:64	Not illuminated	Not illuminated	Not illuminated	Not illuminated	Not illuminated	Not illuminated	DSC OFF switch	-	Not applicable	C, D	×	(See **DTC C1109:64 [DYNAMIC STABILITY CONTROL (DSC)]**.)
C1A08:1C	Not illuminated	Not illuminated	Illuminated	Not illuminated	Flashes*5	Illuminated	DSC HU/CM (internal malfunction)	×	Not applicable	C, D	×	(See **DTC B10DF:46/C1A08:1C/U2007:46/U2007:62/U3000:49 [DYNAMIC STABILITY CONTROL (DSC)]**.)
P0942:46	Not illuminated	Not illuminated	Illuminated	Not illuminated	Flashes*5	Illuminated	DSC unit mismatched installation	×	Not applicable	C, D	×	(See **DTC P0942:46/P0942:49 [DYNAMIC STABILITY CONTROL (DSC)]**.)
P0942:49	Illuminated*7	Illuminated*7	Illuminated	Not illuminated	Flashes*5	Illuminated						
U0001:88	Illuminated	Not illuminated	Illuminated	Not illuminated	Flashes*5	Illuminated						
U0100:00	Illuminated*7	Not illuminated	Illuminated*7	Not illuminated	Flashes*5*6	Illuminated*7						
U0101:00	Not illuminated	Not illuminated	Illuminated	Not illuminated	Flashes*5	Illuminated						

U0131:00	Not illuminated	Not illuminated	Illuminated	Not illuminated	Flashes*5	Illuminated	CAN line	×	Not applicable	C, D	×	(See **DTC U0001:88/U0100:00/U0101:00/U0131:00/U0151:00/U0155:00/U0235:00 [DYNAMIC STABILITY CONTROL (DSC)]**.)
U0151:00	Not illuminated	Not illuminated	Illuminated	Not illuminated	Flashes*5*6	Illuminated*7						
U0155:00	Illuminated*7	Not illuminated	Illuminated*7	Not illuminated	Flashes*5*6	Illuminated*7						
U0235:00	Not illuminated	Not illuminated	Not illuminated	Not illuminated	Not illuminated	Illuminated						
U0301:09	Not illuminated	Not illuminated	Not illuminated	Not illuminated	Not illuminated	Not illuminated	Abnormal message from PCM	×	Not applicable	C, D	×	(See **DTC U0301:09/U0401:00 [DYNAMIC STABILITY CONTROL (DSC)]**.)
U0401:00	Not illuminated	Not illuminated	Illuminated*7	Not illuminated	Flashes*5*6	Illuminated*7						
U0402:00	Not illuminated	Not illuminated	Illuminated	Not illuminated	Flashes*5	Illuminated	Abnormal message from transmission/transaxle	×	Not applicable	C, D	×	(See **DTC U0402:00 [DYNAMIC STABILITY CONTROL (DSC)]**.)
U0420:00	Not illuminated	Not illuminated	Illuminated	Not illuminated	Flashes*5	Illuminated	Abnormal message from EPS CM	×	Not applicable	C, D	×	(See **DTC U0420:00 [DYNAMIC STABILITY CONTROL (DSC)]**.)
U0423:00	Not illuminated	Not illuminated	Not illuminated	Not illuminated	Flashes*5	Illuminated	Abnormal message from instrument cluster	×	Not applicable	C, D	×	(See **DTC U0423:00/U0443:00 [DYNAMIC STABILITY CONTROL (DSC)]**.)
U0433:00	Not illuminated	Not illuminated	Not illuminated	Not illuminated	Not illuminated	Illuminated	Abnormal message from laser sensor	×	Not applicable	C, D	×	(See **DTC U0433:00 [DYNAMIC STABILITY CONTROL (DSC)]**.)
U0443:00	Not illuminated	Not illuminated	Not illuminated	Not illuminated	Not illuminated	Illuminated	Abnormal message from instrument cluster	×	Not applicable	C, D	×	(See **DTC U0423:00/U0443:00 [DYNAMIC STABILITY CONTROL (DSC)]**.)
U0452:86	Not illuminated	Not illuminated	Illuminated	Not illuminated	Flashes*5*6	Illuminated*7	Abnormal message from SAS control module	×	Not applicable	C, D	×	(See **DTC U0452:86 [DYNAMIC STABILITY CONTROL (DSC)]**.)
U2007:46	Not illuminated	Not illuminated	Illuminated	Not illuminated	Not illuminated	Illuminated	DSC HU/CM (internal malfunction)	×	Not applicable	C, D	×	(See **DTC B10DF:46/C1A08:1C/U2007:46/U2007:62/U3000:49 [DYNAMIC STABILITY CONTROL (DSC)]**.)
U2007:62	Illuminated	Illuminated	Illuminated	Not illuminated	Not illuminated	Illuminated	DSC HU/CM (internal malfunction)	×	Not applicable	C, D	×	(See **DTC B10DF:46/C1A08:1C/U2007:46/U2007:62/U3000:49 [DYNAMIC STABILITY CONTROL (DSC)]**.)
U2101:00	Illuminated	Not illuminated	Illuminated	Not illuminated	Flashes*5	Illuminated	Configuration data not recorded	×	Not applicable	C, D	×	(See **DTC U2101:00/U2300:52/U2300:54/U2300:55/U2300:56/U2300:64 [DYNAMIC STABILITY CONTROL (DSC)]**.)
U2300:52												
U2300:54												
U2300:55												
U2300:56												
U2300:64												
U3000:49	Illuminated	Illuminated*7	Illuminated	Not illuminated	Flashes*5*6	Illuminated	DSC HU/CM (internal malfunction)	×	Not applicable	C, D	×	(See **DTC B10DF:46/C1A08:1C/U2007:46/U2007:62/U3000:49 [DYNAMIC STABILITY CONTROL (DSC)]**.)
U3003:08	Not illuminated	Not illuminated	Not illuminated	Not illuminated	Not illuminated	Not illuminated	Power supply system	-	Not applicable	C, D	×	(See **DTC U3003:08/U3003:16/U3003:17 [DYNAMIC STABILITY CONTROL (DSC)]**.)
U3003:16	Illuminated	Not illuminated*8	Illuminated	Not illuminated	Flashes*5	Illuminated		×				
		Illuminated*9*10										
U3003:17	Illuminated	Illuminated	Illuminated	Not illuminated	Flashes*5	Illuminated						

*1 **Vehicles with TPMS**

*2 **Vehicles with smart city brake support (SCBS)**

*3 **C: CMDTC self-test, D: ODDTC self-test**

*4 **Illuminates when two wheels or more have a malfunction.**

*5 **Tire pressure monitoring system warning light illuminates after flashes.**

*6 **Not illuminated/flashed depending on malfunction content.**

*7 **Not illuminated depending on malfunction content.**

*8 **When power supply voltage is 7.9—9.6 V for 700 ms or more.**

*9 **When power supply voltage is 6.0—7.9 V for 780 ms or more.**

*10 **When power supply voltage is less than 6 V for 50 ms or more.**

Fail-safe Function Malfunction Contents

DTC No.	Fail-safe function								
	Control status								
	ABS control	EBD control	TCS Control		DSC Control	Brake assist control	Hill launch assist (HLA)	Tire pressure monitoring system (TPMS)*1	Smart city brake support (SCBS)*2
			Brake control	Engine control					
B10DF:46	Control enabled	Control enabled	Control disabled		Control disabled	Control disabled	Control disabled	Control enabled	Control disabled
B11D4:08	Control enabled	Control enabled	Control enabled		Control enabled	Control enabled	Control enabled	Control enabled	Control disabled
C0001:01	Control disabled	Control disabled	Control disabled		Control disabled	Control disabled	Control disabled	Control enabled	Control disabled
C0002:01									
C0003:01									
C0004:01									
C0010:01									
C0011:01									
C0014:01									
C0015:01									
C0018:01									
C0019:01									
C001C:01									
C001D:01									
C0020:11	Control disabled	Control enabled	Control disabled		Control disabled	Control disabled	Control disabled	Control enabled	Control disabled
C0020:12									
C0020:13									
C0020:71									
C0023:62	Control enabled	Control enabled	Control enabled		Control enabled	Control enabled	Control enabled	Control enabled	Control disabled
C0030:07	Control disabled	Control enabled*3	Control disabled		Control disabled	Control disabled	Control disabled	Control disabled	Control disabled
C0031:07									
C0031:11									
C0031:15									
C0031:29									
C0031:2F									
C0031:64									
C0033:07	Control disabled	Control enabled*3	Control disabled		Control disabled	Control disabled	Control disabled	Control disabled	Control disabled
C0034:07									
C0034:11									
C0034:15									
C0034:29									
C0034:2F									
C0034:64									
C0036:07	Control disabled	Control enabled*3	Control disabled		Control disabled	Control disabled	Control disabled	Control disabled	Control disabled
C0037:07									
C0037:11									
C0037:15									
C0037:29									
C0037:2F									
C0037:64									

C0039:07	Control disabled	Control enabled*3	Control disabled	Control disabled	Control disabled	Control disabled	Control disabled	Control disabled
C003A:07								
C003A:11								
C003A:15								
C003A:29								
C003A:2F								
C003A:64								
C0040:64	Control enabled	Control enabled	Control enabled	Control enabled	Control disabled	Control disabled	Control disabled	Control disabled
C0044:28	Control enabled	Control enabled	Control disabled	Control disabled	Control disabled	Control disabled	Control disabled	Control disabled
C0044:47								
C0044:49								
C0044:51								
C0044:54								
C0044:64								
C0044:8F								
C0051:62	Control enabled	Control enabled	Control disabled	Control disabled	Control enabled	Control enabled	Control disabled	Control disabled
C0051:64								
C0051:67	Control enabled	Control enabled	Control disabled	Control disabled	Control enabled	Control enabled	Control enabled	Control disabled
C0051:85	Control enabled	Control enabled	Control disabled	Control disabled	Control enabled	Control enabled	Control disabled	Control disabled
C0061:28	Control enabled	Control enabled	Control disabled	Control disabled	Control enabled	Control enabled	Control disabled	Control disabled
C0061:54								
C0061:64								
C0062:28	Control enabled	Control enabled	Control enabled	Control enabled	Control enabled	Control disabled	Control enabled	Control enabled
C0062:54								
C0062:64								
C0062:76								
C0063:28	Control enabled	Control enabled	Control disabled	Control disabled	Control enabled	Control enabled	Control disabled	Control disabled
C0063:54								
C0063:64								
C006B:00	Control enabled	Control enabled	Control disabled	Control disabled	Control enabled	Control enabled	Control disabled	Control disabled
C0072:68	Control enabled	Control enabled	Control disabled / Control enabled	Control enabled	Control enabled	Control enabled	Control enabled	Control enabled
C1031:35	Control enabled						Control disabled	Control enabled
C1031:41								
C1031:54								
C1031:68								
C1109:64	Control enabled							
C1A08:1C	Control enabled	Control enabled	Control disabled	Control disabled	Control disabled	Control disabled	Control disabled	Control disabled
P0942:46	Control enabled	Control enabled	Control disabled	Control disabled	Control disabled	Control disabled	Control disabled	Control disabled
P0942:49	Control disabled*4	Control disabled*4	Control disabled	Control disabled	Control disabled	Control disabled	Control disabled	Control disabled
U0001:88	Control disabled	Control enabled	Control disabled	Control disabled	Control disabled	Control disabled	Control disabled	Control disabled
U0100:00	Control disabled*4	Control enabled	Control disabled*4	Control disabled*4	Control disabled*4	Control disabled*4	Control disabled*4	Control disabled*4
U0101:00	Control enabled	Control enabled	Control disabled	Control disabled	Control enabled	Control disabled*4	Control disabled	Control disabled
U0131:00	Control enabled	Control enabled	Control disabled	Control disabled	Control enabled	Control enabled	Control disabled	Control disabled
U0151:00	Control enabled	Control enabled	Control disabled*4	Control disabled*4	Control disabled*4	Control disabled*4	Control disabled*4	Control disabled*4

U0155:00	Control disabled*4	Control enabled	Control disabled*4	Control disabled*4	Control disabled*4	Control disabled*4	Control disabled*4	Control disabled*4
U0235:00	Control enabled	Control enabled	Control enabled	Control enabled	Control enabled	Control enabled	Control enabled	Control disabled
U0301:09	Control enabled							
U0401:00	Control enabled	Control enabled	Control disabled*4	Control disabled*4	Control enabled	Control disabled*4	Control disabled*4	Control disabled*4
U0402:00	Control enabled	Control enabled	Control disabled	Control disabled	Control enabled	Control disabled	Control disabled	Control disabled
U0420:00	Control enabled	Control enabled	Control disabled	Control disabled	Control enabled	Control enabled	Control disabled	Control disabled
U0423:00	Control enabled	Control enabled	Control enabled	Control enabled	Control enabled	Control enabled	Control disabled	Control disabled
U0433:00	Control enabled	Control enabled	Control enabled	Control enabled	Control enabled	Control enabled	Control enabled	Control disabled
U0443:00	Control enabled	Control enabled	Control enabled	Control enabled	Control enabled	Control enabled	Control enabled	Control disabled
U0452:86	Control enabled	Control enabled	Control disabled*4	Control disabled*4	Control enabled	Control disabled*4	Control disabled*4	Control disabled*4
U2007:46	Control enabled	Control enabled	Control disabled	Control disabled	Control disabled*4	Control disabled	Control enabled	Control disabled
U2007:62	Control disabled	Control disabled	Control disabled	Control disabled	Control disabled	Control disabled	Control enabled	Control disabled
U2101:00 U2300:52 U2300:54 U2300:55 U2300:56 U2300:64	Control disabled	Control enabled	Control disabled	Control disabled	Control disabled	Control disabled	Control disabled	Control disabled
U3000:49	Control disabled	Control disabled*4	Control disabled	Control disabled	Control disabled	Control disabled	Control disabled*4	Control disabled
U3003:08	Control enabled							
U3003:16	Control disabled	Control enabled*5 Control disabled*6*7	Control disabled	Control disabled	Control disabled	Control disabled	Control disabled	Control disabled
U3003:17	Control disabled	Control disabled	Control disabled	Control disabled	Control disabled	Control disabled	Control disabled	Control disabled

*1 **Vehicles with TPMS**

*2 **Vehicles with smart city brake support (SCBS)**

*3 **Control disabled when two wheels or more have a malfunction.**

*4 **Enabled depending on malfunction content.**

*5 **When power supply voltage is 7.9—9.6 V for 700 ms or more.**

*6 **When power supply voltage is 6.0—7.9 V for 780 ms or more.**

*7 **When power supply voltage is less than 6 V for 50 ms or more.**

PID/DATA Monitor Table

PID name (definition)	Unit/Condition	Operation condition (reference)	Action
BRAKE_SW	Off/On	• Brake pedal released: Off • Brake pedal depressed: On	Inspect the brake switch. (See **BRAKE SWITCH INSPECTION**.)
BRK_F_P_C (Calculated Value) BRK_F_P_R (Raw Value)	Pa, psi	• Brake pedal depressed: Changes according to the brake fluid pressure	Inspect the brake fluid pressure sensor. (See **BRAKE FLUID PRESSURE SENSOR INSPECTION**.)
DDS_MODE	Not_Learned/Learning/Learned	• During initialization: Not_Learned • During learning: Learning • Learning completed*: Learned	Perform the DTC inspection for the DSC HU/CM. (See **ON-BOARD DIAGNOSIS [DYNAMIC STABILITY CONTROL (DSC)]**.)
DSC_OFF_SW	Off/On	• DSC OFF switch is released: Off • DSC OFF switch is depressed: On	Inspect the DSC OFF switch. (See **DSC OFF SWITCH INSPECTION**.)
DSC_ST	Off/On	• During DSC OFF mode: Off	Perform the DTC inspection for the DSC HU/CM.

		• Other than DSC OFF mode: On	(See **ON-BOARD DIAGNOSIS [DYNAMIC STABILITY CONTROL (DSC)]**.)
LAT_ACCL_C (Calculated Value) LAT_ACCL_R (Raw Value)	G	• Vehicle stopped or driving at constant speed: **0 G** • Cornering to left: Changes **0 G—positive** • Cornering to right: Changes **0 G—negative**	Perform the DTC inspection for the SAS control module. (See **DTC INSPECTION [STANDARD DEPLOYMENT CONTROL SYSTEM]**.) (See **DTC INSPECTION [TWO-STEP DEPLOYMENT CONTROL SYSTEM]**.)
LON_ACCL_C (Calculated Value) LON_ACCL_R (Raw Value)	G	• Vehicle stopped or driving at constant speed: **0 G** • Vehicle is driving at an acceleration: Changes **0 G—positive** • Vehicle is driving at a deceleration: Changes **0 G—negative**	Perform the DTC inspection for the SAS control module. (See **DTC INSPECTION [TWO-STEP DEPLOYMENT CONTROL SYSTEM]**.)
P_BRAKE_SW	Off/On	• Parking brake lever released: Off • Parking brake lever pulled: On	Inspect the parking brake switch. (See **PARKING BRAKE SWITCH INSPECTION**.)
PMP_MT PMP_MT_SP	Off/On	• Pump motor not activated: Off • Pump motor activated: On	Inspect the DSC HU/CM. (See **DSC HU/CM INSPECTION**.)
R_GEAR_SW	Off/On	• Except shift/selector lever at R position: Off • Shift/selector lever at R position: On	• Inspect the PCM. (MTX) (See **PCM INSPECTION [SKYACTIV-G 2.0, SKYACTIV-G 2.5]**.) • Inspect the TCM. (ATX) (See **ON-BOARD DIAGNOSTIC SYSTEM DTC INSPECTION [FW6A-EL]**.)
STR_ANG_C (Calculated Value)	°	• Steering wheel in neutral position (not turned): **0°** • Steering wheel turned to left: Changes **0°—positive** • Steering wheel turned to right: Changes **0°—negative** **NOTE:** • Constantly indicates **0°** until the steering wheel angle neutral position determination by the DSC HU/CM is completed. • The steering wheel angle neutral position determination by the DSC HU/CM is completed when the vehicle is driven in a straight line at a speed of **20 km/h or more** for several seconds.	Perform the DTC inspection for the PCM, DSC HU/CM, and EPS CM. If a DTC is displayed after performing the DTC inspection for the PCM, DSC HU/CM, and EPS CM, repair the malfunctioning part according to the applicable DTC troubleshooting. (See **ON-BOARD DIAGNOSTIC TEST [SKYACTIV-G 2.0, SKYACTIV-G 2.5]**.) (See **ON-BOARD DIAGNOSIS [DYNAMIC STABILITY CONTROL (DSC)]**.) (See **EPS CONTROL MODULE INSPECTION**.) After performing the DTC inspection, perform the following procedures: • Start the engine and drive the vehicle in a straight line at a speed of **20 km/h or more** for several seconds. If an abnormal value is indicated after verifying the value of the STR_ANG_C again, replace the DSC HU/CM.
STR_ANG_R (Raw Value)		• Steering wheel position when ignition is switched ON (engine off or on): **0°** • Steering wheel turned to left: Changes **0°—positive** • Steering wheel turned to right: Changes **0°—negative** **NOTE:** • The signal displayed in this item is a steering angle (relative angle) signal output from the EPS CM.	Inspect the following PID. • STR_ANG (See **EPS CONTROL MODULE INSPECTION**.)
TPMS_TYPE	No_DDS/DDS+TOM_EU/DDS+TOM_US	• TPMS not equipped: No_DDS • TPMS equipped (Corresponding to European regulations): DDS+TOM_EU • TPMS equipped (Corresponding to U.S. regulations): DDS+TOM_US	Perform the DTC inspection for the DSC HU/CM. (See **ON-BOARD DIAGNOSIS [DYNAMIC STABILITY CONTROL (DSC)]**.)
V_INLET_LF V_INLET_LR V_INLET_RF V_INLET_RR V_OUTLET_LF V_OUTLET_LR V_OUTLET_RF V_OUTLET_RR	Off/On	• Solenoid valve not activated: Off • Solenoid valve activated: On	Inspect the DSC HU/CM. (See **DSC HU/CM INSPECTION**.)
V_STB_LF/RR V_STB_RF/LR	Off/On	• Solenoid valve activated: On • Solenoid valve not activated: Off	Inspect the DSC HU/CM. (See **DSC HU/CM INSPECTION**.)
V_TRC_LF/RR V_TRC_RF/LR	Off/On	• Solenoid valve activated: On • Solenoid valve not activated: Off	Inspect the DSC HU/CM. (See **DSC HU/CM INSPECTION**.)
VPWR_B_SOL	V	• Ignition switched ON (engine off): **Approx. 12.2 V** • Idling: **Approx. 14.1 V**	Inspect power supply circuit. (See **DSC HU/CM INSPECTION**.)
VSPD	KPH, MPH	• Vehicle stopped: **0 KPH, 0 MPH** • Vehicle running: Vehicle speed	Inspect the DSC HU/CM. (See **DSC HU/CM INSPECTION**.)
WSPD_SEN_LF			Inspect the front ABS wheel-speed sensor. (See **FRONT ABS WHEEL-SPEED SENSOR INSPECTION**.)
WSPD_SEN_LR			Inspect the rear ABS wheel-speed sensor.

	KPH, MPH	• Vehicle stopped: **0 KPH, 0 MPH** • Vehicle running: Vehicle speed	(See **REAR ABS WHEEL-SPEED SENSOR INSPECTION**.)
WSPD_SEN_RF			Inspect the front ABS wheel-speed sensor. (See **FRONT ABS WHEEL-SPEED SENSOR INSPECTION**.)
WSPD_SEN_RR			Inspect the rear ABS wheel-speed sensor. (See **REAR ABS WHEEL-SPEED SENSOR INSPECTION**.)
YAW_RATE_C (Calculated Value)	°/s	• Vehicle stopped or driving straight: **0 °/s** • Cornering to left: Changes **0 °/s—positive** • Cornering to right: Changes **0 °/s—negative**	Perform the DTC inspection for the SAS control module. (See **DTC INSPECTION [TWO-STEP DEPLOYMENT CONTROL SYSTEM]**.)
YAW_RATE_R (Raw Value)			

*
After ignition is switched off, switch it ON (engine off or on) and verify.

Snapshot Data Table

NOTE:

- The DSC HU/CM stores the following two types of information when a DTC is detected and displays snap shot data in the M-MDS.
  - Vehicle information detected by DSC HU/CM
  - Vehicle information detected by instrument cluster and received by start stop unit via CAN signal
- Refer to PID/DATA monitor table for confirm the DSC system operation status while the DSC CM does not store the DTC. (See **PID/DATA Monitor Table**.)
- Snapshot data items are not displayed according to detected DTC.

Snapshot data item	Unit	Data contents	Data read/use method	Corresponding data monitor items
AAT	°C, °F	Ambient air temperature	Not applicable.	Not applicable.
ABS	Inactive/ Active	Antilock braking system	Not applicable.	Not applicable.
APP_STATUS	Accelerator Pedal Off/ Under 20%/ Over 20%/ FAIL	Accelerator pedal position	Not applicable.	Not applicable.
AYC	Inactive/ Active	Active yaw control	Not applicable.	Not applicable.
BRK_F_P_R	Pa, psi	Brake fluid line hydraulic pressure (Raw Value)	BRK_F_P_R	BRK_F_P_R
BTCS	Inactive/ Active	Brake traction control system	Not applicable.	Not applicable.
CFG_STATUS	Config Complete/ Not Configured/ Config Error	Instrument cluster configuration status	Not applicable.	Not applicable.
ECT_STATUS	Under 0 degrees C/ 0 - Under 80 degrees C/ Over 80 degrees C/ FAIL	Engine coolant temperature status	Not applicable.	Not applicable.
EDC	Inactive/ Active	Engine drag control	Not applicable.	Not applicable.
IC_VPWR	V	Instrument cluster power supply	• The DSC HU/CM constantly receives the power supply voltage value of the instrument cluster sent via CAN signal from the instrument cluster. • If a DTC is detected, the DSC HU/CM records the power supply voltage of the instrument cluster when the DTC was detected, and it is displayed in the M-MDS.	VRWR*2
IG-ON_TIMER	hh:mm:ss*1	Elapsed time since ignition was switched ON **NOTE:** • The instrument cluster records the elapsed time since the ignition was switched ON.	• The DSC HU/CM constantly receives the elapsed time since the ignition was switched ON sent via CAN signal from the instrument cluster. • If a DTC is detected, the DSC HU/CM records the elapsed time since the ignition was switched ON when the DTC was detected, and it is displayed in the M-MDS.	Not applicable.
LAT_ACCL_R	G	Lateral acceleration (Raw Value)	LAT_ACCL_R	LAT_ACCL_R
LON_ACCL_R	G	Longitudinal acceleration (Raw Value)	LON_ACCL_R	LON_ACCL_R
PMP_MT	Off/On	Pump motor	PMP_MT	PMP_MT
		• Key Out: Ignition switched to off • Key Recently Out (Position 0): Elapsed time **within 3 s** since ignition was		

PWR_MODE_KEY	Key Out/Key Recently Out (Position 0)/Accessory (Position 1)/Post Ignition (Position 2)/Ignition On (Position 2)/Running (Position 2)/Running - Starting	switched to off • Accessory (Position 1): Ignition is switched to ACC • Post Ignition (Position 2): Elapsed time **within 3 s** since ignition was switched ON • Ignition On (Position 2): Ignition switched ON (engine off) • Running (Position 2): Ignition switched ON (engine on) • Running - Starting: Cranking condition	• When a DTC is detected, the DSC HU/CM receives the ignition switch condition being detected by the instrument cluster via CAN signals and displays it in the M-MDS.	Not applicable.
RPM_STATUS	Engine Stop/ Under 1500rpm/ Over 1500rpm/ FAIL	Engine RPM status	• The DSC HU/CM constantly receives the ignition switch status sent via CAN signal from the instrument cluster. • If a DTC is detected, the DSC HU/CM records the ignition switch status when the DTC was detected, and it is displayed in the M-MDS.	TACHOMTR*2
SHIFT_STATUS	P/N D/ R/ FAIL	Shift position status	• The DSC HU/CM constantly receives the selector lever position sent via CAN signal from the instrument cluster. • If a DTC is detected, the DSC HU/CM records the selector lever position when the DTC was detected, and it is displayed in the M-MDS.	Not applicable.
STR_ANG_C	°	Steering wheel angle (Calculated Value)	STR_ANG_C	STR_ANG_C
TCS	Inactive/ Active	Traction control system	Not applicable.	Not applicable.
TOTAL_DIST	km, ft, mi	Accumulated total traveled distance from completion of vehicle until DSC HU/CM detects DTC (Odometer value in instrument cluster)	The distance traveled when the DSC HU/CM detected a DTC can be calculated by performing the following procedure. • Verify the odometer value in the instrument cluster. • Verify the snap shot data item TOTAL_DIST. • Subtract 2 from 1.	Not applicable.
TOTAL_TIME	hh:mm:ss*1	Accumulated total elapsed time since vehicle completion until DSC HU/CM detects a DTC **NOTE:** • When the ROOM fuse is removed, and the ignition is switched off, the time is not included in the elapsed time.	The elapsed time when the DSC HU/CM detected a DTC can be calculated by performing the following procedure. • Verify the PID item TOTAL_TIME of the instrument cluster. • Verify the snap shot data item TOTAL_TIME. • Subtract 2 from 1.	Not applicable.
VPWR	V	Power supply	VPWR_B_SOL	VPWR_B_SOL
VSPD	KPH, MPH	Vehicle speed	VSPD	VSPD
VSPD_STATUS	Stop/ 0 - 10km/h/ Over 10km/h/ FAIL	When a DTC is detected, the DSC HU/CM receives the vehicle speed being detected by the instrument cluster via CAN signals and displays it in the M-MDS.	• The DSC HU/CM constantly receives the vehicle speed sent via CAN signal from the instrument cluster. • If a DTC is detected, the DSC HU/CM records the vehicle speed when the DTC was detected, and it is displayed in the M-MDS.	SPEEDOMTR*2
YAW_RATE_R	°/S	Yaw Rate (Raw Value)	YAW_RATE_R	YAW_RATE_R

*1 **Fractions of seconds may be indicated after the decimal point.**

*2 **Instrument cluster PID (See PID/DATA MONITOR TABLE [INSTRUMENT CLUSTER].)**

Active Command Modes Table

N/A: Not applicable

Command name	Output part	Operation	Operating condition
PMP_MT_SP	Pump motor	Off/On	Switch the ignition ON (engine off)
V_INLET_LF	LF inlet solenoid valve		
V_INLET_LR	LR inlet solenoid valve		
V_INLET_RF	RF inlet solenoid valve		
V_INLET_RR	RR inlet solenoid valve		
V_OUTLET_LF	LF outlet solenoid valve		
V_OUTLET_LR	LR outlet solenoid valve		
V_OUTLET_RF	RF outlet solenoid valve		
V_OUTLET_RR	RR outlet solenoid valve		
V_STB_LF/RR	LF/RR stability control solenoid valve	Off/On	Switch the ignition ON (engine off)
V_STB_RF/LR	RF/LR stability control solenoid valve		
V_TRC_LF/RR	LF/RR linear control solenoid valve	Off/On	Switch the ignition ON (engine off)

V_TRC_RF/LR	RF/LR linear control solenoid valve		

2014 - Mazda3 - Brakes

DTC B10DF:46/C1A08:1C/U2007:46/U2007:62/U3000:49 [DYNAMIC STABILITY CONTROL (DSC)]

DTC	B10DF:46, C1A08:1C, U2007:46, U2007:62, U3000:49	DSC HU/CM (internal malfunction)
DETECTION CONDITION	• The DSC CM on-board diagnostic function detects control module internal malfunction.	
FAIL-SAFE FUNCTION	• B10DF:46 ▪ Illuminates the TCS/DSC indicator light and smart city brake support (SCBS) indicator light (amber)*1. ▪ Inhibits the TCS, DSC, brake assist control, hill launch assist (HLA), and smart city brake support (SCBS)*1 controls. • C1A08:1C ▪ Illuminates the TCS/DSC indicator light and smart city brake support (SCBS) indicator light (amber)*1. ▪ Tire pressure monitoring system warning light*1 illuminates after flashes. ▪ Inhibits the TCS, DSC, brake assist control, hill launch assist (HLA), TPMS*1, and smart city brake support (SCBS)*1 controls. • U2007:46 ▪ Illuminates the TCS/DSC indicator light and smart city brake support (SCBS) indicator light (amber)*1. ▪ Inhibits the TCS, DSC, brake assist control*3, hill launch assist (HLA), and smart city brake support (SCBS)*1 controls. • U2007:62 ▪ Illuminates the ABS warning light, brake system warning light, TCS/DSC indicator light, and smart city brake support (SCBS) indicator light (amber)*1. ▪ Inhibits the ABS, EBD, TCS, DSC, brake assist control, hill	

	launch assist (HLA), and smart city brake support (SCBS)*1controls. • U3000:49 ▪ Illuminates the ABS warning light, brake system warning light*2, TCS/DSC indicator light, and smart city brake support (SCBS) indicator light (amber)*1. ▪ Tire pressure monitoring system warning light*1 illuminates after flashes. (Not illuminated/flashed depending on malfunction content.) ▪ Inhibits the ABS, EBD*3, TCS, DSC, brake assist control, hill launch assist (HLA), TPMS*1*3, and smart city brake support (SCBS)*1controls. • *1: If equipped. • *2: Not illuminated depending on malfunction content. • *3: Enabled depending on malfunction content.
POSSIBLE CAUSE	• DSC HU/CM internal malfunction
SYSTEM WIRING DIAGRAM	—

Diagnostic procedure

STEP	INSPECTION		ACTION
1	**VERIFY NO DSC HU/CM MALFUNCTION** • Clear the DTCs from the memory. (See **ON-BOARD DIAGNOSIS [DYNAMIC STABILITY CONTROL (DSC)]**.) • Start the engine and drive the vehicle at **10km/h {6.2 mph} or more**. • Are the same DTCs present?	Yes	Replace the DSC HU/CM, then go to the next step. (See **DSC HU/CM REMOVAL/INSTALLATION**.)
		No	Go to the next step.
2	**VERIFY THAT NO OTHER DTCS ARE PRESENT** • Are any other DTCs output?	Yes	Go to the applicable DTC inspection. (See **ON-BOARD DIAGNOSIS [DYNAMIC STABILITY CONTROL (DSC)]**.)
		No	DTC troubleshooting completed.

DTC B10DF:46/C1A08:1C/U2007:46/U2007:62/U3000:49 [DYNAMIC STABILITY CONTROL (DSC)]

2014 - Mazda3 - Brakes

DTC B11D4:08 [DYNAMIC STABILITY CONTROL (DSC)]

DTC	B11D4:08	Laser sensor
DETECTION CONDITION		• Correct signal cannot be received from laser sensor. • DSC HU/CM received excessively-continuous signal from laser sensor.
FAIL-SAFE FUNCTION		• Illuminates the smart city brake support (SCBS) indicator light (amber). • Inhibits the Smart City Brake Support (SCBS) control.
POSSIBLE CAUSE		• Laser sensor malfunction • Brake fluid for restriction or leakage
SYSTEM WIRING DIAGRAM		Not applicable

Diagnostic procedure

STEP	INSPECTION		ACTION
1	**PERFORM LASER SENSOR DTC INSPECTION** • Switch the ignition off. • Using the M-MDS, perform the DTC inspection for the laser sensor. (See **ON-BOARD DIAGNOSIS [LASER SENSOR]**.) • Are any DTCs detected?	Yes	Go to applicable DTC inspection. (See **ON-BOARD DIAGNOSIS [LASER SENSOR]**.)
		No	Go to the next step.
2	**VERIFY THAT THE SAME DTC IS NOT PRESENT** • Clear the DTCs from the memory. (See **ON-BOARD DIAGNOSIS [DYNAMIC STABILITY CONTROL (DSC)]**.)	Yes	Repeat the inspection from Step 1. If the malfunction recurs, replace the laser sensor, then go to the next step. (See **LASER SENSOR REMOVAL/INSTALLATION**.)

	• Are the same DTCs present?		
		No	Go to the next step.
3	**VERIFY THAT NO OTHER DTCS ARE PRESENT** • Are any other DTCs output?	Yes	Go to the applicable DTC inspection. (See **ON-BOARD DIAGNOSIS [DYNAMIC STABILITY CONTROL (DSC)]**.)
		No	DTC troubleshooting completed.

2014 - Mazda3 - Brakes

DTC C0001:01/C0002:01/C0003:01/C0004:01/C0010:01/C0011:01/C0014:01/C0015:01/C0018:01/C0019:01/C001C:01/C001D:01 [DYNAMIC STABILITY CONTROL (DSC)]

DTC	**C0001:01, C0002:01**	**Traction control solenoid valve system**
	C0003:01, C0004:01	**Stability control solenoid valve system**
	C0010:01	**LF inlet solenoid valve system**
	C0011:01	**LF outlet solenoid valve system**
	C0014:01	**RF inlet solenoid valve system**
	C0015:01	**RF outlet solenoid valve system**
	C0018:01	**LR inlet solenoid valve system**
	C0019:01	**LR outlet solenoid valve system**
	C001C:01	**RR inlet solenoid valve system**
	C001D:01	**RR outlet solenoid valve system**
DETECTION CONDITION	• Malfunction detected in the DSC HU/CM solenoid valve or internal circuit by the DSC HU/CM on-board diagnostic function	
FAIL-SAFE FUNCTION	• Illuminates the ABS warning light, brake system warning light, TCS/DSC indicator light, and smart city brake support (SCBS) indicator light (amber)*1. • Inhibits the ABS, EBD, TCS, DSC, brake assist control, hill launch assist (HLA), and smart city brake support (SCBS)*1 controls. • *1: If equipped.	
POSSIBLE CAUSE	• Open or short circuit in the DSC HU/CM internal solenoid valves • Solenoid valve malfunction	
SYSTEM WIRING DIAGRAM	Not applicable	

Diagnostic procedure

STEP	INSPECTION		ACTION
1	**VERIFY SOLENOID VALVE OPERATION** • Switch the ignition to off. • Connect the M-MDS to the DLC-2. • Switch the ignition ON (engine off).	Yes	Go to the next step.
		No	Replace the DSC HU/CM, then go to the next step. (See **DSC HU/CM REMOVAL/INSTALLATION**.)

	• Access the active command mode for the solenoid valve using the M-MDS. (See **ON-BOARD DIAGNOSIS [DYNAMIC STABILITY CONTROL (DSC)]**.) • Does the solenoid valve operate?		
2	**VERIFY DTC TROUBLESHOOTING COMPLETED** • Clear the DTC from the memory. (See **ON-BOARD DIAGNOSIS [DYNAMIC STABILITY CONTROL (DSC)]**.) • Start the engine and drive the vehicle at **10 km/h {6.2 mph} or more**. • Gradually slow down and stop vehicle. • Are the same DTCs present?	Yes	Repeat the inspection from Step 1. If the malfunction recurs, replace the DSC HU/CM, then go to the next step. (See **DSC HU/CM REMOVAL/INSTALLATION**.)
		No	Go to the next step.
3	**VERIFY AFTER REPAIR PROCEDURE** • Are any other DTCs present?	Yes	Go to the applicable DTC inspection. (See **ON-BOARD DIAGNOSIS [DYNAMIC STABILITY CONTROL (DSC)]**.)
		No	DTC troubleshooting completed.

2014 - Mazda3 - Brakes

DTC C0020:11/C0020:12/C0020:13/C0020:71 [DYNAMIC STABILITY CONTROL (DSC)]

DTC	C0020:11, C0020:12, C0020:13, C0020:71	Pump motor, motor relay

DETECTION CONDITION		• C0020:11
		  ▪ Motor relay signal does not correspond to DSC HU/CM OFF signal.
		• C0020:12
		  ▪ DSC motor monitor signal does not correspond to DSC HU/CM OFF signal.
		  ▪ DSC motor monitor signal does not correspond to DSC HU/CM ON signal.
		• C0020:13
		  ▪ Motor relay signal does not correspond to DSC HU/CM ON signal.
		• C0020:71
		  ▪ DSC HU/CM motor monitor ON signal is not input within specified time limit or more when motor signal is switched from ON to OFF by DSC HU/CM.

FAIL-SAFE FUNCTION		• Illuminates the ABS warning light, TCS/DSC indicator light and smart city brake support (SCBS) indicator light (amber)*1. • Inhibits the ABS, TCS, DSC, brake assist control, and smart city brake support (SCBS)*1 controls. • *1: If equipped.
POSSIBLE CAUSE		• Fuse (ABS/DSCM 50A) malfunction • Open or short circuit in DSC HU/CM internal motor relay, or stuck motor relay • Open or short circuit in DSC HU/CM internal pump motor, or frozen pump motor • Open circuit or short to ground in the wiring harness between the battery and DSC HU/CM terminal B

	• Open circuit in the wiring harness between DSC HU/CM terminal AL and body ground • Poor connection at connectors (female terminal)

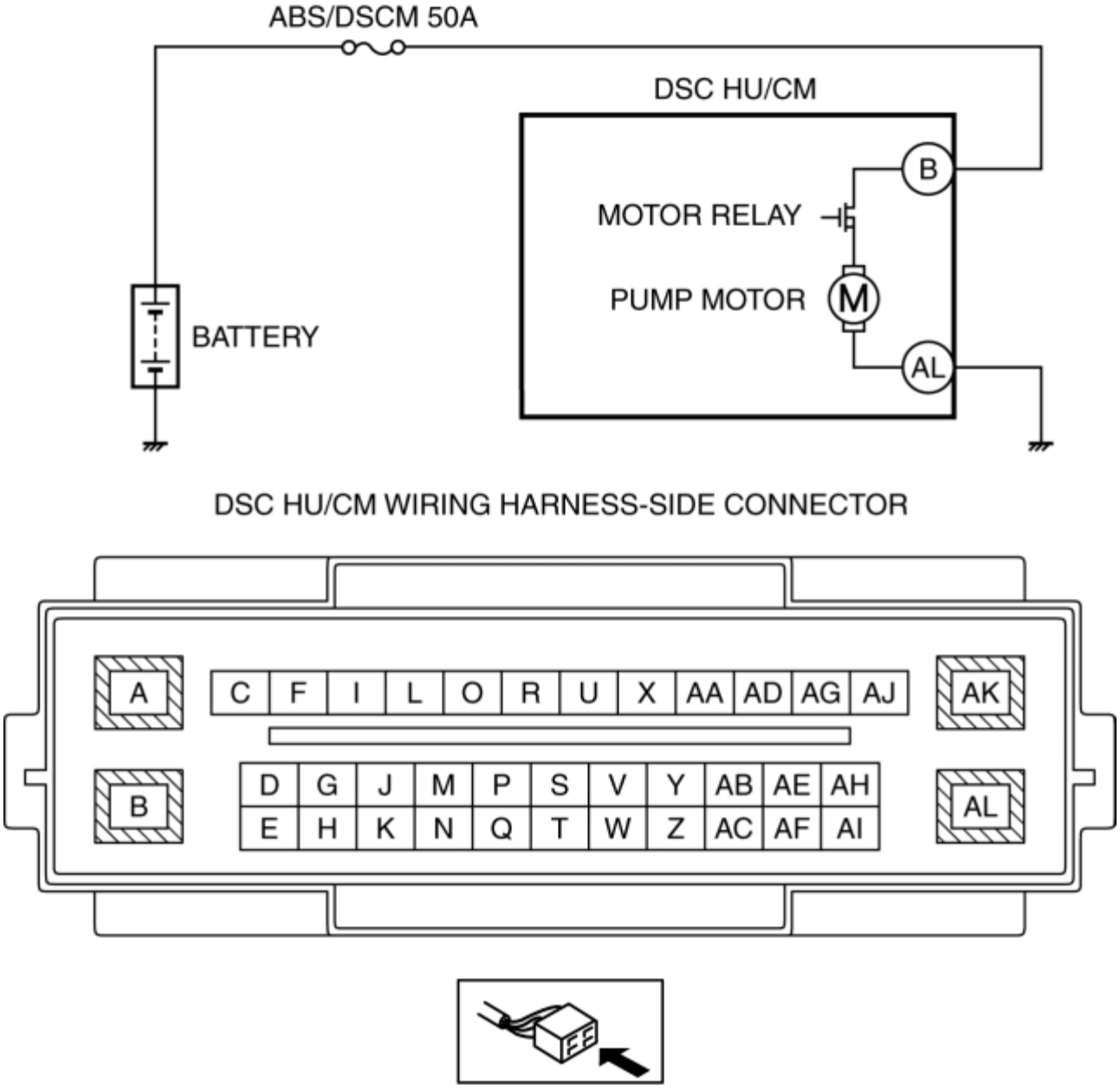

Diagnostic procedure

STEP	INSPECTION		ACTION
1	**INSPECT FUSE CONDITION** • Is the fuse (ABS/DSCM 50A) normal?	Yes	Go to the next step.
		No	Replace the fuse, then go to Step 6.
2	**VERIFY PUMP MOTOR OPERATION**	Yes	Go to Step 6.

	Switch the ignition to off. • Connect the M-MDS to the DLC-2. • Switch the ignition ON (engine off). • Access PMP_MT_SP active command modes using the M-MDS. • Does the pump motor operate?	No	Go to the next step.
3	**INSPECT MOTOR RELAY POWER SUPPLY FOR OPEN CIRCUIT** • Switch the ignition to off. • Disconnect the DSC HU/CM connector. • Inspect for continuity between DSC HU/CM terminal B (vehicle harness-side) and the positive battery terminal. • Is there continuity?	Yes	Go to the next step.
		No	Refer to the wiring diagram and verify whether or not there is a common connector between DSC HU/CM terminal B and the positive battery terminal. **If there is a common connector:** • Determine the malfunctioning part by inspecting the common connector and the terminal for corrosion, damage, or pin disconnection, and the common wiring harness for an open circuit. • Repair or replace the malfunctioning part. **If there is no common connector:** • Repair or replace the wiring harness which has an open circuit. Go to Step 6.
4	**INSPECT MOTOR RELAY POWER SUPPLY FOR SHORT CIRCUIT** • Inspect for continuity between DSC HU/CM terminal B (vehicle harness-side) and body ground. • Is there continuity?	Yes	Repair or replace the wiring harness, then go to Step 6.
		No	Go to the next step.
5	**INSPECT PUMP MOTOR GROUND FOR OPEN CIRCUIT** • Inspect for continuity between DSC HU/CM terminal AL (vehicle harness-side) and body ground.	Yes	Go to the next step.
		No	Repair or replace the wiring harness, then go to the next step.

	• Is there continuity?		
6	**VERIFY THAT THE SAME DTC IS NOT PRESENT** • Reconnect all disconnected connectors. • Clear the DTCs from the memory. (See **ON-BOARD DIAGNOSIS [DYNAMIC STABILITY CONTROL (DSC)]**.) • Start the engine and drive the vehicle at **10 km/h {6.2 mph} or more**. • Are the same DTCs present?	Yes	Repeat the inspection from Step 1. If the malfunction recurs, replace the DSC HU/CM, then go to the next step. (See **DSC HU/CM REMOVAL/INSTALLATION**.)
		No	Go to the next step.
7	**VERIFY THAT NO OTHER DTCS ARE PRESENT** • Are any other DTCs output?	Yes	Go to the applicable DTC inspection. (See **ON-BOARD DIAGNOSIS [DYNAMIC STABILITY CONTROL (DSC)]**.)
		No	DTC troubleshooting completed.

2014 - Mazda3 - Brakes

DTC C0023:62/C0040:64 [DYNAMIC STABILITY CONTROL (DSC)]

DTC	C0023:62, C0040:64	Brake switch
DETECTION CONDITION	• C0023:62 ▪ Brake light ON signal is not input even though the brake light request signal is input. ▪ Brake light ON signal is input even though the brake light request signal is not input. ▪ Communication error with brake light is detected in CAN communication via Rear Body Control Module (RBCM). • C0040:64 ▪ Brake switch ON signal is input for **6 min or more** when driving at a vehicle speed of **20 km/h {12 mph} or more**. ▪ A brake switch ON signal is not input when the brake fluid pressure sensor signal reaches the specified value.	
FAIL-SAFE FUNCTION	• C0023:62 ▪ Illuminates the smart city brake support (SCBS) indicator light (amber). ▪ Inhibits the smart city brake support (SCBS) control. • C0040:64 ▪ Illuminates the TCS/DSC indicator light and smart city brake support (SCBS) indicator light (amber)*1. ▪ Tire pressure monitoring system warning light*1 illuminates after flashes. ▪ Inhibits the brake assist control, hill launch assist (HLA), TPMS*1, and smart city brake support (SCBS)*1 controls. • *1: If equipped.	
POSSIBLE CAUSE	• Open or short circuit in wiring harness between the brake switch and PCM terminal 2G • Brake switch malfunction • Poor connection at connectors (female terminal) • Rear Body Control Module (RBCM) malfunction • PCM malfunction	

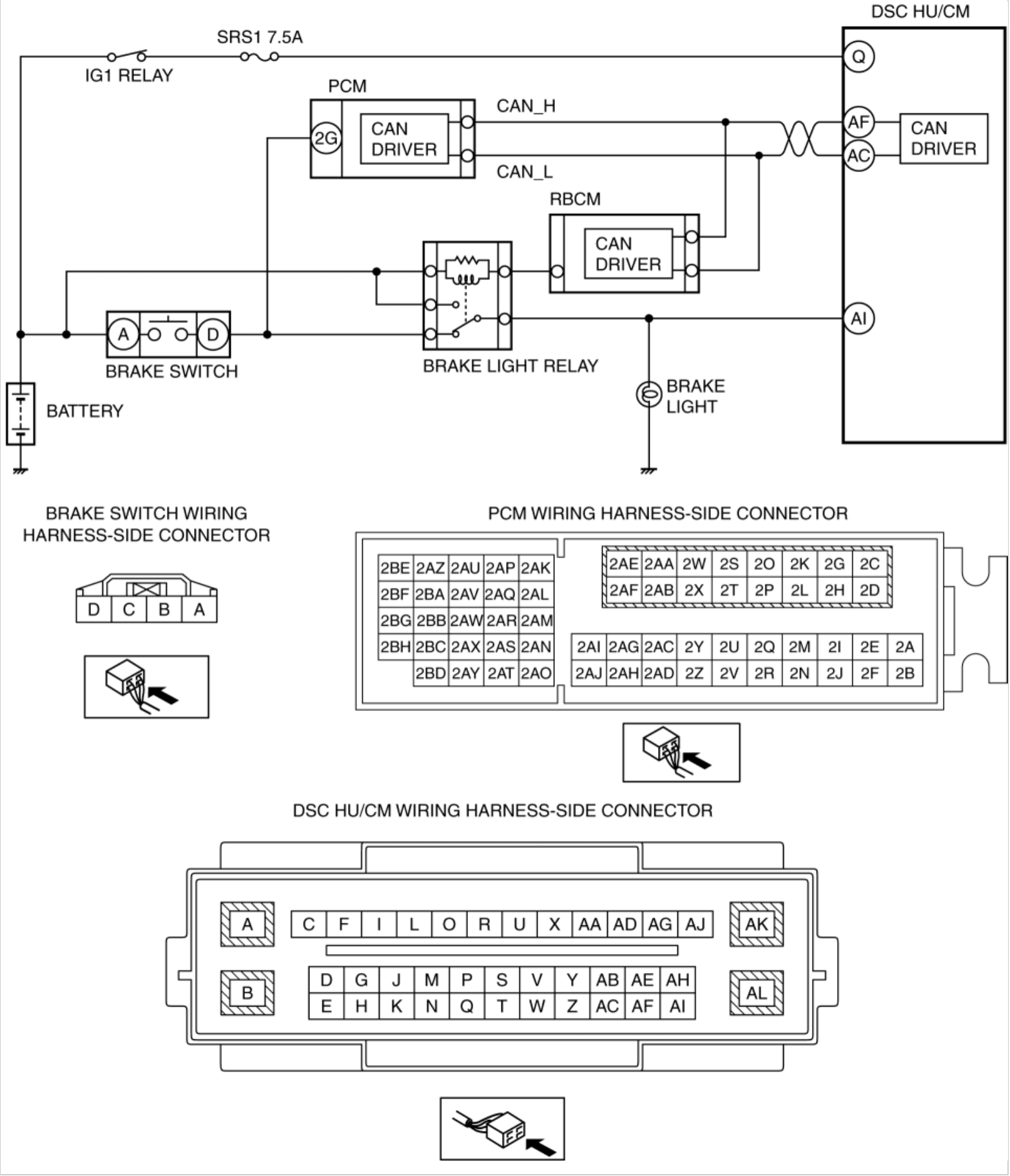

Diagnostic procedure

STEP	INSPECTION		ACTION
1	**INSPECT POWER SUPPLY (SYSTEM) CIRCUIT** • Switch the ignition ON (engine off). • Measure the voltage at the DSC HU/CM connector terminal Q (vehicle harness side) and body ground. • Is the voltage **B+**?	Yes	Go to the next step.
		No	Refer to the wiring diagram and verify whether or not there is a common connector between IG1 relay and DSC HU/CM terminal Q (vehicle harness side). **If there is a common connector:** • Determine the malfunctioning part by inspecting the common connector and the terminal for corrosion, damage, or pin disconnection, and the common wiring harness for an open circuit. • Repair or replace the malfunctioning part. **If there is no common connector:** • Repair or replace the wiring harness which has an open circuit. Go to Step 8.
2	**VERIFY OPEN OR SHORT CIRCUIT IN BRAKE SWITCH SIGNAL** • Switch the ignition ON (engine off). • Measure the voltage between the PCM connector terminal 2G (vehicle harness-side) and body ground when the brake pedal is depressed and released. ◦ **Voltage** **Brake pedal depressed: B+** **Brake pedal released: 1 V or less** • Is the voltage normal?	Yes	Go to the Step 8.
		No	If it is **B+** under any condition, then go to the next step. If it is **1 V or less** under any condition, then go to Step 4.
3	**INSPECT BRAKE SWITCH SIGNAL FOR SHORT TO POWER SUPPLY CIRCUIT** • Disconnect the brake switch connector. • Measure voltage between the brake switch connector terminal D (vehicle harness-side) and body ground. • Is the voltage **1 V or less**?	Yes	Go to Step 5.
		No	Refer to the wiring diagram and verify whether or not there is a common connector between PCM connector terminal 2G (vehicle harness-side) and brake switch connector terminal D (vehicle harness side). **If there is a common connector:** • Determine the malfunctioning part by inspecting the common connector and the terminal for corrosion, damage, or pin disconnection, and the common wiring harness for a short to power supply. • Repair or replace the malfunctioning part. **If there is no common connector:** • Repair or replace the wiring harness which has a short to power supply. Go to Step 8.
4	**INSPECT BRAKE SWITCH SIGNAL FOR OPEN CIRCUIT**	Yes	Go to the next step.

	• Disconnect the PCM connectors. • Disconnect the brake switch connector. • Inspect continuity between the PCM and brake switch as follows. ▪ PCM connector terminal 2G (vehicle harness-side) and brake switch connector terminal D (vehicle harness-side) • Is there continuity?	No	Refer to the wiring diagram and verify whether or not there is a common connector between PCM connector terminal 2G (vehicle harness-side) and brake switch connector terminal D (vehicle harness side). **If there is a common connector:** • Determine the malfunctioning part by inspecting the common connector and the terminal for corrosion, damage, or pin disconnection, and the common wiring harness for an open circuit. • Repair or replace the malfunctioning part. **If there is no common connector:** • Repair or replace the wiring harness which has an open circuit. Go to Step 8.
5	**INSPECT BRAKE SWITCH** • Inspect the brake switch. (See **BRAKE SWITCH INSPECTION**.) • Is the brake switch normal?	Yes	Go to the next step.
		No	Replace the brake switch, then go to Step 8. (See **BRAKE PEDAL REMOVAL/INSTALLATION**.)
6	**PERFORM REAR BODY CONTROL MODULE (RBCM) DTC INSPECTION** • Reconnect all disconnected connectors. • Using the M-MDS, perform the DTC inspection for the rear body control module (RBCM). (See **DTC INSPECTION [REAR BODY CONTROL MODULE (RBCM)]**.) • Are any DTCs detected?	Yes	Go to applicable DTC inspection. (See **DTC TABLE [REAR BODY CONTROL MODULE (RBCM)]**.)
		No	Go to the next step.
7	**PERFORM PCM DTC INSPECTION** • Using the M-MDS, perform the DTC inspection for the PCM. (See **ON-BOARD DIAGNOSTIC TEST [SKYACTIV-G 2.0, SKYACTIV-G 2.5]**.) • Are any DTCs detected?	Yes	Go to applicable DTC inspection. (See **DTC TABLE [SKYACTIV-G 2.0, SKYACTIV-G 2.5]**.)
		No	Go to the next step.
8	**VERIFY THAT THE SAME DTC IS NOT PRESENT** • Reconnect all disconnected connectors. • Clear the DTCs from the memory. (See **ON-BOARD DIAGNOSIS [DYNAMIC STABILITY CONTROL (DSC)]**.) • Start the engine and drive the vehicle at **20 km/h {12 mph} or more**. • Are the same DTCs present?	Yes	Repeat the inspection from Step 1.
		No	Go to the next step.
9	**VERIFY THAT NO OTHER DTCS ARE PRESENT** • Are any other DTCs output?	Yes	Go to the applicable DTC inspection. (See **ON-BOARD DIAGNOSIS [DYNAMIC STABILITY CONTROL (DSC)]**.)
		No	DTC troubleshooting completed.

2014 - Mazda3 - Brakes

DTC C0030:07/C0031:07/C0031:29/C0031:2F/C0031:64/C0033:07/C0034:07/C0034:29/C0034:2F/C0034:64/C0036:07/C0037:07/C0037:29/C0037:2F/C0037:64/C0039:07/C003A:07/C003A:29/C003A:2F/C003A:64 [DYNAMIC STABILITY CONTROL (DSC)]

NOTE:

- When only the driving wheels are rotated while the vehicle is jacked up, DTCs C0037:29 and C003A:29 are input to the memory.

DTC	**C0030:07**	**LF ABS sensor rotor**
	C0031:07, C0031:29, C0031:2F, C0031:64	**LF ABS wheel-speed sensor/ABS sensor rotor**
	C0033:07	**RF ABS sensor rotor**
	C0034:07, C0034:29, C0034:2F, C0034:64	**RF ABS wheel-speed sensor/ABS sensor rotor**
	C0036:07	**LR ABS sensor rotor**
	C0037:07, C0037:29, C0037:2F, C0037:64	**LR ABS wheel-speed sensor/ABS sensor rotor**
	C0039:07	**RR ABS sensor rotor**
	C003A:07, C003A:29, C003A:2F, C003A:64	**RR ABS wheel-speed sensor/ABS sensor rotor**

DETECTION CONDITION	• C0030:07, C0033:07, C0036:07, C0039:07
	  ▪ Periodic abnormality is detected in the signal wave pattern from the ABS wheel-speed sensors.
	• C0031:07, C0034:07, C0037:07, C003A:07
	  ▪ While the vehicle is traveling at a speed of **10 km/h {6.2 mph} or more**, no signal in any of the four wheels or an extremely low vehicle speed signal is detected.
	• C0031:29, C0034:29, C0037:29, C003A:29
	  ▪ The wheel-speed signal is not input or an extremely low wheel-speed signal is detected from any of the four wheels when driving at a vehicle speed of **10 km/h {6.2 mph} or more**
	• C0031:2F, C0034:2F, C0037:2F, C003A:2F
	  ▪ The wheel speed or acceleration speed in any of the 4 wheels is not within the specification.
	  ▪ ABS control continues to operate for **28 s or more**.
	• C0031:64, C0034:64, C0037:64, C003A:64
	  ▪ While the vehicle is traveling at a speed of **20 km/h {12 mph} or more**, an extremely high vehicle speed signal in any of the four wheels is detected.

FAIL-SAFE FUNCTION	• Illuminates the ABS warning light, TCS/DSC indicator light, and smart city brake support (SCBS) indicator light (amber)[*1]. • Tire pressure monitoring system warning light illuminates after flashes. • Inhibits the ABS, TCS, DSC, brake assist control, hill launch assist (HLA), TPMS, and smart city brake support (SCBS)[*1] controls. (Additionally, when any malfunction is detected in two wheels or more, EBD control is inhibited and the brake system warning light is illuminated.) • [*1]: If equipped.
POSSIBLE CAUSE	• ABS sensor rotor malfunction (missing ABS sensor rotor teeth due to foreign material obstruction) • ABS wheel-speed sensor or ABS sensor rotor installation malfunction (If the ABS sensor rotor is installed at an angle, it may cause output of abnormal wave pattern at high speeds.) • Excessive clearance between the ABS wheel-speed sensor and sensor rotor

- ABS wheel-speed sensor malfunction
- Continuous ABS operation

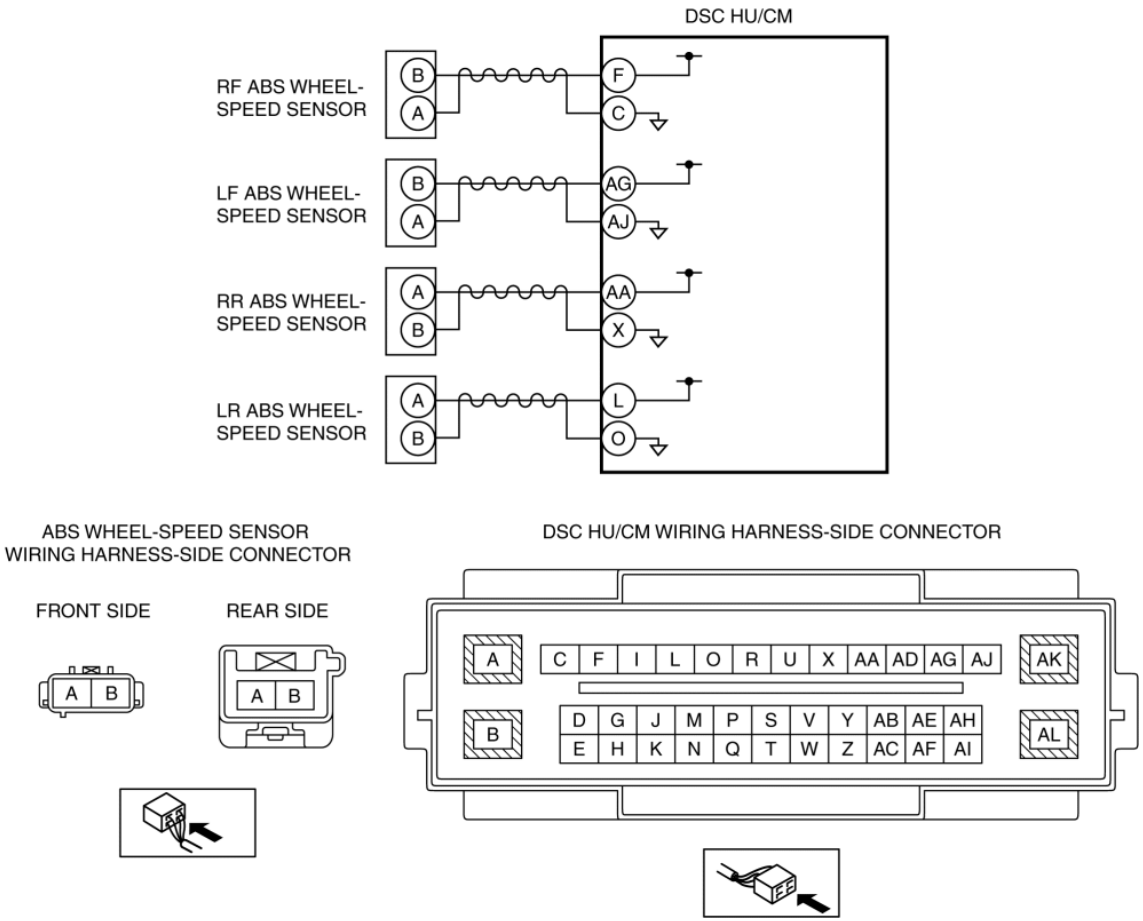

Diagnostic procedure

STEP	INSPECTION		ACTION
1	**INSPECT PID FOR ABS WHEEL-SPEED SENSOR OUTPUT ERROR USING M-MDS** • Switch the ignition to off. • Connect the M-MDS to the DLC-2. • Select the following PIDs using the M-MDS: ▪ WSPD_SEN_LF ▪ WSPD_SEN_LR ▪ WSPD_SEN_RF ▪ WSPD_SEN_RR • Drive the vehicle. • Verify that the vehicle speeds detected by the four ABS wheel-speed sensors are approximately the same. • Are the vehicle speeds approximately the same?	Yes	Go to Step 3.
		No	Go to the next step.

2	**INSPECT FOR SHORT TO GROUND BETWEEN ABS WHEEL-SPEED SENSOR CONNECTORS AND GROUND** • Disconnect the ABS wheel-speed sensor connectors. • Inspect for no continuity between the following ABS wheel-speed sensor connector terminals (vehicle harness-side) and body ground: ▪ ABS wheel-speed sensor (RF): A—Body ground ▪ ABS wheel-speed sensor (LF): A—Body ground ▪ ABS wheel-speed sensor (RR): B—Body ground ▪ ABS wheel-speed sensor (LR): B—Body ground • Is the continuity normal?	Yes	Go to the next step.
		No	Refer to the wiring diagram and verify whether or not there is a common connector between the DSC HU/CM connector terminals (vehicle harness-side) and the following vehicle harness-side connector terminals of the ABS wheel-speed sensors: • RF ABS wheel-speed sensor(-): C—A • LF ABS wheel-speed sensor(-): AJ—A • RR ABS wheel-speed sensor(-): X—B • LR ABS wheel-speed sensor(-): O—B **If there is a common connector:** • Determine the malfunctioning part by inspecting the common connector and the terminal for corrosion, damage, or pin disconnection, and the common wiring harness for a short to ground. • Repair or replace the malfunctioning part. **If there is no common connector:** • Repair or replace the wiring harness which has a short to ground. Go to Step 5.
3	**INSPECT IF MALFUNCTION OCCURRED DUE TO IMPROPER SENSOR CLEARANCE.** • Inspect the clearance between the ABS wheel-speed sensor and the ABS sensor rotor. (See **FRONT ABS WHEEL-SPEED SENSOR INSPECTION**.) (See **REAR ABS WHEEL-SPEED SENSOR INSPECTION**.) • Is the clearance normal?	Yes	Go to the next step.
		No	Replace the ABS wheel-speed sensor, then go to Step 5. (See **FRONT ABS WHEEL-SPEED SENSOR REMOVAL/INSTALLATION**.) (See **REAR ABS WHEEL-SPEED SENSOR REMOVAL/INSTALLATION**.)
4	**VISUALLY INSPECT ABS SENSOR ROTOR FOR FOREIGN MATERIAL ADHERING OR IMPROPER INSTALLATION** • Is the result normal?	Yes	Go to the next step.
		No	Repair or replace the ABS sensor rotor, then go to the next step. • Front ABS sensor rotor (front wheel hub) (See **WHEEL HUB, STEERING KNUCKLE REMOVAL/INSTALLATION**.) • Rear ABS sensor rotor (rear wheel hub) (See **WHEEL HUB COMPONENT REMOVAL/INSTALLATION**.)
5	**VERIFY THAT THE SAME DTC IS NOT PRESENT** • Reconnect all disconnected connectors. • Clear the DTCs from the memory. (See **ON-BOARD DIAGNOSIS [DYNAMIC STABILITY CONTROL (DSC)]**.) • Start the engine and drive the vehicle at **20 km/h {12 mph} or more**. • Are the same DTCs present?	Yes	Repeat the inspection from Step 1. If the malfunction recurs, replace the DSC HU/CM, then go to the next step. (See **DSC HU/CM REMOVAL/INSTALLATION**.)
		No	Go to the next step.
6	**VERIFY THAT NO OTHER DTCS ARE PRESENT** • Are any other DTCs output?	Yes	Go to the applicable DTC inspection. (See **ON-BOARD DIAGNOSIS [DYNAMIC STABILITY CONTROL (DSC)]**.)
		No	DTC troubleshooting completed.

2014 - Mazda3 - Brakes

DTC C0031:11/C0031:15/C0034:11/C0034:15/C0037:11/C0037:15/C003A:11/C003A:15 [DYNAMIC STABILITY CONTROL (DSC)]

DTC	**C0031:11, C0031:15**	**LF ABS wheel-speed sensor**
	C0034:11, C0034:15	**RF ABS wheel-speed sensor**
	C0037:11, C0037:15	**LR ABS wheel-speed sensor**
	C003A:11, C003A:15	**RR ABS wheel-speed sensor**

DETECTION CONDITION	• C0031:11, C0034:11, C0037:11, C003A:11
	  ▪ Short to ground has been detected in the ABS wheel-speed sensor wiring harness on any of the four vehicle wheels.
	• C0031:15, C0034:15, C0037:15, C003A:15
	  ▪ Open circuit or short to power supply has been detected in the ABS wheel-speed sensor wiring harness on any of the four vehicle wheels.

FAIL-SAFE FUNCTION	• Illuminates the ABS warning light, TCS/DSC indicator light, and smart city brake support (SCBS) indicator light (amber)*1. • Tire pressure monitoring system warning light*1 illuminates after flashes. • Inhibits the ABS, TCS, DSC, brake assist control, hill launch assist (HLA), TPMS*1, and smart city brake support (SCBS)*1 controls. (Additionally, when any malfunction is detected in two wheels or more, EBD control is inhibited and the brake system warning light is illuminated.) • *1: If equipped.

POSSIBLE CAUSE	• Open circuit or short to ground/power supply in the wiring harness between the following DSC HU/CM terminals and ABS wheel-speed sensor terminals:
	  ▪ DSC HU/CM terminal F—RF ABS wheel-speed sensor terminal B
	  ▪ DSC HU/CM terminal C—RF ABS wheel-speed sensor terminal A
	  ▪ DSC HU/CM terminal AG—LF ABS wheel-speed sensor terminal B
	  ▪ DSC HU/CM terminal AJ—LF ABS wheel-speed sensor terminal A
	  ▪ DSC HU/CM terminal AA—RR ABS wheel-speed sensor terminal A
	  ▪ DSC HU/CM terminal X—RR ABS wheel-speed sensor terminal B
	  ▪ DSC HU/CM terminal L—LR ABS wheel-speed sensor terminal A
	  ▪ DSC HU/CM terminal O—LR ABS wheel-speed sensor terminal B
	• Malfunction in the ABS wheel-speed sensor
	• Poor connection at connectors (female terminal)

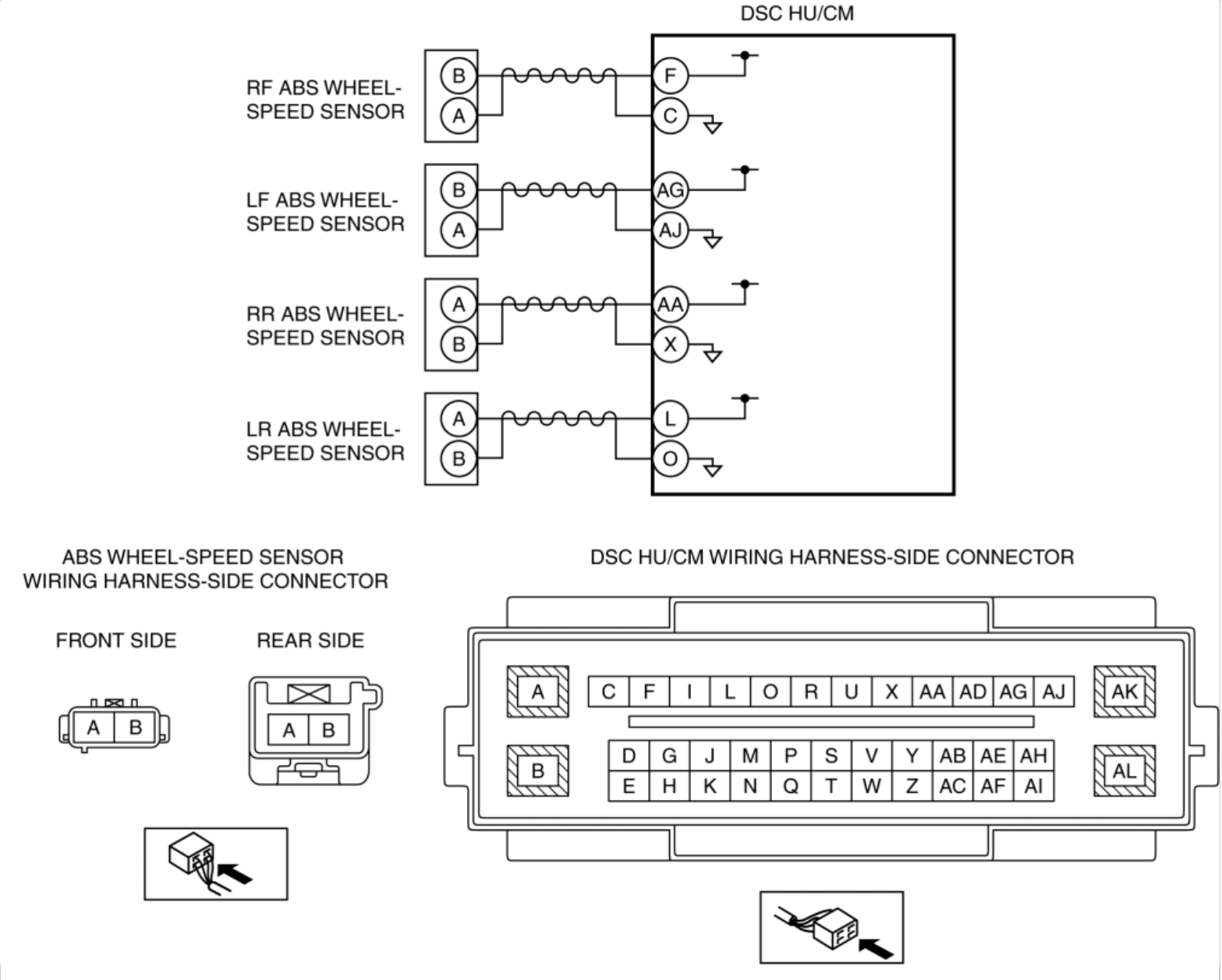

Diagnostic procedure

STEP	INSPECTION		ACTION
1	**INSPECT ABS WHEEL-SPEED SENSOR FOR SHORT TO GROUND** • Switch the ignition to off. • Disconnect the DSC HU/CM connectors. • Inspect for continuity between the following DSC HU/CM connector terminals (vehicle harness-side) and body ground: ▪ RF ABS wheel-speed sensor (+): F ▪ RF ABS wheel-speed sensor (-): C ▪ LF ABS wheel-speed sensor (+): AG ▪ LF ABS wheel-speed	Yes	Go to the next step.
		No	Go to Step 3.

	sensor (-): AJ ▪ RR ABS wheel-speed sensor (+): AA ▪ RR ABS wheel-speed sensor (-): X ▪ LR ABS wheel-speed sensor (+): L ▪ LR ABS wheel-speed sensor (-): O • Is there continuity?		
2	**INSPECT ABS WHEEL-SPEED SENSOR WIRING HARNESS FOR SHORT TO GROUND** • Disconnect the ABS wheel-speed sensor connectors. • Inspect for continuity between the following DSC HU/CM connector terminals (vehicle harness-side) and body ground: ▪ RF ABS wheel-speed sensor (+): F ▪ RF ABS wheel-speed sensor (-): C ▪ LF ABS wheel-speed sensor (+): AG ▪ LF ABS wheel-speed sensor (-): AJ ▪ RR ABS wheel-speed sensor (+): AA ▪ RR ABS wheel-speed sensor (-): X ▪ LR ABS wheel-speed sensor (+): L ▪ LR ABS wheel-speed sensor (-): O • Is there continuity?	Yes	Refer to the wiring diagram and verify whether or not there is a common connector between the DSC HU/CM connector terminals (vehicle harness-side) and the following vehicle harness-side connector terminals of the ABS wheel-speed sensors: • RF ABS wheel-speed sensor (+): F—B • RF ABS wheel-speed sensor (-): C—A • LF ABS wheel-speed sensor (+): AG—B • LF ABS wheel-speed sensor (-): AJ—A • RR ABS wheel-speed sensor (+): AA—A • RR ABS wheel-speed sensor (-): X—B • LR ABS wheel-speed sensor (+): L—A • LR ABS wheel-speed sensor (-): O—B **If there is a common connector:** • Determine the malfunctioning part by inspecting the common connector and the terminal for corrosion, damage, or pin disconnection, and the common wiring harness for a short to ground. • Repair or replace the malfunctioning part. **If there is no common connector:** • Repair or replace the wiring harness which has a short to ground. Go to Step 5.
		No	Replace the ABS wheel-speed sensor, then go to Step 5. (See **FRONT ABS WHEEL-SPEED SENSOR REMOVAL/INSTALLATION**.) (See **REAR ABS WHEEL-SPEED SENSOR REMOVAL/INSTALLATION**.)
3	**INSPECT FOR OPEN CIRCUIT IN ABS WHEEL-SPEED SENSOR WIRING HARNESS** • Inspect for continuity between the DSC HU/CM connectors (vehicle harness-side) and the following vehicle harness-side connector terminals of the ABS wheel-speed sensors: ▪ RF ABS wheel-speed sensor (+): F—B ▪ RF ABS wheel-speed sensor (-): C—A ▪ LF ABS wheel-speed sensor (+): AG—B ▪ LF ABS wheel-speed sensor (-): AJ—A	Yes	Go to the next step.
		No	Refer to the wiring diagram and verify whether or not there is a common connector between the DSC HU/CM connector terminals (vehicle harness-side) and the following vehicle harness-side connector terminals of the ABS wheel-speed sensors: • RF ABS wheel-speed sensor (+): F—B • RF ABS wheel-speed sensor (-): C—A • LF ABS wheel-speed sensor (+): AG—B • LF ABS wheel-speed sensor (-): AJ—A • RR ABS wheel-speed sensor (+): AA—A • RR ABS wheel-speed sensor (-): X—B

	▪ RR ABS wheel-speed sensor (+): AA—A ▪ RR ABS wheel-speed sensor (-): X—B ▪ LR ABS wheel-speed sensor (+): L—A ▪ LR ABS wheel-speed sensor (-): O—B • Is there continuity?		• LR ABS wheel-speed sensor (+): L—A • LR ABS wheel-speed sensor (-): O—B **If there is a common connector:** • Determine the malfunctioning part by inspecting the common connector and the terminal for corrosion, damage, or pin disconnection, and the common wiring harness for an open circuit. • Repair or replace the malfunctioning part. **If there is no common connector:** • Repair or replace the wiring harness which has an open circuit. Go to the Step 5.
4	**INSPECT ABS WHEEL-SPEED SENSOR WIRING HARNESS FOR SHORT TO POWER SUPPLY** • Inspect for voltage between the following DSC HU/CM connector terminals (vehicle harness-side) and body ground: ▪ RF ABS wheel-speed sensor (+): F ▪ RF ABS wheel-speed sensor (-): C ▪ LF ABS wheel-speed sensor (+): AG ▪ LF ABS wheel-speed sensor (-): AJ ▪ RR ABS wheel-speed sensor (+): AA ▪ RR ABS wheel-speed sensor (-): X ▪ LR ABS wheel-speed sensor (+): L ▪ LR ABS wheel-speed sensor (-): O • Is the voltage **1 V or less**?	Yes	Go to the next step.
		No	Refer to the wiring diagram and verify whether or not there is a common connector between the DSC HU/CM connector terminals (vehicle harness-side) and the following vehicle harness-side connector terminals of the ABS wheel-speed sensors: • RF ABS wheel-speed sensor (+): F—B • RF ABS wheel-speed sensor (-): C—A • LF ABS wheel-speed sensor (+): AG—B • LF ABS wheel-speed sensor (-): AJ—A • RR ABS wheel-speed sensor (+): AA—A • RR ABS wheel-speed sensor (-): X—B • LR ABS wheel-speed sensor (+): L—A • LR ABS wheel-speed sensor (-): O—B **If there is a common connector:** • Determine the malfunctioning part by inspecting the common connector and the terminal for corrosion, damage, or pin disconnection, and the common wiring harness for a short to power supply. • Repair or replace the malfunctioning part. **If there is no common connector:** • Repair or replace the wiring harness which has a short to power supply. Go to the next step.
5	**VERIFY THAT THE SAME DTC IS NOT PRESENT** • Reconnect all disconnected connectors. • Clear the DTCs from the memory. (See **ON-BOARD DIAGNOSIS [DYNAMIC STABILITY CONTROL (DSC)]**.) • Are the same DTCs present?	Yes	Repeat the inspection from Step 1. If the malfunction recurs, replace the DSC HU/CM, then go to the next step. (See **DSC HU/CM REMOVAL/INSTALLATION**.)
		No	Go to the next step.
6	**VERIFY THAT NO OTHER DTCS ARE PRESENT** • Are any other DTCs output?	Yes	Go to the applicable DTC inspection. (See **ON-BOARD DIAGNOSIS [DYNAMIC STABILITY CONTROL (DSC)]**.)
		No	DTC troubleshooting completed.

2014 - Mazda3 - Brakes

DTC C0044:28/C0044:47/C0044:49/C0044:51/C0044:54/C0044:64/C0044:8F [DYNAMIC STABILITY CONTROL (DSC)]

DTC	C0044:28, C0044:47, C0044:49, C0044:51, C0044:54, C0044:64, C0044:8F	Brake fluid pressure sensor
DETECTION CONDITION	• C0044:28, C0044:64 ▪ The pressure from the brake fluid pressure sensor is not within specification. • C0044:47, C0044:49 ▪ The voltage value from the brake fluid pressure sensor is not within specification. • C0044:51, C0044:8F ▪ The DSC HU/CM detects the internal brake fluid pressure sensor circuit malfunction. • C0044:54 ▪ The brake fluid pressure sensor detects the initialization procedure has not been perform.	
FAIL-SAFE FUNCTION	• C0044:28, C0044:47, C0044:49, C0044:51, C0044:64, C0044:8F ▪ Illuminates the TCS/DSC indicator light and smart city brake support (SCBS) indicator light (amber)*1. ▪ Tire pressure monitoring system warning light*1 illuminates after flashes. ▪ Inhibits the TCS, DSC, brake assist control, hill launch assist (HLA), TPMS*1, and smart city brake support (SCBS)*1 controls. • C0044:54 ▪ Illuminates the TCS/DSC indicator light and smart city brake support (SCBS) indicator light (amber)*1. ▪ Tire pressure monitoring system warning light*1 illuminates after flashes. (Not illuminated/flashed depending on malfunction content.)	

	▪ Inhibits the TCS, DSC, brake assist control, hill launch assist (HLA), TPMS*1, and smart city brake support (SCBS)*1 controls. • *1: If equipped.
POSSIBLE CAUSE	• The initialization procedure for the brake fluid pressure sensor has not been performed. • Brake fluid pressure sensor malfunction • Open or short circuit in the brake fluid pressure sensor circuit in DSC HU/CM
SYSTEM WIRING DIAGRAM	Not applicable

Diagnostic procedure

STEP	INSPECTION		ACTION
1	**PERFORM BRAKE FLUID PRESSURE SENSOR INITIALIZATION PROCEDURE** • Perform the brake fluid pressure sensor initialization procedure using the M-MDS. (See **DSC RELATED PARTS SENSOR INITIALIZATION PROCEDURE**.) • Is the brake fluid pressure sensor initialization procedure completed normally?	Yes	Go to the next step.
		No	Replace the DSC HU/CM, then go to the next step. (See **DSC HU/CM REMOVAL/INSTALLATION**.)
2	**VERIFY NO ABNORMALITY ON BRAKE FLUID PRESSURE SENSOR** • Clear the DTCs from the memory. (See **ON-BOARD DIAGNOSIS [DYNAMIC STABILITY CONTROL (DSC)]**.) • Start the engine and drive the vehicle at **10 km/h {6.2 mph} or more**. • Are the same DTCs present?	Yes	Replace the DSC HU/CM, then go to the next step. (See **DSC HU/CM REMOVAL/INSTALLATION**.)
		No	Go to the next step.
3	**VERIFY THAT NO OTHER DTCS ARE PRESENT** • Are any other DTCs output?	Yes	Go to the applicable DTC inspection. (See **ON-BOARD DIAGNOSIS [DYNAMIC STABILITY CONTROL (DSC)]**.)
		No	DTC troubleshooting completed.

DTC C0044:28/C0044:47/C0044:49/C0044:51/C0044:54/C0044:64/C0044:8F [DYNAMIC STABILITY CONTROL (DSC)]

2014 - Mazda3 - Brakes

DTC C0051:62/C0051:64/C0051:67/C0051:85 [DYNAMIC STABILITY CONTROL (DSC)]

DTC	C0051:62, C0051:64, C0051:67, C0051:85	Steering angle sensor

DETECTION CONDITION		• C0051:62
		  ▪ The difference between the steering angle calculated by each sensor and the steering angle from the steering angle sensor is the specification or more when the vehicle is driven in a straight line.
		• C0051:64
		  ▪ The difference between the steering angle calculated by each sensor and the steering angle from the steering angle sensor exceeds the specification.
		• C0051:67
		  ▪ The neutral position of the steering angle cannot be estimated from the signals from the ABS wheel-speed sensors and the SAS control module.
		  NOTE:
		  • Each time the ignition is switched ON, the DSC HU/CM calculates the steering angle neutral position based on the signals from each sensor and each module.
		  • If the vehicle is driven as follows just after the engine is started, DTC C0051:67 may be output.
		  ▪ Vehicle is accelerated rapidly while being steered right or left
		  ▪ Vehicle is driven on abnormal road surface such as banked road
		  ▪ Vehicle is driven on continuously curved road such as mountain road

	• If the DTC is a past malfunction during DTC inspection, it does not indicate a vehicle malfunction. • C0051:85 ▪ The steering angle sensor detects signal modulation or steering angle that exceeds specification.
FAIL-SAFE FUNCTION	• C0051:62, C0051:64, C0051:85 ▪ Illuminates the TCS/DSC indicator light and smart city brake support (SCBS) indicator light (amber)*1. ▪ Tire pressure monitoring system warning light*1 illuminates after flashes. ▪ Inhibits the TCS, DSC, TPMS*1, and smart city brake support (SCBS)*1 controls. • C0051:67 ▪ Illuminates the TCS/DSC indicator light and smart city brake support (SCBS) indicator light (amber)*1. ▪ Inhibits the TCS, DSC, and smart city brake support (SCBS)*1 controls. • *1: If equipped.
POSSIBLE CAUSE	• C0051:62, C0051:64, C0051:67, C0051:85 ▪ Improper installation or positioning of the steering angle sensor ▪ Steering angle sensor malfunction ▪ Connector or terminal malfunction • C0051:67 ▪ Vehicle is accelerated rapidly while being steered right or left ▪ Vehicle is driven on abnormal road surface such as banked road ▪ Vehicle is driven on continuously curved road such as mountain road
SYSTEM WIRING DIAGRAM	Not applicable

Diagnostic procedure

STEP	INSPECTION		ACTION
1	**VERIFY WHETHER MALFUNCTION IS PAST OR PRESENT** • Switch the ignition ON (engine off or on). • Are the TCS/DSC indicator light and the smart city brake support (SCBS) indicator light (amber)* illuminated?	Yes	Perform DTC inspection and go to the applicable DTC troubleshooting procedure. (See **ON-BOARD DIAGNOSIS [DYNAMIC STABILITY CONTROL (DSC)]**.) After completing the applicable DTC troubleshooting, go to the next step.
		No	Clear the DTC from the memory and go to the Step 3. (See **ON-BOARD DIAGNOSIS [DYNAMIC STABILITY CONTROL (DSC)]**.)
2	**PERFORM EPS CM DTC INSPECTION** • Perform the EPS CM DTC inspection. (See **ELECTRIC POWER STEERING (EPS) ON-BOARD DIAGNOSIS**.) • Are any DTCs present?	Yes	Go to the applicable DTC inspection. (See **ELECTRIC POWER STEERING (EPS) ON-BOARD DIAGNOSIS**.)
		No	Go to the next step.
3	**VERIFY THAT THE SAME DTC IS NOT PRESENT** • Clear the DTCs from the memory. (See **ON-BOARD DIAGNOSIS [DYNAMIC STABILITY CONTROL (DSC)]**.) • Start the engine and drive the vehicle at **20 km/h {12 mph} or more**. • Are the same DTCs present?	Yes	Repeat the inspection from Step 1. If the malfunction recurs, replace the DSC HU/CM, then go to the next step. (See **DSC HU/CM REMOVAL/INSTALLATION**.)
		No	Go to the next step.
4	**VERIFY THAT NO OTHER DTCS ARE PRESENT** • Are any other DTCs output?	Yes	Go to the applicable DTC inspection. (See **ON-BOARD DIAGNOSIS [DYNAMIC STABILITY CONTROL (DSC)]**.)
		No	DTC troubleshooting completed.

*

With smart city brake support (SCBS)

2014 - Mazda3 - Brakes

DTC C0061:28/C0061:64/C0062:28/C0062:64/C0063:28/C0063:64 [DYNAMIC STABILITY CONTROL (DSC)]

DTC	C0061:28, C0061:64, C0062:28, C0062:64, C0063:28, C0063:64	SAS control module system
DETECTION CONDITION	**NOTE:** • The low-G sensor and the yaw rate sensor are built into the SAS control module. • C0061:28, C0061:64 ▪ Out-of-specification signal modulation or lateral-G value is detected from the low-G sensor. • C0062:28, C0062:64 ▪ Out-of-specification signal modulation or longitudinal-G value is detected from the low-G sensor. • C0063:28, C0063:64 ▪ Out-of-specification signal modulation or yaw rate value is detected from the yaw rate sensor.	
FAIL-SAFE FUNCTION	• C0061:28, C0061:64, C0063:28, C0063:64 ▪ Illuminates the TCS/DSC indicator light and smart city brake support (SCBS) indicator light (amber)*1. ▪ Tire pressure monitoring system warning light*1 illuminates after flashes. ▪ Inhibits the TCS, DSC, TPMS*1, and smart city brake support (SCBS)*1 controls. • C0062:28, C0062:64 ▪ Illuminates the TCS/DSC indicator light. ▪ Inhibits the hill launch assist (HLA) control. • *1: If equipped.	
POSSIBLE	• SAS control module malfunction	

CAUSE	DSC HU/CM malfunction • Poor connection at connectors (female terminal)
SYSTEM WIRING DIAGRAM	Not applicable

Diagnostic procedure

STEP	INSPECTION		ACTION
1	**INSPECT SAS CONTROL MODULE MALFUNCTION** • Switch the ignition to off. • Using the M-MDS, perform the DTC inspection for the SAS control module. (See **DTC INSPECTION [STANDARD DEPLOYMENT CONTROL SYSTEM]**.) (See **DTC INSPECTION [TWO-STEP DEPLOYMENT CONTROL SYSTEM]**.) • Are any DTCs detected?	Yes	Go to applicable DTC inspection. (See **DTC TABLE [STANDARD DEPLOYMENT CONTROL SYSTEM]**.) (See **DTC TABLE [TWO-STEP DEPLOYMENT CONTROL SYSTEM]**.)
		No	Go to the next step.
2	**VERIFY THAT THE SAME DTC IS NOT PRESENT** • Reconnect all disconnected connectors. • Clear the DTCs from the memory. (See **ON-BOARD DIAGNOSIS [DYNAMIC STABILITY CONTROL (DSC)]**.) • Start the engine and drive the vehicle at **10 km/h {6.2 mph} or more**. • Are the same DTCs present?	Yes	Repeat the inspection from Step 1. If the malfunction recurs, replace the DSC HU/CM, then go to the next step. (See **DSC HU/CM REMOVAL/INSTALLATION**.)
		No	Go to the next step.
3	**VERIFY THAT NO OTHER DTCS ARE PRESENT** • Are any other DTCs output?	Yes	Go to the applicable DTC inspection. (See **ON-BOARD DIAGNOSIS [DYNAMIC STABILITY CONTROL (DSC)]**.)
		No	DTC troubleshooting completed.

2014 - Mazda3 - Brakes

DTC C0061:54/C0062:54/C0063:54 [DYNAMIC STABILITY CONTROL (DSC)]

DTC	C0061:54, C0062:54, C0063:54	DSC HU/CM system (unperformed initialization procedure)

DETECTION CONDITION		• C0061:54
		  ▪ DSC HU/CM detects that the initialization procedure has not been performed. (Lateral acceleration sensor)
		• C0062:54
		  ▪ DSC HU/CM detects that the initialization procedure has not been performed. (Longitudinal acceleration sensor)
		• C0063:54
		  ▪ DSC HU/CM detects that the initialization procedure has not been performed. (Yaw rate sensor)

FAIL-SAFE FUNCTION		• C0061:54, C0063:54
		  ▪ Illuminates the TCS/DSC indicator light, and smart city brake support (SCBS) indicator light (amber)*1.
		  ▪ Tire pressure monitoring system warning light*1 illuminates after flashes. (Not illuminated/flashed depending on malfunction content.)
		  ▪ Inhibits the TCS, DSC, TPMS*1, and smart city brake support (SCBS)*1 controls.
		• C0062:54
		  ▪ Illuminates the TCS/DSC indicator light.
		  ▪ Inhibits the hill launch assist (HLA) control.
		• *1: If equipped.

POSSIBLE CAUSE		• Initialization procedure for the lateral acceleration sensor, longitudinal acceleration sensor or yaw rate sensor not performed • SAS control module malfunction • DSC HU/CM malfunction

SYSTEM WIRING DIAGRAM	Not applicable

Diagnostic procedure

STEP	INSPECTION		ACTION
1	**VERIFY INITIALIZATION PROCEDURE** • Was the DSC related parts sensor initialization procedure performed?	Yes	Go to the next step.
		No	Perform the DSC related parts sensor initialization procedure, then go to Step 3. (See **DSC RELATED PARTS SENSOR INITIALIZATION PROCEDURE**.)
2	**INSPECT SAS CONTROL MODULE MALFUNCTION** • Switch the ignition to off. • Using the M-MDS, perform the DTC inspection for the SAS control module. (See **DTC INSPECTION [STANDARD DEPLOYMENT CONTROL SYSTEM]**.) (See **DTC INSPECTION [TWO-STEP DEPLOYMENT CONTROL SYSTEM]**.) • Are any DTCs detected?	Yes	Go to applicable DTC inspection. (See **DTC TABLE [STANDARD DEPLOYMENT CONTROL SYSTEM]**.) (See **DTC TABLE [TWO-STEP DEPLOYMENT CONTROL SYSTEM]**.)
		No	Go to the next step.
3	**VERIFY THAT THE SAME DTC IS NOT PRESENT** • Clear the DTCs from the memory. (See **ON-BOARD DIAGNOSIS [DYNAMIC STABILITY CONTROL (DSC)]**.) • Are the same DTCs present?	Yes	Repeat the inspection from Step 1. If the malfunction recurs, replace the DSC HU/CM, then go to the next step. (See **DSC HU/CM REMOVAL/INSTALLATION**.)
		No	Go to the next step.
4	**VERIFY THAT NO OTHER DTCS ARE PRESENT** • Are any other DTCs output?	Yes	Go to the applicable DTC inspection. (See **ON-BOARD DIAGNOSIS [DYNAMIC STABILITY CONTROL (DSC)]**.)
		No	DTC troubleshooting completed.

2014 - Mazda3 - Brakes

DTC C0062:76 [DYNAMIC STABILITY CONTROL (DSC)]

DTC	C0062:76	SAS control module system
DETECTION CONDITION		• Error is detected in communication with SAS control module by CAN communication.
FAIL-SAFE FUNCTION		• Illuminates the TCS/DSC indicator light. • Inhibits the hill launch assist (HLA) control.
POSSIBLE CAUSE		• Poor SAS control module installation • Low-G sensor malfunction in SAS control module
SYSTEM WIRING DIAGRAM		Not applicable

STEP	INSPECTION		ACTION
1	**VERIFY IF SAS CONTROL MODULE IS CORRECTLY INSTALLED** • Verify the SAS control module installation condition. (See **SAS CONTROL MODULE REMOVAL/INSTALLATION [STANDARD DEPLOYMENT CONTROL SYSTEM]**.) (See **SAS CONTROL MODULE REMOVAL/INSTALLATION [TWO-STEP DEPLOYMENT CONTROL SYSTEM]**.) • Is the installation condition normal?	Yes	Go to the next step.
		No	Install the SAS control module correctly, then go to the next step.
2	**INSPECT SAS CONTROL MODULE MALFUNCTION** • Switch the ignition to off. • Using the M-MDS, perform the DTC inspection for the SAS control module.	Yes	Go to applicable DTC inspection. (See **DTC TABLE [STANDARD DEPLOYMENT CONTROL SYSTEM]**.) **DTC TABLE [TWO-STEP**

	(See **DTC INSPECTION [STANDARD DEPLOYMENT CONTROL SYSTEM]**.) (See **DTC INSPECTION [TWO-STEP DEPLOYMENT CONTROL SYSTEM]**.) • Are any DTCs detected?		(See **DEPLOYMENT CONTROL SYSTEM]**.)
		No	Go to the next step.
3	**PERFORM DSC RELATED PARTS SENSOR INITIALIZATION PROCEDURE** • Perform the DSC related parts sensor initialization procedure using the M-MDS. (See **DSC RELATED PARTS SENSOR INITIALIZATION PROCEDURE**.) • Is the DSC sensor initialization procedure completed normally?	Yes	Go to the next step.
		No	Replace the DSC HU/CM, then go to the next step. (See **DSC HU/CM REMOVAL/INSTALLATION**.)
4	**VERIFY THAT THE SAME DTC IS NOT PRESENT** • Clear the DTCs from the memory. (See **ON-BOARD DIAGNOSIS [DYNAMIC STABILITY CONTROL (DSC)]**.) • Are the same DTCs present?	Yes	Repeat the inspection from Step 1. If the malfunction recurs, replace the DSC HU/CM, then go to the next step. (See **DSC HU/CM REMOVAL/INSTALLATION**.)
		No	Go to the next step.
5	**VERIFY THAT NO OTHER DTCS ARE PRESENT** • Are any other DTCs output?	Yes	Go to the applicable DTC inspection. (See **ON-BOARD DIAGNOSIS [DYNAMIC STABILITY CONTROL (DSC)]**.)
		No	DTC troubleshooting completed.

2014 - Mazda3 - Brakes

DTC C006B:00/C0072:68 [DYNAMIC STABILITY CONTROL (DSC)]

DTC	C006B:00, C0072:68	TCS/DSC control system
DETECTION CONDITION	• C006B:00 ▪ DSC control continues for a specified period of time or more • C0072:68 ▪ Due to excessive braking, TCS control using braking is temporarily inhibited.	
FAIL-SAFE FUNCTION	• C006B:00 ▪ Illuminates the TCS/DSC indicator light and smart city brake support (SCBS) indicator light (amber)*1. ▪ Tire pressure monitoring system warning light*1 illuminates after flashes. ▪ Inhibits the TCS, DSC, TPMS*1, smart city brake support (SCBS)*1 controls. • C0072:68 ▪ Illuminates the TCS/DSC indicator light. ▪ Inhibits the TCS (brake control) control. • *: If equipped.	
POSSIBLE CAUSE	• This does not indicate a malfunction since constant TCS or DSC control over an extended period of time is inhibited to protect the DSC solenoid valve inside the DSC HU or the engine.	
SYSTEM WIRING DIAGRAM	Not applicable	

Diagnostic procedure

STEP	INSPECTION	ACTION

1	**VERIFY THAT THE SAME DTC IS NOT PRESENT** • Clear the DTCs from the memory. (See **ON-BOARD DIAGNOSIS [DYNAMIC STABILITY CONTROL (DSC)]**.) • Are the same DTCs present?	Yes	Replace the DSC HU/CM, then go to the next step. (See **DSC HU/CM REMOVAL/INSTALLATION**.)
		No	Go to the next step.
2	**VERIFY THAT NO OTHER DTCS ARE PRESENT** • Are any other DTCs output?	Yes	Go to the applicable DTC inspection. (See **ON-BOARD DIAGNOSIS [DYNAMIC STABILITY CONTROL (DSC)]**.)
		No	DTC troubleshooting completed.

2014 - Mazda3 - Brakes

DTC C1031:35 [DYNAMIC STABILITY CONTROL (DSC)]

DTC	C1031:35	Tire pressure monitoring system (TPMS) set switch
DETECTION CONDITION		• Continuous ON signal from the TPMS set switch for **60 s or more** is detected.
FAIL-SAFE FUNCTION		• Tire pressure monitoring system warning light illuminates after flashes. • Inhibits the TPMS control.
POSSIBLE CAUSE		• The driver pressed and held the TPMS set switch for **60 s or more**. • TPMS set switch malfunction
SYSTEM WIRING DIAGRAM		Not applicable

Diagnostic procedure

STEP	INSPECTION		ACTION
1	**VERIFY DTCs FOR INSTRUMENT CLUSTER** • Switch the ignition to off. • Using the M-MDS, perform the DTC inspection for the instrument cluster. (See **DTC INSPECTION [INSTRUMENT CLUSTER]**.) • Are any DTCs detected?	Yes	Go to applicable DTC inspection. (See **DTC TABLE [INSTRUMENT CLUSTER]**.)
		No	Go to the next step.
2	**INSPECT TPMS SET SWITCH** • Inspect the TPMS set switch. (See **TIRE PRESSURE MONITORING SYSTEM SET SWITCH INSPECTION**.)	Yes	Go to the next step.
		No	Replace the TPMS set switch, then go to the next step. (See **TIRE PRESSURE MONITORING SYSTEM SET**

	Is the TPMS set switch normal?		**SWITCH REMOVAL / INSTALLATION**.)
3	**VERIFY THAT THE SAME DTC IS NOT PRESENT** • Reconnect all disconnected connectors. • Clear the DTCs from the memory. (See **ON-BOARD DIAGNOSIS [DYNAMIC STABILITY CONTROL (DSC)]**.) • Are the same DTCs present?	Yes	Repeat the inspection from Step 1.
		No	Go to the next step.
4	**VERIFY THAT NO OTHER DTCS ARE PRESENT** • Are any other DTCs output?	Yes	Go to the applicable DTC inspection. (See **ON-BOARD DIAGNOSIS [DYNAMIC STABILITY CONTROL (DSC)]**.)
		No	DTC troubleshooting completed.

2014 - Mazda3 - Brakes

DTC C1031:41 [DYNAMIC STABILITY CONTROL (DSC)]

DTC	C1031:41	Tire pressure monitoring system (TPMS) system
DETECTION CONDITION		• When the DSC HU/CM detects malfunction in the memory for storing a calculated tire pressure value.
FAIL-SAFE FUNCTION		• Tire pressure monitoring system warning light illuminates after flashes. • Inhibits the TPMS control.
POSSIBLE CAUSE		• DSC HU/CM internal error • DSC HU/CM malfunction
SYSTEM WIRING DIAGRAM		—

Diagnostic procedure

STEP	INSPECTION		ACTION

1	**INITIALIZE A TPMS MEMORY**
	• Switch the ignition to off.
	• Connect the M-MDS (IDS) to DLC-2.
	• After the vehicle is identified, select the following items from the initial screen of the IDS.
	  ◦ Select “Chassis”.
	  ◦ Select “ABS/DSC”.
	  ◦ Select “TPMS Reset”.
	• Perform the procedure according to the directions on the screen.
	• Is the initialization normally completed?
		Yes	Go to the next step.

		No	Repeat the inspection from Step 1. If the malfunction recurs, replace the DSC HU/CM, then go to the next step. (See **DSC HU/CM REMOVAL/INSTALLATION**.)
	VERIFY THAT THE SAME DTC IS NOT PRESENT		

2	• Clear the DTCs from the memory. (See **ON-BOARD DIAGNOSIS [DYNAMIC STABILITY CONTROL (DSC)]**.) • Are the same DTCs present?	Yes	Repeat the inspection from Step 1. If the malfunction recurs, replace the DSC HU/CM, then go to the next step. (See **DSC HU/CM REMOVAL/INSTALLATION**.)
		No	Go to the next step.
3	**VERIFY THAT NO OTHER DTCS ARE PRESENT** • Are any other DTCs output?	Yes	Go to the applicable DTC inspection. (See **ON-BOARD DIAGNOSIS [DYNAMIC STABILITY CONTROL (DSC)]**.)
		No	DTC troubleshooting completed.

2014 - Mazda3 - Brakes

DTC C1031:54 [DYNAMIC STABILITY CONTROL (DSC)]

DTC	C1031:54	Tire pressure monitoring system (TPMS) system
DETECTION CONDITION		• Detects that tire such as temporary spare tire with outer diameter of considerable difference is installed • There is a large fluctuation in steering angle and acceleration/deceleration speed repeatedly over short intervals.
FAIL-SAFE FUNCTION		• Tire pressure monitoring system warning light illuminates after flashes. • Inhibits the TPMS control.
POSSIBLE CAUSE		• Diameter of currently installed tires differs from Mazda recommended tires • There is a large fluctuation in steering angle and acceleration/deceleration speed repeatedly over short intervals. • DSC HU/CM malfunction
SYSTEM WIRING DIAGRAM		Not applicable

Diagnostic procedure

STEP	INSPECTION		ACTION
1	**VERIFY THE TIRE** • Verify that the currently equipped tire type (size, supplier, and type) conform to the Mazda recommendation. (See **WHEEL AND TIRE SPECIFICATION**.) • Is the tire type as specified?	Yes	Go to the next step.
		No	Replace the tire, then go to Step 3. (See **WHEEL AND TIRE SPECIFICATION**.)
2	**MEASURE THE TIRE PRESSURE** • Measure the tire pressure when the tires are cold. **WHEEL AND TIRE SPECIFICATION**	Yes	Go to the next step.
		No	Adjust the tire pressure to the specification when the tires are cold,

	(See .) • Is the pressure as specified?		then go to the next step. (See **WHEEL AND TIRE SPECIFICATION**.)
3	**INITIALIZE THE TPMS** • Initialize the TPMS. (See **TIRE PRESSURE MONITORING SYSTEM INITIALIZATION PROCEDURE**.) • Is the initialization normally completed?	Yes	Go to the next step.
		No	Repeat the inspection from Step 1. If the malfunction recurs, replace the DSC HU/CM, then go to the next step. (See **DSC HU/CM REMOVAL/INSTALLATION**.)
4	**VERIFY THAT THE SAME DTC IS NOT PRESENT** • Clear the DTCs from the memory. (See **ON-BOARD DIAGNOSIS [DYNAMIC STABILITY CONTROL (DSC)]**.) • Are the same DTCs present?	Yes	Repeat the inspection from Step 1. If the malfunction recurs, replace the DSC HU/CM, then go to the next step. (See **DSC HU/CM REMOVAL/INSTALLATION**.)
		No	Go to the next step.
5	**VERIFY THAT NO OTHER DTCS ARE PRESENT** • Are any other DTCs output?	Yes	Go to the applicable DTC inspection. (See **ON-BOARD DIAGNOSIS [DYNAMIC STABILITY CONTROL (DSC)]**.)
		No	DTC troubleshooting completed.

2014 - Mazda3 - Brakes

DTC C1031:68 [DYNAMIC STABILITY CONTROL (DSC)]

DTC	C1031:68	Tire pressure monitoring system (TPMS) system
DETECTION CONDITION		• Error is detected in ambient temperature sensor from PCM via CAN communication.
FAIL-SAFE FUNCTION		• Tire pressure monitoring system warning light illuminates after flashes. • Inhibits the TPMS control.
POSSIBLE CAUSE		• Ambient temperature sensor malfunction • PCM malfunction
SYSTEM WIRING DIAGRAM		—

Diagnostic procedure

STEP	INSPECTION		ACTION
1	**VERIFY DTCs FOR PCM** • Switch the ignition to off. • Verify DTCs for the PCM using the M-MDS. (See **ON-BOARD DIAGNOSTIC TEST [SKYACTIV-G 2.0, SKYACTIV-G 2.5]**.) • Is the DTC displayed?	Yes	Repair the malfunctioning part according to the applicable DTC troubleshooting. (See **DTC TABLE [SKYACTIV-G 2.0, SKYACTIV-G 2.5]**.)
		No	Go to the next step.
2	**INSPECT AMBIENT TEMPERATURE SENSOR** • Inspect the AMBIENT TEMPERATURE SENSOR. (See **AMBIENT TEMPERATURE SENSOR INSPECTION [MANUAL AIR CONDITIONER]**.)	Yes	Go to the next step.
		No	Replace the ambient temperature sensor, then go to the next step. (See **AMBIENT TEMPERATURE SENSOR REMOVAL/INSTALLATION [MANUAL AIR**

	(See **AMBIENT TEMPERATURE SENSOR INSPECTION [FULL-AUTO AIR CONDITIONER]**.) • Is the ambient temperature sensor normal?		**CONDITIONER]**.) (See **AMBIENT TEMPERATURE SENSOR REMOVAL/INSTALLATION [FULL-AUTO AIR CONDITIONER]**.)
3	**VERIFY THAT THE SAME DTC IS NOT PRESENT** • Clear the DTCs from the memory. (See **ON-BOARD DIAGNOSIS [DYNAMIC STABILITY CONTROL (DSC)]**.) • Are the same DTCs present?	Yes	Repeat the inspection from Step 1. If the malfunction recurs, replace the PCM, then go to the next step. (See **PCM REMOVAL/INSTALLATION [SKYACTIV-G 2.0, SKYACTIV-G 2.5]**.)
		No	Go to the next step.
4	**VERIFY THAT NO OTHER DTCS ARE PRESENT** • Are any other DTCs output?	Yes	Go to the applicable DTC inspection. (See **ON-BOARD DIAGNOSIS [DYNAMIC STABILITY CONTROL (DSC)]**.)
		No	DTC troubleshooting completed.

2014 - Mazda3 - Brakes

DTC C1109:64 [DYNAMIC STABILITY CONTROL (DSC)]

DTC	C1109:64	DSC OFF switch
DETECTION CONDITION		• Continuous ON signal from the DSC OFF switch for **10 s or more** is detected.
FAIL-SAFE FUNCTION		• Permits the control and does not illuminate each warning/indicator light.
POSSIBLE CAUSE		• The driver pressed and held the DSC OFF switch for **10 s or more**. • Short to ground in the wiring harness between the instrument cluster terminal V and DSC OFF switch terminal B • Open circuit in wiring harness between instrument cluster terminal T and DSC OFF switch terminal C • DSC OFF switch malfunction • Poor connection at connectors (female terminal)

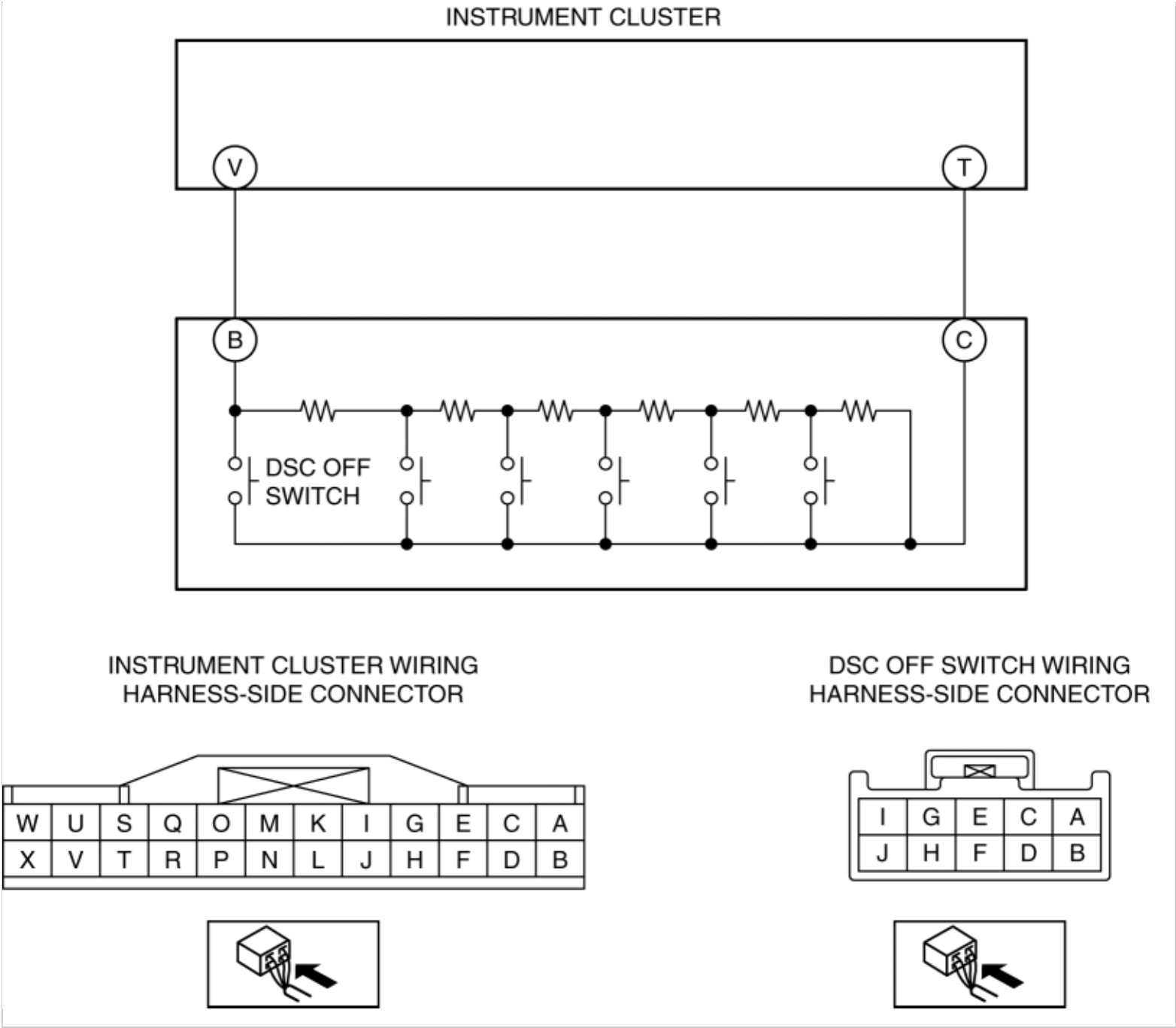

Diagnostic procedure

STEP	INSPECTION		ACTION
1	**PERFORM INSTRUMENT CLUSTER DTC INSPECTION** • Switch the ignition off. • Using the M-MDS, perform the DTC inspection for the instrument cluster. (See **DTC INSPECTION [INSTRUMENT CLUSTER]**.) • Are any DTCs detected?	Yes	Go to applicable DTC inspection. (See **DTC TABLE [INSTRUMENT CLUSTER]**.)
		No	Go to the next step.

2	**INSPECT DSC OFF SWITCH SIGNAL CIRCUIT FOR SHORT TO GROUND** • Disconnect the DSC OFF switch. • Disconnect the instrument cluster connector. • Inspect for continuity between the DSC OFF switch connector terminal B (vehicle harness-side) and body ground. • Is there continuity?	Yes	Refer to the wiring diagram and verify whether or not there is a common connector between the DSC OFF switch connector terminal B (vehicle harness-side) and instrument cluster connector terminal V (vehicle harness-side). **If there is a common connector:** • Determine the malfunctioning part by inspecting the common connector and the terminal for corrosion, damage, or pin disconnection, and the common wiring harness for a short to ground. • Repair or replace the malfunctioning part. **If there is no common connector:** • Repair or replace the wiring harness which has a short to ground. Go to Step 5.
		No	Go to the next step.
3	**INSPECT DSC OFF SWITCH SIGNAL CIRCUIT FOR OPEN CIRCUIT** • Inspect for continuity between the DSC OFF switch connector terminal C (vehicle harness-side) and instrument cluster connector terminal T (vehicle harness-side). • Is there continuity?	Yes	Go to the next step.
		No	Refer to the wiring diagram and verify whether or not there is a common connector between the DSC OFF switch connector terminal C (vehicle harness-side) and instrument cluster connector terminal T (vehicle harness-side). **If there is a common connector:** • Determine the malfunctioning part by inspecting the common connector and the terminal for corrosion, damage, or pin disconnection, and the common wiring harness for an open circuit. • Repair or replace the malfunctioning part. **If there is no common connector:** • Repair or replace the wiring harness which has an open circuit. Go to Step 5.
4	**INSPECT DSC OFF SWITCH** • Inspect the DSC OFF switch. (See **DSC OFF SWITCH INSPECTION**.) • Is the DSC OFF switch	Yes	Go to the next step.
		No	Replace the DSC OFF switch, then go to the next step. (See **DSC OFF SWITCH REMOVAL/INSTALLATION**.)

	normal?		
5	**VERIFY THAT THE SAME DTC IS NOT PRESENT** • Reconnect all disconnected connectors. • Clear the DTCs from the memory. (See **ON-BOARD DIAGNOSIS [DYNAMIC STABILITY CONTROL (DSC)]**.) • Are the same DTCs present?	Yes	Repeat the inspection from Step 1.
		No	Go to the next step.
6	**VERIFY THAT NO OTHER DTCS ARE PRESENT** • Are any other DTCs output?	Yes	Go to the applicable DTC inspection. (See **ON-BOARD DIAGNOSIS [DYNAMIC STABILITY CONTROL (DSC)]**.)
		No	DTC troubleshooting completed.

2014 - Mazda3 - Brakes

DTC P0942:46/P0942:49 [DYNAMIC STABILITY CONTROL (DSC)]

DTC	P0942:46, P0942:49	DSC unit mismatched installation
DETECTION CONDITION	• No match between DSC CM ID and DSC HU ID detected	
FAIL-SAFE FUNCTION	• P0942:46 ▪ Illuminates the TCS/DSC indicator light and smart city brake support (SCBS) indicator light (amber)*1. ▪ Tire pressure monitoring system warning light*1 illuminates after flashes. ▪ Inhibits the TCS, DSC, brake assist control, hill launch assist (HLA), TPMS*1, and smart city brake support (SCBS)*1controls. • P0942:49 ▪ Illuminates the ABS warning light*2, brake system warning light*2, TCS/DSC indicator light, and smart city brake support (SCBS) indicator light (amber)*1. ▪ Tire pressure monitoring system warning light*1 illuminates after flashes. ▪ Inhibits the ABS*3, EBD*3, TCS, DSC, brake assist control, hill launch assist (HLA), TPMS*1, and smart city brake support (SCBS)*1controls. *1: If equipped. *2: Not illuminated depending on malfunction content. *3: Enabled depending on malfunction content.	
POSSIBLE CAUSE	• DSC CM ID and DSC HU ID do not match (DSC HU/CM internal malfunction)	
SYSTEM WIRING	Not applicable	

DIAGRAM	

Diagnostic procedure

STEP	INSPECTION		ACTION
1	**VERIFY NO DSC HU/CM MALFUNCTION** • Clear the DTCs from the memory. (See **ON-BOARD DIAGNOSIS [DYNAMIC STABILITY CONTROL (DSC)]**.) • Start the engine and drive the vehicle at **10km/h {6.2 mph} or more**. • Are the same DTCs present?	Yes	Replace the DSC HU/CM, then go to the next step. (See **DSC HU/CM REMOVAL/INSTALLATION**.)
		No	Go to the next step.
2	**VERIFY THAT NO OTHER DTCS ARE PRESENT** • Are any other DTCs output?	Yes	Go to the applicable DTC inspection. (See **ON-BOARD DIAGNOSIS [DYNAMIC STABILITY CONTROL (DSC)]**.)
		No	DTC troubleshooting completed.

2014 - Mazda3 - Brakes

DTC U0001:88/U0100:00/U0101:00/U0131:00/U0151:00/U0155:00/U0235:00 [DYNAMIC STABILITY CONTROL (DSC)]

DTC	U0001:88, U0100:00, U0101:00, U0131:00, U0151:00, U0155:00, U0235:00	CAN line
DETECTION CONDITION	• U0001:88 ▪ Open or short circuit in CAN system wiring harness is detected. • U0100:00 ▪ Communication error with PCM is detected in CAN communication. • U0101:00 ▪ Communication error with TCM is detected in CAN communication. • U0131:00 ▪ Communication error with EPS CM is detected in CAN communication. • U0151:00 ▪ Communication error with SAS control module is detected in CAN communication. • U0155:00 ▪ Communication error with instrument cluster is detected in CAN communication. • U0235:00 ▪ Communication error with laser sensor is detected in CAN communication.	
	• U0001:88 ▪ Illuminates the ABS warning light, TCS/DSC indicator light, and smart city brake support (SCBS) indicator light (amber)*1. *1	

FAIL-SAFE FUNCTION	▪ Tire pressure monitoring system warning light illuminates after flashes. ▪ Inhibits the ABS, TCS, DSC, brake assist control, hill launch assist (HLA), TPMS*1, and smart city brake support (SCBS)*1 controls. • U0100:00 ▪ Illuminates the ABS warning light*2, TCS/DSC indicator light*2, and smart city brake support (SCBS) indicator light (amber)*1*2. ▪ Tire pressure monitoring system warning light*1 illuminates after flashes. (Not illuminated/flashed depending on malfunction content.) ▪ Inhibits the ABS*3, TCS*3, DSC*3, brake assist control*3, hill launch assist (HLA)*3, TPMS*1*3, and smart city brake support (SCBS)*1*3 controls. • U0101:00 ▪ Illuminates the TCS/DSC indicator light and smart city brake support (SCBS) indicator light (amber)*1. ▪ Tire pressure monitoring system warning light*1 illuminates after flashes. ▪ Inhibits the TCS, DSC, hill launch assist (HLA)*3, TPMS*1, and smart city brake support (SCBS)*1 controls. • U0131:00 ▪ Illuminates the TCS/DSC indicator light and smart city brake support (SCBS) indicator light (amber)*1. ▪ Tire pressure monitoring system warning light*1 illuminates after flashes. ▪ Inhibits the TCS, DSC, TPMS*1, and smart city brake support (SCBS)*1 controls. • U0151:00 ▪ Illuminates the TCS/DSC indicator light and smart city brake support (SCBS) indicator light (amber)*1. ▪ Tire pressure monitoring system warning light*1 illuminates after flashes. (Not illuminated/flashed depending on malfunction content.) ▪ Inhibits the TCS*3, DSC*3, brake assist control*3, hill launch assist (HLA)*3, TPMS*1*3, and smart city brake support (SCBS)*1*3 controls. • U0155:00 ▪ Illuminates the ABS warning light*2, TCS/DSC indicator

	light*2, and smart city brake support (SCBS) indicator light (amber)*1*2. ▪ Tire pressure monitoring system warning light*1 illuminates after flashes. (Not illuminated/flashed depending on malfunction content.) ▪ Inhibits the ABS*3, TCS*3, DSC*3, brake assist control*3, hill launch assist (HLA)*3, TPMS*1*3, and smart city brake support (SCBS)*1*3 controls. • U0235:00 ▪ Illuminates the smart city brake support (SCBS) indicator light (amber). ▪ Inhibits the smart city brake support (SCBS) control. *1: If equipped. *2: Not illuminated depending on malfunction content. *3: Control enabled depending on malfunction content.
POSSIBLE CAUSE	• CAN system wiring harness open or short circuit • CAN system wiring harness open or short circuit with PCM • CAN system wiring harness open or short circuit with TCM • CAN system wiring harness open or short circuit with EPS CM • CAN system wiring harness open or short circuit with SAS control module • CAN system wiring harness open or short circuit with instrument cluster • CAN system wiring harness open or short circuit with laser sensor • instrument cluster malfunction
SYSTEM WIRING DIAGRAM	Not applicable

Diagnostic procedure

- Inspect according to diagnostic procedure in MULTIPLEX COMMUNICATION SYSTEM. (See **FOREWORD**.)

2014 - Mazda3 - Brakes

DTC U0301:09/U0401:00 [DYNAMIC STABILITY CONTROL (DSC)]

DTC	**U0301:09, U0401:00**	**Abnormal message from PCM**
DETECTION CONDITION	• Correct data cannot be received from PCM	
FAIL-SAFE FUNCTION	• U0301:09 ▪ Permits the control and does not illuminate each warning/indicator light. • U0401:00 ▪ Illuminates the TCS/DSC indicator light*1 and smart city brake support (SCBS) indicator light (amber)*1*2. ▪ Tire pressure monitoring system warning light*2 illuminates after flashes. (Not illuminated/flashed depending on malfunction content.) ▪ Inhibits the TCS*3, DSC*3, hill launch assist (HLA)*3, TPMS*2*3, and smart city brake support (SCBS)*2*3 controls. *1: Not illuminated depending on malfunction content. *2: If equipped. *3: Control enabled depending on malfunction content.	
POSSIBLE CAUSE	• PCM malfunction	
SYSTEM WIRING DIAGRAM	Not applicable	

Diagnostic procedure

STEP	INSPECTION	ACTION

1	**PERFORM PCM DTC INSPECTION** • Switch the ignition off. • Using the M-MDS, perform the DTC inspection for the PCM. (See **ON-BOARD DIAGNOSTIC TEST [SKYACTIV-G 2.0, SKYACTIV-G 2.5]**.) • Are any DTCs detected?	Yes	Go to applicable DTC inspection. (See **DTC TABLE [SKYACTIV-G 2.0, SKYACTIV-G 2.5]**.)
		No	Go to the next step.
2	**VERIFY THAT SAME DTC IS NOT PRESENT** • Clear the DTCs from the memory. (See **ON-BOARD DIAGNOSIS [DYNAMIC STABILITY CONTROL (DSC)]**.) • Are the same DTCs present?	Yes	Repeat the inspection from Step 1. If the malfunction recurs, replace the PCM, then go to the next step. (See **PCM REMOVAL/INSTALLATION [SKYACTIV-G 2.0, SKYACTIV-G 2.5]**.)
		No	Go to the next step.
3	**VERIFY THAT NO OTHER DTCs ARE PRESENT** • Are any other DTCs output?	Yes	Go to the applicable DTC inspection. (See **ON-BOARD DIAGNOSIS [DYNAMIC STABILITY CONTROL (DSC)]**.)
		No	DTC troubleshooting completed.

2014 - Mazda3 - Brakes

DTC U0402:00 [DYNAMIC STABILITY CONTROL (DSC)]

DTC	U0402:00	Abnormal message from transmission/transaxle
DETECTION CONDITION		• The DSC HU/CM received error signals from the transmission/transaxle for **1 s or more** with the ignition switched ON (engine off or on).
FAIL-SAFE FUNCTION		• Illuminates the TCS/DSC indicator light and smart city brake support (SCBS) indicator light (amber)*1. • Tire pressure monitoring system warning light*1 illuminates after flashes. • Inhibits the TCS, DSC, hill launch assist (HLA), TPMS*1, and smart city brake support (SCBS)*1 controls. • *1: If equipped.
POSSIBLE CAUSE		• The transmission/transaxle could not send a normal signal temporarily. (DTCs are stored in the TCM.) • Transmission/transaxle malfunction • DSC HU/CM malfunction
SYSTEM WIRING DIAGRAM		Not applicable

Diagnostic procedure

STEP	INSPECTION		ACTION
1	**VERIFY DTCs FOR TCM** • Switch the ignition to off. • Verify DTCs for the TCM using the M-MDS. (See **ON-BOARD DIAGNOSTIC SYSTEM DTC INSPECTION [FW6A-EL]**.) • Is the DTC displayed?	Yes	Repair the malfunctioning part according to the applicable DTC troubleshooting. (See **ON-BOARD DIAGNOSTIC SYSTEM DTC TABLE [FW6A-EL]**.)
		No	Go to the next step.

2	**VERIFY THAT THE SAME DTC IS NOT PRESENT** • Clear DTC for the DSC HU/CM using the M-MDS. (See **ON-BOARD DIAGNOSIS [DYNAMIC STABILITY CONTROL (DSC)]**.) • Are the same DTCs present?	Yes	Repeat the inspection from Step 1. If the malfunction recurs, replace the TCM, then go to the next step. (See **CONTROL VALVE BODY REMOVAL/INSTALLATION [FW6A-EL]**.)
		No	Go to the next step.
3	**VERIFY IF OTHER DTCs DISPLAYED** • Are any other DTCs displayed?	Yes	Repair the malfunctioning part according to the applicable DTC troubleshooting. (See **ON-BOARD DIAGNOSIS [DYNAMIC STABILITY CONTROL (DSC)]**.)
		No	DTC troubleshooting completed.

2014 - Mazda3 - Brakes

DTC U0420:00 [DYNAMIC STABILITY CONTROL (DSC)]

DTC	U0420:00	Abnormal message from EPS CM
DETECTION CONDITION		• Correct data cannot be received from EPS CM
FAIL-SAFE FUNCTION		• Illuminates the TCS/DSC indicator light and smart city brake support (SCBS) indicator light (amber)*1. • Tire pressure monitoring system warning light*1 illuminates after flashes. • Inhibits the TCS, DSC, TPMS*1, smart city brake support (SCBS)*1 controls. • *: If equipped.
POSSIBLE CAUSE		• EPS CM malfunction
SYSTEM WIRING DIAGRAM		Not applicable

Diagnostic procedure

STEP	INSPECTION		ACTION
1	**INSPECT FOR EPS CM MALFUNCTION** • Switch the ignition to off. • Using the M-MDS, perform the DTC inspection for the EPS CM. (See **ELECTRIC POWER STEERING (EPS) ON-BOARD DIAGNOSIS**.) • Are any DTCs detected?	Yes	Go to applicable DTC inspection. (See **ELECTRIC POWER STEERING (EPS) ON-BOARD DIAGNOSIS**.)
		No	Go to the next step.
2	**VERIFY THAT THE SAME DTC IS NOT PRESENT** • Clear the DTCs from the memory. (See **ON-BOARD DIAGNOSIS**	Yes	Repeat the inspection from Step 1. If the malfunction recurs, replace the EPS CM, then go to the next step.

	[DYNAMIC STABILITY CONTROL (DSC)].) • Are the same DTCs present?		(See **STEERING WHEEL AND COLUMN REMOVAL / INSTALLATION**.)
		No	Go to the next step.
3	**VERIFY THAT NO OTHER DTCS ARE PRESENT** • Are any other DTCs output?	Yes	Go to the applicable DTC inspection. (See **ON-BOARD DIAGNOSIS [DYNAMIC STABILITY CONTROL (DSC)]**.)
		No	DTC troubleshooting completed.

2014 - Mazda3 - Brakes

DTC U0423:00/U0443:00 [DYNAMIC STABILITY CONTROL (DSC)]

DTC	U0423:00/U0443:00	Abnormal message from instrument cluster
DETECTION CONDITION	• Correct data cannot be received from instrument cluster	
FAIL-SAFE FUNCTION	• U0423:00 ▪ Illuminates the smart city brake support (SCBS) indicator light (amber)*1. ▪ Tire pressure monitoring system warning light*1 illuminates after flashes. ▪ Inhibits the TPMS*1 and smart city brake support (SCBS)*1 controls. • U0443:00 ▪ Illuminates the smart city brake support (SCBS) indicator light (amber). ▪ Inhibits the smart city brake support (SCBS) controls. • *: If equipped.	
POSSIBLE CAUSE	• Instrument cluster malfunction	
SYSTEM WIRING DIAGRAM	Not applicable	

Diagnostic procedure

STEP	INSPECTION		ACTION
1	**INSPECT FOR INSTRUMENT CLUSTER MALFUNCTION** • Switch the ignition to off. • Using the M-MDS, perform the DTC inspection for the instrument	Yes	Go to applicable DTC inspection. (See **DTC TABLE [INSTRUMENT CLUSTER]**.)
		No	Go to the next step.

	cluster. (See **DTC INSPECTION [INSTRUMENT CLUSTER]**.) • Are any DTCs detected?		
2	**VERIFY THAT THE SAME DTC IS NOT PRESENT** • Clear the DTCs from the memory. (See **ON-BOARD DIAGNOSIS [DYNAMIC STABILITY CONTROL (DSC)]**.) • Are the same DTCs present?	Yes	Repeat the inspection from Step 1. If the malfunction recurs, replace the instrument cluster, then go to the next step. (See **INSTRUMENT CLUSTER REMOVAL/INSTALLATION**.)
		No	Go to the next step.
3	**VERIFY THAT NO OTHER DTCS ARE PRESENT** • Are any other DTCs output?	Yes	Go to the applicable DTC inspection. (See **ON-BOARD DIAGNOSIS [DYNAMIC STABILITY CONTROL (DSC)]**.)
		No	DTC troubleshooting completed.

2014 - Mazda3 - Brakes

DTC U0433:00 [DYNAMIC STABILITY CONTROL (DSC)]

DTC	U0433:00	Abnormal message from laser sensor
DETECTION CONDITION		• Correct data cannot be received from laser sensor
FAIL-SAFE FUNCTION		• Illuminates the smart city brake support (SCBS) indicator light (amber). • Inhibits the smart city brake support (SCBS) control.
POSSIBLE CAUSE		• Laser sensor malfunction
SYSTEM WIRING DIAGRAM		Not applicable

Diagnostic procedure

STEP	INSPECTION		ACTION
1	**INSPECT FOR LASER SENSOR MALFUNCTION** • Switch the ignition to off. • Using the M-MDS, perform the DTC inspection for the laser sensor. (See **ON-BOARD DIAGNOSIS [LASER SENSOR]**.) • Are any DTCs detected?	Yes	Go to applicable DTC inspection. (See **ON-BOARD DIAGNOSIS [LASER SENSOR]**.)
		No	Go to the next step.
2	**VERIFY THAT THE SAME DTC IS NOT PRESENT** • Clear the DTCs from the memory. (See **ON-BOARD DIAGNOSIS [DYNAMIC STABILITY CONTROL (DSC)]**.) • Are the same DTCs present?	Yes	Repeat the inspection from Step 1. If the malfunction recurs, replace the laser sensor, then go to the next step. (See **LASER SENSOR REMOVAL/INSTALLATION**.)
		No	Go to the next step.

3	**VERIFY THAT NO OTHER DTCS ARE PRESENT** • Are any other DTCs output?	Yes	Go to the applicable DTC inspection. (See **ON-BOARD DIAGNOSIS [DYNAMIC STABILITY CONTROL (DSC)]**.)
		No	DTC troubleshooting completed.

2014 - Mazda3 - Brakes

DTC U0452:86 [DYNAMIC STABILITY CONTROL (DSC)]

DTC	U0452:86	Abnormal message from SAS control module
DETECTION CONDITION		• Correct data cannot be received from SAS control module
FAIL-SAFE FUNCTION		• Illuminates the TCS/DSC indicator light, and smart city brake support (SCBS) indicator light (amber)*1*2. • Tire pressure monitoring system warning light*2 illuminates after flashes. (Not illuminated/flashed depending on malfunction content.) • Inhibits the TCS*3, DSC*3, hill launch assist (HLA)*3, TPMS*2*3, and smart city brake support (SCBS)*2*3 controls. • *1: Not illuminated depending on malfunction content. • *2: If equipped. • *3: Enabled depending on malfunction content.
POSSIBLE CAUSE		• SAS control module malfunction
SYSTEM WIRING DIAGRAM		Not applicable

Diagnostic procedure

STEP	INSPECTION		ACTION
1	**INSPECT FOR SAS CONTROL MODULE MALFUNCTION** • Switch the ignition to off. • Using the M-MDS, perform the DTC inspection for the SAS control module. (See **DTC INSPECTION**	Yes	Go to applicable DTC inspection. (See **DTC TABLE [STANDARD DEPLOYMENT CONTROL SYSTEM]**.) (See **DTC TABLE [TWO-STEP DEPLOYMENT CONTROL SYSTEM]**.)
		No	Go to the next step.

	[STANDARD DEPLOYMENT CONTROL SYSTEM].) (See **DTC INSPECTION [TWO-STEP DEPLOYMENT CONTROL SYSTEM]**.) • Are any DTCs detected?		
2	**VERIFY THAT THE SAME DTC IS NOT PRESENT** • Clear the DTCs from the memory. (See **ON-BOARD DIAGNOSIS [DYNAMIC STABILITY CONTROL (DSC)]**.) • Are the same DTCs present?	Yes	Repeat the inspection from Step 1. If the malfunction recurs, replace the SAS control module, then go to the next step. (See **SAS CONTROL MODULE REMOVAL/INSTALLATION [STANDARD DEPLOYMENT CONTROL SYSTEM]**.) (See **SAS CONTROL MODULE REMOVAL/INSTALLATION [TWO-STEP DEPLOYMENT CONTROL SYSTEM]**.)
		No	Go to the next step.
3	**VERIFY THAT NO OTHER DTCS ARE PRESENT** • Are any other DTCs output?	Yes	Go to the applicable DTC inspection. (See **ON-BOARD DIAGNOSIS [DYNAMIC STABILITY CONTROL (DSC)]**.)
		No	DTC troubleshooting completed.

2014 - Mazda3 - Brakes

DTC U2101:00/U2300:52/U2300:54/U2300:55/U2300:56/U2300:64 [DYNAMIC STABILITY CONTROL (DSC)]

DTC	**U2101:00, U2300:52, U2300:54, U2300:55, U2300:56, U2300:64**	**Configuration data not recorded**
DETECTION CONDITION	• DSC CM detects configuration data not record or data error	
FAIL-SAFE FUNCTION	• Illuminates the ABS warning light, TCS/DSC indicator light, and smart city brake support (SCBS) indicator light (amber)*1. • Tire pressure monitoring system warning light*1 illuminates after flashes. • Inhibits the ABS, TCS, DSC, brake assist control, hill launch assist (HLA), TPMS*1, and smart city brake support (SCBS)*1 controls. • *1: If equipped.	
POSSIBLE CAUSE	• Module configuration procedure is not done properly • Correct data cannot be received from instrument cluster • Another vehicles control modules been installed	
SYSTEM WIRING DIAGRAM	Not applicable	

Diagnostic procedure

STEP	INSPECTION	ACTION
1	**RECORD THE CAR CONFIGURATION DATA** • Switch the ignition to off. • Switch the ignition ON (engine off) and wait for **10 s or more**. • Switch the ignition to off and wait for **3 s or more**. • Switch the ignition ON (engine off) and wait	Go to the next step.

	for **3 s or more**.		
2	**VERIFY THAT THE SAME DTC IS NOT PRESENT** • Clear the DTCs from the memory. (See **ON-BOARD DIAGNOSIS [DYNAMIC STABILITY CONTROL (DSC)]**.) • Are the same DTCs present?	Yes	Repeat the inspection from Step 1. If the malfunction recurs, go to the next step.
		No	Go to Step 6.
3	**VERIFY IF PARTS FROM ANOTHER VEHICLE INSTALLED TO INSTRUMENT CLUSTER, PCM OR DSC HU/CM** • Verify if an instrument cluster, PCM or DSC HU/CM from another vehicle is installed. • Has an instrument cluster, PCM, DSC HU/CM or other vehicle part been installed to vehicle?	Yes	Install the correct instrument cluster, PCM or DSC HU/CM, then go to Step 1. (See **INSTRUMENT CLUSTER REMOVAL/INSTALLATION**.) (See **PCM REMOVAL/INSTALLATION [SKYACTIV-G 2.0, SKYACTIV-G 2.5]**.) (See **DSC HU/CM REMOVAL/INSTALLATION**.)
		No	Go to the next step.
4	**INSPECT FOR INSTRUMENT CLUSTER/PCM MALFUNCTION** • Switch the ignition to off. • Using the M-MDS, perform the DTC inspection for the instrument cluster and PCM. (See **DTC INSPECTION [INSTRUMENT CLUSTER]**.) (See **ON-BOARD DIAGNOSTIC TEST [SKYACTIV-G 2.0, SKYACTIV-G 2.5]**.) • Are any DTCs detected?	Yes	Go to applicable DTC inspection. (See **DTC TABLE [INSTRUMENT CLUSTER]**.) (See **DTC TABLE [SKYACTIV-G 2.0, SKYACTIV-G 2.5]**.)
		No	Go to the next step.
5	**VERIFY THAT THE SAME DTC IS NOT PRESENT** • Clear the DTCs from the memory. (See **ON-BOARD DIAGNOSIS [DYNAMIC STABILITY CONTROL (DSC)]**.) • Are the same DTCs present?	Yes	Repeat the inspection from Step 1.
		No	Go to the next step.
6	**VERIFY THAT NO OTHER DTCS ARE PRESENT** • Are any other DTCs output?	Yes	Go to the applicable DTC inspection. (See **ON-BOARD DIAGNOSIS [DYNAMIC STABILITY CONTROL (DSC)]**.)
		No	DTC troubleshooting completed.

2014 - Mazda3 - Brakes

DTC U3003:08/U3003:16/U3003:17 [DYNAMIC STABILITY CONTROL (DSC)]

DTC	U3003:08, U3003:16, U3003:17	Power supply system
DETECTION CONDITION		• U3003:08 ▪ While the vehicle is traveling at a speed of **10km/h {6.2 mph} or more**, a CAN signal error caused by low power supply voltage is detected. • U3003:16 ▪ Low ignition voltage (**7.9—9.6 V**) is detected at the voltage monitor of the solenoid valve or motor monitor. (Except engine cranking condition) ▪ Low ignition voltage (**6.0—7.9 V**) is detected at the voltage monitor of the solenoid valve or motor monitor. ▪ Low ignition voltage (**below 6.0 V**) is detected at the voltage monitor of the solenoid valve or motor monitor. • U3003:17 ▪ High ignition voltage (**17 V or more**) is detected at the voltage monitor of the solenoid valve or motor monitor.
FAIL-SAFE FUNCTION		• U3003:08 ▪ Permits the control and does not illuminate each warning/indicator light. • U3003:16 ▪ Illuminates the ABS warning light, TCS/DSC indicator light and smart city brake support (SCBS) indicator light (amber)*1. ▪ Does not illuminate the brake warning light.*2 ▪ Illuminates the brake warning light.*3*4 ▪ Tire pressure monitoring system warning light*1 illuminates after flashes. ▪ Inhibits the ABS, TCS, DSC, brake assist control, hill launch assist (HLA), TPMS*1, and smart city brake support (SCBS)*1 controls. ▪ Permits the EBD control.*2 ▪ Inhibits the EBD control.*3*4

	• U3003:17
	  ▪ Illuminates the ABS warning light, brake system warning light, TCS/DSC indicator light, and smart city brake support (SCBS) indicator light (amber)*1.
	  ▪ Tire pressure monitoring system warning light*1 illuminates after flashes.
	  ▪ Inhibits the ABS, EBD, TCS, DSC, brake assist control, hill launch assist (HLA), TPMS*1, and smart city brake support (SCBS)*1, controls.
	• *1: If equipped.
	• *2: When power supply voltage is **7.9—9.6 V** for **700 ms or more**.
	• *3: When power supply voltage is **6.0—7.9 V** for **780 ms or more**.
	• *4: When power supply voltage is **below 6 V** for **50 ms or more**.

POSSIBLE CAUSE	• Battery deterioration • Generator malfunction • Fuse (SRS1 7.5A, ABS/DSCS 30A, ABS/DSCM 50A) malfunction • Open or short circuit in wiring harness between DSC HU/CM terminal A and battery • Open or short circuit in wiring harness between DSC HU/CM terminal B and battery • Open or short circuit in wiring harness between DSC HU/CM terminal Q and battery • Open circuit in wiring harness between DSC HU/CM terminal AL and body ground • Poor connection at connectors (female terminal)

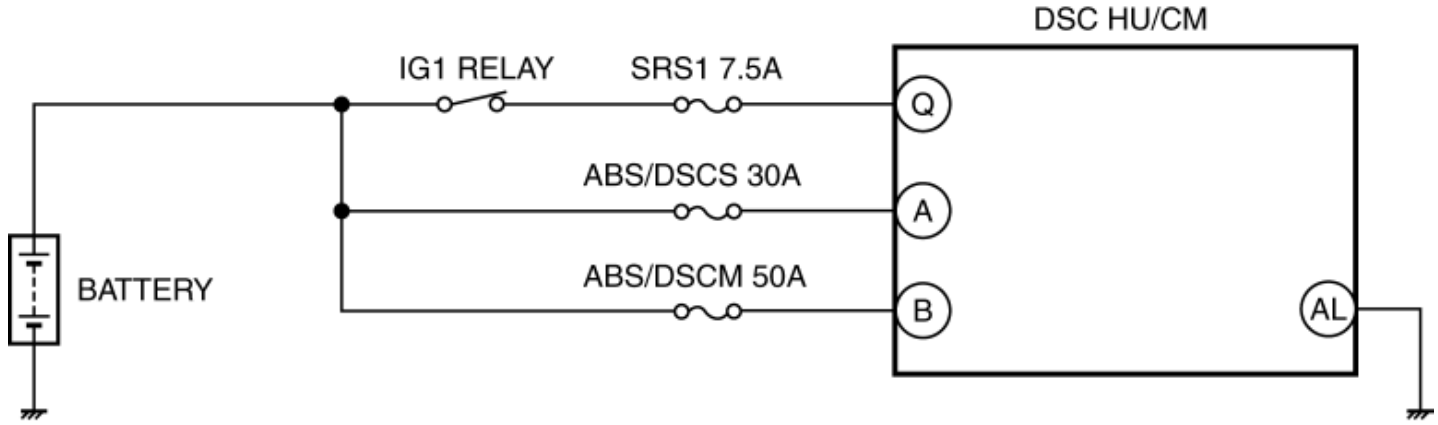

DSC HU/CM WIRING HARNESS-SIDE CONNECTOR

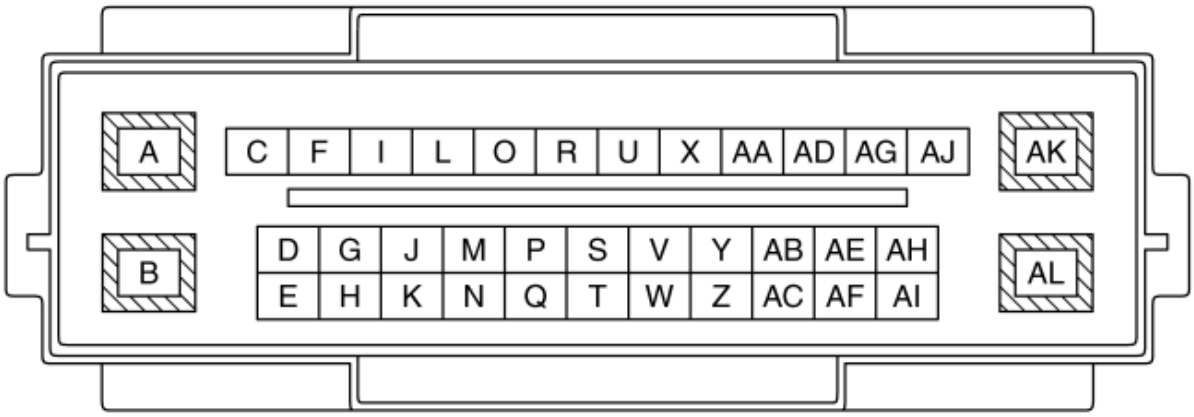

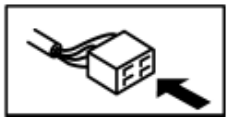

Diagnostic procedure

STEP	INSPECTION		ACTION
1	**INSPECT BATTERY VOLTAGE** • Is the battery positive terminal voltage normal?	Yes	Inspect for normal connection of the battery terminals. Go to the next step.
		No	Charge or replace the battery, then go to Step 7. (See **BATTERY RECHARGING [SKYACTIV-G 2.0, SKYACTIV-G 2.5]**.) (See **BATTERY REMOVAL/INSTALLATION [SKYACTIV-G 2.0, SKYACTIV-G 2.5]**.)
2	**INSPECT BATTERY GRAVITY** • Is battery specific gravity as specified?	Yes	Go to the next step.
		No	Replace the battery, then go to Step 7. (See **BATTERY REMOVAL/INSTALLATION [SKYACTIV-G 2.0, SKYACTIV-G 2.5]**.)

3	**INSPECT CHARGING SYSTEM** • Are the generator and the drive belt tensions normal?	Yes	Go to the next step.
		No	Replace the generator and/or drive belt if necessary. (See **GENERATOR REMOVAL/INSTALLATION [SKYACTIV-G 2.0, SKYACTIV-G 2.5 (WITHOUT i-ELOOP)]**.) (See **GENERATOR REMOVAL/INSTALLATION [SKYACTIV-G 2.0, SKYACTIV-G 2.5 (WITH i-ELOOP)]**.) (See **DRIVE BELT REMOVAL/INSTALLATION [SKYACTIV-G 2.0, SKYACTIV-G 2.5]**.) Go to Step 7.
4	**INSPECT FUSE CONDITION** • Inspect the following fuses. ▪ SRS1 7.5A ▪ ABS/DSCS 30A ▪ ABS/DSCM 50A • Is the fuse normal?	Yes	Go to the next step.
		No	Replace the fuse, then go to Step 7.
5	**INSPECT DSC HU/CM POWER SUPPLY FOR OPEN CIRCUIT** • Disconnect the DSC HU/CM connectors. • Switch the ignition ON (engine off). • Measure the voltage between following connector terminals of the DSC HU/CM (vehicle harness-side) and body ground: ▪ DSC HU/CM: A—Body ground ▪ DSC HU/CM: B—Body ground ▪ DSC HU/CM: Q—Body ground • Is the voltage **10 V or more**?	Yes	Go to the next step.
		No	Refer to the wiring diagram and verify whether or not there is a common connector between following connector terminals of the DSC HU/CM (vehicle harness-side) and positive battery terminal: ▪ DSC HU/CM: A—Positive battery terminal ▪ DSC HU/CM: B—Positive battery terminal ▪ DSC HU/CM: Q—Positive battery terminal **If there is a common connector:** • Determine the malfunctioning part by inspecting the common connector and the terminal for corrosion, damage, or pin disconnection, and the common wiring harness for an open circuit. • Repair or replace the malfunctioning part. **If there is no common connector:** • Repair or replace the wiring harness which has an open circuit. Go to Step 7.
6	**INSPECT DSC HU/CM GROUND FOR POOR GROUND OR OPEN CIRCUIT**	Yes	Go to the next step.

	• Switch the ignition to off. • Measure the resistance between the DSC HU/CM terminal AL (vehicle harness-side) and body ground. • Is the resistance **within 0 —1 ohm**?	No	• If there is open circuit: ▪ Refer to the wiring diagram and verify whether or not there is a common connector between DSC HU/CM terminal AL and the body ground. **If there is a common connector:** • Determine the malfunctioning part by inspecting the common connector and the terminal for corrosion, damage, or pin disconnection, and the common wiring harness for an open circuit. • Repair or replace the malfunctioning part. **If there is no common connector:** • Repair or replace the wiring harness which has an open circuit. ▪ Go to the next step. • If resistance is not within specification: ▪ Refer to the wiring diagram and verify whether or not there is a common connector between DSC HU/CM terminal AL and the body ground. **If there is a common connector:** • Determine the malfunctioning part by inspecting the common

			connector and the terminal for corrosion, damage, or pin disconnection, and the common wiring harness for poor ground. • Repair or replace the malfunctioning part. **If there is no common connector:** • Repair or replace the poor ground part. ▪ Go to the next step.
7	**VERIFY THAT THE SAME DTC IS NOT PRESENT** • Reconnect all disconnected connectors. • Clear the DTCs from the memory. (See **ON-BOARD DIAGNOSIS [DYNAMIC STABILITY CONTROL (DSC)]**.) • Start the engine and drive the vehicle at **20 km/h {12 mph} or more**. • Are the same DTCs present?	Yes	Repeat the inspection from Step 1.
		No	Go to the next step.
8	**VERIFY THAT NO OTHER DTCS ARE PRESENT** • Are any other DTCs output?	Yes	Go to the applicable DTC inspection. (See **ON-BOARD DIAGNOSIS [DYNAMIC STABILITY CONTROL (DSC)]**.)
		No	DTC troubleshooting completed.

2014 - Mazda3 - Brakes

SYSTEM WIRING DIAGRAM [LASER SENSOR]

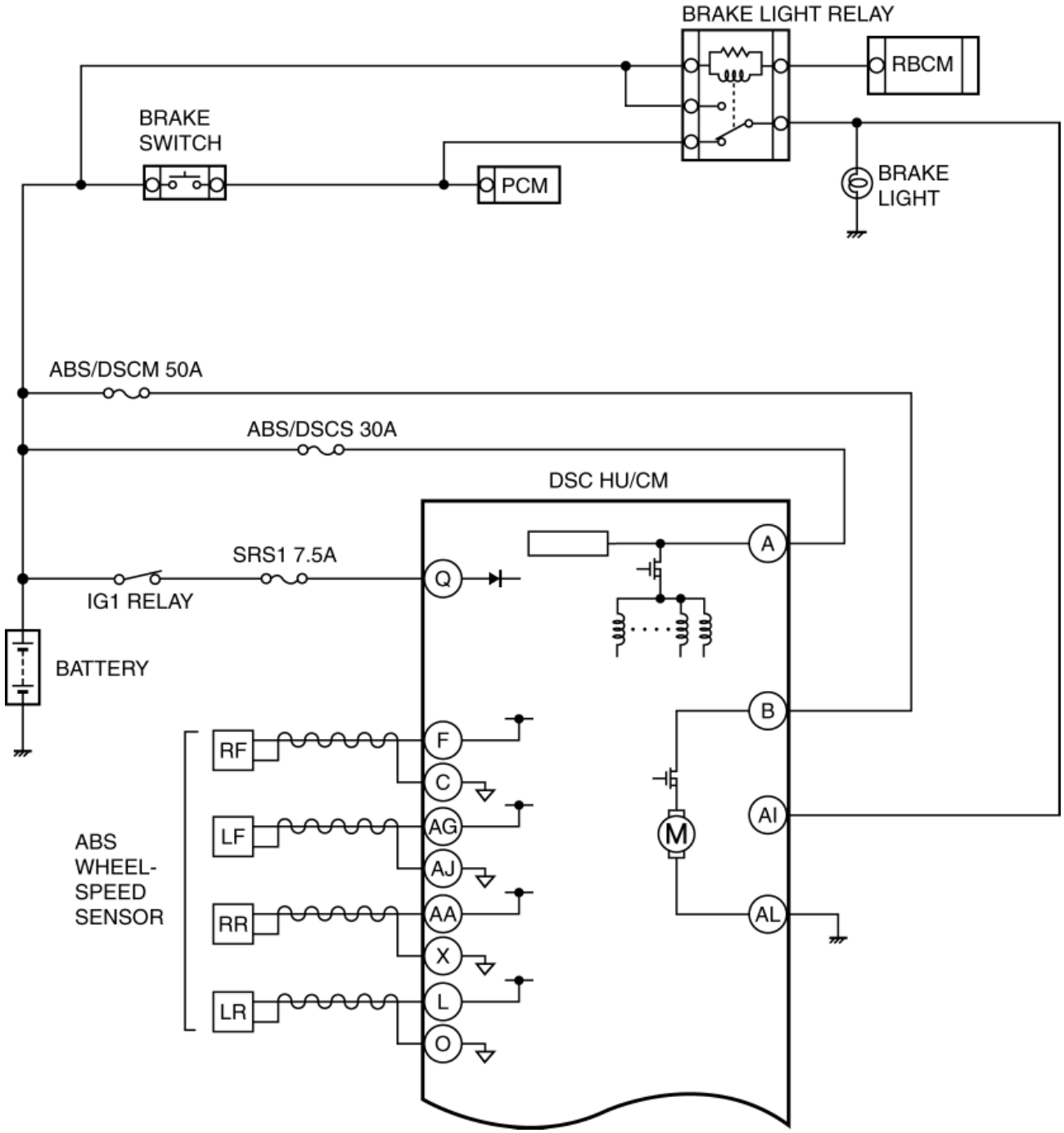

SYSTEM WIRING DIAGRAM [LASER SENSOR]

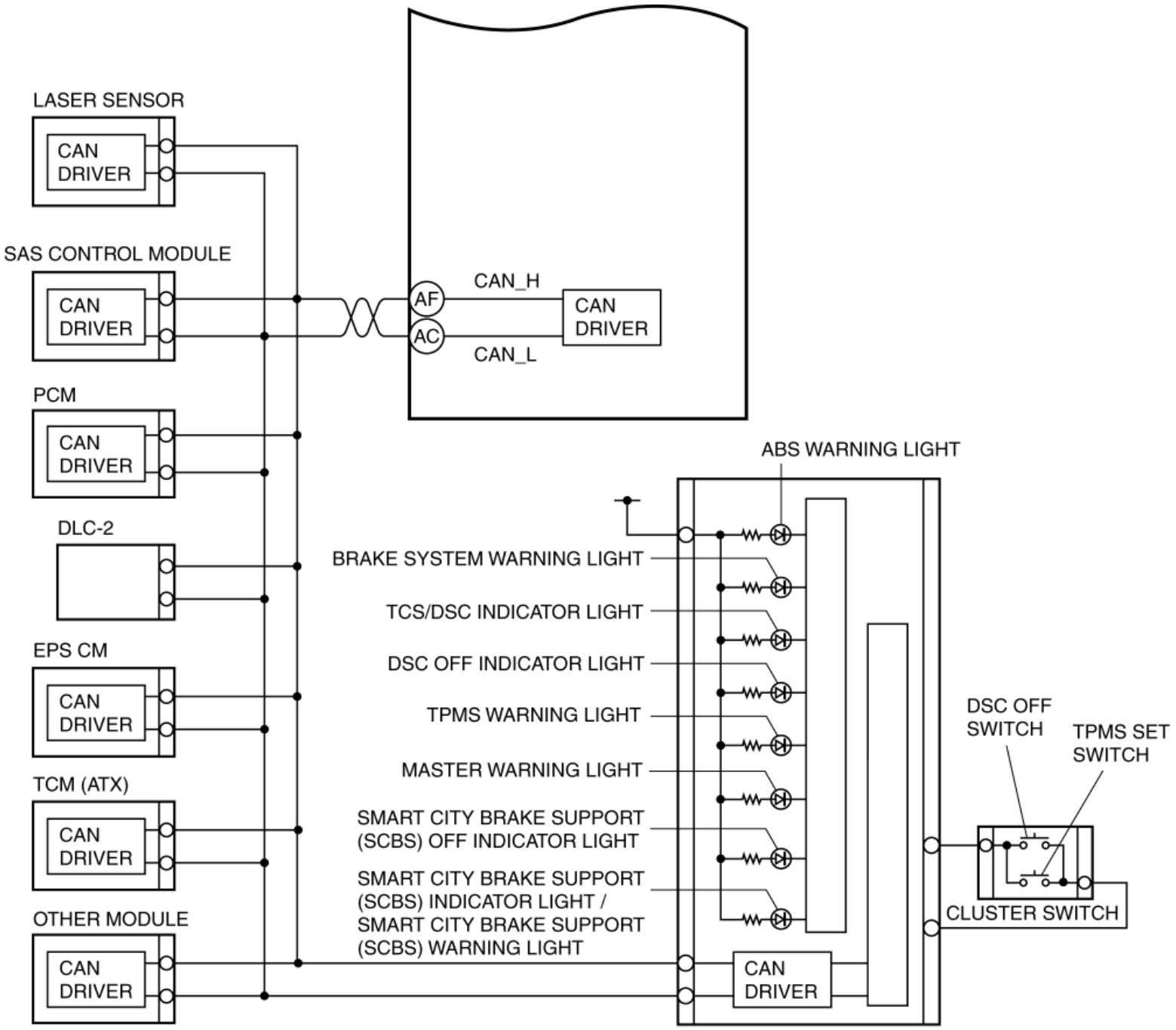

2014 - Mazda3 - Brakes

FOREWORD [LASER SENSOR]

- If there is any vehicle malfunction complaint lodged by a customer, perform malfunction diagnosis according to the troubleshooting procedure.

Troubleshooting Procedure

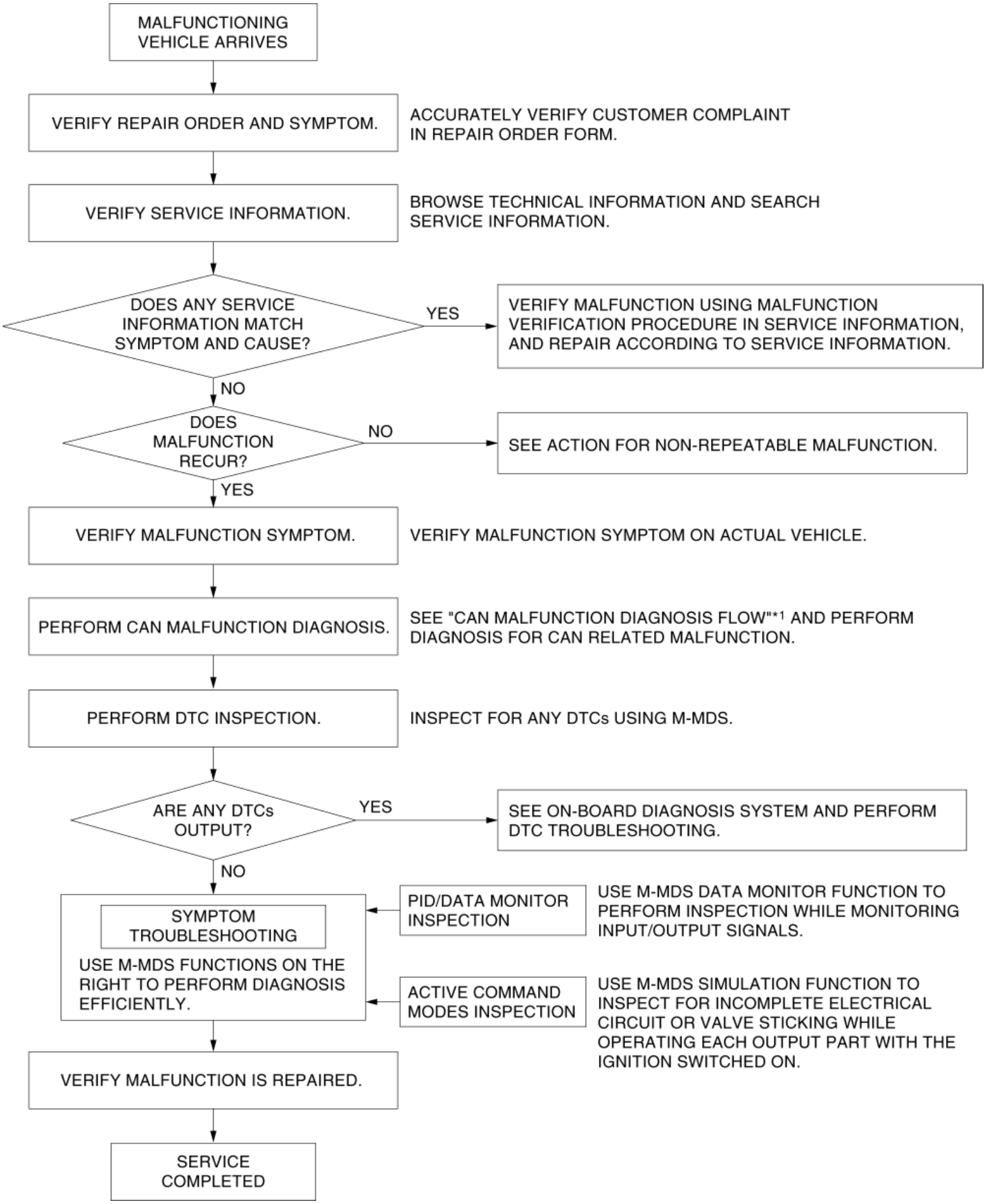
MALFUNCTIONING VEHICLE ARRIVES
VERIFY REPAIR ORDER AND SYMPTOM.
ACCURATELY VERIFY CUSTOMER COMPLAINT IN REPAIR ORDER FORM.
VERIFY SERVICE INFORMATION.
BROWSE TECHNICAL INFORMATION AND SEARCH SERVICE INFORMATION.
DOES ANY SERVICE INFORMATION MATCH SYMPTOM AND CAUSE?
YES
VERIFY MALFUNCTION USING MALFUNCTION VERIFICATION PROCEDURE IN SERVICE INFORMATION, AND REPAIR ACCORDING TO SERVICE INFORMATION.
NO
DOES MALFUNCTION RECUR?
NO
SEE ACTION FOR NON-REPEATABLE MALFUNCTION.
YES
VERIFY MALFUNCTION SYMPTOM.
VERIFY MALFUNCTION SYMPTOM ON ACTUAL VEHICLE.
PERFORM CAN MALFUNCTION DIAGNOSIS.
SEE "CAN MALFUNCTION DIAGNOSIS FLOW"*1 AND PERFORM DIAGNOSIS FOR CAN RELATED MALFUNCTION.
PERFORM DTC INSPECTION.
INSPECT FOR ANY DTCs USING M-MDS.
ARE ANY DTCs OUTPUT?
YES
SEE ON-BOARD DIAGNOSIS SYSTEM AND PERFORM DTC TROUBLESHOOTING.
NO
SYMPTOM TROUBLESHOOTING
USE M-MDS FUNCTIONS ON THE RIGHT TO PERFORM DIAGNOSIS EFFICIENTLY.
PID/DATA MONITOR INSPECTION
USE M-MDS DATA MONITOR FUNCTION TO PERFORM INSPECTION WHILE MONITORING INPUT/OUTPUT SIGNALS.
ACTIVE COMMAND MODES INSPECTION
USE M-MDS SIMULATION FUNCTION TO INSPECT FOR INCOMPLETE ELECTRICAL CIRCUIT OR VALVE STICKING WHILE OPERATING EACH OUTPUT PART WITH THE IGNITION SWITCHED ON.
VERIFY MALFUNCTION IS REPAIRED.
SERVICE COMPLETED

*1

Refer to MULTIPLEX COMMUNICATION SYSTEM. (See CONTROLLER AREA NETWORK (CAN) MALFUNCTION DIAGNOSIS FLOW.)

Action for non-repeatable malfunction

- If the malfunction does not recur, verify the malfunction cause by performing the following actions:
  - Verify that a DTC has been recorded in the memory using the M-MDS. (See **ON-BOARD DIAGNOSIS [LASER SENSOR]**.)
  - Perform a simulation test in the simulation mode based on the repair order form, record the data at that time, and detect the malfunction cause.
  - Shake the wiring harness or connector of the electrical component which is suspected to be the cause of the malfunction, and inspect for the occurrence of any malfunction or DTCs.

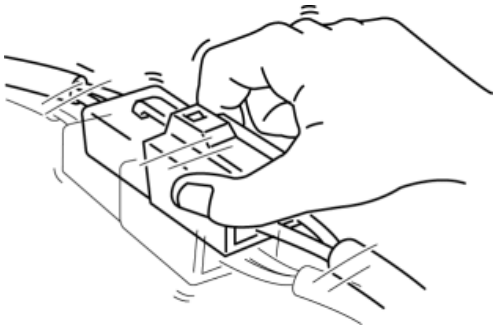

  - Inspect the female terminals for poor connection.

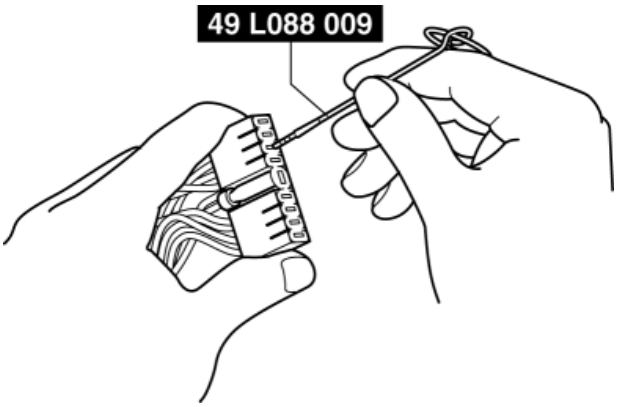

2014 - Mazda3 - Brakes

ON-BOARD DIAGNOSIS [LASER SENSOR]

On-Board Diagnostic (OBD) Test Description

- The OBD test inspects the integrity and function of the laser sensor and outputs the results when requested by the specific tests.
- On-board diagnostic test also:
  - Provides a quick inspection of the laser sensor usually performed at the start of each diagnostic procedure.
  - Provides verification after repairs to ensure that no other faults occurred during service.
- The OBD test is divided into 3 tests:
  - Read/clear diagnostic results, PID monitor and record and active command modes.

Read/clear diagnostic results

- This function allows you to read or clear DTCs in the laser sensor memory.

PID/Data monitor and record

- This function allows you to access certain data values, input signals, calculated values, and system status information.

Reading DTCs Procedure

CMDTC self test

1. Connect the M-MDS (IDS) to the DLC-2.
2. After the vehicle is identified, select the following items from the initialization screen of the IDS.
   a. Select “Self Test”.
   b. Select “All CMDTCs”.
3. Verify the DTC according to the directions on the screen.
   - If any DTCs are displayed, perform troubleshooting according to the corresponding DTC inspection.

4. After completion of repairs, clear all DTCs stored in the laser sensor. (See **Clearing DTCs Procedure**.)

NOTE:

- Snapshot data appears at the top of the help screen when the displayed DTC is selected.
- The data for all DTCs currently detected is stored.

Clearing DTCs Procedure

CMDTC clearing DTCs procedure

1. Connect the M-MDS (IDS) to the DLC-2.
2. After the vehicle is identified, select the following items from the initialization screen of the IDS.
   a. Select “Self Test”.
   b. Select “All CMDTCs”.
3. Verify the DTC according to the directions on the screen.
4. Press the clear button on the DTC screen to clear the DTC.
5. Switch the ignition off.
6. Switch the ignition ON and wait for **5 s or more**.
7. Perform DTC inspection. (See **Reading DTCs Procedure**.)
8. Verify that no DTCs are displayed.

PID/Data Monitor and Record Procedure

1. Connect the M-MDS (IDS) to the DLC-2.
2. After the vehicle is identified, select the following items from the initialization screen of the IDS.
   a. Select “DataLogger”.
   b. Select “Modules”.
   c. Select “SCBS”.
3. Select the applicable PID from the PID table.
4. Verify the PID data according to the directions on the screen.

NOTE:

- The PID data screen function is used for monitoring the calculated value of input/output signals in the module. Therefore, if the monitored value of the output parts is not within the specification, it is necessary to inspect the monitored value of input parts corresponding to the applicable output part control. In addition, because the system does not display an output part malfunction as an abnormality in the monitored value, it is necessary to inspect the output parts individually.

Snapshot Data Access Procedure

1. Connect the M-MDS (IDS) to the DLC-2.
2. After the vehicle is identified, select the following items from the initialization screen of the IDS.
   a. Select “Self Test”.
   b. Select “Modules”.
   c. Select “SCBS”.
3. Then, select the “Retrieve CMDTCs” and perform procedures according to directions on the IDS screen.
4. Retrieve the snapshot data according to the directions on the IDS screen.

NOTE:

- Snapshot data appears at the top of the help screen when the displayed DTC is selected.
- The snapshot data stores the currently detected DTC data.

DTC Table

×: Applicable

-: Not applicable

DTC No.	Smart City Brake Support (SCBS) indicator light (amber)	Malfunction location	Fail-safe	Drive cycle	Self test type*	Memory function	Page
U0001:00	Illuminated	CAN line	×	Not applicable	C	×	(See **DTC U0001:00/U0100:00/U0121:00/U0131:00/U0155:00 [LASER SENSOR]**.)
U0100:00							
U0121:00							
U0131:00							
U0155:00							
U0401:68	Illuminated	Abnormal message from PCM	×	Not applicable	C	×	(See **DTC U0401:68 [LASER SENSOR]**.)

U0415:68	Illuminated	Abnormal message from DSC HU/CM	×	Not applicable	C	×	(See **DTC U0415:68 [LASER SENSOR]**.)
U0420:68	Illuminated	Abnormal message from EPS CM	×	Not applicable	C	×	(See **DTC U0420:68 [LASER SENSOR]**.)
U0423:68	Illuminated	Abnormal message from instrument cluster	×	Not applicable	C	×	(See **DTC U0423:68 [LASER SENSOR]**.)
U1A14:49	Illuminated	Laser sensor	×	Not applicable	C	×	(See **DTC U1A14:49 [LASER SENSOR]**.)
U2300:55 U2300:56	Illuminated	Configuration data not recorded or data error	×	Not applicable	C	×	(See **DTC U2300:55/U2300:56 [LASER SENSOR]**.)
U3000:00 U3000:64	Illuminated	Laser sensor (internal malfunction)	×	Not applicable	C	×	(See **DTC U3000:00/U3000:64 [LASER SENSOR]**.)
U3000:66	Illuminated	Laser sensor	×	Not applicable	C	×	(See **DTC U3000:66 [LASER SENSOR]**.)

*

C: CMDTC self-test

PID/DATA Monitor Table

PID name (definition)	Unit/Condition	Operation condition (reference)	Action
DIST_BMP_TGT	m	Changes according to the distance from bumper to target that the laser sensor has detected	Perform the DTC inspection for the laser sensor. (See **Reading DTCs Procedure**.)
VPWR_IG1	V	Module supply voltage (IG1)	Inspect the battery. (See **BATTERY INSPECTION [SKYACTIV-G 2.0, SKYACTIV-G 2.5]**.)

			Inspect the push button start. (See **PUSH BUTTON START INSPECTION**.)
VSPD	KPH, MPH	Vehicle speed	Inspect the DSC HU/CM. (See **DSC HU/CM INSPECTION**.)

Snapshot Data Table

NOTE:

- The laser sensor stores the following two types of information when a DTC is detected and displays snap shot data in the M-MDS.
    - Vehicle information detected by laser sensor
    - Vehicle information detected by instrument cluster and received by start stop unit via CAN signal
- Refer to PID monitor table for confirm the laser sensor operation status while the laser sensor does not store the DTC. (See **PID/DATA Monitor Table**.)
- Snapshot data items are not displayed, according to detected DTC.

Snapshot data item	Unit	Data contents	Data read/use method	Corresponding data monitor items
DSC_R_BRK	OK/Error	DSC response against brake request from SCBS module	Not applicable	Not applicable
DSC_R_BRK_C	OK/Error	DSC response against brake assist threshold change from SCBS module	Not applicable	Not applicable
DSC_R_NOREQ	OK/Error	DSC response while no request from SCBS module	Not applicable	Not applicable
DSC_R_PRECH	OK/Error	DSC response against pre-charge request from SCBS module	Not applicable	Not applicable
DSC_SYSTEM	OK/Error	DSC system condition	Not applicable	Not applicable
ECU_IN_TEMP	°C	ECU internal temperature	Not applicable	Not applicable
PCM_R_NOREQ	OK/Error	PCM response while no request from SCBS module	Not applicable	Not applicable

PCM_R_REQ	OK/Error	PCM response against request from SCBS module	Not applicable	Not applicable
PCM_SYSTEM	OK/Error	PCM system condition	Not applicable	Not applicable
TOTAL_DIST	km/miles	Accumulated total traveled distance from completion of vehicle until laser sensor detects DTC (Odometer value in instrument cluster)	The distance traveled when the laser sensor detected a DTC can be calculated by performing the following procedure. • Verify the odometer value in the instrument cluster. • Verify the snap shot data item TOTAL_DIST. • Subtract 2 from 1.	Not applicable
TOTAL_TIME	hh:mm:ss*1	Accumulated total elapsed time since vehicle completion until laser sensor detects a DTC **NOTE:** • When the ROOM fuse is removed, and the ignition is switched off, the time is not included in the elapsed time.	The elapsed time when the laser sensor detected a DTC can be calculated by performing the following procedure. • Verify the PID item TOTAL_TIME of the instrument cluster. • Verify the snap shot data item TOTAL_TIME. • Subtract 2 from 1.	TOTAL_TIME*2
VPWR	V	Power supply	Not applicable	Not applicable
VSPD	KPH, MPH	Vehicle speed	Not applicable	VSPD

*1 **The seconds may be indicated after the decimal point.**

*2 **Instrument cluster PID (See PID/DATA MONITOR TABLE [INSTRUMENT CLUSTER].)**

2014 - Mazda3 - Brakes

DTC U0001:00/U0100:00/U0121:00/U0131:00/U0155:00 [LASER SENSOR]

DTC	U0001:00, U0100:00, U0121:00, U0131:00, U0155:00	CAN line
DETECTION CONDITION	• U0001:00 ▪ Open or short circuit in CAN system wiring harness is detected. • U0100:00 ▪ Communication error with PCM is detected in CAN communication. • U0121:00 ▪ Communication error with DSC HU/CM is detected in CAN communication. • U0131:00 ▪ Communication error with EPS CM is detected in CAN communication. • U0155:00 ▪ Communication error with instrument cluster is detected in CAN communication.	
FAIL-SAFE FUNCTION	• Inhibits the Smart City Brake Support (SCBS) controls. • Illuminates the Smart City Brake Support (SCBS) indicator light (amber)	
POSSIBLE CAUSE	• CAN system wiring harness open or short circuit • CAN system wiring harness open or short circuit with PCM • CAN system wiring harness open or short circuit with DSC HU/CM • CAN system wiring harness open or short circuit with EPS CM • CAN system wiring harness open or short circuit with instrument cluster • Instrument cluster malfunction	
SYSTEM		

WIRING DIAGRAM	Not applicable

Diagnostic procedure

- Inspect according to diagnostic procedure in MULTIPLEX COMMUNICATION SYSTEM. (See **FOREWORD**.)

2014 - Mazda3 - Brakes

DTC U0401:68 [LASER SENSOR]

DTC	U0401:68	Abnormal message from PCM
DETECTION CONDITION		• Correct data cannot be received from PCM
FAIL-SAFE FUNCTION		• Inhibits the Smart City Brake Support (SCBS) controls. • Illuminates the Smart City Brake Support (SCBS) indicator light (amber)
POSSIBLE CAUSE		• PCM malfunction
SYSTEM WIRING DIAGRAM		Not applicable

Diagnostic procedure

STEP	INSPECTION		ACTION
1	**INSPECT FOR PCM MALFUNCTION** • Switch the ignition off. • Using the M-MDS, perform the DTC inspection for the PCM. (See **ON-BOARD DIAGNOSTIC TEST [SKYACTIV-G 2.0, SKYACTIV-G 2.5]**.) • Are any DTCs detected?	Yes	Go to applicable DTC inspection. (See **DTC TABLE [SKYACTIV-G 2.0, SKYACTIV-G 2.5]**.)
		No	Go to the next step.
2	**VERIFY THAT SAME DTC IS NOT PRESENT** • Clear the DTCs from the memory. (See **ON-BOARD DIAGNOSIS [LASER SENSOR]**.) • Are the same DTCs present?	Yes	Repeat the inspection from Step 1. If the malfunction recurs, replace the PCM, then go to the next step. (See **PCM REMOVAL/INSTALLATION [SKYACTIV-G 2.0, SKYACTIV-G 2.5]**.)
		No	Go to the next step.

3	**VERIFY THAT NO OTHER DTCs ARE PRESENT** • Are any other DTCs output?	Yes	Go to the applicable DTC inspection. (See **ON-BOARD DIAGNOSIS [LASER SENSOR]**.)
		No	DTC troubleshooting completed.

2014 - Mazda3 - Brakes

DTC U0415:68 [LASER SENSOR]

DTC	U0415:68	Abnormal message from DSC HU/CM
DETECTION CONDITION		• Correct data cannot be received from DSC HU/CM
FAIL-SAFE FUNCTION		• Inhibits the Smart City Brake Support (SCBS) controls. • Illuminates the Smart City Brake Support (SCBS) indicator light (amber)
POSSIBLE CAUSE		• DSC HU/CM malfunction
SYSTEM WIRING DIAGRAM	Not applicable	

Diagnostic procedure

STEP	INSPECTION		ACTION
1	**INSPECT FOR DSC HU/CM MALFUNCTION** • Switch the ignition off. • Using the M-MDS, perform the DTC inspection for the DSC HU/CM. (See **ON-BOARD DIAGNOSIS [DYNAMIC STABILITY CONTROL (DSC)]**.) • Are any DTCs detected?	Yes	Go to applicable DTC inspection. (See **ON-BOARD DIAGNOSIS [DYNAMIC STABILITY CONTROL (DSC)]**.)
		No	Go to the next step.
2	**VERIFY THAT SAME DTC IS NOT PRESENT** • Clear the DTCs from the memory. (See **ON-BOARD DIAGNOSIS [LASER SENSOR]**.) • Are the same DTCs present?	Yes	Repeat the inspection from Step 1. If the malfunction recurs, replace the DSC HU/CM, then go to the next step. (See **DSC HU/CM REMOVAL/INSTALLATION**.)
		No	Go to the next step.

3	**VERIFY THAT NO OTHER DTCs ARE PRESENT** • Are any other DTCs output?	Yes	Go to the applicable DTC inspection. (See **ON-BOARD DIAGNOSIS [LASER SENSOR]**.)
		No	DTC troubleshooting completed.

2014 - Mazda3 - Brakes

DTC U0420:68 [LASER SENSOR]

DTC	U0420:68	Abnormal message from EPS control module
DETECTION CONDITION		• Correct data cannot be received from EPS CM
FAIL-SAFE FUNCTION		• Inhibits the Smart City Brake Support (SCBS) controls. • Illuminates the Smart City Brake Support (SCBS) indicator light (amber)
POSSIBLE CAUSE		• EPS CM malfunction
SYSTEM WIRING DIAGRAM		Not applicable

Diagnostic procedure

STEP	INSPECTION		ACTION
1	**INSPECT FOR EPS CONTROL MODULE MALFUNCTION** • Switch the ignition off. • Using the M-MDS, perform the DTC inspection for the EPS control module. (See **ELECTRIC POWER STEERING (EPS) ON-BOARD DIAGNOSIS**.) • Are any DTCs detected?	Yes	Go to applicable DTC inspection. (See **ELECTRIC POWER STEERING (EPS) ON-BOARD DIAGNOSIS**.)
		No	Go to the next step.
2	**VERIFY THAT SAME DTC IS NOT PRESENT** • Clear the DTCs from the memory. (See **ON-BOARD DIAGNOSIS [LASER SENSOR]**.) • Are the same DTCs present?	Yes	Repeat the inspection from Step 1. If the malfunction recurs, replace the EPS CM, then go to the next step. (See **STEERING WHEEL AND COLUMN REMOVAL/INSTALLATION**.)
		No	Go to the next step.

3	**VERIFY THAT NO OTHER DTCs ARE PRESENT** • Are any other DTCs output?	Yes	Go to the applicable DTC inspection. (See **ON-BOARD DIAGNOSIS [LASER SENSOR]**.)
		No	DTC troubleshooting completed.

2014 - Mazda3 - Brakes

DTC U0423:68 [LASER SENSOR]

DTC	U0423:68	Abnormal message from instrument cluster
DETECTION CONDITION		• Correct data cannot be received from instrument cluster
FAIL-SAFE FUNCTION		• Inhibits the Smart City Brake Support (SCBS) controls. • Illuminates the Smart City Brake Support (SCBS) indicator light (amber)
POSSIBLE CAUSE		• Instrument cluster malfunction
SYSTEM WIRING DIAGRAM		Not applicable

Diagnostic procedure

STEP	INSPECTION		ACTION
1	**INSPECT FOR INSTRUMENT CLUSTER MALFUNCTION** • Switch the ignition off. • Using the M-MDS, perform the DTC inspection for the instrument cluster . (See **DTC INSPECTION [INSTRUMENT CLUSTER]**.) • Are any DTCs detected?	Yes	Go to applicable DTC inspection. (See **DTC TABLE [INSTRUMENT CLUSTER]**.)
		No	Go to the next step.
2	**VERIFY THAT SAME DTC IS NOT PRESENT** • Clear the DTCs from the memory. (See **ON-BOARD DIAGNOSIS [LASER SENSOR]**.) • Are the same DTCs present?	Yes	Configure the instrument cluster, then repeat the inspection from Step 1. (See **INSTRUMENT CLUSTER CONFIGURATION (USING READ/WRITE FUNCTION)**.) (See **INSTRUMENT CLUSTER CONFIGURATION (USING AS-BUILT DATA)**.)

			If the malfunction recurs, replace the instrument cluster, then go to the next step. (See **INSTRUMENT CLUSTER REMOVAL/INSTALLATION**.)
		No	Go to the next step.
3	**VERIFY THAT NO OTHER DTCs ARE PRESENT** • Are any other DTCs output?	Yes	Go to the applicable DTC inspection. (See **ON-BOARD DIAGNOSIS [LASER SENSOR]**.)
		No	DTC troubleshooting completed.

2014 - Mazda3 - Brakes

DTC U1A14:49 [LASER SENSOR]

DTC	U1A14:49	Laser sensor internal electronic malfunction
DETECTION CONDITION	• Laser sensor detects the internal electronic malfunction when the ignition is switched ON.	
FAIL-SAFE FUNCTION	• Inhibits the Smart City Brake Support (SCBS) controls. • Illuminates the Smart City Brake Support (SCBS) indicator light (amber)	
POSSIBLE CAUSE	• Laser sensor malfunction	
SYSTEM WIRING DIAGRAM	Not applicable	

Diagnostic procedure

STEP	INSPECTION		ACTION
1	**RECORD CAR CONFIGURATION DATA** • Switch the ignition to off. • Switch the ignition ON (engine on).		Go to the next step.
2	**VERIFY THAT SAME DTC IS NOT PRESENT** • Clear the DTCs from the memory. (See **ON-BOARD DIAGNOSIS [LASER SENSOR]**.) • Are the same DTCs present?	Yes	Repeat the inspection from Step 1. If the malfunction recurs, replace the laser sensor, then go to the next step. (See **LASER SENSOR REMOVAL/INSTALLATION**.)
		No	Go to the next step.
3	**VERIFY THAT NO OTHER DTCs ARE PRESENT** • Are any other DTCs output?	Yes	Go to the applicable DTC inspection. (See **ON-BOARD DIAGNOSIS [LASER SENSOR]**.)

		No	DTC troubleshooting completed.

2014 - Mazda3 - Brakes

DTC U2300:55/U2300:56 [LASER SENSOR]

DTC	**U2300:55, U2300:56**	Configuration data not recorded
DETECTION CONDITION	• Laser sensor detects configuration data not recorded or data error.	
FAIL-SAFE FUNCTION	• Inhibits the Smart City Brake Support (SCBS) controls. • Illuminates the Smart City Brake Support (SCBS) indicator light (amber)	
POSSIBLE CAUSE	• Laser sensor configuration procedure is not done properly • Correct data cannot be received from instrument cluster	
SYSTEM WIRING DIAGRAM	Not applicable	

Diagnostic procedure

STEP	INSPECTION		ACTION
1	**RECORD CAR CONFIGURATION DATA** • Switch the ignition to off. • Switch the ignition ON (engine on).		Go to the next step.
2	**VERIFY THAT SAME DTC IS NOT PRESENT** • Clear the DTCs from the memory. (See **ON-BOARD DIAGNOSIS [LASER SENSOR]**.) • Are the same DTCs present?	Yes	Repeat the inspection from Step 1. If the malfunction recurs, go to the next step.
		No	Go to step 5.
3	**INSPECT FOR INSTRUMENT CLUSTER MALFUNCTION** • Switch the ignition off. • Using the M-MDS, perform the DTC inspection for the instrument cluster.	Yes	Go to the applicable DTC inspection. (See **DTC TABLE [INSTRUMENT CLUSTER]**.) After repairing the instrument cluster,

	(See **DTC INSPECTION [INSTRUMENT CLUSTER]**.) • Are any DTCs detected?		then go to the next step.
		No	Go to the next step.
4	**VERIFY THAT THE SAME DTC IS NOT PRESENT** • Clear the DTCs from the memory. (See **ON-BOARD DIAGNOSIS [LASER SENSOR]**.) • Are the same DTCs present?	Yes	Replace the laser sensor. (See **LASER SENSOR REMOVAL/INSTALLATION**.)
		No	Go to the next step.
5	**VERIFY THAT NO OTHER DTCs ARE PRESENT** • Are any other DTCs output?	Yes	Go to the applicable DTC inspection. (See **ON-BOARD DIAGNOSIS [LASER SENSOR]**.)
		No	DTC troubleshooting completed.

2014 - Mazda3 - Brakes

DTC U3000:00/U3000:64 [LASER SENSOR]

DTC	**U3000:00, U3000:64**	Laser sensor internal malfunction
DETECTION CONDITION	• Laser sensor detects the internal malfunction when the ignition is switched ON. • Laser sensor detects the invalid output signal.	
FAIL-SAFE FUNCTION	• Inhibits the Smart City Brake Support (SCBS) controls. • Illuminates the Smart City Brake Support (SCBS) indicator light (amber)	
POSSIBLE CAUSE	• Laser sensor malfunction	
SYSTEM WIRING DIAGRAM	Not applicable	

Diagnostic procedure

STEP	INSPECTION		ACTION
1	**RECORD THE CAR CONFIGURATION DATA** • Switch the ignition off. • Switch the ignition ON (engine on).		Go to the next step.
2	**VERIFY THAT SAME DTC IS NOT PRESENT** • Clear the DTCs from the memory. (See **ON-BOARD DIAGNOSIS [LASER SENSOR]**.) • Are the same DTCs present?	Yes	Repeat the inspection from Step 1. If the malfunction recurs, replace the laser sensor, then go to the next step. (See **LASER SENSOR REMOVAL/INSTALLATION**.)
		No	Go to the next step.
3	**VERIFY THAT NO OTHER DTCs ARE PRESENT**	Yes	Go to the applicable DTC inspection.

	• Are any other DTCs output?		(See **ON-BOARD DIAGNOSIS [LASER SENSOR]**.)
		No	DTC troubleshooting completed.

2014 - Mazda3 - Brakes

DTC U3000:66 [LASER SENSOR]

DTC	**U3000:66**	Laser sensor malfunction
DETECTION CONDITION	• Laser sensor detects a large number of consecutive drive cycles with the Smart City Brake Support (SCBS) system malfunction.	
FAIL-SAFE FUNCTION	• Inhibits the Smart City Brake Support (SCBS) controls. • Illuminates the Smart City Brake Support (SCBS) indicator light (amber)	
POSSIBLE CAUSE	• Laser sensor malfunction • Instrument cluster malfunction	
SYSTEM WIRING DIAGRAM	Not applicable	

Diagnostic procedure

STEP	INSPECTION		ACTION
1	**INSPECT FOR INSTRUMENT CLUSTER MALFUNCTION** • Switch the ignition off. • Using the M-MDS, perform the DTC inspection for the DSC HU/CM. (See **ON-BOARD DIAGNOSIS [DYNAMIC STABILITY CONTROL (DSC)]**.) • Are any other DTCs detected?	Yes	Go to the applicable DTC inspection. (See **DTC TABLE [INSTRUMENT CLUSTER]**.)
		No	Go to the next step.
2	**VERIFY THAT NO OTHER DTCs ARE PRESENT** • Are any other DTCs output?	Yes	Go to the applicable DTC inspection. (See **ON-BOARD DIAGNOSIS [LASER SENSOR]**.)
		No	Go to the next step.
	VERIFY THAT THE SAME DTC IS NOT PRESENT		

3	• Clear the DTCs from the memory. (See **ON-BOARD DIAGNOSIS [LASER SENSOR]**.) • Are the same DTCs present?	Yes	Repeat the inspection from Step 1. If the malfunction recurs, replace the laser sensor. (See **LASER SENSOR REMOVAL/INSTALLATION**.)
		No	DTC troubleshooting completed.

2014 - Mazda3 - Brakes

SYSTEM WIRING DIAGRAM [DYNAMIC STABILITY CONTROL (DSC)]

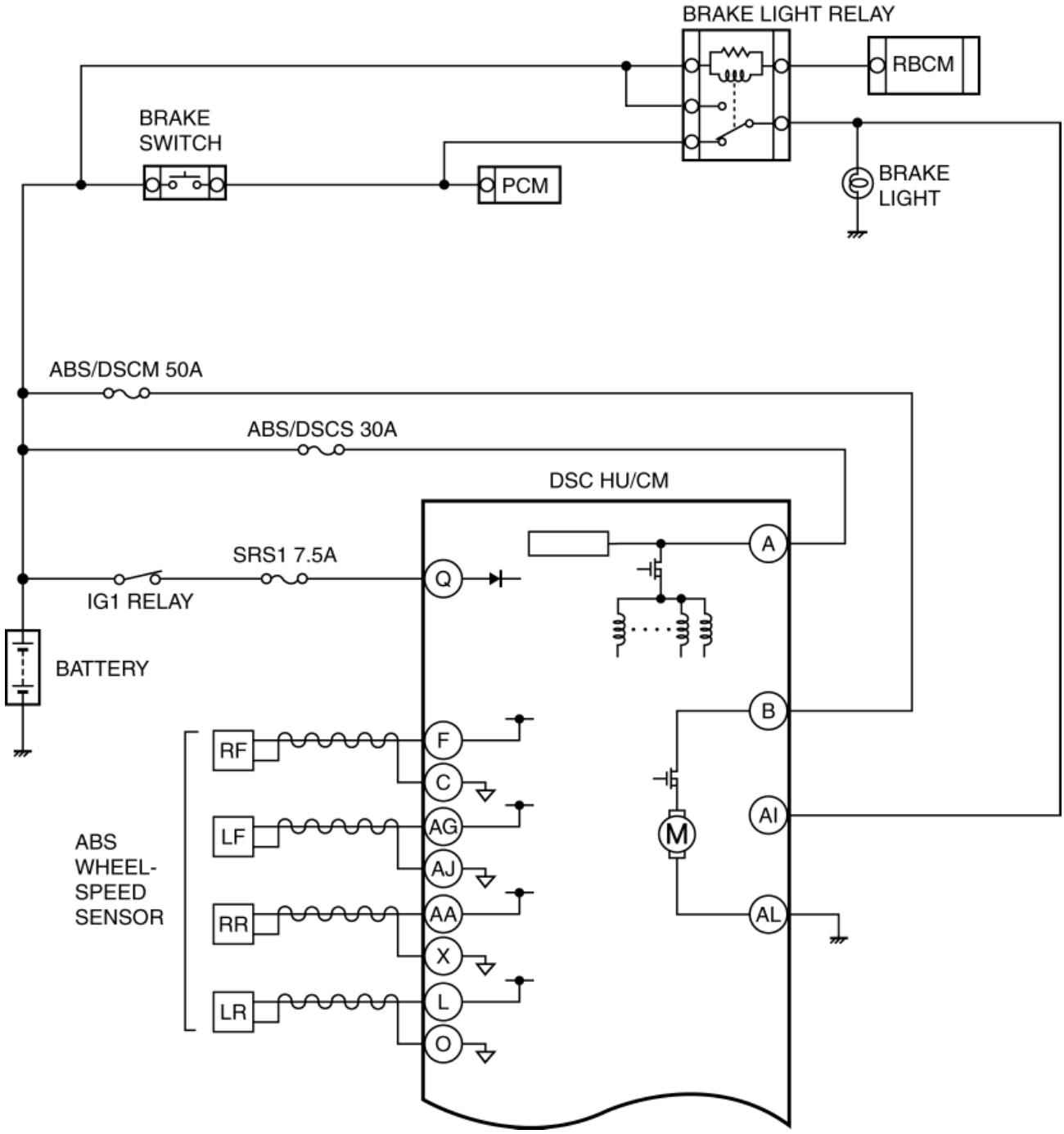

SYSTEM WIRING DIAGRAM [DYNAMIC STABILITY CONTROL (DSC)]

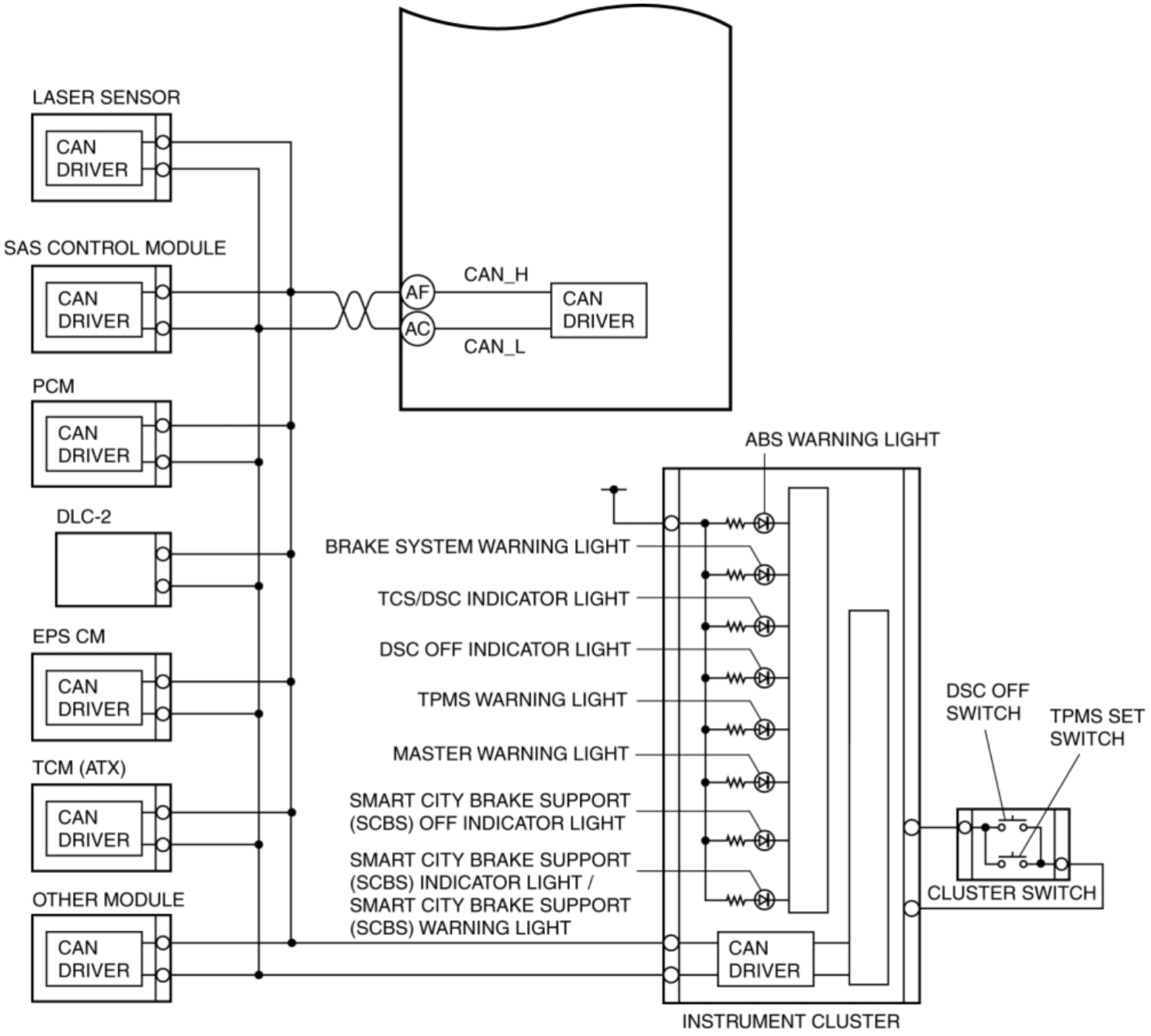

2014 - Mazda3 - Brakes

FOREWORD [DYNAMIC STABILITY CONTROL (DSC)]

- If there is any vehicle malfunction complaint lodged by a customer, perform malfunction diagnosis according to the troubleshooting procedure.

Troubleshooting Procedure

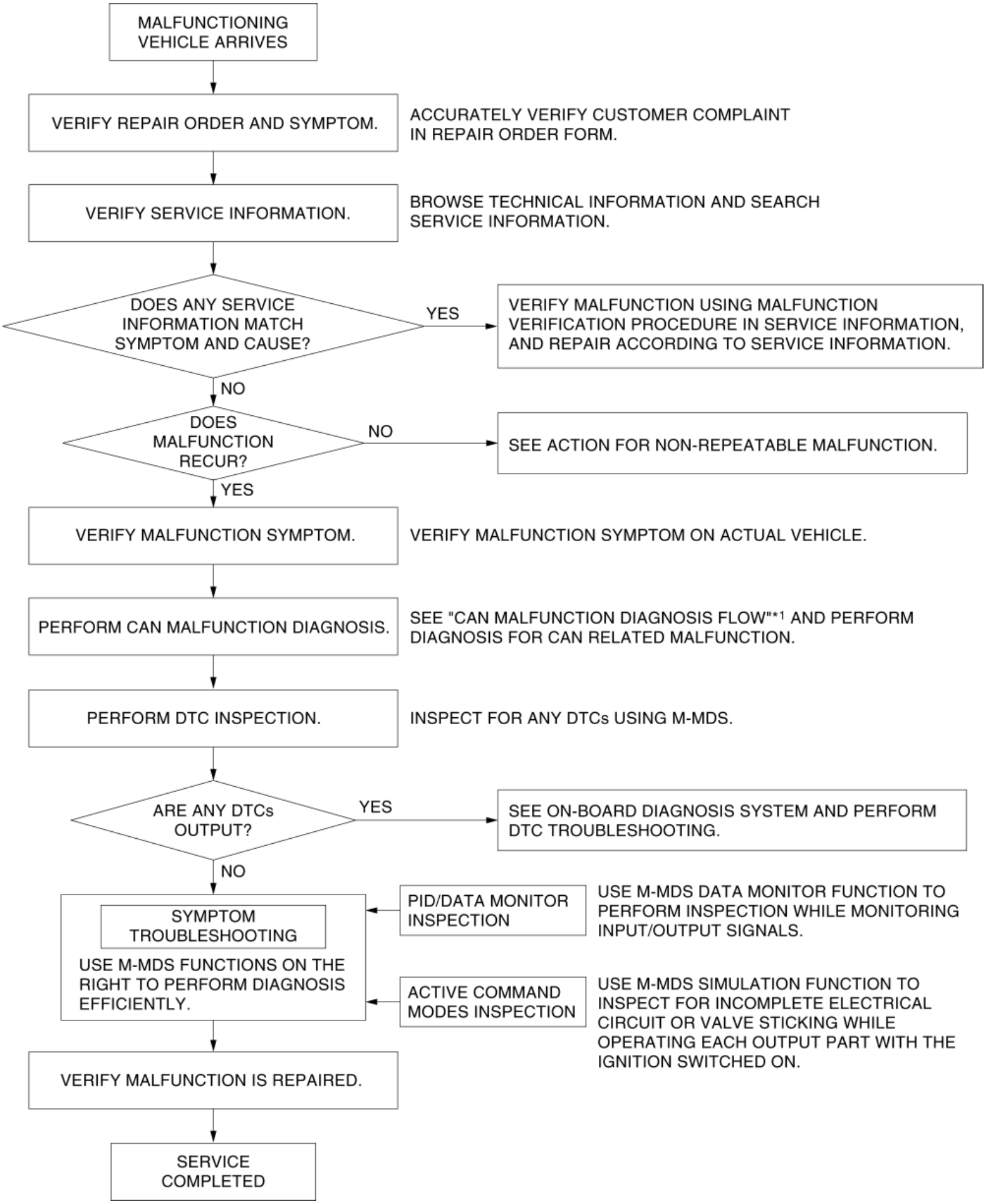
MALFUNCTIONING VEHICLE ARRIVES
VERIFY REPAIR ORDER AND SYMPTOM.
ACCURATELY VERIFY CUSTOMER COMPLAINT IN REPAIR ORDER FORM.
VERIFY SERVICE INFORMATION.
BROWSE TECHNICAL INFORMATION AND SEARCH SERVICE INFORMATION.
DOES ANY SERVICE INFORMATION MATCH SYMPTOM AND CAUSE?
YES
VERIFY MALFUNCTION USING MALFUNCTION VERIFICATION PROCEDURE IN SERVICE INFORMATION, AND REPAIR ACCORDING TO SERVICE INFORMATION.
NO
DOES MALFUNCTION RECUR?
NO
SEE ACTION FOR NON-REPEATABLE MALFUNCTION.
YES
VERIFY MALFUNCTION SYMPTOM.
VERIFY MALFUNCTION SYMPTOM ON ACTUAL VEHICLE.
PERFORM CAN MALFUNCTION DIAGNOSIS.
SEE "CAN MALFUNCTION DIAGNOSIS FLOW"*1 AND PERFORM DIAGNOSIS FOR CAN RELATED MALFUNCTION.
PERFORM DTC INSPECTION.
INSPECT FOR ANY DTCs USING M-MDS.
ARE ANY DTCs OUTPUT?
YES
SEE ON-BOARD DIAGNOSIS SYSTEM AND PERFORM DTC TROUBLESHOOTING.
NO
SYMPTOM TROUBLESHOOTING
USE M-MDS FUNCTIONS ON THE RIGHT TO PERFORM DIAGNOSIS EFFICIENTLY.
PID/DATA MONITOR INSPECTION
USE M-MDS DATA MONITOR FUNCTION TO PERFORM INSPECTION WHILE MONITORING INPUT/OUTPUT SIGNALS.
ACTIVE COMMAND MODES INSPECTION
USE M-MDS SIMULATION FUNCTION TO INSPECT FOR INCOMPLETE ELECTRICAL CIRCUIT OR VALVE STICKING WHILE OPERATING EACH OUTPUT PART WITH THE IGNITION SWITCHED ON.
VERIFY MALFUNCTION IS REPAIRED.
SERVICE COMPLETED

*1

Refer to MULTIPLEX COMMUNICATION SYSTEM. (See CONTROLLER AREA NETWORK (CAN) MALFUNCTION DIAGNOSIS FLOW.)

Action for non-repeatable malfunction

- If the malfunction does not recur, verify the malfunction cause by performing the following actions:
  - Verify that a DTC has been recorded in the memory using the M-MDS. (See **ON-BOARD DIAGNOSIS [DYNAMIC STABILITY CONTROL (DSC)]**.)
  - Perform a simulation test in the simulation mode based on the repair order form, record the data at that time, and detect the malfunction cause.
  - Shake the wiring harness or connector of the electrical component which is suspected to be the cause of the malfunction, and inspect for the occurrence of any malfunction or DTCs.

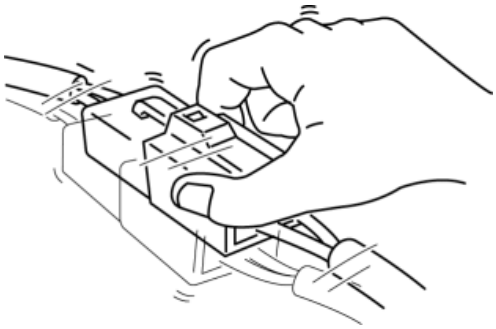

  - Inspect the female terminals for poor connection.

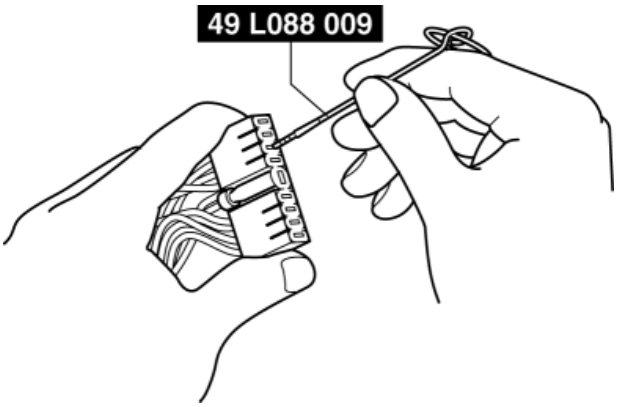

2014 - Mazda3 - Brakes

PRECAUTION [DYNAMIC STABILITY CONTROL (DSC)]

1. The ABS warning light and/or brake system warning light and/or TCS/DSC indicator light and/or DSC OFF indicator light illuminate even when the system is normal.

Warning lights/Indicator lights that may illuminate and/or flash	Cases in which the light may illuminate	Conditions in which the light will go out	ABS, EBD, TCS and DSC control
• ABS warning light • Brake system warning light • TCS/DSC indicator light	Only the front wheels rotate under the following condition while jacked up, stuck, or on the chassis dynamometer: • Detected **8 times** for a continuous **20 s** while at a vehicle speed of **20 km/h {12 mph} or more**. (One detection period is when ignition is switched from ON to off.)	After turning off the ignition once and then restarting the engine, the vehicle is driven at **10km/h {6.2 mph} or more**, and then normal operation is verified.	• ABS: Cuts control. • EBD: Cuts control. • TCS: Cuts control. • DSC: Cuts control.
	Parking brake is not fully released while driving.		
	Brake drag.		
	Sudden acceleration/deceleration.		
	Left/right or front/rear tires are different. (Size, radius, tire pressure, or wear is other than that listed on tire		

	label.)		
	Battery voltage at DSC HU/CM terminal of voltage source drops **below about 9.5 V**.	Battery voltage rises **above about 9.5 V**.	• ABS: Operates control. • EBD: Operates control. • TCS: Operates control. • DSC: Operates control.
Brake system warning light	Brake fluid amount is low.	Brake fluid level is within the specification.	• ABS: Operates control. • EBD: Operates control. • TCS: Operates control. • DSC: Operates control.

2. Precautions during servicing of DSC. The DSC is composed of electrical and mechanical parts. It is necessary to categorize malfunctions as being either electrical or hydraulic when performing troubleshooting.

a. Malfunction in electrical system

- The control module has an on-board diagnostic function. With this function, the ABS warning light and/or brake system warning light and/or TCS/DSC indicator light and/or DSC OFF indicator light will come on when there is a problem in the electrical system.

  Also, past and present malfunctions are recorded in the control module. This function can find malfunction that do not occur during periodic inspections. Connect the M-MDS (IDS) to the DLC-2. The stored malfunctions will be displayed in the order of occurrence. To find out the causes of DSC malfunction, use these on-board diagnostic results.

- If a malfunction occurred in the past but is now normal, the cause is likely a temporary poor connection of the harness. The control module usually operates normally. Be careful when searching for the cause of malfunction.

- After repair, it is necessary to clear the DTC from the control module memory. Also, if the DSC related parts have been replaced, verify that the no DTC has been displayed after repairs.
- After repairing the ABS wheel-speed sensor or ABS sensor rotor, or after replacing the control module, the ABS warning light may not go off even when the ignition is switched ON. In this case, drive the vehicle at a speed of **more than 10 km/h {6.2 mph}**, make sure the ABS warning light goes off, and then clear the DTC.
- When repairing, if the DSC related connectors are disconnected and the ignition is switched ON, the control module will mistakenly detect a fault and record it as a malfunction.

  CAUTION:

  - When any DSC HU/CM (brake fluid pressure sensor) or SAS control module (yaw rate sensor, low-G sensor) are replaced, always perform the initialization procedure to insure proper DSC operation.
- To protect the control module, make sure the ignition is switched off before connecting or disconnecting the control module connector.

b. Malfunctions in hydraulic system

- Symptoms of a hydraulic system malfunction are similar to those of a conventional brake malfunction. However, it is necessary to determine if the malfunction is in a DSC component or the conventional brake system.
- The hydraulic unit contains delicate mechanical parts. If foreign matter gets into the component, the DSC may fail to operate. Also, it will likely become extremely difficult to find the location of the malfunction in the event that the brakes operate but the DSC does not. Make sure foreign matter does not penetrate the hydraulic unit when servicing the DSC (e.g. brake fluid replacement, pipe removal).

Intermittent Concern Troubleshooting

Vibration method

- If a malfunction occurs or worsens while driving on a rough road or the engine vibrates, perform the following steps.

NOTE:

- There are several reasons why the vehicle or engine vibration could cause an electrical malfunction. Inspect the vehicles for the following:
  - Connectors not fully seated.
  - Wiring harnesses not having full play.

    - Wires laying across brackets or moving parts.
    - Wires routed too close to hot parts.
- An improperly routed, improperly clamped, or loose wiring harness can cause it to become pinched between parts.
- The connector joints, points of vibration, and places where wire harnesses pass through the firewall, and the body panels are the major areas to be checked.

Inspection method for switches, sensor connectors, and wires

1. Connect the M-MDS (IDS) to the DLC-2.
2. Switch the ignition ON (engine off).

NOTE:

- If the engine starts and runs, perform the following steps while idling.

3. Access PIDs for the switch or sensor being inspected.
4. Turn the switch on manually.
5. Slightly shake each connector or wiring harness vertically and horizontally while monitoring the PID.

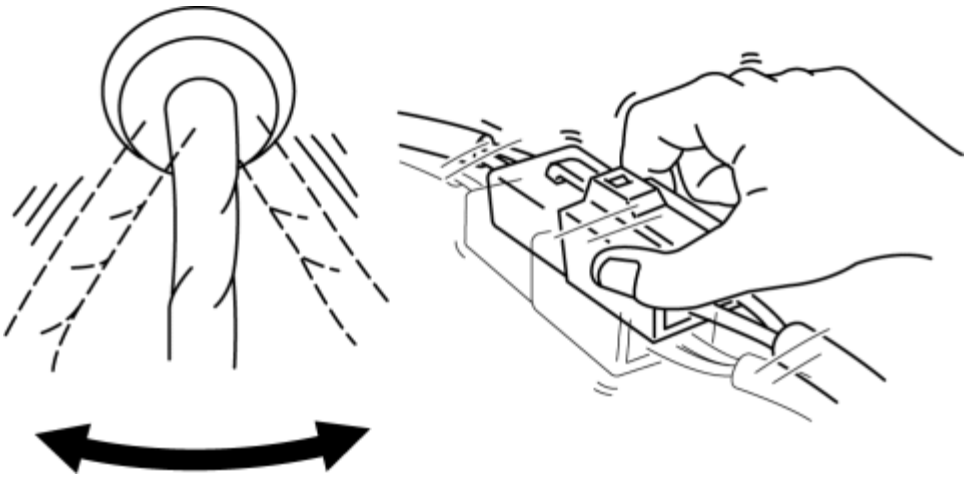

- If the PID value is unstable, inspect for poor connection.

Inspection method for switches and sensors

1. Connect the M-MDS (IDS) to the DLC-2.
2. Switch the ignition ON (engine off).

NOTE:

- If the engine starts and runs, perform the following steps while idling.

3. Access PIDs for the switch or sensor being inspected.
4. Vibrate the sensor slightly with a finger.

- If PID value is unstable or a malfunction occurs, check for a poor connection or poorly mounted sensor.

Malfunction data monitor method

1. Perform malfunction reappearance test according to malfunction reappearance mode and malfunction data monitor. The malfunction cause is found in the malfunction data.

Connector terminal check method

1. Check the connection condition of each female terminal.

2. Insert the male terminal; fit male terminal to female terminal and verify if malfunction is in female terminal.

2014 - Mazda3 - Brakes

SYMPTOM TROUBLESHOOTING [DYNAMIC STABILITY CONTROL (DSC)]

- Verify the symptoms, and perform troubleshooting according to the appropriate number.

No.	Symptom
1	Any of the following lights are not illuminated when the ignition is switched ON: • ABS warning light • Brake system warning light • TCS/DSC indicator light • DSC OFF indicator light
2	Any of the following lights remain illuminated: • ABS warning light • TCS/DSC indicator light • DSC OFF indicator light
3	Brake system warning light remains illuminated
4	A malfunction in the system even though the ABS warning light, brake system warning light, TCS/DSC indicator light and DSC OFF indicator light are not illuminated
5	ABS or TCS*1 operates frequently
	TCS does not work correctly
6	DSC*2 operates frequently
	DSC does not work correctly
7	Hill launch assist (HLA) operates even on a down slope
	Hill launch assist (HLA) does not operate on a slope

8	Smart City Brake Support (SCBS) indicator light (amber) stay on

X: Applied

Troubleshooting item	1	2	3	4	5	6	7	8
	Any of the following lights are not illuminated when with the ignition is switched ON: (ABS warning light, brake system warning light, TCS/DSC indicator light and/or DSC OFF indicator light)	Any of the following lights remain illuminated: (ABS warning light, brake system warning light, TCS/DSC indicator light and/or DSC OFF indicator light)	Brake system warning light remains illuminated	A malfunction in the system even though the ABS warning light, brake system warning light, TCS/DSC indicator light and DSC OFF indicator light are not illuminated	ABS or TCS*1 operates frequently/ TCS does not work correctly	DSC*2 operates frequently/ DSC does not work correctly	Hill launch assist (HLA) operates even on a down slope/ Hill launch assist (HLA) does not operate on a slope	Smart City Brake Support (SCBS) indicator light (amber) stay on
DSC HU/CM does not operate	X	X	X					
Communication error between DSC HU/CM and instrument cluster	X	X	X					

DSC HU/CM internal malfunction	X	X	X					X
Instrument cluster malfunction	X	X	X					
Brake fluid amount is low			X					
DSC HU/CM detected malfunction (input and output device malfunction)		X	X		X	X	X	X
DSC HU/CM detects low voltage in power supply		X	X					
DSC HU/CM ground malfunction	X	X	X					
No connection at DSC HU/CM connector		X	X					
Parking brake does not release			X				X	
Parking brake switch or brake fluid level sensor stuck on			X					
Short to ground in wiring harness between parking brake switch and instrument cluster			X					
Short to ground in wiring harness between brake fluid level sensor and front body control module (FBCM)			X					
Mechanical malfunction in system				X				
Incorrect ABS wheel-speed signal is inputted to DSC HU/CM		X			X	X	X	
Difference in size, air pressure or wear conditions between front and rear tires					X	X	X	
Malfunction in engine control system (TCS malfunction)					X			
Poor installation of SAS control module (yaw rate sensor, low-G sensor)						X	X	
DSC HU/CM initial setting has not been performed after replacing DSC HU/CM		X				X	X	
Input signal malfunction from instrument cluster (parking brake signal)			X				X	

Input signal malfunction from PCM (reverse gear signal)							X	
Communication error between DSC HU/CM and front body control module (FBCM)			X				X	
Communication error between DSC HU/CM and PCM		X					X	
Low-G sensor initialization has not been performed after replacing SAS control module		X					X	
DSC HU/CM detects a malfunction (input/output device malfunction)		X					X	
Center point of low-G sensor has deviated		X					X	
PCM and/or instrument cluster detects a malfunction		X					X	X
Error input signal from PCM		X					X	
Brake (foot brake/parking brake) drag							X	
Laser sensor detects a malfunction								X

*1

DSC system function contains traction control function, TCS / DSC indicator light turns on and off while TCS operates

*2

TCS / DSC indicator light turns on and off while DSC operates

2014 - Mazda3 - Brakes

NO.1 ANY OF THE FOLLOWING LIGHTS ARE NOT ILLUMINATED WITH THE IGNITION SWITCHED ON: (ABS WARNING LIGHT, BRAKE SYSTEM WARNING LIGHT, TCS/DSC INDICATOR LIGHT AND/OR DSC OFF INDICATOR LIGHT) [DYNAMIC STABILITY CONTROL (DSC)]

1	Any of the following lights are not illuminated with the ignition switched ON: (ABS warning light, brake system warning light, TCS/DSC indicator light and/or DSC OFF indicator light)
POSSIBLE CAUSE	• DSC HU/CM does not operate. • Communication error between DSC HU/CM and instrument cluster • Instrument cluster malfunction • DSC HU/CM internal malfunction

Diagnostic procedure

STEP	INSPECTION		ACTION
1	**VERIFY IF MALFUNCTION IS IN WARNING LIGHTS AND INDICATOR LIGHTS' COMMON POWER SUPPLY, OR IN OTHER WARNING LIGHTS AND INDICATOR LIGHTS** • Connect the M-MDS (IDS) to the DLC-2. • Turn on all warning lights and indicator lights using the instrument cluster PID WL+IL of active command modes. (See **ACTIVE COMMAND MODES INSPECTION [INSTRUMENT CLUSTER]**.) • Are other warning and indicator lights illuminated?	Yes	Go to Step 5.
		No	If communication error message is displayed on the M-MDS (IDS) screen: • Go to the next step. If communication error message is not displayed: • Replace the instrument cluster. (See **INSTRUMENT CLUSTER REMOVAL/INSTALLATION**.)
2	**INSPECT INSTRUMENT CLUSTER POWER SUPPLY FUSE** • Inspect the instrument cluster ignition power supply fuse. • Is the fuse normal?	Yes	Go to the next step.
		No	Inspect the blown fuse's circuit for a short to ground. Repair or replace the wiring harness for a possible

			short to ground if necessary. Install appropriate amperage fuse.
*3	**VERIFY IF MALFUNCTION IS IN WIRING HARNESS (BETWEEN INSTRUMENT CLUSTER POWER SUPPLY AND INSTRUMENT CLUSTER FOR CONTINUITY) OR ELSEWHERE** • Switch the ignition ON. • Measure the voltage at instrument cluster terminal S (wiring harness-side). • Is the voltage **approx. 12 V**?	Yes	Go to the next step.
		No	Refer to the wiring diagram and verify whether or not there is a common connector between instrument cluster terminal S (wiring harness-side) and ignition switch. **If there is a common connector:** • Determine the malfunctioning part by inspecting the common connector and the terminal for corrosion, damage, or pin disconnection, and the common wiring harness for an open circuit. • Repair or replace the malfunctioning part. **If there is no common connector:** • Repair or replace the wiring harness which has an open circuit.
*4	**VERIFY IF MALFUNCTION IS IN WIRING HARNESS (BETWEEN INSTRUMENT CLUSTER AND GROUND FOR CONTINUITY) OR INSTRUMENT CLUSTER** • Switch the ignition off. • Disconnect the instrument cluster connector. • Inspect for continuity between instrument cluster terminal K (wiring harness-side) and body ground. • Is there continuity?	Yes	Replace the instrument cluster. (Open circuit in the instrument cluster) (See **INSTRUMENT CLUSTER REMOVAL/INSTALLATION**.)
		No	Repair or replace the wiring harness for a possible open circuit and poor contact at ground point.
5	**CONFIRM DSC HU/CM DTC** • Retrieve the DSC HU/CM DTC using the M-MDS (IDS). (See **ON-BOARD DIAGNOSIS [DYNAMIC STABILITY CONTROL (DSC)]**.) • Are any DTCs present?	Yes	Go to the applicable DTC inspection. (See **ON-BOARD DIAGNOSIS [DYNAMIC STABILITY CONTROL (DSC)]**.)
		No	If a communication error message is displayed on the M-MDS (IDS) screen:

			Go to the next step. If a communication error message is not displayed: • Go to Step 9.
6	**INSPECT DSC HU/CM POWER SUPPLY FUSE** • Inspect the DSC HU/CM ignition power supply fuse. • Is the fuse normal?	Yes	Go to the next step.
		No	Inspect the blown fuse's circuit for a short to ground. Repair or replace the wiring harness for a possible short to ground if necessary. Install appropriate amperage fuse.
*7	**VERIFY IF MALFUNCTION IS IN WIRING HARNESS (BETWEEN DSC HU/CM POWER SUPPLY AND DSC HU/CM FOR CONTINUITY) OR ELSEWHERE** • Switch the ignition ON. • Measure the voltage at the DSC HU/CM terminal Q (wiring harness-side). • Is the voltage **approx. 12 V**?	Yes	Go to the next step.
		No	Inspect for an open circuit between the DSC HU/CM and ignition. Repair or replace the wiring harness for a possible open circuit if necessary.
*8	**VERIFY WHETHER MALFUNCTION IS IN WIRING HARNESS (BETWEEN DSC HU/CM AND GROUND FOR CONTINUITY) OR ELSEWHERE** • Switch the ignition off. • Disconnect the DSC HU/CM connector. • Inspect for continuity between DSC HU/CM terminal AL (wiring harness-side) and body ground. • Is there continuity?	Yes	Replace the DSC HU/CM. (Open circuit in the DSC HU/CM) (See **DSC HU/CM REMOVAL/INSTALLATION**.)
		No	Repair or replace the wiring harness for a possible open circuit and poor contact at ground point.
9	**CONFIRM INSTRUMENT CLUSTER DTC** • Retrieve the instrument cluster DTC using the M-MDS (IDS). (See **DTC INSPECTION [INSTRUMENT CLUSTER]**.) • Are any DTCs present?	Yes	Go to the applicable DTC inspection. (See **DTC TABLE [INSTRUMENT CLUSTER]**.)
		No	Replace the instrument cluster. (See **INSTRUMENT CLUSTER REMOVAL/INSTALLATION**.)

When performing an asterisked (*) troubleshooting inspection, shake the wiring harness and connectors while doing the inspection to discover whether poor contact points are the cause of any intermittent malfunctions. If there is a problem, verify that connectors, terminals and wiring harnesses are connected correctly and undamaged.

2014 - Mazda3 - Brakes

NO.2 ANY OF THE FOLLOWING LIGHTS REMAIN ILLUMINATED: (ABS WARNING LIGHT, TCS/DSC INDICATOR LIGHT AND/OR DSC OFF INDICATOR LIGHT) [DYNAMIC STABILITY CONTROL (DSC)]

2	Any of the following lights remain illuminated: (ABS warning light, TCS/DSC indicator light and/or DSC OFF indicator light)
POSSIBLE CAUSE	• No connection at DSC HU/CM connector (When DSC HU/CM connector is removed, ABS warning light, brake system warning light, TCS/DSC indicator light, and DSC OFF indicator light are illuminated.) • DSC HU/CM detected malfunction (Input and output device malfunction). • DSC HU/CM detects low voltage in power supply. • DSC HU/CM ground malfunction (When DSC HU/CM ground is not securely connected, ABS warning light, brake system warning light, TCS/DSC indicator light, and DSC OFF indicator light are illuminated but DTCs are not displayed.) • DSC HU/CM does not operate. • PCM detected malfunction. • Error signal input from PCM • Communication error between DSC HU/CM and instrument cluster • Communication error between DSC HU/CM and PCM • Communication error between DSC HU/CM and EPS CM • After replacing SAS control module the low-G sensor and yaw rate sensor initialization have not been performed. • After replacing DSC HU/CM, the brake fluid pressure sensor initialization has not been performed. • Non-completion of module configuration (When module configuration is not performed after replacing DSC HU/CM, ABS warning light remains illuminated.) • DSC HU/CM internal malfunction

Diagnostic procedure

STEP	INSPECTION	ACTION
	CONFIRM DSC HU/CM DTC	

1	• Retrieve the DSC HU/CM DTC using the M-MDS (IDS). (See **ON-BOARD DIAGNOSIS [DYNAMIC STABILITY CONTROL (DSC)]**.) • Are any DTCs present?	Yes	Go to the applicable DTC inspection. (See **ON-BOARD DIAGNOSIS [DYNAMIC STABILITY CONTROL (DSC)]**.)
		No	If a communication error message is displayed on the M-MDS (IDS) screen: • Go to the next step. If a communication error message is not displayed: • Go to Step 6.
2	**INSPECT CONNECTION OF DSC HU/CM CONNECTOR** • Inspect connection of the DSC HU/CM connector. • Is the DSC HU/CM connector connected securely?	Yes	Go to the next step.
		No	Connect the DSC HU/CM connector securely, then go to Step 6.
3	**INSPECT DSC HU/CM POWER SUPPLY FUSE** • Inspect the DSC HU/CM ignition power supply fuse. • Is the fuse normal?	Yes	Go to the next step.
		No	Inspect the blown fuse's circuit for a short to ground. Repair or replace the wiring harness for a possible short to ground if necessary. Install appropriate amperage fuse.
*4	**VERIFY IF MALFUNCTION IS IN WIRING HARNESS (BETWEEN DSC HU/CM POWER SUPPLY AND DSC HU/CM FOR CONTINUITY) OR ELSEWHERE** • Switch the ignition ON. • Measure the voltage at the DSC HU/CM terminal Q (wiring harness-side). • Is the voltage **approx. 12 V**?	Yes	Go to the next step.
		No	Refer to the wiring diagram and verify whether or not there is a common connector between DSC HU/CM terminal Q (wiring harness-side) and ignition switch. **If there is a common connector:** • Determine the malfunctioning part by inspecting the common connector and the terminal for corrosion, damage, or pin disconnection, and the common wiring harness for an open circuit. • Repair or replace the malfunctioning part. **If there is no common connector:**

			• Repair or replace the wiring harness which has an open circuit.
*5	**VERIFY IF MALFUNCTION IS IN WIRING HARNESS (BETWEEN DSC HU/CM AND GROUND FOR CONTINUITY) OR ELSEWHERE** • Switch the ignition off. • Disconnect the DSC HU/CM connector. • Inspect for continuity between DSC HU/CM terminal AL (wiring harness-side) and body ground. • Is there continuity?	Yes	Replace the DSC HU/CM. (open circuit in the DSC HU/CM) (See **DSC HU/CM REMOVAL/INSTALLATION**.)
		No	Repair or replace the wiring harness for a possible open circuit and poor contact at the ground point.
6	**CONFIRM PCM DTCs** • Retrieve the PCM DTCs using the M-MDS (IDS). (See **ON-BOARD DIAGNOSTIC TEST [SKYACTIV-G 2.0, SKYACTIV-G 2.5]**.) • Are any DTCs present?	Yes	Go to the applicable DTC inspection. (See **DTC TABLE [SKYACTIV-G 2.0, SKYACTIV-G 2.5]**.)
		No	Go to the next step.
7	**VERIFY IF MALFUNCTION CAUSED BY INITIALIZATION PROCEDURE FOR MODULE NOT PERFORMED** • Verify if the malfunction is caused by initialization procedure for the brake fluid pressure sensor not being performed. • Has the initial setting for the brake fluid pressure sensor been performed after replacing the DSC HU/CM?	Yes	Go to the next step.
		No	Perform the brake fluid pressure sensor initial setting. (See **DSC RELATED PARTS SENSOR INITIALIZATION PROCEDURE**.)
8	**VERIFY IF MALFUNCTION CAUSED BY INITIALIZATION PROCEDURE FOR LOW-G SENSOR NOT PERFORMED** • Verify if the malfunction is caused by the initialization procedure for the low-G sensor not being performed. • Has the initial setting for the low-G sensor been performed after replacing the DSC HU/CM and the SAS control module?	Yes	Go to the next step.
		No	Perform the low-G sensor initial setting. (See **DSC RELATED PARTS SENSOR INITIALIZATION PROCEDURE**.)

9	**VERIFY IF MALFUNCTION CAUSED BY INITIALIZATION PROCEDURE FOR YAW RATE SENSOR NOT PERFORMED** • Verify if the malfunction is caused by the initialization procedure for the yaw rate sensor not being performed. • Has the initial setting for the yaw rate sensor been performed after replacing the DSC HU/CM and the SAS control module?	Yes	Go to the next step.
		No	Perform the yaw rate sensor initial setting. (See **DSC RELATED PARTS SENSOR INITIALIZATION PROCEDURE**.)
10	**VERIFY IF MALFUNCTION IS IN INSTRUMENT CLUSTER OR DSC HU/CM** • Connect the M-MDS (IDS) to the DLC-2. • Turn off and on all warning lights and indicator lights using the instrument cluster PID WL+IL of the active command modes. (See **ACTIVE COMMAND MODES INSPECTION [INSTRUMENT CLUSTER]**.) • Do the ABS warning light, brake system warning light, TCS/DSC indicator light and DSC OFF indicator light turn on and off according to the active command modes?	Yes	Replace the DSC HU/CM. (Internal malfunction) (See **DSC HU/CM REMOVAL/INSTALLATION**.)
		No	Replace the instrument cluster. (See **INSTRUMENT CLUSTER REMOVAL/INSTALLATION**.)

- When performing an asterisked (*) troubleshooting inspection, shake the wiring harness and connectors while doing the inspection to discover whether poor contact points are the cause of any intermittent malfunctions. If there is a problem, verify that connectors, terminals and wiring harnesses are connected correctly and undamaged.

2014 - Mazda3 - Brakes

NO.3 BRAKE SYSTEM WARNING LIGHT REMAINS ILLUMINATED [DYNAMIC STABILITY CONTROL (DSC)]

3	Brake system warning lights remains illuminated

POSSIBLE CAUSE	• Brake fluid amount is low.
	• Parking brake does not release.
	• Parking brake switch or brake fluid level sensor stuck on.
	• Short to ground in following circuit:
	  ▪ Between parking brake switch and instrument cluster
	  ▪ Between brake fluid level sensor and front body control module (FBCM)
	• No connection at DSC HU/CM connector (When DSC HU/CM connector is removed, ABS warning light, brake system warning light, DSC indicator light, and DSC OFF indicator light are illuminated.)
	• DSC HU/CM detected malfunction. (Input and output device malfunction)
	• DSC HU/CM detects low voltage in power supply.
	• DSC HU/CM ground malfunction (When DSC HU/CM ground is not securely connected, ABS warning light, brake system warning light, DSC indicator light, and DSC OFF indicator light are illuminated but DTCs are not display.)
	• DSC HU/CM does not operate.
	• Front body control module (FBCM) detected malfunction.
	• DSC HU/CM internal malfunction
	• Instrument cluster detected malfunction

Diagnostic procedure

STEP	INSPECTION		ACTION
1	**INSPECT BRAKE FLUID AMOUNT AND VERIFY THAT PARKING BRAKE IS RELEASED** • Inspect the brake fluid amount	Yes	Go to the next step.
		No	Add the brake fluid or release the parking brake lever.

	and verify that the parking brake is released. • Is the brake fluid amount normal? • Is the parking brake lever released?		If the brake fluid amount is less than specification: • Inspect and repair the brake line for leakage.
2	**CONFIRM DSC HU/CM DTC** • Retrieve the DSC HU/CM DTC using the M-MDS (IDS). (See **ON-BOARD DIAGNOSIS [DYNAMIC STABILITY CONTROL (DSC)]**.) • Are any DTCs present?	Yes	Go to the applicable DTC inspection. (See **ON-BOARD DIAGNOSIS [DYNAMIC STABILITY CONTROL (DSC)]**.)
		No	If a communication error message is displayed on the M-MDS (IDS) screen: • Go to the next step. If a communication error message is not displayed: • Go to Step 4.
3	**INSPECT CONNECTION OF DSC HU/CM CONNECTOR** • Inspect the connection of the DSC HU/CM connector. • Is the DSC HU/CM connector connected securely?	Yes	Go to the next step.
		No	Connect the DSC HU/CM connector securely, then go to the next step.
4	**CONFIRM INSTRUMENT CLUSTER OPERATION RECORD** • Retrieve the warning system operation history using the M-MDS (IDS). (See **INSTRUMENT CLUSTER OPERATION RECORD**.) • Is the brake system warning light illumination history recorded?	Yes	If the Brake Warning Lamp is recorded: • Go to Step 5. If the Brake Warning Lamp (Brake fluid low) is recorded: • Go to Step 6. If the Brake Warning Lamp (Parking Brake ON over 20 km/h or 12.4 mile/h) is recorded: • Go to Step 8.
		No	Go to Step 10.
5	**VERIFY IF MALFUNCTION IS IN INSTRUMENT CLUSTER OR ELSEWHERE** • Connect the M-MDS (IDS) to the DLC-2. • Turn off and on all warning lights and indicator lights using the instrument cluster	Yes	Go to Step 10.
		No	Replace the instrument cluster. (See **INSTRUMENT CLUSTER REMOVAL/INSTALLATION**.)

	PID WL+IL of active command modes. (See **ACTIVE COMMAND MODES INSPECTION [INSTRUMENT CLUSTER]**.) • Do the ABS warning light, brake system warning light, TCS/DSC indicator light and DSC OFF indicator light turn on and off according to the active command modes?		
6	**VERIFY IF MALFUNCTION IS IN BRAKE FLUID LEVEL SENSOR OR ELSEWHERE** • Inspect the brake fluid level sensor for continuity. (See **BRAKE FLUID LEVEL SENSOR INSPECTION**.) • Is the continuity condition normal?	Yes	Go to the next step.
		No	Replace the malfunctioning part. (See **MASTER CYLINDER REMOVAL/INSTALLATION**.)
*7	**INSPECT FOR SHORT TO GROUND IN WIRING HARNESS BETWEEN FRONT BODY CONTROL MODULE (FBCM) AND BRAKE FLUID LEVEL SWITCH** • Inspect for short to ground in the following circuit: ▪ Between brake fluid level switch and front body control module (FBCM) terminal 2Q • Is a short to ground detected?	Yes	Repair or replace the wiring harness for a possible short to ground.
		No	Retrieve the front body control module (FBCM) DTC using the M-MDS (IDS). (See **DTC INSPECTION [FRONT BODY CONTROL MODULE (FBCM)]**.) If the DTC remains: • Go to the applicable DTC inspection. (See **DTC TABLE [FRONT BODY CONTROL MODULE (FBCM)]**.) If the DTC does not remain: • Replace the front body control module (FBCM). (See **FRONT BODY CONTROL MODULE (FBCM) REMOVAL/INSTALLATION**.)
8	**INSPECT WHETHER MALFUNCTION IS IN PARKING BRAKE SWITCH OR ELSEWHERE** • Inspect the following parts for continuity: ▪ Parking brake	Yes	Go to the next step.
		No	Replace the malfunctioning part. (See **PARKING BRAKE LEVER REMOVAL/INSTALLATION**.)

	switch (See **PARKING BRAKE SWITCH INSPECTION**.) • Is the continuity condition normal?		
*9	**INSPECT FOR SHORT TO GROUND IN WIRING HARNESS BETWEEN INSTRUMENT CLUSTER AND PARKING BRAKE SWITCH** • Inspect for short to ground in the following circuit: ▪ Between parking brake switch and instrument cluster terminal X • Is the short to ground detected?	Yes	Repair or replace the wiring harness for a possible short to ground.
		No	Retrieve the instrument cluster DTC using the M-MDS (IDS). (See **DTC INSPECTION [INSTRUMENT CLUSTER]**.) If the DTC remains: • Go to the applicable DTC inspection. (See **DTC TABLE [INSTRUMENT CLUSTER]**.) If the DTC does not remain: • Replace the instrument cluster. (See **INSTRUMENT CLUSTER REMOVAL/INSTALLATION**.)
10	**INSPECT DSC HU/CM POWER SUPPLY FUSE** • Inspect the DSC HU/CM ignition power supply fuse. • Is the fuse normal?	Yes	Go to the next step.
		No	Inspect the blown fuse's circuit for short to ground. Repair or replace the wiring harness for a possible short to ground as necessary. Install appropriate amperage fuse.
*11	**VERIFY IF MALFUNCTION IS IN WIRING HARNESS (BETWEEN DSC HU/CM POWER SUPPLY AND DSC HU/CM FOR CONTINUITY) OR ELSEWHERE** • Switch the ignition ON. • Measure the voltage at the DSC HU/CM terminal Q (wiring harness-side). • Is the voltage **approx. 12 V**?	Yes	Go to the next step.
		No	Refer to the wiring diagram and verify whether or not there is a common connector between DSC HU/CM terminal Q (wiring harness-side) and ignition switch. **If there is a common connector:** • Determine the malfunctioning part by inspecting the common connector and the terminal for

			corrosion, damage, or pin disconnection, and the common wiring harness for an open circuit. • Repair or replace the malfunctioning part. **If there is no common connector:** • Repair or replace the wiring harness which has an open circuit.
*12	**VERIFY IF MALFUNCTION IS IN WIRING HARNESS (BETWEEN DSC HU/CM AND GROUND FOR CONTINUITY) OR ELSEWHERE** • Switch the ignition off. • Disconnect the DSC HU/CM connector. • Inspect for continuity between DSC HU/CM terminal AL (wiring harness-side) and body ground. • Is there continuity?	Yes	Replace the DSC HU/CM. (open circuit in the DSC HU/CM) (See **DSC HU/CM REMOVAL/INSTALLATION**.)
		No	Repair or replace the wiring harness for a possible open circuit and poor contact in ground point.

- When performing an asterisked (*) troubleshooting inspection, shake the wiring harness and connectors while doing the inspection to discover whether poor contact points are the cause of any intermittent malfunctions. If there is a problem, verify that connectors, terminals and wiring harnesses are connected correctly and undamaged.

2014 - Mazda3 - Brakes

NO.4 A MALFUNCTION IN THE SYSTEM EVEN THOUGH THE ABS WARNING LIGHT, BRAKE SYSTEM WARNING LIGHT, TCS/DSC INDICATOR LIGHT AND DSC OFF INDICATOR LIGHT ARE NOT ILLUMINATED [DYNAMIC STABILITY CONTROL (DSC)]

4	A malfunction in the system even though the ABS warning light, brake system warning light, TCS/DSC indicator light and DSC OFF indicator light are not illuminated
POSSIBLE CAUSE	• Mechanical malfunction in system.

Diagnostic procedure

STEP	INSPECTION		ACTION
1	**CONFIRM DSC HU/CM DTC** • Retrieve the DSC HU/CM DTC using the M-MDS (IDS). (See **ON-BOARD DIAGNOSIS [DYNAMIC STABILITY CONTROL (DSC)]**.) • Are any DTCs present?	Yes	Go to the applicable DTC inspection. (See **ON-BOARD DIAGNOSIS [DYNAMIC STABILITY CONTROL (DSC)]**.)
		No	Go to the next step.
2	**VERIFY SOLENOID VALVE OPERATION** • Switch the ignition off. • Connect the M-MDS (IDS) to the DLC-2. • Switch the ignition ON (engine off). • Access the active command mode for the solenoid valve using the M-MDS (IDS). (See **ON-BOARD DIAGNOSIS [DYNAMIC STABILITY CONTROL (DSC)]**.) • Does the solenoid valve operate?	Yes	Inspect the conventional brake system. If there is a malfunction: • Repair or replace any malfunctioning parts according to the inspection result.
		No	Repair or replace any malfunctioning parts according to the inspection result.

NO.4 A MALFUNCTION IN THE SYSTEM EVEN THOUGH THE ABS WARNING LIGHT, BRAKE SYSTEM WARNING LIGHT, TCS/DSC INDICATOR L...

2014 - Mazda3 - Brakes

NO.5 ABS OR TCS*1 OPERATES FREQUENTLY/TCS DOES NOT WORK CORRECTLY *1: DSC SYSTEM FUNCTION CONTAINS TRACTION CONTROL FUNCTION, TCS/DSC INDICATOR LIGHT TURNS ON AND OFF WHILE TCS OPERATES [DYNAMIC STABILITY CONTROL (DSC)]

5	ABS or TCS*1 operates frequently TCS does not work correctly *1: DSC system function contains traction control function, TCS/DSC indicator light turns on and off while TCS operates
POSSIBLE CAUSE	• Difference in size or air pressure between front and rear tires. • Incorrect ABS wheel-speed signal is input to DSC HU/CM. • Malfunction in engine control system. (TCS malfunction)

Diagnostic procedure

STEP	INSPECTION		ACTION
1	**CONFIRM DSC HU/CM AND PCM DTC** • Retrieve the DSC HU/CM DTC using the M-MDS (IDS). (See **ON-BOARD DIAGNOSIS [DYNAMIC STABILITY CONTROL (DSC)]**.) • Retrieve the PCM DTC using the M-MDS (IDS), if the traction control function has a problem. (See **ON-BOARD DIAGNOSTIC TEST [SKYACTIV-G 2.0, SKYACTIV-G 2.5]**.) • Are any DTCs present?	Yes	Go to the applicable DTC inspection. (See **ON-BOARD DIAGNOSIS [DYNAMIC STABILITY CONTROL (DSC)]**.) (See **DTC TABLE [SKYACTIV-G 2.0, SKYACTIV-G 2.5]**.)
		No	Go to the next step.
2	**INSPECT TIRE SIZE AND AIR PRESSURE** • Inspect tire size and air pressure. • Is the tire size and air pressure as specified?	Yes	Go to the next step.
		No	Replace with specified tires and adjust tire air pressure.

*3	**INSPECT ABS WHEEL-SPEED SENSOR OUTPUT PULSE** • Perform the Voltage Pattern Inspection for each ABS wheel-speed sensor. (See **FRONT ABS WHEEL-SPEED SENSOR INSPECTION**.) (See **REAR ABS WHEEL-SPEED SENSOR INSPECTION**.) • Is the output voltage pattern normal?	Yes	Found malfunctioning part according to the “INTERMITTENT CONCERN TROUBLESHOOTING”. (See **PRECAUTION [DYNAMIC STABILITY CONTROL (DSC)]**.)
		No	ABS wheel-speed sensor installation inspection: • Inspect the ABS wheel-speed sensor for looseness and confirm it is securely installed. ABS sensor rotor installation inspection: • Inspect the ABS sensor rotor for poor installation. Repair or replace any malfunctioning parts according to the inspection result.

- When performing an asterisked (*) troubleshooting inspection, shake the wiring harness and connectors while doing the inspection to discover whether poor contact points are the cause of any intermittent malfunctions. If there is a problem, verify that connectors, terminals and wiring harnesses are connected correctly and undamaged.

2014 - Mazda3 - Brakes

NO.6 DSC*2 OPERATES FREQUENTLY/DSC DOES NOT WORK CORRECTLY *2: TCS/DSC INDICATOR LIGHT TURNS ON AND OFF WHILE DSC OPERATES [DYNAMIC STABILITY CONTROL (DSC)]

6	DSC*2 operates frequently DSC does not work correctly *2: TCS/DSC indicator light turns on and off while DSC operates
POSSIBLE CAUSE	• DSC HU/CM detected malfunction. (Input and output device malfunction) • There is a difference in size or air pressure between front or rear tires. • Poor installation with SAS control module (yaw rate sensor, low-G sensor) (If SAS control module is poorly installed, DSC may operate intermittently.) • When replacing DSC HU/CM, initialization is not performed. (If initialization is not performed correctly, DSC may not work correctly.) • Incorrect ABS wheel speed sensor is input to DSC HU/CM.

Diagnostic procedure

STEP	INSPECTION		ACTION
1	**CONFIRM DSC HU/CM DTC** • Retrieve the DSC HU/CM DTC using the M-MDS (IDS). (See **ON-BOARD DIAGNOSIS [DYNAMIC STABILITY CONTROL (DSC)]**.) • Are any DTCs present?	Yes	Go to the applicable DTC inspection. (See **ON-BOARD DIAGNOSIS [DYNAMIC STABILITY CONTROL (DSC)]**.)
		No	Go to the next step.
2	**VERIFY THAT SAS CONTROL MODULE IS INSTALLED** • Verify that each sensor is installed. • Is SAS control module (yaw rate sensor, low-G sensor) securely installed?	Yes	Go to the next step.
		No	Install the malfunctioning sensor securely.
3	**VERIFY THAT BRAKE FLUID PRESSURE SENSOR IS INITIALIZED**	Yes	Go to the next step.

	• Verify that each sensor is initialized. • Has the initialization for the DSC HU/CM been performed after replacing the DSC HU/CM and the SAS control module?	No	Perform the initialization procedure. (See **DSC RELATED PARTS SENSOR INITIALIZATION PROCEDURE**.)
4	**INSPECT TIRE SIZE AND AIR PRESSURE** • Inspect tire size and air pressure. • Tire size and air pressure as specified?	Yes	Go to the next step.
		No	Replace with specified tires and adjust tire air pressure.
5*	**INSPECT ABS WHEEL-SPEED SENSOR OUTPUT PULSE** • Perform the Voltage Pattern Inspection for each ABS wheel-speed sensor. (See **FRONT ABS WHEEL-SPEED SENSOR INSPECTION**.) (See **REAR ABS WHEEL-SPEED SENSOR INSPECTION**.) • Is the output voltage pattern normal?	Yes	Found malfunctioning part according to the “INTERMITTENT CONCERN TROUBLESHOOTING”. (See **PRECAUTION [DYNAMIC STABILITY CONTROL (DSC)]**.)
		No	ABS wheel-speed sensor installation inspection: • Inspect the ABS wheel-speed sensor for looseness and confirm it is securely installed. ABS sensor rotor installation inspection: • Inspect the ABS sensor rotor for poor installation. Repair or replace any malfunctioning parts according to the inspection result.

- When performing an asterisked (*) troubleshooting inspection, shake the wiring harness and connectors while doing the inspection to discover whether poor contact points are the cause of any intermittent malfunctions. If there is a problem, verify that connectors, terminals and wiring harnesses are connected correctly and undamaged.

2014 - Mazda3 - Brakes

NO.7 HILL LAUNCH ASSIST (HLA) OPERATES EVEN ON A DOWN SLOPE/HILL LAUNCH ASSIST (HLA) DOES NOT OPERATE ON A SLOPE [DYNAMIC STABILITY CONTROL (DSC)]

8	Hill launch assist (HLA) operates even on a down slope Hill launch assist (HLA) does not operate on a slope
POSSIBLE CAUSE	**NOTE:** • HLA operates on an up slope of **about 3% or more** when the shift lever is in a position other than the reverse (R) position (MTX). • HLA operates on an up slope of **about 6% or more** when selector lever position is in a forward gear (ATX). • HLA operates on a down slope of **about 3% or more** when shift lever is in the reverse (R) position (MTX). • HLA operates on a down slope of **about 6% or more** when selector lever is in the R position (ATX). • HLA operates for a maximum of **2 s** after releasing the brake pedal. • DSC HU/CM detects a malfunction (Input/output device malfunction). • PCM and/or instrument cluster detect a malfunction. • SAS control module installation malfunction (If there is a malfunction resulting from SAS control module removal, HLA may not operate at desired inclination angle). • Tire malfunction (Differing air pressure on four wheels, use of tires with differing conditions of wear) • DSC HU/CM initial setting and low-G sensor initialization have not been performed after replacing DSC HU/CM and SAS control module (If initial setting and initialization are not performed, HLA may not operate at desired inclination angle). • Center point of low-G sensor has deviated. • Input signal malfunction from ABS wheel-speed sensor • Input signal malfunction from PCM (Engine torque signal, engine speed signal, accelerator pedal position signal, reverse gear signal, and clutch pedal signal) • Input signal malfunction from instrument cluster (Parking brake signal) • Input signal malfunction from TCM (Selector lever position signal)

	• Communication error between DSC HU/CM and PCM • Communication error between DSC HU/CM and instrument cluster • Brake (foot brake/parking brake) drag

Diagnostic procedure

STEP	INSPECTION		ACTION
1	**VERIFY DTC FOR RELATED MODULES** • Retrieve the DSC HU/CM, PCM, TCM (ATX) and instrument cluster DTC using the M-MDS. (See **ON-BOARD DIAGNOSIS [DYNAMIC STABILITY CONTROL (DSC)]**.) (See **ON-BOARD DIAGNOSTIC TEST [SKYACTIV-G 2.0, SKYACTIV-G 2.5]**.) (See **ON-BOARD DIAGNOSTIC SYSTEM DTC INSPECTION [FW6A-EL]**.) (See **DTC INSPECTION [INSTRUMENT CLUSTER]**.) • Are any DTCs present?	Yes	Go to the applicable DTC inspection. (See **ON-BOARD DIAGNOSIS [DYNAMIC STABILITY CONTROL (DSC)]**.) (See **DTC TABLE [SKYACTIV-G 2.0, SKYACTIV-G 2.5]**.) (See **ON-BOARD DIAGNOSTIC SYSTEM DTC TABLE [FW6A-EL]**.) (See **DTC TABLE [INSTRUMENT CLUSTER]**.)
		No	Go to the next step.
2	**VERIFY IF FALSE DETECTION OF INCLINATION ANGLE CAUSED BY MALFUNCTIONING SAS CONTROL MODULE INSTALLATION** • Inspect the SAS control module installation condition for the following: ▪ Is the module installed with any twisting? ▪ Is the module installed correctly?	Yes	Go to the next step.
		No	Repair the SAS control module installation condition. (See **SAS CONTROL MODULE REMOVAL/INSTALLATION [STANDARD DEPLOYMENT CONTROL SYSTEM]**.) (See **SAS CONTROL MODULE REMOVAL/INSTALLATION [TWO-STEP DEPLOYMENT CONTROL SYSTEM]**.)
3	**VERIFY IF MALFUNCTION CAUSED BY INITIALIZATION PROCEDURE FOR LOW-G SENSOR NOT PERFORMED** • Verify if the malfunction is caused by the initialization procedure for low-G sensor not being performed. • Has the initialization for the low-G sensor been performed after replacing the DSC HU/CM and the SAS control module?	Yes	Go to the next step.
		No	Perform the initialization procedure. (See **DSC RELATED PARTS SENSOR INITIALIZATION PROCEDURE**.)
4	**INSPECT FOR TIRE MALFUNCTION**	Yes	Go to the next step.

	Inspect the tire pressure and condition. • Are tire pressures and conditions normal?		
		No	If the pressure is incorrect, adjust the tire pressure to the specification. If the tires are worn, replace the tires.
5	**INSPECT RELATED MODULES FOR MALFUNCTION CAUSED BY FALSE SIGNAL** • Access the following DSC HU/CM, PCM and instrument cluster PIDs using the M-MDS: (See **ON-BOARD DIAGNOSIS [DYNAMIC STABILITY CONTROL (DSC)]**.) (See **PCM INSPECTION [SKYACTIV-G 2.0, SKYACTIV-G 2.5]**.) (See **ON-BOARD DIAGNOSTIC SYSTEM PID/DATA MONITOR INSPECTION [FW6A-EL]**.) (See **PID/DATA MONITOR INSPECTION [INSTRUMENT CLUSTER]**.) **DSC HU/CM** ▪ BRAKE_SW (Brake signal) ▪ LON_ACCL_C (Low-G sensor (longitudinal G) calculated value signal) ▪ LON_ACCL_R (Low-G sensor (longitudinal G) raw value signal) ▪ BRK_F_P_C (Brake fluid pressure calculated value signal) ▪ BRK_F_P_R (Brake fluid pressure raw value signal) ▪ WSPD_LF (ABS wheel-speed sensor (LF) signal) ▪ WSPD_RF (ABS wheel-speed sensor (RF) signal) ▪ WSPD_LR (ABS wheel-speed sensor (LR) signal) ▪ WSPD_RR (ABS wheel-speed sensor (RR)	Yes	Inspect the following: • Brake (foot brake/parking brake) drag • Engine output malfunction Repair or replace any malfunctioning parts according to the inspection result.
		No	Inspect the related parts and wiring harness. Repair or replace any malfunctioning parts according to the inspection result.

	signal) **PCM** ▪ RPM (Engine speed signal) ▪ APP (APP sensor signal) ▪ CPP (Clutch pedal signal: MTX) ▪ M_GEAR (Manual gear position signal: MTX) ▪ GEAR (Gear commanded signal: ATX) **TCM (ATX)** ▪ TR (Transaxle range sensor signal) **INSTRUMENT CLUSTER** ▪ P_BRAKE_SW (Parking brake signal) • Are all PID values normal?		

2014 - Mazda3 - Brakes

NO.8 SMART CITY BRAKE SUPPORT (SCBS) INDICATOR LIGHT (AMBER) STAY ON [DYNAMIC STABILITY CONTROL (DSC)]

8	Smart City Brake Support (SCBS) indicator light (amber) stay on
POSSIBLE CAUSE	• Laser sensor detects a malfunction. • DSC HU/CM internal malfunction. • DSC HU/CM detected malfunction (input and output device malfunction). • PCM and/or instrument cluster detect a malfunction.

Diagnostic procedure

STEP	INSPECTION		ACTION
1	**CONFIRM LASER SENSOR DTC** • Retrieve the DSC HU/CM and laser sensor DTC using the M-MDS. (See **ON-BOARD DIAGNOSIS [LASER SENSOR]**.) • Are any DTCs present?	Yes	Go to the applicable DTC inspection. (See **ON-BOARD DIAGNOSIS [LASER SENSOR]**.)
		No	Go to the next step.
2	**CONFIRM DSC HU/CM DTC** • Retrieve the DSC HU/CM and laser sensor DTC using the M-MDS. (See **ON-BOARD DIAGNOSIS [DYNAMIC STABILITY CONTROL (DSC)]**.) • Are any DTCs present?	Yes	Go to the applicable DTC inspection. (See **ON-BOARD DIAGNOSIS [DYNAMIC STABILITY CONTROL (DSC)]**.)
		No	Go to the next step.
3	**CONFIRM PCM DTC** • Retrieve the PCM DTC using the M-MDS. (See **ON-BOARD DIAGNOSTIC TEST [SKYACTIV-G 2.0, SKYACTIV-G 2.5]**.)	Yes	Go to the applicable DTC inspection. (See **DTC TABLE [SKYACTIV-G 2.0, SKYACTIV-G 2.5]**.)
		No	Retrieve the instrument cluster DTC using the

	• Are any DTCs present?		M-MDS. (See **DTC INSPECTION [INSTRUMENT CLUSTER]**.) • If any DTCs are present, go to the applicable DTC inspection. (See **DTC TABLE [INSTRUMENT CLUSTER]**.) • If there is not a DTC, replace the instrument cluster. (See **INSTRUMENT CLUSTER REMOVAL/INSTALLATION**.)

2014 - Mazda3 - Brakes

GENERAL PROCEDURES (BRAKE)

Wheel and Tire Installation

1. When installing the wheels and tires, tighten the wheel nuts to the following tightening torque in the order shown in the figure.

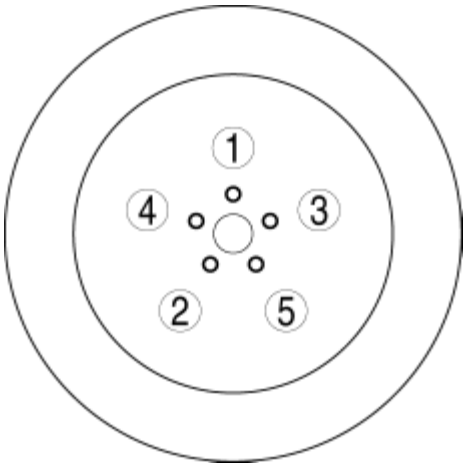

Tightening torque

- 108—147 N·m {12—14 Kgf·m, 80—108 ft·lbf}

Brake Lines Disconnection

1. If any brake line has been disconnected during the procedures, add brake fluid, bleed the brakes, and inspect for leakage after the procedure has been completed.

CAUTION:

- Brake fluid will damage painted surfaces. Be careful not to spill any on painted surfaces. In addition, if there is any brake fluid on the wiring harness, the wire insulation may corrode causing a malfunction such as a short circuit. If brake fluid gets on a painted surface or wiring harness, wash and flush it off completely with water immediately.

Brake Pipe Flare Nut Tightening

1. Tighten the brake pipe flare nut using any commercially available flare nut wrench.

Connector Disconnection

1. Disconnect the negative battery cable before performing any work that requires handling of connectors. (See **NEGATIVE BATTERY CABLE DISCONNECTION/CONNECTION [SKYACTIV-G 2.0, SKYACTIV-G 2.5]**.)

DSC Related Parts

1. Verify that there are no DTCs in the DSC memory after working on DSC related parts. If there are any DTCs in the memory, clear them. (See **ON-BOARD DIAGNOSIS [DYNAMIC STABILITY CONTROL (DSC)]**.)

DSC Related Part Sensor Initialization Procedure

WARNING:

- If the initialization procedure is not completed, the DSC will not operate properly and it might cause an unexpected accident. Therefore, when replacing the following parts, make sure to perform the initialization procedure to insure proper DSC operation.

1. When replacing the following parts, perform the initialization procedure. (See **DSC RELATED PARTS SENSOR INITIALIZATION PROCEDURE**.)
    - DSC HU/CM
    - SAS control module

Tire Pressure Monitoring System (TPMS) Initialization Procedure

CAUTION:

- If the TPMS initialization procedure is performed with the tire pressures not to specification, the system may not operate normally. Therefore, always inspect and adjust the tire pressure of all 4 tires before performing the TPMS initialization procedure.

NOTE:

- Perform the TPMS initialization when the following operations have been performed: (See **TIRE PRESSURE MONITORING SYSTEM INITIALIZATION PROCEDURE**.)
    - Tire pressures have been adjusted
    - Tires or wheels have been replaced
    - Tires have been rotated
    - DSC HU/CM replaced
    - DSC HU/CM connector disconnected
    - Battery is replaced
    - Negative battery cable is disconnected

1. Perform the TPMS initialization procedure when the TPMS warning light illuminates. (See **TIRE PRESSURE MONITORING SYSTEM INITIALIZATION PROCEDURE**.)

2014 - Mazda3 - Brakes

CONVENTIONAL BRAKE SYSTEM LOCATION INDEX

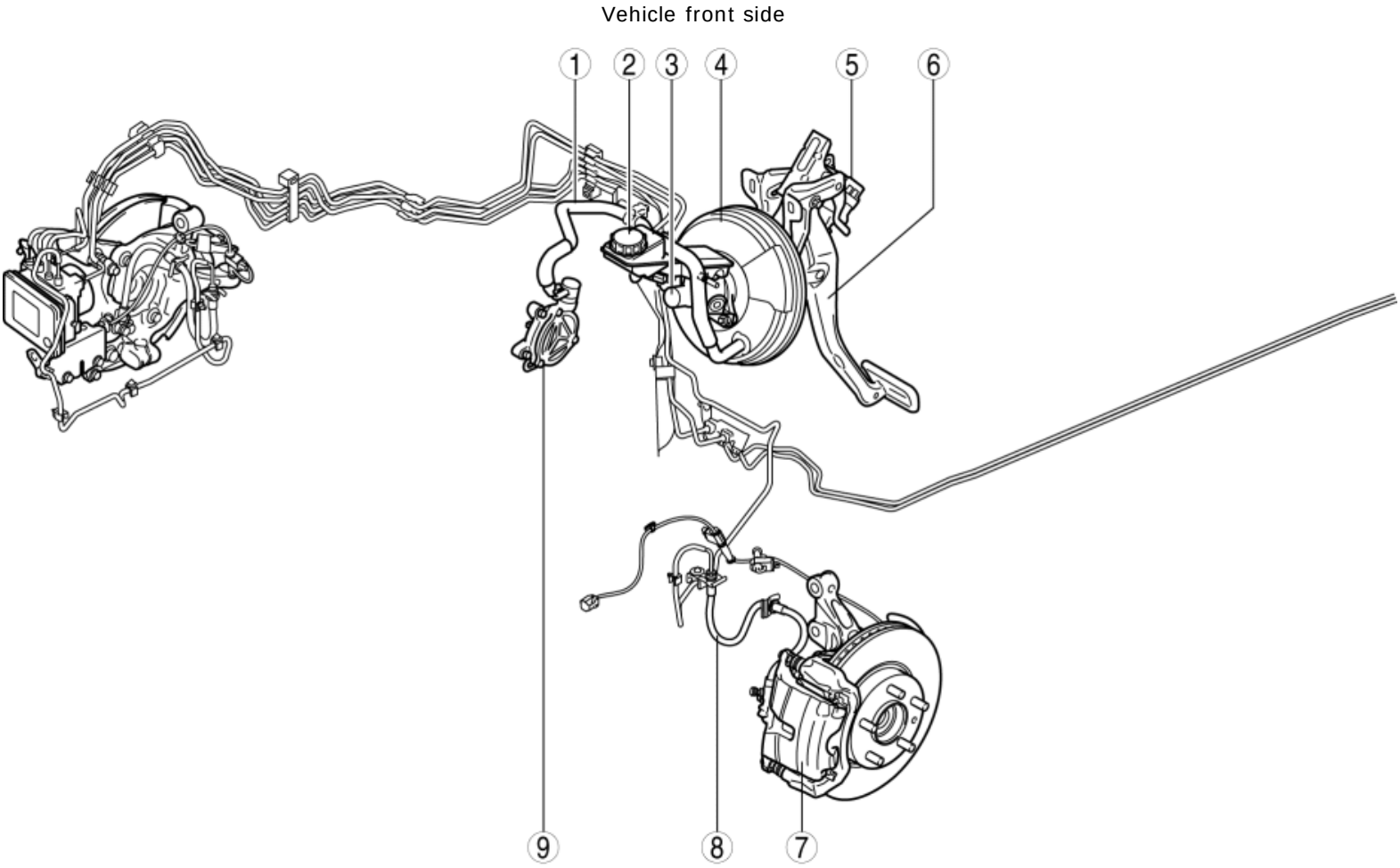

1	Vacuum line (See **VACUUM LINE INSPECTION**.) (See **VACUUM HOSE REMOVAL/INSTALLATION**.)
2	Brake fluid (See **BRAKE FLUID INSPECTION**.) (See **BRAKE FLUID AIR BLEEDING**.)
3	Master cylinder (See **MASTER CYLINDER REMOVAL/INSTALLATION**.) (See **BRAKE FLUID LEVEL SENSOR INSPECTION**.)
4	Power brake unit

	(See **POWER BRAKE UNIT INSPECTION**.) (See **POWER BRAKE UNIT REMOVAL/INSTALLATION**.)
5	Brake switch (See **BRAKE SWITCH INSPECTION**.)
6	Brake pedal (See **BRAKE PEDAL INSPECTION**.) (See **BRAKE PEDAL REMOVAL/INSTALLATION**.)
7	Front brake (disc) (See **FRONT BRAKE (DISC) INSPECTION**.) (See **FRONT BRAKE (DISC) REMOVAL/INSTALLATION**.) (See **DISC PAD (FRONT) REPLACEMENT**.) (See **CALIPER (FRONT) DISASSEMBLY/ASSEMBLY**.)
8	Front brake hose (See **BRAKE HOSE (FRONT) REMOVAL/INSTALLATION**.)
9	Vacuum pump (See **VACUUM PUMP INSPECTION**.) (See **VACUUM PUMP REMOVAL/INSTALLATION**.)

Vehicle rear side

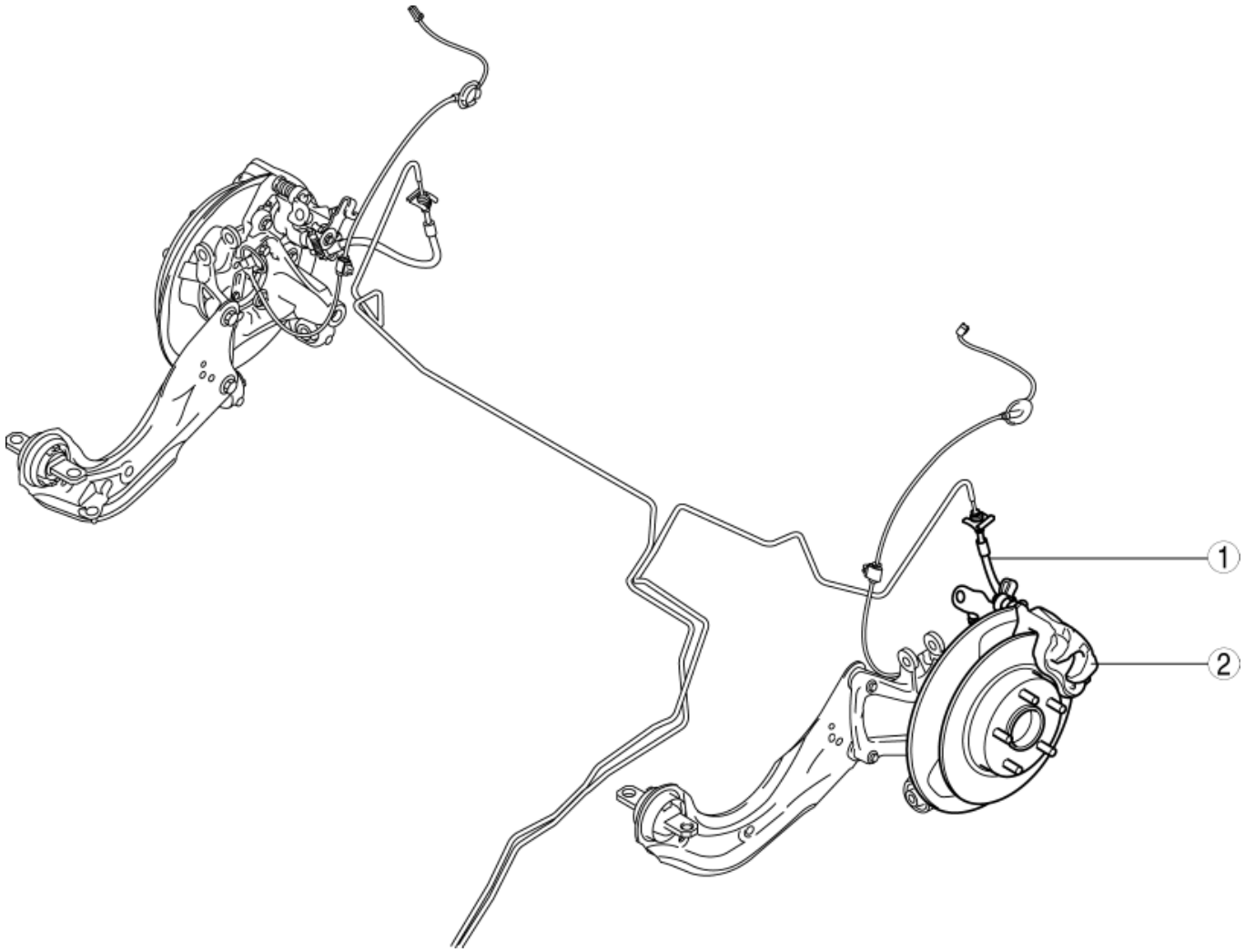

1	Rear brake hose (See **BRAKE HOSE (REAR) REMOVAL/INSTALLATION**.)
2	Rear brake (disc) (See **REAR BRAKE (DISC) INSPECTION**.) (See **REAR BRAKE (DISC) REMOVAL/INSTALLATION**.) (See **DISC PAD (REAR) REPLACEMENT**.) (See **CALIPER (REAR) DISASSEMBLY/ASSEMBLY**.)

2014 - Mazda3 - Brakes

BRAKE FLUID INSPECTION

1. Verify that the brake fluid level in the brake fluid reserve tank is between the MAX and MIN marks.

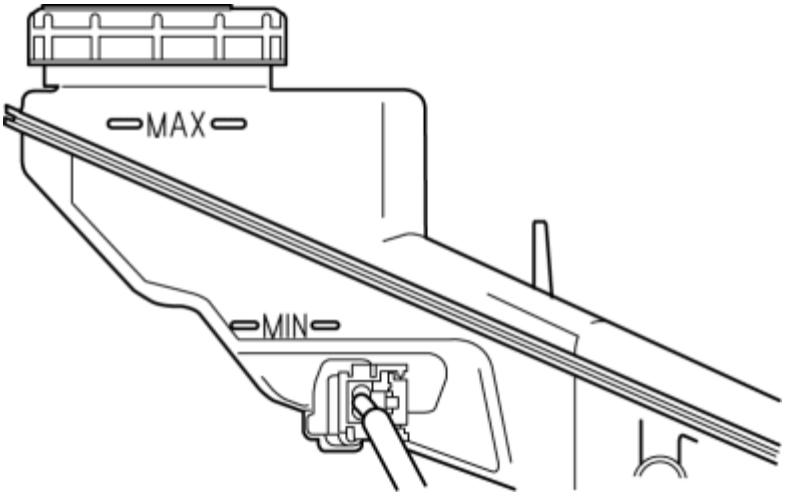

- If the brake fluid level is below the MIN mark, add brake fluid.

2014 - Mazda3 - Brakes

BRAKE FLUID AIR BLEEDING

CAUTION:

- Brake fluid will damage painted surfaces. Be careful not to spill any on painted surfaces. In addition, if there is any brake fluid on the wiring harness, the wire insulation may corrode causing a malfunction such as a short circuit. If brake fluid gets on a painted surface or wiring harness, wash and flush it off completely with water immediately.

NOTE:

- Keep the fluid level in the brake fluid reserve tank at 3/4 full or more during the air bleeding.
- Begin air bleeding with the brake caliper that is furthest from the master cylinder.

Brake fluid type

- SAE J1703 or FMVSS116 DOT-3

1. Remove the cap from the brake fluid reserve tank and add brake fluid.

2. Remove the bleeder cap on the brake caliper, and attach a vinyl tube to the bleeder screw.

3. Place the other end of the vinyl tube in a clear container and fill the container with fluid during air bleeding.

4. Working with two people, one should pump the brake pedal several times and depress and hold the pedal down.

5. While the brake pedal is depressed, the other person should loosen the bleeder screw using a commercially available flare nut wrench, drain out any fluid containing air bubbles, and tighten the bleeder screw.

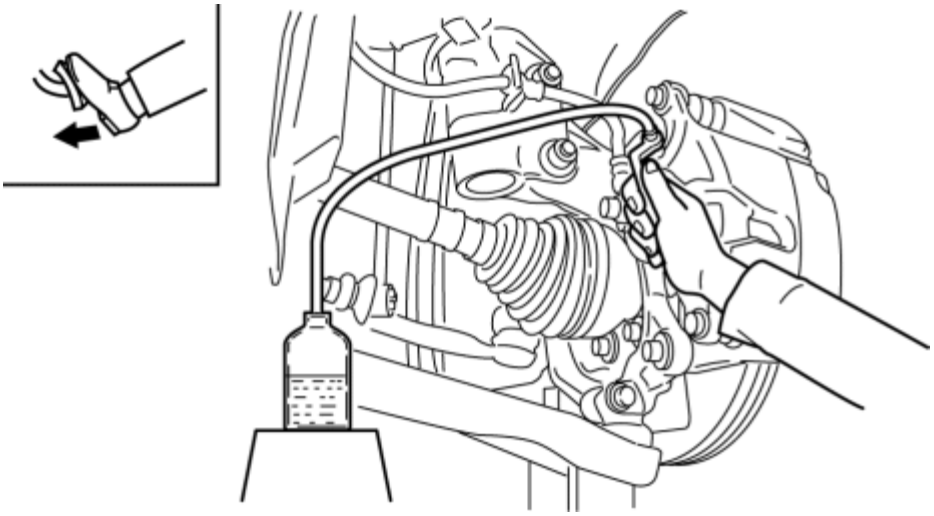

Tightening torque

Front: 16—18 N·m {1.7—1.8 kgf·m, 12—13 ft·lbf}

- Rear: 12—16 N·m {123—163 kgf·cm, 107—141 in·lbf}

6. Repeat Steps 4 and 5 until no air bubbles are seen.

7. Perform air bleeding as described in the above procedures for all brake calipers.

8. After performing normal air bleeding, perform air bleeding again for the right and left rear calipers using the following procedure:

a. Remove the rear caliper installation bolt shown in the figure and lift up the rear caliper.

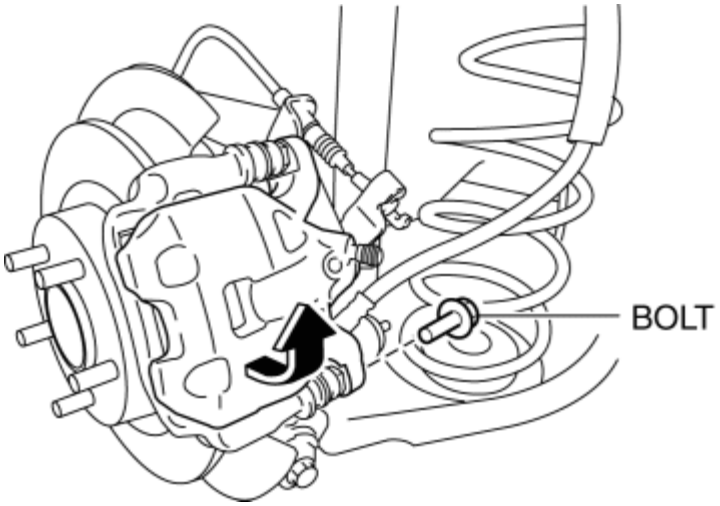

b. Slowly rotate the piston counterclockwise **approx. 180°** using the **SST**.

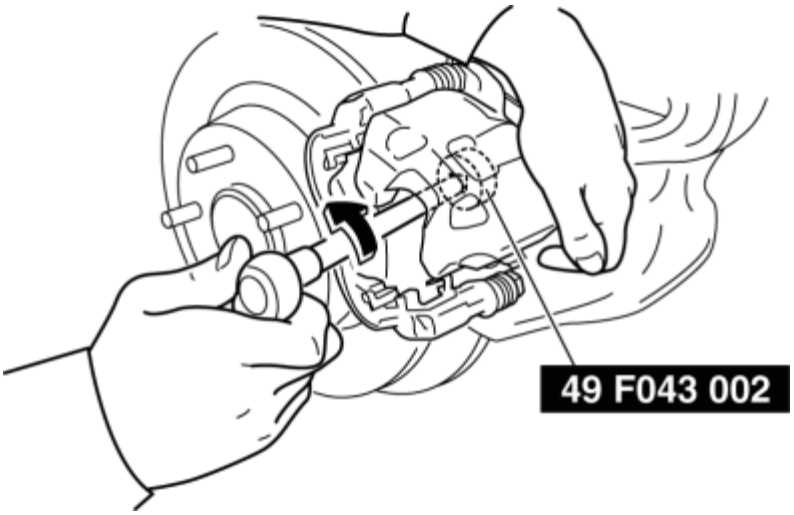

c. Loosen the bleeder screw.

d. Rotate the piston clockwise slowly using the **SST** and push the piston inwards completely to bleed air.

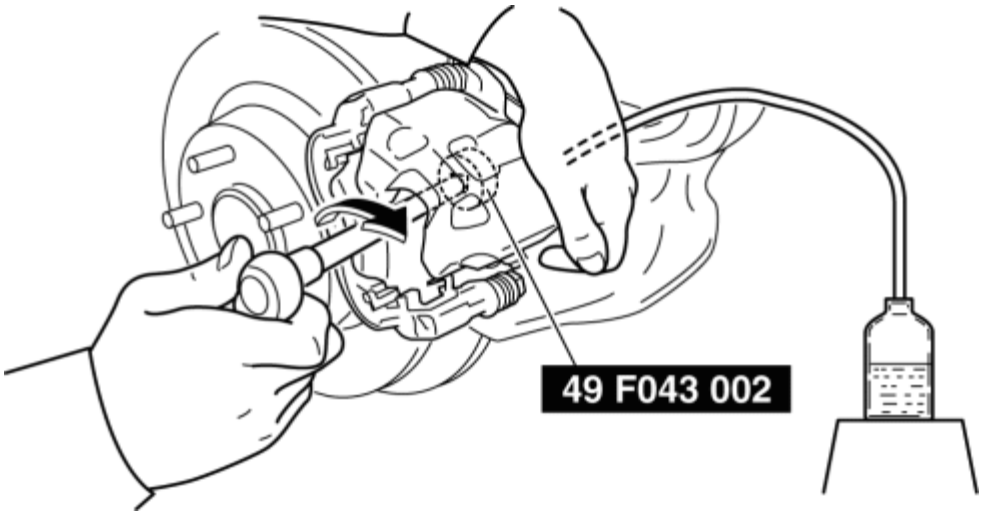

e. Tighten the bleeder screw.

Tightening torque

- 12—16 N·m {123—163 kgf·cm, 107—141 in·lbf}

f. Repeat the procedure from Steps 1 to 5 until no air bubbles are seen.

g. Place the piston groove in the position shown in the figure using the **SST**.

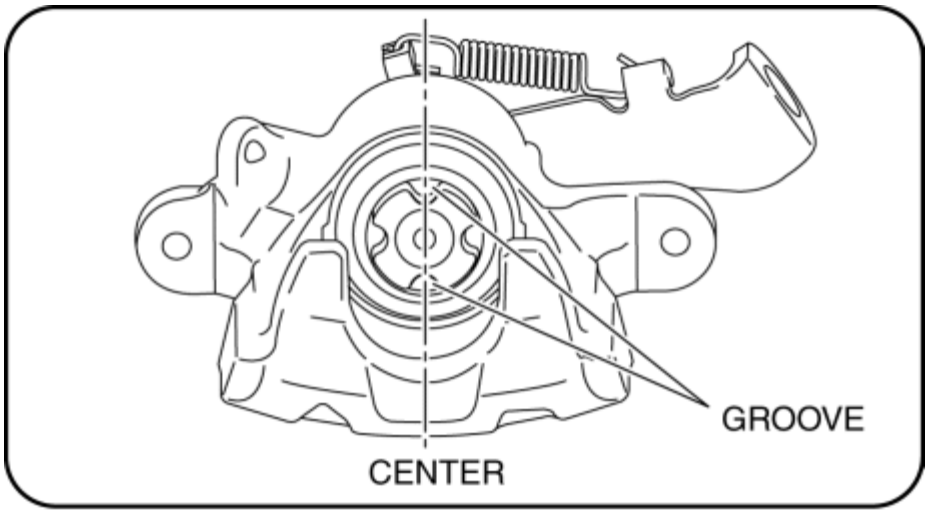

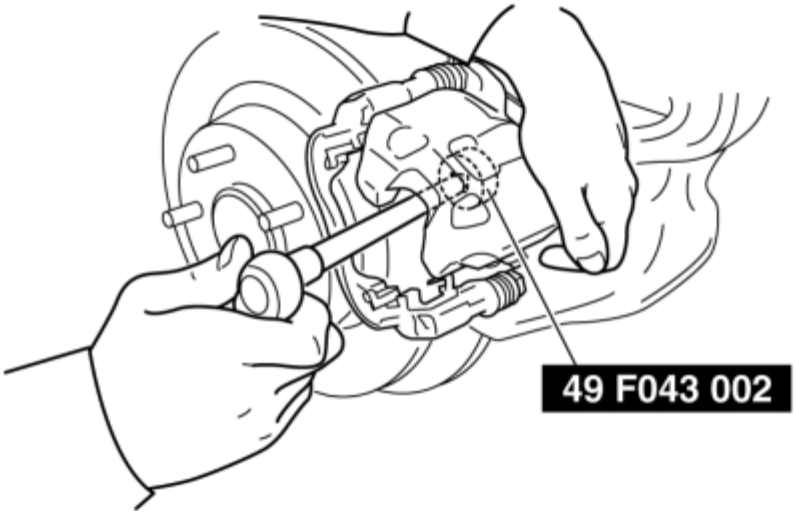

h. Return the rear caliper to the original position and install the rear caliper

installation bolt.

Tightening torque

- 22—26 N·m {2.3—2.6 kgf·m, 17—19 ft·lbf}

9. Clean the brake calipers.
10. After air bleeding, inspect the following:
    - Brake operation
    - Fluid leakage
    - Fluid level

2014 - Mazda3 - Brakes

VACUUM LINE INSPECTION

1. Remove the vacuum hose. (See **VACUUM HOSE REMOVAL/INSTALLATION**.)

2. Verify that air can be blown from the power brake unit side of the vacuum hose towards the vacuum pump side, and that air cannot be blown in the opposite direction.

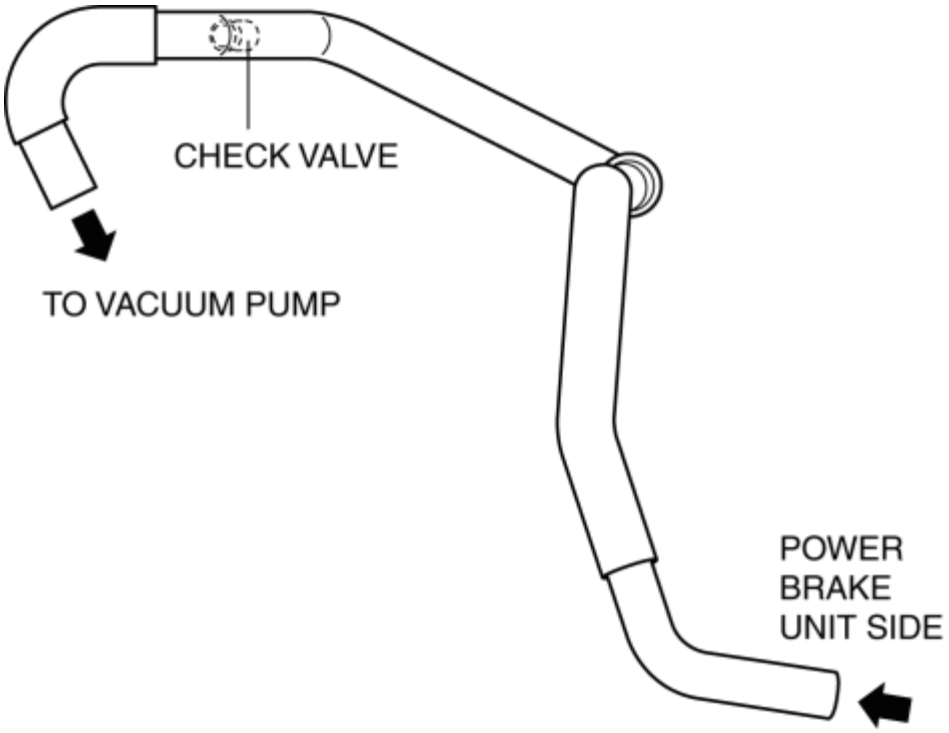

- If there is any malfunction of the inner check valve, replace it together with the vacuum hose as a single unit.

2014 - Mazda3 - Brakes

VACUUM HOSE REMOVAL/INSTALLATION

1. Remove the battery. (See **BATTERY REMOVAL/INSTALLATION [SKYACTIV-G 2.0, SKYACTIV-G 2.5]**.)

2. Pinch open the clamp using pliers and disconnect the vacuum hose.

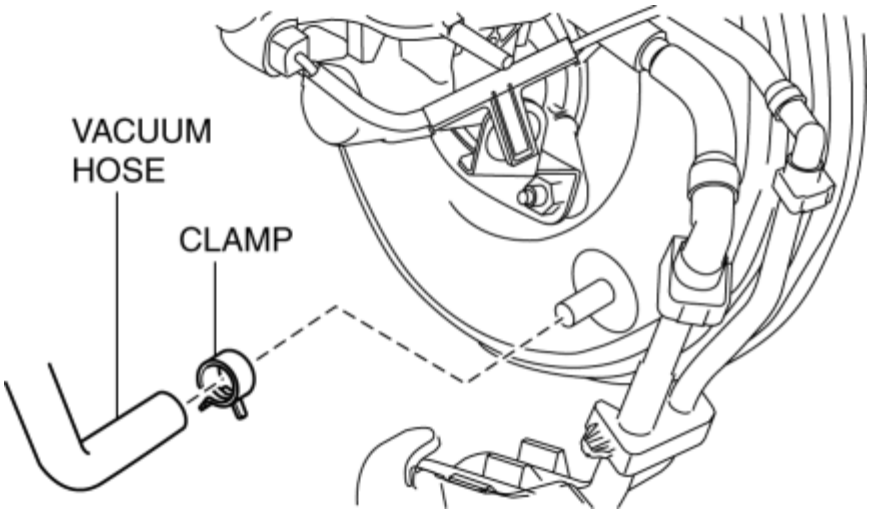

3. Detach the vacuum hose from the clip.

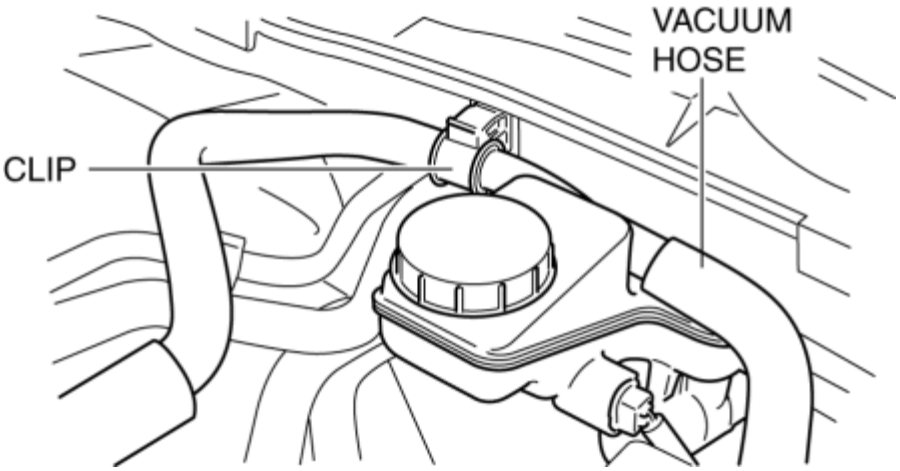

4. Pinch open the clamp using pliers and disconnect the vacuum hose.

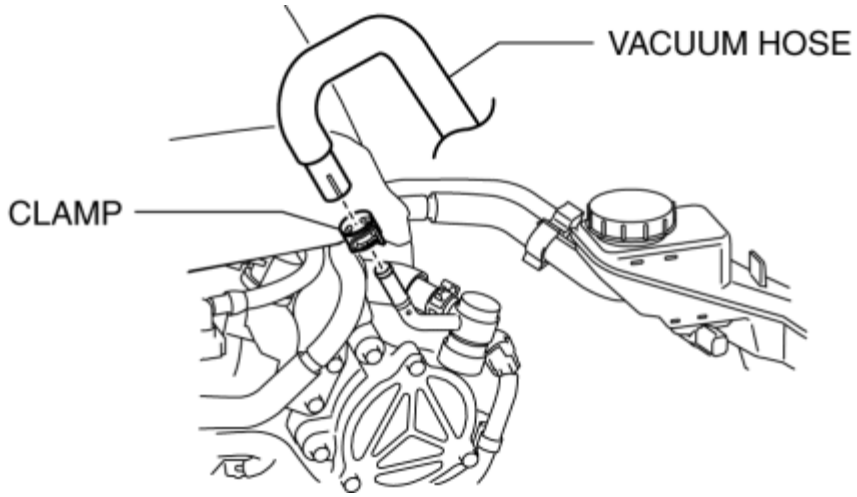

5. Remove the vacuum hose.

6. Install in the reverse order of removal.

2014 - Mazda3 - Brakes

BRAKE PEDAL INSPECTION

Pedal Height Inspection

1. Measure the distance from the center of the upper surface of the pedal pad to the floor covering and verify that it is as specified.

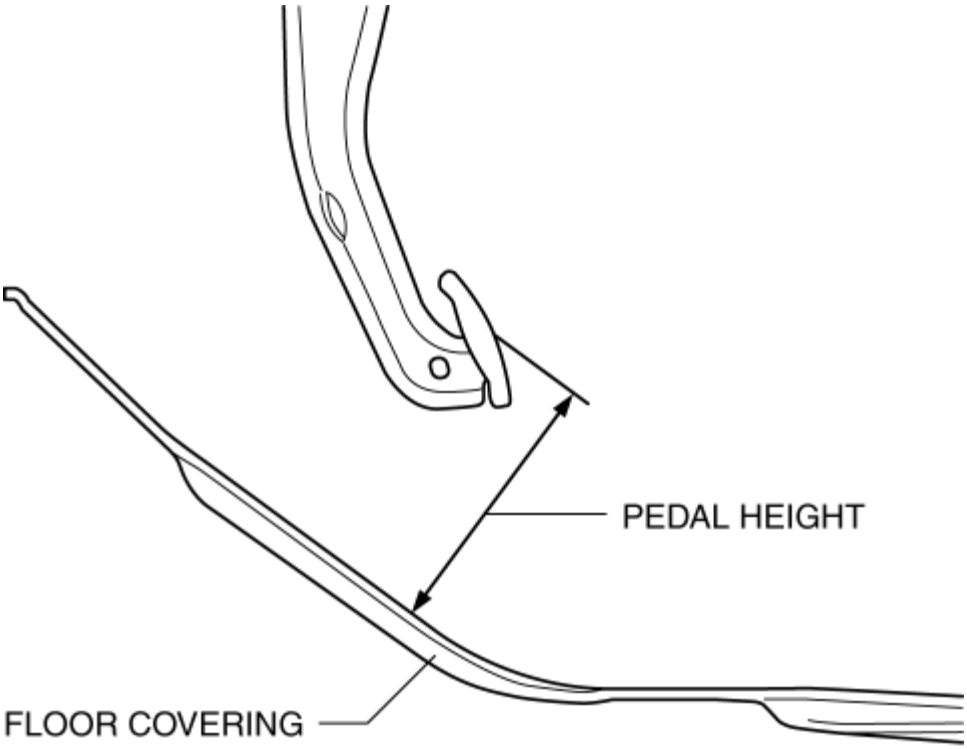

- If not within the specification, inspect the following items and repair or replace the applicable part if there is any malfunction.
    - Power brake unit installation condition
    - Deformation of or damage to the power brake unit fork
    - Brake pedal installation condition
    - Clevis pin wear
- If there is no malfunction in the above items, replace the brake pedal.

  Brake pedal height (reference value)

- 136 mm {5.35 in}

Pedal Play Inspection

1. Pump the pedal several times to release the vacuum in the power brake unit.

2. Gently depress the pedal by hand and measure the pedal play.

- If not within the specification, inspect the wear of the clevis pin. Replace it if there is any malfunction.

Brake pedal play

- 3—5 mm {0.12—0.19 in}

NOTE:

- If there is no malfunction in the clevis pin, there is a possibility that the power brake unit has some malfunction. Verify that there are no malfunctions, and replace it if necessary.

Pedal-to-floor Clearance Inspection

1. Start the engine and depress the brake pedal with a force of **147 N {15.0 kgf, 33.0 lbf}**.

2. Measure the distance from the center of the upper surface of the pedal pad to the floor covering and verify that it is as specified.

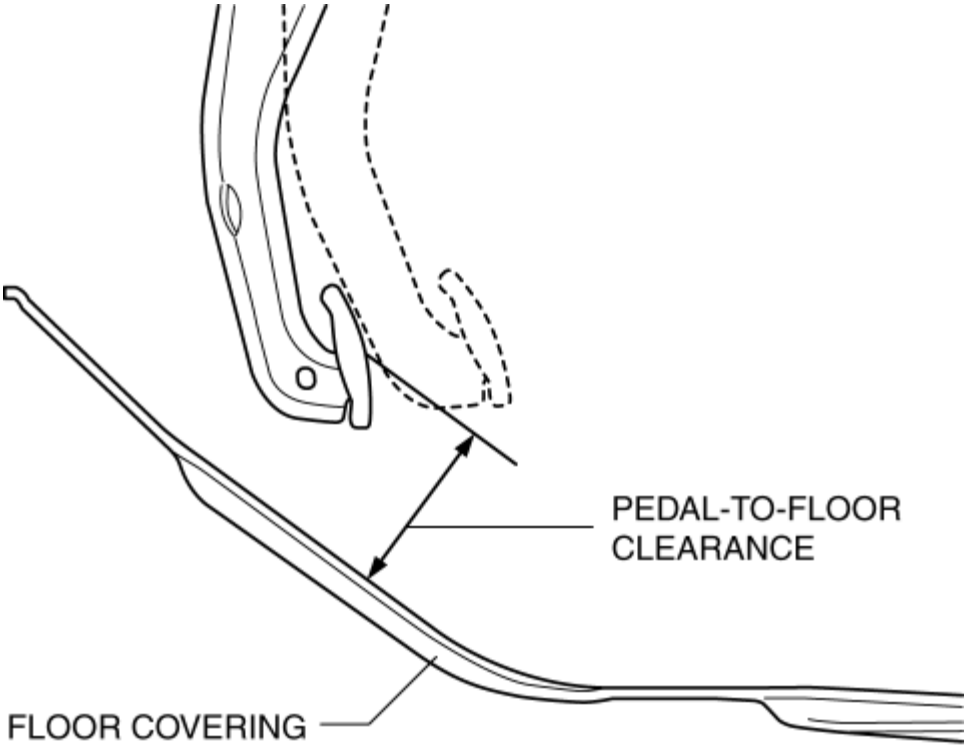

- If it is less than the specification, inspect for air in the brake line.

Brake pedal-to-floor clearance (Brake pedal when depressed at 147 N {15.0 kgf, 33.0 lbf})

- 86 mm {3.4 in} or more

BRAKE PEDAL INSPECTION

2014 - Mazda3 - Brakes

BRAKE PEDAL REMOVAL/INSTALLATION

CAUTION:

- The clearance between the brake switch and the brake pedal is automatically adjusted to the correct amount when the brake switch is inserted into the installation hole on the brake pedal and rotated to fix in place. If the brake switch is not properly installed, the clearance may be incorrect, causing a brake light malfunction. Therefore, always verify that the brake pedal is properly installed and fully released before installing the brake switch to the pedal.
- Once the brake switch clearance has automatically been adjusted, it cannot be adjusted again. Therefore, replace the switch with a new one when replacing the power brake unit or the pedal, or performing any procedure that changes the pedal stroke.

1. Remove in the order indicated in the table.
2. Install in the reverse order of removal.

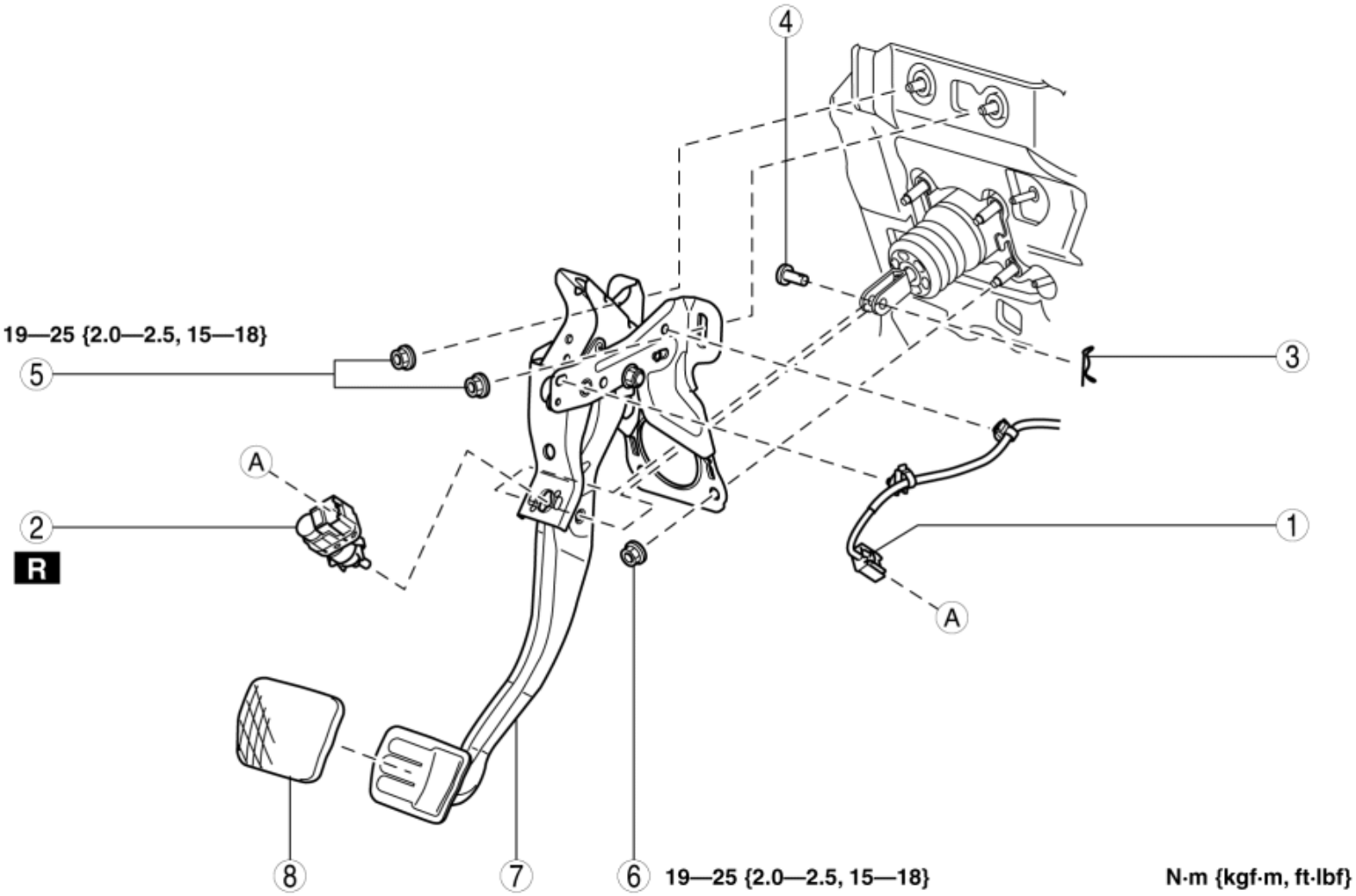

1	Brake switch connector and wiring harness

2	Brake switch (See **Brake Switch Installation Note**.)
3	Spring pin
4	Clevis pin
5	Nut
6	Nut
7	Brake pedal (See **Brake Pedal Removal Note**.)
8	Pedal pad

Brake Pedal Removal Note

1. Move the power brake unit to the vehicle front where the power brake unit fork does not interfere with the brake pedal arm.
2. Remove the brake pedal.

Brake Switch Installation Note

1. Inspect the brake pedal. (See **BRAKE PEDAL INSPECTION**.)
2. With the brake pedal fully released, insert a new brake switch into the installation hole on the brake pedal.
3. Secure the brake switch by turning it counterclockwise **45°**.

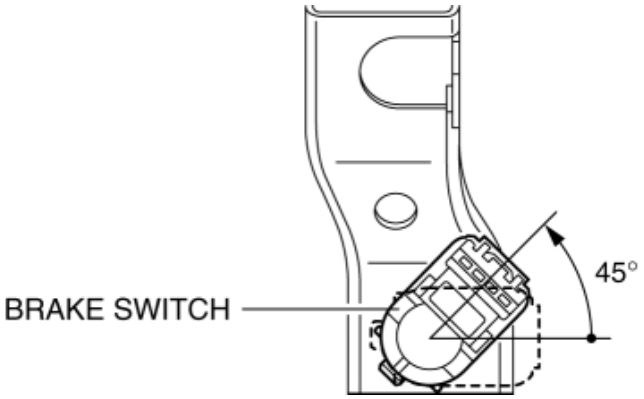

2014 - Mazda3 - Brakes

BRAKE SWITCH INSPECTION

CAUTION:

- Inspect the brake switch with it installed to the brake pedal, otherwise the brake switch may not operate normally. If the brake switch is removed from the brake pedal, replace the brake switch with a new one.

1. Remove the column cover. (See **COLUMN COVER REMOVAL / INSTALLATION**.)
2. Disconnect the brake switch connector.
3. Verify that the continuity is as indicated in the table.

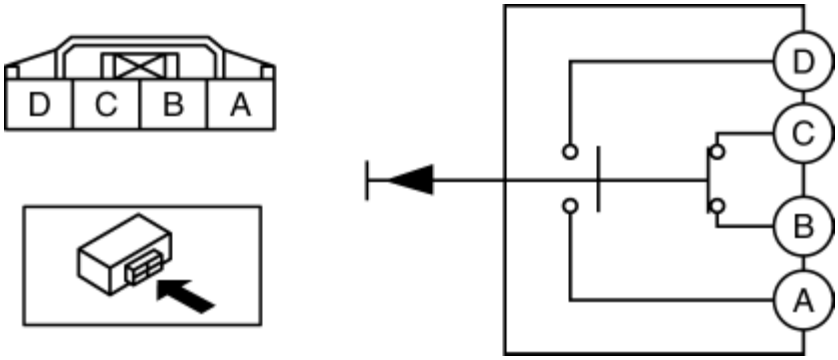

- If not as indicated in the table, replace the brake switch. (See **BRAKE PEDAL REMOVAL / INSTALLATION**.)

○—○ : Continuity

Condition	Terminal			
	A	B	C	D
When the brake pedal is depressed	○			○
When the brake pedal is not depressed		○	○	

2014 - Mazda3 - Brakes

MASTER CYLINDER REMOVAL/INSTALLATION

1. Remove in the order indicated in the table.
2. Install in the reverse order of removal.
3. After installation, add brake fluid, bleed the air, and inspect for fluid leakage. (See **BRAKE FLUID AIR BLEEDING**.)

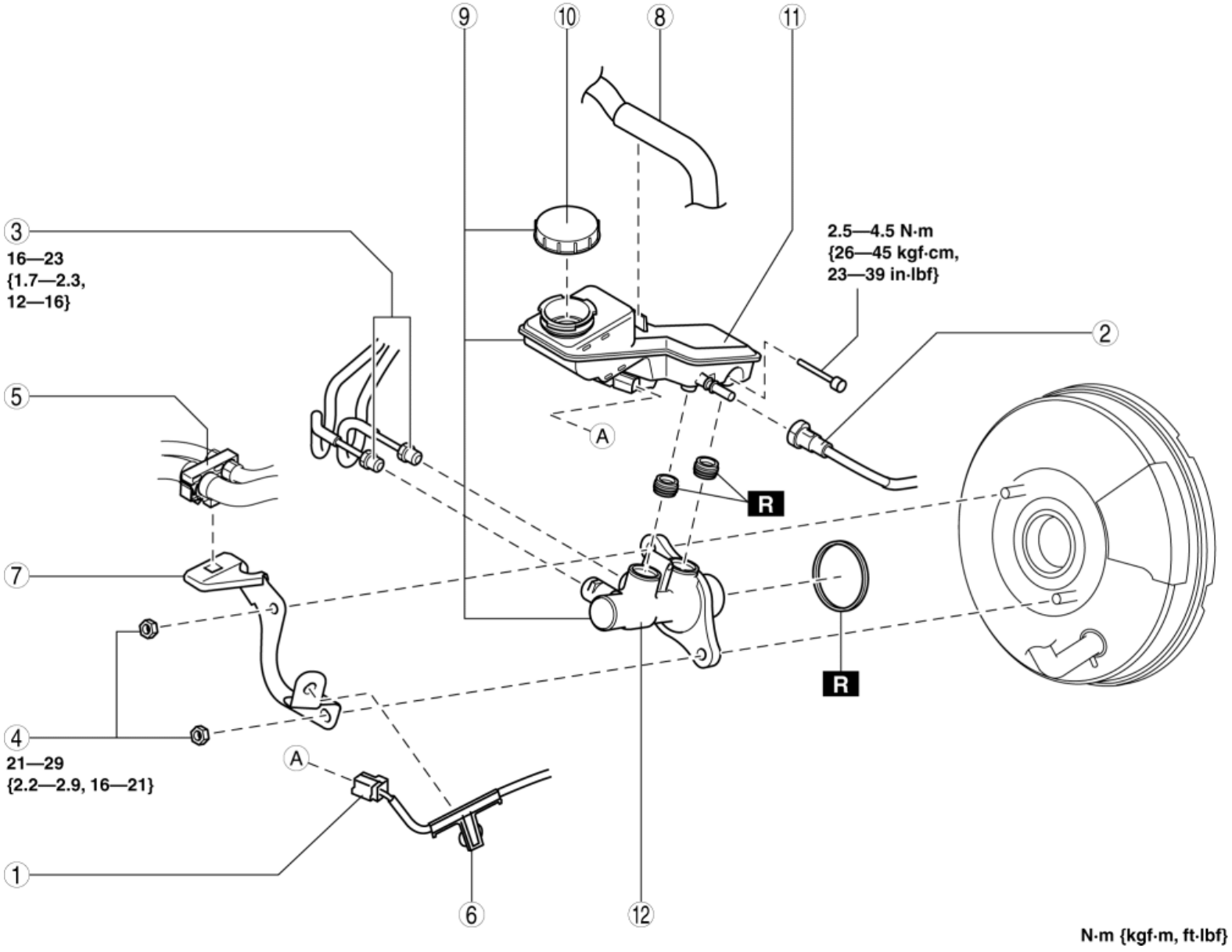

1	Brake fluid level sensor connector
2	Clutch reserve hose (MTX) (See **Clutch Reserve Hose Removal Note (MTX)**.) (See **Clutch Reserve Hose Installation Note (MTX)**.)

3	Brake pipe
4	Nut
5	Hose holder
6	Wiring harness
7	Bracket
8	Vacuum hose
9	Master cylinder
10	Cap
11	Brake fluid reserve tank
12	Cylinder component

Clutch Reserve Hose Removal Note (MTX)

1. Disconnect the clutch reserve hose in the order shown in the figure.

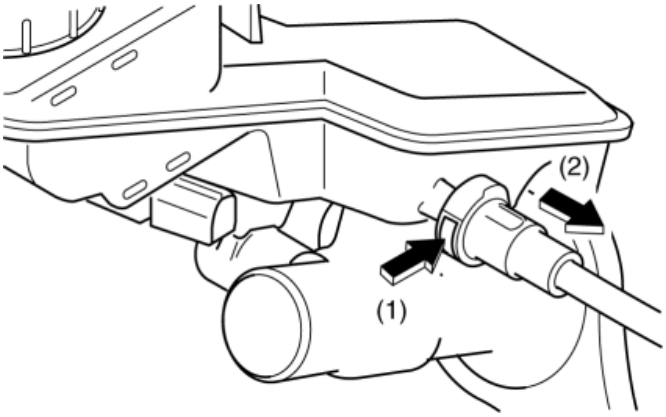

Clutch Reserve Hose Installation Note (MTX)

1. Insert the clutch reserve hose into the master cylinder.
2. Pull the clutch reserve hose to verify that it does not come off, and reinsert it completely.

2014 - Mazda3 - Brakes

BRAKE FLUID LEVEL SENSOR INSPECTION

1. Disconnect the brake fluid level sensor connector from the master cylinder.
2. Inspect for continuity according to fluid level between the brake fluid level sensor terminals.

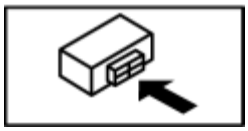

- If not as indicated in the table, replace the reserve tank. (See **MASTER CYLINDER REMOVAL/INSTALLATION**.)

○—○: Continuity

Condition	Terminal	
	A	**B**
Above MIN	○	○
Below MIN		

2014 - Mazda3 - Brakes

POWER BRAKE UNIT INSPECTION

NOTE:

- The following inspection methods are simple inspection methods to determine the function of the power brake unit.
- If there is any malfunction in the power brake unit, replace the power brake unit as a single unit.

Without Using SST

Operation inspection

1. With the engine stopped, pump the brake pedal a few times.
2. With the brake pedal depressed, start the engine.
3. If the brake pedal moves down slightly immediately after starting the engine, the unit is normal.

Vacuum function inspection

1. Start the engine.
2. Stop the engine after driving the vehicle for **1—2 min**.
3. Depress the brake pedal with normal force.
4. If the first pedal stroke is long and becomes shorter with subsequent strokes, the unit is normal.
    - If a problem is found, inspect for damage to or improper installation of the check valve and vacuum hose. After repairing, inspect again.

Vacuum loss function inspection

1. Start the engine.
2. Depress the brake pedal with normal force.
3. With the brake pedal is depressed, stop the engine.
4. Hold the brake pedal depressed for **approx. 30 s**.

5. If the brake pedal height does not change during this time, the unit is normal.

Using SST

NOTE:

- When performing the inspection using the **SST**, inspect the brake pipe on the left or right front wheel.
- The following procedure and figures show the inspection for the brake pipe on the left front wheel.

Pre-inspection preparation

1. Disconnect the brake pipe from the brake hose.

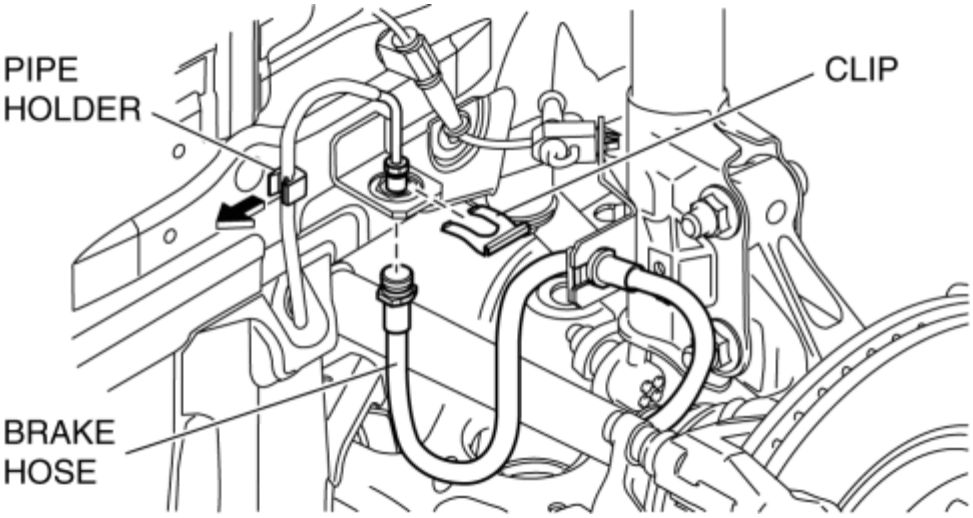

2. Remove the clip.
3. Remove the brake hose from the bracket.
4. Detach the brake pipe from the pipe holder.
5. Install the **SSTs** to the brake pipe as shown in the figure.

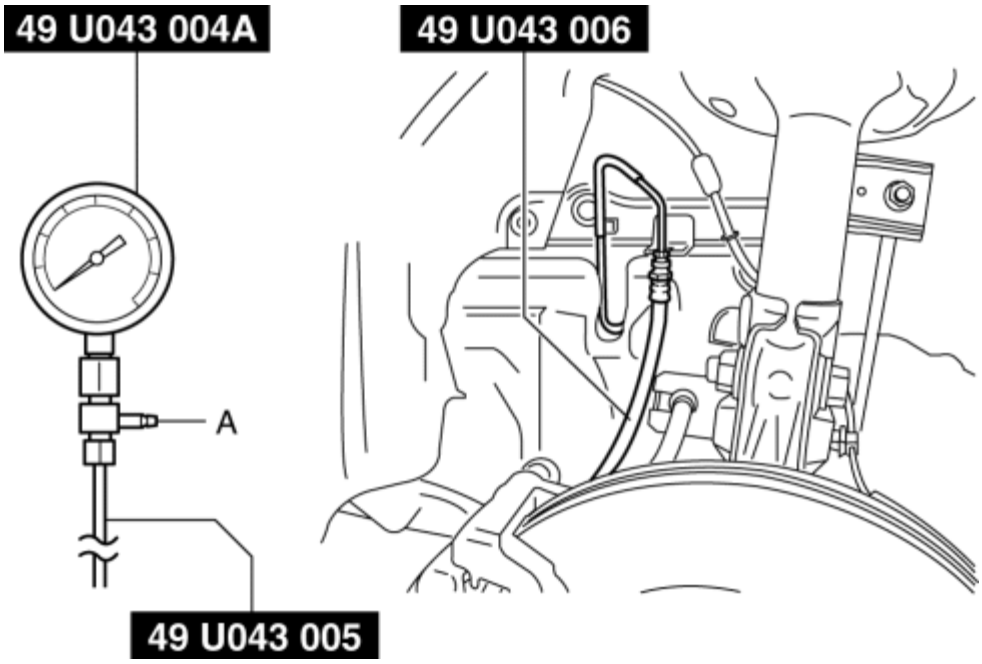

6. Bleed the brake line and the **SSTs** of air. Bleed the air form the **SSTs** using bleeder screw A.

7. Install the pedal force gauge to the brake pedal.

8. Connect the vacuum gauge to the vacuum line.

Vacuum loss inspection

1. Start the engine.

2. Depress the brake pedal with a force of **200 N {20.4 kgf, 45.0 lbf}**.

3. Stop the engine when the vacuum gauge reading reaches **68 kPa {510 mmHg, 20 inHg}** with the brake pedal depressed.

4. With the engine off, observe the vacuum gauge for **15 s**.

5. If the gauge has dropped **3.3 kPa {25 mmHg, 0.97 inHg}** or less, the unit is normal.

Lack of hydraulic pressure inspection

1. If the brake pedal force and fluid pressure correlation is within the specification with the engine stopped and a vacuum amount of **0 kPa {0 mmHg, 0 inHg}**, the system is normal.

Master cylinder fluid pressure

Vacuum amount at 0 kPa {0 mmHg, 0 inHg}	
Brake pedal force	Fluid pressure
200 N {20.4 kgf, 45.0 lbt}	640 kPa {6.53 kgf/cm^2, 92.8 psi} or more

Hydraulic pressure inspection

1. Start the engine. Depress the brake pedal when the vacuum reaches **66.7 kPa {500 mmHg, 19.7 inHg}**.

2. At this time, apply the indicated brake pedal force and if the fluid pressure is within the specification, the unit is normal.

Master cylinder fluid pressure

Vacuum amount at 66.7 kPa {500 mmHg, 19.7 inHg}	
Brake pedal force	Fluid pressure
200 N {20.4 kgf, 45.0 lbt}	7,350 kPa {74.95 kgf/cm^2, 1,066 psi} or more

After-inspection procedure

1. After the inspection, remove the **SSTs**, install the brake hose, clip, and brake pipe to the original positions, and then bleed the air from the brake line. (See **BRAKE HOSE (FRONT) REMOVAL/INSTALLATION**.) (See **BRAKE FLUID AIR BLEEDING**.)

2014 - Mazda3 - Brakes

POWER BRAKE UNIT REMOVAL/INSTALLATION

CAUTION:

- Once the brake switch clearance has automatically been adjusted, it cannot be adjusted again. Therefore, replace the switch with a new one when replacing the power brake unit or performing any procedure that changes the brake pedal stroke.

1. Remove the windshield wiper arm and blade. (See **WINDSHIELD WIPER ARM AND BLADE REMOVAL/INSTALLATION**.)
2. Remove the cowl grille. (See **COWL GRILLE REMOVAL/INSTALLATION**.)
3. Remove the windshield wiper motor and link. (See **WINDSHIELD WIPER MOTOR AND LINK REMOVAL/INSTALLATION**.)
4. Remove the cowl panel. (See **COWL PANEL REMOVAL/INSTALLATION**.)
5. Remove the master cylinder. (See **MASTER CYLINDER REMOVAL/INSTALLATION**.)
6. Remove in the order indicated in the table.
7. Install in the reverse order of removal.
8. After installation, add brake fluid, bleed the air, and inspect for fluid leakage. (See **BRAKE FLUID AIR BLEEDING**.)
9. Remove the brake switch. (See **BRAKE PEDAL REMOVAL/INSTALLATION**.)
10. Inspect the brake pedal. (See **BRAKE PEDAL INSPECTION**.)
11. Install a new brake switch. (See **BRAKE PEDAL REMOVAL/INSTALLATION**.)

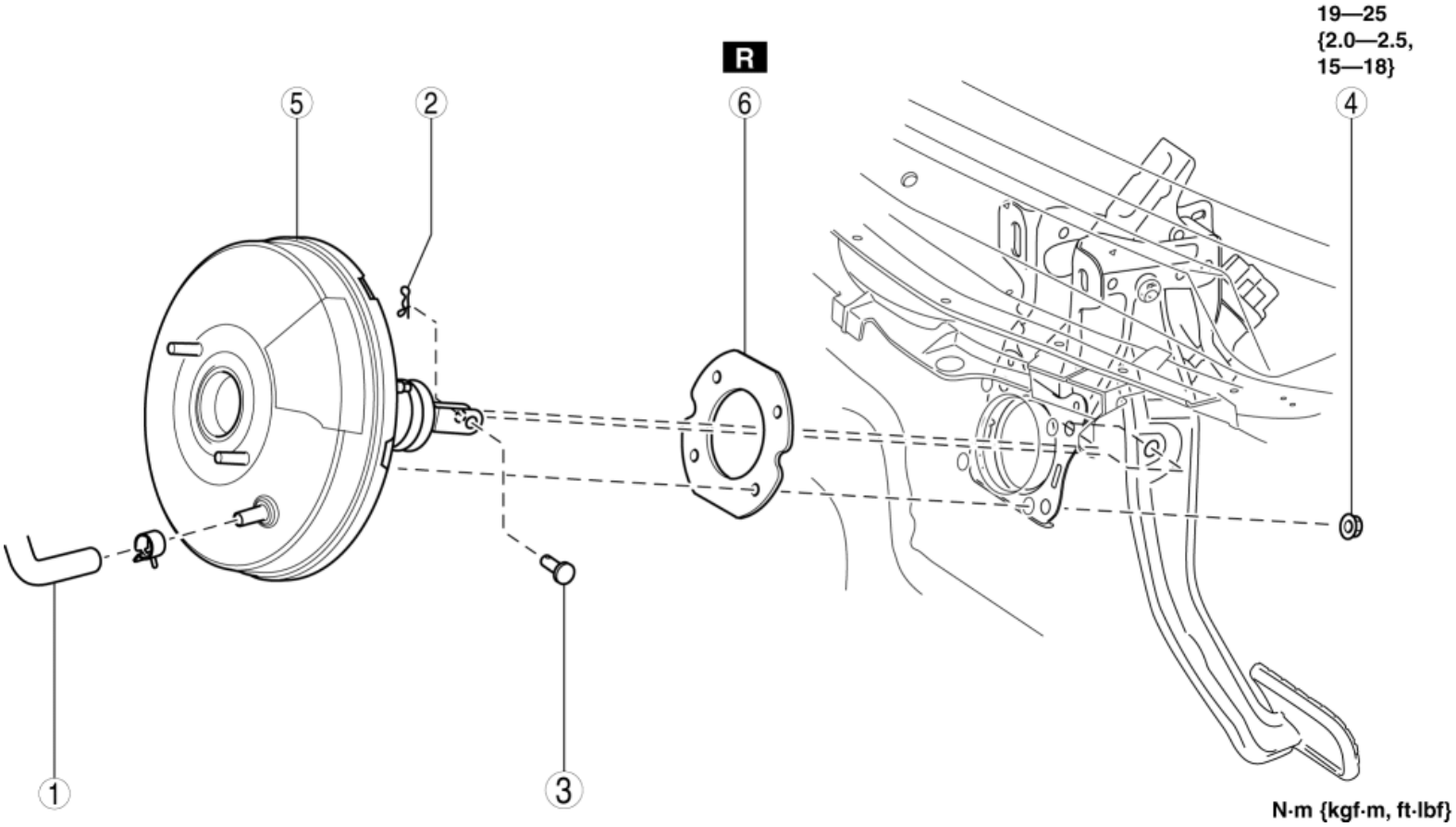

1	Vacuum hose
2	Snap pin
3	Clevis pin
4	Nut
5	Power brake unit
6	Gasket

2014 - Mazda3 - Brakes

VACUUM PUMP INSPECTION

1. Pinch open the clamp using pliers and disconnect the vacuum hose from the vacuum pump. (See **VACUUM HOSE REMOVAL/INSTALLATION**.)

2. Install the vacuum gauge as shown in the figure, then check the vacuum.

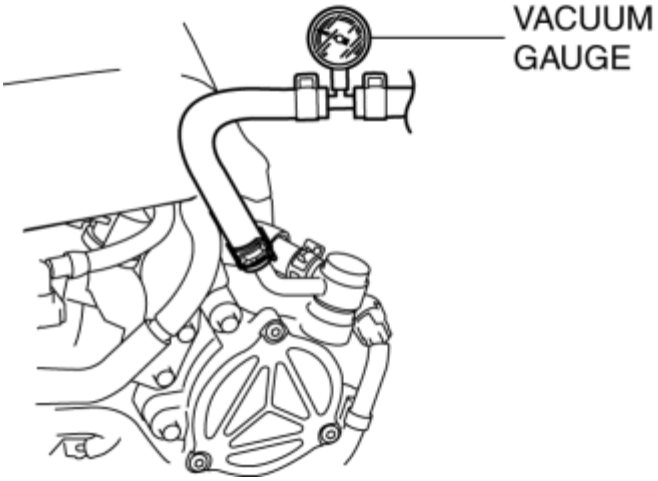

3. Warm up the engine.
   - If the pressure is less than the specification, inspect for the following.
     - Malfunction of the vacuum pump
     - Shortage of lubrication oil pressure

Vacuum pump vacuum specification (reference value)

Measurement condition		Specification
Engine speed	Change in vacuum amount	Period of time change in vacuum amount condition met
While idling (520—700 rpm (reference value))	From 60 kPa {450 mmHg, 18 inHg} to 67 kPa {503 mmHg, 20 inHg}	8 s or less

Vacuum pump maximum vacuum specification (reference value)

Measurement condition	Specification
While idling (no time designation)	93.3 kPa {700 mmHg, 27.6 inHg} or more

4. Install in the reverse order of the removal.

2014 - Mazda3 - Brakes

VACUUM PUMP REMOVAL/INSTALLATION

1. Remove the plug hole plate. (See **PLUG HOLE PLATE REMOVAL/INSTALLATION [SKYACTIV-G 2.0, SKYACTIV-G 2.5]**.)
2. Remove the battery. (See **BATTERY REMOVAL/INSTALLATION [SKYACTIV-G 2.0, SKYACTIV-G 2.5]**.)
3. Set the PCM wiring harness out of the way. (See **BATTERY REMOVAL/INSTALLATION [SKYACTIV-G 2.0, SKYACTIV-G 2.5]**.)
4. Pinch open the clamp using pliers and disconnect the vacuum hose from the vacuum pump. (See **VACUUM HOSE REMOVAL/INSTALLATION**.)
5. Remove in the order shown in the table.
6. Install in the reverse order of removal.

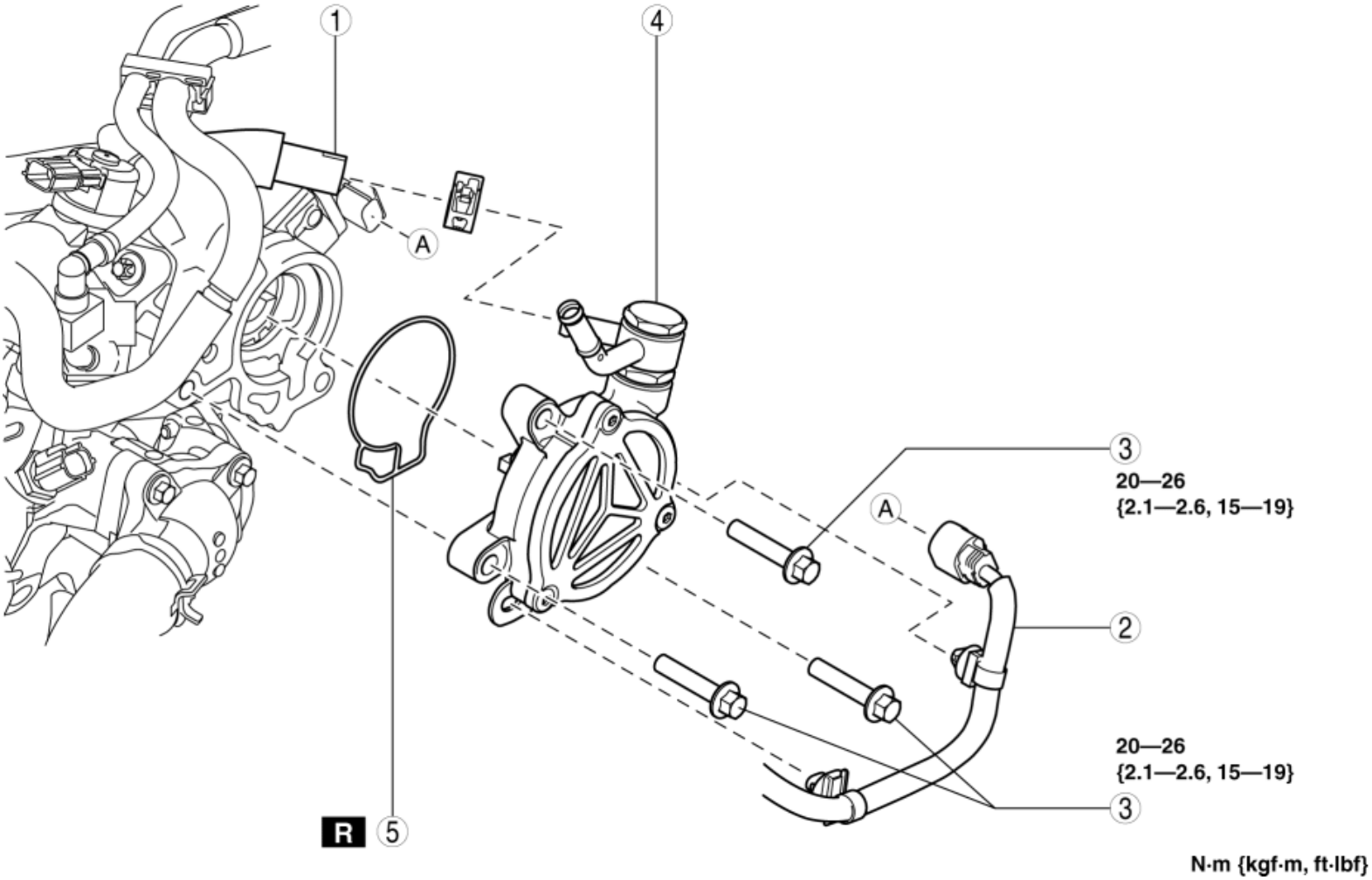

1	Vacuum hose
2	Exhaust CMP sensor connector and wiring harness
3	Bolt

4	Vacuum pump (See **Vacuum Pump Removal Note**.) (See **Vacuum Pump and O-ring Installation Note**.)
5	O-ring (See **Vacuum Pump and O-ring Installation Note**.)

Vacuum Pump Removal Note

1. When removing the vacuum pump, place a rag under the installation surface of the vacuum pump so that engine oil does not get on other parts.
2. Remove the vacuum pump.

Vacuum Pump and O-ring Installation Note

1. Rotate the vacuum pump by hand to drain the remainder of the engine oil in the vacuum pump.
2. Degrease the O-ring installation groove and installation surface.
3. Install the new O-ring to the vacuum pump.
4. Install the vacuum pump.

2014 - Mazda3 - Brakes

FRONT BRAKE (DISC) INSPECTION

Brake Judder Repair Hints

Description

1. Brake judder concern has the following 3 characteristics:

Steering wheel vibration

1. The steering wheel vibrates in the rotation direction. This characteristic is most noticeable when applying brakes at a vehicle speed of **100—140 km/h {62.2—86.9 mph}**.

Floor vibration

1. When applying the brakes, the vehicle body shakes back and forth. The seriousness of the shaking is not influenced by vehicle speed.

Brake pedal vibration

1. When applying the brakes, a pulsating force tries to push the brake pad back. The pulsation is transmitted to the brake pedal.

2. The following are the main possible causes of brake judder:

Due to an excessive runout (side-to-side wobble) of the disc plate, the thickness of the disc plate is uneven.

1. If the runout is **more than 0.04 mm {0.002 in}** at the position **10 mm {0.39 in}** from the disc plate edge, uneven wear occurs on the disc plate because the pad contacts the plate unevenly.

2. If the runout is **less than 0.04 mm {0.002 in}**, uneven wear does not occur.

The disc plate is deformed by heat.

1. Repeated panic braking may raise the temperature in some portions of the disc plate by **approx. 1,000 °C {1,832 °F}**. This results in a deformed disc plate.

Thickness and friction coefficient of the disc plate change due to corrosion.

1. If the vehicle is parked in damp conditions for a long time, corrosion occurs on the friction surface of the disc plate.

2. The thickness of the corrosion is uneven and it sometimes appears like a wave pattern, which changes the friction coefficient and causes a reaction force.

Inspection and repair procedure

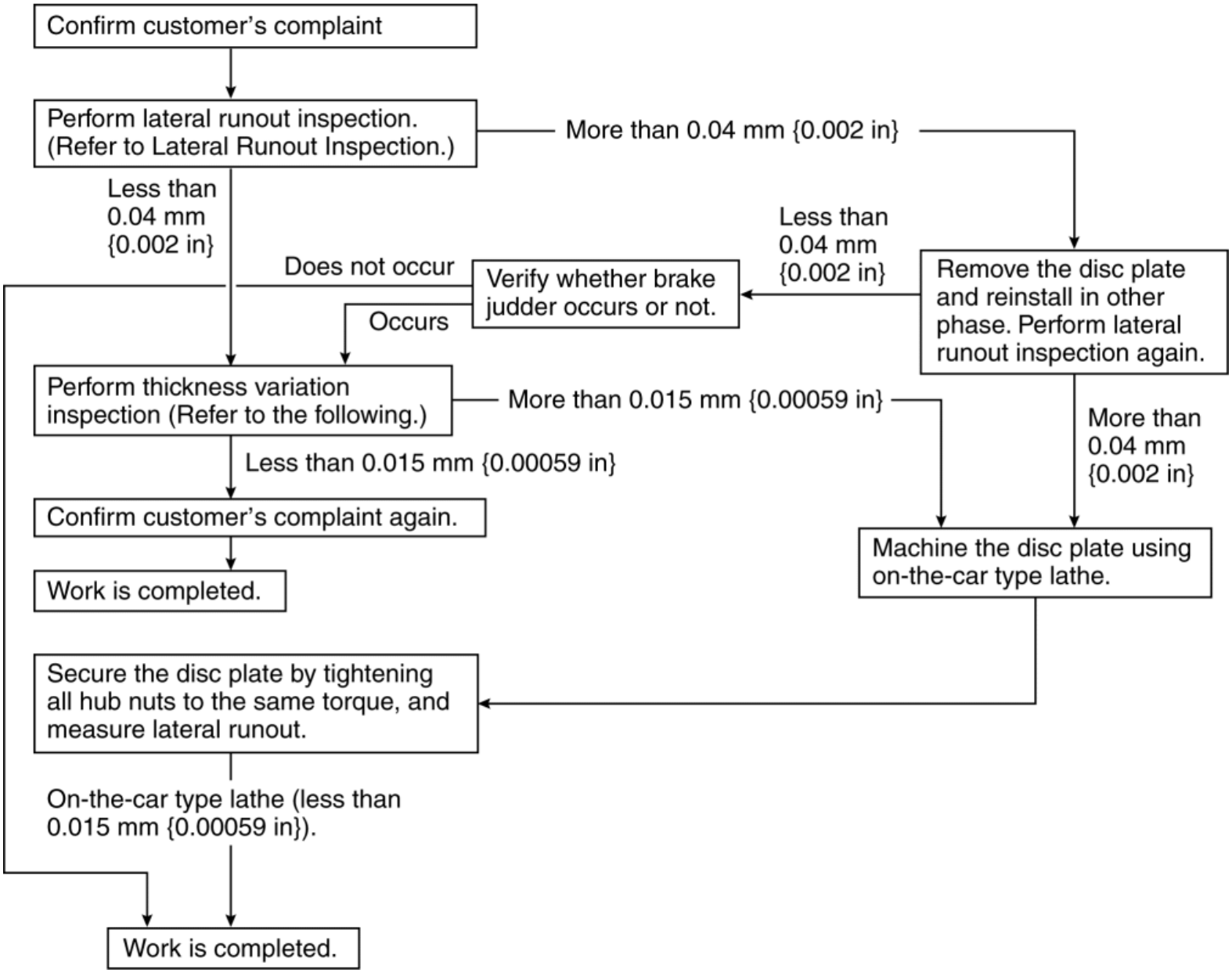

Lateral runout inspection

1. To secure the disc plate and the hub, insert the washer (thickness **10 mm {0.39 in}**, inner diameter **more than 12 mm {0.47 in}**) between each hub bolt and the hub nut, then tighten all the hub nuts.

2. After tightening all the hub nuts to the same torque, put the dial gauge on the friction surface of the disc plate **10 mm {0.39 in}** from the disc plate edge.

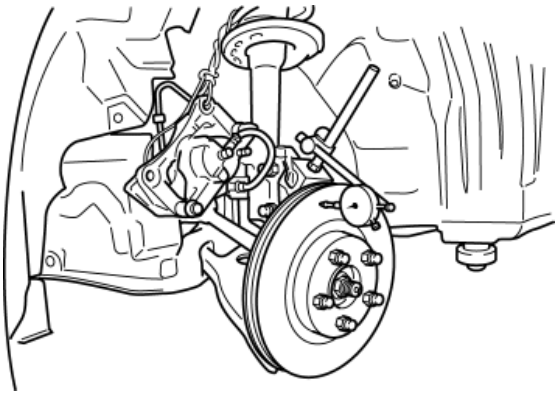

3. Rotate the disc plate one time and measure the runout.

Front disc plate runout limit

- 0.04 mm {0.002 in}

Thickness variation inspection

1. Clean the disc plate-to-pad friction surface using a brake cleaner.
2. Measure the points indicated in the illustration using a caliper (micrometer).

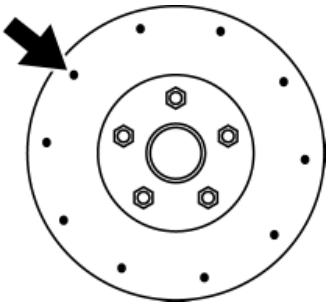

3. Subtract the minimum value from the maximum, and if the result is not within the specification, machine the disc plate using a lathe.

Thickness variation limit

- 0.015 mm {0.00059 in}

WARNING:

- Do not exceed minimum disc plate thickness.

Disc Plate Thickness Inspection

CAUTION:

- Excessive runout may result if the disc plate is removed from the vehicle then machined. Machine the disc plate while installed on the vehicle.

1. Measure the thickness of the disc plate.
   - If the thickness is not within the specification, replace the disc plate.

     Minimum front disc plate thickness

   - 23.0 mm {0.906 in}

     Minimum front disc plate thickness after machining using a brake lathe on-vehicle

   - 23.8 mm {0.937 in}

Disc Pad Thickness Inspection

1. Jack up the front of the vehicle and support it with safety stands.
2. Remove the wheels and tires.
3. Verify the remaining thickness of the pads.

   Minimum front disc pad thickness

   - 2.0 mm {0.079 in} min.

4. Replace the pads as a set (right and left wheels) if either one is at or less than the minimum thickness.

FRONT BRAKE (DISC) INSPECTION

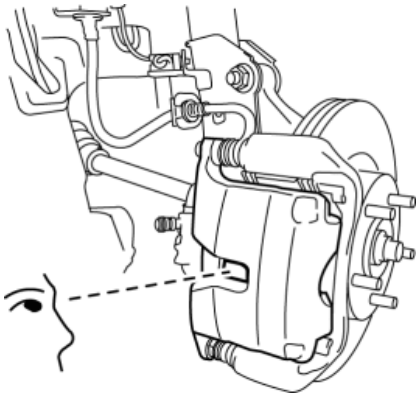

2014 - Mazda3 - Brakes

FRONT BRAKE (DISC) REMOVAL/INSTALLATION

1. Remove in the order indicated in the table.
2. Install in the reverse order of removal.
3. After installation, add brake fluid, bleed the air, and inspect for fluid leakage. (See **BRAKE FLUID AIR BLEEDING**.)
4. Depress the brake pedal a few times, rotate the wheel by hand, and verify that the brake does not drag.

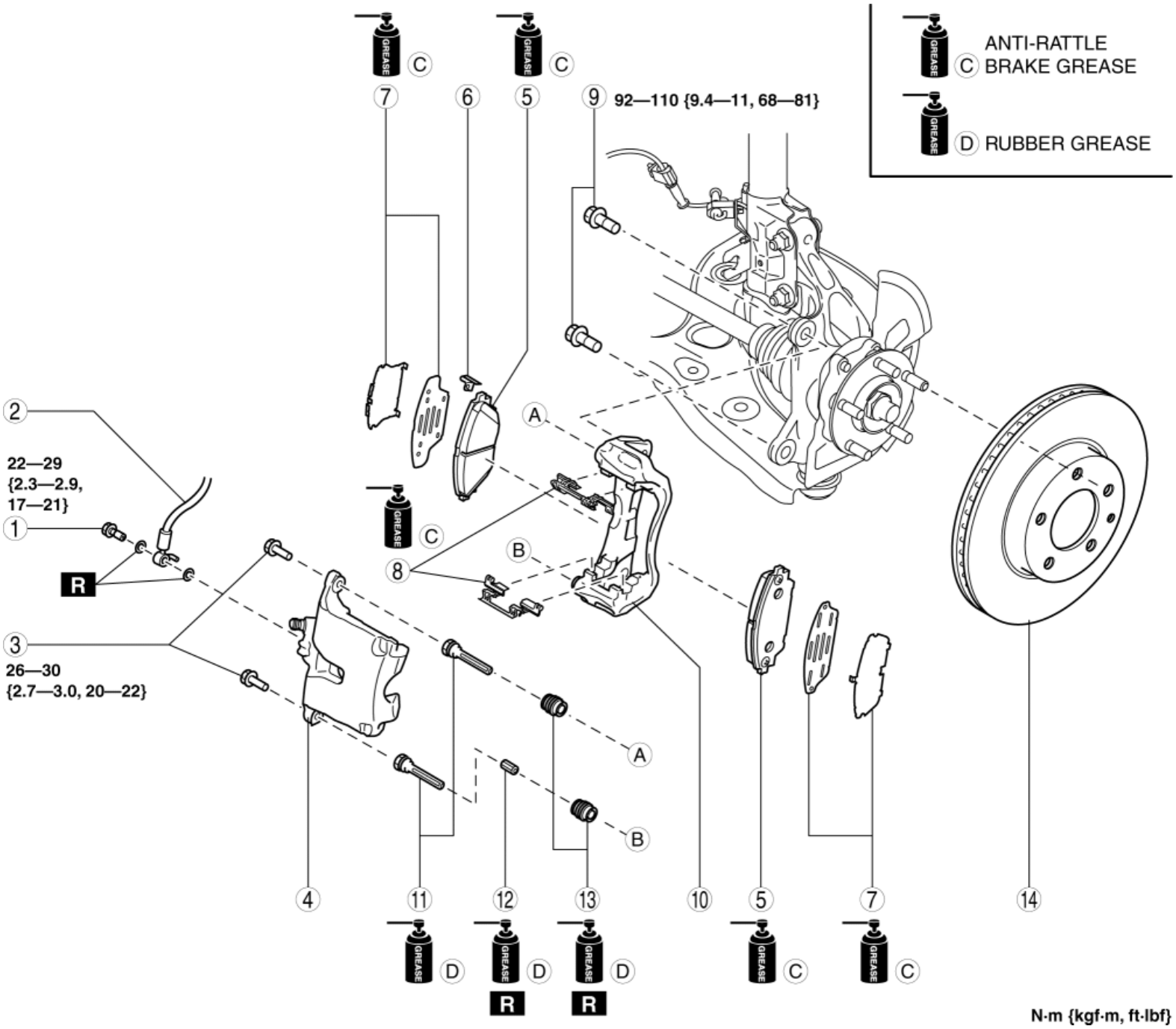

1	Bolt

2	Brake hose
3	Bolt
4	Caliper (See **Disc Pad Installation Note**.)
5	Disc pad (See **Disc Pad Installation Note**.)
6	Wear indicator
7	Shim
8	Guide plate
9	Bolt
10	Mounting support
11	Slide pin
12	Bushing
13	Dust boot
14	Disc plate

Disc Pad Installation Note

1. Clean the exposed area of the piston.
2. Push the piston in using the commercially available disc brake expand tool.

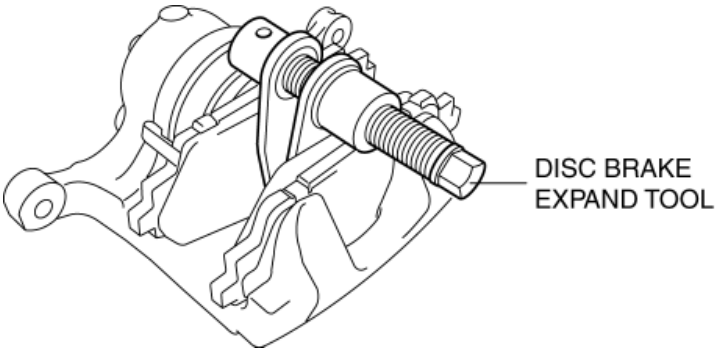

3. Install the disc pads to the mounting support.

2014 - Mazda3 - Brakes

DISC PAD (FRONT) REPLACEMENT

1. Remove in the order indicated in the table.
2. Install in the reverse order of removal.
3. After installation, depress the brake pedal a few times, rotate the wheel by hand, and verify that the brake does not drag.

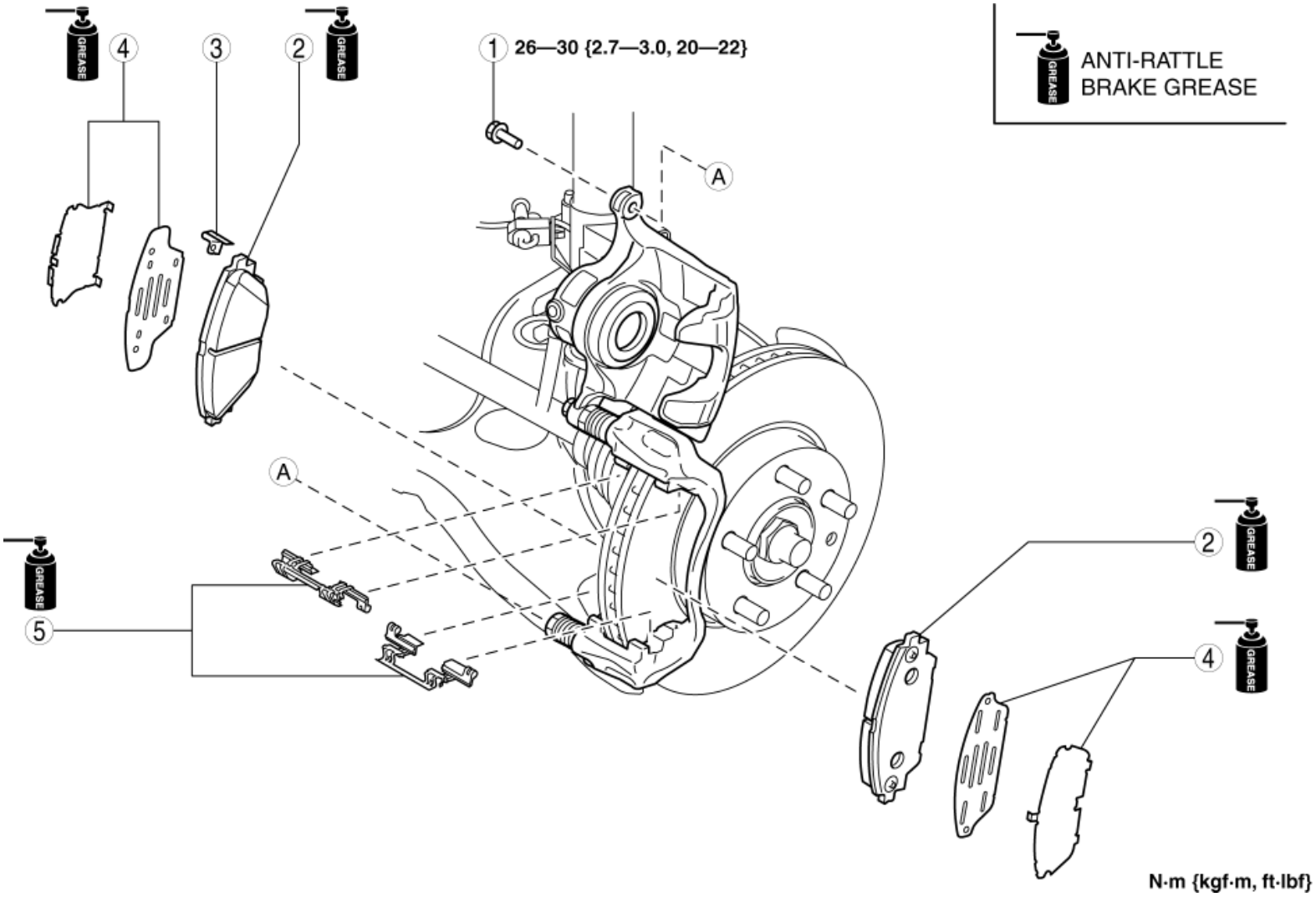

1	Caliper installation bolt (See **Caliper Installation Bolt Removal Note**.) (See **Caliper Installation Bolt Installation Note**.)
2	Disc pad (See **Disc Pad Installation Note**.)
3	Wear indicator

4	Shim
5	Guide plate

Caliper Installation Bolt Removal Note

1. Remove the caliper installation bolt shown in the figure and lift up the caliper.

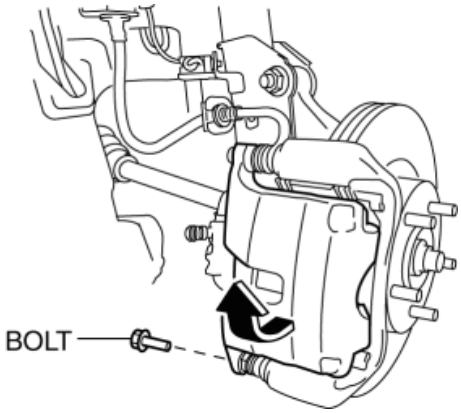

Disc Pad Installation Note

1. Clean the exposed area of the piston.
2. Push the piston in using the commercially available disc brake expand tool.

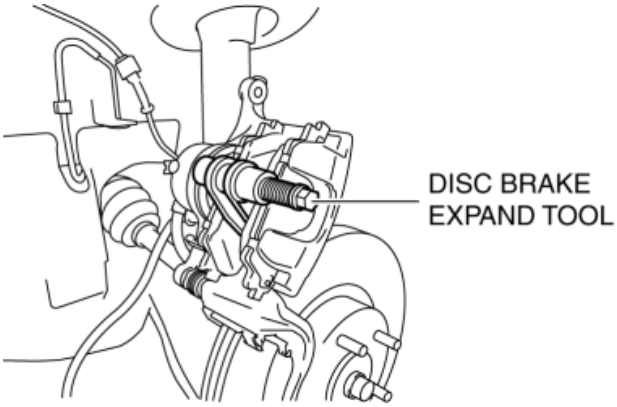

3. Install the disc pads to the mounting support.

Caliper Installation Bolt Installation Note

1. Return the caliper to the original position and install the caliper installation bolt.

2014 - Mazda3 - Brakes

CALIPER (FRONT) DISASSEMBLY/ASSEMBLY

1. Disassemble in the order indicated in the table.

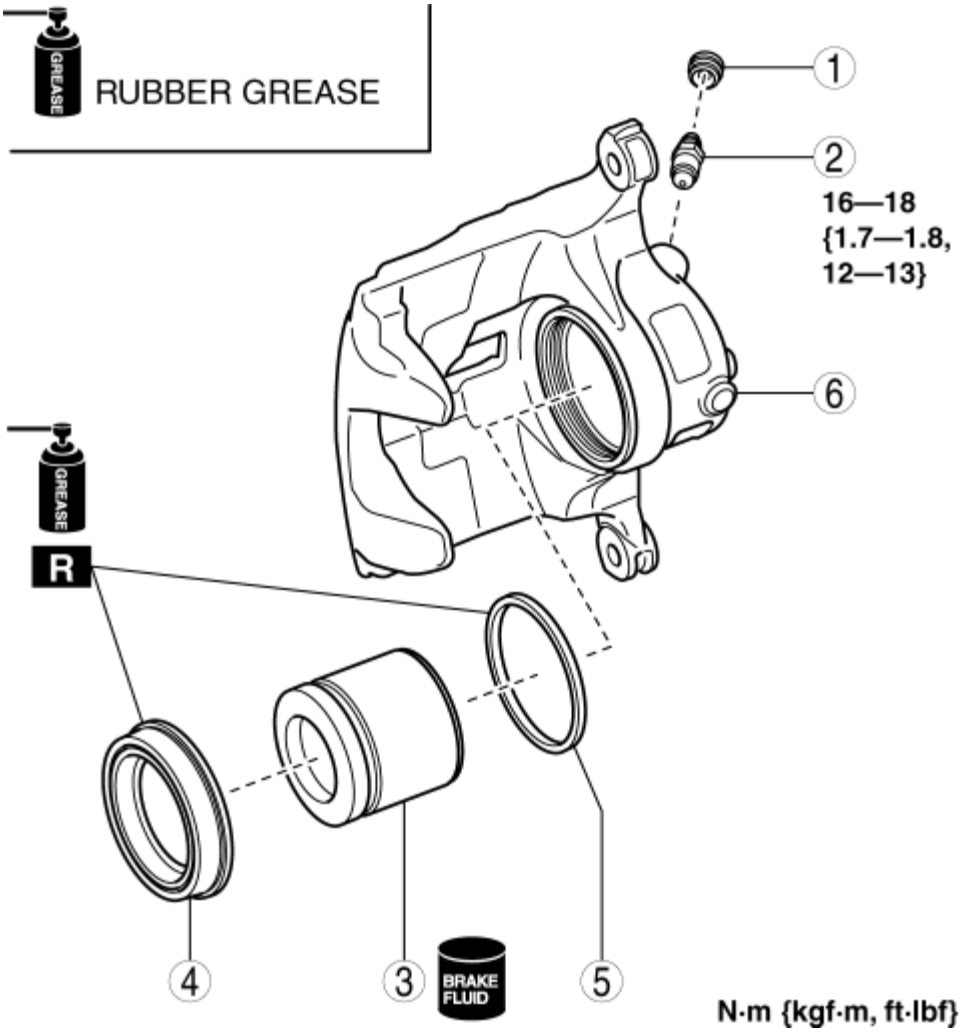

1	Bleeder cap
2	Bleeder screw
3	Piston (See **Piston Disassembly Note**.)
4	Dust seal

5	Piston seal
6	Caliper body

2. Assemble in the reverse order of removal.

Piston Disassembly Note

WARNING:

- When compressed air is blown into the caliper body, injury to a finger or other part from pinching could result from the piston springing up. When blowing in compressed air, do not place your fingers between the piston and caliper body when performing the work.

CAUTION:

- The piston could be damaged if blown out with great force. Blow the compressed air slowly to prevent the piston from suddenly popping out.

1. Insert a piece of wood in the caliper as shown in the figure and blow compressed air through the hole to remove the piston from the caliper body.

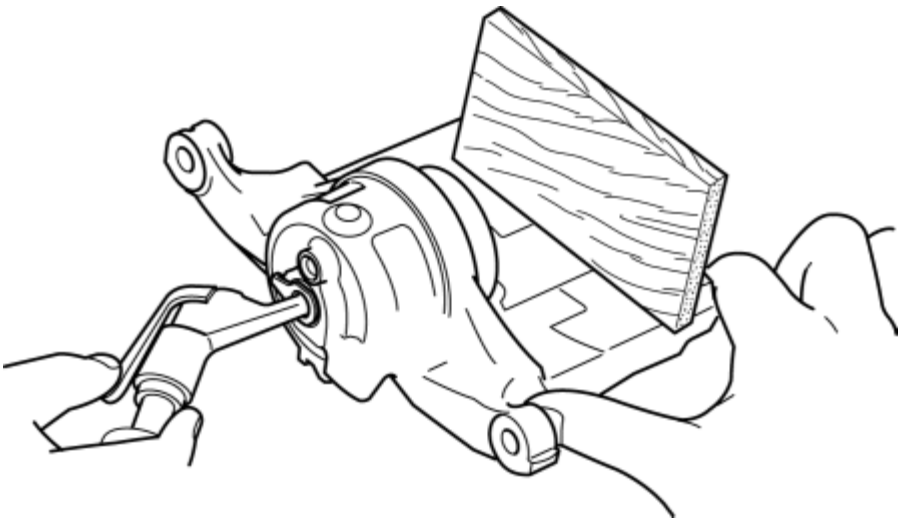

2014 - Mazda3 - Brakes

BRAKE HOSE (FRONT) REMOVAL/INSTALLATION

1. Remove in the order indicated in the table.
2. Install in the reverse order of removal.
3. After installation, add brake fluid, bleed the air, and inspect for fluid leakage. (See **BRAKE FLUID AIR BLEEDING**.)

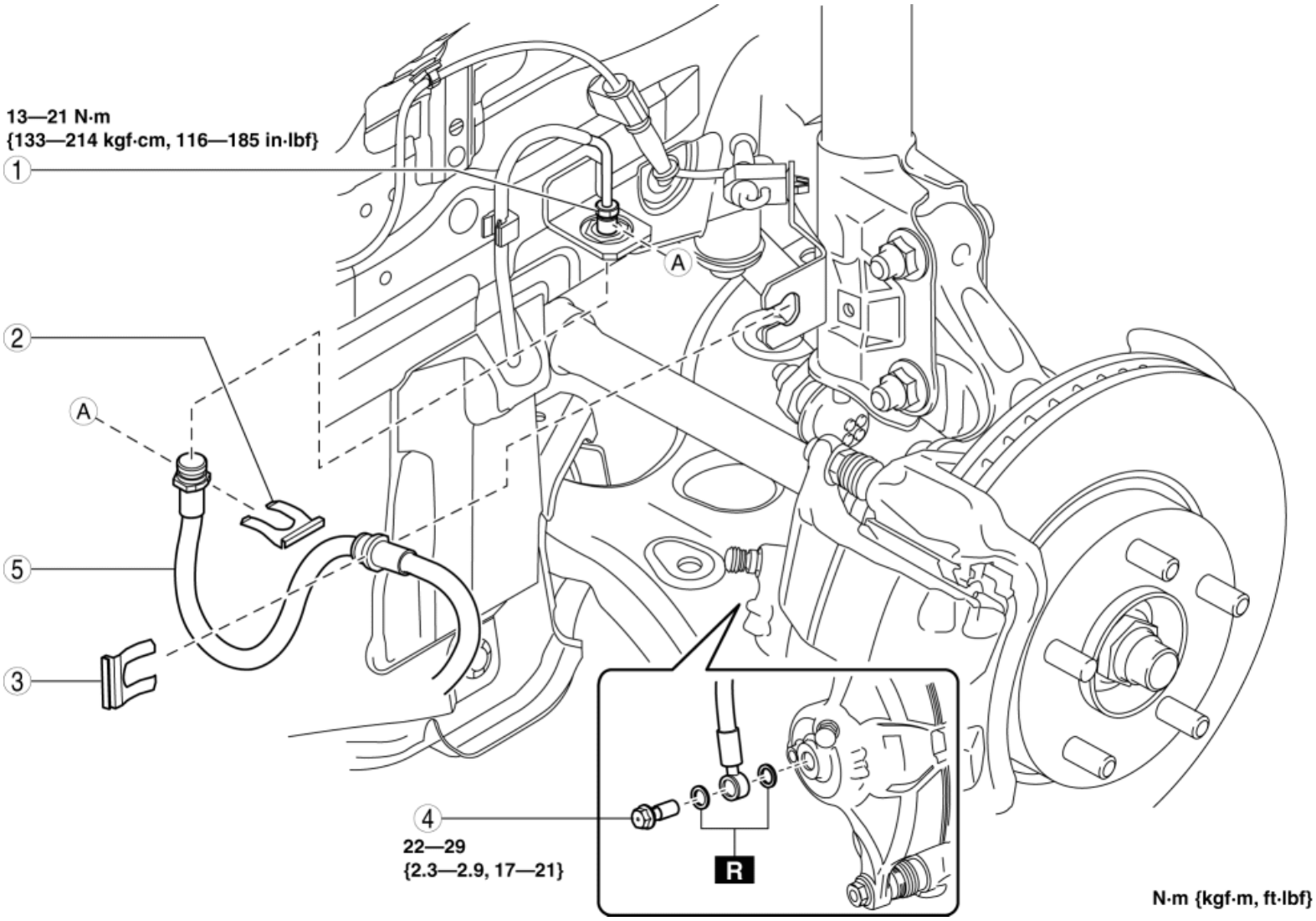

1	Brake pipe
2	Clip
3	Clip
4	Bolt
5	Brake hose

2014 - Mazda3 - Brakes

REAR BRAKE (DISC) INSPECTION

Brake Judder Repair Hints

Description

1. Brake judder concern has the following 3 characteristics:

Steering wheel vibration

1. The steering wheel vibrates in the rotation direction. This characteristic is most noticeable when applying brakes at a vehicle speed of **100—140 km/h {62.2—86.9 mph}**.

Floor vibration

1. When applying the brakes, the vehicle body shakes back and forth. The seriousness of the shaking is not influenced by vehicle speed.

Brake pedal vibration

1. When applying the brakes, a pulsating force tries to push the brake pad back. The pulsation is transmitted to the brake pedal.

2. The following are the main possible causes of brake judder:

Due to an excessive runout (side-to-side wobble) of the disc plate, the thickness of the disc plate is uneven.

1. If the runout is **more than 0.1 mm {0.004 in}** at the position **10 mm {0.39 in}** from the disc plate edge, uneven wear occurs on the disc plate because the pad contacts the plate unevenly.

2. If the runout is **less than 0.1 mm {0.004 in}**, uneven wear does not occur.

The disc plate is deformed by heat.

1. Repeated panic braking may raise the temperature in some portions of the disc plate by **approx. 1,000 °C {1,832 °F}**. This results in a deformed disc plate.

Thickness and friction coefficient of the disc plate change due to corrosion.

1. If the vehicle is parked in damp conditions for a long time, corrosion occurs on the friction surface of the disc plate.

2. The thickness of the corrosion is uneven and it sometimes appears like a wave pattern, which changes the friction coefficient and causes a reaction force.

Inspection and repair procedure

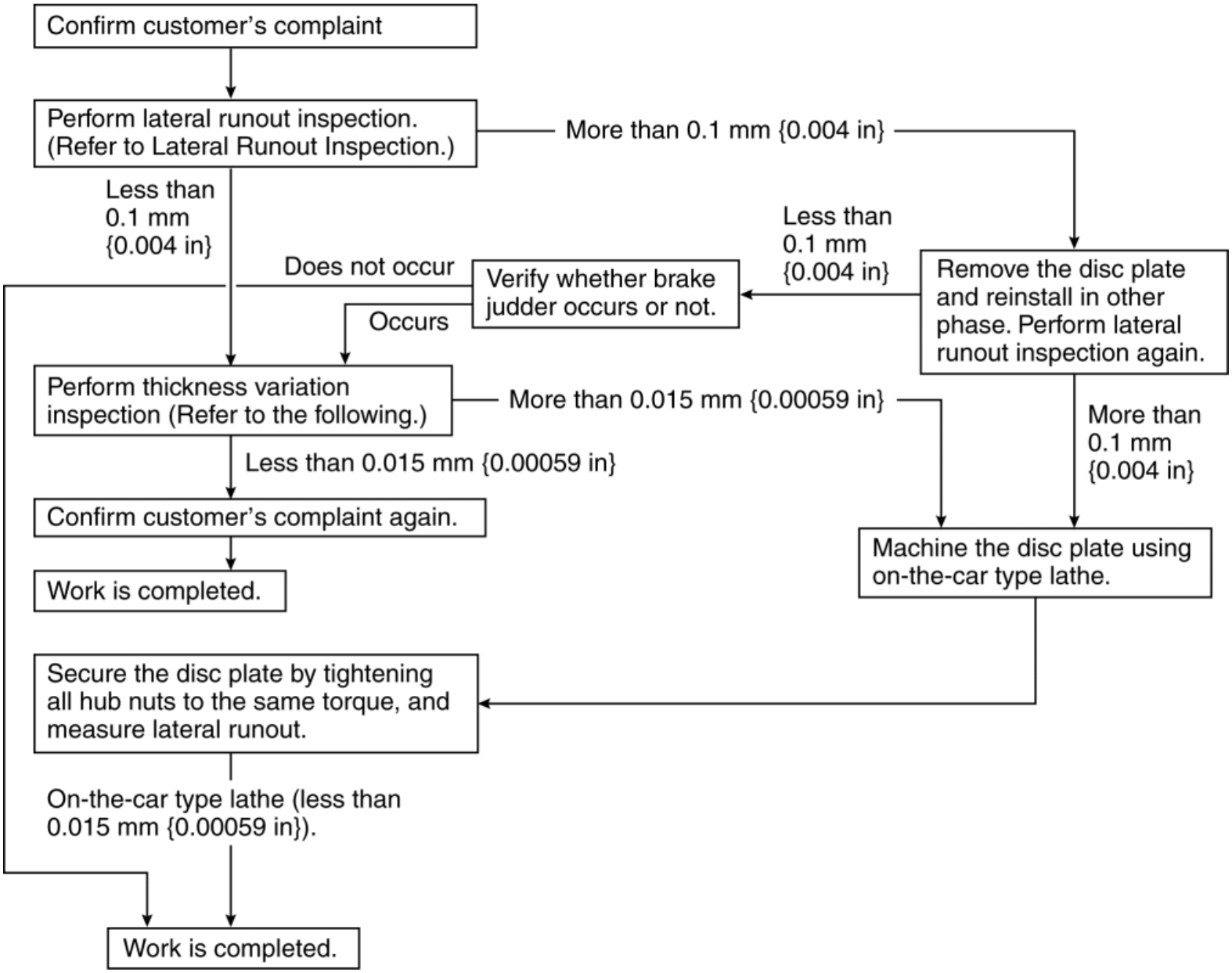

Lateral runout inspection

1. To secure the disc plate and the hub, insert the washer (thickness **10 mm {0.39 in}**, inner diameter **more than 12 mm {0.47 in}**) between each hub bolt and the hub nut, then tighten all the hub nuts.

2. After tightening all the hub nuts to the same torque, put the dial gauge on the friction surface of the disc plate **10 mm {0.39 in}** from the disc plate edge.

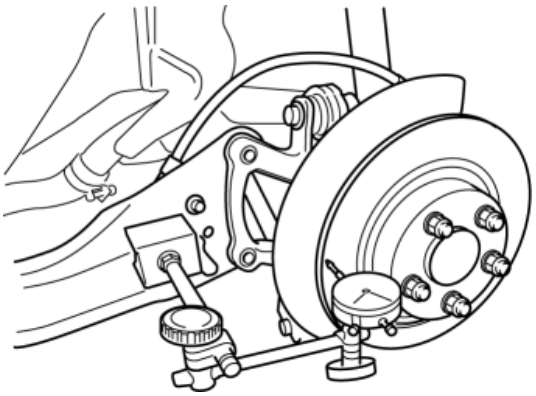

3. Rotate the disc plate one time and measure the runout.

Rear disc plate runout limit

- 0.1 mm {0.004 in}

Thickness variation inspection

1. Clean the disc plate-to-pad friction surface using a brake cleaner.
2. Measure the points indicated in the illustration using a caliper (micrometer).

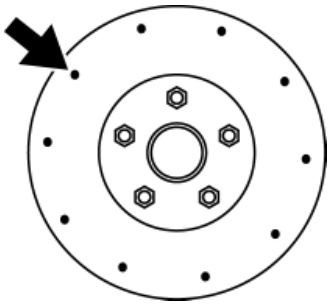

3. Subtract the minimum value from the maximum, and if the result is not within the specification, machine the disc plate using a lathe.

Thickness variation limit

- 0.015 mm {0.00059 in}

WARNING:

- Do not exceed minimum disc plate thickness.

Disc Plate Thickness Inspection

CAUTION:

- Excessive runout may result if the disc plate is removed from the vehicle then machined. Machine the disc plate while installed on the vehicle.

1. Measure the thickness of the disc plate.
   - If the thickness is not within the specification, replace the disc plate.

     Minimum rear disc plate thickness

   - 7.0 mm {0.28 in}

     Minimum rear disc plate thickness after machining using a brake lathe on-vehicle

   - 7.8 mm {0.31 in}

Disc Pad Thickness Inspection

1. Jack up the front of the vehicle and support it with safety stands.
2. Remove the wheels and tires.
3. Verify the remaining thickness of the pads.

   Minimum rear disc pad thickness

   - 2.0 mm {0.079 in} min.

4. Replace the pads as a set (right and left wheels) if either one is at or less than the minimum thickness.

REAR BRAKE (DISC) INSPECTION

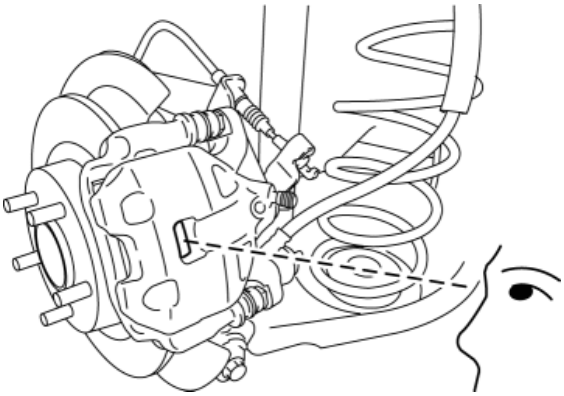

2014 - Mazda3 - Brakes

REAR BRAKE (DISC) REMOVAL/INSTALLATION

CAUTION:

- The rear brake hose gasket has been established as a specialized part. If a gasket other than the specialized part is used, it could result in brake fluid leakage. Therefore, always use the specialized gasket for the rear brake hose.

1. Remove in the order indicated in the table.
2. Install in the reverse order of removal.
3. After installation, add brake fluid, bleed the air, and inspect for fluid leakage. (See **BRAKE FLUID AIR BLEEDING**.)
4. Pump the brake pedal a few times and inspect the following:
    - The disc pad projection is securely installed to the piston groove
    - Parking brake lever stroke
    - Brake drag

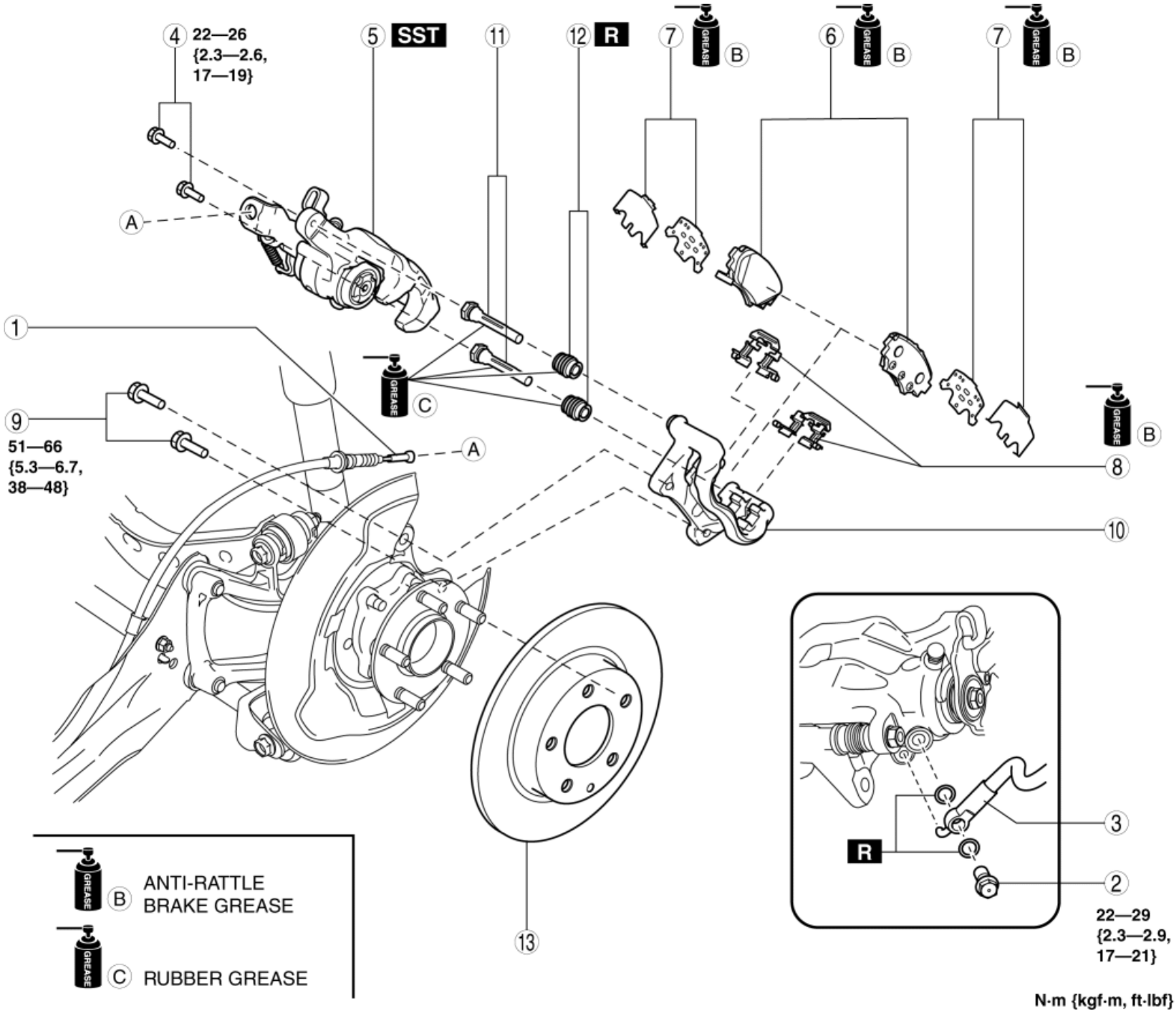

1	Rear parking brake cable (See **Rear Parking Brake Cable Installation Note**.)
2	Bolt
3	Brake hose
4	Bolt
5	Caliper (See **Caliper Installation Note**.)
6	Disc pad

7	Shim
8	Guide plate
9	Bolt
10	Mounting support
11	Slide pin
12	Dust boot
13	Disc plate

Caliper Installation Note

1. Clean the exposed area of the piston.

2. Rotate the piston clockwise slowly using the **SST** and push the piston completely until the piston grooves are in the position shown in the figure.

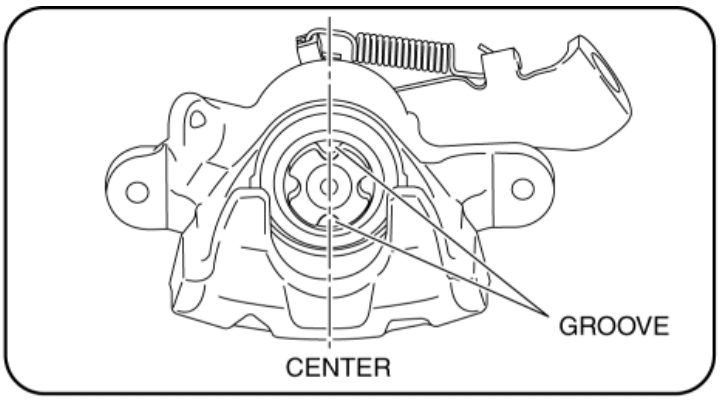

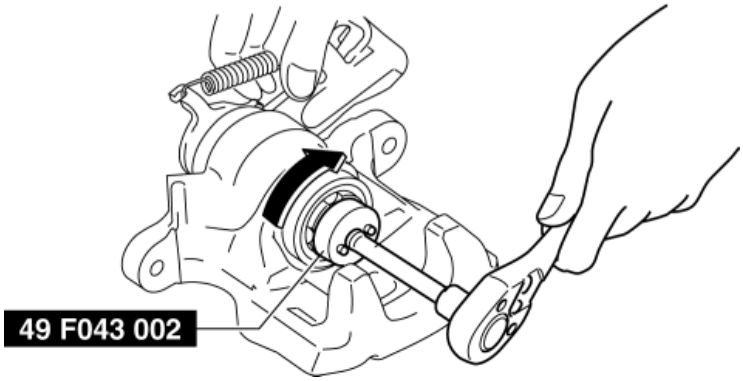

3. Install the caliper.

Rear Parking Brake Cable Installation Note

1. Install the rear parking brake cable to the rear caliper.

2. Verify that the outer end tabs of the rear parking brake cable is securely engaged with the bracket.

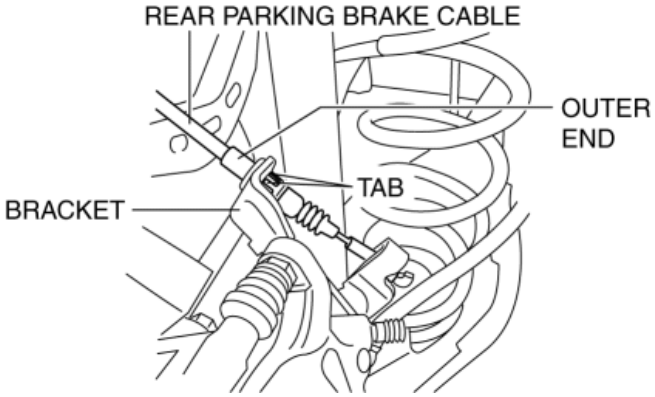
REAR PARKING BRAKE CABLE
OUTER END
TAB
BRACKET

2014 - Mazda3 - Brakes

DISC PAD (REAR) REPLACEMENT

1. Remove in the order indicated in the table.
2. Install in the reverse order of removal.
3. After installation, pump the brake pedal a few times and inspect the following:
    - The disc pad projection is securely installed to the piston groove
    - Parking brake lever stroke
    - Brake drag

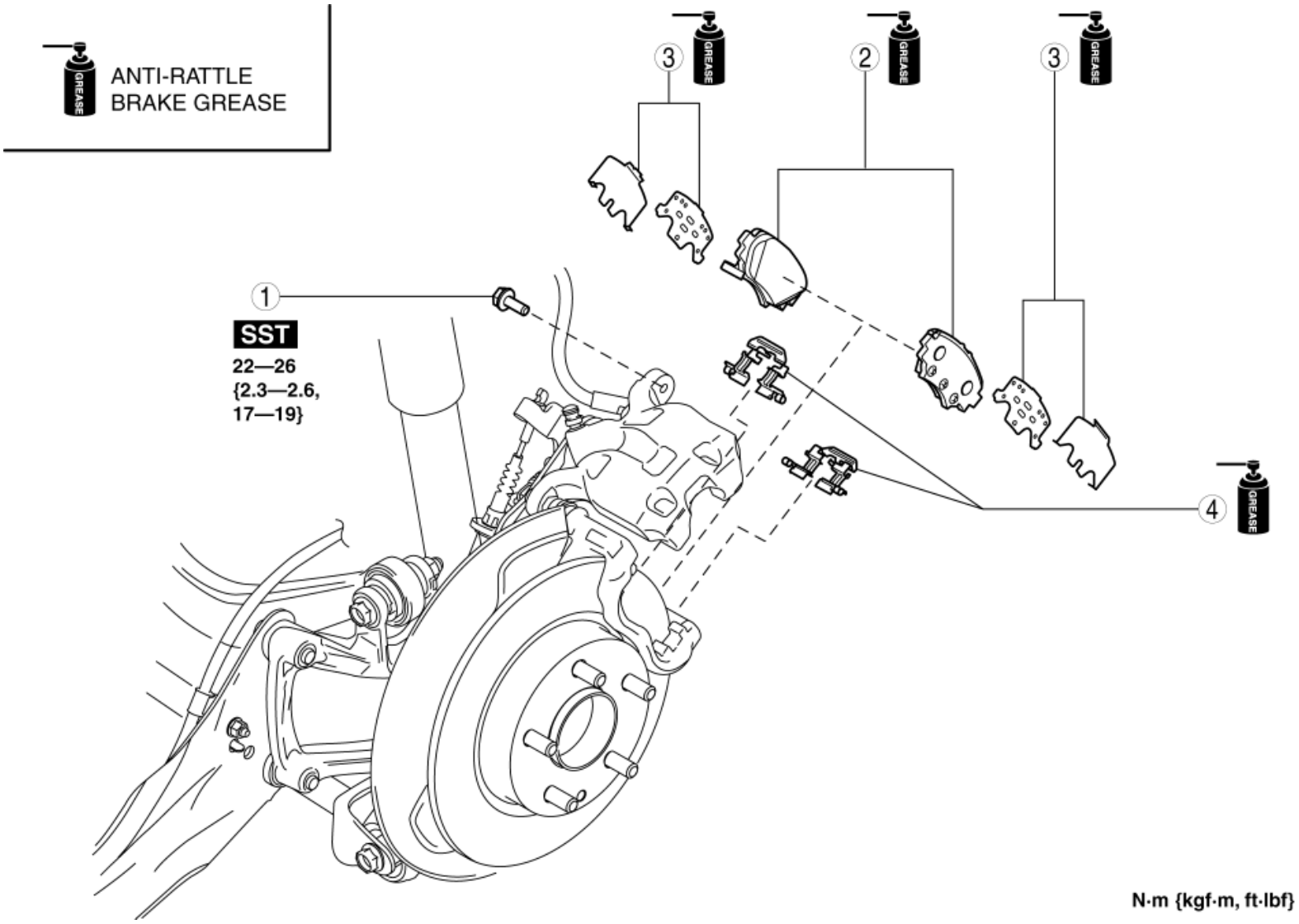

1	Caliper installation bolt (See **Caliper Installation Bolt Removal Note**.) (See **Caliper Installation Bolt Installation Note**.)

2	Disc pad
3	Shim
4	Guide plate

Caliper Installation Bolt Removal Note

1. Remove the caliper installation bolt shown in the figure and lift up the caliper.

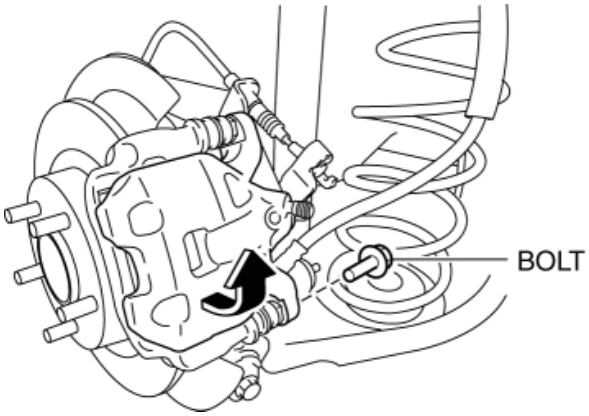

Caliper Installation Bolt Installation Note

1. Clean the exposed area of the piston.

2. Rotate the piston clockwise slowly using the SST and push the piston completely until the piston grooves are in the position shown in the figure.

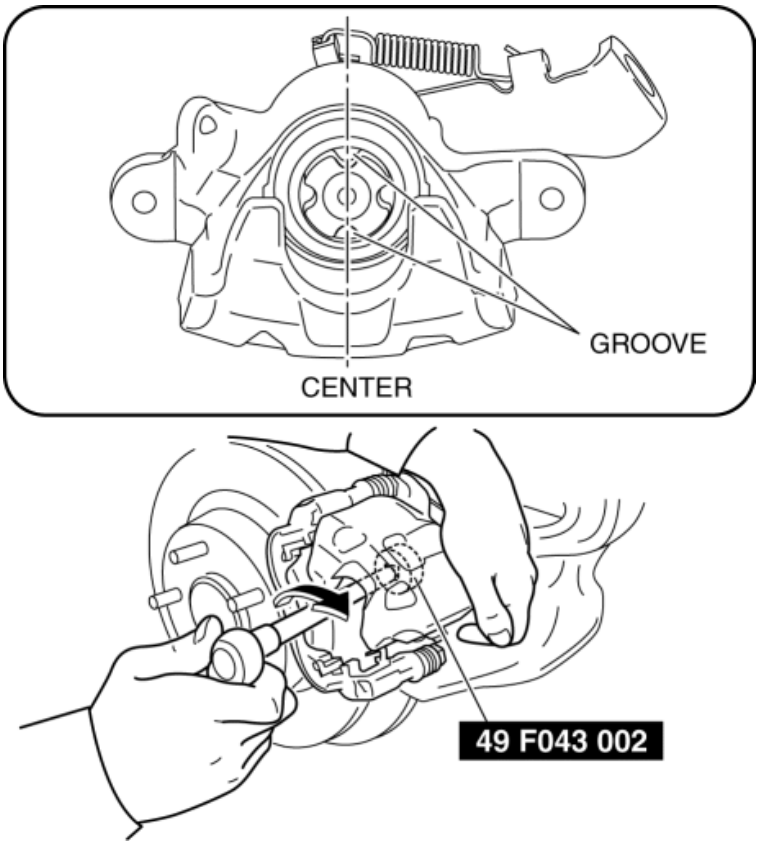

3. Return the caliper to the original position and install the caliper installation bolt.

DISC PAD (REAR) REPLACEMENT

2014 - Mazda3 - Brakes

CALIPER (REAR) DISASSEMBLY/ASSEMBLY

1. Disassemble in the order indicated in the table.

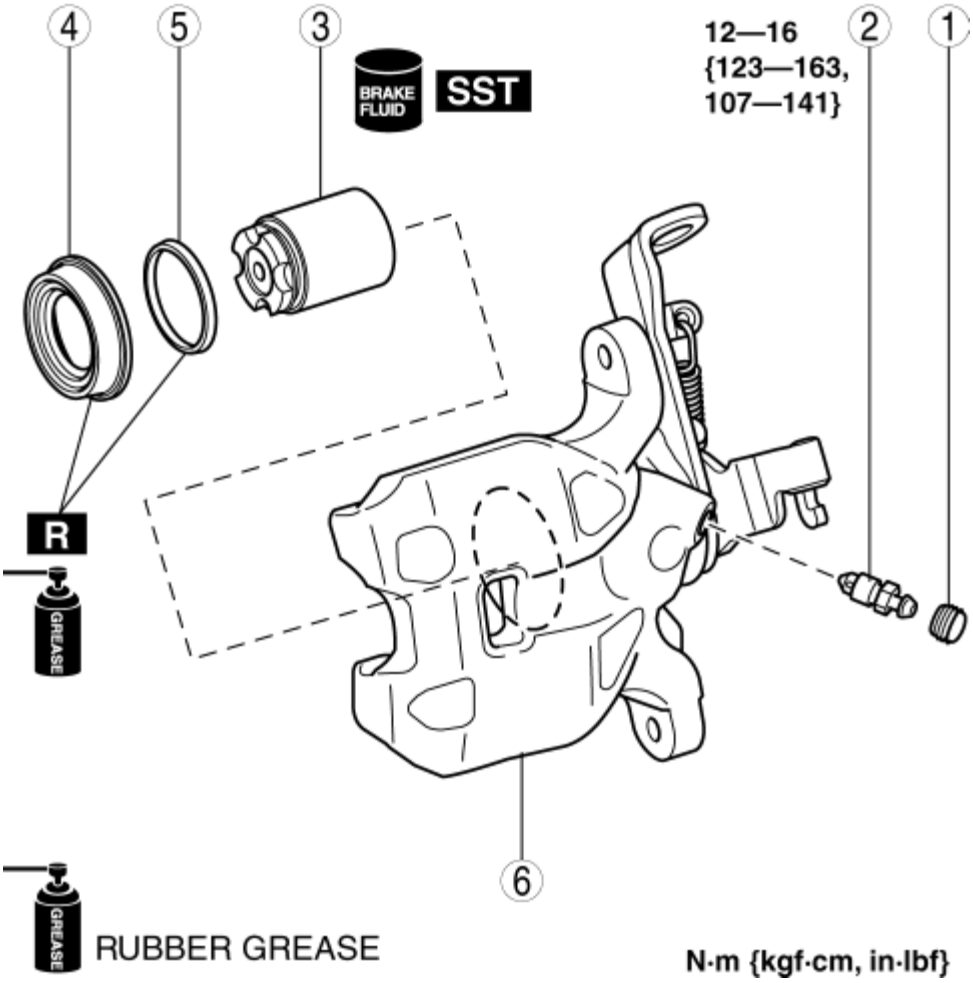

1	Bleeder cap
2	Bleeder screw
3	Piston (See **Piston Disassembly Note**.) (See **Dust Seal, Piston Assembly Note**.)
4	Dust seal

	(See **Dust Seal, Piston Assembly Note**.)
5	Piston seal
6	Caliper body

2. Assemble in the reverse order of removal.

Piston Disassembly Note

1. Rotate the piston counter-clockwise using the **SST**, remove the piston from the caliper body.

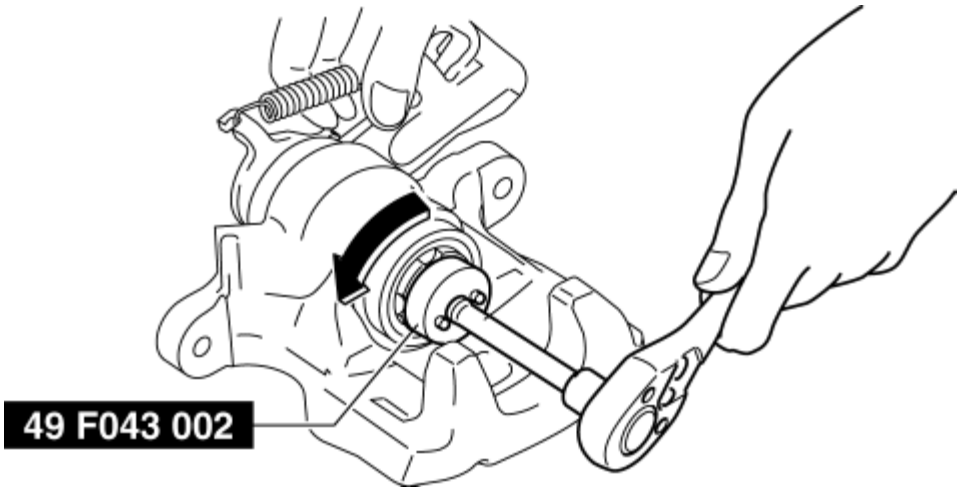

Dust Seal, Piston Assembly Note

1. Assemble the dust seal to the piston.

2. Assemble the lip of the dust seal to the groove of the caliper body with the dust seal assembled to the piston as shown in the figure.

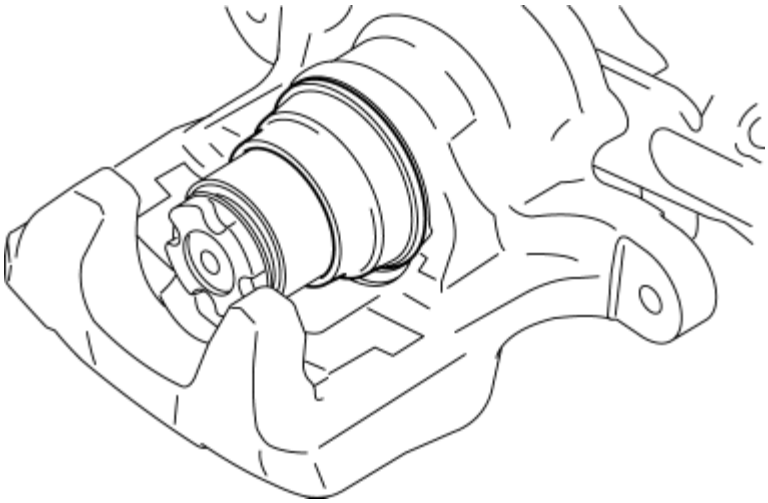

3. Rotate the piston clockwise using the **SST** slowly and push the piston inwards completely.

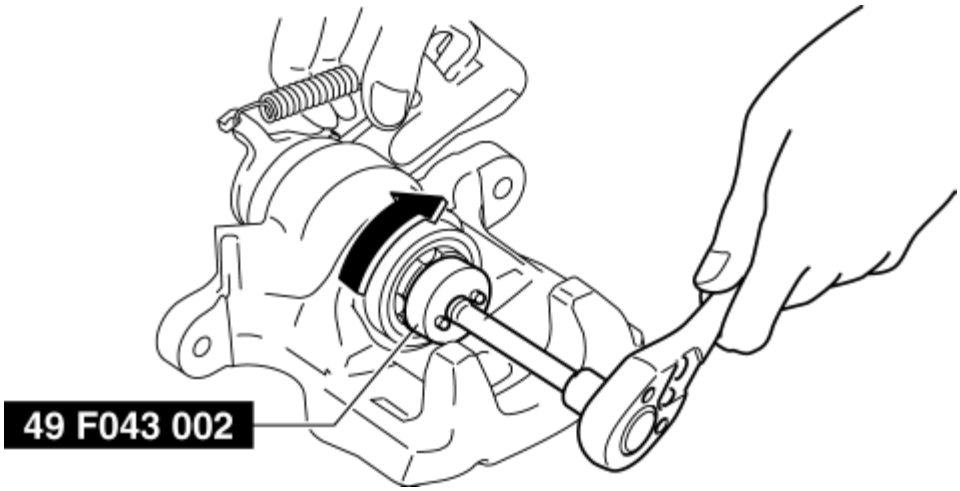

4. Verify that the dust seal is installed into the groove of the piston securely.

2014 - Mazda3 - Brakes

BRAKE HOSE (REAR) REMOVAL/INSTALLATION

CAUTION:

- The rear brake hose gasket has been established as a specialized part. If a gasket other than the specialized part is used, it could result in brake fluid leakage. Therefore, always use the specialized gasket for the rear brake hose.

1. Remove in the order indicated in the table.
2. Install in the reverse order of removal.
3. After installation, add brake fluid, bleed the air, and inspect for fluid leakage. (See **BRAKE FLUID AIR BLEEDING**.)

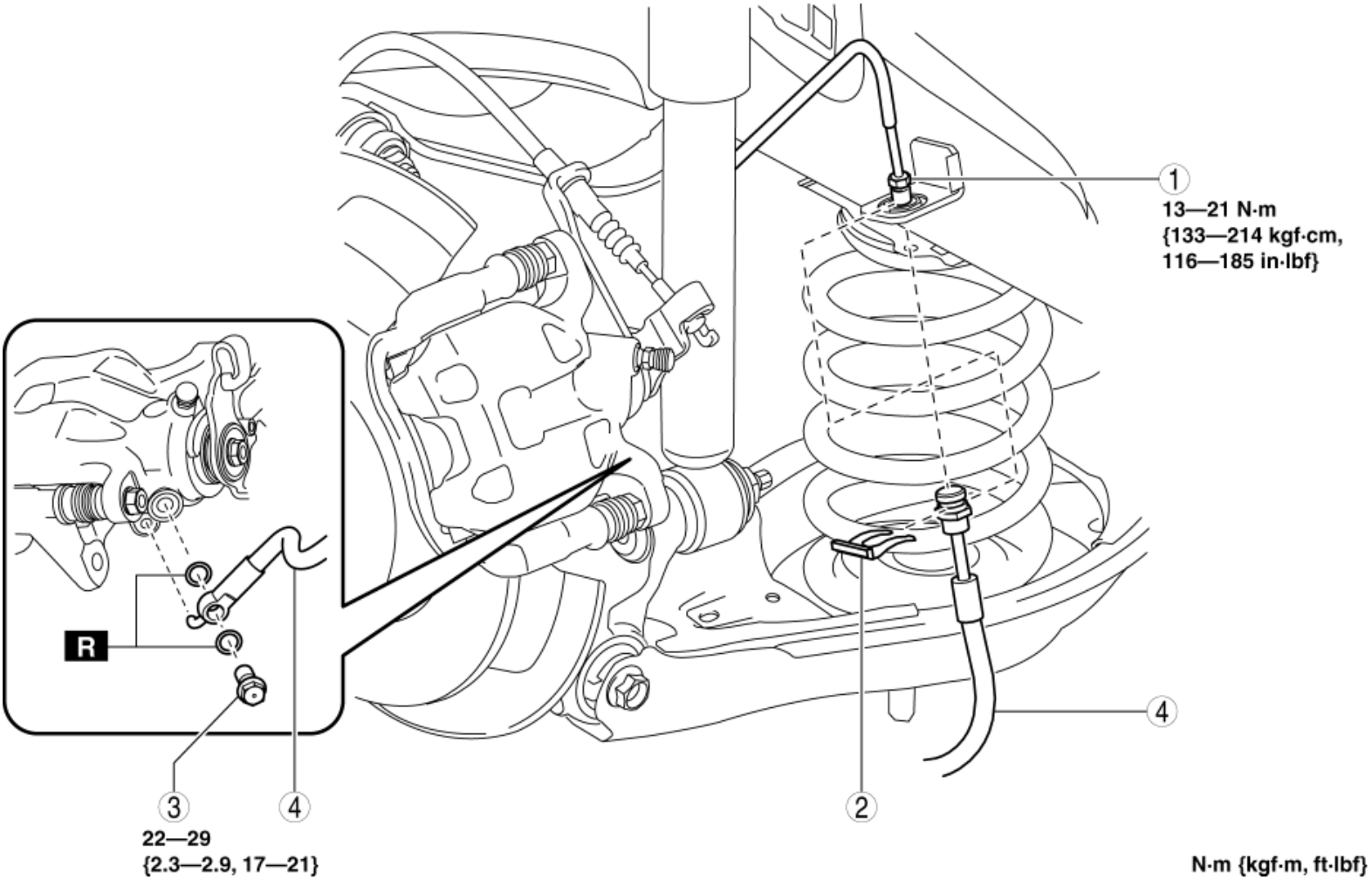

1	Brake pipe
2	Clip
3	Bolt
4	Brake hose

BRAKE HOSE (REAR) REMOVAL/INSTALLATION

2014 - Mazda3 - Brakes

PARKING BRAKE SYSTEM LOCATION INDEX

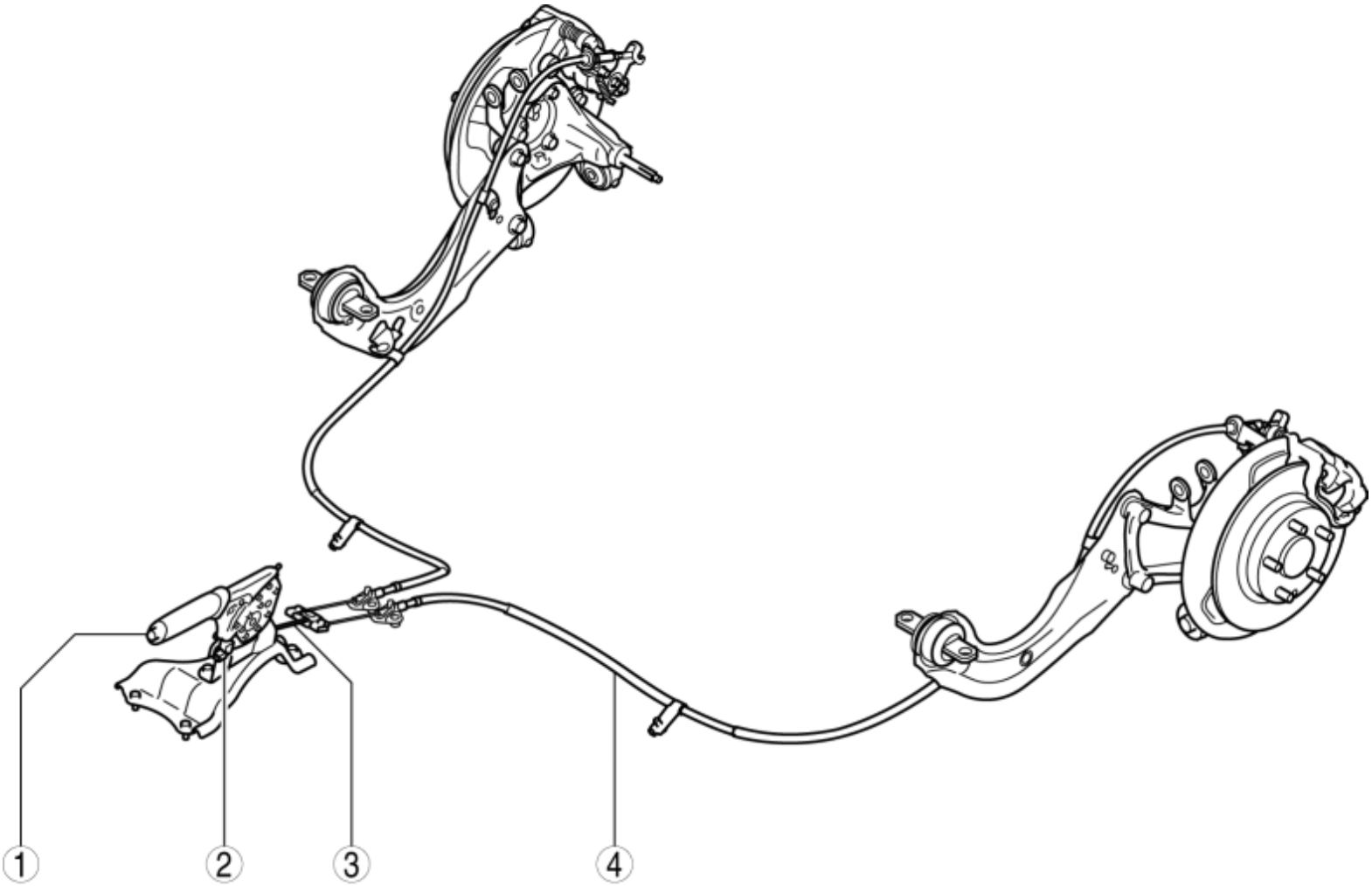

1	Parking brake lever (See **PARKING BRAKE LEVER INSPECTION**.) (See **PARKING BRAKE LEVER ADJUSTMENT**.) (See **PARKING BRAKE LEVER REMOVAL/INSTALLATION**.)
2	Parking brake switch (See **PARKING BRAKE SWITCH INSPECTION**.)
3	Front parking brake cable

	(See **FRONT PARKING BRAKE CABLE REMOVAL/INSTALLATION**.)
4	Rear parking brake cable (See **REAR PARKING BRAKE CABLE REMOVAL/INSTALLATION**.)

2014 - Mazda3 - Brakes

PARKING BRAKE LEVER INSPECTION

Stroke Inspection

1. Pump the brake pedal a few times.

2. Pull the parking brake lever two to three times.

3. Inspect the parking brake stroke by slowly pulling at point A **50 mm {2.0 in}** from the end of the parking brake lever with a force of **98 N {10 kgf, 22 lbf}** and counting the number of notches (clicking sound).

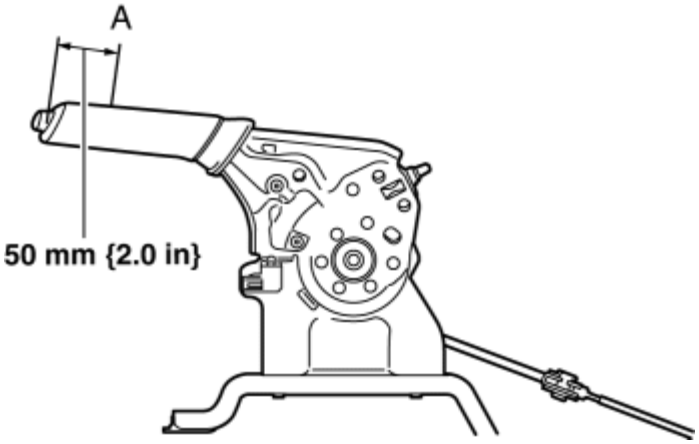

- If not within the specification, adjust the parking brake lever.

  Parking brake lever stroke when pulled at 98 N {10 kgf, 22 lbf}

- 3—4 notches

2014 - Mazda3 - Brakes

PARKING BRAKE LEVER ADJUSTMENT

1. Pump the brake pedal a few times.

2. Disconnect the upper panel from the rear console. (See **UPPER PANEL REMOVAL**.) (See **UPPER PANEL INSTALLATION**.)

3. Turn the adjusting nut and adjust the parking brake lever.

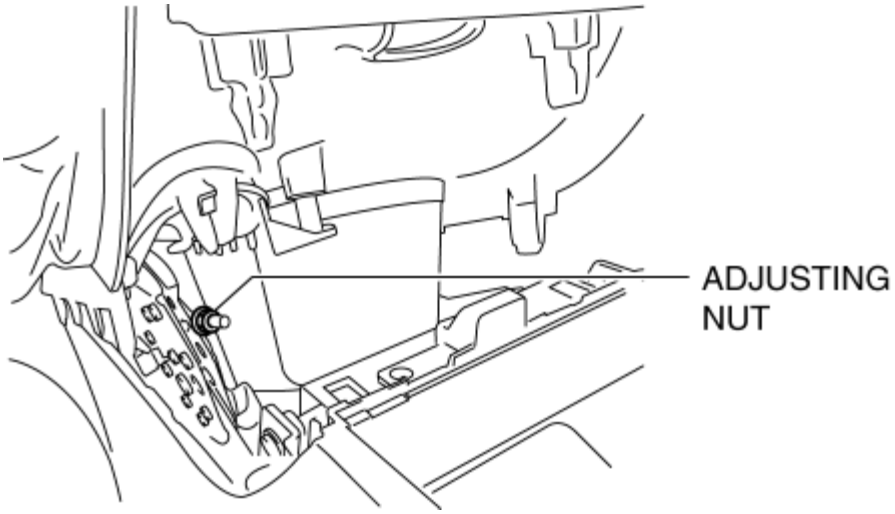

4. After adjustment, pull the parking brake lever one notch and verify that the parking brake warning light illuminates.

5. Verify that the rear brakes do not drag.

2014 - Mazda3 - Brakes

PARKING BRAKE LEVER REMOVAL/INSTALLATION

1. Remove the upper panel. (See **UPPER PANEL REMOVAL**.) (See **UPPER PANEL INSTALLATION**.)
2. Remove in the order indicated in the table.
3. Install in the reverse order of removal.
4. After installation, inspect the parking brake lever stroke. (See **PARKING BRAKE LEVER INSPECTION**.)

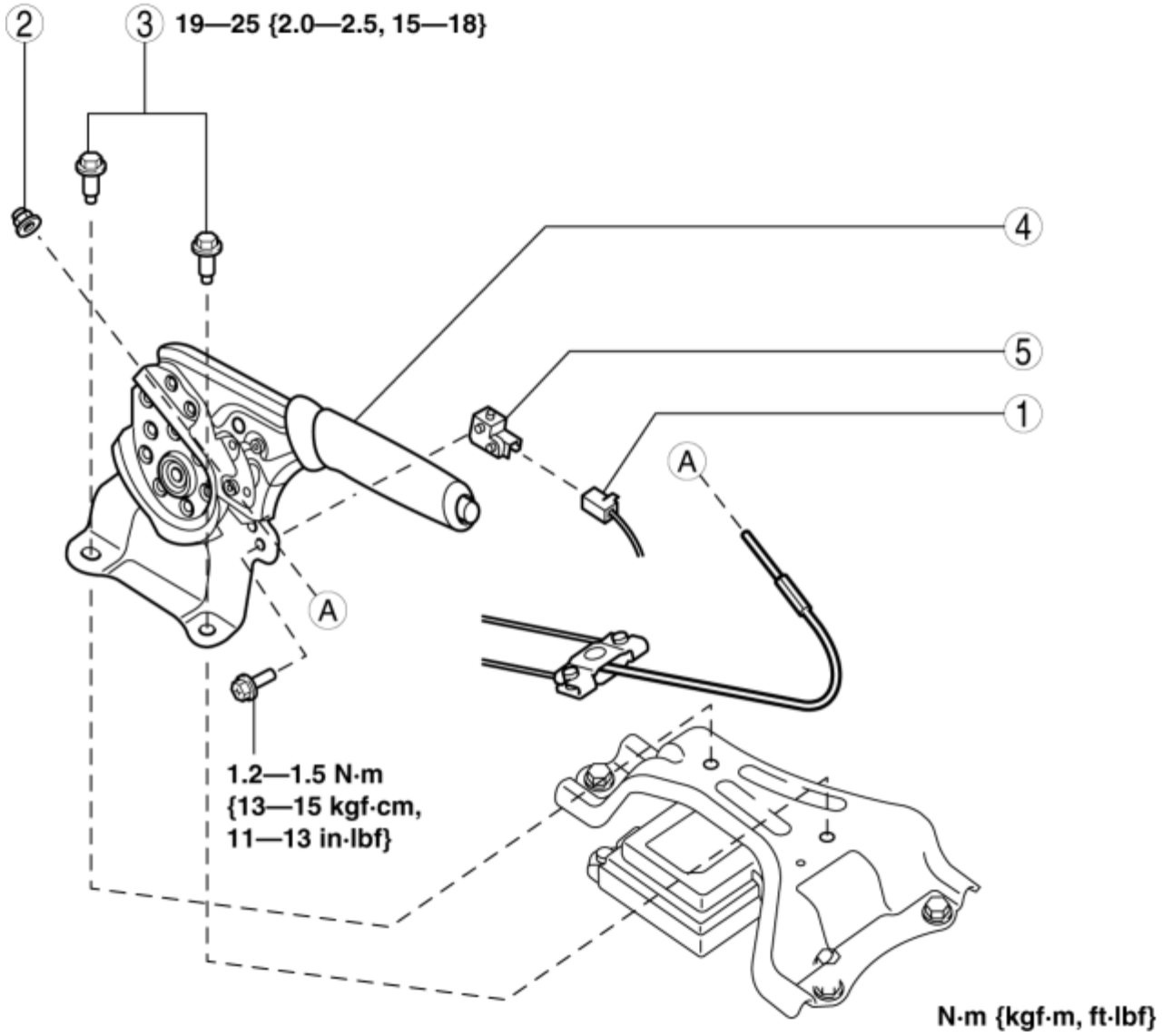

1	Parking brake switch connector

2	Adjusting nut
3	Bolt
4	Parking brake lever
5	Parking brake switch

2014 - Mazda3 - Brakes

FRONT PARKING BRAKE CABLE REMOVAL/INSTALLATION

1. Remove the upper panel. (See **UPPER PANEL REMOVAL**.) (See **UPPER PANEL INSTALLATION**.)
2. Remove in the order indicated in the table.
3. Install in the reverse order of removal.
4. After installation, inspect the parking brake lever stroke. (See **PARKING BRAKE LEVER INSPECTION**.)

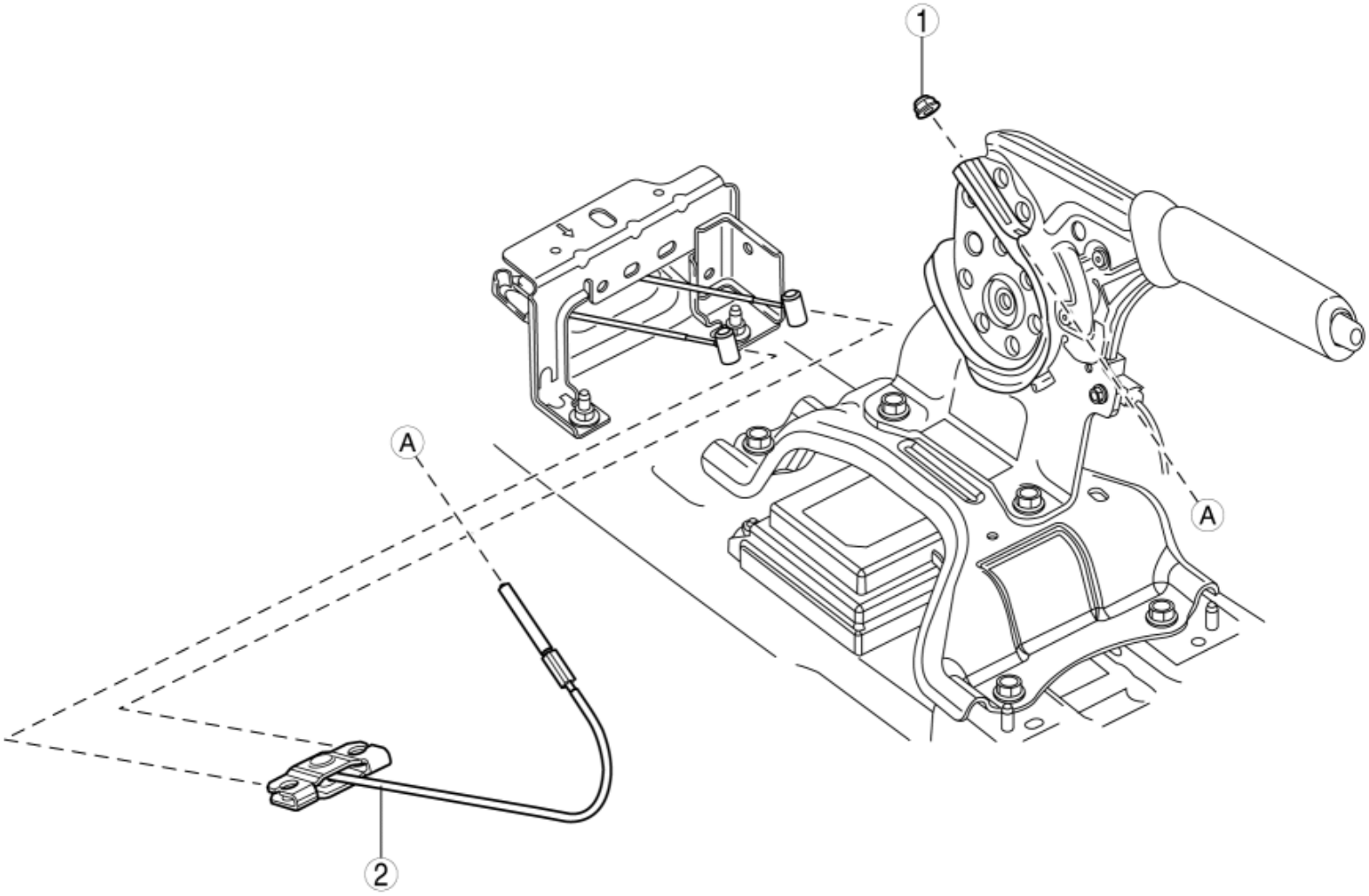

1	Adjusting nut
2	Front parking brake cable

FRONT PARKING BRAKE CABLE REMOVAL/INSTALLATION

2014 - Mazda3 - Brakes

REAR PARKING BRAKE CABLE REMOVAL/INSTALLATION

1. Remove the upper panel. (See **UPPER PANEL REMOVAL**.) (See **UPPER PANEL INSTALLATION**.)
2. Loosen the adjusting nut.
3. Remove the rear parking brake cable from the front parking brake cable. (See **FRONT PARKING BRAKE CABLE REMOVAL/INSTALLATION**.)
4. Remove the floor under cover No.1. (See **FLOOR UNDER COVER REMOVAL/INSTALLATION**.)
5. Remove the insulator (middle) installation nuts and the fasteners. (See **EXHAUST SYSTEM REMOVAL/INSTALLATION [SKYACTIV-G 2.0, SKYACTIV-G 2.5]**.)
6. Set the insulator out of the way.
7. Remove in the order indicated in the table.
8. Install in the reverse order of removal.
9. After installation, inspect the parking brake lever stroke. (See **PARKING BRAKE LEVER INSPECTION**.)

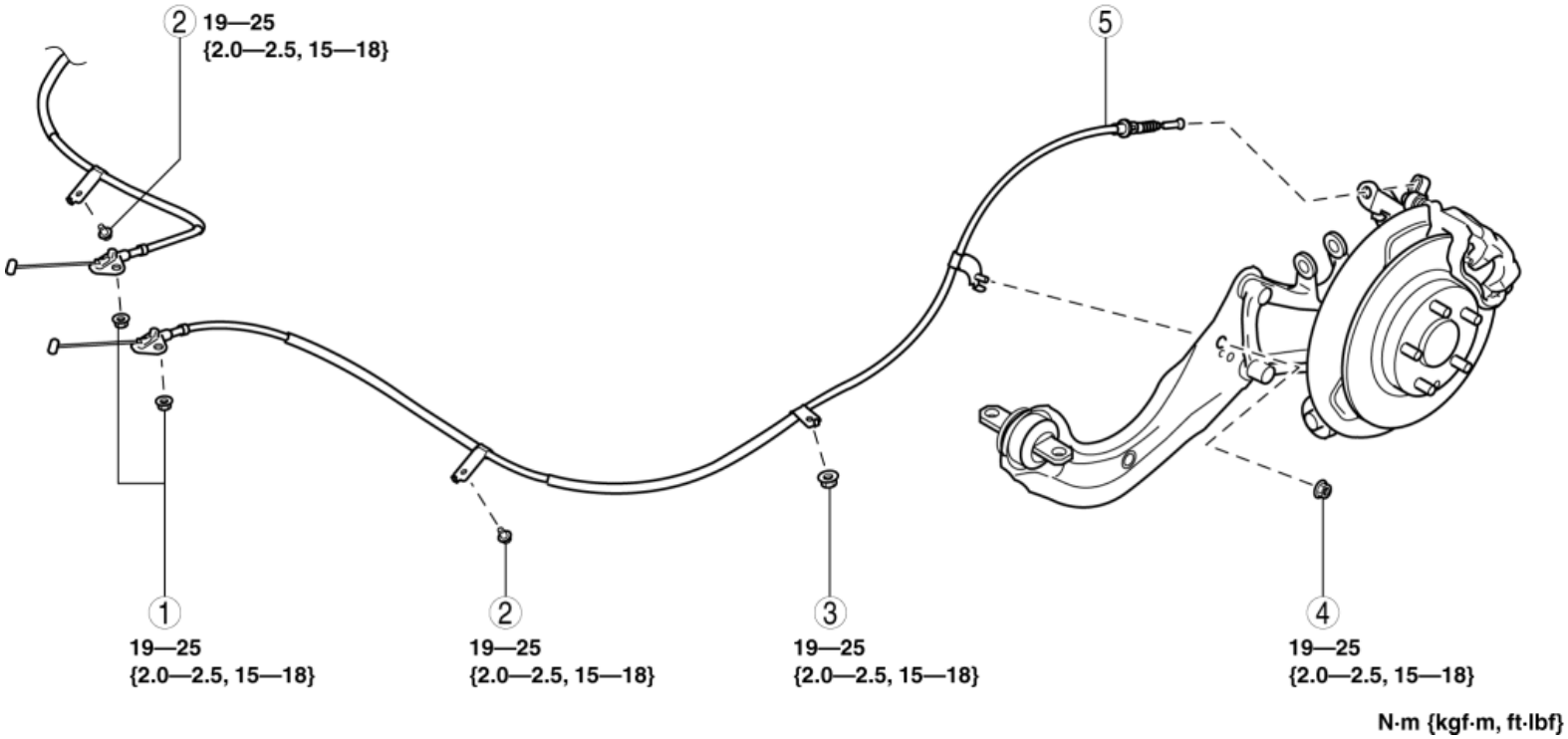

1	Nut
2	Bolt
3	Nut
4	Nut
5	Rear parking brake cable (See **Rear Parking Brake Cable Removal Note**.)

(See **Rear Parking Brake Cable Installation Note**.)

Rear Parking Brake Cable Removal Note

1. Remove the rear parking brake cable from the rear caliper.
2. Remove the rear parking brake cable.

Rear Parking Brake Cable Installation Note

1. Install the rear parking brake cable to the rear caliper.
2. Verify that the outer end tabs of the rear parking brake cable is securely engaged with the bracket.

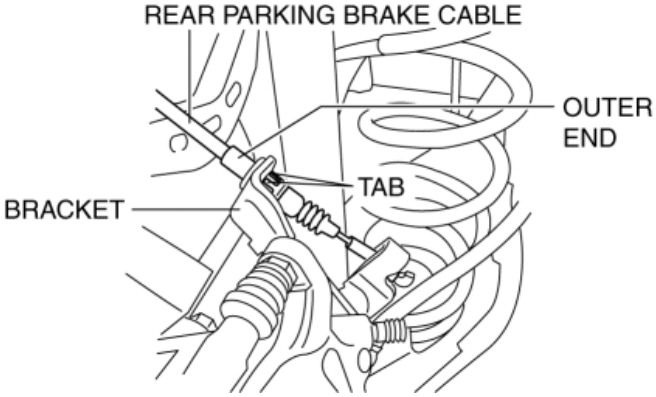

2014 - Mazda3 - Brakes

PARKING BRAKE SWITCH INSPECTION

1. Remove the upper panel. (See **UPPER PANEL REMOVAL**.) (See **UPPER PANEL INSTALLATION**.)
2. Disconnect the parking brake switch connector.
3. Verify that the continuity is as indicated in the table.

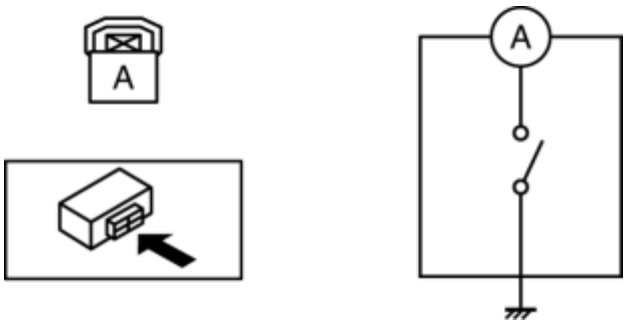

- If not as indicated in the table, replace the parking brake switch.

○—○ : Continuity

Condition	Terminal	
	A	Body ground
Parking brake lever pulled	○	○
Parking brake lever released		

2014 - Mazda3 - Brakes

DYNAMIC STABILITY CONTROL LOCATION INDEX

Vehicle front side

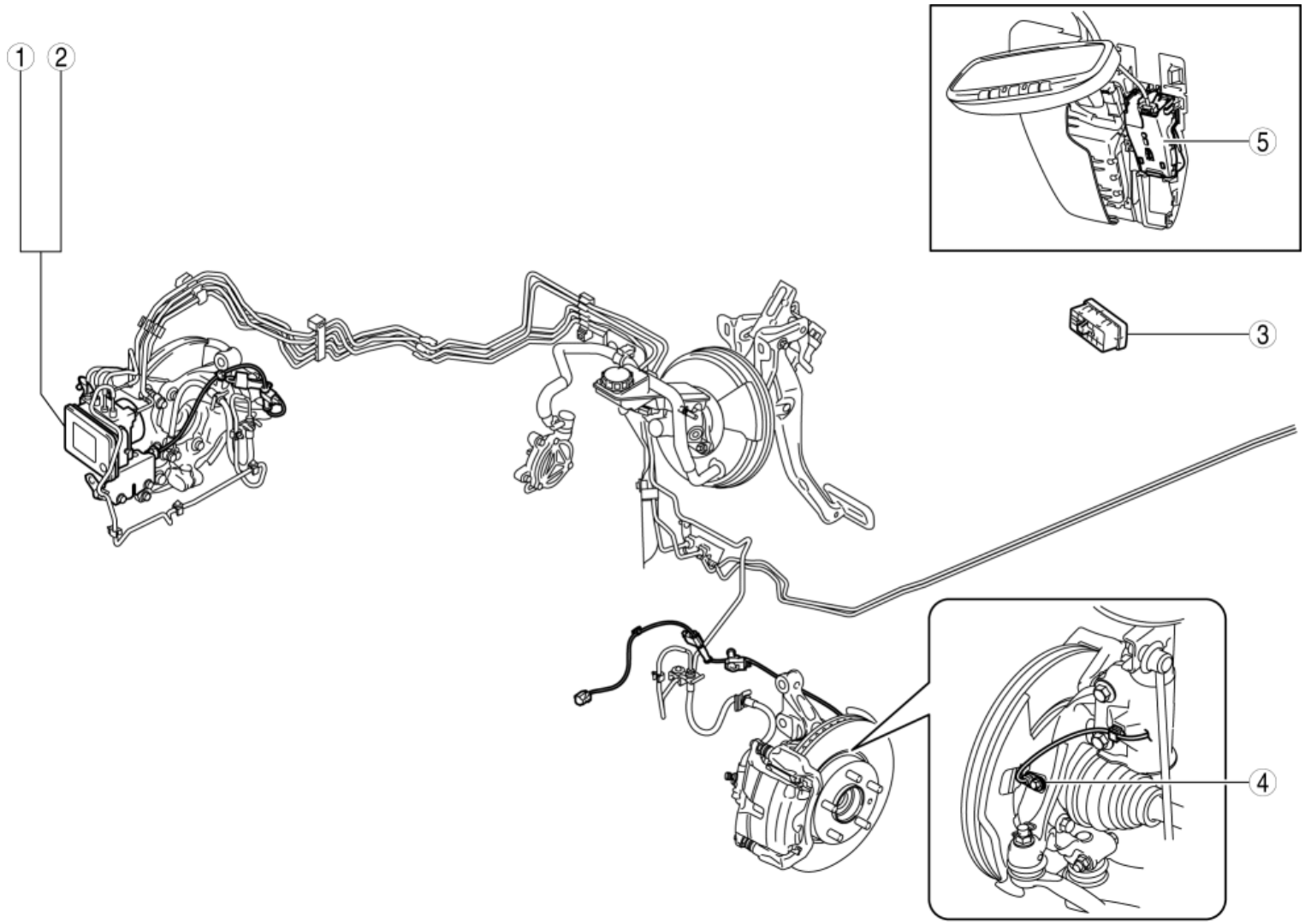

1	DSC HU/CM (See **DSC HU/CM REMOVAL/INSTALLATION**.) (See **DSC RELATED PARTS SENSOR INITIALIZATION PROCEDURE**.) (See **DSC HU/CM INSPECTION**.)
2	Brake fluid pressure sensor (built-into DSC HU/CM) (See **BRAKE FLUID PRESSURE SENSOR INSPECTION**.) (See **DSC RELATED PARTS SENSOR INITIALIZATION PROCEDURE**.)
3	DSC OFF switch (See **DSC OFF SWITCH REMOVAL/INSTALLATION**.)

	(See **DSC OFF SWITCH INSPECTION**.)
4	Front ABS wheel-speed sensor (See **FRONT ABS WHEEL-SPEED SENSOR REMOVAL/INSTALLATION**.) (See **FRONT ABS WHEEL-SPEED SENSOR INSPECTION**.)
5	Laser sensor (vehicles with Smart City Brake Support (SCBS)) (See **LASER SENSOR INSPECTION**.) (See **LASER SENSOR REMOVAL/INSTALLATION**.)

Vehicle rear side

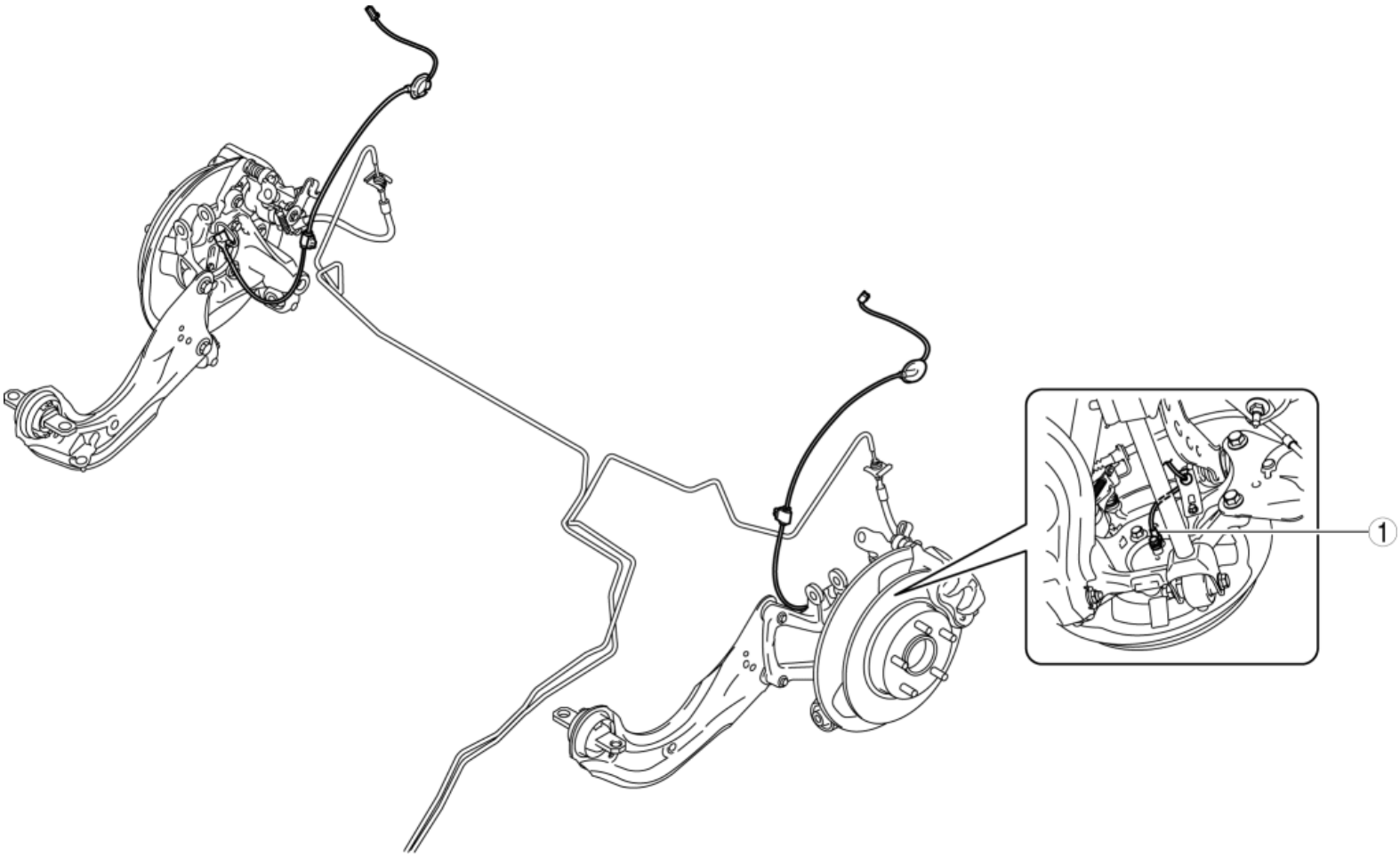

1	Rear ABS wheel-speed sensor (See **REAR ABS WHEEL-SPEED SENSOR REMOVAL/INSTALLATION**.) (See **REAR ABS WHEEL-SPEED SENSOR INSPECTION**.)

2014 - Mazda3 - Brakes

DSC SYSTEM WIRING DIAGRAM

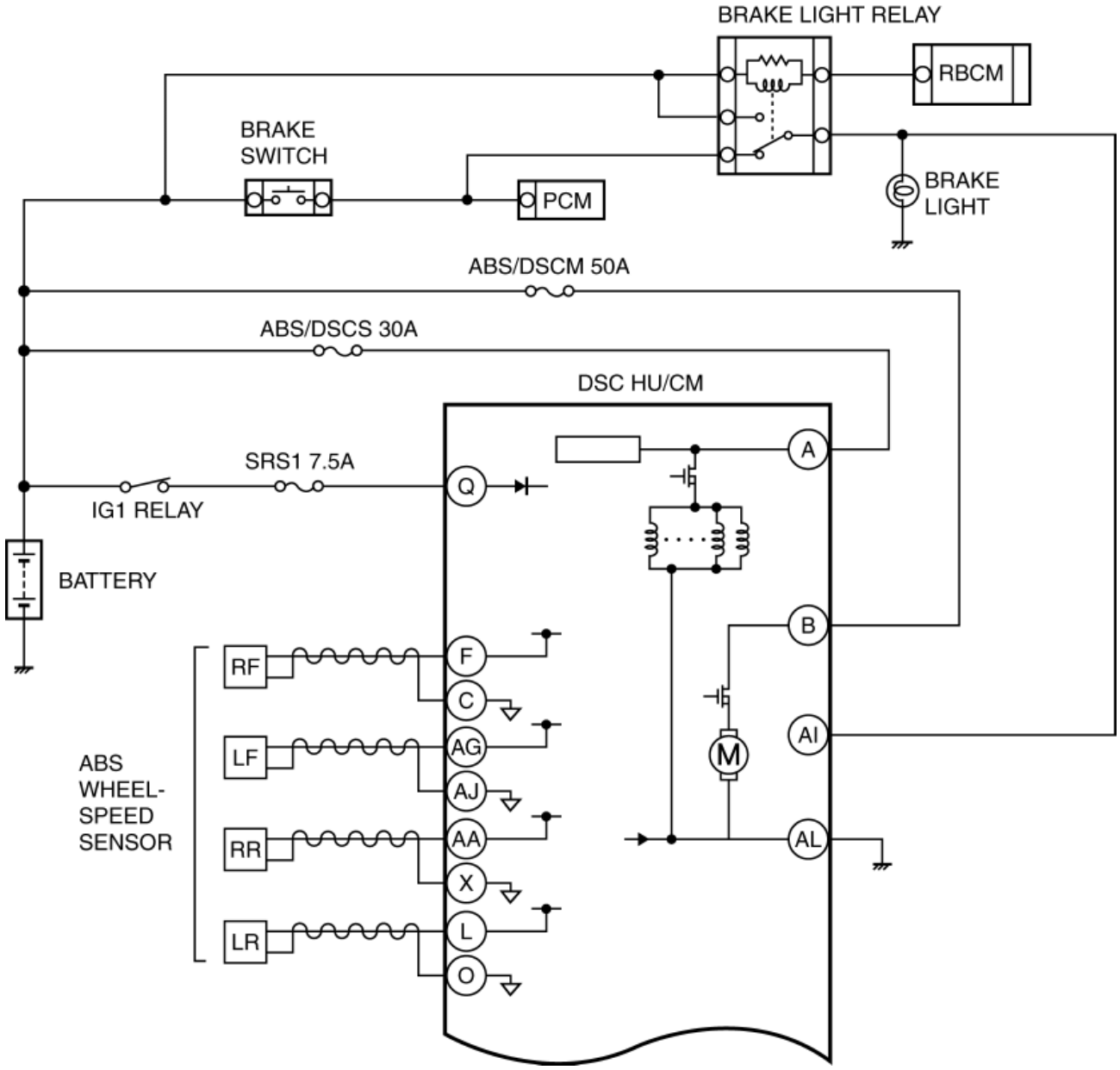

DSC SYSTEM WIRING DIAGRAM

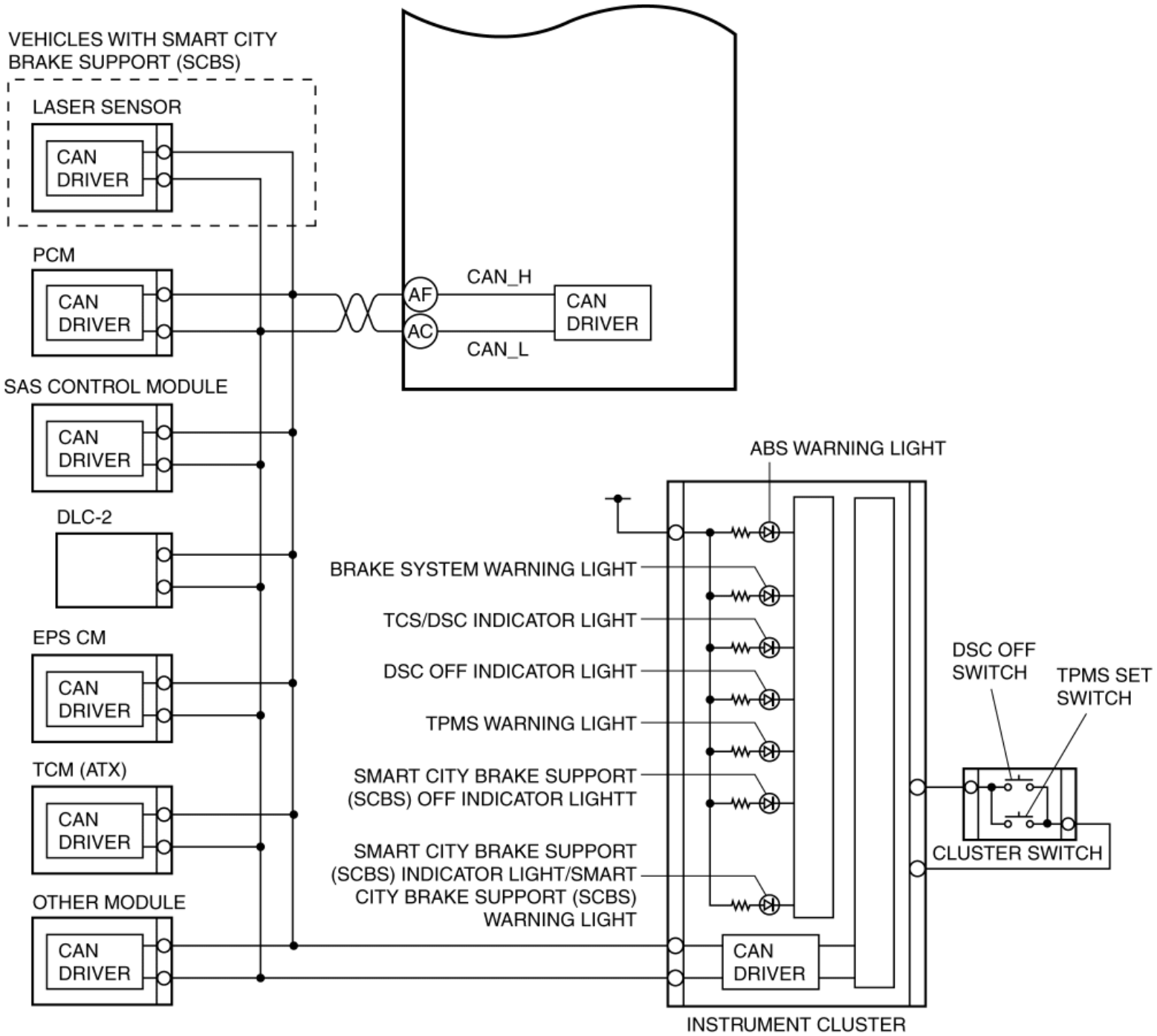

2014 - Mazda3 - Brakes

DSC HU/CM REMOVAL/INSTALLATION

WARNING:

- If the DSC HU/CM configuration is not completed, it could result in an unexpected accident due to the DSC being inoperative. If the DSC HU/CM is replaced, always use the automatic configuration function so that the DSC operation conditions are correct.
- If the DSC related parts sensor initialization procedure is not completed, the DSC will not operate properly and it might cause an unexpected accident. Therefore, after replacing the DSC HU/CM, always perform the DSC related parts sensor initialization procedure to insure proper DSC operation.

CAUTION:

- The internal parts of the DSC HU/CM could be damaged if dropped. Be careful not to drop the DSC HU/CM. Replace the DSC HU/CM if it is subjected to an impact.

NOTE:

- When the ignition is switched to ON or the engine is started after the DSC HU/CM has been replaced, the DSC CM reads data from the instrument cluster via CAN communication to perform automatic configuration.
- The DSC HU/CM prior to replacement stores the vehicle specification information.
- A new DSC HU/CM does not store any vehicle specification information.

1. Remove the plug hole plate. (See **PLUG HOLE PLATE REMOVAL/INSTALLATION [SKYACTIV-G 2.0, SKYACTIV-G 2.5]**.)
2. Remove the bracket.

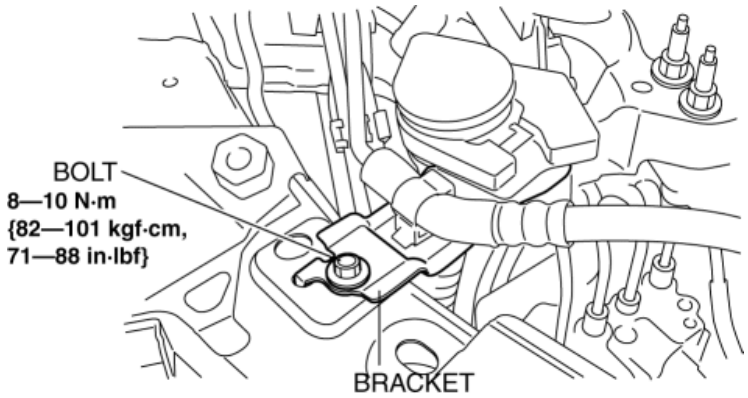

3. Remove in the order indicated in the table.
4. Install in the reverse order of removal.
5. After installation, add brake fluid, bleed the air, and inspect for fluid leakage. (See **BRAKE FLUID AIR BLEEDING**.)
6. Perform the following procedure to implement the DSC HU/CM automatic configuration.
   a. Switch the ignition ON (engine off) and wait for **10 s or more**.
   b. Switch the ignition off and wait for **3 s or more**.
   c. Switch the ignition ON (engine off) and wait for **3 s or more**.
   d. The automatic configuration procedure is completed.
7. Perform the DSC related parts sensor initialization procedure (only when replacing it with a new one). (See **DSC RELATED PARTS SENSOR INITIALIZATION PROCEDURE**.)
8. Perform the TPMS initialization procedure. (Vehicles with TPMS) (See **TIRE PRESSURE MONITORING SYSTEM INITIALIZATION PROCEDURE**.)
9. Clear the DTCs from the memory. (See **ON-BOARD DIAGNOSIS [DYNAMIC STABILITY CONTROL (DSC)]**.)

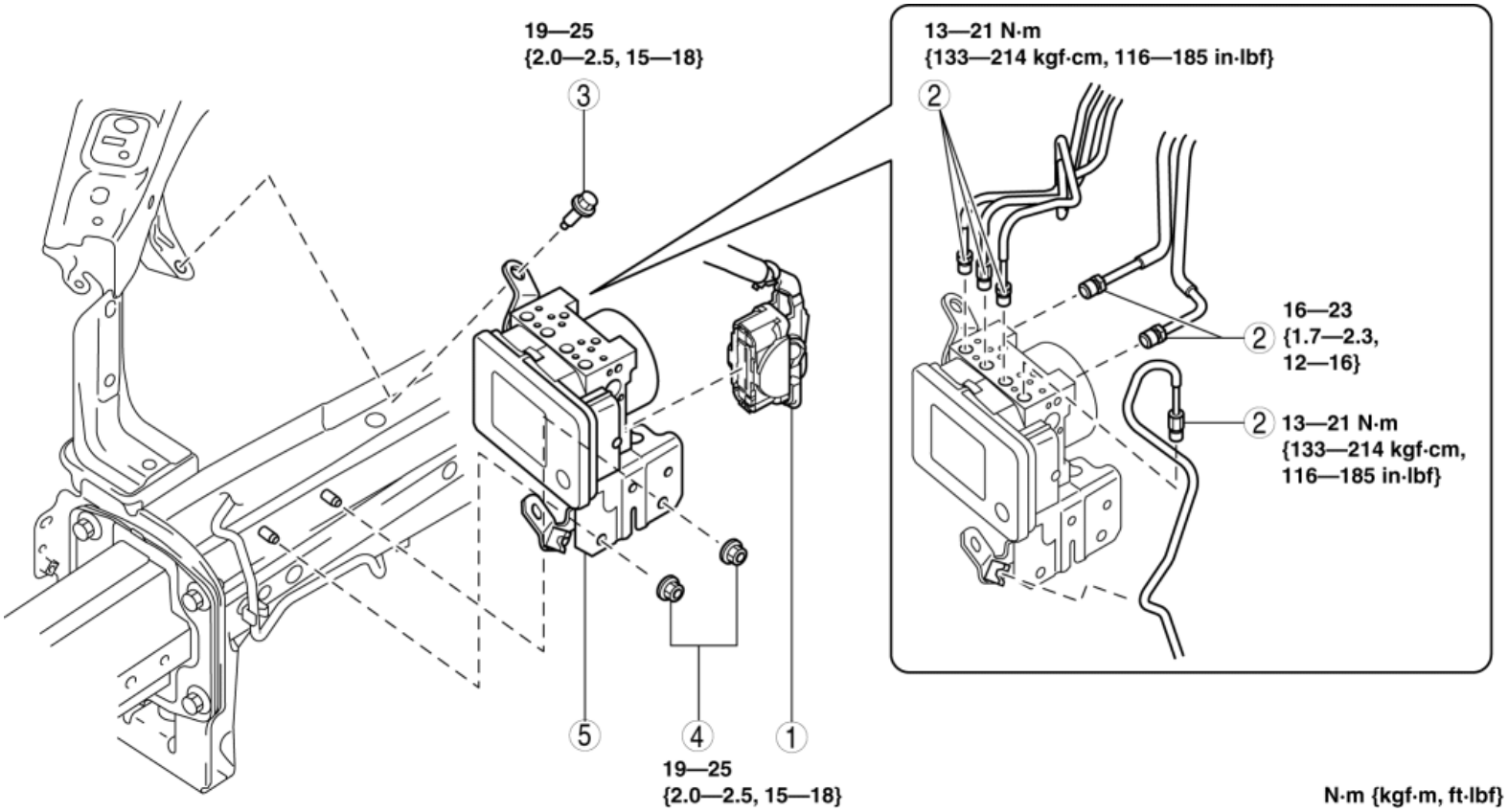

1	Connector (See **Connector Removal Note**.) (See **Connector Installation Note**.)
2	Brake pipe (See **Brake Pipe Removal Note**.) (See **Brake Pipe Installation Note**.)
3	Bolt
4	Nut
5	DSC HU/CM component

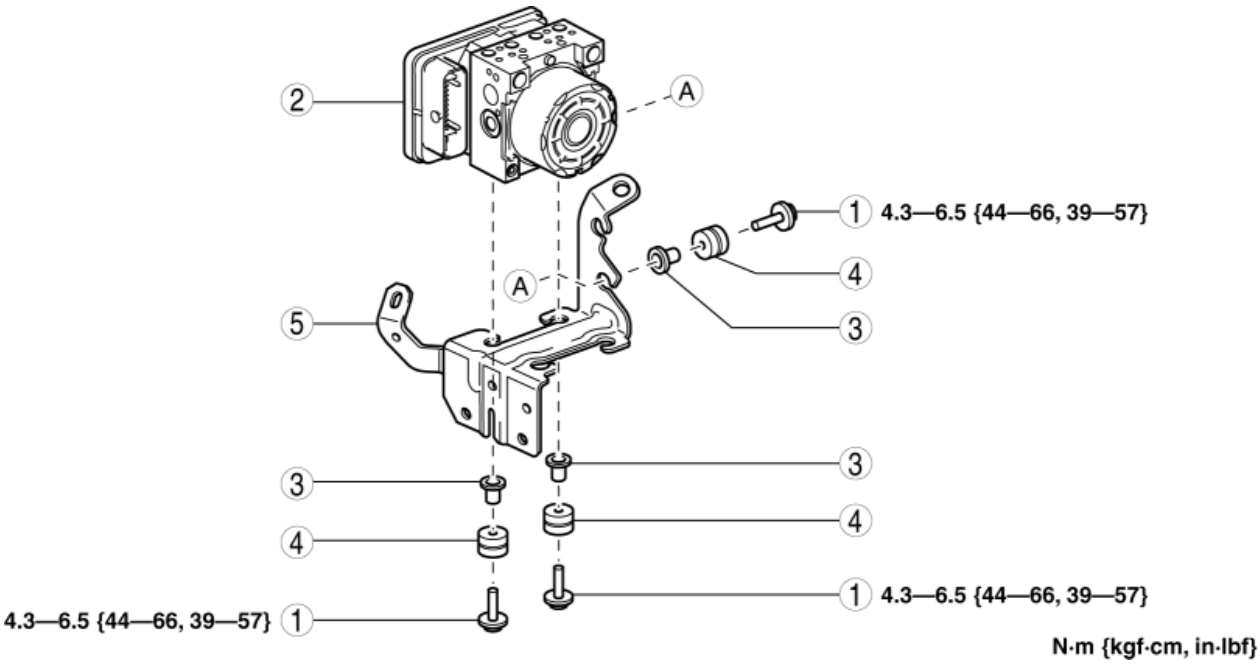

1	Bolt
2	DSC HU/CM
3	Mount bolt
4	Mount rubber
5	Bracket

Connector Removal Note

CAUTION:

- If sand or other particles get into the connector, it may be difficult to remove. To prevent damaging the connector, be careful not to use excessive force when disconnecting it.

1. Pull the lock lever down in the direction of the arrow while pressing the tab of the connector cover.

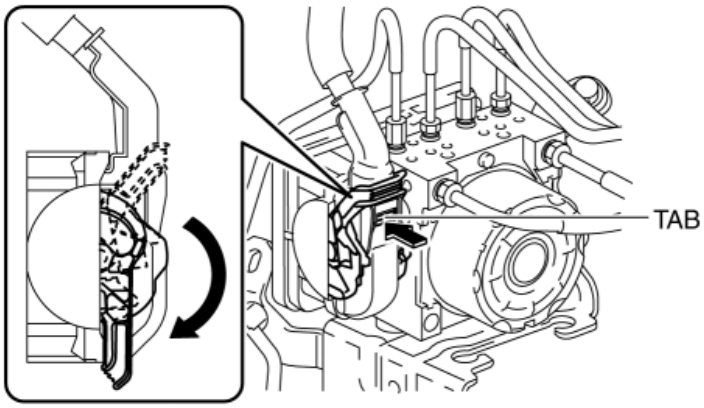

2. Pull the connector toward the vehicle rear and remove it.

Brake Pipe Removal Note

1. Place an alignment mark on the brake pipe and DSC HU/CM.

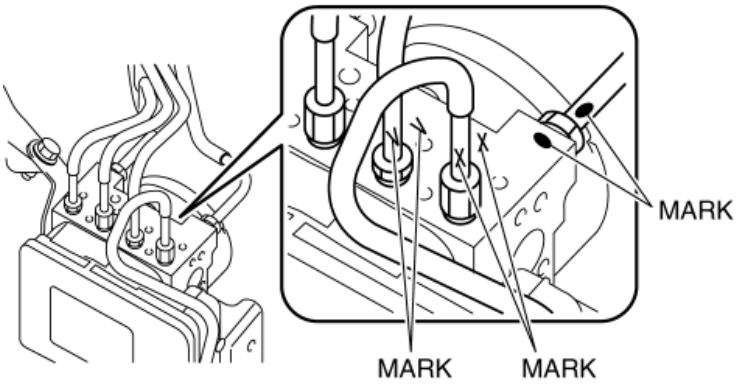

2. Apply protective tape to the connector to prevent brake fluid from entering.

3. Disconnect the brake pipes.

Brake Pipe Installation Note

1. Align the marks made before removal and install the brake pipe to the DSC HU/CM and brake pipe joint referring to the figure.

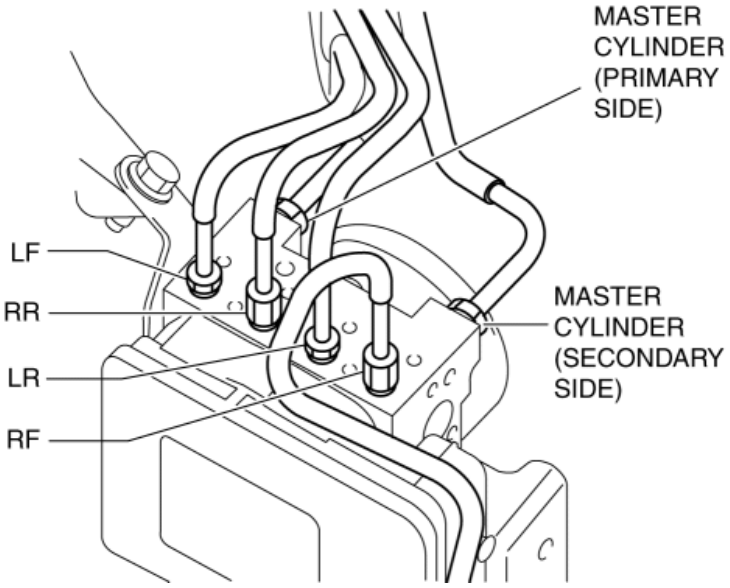

2. Tighten the brake pipe to the specified torque using the commercially available flare nut wrench.

Connector Installation Note

1. Connect the connector and pull the lock lever up in the direction of the arrow.

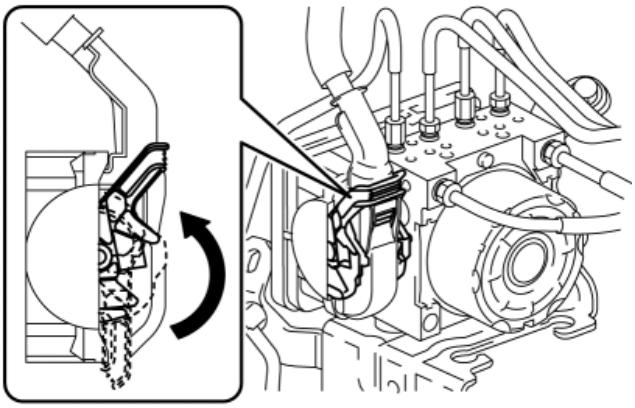

2. After connecting the connector, verify that the connector cover is completely pushed in.

2014 - Mazda3 - Brakes

DSC RELATED PARTS SENSOR INITIALIZATION PROCEDURE

WARNING:

- If the initialization procedure is not completed, the DSC will not operate properly and it might cause an unexpected accident. Therefore, after replacing the DSC HU/CM or SAS control module, always perform the initialization procedure to insure proper DSC operation.

1. Inspect the wheel alignment and the tire pressure.
    - If there is any malfunction, adjust the applicable part.
2. Position the vehicle on level ground.
3. Switch the ignition off.
4. Connect the M-MDS (IDS) to DLC-2.
5. After the vehicle is identified, select the following items from the initial screen of the IDS.
    - Select “Chassis”.
    - Select “ABS/DSC”.
    - Select “Sensor Initialization”.
6. Then, select an item from the screen menu.
    - “Brake fluid pressure sensor”
    - “Lateral Acceleration Sensor”
    - “Yaw Rate Sensor”
    - “Longitudinal Acceleration Sensor”
7. Perform the procedure according to the directions on the screen.
8. Drive the vehicle.
9. After **5 min or more** of driving, verify that the DSC system is normal.

2014 - Mazda3 - Brakes

DSC HU/CM INSPECTION

1. Disconnect the DSC HU/CM connector. (See **DSC HU/CM REMOVAL/INSTALLATION**.)

2. Connect the negative battery cable. (See **NEGATIVE BATTERY CABLE DISCONNECTION/CONNECTION [SKYACTIV-G 2.0, SKYACTIV-G 2.5]**.)

3. Attach the tester lead to the DSC HU/CM wiring harness-side connector and inspect voltage, continuity, or resistance according to the standard (reference) on the table.

Standard (Reference)

DSC HU/CM WIRING HARNESS-SIDE CONNECTOR

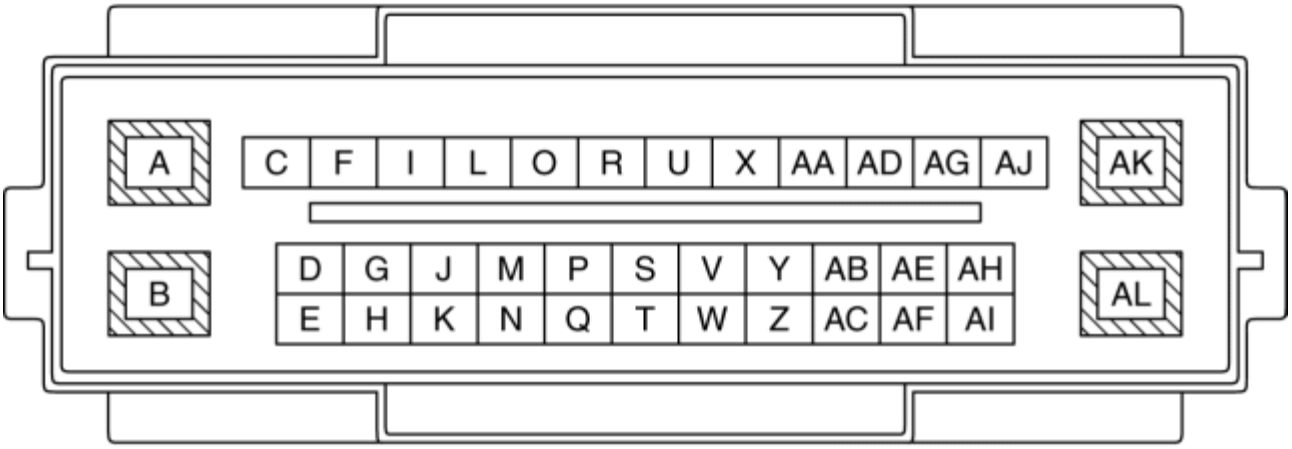

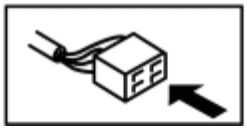

Terminal	Signal name	Connected to	Measured item	Measured terminal (measurement condition)	Standard	Inspection item(s)
A	Power supply (solenoid operation)	Battery	Voltage	Under any condition	B+	• Wiring harness (A—battery)
	Power					

B	supply (motor operation)	Battery	Voltage	Under any condition	B+	• Wiring harness (B—battery)
C	RF wheel-speed (-)	RF ABS wheel-speed sensor	Continuity	C—RF ABS wheel-speed sensor terminal A	Continuity detected	• Wiring harness (C—RF ABS wheel-speed sensor terminal A)
D	—	—	—	—	—	—
E	—	—	—	—	—	—
F	RF wheel-speed (+)	RF ABS wheel-speed sensor	Continuity	F—RF ABS wheel-speed sensor terminal B	Continuity detected	• Wiring harness (F—RF ABS wheel-speed sensor terminal B)
G	—	—	—	—	—	—
H	—	—	—	—	—	—
I	—	—	—	—	—	—
J	—	—	—	—	—	—
K	—	—	—	—	—	—
L	LR wheel-speed (+)	LR ABS wheel-speed sensor	Continuity	L—LR ABS wheel-speed sensor terminal A	Continuity detected	• Wiring harness (L—LR ABS wheel-speed sensor terminal A)
M	—	—	—	—	—	—
N	—	—	—	—	—	—
O	LR wheel-speed (-)	LR wheel-speed sensor	Continuity	O—LR ABS wheel-speed sensor terminal B	Continuity detected	• Wiring harness (O—LR ABS wheel-speed sensor terminal B)
P	—	—	—	—	—	—

Q	Power supply (system)	IG1 relay	Voltage	Ignition switched ON (engine off).	B+	• Wiring harness (Q—IG1 relay)
				Switch the ignition to off.	1 V or less	
R	—	—	—	—	—	—
S	—	—	—	—	—	—
T	—	—	—	—	—	—
U	—	—	—	—	—	—
V	—	—	—	—	—	—
W	—	—	—	—	—	—
X	RR wheel-speed (-)	RR ABS wheel-speed sensor	Continuity	X—RR ABS wheel-speed sensor terminal B	Continuity detected	• Wiring harness (X—RR ABS wheel-speed sensor terminal B)
Y	—	—	—	—	—	—
Z	—	—	—	—	—	—
AA	RR wheel-speed (+)	RR ABS wheel-speed sensor	Continuity	AA—RR ABS wheel-speed sensor terminal A	Continuity detected	• Wiring harness (AA—RR ABS wheel-speed sensor terminal A)
AB	—	—	—	—	—	—
AC	CAN_L	CAN module	This terminal is used for communication and cannot be used for malfunction determination during terminal voltage inspection. Perform a DTC inspection.			
AD	—	—	—	—	—	—
AE	—	—	—	—	—	—
AF	CAN_H	CAN module	This terminal is used for communication and cannot be used for malfunction determination during terminal voltage inspection. Perform a DTC inspection.			

AG	LF wheel-speed sensor (+)	LF ABS wheel-speed sensor	Continuity	AG—LF ABS wheel-speed sensor terminal B	Continuity detected	• Wiring harness (AG—LF ABS wheel-speed sensor terminal B)
AH	—	—	—	—	—	—
AI	Brake light	Brake light relay	Voltage	Brake pedal depressed	B+	• Wiring harness (AI—Brake light relay terminal D)
				Brake pedal released	1 V or less	
AJ	LF wheel-speed sensor (-)	LF wheel-speed sensor	Continuity	AJ—LF ABS wheel-speed sensor terminal A	Continuity detected	• Wiring harness (AJ—LF ABS wheel-speed sensor terminal A)
AK	—	—	—	—	—	—
AL	Ground	Ground point	Continuity	AL—ground point	Continuity detected	• Wiring harness (AL—ground point)

2014 - Mazda3 - Brakes

FRONT ABS WHEEL-SPEED SENSOR REMOVAL/INSTALLATION

1. Remove the mudguard. (See **MUDGUARD REMOVAL/INSTALLATION**.)
2. Remove in the order indicated in the table.
3. Install in the reverse order of removal.
4. After installation, verify that there is no twisting in the front ABS wheel-speed sensor.

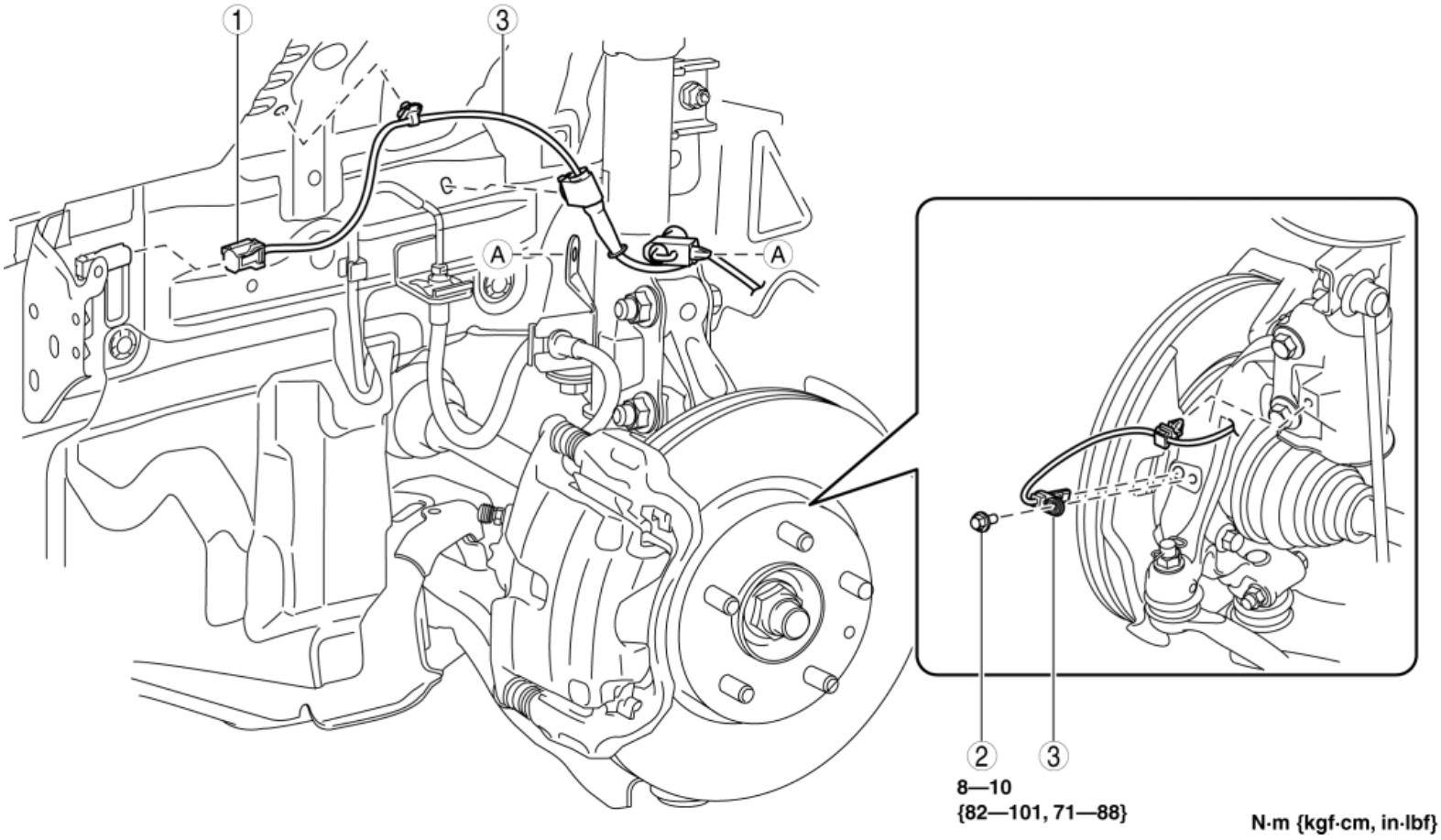

1	Connector
2	Bolt
3	Front ABS wheel-speed sensor

2014 - Mazda3 - Brakes

FRONT ABS WHEEL-SPEED SENSOR INSPECTION

Sensor Output Value Inspection

CAUTION:

- Resistance inspection using other testers may cause damage to the ABS wheel-speed sensor internal circuit. Be sure to use the M-MDS to inspect the ABS wheel-speed sensor.

1. Switch the ignition off.
2. Connect the M-MDS to the DLC-2.
3. Select the following PIDs using the M-MDS:
    - WSPD_SEN_LF (LF wheel-speed sensor)
    - WSPD_SEN_RF (RF wheel-speed sensor)
4. Start the engine and drive the vehicle.
5. Verify that the display of the M-MDS shows the same value as the speedometer.
    - If there is any malfunction, replace the ABS wheel-speed sensor.

Installation Visual Inspection

1. Inspect for the following:
    - If there is any malfunction, replace the part.

    a. Excessive play of the ABS wheel-speed sensor

    b. Deformation of the ABS wheel-speed sensor

    c. Deformation or damage of the ABS sensor rotor

Clearance Inspection

Preparation prior to inspection

1. Remove the ABS wheel-speed sensor. (See **FRONT ABS WHEEL-SPEED SENSOR REMOVAL/INSTALLATION**.)

2. Remove the wheel hub and steering knuckle as a single unit. (See **WHEEL HUB, STEERING KNUCKLE REMOVAL/INSTALLATION**.)

3. Install the ABS wheel-speed sensor to the removed wheel hub, steering knuckle component, and tighten to the specified torque.

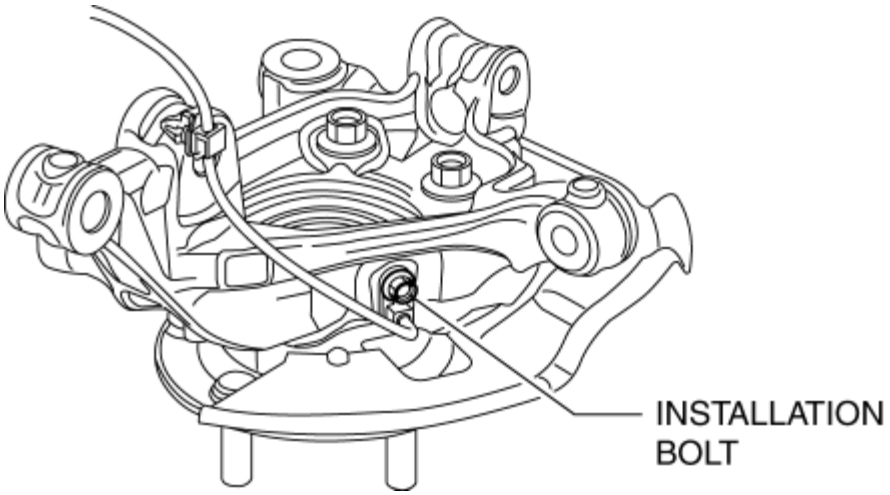

Tightening torque

- 8—10 N·m {82—101 kgf·cm, 71—88 in·lbf}

Clearance Inspection

1. Measure the gap between the ABS sensor rotor and ABS wheel-speed sensor using a feeler gauge.

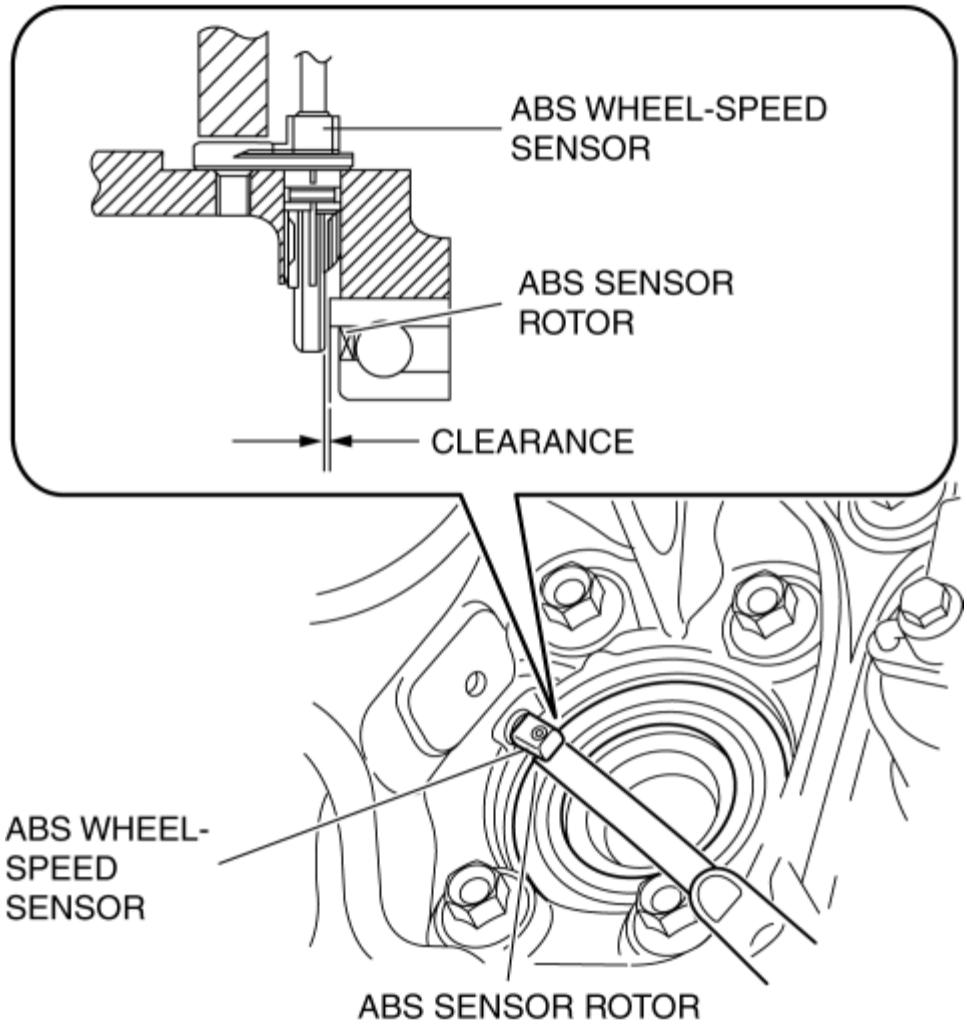

- If not within the specification, verify the following items and repair or replace if necessary.
    - Is there deformation or damage to the ABS sensor rotor?
    - Is there deformation or damage to the ABS wheel speed sensor?
    - Is there foreign matter adhering?

Clearance

- 0.88—1.52 mm {0.035—0.059 in}

Servicing after inspection

1. Remove the ABS wheel-speed sensor from the wheel hub, steering knuckle component.

2. Install the wheel hub, steering knuckle component. (See **WHEEL HUB, STEERING KNUCKLE REMOVAL/INSTALLATION**.)

3. Install the ABS wheel-speed sensor. (See **FRONT ABS WHEEL-SPEED SENSOR REMOVAL/INSTALLATION**.)

4. Inspect the front wheel alignment. (See **FRONT WHEEL ALIGNMENT**.)

FRONT ABS WHEEL-SPEED SENSOR INSPECTION

2014 - Mazda3 - Brakes

REAR ABS WHEEL-SPEED SENSOR REMOVAL/INSTALLATION

1. For the 4SD, remove the following parts:
    a. Trunk end trim (See **TRUNK END TRIM REMOVAL/INSTALLATION**.)
2. For the 5HB, remove the following parts:
    a. Trunk covering (See **TRUNK COVERING REMOVAL/INSTALLATION**.)
    b. Trunk board (See **TRUNK BOARD REMOVAL/INSTALLATION**.)
    c. Trunk end trim (See **TRUNK END TRIM REMOVAL/INSTALLATION**.)
    d. Tire house trim (See **TIRE HOUSE TRIM REMOVAL/INSTALLATION**.)
    e. Rear package tray (See **REAR PACKAGE TRAY REMOVAL/INSTALLATION**.)
    f. Trunk side upper trim (See **TRUNK SIDE UPPER TRIM REMOVAL/INSTALLATION**.)
3. Pull back the trunk side trim to a position which allows for the removal of the rear ABS wheel-speed sensor. (See **TRUNK SIDE TRIM REMOVAL/INSTALLATION**.)
4. Disconnect the rear ABS wheel-speed sensor connector.

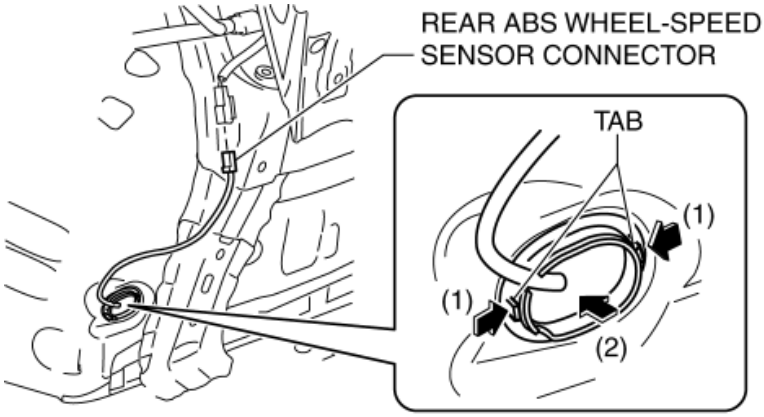

5. Press the rear ABS wheel-speed sensor tabs and press out the sensor toward the outside of the vehicle.
6. Remove in the order indicated in the table.
7. Install in the reverse order of removal.
8. After installation, verify that there is no twisting in the rear ABS wheel-speed sensor.

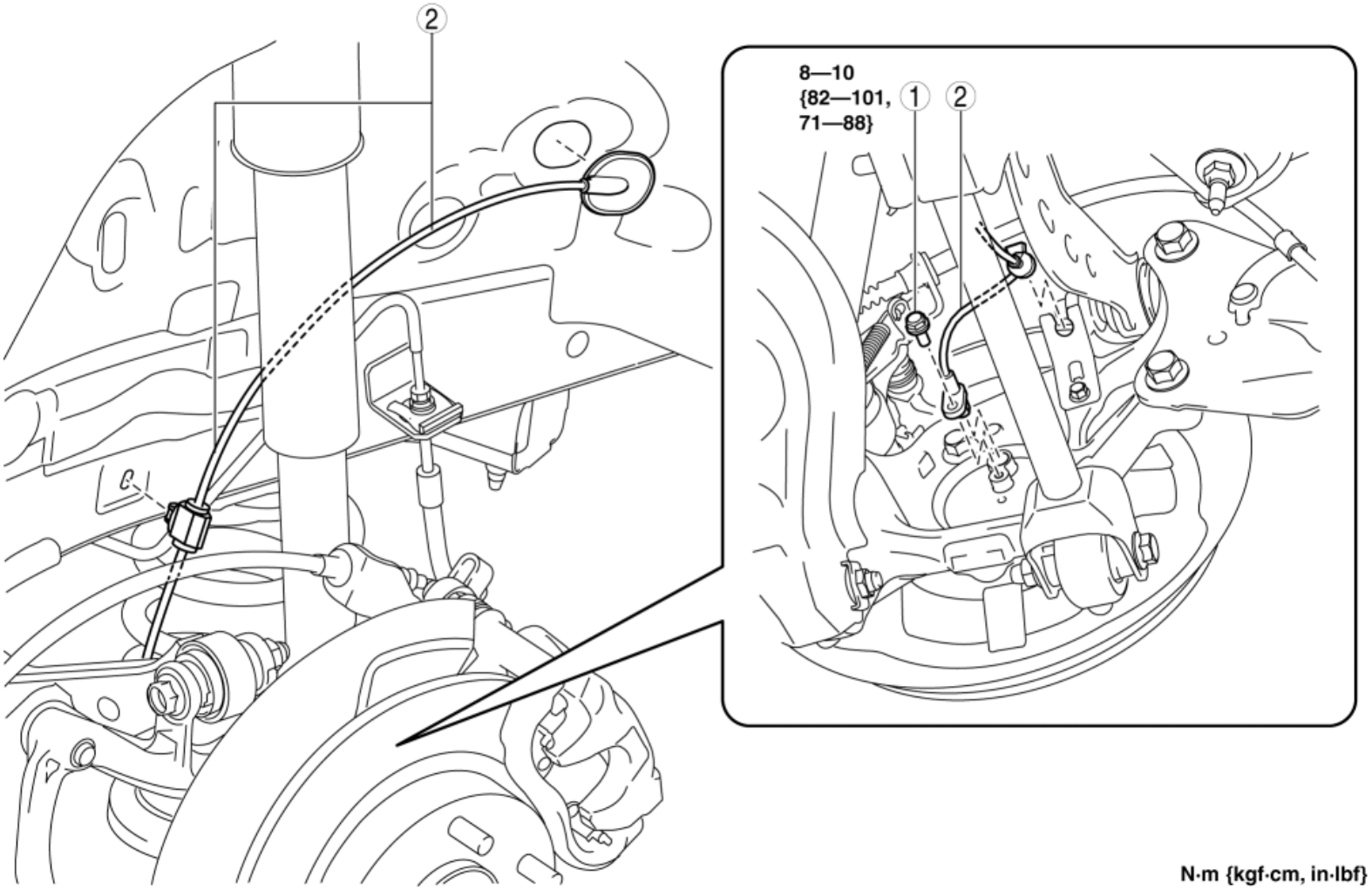

1	Bolt
2	Rear ABS wheel-speed sensor (See **Rear ABS Wheel-speed Sensor Removal Note**.)

Rear ABS Wheel-speed Sensor Removal Note

1. Pull aside the mudguard and remove the rear ABS wheel-speed sensor.

2014 - Mazda3 - Brakes

REAR ABS WHEEL-SPEED SENSOR INSPECTION

Installation Visual Inspection

1. Inspect the following items:

    - If there is any malfunction, replace the applicable part.

    a. Excessive play or deformation of the ABS wheel-speed sensor

Clearance Inspection

1. Remove the ABS wheel-speed sensor.

2. Measure the distance between the ABS wheel-speed sensor installation surface and the ABS sensor rotor. This is dimension A.

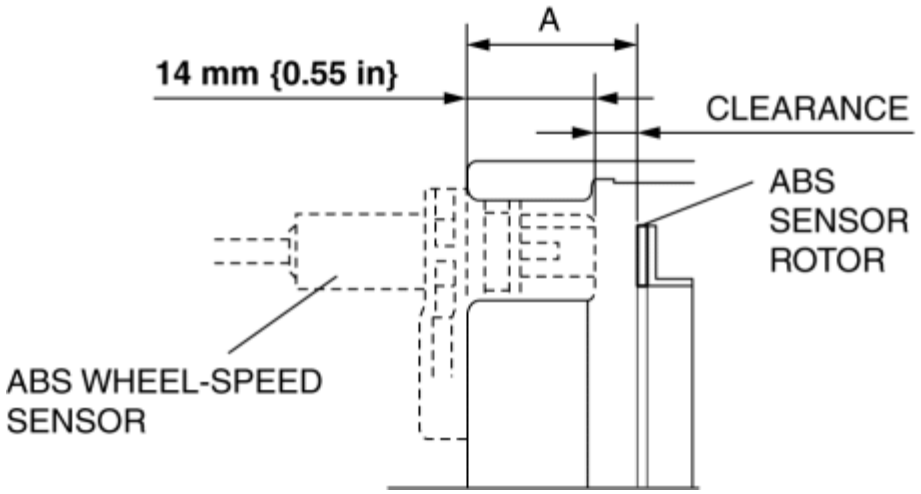

3. Calculate the clearance between the front ABS wheel-speed sensor and the ABS sensor rotor using the following formula:

    - Clearance (mm {in}) = A-14 {0.55}

4. Verify that the clearance between the ABS sensor rotor and the ABS wheel-speed sensor is as indicated below.

    - If there is any malfunction, replace it.

    Clearance

    - 0.47—0.99 mm {0.019—0.038 in}

Sensor Output Value Inspection

1. Switch the ignition off.
2. Connect the M-MDS to the DLC-2.
3. Select the following PIDs using the M-MDS:
    - WSPD_SEN_LR (LR ABS wheel-speed sensor)
    - WSPD_SEN_RR (RR ABS wheel-speed sensor)
4. Start the engine and drive the vehicle.
5. Verify that the display of the M-MDS shows the same value as the speedometer.
    - If there is any malfunction, replace the ABS wheel-speed sensor.

2014 - Mazda3 - Brakes

BRAKE FLUID PRESSURE SENSOR INSPECTION

1. Switch the ignition off.
2. Disconnect the brake pipe from the LF brake hose.

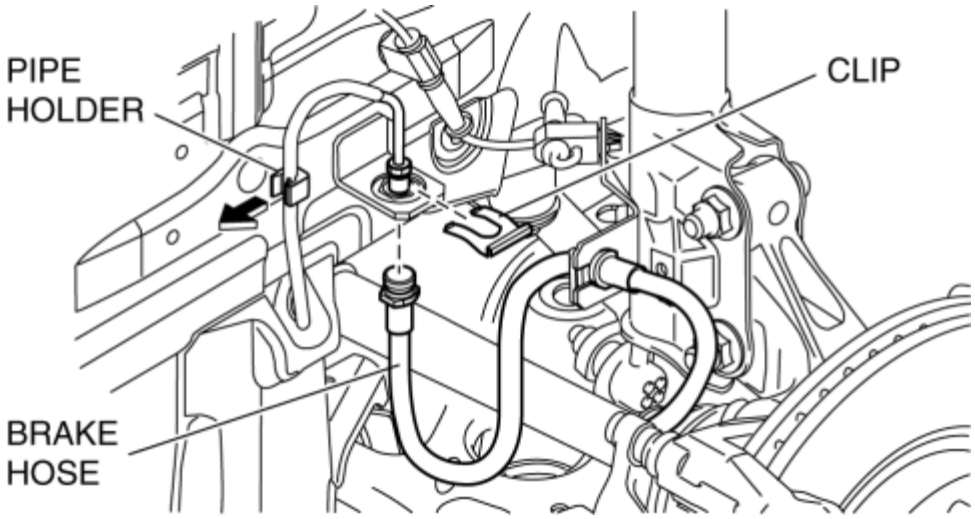

3. Remove the clip.
4. Remove the LF brake hose from the bracket.
5. Detach the brake pipe from the pipe holder.
6. Install the **SST** to the brake pipe as shown in the figure.

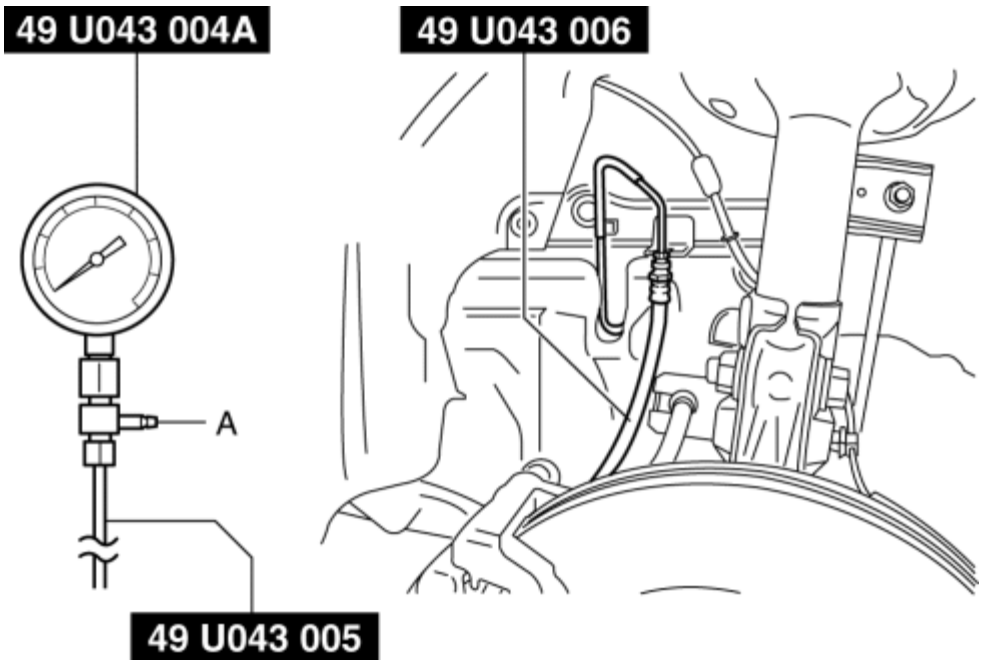

7. Bleed the brake line and the **SSTs** of air. Bleed the air form the **SSTs** using bleeder screw A.

8. Connect the M-MDS to the DLC-2.

9. Select the “BRK_F_P_R” PID.

10. Start the engine.

11. Depress the brake pedal, and confirm that the fluid pressure value of the **SST** (gauge) and the value shown on the M-MDS are equal

- If the fluid pressures are different, replace the DSC HU/CM. (See **DSC HU/CM REMOVAL/INSTALLATION**.)

12. After the inspection, remove the **SSTs**, install the brake hose, clamp, and brake pipe to the original positions, and then bleed the air from the brake line. (See **BRAKE HOSE (FRONT) REMOVAL/INSTALLATION**.) (See **BRAKE FLUID AIR BLEEDING**.)

2014 - Mazda3 - Brakes

DSC OFF SWITCH REMOVAL/INSTALLATION

NOTE:

- The DSC OFF switch is integrated with the cluster switch.
- For the DSC OFF switch removal/installation, refer to CLUSTER SWITCH REMOVAL/INSTALLATION. (See **CLUSTER SWITCH REMOVAL/INSTALLATION**.)

2014 - Mazda3 - Brakes

DSC OFF SWITCH INSPECTION

NOTE:

- The DSC OFF switch is integrated with the cluster switch.
- For the DSC OFF switch removal/installation, refer to CLUSTER SWITCH REMOVAL/INSTALLATION. (See **CLUSTER SWITCH REMOVAL/INSTALLATION**.)

Resistance Inspection

1. Remove the cluster switch. (See **CLUSTER SWITCH REMOVAL/INSTALLATION**.)
2. Measure the resistance between DSC OFF switches B and C under the following conditions:
    - Resistance (standard) with DSC OFF switch pressed and held
        - 0 ohms
    - Resistance (standard) with any switches not pressed
        - 1,139.99—1,163.01 ohms

CIRCUIT WITH DSC OFF SWITCH PRESSED AND HELD

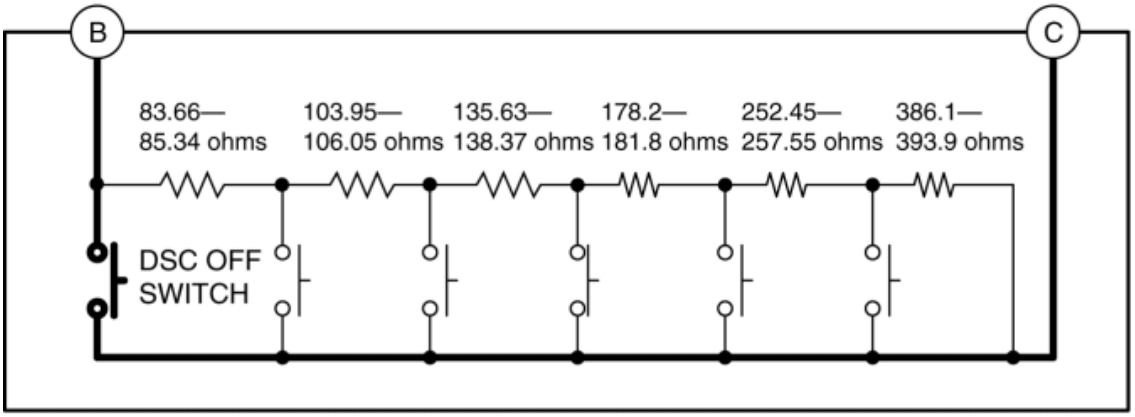

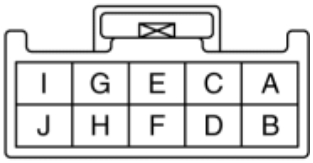

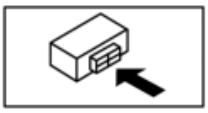

CIRCUIT WITH ANY SWITCHES NOT PRESSED

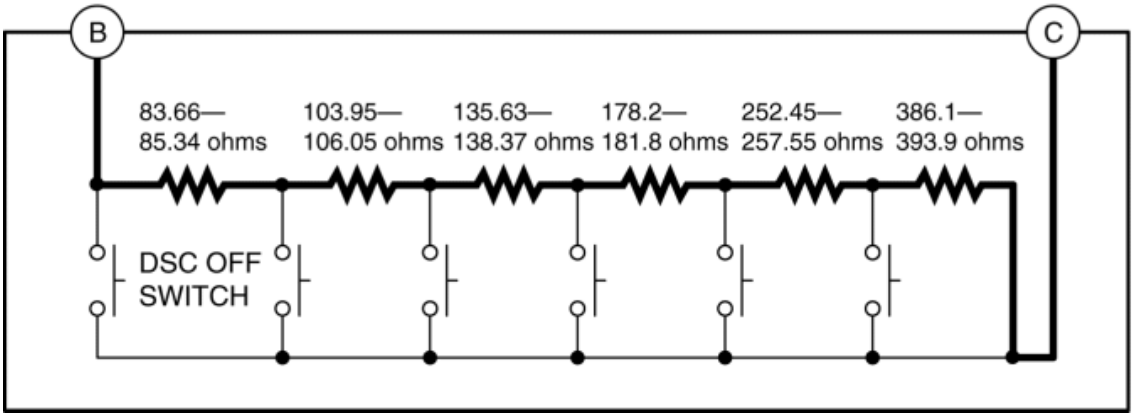

- If not within the specification, replace the cluster switch. (See **CLUSTER SWITCH REMOVAL/INSTALLATION**.)

LED Illumination Inspection

1. Remove the cluster switch. (See **CLUSTER SWITCH REMOVAL/INSTALLATION**.)
2. Apply battery positive voltage to cluster switch terminal J, and connect terminal I to ground.

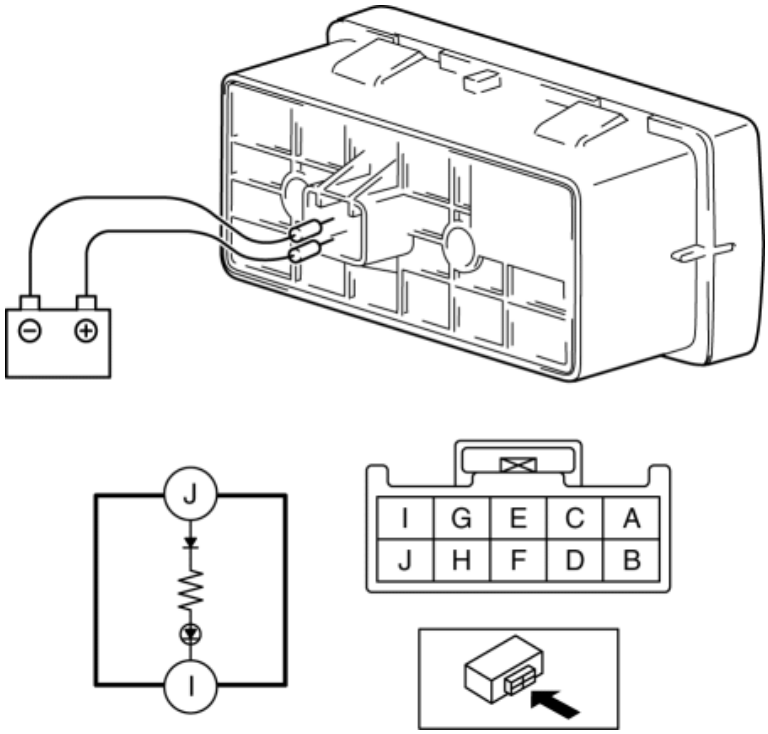

3. Verify that the LED illuminates.
    - If there is any malfunction, replace the cluster switch.

2014 - Mazda3 - Brakes

LASER SENSOR INSPECTION

Simple Inspection

WARNING:

- To prevent eye injury, do not peer directly into the laser sensor using optical instruments with a magnification function such as magnifying glasses or microscopic and objective lenses within a distance of 100 mm {3.94 in} from the sensor.
- Because a simple reflector held with a hand is required, if heavy material such as a steel plate is used, it could be dropped resulting in an accident. Therefore, use light materials such as a plastic plate or cardboard when making the reflector.

CAUTION:

- Perform the work in an area where 6 m or more of space from the front of the vehicle is available.
- Remove cargo from the cabin and trunk compartment so that the vehicle is in an unloaded condition.
- Adjust the air pressure of each tire to the specified value.

1. To make the simple reflector, overlap three pieces of commercially available aluminum foil and adhere them to a plastic plate or piece of cardboard with a length of 50 cm or more on one side.

NOTE:

- If two or fewer pieces of aluminum foil are used, near-infrared reflection may weaken and the M-MDS will be unable to measure the correct distance.
- A reflective material or material which facilitates near-infrared light reflection can be substituted for the aluminum foil.

2. Park the vehicle on level ground.

3. Connect the M-MDS to the DLC-2.

4. After vehicle identification, the following can be selected from the IDS initialization screen.

   a. [Data logger]

   b. [Module]

   c. [SCBS]

5. Select “DIST_BMP_TGT” from PID/DATA Monitor Table.

6. **Stand at the position 6 m {20 ft}** from the front end of the front bumper and hold the simple reflector made in Step 1 at a height of **1.5 m {4.9 ft}** from the ground to verify that the M-MDS screen display is at **6 m**.

7. Then, move to the position **4 m {13 ft}** from the front end of the front bumper and hold the simple reflector at a height of **1 m {3 ft}** from the ground to verify that the M-MDS screen display is at **4 m**.

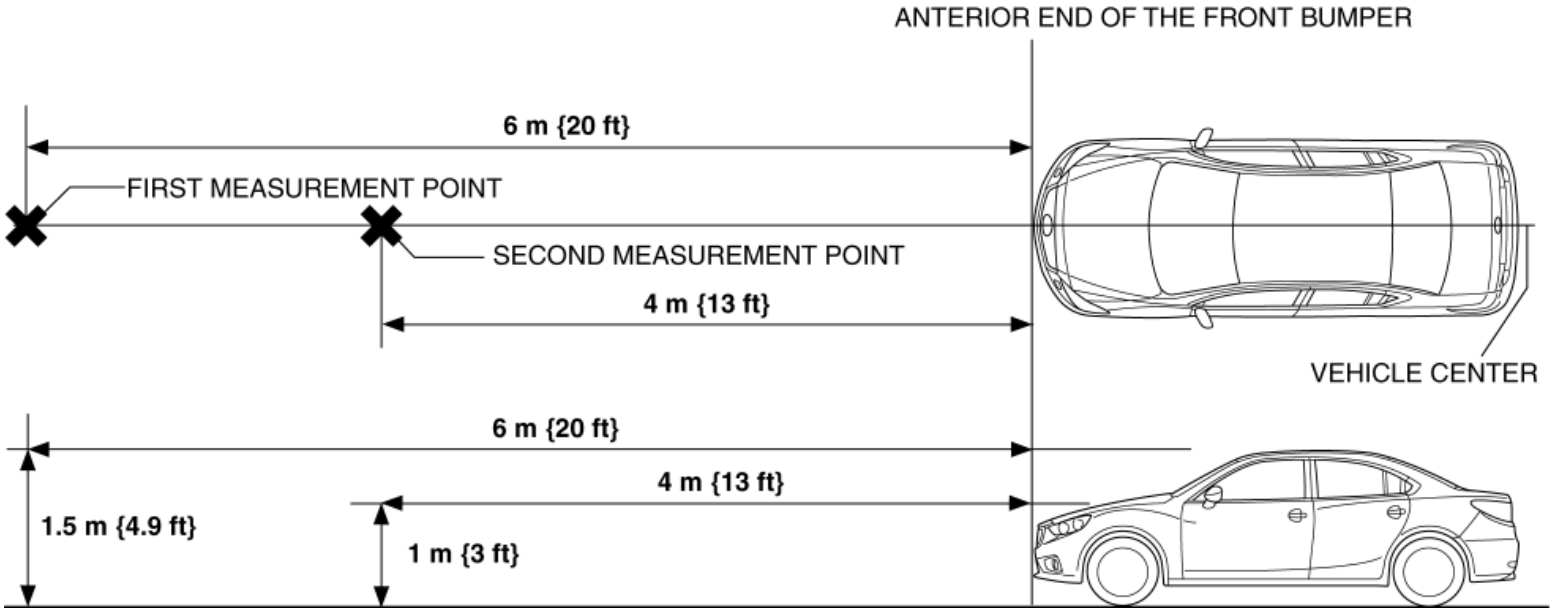

NOTE:

- The brand emblem of the front bumper indicates the center position at the rear of the vehicle.
- The “DIST_BMP_TGT” monitoring value is displayed in **1 m {3 ft}** increments.

8. If there is a malfunction, verify that there is no damage with the laser sensor tab and in the laser sensor installation area of the windshield. (See **LASER SENSOR REMOVAL/INSTALLATION**.)

- If there is a malfunction with the laser sensor tab, replace the laser sensor. (See **LASER SENSOR REMOVAL/INSTALLATION**.)
- If there is a malfunction in the laser sensor installation area of the windshield, replace the windshield. (See **WINDSHIELD REMOVAL**.) (See **WINDSHIELD INSTALLATION**.)

2014 - Mazda3 - Brakes

LASER SENSOR REMOVAL/INSTALLATION

WARNING:

- A removed laser sensor will not meet the conditions for a class 1M laser under the IEC 60825-1 specification and therefore eye safety cannot be assured.
- To prevent eye injury, do not peer directly into the laser sensor using optical instruments with a magnification function such as magnifying glasses or microscopic and objective lenses within a distance of 100 mm {3.94 in} from the sensor.

CAUTION:

- If the laser sensor is installed at an incorrect angle, the laser sensor cannot detect obstructions correctly which could result in an accident. When installing the laser sensor, verify that there is no damage or deformation to the installation part (bracket) and perform the installation correctly.
- If the laser sensor (windshield) gets hit, the laser sensor angle could change and the obstructions cannot be detected correctly which could result in an accident. If the laser sensor has been hit, always inspect for DTCs and verify that there is no malfunction in the Smart City Brake Support (SCBS) system.
- Do not disassemble the laser sensor because it cannot be disassembled together with the lens. If it has been disassembled, replace the laser sensor.
- The internal parts of the laser sensor could be damaged if dropped. Be careful not to drop the laser sensor. Replace the laser sensor if it is subjected to an impact.

NOTE:

- When the ignition is switched ON, the laser sensor reads the vehicle specification information sent via CAN transmission from the instrument cluster, and stores the vehicle specification information.
- The laser sensor prior to replacement stores the vehicle specification information.
- A new laser sensor does not store any vehicle specification information.

1. Remove the cover A. (See **FORWARD SENSING CAMERA (FSC) REMOVAL/INSTALLATION**.)
2. Remove in the order indicated in the table.
3. Install in the reverse order of removal.

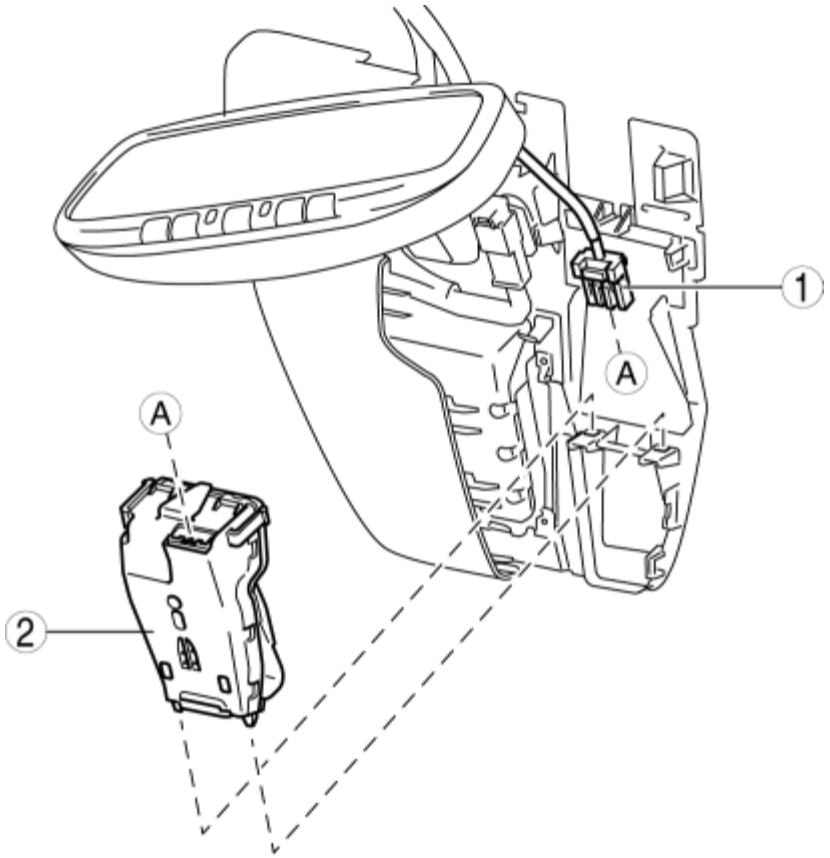

1	Connector
2	Laser sensor (See **Laser Sensor Removal Note**.) (See **Laser Sensor Installation Note**.)

Laser Sensor Removal Note

1. Remove the laser sensor in the order shown in the figure.

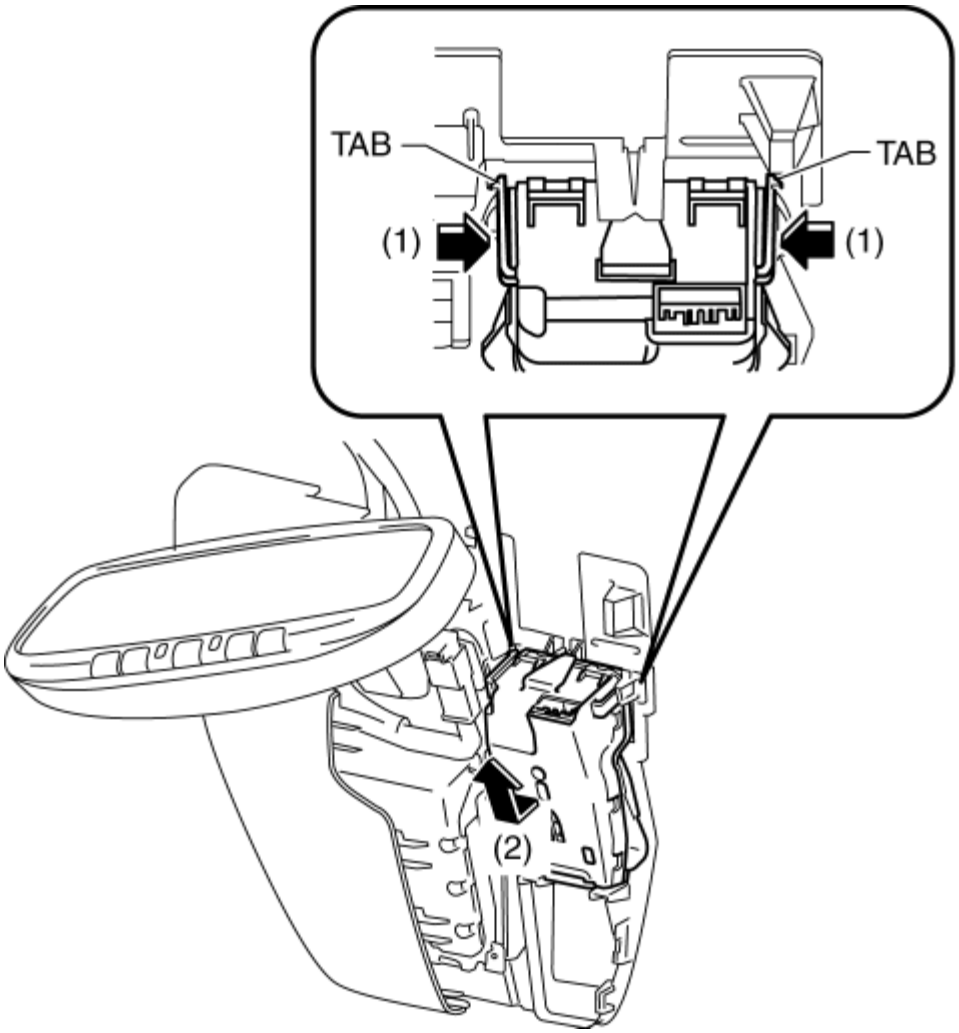

Laser Sensor Installation Note

1. When installing the laser sensor, listen for a click indicating the laser sensor is securely installed.

2. Make sure that the laser sensor tabs are attached correcting.

2014 - Mazda3 - Brakes

BRAKES TECHNICAL DATA

Item	Specification
Brake fluid type	SAE J1703 or FMVSS116 DOT-3
Brake pedal height (reference value)	136 mm {5.35 in}
Brake pedal play	3—5 mm {0.12—0.19 in}
Brake pedal-to-floor clearance (Brake pedal when depressed at 147 N {15.0 kgf, 33.0 lbf})	86 mm {3.4 in} or more
Front disc plate runout limit	0.04 mm {0.002 in}
Minimum front disc plate thickness	23.0 mm {0.906 in}
Minimum front disc plate thickness after machining using a brake lathe on-vehicle	23.8 mm {0.937 in}
Minimum front disc pad thickness	2.0 mm {0.079 in} min.
Rear disc plate runout limit	0.1 mm {0.004 in}
Minimum rear disc plate thickness	7.0 mm {0.28 in}
Minimum rear disc plate thickness after machining using a brake lathe on-vehicle	7.8 mm {0.31 in}
Minimum rear disc pad thickness	2.0 mm {0.079 in} min.
Parking brake lever stroke when pulled at 98 N {10 kgf, 22 lbf}	3—4 notches

Master cylinder fluid pressure

Vacuum amount at 0 kPa {0 mmHg, 0 inHg}

Brake pedal force	Fluid pressure
200 N {20.4 kgf, 45.0 lbt}	640 kPa {6.53 kgf/cm^2, 92.8 psi} or more

Master cylinder fluid pressure

Vacuum amount at 66.7 kPa {500 mmHg, 19.7 inHg}	
Brake pedal force	Fluid pressure
200 N {20.4 kgf, 45.0 lbt}	7,350 kPa {74.95 kgf/cm^2, 1,066 psi} or more

Vacuum pump vacuum specification (reference value)

Measurement condition		Specification
Engine speed	Change in vacuum amount	Period of time change in vacuum amount condition met
While idling (520—700 rpm (reference value))	From 60 kPa {450 mmHg, 18 inHg} to 67 kPa {503 mmHg, 20 inHg}	8 s or less

Vacuum pump maximum vacuum specification (reference value)

Measurement condition	Specification
While idling (no time designation)	93.3 kPa {700 mmHg, 27.6 inHg} or more

< Previous

2014 - Mazda3 - Brakes

BRAKES SST

49 F043 002 Wrench	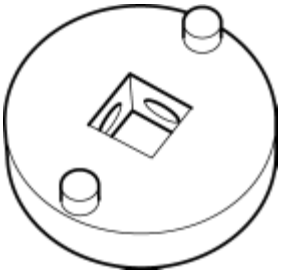	49 U043 004A Oil pressure gauge (Part of 49 U043 0A0A)	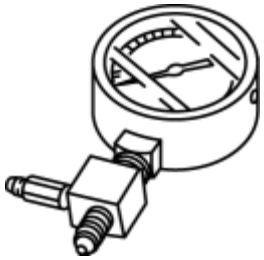	49 U043 005 Joint (Part of 49 U043 0A0A)	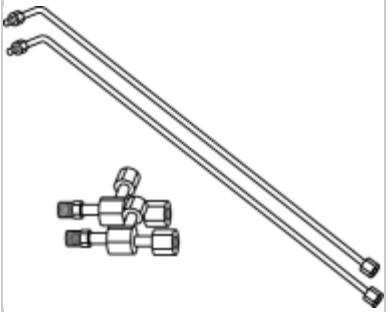
49 U043 006 Hose (Part of 49 U043 0A0A)	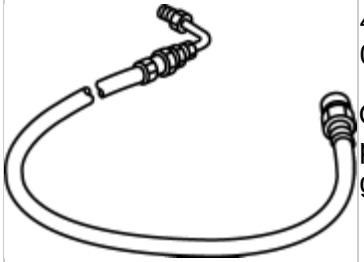	49 U043 0A0A Oil pressure gauge set	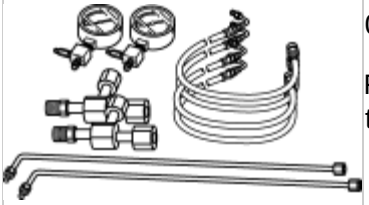	49 L088 009 Feeler tool kit	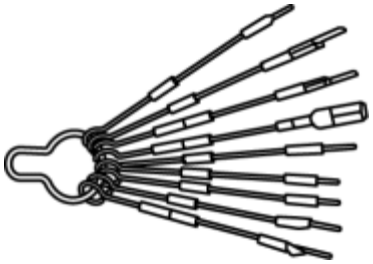

< Previous

Next >

2014 - Mazda3 - Transmission/Transaxle

ON-BOARD DIAGNOSTIC SYSTEM WIRING DIAGRAM [FW6A-EL]

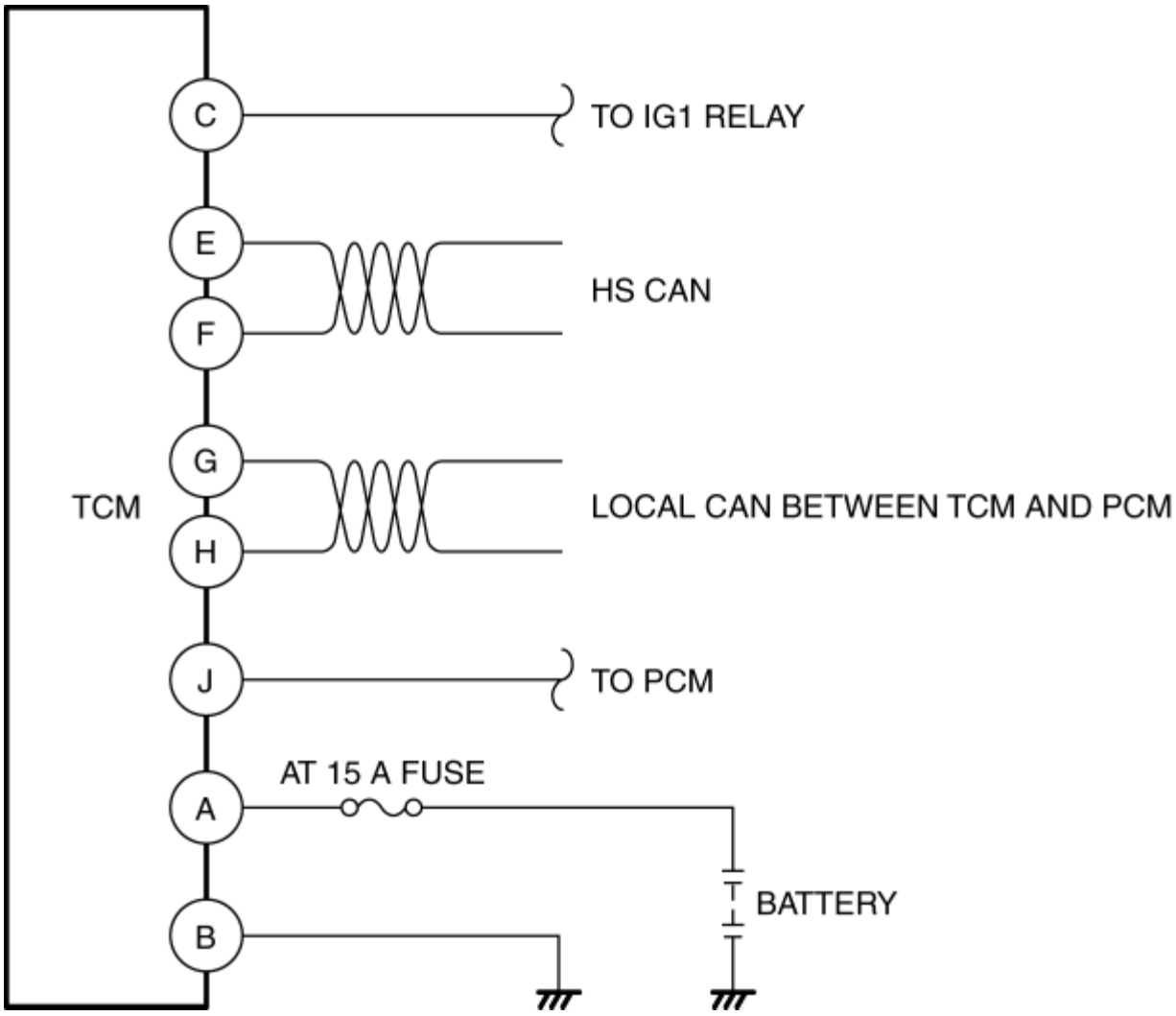

Next >

2014 - Mazda3 - Transmission/Transaxle

ON-BOARD DIAGNOSTIC SYSTEM FOREWORD [FW6A-EL]

- If there is any vehicle malfunction complaint lodged by a customer, perform malfunction diagnosis according to the troubleshooting procedure.

Troubleshooting Procedure

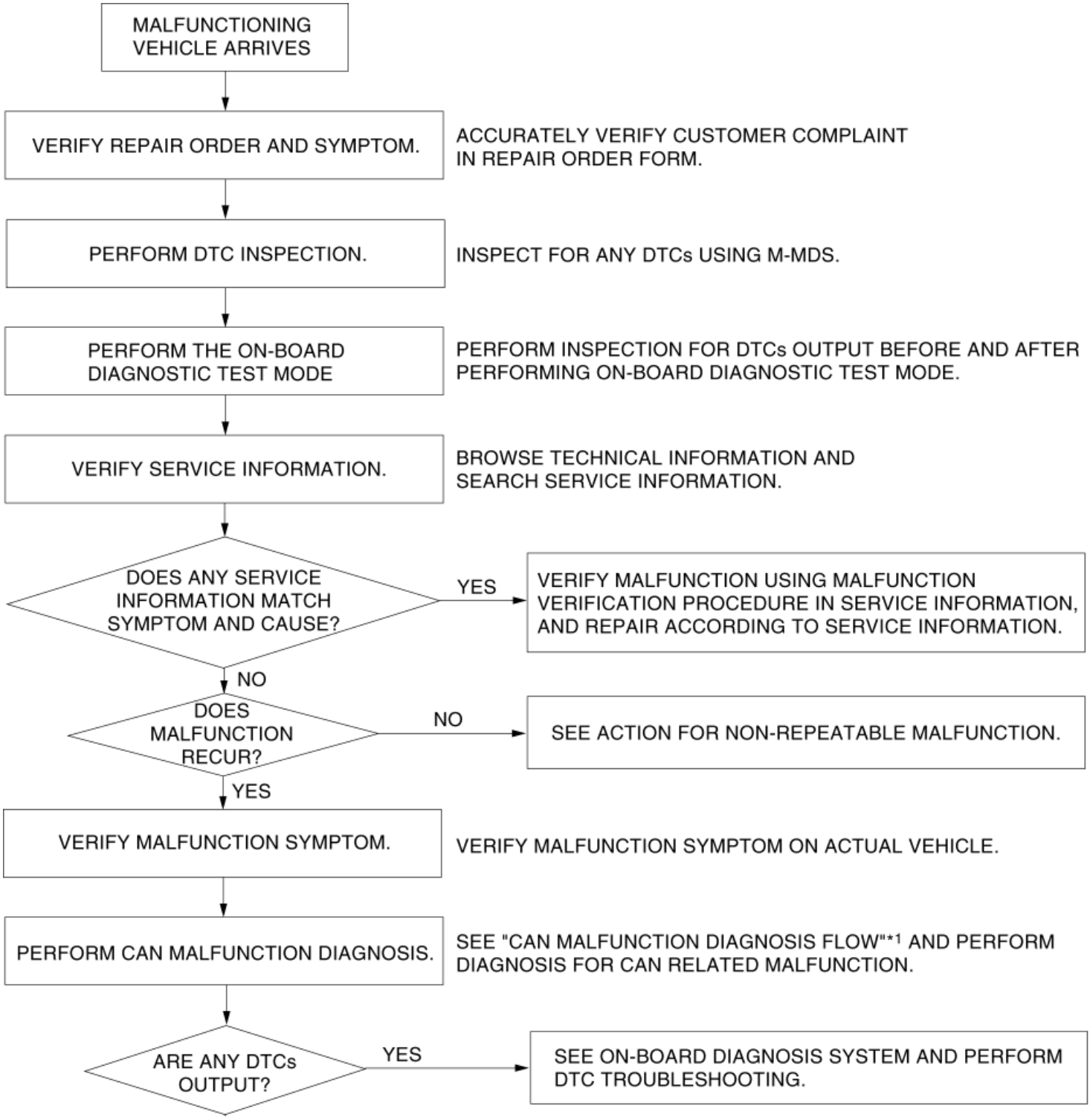

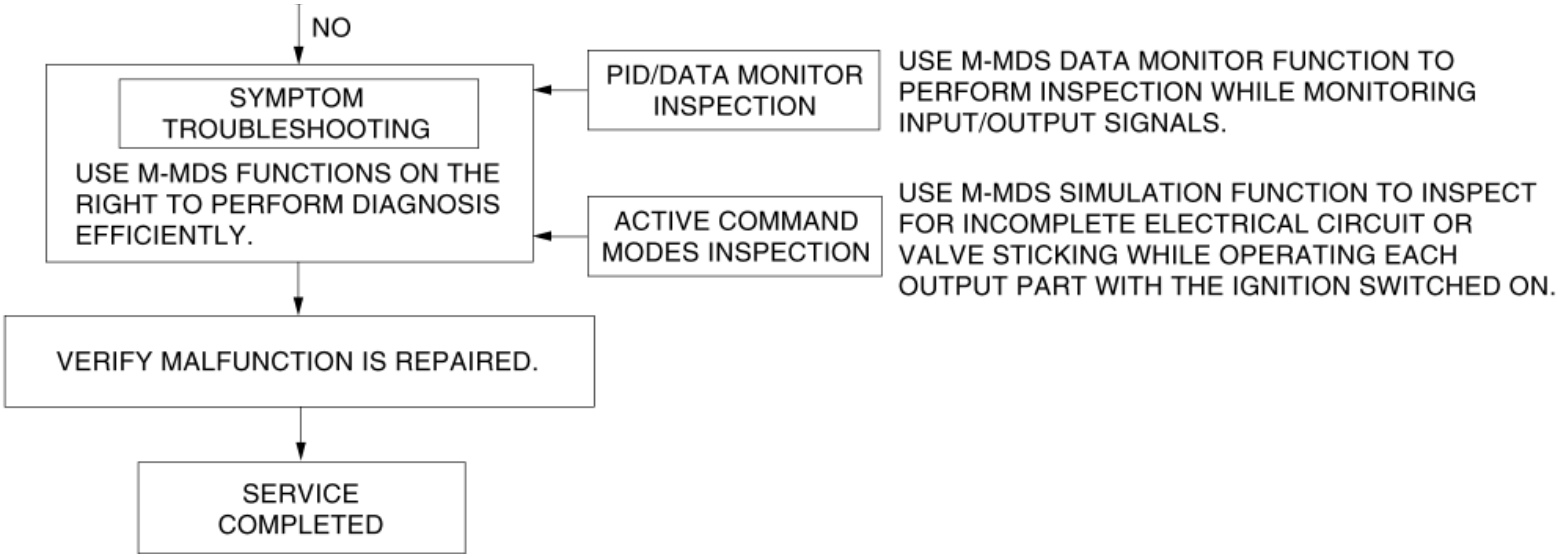

*1

(See CONTROLLER AREA NETWORK (CAN) MALFUNCTION DIAGNOSIS FLOW.)

Repair order form

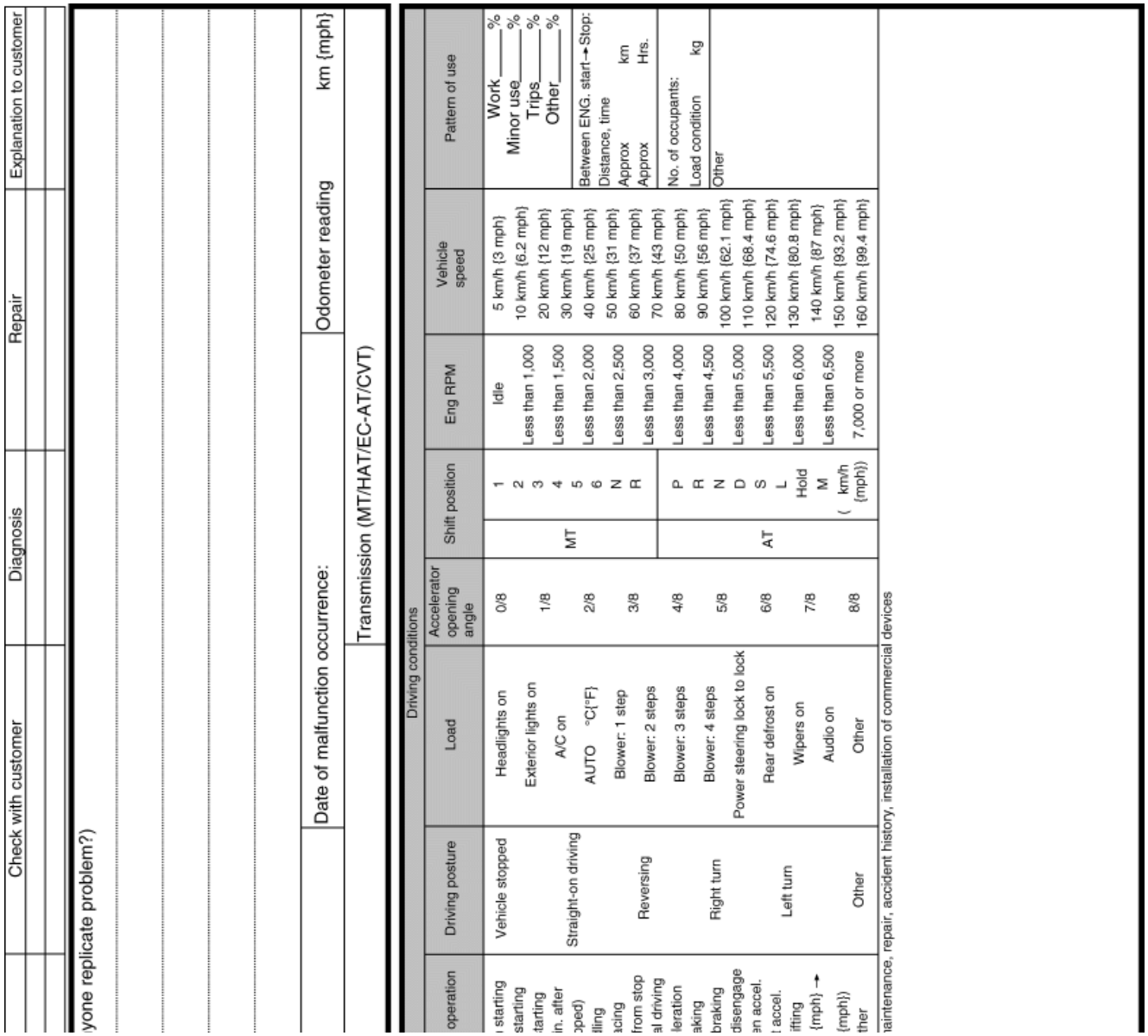

	Check with customer	Diagnosis	Repair	Explanation to customer

(yone replicate problem?)

Date of malfunction occurrence: Odometer reading km {mph}

Transmission (MT/HAT/EC-AT/CVT)

Driving conditions								
operation	Driving posture	Load	Accelerator opening angle	Shift position	Eng RPM	Vehicle speed	Pattern of use
n starting	Vehicle stopped	Headlights on	0/8	1	Idle	5 km/h {3 mph}	Work ____ %
starting		Exterior lights on		2	Less than 1,000	10 km/h {6.2 mph}	Minor use ____ %
tarting			1/8	3	Less than 1,500	20 km/h {12 mph}	Trips ____ %
in. after	Straight-on driving	A/C on		4		30 km/h {19 mph}	Other ____ %
opped)				MT 5	Less than 2,000	40 km/h {25 mph}	Between ENG. start→Stop:
tiling		AUTO °C{°F}	2/8	6		50 km/h {31 mph}	Distance, time km
ncing		Blower: 1 step		N	Less than 2,500	60 km/h {37 mph}	Approx Hrs.
from stop	Reversing		3/8	R		70 km/h {43 mph}	Approx
al driving		Blower: 2 steps			Less than 3,000	80 km/h {50 mph}	No. of occupants:
leration			4/8	P	Less than 4,000	90 km/h {56 mph}	Load condition kg
aking		Blower: 3 steps		R		100 km/h {62.1 mph}	Other
braking	Right turn			N	Less than 4,500	110 km/h {68.4 mph}	
disengage		Blower: 4 steps	5/8	D		120 km/h {74.6 mph}	
an accel.		Power steering lock to lock		S	Less than 5,000	130 km/h {80.8 mph}	
l accel.			6/8	AT L	Less than 5,500	140 km/h {87 mph}	
ifting	Left turn	Rear defrost on		Hold		150 km/h {93.2 mph}	
{mph} →			7/8	M	Less than 6,000	160 km/h {99.4 mph}	
{mph})		Wipers on		(km/h	Less than 6,500		
ther	Other	Audio on	8/8	(mph))	7,000 or more		
		Other					

aintenance, repair, accident history, installation of commercial devices

Repair order form and malfunction symptom check sheet

	Repair order
Date/time	
In-charge	

Customer statement (When? What? What time(s)? Where it occurs. Warning light illumination? Can an

Vehicle body number: | Registration date:

Engine (SOHC/DOHC/RE/DE) (Cab /EGI/ Turbo/ Miller cycle/ LPG/Direct injection)

Environmental conditions				Occurrence frequency			
Weather	Ambient temp.	Drive scenario	Grade		Fuel	Warm-up condition	Driving
Sunny	-10°C {14°F} or less	Depart/arrive	Flat	Once/day	Regular	Cold	When
Cloudy	-10— 0°C {14—32°F}	Traffic jam (city)	Upgrade	2-3 times/day	High Oct.	Half-warmed	After
Rain	0—10°C {32—50°F}	Standard city street	Down	4-5 times/day	Diesel	Fully warmed	Re-s
Snow	10—15°C {50—59°F}	Suburbs	grade	Many times/day	LPG	N/A	(mi
High wind	15—20°C {59—58°F}	Highway	N/A	Once/week	Other	Other	stop
Wind gusts	20—25°C {68—77°F}	Uneven road	Other	2-3 times/week	Fuel gauge	Water temp. gauge	Id
N/A	25—30°C {77—86°F}	Dry road surface		4-5 times/week	F	H	Ra
Other	30—35°C {86—95°F}	Wet road surface		Once/month			Accel.
	35—4{0°C {95—104°F}	Snow bound road		2-3 times/month			Norma
	40—45°C {104—113°F}	Icy road		4-5 times/month			Dece
	45°C {113°F} or more	Other		Other	E	C	Br
	N/A						Soft
	Other						Clutch
							Sudde
							Light
							Sh
							(km/h
							km/h
							O

DTC, measured data (fuel pressure, intake manifold vacuum, throttle sensor electromotive force, air flow electromotive force, other), m

Dealer name:			
Vehicle-in date:	Vehicle body number:		
Subject (Content):	Estimated repair completion date:		
Audio memory			
	1	2	3
FM1			
FM2			
AM			

Odometer reading:					
Person in-charge:					
	4	5	6	Fuel level	
				E	F

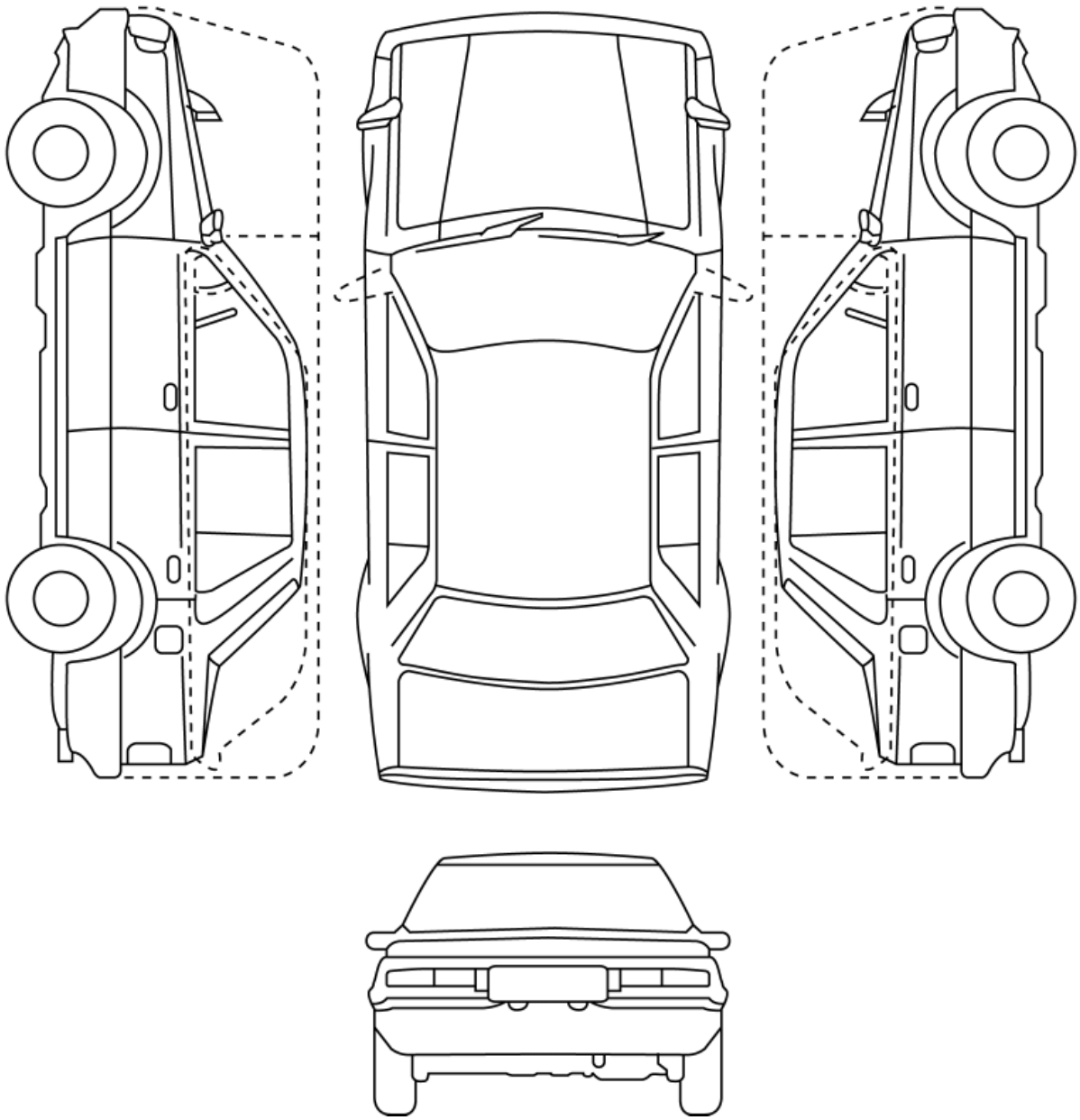

Action for Non-repeatable Malfunction

- If the malfunction does not recur, verify the malfunction cause by performing the following actions:
  - Verify that no DTCs are stored. (See **ON-BOARD DIAGNOSTIC SYSTEM DTC INSPECTION [FW6A-EL]**.)
  - Based on the repair order form, attempt to drive the vehicle or perform tests to replicate the malfunction, record the data at that time, and detect the malfunction cause.
- If the malfunction does not recur after the above servicing, explain to the customer that the vehicle is normal.

2014 - Mazda3 - Transmission/Transaxle

ON-BOARD DIAGNOSTIC SYSTEM DTC INSPECTION [FW6A-EL]

Reading DTCs Procedure

1. Connect the M-MDS to the DLC-2.

2. After the vehicle is identified, select the following items from the initialization screen of the M-MDS.

   a. Select “Self Test”.

   b. Select “Modules”.

   c. Select “TCM”.

NOTE:

- Freeze frame data/snapshot data appears at the top of the help screen when the displayed DTC is selected.

  Freeze frame data

- The freeze frame data consists of data for vehicle and transaxle control system operation conditions when malfunctions in the transaxle control system are detected and stored in the TCM.
- Freeze frame data is stored at the instant the malfunction indicator lamp illuminates, and only a part of the DTC data is stored.

  Snapshot data

- The data for all DTCs currently detected is stored.

  Recorded DTC timing

  - For DTCs with one drive cycle, data is recorded during the malfunction determination period.
  - For DTCs with two drive cycles, data is recorded during non-determination (1st diagnosis) periods.

3. Then, select the “Retrieve CMDTCs” and perform procedures according to the directions on the M-MDS screen.

4. Verify the DTC according to the directions on the screen.

   - If any DTCs are displayed, perform troubleshooting according to the corresponding DTC inspection.

5. After completion of repairs, clear all DTCs stored in the TCM. (See **Freeze frame data item table**.)

Freeze frame data item table

NOTE:

- Refer to PID/DATA monitor table for confirm the transaxle control system operation status while the TCM does not store the DTC. (See **ON-BOARD DIAGNOSTIC SYSTEM PID/DATA MONITOR INSPECTION [FW6A-EL]**.)
- Freeze frame data items are not displayed, according to detected DTC.

—: Not applicable

Freeze frame data item	Unit	Description	Corresponding PID/DATA monitor item
LOAD	%	Calculated engine load	—
ECT	°C {°F}	Engine coolant temperature	ECT
RPM	RPM	Engine speed	RPM
VS	KPH {MPH}	Vehicle speed	VSS
IAT	°C {°F}	Intake air temperature	—
TP	%	Throttle valve position No.1	—
RUNTM	hh:mm:ss	Time from engine start	—
VPWR	V	Module supply voltage	VPWR
APP_D	%	Accelerator pedal position No.1	APP1

Snapshot data item table

NOTE:

- Refer to PID/DATA monitor table for confirm the transaxle control system operation status while the TCM does not store the DTC. (See **ON-BOARD DIAGNOSTIC SYSTEM PID/DATA MONITOR INSPECTION [FW6A-EL]**.)
- Snapshot data items are not displayed, according to detected DTC.

—: Not applicable

Snapshot data item	Unit	Description	Corresponding PID/DATA monitor item
LOAD	%	Calculated engine load	—

ECT	°C {°F}	Engine coolant temperature	ECT
RPM	RPM	Engine speed	RPM
VSS	KPH {MPH}	Vehicle speed	VSS
IAT	°C {°F}	Intake air temperature	—
EG_RUN_TIME	—	Time from engine start	—
VPWR	V	Module supply voltage	VPWR
APP1	%	Accelerator pedal position No.1	APP1
GEAR_SEL	1/2/3/4/5/6	Gear shift position	GEAR_SEL
TSS	RPM	Turbine/input shaft speed	TSS
TFT	°C {°F}	ATF temperature	TFT
OSS	RPM	Output shaft speed	OSS
LOCK_UP	Off/SLIP/On	Torque converter (TCC condition)	LOCK_UP
OIL_PRES_SW2	Off/On	Oil pressure switch No.2 condition	OP_SW2
OIL_PRES_SW1	Off/On	Oil pressure switch No.1 condition	OP_SW1
SS_ON_OFF	Off/On	On/off solenoid condition	SS_ON-OFF

TORQUE_DES	Nm	Desired engine torque	TORQUE_DES
APP	%	Accelerator pedal position No.1	APP
G_INHIBIT_6	Off/On	6GR is inhibited due to malfunction.	—
G_INHIBIT_5	Off/On	5GR is inhibited due to malfunction.	—
G_INHIBIT_4	Off/On	4GR is inhibited due to malfunction.	—
G_INHIBIT_3	Off/On	3GR is inhibited due to malfunction.	—
G_INHIBIT_2	Off/On	2GR is inhibited due to malfunction.	—
G_INHIBIT_1	Off/On	1GR is inhibited due to malfunction.	—
G_INHIBIT_R	Off/On	R position is inhibited due to malfunction.	—
G_INHIBIT_N	Off/On	N position is inhibited due to malfunction.	—
OIL_PRES_SW4	Off/On	Oil pressure switch No.4 condition	OP_SW4
		Oil pressure	

OIL_PRES_SW3	Off/On	switch No.3 condition	OP_SW3
SHIFT_CTRL	DEFAULT/MANUAL/C_CONTROL/HIGH_TEMP/D_MANUAL/FAIL_SAFE	Shift control mode	SHIFT_CTRL
SLIP_VALUE	RPM	Actual slip value between TSS and OSS	—
HTM_DIS	km {mile}	Travel distance since determination of ATF high temperature mode	HTM_DIS
MST_REC_SFT	—	The gear shift position before shifting gears is displayed.	SE_TYPE
SFT_CTL_STS	—	The shift control execution condition is displayed.	SC_STATE
SERIAL_DTC	—	DTC	—
TR	—	Transaxle range sensor position.	TR
PADDLE_UP	Off/On	Shift up operation using steering shift switch.	PADDLE_UP
PADDLE_DOWN	Off/On	Shift down operation using steering shift switch.	PADDLE_DOWN

Clearing DTCs Procedures

1. Connect the M-MDS to the DLC-2.

2. After the vehicle is identified, select the following items from the initialization screen of the M-MDS.

   a. Select “Self Test”.

   b. Select “Modules”.

   c. Select “TCM”.

   d. Select “Retrieve CMDTCs”.

3. Verify the DTC according to the directions on the screen.

4. Press the clear button on the DTC screen to clear the DTC.

5. Switch the ignition off.

6. Close all of the doors, hood, trunk lid, and liftgate, lock the doors, and wait for **3 min**.

7. Switch the ignition ON (engine off or on) and wait for **5 s or more**.

8. Perform DTC inspection. (See **Reading DTCs Procedure**.)

9. Verify that no DTCs are displayed.

2014 - Mazda3 - Transmission/Transaxle

ON-BOARD DIAGNOSTIC TEST MODE [FW6A-EL]

Foreword

- The on-board diagnostic mode is used to diagnose a malfunction in the automatic transaxle based on the sensor signal obtained at that time by forcibly operating each solenoid and selecting each gear.
- If a problem with the automatic transaxle is identified, perform the on-board diagnostic.
- When DTCs are displayed by the on-board diagnosis test, perform the instructions in the applicable DTC troubleshooting.

WARNING:

- The on-board diagnosis test forcibly changes gears within the driving shift range while the engine is running. Before implementing the on-board diagnosis test, securely apply the parking brake and set the wheel blocks for both the front and rear wheels. Otherwise, the vehicle will move which could cause injury or property damage.
- Perform the DTC inspection using the M-MDS before performing on-board diagnostic because the DTC is cleared by performing the on-board diagnostic.

NOTE:

- The time required to perform the diagnostic is **2 to 3 min**.
- If unsafe actions such as shift operation and brake pedal release are detected before the shift position indicator light flashes, the on-board diagnostic test mode is canceled and the shift position indicator light flashes 5 times.

1. Apply the parking brake firmly, and set the wheel blocks for both the front and rear wheels.
2. Inspect the ATF level. (See **AUTOMATIC TRANSAXLE FLUID (ATF) INSPECTION [FW6A-EL]**.)
3. Connect the M-MDS to the DLC-2.
4. Perform vehicle identification using the M-MDS.
5. Start the engine.
6. After the vehicle is identified, select the following items from the initialization screen of the M-MDS.
   a. Select “Data Logger”.
   b. Select “Modules”.
   c. Select “TCM”.
7. While checking the PID TFT (ATF temperature), warm-up the engine completely and allow the

ATF temperature to reach **55 °C {131 °F} or more**.

8. Select the following items from the initialization screen of the M-MDS.

   a. Select “Self Test”.

   b. Select “Modules”.

   c. Select “TCM”.

   d. Select “Retrieve CMDTCs”.

9. Perform the following steps (1) to (5) with the brake pedal depressed.

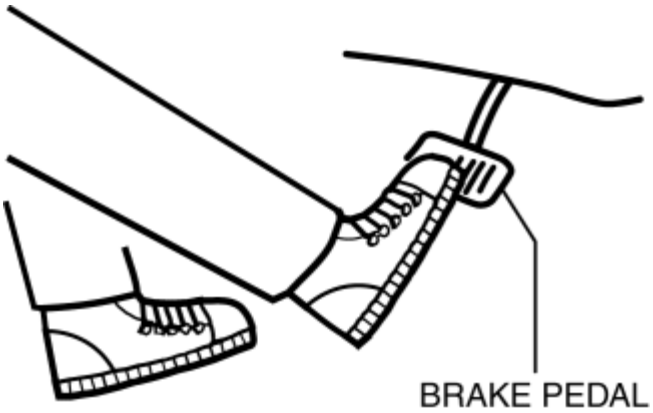

NOTE:

- If the on-board diagnosis test is shut down (Shift position indicator light flashes 5 times), resume the procedure from Step 1.

   a. Shift the selector lever to the R position.

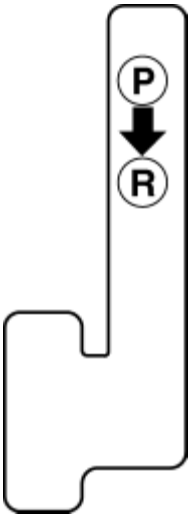

   b. Clear DTCs using the M-MDS and verify that the shift position indicator light flashes 2 times. (See **ON-BOARD DIAGNOSTIC SYSTEM DTC INSPECTION [FW6A-EL]**.)

SHIFT POSITION INDICAOR LIGHT

c. Within **5 s** after the shift position indicator light flashes 2 times, shift the selector lever to the N position and verify that the shift position indicator light flashes 2 times.

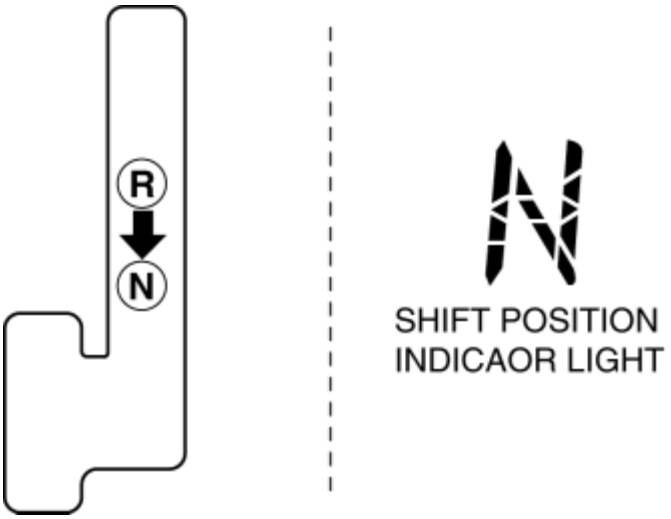

d. Within **5 s** after the shift position indicator light flashes 2 times, shift the selector lever to the D position and verify that the shift position indicator light flashes 3 times.

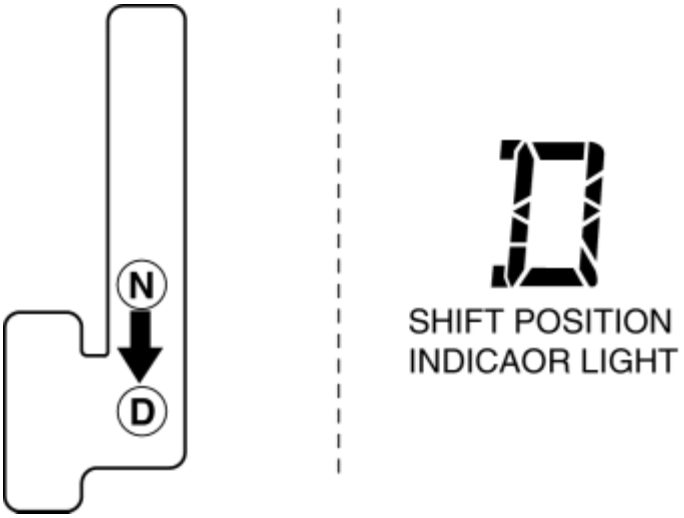

NOTE:

- **Approx. 30 s** is required until the shift position indicator light flashes. In addition, shift shock occurs a few times during stand-by.

e. After the shift position indicator light flashes 3 times, shift the selector lever to the P position.

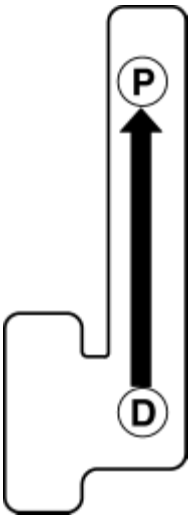

10. Release the brake pedal.

11. Perform the DTC inspection using the M-MDS. (See **ON-BOARD DIAGNOSTIC SYSTEM DTC INSPECTION [FW6A-EL]**.)

- If any DTCs are displayed, perform troubleshooting according to the corresponding DTC inspection. (See **ON-BOARD DIAGNOSTIC SYSTEM DTC INSPECTION [FW6A-EL]**.)

2014 - Mazda3 - Transmission/Transaxle

ON-BOARD DIAGNOSTIC SYSTEM DTC TABLE [FW6A-EL]

×: Applicable—: Not applicable

DTC No.	Check engine light	Automatic transaxle warning light	Description	Fail-safe function	Drive cycle	Self test type*1	Memory function	Page
P0218:00	Illuminated	Illuminated	Automatic transaxle protection control	×	1	C	×	(See **DTC P0218:00 [FW6A-EL]**.)
P0500:00	Illuminated	—	Vehicle speed signal circuit malfunction	×	1	C	×	(See **DTC P0500:00 [FW6A-EL]**.)
P0666:00	Illuminated	Illuminated	ECU internal temperature sensor circuit malfunction	×	1	C	×	(See **DTC P0666:00 [FW6A-EL]**.)
P0667:00	Illuminated	Illuminated	ECU internal temperature sensor/performance problem	×	2	C	×	(See **DTC P0667:00 [FW6A-EL]**.)
P06B8:00	Illuminated	—	NVRAM malfunction	—	1	C, O	×	(See **DTC P06B8:00 [FW6A-EL]**.)
P0706:00	Illuminated	Illuminated	Transaxle range sensor range/performance problem	×	1	C	×	(See **DTC P0706:00 [FW6A-EL]**.)
P0707:00	Illuminated	Illuminated	Transaxle range sensor circuit low input	×	1	C, O	×	(See **DTC P0707:00 [FW6A-EL]**.)
P0708:00	Illuminated	Illuminated	Transaxle range sensor circuit high input	×	1	C, O	×	(See **DTC P0708:00 [FW6A-EL]**.)
P0711:00	Illuminated	Illuminated	TFT sensor range/performance problem	×	2	C	×	(See **DTC P0711:00 [FW6A-EL]**.)
P0712:00	Illuminated	Illuminated	TFT sensor circuit low	×	1	C, O	×	(See **DTC P0712:00**

			input					**[FW6A-EL]**.)
P0713:00	Illuminated	Illuminated	TFT sensor circuit high input	×	2	C	×	(See **DTC P0713:00 [FW6A-EL]**.)
P0715:00	Illuminated	Illuminated	Turbine/input shaft speed sensor/sensor output range malfunction	×	1	C	×	(See **DTC P0715:00 [FW6A-EL]**.)
P0716:00	Illuminated	Illuminated	Turbine/input shaft speed sensor range/performance problem	×	1	C	×	(See **DTC P0716:00 [FW6A-EL]**.)
P0717:00	Illuminated	Illuminated	Open circuit in turbine/input shaft speed sensor circuit	×	1	C	×	(See **DTC P0717:00 [FW6A-EL]**.)
P0720:00	Illuminated	Illuminated	Output shaft speed sensor range/performance problem	×	1	C	×	(See **DTC P0720:00 [FW6A-EL]**.)
P0721:00	Illuminated	Illuminated	Output shaft speed sensor/sensor output range malfunction	×	1	C	×	(See **DTC P0721:00 [FW6A-EL]**.)
P0722:00	Illuminated	Illuminated	Open circuit in output shaft speed sensor circuit	×	1	C	×	(See **DTC P0722:00 [FW6A-EL]**.)
P0729:00	—	—	6GR incorrect ratio	×	2	C	×	(See **DTC P0729:00 [FW6A-EL]**.)
P0731:00	—	—	1GR incorrect ratio	×	2	C	×	(See **DTC P0731:00 [FW6A-EL]**.)
P0732:00	—	—	2GR incorrect ratio	×	2	C	×	(See **DTC P0732:00 [FW6A-EL]**.)
P0733:00	—	—	3GR incorrect ratio	×	2	C	×	(See **DTC P0733:00 [FW6A-EL]**.)
P0734:00	—	—	4GR incorrect ratio	×	2	C	×	(See **DTC P0734:00 [FW6A-EL]**.)
P0735:00	—	—	5GR incorrect ratio	×	2	C	×	(See **DTC P0735:00 [FW6A-EL]**.)

P0736:00	—	Illuminated	Gear reverse incorrect ratio	×	2	C	×	(See **DTC P0736:00 [FW6A-EL]**.)
P073D:00	—	—	Neutral incorrect ratio	—	2	C	×	(See **DTC P073D:00 [FW6A-EL]**.)
P0741:00	Illuminated	Illuminated	TCC control solenoid stuck off	×	2	C	×	(See **DTC P0741:00 [FW6A-EL]**.)
P0743:00	Illuminated	Illuminated	TCC control solenoid circuit malfunction	×	1	C, O	×	(See **DTC P0743:00 [FW6A-EL]**.)
P0746:00	Illuminated	Illuminated	Pressure control solenoid stuck off	×	2	C	×	(See **DTC P0746:00 [FW6A-EL]**.)
P0748:00	Illuminated	Illuminated	Pressure control solenoid circuit malfunction	×	1	C, O	×	(See **DTC P0748:00 [FW6A-EL]**.)
P0751:00	Illuminated	Illuminated	Shift solenoid No.1 stuck off	×	2	C	×	(See **DTC P0751:00 [FW6A-EL]**.)
P0752:00	Illuminated	Illuminated	Shift solenoid No.1 stuck on	×	2	C	×	(See **DTC P0752:00 [FW6A-EL]**.)
P0753:00	Illuminated	Illuminated	Shift solenoid No.1 circuit malfunction	×	1	C, O	×	(See **DTC P0753:00 [FW6A-EL]**.)
P0756:00	Illuminated	Illuminated	Shift solenoid No.2 stuck off	×	2	C	×	(See **DTC P0756:00 [FW6A-EL]**.)
P0757:00	Illuminated	Illuminated	Shift solenoid No.2 stuck on	×	2	C	×	(See **DTC P0757:00 [FW6A-EL]**.)
P0758:00	Illuminated	Illuminated	Shift solenoid No.2 circuit malfunction	×	1	C, O	×	(See **DTC P0758:00 [FW6A-EL]**.)
P0761:00	Illuminated	Illuminated	Shift solenoid No.3 stuck off	×	2	C	×	(See **DTC P0761:00 [FW6A-EL]**.)
P0762:00	Illuminated	Illuminated	Shift solenoid No.3 stuck on	×	2	C	×	(See **DTC P0762:00 [FW6A-EL]**.)
P0763:00	Illuminated	Illuminated	Shift solenoid No.3 circuit malfunction	×	1	C, O	×	(See **DTC P0763:00 [FW6A-EL]**.)
P0766:00	Illuminated	Illuminated	Shift solenoid No.4 stuck off	×	2	C	×	(See **DTC P0766:00 [FW6A-EL]**.)

P0767:00	Illuminated	Illuminated	Shift solenoid No.4 stuck on	×	2	C	×	(See **DTC P0767:00 [FW6A-EL]**.)
P0768:00	Illuminated	Illuminated	Shift solenoid No.4 circuit malfunction	×	1	C, O	×	(See **DTC P0768:00 [FW6A-EL]**.)
P0771:00	Illuminated	Illuminated	On/off solenoid stuck off	×	2	C	×	(See **DTC P0771:00 [FW6A-EL]**.)
P0772:00	Illuminated	Illuminated	On/off solenoid stuck on	×	2	C	×	(See **DTC P0772:00 [FW6A-EL]**.)
P0773:00	Illuminated	Illuminated	On/off solenoid circuit malfunction	×	1	C, O	×	(See **DTC P0773:00 [FW6A-EL]**.)
P0780:00	Illuminated	Illuminated	Gear shifting malfunction	×	2	C	×	(See **DTC P0780:00 [FW6A-EL]**.)
P0819:00	—	—	M position switch/Up switch/Down switch signal error	×	1	C	×	(See **DTC P0819:00 [FW6A-EL]**.)
P0842:00	Illuminated	Illuminated	Oil pressure switch No.1 stuck on	×	2	C	×	(See **DTC P0842:00 [FW6A-EL]**.)
P0843:00	Illuminated	Illuminated	Oil pressure switch No.1 stuck off	×	2	C	×	(See **DTC P0843:00 [FW6A-EL]**.)
P0847:00	Illuminated	Illuminated	Oil pressure switch No.2 stuck on	×	2	C	×	(See **DTC P0847:00 [FW6A-EL]**.)
P0848:00	Illuminated	Illuminated	Oil pressure switch No.2 stuck off	×	2	C	×	(See **DTC P0848:00 [FW6A-EL]**.)
P0872:00	Illuminated	Illuminated	Oil pressure switch No.3 stuck on	×	2	C	×	(See **DTC P0872:00 [FW6A-EL]**.)
P0873:00	Illuminated	Illuminated	Oil pressure switch No.3 stuck off	×	2	C	×	(See **DTC P0873:00 [FW6A-EL]**.)
P0877:00	Illuminated	Illuminated	Oil pressure switch No.4 stuck on	×	2	C	×	(See **DTC P0877:00 [FW6A-EL]**.)
P0878:00	Illuminated	Illuminated	Oil pressure switch No.4 stuck off	×	2	C	×	(See **DTC P0878:00 [FW6A-EL]**.)
			TCM power supply					(See **DTC P0882:00**

P0882:00	Illuminated	—	voltage low	×	1	C	×	**[FW6A-EL]**.)
P0883:00	Illuminated	—	TCM power supply voltage high	×	1	C, O	×	(See **DTC P0883:00 [FW6A-EL]**.)
P1728:00	—	—	Clutch slippage	×	2	C	×	(See **DTC P1728:00 [FW6A-EL]**.)
P1738:00	—	Illuminated	Automatic transaxle internal malfunction	×	2	C	×	(See **DTC P1738:00 [FW6A-EL]**.)
P1784:00	—	Illuminated	Hi cut valve stuck off/R-3-5 cut valve stuck on	×	2	C	×	(See **DTC P1784:00 [FW6A-EL]**.)
P2530:00	—	—	Ignition switch stuck off	—	1	C	×	(See **DTC P2530:00 [FW6A-EL]**.)
P2855:00	—	—	Low clutch hydraulic circuit/sealing malfunction	—	2	C	×	(See **DTC P2855:00 [FW6A-EL]**.)
U0073:00	—	—	CAN system communication error (HS CAN)	×	1	C, O	×	(See **DTC U0073:00, U0100:00, U0121:00, U0131:00, U0155:00 [FW6A-EL]**.)
U0074:00	—	—	CAN system communication error (local CAN between TCM and PCM)	×	1	C, O	×	(See **DTC U0074:00 [FW6A-EL]**.)
U0100:00	Illuminated	—	Communication error to PCM (HS CAN)	×	1	C, O	×	(See **DTC U0073:00, U0100:00, U0121:00, U0131:00, U0155:00 [FW6A-EL]**.)
U0115:00	Illuminated	—	Communication error to PCM (local CAN between TCM and PCM)	×	1	C, O	×	(See **DTC U0115:00 [FW6A-EL]**.)
U0121:00	Illuminated	—	Communication error to DSC HU/CM	×	1	C, O	×	(See **DTC U0073:00, U0100:00, U0121:00, U0131:00, U0155:00 [FW6A-EL]**.)
U0131:00	—	—	Communication error to EPS control module	×	1	C, O	×	
U0155:00	Illuminated	—	Communication error to instrument cluster	×	1	C, O	×	

U0442:00	—	—	Invalid data received from PCM (local CAN between TCM and PCM)	×	1	C, O	×	(See **DTC U0442:00 [FW6A-EL]**.)

*1

C: CMDTC self test, O: KOEO self test

2014 - Mazda3 - Transmission/Transaxle

DTC P0218:00 [FW6A-EL]

DTC P0218:00	Automatic transaxle protection control

DETECTION CONDITION	• Under the following conditions, the ATF temperature is **135 °C {275 °F} or more** for **10 s**:
	  ▪ Engine is running.
	  ▪ TFT sensor related DTC is not recorded.
	Diagnostic support note
	• The check engine light illuminates if the TCM detects the above malfunction condition during the first drive cycle.
	• The automatic transaxle warning light illuminates if the TCM detects the above malfunction condition during the first drive cycle.
	• PENDING CODE is available.
	• FREEZE FRAME DATA is available.
	• DTC is stored in the TCM memory.

FAIL-SAFE FUNCTION	• Inhibits learning control. • Inhibits manual mode. • Inhibits neutral idle control. • Inhibits AAS.
POSSIBLE CAUSE	• Oil cooler malfunction • ATF is more than specified value
SYSTEM WIRING DIAGRAM	Not applicable

Diagnostic procedure

STEP	INSPECTION	ACTION

1	**VERIFY FREEZE FRAME DATA/SNAPSHOT DATA HAS BEEN RECORDED** • Has the freeze frame data/snapshot data been recorded on the repair order?	Yes	Go to the next step.
		No	Record the freeze frame data/snapshot data on the repair order, then go to the next step.
2	**VERIFY RELATED REPAIR INFORMATION AVAILABILITY** • Verify related Service Bulletins and/or on-line repair information availability. • Is any related repair information available?	Yes	Perform repair or diagnosis according to the available repair information. • If the vehicle is not repaired, go to the next step.
		No	Go to the next step.
3	**INSPECT ATF LEVEL** • Inspect the ATF level. (See **AUTOMATIC TRANSAXLE FLUID (ATF) INSPECTION [FW6A-EL]**.) • Is there any malfunction?	Yes	Adjust the ATF level to the specification, then go to Step 5. (See **AUTOMATIC TRANSAXLE FLUID (ATF) REPLACEMENT [FW6A-EL]**.)
		No	Go to the next step.
4	**INSPECT OIL COOLER** • Visually inspect the oil cooler. • Is there any malfunction?	Yes	Replace the oil cooler, then go to the next step. (See **OIL COOLER REMOVAL/INSTALLATION [FW6A-EL]**.)
		No	Go to the next step.
5	**VERIFY DTC TROUBLESHOOTING COMPLETED** • Clear the DTC using the M-MDS. (See **ON-BOARD DIAGNOSTIC SYSTEM DTC INSPECTION [FW6A-EL]**.) • Perform the following procedure to ensure that the DTC has been resolved: ◦ Start the engine and wait for **10 s or more**. • Perform the DTC inspection using the M-MDS. (See **ON-BOARD DIAGNOSTIC SYSTEM DTC INSPECTION [FW6A-EL]**.) • Are any DTCs present?	Yes	Go to the applicable DTC inspection. (See **ON-BOARD DIAGNOSTIC SYSTEM DTC TABLE [FW6A-EL]**.)
		No	DTC troubleshooting completed.

2014 - Mazda3 - Transmission/Transaxle

DTC P0500:00 [FW6A-EL]

DTC P0500:00	Vehicle speed signal circuit malfunction

DETECTION CONDITION	• Under the following conditions, the vehicle speed signal input from DSC HU/CM is incorrect for **10 s**:
	  ▪ Engine is running.
	  ▪ The vehicle is driven in D position or R position.
	  ▪ Output shaft speed sensor related DTC is not recorded
	  ▪ There is no difference between vehicle speed signal from DSC HU/CM and turbine/input shaft speed sensor signal.
	Diagnostic support note
	• The check engine light illuminates if the TCM detects the above malfunction condition during the first drive cycle.
	• The automatic transaxle warning light does not illuminate.
	• PENDING CODE is available.
	• FREEZE FRAME DATA is available.
	• DTC is stored in the TCM memory.

FAIL-SAFE FUNCTION	• Inhibits learning control. • Inhibits neutral idle control. • Inhibits AAS.
POSSIBLE CAUSE	• DSC HU/CM DTC is stored. ▪ ABS wheel-speed sensor malfunction
SYSTEM WIRING DIAGRAM	Not applicable

Diagnostic procedure

STEP	INSPECTION		ACTION
1	**VERIFY FREEZE FRAME DATA/SNAPSHOT DATA HAS BEEN RECORDED** • Has the freeze frame data/snapshot data been recorded on the repair order?	Yes	Go to the next step.
		No	Record the freeze frame data/snapshot data on the repair order, then go to the next step.
2	**VERIFY RELATED REPAIR INFORMATION AVAILABILITY** • Verify related Service Bulletins and/or on-line repair information availability. • Is any related repair information available?	Yes	Perform repair or diagnosis according to the available repair information. • If the vehicle is not repaired, go to the next step.
		No	Go to the next step.
3	**VERIFY STORED DTC IN DSC HU/CM** • Perform the DSC HU/CM DTC inspection using the M-MDS. (See **ON-BOARD DIAGNOSIS [DYNAMIC STABILITY CONTROL (DSC)]**.) • Are any DTCs present?	Yes	Go to the applicable DTC inspection. (See **ON-BOARD DIAGNOSIS [DYNAMIC STABILITY CONTROL (DSC)]**.)
		No	Go to the next step.
4	**VERIFY DTC TROUBLESHOOTING COMPLETED** • Clear the DTC using the M-MDS. (See **ON-BOARD DIAGNOSTIC SYSTEM DTC INSPECTION [FW6A-EL]**.) • Perform the following procedure to ensure that the DTC has been resolved: ◦ Drive the vehicle for **10 s or more** under the following conditions: • Battery voltage: **8 V or more** • Vehicle speed: **45 km/h {28 mph} or more** • Perform the DTC inspection using the M-MDS.	Yes	Go to the applicable DTC inspection. (See **ON-BOARD DIAGNOSTIC SYSTEM DTC TABLE [FW6A-EL]**.)
		No	DTC troubleshooting completed.

	(See **ON-BOARD DIAGNOSTIC SYSTEM DTC INSPECTION [FW6A-EL]**.) • Are any DTCs present?		

2014 - Mazda3 - Transmission/Transaxle

DTC P0666:00 [FW6A-EL]

DTC P0666:00	ECU internal temperature sensor circuit malfunction
DETECTION CONDITION	• Under the following condition, there is malfunction in circuit of ECU internal temperature sensor: ▪ Battery voltage is **8 V or more**. **Diagnostic support note** • The check engine light illuminates if the TCM detects the above malfunction condition in two consecutive drive cycles or in one drive cycle while the DTC for the same malfunction has been stored in the TCM. • The automatic transaxle warning light illuminates if the TCM detects the above malfunction condition in two consecutive drive cycles or in one drive cycle while the DTC for the same malfunction has been stored in the TCM. • PENDING CODE is available. • FREEZE FRAME DATA is available. • DTC is stored in the TCM memory.
FAIL-SAFE FUNCTION	• Inhibits learning control. • Inhibits neutral idle control.
POSSIBLE CAUSE	• Control valve body malfunction ▪ ECU internal temperature sensor (built-into TCM) malfunction
SYSTEM WIRING DIAGRAM	Not applicable

Diagnostic procedure

STEP	INSPECTION	ACTION
	VERIFY FREEZE FRAME DATA/SNAPSHOT	

1	**DATA HAS BEEN RECORDED** • Has the freeze frame data/snapshot data been recorded on the repair order?	Yes	Go to the next step.
		No	Record the freeze frame data/snapshot data on the repair order, then go to the next step.
2	**VERIFY RELATED REPAIR INFORMATION AVAILABILITY** • Verify related Service Bulletins and/or on-line repair information availability. • Is any related repair information available?	Yes	Perform repair or diagnosis according to the available repair information. • If the vehicle is not repaired, replace the control valve body. (See **CONTROL VALVE BODY REMOVAL/INSTALLATION [FW6A-EL]**.) Go to the next step.
		No	Replace the control valve body, then go to the next step. (See **CONTROL VALVE BODY REMOVAL/INSTALLATION [FW6A-EL]**.)
3	**VERIFY DTC TROUBLESHOOTING COMPLETED** • Clear the DTC using the M-MDS. (See **ON-BOARD DIAGNOSTIC SYSTEM DTC INSPECTION [FW6A-EL]**.) • Perform the following procedure to ensure that the DTC has been resolved: ◦ Start the engine. • Perform the DTC inspection using the M-MDS. (See **ON-BOARD DIAGNOSTIC SYSTEM DTC INSPECTION [FW6A-EL]**.) • Are any DTCs present?	Yes	Go to the applicable DTC inspection. (See **ON-BOARD DIAGNOSTIC SYSTEM DTC TABLE [FW6A-EL]**.)
		No	DTC troubleshooting completed.

2014 - Mazda3 - Transmission/Transaxle

DTC P0667:00 [FW6A-EL]

DTC P0667:00	ECU internal temperature sensor/performance problem
DETECTION CONDITION	• Under the following conditions, the difference between ECU internal temperatures of three ECU internal temperature sensors are **15 °C {27 °F} or more**: ▪ Engine is running. ▪ Soaked for **6 hours or more**. ▪ No malfunction in ECU internal temperature sensor circuit **Diagnostic support note** • The check engine light illuminates if the TCM detects the above malfunction condition in two consecutive drive cycles or in one drive cycle while the DTC for the same malfunction has been stored in the TCM. • The automatic transaxle warning light illuminates if the TCM detects the above malfunction condition in two consecutive drive cycles or in one drive cycle while the DTC for the same malfunction has been stored in the TCM. • PENDING CODE is available. • FREEZE FRAME DATA is available. • DTC is stored in the TCM memory.
FAIL-SAFE FUNCTION	• Inhibits learning control. • Inhibits neutral idle control.
POSSIBLE CAUSE	• Control valve body malfunction ▪ ECU internal temperature sensor (built-into TCM) malfunction
SYSTEM WIRING DIAGRAM	Not applicable

Diagnostic procedure

STEP	INSPECTION		ACTION
1	**VERIFY FREEZE FRAME DATA/SNAPSHOT DATA HAS BEEN RECORDED** • Has the freeze frame data/snapshot data been recorded on the repair order?	Yes	Go to the next step.
		No	Record the freeze frame data/snapshot data on the repair order, then go to the next step.
2	**VERIFY RELATED REPAIR INFORMATION AVAILABILITY** • Verify related Service Bulletins and/or on-line repair information availability. • Is any related repair information available?	Yes	Perform repair or diagnosis according to the available repair information. • If the vehicle is not repaired, replace the control valve body. (See **CONTROL VALVE BODY REMOVAL/INSTALLATION [FW6A-EL]**.) Go to the next step.
		No	Replace the control valve body, then go to the next step. (See **CONTROL VALVE BODY REMOVAL/INSTALLATION [FW6A-EL]**.)
3	**VERIFY DTC TROUBLESHOOTING COMPLETED** • Clear the DTC using the M-MDS. (See **ON-BOARD DIAGNOSTIC SYSTEM DTC INSPECTION [FW6A-EL]**.) • Perform the following procedure to ensure that the DTC has been resolved: ◦ Soak for **6 hours or more**. ◦ Start the engine, and warm it up until the ATF temperature is **60 °C {140 °F} or more**, and the engine coolant temperature is **80 °C {176 °F} or more**. • Perform the DTC inspection using the M-MDS. (See **ON-BOARD DIAGNOSTIC SYSTEM DTC INSPECTION [FW6A-EL]**.) • Are any DTCs present?	Yes	Go to the applicable DTC inspection. (See **ON-BOARD DIAGNOSTIC SYSTEM DTC TABLE [FW6A-EL]**.)
		No	DTC troubleshooting completed.

2014 - Mazda3 - Transmission/Transaxle

DTC P06B8:00 [FW6A-EL]

DTC P06B8:00	NVRAM malfunction
DETECTION CONDITION	• Under the following condition, TCM internal NVRAM data retention/read/write disabled: ▪ Battery voltage is **8 V or more**. **Diagnostic support note** • The check engine light illuminates if the TCM detects the above malfunction condition during the first drive cycle. • The automatic transaxle warning light does not illuminate. • PENDING CODE is available. • FREEZE FRAME DATA is available. • DTC is stored in the TCM memory.
FAIL-SAFE FUNCTION	Not applicable
POSSIBLE CAUSE	• TCM initial learning error • Control valve body malfunction ▪ TCM internal NVRAM malfunction
SYSTEM WIRING DIAGRAM	Not applicable

Diagnostic procedure

STEP	INSPECTION		ACTION
1	**VERIFY FREEZE FRAME DATA/SNAPSHOT DATA HAS BEEN RECORDED** • Has the freeze frame data/snapshot data been recorded on the repair order?	Yes	Go to the next step.
		No	Record the freeze frame data/snapshot data on the repair order, then go to the next step.

2	**VERIFY RELATED REPAIR INFORMATION AVAILABILITY** • Verify related Service Bulletins and/or on-line repair information availability. • Is any related repair information available?	Yes	Perform repair or diagnosis according to the available repair information. • If the vehicle is not repaired, go to the next step.
		No	Go to the next step.
3	**PERFORM INITIAL LEARNING** • Perform the initial learning. (See **INITIAL LEARNING [FW6A-EL]**.) • Clear the DTC using the M-MDS. (See **ON-BOARD DIAGNOSTIC SYSTEM DTC INSPECTION [FW6A-EL]**.) • Perform the following procedure to ensure that the DTC has been resolved: ◦ Switch the ignition ON (engine off or on). • Perform the DTC inspection using the M-MDS. (See **ON-BOARD DIAGNOSTIC SYSTEM DTC INSPECTION [FW6A-EL]**.) • Is the DTC P06B8:00 also present?	Yes	Replace the control valve body, then go to the next step. (See **CONTROL VALVE BODY REMOVAL/INSTALLATION [FW6A-EL]**.)
		No	DTC troubleshooting completed.
4	**VERIFY DTC TROUBLESHOOTING COMPLETED** • Clear the DTC using the M-MDS. (See **ON-BOARD DIAGNOSTIC SYSTEM DTC INSPECTION [FW6A-EL]**.) • Perform the following procedure to ensure that the DTC has been resolved: ◦ Switch the ignition ON (engine off or on). • Perform the DTC inspection using the M-MDS.	Yes	Go to the applicable DTC inspection. (See **ON-BOARD DIAGNOSTIC SYSTEM DTC TABLE [FW6A-EL]**.)
		No	DTC troubleshooting completed.

	(See **ON-BOARD DIAGNOSTIC SYSTEM DTC INSPECTION [FW6A-EL]**.) • Are any DTCs present?		

2014 - Mazda3 - Transmission/Transaxle

DTC P0706:00 [FW6A-EL]

DTC P0706:00	Transaxle range sensor range/performance problem
DETECTION CONDITION	• Under the following condition, pattern identification error in switch condition of transaxle range sensors 1 to 4: ▪ Battery voltage is **8 V or more**. **Diagnostic support note** • The check engine light illuminates if the TCM detects the above malfunction condition during the first drive cycle. • The automatic transaxle warning light illuminates if the TCM detects the above malfunction condition during the first drive cycle. • PENDING CODE is available. • FREEZE FRAME DATA is available. • DTC is stored in the TCM memory.
FAIL-SAFE FUNCTION	• Inhibits learning control. • Inhibits manual mode. • Inhibits neutral idle control. • Inhibits AAS.
POSSIBLE CAUSE	• Transaxle range sensor (built-into TCM) malfunction
SYSTEM WIRING DIAGRAM	Not applicable

Diagnostic procedure

STEP	INSPECTION		ACTION
1	**VERIFY FREEZE FRAME DATA/SNAPSHOT DATA HAS BEEN RECORDED**	Yes	Go to the next step.

	• Has the freeze frame data/snapshot data been recorded on the repair order?	No	Record the freeze frame data/snapshot data on the repair order, then go to the next step.
2	**VERIFY RELATED REPAIR INFORMATION AVAILABILITY** • Verify related Service Bulletins and/or on-line repair information availability. • Is any related repair information available?	Yes	Perform repair or diagnosis according to the available repair information. • If the vehicle is not repaired, replace the control valve body. (See **CONTROL VALVE BODY REMOVAL/INSTALLATION [FW6A-EL]**.) Go to the next step.
		No	Replace the control valve body, then go to the next step. (See **CONTROL VALVE BODY REMOVAL/INSTALLATION [FW6A-EL]**.)
3	**VERIFY DTC TROUBLESHOOTING COMPLETED** • Clear the DTC using the M-MDS. (See **ON-BOARD DIAGNOSTIC SYSTEM DTC INSPECTION [FW6A-EL]**.) • Perform the following procedure to ensure that the DTC has been resolved: ◦ Switch the ignition ON (engine off or on). • Perform the DTC inspection using the M-MDS. (See **ON-BOARD DIAGNOSTIC SYSTEM DTC INSPECTION [FW6A-EL]**.) • Are any DTCs present?	Yes	Go to the applicable DTC inspection. (See **ON-BOARD DIAGNOSTIC SYSTEM DTC TABLE [FW6A-EL]**.)
		No	DTC troubleshooting completed.

2014 - Mazda3 - Transmission/Transaxle

DTC P0707:00 [FW6A-EL]

DTC P0707:00	Transaxle range sensor circuit low input
DETECTION CONDITION	• Under the following condition, incorrect voltage in any one of transaxle range sensors 1 to 4: ▪ Battery voltage is **8 V or more**. **Diagnostic support note** • The check engine light illuminates if the TCM detects the above malfunction condition during the first drive cycle. • The automatic transaxle warning light illuminates if the TCM detects the above malfunction condition during the first drive cycle. • PENDING CODE is available. • FREEZE FRAME DATA is available. • DTC is stored in the TCM memory.
FAIL-SAFE FUNCTION	• Inhibits learning control. • Inhibits manual mode. • Inhibits neutral idle control. • Inhibits AAS.
POSSIBLE CAUSE	• Transaxle range sensor (built-into TCM) malfunction
SYSTEM WIRING DIAGRAM	Not applicable

Diagnostic procedure

STEP	INSPECTION		ACTION
1	**VERIFY FREEZE FRAME DATA/SNAPSHOT DATA HAS BEEN RECORDED**	Yes	Go to the next step.

	• Has the freeze frame data/snapshot data been recorded on the repair order?	No	Record the freeze frame data/snapshot data on the repair order, then go to the next step.
2	**VERIFY RELATED REPAIR INFORMATION AVAILABILITY** • Verify related Service Bulletins and/or on-line repair information availability. • Is any related repair information available?	Yes	Perform repair or diagnosis according to the available repair information. • If the vehicle is not repaired, replace the control valve body. (See **CONTROL VALVE BODY REMOVAL/INSTALLATION [FW6A-EL]**.) Go to the next step.
		No	Replace the control valve body, then go to the next step. (See **CONTROL VALVE BODY REMOVAL/INSTALLATION [FW6A-EL]**.)
3	**VERIFY DTC TROUBLESHOOTING COMPLETED** • Clear the DTC using the M-MDS. (See **ON-BOARD DIAGNOSTIC SYSTEM DTC INSPECTION [FW6A-EL]**.) • Perform the following procedure to ensure that the DTC has been resolved: ◦ Switch the ignition ON (engine off or on). • Perform the DTC inspection using the M-MDS. (See **ON-BOARD DIAGNOSTIC SYSTEM DTC INSPECTION [FW6A-EL]**.) • Are any DTCs present?	Yes	Go to the applicable DTC inspection. (See **ON-BOARD DIAGNOSTIC SYSTEM DTC TABLE [FW6A-EL]**.)
		No	DTC troubleshooting completed.

2014 - Mazda3 - Transmission/Transaxle

DTC P0708:00 [FW6A-EL]

DTC P0708:00	Transaxle range sensor circuit high input
DETECTION CONDITION	• Under the following condition, incorrect voltage in any one of transaxle range sensors 1 to 4: ▪ Battery voltage is **8 V or more**. **Diagnostic support note** • The check engine light illuminates if the TCM detects the above malfunction condition during the first drive cycle. • The automatic transaxle warning light illuminates if the TCM detects the above malfunction condition during the first drive cycle. • PENDING CODE is available. • FREEZE FRAME DATA is available. • DTC is stored in the TCM memory.
FAIL-SAFE FUNCTION	• Inhibits learning control. • Inhibits manual mode. • Inhibits neutral idle control. • Inhibits AAS.
POSSIBLE CAUSE	• Transaxle range sensor (built-into TCM) malfunction
SYSTEM WIRING DIAGRAM	Not applicable

Diagnostic procedure

STEP	INSPECTION		ACTION
1	**VERIFY FREEZE FRAME DATA/SNAPSHOT DATA HAS BEEN RECORDED**	Yes	Go to the next step.

	• Has the freeze frame data/snapshot data been recorded on the repair order?	No	Record the freeze frame data/snapshot data on the repair order, then go to the next step.
2	**VERIFY RELATED REPAIR INFORMATION AVAILABILITY** • Verify related Service Bulletins and/or on-line repair information availability. • Is any related repair information available?	Yes	Perform repair or diagnosis according to the available repair information. • If the vehicle is not repaired, replace the control valve body. (See **CONTROL VALVE BODY REMOVAL/INSTALLATION [FW6A-EL]**.) Go to the next step.
		No	Replace the control valve body, then go to the next step. (See **CONTROL VALVE BODY REMOVAL/INSTALLATION [FW6A-EL]**.)
3	**VERIFY DTC TROUBLESHOOTING COMPLETED** • Clear the DTC using the M-MDS. (See **ON-BOARD DIAGNOSTIC SYSTEM DTC INSPECTION [FW6A-EL]**.) • Perform the following procedure to ensure that the DTC has been resolved: ◦ Switch the ignition ON (engine off or on). • Perform the DTC inspection using the M-MDS. (See **ON-BOARD DIAGNOSTIC SYSTEM DTC INSPECTION [FW6A-EL]**.) • Are any DTCs present?	Yes	Go to the applicable DTC inspection. (See **ON-BOARD DIAGNOSTIC SYSTEM DTC TABLE [FW6A-EL]**.)
		No	DTC troubleshooting completed.

2014 - Mazda3 - Transmission/Transaxle

DTC P0711:00 [FW6A-EL]

DTC P0711:00	TFT sensor range/performance problem

DETECTION CONDITION	• Under the following conditions, the ATF temperature is **40 °C {104 °F} or less**:
	  ▪ Certain period has elapsed since engine start.
	  ▪ ECU internal temperature sensor related DTC is not recorded.
	  ▪ Soaked for **6 hours or more**.
	  ▪ ECU internal temperature is **60 °C {140 °F} or more**.
	• Under the following conditions, the ATF temperature is **120 °C {248 °F} or more**:
	  ▪ Certain period has elapsed since engine start.
	  ▪ ECU internal temperature sensor related DTC is not recorded.
	  ▪ Soaked for **6 hours or more**.
	  ▪ ECU internal temperature is **95 °C {203 °F} or less**.
	Diagnostic support note
	• The check engine light illuminates if the TCM detects the above malfunction condition in two consecutive drive cycles or in one drive cycle while the DTC for the same malfunction has been stored in the TCM.
	• The automatic transaxle warning light illuminates if the TCM detects the above malfunction condition in two consecutive drive cycles or in one drive cycle while the DTC for the same malfunction has been stored in the TCM.
	• PENDING CODE is available.
	• FREEZE FRAME DATA is available.
	• DTC is stored in the TCM memory.

FAIL-SAFE FUNCTION	• Inhibits learning control. • Inhibits neutral idle control.

POSSIBLE CAUSE	• TFT sensor malfunction
SYSTEM WIRING DIAGRAM	Not applicable

Diagnostic procedure

STEP	INSPECTION		ACTION
1	**VERIFY FREEZE FRAME DATA/SNAPSHOT DATA HAS BEEN RECORDED** • Has the freeze frame data/snapshot data been recorded on the repair order?	Yes	Go to the next step.
		No	Record the freeze frame data/snapshot data on the repair order, then go to the next step.
2	**VERIFY RELATED REPAIR INFORMATION AVAILABILITY** • Verify related Service Bulletins and/or on-line repair information availability. • Is any related repair information available?	Yes	Perform repair or diagnosis according to the available repair information. • If the vehicle is not repaired, replace the coupler component. (See **COUPLER COMPONENT REMOVAL/INSTALLATION [FW6A-EL]**.) Go to the next step.
		No	Replace the coupler component, then go to the next step. (See **COUPLER COMPONENT REMOVAL/INSTALLATION [FW6A-EL]**.)
3	**VERIFY DTC TROUBLESHOOTING COMPLETED** • Clear the DTC using the M-MDS. (See **ON-BOARD DIAGNOSTIC SYSTEM DTC INSPECTION [FW6A-EL]**.) • Perform the following procedure to ensure that the DTC has been resolved: ◦ Soak for **6 hours or more**. ◦ Idle the engine. • Perform the DTC inspection using the M-MDS.	Yes	Go to the applicable DTC inspection. (See **ON-BOARD DIAGNOSTIC SYSTEM DTC TABLE [FW6A-EL]**.)
		No	DTC troubleshooting completed.

	(See **ON-BOARD DIAGNOSTIC SYSTEM DTC INSPECTION [FW6A-EL]**.) • Are any DTCs present?		

2014 - Mazda3 - Transmission/Transaxle

DTC P0712:00 [FW6A-EL]

DTC P0712:00	TFT sensor circuit low input
DETECTION CONDITION	• Under the following condition, the TFT sensor voltage is **0.12 V or less** for **5 s**: ▪ Battery voltage is **8 V or more**. **Diagnostic support note** • The check engine light illuminates if the TCM detects the above malfunction condition during the first drive cycle. • The automatic transaxle warning light illuminates if the TCM detects the above malfunction condition during the first drive cycle. • PENDING CODE is available. • FREEZE FRAME DATA is available. • DTC is stored in the TCM memory.
FAIL-SAFE FUNCTION	• Inhibits learning control. • Inhibits neutral idle control.
POSSIBLE CAUSE	• TFT sensor malfunction
SYSTEM WIRING DIAGRAM	Not applicable

Diagnostic procedure

STEP	INSPECTION		ACTION
1	**VERIFY FREEZE FRAME DATA/SNAPSHOT DATA HAS BEEN RECORDED** • Has the freeze frame data/snapshot data been recorded on the repair order?	Yes	Go to the next step.
		No	Record the freeze frame data/snapshot data on the repair order, then go to the next step.

2	**VERIFY RELATED REPAIR INFORMATION AVAILABILITY** • Verify related Service Bulletins and/or on-line repair information availability. • Is any related repair information available?	Yes	Perform repair or diagnosis according to the available repair information. • If the vehicle is not repaired, replace the coupler component. (See **COUPLER COMPONENT REMOVAL/INSTALLATION [FW6A-EL]**.) Go to the next step.
		No	Replace the coupler component, then go to the next step. (See **COUPLER COMPONENT REMOVAL/INSTALLATION [FW6A-EL]**.)
3	**VERIFY DTC TROUBLESHOOTING COMPLETED** • Clear the DTC using the M-MDS. (See **ON-BOARD DIAGNOSTIC SYSTEM DTC INSPECTION [FW6A-EL]**.) • Perform the following procedure to ensure that the DTC has been resolved: ◦ Switch the ignition ON (engine off or on) and wait for **5 s or more**. • Perform the DTC inspection using the M-MDS. (See **ON-BOARD DIAGNOSTIC SYSTEM DTC INSPECTION [FW6A-EL]**.) • Are any DTCs present?	Yes	Go to the applicable DTC inspection. (See **ON-BOARD DIAGNOSTIC SYSTEM DTC TABLE [FW6A-EL]**.)
		No	DTC troubleshooting completed.

2014 - Mazda3 - Transmission/Transaxle

DTC P0713:00 [FW6A-EL]

DTC P0713:00	TFT sensor circuit high input
DETECTION CONDITION	• Under the following conditions, the ATF temperature is **−40 °C {−40 °F} or less** for **5 s**: ▪ Battery voltage is **8 V or more**. ▪ IAT is **−25 °C {−13 °F} or more**. ▪ IAT sensor related DTC is not recorded. **Diagnostic support note** • The check engine light illuminates if the TCM detects the above malfunction condition in two consecutive drive cycles or in one drive cycle while the DTC for the same malfunction has been stored in the TCM. • The automatic transaxle warning light illuminates if the TCM detects the above malfunction condition in two consecutive drive cycles or in one drive cycle while the DTC for the same malfunction has been stored in the TCM. • PENDING CODE is available. • FREEZE FRAME DATA is available. • DTC is stored in the TCM memory.
FAIL-SAFE FUNCTION	• Inhibits learning control. • Inhibits neutral idle control.
POSSIBLE CAUSE	• TFT sensor malfunction
SYSTEM WIRING DIAGRAM	Not applicable

Diagnostic procedure

STEP	INSPECTION	ACTION

1	**VERIFY IAT SENSOR PENDING CODE/DTC** • Perform the PCM DTC inspection using the M-MDS. (See **ON-BOARD DIAGNOSTIC TEST [SKYACTIV-G 2.0, SKYACTIV-G 2.5]**.) • Are IAT sensor pending codes/DTCs present?	Yes	Go to the applicable DTC inspection. (See **DTC TABLE [SKYACTIV-G 2.0, SKYACTIV-G 2.5]**.)
		No	Go to the next step.
2	**VERIFY FREEZE FRAME DATA/SNAPSHOT DATA HAS BEEN RECORDED** • Has the freeze frame data/snapshot data been recorded on the repair order?	Yes	Go to the next step.
		No	Record the freeze frame data/snapshot data on the repair order, then go to the next step.
3	**VERIFY RELATED REPAIR INFORMATION AVAILABILITY** • Verify related Service Bulletins and/or on-line repair information availability. • Is any related repair information available?	Yes	Perform repair or diagnosis according to the available repair information. • If the vehicle is not repaired, replace the coupler component. (See **COUPLER COMPONENT REMOVAL/INSTALLATION [FW6A-EL]**.) Go to the next step.
		No	Replace the coupler component, then go to the next step. (See **COUPLER COMPONENT REMOVAL/INSTALLATION [FW6A-EL]**.)
4	**VERIFY DTC TROUBLESHOOTING COMPLETED** • Clear the DTC using the M-MDS. (See **ON-BOARD DIAGNOSTIC SYSTEM DTC INSPECTION [FW6A-EL]**.) • Perform the following procedure to ensure that the DTC has been resolved: ◦ Switch the ignition ON (engine off or on) and wait for **5 s or more**. ◦ Verify that the IAT is **−25 °C {−13 °F} or more**. • Perform the DTC inspection using	Yes	Go to the applicable DTC inspection. (See **ON-BOARD DIAGNOSTIC SYSTEM DTC TABLE [FW6A-EL]**.)
		No	DTC troubleshooting completed.

	the M-MDS. (See **ON-BOARD DIAGNOSTIC SYSTEM DTC INSPECTION [FW6A-EL]**.) • Are any DTCs present?		

2014 - Mazda3 - Transmission/Transaxle

DTC P0715:00 [FW6A-EL]

DTC P0715:00	Turbine/input shaft speed sensor/sensor output range malfunction
DETECTION CONDITION	• Under the following conditions, the difference between engine speed signal and turbine/input shaft speed signal is **400 rpm or more** for **1 s**: ▪ Engine is running. ▪ Turbine/input shaft speed sensor is **9,000 rpm or less**. ▪ The gear shift position is in the neutral condition. **Diagnostic support note** • The check engine light illuminates if the TCM detects the above malfunction condition during the first drive cycle. • The automatic transaxle warning light illuminates if the TCM detects the above malfunction condition during the first drive cycle. • PENDING CODE is available. • FREEZE FRAME DATA is available. • DTC is stored in the TCM memory.
FAIL-SAFE FUNCTION	• Set to TCC control. • Inhibits learning control. • Inhibits manual mode. • Inhibits neutral idle control. • Inhibits AAS. • Inhibits 5GR and 6GR. • Inhibits shift down when the accelerator pedal is depressed.
POSSIBLE CAUSE	• Turbine/input shaft speed sensor malfunction
SYSTEM WIRING DIAGRAM	Not applicable

Diagnostic procedure

STEP	INSPECTION		ACTION
1	**VERIFY FREEZE FRAME DATA/SNAPSHOT DATA HAS BEEN RECORDED** • Has the freeze frame data/snapshot data been recorded on the repair order?	Yes	Go to the next step.
		No	Record the freeze frame data/snapshot data on the repair order, then go to the next step.
2	**VERIFY RELATED REPAIR INFORMATION AVAILABILITY** • Verify related Service Bulletins and/or on-line repair information availability. • Is any related repair information available?	Yes	Perform repair or diagnosis according to the available repair information. • If the vehicle is not repaired, replace the control valve body. (See **CONTROL VALVE BODY REMOVAL/INSTALLATION [FW6A-EL]**.) Go to the next step.
		No	Replace the control valve body, then go to the next step. (See **CONTROL VALVE BODY REMOVAL/INSTALLATION [FW6A-EL]**.)
3	**VERIFY DTC TROUBLESHOOTING COMPLETED** • Clear the DTC using the M-MDS. (See **ON-BOARD DIAGNOSTIC SYSTEM DTC INSPECTION [FW6A-EL]**.) • Perform the following procedure to ensure that the DTC has been resolved: ◦ Drive the vehicle for **1 s or more** under the following condition: • Vehicle speed: **30 km/h {19 mph} or more** • Perform the DTC inspection using the M-MDS.	Yes	Go to the applicable DTC inspection. (See **ON-BOARD DIAGNOSTIC SYSTEM DTC TABLE [FW6A-EL]**.)
		No	DTC troubleshooting completed.

	(See **ON-BOARD DIAGNOSTIC SYSTEM DTC INSPECTION [FW6A-EL]**.) • Are any DTCs present?		

2014 - Mazda3 - Transmission/Transaxle

DTC P0716:00 [FW6A-EL]

DTC P0716:00	Turbine/input shaft speed sensor range/performance problem
DETECTION CONDITION	• Under the following condition, the turbine/input shaft speed is **9,000 rpm or more** for **1 s**: ▪ Battery voltage is **8 V or more**. **Diagnostic support note** • The check engine light illuminates if the TCM detects the above malfunction condition during the first drive cycle. • The automatic transaxle warning light illuminates if the TCM detects the above malfunction condition during the first drive cycle. • PENDING CODE is available. • FREEZE FRAME DATA is available. • DTC is stored in the TCM memory.
FAIL-SAFE FUNCTION	• Set to TCC control. • Inhibits learning control. • Inhibits manual mode. • Inhibits neutral idle control. • Inhibits AAS. • Inhibits 5GR and 6GR. • Inhibits shift down when the accelerator pedal is depressed.
POSSIBLE CAUSE	• Turbine/input shaft speed sensor malfunction
SYSTEM WIRING DIAGRAM	Not applicable

Diagnostic procedure

STEP	INSPECTION		ACTION
1	**VERIFY FREEZE FRAME DATA/SNAPSHOT DATA HAS BEEN RECORDED** • Has the freeze frame data/snapshot data been recorded on the repair order?	Yes	Go to the next step.
		No	Record the freeze frame data/snapshot data on the repair order, then go to the next step.
2	**VERIFY RELATED REPAIR INFORMATION AVAILABILITY** • Verify related Service Bulletins and/or on-line repair information availability. • Is any related repair information available?	Yes	Perform repair or diagnosis according to the available repair information. • If the vehicle is not repaired, replace the control valve body. (See **CONTROL VALVE BODY REMOVAL/INSTALLATION [FW6A-EL]**.) Go to the next step.
		No	Replace the control valve body, then go to the next step. (See **CONTROL VALVE BODY REMOVAL/INSTALLATION [FW6A-EL]**.)
3	**VERIFY DTC TROUBLESHOOTING COMPLETED** • Clear the DTC using the M-MDS. (See **ON-BOARD DIAGNOSTIC SYSTEM DTC INSPECTION [FW6A-EL]**.) • Perform the following procedure to ensure that the DTC has been resolved: ◦ Drive the vehicle for **1 s or more** under the following condition: • Vehicle speed: **30 km/h {19 mph} or more** • Perform the DTC inspection using the M-MDS. (See **ON-BOARD DIAGNOSTIC SYSTEM DTC INSPECTION [FW6A-EL]**.)	Yes	Go to the applicable DTC inspection. (See **ON-BOARD DIAGNOSTIC SYSTEM DTC TABLE [FW6A-EL]**.)
		No	DTC troubleshooting completed.

	• Are any DTCs present?		

2014 - Mazda3 - Transmission/Transaxle

DTC P0717:00 [FW6A-EL]

DTC P0717:00	Open circuit in turbine/input shaft speed sensor circuit

DETECTION CONDITION	• Under the following conditions, the turbine/input shaft speed sensor signal is not input for **1 s**:
	  ▪ Engine is running.
	  ▪ Vehicle speed signal related DTC is not recorded.
	  ▪ Vehicle speed is **16 km/h {9.9 mph} or more**.
	  ▪ There is no difference between vehicle speed signal from DSC HU/CM and output shaft speed sensor signal.
	  ▪ DTC U0121:00 is not recorded.
	Diagnostic support note
	• The check engine light illuminates if the TCM detects the above malfunction condition during the first drive cycle.
	• The automatic transaxle warning light illuminates if the TCM detects the above malfunction condition during the first drive cycle.
	• PENDING CODE is available.
	• FREEZE FRAME DATA is available.
	• DTC is stored in the TCM memory.

FAIL-SAFE FUNCTION	• Set to TCC control. • Inhibits learning control. • Inhibits manual mode. • Inhibits neutral idle control. • Inhibits AAS. • Inhibits 5GR and 6GR. • Inhibits shift down when the accelerator pedal is depressed.
POSSIBLE CAUSE	• Turbine/input shaft speed sensor malfunction

SYSTEM WIRING DIAGRAM	Not applicable

Diagnostic procedure

STEP	INSPECTION		ACTION
1	**VERIFY FREEZE FRAME DATA/SNAPSHOT DATA HAS BEEN RECORDED** • Has the freeze frame data/snapshot data been recorded on the repair order?	Yes	Go to the next step.
		No	Record the freeze frame data/snapshot data on the repair order, then go to the next step.
2	**VERIFY RELATED REPAIR INFORMATION AVAILABILITY** • Verify related Service Bulletins and/or on-line repair information availability. • Is any related repair information available?	Yes	Perform repair or diagnosis according to the available repair information. • If the vehicle is not repaired, replace the control valve body. (See **CONTROL VALVE BODY REMOVAL/INSTALLATION [FW6A-EL]**.) Go to the next step.
		No	Replace the control valve body, then go to the next step. (See **CONTROL VALVE BODY REMOVAL/INSTALLATION [FW6A-EL]**.)
3	**VERIFY DTC TROUBLESHOOTING COMPLETED** • Clear the DTC using the M-MDS. (See **ON-BOARD DIAGNOSTIC SYSTEM DTC INSPECTION [FW6A-EL]**.) • Perform the following procedure to ensure that the DTC has been resolved: ◦ Drive the vehicle for **1 s or more** under the following condition: • Vehicle speed: **16 km/h {9.9 mph}**	Yes	Go to the applicable DTC inspection. (See **ON-BOARD DIAGNOSTIC SYSTEM DTC TABLE [FW6A-EL]**.)
		No	DTC troubleshooting completed.

	or more • Perform the DTC inspection using the M-MDS. (See **ON-BOARD DIAGNOSTIC SYSTEM DTC INSPECTION [FW6A-EL]**.) • Are any DTCs present?		

2014 - Mazda3 - Transmission/Transaxle

DTC P0720:00 [FW6A-EL]

DTC P0720:00	Output shaft speed sensor range/performance problem

DETECTION CONDITION	• Under the following conditions, there is difference between vehicle speed signal from DSC HU/CM and output shaft speed sensor signal for **1 s**:
	  ▪ Engine is running.
	  ▪ The vehicle is driven in D position or R position.
	  ▪ Vehicle speed signal related DTC is not recorded.
	  ▪ There is no difference between vehicle speed signal from DSC HU/CM and turbine/input shaft speed sensor signal.
	  ▪ Output shaft speed sensor signal is input.
	  ▪ Forward: Output shaft speed is **13,560rpm or less**.
	  ▪ Reverse: Output shaft speed is **2,000 rpm or less**.
	Diagnostic support note
	• The check engine light illuminates if the TCM detects the above malfunction condition during the first drive cycle.
	• The automatic transaxle warning light illuminates if the TCM detects the above malfunction condition during the first drive cycle.
	• PENDING CODE is available.
	• FREEZE FRAME DATA is available.
	• DTC is stored in the TCM memory.

FAIL-SAFE FUNCTION	• Inhibits learning control. • Inhibits manual mode. • Inhibits neutral idle control. • Inhibits AAS.
POSSIBLE CAUSE	• Output shaft speed sensor malfunction

SYSTEM WIRING DIAGRAM	Not applicable

Diagnostic procedure

STEP	INSPECTION		ACTION
1	**VERIFY DSC HU/CM DTC** • Perform the DSC HU/CM DTC inspection using the M-MDS. (See **ON-BOARD DIAGNOSIS [DYNAMIC STABILITY CONTROL (DSC)]**.) • Are any DTCs present?	Yes	Go to the applicable DTC inspection. (See **ON-BOARD DIAGNOSIS [DYNAMIC STABILITY CONTROL (DSC)]**.)
		No	Go to the next step.
2	**VERIFY INSTRUMENT CLUSTER REPAIR HISTORY** • Does the instrument cluster have a record of replacement?	Yes	Perform the instrument cluster configuration, then go to Step 6. (See **INSTRUMENT CLUSTER CONFIGURATION (USING AS-BUILT DATA)**.)
		No	Go to the next step.
3	**VERIFY AUTOMATIC TRANSMISSION REPAIR HISTORY** • Does the automatic transmission (with control valve body) have a record of replacement?	Yes	Perform the TCM configuration. (See **TCM CONFIGURATION [FW6A-EL]**.)
		No	Go to the next step.
4	**VERIFY FREEZE FRAME DATA/SNAPSHOT DATA HAS BEEN RECORDED** • Has the freeze frame data/snapshot data been recorded on the repair order?	Yes	Go to the next step.
		No	Record the freeze frame data/snapshot data on the repair order, then go to the next step.
5	**VERIFY RELATED REPAIR INFORMATION AVAILABILITY** • Verify related Service Bulletins and/or on-line repair information availability. • Is any related repair information available?	Yes	Perform repair or diagnosis according to the available repair information. • If the vehicle is not repaired, replace the control valve body. (See **CONTROL VALVE BODY REMOVAL/INSTALLATION [FW6A-EL]**.) Go to the next step.

		No	Replace the control valve body, then go to the next step. (See **CONTROL VALVE BODY REMOVAL/INSTALLATION [FW6A-EL]**.)
6	**VERIFY DTC TROUBLESHOOTING COMPLETED** • Clear the DTC using the M-MDS. (See **ON-BOARD DIAGNOSTIC SYSTEM DTC INSPECTION [FW6A-EL]**.) • Perform the following procedure to ensure that the DTC has been resolved: ◦ Drive the vehicle for **1 s or more** under the following condition: • Vehicle speed: **30 km/h {19 mph} or more** • Perform the DTC inspection using the M-MDS. (See **ON-BOARD DIAGNOSTIC SYSTEM DTC INSPECTION [FW6A-EL]**.) • Are any DTCs present?	Yes	Go to the applicable DTC inspection. (See **ON-BOARD DIAGNOSTIC SYSTEM DTC TABLE [FW6A-EL]**.)
		No	DTC troubleshooting completed.

2014 - Mazda3 - Transmission/Transaxle

DTC P0721:00 [FW6A-EL]

DTC P0721:00	Output shaft speed sensor/sensor output range malfunction
DETECTION CONDITION	• Under the following condition, the output shaft speed is **13,560 rpm or more** in forward or **2,000 rpm or more** in reverse for a continuous **1 s**: ▪ Battery voltage is **8 V or more**. **Diagnostic support note** • The check engine light illuminates if the TCM detects the above malfunction condition during the first drive cycle. • The automatic transaxle warning light illuminates if the TCM detects the above malfunction condition during the first drive cycle. • PENDING CODE is available. • FREEZE FRAME DATA is available. • DTC is stored in the TCM memory.
FAIL-SAFE FUNCTION	• Inhibits learning control. • Inhibits manual mode. • Inhibits neutral idle control. • Inhibits AAS.
POSSIBLE CAUSE	• Output shaft speed sensor malfunction
SYSTEM WIRING DIAGRAM	Not applicable

Diagnostic procedure

STEP	INSPECTION		ACTION
1	**VERIFY DSC HU/CM DTC** • Perform the DSC HU/CM DTC inspection	Yes	Go to the applicable DTC inspection.

	using the M-MDS. (See **ON-BOARD DIAGNOSIS [DYNAMIC STABILITY CONTROL (DSC)]**.) • Are any DTCs present?		(See **ON-BOARD DIAGNOSIS [DYNAMIC STABILITY CONTROL (DSC)]**.)
		No	Go to the next step.
2	**VERIFY INSTRUMENT CLUSTER REPAIR HISTORY** • Does the instrument cluster have a record of replacement?	Yes	Perform the instrument cluster configuration, then go to Step 6. (See **INSTRUMENT CLUSTER CONFIGURATION (USING AS-BUILT DATA)**.)
		No	Go to the next step.
3	**VERIFY AUTOMATIC TRANSMISSION REPAIR HISTORY** • Does the automatic transmission (with control valve body) have a record of replacement?	Yes	Perform the TCM configuration. (See **TCM CONFIGURATION [FW6A-EL]**.)
		No	Go to the next step.
4	**VERIFY FREEZE FRAME DATA/SNAPSHOT DATA HAS BEEN RECORDED** • Has the freeze frame data/snapshot data been recorded on the repair order?	Yes	Go to the next step.
		No	Record the freeze frame data/snapshot data on the repair order, then go to the next step.
5	**VERIFY RELATED REPAIR INFORMATION AVAILABILITY** • Verify related Service Bulletins and/or on-line repair information availability. • Is any related repair information available?	Yes	Perform repair or diagnosis according to the available repair information. • If the vehicle is not repaired, replace the control valve body. (See **CONTROL VALVE BODY REMOVAL/INSTALLATION [FW6A-EL]**.) Go to the next step.
		No	Replace the control valve body, then go to the next step. (See **CONTROL VALVE BODY REMOVAL/INSTALLATION [FW6A-EL]**.)
6	**VERIFY DTC TROUBLESHOOTING COMPLETED** • Clear the DTC using the M-MDS. (See **ON-BOARD DIAGNOSTIC SYSTEM DTC INSPECTION [FW6A-EL]**.)	Yes	Go to the applicable DTC inspection. (See **ON-BOARD DIAGNOSTIC SYSTEM DTC TABLE [FW6A-EL]**.)

	• Perform the following procedure to ensure that the DTC has been resolved:
	  ◦ Drive the vehicle for **1 s or more** under the following condition:
	  • Vehicle speed: **30 km/h {19 mph} or more**
	• Perform the DTC inspection using the M-MDS.
	(See **ON-BOARD DIAGNOSTIC SYSTEM DTC INSPECTION [FW6A-EL]**.)
	• Are any DTCs present?
		No	DTC troubleshooting completed.

2014 - Mazda3 - Transmission/Transaxle

DTC P0722:00 [FW6A-EL]

DTC P0722:00	Open circuit in output shaft speed sensor circuit

DETECTION CONDITION	• Under the following conditions, the output shaft speed sensor signal is not input for **1 s**:
	  ▪ Engine is running.
	  ▪ Vehicle speed signal related DTC is not recorded.
	  ▪ Vehicle speed is **16 km/h {9.9 mph} or more**.
	  ▪ There is no difference between vehicle speed signal from DSC HU/CM and output shaft speed sensor signal.
	  ▪ DTC U0121:00 is not recorded.
	Diagnostic support note
	• The check engine light illuminates if the TCM detects the above malfunction condition during the first drive cycle.
	• The automatic transaxle warning light illuminates if the TCM detects the above malfunction condition during the first drive cycle.
	• PENDING CODE is available.
	• FREEZE FRAME DATA is available.
	• DTC is stored in the TCM memory.

FAIL-SAFE FUNCTION	• Inhibits learning control. • Inhibits manual mode. • Inhibits neutral idle control. • Inhibits AAS.
POSSIBLE CAUSE	• Output shaft speed sensor malfunction
SYSTEM WIRING DIAGRAM	Not applicable

Diagnostic procedure

STEP	INSPECTION		ACTION
1	**VERIFY FREEZE FRAME DATA/SNAPSHOT DATA HAS BEEN RECORDED** • Has the freeze frame data/snapshot data been recorded on the repair order?	Yes	Go to the next step.
		No	Record the freeze frame data/snapshot data on the repair order, then go to the next step.
2	**VERIFY RELATED REPAIR INFORMATION AVAILABILITY** • Verify related Service Bulletins and/or on-line repair information availability. • Is any related repair information available?	Yes	Perform repair or diagnosis according to the available repair information. • If the vehicle is not repaired, replace the control valve body. (See **CONTROL VALVE BODY REMOVAL/INSTALLATION [FW6A-EL]**.) Go to the next step.
		No	Replace the control valve body, then go to the next step. (See **CONTROL VALVE BODY REMOVAL/INSTALLATION [FW6A-EL]**.)
3	**VERIFY DTC TROUBLESHOOTING COMPLETED** • Clear the DTC using the M-MDS. (See **ON-BOARD DIAGNOSTIC SYSTEM DTC INSPECTION [FW6A-EL]**.) • Perform the following procedure to ensure that the DTC has been resolved: ◦ Drive the vehicle for **1 s or more** under the following condition: • Vehicle speed: **16 km/h {9.9 mph} or more** • Perform the DTC inspection using the M-MDS.	Yes	Go to the applicable DTC inspection. (See **ON-BOARD DIAGNOSTIC SYSTEM DTC TABLE [FW6A-EL]**.)
		No	DTC troubleshooting completed.

	(See **ON-BOARD DIAGNOSTIC SYSTEM DTC INSPECTION [FW6A-EL]**.) • Are any DTCs present?		

2014 - Mazda3 - Transmission/Transaxle

DTC P0729:00 [FW6A-EL]

DTC P0729:00	6GR incorrect ratio

DETECTION CONDITION	• In D position, 6GR, the following phenomenon occurs:
	  ▪ There is difference between turbine/input shaft speed and output shaft speed sensor speed for **230 to 1,980 ms** (varies with ATF temperature and ECT) during shift-up.
	  ▪ There is difference between turbine/input shaft speed and output shaft speed sensor speed for **1,500 to 3,900 ms** (varies with ATF temperature) while driving without shifting.
	Diagnostic support note
	• The check engine light does not illuminate.
	• The automatic transaxle warning light does not illuminate.
	• PENDING CODE is available.
	• FREEZE FRAME DATA is not available.
	• DTC is stored in the TCM memory.

FAIL-SAFE FUNCTION	• Inhibits malfunctioning gear. • Limits engine torque. • Inhibits learning control. • Inhibits manual mode. • Inhibits neutral idle control. • Inhibits AAS.
POSSIBLE CAUSE	• ATF is less than specified value • Clutch burnt • Shift solenoid malfunction • ATF leakage from clutch circuit • Control valve body malfunction

SYSTEM WIRING DIAGRAM	Not applicable

Diagnostic procedure

STEP	INSPECTION		ACTION
1	**VERIFY DTC OUTPUT STATUS** • Are any the following DTCs displayed? ▪ P0738:00, P0746:00, P0751:00, P0752:00, P0756:00, P0757:00, P0761:00, P0762:00, P0766:00, P0767:00, P0771:00, P0772:00, P0842:00, P0843:00, P0847:00, P0848:00, P0872:00, P0873:00, P0877:00, P0878:00, P1784:00	Yes	Go to the applicable DTC inspection. (See **ON-BOARD DIAGNOSTIC SYSTEM DTC TABLE [FW6A-EL]**.)
		No	Go to the next step.
2	**INSPECT ATF LEVEL** • Inspect the ATF level. (See **AUTOMATIC TRANSAXLE FLUID (ATF) INSPECTION [FW6A-EL]**.) • Is there any malfunction?	Yes	Adjust the ATF level to the specification, then go to the next step. (See **AUTOMATIC TRANSAXLE FLUID (ATF) REPLACEMENT [FW6A-EL]**.)
		No	Go to the next step.
3	**PERFORM ON-BOARD DIAGNOSTIC TEST TO SPECIFY MALFUNCTIONING PART** **NOTE:** • If only DTCs in which the malfunctioning part is not confirmed are displayed as in the following DTCs, all of the diagnosis may not have been completed. In such cases, the malfunction cause can be determined by performing the on-board diagnostic test. • Perform the on-board diagnostic test. (See **ON-BOARD DIAGNOSTIC TEST MODE [FW6A-EL]**.) • Are any DTCs present?	Yes	Go to the applicable DTC inspection. (See **ON-BOARD DIAGNOSTIC SYSTEM DTC TABLE [FW6A-EL]**.)
		No	ATF amount in Step 2 is correct: • Replace the automatic transaxle. (See **AUTOMATIC TRANSAXLE REMOVAL/INSTALLATION [FW6A-EL]**.) ATF amount adjusted in Step 2: • Drive the vehicle to check it, and if there is no problem then the DTC troubleshooting is complete.

2014 - Mazda3 - Transmission/Transaxle

DTC P0731:00 [FW6A-EL]

DTC P0731:00	1GR incorrect ratio
DETECTION CONDITION	• In D position, 1GR, the following phenomenon occurs: ▪ Speed ratio is **0.75 to 1.2** for **2,000 ms** while vehicle is stopped in D position. ▪ There is difference between turbine/input shaft speed and output shaft speed sensor speed for **230 to 1,980 ms** (varies with ATF temperature and ECT) during shift-up. ▪ There is difference between turbine/input shaft speed and output shaft speed sensor speed for **1,500 to 3,900 ms** (varies with ATF temperature) while driving without shifting. **Diagnostic support note** • The check engine light does not illuminate. • The automatic transaxle warning light does not illuminate. • PENDING CODE is available. • FREEZE FRAME DATA is not available. • DTC is stored in the TCM memory.
FAIL-SAFE FUNCTION	• Inhibits malfunctioning gear. • Limits engine torque. • Inhibits learning control. • Inhibits manual mode. • Inhibits neutral idle control. • Inhibits AAS.
POSSIBLE CAUSE	• ATF is less than specified value • Clutch burnt • Shift solenoid malfunction

	ATF leakage from clutch circuit • Control valve body malfunction
SYSTEM WIRING DIAGRAM	Not applicable

Diagnostic procedure

STEP	INSPECTION		ACTION
1	**VERIFY DTC OUTPUT STATUS** • Are any the following DTCs displayed? ▪ P0738:00, P0746:00, P0751:00, P0752:00, P0756:00, P0757:00, P0761:00, P0762:00, P0766:00, P0767:00, P0771:00, P0772:00, P0842:00, P0843:00, P0847:00, P0848:00, P0872:00, P0873:00, P0877:00, P0878:00, P1784:00	Yes	Go to the applicable DTC inspection. (See **ON-BOARD DIAGNOSTIC SYSTEM DTC TABLE [FW6A-EL]**.)
		No	Go to the next step.
2	**INSPECT ATF LEVEL** • Inspect the ATF level. (See **AUTOMATIC TRANSAXLE FLUID (ATF) INSPECTION [FW6A-EL]**.) • Is there any malfunction?	Yes	Adjust the ATF level to the specification, then go to the next step. (See **AUTOMATIC TRANSAXLE FLUID (ATF) REPLACEMENT [FW6A-EL]**.)
		No	Go to the next step.
3	**PERFORM ON-BOARD DIAGNOSTIC TEST TO SPECIFY MALFUNCTIONING PART** **NOTE:** • If only DTCs in which the malfunctioning part is not confirmed are displayed as in the following DTCs, all of the diagnosis may not have been completed. In such cases, the malfunction cause can be determined by performing the on-board diagnostic test. • Perform the on-board diagnostic test. (See **ON-BOARD DIAGNOSTIC TEST MODE [FW6A-EL]**.) • Are any DTCs present?	Yes	Go to the applicable DTC inspection. (See **ON-BOARD DIAGNOSTIC SYSTEM DTC TABLE [FW6A-EL]**.)
		No	ATF amount in Step 2 is correct: • Replace the automatic transaxle. (See **AUTOMATIC TRANSAXLE REMOVAL/INSTALLATION [FW6A-EL]**.) ATF amount adjusted in Step 2: • Drive the vehicle to

			check it, and if there is no problem then the DTC troubleshooting is complete.

2014 - Mazda3 - Transmission/Transaxle

DTC P0732:00 [FW6A-EL]

DTC P0732:00	2GR incorrect ratio

DETECTION CONDITION	• In D position, 2GR, the following phenomenon occurs:
	  ▪ There is difference between turbine/input shaft speed and output shaft speed sensor speed for **230 to 1,980 ms** (varies with ATF temperature and ECT) during shift-up.
	  ▪ There is difference between turbine/input shaft speed and output shaft speed sensor speed for **1,500 to 3,900 ms** (varies with ATF temperature) while driving without shifting.
	Diagnostic support note
	• The check engine light does not illuminate.
	• The automatic transaxle warning light does not illuminate.
	• PENDING CODE is available.
	• FREEZE FRAME DATA is not available.
	• DTC is stored in the TCM memory.

FAIL-SAFE FUNCTION	• Inhibits malfunctioning gear. • Limits engine torque. • Inhibits learning control. • Inhibits manual mode. • Inhibits neutral idle control. • Inhibits AAS.
POSSIBLE CAUSE	• ATF is less than specified value • Clutch burnt • Shift solenoid malfunction • ATF leakage from clutch circuit • Control valve body malfunction

SYSTEM WIRING DIAGRAM	Not applicable

Diagnostic procedure

STEP	INSPECTION		ACTION
1	**VERIFY DTC OUTPUT STATUS** • Are any the following DTCs displayed? ▪ P0738:00, P0746:00, P0751:00, P0752:00, P0756:00, P0757:00, P0761:00, P0762:00, P0766:00, P0767:00, P0771:00, P0772:00, P0842:00, P0843:00, P0847:00, P0848:00, P0872:00, P0873:00, P0877:00, P0878:00, P1784:00	Yes	Go to the applicable DTC inspection. (See **ON-BOARD DIAGNOSTIC SYSTEM DTC TABLE [FW6A-EL]**.)
		No	Go to the next step.
2	**INSPECT ATF LEVEL** • Inspect the ATF level. (See **AUTOMATIC TRANSAXLE FLUID (ATF) INSPECTION [FW6A-EL]**.) • Is there any malfunction?	Yes	Adjust the ATF level to the specification, then go to the next step. (See **AUTOMATIC TRANSAXLE FLUID (ATF) REPLACEMENT [FW6A-EL]**.)
		No	Go to the next step.
3	**PERFORM ON-BOARD DIAGNOSTIC TEST TO SPECIFY MALFUNCTIONING PART** **NOTE:** • If only DTCs in which the malfunctioning part is not confirmed are displayed as in the following DTCs, all of the diagnosis may not have been completed. In such cases, the malfunction cause can be determined by performing the on-board diagnostic test. • Perform the on-board diagnostic test. (See **ON-BOARD DIAGNOSTIC TEST MODE [FW6A-EL]**.) • Are any DTCs present?	Yes	Go to the applicable DTC inspection. (See **ON-BOARD DIAGNOSTIC SYSTEM DTC TABLE [FW6A-EL]**.)
		No	ATF amount in Step 2 is correct: • Replace the automatic transaxle. (See **AUTOMATIC TRANSAXLE REMOVAL/INSTALLATION [FW6A-EL]**.) ATF amount adjusted in Step 2: • Drive the vehicle to check it, and if there is no problem then the DTC troubleshooting is complete.

2014 - Mazda3 - Transmission/Transaxle

DTC P0733:00 [FW6A-EL]

DTC P0733:00	3GR incorrect ratio

DETECTION CONDITION	• In D position, 3GR, the following phenomenon occurs:
	  ▪ There is difference between turbine/input shaft speed and output shaft speed sensor speed for **230 to 1,980 ms** (varies with ATF temperature and ECT) during shift-up.
	  ▪ There is difference between turbine/input shaft speed and output shaft speed sensor speed for **1,500 to 3,900 ms** (varies with ATF temperature) while driving without shifting.
	Diagnostic support note
	• The check engine light does not illuminate.
	• The automatic transaxle warning light does not illuminate.
	• PENDING CODE is available.
	• FREEZE FRAME DATA is not available.
	• DTC is stored in the TCM memory.

FAIL-SAFE FUNCTION	• Inhibits malfunctioning gear. • Limits engine torque. • Inhibits learning control. • Inhibits manual mode. • Inhibits neutral idle control. • Inhibits AAS.
POSSIBLE CAUSE	• ATF is less than specified value • Clutch burnt • Shift solenoid malfunction • ATF leakage from clutch circuit • Control valve body malfunction

SYSTEM WIRING DIAGRAM	Not applicable

Diagnostic procedure

STEP	INSPECTION		ACTION
1	**VERIFY DTC OUTPUT STATUS** • Are any the following DTCs displayed? ▪ P0738:00, P0746:00, P0751:00, P0752:00, P0756:00, P0757:00, P0761:00, P0762:00, P0766:00, P0767:00, P0771:00, P0772:00, P0842:00, P0843:00, P0847:00, P0848:00, P0872:00, P0873:00, P0877:00, P0878:00, P1784:00	Yes	Go to the applicable DTC inspection. (See **ON-BOARD DIAGNOSTIC SYSTEM DTC TABLE [FW6A-EL]**.)
		No	Go to the next step.
2	**INSPECT ATF LEVEL** • Inspect the ATF level. (See **AUTOMATIC TRANSAXLE FLUID (ATF) INSPECTION [FW6A-EL]**.) • Is there any malfunction?	Yes	Adjust the ATF level to the specification, then go to the next step. (See **AUTOMATIC TRANSAXLE FLUID (ATF) REPLACEMENT [FW6A-EL]**.)
		No	Go to the next step.
3	**PERFORM ON-BOARD DIAGNOSTIC TEST TO SPECIFY MALFUNCTIONING PART** **NOTE:** • If only DTCs in which the malfunctioning part is not confirmed are displayed as in the following DTCs, all of the diagnosis may not have been completed. In such cases, the malfunction cause can be determined by performing the on-board diagnostic test. • Perform the on-board diagnostic test. (See **ON-BOARD DIAGNOSTIC TEST MODE [FW6A-EL]**.) • Are any DTCs present?	Yes	Go to the applicable DTC inspection. (See **ON-BOARD DIAGNOSTIC SYSTEM DTC TABLE [FW6A-EL]**.)
		No	ATF amount in Step 2 is correct: • Replace the automatic transaxle. (See **AUTOMATIC TRANSAXLE REMOVAL/INSTALLATION [FW6A-EL]**.) ATF amount adjusted in Step 2: • Drive the vehicle to check it, and if there is no problem then the DTC troubleshooting is complete.

2014 - Mazda3 - Transmission/Transaxle

DTC P0734:00 [FW6A-EL]

DTC P0734:00	4GR incorrect ratio

DETECTION CONDITION	• In D position, 4GR, the following phenomenon occurs:
	  ▪ There is difference between turbine/input shaft speed and output shaft speed sensor speed for **230 to 1,980 ms** (varies with ATF temperature and ECT) during shift-up.
	  ▪ There is difference between turbine/input shaft speed and output shaft speed sensor speed for **1,500 to 3,900 ms** (varies with ATF temperature) while driving without shifting.
	Diagnostic support note
	• The check engine light does not illuminate.
	• The automatic transaxle warning light does not illuminate.
	• PENDING CODE is available.
	• FREEZE FRAME DATA is not available.
	• DTC is stored in the TCM memory.

FAIL-SAFE FUNCTION	• Inhibits malfunctioning gear. • Limits engine torque. • Inhibits learning control. • Inhibits manual mode. • Inhibits neutral idle control. • Inhibits AAS.
POSSIBLE CAUSE	• ATF is less than specified value • Clutch burnt • Shift solenoid malfunction • ATF leakage from clutch circuit • Control valve body malfunction

SYSTEM WIRING DIAGRAM	Not applicable

Diagnostic procedure

STEP	INSPECTION		ACTION
1	**VERIFY DTC OUTPUT STATUS** • Are any the following DTCs displayed? ▪ P0738:00, P0746:00, P0751:00, P0752:00, P0756:00, P0757:00, P0761:00, P0762:00, P0766:00, P0767:00, P0771:00, P0772:00, P0842:00, P0843:00, P0847:00, P0848:00, P0872:00, P0873:00, P0877:00, P0878:00, P1784:00	Yes	Go to the applicable DTC inspection. (See **ON-BOARD DIAGNOSTIC SYSTEM DTC TABLE [FW6A-EL]**.)
		No	Go to the next step.
2	**INSPECT ATF LEVEL** • Inspect the ATF level. (See **AUTOMATIC TRANSAXLE FLUID (ATF) INSPECTION [FW6A-EL]**.) • Is there any malfunction?	Yes	Adjust the ATF level to the specification, then go to the next step. (See **AUTOMATIC TRANSAXLE FLUID (ATF) REPLACEMENT [FW6A-EL]**.)
		No	Go to the next step.
3	**PERFORM ON-BOARD DIAGNOSTIC TEST TO SPECIFY MALFUNCTIONING PART** **NOTE:** • If only DTCs in which the malfunctioning part is not confirmed are displayed as in the following DTCs, all of the diagnosis may not have been completed. In such cases, the malfunction cause can be determined by performing the on-board diagnostic test. • Perform the on-board diagnostic test. (See **ON-BOARD DIAGNOSTIC TEST MODE [FW6A-EL]**.) • Are any DTCs present?	Yes	Go to the applicable DTC inspection. (See **ON-BOARD DIAGNOSTIC SYSTEM DTC TABLE [FW6A-EL]**.)
		No	ATF amount in Step 2 is correct: • Replace the automatic transaxle. (See **AUTOMATIC TRANSAXLE REMOVAL/INSTALLATION [FW6A-EL]**.) ATF amount adjusted in Step 2: • Drive the vehicle to check it, and if there is no problem then the DTC troubleshooting is complete.

2014 - Mazda3 - Transmission/Transaxle

DTC P0735:00 [FW6A-EL]

DTC P0735:00	5GR incorrect ratio

DETECTION CONDITION	• In D position, 5GR, the following phenomenon occurs:
	  ▪ There is difference between turbine/input shaft speed and output shaft speed sensor speed for **230 to 1,980 ms** (varies with ATF temperature and ECT) during shift-up.
	  ▪ There is difference between turbine/input shaft speed and output shaft speed sensor speed for **1,500 to 3,900 ms** (varies with ATF temperature) while driving without shifting.
	Diagnostic support note
	• The check engine light does not illuminate.
	• The automatic transaxle warning light does not illuminate.
	• PENDING CODE is available.
	• FREEZE FRAME DATA is not available.
	• DTC is stored in the TCM memory.

FAIL-SAFE FUNCTION	• Inhibits malfunctioning gear. • Limits engine torque. • Inhibits learning control. • Inhibits manual mode. • Inhibits neutral idle control. • Inhibits AAS.
POSSIBLE CAUSE	• ATF is less than specified value • Clutch burnt • Shift solenoid malfunction • ATF leakage from clutch circuit • Control valve body malfunction

SYSTEM WIRING DIAGRAM	Not applicable

Diagnostic procedure

STEP	INSPECTION		ACTION
1	**VERIFY DTC OUTPUT STATUS** • Are any the following DTCs displayed? ▪ P0738:00, P0746:00, P0751:00, P0752:00, P0756:00, P0757:00, P0761:00, P0762:00, P0766:00, P0767:00, P0771:00, P0772:00, P0842:00, P0843:00, P0847:00, P0848:00, P0872:00, P0873:00, P0877:00, P0878:00, P1784:00	Yes	Go to the applicable DTC inspection. (See **ON-BOARD DIAGNOSTIC SYSTEM DTC TABLE [FW6A-EL]**.)
		No	Go to the next step.
2	**INSPECT ATF LEVEL** • Inspect the ATF level. (See **AUTOMATIC TRANSAXLE FLUID (ATF) INSPECTION [FW6A-EL]**.) • Is there any malfunction?	Yes	Adjust the ATF level to the specification, then go to the next step. (See **AUTOMATIC TRANSAXLE FLUID (ATF) REPLACEMENT [FW6A-EL]**.)
		No	Go to the next step.
3	**PERFORM ON-BOARD DIAGNOSTIC TEST TO SPECIFY MALFUNCTIONING PART** **NOTE:** • If only DTCs in which the malfunctioning part is not confirmed are displayed as in the following DTCs, all of the diagnosis may not have been completed. In such cases, the malfunction cause can be determined by performing the on-board diagnostic test. • Perform the on-board diagnostic test. (See **ON-BOARD DIAGNOSTIC TEST MODE [FW6A-EL]**.) • Are any DTCs present?	Yes	Go to the applicable DTC inspection. (See **ON-BOARD DIAGNOSTIC SYSTEM DTC TABLE [FW6A-EL]**.)
		No	ATF amount in Step 2 is correct: • Replace the automatic transaxle. (See **AUTOMATIC TRANSAXLE REMOVAL/INSTALLATION [FW6A-EL]**.) ATF amount adjusted in Step 2: • Drive the vehicle to check it, and if there is no problem then the DTC troubleshooting is complete.

DTC P0735:00 [FW6A-EL]

2014 - Mazda3 - Transmission/Transaxle

DTC P0736:00 [FW6A-EL]

DTC P0736:00	Gear reverse incorrect ratio
DETECTION CONDITION	• Speed ratio is **0.75 to 1.2** for **2,000 ms** while vehicle is stopped in R position. **Diagnostic support note** • The check engine light does not illuminate. • The automatic transaxle warning light illuminates if the TCM detects the above malfunction condition in two consecutive drive cycles or in one drive cycle while the DTC for the same malfunction has been stored in the TCM. • PENDING CODE is available. • FREEZE FRAME DATA is not available. • DTC is stored in the TCM memory.
FAIL-SAFE FUNCTION	• Inhibits learning control. • Inhibits neutral idle control.
POSSIBLE CAUSE	• ATF is less than specified value • Clutch burnt • Shift solenoid malfunction • ATF leakage from clutch circuit • Control valve body malfunction
SYSTEM WIRING DIAGRAM	Not applicable

Diagnostic procedure

STEP	INSPECTION	ACTION
	VERIFY DTC OUTPUT STATUS	

1	• Are any the following DTCs displayed? ▪ P0738:00, P0746:00, P0751:00, P0752:00, P0756:00, P0757:00, P0761:00, P0762:00, P0766:00, P0767:00, P0771:00, P0772:00, P0842:00, P0843:00, P0847:00, P0848:00, P0872:00, P0873:00, P0877:00, P0878:00, P1784:00	Yes	Go to the applicable DTC inspection. (See **ON-BOARD DIAGNOSTIC SYSTEM DTC TABLE [FW6A-EL]**.)
		No	Go to the next step.
2	**INSPECT ATF LEVEL** • Inspect the ATF level. (See **AUTOMATIC TRANSAXLE FLUID (ATF) INSPECTION [FW6A-EL]**.) • Is there any malfunction?	Yes	Adjust the ATF level to the specification, then go to the next step. (See **AUTOMATIC TRANSAXLE FLUID (ATF) REPLACEMENT [FW6A-EL]**.)
		No	Go to the next step.
3	**PERFORM ON-BOARD DIAGNOSTIC TEST TO SPECIFY MALFUNCTIONING PART** **NOTE:** • If only DTCs in which the malfunctioning part is not confirmed are displayed as in the following DTCs, all of the diagnosis may not have been completed. In such cases, the malfunction cause can be determined by performing the on-board diagnostic test. • Perform the on-board diagnostic test. (See **ON-BOARD DIAGNOSTIC TEST MODE [FW6A-EL]**.) • Are any DTCs present?	Yes	Go to the applicable DTC inspection. (See **ON-BOARD DIAGNOSTIC SYSTEM DTC TABLE [FW6A-EL]**.)
		No	ATF amount in Step 2 is correct: • Replace the automatic transaxle. (See **AUTOMATIC TRANSAXLE REMOVAL/INSTALLATION [FW6A-EL]**.) ATF amount adjusted in Step 2: • Drive the vehicle to check it, and if there is no problem then the DTC troubleshooting is complete.

2014 - Mazda3 - Transmission/Transaxle

DTC P073D:00 [FW6A-EL]

DTC P073D:00	Neutral incorrect ratio
DETECTION CONDITION	• In P or N position, the following phenomenon occurs: ▪ Speed ratio is **0.5 or less** for **2 s** while vehicle is stopped in P or N position. **Diagnostic support note** • The check engine light does not illuminate. • The automatic transaxle warning light does not illuminate. • PENDING CODE is available. • FREEZE FRAME DATA is not available. • DTC is stored in the TCM memory.
FAIL-SAFE FUNCTION	Not applicable
POSSIBLE CAUSE	• Clutch stuck • Turbine/input shaft speed sensor malfunction
SYSTEM WIRING DIAGRAM	Not applicable

Diagnostic procedure

STEP	INSPECTION		ACTION
1	**VERIFY DTC OUTPUT STATUS** • Are any the following DTCs displayed? ▪ P0705:00, P0706:00, P0715:00, P0716:00,	Yes	Go to the applicable DTC inspection. (See **ON-BOARD DIAGNOSTIC SYSTEM DTC TABLE [FW6A-EL]**.)
		No	Replace the automatic transaxle.(See **AUTOMATIC TRANSAXLE REMOVAL/INSTALLATION [FW6A-EL]**.)

	P0717:00		

2014 - Mazda3 - Transmission/Transaxle

DTC P0741:00 [FW6A-EL]

DTC P0741:00	TCC control solenoid stuck off
DETECTION CONDITION	• Under the following conditions, difference in slip amount **over 5 s** compared to target slip amount is **200 rpm or more**, and TCC feedback hydraulic pressure is **200 kPa {2.04 kgf/cm^2, 29.0 psi} or more** occurs: ▪ Selector lever position is D position. ▪ No electrical malfunction in TCC control solenoid ▪ During TCC or TCC feedback ▪ There is no difference between vehicle speed signal from DSC HU/CM and output shaft speed sensor signal. ▪ Engine is running. ▪ ATF temperature is **−25 °C {−13 °F} or more**. ▪ Turbine/input shaft speed sensor and output shaft speed sensor DTC is not recorded. **Diagnostic support note** • The check engine light illuminates if the TCM detects the above malfunction condition in two consecutive drive cycles or in one drive cycle while the DTC for the same malfunction has been stored in the TCM. • The automatic transaxle warning light illuminates if the TCM detects the above malfunction condition in two consecutive drive cycles or in one drive cycle while the DTC for the same malfunction has been stored in the TCM. • PENDING CODE is available. • FREEZE FRAME DATA is available. • DTC is stored in the TCM memory.
FAIL-SAFE FUNCTION	• Inhibits TCC control. • Inhibits learning control. • Inhibits manual mode. • Inhibits neutral idle control.

	• Inhibits AAS.
POSSIBLE CAUSE	• TCC control solenoid malfunction • ATF leakage from clutch circuit • TCC clutch burnt • Control valve body malfunction
SYSTEM WIRING DIAGRAM	Not applicable

Diagnostic procedure

STEP	INSPECTION		ACTION
1	**VERIFY FREEZE FRAME DATA/SNAPSHOT DATA HAS BEEN RECORDED** • Has the freeze frame data/snapshot data been recorded on the repair order?	Yes	Go to the next step.
		No	Record the freeze frame data/snapshot data on the repair order, then go to the next step.
2	**VERIFY RELATED REPAIR INFORMATION AVAILABILITY** • Verify related Service Bulletins and/or on-line repair information availability. • Is any related repair information available?	Yes	Perform repair or diagnosis according to the available repair information. • If the vehicle is not repaired, replace the automatic transaxle. (See **AUTOMATIC TRANSAXLE REMOVAL/INSTALLATION [FW6A-EL]**.) Go to the next step.
		No	Replace the automatic transaxle, then go to the next step. (See **AUTOMATIC TRANSAXLE REMOVAL/INSTALLATION [FW6A-EL]**.)
3	**VERIFY DTC TROUBLESHOOTING COMPLETED** • Clear the DTC using the M-MDS. (See **ON-BOARD DIAGNOSTIC SYSTEM DTC INSPECTION [FW6A-EL]**.) • Perform the following procedure to ensure that the DTC has been resolved: ◦ Drive the vehicle for **5 s**	Yes	Go to the applicable DTC inspection. (See **ON-BOARD DIAGNOSTIC SYSTEM DTC TABLE [FW6A-EL]**.)
		No	DTC troubleshooting completed.

	or more under the following conditions: • Selector lever position: D position • During TCC or TCC feedback • Perform the DTC inspection using the M-MDS. (See **ON-BOARD DIAGNOSTIC SYSTEM DTC INSPECTION [FW6A-EL]**.) • Are any DTCs present?		

2014 - Mazda3 - Transmission/Transaxle

DTC P0743:00 [FW6A-EL]

DTC P0743:00	TCC control solenoid circuit malfunction
DETECTION CONDITION	• Under the following condition, the TCM detects the TCC control solenoid circuit malfunction: ▪ Battery voltage is **10.5 V or more**. **Diagnostic support note** • The check engine light illuminates if the TCM detects the above malfunction condition during the first drive cycle. • The automatic transaxle warning light illuminates if the TCM detects the above malfunction condition during the first drive cycle. • PENDING CODE is available. • FREEZE FRAME DATA is available. • DTC is stored in the TCM memory.
FAIL-SAFE FUNCTION	• Set to emergency mode. • Inhibits learning control. • Inhibits manual mode. • Inhibits neutral idle control. • Inhibits AAS.
POSSIBLE CAUSE	• Short or open circuit in TCC control solenoid circuit • TCC control solenoid malfunction
SYSTEM WIRING DIAGRAM	Not applicable

Diagnostic procedure

STEP	INSPECTION	ACTION

1	**VERIFY FREEZE FRAME DATA/SNAPSHOT DATA HAS BEEN RECORDED** • Has the freeze frame data/snapshot data been recorded on the repair order?	Yes	Go to the next step.
		No	Record the freeze frame data/snapshot data on the repair order, then go to the next step.
2	**VERIFY RELATED REPAIR INFORMATION AVAILABILITY** • Verify related Service Bulletins and/or on-line repair information availability. • Is any related repair information available?	Yes	Perform repair or diagnosis according to the available repair information. • If the vehicle is not repaired, replace the control valve body. (See **CONTROL VALVE BODY REMOVAL/INSTALLATION [FW6A-EL]**.) Go to the next step.
		No	Replace the control valve body, then go to the next step. (See **CONTROL VALVE BODY REMOVAL/INSTALLATION [FW6A-EL]**.)
3	**VERIFY DTC TROUBLESHOOTING COMPLETED** • Clear the DTC using the M-MDS. (See **ON-BOARD DIAGNOSTIC SYSTEM DTC INSPECTION [FW6A-EL]**.) • Perform the following procedure to ensure that the DTC has been resolved: ◦ Switch the ignition ON (engine off or on). • Perform the DTC inspection using the M-MDS. (See **ON-BOARD DIAGNOSTIC SYSTEM DTC INSPECTION [FW6A-EL]**.) • Are any DTCs present?	Yes	Go to the applicable DTC inspection. (See **ON-BOARD DIAGNOSTIC SYSTEM DTC TABLE [FW6A-EL]**.)
		No	DTC troubleshooting completed.

2014 - Mazda3 - Transmission/Transaxle

DTC P0746:00 [FW6A-EL]

DTC P0746:00	Pressure control solenoid stuck off
DETECTION CONDITION	• Under the following conditions, pressure control solenoid stuck-off detected by combination of gear ratio malfunction and oil pressure switch pattern malfunction: ▪ Engine is running. ▪ ATF temperature is **20 °C {68 °F} or more**. ▪ There is no difference between vehicle speed signal from DSC HU/CM and output shaft speed sensor signal. ▪ Turbine/input shaft speed sensor and output shaft speed sensor DTC is not recorded. **Diagnostic support note** • The check engine light illuminates if the TCM detects the above malfunction condition in two consecutive drive cycles or in one drive cycle while the DTC for the same malfunction has been stored in the TCM. • The automatic transaxle warning light illuminates if the TCM detects the above malfunction condition in two consecutive drive cycles or in one drive cycle while the DTC for the same malfunction has been stored in the TCM. • PENDING CODE is available. • FREEZE FRAME DATA is available. • DTC is stored in the TCM memory.
FAIL-SAFE FUNCTION	• Inhibits malfunctioning gear. • Limits engine torque. • Inhibits learning control. • Inhibits manual mode. • Inhibits neutral idle control. • Inhibits AAS.
	• ATF is less than specified value

POSSIBLE CAUSE	• Pressure control solenoid malfunction
SYSTEM WIRING DIAGRAM	Not applicable

Diagnostic procedure

STEP	INSPECTION		ACTION
1	**VERIFY DTC OUTPUT STATUS** • Is the DTC P1738:00 also present?	Yes	Go to the applicable DTC inspection. (See **DTC P1738:00 [FW6A-EL]**.)
		No	Go to the next step.
2	**VERIFY FREEZE FRAME DATA/SNAPSHOT DATA HAS BEEN RECORDED** • Has the freeze frame data/snapshot data been recorded on the repair order?	Yes	Go to the next step.
		No	Record the freeze frame data/snapshot data on the repair order, then go to the next step.
3	**VERIFY RELATED REPAIR INFORMATION AVAILABILITY** • Verify related Service Bulletins and/or on-line repair information availability. • Is any related repair information available?	Yes	Perform repair or diagnosis according to the available repair information. • If the vehicle is not repaired, go to the next step.
		No	Go to the next step.
4	**INSPECT ATF LEVEL** • Inspect the ATF level. (See **AUTOMATIC TRANSAXLE FLUID (ATF) INSPECTION [FW6A-EL]**.) • Is there any malfunction?	Yes	Adjust the ATF level to the specification, then go to the next step. (See **AUTOMATIC TRANSAXLE FLUID (ATF) REPLACEMENT [FW6A-EL]**.)
		No	Replace the control valve body, then go to the next step. (See **CONTROL VALVE BODY REMOVAL/INSTALLATION [FW6A-EL]**.)
5	**PERFORM ON-BOARD DIAGNOSTIC TEST** • Perform the following procedure to ensure that the DTC has been resolved: ◦ Start the engine.	Yes	Go to the applicable DTC inspection. (See **ON-BOARD DIAGNOSTIC SYSTEM DTC TABLE [FW6A-EL]**.)
		No	Drive the vehicle to check it, and if there is no problem then the DTC troubleshooting is

	◦ Verify that the ATF temperature is **55 °C {131 °F} or more**. • Perform the on-board diagnostic test. (See **ON-BOARD DIAGNOSTIC TEST MODE [FW6A-EL]**.) • Are any DTCs present?		complete.

2014 - Mazda3 - Transmission/Transaxle

DTC P0748:00 [FW6A-EL]

DTC P0748:00	Pressure control solenoid circuit malfunction
DETECTION CONDITION	• Under the following condition, the TCM detects the pressure control solenoid circuit malfunction: ▪ Battery voltage is **10.5 V or more**. **Diagnostic support note** • The check engine light illuminates if the TCM detects the above malfunction condition during the first drive cycle. • The automatic transaxle warning light illuminates if the TCM detects the above malfunction condition during the first drive cycle. • PENDING CODE is available. • FREEZE FRAME DATA is available. • DTC is stored in the TCM memory.
FAIL-SAFE FUNCTION	• Set to emergency mode. • Inhibits learning control. • Inhibits manual mode. • Inhibits neutral idle control. • Inhibits AAS.
POSSIBLE CAUSE	• Short or open circuit in pressure control solenoid circuit • Pressure control solenoid malfunction
SYSTEM WIRING DIAGRAM	Not applicable

Diagnostic procedure

STEP	INSPECTION	ACTION

1	**VERIFY FREEZE FRAME DATA/SNAPSHOT DATA HAS BEEN RECORDED** • Has the freeze frame data/snapshot data been recorded on the repair order?	Yes	Go to the next step.
		No	Record the freeze frame data/snapshot data on the repair order, then go to the next step.
2	**VERIFY RELATED REPAIR INFORMATION AVAILABILITY** • Verify related Service Bulletins and/or on-line repair information availability. • Is any related repair information available?	Yes	Perform repair or diagnosis according to the available repair information. • If the vehicle is not repaired, replace the control valve body. (See **CONTROL VALVE BODY REMOVAL/INSTALLATION [FW6A-EL]**.) Go to the next step.
		No	Replace the control valve body, then go to the next step. (See **CONTROL VALVE BODY REMOVAL/INSTALLATION [FW6A-EL]**.)
3	**VERIFY DTC TROUBLESHOOTING COMPLETED** • Clear the DTC using the M-MDS. (See **ON-BOARD DIAGNOSTIC SYSTEM DTC INSPECTION [FW6A-EL]**.) • Perform the following procedure to ensure that the DTC has been resolved: ◦ Switch the ignition ON (engine off or on). • Perform the DTC inspection using the M-MDS. (See **ON-BOARD DIAGNOSTIC SYSTEM DTC INSPECTION [FW6A-EL]**.) • Are any DTCs present?	Yes	Go to the applicable DTC inspection. (See **ON-BOARD DIAGNOSTIC SYSTEM DTC TABLE [FW6A-EL]**.)
		No	DTC troubleshooting completed.

2014 - Mazda3 - Transmission/Transaxle

DTC P0751:00 [FW6A-EL]

DTC P0751:00	Shift solenoid No.1 stuck off
DETECTION CONDITION	• Under the following conditions, shift solenoid No.1 stuck-off detected by combination of gear ratio malfunction and oil pressure switch pattern malfunction: ▪ Engine is running. ▪ ATF temperature is **20 °C {68 °F} or more**. ▪ There is no difference between vehicle speed signal from DSC HU/CM and output shaft speed sensor signal. ▪ Turbine/input shaft speed sensor and output shaft speed sensor DTC is not recorded. **Diagnostic support note** • The check engine light illuminates if the TCM detects the above malfunction condition in two consecutive drive cycles or in one drive cycle while the DTC for the same malfunction has been stored in the TCM. • The automatic transaxle warning light illuminates if the TCM detects the above malfunction condition in two consecutive drive cycles or in one drive cycle while the DTC for the same malfunction has been stored in the TCM. • PENDING CODE is available. • FREEZE FRAME DATA is available. • DTC is stored in the TCM memory.
FAIL-SAFE FUNCTION	• Inhibits malfunctioning gear. • Limits engine torque. • Inhibits learning control. • Inhibits manual mode. • Inhibits neutral idle control. • Inhibits AAS.
	• ATF is less than specified value

POSSIBLE CAUSE	• Shift solenoid No.1 malfunction • Control valve body malfunction
SYSTEM WIRING DIAGRAM	Not applicable

Diagnostic procedure

STEP	INSPECTION		ACTION
1	**VERIFY DTC OUTPUT STATUS** • Is the DTC P1738:00 also present?	Yes	Go to the applicable DTC inspection. (See **DTC P1738:00 [FW6A-EL]**.)
		No	Go to the next step.
2	**VERIFY FREEZE FRAME DATA/SNAPSHOT DATA HAS BEEN RECORDED** • Has the freeze frame data/snapshot data been recorded on the repair order?	Yes	Go to the next step.
		No	Record the freeze frame data/snapshot data on the repair order, then go to the next step.
3	**VERIFY RELATED REPAIR INFORMATION AVAILABILITY** • Verify related Service Bulletins and/or on-line repair information availability. • Is any related repair information available?	Yes	Perform repair or diagnosis according to the available repair information. • If the vehicle is not repaired, go to the next step.
		No	Go to the next step.
4	**INSPECT ATF LEVEL** • Inspect the ATF level. (See **AUTOMATIC TRANSAXLE FLUID (ATF) INSPECTION [FW6A-EL]**.) • Is there any malfunction?	Yes	Adjust the ATF level to the specification, then go to the next step. (See **AUTOMATIC TRANSAXLE FLUID (ATF) REPLACEMENT [FW6A-EL]**.)
		No	Replace the control valve body, then go to the next step. (See **CONTROL VALVE BODY REMOVAL/INSTALLATION [FW6A-EL]**.)
5	**PERFORM ON-BOARD DIAGNOSTIC TEST** • Perform the following procedure to ensure that the DTC has been resolved:	Yes	ATF amount in Step 4 is correct: • Replace the automatic transaxle, then drive the vehicle to check it,

	◦ Start the engine. ◦ Verify that the ATF temperature is **55 °C {131 °F} or more**. • Perform the on-board diagnostic test. (See **ON-BOARD DIAGNOSTIC TEST MODE [FW6A-EL]**.) • Are any the following DTCs displayed? ▪ P0751:00, P0843:00		and if there is no problem then the DTC troubleshooting is complete. (See **AUTOMATIC TRANSAXLE REMOVAL/INSTALLATION [FW6A-EL]**.) ATF amount adjusted in Step 4: • Replace the control valve body, then go to the next step. (See **CONTROL VALVE BODY REMOVAL/INSTALLATION [FW6A-EL]**.)
		No	No DTCs are displayed: • Drive the vehicle to check it, and if there is no problem then the DTC troubleshooting is complete. If a DTC other than the one indicated on the left is displayed: • Go to the applicable DTC inspection. (See **ON-BOARD DIAGNOSTIC SYSTEM DTC TABLE [FW6A-EL]**)
6	**RE-PERFORM ON-BOARD DIAGNOSTIC TEST** • Perform the following procedure to ensure that the DTC has been resolved: ◦ Start the engine. ◦ Verify that the ATF temperature is **55 °C {131 °F} or more**. • Perform the on-board diagnostic test. (See **ON-BOARD DIAGNOSTIC TEST MODE [FW6A-EL]**.) • Are any DTCs present?	Yes	Go to the applicable DTC inspection. (See **ON-BOARD DIAGNOSTIC SYSTEM DTC TABLE [FW6A-EL]**.)
		No	DTC troubleshooting completed.

2014 - Mazda3 - Transmission/Transaxle

DTC P0752:00 [FW6A-EL]

DTC P0752:00	Shift solenoid No.1 stuck on
DETECTION CONDITION	• Under the following conditions, shift solenoid No.1 stuck-on detected by combination of gear ratio malfunction and oil pressure switch pattern malfunction: ▪ Engine is running. ▪ ATF temperature is **20 °C {68 °F} or more**. ▪ There is no difference between vehicle speed signal from DSC HU/CM and output shaft speed sensor signal. ▪ Turbine/input shaft speed sensor and output shaft speed sensor DTC is not recorded. **Diagnostic support note** • The check engine light illuminates if the TCM detects the above malfunction condition in two consecutive drive cycles or in one drive cycle while the DTC for the same malfunction has been stored in the TCM. • The automatic transaxle warning light illuminates if the TCM detects the above malfunction condition in two consecutive drive cycles or in one drive cycle while the DTC for the same malfunction has been stored in the TCM. • PENDING CODE is available. • FREEZE FRAME DATA is available. • DTC is stored in the TCM memory.
FAIL-SAFE FUNCTION	• Inhibits malfunctioning gear. • Limits engine torque. • Inhibits learning control. • Inhibits manual mode. • Inhibits neutral idle control. • Inhibits AAS.
POSSIBLE	

CAUSE	Shift solenoid No.1 malfunction
SYSTEM WIRING DIAGRAM	Not applicable

Diagnostic procedure

STEP	INSPECTION		ACTION
1	**VERIFY DTC OUTPUT STATUS** • Is the DTC P1738:00 also present?	Yes	Go to the applicable DTC inspection. (See **DTC P1738:00 [FW6A-EL]**.)
		No	Go to the next step.
2	**VERIFY FREEZE FRAME DATA/SNAPSHOT DATA HAS BEEN RECORDED** • Has the freeze frame data/snapshot data been recorded on the repair order?	Yes	Go to the next step.
		No	Record the freeze frame data/snapshot data on the repair order, then go to the next step.
3	**VERIFY RELATED REPAIR INFORMATION AVAILABILITY** • Verify related Service Bulletins and/or on-line repair information availability. • Is any related repair information available?	Yes	Perform repair or diagnosis according to the available repair information. • If the vehicle is not repaired, go to the next step.
		No	Go to the next step.

4	**PERFORM ON-BOARD DIAGNOSTIC TEST**
	• Perform the following procedure to ensure that the DTC has been resolved:
	  ◦ Start the engine.
	  ◦ Verify that the ATF temperature is **55 °C {131 °F} or more**.
	• Perform the on-board diagnostic test.
	(See **ON-BOARD DIAGNOSTIC**
		Yes	Replace the control valve body, then go to the next step.
			(See **CONTROL VALVE BODY REMOVAL/INSTALLATION [FW6A-EL]**)

		No	No DTCs are displayed: • Drive the vehicle to check it, and if there is no problem then the DTC troubleshooting is complete. If a DTC other than the one indicated on the left is displayed: • Go to the applicable DTC inspection. (See **ON-BOARD DIAGNOSTIC**

	TEST MODE [FW6A-EL].) • Are P0752:00 present?		**SYSTEM DTC TABLE [FW6A-EL]**)
5	**RE-PERFORM ON-BOARD DIAGNOSTIC TEST** • Perform the following procedure to ensure that the DTC has been resolved: ◦ Start the engine. ◦ Verify that the ATF temperature is **55 °C {131 °F} or more**. • Perform the on-board diagnostic test. (See **ON-BOARD DIAGNOSTIC TEST MODE [FW6A-EL]**.) • Are any DTCs present?	Yes	Go to the applicable DTC inspection. (See **ON-BOARD DIAGNOSTIC SYSTEM DTC TABLE [FW6A-EL]**.)
		No	DTC troubleshooting completed.

2014 - Mazda3 - Transmission/Transaxle

DTC P0753:00 [FW6A-EL]

DTC P0753:00	Shift solenoid No.1 circuit malfunction
DETECTION CONDITION	• Under the following condition, the TCM detects the shift solenoid No.1 circuit malfunction: ▪ Battery voltage is **10.5 V or more**. **Diagnostic support note** • The check engine light illuminates if the TCM detects the above malfunction condition during the first drive cycle. • The automatic transaxle warning light illuminates if the TCM detects the above malfunction condition during the first drive cycle. • PENDING CODE is available. • FREEZE FRAME DATA is available. • DTC is stored in the TCM memory.
FAIL-SAFE FUNCTION	• Set to emergency mode. • Inhibits learning control. • Inhibits manual mode. • Inhibits neutral idle control. • Inhibits AAS.
POSSIBLE CAUSE	• Short or open circuit in shift solenoid No.1 circuit • Shift solenoid No.1 malfunction
SYSTEM WIRING DIAGRAM	Not applicable

Diagnostic procedure

STEP	INSPECTION	ACTION

1	**VERIFY FREEZE FRAME DATA/SNAPSHOT DATA HAS BEEN RECORDED** • Has the freeze frame data/snapshot data been recorded on the repair order?	Yes	Go to the next step.
		No	Record the freeze frame data/snapshot data on the repair order, then go to the next step.
2	**VERIFY RELATED REPAIR INFORMATION AVAILABILITY** • Verify related Service Bulletins and/or on-line repair information availability. • Is any related repair information available?	Yes	Perform repair or diagnosis according to the available repair information. • If the vehicle is not repaired, replace the control valve body. (See **CONTROL VALVE BODY REMOVAL/INSTALLATION [FW6A-EL]**.) Go to the next step.
		No	Replace the control valve body, then go to the next step. (See **CONTROL VALVE BODY REMOVAL/INSTALLATION [FW6A-EL]**.)
3	**VERIFY DTC TROUBLESHOOTING COMPLETED** • Clear the DTC using the M-MDS. (See **ON-BOARD DIAGNOSTIC SYSTEM DTC INSPECTION [FW6A-EL]**.) • Perform the following procedure to ensure that the DTC has been resolved: ◦ Switch the ignition ON (engine off or on). • Perform the DTC inspection using the M-MDS. (See **ON-BOARD DIAGNOSTIC SYSTEM DTC INSPECTION [FW6A-EL]**.) • Are any DTCs present?	Yes	Go to the applicable DTC inspection. (See **ON-BOARD DIAGNOSTIC SYSTEM DTC TABLE [FW6A-EL]**.)
		No	DTC troubleshooting completed.

2014 - Mazda3 - Transmission/Transaxle

DTC P0756:00 [FW6A-EL]

DTC P0756:00	Shift solenoid No.2 stuck off
DETECTION CONDITION	• Under the following conditions, shift solenoid No.2 stuck-off detected by combination of gear ratio malfunction and oil pressure switch pattern malfunction: ▪ Engine is running. ▪ ATF temperature is **20 °C {68 °F} or more**. ▪ There is no difference between vehicle speed signal from DSC HU/CM and output shaft speed sensor signal. ▪ Turbine/input shaft speed sensor and output shaft speed sensor DTC is not recorded. **Diagnostic support note** • The check engine light illuminates if the TCM detects the above malfunction condition in two consecutive drive cycles or in one drive cycle while the DTC for the same malfunction has been stored in the TCM. • The automatic transaxle warning light illuminates if the TCM detects the above malfunction condition in two consecutive drive cycles or in one drive cycle while the DTC for the same malfunction has been stored in the TCM. • PENDING CODE is available. • FREEZE FRAME DATA is available. • DTC is stored in the TCM memory.
FAIL-SAFE FUNCTION	• Inhibits malfunctioning gear. • Limits engine torque. • Inhibits learning control. • Inhibits manual mode. • Inhibits neutral idle control. • Inhibits AAS.
	• ATF is less than specified value

POSSIBLE CAUSE	• Shift solenoid No.2 malfunction
SYSTEM WIRING DIAGRAM	Not applicable

Diagnostic procedure

STEP	INSPECTION		ACTION
1	**VERIFY DTC OUTPUT STATUS** • Is the DTC P1738:00 also present?	Yes	Go to the applicable DTC inspection. (See **DTC P1738:00 [FW6A-EL]**.)
		No	Go to the next step.
2	**VERIFY FREEZE FRAME DATA/SNAPSHOT DATA HAS BEEN RECORDED** • Has the freeze frame data/snapshot data been recorded on the repair order?	Yes	Go to the next step.
		No	Record the freeze frame data/snapshot data on the repair order, then go to the next step.
3	**VERIFY RELATED REPAIR INFORMATION AVAILABILITY** • Verify related Service Bulletins and/or on-line repair information availability. • Is any related repair information available?	Yes	Perform repair or diagnosis according to the available repair information. • If the vehicle is not repaired, go to the next step.
		No	Go to the next step.
4	**INSPECT ATF LEVEL** • Inspect the ATF level. (See **AUTOMATIC TRANSAXLE FLUID (ATF) INSPECTION [FW6A-EL]**.) • Is there any malfunction?	Yes	Adjust the ATF level to the specification, then go to the next step. (See **AUTOMATIC TRANSAXLE FLUID (ATF) REPLACEMENT [FW6A-EL]**.)
		No	Replace the control valve body, then go to the next step. (See **CONTROL VALVE BODY REMOVAL/INSTALLATION [FW6A-EL]**.)
5	**PERFORM ON-BOARD DIAGNOSTIC TEST** • Perform the following procedure to ensure that the DTC has been resolved:	Yes	ATF amount in Step 4 is correct: • Replace the automatic transaxle, then drive the vehicle to check it, and if there is no problem then the

	◦ Start the engine. ◦ Verify that the ATF temperature is **55 °C {131 °F} or more**. • Perform the on-board diagnostic test. (See **ON-BOARD DIAGNOSTIC TEST MODE [FW6A-EL]**.) • Are any the following DTCs displayed? ▪ P0756:00, P0848:00		DTC troubleshooting is complete. (See **AUTOMATIC TRANSAXLE REMOVAL/INSTALLATION [FW6A-EL]**.) ATF amount adjusted in Step 4: • Replace the control valve body, then go to the next step. (See **CONTROL VALVE BODY REMOVAL/INSTALLATION [FW6A-EL]**.)
		No	No DTCs are displayed: • Drive the vehicle to check it, and if there is no problem then the DTC troubleshooting is complete. If a DTC other than the one indicated on the left is displayed: • Go to the applicable DTC inspection. (See **ON-BOARD DIAGNOSTIC SYSTEM DTC TABLE [FW6A-EL]**)
6	**RE-PERFORM ON-BOARD DIAGNOSTIC TEST** • Perform the following procedure to ensure that the DTC has been resolved: ◦ Start the engine. ◦ Verify that the ATF temperature is **55 °C {131 °F} or more**. • Perform the on-board diagnostic test. (See **ON-BOARD DIAGNOSTIC TEST MODE [FW6A-EL]**.) • Are any DTCs present?	Yes	Go to the applicable DTC inspection. (See **ON-BOARD DIAGNOSTIC SYSTEM DTC TABLE [FW6A-EL]**.)
		No	DTC troubleshooting completed.

2014 - Mazda3 - Transmission/Transaxle

DTC P0757:00 [FW6A-EL]

DTC P0757:00	Shift solenoid No.2 stuck on
DETECTION CONDITION	• Under the following conditions, shift solenoid No.2 stuck-on detected by combination of gear ratio malfunction and oil pressure switch pattern malfunction: ▪ Engine is running. ▪ ATF temperature is **20 °C {68 °F} or more**. ▪ There is no difference between vehicle speed signal from DSC HU/CM and output shaft speed sensor signal. ▪ Turbine/input shaft speed sensor and output shaft speed sensor DTC is not recorded. **Diagnostic support note** • The check engine light illuminates if the TCM detects the above malfunction condition in two consecutive drive cycles or in one drive cycle while the DTC for the same malfunction has been stored in the TCM. • The automatic transaxle warning light illuminates if the TCM detects the above malfunction condition in two consecutive drive cycles or in one drive cycle while the DTC for the same malfunction has been stored in the TCM. • PENDING CODE is available. • FREEZE FRAME DATA is available. • DTC is stored in the TCM memory.
FAIL-SAFE FUNCTION	• Inhibits malfunctioning gear. • Limits engine torque. • Inhibits learning control. • Inhibits manual mode. • Inhibits neutral idle control. • Inhibits AAS.
POSSIBLE	

CAUSE	Shift solenoid No.2 malfunction
SYSTEM WIRING DIAGRAM	Not applicable

Diagnostic procedure

STEP	INSPECTION		ACTION
1	**VERIFY DTC OUTPUT STATUS** • Is the DTC P1738:00 also present?	Yes	Go to the applicable DTC inspection. (See **DTC P1738:00 [FW6A-EL]**.)
		No	Go to the next step.
2	**VERIFY FREEZE FRAME DATA/SNAPSHOT DATA HAS BEEN RECORDED** • Has the freeze frame data/snapshot data been recorded on the repair order?	Yes	Go to the next step.
		No	Record the freeze frame data/snapshot data on the repair order, then go to the next step.
3	**VERIFY RELATED REPAIR INFORMATION AVAILABILITY** • Verify related Service Bulletins and/or on-line repair information availability. • Is any related repair information available?	Yes	Perform repair or diagnosis according to the available repair information. • If the vehicle is not repaired, go to the next step.
		No	Go to the next step.

4	**PERFORM ON-BOARD DIAGNOSTIC TEST**
	• Perform the following procedure to ensure that the DTC has been resolved:
	  ◦ Start the engine.
	  ◦ Verify that the ATF temperature is **55 °C {131 °F} or more**.
	• Perform the on-board diagnostic test.
	(See **ON-BOARD DIAGNOSTIC**
		Yes	Replace the control valve body, then go to the next step.
			(See **CONTROL VALVE BODY REMOVAL/INSTALLATION [FW6A-EL]**)

		No	No DTCs are displayed: • Drive the vehicle to check it, and if there is no problem then the DTC troubleshooting is complete. If a DTC other than the one indicated on the left is displayed: • Go to the applicable DTC inspection. (See **ON-BOARD DIAGNOSTIC**

	TEST MODE [FW6A-EL].) • Are P0757:00 present?		**SYSTEM DTC TABLE [FW6A-EL]**)
5	**RE-PERFORM ON-BOARD DIAGNOSTIC TEST** • Perform the following procedure to ensure that the DTC has been resolved: ◦ Start the engine. ◦ Verify that the ATF temperature is **55 °C {131 °F} or more**. • Perform the on-board diagnostic test. (See **ON-BOARD DIAGNOSTIC TEST MODE [FW6A-EL]**.) • Are any DTCs present?	Yes	Go to the applicable DTC inspection. (See **ON-BOARD DIAGNOSTIC SYSTEM DTC TABLE [FW6A-EL]**.)
		No	DTC troubleshooting completed.

2014 - Mazda3 - Transmission/Transaxle

DTC P0758:00 [FW6A-EL]

DTC P0758:00	Shift solenoid No.2 circuit malfunction
DETECTION CONDITION	• Under the following condition, the TCM detects the shift solenoid No.2 circuit malfunction: ▪ Battery voltage is **10.5 V or more**. **Diagnostic support note** • The check engine light illuminates if the TCM detects the above malfunction condition during the first drive cycle. • The automatic transaxle warning light illuminates if the TCM detects the above malfunction condition during the first drive cycle. • PENDING CODE is available. • FREEZE FRAME DATA is available. • DTC is stored in the TCM memory.
FAIL-SAFE FUNCTION	• Set to emergency mode. • Inhibits learning control. • Inhibits manual mode. • Inhibits neutral idle control. • Inhibits AAS.
POSSIBLE CAUSE	• Short or open circuit in shift solenoid No.2 circuit • Shift solenoid No.2 malfunction
SYSTEM WIRING DIAGRAM	Not applicable

Diagnostic procedure

STEP	INSPECTION	ACTION

1	**VERIFY FREEZE FRAME DATA/SNAPSHOT DATA HAS BEEN RECORDED** • Has the freeze frame data/snapshot data been recorded on the repair order?	Yes	Go to the next step.
		No	Record the freeze frame data/snapshot data on the repair order, then go to the next step.
2	**VERIFY RELATED REPAIR INFORMATION AVAILABILITY** • Verify related Service Bulletins and/or on-line repair information availability. • Is any related repair information available?	Yes	Perform repair or diagnosis according to the available repair information. • If the vehicle is not repaired, replace the control valve body. (See **CONTROL VALVE BODY REMOVAL/INSTALLATION [FW6A-EL]**.) Go to the next step.
		No	Replace the control valve body, then go to the next step. (See **CONTROL VALVE BODY REMOVAL/INSTALLATION [FW6A-EL]**.)
3	**VERIFY DTC TROUBLESHOOTING COMPLETED** • Clear the DTC using the M-MDS. (See **ON-BOARD DIAGNOSTIC SYSTEM DTC INSPECTION [FW6A-EL]**.) • Perform the following procedure to ensure that the DTC has been resolved: ◦ Switch the ignition ON (engine off or on). • Perform the DTC inspection using the M-MDS. (See **ON-BOARD DIAGNOSTIC SYSTEM DTC INSPECTION [FW6A-EL]**.) • Are any DTCs present?	Yes	Go to the applicable DTC inspection. (See **ON-BOARD DIAGNOSTIC SYSTEM DTC TABLE [FW6A-EL]**.)
		No	DTC troubleshooting completed.

2014 - Mazda3 - Transmission/Transaxle

DTC P0761:00 [FW6A-EL]

DTC P0761:00	Shift solenoid No.3 stuck off
DETECTION CONDITION	• Under the following conditions, shift solenoid No.3 stuck-off detected by combination of gear ratio malfunction and oil pressure switch pattern malfunction: ▪ Engine is running. ▪ ATF temperature is **20 °C {68 °F} or more**. ▪ There is no difference between vehicle speed signal from DSC HU/CM and output shaft speed sensor signal. ▪ Turbine/input shaft speed sensor and output shaft speed sensor DTC is not recorded. **Diagnostic support note** • The check engine light illuminates if the TCM detects the above malfunction condition in two consecutive drive cycles or in one drive cycle while the DTC for the same malfunction has been stored in the TCM. • The automatic transaxle warning light illuminates if the TCM detects the above malfunction condition in two consecutive drive cycles or in one drive cycle while the DTC for the same malfunction has been stored in the TCM. • PENDING CODE is available. • FREEZE FRAME DATA is available. • DTC is stored in the TCM memory.
FAIL-SAFE FUNCTION	• Inhibits malfunctioning gear. • Limits engine torque. • Inhibits learning control. • Inhibits manual mode. • Inhibits neutral idle control. • Inhibits AAS.
POSSIBLE	

CAUSE	Shift solenoid No.3 malfunction
SYSTEM WIRING DIAGRAM	Not applicable

Diagnostic procedure

STEP	INSPECTION		ACTION
1	**VERIFY DTC OUTPUT STATUS** • Is the DTC P1738:00 also present?	Yes	Go to the applicable DTC inspection. (See **DTC P1738:00 [FW6A-EL]**.)
		No	Go to the next step.
2	**VERIFY FREEZE FRAME DATA/SNAPSHOT DATA HAS BEEN RECORDED** • Has the freeze frame data/snapshot data been recorded on the repair order?	Yes	Go to the next step.
		No	Record the freeze frame data/snapshot data on the repair order, then go to the next step.
3	**VERIFY RELATED REPAIR INFORMATION AVAILABILITY** • Verify related Service Bulletins and/or on-line repair information availability. • Is any related repair information available?	Yes	Perform repair or diagnosis according to the available repair information. • If the vehicle is not repaired, go to the next step.
		No	Go to the next step.

4	**PERFORM ON-BOARD DIAGNOSTIC TEST**
	• Perform the following procedure to ensure that the DTC has been resolved:
	  ◦ Start the engine.
	  ◦ Verify that the ATF temperature is **55 °C {131 °F} or more**.
	• Perform the on-board diagnostic test.
	(See **ON-BOARD DIAGNOSTIC**
		Yes	Replace the control valve body, then go to the next step.
			(See **CONTROL VALVE BODY REMOVAL/INSTALLATION [FW6A-EL]**)

		No	No DTCs are displayed: • Drive the vehicle to check it, and if there is no problem then the DTC troubleshooting is complete. If a DTC other than the one indicated on the left is displayed: • Go to the applicable DTC inspection. (See **ON-BOARD DIAGNOSTIC**

	TEST MODE [FW6A-EL].) • Are P0761:00 present?		**SYSTEM DTC TABLE [FW6A-EL]**)
5	**RE-PERFORM ON-BOARD DIAGNOSTIC TEST** • Perform the following procedure to ensure that the DTC has been resolved: ◦ Start the engine. ◦ Verify that the ATF temperature is **55 °C {131 °F} or more**. • Perform the on-board diagnostic test. (See **ON-BOARD DIAGNOSTIC TEST MODE [FW6A-EL]**.) • Are any DTCs present?	Yes	Go to the applicable DTC inspection. (See **ON-BOARD DIAGNOSTIC SYSTEM DTC TABLE [FW6A-EL]**.)
		No	DTC troubleshooting completed.

2014 - Mazda3 - Transmission/Transaxle

DTC P0762:00 [FW6A-EL]

DTC P0762:00	Shift solenoid No.3 stuck on
DETECTION CONDITION	• Under the following conditions, shift solenoid No.3 stuck-on detected by combination of gear ratio malfunction and oil pressure switch pattern malfunction: ▪ Engine is running. ▪ ATF temperature is **20 °C {68 °F} or more**. ▪ There is no difference between vehicle speed signal from DSC HU/CM and output shaft speed sensor signal. ▪ Turbine/input shaft speed sensor and output shaft speed sensor DTC is not recorded. **Diagnostic support note** • The check engine light illuminates if the TCM detects the above malfunction condition in two consecutive drive cycles or in one drive cycle while the DTC for the same malfunction has been stored in the TCM. • The automatic transaxle warning light illuminates if the TCM detects the above malfunction condition in two consecutive drive cycles or in one drive cycle while the DTC for the same malfunction has been stored in the TCM. • PENDING CODE is available. • FREEZE FRAME DATA is available. • DTC is stored in the TCM memory.
FAIL-SAFE FUNCTION	• Inhibits malfunctioning gear. • Limits engine torque. • Inhibits learning control. • Inhibits manual mode. • Inhibits neutral idle control. • Inhibits AAS.
	• ATF is less than specified value

POSSIBLE CAUSE	• Shift solenoid No.3 malfunction • Control valve body malfunction
SYSTEM WIRING DIAGRAM	Not applicable

Diagnostic procedure

STEP	INSPECTION		ACTION
1	**VERIFY DTC OUTPUT STATUS** • Is the DTC P1738:00 also present?	Yes	Go to the applicable DTC inspection. (See **DTC P1738:00 [FW6A-EL]**.)
		No	Go to the next step.
2	**VERIFY FREEZE FRAME DATA/SNAPSHOT DATA HAS BEEN RECORDED** • Has the freeze frame data/snapshot data been recorded on the repair order?	Yes	Go to the next step.
		No	Record the freeze frame data/snapshot data on the repair order, then go to the next step.
3	**VERIFY RELATED REPAIR INFORMATION AVAILABILITY** • Verify related Service Bulletins and/or on-line repair information availability. • Is any related repair information available?	Yes	Perform repair or diagnosis according to the available repair information. • If the vehicle is not repaired, go to the next step.
		No	Go to the next step.
4	**INSPECT ATF LEVEL** • Inspect the ATF level. (See **AUTOMATIC TRANSAXLE FLUID (ATF) INSPECTION [FW6A-EL]**.) • Is there any malfunction?	Yes	Adjust the ATF level to the specification, then go to the next step. (See **AUTOMATIC TRANSAXLE FLUID (ATF) REPLACEMENT [FW6A-EL]**.)
		No	Replace the control valve body, then go to the next step. (See **CONTROL VALVE BODY REMOVAL/INSTALLATION [FW6A-EL]**.)
5	**PERFORM ON-BOARD DIAGNOSTIC TEST** • Perform the following procedure to ensure that the DTC has been resolved:	Yes	ATF amount in Step 4 is correct: • Replace the automatic transaxle, then drive the vehicle to check it,

	◦ Start the engine. ◦ Verify that the ATF temperature is **55 °C {131 °F} or more**. • Perform the on-board diagnostic test. (See **ON-BOARD DIAGNOSTIC TEST MODE [FW6A-EL]**.) • Are any the following DTCs displayed? ▪ P0762:00, P0873:00		and if there is no problem then the DTC troubleshooting is complete. (See **AUTOMATIC TRANSAXLE REMOVAL/INSTALLATION [FW6A-EL]**.) ATF amount adjusted in Step 4: • Replace the control valve body, then go to the next step. (See **CONTROL VALVE BODY REMOVAL/INSTALLATION [FW6A-EL]**.)
		No	No DTCs are displayed: • Drive the vehicle to check it, and if there is no problem then the DTC troubleshooting is complete. If a DTC other than the one indicated on the left is displayed: • Go to the applicable DTC inspection. (See **ON-BOARD DIAGNOSTIC SYSTEM DTC TABLE [FW6A-EL]**)
6	**RE-PERFORM ON-BOARD DIAGNOSTIC TEST** • Perform the following procedure to ensure that the DTC has been resolved: ◦ Start the engine. ◦ Verify that the ATF temperature is **55 °C {131 °F} or more**. • Perform the on-board diagnostic test. (See **ON-BOARD DIAGNOSTIC TEST MODE [FW6A-EL]**.) • Are any DTCs present?	Yes	Go to the applicable DTC inspection. (See **ON-BOARD DIAGNOSTIC SYSTEM DTC TABLE [FW6A-EL]**.)
		No	DTC troubleshooting completed.

2014 - Mazda3 - Transmission/Transaxle

DTC P0763:00 [FW6A-EL]

DTC P0763:00	Shift solenoid No.3 circuit malfunction
DETECTION CONDITION	• Under the following condition, the TCM detects the shift solenoid No.3 circuit malfunction: ▪ Battery voltage is **10.5 V or more**. **Diagnostic support note** • The check engine light illuminates if the TCM detects the above malfunction condition during the first drive cycle. • The automatic transaxle warning light illuminates if the TCM detects the above malfunction condition during the first drive cycle. • PENDING CODE is available. • FREEZE FRAME DATA is available. • DTC is stored in the TCM memory.
FAIL-SAFE FUNCTION	• Set to emergency mode. • Inhibits learning control. • Inhibits manual mode. • Inhibits neutral idle control. • Inhibits AAS.
POSSIBLE CAUSE	• Short or open circuit in shift solenoid No.3 circuit • Shift solenoid No.3 malfunction
SYSTEM WIRING DIAGRAM	Not applicable

Diagnostic procedure

STEP	INSPECTION	ACTION

1	**VERIFY FREEZE FRAME DATA/SNAPSHOT DATA HAS BEEN RECORDED** • Has the freeze frame data/snapshot data been recorded on the repair order?	Yes	Go to the next step.
		No	Record the freeze frame data/snapshot data on the repair order, then go to the next step.
2	**VERIFY RELATED REPAIR INFORMATION AVAILABILITY** • Verify related Service Bulletins and/or on-line repair information availability. • Is any related repair information available?	Yes	Perform repair or diagnosis according to the available repair information. • If the vehicle is not repaired, replace the control valve body. (See **CONTROL VALVE BODY REMOVAL/INSTALLATION [FW6A-EL]**.) Go to the next step.
		No	Replace the control valve body, then go to the next step. (See **CONTROL VALVE BODY REMOVAL/INSTALLATION [FW6A-EL]**.)
3	**VERIFY DTC TROUBLESHOOTING COMPLETED** • Clear the DTC using the M-MDS. (See **ON-BOARD DIAGNOSTIC SYSTEM DTC INSPECTION [FW6A-EL]**.) • Perform the following procedure to ensure that the DTC has been resolved: ◦ Switch the ignition ON (engine off or on). • Perform the DTC inspection using the M-MDS. (See **ON-BOARD DIAGNOSTIC SYSTEM DTC INSPECTION [FW6A-EL]**.) • Are any DTCs present?	Yes	Go to the applicable DTC inspection. (See **ON-BOARD DIAGNOSTIC SYSTEM DTC TABLE [FW6A-EL]**.)
		No	DTC troubleshooting completed.

2014 - Mazda3 - Transmission/Transaxle

DTC P0766:00 [FW6A-EL]

DTC P0766:00	Shift solenoid No.4 stuck off
DETECTION CONDITION	• Under the following conditions, shift solenoid No.4 stuck-off detected by combination of gear ratio malfunction and oil pressure switch pattern malfunction: ▪ Engine is running. ▪ ATF temperature is **20 °C {68 °F} or more**. ▪ There is no difference between vehicle speed signal from DSC HU/CM and output shaft speed sensor signal. ▪ Turbine/input shaft speed sensor and output shaft speed sensor DTC is not recorded. **Diagnostic support note** • The check engine light illuminates if the TCM detects the above malfunction condition in two consecutive drive cycles or in one drive cycle while the DTC for the same malfunction has been stored in the TCM. • The automatic transaxle warning light illuminates if the TCM detects the above malfunction condition in two consecutive drive cycles or in one drive cycle while the DTC for the same malfunction has been stored in the TCM. • PENDING CODE is available. • FREEZE FRAME DATA is available. • DTC is stored in the TCM memory.
FAIL-SAFE FUNCTION	• Inhibits malfunctioning gear. • Limits engine torque. • Inhibits learning control. • Inhibits manual mode. • Inhibits neutral idle control. • Inhibits AAS.
POSSIBLE	

CAUSE	Shift solenoid No.4 malfunction
SYSTEM WIRING DIAGRAM	Not applicable

Diagnostic procedure

STEP	INSPECTION		ACTION
1	**VERIFY DTC OUTPUT STATUS** • Is the DTC P1738:00 also present?	Yes	Go to the applicable DTC inspection. (See **DTC P1738:00 [FW6A-EL]**.)
		No	Go to the next step.
2	**VERIFY FREEZE FRAME DATA/SNAPSHOT DATA HAS BEEN RECORDED** • Has the freeze frame data/snapshot data been recorded on the repair order?	Yes	Go to the next step.
		No	Record the freeze frame data/snapshot data on the repair order, then go to the next step.
3	**VERIFY RELATED REPAIR INFORMATION AVAILABILITY** • Verify related Service Bulletins and/or on-line repair information availability. • Is any related repair information available?	Yes	Perform repair or diagnosis according to the available repair information. • If the vehicle is not repaired, go to the next step.
		No	Go to the next step.

4	**PERFORM ON-BOARD DIAGNOSTIC TEST**
	• Perform the following procedure to ensure that the DTC has been resolved:
	  ◦ Start the engine.
	  ◦ Verify that the ATF temperature is **55 °C {131 °F} or more**.
	• Perform the on-board diagnostic test.
	(See **ON-BOARD DIAGNOSTIC**
		Yes	Replace the control valve body, then go to the next step.
			(See **CONTROL VALVE BODY REMOVAL/INSTALLATION [FW6A-EL]**)

		No	No DTCs are displayed: • Drive the vehicle to check it, and if there is no problem then the DTC troubleshooting is complete. If a DTC other than the one indicated on the left is displayed: • Go to the applicable DTC inspection. (See **ON-BOARD DIAGNOSTIC**

	TEST MODE [FW6A-EL].) • Are P0766:00 present?		**SYSTEM DTC TABLE [FW6A-EL]**)
5	**RE-PERFORM ON-BOARD DIAGNOSTIC TEST** • Perform the following procedure to ensure that the DTC has been resolved: ◦ Start the engine. ◦ Verify that the ATF temperature is **55 °C {131 °F} or more**. • Perform the on-board diagnostic test. (See **ON-BOARD DIAGNOSTIC TEST MODE [FW6A-EL]**.) • Are any DTCs present?	Yes	Go to the applicable DTC inspection. (See **ON-BOARD DIAGNOSTIC SYSTEM DTC TABLE [FW6A-EL]**.)
		No	DTC troubleshooting completed.

2014 - Mazda3 - Transmission/Transaxle

DTC P0767:00 [FW6A-EL]

DTC P0767:00	Shift solenoid No.4 stuck on
DETECTION CONDITION	• Under the following conditions, shift solenoid No.4 stuck-on detected by combination of gear ratio malfunction and oil pressure switch pattern malfunction: ▪ Engine is running. ▪ ATF temperature is **20 °C {68 °F} or more**. ▪ There is no difference between vehicle speed signal from DSC HU/CM and output shaft speed sensor signal. ▪ Turbine/input shaft speed sensor and output shaft speed sensor DTC is not recorded. **Diagnostic support note** • The check engine light illuminates if the TCM detects the above malfunction condition in two consecutive drive cycles or in one drive cycle while the DTC for the same malfunction has been stored in the TCM. • The automatic transaxle warning light illuminates if the TCM detects the above malfunction condition in two consecutive drive cycles or in one drive cycle while the DTC for the same malfunction has been stored in the TCM. • PENDING CODE is available. • FREEZE FRAME DATA is available. • DTC is stored in the TCM memory.
FAIL-SAFE FUNCTION	• Inhibits malfunctioning gear. • Limits engine torque. • Inhibits learning control. • Inhibits manual mode. • Inhibits neutral idle control. • Inhibits AAS.
	• ATF is less than specified value

POSSIBLE CAUSE	• Shift solenoid No.4 malfunction
SYSTEM WIRING DIAGRAM	Not applicable

Diagnostic procedure

STEP	INSPECTION		ACTION
1	**VERIFY DTC OUTPUT STATUS** • Is the DTC P1738:00 also present?	Yes	Go to the applicable DTC inspection. (See **DTC P1738:00 [FW6A-EL]**.)
		No	Go to the next step.
2	**VERIFY FREEZE FRAME DATA/SNAPSHOT DATA HAS BEEN RECORDED** • Has the freeze frame data/snapshot data been recorded on the repair order?	Yes	Go to the next step.
		No	Record the freeze frame data/snapshot data on the repair order, then go to the next step.
3	**VERIFY RELATED REPAIR INFORMATION AVAILABILITY** • Verify related Service Bulletins and/or on-line repair information availability. • Is any related repair information available?	Yes	Perform repair or diagnosis according to the available repair information. • If the vehicle is not repaired, go to the next step.
		No	Go to the next step.
4	**INSPECT ATF LEVEL** • Inspect the ATF level. (See **AUTOMATIC TRANSAXLE FLUID (ATF) INSPECTION [FW6A-EL]**.) • Is there any malfunction?	Yes	Adjust the ATF level to the specification, then go to the next step. (See **AUTOMATIC TRANSAXLE FLUID (ATF) REPLACEMENT [FW6A-EL]**.)
		No	Replace the control valve body, then go to the next step. (See **CONTROL VALVE BODY REMOVAL/INSTALLATION [FW6A-EL]**.)
5	**PERFORM ON-BOARD DIAGNOSTIC TEST** • Perform the following procedure to ensure that the DTC has been resolved:	Yes	ATF amount in Step 4 is correct: • Replace the automatic transaxle, then drive the vehicle to check it, and if there is no problem then the

	◦ Start the engine. ◦ Verify that the ATF temperature is **55 °C {131 °F} or more**. • Perform the on-board diagnostic test. (See **ON-BOARD DIAGNOSTIC TEST MODE [FW6A-EL]**.) • Are any the following DTCs displayed? ▪ P0767:00, P0878:00		DTC troubleshooting is complete. (See **AUTOMATIC TRANSAXLE REMOVAL/INSTALLATION [FW6A-EL]**.) ATF amount adjusted in Step 4: • Replace the control valve body, then go to the next step. (See **CONTROL VALVE BODY REMOVAL/INSTALLATION [FW6A-EL]**.)
		No	No DTCs are displayed: • Drive the vehicle to check it, and if there is no problem then the DTC troubleshooting is complete. If a DTC other than the one indicated on the left is displayed: • Go to the applicable DTC inspection. (See **ON-BOARD DIAGNOSTIC SYSTEM DTC TABLE [FW6A-EL]**)
6	**RE-PERFORM ON-BOARD DIAGNOSTIC TEST** • Perform the following procedure to ensure that the DTC has been resolved: ◦ Start the engine. ◦ Verify that the ATF temperature is **55 °C {131 °F} or more**. • Perform the on-board diagnostic test. (See **ON-BOARD DIAGNOSTIC TEST MODE [FW6A-EL]**.) • Are any DTCs present?	Yes	Go to the applicable DTC inspection. (See **ON-BOARD DIAGNOSTIC SYSTEM DTC TABLE [FW6A-EL]**.)
		No	DTC troubleshooting completed.

2014 - Mazda3 - Transmission/Transaxle

DTC P0768:00 [FW6A-EL]

DTC P0768:00	Shift solenoid No.4 circuit malfunction
DETECTION CONDITION	• Under the following condition, the TCM detects the shift solenoid No.4 circuit malfunction: ▪ Battery voltage is **10.5 V or more**. **Diagnostic support note** • The check engine light illuminates if the TCM detects the above malfunction condition during the first drive cycle. • The automatic transaxle warning light illuminates if the TCM detects the above malfunction condition during the first drive cycle. • PENDING CODE is available. • FREEZE FRAME DATA is available. • DTC is stored in the TCM memory.
FAIL-SAFE FUNCTION	• Set to emergency mode. • Inhibits learning control. • Inhibits manual mode. • Inhibits neutral idle control. • Inhibits AAS.
POSSIBLE CAUSE	• Short or open circuit in shift solenoid No.4 circuit • Shift solenoid No.4 malfunction
SYSTEM WIRING DIAGRAM	Not applicable

Diagnostic procedure

STEP	INSPECTION	ACTION

1	**VERIFY FREEZE FRAME DATA/SNAPSHOT DATA HAS BEEN RECORDED** • Has the freeze frame data/snapshot data been recorded on the repair order?	Yes	Go to the next step.
		No	Record the freeze frame data/snapshot data on the repair order, then go to the next step.
2	**VERIFY RELATED REPAIR INFORMATION AVAILABILITY** • Verify related Service Bulletins and/or on-line repair information availability. • Is any related repair information available?	Yes	Perform repair or diagnosis according to the available repair information. • If the vehicle is not repaired, replace the control valve body. (See **CONTROL VALVE BODY REMOVAL/INSTALLATION [FW6A-EL]**.) Go to the next step.
		No	Replace the control valve body, then go to the next step. (See **CONTROL VALVE BODY REMOVAL/INSTALLATION [FW6A-EL]**.)
3	**VERIFY DTC TROUBLESHOOTING COMPLETED** • Clear the DTC using the M-MDS. (See **ON-BOARD DIAGNOSTIC SYSTEM DTC INSPECTION [FW6A-EL]**.) • Perform the following procedure to ensure that the DTC has been resolved: ◦ Switch the ignition ON (engine off or on). • Perform the DTC inspection using the M-MDS. (See **ON-BOARD DIAGNOSTIC SYSTEM DTC INSPECTION [FW6A-EL]**.) • Are any DTCs present?	Yes	Go to the applicable DTC inspection. (See **ON-BOARD DIAGNOSTIC SYSTEM DTC TABLE [FW6A-EL]**.)
		No	DTC troubleshooting completed.

2014 - Mazda3 - Transmission/Transaxle

DTC P0771:00 [FW6A-EL]

DTC P0771:00	On/off solenoid stuck off
DETECTION CONDITION	• Under the following conditions, on/off solenoid stuck-off detected by combination of gear ratio malfunction and oil pressure switch pattern malfunction: ▪ Engine is running. ▪ ATF temperature is **20 °C {68 °F} or more**. ▪ There is no difference between vehicle speed signal from DSC HU/CM and output shaft speed sensor signal. ▪ Turbine/input shaft speed sensor and output shaft speed sensor DTC is not recorded. **Diagnostic support note** • The check engine light illuminates if the TCM detects the above malfunction condition in two consecutive drive cycles or in one drive cycle while the DTC for the same malfunction has been stored in the TCM. • The automatic transaxle warning light illuminates if the TCM detects the above malfunction condition in two consecutive drive cycles or in one drive cycle while the DTC for the same malfunction has been stored in the TCM. • PENDING CODE is available. • FREEZE FRAME DATA is available. • DTC is stored in the TCM memory.
FAIL-SAFE FUNCTION	• Inhibits malfunctioning gear. • Limits engine torque. • Inhibits learning control. • Inhibits manual mode. • Inhibits neutral idle control. • Inhibits AAS.
POSSIBLE	

CAUSE	On/off solenoid malfunction
SYSTEM WIRING DIAGRAM	Not applicable

Diagnostic procedure

STEP	INSPECTION		ACTION
1	**VERIFY DTC OUTPUT STATUS** • Is the DTC P1738:00 also present?	Yes	Go to the applicable DTC inspection. (See **DTC P1738:00 [FW6A-EL]**.)
		No	Go to the next step.
2	**VERIFY FREEZE FRAME DATA/SNAPSHOT DATA HAS BEEN RECORDED** • Has the freeze frame data/snapshot data been recorded on the repair order?	Yes	Go to the next step.
		No	Record the freeze frame data/snapshot data on the repair order, then go to the next step.
3	**VERIFY RELATED REPAIR INFORMATION AVAILABILITY** • Verify related Service Bulletins and/or on-line repair information availability. • Is any related repair information available?	Yes	Perform repair or diagnosis according to the available repair information. • If the vehicle is not repaired, go to the next step.
		No	Go to the next step.

4	**PERFORM ON-BOARD DIAGNOSTIC TEST**
	• Perform the following procedure to ensure that the DTC has been resolved:
	  ◦ Start the engine.
	  ◦ Verify that the ATF temperature is **55 °C {131 °F} or more**.
	• Perform the on-board diagnostic test.
	(See **ON-BOARD DIAGNOSTIC**
		Yes	Replace the control valve body, then go to the next step.
			(See **CONTROL VALVE BODY REMOVAL/INSTALLATION [FW6A-EL]**.)

		No	No DTCs are displayed: • Drive the vehicle to check it, and if there is no problem then the DTC troubleshooting is complete. If a DTC other than the one indicated on the left is displayed: • Go to the applicable DTC inspection. (See **ON-BOARD DIAGNOSTIC**

	TEST MODE [FW6A-EL].) • Are P0771:00 present?		**SYSTEM DTC TABLE [FW6A-EL]**.)

5	**RE-PERFORM ON-BOARD DIAGNOSTIC TEST**
	• Perform the following procedure to ensure that the DTC has been resolved:
	  ◦ Start the engine.
	  ◦ Verify that the ATF temperature is **55 °C {131 °F} or more**.
	• Perform the on-board diagnostic test.
	(See **ON-BOARD DIAGNOSTIC TEST MODE [FW6A-EL]**.)
	• Are any DTCs present?
		Yes	Go to the applicable DTC inspection.
			(See **ON-BOARD DIAGNOSTIC SYSTEM DTC TABLE [FW6A-EL]**.)

		No	DTC troubleshooting completed.

2014 - Mazda3 - Transmission/Transaxle

DTC P0772:00 [FW6A-EL]

DTC P0772:00	On/off solenoid stuck on
DETECTION CONDITION	• Under the following conditions, on/off solenoid stuck-on detected by combination of gear ratio malfunction and oil pressure switch pattern malfunction: ▪ Engine is running. ▪ ATF temperature is **20 °C {68 °F} or more**. ▪ There is no difference between vehicle speed signal from DSC HU/CM and output shaft speed sensor signal. ▪ Turbine/input shaft speed sensor and output shaft speed sensor DTC is not recorded. **Diagnostic support note** • The check engine light illuminates if the TCM detects the above malfunction condition in two consecutive drive cycles or in one drive cycle while the DTC for the same malfunction has been stored in the TCM. • The automatic transaxle warning light illuminates if the TCM detects the above malfunction condition in two consecutive drive cycles or in one drive cycle while the DTC for the same malfunction has been stored in the TCM. • PENDING CODE is available. • FREEZE FRAME DATA is available. • DTC is stored in the TCM memory.
FAIL-SAFE FUNCTION	• Inhibits malfunctioning gear. • Limits engine torque. • Inhibits learning control. • Inhibits manual mode. • Inhibits neutral idle control. • Inhibits AAS.
	• ATF is less than specified value

POSSIBLE CAUSE	• On/off solenoid malfunction • Control valve body malfunction
SYSTEM WIRING DIAGRAM	Not applicable

Diagnostic procedure

STEP	INSPECTION		ACTION
1	**VERIFY DTC OUTPUT STATUS** • Is the DTC P1738:00 also present?	Yes	Go to the applicable DTC inspection. (See **DTC P1738:00 [FW6A-EL]**.)
		No	Go to the next step.
2	**VERIFY FREEZE FRAME DATA/SNAPSHOT DATA HAS BEEN RECORDED** • Has the freeze frame data/snapshot data been recorded on the repair order?	Yes	Go to the next step.
		No	Record the freeze frame data/snapshot data on the repair order, then go to the next step.
3	**VERIFY RELATED REPAIR INFORMATION AVAILABILITY** • Verify related Service Bulletins and/or on-line repair information availability. • Is any related repair information available?	Yes	Perform repair or diagnosis according to the available repair information. • If the vehicle is not repaired, go to the next step.
		No	Go to the next step.
4	**INSPECT ATF LEVEL** • Inspect the ATF level. (See **AUTOMATIC TRANSAXLE FLUID (ATF) INSPECTION [FW6A-EL]**.) • Is there any malfunction?	Yes	Adjust the ATF level to the specification, then go to the next step. (See **AUTOMATIC TRANSAXLE FLUID (ATF) REPLACEMENT [FW6A-EL]**.)
		No	Replace the on/off solenoid, then go to the next step. (See **ON/OFF SOLENOID REMOVAL/INSTALLATION [FW6A-EL]**.)
5	**PERFORM ON-BOARD DIAGNOSTIC TEST** • Perform the following procedure to ensure that the DTC has been resolved:	Yes	ATF amount in Step 4 is correct • Replace the automatic transaxle, then drive the vehicle to check it,

	◦ Start the engine. ◦ Verify that the ATF temperature is **55 °C {131 °F} or more**. • Perform the on-board diagnostic test. (See **ON-BOARD DIAGNOSTIC TEST MODE [FW6A-EL]**.) • Are any DTCs present?		and if there is no problem then the DTC troubleshooting is complete. (See **AUTOMATIC TRANSAXLE REMOVAL/INSTALLATION [FW6A-EL]**.) ATF amount adjusted in Step 4: • Replace the control valve body, then go to the next step. (See **CONTROL VALVE BODY REMOVAL/INSTALLATION [FW6A-EL]**.)
		No	Drive the vehicle to check it, and if there is no problem then the DTC troubleshooting is complete.
6	**RE-PERFORM ON-BOARD DIAGNOSTIC TEST** • Perform the following procedure to ensure that the DTC has been resolved: ◦ Start the engine. ◦ Verify that the ATF temperature is **55 °C {131 °F} or more**. • Perform the on-board diagnostic test. (See **ON-BOARD DIAGNOSTIC TEST MODE [FW6A-EL]**.) • Are any DTCs present?	Yes	Go to the applicable DTC inspection. (See **ON-BOARD DIAGNOSTIC SYSTEM DTC TABLE [FW6A-EL]**.)
		No	DTC troubleshooting completed.

2014 - Mazda3 - Transmission/Transaxle

DTC P0773:00 [FW6A-EL]

DTC P0773:00	On/off solenoid circuit malfunction
DETECTION CONDITION	• Under the following condition, the TCM detects the on/off solenoid circuit malfunction: ▪ Battery voltage is **10.5 V or more**. **Diagnostic support note** • The check engine light illuminates if the TCM detects the above malfunction condition during the first drive cycle. • The automatic transaxle warning light illuminates if the TCM detects the above malfunction condition during the first drive cycle. • PENDING CODE is available. • FREEZE FRAME DATA is available. • DTC is stored in the TCM memory.
FAIL-SAFE FUNCTION	• Set to emergency mode. • Inhibits learning control. • Inhibits manual mode. • Inhibits neutral idle control. • Inhibits AAS.
POSSIBLE CAUSE	• Short or open circuit in on/off solenoid circuit • On/off solenoid malfunction
SYSTEM WIRING DIAGRAM	Not applicable

Diagnostic procedure

STEP	INSPECTION	ACTION

1	**VERIFY FREEZE FRAME DATA/SNAPSHOT DATA HAS BEEN RECORDED** • Has the freeze frame data/snapshot data been recorded on the repair order?	Yes	Go to the next step.
		No	Record the freeze frame data/snapshot data on the repair order, then go to the next step.
2	**VERIFY RELATED REPAIR INFORMATION AVAILABILITY** • Verify related Service Bulletins and/or on-line repair information availability. • Is any related repair information available?	Yes	Perform repair or diagnosis according to the available repair information. • If the vehicle is not repaired, replace the on/off solenoid. (See **ON/OFF SOLENOID REMOVAL/INSTALLATION [FW6A-EL]**.) Go to the next step.
		No	Replace the on/off solenoid, then go to the next step. (See **ON/OFF SOLENOID REMOVAL/INSTALLATION [FW6A-EL]**.)
3	**VERIFY DTC TROUBLESHOOTING COMPLETED** • Clear the DTC using the M-MDS. (See **ON-BOARD DIAGNOSTIC SYSTEM DTC INSPECTION [FW6A-EL]**.) • Perform the following procedure to ensure that the DTC has been resolved: ◦ Switch the ignition ON (engine off or on). • Perform the DTC inspection using the M-MDS. (See **ON-BOARD DIAGNOSTIC SYSTEM DTC INSPECTION [FW6A-EL]**.) • Are any DTCs present?	Yes	Go to the applicable DTC inspection. (See **ON-BOARD DIAGNOSTIC SYSTEM DTC TABLE [FW6A-EL]**.)
		No	DTC troubleshooting completed.

2014 - Mazda3 - Transmission/Transaxle

DTC P0780:00 [FW6A-EL]

DTC P0780:00	Gear shifting malfunction
DETECTION CONDITION	• Under the following condition, the gear shifting inhibited: ▪ Engine is running. **Diagnostic support note** • The check engine light illuminates if the TCM detects the above malfunction condition in two consecutive drive cycles or in one drive cycle while the DTC for the same malfunction has been stored in the TCM. • The automatic transaxle warning light illuminates if the TCM detects the above malfunction condition in two consecutive drive cycles or in one drive cycle while the DTC for the same malfunction has been stored in the TCM. • PENDING CODE is available. • FREEZE FRAME DATA is available. • DTC is stored in the TCM memory.
FAIL-SAFE FUNCTION	• Inhibits learning control. • Inhibits manual mode. • Inhibits neutral idle control. • Inhibits AAS.
POSSIBLE CAUSE	• ATF is less than specified value • On/off solenoid malfunction • Pressure control solenoid malfunction • Shift solenoid malfunction • Oil pressure switch circuit malfunction • Oil pressure switch malfunction • Clutch slippage • ATF leakage from clutch circuit

	• Control valve body malfunction
SYSTEM WIRING DIAGRAM	Not applicable

Diagnostic procedure

STEP	INSPECTION		ACTION
1	**VERIFY DTC OUTPUT STATUS** • Are any the following DTCs displayed? ▪ P0738:00, P0746:00, P0751:00, P0752:00, P0756:00, P0757:00, P0761:00, P0762:00, P0766:00, P0767:00, P0771:00, P0772:00, P0842:00, P0843:00, P0847:00, P0848:00, P0872:00, P0873:00, P0877:00, P0878:00, P1784:00	Yes	Go to the applicable DTC inspection. (See **ON-BOARD DIAGNOSTIC SYSTEM DTC TABLE [FW6A-EL]**.)
		No	Go to the next step.
2	**INSPECT ATF LEVEL** • Inspect the ATF level. (See **AUTOMATIC TRANSAXLE FLUID (ATF) INSPECTION [FW6A-EL]**.) • Is there any malfunction?	Yes	Adjust the ATF level to the specification, then go to the next step. (See **AUTOMATIC TRANSAXLE FLUID (ATF) REPLACEMENT [FW6A-EL]**.)
		No	Go to the next step.
3	**PERFORM ON-BOARD DIAGNOSTIC TEST TO SPECIFY MALFUNCTIONING PART** **NOTE:** • If only DTCs in which the malfunctioning part is not confirmed are displayed as in the following DTCs, all of the diagnosis may not have been completed. In such cases, the malfunction cause can be determined by performing the on-board diagnostic test. • Perform the on-board diagnostic test. (See **ON-BOARD DIAGNOSTIC TEST MODE [FW6A-EL]**.) • Are any DTCs present?	Yes	Go to the applicable DTC inspection. (See **ON-BOARD DIAGNOSTIC SYSTEM DTC TABLE [FW6A-EL]**.)
		No	ATF amount in Step 2 is correct: • Replace the oil pressure switch A and oil pressure switch B. (See **OIL PRESSURE SWITCH REMOVAL/INSTALLATION [FW6A-EL]**.) ATF amount adjusted in Step 2: • Drive the vehicle to check it, and if there is

			no problem then the DTC troubleshooting is complete.

2014 - Mazda3 - Transmission/Transaxle

DTC P0819:00 [FW6A-EL]

DTC P0819:00	M position switch/Up switch/Down switch signal error
DETECTION CONDITION	• Under the following conditions, any of (1) to (4) conditions occurs for **1 s**: ▪ Engine is running. ▪ Battery voltage is **8 V or more**. ▪ Transaxle range sensor related DTC is not recorded. ▪ (1) M position switch signal is on even though forward oil pressure switch is on in any position other than D position. ▪ (2) M position switch signal is off even though up or down switch signal is on in D position. ▪ (3) Up switch signal is on even though M position switch signal is off in any position other than D position. ▪ (4) Down switch signal is on even though M position switch signal is off in any position other than D position. **Diagnostic support note** • The check engine light does not illuminate. • The automatic transaxle warning light does not illuminate. • PENDING CODE is available. • FREEZE FRAME DATA is not available. • DTC is stored in the TCM memory.
FAIL-SAFE FUNCTION	• Inhibits manual mode.
POSSIBLE CAUSE	• Instrument cluster DTC is stored. • Selector lever component connector or terminals malfunction • Selector lever component malfunction ▪ M position switch malfunction ▪ Up switch malfunction ▪ Down switch malfunction • Open circuit in wiring harness between selector lever component terminal J and body ground • Instrument cluster connector or terminals malfunction • Short to ground in wiring harness between the following terminals: ▪ Selector lever component terminal E—Instrument cluster terminal H ▪ Selector lever component terminal C—Instrument cluster terminal F

	Selector lever component terminal D—Instrument cluster terminal G • Short to power supply in wiring harness between the following terminals: ▪ Selector lever component terminal E—Instrument cluster terminal H ▪ Selector lever component terminal C—Instrument cluster terminal F ▪ Selector lever component terminal D—Instrument cluster terminal G • Open circuit in wiring harness between the following terminals: ▪ Selector lever component terminal E—Instrument cluster terminal H ▪ Selector lever component terminal C—Instrument cluster terminal F ▪ Selector lever component terminal D—Instrument cluster terminal G • Instrument cluster malfunction

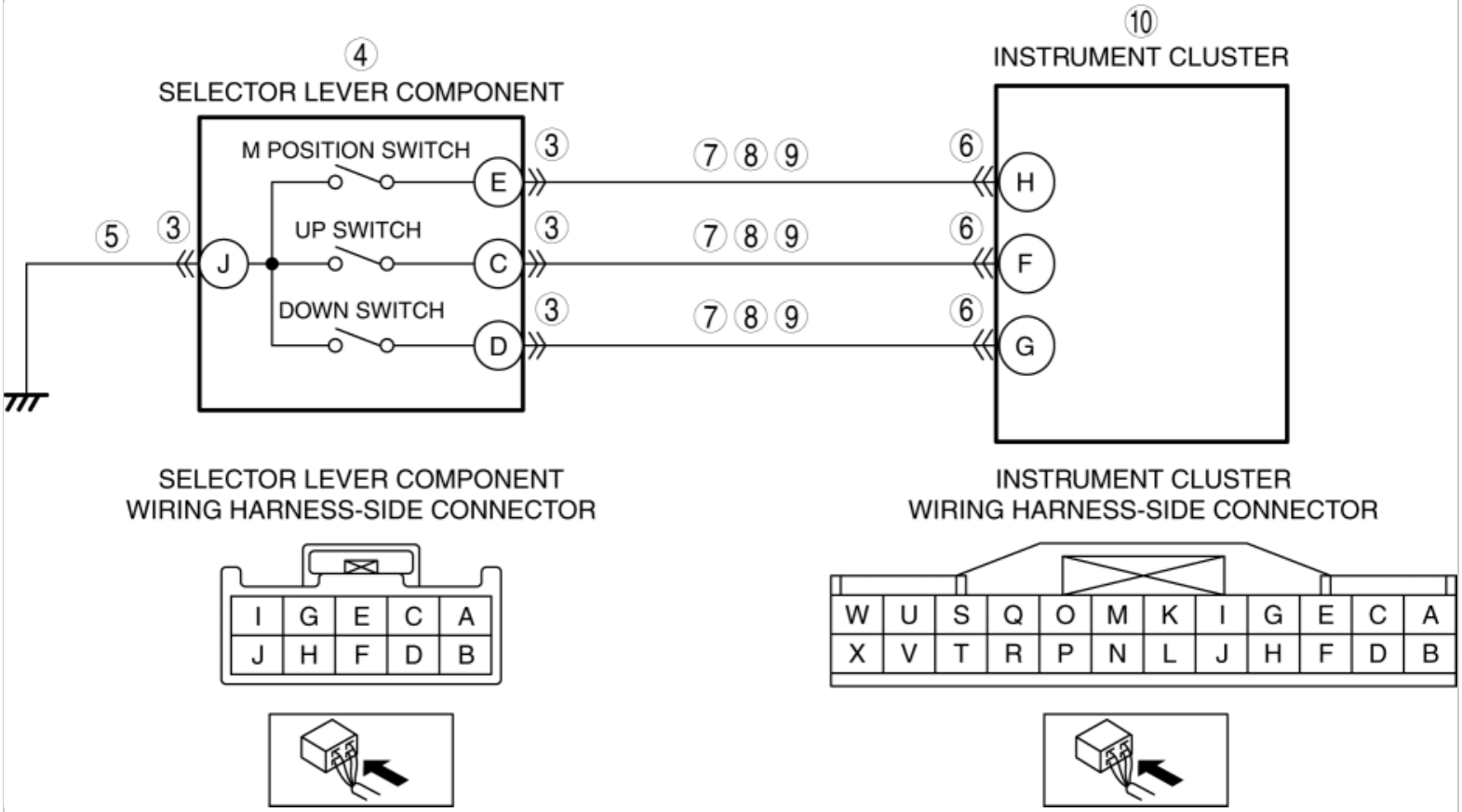

Diagnostic procedure

STEP	INSPECTION		ACTION
1	**VERIFY RELATED REPAIR INFORMATION AVAILABILITY** • Verify related Service Bulletins and/or on-line repair information availability. • Is any related repair information available?	Yes	Perform repair or diagnosis according to the available repair information. • If the vehicle is not repaired, go to the next step.
		No	Go to the next step.
2	**VERIFY INSTRUMENT CLUSTER DTC** • Perform the instrument cluster DTC inspection using the M-MDS.	Yes	Go to the applicable DTC inspection. (See **DTC TABLE [INSTRUMENT CLUSTER]**.)

	(See **DTC INSPECTION [INSTRUMENT CLUSTER]**.) • Are any DTCs present?	No	Go to the next step.
3	**INSPECT SELECTOR LEVER COMPONENT CONNECTOR CONDITION** • Switch the ignition off. • Disconnect the selector lever component connector. • Inspect for poor connection (such as damaged/pulled-out pins, corrosion). • Is there any malfunction?	Yes	Repair or replace the connector and/or terminals, then go to Step 11.
		No	Go to the next step.
4	**INSPECT SELECTOR LEVER COMPONENT** • Inspect the M position switch, up switch and down switch. (See **M POSITION SWITCH INSPECTION [FW6A-EL]**.) (See **UP SWITCH INSPECTION [FW6A-EL]**.) (See **DOWN SWITCH INSPECTION [FW6A-EL]**.) • Is there any malfunction?	Yes	Replace the selector lever component, then go to Step 11. (See **AUTOMATIC TRANSAXLE SHIFT MECHANISM REMOVAL / INSTALLATION**.)
		No	Go to the next step.
5	**INSPECT SELECTOR LEVER COMPONENT GROUND CIRCUIT FOR OPEN CIRCUIT** • Verify that the selector lever component connector is disconnected. • Inspect for continuity between selector lever component terminal J (wiring harness-side) and body ground. • Is there continuity?	Yes	Go to the next step.
		No	Refer to the wiring diagram and verify whether or not there is a common connector between selector lever component terminal J and body ground. **If there is a common connector:** • Determine the malfunctioning part by inspecting the common connector and the terminal for corrosion, damage, or pin disconnection, and the common wiring harness for an open circuit. • Repair or replace the malfunctioning part. **If there is no common connector:** • Repair or replace the wiring harness which has an open circuit. Go to Step 11.
6	**INSPECT INSTRUMENT CLUSTER CONNECTOR CONDITION** • Disconnect the instrument cluster connector. • Inspect for poor connection (such as damaged/pulled-out pins, corrosion). • Is there any malfunction?	Yes	Repair or replace the connector and/or terminals, then go to Step 11.
		No	Go to the next step.
7	**INSPECT SELECTOR LEVER COMPONENT CIRCUIT FOR SHORT TO GROUND** • Verify that the selector lever component and instrument cluster connectors are	Yes	Refer to the wiring diagram and verify whether or not there is a common connector between the following terminals: • Selector lever component terminal E—

	disconnected. • Inspect for continuity between the following terminals (wiring harness-side) and body ground: ▪ Selector lever component terminal E ▪ Selector lever component terminal C ▪ Selector lever component terminal D • Is there continuity?		Instrument cluster terminal H • Selector lever component terminal C—Instrument cluster terminal F • Selector lever component terminal D—Instrument cluster terminal G **If there is a common connector:** • Determine the malfunctioning part by inspecting the common connector and the terminal for corrosion, damage, or pin disconnection, and the common wiring harness for a short to ground. • Repair or replace the malfunctioning part. **If there is no common connector:** • Repair or replace the wiring harness which has a short to ground. Go to Step 11.
		No	Go to the next step.
8	**INSPECT SELECTOR LEVER COMPONENT CIRCUIT FOR SHORT TO POWER SUPPLY** • Verify that the selector lever component and instrument cluster connectors are disconnected. • Switch the ignition ON (engine on). • Measure the voltage at the following terminals (wiring harness-side): ▪ Selector lever component terminal E ▪ Selector lever component terminal C ▪ Selector lever component terminal D • Is the voltage **0 V**?	Yes	Go to the next step.
		No	Refer to the wiring diagram and verify whether or not there is a common connector between the following terminals: • Selector lever component terminal E—Instrument cluster terminal H • Selector lever component terminal C—Instrument cluster terminal F • Selector lever component terminal D—Instrument cluster terminal G **If there is a common connector:** • Determine the malfunctioning part by inspecting the common connector and the terminal for corrosion, damage, or pin disconnection, and the common wiring harness for a short to power supply. • Repair or replace the malfunctioning part. **If there is no common connector:** • Repair or replace the wiring harness which has a short to power supply. Go to Step 11.
9	**INSPECT SELECTOR LEVER COMPONENT CIRCUIT FOR OPEN CIRCUIT** • Verify that the selector lever component and instrument cluster connectors are disconnected. • Switch the ignition off. • Inspect for continuity between the following terminals (wiring harness-side): ▪ Selector lever component terminal E—Instrument	Yes	Go to the next step.
		No	Refer to the wiring diagram and verify whether or not there is a common connector between the following terminals: • Selector lever component terminal E—Instrument cluster terminal H • Selector lever component terminal C—Instrument cluster terminal F • Selector lever component terminal D—

	cluster terminal H ▪ Selector lever component terminal C—Instrument cluster terminal F ▪ Selector lever component terminal D—Instrument cluster terminal G • Is there continuity?		Instrument cluster terminal G **If there is a common connector:** • Determine the malfunctioning part by inspecting the common connector and the terminal for corrosion, damage, or pin disconnection, and the common wiring harness for an open circuit. • Repair or replace the malfunctioning part. **If there is no common connector:** • Repair or replace the wiring harness which has an open circuit. Go to Step 11.
10	**INSPECT INSTRUMENT CLUSTER** • Inspect the instrument cluster. (See **INSTRUMENT CLUSTER INSPECTION**.) • Is there any malfunction?	Yes	Replace the instrument cluster, then go to the next step. (See **INSTRUMENT CLUSTER REMOVAL/INSTALLATION**.)
		No	Go to the next step.
11	**VERIFY DTC TROUBLESHOOTING COMPLETED** • Always reconnect all disconnected connectors. • Clear the DTC using the M-MDS. (See **ON-BOARD DIAGNOSTIC SYSTEM DTC INSPECTION [FW6A-EL]**.) • Perform the following procedure to ensure that the DTC has been resolved: ∘ Verify that the battery voltage is **8 V or more**. ∘ Drive the vehicle for **1 s or more** under the following condition: • Selector lever position: Except D position ∘ Drive the vehicle for **1 s or more** under the following conditions: • Selector lever position: D position • Up switch: On ∘ Drive the vehicle for **1 s or more** under the following conditions: • Selector	Yes	Go to the applicable DTC inspection. (See **ON-BOARD DIAGNOSTIC SYSTEM DTC TABLE [FW6A-EL]**.)
		No	DTC troubleshooting completed.

	lever position: D position • Down switch: On • Perform the DTC inspection using the M-MDS. (See **ON-BOARD DIAGNOSTIC SYSTEM DTC INSPECTION [FW6A-EL]**.) • Are any DTCs present?		

2014 - Mazda3 - Transmission/Transaxle

DTC P0842:00 [FW6A-EL]

NOTE:

- Oil pressure switch No.1 is built into oil pressure switch B.
- If there is a malfunction in oil pressure switch No.1, replace oil pressure switch B.

DTC P0842:00	Oil pressure switch No.1 (Oil pressure switch B) stuck on
DETECTION CONDITION	• Under the following conditions, oil pressure switch No.1 stuck-on detected by combination of gear ratio malfunction and oil pressure switch pattern malfunction: ▪ Engine is running. ▪ ATF temperature is **20 °C {68 °F} or more**. ▪ There is no difference between vehicle speed signal from DSC HU/CM and output shaft speed sensor signal. ▪ Turbine/input shaft speed sensor and output shaft speed sensor DTC is not recorded. **Diagnostic support note** • The check engine light illuminates if the TCM detects the above malfunction condition in two consecutive drive cycles or in one drive cycle while the DTC for the same malfunction has been stored in the TCM. • The automatic transaxle warning light illuminates if the TCM detects the above malfunction condition in two consecutive drive cycles or in one drive cycle while the DTC for the same malfunction has been stored in the TCM. • PENDING CODE is available. • FREEZE FRAME DATA is available. • DTC is stored in the TCM memory.
FAIL-SAFE FUNCTION	• Limits engine torque. • Inhibits learning control. • Inhibits manual mode. • Inhibits neutral idle control.

	• Inhibits AAS.
POSSIBLE CAUSE	• Oil pressure switch No.1 malfunction
SYSTEM WIRING DIAGRAM	Not applicable

Diagnostic procedure

STEP	INSPECTION		ACTION
1	**VERIFY DTC OUTPUT STATUS** • Is the DTC P1738:00 also present?	Yes	Go to the applicable DTC inspection. (See **DTC P1738:00 [FW6A-EL]**.)
		No	Go to the next step.
2	**VERIFY FREEZE FRAME DATA/SNAPSHOT DATA HAS BEEN RECORDED** • Has the freeze frame data/snapshot data been recorded on the repair order?	Yes	Go to the next step.
		No	Record the freeze frame data/snapshot data on the repair order, then go to the next step.
3	**VERIFY RELATED REPAIR INFORMATION AVAILABILITY** • Verify related Service Bulletins and/or on-line repair information availability. • Is any related repair information available?	Yes	Perform repair or diagnosis according to the available repair information. • If the vehicle is not repaired, go to the next step.
		No	Go to the next step.
4	**PERFORM ON-BOARD DIAGNOSTIC TEST** • Perform the following procedure to ensure that the DTC has been resolved: ◦ Start the engine. ◦ Verify that the ATF temperature is **55 °C {131 °F} or more**. • Perform the on-board	Yes	Replace the oil pressure switch No.1, then go to the next step. (See **OIL PRESSURE SWITCH REMOVAL/INSTALLATION [FW6A-EL]**)
		No	No DTCs are displayed: • Drive the vehicle to check it, and if there is no problem then the DTC troubleshooting is complete. If a DTC other than the one indicated on the left is displayed: • Go to the applicable DTC

	diagnostic test. (See **ON-BOARD DIAGNOSTIC TEST MODE [FW6A-EL]**.) • Are P0842:00 present?		inspection. (See **ON-BOARD DIAGNOSTIC SYSTEM DTC TABLE [FW6A-EL]**.)

5	**RE-PERFORM ON-BOARD DIAGNOSTIC TEST**
	
	• Perform the following procedure to ensure that the DTC has been resolved:
	  ◦ Start the engine.
	  ◦ Verify that the ATF temperature is **55 °C {131 °F} or more**.
	
	• Perform the on-board diagnostic test.
	
	(See **ON-BOARD DIAGNOSTIC TEST MODE [FW6A-EL]**.)
	
	• Are any DTCs present?
		Yes	Go to the applicable DTC inspection.
			
			(See **ON-BOARD DIAGNOSTIC SYSTEM DTC TABLE [FW6A-EL]**.)

		No	DTC troubleshooting completed.

2014 - Mazda3 - Transmission/Transaxle

DTC P0843:00 [FW6A-EL]

NOTE:

- Oil pressure switch No.1 is built into oil pressure switch B.
- If there is a malfunction in oil pressure switch No.1, replace oil pressure switch B.

DTC P0843:00	Oil pressure switch No.1 (Oil pressure switch B) stuck off
DETECTION CONDITION	• Under the following conditions, oil pressure switch No.1 stuck-off detected by combination of gear ratio malfunction and oil pressure switch pattern malfunction: ▪ Engine is running. ▪ ATF temperature is **20 °C {68 °F} or more**. ▪ There is no difference between vehicle speed signal from DSC HU/CM and output shaft speed sensor signal. ▪ Turbine/input shaft speed sensor and output shaft speed sensor DTC is not recorded. **Diagnostic support note** • The check engine light illuminates if the TCM detects the above malfunction condition in two consecutive drive cycles or in one drive cycle while the DTC for the same malfunction has been stored in the TCM. • The automatic transaxle warning light illuminates if the TCM detects the above malfunction condition in two consecutive drive cycles or in one drive cycle while the DTC for the same malfunction has been stored in the TCM. • PENDING CODE is available. • FREEZE FRAME DATA is available. • DTC is stored in the TCM memory.
FAIL-SAFE FUNCTION	• Inhibits malfunctioning gear. • Limits engine torque. • Inhibits learning control. • Inhibits manual mode.

	• Inhibits neutral idle control. • Inhibits AAS.
POSSIBLE CAUSE	• ATF is less than specified value • Oil pressure switch No.1 malfunction
SYSTEM WIRING DIAGRAM	Not applicable

Diagnostic procedure

STEP	INSPECTION		ACTION
1	**VERIFY DTC OUTPUT STATUS** • Is the DTC P1738:00 also present?	Yes	Go to the applicable DTC inspection. (See **DTC P1738:00 [FW6A-EL]**.)
		No	Go to the next step.
2	**VERIFY FREEZE FRAME DATA/SNAPSHOT DATA HAS BEEN RECORDED** • Has the freeze frame data/snapshot data been recorded on the repair order?	Yes	Go to the next step.
		No	Record the freeze frame data/snapshot data on the repair order, then go to the next step.
3	**VERIFY RELATED REPAIR INFORMATION AVAILABILITY** • Verify related Service Bulletins and/or on-line repair information availability. • Is any related repair information available?	Yes	Perform repair or diagnosis according to the available repair information. • If the vehicle is not repaired, go to the next step.
		No	Go to the next step.
4	**VERIFY THAT DTC IS PRESENT** • Clear the DTC using the M-MDS. (See **ON-BOARD DIAGNOSTIC SYSTEM DTC INSPECTION [FW6A-EL]**.) • Perform the following procedure to ensure that the DTC has been resolved: ◦ Start the engine.	Yes	Go to the next step.
		No	DTC troubleshooting completed.

	◦ Verify that the ATF temperature is **20 °C {68 °F} or more**. • Perform the DTC inspection using the M-MDS. (See **ON-BOARD DIAGNOSTIC SYSTEM DTC INSPECTION [FW6A-EL]**.) • Is the DTC P0843:00 or P0878:00 present?		
5	**INSPECT ATF LEVEL** • Inspect the ATF level. (See **AUTOMATIC TRANSAXLE FLUID (ATF) INSPECTION [FW6A-EL]**.) • Is there any malfunction?	Yes	Adjust the ATF level to the specification, then go to Step 7. (See **AUTOMATIC TRANSAXLE FLUID (ATF) REPLACEMENT [FW6A-EL]**.)
		No	DTC P0843:00 and P0878:00 are displayed in Step 4: • Refer to the wiring diagram and verify whether or not there is a common connector between TCM and oil pressure switch A. **If there is a common connector:** ▪ Determine the malfunctioning part by inspecting the common connector and the terminal for corrosion, damage, or pin disconnection, and the common wiring harness for a malfunction. ▪ Repair or replace the malfunctioning part. **If there is no common connector:** ▪ Repair or replace the wiring harness.

			• Go to Step 7. Only DTC P0843:00 is displayed in Step 4: • Go to the next step.
6	**INSPECT OIL PRESSURE SWITCH A CONNECTOR AND OIL PRESSURE SWITCH NO.1 CIRCUIT** • Visually inspect for poor connection and open circuit. • Is there any malfunction?	Yes	Refer to the wiring diagram and verify whether or not there is a common connector between TCM and oil pressure switch A. **If there is a common connector:** • Determine the malfunctioning part by inspecting the common connector and the terminal for corrosion, damage, or pin disconnection, and the common wiring harness for a malfunction. • Repair or replace the malfunctioning part. **If there is no common connector:** • Repair or replace the wiring harness. Go to the next step.
		No	Replace the oil pressure switch A, then go to the next step. (See **OIL PRESSURE SWITCH REMOVAL/INSTALLATION [FW6A-EL]**.)

7	**PERFORM ON-BOARD DIAGNOSTIC TEST**
	
	• Perform the following procedure to ensure that the DTC has been resolved:
	
	  ◦ Start the engine.
	
	  ◦ Verify that the ATF temperature is **55 °C {131 °F} or more**.
	
	• Perform the on-board diagnostic test.
	
	(See **ON-BOARD DIAGNOSTIC TEST MODE [FW6A-EL]**.)
	
	• Are any DTCs present?
		Yes	ATF amount in Step 5 is correct
			
			• Replace the automatic transaxle, then drive the vehicle to check it, and if there is no problem then the DTC troubleshooting is complete.
			
			(See **AUTOMATIC TRANSAXLE REMOVAL/INSTALLATION [FW6A-EL]**.)
			
			ATF amount adjusted in Step 5:
			
			• Replace the control valve body, then go to the next step.
			
			(See **CONTROL VALVE BODY REMOVAL/INSTALLATION [FW6A-EL]**.)

		No	Drive the vehicle to check it, and if there is no problem then the DTC troubleshooting is complete.

8	**RE-PERFORM ON-BOARD DIAGNOSTIC TEST** • Perform the following procedure to ensure that the DTC has been resolved: ◦ Start the engine. ◦ Verify that the ATF temperature is **55 °C {131 °F} or more**. • Perform the on-board diagnostic test. (See **ON-BOARD DIAGNOSTIC TEST MODE [FW6A-EL]**.) • Are any DTCs present?	Yes	Go to the applicable DTC inspection. (See **ON-BOARD DIAGNOSTIC SYSTEM DTC TABLE [FW6A-EL]**.)
		No	DTC troubleshooting completed.

2014 - Mazda3 - Transmission/Transaxle

DTC P0847:00 [FW6A-EL]

NOTE:

- Oil pressure switch No.2 is built into oil pressure switch A.
- If there is a malfunction in oil pressure switch No.2, replace oil pressure switch A.

DTC P0847:00	Oil pressure switch No.2 (Oil pressure switch A) stuck on
DETECTION CONDITION	• Under the following conditions, oil pressure switch No.2 stuck-on detected by combination of gear ratio malfunction and oil pressure switch pattern malfunction: ▪ Engine is running. ▪ ATF temperature is **20 °C {68 °F} or more**. ▪ There is no difference between vehicle speed signal from DSC HU/CM and output shaft speed sensor signal. ▪ Turbine/input shaft speed sensor and output shaft speed sensor DTC is not recorded. **Diagnostic support note** • The check engine light illuminates if the TCM detects the above malfunction condition in two consecutive drive cycles or in one drive cycle while the DTC for the same malfunction has been stored in the TCM. • The automatic transaxle warning light illuminates if the TCM detects the above malfunction condition in two consecutive drive cycles or in one drive cycle while the DTC for the same malfunction has been stored in the TCM. • PENDING CODE is available. • FREEZE FRAME DATA is available. • DTC is stored in the TCM memory.
FAIL-SAFE FUNCTION	• Limits engine torque. • Inhibits learning control. • Inhibits manual mode. • Inhibits neutral idle control.

	• Inhibits AAS.
POSSIBLE CAUSE	• Oil pressure switch No.2 malfunction
SYSTEM WIRING DIAGRAM	Not applicable

Diagnostic procedure

STEP	INSPECTION		ACTION
1	**VERIFY DTC OUTPUT STATUS** • Is the DTC P1738:00 also present?	Yes	Go to the applicable DTC inspection. (See **DTC P1738:00 [FW6A-EL]**.)
		No	Go to the next step.
2	**VERIFY FREEZE FRAME DATA/SNAPSHOT DATA HAS BEEN RECORDED** • Has the freeze frame data/snapshot data been recorded on the repair order?	Yes	Go to the next step.
		No	Record the freeze frame data/snapshot data on the repair order, then go to the next step.
3	**VERIFY RELATED REPAIR INFORMATION AVAILABILITY** • Verify related Service Bulletins and/or on-line repair information availability. • Is any related repair information available?	Yes	Perform repair or diagnosis according to the available repair information. • If the vehicle is not repaired, go to the next step.
		No	Go to the next step.

4	**PERFORM ON-BOARD DIAGNOSTIC TEST**
	• Perform the following procedure to ensure that the DTC has been resolved:
	  ◦ Start the engine.
	  ◦ Verify that the ATF temperature is **55 °C {131 °F} or more**.
	• Perform the on-board
		Yes	Replace the oil pressure switch No.2, then go to the next step.
			(See **OIL PRESSURE SWITCH REMOVAL/INSTALLATION [FW6A-EL]**)

		No	No DTCs are displayed: • Drive the vehicle to check it, and if there is no problem then the DTC troubleshooting is complete. If a DTC other than the one indicated on the left is displayed: • Go to the applicable DTC

	diagnostic test. (See **ON-BOARD DIAGNOSTIC TEST MODE [FW6A-EL]**.) • Are P0847:00 present?		inspection. (See **ON-BOARD DIAGNOSTIC SYSTEM DTC TABLE [FW6A-EL]**.)

5	**RE-PERFORM ON-BOARD DIAGNOSTIC TEST**
	
	• Perform the following procedure to ensure that the DTC has been resolved:
	  ◦ Start the engine.
	  ◦ Verify that the ATF temperature is **55 °C {131 °F} or more**.
	
	• Perform the on-board diagnostic test.
	
	(See **ON-BOARD DIAGNOSTIC TEST MODE [FW6A-EL]**.)
	
	• Are any DTCs present?
		Yes	Go to the applicable DTC inspection.
			
			(See **ON-BOARD DIAGNOSTIC SYSTEM DTC TABLE [FW6A-EL]**.)

		No	DTC troubleshooting completed.

2014 - Mazda3 - Transmission/Transaxle

DTC P0848:00 [FW6A-EL]

NOTE:

- Oil pressure switch No.2 is built into oil pressure switch A.
- If there is a malfunction in oil pressure switch No.2, replace oil pressure switch A.

DTC P0848:00	Oil pressure switch No.2 (Oil pressure switch A) stuck off
DETECTION CONDITION	• Under the following conditions, oil pressure switch No.2 stuck-off detected by combination of gear ratio malfunction and oil pressure switch pattern malfunction: ▪ Engine is running. ▪ ATF temperature is **20 °C {68 °F} or more**. ▪ There is no difference between vehicle speed signal from DSC HU/CM and output shaft speed sensor signal. ▪ Turbine/input shaft speed sensor and output shaft speed sensor DTC is not recorded. **Diagnostic support note** • The check engine light illuminates if the TCM detects the above malfunction condition in two consecutive drive cycles or in one drive cycle while the DTC for the same malfunction has been stored in the TCM. • The automatic transaxle warning light illuminates if the TCM detects the above malfunction condition in two consecutive drive cycles or in one drive cycle while the DTC for the same malfunction has been stored in the TCM. • PENDING CODE is available. • FREEZE FRAME DATA is available. • DTC is stored in the TCM memory.
FAIL-SAFE FUNCTION	• Inhibits malfunctioning gear. • Limits engine torque. • Inhibits learning control. • Inhibits manual mode.

	• Inhibits neutral idle control. • Inhibits AAS.
POSSIBLE CAUSE	• ATF is less than specified value • Oil pressure switch No.2 malfunction
SYSTEM WIRING DIAGRAM	Not applicable

Diagnostic procedure

STEP	INSPECTION		ACTION
1	**VERIFY DTC OUTPUT STATUS** • Is the DTC P1738:00 also present?	Yes	Go to the applicable DTC inspection. (See **DTC P1738:00 [FW6A-EL]**.)
		No	Go to the next step.
2	**VERIFY FREEZE FRAME DATA/SNAPSHOT DATA HAS BEEN RECORDED** • Has the freeze frame data/snapshot data been recorded on the repair order?	Yes	Go to the next step.
		No	Record the freeze frame data/snapshot data on the repair order, then go to the next step.
3	**VERIFY RELATED REPAIR INFORMATION AVAILABILITY** • Verify related Service Bulletins and/or on-line repair information availability. • Is any related repair information available?	Yes	Perform repair or diagnosis according to the available repair information. • If the vehicle is not repaired, go to the next step.
		No	Go to the next step.
4	**VERIFY THAT DTC IS PRESENT** • Clear the DTC using the M-MDS. (See **ON-BOARD DIAGNOSTIC SYSTEM DTC INSPECTION [FW6A-EL]**.) • Perform the following procedure to ensure that the DTC has been resolved: ◦ Start the engine.	Yes	Go to the next step.
		No	DTC troubleshooting completed.

	◦ Verify that the ATF temperature is **20 °C {68 °F} or more**. • Perform the DTC inspection using the M-MDS. (See **ON-BOARD DIAGNOSTIC SYSTEM DTC INSPECTION [FW6A-EL]**.) • Is the DTC P0848:00 or P0873:00 present?		
5	**INSPECT ATF LEVEL** • Inspect the ATF level. (See **AUTOMATIC TRANSAXLE FLUID (ATF) INSPECTION [FW6A-EL]**.) • Is there any malfunction?	Yes	Adjust the ATF level to the specification, then go to Step 7. (See **AUTOMATIC TRANSAXLE FLUID (ATF) REPLACEMENT [FW6A-EL]**.)
		No	DTC P0848:00 and P0873:00 are displayed in Step 4: • Refer to the wiring diagram and verify whether or not there is a common connector between TCM and oil pressure switch B. **If there is a common connector:** ▪ Determine the malfunctioning part by inspecting the common connector and the terminal for corrosion, damage, or pin disconnection, and the common wiring harness for a malfunction. ▪ Repair or replace the malfunctioning part. **If there is no common connector:** ▪ Repair or replace the wiring harness.

			• Go to Step 7. Only DTC P0848:00 is displayed in Step 4: • Go to the next step.
6	**INSPECT OIL PRESSURE SWITCH B CONNECTOR AND OIL PRESSURE SWITCH NO.2 CIRCUIT** • Visually inspect for poor connection and open circuit. • Is there any malfunction?	Yes	Refer to the wiring diagram and verify whether or not there is a common connector between TCM and oil pressure switch B. **If there is a common connector:** • Determine the malfunctioning part by inspecting the common connector and the terminal for corrosion, damage, or pin disconnection, and the common wiring harness for a malfunction. • Repair or replace the malfunctioning part. **If there is no common connector:** • Repair or replace the wiring harness. Go to the next step.
		No	Replace the oil pressure switch B, then go to the next step. (See **OIL PRESSURE SWITCH REMOVAL/INSTALLATION [FW6A-EL]**.)

7	**PERFORM ON-BOARD DIAGNOSTIC TEST**
	
	• Perform the following procedure to ensure that the DTC has been resolved:
	
	  ◦ Start the engine.
	
	  ◦ Verify that the ATF temperature is **55 °C {131 °F} or more**.
	
	• Perform the on-board diagnostic test.
	
	(See **ON-BOARD DIAGNOSTIC TEST MODE [FW6A-EL]**.)
	
	• Are any DTCs present?
		Yes	ATF amount in Step 5 is correct
			
			• Replace the automatic transaxle, then drive the vehicle to check it, and if there is no problem then the DTC troubleshooting is complete.
			
			(See **AUTOMATIC TRANSAXLE REMOVAL/INSTALLATION [FW6A-EL]**.)
			
			ATF amount adjusted in Step 5:
			
			• Replace the control valve body, then go to the next step.
			
			(See **CONTROL VALVE BODY REMOVAL/INSTALLATION [FW6A-EL]**.)

		No	Drive the vehicle to check it, and if there is no problem then the DTC troubleshooting is complete.

8	**RE-PERFORM ON-BOARD DIAGNOSTIC TEST**
	• Perform the following procedure to ensure that the DTC has been resolved:
	  ◦ Start the engine.
	  ◦ Verify that the ATF temperature is **55 °C {131 °F} or more**.
	• Perform the on-board diagnostic test.
	(See **ON-BOARD DIAGNOSTIC TEST MODE [FW6A-EL]**.)
	• Are any DTCs present?
		Yes	Go to the applicable DTC inspection.
			(See **ON-BOARD DIAGNOSTIC SYSTEM DTC TABLE [FW6A-EL]**.)

		No	DTC troubleshooting completed.

2014 - Mazda3 - Transmission/Transaxle

DTC P0872:00 [FW6A-EL]

NOTE:

- Oil pressure switch No.3 is built into oil pressure switch A.
- If there is a malfunction in oil pressure switch No.3, replace oil pressure switch A.

DTC P0872:00	Oil pressure switch No.3 (Oil pressure switch A) stuck on
DETECTION CONDITION	• Under the following conditions, oil pressure switch No.3 stuck-on detected by combination of gear ratio malfunction and oil pressure switch pattern malfunction: ▪ Engine is running. ▪ ATF temperature is **20 °C {68 °F} or more**. ▪ There is no difference between vehicle speed signal from DSC HU/CM and output shaft speed sensor signal. ▪ Turbine/input shaft speed sensor and output shaft speed sensor DTC is not recorded. **Diagnostic support note** • The check engine light illuminates if the TCM detects the above malfunction condition in two consecutive drive cycles or in one drive cycle while the DTC for the same malfunction has been stored in the TCM. • The automatic transaxle warning light illuminates if the TCM detects the above malfunction condition in two consecutive drive cycles or in one drive cycle while the DTC for the same malfunction has been stored in the TCM. • PENDING CODE is available. • FREEZE FRAME DATA is available. • DTC is stored in the TCM memory.
FAIL-SAFE FUNCTION	• Limits engine torque. • Inhibits learning control. • Inhibits manual mode. • Inhibits neutral idle control.

	• Inhibits AAS.
POSSIBLE CAUSE	• Oil pressure switch No.3 malfunction
SYSTEM WIRING DIAGRAM	Not applicable

Diagnostic procedure

STEP	INSPECTION		ACTION
1	**VERIFY DTC OUTPUT STATUS** • Is the DTC P1738:00 also present?	Yes	Go to the applicable DTC inspection. (See **DTC P1738:00 [FW6A-EL]**.)
		No	Go to the next step.
2	**VERIFY FREEZE FRAME DATA/SNAPSHOT DATA HAS BEEN RECORDED** • Has the freeze frame data/snapshot data been recorded on the repair order?	Yes	Go to the next step.
		No	Record the freeze frame data/snapshot data on the repair order, then go to the next step.
3	**VERIFY RELATED REPAIR INFORMATION AVAILABILITY** • Verify related Service Bulletins and/or on-line repair information availability. • Is any related repair information available?	Yes	Perform repair or diagnosis according to the available repair information. • If the vehicle is not repaired, go to the next step.
		No	Go to the next step.

4	**PERFORM ON-BOARD DIAGNOSTIC TEST**
	• Perform the following procedure to ensure that the DTC has been resolved:
	  ◦ Start the engine.
	  ◦ Verify that the ATF temperature is **55 °C {131 °F} or more**.
	• Perform the on-board
		Yes	Replace the oil pressure switch No.3, then go to the next step.
			(See **OIL PRESSURE SWITCH REMOVAL/INSTALLATION [FW6A-EL]**)

		No	No DTCs are displayed: • Drive the vehicle to check it, and if there is no problem then the DTC troubleshooting is complete. If a DTC other than the one indicated on the left is displayed: • Go to the applicable DTC

	diagnostic test. (See **ON-BOARD DIAGNOSTIC TEST MODE [FW6A-EL]**.) • Are P0872:00 present?		inspection. (See **ON-BOARD DIAGNOSTIC SYSTEM DTC TABLE [FW6A-EL]**.)

5	**RE-PERFORM ON-BOARD DIAGNOSTIC TEST**
	
	• Perform the following procedure to ensure that the DTC has been resolved:
	  ◦ Start the engine.
	  ◦ Verify that the ATF temperature is **55 °C {131 °F} or more**.
	
	• Perform the on-board diagnostic test.
	
	(See **ON-BOARD DIAGNOSTIC TEST MODE [FW6A-EL]**.)
	
	• Are any DTCs present?
		Yes	Go to the applicable DTC inspection.
			
			(See **ON-BOARD DIAGNOSTIC SYSTEM DTC TABLE [FW6A-EL]**.)

		No	DTC troubleshooting completed.

2014 - Mazda3 - Transmission/Transaxle

DTC P0873:00 [FW6A-EL]

NOTE:

- Oil pressure switch No.3 is built into oil pressure switch A.
- If there is a malfunction in oil pressure switch No.3, replace oil pressure switch A.

DTC P0873:00	Oil pressure switch No.3 (Oil pressure switch A) stuck off
DETECTION CONDITION	• Under the following conditions, oil pressure switch No.3 stuck-off detected by combination of gear ratio malfunction and oil pressure switch pattern malfunction: ▪ Engine is running. ▪ ATF temperature is **20 °C {68 °F} or more**. ▪ There is no difference between vehicle speed signal from DSC HU/CM and output shaft speed sensor signal. ▪ Turbine/input shaft speed sensor and output shaft speed sensor DTC is not recorded. **Diagnostic support note** • The check engine light illuminates if the TCM detects the above malfunction condition in two consecutive drive cycles or in one drive cycle while the DTC for the same malfunction has been stored in the TCM. • The automatic transaxle warning light illuminates if the TCM detects the above malfunction condition in two consecutive drive cycles or in one drive cycle while the DTC for the same malfunction has been stored in the TCM. • PENDING CODE is available. • FREEZE FRAME DATA is available. • DTC is stored in the TCM memory.
FAIL-SAFE FUNCTION	• Inhibits malfunctioning gear. • Limits engine torque. • Inhibits learning control. • Inhibits manual mode.

	• Inhibits neutral idle control. • Inhibits AAS.
POSSIBLE CAUSE	• ATF is less than specified value • Oil pressure switch No.3 malfunction
SYSTEM WIRING DIAGRAM	Not applicable

Diagnostic procedure

STEP	INSPECTION		ACTION
1	**VERIFY DTC OUTPUT STATUS** • Is the DTC P1738:00 also present?	Yes	Go to the applicable DTC inspection. (See **DTC P1738:00 [FW6A-EL]**.)
		No	Go to the next step.
2	**VERIFY FREEZE FRAME DATA/SNAPSHOT DATA HAS BEEN RECORDED** • Has the freeze frame data/snapshot data been recorded on the repair order?	Yes	Go to the next step.
		No	Record the freeze frame data/snapshot data on the repair order, then go to the next step.
3	**VERIFY RELATED REPAIR INFORMATION AVAILABILITY** • Verify related Service Bulletins and/or on-line repair information availability. • Is any related repair information available?	Yes	Perform repair or diagnosis according to the available repair information. • If the vehicle is not repaired, go to the next step.
		No	Go to the next step.
4	**VERIFY THAT DTC IS PRESENT** • Clear the DTC using the M-MDS. (See **ON-BOARD DIAGNOSTIC SYSTEM DTC INSPECTION [FW6A-EL]**.) • Perform the following procedure to ensure that the DTC has been resolved: ◦ Start the engine.	Yes	Go to the next step.
		No	DTC troubleshooting completed.

	◦ Verify that the ATF temperature is **20 °C {68 °F} or more**. • Perform the DTC inspection using the M-MDS. (See **ON-BOARD DIAGNOSTIC SYSTEM DTC INSPECTION [FW6A-EL]**.) • Is the DTC P0848:00 or P0873:00 present?		
5	**INSPECT ATF LEVEL** • Inspect the ATF level. (See **AUTOMATIC TRANSAXLE FLUID (ATF) INSPECTION [FW6A-EL]**.) • Is there any malfunction?	Yes	Adjust the ATF level to the specification, then go to Step 7. (See **AUTOMATIC TRANSAXLE FLUID (ATF) REPLACEMENT [FW6A-EL]**.)
		No	DTC P0848:00 and P0873:00 are displayed in Step 4: • Refer to the wiring diagram and verify whether or not there is a common connector between TCM and oil pressure switch B. **If there is a common connector:** ▪ Determine the malfunctioning part by inspecting the common connector and the terminal for corrosion, damage, or pin disconnection, and the common wiring harness for a malfunction. ▪ Repair or replace the malfunctioning part. **If there is no common connector:** ▪ Repair or replace the wiring harness.

			• Go to Step 7. Only DTC P0873:00 is displayed in Step 4: • Go to the next step.
6	**INSPECT OIL PRESSURE SWITCH B CONNECTOR AND OIL PRESSURE SWITCH NO.3 CIRCUIT** • Visually inspect for poor connection and open circuit. • Is there any malfunction?	Yes	Refer to the wiring diagram and verify whether or not there is a common connector between TCM and oil pressure switch B. **If there is a common connector:** • Determine the malfunctioning part by inspecting the common connector and the terminal for corrosion, damage, or pin disconnection, and the common wiring harness for a malfunction. • Repair or replace the malfunctioning part. **If there is no common connector:** • Repair or replace the wiring harness. Go to the next step.
		No	Replace the oil pressure switch B, then go to the next step. (See **OIL PRESSURE SWITCH REMOVAL/INSTALLATION [FW6A-EL]**.)

7	**PERFORM ON-BOARD DIAGNOSTIC TEST**
	
	• Perform the following procedure to ensure that the DTC has been resolved:
	
	  ◦ Start the engine.
	
	  ◦ Verify that the ATF temperature is **55 °C {131 °F} or more**.
	
	• Perform the on-board diagnostic test.
	
	(See **ON-BOARD DIAGNOSTIC TEST MODE [FW6A-EL]**.)
	
	• Are any DTCs present?
		Yes	ATF amount in Step 5 is correct
			
			• Replace the automatic transaxle, then drive the vehicle to check it, and if there is no problem then the DTC troubleshooting is complete.
			
			(See **AUTOMATIC TRANSAXLE REMOVAL/INSTALLATION [FW6A-EL]**.)
			
			ATF amount adjusted in Step 5:
			
			• Replace the control valve body, then go to the next step.
			
			(See **CONTROL VALVE BODY REMOVAL/INSTALLATION [FW6A-EL]**.)

		No	Drive the vehicle to check it, and if there is no problem then the DTC troubleshooting is complete.

8	**RE-PERFORM ON-BOARD DIAGNOSTIC TEST**
	• Perform the following procedure to ensure that the DTC has been resolved:
	  ◦ Start the engine.
	  ◦ Verify that the ATF temperature is **55 °C {131 °F} or more**.
	• Perform the on-board diagnostic test.
	(See **ON-BOARD DIAGNOSTIC TEST MODE [FW6A-EL]**.)
	• Are any DTCs present?
		Yes	Go to the applicable DTC inspection.
			(See **ON-BOARD DIAGNOSTIC SYSTEM DTC TABLE [FW6A-EL]**.)

		No	DTC troubleshooting completed.

2014 - Mazda3 - Transmission/Transaxle

DTC P0877:00 [FW6A-EL]

NOTE:

- Oil pressure switch No.4 is built into oil pressure switch B.
- If there is a malfunction in oil pressure switch No.4, replace oil pressure switch B.

DTC P0877:00	Oil pressure switch No.4 (Oil pressure switch B) stuck on
DETECTION CONDITION	• Under the following conditions, oil pressure switch No.4 stuck-on detected by combination of gear ratio malfunction and oil pressure switch pattern malfunction: ▪ Engine is running. ▪ ATF temperature is **20 °C {68 °F} or more**. ▪ There is no difference between vehicle speed signal from DSC HU/CM and output shaft speed sensor signal. ▪ Turbine/input shaft speed sensor and output shaft speed sensor DTC is not recorded. **Diagnostic support note** • The check engine light illuminates if the TCM detects the above malfunction condition in two consecutive drive cycles or in one drive cycle while the DTC for the same malfunction has been stored in the TCM. • The automatic transaxle warning light illuminates if the TCM detects the above malfunction condition in two consecutive drive cycles or in one drive cycle while the DTC for the same malfunction has been stored in the TCM. • PENDING CODE is available. • FREEZE FRAME DATA is available. • DTC is stored in the TCM memory.
FAIL-SAFE FUNCTION	• Limits engine torque. • Inhibits learning control. • Inhibits manual mode. • Inhibits neutral idle control.

	• Inhibits AAS.
POSSIBLE CAUSE	• Oil pressure switch No.4 malfunction
SYSTEM WIRING DIAGRAM	Not applicable

Diagnostic procedure

STEP	INSPECTION		ACTION
1	**VERIFY DTC OUTPUT STATUS** • Is the DTC P1738:00 also present?	Yes	Go to the applicable DTC inspection. (See **DTC P1738:00 [FW6A-EL]**.)
		No	Go to the next step.
2	**VERIFY FREEZE FRAME DATA/SNAPSHOT DATA HAS BEEN RECORDED** • Has the freeze frame data/snapshot data been recorded on the repair order?	Yes	Go to the next step.
		No	Record the freeze frame data/snapshot data on the repair order, then go to the next step.
3	**VERIFY RELATED REPAIR INFORMATION AVAILABILITY** • Verify related Service Bulletins and/or on-line repair information availability. • Is any related repair information available?	Yes	Perform repair or diagnosis according to the available repair information. • If the vehicle is not repaired, go to the next step.
		No	Go to the next step.
4	**PERFORM ON-BOARD DIAGNOSTIC TEST** • Perform the following procedure to ensure that the DTC has been resolved: ◦ Start the engine. ◦ Verify that the ATF temperature is **55 °C {131 °F} or more**. • Perform the on-board	Yes	Replace the oil pressure switch No.4, then go to the next step. (See **OIL PRESSURE SWITCH REMOVAL/INSTALLATION [FW6A-EL]**)
		No	No DTCs are displayed: • Drive the vehicle to check it, and if there is no problem then the DTC troubleshooting is complete. If a DTC other than the one indicated on the left is displayed: • Go to the applicable DTC

	diagnostic test. (See **ON-BOARD DIAGNOSTIC TEST MODE [FW6A-EL]**.) • Are P0877:00 present?		inspection. (See **ON-BOARD DIAGNOSTIC SYSTEM DTC TABLE [FW6A-EL]**.)

5	**RE-PERFORM ON-BOARD DIAGNOSTIC TEST**
	
	• Perform the following procedure to ensure that the DTC has been resolved:
	  ◦ Start the engine.
	  ◦ Verify that the ATF temperature is **55 °C {131 °F} or more**.
	
	• Perform the on-board diagnostic test.
	
	(See **ON-BOARD DIAGNOSTIC TEST MODE [FW6A-EL]**.)
	
	• Are any DTCs present?
		Yes	Go to the applicable DTC inspection.
			
			(See **ON-BOARD DIAGNOSTIC SYSTEM DTC TABLE [FW6A-EL]**.)

		No	DTC troubleshooting completed.

2014 - Mazda3 - Transmission/Transaxle

DTC P0878:00 [FW6A-EL]

NOTE:

- Oil pressure switch No.4 is built into oil pressure switch B.
- If there is a malfunction in oil pressure switch No.4, replace oil pressure switch B.

DTC P0878:00	Oil pressure switch No.4 (Oil pressure switch B) stuck off
DETECTION CONDITION	• Under the following conditions, oil pressure switch No.4 stuck-off detected by combination of gear ratio malfunction and oil pressure switch pattern malfunction: ▪ Engine is running. ▪ ATF temperature is **20 °C {68 °F} or more**. ▪ There is no difference between vehicle speed signal from DSC HU/CM and output shaft speed sensor signal. ▪ Turbine/input shaft speed sensor and output shaft speed sensor DTC is not recorded. **Diagnostic support note** • The check engine light illuminates if the TCM detects the above malfunction condition in two consecutive drive cycles or in one drive cycle while the DTC for the same malfunction has been stored in the TCM. • The automatic transaxle warning light illuminates if the TCM detects the above malfunction condition in two consecutive drive cycles or in one drive cycle while the DTC for the same malfunction has been stored in the TCM. • PENDING CODE is available. • FREEZE FRAME DATA is available. • DTC is stored in the TCM memory.
FAIL-SAFE FUNCTION	• Inhibits malfunctioning gear. • Limits engine torque. • Inhibits learning control. • Inhibits manual mode.

	• Inhibits neutral idle control. • Inhibits AAS.
POSSIBLE CAUSE	• ATF is less than specified value • Oil pressure switch No.4 malfunction
SYSTEM WIRING DIAGRAM	Not applicable

Diagnostic procedure

STEP	INSPECTION		ACTION
1	**VERIFY DTC OUTPUT STATUS** • Is the DTC P1738:00 also present?	Yes	Go to the applicable DTC inspection. (See **DTC P1738:00 [FW6A-EL]**.)
		No	Go to the next step.
2	**VERIFY FREEZE FRAME DATA/SNAPSHOT DATA HAS BEEN RECORDED** • Has the freeze frame data/snapshot data been recorded on the repair order?	Yes	Go to the next step.
		No	Record the freeze frame data/snapshot data on the repair order, then go to the next step.
3	**VERIFY RELATED REPAIR INFORMATION AVAILABILITY** • Verify related Service Bulletins and/or on-line repair information availability. • Is any related repair information available?	Yes	Perform repair or diagnosis according to the available repair information. • If the vehicle is not repaired, go to the next step.
		No	Go to the next step.
4	**VERIFY THAT DTC IS PRESENT** • Clear the DTC using the M-MDS. (See **ON-BOARD DIAGNOSTIC SYSTEM DTC INSPECTION [FW6A-EL]**.) • Perform the following procedure to ensure that the DTC has been resolved: ◦ Start the engine.	Yes	Go to the next step.
		No	DTC troubleshooting completed.

	◦ Verify that the ATF temperature is **20 °C {68 °F} or more**. • Perform the DTC inspection using the M-MDS. (See **ON-BOARD DIAGNOSTIC SYSTEM DTC INSPECTION [FW6A-EL]**.) • Is the DTC P0843:00 or P0878:00 present?		
5	**INSPECT ATF LEVEL** • Inspect the ATF level. (See **AUTOMATIC TRANSAXLE FLUID (ATF) INSPECTION [FW6A-EL]**.) • Is there any malfunction?	Yes	Adjust the ATF level to the specification, then go to Step 7. (See **AUTOMATIC TRANSAXLE FLUID (ATF) REPLACEMENT [FW6A-EL]**.)
		No	DTC P0843:00 and P0878:00 are displayed in Step 4: • Refer to the wiring diagram and verify whether or not there is a common connector between TCM and oil pressure switch A. **If there is a common connector:** ▪ Determine the malfunctioning part by inspecting the common connector and the terminal for corrosion, damage, or pin disconnection, and the common wiring harness for a malfunction. ▪ Repair or replace the malfunctioning part. **If there is no common connector:** ▪ Repair or replace the wiring harness.

			• Go to Step 7. Only DTC P0878:00 is displayed in Step 4: • Go to the next step.
6	**INSPECT OIL PRESSURE SWITCH A CONNECTOR AND OIL PRESSURE SWITCH NO.4 CIRCUIT** • Visually inspect for poor connection and open circuit. • Is there any malfunction?	Yes	Refer to the wiring diagram and verify whether or not there is a common connector between TCM and oil pressure switch A. **If there is a common connector:** • Determine the malfunctioning part by inspecting the common connector and the terminal for corrosion, damage, or pin disconnection, and the common wiring harness for a malfunction. • Repair or replace the malfunctioning part. **If there is no common connector:** • Repair or replace the wiring harness. Go to the next step.
		No	Replace the oil pressure switch A, then go to the next step. (See **OIL PRESSURE SWITCH REMOVAL/INSTALLATION [FW6A-EL]**.)

7	**PERFORM ON-BOARD DIAGNOSTIC TEST**
	
	• Perform the following procedure to ensure that the DTC has been resolved:
	
	  ◦ Start the engine.
	
	  ◦ Verify that the ATF temperature is **55 °C {131 °F} or more**.
	
	• Perform the on-board diagnostic test.
	
	(See **ON-BOARD DIAGNOSTIC TEST MODE [FW6A-EL]**.)
	
	• Are any DTCs present?
		Yes	ATF amount in Step 5 is correct
			
			• Replace the automatic transaxle, then drive the vehicle to check it, and if there is no problem then the DTC troubleshooting is complete.
			
			(See **AUTOMATIC TRANSAXLE REMOVAL/INSTALLATION [FW6A-EL]**.)
			
			ATF amount adjusted in Step 5:
			
			• Replace the control valve body, then go to the next step.
			
			(See **CONTROL VALVE BODY REMOVAL/INSTALLATION [FW6A-EL]**.)

		No	Drive the vehicle to check it, and if there is no problem then the DTC troubleshooting is complete.

8	**RE-PERFORM ON-BOARD DIAGNOSTIC TEST**
	• Perform the following procedure to ensure that the DTC has been resolved:
	  ◦ Start the engine.
	  ◦ Verify that the ATF temperature is **55 °C {131 °F} or more**.
	• Perform the on-board diagnostic test.
	(See **ON-BOARD DIAGNOSTIC TEST MODE [FW6A-EL]**.)
	• Are any DTCs present?
		Yes	Go to the applicable DTC inspection.
			(See **ON-BOARD DIAGNOSTIC SYSTEM DTC TABLE [FW6A-EL]**.)

		No	DTC troubleshooting completed.

2014 - Mazda3 - Transmission / Transaxle

DTC P0882:00 [FW6A-EL]

DTC P0882:00	TCM power supply voltage low

DETECTION CONDITION	• Under the following conditions, the TCM power supply voltage is **8—10.5 V or less** (varies with ATF temperature):
	  ▪ **5 s or more** has elapsed or battery voltage exceeds **11 V or more** for **0.2 s** since engine speed increases **−200 rpm or more** of target idle speed.
	  ▪ Selector lever position is D or R position.
	Diagnostic support note
	• The check engine light illuminates if the TCM detects the above malfunction condition during the first drive cycle.
	• The automatic transaxle warning light does not illuminate.
	• PENDING CODE is available.
	• FREEZE FRAME DATA is available.
	• DTC is stored in the TCM memory.

FAIL-SAFE FUNCTION	• Set to emergency mode. • Inhibits learning control. • Inhibits manual mode. • Inhibits neutral idle control. • Inhibits AAS.

POSSIBLE CAUSE	• PCM DTC is stored.
	• Battery malfunction
	• Generator malfunction
	• TCM connector or terminals malfunction
	• TCM power supply circuit malfunction
	  ▪ Short to ground in wiring harness between AT 15 A fuse and TCM terminal A
	  ▪ AT 15 A fuse malfunction
	  ▪ Open circuit in wiring harness between battery positive terminal and TCM terminal A

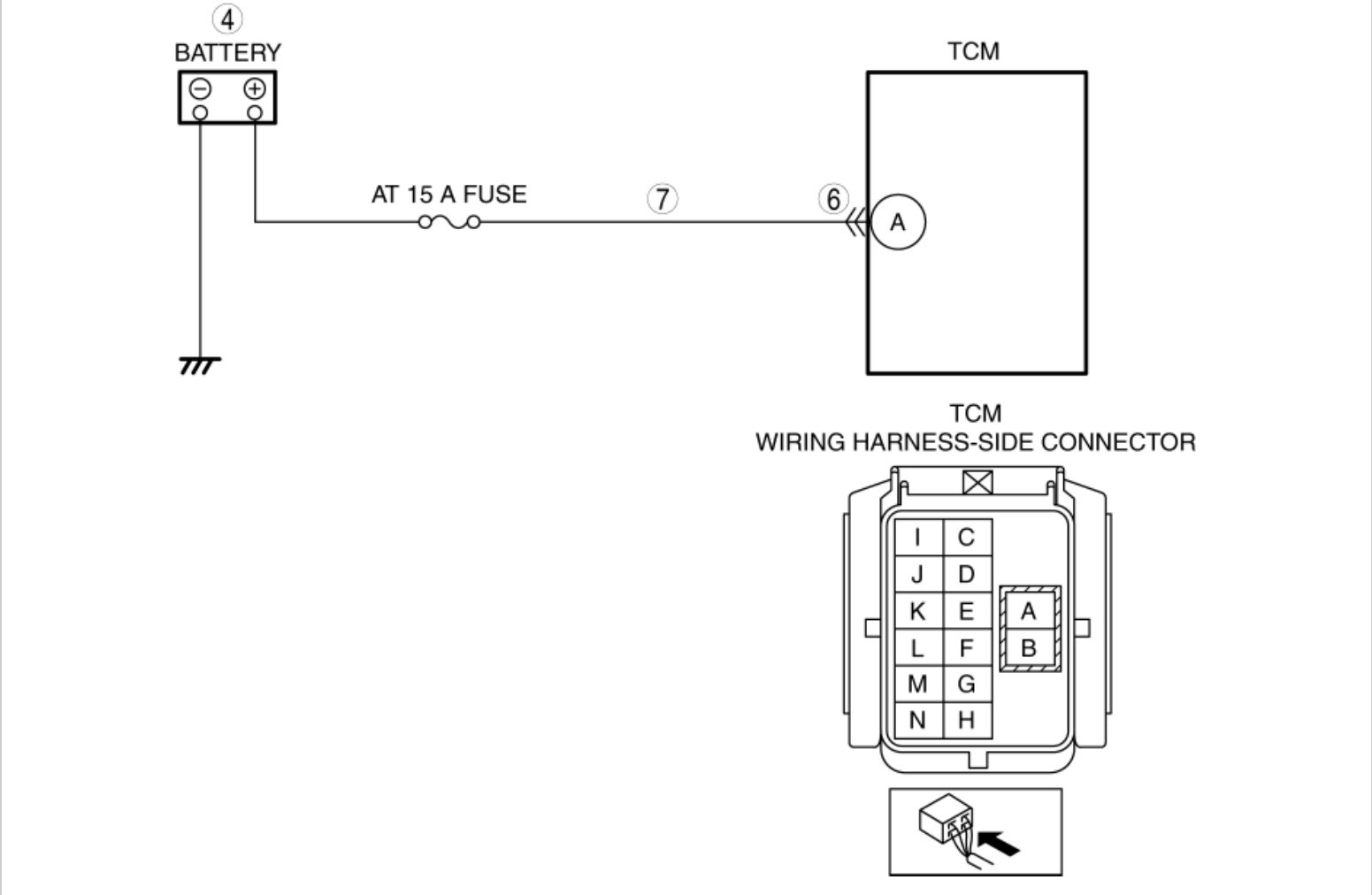

Diagnostic procedure

STEP	INSPECTION		ACTION
1	**VERIFY FREEZE FRAME DATA/SNAPSHOT DATA HAS BEEN RECORDED** • Has the freeze frame data/snapshot data been recorded on the repair order?	Yes	Go to the next step.
		No	Record the freeze frame data/snapshot data on the repair order, then go to the next step.
2	**VERIFY RELATED REPAIR INFORMATION AVAILABILITY** • Verify related Service Bulletins and/or on-line repair information availability. • Is any related repair information available?	Yes	Perform repair or diagnosis according to the available repair information. • If the vehicle is not repaired, go to the next step.
		No	Go to the next step.
3	**VERIFY PCM DTC** • Perform the PCM DTC inspection using the M-MDS. (See **ON-BOARD DIAGNOSTIC TEST [SKYACTIV-G 2.0, SKYACTIV-G 2.5]**.) • Are any DTCs present?	Yes	Go to the applicable DTC inspection. (See **DTC TABLE [SKYACTIV-G 2.0, SKYACTIV-G 2.5]**.)
		No	Go to the next step.
4	**INSPECT BATTERY** • Inspect the battery.	Yes	Recharge or replace the battery, then go to Step 8. (See **BATTERY RECHARGING [SKYACTIV-G 2.0, SKYACTIV-G 2.5]**.)

	(See **BATTERY INSPECTION [SKYACTIV-G 2.0, SKYACTIV-G 2.5]**.) • Is there any malfunction?		(See **BATTERY REMOVAL/INSTALLATION [SKYACTIV-G 2.0, SKYACTIV-G 2.5]**.)
		No	Go to the next step.
5	**INSPECT GENERATOR** • Inspect the generator. (See **GENERATOR INSPECTION [SKYACTIV-G 2.0, SKYACTIV-G 2.5 (WITHOUT i-ELOOP)]**.) (See **GENERATOR INSPECTION [SKYACTIV-G 2.0, SKYACTIV-G 2.5 (WITH i-ELOOP)]**.) • Is there any malfunction?	Yes	Replace the generator, then go to Step 8. (See **GENERATOR REMOVAL/INSTALLATION [SKYACTIV-G 2.0, SKYACTIV-G 2.5 (WITHOUT i-ELOOP)]**.) (See **GENERATOR REMOVAL/INSTALLATION [SKYACTIV-G 2.0, SKYACTIV-G 2.5 (WITH i-ELOOP)]**.)
		No	Go to the next step.
6	**INSPECT TCM CONNECTOR AND TERMINALS** • Switch the ignition off. • Disconnect the TCM connector. • Visually inspect the TCM connector and terminals. • Is there any malfunction?	Yes	Repair or replace the connector and/or terminals, then go to Step 8.
		No	Go to the next step.
7	**INSPECT TCM POWER SUPPLY CIRCUIT** • Always reconnect all disconnected connectors. • Access the PID VPWR using the M-MDS. (See **ON-BOARD DIAGNOSTIC SYSTEM PID/DATA MONITOR INSPECTION [FW6A-EL]**.) • Is the PID value **B+**?	Yes	Go to the next step.
		No	Inspect the AT 15 A fuse. • If the fuse is blown: ▪ Refer to the wiring diagram and verify whether or not there is a common connector between AT 15 A fuse and TCM terminal A. **If there is a common connector:** • Determine the malfunctioning part by inspecting the common connector and the terminal for corrosion, damage, or pin disconnection, and the common wiring harness for a short to ground. • Repair or replace the malfunctioning part. **If there is no common connector:**

			• Repair or replace the wiring harness which has a short to ground. • Replace the fuse. • If the fuse is deteriorated: ▪ Replace the malfunctioning fuse. • If the fuse is normal: ▪ Refer to the wiring diagram and verify whether or not there is a common connector between battery positive terminal and TCM terminal A. **If there is a common connector:** • Determine the malfunctioning part by inspecting the common connector and the terminal for corrosion, damage, or pin disconnection, and the common wiring harness for an open circuit. • Repair or replace the malfunctioning part. **If there is no common connector:** • Repair or replace the wiring harness which has an open circuit. Go to the next step.
8	**VERIFY DTC TROUBLESHOOTING COMPLETED** • Always reconnect all disconnected connectors. • Clear the DTC using the M-MDS. (See **ON-BOARD DIAGNOSTIC SYSTEM DTC INSPECTION [FW6A-EL]**.) • Perform the following procedure to ensure that the DTC has been resolved:	Yes	Go to the applicable DTC inspection. (See **ON-BOARD DIAGNOSTIC SYSTEM DTC TABLE [FW6A-EL]**.)
		No	DTC troubleshooting completed.

	◦ Drive the vehicle for **5 s or more** under the following condition: • Selector lever position: D or R position • Perform the DTC inspection using the M-MDS. (See **ON-BOARD DIAGNOSTIC SYSTEM DTC INSPECTION [FW6A-EL]**.) • Are any DTCs present?		

2014 - Mazda3 - Transmission/Transaxle

DTC P0883:00 [FW6A-EL]

DTC P0883:00	TCM power supply voltage high
DETECTION CONDITION	• TCM power supply voltage is **18 V or more** for **5 s**. **Diagnostic support note** • The check engine light illuminates if the TCM detects the above malfunction condition during the first drive cycle. • The automatic transaxle warning light does not illuminate. • PENDING CODE is available. • FREEZE FRAME DATA is available. • DTC is stored in the TCM memory.
FAIL-SAFE FUNCTION	• Set to emergency mode. • Inhibits learning control. • Inhibits manual mode. • Inhibits neutral idle control. • Inhibits AAS.
POSSIBLE CAUSE	• PCM DTC is stored. • Battery malfunction • Generator malfunction
SYSTEM WIRING DIAGRAM	Not applicable

Diagnostic procedure

STEP	INSPECTION		ACTION
1	**VERIFY FREEZE FRAME DATA/SNAPSHOT DATA HAS BEEN RECORDED**	Yes	Go to the next step.

	• Has the freeze frame data/snapshot data been recorded on the repair order?	No	Record the freeze frame data/snapshot data on the repair order, then go to the next step.
2	**VERIFY RELATED REPAIR INFORMATION AVAILABILITY** • Verify related Service Bulletins and/or on-line repair information availability. • Is any related repair information available?	Yes	Perform repair or diagnosis according to the available repair information. • If the vehicle is not repaired, go to the next step.
		No	Go to the next step.
3	**VERIFY PCM DTC** • Perform the PCM DTC inspection using the M-MDS. (See **ON-BOARD DIAGNOSTIC TEST [SKYACTIV-G 2.0, SKYACTIV-G 2.5]**.) • Are any DTCs present?	Yes	Go to the applicable DTC inspection. (See **DTC TABLE [SKYACTIV-G 2.0, SKYACTIV-G 2.5]**.)
		No	Go to the next step.
4	**INSPECT BATTERY** • Inspect the battery. (See **BATTERY INSPECTION [SKYACTIV-G 2.0, SKYACTIV-G 2.5]**.) • Is there any malfunction?	Yes	Replace the battery, then go to Step 6. (See **BATTERY REMOVAL/INSTALLATION [SKYACTIV-G 2.0, SKYACTIV-G 2.5]**.)
		No	Go to the next step.
5	**INSPECT GENERATOR** • Inspect the generator. (See **GENERATOR INSPECTION [SKYACTIV-G 2.0, SKYACTIV-G 2.5 (WITHOUT i-ELOOP)]**.) (See **GENERATOR INSPECTION [SKYACTIV-G 2.0, SKYACTIV-G 2.5 (WITH i-ELOOP)]**.) • Is there any malfunction?	Yes	Replace the generator, then go to the next step. (See **GENERATOR REMOVAL/INSTALLATION [SKYACTIV-G 2.0, SKYACTIV-G 2.5 (WITHOUT i-ELOOP)]**.) (See **GENERATOR REMOVAL/INSTALLATION [SKYACTIV-G 2.0, SKYACTIV-G 2.5 (WITH i-ELOOP)]**.)
		No	Go to the next step.
6	**VERIFY DTC TROUBLESHOOTING COMPLETED** • Clear the DTC using the M-MDS. (See **ON-BOARD DIAGNOSTIC SYSTEM DTC INSPECTION [FW6A-EL]**.) • Perform the following procedure to ensure that the DTC has been resolved:	Yes	Go to the applicable DTC inspection. (See **ON-BOARD DIAGNOSTIC SYSTEM DTC TABLE [FW6A-EL]**.)
		No	DTC troubleshooting completed.

	◦ Switch the ignition ON (engine off or on) and wait for **5 s or more**. • Perform the DTC inspection using the M-MDS. (See **ON-BOARD DIAGNOSTIC SYSTEM DTC INSPECTION [FW6A-EL]**.) • Are any DTCs present?		

2014 - Mazda3 - Transmission/Transaxle

DTC P1728:00 [FW6A-EL]

DTC P1728:00	Clutch slippage
DETECTION CONDITION	• Under the following conditions, turbine/input shaft speed suddenly increases **300 rpm or more** for **1,450 ms**: ▪ Engine is running. ▪ Vehicle speed is **5 km/h {3 mph} or more**. ▪ There is no difference between vehicle speed signal from DSC HU/CM and output shaft speed sensor signal. ▪ Not shifting ▪ Selector lever position is D position. ▪ Turbine/input shaft speed is **1,200 rpm or more**. ▪ Oil pressure switch pattern (1st—6th) is normal. **Diagnostic support note** • The check engine light does not illuminate. • The automatic transaxle warning light does not illuminate. • PENDING CODE is available. • FREEZE FRAME DATA is not available. • DTC is stored in the TCM memory.
FAIL-SAFE FUNCTION	• Inhibits malfunctioning gear. • Limits engine torque. • Maximizes the line pressure. • Inhibits learning control. • Inhibits manual mode. • Inhibits neutral idle control. • Inhibits AAS.
POSSIBLE	• ATF is less than specified value

CAUSE	• Clutch slippage
SYSTEM WIRING DIAGRAM	Not applicable

Diagnostic procedure

STEP	INSPECTION		ACTION
1	**VERIFY RELATED REPAIR INFORMATION AVAILABILITY** • Verify related Service Bulletins and/or on-line repair information availability. • Is any related repair information available?	Yes	Perform repair or diagnosis according to the available repair information. • If the vehicle is not repaired, go to the next step.
		No	Go to the next step.
2	**INSPECT ATF LEVEL** • Inspect the ATF level. (See **AUTOMATIC TRANSAXLE FLUID (ATF) INSPECTION [FW6A-EL]**.) • Is there any malfunction?	Yes	Adjust the ATF level to the specification, then go to the next step. (See **AUTOMATIC TRANSAXLE FLUID (ATF) REPLACEMENT [FW6A-EL]**.)
		No	Replace the automatic transaxle, then go to the next step. (See **AUTOMATIC TRANSAXLE REMOVAL/INSTALLATION [FW6A-EL]**.)
3	**VERIFY DTC TROUBLESHOOTING COMPLETED** • Clear the DTC using the M-MDS. (See **ON-BOARD DIAGNOSTIC SYSTEM DTC INSPECTION [FW6A-EL]**.) • Perform the following procedure to ensure that the DTC has been resolved: ◦ Drive the vehicle without shifting for **20 min or more** under the following conditions: • Vehicle speed: **5 km/h {3 mph} or more** • Selector	Yes	ATF amount in Step 2 is correct • Go to the applicable DTC inspection. (See **ON-BOARD DIAGNOSTIC SYSTEM DTC TABLE [FW6A-EL]**.) ATF amount adjusted in Step 2: • Replace the automatic transaxle, then drive the vehicle to check it, and if there is no problem then the DTC troubleshooting is complete. (See **AUTOMATIC TRANSAXLE REMOVAL/INSTALLATION [FW6A-EL]**.)

	lever position: D position • Perform the DTC inspection using the M-MDS. (See **ON-BOARD DIAGNOSTIC SYSTEM DTC INSPECTION [FW6A-EL]**.) • Are any DTCs present?		
		No	DTC troubleshooting completed.

2014 - Mazda3 - Transmission/Transaxle

DTC P1738:00 [FW6A-EL]

DTC P1738:00	Automatic transaxle internal malfunction
DETECTION CONDITION	• Malfunction location cannot be determined based on combination of gear ratio malfunction and oil pressure switch pattern malfunction. **Diagnostic support note** • The check engine light does not illuminate. • The automatic transaxle warning light illuminates if the TCM detects the above malfunction condition in two consecutive drive cycles or in one drive cycle while the DTC for the same malfunction has been stored in the TCM. • PENDING CODE is available. • FREEZE FRAME DATA is not available. • DTC is stored in the TCM memory.
FAIL-SAFE FUNCTION	• Inhibits learning control. • Inhibits manual mode. • Inhibits neutral idle control. • Inhibits AAS.
POSSIBLE CAUSE	• ATF is less than specified value • Automatic transaxle internal malfunction
SYSTEM WIRING DIAGRAM	Not applicable

Diagnostic procedure

STEP	INSPECTION		ACTION
1	**INSPECT ATF LEVEL** • Inspect the ATF level.	Yes	Go to Step 4.

	(See **AUTOMATIC TRANSAXLE FLUID (ATF) INSPECTION [FW6A-EL]**.) • Is there any malfunction?	No	Adjust the ATF level to the specification, then go to the next step. (See **AUTOMATIC TRANSAXLE FLUID (ATF) ADJUSTMENT [FW6A-EL]**.)
2	**PERFORM ON-BOARD DIAGNOSTIC TEST TO SPECIFY MALFUNCTIONING PART** **NOTE:** • If only DTCs in which the malfunctioning part is not confirmed are displayed as in the following DTCs, all of the diagnosis may not have been completed. In such cases, the malfunction cause can be determined by performing the on-board diagnostic test. • Perform the on-board diagnostic test. (See **ON-BOARD DIAGNOSTIC TEST MODE [FW6A-EL]**.) • Are any DTCs present?	Yes	DTC P1738:00 is displayed: • Replace the automatic transaxle. (See **AUTOMATIC TRANSAXLE REMOVAL/INSTALLATION [FW6A-EL]**.) DTC other than P1738:00 is displayed: • Go to the applicable DTC inspection. (See **ON-BOARD DIAGNOSTIC SYSTEM DTC TABLE [FW6A-EL]**.)
		No	Go to the next step.
3	**DRIVE VEHICLE AND VERIFY DTCs** • Stop the engine. • Drive the vehicle for **5 min or more** after the engine restarts. • Perform the DTC inspection using the M-MDS. (See **ON-BOARD DIAGNOSTIC SYSTEM DTC INSPECTION [FW6A-EL]**.) • Are any DTCs present?	Yes	DTC P1738:00 is displayed: • Replace the automatic transaxle. (See **AUTOMATIC TRANSAXLE REMOVAL/INSTALLATION [FW6A-EL]**.) DTC other than P1738:00 is displayed: • Go to the applicable DTC inspection. (See **ON-BOARD DIAGNOSTIC SYSTEM DTC TABLE [FW6A-EL]**.)
		No	No DTCs are displayed: • DTC troubleshooting completed.
4	**PERFORM ON-BOARD DIAGNOSTIC TEST** • Perform the on-board diagnostic test. (See **ON-BOARD DIAGNOSTIC TEST MODE [FW6A-EL]**.)	Yes	DTC P1738:00 is displayed: • Replace the automatic transaxle. (See **AUTOMATIC**

	• Are any DTCs present?		**TRANSAXLE REMOVAL/INSTALLATION [FW6A-EL]**.) DTC other than P1738:00 is displayed: • Go to the applicable DTC inspection. (See **ON-BOARD DIAGNOSTIC SYSTEM DTC TABLE [FW6A-EL]**.)
		No	Go to the next step.
5	**DRIVE VEHICLE AND VERIFY DTCs** • Stop the engine. • Drive the vehicle for **5 min or more** after the engine restarts. • Perform the DTC inspection using the M-MDS. (See **ON-BOARD DIAGNOSTIC SYSTEM DTC INSPECTION [FW6A-EL]**.) • Are any DTCs present?	Yes	DTC P1738:00 is displayed: • Replace the automatic transaxle. (See **AUTOMATIC TRANSAXLE REMOVAL/INSTALLATION [FW6A-EL]**.) DTC other than P1738:00 is displayed: • Go to the applicable DTC inspection. (See **ON-BOARD DIAGNOSTIC SYSTEM DTC TABLE [FW6A-EL]**.)
		No	Replace the control valve body. (See **CONTROL VALVE BODY REMOVAL/INSTALLATION [FW6A-EL]**.)

2014 - Mazda3 - Transmission/Transaxle

DTC P1784:00 [FW6A-EL]

DTC P1784:00	Hi cut valve stuck off/R-3-5 cut valve stuck on
DETECTION CONDITION	• Under the following conditions, hi cut valve stuck-off or R-3-5 cut valve stuck-on detected by combination of gear ratio malfunction and oil pressure switch pattern malfunction: ▪ Engine is running. ▪ ATF temperature is **20 °C {68 °F} or more**. ▪ There is no difference between vehicle speed signal from DSC HU/CM and output shaft speed sensor signal. ▪ Turbine/input shaft speed sensor and output shaft speed sensor DTC is not recorded. **Diagnostic support note** • The check engine light does not illuminate. • The automatic transaxle warning light illuminates if the TCM detects the above malfunction condition in two consecutive drive cycles or in one drive cycle while the DTC for the same malfunction has been stored in the TCM. • PENDING CODE is available. • FREEZE FRAME DATA is not available. • DTC is stored in the TCM memory.
FAIL-SAFE FUNCTION	• Inhibits malfunctioning gear. • Limits engine torque. • Inhibits learning control. • Inhibits neutral idle control.
POSSIBLE CAUSE	• ATF is less than specified value • Hi cut valve malfunction • R-3-5 cut valve malfunction • Clutch burnt

SYSTEM WIRING DIAGRAM	Not applicable

Diagnostic procedure

STEP	INSPECTION		ACTION
1	**VERIFY RELATED REPAIR INFORMATION AVAILABILITY** • Verify related Service Bulletins and/or on-line repair information availability. • Is any related repair information available?	Yes	Perform repair or diagnosis according to the available repair information. • If the vehicle is not repaired, go to the next step.
		No	Go to the next step.
2	**INSPECT ATF LEVEL** • Inspect the ATF level. (See **AUTOMATIC TRANSAXLE FLUID (ATF) INSPECTION [FW6A-EL]**.) • Is there any malfunction?	Yes	Adjust the ATF level to the specification, then go to the next step. (See **AUTOMATIC TRANSAXLE FLUID (ATF) REPLACEMENT [FW6A-EL]**.)
		No	Replace the automatic transaxle. (See **AUTOMATIC TRANSAXLE REMOVAL/INSTALLATION [FW6A-EL]**.)
3	**PERFORM STALL TEST TO VERIFY DTCs** • Clear the DTC using the M-MDS. (See **ON-BOARD DIAGNOSTIC SYSTEM DTC INSPECTION [FW6A-EL]**.) • Perform the stall test in the reverse (R) position. (See **MECHANICAL SYSTEM TEST [FW6A-EL]**.) • Perform the DTC inspection using the M-MDS. (See **ON-BOARD DIAGNOSTIC SYSTEM DTC INSPECTION [FW6A-EL]**.) • Are any DTCs present?	Yes	Replace the automatic transaxle. (See **AUTOMATIC TRANSAXLE REMOVAL/INSTALLATION [FW6A-EL]**.)
		No	Go to the next step.
4	**PERFORM ON-BOARD DIAGNOSTIC TEST** • Perform the on-board diagnostic test.	Yes	Replace the automatic transaxle. (See **AUTOMATIC TRANSAXLE**

	(See **ON-BOARD DIAGNOSTIC TEST MODE [FW6A-EL]**.) • Are any DTCs present?		**REMOVAL / INSTALLATION [FW6A-EL]**.)
		No	Drive the vehicle for **10 min or more**. DTCs are displayed: • Replace the automatic transaxle. (See **AUTOMATIC TRANSAXLE REMOVAL / INSTALLATION [FW6A-EL]**.) No DTCs are displayed: • DTC troubleshooting completed.

2014 - Mazda3 - Transmission/Transaxle

DTC P2530:00 [FW6A-EL]

DTC P2530:00	Ignition switch stuck off
DETECTION CONDITION	• If the IG ON time count of the instrument cluster proceeds **5 s** under the following condition: ▪ Ignition switch signal off **Diagnostic support note** • The check engine light does not illuminate. • The automatic transaxle warning light does not illuminate. • PENDING CODE is available. • FREEZE FRAME DATA is not available. • DTC is stored in the TCM memory.
FAIL-SAFE FUNCTION	Not applicable

POSSIBLE CAUSE	• Start stop unit malfunction
	  ▪ Ignition switch signal output stuck off
	• Wiring harness malfunction
	  ▪ Short or open signal in ignition switch
	  ▪ Ignition switch signal terminal (start stop unit terminal 2S) malfunction
	• Control valve body malfunction
	  ▪ Ignition switch signal terminal (start stop unit terminal 2S) pin deformity

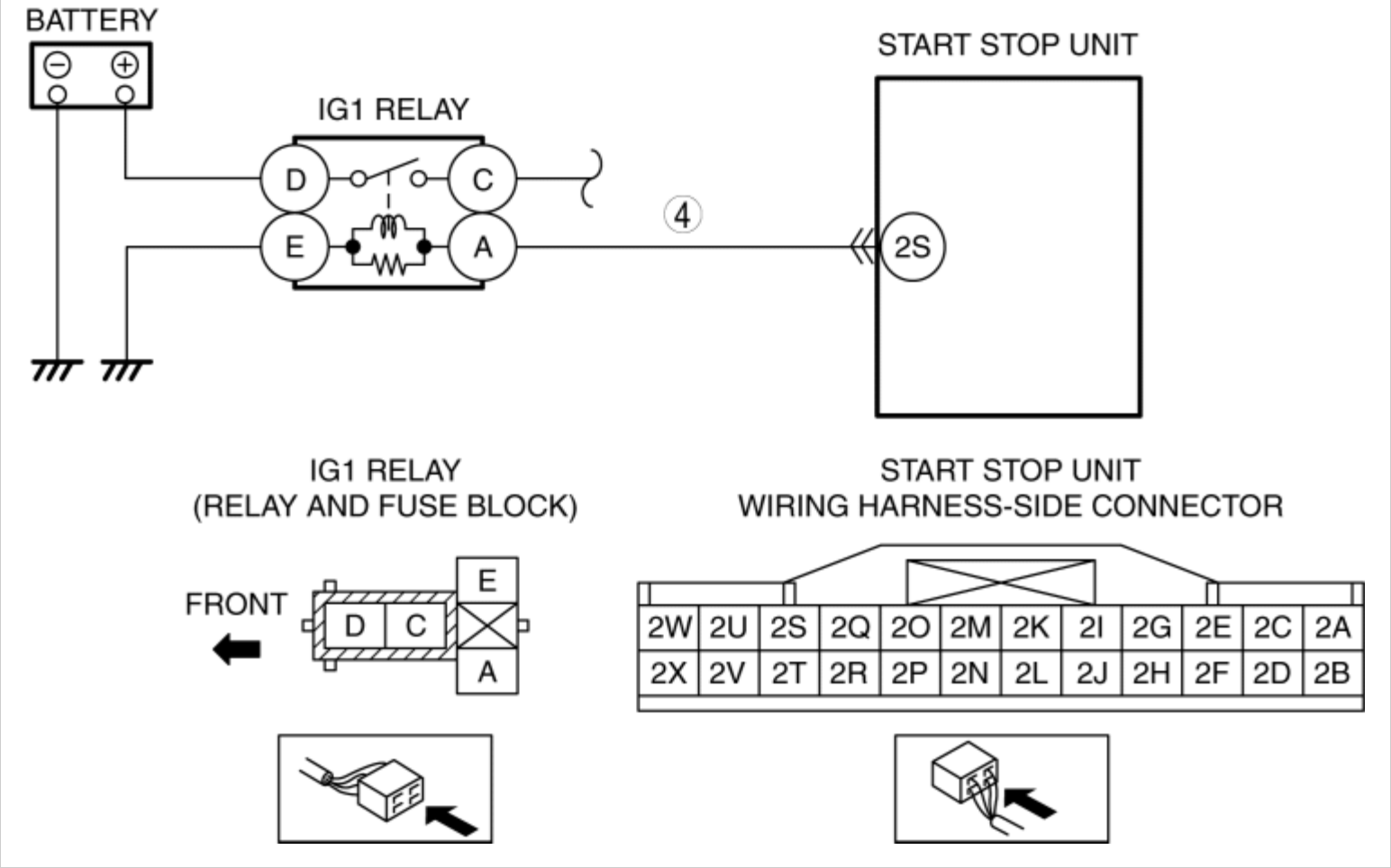

Diagnostic procedure

STEP	INSPECTION		ACTION
1	**VERIFY FREEZE FRAME DATA/SNAPSHOT DATA HAS BEEN RECORDED** • Has the freeze frame data/snapshot data been recorded on the repair order?	Yes	Go to the next step.
		No	Record the freeze frame data/snapshot data on the repair order, then go to the next step.
2	**VERIFY RELATED REPAIR INFORMATION AVAILABILITY** • Verify related Service Bulletins and/or on-line repair information availability. • Is any related repair information available?	Yes	Perform repair or diagnosis according to the available repair information. • If the vehicle is not repaired, go to the next step.
		No	Go to the next step.
3	**VERIFY STORED DTC IN START STOP UNIT** • Perform the start stop unit DTC inspection using the M-MDS.	Yes	Go to the applicable DTC inspection. (See **DTC TABLE [START STOP UNIT]**.)
		No	Go to the next step.

	(See **DTC INSPECTION [START STOP UNIT]**.) • Are any DTCs present?		
4	**INSPECT IGNITION CIRCUIT FOR OPEN CIRCUIT** • Switch the ignition off. • Disconnect the negative battery cable. (See **NEGATIVE BATTERY CABLE DISCONNECTION/CONNECTION [SKYACTIV-G 2.0, SKYACTIV-G 2.5]**.) • Disconnect the following connectors. ▪ IG1 relay ▪ Start stop unit • Inspect for continuity between the following terminals (wiring harness-side): ▪ IG1 relay terminal A—Start stop unit terminal 2S • Is there continuity?	Yes	Go to the next step.
		No	Refer to the wiring diagram and verify whether or not there is a common connector between IG1 relay terminal A and start stop unit terminal 2S. **If there is a common connector:** • Determine the malfunctioning part by inspecting the common connector and the terminal for corrosion, damage, or pin disconnection, and the common wiring harness for an open circuit. • Repair or replace the malfunctioning part. **If there is no common connector:** • Repair or replace the wiring harness which has an open circuit. Go to Step 6.
5	**VERIFY ENGINE START** • Always reconnect all disconnected connectors. • Reconnect the negative battery cable. (See **NEGATIVE BATTERY CABLE DISCONNECTION/CONNECTION [SKYACTIV-G 2.0, SKYACTIV-G 2.5]**.) • Does the engine start normally?	Yes	Replace the control valve body, then go to the next step. (See **CONTROL VALVE BODY REMOVAL/INSTALLATION [FW6A-EL]**.)
		No	Replace the start stop unit, then go to the next step. (See **START STOP UNIT REMOVAL/INSTALLATION**.)
6	**VERIFY DTC TROUBLESHOOTING COMPLETED** • Clear the DTC using the M-	Yes	Go to the applicable DTC inspection. (See **ON-BOARD DIAGNOSTIC SYSTEM DTC TABLE**

	MDS.
	
	(See **ON-BOARD DIAGNOSTIC SYSTEM DTC INSPECTION [FW6A-EL]**.)
	
	• Perform the following procedure to ensure that the DTC has been resolved:
	  ◦ Switch the ignition ON (engine off or on) and wait for **10 s or more**.
	  ◦ Switch the ignition off.
	
	• Perform the DTC inspection using the M-MDS.
	
	(See **ON-BOARD DIAGNOSTIC SYSTEM DTC INSPECTION [FW6A-EL]**.)
	
	• Are any DTCs present?
			[FW6A-EL].)

		No	DTC troubleshooting completed.

2014 - Mazda3 - Transmission/Transaxle

DTC P2855:00 [FW6A-EL]

DTC P2855:00	Low clutch hydraulic circuit/sealing malfunction
DETECTION CONDITION	• Slow engaging after operating selector lever from N to D position. **Diagnostic support note** • The check engine light does not illuminate. • The automatic transaxle warning light does not illuminate. • PENDING CODE is available. • FREEZE FRAME DATA is not available. • DTC is stored in the TCM memory.
FAIL-SAFE FUNCTION	Not applicable
POSSIBLE CAUSE	• Low clutch piston sealing malfunction • Seal ring poor functioning • ATF is less than specified value
SYSTEM WIRING DIAGRAM	Not applicable

Diagnostic procedure

STEP	INSPECTION		ACTION
1	**INSPECT ATF LEVEL** • Inspect the ATF level. (See **AUTOMATIC TRANSAXLE FLUID (ATF) INSPECTION [FW6A-EL]**.) • Is there any malfunction?	Yes	Adjust the ATF level to the specification, then go to the next step. (See **AUTOMATIC TRANSAXLE FLUID (ATF) REPLACEMENT [FW6A-EL]**.)
		No	Replace the automatic transaxle.

			(See **AUTOMATIC TRANSAXLE REMOVAL/INSTALLATION [FW6A-EL]**.)
2	**VERIFY DTC TROUBLESHOOTING COMPLETED** • Perform the following procedure to ensure that the DTC has been resolved: ◦ Verify that the ATF temperature is **30 °C {86 °F} or more**. ◦ Perform the following operation **20 times**. ▪ Operate the selector lever from N to D position and wait for **5 s or more**. ▪ Operate the selector lever from D to N position and wait for **5 s or more**. • Clear the DTC using the M-MDS. (See **ON-BOARD DIAGNOSTIC SYSTEM DTC INSPECTION [FW6A-EL]**.) • Perform the DTC inspection using the M-MDS. (See **ON-BOARD DIAGNOSTIC SYSTEM DTC INSPECTION [FW6A-EL]**.) • Is the DTC P2855:00 also present?	Yes	Replace the automatic transaxle. (See **AUTOMATIC TRANSAXLE REMOVAL/INSTALLATION [FW6A-EL]**.)
		No	DTC troubleshooting completed.

2014 - Mazda3 - Transmission/Transaxle

DTC U0073:00, U0100:00, U0121:00, U0131:00, U0155:00 [FW6A-EL]

DTC U0073:00	CAN system communication error (HS CAN)
DETECTION CONDITION	• Under the following condition, a communication error (HS CAN) occurs: ▪ Battery voltage is **10 V or more**. **Diagnostic support note** • The check engine light does not illuminate. • The automatic transaxle warning light does not illuminate. • PENDING CODE is available. • FREEZE FRAME DATA is not available. • DTC is stored in the TCM memory.
FAIL-SAFE FUNCTION	• Inhibits learning control. • Inhibits neutral idle control. • Inhibits AAS.
POSSIBLE CAUSE	• CAN bus communication line malfunction (HS CAN) • TCM malfunction
SYSTEM WIRING DIAGRAM	Not applicable

DTC U0100:00	Communication error to PCM (HS CAN)
	• Under the following condition, the TCM cannot receive the signal from PCM (HS CAN): ▪ Battery voltage is **10 V or more**. **Diagnostic support note**

DETECTION CONDITION	• The check engine light illuminates if the TCM detects the above malfunction condition during the first drive cycle. • The automatic transaxle warning light does not illuminate. • PENDING CODE is available. • FREEZE FRAME DATA is available. • DTC is stored in the TCM memory.
FAIL-SAFE FUNCTION	• Inhibits learning control. • Inhibits neutral idle control. • Inhibits AAS.
POSSIBLE CAUSE	• CAN communication line malfunction between PCM and TCM (HS CAN) • TCM malfunction
SYSTEM WIRING DIAGRAM	Not applicable

DTC U0121:00	Communication error to DSC HU/CM
DETECTION CONDITION	• Under the following condition, the TCM cannot receive the signal from DSC HU/CM: ▪ Battery voltage is **10 V or more**. **Diagnostic support note** • The check engine light illuminates if the TCM detects the above malfunction condition during the first drive cycle. • The automatic transaxle warning light does not illuminate. • PENDING CODE is available. • FREEZE FRAME DATA is available. • DTC is stored in the TCM memory.
FAIL-SAFE FUNCTION	• Inhibits learning control. • Inhibits neutral idle control. • Inhibits AAS.
POSSIBLE CAUSE	• CAN communication line malfunction between TCM and DSC HU/CM • TCM malfunction

SYSTEM WIRING DIAGRAM	Not applicable

DTC U0131:00	Communication error to EPS control module
DETECTION CONDITION	• Under the following condition, the TCM cannot receive the signal from EPS control module: ▪ Battery voltage is **10 V or more**. **Diagnostic support note** • The check engine light does not illuminate. • The automatic transaxle warning light does not illuminate. • PENDING CODE is available. • FREEZE FRAME DATA is not available. • DTC is stored in the TCM memory.
FAIL-SAFE FUNCTION	• Inhibits learning control. • Inhibits neutral idle control.
POSSIBLE CAUSE	• CAN communication line malfunction between TCM and EPS control module • TCM malfunction
SYSTEM WIRING DIAGRAM	Not applicable

DTC U0155:00	Communication error to instrument cluster
DETECTION CONDITION	• Under the following condition, the TCM cannot receive the signal from instrument cluster: ▪ Battery voltage is **10 V or more**. **Diagnostic support note** • The check engine light illuminates if the TCM detects the above malfunction condition during the first drive cycle. • The automatic transaxle warning light does not illuminate. • PENDING CODE is available.

	• FREEZE FRAME DATA is available. • DTC is stored in the TCM memory.
FAIL-SAFE FUNCTION	• Inhibits learning control. • Inhibits manual mode. • Inhibits neutral idle control.
POSSIBLE CAUSE	• CAN communication line malfunction between TCM and instrument cluster • TCM malfunction
SYSTEM WIRING DIAGRAM	Not applicable

Diagnostic Procedure

- Inspect according to the diagnostic procedure in ON-BOARD DIAGNOSTIC [MULTIPLEX COMMUNICATION SYSTEM]. (See **FOREWORD**.)

2014 - Mazda3 - Transmission/Transaxle

DTC U0074:00 [FW6A-EL]

DTC U0074:00	CAN system communication error (local CAN between TCM and PCM)
DETECTION CONDITION	• Under the following condition, a communication error (local CAN between TCM and PCM) occurs: ▪ Battery voltage is **10 V or more**. **Diagnostic support note** • The check engine light does not illuminate. • The automatic transaxle warning light does not illuminate. • PENDING CODE is available. • FREEZE FRAME DATA is not available. • DTC is stored in the TCM memory.
FAIL-SAFE FUNCTION	• Set to TCC control. • Inhibits learning control. • Inhibits manual mode. • Inhibits neutral idle control. • Inhibits AAS. • Inhibits 5GR and 6GR. • Inhibits shift down when the accelerator pedal is depressed.
POSSIBLE CAUSE	• CAN communication line malfunction between TCM and PCM (local CAN between TCM and PCM) • PCM DTC is stored. • TCM malfunction
SYSTEM WIRING DIAGRAM	Not applicable

Diagnostic procedure

STEP	INSPECTION	ACTION

1	**VERIFY RELATED REPAIR INFORMATION AVAILABILITY** • Verify related Service Bulletins and/or on-line repair information availability. • Is any related repair information available?	Yes	Perform repair or diagnosis according to the available repair information. • If the vehicle is not repaired, go to the next step.
		No	Go to the next step.
2	**VERIFY PCM DTC** • Perform the PCM DTC inspection using the M-MDS. (See **ON-BOARD DIAGNOSTIC TEST [SKYACTIV-G 2.0, SKYACTIV-G 2.5]**.) • Are any DTCs present?	Yes	DTC U0074:00 is displayed: • CAN communication line can be considered the cause. ▪ Refer to the wiring diagram and verify whether or not there is a common connector between TCM and PCM. **If there is a common connector:** • Determine the malfunctioning part by inspecting the common connector and the terminal for corrosion, damage, or pin disconnection, and the common wiring harness for a malfunction. • Repair or replace the malfunctioning part. **If there is no common connector:** • Repair or replace the wiring harness. • Go to the next step. DTC other than U0074:00 is displayed: • Go to the applicable DTC inspection.

			(See **DTC TABLE [SKYACTIV-G 2.0, SKYACTIV-G 2.5]**.)
		No	Go to the next step.
3	**VERIFY DTC TROUBLESHOOTING COMPLETED** • Clear the DTC using the M-MDS. (See **ON-BOARD DIAGNOSTIC SYSTEM DTC INSPECTION [FW6A-EL]**.) • Perform the following procedure to ensure that the DTC has been resolved: ▪ Switch the ignition ON (engine off or on). • Perform the DTC inspection using the M-MDS. (See **ON-BOARD DIAGNOSTIC SYSTEM DTC INSPECTION [FW6A-EL]**.) • Is the same DTC present?	Yes	Replace the control valve body, then go to the next step. (See **CONTROL VALVE BODY REMOVAL/INSTALLATION [FW6A-EL]**.)
		No	Go to the next step.
4	**VERIFY NO DTC IS PRESENT** • Are any DTCs present?	Yes	Go to the applicable DTC inspection. (See **ON-BOARD DIAGNOSTIC SYSTEM DTC TABLE [FW6A-EL]**.)
		No	DTC troubleshooting completed.

2014 - Mazda3 - Transmission/Transaxle

DTC U0115:00 [FW6A-EL]

DTC U0115:00	Communication error to PCM (local CAN between TCM and PCM)
DETECTION CONDITION	• Under the following condition, the TCM cannot receive the signal from PCM (local CAN between TCM and PCM): ▪ Battery voltage is **10 V or more**. **Diagnostic support note** • The check engine light illuminates if the TCM detects the above malfunction condition during the first drive cycle. • The automatic transaxle warning light does not illuminate. • PENDING CODE is available. • FREEZE FRAME DATA is available. • DTC is stored in the TCM memory.
FAIL-SAFE FUNCTION	• Set to TCC control. • Inhibits learning control. • Inhibits manual mode. • Inhibits neutral idle control. • Inhibits AAS. • Inhibits 5GR and 6GR. • Inhibits shift down when the accelerator pedal is depressed.
POSSIBLE CAUSE	• PCM DTC is stored. • PCM malfunction • TCM malfunction
SYSTEM WIRING DIAGRAM	Not applicable

Diagnostic procedure

STEP	INSPECTION		ACTION
1	**VERIFY FREEZE FRAME DATA/SNAPSHOT DATA HAS BEEN RECORDED** • Has the freeze frame data/snapshot data been recorded on the repair order?	Yes	Go to the next step.
		No	Record the freeze frame data/snapshot data on the repair order, then go to the next step.
2	**VERIFY RELATED REPAIR INFORMATION AVAILABILITY** • Verify related Service Bulletins and/or on-line repair information availability. • Is any related repair information available?	Yes	Perform repair or diagnosis according to the available repair information. • If the vehicle is not repaired, go to the next step.
		No	Go to the next step.
3	**VERIFY PCM DTC** • Perform the PCM DTC inspection using the M-MDS. (See **ON-BOARD DIAGNOSTIC TEST [SKYACTIV-G 2.0, SKYACTIV-G 2.5]**.) • Are any DTCs present?	Yes	Go to the applicable DTC inspection. (See **DTC TABLE [SKYACTIV-G 2.0, SKYACTIV-G 2.5]**.)
		No	PCM can be considered the cause. • Replace the PCM, then go to the next step. (See **PCM REMOVAL/INSTALLATION [SKYACTIV-G 2.0, SKYACTIV-G 2.5]**.)
4	**VERIFY DTC TROUBLESHOOTING COMPLETED** • Clear the DTC using the M-MDS. (See **ON-BOARD DIAGNOSTIC SYSTEM DTC INSPECTION [FW6A-EL]**.) • Perform the following procedure to ensure that the DTC has been resolved: ▪ Switch the ignition ON (engine off or on). • Perform the DTC inspection using the M-MDS. (See **ON-BOARD DIAGNOSTIC SYSTEM DTC INSPECTION [FW6A-EL]**.)	Yes	Replace the control valve body, then go to the next step. (See **CONTROL VALVE BODY REMOVAL/INSTALLATION [FW6A-EL]**.)
		No	Go to the next step.

	• Is the same DTC present?		
5	**VERIFY NO DTC IS PRESENT** • Are any DTCs present?	Yes	Go to the applicable DTC inspection. (See **ON-BOARD DIAGNOSTIC SYSTEM DTC TABLE [FW6A-EL]**.)
		No	DTC troubleshooting completed.

2014 - Mazda3 - Transmission/Transaxle

DTC U0442:00 [FW6A-EL]

DTC U0442:00	Invalid data received from PCM (local CAN between TCM and PCM)
DETECTION CONDITION	• Under the following condition, the TCM detects the invalid PCM signal for **0.5 s**: ▪ Battery voltage is **10 V or more**. **Diagnostic support note** • The check engine light does not illuminate. • The automatic transaxle warning light does not illuminate. • PENDING CODE is available. • FREEZE FRAME DATA is not available. • DTC is stored in the TCM memory.
FAIL-SAFE FUNCTION	• Set to TCC control. • Inhibits learning control. • Inhibits manual mode. • Inhibits neutral idle control. • Inhibits 5GR and 6GR. • Inhibits shift down when the accelerator pedal is depressed.
POSSIBLE CAUSE	• PCM DTC is stored.
SYSTEM WIRING DIAGRAM	Not applicable

Diagnostic procedure

STEP	INSPECTION		ACTION
1	**VERIFY RELATED REPAIR INFORMATION AVAILABILITY**	Yes	Perform repair or diagnosis according to the available repair information.

	• Verify related Service Bulletins and/or on-line repair information availability. • Is any related repair information available?		• If the vehicle is not repaired, go to the next step.
		No	Go to the next step.
2	**VERIFY PCM DTC** • Perform the PCM DTC inspection using the M-MDS. (See **ON-BOARD DIAGNOSTIC TEST [SKYACTIV-G 2.0, SKYACTIV-G 2.5]**.) • Are any DTCs present?	Yes	Go to the applicable DTC inspection. (See **DTC TABLE [SKYACTIV-G 2.0, SKYACTIV-G 2.5]**.)
		No	Go to the next step.
3	**VERIFY DTC TROUBLESHOOTING COMPLETED** • Clear the DTC using the M-MDS. (See **ON-BOARD DIAGNOSTIC SYSTEM DTC INSPECTION [FW6A-EL]**.) • Perform the following procedure to ensure that the DTC has been resolved: ◦ Start the engine and warm it up completely. ◦ Drive the vehicle for a while under the following conditions: • Selector lever position: D position • Perform the DTC inspection using the M-MDS. (See **ON-BOARD DIAGNOSTIC SYSTEM DTC INSPECTION [FW6A-EL]**.) • Are any DTCs present?	Yes	Go to the applicable DTC inspection. (See **ON-BOARD DIAGNOSTIC SYSTEM DTC TABLE [FW6A-EL]**.)
		No	DTC troubleshooting completed.

2014 - Mazda3 - Transmission/Transaxle

ON-BOARD DIAGNOSTIC SYSTEM PID/DATA MONITOR INSPECTION [FW6A-EL]

1. Connect the M-MDS to the DLC-2.
2. After the vehicle is identified, select the following items from the initialization screen of the M-MDS.
   a. Select “Data Logger”.
   b. Select “Modules”.
   c. Select “TCM”.
3. Select the applicable PID from the PID table.
4. Verify the PID data according to the directions on the screen.

NOTE:

- The PID data screen function is used for monitoring the calculated value of input/output signals in the module. Therefore, if the monitored value of the output components is not within the specification, it is necessary to inspect the monitored value of input components corresponding to the applicable output component control. In addition, because the system does not display an output component malfunction as an abnormality in the monitored value, it is necessary to inspect the output components individually.
- When detecting DTCs, PIDs related to a malfunctioning system may not display even if the module is normal. Therefore, if a PID is not displayed, it is necessary to verify the DTC, perform malfunction diagnosis of the DTC that was detected, and do repairs.

PID/DATA monitor item table (Reference)—: Not applicable

Item	Unit/Condition	Test condition	Specification (Reference)	Output part name
APP	%	Accelerator pedal released	Approx. 0 %	APP sensor
		Accelerator pedal fully depressed	Approx. 100 %	
APP1	%	Accelerator pedal released	Approx. 15 %	APP sensor No.1
		Accelerator pedal fully depressed	Approx. 82 %	
DGP_DIS_1	km {mile}	Displays traveled distance since the differential protection control operated due to excessive rotation difference between left/right drive wheels		—
DGP_DIS_2	km {mile}	Displays traveled distance since the DGP_MAX_DIF is updated		—
		Displays maximum rotation difference since the differential		

DGP_MAX_DIF	RPM	protection control operated due to excessive rotation difference between left/right drive wheels		—
DGP_SPD	KPH {MPH}	Displays vehicle speed with trailing wheels since the differential protection control operated due to excessive rotation difference between left/right drive wheels		—
ECT	°C {°F}	Displays ECT		ECT sensor
ECU_A	°C {°F}	Displays ECU internal temperature A		ECU internal temperature sensor A
ECU_B	°C {°F}	Displays ECU internal temperature B		ECU internal temperature sensor B
ECU_C	°C {°F}	Displays ECU internal temperature C		ECU internal temperature sensor C
GEAR_RA	Ratio	Selector lever in 1GR at D position	Approx. 3.5526	• Shift solenoid No.1 • Shift solenoid No.2 • Shift solenoid No.3 • Shift solenoid No.4
		Selector lever in 2GR at D position	Approx. 2.0228	
		Selector lever in 3GR at D position	Approx. 1.4522	
		Selector lever in 4GR at D position	Approx. 1.0000	
		Selector lever in 5GR at D position	Approx. 0.7084	
		Selector lever in 6GR at D position	Approx. 0.5993	
GEAR_SEL	1/2/3/4/5/6	Selector lever in 1GR at D position	1	• Shift solenoid No.1 • Shift solenoid No.2 • Shift solenoid No.3
		Selector lever in 2GR at D position	2	
		Selector lever in 3GR at D position	3	
		Selector lever in 4GR at D position	4	

		Selector lever in 5GR at D position	5	Shift solenoid No.4
		Selector lever in 6GR at D position	6	
HI_TEMP	—	Displays ATF high temperature mode determination amount (ATF temperature 132 °C {270 °F} or more)		—
HTM_CNT	—	Displays ATF high temperature mode determination amount (ATF temperature 132 °C {270 °F} or more)		—
HTM_DIS	km {mile}	Displays traveled distance after determining the ATF high temperature mode (ATF temperature 132 °C {270 °F} or more)		—
LINEDES	kPa {kgf/cm^2, psi}	Idle at P position after warm-up	Approx. 500 kPa {5.10 kgf/cm^2, 72.5 psi}	—
LN_C_CLUTCH	kPa {kgf/cm^2, psi}	Displays hydraulic control learning value data		—
LN_O_CLUTCH	kPa {kgf/cm^2, psi}	Displays hydraulic control learning value data		—
LN_OV_SCOPE	—	Displays hydraulic control learning value data		—
LN_T_CLUTCH	kPa {kgf/cm^2, psi}	Displays hydraulic control learning value data		—
LOCK_UP	OFF/SLIP/ON	OFF: • Except below SLIP: • "SLIP" is displayed during TCC control with the difference between the engine speed and turbine shaft speed less than the control value. • Resets while TCC control is stopped or if the difference between the engine speed and turbine/shaft speed is the specification or more. ON: • "ON" is displayed during TCC control and there is almost no difference between the engine speed and turbine shaft speed*. • Resets while TCC control is stopped or if the difference between the engine speed and turbine shaft speed is the specification or		—

		more. *: The TCC controls the TCC hydraulic pressure to suppress hydraulic pressure loss and transaxle vibration due to TCC clutch engagement. Therefore, normally, there is a difference between the engine speed and turbine shaft speed. Because the TCC hydraulic pressure is increased by the fail-safe and TCC is performed while the ATF is hot, there is almost no difference.		
LONGI_ACCEL	—	Displays acceleration calculated from the drive wheels		—
OP_SW1	Off/On	Selector lever at P position	Off	Oil pressure switch No.1
		Selector lever at R position	Off	
		Selector lever at N position	Off	
		Selector lever in 1GR at D position	On	
		Selector lever in 2GR at D position	On	
		Selector lever in 3GR at D position	On	
		Selector lever in 4GR at D position	On	
		Selector lever in 5GR at D position	Off	
		Selector lever in 6GR at D position	Off	
OP_SW1_OFF	kPa {kgf/cm^2, psi}	After performing on-board diagnostic test mode	More than 50 kPa {0.51 kgf/cm^2, 7.3 psi} (0 kPa {0 kgf/cm^2, 0 psi} before performing on-board diagnostic test mode)	Oil pressure switch No.1
OP_SW1_ON	kPa {kgf/cm^2, psi}	After performing on-board diagnostic test mode	Less than 320 kPa {3.26 kgf/cm^2, 46.4 psi} (0 kPa {0 kgf/cm^2, 0 psi} before performing on-board diagnostic test mode)	Oil pressure switch No.1
		Selector lever at P position	Off	
		Selector lever at R position	Off	

OP_SW2	Off/On	Selector lever at N position	Off	Oil pressure switch No.2
		Selector lever in 1GR at D position	Off	
		Selector lever in 2GR at D position	On	
		Selector lever in 3GR at D position	Off	
		Selector lever in 4GR at D position	Off	
		Selector lever in 5GR at D position	Off	
		Selector lever in 6GR at D position	On	
OP_SW2_OFF	kPa {kgf/cm^2, psi}	After performing on-board diagnostic test mode	More than 50 kPa {0.51 kgf/cm^2, psi} (0 kPa {0 kgf/cm^2, 0 psi} before performing on-board diagnostic test mode)	Oil pressure switch No.2
OP_SW2_ON	kPa {kgf/cm^2, psi}	After performing on-board diagnostic test mode	Less than 260 kPa {2.65 kgf/cm^2, 37.7 psi} (0 kPa {0 kgf/cm^2, 0 psi} before performing on-board diagnostic test mode)	Oil pressure switch No.2
OP_SW3	Off/On	Selector lever at P position	Off	Oil pressure switch No.3
		Selector lever at R position	On	
		Selector lever at N position	Off	
		Selector lever in 1GR at D position	Off	
		Selector lever in 2GR at D position	Off	
		Selector lever in 3GR at D position	On	
		Selector lever in 4GR at D position	Off	

		Selector lever in 5GR at D position	On	
		Selector lever in 6GR at D position	Off	
OP_SW3_OFF	kPa {kgf/cm^2, psi}	After performing on-board diagnostic test mode	More than 50 kPa {0.51 kgf/cm^2, 7.3 psi} (0 kPa {0 kgf/cm^2, 0 psi} before performing on-board diagnostic test mode)	Oil pressure switch No.3
OP_SW3_ON	kPa {kgf/cm^2, psi}	After performing on-board diagnostic test mode	Less than 215 kPa {2.19 kgf/cm^2, 31.2 psi} (0 kPa {0 kgf/cm^2, 0 psi} before performing on-board diagnostic test mode)	Oil pressure switch No.3
OP_SW4	Off/On	Selector lever at P position	Off	Oil pressure switch No.4
		Selector lever at R position	Off	
		Selector lever at N position	Off	
		Selector lever in 1GR at D position	Off	
		Selector lever in 2GR at D position	Off	
		Selector lever in 3GR at D position	Off	
		Selector lever in 4GR at D position	On	
		Selector lever in 5GR at D position	On	
		Selector lever in 6GR at D position	On	
OP_SW4_OFF	kPa {kgf/cm^2, psi}	After performing on-board diagnostic test mode	More than 50 kPa {0.51 kgf/cm^2, 7.3 psi} (0 kPa {0 kgf/cm^2, 0 psi} before performing on-board diagnostic test mode)	Oil pressure switch No.4
OP_SW4_ON	kPa {kgf/cm^2, psi}	After performing on-board	Less than 260 kPa {2.65 kgf/cm^2, 37.7 psi} (0 kPa {0 kgf/cm^2, 0	Oil pressure switch No.4

		diagnostic test mode	psi} before performing on-board diagnostic test mode)	
OSS	RPM	Vehicle stopped	0 RPM	Output shaft speed sensor
		Vehicle speed 30 km/h {19 mph} in 4GR at D position	Approx. 1000 RPM	
PADDLE_DOWN*1	Off/On	Except below	Off	—
		Shift down operation using steering shift switch	On	
PADDLE_UP*1	Off/On	Except below	Off	—
		Shift up operation using steering shift switch	On	
RPM	RPM	Displays engine speed		PCM
SC_STATE	Not Active/Active	The shift control execution condition is displayed.		—
SE_TYPE	No valid data/Bf_1st Af_2nd/Bf_1st Af_3rd/Bf_1st Af_4th/Bf_1st Af_5th/Bf_1st Af_6th/Bf_2nd Af_1st/Bf_2nd Af_3rd/Bf_2nd Af_4th/Bf_2nd Af_5th/Bf_2nd Af_6th/Bf_3rd Af_1st/Bf_3rd Af_2nd/Bf_3rd Af_4th/Bf_3rd Af_5th/Bf_3rd Af_6th/Bf_4th Af_1st/Bf_4th Af_2nd/Bf_4th Af_3rd/Bf_4th Af_5th/Bf_4th Af_6th/Bf_5th Af_1st/Bf_5th Af_2nd/Bf_5th Af_3rd/Bf_5th Af_4th/Bf_5th Af_6th/Bf_6th Af_1st/Bf_6th Af_2nd/Bf_6th Af_3rd/Bf_6th Af_4th/Bf_6th Af_5th	The gear shift position before shifting gears is displayed. **NOTE:** • Bf indicates gear position before shifting • Af indicates gear position after shifting ◦ (Example of display) Bf_1st Af_2nd • Bf_1st:Gear position at 1st gear before shifting • Af_2nd:Gear position at 2nd gear after shifting		—
		D position normal mode	DEFAULT	
		M position manual mode	MANUAL	
		Cruise control (cruise control system)	C_CONTROL	

SHIFT_CTRL	DEFAULT/MANUAL/C_CONTROL/HIGH_TEMP/D_MANUAL/FAIL_SAFE	Automatic transaxle protection mode (ATF high temperature mode)	HIGH_TEMP	—
		D position direct mode	D_MANUAL	
		Fail-safe mode	FAIL_SAFE	
SS_ON-OFF	Off/On	On/off solenoid is off.	Off	On/off solenoid
		On/off solenoid is on.	On	
SS1	A	Vehicle stopped at P position	Approx. 0 A	Shift solenoid No.1
		Vehicle stopped at R position	Approx. 0 A	
		Vehicle stopped at N position	Approx. 0 A	
		Driving in D position 1GR	Approx. 1 A	
		Driving in D position 2GR	Approx. 1 A	
		Driving in D position 3GR	Approx. 1 A	
		Driving in D position 4GR	Approx. 1 A	
		Driving in D position 5GR	Approx. 0 A	
		Driving in D position 6GR	Approx. 0 A	
SS1_C	A	Vehicle stopped at P position	Approx. 0 A	Shift solenoid No.1
		Vehicle stopped at R position	Approx. 0 A	
		Vehicle stopped at N position	Approx. 0 A	
		Driving in D position 1GR	Approx. 1 A	
		Driving in D position 2GR	Approx. 1 A	

		Driving in D position 3GR	Approx. 1 A	
		Driving in D position 4GR	Approx. 1 A	
		Driving in D position 5GR	Approx. 0 A	
		Driving in D position 6GR	Approx. 0 A	
SS2	A	Vehicle stopped at P position	Approx. 0 A	Shift solenoid No.2
		Vehicle stopped at R position	Approx. 0 A	
		Vehicle stopped at N position	Approx. 0 A	
		Driving in D position 1GR	Approx. 0 A	
		Driving in D position 2GR	Approx. 1 A	
		Driving in D position 3GR	Approx. 0 A	
		Driving in D position 4GR	Approx. 0 A	
		Driving in D position 5GR	Approx. 0 A	
		Driving in D position 6GR	Approx. 1 A	
SS2_C	A	Vehicle stopped at P position	Approx. 0 A	Shift solenoid No.2
		Vehicle stopped at R position	Approx. 0 A	
		Vehicle stopped at N position	Approx. 0 A	
		Driving in D position 1GR	Approx. 0 A	
		Driving in D position 2GR	Approx. 1 A	
		Driving in D position 3GR	Approx. 0 A	
		Driving in D position 4GR	Approx. 0 A	

		Driving in D position 5GR	Approx. 0 A	
		Driving in D position 6GR	Approx. 1 A	
SS3	A	Vehicle stopped at P position	Approx. 1 A	Shift solenoid No.3
		Vehicle stopped at R position	Approx. 0 A	
		Vehicle stopped at N position	Approx. 1 A	
		Driving in D position 1GR	Approx. 1 A	
		Driving in D position 2GR	Approx. 1 A	
		Driving in D position 3GR	Approx. 0 A	
		Driving in D position 4GR	Approx. 1 A	
		Driving in D position 5GR	Approx. 0 A	
		Driving in D position 6GR	Approx. 1 A	
SS3_C	A	Vehicle stopped at P position	Approx. 1 A	Shift solenoid No.3
		Vehicle stopped at R position	Approx. 0 A	
		Vehicle stopped at N position	Approx. 1 A	
		Driving in D position 1GR	Approx. 1 A	
		Driving in D position 2GR	Approx. 1 A	
		Driving in D position 3GR	Approx. 0 A	
		Driving in D position 4GR	Approx. 1 A	
		Driving in D position 5GR	Approx. 0 A	
		Driving in D position 6GR	Approx. 1 A	

SS4	A	Vehicle stopped at P position	Approx. 0 A	Shift solenoid No.4
		Vehicle stopped at R position	Approx. 0 A	
		Vehicle stopped at N position	Approx. 0 A	
		Driving in D position 1GR	Approx. 0 A	
		Driving in D position 2GR	Approx. 1 A	
		Driving in D position 3GR	Approx. 1 A	
		Driving in D position 4GR	Approx. 0 A	
		Driving in D position 5GR	Approx. 0 A	
		Driving in D position 6GR	Approx. 0 A	
SS4_C	A	Vehicle stopped at P position	Approx. 0 A	Shift solenoid No.4
		Vehicle stopped at R position	Approx. 0 A	
		Vehicle stopped at N position	Approx. 0 A	
		Driving in D position 1GR	Approx. 0 A	
		Driving in D position 2GR	Approx. 1 A	
		Driving in D position 3GR	Approx. 1 A	
		Driving in D position 4GR	Approx. 0 A	
		Driving in D position 5GR	Approx. 0 A	
		Driving in D position 6GR	Approx. 0 A	
		Vehicle stopped at P position	Approx. 0 A	
		Vehicle stopped at R	Approx. 0 A	

		position		
		Vehicle stopped at N position	Approx. 0 A	
		Under the following conditions: • Driving in D position 1GR • Accelerator pedal opening angle is approx. 10 %	Approx. 430 mA	
		Under the following conditions: • Driving in D position 2GR • Accelerator pedal opening angle is approx. 10 %	Approx. 430 mA	
SSLU	A	Under the following conditions: • Driving in D position 3GR • Accelerator pedal opening angle is approx. 10 %	Approx. 430 mA	TCC control solenoid
		Under the following conditions: • Driving in D position 4GR • Accelerator pedal	Approx. 430 mA	

		opening angle is approx. 10 %		
		Under the following conditions: • Driving in D position 5GR • Accelerator pedal opening angle is approx. 10 %	Approx. 430 mA	
		Under the following conditions: • Driving in D position 6GR • Accelerator pedal opening angle is approx. 10 %	Approx. 430 mA	
		Vehicle stopped at P position	Approx. 0 A	
		Vehicle stopped at R position	Approx. 0 A	
		Vehicle stopped at N position	Approx. 0 A	
		Under the following conditions: • Driving in D position 1GR • Accelerator pedal opening angle is approx. 10 %	Approx. 430 mA	

SSLU_C	A	Under the following conditions: • Driving in D position 2GR • Accelerator pedal opening angle is approx. 10 %	Approx. 430 mA	TCC control solenoid
		Under the following conditions: • Driving in D position 3GR • Accelerator pedal opening angle is approx. 10 %	Approx. 430 mA	
		Under the following conditions: • Driving in D position 4GR • Accelerator pedal opening angle is approx. 10 %	Approx. 430 mA	
		Under the following conditions: • Driving in D position 5GR • Accelerator pedal opening angle is approx. 10 %	Approx. 430 mA	

		Under the following conditions: • Driving in D position 6GR • Accelerator pedal opening angle is approx. 10 %	Approx. 430 mA	
		Vehicle stopped at P position	0 kPa {0 kgf/cm^2, 0 psi}	
		Vehicle stopped at R position	0 kPa {0 kgf/cm^2, 0 psi}	
		Vehicle stopped at N position	0 kPa {0 kgf/cm^2, 0 psi}	
		Under the following conditions: • Driving in D position 1GR • Accelerator pedal opening angle is approx. 10 %	Approx. 360 kPa {3.67 kgf/cm^2, 52.2 psi}	
		Under the following conditions: • Driving in D position 2GR • Accelerator pedal opening angle is approx. 10 %	Approx. 360 kPa {3.67 kgf/cm^2, 52.2 psi}	
		Under the following conditions: • Driving in D position		

SSLU_PRES	kPa {kgf/cm^2, psi}	3GR • Accelerator pedal opening angle is approx. 10 %	Approx. 360 kPa {3.67 kgf/cm^2, 52.2 psi}	TCC control solenoid
		Under the following conditions: • Driving in D position 4GR • Accelerator pedal opening angle is approx. 10 %	Approx. 360 kPa {3.67 kgf/cm^2, 52.2 psi}	
		Under the following conditions: • Driving in D position 5GR • Accelerator pedal opening angle is approx. 10 %	Approx. 360 kPa {3.67 kgf/cm^2, 52.2 psi}	
		Under the following conditions: • Driving in D position 6GR • Accelerator pedal opening angle is approx. 10 %	Approx. 360 kPa {3.67 kgf/cm^2, 52.2 psi}	
		Vehicle stopped at P position	Approx. 980 mA	
		Vehicle stopped at R position	Approx. 930 mA	

		Vehicle stopped at N position	Approx. 980 mA	
		Under the following conditions: • Driving in D position 1GR • Accelerator pedal opening angle is approx. 10 %	Approx. 400—800 mA	
		Under the following conditions: • Driving in D position 2GR • Accelerator pedal opening angle is approx. 10 %	Approx. 400—800 mA	
SSP	A	Under the following conditions: • Driving in D position 3GR • Accelerator pedal opening angle is approx. 10 %	Approx. 400—800 mA	Pressure control solenoid
		Under the following conditions: • Driving in D position 4GR • Accelerator pedal opening angle is	Approx. 400—800 mA	

		approx. 10 %		
		Under the following conditions: • Driving in D position 5GR • Accelerator pedal opening angle is approx. 10 %	Approx. 400—800 mA	
		Under the following conditions: • Driving in D position 6GR • Accelerator pedal opening angle is approx. 10 %	Approx. 400—800 mA	
		Vehicle stopped at P position	Approx. 980 mA	
		Vehicle stopped at R position	Approx. 930 mA	
		Vehicle stopped at N position	Approx. 980 mA	
		Under the following conditions: • Driving in D position 1GR • Accelerator pedal opening angle is approx. 10 %	Approx. 400—800 mA	
		Under the following		

		conditions: • Driving in D position 2GR • Accelerator pedal opening angle is approx. 10 %	Approx. 400—800 mA	
SSP_C	A	Under the following conditions: • Driving in D position 3GR • Accelerator pedal opening angle is approx. 10 %	Approx. 400—800 mA	Pressure control solenoid
		Under the following conditions: • Driving in D position 4GR • Accelerator pedal opening angle is approx. 10 %	Approx. 400—800 mA	
		Under the following conditions: • Driving in D position 5GR • Accelerator pedal opening angle is approx. 10 %	Approx. 400—800 mA	
		Under the following conditions:		

		• Driving in D position 6GR • Accelerator pedal opening angle is approx. 10 %	Approx. 400—800 mA	
		Vehicle stopped at P position	Approx. 45 kPa {0.46 kgf/cm^2, 6.5 psi}	
		Vehicle stopped at R position	Approx. 80 kPa {0.82 kgf/cm^2, 12 psi}	
		Vehicle stopped at N position	Approx. 45 kPa {0.46 kgf/cm^2, 6.5 psi}	
		Under the following conditions: • Driving in D position 1GR • Accelerator pedal opening angle is approx. 10 %	130—460 kPa {1.33—4.69 kgf/cm^2, 18.9—66.7 psi}	
		Under the following conditions: • Driving in D position 2GR • Accelerator pedal opening angle is approx. 10 %	130—460 kPa {1.33—4.69 kgf/cm^2, 18.9—66.7 psi}	
		Under the following conditions: • Driving in D position 3GR	130—460 kPa {1.33—4.69	

SSP_PRES	kPa {kgf/cm^2, psi}	• Accelerator pedal opening angle is approx. 10 %	kgf/cm , 18.9—66.7 psi}	Pressure control solenoid
		Under the following conditions: • Driving in D position 4GR • Accelerator pedal opening angle is approx. 10 %	130—460 kPa {1.33—4.69 kgf/cm^2, 18.9—66.7 psi}	
		Under the following conditions: • Driving in D position 5GR • Accelerator pedal opening angle is approx. 10 %	130—460 kPa {1.33—4.69 kgf/cm^2, 18.9—66.7 psi}	
		Under the following conditions: • Driving in D position 6GR • Accelerator pedal opening angle is approx. 10 %	130—460 kPa {1.33—4.69 kgf/cm^2, 18.9—66.7 psi}	
TFT	°C {°F}	Displays ATF temperature		TFT sensor
THOP	%	Accelerator pedal fully released	Approx. 22 %	PCM
		Accelerator pedal fully	Approx. 91 %	

		depressed		
TORQUE_ACT	Nm	Displays actual engine torque		—
TORQUE_DES	Nm	Displays desired engine torque		—
TR	P/SHIFT_DOWN/SHIFT_UP/M/D/N/R	Selector lever at P position	P	Transaxle range sensor
		Selector lever at M position (−) side position	SHIFT_DOWN	
		Selector lever at M position (+) side position	SHIFT_UP	
		Selector lever at M position	M	
		Selector lever at D position	D	
		Selector lever at N position	N	
		Selector lever at R position	R	
TSS	RPM	Vehicle stopped at D position	0 RPM	Turbine/input shaft speed sensor
		Engine speed 1,000 rpm at P position	900—1,100 RPM	
UPSHIFT_REV	Off/On	Shift-up due to engine request is not recorded. (Shift up request can be reset by clearing the DTCs.)	Off	—
		Shift-up due to engine request is recorded.	On	
VPWR	V	Displays TCM power supply voltage		• Battery • TCM
VSS	KPH {MPH}	Displays vehicle speed		Output shaft speed sensor

*1

With steering shift switch

2014 - Mazda3 - Transmission/Transaxle

ON-BOARD DIAGNOSTIC SYSTEM SIMULATION INSPECTION [FW6A-EL]

1. Connect the M-MDS to the DLC-2.
2. After the vehicle is identified, select the following items from the initialization screen of the M-MDS.
    a. Select “Data Logger”.
    b. Select “Modules”.
    c. Select “TCM”.
3. Select the simulation items from the PID table.
4. Perform the active command modes function, inspect the operations for each part.
    - If the operation of output parts cannot be verified after the active command mode inspection is performed, this could indicate the possibility of an open or short circuit, sticking, or operation malfunction in the output parts.

Simulation item table

Item	Description	Unit/Condition	Operation condition
SS_ON-OFF	On/off solenoid condition	Off/On	Under the following conditions: • Vehicle stopped • Idling at P or N position
SS1_C	Shift solenoid No.1 target current	A	Under the following conditions: • Vehicle stopped • Idling at P or N position
SS2_C	Shift solenoid No.2 target current	A	Under the following conditions: • Vehicle stopped • Idling at P or N position
SS3_C	Shift solenoid No.3 target current	A	Under the following conditions: • Vehicle stopped • Idling at P or N position

SS4_C	Shift solenoid No.4 target current	A	Under the following conditions: • Vehicle stopped • Idling at P or N position
SSLU_C	TCC control solenoid target current	A	Under the following conditions: • ATF temperature (PID: TFT) is 20 °C {68 °F} or more. • Output shaft speed (PID: OSS) is 10 rpm or more. • Turbine/input shaft speed (PID: TSS) is 1,000 rpm or more. • Brake pedal released
SSP_C	Pressure control solenoid target current	A	Idling at P or N position

2014 - Mazda3 - Transmission/Transaxle

AUTOMATIC TRANSAXLE CONTROL SYSTEM WIRING DIAGRAM [FW6A-EL]

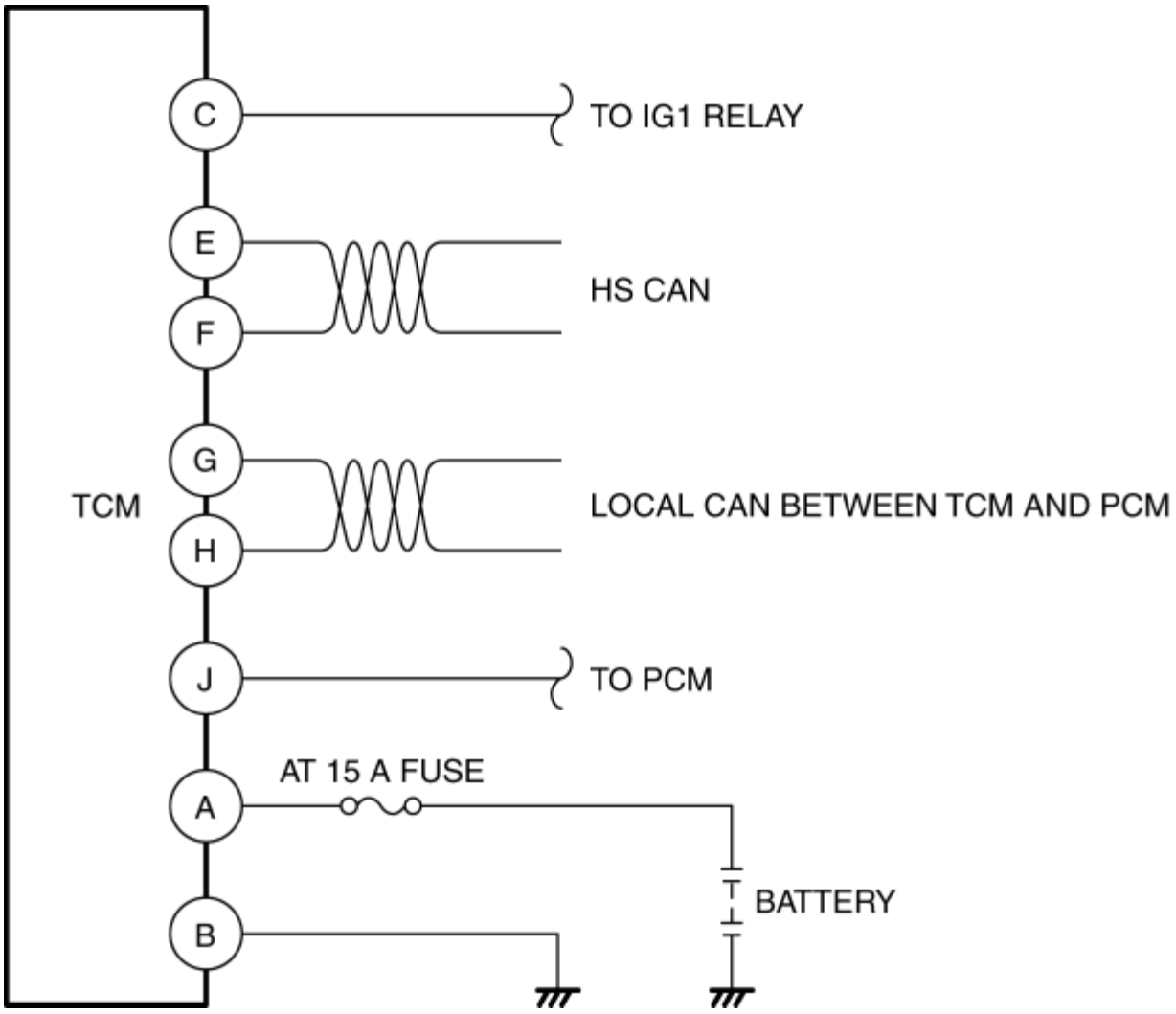

2014 - Mazda3 - Transmission / Transaxle

FOREWORD [FW6A-EL]

- If there is any vehicle malfunction complaint lodged by a customer, perform malfunction diagnosis according to the troubleshooting procedure.

Troubleshooting Procedure

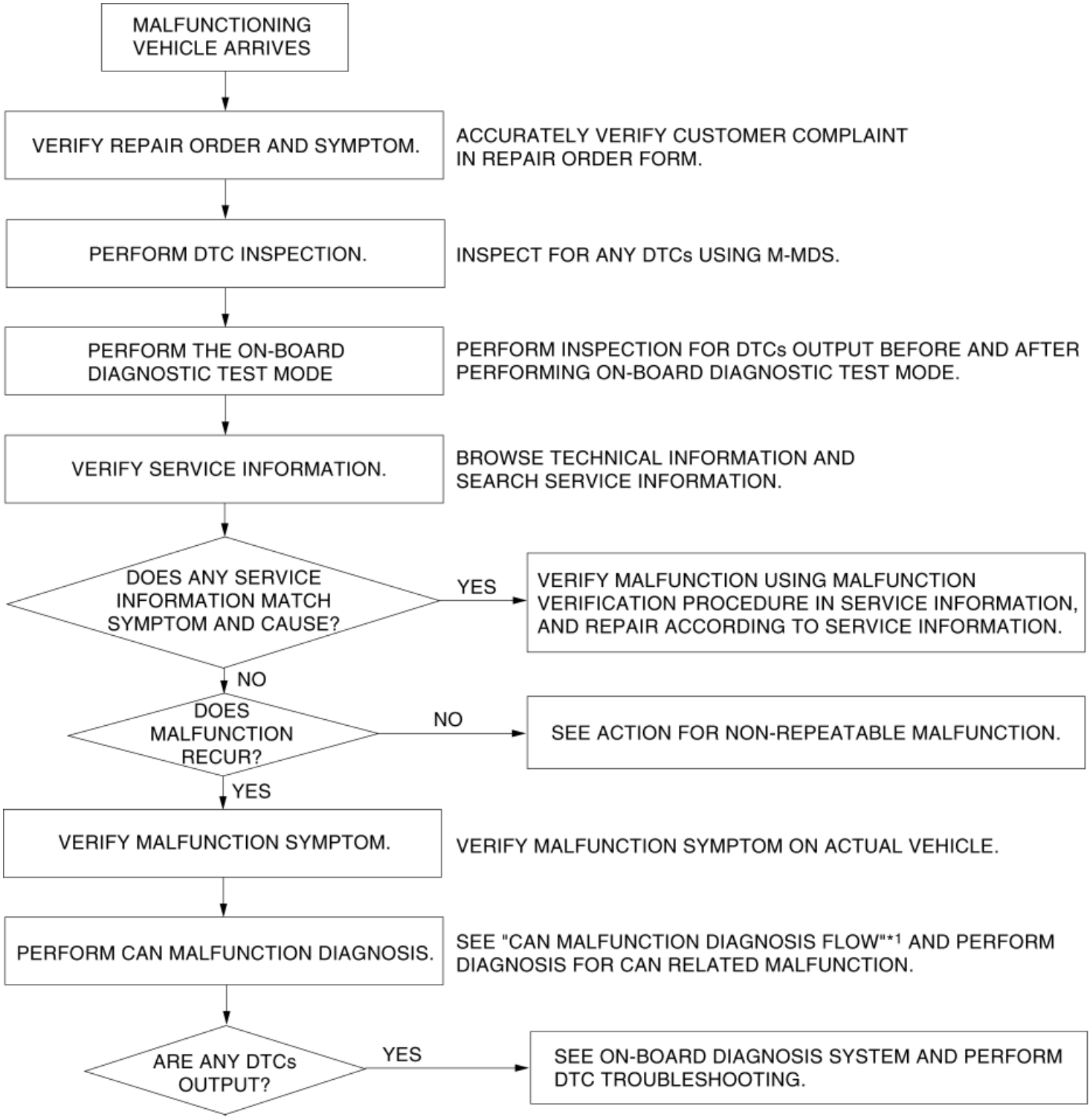

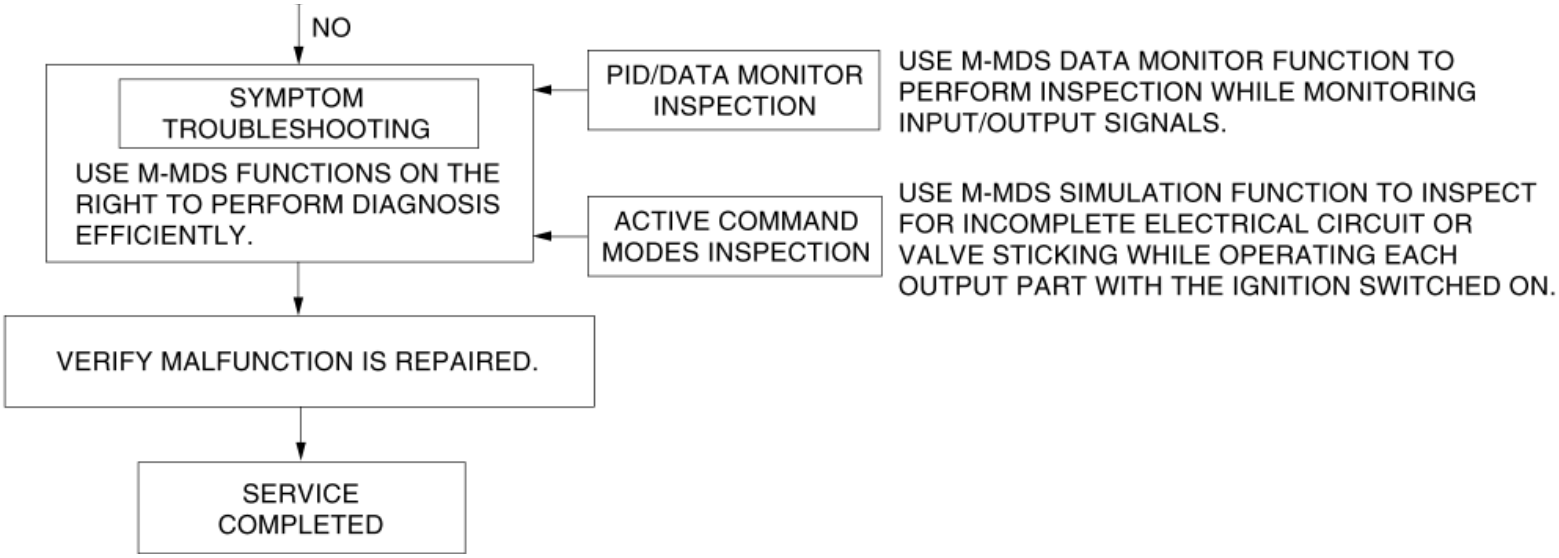

*1

(See CONTROLLER AREA NETWORK (CAN) MALFUNCTION DIAGNOSIS FLOW.)

Repair order form

	Check with customer	Diagnosis	Repair	Explanation to customer

yone replicate problem?)

Date of malfunction occurrence:	Odometer reading km {mph}
Transmission (MT/HAT/EC-AT/CVT)	

Driving conditions								
operation	Driving posture	Load	Accelerator opening angle	Shift position	Eng RPM	Vehicle speed	Pattern of use
starting starting tarting n. after oped) iling acing from stop al driving leration aking braking disengage gn accel. t accel. ifting {mph} → {mph}) ther	Vehicle stopped Straight-on driving Reversing Right turn Left turn Other	Headlights on Exterior lights on A/C on AUTO °C(°F) Blower: 1 step Blower: 2 steps Blower: 3 steps Blower: 4 steps Power steering lock to lock Rear defrost on Wipers on Audio on Other	0/8 1/8 2/8 3/8 4/8 5/8 6/8 7/8 8/8	MT 1 2 3 4 5 6 N R AT P R N D S L Hold M (km/h {mph})	Idle Less than 1,000 Less than 1,500 Less than 2,000 Less than 2,500 Less than 3,000 Less than 4,000 Less than 4,500 Less than 5,000 Less than 5,500 Less than 6,000 Less than 6,500 7,000 or more	5 km/h {3 mph} 10 km/h {6.2 mph} 20 km/h {12 mph} 30 km/h {19 mph} 40 km/h {25 mph} 50 km/h {31 mph} 60 km/h {37 mph} 70 km/h {43 mph} 80 km/h {50 mph} 90 km/h {56 mph} 100 km/h {62.1 mph} 110 km/h {68.4 mph} 120 km/h {74.6 mph} 130 km/h {80.8 mph} 140 km/h {87 mph} 150 km/h {93.2 mph} 160 km/h {99.4 mph}	Work ____ % Minor use ____ % Trips ____ % Other ____ % Between ENG. start → Stop: Distance, time Approx km Approx Hrs. No. of occupants: Load condition kg Other

aintenance, repair, accident history, installation of commercial devices

Repair order form and malfunction symptom check sheet

	Repair order
Date/time	
In-charge	

Customer statement (When? What? What time(s)? Where it occurs. Warning light illumination? Can an

Vehicle body number: | Registration date:

Engine (SOHC/DOHC/RE/DE) (Cab /EGI/ Turbo/ Miller cycle/ LPG/Direct injection)

Environmental conditions				Occurrence frequency			
Weather	Ambient temp.	Drive scenario	Grade		Fuel	Warm-up condition	Driving
Sunny Cloudy Rain Snow High wind Wind gusts N/A Other	-10°C {14°F} or less -10— 0°C {14—32°F} 0—10°C {32—50°F} 10—15°C {50—59°F} 15—20°C {59—58°F} 20—25°C {68—77°F} 25—30°C {77—86°F} 30—35°C {86—95°F} 35—4{0°C {95—104°F} 40—45°C {104—113°F} 45°C {113°F} or more N/A Other	Depart/arrive Traffic jam (city) Standard city street Suburbs Highway Uneven road Dry road surface Wet road surface Snow bound road Icy road Other	Flat Upgrade Down grade N/A Other	Once/day 2-3 times/day 4-5 times/day Many times/day Once/week 2-3 times/week 4-5 times/week Once/month 2-3 times/month 4-5 times/month Other	Regular High Oct. Diesel LPG Other Fuel gauge F E	Cold Half-warmed Fully warmed N/A Other Water temp. gauge H C	When After Re-s (mi stop Id Ra Accel. Norma Dece Bra Soft Clutch Sudde Light Sh (km/h km/h O

DTC, measured data (fuel pressure, intake manifold vacuum, throttle sensor electromotive force, air flow electromotive force, other), m

Dealer name:			
Vehicle-in date:	Vehicle body number:		
Subject (Content):	Estimated repair completion date:		
Audio memory			
	1	2	3	4	5	6
FM1						
FM2						
AM						
	Odometer reading:		
	Person in-charge:		
	Fuel level	E F	

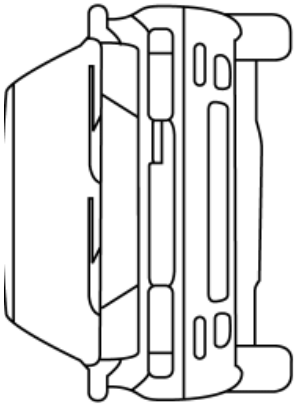

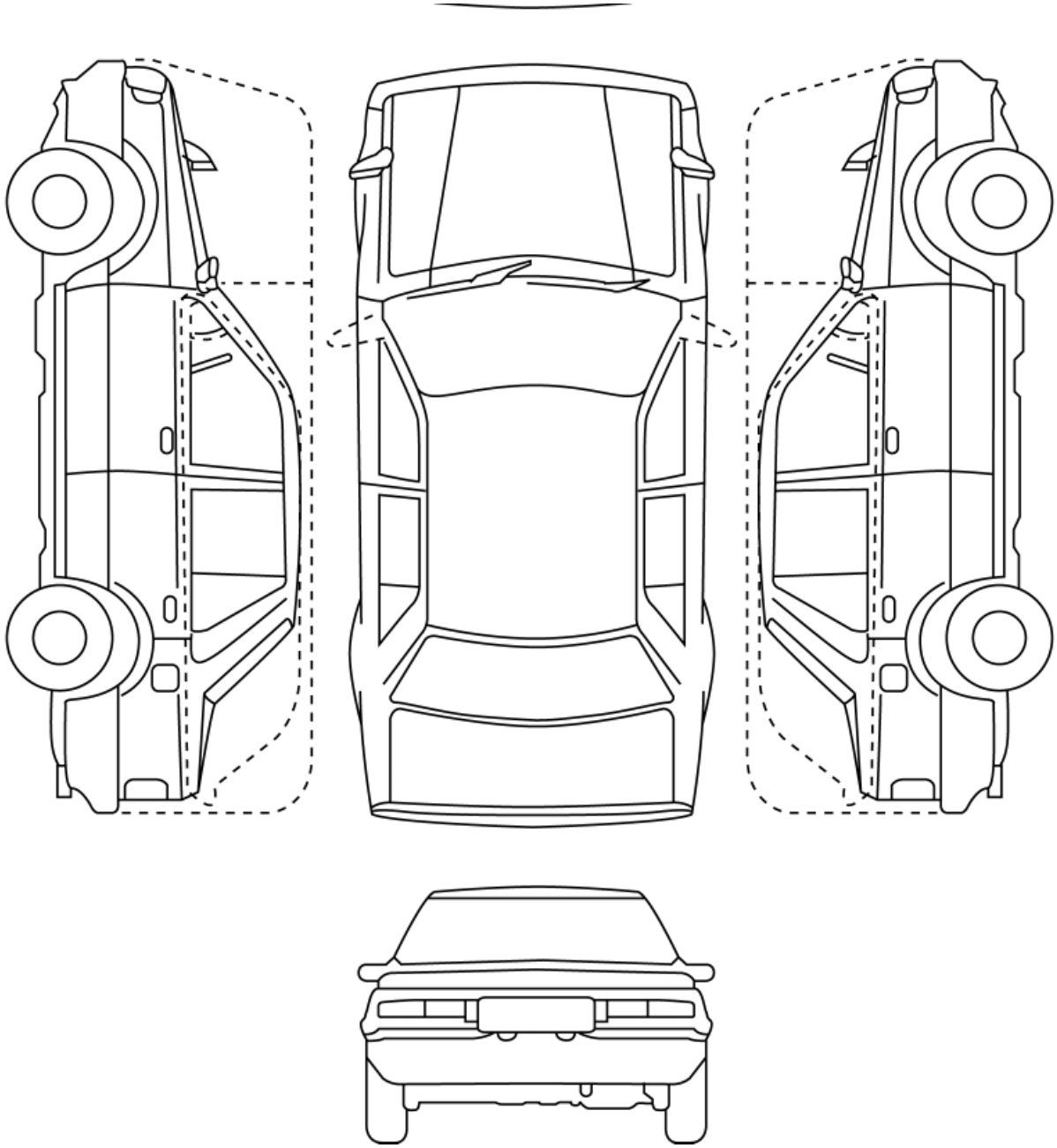

Action for Non-repeatable Malfunction

- If the malfunction does not recur, verify the malfunction cause by performing the following actions:
  - Verify that no DTCs are stored. (See **ON-BOARD DIAGNOSTIC SYSTEM DTC INSPECTION [FW6A-EL]**.)
  - Based on the repair order form, attempt to drive the vehicle or perform tests to replicate the malfunction, record the data at that time, and detect the malfunction cause.
- If the malfunction does not recur after the above servicing, explain to the customer that the vehicle is normal.

2014 - Mazda3 - Transmission/Transaxle

SYMPTOM TROUBLESHOOTING ITEM TABLE [FW6A-EL]

- Use the chart below to verify the symptoms of the trouble in order to diagnose the appropriate area.

NOTE:

- If a tire with a different diameter than the standard tire is installed, the TCM determines that the driving mode is the AAS mode, and may change to a different shift timing from the normal timing.

Troubleshooting item	Description	Page
Vehicle does not move in D, M or R position	• Vehicle does not move when accelerator pedal is depressed. • The engine revs up but the vehicle does not move even though the accelerator pedal is depressed. • Tires are locked and do not move even though the accelerator pedal is depressed.	(See **VEHICLE DOES NOT MOVE IN D, M OR R POSITION [FW6A-EL]**.)
Vehicle moves in P position, or parking gear does not disengage when P is disengaged	• Vehicle rolls when on a downward slope in P position. • Vehicle does not move in D, M and R position when accelerator pedal is depressed, and engine remains in stalled condition.	(See **VEHICLE MOVES IN P POSITION, OR PARKING GEAR DOES NOT DISENGAGE WHEN P IS DISENGAGED [FW6A-EL]**.)
Excessive creep	• Vehicle accelerates in D and R position when accelerator pedal is not depressed.	(See **EXCESSIVE CREEP [FW6A-EL]**.)
No creep at all	• Vehicle does not move in D, M or R position when idling on flat paved road.	(See **NO CREEP AT ALL [FW6A-EL]**.)
Low maximum speed and poor acceleration	• Vehicle acceleration is poor at start. • Delayed acceleration when accelerator pedal is depressed	(See **LOW MAXIMUM SPEED AND POOR ACCELERATION [FW6A-EL]**.)

	while driving.	
No shifting	• Single shift position only. • Sometimes shifts correctly.	(See **NO SHIFTING [FW6A-EL]**.)
Does not shift to 5GR or 6GR	• Vehicle does not upshift from 4GR to 5GR or 5GR to 6GR even though vehicle speed is increased. • At a vehicle speed range where the transaxle should shift up to 5GR and 6GR gears in D position based on the shift pattern, the transaxle does not shift to 5GR and 6GR gears by gradually releasing the accelerator pedal.	(See **DOES NOT SHIFT TO 5GR OR 6GR [FW6A-EL]**.)
Abnormal shifting	• Shifts incorrectly (incorrect shift pattern).	(See **ABNORMAL SHIFTING [FW6A-EL]**.)
Frequent shifting	• Downshifting occurs suddenly even when accelerator pedal is depressed slightly in D position.	(See **FREQUENT SHIFTING [FW6A-EL]**.)
Shift point is high or low	• Shift point considerably different from automatic shift diagram. • Shift delays when accelerating. • Shift occurs suddenly when accelerating and engine speed does not increase.	(See **SHIFT POINT IS HIGH OR LOW [FW6A-EL]**.)
No kickdown	• Does not downshift when accelerator pedal is fully depressed within kickdown range.	(See **NO KICKDOWN [FW6A-EL]**.)
Engine flares up or slips when upshifting or downshifting	• When accelerator pedal is depressed, engine speed increases normally but vehicle speed increases slowly. • When accelerator pedal is depressed while driving, engine speed increases but vehicle speed does not.	(See **ENGINE FLARES UP OR SLIPS WHEN UPSHIFTING OR DOWNSHIFTING [FW6A-EL]**.)
Judder upon torque converter clutch (TCC) operation	• Vehicle jolts when TCC is engaged.	(See **JUDDER UPON TORQUE CONVERTER CLUTCH (TCC) OPERATION [FW6A-EL]**.)
Excessive shift shock	• Strong shock is felt when shifting	(See **EXCESSIVE SHIFT SHOCK**

from N to D or N to R position	from N to D or N to R position at idle.	**FROM N TO D OR N TO R POSITION [FW6A-EL]**.)
Slow engaging after operating selector lever from N to D position	• When depressing the accelerator pedal just after operating the selector lever from N to D position with the ATF temperature at **60 °C {140 °F} or more**, it takes **3 s or more** to engage. • Malfunction symptom only occurs once when accelerating from a standstill. • Engagement after operating the selector lever from N to R position is normal.	(See **SLOW ENGAGING AFTER OPERATING SELECTOR LEVER FROM N TO D POSITION [FW6A-EL]**.)
Excessive shift shock is felt when upshifting and downshifting	• Excessive shift shock is felt when depressing accelerator pedal to accelerate at upshifting. • During cruising, excessive shift shock is felt when depressing accelerator pedal at downshifting.	(See **EXCESSIVE SHIFT SHOCK IS FELT WHEN UPSHIFTING AND DOWNSHIFTING [FW6A-EL]**.)
Excessive shift shock on torque converter clutch (TCC)	• Strong shock is felt when TCC is engaged.	(See **EXCESSIVE SHIFT SHOCK ON TORQUE CONVERTER CLUTCH (TCC) [FW6A-EL]**.)
Noise occurs at idle when vehicle is stopped in all positions	• Transaxle is noisy in all positions when vehicle idling.	(See **NOISE OCCURS AT IDLE WHEN VEHICLE IS STOPPED IN ALL POSITIONS [FW6A-EL]**.)
Noise occurs at idle when vehicle is stopped in D, M or R position	• Transaxle is noisy in driving positions when vehicle is idling.	(See **NOISE OCCURS AT IDLE WHEN VEHICLE IS STOPPED IN D, M OR R POSITION [FW6A-EL]**.)
Transaxle overheats	• Burnt smell emitted from the transaxle. • Smoke is emitted from the transaxle.	(See **TRANSAXLE OVERHEATS [FW6A-EL]**.)
Engine stalls when shifted to D, M or R position	• Engine stalls when shifting from N or P position to D, M or R position at idle.	(See **ENGINE STALLS WHEN SHIFTED TO D, M OR R POSITION [FW6A-EL]**.)
Starter does not work	• Starter does not work even when in P or N position.	(See **STARTER DOES NOT WORK [FW6A-EL]**.)

Gear position indicator does not illuminate in M position	Gear position indicator in instrument cluster does not illuminate in M position with the ignition switched ON (engine off or on).	(See **GEAR POSITION INDICATOR DOES NOT ILLUMINATE IN M POSITION [FW6A-EL]**.)
Gear position indicator illuminates in P, R, N and D positions	• Gear position indicator in instrument cluster illuminates in P, R, N and D positions with the ignition switched ON (engine off or on).	(See **GEAR POSITION INDICATOR ILLUMINATES IN P, R, N AND D POSITIONS [FW6A-EL]**.)
M position indicator light does not illuminate in M position/M position indicator light illuminates in D position	• M position indicator light in instrument cluster does not illuminate in M position or M position indicator light in instrument cluster in P, R, N and D positions with the ignition switched ON (engine off or on).	(See **M POSITION INDICATOR LIGHT DOES NOT ILLUMINATE IN M POSITION/M POSITION INDICATOR LIGHT ILLUMINATES IN D POSITION [FW6A-EL]**.)
ATF seeping from automatic transaxle	• ATF is seeping from the automatic transaxle case. • Foreign matter mixed with ATF is in the automatic transaxle case.	(See **ATF SEEPING FROM AUTOMATIC TRANSAXLE [FW6A-EL]**.)

2014 - Mazda3 - Transmission / Transaxle

QUICK DIAGNOSIS CHART [FW6A-EL]

X: APPLIED

ITEM / SYMPTOM	NCTION	NCTION	NCTION	ED SPECIFICATION	TEM MALFUNCTION	M OPERATING CTION	R MALFUNCTION	UNCTION	ICTION	(DIAMETER, HAN STANDARD)	MALFUNCTION	NCTION	FUNCTION	TION	R CTION	M MALFUNCTION	CK	ION AND DAMAGE	ATION OF	OR WORN OF PENSION		NCTION	DY MALFUNCTION	ICTION	EARNING
VEHICLE DOES NOT MOVE IN D, M OR R POSITION															X	X	X								
VEHICLE MOVES IN P POSITION, OR PARKING GEAR DOES NOT DISENGAGE WHEN P IS DISENGAGED																X									
EXCESSIVE CREEP				X																					
NO CREEP AT ALL				X											X										
LOW MAXIMUM SPEED AND POOR ACCELERATION		X	X		X							X													
NO SHIFTING		X	X					X	X	X	X	X	X												
DOES NOT SHIFT TO 5GR OR 6GR		X	X					X	X	X	X	X													
ABNORMAL SHIFTING	X	X	X					X	X	X	X	X	X												
FREQUENT SHIFTING											X	X													
SHIFT POINT IS HIGH OR LOW	X							X	X	X	X	X	X												
NO KICKDOWN												X													
ENGINE FLARES UP OR SLIPS WHEN UPSHIFTING OR DOWNSHIFTING			X									X													X
JUDDER UPON TORQUE CONVERTER CLUTCH (TCC) OPERATION		X										X			X										
EXCESSIVE SHIFT SHOCK FROM N TO D OR N TO R POSITION				X								X								X					X
SLOW ENGAGING AFTER OPERATING SELECTOR LEVER FROM N TO D POSITION																		X					X		
EXCESSIVE SHIFT SHOCK IS FELT WHEN UPSHIFTING AND DOWNSHIFTING												X													X
EXCESSIVE SHIFT SHOCK ON TORQUE CONVERTER CLUTCH (TCC)												X			X										X
NOISE OCCURS AT IDLE WHEN VEHICLE IS STOPPED IN ALL POSITIONS					X									X	X										
NOISE OCCURS AT IDLE WHEN VEHICLE IS STOPPED IN D, M OR R POSITION					X										X										
TRANSAXLE OVERHEATS	X	X										X	X								X	X	X		
ENGINE STALLS WHEN SHIFTED TO D, M OR R POSITION				X											X									X	
STARTER DOES NOT WORK					X	X																			
GEAR POSITION INDICATOR DOES NOT ILLUMINATE IN M POSITION							X														X				
GEAR POSITION INDICATOR ILLUMINATES IN P, R, N AND D POSITIONS							X																		
M POSITION INDICATOR LIGHT DOES NOT ILLUMINATE IN M POSITION/ M POSITION INDICATOR LIGHT ILLUMINATES IN D POSITION							X																		
ATF SEEPING FROM AUTOMATIC TRANSAXLE																		X	X						

CAUSE OF TROUBLE
ECT SENSOR MALFU
CKP SENSOR MALFU
MAF SENSOR MALFU
NOT WITHIN IDLE SPE
ENGINE CONTROL SYST
IMMOBILIZER SYSTE
OR SYSTEM MALFUN
INSTRUMENT CLUSTE
BARO SENSOR MALF
IAT SENSOR MALFUN
TIRE MALFUNCTION
PRESSURE OTHER T
LOW-G (XY) SENSOR
APP SENSOR MALFU
BRAKE SWITCH MAL
OIL PUMP MALFUNC
TORQUE CONVERTE
OPERATING MALFUN
PARKING MECHANIS
MANUAL SHAFT STU
SEALING DETERIORAT
INCORRECT INSTALL
ATX EXTERNAL PART
POOR INSTALLATION
ENGINE MOUNT, SUS
ATF MALFUNCTION
OIL COOLER MALFUN
CONTROL VALVE BOD
TCC PISTON MALFUN
INSUFFICIENT TCM L

2014 - Mazda3 - Transmission/Transaxle

VEHICLE DOES NOT MOVE IN D, M OR R POSITION [FW6A-EL]

TROUBLESHOOTING ITEM	Vehicle does not move in D, M or R position
DESCRIPTION	• Vehicle does not move when accelerator pedal is depressed. • The engine revs up but the vehicle does not move even though the accelerator pedal is depressed. • Tires are locked and do not move even though the accelerator pedal is depressed.
POSSIBLE CAUSE	• Improper operation of parking mechanism • Manual shaft (manual valve) stuck • Torque converter malfunction

Diagnostic procedure

STEP	INSPECTION		ACTION
1	**INSPECT PARKING MECHANISM FOR MALFUNCTION** • When the vehicle is stopped on a flat, level road and the engine is off, does the vehicle move when pushed? (In D, N or R position with the brake pedal released.)	Yes	Go to the next step.
		No	Replace the parking mechanism. (See **AUTOMATIC TRANSAXLE REMOVAL/INSTALLATION [FW6A-EL]**.)
2	**VERIFY IF MALFUNCTION CAUSE IS MANUAL SHAFT OR TORQUE CONVERTER** • Move the vehicle to a level surface and apply the parking brake. • Disconnect the negative battery cable. (See **NEGATIVE BATTERY CABLE DISCONNECTION/CONNECTION [SKYACTIV-G 2.0, SKYACTIV-G 2.5]**.)	Yes	Replace the automatic transaxle. (See **AUTOMATIC TRANSAXLE REMOVAL/INSTALLATION [FW6A-EL]**.)
		No	Replace the control valve

- Remove the battery component (ex: battery, battery tray and PCM component).

  (See **BATTERY REMOVAL/INSTALLATION [SKYACTIV-G 2.0, SKYACTIV-G 2.5]**.)

- Remove the air cleaner component.

  (See **INTAKE-AIR SYSTEM REMOVAL/INSTALLATION [SKYACTIV-G 2.0, SKYACTIV-G 2.5]**.)

- Can the manual shaft be rotated by hand?

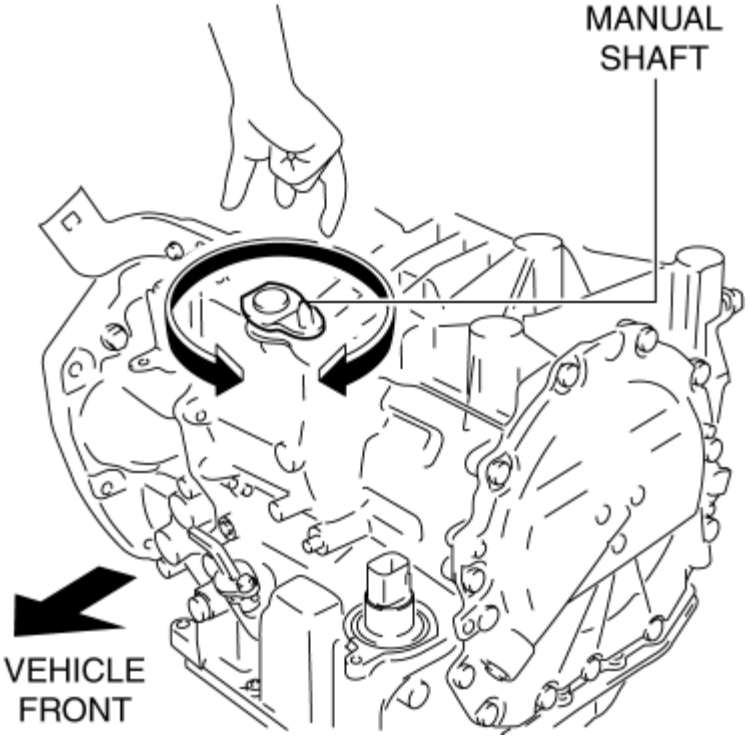

body.

(See **CONTROL VALVE BODY REMOVAL/INSTALLATION [FW6A-EL]**.)

2014 - Mazda3 - Transmission/Transaxle

VEHICLE MOVES IN P POSITION, OR PARKING GEAR DOES NOT DISENGAGE WHEN P IS DISENGAGED [FW6A-EL]

TROUBLESHOOTING ITEM	Vehicle moves in P position, or parking gear does not disengage when P is disengaged
DESCRIPTION	• Vehicle rolls when on a downward slope in P position. • Vehicle does not move in D, M and R position when accelerator pedal is depressed, and engine remains in stalled condition.
POSSIBLE CAUSE	• Parking mechanism malfunction

Diagnostic procedure

STEP	INSPECTION		ACTION
1	**INSPECT PARKING MECHANISM FOR MALFUNCTION** • When the vehicle is stopped on a flat, level road and the engine is off, does the vehicle move when pushed? (In D, N or R position with the brake pedal released.)	Yes	Symptom troubleshooting is completed.
		No	Replace the parking mechanism. (See **AUTOMATIC TRANSAXLE REMOVAL/INSTALLATION [FW6A-EL]**.)

2014 - Mazda3 - Transmission/Transaxle

EXCESSIVE CREEP [FW6A-EL]

TROUBLESHOOTING ITEM	Excessive creep
DESCRIPTION	• Vehicle accelerates in D and R position when accelerator pedal is not depressed.
POSSIBLE CAUSE	• Not within idle speed specification

Diagnostic procedure

STEP	INSPECTION		ACTION
1	**INSPECT ENGINE CONTROL SYSTEM FOR MALFUNCTION** • Perform the symptom troubleshooting “NO.9 FAST IDLE/RUNS ON”. (See **NO.9 FAST IDLE/RUNS ON [SKYACTIV-G 2.0, SKYACTIV-G 2.5]**.) • Is there any malfunction?	Yes	Repair or replace any malfunctioning parts according to the inspection result.
		No	Symptom troubleshooting is completed.

2014 - Mazda3 - Transmission/Transaxle

NO CREEP AT ALL [FW6A-EL]

TROUBLESHOOTING ITEM	No creep at all
DESCRIPTION	• Vehicle does not move in D, M or R position when idling on flat paved road.
POSSIBLE CAUSE	• Not within idle speed specification

Diagnostic procedure

STEP	INSPECTION		ACTION
1	**INSPECT ENGINE CONTROL SYSTEM FOR MALFUNCTION** • Perform the symptom troubleshooting “NO.9 FAST IDLE/RUNS ON”. (See **NO.9 FAST IDLE/RUNS ON [SKYACTIV-G 2.0, SKYACTIV-G 2.5]**.) • Is there any malfunction?	Yes	Repair or replace any malfunctioning parts according to the inspection result.
		No	Go to the next step.
2	**VERIFY IF MALFUNCTION CAUSE IS TORQUE CONVERTER** • Is the malfunction symptom at same level compared to a vehicle of the same model?	Yes	Symptom troubleshooting is completed.
		No	Replace the automatic transaxle. (See **AUTOMATIC TRANSAXLE REMOVAL/INSTALLATION [FW6A-EL]**.)

2014 - Mazda3 - Transmission/Transaxle

LOW MAXIMUM SPEED AND POOR ACCELERATION [FW6A-EL]

TROUBLESHOOTING ITEM	Low maximum speed and poor acceleration
DESCRIPTION	• Vehicle acceleration is poor at start. • Delayed acceleration when accelerator pedal is depressed while driving.

POSSIBLE CAUSE	• Engine control system malfunction
	• Signal malfunction
	  ▪ APP sensor malfunction
	  ▪ CKP sensor malfunction
	  ▪ MAF sensor malfunction

CAUTION:

- Verify the malfunction symptom according to not only the PID value but also the symptom troubleshooting.

Related PCM PIDs

Item (definition)	Unit/Condition	Definition	Condition/Specification (Reference)
APP	%	Accelerator pedal position	• Accelerator pedal released: Approx. 0% • Accelerator pedal depressed: Approx. 100%
MAF	g/Sec	Mass air flow	• Displays MAF
	V		• Switch ignition ON (engine off) (MAF: 0.59 g/s {0.078 lb/min}): Approx. 0.72 V • Idle (after warm up) (MAF: 2.17 g/s {0.287 lb/min}): Approx. 0.86 V • Racing (engine speed is 2,000 rpm) (MAF: 4.73

			g/s {0.626 lb/min}): Approx. 1.07 V
RPM	RPM	Engine speed	• Displays engine speed

Diagnostic procedure

STEP	INSPECTION		ACTION
1	**INSPECT ENGINE CONTROL SYSTEM FOR MALFUNCTION** • Perform the symptom troubleshooting “NO.12 LACK/LOSS OF POWER-ACCELERATION/CRUISE”. (See **NO.12 LACK/LOSS OF POWER-ACCELERATION/CRUISE [SKYACTIV-G 2.0, SKYACTIV-G 2.5]**.) • Is there any malfunction?	Yes	Repair or replace any malfunctioning parts according to the inspection result.
		No	Go to the next step.
2	**INSPECT SIGNAL PARTS FOR MALFUNCTION** • Inspect the value at the following PCM PIDs using the M-MDS. (See **ON-BOARD DIAGNOSTIC TEST [SKYACTIV-G 2.0, SKYACTIV-G 2.5]**.) ▪ APP (APP sensor) ▪ MAF (MAF sensor) ▪ RPM (CKP sensor) • Is there any malfunction?	Yes	Repair or replace any malfunctioning parts according to the inspection result.
		No	Explain to the customer that the vehicle is not malfunctioning and they should keep an eye on it.

2014 - Mazda3 - Transmission/Transaxle

NO SHIFTING [FW6A-EL]

TROUBLESHOOTING ITEM	No shifting
DESCRIPTION	• Single shift position only. • Sometimes shifts correctly.

POSSIBLE CAUSE	• Signal malfunction
	  ▪ APP sensor malfunction
	  ▪ BARO sensor malfunction
	  ▪ Brake switch malfunction
	  ▪ CKP sensor malfunction
	  ▪ IAT sensor No.1 malfunction
	  ▪ MAF sensor malfunction
	• Low-G (XY) sensor (built into SAS control module) malfunction
	NOTE:
	• If a tire with a different diameter than the standard tire is installed, the TCM determines that the driving mode is the AAS mode, and may change to a different shift timing from the normal timing.
	• When SPORT mode is selected, a gear lower than NORMAL mode is selected, and the gear is maintained for a longer period of time. (with drive selection switch)

CAUTION:

- Verify the malfunction symptom according to not only the PID value but also the symptom troubleshooting.

Related PCM PIDs

Item (definition)	Unit/Condition	Definition	Condition/Specification (Reference)

APP	%	Accelerator pedal position	• Accelerator pedal released: Approx. 0% • Accelerator pedal depressed: Approx. 100%
BARO	KPa {MPa}, mBar {Bar}, psi, in H20	Barometric pressure	• Displays BARO
	V		• Ignition switched ON (at sea level): Approx. 4.08 V
BOO	Off/On	Brake switch (No.1 signal)	• Brake pedal released: Off • Brake pedal depressed: On
IAT	°C, °F	Intake air temperature (No.1)	• Displays IAT (No.1)
	V		• IAT is 20 °C {68 °F}: Approx. 2.70 V • IAT is 40 °C {104 °F}: Approx. 1.80 V • IAT is 60 °C {140 °F}: Approx. 1.20 V
MAF	g/Sec	Mass air flow	• Displays MAF
	V		• Switch ignition ON (engine off) (MAF: 0.59 g/s {0.078 lb/min}): Approx. 0.72 V • Idle (after warm up) (MAF: 2.17 g/s {0.287 lb/min}): Approx. 0.86 V • Racing (engine speed is 2,000 rpm) (MAF: 4.73 g/s {0.626 lb/min}): Approx. 1.07 V
RPM	RPM	Engine speed	• Displays engine speed

Diagnostic procedure

STEP	INSPECTION		ACTION
1	**INSPECT SIGNAL PARTS FOR MALFUNCTION** • Inspect the value at the following PCM PIDs using the M-MDS. (See **ON-BOARD DIAGNOSTIC TEST [SKYACTIV-G 2.0, SKYACTIV-G 2.5]**.) ▪ APP (APP	Yes	Repair or replace any malfunctioning parts according to the inspection result.
		No	Go to the next step.

	sensor) ▪ BARO (BARO sensor) ▪ BOO (Brake switch) ▪ IAT (IAT sensor No.1) ▪ MAF (MAF sensor) ▪ RPM (CKP sensor) • Is there any malfunction?		
2	**VERIFY IF MALFUNCTION CAUSE IS LOW-G (XY) SENSOR** • Is there any malfunction?	Yes	Replace the SAS control module. (See **SAS CONTROL MODULE REMOVAL/INSTALLATION [STANDARD DEPLOYMENT CONTROL SYSTEM]**.) (See **SAS CONTROL MODULE REMOVAL/INSTALLATION [TWO-STEP DEPLOYMENT CONTROL SYSTEM]**.)
		No	Symptom troubleshooting is completed.

2014 - Mazda3 - Transmission/Transaxle

DOES NOT SHIFT TO 5GR OR 6GR [FW6A-EL]

TROUBLESHOOTING ITEM	Does not shift to 5GR or 6GR
DESCRIPTION	• Vehicle does not upshift from 4GR to 5GR or 5GR to 6GR even though vehicle speed is increased. • At a vehicle speed range where the transaxle should shift up to 5GR and 6GR gears in D position based on the shift pattern, the transaxle does not shift to 5GR and 6GR gears by gradually releasing the accelerator pedal.

POSSIBLE CAUSE	• Signal malfunction
	  ▪ APP sensor malfunction
	  ▪ BARO sensor malfunction
	  ▪ CKP sensor malfunction
	  ▪ IAT sensor No.1 malfunction
	  ▪ MAF sensor malfunction
	• Low-G (XY) sensor (built into SAS control module) malfunction
	NOTE:
	• If a tire with a different diameter than the standard tire is installed, the TCM determines that the driving mode is the AAS mode, and may change to a different shift timing from the normal timing.
	• When SPORT mode is selected, a gear lower than NORMAL mode is selected, and the gear is maintained for a longer period of time. (with drive selection switch)

CAUTION:

- Verify the malfunction symptom according to not only the PID value but also the symptom troubleshooting.

Related PCM PIDs

Item	Unit/Condition	Definition	Condition/Specification (Reference)

(definition)			
APP	%	Accelerator pedal position	• Accelerator pedal released: Approx. 0% • Accelerator pedal depressed: Approx. 100%
BARO	KPa {MPa}, mBar {Bar}, psi, in H20	Barometric pressure	• Displays BARO
	V		• Ignition switched ON (at sea level): Approx. 4.08 V
IAT	°C, °F	Intake air temperature (No.1)	• Displays IAT (No.1)
	V		• IAT is 20 °C {68 °F}: Approx. 2.70 V • IAT is 40 °C {104 °F}: Approx. 1.80 V • IAT is 60 °C {140 °F}: Approx. 1.20 V
MAF	g/Sec	Mass air flow	• Displays MAF
	V		• Switch ignition ON (engine off) (MAF: 0.59 g/s {0.078 lb/min}): Approx. 0.72 V • Idle (after warm up) (MAF: 2.17 g/s {0.287 lb/min}): Approx. 0.86 V • Racing (engine speed is 2,000 rpm) (MAF: 4.73 g/s {0.626 lb/min}): Approx. 1.07 V
RPM	RPM	Engine speed	• Displays engine speed

Diagnostic procedure

STEP	INSPECTION		ACTION
1	**INSPECT SIGNAL PARTS FOR MALFUNCTION** • Inspect the value at the following PCM PIDs using the M-MDS. (See **ON-BOARD DIAGNOSTIC TEST [SKYACTIV-G 2.0, SKYACTIV-G 2.5]**.) ▪ APP (APP sensor)	Yes	Repair or replace any malfunctioning parts according to the inspection result.
		No	Go to the next step.

	▪ BARO (BARO sensor) ▪ IAT (IAT sensor No.1) ▪ MAF (MAF sensor) ▪ RPM (CKP sensor) • Is there any malfunction?		
2	**VERIFY IF MALFUNCTION CAUSE IS LOW-G (XY) SENSOR** • Is there any malfunction?	Yes	Replace the SAS control module. (See **SAS CONTROL MODULE REMOVAL/INSTALLATION [STANDARD DEPLOYMENT CONTROL SYSTEM]**.) (See **SAS CONTROL MODULE REMOVAL/INSTALLATION [TWO-STEP DEPLOYMENT CONTROL SYSTEM]**.)
		No	Symptom troubleshooting is completed.

2014 - Mazda3 - Transmission/Transaxle

ABNORMAL SHIFTING [FW6A-EL]

TROUBLESHOOTING ITEM	Abnormal shifting
DESCRIPTION	• Shifts incorrectly (incorrect shift pattern).
POSSIBLE CAUSE	• Signal malfunction ▪ APP sensor malfunction ▪ BARO sensor malfunction ▪ Brake switch malfunction ▪ CKP sensor malfunction ▪ ECT sensor No.1 malfunction ▪ IAT sensor No.1 malfunction ▪ MAF sensor malfunction • Low-G (XY) sensor (built into SAS control module) malfunction **NOTE:** • If a tire with a different diameter than the standard tire is installed, the TCM determines that the driving mode is the AAS mode, and may change to a different shift timing from the normal timing. • When SPORT mode is selected, a gear lower than NORMAL mode is selected, and the gear is maintained for a longer period of time. (with drive selection switch)

CAUTION:

- Verify the malfunction symptom according to not only the PID value but also the symptom troubleshooting.

Related PCM PIDs

Item (definition)	Unit/Condition	Definition	Condition/Specification (Reference)

APP	%	Accelerator pedal position	• Accelerator pedal released: Approx. 0% • Accelerator pedal depressed: Approx. 100%
BARO	KPa {MPa}, mBar {Bar}, psi, in H20	Barometric pressure	• Displays BARO
	V		• Ignition switched ON (at sea level): Approx. 4.08 V
BOO	Off/On	Brake switch (No.1 signal)	• Brake pedal released: Off • Brake pedal depressed: On
ECT	°C, °F	Engine coolant temperature (No.1)	• Displays ECT
	V		• ECT is 20 °C {68 °F}: Approx. 3.10 V • ECT is 40 °C {104 °F}: Approx. 2.16 V • ECT is 60 °C {140 °F}: Approx. 1.40 V • ECT is 80 °C {176 °F}: Approx. 0.87 V • ECT is 100 °C {212 °F}: Approx. 0.54 V
IAT	°C, °F	Intake air temperature (No.1)	• Displays IAT (No.1)
	V		• IAT is 20 °C {68 °F}: Approx. 2.70 V • IAT is 40 °C {104 °F}: Approx. 1.80 V • IAT is 60 °C {140 °F}: Approx. 1.20 V
MAF	g/Sec	Mass air flow	• Displays MAF
	V		• Switch ignition ON (engine off) (MAF: 0.59 g/s {0.078 lb/min}): Approx. 0.72 V • Idle (after warm up) (MAF: 2.17 g/s {0.287 lb/min}): Approx. 0.86 V • Racing (engine speed is 2,000 rpm) (MAF: 4.73 g/s {0.626 lb/min}): Approx. 1.07 V
RPM	RPM	Engine speed	• Displays engine speed

Diagnostic procedure

STEP	INSPECTION		ACTION
1	**INSPECT SIGNAL PARTS FOR MALFUNCTION** • Inspect the value at the following PCM PIDs using the M-MDS. (See **ON-BOARD DIAGNOSTIC TEST [SKYACTIV-G 2.0, SKYACTIV-G 2.5]**.) ▪ APP (APP sensor) ▪ BARO (BARO sensor) ▪ BOO (Brake switch) ▪ ECT (ECT sensor No.1) ▪ IAT (IAT sensor No.1) ▪ MAF (MAF sensor) ▪ RPM (CKP sensor) • Is there any malfunction?	Yes	Repair or replace any malfunctioning parts according to the inspection result.
		No	Go to the next step.
2	**VERIFY IF MALFUNCTION CAUSE IS LOW-G (XY) SENSOR** • Is there any malfunction?	Yes	Replace the SAS control module. (See **SAS CONTROL MODULE REMOVAL/INSTALLATION [STANDARD DEPLOYMENT CONTROL SYSTEM]**.) (See **SAS CONTROL MODULE REMOVAL/INSTALLATION [TWO-STEP DEPLOYMENT CONTROL SYSTEM]**.)
		No	Symptom troubleshooting is completed.

2014 - Mazda3 - Transmission/Transaxle

FREQUENT SHIFTING [FW6A-EL]

TROUBLESHOOTING ITEM	Frequent shifting
DESCRIPTION	• Downshifting occurs suddenly even when accelerator pedal is depressed slightly in D position.
POSSIBLE CAUSE	• Signal malfunction ▪ APP sensor malfunction • Low-G (XY) sensor (built into SAS control module) malfunction

CAUTION:

- Verify the malfunction symptom according to not only the PID value but also the symptom troubleshooting.

Related PCM PIDs

Item (definition)	Unit/Condition	Definition	Condition/Specification (Reference)
APP	%	Accelerator pedal position	• Accelerator pedal released: Approx. 0% • Accelerator pedal depressed: Approx. 100%

Diagnostic procedure

STEP	INSPECTION		ACTION
1	**INSPECT SIGNAL PARTS FOR MALFUNCTION** • Inspect the value at the following PCM PID using the M-MDS. (See **ON-BOARD DIAGNOSTIC**	Yes	Repair or replace any malfunctioning parts according to the inspection result.
		No	Go to the next step.

	TEST [SKYACTIV-G 2.0, SKYACTIV-G 2.5].) ▪ APP (APP sensor) • Is there any malfunction?		
2	**VERIFY IF MALFUNCTION CAUSE LOW-G (XY) SENSOR** • Is there any malfunction?	Yes	Replace the SAS control module. (See **SAS CONTROL MODULE REMOVAL/INSTALLATION [STANDARD DEPLOYMENT CONTROL SYSTEM]**.) (See **SAS CONTROL MODULE REMOVAL/INSTALLATION [TWO-STEP DEPLOYMENT CONTROL SYSTEM]**.)
		No	Symptom troubleshooting is completed.

2014 - Mazda3 - Transmission/Transaxle

SHIFT POINT IS HIGH OR LOW [FW6A-EL]

TROUBLESHOOTING ITEM	Shift point is high or low
DESCRIPTION	• Shift point considerably different from automatic shift diagram. • Shift delays when accelerating. • Shift occurs suddenly when accelerating and engine speed does not increase.

POSSIBLE CAUSE	• Signal malfunction
	  ▪ APP sensor malfunction
	  ▪ BARO sensor malfunction
	  ▪ Brake switch malfunction
	  ▪ ECT sensor No.1 malfunction
	  ▪ IAT sensor No.1 malfunction
	• Low-G (XY) sensor (built into SAS control module) malfunction
	NOTE:
	• If a tire with a different diameter than the standard tire is installed, the TCM determines that the driving mode is the AAS mode, and may change to a different shift timing from the normal timing.
	• When SPORT mode is selected, a gear lower than NORMAL mode is selected, and the gear is maintained for a longer period of time. (with drive selection switch)

CAUTION:

- Verify the malfunction symptom according to not only the PID value but also the symptom troubleshooting.

Related PCM PIDs

Item (definition)	Unit/Condition	Definition	Condition/Specification (Reference)

APP	%	Accelerator pedal position	• Accelerator pedal released: Approx. 0% • Accelerator pedal depressed: Approx. 100%
BARO	KPa {MPa}, mBar {Bar}, psi, in H20	Barometric pressure	• Displays BARO
	V		• Ignition switched ON (at sea level): Approx. 4.08 V
BOO	Off/On	Brake switch (No.1 signal)	• Brake pedal released: Off • Brake pedal depressed: On
ECT	°C, °F	Engine coolant temperature (No.1)	• Displays ECT
	V		• ECT is 20 °C {68 °F}: Approx. 3.10 V • ECT is 40 °C {104 °F}: Approx. 2.16 V • ECT is 60 °C {140 °F}: Approx. 1.40 V • ECT is 80 °C {176 °F}: Approx. 0.87 V • ECT is 100 °C {212 °F}: Approx. 0.54 V
IAT	°C, °F	Intake air temperature (No.1)	• Displays IAT (No.1)
	V		• IAT is 20 °C {68 °F}: Approx. 2.70 V • IAT is 40 °C {104 °F}: Approx. 1.80 V • IAT is 60 °C {140 °F}: Approx. 1.20 V

Diagnostic procedure

STEP	INSPECTION		ACTION
1	**INSPECT SIGNAL PARTS FOR MALFUNCTION** • Inspect the value at the following PCM PIDs using the	Yes	Repair or replace any malfunctioning parts according to the inspection result.

	M-MDS. (See **ON-BOARD DIAGNOSTIC TEST [SKYACTIV-G 2.0, SKYACTIV-G 2.5]**.) ▪ APP (APP sensor) ▪ BARO (BARO sensor) ▪ BOO (Brake switch) ▪ ECT (ECT sensor No.1) ▪ IAT (IAT sensor No.1) • Is there any malfunction?	No	Go to the next step.
2	**VERIFY IF MALFUNCTION CAUSE IS LOW-G (XY) SENSOR** • Is there any malfunction?	Yes	Replace the SAS control module. (See **SAS CONTROL MODULE REMOVAL/INSTALLATION [STANDARD DEPLOYMENT CONTROL SYSTEM]**.) (See **SAS CONTROL MODULE REMOVAL/INSTALLATION [TWO-STEP DEPLOYMENT CONTROL SYSTEM]**.)
		No	Symptom troubleshooting is completed.

2014 - Mazda3 - Transmission/Transaxle

NO KICKDOWN [FW6A-EL]

TROUBLESHOOTING ITEM	No kickdown
DESCRIPTION	• Does not downshift when accelerator pedal is fully depressed within kickdown range.
POSSIBLE CAUSE	• Signal malfunction ▪ APP sensor malfunction

CAUTION:

- Verify the malfunction symptom according to not only the PID value but also the symptom troubleshooting.

Related PCM PIDs

Item (definition)	Unit/Condition	Definition	Condition/Specification (Reference)
APP	%	Accelerator pedal position	• Accelerator pedal released: Approx. 0% • Accelerator pedal depressed: Approx. 100%

Diagnostic procedure

STEP	INSPECTION		ACTION
1	**INSPECT SIGNAL PARTS FOR MALFUNCTION** • Inspect the value at the following PCM PID using the M-MDS. (See **ON-BOARD DIAGNOSTIC TEST [SKYACTIV-G 2.0, SKYACTIV-G 2.5]**.) ▪ APP (APP sensor)	Yes	Repair or replace any malfunctioning parts according to the inspection result.
		No	Symptom troubleshooting is completed.

	• Is there any malfunction?		

2014 - Mazda3 - Transmission/Transaxle

ENGINE FLARES UP OR SLIPS WHEN UPSHIFTING OR DOWNSHIFTING [FW6A-EL]

TROUBLESHOOTING ITEM	Engine flares up or slips when upshifting or downshifting
DESCRIPTION	• When accelerator pedal is depressed, engine speed increases normally but vehicle speed increases slowly. • When accelerator pedal is depressed while driving, engine speed increases but vehicle speed does not.
POSSIBLE CAUSE	• Insufficient TCM learning • Signal malfunction ▪ APP sensor malfunction ▪ CKP sensor malfunction ▪ MAF sensor malfunction

CAUTION:

- Verify the malfunction symptom according to not only the PID value but also the symptom troubleshooting.

Related PCM PIDs

Item (definition)	Unit/Condition	Definition	Condition/Specification (Reference)
APP	%	Accelerator pedal position	• Accelerator pedal released: Approx. 0% • Accelerator pedal depressed: Approx. 100%
MAF	g/Sec	Mass air flow	• Displays MAF
	V		• Switch ignition ON (engine off) (MAF: 0.59 g/s {0.078 lb/min}): Approx. 0.72 V • Idle (after warm up) (MAF: 2.17 g/s {0.287 lb/min}): Approx. 0.86 V

			• Racing (engine speed is 2,000 rpm) (MAF: 4.73 g/s {0.626 lb/min}): Approx. 1.07 V
RPM	RPM	Engine speed	• Displays engine speed

Diagnostic procedure

STEP	INSPECTION		ACTION
1	**VERIFY MALFUNCTION SYMPTOM** • Is the malfunction symptom at the same level compared to a vehicle of the same model?	Yes	Symptom troubleshooting is completed.
		No	Go to the next step.
2	**PERFORM INITIAL LEARNING** • Perform the initial learning. (See **INITIAL LEARNING [FW6A-EL]**.) • Does the symptom disappear?	Yes	Symptom troubleshooting is completed.
		No	Go to the next step.
3	**INSPECT SIGNAL PARTS FOR MALFUNCTION** • Inspect the value at the following PCM PIDs using the M-MDS. (See **ON-BOARD DIAGNOSTIC TEST [SKYACTIV-G 2.0, SKYACTIV-G 2.5]**.) ▪ APP (APP sensor) ▪ MAF (MAF sensor) ▪ RPM (CKP sensor) • Is there any malfunction?	Yes	Repair or replace any malfunctioning parts according to the inspection result.
		No	Symptom troubleshooting is completed.

2014 - Mazda3 - Transmission/Transaxle

JUDDER UPON TORQUE CONVERTER CLUTCH (TCC) OPERATION [FW6A-EL]

TROUBLESHOOTING ITEM	Judder upon torque converter clutch (TCC) operation
DESCRIPTION	• Vehicle jolts when TCC is engaged.

POSSIBLE CAUSE	• Signal malfunction
	  ▪ APP sensor malfunction
	  ▪ CKP sensor malfunction
	• Torque converter malfunction

CAUTION:

- Verify the malfunction symptom according to not only the PID value but also the symptom troubleshooting.

Related PCM PIDs

Item (definition)	Unit/Condition	Definition	Condition/Specification (Reference)
APP	%	Accelerator pedal position	• Accelerator pedal released: Approx. 0% • Accelerator pedal depressed: Approx. 100%
RPM	RPM	Engine speed	• Displays engine speed

Diagnostic procedure

STEP	INSPECTION		ACTION
1	**VERIFY MALFUNCTION SYMPTOM** • Is the malfunction symptom at the same level compared to a vehicle of the same model?	Yes	Symptom troubleshooting is completed.
		No	Go to the next step.

2	**INSPECT SIGNAL PARTS FOR MALFUNCTION** • Inspect the value at the following PCM PIDs using the M-MDS. (See **ON-BOARD DIAGNOSTIC TEST [SKYACTIV-G 2.0, SKYACTIV-G 2.5]**.) ▪ APP (APP sensor) ▪ RPM (CKP sensor) • Is there any malfunction?	Yes	Repair or replace any malfunctioning parts according to the inspection result.
		No	Replace the automatic transaxle. (See **AUTOMATIC TRANSAXLE REMOVAL/INSTALLATION [FW6A-EL]**.)

2014 - Mazda3 - Transmission/Transaxle

EXCESSIVE SHIFT SHOCK FROM N TO D OR N TO R POSITION [FW6A-EL]

TROUBLESHOOTING ITEM	Excessive shift shock from N to D or N to R position
DESCRIPTION	• Strong shock is felt when shifting from N to D or N to R position at idle.

POSSIBLE CAUSE	• Insufficient TCM learning (Insufficient learning in N to D position or N to R position)
	• Not within idle speed specification
	• Signal malfunction
	  ▪ APP sensor malfunction
	  ▪ CKP sensor malfunction
	• Poor installation or worn of engine mount, suspension

CAUTION:

- Verify the malfunction symptom according to not only the PID value but also the symptom troubleshooting.

Related PCM PIDs

Item (definition)	Unit/Condition	Definition	Condition/Specification (Reference)
APP	%	Accelerator pedal position	• Accelerator pedal released: Approx. 0% • Accelerator pedal depressed: Approx. 100%
RPM	RPM	Engine speed	• Displays engine speed

Diagnostic procedure

STEP	INSPECTION		ACTION
1	**VERIFY MALFUNCTION SYMPTOM** • Is the malfunction symptom (shift shock/shifting time) at the same level compared to a vehicle of the same model?	Yes	Symptom troubleshooting is completed.
		No	Go to the next step.
2	**PERFORM ON-BOARD DIAGNOSTIC TO VERIFY HYDRAULIC PRESSURE SWITCH OPERATION PRESSURE** • Is the operation pressure normal?	Yes	Go to the next step.
		No	Replace the control valve body. (See **CONTROL VALVE BODY REMOVAL / INSTALLATION [FW6A-EL]**.)
3	**PERFORM INITIAL LEARNING, N TO D POSITION LEARNING, AND N TO R POSITION LEARNING** • Perform the Initial Learning. (See **INITIAL LEARNING [FW6A-EL]**.) • Perform N to D position learning using the following procedure: ◦ (1) The ATF temperature is **30 °C {86 °F} or more**. ◦ (2) Shift the selector lever from P position to N position. ◦ (3) Shift the selector lever from N position to D position and wait for **5 s or more** while holding the lever in the D position. ◦ (4) Shift the selector lever from D position to N position and wait for **5 s or more** while holding the lever in the N position. ◦ (5) Perform the procedures (3) to (4) above ten times. • Perform N to R position leaning using the following procedure: ◦ (1) The ATF temperature is **60 °C {140 °F} or more**. ◦ (2) Shift the selector lever from P position to N position. ◦ (3) Shift the selector lever from N position to R position and wait for **5 s or more** while holding the lever in the R position.	Yes	Symptom troubleshooting is completed.
		No	Go to the next step.

	◦ (4) Shift the selector lever from R position to N position and wait for **5 s or more** while holding the lever in the N position. ◦ (5) Perform the procedures (3) to (4) above ten times. • Does the symptom disappear?		
4	**INSPECT ENGINE CONTROL SYSTEM FOR MALFUNCTION** • Perform the symptom troubleshooting “NO.9 FAST IDLE/RUNS ON”. (See **NO.9 FAST IDLE/RUNS ON [SKYACTIV-G 2.0, SKYACTIV-G 2.5]**.) • Is there any malfunction?	Yes	Repair or replace any malfunctioning parts according to the inspection result.
		No	Go to the next step.
5	**INSPECT SIGNAL PARTS FOR MALFUNCTION** • Inspect the value at the following PCM PIDs using the M-MDS. (See **ON-BOARD DIAGNOSTIC TEST [SKYACTIV-G 2.0, SKYACTIV-G 2.5]**.) ▪ APP (APP sensor) ▪ RPM (CKP sensor) • Is there any malfunction?	Yes	Repair or replace any malfunctioning parts according to the inspection result.
		No	Go to the next step.
6	**INSPECT ENGINE MOUNT/SUSPENSION FOR POOR TIGHTENING** • Is there any malfunction?	Yes	Repair or replace any malfunctioning parts according to the inspection result. (See **ENGINE REMOVAL/INSTALLATION [SKYACTIV-G 2.0, SKYACTIV-G 2.5]**.)
		No	Symptom troubleshooting is completed.

2014 - Mazda3 - Transmission/Transaxle

SLOW ENGAGING AFTER OPERATING SELECTOR LEVER FROM N TO D POSITION [FW6A-EL]

TROUBLESHOOTING ITEM	Slow engaging after operating selector lever from N to D position
DESCRIPTION	• When depressing the accelerator pedal just after operating the selector lever from N to D position with the ATF temperature at **60 °C {140 °F} or more**, it takes **3 s or more** to engage. • Malfunction symptom only occurs once when accelerating from a standstill. • Engagement after operating the selector lever from N to R position is normal.
POSSIBLE CAUSE	• Low clutch piston malfunction • Low clutch hydraulic system sealing malfunction

Diagnostic Procedure

Step	Inspection	Results	Action
1	**VERIFY DTCs** • Are any DTCs detected?	Yes	Repair the malfunctioning location according to the applicable DTC troubleshooting. (See **ON-BOARD DIAGNOSTIC SYSTEM DTC TABLE [FW6A-EL]**.)
		No	Go to the next step.
2	**PERFORM INITIAL LEARNING AND N TO D RANGE LEARNING** • Perform the initial learning. (See **INITIAL LEARNING [FW6A-EL]**.) • Perform the N to D position learning	Yes	Complete the symptom troubleshooting.
		No	Replace the automatic transaxle. (See **AUTOMATIC TRANSAXLE REMOVAL/INSTALLATION [FW6A-EL]**.)

using the following procedure:

- (1) Set the ATF temperature to **30 °C {86 °F} or more**.
- (2) Shift the selector lever to N position.
- (3) Shift the selector lever to D position and wait for **5 s or more**.
- (4) Shift the selector lever to N position and wait for **5 s or more**.
- (5) Perform steps (3) to (4) **10 times**.

- Has the malfunction symptom been eliminated?

2014 - Mazda3 - Transmission/Transaxle

EXCESSIVE SHIFT SHOCK IS FELT WHEN UPSHIFTING AND DOWNSHIFTING [FW6A-EL]

TROUBLESHOOTING ITEM	Excessive shift shock is felt when upshifting and downshifting
DESCRIPTION	• Excessive shift shock is felt when depressing accelerator pedal to accelerate at upshifting. • During cruising, excessive shift shock is felt when depressing accelerator pedal at downshifting.
POSSIBLE CAUSE	• Insufficient TCM learning • Signal malfunction ▪ APP sensor malfunction • Poor installation or worn of engine mount, suspension

CAUTION:

- Verify the malfunction symptom according to not only the PID value but also the symptom troubleshooting.

Related PCM PIDs

Item (definition)	Unit/Condition	Definition	Condition/Specification (Reference)
APP	%	Accelerator pedal position	• Accelerator pedal released: Approx. 0% • Accelerator pedal depressed: Approx. 100%

Diagnostic procedure

STEP	INSPECTION		ACTION
1	**VERIFY MALFUNCTION SYMPTOM** • Is the malfunction symptom (shift	Yes	Symptom troubleshooting is completed.

	shock/shifting time) at the same level compared to a vehicle of the same model?	No	Go to the next step.
2	**PERFORM INITIAL LEARNING** • Perform the initial learning. (See **INITIAL LEARNING [FW6A-EL]**.) • Does the symptom disappear?	Yes	Symptom troubleshooting is completed.
		No	Go to the next step.
3	**PERFORM ON-BOARD DIAGNOSTIC TO VERIFY HYDRAULIC PRESSURE SWITCH OPERATION PRESSURE** • Is the operation pressure normal?	Yes	Go to the next step.
		No	Replace the control valve body. (See **CONTROL VALVE BODY REMOVAL/INSTALLATION [FW6A-EL]**.)
4	**INSPECT SIGNAL PARTS FOR MALFUNCTION** • Inspect the value at the following PCM PID using the M-MDS. (See **ON-BOARD DIAGNOSTIC TEST [SKYACTIV-G 2.0, SKYACTIV-G 2.5]**.) ▪ APP (APP sensor) • Is there any malfunction?	Yes	Repair or replace any malfunctioning parts according to the inspection result.
		No	Go to the next step.
5	**INSPECT ENGINE MOUNT/SUSPENSION FOR POOR TIGHTENING** • Is there any malfunction?	Yes	Repair or replace any malfunctioning parts according to the inspection result. (See **DTC TABLE [SKYACTIV-G 2.0, SKYACTIV-G 2.5]**.)
		No	Symptom troubleshooting is completed.

2014 - Mazda3 - Transmission/Transaxle

EXCESSIVE SHIFT SHOCK ON TORQUE CONVERTER CLUTCH (TCC) [FW6A-EL]

TROUBLESHOOTING ITEM	Excessive shift shock on torque converter clutch (TCC)
DESCRIPTION	• Strong shock is felt when TCC is engaged.

POSSIBLE CAUSE	• Insufficient TCM learning (Insufficient TCC learning)
	• Signal malfunction
	  ▪ APP sensor malfunction
	  ▪ CKP sensor malfunction
	• Torque converter malfunction

CAUTION:

- Verify the malfunction symptom according to not only the PID value but also the symptom troubleshooting.

Related PCM PIDs

Item (definition)	Unit/Condition	Definition	Condition/Specification (Reference)
APP	%	Accelerator pedal position	• Accelerator pedal released: Approx. 0% • Accelerator pedal depressed: Approx. 100%
RPM	RPM	Engine speed	• Displays engine speed

Diagnostic procedure

STEP	INSPECTION		ACTION
1	**PERFORM INITIAL LEARNING AND TCC LEARNING** • Perform the initial learning.	Yes	Symptom troubleshooting is completed.

	(See **INITIAL LEARNING [FW6A-EL]**.)
	• Perform TCC learning using the following procedure:
	  ◦ (1) The ATF temperature is **20 °C {68 °F} or more**.
	  ◦ (2) Constantly maintain the accelerator pedal opening angle between **20 %** to **60 %**.
	  ◦ (3) Accelerate the vehicle from a stop to 1st gear and from 1st to 2nd gear.
	  ◦ (4) Perform the shifting above (3) ten times.
	• Does the symptom disappear?
		No	Go to the next step.

2	**INSPECT SIGNAL PARTS FOR MALFUNCTION**
	• Inspect the value at the following PCM PIDs using the M-MDS.
	(See **ON-BOARD DIAGNOSTIC TEST [SKYACTIV-G 2.0, SKYACTIV-G 2.5]**.)
	  ▪ APP (APP sensor)
	  ▪ RPM (CKP sensor)
	• Is there any malfunction?
		Yes	Repair or replace any malfunctioning parts according to the inspection result.

		No	Replace the automatic transaxle. (See **AUTOMATIC TRANSAXLE REMOVAL/INSTALLATION [FW6A-EL]**.)

2014 - Mazda3 - Transmission/Transaxle

NOISE OCCURS AT IDLE WHEN VEHICLE IS STOPPED IN ALL POSITIONS [FW6A-EL]

TROUBLESHOOTING ITEM	Noise occurs at idle when vehicle is stopped in all positions
DESCRIPTION	• Transaxle is noisy in all positions when vehicle idling.
POSSIBLE CAUSE	• Engine control system malfunction • Automatic transaxle internal parts malfunction ▪ Oil pump malfunction ▪ Torque converter internal parts malfunction

Diagnostic procedure

STEP	INSPECTION		ACTION
1	**VERIFY IF MALFUNCTION CAUSE IS ENGINE CONTROL SYSTEM OR TORQUE CONVERTER** • Inspect the engine condition. • Is there any malfunction?	Yes	Go to the appropriate symptom troubleshooting. (See **SYMPTOM DIAGNOSTIC INDEX [SKYACTIV-G 2.0, SKYACTIV-G 2.5]**.)
		No	Replace the automatic transaxle. (See **AUTOMATIC TRANSAXLE REMOVAL/INSTALLATION [FW6A-EL]**.)

2014 - Mazda3 - Transmission/Transaxle

NOISE OCCURS AT IDLE WHEN VEHICLE IS STOPPED IN D, M OR R POSITION [FW6A-EL]

TROUBLESHOOTING ITEM	Noise occurs at idle when vehicle is stopped in D, M or R position
DESCRIPTION	• Transaxle is noisy in driving positions when vehicle is idling.
POSSIBLE CAUSE	• Engine control system malfunction • Automatic transaxle internal parts malfunction ▪ Torque converter internal parts malfunction

Diagnostic procedure

STEP	INSPECTION		ACTION
1	**VERIFY IF MALFUNCTION CAUSE IS ENGINE CONTROL SYSTEM OR TORQUE CONVERTER** • Inspect the engine condition. • Is there any malfunction?	Yes	Go to the appropriate symptom troubleshooting. (See **SYMPTOM DIAGNOSTIC INDEX [SKYACTIV-G 2.0, SKYACTIV-G 2.5]**.)
		No	Replace the automatic transaxle. (See **AUTOMATIC TRANSAXLE REMOVAL/INSTALLATION [FW6A-EL]**.)

2014 - Mazda3 - Transmission/Transaxle

TRANSAXLE OVERHEATS [FW6A-EL]

TROUBLESHOOTING ITEM	Transaxle overheats
DESCRIPTION	• Burnt smell emitted from the transaxle. • Smoke is emitted from the transaxle.

POSSIBLE CAUSE	• Signal malfunction
	  ▪ APP sensor malfunction
	  ▪ Brake switch malfunction
	  ▪ CKP sensor malfunction
	  ▪ ECT sensor No.1 malfunction
	• ATF malfunction
	• Oil cooler malfunction
	• Control valve body malfunction

CAUTION:

- Verify the malfunction symptom according to not only the PID value but also the symptom troubleshooting.

Related PCM PIDs

Item (definition)	Unit/Condition	Definition	Condition/Specification (Reference)
APP	%	Accelerator pedal position	• Accelerator pedal released: Approx. 0% • Accelerator pedal depressed: Approx. 100%
BOO	Off/On	Brake switch (No.1 signal)	• Brake pedal released: Off • Brake pedal depressed: On
	°C, °F		• Displays ECT

ECT	V	Engine coolant temperature (No.1)	• ECT is 20 °C {68 °F}: Approx. 3.10 V • ECT is 40 °C {104 °F}: Approx. 2.16 V • ECT is 60 °C {140 °F}: Approx. 1.40 V • ECT is 80 °C {176 °F}: Approx. 0.87 V • ECT is 100 °C {212 °F}: Approx. 0.54 V
RPM	RPM	Engine speed	• Displays engine speed

Related TCM PIDs—: Not applicable

Item	Unit/Condition	Test condition	Specification (Reference)	Output part name
ECU_A	°C {°F}	Displays ECU internal temperature A		ECU internal temperature sensor A
ECU_B	°C {°F}	Displays ECU internal temperature B		ECU internal temperature sensor B
ECU_C	°C {°F}	Displays ECU internal temperature C		ECU internal temperature sensor C
GEAR_SEL	1/2/3/4/5/6	Selector lever in 1GR at D position	1	• Shift solenoid No.1 • Shift solenoid No.2 • Shift solenoid No.3 • Shift solenoid No.4
		Selector lever in 2GR at D position	2	
		Selector lever in 3GR at D position	3	
		Selector lever in 4GR at D position	4	
		Selector lever in 5GR at D position	5	
		Selector lever in 6GR at D position	6	
LINEDES	kPa {kgf/cm^2, psi}	Idle at P position after warm-up	Approx. 500 kPa {5.10 kgf/cm^2,	—

			72.5 psi}	
OP_SW1	Off/On	Selector lever at P position	Off	Oil pressure switch No.1
		Selector lever at R position	Off	
		Selector lever at N position	Off	
		Selector lever in 1GR at D position	On	
		Selector lever in 2GR at D position	On	
		Selector lever in 3GR at D position	On	
		Selector lever in 4GR at D position	On	
		Selector lever in 5GR at D position	Off	
		Selector lever in 6GR at D position	Off	
OP_SW2	Off/On	Selector lever at P position	Off	Oil pressure switch No.2
		Selector lever at R position	Off	
		Selector lever at N position	Off	
		Selector lever in 1GR at D position	Off	
		Selector lever in 2GR at D position	On	
		Selector lever in 3GR at D position	Off	
		Selector lever in 4GR at D position	Off	
		Selector lever in 5GR at D position	Off	
		Selector lever in 6GR at D position	On	

OP_SW3	Off/On	Selector lever at P position	Off	Oil pressure switch No.3
		Selector lever at R position	On	
		Selector lever at N position	Off	
		Selector lever in 1GR at D position	Off	
		Selector lever in 2GR at D position	Off	
		Selector lever in 3GR at D position	On	
		Selector lever in 4GR at D position	Off	
		Selector lever in 5GR at D position	On	
		Selector lever in 6GR at D position	Off	
OP_SW4	Off/On	Selector lever at P position	Off	Oil pressure switch No.4
		Selector lever at R position	Off	
		Selector lever at N position	Off	
		Selector lever in 1GR at D position	Off	
		Selector lever in 2GR at D position	Off	
		Selector lever in 3GR at D position	Off	
		Selector lever in 4GR at D position	On	
		Selector lever in 5GR at D position	On	
		Selector lever in 6GR at D position	On	

OSS	RPM	Vehicle stopped	0 RPM	Output shaft speed sensor
		Vehicle speed 30 km/h {19 mph} in 4GR at D position	Approx. 1000 RPM	
SS1	A	Vehicle stopped at P position	Approx. 0 A	Shift solenoid No.1
		Vehicle stopped at R position	Approx. 0 A	
		Vehicle stopped at N position	Approx. 0 A	
		Driving in D position 1GR	Approx. 1 A	
		Driving in D position 2GR	Approx. 1 A	
		Driving in D position 3GR	Approx. 1 A	
		Driving in D position 4GR	Approx. 1 A	
		Driving in D position 5GR	Approx. 0 A	
		Driving in D position 6GR	Approx. 0 A	
SS2	A	Vehicle stopped at P position	Approx. 0 A	Shift solenoid No.2
		Vehicle stopped at R position	Approx. 0 A	
		Vehicle stopped at N position	Approx. 0 A	
		Driving in D position 1GR	Approx. 0 A	
		Driving in D position 2GR	Approx. 1 A	
		Driving in D position 3GR	Approx. 0 A	
		Driving in D position 4GR	Approx. 0 A	
		Driving in D position 5GR	Approx. 0 A	
		Driving in D position 6GR	Approx. 1 A	
		Vehicle stopped at P	Approx. 1 A	

		position		
		Vehicle stopped at R position	Approx. 0 A	
		Vehicle stopped at N position	Approx. 1 A	
SS3	A	Driving in D position 1GR	Approx. 1 A	Shift solenoid No.3
		Driving in D position 2GR	Approx. 1 A	
		Driving in D position 3GR	Approx. 0 A	
		Driving in D position 4GR	Approx. 1 A	
		Driving in D position 5GR	Approx. 0 A	
		Driving in D position 6GR	Approx. 1 A	
		Vehicle stopped at P position	Approx. 0 A	
		Vehicle stopped at R position	Approx. 0 A	
		Vehicle stopped at N position	Approx. 0 A	
SS4	A	Driving in D position 1GR	Approx. 0 A	Shift solenoid No.4
		Driving in D position 2GR	Approx. 1 A	
		Driving in D position 3GR	Approx. 1 A	
		Driving in D position 4GR	Approx. 0 A	
		Driving in D position 5GR	Approx. 0 A	
		Driving in D position 6GR	Approx. 0 A	
		Vehicle stopped at P position	Approx. 0 A	
		Vehicle stopped at R position	Approx. 0 A	
		Vehicle stopped at N	Approx. 0 A	

		position		
		Under the following conditions: • Driving in D position 1GR • Accelerator pedal opening angle is approx. 10 %	Approx. 430 mA	
		Under the following conditions: • Driving in D position 2GR • Accelerator pedal opening angle is approx. 10 %	Approx. 430 mA	
SSLU	A	Under the following conditions: • Driving in D position 3GR • Accelerator pedal opening angle is approx. 10 %	Approx. 430 mA	TCC control solenoid
		Under the following conditions: • Driving in D position 4GR • Accelerator pedal opening angle is approx. 10 %	Approx. 430 mA	
		Under the following		

		conditions: • Driving in D position 5GR • Accelerator pedal opening angle is approx. 10 %	Approx. 430 mA	
		Under the following conditions: • Driving in D position 6GR • Accelerator pedal opening angle is approx. 10 %	Approx. 430 mA	
		Vehicle stopped at P position	0 kPa {0 kgf/cm^2, 0 psi}	
		Vehicle stopped at R position	0 kPa {0 kgf/cm^2, 0 psi}	
		Vehicle stopped at N position	0 kPa {0 kgf/cm^2, 0 psi}	
		Under the following conditions: • Driving in D position 1GR • Accelerator pedal opening angle is approx. 10 %	Approx. 360 kPa {3.67 kgf/cm^2, 52.2 psi}	
		Under the following conditions: • Driving in D position		

		2GR • Accelerator pedal opening angle is approx. 10 %	Approx. 360 kPa {3.67 kgf/cm^2, 52.2 psi}	
SSLU_PRES	kPa {kgf/cm^2, psi}	Under the following conditions: • Driving in D position 3GR • Accelerator pedal opening angle is approx. 10 %	Approx. 360 kPa {3.67 kgf/cm^2, 52.2 psi}	TCC control solenoid
		Under the following conditions: • Driving in D position 4GR • Accelerator pedal opening angle is approx. 10 %	Approx. 360 kPa {3.67 kgf/cm^2, 52.2 psi}	
		Under the following conditions: • Driving in D position 5GR • Accelerator pedal opening angle is approx. 10 %	Approx. 360 kPa {3.67 kgf/cm^2, 52.2 psi}	
		Under the following conditions: • Driving in D position 6GR • Accelerator	Approx. 360 kPa {3.67 kgf/cm^2,	

		pedal opening angle is approx. 10 %	52.2 psi}	
SSP	A	Vehicle stopped at P position	Approx. 980 mA	Pressure control solenoid
		Vehicle stopped at R position	Approx. 930 mA	
		Vehicle stopped at N position	Approx. 980 mA	
		Under the following conditions: • Driving in D position 1GR • Accelerator pedal opening angle is approx. 10 %	Approx. 400 —800 mA	
		Under the following conditions: • Driving in D position 2GR • Accelerator pedal opening angle is approx. 10 %	Approx. 400 —800 mA	
		Under the following conditions: • Driving in D position 3GR • Accelerator pedal opening angle is approx. 10 %	Approx. 400 —800 mA	

		Under the following conditions: • Driving in D position 4GR • Accelerator pedal opening angle is approx. 10 %	Approx. 400—800 mA	
		Under the following conditions: • Driving in D position 5GR • Accelerator pedal opening angle is approx. 10 %	Approx. 400—800 mA	
		Under the following conditions: • Driving in D position 6GR • Accelerator pedal opening angle is approx. 10 %	Approx. 400—800 mA	
		Vehicle stopped at P position	Approx. 45 kPa {0.46 kgf/cm^2, 6.5 psi}	
		Vehicle stopped at R position	Approx. 80 kPa {0.82 kgf/cm^2, 12 psi}	
		Vehicle stopped at N position	Approx. 45 kPa {0.46 kgf/cm^2, 6.5 psi}	

		Under the following conditions: • Driving in D position 1GR • Accelerator pedal opening angle is approx. 10 %	130—460 kPa {1.33—4.69 kgf/cm^2, 18.9—66.7 psi}	
		Under the following conditions: • Driving in D position 2GR • Accelerator pedal opening angle is approx. 10 %	130—460 kPa {1.33—4.69 kgf/cm^2, 18.9—66.7 psi}	
SSP_PRES	kPa {kgf/cm^2, psi}	Under the following conditions: • Driving in D position 3GR • Accelerator pedal opening angle is approx. 10 %	130—460 kPa {1.33—4.69 kgf/cm^2, 18.9—66.7 psi}	Pressure control solenoid
		Under the following conditions: • Driving in D position 4GR • Accelerator pedal opening angle is approx. 10 %	130—460 kPa {1.33—4.69 kgf/cm^2, 18.9—66.7 psi}	
		Under the following conditions: • Driving in		

		D position 5GR • Accelerator pedal opening angle is approx. 10 %	130—460 kPa {1.33—4.69 kgf/cm^2, 18.9—66.7 psi}	
		Under the following conditions: • Driving in D position 6GR • Accelerator pedal opening angle is approx. 10 %	130—460 kPa {1.33—4.69 kgf/cm^2, 18.9—66.7 psi}	
TR	P/SHIFT_DOWN/SHIFT_UP/M/D/N/R	Selector lever at P position	P	Transaxle range sensor
		Selector lever at M position (−) side position	SHIFT_DOWN	
		Selector lever at M position (+) side position	SHIFT_UP	
		Selector lever at M position	M	
		Selector lever at D position	D	
		Selector lever at N position	N	
		Selector lever at R position	R	
TSS	RPM	Vehicle stopped at D position	0 RPM	Turbine/input shaft speed sensor
		Engine speed 1,000 rpm at P position	900—1,100 RPM	
VSS	KPH {MPH}	Displays vehicle speed		Output shaft speed sensor

Diagnostic procedure

STEP	INSPECTION	ACTION

1	**INSPECT SIGNAL PARTS FOR MALFUNCTION** • Inspect the value at the following PCM PIDs using the M-MDS. (See **ON-BOARD DIAGNOSTIC TEST [SKYACTIV-G 2.0, SKYACTIV-G 2.5]**.) ▪ APP (APP sensor) ▪ BOO (Brake switch) ▪ ECT (ECT sensor No.1) ▪ RPM (CKP sensor) • Is there any malfunction?	Yes	Repair or replace any malfunctioning parts according to the inspection result.
		No	Go to the next step.
2	**INSPECT ATF LEVEL** • Inspect the ATF level. (See **AUTOMATIC TRANSAXLE FLUID (ATF) INSPECTION [FW6A-EL]**.) • Is there any malfunction?	Yes	Adjust the ATF level to the specification. (See **AUTOMATIC TRANSAXLE FLUID (ATF) REPLACEMENT [FW6A-EL]**.)
		No	Go to the next step.
3	**VISUALLY INSPECT OIL COOLER** • Visually inspect the oil cooler. • Is there any malfunction?	Yes	Repair or replace any malfunctioning parts according to the inspection result. (See **OIL COOLER REMOVAL/INSTALLATION [FW6A-EL]**.)
		No	Go to the next step.
4	**VERIFY IF MALFUNCTION CAUSE IS CONTROL VALVE BODY** • Inspect the value at the following TCM PIDs using the M-MDS. (See **ON-BOARD DIAGNOSTIC SYSTEM PID/DATA MONITOR INSPECTION [FW6A-EL]**.) ▪ ECU_A ▪ ECU_B ▪ ECU_C ▪ GEAR_SEL ▪ LINEDES ▪ OP_SW1 ▪ OP_SW2 ▪ OP_SW3 ▪ OP_SW4 ▪ OSS	Yes	Replace the control valve body, then go to the next step. (See **CONTROL VALVE BODY REMOVAL/INSTALLATION [FW6A-EL]**.)
		No	Symptom troubleshooting is completed.

	▪ SS1 ▪ SS2 ▪ SS3 ▪ SS4 ▪ SSLU ▪ SSLU_PRES ▪ SSP ▪ SSP_PRES ▪ TR ▪ TSS ▪ VSS • Is there any malfunction?		

2014 - Mazda3 - Transmission/Transaxle

ENGINE STALLS WHEN SHIFTED TO D, M OR R POSITION [FW6A-EL]

TROUBLESHOOTING ITEM	Engine stalls when shifted to D, M or R position
DESCRIPTION	• Engine stalls when shifting from N or P position to D, M or R position at idle.

POSSIBLE CAUSE	• Not within idle speed specification
	• TCC piston malfunction (solenoid drive circuit, hydraulic passage blockage, poor operation)
	  ▪ Output solenoid valve malfunction (stuck)
	  • TCC control solenoid
	• Torque converter malfunction

Diagnostic procedure

STEP	INSPECTION		ACTION
1	**VERIFY IF MALFUNCTION CAUSE IS ENGINE CONTROL SYSTEM OR TORQUE CONVERTER** • Perform the symptom troubleshooting “NO.5 ENGINE STALLS-AFTER START/AT IDLE” and “NO.10 LOW IDLE/STALLS DURING DECELERATION”. (See **NO.5 ENGINE STALLS-AFTER START/AT IDLE [SKYACTIV-G 2.0, SKYACTIV-G 2.5]**.) (See **NO.10 LOW IDLE/STALLS DURING DECELERATION [SKYACTIV-G 2.0, SKYACTIV-G 2.5]**.) • Is there any malfunction?	Yes	Repair or replace any malfunctioning parts according to the inspection result.
		No	Replace the automatic transaxle. (See **AUTOMATIC TRANSAXLE REMOVAL/INSTALLATION [FW6A-EL]**.)

2014 - Mazda3 - Transmission/Transaxle

STARTER DOES NOT WORK [FW6A-EL]

TROUBLESHOOTING ITEM	Starter does not work
DESCRIPTION	• Starter does not work even when in P or N position.
POSSIBLE CAUSE	• Wiring harness between TCM terminal J and PCM terminal 2BD malfunction • Wiring harness between TCM terminal J and start stop unit terminal 1F malfunction • Wiring harness between start stop unit terminal 2H and LF control unit terminal G malfunction (With advanced keyless entry system) • Immobilizer system operating or system malfunction • Engine control system malfunction

Diagnostic procedure

STEP	INSPECTION		ACTION
1	**INSPECT WIRING HARNESS BETWEEN TCM AND PCM** • Switch the ignition off. • Disconnect the PCM connector and TCM connector. • Visually inspect for pin deformity, open circuit, or wiring harness non-insulation between TCM terminal J and PCM terminal 2BD. • Is there any malfunction?	Yes	Repair or replace any malfunctioning parts according to the inspection result.
		No	Go to the next step.
2	**INSPECT WIRING HARNESS BETWEEN TCM AND START STOP UNIT** • Disconnect the start stop unit connector. • Visually inspect for pin deformity, open circuit, or wiring harness non-insulation between TCM terminal J and start stop unit terminal 1F. • Is there any malfunction?	Yes	Repair or replace any malfunctioning parts according to the inspection result.
		No	Without advanced keyless entry system:

			Go to step 4. With advanced keyless entry system: • Go to the next step.
3	**INSPECT WIRING HARNESS BETWEEN TCM AND LF CONTROL UNIT** • Disconnect the LF control unit connector. • Visually inspect for pin deformity, open circuit, or wiring harness non-insulation between start stop unit terminal 2H and LF control unit terminal G. • Is there any malfunction?	Yes	Repair or replace any malfunctioning parts according to the inspection result.
		No	Go to the next step.
4	**INSPECT IMMOBILIZER SYSTEM AND ENGINE CONTROL SYSTEM FOR MALFUNCTION** • Perform the symptom troubleshooting “NO.3 WILL NOT CRANK”. (See **NO.3 WILL NOT CRANK [SKYACTIV-G 2.0, SKYACTIV-G 2.5]**.) • Is there any malfunction?	Yes	Repair or replace any malfunctioning parts according to the inspection result.
		No	Symptom troubleshooting is completed.

2014 - Mazda3 - Transmission/Transaxle

GEAR POSITION INDICATOR DOES NOT ILLUMINATE IN M POSITION [FW6A-EL]

TROUBLESHOOTING ITEM	Gear position indicator does not illuminate in M position
DESCRIPTION	• Gear position indicator in instrument cluster does not illuminate in M position with the ignition switched ON (engine off or on).
POSSIBLE CAUSE	• Instrument cluster malfunction **NOTE:** • When the ATF temperature is **132 °C {270 °F} or more**, gear fixing is inhibited, the gear position indicator is turned off, and the control is changed to the automatic shift control.

Diagnostic procedure

STEP	INSPECTION		ACTION
1	**INSPECT INSTRUMENT CLUSTER FOR MALFUNCTION** • Inspect the instrument cluster. (See **INSTRUMENT CLUSTER INSPECTION**.) • Is there any malfunction?	Yes	Replace the instrument cluster. (See **INSTRUMENT CLUSTER REMOVAL/INSTALLATION**.)
		No	Symptom troubleshooting is completed.

2014 - Mazda3 - Transmission/Transaxle

GEAR POSITION INDICATOR ILLUMINATES IN P, R, N AND D POSITIONS [FW6A-EL]

TROUBLESHOOTING ITEM	Gear position indicator illuminates in P, R, N and D positions
DESCRIPTION	• Gear position indicator in instrument cluster illuminates in P, R, N and D positions with the ignition switched ON (engine off or on).
POSSIBLE CAUSE	• Instrument cluster malfunction

Diagnostic procedure

STEP	INSPECTION		ACTION
1	**INSPECT INSTRUMENT CLUSTER FOR MALFUNCTION** • Inspect the instrument cluster. (See **INSTRUMENT CLUSTER INSPECTION**.) • Is there any malfunction?	Yes	Replace the instrument cluster. (See **INSTRUMENT CLUSTER REMOVAL/INSTALLATION**.)
		No	Symptom troubleshooting is completed.

2014 - Mazda3 - Transmission/Transaxle

M POSITION INDICATOR LIGHT DOES NOT ILLUMINATE IN M POSITION/M POSITION INDICATOR LIGHT ILLUMINATES IN D POSITION [FW6A-EL]

TROUBLESHOOTING ITEM	M position indicator light does not illuminate in M position/M position indicator light illuminates in D position
DESCRIPTION	• M position indicator light in instrument cluster does not illuminate in M position or M position indicator light in instrument cluster in P, R, N and D positions with the ignition switched ON (engine off or on).
POSSIBLE CAUSE	• Instrument cluster malfunction

Diagnostic procedure

STEP	INSPECTION		ACTION
1	**INSPECT INSTRUMENT CLUSTER FOR MALFUNCTION** • Inspect the instrument cluster. (See **INSTRUMENT CLUSTER INSPECTION**.) • Is there any malfunction?	Yes	Replace the instrument cluster. (See **INSTRUMENT CLUSTER REMOVAL/INSTALLATION**.)
		No	Symptom troubleshooting is completed.

2014 - Mazda3 - Transmission/Transaxle

ATF SEEPING FROM AUTOMATIC TRANSAXLE [FW6A-EL]

TROUBLESHOOTING ITEM	ATF seeping from automatic transaxle
DESCRIPTION	• ATF is seeping from the automatic transaxle case. • Foreign matter mixed with ATF is in the automatic transaxle case.
POSSIBLE CAUSE	**NOTE:** • ATF seeping radiates from ATF leak source. • Identify the type of seeping oil referring to “SERVICE CAUTIONS, Oil Leakage Inspection” in the general information. (See **SERVICE CAUTIONS**.) • To prevent misdiagnosis, remove any grease or dirt from the seep location and verify the location of the seeping after driving the vehicle. • ATF leakage from the following locations ▪ Oil pan (Part of drain plug etc.) ▪ Converter housing (Part of torque converter etc.) ▪ End cover ▪ Oil cooler ▪ Oil seal (differential) ▪ Oil seal (control valve body) ▪ Oil seal (manual shaft) ▪ Dipstick ▪ Line pressure detection port ▪ Air breather

Diagnostic procedure

STEP	INSPECTION	ACTION
	VERIFY IF THE MALFUNCTION CAUSE	

1	**IS ATF LEAKAGE FROM THE FOLLOWING LOCATIONS** • Verify if ATF is leaking from the locations described above. • Is there ATF seeping from a location?	Yes	Verify the installation and damage condition of the part at the location where the ATF is seeping and repair or replace the malfunctioning part.
		No	Symptom troubleshooting is completed.

2014 - Mazda3 - Transmission/Transaxle

CLUTCH LOCATION INDEX [C66M-R]

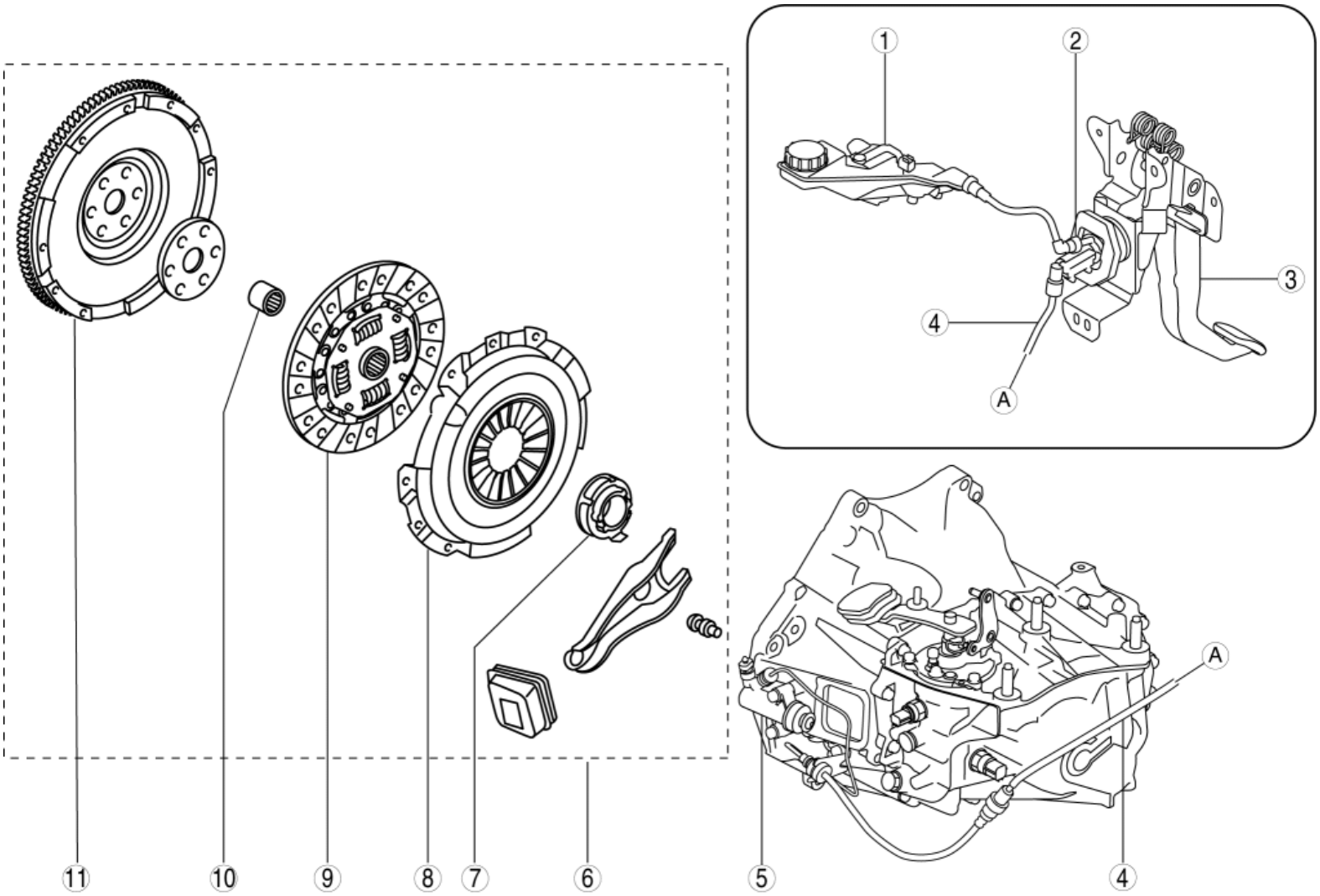

1	Reserve tank (See **CLUTCH FLUID INSPECTION [C66M-R]**.) (See **CLUTCH FLUID REPLACEMENT/AIR BLEEDING [C66M-R]**.)
2	Clutch master cylinder (See **CLUTCH MASTER CYLINDER REMOVAL/INSTALLATION [C66M-R]**.)
3	Clutch pedal (See **CLUTCH PEDAL INSPECTION [C66M-R]**.) (See **CLUTCH PEDAL REMOVAL/INSTALLATION [C66M-R]**.) (See **CLUTCH PEDAL POSITION SWITCH REMOVAL/INSTALLATION [C66M-R]**.) (See **STARTER INTERLOCK SWITCH REMOVAL/INSTALLATION [C66M-R]**.)

4	Clutch pipe and hose (See **CLUTCH FLUID LEAKAGE INSPECTION [C66M-R]**.) (See **CLUTCH PIPE AND HOSE REMOVAL/INSTALLATION [C66M-R]**.)
5	Clutch release cylinder (See **CLUTCH RELEASE CYLINDER REMOVAL/INSTALLATION [C66M-R]**.)
6	Clutch unit (See **CLUTCH UNIT REMOVAL/INSTALLATION [C66M-R]**.)
7	Clutch release collar (See **CLUTCH UNIT REMOVAL/INSTALLATION [C66M-R]**.) (See **CLUTCH RELEASE COLLAR INSPECTION [C66M-R]**.)
8	Clutch cover (See **CLUTCH UNIT REMOVAL/INSTALLATION [C66M-R]**.) (See **CLUTCH COVER INSPECTION [C66M-R]**.)
9	Clutch disc (See **CLUTCH UNIT REMOVAL/INSTALLATION [C66M-R]**.) (See **CLUTCH DISC INSPECTION [C66M-R]**.)
10	Pilot bearing (See **CLUTCH UNIT REMOVAL/INSTALLATION [C66M-R]**.) (See **PILOT BEARING INSPECTION [C66M-R]**.)
11	Flywheel (See **CLUTCH UNIT REMOVAL/INSTALLATION [C66M-R]**.) (See **FLYWHEEL INSPECTION [C66M-R]**.)

2014 - Mazda3 - Transmission/Transaxle

CLUTCH FLUID INSPECTION [C66M-R]

NOTE:

- A common reserve tank is used for the clutch system and brake system.

1. Verify that the clutch fluid is between the MIN mark and the MAX mark.

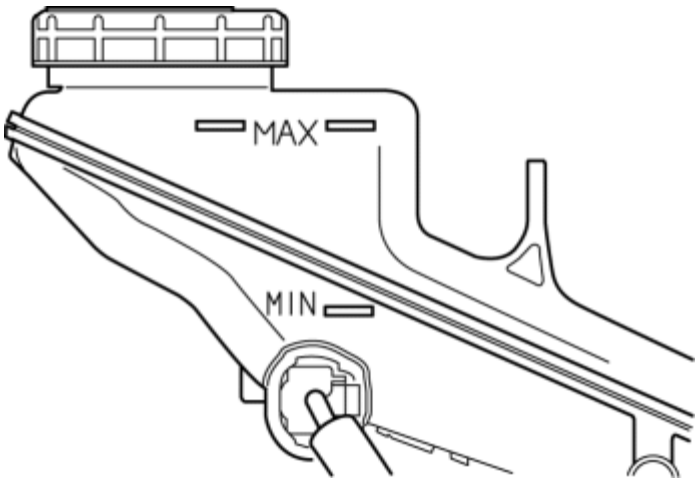

- If fluid level is lower than MIN mark, perform the following procedure:
  - Verify that there is no fluid leakage. (See **CLUTCH FLUID LEAKAGE INSPECTION [C66M-R]**.)
  - Add fluid to the level between MIN mark and the MAX mark.

Clutch fluid

- SAE J1703 or FMVSS116 DOT-3

2014 - Mazda3 - Transmission/Transaxle

CLUTCH FLUID LEAKAGE INSPECTION [C66M-R]

CAUTION:

- Do not allow clutch fluid to get on a painted surface. Clutch fluid contains properties which can dissolve the paint. If clutch fluid gets on a painted surface, rinse with water immediately, then wipe the area dry.

1. Verify reserve tank cap is on tight.
2. Pump the clutch pedal a few times.
3. Inspect for the clutch fluid leakage at the points indicated in the figure.

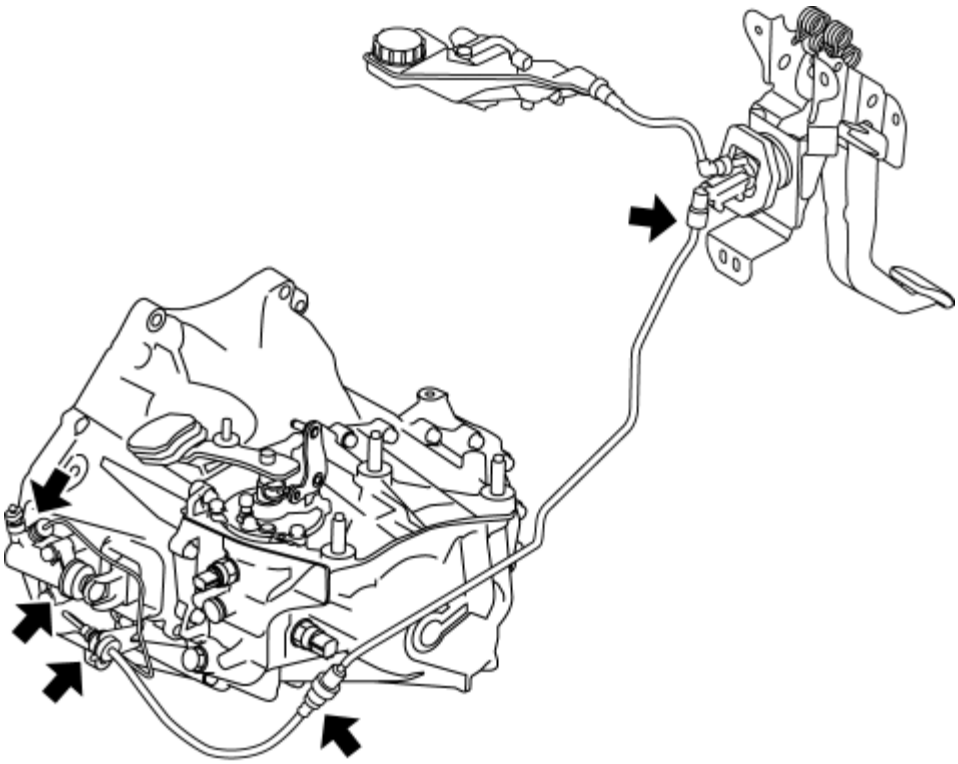

NOTE:

- If there is clutch fluid leakage from the piston in the clutch release cylinder, there is clutch fluid in the boot of clutch release cylinder.
- If there is clutch fluid leakage, repair or replace the malfunctioning location.

2014 - Mazda3 - Transmission/Transaxle

CLUTCH FLUID REPLACEMENT/AIR BLEEDING [C66M-R]

CAUTION:

- Do not allow clutch fluid to get on a painted surface. Clutch fluid contains properties which can dissolve the paint. If clutch fluid gets on a painted surface, rinse with water immediately, then wipe the area dry.
- Do not mix different types of clutch fluid, otherwise the clutch may not operate normally.
- Do not reuse old clutch fluid, otherwise the clutch may not operate normally.

NOTE:

- A common reserve tank is used for the clutch system and brake system.

1. Remove the front under cover No.2. (See **FRONT UNDER COVER No.2 REMOVAL/INSTALLATION**.)

2. Remove the reserve tank cap.

3. Drain the clutch fluid from bleeder screw.

4. Add new clutch fluid to the MAX mark of the reserve tank.

Clutch fluid

- SAE J1703 or FMVSS116 DOT-3

5. Bleed the air from the clutch system.

CAUTION:

- Keep the clutch fluid level in the reserve tank at 3/4 full or more during air bleeding.

a. Connect a vinyl tube to the bleeder screw.

b. Place the other end of the vinyl tube in a clear container, and fill clutch fluid in the container during air bleeding.

c. Working with two people, one should depress the clutch pedal a few times and then depress and hold the pedal down.

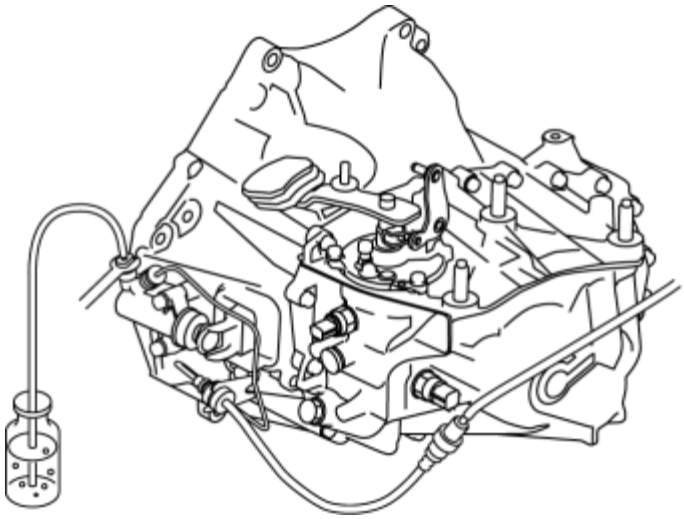

d. While the clutch pedal is being held down, the other person should loosen the bleeder screw, and bleed any fluid containing air bubbles. Once completed, tighten the bleeder screw.

e. Continue to perform Steps 4 and 5 until no air comes from the vinyl tube.

f. Fill the reserve tank to MAX mark with the clutch fluid.

Clutch fluid

- SAE J1703 or FMVSS116 DOT-3

6. Install the reserve tank cap.

7. Install the front under cover No.2. (See **FRONT UNDER COVER No.2 REMOVAL/INSTALLATION**.)

2014 - Mazda3 - Transmission/Transaxle

CLUTCH PEDAL INSPECTION [C66M-R]

NOTE:

- For the clutch pedal inspection, note the following and measure each inspection location.
  - Measure the center of the upper surface of the pedal pad for each inspection.
  - If the distance from the pedal pad to the floor covering is measured, measure the shortest distance from the center of the upper surface of the pedal pad to the floor covering.

Pedal Inspection Preparation

1. Verify that the clutch fluid is between the MIN mark and the MAX mark.

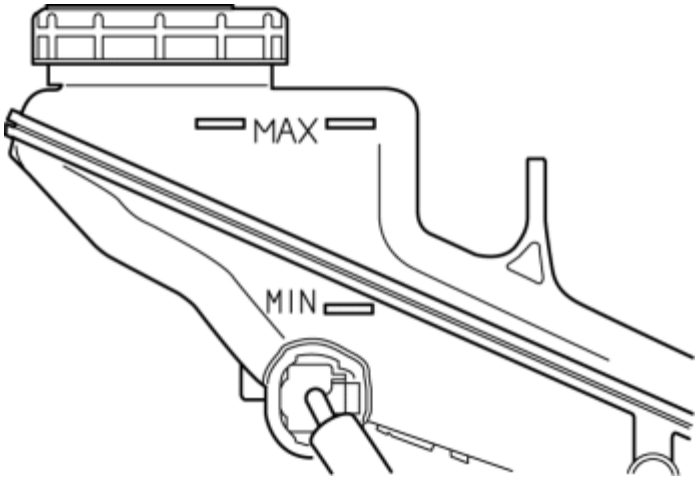

2. Verify that there is no clutch fluid leakage. (See **CLUTCH FLUID LEAKAGE INSPECTION [C66M-R]**.)

Pedal Height Inspection

1. Perform “Pedal Inspection Preparation”. (See **Pedal Inspection Preparation**.)
2. Measure the pedal height with the clutch pedal released as shown in the figure.

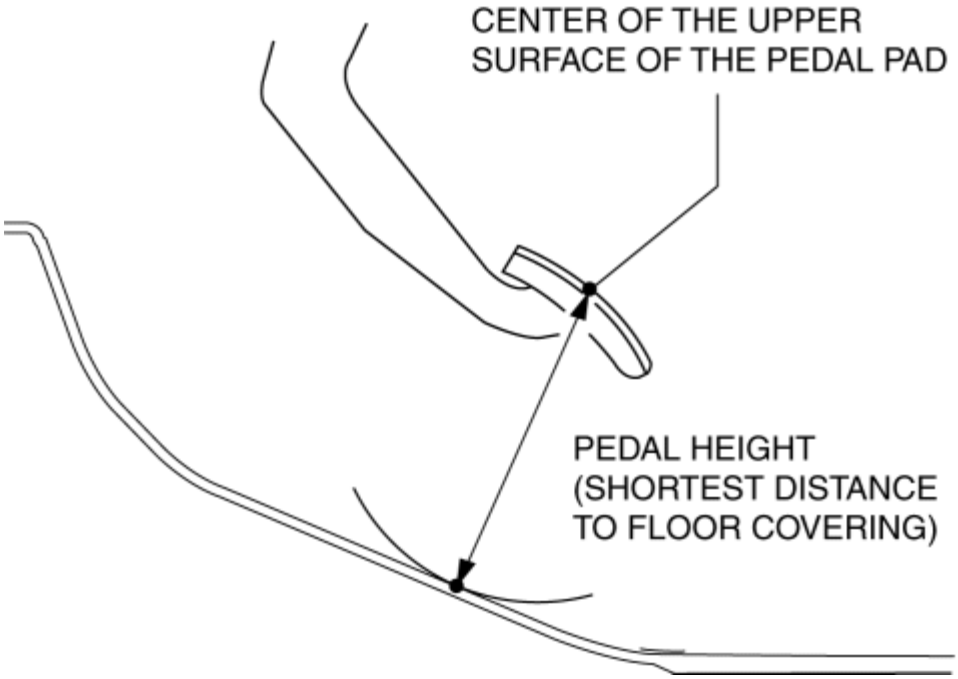

Pedal height (reference value)

- 156 mm {6.14 in}
- If it is not the specification, replace the clutch pedal. (See **CLUTCH PEDAL REMOVAL/INSTALLATION [C66M-R]**.)

Pedal Free Play Inspection

1. Perform “Pedal Inspection Preparation”. (See **Pedal Inspection Preparation**.)

2. Depress the clutch pedal by hand until clutch resistance is felt, and measure the pedal free play as shown in the figure.

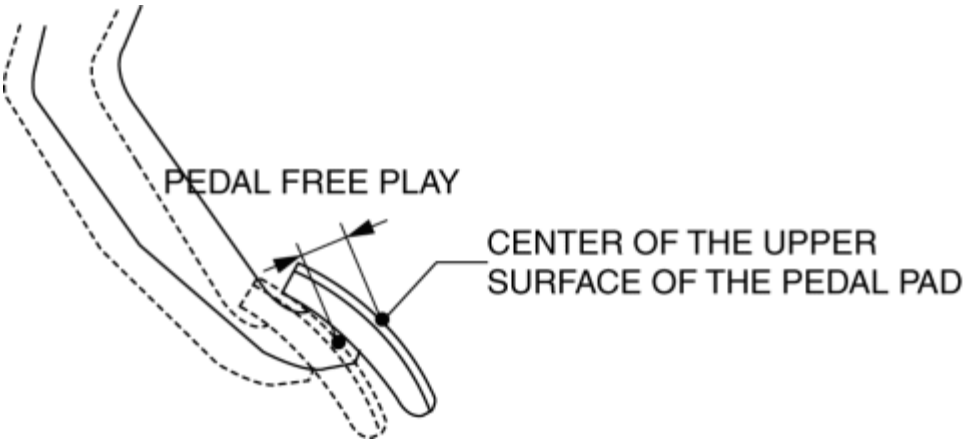

Pedal free play (reference value)

- 10 mm {0.39 in} or less
- If it exceeds the specification, replace the clutch pedal. (See **CLUTCH PEDAL REMOVAL/INSTALLATION [C66M-R]**.)

Pedal Full Stroke Inspection

1. Perform “Pedal Inspection Preparation”. (See **Pedal Inspection Preparation**.)

2. Depress the clutch pedal from the released condition to the full depression position, and measure the pedal full stroke as shown in the figure.

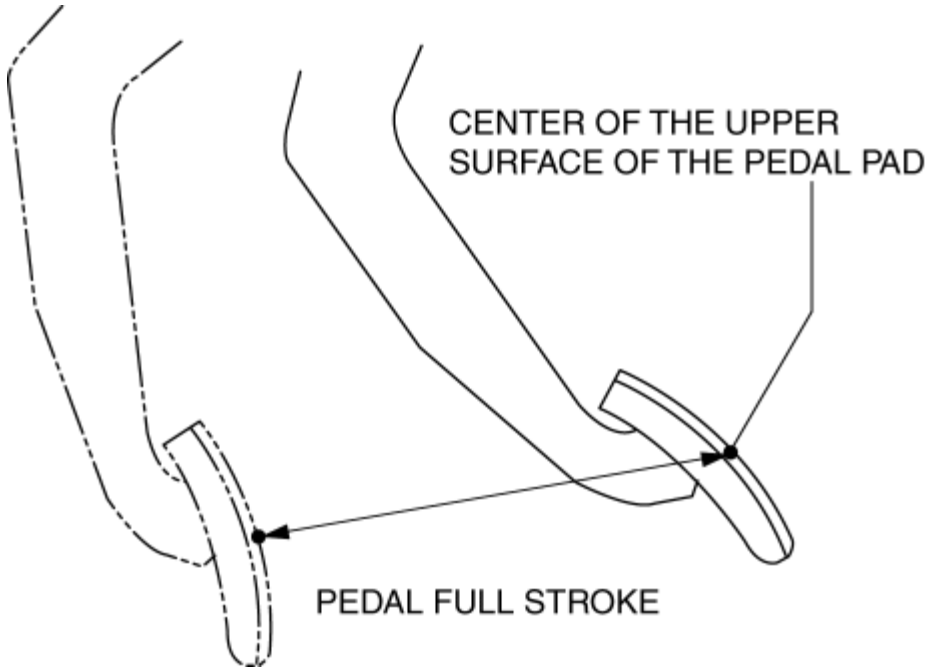

Pedal full stroke (reference value)

- 141 mm {5.55 in}
- If it is not the specification, replace the clutch pedal. (See **CLUTCH PEDAL REMOVAL/INSTALLATION [C66M-R]**.)

Clutch Disengagement Point Inspection

WARNING:

- When performing the following procedure, make sure that the area around the vehicle is free of people or objects as the vehicle might move suddenly.

1. Perform “Pedal Inspection Preparation”. (See **Pedal Inspection Preparation**.)

2. Verify that the pedal height is normal. (See **Pedal Height Inspection**.)

3. Verify that the pedal free play is normal. (See **Pedal Free Play Inspection**.)

4. Verify that the pedal full stroke is normal. (See **Pedal Full Stroke Inspection**.)

5. Apply the parking brake and fix the front and rear wheels with wheel chocks.

6. Start the engine.

7. With the clutch pedal depressed, move the shift lever to the position just before engaging the reverse gear. (Do not shift completely to reverse position)

8. Gradually release the clutch pedal and then hold it at the point where the sound of gear-

grinding begins (clutch disengagement point).

9. Measure distance A as shown in the figure when the clutch pedal is at the clutch disengagement point.

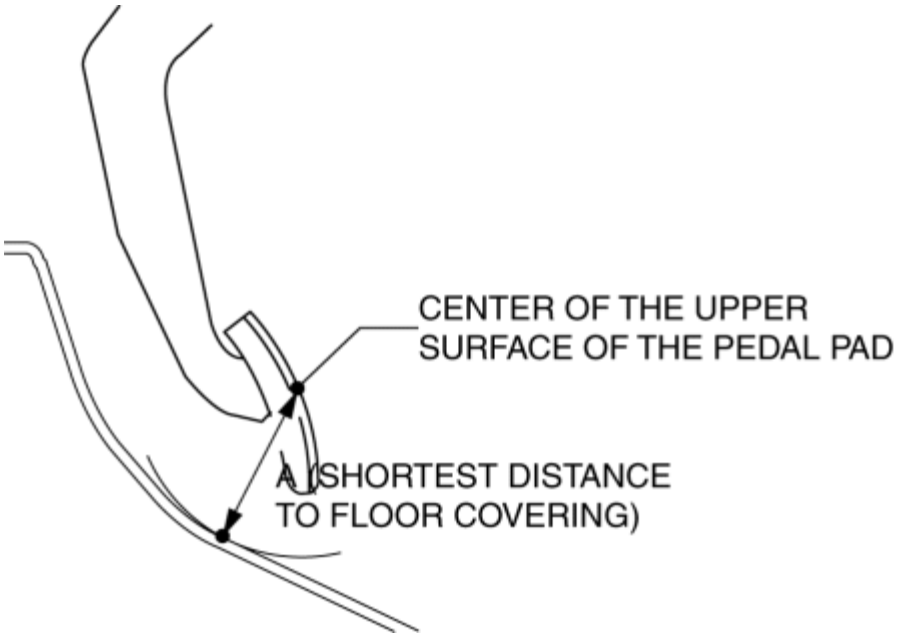

Distance A (reference value)

- 63 mm {2.5 in} or more
- If it is less than the specification, bleed the air from the clutch system. (See **CLUTCH FLUID REPLACEMENT/AIR BLEEDING [C66M-R]**.)

2014 - Mazda3 - Transmission/Transaxle

CLUTCH PEDAL REMOVAL/INSTALLATION [C66M-R]

CAUTION:

- Do not allow clutch fluid to get on a painted surface. Clutch fluid contains properties which can dissolve the paint. If clutch fluid gets on a painted surface, rinse with water immediately, then wipe the area dry.

Removal

1. Disconnect the negative battery cable. (See **NEGATIVE BATTERY CABLE DISCONNECTION/CONNECTION [SKYACTIV-G 2.0, SKYACTIV-G 2.5]**.)

2. Remove the air cleaner component. (ex: air cleaner, air hose) (See **INTAKE-AIR SYSTEM REMOVAL/INSTALLATION [SKYACTIV-G 2.0, SKYACTIV-G 2.5]**.)

3. Remove the battery component. (ex: battery, battery tray and PCM component) (See **BATTERY REMOVAL/INSTALLATION [SKYACTIV-G 2.0, SKYACTIV-G 2.5]**.)

4. Remove the clutch pedal position switch. (See **CLUTCH PEDAL POSITION SWITCH REMOVAL/INSTALLATION [C66M-R]**.)

5. Remove the starter interlock switch. (See **STARTER INTERLOCK SWITCH REMOVAL/INSTALLATION [C66M-R]**.)

6. Remove the joint cover. (See **STEERING WHEEL AND COLUMN REMOVAL/INSTALLATION**.)

7. Disconnect the clutch reserve hose from clutch master cylinder, and plug it to avoid clutch fluid leakage. (See **CLUTCH PIPE AND HOSE REMOVAL/INSTALLATION [C66M-R]**.)

8. Disconnect the clutch pipe and hose No.1 from clutch master cylinder, and plug it to avoid clutch fluid leakage. (See **CLUTCH PIPE AND HOSE REMOVAL/INSTALLATION [C66M-R]**.)

9. Remove in the order indicated in the table.

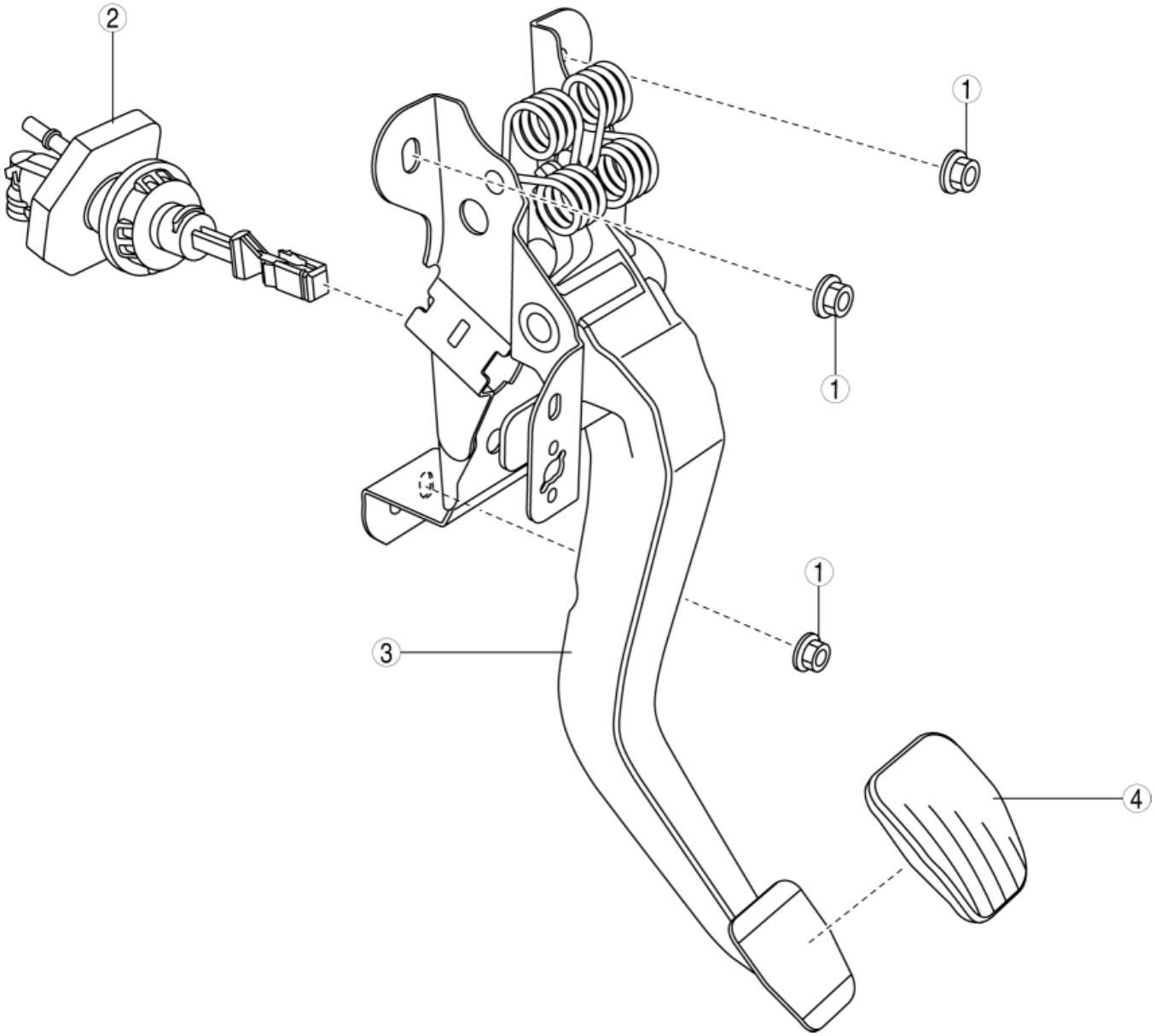

1	Nut
2	Clutch master cylinder (See **CLUTCH MASTER CYLINDER REMOVAL/INSTALLATION [C66M-R]**.)
3	Clutch pedal
4	Pedal pad

Installation

1. Install in the order indicated in the table.

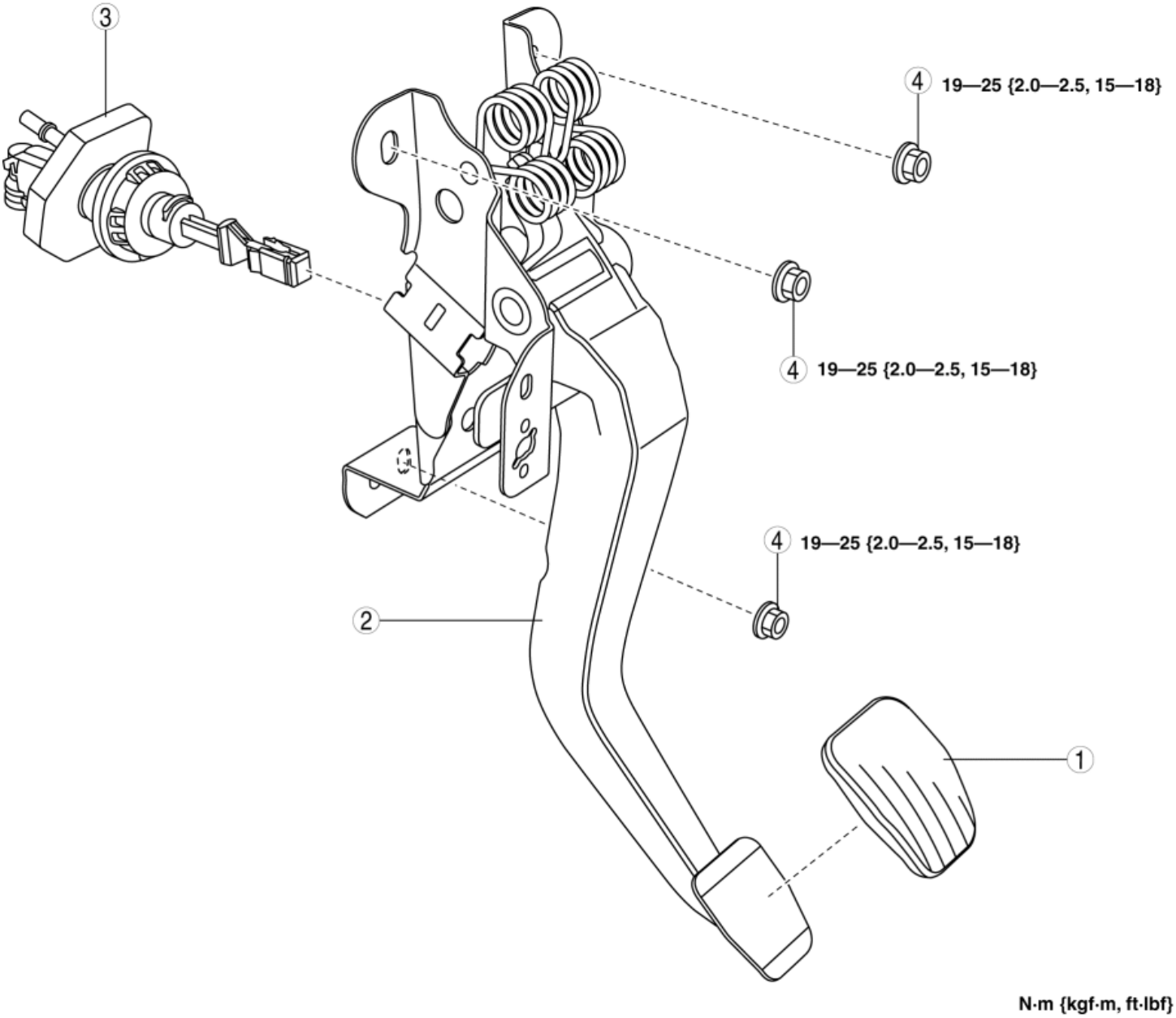

1	Pedal pad
2	Clutch pedal
3	Clutch master cylinder (See **CLUTCH MASTER CYLINDER REMOVAL/INSTALLATION [C66M-R]**.)
4	Nut

2. Connect the clutch pipe and hose No.1 to clutch master cylinder. (See **CLUTCH PIPE AND HOSE REMOVAL/INSTALLATION [C66M-R]**.)

3. Connect the clutch reserve hose to clutch master cylinder. (See **CLUTCH PIPE AND HOSE REMOVAL/INSTALLATION [C66M-R]**.)

4. Install the joint cover. (See **STEERING WHEEL AND COLUMN REMOVAL/INSTALLATION**.)

5. Bleed the air from the clutch system. (See **CLUTCH FLUID REPLACEMENT/AIR BLEEDING [C66M-R]**.)

6. Inspect the clutch pedal height, and verify that the clutch pedal is installed correctly. (See **CLUTCH PEDAL INSPECTION [C66M-R]**.)

7. Install a new starter interlock switch. (See **STARTER INTERLOCK SWITCH REMOVAL/INSTALLATION [C66M-R]**.)

8. Install a new clutch pedal position switch. (See **CLUTCH PEDAL POSITION SWITCH REMOVAL/INSTALLATION [C66M-R]**.)

9. Install the battery component. (ex: battery, battery tray and PCM component) (See **BATTERY REMOVAL/INSTALLATION [SKYACTIV-G 2.0, SKYACTIV-G 2.5]**.)

10. Install the air cleaner component. (ex: air cleaner, air hose) (See **INTAKE-AIR SYSTEM REMOVAL/INSTALLATION [SKYACTIV-G 2.0, SKYACTIV-G 2.5]**.)

11. Connect the negative battery cable. (See **NEGATIVE BATTERY CABLE DISCONNECTION/CONNECTION [SKYACTIV-G 2.0, SKYACTIV-G 2.5]**.)

12. Fully depress the clutch pedal, and verify that the engine starts.

2014 - Mazda3 - Transmission/Transaxle

CLUTCH PEDAL POSITION SWITCH REMOVAL/INSTALLATION [C66M-R]

1. Disconnect the negative battery cable. (See **NEGATIVE BATTERY CABLE DISCONNECTION/CONNECTION [SKYACTIV-G 2.0, SKYACTIV-G 2.5]**.)

2. Disconnect the clutch pedal position switch connector.

3. Rotate the clutch pedal position switch 45° counterclockwise.

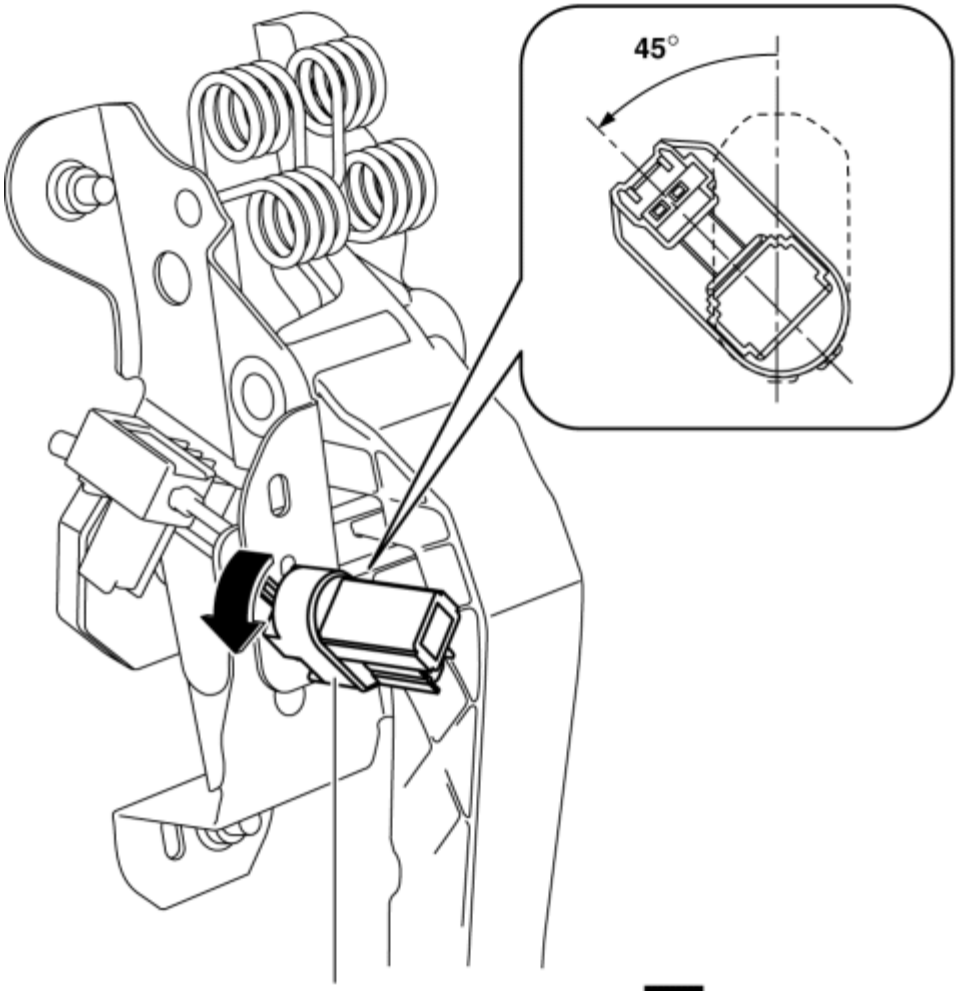

CLUTCH PEDAL POSITION SWITCH R

4. Remove the clutch pedal position switch from the clutch pedal.

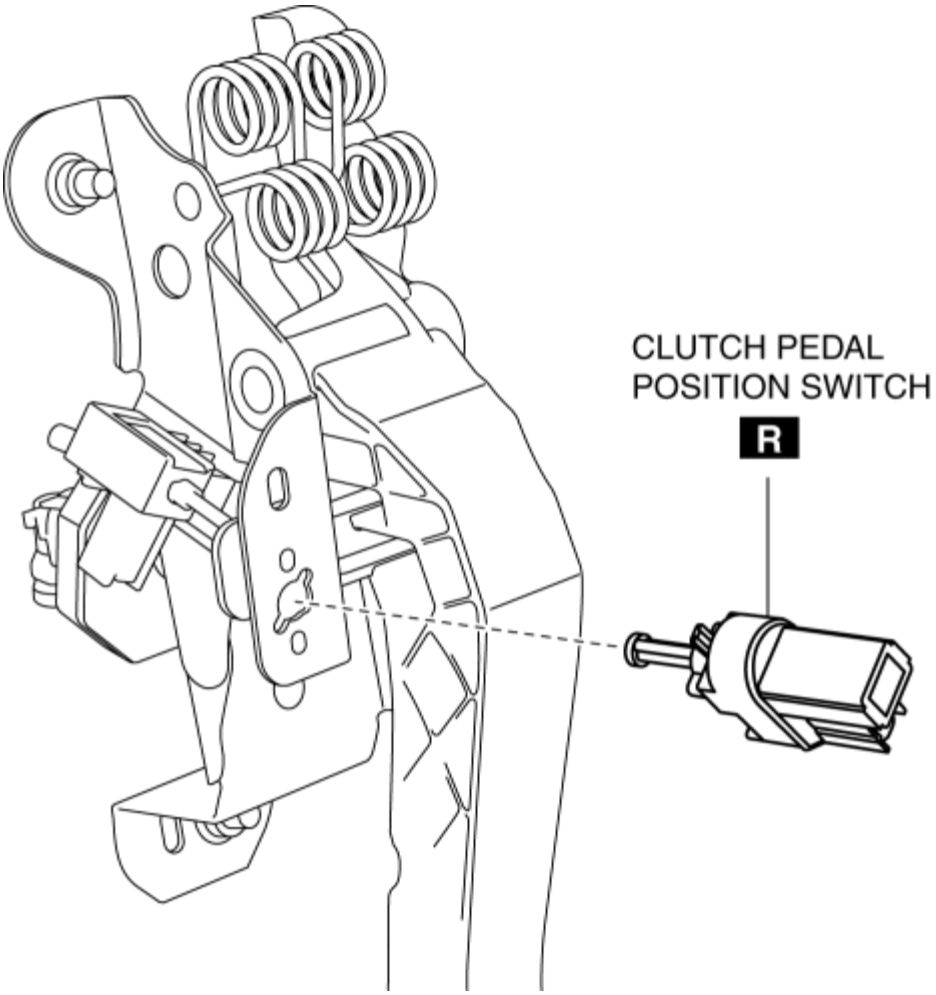

5. Insert a new clutch pedal position switch into the clutch pedal hole until the switch stops.

6. Rotate the clutch pedal position switch 45° clockwise.

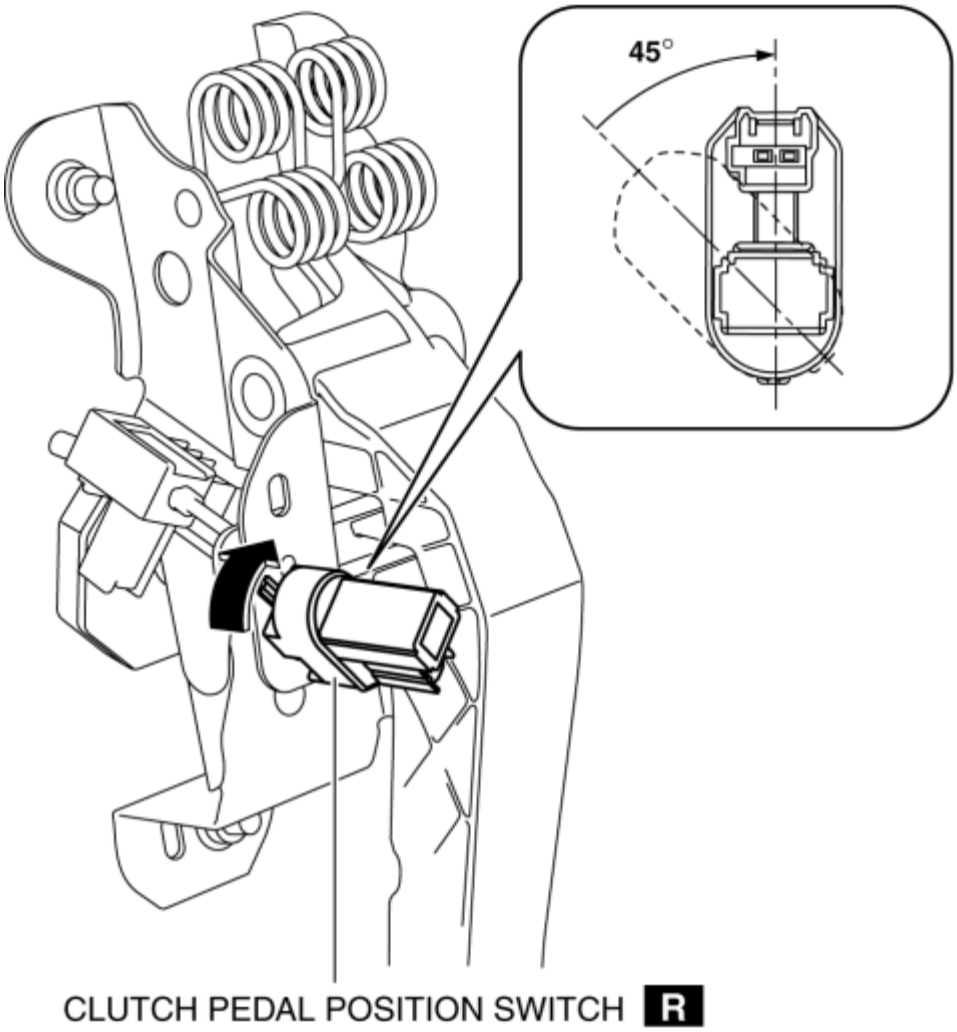

7. Verify that the clutch pedal position switch is locked securely.

8. Install in the reverse order of removal.

2014 - Mazda3 - Transmission/Transaxle

STARTER INTERLOCK SWITCH REMOVAL/INSTALLATION [C66M-R]

1. Disconnect the negative battery cable. (See **NEGATIVE BATTERY CABLE DISCONNECTION/CONNECTION [SKYACTIV-G 2.0, SKYACTIV-G 2.5]**.)

2. Disconnect the starter interlock switch connector.

3. Remove the starter interlock switch using the following procedure:

   a. Detach hook A in the direction of the arrow shown in the figure.

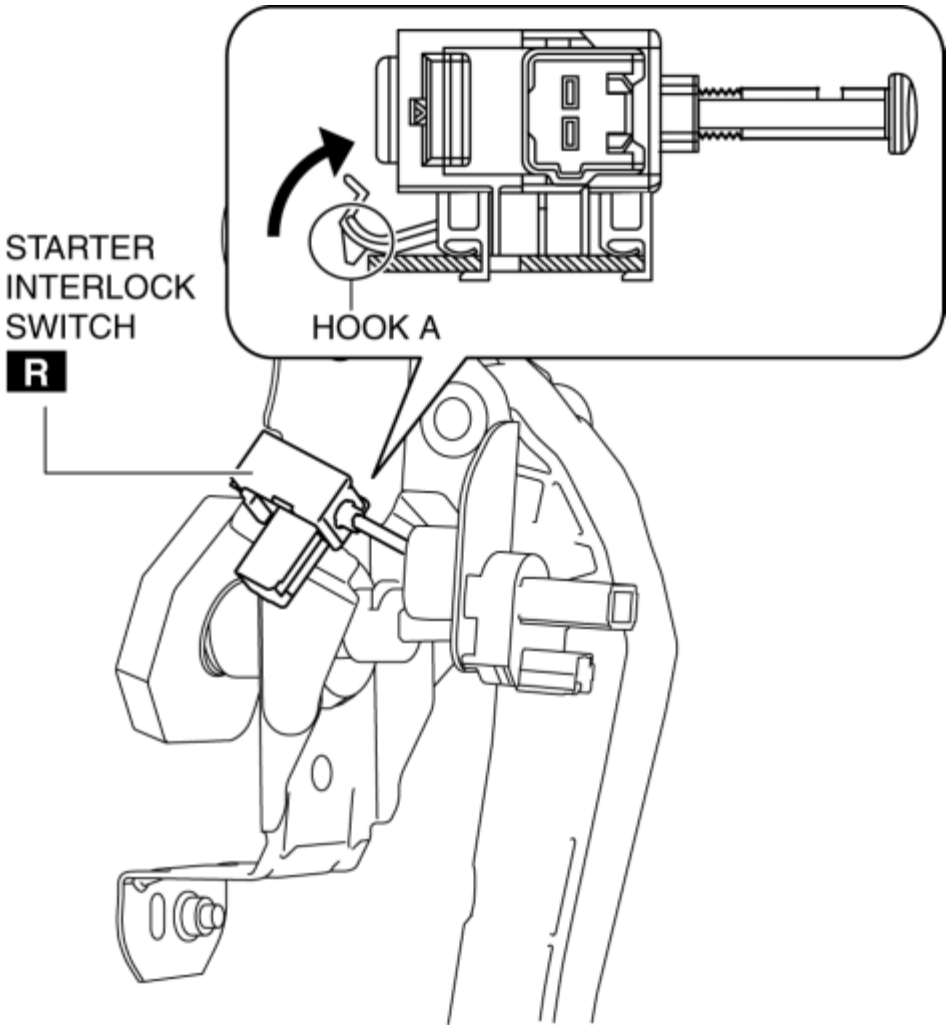

   b. Slide the starter interlock switch in the direction of the arrow shown in the figure.

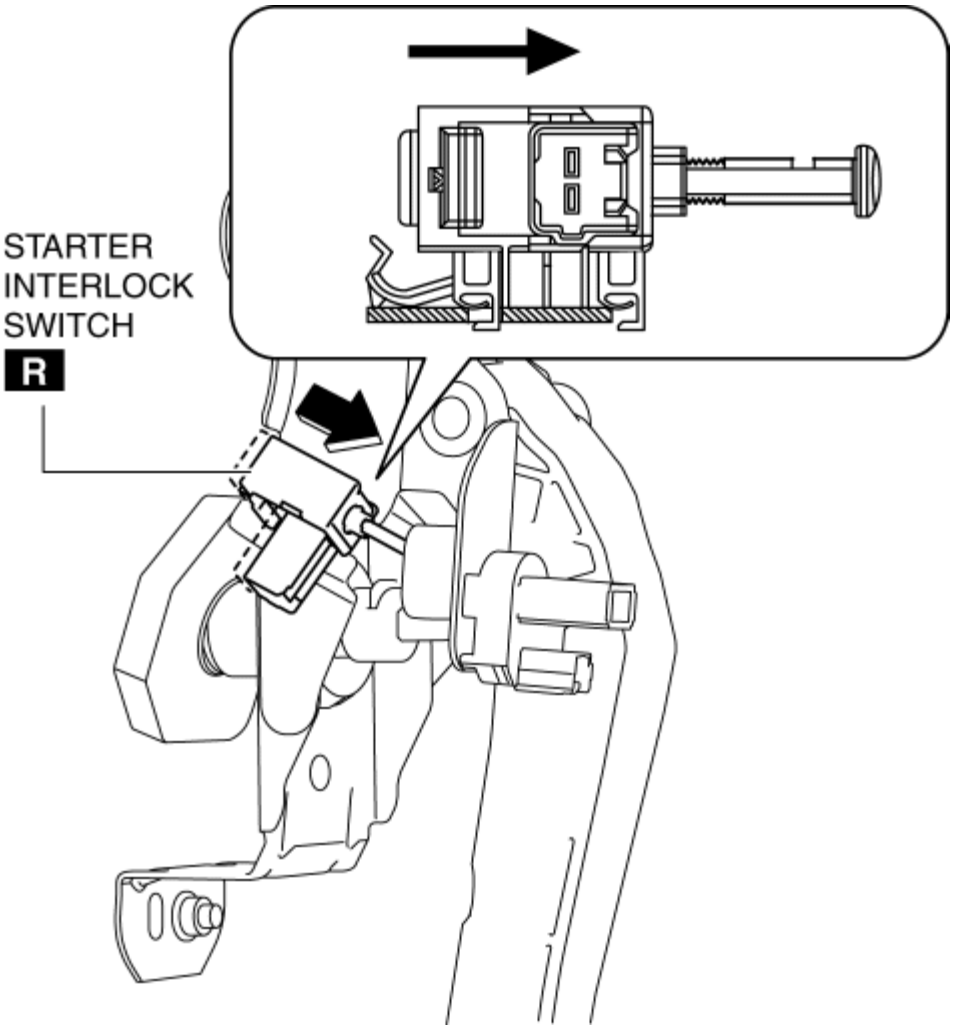

c. Remove the starter interlock switch from the clutch pedal.

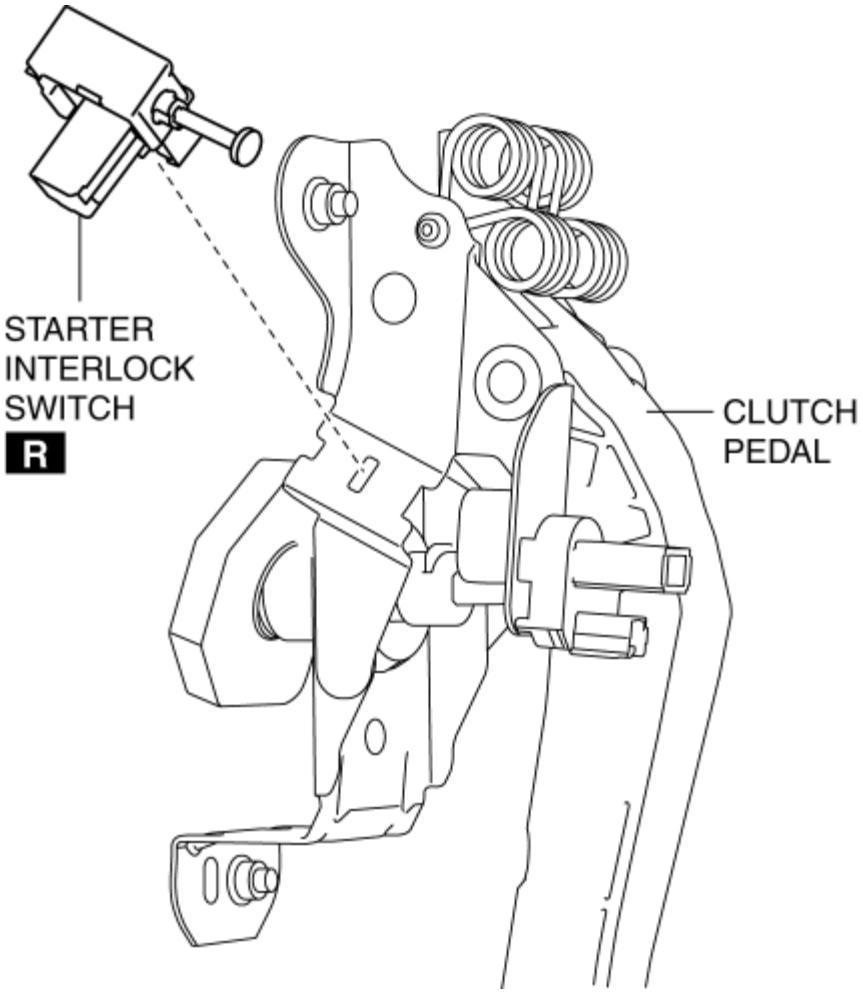

4. Install the starter interlock switch using the following procedure:

    a. Insert hook B of a new starter interlock switch into the clutch pedal hole.

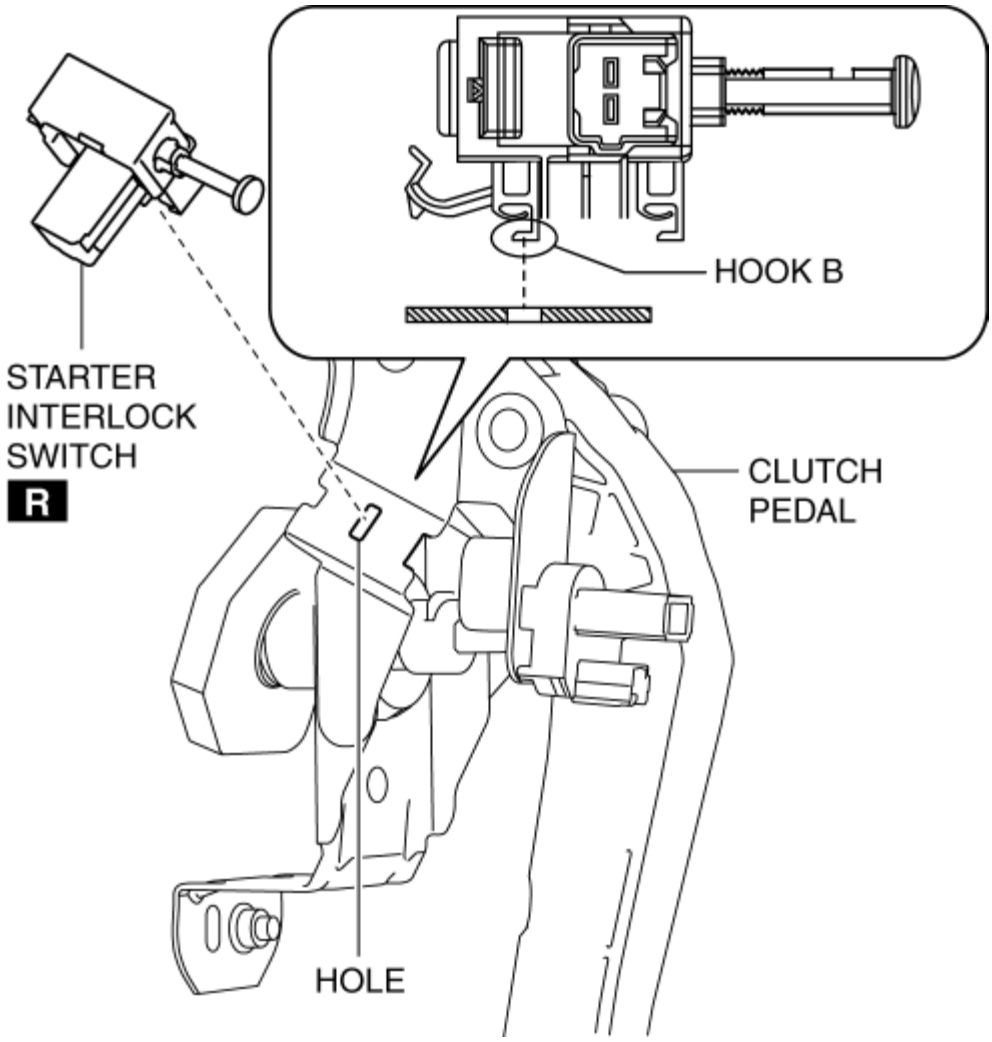

b. While pressing the starter interlock switch against the clutch pedal, slide the starter interlock switch until hook A is locked in the direction of the arrow shown in the figure.

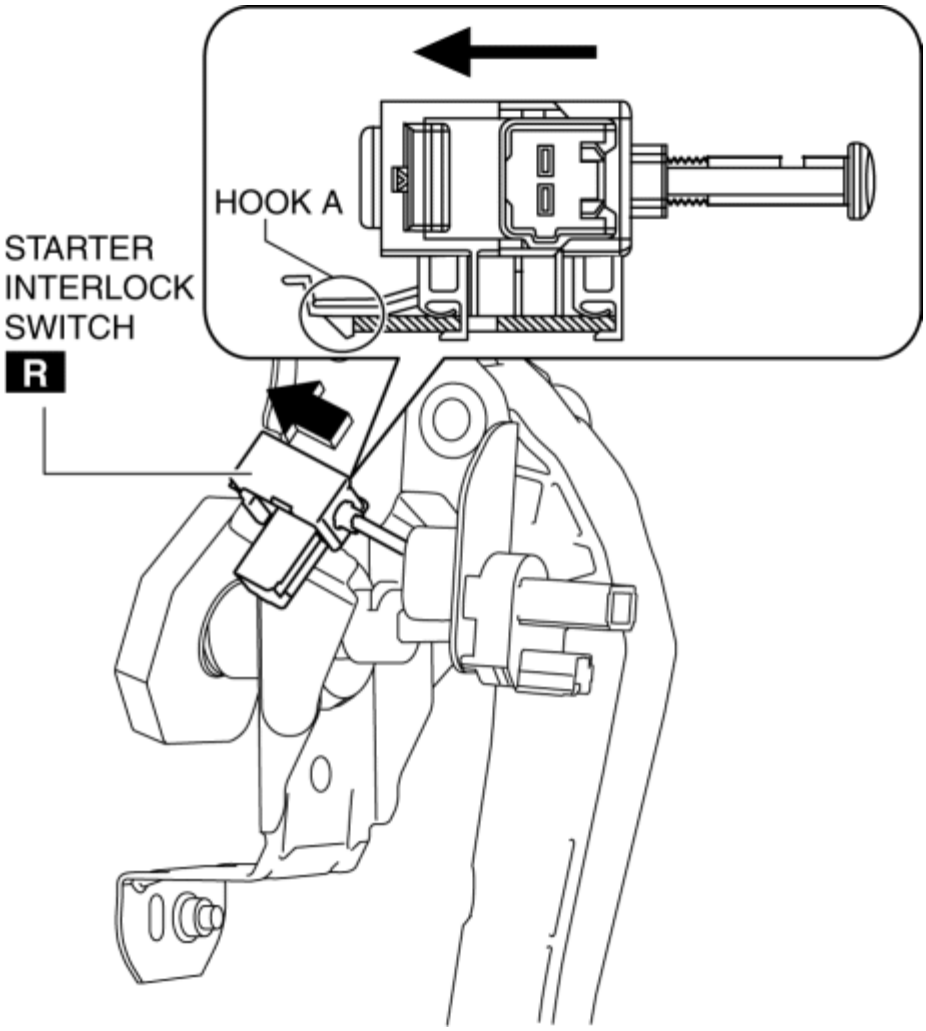

5. Fully depress the clutch pedal in the direction of arrow, and verify that a click sound from the starter interlock switch is heard.

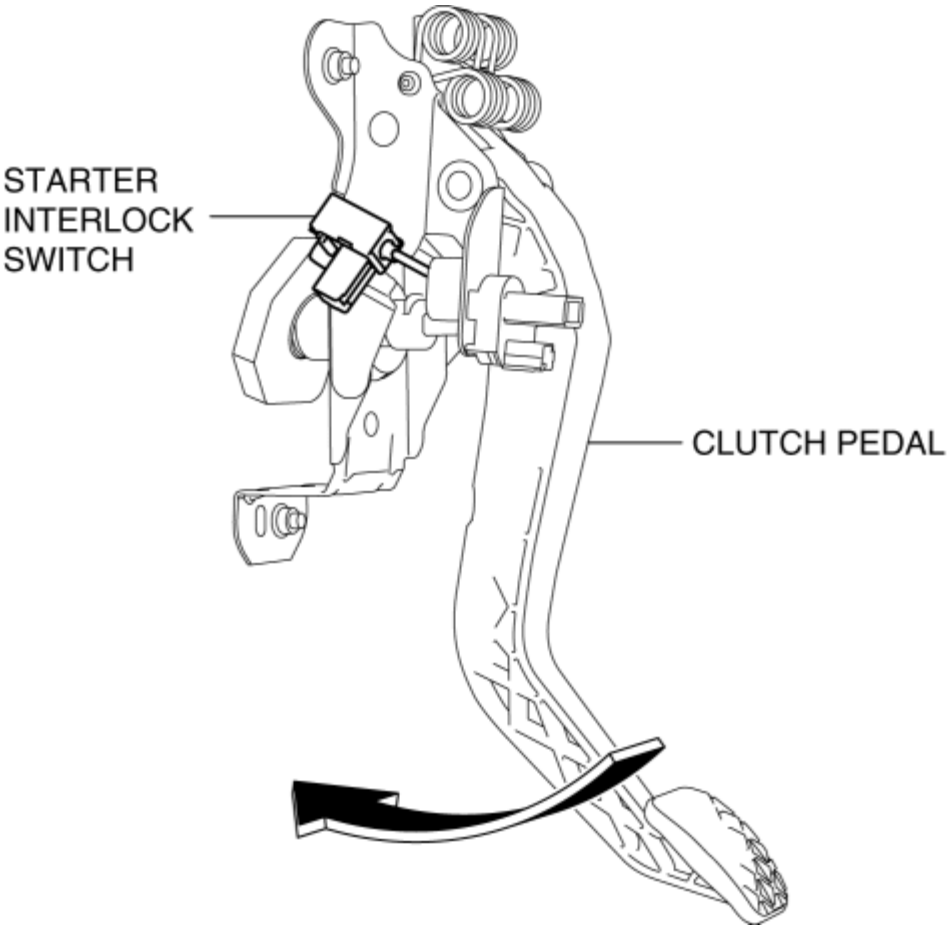

6. Install in the reverse order of removal.

7. Fully depress the clutch pedal, and verify that the engine starts.

2014 - Mazda3 - Transmission/Transaxle

CLUTCH MASTER CYLINDER REMOVAL/INSTALLATION [C66M-R]

CAUTION:

- Do not allow clutch fluid to get on a painted surface. Clutch fluid contains properties which can dissolve the paint. If clutch fluid gets on a painted surface, rinse with water immediately, then wipe the area dry.

Removal

1. Disconnect the negative battery cable. (See **NEGATIVE BATTERY CABLE DISCONNECTION/CONNECTION [SKYACTIV-G 2.0, SKYACTIV-G 2.5]**.)

2. Remove the air cleaner component. (ex: air cleaner, air hose) (See **INTAKE-AIR SYSTEM REMOVAL/INSTALLATION [SKYACTIV-G 2.0, SKYACTIV-G 2.5]**.)

3. Remove the battery component. (ex: battery, battery tray and PCM component) (See **BATTERY REMOVAL/INSTALLATION [SKYACTIV-G 2.0, SKYACTIV-G 2.5]**.)

4. Remove the clutch pedal position switch. (See **CLUTCH PEDAL POSITION SWITCH REMOVAL/INSTALLATION [C66M-R]**.)

5. Remove the starter interlock switch. (See **STARTER INTERLOCK SWITCH REMOVAL/INSTALLATION [C66M-R]**.)

6. Remove the joint cover. (See **STEERING WHEEL AND COLUMN REMOVAL/INSTALLATION**.)

7. Disconnect the clutch reserve hose from clutch master cylinder, and plug it to avoid clutch fluid leakage. (See **CLUTCH PIPE AND HOSE REMOVAL/INSTALLATION [C66M-R]**.)

8. Disconnect the clutch pipe and hose No.1 from clutch master cylinder, and plug it to avoid clutch fluid leakage. (See **CLUTCH PIPE AND HOSE REMOVAL/INSTALLATION [C66M-R]**.)

9. Remove the clutch master cylinder using the following procedure:

    a. Remove the clutch pedal and the clutch master cylinder as a single unit.

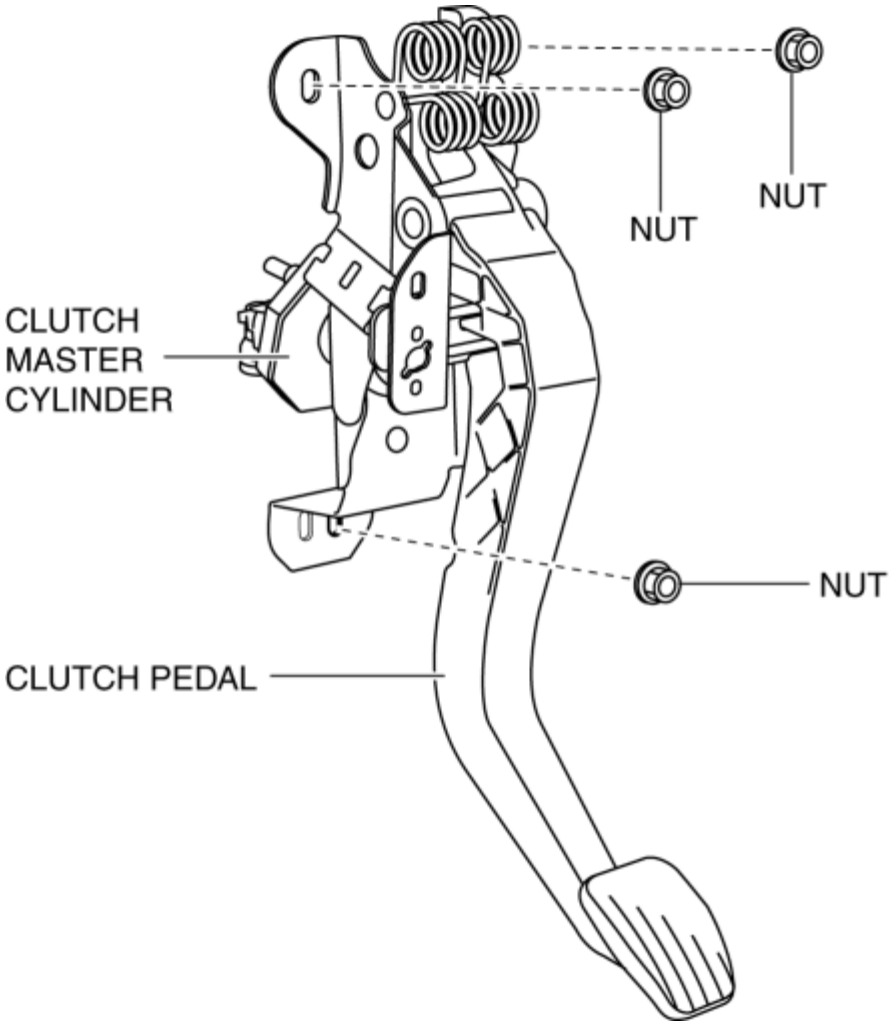

b. Rotate the clutch master cylinder in the direction of the arrow shown in the figure to disconnect the clutch master cylinder (body) and clutch pedal.

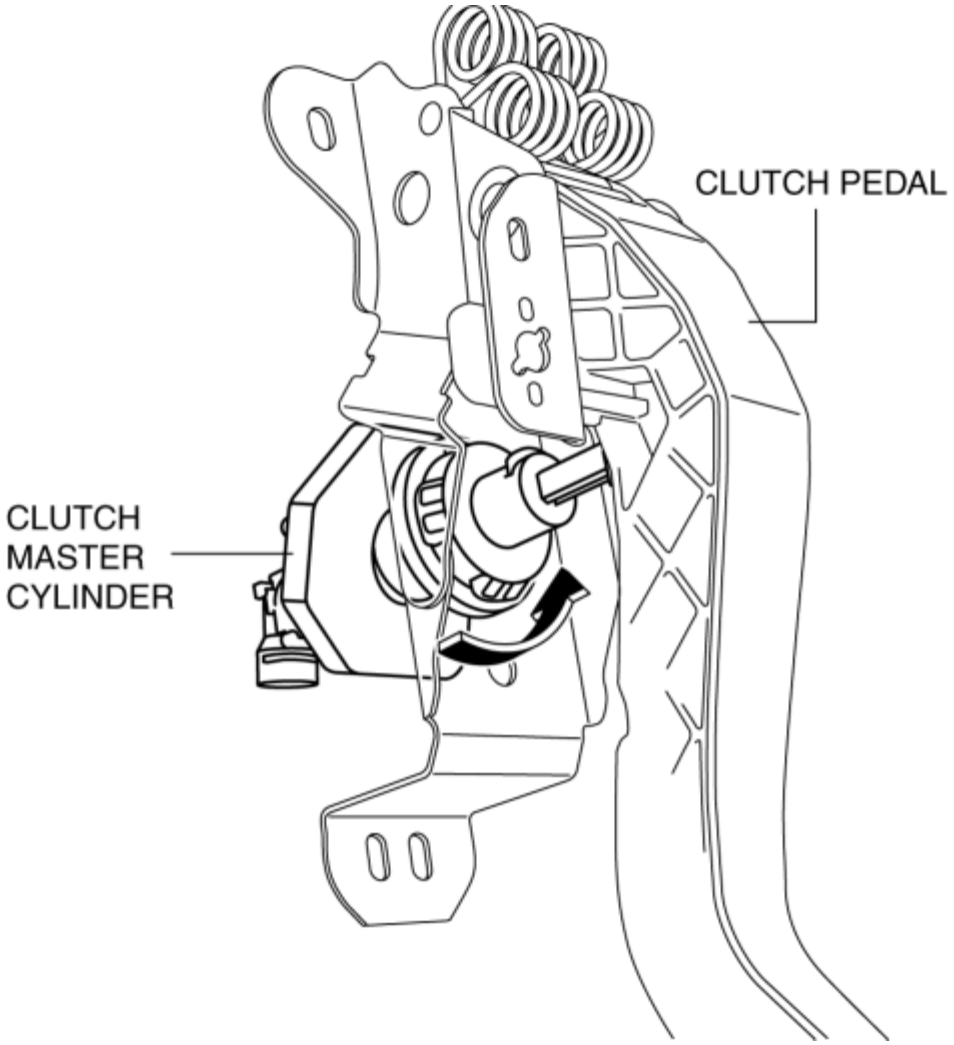

c. Disengage the tabs of the push rod and remove the master cylinder.

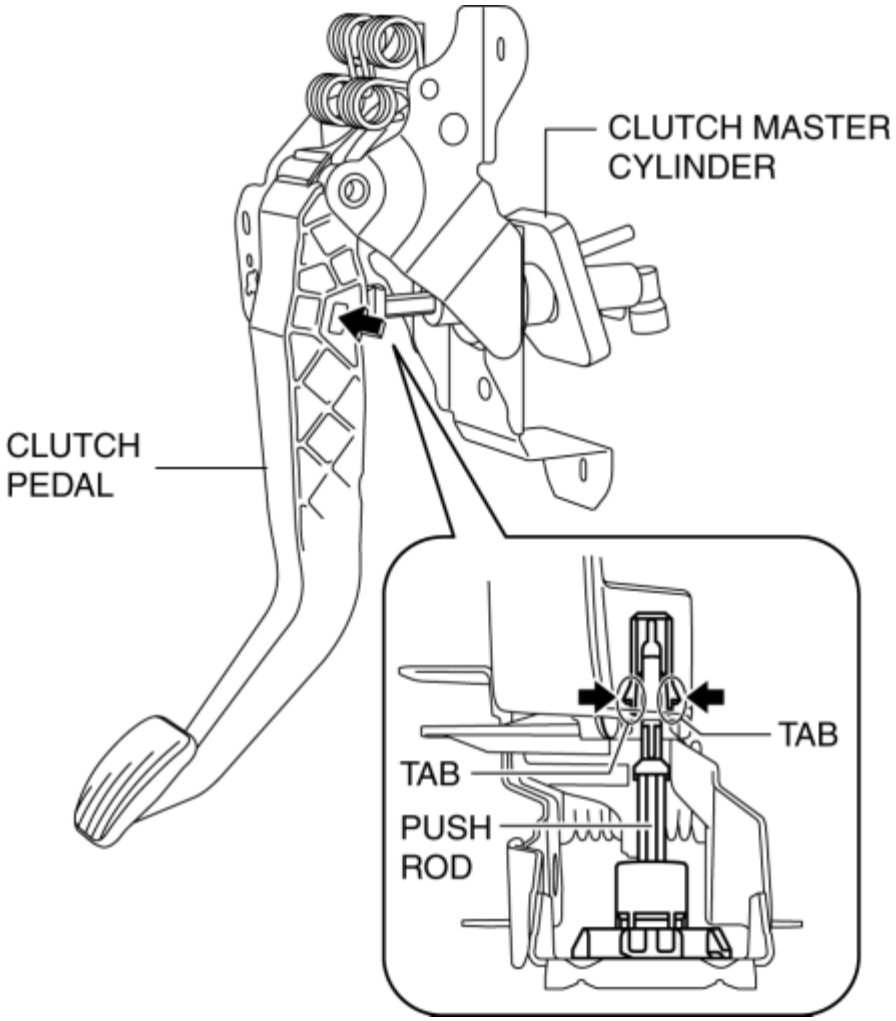

Installation

1. Install the clutch master cylinder using the following procedure:

    a. Engage the tabs of the push rod with the clutch pedal as shown in the figure.

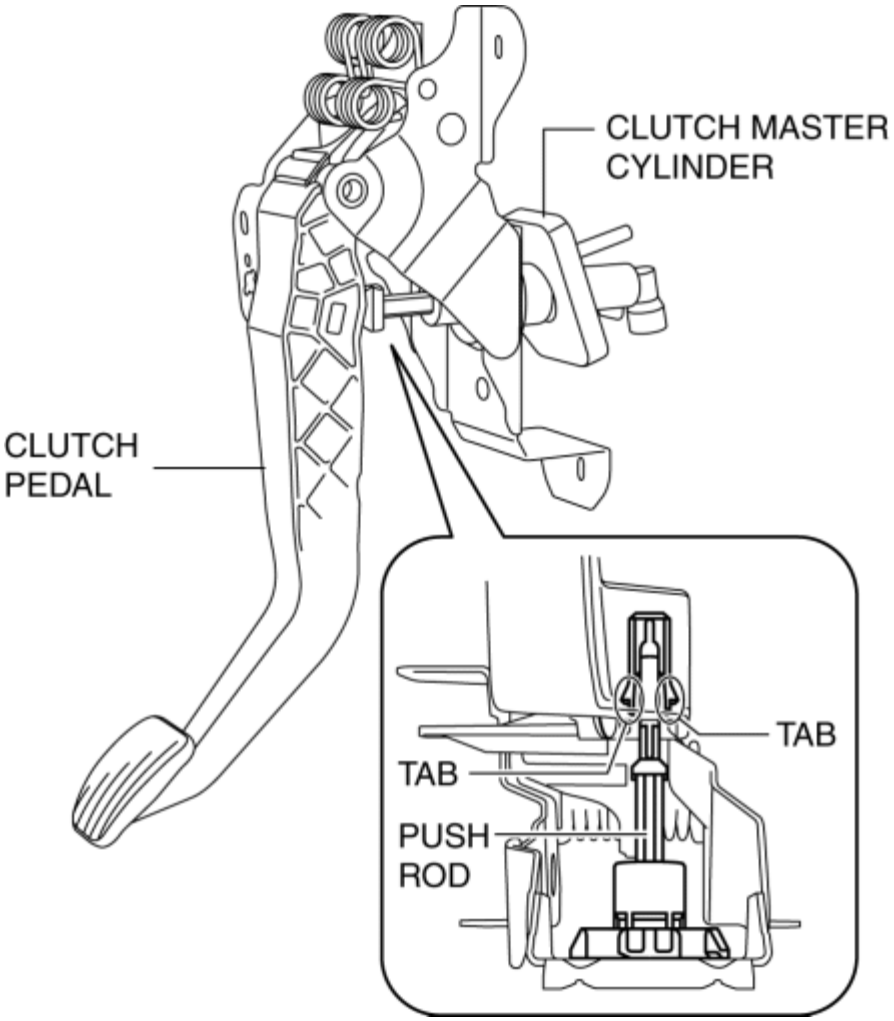

b. Rotate the clutch master cylinder in the direction shown until it stops.

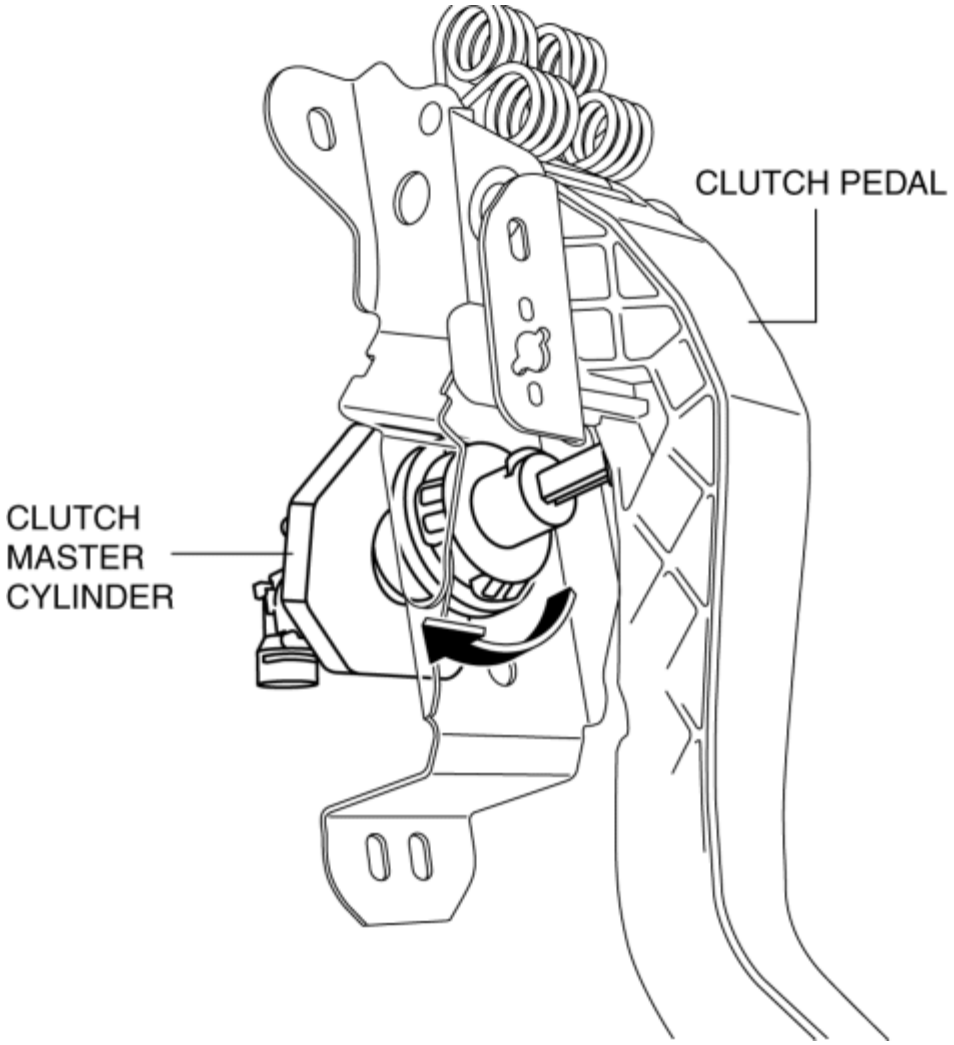

c. Install the clutch pedal and the clutch master cylinder as a single unit.

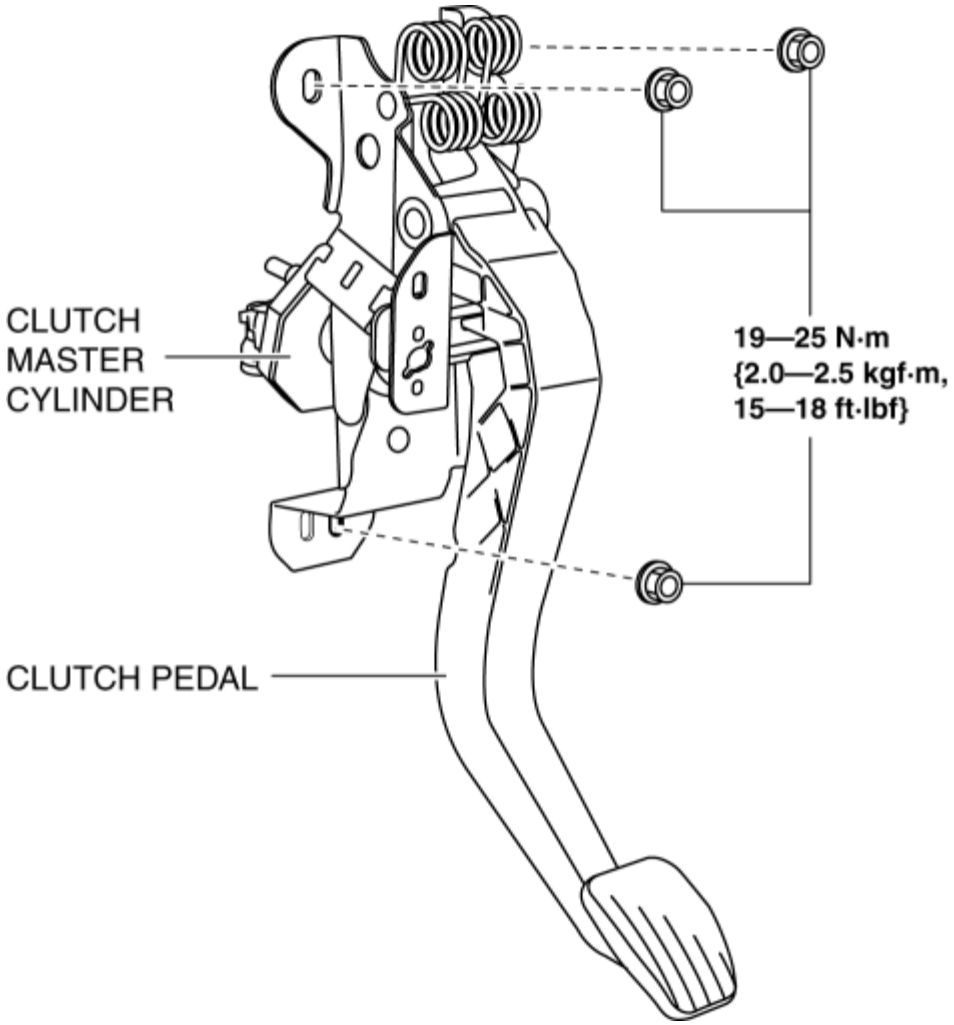

2. Connect the clutch pipe and hose No.1 to clutch master cylinder. (See **CLUTCH PIPE AND HOSE REMOVAL/INSTALLATION [C66M-R]**.)

3. Connect the clutch reserve hose to clutch master cylinder. (See **CLUTCH PIPE AND HOSE REMOVAL/INSTALLATION [C66M-R]**.)

4. Install the joint cover. (See **STEERING WHEEL AND COLUMN REMOVAL/INSTALLATION**.)

5. Bleed the air from the clutch system. (See **CLUTCH FLUID REPLACEMENT/AIR BLEEDING [C66M-R]**.)

6. Inspect the clutch pedal height, and verify that the clutch pedal is installed correctly. (See **CLUTCH PEDAL INSPECTION [C66M-R]**.)

7. Install a new starter interlock switch. (See **STARTER INTERLOCK SWITCH REMOVAL/INSTALLATION [C66M-R]**.)

8. Install a new clutch pedal position switch. (See **CLUTCH PEDAL POSITION SWITCH REMOVAL/INSTALLATION [C66M-R]**.)

9. Install the battery component. (ex: battery, battery tray and PCM component) (See **BATTERY REMOVAL/INSTALLATION [SKYACTIV-G 2.0, SKYACTIV-G 2.5]**.)

10. Install the air cleaner component. (ex: air cleaner, air hose) (See **INTAKE-AIR SYSTEM REMOVAL/INSTALLATION [SKYACTIV-G 2.0, SKYACTIV-G 2.5]**.)

11. Connect the negative battery cable. (See **NEGATIVE BATTERY CABLE DISCONNECTION/CONNECTION [SKYACTIV-G 2.0, SKYACTIV-G 2.5]**.)

12. Fully depress the clutch pedal, and verify that the engine starts.

2014 - Mazda3 - Transmission/Transaxle

CLUTCH PIPE AND HOSE REMOVAL/INSTALLATION [C66M-R]

CAUTION:

- Do not allow clutch fluid to get on a painted surface. Clutch fluid contains properties which can dissolve the paint. If clutch fluid gets on a painted surface, rinse with water immediately, then wipe the area dry.

1. Disconnect the negative battery cable. (See **NEGATIVE BATTERY CABLE DISCONNECTION/CONNECTION [SKYACTIV-G 2.0, SKYACTIV-G 2.5]**.)

2. Remove the air cleaner component. (ex: air cleaner, air hose) (See **INTAKE-AIR SYSTEM REMOVAL/INSTALLATION [SKYACTIV-G 2.0, SKYACTIV-G 2.5]**.)

3. Remove the battery component. (ex: battery, battery tray and PCM component) (See **BATTERY REMOVAL/INSTALLATION [SKYACTIV-G 2.0, SKYACTIV-G 2.5]**.)

4. Remove the clutch reserve hose while pressing the point indicated by the arrow in the figure.

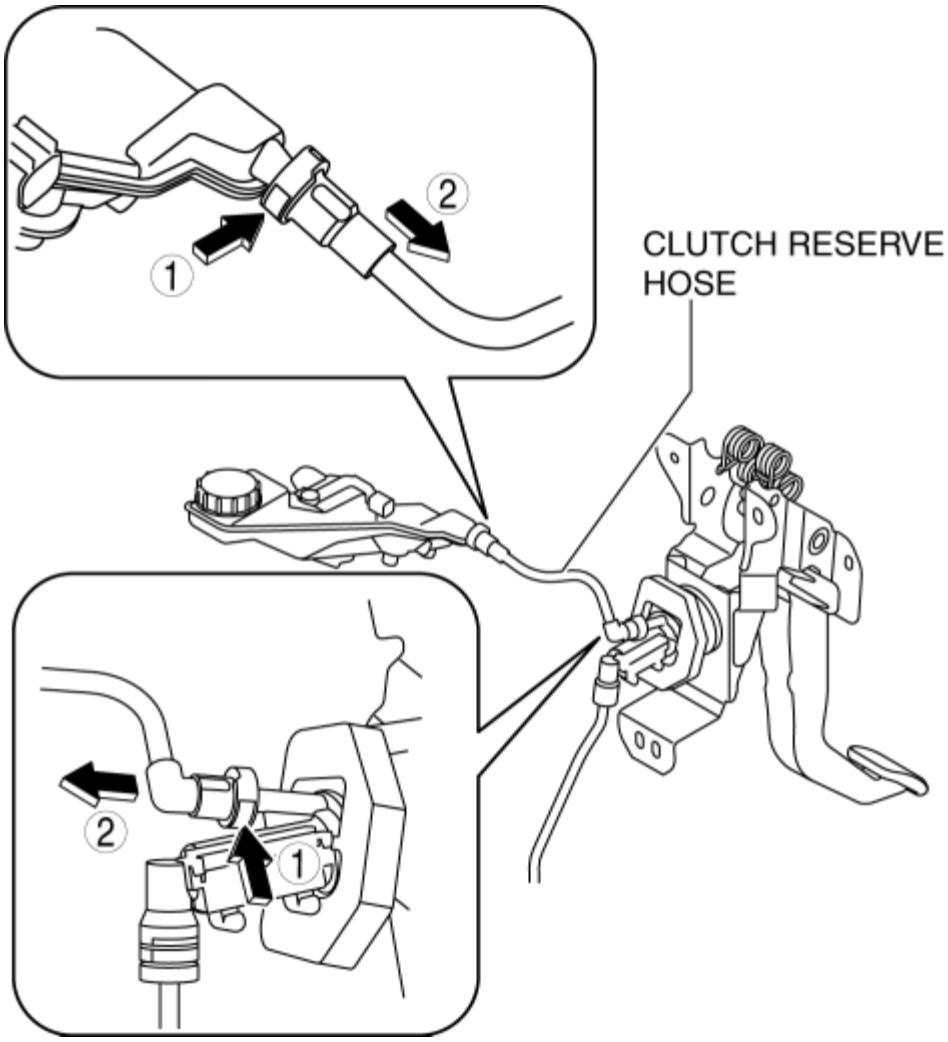

5. Remove the clutch pipe and hose using the following procedure:

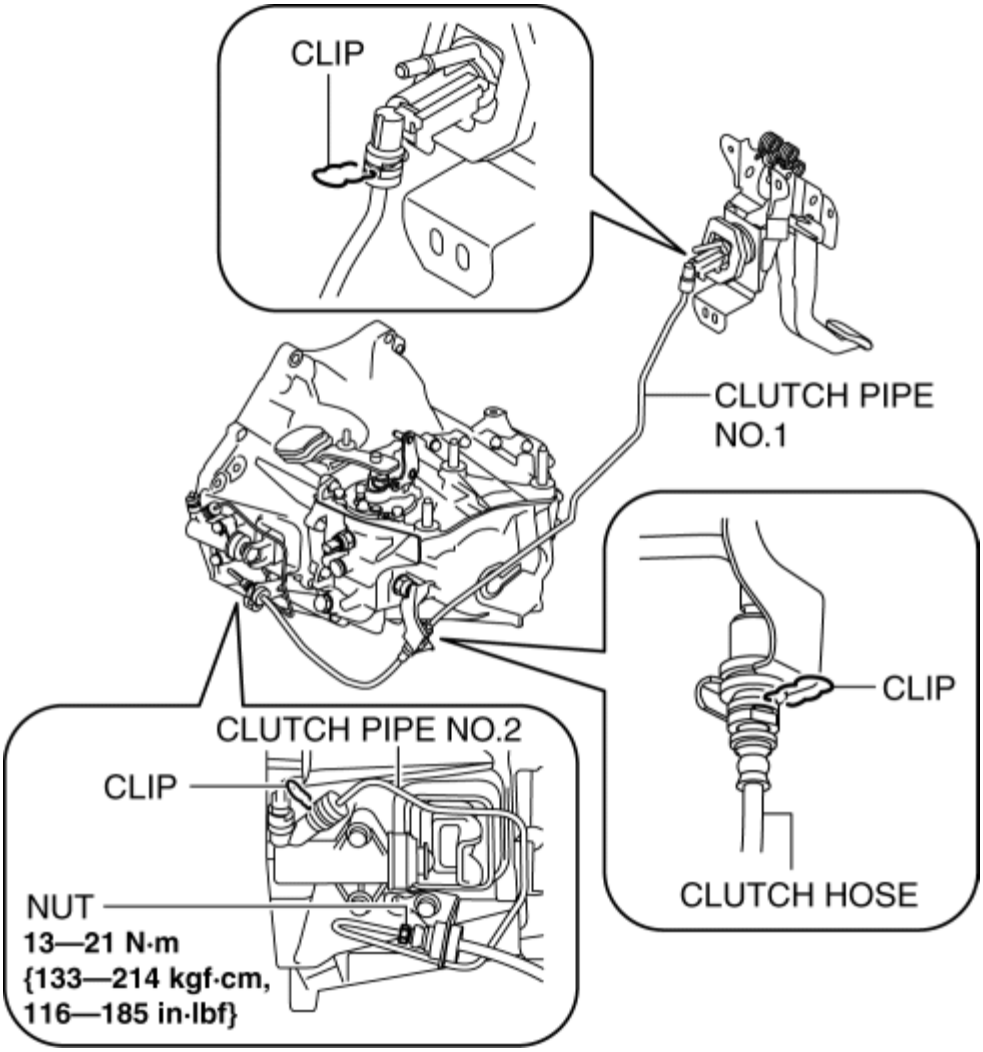

a. Lift the connector clip.

b. Pull out the clutch pipe and hose connector straight to detach it.

c. Remove the clutch pipe and hose.

6. Verify that the seal ring is installed to the clutch pipe and hose connector.

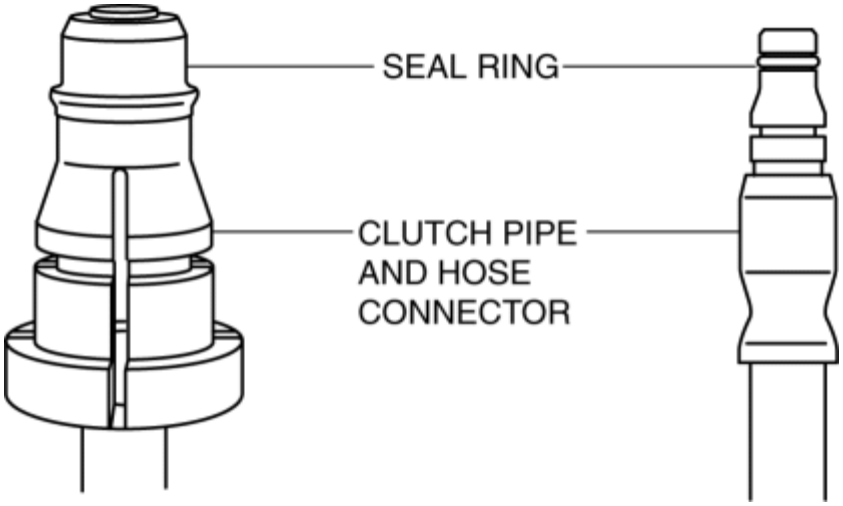

CAUTION:

- When removing the clutch pipe and hose, the seal ring for the clutch pipe and hose could remain on the receiving area of the connector. If the clutch pipe and hose is assembled under this condition, it could cause clutch fluid leakage from the connector.

7. Install the clutch pipe and hose.

   a. Press in the connector clip.

   b. Insert the clutch pipe and hose connector straight.

   NOTE:

   - When the connector is engaged, a click sound is heard.

   c. Install the clutch pipe and hose.

8. Insert the clutch reserve hose connector straight.

NOTE:

- When the connector is engaged, a click sound is heard.

9. Pull each engagement of the clutch reserve hose and clutch pipe and hose, verify that they are engaged, and then press all of them again.

10. Install in the reverse order of removal.

11. Bleed the air from the clutch system. (See **CLUTCH FLUID REPLACEMENT/AIR BLEEDING [C66M-R]**.)

2014 - Mazda3 - Transmission/Transaxle

CLUTCH RELEASE CYLINDER REMOVAL/INSTALLATION [C66M-R]

CAUTION:

- Do not allow clutch fluid to get on a painted surface. Clutch fluid contains properties which can dissolve the paint. If clutch fluid gets on a painted surface, rinse with water immediately, then wipe the area dry.

1. Remove the front under cover No.2. (See **FRONT UNDER COVER No.2 REMOVAL/INSTALLATION**.)

2. Disconnect the clutch pipe and hose No.2 from clutch release cylinder, and plug it to avoid clutch fluid leakage. (See **CLUTCH PIPE AND HOSE REMOVAL/INSTALLATION [C66M-R]**.)

3. Remove the clutch release cylinder.

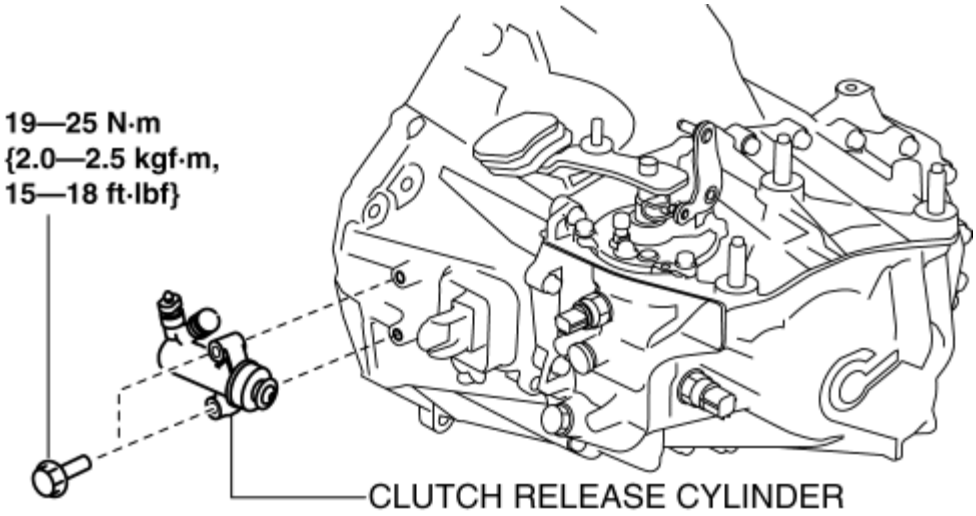

4. Install in the reverse order of removal.

5. Bleed the air from the clutch system. (See **CLUTCH FLUID REPLACEMENT/AIR BLEEDING [C66M-R]**.)

2014 - Mazda3 - Transmission/Transaxle

CLUTCH UNIT REMOVAL/INSTALLATION [C66M-R]

1. Disconnect the negative battery cable. (See **NEGATIVE BATTERY CABLE DISCONNECTION/CONNECTION [SKYACTIV-G 2.0, SKYACTIV-G 2.5]**.)
2. Remove the MTX. (See **MANUAL TRANSAXLE REMOVAL/INSTALLATION [C66M-R]**.)
3. Remove in the order indicated in the table.
4. Install in the reverse order of removal.
5. Add the specified amount of specified transaxle oil. (See **MANUAL TRANSAXLE OIL REPLACEMENT [C66M-R]**.)

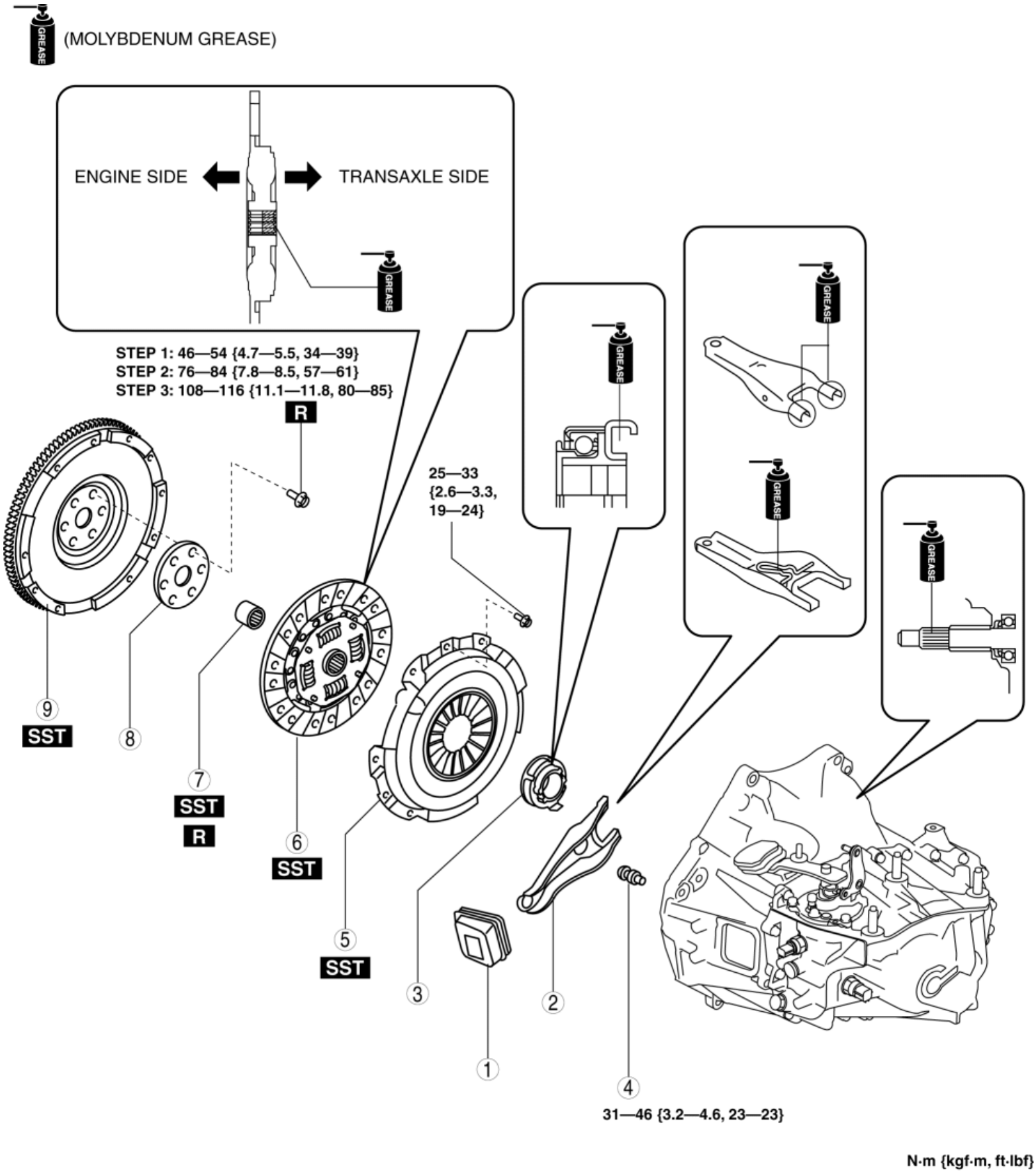
(MOLYBDENUM GREASE)
ENGINE SIDE
TRANSAXLE SIDE
GREASE
STEP 1: 46—54 {4.7—5.5, 34—39}
STEP 2: 76—84 {7.8—8.5, 57—61}
STEP 3: 108—116 {11.1—11.8, 80—85}
R
25—33
{2.6—3.3,
19—24}
9
SST
8
7
SST
R
6
SST
5
SST
3
1
2
4
31—46 {3.2—4.6, 23—23}
N·m {kgf·m, ft·lbf}

1	Boot

2	Clutch release fork
3	Clutch release collar
4	Pivot pin
5	Clutch cover (See **Clutch Cover and Disc Removal Note**.) (See **Clutch Disc and Cover Installation Note**.)
6	Clutch disc (See **Clutch Cover and Disc Removal Note**.) (See **Clutch Disc and Cover Installation Note**.)
7	Pilot bearing (See **Pilot Bearing Removal Note**.) (See **Pilot Bearing Installation Note**.)
8	Plate
9	Flywheel (See **Flywheel Removal Note**.) (See **Flywheel Installation Note**.)

Clutch Cover and Disc Removal Note

1. Hold the clutch unit using the **SST**.

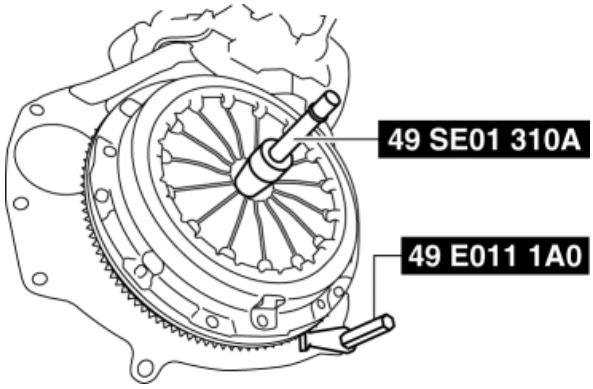

2. Loosen each bolt one turn at a time in a crisscross pattern until spring tension is released.
3. Remove the clutch cover and disc.

Pilot Bearing Removal Note

NOTE:

- The pilot bearing does not need to be removed unless you are replacing it.

1. Use the **SST** to remove the pilot bearing.

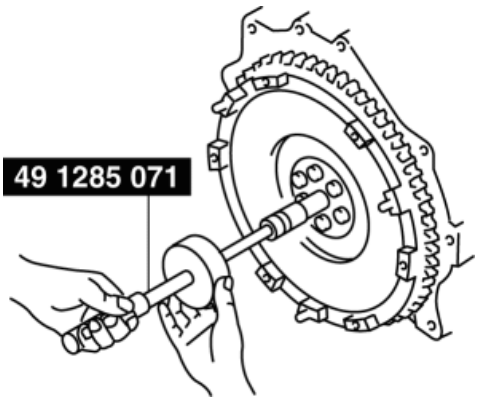

Flywheel Removal Note

1. Hold the flywheel using the **SST**.

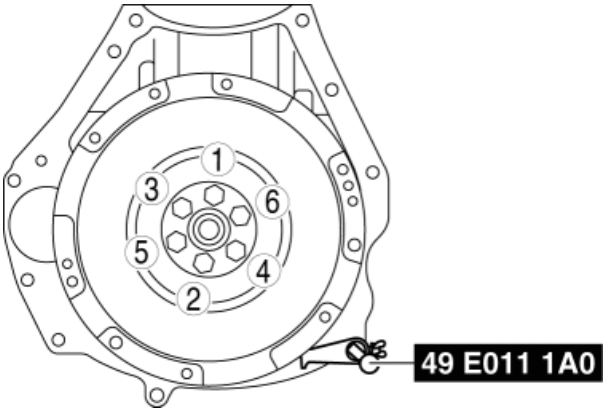

2. Remove the lock bolts, and remove the plate and the flywheel.
3. Inspect for oil leakage from the crankshaft rear oil seal.
   - If there is any malfunction, replace the crankshaft rear oil seal. (See **REAR OIL SEAL REPLACEMENT [SKYACTIV-G 2.0, SKYACTIV-G 2.5]**.)

Flywheel Installation Note

1. Clean the crankshaft thread holes.
2. Install the flywheel and the plate to the crankshaft, and temporarily tighten a new lock bolts.
3. Hold the flywheel using the **SST**.

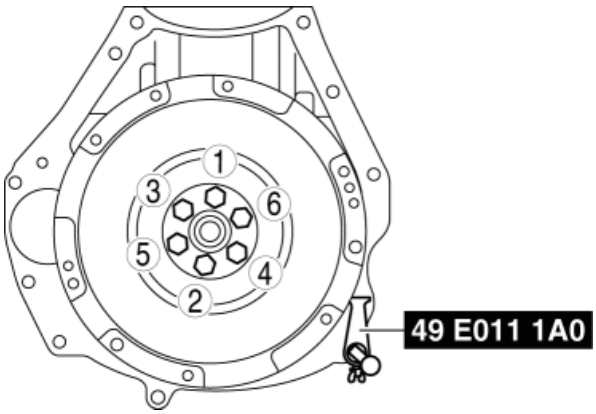

4. Tighten the lock bolts completely in the order shown in the figure in the following 3 steps.

   Tightening torque

- Step 1: 46—54 N·m {4.7—5.5 kgf·m, 34—39 ft·lbf}
- Step 2: 76—84 N·m {7.8—8.5 kgf·m, 57—61 ft·lbf}
- Step 3: 108—116 N·m {11.1—11.8 kgf·m, 80—85 ft·lbf}

Pilot Bearing Installation Note

1. Install new pilot bearing to the specified position using the following tools.

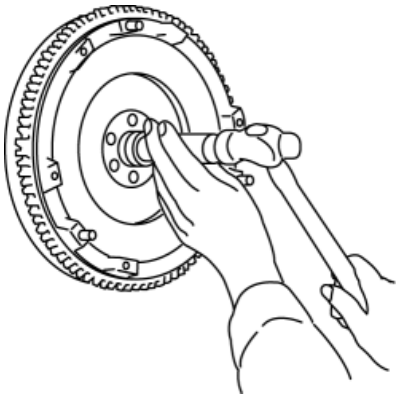

Tool

- Snap-on brand millimeter size bushing driver set (A160M) adapter A160M7 (20—22 mm)
- Use the adapter with the 20 mm side of the A160M7 (20—22 mm) facing the pilot bearing side.

Substitution tool

- Outer diameter: 21 mm {0.83 in}
- Inner diameter: 19 mm {0.75 in}

Standard position

- Distance A of pilot bearing from crankshaft end: 1.5—2.5 mm {0.060—0.098 in}

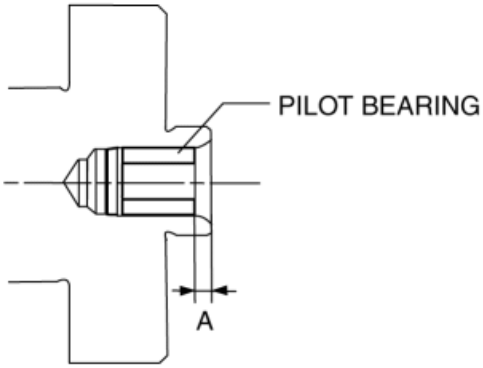

Clutch Disc and Cover Installation Note

1. Hold the clutch disc position using the **SST**.

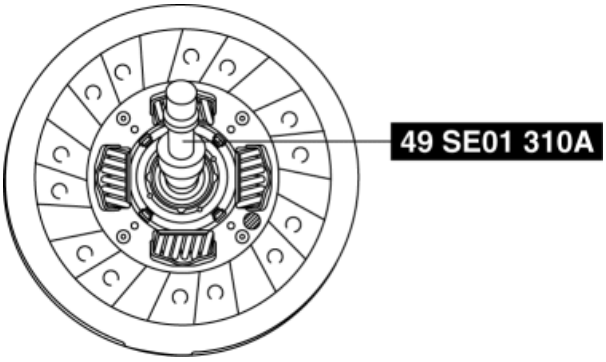

2. Hold the clutch unit using the **SST**.

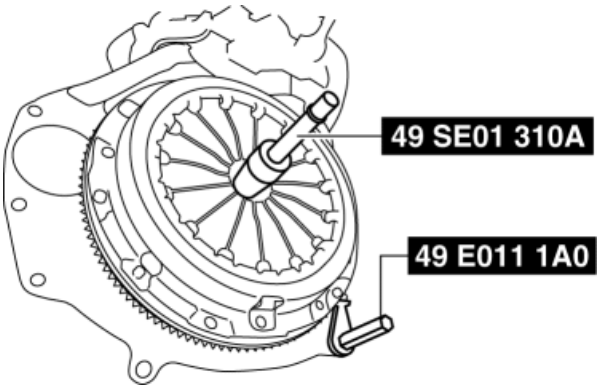

3. Tighten the bolts in Min. 2 stages.

   a. Temporarily tighten the bolts in the order shown in the figure.

   b. Tighten the bolts completely in two or three steps in the order shown in the figure and install the clutch disc and cover.

Tightening torque

- 25—33 N·m {2.6—3.3 kgf·m, 19—24 ft·lbf}

4. Remove the **SST**s.

2014 - Mazda3 - Transmission/Transaxle

CLUTCH RELEASE COLLAR INSPECTION [C66M-R]

CAUTION:

- Do not clean the clutch release collar with cleaning fluids or a steam cleaner because it is filled with grease.

Operation Inspection

1. Turn the collar while applying force in the axial direction, and inspect for sticking, excessive resistance, and an abnormal noise.

- If there is any malfunction, replace the clutch release collar. (See **CLUTCH UNIT REMOVAL/INSTALLATION [C66M-R]**.)

2014 - Mazda3 - Transmission/Transaxle

CLUTCH COVER INSPECTION [C66M-R]

1. Remove the clutch cover. (See **CLUTCH UNIT REMOVAL/INSTALLATION [C66M-R]**.)
2. Perform the following procedures to inspect the clutch cover.
   - If it exceeds the maximum specification, replace the clutch cover. (See **CLUTCH UNIT REMOVAL/INSTALLATION [C66M-R]**.)

a. Measure the wear of the diaphragm spring fingers.

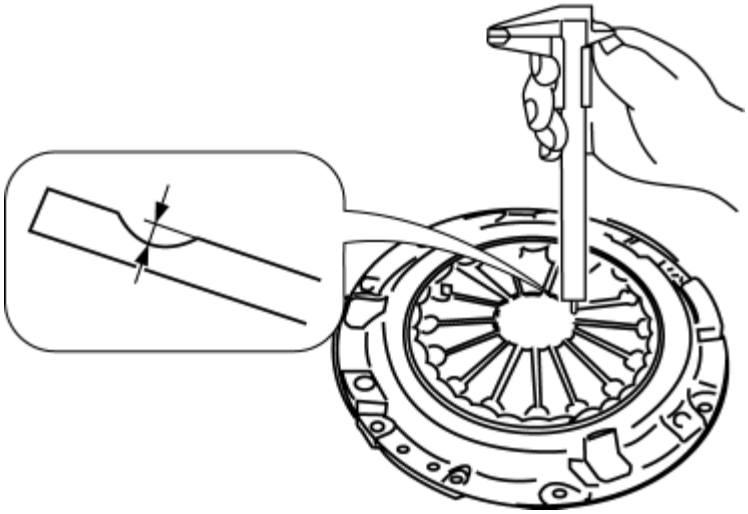

Clutch cover diaphragm spring fingers maximum depth

- 0.6 mm {0.02 in}

b. Measure the flatness of the pressure plate with a straight edge and a feeler gauge.

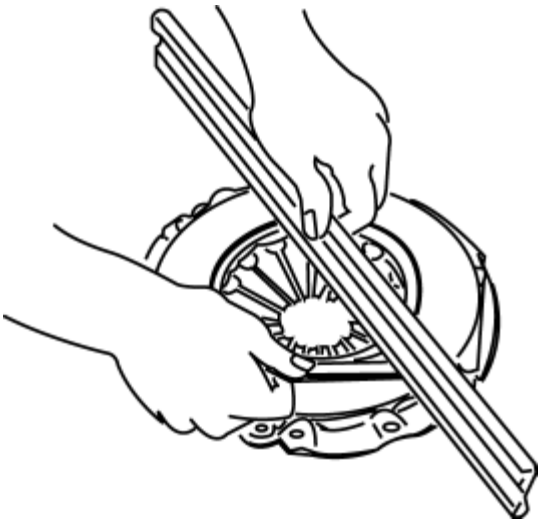

Maximum clearance of flatness of the pressure plate

- 0.3 mm {0.01 in}

c. Inspect the diaphragm spring fingers for the degree of uniformity in their height.

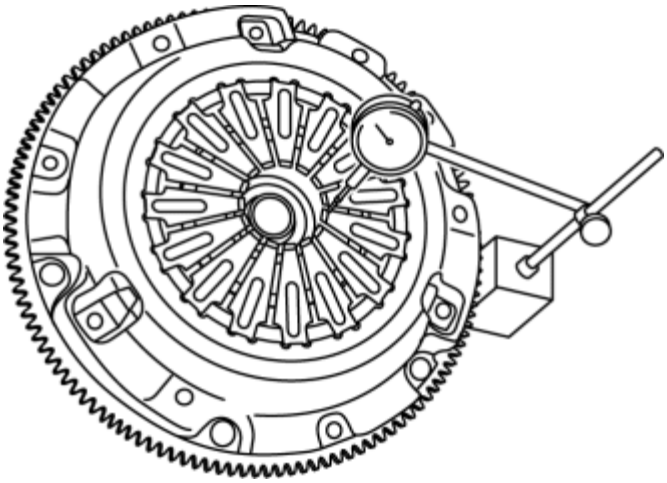

i. Install the clutch cover. (See **CLUTCH UNIT REMOVAL / INSTALLATION [C66M-R]**.)

ii. When checking the diaphragm spring fingers, mount a dial gauge on the cylinder block.

iii. Rotate the flywheel and check for misaligned diaphragm spring fingers.

Clutch cover diaphragm spring fingers maximum height difference

- 1.0 mm {0.039 in}

2014 - Mazda3 - Transmission/Transaxle

CLUTCH DISC INSPECTION [C66M-R]

1. Inspect the lining surface for discoloration and grease adhesion.
2. Inspect the torsion spring for weakness and the rivets for looseness.
3. Using a vernier caliper, measure the depth between the lining surface and the rivet head.

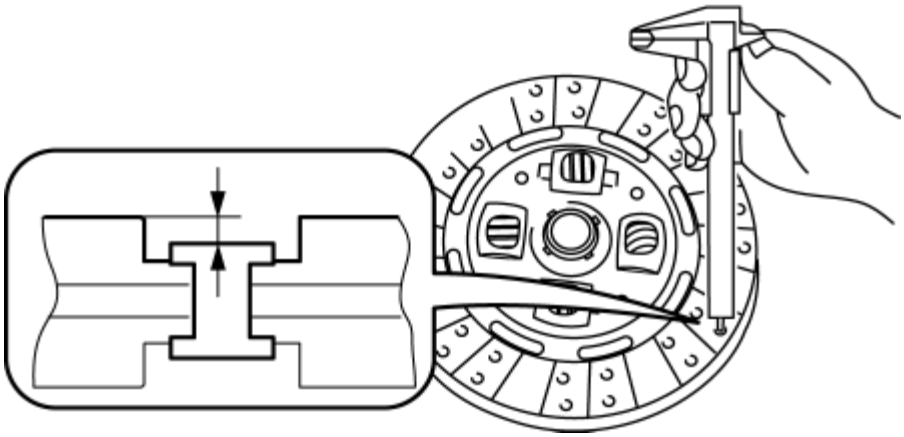

Minimum clutch disc thickness

- 0.3 mm {0.01 in}
- If it is less than the minimum specification, replace the clutch disc. (See **CLUTCH UNIT REMOVAL/INSTALLATION [C66M-R]**.)

4. Measure the clutch disc runout using a dial gauge.

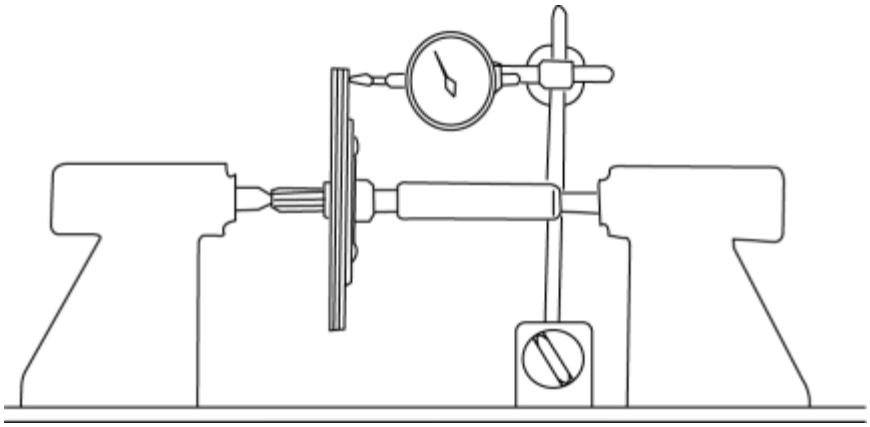

Maximum clutch disc runout

- 0.7 mm {0.03 in}
- If it exceeds the maximum specification, replace the clutch disc. (See **CLUTCH UNIT REMOVAL/INSTALLATION [C66M-R]**.)

2014 - Mazda3 - Transmission/Transaxle

PILOT BEARING INSPECTION [C66M-R]

1. Without removing the pilot bearing, turn the bearing while applying force in the axial direction.

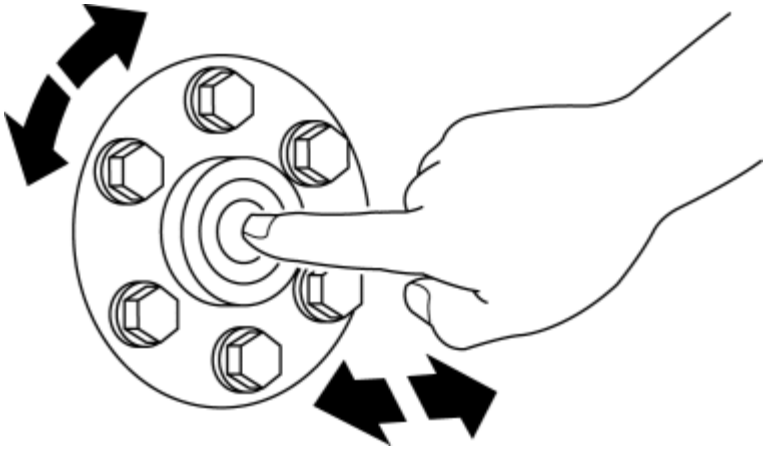

- If there is any malfunction, replace the pilot bearing. (See **CLUTCH UNIT REMOVAL/INSTALLATION [C66M-R]**.)

2014 - Mazda3 - Transmission/Transaxle

FLYWHEEL INSPECTION [C66M-R]

1. Remove the flywheel. (See **CLUTCH UNIT REMOVAL/INSTALLATION [C66M-R]**.)
2. Perform the following procedures to inspect the flywheel.
   - If there is any malfunction or it exceeds the maximum specification, replace the flywheel. (See **CLUTCH UNIT REMOVAL/INSTALLATION [C66M-R]**.)

   a. Inspect the surface that contacts the clutch disc for scratches, nicks, and discoloration.

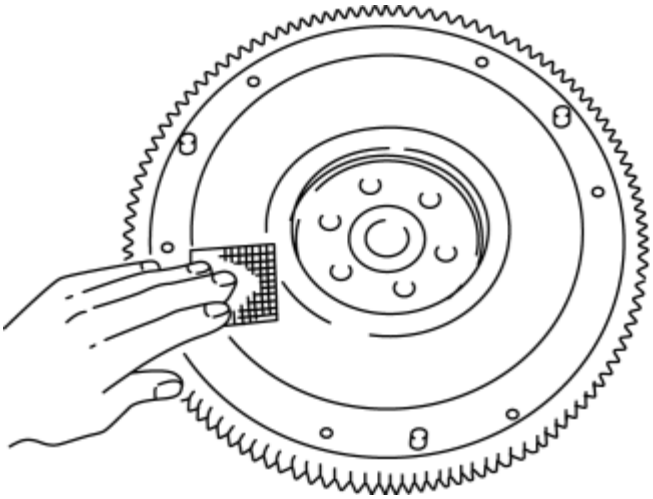

   - Correct slight scratches and discoloration using sandpaper.

   b. Inspect the ring gear teeth for damage and wear.

   c. Inspect the runout of the surface that contacts the clutch disc.

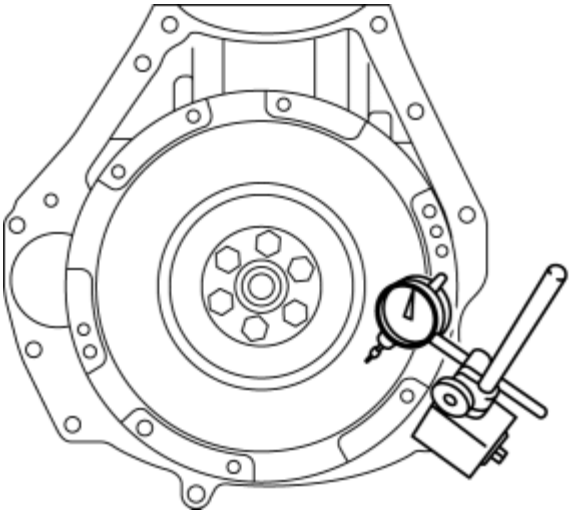

   i. Install the flywheel. (See **CLUTCH UNIT REMOVAL/INSTALLATION [C66M-R]**.)

ii. Measure the runout of the surface that contacts the clutch disc using a dial gauge.

Flywheel maximum runout

- 0.1 mm {0.004 in}

2014 - Mazda3 - Transmission/Transaxle

MANUAL TRANSAXLE LOCATION INDEX [C66M-R]

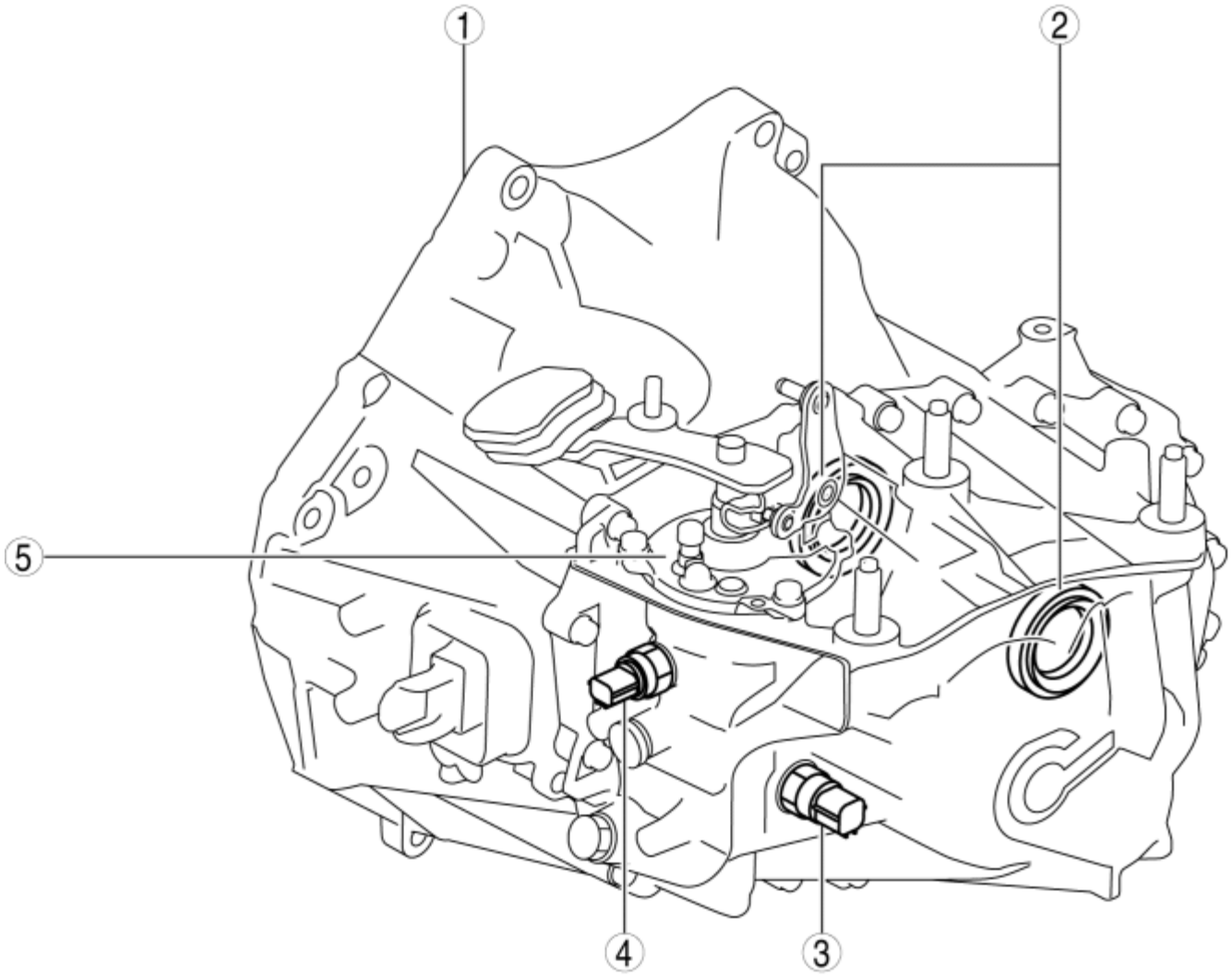

1	Manual transaxle (See **MANUAL TRANSAXLE OIL INSPECTION [C66M-R]**.) (See **MANUAL TRANSAXLE OIL REPLACEMENT [C66M-R]**.) (See **MANUAL TRANSAXLE REMOVAL/INSTALLATION [C66M-R]**.) (See **INSPECTION AFTER MANUAL TRANSAXLE OVERHAUL [C66M-R]**.)
2	Oil seal (differential) (See **OIL SEAL (DIFFERENTIAL) REPLACEMENT [C66M-R]**.)

3	Back-up light switch (See **BACK-UP LIGHT SWITCH REMOVAL/INSTALLATION [C66M-R]**.)
4	Neutral switch (See **NEUTRAL SWITCH REMOVAL/INSTALLATION [C66M-R]**.)
5	Shift control module (See **SHIFT CONTROL MODULE REMOVAL/INSTALLATION [C66M-R]**.)

2014 - Mazda3 - Transmission/Transaxle

MANUAL TRANSAXLE OIL INSPECTION [C66M-R]

1. Park the vehicle on level ground.

2. Remove the front under cover No.2. (See **FRONT UNDER COVER No.2 REMOVAL/INSTALLATION**.)

3. Remove the oil level plug and gasket.

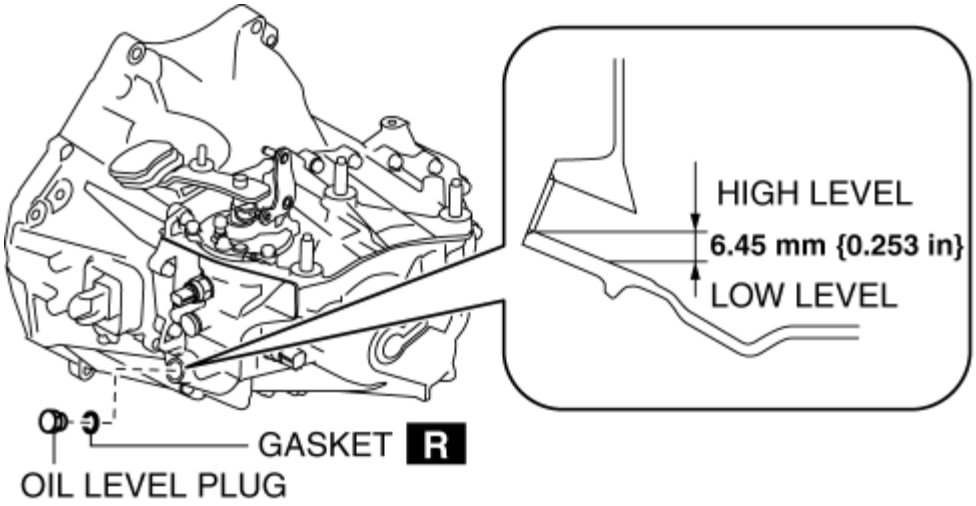

4. Verify that the manual transaxle oil is near the brim of the plug port.

   - When the manual transaxle oil level is lower than the lower limit, add manual transaxle oil.

     Manual transaxle oil grade

   - API service GL-4

     Manual transaxle oil viscosity

   - SAE 75W-80

5. Install a new gasket and the oil level plug.

     Tightening torque

   - 39—59 N·m {4.0—6.0 kgf·m, 29—43 ft·lbf}

6. Install the front under cover No.2. (See **FRONT UNDER COVER No.2 REMOVAL/INSTALLATION**.)

2014 - Mazda3 - Transmission/Transaxle

MANUAL TRANSAXLE OIL REPLACEMENT [C66M-R]

1. Park the vehicle on level ground.

2. Remove the front under cover No.2. (See **FRONT UNDER COVER No.2 REMOVAL/INSTALLATION**.)

3. Remove the drain plug and gasket, and drain the manual transaxle oil.

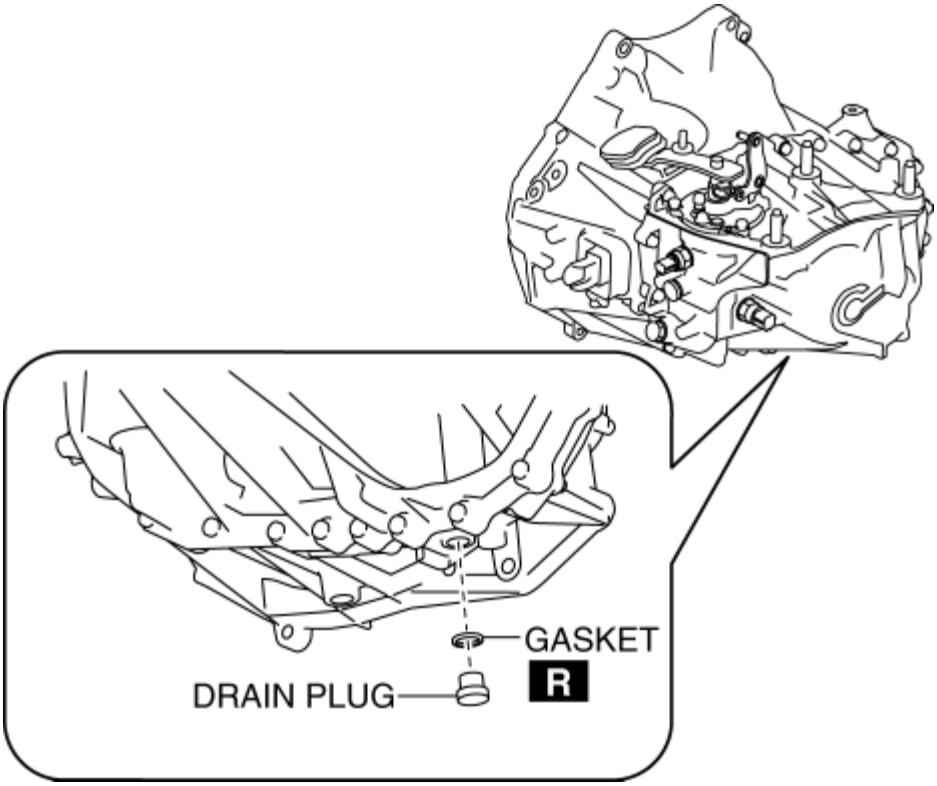

4. Install a new gasket and the drain plug.

Tightening torque

- 39—59 N·m {4.0—6.0 kgf·m, 29—43 ft·lbf}

5. Remove the oil level plug and gasket.

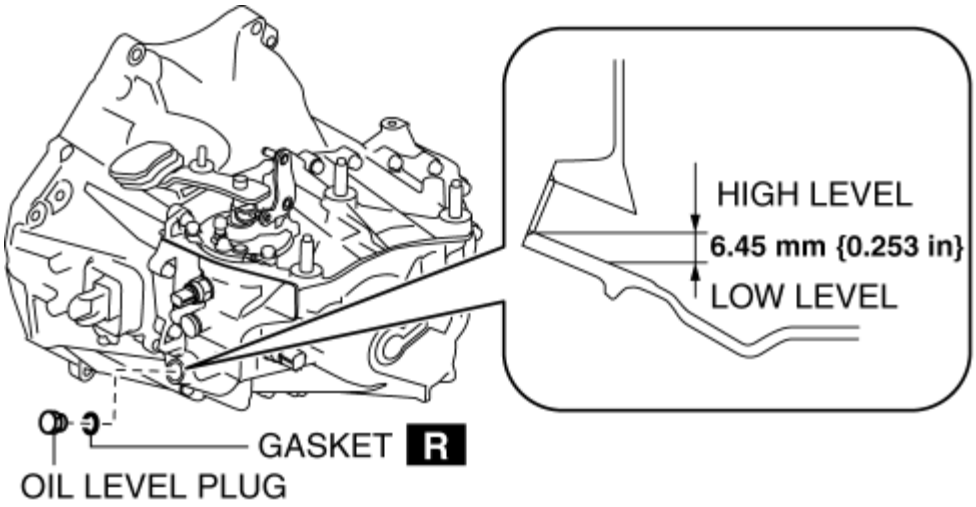

6. Add the specified manual transaxle oil through the oil level plug port.

Manual transaxle oil grade

- API service GL-4

Manual transaxle oil viscosity

- SAE 75W-80

Manual transaxle oil capacity (approx. quantity)

- 1.70 L {1.80 US qt, 1.50 Imp qt}

7. Install a new gasket and the oil level plug.

Tightening torque

- 39—59 N·m {4.0—6.0 kgf·m, 29—43 ft·lbf}

8. Install the front under cover No.2. (See **FRONT UNDER COVER No.2 REMOVAL/INSTALLATION**.)

2014 - Mazda3 - Transmission/Transaxle

NEUTRAL SWITCH REMOVAL/INSTALLATION [C66M-R]

1. Disconnect the negative battery cable. (See **NEGATIVE BATTERY CABLE DISCONNECTION/CONNECTION [SKYACTIV-G 2.0, SKYACTIV-G 2.5]**.)

2. Remove the air cleaner component. (ex: air cleaner, air hose) (See **INTAKE-AIR SYSTEM REMOVAL/INSTALLATION [SKYACTIV-G 2.0, SKYACTIV-G 2.5]**.)

3. Remove in the order indicated in the table.

4. Install in the reverse order of removal.

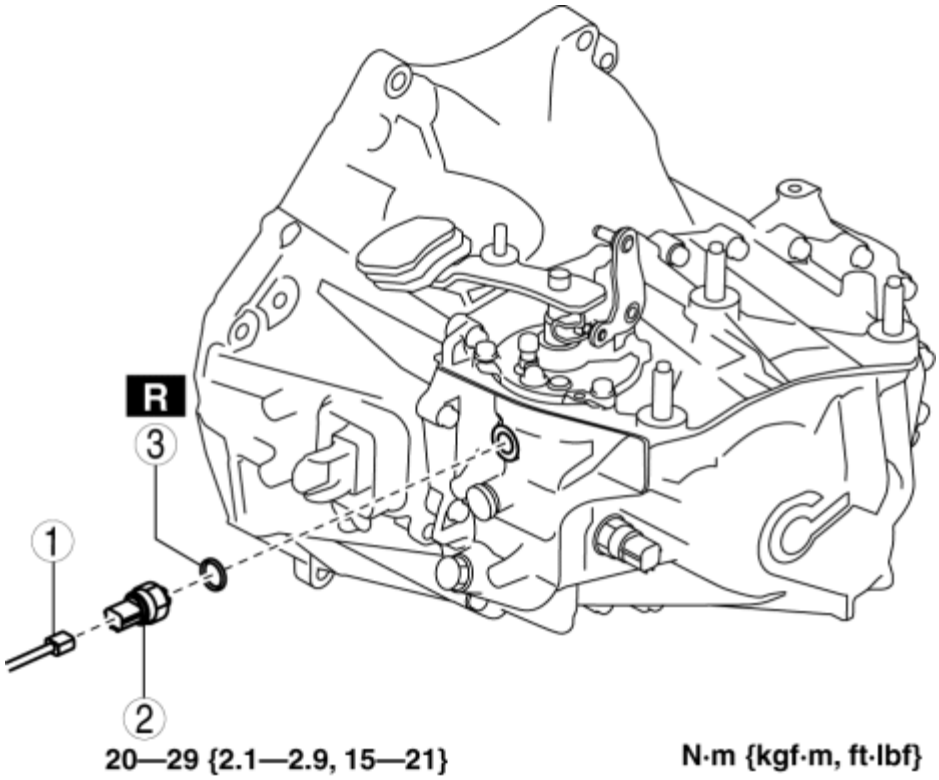

1	Neutral switch connector
2	Neutral switch
3	Gasket

NEUTRAL SWITCH REMOVAL/INSTALLATION [C66M-R]

2014 - Mazda3 - Transmission/Transaxle

BACK-UP LIGHT SWITCH REMOVAL/INSTALLATION [C66M-R]

1. Disconnect the negative battery cable. (See **NEGATIVE BATTERY CABLE DISCONNECTION/CONNECTION [SKYACTIV-G 2.0, SKYACTIV-G 2.5]**.)

2. Remove the air cleaner component. (ex: air cleaner, air hose) (See **INTAKE-AIR SYSTEM REMOVAL/INSTALLATION [SKYACTIV-G 2.0, SKYACTIV-G 2.5]**.)

3. Remove in the order indicated in the table.

4. Install in the reverse order of removal.

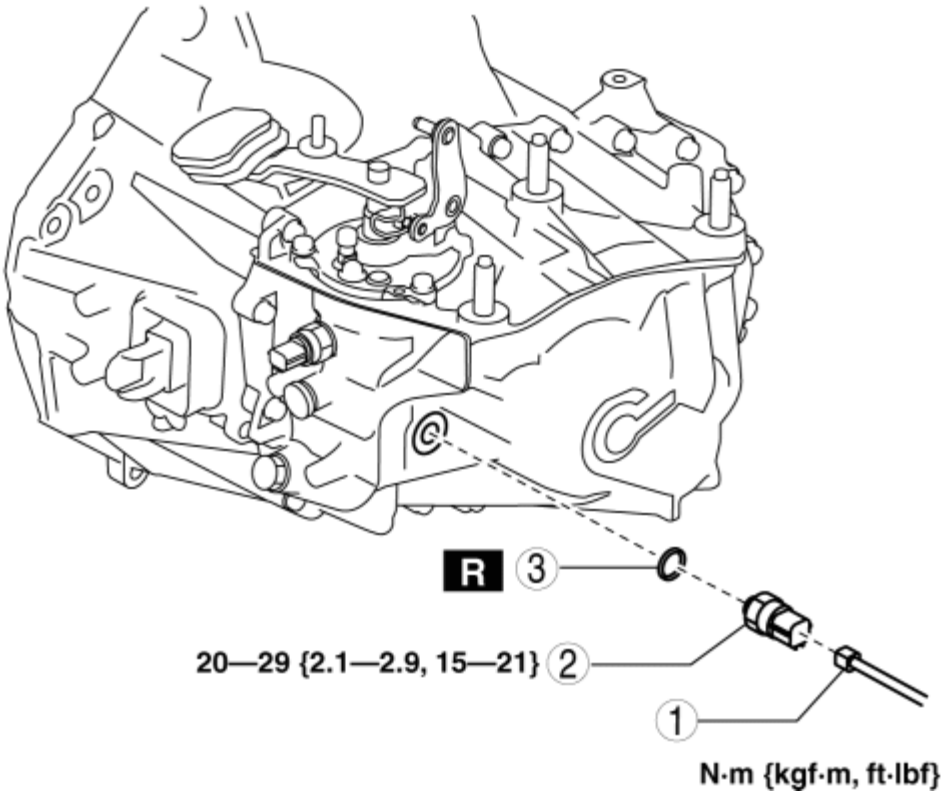

1	Back-up light switch connector
2	Back-up light switch
3	Gasket

BACK-UP LIGHT SWITCH REMOVAL/INSTALLATION [C66M-R]

2014 - Mazda3 - Transmission/Transaxle

MANUAL TRANSAXLE REMOVAL/INSTALLATION [C66M-R]

Removal

1. Disconnect the negative battery cable. (See **NEGATIVE BATTERY CABLE DISCONNECTION/CONNECTION [SKYACTIV-G 2.0, SKYACTIV-G 2.5]**.)
2. Remove the plug hole plate. (See **PLUG HOLE PLATE REMOVAL/INSTALLATION [SKYACTIV-G 2.0, SKYACTIV-G 2.5]**.)
3. Remove the front under cover No.2. (See **FRONT UNDER COVER No.2 REMOVAL/INSTALLATION**.)
4. Remove the front under cover No.1. (See **FRONT UNDER COVER No.1 REMOVAL/INSTALLATION**.)
5. Remove the splash shield. (See **SPLASH SHIELD REMOVAL/INSTALLATION**.)
6. Drain the manual transaxle oil. (See **MANUAL TRANSAXLE OIL REPLACEMENT [C66M-R]**.)
7. Disconnect and/or remove the following parts in the engine compartment.

   a. Remove the air cleaner component. (ex: air cleaner, air hose) (See **INTAKE-AIR SYSTEM REMOVAL/INSTALLATION [SKYACTIV-G 2.0, SKYACTIV-G 2.5]**.)

   b. Remove the battery component. (ex: battery, battery tray and PCM component) (See **BATTERY REMOVAL/INSTALLATION [SKYACTIV-G 2.0, SKYACTIV-G 2.5]**.)

   c. Disconnect the control cable from MTX. (See **MANUAL TRANSAXLE SHIFT MECHANISM REMOVAL/INSTALLATION [C66M-R]**.)

   d. Remove the control cable bracket from MTX.

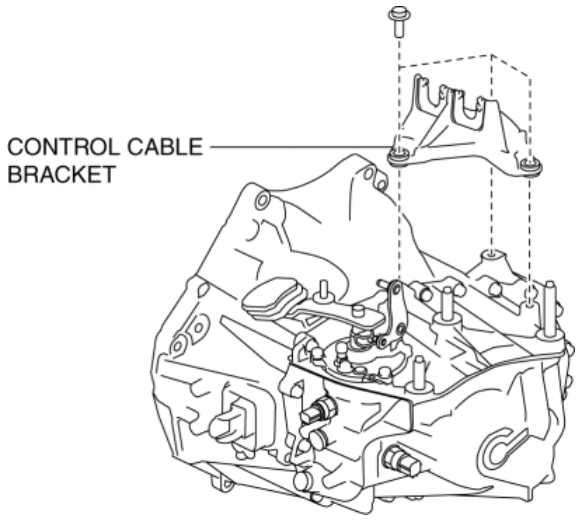

   e. Remove the bolt shown in the figure, and set the ground cable aside.

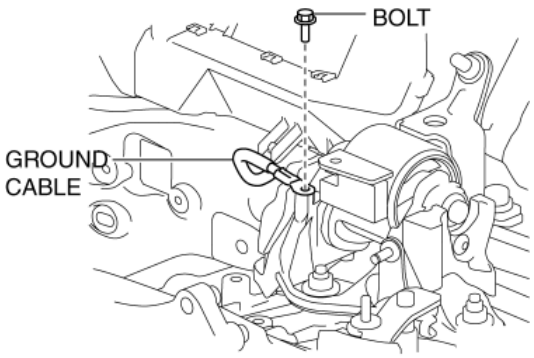

   f. Remove the bracket from the MTX and the exhaust manifold.

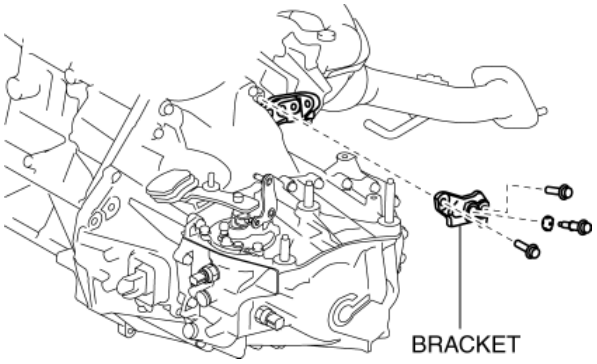

g. Disconnect the neutral switch connector from MTX. (See **NEUTRAL SWITCH REMOVAL/INSTALLATION [C66M-R]**.)

h. Disconnect the back-up light switch connector from MTX. (See **BACK-UP LIGHT SWITCH REMOVAL/INSTALLATION [C66M-R]**.)

i. Disconnect the lower radiator hose clip and the brackets from the MTX, and set the wiring harness aside.

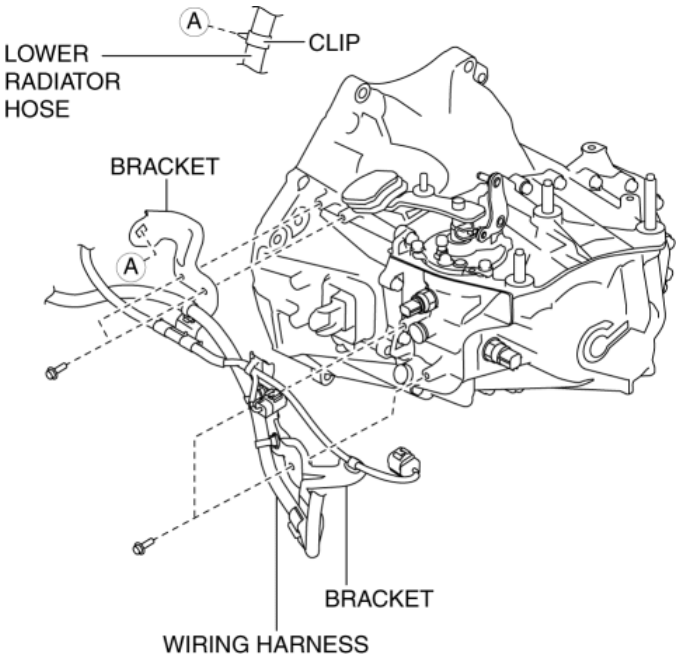

8. Disconnect and/or remove the following parts related to the suspension and axle.

a. Remove the front tires. (See **GENERAL PROCEDURES (FRONT AND REAR AXLES)**.)

b. Disconnect the clip securing the brake hose from the shock absorber. (See **BRAKE HOSE (FRONT) REMOVAL/INSTALLATION**.)

c. Disconnect the ABS wheel-speed sensors from the steering knuckles. (See **FRONT ABS WHEEL-SPEED SENSOR REMOVAL/INSTALLATION**.)

d. Disconnect the tie-rod end ball joints from the steering knuckles. (See **FRONT CROSSMEMBER REMOVAL/INSTALLATION**.)

e. Disconnect the stabilizer control links from the shock absorber. (See **FRONT STABILIZER REMOVAL/INSTALLATION**.)

f. Disconnect the front lower arms from the steering knuckles. (See **FRONT CROSSMEMBER REMOVAL/INSTALLATION**.)

g. Disconnect the drive shaft (LH) from the MTX. (See **FRONT DRIVE SHAFT REMOVAL/INSTALLATION**.)

h. Disconnect the drive shaft (RH) from the MTX. (See **FRONT DRIVE SHAFT REMOVAL/INSTALLATION**.)

9. Disconnect and/or remove the following parts from the underside of the vehicle.

a. Remove the clutch release cylinder with the clutch pipe still connected and set it out of the way. (See **CLUTCH RELEASE CYLINDER REMOVAL/INSTALLATION [C66M-R]**.)

b. Remove the starter. (See **STARTER REMOVAL/INSTALLATION [SKYACTIV-G 2.0, SKYACTIV-G 2.5]**.)

c. Remove the front crossmember component and No.1 engine mount rubber as a single unit. (See **FRONT CROSSMEMBER REMOVAL/INSTALLATION**.)

d. Remove the bracket plate and No.1 engine mount bracket from the MTX.

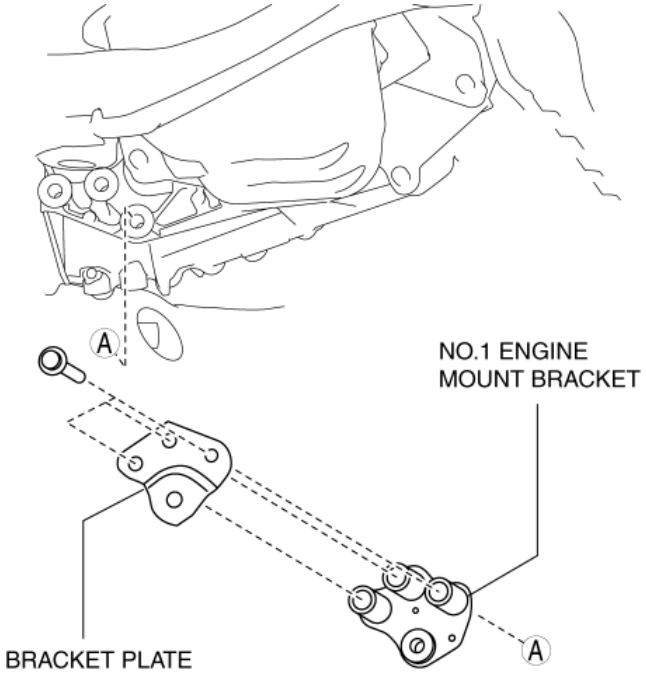

10. Install the **SST** using the following procedure.

CAUTION:

- Refer to the SST instruction manual for the basic handing procedure.

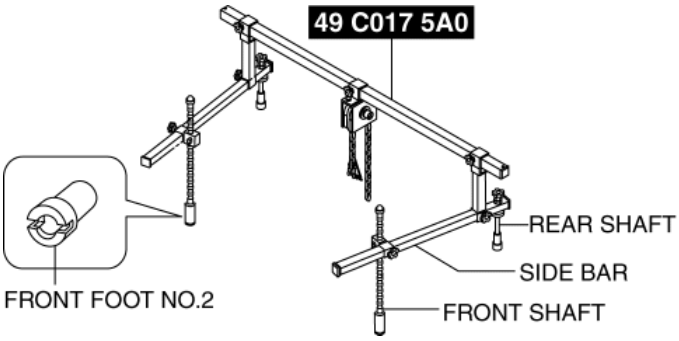

a. Install one front foot No.2 to each of the left and right front shafts of the **SST**.

b. Protect the positions shown in the figure using tape.

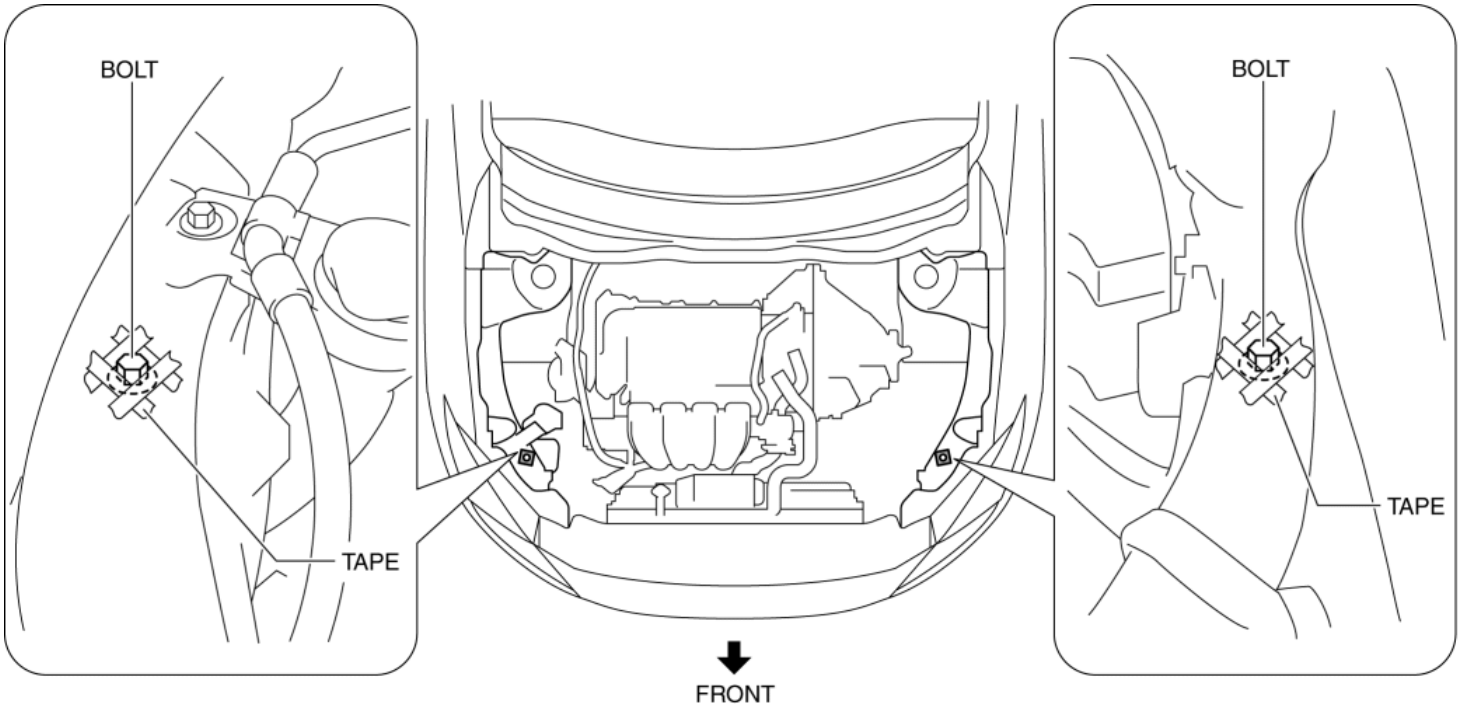

c. To enable to install the **SST**, disconnect the clip shown in the figure and set the wiring harness aside.

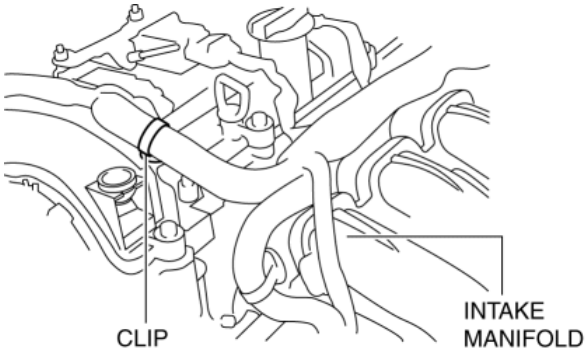

d. Install the **SST** using **part number 99794 1025** or an **M10 × 1.25**, length **25 mm {0.98 in}** bolt as shown in the figure.

Engine front side

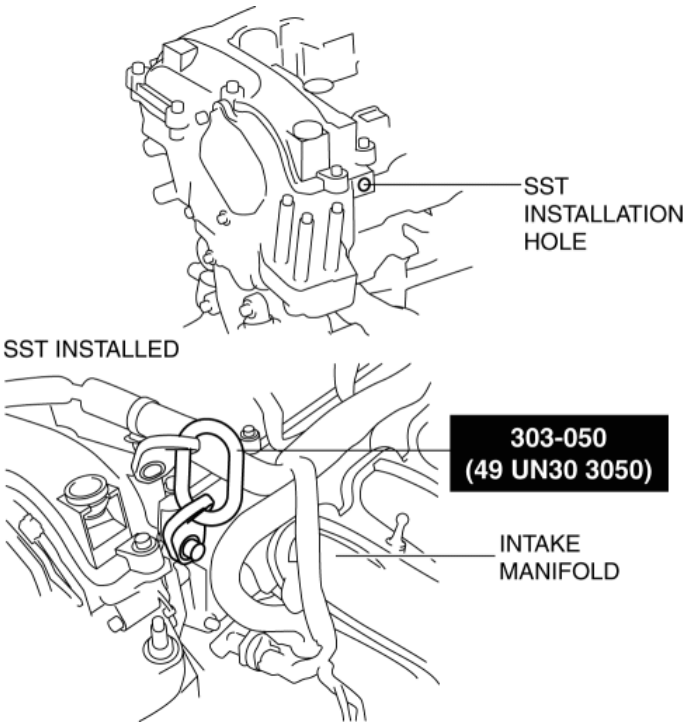

Tightening torque

- 38—51 N·m {3.9—5.2 kgf·m, 29—37 ft·lbf}

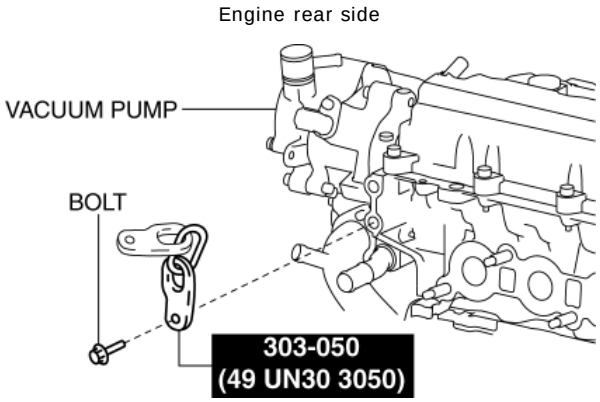

Tightening torque

- 38—51 N·m {3.9—5.2 kgf·m, 29—37 ft·lbf}

e. As shown in the figure, set the rear shafts of the **SST** to the left and right shock absorber nuts.

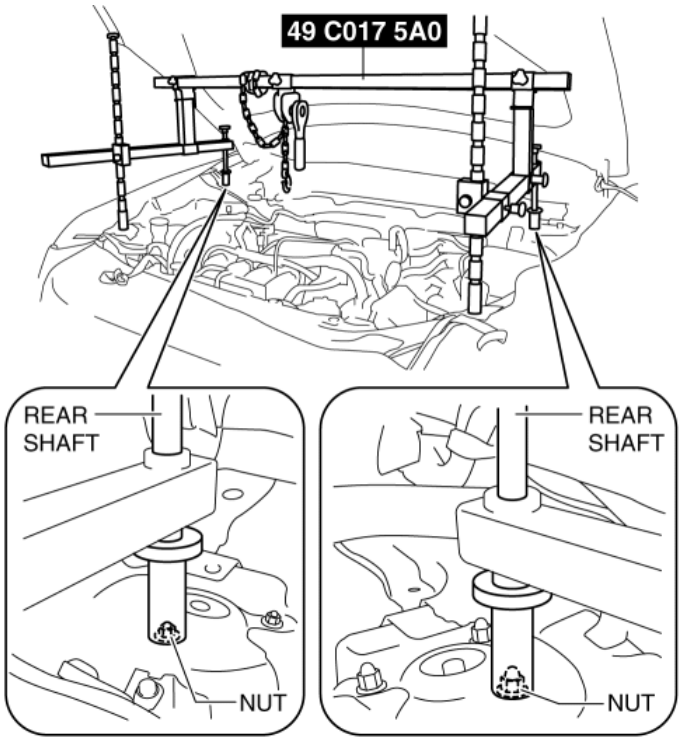

f. As shown in the figure, set the front shafts of the **SST** to the left and right bolts.

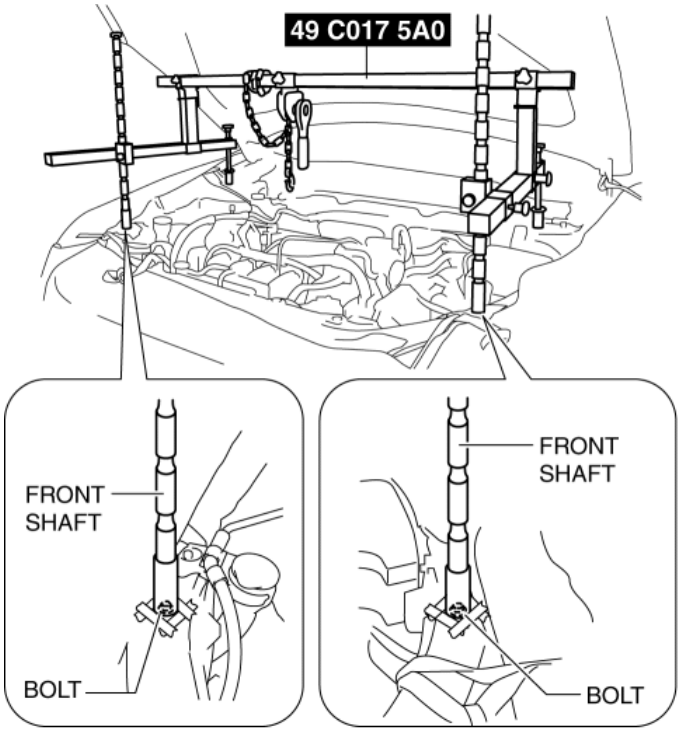

g. Install the **SST (49 L017 5A0)** to the **SST (49 C017 5A0)** as shown in the figure.

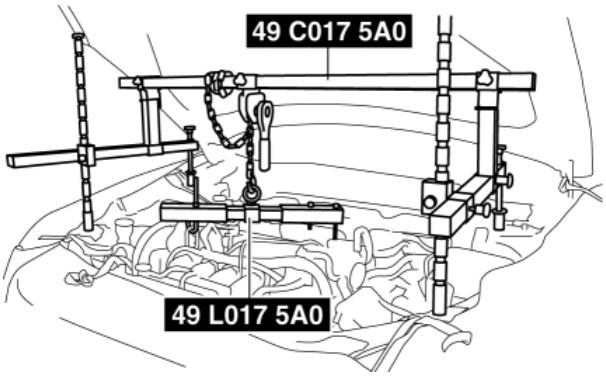

h. Install the **SST (49 L017 5A0)** to the **SST (49 UN30 3050)** with the hook of the **SST (49 L017 5A0)** facing outward.

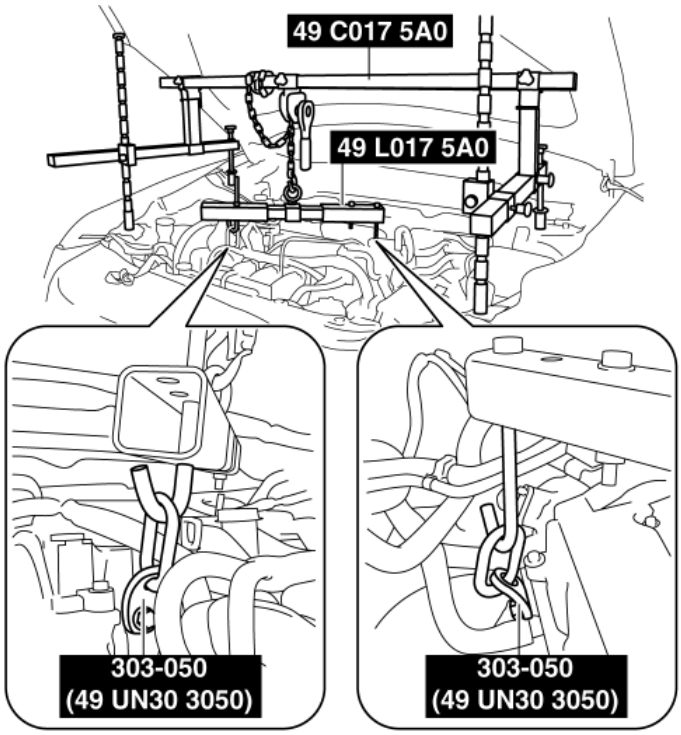

i. Adjust the height of the left and right side bars so that they are leveled, then tighten each part of the **SST**.

j. Apply tension to the chain to secure the engine.

11. Remove in the order indicated in the table.

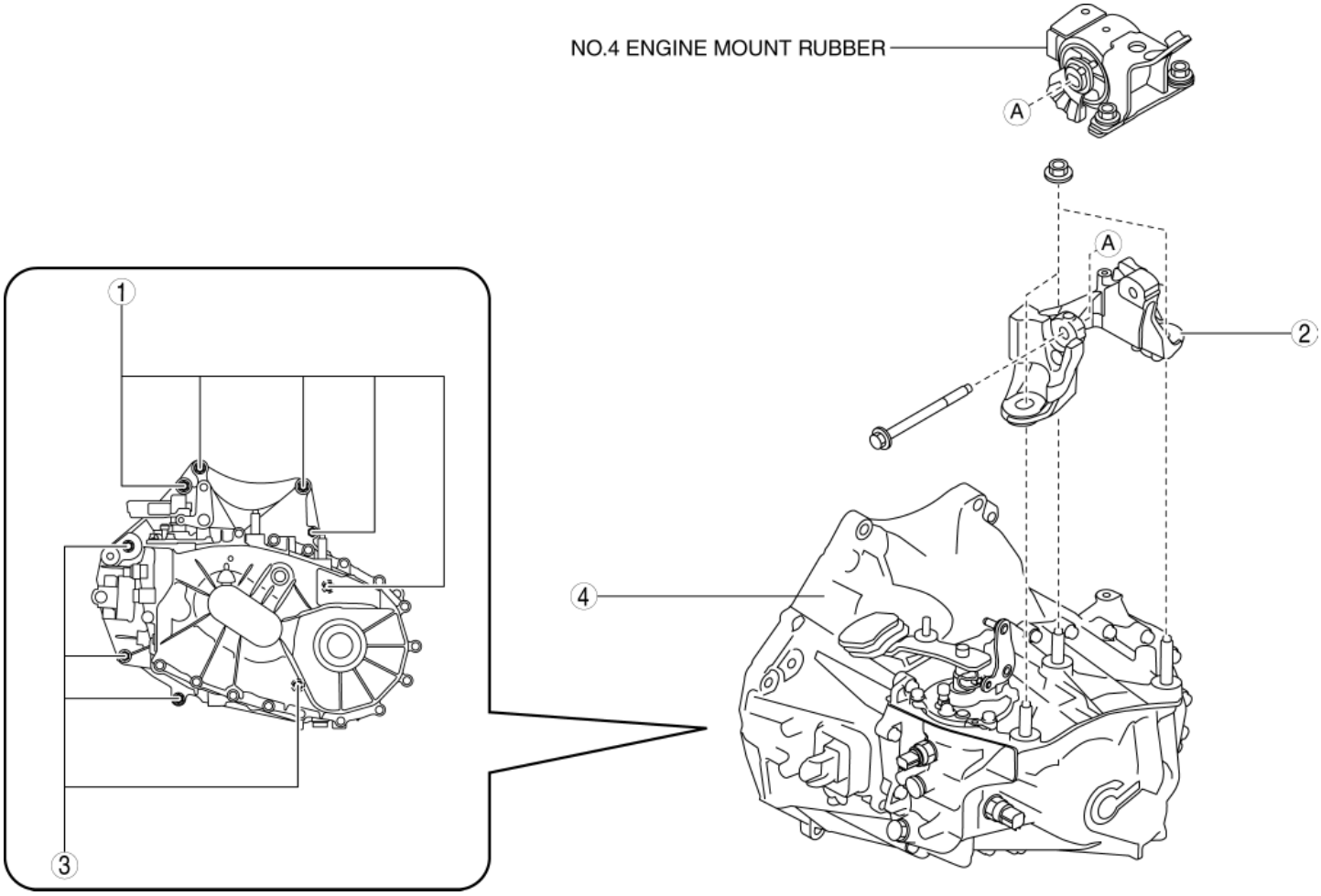

1	Transaxle mounting bolt (upper side)
2	No.4 engine mount bracket (See **No.4 engine mount bracket removal note**.)
3	Transaxle mounting bolt (lower side) (See **Transaxle mounting bolt removal note**.)
4	MTX

No.4 engine mount bracket removal note

CAUTION:

- A slot has been adopted for the No.4 engine mount bracket installation hole. If the No.4 engine mount bracket is deviated from the original position when installing the No.4 engine mount, engine noise or vibration could increase. When removing the No.4 engine mount, place alignment marks on the No.4 engine mount bracket so that they can be assembled to the same positions as before removal.

1. Place alignment marks on the locations shown in the figure so that they can be assembled to the same positions as before removal.

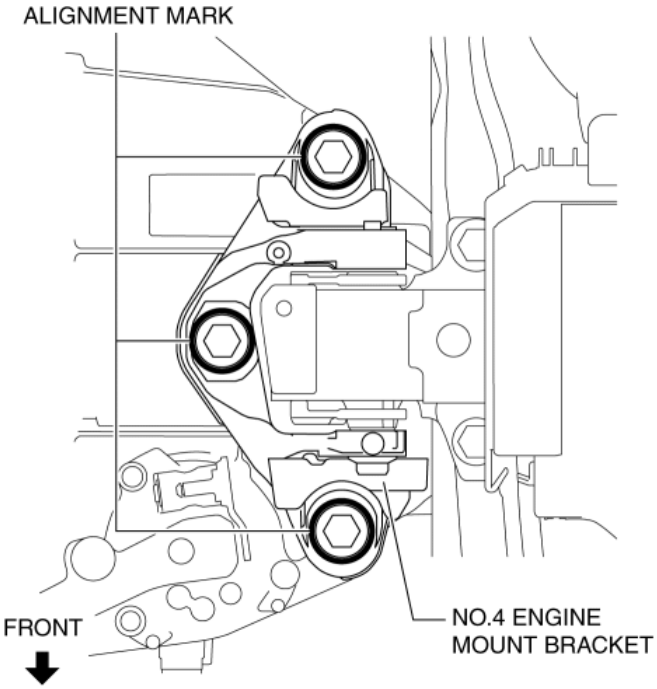

NOTE:

- Paint so that the outline of the nut is framed on the bracket side.

2. Remove the No.4 engine mount bracket.

Transaxle mounting bolt removal note

WARNING:

- Remove the MTX carefully, holding it steady. If the MTX falls it could be damaged or cause injury.

1. Adjust the **SST** and lean the engine toward the MTX.

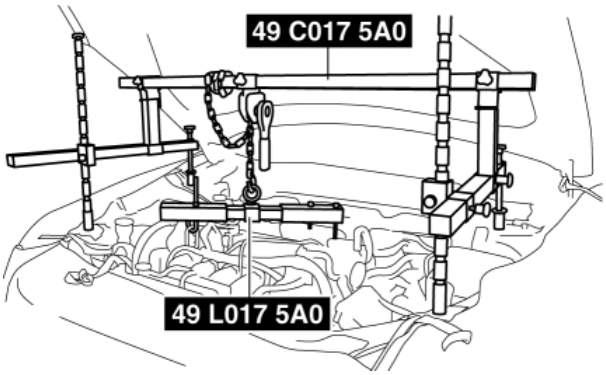

2. Support the MTX on a jack.

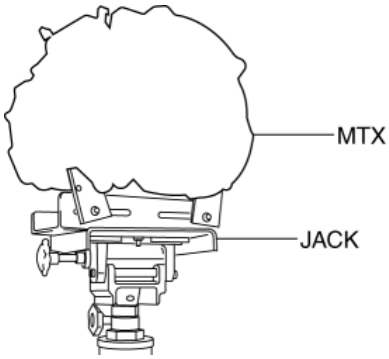

3. Remove the transaxle mounting bolts (lower side).

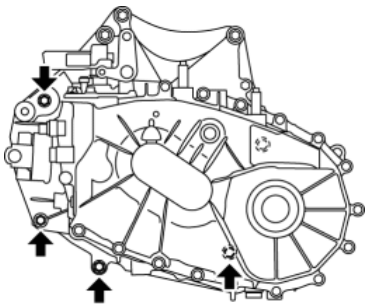

4. Remove the MTX.

Installation

WARNING:

- Install the MTX carefully, holding it steady. If the MTX falls it could be damaged or cause injury.

1. Set the MTX on a jack and lift into place.

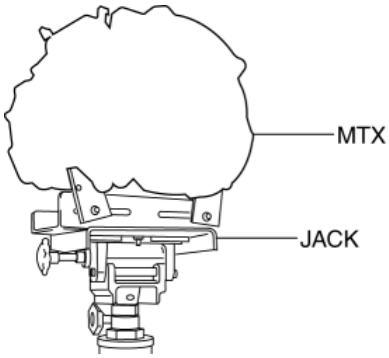

2. Install the MTX to the engine, and tighten the Transaxle mounting bolts.

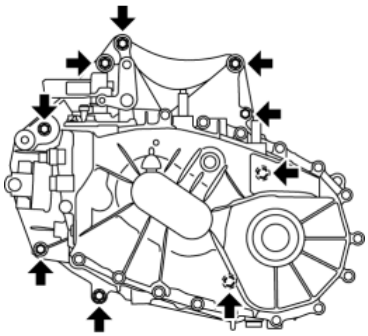

Tightening torque

- 38—52 N·m {3.9—5.3 kgf·m, 29—38 ft·lbf}

3. Tighten the stud bolts for the MTX.

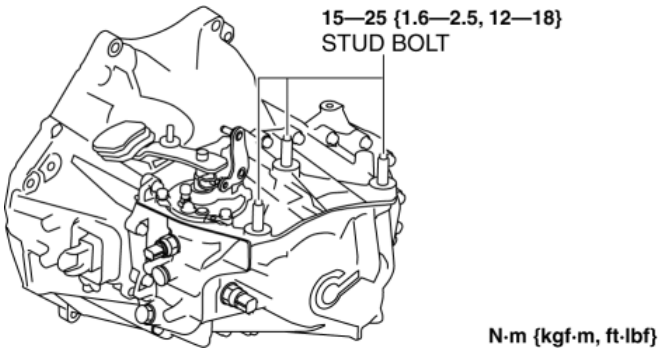

NOTE:

- If the No.4 engine mount bracket nut is loosened, tighten the stud bolts for the MTX because they may be loosened.

4. Install the No.4 engine mount bracket to No.4 engine mount rubber, and temporarily tighten the installation bolt.

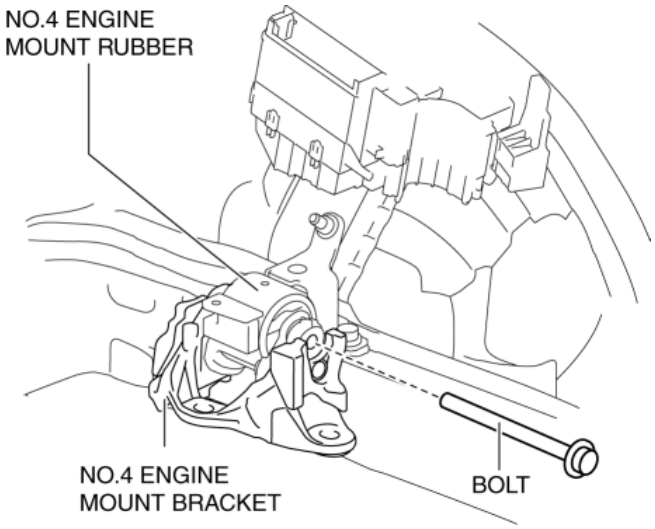

5. Pull up the MTX using the **SST**s, pass the MTX stud bolts through the No.4 engine mount bracket, and temporarily tighten the No.4 engine mount installation nuts.

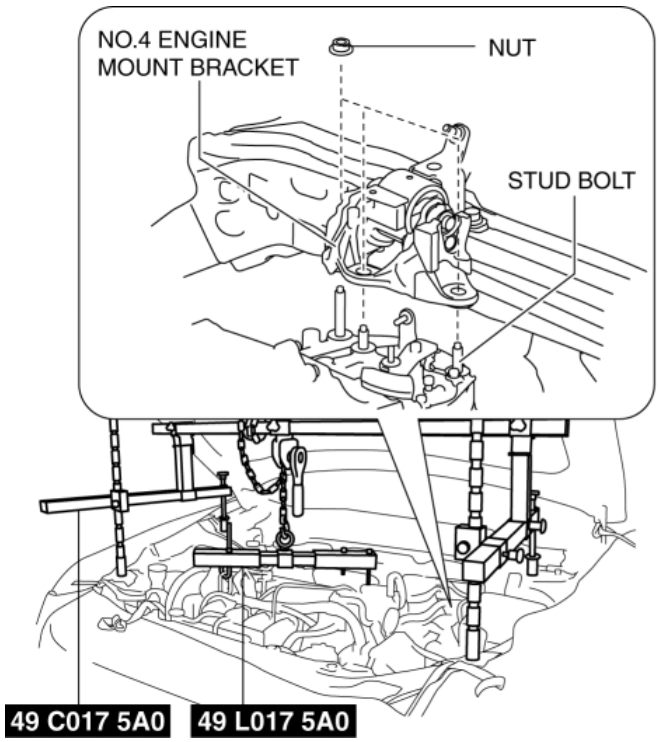

6. Install the No.1 engine mount bracket and bracket plate to the MTX, and temporarily tighten the installation bolts.

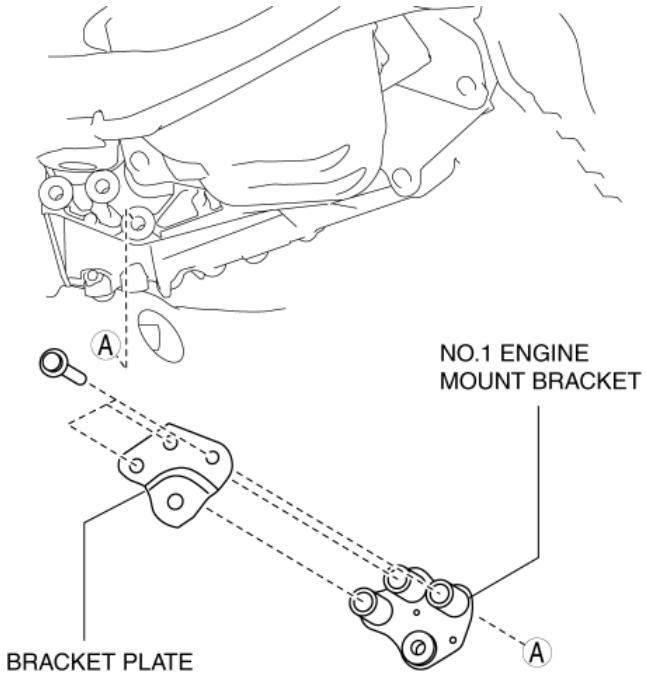

7. Install the front crossmember component and No.1 engine mount rubber as a single unit. (See **FRONT CROSSMEMBER REMOVAL/INSTALLATION**.)

8. Temporarily tighten the No.1 engine mount rubber installation bolts.

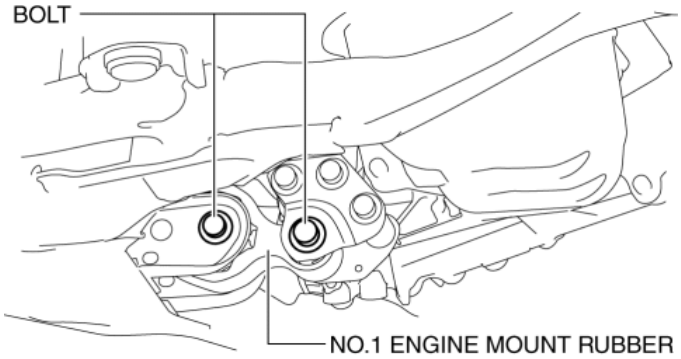

9. Align the alignment marks on the No.4 engine mount bracket and nuts, and temporarily tighten the nuts shown in the figure.

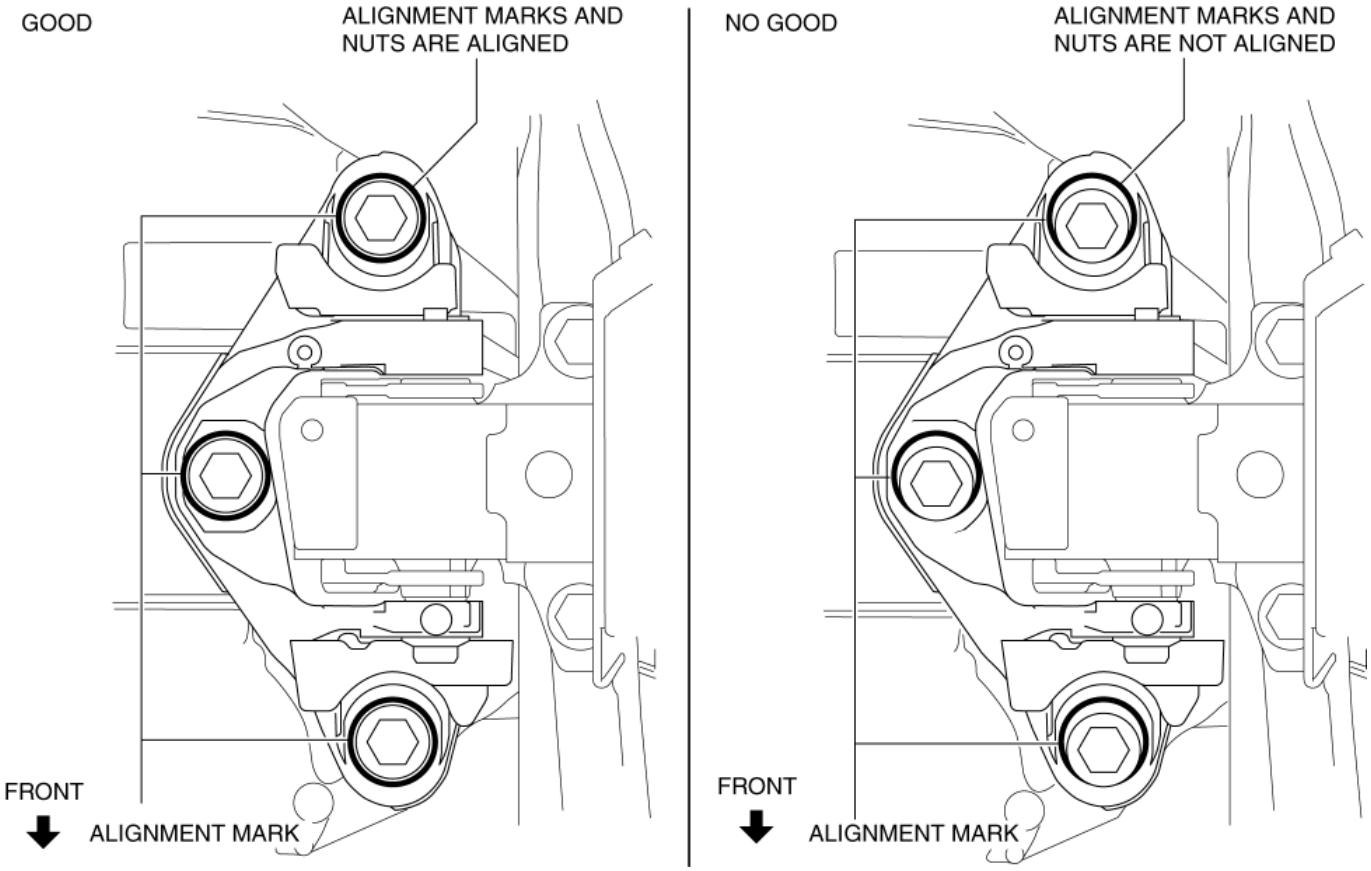

10. Tighten the No.4 engine mount bracket installation nuts and bolt in the order shown in the figure.

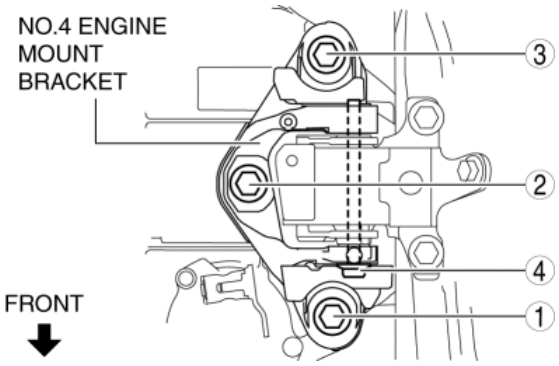

No.	Tightening torque
1, 2, 3	92—116 N·m {9.4—11 kgf·m, 68—85 ft·lbf}
4	81—99 N·m {8.3—10 kgf·m, 60—73 ft·lbf}

11. Tighten the No.1 engine mount bracket and bracket plate installation bolts in the order shown in the figure.

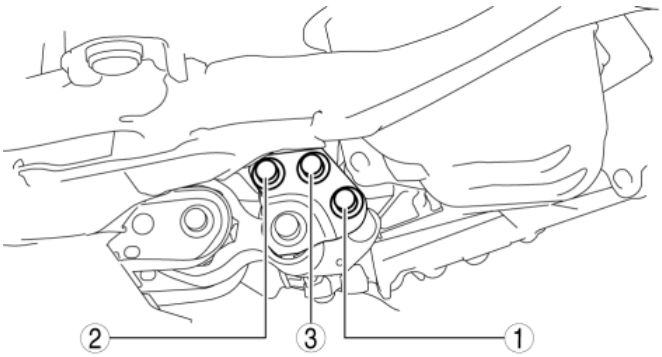

Tightening torque

- 84—98 N·m {8.6—9.9 kgf·m, 62—72 ft·lbf}

12. Remove the **SSTs (49 C017 5A0, 49 L017 5A0)**.
13. Tighten the No.1 engine mount rubber installation bolts.

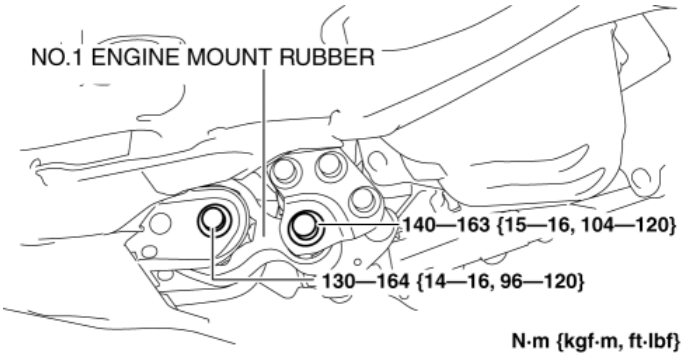

14. Connect and/or Install the following parts to the underside of the vehicle.
    a. Install the starter. (See **STARTER REMOVAL/INSTALLATION [SKYACTIV-G 2.0, SKYACTIV-G 2.5]**.)
    b. Install the clutch release cylinder to the MTX. (See **CLUTCH RELEASE CYLINDER REMOVAL/INSTALLATION [C66M-R]**.)
15. Connect and/or Install the following parts related to the suspension and axle.
    a. Connect the drive shaft (RH) to the MTX. (See **FRONT DRIVE SHAFT REMOVAL/INSTALLATION**.)
    b. Connect the drive shaft (LH) to the MTX. (See **FRONT DRIVE SHAFT REMOVAL/INSTALLATION**.)
    c. Connect the front lower arms to the steering knuckles. (See **FRONT CROSSMEMBER REMOVAL/INSTALLATION**.)
    d. Connect the stabilizer control links to the shock absorber. (See **FRONT STABILIZER REMOVAL/INSTALLATION**.)
    e. Connect the tie-rod end ball joints to the steering knuckles. (See **FRONT CROSSMEMBER REMOVAL/INSTALLATION**.)
    f. Connect the ABS wheel-speed sensors to the steering knuckles. (See **FRONT ABS WHEEL-SPEED SENSOR REMOVAL/INSTALLATION**.)
    g. Connect the clip securing the brake hose to the shock absorber. (See **BRAKE HOSE (FRONT) REMOVAL/INSTALLATION**.)
    h. Install the front tires. (See **GENERAL PROCEDURES (FRONT AND REAR AXLES)**.)
16. Connect and/or install the following parts in the engine compartment.
    a. Connect the clip shown in the figure.

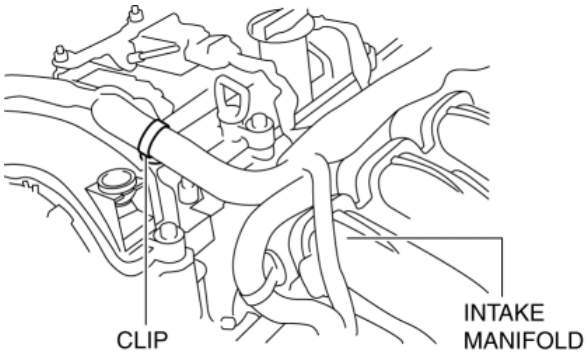

    b. Install the lower radiator hose clip and bracket to the MTX.

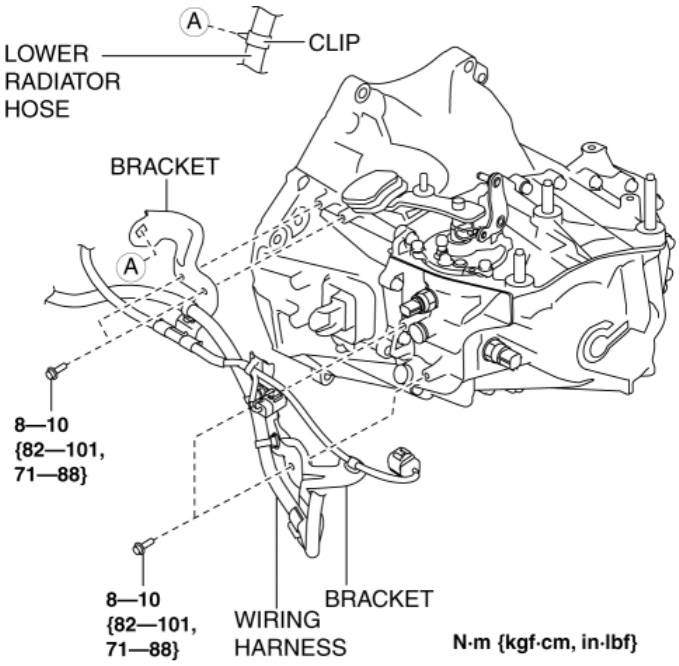

c. Connect the back-up light switch connector.(See **BACK-UP LIGHT SWITCH REMOVAL/INSTALLATION [C66M-R]**.)

d. Connect the neutral switch connector. (See **NEUTRAL SWITCH REMOVAL/INSTALLATION [C66M-R]**.)

e. Install the bracket to the MTX and the exhaust manifold using the following procedure:

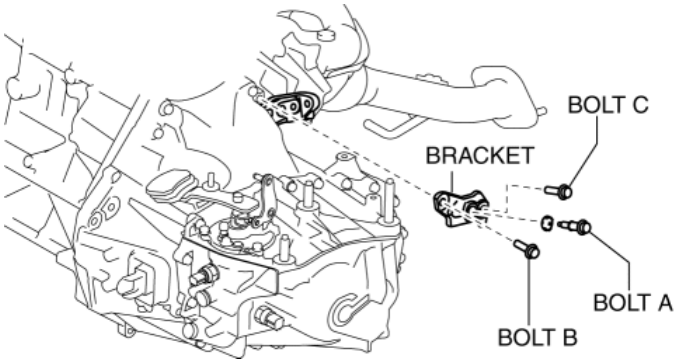

i. Tighten the bolt A.

Tightening torque

- 19—25 N·m {2.0—2.5 kgf·m, 15—18 ft·lbf}

ii. Temporarily tighten the bolt B and C.

iii. Tighten the bolt B.

Tightening torque

- 38—51 N·m {3.9—5.2 kgf·m, 29—37 ft·lbf}

iv. Tighten the bolt C.

Tightening torque

- 38—51 N·m {3.9—5.2 kgf·m, 29—37 ft·lbf}

f. Connect the ground cable to the No.4 engine mount bracket.

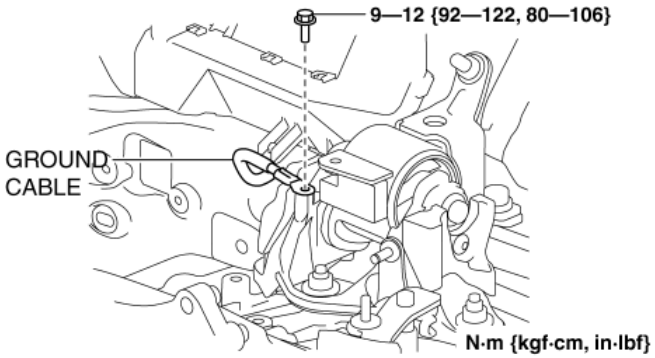

g. Install the control cable bracket to the MTX.

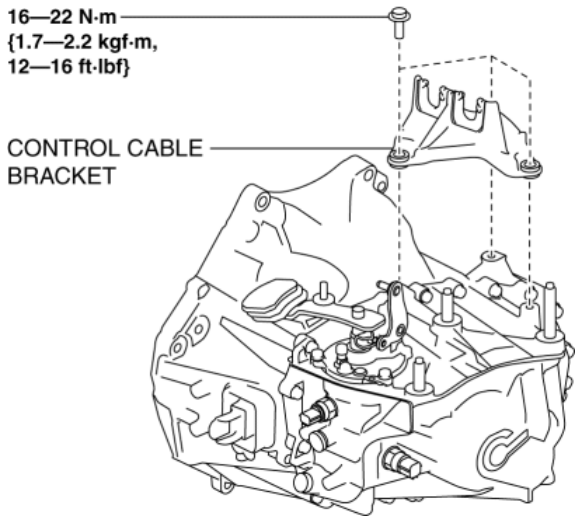

h. Connect the control cable to the MTX. (See **MANUAL TRANSAXLE SHIFT MECHANISM REMOVAL/INSTALLATION [C66M-R]**.)

i. Install the battery component. (ex: battery, battery tray and PCM component) (See **BATTERY REMOVAL/INSTALLATION [SKYACTIV-G 2.0, SKYACTIV-G 2.5]**.)

j. Install the air cleaner component. (ex: air cleaner, air hose) (See **INTAKE-AIR SYSTEM REMOVAL/INSTALLATION [SKYACTIV-G 2.0, SKYACTIV-G 2.5]**.)

17. Install the splash shield. (See **SPLASH SHIELD REMOVAL/INSTALLATION**.)

18. Install the front under cover No.1. (See **FRONT UNDER COVER No.1 REMOVAL/INSTALLATION**.)

19. Add the specified amount of specified transaxle oil. (See **MANUAL TRANSAXLE OIL REPLACEMENT [C66M-R]**.)

20. Install the front under cover No.2. (See **FRONT UNDER COVER No.2 REMOVAL/INSTALLATION**.)

21. Connect the negative battery cable. (See **NEGATIVE BATTERY CABLE DISCONNECTION/CONNECTION [SKYACTIV-G 2.0, SKYACTIV-G 2.5]**.)

22. Install the plug hole plate. (See **PLUG HOLE PLATE REMOVAL/INSTALLATION [SKYACTIV-G 2.0, SKYACTIV-G 2.5]**.)

23. If the MTX is overhauled, perform the “INSPECTION AFTER MANUAL TRANSAXLE OVERHAUL”. (See **INSPECTION AFTER MANUAL TRANSAXLE OVERHAUL [C66M-R]**.)

2014 - Mazda3 - Transmission/Transaxle

INSPECTION AFTER MANUAL TRANSAXLE OVERHAUL [C66M-R]

1. After warming up the engine, drive the vehicle and inspect the following items:
    a. No abnormal noise in each shift position.
    b. Smooth shift operation when shifting gears.
    c. No gear slip-out after shifting gears.
    d. Back-up light switch operates correctly.

2014 - Mazda3 - Transmission/Transaxle

OIL SEAL (DIFFERENTIAL) REPLACEMENT [C66M-R]

CAUTION:

- The sharp edges of the drive shaft can slice or puncture the oil seal. Be careful when installing the drive shaft to the transaxle.

1. Remove the front under cover No.2. (See **FRONT UNDER COVER No.2 REMOVAL/INSTALLATION**.)

2. Drain the manual transaxle oil. (See **MANUAL TRANSAXLE OIL REPLACEMENT [C66M-R]**.)

3. Disconnect the drive shaft (LH) from the MTX. (See **FRONT DRIVE SHAFT REMOVAL/INSTALLATION**.)

4. Disconnect the drive shaft (RH) from the MTX. (See **FRONT DRIVE SHAFT REMOVAL/INSTALLATION**.)

5. Remove the oil seal (LH).

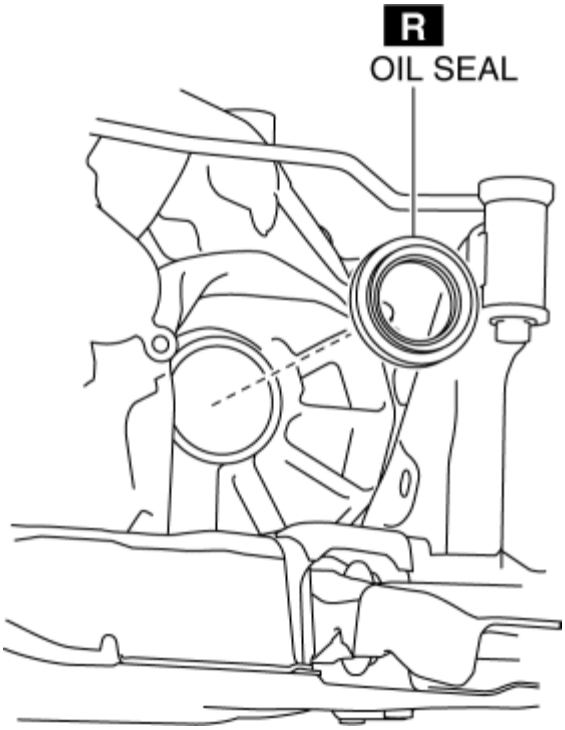

6. Remove the oil seal (RH).

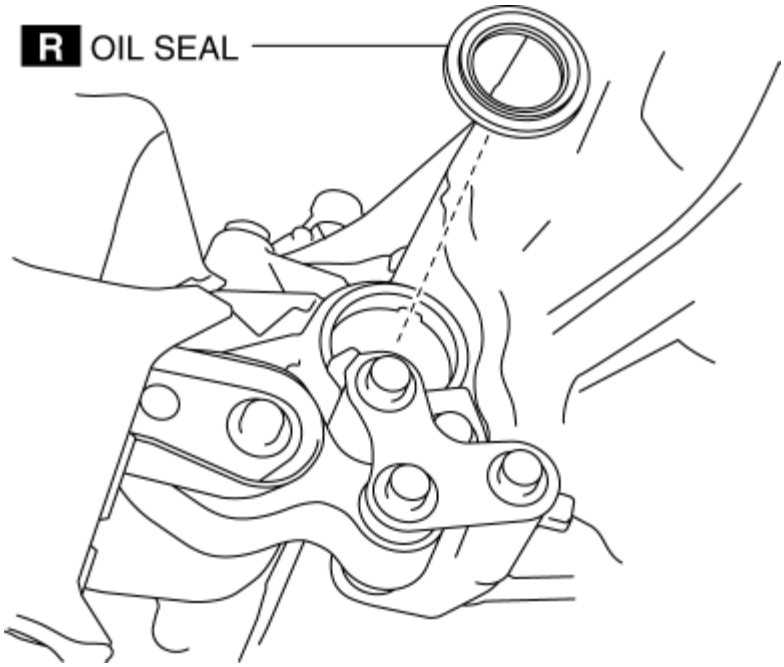

7. Using the **SST**s and a hammer, tap a new oil seal (LH) in evenly until the **SST**s contacts the transaxle case.

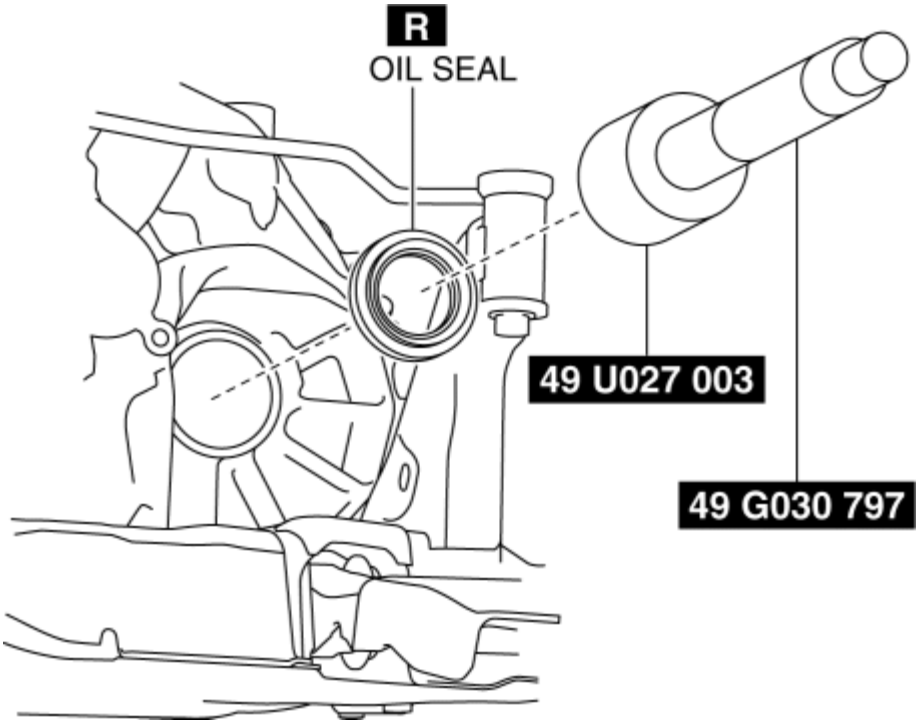

8. Using the **SST**s and a hammer, tap a new oil seal (RH) in evenly until the **SST**s contacts the transaxle case.

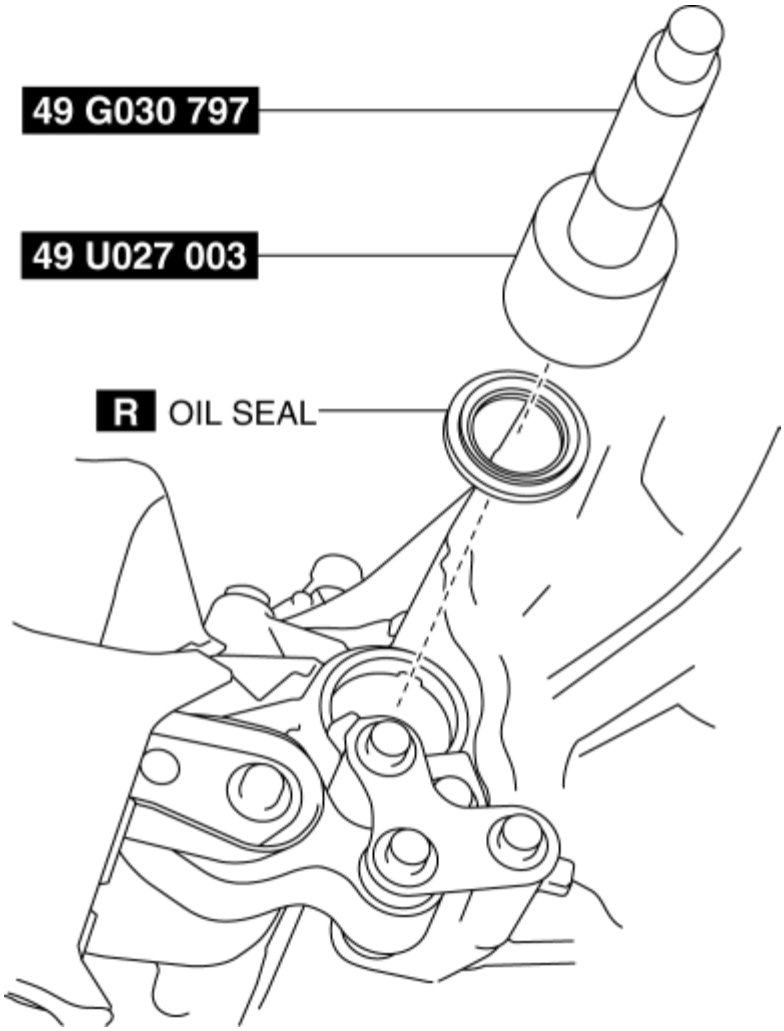

9. Coat the lip of each oil seal with transaxle oil.

10. Install in the reverse order of removal.

11. Add the specified amount of specified transaxle oil. (See **MANUAL TRANSAXLE OIL REPLACEMENT [C66M-R]**.)

2014 - Mazda3 - Transmission/Transaxle

SHIFT CONTROL MODULE REMOVAL/INSTALLATION [C66M-R]

Removal

1. Shift the shift lever to the neutral position.

2. Remove the plug hole plate. (See **PLUG HOLE PLATE REMOVAL/INSTALLATION [SKYACTIV-G 2.0, SKYACTIV-G 2.5]**.)

3. Disconnect the negative battery cable. (See **NEGATIVE BATTERY CABLE DISCONNECTION/CONNECTION [SKYACTIV-G 2.0, SKYACTIV-G 2.5]**.)

4. Remove the air cleaner and air hose as a single unit. (See **INTAKE-AIR SYSTEM REMOVAL/INSTALLATION [SKYACTIV-G 2.0, SKYACTIV-G 2.5]**.)

5. Remove the battery and battery tray. (See **BATTERY REMOVAL/INSTALLATION [SKYACTIV-G 2.0, SKYACTIV-G 2.5]**.)

6. Disconnect the control cable from the transaxle.

   a. Pull the lock pin in the direction of the arrow shown in the figure and release the control cable end lock.

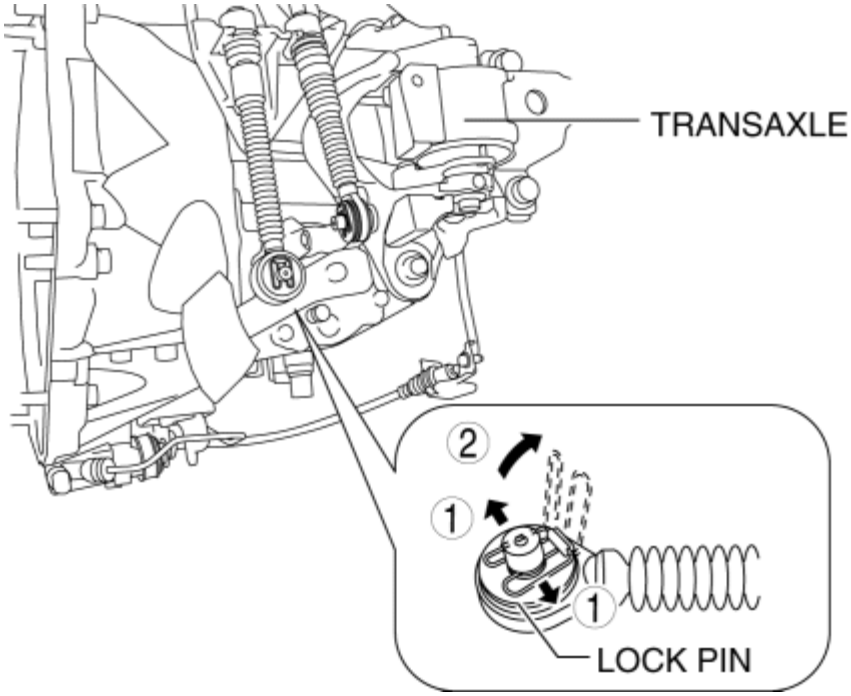

   b. Press the tabs on the control cable and disconnect the control cable from the bracket on the transaxle.

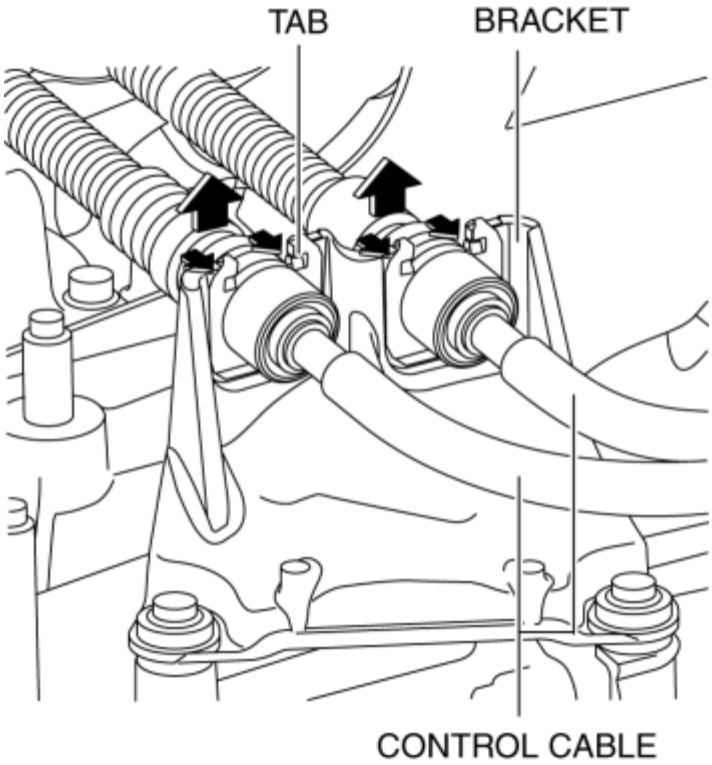

7. Remove the neutral switch in the order shown in the figure

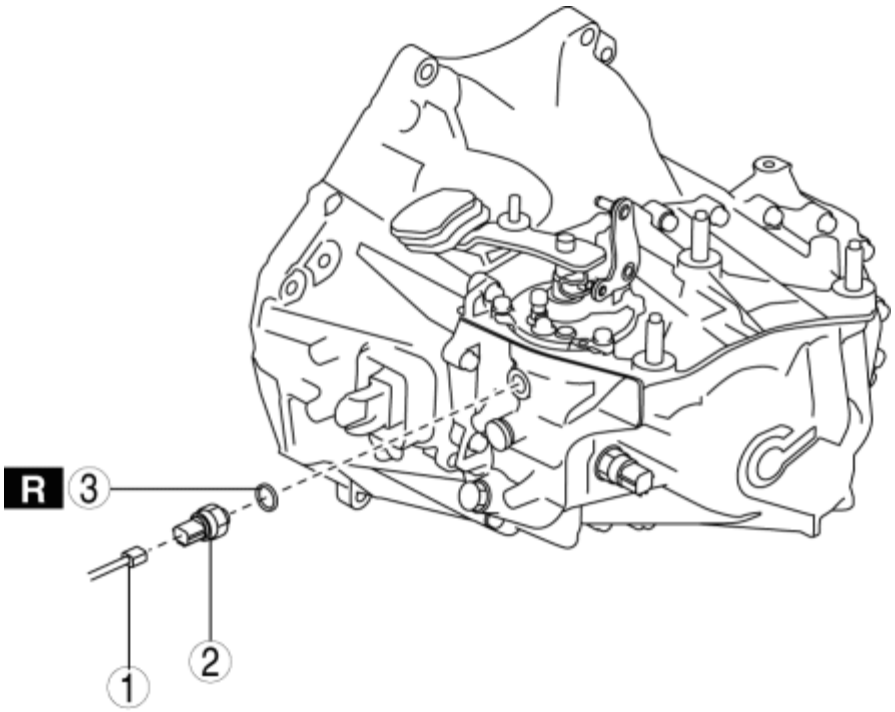

1	Connector
2	Neutral switch
3	Gasket

8. Remove the detent ball pin in the order shown in the figure

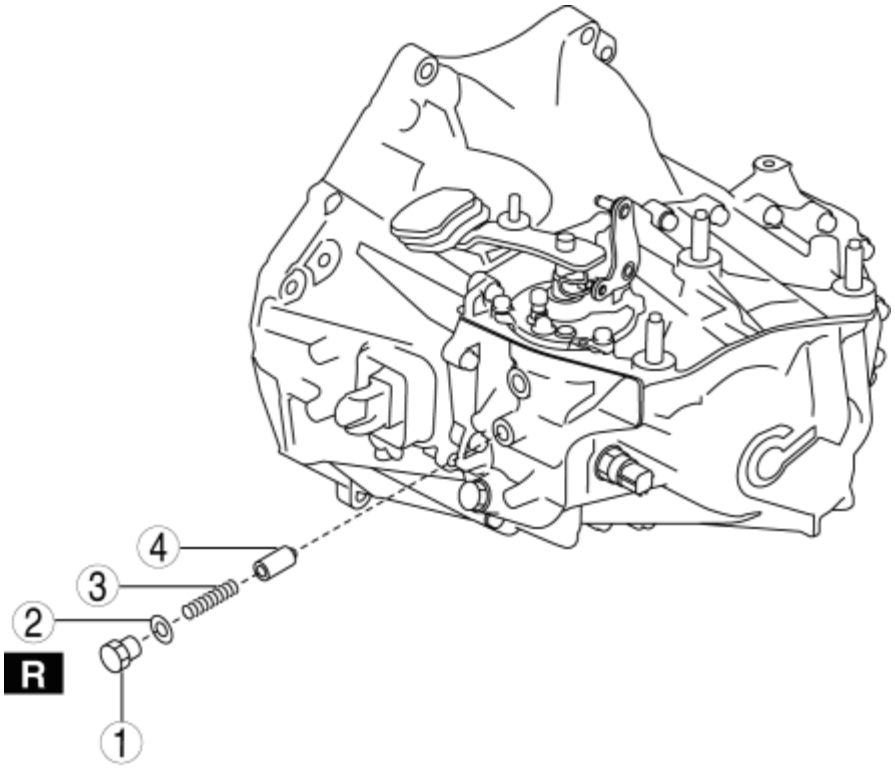

1	Plug
2	Gasket
3	Spring
4	Detent ball pin

9. Remove the back-up light switch in the order shown in the figure

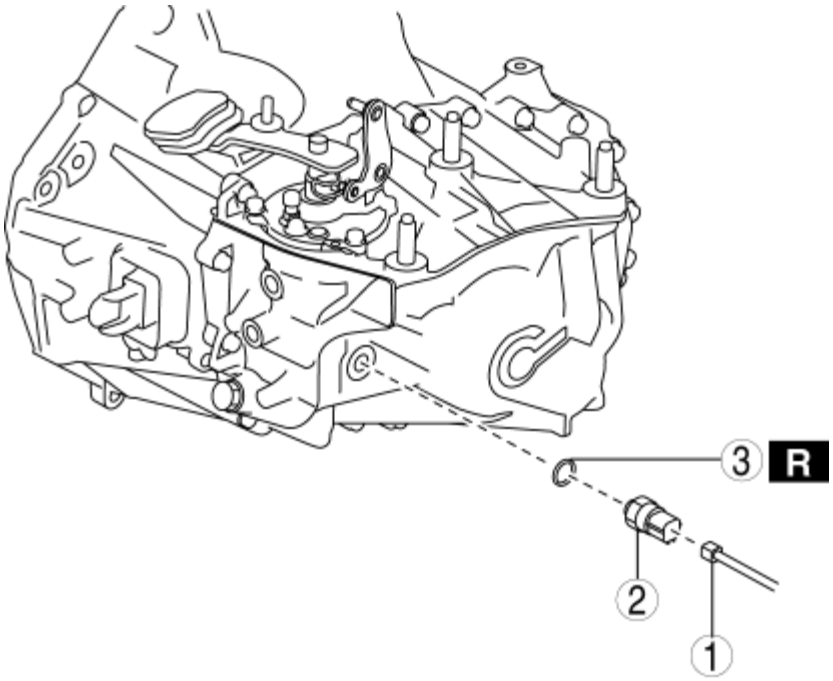

1	Connector
2	Back-up light switch
3	Gasket

10. Remove the shift control module in the order shown in the figure

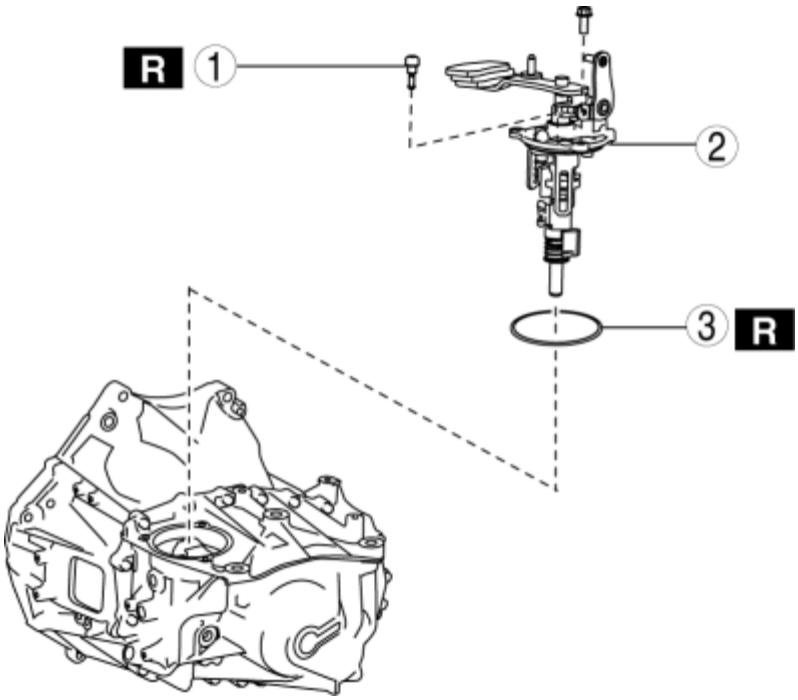

1	Breather
2	Shift control module
3	O-ring

Installation

1. Verify that the shift control module is in the neutral position.

NOTE:

- If the shift control module is in the neutral position, the shift lever with the weight can be moved up and down to a large extent.

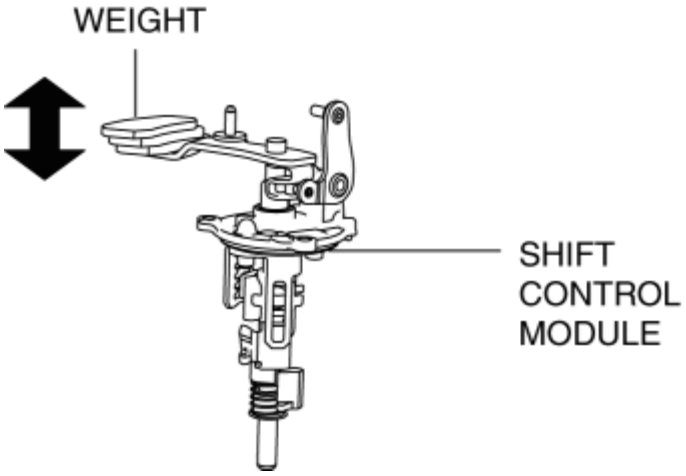

2. Install the shift control module in the order shown in the figure

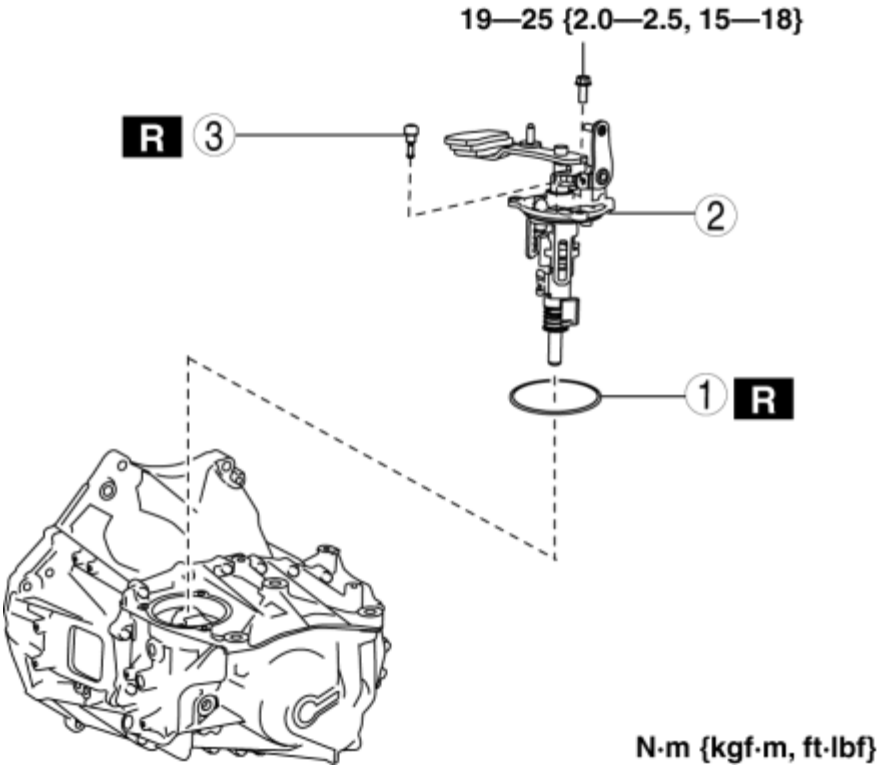

1	O-ring
2	Shift control module
3	Breather

3. Install the back-up light switch in the order shown in the figure

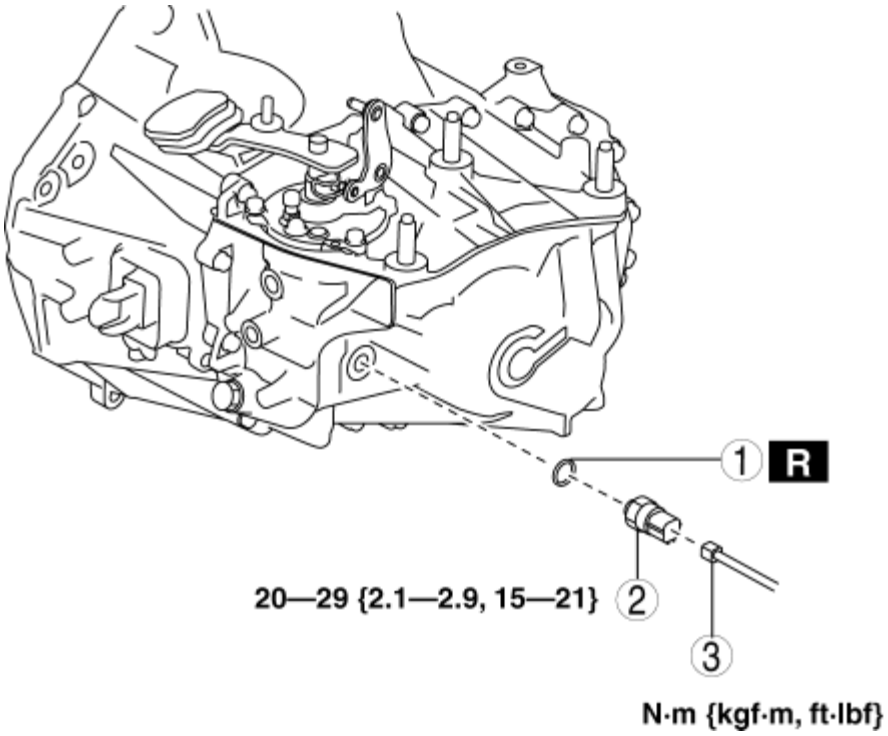

1	Gasket
2	Back-up light switch
3	Connector

4. Install the detent ball pin in the order shown in the figure

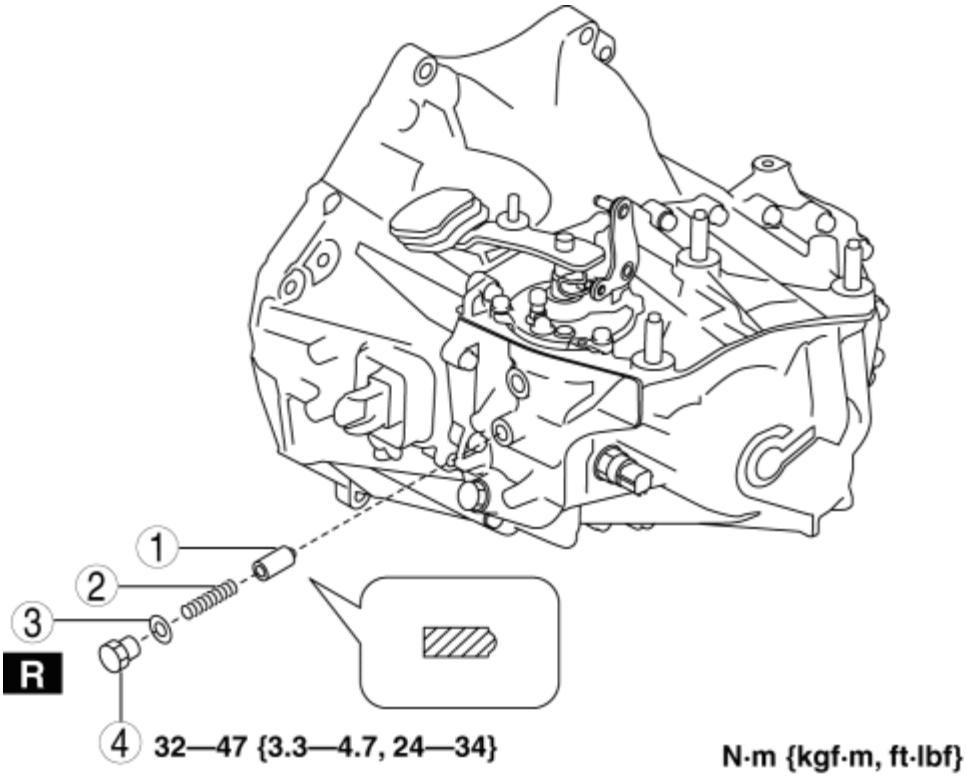

1	Detent ball pin
2	Spring
3	Gasket
4	Plug

5. Install the neutral switch in the order shown in the figure

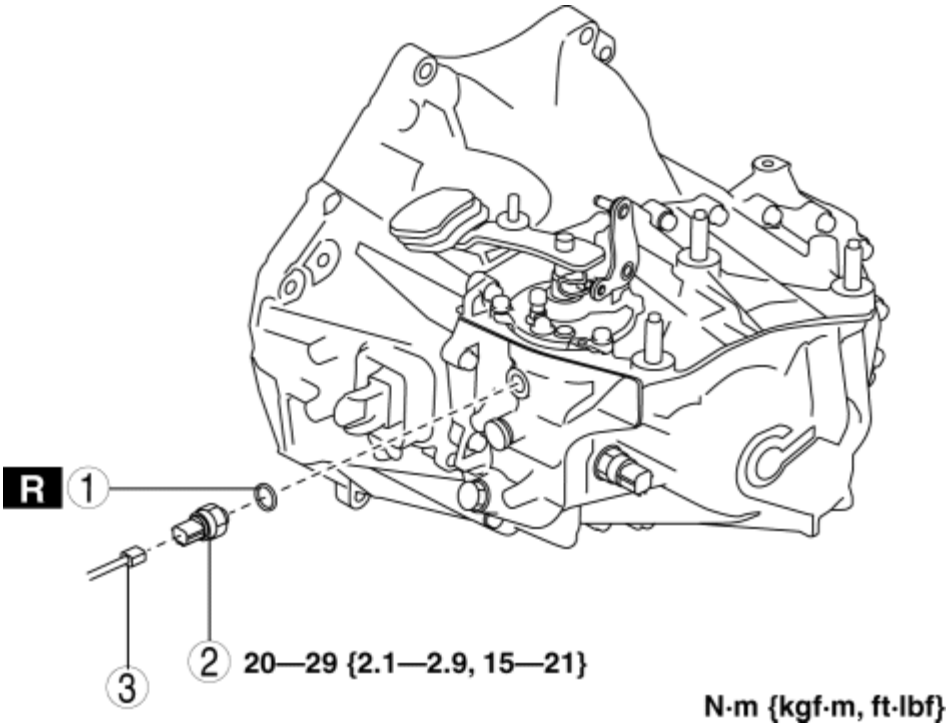

1	Gasket
2	Neutral switch
3	Connector

6. Connect the control cable to the transaxle.

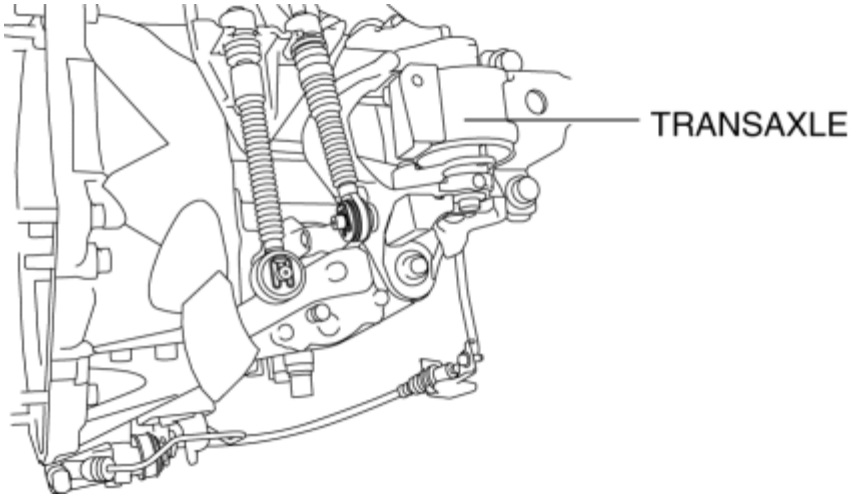

7. Make sure that the shift lever can be shifted smoothly.

8. Install the battery tray and battery. (See **BATTERY REMOVAL/INSTALLATION [SKYACTIV-G 2.0, SKYACTIV-G 2.5]**.)

9. Install the air cleaner and air hose as a single unit. (See **INTAKE-AIR SYSTEM REMOVAL/INSTALLATION [SKYACTIV-G 2.0, SKYACTIV-G 2.5]**.)

10. Connect the negative battery cable. (See **NEGATIVE BATTERY CABLE DISCONNECTION/CONNECTION [SKYACTIV-G 2.0, SKYACTIV-G 2.5]**.)

11. Install the plug hole plate. (See **PLUG HOLE PLATE REMOVAL/INSTALLATION [SKYACTIV-G 2.0, SKYACTIV-G 2.5]**.)

2014 - Mazda3 - Transmission/Transaxle

MANUAL TRANSAXLE SHIFT MECHANISM LOCATION INDEX [C66M-R]

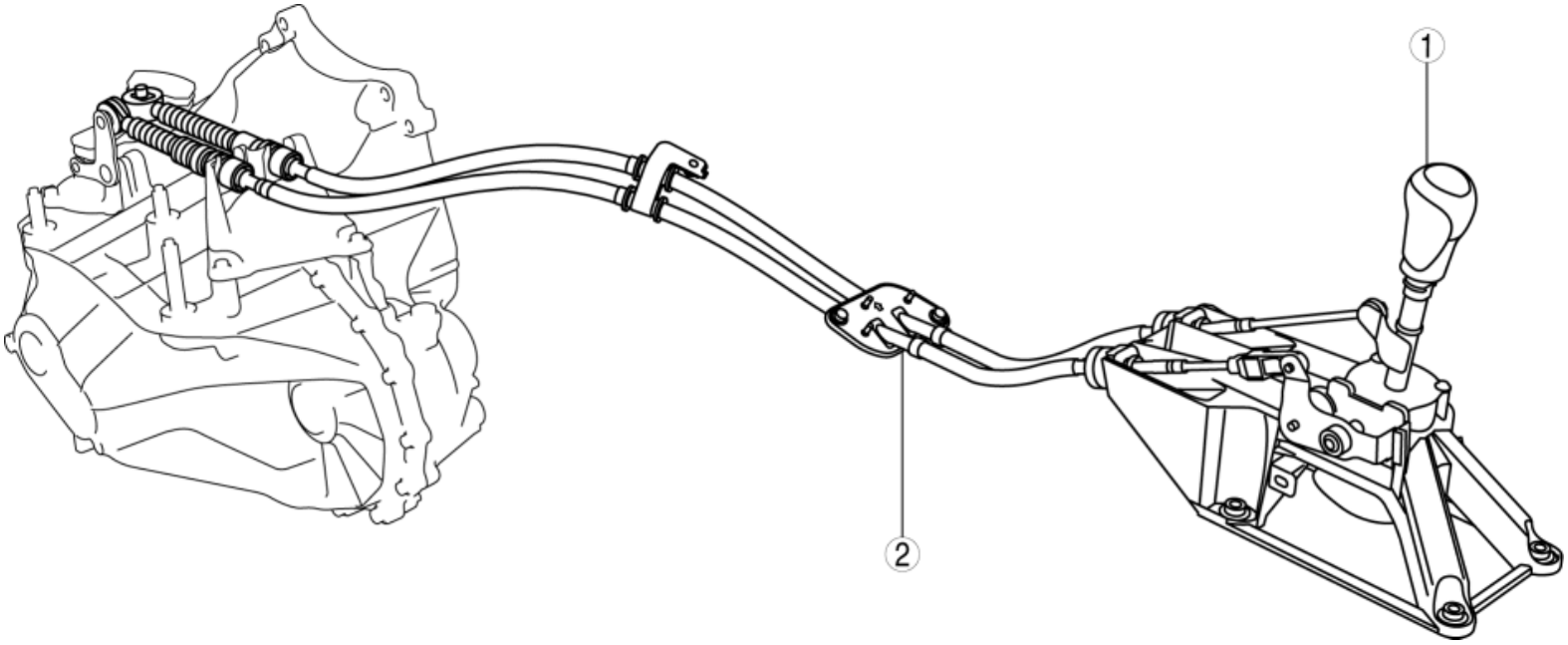

1	Shift lever (See **MANUAL TRANSAXLE SHIFT MECHANISM REMOVAL/INSTALLATION [C66M-R]**.)
2	Control cable (See **MANUAL TRANSAXLE SHIFT MECHANISM REMOVAL/INSTALLATION [C66M-R]**.)

2014 - Mazda3 - Transmission/Transaxle

MANUAL TRANSAXLE SHIFT MECHANISM REMOVAL/INSTALLATION [C66M-R]

1. Disconnect the negative battery cable. (See **NEGATIVE BATTERY CABLE DISCONNECTION/CONNECTION [SKYACTIV-G 2.0, SKYACTIV-G 2.5]**.)

2. Remove the shift lever using the following procedure:

   a. Remove the upper panel. (See **UPPER PANEL REMOVAL**.) (See **UPPER PANEL INSTALLATION**.)

   b. Remove the shift lever knob.

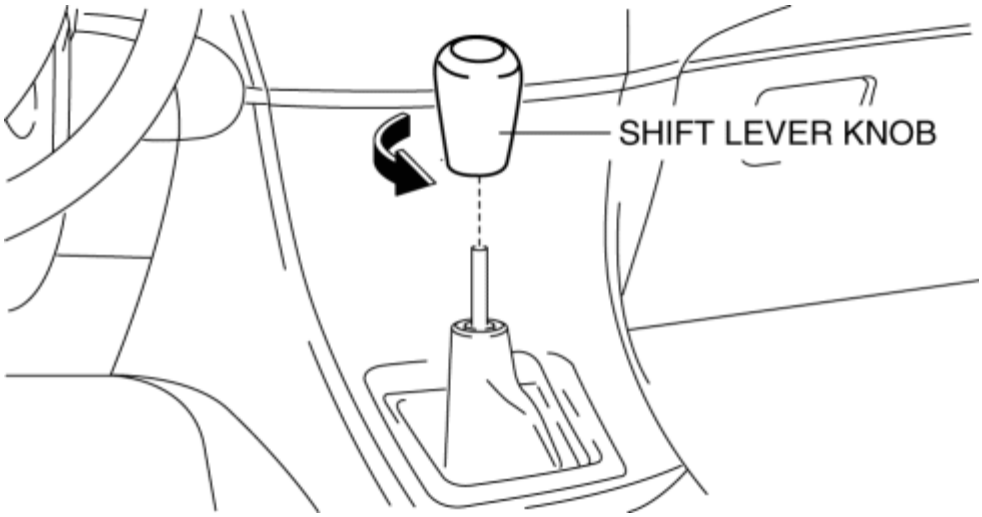

   c. Remove the shift panel. (See **SHIFT PANEL REMOVAL/INSTALLATION**.)

   d. Remove the front console box. (See **FRONT CONSOLE BOX REMOVAL/INSTALLATION**.)

   e. Remove the side wall. (See **SIDE WALL REMOVAL/INSTALLATION**.)

   f. Remove the rear console. (See **REAR CONSOLE REMOVAL/INSTALLATION**.)

   g. Press the tabs on the control cable as shown in the figure and disconnect the shift lever from the control cable.

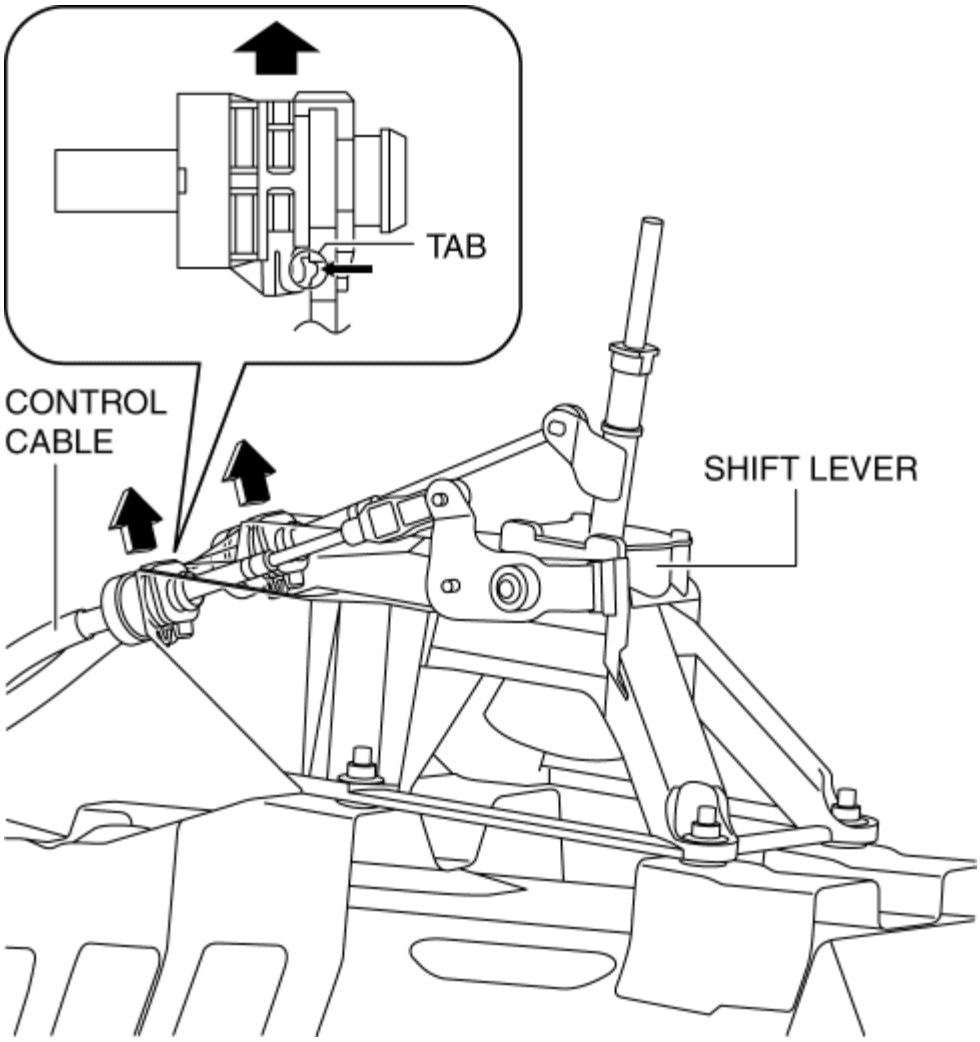

h. Disconnect the control cable end (shift side) from shift lever as shown in the figure.

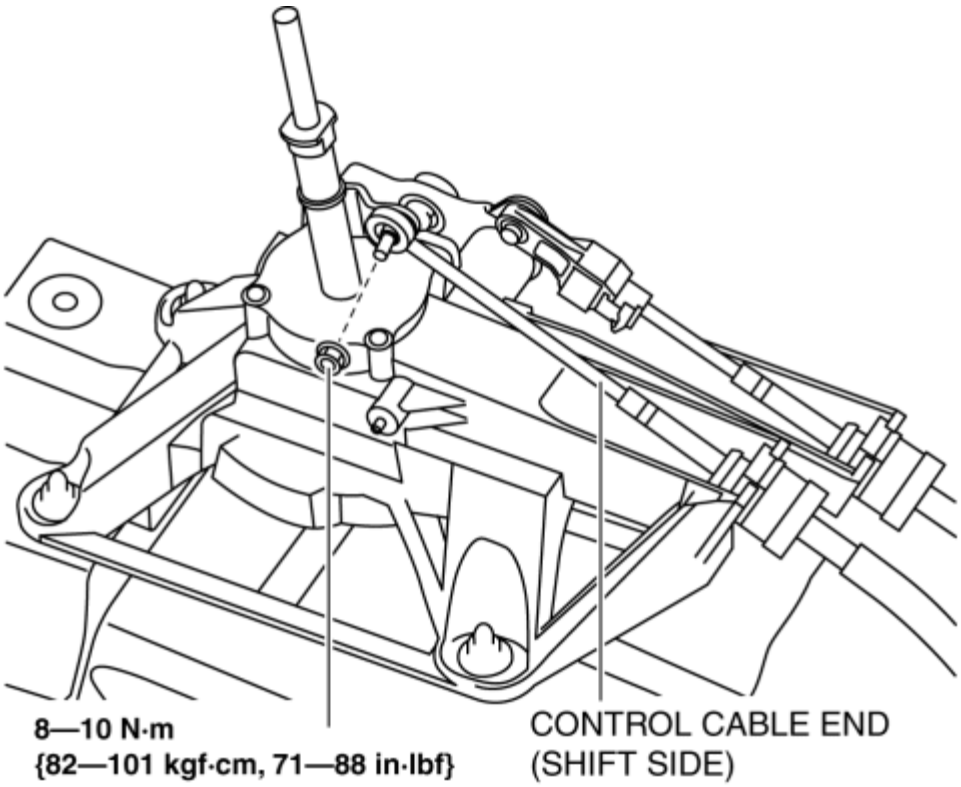

i. Disconnect the control cable end (select side) from the shift lever using the following procedure:

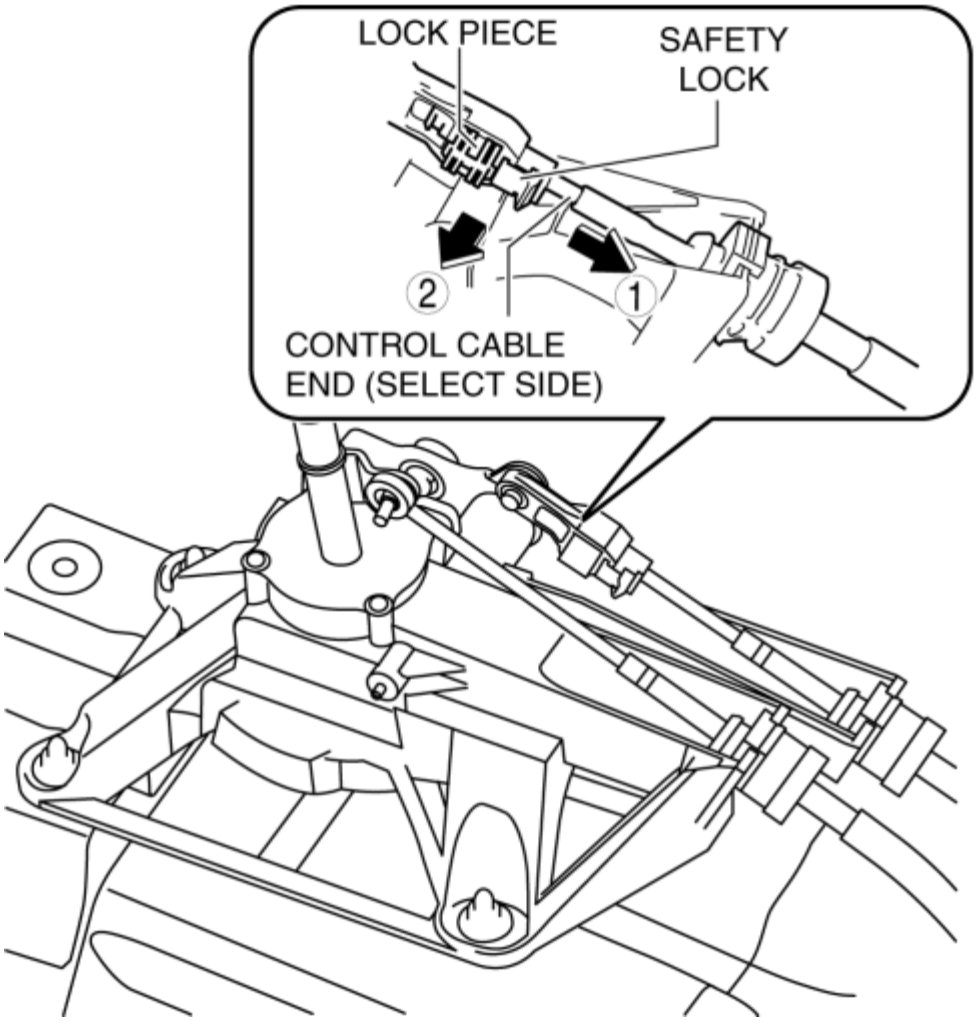

i. Press down the safety lock in the direction shown in the figure.

ii. Push out the lock piece in the direction shown in the figure.

iii. Disconnect the control cable end (select side) from the shift lever.

j. Disconnect the connector from shift lever as shown in the figure.

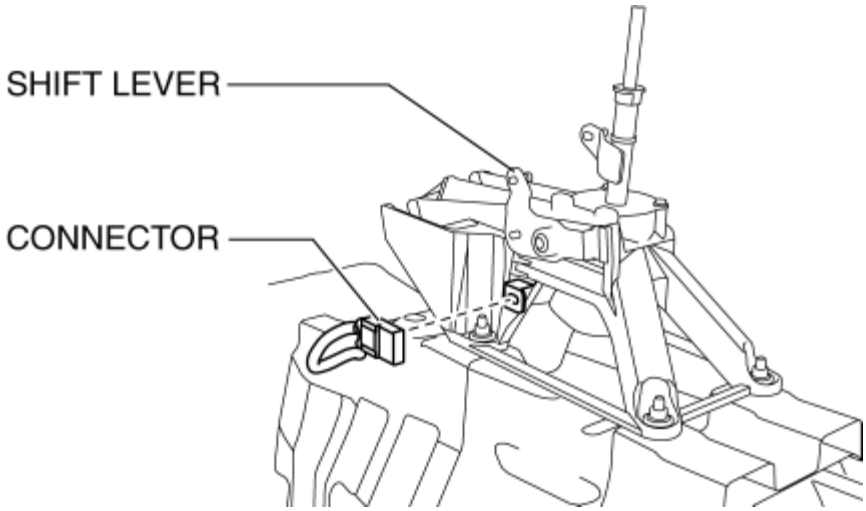

k. Remove the shift lever.

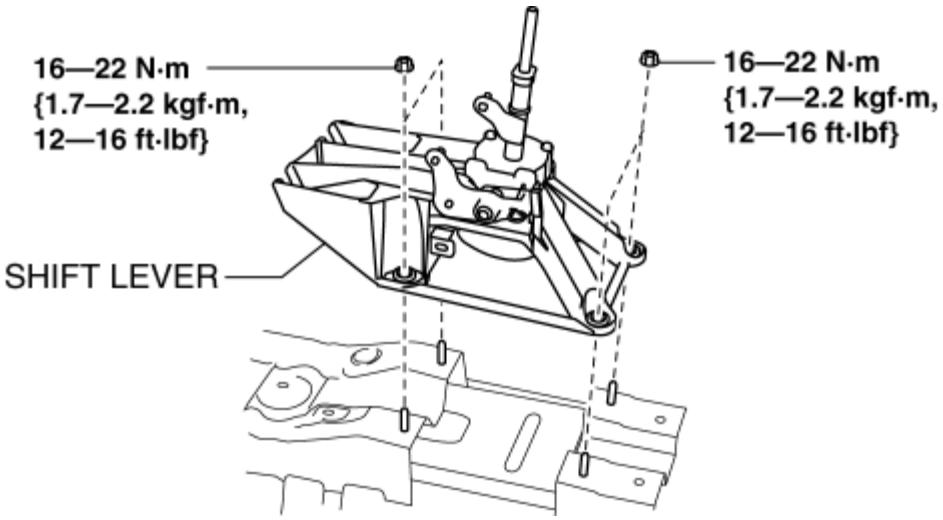

3. Remove the control cable using the following procedure:

a. Remove the air cleaner component. (ex: air cleaner, air hose) (See **INTAKE-AIR SYSTEM REMOVAL/INSTALLATION [SKYACTIV-G 2.0, SKYACTIV-G 2.5]**.)

b. Remove the battery component. (ex: battery, battery tray and PCM component) (See **BATTERY REMOVAL/INSTALLATION [SKYACTIV-G 2.0, SKYACTIV-G 2.5]**.)

c. Remove the control cable end from the MTX.

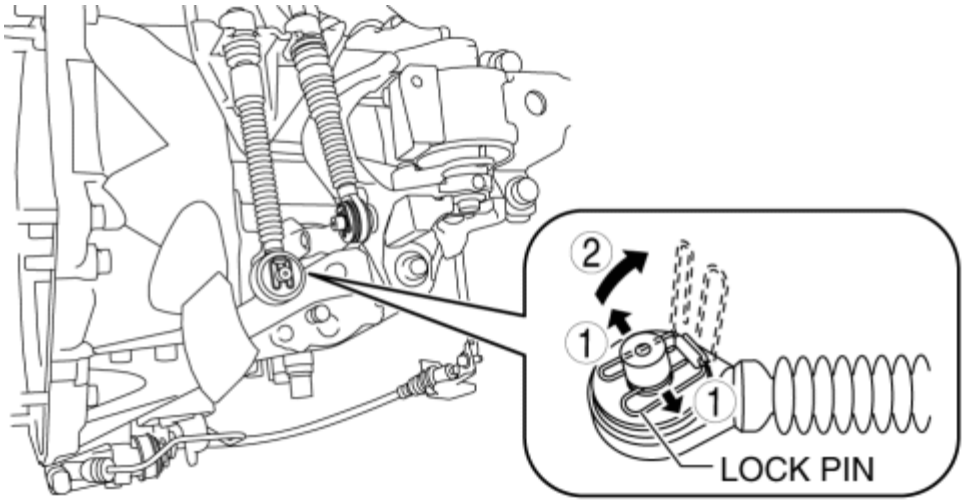

i. Pull the lock pin in the direction of the arrow shown in the figure and release the control cable end (MTX side) lock.

ii. Remove the control cable end from the MTX.

d. Press the tabs on the control cable and disconnect the control cable from the bracket.

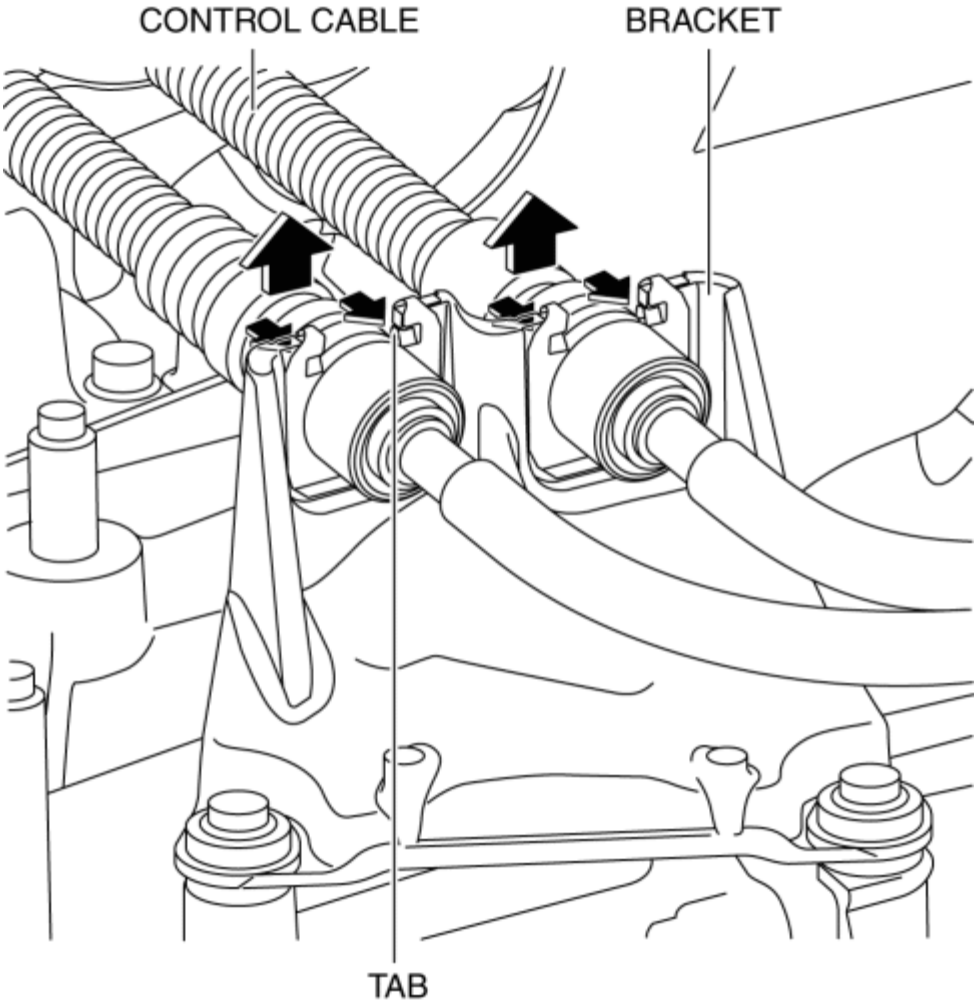

e. Remove the fastening nut for the control cable.

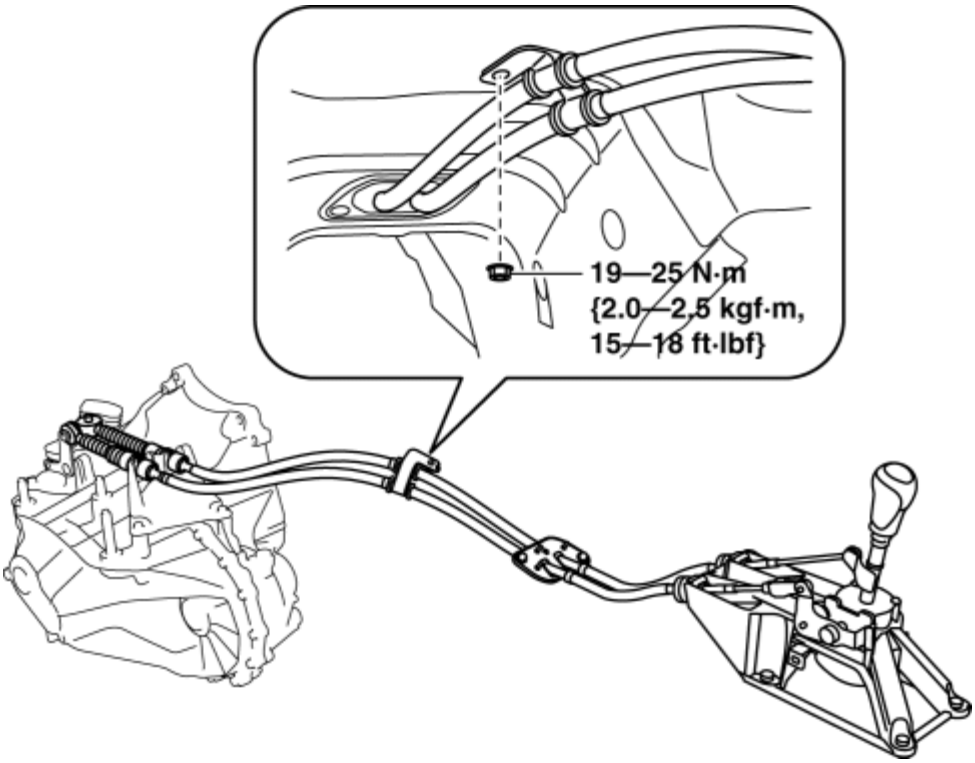

f. Remove the fastening nuts for the grommet.

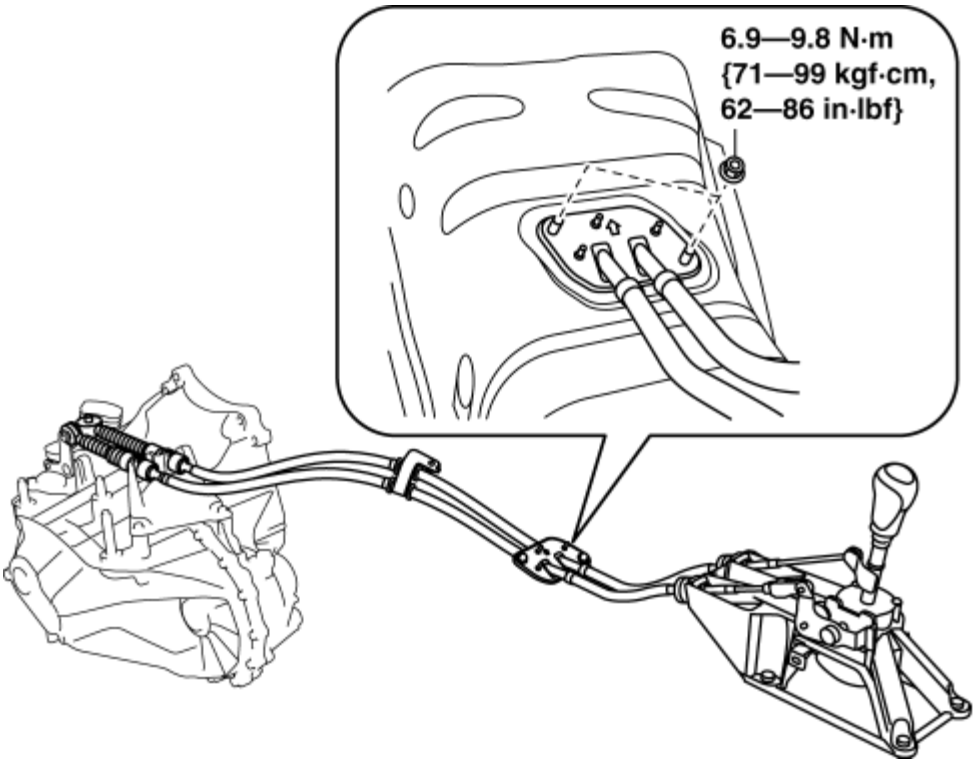

g. Remove the control cable.

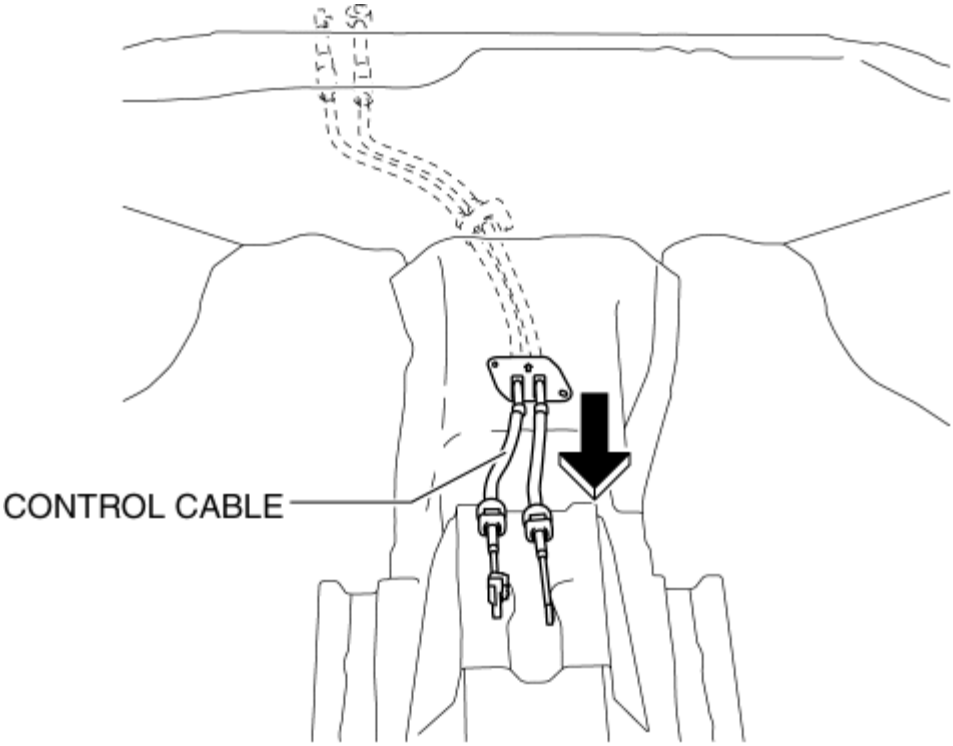

4. Make sure that the shift lever (transaxle side) is in neutral position.

5. Install in the reverse order of removal.

2014 - Mazda3 - Transmission / Transaxle

AUTOMATIC TRANSAXLE LOCATION INDEX [FW6A-EL]

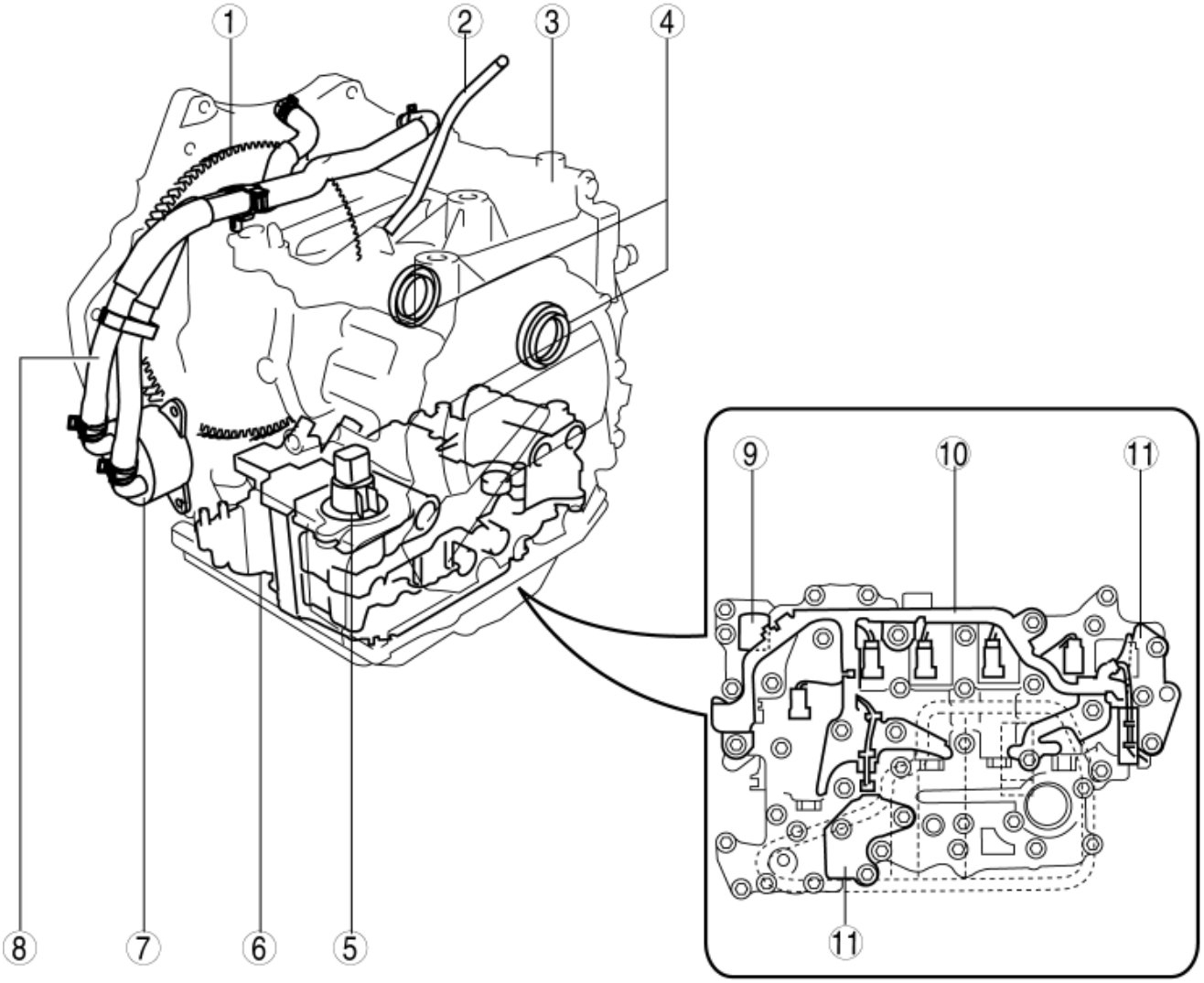

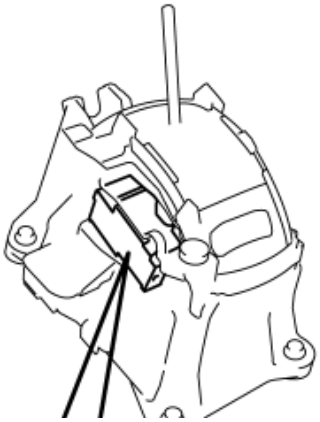

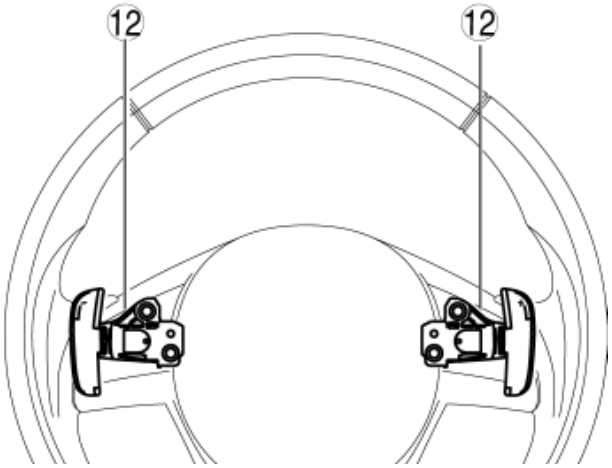

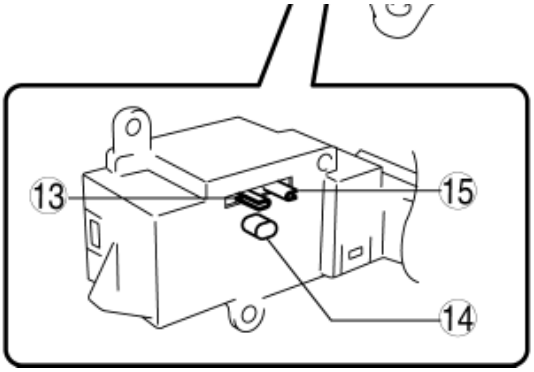

1	Drive plate (See **DRIVE PLATE REMOVAL/INSTALLATION [FW6A-EL]**.)
2	Breather hose (See **AUTOMATIC TRANSAXLE REMOVAL/INSTALLATION [FW6A-EL]**.)
3	Automatic transaxle (See **MECHANICAL SYSTEM TEST [FW6A-EL]**.) (See **ROAD TEST [FW6A-EL]**.) (See **AUTOMATIC TRANSAXLE FLUID (ATF) INSPECTION [FW6A-EL]**.) (See **AUTOMATIC TRANSAXLE FLUID (ATF) REPLACEMENT [FW6A-EL]**.) (See **AUTOMATIC TRANSAXLE FLUID (ATF) ADJUSTMENT [FW6A-EL]**.) (See **INITIAL LEARNING [FW6A-EL]**.) (See **AUTOMATIC TRANSAXLE REMOVAL/INSTALLATION [FW6A-EL]**.)
4	Oil seal (differential) (See **OIL SEAL (DIFFERENTIAL) REPLACEMENT [FW6A-EL]**.)
5	Oil seal (control valve body) (See **OIL SEAL (CONTROL VALVE BODY) REPLACEMENT [FW6A-EL]**.)
6	Control valve body (See **CONTROL VALVE BODY REMOVAL/INSTALLATION [FW6A-EL]**.) (See **TCM CONFIGURATION [FW6A-EL]**.)
7	Oil cooler (See **OIL COOLER REMOVAL/INSTALLATION [FW6A-EL]**.)
8	Water hose (See **OIL COOLER REMOVAL/INSTALLATION [FW6A-EL]**.)
9	ON/OFF solenoid

	(See **ON/OFF SOLENOID REMOVAL/INSTALLATION [FW6A-EL]**.)
10	Coupler component (See **COUPLER COMPONENT REMOVAL/INSTALLATION [FW6A-EL]**.)
11	Oil pressure switch (See **OIL PRESSURE SWITCH REMOVAL/INSTALLATION [FW6A-EL]**.)
12	Steering shift switch (See **STEERING SHIFT SWITCH INSPECTION [FW6A-EL]**.) (See **STEERING SHIFT SWITCH REMOVAL/INSTALLATION [FW6A-EL]**.)
13	Up switch (See **UP SWITCH INSPECTION [FW6A-EL]**.) (See **UP SWITCH REMOVAL/INSTALLATION [FW6A-EL]**.)
14	M position switch (See **M POSITION SWITCH INSPECTION [FW6A-EL]**.) (See **M POSITION SWITCH REMOVAL/INSTALLATION [FW6A-EL]**.)
15	Down switch (See **DOWN SWITCH INSPECTION [FW6A-EL]**.) (See **DOWN SWITCH REMOVAL/INSTALLATION [FW6A-EL]**.)

2014 - Mazda3 - Transmission/Transaxle

MECHANICAL SYSTEM TEST [FW6A-EL]

Mechanical system test preparation

1. Apply the parking brake firmly, and set the wheel blocks for both the front and rear wheels.
2. Inspect the engine coolant level. (See **ENGINE COOLANT LEVEL INSPECTION [SKYACTIV-G 2.0, SKYACTIV-G 2.5]**.)
3. Inspect the engine oil level. (See **ENGINE OIL LEVEL INSPECTION [SKYACTIV-G 2.0, SKYACTIV-G 2.5]**.)
4. Inspect the ATF level. (See **AUTOMATIC TRANSAXLE FLUID (ATF) INSPECTION [FW6A-EL]**.)
5. Inspect the ignition timing. (See **ENGINE TUNE-UP [SKYACTIV-G 2.0, SKYACTIV-G 2.5]**.)
6. Inspect the idle speed. (See **ENGINE TUNE-UP [SKYACTIV-G 2.0, SKYACTIV-G 2.5]**.)
7. Verify that no DTCs are stored.

Line pressure test

1. Perform the mechanical system test preparation. (See **Mechanical system test preparation**.)
2. Remove the front under cover No.2. (See **FRONT UNDER COVER No.2 REMOVAL/INSTALLATION**.)
3. Disconnect the wiring harness from the front crossmember. (Vehicle with i-ELOOP)

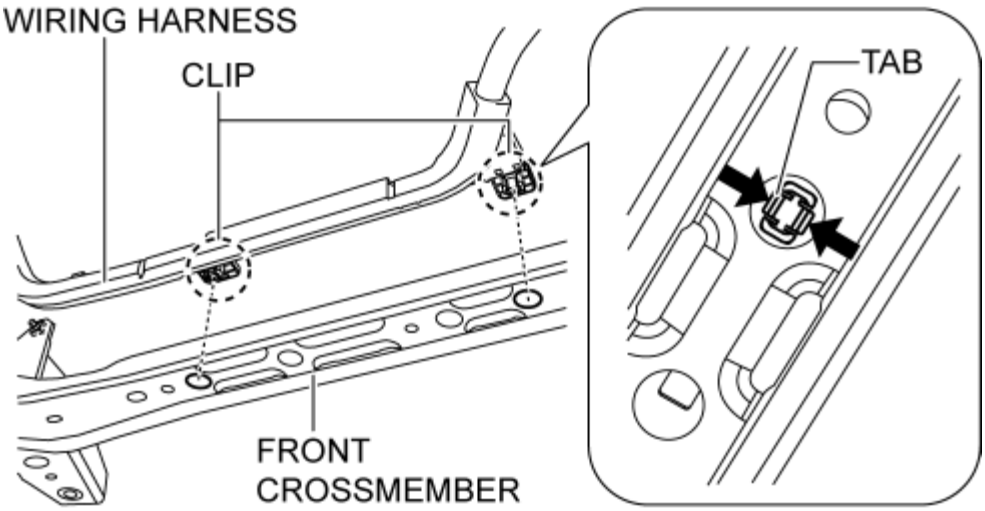

4. Disconnect the wiring harness clip from the harness bracket.

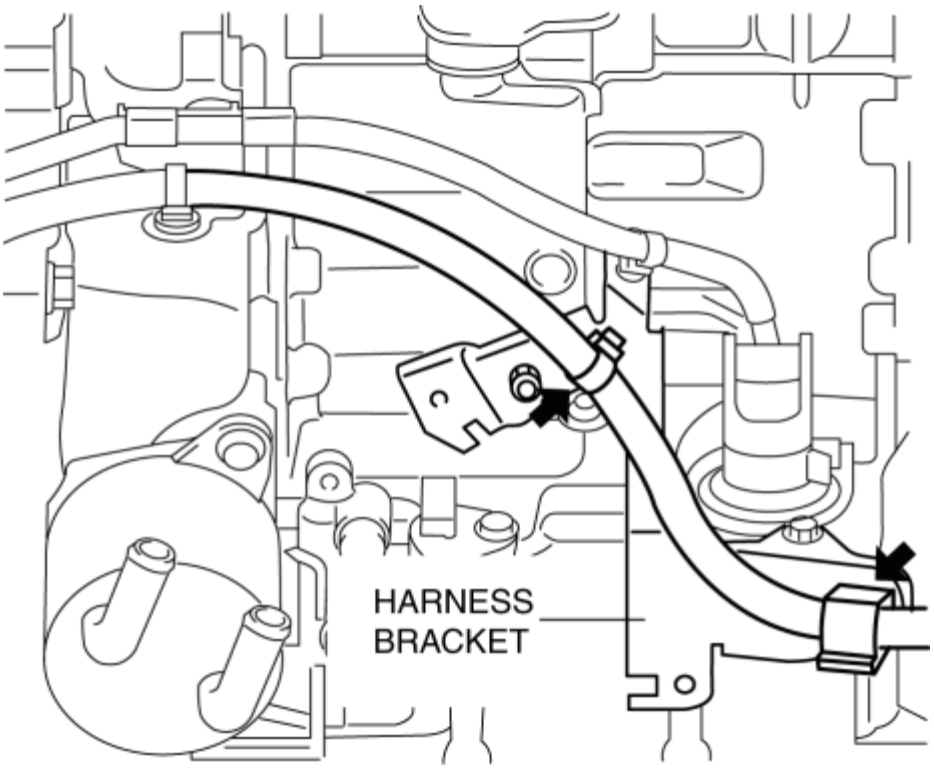

5. Remove the splash shield. (LH) (See **SPLASH SHIELD REMOVAL/INSTALLATION**.)

6. Remove the harness bracket installation bolts from the transaxle and set it aside.

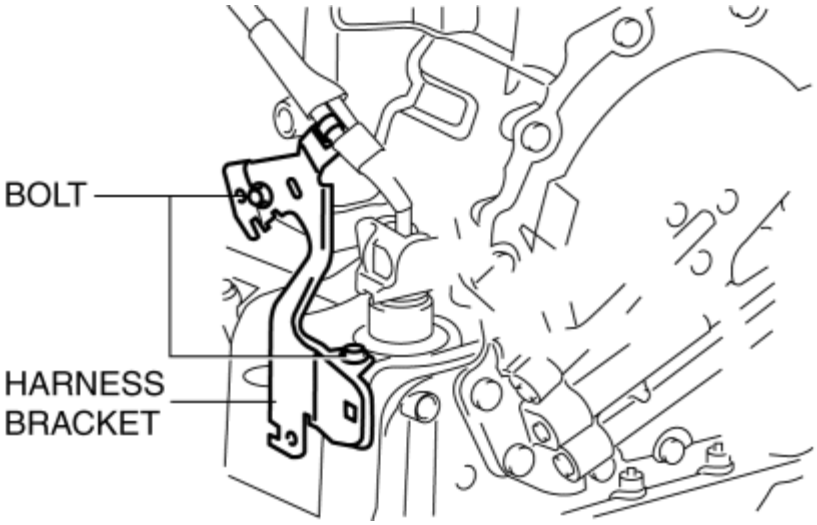

7. Remove the pressure detection square head plug.

WARNING:

- Do not remove the square head plug when the ATF temperature is high. Otherwise, ATF could overflow and cause severe burns or serious injury. Remove the square head plug when the transaxle and ATF temperatures are low.

NOTE:

- Use a suitable oil pressure gauge that corresponds to the line pressure because the maximum scale value differs depending on the oil pressure gauge.

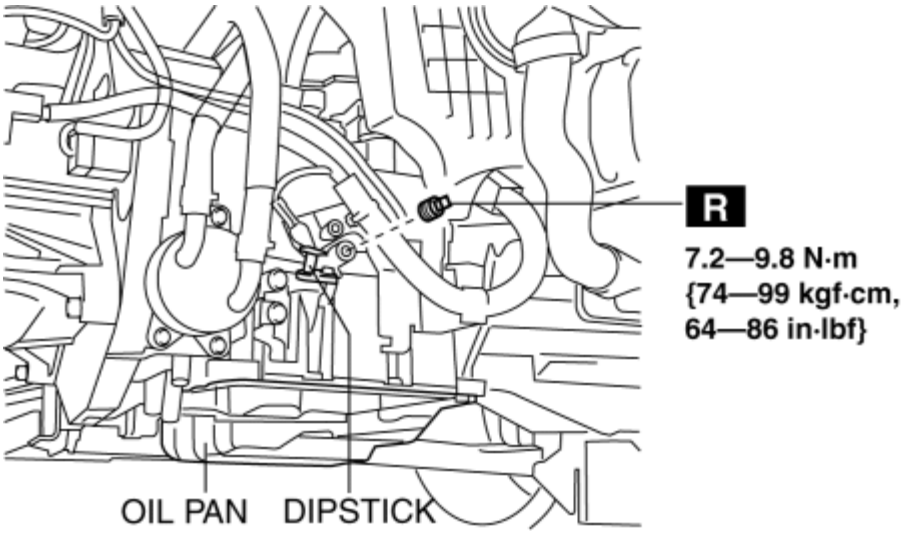

8. Install **SSTs (49 D019 908, 49 D019 909, 49 D019 910,** 49 D019 911, 49 D019 913) to the line pressure detection port as shown in the figure.

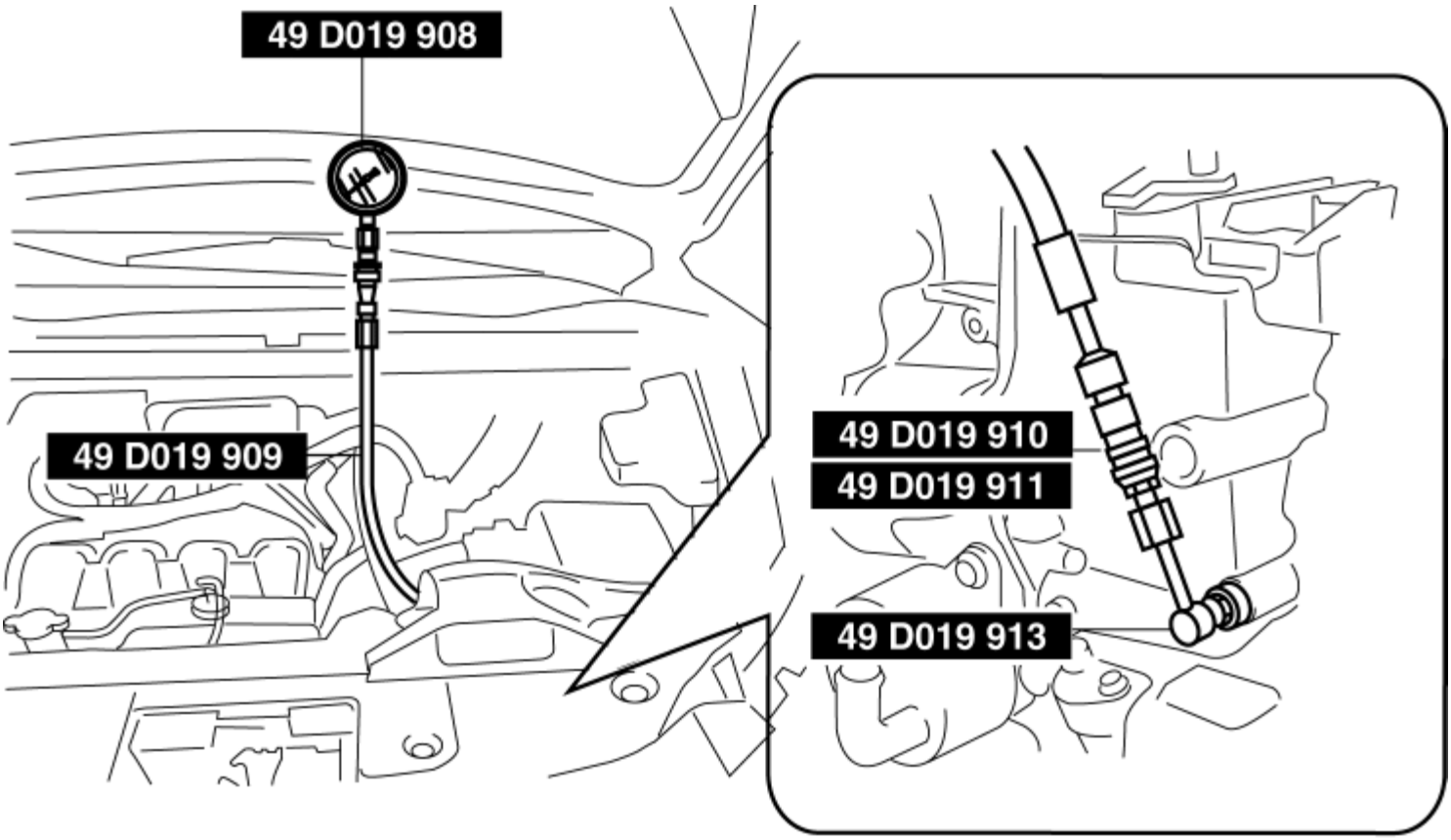

9. Start the engine.

10. Warm up the engine until the ATF temperature is **60—70 °C {140—158 °F}**.

11. Shift the selector lever to the D position.

12. Measure the line pressure while idling in D position.

13. Measure the line pressures while idling in the M (1st gear) and R positions using the same procedure.

14. Stop the engine.

15. Change the low-pressure gauge (49 D019 908) to the high-pressure gauge (49 D019 907).

16. Start the engine.

17. Measure the line pressure while stalling in D position.

    a. Strongly depress the brake pedal with the left foot.

    b. Shift the selector lever to the D position.

    CAUTION:

    - To prevent damage to the transaxle, measure the line pressure while stalling (Step (3)—(4)) within 5 s.

    c. Slowly depress the accelerator pedal fully with the right foot all the way down.

    d. Read the line pressure quickly while stalling, and remove the right foot from the accelerator pedal.

    e. Shift the selector lever to the N position and idle for **1 min or more**.

18. Measure the line pressure while stalling for positions other than D in the same procedure.

    - If there is any malfunction, one of the following causes may have occurred:

Condition		Possible cause
Lower than specification	Lower in R, D, and M (1GR) position	• Oil pump wear • ATF leakage from oil pump, control valve body, and transaxle case • Pressure regulator valve sticking • Pressure control solenoid malfunction • Solenoid reducing valve sticking
	Lower in D and M (1GR) position	• ATF leakage from low clutch hydraulic circuit
	Lower in R and M (1GR) position	• ATF leakage from low and reverse brake hydraulic circuit
	Lower in R position	• ATF leakage from R-3-5 brake hydraulic circuit
Higher than specification	Higher in R, D, and M (1GR) position	• Pressure regulator valve sticking • Pressure control solenoid malfunction

Line pressure

Measurement conditions		Specification (kPa {kgf/cm^2, psi})
Idling	R position	**500—700 {5.10—7.13, 72.6—101.0}**
	D and M (1GR) position	**330—470 {3.37—4.79, 47.9—68.1}**
Stalling	R position	**1,790—2,100 {18.26—21.41, 259.7—304.5}**
	D and M (1GR) position	**970—1,170 {9.90—11.93, 141.0—169.6}**

19. Stop the engine.

20. Remove the **SSTs**.

WARNING:

- If the SST is removed when the ATF temperature is high, ATF could overflow and cause severe burns or serious injury. Remove the SST when the transaxle and ATF temperatures are low.

21. Install a new square head plug.

NOTE:

- Do not reuse the square head plug because a sealant coating has been applied.

Tightening torque

- 7.2—9.8 N·m {74—99 kgf·cm, 64—86 in·lbf}

22. Install the harness bracket installation bolts.

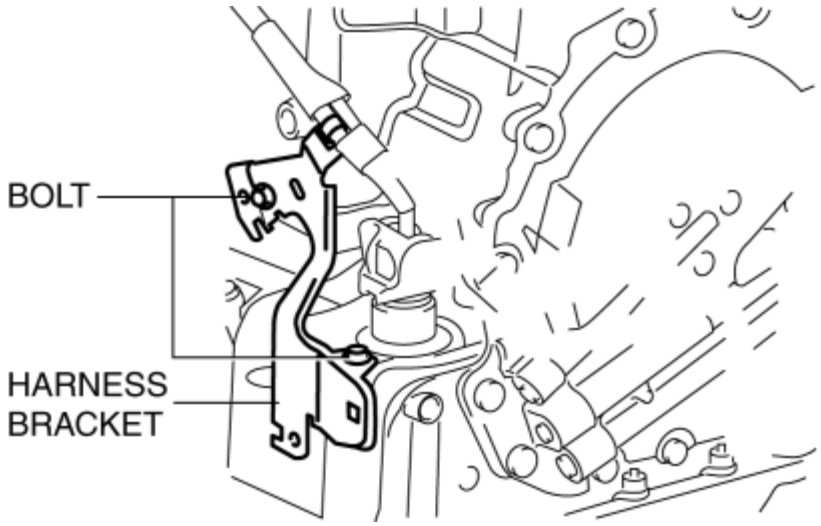

Tightening torque

- 8—10 N·m {82—101 kgf·cm, 71—88 in·lbf}

23. Install the splash shield. (LH) (See **SPLASH SHIELD REMOVAL/INSTALLATION**.)

24. Connect the wiring harness clip to the harness bracket.

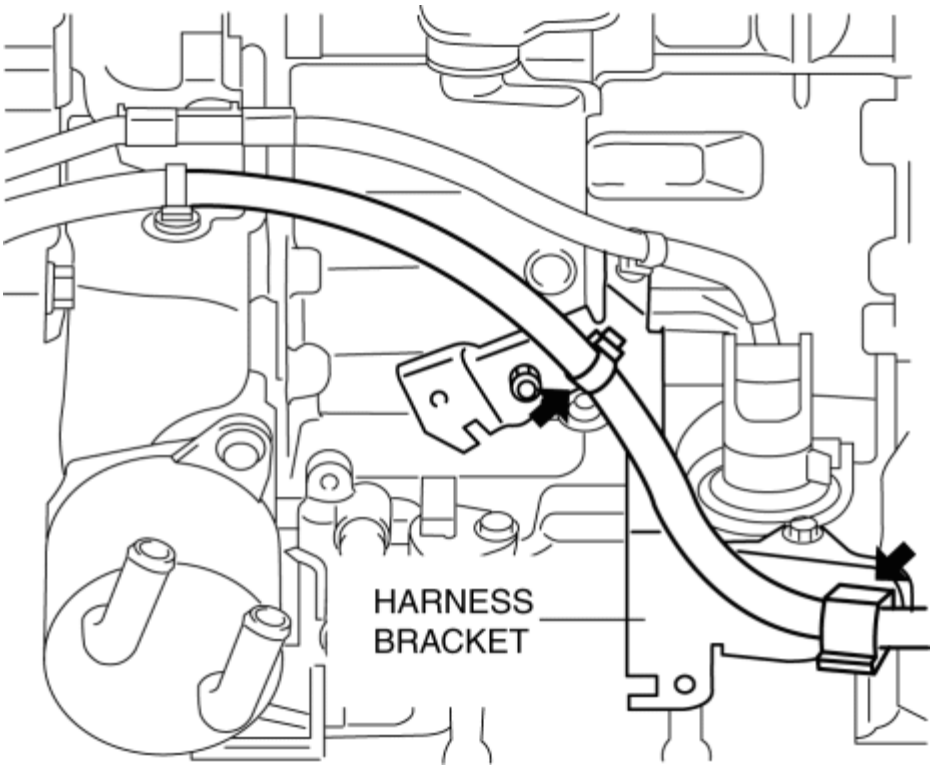

25. Disconnect the wiring harness to the front crossmember. (Vehicle with i-ELOOP)

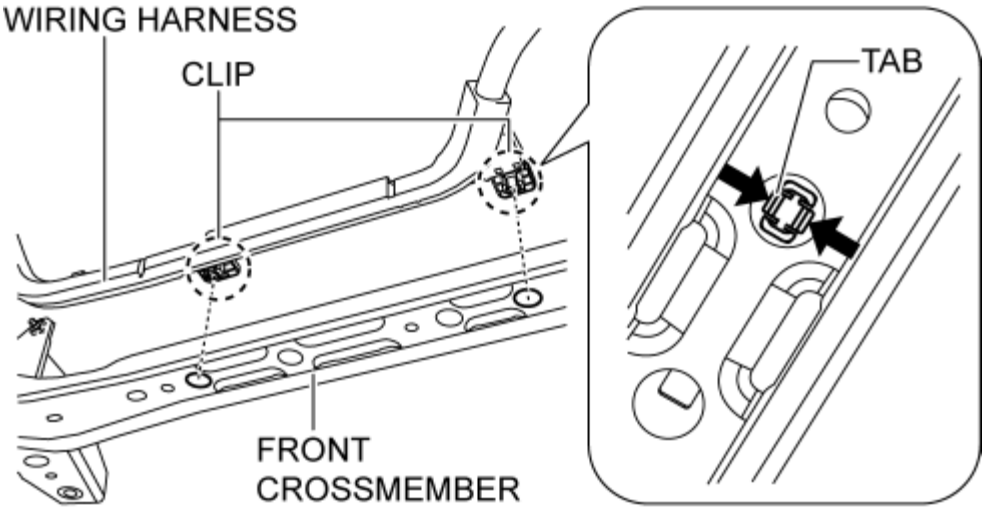

26. Install the front under cover No.2. (See **FRONT UNDER COVER No.2 REMOVAL/INSTALLATION**.)

Stall test

1. Perform the mechanical system test preparation. (See **Mechanical system test preparation**.)
2. Apply the parking brake firmly, and set the wheel blocks for both the front and rear wheels.
3. Start the engine.
4. Measure the stall speed in the D position.
   a. Strongly depress the brake pedal with the left foot.
   b. Shift the selector lever to the D position.

CAUTION:

- To prevent damage to the transaxle, measure the stall speed (Step (3)—(4)) within 5 s.

c. Slowly depress the accelerator pedal fully with the right foot all the way down.

d. Read the engine speed quickly when the speed is stabilized, and remove the right foot from the accelerator pedal.

e. Shift the selector lever to the N position and idle for **1 min or more**.

5. Measure the stall speed in the M (1st gear) and R positions using the same procedure.

- If there is any malfunction, one of the following causes may have occurred:

<table>
<tr><th colspan="2">Condition</th><th colspan="2">Possible cause</th></tr>
<tr><td rowspan="4">Higher than specification</td><td rowspan="2">Higher in R, D, and M (1GR) position</td><td>Line pressure is low</td><td>• Oil pump wear
• ATF leakage from oil pump, control valve body, and transaxle case
• Pressure regulator valve sticking
• TR control valve sticking
• Pressure control solenoid operation malfunction</td></tr>
<tr><td colspan="2">• Low and reverse brake slippage, and damage of one-way clutch</td></tr>
<tr><td>Higher in D and M (1GR) position</td><td colspan="2">• Low clutch slippage
• One-way clutch damage</td></tr>
<tr><td>Higher in R position</td><td colspan="2">Perform road test to determine whether problem is in R-3-5 brake or low and reverse brake
• Engine brake operates in M (1GR) position
▪ R-3-5 brake slippage
• Engine braking does not operate in M (1GR) position
▪ Low and reverse brake slippage</td></tr>
<tr><td>Lower than specification</td><td>Lower in R, D, and M (1GR) position</td><td colspan="2">• Engine malfunction
• One-way clutch slippage in torque</td></tr>
</table>

		converter

Stall speed

Measurement conditions	Standard value (rpm)
R position	1,700—2,200
D position	1,900—2,600
M position	

Time lag test

1. Perform the mechanical system test preparation. (See **Mechanical system test preparation**.)
2. Apply the parking brake firmly, and set the wheel blocks for both the front and rear wheels.
3. Start the engine.
4. Measure the time lag from the N position to the D position.
   a. Shift the selector lever from the N position to the D position with the brake pedal depressed.
   b. Measure the time until the shift shock is felt firmly after shifting.
5. Measure the time lag from the N position to the R position using the same procedure.
   - If there is any malfunction, one of the following causes may have occurred:

Condition		Possible cause
N to D selected	Longer than specification	• Line pressure is low • Low clutch slippage • ATF leakage from low clutch hydraulic circuit • ATF leakage from low and reverse brake hydraulic circuit • Shift solenoid No.1 operation malfunction • Shift solenoid No.4 operation malfunction
		• Line pressure is high • N-D accumulator operation malfunction

	Shorter than specification	• Shift solenoid No.1 operation malfunction • Shift solenoid No.4 operation malfunction
N to R selected	Longer than specification	• Line pressure is low • Low and Reverse brake slippage • R-3-5 brake slippage • ATF leakage from R-3-5 brake hydraulic circuit • ATF leakage from low and reverse brake hydraulic circuit • Shift solenoid No.3 operation malfunction • Shift solenoid No.4 operation malfunction
	Shorter than specification	• Line pressure is high • N-R accumulator operation malfunction • Shift solenoid No.3 operation malfunction • Shift solenoid No.4 operation malfunction

Time lag

Measurement conditions	Specification (s)
N to D selected	0.4—0.7
N to R selected	

2014 - Mazda3 - Transmission/Transaxle

ROAD TEST [FW6A-EL]

WARNING:

- When performing a road test, always verify the safety of the surrounding area before performing the test.

NOTE:

- When performing a road test requiring speeds which exceed the legal speed limit, use a dynamometer.

Road test preparation

1. Inspect the engine coolant level. (See **ENGINE COOLANT LEVEL INSPECTION [SKYACTIV-G 2.0, SKYACTIV-G 2.5]**.)

2. Inspect the engine oil level. (See **ENGINE OIL LEVEL INSPECTION [SKYACTIV-G 2.0, SKYACTIV-G 2.5]**.)

3. Inspect the ATF level. (See **AUTOMATIC TRANSAXLE FLUID (ATF) INSPECTION [FW6A-EL]**.)

4. Inspect the ignition timing. (See **ENGINE TUNE-UP [SKYACTIV-G 2.0, SKYACTIV-G 2.5]**.)

5. Inspect the idle speed. (See **ENGINE TUNE-UP [SKYACTIV-G 2.0, SKYACTIV-G 2.5]**.)

6. Verify that no DTCs are stored.

D position test

1. Perform road test preparations. (See **Road test preparation**.)

2. Warm up the transaxle.

3. Select D position.

4. Inspect the shift point for the D position in normal mode.

    - If there is any malfunction, refer to symptom troubleshooting and verify the malfunction symptom.

    a. Depress the accelerator pedal and start the vehicle, and verify that the gears shift from 1st to 2nd, 2nd to 3rd, 3rd to 4th, 4th to 5th, and 5th to 6th. In addition, verify that the vehicle speed corresponds to the shift point when shifting.

    b. Release the accelerator pedal while driving in 6th gear, and verify that the gears shift from 6th to 5th, 5th to 4th, 4th to 3rd, 3rd to 2nd, and 2nd to 1st. In addition, verify that the vehicle speed corresponds to the shift point when shifting.

NOTE:

- When the accelerator pedal is fully released quickly, shifting is not performed according to the shift pattern because the gear being used may be maintained.
- When decelerating by strongly depressing the brake pedal, shifting is not performed according to the shift pattern because the shift-down point may be at high vehicle speed.

c. Kickdown while driving in 6th, 5th, 4th, 3rd, and 2nd gears, and verify that the gears shift from 6th to 5th, 5th to 4th, 4th to 3rd, 3rd to 2nd, and 2nd to 1st. In addition, verify that the vehicle speed limit for kickdown corresponds to the shift point.

d. Verify that the shift shock is minimal, shifting is smooth and timely, and there is no abnormal noise or slip.

e. Verify that the TCC is engaged.

Shift point

SKYACTIV-G 2.0

Position/mode		Accelerator pedal depression amount	Shift	Vehicle speed (km/h {mph})
D	NORMAL	8/8	$D_1 \rightarrow D_2$	53—64 {33—39}
			$D_2 \rightarrow D_3$	93—113 {58.0—70.2}
			$D_3 \rightarrow D_4$	130—158 {80.8—98.1}
			$D_4 \rightarrow D_5$	186—227 {116—141}
		25% (APP)	$D_1 \rightarrow D_2$	15—18 {9.4—11.0}
			$D_2 \rightarrow D_3$	29—34 {19—21}
			$D_3 \rightarrow D_4$	39—46 {25—28}
			$D_4 \rightarrow D_5$	60—72 {38—44}
			$D_5 \rightarrow D_6$	80—96 {50—59}
			$D_6 \rightarrow D_5$	60—73 {38—45}
			$D_5 \rightarrow D_4$	45—54 {28—33}

		0/8	$D_4 \rightarrow D_3$	30—35 {19—21}
			$D_3 \rightarrow D_2$	13—15 {8.1—9.3}
			$D_2 \rightarrow D_1$	6.5—7.9 {4.1—4.9}

SKYACTIV-G 2.5

Position/mode		Accelerator pedal depression amount	Shift	Vehicle speed (km/h {mph})
D	NORMAL	8/8	$D_1 \rightarrow D_2$	53—64 {33—39}
			$D_2 \rightarrow D_3$	94—114 {59.0—70.8}
			$D_3 \rightarrow D_4$	132—160 {82.1—99.4}
			$D_4 \rightarrow D_5$	189—229 {118—142}
		25% (APP)	$D_1 \rightarrow D_2$	19—22 {12—13}
			$D_2 \rightarrow D_3$	29—35 {19—21}
			$D_3 \rightarrow D_4$	39—47 {25—29}
			$D_4 \rightarrow D_5$	53—64 {33—39}
			$D_5 \rightarrow D_6$	65—79 {41—49}
		0/8	$D_6 \rightarrow D_5$	61—73 {38—45}
			$D_5 \rightarrow D_4$	45—53 {28—32}
			$D_4 \rightarrow D_3$	32—38 {20—23}
			$D_3 \rightarrow D_2$	14—16 {8.7—9.9}
			$D_2 \rightarrow D_1$	6.9—8.3 {4.3—5.1}

M position test

1. Perform road test preparations. (See **Road test preparation**.)
2. Warm up the transaxle.
3. Select the M position.
4. Inspect the shift point for the M position.
   - If there is any malfunction, refer to symptom troubleshooting and verify the malfunction symptom.

   a. Perform the shift operation while driving and verify that the gears can be shifted.

   b. Release the accelerator pedal while driving in 6th gear, and verify that the gears shift from 6th to 5th, 5th to 4th, 4th to 3rd, 3rd to 2nd, and 2nd to 1st. In addition, verify that the vehicle speed corresponds to the shift point when shifting.

   c. Release the accelerator pedal while driving and verify that the engine braking operates in all gears.

   d. Verify that the shift shock is minimal, shifting is smooth and timely, and there is no abnormal noise or slip.

Shift point

SKYACTIV-G 2.0

Position/mode	Accelerator pedal depression amount	Shift	Vehicle speed (km/h {mph})
M	0/8	$M_6 \rightarrow M_5$	60—73 {38—45}
		$M_5 \rightarrow M_4$	45—54 {28—33}
		$M_4 \rightarrow M_3$	30—35 {19—21}
		$M_3 \rightarrow M_2$	13—15 {8.1—9.3}
		$M_2 \rightarrow M_1$	6.5—7.9 {4.1—4.9}

SKYACTIV-G 2.5

Position/mode	Accelerator pedal depression amount	Shift	Vehicle speed (km/h {mph})
M	0/8	$M_6 \rightarrow M_5$	61—73 {38—45}
		$M_5 \rightarrow M_4$	45—53 {28—32}
		$M_4 \rightarrow M_3$	32—38 {20—23}

		$M_3 \rightarrow M_2$	14—16 {8.7—9.9}
		$M_2 \rightarrow M_1$	6.9—8.3 {4.3—5.1}

5. Inspect 2nd gear fixed mode.

   a. While the vehicle is stopped or the vehicle speed is **10 km/h {6.2 mph} or less**, operate the selector lever toward + to shift to 2nd gear.

   b. Verify that the gear is fixed in 2nd gear.

   c. Release the accelerator pedal while driving and verify that the engine braking operates.

   d. Perform the shift operation while driving and verify that the gears can be shifted.

P position test

1. Park the vehicle on a gentle slope and shift the selector lever to the P position.
2. Release the brake and verify that the vehicle does not move.
   - If there is any malfunction, inspect the parking mechanism in the transaxle.

2014 - Mazda3 - Transmission/Transaxle

AUTOMATIC TRANSAXLE FLUID (ATF) INSPECTION [FW6A-EL]

CAUTION:

- If the ATF level is not within the specification or ATF is not adhering to the dipstick after warming up the engine, do not drive the vehicle. Otherwise, the transaxle could be damaged.

ATF level inspection

1. Remove the front under cover No.2. (See **FRONT UNDER COVER No.2 REMOVAL/INSTALLATION**.)
2. Disconnect the wiring harness from the front crossmember. (Vehicle with i-ELOOP)

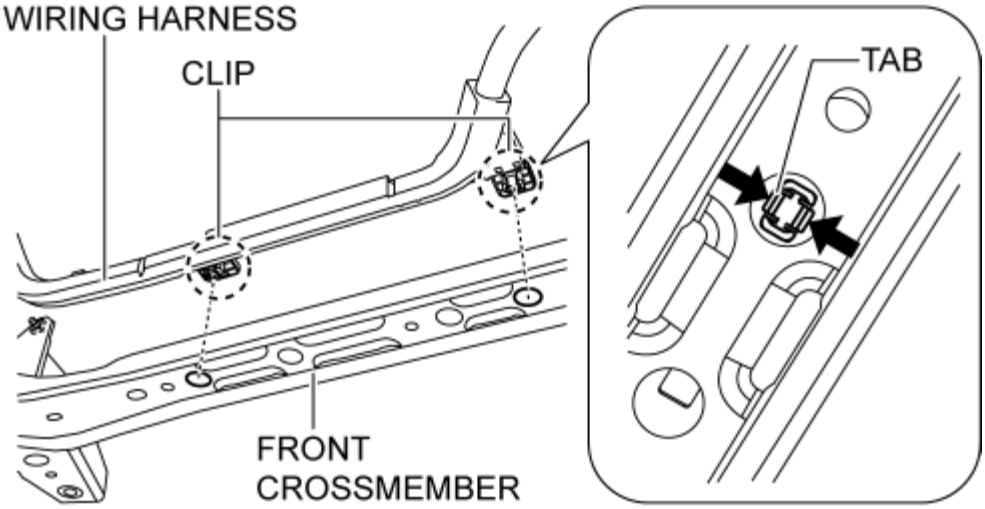

3. Remove the dipstick securing bolt.
4. Connect the M-MDS to the DLC-2 and display the PID TFT.
5. Warm up the engine until the ATF temperature is 50 °C {122 °F}.
6. Remove the dipstick and wipe ATF off using a nylon cloth while leaving the engine idling.

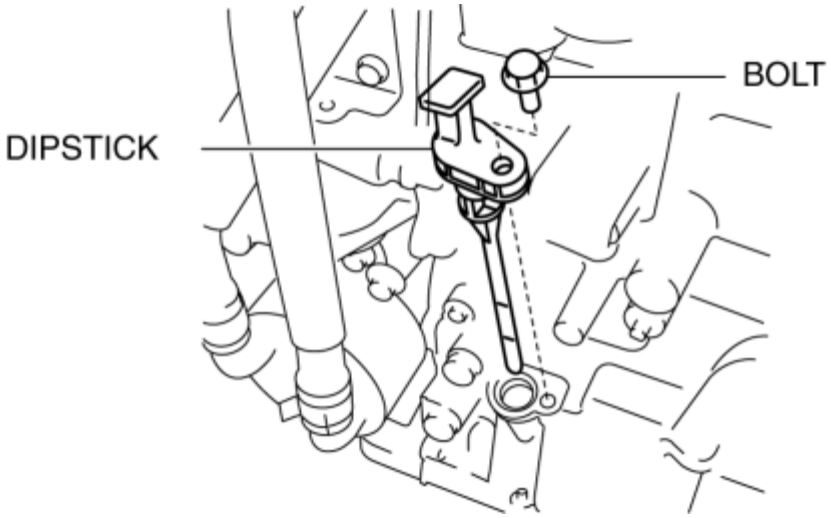

WARNING:

- Keep hands and tools away from the cooling fan even if the cooling fan is not operating to prevent injury, or damage to the cooling fan.
- Do not touch parts which have become heated. Otherwise, it could cause severe burns or serious injury.

7. Insert the dipstick and pull it out again.

8. Verify that the ATF is adhering between L and F on the dipstick.

- If ATF is not adhering between L and F on the dipstick, adjust the ATF level. (See **AUTOMATIC TRANSAXLE FLUID (ATF) ADJUSTMENT [FW6A-EL]**.)

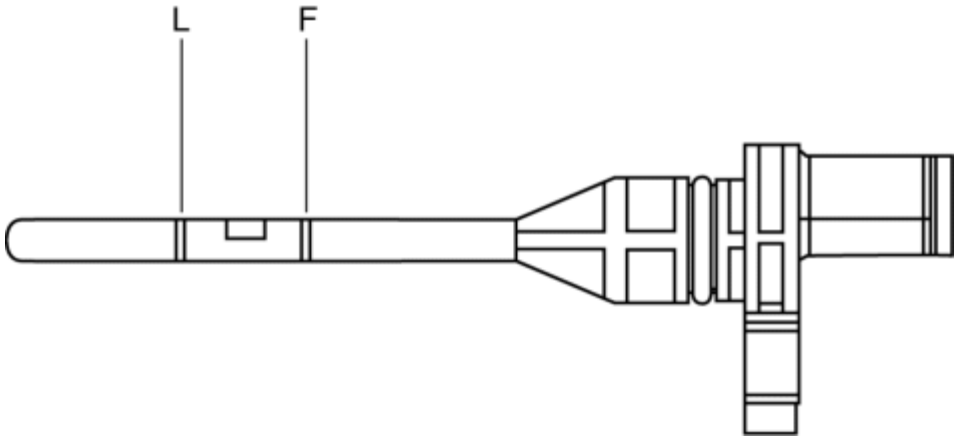

NOTE:

- The ATF color is blue.
- Only use ATF FZ for the FW6A-EL.

  ATF type

- ATF FZ

9. Insert the dipstick and install the securing bolt.

   Tightening torque

- 8—11 N·m {82—112 kgf·cm, 71—97 in·lbf}

10. Connect the wiring harness to the front crossmember. (Vehicle with i-ELOOP)

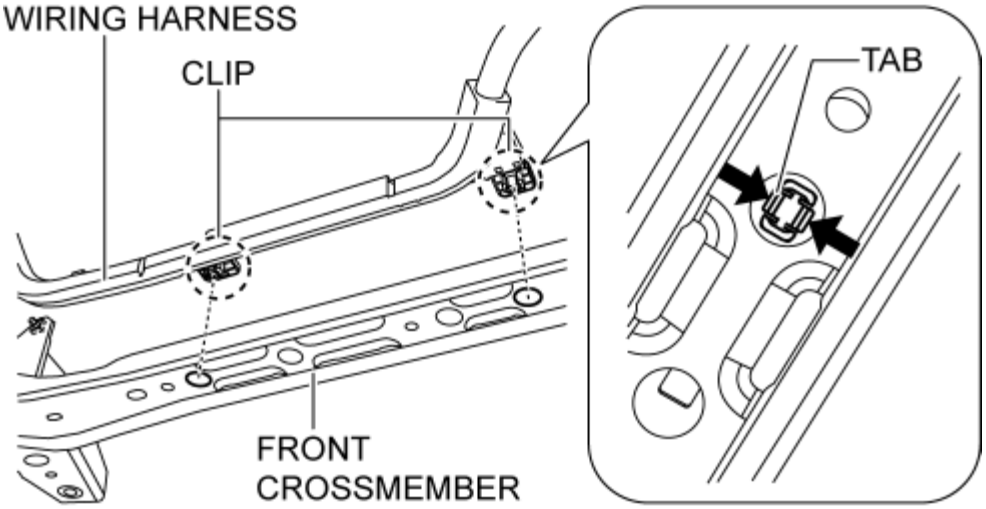

11. Install the front under cover No.2. (See **FRONT UNDER COVER No.2 REMOVAL/INSTALLATION**.)

2014 - Mazda3 - Transmission/Transaxle

AUTOMATIC TRANSAXLE FLUID (ATF) REPLACEMENT [FW6A-EL]

WARNING:

- Do not perform the servicing while the ATF is hot. Otherwise, it could cause severe burns or serious injury.

1. Remove the front under cover No.2. (See **FRONT UNDER COVER No.2 REMOVAL/INSTALLATION**.)

2. Disconnect the wiring harness from the front crossmember. (Vehicle with i-ELOOP)

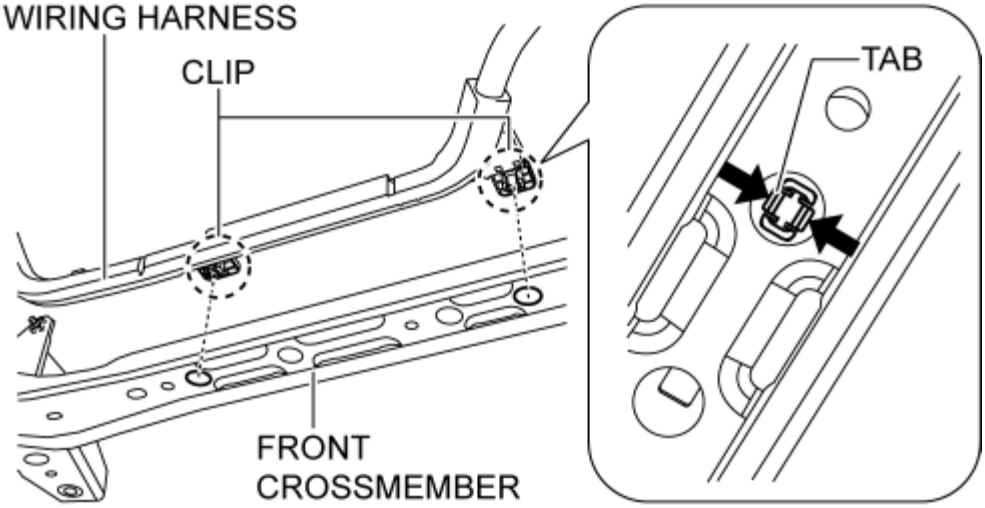

3. Remove the dipstick securing bolt.

4. Remove the dipstick.

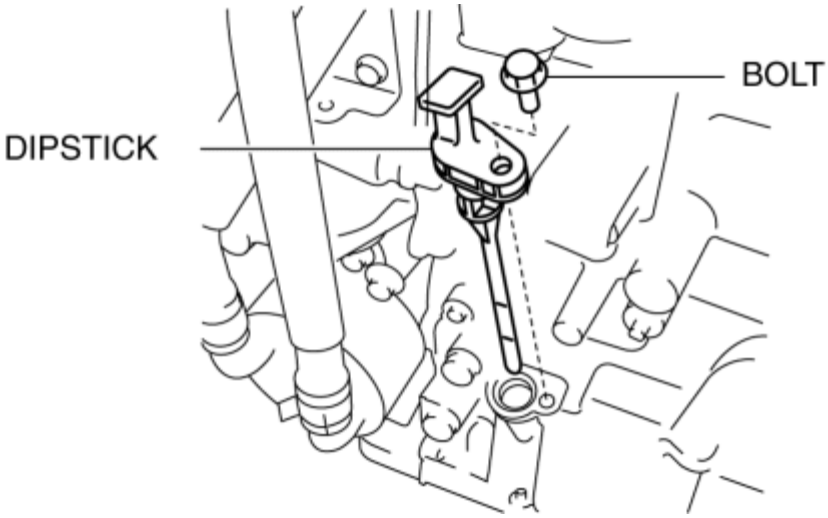

5. Remove the drain plug and washer, and drain the ATF.

6. Install a new washer and drain plug.

Tightening torque

- 30—41 N·m {3.1—4.1 kgf·m, 23—30 ft·lbf}

7. Add ATF from the dipstick installation hole.

NOTE:

- The ATF color is blue.
- Only use ATF FZ for the FW6A-EL.

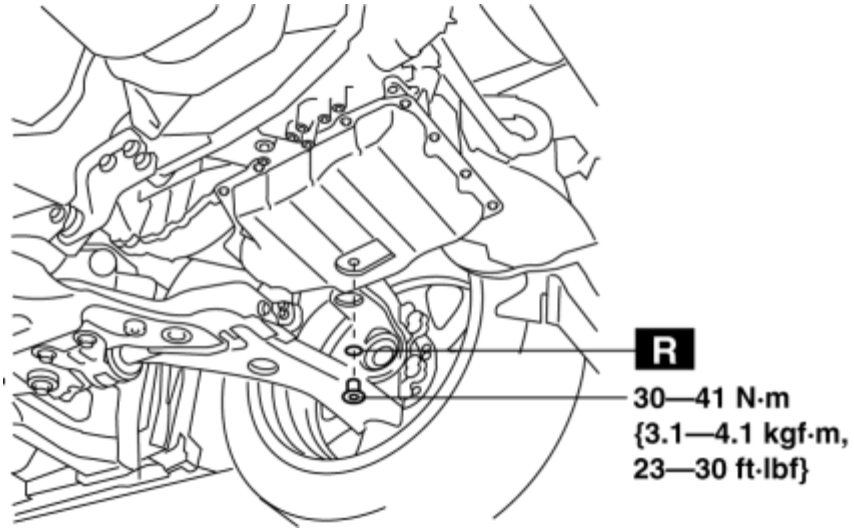

ATF type

- ATF FZ

Resupply amount (Reference)

- ATF is drained from drain plug: 3.5—4.9 L {3.7—5.1 US qt, 3.1—4.3 Imp qt}

8. Adjust the ATF level. (See **AUTOMATIC TRANSAXLE FLUID (ATF) ADJUSTMENT [FW6A-EL]**.)

9. Insert the dipstick and install the securing bolt.

Tightening torque

- 8—11 N·m {82—112 kgf·cm, 71—97 in·lbf}

10. Connect the wiring harness to the front crossmember. (Vehicle with i-ELOOP)

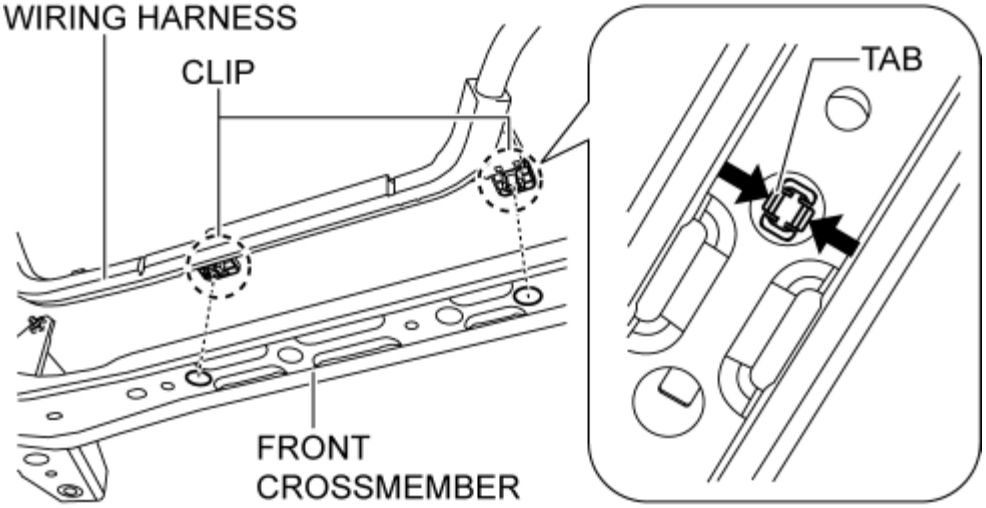

11. Install the front under cover No.2. (See **FRONT UNDER COVER No.2 REMOVAL/INSTALLATION**.)

2014 - Mazda3 - Transmission/Transaxle

AUTOMATIC TRANSAXLE FLUID (ATF) ADJUSTMENT [FW6A-EL]

CAUTION:

- Only adjust the ATF level when the ATF temperature is 45—55 °C {113—131 °F}. If the ATF level is incorrect, it could damage the transaxle.
- Do not add ATF over the specification. Otherwise, the transaxle performance could be reduced and ATF could leak.

1. Remove the front under cover No.2. (See **FRONT UNDER COVER No.2 REMOVAL/INSTALLATION**.)

2. Disconnect the wiring harness from the front crossmember. (Vehicle with i-ELOOP)

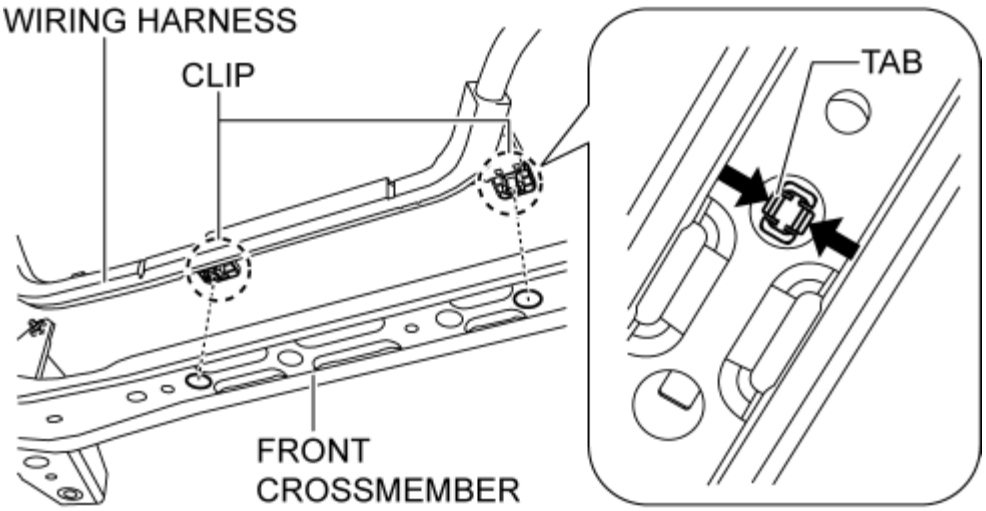

3. Remove the dipstick securing bolt.

4. Remove the dipstick.

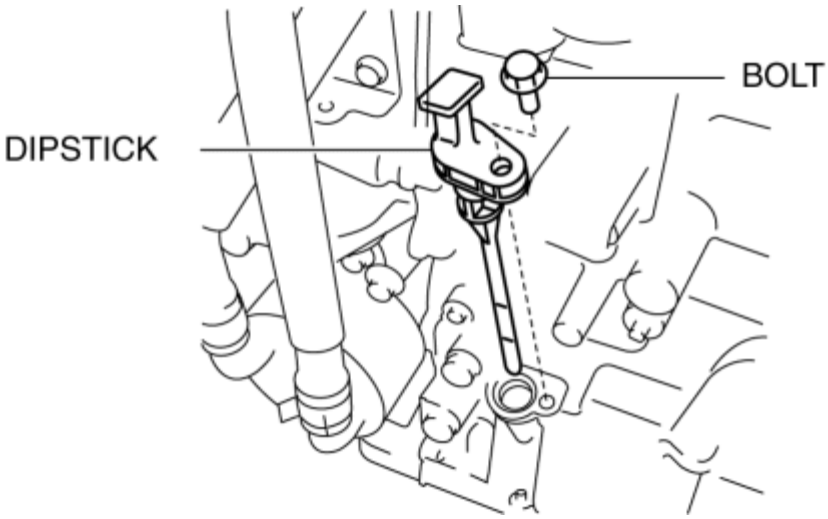

5. Adjust the ATF level.

a. Connect the M-MDS to the DLC-2 and display the PID TFT.

b. Warm up the engine until the ATF temperature is **50 °C {122 °F}**.

c. Remove the dipstick and wipe the ATF off using a rag while leaving the engine idling.

WARNING:

- Keep hands and tools away from the cooling fan even if the cooling fan is not operating to prevent injury, or damage to the cooling fan.
- Do not touch parts which have become heated. Otherwise, it could cause severe burns or serious injury.

d. Insert the dipstick and pull it out again.

e. Verify that ATF is adhering to the central marker area on the dipstick.

- If ATF is not adhering to the central marker area on the dipstick, adjust the ATF level to the central marker area.

NOTE:

- The ATF color is blue.
- Only use ATF FZ for the FW6A-EL.

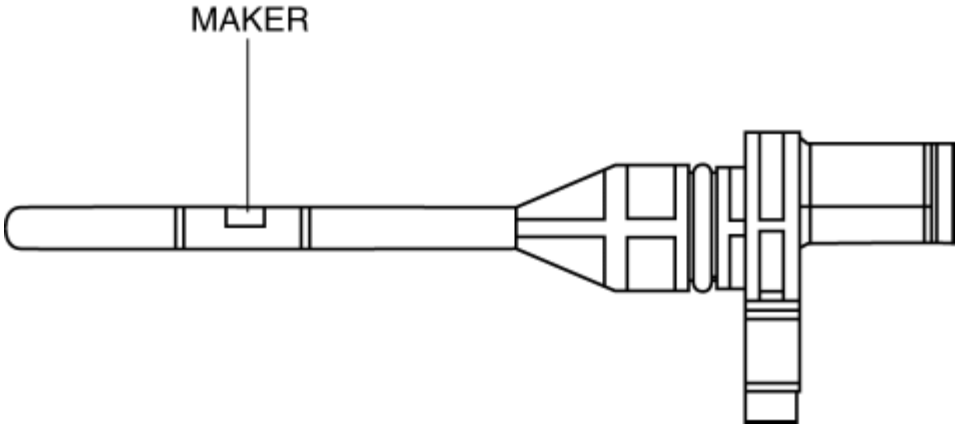

ATF type

- ATF FZ

6. Insert the dipstick and install the securing bolt.

Tightening torque

- 8—11 N·m {82—112 kgf·cm, 71—97 in·lbf}

7. Connect the wiring harness to the front crossmember. (Vehicle with i-ELOOP)

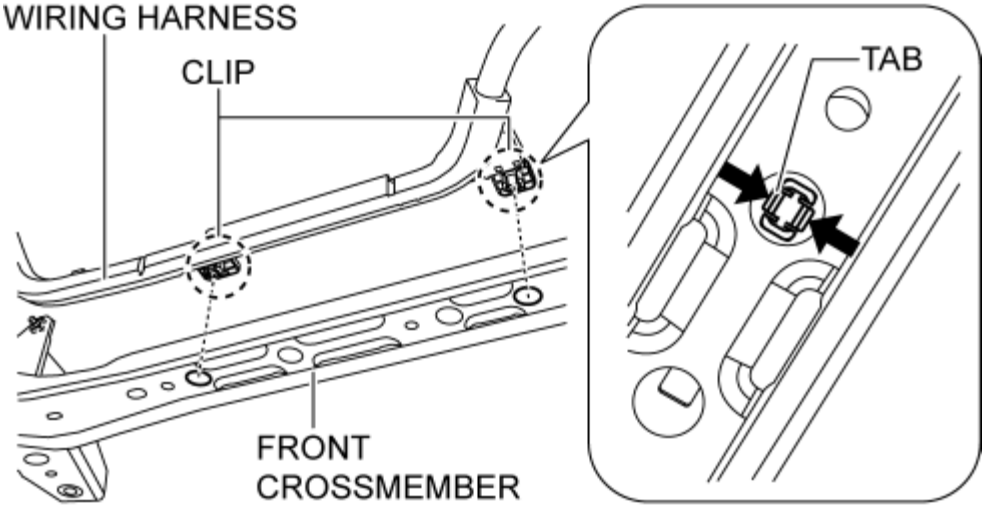

8. Install the front under cover No.2. (See **FRONT UNDER COVER No.2 REMOVAL/INSTALLATION**.)

2014 - Mazda3 - Transmission/Transaxle

M POSITION SWITCH INSPECTION [FW6A-EL]

Continuity Inspection

NOTE:

- The M position switch is built into the selector lever component.

1. Disconnect the negative battery cable. (See **NEGATIVE BATTERY CABLE DISCONNECTION/CONNECTION [SKYACTIV-G 2.0, SKYACTIV-G 2.5]**.)

2. Perform the following procedure to remove the selector lever knob.

NOTE:

- If the servicing is difficult, release the shift lock manually and shift the selector lever to the N position.

a. Insert the tool (width: **6 mm {0.2 in} or less**, thickness: **1 mm {0.04} or less**) as shown in the figure.

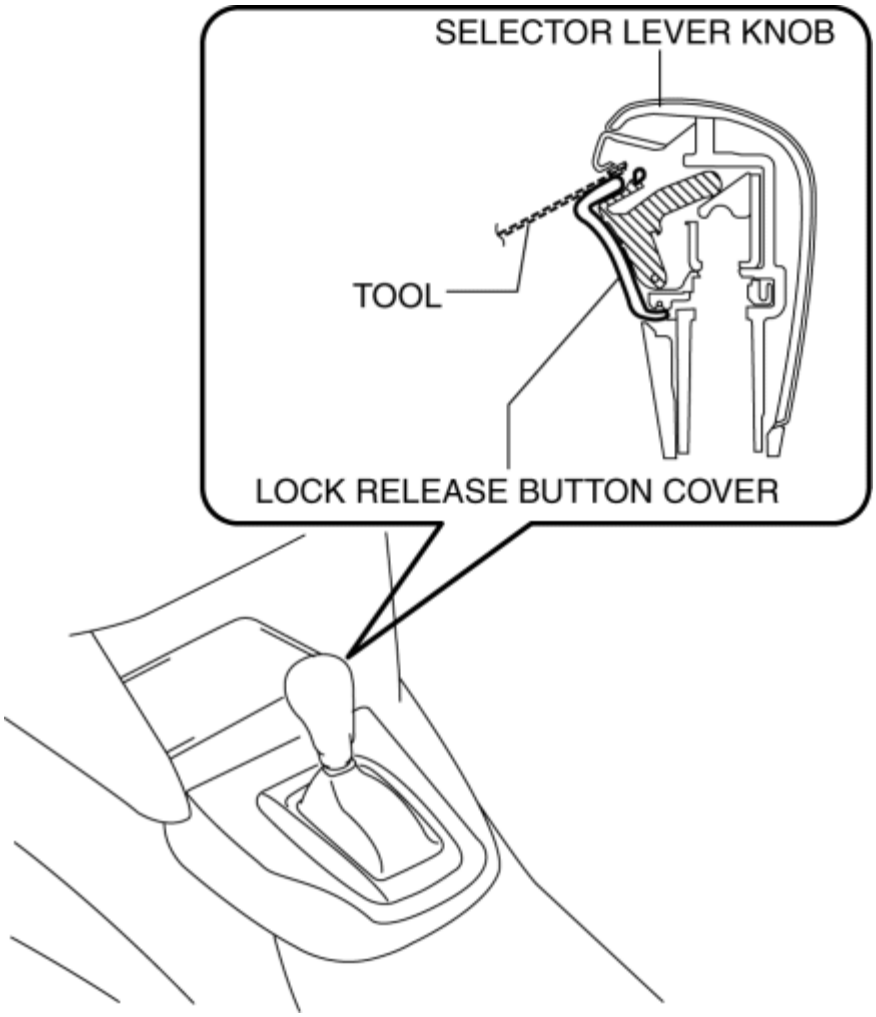

b. Move the tool in the direction of arrow (1) in the figure and detach the hook. Move the lock release button cover in the direction of arrow (2) in the figure and remove it.

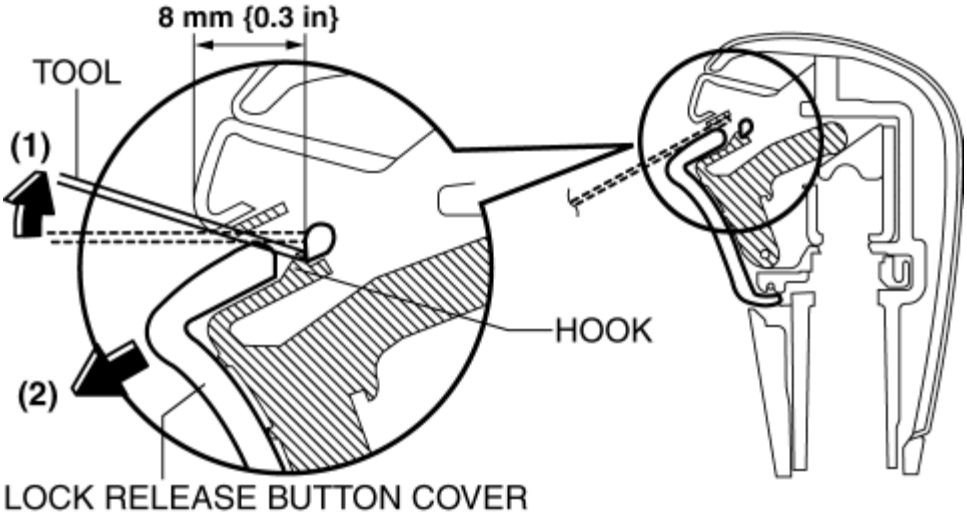

c. Remove the spring.

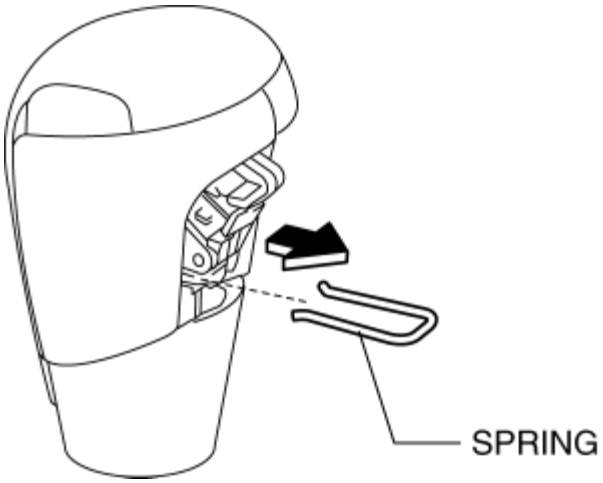

d. Remove the selector lever knob.

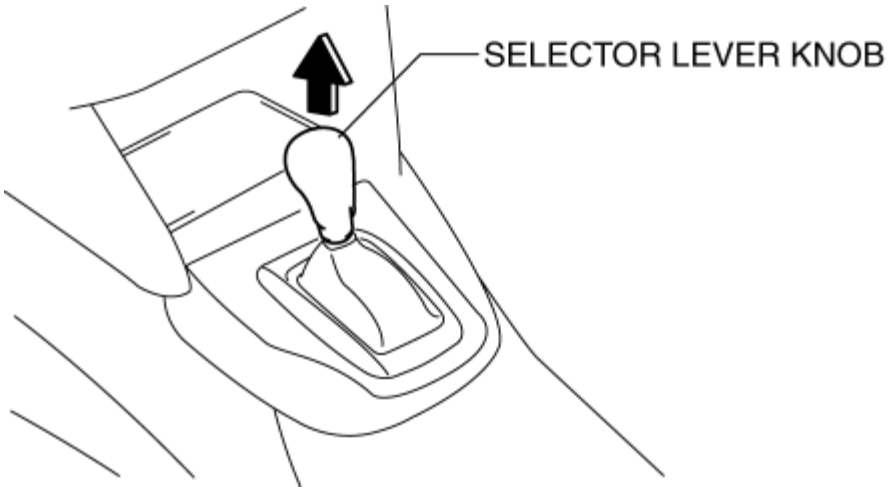

3. Remove the front console. (See **FRONT CONSOLE REMOVAL / INSTALLATION**.)

4. Disconnect the selector lever component connector.

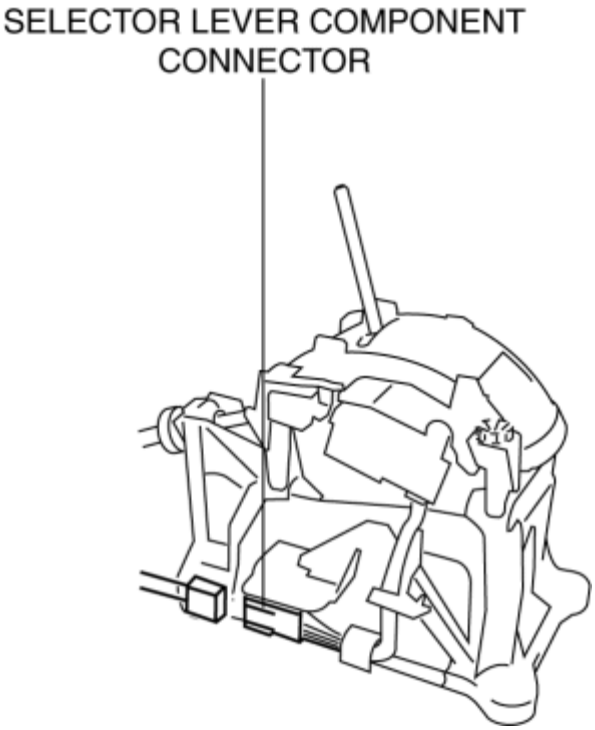

5. Verify that the continuity between selector lever component terminals E and J.

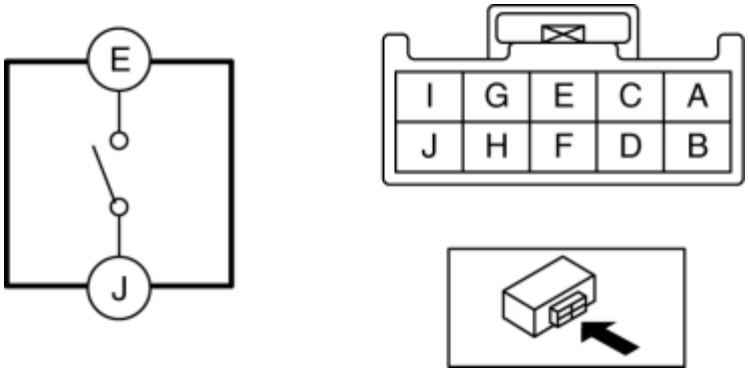

- If not as verified, replace the selector lever component. (See **AUTOMATIC TRANSAXLE SHIFT MECHANISM REMOVAL / INSTALLATION**.)

M position switch specification

Test condition	Continuity
Selector lever is in the M position.	Continuity
Selector lever is not in the M position.	No continuity

2014 - Mazda3 - Transmission/Transaxle

M POSITION SWITCH REMOVAL/INSTALLATION [FW6A-EL]

NOTE:

- The M position switch is built into the selector lever component.

1. If the M position switch is replaced, replace the selector lever component. (See **AUTOMATIC TRANSAXLE SHIFT MECHANISM REMOVAL/INSTALLATION**.)

2014 - Mazda3 - Transmission/Transaxle

UP SWITCH INSPECTION [FW6A-EL]

Continuity Inspection

NOTE:

- The up switch is built into the selector lever component.

1. Disconnect the negative battery cable. (See **NEGATIVE BATTERY CABLE DISCONNECTION/CONNECTION [SKYACTIV-G 2.0, SKYACTIV-G 2.5]**.)

2. Perform the following procedure to remove the selector lever knob.

NOTE:

- If the servicing is difficult, release the shift lock manually and shift the selector lever to the N position.

a. Insert the tool (width: **6 mm {0.2 in} or less**, thickness: **1 mm {0.04} or less**) as shown in the figure.

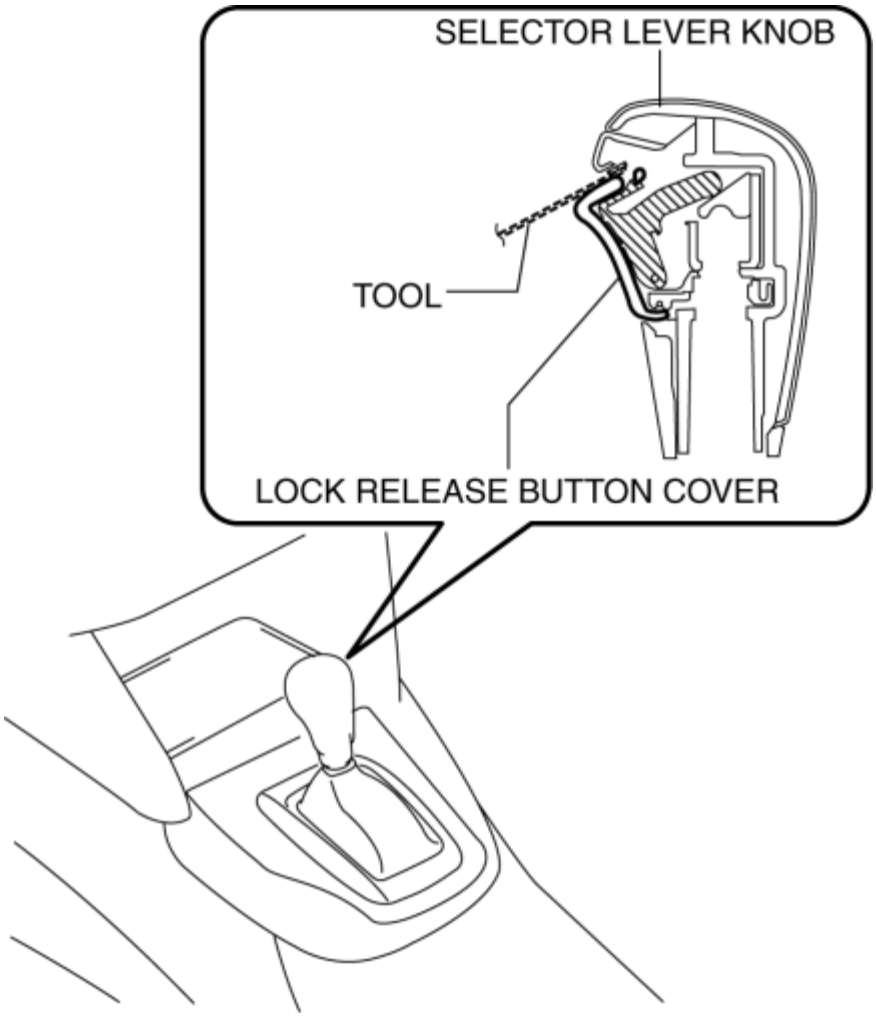

b. Move the tool in the direction of arrow (1) in the figure and detach the hook. Move the lock release button cover in the direction of arrow (2) in the figure and remove it.

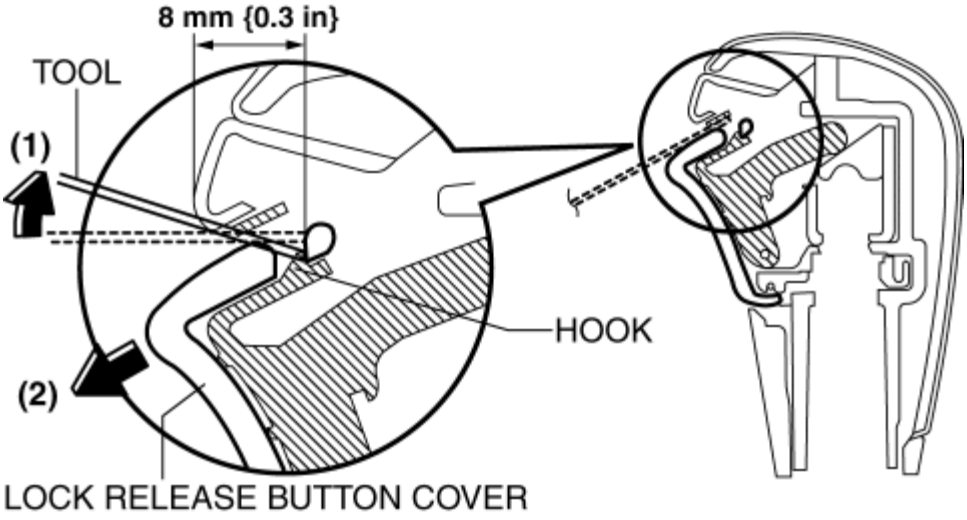

c. Remove the spring.

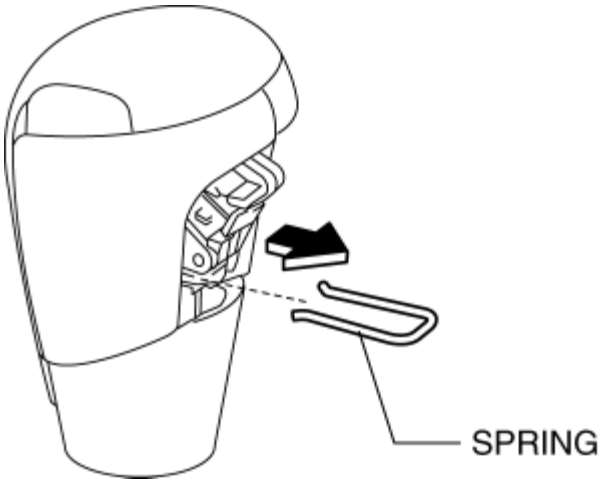

d. Remove the selector lever knob.

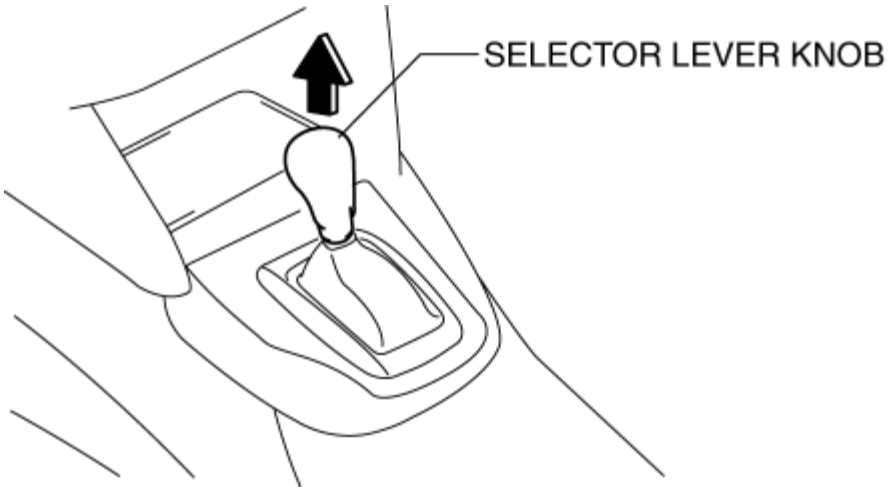

3. Remove the front console. (See **FRONT CONSOLE REMOVAL / INSTALLATION**.)

4. Disconnect the selector lever component connector.

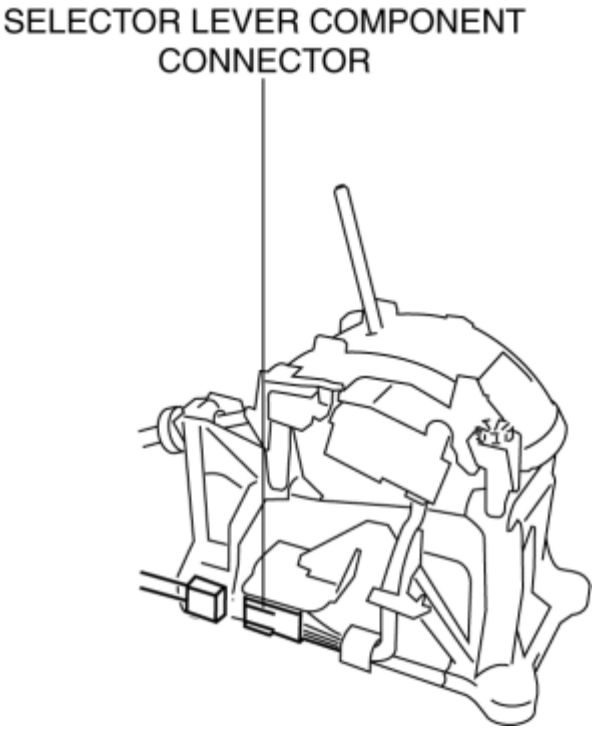

5. Verify that the continuity between selector lever component terminals C and J.

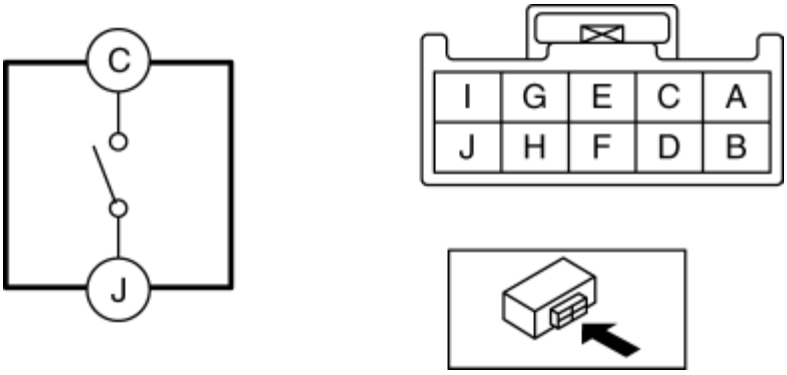

- If not as verified, replace the selector lever component. (See **AUTOMATIC TRANSAXLE SHIFT MECHANISM REMOVAL/INSTALLATION**.)

Up switch specification

Test condition	Continuity
Selector lever is in the M position (+) side position.	Continuity
Selector lever is not in the M position (+) side position.	No continuity

2014 - Mazda3 - Transmission/Transaxle

UP SWITCH REMOVAL/INSTALLATION [FW6A-EL]

NOTE:

- The up switch is built into the selector lever component.

1. If the up switch is replaced, replace the selector lever component. (See **AUTOMATIC TRANSAXLE SHIFT MECHANISM REMOVAL/INSTALLATION**.)

2014 - Mazda3 - Transmission/Transaxle

DOWN SWITCH INSPECTION [FW6A-EL]

Continuity Inspection

NOTE:

- The down switch is built into the selector lever component.

1. Disconnect the negative battery cable. (See **NEGATIVE BATTERY CABLE DISCONNECTION/CONNECTION [SKYACTIV-G 2.0, SKYACTIV-G 2.5]**.)

2. Perform the following procedure to remove the selector lever knob.

NOTE:

- If the servicing is difficult, release the shift lock manually and shift the selector lever to the N position.

a. Insert the tool (width: **6 mm {0.2 in} or less**, thickness: **1 mm {0.04} or less**) as shown in the figure.

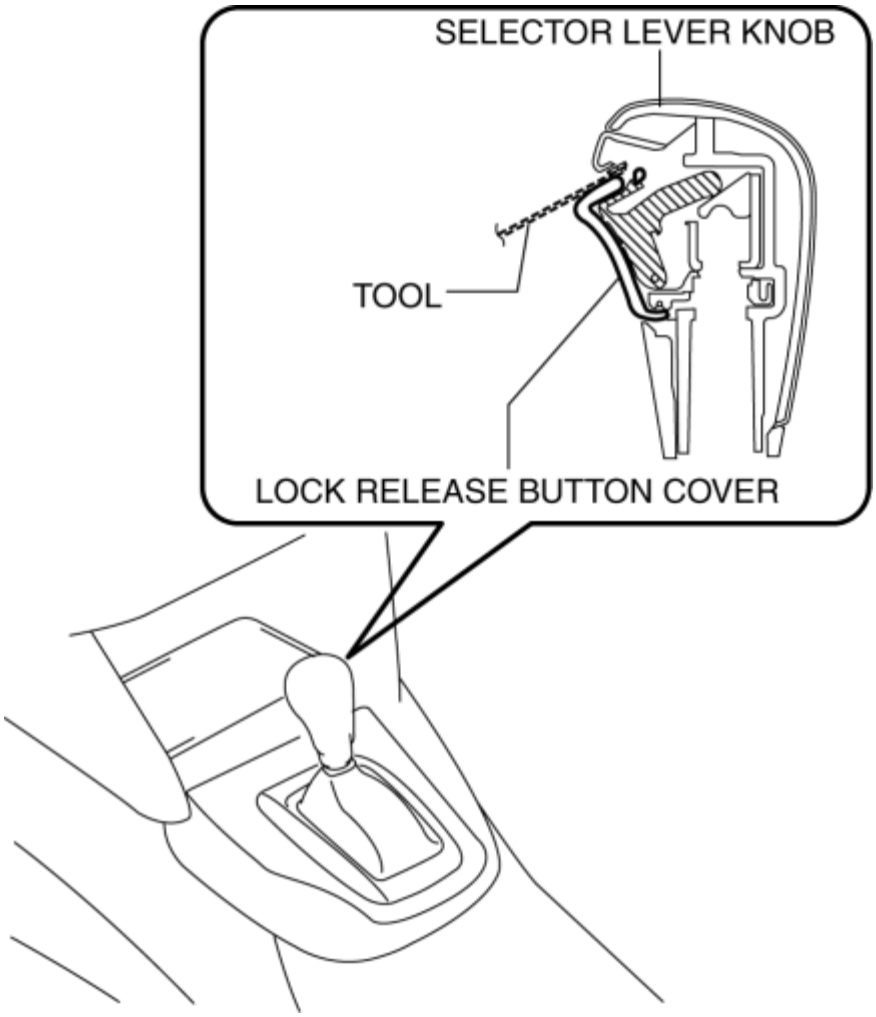

b. Move the tool in the direction of arrow (1) in the figure and detach the hook. Move the lock release button cover in the direction of arrow (2) in the figure and remove it.

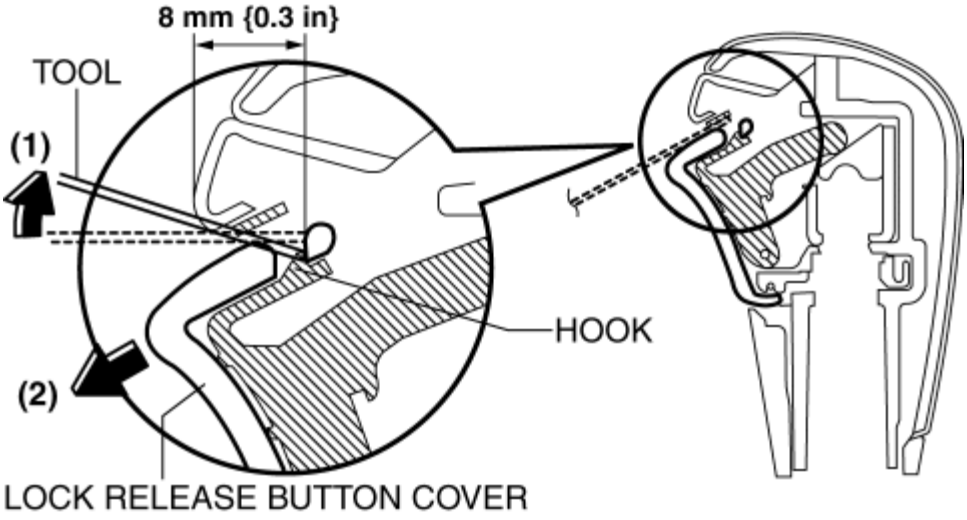

c. Remove the spring.

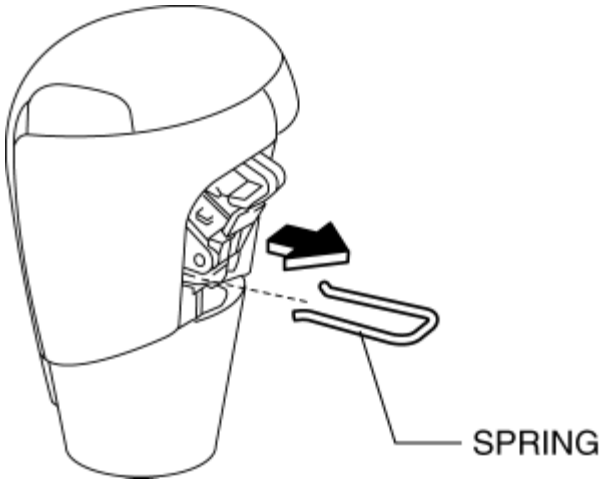

d. Remove the selector lever knob.

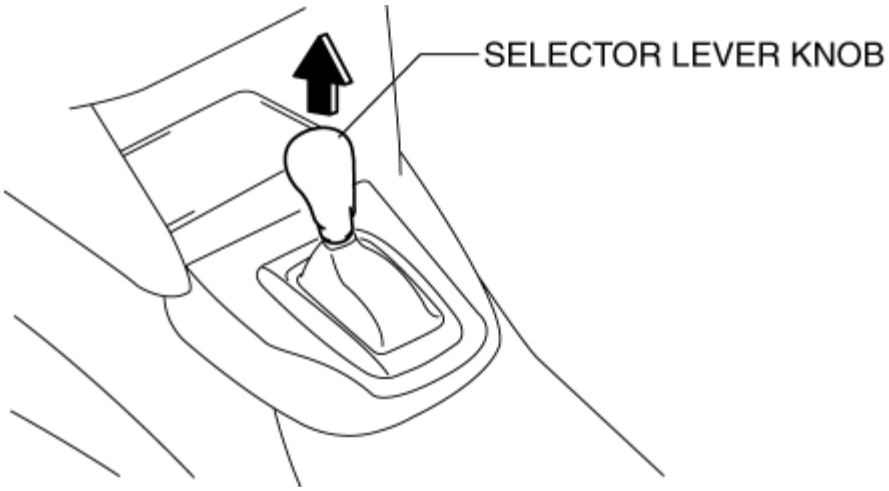

3. Remove the front console. (See **FRONT CONSOLE REMOVAL / INSTALLATION**.)

4. Disconnect the selector lever component connector.

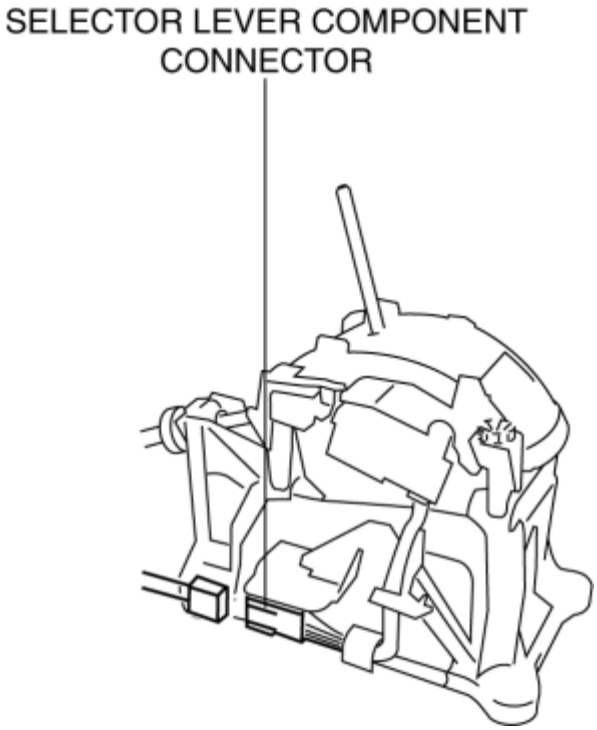

5. Verify that the continuity between selector lever component terminals D and J.

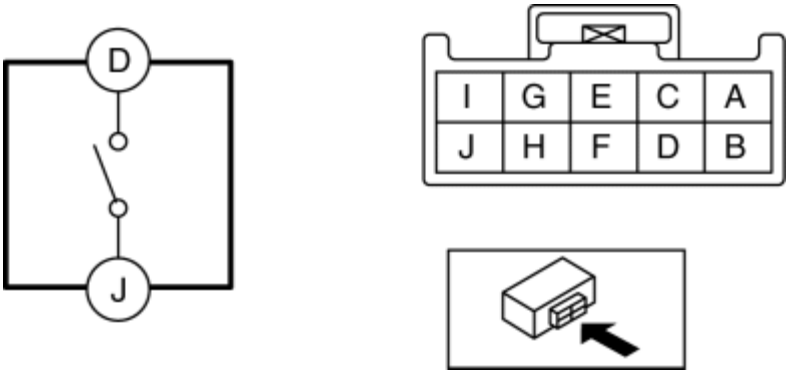

- If not as verified, replace the selector lever component. (See **AUTOMATIC TRANSAXLE SHIFT MECHANISM REMOVAL / INSTALLATION**.)

Down switch specification

Test condition	Continuity
Selector lever is in the M position (−) side position.	Continuity
Selector lever is not in the M position (−) side position.	No continuity

2014 - Mazda3 - Transmission/Transaxle

DOWN SWITCH REMOVAL/INSTALLATION [FW6A-EL]

NOTE:

- The down switch is built into the selector lever component.

1. If the down switch is replaced, replace the selector lever component. (See **AUTOMATIC TRANSAXLE SHIFT MECHANISM REMOVAL/INSTALLATION**.)

2014 - Mazda3 - Transmission/Transaxle

STEERING SHIFT SWITCH INSPECTION [FW6A-EL]

1. Disconnect the negative battery cable. (See **NEGATIVE BATTERY CABLE DISCONNECTION/CONNECTION [SKYACTIV-G 2.0, SKYACTIV-G 2.5]**.)

2. Remove the driver-side air bag module. (See **DRIVER-SIDE AIR BAG MODULE REMOVAL [TWO-STEP DEPLOYMENT CONTROL SYSTEM]**.) (See **DRIVER-SIDE AIR BAG MODULE INSTALLATION [TWO-STEP DEPLOYMENT CONTROL SYSTEM]**.) (See **DRIVER-SIDE AIR BAG MODULE REMOVAL [STANDARD DEPLOYMENT CONTROL SYSTEM]**.) (See **DRIVER-SIDE AIR BAG MODULE INSTALLATION [STANDARD DEPLOYMENT CONTROL SYSTEM]**.)

3. Disconnect the steering shift switch wiring harness connector.

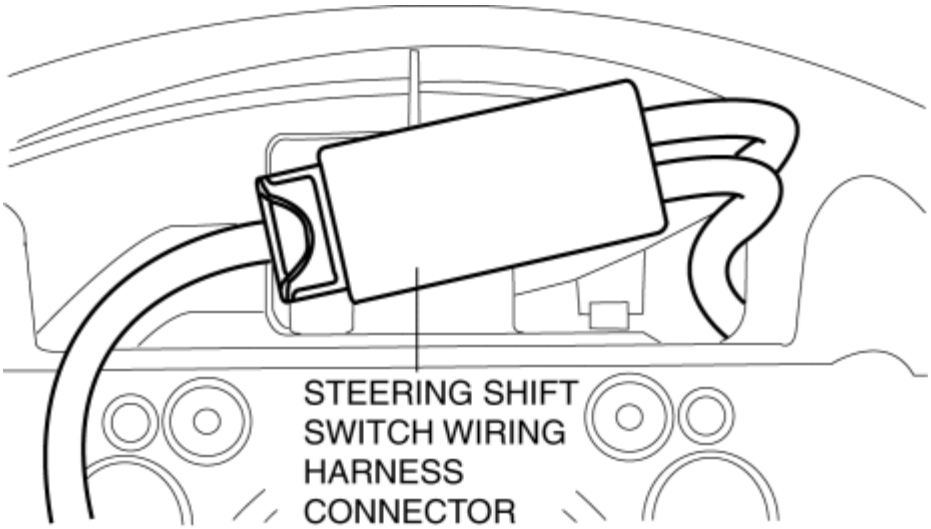

4. Remove the column cover. (See **COLUMN COVER REMOVAL/INSTALLATION**.)

5. Using a precision flathead screwdriver, release the tab.

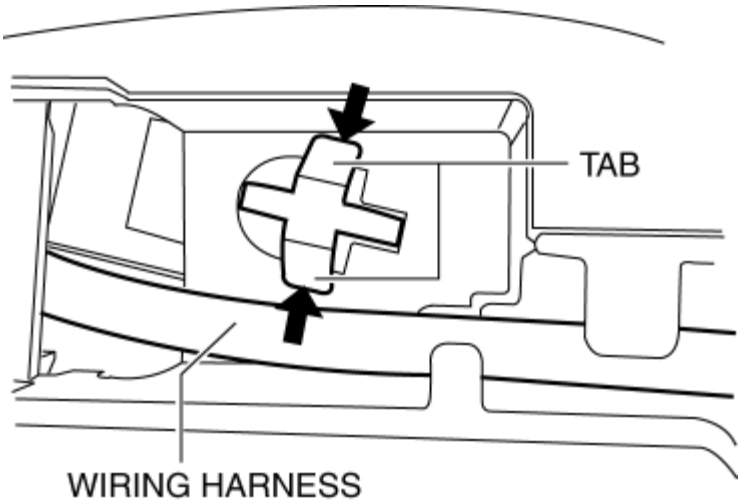

6. Measure the continuity between steering shift switch wiring harness connector terminals A—B

and terminals D—E.

Up switch

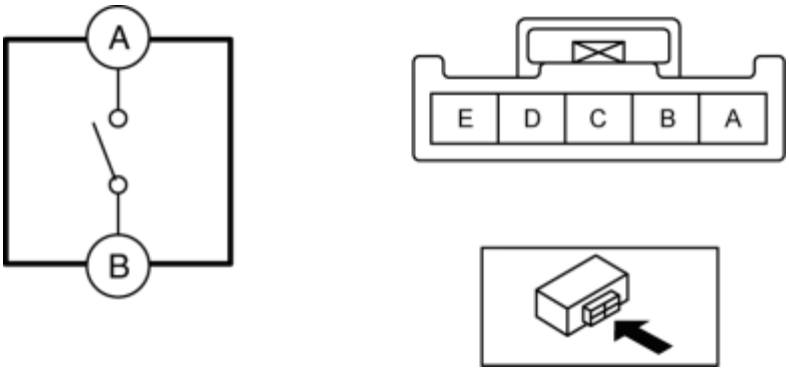

Down switch

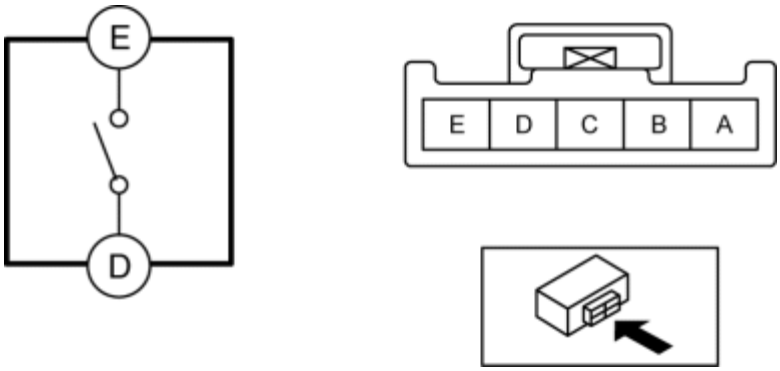

Switch	Terminal	Test condition	Continuity
Up switch	A—B	Up switch is operated (up switch is pulled outward)	Continuity
		Up switch is not operated (up switch is not pulled outward)	No continuity
Down switch	D—E	Down switch is operated (down switch is pulled outward)	Continuity
		Down switch is not operated (down switch is not pulled outward)	No continuity

- If there is any malfunction, replace the steering shift switch. (See **STEERING SHIFT SWITCH REMOVAL/INSTALLATION [FW6A-EL]**.)

2014 - Mazda3 - Transmission/Transaxle

STEERING SHIFT SWITCH REMOVAL/INSTALLATION [FW6A-EL]

1. Disconnect the negative battery cable. (See **NEGATIVE BATTERY CABLE DISCONNECTION/CONNECTION [SKYACTIV-G 2.0, SKYACTIV-G 2.5]**.)

2. Remove in the order indicated in the table.

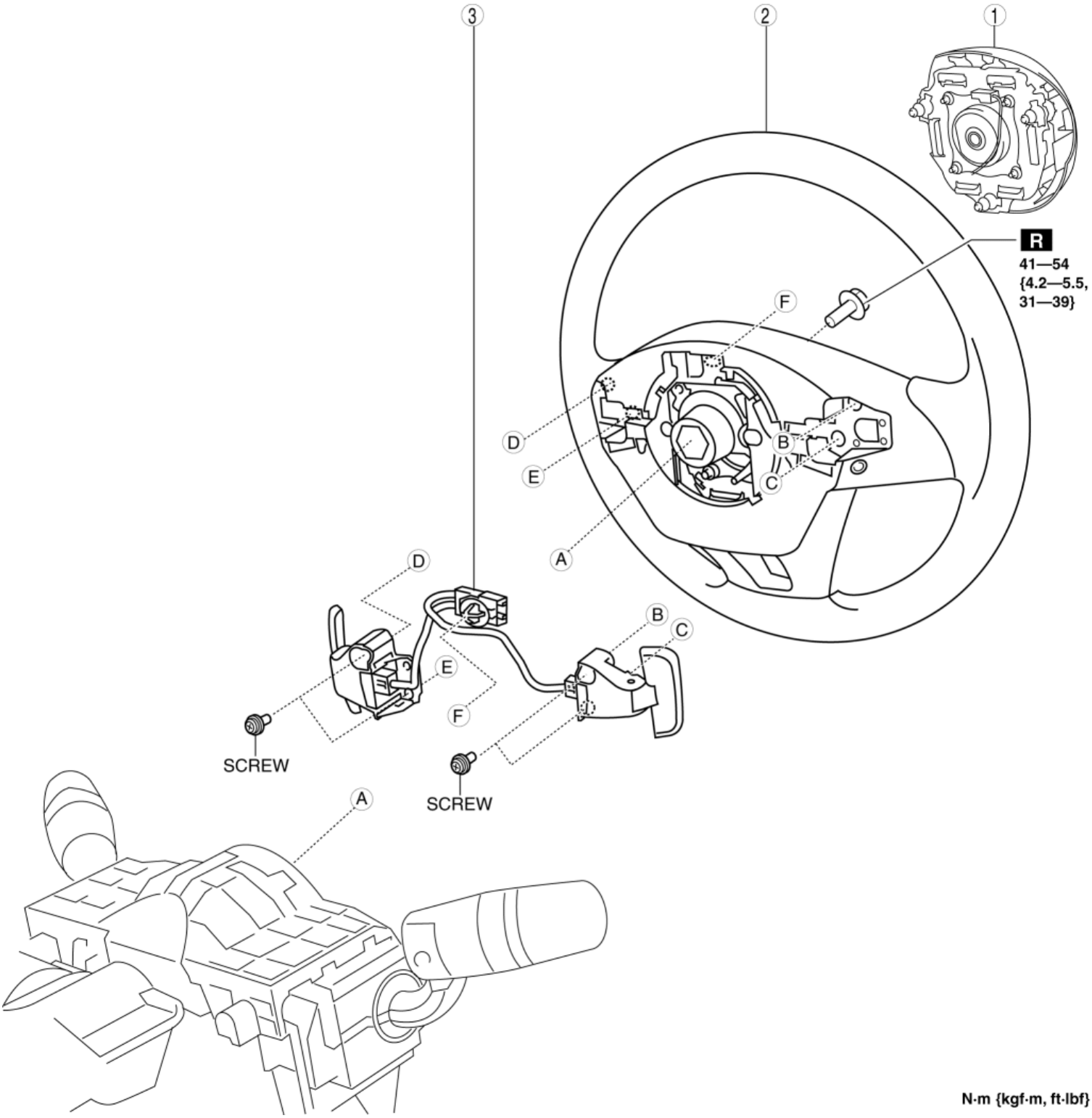

1	Driver-side air bag module (See **DRIVER-SIDE AIR BAG MODULE REMOVAL [TWO-STEP DEPLOYMENT CONTROL SYSTEM]**.) (See **DRIVER-SIDE AIR BAG MODULE INSTALLATION [TWO-STEP DEPLOYMENT CONTROL SYSTEM]**.) (See **DRIVER-SIDE AIR BAG MODULE REMOVAL [STANDARD DEPLOYMENT CONTROL SYSTEM]**.) (See **DRIVER-SIDE AIR BAG MODULE INSTALLATION [STANDARD DEPLOYMENT CONTROL SYSTEM]**.)
2	Steering wheel (See **STEERING WHEEL AND COLUMN REMOVAL/INSTALLATION**.)
3	Steering shift switch component (See **Steering Shift Switch Component Removal Note**.)

3. Install in the reverse order of removal.

Steering Shift Switch Component Removal Note

1. Disconnect the steering shift switch wiring harness connector.

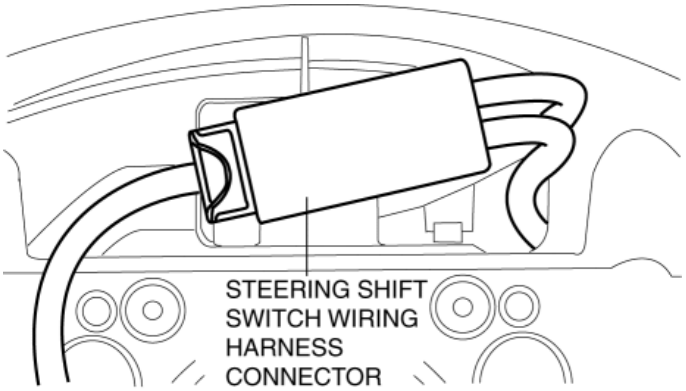

2. Detach the tabs of the cover in the area circled by a dashed line and open the cover.

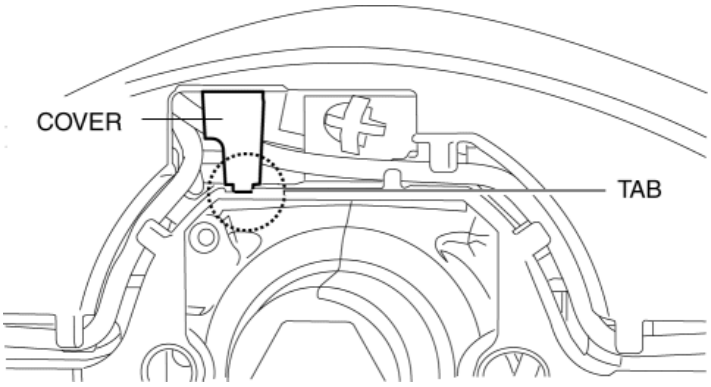

3. Using a precision flathead screwdriver, release the tab.

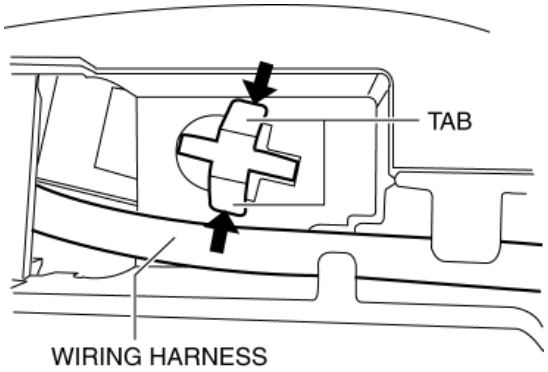

4. Remove the steering shift switch component from the gap in the opening of the cover.

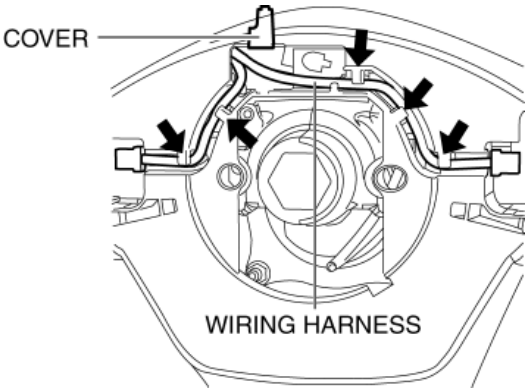

5. Install in the reverse order of removal.

2014 - Mazda3 - Transmission/Transaxle

COUPLER COMPONENT REMOVAL/INSTALLATION [FW6A-EL]

WARNING:

- A hot transaxle and ATF can cause severe burns. Turn off the engine and wait until they are cool.
- Always wear protective eye wear when using the air compressor. If the air compressor is used, any particles of dirt or sludge could spatter and get into the eyes.

CAUTION:

- Placing the control valve body connector side pointed downward could damage the control valve body connector part or sensor. If the servicing can only be performed by pointing the control valve body connector side downward, spread shock-absorbing material, which does not produce dust or foreign matter, and place the control valve body connector part and sensor on the table so that they do not directly contact the table.

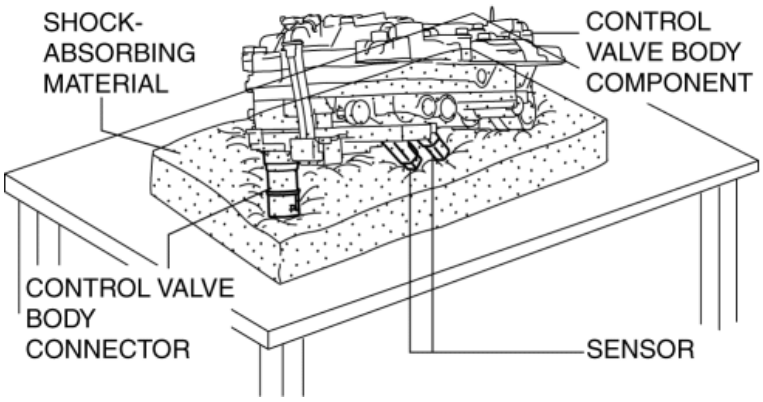

1. Select the selector lever to P position.
2. Disconnect the negative battery cable. (See **NEGATIVE BATTERY CABLE DISCONNECTION/CONNECTION [SKYACTIV-G 2.0, SKYACTIV-G 2.5]**.)
3. Remove the front under cover No.2. (See **FRONT UNDER COVER No.2 REMOVAL/INSTALLATION**.)
4. Clean the transaxle exterior throughout with a steam cleaner or cleaning solvents.
5. Remove the air cleaner component. (See **INTAKE-AIR SYSTEM REMOVAL/INSTALLATION [SKYACTIV-G 2.0, SKYACTIV-G 2.5]**.)
6. Remove the control valve body. (See **CONTROL VALVE BODY REMOVAL/INSTALLATION [FW6A-EL]**.)
7. Remove the oil seal (control valve body). (See **OIL SEAL (CONTROL VALVE BODY) REPLACEMENT [FW6A-EL]**.)
8. Disconnect the coupler component connectors.

CAUTION:

- Do not scratch the shift solenoid, shift solenoid connector, oil pressure switch, and oil pressure switch connector with the precision flathead screwdriver.
- When disconnecting connectors, grasp the connectors, not the wiring harnesses. Otherwise, the wiring harnesses may be pulled out of the connector causing poor contact.

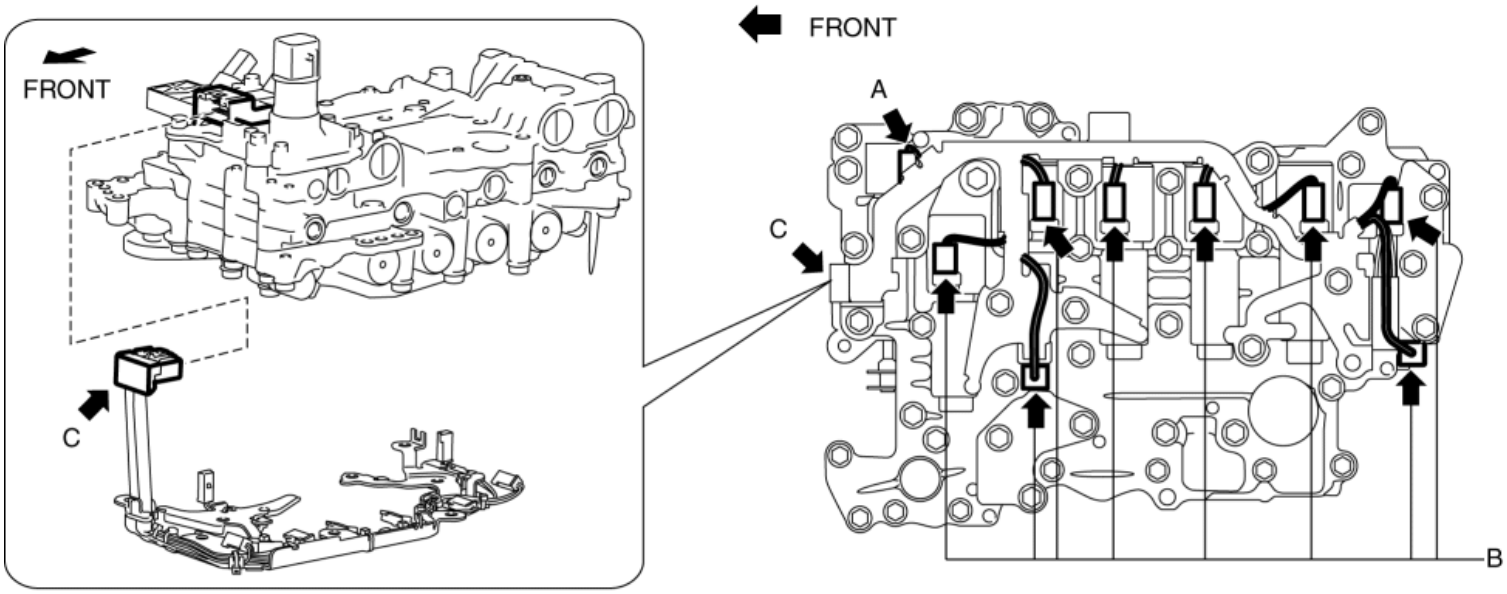

CONNECTOR A: ON/OFF SOLENOID
CONNECTOR B: SHIFT SOLENOID / OIL PRESSURE SWITCH
CONNECTOR C: TCM

a. Disconnect connector A and connector C by pressing the connector tab with your fingers.

b. Insert a precision flathead screwdriver and move it in the direction of the arrow to disconnect connector B as shown in the figure.

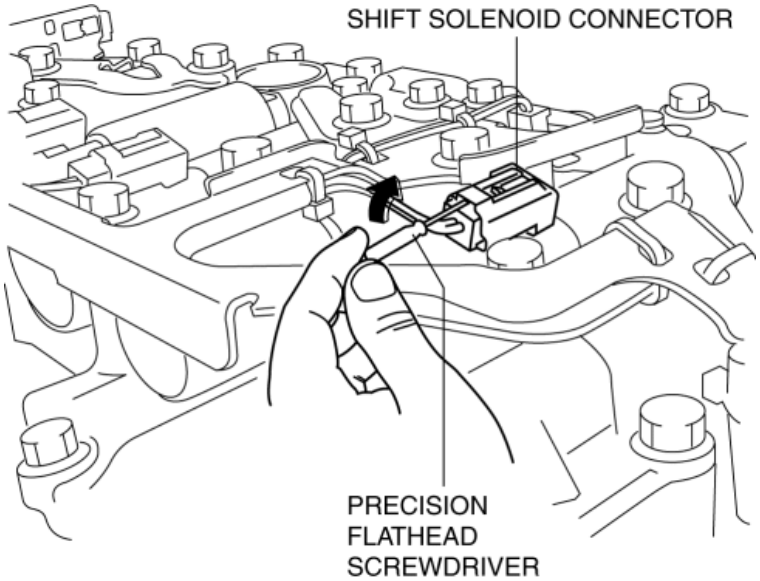

9. Remove the coupler component.

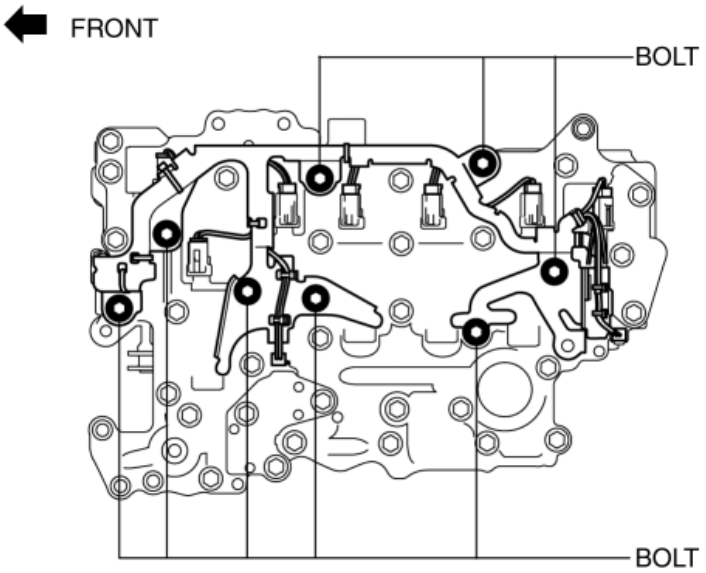

CAUTION:

- Because there are solenoid valve securing pins in the areas circled with a dotted line shown in the figure. Always verify that the solenoid valve securing pins are on the control valve body when installing the coupler component.

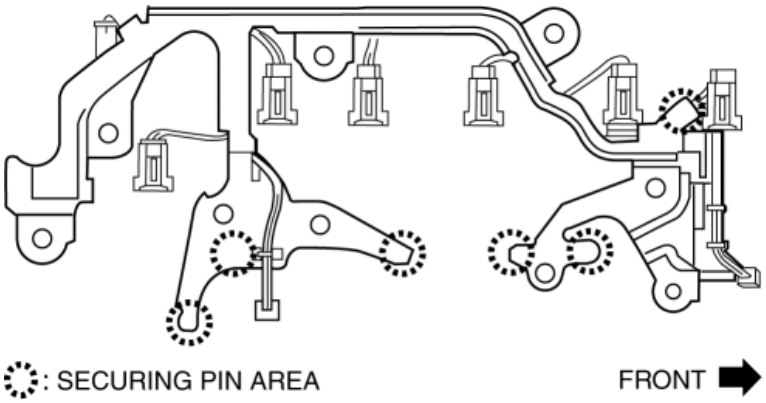

10. Temporarily install the coupler component so that the oil strainer installation bolt hole does not deviate.

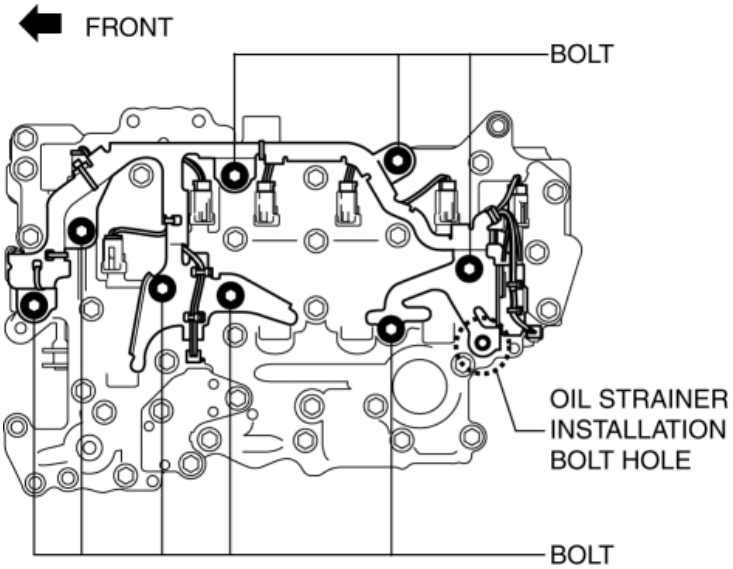

11. After verifying that the oil strainer installation bolt hole is not deviated, install the coupler component.

CAUTION:

- After assembling the coupler component, verify that shift solenoids No.1, 2, 3, 4, the pressure control solenoid, and the TCC control solenoid cannot be pulled out from the control valve body.

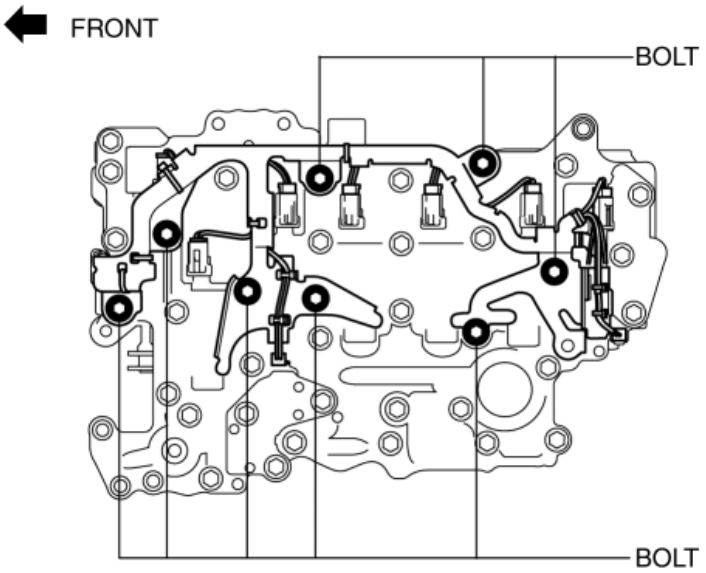

Tightening torque

- 9—10 N·m {92—101 kgf·cm, 80—88 in·lbf}

12. Connect the coupler component connectors.

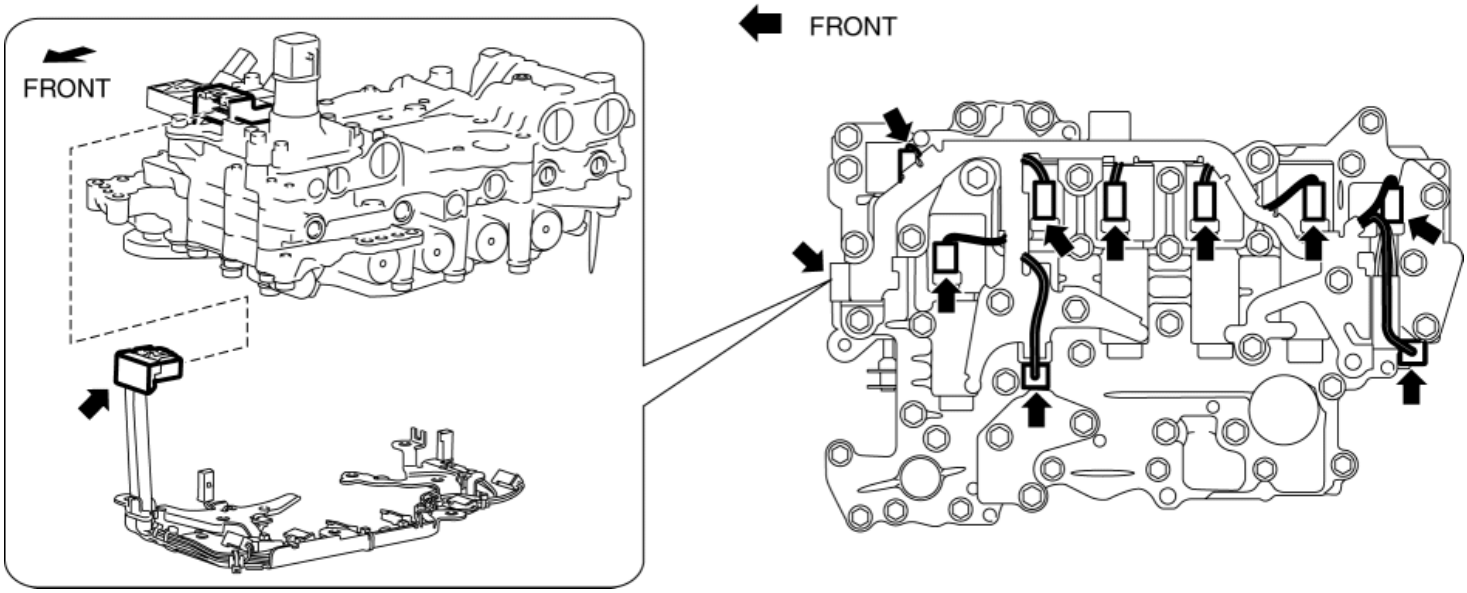

13. Install the control valve body. (See **CONTROL VALVE BODY REMOVAL/INSTALLATION [FW6A-EL]**.)

14. Install the oil seal (control valve body). (See **OIL SEAL (CONTROL VALVE BODY) REPLACEMENT [FW6A-EL]**.)

15. Install the hose clamp. (See **CONTROL VALVE BODY REMOVAL/INSTALLATION [FW6A-EL]**.)

16. Connect the control valve body connector. (See **CONTROL VALVE BODY REMOVAL/INSTALLATION [FW6A-EL]**.)

CAUTION:

- Make sure that your hand does not touch the terminal as the connector terminal could be damaged.
- Verify that there is no fluid or foreign matter adhering to the connector before connecting the connector.
- Insert the connector straight as the connector terminal could be damaged.
- Rotate the connector lever until a click is heard.

17. Add the ATF. (See **AUTOMATIC TRANSAXLE FLUID (ATF) REPLACEMENT [FW6A-EL]**.)

18. Install the air cleaner component. (See **INTAKE-AIR SYSTEM REMOVAL/INSTALLATION [SKYACTIV-G 2.0, SKYACTIV-G 2.5]**.)

19. Connect the negative battery cable. (See **NEGATIVE BATTERY CABLE DISCONNECTION/CONNECTION [SKYACTIV-G 2.0, SKYACTIV-G 2.5]**.)

20. Perform the “Mechanical System Test”. (See **MECHANICAL SYSTEM TEST [FW6A-EL]**.)

21. Install the front under cover No.2. (See **FRONT UNDER COVER No.2 REMOVAL/INSTALLATION**.)

2014 - Mazda3 - Transmission/Transaxle

OIL PRESSURE SWITCH REMOVAL/INSTALLATION [FW6A-EL]

WARNING:

- A hot transaxle and ATF can cause severe burns. Turn off the engine and wait until they are cool.
- Always wear protective eye wear when using the air compressor. If the air compressor is used, any particles of dirt or sludge could spatter and get into the eyes.

CAUTION:

- If the oil pressure switch has been replaced, perform initial learning. (See **INITIAL LEARNING [FW6A-EL]**.)
- Placing the control valve body connector side pointed downward could damage the control valve body connector part or sensor. If the servicing can only be performed by pointing the control valve body connector side downward, spread shock-absorbing material, which does not produce dust or foreign matter, and place the control valve body connector part and sensor on the table so that they do not directly contact the table.

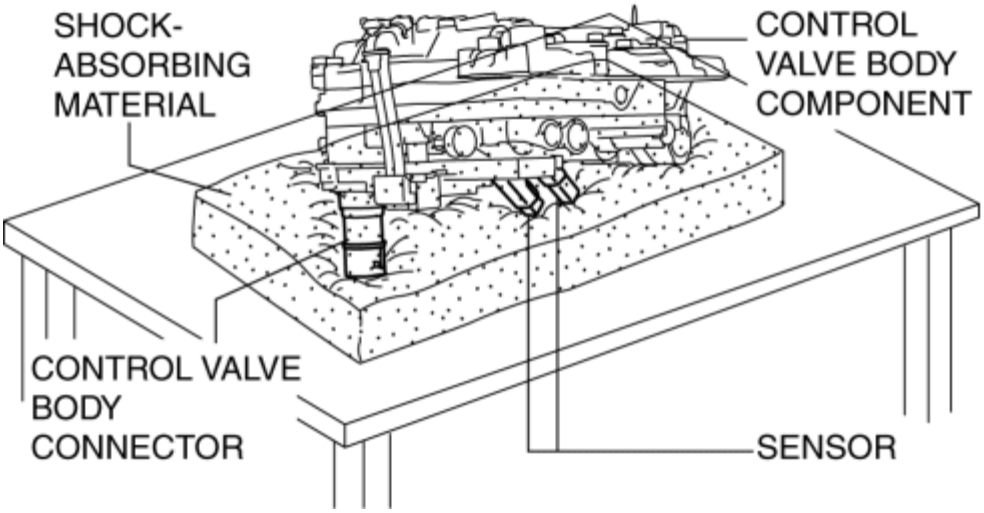

Oil Pressure Switch A

1. Select the selector lever to P position.

2. Disconnect the negative battery cable. (See **NEGATIVE BATTERY CABLE DISCONNECTION/CONNECTION [SKYACTIV-G 2.0, SKYACTIV-G 2.5]**.)

3. Remove the front under cover No.2. (See **FRONT UNDER COVER No.2 REMOVAL/INSTALLATION**.)

4. Clean the transaxle exterior throughout with a steam cleaner or cleaning solvents.

5. Remove the air cleaner component. (See **INTAKE-AIR SYSTEM REMOVAL/INSTALLATION [SKYACTIV-G 2.0, SKYACTIV-G 2.5]**.)

6. Remove the control valve body. (See **CONTROL VALVE BODY REMOVAL/INSTALLATION [FW6A-EL]**.)

7. Remove the oil seal (control valve body). (See **OIL SEAL (CONTROL VALVE BODY) REPLACEMENT [FW6A-EL]**.)

8. Insert a precision flathead screwdriver and move it in the direction of the arrow to disconnect the oil pressure switch A connector as shown in the figure.

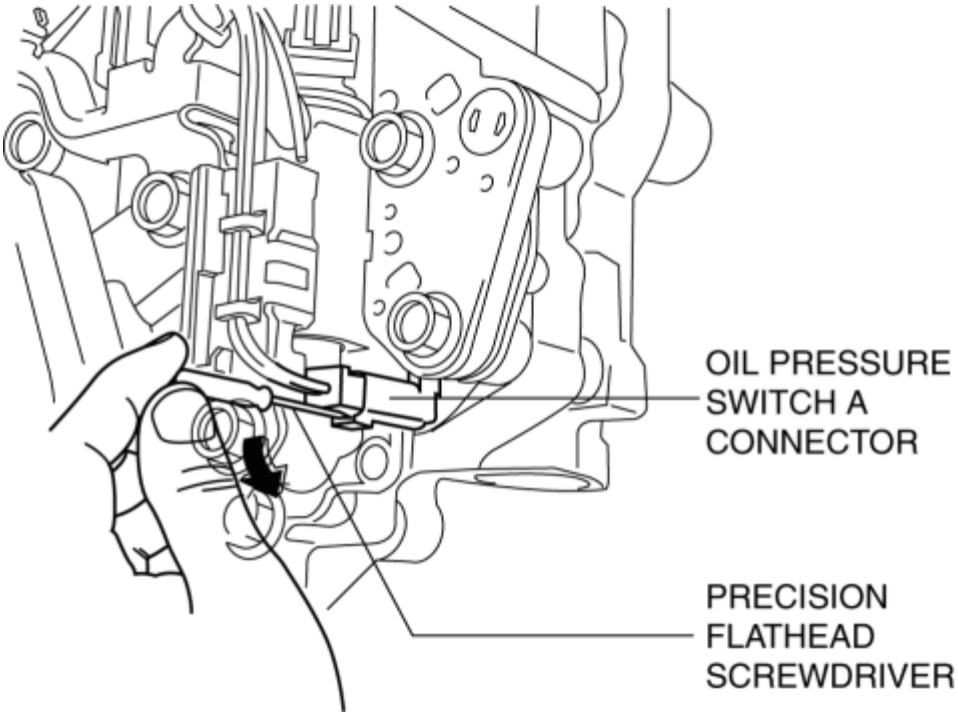

CAUTION:

- Do not scratch the oil pressure switch A and oil pressure switch connector A with the precision flathead screwdriver.
- When disconnecting connectors, grasp the connectors, not the wiring harnesses. Otherwise, the wiring harnesses may be pulled out of the connector causing poor contact.

9. Remove the oil pressure switch A fitting bolts.

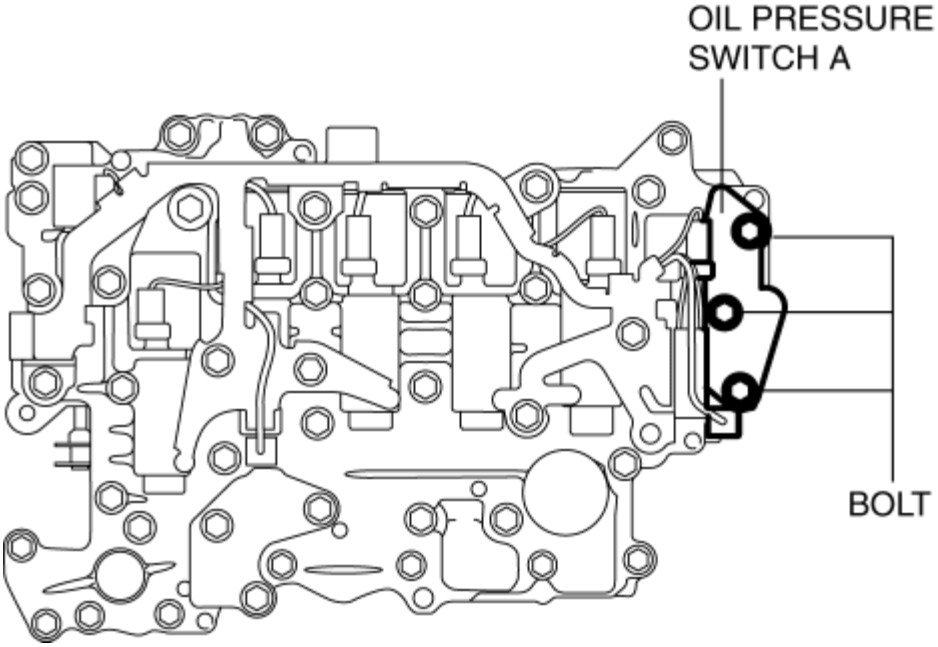

10. Detach tab shown in the figure and remove the oil pressure switch A from the control valve body.

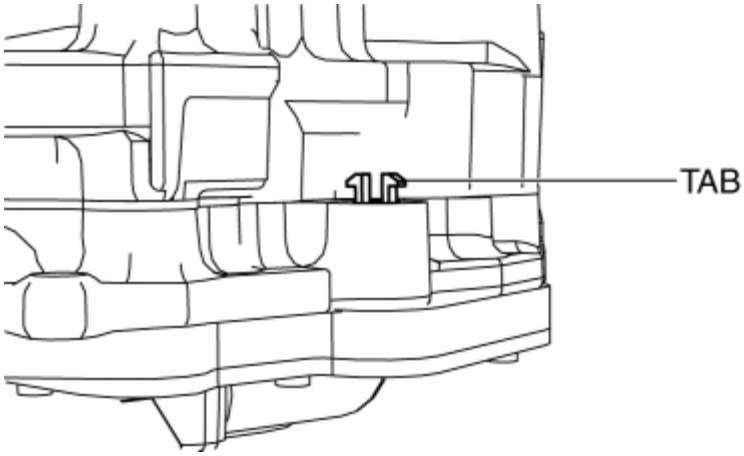

11. Install the oil pressure switch A to the control valve body.

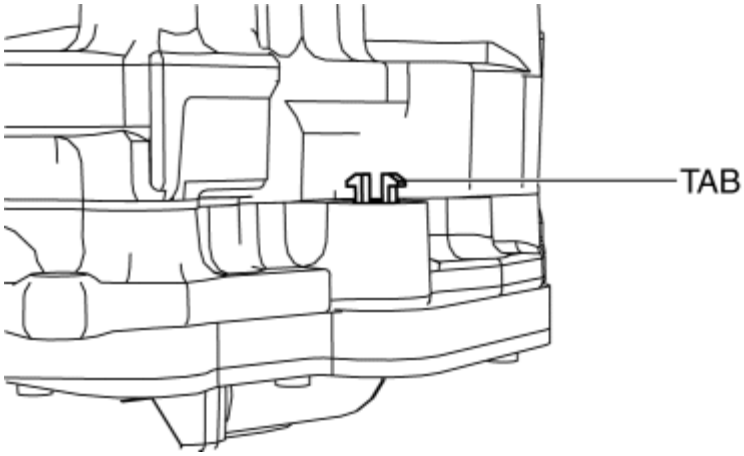

12. Verify that the tab is attached correctly.

13. Install the oil pressure switch A fitting bolts.

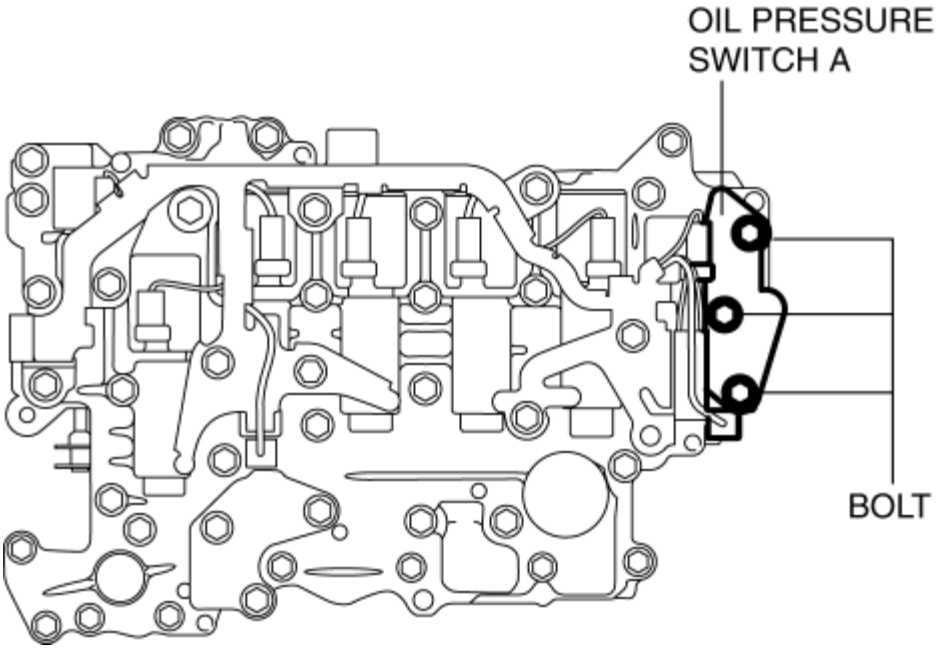

Tightening torque

- 9—10 N·m {92—101 kgf·cm, 80—88 in·lbf}

14. Connect the oil pressure switch A connector.

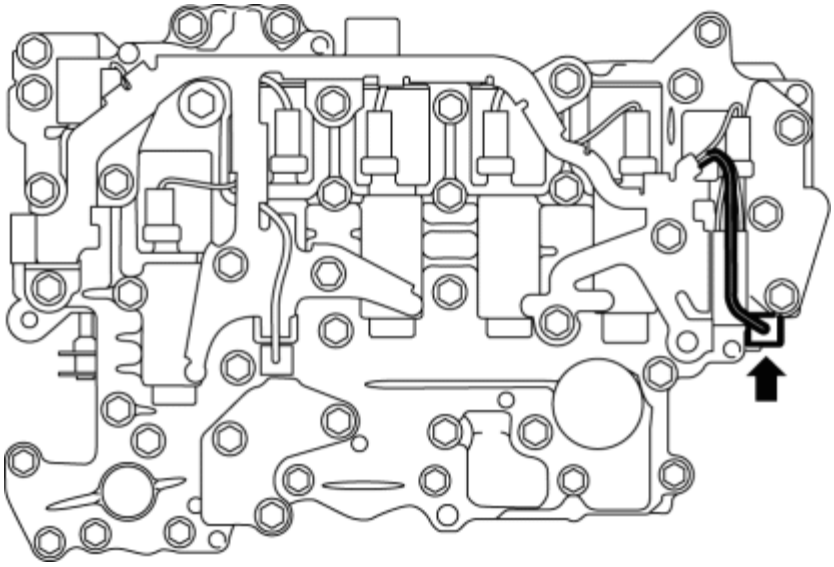

15. Install the control valve body. (See **CONTROL VALVE BODY REMOVAL/INSTALLATION [FW6A-EL]**.)

16. Install the oil seal (control valve body). (See **OIL SEAL (CONTROL VALVE BODY) REPLACEMENT [FW6A-EL]**.)

17. Install the hose clamp. (See **CONTROL VALVE BODY REMOVAL/INSTALLATION [FW6A-EL]**.)

18. Connect the control valve body connector. (See **CONTROL VALVE BODY REMOVAL/INSTALLATION [FW6A-EL]**.)

CAUTION:

- Make sure that your hand does not touch the terminal as the connector terminal could be damaged.

- Verify that there is no fluid or foreign matter adhering to the connector before connecting the connector.
- Insert the connector straight as the connector terminal could be damaged.
- Rotate the connector lever until a click is heard.

19. Add the ATF. (See **AUTOMATIC TRANSAXLE FLUID (ATF) REPLACEMENT [FW6A-EL]**.)

20. Install the air cleaner component. (See **INTAKE-AIR SYSTEM REMOVAL/INSTALLATION [SKYACTIV-G 2.0, SKYACTIV-G 2.5]**.)

21. Connect the negative battery cable. (See **NEGATIVE BATTERY CABLE DISCONNECTION/CONNECTION [SKYACTIV-G 2.0, SKYACTIV-G 2.5]**.)

22. Perform the “Initial Learning” (oil pressure switch A Replacement). (See **INITIAL LEARNING [FW6A-EL]**.)

23. Perform the “Mechanical System Test”. (See **MECHANICAL SYSTEM TEST [FW6A-EL]**.)

24. Install the front under cover No.2. (See **FRONT UNDER COVER No.2 REMOVAL/INSTALLATION**.)

Oil Pressure Switch B

1. Disconnect the negative battery cable. (See **NEGATIVE BATTERY CABLE DISCONNECTION/CONNECTION [SKYACTIV-G 2.0, SKYACTIV-G 2.5]**.)

2. Remove the front under cover No.2. (See **FRONT UNDER COVER No.2 REMOVAL/INSTALLATION**.)

3. Clean the transaxle exterior throughout with a steam cleaner or cleaning solvents.

4. Drain the ATF. (See **AUTOMATIC TRANSAXLE FLUID (ATF) REPLACEMENT [FW6A-EL]**.)

5. Remove the oil pan.

CAUTION:

- To avoid damaging the control valve body, if there is a large amount of foreign material at the bottom of the oil pan when the oil pan is removed, replace the oil strainer with a new one.
- If there is not a large amount of foreign material at the bottom of the oil pan, the oil strainer does not have to be replaced.

NOTE:

- Always use new oil pan installation bolts when re-installing the oil pan because the oil pan installation bolts cannot be reused.

6. Remove the oil strainer. (See **CONTROL VALVE BODY REMOVAL/INSTALLATION [FW6A-EL]**.)

7. Remove the oil strainer O-rings. (See **CONTROL VALVE BODY REMOVAL/INSTALLATION [FW6A-EL]**.)

8. Insert a precision flathead screwdriver and move it in the direction of the arrow to disconnect the oil pressure switch B connector as shown in the figure.

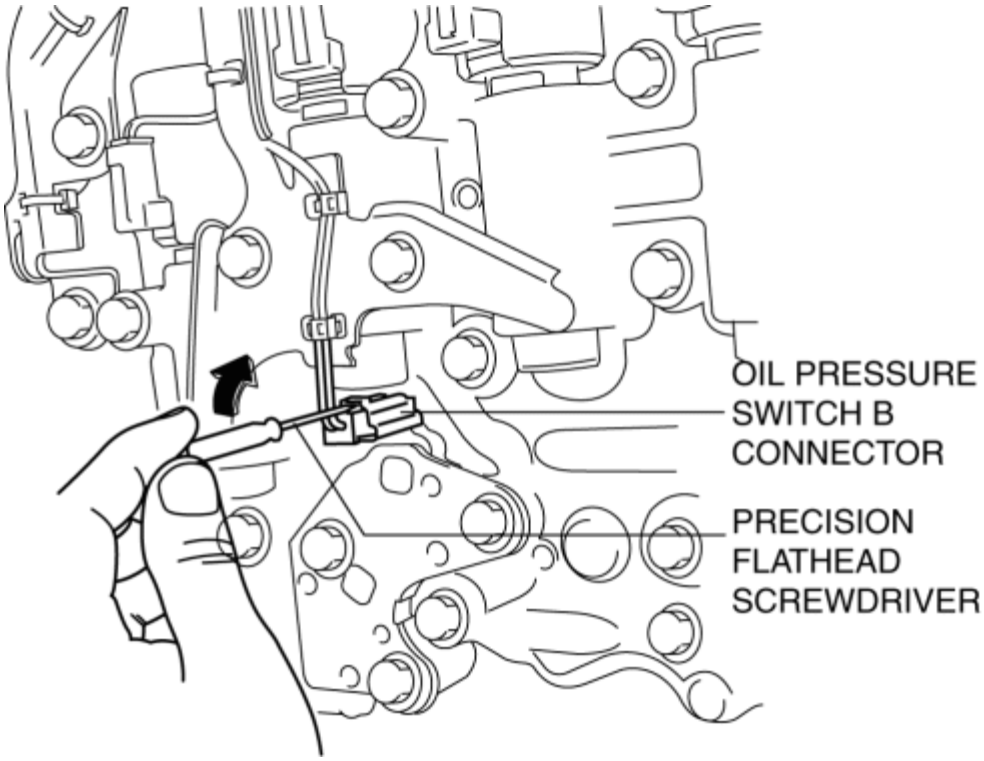

CAUTION:

- Do not scratch the oil pressure switch B and oil pressure switch connector B with the precision flathead screwdriver.
- When disconnecting connectors, grasp the connectors, not the wiring harnesses. Otherwise, the wiring harnesses may be pulled out of the connector causing poor contact.

9. Remove the oil pressure switch B.

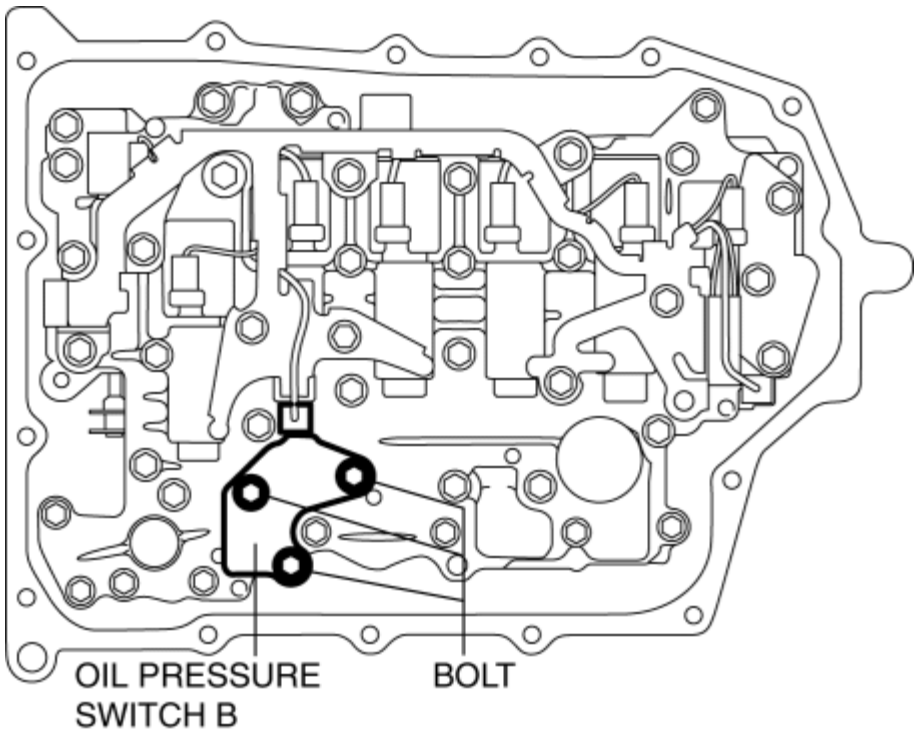

10. Install the oil pressure switch B.

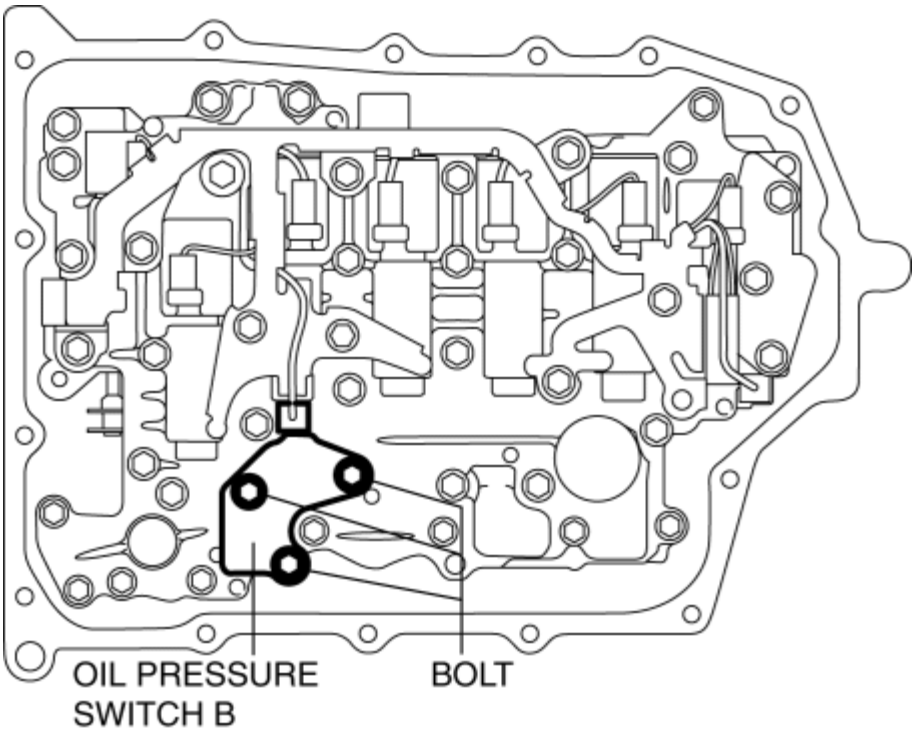

Tightening torque

- 9—10 N·m {92—101 kgf·cm, 80—88 in·lbf}

11. Connect the oil pressure switch B connector.

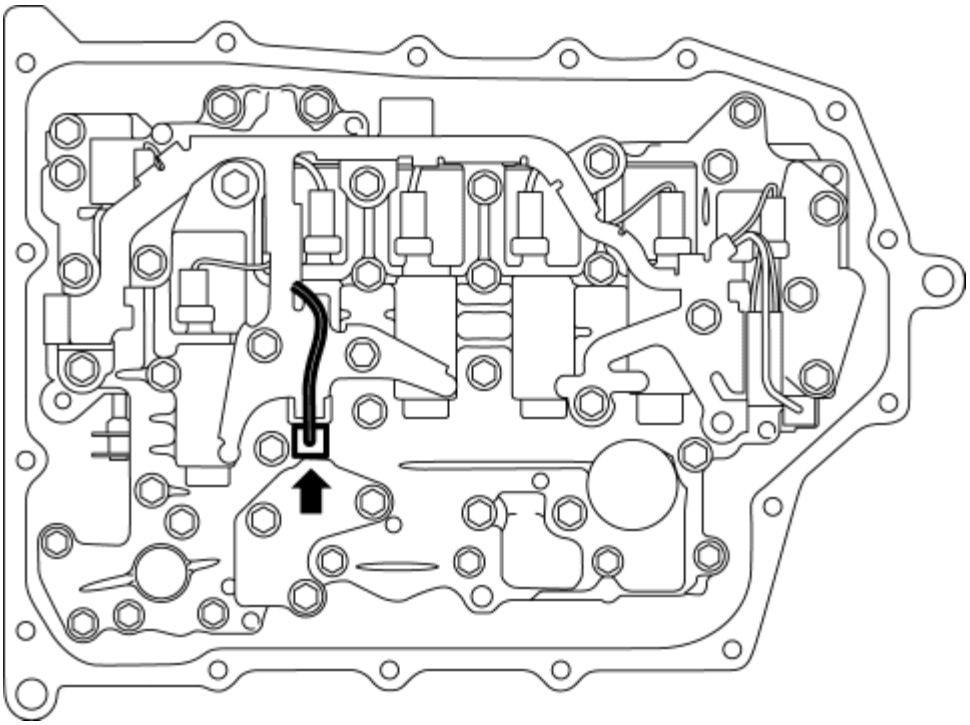

12. Install the oil strainer O-rings. (See **CONTROL VALVE BODY REMOVAL/INSTALLATION [FW6A-EL]**.)

NOTE:

- If there is a large amount of foreign material at the bottom of the oil pan, replace the oil strainer with a new one.

13. Install the oil strainer. (See **CONTROL VALVE BODY REMOVAL/INSTALLATION [FW6A-EL]**.)

14. Apply a light coat of silicone sealant (TB1217E or equivalent) to the contact surfaces of the oil pan and transaxle case.

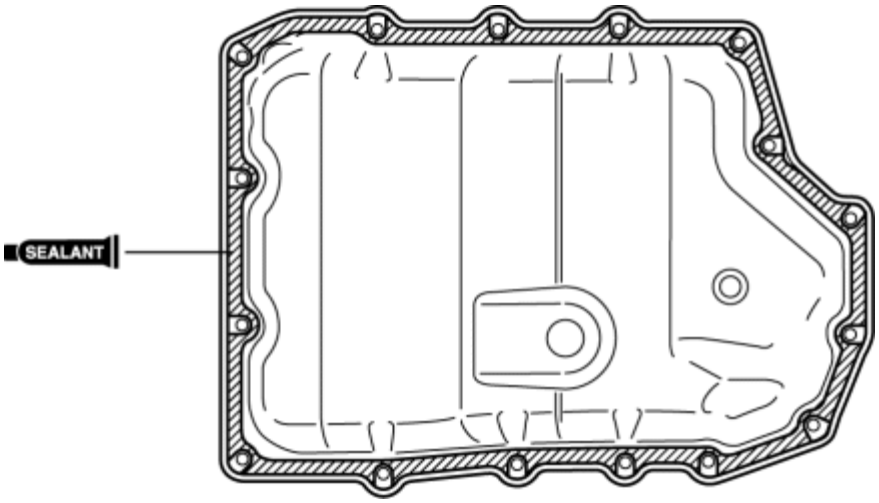

CAUTION:

- Clean any remaining silicone sealant on the contact surface of the transaxle case and oil pan, and degrease the sealant area. Otherwise, oil could leak.

15. Install the oil pan with new bolts before the applied sealant starts to harden.

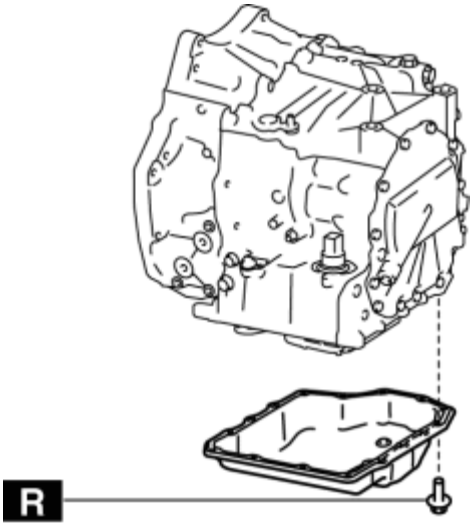

Tightening torque

- 8—10 N·m {82—101 kgf·cm, 71—88 in·lbf}

16. Add the ATF. (See **AUTOMATIC TRANSAXLE FLUID (ATF) REPLACEMENT [FW6A-EL]**.)

17. Connect the negative battery cable. (See **NEGATIVE BATTERY CABLE DISCONNECTION/CONNECTION [SKYACTIV-G 2.0, SKYACTIV-G 2.5]**.)

18. Perform the “Initial Learning” (oil pressure switch B Replacement). (See **INITIAL LEARNING [FW6A-EL]**.)

19. Perform the “Mechanical System Test”. (See **MECHANICAL SYSTEM TEST [FW6A-EL]**.)

20. Install the front under cover No.2. (See **FRONT UNDER COVER No.2 REMOVAL/INSTALLATION**.)

OIL PRESSURE SWITCH REMOVAL/INSTALLATION [FW6A-EL]

2014 - Mazda3 - Transmission/Transaxle

ON/OFF SOLENOID REMOVAL/INSTALLATION [FW6A-EL]

WARNING:

- A hot transaxle and ATF can cause severe burns. Turn off the engine and wait until they are cool.
- Always wear protective eye wear when using the air compressor. If the air compressor is used, any particles of dirt or sludge could spatter and get into the eyes.

1. Disconnect the negative battery cable. (See **NEGATIVE BATTERY CABLE DISCONNECTION/CONNECTION [SKYACTIV-G 2.0, SKYACTIV-G 2.5]**.)

2. Remove the front under cover No.2. (See **FRONT UNDER COVER No.2 REMOVAL/INSTALLATION**.)

3. Clean the transaxle exterior throughout with a steam cleaner or cleaning solvents.

4. Drain the ATF. (See **AUTOMATIC TRANSAXLE FLUID (ATF) REPLACEMENT [FW6A-EL]**.)

5. Remove the oil pan.

CAUTION:

- To avoid damaging the control valve body, if there is a large amount of foreign material at the bottom of the oil pan when the oil pan is removed, replace the oil strainer with a new one.
- If there is not a large amount of foreign material at the bottom of the oil pan, the oil strainer does not have to be replaced.

NOTE:

- Always use new oil pan installation bolts when re-installing the oil pan because the oil pan installation bolts cannot be reused.

6. Disconnect the ON/OFF solenoid connector.

NOTE:

- Disconnect the ON/OFF solenoid connector by pressing the connector tab with your fingers.

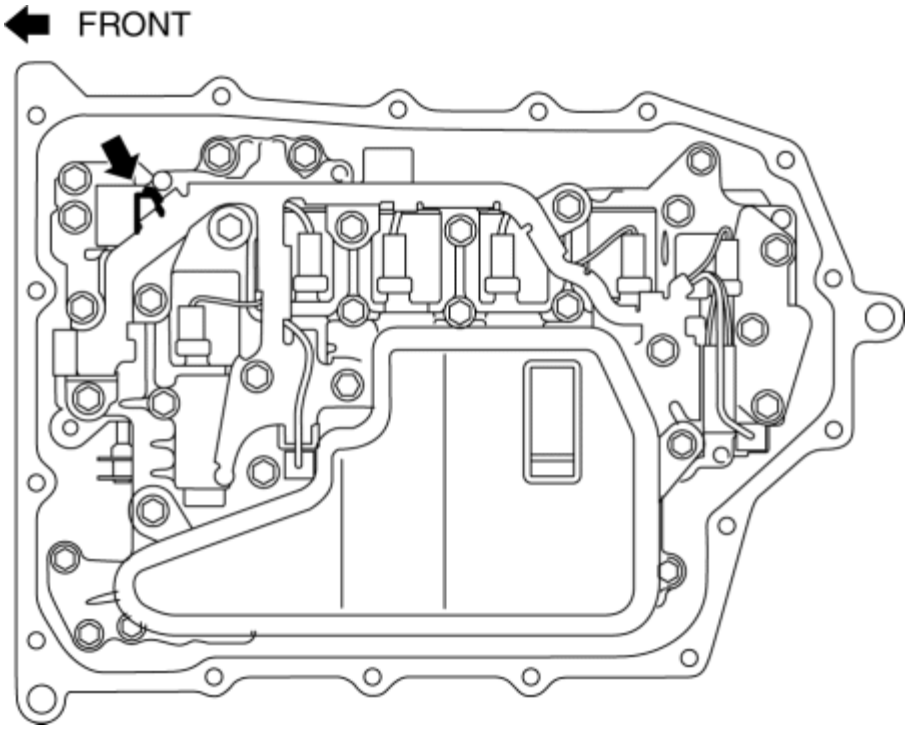

7. Remove the ON/OFF solenoid.

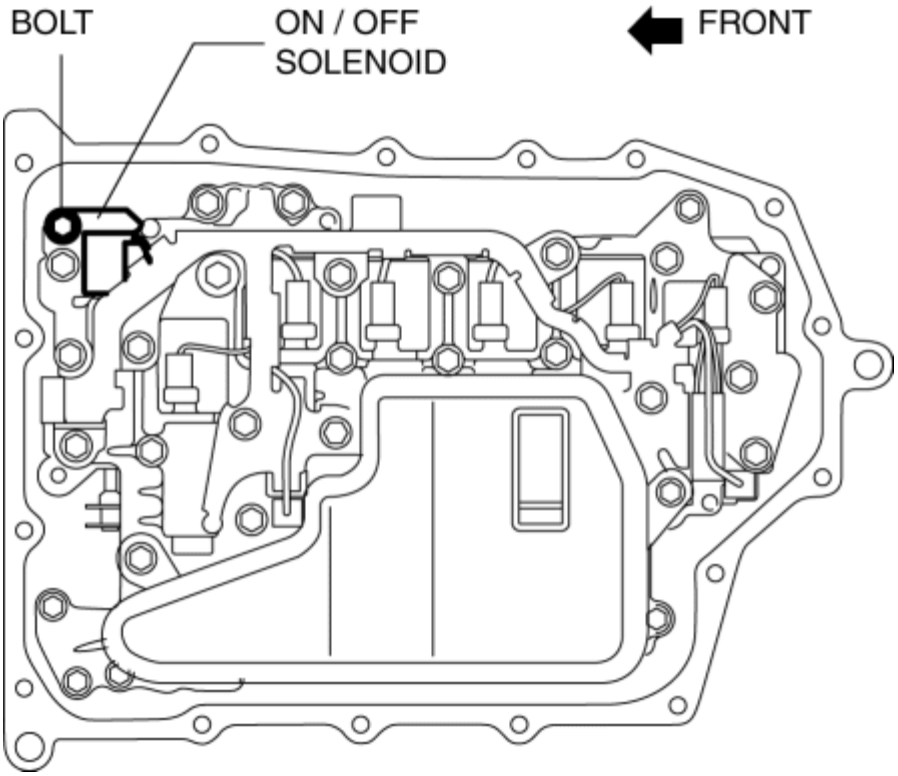

8. Install the ON/OFF solenoid.

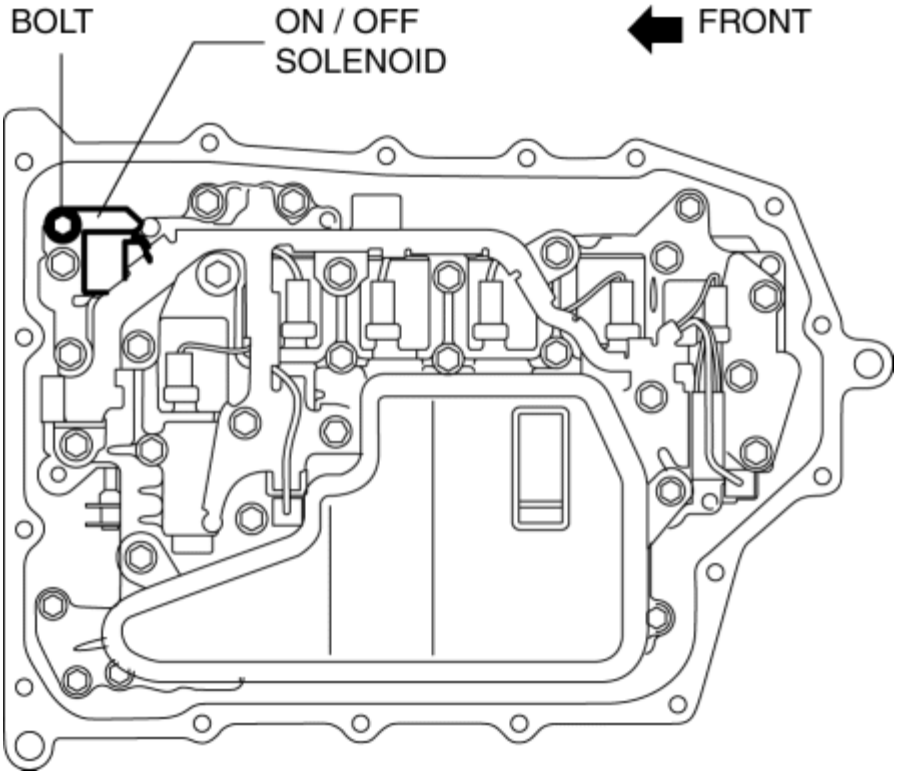

Tightening torque

- 9—10 N·m {92—101 kgf·cm, 80—88 in·lbf}

9. Connect the ON/OFF solenoid connector.

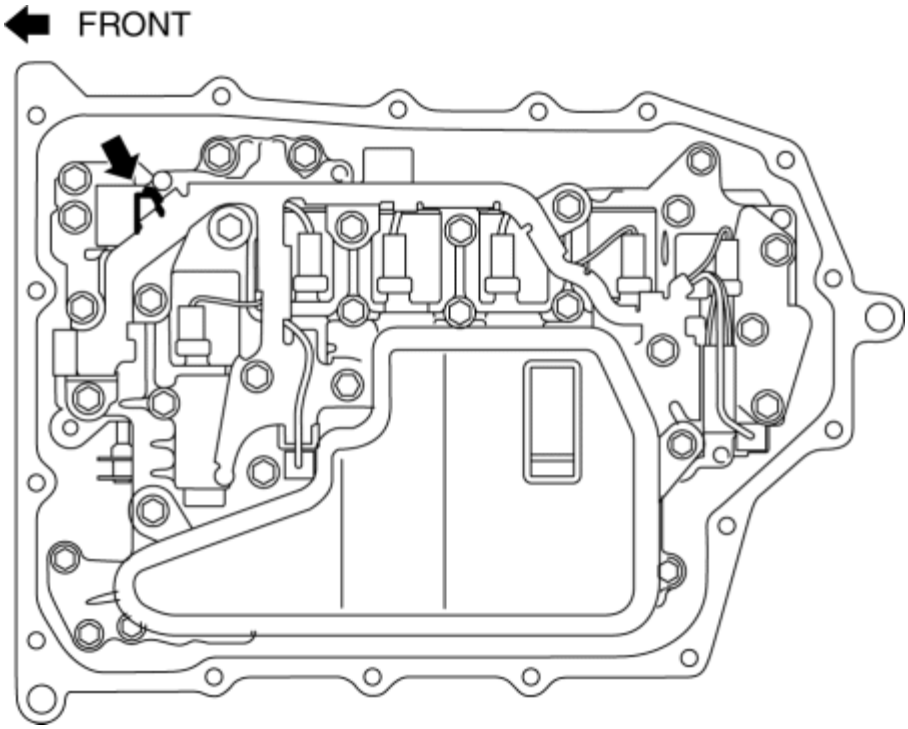

10. Apply a light coat of silicone sealant (TB1217E or equivalent) to the contact surfaces of the oil pan and transaxle case.

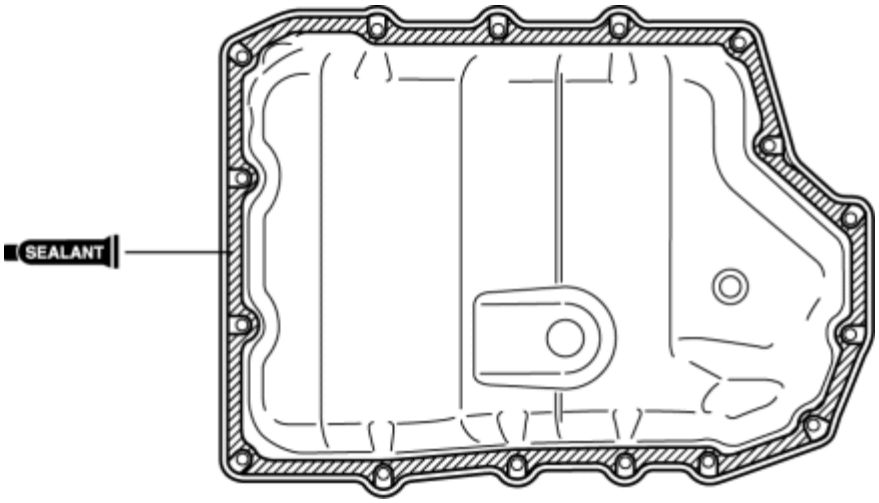

CAUTION:

- Clean any remaining silicone sealant on the contact surface of the transaxle case and oil pan, and degrease the sealant area. Otherwise, oil could leak.

11. Install the oil pan with new bolts before the applied sealant starts to harden.

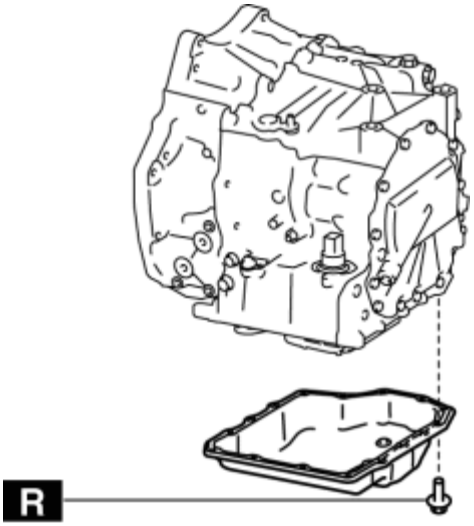

Tightening torque

- 8—10 N·m {82—101 kgf·cm, 71—88 in·lbf}

12. Add the ATF. (See **AUTOMATIC TRANSAXLE FLUID (ATF) REPLACEMENT [FW6A-EL]**.)

13. Connect the negative battery cable. (See **NEGATIVE BATTERY CABLE DISCONNECTION/CONNECTION [SKYACTIV-G 2.0, SKYACTIV-G 2.5]**.)

14. Perform the “Mechanical System Test”. (See **MECHANICAL SYSTEM TEST [FW6A-EL]**.)

15. Install the front under cover No.2. (See **FRONT UNDER COVER No.2 REMOVAL/INSTALLATION**.)

2014 - Mazda3 - Transmission/Transaxle

AUTOMATIC TRANSAXLE REMOVAL/INSTALLATION [FW6A-EL]

CAUTION:

- If the automatic transaxle has been replaced, perform initial learning. (See **INITIAL LEARNING [FW6A-EL]**.)
- Performing the following procedures without first removing the front ABS wheel-speed sensor may possibly cause an open circuit in the harness if it is pulled by mistake. Before performing the following procedures, disconnect the front ABS wheel-speed sensor (axle side) and fix it to an appropriate place where the sensor will not be pulled by mistake while servicing the vehicle.
- Secure the steering wheel using tape or a cable to prevent the steering shaft from rotating after disconnecting the steering shaft. If the steering wheel rotates after the steering shaft and the steering gear and linkage are disconnected, the internal parts of the clock spring could be damaged.

Removal

1. Disconnect the negative battery cable. (See **NEGATIVE BATTERY CABLE DISCONNECTION/CONNECTION [SKYACTIV-G 2.0, SKYACTIV-G 2.5]**.)
2. Remove the air cleaner and air hose as a single unit. (See **INTAKE-AIR SYSTEM REMOVAL/INSTALLATION [SKYACTIV-G 2.0, SKYACTIV-G 2.5]**.)
3. Remove the battery tray and PCM component. (See **BATTERY REMOVAL/INSTALLATION [SKYACTIV-G 2.0, SKYACTIV-G 2.5]**.)
4. Disconnect the wiring harness clip from the transaxle.

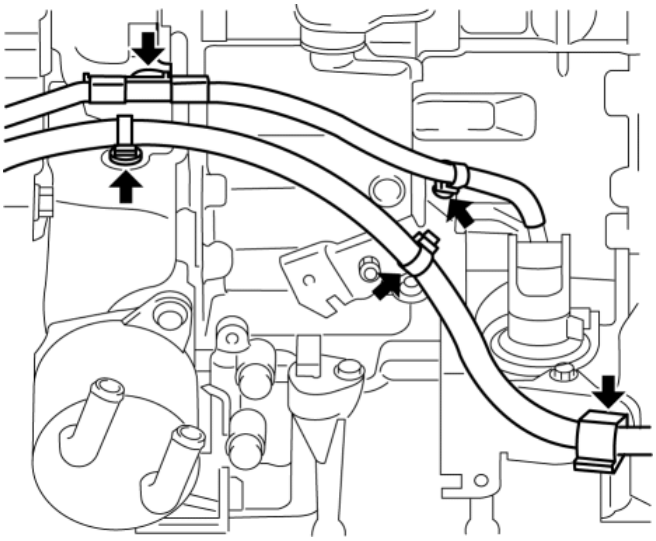

5. Remove the splash shield (LH). (See **SPLASH SHIELD REMOVAL/INSTALLATION**.)
6. Disconnect the control valve body connector.

CAUTION:

- Make sure that your hand does not touch the terminal as the connector terminal could be damaged.
- Water or foreign objects entering the connector can cause a poor connection or corrosion. Be sure not to drop water or foreign objects on the connector when disconnecting it.

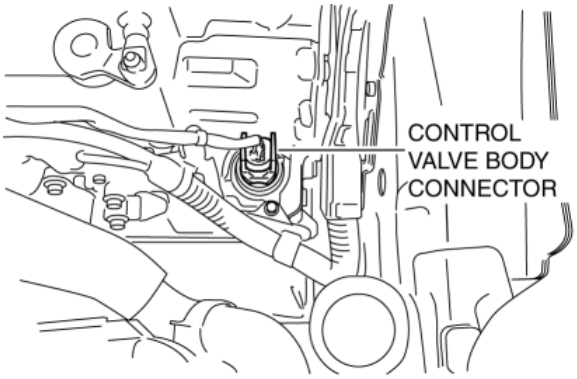

7. Remove the bracket from the transaxle.

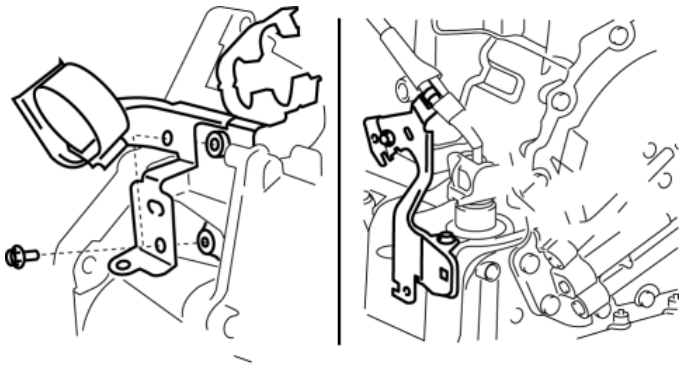

8. Disconnect the ground cable.

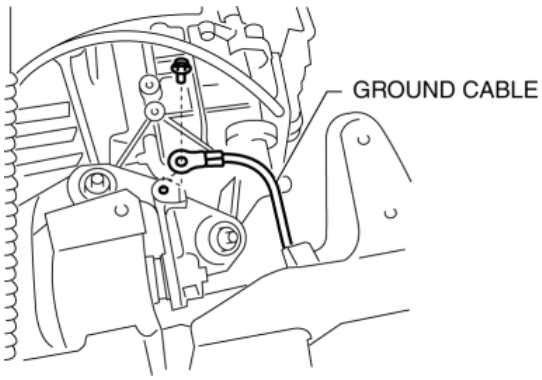

9. Disconnect the selector cable from the transaxle.

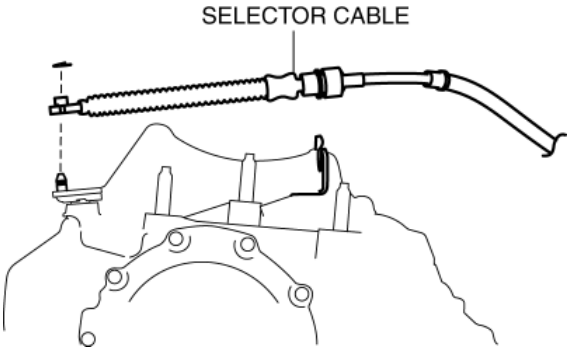

10. Remove the selector cable bracket.

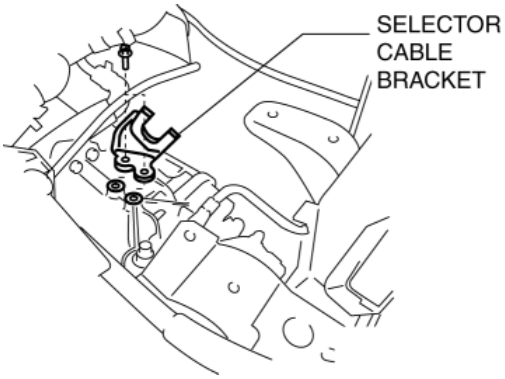

11. Remove the bracket.

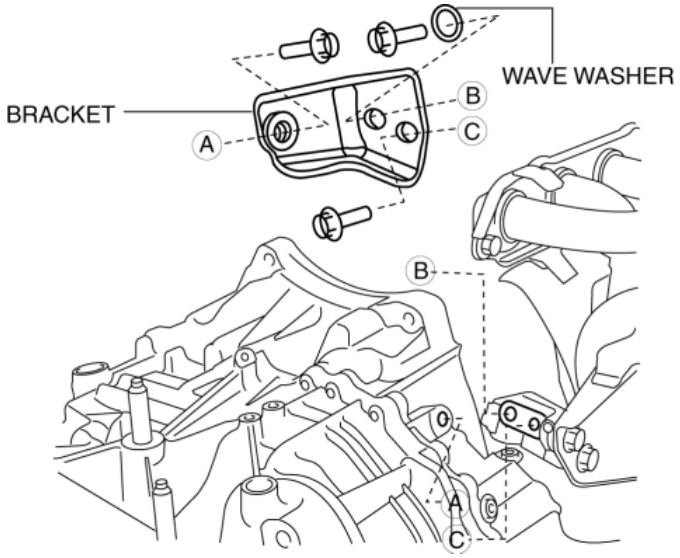

12. Disconnect the breather hose from the transaxle.

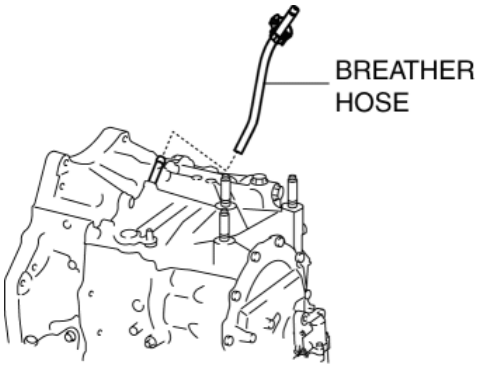

13. Remove the joint cover. (See **STEERING WHEEL AND COLUMN REMOVAL/INSTALLATION**.)

14. Disconnect the intermediate shaft from the steering gear and linkage. (See **STEERING WHEEL AND COLUMN REMOVAL/INSTALLATION**.)

15. Remove the front tires. (See **GENERAL PROCEDURES (SUSPENSION)**.)

16. Remove the front under cover No.2. (See **FRONT UNDER COVER No.2 REMOVAL/INSTALLATION**.)

17. Disconnect the wiring harness from the front crossmember. (Vehicle with i-ELOOP)

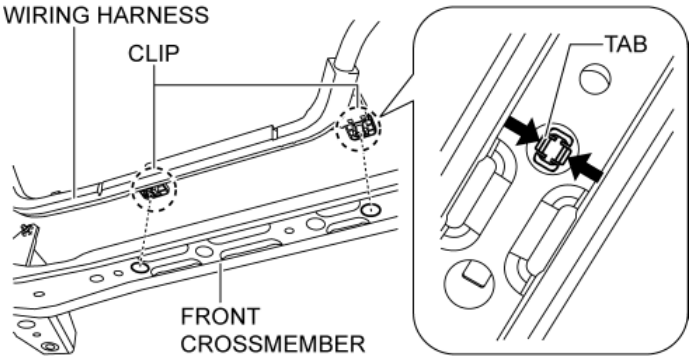

18. Remove the front under cover No.1. (See **FRONT UNDER COVER No.1 REMOVAL/INSTALLATION**.)

19. Drain the ATF. (See **AUTOMATIC TRANSAXLE FLUID (ATF) REPLACEMENT [FW6A-EL]**.)

20. Disconnect the oil cooler from the transaxle with the hose connected. (Except Automatic Transaxle Replacement) (See **OIL COOLER REMOVAL/INSTALLATION [FW6A-EL]**.)

21. Disconnect the water hose from the oil cooler. (Automatic Transaxle Replacement) (See **OIL COOLER REMOVAL/INSTALLATION [FW6A-EL]**.)

22. Remove the starter. (See **STARTER REMOVAL/INSTALLATION [SKYACTIV-G 2.0, SKYACTIV-G 2.5]**.)

23. Remove the blind cover.

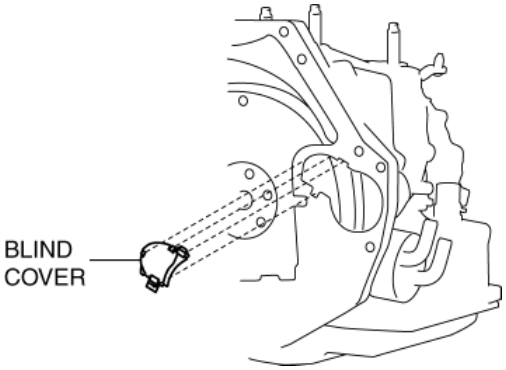

24. Hold the crankshaft pulley to prevent drive plate from rotating.

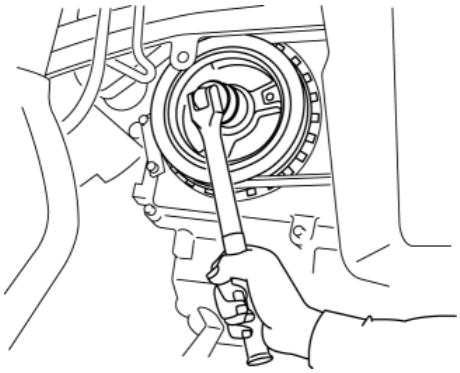

25. Remove the torque converter nuts from the starter installation hole.

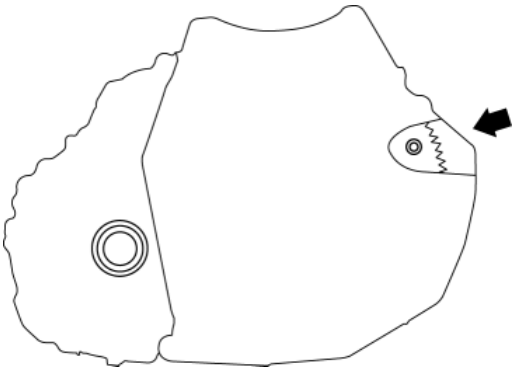

26. Disconnect the front ABS wheel-speed sensors from the steering knuckles. (See **FRONT ABS WHEEL-SPEED SENSOR REMOVAL/INSTALLATION**.)

27. Disconnect the clips securing the brake hose from the front shock absorbers. (See **BRAKE HOSE (FRONT) REMOVAL/INSTALLATION**.)

28. Disconnect the tie-rod end ball joints from the steering knuckles. (See **STEERING GEAR AND LINKAGE REMOVAL/INSTALLATION**.)

29. Disconnect the front lower arms from the steering knuckles. (See **FRONT LOWER ARM REMOVAL/INSTALLATION**.)

30. Disconnect the front stabilizer control links from the front stabilizer. (See **FRONT STABILIZER REMOVAL/INSTALLATION**.)

31. Disconnect the front drive shaft (LH) from the transaxle. (See **FRONT DRIVE SHAFT REMOVAL/INSTALLATION**.)

32. Disconnect the front drive shaft (RH) from the transaxle. (See **FRONT DRIVE SHAFT REMOVAL/INSTALLATION**.)

33. Remove the front crossmember component and No.1 engine mount rubber as a single unit. (See **FRONT CROSSMEMBER REMOVAL/INSTALLATION**.)

34. Remove the bracket plate and No.1 engine mount bracket from the transaxle.

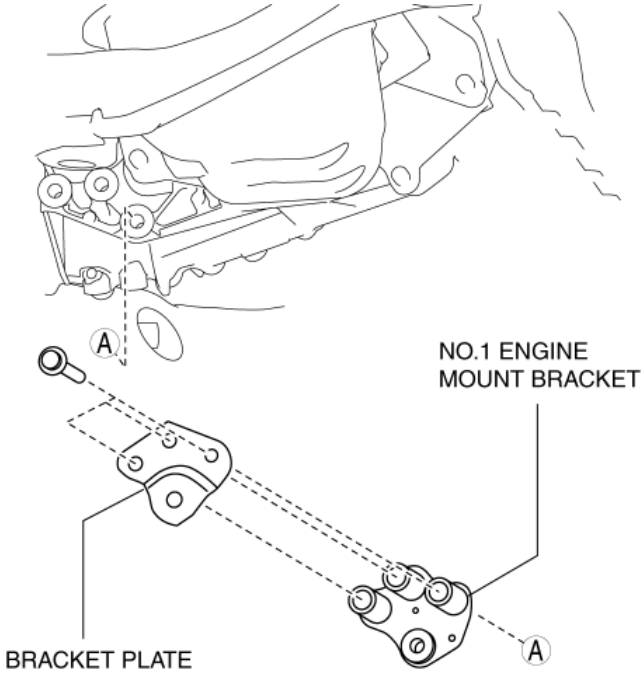

35. Install the **SST** using the following procedures.

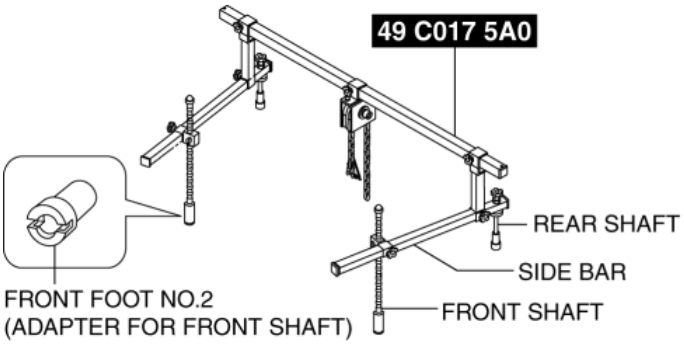

CAUTION:

- Refer to the SST instruction manual for the basic handing procedure.

a. Install one front foot No.2 to each of the left and right front shafts of the **SST**.

b. Protect the positions shown in the area using tape.

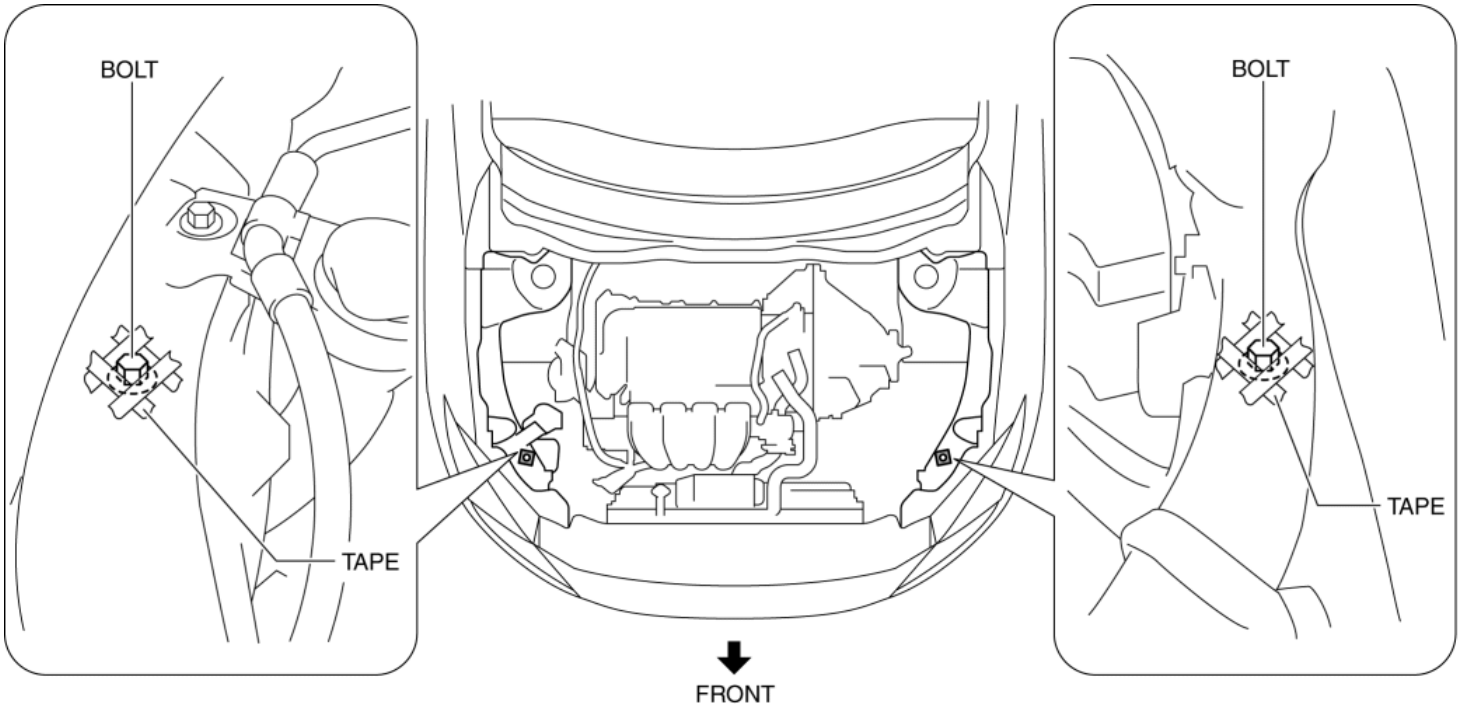

c. To enable to install the **SST**, disconnect the clip shown in the figure and set the wiring harness aside.

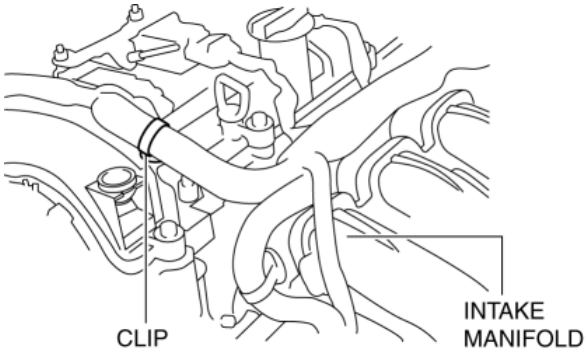

d. Install the **SST** using **part number 99794 1025** or an **M10—1.25**, length **25 mm {0.98 in}** bolt as shown in the figure.

Engine front side

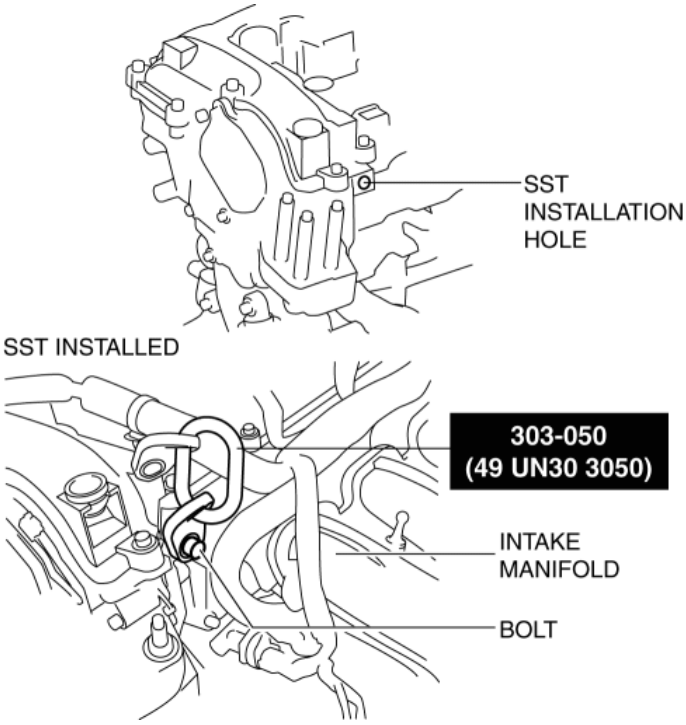

Tightening torque

- 38—51 N·m {3.9—5.2 kgf·m, 29—37 ft·lbf}

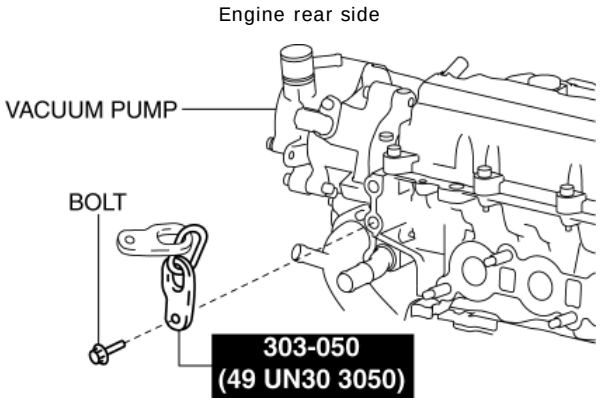

Tightening torque

- 38—51 N·m {3.9—5.2 kgf·m, 29—37 ft·lbf}

e. As shown in the figure, set the rear shafts of the **SST** to the left and right shock absorber nuts.

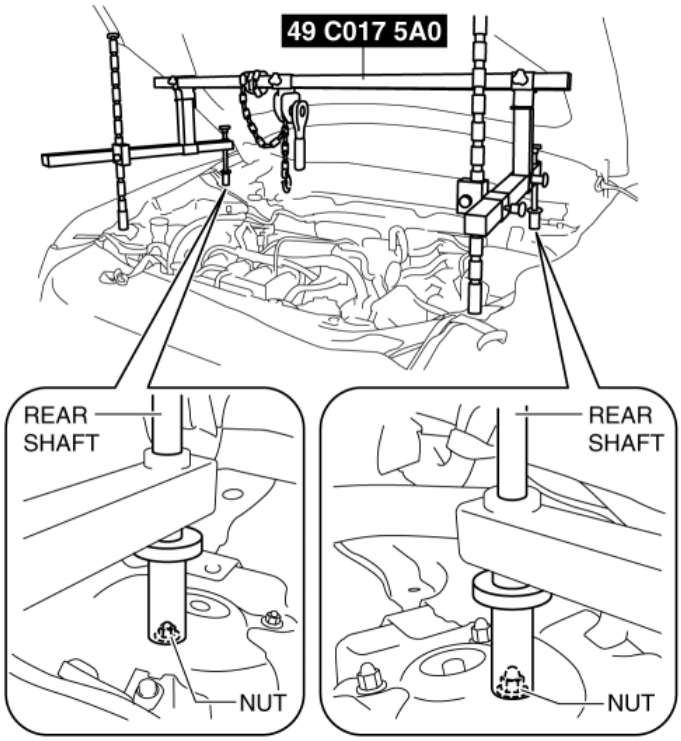

f. As shown in the figure, set the front shafts of the **SST** to the left and right bolts.

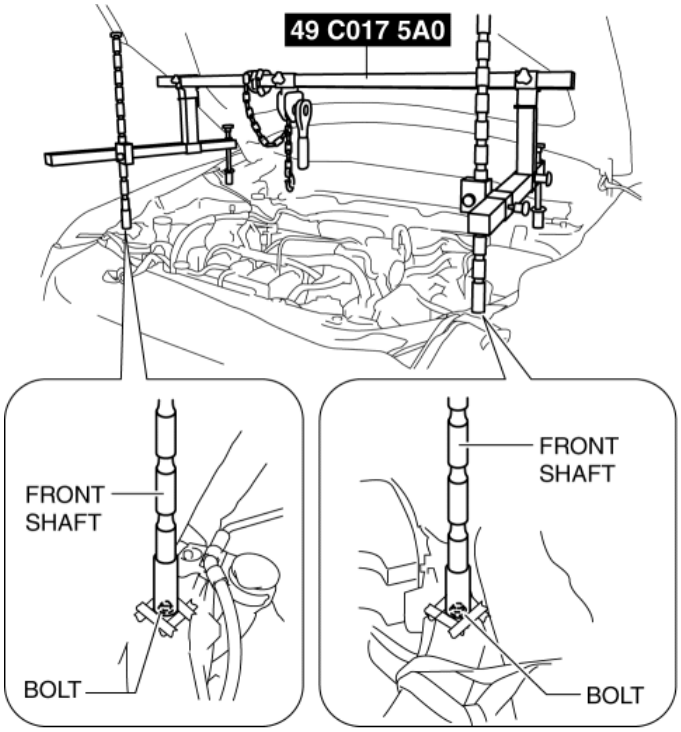

g. Install the **SST** (49 L017 5A0) to the **SST** (49 C017 5A0) as shown in the figure.

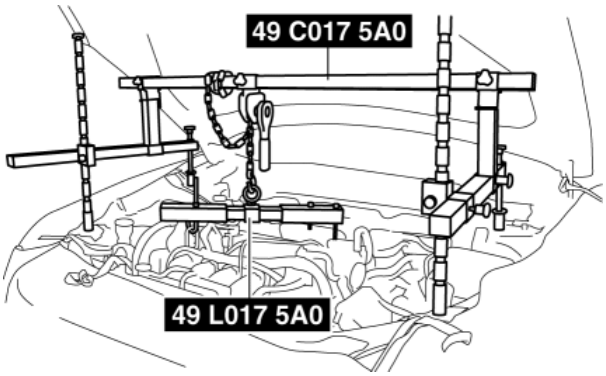

h. Install the **SST** (49 L017 5A0) to the **SST** (49 UN30 3050) with the hook of the **SST** (49 L017 5A0) facing outward.

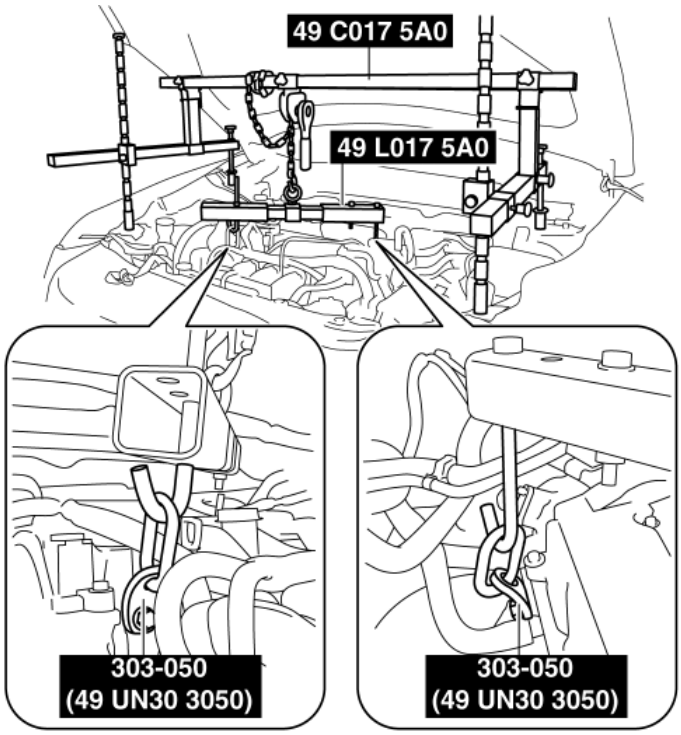

i. Adjust the height of the left and right side bars so that they are leveled, then tighten each part of the **SST**.

j. Apply tension to the chain to secure the engine.

36. Remove in the order shown in the table.

WARNING:

- Improperly jacking a transaxle is dangerous. It can slip off the jack and may cause serious injury.

CAUTION:

- To prevent the torque converter and transaxle from separating, remove the transaxle without tilting it toward the torque converter.

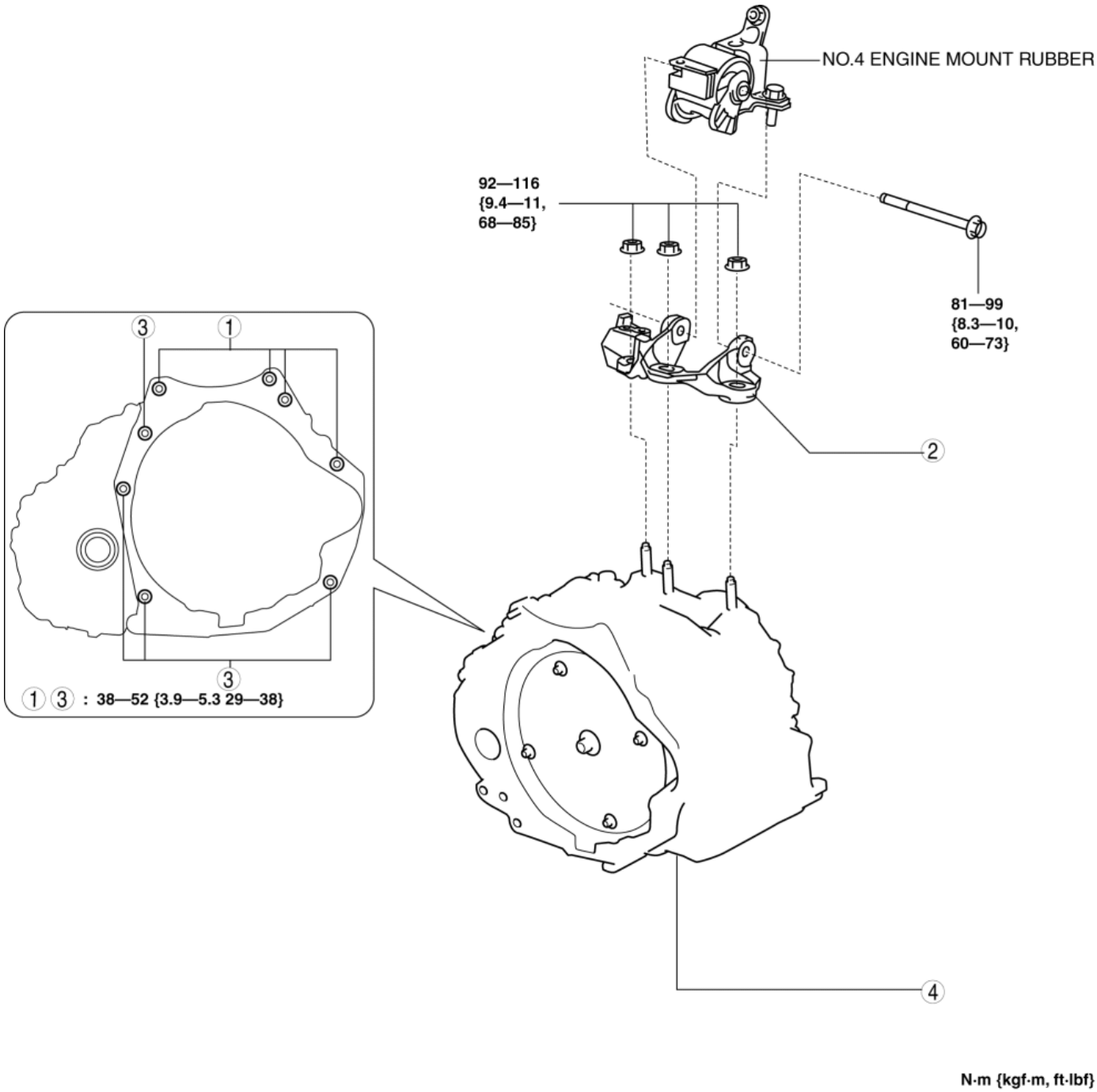

1	Transaxle mounting bolts (upper side)
2	No.4 engine mount bracket (See **No.4 engine mount bracket removal note**.)

3	Transaxle mounting bolts (lower side) (See **Transaxle mounting bolt removal note**.)
4	Transaxle (See **No.4 engine mount bracket removal note**.) (See **Transaxle mounting bolt removal note**.)

No.4 engine mount bracket removal note

CAUTION:

- A slot has been adopted for the No.4 engine mount bracket installation hole. If the No.4 engine mount bracket is deviated from the original position when installing the No.4 engine mount, engine noise or vibration could increase. When removing the No.4 engine mount, place alignment marks on the No.4 engine mount bracket so that they can be assembled to the same positions as before removal.

1. Place alignment marks on the locations shown in the figure so that they can be assembled to the same positions as before removal.

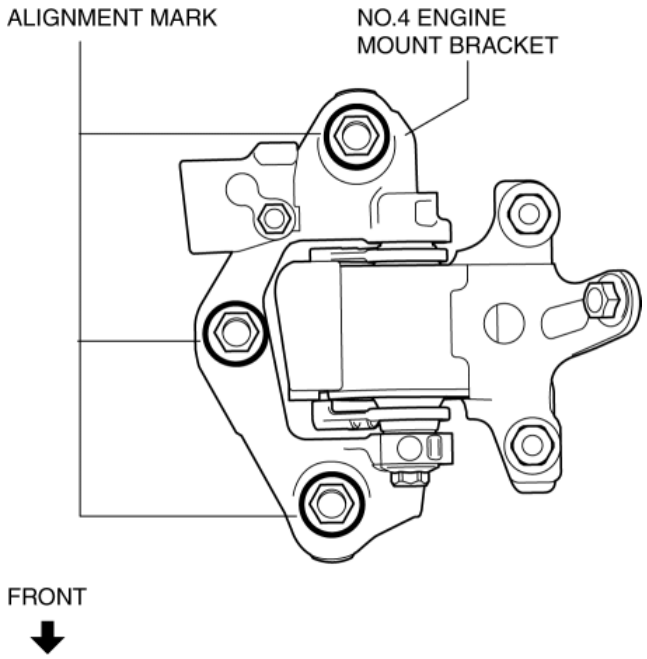

NOTE:

- Paint so that the outline of the nut is framed on the bracket side.

2. Remove the No.4 engine mount bracket.

Transaxle mounting bolt removal note

WARNING:

- Remove the transaxle carefully, holding it steady. If the transaxle falls it could be damaged or cause injury.

1. Adjust the **SST** and lean the engine toward the transaxle.

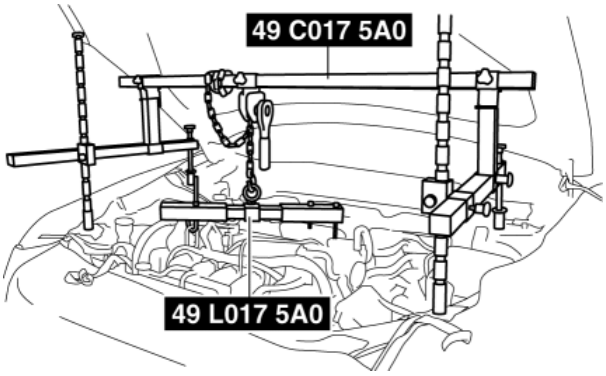

2. Support the transaxle on a jack.

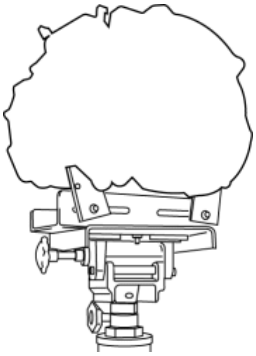

3. Remove the transaxle mounting bolts (lower side).
4. Remove the transaxle.

Installation

CAUTION:

- Verify that the torque converter stud bolts are inserted into the drive plate bolt holes, and install the transaxle installation bolts. Otherwise, the drive plate could be damaged.

1. Verify that the torque converter stud bolts are inserted into the drive plate bolt holes from the starter installation hole.

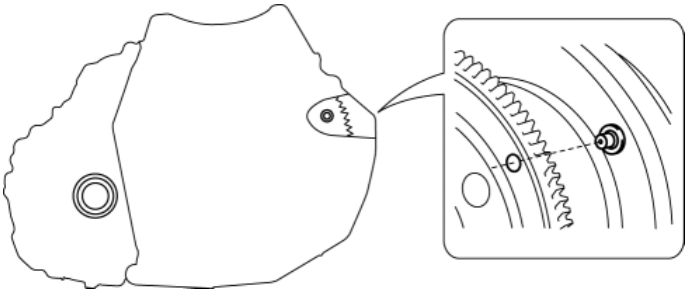

2. Install the transaxle mounting bolts.

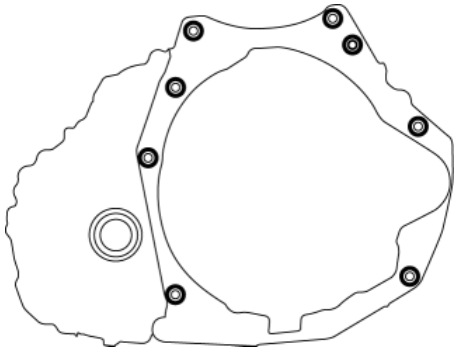

Tightening torque

- 38—52 N·m {3.9—5.3 kgf·m, 29—38 ft·lbf}

3. Tighten the stud bolts for the transaxle.

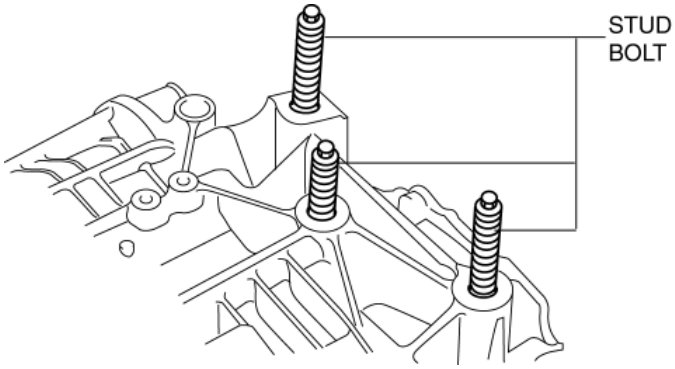

NOTE:

- If the No.4 engine mount bracket nut is loosened, tighten the stud bolts for the transaxle because they may be loosened.

  Tightening torque

- 15—25 N·m {1.6—2.5 kgf·m, 12—18 ft·lbf}

4. Install the No.4 engine mount bracket to No.4 engine mount rubber, and temporarily tighten the installation bolt.

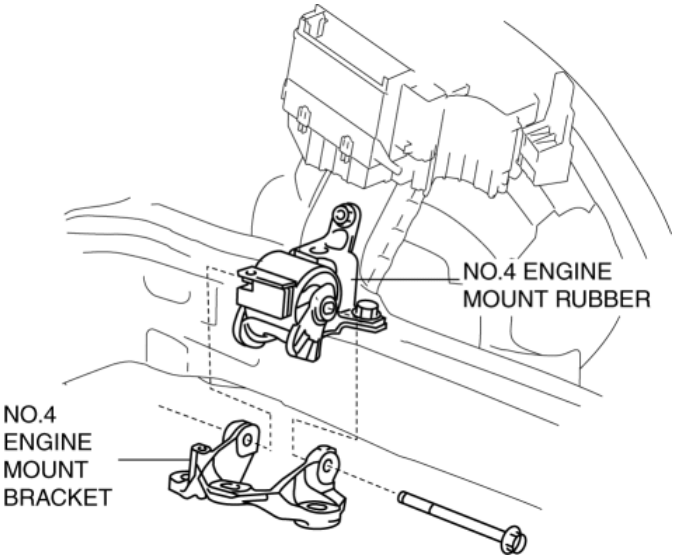

5. Pull up the transaxle using the **SSTs**, pass the transaxle stud bolts through the No.4 engine mount bracket, and temporarily tighten the No.4 engine mount installation nuts.

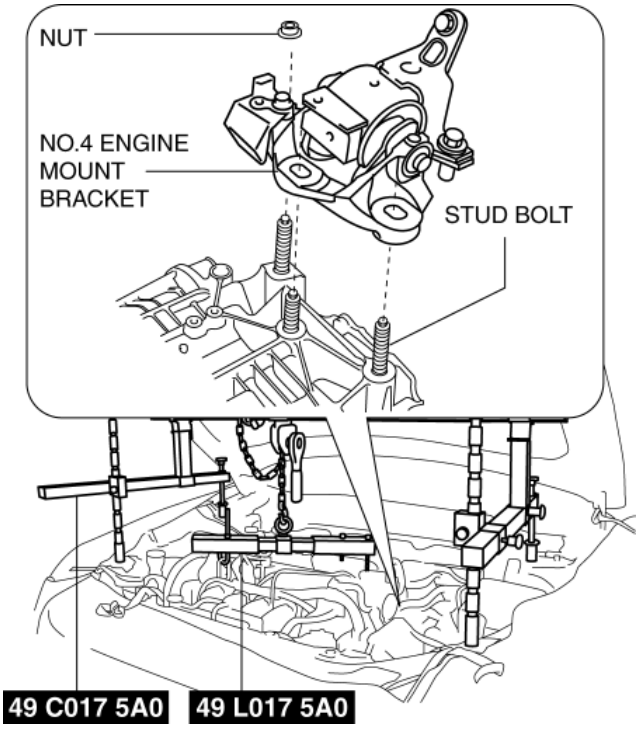

6. Install the No.1 engine mount bracket and the bracket plate to the transaxle, and temporarily tighten the installation bolts.

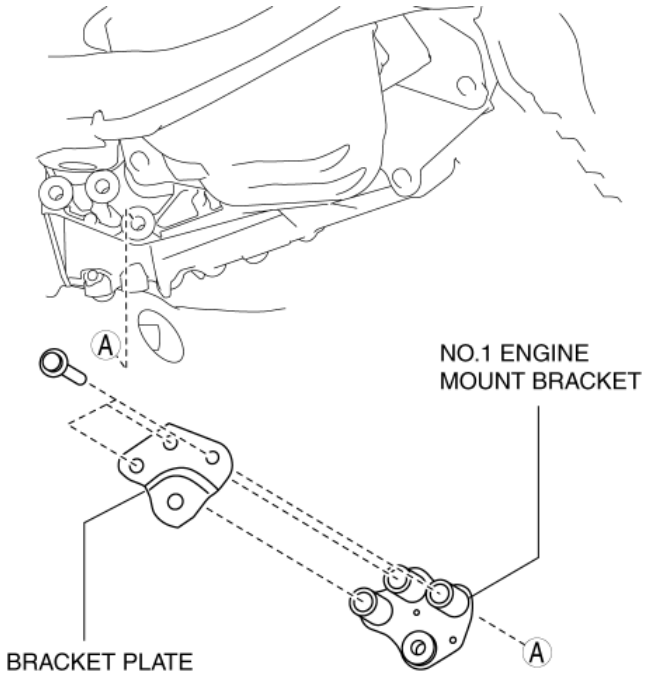

7. Install the bracket to the transaxle and the exhaust manifold and tighten the bolts in the order shown in the figure.

NOTE:

- When installing bolt B, be careful that the wave washer does not get caught in the bracket.

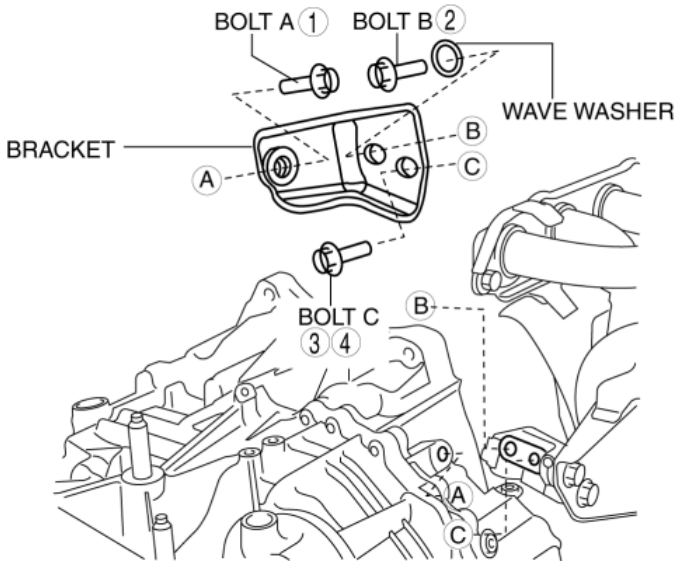

Tightening procedure

- Tighten the bolt A.
  - 38—51 N·m {3.9—5.2 kgf·m, 29—37 ft·lbf}
- Tighten the bolt B.
  - 8—10 N·m {82—101 kgf·cm, 71—88 in·lbf}
- Tighten the bolt C.
  - 5—10 N·m {51—101 kgf·cm, 45—88 in·lbf}
- Loosen the bolt B 90°—180°

8. Install the front crossmember component and No.1 engine mount rubber as a single unit. (See **FRONT CROSSMEMBER REMOVAL/INSTALLATION**.)

9. Temporarily tighten the No.1 engine mount rubber installation bolts.

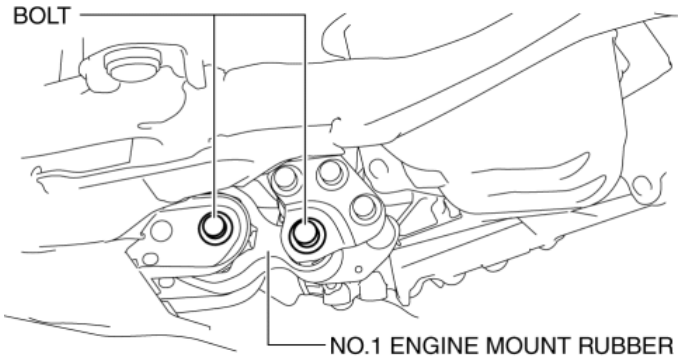

10. Align the alignment marks on the No.4 engine mount bracket and nuts, and temporarily tighten the nuts shown in the figure.

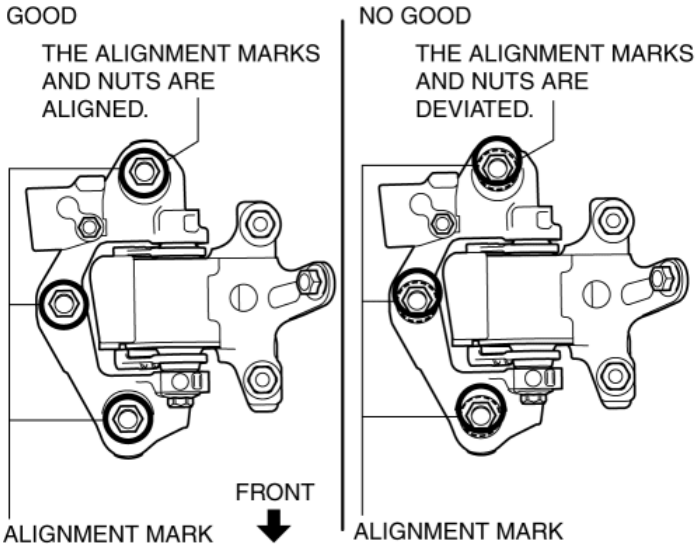

11. Tighten the No.4 engine mount bracket installation nuts and bolt in the order shown in the figure.

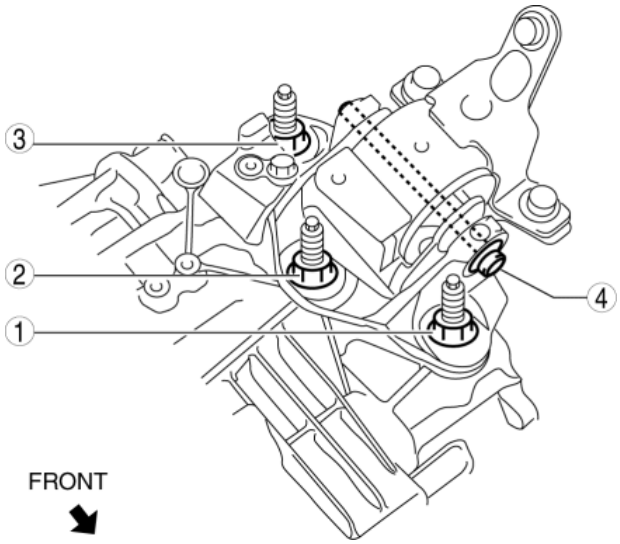

No.	Tightening torque
1, 2, 3	92—116 N·m {9.4—11 kgf·m, 69—85 ft·lbf}
4	81—99 N·m {8.3—10 kgf·m, 60—73 ft·lbf}

12. Tighten the No.1 engine mount bracket and bracket plate installation bolts in the order shown in the figure.

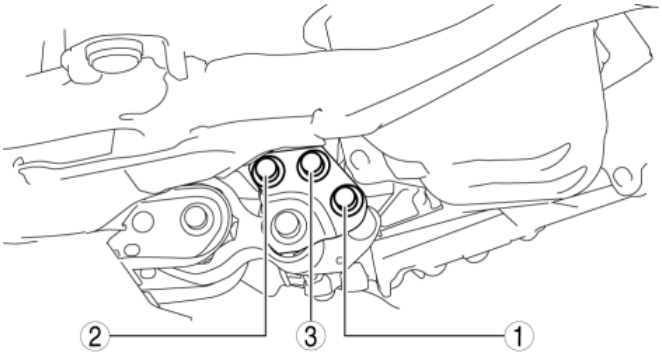

Tightening torque

- 84—98 N·m {8.6—9.9 kgf·m, 62—72 ft·lbf}

13. Remove the **SST (49 C017 5A0, 49 L017 5A0)**.
14. Tighten the No.1 engine mount rubber installation bolts.

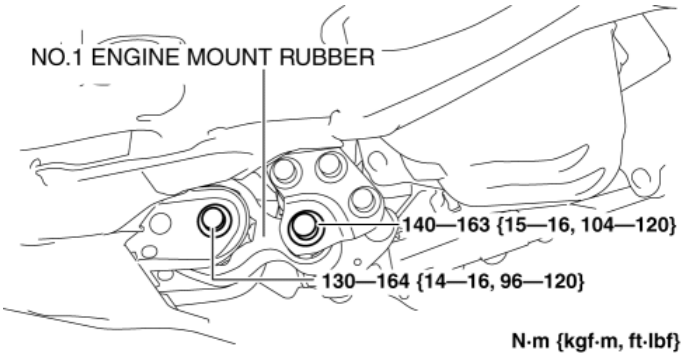

15. Fix the crankshaft pulley to lock the torque converter against rotation.

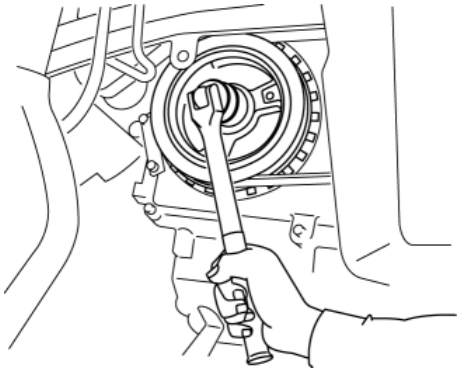

CAUTION:

- After temporarily tightening the torque converter installation nut uniformly, tighten it to the specified torque.

16. Tighten the torque converter installation nuts.

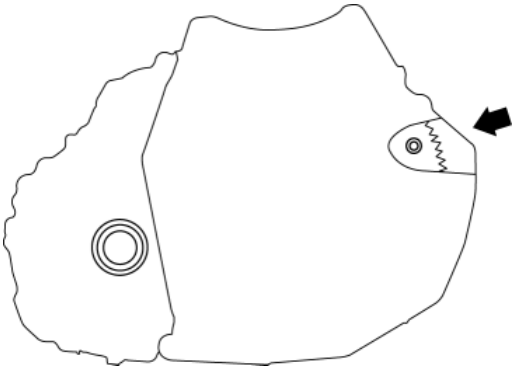

Tightening torque

- 41—54 N·m {4.2—5.5 kgf·m, 31—39 ft·lbf}

17. Install the blind cover.

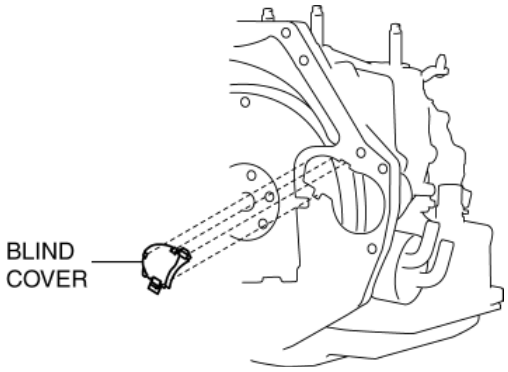

18. Install the starter. (See **STARTER REMOVAL/INSTALLATION [SKYACTIV-G 2.0, SKYACTIV-G 2.5]**.)

19. Install the front drive shaft (RH) to the transaxle. (See **FRONT DRIVE SHAFT REMOVAL/INSTALLATION**.)

20. Install the front drive shaft (LH) to the transaxle. (See **FRONT DRIVE SHAFT REMOVAL/INSTALLATION**.)

21. Install the front stabilizer control links to the front stabilizer. (See **FRONT STABILIZER REMOVAL/INSTALLATION**.)

22. Install the front lower arms to the steering knuckles. (See **FRONT LOWER ARM REMOVAL/INSTALLATION**.)

23. Install the tie-rod end ball joints to the steering knuckles. (See **STEERING GEAR AND LINKAGE REMOVAL/INSTALLATION**.)

24. Install the clips securing the brake hose to the front shock absorbers. (See **BRAKE HOSE (FRONT) REMOVAL/INSTALLATION**.)

25. Install the front ABS wheel-speed sensors to the steering knuckles. (See **FRONT ABS WHEEL-SPEED SENSOR REMOVAL/INSTALLATION**.)

26. Connect the water hose to the oil cooler. (Automatic Transaxle Replacement) (See **OIL COOLER REMOVAL/INSTALLATION [FW6A-EL]**.)

27. Install the oil cooler to the transaxle with the hose connected. (Except Automatic Transaxle Replacement) (See **OIL COOLER REMOVAL/INSTALLATION [FW6A-EL]**.)

28. Install the front under cover No.1. (See **FRONT UNDER COVER No.1 REMOVAL/INSTALLATION**.)

29. Install the front tires. (See **GENERAL PROCEDURES (SUSPENSION)**.)

30. Install the intermediate shaft to the steering gear and linkage. (See **STEERING WHEEL AND COLUMN REMOVAL/INSTALLATION**.)

31. Install the joint cover. (See **STEERING WHEEL AND COLUMN REMOVAL/INSTALLATION**.)

32. Connect the breather hose to the transaxle.

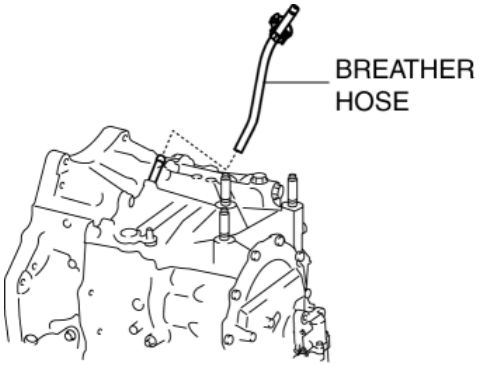

33. Install the selector cable bracket.

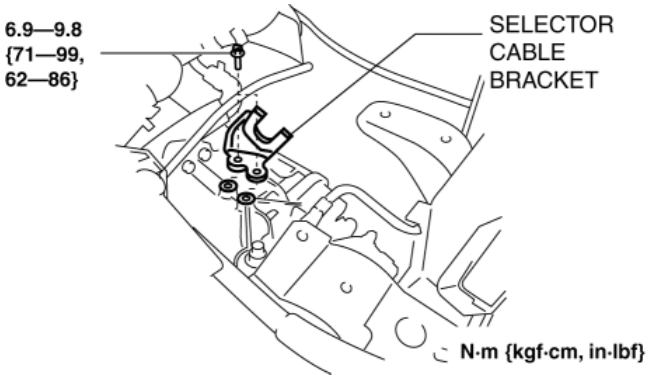

34. Connect the selector cable to the transaxle.

35. Install the ground cable.

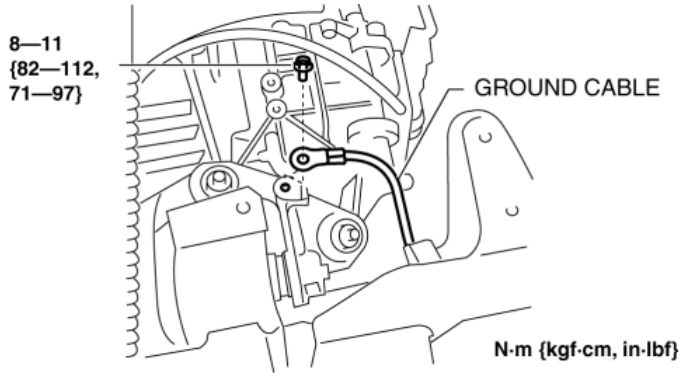

36. Install the bracket to the transaxle.

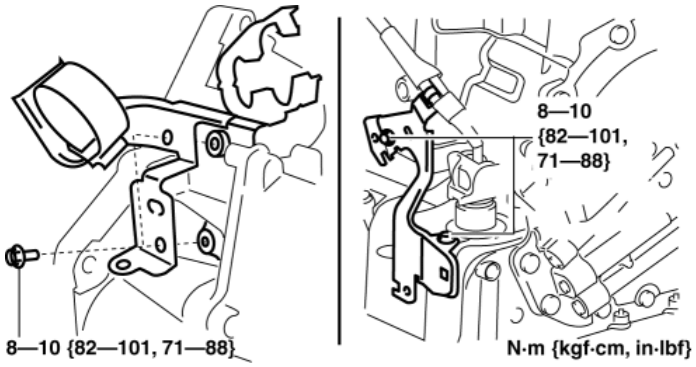

37. Connect the control valve body connector.

CAUTION:

- Make sure that your hand does not touch the terminal as the connector terminal could be damaged.
- Verify that there is no fluid or foreign matter adhering to the connector before connecting the connector.
- Insert the connector straight as the connector terminal could be damaged.
- Rotate the connector lever until a click is heard.

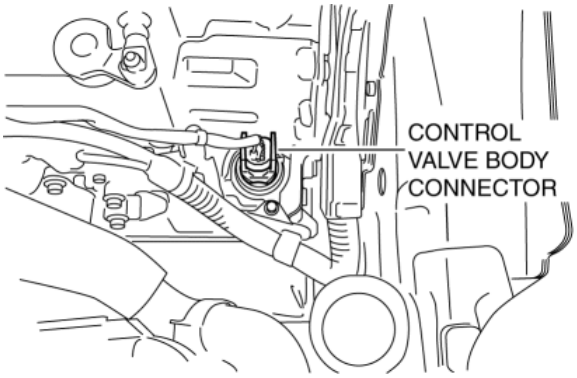

38. Install the splash shield (LH). (See **SPLASH SHIELD REMOVAL/INSTALLATION**.)

39. Connect the wiring harness from the transaxle.

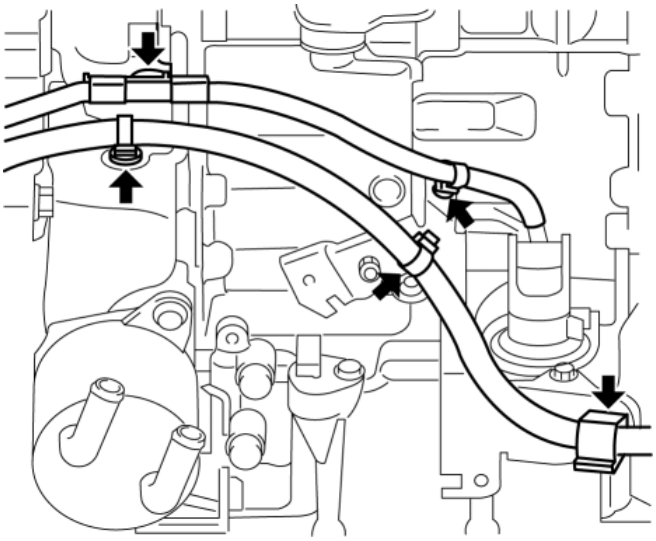

40. Install the battery tray and PCM component. (See **BATTERY REMOVAL/INSTALLATION [SKYACTIV-G 2.0, SKYACTIV-G 2.5]**.)
41. Install the air cleaner and air hose as a single unit. (See **INTAKE-AIR SYSTEM REMOVAL/INSTALLATION [SKYACTIV-G 2.0, SKYACTIV-G 2.5]**.)
42. Connect the negative battery cable. (See **NEGATIVE BATTERY CABLE DISCONNECTION/CONNECTION [SKYACTIV-G 2.0, SKYACTIV-G 2.5]**.)
43. Add the ATF. (See **AUTOMATIC TRANSAXLE FLUID (ATF) REPLACEMENT [FW6A-EL]**.)
44. Perform the “Initial Learning” (automatic transaxle Replacement). (See **INITIAL LEARNING [FW6A-EL]**.)
45. Perform the “Mechanical System Test”. (See **MECHANICAL SYSTEM TEST [FW6A-EL]**.)
46. Install the front under cover No.2. (See **FRONT UNDER COVER No.2 REMOVAL/INSTALLATION**.)

2014 - Mazda3 - Transmission/Transaxle

DRIVE PLATE REMOVAL/INSTALLATION [FW6A-EL]

1. Remove the transaxle. (See **AUTOMATIC TRANSAXLE REMOVAL/INSTALLATION [FW6A-EL]**.)
2. Remove in the order indicated in the table.

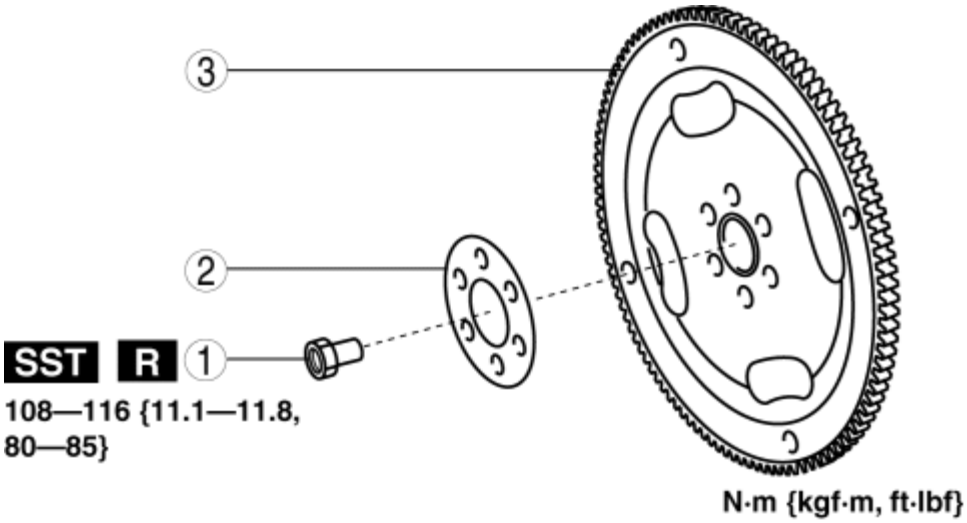

1	Drive plate installation bolts (See **Drive Plate Installation Bolts Removal Note**.) (See **Drive Plate Installation Bolts Installation Note**.)
2	Backing plate
3	Drive plate

3. Install in the reverse order of removal.

Drive Plate Installation Bolts Removal Note

1. Set the **SST** against the drive plate.

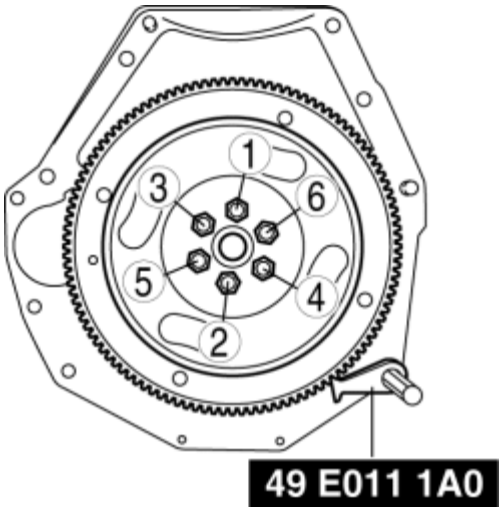

2. Loosen the drive plate installation bolts uniformly in two or three steps in the order shown in the figure, then remove the bolts and the drive plate.

Drive Plate Installation Bolts Installation Note

1. Set the **SST** against the drive plate.

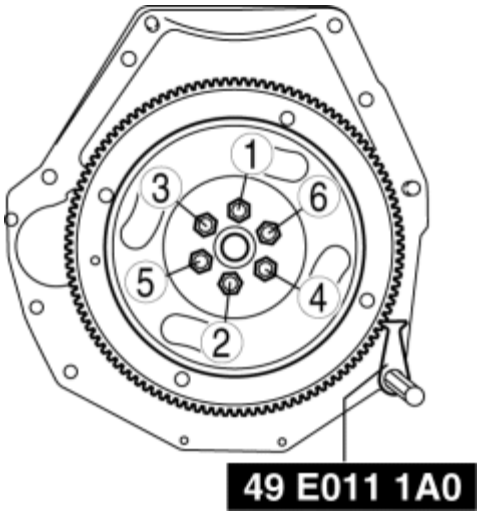

2. Tighten the new drive plate installation bolts uniformly in two or three steps in the order shown in the figure.

Tightening torque

- 108—116 N·m {11.1—11.8 kgf·m, 80—85 ft·lbf}

2014 - Mazda3 - Transmission/Transaxle

OIL SEAL (DIFFERENTIAL) REPLACEMENT [FW6A-EL]

Transaxle Case Side

1. Remove the front under cover No.2. (See **FRONT UNDER COVER No.2 REMOVAL/INSTALLATION**.)

2. Drain the ATF. (See **AUTOMATIC TRANSAXLE FLUID (ATF) REPLACEMENT [FW6A-EL]**.)

3. Disconnect the front drive shaft (LH) from the transaxle. (See **FRONT DRIVE SHAFT REMOVAL/INSTALLATION**.)

4. Remove the oil seal using a flathead screwdriver.

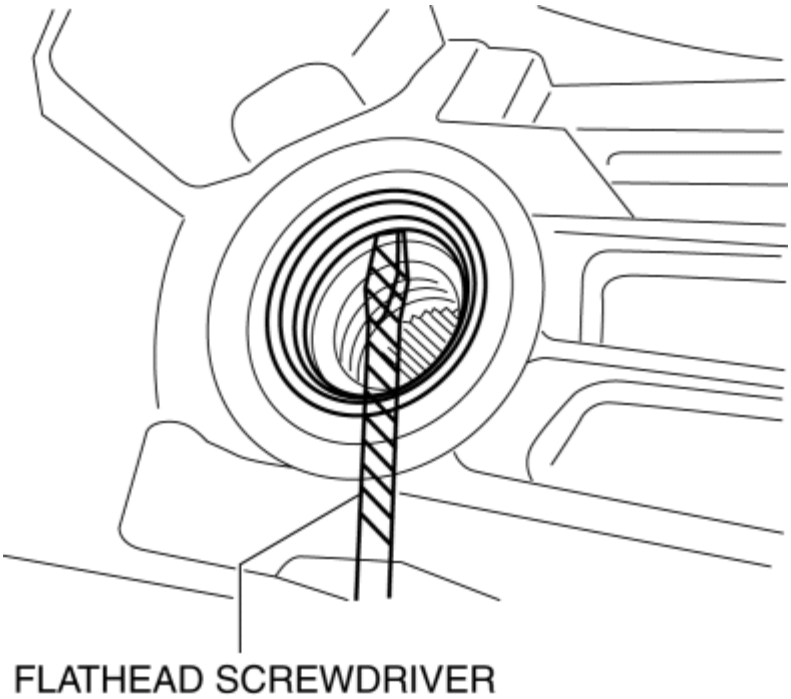

5. Using the **SSTs** and a hammer, tap a new oil seal in evenly until the **SST** (**49 U027 003**) contacts the transaxle case.

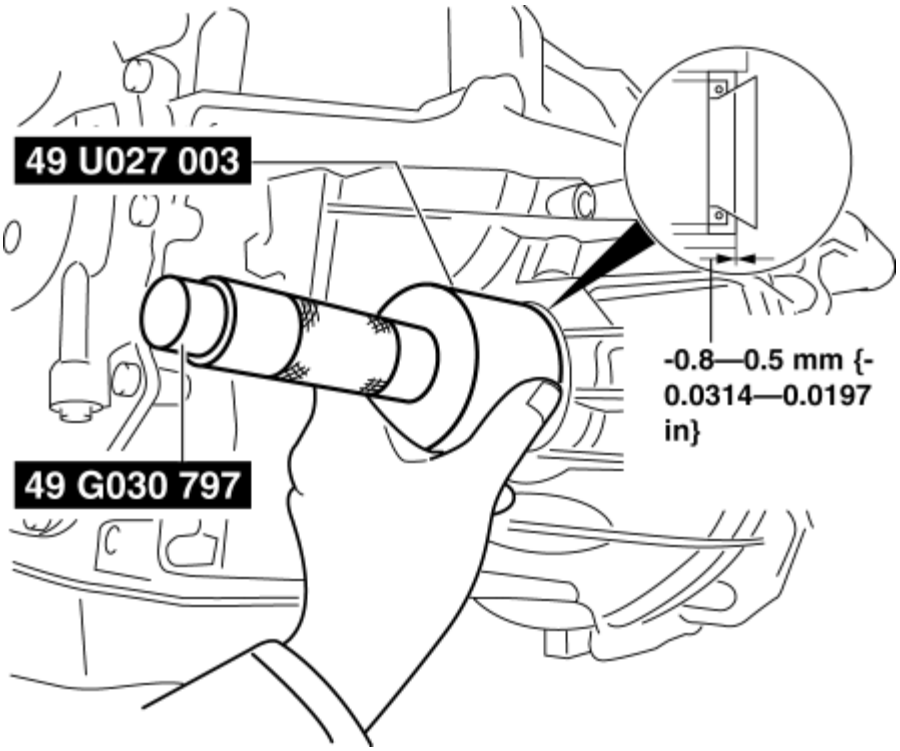

6. Coat the lip of the oil seal with ATF.

CAUTION:

- The oil seal is easily damaged by the sharp edges of the drive shaft splines. Do not let the splines contact the oil seal.

7. Install the front drive shaft (LH) to the transaxle. (See **FRONT DRIVE SHAFT REMOVAL/INSTALLATION**.)

8. Add the ATF. (See **AUTOMATIC TRANSAXLE FLUID (ATF) REPLACEMENT [FW6A-EL]**.)

9. Perform the “Mechanical System Test”. (See **MECHANICAL SYSTEM TEST [FW6A-EL]**.)

10. Install the front under cover No.2. (See **FRONT UNDER COVER No.2 REMOVAL/INSTALLATION**.)

Converter housing Side

1. Remove the front under cover No.2. (See **FRONT UNDER COVER No.2 REMOVAL/INSTALLATION**.)

2. Drain the ATF. (See **AUTOMATIC TRANSAXLE FLUID (ATF) REPLACEMENT [FW6A-EL]**.)

3. Disconnect the front drive shaft (RH). (See **FRONT DRIVE SHAFT REMOVAL/INSTALLATION**.)

4. Remove the oil seal using a flathead screwdriver.

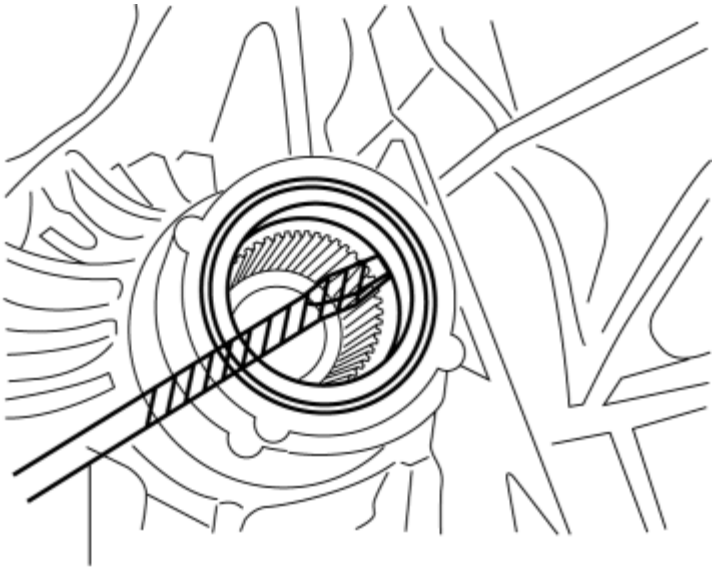

FLATHEAD SCREWDRIVER

5. Using the **SSTs** and a hammer, tap a new oil seal in evenly until the **SST** (**49 U027 003**) contacts the transaxle case.

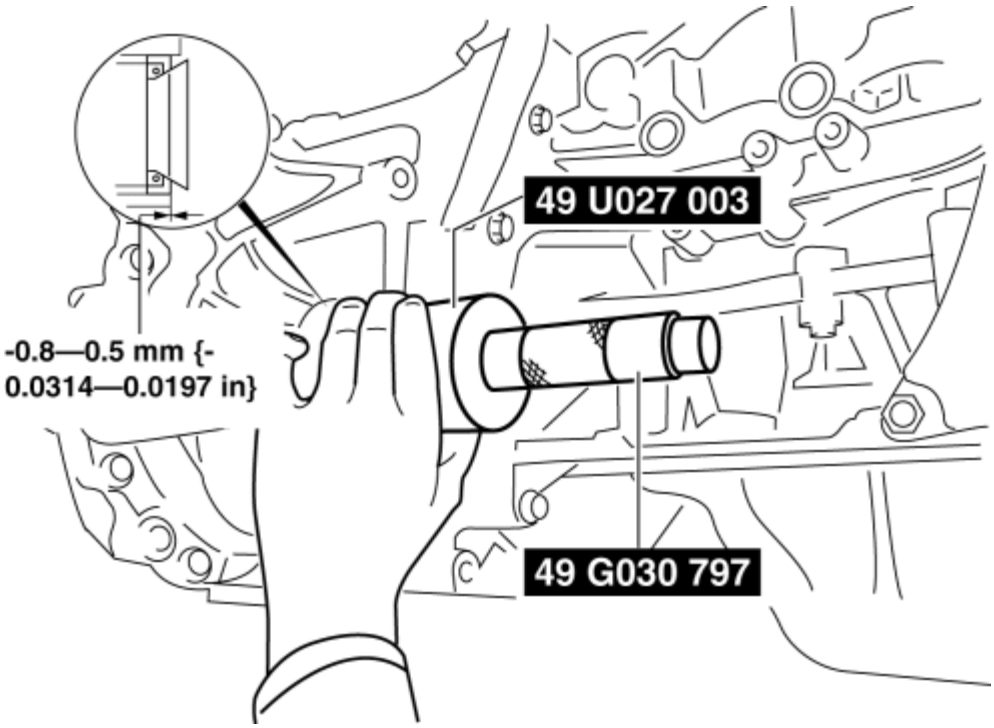

6. Coat the lip of the oil seal with ATF.

CAUTION:

- The oil seal is easily damaged by the sharp edges of the drive shaft splines. Do not let the splines contact the oil seal.

7. Install the front drive shaft (RH). (See **FRONT DRIVE SHAFT REMOVAL/INSTALLATION**.)

8. Add the ATF. (See **AUTOMATIC TRANSAXLE FLUID (ATF) REPLACEMENT [FW6A-EL]**.)

9. Perform the “Mechanical System Test”. (See **MECHANICAL SYSTEM TEST [FW6A-EL]**.)

10. Install the front under cover No.2. (See **FRONT UNDER COVER No.2 REMOVAL/INSTALLATION**.)

OIL SEAL (DIFFERENTIAL) REPLACEMENT [FW6A-EL]

2014 - Mazda3 - Transmission/Transaxle

OIL SEAL (CONTROL VALVE BODY) REPLACEMENT [FW6A-EL]

1. Disconnect the negative battery cable. (See **NEGATIVE BATTERY CABLE DISCONNECTION/CONNECTION [SKYACTIV-G 2.0, SKYACTIV-G 2.5]**.)

2. Remove the air cleaner component. (See **INTAKE-AIR SYSTEM REMOVAL/INSTALLATION [SKYACTIV-G 2.0, SKYACTIV-G 2.5]**.)

3. Disconnect the control valve body connector.

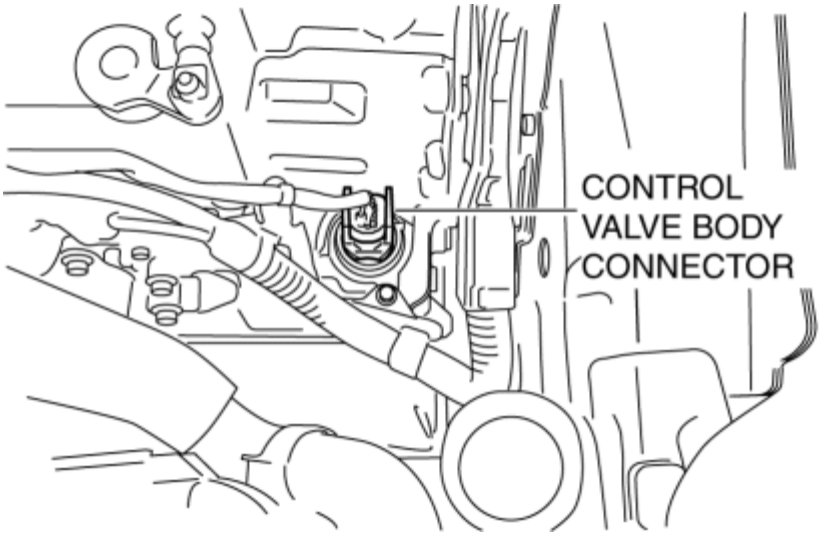

CAUTION:

- Make sure that your hand does not touch the terminal as the connector terminal could be damaged.
- Water or foreign objects entering the connector can cause a poor connection or corrosion. Be sure not to drop water or foreign objects on the connector when disconnecting it.

4. Remove the hose clamp.

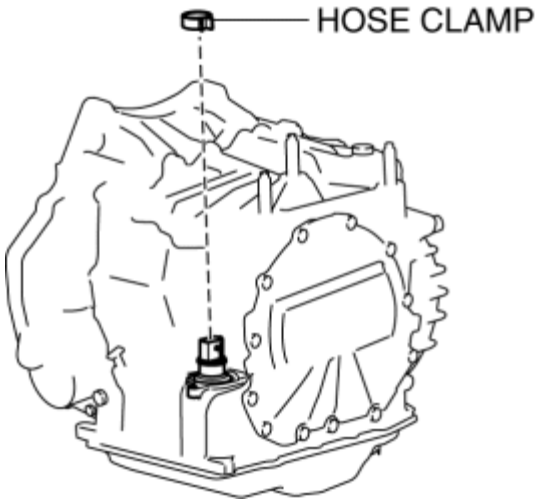

5. Cut the oil seal using a utility knife as shown in the following illustration.

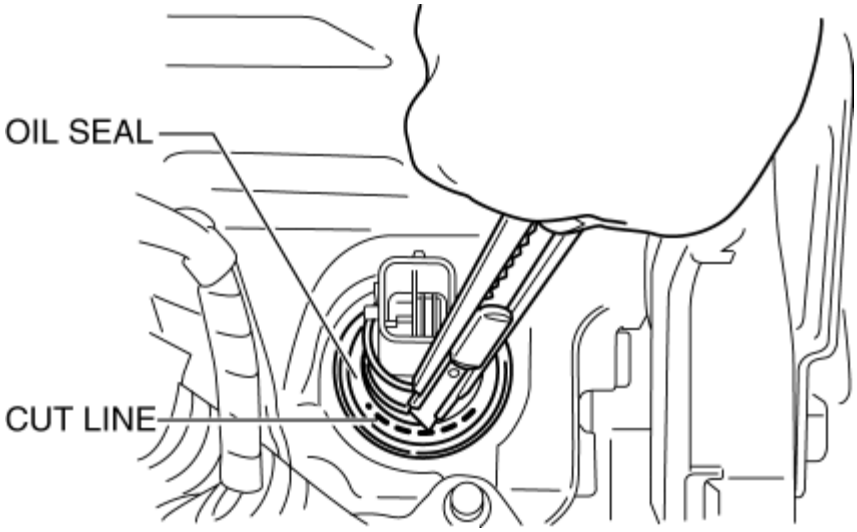

CAUTION:

- Do not damage the transaxle case.
- Do not damage the control valve body coupler connector.
- To prevent foreign matter penetration, clean the oil seal area thoroughly and cut the oil seal so as not to leave cutting fragments.

6. Using a tape-wrapped flathead screwdriver, remove the oil seal from the transaxle case.

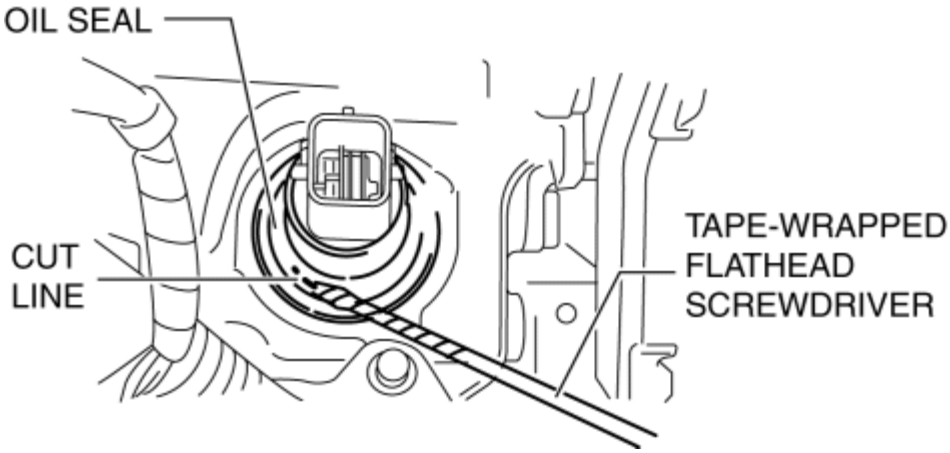

NOTE:

- Remove the oil seal by tapping the tip of a tape-wrapped flathead screwdriver on the inner circumference surface A area of the oil seal.

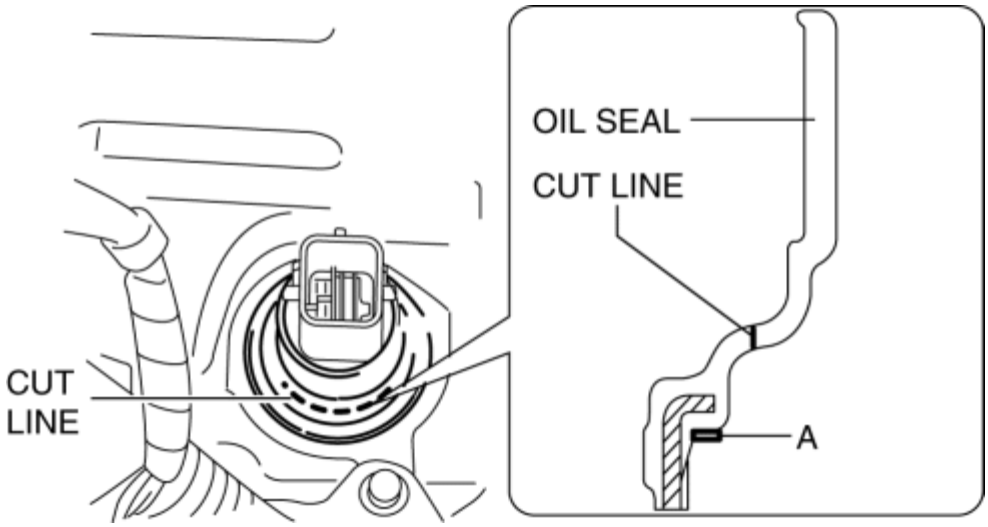

7. Temporarily install the oil seal (control valve body) by hand.

8. Using the **SSTs** and a hammer, install the oil seal (control valve body) so that it is not tilted and there is no height difference between the transaxle case surface and the end surface of the oil seal.

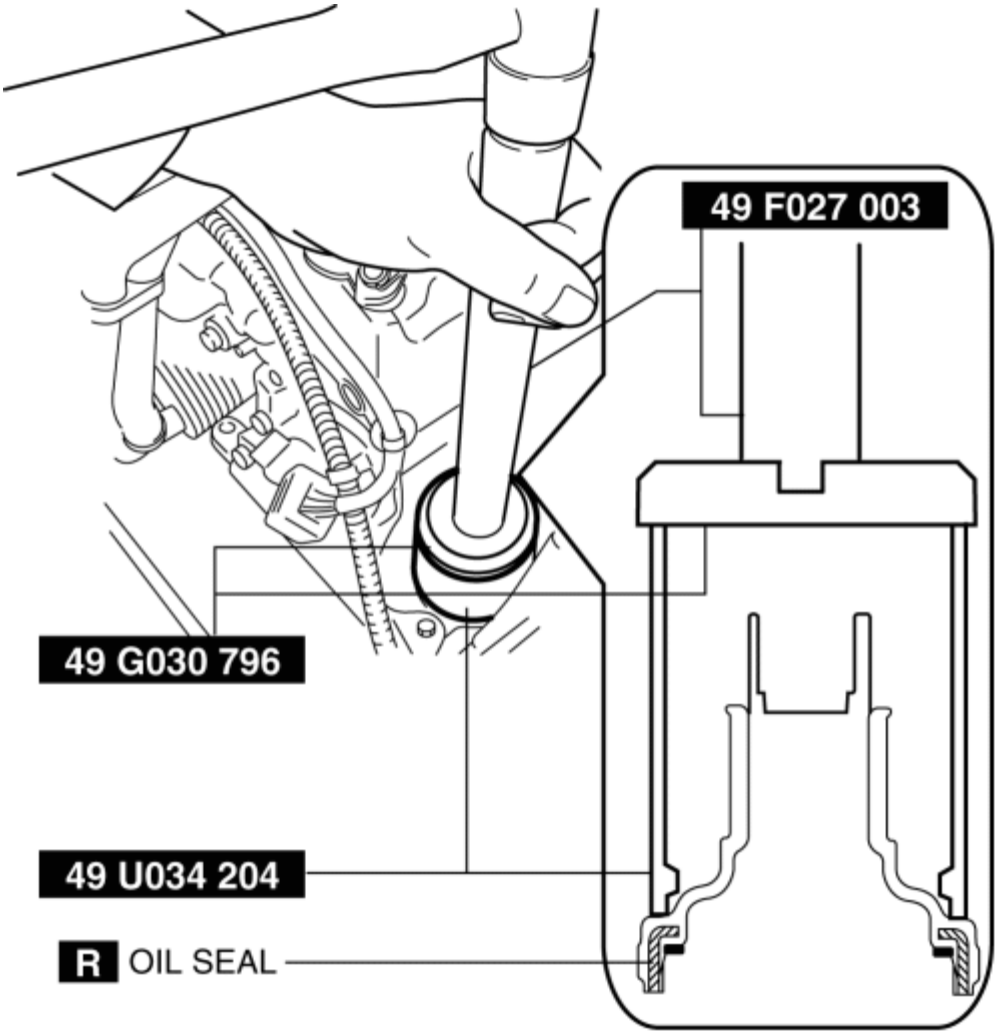

CAUTION:

- When installing the oil seal (control valve body), do not mistakenly hit the control valve body connector with the hammer. Otherwise the control valve body connector could be damaged making it no longer waterproof.

9. Install a new hose clamp to the position shown in the figure.

CAUTION:

- If the hose clamp is reused it could cause ATF leakage, therefore use a new hose clamp.
- Install the hose clamp tab to within the range shown in the figure.

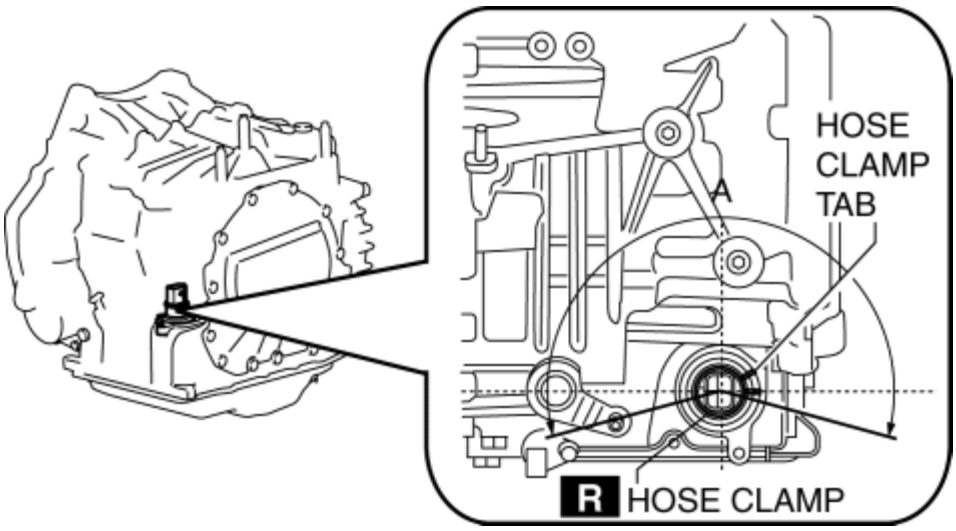

A: 210°

- Install the hose clamp so that it does not interfere with the top and bottom flanges of the oil seal to maintain the waterproofing integrity.

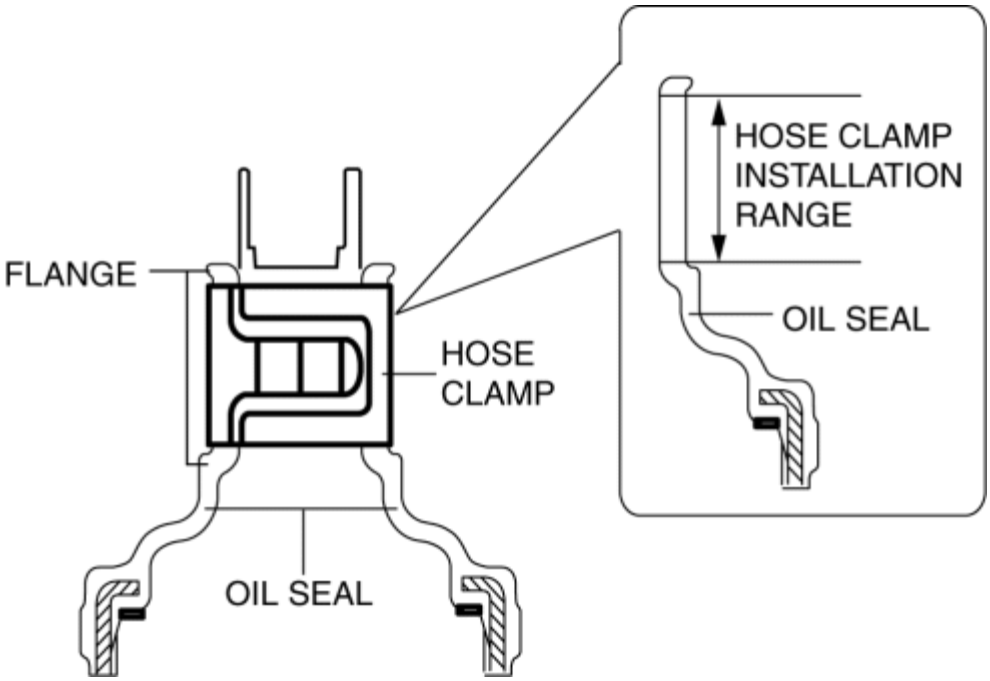

10. Connect the control valve body connector.

CAUTION:

- Make sure that your hand does not touch the terminal as the connector terminal could be damaged.
- Verify that there is no fluid or foreign matter adhering to the connector before connecting the connector.
- Insert the connector straight as the connector terminal could be damaged.
- Rotate the connector lever until a click is heard.

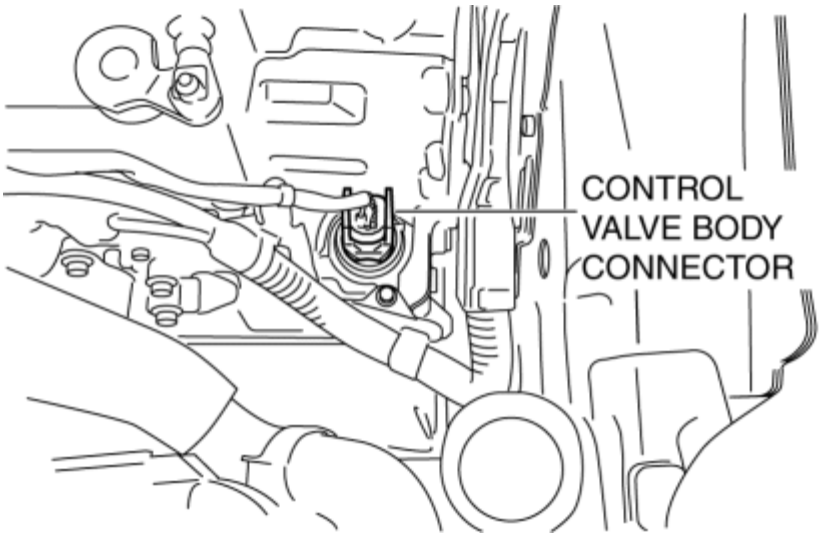

11. Install the air cleaner component. (See **INTAKE-AIR SYSTEM REMOVAL/INSTALLATION [SKYACTIV-G 2.0, SKYACTIV-G 2.5]**.)

12. Connect the negative battery cable. (See **NEGATIVE BATTERY CABLE DISCONNECTION/CONNECTION [SKYACTIV-G 2.0, SKYACTIV-G 2.5]**.)

2014 - Mazda3 - Transmission/Transaxle

OIL COOLER REMOVAL/INSTALLATION [FW6A-EL]

Water Hose

1. Disconnect the negative battery cable. (See **NEGATIVE BATTERY CABLE DISCONNECTION/CONNECTION [SKYACTIV-G 2.0, SKYACTIV-G 2.5]**.)

2. Remove the air cleaner and air hose as a single unit. (See **INTAKE-AIR SYSTEM REMOVAL/INSTALLATION [SKYACTIV-G 2.0, SKYACTIV-G 2.5]**.)

3. Remove the battery tray and PCM component. (See **BATTERY REMOVAL/INSTALLATION [SKYACTIV-G 2.0, SKYACTIV-G 2.5]**.)

4. Remove the front under cover No.2. (See **FRONT UNDER COVER No.1 REMOVAL/INSTALLATION**.)

5. Disconnect the wiring harness from the front crossmember. (Vehicle with i-ELOOP)

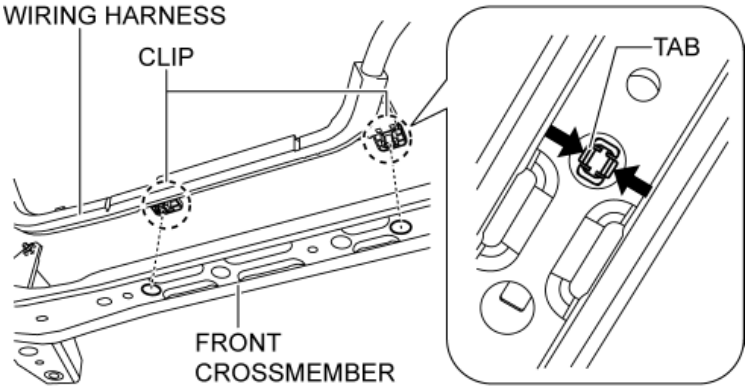

6. Drain the engine coolant. (See **ENGINE COOLANT REPLACEMENT [SKYACTIV-G 2.0, SKYACTIV-G 2.5]**.)

7. Remove in the order indicated in the table.

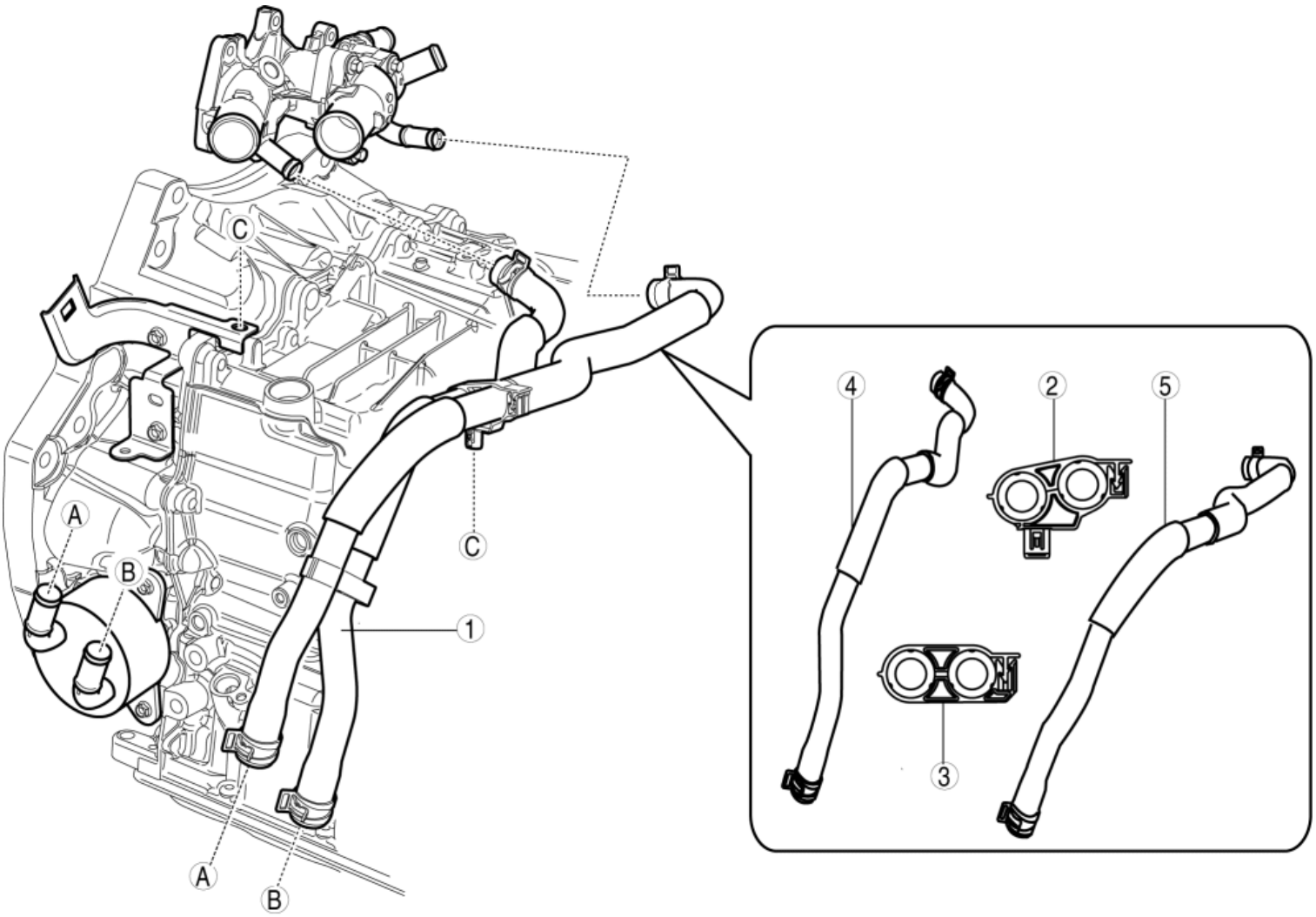

1	Water hose component (See **Water Hose No.1 and No.2 (oil cooler side) Installation Note**.) (See **Water Hose No.1 (outlet case side) Installation Note**.)
2	Hose clip No.1
3	Hose clip No.2
4	Water hose No.1 (See **Water Hose No.1 and No.2 (oil cooler side) Installation Note**.) (See **Water Hose No.1 (outlet case side) Installation Note**.)
5	Water hose No.2 (See **Water Hose No.1 and No.2 (oil cooler side) Installation Note**.) (See **Water Hose No.2 (bypass pipe side) Installation Note**.)

8. Install in the reverse order of removal.

9. Add the engine coolant. (See **ENGINE COOLANT REPLACEMENT [SKYACTIV-G 2.0, SKYACTIV-G 2.5]**.)

Water Hose No.1 and No.2 (oil cooler side) Installation Note

1. Install the water hose to the oil cooler as shown in the figure with the hose clamp expanded.

NOTE:

- A new water hose and hose clamp are attached.

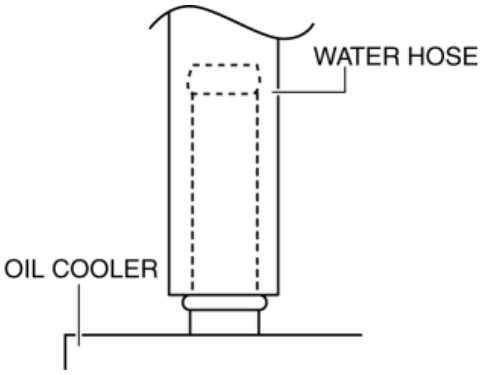

2. Install the hose clamp so that center A of the hose clamp tab is within the range shown in the figure.

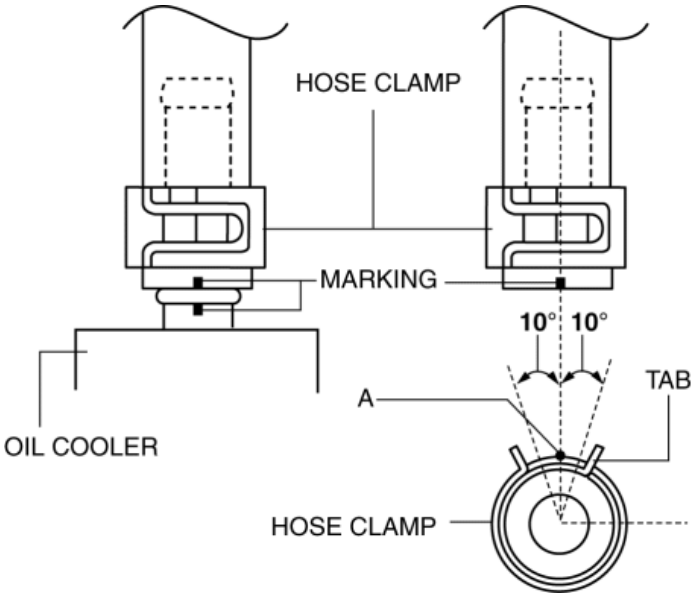

- Verify that the installation angle of the hose clamp is within the range shown in the figure.

3. Verify that the hose clamp does not interfere with any other components.

Water Hose No.1 (outlet case side) Installation Note

1. Install the water hose No.1 to the outlet case as shown in the figure with the hose clamp expanded.

NOTE:

- A new water hose No.1 and hose clamp are attached.

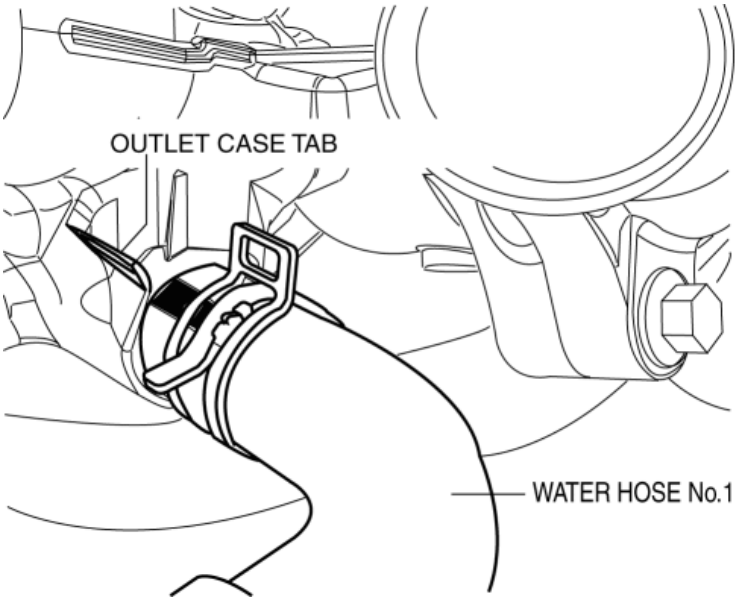

2. Install the hose clamp so that center A of the hose clamp tab is within the range shown in the figure.

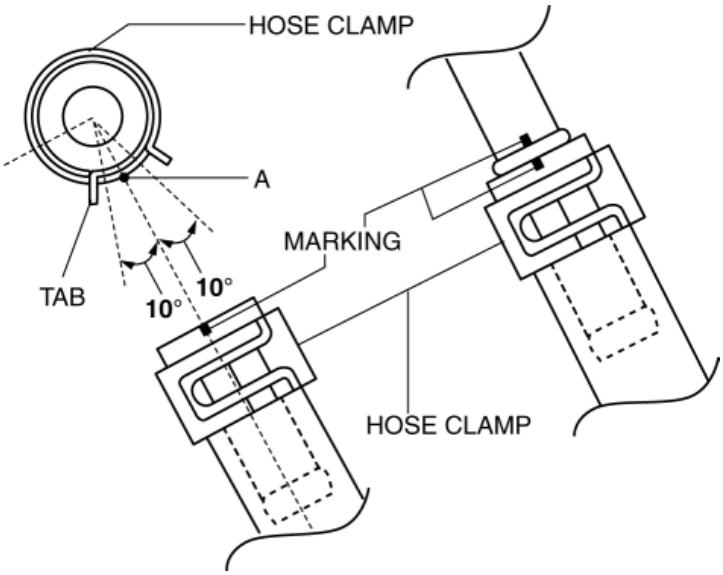

- Verify that the installation angle of the hose clamp is within the range shown in the figure.

3. Verify that the hose clamp does not interfere with any other components.

Water Hose No.2 (bypass pipe side) Installation Note

1. Install the water hose No.2 to the bypass pipe as shown in the figure with the hose clamp expanded.

NOTE:

- A new water hose No.2 and hose clamp are attached.

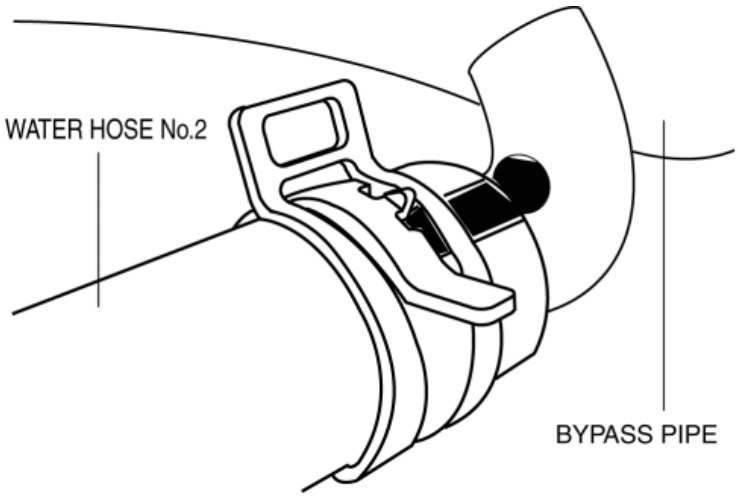

2. Install the hose clamp so that center A of the hose clamp tab is within the range shown in the figure.

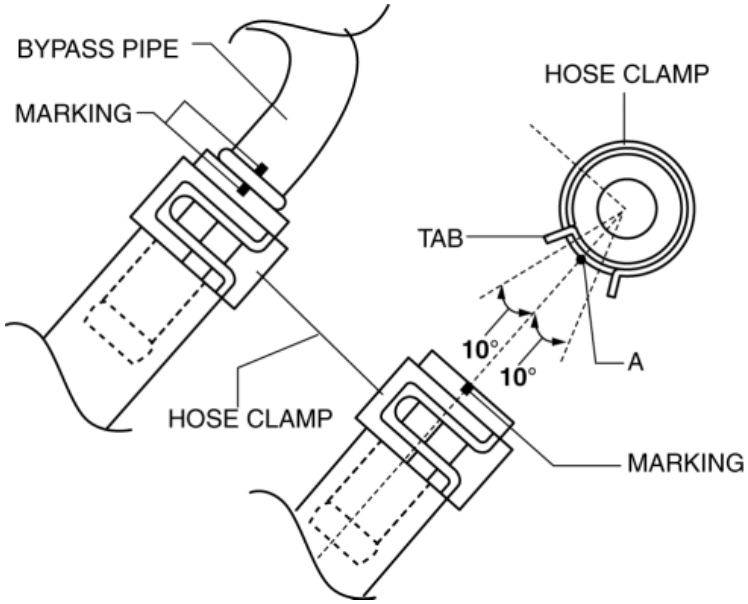

- Verify that the installation angle of the hose clamp is within the range shown in the figure.

3. Verify that the hose clamp does not interfere with any other components.

Oil Cooler

1. Disconnect the negative battery cable. (See **NEGATIVE BATTERY CABLE DISCONNECTION/CONNECTION [SKYACTIV-G 2.0, SKYACTIV-G 2.5]**.)

2. Remove the front under cover No.2. (See **FRONT UNDER COVER No.1 REMOVAL/INSTALLATION**.)

3. Drain the ATF. (See **AUTOMATIC TRANSAXLE FLUID (ATF) REPLACEMENT [FW6A-EL]**.)

4. Disconnect the wiring harness from the front crossmember. (Vehicle with i-ELOOP)

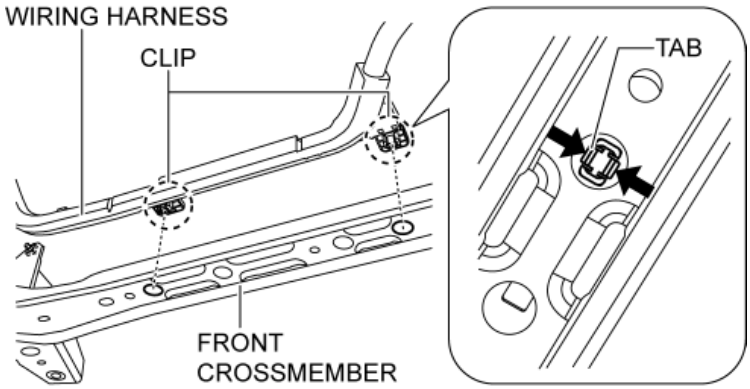

5. Drain the engine coolant. (See **ENGINE COOLANT REPLACEMENT [SKYACTIV-G 2.0, SKYACTIV-G 2.5]**.)

6. Remove in the order indicated in the table.

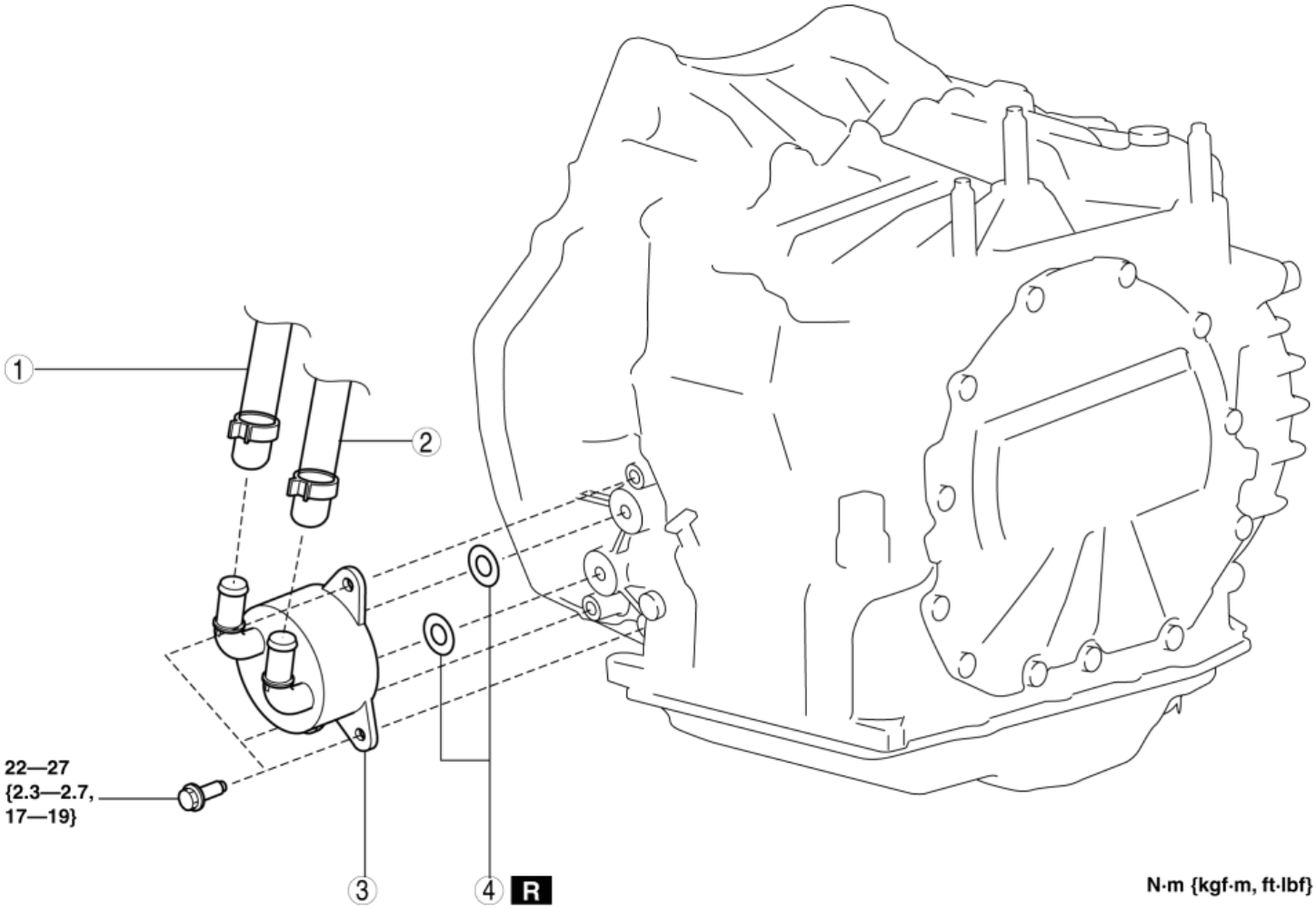

1	Water hose No.1 (See **Water Hose No.1 and No.2 (oil cooler side) Installation Note**.)
2	Water hose No.2 (See **Water Hose No.1 and No.2 (oil cooler side) Installation Note**.)
3	Water-cooled oil cooler
4	O-rings

7. Install in the reverse order of removal.
8. Add the engine coolant. (See **ENGINE COOLANT REPLACEMENT [SKYACTIV-G 2.0, SKYACTIV-G 2.5]**.)
9. Add the ATF. (See **AUTOMATIC TRANSAXLE FLUID (ATF) REPLACEMENT [FW6A-EL]**.)
10. Perform the “Mechanical System Test”. (See **MECHANICAL SYSTEM TEST [FW6A-EL]**.)

2014 - Mazda3 - Transmission/Transaxle

CONTROL VALVE BODY REMOVAL/INSTALLATION [FW6A-EL]

On-Vehicle Removal

WARNING:

- A hot transaxle and ATF can cause severe burns. Turn off the engine and wait until they are cool.
- Using compressed air can cause dirt and other particles to fly out, causing injury to the eyes. Wear protective eyeglasses whenever using compressed air.

CAUTION:

- If the control valve body has been replaced, perform initial learning. (See **INITIAL LEARNING [FW6A-EL]**.)
- If the control valve body has been replaced, perform TCM configuration. (See **TCM CONFIGURATION [FW6A-EL]**.)
- Placing the control valve body connector side pointed downward could damage the control valve body connector part or sensor. If the servicing can only be performed by pointing the control valve body connector side downward, spread shock-absorbing material, which does not produce dust or foreign matter, and place the control valve body connector part and sensor on the table so that they do not directly contact the table.

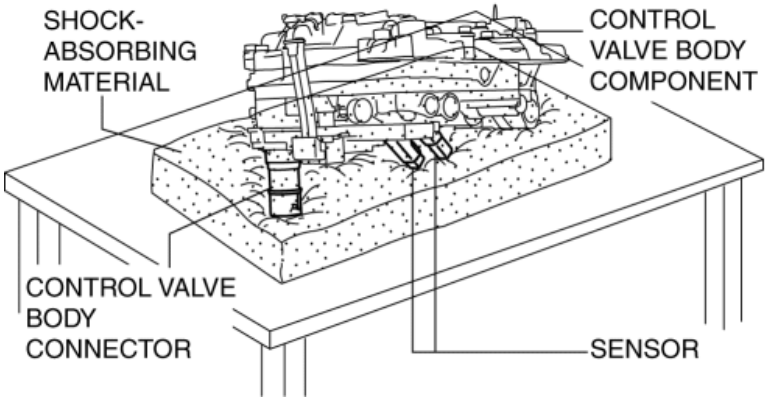

1. Select the selector lever to P position.
2. Disconnect the negative battery cable. (See **NEGATIVE BATTERY CABLE DISCONNECTION/CONNECTION [SKYACTIV-G 2.0, SKYACTIV-G 2.5]**.)
3. Remove the front under cover No.2. (See **FRONT UNDER COVER No.2 REMOVAL/INSTALLATION**.)
4. Clean the transaxle exterior throughout with a steam cleaner or cleaning solvents.
5. Remove the air cleaner component. (See **INTAKE-AIR SYSTEM REMOVAL/INSTALLATION [SKYACTIV-G 2.0, SKYACTIV-G 2.5]**.)
6. Disconnect the control valve body connector.

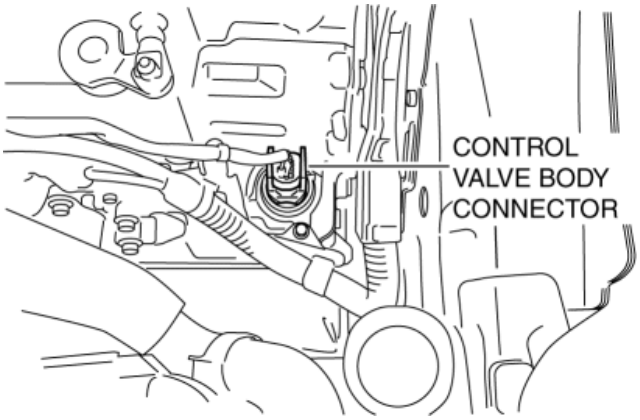

CAUTION:

- Make sure that your hand does not touch the terminal as the connector terminal could be damaged.
- Water or foreign objects entering the connector can cause a poor connection or corrosion. Be sure not to drop water or foreign objects on the connector when disconnecting it.

7. Remove the hose clamp.

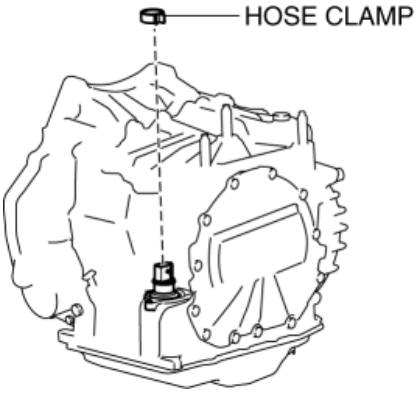

8. Drain the ATF. (See **AUTOMATIC TRANSAXLE FLUID (ATF) REPLACEMENT [FW6A-EL]**.)

9. Remove the oil pan.

CAUTION:

- To avoid damaging the control valve body, if there is a large amount of foreign material at the bottom of the oil pan when the oil pan is removed, replace the oil strainer with a new one.
- If there is not a large amount of foreign material at the bottom of the oil pan, the oil strainer does not have to be replaced.

NOTE:

- Always use new oil pan installation bolts when re-installing the oil pan because the oil pan installation bolts cannot be reused.

10. Remove the oil strainer.

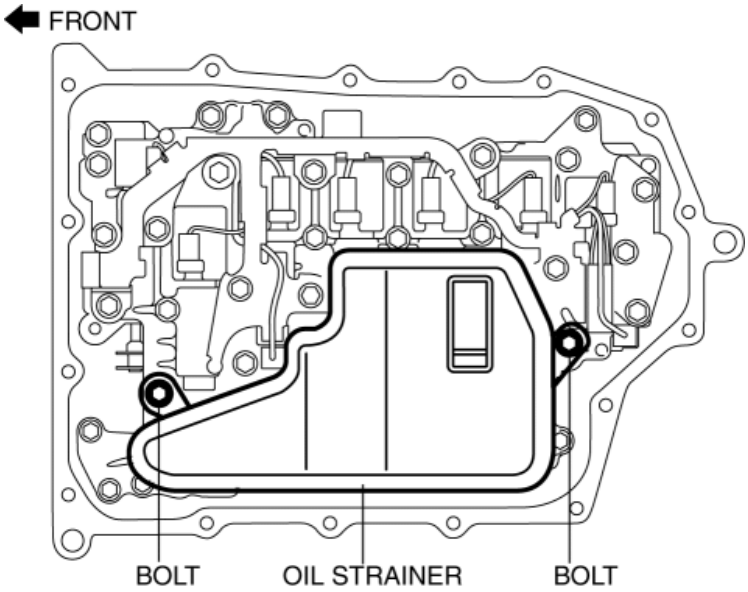

11. Remove the oil strainer O-rings.

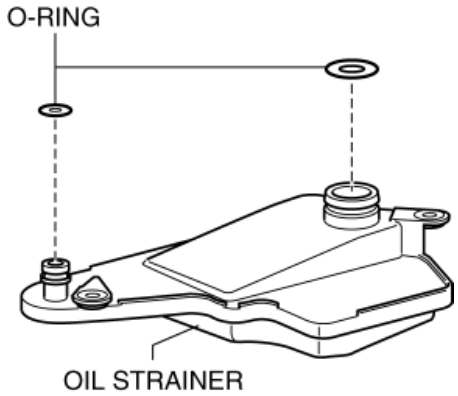

12. Remove the control valve body.

CAUTION:

- Remove the control valve body directly from underneath so that force is not applied to the control valve body connector in the lateral direction.

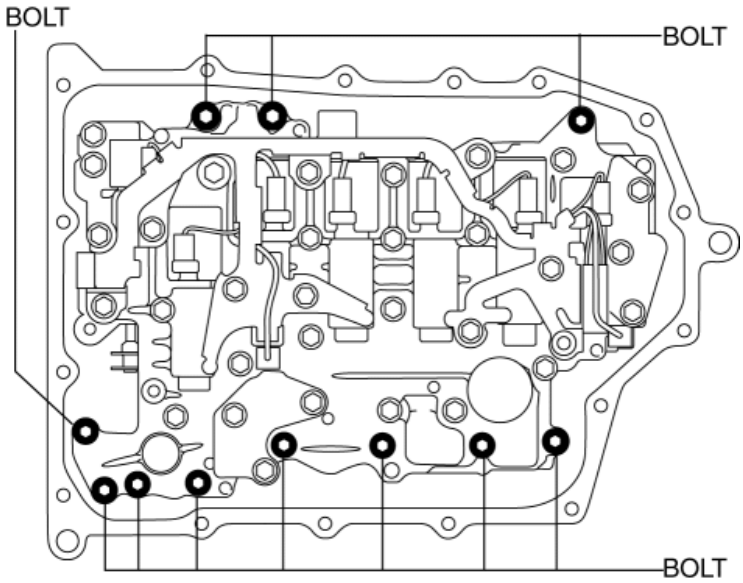

13. Remove the oil seal (control valve body). (See **OIL SEAL (CONTROL VALVE BODY) REPLACEMENT [FW6A-EL]**.)

14. Remove the gasket from the transaxle case.

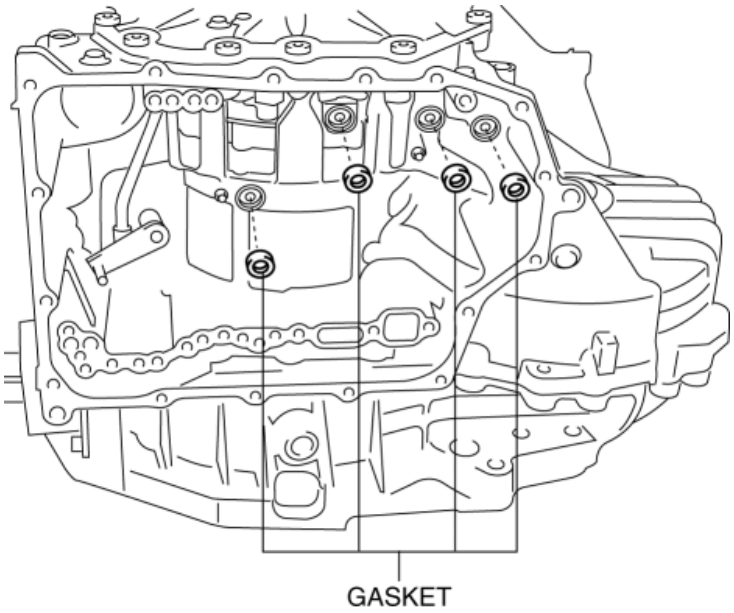

On-Vehicle Installation

1. Install the gasket to the transaxle case.

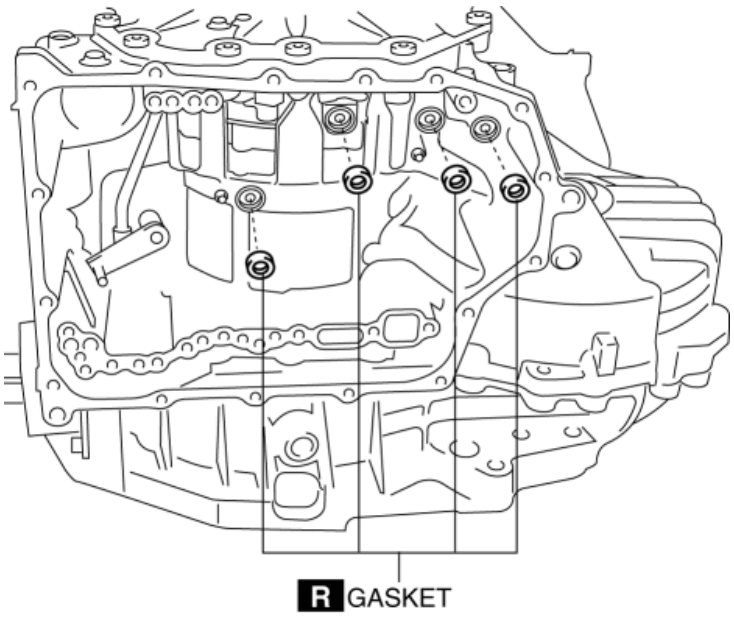

2. Install the dowel pin to the control valve body.

NOTE:

- If the dowel pin remains in the transaxle case, remove the dowel pin from the transaxle case and install the dowel pin to the control valve body.

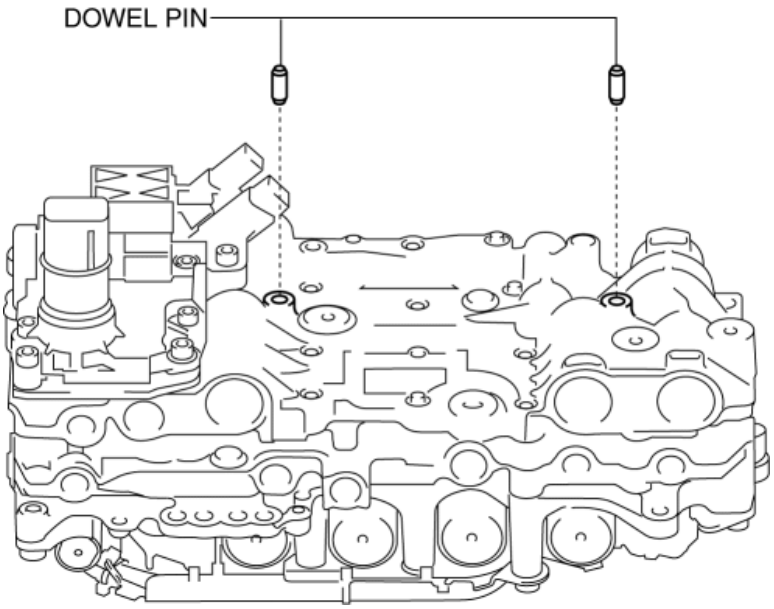

3. Install the control valve body so that the parking assist lever component is engaged in the gap between the two surfaces of the spool part of the manual valve.

CAUTION:

- Install the control valve body so that the turbine/input shaft speed sensor, output shaft speed sensor, and control valve body connector do not contact the transaxle case.

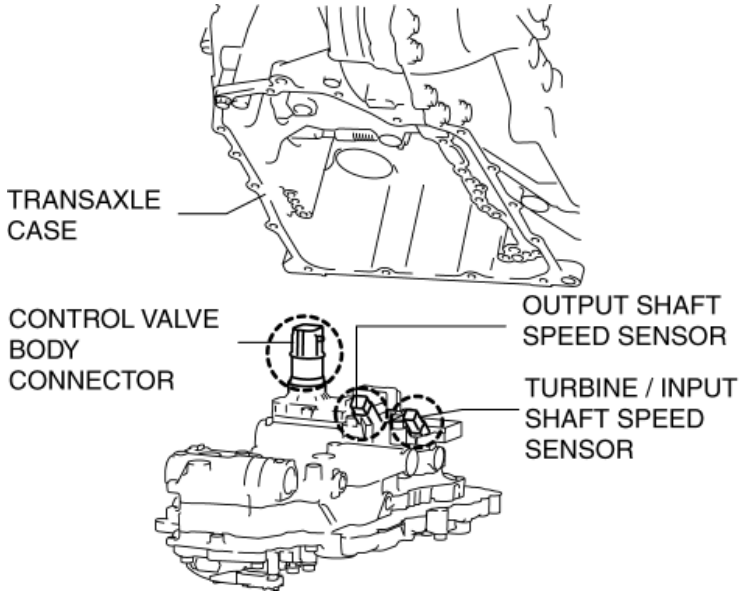

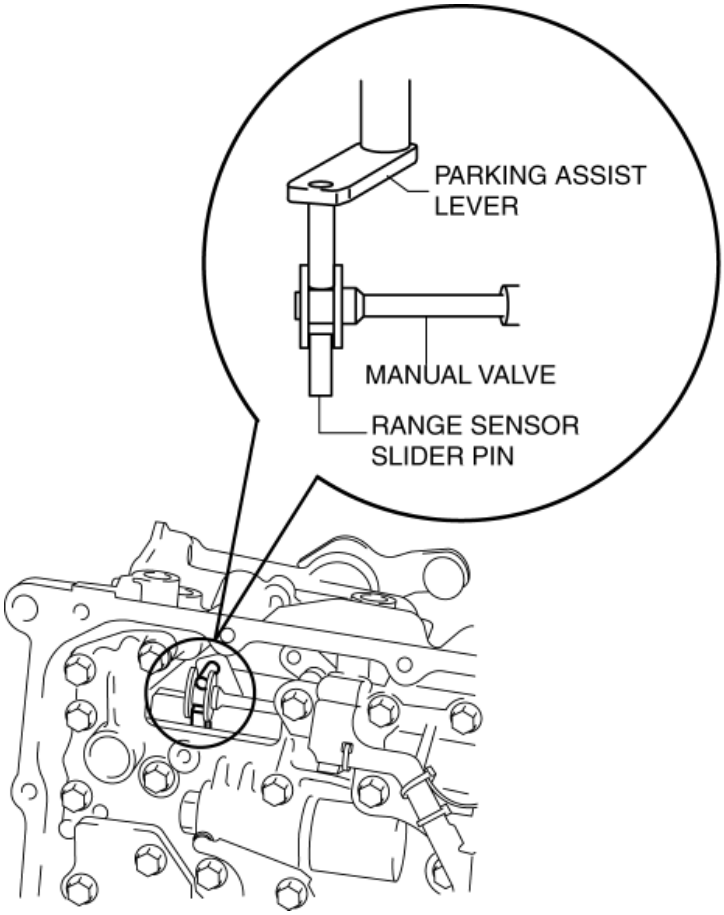

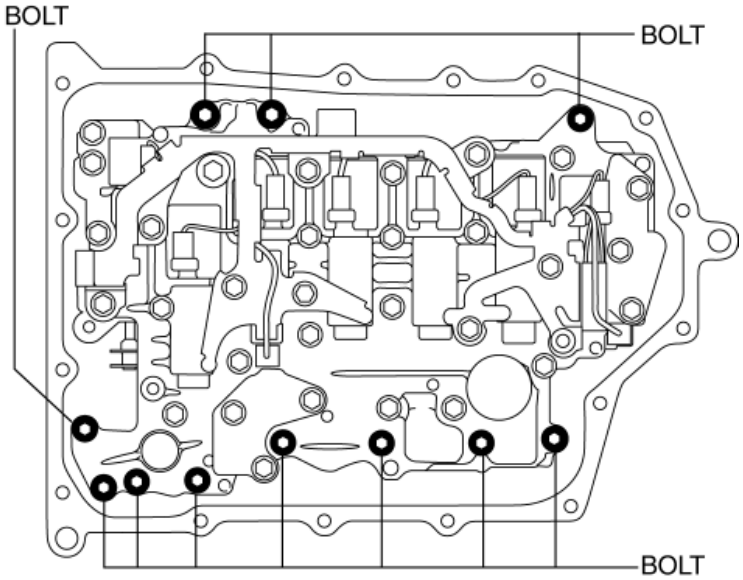

Tightening torque

- 9—10 N·m {92—101 kgf·cm, 80—88 in·lbf}

4. Move the manual valve in both directions of the arrow and verify that the manual valve is correctly connected to the parking assist lever component and the slider pin for the range sensor.

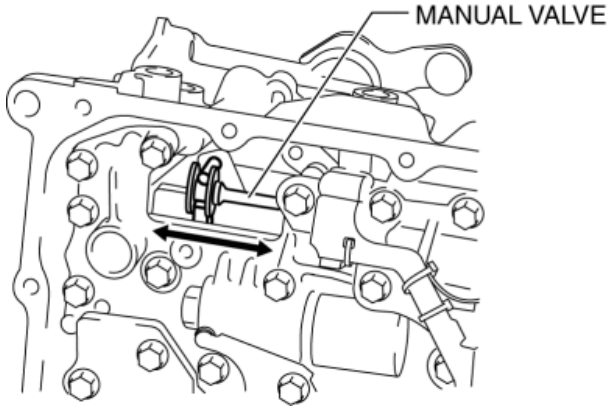

NOTE:

- If the manual valve only moves in the gap between the parking assist lever component surface and the manual valve surface, the manual valve and the parking assist lever component are correctly engaged.

5. Install the oil strainer O-rings.

NOTE:

- If there is a large amount of foreign material at the bottom of the oil pan, replace the oil strainer with a new one.

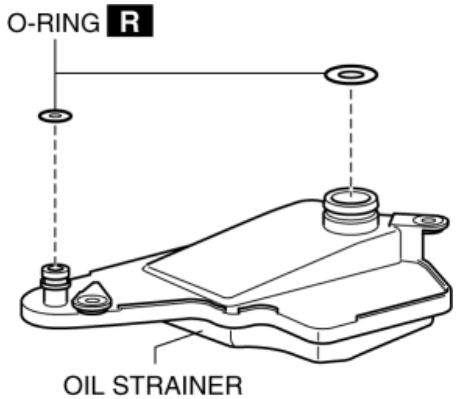

6. Install the oil strainer.

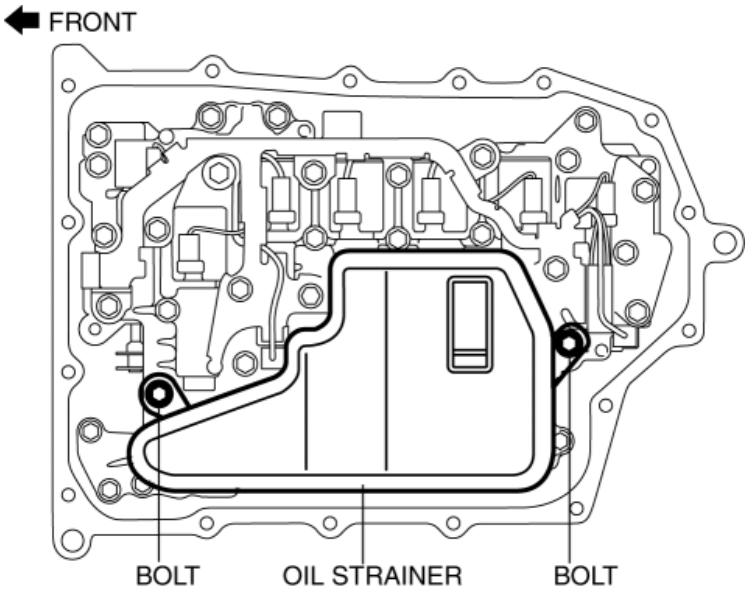

Tightening torque

- 9—10 N·m {92—101 kgf·cm, 80—88 in·lbf}

7. Apply a light coat of silicone sealant (TB1217E or equivalent) to the contact surfaces of the oil pan and transaxle case.

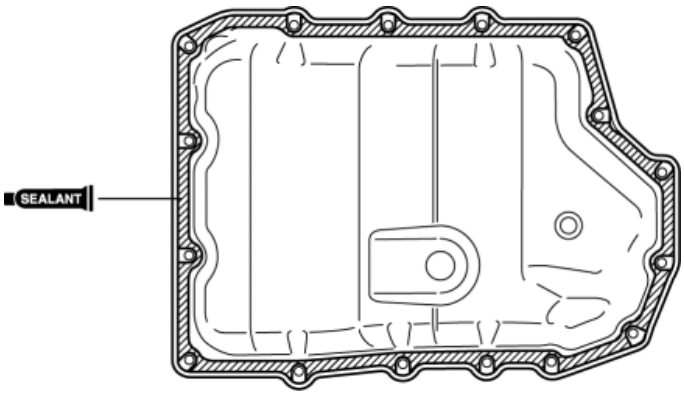

CAUTION:

- Clean any remaining silicone sealant on the contact surface of the transaxle case and oil pan, and degrease the sealant area. Otherwise, oil could leak.

8. Install the oil pan with new bolts before the applied sealant starts to harden.

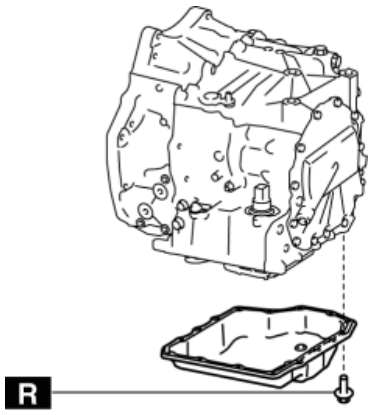

Tightening torque

- 8—10 N·m {82—101 kgf·cm, 71—88 in·lbf}

9. Install the oil seal (control valve body). (See **OIL SEAL (CONTROL VALVE BODY) REPLACEMENT [FW6A-EL]**.)

10. Install a new hose clamp to the position shown in the figure.

CAUTION:

- If the hose clamp is reused it could cause ATF leakage, therefore use a new hose clamp.
- Install the hose clamp tab to within the range shown in the figure.

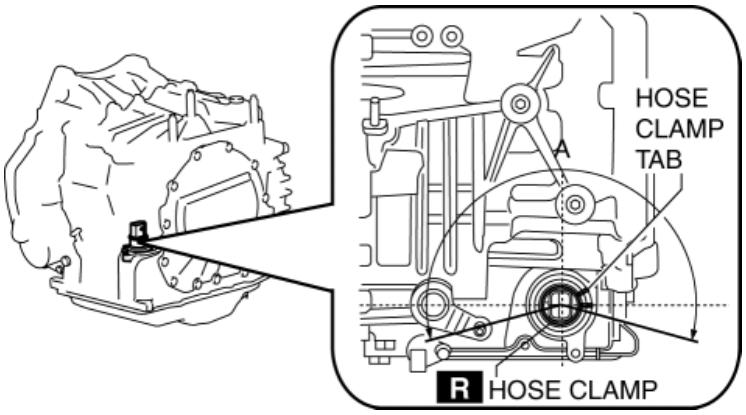

A: 210°

- Install the hose clamp so that it does not interfere with the top and bottom flanges of the oil seal to maintain the waterproofing integrity.

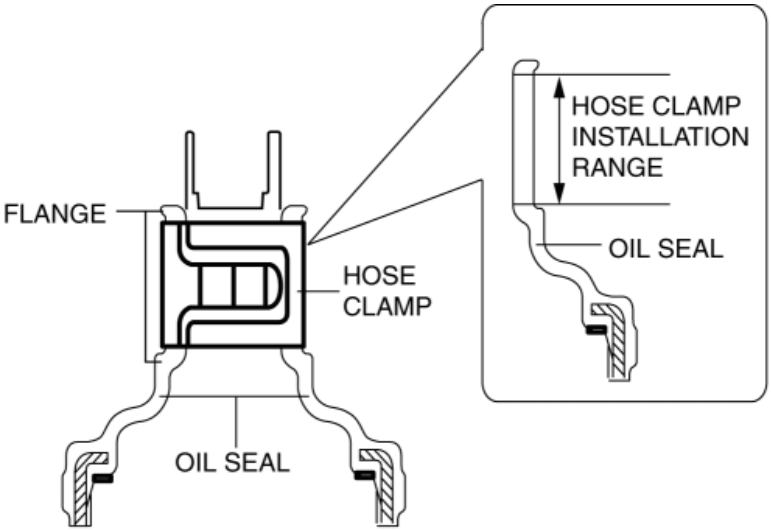

11. Connect the control valve body connector.

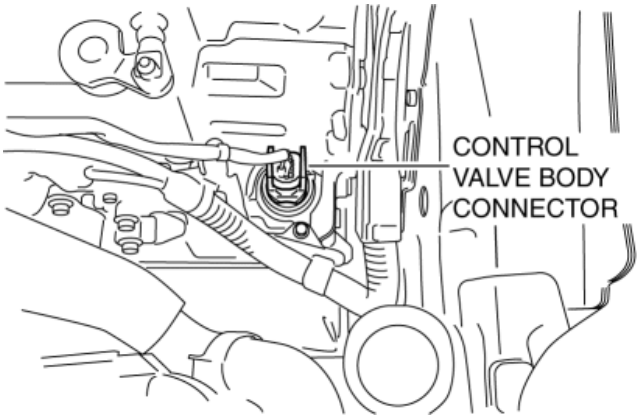

CAUTION:

- Make sure that your hand does not touch the terminal as the connector terminal could be damaged.
- Verify that there is no fluid or foreign matter adhering to the connector before connecting the connector.
- Insert the connector straight as the connector terminal could be damaged.
- Rotate the connector lever until a click is heard.

12. Add the ATF. (See **AUTOMATIC TRANSAXLE FLUID (ATF) REPLACEMENT [FW6A-EL]**.)

13. Install the air cleaner component. (See **INTAKE-AIR SYSTEM REMOVAL/INSTALLATION [SKYACTIV-G 2.0, SKYACTIV-G 2.5]**.)

14. Connect the negative battery cable. (See **NEGATIVE BATTERY CABLE DISCONNECTION/CONNECTION [SKYACTIV-G 2.0, SKYACTIV-G 2.5]**.)

15. Perform the “TCM configuration” (Control valve body Replacement). (See **TCM CONFIGURATION [FW6A-EL]**.)
16. Perform the “Initial Learning” (Control valve body Replacement). (See **INITIAL LEARNING [FW6A-EL]**.)
17. Perform the “Mechanical System Test”. (See **MECHANICAL SYSTEM TEST [FW6A-EL]**.)
18. Install the front under cover No.2. (See **FRONT UNDER COVER No.2 REMOVAL/INSTALLATION**.)
19. Perform the “Road Test”. (See **ROAD TEST [FW6A-EL]**.)

2014 - Mazda3 - Transmission/Transaxle

INITIAL LEARNING [FW6A-EL]

Introduction

- If the control valve body, oil pressure switch, and automatic transaxle are replaced, always perform the initial learning. If the initial learning is not completed, engine rev-up may occur or shift shock may increase. DTC P06B8:00 is displayed while the initial learning has not been implemented.
- The procedure for the initial learning has a procedure which uses the M-MDS and one which does not. The initial learning can be activated easily using the M-MDS.

WARNING:

- The initial learning forcibly changes gears within the driving shift range while the engine is running. Before implementing the initial learning, securely apply the parking brake and set the wheel blocks for both the front and rear wheels. Otherwise, the vehicle will move which could cause injury or property damage.

Using M-MDS

Preparation before servicing

1. Verify initial learning implementation necessity for replacement parts.

Replacement part	Initial learning necessity
Control valve body replacement	Necessary
Oil pressure switch replacement	Necessary
Automatic transaxle replacement	Necessary
ON/OFF solenoid replacement	Unnecessary
Coupler component replacement	Unnecessary

2. Apply the parking brake firmly, and set the wheel blocks for both the front and rear wheels.

3. Inspect the ATF level. (See **AUTOMATIC TRANSAXLE FLUID (ATF) INSPECTION [FW6A-EL]**.)

4. Bring the M-MDS inside the vehicle and connect it to the DLC-2.

5. Perform vehicle identification using the M-MDS.

6. Start the engine.

7. After the vehicle is identified, select the following items from initialization of the M-MDS.

   a. Select “Data logger”.

   b. Select “Module”.

   c. Select “TCM”.

8. While checking the PID TFT (ATF temperature), warm-up the engine and allow the ATF temperature to reach **60—110 °C {140—230 °F}**.

Starting procedure for initial learning

1. After the vehicle is identified, select the following items from initialization of the M-MDS.

   a. Select “Self-test”

   b. Select “Module”

   c. Select “TCM”

   d. Select “Retrieve CMDTCs”

NOTE:

- DTC P06B8:00 is displayed while the initial learning has not been implemented.

2. Start the engine and wait for **30 s or more**.

3. Perform the following steps (1) to (4) with the brake pedal depressed.

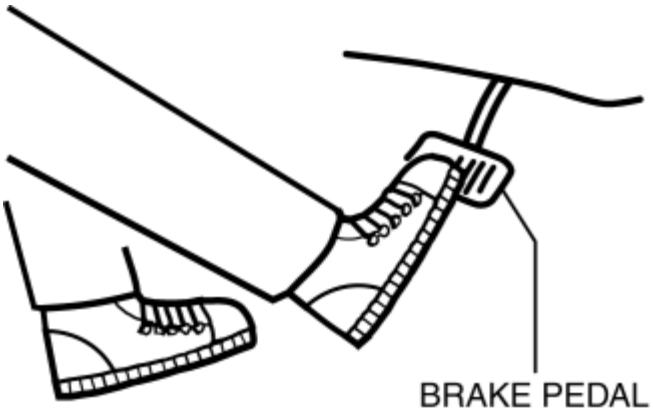

CAUTION:

- When the brake fluid pressure sensor value is the specification or less, shut down the initial learning to assure safety. Accordingly, be careful of the following when performing the initial learning:

  - Strongly depress the brake pedal while performing the initial learning.

- Do not depress the brake pedal again. Otherwise, the brake booster pressure will decrease and the brake force will weaken.

a. Shift the selector lever from P position to D position and click the DTC clear button for the M-MDS.

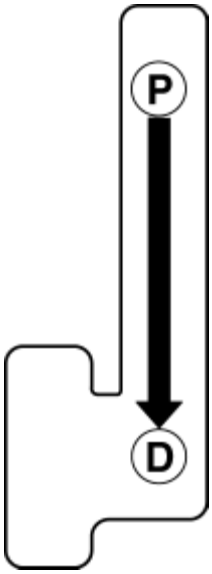

b. When the M-MDS screen returns to the DTC display screen, shift the selector lever from D position to M position within **10 s** and verify that the engine speed increases from idling.

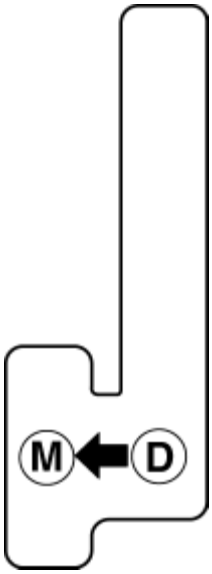

NOTE:

- The initial learning implements after idle speed starts increasing. If idle speed does not start increasing, repeat the procedure from Step 2.
- The shift position indicator light does not turn off while the initial learning is being implemented.
- If the initial learning is shut down for any reason while performing the learning, shift position indicator light does not flash. If shift position indicator light does not flash, repeat the procedure from Step 2.

c. Verify that the engine speed returns to idle and shift position indicator light flashes **two times**.

SHIFT POSITION INDICATOR LIGHT

d. Verify that M1 is displayed after the shift position indicator light flashes **two times**, shift the selector lever to the P position, and turn off the engine.

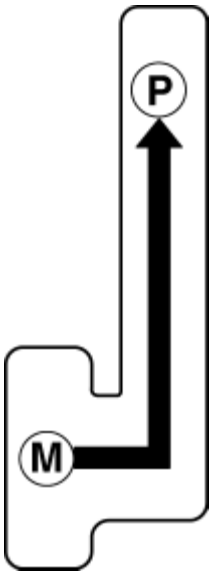

NOTE:

- Be careful not to miss looking at shift position indicator light because the light flashes only **one time**.

4. Release the brake pedal.

5. Switch the ignition to KOEO and verify the DTC.

   - If DTC P06B8:00 is displayed, repeat the procedure from Step 2. If any other DTCs are displayed, perform the applicable DTC troubleshooting. (See **ON-BOARD DIAGNOSTIC SYSTEM DTC TABLE [FW6A-EL]**.)

Not Using of M-MDS

Preparation before servicing

1. Verify initial learning implementation necessity for replacement parts.

Replacement part	Initial learning necessity
Control valve body replacement	Necessary
Oil pressure switch replacement	Necessary
Automatic transaxle replacement	Necessary
ON/OFF solenoid replacement	Unnecessary
Coupler component replacement	Unnecessary

2. Apply the parking brake firmly, and set the wheel blocks for both the front and rear wheels.
3. Inspect the ATF level. (See **AUTOMATIC TRANSAXLE FLUID (ATF) INSPECTION [FW6A-EL]**.)
4. Start the engine.
5. Warm-up the engine and allow the ATF temperature to reach **60—110 °C {140—230 °F}**.

Starting procedure for initial learning

1. Start the engine and wait for **30 s or more**.
2. Perform the following steps (1) to (7) with the brake pedal depressed.

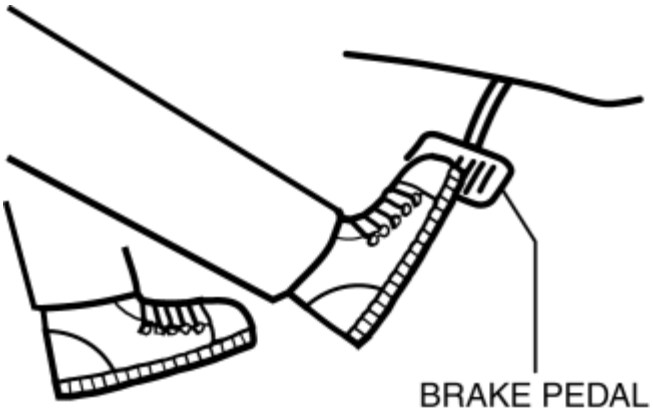

CAUTION:

- When the brake fluid pressure sensor value is the specification or less, shut down the initial learning to assure safety. Accordingly, be careful of the following when performing the initial learning:
  - Strongly depress the brake pedal while performing the initial learning.
  - Do not depress the brake pedal again. Otherwise, the brake booster pressure will decrease and the brake force will weaken.

a. Shift the selector lever from P position to N position, press the push button start **one time**, and stop the engine.

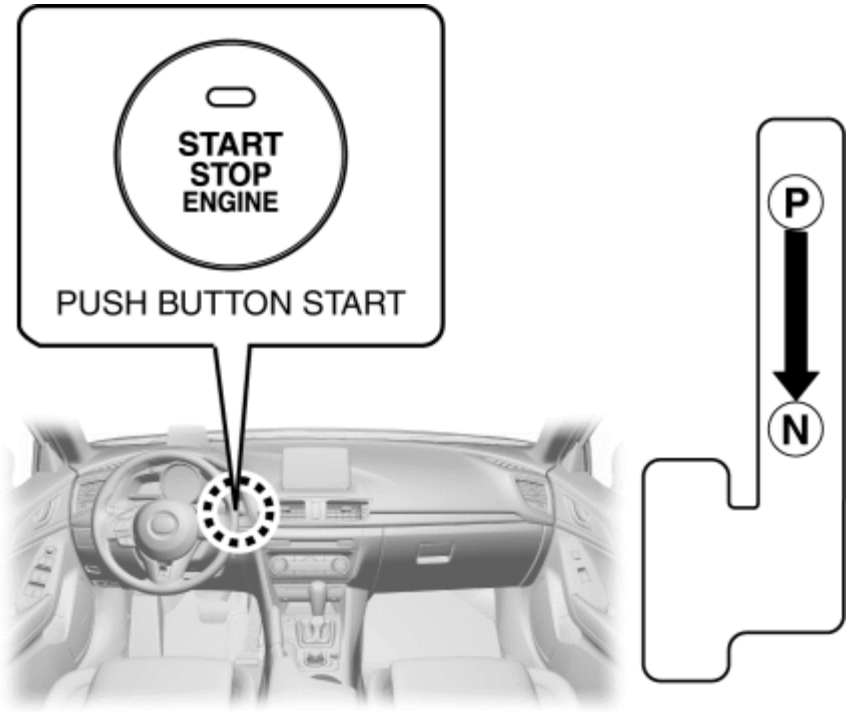

b. Shift the selector lever from N position to M- position, press the push button start **one time** while holding the lever in the M- position, and wait for **5 s or more** (ignition switch ON (engine on)).

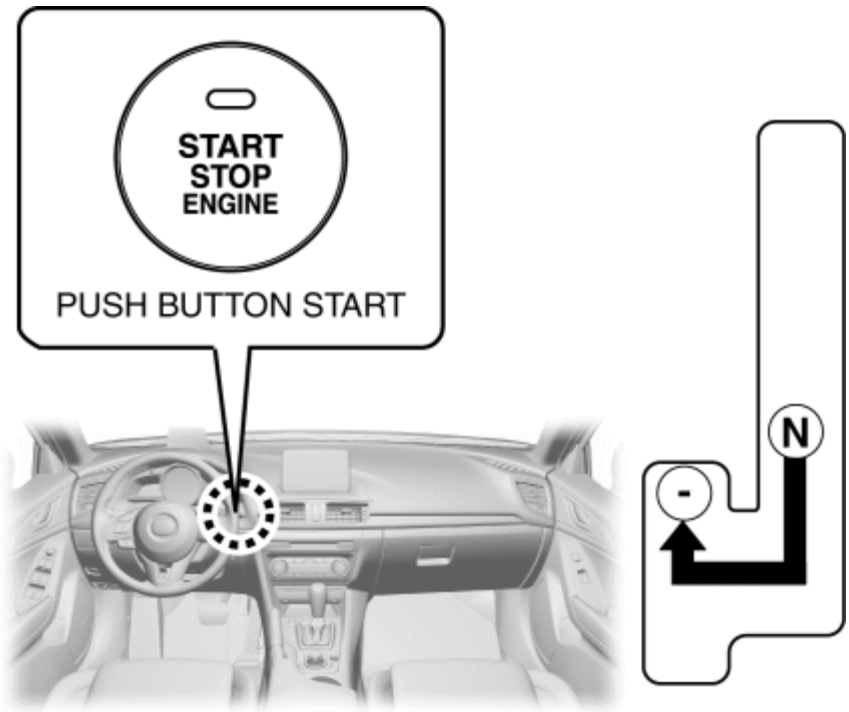

c. Shift the selector lever from M- position to N position, press the push button start **one time**, and start the engine.

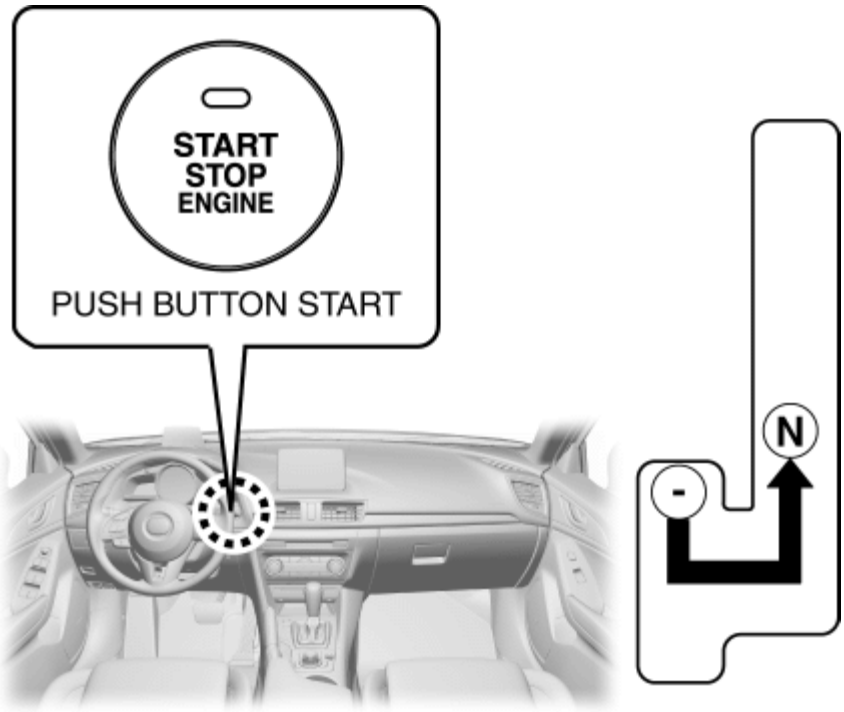

d. Shift the selector lever from N position to M+ position and wait for **5 s or more** while holding the lever in the M+ position.

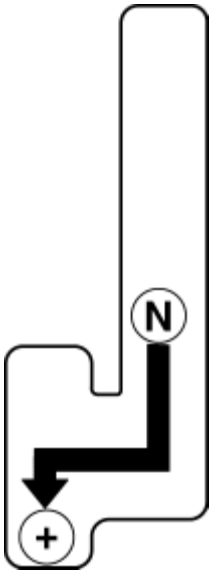

e. Select the selector lever from M+ position to M- position and wait for **5 s or more** while holding the lever in the M- position.

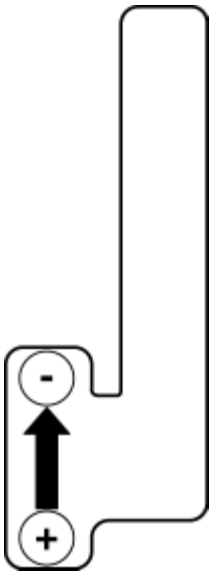

f. When idle increase starts, shift the selector lever to the M position (manual position), and verify that M1 is displayed after the shift position indicator light flashes **two times**.

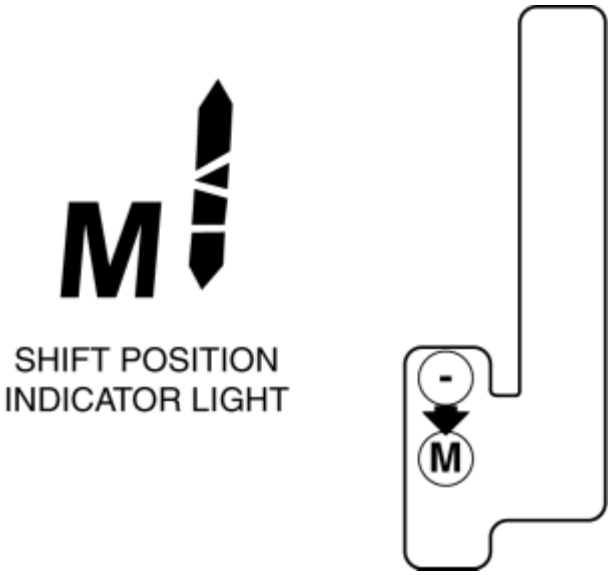

NOTE:

- The initial learning implements after idle speed starts increasing. If idle speed does not start increasing, repeat the procedure from Step 1 "Start the engine and wait for **30 s or more**.".
- The shift position indicator light does not turn off while the initial learning is being implemented.

g. After shift position indicator light flashes twice, shift the selector lever from M position to P position and stop the engine.

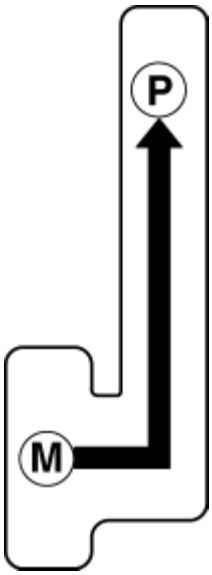

NOTE:

- Be careful not to miss looking at shift position indicator light because the light flashes only **one time**.

3. Release the brake pedal.

4. Clear the DTC using the M-MDS and switch the ignition to off. (See **ON-BOARD DIAGNOSTIC SYSTEM DTC INSPECTION [FW6A-EL]**.)

5. Switch the ignition ON (engine off or on) and verify that DTC P06B8:00 is not recorded using the M-MDS. (See **ON-BOARD DIAGNOSTIC SYSTEM DTC TABLE [FW6A-EL]**.)

- If the DTC P06B8:00 is displayed, repeat the procedure from Step 1.

2014 - Mazda3 - Transmission/Transaxle

TCM CONFIGURATION [FW6A-EL]

NOTE:

- The TCM is built into the control valve body.

1. Verify TCM configuration implementation necessity for replacement parts.

Replacement part	Configuration necessity
Control valve body replacement	Necessary
Oil pressure switch replacement	Unnecessary
Automatic transaxle replacement	Unnecessary
ON/OFF solenoid replacement	Unnecessary
Coupler component replacement	Unnecessary

2. Connect the M-MDS to the DLC-2.
3. After vehicle identification, the following can be selected from the M-MDS initialization screen.
    - Select “Module Programming”
4. Then, select the following from the screen menu.
    - Select “Programmable Module Installation”
    - Select “TCM”
5. Perform the configuration following the instructions on the screen.
6. Verify that no DTCs are stored. (See **ON-BOARD DIAGNOSTIC SYSTEM DTC INSPECTION [FW6A-EL]**.)

NOTE:

- If any DTC (U code) is output, the system is normal.

7. Delete the U code and verify that no DTC is output. (See **ON-BOARD DIAGNOSTIC SYSTEM DTC INSPECTION [FW6A-EL]**.)
    - If any DTC other than U code is output, repair the malfunctioning location according to the applicable DTC troubleshooting. (See **ON-BOARD DIAGNOSTIC SYSTEM DTC TABLE [FW6A-EL]**.)

2014 - Mazda3 - Transmission/Transaxle

AUTOMATIC TRANSAXLE SHIFT MECHANISM LOCATION INDEX

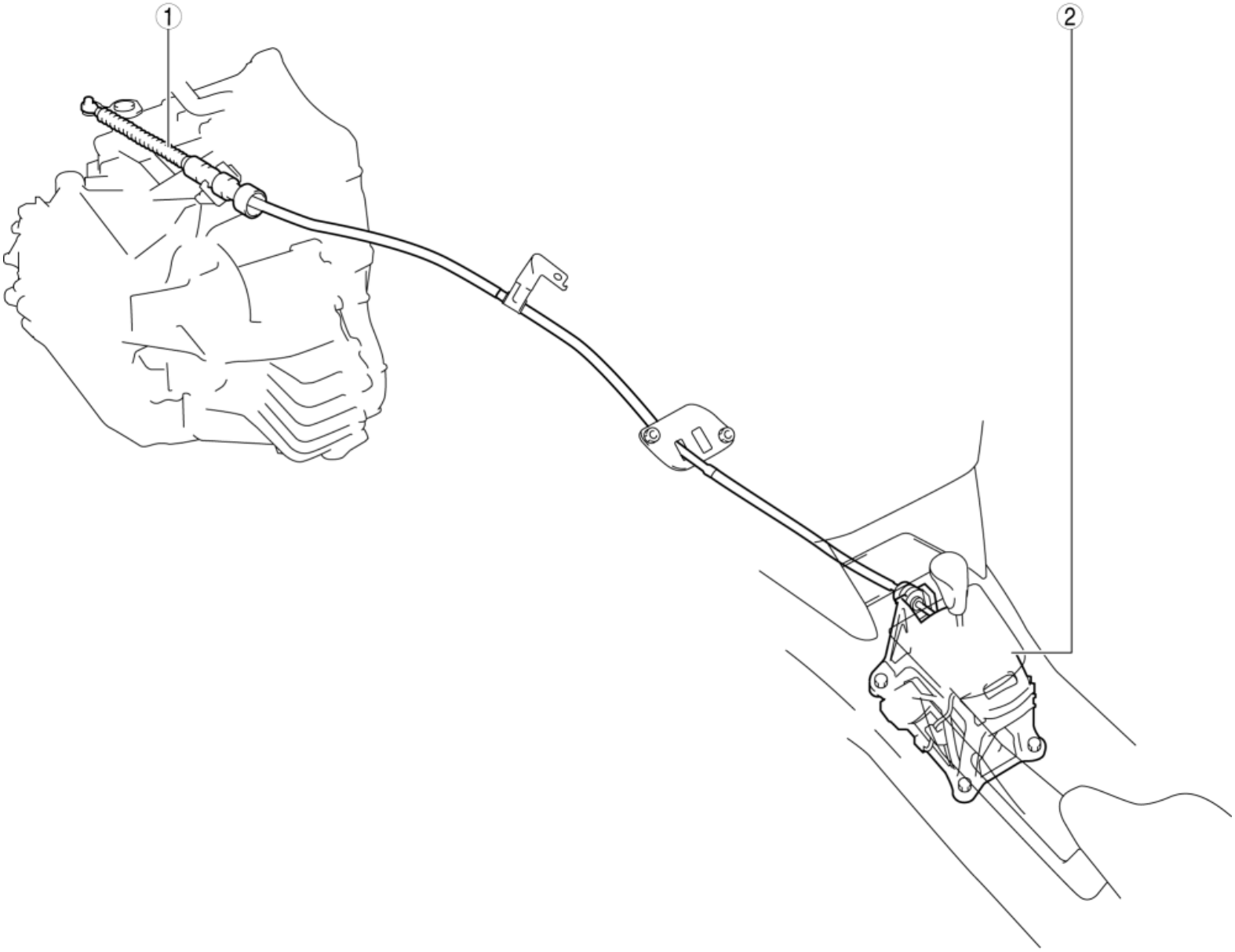

1	Selector cable (See **AUTOMATIC TRANSAXLE SHIFT MECHANISM REMOVAL/INSTALLATION**.)
2	Selector lever component (See **AUTOMATIC TRANSAXLE SHIFT MECHANISM REMOVAL/INSTALLATION**.) (See **SELECTOR LEVER INSPECTION**.) (See **SHIFT-LOCK SYSTEM INSPECTION**.) (See **NOT P POSITION SWITCH INSPECTION**.)

2014 - Mazda3 - Transmission/Transaxle

AUTOMATIC TRANSAXLE SHIFT MECHANISM REMOVAL/INSTALLATION

Selector Lever Removal/Installation

1. Disconnect the negative battery cable. (See **NEGATIVE BATTERY CABLE DISCONNECTION/CONNECTION [SKYACTIV-G 2.0, SKYACTIV-G 2.5]**.)

2. Perform the following procedure to remove the selector lever knob.

NOTE:

- If the servicing is difficult, release the shift lock manually and shift the selector lever to the N position.

a. Insert the tool (width: **6 mm {0.2 in} or less**, thickness: **1 mm {0.04 in} or less**) as shown in the figure.

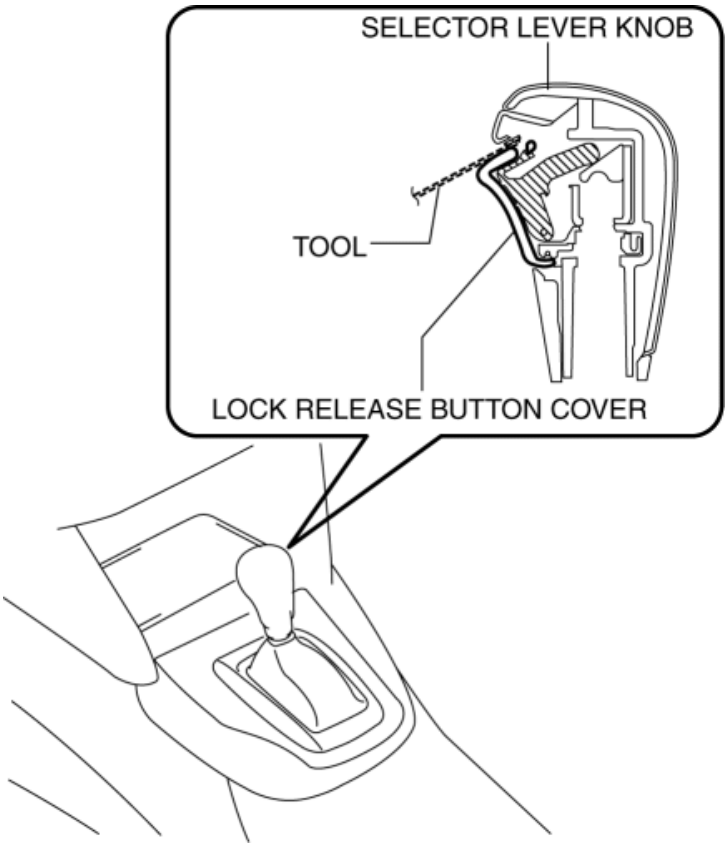

b. Move the tool in the direction of arrow (1) in the figure and detach the hook. Move the lock release button cover in the direction of arrow (2) in the figure and remove it.

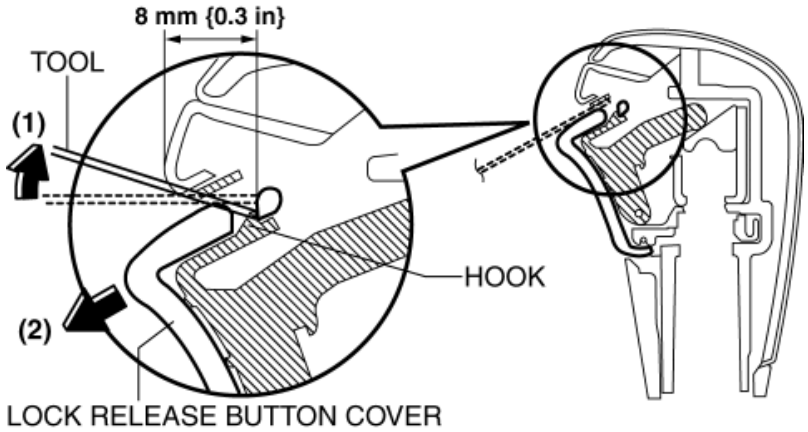

c. Remove the spring.

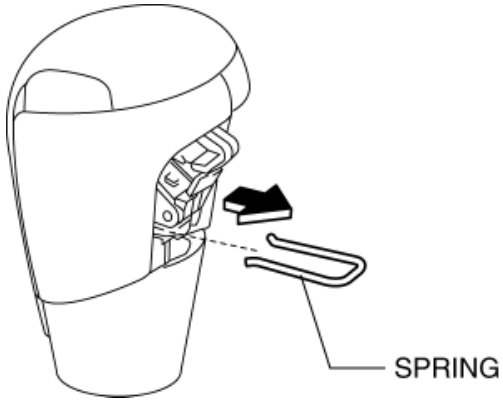

d. Remove the selector lever knob.

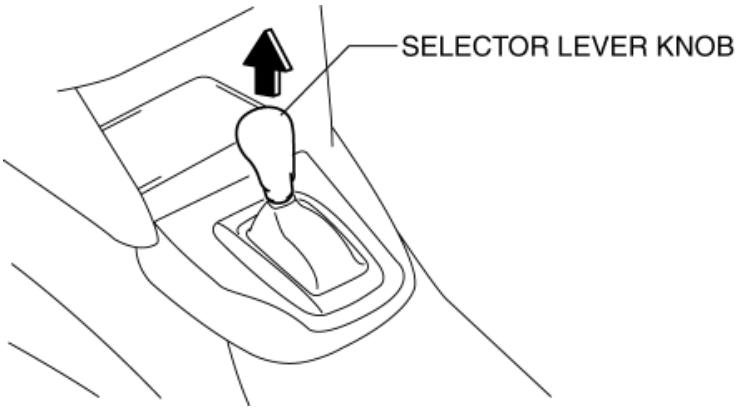

3. Remove the front console. (See **FRONT CONSOLE REMOVAL / INSTALLATION**.)

4. Disconnect the selector lever component connector.

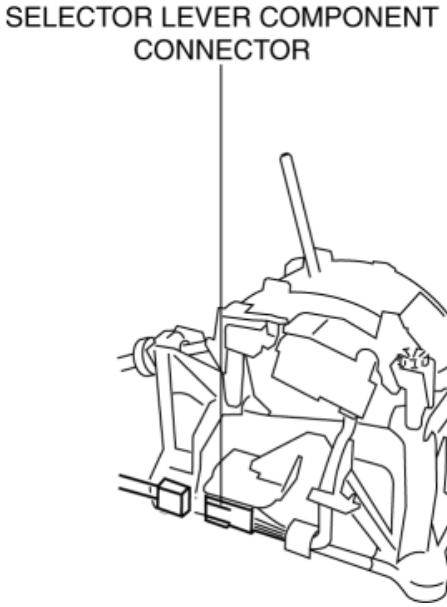

5. Remove the selector cable (selector lever side). (See **Selector Cable Removal/Installation**.)

6. Remove the nuts from the selector lever.

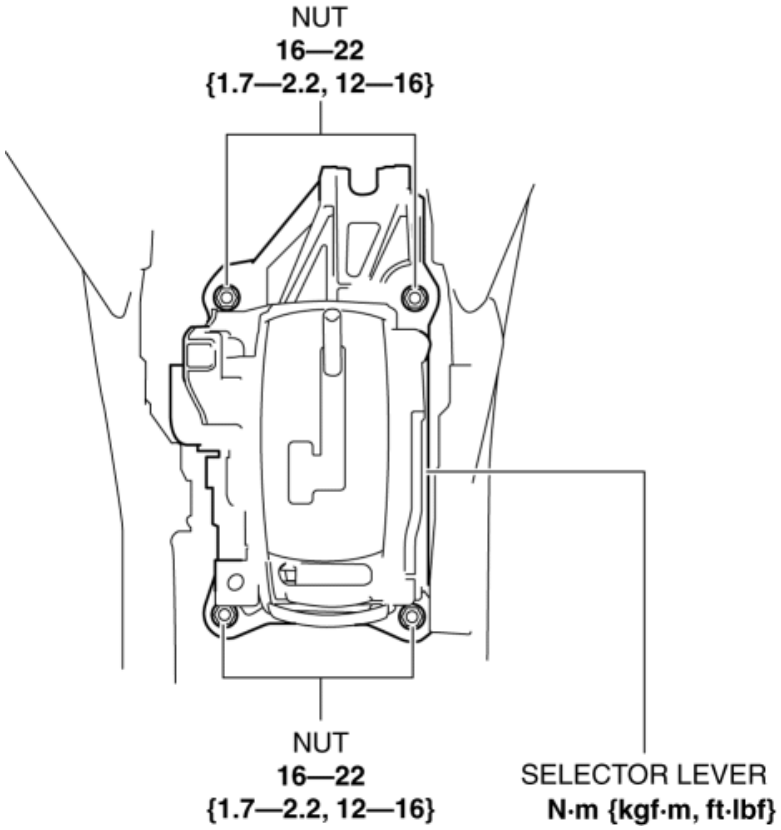

7. Remove the selector lever.

8. Install the selector lever.

9. Install the nuts from the selector lever.

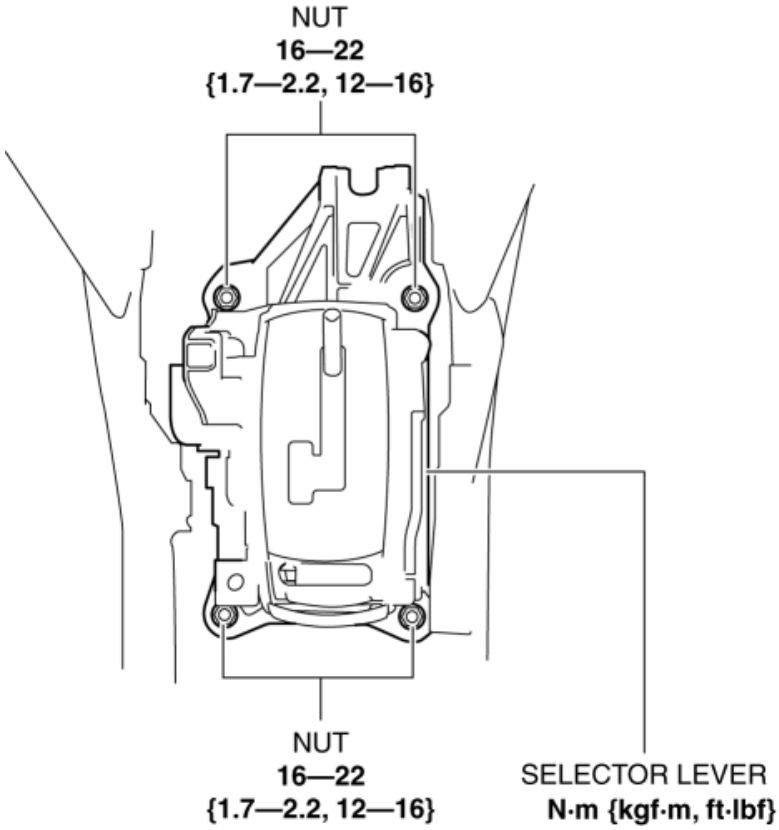

10. Install the selector cable (selector lever side). (See **Selector Cable Removal / Installation**.)
11. Connect the selector lever component connector.

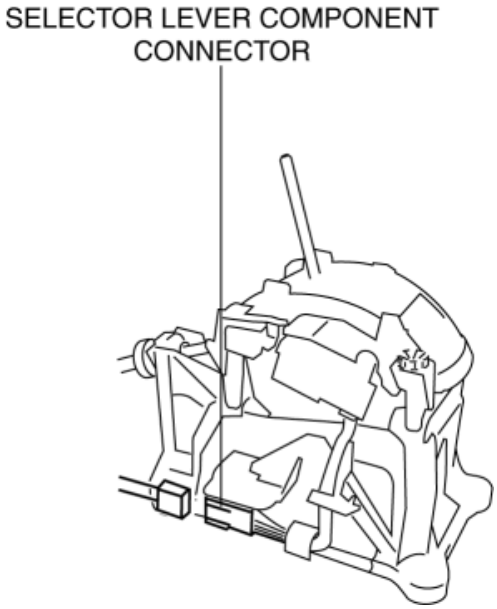

12. Install the front console. (See **FRONT CONSOLE REMOVAL / INSTALLATION**.)
13. Perform the following procedure to install the selector lever knob.
    a. Install the spring to the selector lever knob.

    CAUTION:

    - Install the spring so that it is stopped by the stopper.

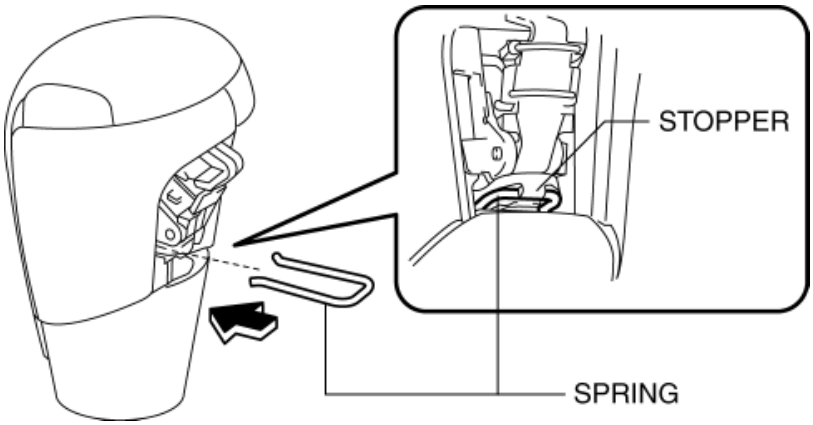

b. Install the selector lever knob to the selector lever component.

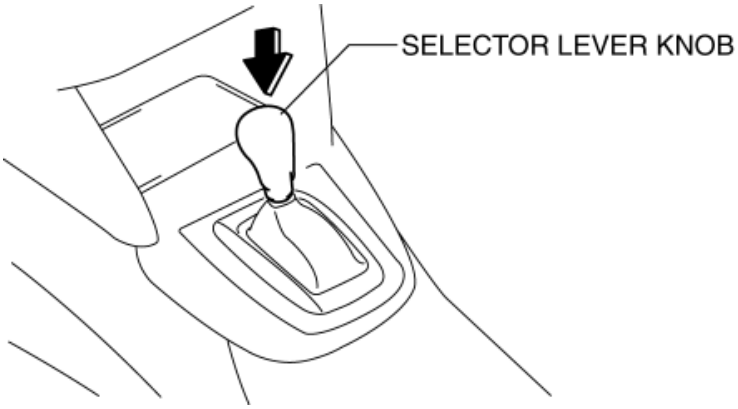

c. Install the lock release button cover so that it engages with the hook of the selector lever knob.

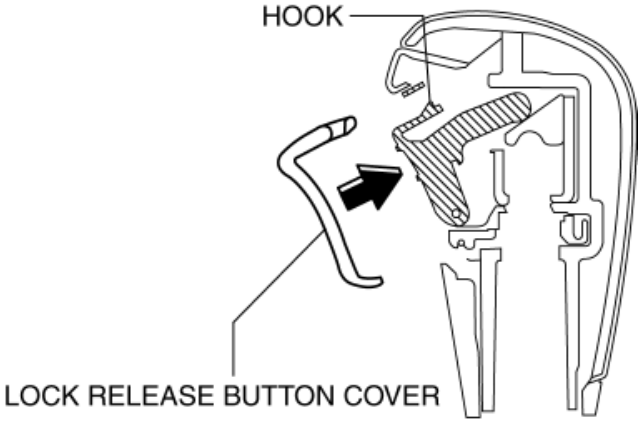

14. Connect the negative battery cable. (See **NEGATIVE BATTERY CABLE DISCONNECTION/CONNECTION [SKYACTIV-G 2.0, SKYACTIV-G 2.5]**.)

Indicator Removal/Installation

1. Disconnect the negative battery cable. (See **NEGATIVE BATTERY CABLE DISCONNECTION/CONNECTION [SKYACTIV-G 2.0, SKYACTIV-G 2.5]**.)
2. Remove the upper panel. (See **UPPER PANEL REMOVAL**.) (See **UPPER PANEL INSTALLATION**.)
3. Remove the selector lever knob. (See **Selector Lever Removal/Installation**.)
4. Remove the shift panel. (See **SHIFT PANEL REMOVAL/INSTALLATION**.)
5. Remove in the order indicated in the table.
6. Install in the reverse order of removal.

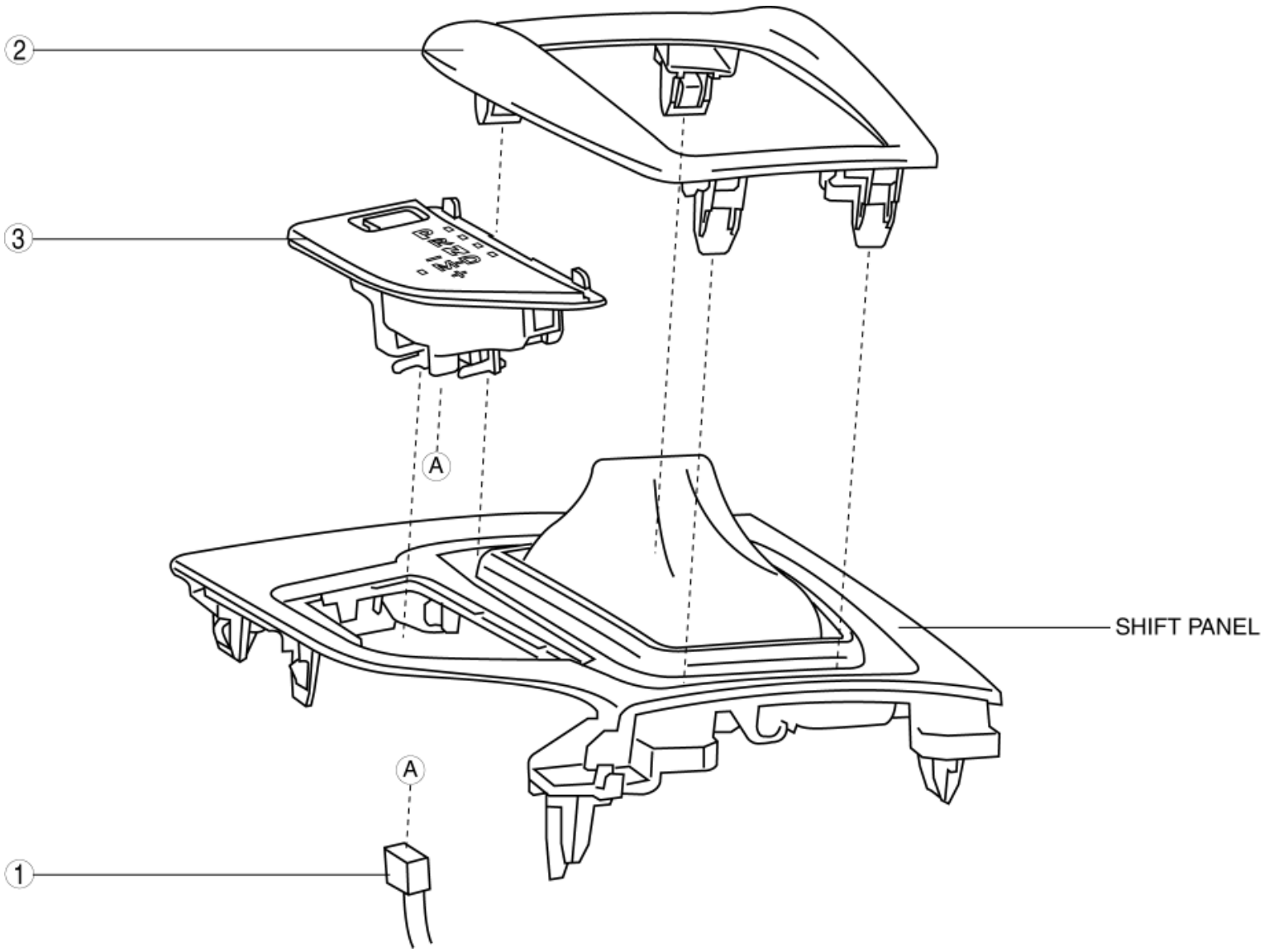

1	Connector
2	Indicator panel
3	Indicator (See **Indicator Removal Note**.)

Indicator Removal Note

1. Detach tabs shown in the figure and remove the indicator.

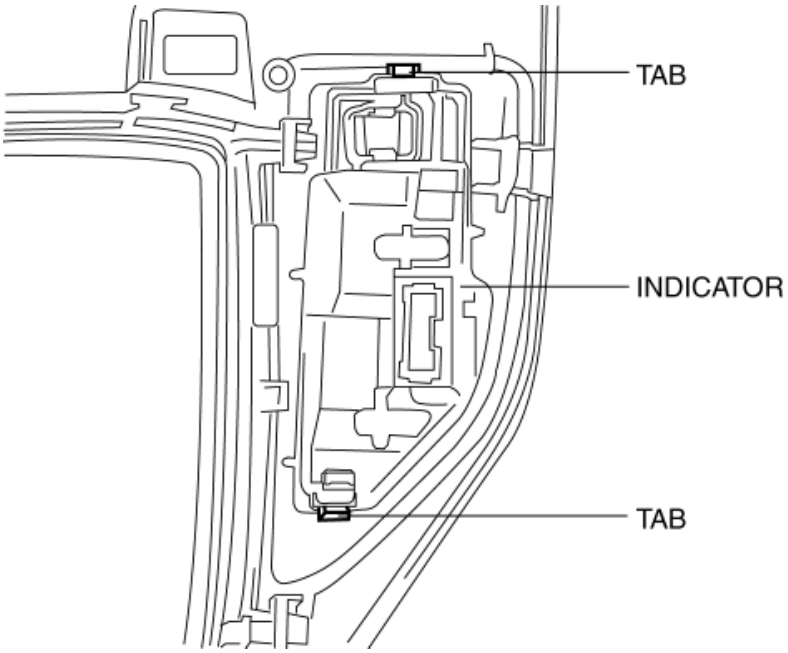

Selector Cable Removal/Installation

1. Disconnect the negative battery cable. (See **NEGATIVE BATTERY CABLE DISCONNECTION/CONNECTION [SKYACTIV-G 2.0, SKYACTIV-G 2.5]**.)

2. Remove the selector lever knob. (See **Selector Lever Removal/Installation**.)

3. Perform the following procedure to remove the selector cable (selector lever side).

   a. Remove the front console. (See **FRONT CONSOLE REMOVAL/INSTALLATION**.)

   b. Pull out the safety lock in the direction of the arrow (1) shown in the figure, pull out the lock piece in the direction of the arrow (2) shown in the figure, and release the lock. (See **Selector Cable (Selector Lever Side) Installation Note**.)

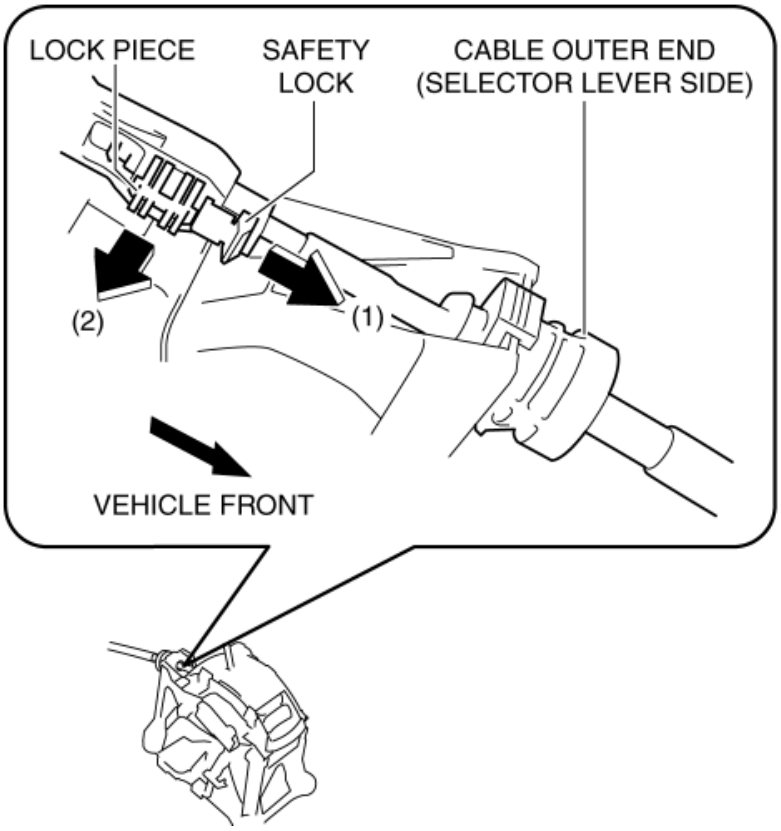

c. While pressing the cable outer end tab (selector lever side) in the direction of the arrow (3) shown in the figure, lift up cable outer end (selector lever side) in the direction of the arrow (4) shown in the figure to detach the cable outer end tab (selector lever side) from the bracket.

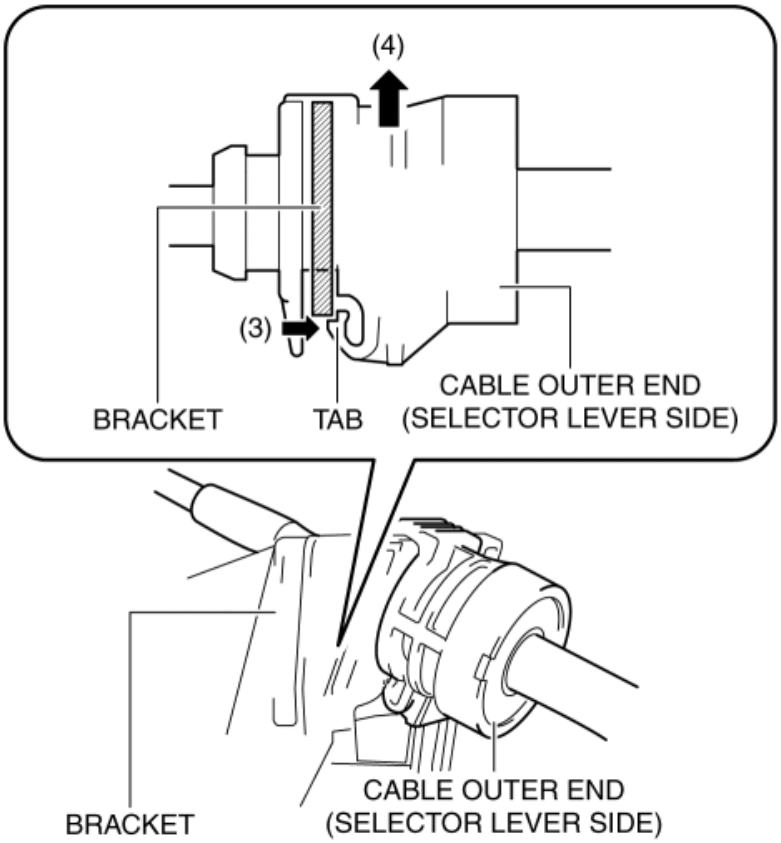

d. Remove the cable outer end (selector lever side) from the bracket.

e. Remove the selector cable end (selector lever side) from the selector lever.

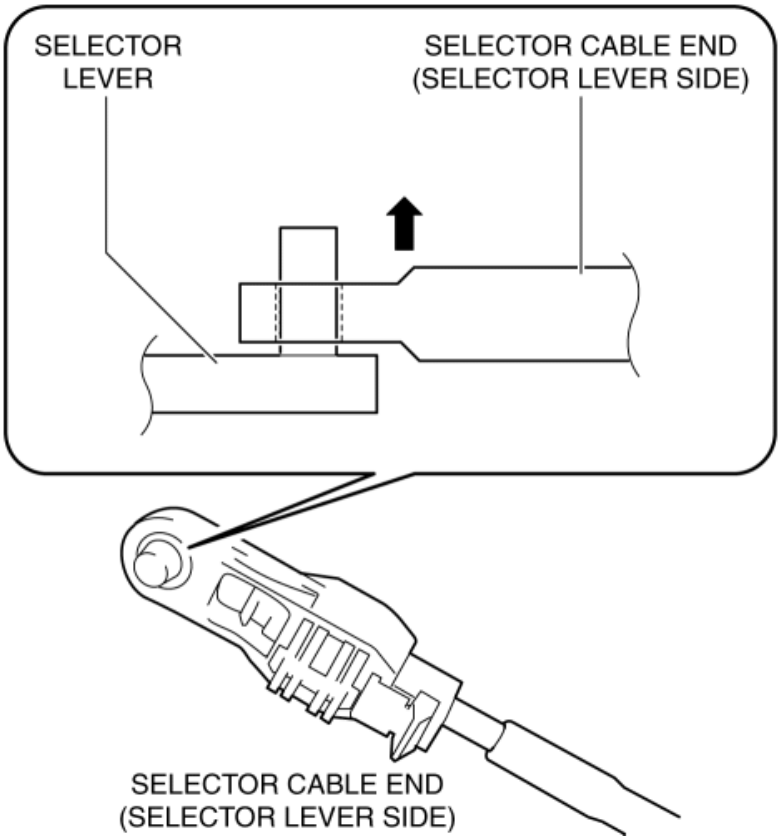

4. Perform the following procedure to remove the selector cable (transaxle side).

a. Remove the air cleaner case. (See **INTAKE-AIR SYSTEM REMOVAL/INSTALLATION [SKYACTIV-G 2.0, SKYACTIV-G 2.5]**.)

b. Remove the battery tray. (See **BATTERY REMOVAL/INSTALLATION [SKYACTIV-G 2.0, SKYACTIV-G 2.5]**.)

c. While pressing the bracket tab in the direction of the arrow (5) shown in the figure, lift up the cable outer end (transaxle side) in the direction of the arrow (6) shown in the figure to detach the bracket tab from the cable outer end (transaxle side).

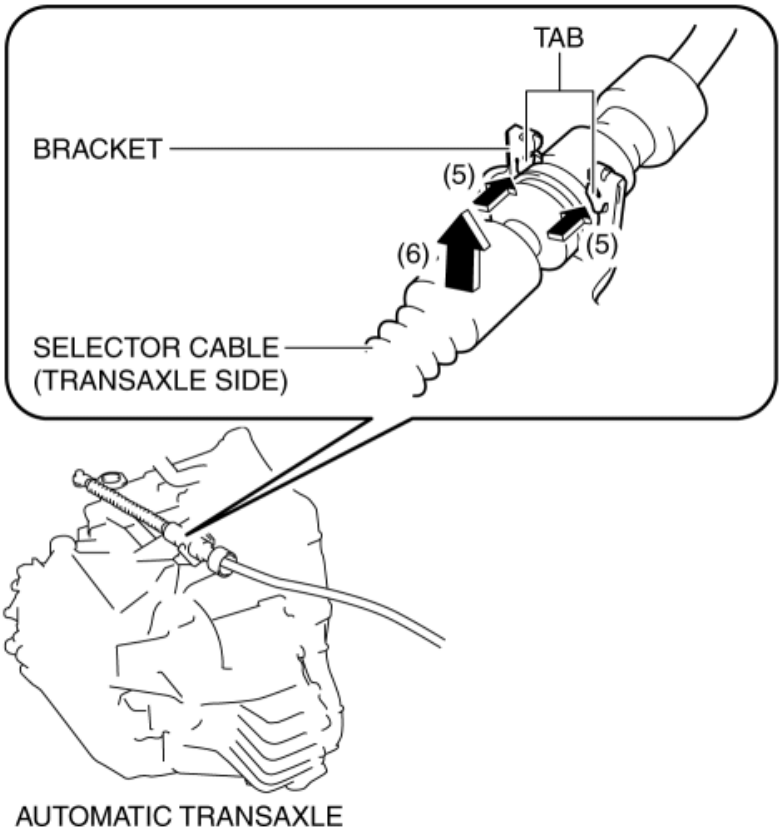

d. Remove the cable outer end (transaxle side) from the bracket. (See **Cable Outer End (Transaxle Side) Installation Note**.)

e. Remove the clip from the selector cable end (transaxle side).

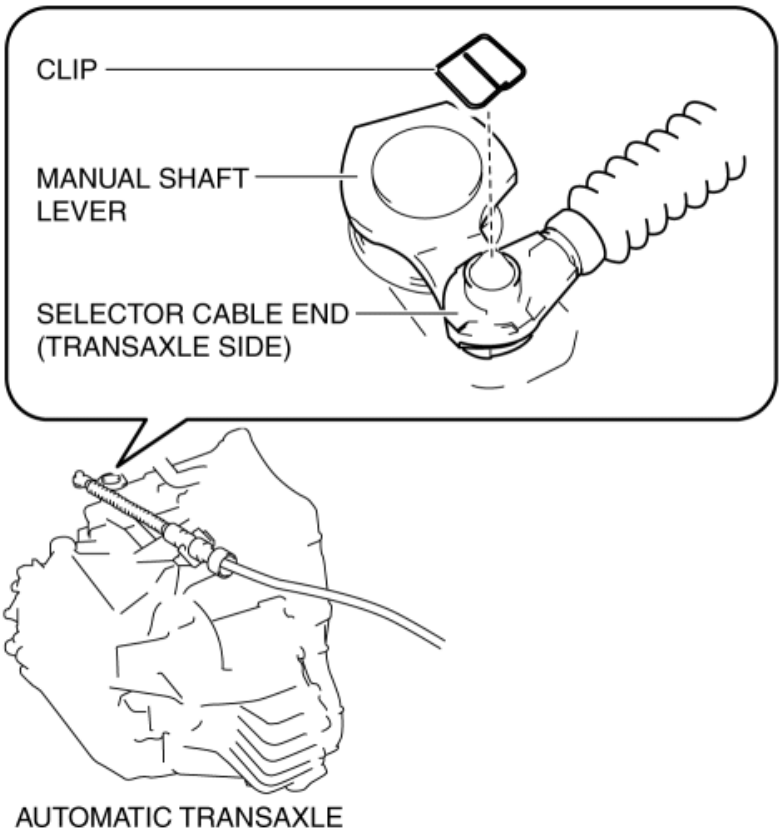

f. Remove the selector cable end (transaxle side) from the manual shaft lever.

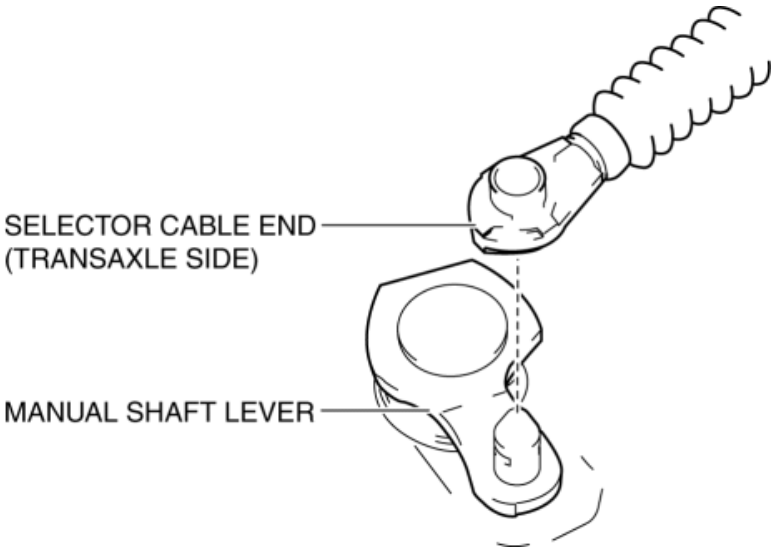

5. Remove the side wall. (See **SIDE WALL REMOVAL/INSTALLATION**.)

6. Remove the clip as shown in the figure and remove the nut.

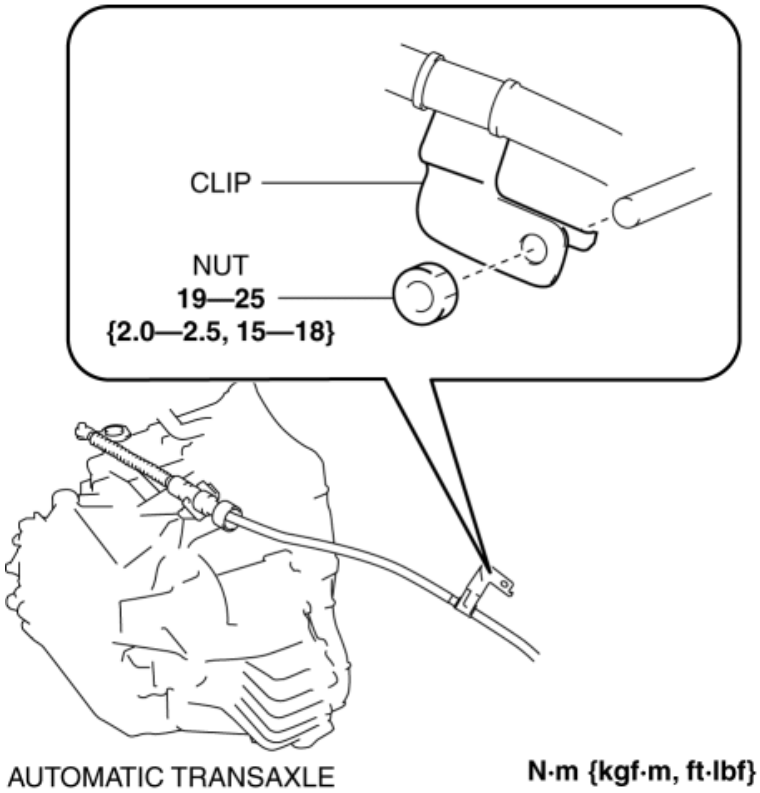

7. Remove the front console. (See **FRONT CONSOLE REMOVAL/INSTALLATION**.)

8. Remove the grommet as shown in the figure and remove the nuts.

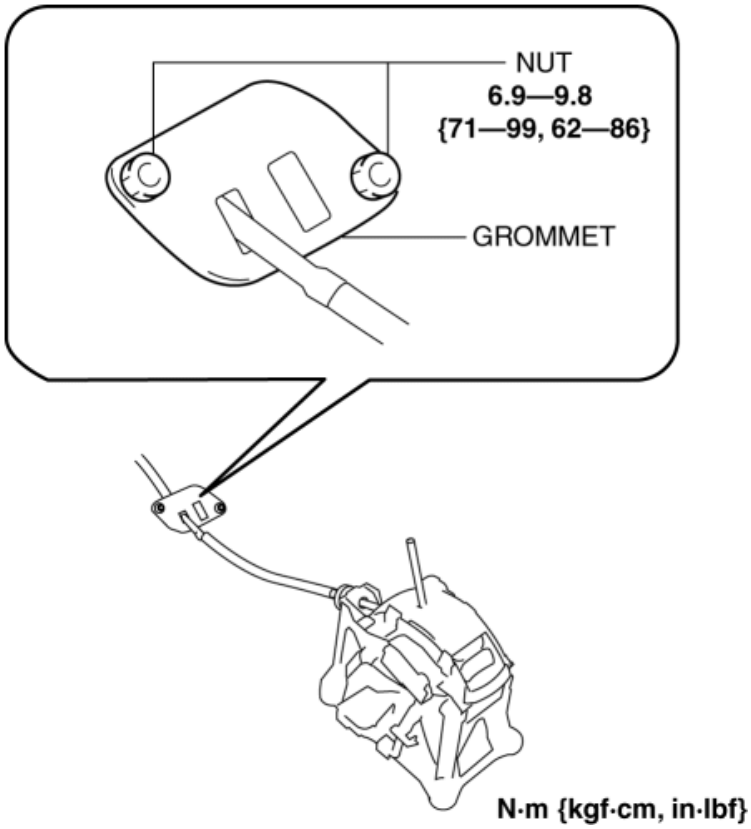

9. Install in the reverse order of removal.

Selector Cable Adjustment

1. Disconnect the negative battery cable. (See **2.0, SKYACTIV-G 2.5]**.)

2. Remove the upper panel. (See **UPPER PANEL REMOVAL**.) (See **UPPER PANEL INSTALLATION**.)

3. Remove the selector lever knob. (See **Selector Lever Removal/Installation**.)

4. Remove the shift panel. (See **SHIFT PANEL REMOVAL/INSTALLATION**.)

5. Shift the selector lever to the P position.

6. Pull out the safety lock in the direction of the arrow (1) shown in the figure, pull out the lock piece in the direction of the arrow (2) shown in the figure, and release the lock. (See **Selector Cable (Selector Lever Side) Installation Note**.)

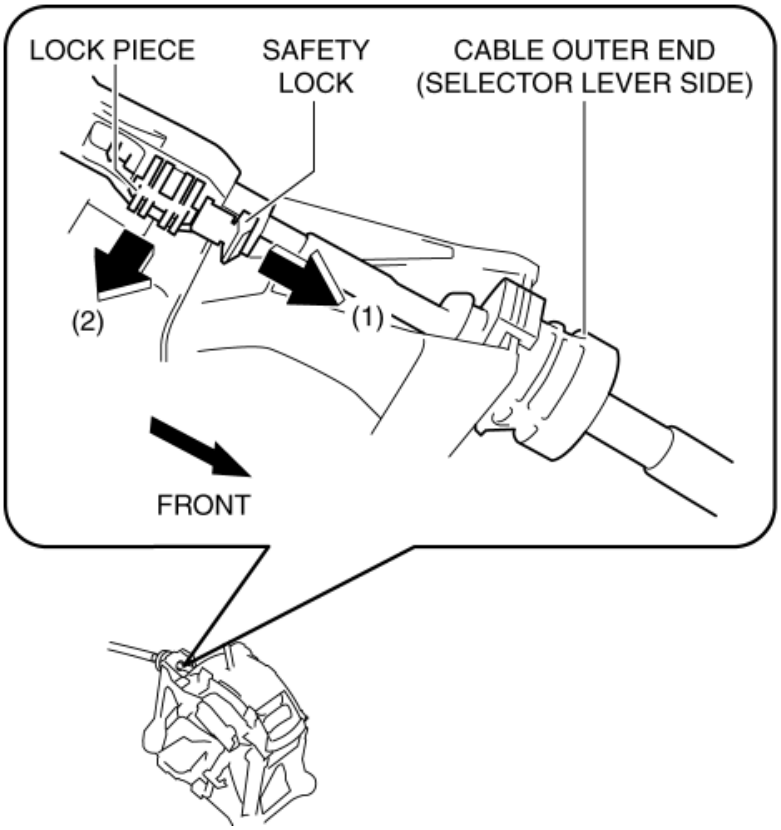

7. Set the manual shaft to the P position.

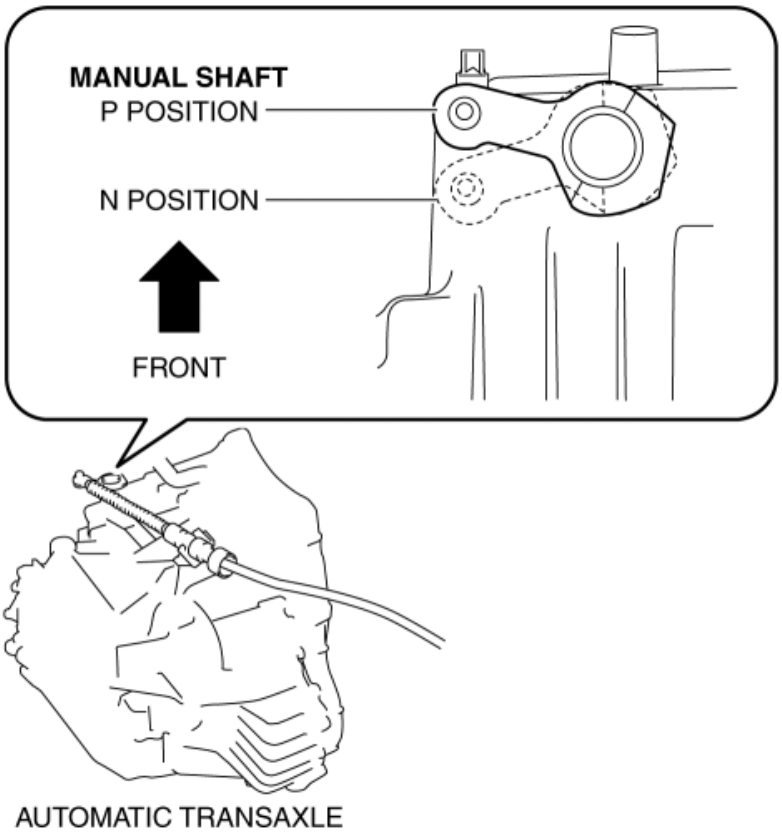

8. Press in the lock piece in the direction of the arrow (1) shown in the figure, press in the safety lock in the direction of the arrow (2) shown in the figure, and lock it.

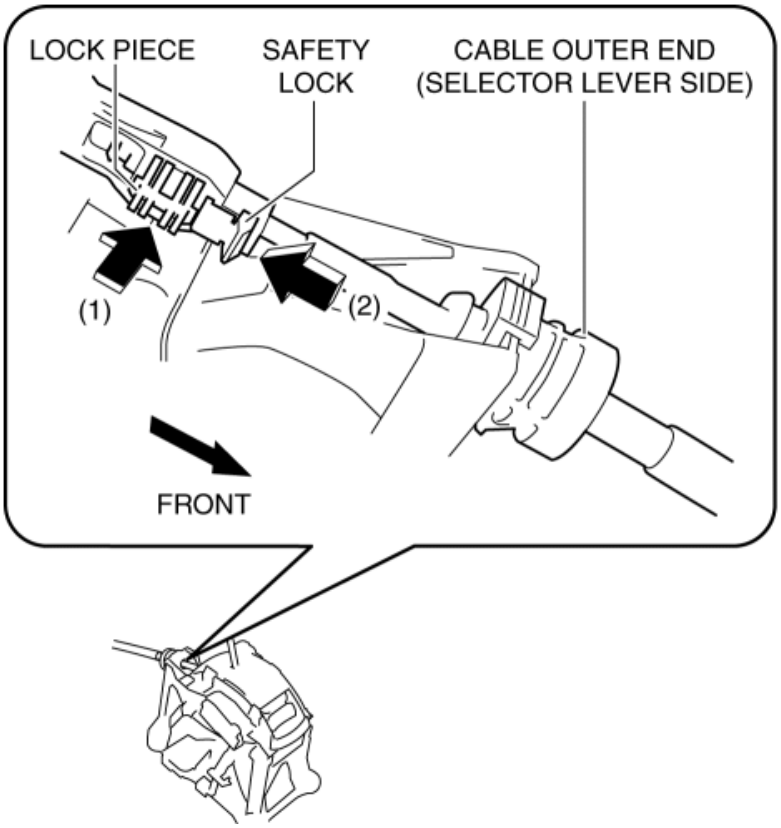

9. Perform the procedure in the reverse order of Step 1 to 4 to install the removed part.

10. Perform the selector lever inspection. (See **SELECTOR LEVER INSPECTION**.)

Selector Cable (Selector Lever Side) Installation Note

1. Verify that the selector lever is in the P position.
2. Verify that the manual shaft is in the P position.

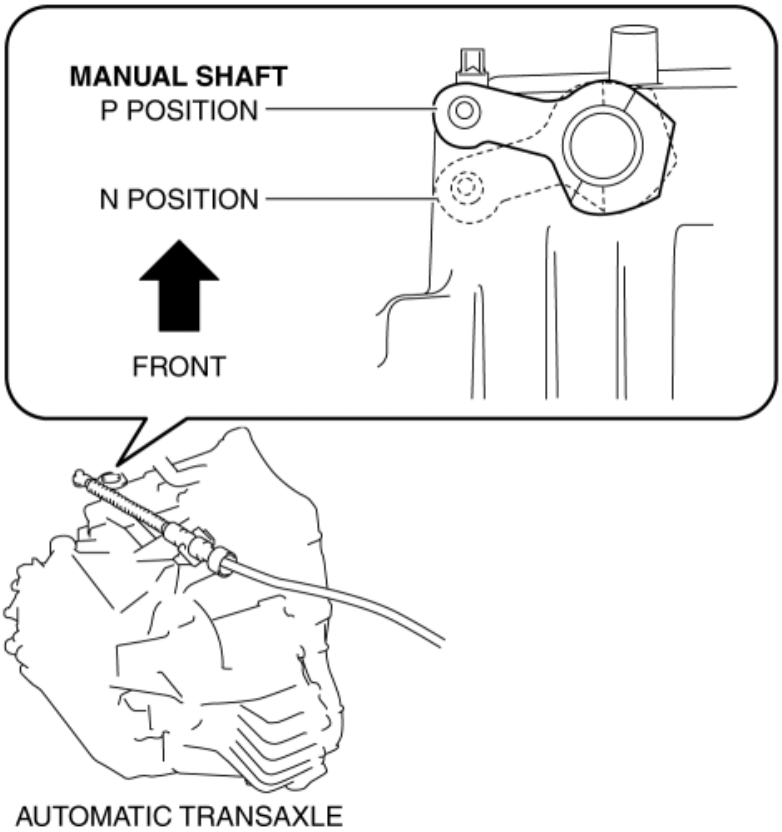

3. Press in the lock piece in the direction of the arrow (1) shown in the figure, press in the safety lock in the direction of the arrow (2) shown in the figure, and lock it.

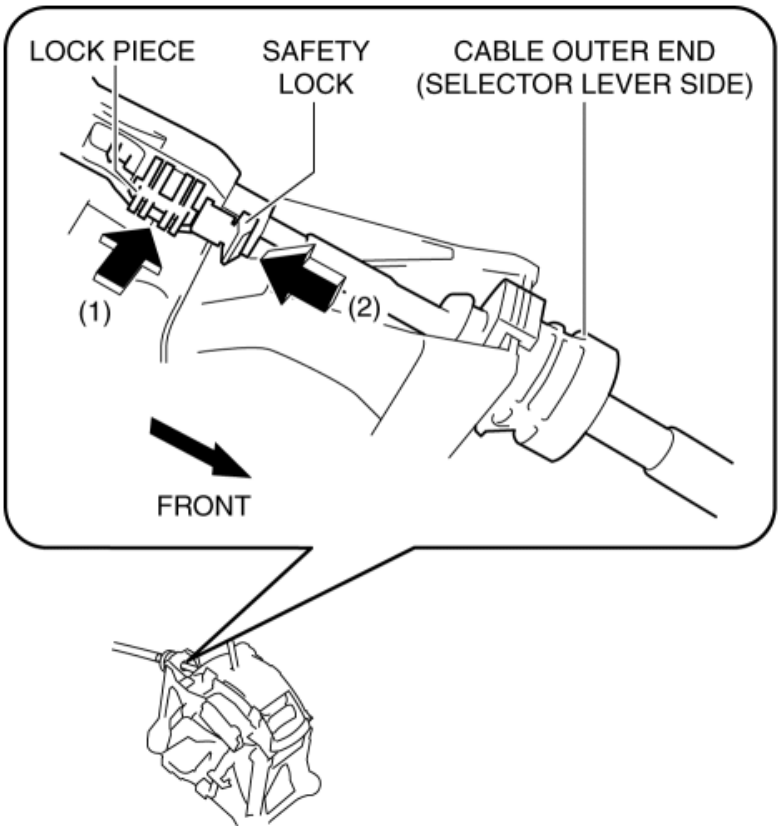

Cable Outer End (Transaxle Side) Installation Note

1. Assemble the cable outer end (transaxle side) to the bracket so that the marking is in the area of the arrow shown in the figure.

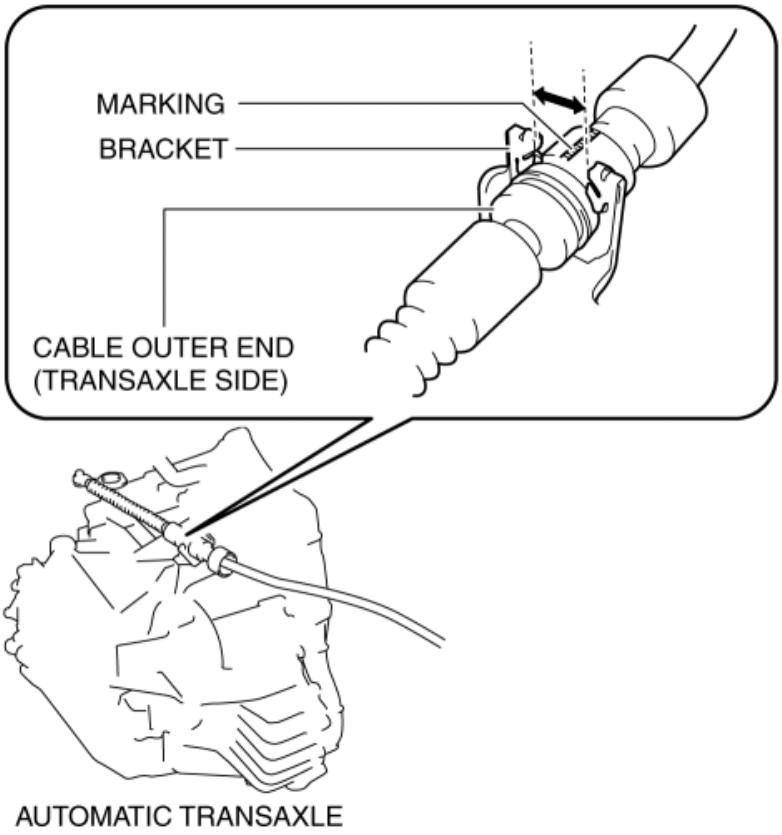

2014 - Mazda3 - Transmission/Transaxle

SELECTOR LEVER INSPECTION

1. Switch the ignition ON (engine off or on).
2. Perform the following procedures to inspect the selector lever.
   - If there is any malfunction, adjust the selector cable. (See **AUTOMATIC TRANSAXLE SHIFT MECHANISM REMOVAL/INSTALLATION**.)

   a. Verify that the selector lever can be operated as shown in the figure.

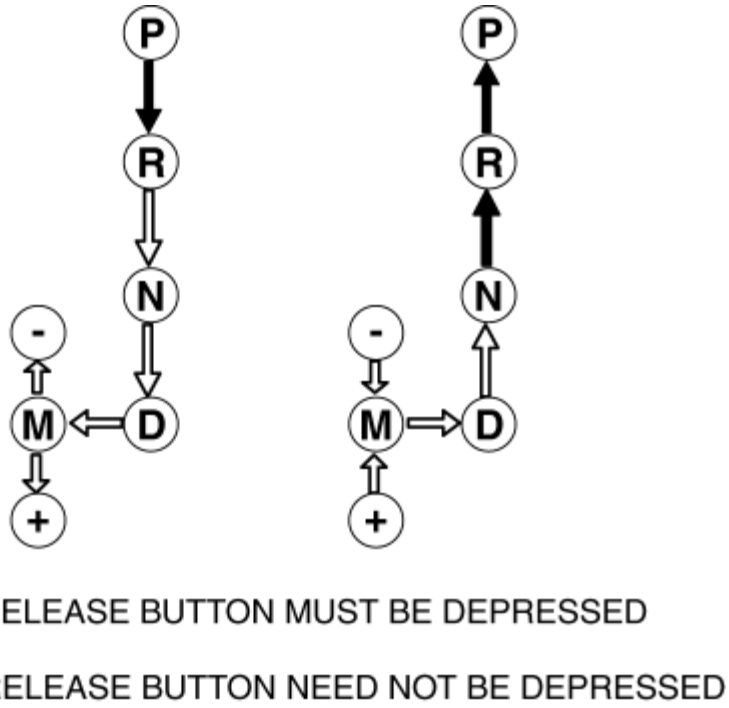

   b. Verify that the selector lever can be operated smoothly and moderately.

2014 - Mazda3 - Transmission/Transaxle

SHIFT-LOCK SYSTEM INSPECTION

Shift-Lock System Inspection

1. Switch the ignition ON (engine off).
2. Shift the selector lever to the P position.
3. Verify that the selector lever cannot be shifted from P to R position when the brake pedal is released.
    - If it can be verified, go to the next step.
    - If not as verified, inspect the following parts:
        - Shift-lock solenoid (See **Shift-Lock System Inspection**.)
        - Not P position switch (See **NOT P POSITION SWITCH INSPECTION**.)
        - Brake switch (See **BRAKE PEDAL INSPECTION**.)
        - Start stop unit (See **START STOP UNIT INSPECTION**.)
        - PCM (See **PCM INSPECTION [SKYACTIV-G 2.0, SKYACTIV-G 2.5]**.)
4. Verify that the selector lever can be shifted from P to R position when the brake pedal is depressed.
    - If it can be verified, go to the next step.
    - If not as verified, inspect the following parts:
        - Shift-lock solenoid (See **Shift-Lock System Inspection**.)
        - Not P position switch (See **NOT P POSITION SWITCH INSPECTION**.)
        - Brake switch (See **BRAKE PEDAL INSPECTION**.)
        - Start stop unit (See **START STOP UNIT INSPECTION**.)
        - PCM (See **PCM INSPECTION [SKYACTIV-G 2.0, SKYACTIV-G 2.5]**.)

Shift-Lock Solenoid Inspection

NOTE:

- The shift-lock solenoid is built into the selector lever component.

1. Disconnect the negative battery cable. (See **NEGATIVE BATTERY CABLE DISCONNECTION/CONNECTION [SKYACTIV-G 2.0, SKYACTIV-G 2.5]**.)

2. Perform the following procedure to remove the selector lever knob.

NOTE:

- If the servicing is difficult, release the shift lock manually and shift the selector lever to the N position.

a. Insert the tool (width: **6 mm {0.2 in} or less**, thickness: **1 mm {0.04 in} or less**) as shown in the figure.

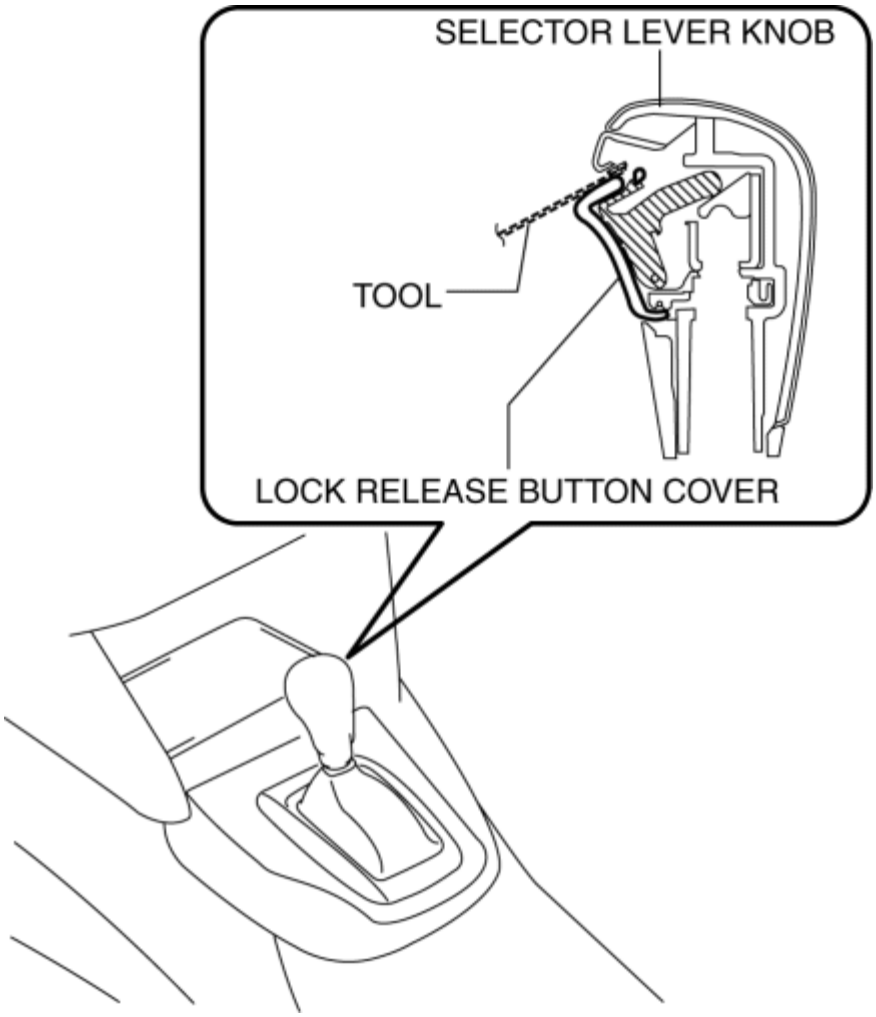

b. Move the tool in the direction of arrow (1) in the figure and detach the hook. Move the lock release button cover in the direction of arrow (2) in the figure and remove it.

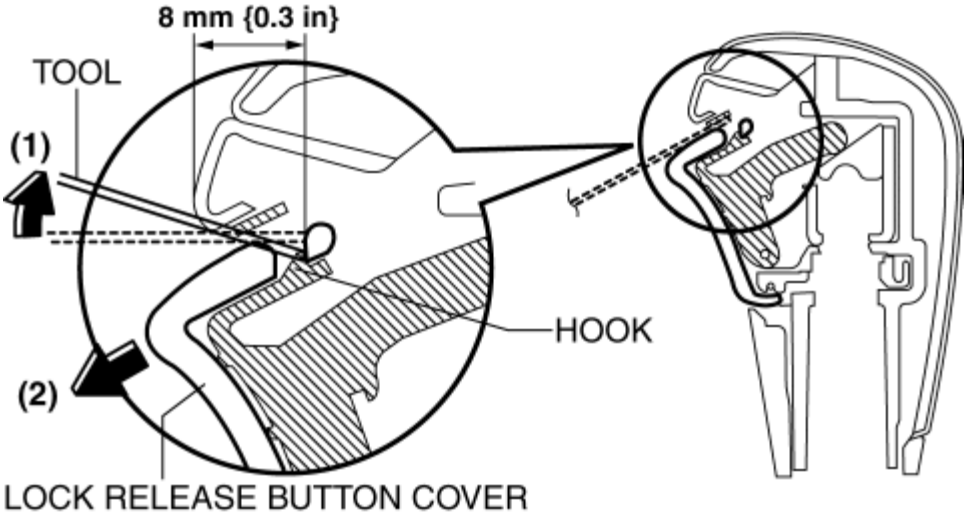

c. Remove the spring.

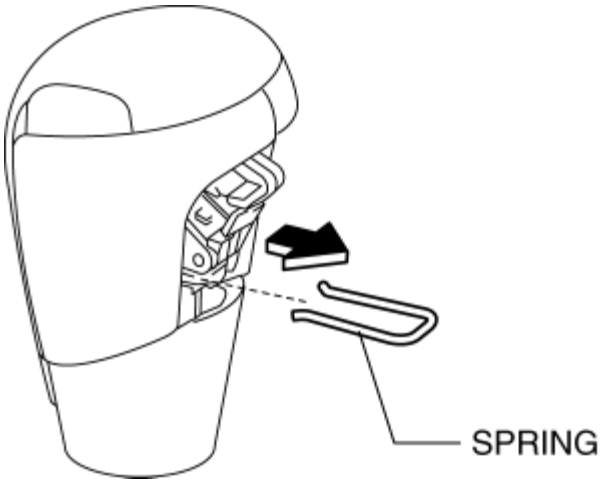

d. Remove the selector lever knob.

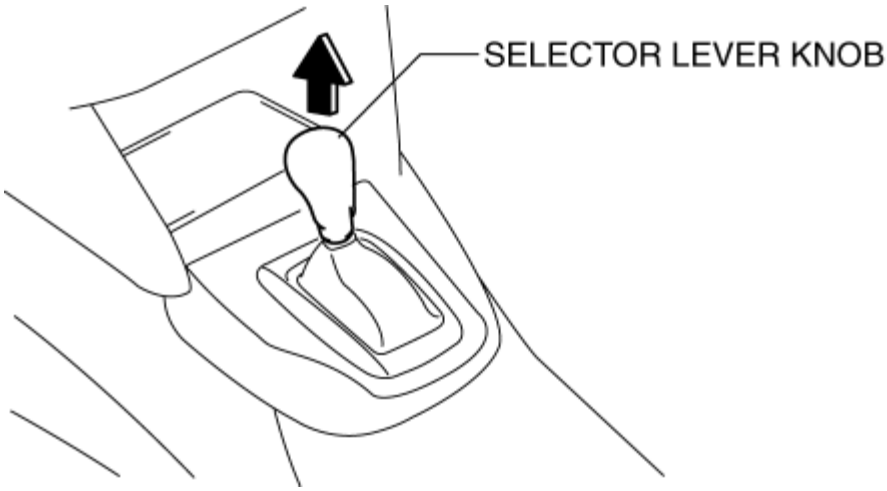

3. Remove the front console. (See **FRONT CONSOLE REMOVAL/INSTALLATION**.)

4. Reconnect the negative battery cable. (See **NEGATIVE BATTERY CABLE DISCONNECTION/CONNECTION [SKYACTIV-G 2.0, SKYACTIV-G 2.5]**.)

5. Verify that the voltages of each of the selector lever component terminals are as indicated in the table.

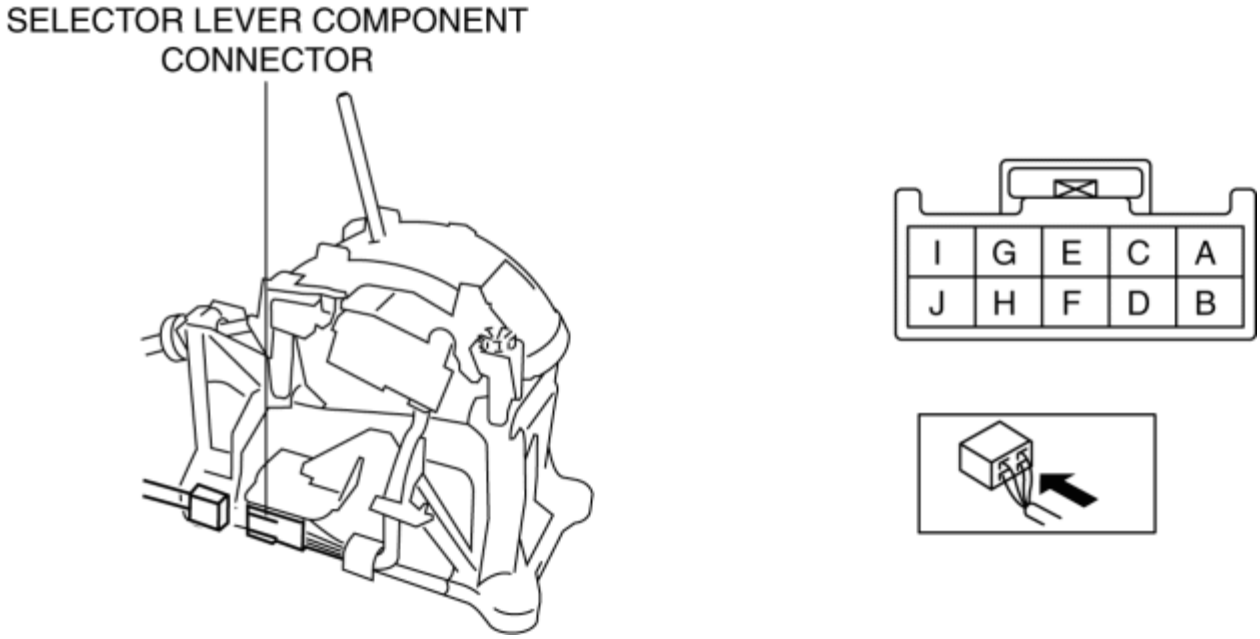

Shift-lock solenoid specification

Terminal	Connected to	Test condition	Voltage (V)
A	IG1 relay	Ignition switched ON (engine on)	B+
		Except above	Below 1.0
H	Start stop unit	Under any condition	Below 1.0

- If the voltage is not as indicated in the table, repair or replace the related wiring harness.
- If the voltage can be verified as indicated in the table, replace the selector lever component. (See **AUTOMATIC TRANSAXLE SHIFT MECHANISM REMOVAL/INSTALLATION**.)

Shift-lock Override Button Inspection

1. Switch the ignition to off.

2. Verify that the selector lever is in the P position.

3. Without the brake pedal depressed, verify that the selector lever cannot be shifted from the P position.

4. Remove the emergency override hole cover using a tape-wrapped flathead screwdriver.

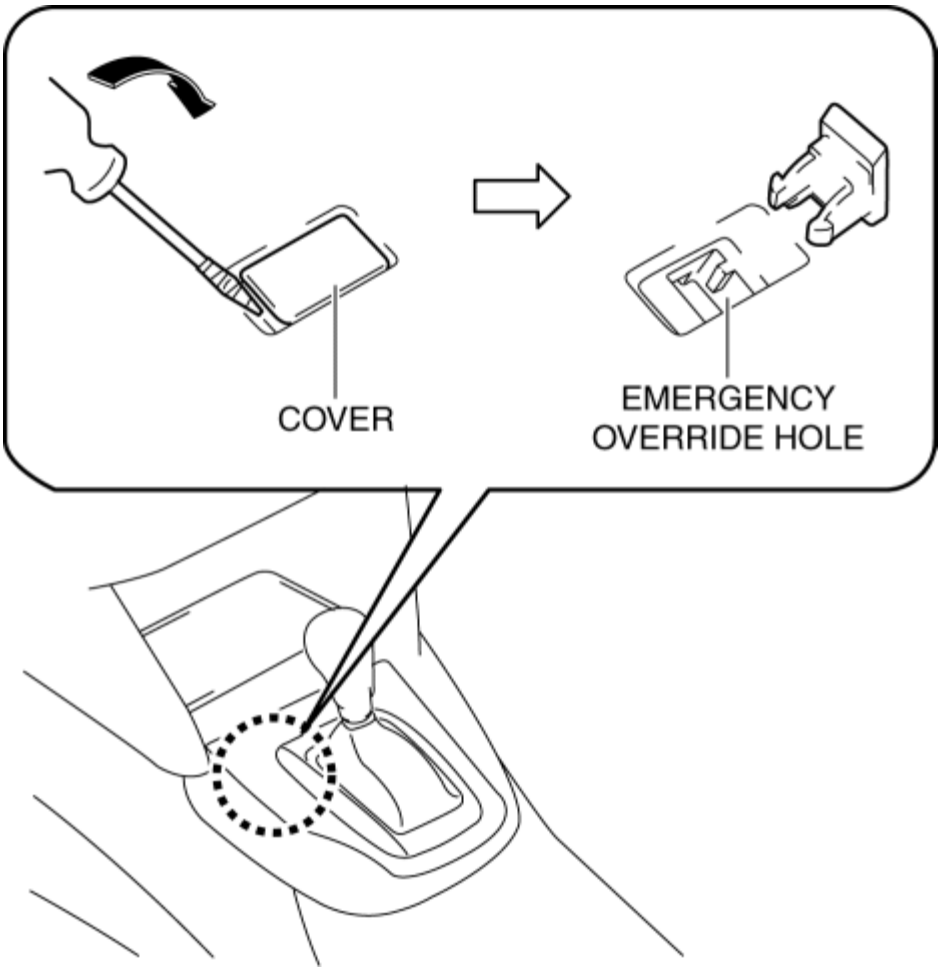

5. Insert the flathead screwdriver into the emergency override hole and push it down.

6. Verify that the selector lever can be shifted from the P position.

- If not as verified, replace the selector lever. (See **AUTOMATIC TRANSAXLE SHIFT MECHANISM REMOVAL/INSTALLATION**.)

2014 - Mazda3 - Transmission/Transaxle

NOT P POSITION SWITCH INSPECTION

NOTE:

- The not P position switch is built into the selector lever component.

1. Disconnect the negative battery cable. (See **NEGATIVE BATTERY CABLE DISCONNECTION/CONNECTION [SKYACTIV-G 2.0, SKYACTIV-G 2.5]**.)

2. Perform the following procedure to remove the selector lever knob.

NOTE:

- If the servicing is difficult, release the shift lock manually and shift the selector lever to the N position.

a. Insert the tool (width: **6 mm {0.2 in} or less**, thickness: **1 mm {0.04 in} or less**) as shown in the figure.

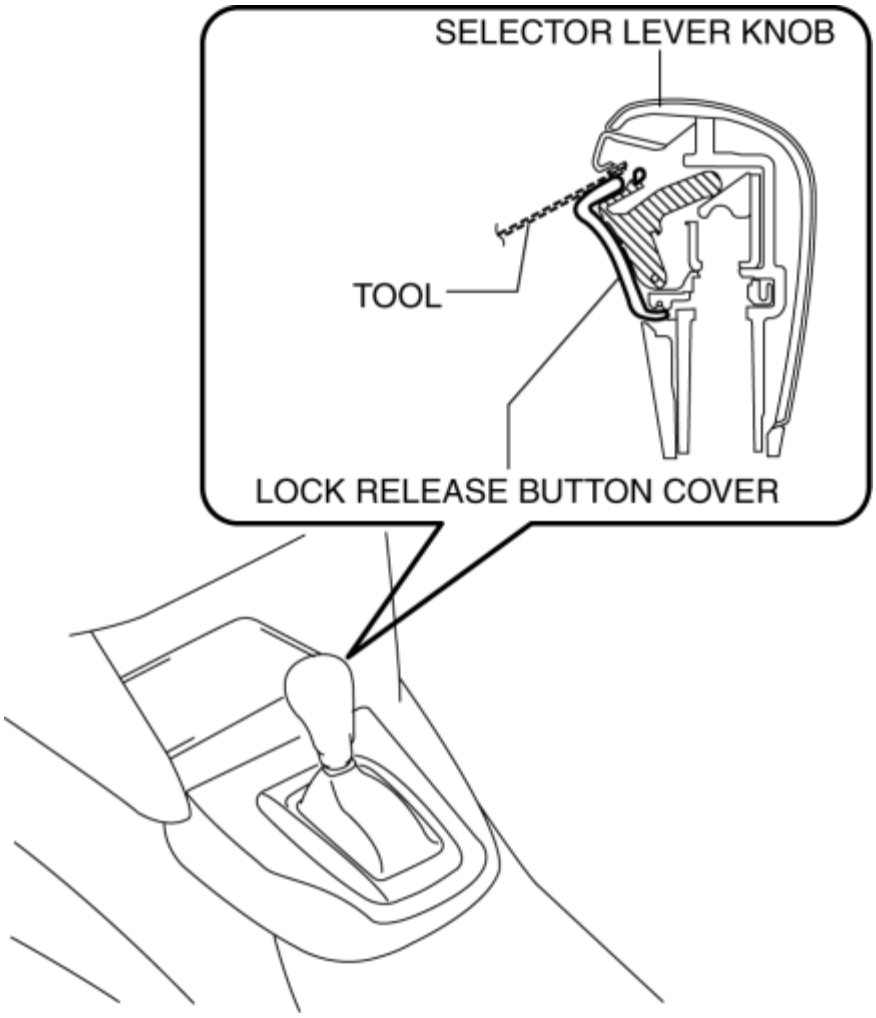

b. Move the tool in the direction of arrow (1) in the figure and detach the hook. Move

the lock release button cover in the direction of arrow (2) in the figure and remove it.

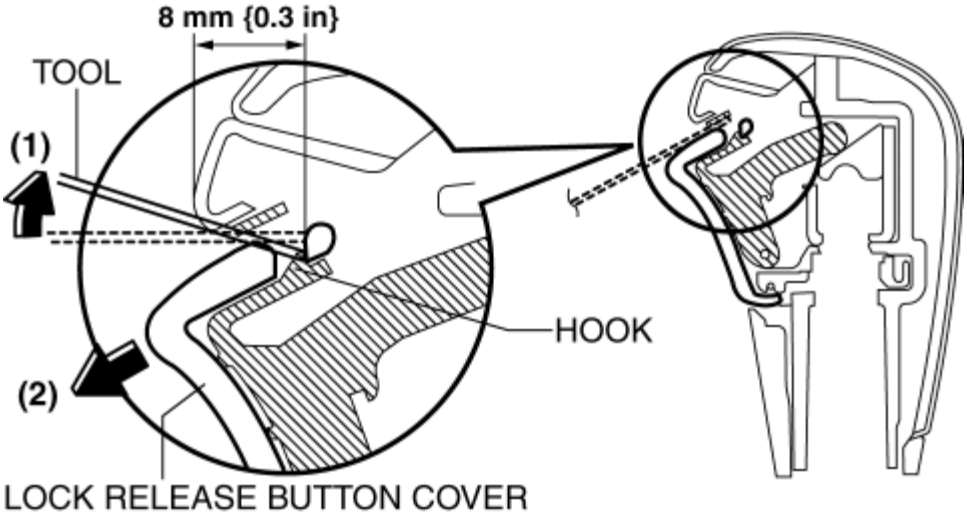

c. Remove the spring.

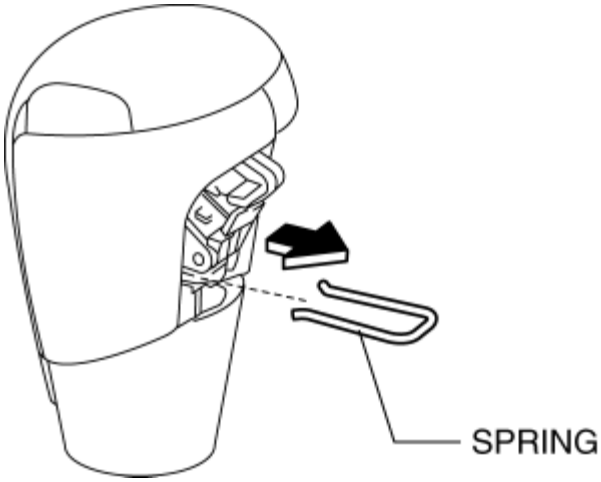

d. Remove the selector lever knob.

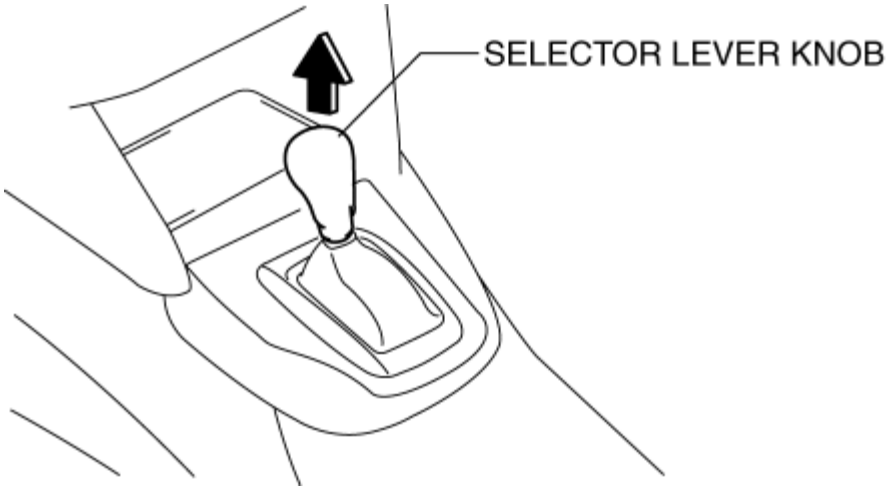

3. Remove the front console. (See **FRONT CONSOLE REMOVAL / INSTALLATION**.)

4. Disconnect the selector lever component connector.

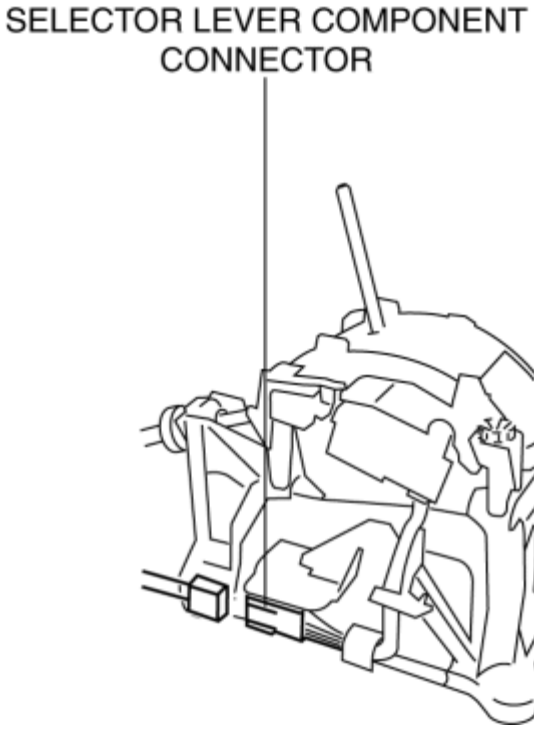

5. Verify that the continuity between selector lever component terminals B and I.

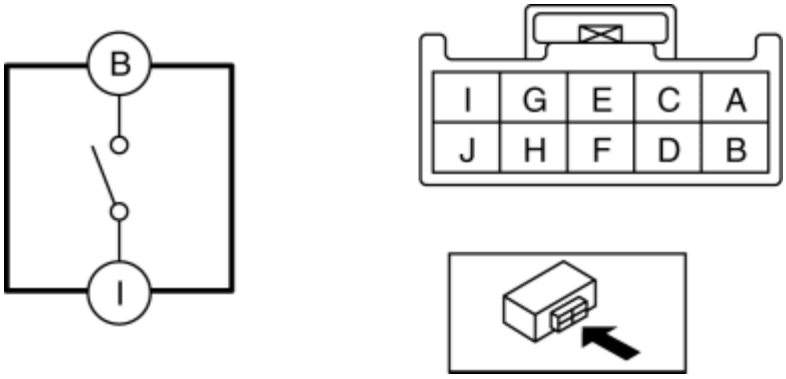

- If not as verified, replace the selector lever component. (See **AUTOMATIC TRANSAXLE SHIFT MECHANISM REMOVAL/INSTALLATION**.)

Not P position switch specification

Test condition	Continuity
Selector lever is in the P position.	No continuity
Selector lever is not in the P position.	Continuity

2014 - Mazda3 - Transmission/Transaxle

TRANSMISSION/TRANSAXLE TECHNICAL DATA

Clutch [C66M-R]

Item	Specification
Clutch fluid	SAE J1703 or FMVSS116 DOT-3
Clutch pedal height (reference value)	156 mm {6.14 in}
Clutch pedal free play (reference value)	10 mm {0.39 in} or less
Clutch pedal full stroke (reference value)	141 mm {5.55 in}
Distance A, from clutch disengagement point to floor covering (reference value)	63 mm {2.5 in} or more
Clutch cover diaphragm spring fingers maximum depth	0.6 mm {0.02 in}
Maximum clearance of flatness of the pressure plate	0.3 mm {0.01 in}
Clutch cover diaphragm spring fingers maximum height difference	1.0 mm {0.039 in}
Minimum clutch disc thickness	0.3 mm {0.01 in}
Maximum clutch disc runout	0.7 mm {0.03 in}
Flywheel maximum runout	0.1 mm {0.004 in}

Manual Transaxle [C66M-R]

Item		Specification
Manual transaxle oil	Grade	API service GL-4
	Viscosity	SAE 75W-80
	Capacity (approx. quantity)	1.70 L {1.80 US qt, 1.50 Imp qt}

Automatic Transaxle [FW6A-EL]

Item		Specification
ATF	Type	ATF FZ
	Capacity (approx. quantity)	7.8 L {8.2 US qt, 6.9 Imp qt}
	Added amount if ATF is drained from drain plug (approx. quantity)	3.5—4.9 L {3.7—5.1 US qt, 3.1—4.3 Imp qt}

Line pressure

Measurement conditions		Specification (kPa {kgf/cm^2, psi})
Idling	R position	500—700 {5.10—7.13, 72.6—101.0}
	D and M (1GR) position	330—470 {3.37—4.79, 47.9—68.1}
Stalling	R position	1,790—2,100 {18.26—21.41, 259.7—304.5}
	D and M (1GR) position	970—1,170 {9.90—11.93, 141.0—169.6}

Stall speed

Measurement conditions	Specification (rpm)
R position	1,700—2,200
D position	1,900—2,600
M position	

Time lag

Measurement conditions	Specification (s)
N to D selected	0.4—0.7
N to R selected	

< Previous

2014 - Mazda3 - Transmission/Transaxle

TRANSMISSION/TRANSAXLE SST

1: Mazda SST number

2: Global SST number

Example

1:49 UN30 3009 2:303-009 Crankshaft damper remover	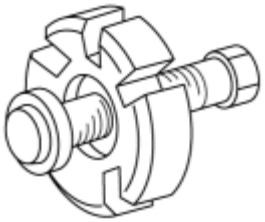

Clutch [C66M-R]

1:49 E011 1A0 2: – Ring gear brake set	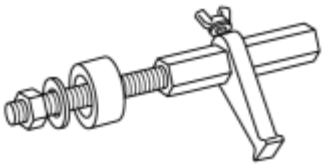	1:49 SE01 310A 2: – Clutch disc center tool	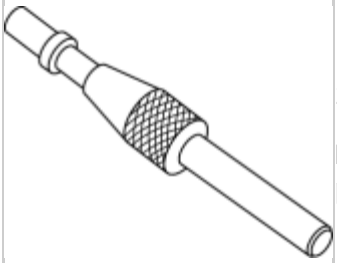	1:49 1285 071 2: – Bearing puller	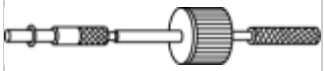

Manual Transaxle [C66M-R]

1:49 UN30		1:49		1:49	

3050 2: 303-050 Engine lifting brackets	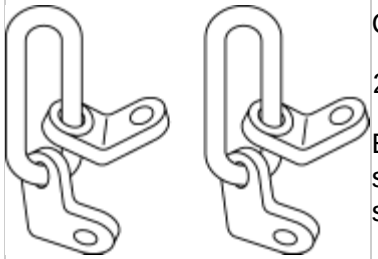	C017 5A0 2: – Engine support set	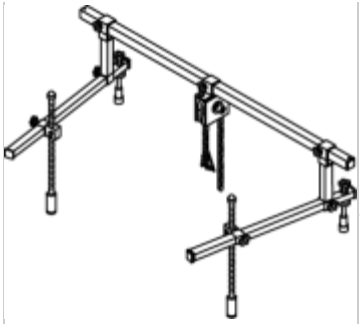	L017 5A0 2: – Support hanger	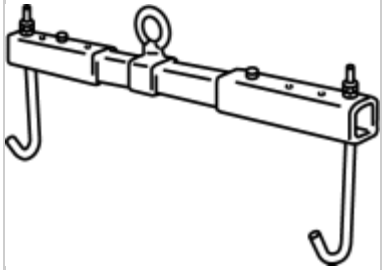
1:49 G030 797 2: – Handle (Part of 49 G030 795)	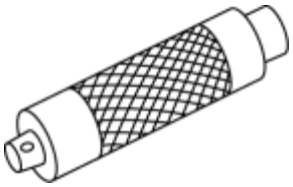	1:49 U027 003 2: – Oil Seal Installer	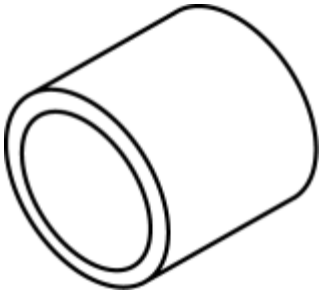	–	

Automatic Transaxle [FW6A-EL]

1:49 D019 910 2: – Adapter (Part of 49 D019 9A2)	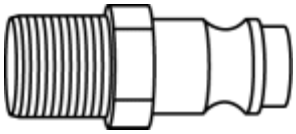	1:49 D019 911 2: – Adapter (Part of 49 D019 9A2)	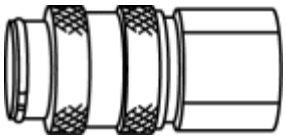	1:49 D019 913 2: – Adapter (Part of 49 D019 9A2)	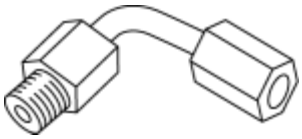
1:49 D019 909 2: – Hose (Part of 49 D019 9A2)		1:49 D019 908 2: – Gauge (Part of 49 D019 9A2)		1:49 D019 907 2: – Oil pressure gauge (Part of 49 D019 9A2)	
1:49 UN30 3050		1:49 C017 5A0		1:49 L017 5A0	

2: 303-050 Engine lifting brackets	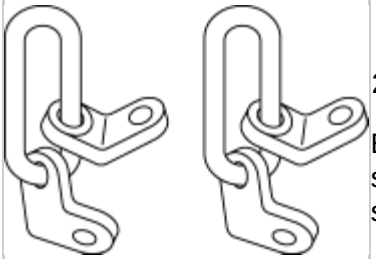	2: – Engine support set	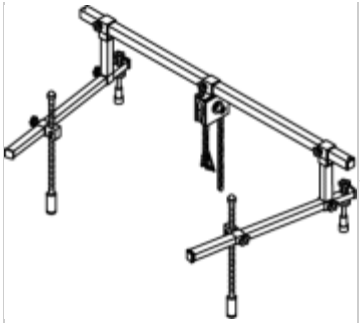	2: – Support hanger	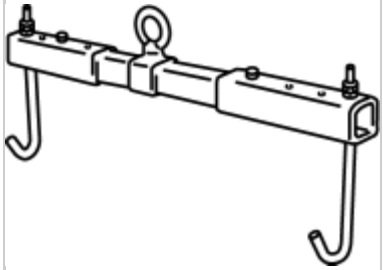
1:49 E011 1A0 2: – Ring gear brake set	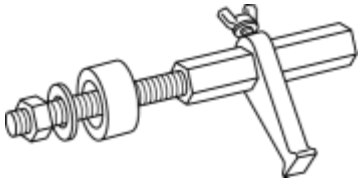	1:49 G030 797 2: – Handle (Part of 49 G030 795)	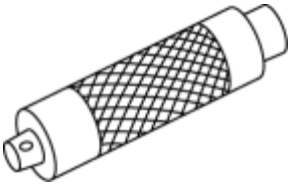	1:49 U027 003 2: – Oil Seal Installer	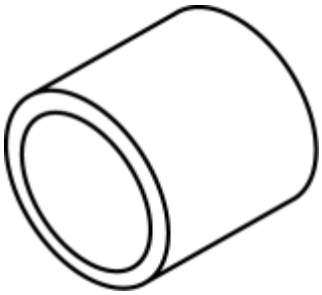
1:49 G030 796 2: – Body (Part of 49 G030 795)		1:49 F027 003 2: – Handle	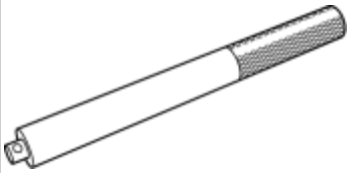	1:49 U034 204 2: – Dust boot installer	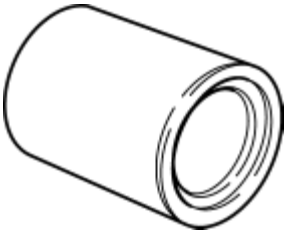

< Previous

Next >

2014 - Mazda3 - Steering

ELECTRIC POWER STEERING (EPS) SYSTEM WIRING DIAGRAM

ELECTRIC POWER STEERING (EPS) SYSTEM WIRING DIAGRAM

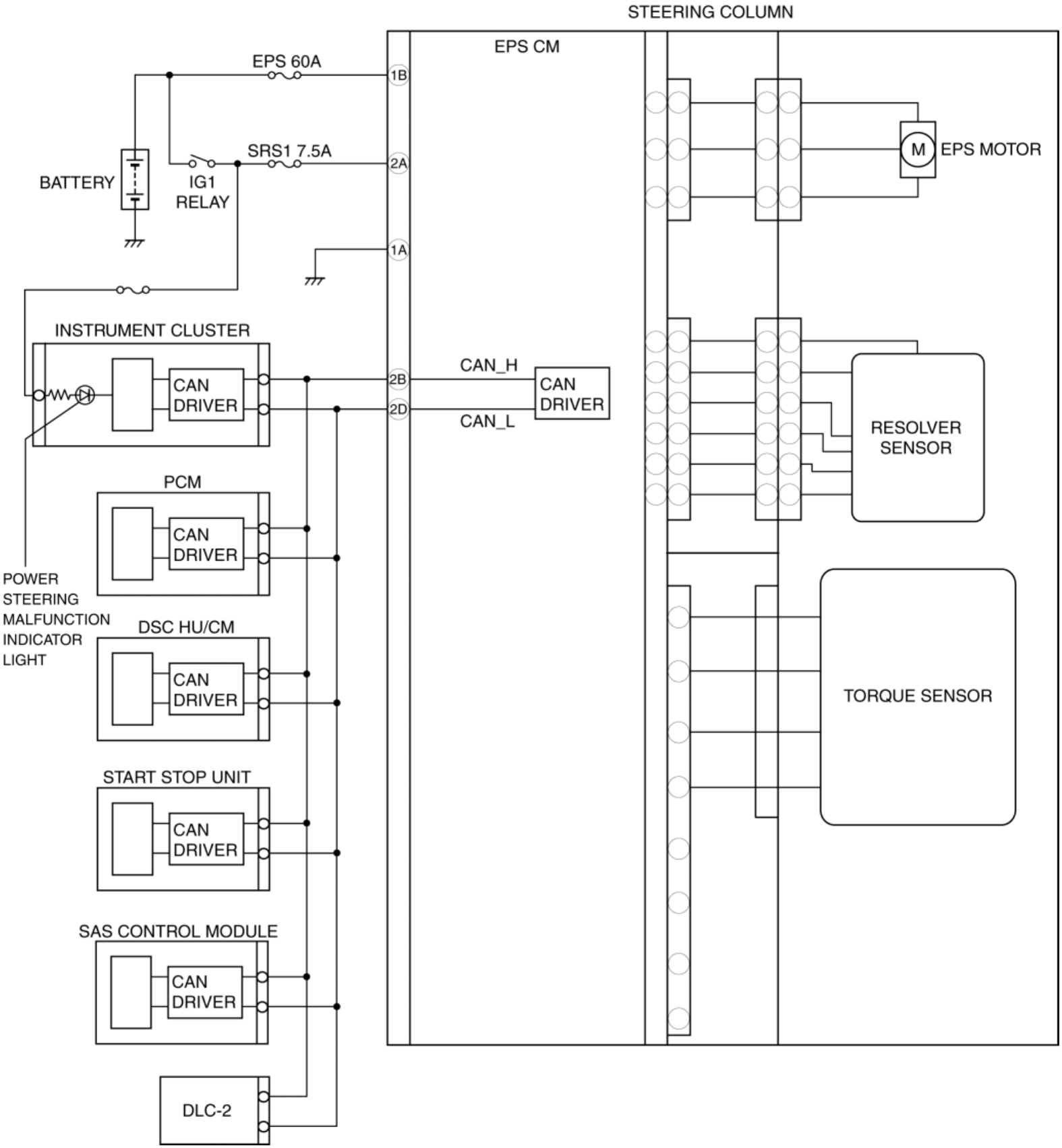

Next >

2014 - Mazda3 - Steering

FOREWORD

- If there is any vehicle malfunction complaint lodged by a customer, perform malfunction diagnosis according to the troubleshooting procedure.

Troubleshooting Procedure

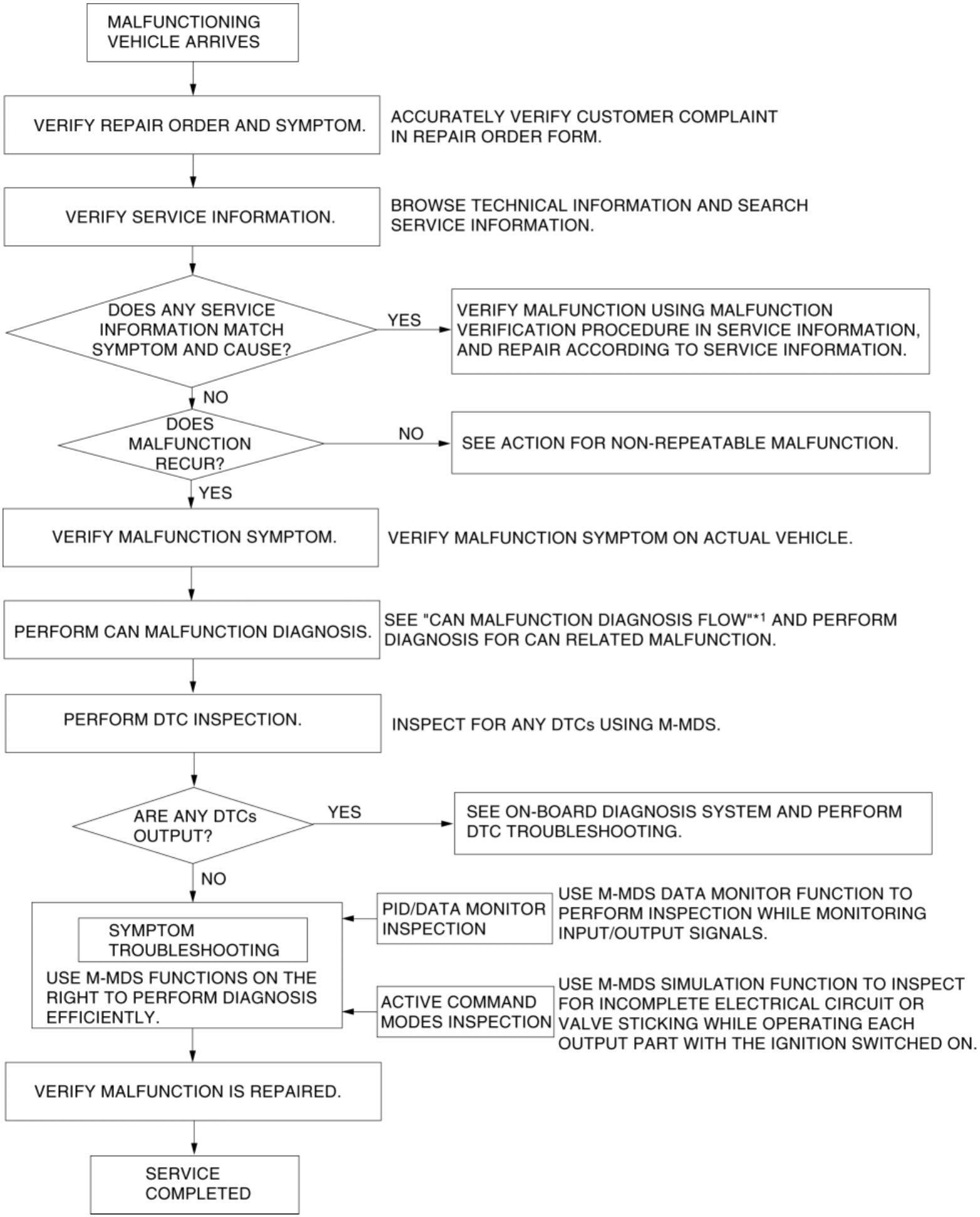
MALFUNCTIONING VEHICLE ARRIVES
VERIFY REPAIR ORDER AND SYMPTOM.
ACCURATELY VERIFY CUSTOMER COMPLAINT IN REPAIR ORDER FORM.
VERIFY SERVICE INFORMATION.
BROWSE TECHNICAL INFORMATION AND SEARCH SERVICE INFORMATION.
DOES ANY SERVICE INFORMATION MATCH SYMPTOM AND CAUSE?
YES
VERIFY MALFUNCTION USING MALFUNCTION VERIFICATION PROCEDURE IN SERVICE INFORMATION, AND REPAIR ACCORDING TO SERVICE INFORMATION.
NO
DOES MALFUNCTION RECUR?
NO
SEE ACTION FOR NON-REPEATABLE MALFUNCTION.
YES
VERIFY MALFUNCTION SYMPTOM.
VERIFY MALFUNCTION SYMPTOM ON ACTUAL VEHICLE.
PERFORM CAN MALFUNCTION DIAGNOSIS.
SEE "CAN MALFUNCTION DIAGNOSIS FLOW"*1 AND PERFORM DIAGNOSIS FOR CAN RELATED MALFUNCTION.
PERFORM DTC INSPECTION.
INSPECT FOR ANY DTCs USING M-MDS.
ARE ANY DTCs OUTPUT?
YES
SEE ON-BOARD DIAGNOSIS SYSTEM AND PERFORM DTC TROUBLESHOOTING.
NO
SYMPTOM TROUBLESHOOTING
USE M-MDS FUNCTIONS ON THE RIGHT TO PERFORM DIAGNOSIS EFFICIENTLY.
PID/DATA MONITOR INSPECTION
USE M-MDS DATA MONITOR FUNCTION TO PERFORM INSPECTION WHILE MONITORING INPUT/OUTPUT SIGNALS.
ACTIVE COMMAND MODES INSPECTION
USE M-MDS SIMULATION FUNCTION TO INSPECT FOR INCOMPLETE ELECTRICAL CIRCUIT OR VALVE STICKING WHILE OPERATING EACH OUTPUT PART WITH THE IGNITION SWITCHED ON.
VERIFY MALFUNCTION IS REPAIRED.
SERVICE COMPLETED

*1

Refer to MULTIPLEX COMMUNICATION SYSTEM. (See CONTROLLER AREA NETWORK (CAN) MALFUNCTION DIAGNOSIS FLOW.)

Action for non-repeatable malfunction

- If the malfunction does not recur, verify the malfunction cause by performing the following actions:

1. Verify that a DTC has been recorded in the memory using the M-MDS. (See **ELECTRIC POWER STEERING (EPS) ON-BOARD DIAGNOSIS**.)

2. Perform a simulation test in the simulation mode based on the repair order form, record the data at that time, and detect the malfunction cause.

3. Shake the wiring harness or connector of the electrical component which is suspected to be the cause of the malfunction, and inspect for the occurrence of any malfunction or DTCs.

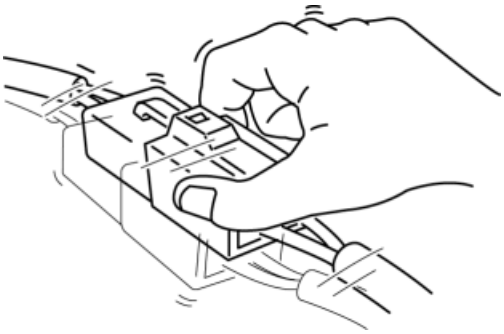

4. Inspect the female terminals for poor connection.

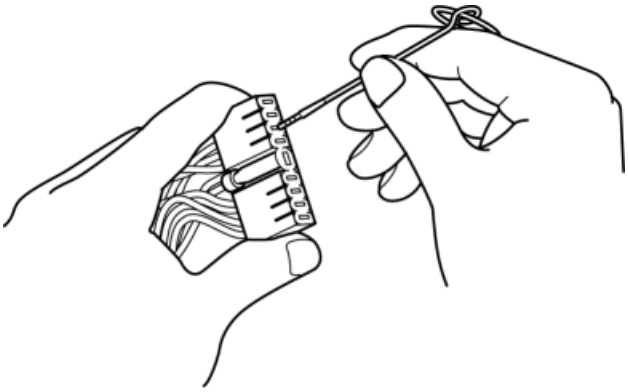

2014 - Mazda3 - Steering

ELECTRIC POWER STEERING (EPS) ON-BOARD DIAGNOSIS

On-Board Diagnostic (OBD) Test Description

- The OBD test inspects the integrity and function of the EPS and outputs the results when requested by the specific tests.
- On-board diagnostic test also:
    - Provides a quick inspection of the EPS usually performed at the start of each diagnostic procedure.
    - Provides verification after repairs to ensure that no other faults occurred during service.
- The OBD test is divided into 2 tests:
    - Read/clear diagnostic results, PID monitor and record.

Read/clear diagnostic results

- This function allows reading or clearing of DTCs in the EPS CM memory.

PID/Data monitor and record

- This function allows access of certain data values, input signals, calculated values, and system status information.

Reading DTCs Procedure

CMDTC self test

1. Connect the M-MDS (IDS) to the DLC-2.
2. After the vehicle is identified, select the following items from the initialization screen of the IDS.
    a. Select “Self Test”.
    b. Select “All CMDTCs”.
3. Verify the DTC according to the directions on the screen.
    - If any DTCs are displayed, perform troubleshooting according to the corresponding DTC inspection after recording the snapshot data.
4. After completion of repairs, clear all DTCs stored in the EPS. (See **Clearing DTCs Procedure**.)

ODDTC self test

1. Connect the M-MDS (IDS) to the DLC-2.
2. After the vehicle is identified, select the following items from the initialization screen of the IDS.
    a. Select “Self Test”.
    b. Select “Modules”.
    c. Select “EPS”.
3. Verify the DTC according to the directions on the screen.
    - If any DTCs are displayed, perform troubleshooting according to the corresponding DTC inspection after recording the snapshot data.
4. After completion of repairs, clear all DTCs stored in the EPS. (See **Clearing DTCs Procedure**.)

Snapshot Data Access Procedure

1. Connect the M-MDS (IDS) to the DLC-2.
2. After the vehicle is identified, select the following items from the initialization screen of the IDS.
    a. Select “Self Test”.
    b. Select “Modules”.
    c. Select “EPS”.
3. Then, select the “Retrieve CMDTCs” and perform procedures according to directions on the IDS screen.
4. Retrieve the freeze frame PID data according to the directions on the IDS screen.

NOTE:

- Snapshot data appears at the top of the help screen when the displayed DTC is selected.
- Snapshot data stores the currently detected DTC data.

Clearing DTCs Procedure

CMDTC clearing procedure

1. Connect the M-MDS (IDS) to the DLC-2.
2. After the vehicle is identified, select the following items from the initialization screen of the IDS.
    a. Select “Self Test”.
    b. Select “All CMDTCs”.
3. Verify the DTC according to the directions on the screen.
4. Press the clear button on the DTC screen to clear the DTC.
5. Switch the ignition OFF.
6. Switch the ignition ON (engine off) and wait for **5 s or more**.

7. Perform DTC inspection. (See **Reading DTCs Procedure**.)
8. Verify that no DTCs are displayed.

ODDTC clearing procedure

1. Connect the M-MDS (IDS) to the DLC-2.
2. After the vehicle is identified, select the following items from the initialization screen of the IDS.
   a. Select “Self Test”.
   b. Select “Modules”.
   c. Select “EPS”.
3. Verify the DTC according to the directions on the screen.
4. Press the clear button on the DTC screen to clear the DTC.
5. Switch the ignition OFF.
6. Switch the ignition ON (engine off) and wait for **5 s or more**.
7. Perform DTC inspection. (See **Reading DTCs Procedure**.)
8. Verify that no DTCs are displayed.

PID/Data Monitor and Record Procedure

1. Connect the M-MDS (IDS) to the DLC-2.
2. After the vehicle is identified, select the following items from the initialization screen of the IDS.
   a. Select “DataLogger”.
   b. Select “Modules”.
   c. Select “EPS”.
3. Select the applicable PID from the PID table.
4. Verify the PID data according to the directions on the screen.

NOTE:

- The PID data screen function is used for monitoring the calculated value of input/output signals in the module. Therefore, if the monitored value of the output parts is not within the specification, it is necessary to inspect the monitored value of input parts corresponding to the applicable output part control. In addition, because the system does not display an output part malfunction as an abnormality in the monitored value, it is necessary to inspect the output parts individually.
- When detecting DTCs, PIDs related to a malfunctioning system may not display even if the module is normal. Therefore, if a PID is not displayed, it is necessary to verify the DTC, perform malfunction diagnosis of the DTC that was detected, and do repairs.

DTC Table

×: Applicable

—: Not applicable

DTC M-MDS	Power steering malfunction indicator light illumination status	Diagnosis system component	Fail-safe	Drive cycle	Self test type*1	Memory function	Page
C200B:02	Illuminated	Torque sensor	×	—	C, D	×	(See **DTC C200B:02/C200B:16/C200B:62/C200B:64/C200B:85**.)
C200B:16	Illuminated	Torque sensor	×	—	C, D	×	
C200B:1C	Illuminated	Torque sensor	×	—	C, D	×	(See **DTC C200B:1C/C200C:1C**.)
C200B:62	Illuminated	Torque sensor	×	—	C, D	×	(See **DTC C200B:02/C200B:16/C200B:62/C200B:64/C200B:85**.)
C200B:64	Illuminated	Torque sensor	×	—	C, D	×	
C200B:85	Illuminated	Torque sensor	×	—	C, D	×	
C200C:1C	Illuminated	Torque sensor	×	—	C, D	×	(See **DTC C200B:1C/C200C:1C**.)
C200D:1C	Flashes/Illuminated*2	Resolver sensor	×	—	C, D	×	(See **DTC C200D:1C/C200D:64/U2011:19/U2011:1C/U2011:62/U2011:72/U2011:92**.)
C200D:64	Illuminated	Resolver sensor	×	—	C, D	×	
U0001:88	Illuminated	CAN system communication error	×	—	C, D	×	(See **DTC U0001:88/U0100:00/U0121:00/U0155:00/U0214:00**.)
U0100:00	Illuminated	Communication error to PCM	×	—	C, D	×	
U0121:00	—	Communication error to DSC CM	×	—	C, D	×	
U0155:00	—	Communication error to instrument cluster	×	—	C, D	×	
U0214:00	—	Communication error to start stop unit	×	—	C, D	×	

U0338:00	—	Signal error from start stop unit	×	—	C, D	×	(See **DTC U0338:00/U0515:00**.)
U0401:00	Illuminated	Signal (vehicle speed) error from PCM	×	—	C, D	×	(See **DTC U0401:00**.)
	—	Signal (engine speed) error from PCM	×	—	C, D	×	
U0415:00	—	Signal error from DSC CM	×	—	C, D	×	(See **DTC U0415:00**.)
U0423:00	—*3	Signal (engin switch status) error from instrument cluster	×	—	C, D	×	(See **DTC U0423:00**)
U0515:00	—	Signal error from start stop unit	×	—	C, D	×	(See **DTC U0338:00/U0515:00**.)
U2011:19	Illuminated	EPS motor	×	—	C, D	×	(See **DTC C200D:1C/C200D:64/U2011:19/U2011:1C/U2011:62/U2011:72/U2011:92**.)
U2011:1C	Illuminated	EPS motor	×	—	C, D	×	
U2011:62	Illuminated	EPS motor	×	—	C, D	×	
U2011:72	Illuminated	EPS motor	×	—	C, D	×	
U2011:92	Illuminated	EPS motor	×	—	C, D	×	
U2300:54	—	EPS configuration	×	—	C, D	×	(See **DTC U2300:54/U2300:55/U2300:56**.)
U2300:55	Illuminated	EPS configuration	×	—	C, D	×	
U2300:56	—	EPS configuration	×	—	C, D	×	
U3000:16	Illuminated	EPS CM	×	—	C, D	×	
U3000:1C	Illuminated	EPS CM	×	—	C, D	×	
U3000:28	Illuminated	EPS CM	×	—	C, D	×	

U3000:41	Illuminated	EPS CM	×	—	C, D	×	(See **DTC U3000:16/U3000:1C/U3000:28/U3000:41/U3000:46/U3000:47/U3000:49/U3000:61/U3000:73/U3000:96**.)
U3000:46	—	EPS CM	×	—	C, D	×	
U3000:47	Illuminated	EPS CM	×	—	C, D	×	
U3000:49	Illuminated	EPS CM	×	—	C, D	×	
U3000:4B	—	EPS CM	×	—	C, D	×	(See **DTC U3000:4B**.)
U3000:61	Illuminated	EPS CM	×	—	C, D	×	
U3000:73	Illuminated	EPS CM	×	—	C, D	×	(See **DTC U3000:16/U3000:1C/U3000:28/U3000:41/U3000:46/U3000:47/U3000:49/U3000:61/U3000:73/U3000:96**.)
U3000:96	Illuminated	EPS CM	×	—	C, D	×	
U3003:16	Illuminated	Battery power supply	×	—	C, D	×	(See **DTC U3003:16**.)
U3003:17	Illuminated	Battery power supply	×	—	C, D	×	(See **DTC U3003:17**.)

*1 **C: CMDTC self test, D: ODDTC self test**

*2 **If the EPS CM detects an internal circuit malfunction in the resolver sensor, it flashes the power steering malfunction indicator light. At this time, if EPS system internal temperature increases, the assist force gradually weakens. Then if assist force decreases above the specified value, the power steering malfunction indicator light switches from flashing to illumination.**

*3 **If the EPS CM detects the signal that a engine speed is below the specified value, it illuminates the power steering malfunction indicator light.**

Fail-safe Function Table

DTC M-MDS	Fail-safe control status
C200B:02	Control disabled
C200B:16	Control disabled
C200B:1C	Control disabled

C200B:62	Control disabled
C200B:64	Control is maintained in the backup control
C200B:85	Control disabled
C200C:1C	Control disabled
C200D:1C	Control is maintained in the backup control and the power steering warning buzzer is sounded ▪ If EPS system internal temperature increases above the specified value, the EPS CM disables assistance and stops the power steering warning buzzer is sounded
C200D:64	Control disabled
U0001:88	Control enabled
U0100:00	Control is maintained by gradually changing the controlled vehicle speed and setting it to **100 km/h {62.1 mph}**
U0121:00	Control enabled
U0155:00	Control enabled
U0214:00	Control enabled
U0338:00	Control enabled
U0401:00	• Vehicle speed signal malfunction ▪ Control is maintained by gradually changing the controlled vehicle speed and setting it to **100 km/h {62.1 mph}** • Engine speed signal malfunction ▪ Control enabled
U0415:00	Control enabled
U0423:00	Control enabled ▪ If the EPS CM detects the signal that a engine speed is below the specified value, it disables assistance
U0515:00	Control enabled
U2011:19	Control disabled
U2011:1C	Control disabled
U2011:62	Control disabled

U2011:72	• An open circuit malfunction is detected in the one phase of the three-phase stator in the EPS motor ▪ Control is maintained in the backup control • Other malfunction detected in EPS motor internal circuit ▪ Control disabled
U2011:92	Control disabled
U2300:54	Control enabled
U2300:55	Control enabled
U2300:56	Control enabled
U3000:16	Control disabled
U3000:1C	Control disabled
U3000:28	Control disabled
U3000:41	Control disabled
U3000:46	Control is maintained in fail mode
U3000:47	Control disabled
U3000:49	Control disabled
U3000:4B	Control is maintained in fail mode
U3000:61	Control disabled
U3000:73	Control disabled
U3000:96	Control disabled
U3003:16	Control is maintained by gradually decreasing the motor control current However, control is inhibited if the power supply voltage is the specified value of less.
U3003:17	Control disabled

PID/DATA Monitor Table

NOTE:

- If the PID/data monitor value “STR_ANG” is inspected, perform the following procedure before inspecting.
    - Switch the ignition to OFF, and maintain this condition for **approx. 3 s**.
    - Set the vehicle wheels in the straight-ahead position.
    - Switch the ignition ON (engine off or on).

PID name (definition) M-MDS display	Unit/Operation	Operation Status (Reference)	Inspection item(s)	EPS control module terminal
CEN_TRQ_S	Nm	• Torque sensor neutral position: Near 0 Nm	• Steering column replacement (See **STEERING WHEEL AND COLUMN REMOVAL/INSTALLATION**.)	—
ECU_IN_TMP	°C, °F	• Displays temperature of board in EPS control module: -40°C—+215°C {-40°F—419°F}	• EPS CM replacement (See **STEERING WHEEL AND COLUMN REMOVAL/INSTALLATION**.)	—
ENG_RPM	RPM	• Engine stopped: 0 RPM • Engine rotating at **3,000 RPM**: 3,000 RPM	• PCM inspection (See **PCM INSPECTION [SKYACTIV-G 2.0, SKYACTIV-G 2.5]**.)	—
MT_CURRENT	A	• When not steered: Near 0 A • Steered: Changes to positive or negative	• EPS CM replacement (See **STEERING WHEEL AND COLUMN REMOVAL/INSTALLATION**.)	—
OH_CR_C	Yes/No	• Is the overheating prevention control (Complete) operating?	—	—
OH_CR_M	Yes/No	• Is the overheating prevention control (Middle) operating?	—	—
OH_HIST_C	Yes/No	• Has the overheating prevention control (Complete) operated before?	—	—
OH_HIST_M	Yes/No	• Has the overheating prevention control (Middle) operated before?	—	—
OH_IG_CNT_C	—	• History of overheating prevention control (Complete) • Number of times vehicle is driven (ignition switched ON (engine off or on)) after overheating prevention control operates	—	—

OH_IG_CNT_M	—	• History of overheating prevention control (Middle) • Number of times vehicle is driven (ignition switched ON (engine off or on)) after overheating prevention control operates	—	—
STR_AB_EST	°	• Steering wheel in neutral position (not turned): **0°** • Steered left: Changes to **0°—Positive** • Steered right: Changes to **0°—Negative** **NOTE:** • The signal displayed in this item is a estimated absolute steering angle signal output.	Perform the DTC inspection for the PCM, DSC HU/CM, and EPS CM. If a DTC is displayed after performing the DTC inspection for the PCM, DSC HU/CM, and EPS CM, repair the malfunctioning part according to the applicable DTC troubleshooting. (See **ON-BOARD DIAGNOSTIC TEST [SKYACTIV-G 2.0, SKYACTIV-G 2.5]**.) (See **ON-BOARD DIAGNOSIS [DYNAMIC STABILITY CONTROL (DSC)]**.) (See **EPS CONTROL MODULE INSPECTION**.) After performing the DTC inspection, perform the following procedures: • Switch the ignition off and maintain condition for approx. **3 s**. • Set the vehicle wheels straight-ahead. • Switch the ignition ON (engine off or on). If an abnormal value is indicated after verifying the value of the STR_ANG again, replace the EPS CM.	—
STR_ANG	°	• Steering wheel position when ignition is switched ON (engine off or on): **0°** • Steered left: Changes to **0°—Positive** • Steered right: Changes to **0°—Negative** **NOTE:** • The signal displayed in this item is a steering angle (relative angle) signal.		—
STR_ROT_SPD	°/s	• Not steered: Near 0 °/s • Steered: Changes according to steering speed	• EPS CM replacement (See **STEERING WHEEL AND COLUMN REMOVAL/INSTALLATION**.)	—
STR_TRQ_S_M	Nm	• Not steered: Near 0 Nm • Steered left: Changes to 0 Nm—Positive • Steered right: Changes to 0 Nm—Negative	• EPS CM replacement (See **STEERING WHEEL AND COLUMN REMOVAL/INSTALLATION**.)	—
STR_TRQ_S_S	Nm	• Not steered: Near 0 Nm • Steered left: Changes to 0 Nm—Positive • Steered right: Changes to 0 Nm—Negative	• EPS CM replacement (See **STEERING WHEEL AND COLUMN REMOVAL/INSTALLATION**.)	—
VPWR	V	• Engine stopped: Approx. **12 V** • Idling: Approx. **14 V**	• Battery inspection (See **BATTERY INSPECTION [SKYACTIV-G 2.0, SKYACTIV-G 2.5]**.) • Power supply circuit inspection (ignition switch, fuses)	1B

VSPD	KPH, MPH	• Vehicle stopped: 0 KPH, 0 MPH • Vehicle speed **20 km/h {12 mph}**: 20 KPH, 12 MPH	• PCM inspection (See **PCM INSPECTION [SKYACTIV-G 2.0, SKYACTIV-G 2.5]**.)	—

Snapshot Data Table

NOTE:

- Refer to PID monitor table for confirm the EPS system operation status while the EPS does not store the DTC. (See **PID/DATA Monitor Table**.)
- Snapshot data items are not displayed, according to detected DTC.

—: Not applicable

Snapshot data item	Unit	Data contents	Data read/use method	Corresponding data monitor items
AAT	°C, °F	Ambient air temperature	—	—
APP_STATUS	Accelerator Pedal Off/ Under 20%/ Over 20%/ FAIL	Accelerator pedal position	—	—
CEN_TRQ_S	Nm	Center value of torque sensor	—	CEN_TRQ_S
CFG_STATUS	Config Complete/ Not Configured/ Config Error	Instrument cluster configuration status	—	—
ECT_STATUS	Under 0 degrees C/ 0 - Under 80 degrees C/ Over 80 degrees C/ FAIL	Engine coolant temperature status	—	—
ECU_IN_TMP	°C, °F	ECU internal temperature	—	ECU_IN_TMP
ENG_RPM	RPM	Engine speed	—	ENG_RPM
			• The EPS CM constantly receives the power supply voltage value of the instrument cluster sent via CAN signal	

IC_VPWR	V	Instrument cluster power supply	from the instrument cluster. • If a DTC is detected, the EPS CM records the power supply voltage of the instrument cluster when the DTC was detected, and it is displayed in the M-MDS.	VPWR*[2]
IG-ON_TIMER	hh:mm:ss*[1]	Elapsed time since ignition was switched ON **NOTE:** • The instrument cluster records the elapsed time since the ignition was switched ON.	• The EPS CM constantly receives the elapsed time since the ignition was switched ON sent via CAN signal from the instrument cluster. • If a DTC is detected, the EPS CM records the elapsed time since the ignition was switched ON when the DTC was detected, and it is displayed in the M-MDS.	—
MT_CURRENT	A	Motor current	—	MT_CURRENT
OH_CR_C	No/Yes	Current complete overheat protection	—	OH_CR_C
OH_CR_M	No/Yes	Current middle overheat protection	—	OH_CR_M
OH_HIST_C	No/Yes	History of complete overheat protection	—	OH_HIST_C
OH_HIST_M	No/Yes	History of middle overheat protection	—	OH_HIST_M
OH_IG_CNT_C	—	IG ON counter after complete overheat protection	—	OH_IG_CNT_C
OH_IG_CNT_M	—	IG ON counter after middle overheat protection	—	OH_IG_CNT_M
PWR_MODE_KEY	Key Out/Key Recently Out (Position 0)/Accessory (Position 1)/Post Ignition (Position 2)/Ignition On (Position 2)/Running (Position 2)/Running - Starting	• Key Out: Ignition switched to off • Key Recently Out (Position 0): Elapsed time **within 3 s** since ignition was switched to off • Accessory (Position 1): Ignition is switched to ACC • Post Ignition (Position 2): Elapsed time **within 3 s** since ignition was switched ON • Ignition On (Position	• When a DTC is detected, the EPS CM receives the ignition switch condition being detected by the instrument cluster via CAN signals and displays it in the M-MDS.	—

		2): Ignition switched ON (engine off) • Running (Position 2): Ignition switched ON (engine on) • Running - Starting: Cranking condition		
RPM_STATUS	Engine Stop/ Under 1500rpm/ Over 1500rpm/ FAIL	Engine RPM status	• The EPS CM constantly receives the ignition switch status sent via CAN signal from the instrument cluster. • If a DTC is detected, the EPS CM records the ignition switch status when the DTC was detected, and it is displayed in the M-MDS.	TACHOMTR*2
SHIFT_STATUS	P/N D/ R/ FAIL	Shift position status	• The EPS CM constantly receives the selector lever position sent via CAN signal from the instrument cluster. • If a DTC is detected, the EPS CM records the selector lever position when the DTC was detected, and it is displayed in the M-MDS.	Not applicable
STR_AB_EST	°	Steering wheel estimated absolute angle	—	STR_AB_EST
STR_ANG	°	Steering wheel angle	—	STR_ANG
STR_ROT_SPD	°/s	Steering wheel rotation speed	—	STR_ROT_SPD
STR_TRQ_S_M	Nm	Steering shaft torque (Main)	—	STR_TRQ_S_M
STR_TRQ_S_S	Nm	Steering shaft torque (Sub)	—	STR_TRQ_S_S
TOTAL_DIST	km, ft, mi	Accumulated total traveled distance from completion of vehicle until EPS CM detects DTC (Odometer value in instrument cluster)	The distance traveled when the EPS CM detected a DTC can be calculated by performing the following procedure. • Verify the odometer value in the instrument cluster. • Verify the snap shot data item TOTAL_DIST. • Subtract 2 from 1.	—
		Accumulated total elapsed time since vehicle completion until EPS CM detects a DTC	The elapsed time when the EPS CM detected a DTC can be calculated by performing the following procedure. • Verify the PID item TOTAL_TIME of the	

TOTAL_TIME	hh:mm:ss*1	**NOTE:** • When the ROOM removed, and the ignition is switched off, the time is not included in the elapsed time.	instrument cluster. • Verify the snap shot data item TOTAL_TIME. • Subtract 2 from 1.	TOTAL_TIME*2
VPWR	V	Power supply	—	VPWR
VSPD	KPH, MPH	Vehicle speed	—	VSPD
VSPD_STATUS	Stop/ 0 - 10km/h/ Over 10km/h/ FAIL	Vehicle speed status	• The EPS CM constantly receives the vehicle speed sent via CAN signal from the instrument cluster. • If a DTC is detected, the EPS CM records the vehicle speed when the DTC was detected, and it is displayed in the M-MDS.	SPEEDOMTR*2

*1 **The seconds may be indicated after the decimal point.**

*2 **Instrument cluster PID (See PID/DATA MONITOR TABLE [INSTRUMENT CLUSTER].)**

2014 - Mazda3 - Steering

DTC C200B:02/C200B:16/C200B:62/C200B:64/C200B:85

DTC C200B:02, C200B:16, C200B:62, C200B:64	Torque sensor

DETECTION CONDITION	• C200B:02
	  ▪ Signal error detected in torque sensor signal
	• C200B:16
	  ▪ Open or short circuit is detected in torque sensor circuit
	• C200B:62
	  ▪ Difference occurs between the torque sensor signal 1 and the torque sensor signal 2 from torque sensor
	• C200B:64
	  ▪ Signal error detected in torque sensor signal
	• C200B:85
	  ▪ Torque sensor signal is out of the specified range

FAIL-SAFE FUNCTION	• C200B:02/C200B:16/C200B:62/C200:85
	  ▪ Control disabled
	  ▪ Power steering malfunction indicator light: Illuminated
	• C200B:64
	  ▪ Control is maintained in the backup control
	  ▪ Power steering malfunction indicator light: Illuminated

POSSIBLE CAUSE	• Torque sensor malfunction • EPS CM malfunction

SYSTEM WIRING DIAGRAM	—

Diagnostic Procedure

Step	Inspection		Action
1	**INSPECT TORQUE SENSOR USING M-MDS** • Connect the M-MDS to the DLC-2. • Switch the ignition ON (engine off). • Access “STR_TRQ_S_M” and ”STR_TRQ_S_S” PIDs. (See **ELECTRIC POWER STEERING (EPS) ON-BOARD DIAGNOSIS**.) • Verify that the data monitor value changes when the steering wheel is turned. ▪ Left: 0—positive ▪ Right: 0— negative • Do the torque sensor signal values change in the same way?	Yes	Go to the next step.
		No	Replace the steering column (torque sensor), then go to the next step. (See **STEERING WHEEL AND COLUMN REMOVAL/INSTALLATION**.)
2	**VERIFY THAT SAME DTC IS NOT PRESENT** • Clear the DTC from the memory. (See **ELECTRIC POWER STEERING (EPS) ON-BOARD DIAGNOSIS**.) • Is the same DTC present? (See **ELECTRIC POWER STEERING (EPS) ON-BOARD DIAGNOSIS**.)	Yes	Repeat the inspection from Step 1. If the malfunction recurs, replace the EPS CM, then go to the next step. (See **STEERING WHEEL AND COLUMN REMOVAL/INSTALLATION**.)
		No	Go to the next step.
3	**VERIFY THAT NO OTHER DTCs ARE PRESENT** • Are any other DTCs output? (See **ELECTRIC POWER STEERING (EPS) ON-BOARD DIAGNOSIS**.)	Yes	Go to the applicable DTC inspection. (See **ELECTRIC POWER STEERING (EPS) ON-BOARD DIAGNOSIS**.)
		No	DTC troubleshooting completed.

2014 - Mazda3 - Steering

DTC C200B:1C/C200C:1C

DTC C200B:1C, C200C:1C	**Torque sensor**
DETECTION CONDITION	• Open or short circuit is detected in torque sensor circuit
FAIL-SAFE FUNCTION	• Control disabled • Power steering malfunction indicator light: Illuminated
POSSIBLE CAUSE	• Open or short circuit in wiring harness between the EPS CM terminals and torque sensor. • Poor connection at connectors • Torque sensor malfunction • EPS CM malfunction
SYSTEM WIRING DIAGRAM	—

Diagnostic Procedure

Step	Inspection		Action
1	**INSPECT TORQUE SENSOR USING M-MDS** • Connect the M-MDS to the DLC-2. • Switch the ignition ON (engine off). • Access “STR_TRQ_S_M” and ”STR_TRQ_S_S” PIDs. (See **ELECTRIC POWER STEERING (EPS) ON-BOARD DIAGNOSIS**.)	Yes	Malfunction may be temporary. Go to step 3.
		No	Go to the next step.

	• Verify that the data monitor value changes when the steering wheel is turned.
	  ▪ Left: 0—positive
	  ▪ Right: 0— negative
	• Do the torque sensor signal values change in the same way?		

2	**INSPECT TORQUE SENSOR CONNECTOR AND TORQUE SENSOR WIRING HARNESS** • Switch the ignition OFF. • Disconnect the torque sensor connector. • Are the connector connection, connector pins, and wiring harness normal?	Yes	Replace the steering column (torque sensor), then go to the next step. (See **STEERING WHEEL AND COLUMN REMOVAL/INSTALLATION**.)
		No	Repair or replace the connector or wiring harness, then go to the next step.
3	**VERIFY THAT SAME DTC IS NOT PRESENT** • Clear the DTC from the memory. (See **ELECTRIC POWER STEERING (EPS) ON-BOARD DIAGNOSIS**.) • Is the same DTC present? (See **ELECTRIC POWER STEERING (EPS) ON-BOARD DIAGNOSIS**.)	Yes	Repeat the inspection from Step 1. If the malfunction recurs, replace the EPS CM, then go to the next step. (See **STEERING WHEEL AND COLUMN REMOVAL/INSTALLATION**.)
		No	Go to the next step.
4	**VERIFY THAT NO OTHER DTCs ARE PRESENT** • Are any other DTCs output? (See **ELECTRIC POWER STEERING (EPS) ON-BOARD DIAGNOSIS**.)	Yes	Go to the applicable DTC inspection. (See **ELECTRIC POWER STEERING (EPS) ON-BOARD DIAGNOSIS**.)
		No	DTC troubleshooting completed.

2014 - Mazda3 - Steering

DTC C200D:1C/C200D:64/U2011:19/U2011:1C/U2011:62/U2011:72/U2011:92

DTC C200D:1C, C200D:64, U2011:19, U2011:1C, U2011:62, U2011:72, U2011:92	EPS motor

DETECTION CONDITION	• C200D:1C
	  ▪ Malfunction detected in resolver sensor internal circuit
	• C200D:64
	  ▪ Signal error detected in resolver sensor signal
	• U2011:19, U2011:1C, U2011:62, U2011:72
	  ▪ Malfunction detected in EPS motor internal circuit
	• U2011:92
	  ▪ Malfunction detected in EPS motor internal circuit in the backup control

	• C200D:1C
	  ▪ Control is maintained in the backup control (if EPS system internal temperature increases, the assist force gradually weakens)
	  ▪ Power steering malfunction indicator light: Flashes (**0.5 Hz**)
	  ▪ Power steering warning buzzer: sounds intermittently (**0.5 Hz**)
	  • If EPS system internal temperature increases above the specified value, the flashing interval for the power steering malfunction indicator light and the power steering warning buzzer sound interval are shortened (from **0.5 Hz** to **2.0 Hz**)

FAIL-SAFE FUNCTION	• If EPS system internal temperature increases further, the power steering malfunction indicator light switches from flashing to illumination and the power steering warning buzzer sounds continuously • If EPS system overheating continues, the EPC CM disables assistance and stops the power steering warning buzzer (the power steering malfunction indicator light remains illuminated) • C200D:64, U2011:19, U2011:1C, U2011:62 ▪ Control disabled ▪ Power steering malfunction indicator light: Illuminated • U2011:72 ▪ An open circuit malfunction is detected in the one phase of the three-phase stator in the EPS motor • Control is maintained in the backup control ▪ Other malfunction detected in EPS motor internal circuit • Control disabled ▪ Power steering malfunction indicator light: Illuminated • U2011:92 ▪ Control disabled ▪ Power steering malfunction indicator light: Illuminated
POSSIBLE CAUSE	• Malfunction in internal steering column, EPS motor
SYSTEM WIRING DIAGRAM	—

Diagnostic Procedure

Step	Inspection		Action
1	**VERIFY DTC** • Clear the DTC from the memory. (See **ELECTRIC POWER STEERING (EPS) ON-BOARD DIAGNOSIS**.) • Verify if any DTCs are displayed. (See **ELECTRIC POWER STEERING (EPS) ON-BOARD DIAGNOSIS**.) • Is the same DTC present?	Yes	Replace the EPS CM (EPS motor). (See **STEERING WHEEL AND COLUMN REMOVAL/INSTALLATION**.)
		No	Go to the next step.
2	**VERIFY THAT NO OTHER DTCs ARE PRESENT** • Are any other DTCs output? (See **ELECTRIC POWER STEERING (EPS) ON-BOARD DIAGNOSIS**.)	Yes	Go to the applicable DTC inspection. (See **ELECTRIC POWER STEERING (EPS) ON-BOARD DIAGNOSIS**.)
		No	DTC troubleshooting completed.

2014 - Mazda3 - Steering

DTC U0001:88/U0100:00/U0121:00/U0155:00/U0214:00

DTC	**U0001:88**	**CAN system Communication error**
	U0100:00	**Communication error to PCM**
	U0121:00	**Communication error to DSC HU/CM**
	U0155:00	**Communication error to instrument cluster**
	U0214:00	**Communication error to start stop unit**

DETECTION CONDITION		• U0001:88
		  ▪ Error detected in line between CAN connection module and CAN bus communication line
		• U0100:00
		  ▪ Communication error to PCM is detected in CAN communication
		• U0121:00
		  ▪ Communication error to DSC CM is detected in CAN communication
		• U0155:00
		  ▪ Communication error to instrument cluster is detected in CAN communication
		• U0214:00
		  ▪ Communication error to start stop unit is detected in CAN communication

		• U0001:88
		  ▪ Control enabled
		  ▪ Power steering malfunction indicator light: Illuminated
		• U0100:00
		  ▪ Control is maintained by gradually changing the

FAIL-SAFE FUNCTION	controlled vehicle speed and setting it to **100 km/h {62.1 mph}** ▪ Power steering malfunction indicator light: Illuminated • U0121:00, U0155:00 ▪ Control enabled ▪ Power steering malfunction indicator light: Not illuminated • U0214:00 ▪ Control enabled ▪ Power steering malfunction indicator light: Not illuminated
POSSIBLE CAUSE	• CAN system wiring harness open or short circuit with PCM • CAN system wiring harness open or short circuit with DSC HU/CM • CAN system wiring harness open or short circuit with instrument cluster • CAN system wiring harness open or short circuit with start stop unit • Poor connection at connectors
SYSTEM WIRING DIAGRAM	—

Diagnostic procedure

- Perform inspection according to the diagnostic procedure in MULTIPLEX COMMUNICATION SYSTEM. (See **FOREWORD**.)

2014 - Mazda3 - Steering

DTC U0338:00/U0515:00

DTC U0338:00, U0515:00	**CAN system communication error**
DETECTION CONDITION	• Error detected in signal from the start stop unit via CAN communication
FAIL-SAFE FUNCTION	• Control enabled • Power steering malfunction indicator light: Not illuminated
POSSIBLE CAUSE	• Start stop unit malfunction • Mis-assembly of the steering angle sensor
SYSTEM WIRING DIAGRAM	—

Diagnostic Procedure

Step	Inspection		Action
1	**INSPECT FOR THE START STOP UNIT MALFUNCTION** • Using the M-MDS, perform the DTC inspection for the start stop unit. (See **DTC INSPECTION [START STOP UNIT]**.) • Are any DTCs detected?	Yes	Go to applicable DTC inspection. (See **DTC TABLE [START STOP UNIT]**.) DTC troubleshooting completed, then go to the next step.
		No	Go to the next step.
2	**VERIFY DTC TROUBLESHOOTING COMPLETED** • Clear the DTC from the memory. (See **ELECTRIC POWER STEERING (EPS) ON-BOARD DIAGNOSIS**.)	Yes	Replace the start stop unit. (See **START STOP UNIT REMOVAL/INSTALLATION**.)

	• Is the same DTC present? (See **ELECTRIC POWER STEERING (EPS) ON-BOARD DIAGNOSIS**.)	No	DTC troubleshooting completed.

2014 - Mazda3 - Steering

DTC U0401:00

DTC U0401:00	**CAN system communication error**
DETECTION CONDITION	• Error detected in signal from PCM via CAN communication
FAIL-SAFE FUNCTION	• Vehicle speed signal malfunction ▪ Control is maintained by gradually changing the controlled vehicle speed and setting it to **100 km/h {62.1 mph}** ▪ Power steering malfunction indicator light: Illuminated • Engine speed signal malfunction ▪ Control enabled ▪ Power steering malfunction indicator light: Not illuminated
POSSIBLE CAUSE	• PCM malfunction
SYSTEM WIRING DIAGRAM	—

Diagnostic Procedure

Step	Inspection		Action
1	**INSPECT FOR PCM MALFUNCTION** • Using the M-MDS, perform the DTC inspection for the PCM. (See **ON-BOARD DIAGNOSTIC TEST [SKYACTIV-G 2.0, SKYACTIV-G 2.5]**.)	Yes	Go to applicable DTC inspection. (See **DTC TABLE [SKYACTIV-G 2.0, SKYACTIV-G 2.5]**.) DTC troubleshooting completed, then go to

	• Are any DTCs detected?		the next step.
		No	Go to the next step.
2	**VERIFY DTC TROUBLESHOOTING COMPLETED** • Clear the DTC from the memory. (See **ELECTRIC POWER STEERING (EPS) ON-BOARD DIAGNOSIS**.) • Is the same DTC present? (See **ELECTRIC POWER STEERING (EPS) ON-BOARD DIAGNOSIS**.)	Yes	Replace the PCM. (See **PCM REMOVAL/INSTALLATION [SKYACTIV-G 2.0, SKYACTIV-G 2.5]**.)
		No	DTC troubleshooting completed.

2014 - Mazda3 - Steering

DTC U0415:00

DTC U0415:00	CAN system communication error
DETECTION CONDITION	• Error detected in signal from DSC HU/CM via CAN communication
FAIL-SAFE FUNCTION	• Control enabled • Power steering malfunction indicator light: Not illuminated
POSSIBLE CAUSE	• DSC HU/CM malfunction
SYSTEM WIRING DIAGRAM	—

Diagnostic Procedure

Step	Inspection		Action
1	**INSPECT FOR DSC HU/CM MALFUNCTION** • Using the M-MDS, perform the DTC inspection for the DSC HU/CM. (See **ON-BOARD DIAGNOSIS [DYNAMIC STABILITY CONTROL (DSC)]**.) • Are any DTCs detected?	Yes	Go to applicable DTC inspection. (See **ON-BOARD DIAGNOSIS [DYNAMIC STABILITY CONTROL (DSC)]**.) DTC troubleshooting completed, then go to the next step.
		No	Go to the next step.
2	**VERIFY DTC TROUBLESHOOTING COMPLETED** • Clear the DTC from the memory. (See **ELECTRIC POWER STEERING (EPS) ON-BOARD DIAGNOSIS**.) • Is the same DTC present?	Yes	Replace the DSC HU/CM. (See **ELECTRIC POWER STEERING (EPS) ON-BOARD DIAGNOSIS**.)
		No	DTC troubleshooting completed.

	(See **ELECTRIC POWER STEERING (EPS) ON-BOARD DIAGNOSIS**.)		

2014 - Mazda3 - Steering

DTC U0423:00

DTC U0423:00	**CAN system communication error**
DETECTION CONDITION	• Error detected in signal from instrument cluster via CAN communication

FAIL-SAFE FUNCTION	• Control enabled
	  ▪ If the EPS CM detects the signal that a engine speed is below the specified value, it disables assistance
	• Power steering malfunction indicator light: Not illuminated
	  ▪ If the EPS CM detects the signal that a engine speed is below the specified value, it illuminates the power steering malfunction indicator light

POSSIBLE CAUSE	• EPS CM detects the signal that a engine speed is below the specified value • Abnormal engine switch status is detected • PCM malfunction • Instrument cluster malfunction
SYSTEM WIRING DIAGRAM	—

Diagnostic Procedure

Step	Inspection		Action
1	**INSPECT FOR INSTRUMENT CLUSTER MALFUNCTION** • Using the M-MDS, perform the DTC inspection for the	Yes	Go to applicable DTC inspection. (See **DTC TABLE [INSTRUMENT CLUSTER]**.)

	instrument cluster. (See **DTC INSPECTION [INSTRUMENT CLUSTER]**.) • Are any DTCs detected?		DTC troubleshooting completed, then go to the next step.
		No	Go to the next step.
2	**VERIFY EPS STATUS** • Start the engine. • Turn the steering wheel to the right and left. • Is the assist force generated?	Yes	Go to the Step 3.
		No	Using the M-MDS, perform the tachometer inspection. (See **INSTRUMENT CLUSTER INSPECTION**.) If the tachometer is abnormal, inspect for the PCM malfunction and the related wiring harnesses. (See **ON-BOARD DIAGNOSTIC TEST [SKYACTIV-G 2.0, SKYACTIV-G 2.5]**.) If the PCM and related wiring harnesses are normal, replace the instrument cluster (See **INSTRUMENT CLUSTER REMOVAL/INSTALLATION**.) Inspection/replacement completed, then go to the next step.
3	**VERIFY THAT THE SAME DTC IS NOT PRESENT** • Make sure to reconnect all disconnected connectors. • Clear the DTC from the memory. (See **ELECTRIC POWER STEERING (EPS) ON-BOARD DIAGNOSIS**.) • Is the same DTC present? (See **ELECTRIC POWER STEERING (EPS) ON-BOARD DIAGNOSIS**.)	Yes	Repeat the inspection from Step 1. If the malfunction recurs, replace the EPS CM, then go to the next step. (See **STEERING WHEEL AND COLUMN REMOVAL/INSTALLATION**.)
		No	Go to the next step.
5	**VERIFY THAT NO OTHER DTCS ARE PRESENT** • Are any other DTCs output?	Yes	Go to the applicable DTC inspection. (See **ELECTRIC POWER STEERING (EPS) ON-BOARD DIAGNOSIS**.)
		No	DTC troubleshooting completed.

2014 - Mazda3 - Steering

DTC U2300:54/U2300:55/U2300:56

DTC U2300:54, U2300:55, U2300:56	EPS configuration
DETECTION CONDITION	• EPS CM detects configuration data not read or data error
FAIL-SAFE FUNCTION	• U2300:54 ▪ Control enabled ▪ Power steering malfunction indicator light: Not illuminated • U2300:55 ▪ Control enabled ▪ Power steering malfunction indicator light: Illuminated • U2300:56 ▪ Control enabled ▪ Power steering malfunction indicator light: Not illuminated
POSSIBLE CAUSE	• Module configuration procedure is not done properly • Correct data cannot be received from instrument cluster
SYSTEM WIRING DIAGRAM	—

Diagnostic Procedure

Step	Inspection	Action
1	**RECORD THE CAR CONFIGURATION DATA**	Go to the next step.

	Switch the ignition OFF. • Switch the ignition ON (engine off or on), and maintain this condition for **approx. 1 min**. • Switch the ignition OFF, and maintain this condition for **approx. 3 s**. • Switch the ignition ON (engine off or on).		
2	**VERIFY THAT THE SAME DTC IS NOT PRESENT** • Clear the DTC from the memory. (See **ELECTRIC POWER STEERING (EPS) ON-BOARD DIAGNOSIS**.) • Is the same DTC present?	Yes	Repeat the inspection from Step 1. If the malfunction recurs, go to the next step.
		No	Go to Step 5.
3	**INSPECT FOR INSTRUMENT CLUSTER MALFUNCTION** • Switch the ignition OFF. • Using the M-MDS, perform the DTC inspection for the instrument cluster. (See **DTC INSPECTION [INSTRUMENT CLUSTER]**.) • Are any DTCs detected?	Yes	Go to applicable DTC inspection. (See **DTC TABLE [INSTRUMENT CLUSTER]**.) After repairing the instrument cluster, perform the “INSTRUMENT CLUSTER CONFIGURATION”, then go to the next step. (See **INSTRUMENT CLUSTER CONFIGURATION (USING READ/WRITE FUNCTION)**.) (See **INSTRUMENT CLUSTER CONFIGURATION (USING AS-BUILT DATA)**.)
		No	Go to the next step.
4	**VERIFY THAT THE SAME DTC IS NOT PRESENT** • Clear the DTC from the memory. (See **ELECTRIC POWER STEERING (EPS) ON-BOARD DIAGNOSIS**.) • Is the same DTC present?	Yes	Repeat the inspection from Step 1. If the malfunction recurs, replace the EPS CM, then go to the next step. (See **STEERING WHEEL AND COLUMN REMOVAL/INSTALLATION**.)
		No	Go to the next step.
5	**VERIFY THAT NO OTHER DTCs ARE PRESENT** • Are any other DTCs output? (See **ELECTRIC POWER STEERING (EPS) ON-BOARD**	Yes	Go to the applicable DTC inspection. (See **ELECTRIC POWER STEERING (EPS) ON-BOARD DIAGNOSIS**.)

	DIAGNOSIS.)	No	DTC troubleshooting completed.

2014 - Mazda3 - Steering

DTC U3000:16/U3000:1C/U3000:28/U3000:41/U3000:46/U3000:47/U3000:49/U3000:61/U3000:73/U3000:96

DTC U3000:16, U3000:1C, U3000:28, U3000:41, U3000:46, U3000:47, U3000:49, U3000:61, U3000:73, U3000:96	**EPS CM**
DETECTION CONDITION	• The on-board diagnostic function detects control module malfunction

FAIL-SAFE FUNCTION	• U3000:16, U3000:1C, U3000:28, C3000:41, U3000:47, U3000:49, U3000:61, U3000:73, U3000:96
	  • Control disabled
	  • Power steering malfunction indicator light: Illuminated
	• U3000:46
	  • Control is maintained in fail mode
	  • Power steering malfunction indicator light: Not illuminated

POSSIBLE CAUSE	• Internal malfunction of EPS CM
SYSTEM WIRING DIAGRAM	—

Diagnostic Procedure

Step	Inspection		Action
1	**VERIFY DTC** • Clear the DTC from the memory. (See **ELECTRIC POWER STEERING (EPS) ON-BOARD DIAGNOSIS**.) • Verify if any DTCs are displayed.	Yes	Replace the EPS CM. (See **STEERING WHEEL AND COLUMN REMOVAL/INSTALLATION**.)
		No	Go to the next step.

	(See **ELECTRIC POWER STEERING (EPS) ON-BOARD DIAGNOSIS**.) • Is the same DTC present?		
2	**VERIFY THAT NO OTHER DTCs ARE PRESENT** • Are any other DTCs output? (See **ELECTRIC POWER STEERING (EPS) ON-BOARD DIAGNOSIS**.)	Yes	Go to the applicable DTC inspection. (See **ELECTRIC POWER STEERING (EPS) ON-BOARD DIAGNOSIS**.)
		No	DTC troubleshooting completed.

2014 - Mazda3 - Steering

DTC U3000:4B

WARNING:

- The EPS CM temperature could become high and may cause a burn. Before performing the work, verify that the steering column is cold.

DTC U3000:4B	**EPS CM**
DETECTION CONDITION	• Abnormal temperature in EPS CM is detected
FAIL-SAFE FUNCTION	• Control is maintained in fail mode • Power steering malfunction indicator light: Not illuminated
POSSIBLE CAUSE	• Due to the continuously static steering, being turned to the lock end, or other causes, the internal temperature of the EPS CM is more than the specified value. • EPS CM malfunction
SYSTEM WIRING DIAGRAM	—

Diagnostic Procedure

Step	Inspection		Action
1	**SWITCH THE IGNITION TO OFF AND ALLOW EPS CONTROL MODULE TO COOL DOWN.**		
2	**VERIFY THAT SAME DTC IS NOT PRESENT** • Clear the DTC from the memory. (See **ELECTRIC POWER STEERING (EPS) ON-BOARD DIAGNOSIS**.)	Yes	Repeat the inspection from Step 1. If the malfunction recurs, replace the EPS CM.

	• Is the same DTC present? (See **ELECTRIC POWER STEERING (EPS) ON-BOARD DIAGNOSIS**.)		(See **STEERING WHEEL AND COLUMN REMOVAL / INSTALLATION**.)
		No	Go to the next step.
3	**VERIFY THAT NO OTHER DTCs ARE PRESENT** • Are any other DTCs output? (See **ELECTRIC POWER STEERING (EPS) ON-BOARD DIAGNOSIS**.)	Yes	Go to the applicable DTC inspection. (See **ELECTRIC POWER STEERING (EPS) ON-BOARD DIAGNOSIS**.)
		No	DTC troubleshooting completed.

2014 - Mazda3 - Steering

DTC U3003:16

DTC U3003:16	**Battery power supply**
DETECTION CONDITION	• Voltage of 8 V or less detected by EPS CM internal ignition voltage observation.
FAIL-SAFE FUNCTION	• Control is maintained by gradually decreasing the motor control current ▪ However, control is inhibited if the power supply voltage is the specified value of less. • Power steering malfunction indicator light: Illuminated
POSSIBLE CAUSE	• Battery and/or generator malfunction • EPS 60A fuse malfunction • Malfunction in the wiring harness between EPS CM terminal 1B and battery • Open circuit in the wiring harness between EPS CM terminal 1A and body ground
SYSTEM WIRING DIAGRAM	

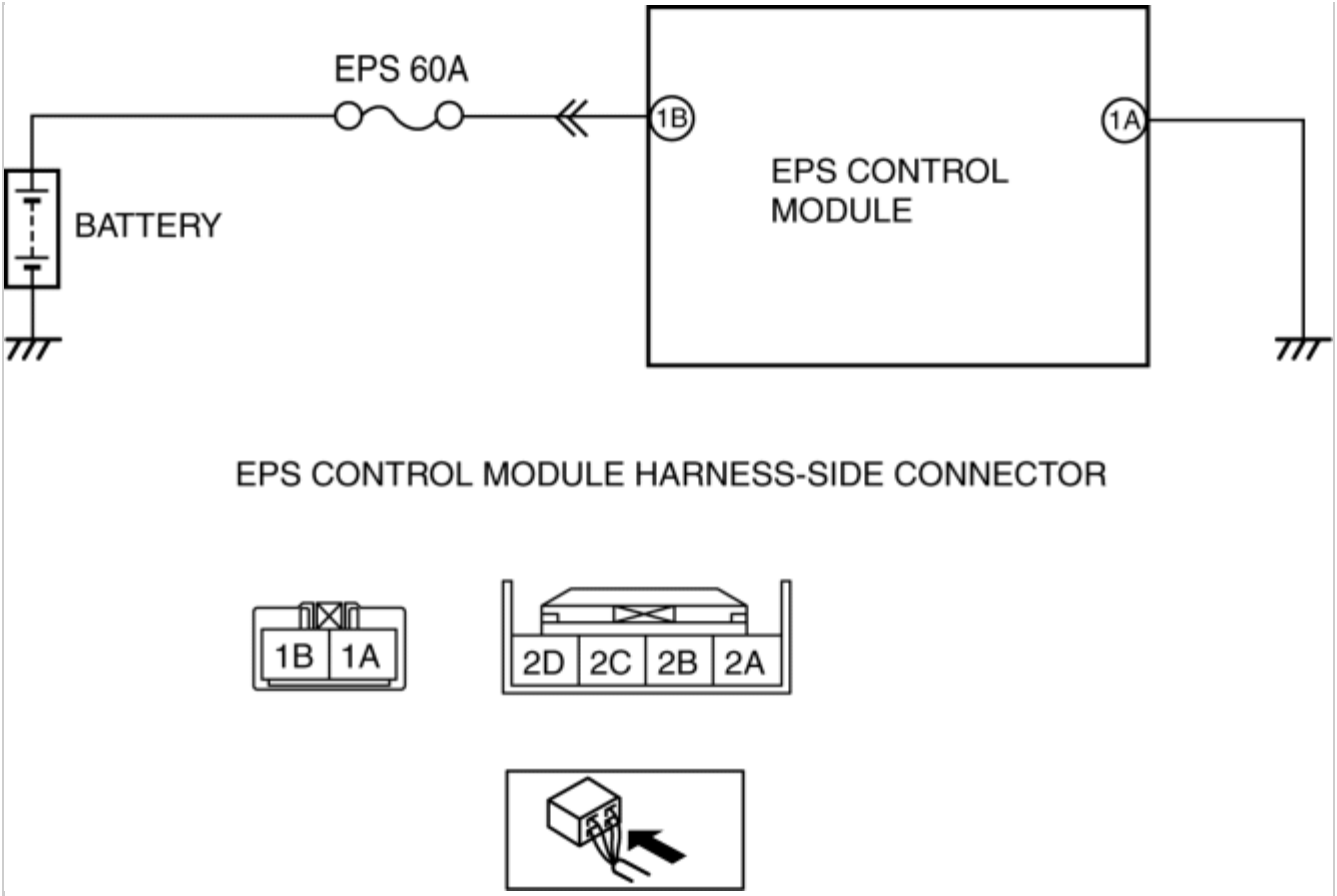

Diagnostic Procedure

Step	Inspection		Action
1	**INSPECT BATTERY VOLTAGE** • Is the battery terminal voltage normal? (See **BATTERY INSPECTION [SKYACTIV-G 2.0, SKYACTIV-G 2.5]**.)	Yes	Make sure that battery terminal connection is okay. Go to the next step.
		No	Charge or replace the battery, then go to Step 6. (See **BATTERY RECHARGING [SKYACTIV-G 2.0, SKYACTIV-G 2.5]**.) (See **BATTERY REMOVAL/INSTALLATION [SKYACTIV-G 2.0, SKYACTIV-G 2.5]**.)
2	**INSPECT BATTERY GRAVITY** • Is the battery specific gravity as specified? (See **BATTERY INSPECTION**	Yes	Go to the next step.
		No	Replace the battery, then go to Step 6. **BATTERY REMOVAL/INSTALLATION**

	[SKYACTIV-G 2.0, SKYACTIV-G 2.5].)		(See **[SKYACTIV-G 2.0, SKYACTIV-G 2.5]**.)
3	**INSPECT CHARGING SYSTEM** • Are the generator and drive belt tension normal? (See **GENERATOR INSPECTION [SKYACTIV-G 2.0, SKYACTIV-G 2.5 (WITHOUT i-ELOOP)]**.) (See **GENERATOR INSPECTION [SKYACTIV-G 2.0, SKYACTIV-G 2.5 (WITH i-ELOOP)]**.) (See **DRIVE BELT INSPECTION [SKYACTIV-G 2.0, SKYACTIV-G 2.5]**.)	Yes	Go to the next step.
		No	Replace the generator and/or drive belt if necessary. Go to step 6. (See **GENERATOR REMOVAL/INSTALLATION [SKYACTIV-G 2.0, SKYACTIV-G 2.5 (WITHOUT i-ELOOP)]**.) (See **GENERATOR REMOVAL/INSTALLATION [SKYACTIV-G 2.0, SKYACTIV-G 2.5 (WITH i-ELOOP)]**.) (See **DRIVE BELT REMOVAL/INSTALLATION [SKYACTIV-G 2.0, SKYACTIV-G 2.5]**.)
4	**INSPECT FUSE CONDITION** • Is the fuse (EPS 60A) normal?	Yes	Go to the next step.
		No	Replace the fuse, then go to Step 7.
5	**INSPECT EPS CM POWER SUPPLY CIRCUIT FOR OPEN OR SHORT CIRCUIT** • Start the engine. • Measure the voltage between following EPS CM terminal (wiring harness-side) and ground. ▪ EPS CM: 1B—ground • Is the voltage **8 V or more**?	Yes	Go to the next Step.
		No	Repair or replace the wiring harness (including fuse) between the EPS CM and ground, then go to Step 6.
6	**INSPECT EPS CM GROUND CIRCUIT FOR POOR GROUND OR OPEN CIRCUIT** • Switch the ignition OFF. • Inspect for continuity between EPS control module terminal 1A and body ground. • Is there continuity?	Yes	Go to the next step.
		No	Repair or replace the wiring harness between terminal 1A and body ground, then go to the next step.
7	**VERIFY THAT THE SAME DTC IS NOT PRESENT** • Make sure to reconnect all disconnected connectors. • Clear the DTC from the memory.	Yes	Replace the steering column, then go to the next step. (See **STEERING WHEEL AND COLUMN REMOVAL/INSTALLATION**.)

	(See **ELECTRIC POWER STEERING (EPS) ON-BOARD DIAGNOSIS**.) • Is the same DTC present?	No	Go to the next step.
8	**VERIFY THAT NO OTHER DTCS ARE PRESENT** • Are any other DTCs output?	Yes	Go to the applicable DTC inspection. (See **ELECTRIC POWER STEERING (EPS) ON-BOARD DIAGNOSIS**.)
		No	DTC troubleshooting completed.

2014 - Mazda3 - Steering

DTC U3003:17

DTC U3003:17	**Battery power supply**
DETECTION CONDITION	• Voltage of 17.5 V or more detected by EPS CM internal battery voltage observation.
FAIL-SAFE FUNCTION	• Control disabled • Power steering malfunction indicator light: Illuminated
POSSIBLE CAUSE	• Generator malfunction • Poor connection at connectors
SYSTEM WIRING DIAGRAM	—

Diagnostic procedure

STEP	INSPECTION		ACTION
1	**INSPECT CHARGING SYSTEM** • Are the generator and drive belt tension normal? (See **GENERATOR INSPECTION [SKYACTIV-G 2.0, SKYACTIV-G 2.5 (WITHOUT i-ELOOP)]**.) (See **GENERATOR INSPECTION [SKYACTIV-G 2.0, SKYACTIV-G 2.5 (WITH i-ELOOP)]**.) (See **DRIVE BELT INSPECTION [SKYACTIV-G 2.0, SKYACTIV-G 2.5]**.)	Yes	Go to the next step.
		No	Replace the generator and/or drive belt if necessary. Go to step 3. (See **GENERATOR REMOVAL/INSTALLATION [SKYACTIV-G 2.0, SKYACTIV-G 2.5 (WITHOUT i-ELOOP)]**.) (See **GENERATOR REMOVAL/INSTALLATION [SKYACTIV-G 2.0, SKYACTIV-G 2.5 (WITH i-ELOOP)]**.) (See **DRIVE BELT REMOVAL/INSTALLATION [SKYACTIV-G 2.0, SKYACTIV-G 2.5]**.)
2	**INSPECT WHETHER MALFUNCTION IS CAUSED BY POOR CONNECTION OF EPS CM OR PIN**	Yes	Go to the next step.

	DEFORMATION • Switch the ignition OFF. • Inspect connection of the EPS CM and wiring harness. • Disconnect the EPS CM connector. • Inspect whether malfunction is caused by bent or poorly connected EPS CM connector pin. • Are the connector connection, connector pins, and wiring harness normal?	No	Repair or replace the faulty connector wiring harness, then go to the next step.
3	**VERIFY THAT THE SAME DTC IS NOT PRESENT** • Make sure to reconnect all disconnected connectors. • Clear the DTC from the memory. (See **ELECTRIC POWER STEERING (EPS) ON-BOARD DIAGNOSIS**.) • Is the same DTC present?	Yes	Replace the EPS CM, then go to the next step. (See **STEERING WHEEL AND COLUMN REMOVAL/INSTALLATION**.)
		No	Go to the next step.
4	**VERIFY THAT NO OTHER DTCS ARE PRESENT** • Are any other DTCs output?	Yes	Go to the applicable DTC inspection. (See **ELECTRIC POWER STEERING (EPS) ON-BOARD DIAGNOSIS**.)
		No	DTC troubleshooting completed.

2014 - Mazda3 - Steering

ELECTRIC POWER STEERING (EPS) SYSTEM WIRING DIAGRAM

ELECTRIC POWER STEERING (EPS) SYSTEM WIRING DIAGRAM

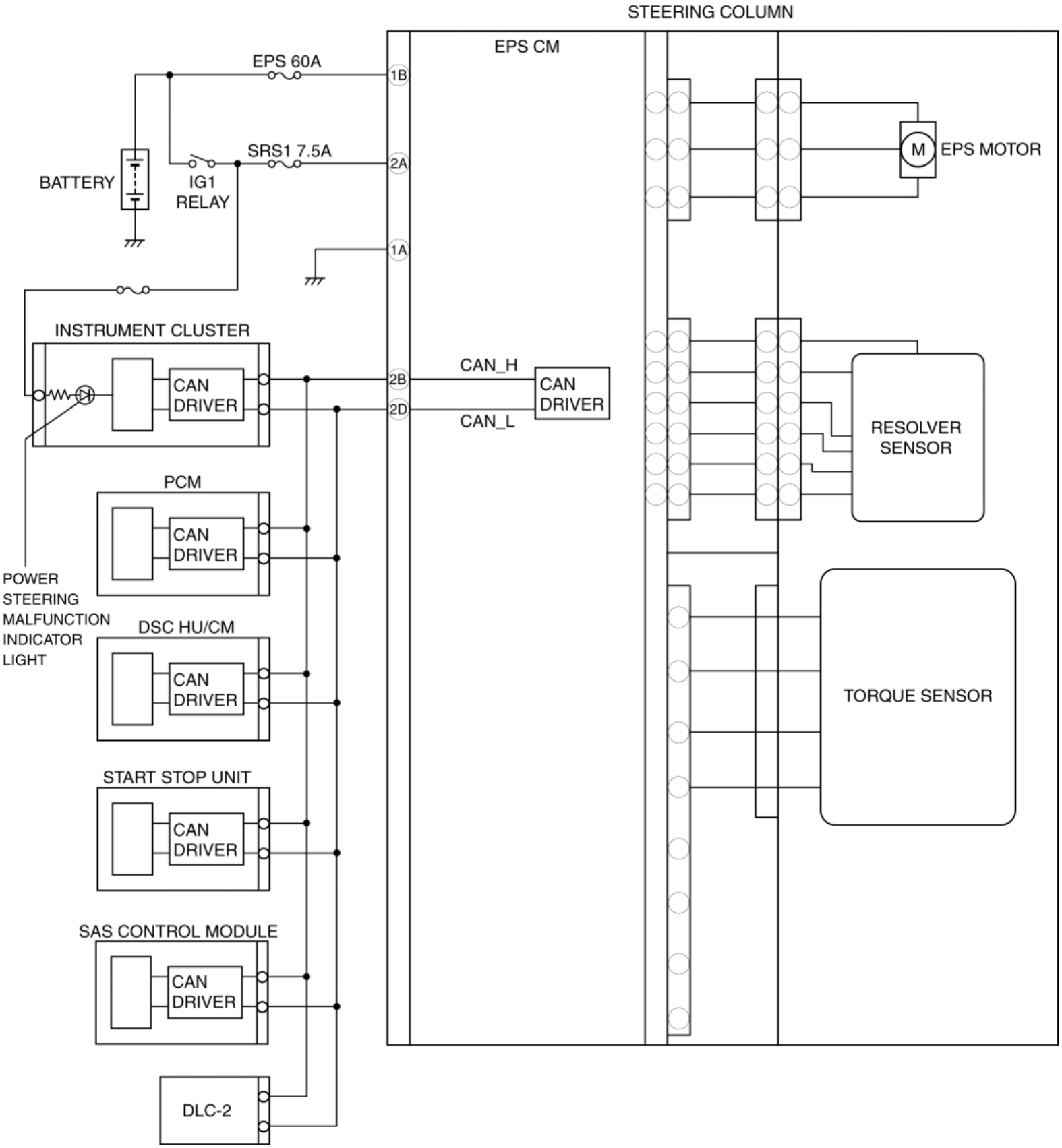

2014 - Mazda3 - Steering

FOREWORD

- If there is any vehicle malfunction complaint lodged by a customer, perform malfunction diagnosis according to the troubleshooting procedure.

Troubleshooting Procedure

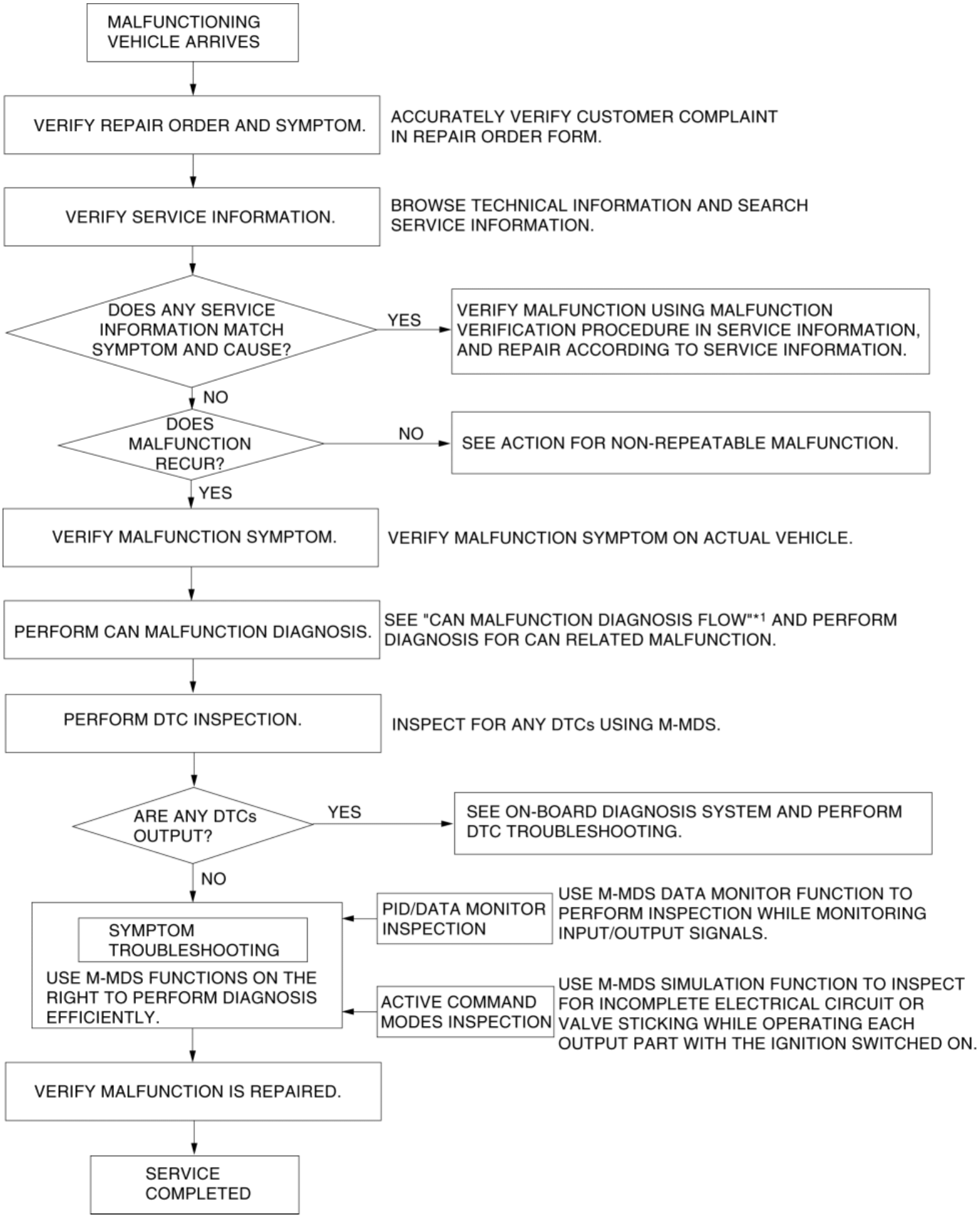
MALFUNCTIONING VEHICLE ARRIVES
VERIFY REPAIR ORDER AND SYMPTOM.
ACCURATELY VERIFY CUSTOMER COMPLAINT IN REPAIR ORDER FORM.
VERIFY SERVICE INFORMATION.
BROWSE TECHNICAL INFORMATION AND SEARCH SERVICE INFORMATION.
DOES ANY SERVICE INFORMATION MATCH SYMPTOM AND CAUSE?
YES
VERIFY MALFUNCTION USING MALFUNCTION VERIFICATION PROCEDURE IN SERVICE INFORMATION, AND REPAIR ACCORDING TO SERVICE INFORMATION.
NO
DOES MALFUNCTION RECUR?
NO
SEE ACTION FOR NON-REPEATABLE MALFUNCTION.
YES
VERIFY MALFUNCTION SYMPTOM.
VERIFY MALFUNCTION SYMPTOM ON ACTUAL VEHICLE.
PERFORM CAN MALFUNCTION DIAGNOSIS.
SEE "CAN MALFUNCTION DIAGNOSIS FLOW"*1 AND PERFORM DIAGNOSIS FOR CAN RELATED MALFUNCTION.
PERFORM DTC INSPECTION.
INSPECT FOR ANY DTCs USING M-MDS.
ARE ANY DTCs OUTPUT?
YES
SEE ON-BOARD DIAGNOSIS SYSTEM AND PERFORM DTC TROUBLESHOOTING.
NO
SYMPTOM TROUBLESHOOTING
USE M-MDS FUNCTIONS ON THE RIGHT TO PERFORM DIAGNOSIS EFFICIENTLY.
PID/DATA MONITOR INSPECTION
USE M-MDS DATA MONITOR FUNCTION TO PERFORM INSPECTION WHILE MONITORING INPUT/OUTPUT SIGNALS.
ACTIVE COMMAND MODES INSPECTION
USE M-MDS SIMULATION FUNCTION TO INSPECT FOR INCOMPLETE ELECTRICAL CIRCUIT OR VALVE STICKING WHILE OPERATING EACH OUTPUT PART WITH THE IGNITION SWITCHED ON.
VERIFY MALFUNCTION IS REPAIRED.
SERVICE COMPLETED

*1

Refer to MULTIPLEX COMMUNICATION SYSTEM. (See CONTROLLER AREA NETWORK (CAN) MALFUNCTION DIAGNOSIS FLOW.)

Action for non-repeatable malfunction

- If the malfunction does not recur, verify the malfunction cause by performing the following actions:

1. Verify that a DTC has been recorded in the memory using the M-MDS. (See **ELECTRIC POWER STEERING (EPS) ON-BOARD DIAGNOSIS**.)

2. Perform a simulation test in the simulation mode based on the repair order form, record the data at that time, and detect the malfunction cause.

3. Shake the wiring harness or connector of the electrical component which is suspected to be the cause of the malfunction, and inspect for the occurrence of any malfunction or DTCs.

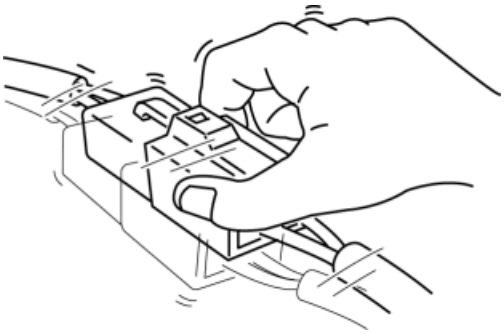

4. Inspect the female terminals for poor connection.

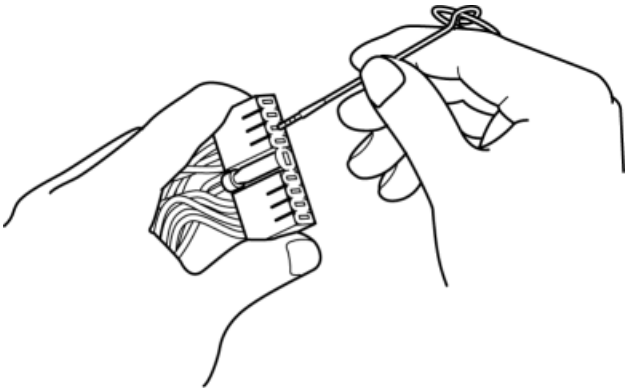

2014 - Mazda3 - Steering

PRECAUTION

Intermittent Concern Troubleshooting

Vibration method

- If a malfunction occurs or becomes worse while driving on a rough road or when the engine is vibrating, perform the following steps.

NOTE:

- There are several reasons why vehicle or engine vibration could cause an electrical malfunction. Inspect the following:
    - Connectors not fully seated.
    - Wiring harnesses not having full play.
    - Wires laying across brackets or moving parts.
    - Wires routed too close to hot parts.
- An improperly routed, improperly clamped, or loose wiring harness can cause wiring to become pinched between parts.
- The connector joints, points of vibration, and places where wiring harness pass through the firewall, body panels and other panels are the major areas to be inspected.

Inspection method for switch and/or sensor connectors or wires

1. Connect the M-MDS to the DLC-2.
2. Turn the ignition switch to the ON position (engine off).

NOTE:

- If the engine starts and runs, perform the following steps at idle.

3. Access PIDs for the switch you are inspecting.
4. Turn the switch on manually.
5. Slightly shake each connector or wiring harness vertically and horizontally while monitoring the PID.

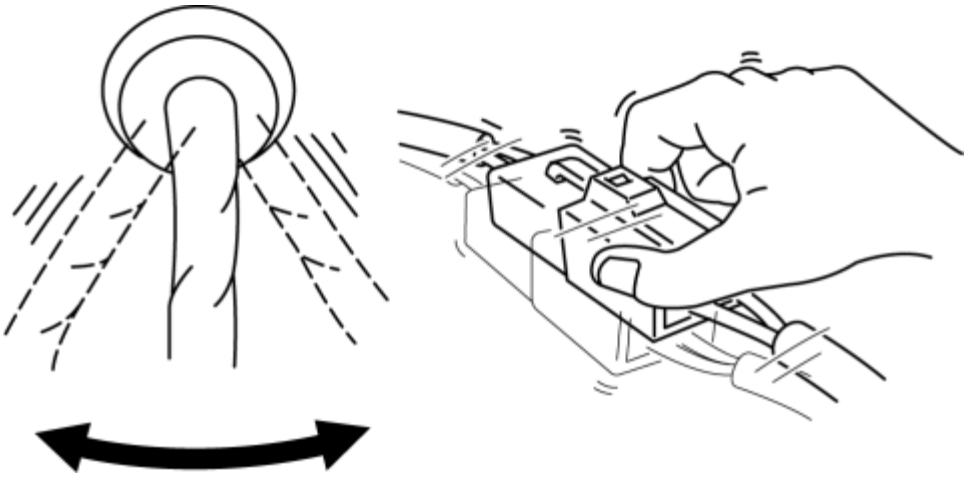

- If the PID value is unstable, inspect for poor connection.

Inspection method for sensors

1. Connect the M-MDS to the DLC-2.
2. Turn the ignition switch to the ON position (engine off).

NOTE:

- If the engine starts and runs, perform the following steps at idle.

3. Access PIDs for the switch you are inspecting.
4. Vibrate the sensor slightly with your finger.
   - If the PID value is unstable or a malfunction occurs, inspect for poor connection and/or poorly mounted sensor.

Connector terminal inspection method

1. Inspect the connection of each female terminal.
2. Insert the male terminal to the female terminal and inspect the female terminal for looseness.

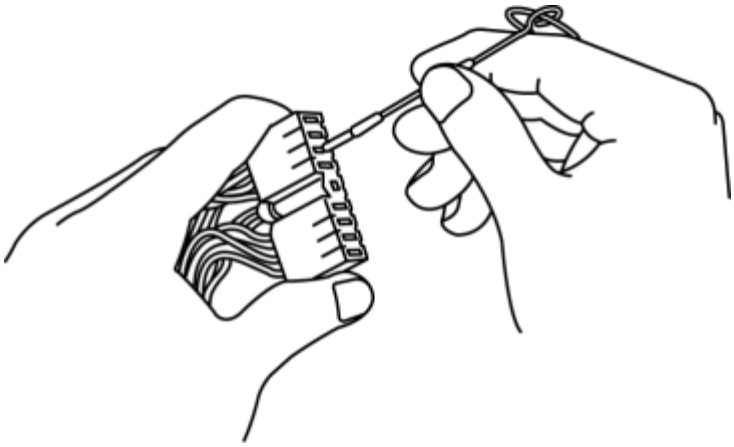

PRECAUTION

2014 - Mazda3 - Steering

SYMPTOM TROUBLESHOOTING

- Verify the symptom, and perform troubleshooting according to the appropriate number.

No.	Symptom
1	Power steering malfunction indicator light does not illuminate with ignition switched ON
2	Power steering malfunction indicator light illuminates/flashes even though engine has started
3	Power assist differs between right and left turns

2014 - Mazda3 - Steering

NO.1 POWER STEERING MALFUNCTION INDICATOR LIGHT DOES NOT ILLUMINATE WITH IGNITION SWITCHED ON

1	**Power steering malfunction indicator light does not illuminate with ignition switched ON.**

TROUBLESHOOTING HINTS

- Power steering malfunction indicator light circuit malfunction in the instrument cluster.
- An error originates from the EPS CM, and the off signal is generated.
    - EPS CM malfunction

Diagnostic procedure

STEP	INSPECTION		ACTION
1	• Turn on the power steering malfunction indicator light at instrument cluster using the “WL+IL” of the M-MDS active command modes function. • Does the power steering malfunction indicator light turn on?	Yes	EPS CM malfunction. Replace the EPS CM. (See **STEERING GEAR AND LINKAGE REMOVAL/INSTALLATION**.)
		No	Perform the instrument cluster configuration, then repeat the inspection from Step 1. (See **INSTRUMENT CLUSTER CONFIGURATION (USING AS-BUILT DATA)**.) If the malfunction recurs, replace the instrument cluster. (See **INSTRUMENT CLUSTER REMOVAL/INSTALLATION**.)

2014 - Mazda3 - Steering

NO.2 POWER STEERING MALFUNCTION INDICATOR LIGHT ILLUMINATES/FLASES EVEN THOUGH ENGINE HAS STARTED

2	**Power steering malfunction indicator light illuminates/flashes even though engine has started.**

TROUBLESHOOTING HINTS

- EPS system malfunction.
  - Wiring harness malfunction
  - Connector condition malfunction
  - Torque sensor malfunction
  - Resolver sensor malfunction

    NOTE:

    - If the EPS CM detects an internal circuit malfunction in the resolver sensor, the power steering malfunction indicator light flashes.
  - EPS motor malfunction
  - Fuse malfunction
  - EPS CM malfunction
- EPS CM detects an EPS system malfunction even though the EPS system is normal.
- CAN communication line and/or CAN signal malfunction.
  - Vehicle speed signal error
  - Engine speed signal error
  - CAN wiring harness malfunction
- EPS warning light circuit malfunction in the instrument cluster.
- CAN wiring harness malfunction.
  - Malfunction in wiring harness between EPS CM and instrument cluster
- Instrument cluster configuration procedure was not completed properly.

Diagnostic procedure

NO.2 POWER STEERING MALFUNCTION INDICATOR LIGHT ILLUMINATES/FLASES EVEN THOUGH ENGINE HAS STARTED

STEP	INSPECTION		ACTION
1	• Switch the ignition to off and maintain this condition **approx. 1 minute**. • Switch the ignition ON (engine on). • Perform the DTC inspection. (See **ELECTRIC POWER STEERING (EPS) ON-BOARD DIAGNOSIS**.) • Are any DTCs present?	Yes	Go to the applicable DTC inspection. (See **ELECTRIC POWER STEERING (EPS) ON-BOARD DIAGNOSIS**.)
		No	Go to the next step.
2	• Turn off the EPS warning light at instrument cluster using the “WL+IL” of the M-MDS active command modes function. • Does the EPS warning light turn off?	Yes	EPS CM malfunction. Replace the EPS CM. (See **STEERING WHEEL AND COLUMN REMOVAL/INSTALLATION**.)
		No	Perform the instrument cluster configuration, then repeat the inspection from Step 1. (See **INSTRUMENT CLUSTER CONFIGURATION (USING AS-BUILT DATA)**.) If the malfunction recurs, replace the instrument cluster. (See **INSTRUMENT CLUSTER REMOVAL/INSTALLATION**.)

2014 - Mazda3 - Steering

NO.3 POWER ASSIST DIFFERS BETWEEN RIGHT AND LEFT TURNS

3	**Power assist differs between right and left turns.**

TROUBLESHOOTING HINTS

- Steering gear and linkage malfunction.
- EPS CM malfunction.
- Poor connection of EPS CM connector, terminal damage.
- The steering wheel angle neutral position automatic learning function has not been operated.

NOTE:

- If the right and left wheels are rotated freely at the same speed with the vehicle jacked up, the EPS CM may learn the steering angle incorrectly.
- The steering angle learned by the EPS CM is cleared when **1 min. or more** has elapsed after the ignition was switched off.

Diagnostic procedure

STEP	INSPECTION		ACTION
1	• Have DTCs been recorded in the memory?	Yes	Perform inspection using the appropriate DTC.
		No	Go to the next step.
2	• Switch the ignition to off and maintain this condition **1 min. or more**. • Switch the ignition ON (engine on). • Drive **10 m {33 ft} or above** in a straight line at **more than 10 km/h {6.2 mph}**. • Is there recurrence of malfunction?	Yes	Go to the next step.
		No	Temporary error occurred while learning steering wheel angle neutral position. There is not malfunction in the EPS system.
3	• Inspect the connection of the EPS CM connector.	Yes	Replace the steering gear and linkage.

	• Disconnect the EPS CM connector. • Inspect both the EPS CM and wiring harness-side connector for poor connection (such as damage/pulled-out pins, corrosion). • Are all the pins normal?		(See **STEERING GEAR AND LINKAGE REMOVAL/INSTALLATION**.)
		No	**If poor connection of EPS CM connector:** • Securely connect the EPS CM connector. **If the EPS CM side connector is wrong:** • Replace the EPS CM. (See **STEERING WHEEL AND COLUMN REMOVAL/INSTALLATION**.) **If the wiring harness-side connector is wrong:** • Repair or replace the pins and/or the connector. • Recheck malfunction symptoms, then replace the steering gear and linkage. (See **STEERING GEAR AND LINKAGE REMOVAL/INSTALLATION**.)

2014 - Mazda3 - Steering

GENERAL PROCEDURES (STEERING)

WARNING:

- Always inspect the steering component carefully for any shock or impact which may have occurred during a collision or servicing operation. If a damaged part or a part suspected of being damaged is used, it could result in an unexpected accident due to the steering mechanism being inoperative. Always replace the damaged part or part suspected of being damaged.
- If the steering mechanism is turned from lock to lock continuously or the steering rack terminal limit is reached repeatedly, such high-load steering action increases the temperature of the steering column (to approx. 85 °C {185°F}), causing severe burns. Be careful when handling the steering column.
- If the steering column is dropped, the EPS CM could be damaged internally causing the steering mechanism to become inoperative, which could result in an unexpected accident. Always replace the steering column if it has been subjected to an impact.

CAUTION:

- If the steering column is stored in a humid place, the EPS system may not operate properly when installed to the vehicle. Store the steering column in a suitable place.
- Be careful when handling the steering column because it weighs approximately 10 kg {22 lb} and it could fall off and be damaged while servicing.
- If the intermediate shaft is connected to the steering gear (pinion) before installing the steering column to the dashboard member, the weight of the steering column could cause damage to the intermediate shaft slider/bush/yoke. Always follow the procedure in the Workshop Manual.
- The universal joint could be damaged if subjected to an impact when the intermediate shaft (pinion) is disconnected. Perform the servicing carefully avoiding impact when disconnecting the intermediate shaft from the steering gear (pinion).
- Do not release the lock of the adjusting lever when handling the steering column unless it is securely installed to the dashboard member. If the adjusting lever is unlocked with the steering column not securely installed, the steering column and other parts could be damaged.
- A new steering column is shipped in a pre-set condition. Maintain this condition until the steering column is completely installed to the dashboard member so as to avoid damage during transportation and installation.
- When removing/installing the steering column, keep the wiring harness away from the steering column installation area so as to prevent the steering column from being caught in the wiring harness and damaged.

NOTE:

- If the vehicle is driven in a straight line at a vehicle speed of approx. **10 km/h {6.2**

mph} or more, the EPS CM detects the steering wheel straight ahead position automatically. Until the self-learning of the steering wheel straight ahead position is finished, the EPS CM performs assist control based on the steering angle recognized when the ignition is switched ON.

- When installing a replacement part, be careful not to rotate the steering shaft until the installation has been completed.
- In order to completely interrupt the EPS system power supply, do not disconnect the battery for **20 s** or more after the ignition switch is turned off.
- Do not replace the steering column (EPS system) with that of another vehicle even if they are the same model.

Wheel And Tire Installation

1. When installing the wheels and tires, tighten the wheel nuts to the following tightening torque in the order shown in the figure.

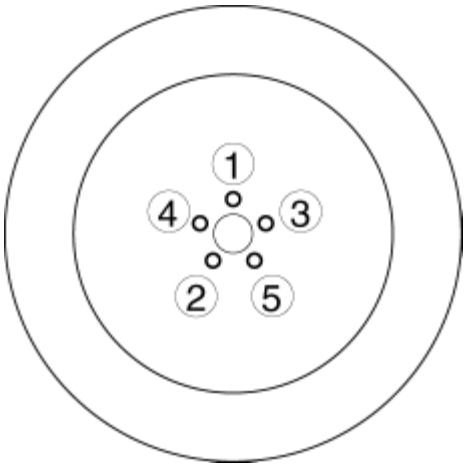

Tightening Torque

- 108—147 N·m {12—14 kgf·m, 80—108 ft·lbf}

Connectors disconnection

1. Disconnect the negative battery terminal before performing any work that requires handling of connectors. (See **NEGATIVE BATTERY CABLE DISCONNECTION/CONNECTION [SKYACTIV-G 2.0, SKYACTIV-G 2.5]**.)

Suspension Links Removal/Installation

NOTE:

- To prevent the bushings from being twisted or pinched, perform the procedures with no passengers or luggage aboard the vehicle.

1. For the joint sections with rubber bushings, raise the vehicle using a lift and temporarily tighten the installation nuts and bolts. Afterwards, tighten to the specified torque with the wheels on the ground.

EPS Related Parts

CAUTION:

- If the EPS CM configuration is not completed, the EPS will not operate properly. If the steering column component or EPS CM is replaced, always carry out the automatic configuration so that the EPS operates properly.

1. Make sure that there are no DTCs in the EPS memory after working on EPS related parts. If there are any DTCs in the memory, go to the applicable DTC diagnostic procedure. (See **ELECTRIC POWER STEERING (EPS) ON-BOARD DIAGNOSIS**.)

2014 - Mazda3 - Steering

STEERING LOCATION INDEX

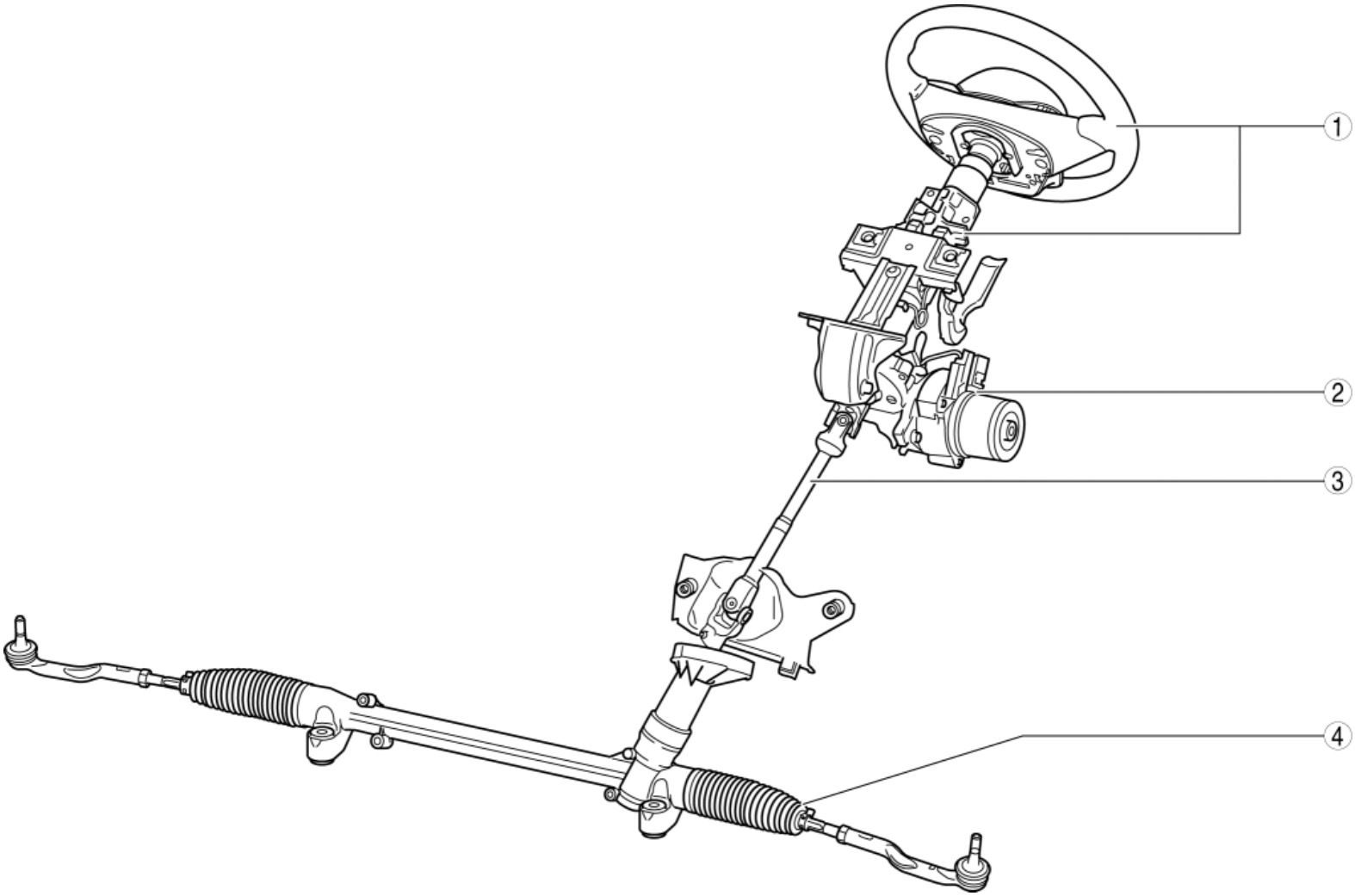

1	Steering wheel and column (See **STEERING WHEEL AND COLUMN INSPECTION**.) (See **STEERING WHEEL AND COLUMN REMOVAL/INSTALLATION**.) (See **STEERING SHAFT INSPECTION**.)
2	EPS CM, EPS motor (See **EPS CONTROL MODULE INSPECTION**.)
3	Intermediate shaft (See **INTERMEDIATE SHAFT REMOVAL/INSTALLATION**.) (See **STEERING SHAFT INSPECTION**.)
4	Steering gear and linkage (See **TIE-ROD END REPLACEMENT**.)

(See **STEERING GEAR AND LINKAGE REMOVAL/INSTALLATION**.)

(See **STEERING GEAR AND LINKAGE INSPECTION**.)

(See **STEERING GEAR AND LINKAGE DISASSEMBLY**.)

(See **TIE-ROD END INSPECTION**.)

(See **TIE ROD INSPECTION**.)

(See **STEERING GEAR AND LINKAGE ASSEMBLY**.)

2014 - Mazda3 - Steering

ELECTRIC POWER STEERING (EPS) SYSTEM WIRING DIAGRAM

ELECTRIC POWER STEERING (EPS) SYSTEM WIRING DIAGRAM

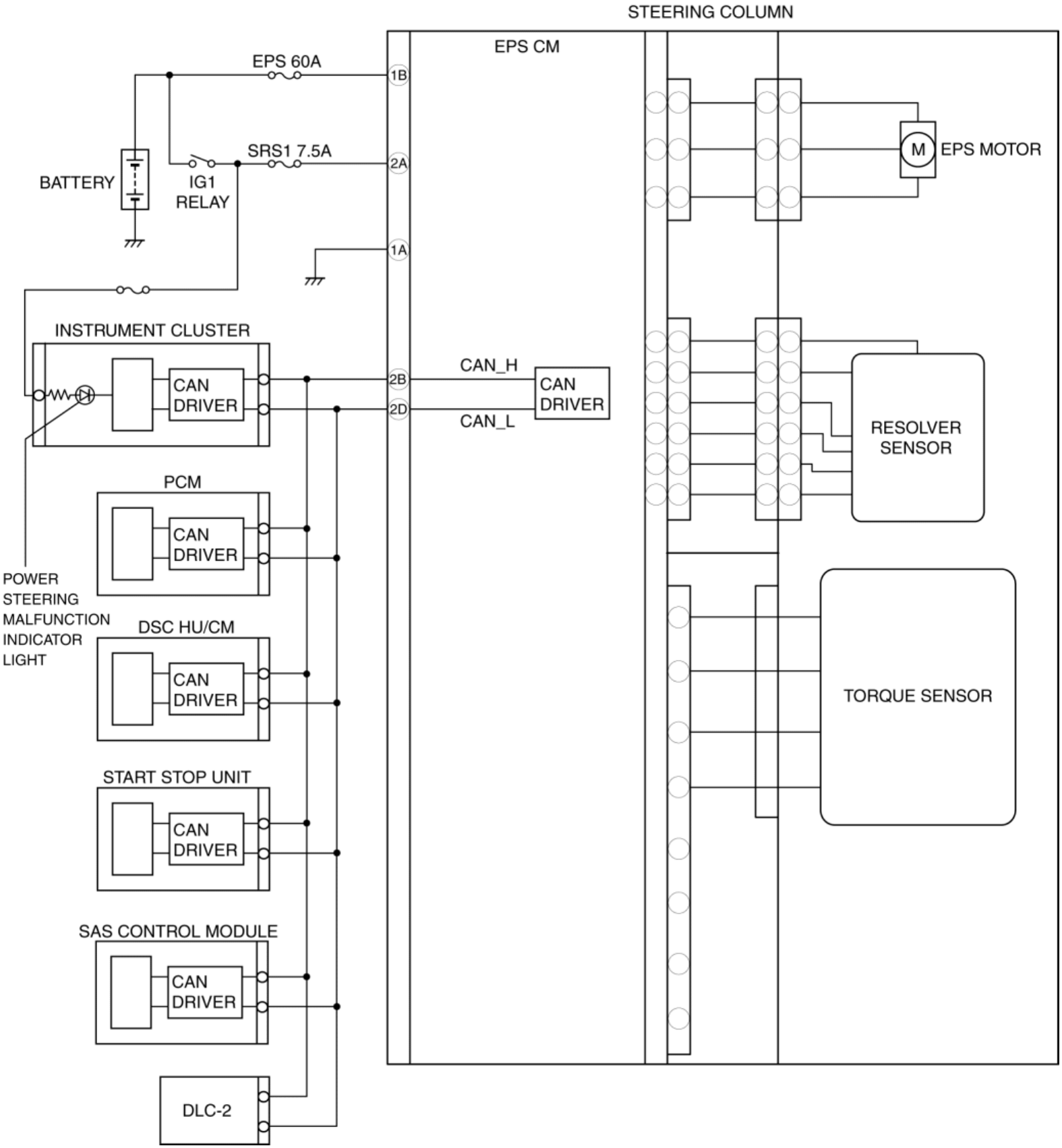

2014 - Mazda3 - Steering

STEERING WHEEL AND COLUMN INSPECTION

Play inspection

1. With the wheels in the straight-ahead position, start the engine.

2. Turn the steering wheel to the left and right gently, then verify that the steering wheel play is within the specification.

Steering wheel play

- 0—30 mm {0—1.1 in}

Looseness, Excessive Play Inspection

1. Inspect the steering wheel for looseness or excessive play in the axial direction of the shaft and four locations around the steering wheel.

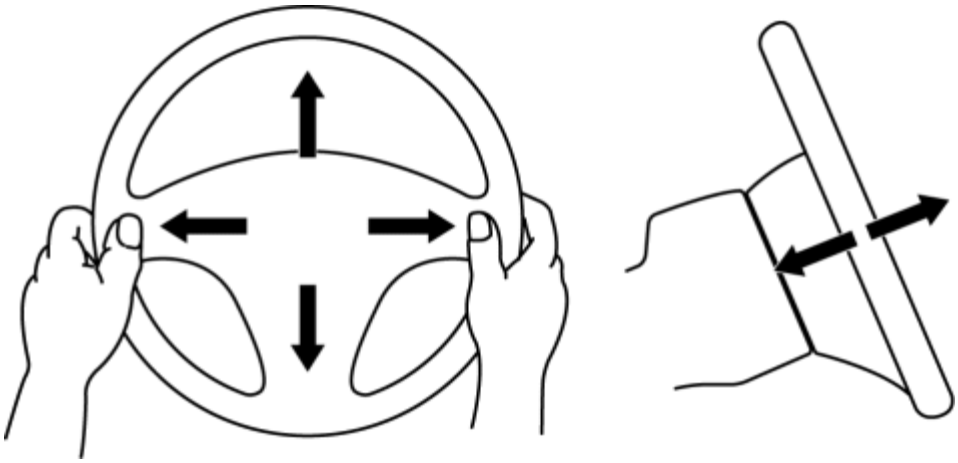

- If there is any malfunction, inspect the following, and repair or replace the applicable part.
    - Column bearing wear
    - Looseness of the steering wheel installation part
    - Looseness of the column installation area
    - Excessive play in the intermediate shaft joint
    - Excessive play in the steering gear

Steering Force Inspection

1. Verify that the equipped tire size and tire air pressure is as specified.

2. With the vehicle on a hard, level surface, put the wheels in the straight-ahead position.

3. Remove the driver-side air bag module. (See **DRIVER-SIDE AIR BAG MODULE REMOVAL [TWO-STEP DEPLOYMENT CONTROL SYSTEM]**.) (See **DRIVER-SIDE AIR BAG MODULE INSTALLATION [TWO-STEP DEPLOYMENT CONTROL SYSTEM]**.) (See **DRIVER-SIDE AIR BAG MODULE REMOVAL [STANDARD DEPLOYMENT CONTROL SYSTEM]**.) (See **DRIVER-SIDE AIR BAG MODULE INSTALLATION [STANDARD DEPLOYMENT CONTROL SYSTEM]**.)

WARNING:

- Handling the air bag module improperly can accidentally operate (deploy) the air bag module, which may seriously injure you. Read the service warnings and cautions before handling the air bag module. (See **AIR BAG SYSTEM SERVICE WARNINGS [TWO-STEP DEPLOYMENT CONTROL SYSTEM]**.) (See **AIR BAG SYSTEM SERVICE WARNINGS [STANDARD DEPLOYMENT CONTROL SYSTEM]**.) (See **AIR BAG SYSTEM SERVICE CAUTIONS [TWO-STEP DEPLOYMENT CONTROL SYSTEM]**.) (See **AIR BAG SYSTEM SERVICE CAUTIONS [STANDARD DEPLOYMENT CONTROL SYSTEM]**.)

4. Start the engine and idle it.

5. Verify that the power steering malfunction indicator light is not illuminated or flashing.

6. Inspect the steering torque using a torque wrench.

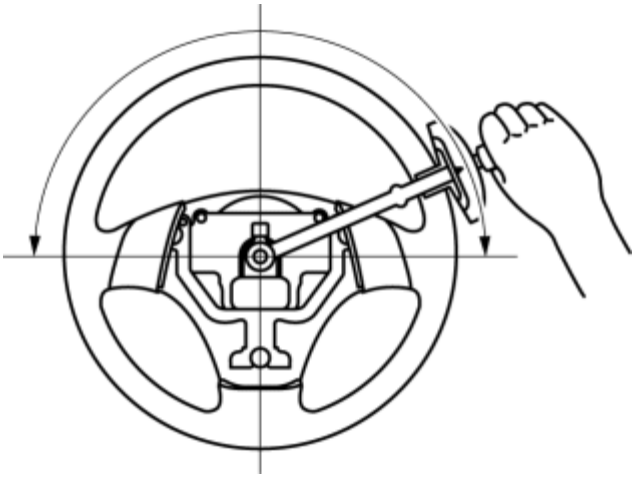

- If it exceeds the reference value, inspect the steering gear and linkage. (See **STEERING GEAR AND LINKAGE INSPECTION**.)

  Steering wheel steering force (reference)

- 7.8 N·m {80 kgf·cm, 69 in·lbf} or less

NOTE:

- Comparing another vehicle of the same model under the same conditions is an acceptable inspection method.
- The steering torque varies with the conditions indicated below.
  - Road conditions: Such as dry, wet, asphalt, or concrete
  - Tire condition: Such as brand, wear, and tire pressure

STEERING WHEEL AND COLUMN INSPECTION

2014 - Mazda3 - Steering

STEERING WHEEL AND COLUMN REMOVAL/INSTALLATION

WARNING:

- Handling the air bag module improperly can accidentally operate (deploy) the air bag module, which may seriously injure you. Read the service warnings and cautions before handling the air bag module. (See **AIR BAG SYSTEM SERVICE WARNINGS [TWO-STEP DEPLOYMENT CONTROL SYSTEM]**.) (See **AIR BAG SYSTEM SERVICE WARNINGS [STANDARD DEPLOYMENT CONTROL SYSTEM]**.) (See **AIR BAG SYSTEM SERVICE CAUTIONS [TWO-STEP DEPLOYMENT CONTROL SYSTEM]**.) (See **AIR BAG SYSTEM SERVICE CAUTIONS [STANDARD DEPLOYMENT CONTROL SYSTEM]**.)
- The steering column (EPS motor) temperature increases directly after continuous turning of the steering mechanism which could cause burns if it is touched. Before performing any servicing, verify that the steering column has cooled off.

CAUTION:

- If the EPS CM configuration is not completed, the EPS will not operate properly. If the EPS CM is replaced, always use the automatic configuration function so that the EPS operation conditions are correct.
- If the EPS column is dropped it could result in internal damage to the EPS CM, therefore be careful not to drop it. Replace the EPS CM if it is subjected to an impact.

NOTE:

- When the ignition is switched ON or the engine is started after the EPS CM has been replaced, the EPS CM reads data from the instrument cluster via CAN communication to perform automatic configuration.
- The EPS CM prior to replacement stores the vehicle specification information.
- A new EPS CM does not store any vehicle specification information.

1. Remove the upper panel. (See **UPPER PANEL REMOVAL**.) (See **UPPER PANEL INSTALLATION**.)
2. Remove the rear console. (See **REAR CONSOLE REMOVAL/INSTALLATION**.)
3. Remove the shift lever knob (MTX). (See **MANUAL TRANSAXLE SHIFT MECHANISM REMOVAL/INSTALLATION [C66M-R]**.)
4. Remove the selector lever knob (ATX). (See **AUTOMATIC TRANSAXLE SHIFT MECHANISM REMOVAL/INSTALLATION**.)
5. Remove the shift panel. (See **SHIFT PANEL REMOVAL/INSTALLATION**.)
6. Remove the front console box. (See **FRONT CONSOLE BOX REMOVAL/INSTALLATION**.)
7. Remove the CD player (with CD player). (See **CD PLAYER REMOVAL**.) (See **CD PLAYER INSTALLATION**.)
8. Remove the side wall. (See **SIDE WALL REMOVAL/INSTALLATION**.)
9. Remove the glove compartment. (See **GLOVE COMPARTMENT REMOVAL/INSTALLATION**.)
10. Remove the decoration panel. (See **DECORATION PANEL REMOVAL/INSTALLATION**.)
11. Remove the front console. (See **FRONT CONSOLE REMOVAL/INSTALLATION**.)
12. Remove the driver-side front scuff plate. (See **FRONT SCUFF PLATE REMOVAL/INSTALLATION**.)
13. Remove the driver-side front side trim. (See **FRONT SIDE TRIM REMOVAL/INSTALLATION**.)
14. Remove the hood release lever. (See **HOOD RELEASE LEVER AND RELEASE CABLE REMOVAL/INSTALLATION**.)
15. Remove the fuel-filler lid opener lever. (See **FUEL-FILLER LID OPENER AND LEVER REMOVAL/INSTALLATION**.)
16. Remove the lower panel. (See **LOWER PANEL REMOVAL/INSTALLATION**.)
17. Remove the knee bolster. (See **KNEE BOLSTER REMOVAL/INSTALLATION**.)
18. Remove the AudioPilot®2 microphone (with Bose®). (See **AudioPilot®2 MICROPHONE REMOVAL/INSTALLATION**.)
19. Detach the harness clips shown in the figure.

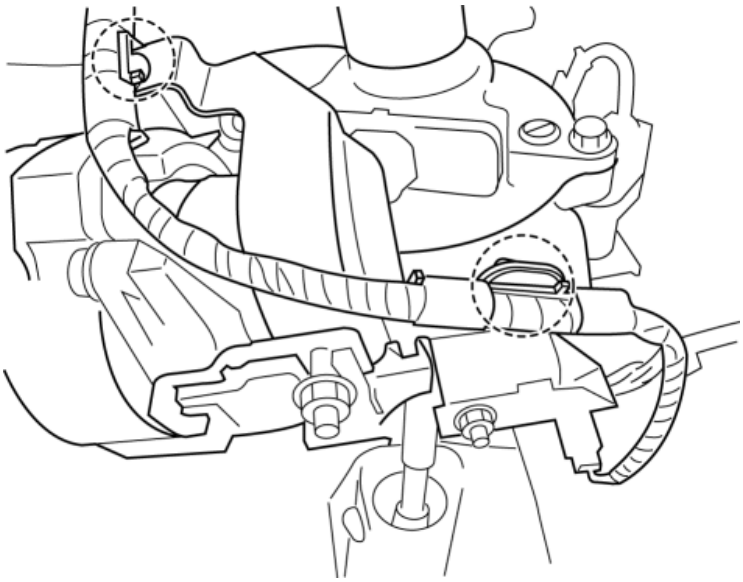

20. Remove in the order indicated in the table.

21. Install in the reverse order of removal.

22. If the EPS CM is replaced, perform the following procedure.

    a. After installation, switch the ignition ON or start the engine, and maintain this condition for **approx. 1 min** to allow the EPS CM automatic configuration to be performed.

    b. Switch the ignition OFF, and maintain this condition for **approx. 3 s**

    c. Switch the ignition ON (engine on or off) to allow the EPS CM automatic configuration to be performed.

    d. Clear the DTC from the memory. (See **ELECTRIC POWER STEERING (EPS) ON-BOARD DIAGNOSIS**.)

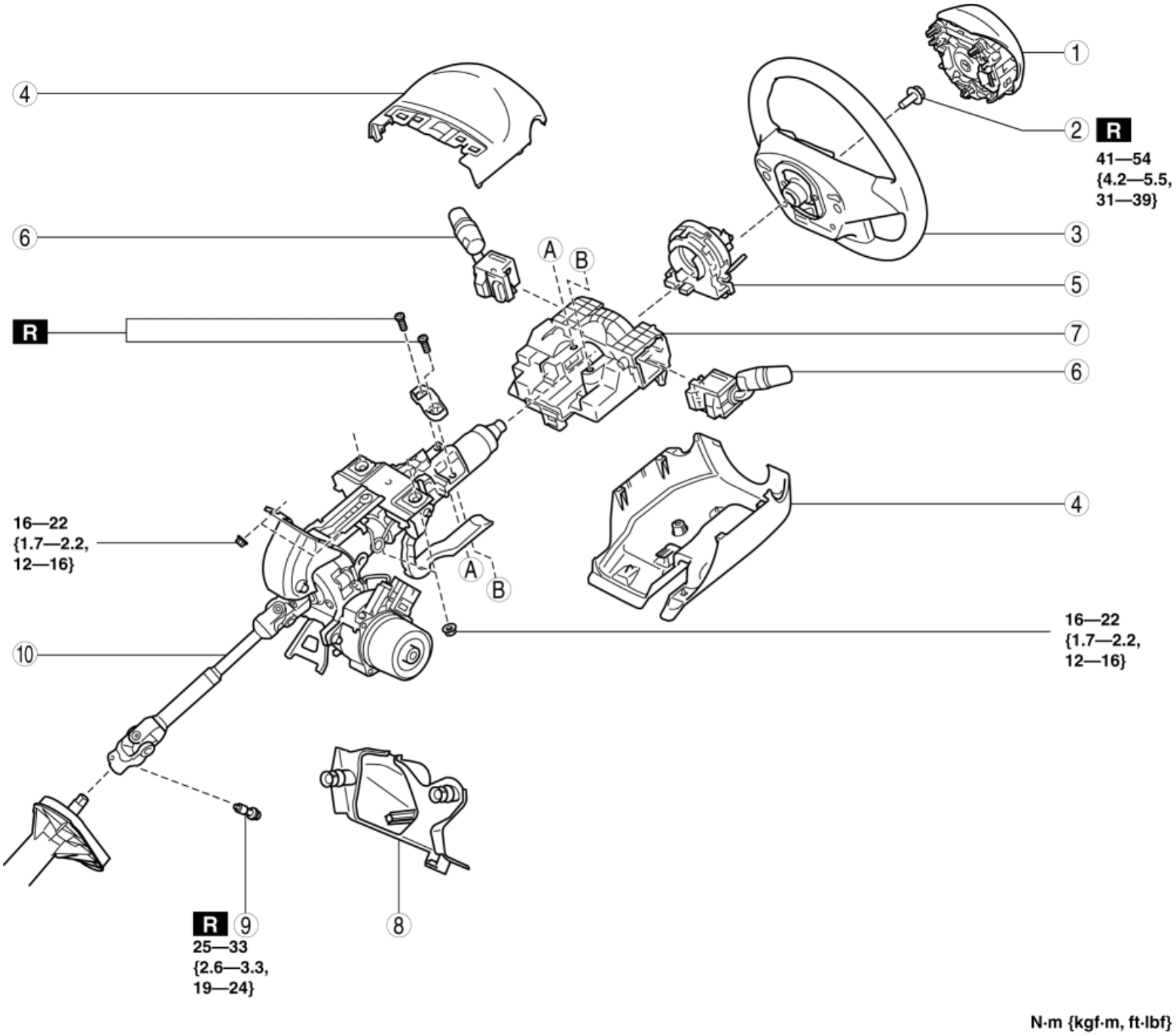

1	Driver-side air bag module (See **DRIVER-SIDE AIR BAG MODULE REMOVAL [TWO-STEP DEPLOYMENT CONTROL SYSTEM]**.) (See **DRIVER-SIDE AIR BAG MODULE INSTALLATION [TWO-STEP DEPLOYMENT CONTROL SYSTEM]**.) (See **DRIVER-SIDE AIR BAG MODULE REMOVAL [STANDARD DEPLOYMENT CONTROL SYSTEM]**.) (See **DRIVER-SIDE AIR BAG MODULE INSTALLATION [STANDARD DEPLOYMENT CONTROL SYSTEM]**.)
2	Lockbolt
3	Steering wheel (See **Steering Wheel Removal Note**.) (See **Steering Wheel Installation Note**.)

4	Column cover (See **COLUMN COVER REMOVAL/INSTALLATION**.)
5	Clock spring (See **CLOCK SPRING REMOVAL/INSTALLATION [TWO-STEP DEPLOYMENT CONTROL SYSTEM]**.) (See **CLOCK SPRING REMOVAL/INSTALLATION [STANDARD DEPLOYMENT CONTROL SYSTEM]**.)
6	Light switch, wiper and washer switch (See **LIGHT SWITCH REMOVAL/INSTALLATION**.) (See **WIPER AND WASHER SWITCH REMOVAL/INSTALLATION**.)
7	Start stop unit (See **START STOP UNIT REMOVAL/INSTALLATION**.)
8	Joint cover
9	Joint bolt
10	Steering column component (See **Steering Column Component Removal Note**.) (See **Steering Column Component Installation Note**.)

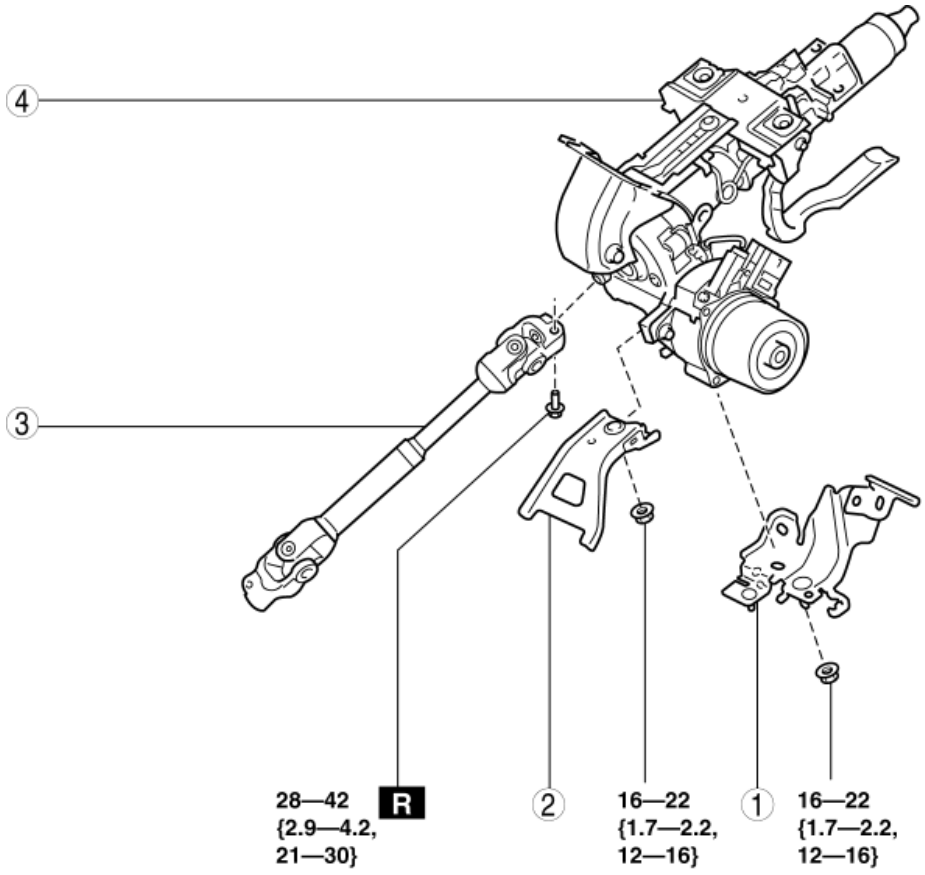

N·m {kgf·m, ft·lbf}

1	Harness bracket

2*	Bracket (MTX vehicles) (See **Bracket Installation Note**.)
3	Intermediate shaft (See **INTERMEDIATE SHAFT REMOVAL/INSTALLATION**.)
4	Steering column

* **Except U.S.A. and Canada**

Steering Wheel Removal Note

CAUTION:

- Do not try to remove the steering wheel by hitting the shaft with a hammer. The steering column will be damaged.

1. Set the vehicle wheels in the straight-ahead position.
2. Remove the steering wheel using any commercially available puller.

Steering Column Component Removal Note

CAUTION:

- Always lock the adjusting lever to prevent damage to the steering column. In addition, do not unlock the adjusting lever until the steering column installation is completed.
- If the steering column is removed, remove it according to the procedure to prevent damage to intermediate shaft that could result if the steering column is removed in the incorrect order.

1. Lock the adjusting lever.
2. Place alignment marks on the steering gear (pinion) and the intermediate shaft as shown in the figure.

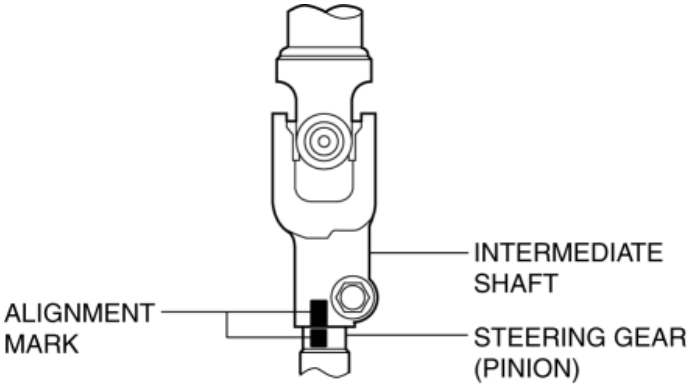

3. Remove the bolt, disconnect the intermediate shaft from the steering gear (pinion shaft).
4. Remove the nut, and then remove the steering column component from the dashboard member.

Bracket Installation Note

1. Insert the bracket bolt into the steering column and install the projecting part of the bracket to the installation area of the steering column.

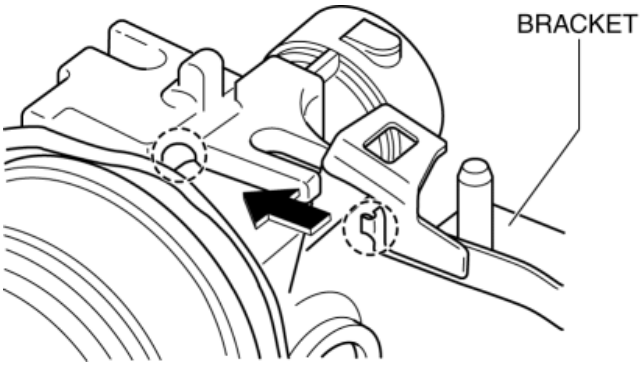

2. Verify that the projection on the steering column is inserted into the hole in the bracket as shown in the figure and tighten the nut to the specified torque.

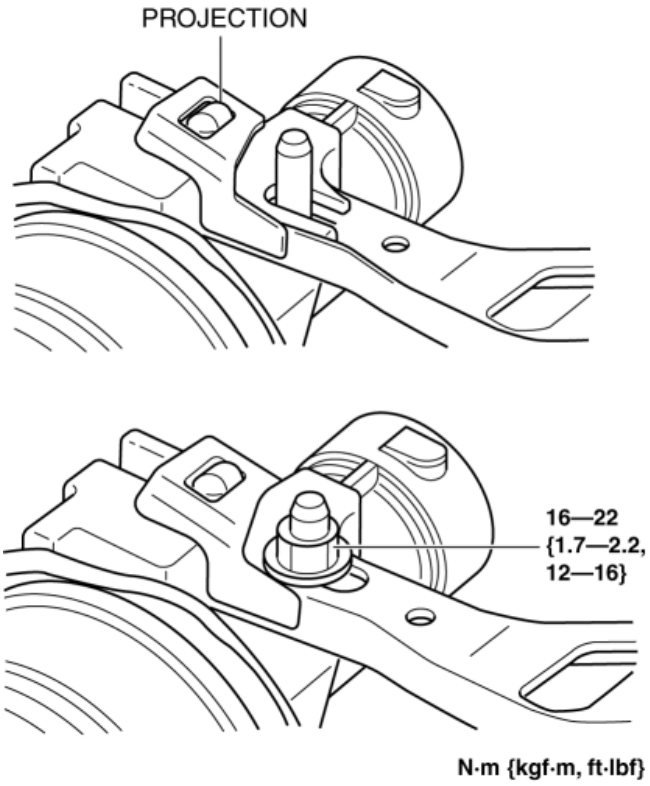

Steering Column Component Installation Note

CAUTION:

- If the steering column is installed, install it according to the procedure to prevent damage to intermediate shaft that could result if the steering column is installed in the incorrect order.
- Do not unlock the adjusting lever until the steering column installation is completed to prevent damage to the steering column.

1. Temporarily install the steering column component to the dashboard member using nuts A and B.

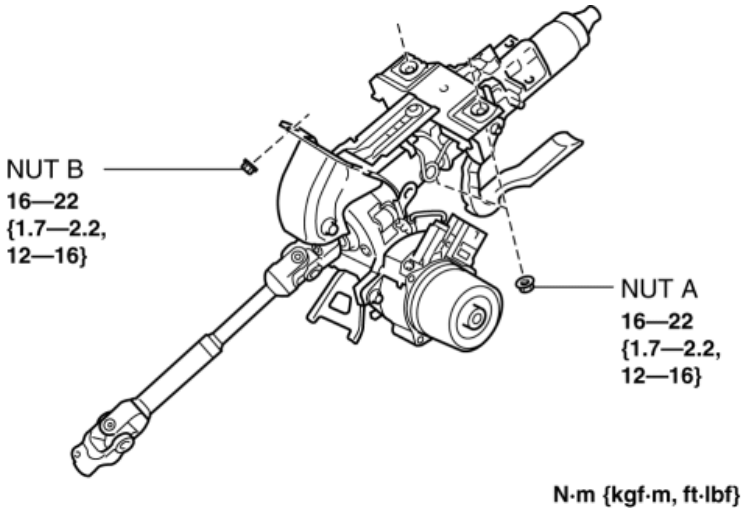

2. Tilt the steering column component towards the temporarily installed nut B and temporarily install the steering column component to the instrument panel member using nut A

3. Tighten the nuts in the order of nut A and nut B.

4. Align the alignment marks on the steering column and the steering gear (pinion), which were placed before removing the intermediate shaft, and install the intermediate shaft.

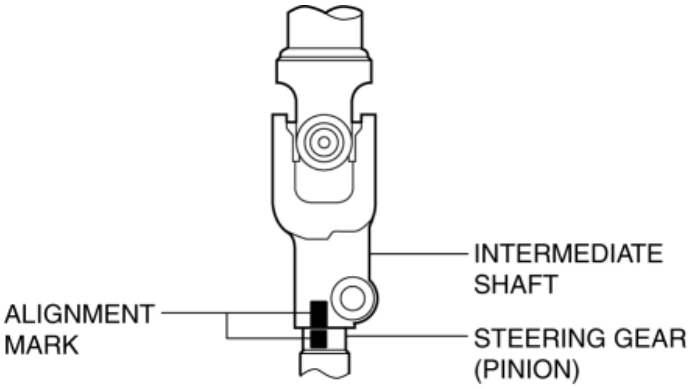

5. Tighten a new joint bolt.

NOTE:

- Verify that joint bolt is installed to the groove of the steering gear (pinion).

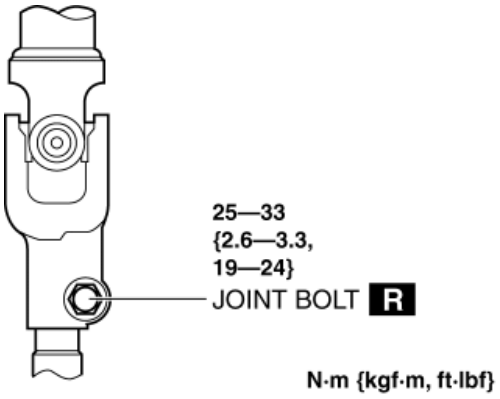

Steering Wheel Installation Note

1. Set the vehicle wheels in the straight-ahead position, and install the steering wheel using a new lockbolt.

2014 - Mazda3 - Steering

INTERMEDIATE SHAFT REMOVAL/INSTALLATION

WARNING:

- The steering column (EPS motor) temperature increases directly after continuous turning of the steering mechanism which could cause burns if it is touched. Before performing any servicing, verify that the steering column has cooled off.

1. Rotate the steering wheel until the joint bolt is in a position in which it can be removed.

CAUTION:

- Secure the steering wheel using tape or a cable to prevent the steering shaft from rotating after disconnecting the intermediate shaft. If the steering wheel rotates after the steering shaft and the steering gear and linkage are disconnected, the internal parts of the clock spring could be damaged.

2. Lock the adjusting lever.
3. Remove in the order indicated in the table.
4. Install in the reverse order of removal.

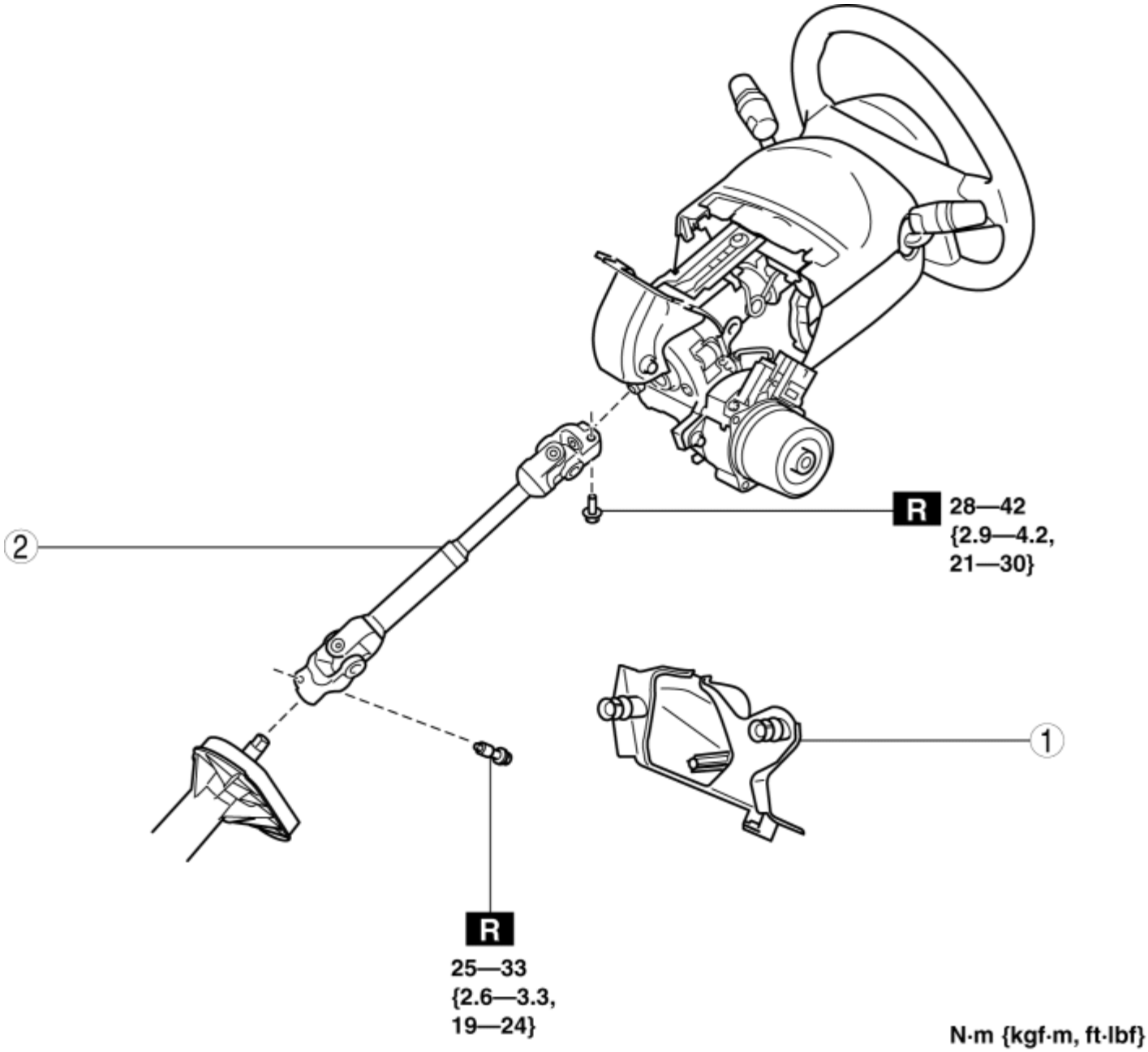

1	Joint cover
2	Intermediate shaft (See **Intermediate Shaft Removal Note**.) (See **Intermediate Shaft Installation Note**.)

Intermediate Shaft Removal Note

1. Place an alignment mark across the break between the steering column and the yoke for the

intermediate shaft as shown in the figure.

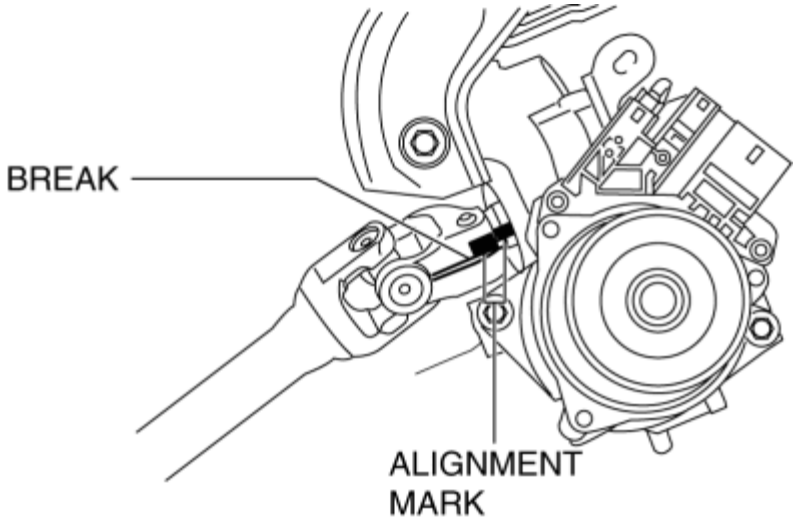

2. Place alignment marks on the steering gear (pinion) and the intermediate shaft as shown in the figure.

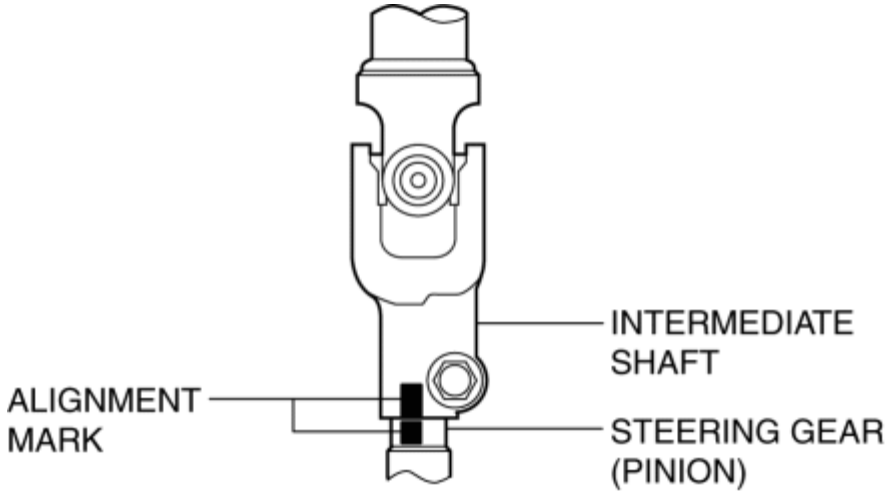

3. Remove joint bolt A, then joint bolt B.

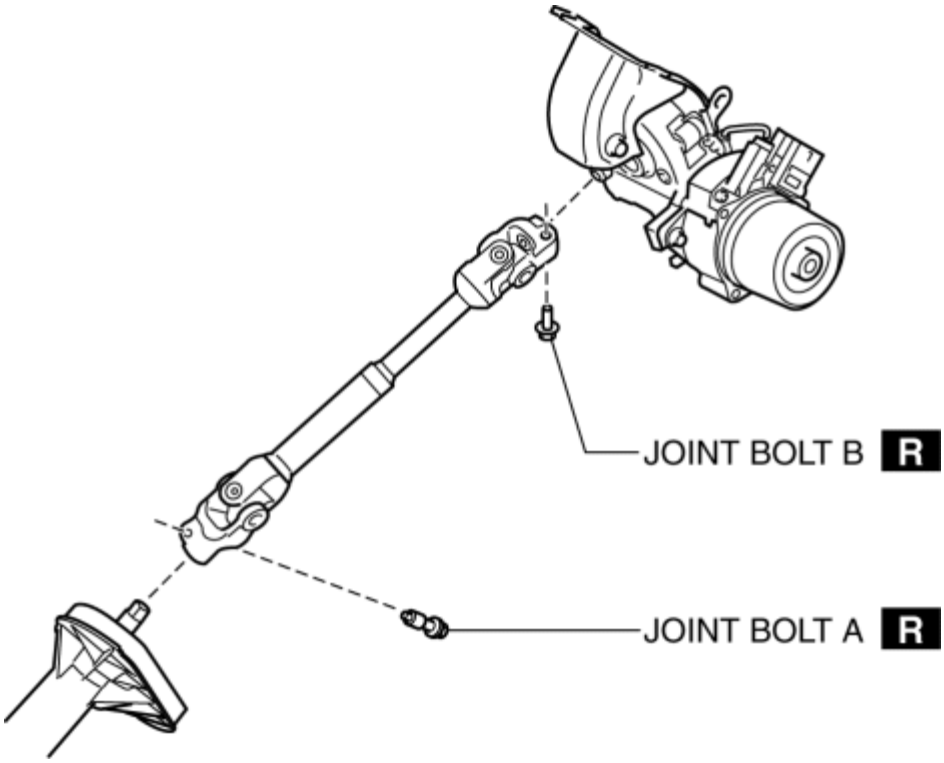

4. Remove the intermediate shaft.

Intermediate Shaft Installation Note

1. Place alignment marks on the new intermediate shaft in the same positions as the removed intermediate shaft.

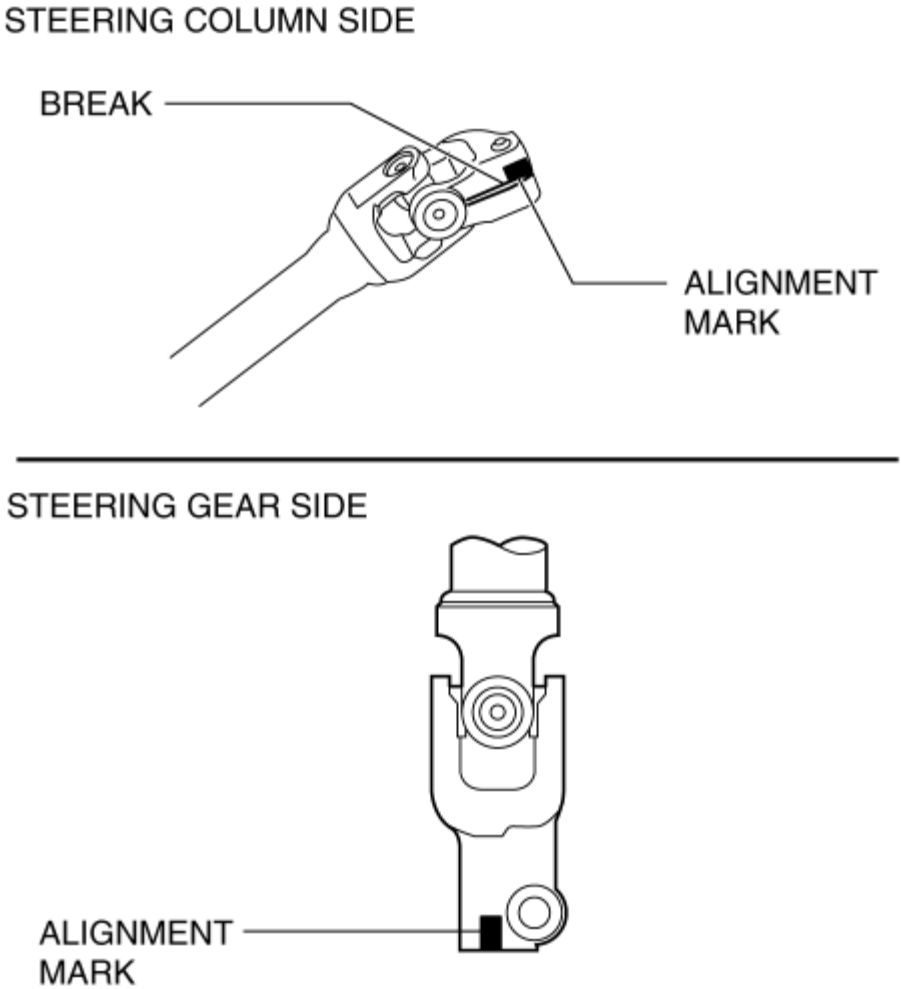

2. Align the alignment marks on the steering column and the steering gear (pinion), which were placed before removing the intermediate shaft, and install the intermediate shaft.

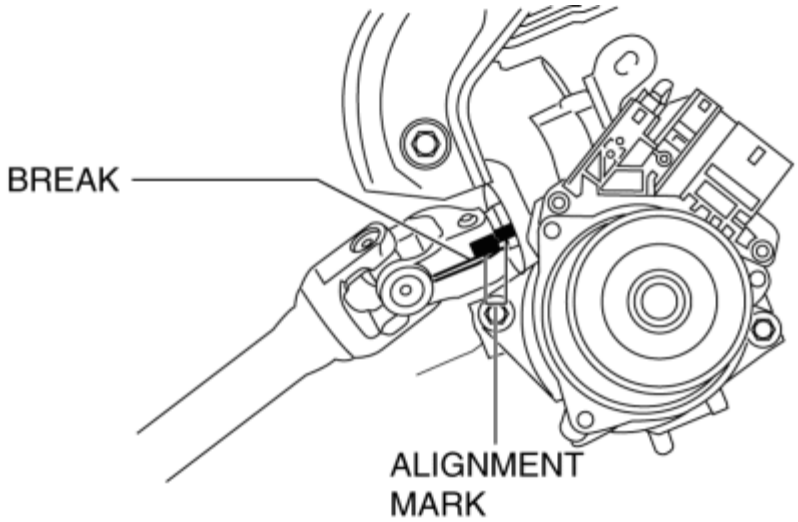

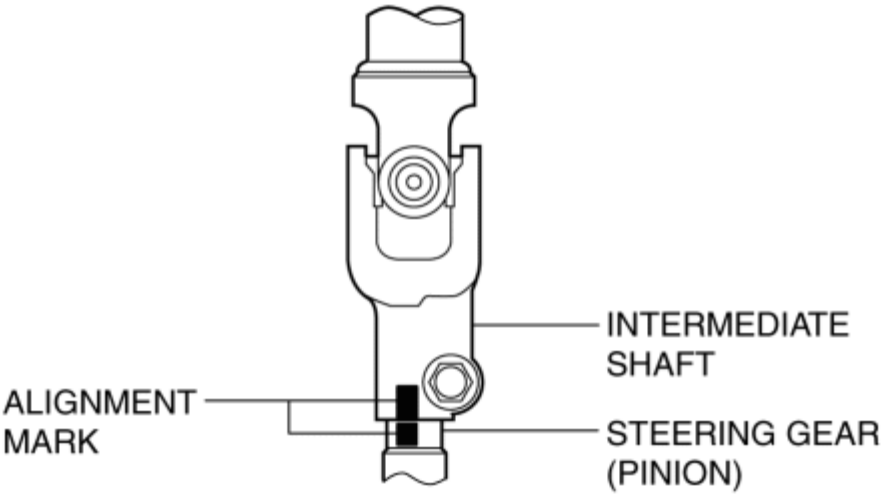

NOTE:

- Install joint bolt B, then joint bolt A.

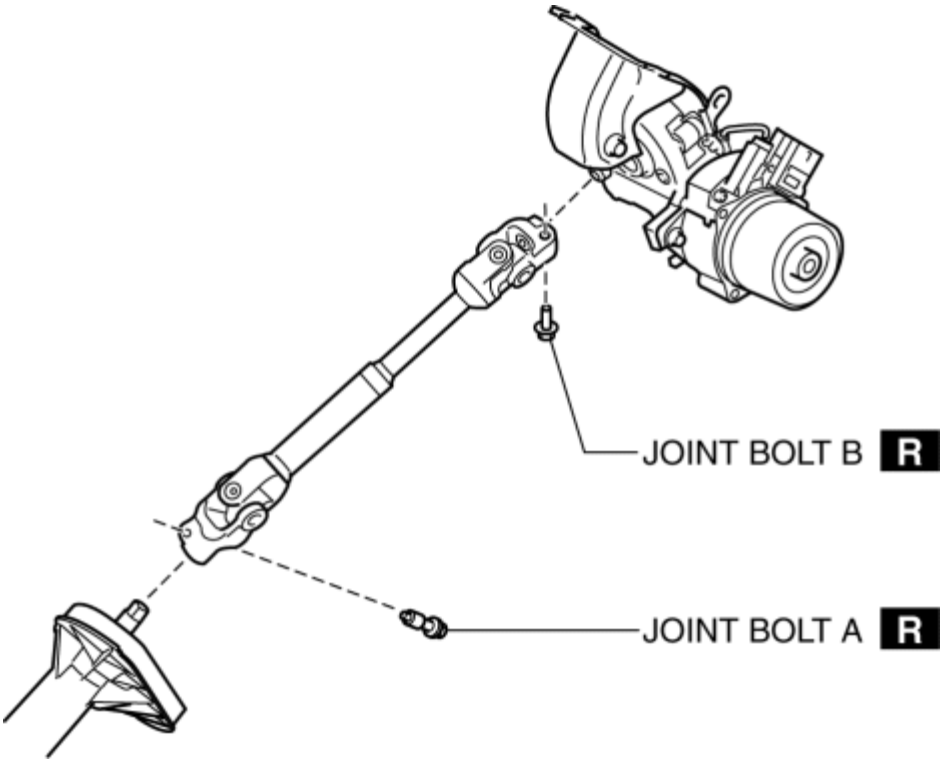

3. Verify that the joint bolt B flange is seated in the specified position.

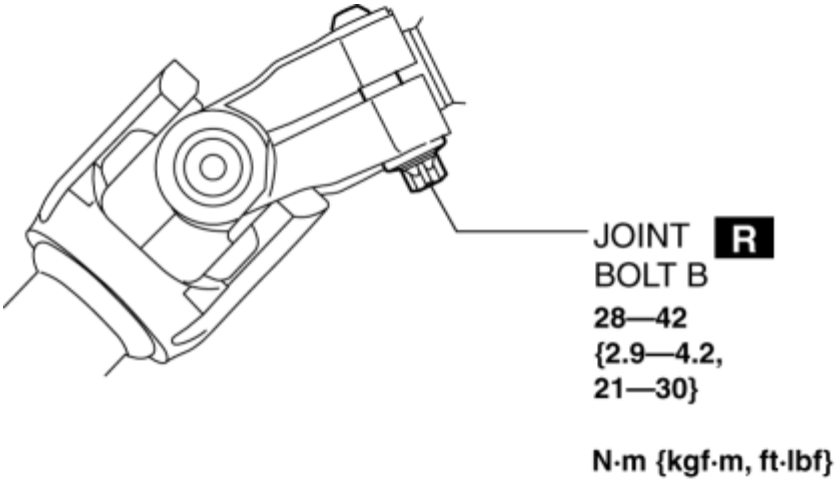

4. Verify that joint bolt A is installed to the groove of the steering gear (pinion).

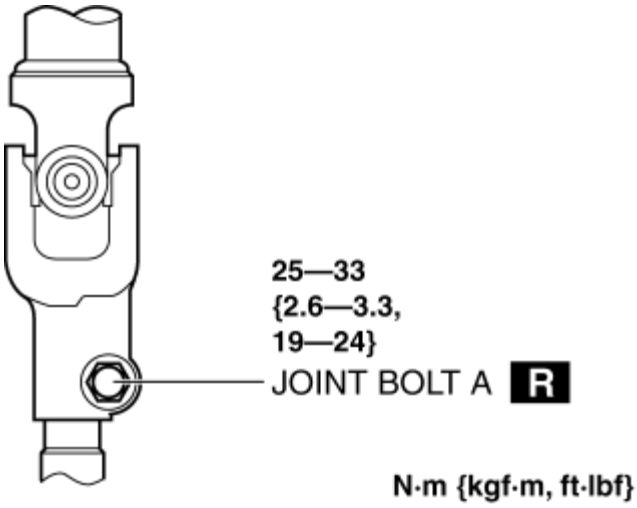

2014 - Mazda3 - Steering

STEERING SHAFT INSPECTION

1. Inspect the steering column for excessive play and damage.

2. Verify that the clearance between the projection on the steering column shown in the figure and the bracket is less than **2.0 mm {0.079 in}**.

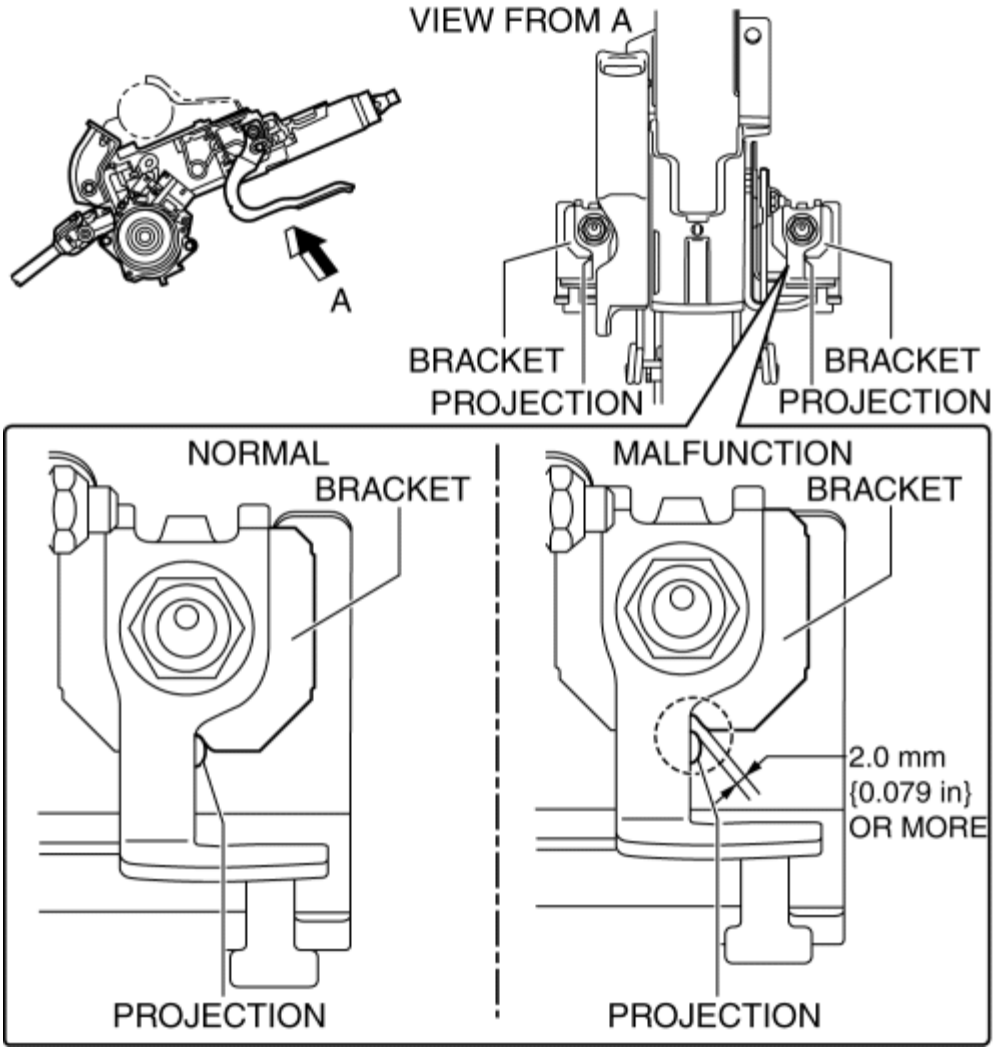

- If the clearance between the projection and bracket is **2.0 mm {0.079 in}** or more, replace the steering column component.

NOTE:

- If the clearance between the projection and bracket is **2.0 mm {0.079 in}** or more, the impact absorbing mechanism of the steering column will operate, therefore it is necessary to replace the steering column component.

3. Inspect the tilt/telescope mechanism operation for the following:

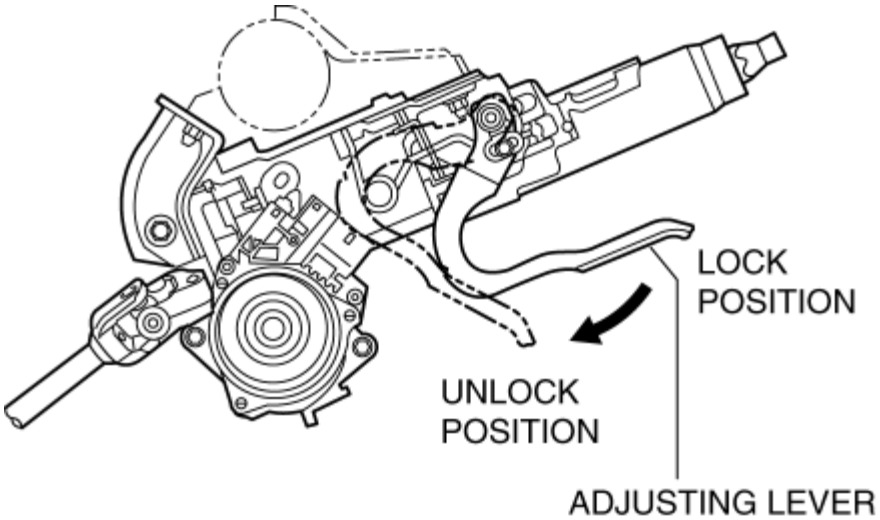

a. The adjusting lever moves smoothly from the lock to the unlock position.

b. The steering shaft is fixed firmly when the adjusting lever is locked.

- If there is any malfunction, replace the steering column.

2014 - Mazda3 - Steering

TIE-ROD END REPLACEMENT

1. Remove the snap pin.

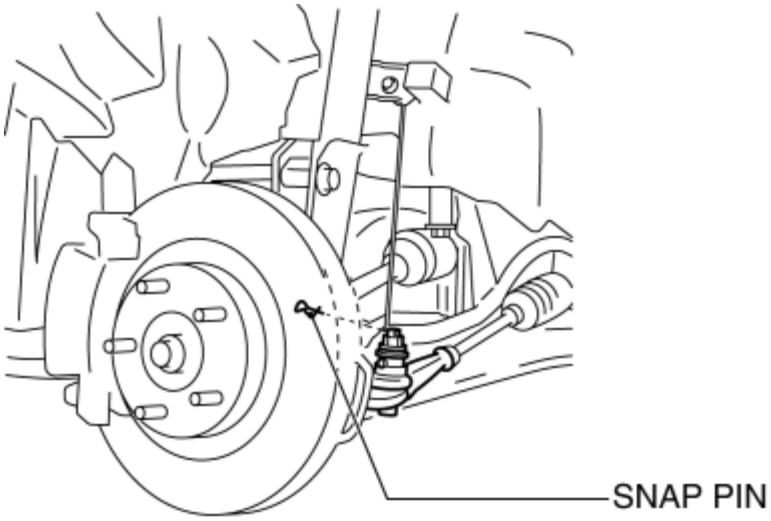

2. Loosen the tie-rod end locknut.
3. Detach the tie-rod end from the steering knuckle using the **SST**.

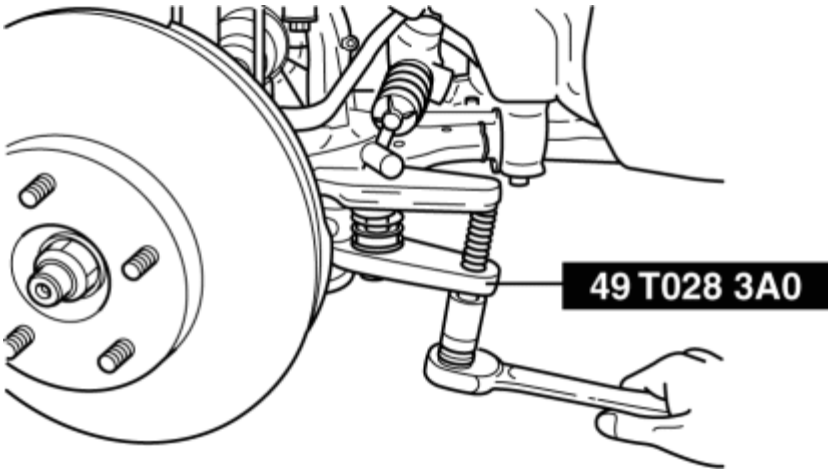

4. Remove the tie-rod end locknut.
5. Place alignment marks as shown in the figure for proper installation.

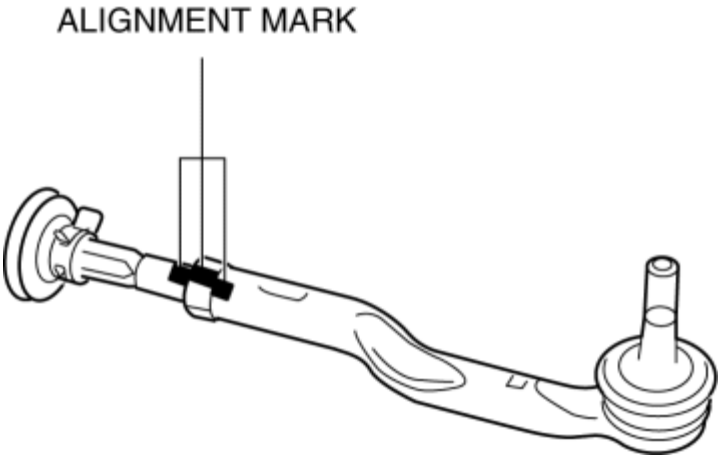

6. Remove the tie-rod end.

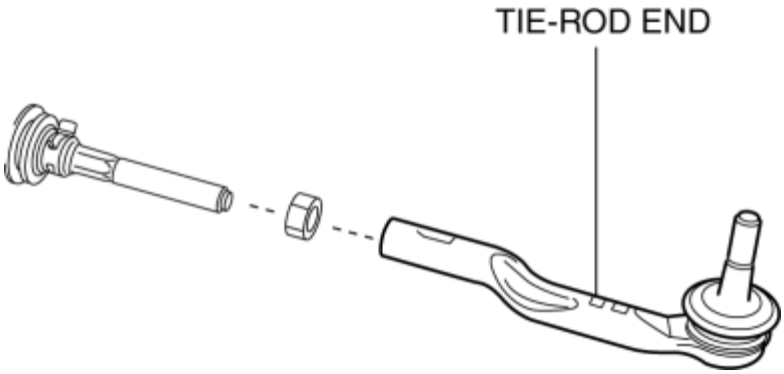

7. Align the alignment marks made before removing the tie-rod end, and then install a new tie-rod end to the tie rod.

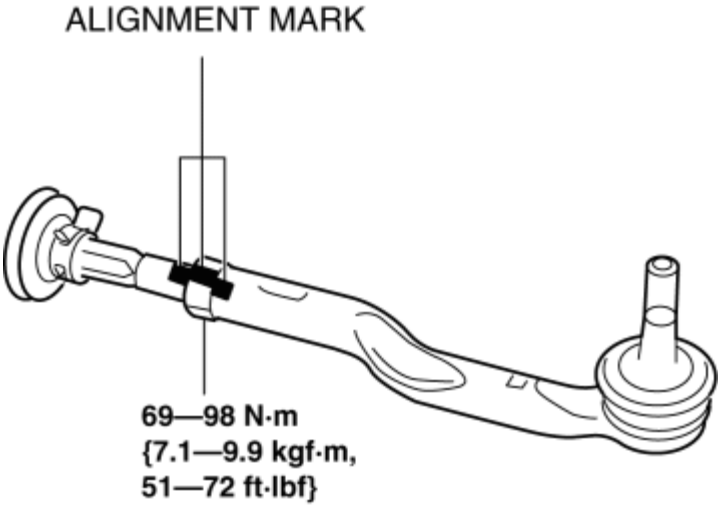

NOTE:

- "R" is inscribed on the right side of the tie-rod end and "L" is inscribed on the left side of the tie-rod end. Verify if the part is for the left or right side before installation because the left and right parts of the tie-rod end have different shapes.

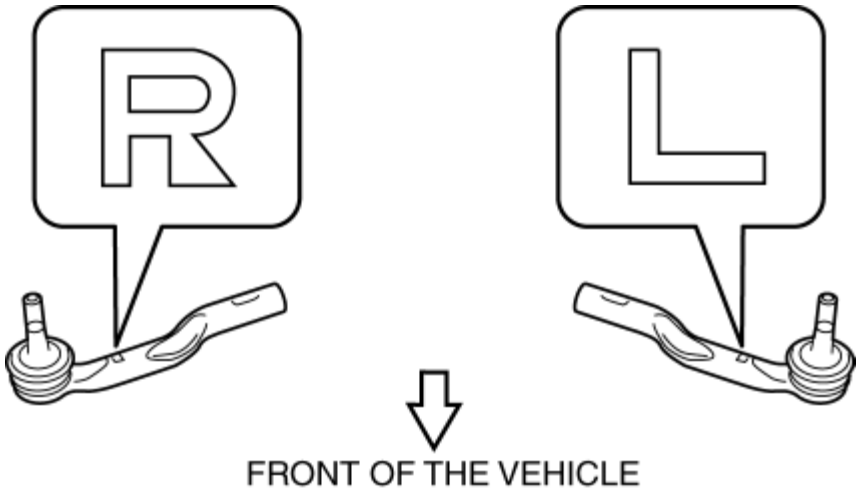

- If there are no alignment marks, go to the following procedure.

8. Adjust dimension A shown in the figure to the standard, and assemble.

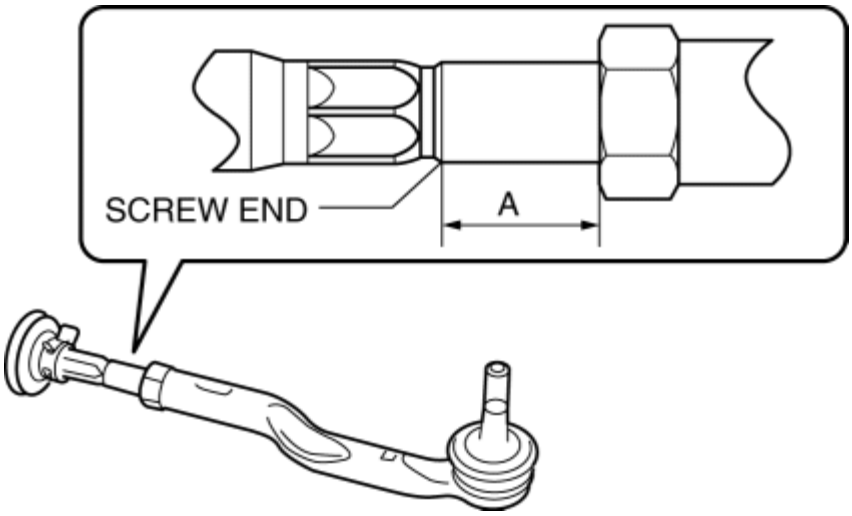

Standard Dimension A

- 8.4—21.4 mm {0.34—0.84 in}

9. Install the tie-rod end to the steering knuckle.

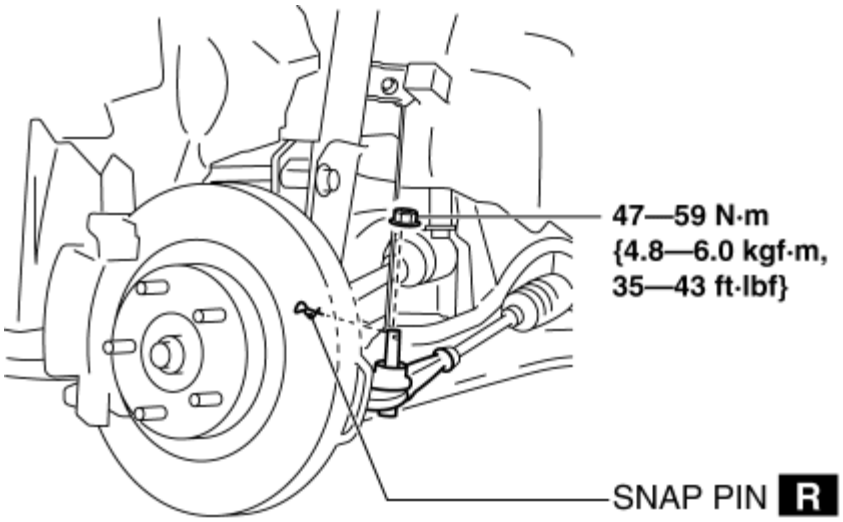

10. Install a new snap pin.

11. After installation, inspect the front wheel alignment and adjust it if necessary. (See **FRONT WHEEL ALIGNMENT**.)

2014 - Mazda3 - Steering

STEERING GEAR AND LINKAGE REMOVAL/INSTALLATION

CAUTION:

- Performing the following procedures without first removing the ABS wheel-speed sensor may possibly cause an open circuit in the wiring harness if it is pulled by mistake. Before performing the following procedures, disconnect the ABS wheel-speed sensor connector (axle side) and fix the wiring harness to an appropriate place where it will not be pulled by mistake while servicing the vehicle.
- Secure the steering wheel using tape or a cable to prevent the steering shaft from rotating after disconnecting the steering shaft. If the steering wheel rotates after the steering shaft and the steering gear and linkage are disconnected, the internal parts of the clock spring could be damaged.

1. Remove the joint cover. (See **STEERING WHEEL AND COLUMN REMOVAL/INSTALLATION**.)

2. Disconnect the intermediate shaft from the steering gear and linkage. (See **STEERING WHEEL AND COLUMN REMOVAL/INSTALLATION**.)

3. Disconnect the front ABS wheel-speed sensor wiring harness installed to the steering knuckle and set it aside. (See **FRONT ABS WHEEL-SPEED SENSOR REMOVAL/INSTALLATION**.)

4. Remove the front under cover No.2. (See **FRONT UNDER COVER No.2 REMOVAL/INSTALLATION**.)

5. Remove the front under cover No.1. (See **FRONT UNDER COVER No.1 REMOVAL/INSTALLATION**.)

6. Remove the splash shield. (See **SPLASH SHIELD REMOVAL/INSTALLATION**.)

7. Remove the front crossmember component. (See **FRONT CROSSMEMBER REMOVAL/INSTALLATION**.)

8. Remove in the order indicated in the table.

9. Install in the reverse order of removal.

10. After installation, inspect the front wheel alignment. (See **FRONT WHEEL ALIGNMENT**.)

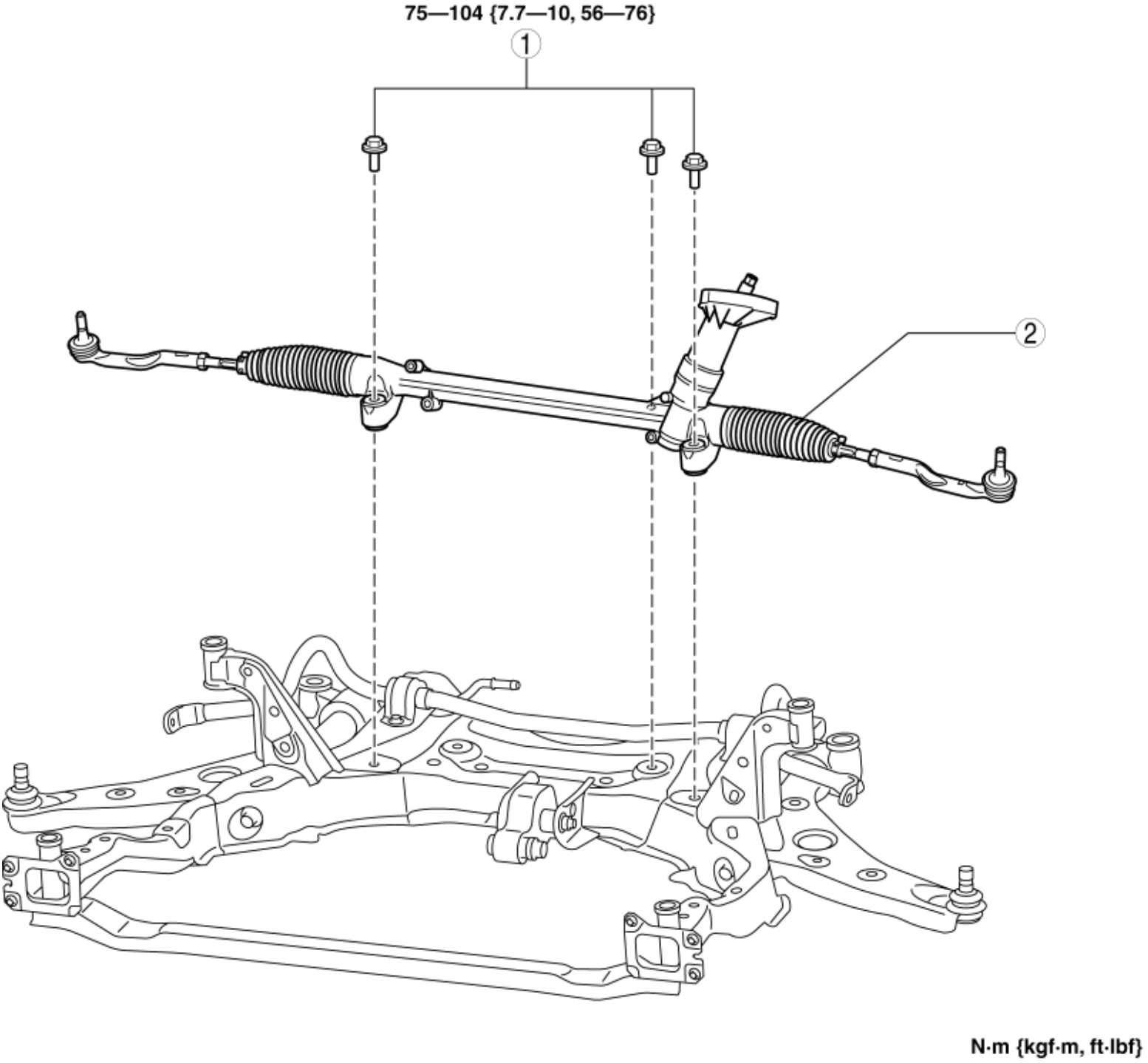

1	Steering gear and linkage installation bolt
2	Steering gear and linkage (See **Steering Gear and Linkage Removal Note**.)

Steering Gear and Linkage Removal Note

1. Remove the steering gear and linkage installation bolts, move the steering gear and linkage in the direction and order of the arrows shown in the figure, and then remove it.

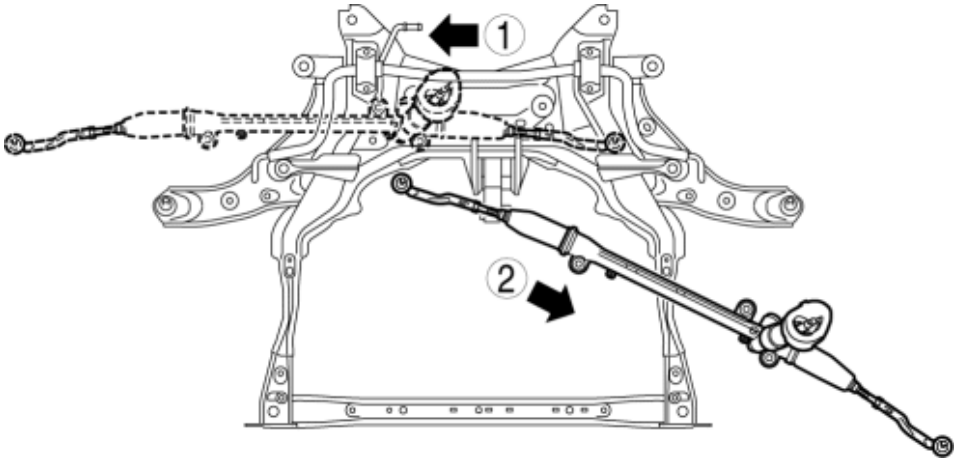

2014 - Mazda3 - Steering

STEERING GEAR AND LINKAGE INSPECTION

1. Remove the steering gear and linkage. (See **STEERING GEAR AND LINKAGE REMOVAL/INSTALLATION**.)

2. Remove the tie-rod end and boot. (See **STEERING GEAR AND LINKAGE DISASSEMBLY**.)

3. Measure the rotation torque of the pinion shaft using a crescent wrench and pull scale. (speed measurement reference **10—15 rpm**)

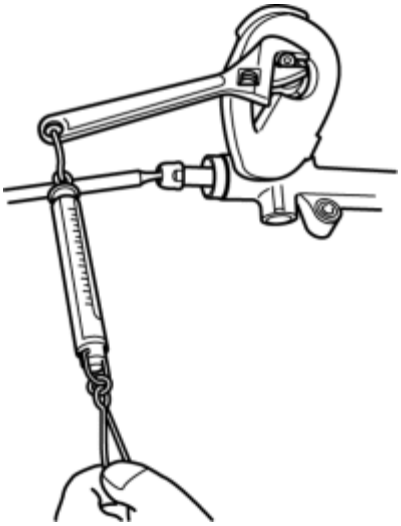

a. Install the crescent wrench to the steering gear.

b. Measure the length from the pinion shaft center to the crescent wrench end (application point of pull scale) as shown in the figure. This is dimension A.

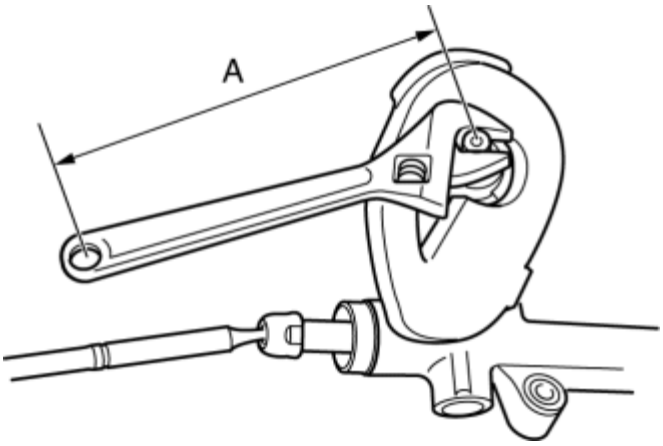

c. The rotation torque of the pinion shaft can be calculated using the following formula Measured value using pull scale (N {kgf, lbf}) = rotation torque of the pinion shaft (N·m {kgf·cm, in·lbf})/length A (m {cm, in})

Pinion shaft rotation torque (center of rack ± 180°)

- 1.2—1.8 N·m {13—18 kgf·cm, 11—15 in·lbf} [Pull scale reading: 1.2—1.8 N·m {13—18 kgf·cm, 11—15 in·lbf}/A (m {cm, in})]
- If not within the specification, replace the steering gear. (See **STEERING GEAR AND LINKAGE REMOVAL/INSTALLATION**.)

2014 - Mazda3 - Steering

STEERING GEAR AND LINKAGE DISASSEMBLY

CAUTION:

- To prevent damage to the steering gear, secure it to the vise using a copper plate or clean cloth.

1. Disassemble in the order indicated in the figure.

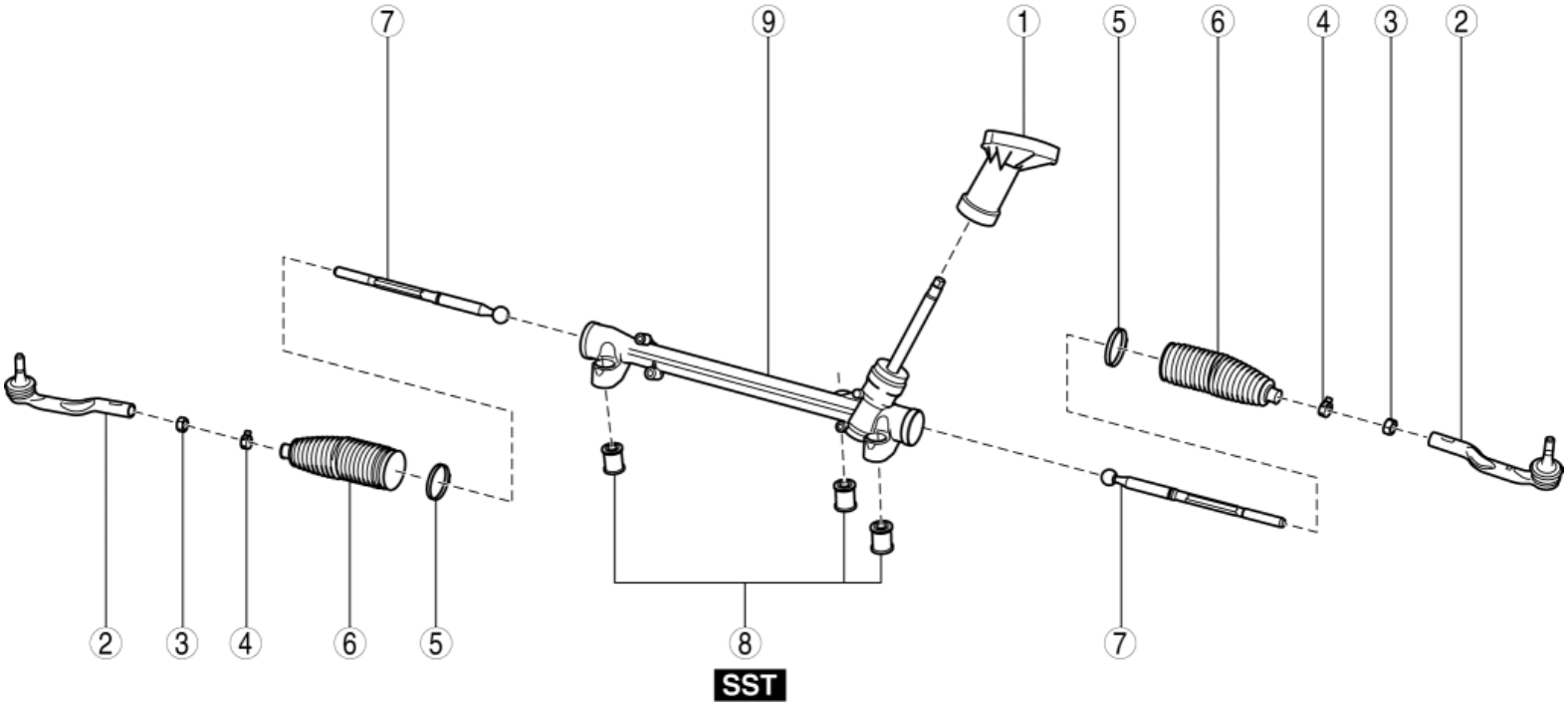

1	Dust cover
2	Tie-rod end (See **Tie-rod End Disassembly Note**.)
3	Locknut
4	Boot clamp
5	Boot band (See **Boot Band Disassembly Note** .)
6	Boot
7	Tie rod (See **Tie Rod Disassembly Note**.)
8	Mounting rubber (See **Mounting Rubber Disassembly Note**.)
9	Steering gear

Tie-rod End Disassembly Note

1. Place alignment marks as shown in the figure for proper installation.

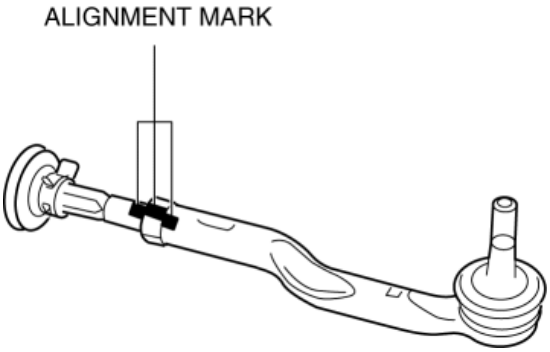

2. Remove the tie-rod end.

Boot Band Disassembly Note

1. Insert a flathead screwdriver into the boot band as shown in the figure, then press the caulked area outward to remove the boot band.

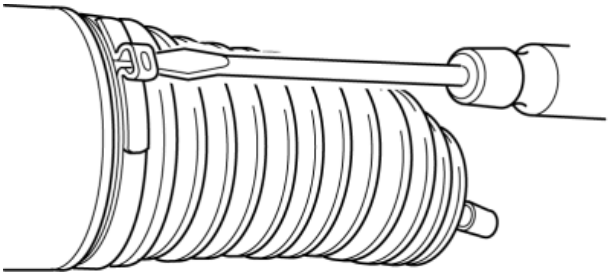

Tie Rod Disassembly Note

1. Lock the steering rack end (pinion gear side) against rotation with a suitable wrench and remove the tie rod using another one.

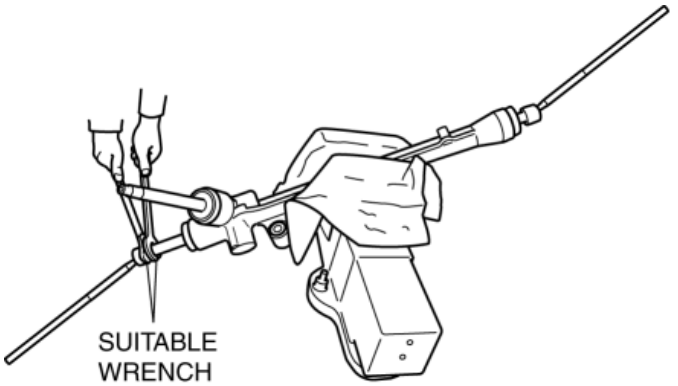

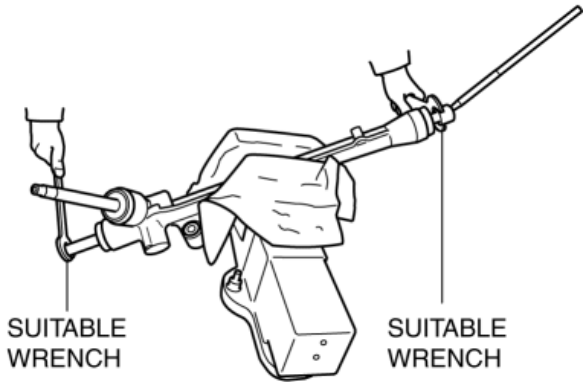

Mounting Rubber Disassembly Note

1. Remove the mounting rubber from the gear housing using the **SSTs** and a press.

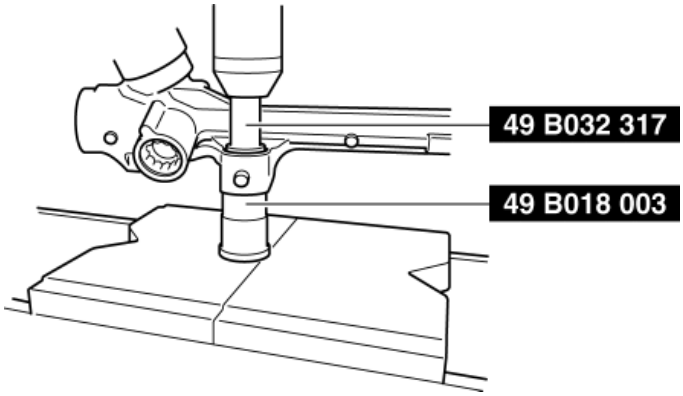

2014 - Mazda3 - Steering

TIE-ROD END INSPECTION

1. Inspect the tie-rod end for damage and the boot for cracks.
    - If there is any malfunction, replace the tie-rod end.
2. Inspect for excessive play.
    - If there is any malfunction, replace the tie-rod end.
3. Rotate the tie-rod end five times.
4. Install two nuts to the ball joint and measure the tie-rod end rotational torque using a torque wrench.

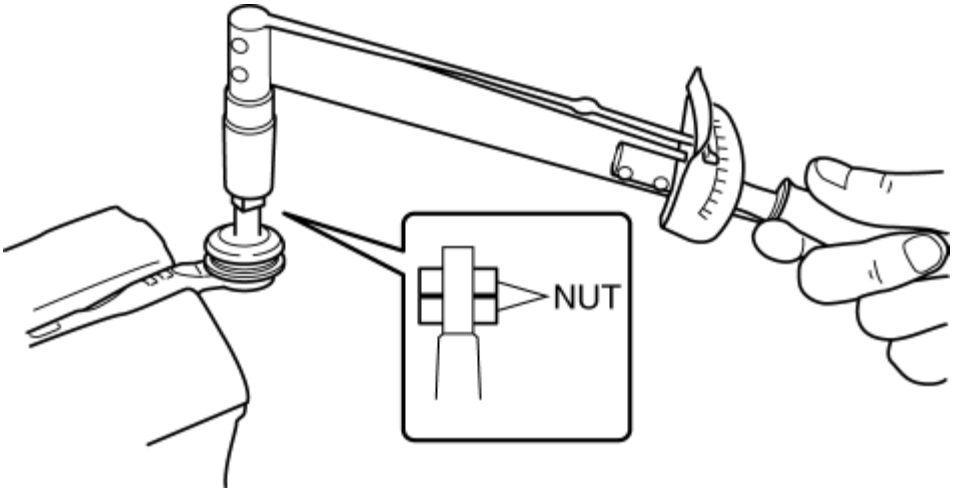

- If not within the specification, replace the tie-rod end.

  Tie-rod end rotational torque

- 0.6—3.0 N·m {6.2—30 kgf·cm, 5.4—26 in·lbf}

2014 - Mazda3 - Steering

TIE ROD INSPECTION

1. Inspect for bending and damage.
    - If there is any malfunction, replace the tie rod.
2. Inspect for excessive play.
    - If there is any malfunction, replace the tie rod.
3. Swing the tie rod five times.
4. Measure the swing torque of the tie rod using a pull scale.

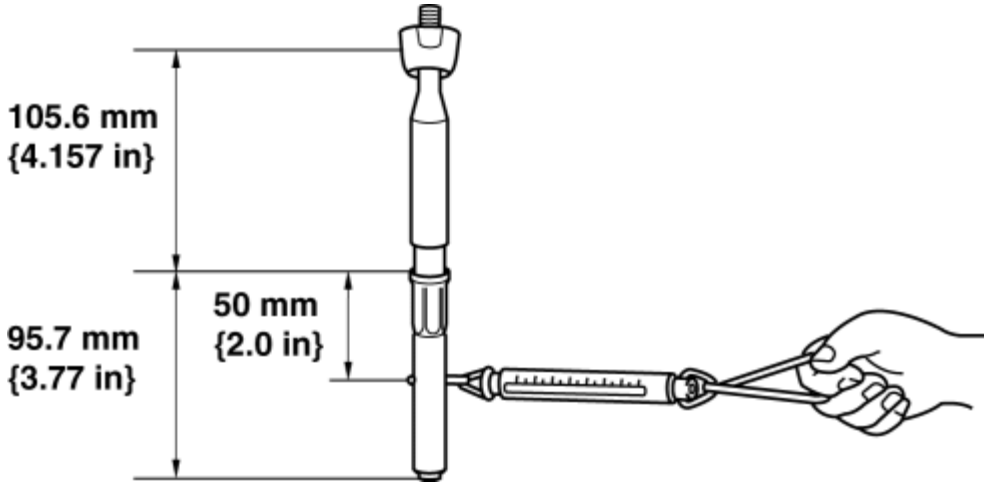

- If not within the specification, replace the tie rod.

Tie rod swing torque

- 0.4—4.0 N·m {4.1—40 kgf·cm, 3.6—35 in·lbf} [Pull scale reading: 2.6—26.0 N {0.3—2.6 kgf, 0.6—5.8 lbf}]

2014 - Mazda3 - Steering

STEERING GEAR AND LINKAGE ASSEMBLY

CAUTION:

- To prevent damage to the steering gear, secure it to the vise using a copper plate or clean cloth.

1. Assemble in the order shown in the figure.

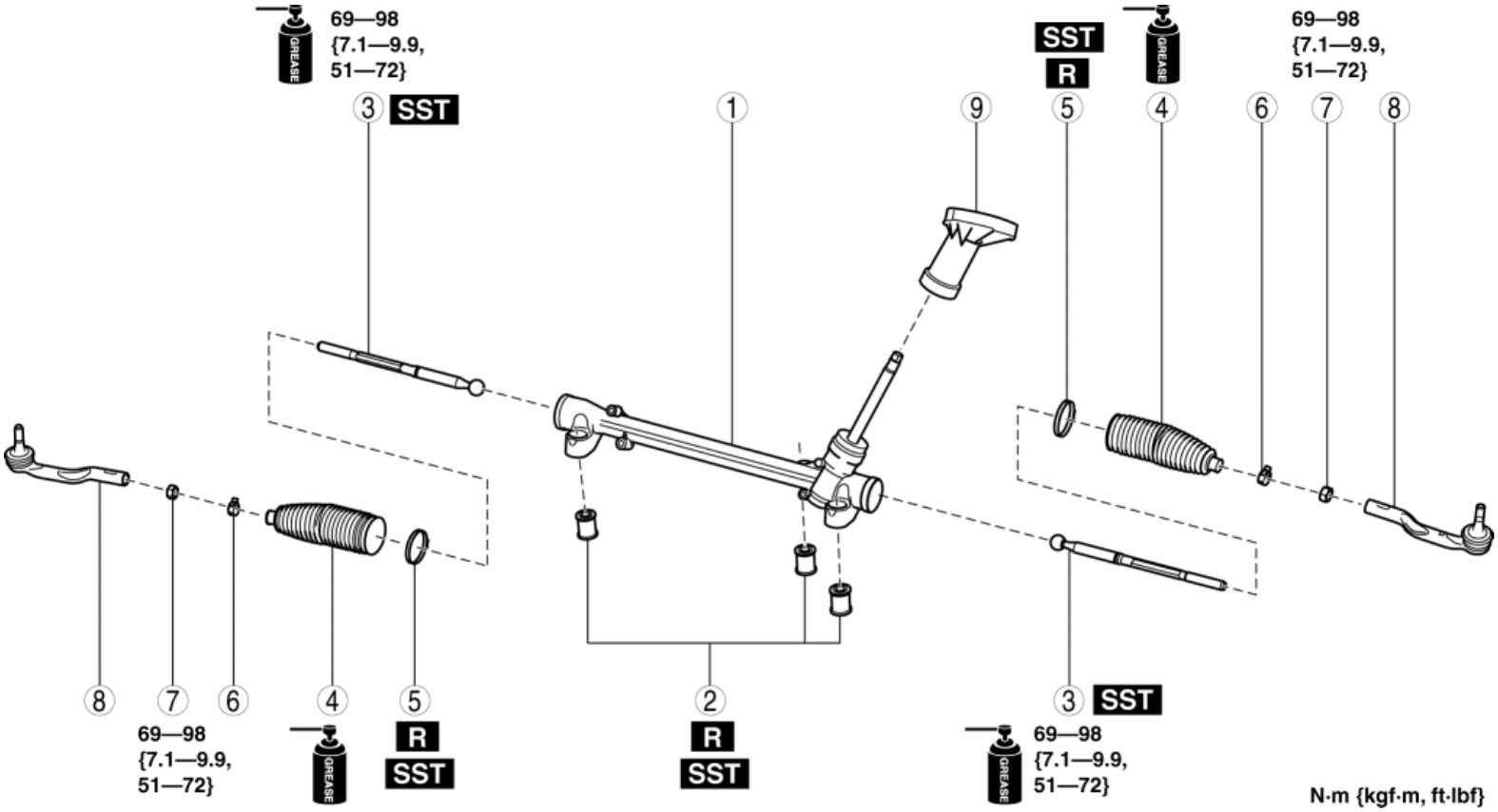

1	Steering gear
2	Mounting rubber (See **Mounting Rubber Assembly Note**.)
3	Tie rod (See **Tie Rod Assembly Note** .)
4	Boot
5	Boot band (See **Boot Band Assembly Note** .)
6	Boot clamp
7	Locknut

8	Tie-rod end (See **Tie-rod End Assembly Note**.)
9	Dust cover

Mounting Rubber Assembly Note

1. Apply soapy water to the rubber part of the mounting rubber.

2. Press fit the ear portion of the mounting rubber (lower side) using the SSTs until it projects from the gear housing as shown in the figure.

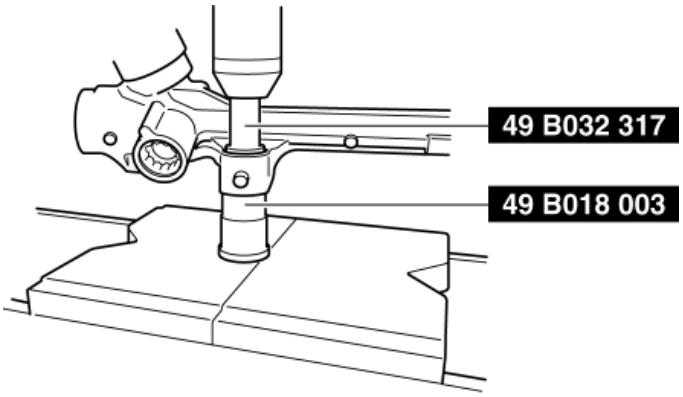

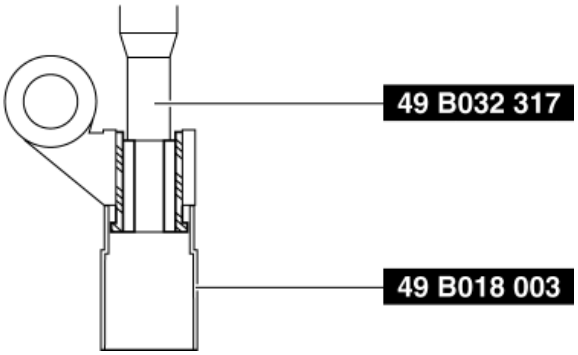

NOTE:

- Press fit the ear portion of the mounting rubber (upper side) until it partially enters the gear housing.

3. Reverse the gear housing, then press fit the mounting rubber using the SSTs and the press until the mounting rubber ear portion (upper side) contacts the gear housing.

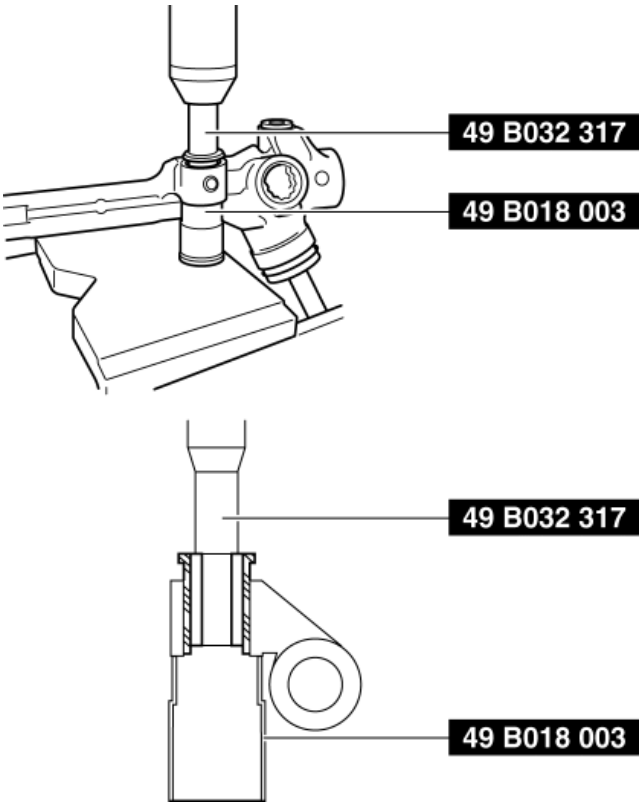

4. Verify that both mounting rubber ears are correctly assembled with no gaps between them and the gear housing as shown in the figure.

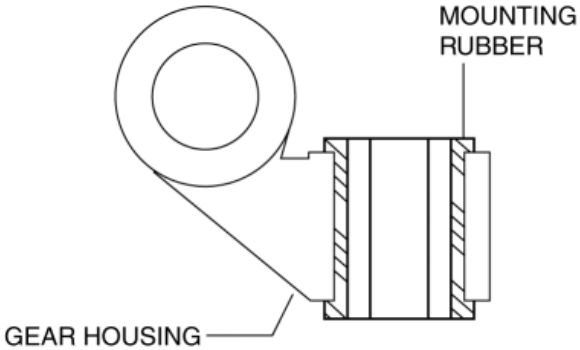

- If there are gaps, readjust their positions using the **SSTs** and the press.

Tie Rod Assembly Note

1. Lock the steering rack end (pinion gear side) against rotation with a suitable wrench and install the tie rod using another one.

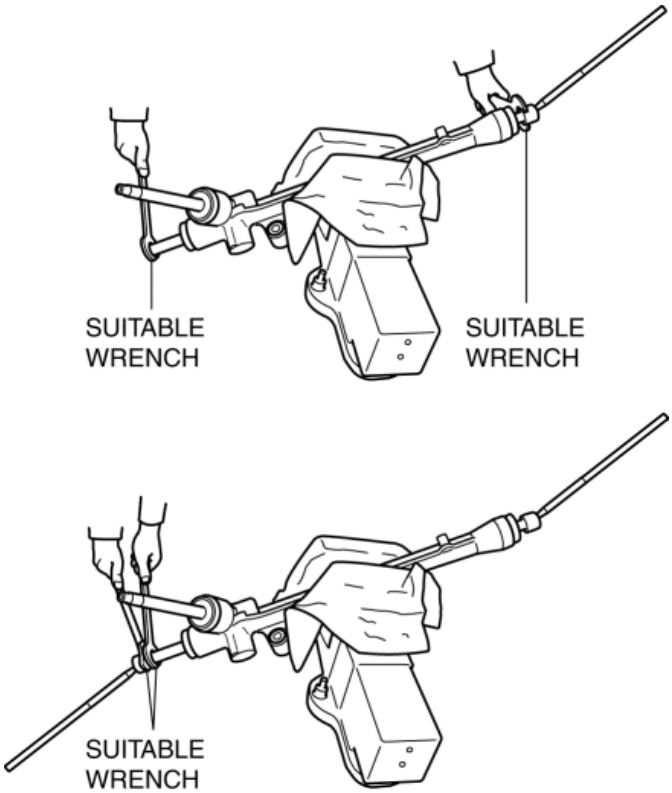

2. Combine the **SST** with the torque wrench, then measure A and L as shown in the figure.

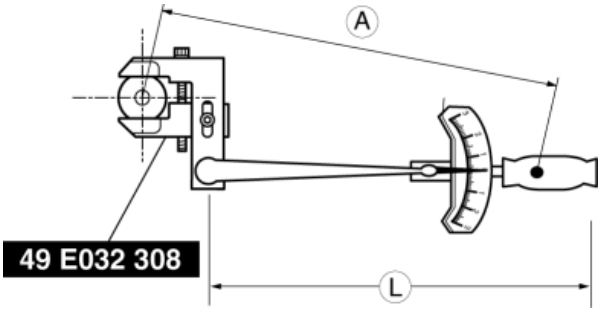

- A: Length from the center of the tie rod to the grip.
- L: Length of the torque wrench.

3. Recalculate the torque by using torque formulas, then tighten the tie rod using the **SST**.

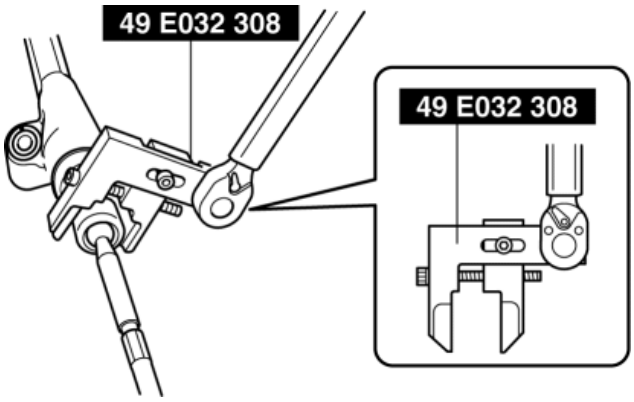

CAUTION:

- When installing a torque wrench to the SST (49 E032 308), install it perpendicular to the SST as shown in the figure. If installed incorrectly, the SST could separate from the tie rod, which could cause damage to the tie rod.

  Tightening Torque

- 69—98 N·m {7.1—9.9 kgf·m, 51—72 ft·lbf}

Torque formula

Torque unit	Formula
N·m	N·m × [L/A]
kgf·m	kgf·m × [L/A]
ft·lbf	ft·lbf × [L/A]

Boot Band Assembly Note

1. Assemble the boot band to the boot.
2. Crimp the boot band using the **SST**.

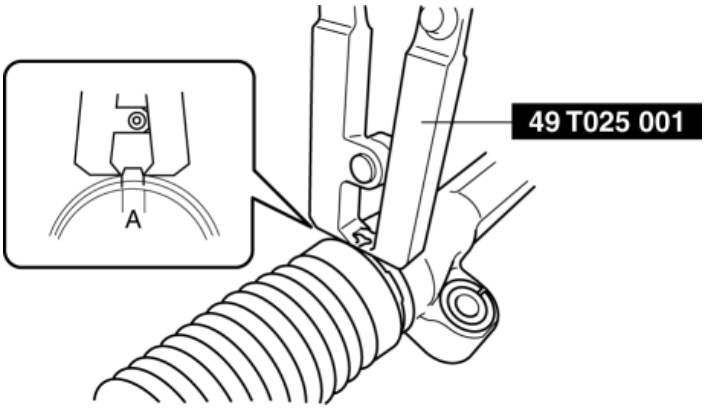

3. Verify that the crimping clearance A is within the specification.
   - If crimping clearance A exceeds the specification, reduce **SST** clearance, and crimp the boot band again.
   - If crimping clearance A is less than the specification, increase **SST** clearance, and crimp a new boot band.

     Standard clearance A
   - 2.5—3.0 mm {0.10—0.11 in}
4. Rotate the boot by hand and verify that it is securely installed to the boot band.

Tie-rod End Assembly Note

1. Align the alignment marks made before removal and assemble the tie-rod end to the tie rod.

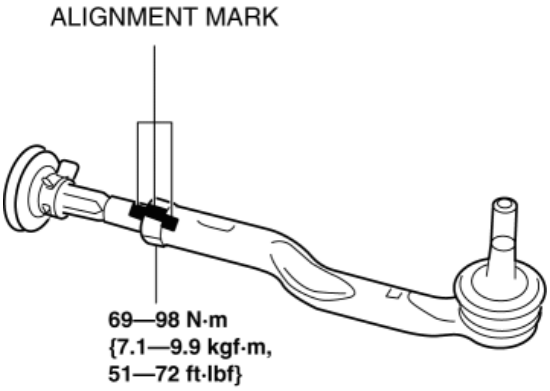

NOTE:

- "R" is inscribed on the right side of the tie-rod end and "L" is inscribed on the left side of the tie-rod end. Verify if the part is for the left or right side before installation because the left and right parts of the tie-rod end have different shapes.

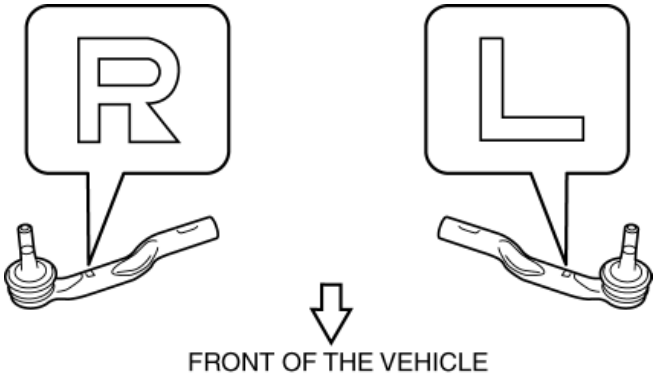

- If there are no alignment marks, go to the next step.

2. Adjust dimension A shown in the figure to the standard, then assemble the tie-rod end.

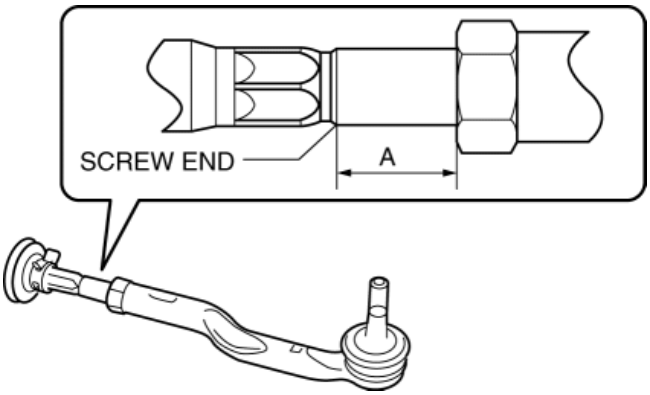

Standard Dimension A

- 8.4—21.4 mm {0.34—0.84 in}

2014 - Mazda3 - Steering

EPS CONTROL MODULE INSPECTION

1. Remove the upper panel. (See **UPPER PANEL REMOVAL**.) (See **UPPER PANEL INSTALLATION**.)

2. Remove the rear console. (See **REAR CONSOLE REMOVAL/INSTALLATION**.)

3. Remove the shift lever knob (MTX). (See **MANUAL TRANSAXLE SHIFT MECHANISM REMOVAL/INSTALLATION [C66M-R]**.)

4. Remove the selector lever knob (ATX). (See **AUTOMATIC TRANSAXLE SHIFT MECHANISM REMOVAL/INSTALLATION**.)

5. Remove the shift panel. (See **SHIFT PANEL REMOVAL/INSTALLATION**.)

6. Remove the front console box. (See **FRONT CONSOLE BOX REMOVAL/INSTALLATION**.)

7. Remove the CD player (with CD player). (See **CD PLAYER REMOVAL**.) (See **CD PLAYER INSTALLATION**.)

8. Remove the side wall. (See **SIDE WALL REMOVAL/INSTALLATION**.)

9. Remove the glove compartment. (See **GLOVE COMPARTMENT REMOVAL/INSTALLATION**.)

10. Remove the decoration panel. (See **DECORATION PANEL REMOVAL/INSTALLATION**.)

11. Remove the front console. (See **FRONT CONSOLE REMOVAL/INSTALLATION**.)

12. Remove the driver-side front scuff plate. (See **FRONT SCUFF PLATE REMOVAL/INSTALLATION**.)

13. Remove the driver-side front side trim. (See **FRONT SIDE TRIM REMOVAL/INSTALLATION**.)

14. Remove the hood release lever. (See **HOOD RELEASE LEVER AND RELEASE CABLE REMOVAL/INSTALLATION**.)

15. Remove the fuel-filler lid opener lever. (See **FUEL-FILLER LID OPENER AND LEVER REMOVAL/INSTALLATION**.)

16. Remove the lower panel. (See **LOWER PANEL REMOVAL/INSTALLATION**.)

17. Attach the tester lead to the underside of the EPS CM connector and inspect the voltage according to the terminal voltage table (reference).

Terminal Voltage Table (Reference)

EPS CONTROL MODULE HARNESS-SIDE CONNECTOR

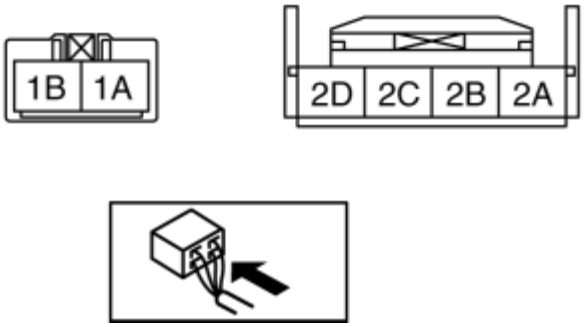

Terminal	Signal name	Connected to	Measured item	Measured terminal (measurement condition)	Voltage (V)	Inspection item(s)
1A	Ground	Ground point	Voltage	Under any condition	1 or less	• Wiring harness (1A—ground point)
1B	Battery power supply	Battery	Voltage	Under any condition	B+	• Wiring harness (1B—battery) • Fuse (EPS 60A)
2A	Ignition power supply	IG1 relay	Voltage	Ignition ON (engine off or on)	B+	• Wiring harness (2A—IG1 relay—battery) • Fuse (SRS1 7.5A)
				Ignition OFF (LOCK)	1 or less	
2B	CAN_H	—	Perform DTC inspection			—
2C	—	—	—	—	—	—
2D	CAN_L	—	Perform DTC inspection			—

2014 - Mazda3 - Steering

STEERING TECHNICAL DATA

Item	Specification
Steering wheel play	0—30 mm {0—1.1 in}
Steering wheel steering force (reference)	7.8 N·m {80 kgf·cm, 69 in·lbf} or less
Pinion shaft rotation torque (center of rack ± 180°)	1.2—1.8 N·m {13—18 kgf·cm, 11—15 in·lbf} [Pull scale reading: 1.2—1.8 N·m {13—18 kgf·cm, 11—15 in·lbf}/A (m {cm, in})] A: Length from the pinion shaft center to application point of pull scale
Tie-rod end rotational torque	0.6—3.0 N·m {6.2—30 kgf·cm, 5.4—26 in·lbf}
Tie rod swing torque	0.4—4.0 N·m {4.1—40 kgf·cm, 3.6—35 in·lbf} [Pull scale reading: 2.6—26 N {0.3—2.6 kgf, 0.6—5.8 lbf}]

< Previous

2014 - Mazda3 - Steering

STEERING SST

49 T028 3A0 Ball joint puller set	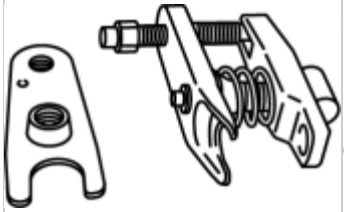	49 T025 001 Boot clamp crimpers	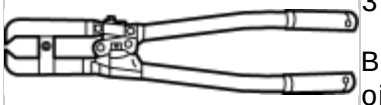	49 B032 317 Bearing & oil seal remover	
49 B018 003 Body B		49 E032 308 Wrench	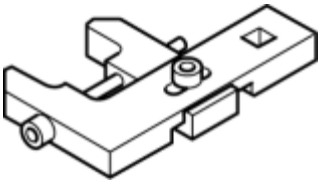	49 L088 009 Feeler tool kit	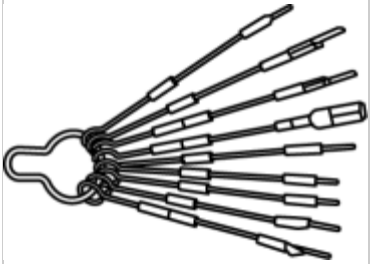

< Previous

Next >

2014 - Mazda3 - HVAC

ON-BOARD DIAGNOSTIC SYSTEM WIRING DIAGRAM [FULL-AUTO AIR CONDITIONER]

With Dual Type Climate Control Unit

ON-BOARD DIAGNOSTIC SYSTEM WIRING DIAGRAM [FULL-AUTO AIR CONDITIONER]

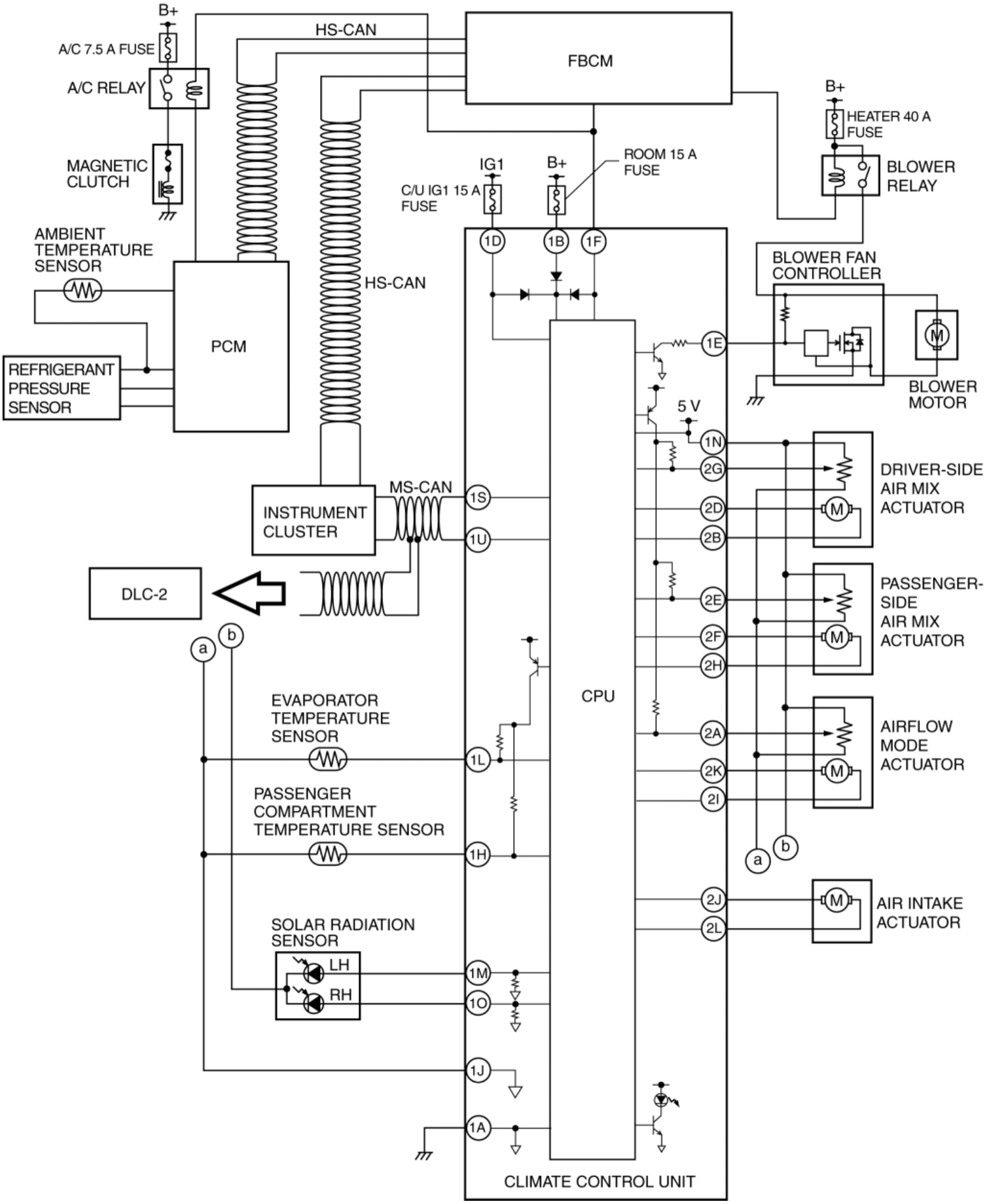

CLIMATE CONTROL UNIT WIRING HARNESS SIDE CONNECTOR

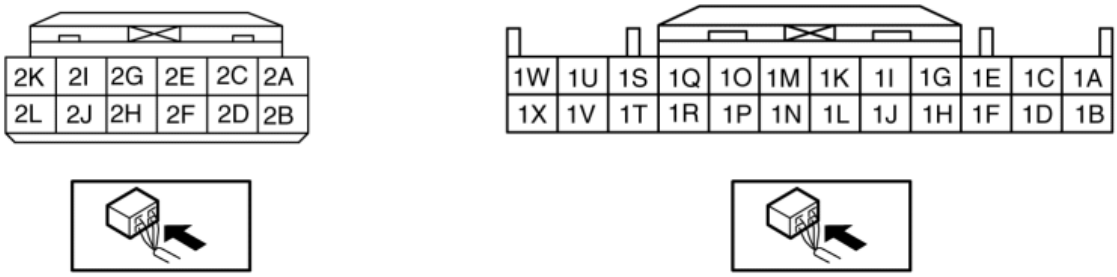

With Single Type Climate Control Unit

ON-BOARD DIAGNOSTIC SYSTEM WIRING DIAGRAM [FULL-AUTO AIR CONDITIONER]

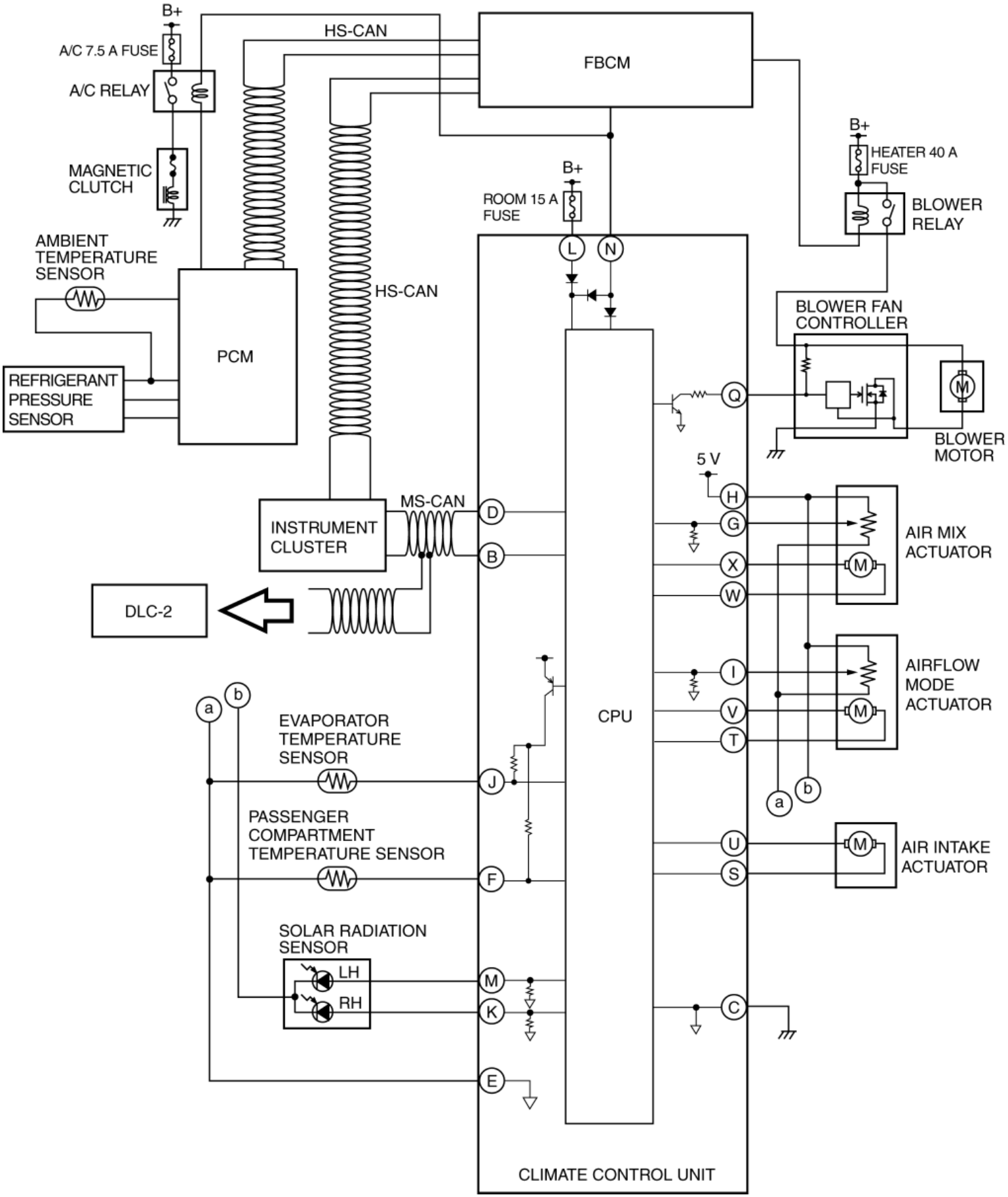

CLIMATE CONTROL UNIT WIRING HARNESS SIDE CONNECTOR

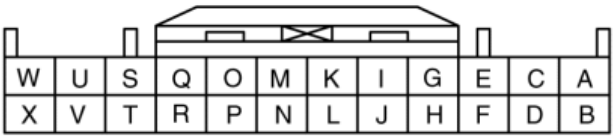

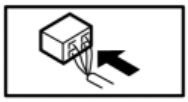

Next >

2014 - Mazda3 - HVAC

FOREWORD [FULL-AUTO AIR CONDITIONER]

- If there is any vehicle malfunction complaint lodged by a customer, perform malfunction diagnosis according to the troubleshooting procedure.

Troubleshooting Procedure

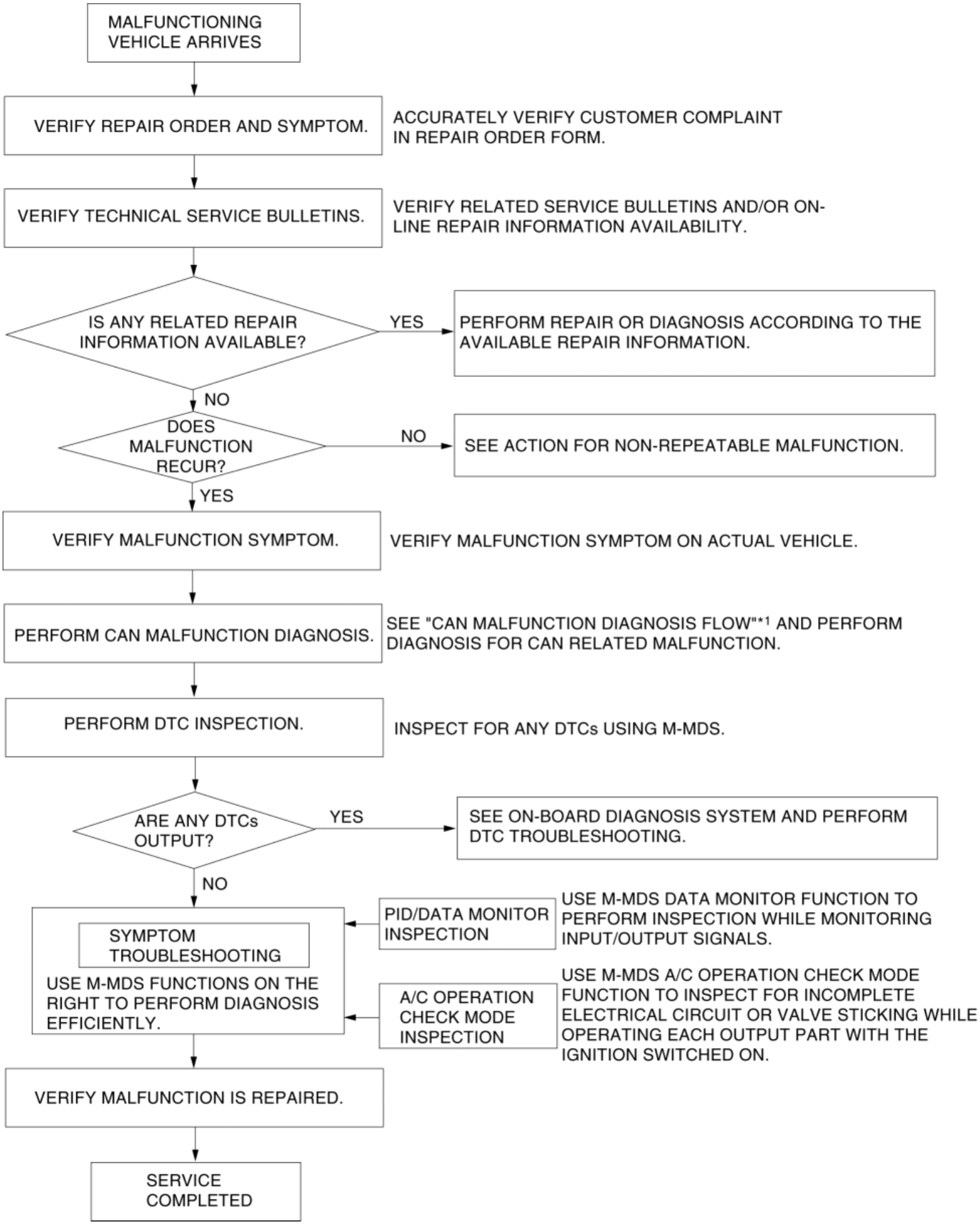
MALFUNCTIONING VEHICLE ARRIVES
VERIFY REPAIR ORDER AND SYMPTOM.
ACCURATELY VERIFY CUSTOMER COMPLAINT IN REPAIR ORDER FORM.
VERIFY TECHNICAL SERVICE BULLETINS.
VERIFY RELATED SERVICE BULLETINS AND/OR ON-LINE REPAIR INFORMATION AVAILABILITY.
IS ANY RELATED REPAIR INFORMATION AVAILABLE?
YES
PERFORM REPAIR OR DIAGNOSIS ACCORDING TO THE AVAILABLE REPAIR INFORMATION.
NO
DOES MALFUNCTION RECUR?
NO
SEE ACTION FOR NON-REPEATABLE MALFUNCTION.
YES
VERIFY MALFUNCTION SYMPTOM.
VERIFY MALFUNCTION SYMPTOM ON ACTUAL VEHICLE.
PERFORM CAN MALFUNCTION DIAGNOSIS.
SEE "CAN MALFUNCTION DIAGNOSIS FLOW"*1 AND PERFORM DIAGNOSIS FOR CAN RELATED MALFUNCTION.
PERFORM DTC INSPECTION.
INSPECT FOR ANY DTCs USING M-MDS.
ARE ANY DTCs OUTPUT?
YES
SEE ON-BOARD DIAGNOSIS SYSTEM AND PERFORM DTC TROUBLESHOOTING.
NO
SYMPTOM TROUBLESHOOTING
USE M-MDS FUNCTIONS ON THE RIGHT TO PERFORM DIAGNOSIS EFFICIENTLY.
PID/DATA MONITOR INSPECTION
USE M-MDS DATA MONITOR FUNCTION TO PERFORM INSPECTION WHILE MONITORING INPUT/OUTPUT SIGNALS.
A/C OPERATION CHECK MODE INSPECTION
USE M-MDS A/C OPERATION CHECK MODE FUNCTION TO INSPECT FOR INCOMPLETE ELECTRICAL CIRCUIT OR VALVE STICKING WHILE OPERATING EACH OUTPUT PART WITH THE IGNITION SWITCHED ON.
VERIFY MALFUNCTION IS REPAIRED.
SERVICE COMPLETED

*1

CONTROLLER AREA NETWORK (CAN) MALFUNCTION DIAGNOSIS FLOW.

Action for non-repeatable malfunction

- If the malfunction does not recur, verify the malfunction cause by performing the following actions:
  - Based on the repair order form, attempt to drive the vehicle or perform tests to replicate the malfunction, record the data (such as CAN circuit voltage) at that time, and detect the malfunction cause.
  - Refer to [Determining Open Circuit Location] based on the recorded DTC, shake the wiring harness or connector of the electrical component which is suspected to be the cause of the malfunction, and inspect for any changes in CAN system voltage or occurrence of any DTCs.

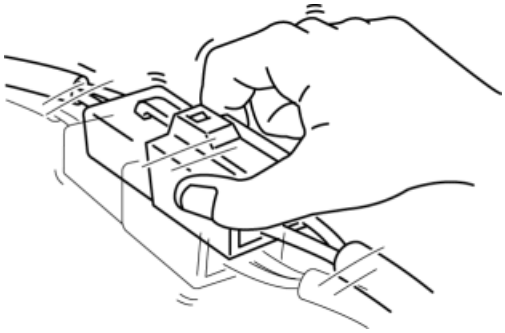

  - Inspect the female terminals on the connector of the electric component which is suspected to be the cause of the malfunction for poor connection.

2014 - Mazda3 - HVAC

FLOWCHART [FULL-AUTO AIR CONDITIONER]

- Use the following flowchart to verify the cause of the problem.

NOTE:

- When inspecting past malfunction codes, inspect only the DTCs that were indicated before beginning the inspection. A mis-diagnosis could occur as a result of new DTCs being added while performing an inspection by disconnecting related parts or connectors.
- When DTCs of the present malfunction are no longer output after present or past malfunctions or both have been repaired, always clear the past malfunction from memory to prevent repair of malfunctions that have already been repaired.

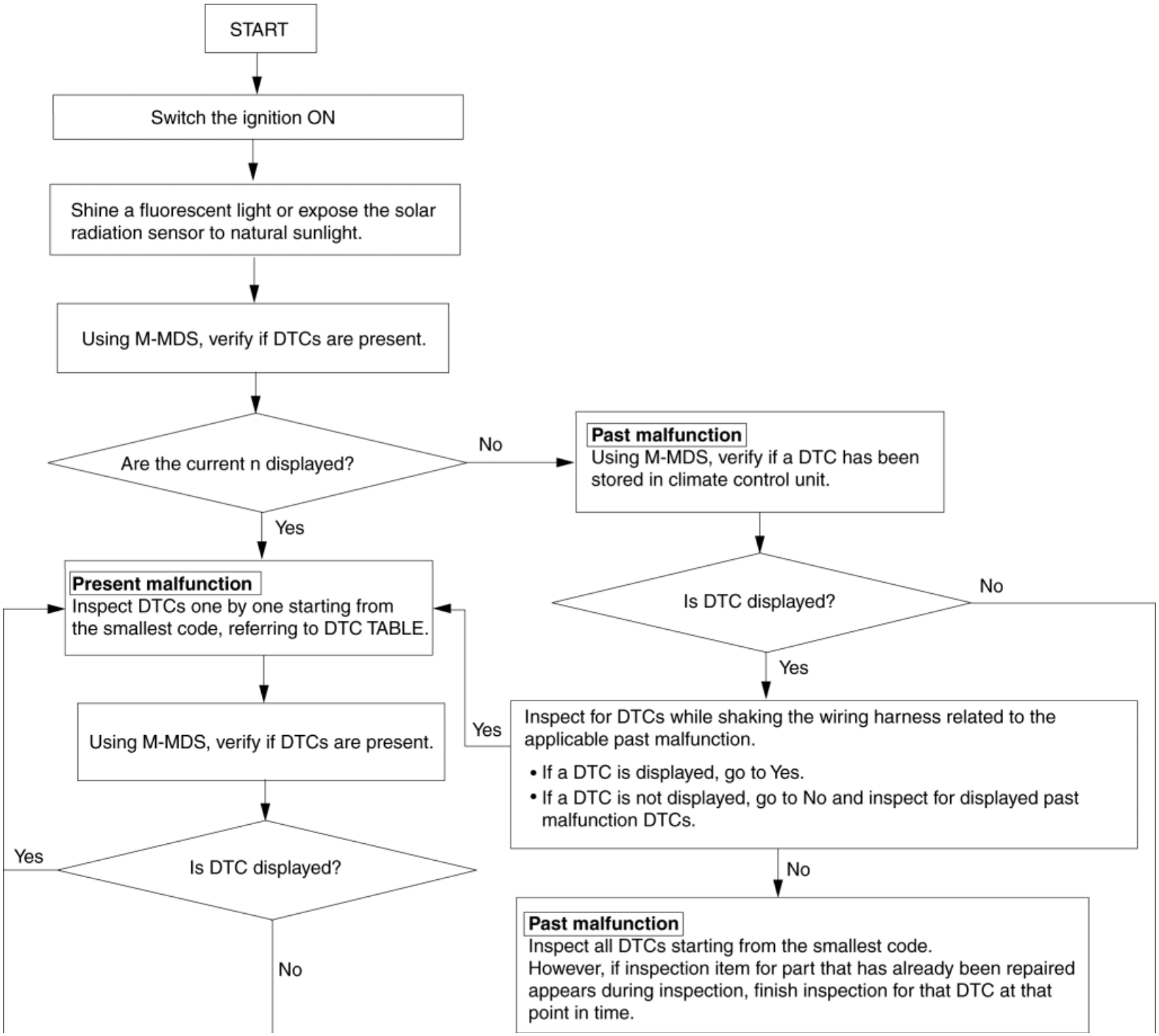

FLOWCHART [FULL-AUTO AIR CONDITIONER]

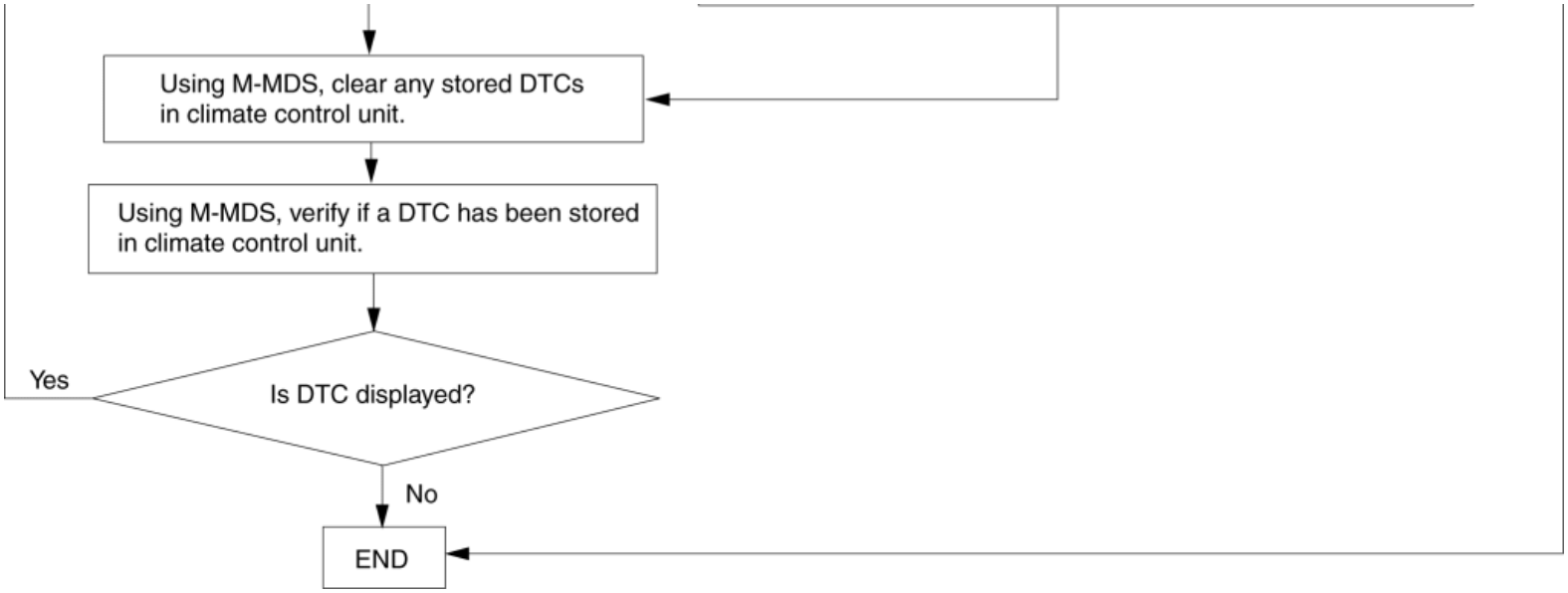

2014 - Mazda3 - HVAC

DTC DISPLAY [FULL-AUTO AIR CONDITIONER]

NOTE:

- If power from the battery is interrupted, the climate control unit will go into a non-configured state because the memory for the configuration information is erased. If the ignition is switched ON (engine off) at this time, DTC U2300:55 is detected.
- Normally, the configuration is re-performed within **6 s** after the ignition is switched ON (engine off).
- After performing the configuration, DTC U2300:55 will be cleared if the ignition is switched ON (engine off) after the ignition is switched off.

CMDTC Self Test

1. Switch the ignition off.
2. Switch the ignition ON (engine off) and wait for **6 s or more**.
3. Switch the ignition off.
4. Connect the M-MDS to the DLC-2.
5. Expose the solar radiation sensor to natural sunlight.

NOTE:

- If natural sunlight is not shone on the solar radiation sensor, the climate control unit determines a malfunction and indicates DTC “B1A63:13, B1A64:13”.

6. After the vehicle is identified, select the following items from the initialization screen of the M-MDS.
   a. Select “Self Test”.
   b. Select “All CMDTCs”.
7. Verify the DTC according to the directions on the screen.
   - If any DTCs are displayed, perform troubleshooting according to the corresponding DTC inspection.
8. After completion of repairs, clear all DTCs stored in the climate control unit. (See **CLEARING DTC [FULL-AUTO AIR CONDITIONER]**.)

ODDTC Self Test

1. Switch the ignition off.

2. Switch the ignition ON (engine off) and wait for **6 s or more**.

3. Switch the ignition off.

4. Connect the M-MDS to the DLC-2.

5. Expose the solar radiation sensor to natural sunlight.

NOTE:

- If natural sunlight is not shone on the solar radiation sensor, the climate control unit determines a malfunction and indicates DTC “B1A63:13, B1A64:13”.

6. After the vehicle is identified, select the following items from the initialization screen of the M-MDS.

a. Select “Self Test”.

b. Select “Modules”.

c. Select “EATC”.

7. Verify the DTC according to the directions on the screen.

- If any DTCs are displayed, perform troubleshooting according to the corresponding DTC inspection.

8. After completion of repairs, clear all DTCs stored in the climate control unit. (See **CLEARING DTC [FULL-AUTO AIR CONDITIONER]**.)

2014 - Mazda3 - HVAC

CLEARING DTC [FULL-AUTO AIR CONDITIONER]

CMDTC Clearing DTC Procedure

1. Connect the M-MDS to the DLC-2.
2. After the vehicle is identified, select the following items from the initialization screen of the M-MDS.
    a. Select “Self Test”.
    b. Select “All CMDTCs”.
3. Verify the DTC according to the directions on the screen.
4. Press the clear button on the DTC screen to clear the DTC.
5. Switch the ignition off.
6. Switch the ignition ON (engine off or on) and wait for **5 s or more.**
7. Perform DTC inspection. (See **DTC DISPLAY [FULL-AUTO AIR CONDITIONER]**.)
8. Verify that no DTCs are displayed.

ODDTC Clearing DTC Procedure

1. Connect the M-MDS to the DLC-2.
2. After the vehicle is identified, select the following items from the initialization screen of the M-MDS.
    a. Select “Self Test”.
    b. Select “Modules”.
    c. Select “EATC”.
3. Verify the DTC according to the directions on the screen.
4. Press the clear button on the DTC screen to clear the DTC.
5. Switch the ignition off.
6. Switch the ignition ON (engine off or on) and wait for **5 s or more.**
7. Perform DTC inspection. (See **DTC DISPLAY [FULL-AUTO AIR CONDITIONER]**.)
8. Verify that no DTCs are displayed.

CLEARING DTC [FULL-AUTO AIR CONDITIONER]

2014 - Mazda3 - HVAC

DTC TABLE [FULL-AUTO AIR CONDITIONER]

X: Applicable—: Not applicable

DTC No.	Warning/indicator light	System malfunction location	Fail-safe function	Drive cycle	Self test type*1	Memory function	Page
B1081:71*2	—	Driver-side air mix actuator motor lock	X	—	C	X	(See **DTC B1081:71, B1082:71 [FULL-AUTO AIR CONDITIONER]**.)
B1082:71*2	—	Passenger-side air mix actuator motor lock	X	—	C	X	
B1086:71	—	Airflow mode actuator motor lock	X	—	C	X	(See **DTC B1086:71 [FULL-AUTO AIR CONDITIONER]**.)
B13AA:71*3	—	Air mix actuator motor lock	X	—	C	X	(See **DTC B13AA:71 [FULL-AUTO AIR CONDITIONER]**.)
B13AB:12*3	—	Air mix actuator (potentiometer) circuit short to power supply	X	—	C, D	X	(See **DTC B13AB:12, B13AB:13 [FULL-AUTO AIR CONDITIONER]**.)
B13AB:13*3	—	Air mix actuator (potentiometer) circuit short to power supply	X	—	C, D	X	
B1A61:11	—	Passenger compartment temperature sensor circuit short to ground	X	—	C, D	X	(See **DTC B1A61:11, B1A61:13 [FULL-AUTO AIR CONDITIONER]**.)
B1A61:13	—	Passenger compartment temperature sensor circuit open	X	—	C, D	X	
B1A63:12	—	Solar radiation sensor (RH) circuit shot to power supply	X	—	C, D	X	(See **DTC B1A63:12, B1A63:13,**
B1A63:13	—	Solar radiation sensor (RH) circuit open	X	—	D	X	

B1A64:12	—	Solar radiation sensor (LH) circuit shot to power supply	X	—	C, D	X	**B1A64:12, B1A64:13 [FULL-AUTO AIR CONDITIONER]**.)
B1A64:13	—	Solar radiation sensor (LH) circuit open	X	—	D	X	
B1B71:11	—	Evaporator temperature sensor circuit short to ground	X	—	C, D	X	(See **DTC B1B71:11, B1B71:13 [FULL-AUTO AIR CONDITIONER]**.)
B1B71:13	—	Evaporator temperature sensor circuit open	X	—	C, D	X	
B1C1A:11 *2	—	Driver-side air mix actuator (potentiometer) circuit short to ground	X	—	C, D	X	(See **DTC B1C1A:11, B1C1A:13, B1C1B:11, B1C1B:13 [FULL-AUTO AIR CONDITIONER]**.)
B1C1A:13 *2	—	Driver-side air mix actuator (potentiometer) circuit open	X	—	C, D	X	
B1C1B:11 *2	—	Passenger-side air mix actuator (potentiometer) circuit short to ground	X	—	C, D	X	
B1C1B:13 *2	—	Passenger-side air mix actuator (potentiometer) circuit open	X	—	C, D	X	
B1C1C:11 *2	—	Airflow mode actuator (potentiometer) circuit short to ground	X	—	C, D	X	(See **DTC B1C1C:11, B1C1C:12, B1C1C:13 [FULL-AUTO AIR CONDITIONER]**.)
B1C1C:12 *3	—	Airflow mode actuator (potentiometer) circuit short to power supply	X	—	C, D	X	
B1C1C:13	—	Airflow mode actuator (potentiometer) circuit open	X	—	C, D	X	
U0010:88	—	Unit communication error (MS-CAN)	X	—	C, D *2 C *3	X	(See **DTC U0010:88, U0155:00 [FULL-AUTO AIR CONDITIONER]**.)
U0155:00	—	Communication error with instrument cluster	X	—	C *2 C, D *3	X	
							(See **DTC**

U0423:68	—	Invalid date received from Instrument cluster	X	—	C, D	X	**U0423:68 [FULL-AUTO AIR CONDITIONER]**.)
U200D:11	—	Climate control unit circuit voltage (**+5V**) circuit short to ground	—	—	C, D	X	(See **DTC U200D:11 [FULL-AUTO AIR CONDITIONER]**.)
U2300:54	—	Configuration error (data not received)	X	—	C, D	X	(See **DTC U2300:54, U2300:55, U2300:56, U2300:64 [FULL-AUTO AIR CONDITIONER]**.)
U2300:55	—	Configuration error (not configured)	X	—	C, D	—	
U2300:56	—	Configuration error (ineffective/non-interchangeable data read)	X	—	C, D	X	
U2300:64	—	Configuration error (error value read)	X	—	C, D	X	
U3003:16	—	Climate control unit power supply circuit voltage below threshold (**9.98 V or less**)*2 (**10.00 V or less**)*3	—	—	C, D	X	(See **DTC U3003:16, U3003:17 [FULL-AUTO AIR CONDITIONER]**.)
U3003:17	—	Climate control unit power supply circuit voltage above threshold (**16.21 V or more**)*2 (**17.30 V or more**)*3	—	—	C, D	X	
U300E:13	—	Climate control unit power supply circuit open (IG1 or IG2)*2 (IG2)*3	—	—	C, D	X	(See **DTC U300E:13 [FULL-AUTO AIR CONDITIONER]**.)

*1 **C: CMDTC self test, D: ODDTC self test**

*2 **With dual type climate control unit**

*3 **With single type climate control unit**

2014 - Mazda3 - HVAC

DTC B1081:71, B1082:71 [FULL-AUTO AIR CONDITIONER]

System malfunction location	• B1081:71: Driver-side air mix actuator motor lock • B1082:71: Passenger-side air mix actuator motor lock
Detection condition	• Air mix actuator motor lock
Fail-safe function	**Malfunction determined when ignition switched ON** • Air mix actuator drive signal is stopped right when the malfunction is determined. **Malfunction already exists when ignition switched ON** • Twenty seconds after the ignition is switched ON, the air mix actuator drive signal is output normally again. Afterwards, motor output is stopped during malfunction determination.
Possible cause	• Connector or terminal malfunction • Air mix actuator malfunction • A/C unit (air mix link and air mix crank) malfunction • Open circuit in wiring harness between climate control unit and air mix actuator • Short to ground in wiring harness between climate control unit and air mix actuator • Climate control unit malfunction

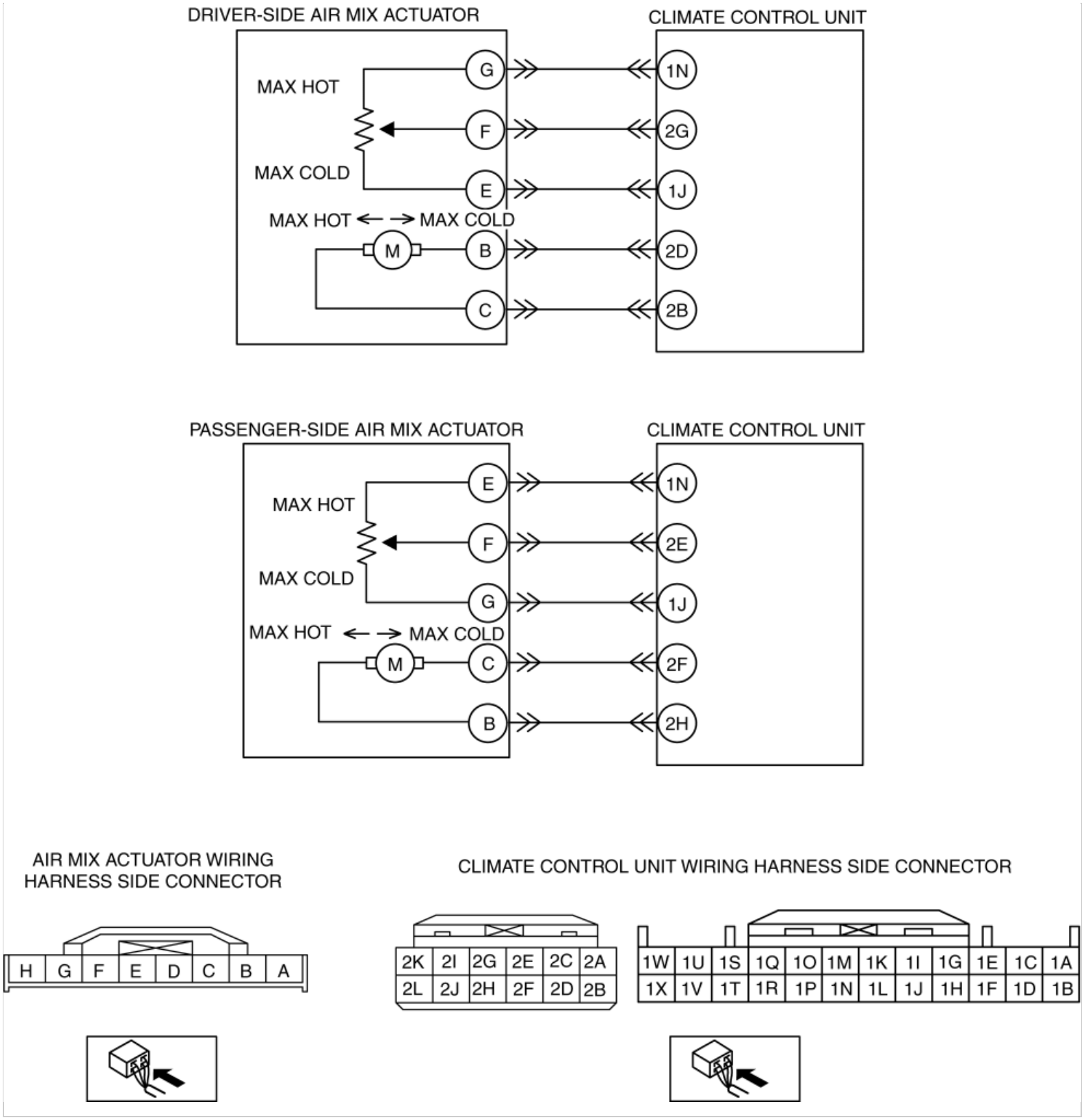

Diagnostic Procedure

STEP	INSPECTION		ACTION
1	**INSPECT AIR MIX ACTUATOR CONNECTOR**	Yes	Go to the next step.

	Switch the ignition off. • Disconnect the negative battery cable. (See **NEGATIVE BATTERY CABLE DISCONNECTION/CONNECTION [SKYACTIV-G 2.0, SKYACTIV-G 2.5]**.) • Disconnect the air mix actuator connector. (See **AIR MIX ACTUATOR REMOVAL/INSTALLATION [FULL-AUTO AIR CONDITIONER]**.) • Inspect the connector and terminals (corrosion, damage, pin disconnection). • Are the connector and terminals normal?	No	Repair/replace the connector or terminal. After repair procedure, go to the next step.
2	**INSPECT AIR MIX ACTUATOR** • Inspect the air mix actuator. (See **AIR MIX ACTUATOR INSPECTION [FULL-AUTO AIR CONDITIONER]**.) • Is it normal?	Yes	Go to the next step.
		No	Replace the air mix actuator. (See **AIR MIX ACTUATOR REMOVAL/INSTALLATION [FULL-AUTO AIR CONDITIONER]**.) Go to the next step.
3	**INSPECT AIR MIX LINK OPERATION** • Operate the air mix link manually. • Does the air mix link operate smoothly?	Yes	Reconnect the disconnected connectors, then go to the next step.
		No	Replace the air mix link and the air mix crank. (See **A/C UNIT DISASSEMBLY/ASSEMBLY**.) Go to the next step.
4	**INSPECT AIR MIX ACTUATOR CIRCUIT FOR OPEN CIRCUIT OR SHORT TO GROUND** • Disconnect the climate control unit connector. (See **CLIMATE CONTROL UNIT REMOVAL/INSTALLATION [FULL-AUTO AIR CONDITIONER]**.) • Apply battery positive voltage and connect the ground to the climate control unit terminal 2D and 2B, and then inspect the air mix actuator. (Driver-side) • Apply battery positive voltage and connect the ground to the climate control unit terminal 2F and 2H, and then inspect the air mix actuator. (Passenger-side) • Does the air mix actuator operate?	Yes	Go to the next step.
		No	Refer to the wiring diagram and verify whether or not there is a common connector between climate control unit terminal and air mix actuator terminal. **If there is a common connector:** • Determine the malfunctioning part by inspecting the common connector and the terminal for corrosion, damage, or pin disconnection, and the common wiring harness for an open circuit or short to ground. • Repair or replace the malfunctioning part. **If there is no common connector:** • Repair or replace the wiring harness which has an open circuit or short to ground. Go to the next step.
5	**VERIFY CLIMATE CONTROL UNIT CONNECTOR CONDITION** • Inspect the connector and terminals (corrosion, damage, pin disconnection). • Are the connector and terminals normal?	Yes	Go to the next step.
		No	Repair/replace the malfunctioning vehicle wiring harness, connector, or terminal. After repair procedure, go to the next step.
6	**VERIFY THAT SAME DTC IS NOT OUTPUT AGAIN** • Reconnect the disconnected connectors.	Yes	Repeat the inspection from Step 1.

	• Connect the negative battery cable. (See **NEGATIVE BATTERY CABLE DISCONNECTION/CONNECTION [SKYACTIV-G 2.0, SKYACTIV-G 2.5]**.) • Clear the past malfunction from memory. (See **CLEARING DTC [FULL-AUTO AIR CONDITIONER]**.) • Verify DTCs. (See **DTC DISPLAY [FULL-AUTO AIR CONDITIONER]**.) • Is DTC B1081:71 or B1082:71 output?		If the malfunction does not recur, go to the next step. • If the malfunction recurs, replace the climate control unit. (See **CLIMATE CONTROL UNIT REMOVAL/INSTALLATION [FULL-AUTO AIR CONDITIONER]**.) Go to the next step.
		No	Go to the next step.
7	**VERIFY THAT NO OTHER DTCs ARE PRESENT** • Verify other DTCs displayed. (See **DTC DISPLAY [FULL-AUTO AIR CONDITIONER]**.) • Are any other DTCs output?	Yes	Perform the corresponding DTC inspection. (See **DTC TABLE [FULL-AUTO AIR CONDITIONER]**.)
		No	DTC troubleshooting completed.

2014 - Mazda3 - HVAC

DTC B1086:71 [FULL-AUTO AIR CONDITIONER]

With Dual Type Climate Control Unit

System malfunction location	• Airflow mode actuator motor lock
Detection condition	• Airflow mode actuator motor lock
Fail-safe function	**Malfunction determined when ignition switched ON** • Airflow mode actuator drive signal is stopped right when the malfunction is determined. **Malfunction already exists when ignition switched ON** • Nine seconds after the ignition is switched ON, the airflow mode actuator drive signal is output normally again. Afterwards, motor output is stopped during malfunction determination.
Possible cause	• Connector or terminal malfunction • Airflow mode actuator malfunction • A/C unit (airflow mode link and airflow mode crank) malfunction • Open circuit in wiring harness between climate control unit and airflow mode actuator • Short to ground in wiring harness between climate control unit and airflow mode actuator • Climate control unit malfunction

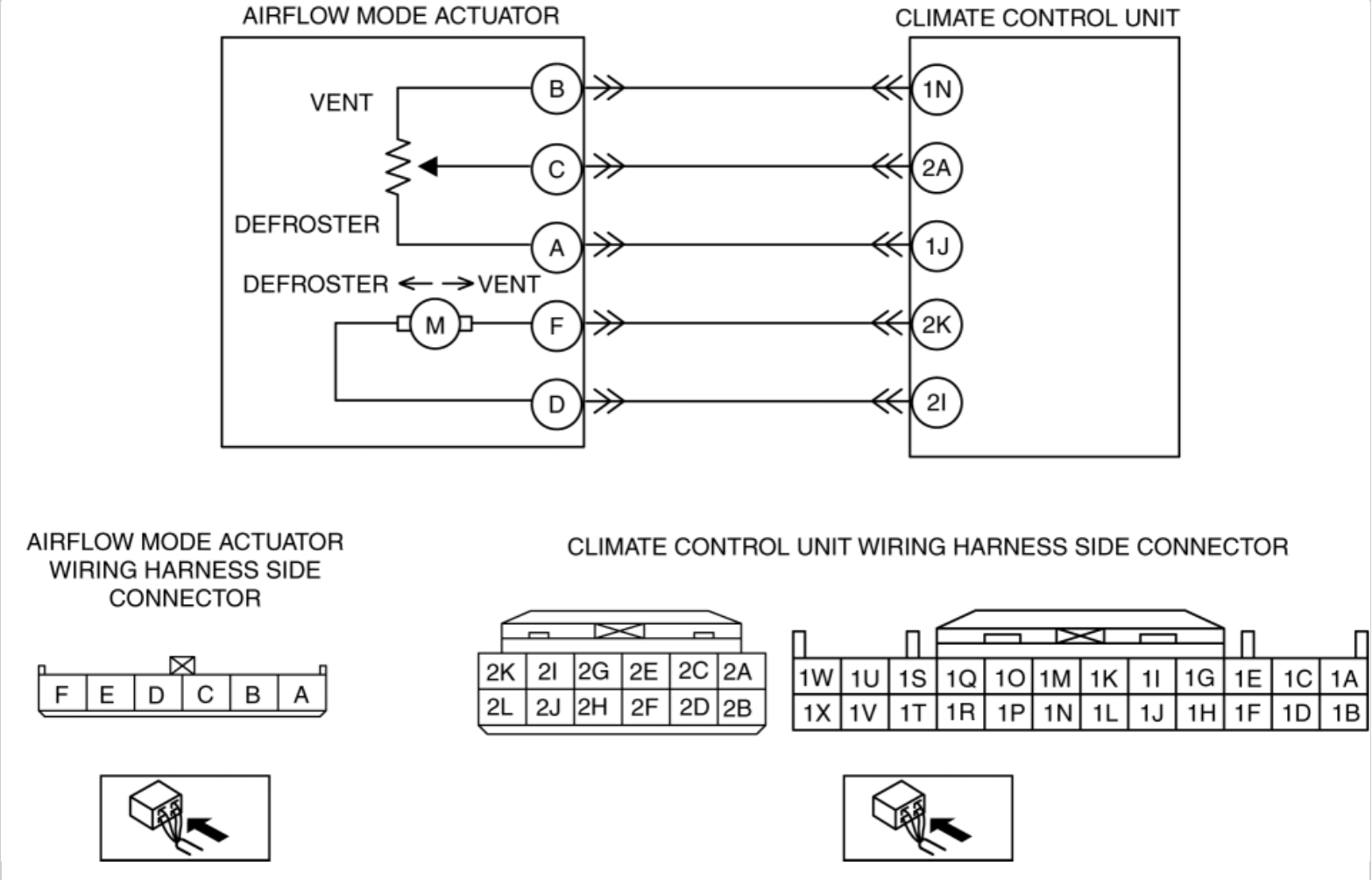

Diagnostic procedure

STEP	INSPECTION		ACTION
1	**INSPECT AIRFLOW MODE ACTUATOR CONNECTOR** • Switch the ignition off. • Disconnect the negative battery cable. (See **NEGATIVE BATTERY CABLE DISCONNECTION/CONNECTION [SKYACTIV-G 2.0, SKYACTIV-G 2.5]**.) • Disconnect the airflow mode actuator connector. (See **AIRFLOW MODE ACTUATOR REMOVAL/INSTALLATION [FULL-AUTO AIR CONDITIONER]**.) • Inspect the connector and terminals (corrosion, damage, pin disconnection). • Are the connector and terminals normal?	Yes	Go to the next step.
		No	Repair/replace the connector or terminal. After repair procedure, go to the next step.
2	**INSPECT AIRFLOW MODE ACTUATOR**	Yes	Go to the next step.

	• Inspect the airflow mode actuator. (See **AIRFLOW MODE ACTUATOR INSPECTION [FULL-AUTO AIR CONDITIONER]**.) • Is it normal?		
		No	Replace the airflow mode actuator. (See **AIRFLOW MODE ACTUATOR REMOVAL/INSTALLATION [FULL-AUTO AIR CONDITIONER]**.) Go to the next step.
3	**INSPECT AIRFLOW MODE MAIN LINK OPERATION** • Operate the airflow mode main link manually. • Does the airflow mode main link operate smoothly?	Yes	Reconnect the disconnected connector, then go to the next step.
		No	Replace the airflow mode main link, airflow mode sub link, and the airflow mode crank. (See **AIRFLOW MODE MAIN LINK REMOVAL/INSTALLATION**.) (See **A/C UNIT DISASSEMBLY/ASSEMBLY**.) Go to the next step.
4	**INSPECT AIRFLOW MODE ACTUATOR CIRCUIT FOR OPEN CIRCUIT OR SHORT TO GROUND** • Disconnect the climate control unit connector. (See **CLIMATE CONTROL UNIT REMOVAL/INSTALLATION [FULL-AUTO AIR CONDITIONER]**.) • Apply battery positive voltage and connect the ground to the climate control unit connector terminals 2K and 2I, and then inspect the airflow mode actuator. • Does the airflow mode actuator operate?	Yes	Go to the next step.
		No	Refer to the wiring diagram and verify whether or not there is a common connector between climate control unit terminal and airflow mode actuator terminal. **If there is a common connector:** • Determine the malfunctioning part by inspecting the common connector and the terminal for corrosion, damage, or pin disconnection, and the common wiring harness for an open circuit or short to ground. • Repair or replace the malfunctioning part. **If there is no common connector:** • Repair or replace the wiring harness which has an open circuit or short to ground. Go to the next step.
5	**VERIFY CLIMATE CONTROL UNIT CONNECTOR CONDITION** • Inspect the connector and terminals (corrosion, damage, pin disconnection). • Are the connector and terminals normal?	Yes	Go to the next step.
		No	Repair/replace the malfunctioning vehicle wiring harness, connector, or terminal. After repair procedure, go to the next step.
6	**VERIFY THAT SAME DTC IS NOT OUTPUT AGAIN** • Reconnect the disconnected connectors. • Connect the negative battery cable. (See **NEGATIVE BATTERY CABLE DISCONNECTION/CONNECTION [SKYACTIV-G 2.0, SKYACTIV-G 2.5]**.) • Clear the past malfunction from memory. (See **CLEARING DTC [FULL-AUTO AIR CONDITIONER]**.) • Verify DTCs. (See **DTC DISPLAY [FULL-AUTO AIR**	Yes	Repeat the inspection from Step 1. • If the malfunction does not recur, go to the next step. • If the malfunction recurs, replace the climate control unit. (See **CLIMATE CONTROL UNIT REMOVAL/INSTALLATION [FULL-AUTO AIR CONDITIONER]**.) Go to the next step.
		No	Go to the next step.

	CONDITIONER].) • Is DTC B1086:71 output?		
7	**VERIFY THAT NO OTHER DTCs ARE PRESENT** • Verify other DTCs displayed. (See **DTC DISPLAY [FULL-AUTO AIR CONDITIONER]**.) • Are any other DTCs output?	Yes	Perform the corresponding DTC inspection. (See **DTC TABLE [FULL-AUTO AIR CONDITIONER]**.)
		No	DTC troubleshooting completed.

With Single Type Climate Control Unit

System malfunction location	• Airflow mode actuator motor lock
Detection condition	• Airflow mode actuator motor lock
Fail-safe function	**Malfunction determined when ignition switched ON** • Airflow mode actuator drive signal is stopped right when the malfunction is determined. **Malfunction already exists when ignition switched ON** • Nine seconds after the ignition is switched ON, the airflow mode actuator drive signal is output normally again. Afterwards, motor output is stopped during malfunction determination.
Possible cause	• Connector or terminal malfunction • Airflow mode actuator malfunction • A/C unit (airflow mode link and airflow mode crank) malfunction • Open circuit in wiring harness between climate control unit and airflow mode actuator • Short to ground in wiring harness between climate control unit and airflow mode actuator • Climate control unit malfunction

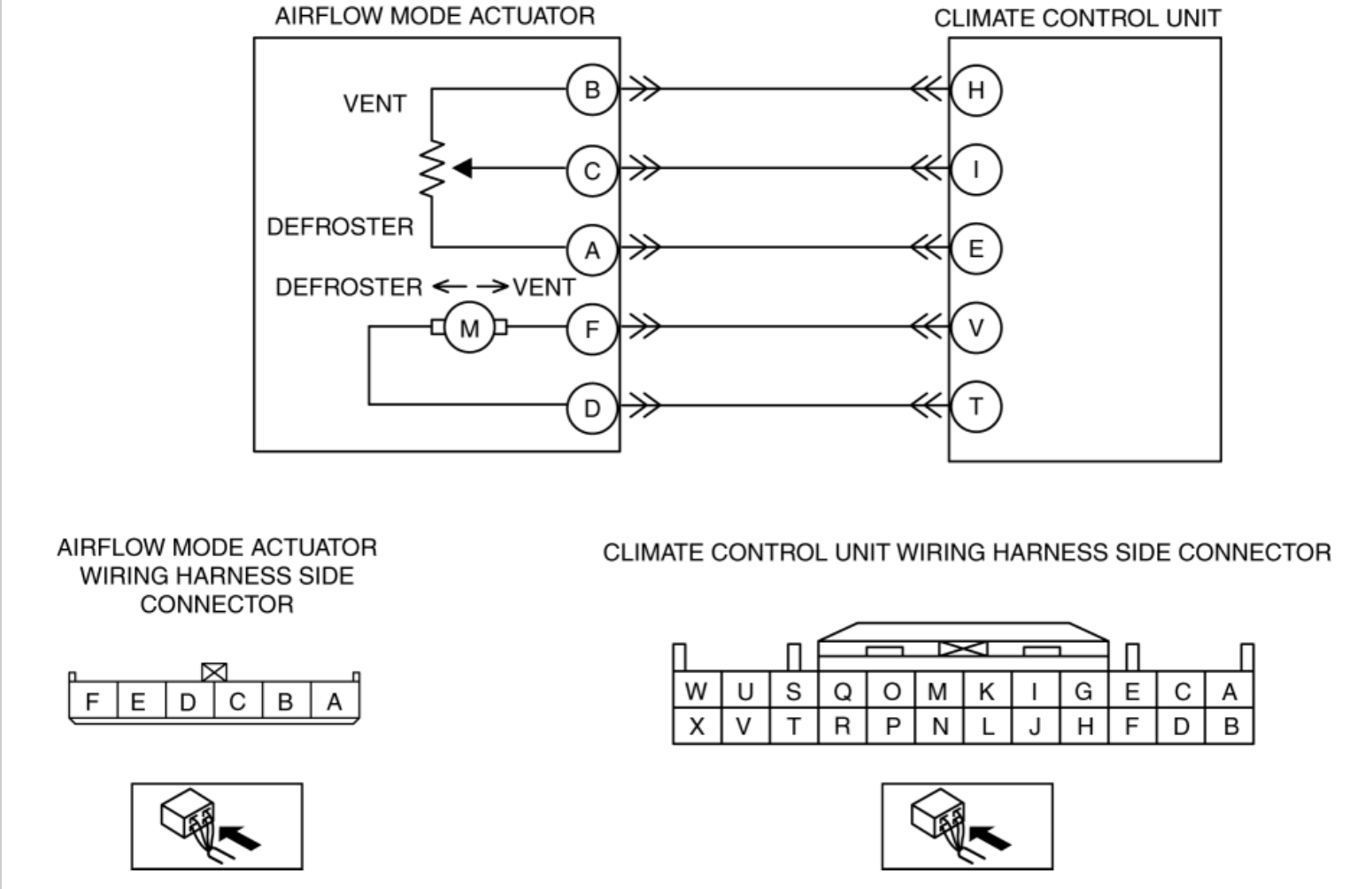

Diagnostic procedure

STEP	INSPECTION		ACTION
1	**INSPECT AIRFLOW MODE ACTUATOR CONNECTOR** • Switch the ignition off. • Disconnect the negative battery cable. (See **NEGATIVE BATTERY CABLE DISCONNECTION/CONNECTION [SKYACTIV-G 2.0, SKYACTIV-G 2.5]**.) • Disconnect the airflow mode actuator connector. (See **AIRFLOW MODE ACTUATOR REMOVAL/INSTALLATION [FULL-AUTO AIR CONDITIONER]**.) • Inspect the connector and terminals (corrosion, damage, pin disconnection). • Are the connector and terminals normal?	Yes	Go to the next step.
		No	Repair/replace the connector or terminal. After repair procedure, go to the next step.

2	**INSPECT AIRFLOW MODE ACTUATOR** • Inspect the airflow mode actuator. (See **AIRFLOW MODE ACTUATOR INSPECTION [FULL-AUTO AIR CONDITIONER]**.) • Is it normal?	Yes	Go to the next step.
		No	Replace the airflow mode actuator. (See **AIRFLOW MODE ACTUATOR REMOVAL/INSTALLATION [FULL-AUTO AIR CONDITIONER]**.) Go to the next step.
3	**INSPECT AIRFLOW MODE MAIN LINK OPERATION** • Operate the airflow mode main link manually. • Does the airflow mode main link operate smoothly?	Yes	Reconnect the disconnected connector, then go to the next step.
		No	Replace the airflow mode main link, airflow mode sub link, and the airflow mode crank. (See **AIRFLOW MODE MAIN LINK REMOVAL/INSTALLATION**.) (See **A/C UNIT DISASSEMBLY/ASSEMBLY**.) Go to the next step.
4	**INSPECT AIRFLOW MODE ACTUATOR CIRCUIT FOR OPEN CIRCUIT OR SHORT TO GROUND** • Disconnect the climate control unit connector. (See **CLIMATE CONTROL UNIT REMOVAL/INSTALLATION [FULL-AUTO AIR CONDITIONER]**.) • Apply battery positive voltage and connect the ground to the climate control unit connector terminals V and T, and then inspect the airflow mode actuator. • Does the airflow mode actuator operate?	Yes	Go to the next step.
		No	Refer to the wiring diagram and verify whether or not there is a common connector between climate control unit terminal and airflow mode actuator terminal. **If there is a common connector:** • Determine the malfunctioning part by inspecting the common connector and the terminal for corrosion, damage, or pin disconnection, and the common wiring harness for an open circuit or short to ground. • Repair or replace the malfunctioning part. **If there is no common connector:** • Repair or replace the wiring harness which has an open circuit or short to ground. Go to the next step.
5	**VERIFY CLIMATE CONTROL UNIT CONNECTOR CONDITION** • Inspect the connector and terminals (corrosion, damage, pin disconnection). • Are the connector and terminals normal?	Yes	Go to the next step.
		No	Repair/replace the malfunctioning vehicle wiring harness, connector, or terminal. After repair procedure, go to the next step.
6	**VERIFY THAT SAME DTC IS NOT OUTPUT AGAIN** • Reconnect the disconnected connectors. • Connect the negative battery cable. (See **NEGATIVE BATTERY CABLE DISCONNECTION/CONNECTION [SKYACTIV-G 2.0, SKYACTIV-G 2.5]**.) • Clear the past malfunction from memory. (See **CLEARING DTC [FULL-AUTO AIR CONDITIONER]**.) • Verify DTCs.	Yes	Repeat the inspection from Step 1. • If the malfunction does not recur, go to the next step. • If the malfunction recurs, replace the climate control unit. (See **CLIMATE CONTROL UNIT REMOVAL/INSTALLATION [FULL-AUTO AIR CONDITIONER]**.) Go to the next step.
		No	Go to the next step.

	(See **DTC DISPLAY [FULL-AUTO AIR CONDITIONER]**.) • Is DTC B1086:71 output?		
7	**VERIFY THAT NO OTHER DTCs ARE PRESENT** • Verify other DTCs displayed. (See **DTC DISPLAY [FULL-AUTO AIR CONDITIONER]**.) • Are any other DTCs output?	Yes	Perform the corresponding DTC inspection. (See **DTC TABLE [FULL-AUTO AIR CONDITIONER]**.)
		No	DTC troubleshooting completed.

2014 - Mazda3 - HVAC

DTC B13AA:71 [FULL-AUTO AIR CONDITIONER]

System malfunction location	• Air mix actuator motor lock
Detection condition	• Air mix actuator motor lock
Fail-safe function	**Malfunction determined when ignition switched ON** • Air mix actuator drive signal is stopped right when the malfunction is determined. **Malfunction already exists when ignition switched ON** • Twenty seconds after the ignition is switched ON, the air mix actuator drive signal is output normally again. Afterwards, motor output is stopped during malfunction determination.
Possible cause	• Connector or terminal malfunction • Air mix actuator malfunction • A/C unit (air mix link and air mix crank) malfunction • Open circuit in wiring harness between climate control unit and air mix actuator • Short to ground in wiring harness between climate control unit and air mix actuator • Climate control unit malfunction

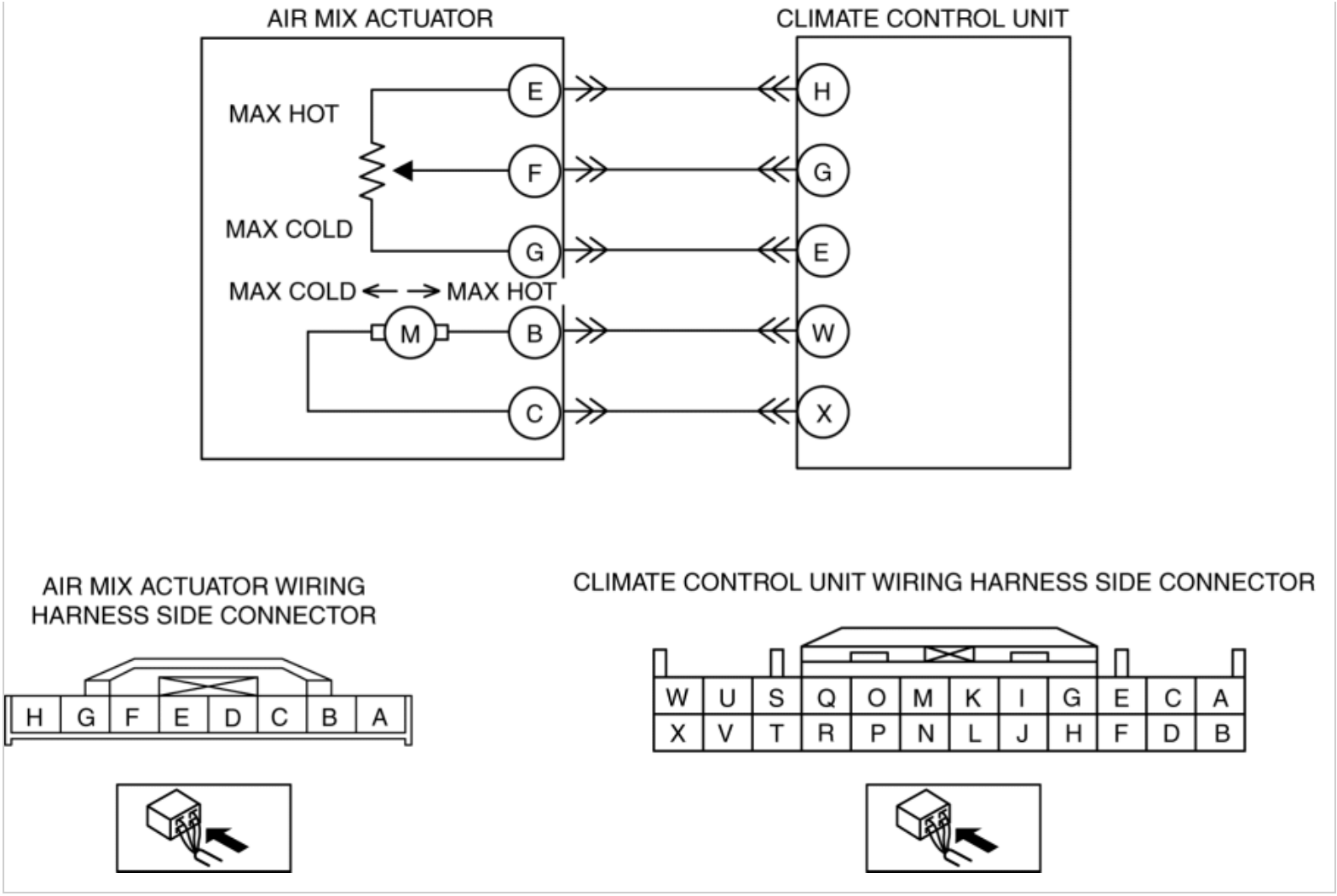

Diagnostic Procedure

STEP	INSPECTION		ACTION
1	**INSPECT AIR MIX ACTUATOR CONNECTOR** • Switch the ignition off. • Disconnect the negative battery cable. (See **NEGATIVE BATTERY CABLE DISCONNECTION/CONNECTION [SKYACTIV-G 2.0, SKYACTIV-G 2.5]**.) • Disconnect the air mix actuator connector. (See **AIR MIX ACTUATOR REMOVAL/INSTALLATION [FULL-AUTO AIR CONDITIONER]**.) • Inspect the connector and terminals (corrosion, damage, pin disconnection).	Yes	Go to the next step.
		No	Repair/replace the connector or terminal. After repair procedure, go to the next step.

	• Are the connector and terminals normal?		
2	**INSPECT AIR MIX ACTUATOR** • Inspect the air mix actuator. (See **AIR MIX ACTUATOR INSPECTION [FULL-AUTO AIR CONDITIONER]**.) • Is it normal?	Yes	Go to the next step.
		No	Replace the air mix actuator. (See **AIR MIX ACTUATOR REMOVAL/INSTALLATION [FULL-AUTO AIR CONDITIONER]**.) Go to the next step.
3	**INSPECT AIR MIX LINK OPERATION** • Operate the air mix link manually. • Does the air mix link operate smoothly?	Yes	Reconnect the disconnected connector, then go to the next step.
		No	Replace the air mix link and the air mix crank. (See **A/C UNIT DISASSEMBLY/ASSEMBLY**.) Go to the next step.
4	**INSPECT AIR MIX ACTUATOR CIRCUIT FOR OPEN CIRCUIT OR SHORT TO GROUND** • Disconnect the climate control unit connector. (See **CLIMATE CONTROL UNIT REMOVAL/INSTALLATION [FULL-AUTO AIR CONDITIONER]**.) • Apply battery positive voltage and connect the ground to the climate control unit terminal X and W, and then inspect the air mix actuator. • Does the air mix actuator operate?	Yes	Go to the next step.
		No	Refer to the wiring diagram and verify whether or not there is a common connector between climate control unit terminal and air mix actuator terminal. **If there is a common connector:** • Determine the malfunctioning part by inspecting the common connector and the terminal for corrosion, damage, or pin disconnection, and the common wiring harness for an open circuit or short to ground. • Repair or replace the malfunctioning part. **If there is no common connector:** • Repair or replace the wiring harness which has an open circuit or short to ground. Go to the next step.
5	**VERIFY CLIMATE CONTROL UNIT CONNECTOR CONDITION** • Inspect the connector and terminals (corrosion, damage, pin disconnection). • Are the connector and terminals normal?	Yes	Go to the next step.
		No	Repair/replace the malfunctioning vehicle wiring harness, connector, or terminal. After repair procedure, go to the next step.
6	**VERIFY THAT SAME DTC IS NOT OUTPUT AGAIN** • Reconnect the disconnected connector. • Connect the negative battery cable. (See **NEGATIVE BATTERY CABLE DISCONNECTION/CONNECTION [SKYACTIV-G 2.0, SKYACTIV-G 2.5]**.)	Yes	Repeat the inspection from Step 1. • If the malfunction does not recur, go to the next step. • If the malfunction recurs, replace the climate control unit. (See **CLIMATE CONTROL UNIT REMOVAL/INSTALLATION [FULL-AUTO AIR CONDITIONER]**.)

	• Clear the past malfunction from memory. (See **CLEARING DTC [FULL-AUTO AIR CONDITIONER]**.) • Verify DTCs. (See **DTC DISPLAY [FULL-AUTO AIR CONDITIONER]**.) • Is DTC B13AA:71 output?		Go to the next step.
		No	Go to the next step.
7	**VERIFY THAT NO OTHER DTCs ARE PRESENT** • Verify other DTCs displayed. (See **DTC DISPLAY [FULL-AUTO AIR CONDITIONER]**.) • Are any other DTCs output?	Yes	Perform the corresponding DTC inspection. (See **DTC TABLE [FULL-AUTO AIR CONDITIONER]**.)
		No	DTC troubleshooting completed.

2014 - Mazda3 - HVAC

DTC B13AB:12, B13AB:13 [FULL-AUTO AIR CONDITIONER]

System malfunction location	• B13AB:12: Air mix actuator (potentiometer) circuit short to power supply • B13AB:13: Air mix actuator (potentiometer) circuit open
Detection condition	• Malfunction in wiring harness between air mix actuator and climate control unit
Fail-safe function	**Malfunction determined when ignition switched ON** • Air mix actuator drive signal is stopped right when the malfunction is determined. **Malfunction already exists when ignition switched ON** • Control based on ambient temperature.
Possible cause	• Connector or terminal malfunction • Air mix actuator malfunction • Open circuit in wiring harness between climate control unit and air mix actuator • Short to power supply in wiring harness between climate control unit and air mix actuator • Climate control unit malfunction

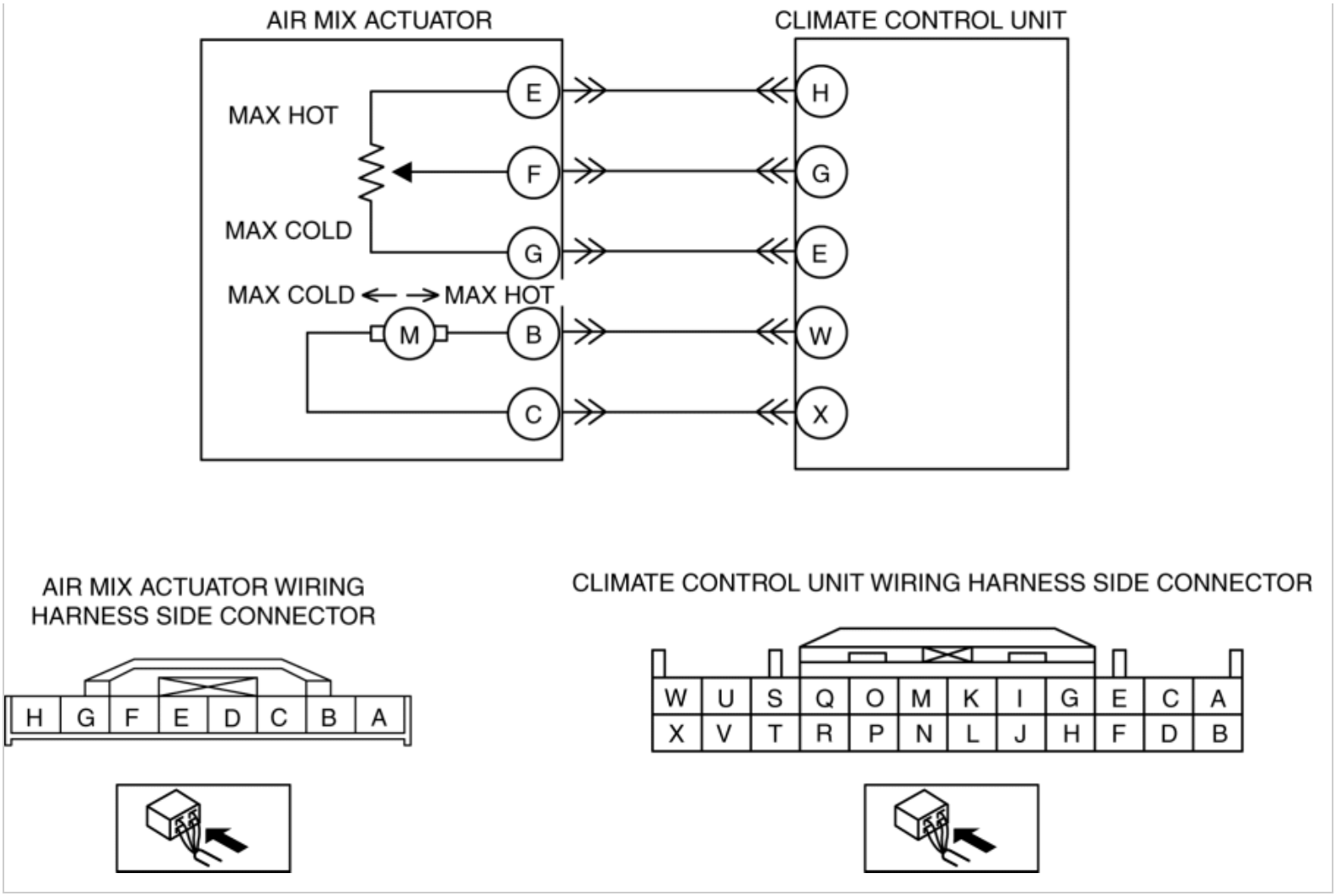

Diagnostic Procedure

STEP	INSPECTION		ACTION
1	**INSPECT AIR MIX ACTUATOR CONNECTOR** • Switch the ignition off. • Disconnect the negative battery cable. (See **NEGATIVE BATTERY CABLE DISCONNECTION/CONNECTION [SKYACTIV-G 2.0, SKYACTIV-G 2.5]**.) • Disconnect the air mix actuator connector. (See **AIR MIX ACTUATOR REMOVAL/INSTALLATION [FULL-AUTO AIR CONDITIONER]**.) • Inspect the connector and	Yes	Go to the next step.
		No	Repair/replace the connector or terminal. After repair procedure, go to the next step.

	terminals (corrosion, damage, pin disconnection). • Are the connector and terminals normal?		
2	**INSPECT AIR MIX ACTUATOR** • Inspect the air mix actuator. (See **AIR MIX ACTUATOR INSPECTION [FULL-AUTO AIR CONDITIONER]**.) • Is it normal?	Yes	Go to the next step.
		No	Replace the air mix actuator. (See **AIR MIX ACTUATOR REMOVAL/INSTALLATION [FULL-AUTO AIR CONDITIONER]**.) Go to the next step.
3	**INSPECT AIR MIX ACTUATOR (POTENTIOMETER) CIRCUIT FOR OPEN CIRCUIT** • Disconnect the climate control unit connector. (See **CLIMATE CONTROL UNIT REMOVAL/INSTALLATION [FULL-AUTO AIR CONDITIONER]**.) • Disconnect the air mix actuator connector. (See **AIR MIX ACTUATOR REMOVAL/INSTALLATION [FULL-AUTO AIR CONDITIONER]**.) • Inspect for continuity between the following terminals (wiring harness-side): ▪ Climate control unit terminal H—air mix actuator terminal E ▪ Climate control unit terminal G—air mix actuator terminal F ▪ Climate control unit terminal E—air mix actuator terminal G • Is there continuity?	Yes	Go to the next step.
		No	Refer to the wiring diagram and verify whether or not there is a common connector between climate control unit terminal and air mix actuator terminal. **If there is a common connector:** • Determine the malfunctioning part by inspecting the common connector and the terminal for corrosion, damage, or pin disconnection, and the common wiring harness for an open circuit. • Repair or replace the malfunctioning part. **If there is no common connector:** • Repair or replace the wiring harness which has an open circuit. Go to the next step.
4	**INSPECT AIR MIX ACTUATOR (POTENTIOMETER) CIRCUIT FOR SHORT TO POWER SUPPLY** • Connect the negative battery	Yes	Go to the next step.
		No	Refer to the wiring diagram and verify whether or not there is a common connector between climate control unit terminal and air mix

	cable. (See **NEGATIVE BATTERY CABLE DISCONNECTION/CONNECTION [SKYACTIV-G 2.0, SKYACTIV-G 2.5]**.) • Switch the ignition ON (engine off or on). • Measure the voltage at the following terminals (wiring harness-side): ▪ Climate control unit terminal H ▪ Climate control unit terminal G ▪ Climate control unit terminal E • Is the voltage **0 V**?		actuator terminal. **If there is a common connector:** • Determine the malfunctioning part by inspecting the common connector and the terminal for corrosion, damage, or pin disconnection, and the common wiring harness for a short to power supply. • Repair or replace the malfunctioning part. **If there is no common connector:** • Repair or replace the wiring harness which has a short to power supply. Go to the next step.
5	**VERIFY CLIMATE CONTROL UNIT CONNECTOR CONDITION** • Inspect the connector and terminals (corrosion, damage, pin disconnection). • Are the connector and terminals normal?	Yes	Go to the next step.
		No	Repair/replace the malfunctioning vehicle wiring harness, connector, or terminal. After repair procedure, go to the next step.
6	**VERIFY THAT SAME DTC IS NOT OUTPUT AGAIN** • Reconnect the disconnected connectors. • Connect the negative battery cable. (See **NEGATIVE BATTERY CABLE DISCONNECTION/CONNECTION [SKYACTIV-G 2.0, SKYACTIV-G 2.5]**.) • Clear the past malfunction from memory. (See **CLEARING DTC [FULL-AUTO AIR CONDITIONER]**.) • Verify DTCs. (See **DTC DISPLAY [FULL-AUTO AIR CONDITIONER]**.) • Is DTC B13AB:12, B13AB:13 output?	Yes	Repeat the inspection from Step 1. • If the malfunction does not recur, go to the next step. • If the malfunction recurs, replace the climate control unit. (See **CLIMATE CONTROL UNIT REMOVAL/INSTALLATION [FULL-AUTO AIR CONDITIONER]**.) Go to the next step.
		No	Go to the next step.
7	**VERIFY THAT NO OTHER DTCs ARE PRESENT**	Yes	Perform the corresponding DTC inspection.

	• Verify other DTCs displayed. (See **DTC DISPLAY [FULL-AUTO AIR CONDITIONER]**.) • Are any other DTCs output?		(See **DTC TABLE [FULL-AUTO AIR CONDITIONER]**.)
		No	DTC troubleshooting completed.

2014 - Mazda3 - HVAC

DTC B1A61:11, B1A61:13 [FULL-AUTO AIR CONDITIONER]

With Dual Type Climate Control Unit

System malfunction location	• B1A61:11: Passenger compartment temperature sensor circuit short to ground • B1A61:13: Passenger compartment temperature sensor circuit open
Detection condition	• Malfunction in wiring harness between passenger compartment temperature sensor and climate control unit
Fail-safe function	**Malfunction determined when ignition switched ON** • Passenger compartment temperature sensor input value is fixed at the value right before the malfunction. **Malfunction already exists when ignition switched ON** • Passenger compartment temperature sensor input value is fixed at **25 °C {77 °F}.**
Possible cause	• Connector or terminal malfunction • Passenger compartment temperature sensor malfunction • Open circuit in wiring harness between climate control unit and passenger compartment temperature sensor • Short to ground in wiring harness between climate control unit and passenger compartment temperature sensor • Climate control unit malfunction

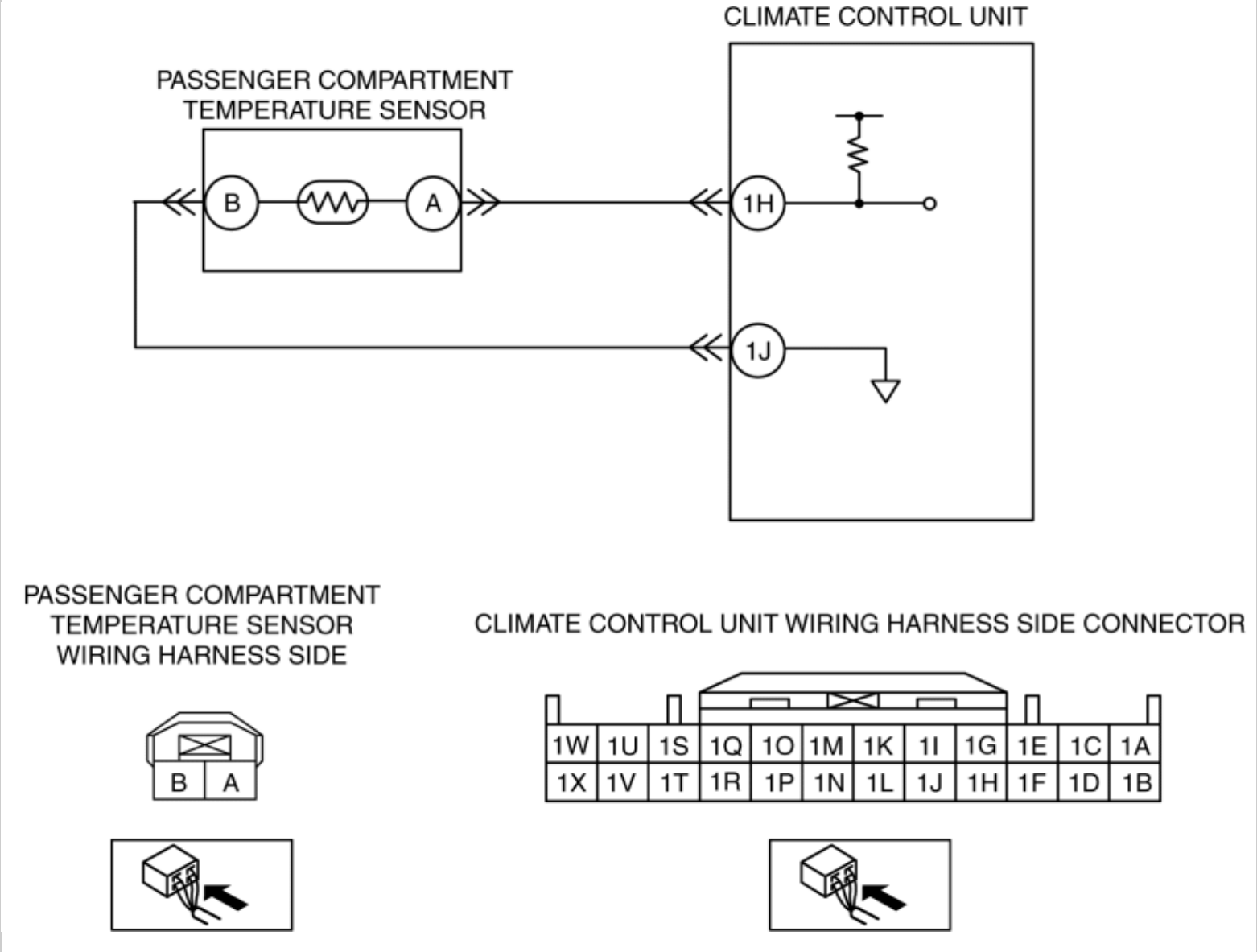

Diagnostic procedure

STEP	INSPECTION		ACTION
1	**INSPECT PASSENGER COMPARTMENT TEMPERATURE SENSOR CONNECTOR** • Switch the ignition off. • Disconnect the negative battery cable. (See **NEGATIVE BATTERY CABLE DISCONNECTION/CONNECTION [SKYACTIV-G 2.0, SKYACTIV-G 2.5]**.) • Disconnect the passenger	Yes	Go to the next step.
		No	Repair/replace the connector or terminal. After repair procedure, go to the next step.

	compartment temperature sensor connector. (See **PASSENGER COMPARTMENT TEMPERATURE SENSOR REMOVAL/INSTALLATION [FULL-AUTO AIR CONDITIONER]**.) • Inspect the connector and terminals (corrosion, damage, pin disconnection). • Are the connector and terminals normal?		
2	**INSPECT PASSENGER COMPARTMENT TEMPERATURE SENSOR** • Inspect the passenger compartment temperature sensor. (See **PASSENGER COMPARTMENT TEMPERATURE SENSOR INSPECTION [FULL-AUTO AIR CONDITIONER]**.) • Is it normal?	Yes	Go to the next step.
		No	Replace the passenger compartment temperature sensor. (See **PASSENGER COMPARTMENT TEMPERATURE SENSOR REMOVAL/INSTALLATION [FULL-AUTO AIR CONDITIONER]**.) Go to the next step.
3	**INSPECT PASSENGER COMPARTMENT TEMPERATURE SENSOR CIRCUIT FOR OPEN CIRCUIT** • Disconnect the climate control unit connector. (See **CLIMATE CONTROL UNIT REMOVAL/INSTALLATION [FULL-AUTO AIR CONDITIONER]**.) • Disconnect the passenger compartment temperature sensor connector. (See **PASSENGER COMPARTMENT TEMPERATURE SENSOR REMOVAL/INSTALLATION [FULL-AUTO AIR CONDITIONER]**.) • Inspect for continuity between the following terminals (wiring harness-side): ▪ Climate control unit terminal 1H —passenger	Yes	Go to the next step.
		No	Refer to the wiring diagram and verify whether or not there is a common connector between climate control unit terminal and passenger compartment temperature sensor terminal. **If there is a common connector:** • Determine the malfunctioning part by inspecting the common connector and the terminal for corrosion, damage, or pin disconnection, and the common wiring harness for an open circuit. • Repair or replace the malfunctioning part. **If there is no common connector:** • Repair or replace the wiring harness which has an open circuit. Go to the next step.

	compartment temperature sensor terminal A ▪ Climate control unit terminal 1J—passenger compartment temperature sensor terminal B • Is there continuity?		
4	**INSPECT PASSENGER COMPARTMENT TEMPERATURE SENSOR CIRCUIT FOR SHORT TO GROUND** • Inspect for continuity between the following terminal (wiring harness-side) and body ground: ▪ Climate control unit terminal 1H • Is there continuity?	Yes	Refer to the wiring diagram and verify whether or not there is a common connector between climate control unit terminal and passenger compartment temperature sensor terminal. **If there is a common connector:** • Determine the malfunctioning part by inspecting the common connector and the terminal for corrosion, damage, or pin disconnection, and the common wiring harness for a short to ground. • Repair or replace the malfunctioning part. **If there is no common connector:** • Repair or replace the wiring harness which has a short to ground. Go to the next step.
		No	Connect the climate control unit connector, then go to the next step.
5	**VERIFY CLIMATE CONTROL UNIT CONNECTOR CONDITION** • Inspect the connector and terminals (corrosion, damage, pin disconnection). • Are the connector and terminals normal?	Yes	Go to the next step.
		No	Repair/replace the malfunctioning vehicle wiring harness, connector, or terminal. After repair procedure, go to the next step.
6	**INSPECT PASSENGER COMPARTMENT TEMPERATURE SENSOR CIRCUIT** • Connect the climate control unit connector. • Connect the negative battery cable. (See **NEGATIVE BATTERY**	Yes	The system is normal at present. Go to the next step.
		No	Go to the next step.

	CABLE DISCONNECTION/CONNECTION [SKYACTIV-G 2.0, SKYACTIV-G 2.5].) • Switch the ignition ON (engine off or on). • Inspect the voltage at the following climate control unit terminal (wiring harness-side). ▪ Terminal 1H (passenger compartment temperature sensor input signal) • Is the voltage normal? (**Approx. 5 V**)		
7	**VERIFY THAT SAME DTC IS NOT OUTPUT AGAIN** • Switch the ignition off. • Disconnect the negative battery cable. • Reconnect the disconnected connectors. • Connect the negative battery cable. (See **NEGATIVE BATTERY CABLE DISCONNECTION/CONNECTION [SKYACTIV-G 2.0, SKYACTIV-G 2.5]**.) • Clear the past malfunction from memory. (See **CLEARING DTC [FULL-AUTO AIR CONDITIONER]**.) • Verify DTCs. (See **DTC DISPLAY [FULL-AUTO AIR CONDITIONER]**.) • Is DTC B1A61:11 or B1A61:13 output?	Yes	Repeat the inspection from Step 1. • If the malfunction does not recur, go to the next step. • If the malfunction recurs, replace the climate control unit. (See **CLIMATE CONTROL UNIT REMOVAL/INSTALLATION [FULL-AUTO AIR CONDITIONER]**.) Go to the next step.
		No	Go to the next step.
8	**VERIFY THAT NO OTHER DTCs ARE PRESENT** • Verify other DTCs displayed. (See **DTC DISPLAY [FULL-AUTO AIR CONDITIONER]**.)	Yes	Perform the corresponding DTC inspection. (See **DTC TABLE [FULL-AUTO AIR CONDITIONER]**.)
		No	DTC troubleshooting completed.

	• Are any other DTCs output?		

With Single Type Climate Control Unit

System malfunction location	• B1A61:11: Passenger compartment temperature sensor circuit short to ground • B1A61:13: Passenger compartment temperature sensor circuit open
Detection condition	• Malfunction in wiring harness between passenger compartment temperature sensor and climate control unit
Fail-safe function	**Malfunction determined when ignition switched ON** • Passenger compartment temperature sensor input value is fixed at the value right before the malfunction. **Malfunction already exists when ignition switched ON** • Passenger compartment temperature sensor input value is fixed at **25 °C {77 °F}.**
Possible cause	• Connector or terminal malfunction • Passenger compartment temperature sensor malfunction • Open circuit in wiring harness between climate control unit and passenger compartment temperature sensor • Short to ground in wiring harness between climate control unit and passenger compartment temperature sensor • Climate control unit malfunction

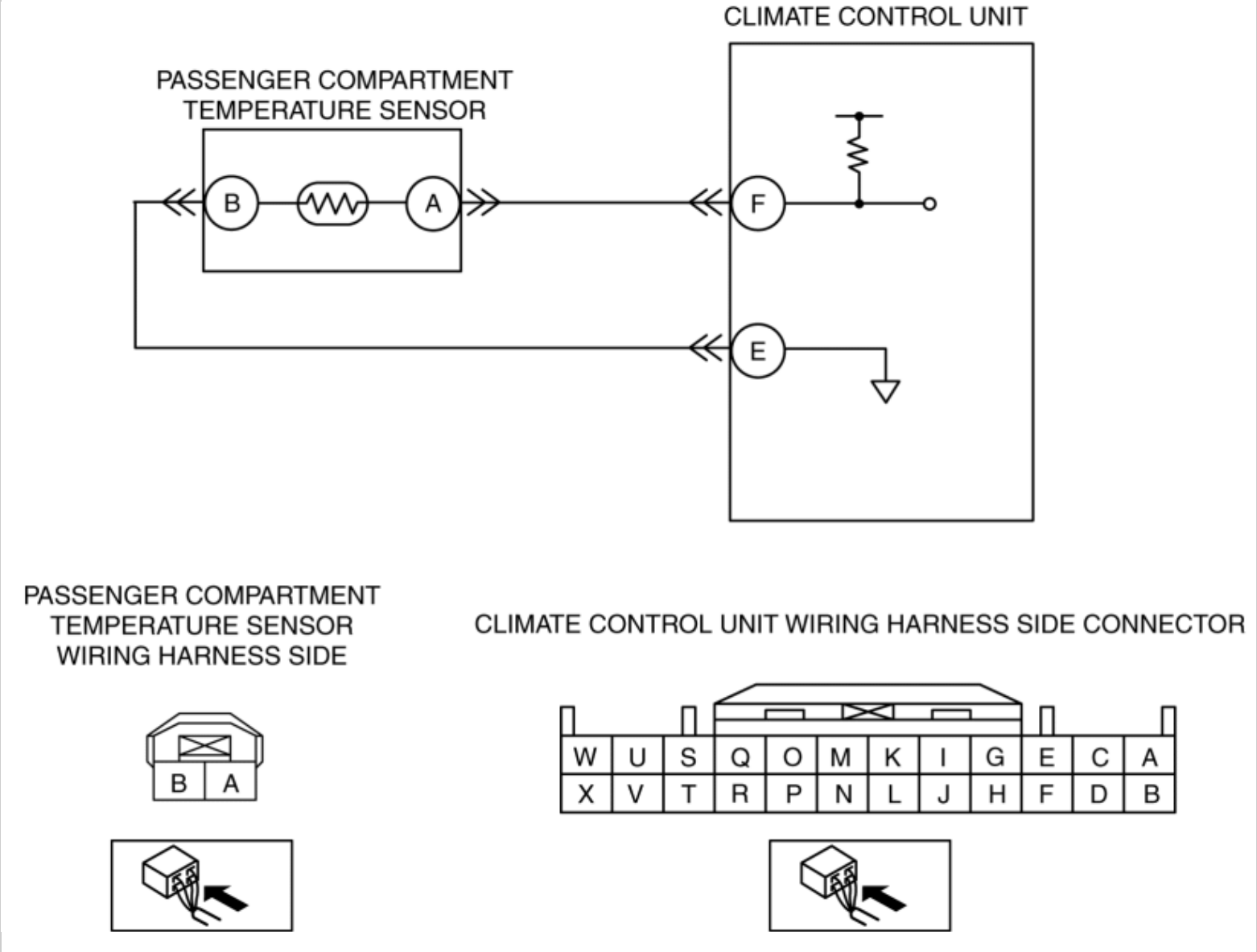

Diagnostic procedure

STEP	INSPECTION		ACTION
1	**INSPECT PASSENGER COMPARTMENT TEMPERATURE SENSOR CONNECTOR** • Switch the ignition off. • Disconnect the negative battery cable. (See **NEGATIVE BATTERY CABLE DISCONNECTION/CONNECTION [SKYACTIV-G 2.0, SKYACTIV-G 2.5]**.) • Disconnect the passenger compartment temperature	Yes	Go to the next step.
		No	Repair/replace the connector or terminal. After repair procedure, go to the next step.

	sensor connector. (See **PASSENGER COMPARTMENT TEMPERATURE SENSOR REMOVAL/INSTALLATION [FULL-AUTO AIR CONDITIONER]**.) • Inspect the connector and terminals (corrosion, damage, pin disconnection). • Are the connector and terminals normal?		
2	**INSPECT PASSENGER COMPARTMENT TEMPERATURE SENSOR** • Inspect the passenger compartment temperature sensor. (See **PASSENGER COMPARTMENT TEMPERATURE SENSOR INSPECTION [FULL-AUTO AIR CONDITIONER]**.) • Is it normal?	Yes	Go to the next step.
		No	Replace the passenger compartment temperature sensor. (See **PASSENGER COMPARTMENT TEMPERATURE SENSOR REMOVAL/INSTALLATION [FULL-AUTO AIR CONDITIONER]**.) Go to the next step.
3	**INSPECT PASSENGER COMPARTMENT TEMPERATURE SENSOR CIRCUIT FOR OPEN CIRCUIT** • Disconnect the climate control unit connector. (See **CLIMATE CONTROL UNIT REMOVAL/INSTALLATION [FULL-AUTO AIR CONDITIONER]**.) • Disconnect the passenger compartment temperature sensor connector. (See **PASSENGER COMPARTMENT TEMPERATURE SENSOR REMOVAL/INSTALLATION [FULL-AUTO AIR CONDITIONER]**.) • Inspect for continuity between the following terminals (wiring harness-side): ▪ Climate control unit terminal F—passenger compartment	Yes	Go to the next step.
		No	Refer to the wiring diagram and verify whether or not there is a common connector between climate control unit terminal and passenger compartment temperature sensor terminal. **If there is a common connector:** • Determine the malfunctioning part by inspecting the common connector and the terminal for corrosion, damage, or pin disconnection, and the common wiring harness for an open circuit. • Repair or replace the malfunctioning part. **If there is no common connector:** • Repair or replace the wiring harness which has an open circuit. Go to the next step.

	temperature sensor terminal A ▪ Climate control unit terminal E—passenger compartment temperature sensor terminal B • Is there continuity?		
4	**INSPECT PASSENGER COMPARTMENT TEMPERATURE SENSOR CIRCUIT FOR SHORT TO GROUND** • Inspect for continuity between the following terminal (wiring harness-side) and body ground: ▪ Climate control unit terminal F • Is there continuity?	Yes	Refer to the wiring diagram and verify whether or not there is a common connector between climate control unit terminal and passenger compartment temperature sensor terminal. **If there is a common connector:** • Determine the malfunctioning part by inspecting the common connector and the terminal for corrosion, damage, or pin disconnection, and the common wiring harness for a short to ground. • Repair or replace the malfunctioning part. **If there is no common connector:** • Repair or replace the wiring harness which has a short to ground. Go to the next step.
		No	Connect the climate control unit connector, then go to the next step.
5	**VERIFY CLIMATE CONTROL UNIT CONNECTOR CONDITION** • Inspect the connector and terminals (corrosion, damage, pin disconnection). • Are the connector and terminals normal?	Yes	Go to the next step.
		No	Repair/replace the malfunctioning vehicle wiring harness, connector, or terminal. After repair procedure, go to the next step.
6	**INSPECT PASSENGER COMPARTMENT TEMPERATURE SENSOR CIRCUIT** • Connect the climate control unit connector. • Connect the negative battery cable. (See **NEGATIVE BATTERY CABLE**	Yes	The system is normal at present. Go to the next step.
		No	Go to the next step.

	DISCONNECTION/CONNECTION [SKYACTIV-G 2.0, SKYACTIV-G 2.5].) • Switch the ignition ON (engine off or on). • Inspect the voltage at the following climate control unit terminal (wiring harness-side). ▪ Terminal F (passenger compartment temperature sensor input signal) • Is the voltage normal? (**Approx. 5 V**)		
7	**VERIFY THAT SAME DTC IS NOT OUTPUT AGAIN** • Switch the ignition off. • Disconnect the negative battery cable. • Reconnect the disconnected connectors. • Connect the negative battery cable. (See **NEGATIVE BATTERY CABLE DISCONNECTION/CONNECTION [SKYACTIV-G 2.0, SKYACTIV-G 2.5]**.) • Clear the past malfunction from memory. (See **CLEARING DTC [FULL-AUTO AIR CONDITIONER]**.) • Verify DTCs. (See **DTC DISPLAY [FULL-AUTO AIR CONDITIONER]**.) • Is DTC B1A61:11 or B1A61:13 output?	Yes	Repeat the inspection from Step 1. • If the malfunction does not recur, go to the next step. • If the malfunction recurs, replace the climate control unit. (See **CLIMATE CONTROL UNIT REMOVAL/INSTALLATION [FULL-AUTO AIR CONDITIONER]**.) Go to the next step.
		No	Go to the next step.
8	**VERIFY THAT NO OTHER DTCs ARE PRESENT** • Verify other DTCs displayed. (See **DTC DISPLAY [FULL-AUTO AIR CONDITIONER]**.)	Yes	Perform the corresponding DTC inspection. (See **DTC TABLE [FULL-AUTO AIR CONDITIONER]**.)
		No	DTC troubleshooting completed.

	Are any other DTCs output?		

2014 - Mazda3 - HVAC

DTC B1A63:12, B1A63:13, B1A64:12, B1A64:13 [FULL-AUTO AIR CONDITIONER]

With Dual Type Climate Control Unit

System malfunction location	• B1A63:12: Solar radiation sensor (RH) circuit short to power supply • B1A63:13: Solar radiation sensor (RH) circuit open • B1A64:12: Solar radiation sensor (LH) circuit short to power supply • B1A64:13: Solar radiation sensor (LH) circuit open
Detection condition	• Malfunction in wiring harness between solar radiation sensor and climate control unit
Fail-safe function	**Malfunction determined when ignition switched ON** • The solar radiation sensor input value is fixed at the value directly before the malfunction only when the valve is **1,450 W/m^2 or more**. **Malfunction already exists when ignition switched ON** • Solar radiation sensor value is fixed at **0 W/m^2**.
Possible cause	• Connector or terminal malfunction • Light amount shone on the solar radiation sensor is insufficient (Circuit is normal) • Solar radiation sensor malfunction • Open circuit in wiring harness between climate control unit and solar radiation sensor • Short to power supply in wiring harness between climate control unit and solar radiation sensor • Climate control unit malfunction

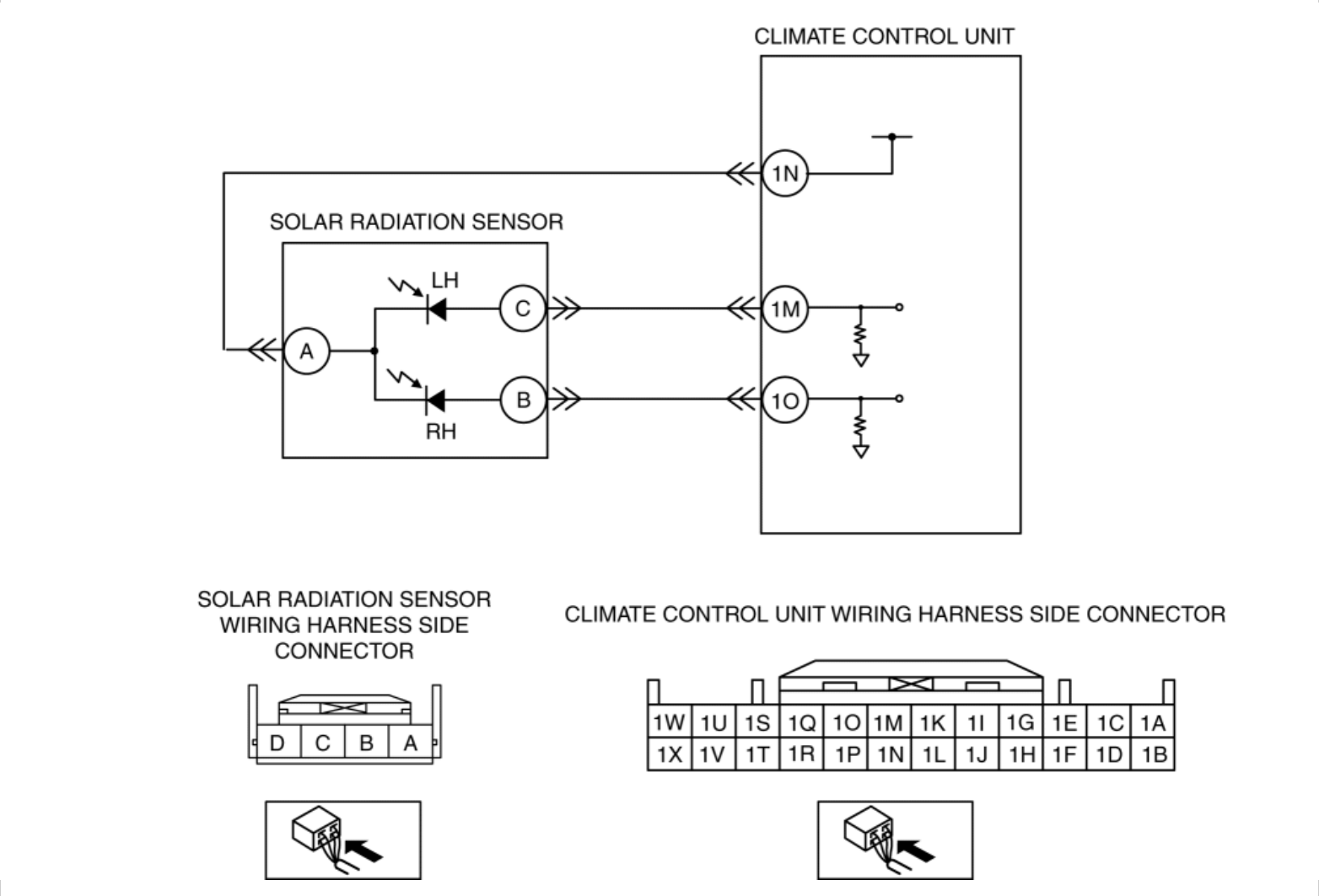

Diagnostic procedure

STEP	INSPECTION		ACTION
1	**INSPECT SOLAR RADIATION SENSOR CONNECTOR** • Switch the ignition off. • Disconnect the negative battery cable. (See **NEGATIVE BATTERY CABLE DISCONNECTION/CONNECTION [SKYACTIV-G 2.0, SKYACTIV-G 2.5]**.) • Disconnect the solar radiation sensor connector. (See **SOLAR RADIATION SENSOR REMOVAL/INSTALLATION [FULL-AUTO AIR CONDITIONER]**.) • Inspect the connector and terminals (corrosion, damage,	Yes	Go to the next step.
		No	Repair/replace the connector or terminal. After repair procedure, go to the next step.

	pin disconnection). • Are the connector and terminals normal?		
2	**INSPECT SOLAR RADIATION SENSOR** • Inspect the solar radiation sensor. (See **SOLAR RADIATION SENSOR INSPECTION [FULL-AUTO AIR CONDITIONER]**.) • Is it normal?	Yes	Go to the next step.
		No	Replace the solar radiation sensor. (See **SOLAR RADIATION SENSOR REMOVAL/INSTALLATION [FULL-AUTO AIR CONDITIONER]**.) Go to the next step.
3	**INSPECT SOLAR RADIATION SENSOR CIRCUIT FOR OPEN CIRCUIT** • Disconnect the climate control unit connector. (See **CLIMATE CONTROL UNIT REMOVAL/INSTALLATION [FULL-AUTO AIR CONDITIONER]**.) • Disconnect the solar radiation sensor connector. (See **SOLAR RADIATION SENSOR REMOVAL/INSTALLATION [FULL-AUTO AIR CONDITIONER]**.) • Inspect for continuity between the following terminals (wiring harness-side): ▪ Climate control unit terminal 1N—solar radiation sensor terminal A ▪ Climate control unit terminal 1M—solar radiation sensor terminal C ▪ Climate control unit terminal 1O—solar radiation sensor terminal B • Is there continuity?	Yes	Go to the next step.
		No	Refer to the wiring diagram and verify whether or not there is a common connector between climate control unit terminal and solar radiation sensor terminal. **If there is a common connector:** • Determine the malfunctioning part by inspecting the common connector and the terminal for corrosion, damage, or pin disconnection, and the common wiring harness for an open circuit. • Repair or replace the malfunctioning part. **If there is no common connector:** • Repair or replace the wiring harness which has an open circuit. Go to the next step.
4	**INSPECT SOLAR RADIATION SENSOR CIRCUIT FOR SHORT TO POWER SUPPLY** • Connect the negative battery cable. (See **NEGATIVE BATTERY CABLE DISCONNECTION/CONNECTION [SKYACTIV-G 2.0, SKYACTIV-G**	Yes	Go to the next step.
		No	Refer to the wiring diagram and verify whether or not there is a common connector between climate control unit terminal and solar radiation sensor terminal. **If there is a common connector:** • Determine the malfunctioning part by inspecting the common connector and the terminal for corrosion, damage, or pin

	2.5].) • Switch the ignition ON (engine off or on). • Measure the voltage at the following terminals (wiring harness-side): ▪ Climate control unit terminal 1N ▪ Climate control unit terminal 1M ▪ Climate control unit terminal 1O • Is the voltage **0 V**?		disconnection, and the common wiring harness for a short to power supply. • Repair or replace the malfunctioning part. **If there is no common connector:** • Repair or replace the wiring harness which has a short to power supply. Go to the next step.
5	**VERIFY CLIMATE CONTROL UNIT CONNECTOR CONDITION** • Switch the ignition off. • Disconnect the negative battery cable. (See **NEGATIVE BATTERY CABLE DISCONNECTION/CONNECTION [SKYACTIV-G 2.0, SKYACTIV-G 2.5]**.) • Inspect the connector and terminals (corrosion, damage, pin disconnection). • Are the connector and terminals normal?	Yes	Go to the next step.
		No	Repair/replace the malfunctioning vehicle wiring harness, connector, or terminal. After repair procedure, go to the next step.
6	**VERIFY THAT SAME DTC IS NOT OUTPUT AGAIN** • Reconnect the disconnected connectors. • Connect the negative battery cable. (See **NEGATIVE BATTERY CABLE DISCONNECTION/CONNECTION [SKYACTIV-G 2.0, SKYACTIV-G 2.5]**.) • Clear the past malfunction from memory. (See **CLEARING DTC [FULL-AUTO AIR CONDITIONER]**.) • Verify DTCs. (See **DTC DISPLAY [FULL-AUTO AIR CONDITIONER]**.) • Is DTC B1A63:12, B1A63:13, B1A64:12 or B1A64:13 output?	Yes	Repeat the inspection from Step 1. • If the malfunction does not recur, go to the next step. • If the malfunction recurs, replace the climate control unit. (See **CLIMATE CONTROL UNIT REMOVAL/INSTALLATION [FULL-AUTO AIR CONDITIONER]**.) Go to the next step.
		No	Go to the next step.
7	**VERIFY THAT NO OTHER DTCs ARE PRESENT** • Verify other DTCs displayed.	Yes	Perform the corresponding DTC inspection. (See **DTC TABLE [FULL-AUTO AIR CONDITIONER]**.)

	(See **DTC DISPLAY [FULL-AUTO AIR CONDITIONER]**.) • Are any other DTCs output?	No	DTC troubleshooting completed.

With Single Type Climate Control Unit

System malfunction location	• B1A63:12: Solar radiation sensor (RH) circuit short to power supply • B1A63:13: Solar radiation sensor (RH) circuit open • B1A64:12: Solar radiation sensor (LH) circuit short to power supply • B1A64:13: Solar radiation sensor (LH) circuit open
Detection condition	• Malfunction in wiring harness between solar radiation sensor and climate control unit
Fail-safe function	**Malfunction determined when ignition switched ON** • The solar radiation sensor input value is fixed at the value directly before the malfunction only when the valve is **1,450 W/m^2 or more**. **Malfunction already exists when ignition switched ON** • Solar radiation sensor value is fixed at **0 W/m^2**.
Possible cause	• Connector or terminal malfunction • Light amount shone on the solar radiation sensor is insufficient (Circuit is normal) • Solar radiation sensor malfunction • Open circuit in wiring harness between climate control unit and solar radiation sensor • Short to power supply in wiring harness between climate control unit and solar radiation sensor • Climate control unit malfunction

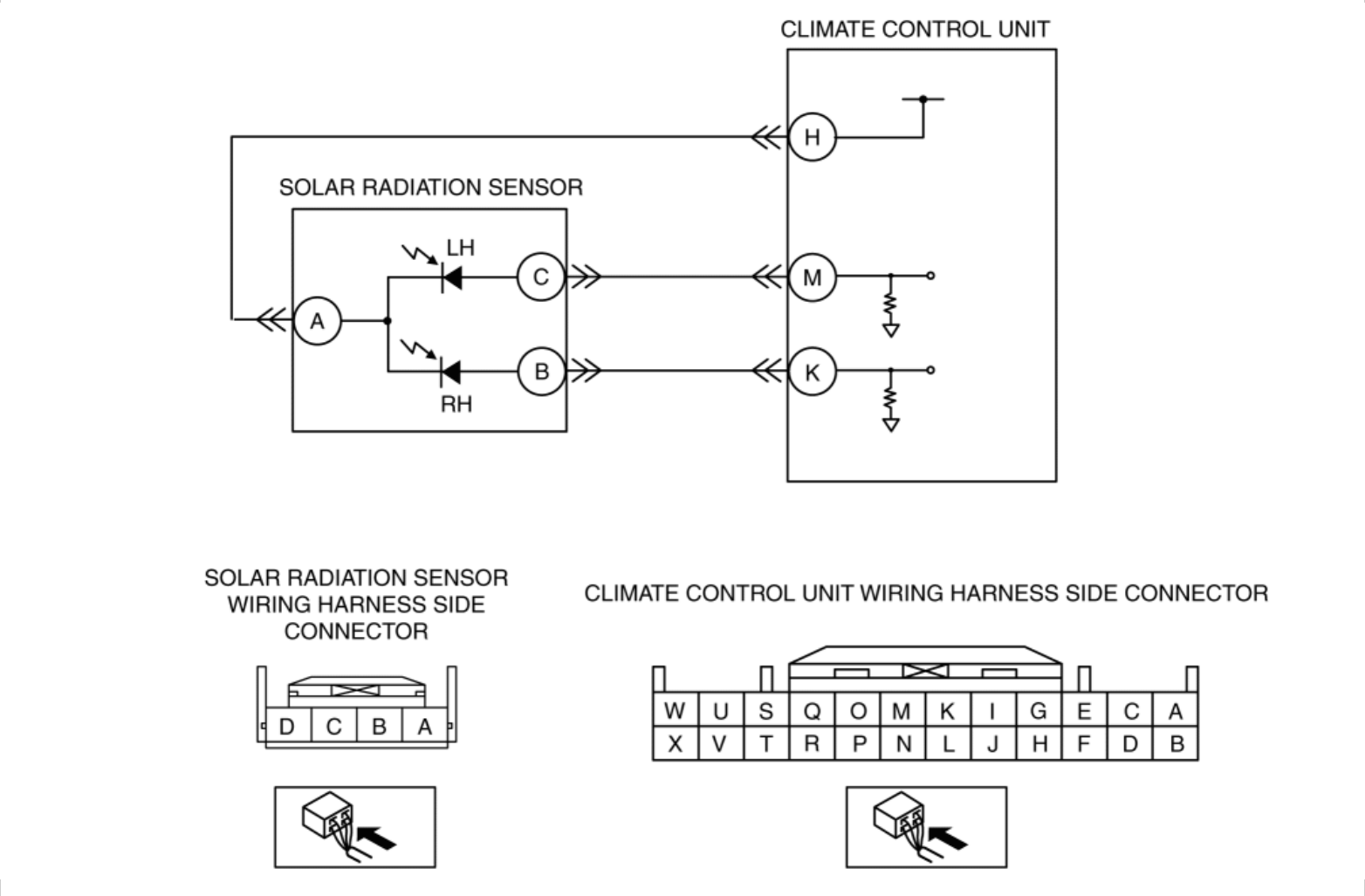

Diagnostic procedure

STEP	INSPECTION		ACTION
1	**INSPECT SOLAR RADIATION SENSOR CONNECTOR** • Switch the ignition off. • Disconnect the negative battery cable. (See **NEGATIVE BATTERY CABLE DISCONNECTION/CONNECTION [SKYACTIV-G 2.0, SKYACTIV-G 2.5]**.) • Disconnect the solar radiation sensor connector. (See **SOLAR RADIATION SENSOR REMOVAL/INSTALLATION [FULL-AUTO AIR CONDITIONER]**.) • Inspect the connector and terminals (corrosion, damage, pin disconnection).	Yes	Go to the next step.
		No	Repair/replace the connector or terminal. After repair procedure, go to the next step.

	• Are the connector and terminals normal?		
2	**INSPECT SOLAR RADIATION SENSOR** • Inspect the solar radiation sensor. (See **SOLAR RADIATION SENSOR INSPECTION [FULL-AUTO AIR CONDITIONER]**.) • Is it normal?	Yes	Go to the next step.
		No	Replace the solar radiation sensor. (See **SOLAR RADIATION SENSOR REMOVAL/INSTALLATION [FULL-AUTO AIR CONDITIONER]**.) Go to the next step.
3	**INSPECT SOLAR RADIATION SENSOR CIRCUIT FOR OPEN CIRCUIT** • Disconnect the climate control unit connector. (See **CLIMATE CONTROL UNIT REMOVAL/INSTALLATION [FULL-AUTO AIR CONDITIONER]**.) • Disconnect the solar radiation sensor connector. (See **SOLAR RADIATION SENSOR REMOVAL/INSTALLATION [FULL-AUTO AIR CONDITIONER]**.) • Inspect for continuity between the following terminals (wiring harness-side): ▪ Climate control unit terminal H—solar radiation sensor terminal A ▪ Climate control unit terminal M—solar radiation sensor terminal C ▪ Climate control unit terminal K—solar radiation sensor terminal B • Is there continuity?	Yes	Go to the next step.
		No	Refer to the wiring diagram and verify whether or not there is a common connector between climate control unit terminal and solar radiation sensor terminal. **If there is a common connector:** • Determine the malfunctioning part by inspecting the common connector and the terminal for corrosion, damage, or pin disconnection, and the common wiring harness for an open circuit. • Repair or replace the malfunctioning part. **If there is no common connector:** • Repair or replace the wiring harness which has an open circuit. Go to the next step.
4	**INSPECT SOLAR RADIATION SENSOR CIRCUIT FOR SHORT TO POWER SUPPLY** • Connect the negative battery cable. (See **NEGATIVE BATTERY CABLE DISCONNECTION/CONNECTION [SKYACTIV-G 2.0, SKYACTIV-G 2.5]**.)	Yes	Go to the next step.
		No	Refer to the wiring diagram and verify whether or not there is a common connector between climate control unit terminal and solar radiation sensor terminal. **If there is a common connector:** • Determine the malfunctioning part by inspecting the common connector and the terminal for corrosion, damage, or pin disconnection, and the common wiring harness for a short to power supply.

	Switch the ignition ON (engine off or on). • Measure the voltage at the following terminals (wiring harness-side): ▪ Climate control unit terminal H ▪ Climate control unit terminal M ▪ Climate control unit terminal K • Is the voltage **0 V**?		• Repair or replace the malfunctioning part. **If there is no common connector:** • Repair or replace the wiring harness which has a short to power supply. Go to the next step.
5	**VERIFY CLIMATE CONTROL UNIT CONNECTOR CONDITION** • Switch the ignition off. • Disconnect the negative battery cable. (See **NEGATIVE BATTERY CABLE DISCONNECTION/CONNECTION [SKYACTIV-G 2.0, SKYACTIV-G 2.5]**.) • Inspect the connector and terminals (corrosion, damage, pin disconnection). • Are the connector and terminals normal?	Yes	Go to the next step.
		No	Repair/replace the malfunctioning vehicle wiring harness, connector, or terminal. After repair procedure, go to the next step.
6	**VERIFY THAT SAME DTC IS NOT OUTPUT AGAIN** • Reconnect the disconnected connectors. • Connect the negative battery cable. (See **NEGATIVE BATTERY CABLE DISCONNECTION/CONNECTION [SKYACTIV-G 2.0, SKYACTIV-G 2.5]**.) • Clear the past malfunction from memory. (See **CLEARING DTC [FULL-AUTO AIR CONDITIONER]**.) • Verify DTCs. (See **DTC DISPLAY [FULL-AUTO AIR CONDITIONER]**.) • Is DTC B1A63:12, B1A63:13, B1A64:12 or B1A64:13 output?	Yes	Repeat the inspection from Step 1. • If the malfunction does not recur, go to the next step. • If the malfunction recurs, replace the climate control unit. (See **CLIMATE CONTROL UNIT REMOVAL/INSTALLATION [FULL-AUTO AIR CONDITIONER]**.) Go to the next step.
		No	Go to the next step.
7	**VERIFY THAT NO OTHER DTCs ARE PRESENT** • Verify other DTCs displayed. (See **DTC DISPLAY [FULL-AUTO AIR CONDITIONER]**.)	Yes	Perform the corresponding DTC inspection. (See **DTC TABLE [FULL-AUTO AIR CONDITIONER]**.)
		No	DTC troubleshooting completed.

	• Are any other DTCs output?		

2014 - Mazda3 - HVAC

DTC B1B71:11, B1B71:13 [FULL-AUTO AIR CONDITIONER]

With Dual Type Climate Control Unit

System malfunction location	• B1B71:11: Evaporator temperature sensor circuit short to ground • B1B71:13: Evaporator temperature sensor circuit open
Detection condition	• Malfunction in wiring harness between evaporator temperature sensor and climate control unit
Fail-safe function	• A/C output OFF is controlled when the evaporator temperature sensor input value is at **0 °C {32 °F}**.
Possible cause	• Connector or terminal malfunction • Evaporator temperature sensor malfunction • Open circuit in wiring harness between climate control unit and evaporator temperature sensor • Short to ground in wiring harness between climate control unit and evaporator temperature sensor • Climate control unit malfunction

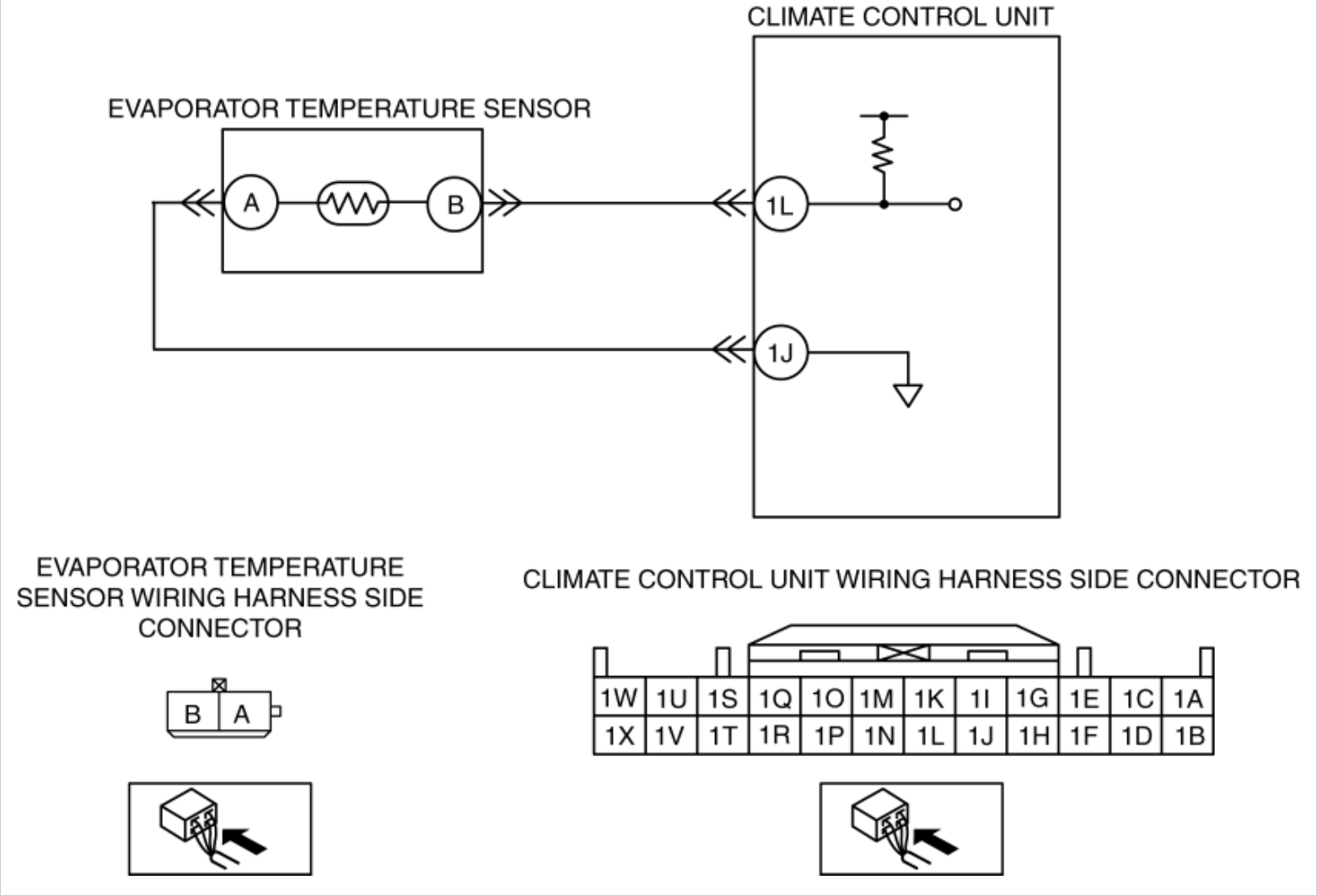

Diagnostic procedure

STEP	INSPECTION		ACTION
1	**INSPECT EVAPORATOR TEMPERATURE SENSOR CONNECTOR** • Switch the ignition off. • Disconnect the negative battery cable. (See **NEGATIVE BATTERY CABLE DISCONNECTION/CONNECTION [SKYACTIV-G 2.0, SKYACTIV-G 2.5]**.) • Disconnect the evaporator temperature sensor connector. (See **EVAPORATOR TEMPERATURE SENSOR**	Yes	Go to the next step.
		No	Repair/replace the connector or terminal. After repair procedure, go to the next step.

	INSPECTION [FULL-AUTO AIR CONDITIONER].) • Inspect the connector and terminals (corrosion, damage, pin disconnection). • Are the connector and terminals normal?		
2	**INSPECT EVAPORATOR TEMPERATURE SENSOR** • Inspect the evaporator temperature sensor. (See **EVAPORATOR TEMPERATURE SENSOR INSPECTION [FULL-AUTO AIR CONDITIONER]**.) • Is it normal?	Yes	Go to the next step.
		No	Replace the evaporator temperature sensor. (See **A/C UNIT DISASSEMBLY/ASSEMBLY**.) Go to the next step.
3	**INSPECT EVAPORATOR TEMPERATURE SENSOR CIRCUIT FOR OPEN CIRCUIT** • Disconnect the climate control unit connector. (See **CLIMATE CONTROL UNIT REMOVAL/INSTALLATION [FULL-AUTO AIR CONDITIONER]**.) • Disconnect the evaporator temperature sensor connector. (See **EVAPORATOR TEMPERATURE SENSOR INSPECTION [FULL-AUTO AIR CONDITIONER]**.) • Inspect for continuity between the following terminals (wiring harness-side): ▪ Climate control unit terminal 1J—evaporator temperature sensor terminal A ▪ Climate control unit terminal 1L—evaporator temperature sensor terminal B • Is there continuity?	Yes	Go to the next step.
		No	Refer to the wiring diagram and verify whether or not there is a common connector between climate control unit terminal and evaporator temperature sensor terminal. **If there is a common connector:** • Determine the malfunctioning part by inspecting the common connector and the terminal for corrosion, damage, or pin disconnection, and the common wiring harness for an open circuit. • Repair or replace the malfunctioning part. **If there is no common connector:** • Repair or replace the wiring harness which has an open circuit. Go to the next step.

4	**INSPECT EVAPORATOR TEMPERATURE SENSOR CIRCUIT FOR SHORT TO GROUND** • Inspect for continuity between the following terminal (wiring harness-side) and body ground: ▪ Climate control unit terminal 1L • Is there continuity?	Yes	Refer to the wiring diagram and verify whether or not there is a common connector between climate control unit terminal and evaporator temperature sensor terminal. **If there is a common connector:** • Determine the malfunctioning part by inspecting the common connector and the terminal for corrosion, damage, or pin disconnection, and the common wiring harness for a short to ground. • Repair or replace the malfunctioning part. **If there is no common connector:** • Repair or replace the wiring harness which has a short to ground. Go to the next step.
		No	Connect the climate control unit connector, then go to the next step.
5	**VERIFY CLIMATE CONTROL UNIT CONNECTOR CONDITION** • Inspect the connector and terminals (corrosion, damage, pin disconnection). • Are the connector and terminals normal?	Yes	Go to the next step.
		No	Repair/replace the malfunctioning vehicle wiring harness, connector, or terminal. After repair procedure, go to the next step.
6	**INSPECT EVAPORATOR TEMPERATURE SENSOR CIRCUIT** • Connect the climate control unit connector. • Connect the negative battery cable. (See **NEGATIVE BATTERY CABLE DISCONNECTION/CONNECTION [SKYACTIV-G 2.0, SKYACTIV-G 2.5]**.) • Switch the ignition ON (engine off or on). • Inspect the voltage at the following climate control unit terminal (wiring harness-side). ▪ Terminal 1L (evaporator temperature sensor input signal) • Is the voltage normal? (**Approx. 5 V**)	Yes	The system is normal at present. Go to the next step.
		No	Go to the next step.

7	**VERIFY THAT SAME DTC IS NOT OUTPUT AGAIN** • Switch the ignition off. • Disconnect the negative battery cable. • Reconnect the disconnected connectors. • Connect the negative battery cable. (See **NEGATIVE BATTERY CABLE DISCONNECTION/CONNECTION [SKYACTIV-G 2.0, SKYACTIV-G 2.5]**.) • Clear the past malfunction from memory. • Verify DTCs. (See **DTC DISPLAY [FULL-AUTO AIR CONDITIONER]**.) • Is DTC B1B71:11 or B1B71:13 output?	Yes	Repeat the inspection from Step 1. • If the malfunction does not recur, go to the next step. • If the malfunction recurs, replace the climate control unit. (See **CLIMATE CONTROL UNIT REMOVAL/INSTALLATION [FULL-AUTO AIR CONDITIONER]**.) Go to the next step.
		No	Go to the next step.
8	**VERIFY THAT NO OTHER DTCs ARE PRESENT** • Verify other DTCs displayed. (See **DTC DISPLAY [FULL-AUTO AIR CONDITIONER]**.) • Are any other DTCs output?	Yes	Perform the corresponding DTC inspection. (See **DTC TABLE [FULL-AUTO AIR CONDITIONER]**.)
		No	DTC troubleshooting completed.

With Single Type Climate Control Unit

System malfunction location	• B1B71:11: Evaporator temperature sensor circuit short to ground • B1B71:13: Evaporator temperature sensor circuit open
Detection condition	• Malfunction in wiring harness between evaporator temperature sensor and climate control unit
Fail-safe function	• A/C output OFF is controlled when the evaporator temperature sensor input value is at **0 °C {32 °F}**.
	• Connector or terminal malfunction • Evaporator temperature sensor malfunction • Open circuit in wiring harness between climate control unit and evaporator

Possible cause	temperature sensor • Short to ground in wiring harness between climate control unit and evaporator temperature sensor • Climate control unit malfunction

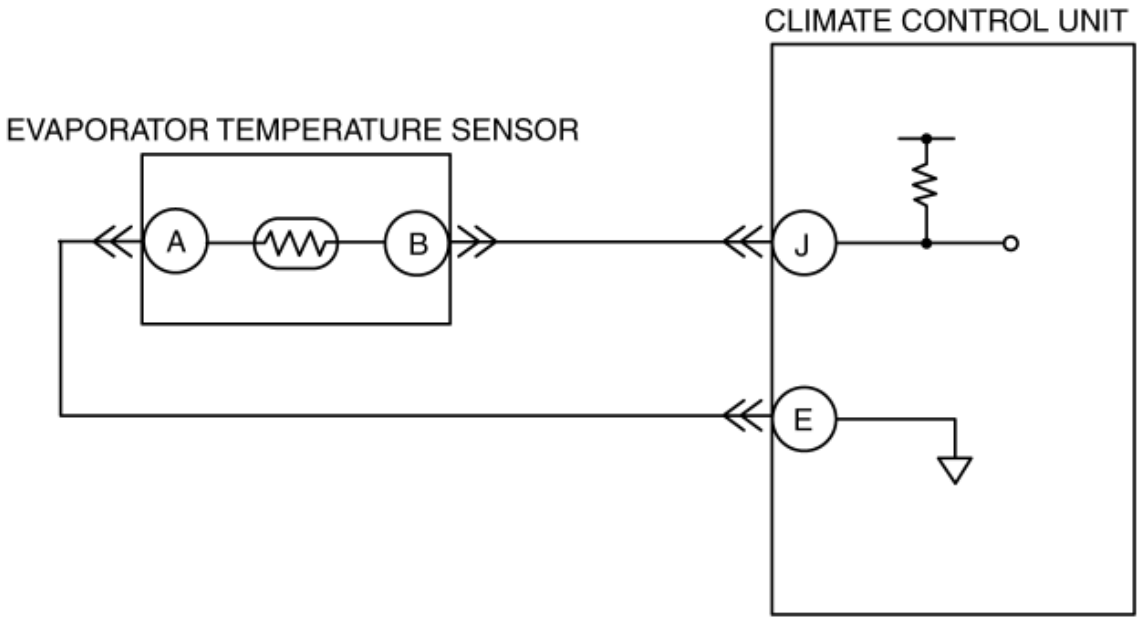

EVAPORATOR TEMPERATURE SENSOR WIRING HARNESS SIDE CONNECTOR

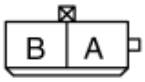

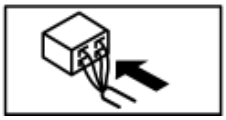

CLIMATE CONTROL UNIT WIRING HARNESS SIDE CONNECTOR

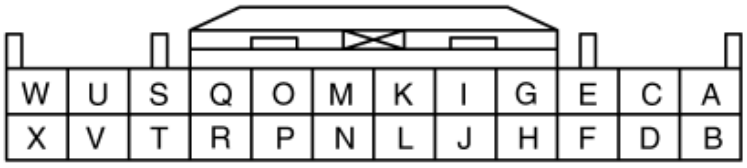

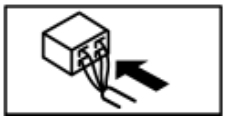

Diagnostic procedure

STEP	INSPECTION		ACTION
1	**INSPECT EVAPORATOR TEMPERATURE SENSOR CONNECTOR** • Switch the ignition off. • Disconnect the negative battery cable. (See **NEGATIVE BATTERY CABLE DISCONNECTION/CONNECTION [SKYACTIV-G 2.0, SKYACTIV-G**	Yes	Go to the next step.
		No	Repair/replace the connector or terminal. After repair procedure, go to the next step.

	2.5].) • Disconnect the evaporator temperature sensor connector. (See **EVAPORATOR TEMPERATURE SENSOR INSPECTION [FULL-AUTO AIR CONDITIONER]**.) • Inspect the connector and terminals (corrosion, damage, pin disconnection). • Are the connector and terminals normal?		
2	**INSPECT EVAPORATOR TEMPERATURE SENSOR** • Inspect the evaporator temperature sensor. (See **EVAPORATOR TEMPERATURE SENSOR INSPECTION [FULL-AUTO AIR CONDITIONER]**.) • Is it normal?	Yes	Go to the next step.
		No	Replace the evaporator temperature sensor. (See **A/C UNIT DISASSEMBLY/ASSEMBLY**.) Go to the next step.
3	**INSPECT EVAPORATOR TEMPERATURE SENSOR CIRCUIT FOR OPEN CIRCUIT** • Disconnect the climate control unit connector. (See **CLIMATE CONTROL UNIT REMOVAL/INSTALLATION [FULL-AUTO AIR CONDITIONER]**.) • Disconnect the evaporator temperature sensor connector. (See **EVAPORATOR TEMPERATURE SENSOR INSPECTION [FULL-AUTO AIR CONDITIONER]**.) • Inspect for continuity between the following terminals (wiring harness-side): ▪ Climate control unit terminal E—evaporator temperature sensor terminal A ▪ Climate control unit	Yes	Go to the next step.
		No	Refer to the wiring diagram and verify whether or not there is a common connector between climate control unit terminal and evaporator temperature sensor terminal. **If there is a common connector:** • Determine the malfunctioning part by inspecting the common connector and the terminal for corrosion, damage, or pin disconnection, and the common wiring harness for an open circuit. • Repair or replace the malfunctioning part. **If there is no common connector:** • Repair or replace the wiring harness which has an open circuit. Go to the next step.

	terminal J—evaporator temperature sensor terminal B • Is there continuity?		
4	**INSPECT EVAPORATOR TEMPERATURE SENSOR CIRCUIT FOR SHORT TO GROUND** • Inspect for continuity between the following terminal (wiring harness-side) and body ground: ▪ Climate control unit terminal J • Is there continuity?	Yes	Refer to the wiring diagram and verify whether or not there is a common connector between climate control unit terminal and evaporator temperature sensor terminal. **If there is a common connector:** • Determine the malfunctioning part by inspecting the common connector and the terminal for corrosion, damage, or pin disconnection, and the common wiring harness for a short to ground. • Repair or replace the malfunctioning part. **If there is no common connector:** • Repair or replace the wiring harness which has a short to ground. Go to the next step.
		No	Connect the climate control unit connector, then go to the next step.
5	**VERIFY CLIMATE CONTROL UNIT CONNECTOR CONDITION** • Inspect the connector and terminals (corrosion, damage, pin disconnection). • Are the connector and terminals normal?	Yes	Go to the next step.
		No	Repair/replace the malfunctioning vehicle wiring harness, connector, or terminal. After repair procedure, go to the next step.
6	**INSPECT EVAPORATOR TEMPERATURE SENSOR CIRCUIT** • Connect the climate control unit connector. • Connect the negative battery cable. (See **NEGATIVE BATTERY CABLE DISCONNECTION/CONNECTION [SKYACTIV-G 2.0, SKYACTIV-G 2.5]**.) • Switch the ignition ON (engine off or on). • Inspect the voltage at the following climate control unit terminal (wiring harness-side).	Yes	The system is normal at present. Go to the next step.
		No	Go to the next step.

	▪ Terminal J (evaporator temperature sensor input signal) • Is the voltage normal? (**Approx. 5 V**)		
7	**VERIFY THAT SAME DTC IS NOT OUTPUT AGAIN** • Switch the ignition off. • Disconnect the negative battery cable. • Reconnect the disconnected connectors. • Connect the negative battery cable. (See **NEGATIVE BATTERY CABLE DISCONNECTION/CONNECTION [SKYACTIV-G 2.0, SKYACTIV-G 2.5]**.) • Clear the past malfunction from memory. (See **CLEARING DTC [FULL-AUTO AIR CONDITIONER]**.) • Verify DTCs. (See **DTC DISPLAY [FULL-AUTO AIR CONDITIONER]**.) • Is DTC B1B71:11 or B1B71:13 output?	Yes	Repeat the inspection from Step 1. • If the malfunction does not recur, go to the next step. • If the malfunction recurs, replace the climate control unit. (See **CLIMATE CONTROL UNIT REMOVAL/INSTALLATION [FULL-AUTO AIR CONDITIONER]**.) Go to the next step.
		No	Go to the next step.
8	**VERIFY THAT NO OTHER DTCs ARE PRESENT** • Verify other DTCs displayed. (See **DTC DISPLAY [FULL-AUTO AIR CONDITIONER]**.) • Are any other DTCs output?	Yes	Perform the corresponding DTC inspection. (See **DTC TABLE [FULL-AUTO AIR CONDITIONER]**.)
		No	DTC troubleshooting completed.

2014 - Mazda3 - HVAC

DTC B1C1A:11, B1C1A:13, B1C1B:11, B1C1B:13 [FULL-AUTO AIR CONDITIONER]

System malfunction location	• B1C1A:11: Driver-side air mix actuator (potentiometer) circuit short to ground • B1C1A:13: Driver-side air mix actuator (potentiometer) circuit open • B1C1B:11: Passenger-side air mix actuator (potentiometer) circuit short to ground • B1C1B:13: Passenger-side air mix actuator (potentiometer) circuit open
Detection condition	• Malfunction in wiring harness between air mix actuator and climate control unit
Fail-safe function	**Malfunction determined when ignition switched ON** • Air mix actuator drive signal is stopped right when the malfunction is determined. **Malfunction already exists when ignition switched ON** • Control based on ambient temperature.
Possible cause	• Connector or terminal malfunction • Air mix actuator malfunction • Open circuit in wiring harness between climate control unit and air mix actuator • Short to power supply in wiring harness between climate control unit and air mix actuator • Climate control unit malfunction

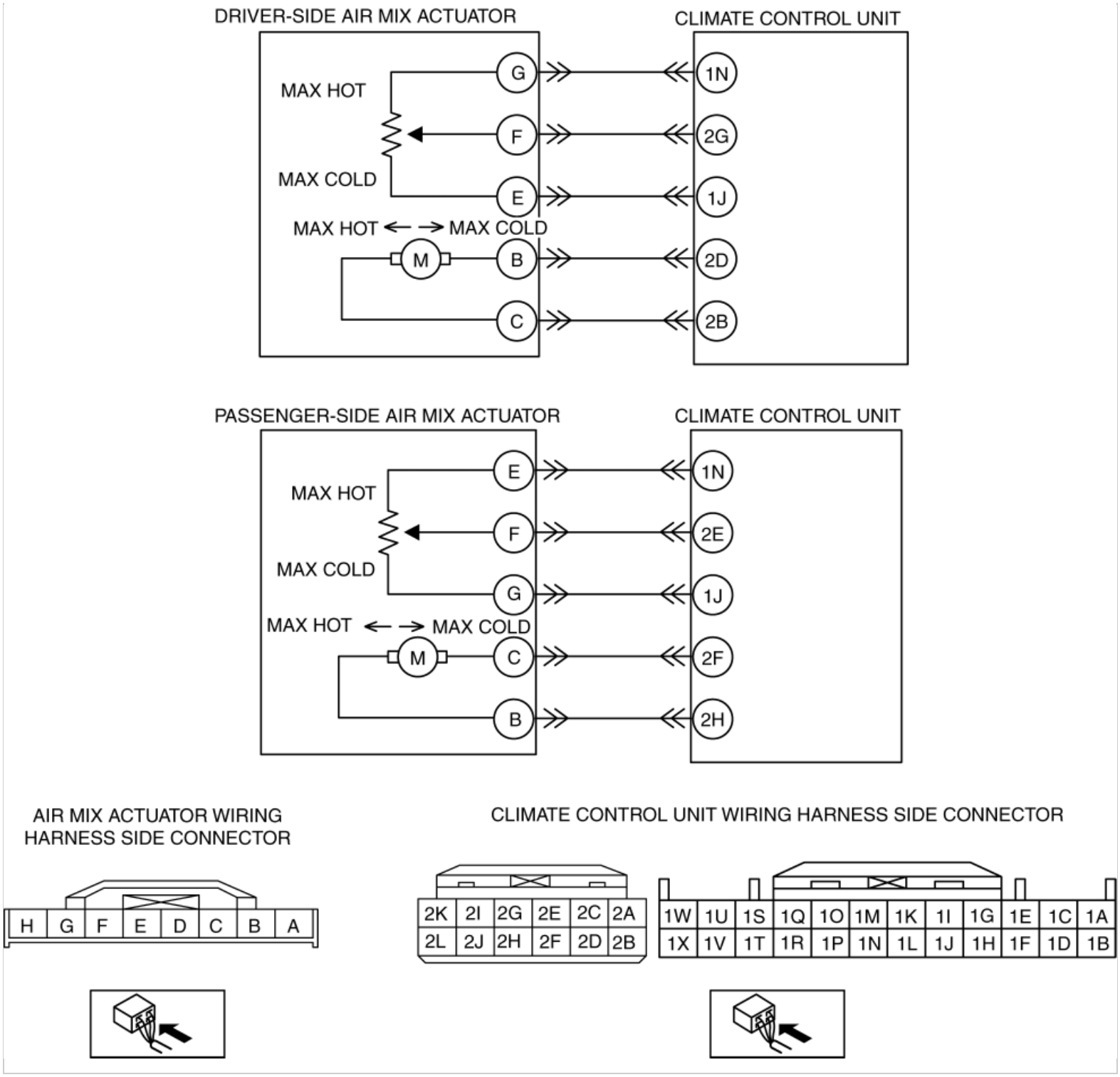

Diagnostic Procedure

STEP	INSPECTION		ACTION
1	**INSPECT AIR MIX ACTUATOR CONNECTOR** • Switch the ignition off. • Disconnect the negative battery cable.	Yes	Go to the next step.
		No	Repair/replace the connector or terminal. After repair procedure, go to the next step.

	(See **NEGATIVE BATTERY CABLE DISCONNECTION/CONNECTION [SKYACTIV-G 2.0, SKYACTIV-G 2.5]**.) • Disconnect the air mix actuator connector. (See **AIR MIX ACTUATOR REMOVAL/INSTALLATION [FULL-AUTO AIR CONDITIONER]**.) • Inspect the connector and terminals (corrosion, damage, pin disconnection). • Are the connector and terminals normal?		
2	**INSPECT AIR MIX ACTUATOR** • Inspect the air mix actuator. (See **AIR MIX ACTUATOR INSPECTION [FULL-AUTO AIR CONDITIONER]**.) • Is it normal?	Yes	Go to the next step.
		No	Replace the air mix actuator. (See **AIR MIX ACTUATOR REMOVAL/INSTALLATION [FULL-AUTO AIR CONDITIONER]**.) Go to the next step.
3	**INSPECT AIR MIX ACTUATOR (POTENTIOMETER) CIRCUIT FOR OPEN CIRCUIT** • Disconnect the climate control unit connector. (See **CLIMATE CONTROL UNIT REMOVAL/INSTALLATION [FULL-AUTO AIR CONDITIONER]**.) • Disconnect the air mix actuator connector. (See **AIR MIX ACTUATOR REMOVAL/INSTALLATION [FULL-AUTO AIR CONDITIONER]**.) • Inspect for continuity between the following terminals (wiring harness-side): **Driver-side** ▪ Climate control unit terminal 1N—air mix actuator terminal G ▪ Climate control unit terminal 2G—air mix actuator terminal F ▪ Climate control unit terminal 1J—	Yes	Go to the next step.
		No	Refer to the wiring diagram and verify whether or not there is a common connector between climate control unit terminal and air mix actuator terminal. **If there is a common connector:** • Determine the malfunctioning part by inspecting the common connector and the terminal for corrosion, damage, or pin disconnection, and the common wiring harness for an open circuit. • Repair or replace the malfunctioning part. **If there is no common connector:** • Repair or replace the wiring harness which has an open circuit. Go to the next step.

	air mix actuator terminal E **Passenger-side** ▪ Climate control unit terminal 1N—air mix actuator terminal E ▪ Climate control unit terminal 2E—air mix actuator terminal F ▪ Climate control unit terminal 1J—air mix actuator terminal G • Is there continuity?		
4	**INSPECT AIR MIX ACTUATOR (POTENTIOMETER) SHORT TO GROUND** • Inspect for continuity between the following terminals (wiring harness-side) and body ground: **Driver-side** ▪ Climate control unit 2G **Passenger-side** ▪ Climate control unit 2E • Is there continuity?	Yes	Refer to the wiring diagram and verify whether or not there is a common connector between climate control unit terminal and air mix actuator terminal. **If there is a common connector:** • Determine the malfunctioning part by inspecting the common connector and the terminal for corrosion, damage, or pin disconnection, and the common wiring harness for a short to ground. • Repair or replace the malfunctioning part. **If there is no common connector:** • Repair or replace the wiring harness which has a short to ground. Go to the next step.
		No	Go to the next step.
5	**VERIFY CLIMATE CONTROL UNIT CONNECTOR CONDITION** • Inspect the connector and terminals (corrosion, damage, pin disconnection). • Are the connector and terminals normal?	Yes	Go to the next step.
		No	Repair/replace the malfunctioning vehicle wiring harness, connector, or terminal. After repair procedure, go to the next step.
6	**VERIFY THAT SAME DTC IS NOT OUTPUT AGAIN** • Reconnect the disconnected connectors. • Connect the negative battery cable. (See **NEGATIVE BATTERY CABLE DISCONNECTION/CONNECTION [SKYACTIV-G 2.0, SKYACTIV-G**	Yes	Repeat the inspection from Step 1. • If the malfunction does not recur, go to the next step. • If the malfunction recurs, replace the climate control unit. (See **CLIMATE CONTROL UNIT REMOVAL/INSTALLATION [FULL-AUTO AIR CONDITIONER]**.) Go to the next step.
		No	Go to the next step.

	2.5].) • Clear the past malfunction from memory. (See **CLEARING DTC [FULL-AUTO AIR CONDITIONER]**.) • Verify DTCs. (See **DTC DISPLAY [FULL-AUTO AIR CONDITIONER]**.) • Is DTC B1C1A:11, B1C1A:13, B1C1B:11, B1C1B:13 output?		
7	**VERIFY THAT NO OTHER DTCs ARE PRESENT** • Verify other DTCs displayed. (See **DTC DISPLAY [FULL-AUTO AIR CONDITIONER]**.) • Are any other DTCs output?	Yes	Perform the corresponding DTC inspection. (See **DTC TABLE [FULL-AUTO AIR CONDITIONER]**.)
		No	DTC troubleshooting completed.

2014 - Mazda3 - HVAC

DTC B1C1C:11, B1C1C:12, B1C1C:13 [FULL-AUTO AIR CONDITIONER]

With Dual Type Climate Control Unit

System malfunction location	• B1C1C:11: Airflow mode actuator (potentiometer) circuit short to ground • B1C1C:13: Airflow mode actuator (potentiometer) circuit open
Detection condition	• Malfunction in wiring harness between airflow mode actuator and climate control unit
Fail-safe function	**Malfunction determined when ignition switched ON** • Airflow mode actuator drive signal is stopped right when the malfunction is determined. **Malfunction already exists when ignition switched ON** • Control based on ambient temperature.
Possible cause	• Connector or terminal malfunction • Airflow mode actuator malfunction • Open circuit in wiring harness between climate control unit and airflow mode actuator • Short to power supply in wiring harness between climate control unit and airflow mode actuator • Climate control unit malfunction

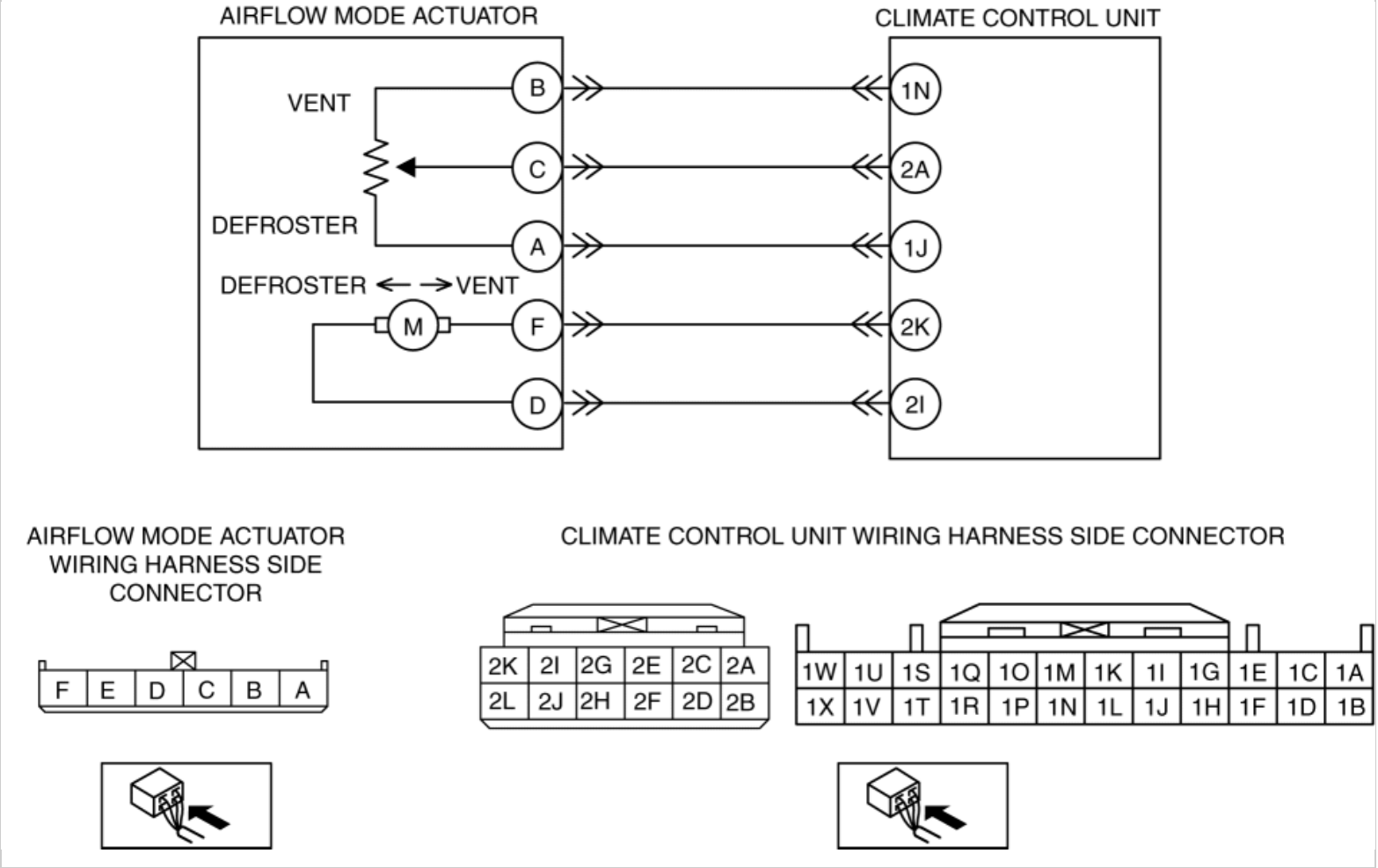

Diagnostic procedure

STEP	INSPECTION		ACTION
1	**INSPECT AIRFLOW MODE ACTUATOR CONNECTOR** • Switch the ignition off. • Disconnect the negative battery cable. (See **NEGATIVE BATTERY CABLE DISCONNECTION/CONNECTION [SKYACTIV-G 2.0, SKYACTIV-G 2.5]**.) • Disconnect the airflow mode actuator connector. (See **AIRFLOW MODE ACTUATOR REMOVAL/INSTALLATION [FULL-AUTO AIR CONDITIONER]**.) • Inspect the connector and terminals (corrosion, damage, pin disconnection).	Yes	Go to the next step.
		No	Repair/replace the connector or terminal. After repair procedure, go to the next step.

	• Are the connector and terminals normal?		
2	**INSPECT AIRFLOW MODE ACTUATOR** • Inspect the airflow mode actuator. (See **AIRFLOW MODE ACTUATOR INSPECTION [FULL-AUTO AIR CONDITIONER]**.) • Is it normal?	Yes	Go to the next step.
		No	Replace the airflow mode actuator. (See **AIRFLOW MODE ACTUATOR REMOVAL/INSTALLATION [FULL-AUTO AIR CONDITIONER]**.) Go to the next step.
3	**INSPECT AIRFLOW MODE ACTUATOR (POTENTIOMETER) CIRCUIT FOR OPEN CIRCUIT** • Disconnect the climate control unit connector. (See **CLIMATE CONTROL UNIT REMOVAL/INSTALLATION [FULL-AUTO AIR CONDITIONER]**.) • Disconnect the airflow mode actuator connector. (See **AIRFLOW MODE ACTUATOR REMOVAL/INSTALLATION [FULL-AUTO AIR CONDITIONER]**.) • Inspect for continuity between the following terminals (wiring harness-side): ▪ Climate control unit terminal 1N—airflow mode actuator terminal B ▪ Climate control unit terminal 2A—airflow mode actuator terminal C ▪ Climate control unit terminal 1J—airflow mode actuator terminal A • Is there continuity?	Yes	Go to the next step.
		No	Refer to the wiring diagram and verify whether or not there is a common connector between climate control unit terminal and airflow mode actuator terminal. **If there is a common connector:** • Determine the malfunctioning part by inspecting the common connector and the terminal for corrosion, damage, or pin disconnection, and the common wiring harness for an open circuit. • Repair or replace the malfunctioning part. **If there is no common connector:** • Repair or replace the wiring harness which has an open circuit. Go to the next step.
4	**INSPECT AIRFLOW MODE ACTUATOR (POTENTIOMETER) CIRCUIT FOR SHORT TO GROUND** • Inspect for continuity between the following terminal (wiring harness-side) and body ground:	Yes	Refer to the wiring diagram and verify whether or not there is a common connector between climate control unit terminal and airflow mode actuator terminal. **If there is a common connector:** • Determine the malfunctioning part by inspecting the common connector and the terminal for corrosion, damage,

	▪ Climate control unit terminal 2A • Is there continuity?		or pin disconnection, and the common wiring harness for a short to ground. • Repair or replace the malfunctioning part. **If there is no common connector:** • Repair or replace the wiring harness which has a short to ground. Go to the next step.
		No	Go to the next step.
5	**VERIFY CLIMATE CONTROL UNIT CONNECTOR CONDITION** • Inspect the connector and terminals (corrosion, damage, pin disconnection). • Are the connector and terminals normal?	Yes	Go to the next step.
		No	Repair/replace the malfunctioning vehicle wiring harness, connector, or terminal. After repair procedure, go to the next step.
6	**VERIFY THAT SAME DTC IS NOT OUTPUT AGAIN** • Reconnect the disconnected connectors. • Connect the negative battery cable. (See **NEGATIVE BATTERY CABLE DISCONNECTION/CONNECTION [SKYACTIV-G 2.0, SKYACTIV-G 2.5]**.) • Clear the past malfunction from memory. (See **CLEARING DTC [FULL-AUTO AIR CONDITIONER]**.) • Verify DTCs. (See **DTC DISPLAY [FULL-AUTO AIR CONDITIONER]**.) • Is DTC B1C1C:11, B1C1C:13 output?	Yes	Repeat the inspection from Step 1. • If the malfunction does not recur, go to the next step. • If the malfunction recurs, replace the climate control unit. (See **CLIMATE CONTROL UNIT REMOVAL/INSTALLATION [FULL-AUTO AIR CONDITIONER]**.) Go to the next step.
		No	Go to the next step.
7	**VERIFY THAT NO OTHER DTCs ARE PRESENT** • Verify other DTCs displayed. (See **DTC DISPLAY [FULL-AUTO AIR CONDITIONER]**.) • Are any other DTCs output?	Yes	Perform the corresponding DTC inspection. (See **DTC TABLE [FULL-AUTO AIR CONDITIONER]**.)
		No	DTC troubleshooting completed.

With Single Type Climate Control Unit

System malfunction location	• B1C1C:12: Airflow mode actuator (potentiometer) circuit short to power supply • B1C1C:13: Airflow mode actuator (potentiometer) circuit open

Detection condition	• Malfunction in wiring harness between airflow mode actuator and climate control unit
Fail-safe function	**Malfunction determined when ignition switched ON** • Airflow mode actuator drive signal is stopped right when the malfunction is determined. **Malfunction already exists when ignition switched ON** • Control based on ambient temperature.
Possible cause	• Connector or terminal malfunction • Airflow mode actuator malfunction • Open circuit in wiring harness between climate control unit and airflow mode actuator • Short to power supply in wiring harness between climate control unit and airflow mode actuator • Climate control unit malfunction

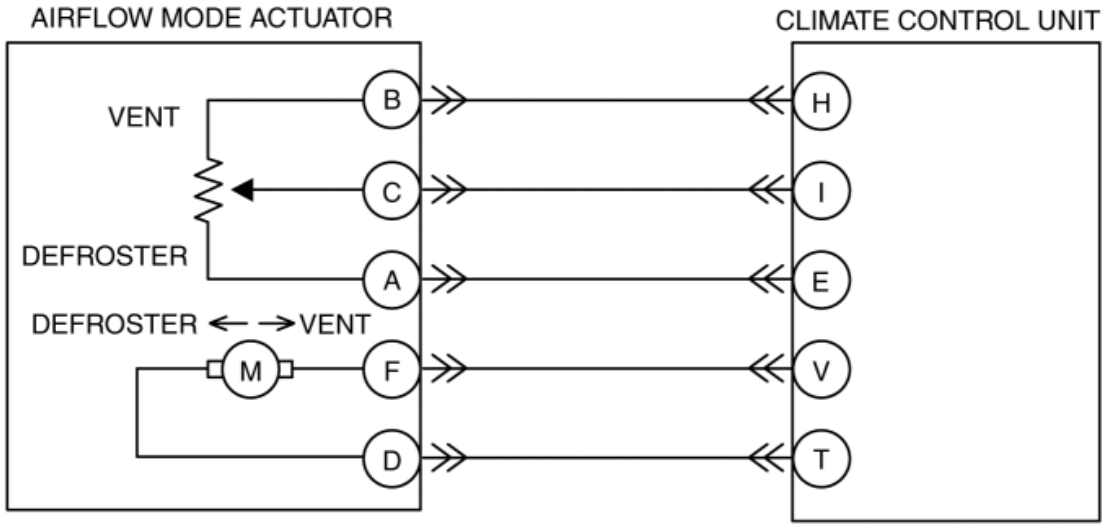

AIRFLOW MODE ACTUATOR WIRING HARNESS SIDE CONNECTOR

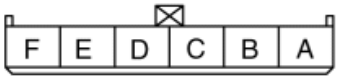

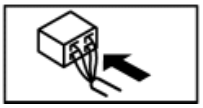

CLIMATE CONTROL UNIT WIRING HARNESS SIDE CONNECTOR

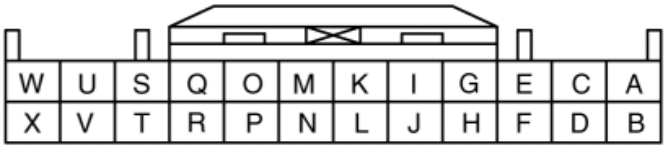

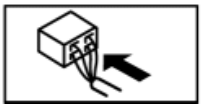

Diagnostic procedure

STEP	INSPECTION		ACTION
1	**INSPECT AIRFLOW MODE ACTUATOR CONNECTOR**	Yes	Go to the next step.

	• Switch the ignition off. • Disconnect the negative battery cable. (See **NEGATIVE BATTERY CABLE DISCONNECTION/CONNECTION [SKYACTIV-G 2.0, SKYACTIV-G 2.5]**.) • Disconnect the airflow mode actuator connector. (See **AIRFLOW MODE ACTUATOR REMOVAL/INSTALLATION [FULL-AUTO AIR CONDITIONER]**.) • Inspect the connector and terminals (corrosion, damage, pin disconnection). • Are the connector and terminals normal?	No	Repair/replace the connector or terminal. After repair procedure, go to the next step.
2	**INSPECT AIRFLOW MODE ACTUATOR** • Inspect the airflow mode actuator. (See **AIRFLOW MODE ACTUATOR INSPECTION [FULL-AUTO AIR CONDITIONER]**.) • Is it normal?	Yes	Go to the next step.
		No	Replace the airflow mode actuator. (See **AIRFLOW MODE ACTUATOR REMOVAL/INSTALLATION [FULL-AUTO AIR CONDITIONER]**.) Go to the next step.
3	**INSPECT AIRFLOW MODE ACTUATOR (POTENTIOMETER) CIRCUIT FOR OPEN CIRCUIT** • Disconnect the climate control unit connector. (See **CLIMATE CONTROL UNIT REMOVAL/INSTALLATION [FULL-AUTO AIR CONDITIONER]**.) • Disconnect the airflow mode actuator connector. (See **AIRFLOW MODE ACTUATOR REMOVAL/INSTALLATION [FULL-AUTO AIR CONDITIONER]**.) • Inspect for continuity between the following terminals (wiring harness-side): ▪ Climate control unit terminal H—airflow mode actuator terminal B ▪ Climate control unit terminal I—	Yes	Go to the next step.
		No	Refer to the wiring diagram and verify whether or not there is a common connector between climate control unit terminal and airflow mode actuator terminal. **If there is a common connector:** • Determine the malfunctioning part by inspecting the common connector and the terminal for corrosion, damage, or pin disconnection, and the common wiring harness for an open circuit. • Repair or replace the malfunctioning part. **If there is no common connector:** • Repair or replace the wiring harness which has an open circuit. Go to the next step.

	airflow mode actuator terminal C ▪ Climate control unit terminal E—airflow mode actuator terminal A • Is there continuity?		
4	**INSPECT AIRFLOW MODE ACTUATOR (POTENTIOMETER) CIRCUIT FOR SHORT TO POWER SUPPLY** • Connect the negative battery cable. (See **NEGATIVE BATTERY CABLE DISCONNECTION/CONNECTION [SKYACTIV-G 2.0, SKYACTIV-G 2.5]**.) • Switch the ignition ON (engine off or on). • Measure the voltage at the following terminals (wiring harness-side): ▪ Climate control unit terminal H ▪ Climate control unit terminal I ▪ Climate control unit terminal E • Is the voltage **0 V**?	Yes	Go to the next step.
		No	Refer to the wiring diagram and verify whether or not there is a common connector between climate control unit terminal and airflow mode actuator terminal. **If there is a common connector:** • Determine the malfunctioning part by inspecting the common connector and the terminal for corrosion, damage, or pin disconnection, and the common wiring harness for a short to power supply. • Repair or replace the malfunctioning part. **If there is no common connector:** • Repair or replace the wiring harness which has a short to power supply. Go to the next step.
5	**VERIFY CLIMATE CONTROL UNIT CONNECTOR CONDITION** • Inspect the connector and terminals (corrosion, damage, pin disconnection). • Are the connector and terminals normal?	Yes	Go to the next step.
		No	Repair/replace the malfunctioning vehicle wiring harness, connector, or terminal. After repair procedure, go to the next step.
6	**VERIFY THAT SAME DTC IS NOT OUTPUT AGAIN** • Reconnect the disconnected connectors. • Connect the negative battery cable. (See **NEGATIVE BATTERY CABLE DISCONNECTION/CONNECTION [SKYACTIV-G 2.0, SKYACTIV-G 2.5]**.) • Clear the past malfunction from memory.	Yes	Repeat the inspection from Step 1. • If the malfunction does not recur, go to the next step. • If the malfunction recurs, replace the climate control unit. (See **CLIMATE CONTROL UNIT REMOVAL/INSTALLATION [FULL-AUTO AIR CONDITIONER]**.) Go to the next step.
		No	Go to the next step.

	(See **CLEARING DTC [FULL-AUTO AIR CONDITIONER]**.) • Verify DTCs. (See **DTC DISPLAY [FULL-AUTO AIR CONDITIONER]**.) • Is DTC B1C1C:12, B1C1C:13 output?		
7	**VERIFY THAT NO OTHER DTCs ARE PRESENT** • Verify other DTCs displayed. (See **DTC DISPLAY [FULL-AUTO AIR CONDITIONER]**.) • Are any other DTCs output?	Yes	Perform the corresponding DTC inspection. (See **DTC TABLE [FULL-AUTO AIR CONDITIONER]**.)
		No	DTC troubleshooting completed.

2014 - Mazda3 - HVAC

DTC U0010:88, U0155:00 [FULL-AUTO AIR CONDITIONER]

System malfunction location	• U0010:88: Unit communication error (MS-CAN) • U0155:00: Communication error with instrument cluster
Detection condition	**U0010:88** • The climate control unit detects a CAN bus communication line (MS-CAN) malfunction. **U0155:00** • The climate control unit could not receive CAN signal from the instrument cluster for **5 s or more**.
Fail-safe function	Not applicable
Possible cause	• Malfunction in CAN bus communication line • Malfunction in CAN line between the climate control unit and instrument cluster
System wiring diagram	Not applicable

Diagnostic Procedure

- Perform the malfunction diagnosis according to the troubleshooting procedure for the multiplex communication system. (See **FOREWORD**.)

2014 - Mazda3 - HVAC

DTC U0423:68 [FULL-AUTO AIR CONDITIONER]

System malfunction location	• Invalid data received from instrument cluster
Detection condition	• The climate control unit receives error signals from the Instrument cluster
Fail-safe function	Not applicable
Possible cause	• Instrument cluster malfunction • Climate control unit malfunction
System wiring diagram	Not applicable

Diagnostic Procedure

Step	Inspection		Action
1	**PERFORM INSTRUMENT CLUSTER DTC INSPECTION** • Perform the instrument cluster DTC inspection using the M-MDS. (See **DTC INSPECTION [INSTRUMENT CLUSTER]**.) • Are any DTCs present?	Yes	Go to the applicable DTC inspection. (See **DTC TABLE [INSTRUMENT CLUSTER]**.)
		No	Go to the next step.
2	**PERFORM CLIMATE CONTROL UNIT DTC INSPECTION** • Clear the DTC from the climate control unit memory using the M-MDS. (See **CLEARING DTC [FULL-**	Yes	Replace the instrument cluster, then go to the next step. (See **INSTRUMENT CLUSTER REMOVAL/INSTALLATION**.)

	AUTO AIR CONDITIONER.) • Perform the climate control unit DTC inspection using the M-MDS. (See **DTC DISPLAY [FULL-AUTO AIR CONDITIONER]**.) • Is the same DTC present?	No	Go to the next step.
3	**VERIFY TROUBLESHOOTING COMPLETED** • Clear the DTC from the climate control unit memory using the M-MDS. (See **CLEARING DTC [FULL-AUTO AIR CONDITIONER]**.) • Perform the climate control unit DTC inspection using the M-MDS. (See **DTC DISPLAY [FULL-AUTO AIR CONDITIONER]**.) • Is the same DTC present?	Yes	Repeat the inspection from Step 1. • If the malfunction does not recur, go to the next step. • If the malfunction recurs, replace the climate control unit. (See **CLIMATE CONTROL UNIT REMOVAL/INSTALLATION [FULL-AUTO AIR CONDITIONER]**.) Go to the next step.
		No	Go to the next step.
4	**VERIFY THAT NO OTHER DTCs ARE PRESENT** • Verify other DTCs displayed. (See **DTC DISPLAY [FULL-AUTO AIR CONDITIONER]**.) • Are any other DTCs output?	Yes	Perform the corresponding DTC inspection. (See **DTC TABLE [FULL-AUTO AIR CONDITIONER]**.)
		No	DTC troubleshooting completed.

2014 - Mazda3 - HVAC

DTC U200D:11 [FULL-AUTO AIR CONDITIONER]

With Dual Type Climate Control Unit

System malfunction location	• Climate control unit circuit voltage (+5V) circuit short to ground
Detection condition	• Malfunction in wiring harness between climate control unit circuit voltage (+5V) and each sensor/actuator
Fail-safe function	Not applicable
Possible cause	• Connector or terminal malfunction • Each sensor/actuator malfunction • Short to ground in wiring harness between climate control unit and air mix actuator • Short to ground in wiring harness between climate control unit and airflow mode actuator • Short to ground in wiring harness between climate control unit and solar radiation sensor • Short to ground in wiring harness between climate control unit and evaporator temperature sensor • Short to ground in wiring harness between climate control unit and passenger compartment temperature sensor • Climate control unit malfunction

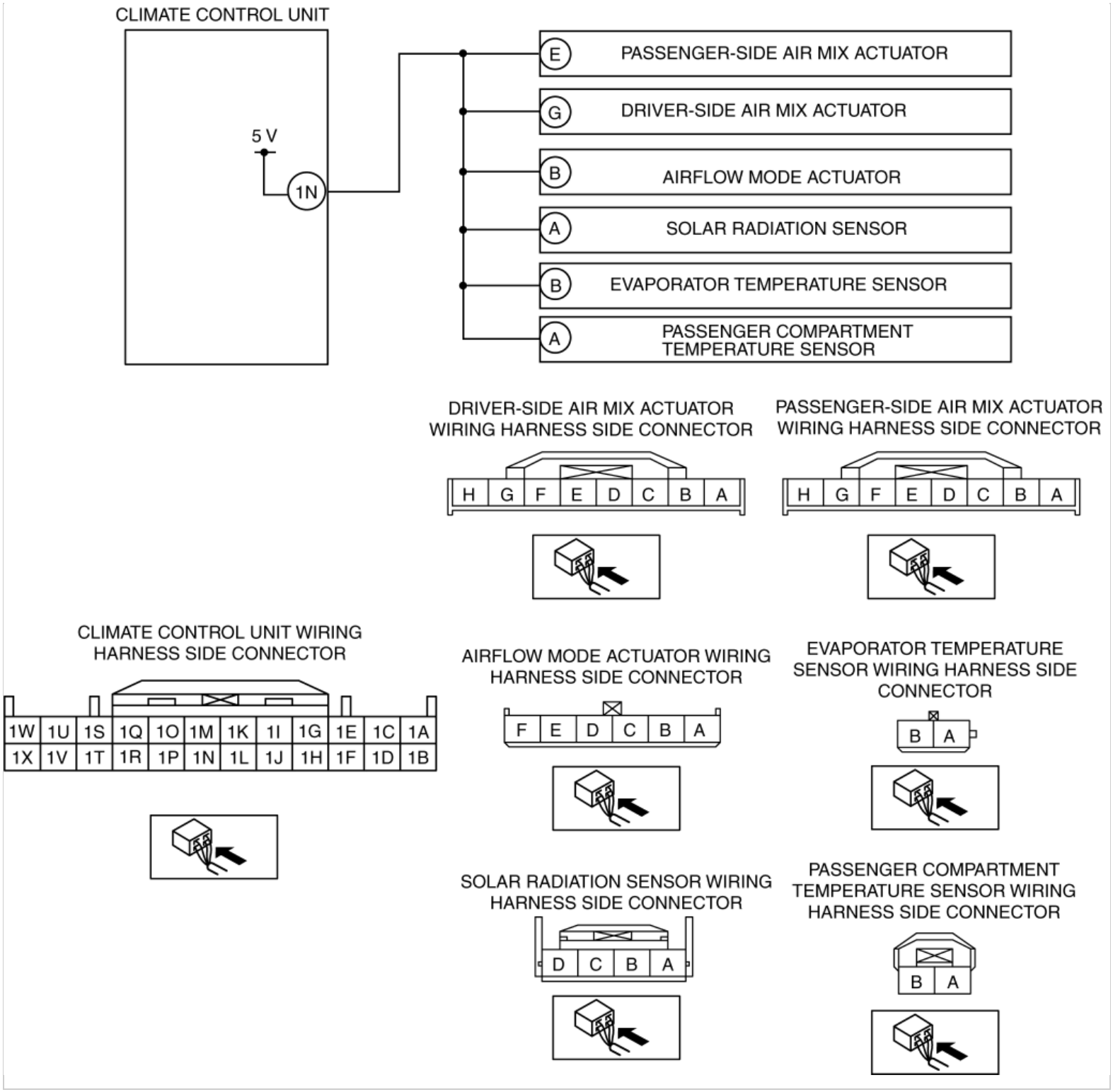

Diagnostic procedure

STEP	INSPECTION		ACTION
1	**VERIFY CLIMATE CONTROL UNIT CONNECTOR CONDITION** • Switch the ignition off. • Disconnect the negative battery cable.	Yes	Go to the next step.
		No	Repair/replace the malfunctioning vehicle wiring harness, connector, or terminal.

	(See **NEGATIVE BATTERY CABLE DISCONNECTION/CONNECTION [SKYACTIV-G 2.0, SKYACTIV-G 2.5]**.) • Disconnect the climate control unit connectors. (See **CLIMATE CONTROL UNIT REMOVAL/INSTALLATION [FULL-AUTO AIR CONDITIONER]**.) • Inspect the connector and terminals (corrosion, damage, pin disconnection). • Are the connector and terminals normal?		After repair procedure, go to the next step.
2	**VERIFY CONNECTOR CONDITION** • Disconnect the following each sensor/actuator connectors. ▪ Air mix actuator (See **AIR MIX ACTUATOR REMOVAL/INSTALLATION [FULL-AUTO AIR CONDITIONER]**.) ▪ Airflow mode actuator (See **AIRFLOW MODE ACTUATOR REMOVAL/INSTALLATION [FULL-AUTO AIR CONDITIONER]**.) ▪ Solar radiation sensor (See **SOLAR RADIATION SENSOR REMOVAL/INSTALLATION [FULL-AUTO AIR CONDITIONER]**.) ▪ Evaporator temperature sensor (See **EVAPORATOR TEMPERATURE SENSOR REMOVAL/INSTALLATION [FULL-AUTO AIR CONDITIONER]**.) ▪ Passenger compartment temperature sensor (See **PASSENGER COMPARTMENT TEMPERATURE SENSOR REMOVAL/INSTALLATION [FULL-AUTO AIR CONDITIONER]**.) • Inspect the connector and terminals (corrosion, damage, pin disconnection). • Are the connector and terminals normal?	Yes	Go to the next step.
		No	Replace the malfunctioning part. (See **AIR MIX ACTUATOR REMOVAL/INSTALLATION [FULL-AUTO AIR CONDITIONER]**.) (See **AIRFLOW MODE ACTUATOR REMOVAL/INSTALLATION [FULL-AUTO AIR CONDITIONER]**.) (See **SOLAR RADIATION SENSOR REMOVAL/INSTALLATION [FULL-AUTO AIR CONDITIONER]**.) (See **EVAPORATOR TEMPERATURE SENSOR REMOVAL/INSTALLATION [FULL-AUTO AIR CONDITIONER]**.) (See **PASSENGER COMPARTMENT TEMPERATURE SENSOR REMOVAL/INSTALLATION [FULL-AUTO AIR CONDITIONER]**.) After replace procedure, go to the next step.
3	**INSPECT EACH SENSOR/ACTUATOR** • Inspect the following each sensor/actuator. ▪ Air mix actuator (See **AIR MIX ACTUATOR INSPECTION [FULL-AUTO AIR CONDITIONER]**.) ▪ Airflow mode actuator	Yes	Go to the next step.
		No	Replace the malfunctioning sensor/actuator. (See **AIR MIX ACTUATOR REMOVAL/INSTALLATION [FULL-AUTO AIR CONDITIONER]**.) (See **AIRFLOW MODE ACTUATOR REMOVAL/INSTALLATION [FULL-AUTO AIR CONDITIONER]**.) (See **SOLAR RADIATION SENSOR REMOVAL/INSTALLATION [FULL-AUTO AIR**

	(See **AIRFLOW MODE ACTUATOR INSPECTION [FULL-AUTO AIR CONDITIONER]**.) ▪ Solar radiation sensor (See **SOLAR RADIATION SENSOR INSPECTION [FULL-AUTO AIR CONDITIONER]**.) ▪ Evaporator temperature sensor (See **EVAPORATOR TEMPERATURE SENSOR INSPECTION [FULL-AUTO AIR CONDITIONER]**.) ▪ Passenger compartment temperature sensor (See **PASSENGER COMPARTMENT TEMPERATURE SENSOR INSPECTION [FULL-AUTO AIR CONDITIONER]**.) • Is it normal?		**CONDITIONER]**.) (See **EVAPORATOR TEMPERATURE SENSOR REMOVAL/INSTALLATION [FULL-AUTO AIR CONDITIONER]**.) (See **PASSENGER COMPARTMENT TEMPERATURE SENSOR REMOVAL/INSTALLATION [FULL-AUTO AIR CONDITIONER]**.) After replace procedure, go to the next step.
4	**INSPECT EACH SENSOR/ACTUATOR CIRCUIT FOR SHORT TO GROUND** • Inspect for continuity between the following terminal (wiring harness-side) and body ground: ▪ Climate control unit terminal 1N • Is there continuity?	Yes	Refer to the wiring diagram and verify whether or not there is a common connector between climate control unit terminal 1N and each sensor/actuator terminals. **If there is a common connector:** • Determine the malfunctioning part by inspecting the common connector and the terminal for corrosion, damage, or pin disconnection, and the common wiring harness for a short to ground. • Repair or replace the malfunctioning part. **If there is no common connector:** • Repair or replace the wiring harness which has a short to ground. Go to the next step.
		No	Go to the next step.
5	**VERIFY THAT SAME DTC IS NOT OUTPUT AGAIN** • Reconnect the disconnected connectors. • Connect the negative battery cable. (See **NEGATIVE BATTERY CABLE DISCONNECTION/CONNECTION [SKYACTIV-G 2.0, SKYACTIV-G 2.5]**.) • Clear the past malfunction from memory. (See **CLEARING DTC [FULL-AUTO AIR CONDITIONER]**.) • Verify DTCs. (See **DTC DISPLAY [FULL-AUTO AIR CONDITIONER]**.) • Is DTC U200D:11 output?	Yes	Repeat the inspection from Step 1. • If the malfunction does not recur, go to the next step. • If the malfunction recurs, replace the climate control unit. (See **CLIMATE CONTROL UNIT REMOVAL/INSTALLATION [FULL-AUTO AIR CONDITIONER]**.) Go to the next step.
		No	Go to the next step.
6	**VERIFY THAT NO OTHER DTCs ARE PRESENT** • Verify other DTCs displayed. (See **DTC DISPLAY [FULL-AUTO AIR**	Yes	Perform the corresponding DTC inspection. (See **DTC TABLE [FULL-AUTO AIR CONDITIONER]**.)

	CONDITIONER].) • Are any other DTCs output?	No	DTC troubleshooting completed.

With Single Type Climate Control Unit

System malfunction location	• Climate control unit circuit voltage (+5V) circuit short to ground
Detection condition	• Malfunction in wiring harness between climate control unit circuit voltage (+5V) and each sensor/actuator
Fail-safe function	Not applicable
Possible cause	• Connector or terminal malfunction • Each sensor/actuator malfunction • Short to ground in wiring harness between climate control unit and air mix actuator • Short to ground in wiring harness between climate control unit and airflow mode actuator • Short to ground in wiring harness between climate control unit and solar radiation sensor • Short to ground in wiring harness between climate control unit and evaporator temperature sensor • Short to ground in wiring harness between climate control unit and passenger compartment temperature sensor • Climate control unit malfunction

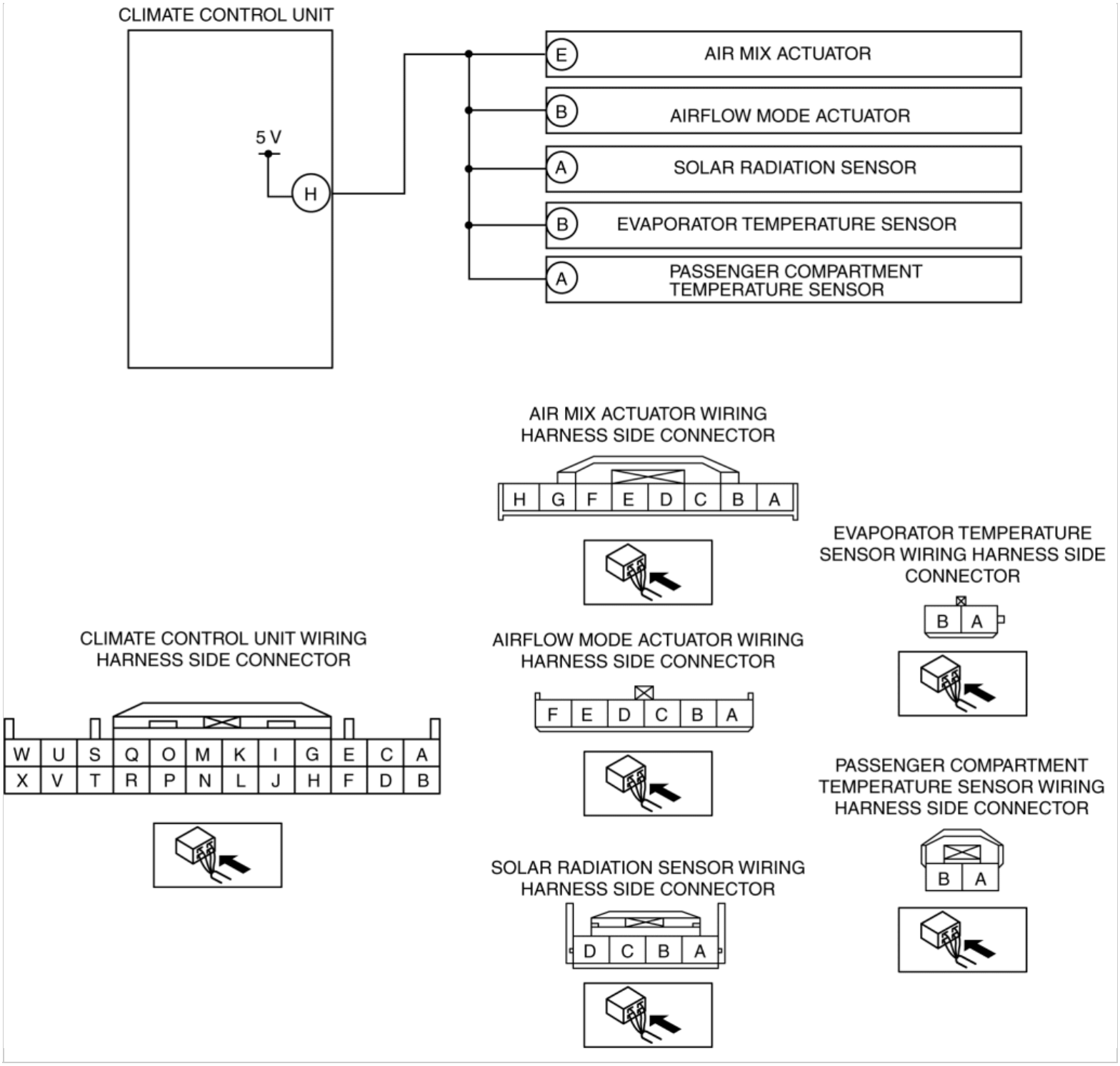

Diagnostic procedure

STEP	INSPECTION		ACTION
1	**VERIFY CLIMATE CONTROL UNIT CONNECTOR CONDITION** • Switch the ignition off. • Disconnect the negative battery cable. (See **NEGATIVE BATTERY CABLE DISCONNECTION/CONNECTION**	Yes	Go to the next step.
		No	Repair/replace the malfunctioning vehicle wiring harness, connector, or terminal. After repair procedure, go to the next step.

	[SKYACTIV-G 2.0, SKYACTIV-G 2.5].) • Disconnect the climate control unit connectors. (See **CLIMATE CONTROL UNIT REMOVAL/INSTALLATION [FULL-AUTO AIR CONDITIONER]**.) • Inspect the connector and terminals (corrosion, damage, pin disconnection). • Are the connector and terminals normal?		
2	**VERIFY CONNECTOR CONDITION** • Disconnect the following each sensor/actuator connectors. ▪ Air mix actuator (See **AIR MIX ACTUATOR REMOVAL/INSTALLATION [FULL-AUTO AIR CONDITIONER]**.) ▪ Airflow mode actuator (See **AIRFLOW MODE ACTUATOR REMOVAL/INSTALLATION [FULL-AUTO AIR CONDITIONER]**.) ▪ Solar radiation sensor (See **SOLAR RADIATION SENSOR REMOVAL/INSTALLATION [FULL-AUTO AIR CONDITIONER]**.) ▪ Evaporator temperature sensor (See **EVAPORATOR TEMPERATURE SENSOR REMOVAL/INSTALLATION [FULL-AUTO AIR CONDITIONER]**.) ▪ Passenger compartment temperature sensor (See **PASSENGER COMPARTMENT TEMPERATURE SENSOR REMOVAL/INSTALLATION [FULL-AUTO AIR CONDITIONER]**.) • Inspect the connector and terminals (corrosion, damage, pin disconnection). • Are the connector and terminals normal?	Yes	Go to the next step.
		No	Replace the malfunctioning part. (See **AIR MIX ACTUATOR REMOVAL/INSTALLATION [FULL-AUTO AIR CONDITIONER]**.) (See **AIRFLOW MODE ACTUATOR REMOVAL/INSTALLATION [FULL-AUTO AIR CONDITIONER]**.) (See **SOLAR RADIATION SENSOR REMOVAL/INSTALLATION [FULL-AUTO AIR CONDITIONER]**.) (See **EVAPORATOR TEMPERATURE SENSOR REMOVAL/INSTALLATION [FULL-AUTO AIR CONDITIONER]**.) (See **PASSENGER COMPARTMENT TEMPERATURE SENSOR REMOVAL/INSTALLATION [FULL-AUTO AIR CONDITIONER]**.) After replace procedure, go to the next step.
3	**INSPECT EACH SENSOR/ACTUATOR** • Inspect the following each sensor/actuator. ▪ Air mix actuator (See **AIR MIX ACTUATOR INSPECTION [FULL-AUTO AIR CONDITIONER]**.) ▪ Airflow mode actuator (See **AIRFLOW MODE ACTUATOR INSPECTION**	Yes	Go to the next step.
		No	Replace the malfunctioning sensor/actuator. (See **AIR MIX ACTUATOR REMOVAL/INSTALLATION [FULL-AUTO AIR CONDITIONER]**.) (See **AIRFLOW MODE ACTUATOR REMOVAL/INSTALLATION [FULL-AUTO AIR CONDITIONER]**.) (See **SOLAR RADIATION SENSOR REMOVAL/INSTALLATION [FULL-AUTO AIR CONDITIONER]**.)

	[FULL-AUTO AIR CONDITIONER].) ▪ Solar radiation sensor (See SOLAR RADIATION SENSOR INSPECTION [FULL-AUTO AIR CONDITIONER].) ▪ Evaporator temperature sensor (See EVAPORATOR TEMPERATURE SENSOR INSPECTION [FULL-AUTO AIR CONDITIONER].) ▪ Passenger compartment temperature sensor (See PASSENGER COMPARTMENT TEMPERATURE SENSOR INSPECTION [FULL-AUTO AIR CONDITIONER].) • Is it normal?		(See EVAPORATOR TEMPERATURE SENSOR REMOVAL/INSTALLATION [FULL-AUTO AIR CONDITIONER].) (See PASSENGER COMPARTMENT TEMPERATURE SENSOR REMOVAL/INSTALLATION [FULL-AUTO AIR CONDITIONER].) After replace procedure, go to the next step.
4	**INSPECT EACH SENSOR/ACTUATOR CIRCUIT FOR SHORT TO GROUND** • Inspect for continuity between the following terminal (wiring harness-side) and body ground: ▪ Climate control unit terminal H • Is there continuity?	Yes	Refer to the wiring diagram and verify whether or not there is a common connector between climate control unit terminal H and each sensor/actuator terminals. **If there is a common connector:** • Determine the malfunctioning part by inspecting the common connector and the terminal for corrosion, damage, or pin disconnection, and the common wiring harness for a short to ground. • Repair or replace the malfunctioning part. **If there is no common connector:** • Repair or replace the wiring harness which has a short to ground. Go to the next step.
		No	Go to the next step.
5	**VERIFY THAT SAME DTC IS NOT OUTPUT AGAIN** • Reconnect the disconnected connectors. • Connect the negative battery cable. (See NEGATIVE BATTERY CABLE DISCONNECTION/CONNECTION [SKYACTIV-G 2.0, SKYACTIV-G 2.5].) • Clear the past malfunction from memory. (See CLEARING DTC [FULL-AUTO AIR CONDITIONER].) • Verify DTCs. (See DTC DISPLAY [FULL-AUTO AIR CONDITIONER].) • Is DTC U200D:11 output?	Yes	Repeat the inspection from Step 1. • If the malfunction does not recur, go to the next step. • If the malfunction recurs, replace the climate control unit. (See CLIMATE CONTROL UNIT REMOVAL/INSTALLATION [FULL-AUTO AIR CONDITIONER].) Go to the next step.
		No	Go to the next step.
6	**VERIFY THAT NO OTHER DTCs ARE PRESENT** • Verify other DTCs displayed. (See DTC DISPLAY [FULL-AUTO AIR CONDITIONER].)	Yes	Perform the corresponding DTC inspection. (See DTC TABLE [FULL-AUTO AIR CONDITIONER].)
		No	DTC troubleshooting completed.

	• Are any other DTCs output?		

2014 - Mazda3 - HVAC

DTC U2300:54, U2300:55, U2300:56, U2300:64 [FULL-AUTO AIR CONDITIONER]

System malfunction location	• U2300:54: Configuration error (data not received) • U2300:55: Configuration error (not configured) • U2300:56: Configuration error (ineffective/non-interchangeable data read) • U2300:64: Configuration error (error value read)
Detection condition	• Climate control unit detects configuration data not record or data error

Fail-safe function	• Sets the configuration value to the following fixed value
	  ▪ Country destination: North_America
	  ▪ PTC heater: Not_Equipped

Possible cause	**NOTE:** • If power from the battery is interrupted, the climate control unit will go into a non-configured state because the memory for the configuration information is erased. If the ignition is switched ON (engine off) at this time, DTC U2300:55 is detected. • Normally, the configuration is re-performed within **6 s** after the ignition is switched ON (engine off). • After performing the configuration, DTC U2300:55 will be cleared if the ignition is switched ON (engine off) after the ignition is switched off. • Module configuration procedure was not completed properly • Correct data cannot be received from instrument cluster • Climate control unit malfunction
System wiring diagram	Not applicable

Diagnostic Procedure

Step	Inspection		Action
1	**RECORD CAR CONFIGURATION DATA** • Switch the ignition ON (engine off) and wait for **6 s or more**. • Switch the ignition off. • Switch the ignition ON (engine off).		Go to the next step.
2	**VERIFY THAT SAME DTC IS NOT PRESENT** • Clear the DTCs from the memory. (See **CLEARING DTC [FULL-AUTO AIR CONDITIONER]**.) • Perform the climate control unit DTC inspection using the M-MDS. (See **DTC DISPLAY [FULL-AUTO AIR CONDITIONER]**.) • Are the same DTCs present?	Yes	Repeat the inspection from Step 1. If the malfunction recurs, go to the next step.
		No	Go to Step 5.
3	**INSPECT FOR INSTRUMENT CLUSTER MALFUNCTION** • Switch the ignition off. • Perform the instrument cluster DTC inspection using the M-MDS. (See **DTC INSPECTION [INSTRUMENT CLUSTER]**.) • Are any DTCs present?	Yes	Go to applicable DTC inspection. (See **DTC TABLE [INSTRUMENT CLUSTER]**.) After repairing the instrument cluster, perform the instrument cluster configuration. (See **INSTRUMENT CLUSTER CONFIGURATION (USING AS-BUILT DATA)**.) Then go to the next step.
		No	Go to the next step.
4	**VERIFY THAT SAME DTC IS NOT PRESENT** • Clear the DTCs from the memory. (See **CLEARING DTC [FULL-AUTO AIR CONDITIONER]**.) • Perform the climate control unit DTC inspection using the M-MDS.	Yes	Repeat the inspection from Step 1. • If the malfunction does not recur, go to the next step. • If the malfunction recurs, replace the climate control unit. (See **CLIMATE CONTROL UNIT REMOVAL/INSTALLATION [FULL-AUTO AIR CONDITIONER]**.)

	(See **DTC DISPLAY [FULL-AUTO AIR CONDITIONER]**.) • Are the same DTCs present?		Go to the next step.
		No	Go to the next step.
5	**VERIFY THAT NO OTHER DTCs ARE PRESENT** • Verify other DTCs displayed. (See **DTC DISPLAY [FULL-AUTO AIR CONDITIONER]**.) • Are any other DTCs output?	Yes	Perform the corresponding DTC inspection. (See **DTC TABLE [FULL-AUTO AIR CONDITIONER]**.)
		No	DTC troubleshooting completed.

2014 - Mazda3 - HVAC

DTC U3003:16, U3003:17 [FULL-AUTO AIR CONDITIONER]

With Dual Type Climate Control Unit

System malfunction location	• U3003:16: Climate control unit power supply circuit voltage below threshold **(9.98 V or less)** • U3003:17: Climate control unit power supply circuit voltage above threshold **(16.21 V or more)**
Detection condition	• Climate control unit power supply voltage is other than **9.99—16.20 V**
Fail-safe function	Not applicable
Possible cause	• Generator system malfunction • ROOM 15 A fuse malfunction • Battery malfunction • Climate control unit connector malfunction • Open or short circuit to ground in wiring harness between battery positive terminal and climate control unit terminal • Climate control unit malfunction

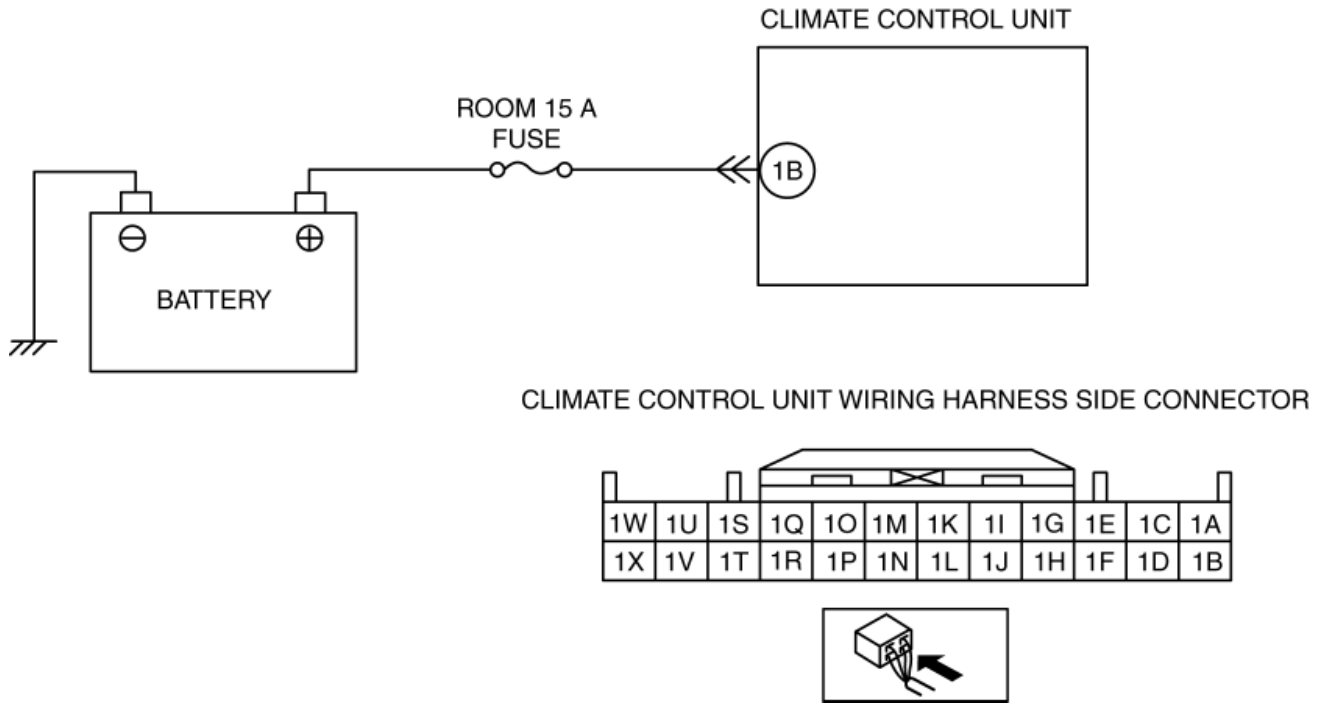

Diagnostic procedure

STEP	INSPECTION		ACTION
1	**INSPECT PCM DTC (INSPECT GENERATOR CIRCUIT)** • Switch the ignition off. • Connect the M-MDS to the DLC-2. • Perform the PCM DTC inspection using the M-MDS. (See **ON-BOARD DIAGNOSTIC TEST [SKYACTIV-G 2.0, SKYACTIV-G 2.5]**.) • Are any DTCs present?	Yes	Go to the applicable DTC inspection. (See **DTC TABLE [SKYACTIV-G 2.0, SKYACTIV-G 2.5]**.)
		No	Go to the next step.
2	**INSPECT FUSE** • Switch the ignition off. • Disconnect the negative battery cable. (See **NEGATIVE BATTERY CABLE DISCONNECTION/CONNECTION [SKYACTIV-G 2.0, SKYACTIV-G 2.5]**.) • Remove the ROOM 15 A fuse. • Is the fuse normal?	Yes	Install the ROOM 15 A fuse, then go to the next step.
		No	Replace the ROOM 15 A fuse, then go to the next step.
3	**INSPECT BATTERY** • Inspect the battery. (See **BATTERY INSPECTION [SKYACTIV-G 2.0, SKYACTIV-G 2.5]**.) • Is the battery normal?	Yes	Go to the next step.
		No	Replace or charge the battery. (See **BATTERY REMOVAL/INSTALLATION [SKYACTIV-G 2.0, SKYACTIV-G 2.5]**.) (See **BATTERY RECHARGING [SKYACTIV-G 2.0, SKYACTIV-G 2.5]**.) Then go to the next step.
4	**VERIFY CLIMATE CONTROL UNIT CONNECTOR CONDITION** • Disconnect the climate control unit connector. (See **CLIMATE CONTROL UNIT REMOVAL/INSTALLATION [FULL-AUTO AIR CONDITIONER]**.) • Inspect the connector and terminals (corrosion, damage, pin disconnection). • Are the connector and terminals normal?	Yes	Go to the next step.
		No	Repair/replace the connector or terminal. After repair procedure, go to the next step.
5	**INSPECT CLIMATE CONTROL UNIT POWER SUPPLY CIRCUIT FOR SHORT TO GROUND** • Inspect for continuity between climate control unit terminal 1B and body ground. • Is there continuity?	Yes	Refer to the wiring diagram and verify whether or not there is a common connector between climate control unit terminal 1B and battery positive terminal. **If there is a common connector:** • Determine the malfunctioning part by inspecting the common connector and the terminal for corrosion, damage, or pin disconnection, and the common wiring harness for a short to ground. • Repair or replace the malfunctioning part.

			If there is no common connector: • Repair or replace the wiring harness which has a short to ground. Go to Step 7.
		No	Go to the next step.
6	**INSPECT CLIMATE CONTROL UNIT POWER SUPPLY CIRCUIT FOR OPEN CIRCUIT** • Inspect for continuity between climate control unit terminal 1B and battery positive terminal. • Is there continuity?	Yes	Go to the next step.
		No	Refer to the wiring diagram and verify whether or not there is a common connector between climate control unit terminal 1B and battery positive terminal. **If there is a common connector:** • Determine the malfunctioning part by inspecting the common connector and the terminal for corrosion, damage, or pin disconnection, and the common wiring harness for an open circuit. • Repair or replace the malfunctioning part. **If there is no common connector:** • Repair or replace the wiring harness which has an open circuit. Go to the next step.
7	**INSPECT CLIMATE CONTROL UNIT** • Reconnect the disconnected connectors. • Connect the negative battery cable. (See **NEGATIVE BATTERY CABLE DISCONNECTION/CONNECTION [SKYACTIV-G 2.0, SKYACTIV-G 2.5]**.) • Clear DTCs using the M-MDS. (See **CLEARING DTC [FULL-AUTO AIR CONDITIONER]**.) • Perform the climate control unit DTC inspection using the M-MDS. (See **DTC DISPLAY [FULL-AUTO AIR CONDITIONER]**.) • Are DTCs U3003:16 or U3003:17 displayed?	Yes	Repeat the inspection from Step 1. • If the malfunction does not recur, go to the next step. • If the malfunction recurs, replace the climate control unit. (See **CLIMATE CONTROL UNIT REMOVAL/INSTALLATION [FULL-AUTO AIR CONDITIONER]**.) Go to the next step.
		No	Go to the next step.
8	**VERIFY THAT NO OTHER DTCs ARE PRESENT** • Verify other DTCs displayed. (See **DTC DISPLAY [FULL-AUTO AIR CONDITIONER]**.) • Are any other DTCs output?	Yes	Perform the corresponding DTC inspection. (See **DTC TABLE [FULL-AUTO AIR CONDITIONER]**.)
		No	DTC troubleshooting completed.

With Single Type Climate Control Unit

System malfunction	• U3003:16: Climate control unit power supply circuit voltage below threshold **(10.00 V or less)**

location	• U3003:17: Climate control unit power supply circuit voltage above threshold **(17.30 V or more)**
Detection condition	• Climate control unit power supply voltage is other than **10.00—17.29 V**
Fail-safe function	Not applicable
Possible cause	• Generator system malfunction • ROOM 15 A fuse malfunction • Battery malfunction • Climate control unit connector malfunction • Open or short circuit to ground in wiring harness between battery positive terminal and climate control unit terminal • Open or short circuit to ground in wiring harness between front body control module (FBCM) terminal and climate control unit terminal • Climate control unit malfunction

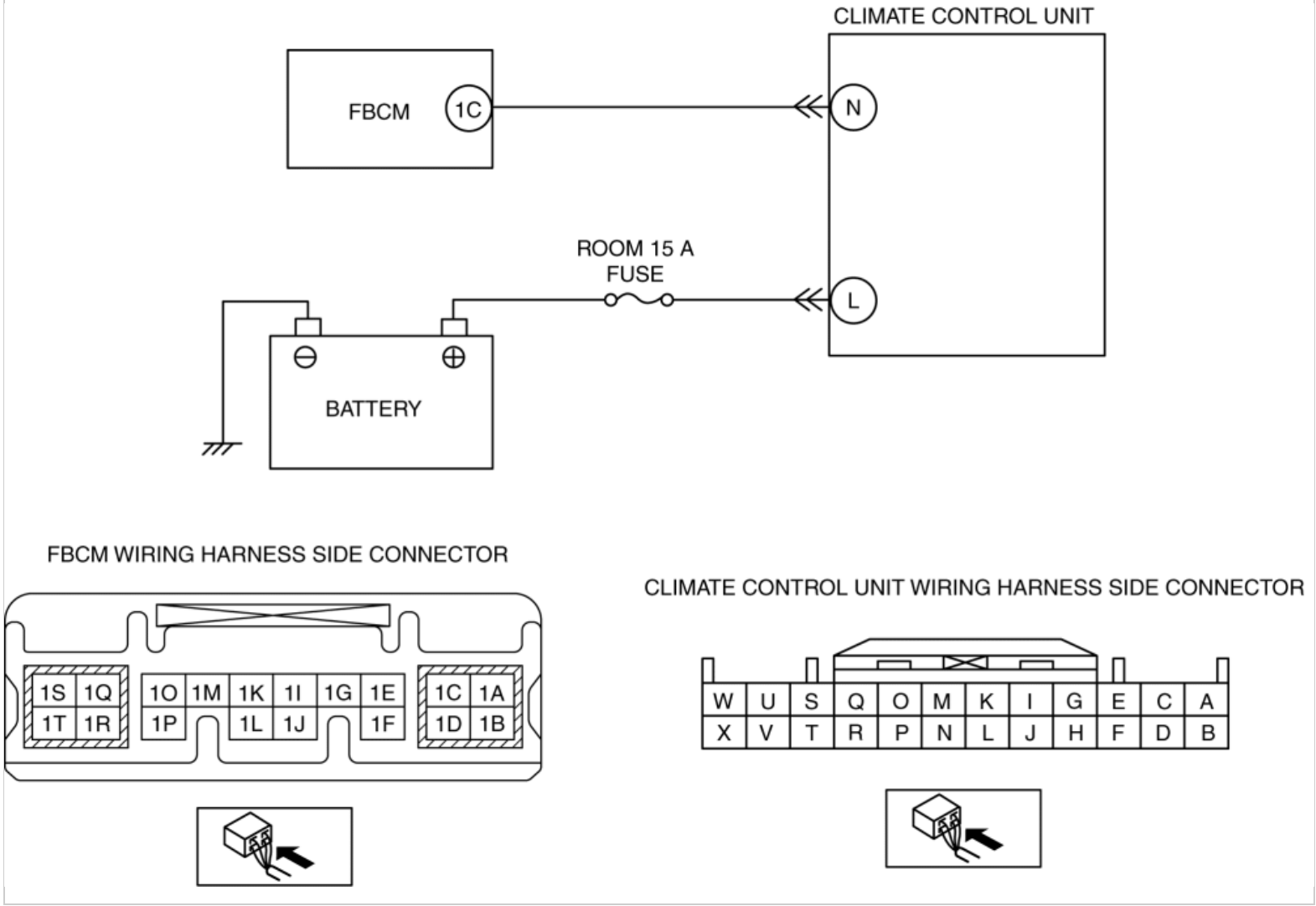

Diagnostic procedure

STEP	INSPECTION	ACTION

1	**INSPECT PCM DTC (INSPECT GENERATOR CIRCUIT)** • Switch the ignition off. • Connect the M-MDS to the DLC-2. • Perform the PCM DTC inspection using the M-MDS. (See **ON-BOARD DIAGNOSTIC TEST [SKYACTIV-G 2.0, SKYACTIV-G 2.5]**.) • Are any DTCs present?	Yes	Go to the applicable DTC inspection. (See **DTC TABLE [SKYACTIV-G 2.0, SKYACTIV-G 2.5]**.)
		No	Go to the next step.
2	**INSPECT FUSE** • Switch the ignition off. • Disconnect the negative battery cable. (See **NEGATIVE BATTERY CABLE DISCONNECTION/CONNECTION [SKYACTIV-G 2.0, SKYACTIV-G 2.5]**.) • Remove the ROOM 15 A fuse. • Is the fuse normal?	Yes	Install the ROOM 15 A fuse, then go to the next step.
		No	Replace the ROOM 15 A fuse, then go to the next step.
3	**INSPECT BATTERY** • Inspect the battery. (See **BATTERY INSPECTION [SKYACTIV-G 2.0, SKYACTIV-G 2.5]**.) • Is the battery normal?	Yes	Go to the next step.
		No	Replace or charge the battery. (See **BATTERY REMOVAL/INSTALLATION [SKYACTIV-G 2.0, SKYACTIV-G 2.5]**.) (See **BATTERY RECHARGING [SKYACTIV-G 2.0, SKYACTIV-G 2.5]**.) Then go to the next step.
4	**VERIFY CLIMATE CONTROL UNIT CONNECTOR CONDITION** • Disconnect the climate control unit connector. (See **CLIMATE CONTROL UNIT REMOVAL/INSTALLATION [FULL-AUTO AIR CONDITIONER]**.) • Inspect the connector and terminals (corrosion, damage, pin disconnection). • Are the connector and terminals normal?	Yes	Go to the next step.
		No	Repair/replace the connector or terminal. After repair procedure, go to the next step.
5	**INSPECT CLIMATE CONTROL UNIT POWER SUPPLY CIRCUIT FOR SHORT TO GROUND** • Inspect for continuity between climate control unit terminal L and body ground. • Is there continuity?	Yes	Refer to the wiring diagram and verify whether or not there is a common connector between climate control unit terminal and battery positive terminal. **If there is a common connector:** • Determine the malfunctioning part by inspecting the common connector and the terminal for corrosion, damage, or pin disconnection, and the common wiring harness for a short to ground. • Repair or replace the malfunctioning part. **If there is no common connector:** • Repair or replace the wiring harness which has a short to ground. Go to Step 9.

		No	Go to the next step.
6	**INSPECT CLIMATE CONTROL UNIT POWER SUPPLY CIRCUIT FOR OPEN CIRCUIT** • Inspect for continuity between climate control unit terminal L and battery positive terminal. • Is there continuity?	Yes	Go to the next step.
		No	Refer to the wiring diagram and verify whether or not there is a common connector between climate control unit terminal and battery positive terminal. **If there is a common connector:** • Determine the malfunctioning part by inspecting the common connector and the terminal for corrosion, damage, or pin disconnection, and the common wiring harness for an open circuit. • Repair or replace the malfunctioning part. **If there is no common connector:** • Repair or replace the wiring harness which has an open circuit. Go to Step 9.
7	**INSPECT CLIMATE CONTROL UNIT POWER SUPPLY CIRCUIT FOR SHORT TO GROUND** • Inspect for continuity between climate control unit terminal N and body ground. • Is there continuity?	Yes	Refer to the wiring diagram and verify whether or not there is a common connector between climate control unit terminal and front body control module (FBCM) terminal. **If there is a common connector:** • Determine the malfunctioning part by inspecting the common connector and the terminal for corrosion, damage, or pin disconnection, and the common wiring harness for a short to ground. • Repair or replace the malfunctioning part. **If there is no common connector:** • Repair or replace the wiring harness which has a short to ground. Go to Step 9.
		No	Go to the next step.
8	**INSPECT CLIMATE CONTROL UNIT POWER SUPPLY CIRCUIT FOR OPEN CIRCUIT** • Inspect for continuity between climate control unit terminal N and front body control module (FBCM) terminal 1C. • Is there continuity?	Yes	Go to the next step.
		No	Refer to the wiring diagram and verify whether or not there is a common connector between climate control unit terminal and front body control module (FBCM) terminal. **If there is a common connector:** • Determine the malfunctioning part by inspecting the common connector and the terminal for corrosion, damage, or pin disconnection, and the common wiring harness for an open circuit. • Repair or replace the malfunctioning part. **If there is no common connector:** • Repair or replace the wiring harness which has an open circuit. Go to the next step.
9	**INSPECT CLIMATE CONTROL UNIT** • Reconnect the disconnected connectors. • Connect the negative battery cable.	Yes	Repeat the inspection from Step 1. • If the malfunction does not recur, go to the next step. • If the malfunction recurs, replace the climate control unit.

	(See **NEGATIVE BATTERY CABLE DISCONNECTION/CONNECTION [SKYACTIV-G 2.0, SKYACTIV-G 2.5]**.) • Clear DTCs using the M-MDS. (See **CLEARING DTC [FULL-AUTO AIR CONDITIONER]**.) • Perform the climate control unit DTC inspection using the M-MDS. (See **DTC DISPLAY [FULL-AUTO AIR CONDITIONER]**.) • Are DTCs U3003:16 or U3003:17 displayed?		(See **CLIMATE CONTROL UNIT REMOVAL/INSTALLATION [FULL-AUTO AIR CONDITIONER]**.) Go to the next step.
		No	Go to the next step.
10	**VERIFY THAT NO OTHER DTCs ARE PRESENT** • Verify other DTCs displayed. (See **DTC DISPLAY [FULL-AUTO AIR CONDITIONER]**.) • Are any other DTCs output?	Yes	Perform the corresponding DTC inspection. (See **DTC TABLE [FULL-AUTO AIR CONDITIONER]**.)
		No	DTC troubleshooting completed.

2014 - Mazda3 - HVAC

DTC U300E:13 [FULL-AUTO AIR CONDITIONER]

With Dual Type Climate Control Unit

System malfunction location	• Climate control unit power supply circuit open (IG1 or IG2)
Detection condition	• Malfunction in wiring harness between climate control unit and IG1 relay • Malfunction in wiring harness between climate control unit and front body control module (FBCM)
Fail-safe function	Not applicable
Possible cause	• C/U IG1 15 A fuse malfunction • IG1 relay malfunction • Climate control unit connector malfunction • Front body control module (FBCM) connector malfunction • Open circuit in wiring harness between battery positive terminal and climate control unit terminal • Open circuit in wiring harness between front body control module (FBCM) terminal and climate control unit terminal • Climate control unit malfunction

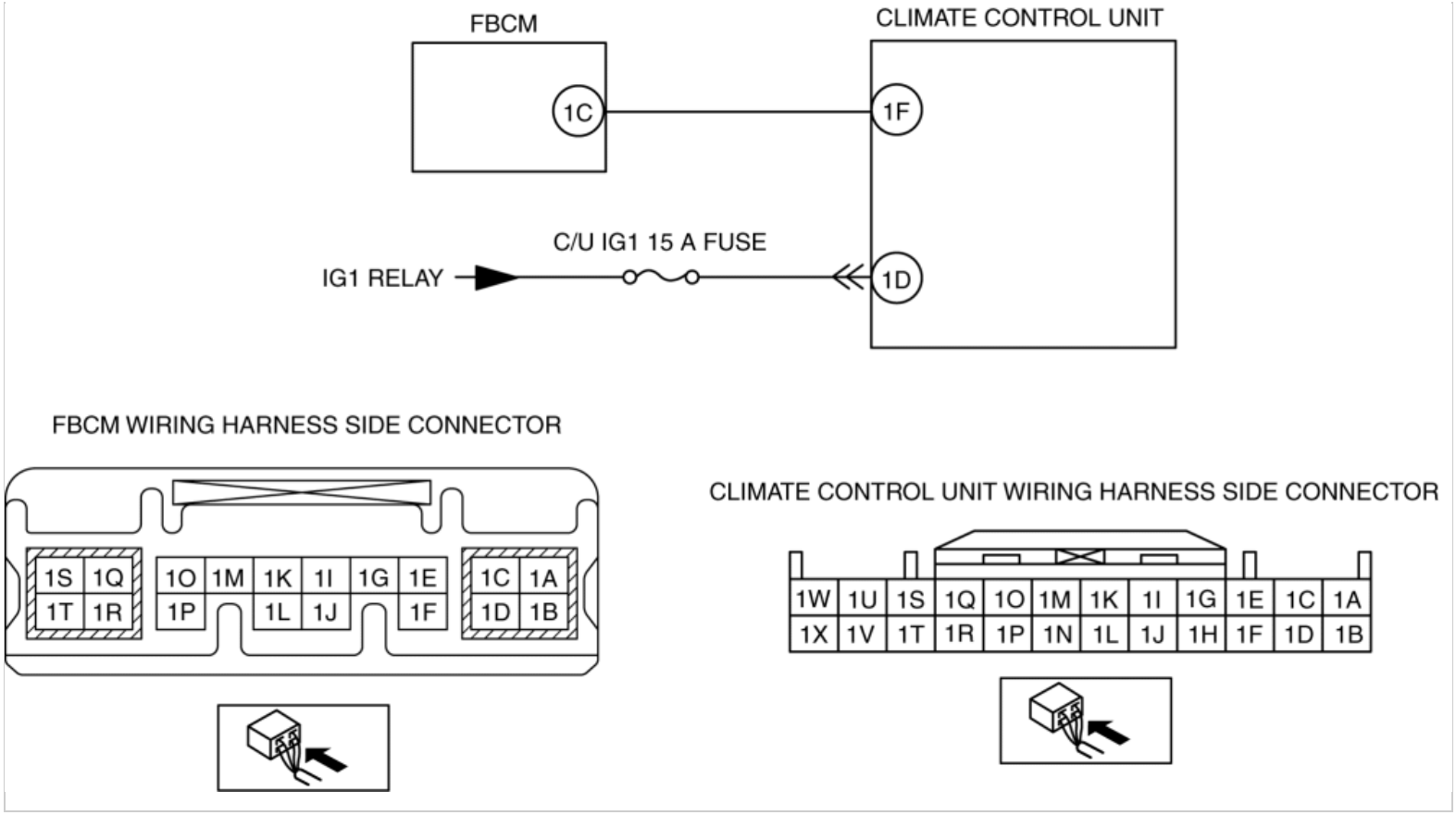

Diagnostic procedure

STEP	INSPECTION		ACTION
1	**INSPECT FUSE** • Switch the ignition off. • Disconnect the negative battery cable. (See **NEGATIVE BATTERY CABLE DISCONNECTION/CONNECTION [SKYACTIV-G 2.0, SKYACTIV-G 2.5]**.) • Remove the C/U IG1 15 A fuse. • Is the fuse normal?	Yes	Install the C/U IG1 15 A fuse, then go to the next step.
		No	Replace the C/U IG1 15 A fuse, then go to Step 5.
2	**INSPECT IG1 RELAY FOR MALFUNCTION** • Switch the ignition off. • Disconnect the negative battery cable. (See **NEGATIVE BATTERY CABLE DISCONNECTION/CONNECTION [SKYACTIV-G 2.0, SKYACTIV-G 2.5]**.) • Remove the IG1 relay. (See **RELAY LOCATION**.) • Inspect the IG1 relay.	Yes	Go to the next step.
		No	Replace the IG1 relay, then go to Step 5. (See **RELAY LOCATION**.)

	(See **RELAY INSPECTION**.) • Is the IG1 relay normal?		
3	**VERIFY CLIMATE CONTROL UNIT CONNECTOR CONDITION** • Disconnect the climate control unit connector. (See **CLIMATE CONTROL UNIT REMOVAL/INSTALLATION [FULL-AUTO AIR CONDITIONER]**.) • Inspect the connector and terminals (corrosion, damage, pin disconnection). • Are the connector and terminals normal?	Yes	Go to the next step.
		No	Repair/replace the connector or terminal. After repair procedure, go to the next step.
4	**VERIFY FRONT BODY CONTROL MODULE (FBCM) CONNECTOR CONDITION** • Disconnect the front body control module (FBCM) connector. (See **FRONT BODY CONTROL MODULE (FBCM) REMOVAL/INSTALLATION**.) • Inspect the connector and terminals (corrosion, damage, pin disconnection). • Are the connector and terminals normal?	Yes	Go to the next step.
		No	Repair/replace the connector or terminal. After repair procedure, go to the next step.
5	**INSPECT CLIMATE CONTROL UNIT POWER SUPPLY CIRCUIT FOR OPEN CIRCUIT** • Inspect for continuity between climate control unit terminal 1D and C/U IG1 15 A fuse. • Is there continuity?	Yes	Go to the next step.
		No	Refer to the wiring diagram and verify whether or not there is a common connector between climate control unit terminal and C/U IG1 15 A fuse. **If there is a common connector:** • Determine the malfunctioning part by inspecting the common connector and the terminal for corrosion, damage, or pin disconnection, and the common wiring harness for an open circuit. • Repair or replace the malfunctioning part. **If there is no common connector:** • Repair or replace the wiring harness which has an open circuit. Go to the next step.
6	**INSPECT CLIMATE CONTROL UNIT POWER SUPPLY CIRCUIT FOR OPEN CIRCUIT** • Inspect for continuity between climate control unit terminal 1F and front body control module (FBCM) terminal 1C. • Is there continuity?	Yes	Go to the next step.
		No	Refer to the wiring diagram and verify whether or not there is a common connector between climate control unit terminal and front body control module (FBCM) terminal. **If there is a common connector:** • Determine the malfunctioning part by inspecting the common connector and the terminal for corrosion, damage, or pin disconnection, and the common wiring harness for an open circuit. • Repair or replace the malfunctioning part. **If there is no common connector:**

			• Repair or replace the wiring harness which has an open circuit. Go to the next step.
7	**INSPECT CLIMATE CONTROL UNIT** • Reconnect the disconnected connectors. • Connect the negative battery cable. (See **NEGATIVE BATTERY CABLE DISCONNECTION/CONNECTION [SKYACTIV-G 2.0, SKYACTIV-G 2.5]**.) • Clear DTCs using the M-MDS. • Perform the climate control unit DTC inspection using the M-MDS. (See **DTC DISPLAY [FULL-AUTO AIR CONDITIONER]**.) • Are DTCs U300E:13 displayed?	Yes	Repeat the inspection from Step 1. • If the malfunction does not recur, go to the next step. • If the malfunction recurs, replace the climate control unit. (See **CLIMATE CONTROL UNIT REMOVAL/INSTALLATION [FULL-AUTO AIR CONDITIONER]**.) Go to the next step.
		No	Go to the next step.
8	**VERIFY THAT NO OTHER DTCs ARE PRESENT** • Verify other DTCs displayed. (See **DTC DISPLAY [FULL-AUTO AIR CONDITIONER]**.) • Are any other DTCs output?	Yes	Perform the corresponding DTC inspection. (See **DTC TABLE [FULL-AUTO AIR CONDITIONER]**.)
		No	DTC troubleshooting completed.

With Single Type Climate Control Unit

System malfunction location	• Climate control unit power supply circuit open (IG2)
Detection condition	• Malfunction in wiring harness between climate control unit and front body control module (FBCM)
Fail-safe function	Not applicable
Possible cause	• Climate control unit connector malfunction • Front body control module (FBCM) connector malfunction • Open circuit in wiring harness between front body control module (FBCM) terminal and climate control unit terminal • Climate control unit malfunction

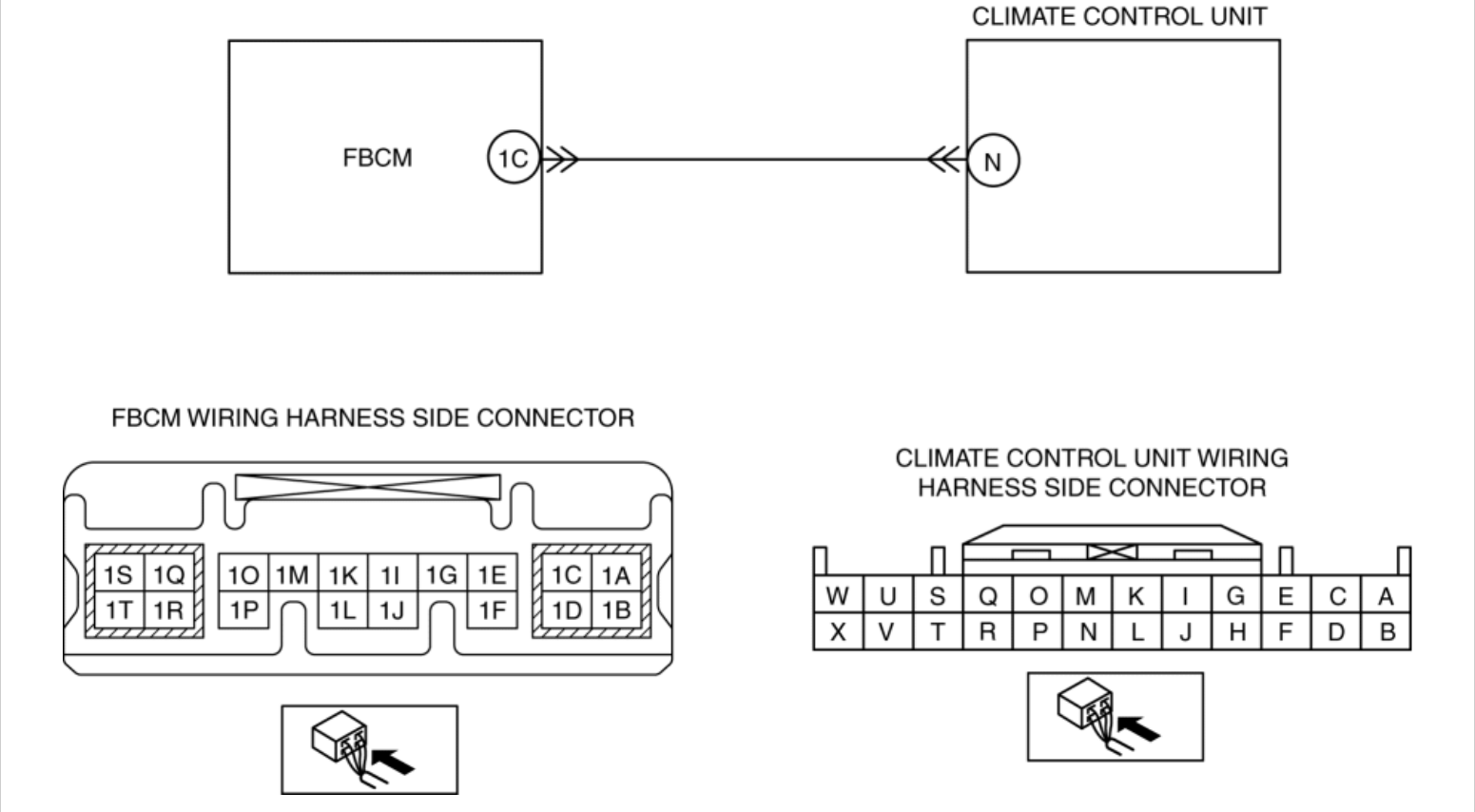

Diagnostic procedure

STEP	INSPECTION		ACTION
1	**VERIFY CLIMATE CONTROL UNIT CONNECTOR CONDITION** • Switch the ignition off. • Disconnect the negative battery cable. (See **NEGATIVE BATTERY CABLE DISCONNECTION/CONNECTION [SKYACTIV-G 2.0, SKYACTIV-G 2.5]**.) • Disconnect the climate control unit connector. (See **CLIMATE CONTROL UNIT REMOVAL/INSTALLATION [FULL-AUTO AIR CONDITIONER]**.) • Inspect the connector and terminals (corrosion, damage, pin disconnection). • Are the connector and terminals normal?	Yes	Go to the next step.
		No	Repair/replace the connector or terminal. After repair procedure, go to the next step.
2	**VERIFY FRONT BODY CONTROL MODULE (FBCM) CONNECTOR CONDITION** • Disconnect the front body control module (FBCM) connector.	Yes	Go to the next step.
		No	Repair/replace the connector or terminal. After repair procedure, go to the next step.

	(See **FRONT BODY CONTROL MODULE (FBCM) REMOVAL/INSTALLATION**.) • Inspect the connector and terminals (corrosion, damage, pin disconnection). • Are the connector and terminals normal?		
3	**INSPECT CLIMATE CONTROL UNIT POWER SUPPLY CIRCUIT FOR OPEN CIRCUIT** • Inspect for continuity between climate control unit terminal N and front body control module (FBCM) terminal 1C. • Is there continuity?	Yes	Go to the next step.
		No	Refer to the wiring diagram and verify whether or not there is a common connector between climate control unit terminal and front body control module (FBCM) terminal. **If there is a common connector:** • Determine the malfunctioning part by inspecting the common connector and the terminal for corrosion, damage, or pin disconnection, and the common wiring harness for an open circuit. • Repair or replace the malfunctioning part. **If there is no common connector:** • Repair or replace the wiring harness which has an open circuit. Go to the next step.
4	**INSPECT CLIMATE CONTROL UNIT** • Reconnect the disconnected connectors. • Connect the negative battery cable. (See **NEGATIVE BATTERY CABLE DISCONNECTION/CONNECTION [SKYACTIV-G 2.0, SKYACTIV-G 2.5]**.) • Clear DTCs using the M-MDS. • Perform the climate control unit DTC inspection using the M-MDS. (See **DTC DISPLAY [FULL-AUTO AIR CONDITIONER]**.) • Are DTCs U300E:13 displayed?	Yes	Repeat the inspection from Step 1. • If the malfunction does not recur, go to the next step. • If the malfunction recurs, replace the climate control unit. (See **CLIMATE CONTROL UNIT REMOVAL/INSTALLATION [FULL-AUTO AIR CONDITIONER]**.) Go to the next step.
		No	Go to the next step.
5	**VERIFY THAT NO OTHER DTCs ARE PRESENT** • Verify other DTCs displayed. (See **DTC DISPLAY [FULL-AUTO AIR CONDITIONER]**.) • Are any other DTCs output?	Yes	Perform the corresponding DTC inspection. (See **DTC TABLE [FULL-AUTO AIR CONDITIONER]**.)
		No	DTC troubleshooting completed.

2014 - Mazda3 - HVAC

PID/DATA MONITOR DISPLAY [FULL-AUTO AIR CONDITIONER]

1. Connect the M-MDS to the DLC 2.

2. After the vehicle is identified, select the following items from the initialization screen of the M-MDS.

    a. Select “DataLogger”.

    b. Select “Modules”.

    c. Select “EATC”.

3. Select the applicable PID from the PID table.

4. Verify the PID data according to the directions on the screen.

NOTE:

- The PID data screen function is used for monitoring the calculated value of input/output signals in the module. Therefore, if the monitored value of the output parts is not within the specification, it is necessary to inspect the monitored value of input parts corresponding to the applicable output part control. In addition, because the system does not display an output part malfunction as an abnormality in the monitored value, it is necessary to inspect the output parts individually.

2014 - Mazda3 - HVAC

PID/DATA MONITOR TABLE [FULL-AUTO AIR CONDITIONER]

With Dual Type Climate Control Unit

PID	Unit/Condition	Data contents	Climate control unit terminal
A/C_SW	Off/On	• Off: A/C switch is off. • On: A/C switch is on.	—
AUTO_SW	Off/On	• Off: AUTO switch is off. • On: AUTO switch is on.	—
B_MT_RLY_CS	Off/On	• Off: Blower relay is off. • On: Blower relay is on.	1S, 1U (CAN)
DEF_SW	Off/On	• Off: DEFROSTER switch is off. • On: DEFROSTER switch is on.	1S, 1U (CAN)
DUAL_SW	Off/On	• Off: DUAL switch is off. • On: DUAL switch is on.	—
ENG_C_TMP	°C, °F	Engine coolant temperature is displayed.	1S, 1U (CAN)
EVA_TMP_SEN	°C, °F	Evaporator temperature is displayed.	1L
F_REC_CS	Off/On	• Off: Forced recirculate control is off. • On: Forced recirculate control is on.	—
FRE_SW	Off/On	• Off: FRESH switch is off. • On: FRESH switch is on.	—

INC_TMP_SEN	°C, °F	Cabin temperature is displayed.	1H
M_DOWN_SW	Off/On	• Off: MODE switch (DOWN) is off. • On: MODE switch (DOWN) is on.	—
M_UP_SW	Off/On	• Off: MODE switch (UP) is off. • On: MODE switch (UP) is on.	—
OFF_SW	Off/On	• Off: OFF switch is off. • On: OFF switch is on.	—
OUT_CAR_TMP	°C, °F	Ambient temperature is displayed.	—
R/DEF_CS	Off/On	• Off: Rear window defroster is turned off. • On: Rear window defroster is turned on.	—
R/DEF_SW	Off/On	• Off: Rear window defroster switch is off. • On: Rear window defroster switch is on.	—
REC_SW	Off/On	• Off: RECIRCULATE switch is off. • On: RECIRCULATE switch is on.	—
SLR_R_SEN_L	W/m^2	Solar radiation amount is displayed.	1M
SLR_R_SEN_R			1O
UNIT_TMP	deg_C/deg_F	• deg_C: Centigrade • deg_F: Fahrenheit	—

With Single Type Climate Control Unit

PID	Unit/Condition	Data contents	Climate control unit terminal

A/C_SW	Off/On	Off: A/C switch is off. • On: A/C switch is on.	—
B_MT_RLY_CS	Off/On	• Off: Blower relay is off. • On: Blower relay is on.	D, B (CAN)
ENG_C_TMP	°C, °F	Engine coolant temperature is displayed.	D, B (CAN)
EVA_TMP_SEN	°C, °F	Evaporator temperature is displayed.	J
F_REC_CS	Off/On	• Off: Forced recirculate control is off. • On: Forced recirculate control is on.	—
INC_TMP_SEN	°C, °F	Cabin temperature is displayed.	F
OUT_CAR_TMP	°C, °F	Ambient temperature is displayed.	—
R/DEF_CS	Off/On	• Off: Rear window defroster is turned off. • On: Rear window defroster is turned on.	—
R/DEF_SW	Off/On	• Off: Rear window defroster switch is off. • On: Rear window defroster switch is on.	—
REC_SW	Off/On	• Off: RECIRCULATE switch is off. • On: RECIRCULATE switch is on.	—
SLR_R_SEN_L	W/m^2	Solar radiation amount is displayed.	M
SLR_R_SEN_R			K

2014 - Mazda3 - HVAC

A/C OPERATION CHECK MODE [FULL-AUTO AIR CONDITIONER]

With Dual Type Climate Control Unit

- The A/C operation check mode forcibly operates the output devices as shown in the operation check table regardless of the signals input to the climate control unit.
- During an A/C operation check mode operation, indication in the display panel and the illumination of the indicator light on the switches are automatically controlled.
- Determine the malfunctioning part by visual inspection, listening to the operation sound, placing a hand on the air vents, or checking that each transition is as indicated in the operation check table.

M-MDS display	Target part	Reference
Air Mix Actuator	• Air mix actuator • Air mix door	(See **Air mix actuator**)
Air conditioning compressor	• A/C compressor	(See **A/C compressor**)
Air Intake Actuator	• Air intake actuator • Air intake door	(See **Air intake actuator**)
Blower Motor Speed	• Blower motor	(See **Blower motor**)
Air Flow Mode Actuator	• Airflow mode actuator • Airflow mode door	(See **Airflow mode actuator**)
Illumination of All Indicator Lights	• Climate control unit	(See **Indicator light**)

Air mix actuator

1. Connect the M-MDS to the DLC-2.
2. Switch the ignition ON (engine off).

3. After the vehicle is identified, select the following items from the initial screen of the M-MDS.
   a. Select the “Body”.
   b. Select the “EATC Operation Check”.
4. Select the “Air Mix Actuator” from the screen menu.
5. Verify the A/C operation check mode according to the directions on the screen.
6. Select "Stop" to stop the A/C operation check. (See **A/C operation check stop**.)

Operation

Step	Air mix actuator	Airflow mode actuator	Blower speed	Magnet clutch	Air intake actuator
1	**0 %**	VENT	3rd	ON	FRESH
2	**50 %**				
3	**100 %**				
4	**50 %**				

Display

Step	Temperature (°C {°F})	Airflow mode	Blower volume	A/C	Recirculate switch indicator light	Fresh switch indicator light
1	**20.0 {68}**			Displayed	Not illuminated	Illuminated
2	**20.5 {68.9}**					
3	**21.0 {70}**					
4	**20.5 {68.9}**					

NOTE:

- After **approx. 4 s** have elapsed, the operation step moves to the next step.
- When the last step is finished, the operation is repeated from Step 1.
- To prevent super-cooling, the magnetic clutch turns off despite the A/C forced override.

A/C compressor

1. Connect the M-MDS to the DLC-2.

2. Switch the ignition ON (engine off).
3. After the vehicle is identified, select the following items from the initial screen of the M-MDS.
    a. Select the “Body”.
    b. Select the “EATC Operation Check”.
4. Select the “Air conditioning compressor” from the screen menu.
5. Verify the A/C operation check mode according to the directions on the screen.
6. Select "Stop" to stop the A/C operation check. (See **A/C operation check stop**.)

Operation

Step	Air mix actuator	Airflow mode actuator	Blower speed	Magnet clutch	Air intake actuator
1	**0 %**	VENT	5th	ON	FRESH
2				OFF	

Display

Step	Temperature (°C {°F})	Airflow mode	Blower volume	A/C	Recirculate switch indicator light	Fresh switch indicator light
1	**8 {46}**			Displayed	Not illuminated	Illuminated
2				Not displayed		

NOTE:

- After the following times have elapsed, the operation step moves to the next step.
    - Step 1: **Approx. 5 s**
    - Step 2: **Approx. 25 s**
- When the last step is finished, the operation is repeated from Step 1.

Air intake actuator

1. Connect the M-MDS to the DLC-2.
2. Switch the ignition ON (engine off).
3. After the vehicle is identified, select the following items from the initial screen of the M-MDS.
    a. Select the “Body”.

b. Select the “EATC Operation Check”.

4. Select the “Air Intake Actuator” from the screen menu.
5. Verify the A/C operation check mode according to the directions on the screen.
6. Select "Stop" to stop the A/C operation check. (See **A/C operation check stop**.)

Operation

Step	Air mix actuator	Airflow mode actuator	Blower speed	Magnet clutch	Air intake actuator
1	**0 %**	VENT	3rd	ON	FRESH
2					RECIRCULATE
3				OFF	FRESH
4					RECIRCULATE

Display

Step	Temperature (°C {°F})	Airflow mode	Blower volume	A/C	Recirculate switch indicator light	Fresh switch indicator light
1	**4 {39}**			Displayed	Not illuminated	Illuminated
2					Illuminated	Not illuminated
3				Not displayed	Not illuminated	Illuminated
4					Illuminated	Not illuminated

NOTE:

- After **approx. 4 s** have elapsed, the operation step moves to the next step.
- When the last step is finished, the operation is repeated from Step 1.
- To prevent super-cooling, the magnetic clutch turns off despite the A/C forced override.

Blower motor

1. Connect the M-MDS to the DLC-2.
2. Switch the ignition ON (engine off).
3. After the vehicle is identified, select the following items from the initial screen of the M-MDS.

a. Select the “Body”.

b. Select the “EATC Operation Check”.

4. Select the “Blower Motor Speed” from the screen menu.
5. Verify the A/C operation check mode according to the directions on the screen.
6. Select "Stop" to stop the A/C operation check. (See **A/C operation check stop**.)

Operation

Step	Air mix actuator	Airflow mode actuator	Blower speed	Magnet clutch	Air intake actuator
1	**50 %**	VENT	OFF	OFF	FRESH
2			1st	ON	
3			3rd		
4			5th		
5			7th		

Display

Step	Temperature (°C {°F})	Airflow mode	Blower volume	A/C	Recirculate switch indicator light	Fresh switch indicator light
1	**1 {34}**		Not displayed	Not displayed	Not illuminated	Illuminated
2				Displayed		
3						
4						
5						

NOTE:

- After **approx. 4 s** have elapsed, the operation step moves to the next step.
- When the last step is finished, the operation is repeated from Step 1.
- To prevent super-cooling, the magnetic clutch turns off despite the A/C forced override.

Airflow mode actuator

1. Connect the M-MDS to the DLC-2.
2. Switch the ignition ON (engine off).
3. After the vehicle is identified, select the following items from the initial screen of the M-MDS.
   a. Select the “Body”.
   b. Select the “EATC Operation Check”.
4. Select the “Airflow Mode Actuator” from the screen menu.
5. Verify the A/C operation check mode according to the directions on the screen.
6. Select "Stop" to stop the A/C operation check. (See **A/C operation check stop**.)

Operation

Step	Air mix actuator	Airflow mode actuator	Blower speed	Magnet clutch	Air intake actuator
1	**50 %**	VENT	3rd	ON	FRESH
2		BI-LEVEL			
3		HEAT			
4		DEF/HEAT			
5		DEFROSTER			

Display

Step	Temperature (°C {°F})	Airflow mode	Blower volume	A/C	Recirculate switch indicator light	Fresh switch indicator light
1	**3 {37}**			Displayed	Not illuminated	Illuminated
2						
3						
4						
5						

NOTE:

- After **approx. 4 s** have elapsed, the operation step moves to the next step.
- When the last step is finished, the operation is repeated from Step 1.
- To prevent super-cooling, the magnetic clutch turns off despite the A/C forced override.

Indicator light

1. Connect the M-MDS to the DLC-2.
2. Switch the ignition ON (engine off).
3. After the vehicle is identified, select the following items from the initial screen of the M-MDS.
   a. Select the “Body”.
   b. Select the “EATC Operation Check”.
4. Select the “Illumination Of All Indicator Lights” from the screen menu.
5. Verify the A/C operation check mode according to the directions on the screen.
6. Select "Stop" to stop the A/C operation check. (See **A/C operation check stop**.)

Operation

Step	Air mix actuator	Airflow mode actuator	Blower speed	Magnet clutch	Air intake actuator
—	**50 %**	VENT	OFF	OFF	FRESH

Display

Step	Temperature (°C {°F})	Airflow mode	Blower volume	A/C	Recirculate switch indicator light	Fresh switch indicator light
—	All indicator displayed				Illuminated	Illuminated

A/C operation check stop

1. If "Stop" is selected while the A/C operation check is operating, the A/C stops at the conditions shown in the table.

Operation

Step	Air mix actuator	Airflow mode actuator	Blower speed	Magnet clutch	Air intake actuator

—	**50 %**	VENT	OFF	OFF	FRESH

Display

Step	Temperature (°C {°F})	Airflow mode	Blower volume	A/C	Recirculate switch indicator light	Fresh switch indicator light
—	**0 {32}**		Not displayed	Not displayed	Not illuminated	Illuminated

With Single Type Climate Control Unit

- The A/C operation check mode forcibly operates the output devices as shown in the operation check table regardless of the signals input to the climate control unit.
- During an A/C operation check mode operation, indication in the display panel and the illumination of the indicator light on the switches are automatically controlled.
- Determine the malfunctioning part by visual inspection, listening to the operation sound, placing a hand on the air vents, or checking that each transition is as indicated in the operation check table.

M-MDS display	Target part	Reference
Air Mix Actuator	• Air mix actuator • Air mix door	(See **Air mix actuator**)
Air conditioning compressor	• A/C compressor	(See **A/C compressor**)
Air Intake Actuator	• Air intake actuator • Air intake door	(See **Air intake actuator**)
Blower Motor Speed	• Blower motor	(See **Blower motor**)
Air Flow Mode Actuator	• Airflow mode actuator • Airflow mode door	(See **Airflow mode actuator**)
Illumination of All Indicator Lights	• Climate control unit	(See **Indicator light**)

Air mix actuator

1. Connect the M-MDS to the DLC-2.
2. Switch the ignition ON (engine off).
3. After the vehicle is identified, select the following items from the initial screen of the M-MDS.
    a. Select the “Body”.
    b. Select the “EATC Operation Check”.
4. Select the “Air Mix Actuator” from the screen menu.
5. Verify the A/C operation check mode according to the directions on the screen.
6. Select "Stop" to stop the A/C operation check. (See **A/C operation check stop**.)

Operation

Step	Air mix actuator	Airflow mode actuator	Blower speed	Magnet clutch	Air intake actuator
1	**0 %**	VENT	5th	ON	FRESH
2	**100 %**				

Indicator light

Step	Recirculate switch indicator light	Rear window defroster switch indicator light	A/C switch indicator light
1	Illuminated	Not illuminated	Illuminated
2			

NOTE:

- After **approx. 22 s** have elapsed, the operation step moves to the next step.
- When the last step is finished, the operation is repeated from Step 1.
- To prevent super-cooling, the magnetic clutch turns off despite the A/C forced override.

A/C compressor

1. Connect the M-MDS to the DLC-2.
2. Switch the ignition ON (engine off).
3. After the vehicle is identified, select the following items from the initial screen of the M-MDS.
    a. Select the “Body”.
    b. Select the “EATC Operation Check”.

4. Select the “Air conditioning compressor” from the screen menu.
5. Verify the A/C operation check mode according to the directions on the screen.
6. Select "Stop" to stop the A/C operation check. (See **A/C operation check stop**.)

Operation

Step	Air mix actuator	Airflow mode actuator	Blower speed	Magnet clutch	Air intake actuator
1	**0 %**	VENT	5th	ON	FRESH
2				OFF	

Indicator light

Step	Recirculate switch indicator light	Rear window defroster switch indicator light	A/C switch indicator light
1	Not illuminated	Not illuminated	Illuminated
2			Not illuminated

NOTE:

- After the following times have elapsed, the operation step moves to the next step.
  - Step 1: **Approx. 5 s**
  - Step 2: **Approx. 25 s**
- When the last step is finished, the operation is repeated from Step 1.

Air intake actuator

1. Connect the M-MDS to the DLC-2.
2. Switch the ignition ON (engine off).
3. After the vehicle is identified, select the following items from the initial screen of the M-MDS.
   a. Select the “Body”.
   b. Select the “EATC Operation Check”.
4. Select the “Air Intake Actuator” from the screen menu.
5. Verify the A/C operation check mode according to the directions on the screen.
6. Select "Stop" to stop the A/C operation check. (See **A/C operation check stop**.)

Operation

Step	Air mix actuator	Airflow mode actuator	Blower speed	Magnet clutch	Air intake actuator
1	**0 %**	VENT	5th	ON	FRESH
2					RECIRCULATE
3				OFF	FRESH
4					RECIRCULATE

Indicator light

Step	Recirculate switch indicator light	Rear window defroster switch indicator light	A/C switch indicator light
1	Not illuminated	Not illuminated	Illuminated
2	Illuminated		
3	Not illuminated		Not illuminated
4	Illuminated		

NOTE:

- After **approx. 11 s** have elapsed, the operation step moves to the next step.
- When the last step is finished, the operation is repeated from Step 1.
- To prevent super-cooling, the magnetic clutch turns off despite the A/C forced override.

Blower motor

1. Connect the M-MDS to the DLC-2.
2. Switch the ignition ON (engine off).
3. After the vehicle is identified, select the following items from the initial screen of the M-MDS.
   a. Select the “Body”.
   b. Select the “EATC Operation Check”.
4. Select the “Blower Motor Speed” from the screen menu.
5. Verify the A/C operation check mode according to the directions on the screen.
6. Select "Stop" to stop the A/C operation check. (See **A/C operation check stop**.)

Operation

Step	Air mix actuator	Airflow mode actuator	Blower speed	Magnet clutch	Air intake actuator
1	**50 %**	VENT	OFF	OFF	FRESH
2			1st	ON	
3			3rd		
4			5th		
5			7th		

Indicator light

Step	Recirculate switch indicator light	Rear window defroster switch indicator light	A/C switch indicator light
1	Not illuminated	Not illuminated	Not illuminated
2			Illuminated
3			
4			
5			

NOTE:

- After **approx. 4 s** have elapsed, the operation step moves to the next step.
- When the last step is finished, the operation is repeated from Step 1.
- To prevent super-cooling, the magnetic clutch turns off despite the A/C forced override.

Airflow mode actuator

1. Connect the M-MDS to the DLC-2.
2. Switch the ignition ON (engine off).
3. After the vehicle is identified, select the following items from the initial screen of the M-MDS.
   a. Select the “Body”.
   b. Select the “EATC Operation Check”.

4. Select the “Airflow Mode Actuator” from the screen menu.
5. Verify the A/C operation check mode according to the directions on the screen.
6. Select "Stop" to stop the A/C operation check. (See **A/C operation check stop**.)

Operation

Step	Air mix actuator	Airflow mode actuator	Blower speed	Magnet clutch	Air intake actuator
1	**50 %**	VENT	5th	ON	FRESH
2		BI-LEVEL			
3		HEAT			
4		DEF/HEAT			
5		DEFROSTER			

Indicator light

Step	Recirculate switch indicator light	Rear window defroster switch indicator light	A/C switch indicator light
1	Not illuminated	Not illuminated	Illuminated
2			
3			
4			
5			

NOTE:

- After **approx. 11 s** have elapsed, the operation step moves to the next step.
- When the last step is finished, the operation is repeated from Step 1.
- To prevent super-cooling, the magnetic clutch turns off despite the A/C forced override.

Indicator light

1. Connect the M-MDS to the DLC-2.
2. Switch the ignition ON (engine off).

3. After the vehicle is identified, select the following items from the initial screen of the M-MDS.
    a. Select the “Body”.
    b. Select the “EATC Operation Check”.
4. Select the “Illumination Of All Indicator Lights” from the screen menu.
5. Verify the A/C operation check mode according to the directions on the screen.
6. Select "Stop" to stop the A/C operation check. (See **A/C operation check stop**.)

Operation

Step	Air mix actuator	Airflow mode actuator	Blower speed	Magnet clutch	Air intake actuator
—	**50 %**	VENT	OFF	OFF	FRESH

Indicator light

Step	Recirculate switch indicator light	Rear window defroster switch indicator light	A/C switch indicator light
—	Illuminated	Illuminated	Illuminated

A/C operation check stop

1. If "Stop" is selected while the A/C operation check is operating, the A/C stops at the conditions shown in the table.

Operation

Step	Air mix actuator	Airflow mode actuator	Blower speed	Magnet clutch	Air intake actuator
—	**50 %**	VENT	OFF	OFF	FRESH

Indicator light

Step	Recirculate switch indicator light	Rear window defroster switch indicator light	A/C switch indicator light
—	Not illuminated	Not illuminated	Not illuminated

2014 - Mazda3 - HVAC

SYMPTOM TROUBLESHOOTING SYSTEM WIRING DIAGRAM [FULL-AUTO AIR CONDITIONER]

With Dual Type Climate Control Unit

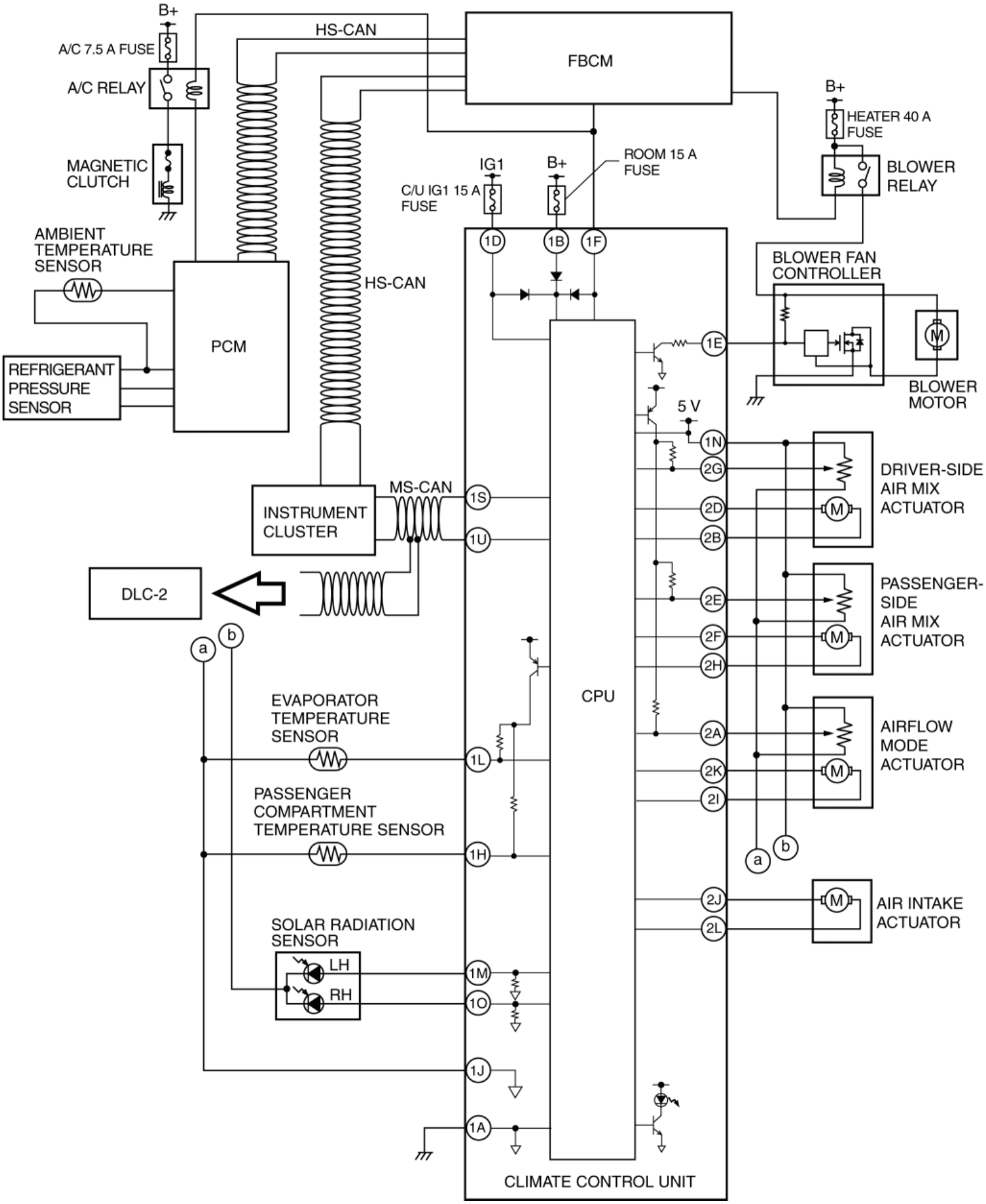
B+
A/C 7.5 A FUSE
A/C RELAY
MAGNETIC CLUTCH
HS-CAN
FBCM
B+
HEATER 40 A FUSE
BLOWER RELAY
IG1
B+
ROOM 15 A FUSE
C/U IG1 15 A FUSE
AMBIENT TEMPERATURE SENSOR
PCM
HS-CAN
1D
1B
1F
BLOWER FAN CONTROLLER
1E
BLOWER MOTOR
REFRIGERANT PRESSURE SENSOR
5 V
1N
2G
DRIVER-SIDE AIR MIX ACTUATOR
MS-CAN
1S
INSTRUMENT CLUSTER
2D
2B
1U
DLC-2
2E
PASSENGER-SIDE AIR MIX ACTUATOR
2F
2H
a
b
CPU
EVAPORATOR TEMPERATURE SENSOR
2A
AIRFLOW MODE ACTUATOR
1L
2K
2I
PASSENGER COMPARTMENT TEMPERATURE SENSOR
1H
a
b
2J
AIR INTAKE ACTUATOR
2L
SOLAR RADIATION SENSOR
LH
RH
1M
1O
1J
1A
CLIMATE CONTROL UNIT

CLIMATE CONTROL UNIT WIRING HARNESS SIDE CONNECTOR

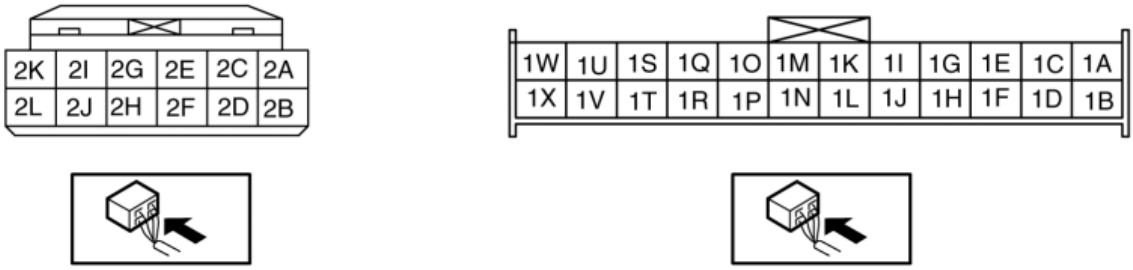

With Single Type Climate Control Unit

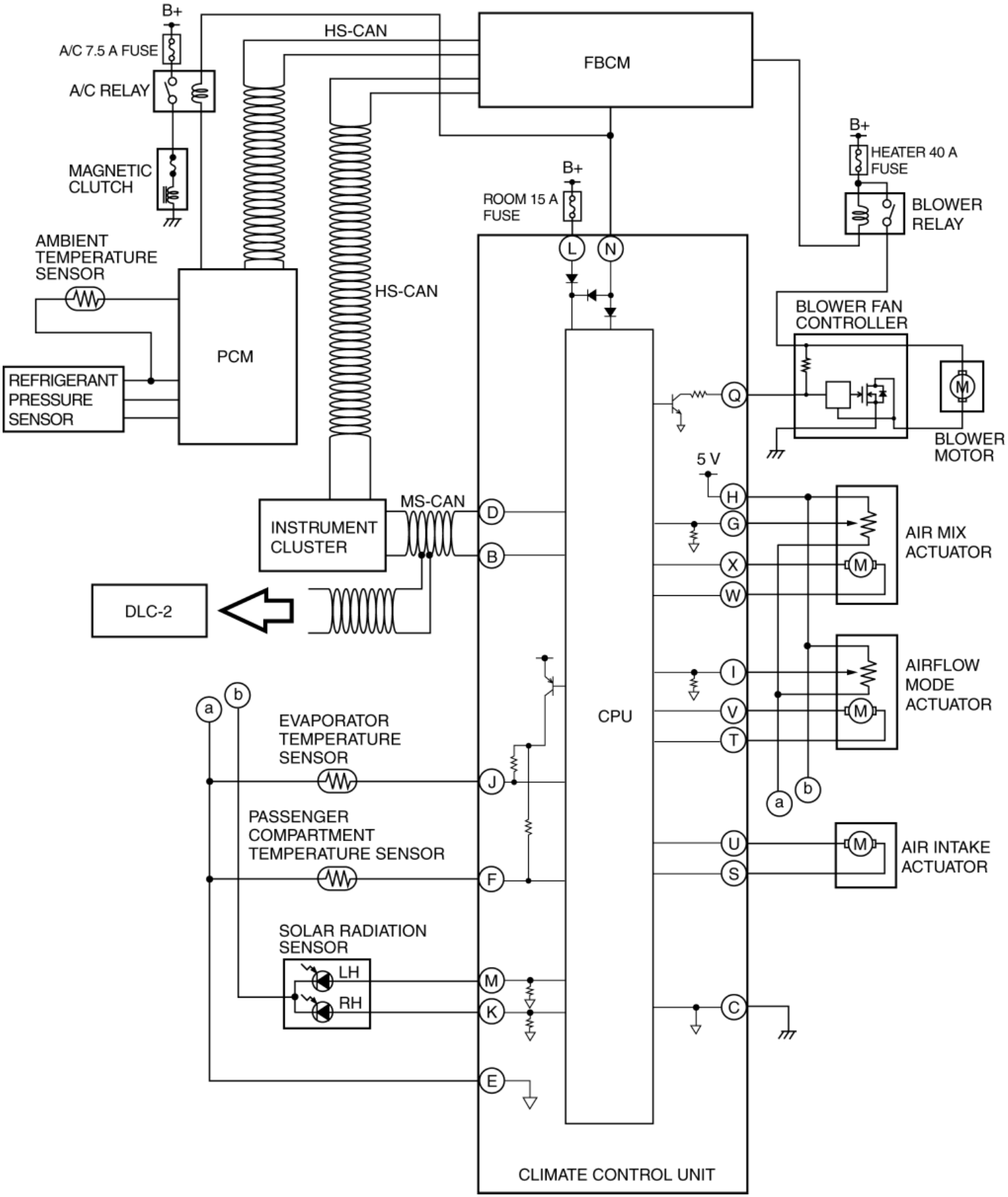
B+
A/C 7.5 A FUSE
A/C RELAY
MAGNETIC CLUTCH
HS-CAN
FBCM
B+
HEATER 40 A FUSE
BLOWER RELAY
B+
ROOM 15 A FUSE
AMBIENT TEMPERATURE SENSOR
PCM
HS-CAN
REFRIGERANT PRESSURE SENSOR
L
N
BLOWER FAN CONTROLLER
Q
M
BLOWER MOTOR
5 V
H
G
X
W
AIR MIX ACTUATOR
M
MS-CAN
D
B
INSTRUMENT CLUSTER
DLC-2
I
V
T
AIRFLOW MODE ACTUATOR
M
a
b
CPU
EVAPORATOR TEMPERATURE SENSOR
J
PASSENGER COMPARTMENT TEMPERATURE SENSOR
F
U
S
M
AIR INTAKE ACTUATOR
SOLAR RADIATION SENSOR
LH
RH
M
K
C
E
CLIMATE CONTROL UNIT

CLIMATE CONTROL UNIT WIRING HARNESS SIDE CONNECTOR

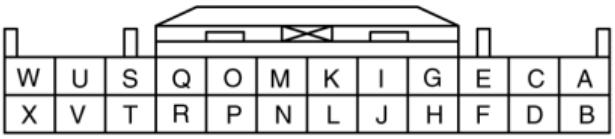

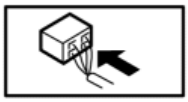

2014 - Mazda3 - HVAC

FOREWORD [FULL-AUTO AIR CONDITIONER]

- If there is any vehicle malfunction complaint lodged by a customer, perform malfunction diagnosis according to the troubleshooting procedure.

Troubleshooting Procedure

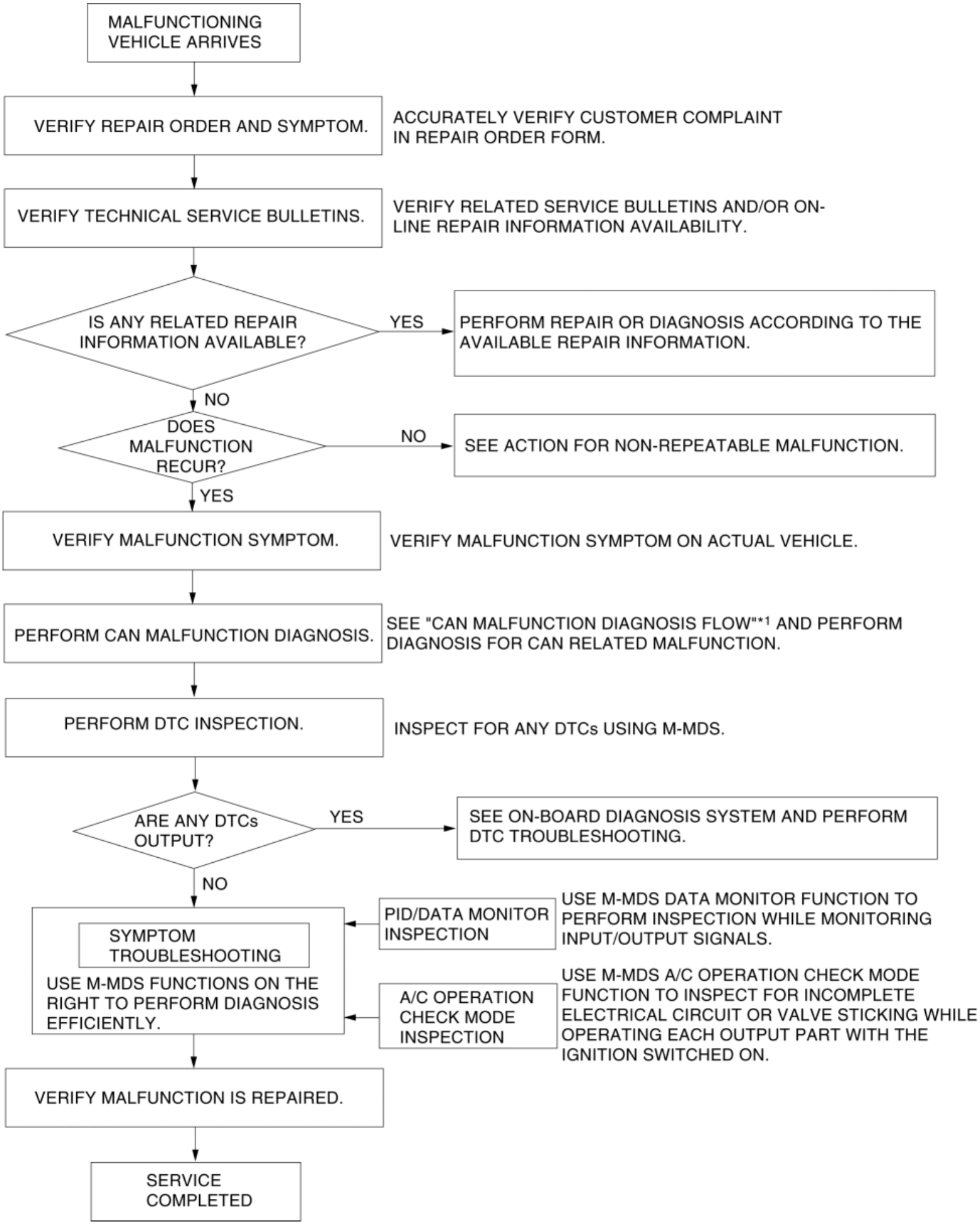
MALFUNCTIONING VEHICLE ARRIVES
VERIFY REPAIR ORDER AND SYMPTOM.
ACCURATELY VERIFY CUSTOMER COMPLAINT IN REPAIR ORDER FORM.
VERIFY TECHNICAL SERVICE BULLETINS.
VERIFY RELATED SERVICE BULLETINS AND/OR ON-LINE REPAIR INFORMATION AVAILABILITY.
IS ANY RELATED REPAIR INFORMATION AVAILABLE?
YES
PERFORM REPAIR OR DIAGNOSIS ACCORDING TO THE AVAILABLE REPAIR INFORMATION.
NO
DOES MALFUNCTION RECUR?
NO
SEE ACTION FOR NON-REPEATABLE MALFUNCTION.
YES
VERIFY MALFUNCTION SYMPTOM.
VERIFY MALFUNCTION SYMPTOM ON ACTUAL VEHICLE.
PERFORM CAN MALFUNCTION DIAGNOSIS.
SEE "CAN MALFUNCTION DIAGNOSIS FLOW"*1 AND PERFORM DIAGNOSIS FOR CAN RELATED MALFUNCTION.
PERFORM DTC INSPECTION.
INSPECT FOR ANY DTCs USING M-MDS.
ARE ANY DTCs OUTPUT?
YES
SEE ON-BOARD DIAGNOSIS SYSTEM AND PERFORM DTC TROUBLESHOOTING.
NO
SYMPTOM TROUBLESHOOTING
USE M-MDS FUNCTIONS ON THE RIGHT TO PERFORM DIAGNOSIS EFFICIENTLY.
PID/DATA MONITOR INSPECTION
USE M-MDS DATA MONITOR FUNCTION TO PERFORM INSPECTION WHILE MONITORING INPUT/OUTPUT SIGNALS.
A/C OPERATION CHECK MODE INSPECTION
USE M-MDS A/C OPERATION CHECK MODE FUNCTION TO INSPECT FOR INCOMPLETE ELECTRICAL CIRCUIT OR VALVE STICKING WHILE OPERATING EACH OUTPUT PART WITH THE IGNITION SWITCHED ON.
VERIFY MALFUNCTION IS REPAIRED.
SERVICE COMPLETED

*1

CONTROLLER AREA NETWORK (CAN) MALFUNCTION DIAGNOSIS FLOW

Action for non-repeatable malfunction

- If the malfunction does not recur, verify the malfunction cause by performing the following actions:
  - Based on the repair order form, attempt to drive the vehicle or perform tests to replicate the malfunction, record the data (such as CAN circuit voltage) at that time, and detect the malfunction cause.
  - Refer to [Determining Open Circuit Location] based on the recorded DTC, shake the wiring harness or connector of the electrical component which is suspected to be the cause of the malfunction, and inspect for any changes in CAN system voltage or occurrence of any DTCs.

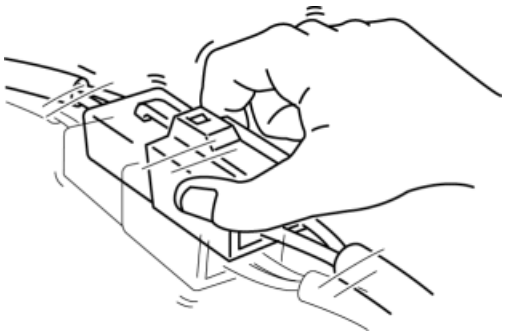

  - Inspect the female terminals on the connector of the electric component which is suspected to be the cause of the malfunction for poor connection.

2014 - Mazda3 - HVAC

TROUBLESHOOTING INDEX [FULL-AUTO AIR CONDITIONER]

TROUBLESHOOTING ITEM	DESCRIPTION
INSUFFICIENT AIR (OR NO AIR) BLOWN FROM VENTS [FULL-AUTO AIR CONDITIONER]	• Problem with each vent and/or duct • Airflow mode does not change
AMOUNT OF AIR BLOWN FROM VENTS DOES NOT CHANGE [FULL-AUTO AIR CONDITIONER]	• Malfunction in blower system
AIR INTAKE MODE DOES NOT CHANGE [FULL-AUTO AIR CONDITIONER]	• Air intake mode does not change when switching REC/FRESH mode
NO TEMPERATURE CONTROL WITH CLIMATE CONTROL UNIT [FULL-AUTO AIR CONDITIONER]	• Temperature does not change when operating temperature dial • Malfunction in A/C unit and/or climate control unit air mix system • Malfunction in driver and/or passenger side air mix actuator or related wiring harness
WINDSHIELD FOGGED [FULL-AUTO AIR CONDITIONER]	• A/C compressor does not operate while airflow mode is in DEFROSTER or DEF/HEAT modes • Air intake mode does not change to FRESH while airflow mode is in DEFROSTER or DEF/HEAT modes
AIR FROM VENTS NOT COLD ENOUGH [FULL-AUTO AIR CONDITIONER]	• Magnetic clutch operates but A/C system malfunctions
NO COOL AIR [FULL-AUTO AIR CONDITIONER]	• Magnetic clutch does not operate
NOISE WHILE OPERATING A/C SYSTEM [FULL-AUTO AIR CONDITIONER]	• Noise from magnetic clutch, A/C compressor, hose or refrigerant line
DUAL A/C CONTROL DOES NOT OPERATE [FULL-AUTO AIR CONDITIONER] (with dual type climate control	• Driver or passenger side temperature control dial does not operate

unit)	individually • Temperature control operates normally expect for dual A/C control function

2014 - Mazda3 - HVAC

INSUFFICIENT AIR (OR NO AIR) BLOWN FROM VENTS [FULL-AUTO AIR CONDITIONER]

DESCRIPTION	• Problem with each vent and/or duct • Airflow mode does not change
POSSIBLE CAUSE	• ROOM 15 A fuse malfunction • Open or short circuit in wiring harness between battery positive terminal and climate control unit • Open or short circuit in wiring harness between climate control unit and airflow mode actuator / air mix actuator • Airflow mode actuator malfunction • Airflow mode link malfunction • Airflow mode door malfunction • Vent or duct malfunction (clogging, deformation, air leakage, improper operation)

- When performing an asterisked (*) troubleshooting inspection, shake the wiring harness and connectors while performing the inspection to discover whether poor contact points are the cause of any intermittent malfunctions.

  If there is a problem, check to make sure connectors, terminals and wiring harnesses are connected correctly and undamaged.

Diagnostic Procedure

STEP	INSPECTION		ACTION
1	**INSPECT FUSE** • Remove the ROOM 15 A fuse. • Is the fuse normal?	Yes	Go to the next step.
		No	**If the fuse is melted:** Repair or replace wiring harness for short to ground and replace the fuse.

			If the fuse is deterioration: Replace the fuse. Then go to Step 14.
2*	**INSPECT TO SEE WHETHER MALFUNCTION (OPEN CIRCUIT) IS IN B+ SIGNAL WIRING HARNESS (BETWEEN FUSE BLOCK AND CLIMATE CONTROL UNIT) OR ELSEWHERE** • Disconnect the climate control unit connector. (See **CLIMATE CONTROL UNIT REMOVAL/INSTALLATION [FULL-AUTO AIR CONDITIONER]**.) • Switch the ignition ON (engine off or on). • Measure voltage at the following terminal of climate control unit. **With dual type climate control unit:** ▪ Terminal 1B **With single type climate control unit:** ▪ Terminal L • Is the voltage **approx. 12 V**?	Yes	Go to the next step.
		No	Refer to the wiring diagram and verify whether or not there is a common connector between climate control unit terminal and fuse block terminal. **If there is a common connector:** • Determine the malfunctioning part by inspecting the common connector and the terminal for corrosion, damage, or pin disconnection, and the common wiring harness for an open circuit. • Repair or replace the malfunctioning part. **If there is no common connector:** • Repair or replace the wiring harness which has an open circuit. Go to the Step 19.
3*	**INSPECT TO SEE WHETHER MALFUNCTION IS IN A/C UNIT OR AIRFLOW MODE ACTUATOR** • Switch the ignition ON (engine off or on). • Measure voltage at the following terminal of climate control unit when airflow mode at VENT and DEFROSTER. **With dual type climate control unit:** ▪ Terminal 2A **With single type climate control unit:** ▪ Terminal I	Yes	Go to Step 15.
		No	Go to the next step.

	• Is voltage normal?		
4*	**INSPECT TO SEE WHETHER MALFUNCTION IS IN POSITION SENSOR OR ELSEWHERE** • Switch the ignition ON (engine off or on). • Measure voltage at the following terminals of climate control unit when temperature setting to MAX HOT and MAX COLD. **With dual type climate control unit:** ▪ Terminal 2G ▪ Terminal 2E **With single type climate control unit:** ▪ Terminal G • Is voltage normal?	Yes	Go to Step 7.
		No	Go to the next step.
5*	**INSPECT TO SEE WHETHER MALFUNCTION (LACK OF CONTINUITY OR SHORT TO POWER SUPPLY OR GROUND) IS IN POSITION SENSOR POWER SUPPLY OR ELSEWHERE** • Switch the ignition ON (engine off or on). • Measure voltage at the following terminal of climate control unit. **With dual type climate control unit:** ▪ Terminal 1N **With single type climate control unit:** ▪ Terminal H • Is voltage **approx. 5 V**?	Yes	Go to the next step.
		No	Refer to the wiring diagram and verify whether or not there is a common connector between climate control unit terminal and airflow mode actuator / air mix actuator terminal. **If there is a common connector:** • Determine the malfunctioning part by inspecting the common connector and the terminal for corrosion, damage, or pin disconnection, and the common wiring harness. • Repair or replace the malfunctioning part. **If there is no common connector:** • Repair or replace the wiring harness. Go to Step 19.

6*	**INSPECT TO SEE WHETHER MALFUNCTION (LACK OF CONTINUITY OR OPEN CIRCUIT) IS IN POSITION SENSOR GROUND OR ELSEWHERE** • Measure voltage at the following terminal of climate control unit. **With dual type climate control unit:** ▪ Terminal 1J **With single type climate control unit:** ▪ Terminal E • Is voltage **below 1.0 V**?	Yes	Go to Step 11.
		No	Refer to the wiring diagram and verify whether or not there is a common connector between climate control unit terminal and airflow mode actuator / air mix actuator terminal. **If there is a common connector:** • Determine the malfunctioning part by inspecting the common connector and the terminal for corrosion, damage, or pin disconnection, and the common wiring harness. • Repair or replace the malfunctioning part. **If there is no common connector:** • Repair or replace the wiring harness. Go to Step 19.
7*	**INSPECT TO SEE WHETHER MALFUNCTION (SHORT TO POWER SUPPLY) IS IN WIRING HARNESS (AIRFLOW MODE POSITION SIGNAL) OR ELSEWHERE** • Measure voltage at the following terminal of climate control unit. **With dual type climate control unit:** ▪ Terminal 2A **With single type climate control unit:** ▪ Terminal I • Is voltage **approx. 12 V**, at Step 4?	Yes	Refer to the wiring diagram and verify whether or not there is a common connector between climate control unit terminal and airflow mode actuator terminal. **If there is a common connector:** • Determine the malfunctioning part by inspecting the common connector and the terminal for corrosion, damage, or pin disconnection, and the common wiring harness for a short to power supply. • Repair or replace the malfunctioning part. **If there is no common connector:** • Repair or replace the wiring harness which has a short to power supply. Go to the Step 19.

		No	Go to the next step.
8*	**INSPECT TO SEE WHETHER MALFUNCTION (LACK OF CONTINUITY) IS IN WIRING HARNESS (AIRFLOW MODE POSITION SIGNAL) OR ELSEWHERE** • Switch the ignition off. • Disconnect the climate control unit connector. (See **CLIMATE CONTROL UNIT REMOVAL/INSTALLATION [FULL-AUTO AIR CONDITIONER]**.) • Disconnect the airflow mode actuator connector. (See **AIRFLOW MODE ACTUATOR REMOVAL/INSTALLATION [FULL-AUTO AIR CONDITIONER]**.) • Verify continuity at following terminals between climate control unit and airflow mode actuator. **With dual type climate control unit:** ▪ Climate control unit terminal 2A — airflow mode actuator terminal C **With single type climate control unit:** ▪ Climate control unit terminal I — airflow mode actuator terminal C • Is there continuity?	Yes	Go to the next step.
		No	Refer to the wiring diagram and verify whether or not there is a common connector between climate control unit terminal and airflow mode actuator terminal. **If there is a common connector:** • Determine the malfunctioning part by inspecting the common connector and the terminal for corrosion, damage, or pin disconnection, and the common wiring harness. • Repair or replace the malfunctioning part. **If there is no common connector:** • Repair or replace the wiring harness. Go to Step 19.
9*	**INSPECT TO SEE WHETHER MALFUNCTION (SHORT TO GROUND) IS IN WIRING HARNESS (AIRFLOW MODE POSITION SIGNAL) OR POSITION SENSOR COMMON (POWER SUPPLY OR GROUND) HARNESS** • Verify continuity at the following terminals between climate control unit and ground. **With dual type climate control**	Yes	Repair wiring harness between climate control unit terminal and airflow mode actuator terminal. Then go to Step 19.
		No	Inspection and repair for open circuit following: • Between airflow mode

	unit: ▪ Terminal 2A **With single type climate control unit:** ▪ Terminal I • Is there continuity?		actuator terminal B and junction point to each air mix actuator (position sensor power supply). • Between airflow mode actuator terminal A and junction point to each air mix actuator (position sensor ground). Then go to Step 19.
10*	**INSPECT TO SEE WHETHER MALFUNCTION (LACK OF CONTINUITY) IS IN AIRFLOW MODE ACTUATOR WIRING HARNESS (BETWEEN CLIMATE CONTROL UNIT AND AIRFLOW MODE ACTUATOR) OR ELSEWHERE** • Switch the ignition ON (engine off or on). • Measure voltage at the following terminals of climate control unit. **With dual type climate control unit:** ▪ Terminal 2K (DEFROSTER mode motor drive signal) ▪ Terminal 2I (VENT mode motor drive signal) **With single type climate control unit:** ▪ Terminal V (DEFROSTER mode motor drive signal) ▪ Terminal T (VENT mode motor drive signal) • Is voltage normal?	Yes	Go to the next step.
		No	Go to Step 12.
11*	**INSPECT TO SEE WHETHER MALFUNCTION (LACK OF CONTINUITY) IS IN AIRFLOW MODE ACTUATOR OR WIRING HARNESS (BETWEEN CLIMATE CONTROL UNIT AND AIRFLOW MODE ACTUATOR)** • Verify continuity at following terminals between airflow mode actuator and climate control unit.	Yes	Go to Step 16.
		No	Refer to the wiring diagram and verify whether or not there is a common connector between climate control unit terminal and airflow mode actuator terminal. **If there is a common**

	With dual type climate control unit: ▪ Climate control unit terminal 2K — airflow mode actuator terminal F (DEFROSTER mode motor drive signal) ▪ Climate control unit terminal 2I — airflow mode actuator terminal D (VENT mode motor drive signal) **With single type climate control unit:** ▪ Climate control unit terminal V — airflow mode actuator terminal F (DEFROSTER mode motor drive signal) ▪ Climate control unit terminal T — airflow mode actuator terminal D (VENT mode motor drive signal) • Is there continuity?		**connector:** • Determine the malfunctioning part by inspecting the common connector and the terminal for corrosion, damage, or pin disconnection, and the common wiring harness. • Repair or replace the malfunctioning part. **If there is no common connector:** • Repair or replace the wiring harness. Go to Step 19.
12*	**INSPECT TO SEE WHETHER MALFUNCTION IS IN AIRFLOW MODE ACTUATOR OR ELSEWHERE** • Airflow mode actuator and climate control unit connectors disconnected. • Measure voltage at the following terminals of climate control unit. **With dual type climate control unit:** ▪ Terminal 2K (DEFROSTER mode motor drive signal) ▪ Terminal 2I (VENT mode motor drive signal)	Yes	Go to Step 15.
		No	Go to the next step.

	With single type climate control unit: ▪ Terminal V (DEFROSTER mode motor drive signal) ▪ Terminal T (VENT mode motor drive signal) • Is voltage normal?		
13*	**INSPECT TO SEE WHETHER MALFUNCTION IS IN WIRING HARNESS (SHORT TO B+ BETWEEN CLIMATE CONTROL UNIT AND AIRFLOW MODE ACTUATOR) OR ELSEWHERE** • Measure voltage at the following terminals of the climate control unit harness-side connector. **With dual type climate control unit:** ▪ Terminal 2K (DEFROSTER mode motor drive signal) ▪ Terminal 2I (VENT mode motor drive signal) **With single type climate control unit:** ▪ Terminal V (DEFROSTER mode motor drive signal) ▪ Terminal T (VENT mode motor drive signal) • Are voltages **approx. 0 V**?	Yes	Go to the next step.
		No	Refer to the wiring diagram and verify whether or not there is a common connector between climate control unit terminal and airflow mode actuator terminal. **If there is a common connector:** • Determine the malfunctioning part by inspecting the common connector and the terminal for corrosion, damage, or pin disconnection, and the common wiring harness for a short to power supply. • Repair or replace the malfunctioning part. **If there is no common connector:** • Repair or replace the wiring harness which has a short to power supply. Go to the Step 19.
14*	**INSPECT TO SEE WHETHER MALFUNCTION IS IN WIRING HARNESS (SHORT TO GROUND BETWEEN CLIMATE CONTROL UNIT AND AIRFLOW MODE ACTUATOR) OR ELSEWHERE** • Switch the ignition off. • Verify that continuity at the following harness-side connector terminals between climate control unit and ground.	Yes	Refer to the wiring diagram and verify whether or not there is a common connector between climate control unit terminal and airflow mode actuator terminal. **If there is a common connector:** • Determine the malfunctioning part by

	With dual type climate control unit: ▪ Terminal 2K (DEFROSTER mode motor drive signal) ▪ Terminal 2I (VENT mode motor drive signal) **With single type climate control unit:** ▪ Terminal V (DEFROSTER mode motor drive signal) ▪ Terminal T (VENT mode motor drive signal) • Is there continuity?		inspecting the common connector and the terminal for corrosion, damage, or pin disconnection, and the common wiring harness for a short to ground. • Repair or replace the malfunctioning part. **If there is no common connector:** • Repair or replace the wiring harness which has a short to ground. Go to the Step 19.
		No	Go to the next step.
15	**INSPECT AIRFLOW MODE ACTUATOR** • Inspect airflow mode actuator. (See **AIRFLOW MODE ACTUATOR INSPECTION [FULL-AUTO AIR CONDITIONER]**.) • Is airflow mode actuator normal?	Yes	Go to the next step.
		No	Replace the airflow mode actuator. (See **AIRFLOW MODE ACTUATOR REMOVAL/INSTALLATION [FULL-AUTO AIR CONDITIONER]**.) Then go to the Step 19.
16	**INSPECT AIRFLOW MODE LINK** • Inspect airflow mode links. (See **AIRFLOW MODE MAIN LINK REMOVAL/INSTALLATION**.) ▪ Is grease on link? ▪ Are links securely and properly installed? ▪ Are links free of obstructions and hindrances? • Are the above items normal?	Yes	Go to the next step.
		No	Apply grease to links. If any links are damaged, replace malfunctioning part. Then go to the Step 19.
17	**INSPECT TO SEE WHETHER MALFUNCTION IS IN CLIMATE CONTROL UNIT OR AIRFLOW MODE DOOR**	Yes	Go to the next step.

	• Inspect A/C unit airflow mode door. (See **A/C UNIT REMOVAL/INSTALLATION**.) ▪ Is door free of obstructions, cracks and damage? ▪ Are door securely and properly installed? • Are the above items normal?	No	Remove the obstruction, or install door in proper position. If any doors are cracked or damaged, replace them. Then go to the Step 19. (See **A/C UNIT DISASSEMBLY/ASSEMBLY**.)
18	**VERIFY DUCT INSTALLATION CONDITION** • Are the following ducts installed properly? (See **DASHBOARD REMOVAL**.)(See **DASHBOARD INSTALLATION**.) ▪ Dashboard ducts ▪ Defroster ducts	Yes	Inspect ducts for restriction, deformity, and air leakage, then go to the next step.
		No	Install the incorrectly installed ducts properly, then go to the next step. (See **DASHBOARD DISASSEMBLY/ASSEMBLY**.)
19	**VERIFY THAT MALFUNCTION SYMPTOM DOES NOT RECUR AFTER REPAIR** • Is air discharged from vent?	Yes	Troubleshooting completed. Explain repairs to customer.
		No	Recheck malfunction symptoms, then repeat from Step 1 if the malfunction recurs.

2014 - Mazda3 - HVAC

AMOUNT OF AIR BLOWN FROM VENTS DOES NOT CHANGE [FULL-AUTO AIR CONDITIONER]

DESCRIPTION	• Malfunction in blower system
POSSIBLE CAUSE	• HEATER 40 A fuse malfunction • Blower unit malfunction • Open or short circuit in wiring harness between climate control unit and blower relay • Blower relay malfunction • Blower motor malfunction • Blower fan controller malfunction • Climate control unit malfunction

- When performing an asterisked (*) troubleshooting inspection, shake the wiring harness and connectors while performing the inspection to discover whether poor contact points are the cause of any intermittent malfunctions. If there is a problem, inspect make sure connectors, terminals and wiring harnesses are connected correctly and undamaged.

Diagnostic Procedure

STEP	INSPECTION		ACTION
1	**INSPECT FUSE** • Remove the HEATER 40 A fuse. • Is the fuse normal?	Yes	Go to the next step.
		No	**If the fuse is melted:** Repair or replace wiring harness for short to ground and replace the fuse. **If the fuse is deterioration:** Replace the fuse. Then go to Step 15.

2	**INSPECT TO SEE WHETHER MALFUNCTION IS IN BLOWER UNIT OR ELSEWHERE** • Switch the ignition ON (engine off or on). • Turn the fan dial clockwise. • Recirculate air inside the vehicle. • Does the blower motor rotate smoothly?	Yes	Go to the next step.
		No	Go to Step 4.
3	**INSPECT BLOWER UNIT INTAKE VENT** • Is blower unit intake vent restricted?	Yes	Remove obstruction, then go to Step 15.
		No	Inspect if there are any obstruction in the A/C unit passage, then go to Step 15.
4*	**INSPECT TO SEE WHETHER MALFUNCTION IS IN BLOWER RELAY SYSTEM OR BLOWER FAN CONTROLLER SYSTEM** • Switch the ignition ON (engine off or on). • Turn the fan dial clockwise. • Measure the voltage at the following blower motor terminal. ▪ Terminal A (blower motor operation signal) • Is voltage **approx. 12 V**?	Yes	Go to Step 8.
		No	Go to the next step.
5*	**INSPECT TO SEE WHETHER MALFUNCTION IS IN WIRING HARNESS (LACK OF CONTINUITY BETWEEN FUSE BLOCK AND BLOWER RELAY) OR ELSEWHERE** • Measure the voltage at the following blower relay terminals. ▪ Terminal A (B+ signal) ▪ Terminal B (B+ signal) • Is the voltage **approx. 12 V**?	Yes	Go to the next step.
		No	Refer to the wiring diagram and verify whether or not there is a common connector between blower relay terminal and HEATER 40 A fuse. **If there is a common connector:** • Determine the malfunctioning part by inspecting the common connector and the terminal for corrosion, damage, or pin disconnection, and the common wiring harness. • Repair or replace the malfunctioning part. **If there is no common**

			connector: • Repair or replace the wiring harness. Go to Step 15.
6*	**INSPECT TO SEE WHETHER MALFUNCTION IS IN WIRING HARNESS (LACK OF CONTINUITY BETWEEN BLOWER RELAY AND GROUND) OR ELSEWHERE** • Measure the voltage at the following blower relay terminal. ▪ Terminal D (ground) • Is the voltage **approx. 0 V**?	Yes	Go to the next step.
		No	Refer to the wiring diagram and verify whether or not there is a common connector between blower relay terminal and front body control module (FBCM) terminal. **If there is a common connector:** • Determine the malfunctioning part by inspecting the common connector and the terminal for corrosion, damage, or pin disconnection, and the common wiring harness. • Repair or replace the malfunctioning part. **If there is no common connector:** • Repair or replace the wiring harness. Go to Step 15.
7*	**INSPECT TO SEE WHETHER MALFUNCTION IS IN WIRING HARNESS (LACK OF CONTINUITY BETWEEN BLOWER RELAY AND BLOWER FAN CONTROLLER) OR BLOWER RELAY** • Switch the ignition ON (engine off or on). • Measure the voltage at the following blower relay terminal. ▪ Terminal C (blower motor operation signal) • Is the voltage **approx. 12 V**?	Yes	Repair the wiring harness for lack of continuity between the blower relay and blower fan controller, then go to Step 15.
		No	Replace the blower relay, then go to Step 15. (See **RELAY LOCATION**.)
8*	**INSPECT BLOWER MOTOR** • Inspect the blower motor. (See **BLOWER MOTOR INSPECTION**.)	Yes	Go to the next step.
		No	Replace the blower motor, then go to Step 15.

	• Is the blower motor normal?		(See **BLOWER MOTOR REMOVAL/INSTALLATION**.)
9*	**INSPECT TO SEE WHETHER MALFUNCTION IS IN WIRING HARNESS (LACK OF CONTINUITY BETWEEN BLOWER MOTOR AND BLOWER FAN CONTROLLER) OR ELSEWHERE** • Measure the voltage at the following terminal of blower fan controller. ▪ Terminal E (blower motor operation signal) • Is voltage **approx. 12 V**?	Yes	Go to the next step.
		No	Refer to the wiring diagram and verify whether or not there is a common connector between blower motor terminal and blower fan controller terminal. **If there is a common connector:** • Determine the malfunctioning part by inspecting the common connector and the terminal for corrosion, damage, or pin disconnection, and the common wiring harness. • Repair or replace the malfunctioning part. **If there is no common connector:** • Repair or replace the wiring harness. Go to Step 15.
10*	**INSPECT TO SEE WHETHER MALFUNCTION IS IN WIRING HARNESS (LACK OF CONTINUITY BETWEEN BLOWER FAN CONTROLLER AND GROUND) OR ELSEWHERE** • Measure the voltage at the following blower fan controller terminal. ▪ Terminal C (ground) • Is the voltage **approx. 0 V**?	Yes	Go to the next step.
		No	Refer to the wiring diagram and verify whether or not there is a common connector between blower fan controller terminal and ground. **If there is a common connector:** • Determine the malfunctioning part by inspecting the common connector and the terminal for corrosion, damage, or pin disconnection, and the common wiring harness. • Repair or replace the malfunctioning part. **If there is no common connector:** • Repair or replace the wiring

			harness. Go to Step 15.
11	**INSPECT BLOWER UNIT** • Inspect the fan in blower unit. ▪ Is the fan free of interference with the blower unit case? ▪ Is the fan free of foreign matter and obstructions? • Is the fan normal?	Yes	Go to the next step.
		No	Remove obstruction, repair or replace the fan and blower unit case, then go to Step 15.
12*	**INSPECT BLOWER FAN CONTROLLER** • Inspect the blower fan controller. (See **BLOWER FAN CONTROLLER INSPECTION**.) • Is the blower fan controller normal?	Yes	Go to the next step.
		No	Replace the blower fan controller, then go to Step 15. (See **BLOWER FAN CONTROLLER REMOVAL/INSTALLATION**.)
13*	**INSPECT TO SEE WHETHER MALFUNCTION IS IN WIRING HARNESS (LACK OF CONTINUITY BETWEEN BLOWER FAN CONTROLLER AND CLIMATE CONTROL UNIT) OR ELSEWHERE** • Switch the ignition off. • Disconnect climate control unit connector. • Inspect for continuity at the following terminals between the blower fan controller and climate control unit. **With dual type climate control unit:** ▪ Terminal B—1E (blower motor speed control signal) **With single type climate control unit:** ▪ Terminal B—Q (blower motor speed control signal)	Yes	Go to the next step.
		No	Refer to the wiring diagram and verify whether or not there is a common connector between blower fan controller terminal and climate control unit terminal. **If there is a common connector:** • Determine the malfunctioning part by inspecting the common connector and the terminal for corrosion, damage, or pin disconnection, and the common wiring harness. • Repair or replace the malfunctioning part. **If there is no common connector:** • Repair or replace the wiring harness. Go to Step 15.

	• Is there continuity?		
14*	**INSPECT TO SEE WHETHER MALFUNCTION IS IN CLIMATE CONTROL UNIT OR WIRING HARNESS (SHORT TO GROUND IN WIRING HARNESS BETWEEN BLOWER FAN CONTROLLER AND CLIMATE CONTROL UNIT)** • Inspect for continuity at the following terminal between the blower fan controller and ground. ▪ Terminal B (blower motor control signal)—ground • Is there continuity?	Yes	Refer to the wiring diagram and verify whether or not there is a common connector between blower fan controller terminal and ground. **If there is a common connector:** • Determine the malfunctioning part by inspecting the common connector and the terminal for corrosion, damage, or pin disconnection, and the common wiring harness for a short to ground. • Repair or replace the malfunctioning part. **If there is no common connector:** • Repair or replace the wiring harness which has a short to ground. Go to the next step.
		No	Replace the climate control unit, then go to the next step. (See **CLIMATE CONTROL UNIT REMOVAL/INSTALLATION [FULL-AUTO AIR CONDITIONER]**.)
15	**VERIFY THAT MALFUNCTION SYMPTOM DOES NOT RECUR AFTER REPAIR** • Is air discharged from vent?	Yes	Troubleshooting completed. Explain repairs to customer.
		No	Recheck malfunction symptoms, then repeat from Step 1 if the malfunction recurs.

2014 - Mazda3 - HVAC

AIR INTAKE MODE DOES NOT CHANGE [FULL-AUTO AIR CONDITIONER]

DESCRIPTION	• Air intake mode does not change when switching REC/FRESH mode
POSSIBLE CAUSE	• Air intake actuator malfunction • Open or short circuit in wiring harness between climate control unit and air intake actuator • Climate control unit malfunction • Air intake link malfunction • Air intake door malfunction • Restriction in blower unit

- When performing an asterisked (*) troubleshooting inspection, shake the wiring harness and connectors while performing the inspection to discover whether poor contact points are the cause of any intermittent malfunctions. If there is a problem, inspect to make sure connectors, terminals and wiring harnesses are connected correctly and undamaged.

Diagnostic Procedure

STEP	INSPECTION		ACTION
1	**INSPECT AIR INTAKE ACTUATOR** • Inspect the following item using the M-MDS A/C operation check mode function. (See **A/C OPERATION CHECK MODE [FULL-AUTO AIR CONDITIONER]**.) ▪ Air Intake Actuator • Does the air intake actuator operate?	Yes	Go to Step 7.
		No	Go to the next step.

2	**INSPECT TO SEE WHETHER MALFUNCTION IS IN AIR INTAKE ACTUATOR OR ELSEWHERE** • Disconnect the air intake actuator connector. • Switch the ignition ON (engine off or on). (See **AIR INTAKE ACTUATOR REMOVAL/INSTALLATION [FULL-AUTO AIR CONDITIONER]**.) • Measure the voltages at the following climate control unit terminals. **With dual type climate control unit** ▪ Terminal 2J (FRESH motor drive signal) ▪ Terminal 2L (RECIRCULATE motor drive signal) **With single type climate control unit** ▪ Terminal U (FRESH motor drive signal) ▪ Terminal S (RECIRCULATE motor drive signal) • Are voltages normal?	Yes	Go to the next step.
		No	Go to Step 4.
3	**INSPECT AIR INTAKE ACTUATOR** • Inspect the air intake actuator. (See **AIR INTAKE ACTUATOR INSPECTION [FULL-AUTO AIR CONDITIONER]**.) • Is the air intake actuator normal?	Yes	Go to Step 7.
		No	Replace the air intake actuator. (See **AIR INTAKE ACTUATOR REMOVAL/INSTALLATION [FULL-AUTO AIR CONDITIONER]**.) Then go to Step 9.
4	**INSPECT TO SEE WHETHER MALFUNCTION IS IN WIRING HARNESS (SHORT TO B+ BETWEEN CLIMATE CONTROL UNIT AND AIR**	Yes	Go to the next step.

	INTAKE ACTUATOR) OR ELSEWHERE • Air intake actuator connector disconnected. • Disconnect the climate control unit connector. (See **CLIMATE CONTROL UNIT REMOVAL/INSTALLATION [FULL-AUTO AIR CONDITIONER]**.) • Measure the voltages at the following air intake actuator terminals. ▪ Terminal C (FRESH motor drive signal) ▪ Terminal B (RECIRCULATE motor drive signal) • Are voltages **approx. 0 V**?	No	Refer to the wiring diagram and verify whether or not there is a common connector between climate control unit terminal and air intake actuator terminal. **If there is a common connector:** • Determine the malfunctioning part by inspecting the common connector and the terminal for corrosion, damage, or pin disconnection, and the common wiring harness for a short to power supply. • Repair or replace the malfunctioning part. **If there is no common connector:** • Repair or replace the wiring harness which has a short to power supply. Go to Step 9.
5	**INSPECT TO SEE WHETHER MALFUNCTION IS IN WIRING HARNESS (SHORT TO GROUND BETWEEN CLIMATE CONTROL UNIT AND AIR INTAKE ACTUATOR) OR ELSEWHERE** • Climate control unit and air intake actuator connectors disconnected. • Switch the ignition off. • Inspect for continuity at the following terminals between the air intake actuator and ground. ▪ Terminal C (FRESH motor drive signal) ▪ Terminal B (RECIRCULATE motor drive signal) • Is there continuity?	Yes	Refer to the wiring diagram and verify whether or not there is a common connector between climate control unit terminal and air intake actuator terminal. **If there is a common connector:** • Determine the malfunctioning part by inspecting the common connector and the terminal for corrosion, damage, or pin disconnection, and the common wiring harness for a short to ground. • Repair or replace the malfunctioning part. **If there is no common connector:** • Repair or replace the wiring harness which has a short to ground. Go to Step 9.
		No	Go to the next step.

6	**INSPECT TO SEE WHETHER MALFUNCTION IS IN WIRING HARNESS (LACK OF CONTINUITY OR OPEN BETWEEN CLIMATE CONTROL UNIT AND AIR INTAKE ACTUATOR) OR ELSEWHERE** • Climate control unit and air intake actuator connectors disconnected. • Inspect for continuity at the following terminals between the air intake actuator and climate control unit. **With dual type climate control unit** ▪ Terminal C—2J (FRESH motor drive signal) ▪ Terminal B—2L (RECIRCULATE motor drive signal) **With single type climate control unit** ▪ Terminal C—U (FRESH motor drive signal) ▪ Terminal B—S (RECIRCULATE motor drive signal) • Is there continuity?	Yes	Replace the climate control unit, then go to Step 9. (See **CLIMATE CONTROL UNIT REMOVAL/INSTALLATION [FULL-AUTO AIR CONDITIONER]**.)
		No	Refer to the wiring diagram and verify whether or not there is a common connector between climate control unit terminal and air intake actuator terminal. **If there is a common connector:** • Determine the malfunctioning part by inspecting the common connector and the terminal for corrosion, damage, or pin disconnection, and the common wiring harness. • Repair or replace the malfunctioning part. **If there is no common connector:** • Repair or replace the wiring harness. Go to Step 9.
7	**INSPECT AIR INTAKE LINK** • Inspect the air intake link. (See **BLOWER UNIT REMOVAL/INSTALLATION**.) ▪ Is there grease on link? ▪ Are the links securely and properly installed? ▪ Are the links free of	Yes	Go to the next step.
		No	Apply grease to the links. If any the links are damaged, replace the air intake actuator, then go to Step 9. (See **BLOWER UNIT DISASSEMBLY/ASSEMBLY**.)

	obstructions and hindrances? • Are the above items normal?		
8	**INSPECT TO SEE WHETHER MALFUNCTION IS IN CLIMATE CONTROL UNIT OR AIR INTAKE DOOR** • Inspect the blower unit air intake door. (See **BLOWER UNIT REMOVAL/INSTALLATION**.) ▪ Is the door free of obstructions, cracks, and damage? ▪ Are the doors securely and properly installed? • Are the above items normal?	Yes	Go to the next step.
		No	Remove obstruction, or install the doors in the proper position. If any doors are cracked or damaged, replace them, then go to the next step. (See **BLOWER UNIT DISASSEMBLY/ASSEMBLY**.)
9	**VERIFY THAT MALFUNCTION SYMPTOMS DO NOT RECUR AFTER REPAIR** • Does the air intake mode change smoothly?	Yes	Troubleshooting completed. Explain repairs to customer.
		No	Recheck malfunction symptoms, then repeat from Step 1 if the malfunction recurs.

2014 - Mazda3 - HVAC

NO TEMPERATURE CONTROL WITH CLIMATE CONTROL UNIT [FULL-AUTO AIR CONDITIONER]

DESCRIPTION	• Temperature does not change when operating temperature dial • Malfunction in A/C unit and/or climate control unit air mix system • Malfunction in driver and/or passenger side air mix actuator or related wiring harness
POSSIBLE CAUSE	• ROOM 15 A fuse malfunction • Open or short circuit in wiring harness between fuse block and climate control unit • Open or short circuit in wiring harness between climate control unit and air mix actuator • Air mix actuator malfunction • Air mix link malfunction • Air mix door malfunction • Climate control unit malfunction • Heater hose malfunction

Diagnostic Procedure

STEP	INSPECTION		ACTION
1	**INSPECT COOLANT TEMPERATURE** • Is the coolant sufficiently warmed up?	Yes	Go to the next step.
		No	Warm up the engine, then go to Step 19.
2*	**INSPECT FUSE** • Remove the ROOM 15 A fuse. • Is the fuse normal?	Yes	Go to the next step.
		No	**If the fuse is melted:** Repair or replace wiring harness for short to

			ground and replace the fuse. **If the fuse is deterioration:** Replace the fuse. Then go to Step 19.
3*	**INSPECT TO SEE WHETHER MALFUNCTION (OPEN CIRCUIT) IS IN B+ SIGNAL WIRING HARNESS (BETWEEN FUSE BLOCK AND CLIMATE CONTROL UNIT) OR ELSEWHERE** • Disconnect the climate control unit connector. (See **CLIMATE CONTROL UNIT REMOVAL/INSTALLATION [FULL-AUTO AIR CONDITIONER]**.) • Switch the ignition ON (engine off or on). • Measure voltage at the following terminal of climate control unit. **With dual type climate control unit:** ▪ Terminal 1B **With single type climate control unit:** ▪ Terminal L • Is the voltage **approx. 12 V?**	Yes	Go to the next step.
		No	Refer to the wiring diagram and verify whether or not there is a common connector between fuse block terminal and climate control unit terminal. **If there is a common connector:** • Determine the malfunctioning part by inspecting the common connector and the terminal for corrosion, damage, or pin disconnection, and the common wiring harness for an open circuit. • Repair or replace the malfunctioning part. **If there is no common connector:** • Repair or replace the wiring harness which has an open circuit. Go to Step 19.
4*	**INSPECT TO SEE WHETHER MALFUNCTION IS IN CLIMATE CONTROL UNIT OR AIR MIX ACTUATOR** • Reconnect the disconnected climate control unit connector. • Switch the ignition ON (engine off or on). • Measure voltage at the following terminals of climate control unit when temperature setting to MAX HOT and MAX COLD. **With dual type climate control unit:** ▪ Terminal 2G	Yes	Go to Step 15.
		No	Go to the next step.

	Terminal 2E **With single type climate control unit:** ▪ Terminal G • Is voltage normal?		
5*	**INSPECT TO SEE WHETHER MALFUNCTION IS IN POSITION SENSOR OR ELSEWHERE** • Switch the ignition ON (engine off or on). • Measure voltage at the following terminal of climate control unit when airflow mode at VENT and DEFROSTER. **With dual type climate control unit:** ▪ Terminal 2A **With single type climate control unit:** ▪ Terminal I • Is voltage normal?	Yes	Go to Step 9.
		No	Go to the next step.
6*	**INSPECT TO SEE WHETHER MALFUNCTION (LACK OF CONTINUITY OR SHORT TO BATTERY POWER OR GROUND) IS IN POSITION SENSOR POWER SUPPLY OR ELSEWHERE** • Switch the ignition ON (engine off or on). • Measure voltage at the following terminal of climate control unit. **With dual type climate control unit:** ▪ Terminal 1N **With single type climate control unit:** ▪ Terminal H • Is voltage **approx. 5 V?**	Yes	Go to the next step.
		No	Refer to the wiring diagram and verify whether or not there is a common connector between climate control unit terminal and air mix actuator terminal. **If there is a common connector:** • Determine the malfunctioning part by inspecting the common connector and the terminal for corrosion, damage, or pin disconnection, and the common wiring harness. • Repair or replace the malfunctioning part. **If there is no common connector:**

			Repair or replace the wiring harness. Go to Step 19.
7*	**INSPECT TO SEE WHETHER MALFUNCTION (LACK OF CONTINUITY OR OPEN) IS IN POSITION SENSOR GROUND OR ELSEWHERE** • Measure voltage at the following terminal of climate control unit. **With dual type climate control unit:** ▪ Terminal 1J **With single type climate control unit:** ▪ Terminal E • Is the voltage **below. 1.0 V?**	Yes	Go to Step 12.
		No	Refer to the wiring diagram and verify whether or not there is a common connector between climate control unit terminal and air mix actuator terminal. **If there is a common connector:** • Determine the malfunctioning part by inspecting the common connector and the terminal for corrosion, damage, or pin disconnection, and the common wiring harness. • Repair or replace the malfunctioning part. **If there is no common connector:** • Repair or replace the wiring harness. Go to Step 19.
8	**INSPECT TO SEE WHETHER MALFUNCTION (SHORT TO POWER SUPPLY) IS IN WIRING HARNESS (AIR MIX POSITION SIGNAL) OR ELSEWHERE** • Measure voltage at the following terminals of climate control unit. **With dual type climate control unit:** ▪ Terminal 2G ▪ Terminal 2E **With single type climate control unit:** ▪ Terminal G • Is the voltage **approx. 12V,** at Step 5?	Yes	Refer to the wiring diagram and verify whether or not there is a common connector between climate control unit terminal and air mix actuator terminal. **If there is a common connector:** • Determine the malfunctioning part by inspecting the common connector and the terminal for corrosion, damage, or pin disconnection, and the common wiring harness for a short to power supply. • Repair or replace the malfunctioning part. **If there is no common connector:** • Repair or replace the wiring

			harness which has a short to power supply. Go to Step 19.
		No	Go to the next step.
9*	**INSPECT TO SEE WHETHER MALFUNCTION (LACK OF CONTINUITY) IS IN WIRING HARNESS (AIR MIX POSITION SIGNAL) OR ELSEWHERE** • Switch the ignition off. • Disconnect the climate control unit connector. (See **CLIMATE CONTROL UNIT REMOVAL/INSTALLATION [FULL-AUTO AIR CONDITIONER]**.) • Disconnect the air mix actuator connector. (See **AIR MIX ACTUATOR REMOVAL/INSTALLATION [FULL-AUTO AIR CONDITIONER]**.) • Verify continuity at following terminals between climate control unit and air mix actuator. **With dual type climate control unit:** ▪ Climate control unit terminal 2G —driver-side air mix actuator terminal F ▪ Climate control unit terminal 2E —passenger-side air mix actuator terminal F **With single type climate control unit:** ▪ Climate control unit terminal G —air mix actuator terminal F • Is there continuity?	Yes	Go to the next step.
		No	Refer to the wiring diagram and verify whether or not there is a common connector between climate control unit terminal and each side air mix actuator terminal. **If there is a common connector:** • Determine the malfunctioning part by inspecting the common connector and the terminal for corrosion, damage, or pin disconnection, and the common wiring harness. • Repair or replace the malfunctioning part. **If there is no common connector:** • Repair or replace the wiring harness. Go to Step 19.

10*	**INSPECT TO SEE WHETHER MALFUNCTION (SHORT TO GROUND) IS IN WIRING HARNESS (AIR MIX POSITION SIGNAL) OR POSITION SENSOR COMMON (POWER SUPPLY OR GROUND) HARNESS** • Climate control unit and air mix actuator connectors disconnected. • Verify continuity at the following terminals between climate control unit and ground. **With dual type climate control unit:** ▪ Terminal 2G ▪ Terminal 2E **With single type climate control unit:** ▪ Terminal G • Is there continuity?	Yes	Repair wiring harness for short to ground between climate control unit and air mix actuator. Then go to Step 19.
		No	Inspect and repair for open circuit following: • Between driver side air mix actuator terminal G and junction point to airflow mode actuator (position sensor power supply). • Between passenger side air mix actuator terminal E and junction point to airflow mode actuator (position sensor power supply). • Between driver side air mix actuator terminal E and junction point to airflow mode actuator (position sensor ground). • Between passenger side air mix actuator terminal G and junction point to airflow mode actuator (position sensor ground). Then go to Step 19.
11*	**INSPECT TO SEE WHETHER MALFUNCTION (LACK OF CONTINUITY) IS IN AIR MIX ACTUATOR OR WIRING HARNESS (BETWEEN CLIMATE CONTROL UNIT AND AIR MIX ACTUATOR)** • Disconnect the air mix actuator connector. (See **AIR MIX ACTUATOR REMOVAL/INSTALLATION [FULL-AUTO AIR CONDITIONER]**.) • Measure voltage at the following terminals of air mix actuator. **With dual type climate control unit:** ▪ Terminal C (driver-side)/B (passenger-side) (COLD motor	Yes	Go to Step 16.
		No	Go to the next step.

	drive signal) ▪ Terminal B (driver-side)/C (passenger-side) (HOT motor drive signal) **With single type climate control unit:** ▪ Terminal B (COLD motor drive signal) ▪ Terminal C (HOT motor drive signal) • Are voltage s as shown below? ▪ COLD motor drive signal: **approx. 10 V** during COLD and **approx. 0.5 V** during HOT ▪ HOT motor drive signal: **approx. 0.5 V** during COLD and **approx. 10 V** during HOT		
12*	**INSPECT TO SEE WHETHER MALFUNCTION IS IN WIRING HARNESS (SHORT TO B+ BETWEEN CLIMATE CONTROL UNIT AND AIR MIX ACTUATOR) OR ELSEWHERE** • Air mix actuator connectors disconnected. • Disconnect the climate control unit connector. (See **CLIMATE CONTROL UNIT REMOVAL/INSTALLATION [FULL-AUTO AIR CONDITIONER]**.) • Measure voltage at the following terminals of the climate control unit harness-side connector. **With dual type climate control unit (driver-side):**	Yes	Go to the next step.
		No	Refer to the wiring diagram and verify whether or not there is a common connector between climate control unit terminal and air mix actuator terminal. **If there is a common connector:** • Determine the malfunctioning part by inspecting the common connector and the terminal for corrosion, damage, or pin disconnection, and the common wiring harness for a short to power supply. • Repair or replace the malfunctioning part.

	▪ Terminal 2B (COLD motor drive signal) ▪ Terminal 2D (HOT motor drive signal) **With dual type climate control unit (passenger-side):** ▪ Terminal 2H (COLD motor drive signal) ▪ Terminal 2F (HOT motor drive signal) **With single type climate control unit:** ▪ Terminal W (COLD motor drive signal) ▪ Terminal X (HOT motor drive signal) • Are voltages **approx. 0 V?**		**If there is no common connector:** • Repair or replace the wiring harness which has a short to power supply. Go to Step 19.
13*	**INSPECT TO SEE WHETHER MALFUNCTION IS IN WIRING HARNESS (SHORT TO GROUND BETWEEN CLIMATE CONTROL UNIT AND AIR MIX ACTUATOR) OR ELSEWHERE** • Air mix actuator connectors disconnected. • Switch the ignition off. • Verify that continuity at the following harness-side connector terminals between climate control unit and ground. **With dual type climate control unit (driver-side):** ▪ Terminal 2B(COLD motor drive signal)	Yes	Refer to the wiring diagram and verify whether or not there is a common connector between climate control unit terminal and air mix actuator terminal. **If there is a common connector:** • Determine the malfunctioning part by inspecting the common connector and the terminal for corrosion, damage, or pin disconnection, and the common wiring harness for a short to ground. • Repair or replace the malfunctioning part. **If there is no common connector:** • Repair or replace the wiring

	▪ Terminal 2D (HOT motor drive signal) **With dual type climate control unit (passenger-side):** ▪ Terminal 2H (COLD motor drive signal) ▪ Terminal 2F (HOT motor drive signal) **With single type climate control unit:** ▪ Terminal W (COLD motor drive signal) ▪ Terminal X (HOT motor drive signal) • Is there continuity?		harness which has a short to ground. Go to Step 19.
		No	Go to the next step.
14*	**INSPECT TO SEE WHETHER MALFUNCTION IS IN WIRING HARNESS (LACK OF CONTINUITY OR OPEN BETWEEN CLIMATE CONTROL UNIT AND AIR MIX ACTUATOR) OR ELSEWHERE** • Air mix actuator connectors disconnected. • Switch the ignition off. • Verify that continuity at the following harness-side connector terminals between climate control unit and each air mix actuator. **With dual type climate control unit (driver-side):** • Terminal C—climate control unit terminal 2B (COLD motor drive signal) • Terminal B—climate control unit terminal 2D (HOT motor drive signal) **With dual type climate control unit (passenger-side):**	Yes	Go to the next step.
		No	Refer to the wiring diagram and verify whether or not there is a common connector between climate control unit terminal and air mix actuator terminal. **If there is a common connector:** • Determine the malfunctioning part by inspecting the common connector and the terminal for corrosion, damage, or pin disconnection, and the common wiring harness. • Repair or replace the malfunctioning part. **If there is no common connector:** • Repair or replace the wiring harness.

	• Terminal B—climate control unit terminal 2H (COLD motor drive signal) • Terminal C—climate control unit terminal 2F (HOT motor drive signal) **With single type climate control unit:** • Terminal B—climate control unit terminal W (COLD motor drive signal) • Terminal C—climate control unit terminal X (HOT motor drive signal) • Is there continuity?		Go to Step 19.
15	**INSPECT AIR MIX ACTUATOR** • Inspect the air mix actuator. (See **AIR MIX ACTUATOR INSPECTION [FULL-AUTO AIR CONDITIONER]**.) • Is air mix actuator normal?	Yes	Go to the next step.
		No	Replace the suspected side air mix actuator. Then go to 19. (See **AIR MIX ACTUATOR REMOVAL/INSTALLATION [FULL-AUTO AIR CONDITIONER]**.)
16	**INSPECT AIR MIX LINK** • Inspect the air mix links for each-side. (See **A/C UNIT REMOVAL/INSTALLATION**.) ▪ Is grease on link? ▪ Are links securely and properly installed? ▪ Are links free of obstructions and hindrances? • Are the above items normal?	Yes	Go to the next step.
		No	Apply grease to links. If any links are damaged. Replace malfunctioning part. (See **A/C UNIT DISASSEMBLY/ASSEMBLY**.) Then go to Step 19.
17	**INSPECT TO SEE WHETHER MALFUNCTION IS IN CLIMATE CONTROL UNIT OR AIR MIX DOOR ELSEWHERE** • Inspect the A/C unit and each-side air mix door.	Yes	Go to the next step.
		No	Remove the obstruction, or install door in proper position. If any door are cracked, replace them.

	(See **A/C UNIT REMOVAL/INSTALLATION**.) ▪ Is door free of obstructions and damage? ▪ Are doors securely and properly installed? • Are the above items normal?		(See **A/C UNIT DISASSEMBLY/ASSEMBLY**.) Then go to the next step.
18	**INSPECT HEATER HOSE** • Inspect the heater hoses for the following: ▪ Is heater hoses free of damage and cracks? ▪ Are heater hoses connections free of engine coolant leakage? ▪ Are heater hoses installation points on A/C unit free of engine coolant leakage? • Are the above items normal?	Yes	Replace the climate control unit. Then go to the next step. (See **CLIMATE CONTROL UNIT REMOVAL/INSTALLATION [FULL-AUTO AIR CONDITIONER]**.)
		No	If heater hoses connections are loose, install securely in the correct position. Repair or replace the heater hoses. (See **HEATER HOSE REMOVAL/INSTALLATION**.) then go to the next step.
19	**VERIFY THAT MALFUNCTION SYMPTOM DOES NOT RECUR AFTER REPAIR** • Does the unit operate at every temperature setting?	Yes	Troubleshooting completed. Explain repairs to customer.
		No	Recheck malfunction symptoms, then repeat from Step1 if the malfunction recurs.

2014 - Mazda3 - HVAC

WINDSHIELD FOGGED [FULL-AUTO AIR CONDITIONER]

DESCRIPTION	• A/C compressor does not operate while airflow mode is in DEFROSTER or DEF/HEAT modes • Air intake mode does not change to FRESH while airflow mode is in DEFROSTER or DEF/HEAT modes
POSSIBLE CAUSE	• A/C compressor malfunction • ROOM 15 A fuse malfunction • Air intake link malfunction • Open or short circuit in wiring harness between climate control unit and air intake actuator • Air intake actuator malfunction • Climate control unit malfunction • Blower unit malfunction • Air intake door malfunction

- When performing an asterisked (*) troubleshooting inspection, shake the wiring harness and connectors while doing the inspection to discover whether poor contact points are the cause of any intermittent malfunctions. If there is a problem, inspect to make sure connectors, terminals and wiring harness are connected correctly and undamaged.

Diagnostic Procedure

STEP	INSPECTION		ACTION
1	**COOL AIR BLOW OUT INSPECTION** • When both the A/C switch and airflow volume control dial in the climate control unit are on, does cool air blow out from the vent?	Yes	Go to the next step.
		No	Go to Step 1 of the following troubleshooting. **NO COOL AIR [FULL-AUTO AIR CONDITIONER]**

2	**INSPECT FUSE** • Remove the ROOM 15 A fuse. • Is the fuse normal?	Yes	Go to the next step.
		No	**If the fuse is melted:** Repair or replace wiring harness for a short to ground and replace the fuse. **If the fuse is deterioration:** Replace the fuse. Then go to Step 13.
3	**INSPECT AIR INTAKE ACTUATOR LINK** • Inspect the air intake actuator link. (See **BLOWER UNIT REMOVAL/INSTALLATION**.) ▪ Is there grease on the link? ▪ Is the link securely and properly positioned? ▪ Is the link free of obstructions? • Are the above items normal?	Yes	Go to the next step.
		No	Apply grease or install the link properly and securely, remove obstruction, then go to Step 13. (See **BLOWER UNIT DISASSEMBLY/ASSEMBLY**.)
4*	**INSPECT WIRING HARNESS BETWEEN FUSE BLOCK AND CLIMATE CONTROL UNIT FOR CONTINUITY** • Disconnect the climate control unit connector. (See **CLIMATE CONTROL UNIT REMOVAL/INSTALLATION [FULL-AUTO AIR CONDITIONER]**.) • Switch the ignition ON (engine off or on). • Measure voltage at the following terminal of climate control unit. **With dual type climate control unit:** ▪ Terminal 1B	Yes	Go to the next step.
		No	Refer to the wiring diagram and verify whether or not there is a common connector between fuse block terminal and climate control unit terminal. **If there is a common connector:** • Determine the malfunctioning part by inspecting the common connector and the terminal for corrosion, damage, or pin disconnection, and the common wiring harness. • Repair or replace the malfunctioning part. **If there is no common connector:**

	With single type climate control unit: ▪ Terminal L • Is the voltage **approx. 12 V**?		• Repair or replace the wiring harness. Go to Step 13.
5	**VERIFY WHETHER MALFUNCTION IS IN A/C UNIT AIR INTAKE DOOR OR ELSEWHERE** • Switch the ignition off. • Connect the climate control unit connector. • Remove the air intake actuator. (See **AIR INTAKE ACTUATOR REMOVAL/INSTALLATION [FULL-AUTO AIR CONDITIONER]**.) • Switch the ignition ON (engine off or on). • Set the airflow volume control dial to MAX position. • Does the air intake mode (RECIRCULATE, FRESH) change smoothly when the air intake link is operated by hand?	Yes	Go to the next step.
		No	Go to Step 11.
6	**INSPECT AIR INTAKE ACTUATOR** • Inspect the air intake actuator. (See **AIR INTAKE ACTUATOR INSPECTION [FULL-AUTO AIR CONDITIONER]**.) • Is it normal?	Yes	Go to the next step.
		No	Replace the air intake actuator, go to Step 13. (See **AIR INTAKE ACTUATOR REMOVAL/INSTALLATION [FULL-AUTO AIR CONDITIONER]**.)
7	**INSPECT AIR INTAKE SELECTOR SWITCH AND DEFROSTER SWITCH IN CLIMATE CONTROL UNIT** • Measure voltage at the following terminals of climate control unit. **With dual type climate control unit:** ▪ Terminal 2J (FRESH signal)	Yes	Go to the next step.
		No	Replace the climate control unit, then go to Step 13. (See **CLIMATE CONTROL UNIT REMOVAL/INSTALLATION [FULL-AUTO AIR CONDITIONER]**.)

	▪ Terminal 2L (RECIRCULATE signal) **With single type climate control unit:** ▪ Terminal U (FRESH signal) ▪ Terminal S (RECIRCULATE signal) • Is voltage normal?		
8*	**INSPECT WIRING HARNESS BETWEEN CLIMATE CONTROL UNIT AND AIR INTAKE ACTUATOR FOR CONTINUITY** • Switch the ignition off. • Is there continuity between the following climate control unit terminals and air intake actuator terminals? **With dual type climate control unit:** ▪ Terminal 2J — Terminal C (FRESH signal) ▪ Terminal 2L — Terminal B (RECIRCULATE signal) **With single type climate control unit:** ▪ Terminal U — Terminal C (FRESH signal) ▪ Terminal S — Terminal B (RECIRCULATE signal)	Yes	Go to the next step.
		No	Refer to the wiring diagram and verify whether or not there is a common connector between climate control unit terminal and air intake actuator terminal. **If there is a common connector:** • Determine the malfunctioning part by inspecting the common connector and the terminal for corrosion, damage, or pin disconnection, and the common wiring harness for an open circuit. • Repair or replace the malfunctioning part. **If there is no common connector:** • Repair or replace the wiring harness which has an open circuit. Go to Step 13.
9*	**INSPECT WIRING HARNESS BETWEEN CLIMATE CONTROL UNIT AND AIR INTAKE ACTUATOR FOR SHORT TO GROUND**	Yes	Refer to the wiring diagram and verify whether or not there is a common connector between climate

	• Is there continuity between the following climate control unit terminals and ground? **With dual type climate control unit:** ▪ Terminal 2J (FRESH signal) ▪ Terminal 2L (RECIRCULATE signal) **With single type climate control unit:** ▪ Terminal U (FRESH signal) ▪ Terminal S (RECIRCULATE signal)		control unit terminal and air intake actuator terminal. **If there is a common connector:** • Determine the malfunctioning part by inspecting the common connector and the terminal for corrosion, damage, or pin disconnection, and the common wiring harness for a short to ground. • Repair or replace the malfunctioning part. **If there is no common connector:** • Repair or replace the wiring harness which has a short to ground. Go to Step 13.
		No	Go to the next step.
10*	**INSPECT WIRING HARNESS BETWEEN CLIMATE CONTROL UNIT AND AIR INTAKE ACTUATOR FOR SHORT TO B+** • Switch the ignition ON (engine off or on). • Measure the voltage at the following climate control unit terminals. **With dual type climate control unit:** ▪ Terminal 2J (FRESH signal) ▪ Terminal 2L (RECIRCULATE signal) **With single type climate control unit:** ▪ Terminal U (FRESH signal)	Yes	Refer to the wiring diagram and verify whether or not there is a common connector between climate control unit terminal and air intake actuator terminal. **If there is a common connector:** • Determine the malfunctioning part by inspecting the common connector and the terminal for corrosion, damage, or pin disconnection, and the common wiring harness for a short to power supply. • Repair or replace the malfunctioning part. **If there is no common connector:** • Repair or replace the wiring harness which has a short to power supply. Go to Step 13.
		No	Replace the climate control unit, then go to Step

	Terminal S (RECIRCULATE signal) • Is the voltage **approx. 12 V**?		13. (See **CLIMATE CONTROL UNIT REMOVAL/INSTALLATION [FULL-AUTO AIR CONDITIONER]**.)
11	**INSPECT BLOWER UNIT AIR INTAKE DOOR** • Is there any foreign matter or obstruction in the blower unit air intake door? (See **BLOWER UNIT REMOVAL/INSTALLATION**.)	Yes	Remove obstruction, then go to Step 13.
		No	Go to the next step.
12	**VERIFY THAT BLOWER UNIT AIR INTAKE DOOR IS POSITIONED SECURELY AND PROPERLY** • Is the blower unit air intake door securely and properly positioned? (See **BLOWER UNIT REMOVAL/INSTALLATION**.)	Yes	Go to the next step.
		No	Install the air intake door securely in the proper position, then go to the next step. (See **BLOWER UNIT DISASSEMBLY/ASSEMBLY**.)
13	**VERIFY THAT MALFUNCTION SYMPTOM DOES NOT RECUR AFTER REPAIR** • Does the malfunction disappear?	Yes	Troubleshooting completed. Explain repairs to customer.
		No	Recheck malfunction symptoms, then repeat from Step 1 if the malfunction recurs.

2014 - Mazda3 - HVAC

AIR FROM VENTS NOT COLD ENOUGH [FULL-AUTO AIR CONDITIONER]

DESCRIPTION	• Magnetic clutch operates but A/C system malfunctions
POSSIBLE CAUSE	**NOTE:** • If the engine coolant temperature increases due to a cooling system malfunction, the fail-safe function disables the A/C operation. • Drive belt malfunction • Refrigerant pressure sensor malfunction • Blower unit or condenser malfunction • Cooling fan system malfunction • Condenser or related part malfunction • A/C unit or condenser malfunction • Receiver/drier or expansion valve malfunction (valve closes too much) • Refrigerant lines malfunction • A/C compressor system malfunction, insufficient compressor oil • Over filling of compressor oil, malfunction in expansion valve or A/C unit air mix link system • Evaporative temperature sensor malfunction

Diagnostic Procedure

STEP	INSPECTION		ACTION
1	**INSPECT CLIMATE CONTROL UNIT FOR DTC** • Retrieve the climate control unit DTC using the M-MDS. (See **DTC DISPLAY [FULL-AUTO AIR CONDITIONER]**.)	Yes	Go to the applicable DTC troubleshooting procedures. (See **DTC TABLE [FULL-AUTO AIR CONDITIONER]**.)

	• Are there DTC displayed?	No	Go to the next step.
2	**INSPECT REFRIGERANT PRESSURE TO LOCATE MALFUNCTION** • Perform refrigerant pressure check. (See **REFRIGERANT PRESSURE CHECK**.) • Is the refrigerant pressure normal?	Yes	Go to the next step.
		No	Record the inspection result. • If the refrigerant high-pressure and low-pressure values are both high, go to Step 6. • If the refrigerant high-pressure and low-pressure values are approximately the same, go to Step 9. • If the refrigerant high-pressure and low-pressure values are both low, go to Step 11. • If there is a vacuum on the low pressure side and extremely low pressure on the high pressure side, go to Step 17. • If there is low pressure on the high pressure side and high pressure on the low pressure side, replace the A/C compressor, then go to Step 21. (See **A/C COMPRESSOR REMOVAL/INSTALLATION**.) • If the refrigerant pressure is other than above condition, go to Step 19.
3	**INSPECT REFRIGERANT SYSTEM PERFORMANCE** • Perform refrigerant system performance test. (See **REFRIGERANT SYSTEM PERFORMANCE TEST**.) • Is the operation normal?	Yes	Operation is normal. (Recheck malfunction symptoms.)
		No	Go to the next step.
4	**INSPECT DRIVE BELT** • Inspect the drive belt. (See **DRIVE BELT INSPECTION [SKYACTIV-G 2.0, SKYACTIV-G 2.5]**.)	Yes	Go to the next step.
		No	Adjust or replace the drive belt, then go to the next step.

	• Is it normal?		(See **DRIVE BELT REMOVAL/INSTALLATION [SKYACTIV-G 2.0, SKYACTIV-G 2.5]**.)
5	**INSPECT REFRIGERANT PRESSURE SENSOR** • Inspect the refrigerant pressure sensor. (See **REFRIGERANT PRESSURE SENSOR INSPECTION [FULL-AUTO AIR CONDITIONER]**.) • Is it normal?	Yes	Go to the next step.
		No	Repair or replace malfunctioning part according to inspection result, then go to Step 21.
6	**INSPECT COOLING FAN OPERATION** • Verify the cooling fan operation. (See **ENGINE CONTROL SYSTEM OPERATION INSPECTION [SKYACTIV-G 2.0, SKYACTIV-G 2.5]**.) • Is the cooling fan operation normal?	Yes	Go to the next step.
		No	Repair or replace the malfunctioning location according to the inspection results. Then go to Step 21.
7	**VISUALLY INSPECT CONDENSER** • Is the condenser fin clogged or obstructed by foreign matter?	Yes	Remove the foreign matter. Repair the condenser fin. Then go to Step 21.
		No	Go to the next step.
8	**CHECK REFRIGERATION SYSTEM FOR OVERCHARGE OR AIR CONTAMINATION** • Is the low side line hot to the touch?	Yes	Recover refrigerant. Evacuate system for one hour. Refill with correct amount of refrigerant, and go to Step 21.
		No	Recover refrigerant, evacuate for **15 minutes,** refill with correct amount and go to Step 21.
9	**VERIFY IF WHETHER MALFUNCTION IS IN EXPANSION VALVE OR ELSEWHERE** • Compare the refrigerant pressure of the low pressure side with the high pressure side at Step 3. • Is there little difference between the high pressure side and low pressure side readings (refer to graph in REFRIGERANT PRESSURE CHECK procedure)? (See **REFRIGERANT PRESSURE CHECK**.)	Yes	Replace the expansion valve. After performing the following servicing, go to Step 21. • Adjust the compressor oil to the specified level. • After discharging, charge with new refrigerant to the specified level.
		No	Go to the next step.
	INSPECT AIR MIX DOOR RELATED PART		

10	**INSTALLATION** • Measure the voltages at the following climate control unit terminals when the temperature control dials are set to MAX COLD and MAX HOT. **With dual type climate control unit:** ▪ Terminal 2G ▪ Terminal 2E **With single type climate control unit:** ▪ Terminal G • Are voltages normal?	Yes	Adjust the compressor oil to the specified amount, then go to Step 21. (See **A/C COMPRESSOR REMOVAL/INSTALLATION**.)
		No	• Inspect the air mix link, air mix crank, and air mix rod of the A/C unit correctly and securely installed to their positions. (See **A/C UNIT REMOVAL/INSTALLATION**.) • Repair or install the suspect part correctly according to inspection result, then go to Step 21.
11	**INSPECT BLOWER UNIT FOR BLOCKAGE** • Is the blower unit intake and air filter clogged? (See **AIR FILTER INSPECTION**.)	Yes	Remove the cause of the restriction. Replace the air filter if it is restricted. (See **AIR FILTER REMOVAL/INSTALLATION**.) Then go to Step 21.
		No	Go to the next step.
12	**VERIFY IF WHETHER MALFUNCTION IS REFRIGERANT LINE LEAKAGE OR ELSEWHERE** • Verify if there is gas leakage from the system hoses using the gas leak tester. • Is there gas leakage?	Yes	• If there is leakage from a system hose connection area, go to Step 14. • If there is leakage other than from a system hose connection area, go to Step 16.
		No	Go to the next step.
13	**VISUALLY INSPECT REFRIGERANT LINE** • Is a system hose crushed?	Yes	Replace the crushed system hose. (See **REFRIGERANT LINE REMOVAL/INSTALLATION**.) After performing the following servicing, go to Step 21. • Adjust the compressor oil to the specified level. • After discharging, charge with new refrigerant to the

			specified level.
		No	Go to Step 20.
14	**VERIFY IF MALFUNCTION IS IN REFRIGERANT LINE JOINT LOOSE OR O-RING** • Tighten the system hose connection area to the specified torque. (See **REFRIGERANT LINE REMOVAL/INSTALLATION**.) • Has the leakage stopped?	Yes	Go to the next step.
		No	Go to Step 16.
15	**VISUALLY INSPECT REFRIGERANT LINE** • Is a system hose crushed?	Yes	Replace the crushed system hose. (See **REFRIGERANT LINE REMOVAL/INSTALLATION**.) After performing the following servicing, go to Step 21. • Adjust the compressor oil to the specified level. • After discharging, charge with new refrigerant to the specified level.
		No	Adjust the compressor oil to the specified amount, then go to Step 21. (See **A/C COMPRESSOR REMOVAL/INSTALLATION**.)
16	**VISUALLY INSPECT REFRIGERANT LINE** • Is a system hose crushed?	Yes	Replace the O-ring of the leaking area. Replace the crushed system hose. (See **REFRIGERANT LINE REMOVAL/INSTALLATION**.) After performing the following servicing, go to Step 21. • Adjust the compressor oil to the specified level. • After discharging, charge with new refrigerant to the specified level.
		No	Replace the O-ring of the leaking area. After performing the following servicing, go to

			Step 21. • Adjust the compressor oil to the specified level. • After discharging, charge with new refrigerant to the specified level.
17	**VERIFY IF MALFUNCTION IS WATER IN REFRIGERANT SYSTEM OR ELSEWHERE** • Is there is no refrigerant pressure on the low pressure side, or is it normal? (See **REFRIGERANT PRESSURE CHECK**.)	Yes	Replace the condenser. (Water in refrigerant system) (See **CONDENSER REMOVAL/INSTALLATION**.) Go to Step 21.
		No	Go to the next step.
18	**VERIFY IF MALFUNCTION IS IN RECEIVER DRYER FILTER OR EXPANSION VALVE** • Remove the expansion valve and verify its condition. (See **EXPANSION VALVE REMOVAL/INSTALLATION**.) • Is there refrigerant leakage or valve restriction?	Yes	**If there is foreign matter restricting the valve:** • Remove the foreign matter. **If there is refrigerant leakage or restriction:** • Replace the expansion valve. Perform discharge, charge with new refrigerant, and then go to Step 21.
		No	Replace the condenser. (Receiver/Dryer filter is clogged.) (See **CONDENSER REMOVAL/INSTALLATION**.) Then go to Step 21.
19	**INSPECT EVAPORATIVE TEMPERATURE SENSOR** • Inspect the evaporator temperature sensor. (See **EVAPORATOR TEMPERATURE SENSOR INSPECTION [FULL-AUTO AIR CONDITIONER]**.) • Is it normal?	Yes	Verify the evaporator temperature sensor position. (See **A/C UNIT DISASSEMBLY/ASSEMBLY**.) Then go to Step 21.
		No	Replace the evaporator temperature sensor, then go to Step 21. (See **A/C UNIT DISASSEMBLY/ASSEMBLY**.)
20	**INSPECT AIR MIX DOOR RELATED PART INSTALLATION** • Measure the voltages at the following climate control unit terminals when the temperature control dials are set to MAX COLD	Yes	Go to the next step.
		No	• Inspect the air mix link, air mix crank, and verify that the air mix rod of the A/C unit is

	and MAX HOT. **With dual type climate control unit:** ▪ Terminal 2G ▪ Terminal 2E **With single type climate control unit:** ▪ Terminal G • Are voltages normal?		correctly and securely installed to their positions. (See **A/C UNIT DISASSEMBLY/ASSEMBLY**.) • Repair or install the suspect part correctly according to the inspection result, then go to the next step.
21	**VERIFY THAT MALFUNCTION SYMPTOM DOES NOT RECUR AFTER REPAIR** • If the refrigerant discharged during inspection has not been recharged, charge with new refrigerant to the specified level. • Does cool air discharge from the vents? (Are results of refrigerant system performance test normal?) (See **REFRIGERANT SYSTEM PERFORMANCE TEST**.)	Yes	Troubleshooting completed. Explain repairs to customer.
		No	Recheck malfunction symptoms, then repeat from Step 1 if malfunction recurs.

2014 - Mazda3 - HVAC

NO COOL AIR [FULL-AUTO AIR CONDITIONER]

DESCRIPTION	• Magnetic clutch does not operate
POSSIBLE CAUSE	• Airflow mode system malfunction • Blower system malfunction • A/C compressor malfunction • CAN communication malfunction • PCM A/C cut control system malfunction • Refrigerant pressure sensor malfunction • Evaporator temperature sensor malfunction • Magnetic clutch malfunction • A/C 7.5 A fuse malfunction • A/C relay malfunction • Improper refrigerant charging amount

- When performing an asterisked (*) troubleshooting inspection, shake the wiring harness and connectors while performing the inspection to discover whether poor contact points are the cause of any intermittent malfunctions. If there is a problem, check to make sure connectors, terminals and wiring harnesses are connected correctly and undamaged.

Diagnostic Procedure

STEP	INSPECTION		ACTION
1	**INSPECT AIR BLOW OUT** • Does air blow out?	Yes	Go to the next step.
		No	Go to Step 1 of the following troubleshooting. **INSUFFICIENT AIR (OR NO AIR) BLOWN FROM VENTS [FULL-AUTO AIR CONDITIONER]**

			AMOUNT OF AIR BLOWN FROM VENTS DOES NOT CHANGE [FULL-AUTO AIR CONDITIONER]
2	**INSPECT A/C COMPRESSOR OPERATION** • Start engine. • Turn A/C switch and fan switch on. • Does A/C compressor operate?	Yes	Go to Step 1 of the following troubleshooting. **AIR FROM VENTS NOT COLD ENOUGH [FULL-AUTO AIR CONDITIONER]**
		No	Go to the next step.
3	**INSPECT FOR DTCs IN PCM, CLIMATE CONTROL UNIT, AND INSTRUMENT CLUSTER** • Inspect for DTCs related to the PCM, climate control unit, and instrument cluster on-board diagnostic system. (See **FOREWORD [SKYACTIV-G 2.0, SKYACTIV-G 2.5]**.) (See **DTC DISPLAY [FULL-AUTO AIR CONDITIONER]**.) (See **DTC INSPECTION [INSTRUMENT CLUSTER]**.) • Are any DTCs displayed?	Yes	Go to appropriate inspection procedure. (See **DTC TABLE [SKYACTIV-G 2.0, SKYACTIV-G 2.5]**.) (See **DTC TABLE [FULL-AUTO AIR CONDITIONER]**.) (See **DTC TABLE [INSTRUMENT CLUSTER]**.)
		No	Go to the next step.
4	**DETERMINE IF MALFUNCTION CAUSE IS A/C REQUEST SIGNAL OR A/C RELAY OPERATIONAL MALFUNCTION** • Access PCM PID ACCS using the M-MDS. (See **OBD-II PARAMETER IDENTIFICATION (PID) ACCESS [SKYACTIV-G 2.0, SKYACTIV-G 2.5]**.) • Start the engine and idle it. • Turn the PID ACCS to ON from OFF using the M-MDS simulation function. • Is the A/C magnetic clutch engaged?	Yes	Go to the next step.
		No	Go to Step 9.
5	**DETERMINE IF MALFUNCTION CAUSE IS A/C PRESSURE SENSOR SIGNAL OR ELSEWHERE** • Access climate control unit PID AC_PRES.	Yes	Go to Step 7.
		No	Go to the next step.

	(See **OBD-II PARAMETER IDENTIFICATION (PID) ACCESS [SKYACTIV-G 2.0, SKYACTIV-G 2.5]**.) • Monitor the AC_PRES PID while turning on and off the air conditioner by switching the control panel. • Is the PID normal?		
6	**INSPECT REFRIGERANT PRESSURE SENSOR** • Inspect the refrigerant pressure sensor. (See **REFRIGERANT PRESSURE SENSOR INSPECTION [FULL-AUTO AIR CONDITIONER]**.) • Is the refrigerant pressure sensor normal?	Yes	Inspect the following and repair or replace if necessary. • Refrigerant charging amount • A/C compressor for seizure Then go to Step 15.
		No	Repair or replace malfunctioning part according to inspection result, then go to Step 15.
7	**DETERMINE IF MALFUNCTION CAUSE IS EVAPORATOR TEMPERATURE SENSOR OPERATIONAL SIGNAL OR ELSEWHERE** • Access climate control unit PID EVA_TMP_SEN. (See **PID/DATA MONITOR DISPLAY [FULL-AUTO AIR CONDITIONER]**.) • Monitor the EVA_TMP_SEN PID while turning on and off the air conditioner by switching the control panel. (See **PID/DATA MONITOR TABLE [FULL-AUTO AIR CONDITIONER]**.) • Is the PID normal?	Yes	Go to Step 9.
		No	Go to the next step.
8	**INSPECT EVAPORATOR TEMPERATURE SENSOR** • Inspect the evaporator temperature sensor. (See **EVAPORATOR TEMPERATURE SENSOR INSPECTION [FULL-AUTO AIR CONDITIONER]**.) • Is the evaporator temperature sensor normal?	Yes	Refer to the wiring diagram and verify whether or not there is a common connector between evaporator temperature sensor terminal and climate control unit terminal. **If there is a common connector:** • Determine the malfunctioning part by inspecting the common connector and the terminal for corrosion, damage, or pin

			disconnection, and the common wiring harness. • Repair or replace the malfunctioning part. **If there is no common connector:** • Repair or replace the wiring harness. Go to Step 15.
		No	Replace the evaporator temperature sensor, then go to Step 15. (See **A/C UNIT DISASSEMBLY/ASSEMBLY**.)
9	**INSPECT TO SEE WHETHER MALFUNCTION (LACK OF CONTINUITY) IS IN A/C CONTROL SIGNAL CIRCUIT (BETWEEN A/C RELAY AND PCM) OR ELSEWHERE** • Does cool air blow out when terminal E of A/C relay connector (A/C control signal) is grounded?	Yes	Release short, then go to the next step.
		No	Go to Step 11.
10*	**INSPECT TO SEE WHETHER MALFUNCTION (LACK OF CONTINUITY) IS IN PCM OR WIRING HARNESS (BETWEEN A/C RELAY AND PCM)** • Test voltage at the A/C relay control signal terminal of PCM. • Is voltage **approx. 12 V**?	Yes	Inspect the PCM, then go to Step 15. (See **PCM INSPECTION [SKYACTIV-G 2.0, SKYACTIV-G 2.5]**.)
		No	Refer to the wiring diagram and verify whether or not there is a common connector between A/C relay terminal and PCM terminal. **If there is a common connector:** • Determine the malfunctioning part by inspecting the common connector and the terminal for corrosion, damage, or pin disconnection, and the common wiring harness. • Repair or replace the malfunctioning part. **If there is no common connector:** • Repair or replace the wiring harness. Go to Step 15.

11*	**INSPECT TO SEE WHETHER MALFUNCTION IS IN MAGNETIC CLUTCH OR ELSEWHERE** • Inspect the magnetic clutch. (See **MAGNETIC CLUTCH INSPECTION**.) • Is the magnetic clutch normal?	Yes	Go to the next step.
		No	Replace the magnetic clutch, then go to Step 15. (See **MAGNETIC CLUTCH DISASSEMBLY/ASSEMBLY**.)
12	**INSPECT FUSE** • Remove the A/C 7.5 A fuse. • Is the fuse normal?	Yes	Go to the next step.
		No	Replace the A/C 7.5 A fuse, then go to Step 15. If fuse burns out immediately, go to the next step.
13	**INSPECT WIRING HARNESS BETWEEN FUSE BLOCK AND A/C RELAY FOR LACK OF CONTINUITY** • Test voltages at following terminals of A/C relay. ▪ Terminal A (A/C relay control signal) ▪ Terminal C (A/C control signal) • Are voltages **approx. 12 V**?	Yes	Go to the next step.
		No	Refer to the wiring diagram and verify whether or not there is a common connector between fuse block terminal and A/C relay terminal. **If there is a common connector:** • Determine the malfunctioning part by inspecting the common connector and the terminal for corrosion, damage, or pin disconnection, and the common wiring harness. • Repair or replace the malfunctioning part. **If there is no common connector:** • Repair or replace the wiring harness. Go to Step 15.
14	**INSPECT TO SEE WHETHER MALFUNCTION IS IN A/C RELAY OR WIRING HARNESS (BETWEEN A/C RELAY AND MAGNETIC CLUTCH)** • Test voltage at the following terminal of A/C relay. ▪ Terminal D (magnetic clutch operation signal)	Yes	Inspect wiring harness between A/C relay and magnetic clutch. • If above wiring harness is normal, go to the next step. • If above wiring harness malfunctions, repair wiring harness, then go to the next step.
		No	Replace the A/C relay, then go to the next step.

	• Is voltage **approx. 12 V**?		(See **RELAY LOCATION**.)
15	**VERIFY THAT MALFUNCTION SYMPTOMS DO NOT RECUR AFTER REPAIR** • Does cool air discharge from the vents? (Are the results of refrigerant system performance test normal?) (See **REFRIGERANT SYSTEM PERFORMANCE TEST**.)	Yes	Troubleshooting completed. Explain repairs to customer.
		No	Recheck malfunction symptoms, then repeat from Step 1 if malfunction recurs.

2014 - Mazda3 - HVAC

NOISE WHILE OPERATING A/C SYSTEM [FULL-AUTO AIR CONDITIONER]

DESCRIPTION	• Noise from magnetic clutch, A/C compressor, hose or refrigerant line
POSSIBLE CAUSE	• Magnetic clutch operation noise • A/C compressor vane noise • A/C compressor slippage noise • Hose or refrigerant line interference noise

*

If there is gas leakage, air enters the A/C system. The desiccant within the receiver/drier absorbs the moisture from the air and becomes saturated. If the A/C system is used in this condition, the inside of the A/C compressor will begin to rust due to this moisture, which may cause lock up or noise to occur. Therefore, replacement of the receiver/drier is necessary.

Diagnostic Procedure

STEP	INSPECTION		ACTION
1	**INSPECT A/C COMPRESSOR VANE FOR NOISE** • Is there a jingling, popping, beeping, or buzzing sound (A/C compressor vane noise)?	Yes	Go to Step 5.
		No	Go to the next step.
2	**INSPECT A/C COMPRESSOR FOR SLIPPAGE NOISE** • Is there a squeaking or whirling sound (A/C compressor slippage noise)?	Yes	Go to Step 14.
		No	Go to the next step.
3	**INSPECT A/C COMPRESSOR FOR INTERFERENCE NOISE** • Is there a rattling or vibrating	Yes	Go to Step 18.

	sound (interference noise)?	No	Go to the next step.
4	**INSPECT MAGNETIC CLUTCH FOR OPERATION NOISE** • Is there a clicking sound (magnetic clutch operation noise)?	Yes	Adjust clearance between pressure plate of magnetic clutch and A/C compressor pulley, then go to Step 19. (See **MAGNETIC CLUTCH ADJUSTMENT**.)
		No	Condition is normal. (Recheck malfunction symptoms.)
5	**INSPECT A/C COMPRESSOR FOR PERIOD NOISE OCCURS** • Is noise heard continuously for **more than 3 s** after A/C compressor turns on?	Yes	Go to the next step.
		No	Condition is normal. (Noise occurs for **2—3 s** immediately after A/C compressor turns on.)
6	**INSPECT IDLE SPEED** • Inspect idle speed. (See **ENGINE TUNE-UP [SKYACTIV-G 2.0, SKYACTIV-G 2.5]**.) • Is it normal?	Yes	Go to the next step.
		No	Follow the repair instructions indicated in the “ENGINE” section, then go to Step 19.
7	**INSPECT REFRIGERANT AMOUNT** • Inspect refrigerant amount. (See **REFRIGERANT CHARGING**.) • Is it normal?	Yes	Go to Step 10.
		No	Go to the next step.
8	**INSPECT REFRIGERANT LINES** • Inspect refrigerant lines. ▪ Is piping free of damage and cracks? ▪ Are piping connections free of oil grime? (Visual inspection) ▪ Are piping connections free of gas leakage? ▪ Are piping installation	Yes	Go to the next step.
		No	If piping or A/C component(s) is damaged or cracked, replace then go to Step 19. If there is gas leakage, repair or replace connection and replace condenser*, then go to Step 19. (See **A/C COMPRESSOR REMOVAL/INSTALLATION**.) (See **CONDENSER REMOVAL/INSTALLATION**.) (See **EXPANSION VALVE REMOVAL/INSTALLATION**.) (See **REFRIGERANT LINE REMOVAL/INSTALLATION**.) (See **RECEIVER/DRIER REMOVAL/INSTALLATION**.)

	points on condenser free of gas leakage? ▪ Are piping installation points on receiver/drier free of gas leakage? ▪ Are piping installation points on A/C compressor free of gas leakage? ▪ Are piping installation points on A/C unit free of gas leakage? ▪ Perform gas leak inspection using gas leak tester. • Are the above items normal?		
9	**INSPECT EVAPORATOR PIPING CONNECTIONS IN A/C UNIT FOR GAS LEAKAGE** • Are piping connections for evaporator in A/C unit free of gas leakage? (See **REFRIGERANT CHARGING**.)	Yes	Adjust refrigerant amount to specified level, then go to Step 19. (See **REFRIGERANT CHARGING**.)
		No	If piping is damaged or cracked, replace then go to Step 19. If there is gas leakage, repair or replace connection and replace condenser*, then go to Step 19. (See **A/C COMPRESSOR REMOVAL/INSTALLATION**.) (See **CONDENSER REMOVAL/INSTALLATION**.) (See **EXPANSION VALVE REMOVAL/INSTALLATION**.) (See **REFRIGERANT LINE REMOVAL/INSTALLATION**.) (See **RECEIVER/DRIER REMOVAL/INSTALLATION**.)
10	**VERIFY IF MALFUNCTION IS IN COMPRESSOR OIL OR ELSEWHERE**	Yes	Go to the next step.

	• Add **20 ml {20 cc, 0.68 fl oz}** of compressor oil. • Is noise heard when racing engine?	No	Troubleshooting completed. Explain repair to customer.
11	**VERIFY IF MALFUNCTION IS IN A/C COMPRESSOR OR ELSEWHERE** • Drain compressor oil. (See **A/C COMPRESSOR REMOVAL/INSTALLATION**.) • Is it contaminated with metal particles?	Yes	Go to the next step.
		No	Replace A/C compressor, then go to Step 19. (See **A/C COMPRESSOR REMOVAL/INSTALLATION**.)
12	**VERIFY IF MALFUNCTION IS SOMEWHERE IN A/C SYSTEM OR ELSEWHERE** • Is compressor oil whitish and mixed with water?	Yes	Replace entire A/C system (excluding heater), then go to Step 19. (See **A/C COMPRESSOR REMOVAL/INSTALLATION**.) (See **CONDENSER REMOVAL/INSTALLATION**.) (See **EXPANSION VALVE REMOVAL/INSTALLATION**.) (See **REFRIGERANT LINE REMOVAL/INSTALLATION**.) (See **RECEIVER/DRIER REMOVAL/INSTALLATION**.)
		No	Go to the next step.
13	**INSPECT A/C COMPRESSOR OIL** • Is compressor oil darker than normal and contaminated with aluminum chips?	Yes	Replace A/C compressor and condenser, then go to Step 19. (Since A/C compressor may be worn and receiver/drier may be restricted, replacement of receiver/drier is necessary.) (See **A/C COMPRESSOR REMOVAL/INSTALLATION**.) (See **CONDENSER REMOVAL/INSTALLATION**.)
		No	Condition is normal. Recheck malfunction symptoms.
14	**VERIFY IF MALFUNCTION IS IN A/C COMPRESSOR OR ELSEWHERE** • Is noise heard immediately after A/C compressor is stopped?	Yes	Replace A/C compressor, then go to Step 19. (A/C compressor discharge valve left open) (See **A/C COMPRESSOR REMOVAL/INSTALLATION**.)
		No	Go to the next step.
15	**INSPECT DRIVE BELT** • Inspect the drive belt. (See **DRIVE BELT INSPECTION [SKYACTIV-G 2.0, SKYACTIV-G**	Yes	Go to the next step.
		No	Replace the drive belt, then go to Step 19.

	2.5].) • Is it normal?		(See **DRIVE BELT REMOVAL/INSTALLATION [SKYACTIV-G 2.0, SKYACTIV-G 2.5]**.)
16	**INSPECT DRIVE BELT CONDITION** • Is drive belt worn? • Does it have foreign matter imbedded in it, or have oil on it?	Yes	Remove obstruction, remove oil, or replace drive belt, then go to Step 19.
		No	Go to the next step.
17	**INSPECT MAGNETIC CLUTCH** • Inspect the magnetic clutch. (See **MAGNETIC CLUTCH INSPECTION**.) • Is it normal?	Yes	Replace A/C compressor (excluding pressure plate, A/C compressor pulley, and stator), then go to Step 19. (See **A/C COMPRESSOR REMOVAL/INSTALLATION**.)
		No	Replace magnetic clutch, then go to Step 19. (See **MAGNETIC CLUTCH DISASSEMBLY/ASSEMBLY**.)
18	**VERIFY IF MALFUNCTION IS IN A/C COMPRESSOR OR REFRIGERANT LINES** • Is noise emitted from A/C compressor?	Yes	Visually inspect A/C compressor, replace appropriate parts if necessary, then go to the next step.
		No	If noise is due to refrigerant lines, repair detached or missing clips, tighten loose bolts, then go to the next step.
19	**VERIFY THAT MALFUNCTION SYMPTOM DOES NOT RECUR AFTER REPAIR** • Has A/C compressor noise stopped?	Yes	Troubleshooting completed. Explain repairs to customer.
		No	Recheck malfunction symptoms, then repeat from Step 1 if malfunction recurs.

2014 - Mazda3 - HVAC

DUAL A/C CONTROL DOES NOT OPERATE [FULL-AUTO AIR CONDITIONER]

DESCRIPTION	• Driver or passenger side temperature control dial does not operate individually • Temperature control operates normally except for dual A/C control function
POSSIBLE CAUSE	• Air mix door malfunction (driver or passenger-side) • Air mix actuator malfunction (driver or passenger-side) • Open or short circuit in wiring or poor connection between climate control unit and air mix actuator (driver or passenger-side) • Climate control unit malfunction

- When performing an asterisked (*) troubleshooting inspection, shake the wiring harness and connectors while doing the inspection to discover whether poor contact points are the cause of any intermittent malfunctions. If there is a problem, inspect to make sure connectors, terminals and wiring harness are connected correctly and undamaged.

Diagnostic Procedure

STEP	INSPECTION		ACTION
1	**VERIFY SYMPTOM** • Turn on the A/C. • Perform the dual A/C control function for driver and passenger side individually. • Is it either the temperature control on driver side or passenger side?	Yes	Go to the next step.
		No	Go to Step 12.
2	**INSPECT TO SEE WHETHER MALFUNCTION IS IN AIR MIX DOOR OR ELSEWHERE**	Yes	Go to Step 8.
		No	Go to the next step.

	Turn on the A/C. • Change temperature control on the suspected side while in dual mode. • Does the air mix door on the suspect side move smoothly?		
3	**INSPECT AIR MIX ACTUATOR** • Inspect the air mix actuator on the suspect side. (See **AIR MIX ACTUATOR INSPECTION [FULL-AUTO AIR CONDITIONER]**.) • Is the air mix actuator normal?	Yes	Go to the next step.
		No	Replace the air mix actuator on the suspected side, then go to Step 15. (See **AIR MIX ACTUATOR REMOVAL/INSTALLATION [FULL-AUTO AIR CONDITIONER]**.)
4*	**INSPECT AIR MIX ACTUATOR (MOTOR) CIRCUIT FOR SHORT TO GROUND** • Disconnect the climate control unit connector. (See **CLIMATE CONTROL UNIT REMOVAL/INSTALLATION [FULL-AUTO AIR CONDITIONER]**.) • Inspect for continuity between the following terminals (wiring harness-side) and body ground: ▪ Climate control unit terminal 2D (driver-side motor) ▪ Climate control unit terminal 2B (driver-side motor) ▪ Climate control unit terminal 2F (passenger-side motor) ▪ Climate control unit terminal 2H (passenger-side motor)	Yes	Refer to the wiring diagram and verify whether or not there is a common connector between climate control unit terminal and ground. **If there is a common connector:** • Determine the malfunctioning part by inspecting the common connector and the terminal for corrosion, damage, or pin disconnection, and the common wiring harness for a short to ground. • Repair or replace the malfunctioning part. **If there is no common connector:** • Repair or replace the wiring harness which has a short to ground. Go to Step 15.
		No	Go to the next step.

	• Is there continuity?		
5*	**INSPECT AIR MIX ACTUATOR (MOTOR) CIRCUIT FOR OPEN CIRCUIT** • Air mix actuator and climate control unit connectors are disconnected. • Inspect for continuity between the following terminals (wiring harness-side): ▪ Climate control unit terminal 2D — driver-side air mix actuator terminal B ▪ Climate control unit terminal 2B — driver-side air mix actuator terminal C ▪ Climate control unit terminal 2F— passenger-side air mix actuator terminal C ▪ Climate control unit terminal 2H — passenger-side air mix actuator terminal B • Is there continuity?	Yes	Go to the next step.
		No	Refer to the wiring diagram and verify whether or not there is a common connector between climate control unit terminal and air mix actuator terminal. **If there is a common connector:** • Determine the malfunctioning part by inspecting the common connector and the terminal for corrosion, damage, or pin disconnection, and the common wiring harness for an open circuit. • Repair or replace the malfunctioning part. **If there is no common connector:** • Repair or replace the wiring harness which has an open circuit. Go to Step 15.
6*	**INSPECT AIR MIX ACTUATOR (MOTOR) CIRCUIT FOR SHORT TO POWER SUPPLY** • Air mix actuator and climate control unit connectors are disconnected. • Connect the negative battery cable.	Yes	Go to the next step.
		No	Refer to the wiring diagram and verify whether or not there is a common connector between climate control unit terminal and air mix actuator terminal. **If there is a common connector:**

	(See **NEGATIVE BATTERY CABLE DISCONNECTION/CONNECTION [SKYACTIV-G 2.0, SKYACTIV-G 2.5]**.) • Switch the ignition ON (engine off or on). • Measure the voltage at the following terminals (wiring harness-side): ▪ Climate control unit terminal 2D (driver-side motor) ▪ Climate control unit terminal 2B (driver-side motor) ▪ Climate control unit terminal 2F (passenger-side motor) ▪ Climate control unit terminal 2H (passenger-side motor) • Is the voltage **0 V**?		• Determine the malfunctioning part by inspecting the common connector and the terminal for corrosion, damage, or pin disconnection, and the common wiring harness for a short to power supply. • Repair or replace the malfunctioning part. **If there is no common connector:** • Repair or replace the wiring harness which has a short to power supply. Go to Step 15.
7	**INSPECT AIR MIX DOOR** • Inspect the suspect side air mix door. • Is the air mix door normal?	Yes	Replace the climate control unit, then go to Step 15. (See **CLIMATE CONTROL UNIT REMOVAL/INSTALLATION [FULL-AUTO AIR CONDITIONER]**.)
		No	Remove the obstruction or replace A/C unit case on the suspected side, then go to Step 15. (See **A/C UNIT DISASSEMBLY/ASSEMBLY**.)
8*	**INSPECT AIR MIX ACTUATOR POSITION SENSOR** • Inspect the air mix actuator position sensor on the suspected side.	Yes	Go to the next step.
		No	Replace the air mix actuator on the suspected side, then go to Step 15. (See **AIR MIX ACTUATOR REMOVAL/INSTALLATION**

	(See **AIR MIX ACTUATOR INSPECTION [FULL-AUTO AIR CONDITIONER]**.) • Is the air mix actuator position sensor normal?		**[FULL-AUTO AIR CONDITIONER]**.)
9*	**INSPECT AIR MIX ACTUATOR (POSITION SENSOR) CIRCUIT FOR SHORT TO GROUND** • Disconnect the climate control unit connector. (See **CLIMATE CONTROL UNIT REMOVAL/INSTALLATION [FULL-AUTO AIR CONDITIONER]**.) • Inspect for continuity between the following terminals (wiring harness-side) and body ground: ▪ Climate control unit terminal 2G (driver-side position sensor) ▪ Climate control unit terminal 2E (passenger-side position sensor) ▪ Climate control unit terminal 1N (position sensor power supply) ▪ Climate control unit terminal 1J (position sensor ground) • Is there continuity?	Yes	Refer to the wiring diagram and verify whether or not there is a common connector between climate control unit terminal and air mix actuator terminal. **If there is a common connector:** • Determine the malfunctioning part by inspecting the common connector and the terminal for corrosion, damage, or pin disconnection, and the common wiring harness for a short to ground. • Repair or replace the malfunctioning part. **If there is no common connector:** • Repair or replace the wiring harness which has a short to ground. Go to Step 15.
		No	Go to the next step.
10*	**INSPECT AIR MIX ACTUATOR (POSITION SENSOR) CIRCUIT FOR OPEN CIRCUIT** • Air mix actuator and climate control unit connectors are	Yes	Go to the next step.
		No	Refer to the wiring diagram and verify whether or not there is a common connector between climate

disconnected.

- Inspect for continuity between the following terminals (wiring harness-side):
  - Climate control unit terminal 2G — driver-side air mix actuator terminal F
  - Climate control unit terminal 2E — passenger-side air mix actuator terminal F
  - Climate control unit terminal 1N — driver-side air mix actuator terminal G
  - Climate control unit terminal 1N — passenger-side air mix actuator terminal E
  - Climate control unit terminal 1J — driver-side air mix actuator terminal E
  - Climate control unit terminal 1J — passenger-side air mix actuator terminal G
- Is there continuity?

control unit terminal and air mix actuator terminal.

If there is a common connector:

- Determine the malfunctioning part by inspecting the common connector and the terminal for corrosion, damage, or pin disconnection, and the common wiring harness for an open circuit.
- Repair or replace the malfunctioning part.

If there is no common connector:

- Repair or replace the wiring harness which has an open circuit.

Go to Step 15.

11*	**INSPECT AIR MIX ACTUATOR (POSITION SENSOR) CIRCUIT FOR SHORT TO POWER SUPPLY** • Air mix actuator and climate control unit connectors are disconnected. • Connect the negative battery cable. (See **NEGATIVE BATTERY CABLE DISCONNECTION/CONNECTION [SKYACTIV-G 2.0, SKYACTIV-G 2.5]**.) • Switch the ignition ON (engine off or on). • Measure the voltage at the following terminals (wiring harness-side): ▪ Climate control unit terminal 2G (driver-side position sensor) ▪ Climate control unit terminal 2E (passenger-side position sensor) ▪ Climate control unit terminal 1N (position sensor power supply) ▪ Climate control unit terminal 1J (position sensor ground) • Is the voltage **0 V**?	Yes	Go to the next step.
		No	Refer to the wiring diagram and verify whether or not there is a common connector between climate control unit terminal and air mix actuator terminal. **If there is a common connector:** • Determine the malfunctioning part by inspecting the common connector and the terminal for corrosion, damage, or pin disconnection, and the common wiring harness for a short to power supply. • Repair or replace the malfunctioning part. **If there is no common connector:** • Repair or replace the wiring harness which has a short to power supply. Go to Step 15.
12*	**INSPECT AIR MIX ACTUATOR (POSITION SENSOR) CIRCUIT FOR SHORT TO GROUND** • Disconnect the climate control	Yes	Refer to the wiring diagram and verify whether or not there is a common connector between climate control unit terminal and air mix actuator.

	unit connector. (See **CLIMATE CONTROL UNIT REMOVAL / INSTALLATION [FULL-AUTO AIR CONDITIONER]**.) • Inspect for continuity between the following terminals (wiring harness-side) and body ground: ▪ Climate control unit terminal 1N (position sensor power supply) ▪ Climate control unit terminal 1J (position sensor ground) • Is there continuity?		**If there is a common connector:** • Determine the malfunctioning part by inspecting the common connector and the terminal for corrosion, damage, or pin disconnection, and the common wiring harness for a short to ground. • Repair or replace the malfunctioning part. **If there is no common connector:** • Repair or replace the wiring harness which has a short to ground. Go to Step 15.
		No	Go to the next step.
13*	**INSPECT AIR MIX ACTUATOR (POSITION SENSOR) CIRCUIT FOR OPEN CIRCUIT** • Air mix actuator and climate control unit connectors are disconnected. • Inspect for continuity between the following terminals (wiring harness-side): ▪ Climate control unit terminal 1N — driver-side air mix actuator terminal G ▪ Climate control unit terminal 1N — passenger-side air mix actuator terminal E ▪ Climate control unit	Yes	Go to the next step.
		No	Refer to the wiring diagram and verify whether or not there is a common connector between climate control unit terminal and air mix actuator terminal. **If there is a common connector:** • Determine the malfunctioning part by inspecting the common connector and the terminal for corrosion, damage, or pin disconnection, and the common wiring harness for an open circuit. • Repair or replace the malfunctioning part. **If there is no common connector:** • Repair or replace the wiring harness which has an open circuit. Go to Step 15.

	terminal 1J — driver-side air mix actuator terminal E ▪ Climate control unit terminal 1J — passenger-side air mix actuator terminal G • Is there continuity?		
14*	**INSPECT AIR MIX ACTUATOR (POSITION SENSOR) CIRCUIT FOR SHORT TO POWER SUPPLY** • Air mix actuator and climate control unit connectors are disconnected. • Connect the negative battery cable. (See **NEGATIVE BATTERY CABLE DISCONNECTION/CONNECTION [SKYACTIV-G 2.0, SKYACTIV-G 2.5]**.) • Switch the ignition ON (engine off or on). • Measure the voltage at the following terminals (wiring harness-side): ▪ Climate control unit terminal 1N (position sensor power supply) ▪ Climate control unit terminal 1J (position sensor ground) • Is the voltage **0 V**?	Yes	Go to the next step.
		No	Refer to the wiring diagram and verify whether or not there is a common connector between climate control unit terminal and air mix actuator terminal. **If there is a common connector:** • Determine the malfunctioning part by inspecting the common connector and the terminal for corrosion, damage, or pin disconnection, and the common wiring harness for a short to power supply. • Repair or replace the malfunctioning part. **If there is no common connector:** • Repair or replace the wiring harness which has a short to power supply. Go to the next step.
15	**VERIFY THAT MALFUNCTION SYMPTOMS DO NOT RECUR AFTER REPAIR**	Yes	Troubleshooting completed. Explain repairs to customer.

	• Can the temperatures for the driver-side and passenger-side be adjusted independently?		
		No	Recheck malfunction symptoms, then repeat from Step 1 if malfunction recurs.

2014 - Mazda3 - HVAC

SYMPTOM TROUBLESHOOTING SYSTEM WIRING DIAGRAM [MANUAL AIR CONDITIONER]

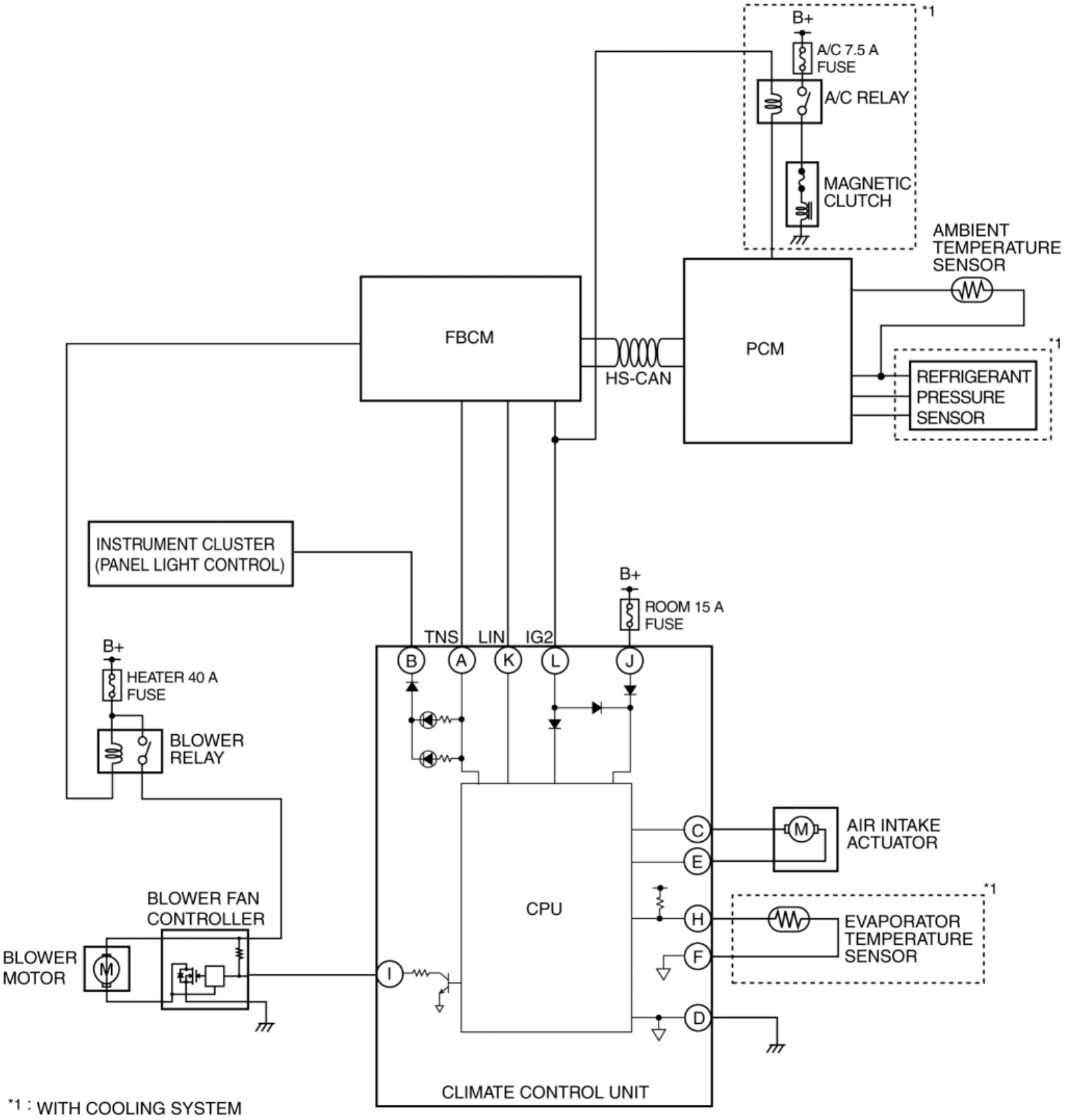

CLIMATE CONTROL UNIT WIRING HARNESS SIDE CONNECTOR

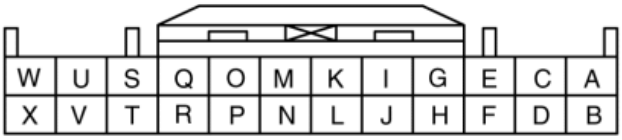

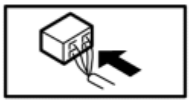

2014 - Mazda3 - HVAC

FOREWORD [MANUAL AIR CONDITIONER]

- If there is any vehicle malfunction complaint lodged by a customer, perform malfunction diagnosis according to the troubleshooting procedure.

Troubleshooting Procedure

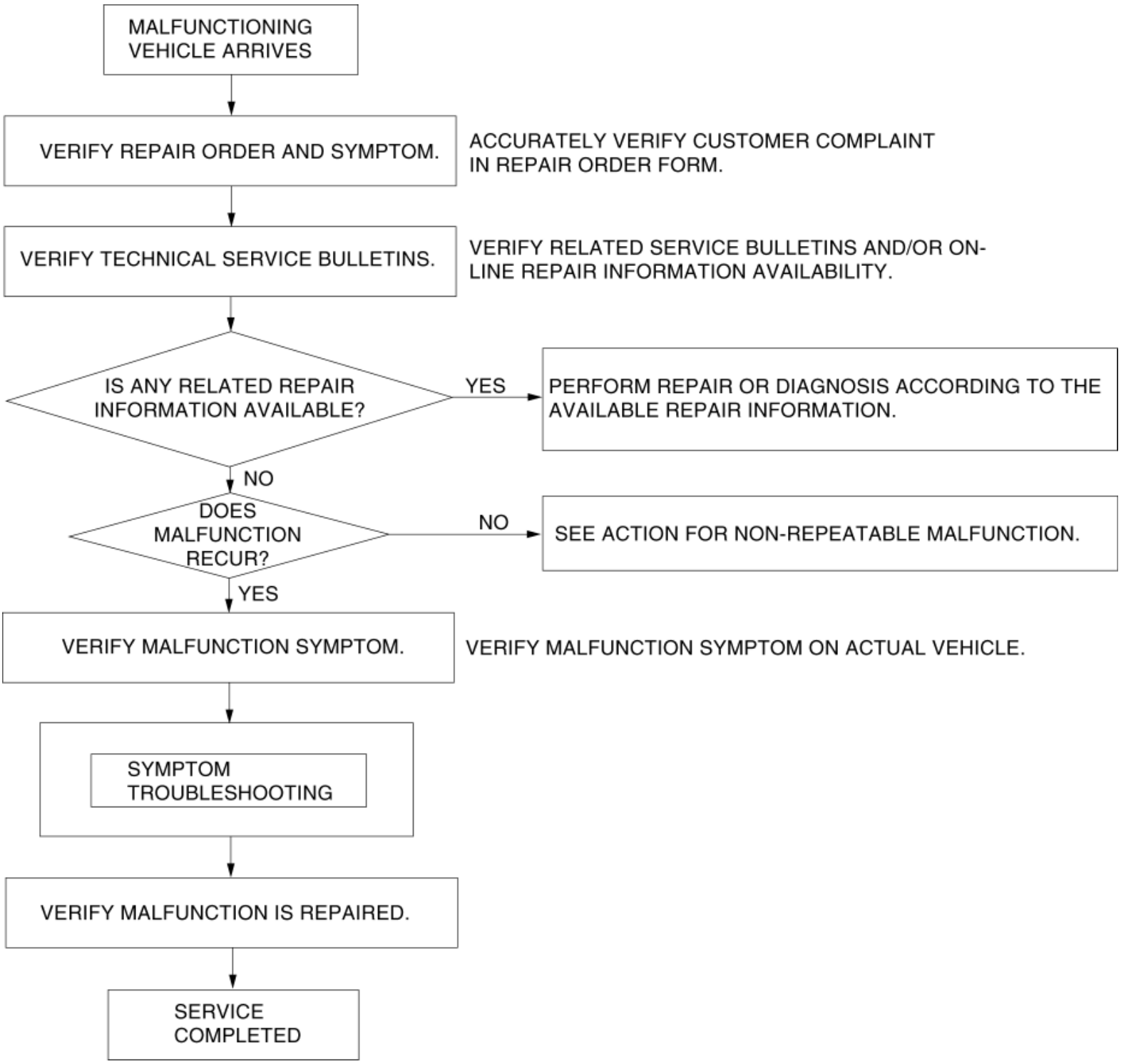

Action for non-repeatable malfunction

- If the malfunction does not recur, verify the malfunction cause by performing the following actions:
  - Based on the repair order form, attempt to drive the vehicle or perform tests to replicate the malfunction, record the data at that time, and detect the malfunction cause.
  - Refer to [Determining Open Circuit Location] based on the recorded DTC, shake the wiring harness or connector of the electrical component which is suspected to be the cause of the malfunction.

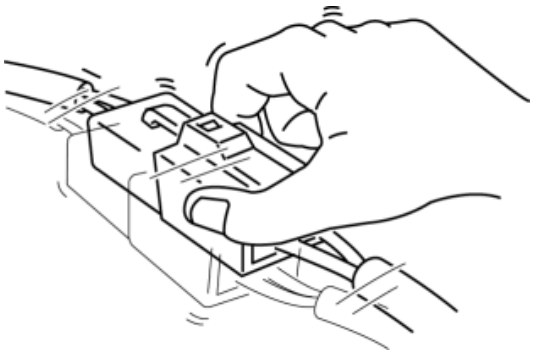

- Inspect the female terminals on the connector of the electric component which is suspected to be the cause of the malfunction for poor connection.

2014 - Mazda3 - HVAC

TROUBLESHOOTING INDEX [MANUAL AIR CONDITIONER]

TROUBLESHOOTING ITEM	DESCRIPTION
INSUFFICIENT AIR (OR NO AIR) BLOWN FROM VENTS [MANUAL AIR CONDITIONER]	• Problem with each vent and/or duct • Airflow mode does not change
AMOUNT OF AIR BLOWN FROM VENTS DOES NOT CHANGE [MANUAL AIR CONDITIONER]	• Malfunction in blower system
AIR INTAKE MODE DOES NOT CHANGE [MANUAL AIR CONDITIONER]	• Air intake mode does not change when switching REC/FRESH mode
NO TEMPERATURE CONTROL WITH CLIMATE CONTROL UNIT [MANUAL AIR CONDITIONER]	• Temperature does not change when operating temperature dial • Malfunction in A/C unit and/or climate control unit air mix system • Malfunction in air mix actuator or related wiring harness
WINDSHIELD FOGGED [MANUAL AIR CONDITIONER]	• A/C compressor does not operate while airflow mode is in DEFROSTER or HEAT/DEF modes • Air intake mode does not change to FRESH while airflow mode is in DEFROSTER or HEAT/DEF modes
AIR FROM VENTS NOT COLD ENOUGH [MANUAL AIR CONDITIONER]	• Magnetic clutch operates but A/C system malfunctions
NO COOL AIR [MANUAL AIR CONDITIONER]	• Magnetic clutch does not operate
NOISE WHILE OPERATING A/C SYSTEM [MANUAL AIR CONDITIONER]	• Noise from magnetic clutch, A/C compressor, hose or refrigerant line

2014 - Mazda3 - HVAC

INSUFFICIENT AIR (OR NO AIR) BLOWN FROM VENTS [MANUAL AIR CONDITIONER]

DESCRIPTION	• Problem with each vent and/or duct • Airflow mode does not change
POSSIBLE CAUSE	• Airflow mode wire malfunction • VENT mode system malfunction • HEAT mode system malfunction • DEFROSTER mode system malfunction • Vent or duct malfunction (clogging, deformation, air leakage, improper operation)

Diagnostic Procedure

STEP	INSPECTION		ACTION
1	**INSPECT A/C UNIT AIRFLOW MODE SYSTEM** • Inspect the A/C unit and/or climate control unit airflow mode links, air airflow mode cranks, air airflow mode rods, and wire clamp. (See **CLIMATE CONTROL UNIT REMOVAL/INSTALLATION [MANUAL AIR CONDITIONER]**.) ▪ Is there grease on links and cranks? ▪ Are links, cranks, and rods securely	Yes	Go to the next step.
		No	Apply grease or airflow mode the links, cranks, and rods securely in their proper positions, repair or replace the airflow mode wire clamp, then go to Step 9. (See **CLIMATE CONTROL UNIT REMOVAL/INSTALLATION [MANUAL AIR CONDITIONER]**.)

	installed in their proper positions? ▪ Is wire clamp free of deformation? • Are the above items normal?		
2	**INSPECT TO SEE WHETHER MALFUNCTION IS IN VENT MODE OR OTHER MODES** • Does air blow out when in the VENT mode?	Yes	Go to Step 5.
		No	Go to the next step.
3	**INSPECT VENT** • Is the vent clogged?	Yes	Remove obstruction, then go to Step 9.
		No	Go to the next step.
4	**VERIFY THAT DUCT IN DASHBOARD IS INSTALLED** • Is the duct in the dashboard properly installed? (See **DASHBOARD REMOVAL**.)(See **DASHBOARD INSTALLATION**.)	Yes	Inspect the duct for clogging, deformation and air leakage, then go to Step 9.
		No	Install the incorrectly installed ducts properly, then go to Step 9. (See **DASHBOARD DISASSEMBLY/ASSEMBLY**.)
5	**INSPECT TO SEE WHETHER MALFUNCTION IS IN HEAT MODE OR DEFROSTER MODE** • Does air blow out when in the HEAT mode?	Yes	Go to the next step.
		No	Inspect the vent for clogging, then go to Step 9.
6	**INSPECT DEFROSTER MODE** • Does air blow out when in the DEFROSTER mode?	Yes	Operation is normal. Recheck malfunction symptoms.
		No	Go to the next step.
7	**INSPECT VENT** • Is the vent clogged?	Yes	Remove obstruction, then go to Step 9.
		No	Go to the next step.
8	**VERIFY DUCT INSTALLATION CONDITION** • Are the following ducts installed properly? (See **DASHBOARD REMOVAL**.)(See **DASHBOARD INSTALLATION**.)	Yes	Inspect ducts for restriction, deformity, and air leakage, then go to the next step.
		No	Install the incorrectly installed ducts properly, then go to the next step. (See **DASHBOARD DISASSEMBLY/ASSEMBLY**.)

	▪ Dashboard ducts ▪ Defroster ducts		
9	**CONFIRM THAT MALFUNCTION SYMPTOM DOES NOT RECUR AFTER REPAIR** • Is air discharged from vent?	Yes	Troubleshooting completed. Explain repairs to customer.
		No	Recheck malfunction symptoms, then repeat from Step 1 if the malfunction recurs.

2014 - Mazda3 - HVAC

AMOUNT OF AIR BLOWN FROM VENTS DOES NOT CHANGE [MANUAL AIR CONDITIONER]

DESCRIPTION	• Malfunction in blower system
POSSIBLE CAUSE	• HEATER 40 A fuse malfunction • Blower unit malfunction • Open or short circuit in wiring harness between climate control unit and blower relay • Blower relay malfunction • Blower motor malfunction • Blower fan controller malfunction • Climate control unit malfunction

- When performing an asterisked (*) troubleshooting inspection, shake the wiring harness and connectors while performing the inspection to discover whether poor contact points are the cause of any intermittent malfunctions. If there is a problem, inspect make sure connectors, terminals and wiring harnesses are connected correctly and undamaged.

Diagnostic Procedure

STEP	INSPECTION		ACTION
1	**INSPECT FUSE** • Remove the HEATER 40 A fuse. • Is the fuse normal?	Yes	Go to the next step.
		No	**If the fuse is melted:** Repair or replace wiring harness for short to GND and replace the fuse. **If the fuse is deterioration:** Replace the fuse. Then go to Step 15.

2	**INSPECT TO SEE WHETHER MALFUNCTION IS IN BLOWER UNIT OR ELSEWHERE** • Switch the ignition ON (engine off or on). • Turn the fan dial clockwise. • Recirculate air inside the vehicle. • Does the blower motor rotate smoothly?	Yes	Go to the next step.
		No	Go to Step 4.
3	**INSPECT BLOWER UNIT INTAKE VENT** • Is blower unit intake vent clogged?	Yes	Remove obstruction, then go to Step 15.
		No	Inspect if there are any obstruction in the A/C unit passage, then go to Step 15.
4*	**INSPECT TO SEE WHETHER MALFUNCTION IS IN BLOWER RELAY SYSTEM OR BLOWER FAN CONTROLLER SYSTEM** • Switch the ignition ON (engine off or on). • Turn the fan dial clockwise. • Measure the voltage at the following blower motor terminal. ▪ Terminal A (blower motor operation signal) • Is voltage **approx. 12 V**?	Yes	Go to Step 8.
		No	Go to the next step.
5*	**INSPECT TO SEE WHETHER MALFUNCTION IS IN WIRING HARNESS (LACK OF CONTINUITY BETWEEN FUSE BLOCK AND BLOWER RELAY) OR ELSEWHERE** • Measure the voltage at the following blower relay terminals. ▪ Terminal A (B+ signal) ▪ Terminal B (B+ signal) • Is the voltage **approx. 12 V**?	Yes	Go to the next step.
		No	Refer to the wiring diagram and verify whether or not there is a common connector between blower relay terminal and HEATER 40 A fuse. **If there is a common connector:** • Determine the malfunctioning part by inspecting the common connector and the terminal for corrosion, damage, or pin disconnection, and the common wiring harness. • Repair or replace the malfunctioning part.

			If there is no common connector: • Repair or replace the wiring harness. Go to Step 15.
6*	**INSPECT TO SEE WHETHER MALFUNCTION IS IN WIRING HARNESS (LACK OF CONTINUITY BETWEEN BLOWER RELAY AND GROUND) OR ELSEWHERE** • Measure the voltage at the following blower relay terminal. ▪ Terminal D (GND signal) • Is the voltage **approx. 0 V**?	Yes	Go to the next step.
		No	Refer to the wiring diagram and verify whether or not there is a common connector between blower relay terminal and front body control module (FBCM) terminal. **If there is a common connector:** • Determine the malfunctioning part by inspecting the common connector and the terminal for corrosion, damage, or pin disconnection, and the common wiring harness. • Repair or replace the malfunctioning part. **If there is no common connector:** • Repair or replace the wiring harness. Go to Step 15.
7*	**INSPECT TO SEE WHETHER MALFUNCTION IS IN WIRING HARNESS (LACK OF CONTINUITY BETWEEN BLOWER RELAY AND BLOWER FAN CONTROLLER) OR BLOWER RELAY** • Measure the voltage at the following blower relay terminal. ▪ Terminal C (blower motor operation signal) • Is the voltage **approx. 12 V**?	Yes	Repair the wiring harness for lack of continuity between the blower relay and blower fan controller, then go to Step 15.
		No	Replace the blower relay, then go to Step 15.
8*	**INSPECT BLOWER MOTOR** • Inspect the blower motor. (See **BLOWER MOTOR INSPECTION**.) • Is the blower motor normal?	Yes	Go to the next step.
		No	Replace the blower motor, then go to Step 15. (See **BLOWER MOTOR REMOVAL/INSTALLATION**.)

9*	**INSPECT TO SEE WHETHER MALFUNCTION IS IN WIRING HARNESS (LACK OF CONTINUITY BETWEEN BLOWER MOTOR AND BLOWER FAN CONTROLLER) OR ELSEWHERE** • Measure the voltage at the following terminal of blower fan controller. ▪ Terminal E (blower motor operation signal) • Is voltage **approx. 12 V**?	Yes	Go to the next step.
		No	Refer to the wiring diagram and verify whether or not there is a common connector between blower motor terminal and blower fan controller terminal. **If there is a common connector:** • Determine the malfunctioning part by inspecting the common connector and the terminal for corrosion, damage, or pin disconnection, and the common wiring harness. • Repair or replace the malfunctioning part. **If there is no common connector:** • Repair or replace the wiring harness. Go to Step 15.
10*	**INSPECT TO SEE WHETHER MALFUNCTION IS IN WIRING HARNESS (LACK OF CONTINUITY BETWEEN BLOWER FAN CONTROLLER AND GROUND) OR ELSEWHERE** • Measure the voltage at the following blower fan controller terminal. ▪ Terminal C (GND) • Is the voltage **approx. 0 V**?	Yes	Go to the next step.
		No	Refer to the wiring diagram and verify whether or not there is a common connector between blower fan controller terminal and ground. **If there is a common connector:** • Determine the malfunctioning part by inspecting the common connector and the terminal for corrosion, damage, or pin disconnection, and the common wiring harness. • Repair or replace the malfunctioning part. **If there is no common connector:** • Repair or replace the wiring harness. Go to Step 15.
11	**INSPECT BLOWER UNIT** • Inspect the fan in blower unit.	Yes	Go to the next step.
		No	Remove obstruction, repair or replace the

	▪ Is the fan free of interference with the blower unit case? ▪ Is the fan free of foreign material and obstruction? • Is the fan normal?		fan and A/C unit case, then go to Step 15.
12*	**INSPECT BLOWER FAN CONTROLLER** • Inspect the blower fan controller. (See **BLOWER FAN CONTROLLER INSPECTION**.) • Is the blower fan controller normal?	Yes	Go to the next step.
		No	Replace the blower fan controller, then go to Step 15. (See **BLOWER FAN CONTROLLER REMOVAL/INSTALLATION**.)
13*	**INSPECT TO SEE WHETHER MALFUNCTION IS IN WIRING HARNESS (LACK OF CONTINUITY BETWEEN BLOWER FAN CONTROLLER AND CLIMATE CONTROL UNIT) OR ELSEWHERE** • Switch the ignition off. • Disconnect climate control unit connector. • Inspect for continuity at the following terminals between the blower fan controller and climate control unit. ▪ Terminal B—I (blower motor speed control signal) • Is there continuity?	Yes	Go to the next step.
		No	Refer to the wiring diagram and verify whether or not there is a common connector between blower fan controller terminal and climate control unit terminal. **If there is a common connector:** • Determine the malfunctioning part by inspecting the common connector and the terminal for corrosion, damage, or pin disconnection, and the common wiring harness. • Repair or replace the malfunctioning part. **If there is no common connector:** • Repair or replace the wiring harness. Go to Step 15.
14*	**INSPECT TO SEE WHETHER MALFUNCTION IS IN CLIMATE CONTROL UNIT OR WIRING HARNESS (SHORT TO GROUND IN WIRING HARNESS BETWEEN BLOWER FAN CONTROLLER AND CLIMATE CONTROL UNIT)** • Inspect for continuity at the following terminal between the blower fan controller and ground.	Yes	Refer to the wiring diagram and verify whether or not there is a common connector between blower fan controller terminal and ground. **If there is a common connector:** • Determine the malfunctioning part by inspecting the common

	Terminal B (blower motor speed control signal)—ground • Is there continuity?		connector and the terminal for corrosion, damage, or pin disconnection, and the common wiring harness for a short to ground. • Repair or replace the malfunctioning part. **If there is no common connector:** • Repair or replace the wiring harness which has a short to ground. Go to the next step.
		No	Replace the climate control unit, then go to the next step. (See **CLIMATE CONTROL UNIT REMOVAL/INSTALLATION [MANUAL AIR CONDITIONER]**.)
15	**CONFIRM THAT MALFUNCTION SYMPTOM DOES NOT RECUR AFTER REPAIR** • Is air discharged from vent?	Yes	Troubleshooting completed. Explain repairs to customer.
		No	Recheck malfunction symptoms, then repeat from Step 1 if the malfunction recurs.

2014 - Mazda3 - HVAC

AIR INTAKE MODE DOES NOT CHANGE [MANUAL AIR CONDITIONER]

DESCRIPTION	• Air intake mode does not change when switching REC/FRESH mode
POSSIBLE CAUSE	• Air intake actuator malfunction • Open or short circuit in wiring harness between climate control unit and air intake actuator • Climate control unit malfunction • Air intake link malfunction • Air intake door malfunction • Restriction in blower unit

- When performing an asterisked (*) troubleshooting inspection, shake the wiring harness and connectors while performing the inspection to discover whether poor contact points are the cause of any intermittent malfunctions. If there is a problem, inspect to make sure connectors, terminals and wiring harnesses are connected correctly and undamaged.

NOTE:

- The climate control unit controls the air intake mode when the airflow mode is in DEFROSTER so that it is fixed at FRESH mode. At this time, the airflow mode cannot be changed from FRESH to RECIRCULATE even if the REC switch is pressed, but this does not indicate a malfunction.

Diagnostic Procedure

STEP	INSPECTION		ACTION
1	**INSPECT TO SEE WHETHER MALFUNCTION IS IN AIR INTAKE ACTUATOR OR ELSEWHERE** • Disconnect the air intake actuator connector. • Switch the ignition ON (engine	Yes	Go to the next step.
		No	Go to Step 3.

	off or on). • Measure the voltages at the following climate control unit terminals. ▪ Terminal E (FRESH motor drive signal) ▪ Terminal C (RECIRCULATE motor drive signal) • Are voltages normal?		
2	**INSPECT AIR INTAKE ACTUATOR** • Inspect air intake actuator. (See **AIR INTAKE ACTUATOR INSPECTION [MANUAL AIR CONDITIONER]**.) • Is it normal?	Yes	Go to the Step 6.
		No	Replace the air intake actuator, then go to Step 8. (See **AIR INTAKE ACTUATOR REMOVAL/INSTALLATION [MANUAL AIR CONDITIONER]**.)
3	**INSPECT TO SEE WHETHER MALFUNCTION IS IN WIRING HARNESS (SHORT TO POWER SUPPLY BETWEEN CLIMATE CONTROL UNIT AND AIR INTAKE ACTUATOR) OR ELSEWHERE** • Air intake actuator connector disconnected. • Disconnect the climate control unit connector. • Measure the voltages at the following air intake actuator terminals. ▪ Terminal C (FRESH motor drive signal) ▪ Terminal B (RECIRCULATE motor drive signal) • Are voltages **approx. 0 V**?	Yes	Go to the next step.
		No	Refer to the wiring diagram and verify whether or not there is a common connector between climate control unit terminal and air intake actuator terminal. **If there is a common connector:** • Determine the malfunctioning part by inspecting the common connector and the terminal for corrosion, damage, or pin disconnection, and the common wiring harness for a short to power supply. • Repair or replace the malfunctioning part. **If there is no common connector:** • Repair or replace the wiring harness which has a short to power supply. Go to Step 8.
4	**INSPECT TO SEE WHETHER MALFUNCTION IS IN WIRING HARNESS (SHORT TO**	Yes	Refer to the wiring diagram and verify whether or not there is a common connector between

	GROUND BETWEEN CLIMATE CONTROL UNIT AND AIR INTAKE ACTUATOR) OR ELSEWHERE • Climate control unit and air intake actuator connectors disconnected. • Switch the ignition off. • Inspect for continuity at the following terminals between the air intake actuator and ground. ▪ Terminal C (FRESH motor drive signal) ▪ Terminal B (RECIRCULATE motor drive signal) • Is there continuity?		climate control unit terminal and air intake actuator terminal. **If there is a common connector:** • Determine the malfunctioning part by inspecting the common connector and the terminal for corrosion, damage, or pin disconnection, and the common wiring harness for a short to ground. • Repair or replace the malfunctioning part. **If there is no common connector:** • Repair or replace the wiring harness which has a short to ground. Go to Step 8.
		No	Go to the next step.
5	**INSPECT TO SEE WHETHER MALFUNCTION IS IN WIRING HARNESS (LACK OF CONTINUITY OR OPEN BETWEEN CLIMATE CONTROL UNIT AND AIR INTAKE ACTUATOR) OR ELSEWHERE** • Climate control unit and air intake actuator connectors disconnected. • Inspect for continuity at the following terminals between the air intake actuator and climate control unit. ▪ Terminal C—E (FRESH motor drive signal) ▪ Terminal B—C (RECIRCULATE motor drive signal) • Is there continuity?	Yes	Replace the climate control unit, then go to Step 8. (See **CLIMATE CONTROL UNIT REMOVAL / INSTALLATION [FULL-AUTO AIR CONDITIONER]**.)
		No	Refer to the wiring diagram and verify whether or not there is a common connector between climate control unit terminal and air intake actuator terminal. **If there is a common connector:** • Determine the malfunctioning part by inspecting the common connector and the terminal for corrosion, damage, or pin disconnection, and the common wiring harness. • Repair or replace the malfunctioning part. **If there is no common connector:** • Repair or replace the wiring harness. Go to Step 8.

6	**INSPECT AIR INTAKE LINK** • Inspect the air intake link. (See **BLOWER UNIT REMOVAL/INSTALLATION**.) ▪ Is there grease on link? ▪ Are the links securely and properly installed? ▪ Are the links free of obstructions and hindrances? • Are the above items normal?	Yes	Go to the next step.
		No	Apply grease to the links. If any the links are damaged, replace the air intake actuator, then go to Step 8. (See **BLOWER UNIT DISASSEMBLY/ASSEMBLY**.)
7	**INSPECT TO SEE WHETHER MALFUNCTION IS IN CLIMATE CONTROL UNIT OR AIR INTAKE DOOR** • Inspect the blower unit air intake door. (See **BLOWER UNIT REMOVAL/INSTALLATION**.) ▪ Is the door free of obstructions, cracks, and damage? ▪ Are the doors securely and properly installed? • Are the above items normal?	Yes	Go to the next step.
		No	Remove obstruction, or install the doors in the proper position. If any doors are cracked or damaged, replace them, then go to the next step.
8	**CONFIRM THAT MALFUNCTION SYMPTOMS DO NOT RECUR AFTER REPAIR** • Does the air intake mode change smoothly?	Yes	Troubleshooting completed. Explain repairs to customer.
		No	Recheck malfunction symptoms, then repeat from Step 1 if the malfunction recurs.

2014 - Mazda3 - HVAC

NO TEMPERATURE CONTROL WITH CLIMATE CONTROL UNIT [MANUAL AIR CONDITIONER]

DESCRIPTION	• Temperature does not change when operating temperature setting dial • Malfunction in A/C unit and/or climate control unit air mix system
POSSIBLE CAUSE	• Air mix wire malfunction • Air mix link malfunction • Air mix door malfunction • Climate control unit malfunction • Heater hose malfunction

Diagnostic Procedure

STEP	INSPECTION		ACTION
1	**INSPECT COOLANT TEMPERATURE** • Is the coolant sufficiently warmed up?	Yes	Go to the next step.
		No	Warm up the engine, then go to Step 8.
2	**INSPECT A/C UNIT AIR MIX SYSTEM** • Inspect the A/C unit air mix links, air mix cranks, and wire clamp. (See **CLIMATE CONTROL UNIT REMOVAL/INSTALLATION [MANUAL AIR CONDITIONER]**.) ▪ Is there grease on links and cranks?	Yes	Go to the next step.
		No	Apply grease or install the links, cranks, and rods securely in their proper positions, repair or replace the wire clamp, then go to Step 8. (See **A/C UNIT DISASSEMBLY/ASSEMBLY**.)

	▪ Are links and cranks securely installed in their proper positions? ▪ Is wire clamp free of deformation? • Are the above items normal?		
3	**VERIFY THAT AIR MIX WIRE FROM A/C UNIT IS POSITIONED SECURELY AND CORRECTLY** • Is the air mix wire securely installed in the correct position in relation to the A/C unit air mix links? (See **CLIMATE CONTROL UNIT REMOVAL/INSTALLATION [MANUAL AIR CONDITIONER]**.)	Yes	Go to the next step.
		No	Adjust the air mix wire or install securely in the correct position, then go to Step 8. (See **CLIMATE CONTROL UNIT REMOVAL/INSTALLATION [MANUAL AIR CONDITIONER]**.)
4	**INSPECT CLIMATE CONTROL UNIT** • Inspect the climate control unit. (See **CLIMATE CONTROL UNIT INSPECTION [MANUAL AIR CONDITIONER]**.) • Is the climate control unit normal?	Yes	Go to the next step.
		No	Replace the climate control unit, then go to Step 8. (See **CLIMATE CONTROL UNIT REMOVAL/INSTALLATION [MANUAL AIR CONDITIONER]**.)
5	**INSPECT AIR MIX LINK** • Inspect the air mix link. (See **A/C UNIT REMOVAL/INSTALLATION**.) ▪ Is grease on link? ▪ Are links securely and properly installed? ▪ Are links free of obstructions and hindrances?	Yes	Go to the next step.
		No	Apply grease to links. If any links are damaged. Replace malfunctioning part. (See **A/C UNIT DISASSEMBLY/ASSEMBLY**.) Then go to Step 8.

	• Are the above items normal?		
6	**INSPECT A/C UNIT** AIR MIX DOOR • Inspect the air mix door. (See **A/C UNIT REMOVAL/INSTALLATION**.) ▪ Is door free of obstructions and damage? ▪ Are doors securely and properly installed? • Are the above items normal?	Yes	Go to the next step.
		No	Remove the obstruction, or install door in proper position. If any door are cracked, replace them. (See **A/C UNIT DISASSEMBLY/ASSEMBLY**.) Then go to the next step.
7	**INSPECT HEATER HOSE** • Inspect the heater hoses for the following: ▪ Is heater hoses free of damage and cracks? ▪ Are heater hoses connections free of engine coolant leakage? ▪ Are heater hoses installation points on A/C unit free of engine coolant leakage? • Are the above items normal?	Yes	Go to the next step.
		No	If heater hoses connections are loose, install securely in the correct position. Repair or replace the heater hoses. (See **HEATER HOSE REMOVAL/INSTALLATION**.) then go to the next step.
8	**VERIFY THAT MALFUNCTION SYMPTOM OCCURS AFTER REPAIR** • Does the unit operate in every temperature setting?	Yes	Troubleshooting completed. Explain repairs to customer.
		No	Recheck malfunction symptoms, then repeat from Step 1 if the malfunction recurs.

NO TEMPERATURE CONTROL WITH CLIMATE CONTROL UNIT [MANUAL AIR CONDITIONER]

2014 - Mazda3 - HVAC

WINDSHIELD FOGGED [MANUAL AIR CONDITIONER]

DESCRIPTION	• A/C compressor does not operate while airflow mode is in DEFROSTER or HEAT/DEF modes • Air intake mode does not change to FRESH while airflow mode is in DEFROSTER or HEAT/DEF modes
POSSIBLE CAUSE	• A/C compressor malfunction • ROOM 15 A fuse malfunction • Air intake link malfunction • Open or short circuit in wiring harness between climate control unit and air intake actuator • Air intake actuator malfunction • Climate control unit malfunction • Blower unit malfunction • Air intake door malfunction

- When performing an asterisked (*) troubleshooting inspection, shake the wiring harness and connectors while doing the inspection to discover whether poor contact points are the cause of any intermittent malfunctions. If there is a problem, inspect to make sure connectors, terminals and wiring harness are connected correctly and undamaged.

Diagnostic Procedure

STEP	INSPECTION		ACTION
1	**COOL AIR BLOW OUT INSPECTION** • When both the A/C switch and airflow volume control dial in the climate control unit are on, does cool air blow out from the vent?	Yes	Go to the next step.
		No	Go to Step 1 of the following troubleshooting. (See **NO COOL AIR [MANUAL AIR CONDITIONER]**.)

2	**INSPECT FUSE** • Remove the ROOM 15 A fuse. • Is the fuse normal?	Yes	Go to the next step.
		No	**If the fuse is melted:** Repair or replace wiring harness for a short to ground and replace the fuse. **If the fuse is deterioration:** Replace the fuse. Then go to Step 13.
3	**INSPECT AIR INTAKE ACTUATOR LINK** • Inspect the air intake actuator link. (See **BLOWER UNIT REMOVAL/INSTALLATION**.) ▪ Is there grease on the link? ▪ Is the link securely and properly positioned? ▪ Is the link free of obstructions? • Are the above items normal?	Yes	Go to the next step.
		No	Apply grease or install the link properly and securely, remove obstruction, then go to Step 13. (See **BLOWER UNIT DISASSEMBLY/ASSEMBLY**.)
*4	**INSPECT WIRING HARNESS BETWEEN FUSE BLOCK AND CLIMATE CONTROL UNIT FOR CONTINUITY** • Disconnect the climate control unit connector. (See **CLIMATE CONTROL UNIT REMOVAL/INSTALLATION [MANUAL AIR CONDITIONER]**.) • Switch the ignition ON (engine off or on). • Measure the voltage at climate control unit terminal J (B+ signal). • Is the voltage **approx. 12 V**?	Yes	Go to the next step.
		No	Refer to the wiring diagram and verify whether or not there is a common connector between fuse block terminal and climate control unit terminal. **If there is a common connector:** • Determine the malfunctioning part by inspecting the common connector and the terminal for corrosion, damage, or pin disconnection, and the common wiring harness. • Repair or replace the malfunctioning part. **If there is no common connector:** • Repair or replace the wiring harness.

			Go to Step 13.
5	**VERIFY WHETHER MALFUNCTION IS IN BLOWER UNIT AIR INTAKE DOOR OR ELSEWHERE** • Switch the ignition off. • Connect the climate control unit connector. • Remove the air intake actuator. (See **AIR INTAKE ACTUATOR REMOVAL/INSTALLATION [MANUAL AIR CONDITIONER]**.) • Switch the ignition ON (engine off or on). • Set the fan switch to on position. • Does the air intake mode (RECIRCULATE, FRESH) change smoothly when the air intake link is operated by hand?	Yes	Go to the next step.
		No	Go to Step 12.
6	**INSPECT AIR INTAKE ACTUATOR** • Inspect the air intake actuator. (See **AIR INTAKE ACTUATOR INSPECTION [MANUAL AIR CONDITIONER]**.) • Is it normal?	Yes	Go to the next step.
		No	Replace the air intake actuator, go to Step 13. (See **AIR INTAKE ACTUATOR REMOVAL/INSTALLATION [MANUAL AIR CONDITIONER]**.)
7	**INSPECT AIR INTAKE SELECTOR SWITCH AND DEFROSTER SWITCH IN CLIMATE CONTROL UNIT** • Measure the voltage at climate control unit connector terminals C and E. • Is it normal?	Yes	Go to the next step.
		No	Replace the climate control unit, then go to Step 13. (See **CLIMATE CONTROL UNIT REMOVAL/INSTALLATION [MANUAL AIR CONDITIONER]**.)
*8	**INSPECT WIRING HARNESS BETWEEN CLIMATE CONTROL UNIT AND AIR INTAKE ACTUATOR FOR CONTINUITY** • Switch the ignition off. • Is there continuity between the following climate control unit terminals and air intake actuator terminals?	Yes	Go to the next step.
		No	Refer to the wiring diagram and verify whether or not there is a common connector between climate control unit terminal and air intake actuator terminal. **If there is a common connector:** • Determine the malfunctioning

	▪ Terminal E (FRESH signal)—Terminal C ▪ Terminal C (RECIRCULATE signal)—Terminal B		part by inspecting the common connector and the terminal for corrosion, damage, or pin disconnection, and the common wiring harness for an open circuit. • Repair or replace the malfunctioning part. **If there is no common connector:** • Repair or replace the wiring harness which has an open circuit. Go to Step 13.
*9	**INSPECT WIRING HARNESS BETWEEN CLIMATE CONTROL UNIT AND AIR INTAKE ACTUATOR FOR SHORT TO GROUND** • Is there continuity between the following climate control unit terminals and ground? ▪ Terminal E (FRESH signal) ▪ Terminal C (RECIRCULATE signal)	Yes	Refer to the wiring diagram and verify whether or not there is a common connector between climate control unit terminal and air intake actuator terminal. **If there is a common connector:** • Determine the malfunctioning part by inspecting the common connector and the terminal for corrosion, damage, or pin disconnection, and the common wiring harness for a short to ground. • Repair or replace the malfunctioning part. **If there is no common connector:** • Repair or replace the wiring harness which has a short to ground. Go to Step 13.
		No	Go to the next step.
*10	**INSPECT WIRING HARNESS BETWEEN CLIMATE CONTROL UNIT AND AIR INTAKE ACTUATOR FOR SHORT TO B+** • Switch the ignition ON (engine off or on). • Measure the voltage at the following climate control unit terminals. ▪ Terminal E	Yes	Refer to the wiring diagram and verify whether or not there is a common connector between climate control unit terminal and air intake actuator terminal. **If there is a common connector:** • Determine the malfunctioning part by inspecting the common connector and the terminal for corrosion, damage, or pin

	(FRESH signal) ▪ Terminal C (RECIRCULATE signal) • Is the voltage **approx. 12 V**?		disconnection, and the common wiring harness for a short to power supply. • Repair or replace the malfunctioning part. **If there is no common connector:** • Repair or replace the wiring harness which has a short to power supply. Go to Step 13.
		No	Replace the climate control unit, then go to Step 13. (See **CLIMATE CONTROL UNIT REMOVAL/INSTALLATION [MANUAL AIR CONDITIONER]**.)
11	**INSPECT BLOWER UNIT AIR INTAKE DOOR** • Is there any foreign matter or obstruction in the blower unit air intake door? (See **BLOWER UNIT REMOVAL/INSTALLATION**.)	Yes	Remove obstruction, then go to Step 13.
		No	Go to the next step.
12	**VERIFY THAT BLOWER UNIT AIR INTAKE DOOR IS POSITIONED SECURELY AND PROPERLY** • Is the blower unit air intake door securely and properly positioned? (See **BLOWER UNIT REMOVAL/INSTALLATION**.)	Yes	Go to the next step.
		No	Install the air intake door securely in the proper position, then go to the next step. (See **BLOWER UNIT DISASSEMBLY/ASSEMBLY**.)
13	**VERIFY THAT MALFUNCTION SYMPTOM OCCURS AFTER REPAIR** • Does the malfunction disappear?	Yes	Troubleshooting completed. Explain repairs to customer.
		No	Recheck malfunction symptoms, then repeat from Step 1 if the malfunction recurs.

2014 - Mazda3 - HVAC

AIR FROM VENTS NOT COLD ENOUGH [MANUAL AIR CONDITIONER]

DESCRIPTION	• Magnetic clutch operates but A/C system malfunctions
POSSIBLE CAUSE	**NOTE:** • If the engine coolant temperature increases due to a cooling system malfunction, the fail-safe function disables the A/C operation. • Drive belt malfunction • Refrigerant pressure sensor malfunction • Blower unit or condenser malfunction • Cooling fan system malfunction • Condenser or related part malfunction • A/C unit or condenser malfunction • Receiver/drier or expansion valve malfunction (valve closes too much) • A/C compressor system malfunction, insufficient compressor oil • Over filling of compressor oil, malfunction in expansion valve or A/C unit air mix link system • Evaporative temperature sensor malfunction

Diagnostic Procedure

STEP	INSPECTION		ACTION
1	**INSPECT REFRIGERANT PRESSURE TO LOCATE MALFUNCTION** • Perform refrigerant pressure check. (See **REFRIGERANT PRESSURE CHECK**.)	Yes	Go to the next step.
		No	Record the inspection result. • If the refrigerant high-pressure and low-pressure values are both high, go to

	• Is the refrigerant pressure normal?		Step 5. • If the refrigerant high-pressure and low-pressure values are approximately the same, go to Step 9. • If the refrigerant high-pressure and low-pressure values are both low, go to Step 10. • If there is a vacuum on the low pressure side and extremely low pressure on the high pressure side, go to Step 16. • If there is low pressure on the high pressure side and high pressure on the low pressure side, replace the A/C compressor, then go to Step 20. (See **A/C COMPRESSOR REMOVAL/INSTALLATION**.) • If the refrigerant pressure is other than above condition, go to Step 18.
2	**INSPECT REFRIGERANT SYSTEM PERFORMANCE** • Perform refrigerant system performance test. (See **REFRIGERANT SYSTEM PERFORMANCE TEST**.) • Is the operation normal?	Yes	Operation is normal. (Recheck malfunction symptoms.)
		No	Go to the next step.
3	**INSPECT DRIVE BELT** • Inspect the drive belt. (See **DRIVE BELT INSPECTION [SKYACTIV-G 2.0, SKYACTIV-G 2.5]**.) • Is it normal?	Yes	Go to the next step.
		No	Adjust or replace the drive belt, then the next step. (See **DRIVE BELT REMOVAL/INSTALLATION [SKYACTIV-G 2.0, SKYACTIV-G 2.5]**.)
4	**INSPECT REFRIGERANT PRESSURE SENSOR** • Inspect the refrigerant pressure sensor. (See **REFRIGERANT PRESSURE SENSOR INSPECTION [MANUAL AIR CONDITIONER]**.)	Yes	Go to the next step.
		No	Repair or replace malfunctioning part according to inspection result, then go to Step 20.

	• Is it normal?		
5	**INSPECT COOLING FAN OPERATION** • Verify the cooling fan operation. (See **ENGINE CONTROL SYSTEM OPERATION INSPECTION [SKYACTIV-G 2.0, SKYACTIV-G 2.5]**.) • Is the cooling fan operation normal?	Yes	Go to the next step.
		No	Repair or replace the malfunctioning location according to the inspection results. Then go to Step 20.
6	**VISUALLY INSPECT CONDENSER** • Is the condenser fin clogged or obstructed by foreign material?	Yes	Remove the foreign material. Repair the condenser fin. Then go to Step 20.
		No	Go to the next step.
7	**CHECK REFRIGERATION SYSTEM FOR OVERCHARGE OR AIR CONTAMINATION** • Is the low side line hot to the touch?	Yes	Recover refrigerant. Evacuate system for one hour. Refill with correct amount of refrigerant, and go to step 20.
		No	Recover refrigerant, evacuate for **15 minutes,** refill with correct amount and go to step 20.
8	**CHECK TO SEE WHETHER MALFUNCTION IS IN EXPANSION VALVE OR ELSEWHERE** • Compare the refrigerant pressure of the low pressure side with the high pressure side at Step 3. • Is there little difference between the high pressure side and low pressure side readings (refer to graph in REFRIGERANT PRESSURE CHECK procedure)? (See **REFRIGERANT PRESSURE CHECK**.)	Yes	Replace the expansion valve. After performing the following servicing, go to Step 20. • Adjust the compressor oil to the specified level. • After discharging, charge with new refrigerant to the specified level.
		No	Go to the next step.
9	**INSPECT AIR MIX DOOR RELATED PART INSTALLATION** • Remove the A/C unit. (See **A/C UNIT REMOVAL/INSTALLATION**.) • Are the air mix link, and air mix crank of the A/C unit correctly and securely installed to their positions?	Yes	Adjust the compressor oil to the specified amount, then go to Step 20. (See **A/C COMPRESSOR REMOVAL/INSTALLATION**.)
		No	• Inspect the air mix link and air mix crank of the A/C unit correctly and securely installed to their positions.

			(See **A/C UNIT DISASSEMBLY/ASSEMBLY**.) • Repair or install correctly for suspect part according to inspection result, then go to Step 20.
10	**INSPECT BLOWER UNIT FOR BLOCKAGE** • Is the blower unit intake and air filter clogged? (See **AIR FILTER INSPECTION**.)	Yes	Remove the cause of the clogging. Replace the air filter if it is clogged. (See **AIR FILTER REMOVAL/INSTALLATION**.) Then go to Step 20.
		No	Go to the next step.
11	**CHECK TO SEE WHETHER MALFUNCTION IS REFRIGERANT LINE LEAKAGE OR ELSEWHERE** • Verify if there is gas leakage from the system hoses using the gas leak tester. • Is there gas leakage?	Yes	• If there is leakage from a system hose connection area, go to Step 13. • If there is leakage other than from a system hose connection area, go to Step 15.
		No	Go to the next step.
12	**VISUALLY INSPECT REFRIGERANT LINE** • Is a system hose crushed?	Yes	Replace the crushed system hose. (See **REFRIGERANT LINE REMOVAL/INSTALLATION**.) After performing the following servicing, go to Step 20. • Adjust the compressor oil to the specified level. • After discharging, charge with new refrigerant to the specified level.
		No	Go to Step 19.
13	**CHECK TO SEE WHETHER MALFUNCTION IS IN REFRIGERANT LINE JOINT LOOSE OR O-RING** • Tighten the system hose connection area to the specified torque. (See **REFRIGERANT LINE REMOVAL/INSTALLATION**.) • Has the leakage stopped?	Yes	Go to the next step.
		No	Go to Step 15.

14	**VISUALLY INSPECT REFRIGERANT LINE** • Is a system hose crushed?	Yes	Replace the crushed system hose. (See **REFRIGERANT LINE REMOVAL/INSTALLATION**.) After performing the following servicing, go to Step 20. • Adjust the compressor oil to the specified level. • After discharging, charge with new refrigerant to the specified level.
		No	Adjust the compressor oil to the specified amount, then go to Step 20. (See **A/C COMPRESSOR REMOVAL/INSTALLATION**.)
15	**VISUALLY INSPECT REFRIGERANT LINE** • Is a system hose crushed?	Yes	Replace the O-ring of the leaking area. Replace the crushed system hose. (See **REFRIGERANT LINE REMOVAL/INSTALLATION**.) After performing the following servicing, go to Step 20. • Adjust the compressor oil to the specified level. • After discharging, charge with new refrigerant to the specified level.
		No	Replace the O-ring of the leaking area. After performing the following servicing, go to Step 20. • Adjust the compressor oil to the specified level. • After discharging, charge with new refrigerant to the specified level.
16	**CHECK TO SEE WHETHER MALFUNCTION IS WATER IN REFRIGERANT SYSTEM OR ELSEWHERE** • Is there is no refrigerant pressure on the low pressure side, or is it normal?	Yes	Replace the condenser. (Water in refrigerant system) (See **CONDENSER REMOVAL/INSTALLATION**.) Go to Step 20.

		No	Go to the next step.
17	**CHECK TO SEE WHETHER MALFUNCTION IS IN RECEIVER DRYER FILTER OR EXPANSION VALVE** • Remove the expansion valve and verify its condition. (See **EXPANSION VALVE REMOVAL/INSTALLATION**.) • Is there refrigerant leakage or valve clogging?	Yes	**If there is foreign matter clogging the valve:** • Remove the foreign matter. **If there is refrigerant leakage or clogging:** • Replace the expansion valve. Perform discharge, charge with new refrigerant, and then go to Step 20.
		No	Replace the condenser. (Receiver/Dryer filter is clogged.) (See **CONDENSER REMOVAL/INSTALLATION**.) Then go to Step 20.
18	**INSPECT EVAPORATIVE TEMPERATURE SENSOR** • Inspect the evaporator temperature sensor. (See **EVAPORATOR TEMPERATURE SENSOR INSPECTION [MANUAL AIR CONDITIONER]**.) • Is it normal?	Yes	Verify the evaporator temperature sensor position. (See **A/C UNIT DISASSEMBLY/ASSEMBLY**.) Then go to Step 20.
		No	Replace the evaporator temperature sensor, then go to Step 20. (See **A/C UNIT DISASSEMBLY/ASSEMBLY**.)
19	**INSPECT AIR MIX DOOR RELATED PART INSTALLATION** • Remove the A/C unit. (See **A/C UNIT REMOVAL/INSTALLATION**.) • Are the air mix link, and air mix crank of the A/C unit correctly and securely installed to their positions?	Yes	Go to the next step.
		No	• Inspect the air mix link and air mix crank of the A/C unit correctly and securely installed to their positions. (See **A/C UNIT DISASSEMBLY/ASSEMBLY**.) • Repair or install correctly for suspect part according to inspection result, then go to next Step.
20	**VERIFY THAT MALFUNCTION SYMPTOM DOES OCCURS AFTER REPAIR** • If the refrigerant discharged during inspection has not been recharged, discharge and charge with new refrigerant to the specified level.	Yes	Troubleshooting completed. Explain repairs to customer.
		No	Recheck malfunction symptoms, then repeat from Step 1 if malfunction recurs.

	• Does cool air blow out? (Are results of refrigerant system performance test normal?)		

2014 - Mazda3 - HVAC

NO COOL AIR [MANUAL AIR CONDITIONER]

DESCRIPTION	• Magnetic clutch does not operate
POSSIBLE CAUSE	• Airflow mode system malfunction • Blower system malfunction • A/C compressor malfunction • CAN communication malfunction • PCM A/C cut control system malfunction • Refrigerant pressure sensor malfunction • Evaporator temperature sensor malfunction • LIN communication malfunction • Magnetic clutch malfunction • A/C 7.5 A fuse malfunction • A/C relay malfunction • Improper refrigerant charging amount

- When performing an asterisked (*) troubleshooting inspection, shake the wiring harness and connectors while performing the inspection to discover whether poor contact points are the cause of any intermittent malfunctions. If there is a problem, check to make sure connectors, terminals and wiring harnesses are connected correctly and undamaged.

Diagnostic Procedure

STEP	INSPECTION		ACTION
1	**INSPECT AIR BLOW OUT** • Does air blow out?	Yes	Go to the next step.
		No	Go to Step 1 of the following troubleshooting.

			(See **INSUFFICIENT AIR (OR NO AIR) BLOWN FROM VENTS [MANUAL AIR CONDITIONER]**.) (See **AMOUNT OF AIR BLOWN FROM VENTS DOES NOT CHANGE [MANUAL AIR CONDITIONER]**.)
2	**INSPECT A/C COMPRESSOR OPERATION** • Start engine. • Turn A/C switch and fan switch on. • Does A/C compressor operate?	Yes	Go to Step 1 of the following troubleshooting. (See **AIR FROM VENTS NOT COLD ENOUGH [MANUAL AIR CONDITIONER]**.)
		No	Go to the next step.
3	**INSPECT FOR DTCs IN PCM AND FBCM** • Inspect for DTCs related to the PCM and FBCM on-board diagnostic system. (See **FOREWORD [SKYACTIV-G 2.0, SKYACTIV-G 2.5]**.) (See **DTC INSPECTION [FRONT BODY CONTROL MODULE (FBCM)]**.) • Are any DTCs displayed?	Yes	Go to appropriate inspection procedure. (See **DTC TABLE [SKYACTIV-G 2.0, SKYACTIV-G 2.5]**.) (See **DTC TABLE [FRONT BODY CONTROL MODULE (FBCM)]**.)
		No	Go to the next step.
4	**DETERMINE IF MALFUNCTION CAUSE IS A/C REQUEST SIGNAL OR A/C RELAY OPERATIONAL MALFUNCTION** • Access PCM PID ACCS using the M-MDS. (See **OBD-II PARAMETER IDENTIFICATION (PID) ACCESS [SKYACTIV-G 2.0, SKYACTIV-G 2.5]**.) • Start the engine and idle it. • Turn the PID ACCS to ON from OFF using the M-MDS simulation function. • Is the A/C magnetic clutch engaged?	Yes	Go to the next step.
		No	Go to Step 10.
5	**DETERMINE IF MALFUNCTION CAUSE IS A/C PRESSURE SENSOR SIGNAL OR ELSEWHERE** • Access climate control unit PID AC_PRES. (See **OBD-II PARAMETER IDENTIFICATION (PID) ACCESS [SKYACTIV-G 2.0, SKYACTIV-G**	Yes	Go to Step 7.
		No	Go to the next step.

	2.5].) • Monitor the AC_PRES PID while turning on and off the air conditioner by switching the control panel. • Is the PID normal?		
6	**INSPECT REFRIGERANT PRESSURE SENSOR** • Inspect refrigerant pressure sensor. (See **REFRIGERANT PRESSURE SENSOR INSPECTION [MANUAL AIR CONDITIONER]**.) • Is the refrigerant pressure sensor normal?	Yes	Inspect the following and repair or replace if necessary. • Refrigerant charging amount • A/C compressor for seizure Then go to Step 16.
		No	Repair or replace malfunctioning part according to inspection result, then go to Step 16.
7*	**SIGNAL INSPECTION FROM EVAPORATOR TEMPERATURE SENSOR TO CLIMATE CONTROL UNIT** • Remove the climate control unit. (See **CLIMATE CONTROL UNIT REMOVAL/INSTALLATION [MANUAL AIR CONDITIONER]**.) • Reconnect the climate control unit connector. • Measure the climate control unit terminal H voltage. (See **CLIMATE CONTROL UNIT INSPECTION [MANUAL AIR CONDITIONER]**.) • Is the voltage within the specified?	Yes	Go to Step 10.
		No	Go to the next step.
8	**INSPECT EVAPORATOR TEMPERATURE SENSOR** • Inspect the evaporator temperature sensor. (See **EVAPORATOR TEMPERATURE SENSOR INSPECTION [MANUAL AIR CONDITIONER]**.) • Is the evaporator temperature sensor normal?	Yes	Refer to the wiring diagram and verify whether or not there is a common connector between evaporator temperature sensor terminal and climate control unit terminal. **If there is a common connector:** • Determine the malfunctioning part by inspecting the common connector and the terminal for corrosion, damage, or pin disconnection, and the common

			wiring harness. • Repair or replace the malfunctioning part. **If there is no common connector:** • Repair or replace the wiring harness. Go to Step 16.
		No	Replace the evaporator temperature sensor, then go to Step 16. (See **A/C UNIT DISASSEMBLY/ASSEMBLY**.)
9	**CONTINUITY INSPECTION BETWEEN CLIMATE CONTROL UNIT AND FBCM** • Inspect for open or short circuit between climate control unit terminal K and FBCM terminal 2J. Is there any open or short circuit detected?	Yes	Repair for open or short circuit.
		No	Replace the climate control unit.(A/C switch malfunction or climate control unit does not determine A/C request or transmit the A/C request signal.) (See **CLIMATE CONTROL UNIT REMOVAL/INSTALLATION [MANUAL AIR CONDITIONER]**.)
10	**INSPECT TO SEE WHETHER MALFUNCTION (LACK OF CONTINUITY) IS IN A/C CONTROL SIGNAL CIRCUIT (BETWEEN A/C RELAY AND PCM) OR ELSEWHERE** • Does cool air blow out when terminal E of A/C relay connector (A/C control signal) is grounded?	Yes	Release short, then go to the next step.
		No	Go to Step 12.
11*	**INSPECT TO SEE WHETHER MALFUNCTION (LACK OF CONTINUITY) IS IN PCM OR WIRING HARNESS (BETWEEN A/C RELAY AND PCM)** • Test voltage at the A/C relay control signal terminal of PCM. • Is voltage **approx. 12 V**?	Yes	Inspect PCM, then go to Step 16. (See **PCM INSPECTION [SKYACTIV-G 2.0, SKYACTIV-G 2.5]**.)
		No	Refer to the wiring diagram and verify whether or not there is a common connector between A/C relay terminal and PCM terminal. **If there is a common connector:** • Determine the malfunctioning part by inspecting the common connector and the terminal for corrosion, damage, or pin disconnection, and the common

			wiring harness. • Repair or replace the malfunctioning part. **If there is no common connector:** • Repair or replace the wiring harness. Go to Step 16.
12*	**INSPECT TO SEE WHETHER MALFUNCTION IS IN MAGNETIC CLUTCH OR ELSEWHERE** • Inspect the magnetic clutch. (See **MAGNETIC CLUTCH INSPECTION**.) • Is the magnetic clutch normal?	Yes	Go to the next step.
		No	Replace the magnetic clutch, then go to Step 16. (See **MAGNETIC CLUTCH DISASSEMBLY/ASSEMBLY**.)
13	**INSPECT FUSE** • Remove the A/C 7.5 A fuse. • Is the fuse normal?	Yes	Go to the next step.
		No	Replace the A/C 7.5 A fuse, then go to Step 16. If fuse burns out immediately, go to the next step.
14	**INSPECT WIRING HARNESS BETWEEN FUSE BLOCK AND A/C RELAY FOR LACK OF CONTINUITY** • Test voltages at following terminals of A/C relay. ▪ Terminal A (A/C relay control signal) ▪ Terminal C (A/C control signal) • Are voltages **approx. 12 V**?	Yes	Go to the next step.
		No	Refer to the wiring diagram and verify whether or not there is a common connector between fuse block terminal and A/C relay terminal. **If there is a common connector:** • Determine the malfunctioning part by inspecting the common connector and the terminal for corrosion, damage, or pin disconnection, and the common wiring harness. • Repair or replace the malfunctioning part. **If there is no common connector:** • Repair or replace the wiring harness. Go to Step 16.
	INSPECT TO SEE WHETHER MALFUNCTION		

15	**IS IN A/C RELAY OR WIRING HARNESS (BETWEEN A/C RELAY AND MAGNETIC CLUTCH)** • Test voltage at the following terminal of A/C relay. ▪ Terminal D (magnetic clutch operation signal) • Is voltage **approx. 12 V**?	Yes	Inspect wiring harness between A/C relay and magnetic clutch. • If above wiring harness is normal, go to the next step. • If above wiring harness malfunctions, repair wiring harness, then go to the next step.
		No	Replace A/C relay, then go to the next step. (See **RELAY LOCATION**.)
16	**VERIFY THAT MALFUNCTION SYMPTOMS DO NOT RECUR AFTER REPAIR** • Does cool air discharge from the vents? (Are the results of refrigerant system performance test normal?) (See **REFRIGERANT SYSTEM PERFORMANCE TEST**.)	Yes	Troubleshooting completed. Explain repairs to customer.
		No	Recheck malfunction symptoms, then repeat from Step 1 if malfunction recurs.

2014 - Mazda3 - HVAC

NOISE WHILE OPERATING A/C SYSTEM [MANUAL AIR CONDITIONER]

DESCRIPTION	• Noise from magnetic clutch, A/C compressor, hose or refrigerant line
POSSIBLE CAUSE	• Magnetic clutch operation noise • A/C compressor vane noise • A/C compressor slippage noise • Hose or refrigerant line interference noise

*

If there is gas leakage, air enters into the A/C system. The desiccant within the receiver/drier absorbs the moisture from the air and becomes saturated. If the A/C system is used in this condition, the inside of the A/C compressor will begin to rust due to this moisture, which may cause lock up or noise to occur. Therefore, replacement of the receiver/drier is necessary.

Diagnostic Procedure

STEP	INSPECTION		ACTION
1	**INSPECT A/C COMPRESSOR VANE FOR NOISE** • Is there a jingling, popping, beeping, or buzzing sound (A/C compressor vane noise)?	Yes	Go to Step 5.
		No	Go to the next step.
2	**INSPECT A/C COMPRESSOR FOR SLIPPAGE NOISE** • Is there a squeaking or whirling sound (A/C compressor slippage noise)?	Yes	Go to Step 14.
		No	Go to the next step.
3	**INSPECT A/C COMPRESSOR FOR INTERFERENCE NOISE** • Is there a rattling or vibrating	Yes	Go to Step 18.

	sound (interference noise)?	No	Go to the next step.
4	**INSPECT MAGNETIC CLUTCH FOR OPERATION NOISE** • Is there a clicking sound (magnetic clutch operation noise)?	Yes	Adjust clearance between pressure plate of magnetic clutch and A/C compressor pulley, then go to Step 19. (See **MAGNETIC CLUTCH ADJUSTMENT**.)
		No	Condition is normal. (Recheck malfunction symptoms.)
5	**INSPECT A/C COMPRESSOR FOR PERIOD NOISE OCCURS** • Is noise heard continuously for **more than 3 s** after A/C compressor turns on?	Yes	Go to the next step.
		No	Condition is normal. (Noise occurs for **2—3 s** immediately after A/C compressor turns on.)
6	**INSPECT IDLE SPEED** • Inspect idle speed. (See **ENGINE TUNE-UP [SKYACTIV-G 2.0, SKYACTIV-G 2.5]**.) • Is it normal?	Yes	Go to the next step.
		No	Follow the repair instructions indicated in the “ENGINE” section, then go to Step 19.
7	**INSPECT REFRIGERANT AMOUNT** • Inspect refrigerant amount. (See **REFRIGERANT CHARGING**.) • Is it normal?	Yes	Go to Step 10.
		No	Go to the next step.
8	**INSPECT REFRIGERANT LINES** • Inspect refrigerant lines. ▪ Is piping free of damage and cracks? ▪ Are piping connections free of oil grime? (Visual inspection) ▪ Are piping connections free of gas leakage? ▪ Are piping installation	Yes	Go to the next step.
		No	If piping or A/C component(s) is damaged or cracked, replace then go to Step 19. If there is gas leakage, repair or replace connection and replace condenser*, then go to Step 19. (See **A/C COMPRESSOR REMOVAL/INSTALLATION**.) (See **CONDENSER REMOVAL/INSTALLATION**.) (See **EXPANSION VALVE REMOVAL/INSTALLATION**.) (See **REFRIGERANT LINE REMOVAL/INSTALLATION**.) (See **RECEIVER/DRIER REMOVAL/INSTALLATION**.)

	points on condenser free of gas leakage? ▪ Are piping installation points on receiver/drier free of gas leakage? ▪ Are piping installation points on A/C compressor free of gas leakage? ▪ Are piping installation points on A/C unit free of gas leakage? ▪ Perform gas leak inspection using gas leak tester. • Are the above items normal?		
9	**INSPECT EVAPORATOR PIPING CONNECTIONS IN A/C UNIT FOR GAS LEAKAGE** • Are piping connections for evaporator in A/C unit free of gas leakage? (See **REFRIGERANT CHARGING**.)	Yes	Adjust refrigerant amount to specified level, then go to Step 19. (See **REFRIGERANT CHARGING**.)
		No	If piping is damaged or cracked, replace then go to Step 19. If there is gas leakage, repair or replace connection and replace condenser*, then go to Step 19. (See **A/C COMPRESSOR REMOVAL/INSTALLATION**.) (See **CONDENSER REMOVAL/INSTALLATION**.) (See **EXPANSION VALVE REMOVAL/INSTALLATION**.) (See **REFRIGERANT LINE REMOVAL/INSTALLATION**.) (See **RECEIVER/DRIER REMOVAL/INSTALLATION**.)
10	**VERIFY IF MALFUNCTION IS IN COMPRESSOR OIL OR ELSEWHERE**	Yes	Go to the next step.

	• Add **20 ml {20 cc, 0.68 fl oz}** of compressor oil. • Is noise heard when racing engine?	No	Troubleshooting completed. Explain repair to customer.
11	**VERIFY IF MALFUNCTION IS IN A/C COMPRESSOR OR ELSEWHERE** • Drain compressor oil. (See **A/C COMPRESSOR REMOVAL/INSTALLATION**.) • Is it contaminated with metal particles?	Yes	Go to the next step.
		No	Replace A/C compressor, then go to Step 19. (See **A/C COMPRESSOR REMOVAL/INSTALLATION**.)
12	**VERIFY IF MALFUNCTION IS SOMEWHERE IN A/C SYSTEM OR ELSEWHERE** • Is compressor oil whitish and mixed with water?	Yes	Replace entire A/C system (excluding heater), then go to Step 19. (See **A/C COMPRESSOR REMOVAL/INSTALLATION**.) (See **CONDENSER REMOVAL/INSTALLATION**.) (See **EXPANSION VALVE REMOVAL/INSTALLATION**.) (See **REFRIGERANT LINE REMOVAL/INSTALLATION**.) (See **RECEIVER/DRIER REMOVAL/INSTALLATION**.)
		No	Go to the next step.
13	**INSPECT A/C COMPRESSOR OIL** • Is compressor oil darker than normal and contaminated with aluminum chips?	Yes	Replace A/C compressor and condenser, then go to Step 19. (Since A/C compressor may be worn and receiver/drier may be restricted, replacement of receiver/drier is necessary.) (See **A/C COMPRESSOR REMOVAL/INSTALLATION**.) (See **CONDENSER REMOVAL/INSTALLATION**.)
		No	Condition is normal. Recheck malfunction symptoms.
14	**VERIFY IF MALFUNCTION IS IN A/C COMPRESSOR OR ELSEWHERE** • Is noise heard immediately after A/C compressor is stopped?	Yes	Replace A/C compressor, then go to Step 19. (A/C compressor discharge valve left open) (See **A/C COMPRESSOR REMOVAL/INSTALLATION**.)
		No	Go to the next step.
15	**INSPECT DRIVE BELT** • Inspect the drive belt. (See **DRIVE BELT INSPECTION [SKYACTIV-G 2.0, SKYACTIV-G**	Yes	Go to the next step.
		No	Replace the drive belt, then go to Step 19.

	2.5].) • Is it normal?		(See **DRIVE BELT REMOVAL/INSTALLATION [SKYACTIV-G 2.0, SKYACTIV-G 2.5]**.)
16	**INSPECT DRIVE BELT CONDITION** • Is drive belt worn? • Does it have foreign matter imbedded in it, or have oil on it?	Yes	Remove obstruction, remove oil, or replace drive belt, then go to Step 19.
		No	Go to the next step.
17	**INSPECT MAGNETIC CLUTCH** • Inspect the magnetic clutch. (See **MAGNETIC CLUTCH INSPECTION**.) • Is it normal?	Yes	Replace A/C compressor (excluding pressure plate, A/C compressor pulley, and stator), then go to Step 19. (See **A/C COMPRESSOR REMOVAL/INSTALLATION**.)
		No	Replace magnetic clutch, then go to Step 19. (See **MAGNETIC CLUTCH DISASSEMBLY/ASSEMBLY**.)
18	**VERIFY IF MALFUNCTION IS IN A/C COMPRESSOR OR REFRIGERANT LINES** • Is noise emitted from A/C compressor?	Yes	Visually inspect A/C compressor, replace appropriate parts if necessary, then go to the next step.
		No	If noise is due to refrigerant lines, repair detached or missing clips, tighten loose bolts, then go to the next step.
19	**VERIFY THAT MALFUNCTION SYMPTOM DOES NOT RECUR AFTER REPAIR** • Has A/C compressor noise stopped?	Yes	Troubleshooting completed. Explain repairs to customer.
		No	Recheck malfunction symptoms, then repeat from Step 1 if malfunction recurs.

2014 - Mazda3 - HVAC

REFRIGERANT SYSTEM SERVICE WARNINGS

Handling Refrigerant

- Avoid breathing air conditioning refrigerant or lubricant vapor. Exposure may irritate eyes, nose and throat. Also, due to environmental concerns, we urge use of recovery/recycling/recharging equipment when draining HFC-134a from the air conditioning system. If accidental system discharge occurs, ventilate work area before resuming service.
- Do not perform pressure test or leak test for HFC-134a service equipment and/or vehicle air conditioning system using compressed air. Some mixtures of air and HFC-134a have been shown to be combustible at elevated pressures. These mixtures, if ignited, may cause injury or property damage. Additional health and safety information may be obtained from refrigerant manufacturers.
- Do not allow the refrigerant to leak near fire or any kind of heat. A poisonous gas may be generated if the refrigerant gas contacts fire or heat such as from cigarettes and heaters. When carrying out any operation that can cause refrigerant leakage, extinguish or remove the above mentioned heat sources and maintain adequate ventilation.
- Handling liquid refrigerant is dangerous. A drop of it on the skin can result in localized frostbite. When handling the refrigerant, wear gloves and safety goggles. If refrigerant splashes into the eyes, immediately wash them with clean water and consult a doctor.

Storing Refrigerant

- The refrigerant container is highly pressurized. If it is subjected to high heat, it could explode, scattering metal fragments and liquid refrigerant that can seriously injure you. Store the refrigerant at temperatures below 40 °C {104 °F}.

2014 - Mazda3 - HVAC

REFRIGERANT SYSTEM SERVICE CAUTIONS

Handling Insufficient Refrigerant Level

- **If an insufficient refrigerant level is detected at troubleshooting, do not charge (add) the refrigerant. Because an accurate amount of refrigerant cannot be determined from the pressure indicated on the manifold gauge, never charge the refrigerant. If there is too much or too little refrigerant from the refilling, there may be secondary problems such as damage to the refrigerant cycle parts, or a decrease of cooling performance. Therefore, if it is determined that the refrigerant level is insufficient, completely remove refrigerant from the refrigerant cycle and refill with refrigerant to the specified amount.**

Handling Compressor Oil

- **Use only the following specified compressor oil for this vehicle. Using compressor oil (PAG oil) other than specified compressor oil can damage the A/C compressor.**
- FD46XG
- **Do not spill compressor oil on the vehicle. A drop of compressor oil on the vehicle surface can eat away at the paint. If oil gets on the vehicle, wipe it off immediately.**
- **Compressor oil (PAG oil) has a higher moisture absorption efficiency than the previously used mineral oil. If moisture mixes with the compressor oil, the refrigerant system could be damaged. Therefore, install caps immediately after using the compressor oil or removing refrigerant system parts to prevent moisture absorption.**
- **If the refrigerant gas is completely discharged from the system for reasons such as a malfunction during A/C operation, repair or replace the malfunctioning part, charge the refrigerant to the specified amount and always add 60 ml {60 cc, 2.0 fl oz} of compressor. If the compressor oil is not adequately replenished, the A/C compressor may quickly deteriorate, abnormal noise may develop, cooling performance may be affected or, in the worst case, the A/C compressor may seize.**

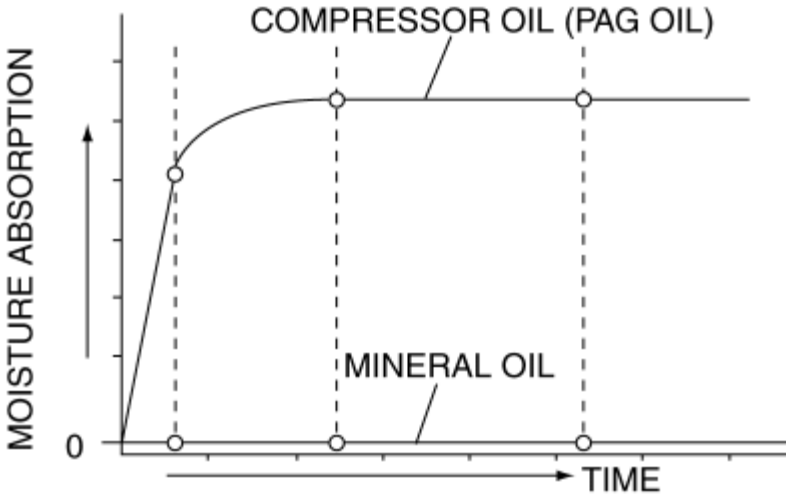
COMPRESSOR OIL (PAG OIL)
MOISTURE ABSORPTION
MINERAL OIL
0
TIME

2014 - Mazda3 - HVAC

REFRIGERANT SYSTEM GENERAL PROCEDURES

1. Fully close the valves of the manifold gauge.
2. Connect the charging hoses to the high and low-pressure side joints of the manifold gauge.

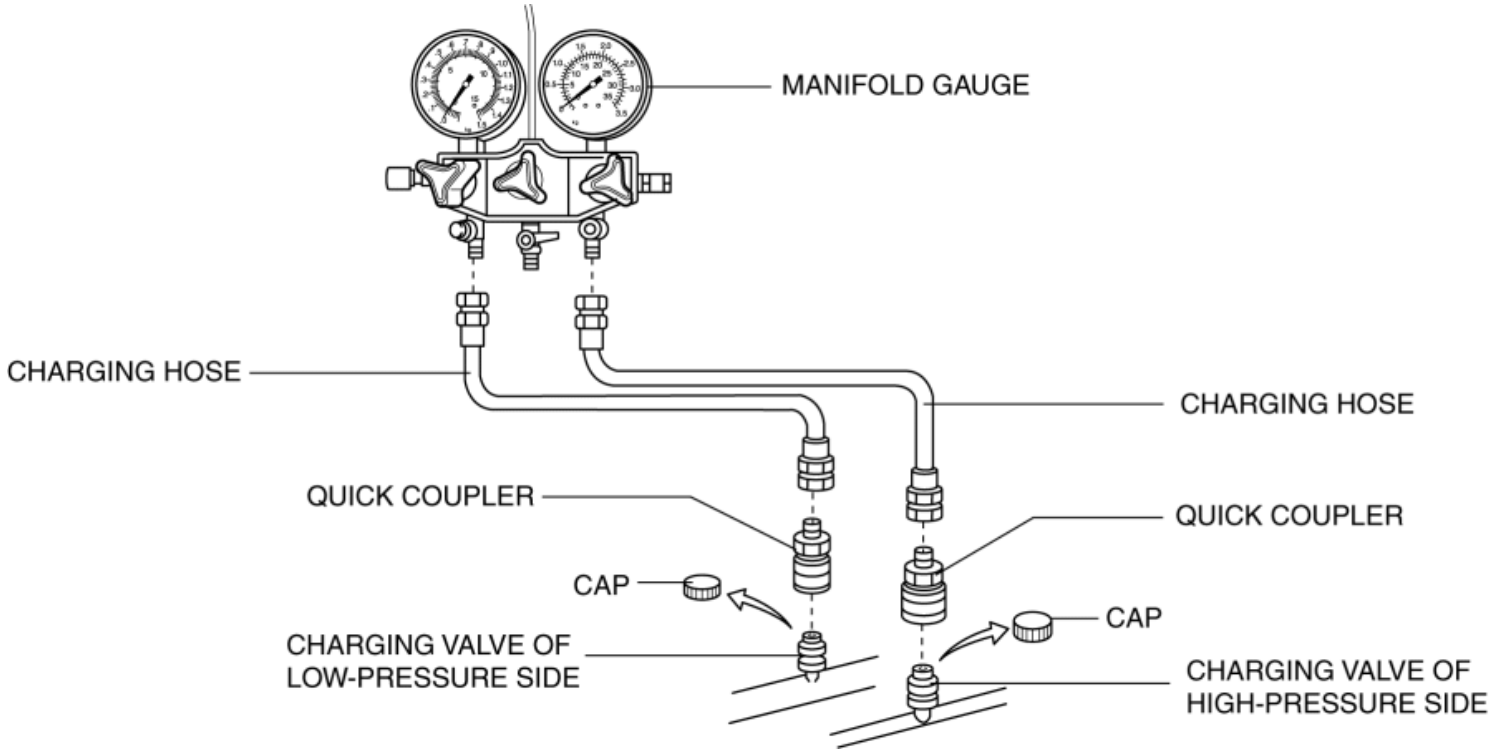

3. Connect the quick couplers to the ends of the charging hoses.
4. Connect the quick couplers to the charging valves.

2014 - Mazda3 - HVAC

REFRIGERANT CHARGING

CAUTION:

- Do not use a different type of refrigerant or charge beyond the specified level. Otherwise, cooling ability will be lowered and the A/C compressor could be damaged.

Adding Compressor Oil

1. Weigh the compressor oil which is exhausted when collecting the refrigerant.

2. When adding refrigerant, add new oil equivalent in weight to the exhausted amount to the refrigerant cycle.

Charging Recycled HFC-134a Refrigerant

1. Connect a HFC-134a recovery/recycling/recharging device to the vehicle and follow the device manufacturer's instructions.

Charging Preparation

1. Install the manifold gauge set.

2. Connect the tap pin side of the charging hose to the air purge valve of the manifold gauge.

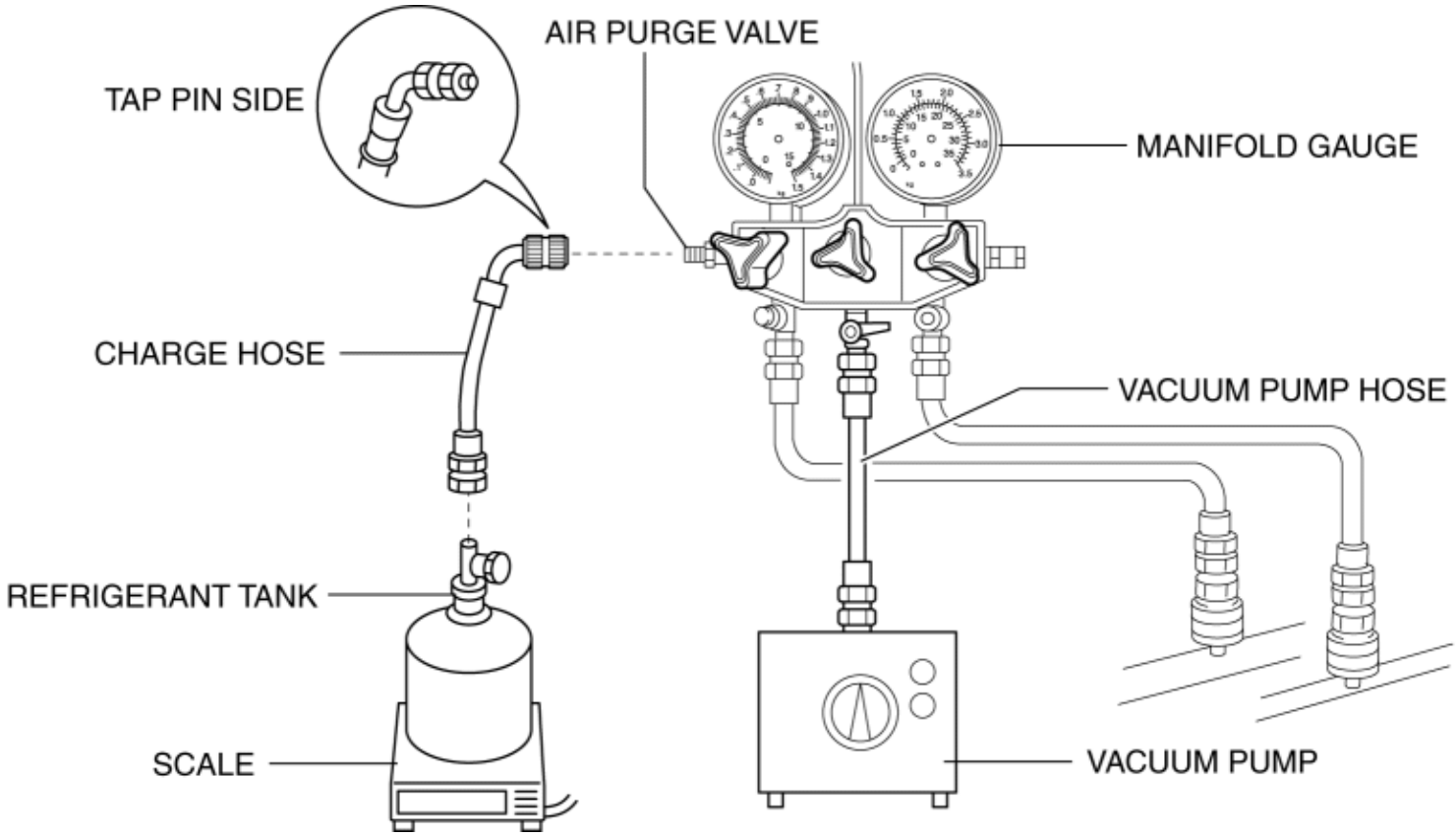

3. Connect the vacuum pump hose to the center joint of the manifold gauge.
4. Connect the vacuum pump hose to the vacuum pump.
5. Connect the charging hose to the refrigerant tank.
6. Place the refrigerant tank on the scale.

Regular amount of refrigerant (approx. quantity)

- **465—515** g {**16.5—18.1** oz}

Evacuation

1. Open all the valves of the manifold gauge.

CAUTION:

- Close the manifold gauge valve immediately after stopping the vacuum pump. If the valve is left open, the vacuum pump oil will back flow into the refrigeration cycle and cause a decrease in the efficiency of the air conditioner.

2. Start the vacuum pump and let it operate for **15 min**.

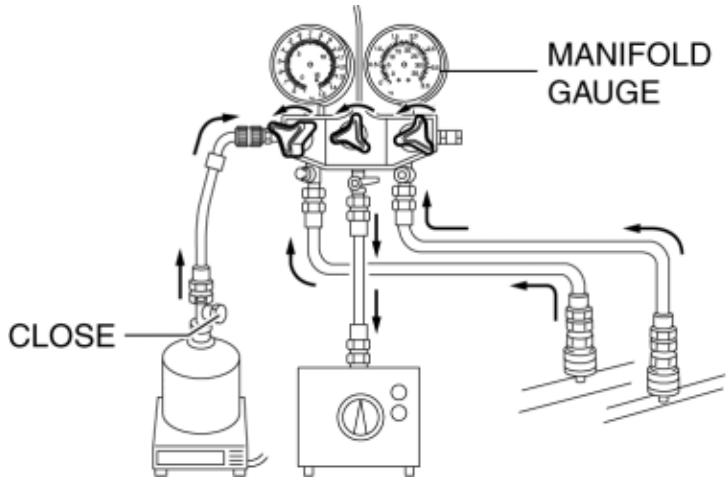

3. Verify that high and low-pressure side readings of the manifold gauge are at **–101 kPa {–1.03 kgf/cm^2, –14.6 psi}**. Close each valve of the manifold gauge.

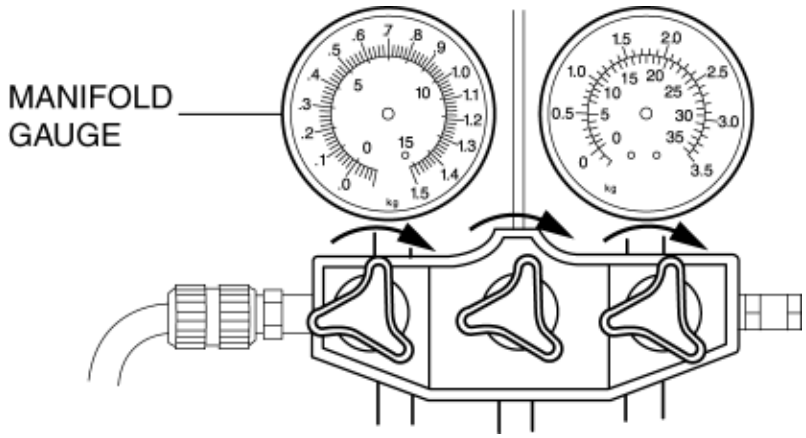

Airtightness Check

1. Stop the vacuum pump and wait for **5 min**.
2. Check the high and low-pressure side readings of the manifold gauge.
   - If the reading has changed, inspect for leakage and go to Evacuation. (See **Charging Preparation**.)
   - If the reading has not changed, go to Charging New R-134a Refrigerant. (See **Airtightness Check**.)

Charging New HFC-134a Refrigerant

1. Open the valve of the refrigerant tank.
2. Weigh the refrigerant tank to charge the suitable amount of refrigerant.

WARNING:

- If the refrigerant system is charged with a large amount of refrigerant when inspecting for gas leakage, and if any leakage should occur, the refrigerant will be released into the atmosphere. In order to prevent the accidental release of refrigerant which can destroy the ozone layer in the stratosphere, follow the proper procedures and charge with only a small amount of refrigerant when inspecting for

gas leakage.

- If charging the system with refrigerant using service cans, running the engine with the high-pressure side valve open is dangerous. Pressure within the service cans will increase and the cans could explode, scattering metal fragments and liquid refrigerant that can seriously injure you. Therefore, do not open the high-pressure side valve while the engine is running.

3. Open the low-pressure side valve of the manifold gauge.

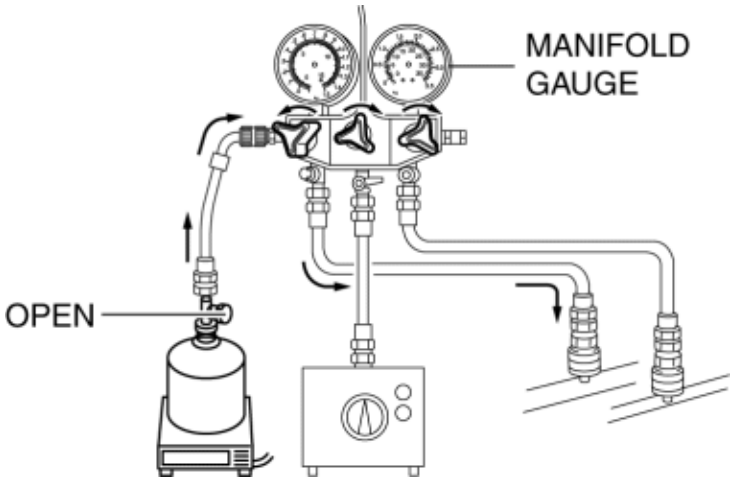

4. When the high-pressure side reading increases to **0.098 MPa {1.0 kgf/cm^2, 14 psi}**, close the low-pressure side valve of the manifold gauge.

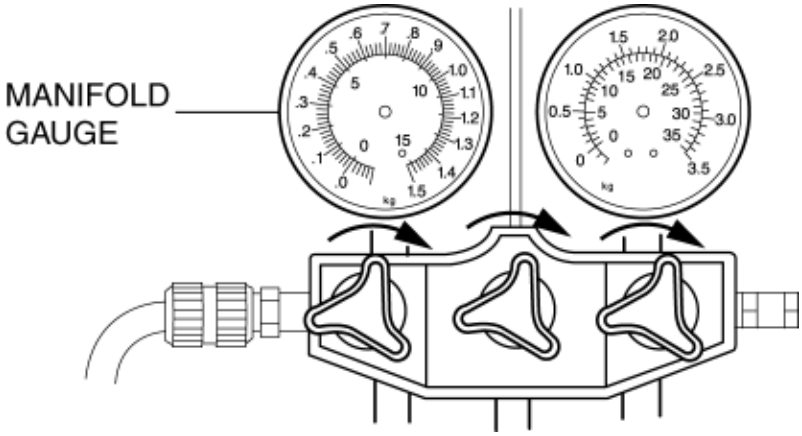

5. Inspect for leakage from the cooler pipe/hose connections using the gas leak tester.

- If there is no leakage, go to Step 7.
- If leakage is found at a loose joint, tighten the joint, then go to next step.

6. Inspect for leakage again.

- If there is no leakage after tightening the joint, go to next step.
- If there is still a leakage at the same joint, discharge the refrigerant and then repair the joint. Repeat the charging procedure from evacuation.

WARNING:

- If charging the system with refrigerant using service cans, running the engine with the high-pressure side valve open is dangerous. Pressure within the service cans will increase and the cans could explode, scattering metal fragments and liquid refrigerant that can seriously injure you. Therefore, do not open the high-pressure side valve while the engine is running.

7. Open the low-pressure side valve of the manifold gauge and charge with refrigerant until the weight of refrigerant tank has decreased **250 g {8.82 oz}** from the amount in Step 2.

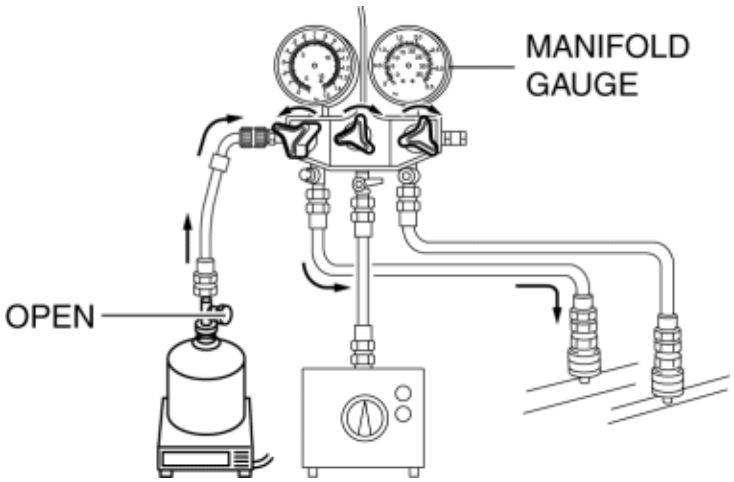

8. Close the low-pressure side valve of the manifold gauge.

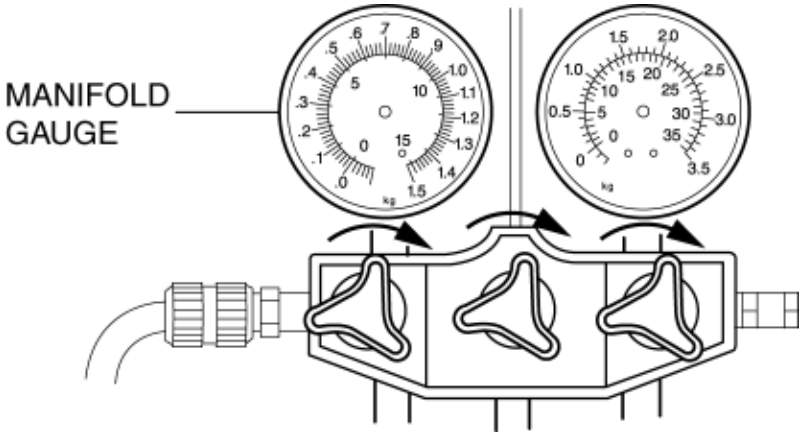

WARNING:

- If charging the system with refrigerant using service cans, running the engine with the high-pressure side valve open is dangerous. Pressure within the service cans will increase and the cans could explode, scattering metal fragments and liquid refrigerant that can seriously injure you. Therefore, do not open the high-pressure side valve while the engine is running.

9. Start the engine and actuate the A/C compressor.

10. Open the low-pressure side valve of the manifold gauge and charge with refrigerant until the weight of the refrigerant tank has decreased to the regular amount from the amount in Step 2.

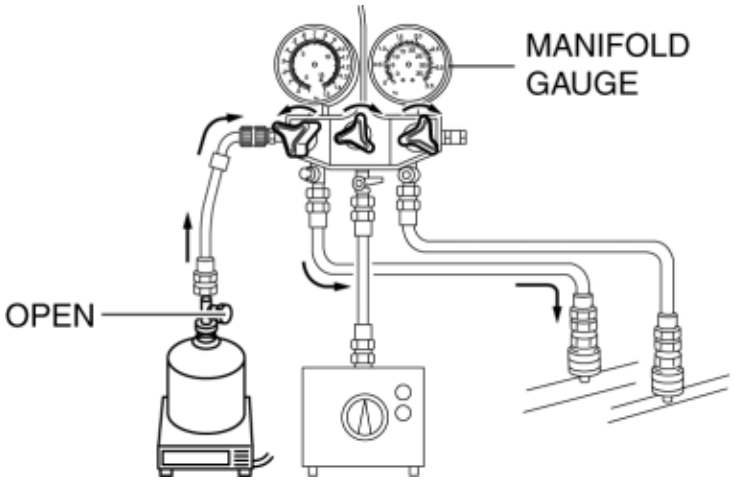

11. Close the low-pressure side valve of the manifold gauge and the valve of the refrigerant tank.
12. Stop the engine and A/C compressor.

Leak Test

1. Inspect for leakage using the gas leak tester.
    - If there is no leakage, go to Step 3.
    - If leakage is found at a loose joint, tighten the joint, then go to the next step.
2. Inspect for leakage again.
    - If there is no leakage after tightening the joint, go to the next step.
    - If there is still leakage at the same joint, discharge the refrigerant and then repair the joint. Repeat the charging procedure from evacuation.
3. Disconnect the quick couplers from the charging valves.
4. Install the caps to the charging valves.

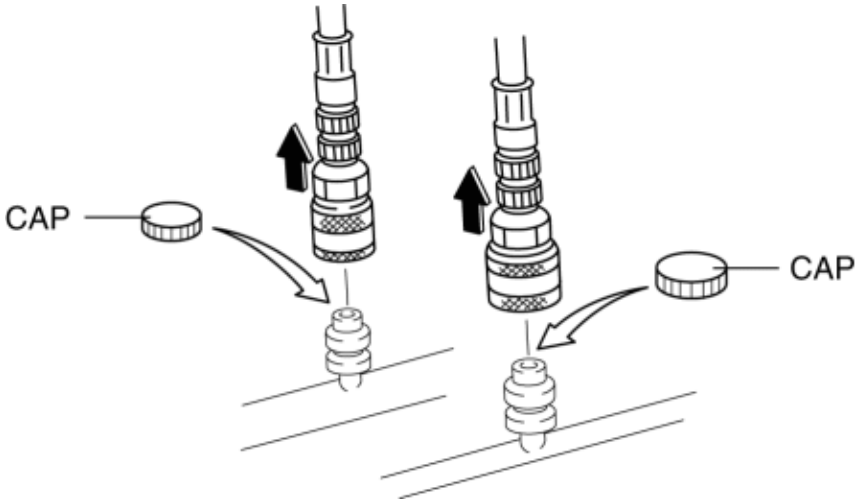

2014 - Mazda3 - HVAC

REFRIGERANT RECOVERY

- Connect a HFC-134a recovery/recycling/recharging device to the vehicle and follow the device manufacturer's instructions.

2014 - Mazda3 - HVAC

REFRIGERANT PRESSURE CHECK

NOTE:

- Measure the refrigerant pressure after **approx.10 min** have elapsed from engine start.

1. Install the manifold gauge. (See **REFRIGERANT SYSTEM GENERAL PROCEDURES**.)
2. Start the engine and warm it up.
3. Set the fan speed to MAX HI.
4. Turn the A/C switch on.
5. Set to RECIRCULATE mode.
6. Set the temperature control to MAX COLD.
7. Set to VENT mode.
8. Close all the doors and all the windows.
9. Maintain the engine speed at **1,500 rpm**.
10. Measure the ambient temperature and high- and low- pressure side reading of the manifold gauge.
11. Verify that the intersection of the pressure reading of the manifold gauge and ambient temperature is in the shaded zone.

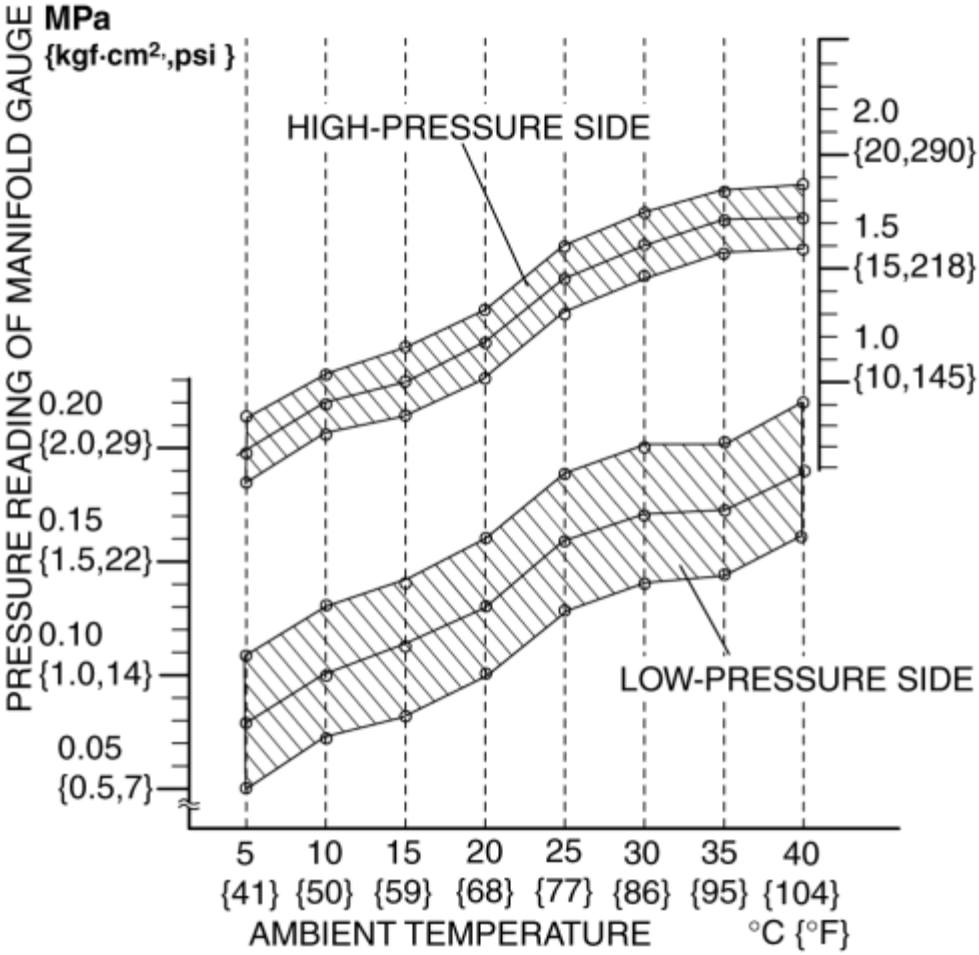

- If there is any malfunction, inspect the refrigerant system according to the troubleshooting chart.

2014 - Mazda3 - HVAC

REFRIGERANT SYSTEM PERFORMANCE TEST

NOTE:

- Measure the air conditioner output temperature after **approx.10 min** have elapsed from engine start.

1. Inspect the refrigerant pressure. (See **REFRIGERANT PRESSURE CHECK**.)
2. Place a dry-bulb thermometer in the driver-side center ventilator outlet.

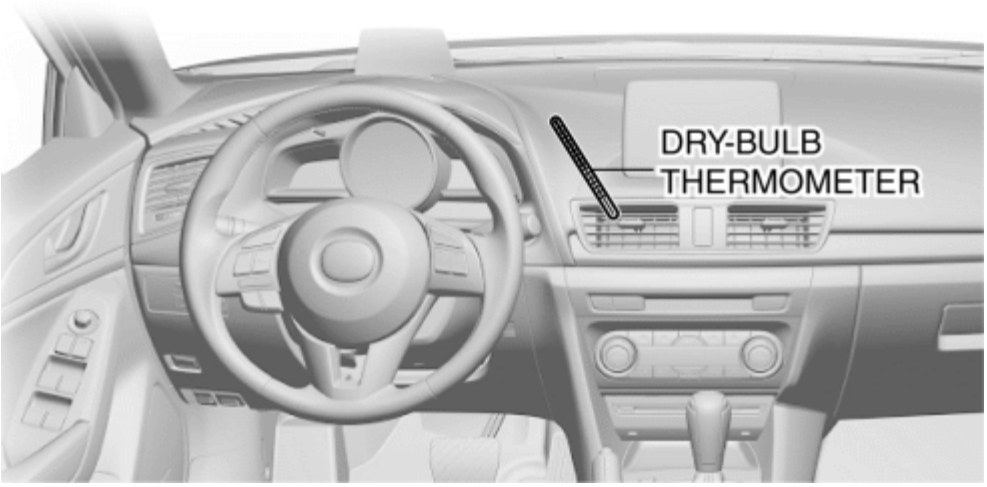

3. Start the engine and warm it up.
4. Set the fan speed to MAX HI.
5. Turn the A/C switch on.
6. Set to RECIRCULATE mode.
7. Set the temperature control to MAX COLD.
8. Set to VENT mode.
9. Close all the doors and windows.
10. Maintain the engine speed at **1,500 rpm**.
11. Wait until the air conditioner output temperature stabilizes.

    Stabilized condition

    - The A/C compressor repeatedly turns on and off at regular intervals.

12. After the blower air is stabilized, read the dry-bulb thermometer.
13. Verify the ambient temperature.

14. Verify that the temperature reading is in the shaded zone.

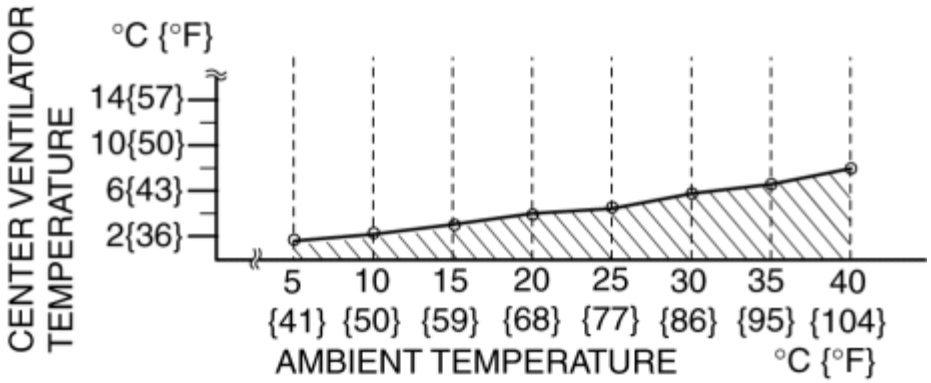

- If the there is any malfunction, inspect the refrigerant system according to the troubleshooting chart.

2014 - Mazda3 - HVAC

HVAC BASIC SYSTEM LOCATION INDEX

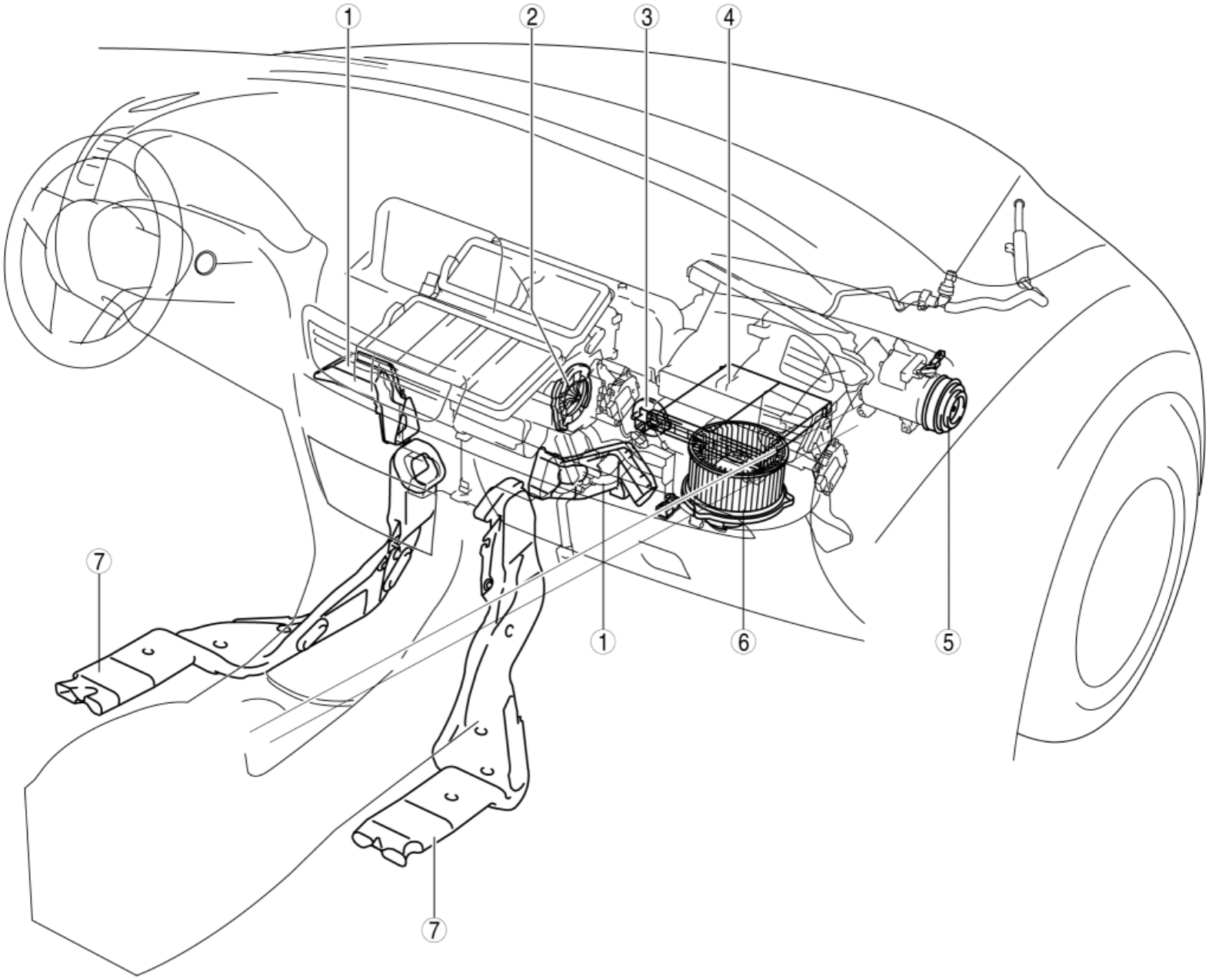

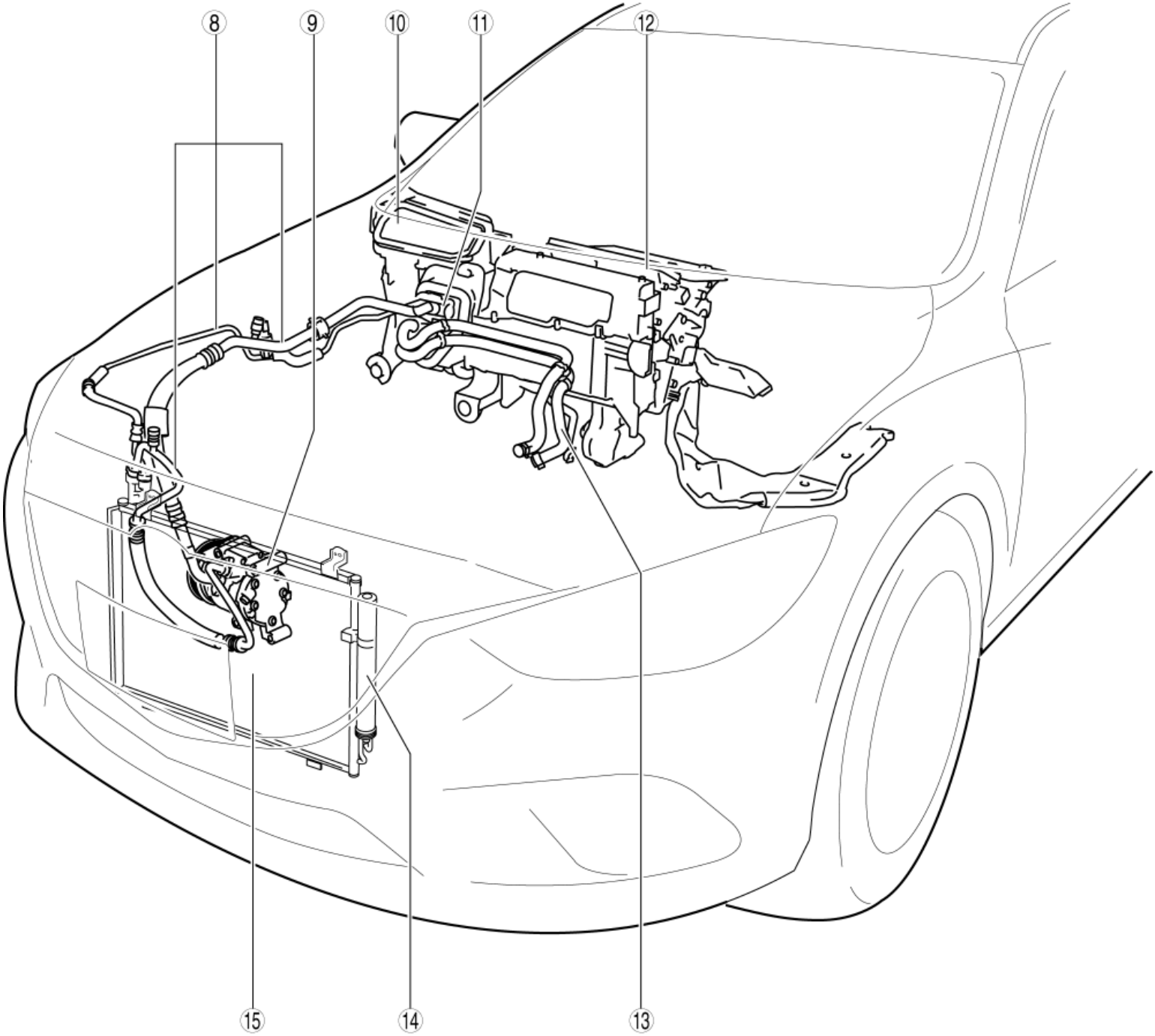

1	Front heat duct (See **FRONT HEAT DUCT REMOVAL/INSTALLATION**.)
2	Airflow mode main link (See **AIRFLOW MODE MAIN LINK REMOVAL/INSTALLATION**.)
3	Blower fan controller (See **BLOWER FAN CONTROLLER REMOVAL/INSTALLATION**.) (See **BLOWER FAN CONTROLLER INSPECTION**.)
4	Air filter (See **AIR FILTER REMOVAL/INSTALLATION**.)

	(See **AIR FILTER INSPECTION**.)
5	Magnetic clutch (See **MAGNETIC CLUTCH DISASSEMBLY/ASSEMBLY**.) (See **MAGNETIC CLUTCH ADJUSTMENT**.) (See **MAGNETIC CLUTCH INSPECTION**.)
6	Blower motor (See **BLOWER MOTOR REMOVAL/INSTALLATION**.) (See **BLOWER MOTOR INSPECTION**.)
7	Rear heat duct (See **REAR HEAT DUCT REMOVAL/INSTALLATION**.)
8	Refrigerant line (See **REFRIGERANT LINE REMOVAL/INSTALLATION**.)
9	A/C compressor (See **A/C COMPRESSOR REMOVAL/INSTALLATION**.)
10	Blower unit (See **BLOWER UNIT REMOVAL/INSTALLATION**.) (See **BLOWER UNIT DISASSEMBLY/ASSEMBLY**.)
11	Expansion valve (See **EXPANSION VALVE REMOVAL/INSTALLATION**.)
12	A/C unit (See **A/C UNIT REMOVAL/INSTALLATION**.) (See **A/C UNIT DISASSEMBLY/ASSEMBLY**.) (See **EXPANSION VALVE REMOVAL/INSTALLATION**.) (See **EVAPORATOR INSPECTION**.) (See **HEATER CORE INSPECTION**.)
13	Heater hose (See **HEATER HOSE REMOVAL/INSTALLATION**.)
14	Receiver/drier (See **RECEIVER/DRIER REMOVAL/INSTALLATION**.)
15	Condenser (See **CONDENSER REMOVAL/INSTALLATION**.) (See **CONDENSER INSPECTION**.)

2014 - Mazda3 - HVAC

BLOWER UNIT REMOVAL/INSTALLATION

1. Disconnect the negative battery cable. (See **NEGATIVE BATTERY CABLE DISCONNECTION/CONNECTION [SKYACTIV-G 2.0, SKYACTIV-G 2.5]**.)
2. Remove the following parts:
   a. Glove compartment (See **GLOVE COMPARTMENT REMOVAL/INSTALLATION**.)
   b. Decoration panel (See **DECORATION PANEL REMOVAL/INSTALLATION**.)
   c. Dashboard under cover (See **DASHBOARD UNDER COVER REMOVAL/INSTALLATION**.)
   d. Side wall (passenger-side) (See **SIDE WALL REMOVAL/INSTALLATION**.)
   e. Front heat duct (passenger-side) (See **FRONT HEAT DUCT REMOVAL/INSTALLATION**.)
   f. Front scuff plate (passenger-side) (See **FRONT SCUFF PLATE REMOVAL/INSTALLATION**.)
   g. Front side trim (passenger-side) (See **FRONT SIDE TRIM REMOVAL/INSTALLATION**.)
   h. Dashboard under cover (See **DASHBOARD UNDER COVER REMOVAL/INSTALLATION**.)
   i. Lower panel (passenger-side) (See **LOWER PANEL REMOVAL/INSTALLATION**.)
3. Disconnect the blower motor connector.
4. Disconnect the air intake actuator connector.

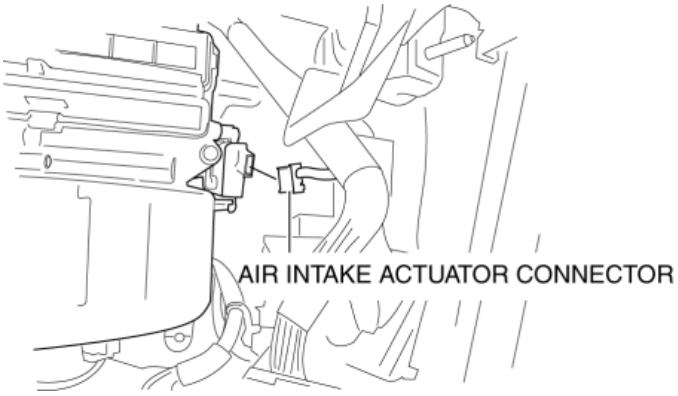

5. Remove the blower unit installation nuts.

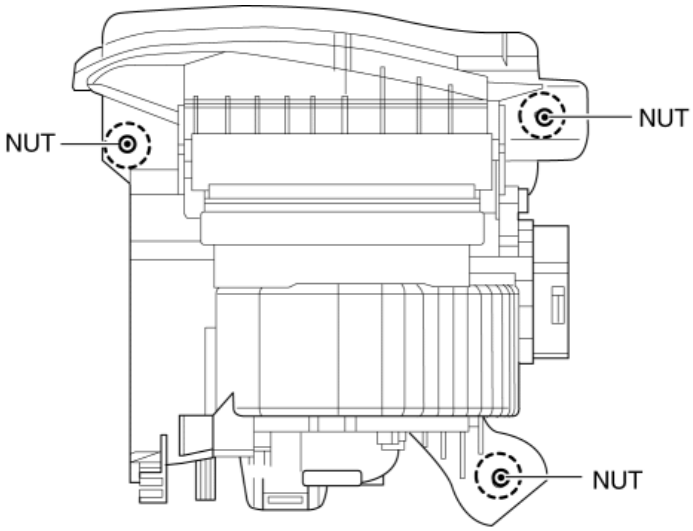

NUT: 8—10 N·m {82—101 kgf·cm, 71—88 in·lbf}

6. Remove the blower unit as shown in the figure.

CAUTION:

- When removing the blower unit, move it little by little while verifying that there is no sticking in the surrounding parts or the wiring harness. If the blower unit is removed with excessive force, surrounding parts or the blower unit could be damaged.

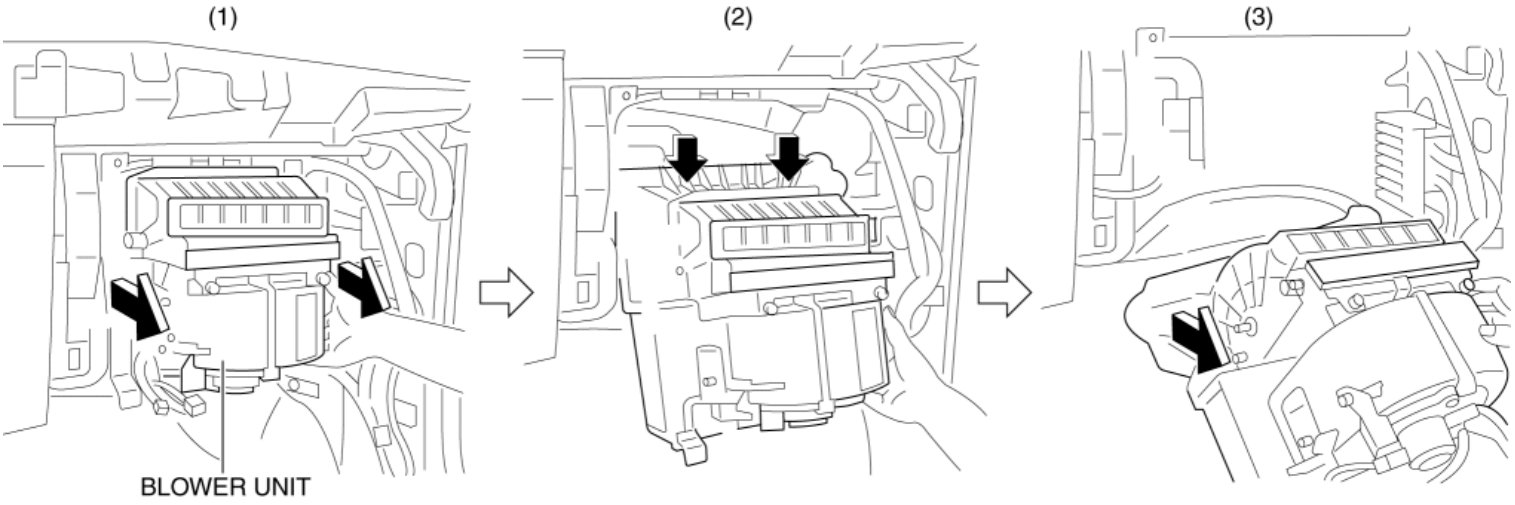

7. Install in the reverse order of removal.

2014 - Mazda3 - HVAC

BLOWER UNIT DISASSEMBLY/ASSEMBLY

CAUTION:

- Apply only the specified grease to the link. Otherwise abnormal noise or improper operation may result.

1. Disassemble in the order indicated in the table.

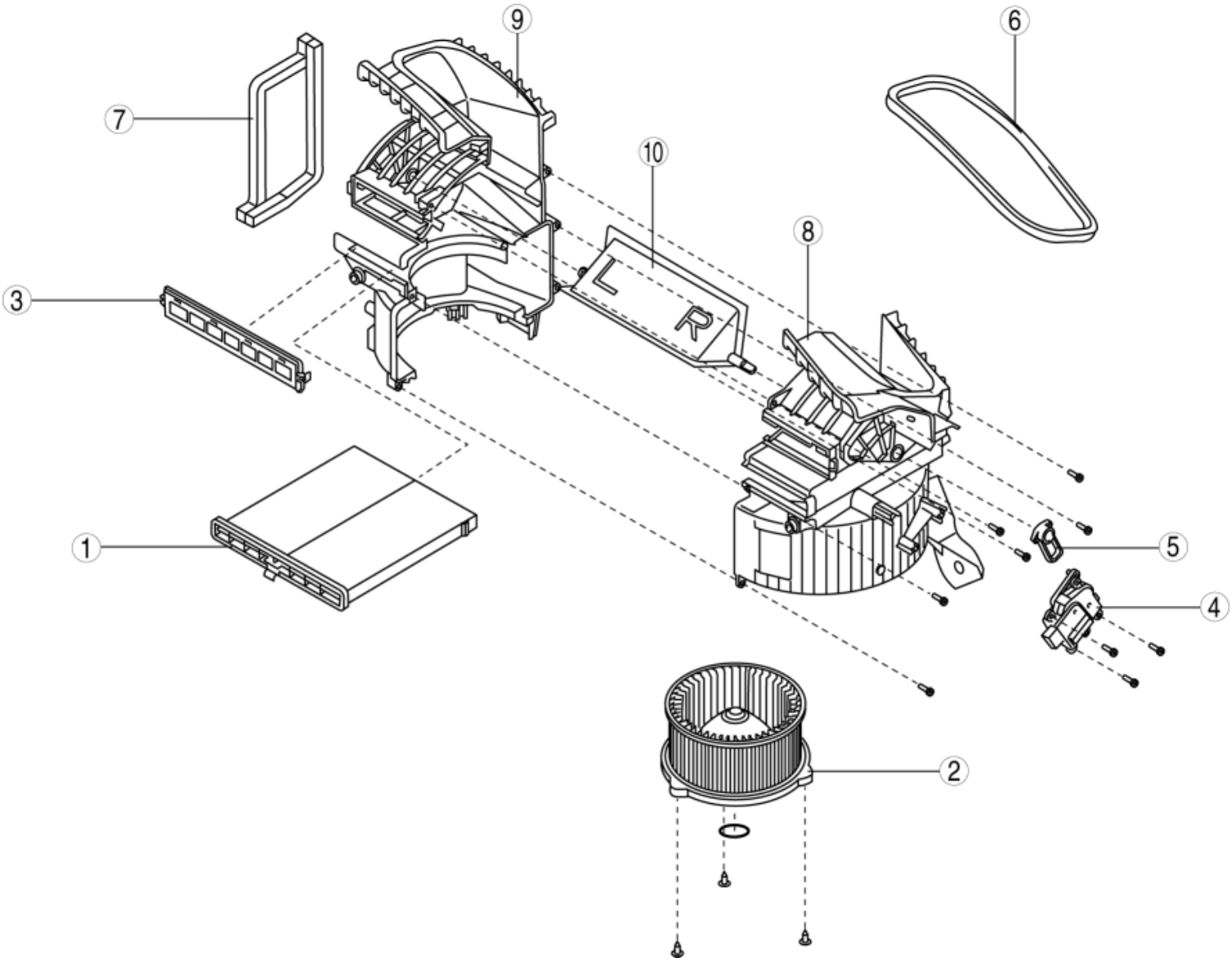

1	Air filter
2	Blower motor
3	Cover

4	Air intake actuator
5	Air intake link
6	Polyurethane (1)
7	Polyurethane (2)
8	Blower case (1)
9	Blower case (2)
10	Air intake door

2. Assemble in the reverse order of disassembly.

2014 - Mazda3 - HVAC

BLOWER MOTOR REMOVAL/INSTALLATION

1. Disconnect the negative battery cable. (See **NEGATIVE BATTERY CABLE DISCONNECTION/CONNECTION [SKYACTIV-G 2.0, SKYACTIV-G 2.5]**.)

2. Remove the dashboard under cover. (See **DASHBOARD UNDER COVER REMOVAL/INSTALLATION**.)

3. Disconnect the connector.

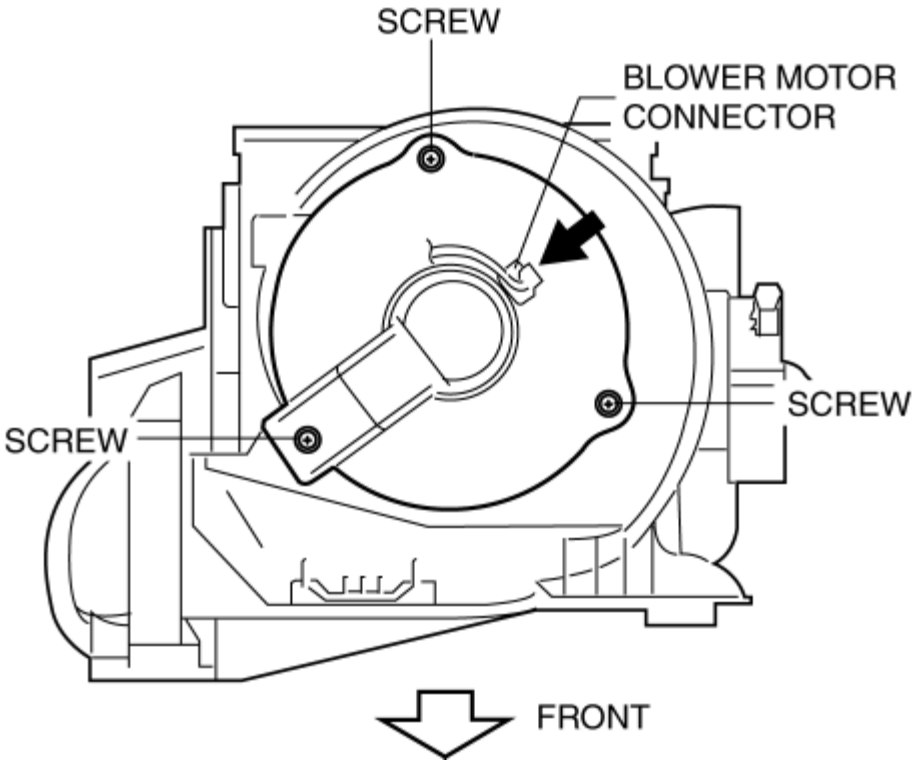

4. Remove the screws.

5. Remove the blower motor.

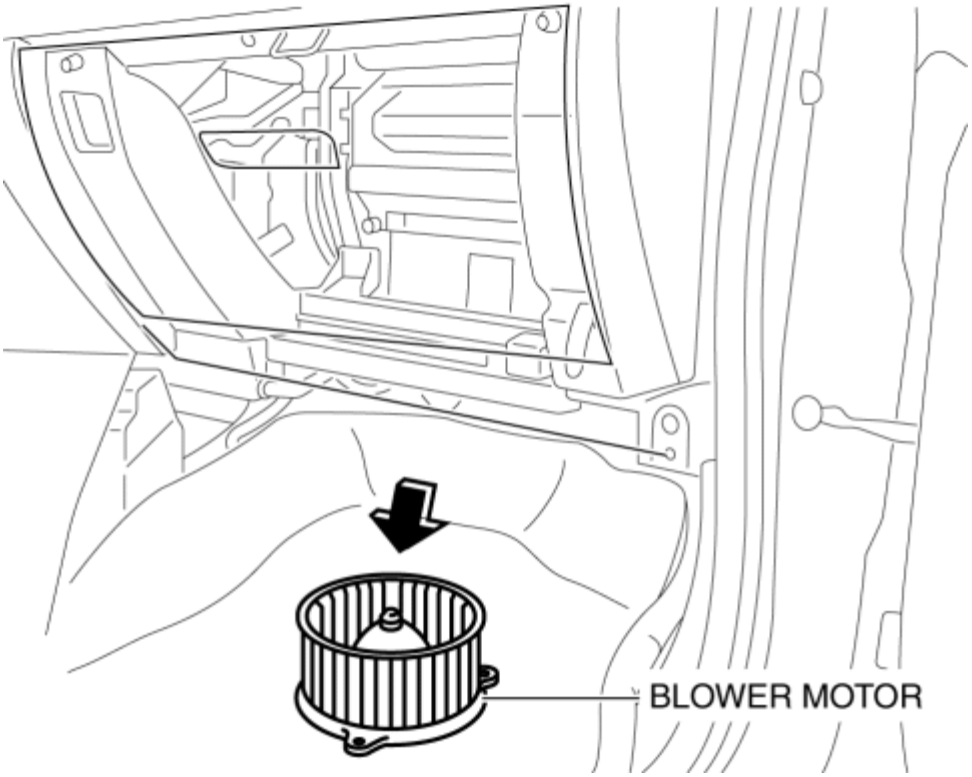

6. Install in the reverse order of removal.

2014 - Mazda3 - HVAC

BLOWER MOTOR INSPECTION

1. Disconnect the negative battery cable. (See **NEGATIVE BATTERY CABLE DISCONNECTION/CONNECTION [SKYACTIV-G 2.0, SKYACTIV-G 2.5]**.)

2. Remove the dashboard under cover. (See **DASHBOARD UNDER COVER REMOVAL/INSTALLATION**.)

3. Remove the blower motor. (See **BLOWER MOTOR REMOVAL/INSTALLATION**.)

4. Connect battery positive voltage to blower motor terminal B, connect terminal A to ground, and then verify its operation.

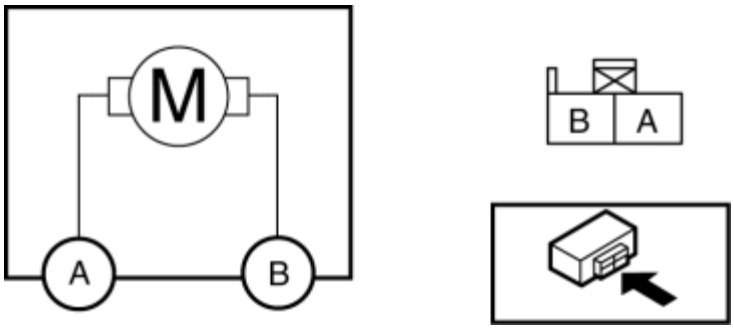

- If there is any malfunction, replace the blower motor. (See **BLOWER MOTOR REMOVAL/INSTALLATION**.)

2014 - Mazda3 - HVAC

BLOWER FAN CONTROLLER REMOVAL/INSTALLATION

NOTE:

- When removing the blower fan controller, perform the procedure in the posture shown in the figure.

1. Disconnect the negative battery cable. (See **NEGATIVE BATTERY CABLE DISCONNECTION/CONNECTION [SKYACTIV-G 2.0, SKYACTIV-G 2.5]**.)
2. Remove the following parts:
   a. Dashboard under cover (See **DASHBOARD UNDER COVER REMOVAL/INSTALLATION**.)
   b. Side wall (passenger-side) (See **SIDE WALL REMOVAL/INSTALLATION**.)
   c. Front heat duct (passenger-side) (See **FRONT HEAT DUCT REMOVAL/INSTALLATION**.)
3. Disconnect the connector.

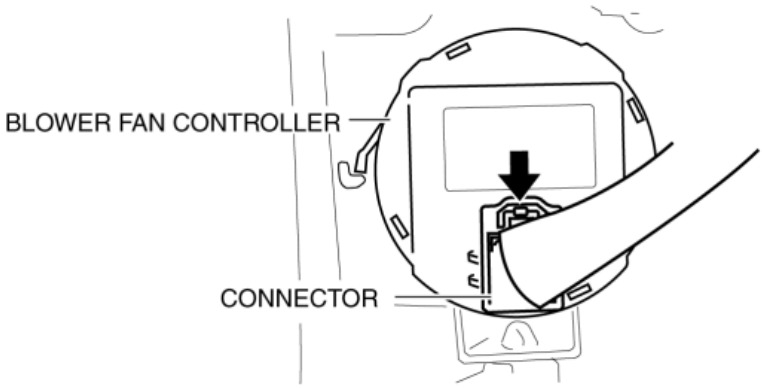

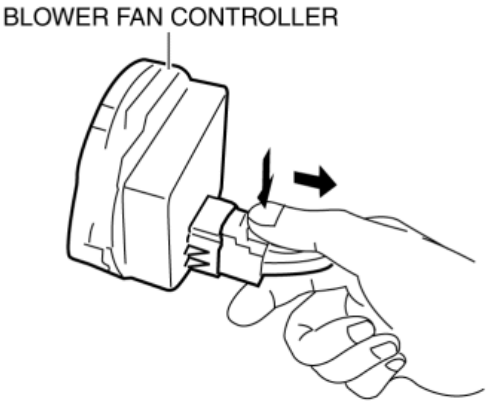

4. Rotate the blower fan controller (2) while pressing the tab (1).

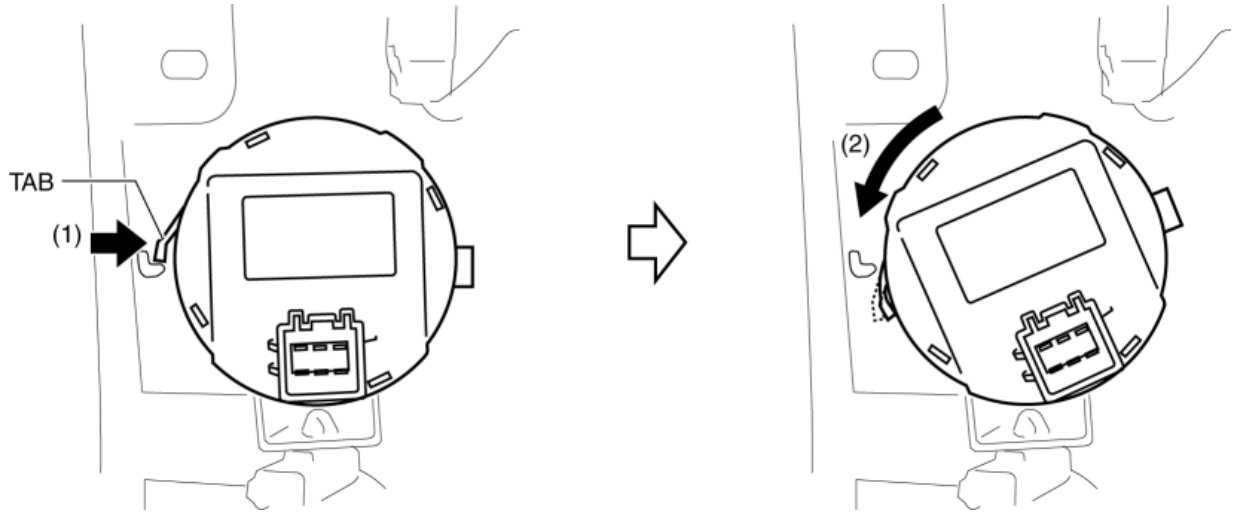

5. Remove the blower fan controller.

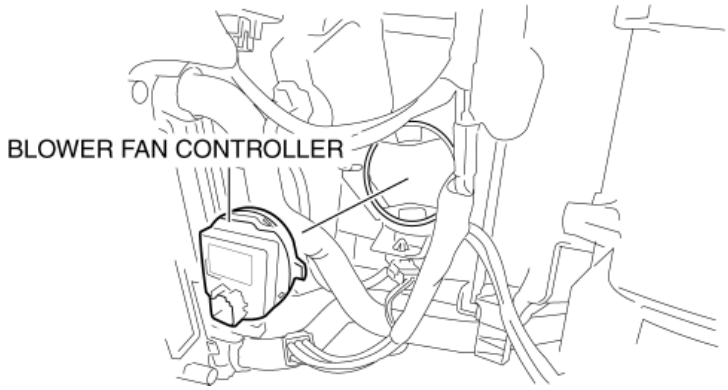

6. Install in the reverse order of removal.

2014 - Mazda3 - HVAC

BLOWER FAN CONTROLLER INSPECTION

1. Disconnect the negative battery cable. (See **NEGATIVE BATTERY CABLE DISCONNECTION/CONNECTION [SKYACTIV-G 2.0, SKYACTIV-G 2.5]**.)
2. Remove the following parts:
   a. Dashboard under cover (See **DASHBOARD UNDER COVER REMOVAL/INSTALLATION**.)
   b. Side wall (passenger-side) (See **SIDE WALL REMOVAL/INSTALLATION**.)
   c. Front heat duct (passenger-side) (See **FRONT HEAT DUCT REMOVAL/INSTALLATION**.)
3. Remove the blower fan controller. (See **BLOWER FAN CONTROLLER REMOVAL/INSTALLATION**.)
4. Connect the blower fan controller connector.

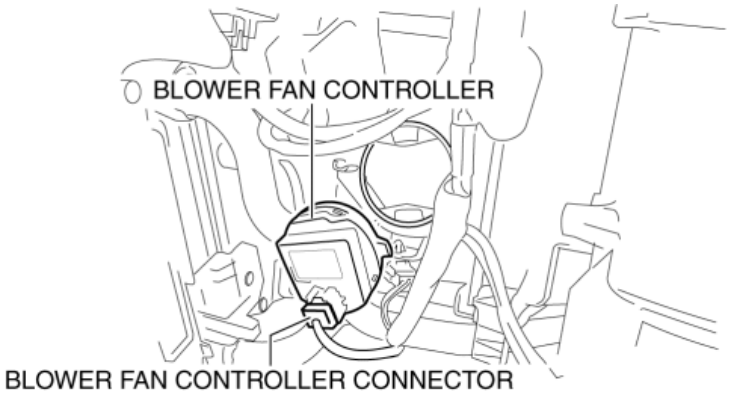

5. Connect the negative battery cable. (See **NEGATIVE BATTERY CABLE DISCONNECTION/CONNECTION [SKYACTIV-G 2.0, SKYACTIV-G 2.5]**.)
6. Switch the ignition ON (engine off or on).
7. Connect the negative (-) lead of the tester to body ground.
8. Insert the positive (+) lead of the tester into each blower fan controller terminal.
9. Measure the voltage according to the terminal voltage table.
   - If there is any malfunction, inspect the parts under “Inspection item (s)”.
     - If the parts under “Inspection item (s)” are found to be normal, replace the blower fan controller. (See **BLOWER FAN CONTROLLER REMOVAL/INSTALLATION**.)

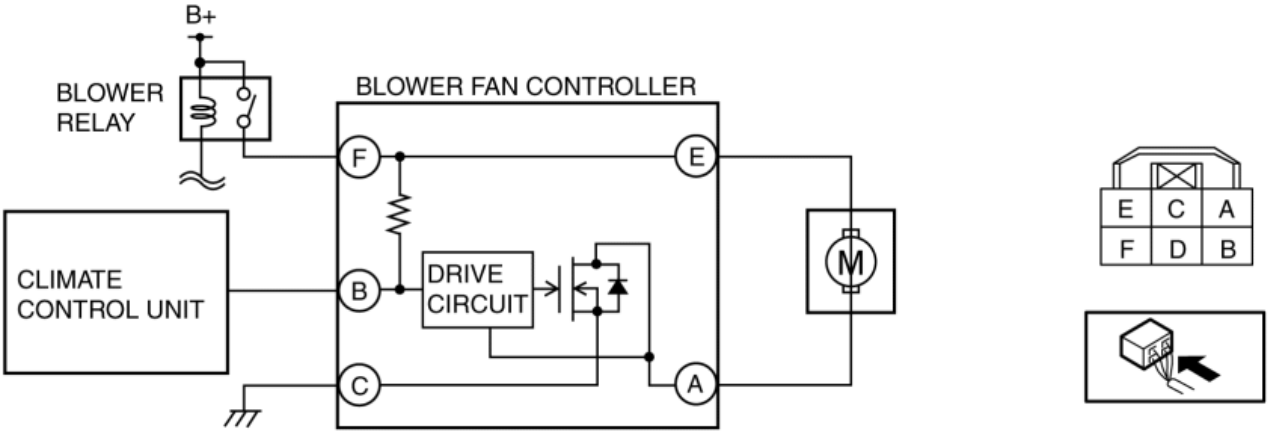

Terminal Voltage Table (Reference)

BLOWER FAN CONTROLLER INSPECTION

Terminal	Signal name	Connected to	Measurement condition		Voltage (V)	Inspection item (s)
A	Motor operation (-)	Blower motor	Switch the ignition off		1.0 or less	• Blower motor • Related wiring harness
			Fan stopped (Switch the ignition ON (engine off or on))		B+	
			Fan: manual 1st		8.4	
			Fan: manual 3rd		6.8	
			Fan: manual 7th		1.0 or less	
B	Blower fan speed control	Climate control unit	Switch the ignition off		1.0 or less	• Related wiring harness • Climate control unit
			Fan stopped (Switch the ignition ON (engine off or on))		B+	
			• Airflow mode: VENT • Air intake mode: RECIRCULATE	Fan: manual 1st	9.7	
				Fan: manual 3rd	7.1	
				Fan: manual 7th	3.3	
C	GND	Body ground	Under any condition		1.0 or less	• Related wiring harness
D	—	—	—		—	—
E	Motor operation (+)	Blower motor	Switch the ignition off		1.0 or less	• Blower motor • Related wiring harness
			Switch the ignition ON (engine off or on)		B+	
F	B+	Blower relay	Switch the ignition off		1.0 or less	• Related wiring harness • Blower relay
			Switch the ignition ON (engine off or on)		B+	

2014 - Mazda3 - HVAC

AIR FILTER REMOVAL/INSTALLATION

1. Remove the glove compartment. (See **GLOVE COMPARTMENT REMOVAL/INSTALLATION**.)
2. Remove the air filter.

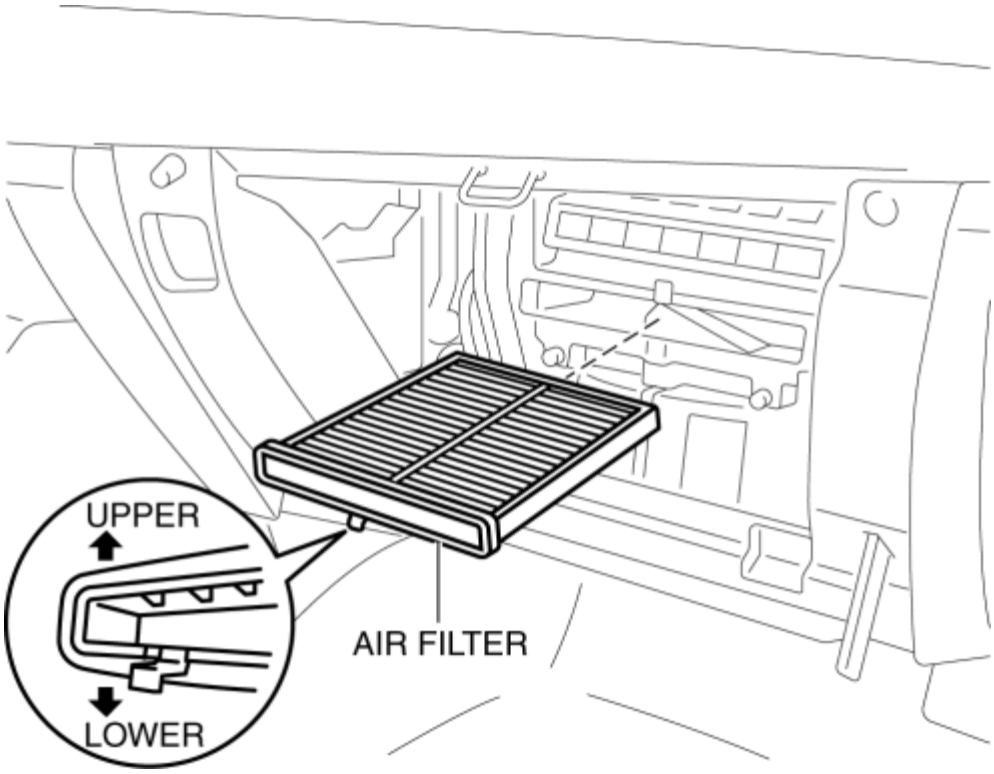

3. Install in the reverse order of removal.

2014 - Mazda3 - HVAC

AIR FILTER INSPECTION

1. Remove the glove compartment. (See **GLOVE COMPARTMENT REMOVAL/INSTALLATION**.)
2. Remove the air filter. (See **AIR FILTER REMOVAL/INSTALLATION**.)
3. Verify that there is no damage, excessive dirt, or abnormal odor on the air filter.
    - If there is any malfunction, replace the air filter. (See **AIR FILTER REMOVAL/INSTALLATION**.)

NOTE:

- The air filter cannot be reused by cleaning it with water or compressed air.

2014 - Mazda3 - HVAC

A/C UNIT REMOVAL/INSTALLATION

1. Disconnect the negative battery cable. (See **NEGATIVE BATTERY CABLE DISCONNECTION/CONNECTION [SKYACTIV-G 2.0, SKYACTIV-G 2.5]**.)

2. Discharge the refrigerant. (See **REFRIGERANT CHARGING**.)

3. Drain the engine coolant. (See **ENGINE COOLANT REPLACEMENT [SKYACTIV-G 2.0, SKYACTIV-G 2.5]**.)

4. Remove the following parts:

   a. Windshield wiper arm and blade (See **WINDSHIELD WIPER ARM AND BLADE REMOVAL/INSTALLATION**.)

   b. Cowl grille (See **COWL GRILLE REMOVAL/INSTALLATION**.)

   c. Front scuff plate (See **FRONT SCUFF PLATE REMOVAL/INSTALLATION**.)

   d. Front side trim (See **FRONT SIDE TRIM REMOVAL/INSTALLATION**.)

   e. A-pillar trim (See **A-PILLAR TRIM REMOVAL/INSTALLATION**.)

   f. Driver-side air bag module (See **DRIVER-SIDE AIR BAG MODULE REMOVAL [TWO-STEP DEPLOYMENT CONTROL SYSTEM]**.)(See **DRIVER-SIDE AIR BAG MODULE INSTALLATION [TWO-STEP DEPLOYMENT CONTROL SYSTEM]**.)(See **DRIVER-SIDE AIR BAG MODULE REMOVAL [STANDARD DEPLOYMENT CONTROL SYSTEM]**.)(See **DRIVER-SIDE AIR BAG MODULE INSTALLATION [STANDARD DEPLOYMENT CONTROL SYSTEM]**.)

   g. Steering wheel (See **STEERING WHEEL AND COLUMN REMOVAL/INSTALLATION**.)

   h. Meter hood (See **METER HOOD REMOVAL/INSTALLATION**.)

   i. Instrument cluster (See **INSTRUMENT CLUSTER REMOVAL/INSTALLATION**.)

   j. Column cover (See **COLUMN COVER REMOVAL/INSTALLATION**.)

   k. Upper panel (See **UPPER PANEL REMOVAL**.)(See **UPPER PANEL INSTALLATION**.)

   l. Rear console (See **REAR CONSOLE REMOVAL/INSTALLATION**.)

   m. Shift lever knob (MTX) (See **MANUAL TRANSAXLE SHIFT MECHANISM REMOVAL/INSTALLATION [C66M-R]**.)

   n. Selector lever knob (ATX) (See **AUTOMATIC TRANSAXLE SHIFT MECHANISM REMOVAL/INSTALLATION**.)

   o. Shift panel (See **SHIFT PANEL REMOVAL/INSTALLATION**.)

   p. Front console box (See **FRONT CONSOLE BOX REMOVAL/INSTALLATION**.)

   q. CD player (with CD player) (See **CD PLAYER REMOVAL**.)(See **CD PLAYER INSTALLATION**.)

r. Side wall (See **SIDE WALL REMOVAL/INSTALLATION**.)

s. Glove compartment (See **GLOVE COMPARTMENT REMOVAL/INSTALLATION**.)

t. Decoration panel (See **DECORATION PANEL REMOVAL/INSTALLATION**.)

u. Front console (See **FRONT CONSOLE REMOVAL/INSTALLATION**.)

v. Climate control unit (See **CLIMATE CONTROL UNIT REMOVAL/INSTALLATION [FULL-AUTO AIR CONDITIONER]**.) (See **CLIMATE CONTROL UNIT REMOVAL/INSTALLATION [MANUAL AIR CONDITIONER]**.)

w. Center display (See **CENTER DISPLAY REMOVAL/INSTALLATION**.)

x. Dashboard under cover (See **DASHBOARD UNDER COVER REMOVAL/INSTALLATION**.)

y. Hood release lever (See **HOOD RELEASE LEVER AND RELEASE CABLE REMOVAL/INSTALLATION**.)

z. Fuel-filler lid opener lever (See **FUEL-FILLER LID OPENER AND LEVER REMOVAL/INSTALLATION**.)

aa. Driver-side lower panel (See **LOWER PANEL REMOVAL/INSTALLATION**.)

ab. Knee bolster (See **KNEE BOLSTER REMOVAL/INSTALLATION**.)

ac. Joint cover (See **STEERING WHEEL AND COLUMN REMOVAL/INSTALLATION**.)

ad. Steering shaft (See **STEERING WHEEL AND COLUMN REMOVAL/INSTALLATION**.)

ae. Selector lever component (MTX) (See **MANUAL TRANSAXLE SHIFT MECHANISM REMOVAL/INSTALLATION [C66M-R]**.)

af. Selector lever component (ATX) (See **AUTOMATIC TRANSAXLE SHIFT MECHANISM REMOVAL/INSTALLATION**.)

ag. Parking brake lever (See **PARKING BRAKE LEVER REMOVAL/INSTALLATION**.)

ah. Passenger-side lower panel (See **LOWER PANEL REMOVAL/INSTALLATION**.)

ai. Dashboard (See **DASHBOARD REMOVAL**.)(See **DASHBOARD INSTALLATION**.)

5. Remove the blower unit. (See **BLOWER UNIT REMOVAL/INSTALLATION**.)

6. Remove the floor insulator. (See **FLOOR INSULATOR REMOVAL/INSTALLATION**.)

7. Disconnect the drain hose.

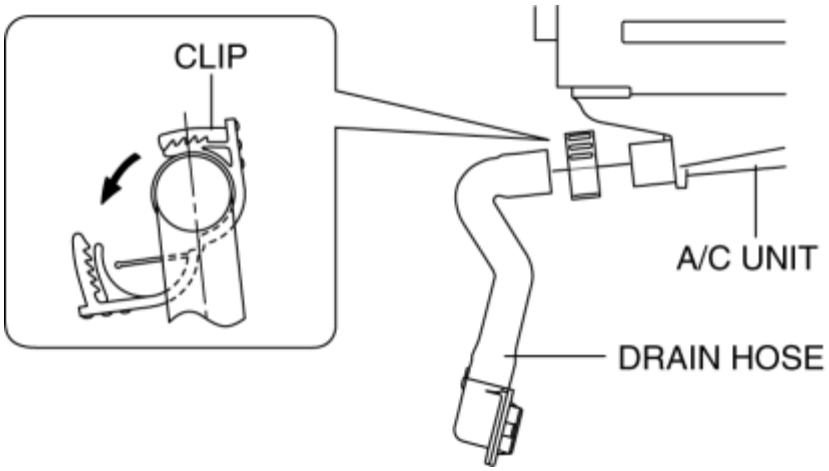

8. Remove the fastener. (rear heat duct)

9. Remove the bolt, then disconnect the cooler hose (LO) and cooler pipe.

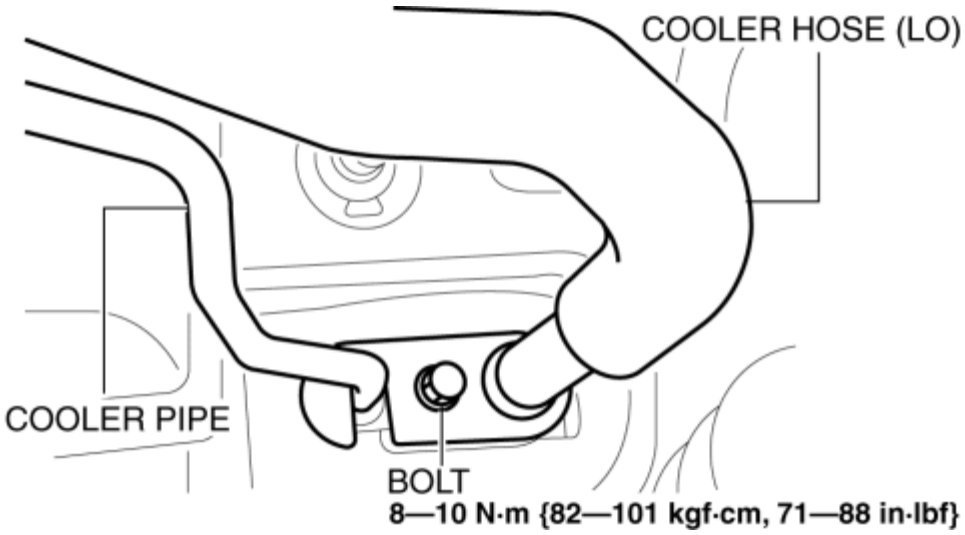

CAUTION:

- If moisture or foreign matter enters the refrigeration cycle, cooling ability will be lowered and abnormal noise or other malfunctions could occur. Always plug open fittings immediately after removing any refrigeration cycle parts.

10. Disconnect the heater hose.

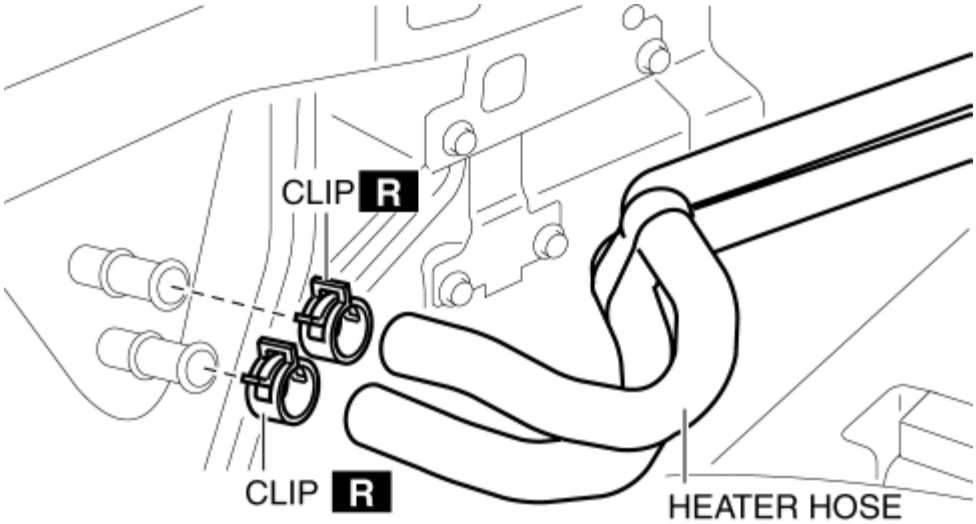

11. Remove the nut, then remove the A/C unit. Do not allow compressor oil to spill.

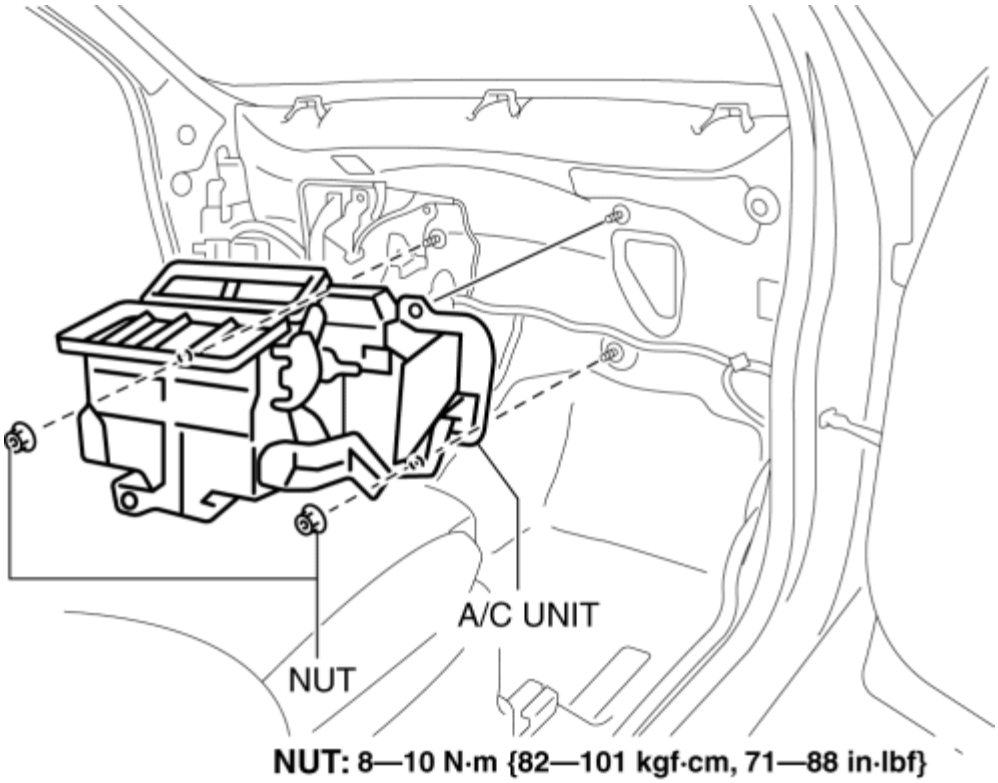

12. Install in the reverse order of removal. (See **A/C Unit Installation Note**.)

13. Inspect for engine coolant leakage. (See **ENGINE COOLANT LEAKAGE INSPECTION [SKYACTIV-G 2.0, SKYACTIV-G 2.5]**.)

14. Perform the refrigerant system performance test. (See **REFRIGERANT SYSTEM PERFORMANCE TEST**.)

A/C Unit Installation Note

1. When replacing the A/C unit or evaporator, add compressor oil to the refrigerant cycle.

   Supplemental oil amount (approx. quantity)

   - 40 ml {40 cc, 1.4 fl oz}

Drain Hose Installation Note

1. Install the clip as shown in the figure.

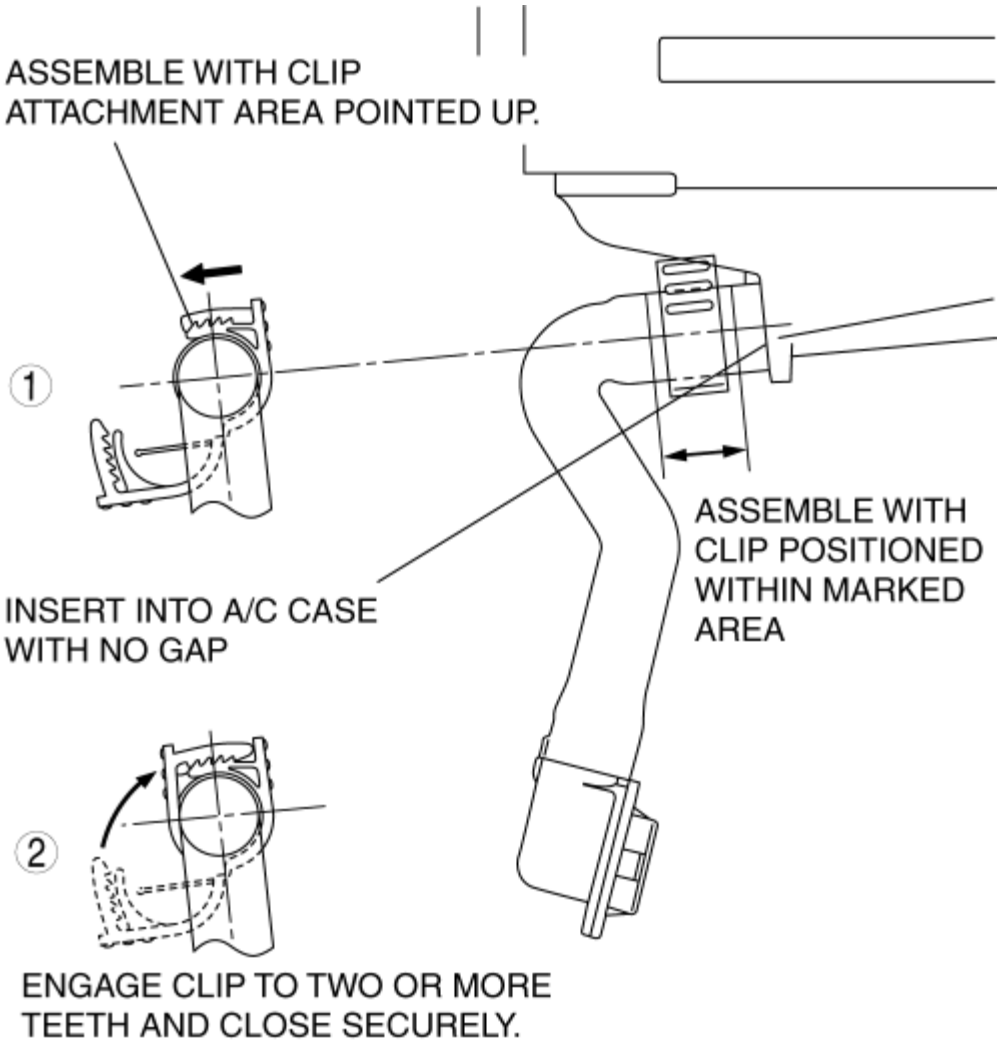
ASSEMBLE WITH CLIP
ATTACHMENT AREA POINTED UP.
1
INSERT INTO A/C CASE
WITH NO GAP
ASSEMBLE WITH
CLIP POSITIONED
WITHIN MARKED
AREA
2
ENGAGE CLIP TO TWO OR MORE
TEETH AND CLOSE SECURELY.

2014 - Mazda3 - HVAC

A/C UNIT DISASSEMBLY/ASSEMBLY

Full-auto Air Conditioner

CAUTION:

- If a non-specified grease is used, it may result in abnormal noise or improper operation of the links. Apply only the specified grease to each link.

1. Disassemble in the order indicated in the table.

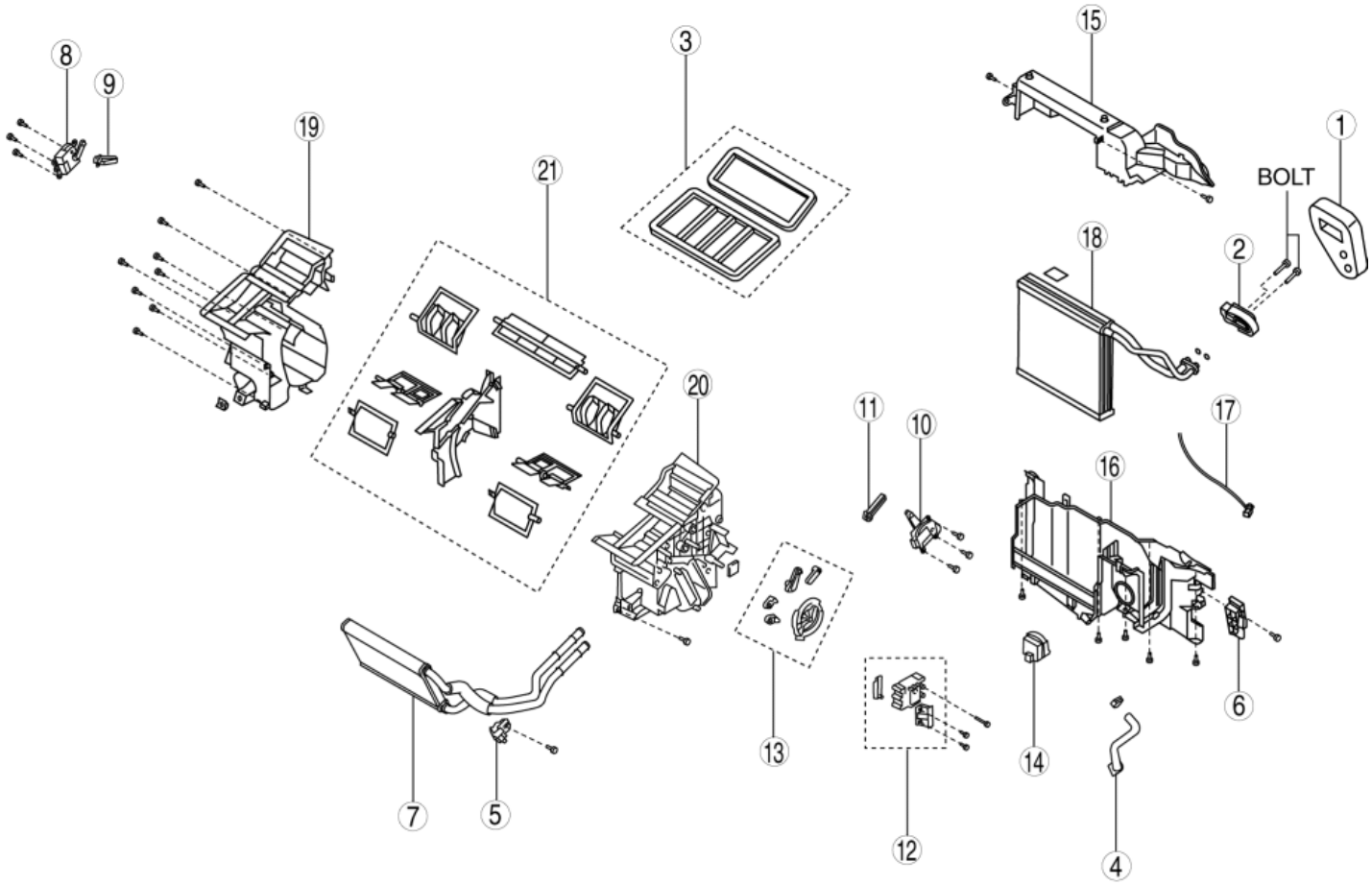

BOLT: **3.5—5.5 N·m {36—56 kgf·cm, 31—48 in·lbf}**

X: Applicable—: Not applicable

Step	Part name	Disassembly/assembly of main parts		
		Heater core	Evaporator temperature sensor	Evaporator
1	Polyurethane foam	X	—	X
2	Expansion valve	—	—	X
3	Adhesive polyurethane	—	—	—
4	Drain hose	—	—	—

5	Plate (1)	X	—	—
6	Plate (2)	X	—	—
7	Heater core	X	—	—
8	Driver-side air mix actuator (with dual type climate control unit)	—	—	—
9	Driver-side air mix link (with dual type climate control unit)	—	—	—
10	Passenger-side air mix actuator (with dual type climate control unit) Air mix actuator (with single type climate control unit)	—	—	—
11	Passenger-side air mix link (with dual type climate control unit) Air mix link (with single type climate control unit)	—	—	—
12	Airflow mode actuator	—	—	—
13	Airflow mode link set	—	—	—
14	Blower fan controller	—	—	—
15	A/C case (1)	—	X	X
16	A/C case (2)	—	X	X
17	Evaporator temperature sensor (See **Evaporator temperature sensor assembly note**.)	—	X	X
18	Evaporator	—	—	X
19	A/C case (3)			
20	A/C case (4)	—	—	—
21	Door damper	—	—	—

2. Assemble in the reverse order of disassembly.

Evaporator temperature sensor assembly note

1. Assemble the evaporator temperature sensor as shown in the figure.

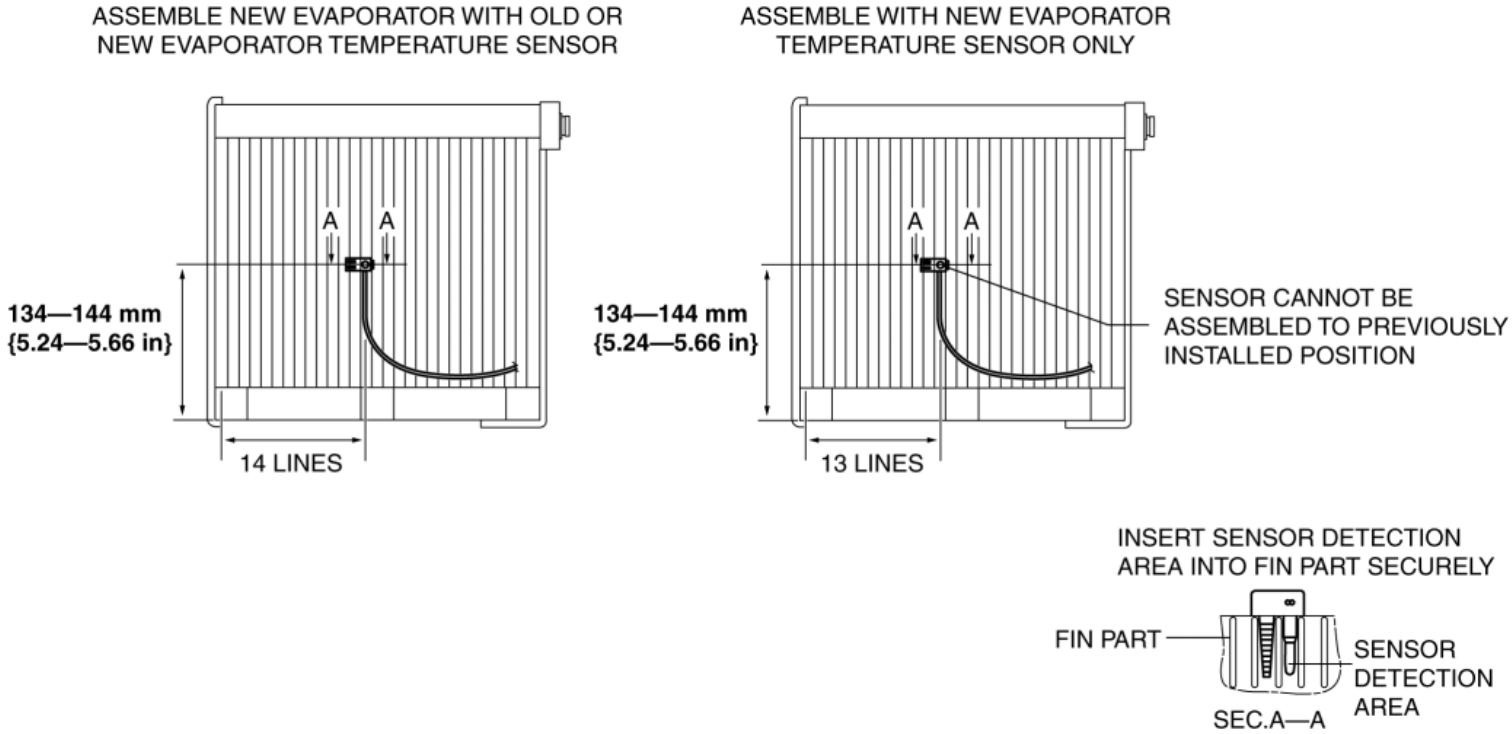

CAUTION:

- When installing the evaporator temperature sensor without replacing the evaporator, assemble the evaporator temperature sensor with the installation position slid to the left of the previous position by 1 line. If the evaporator temperature sensor is assembled to the previously installed position, it may not function due to poor contact of the fin surface with the sensor detection area caused by fin deformation.

NOTE:

- If an evaporator temperature sensor cannot be correctly positioned on the evaporator, replace the evaporator.

Manual Air Conditioner

CAUTION:

- If a non-specified grease is used, it may result in abnormal noise or improper operation of the links. Apply only the specified grease to each link.

1. Disassemble in the order indicated in the table.

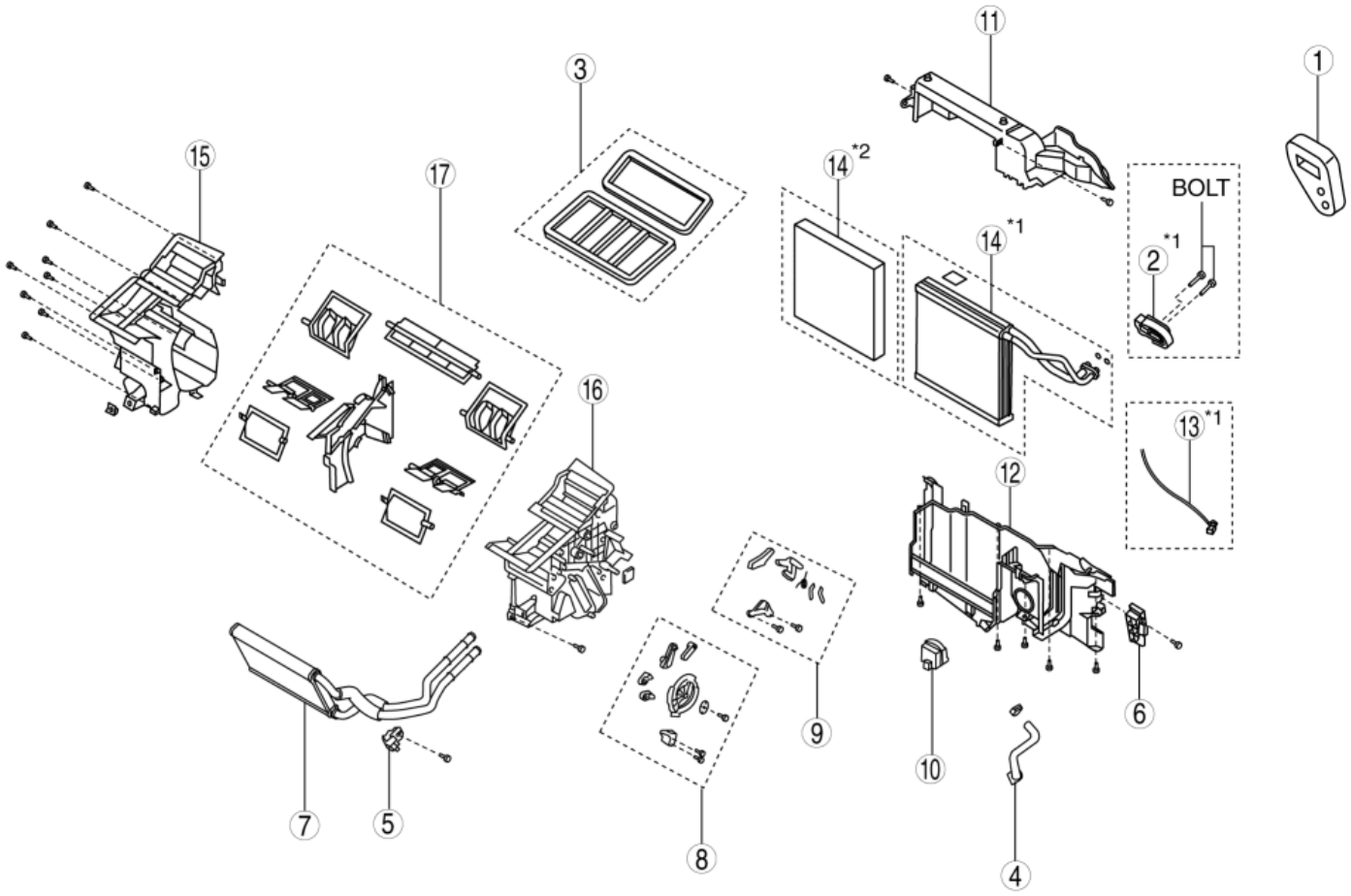

BOLT: **3.5—5.5 N·m {36—56 kgf·cm, 31—48 in·lbf}**

*1 : WITH COOLING SYSTEM
*2 : WITHOUT COOLING SYSTEM

X: Applicable—: Not applicable

Step	Part name	Disassembly/assembly of main parts		
		Heater core	Evaporator temperature sensor	Evaporator
1	Polyurethane foam	X	—	X
2	Expansion valve	—	—	X
3	Adhesive polyurethane	—	—	—
4	Drain hose	—	—	—
5	Plate (1)	X	—	—
6	Plate (2)	X	—	—
7	Heater core	X	—	—
8	Airflow mode link set	X (wire clamp)	—	—
9	Air mix link	—	—	—
10	Blower fan controller	—	—	—
11	A/C case (1)	—	X	X

12	A/C case (2)	—	X	X
13	Evaporator temperature sensor (See **Evaporator temperature sensor assembly note**.)	—	X	X
14	Evaporator (with cooling system)	—	—	X
	Case (without cooling system)	—	—	—
15	A/C case (3)	—	—	—
16	A/C case (4)	—	—	—
17	Door damper	—	—	—

2. Assemble in the reverse order of disassembly.

Evaporator temperature sensor assembly note

1. Assemble the evaporator temperature sensor as shown in the figure.

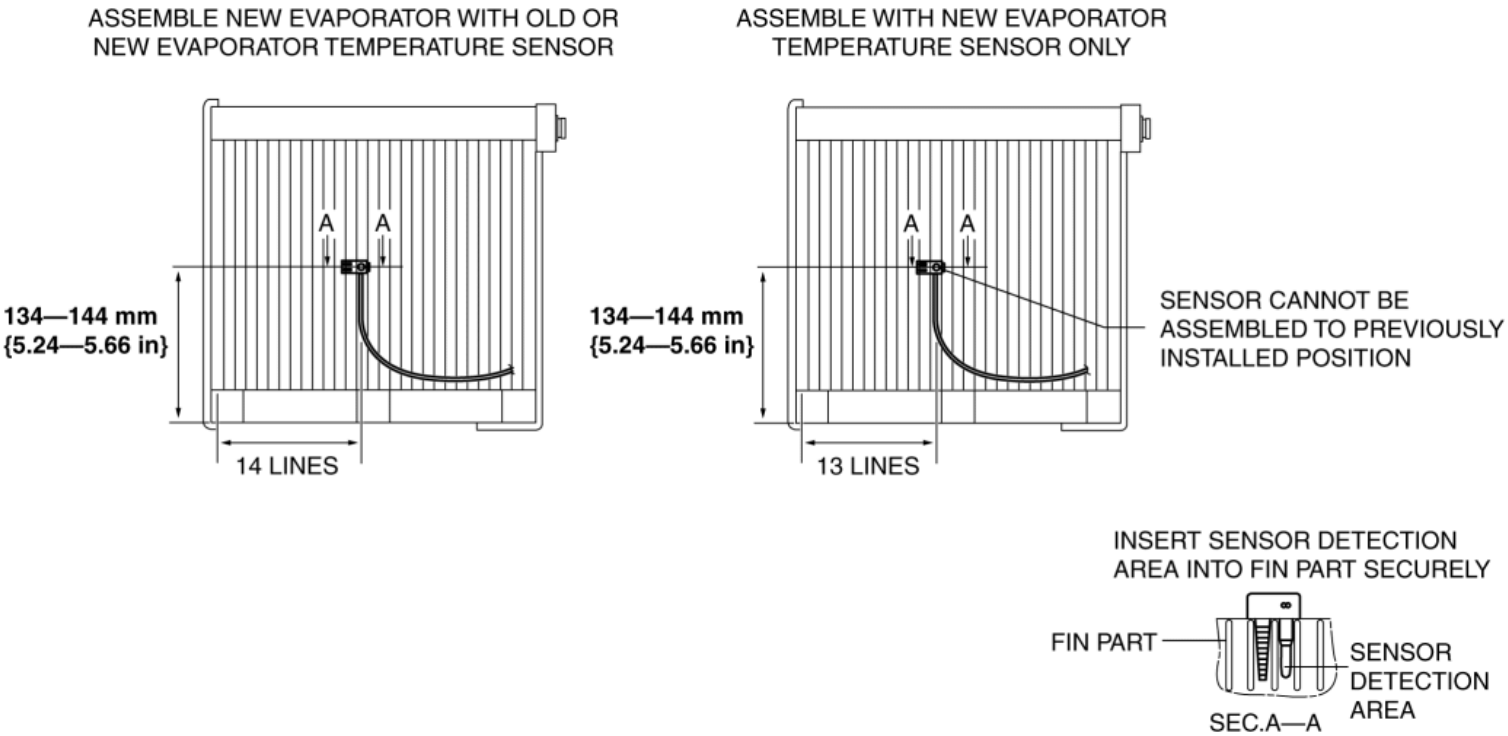

CAUTION:

- When installing the evaporator temperature sensor without replacing the evaporator, assemble the evaporator temperature sensor with the installation position slid to the left of the previous position by 1 line. If the evaporator temperature sensor is assembled to the previously installed position, it may not function due to poor contact of the fin surface with the sensor detection area caused by fin deformation.

NOTE:

- If an evaporator temperature sensor cannot be correctly positioned on the evaporator, replace the evaporator.

2014 - Mazda3 - HVAC

EXPANSION VALVE REMOVAL/INSTALLATION

1. Disconnect the negative battery cable. (See **NEGATIVE BATTERY CABLE DISCONNECTION/CONNECTION [SKYACTIV-G 2.0, SKYACTIV-G 2.5]**.)

2. Discharge the refrigerant from the system. (See **REFRIGERANT CHARGING**.)

CAUTION:

- If moisture or foreign matter enters the refrigeration cycle, cooling ability will be lowered and abnormal noise will occur. Always immediately plug all open fittings after removing any refrigeration cycle parts to keep moisture or foreign matter out of the cycle.

3. Remove the nut.

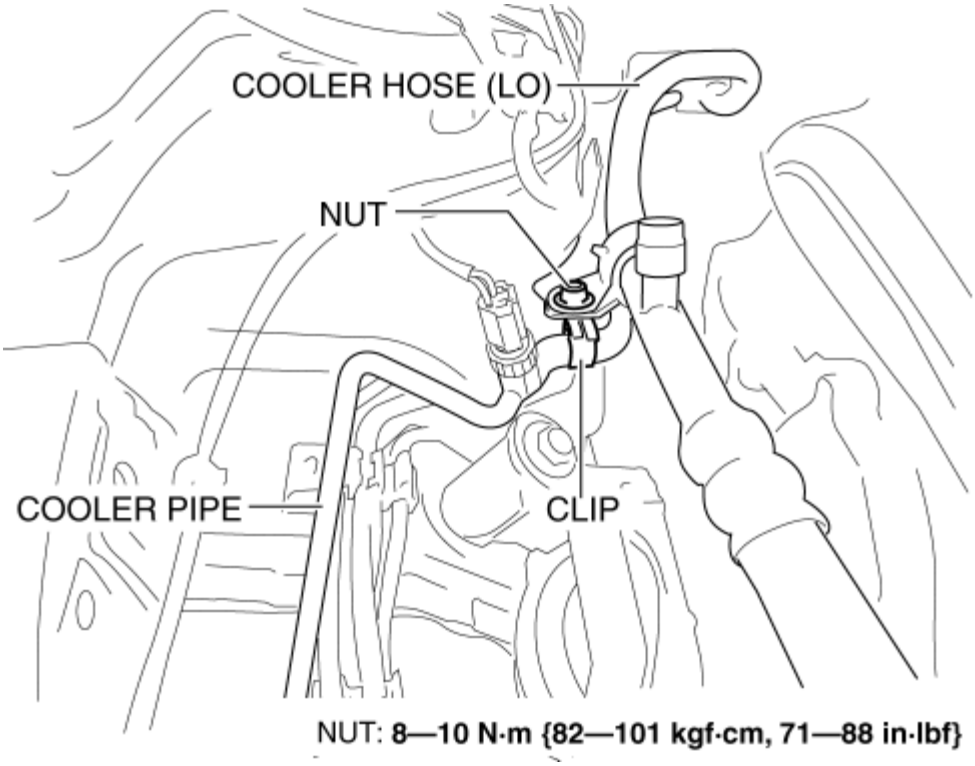

4. Remove the clip.

5. Remove the bolt and disconnect the cooler hose (LO) and cooler pipe. Do not allow compressor oil to spill.

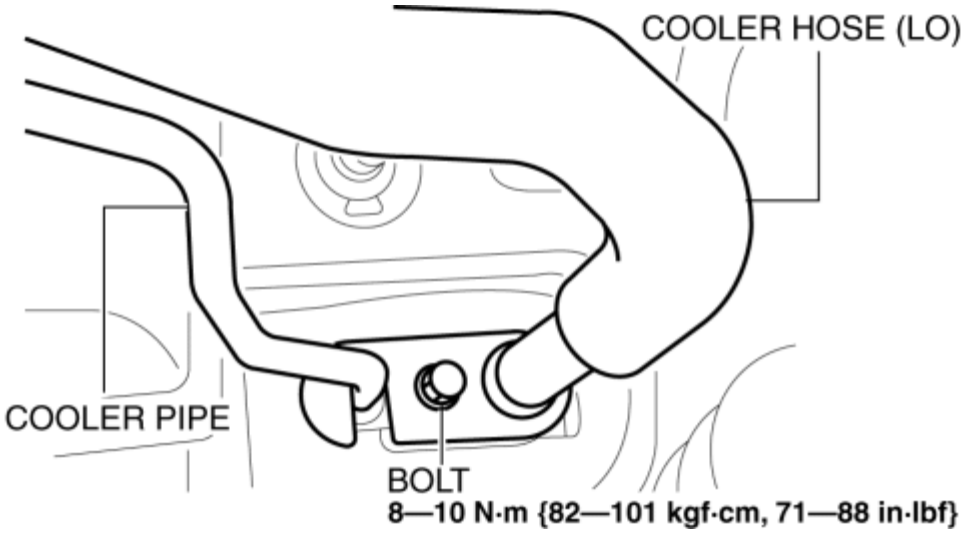

6. Remove the bolts.

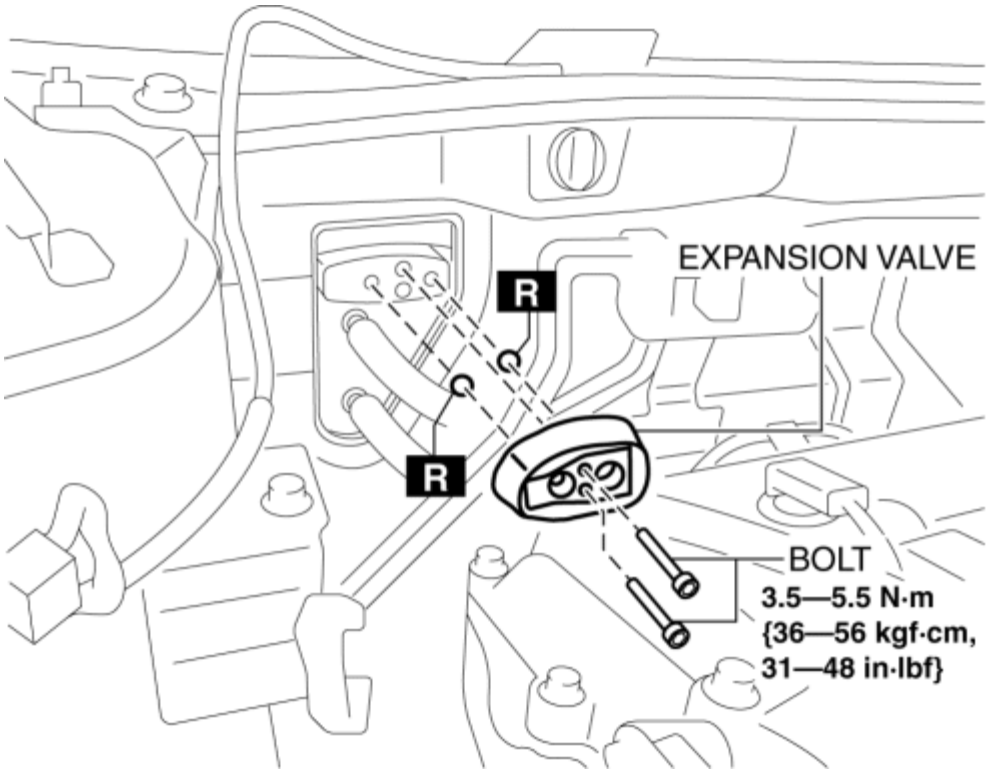

7. Remove the expansion valve. Do not allow compressor oil to spill.

8. Install in the reverse order of removal.

9. Perform the refrigerant system performance test. (See **REFRIGERANT SYSTEM PERFORMANCE TEST**.)

2014 - Mazda3 - HVAC

EVAPORATOR INSPECTION

1. Disconnect the negative battery cable. (See **NEGATIVE BATTERY CABLE DISCONNECTION/CONNECTION [SKYACTIV-G 2.0, SKYACTIV-G 2.5]**.)

2. Discharge the refrigerant. (See **REFRIGERANT CHARGING**.)

3. Drain the engine coolant. (See **ENGINE COOLANT REPLACEMENT [SKYACTIV-G 2.0, SKYACTIV-G 2.5]**.)

4. Remove the dashboard (See **DASHBOARD REMOVAL**.)(See **DASHBOARD INSTALLATION**.)

5. Remove the blower unit. (See **BLOWER UNIT REMOVAL/INSTALLATION**.)

6. Remove the A/C unit. (See **A/C UNIT REMOVAL/INSTALLATION**.)

7. Remove the evaporator. (See **A/C UNIT DISASSEMBLY/ASSEMBLY**.)

8. Inspect the evaporator for damage, cracks, and oil leakage.

    - If there is any malfunction, replace the evaporator. (See **A/C UNIT DISASSEMBLY/ASSEMBLY**.)

9. Visually inspect the fins for bending.

    - If there is any bending, use the end of a flathead screwdriver to straighten the fins.

2014 - Mazda3 - HVAC

HEATER CORE INSPECTION

1. Disconnect the negative battery cable. (See **NEGATIVE BATTERY CABLE DISCONNECTION/CONNECTION [SKYACTIV-G 2.0, SKYACTIV-G 2.5]**.)

2. Discharge the refrigerant. (See **REFRIGERANT CHARGING**.)

3. Drain the engine coolant. (See **ENGINE COOLANT REPLACEMENT [SKYACTIV-G 2.0, SKYACTIV-G 2.5]**.)

4. Remove the dashboard (See **DASHBOARD REMOVAL**.)(See **DASHBOARD INSTALLATION**.)

5. Remove the blower unit. (See **BLOWER UNIT REMOVAL/INSTALLATION**.)

6. Remove the A/C unit. (See **A/C UNIT REMOVAL/INSTALLATION**.)

7. Remove the heater core. (See **A/C UNIT DISASSEMBLY/ASSEMBLY**.)

8. Inspect the heater core for damage, cracks, and water leakage.

    - If there is any malfunction, replace the heater core. (See **A/C UNIT DISASSEMBLY/ASSEMBLY**.)

9. Visually inspect the fins for bending.

    - If there is any bending, use the end of a flathead screwdriver to straighten the fins.

10. Visually inspect the heater hose for deformation.

    - Repair with pliers if there is deformation. If there is any malfunction, replace the heater core. (See **A/C UNIT DISASSEMBLY/ASSEMBLY**.)

2014 - Mazda3 - HVAC

AIRFLOW MODE MAIN LINK REMOVAL/INSTALLATION

Full-auto Air Conditioner

1. The airflow mode main link is installed to the airflow mode actuator. When removing the airflow mode main link, refer to the airflow mode actuator removal/installation. (See **AIRFLOW MODE ACTUATOR REMOVAL/INSTALLATION [FULL-AUTO AIR CONDITIONER]**.)

Manual Air Conditioner

1. Disconnect the negative battery cable. (See **NEGATIVE BATTERY CABLE DISCONNECTION/CONNECTION [SKYACTIV-G 2.0, SKYACTIV-G 2.5]**.)
2. Remove the glove compartment. (See **GLOVE COMPARTMENT REMOVAL/INSTALLATION**.)
3. Press the tab down, then slide the wire off the link.

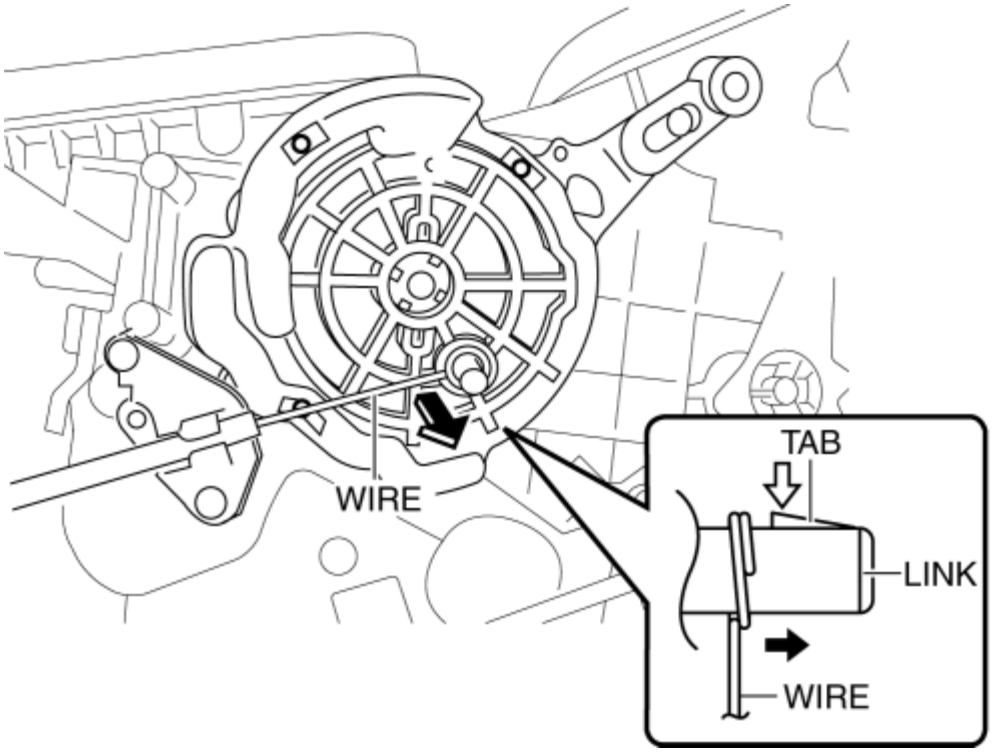

4. Remove the screw, then airflow mode main link.

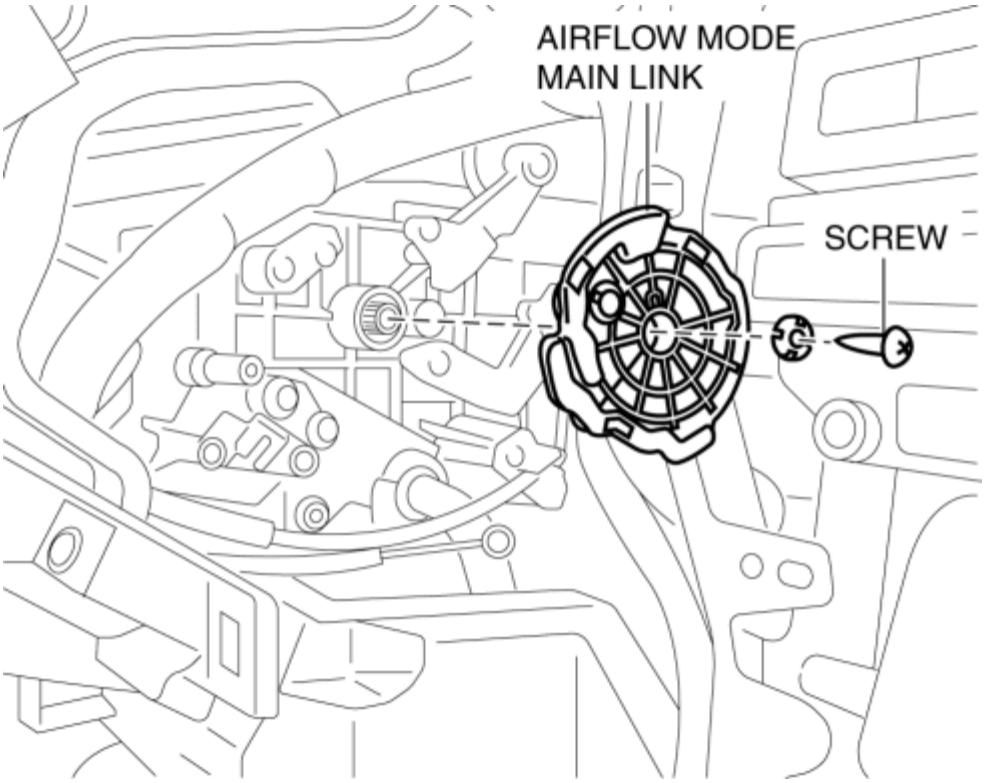

5. Install in the reverse order of removal. (See **Airflow mode main link installation note**.)

Airflow mode main link installation note

CAUTION:

- Apply only the specified grease to links. Otherwise abnormal noise or improper operation may result.

1. Align the airflow mode main link hole with the airflow mode sub link projection as shown in the figure.

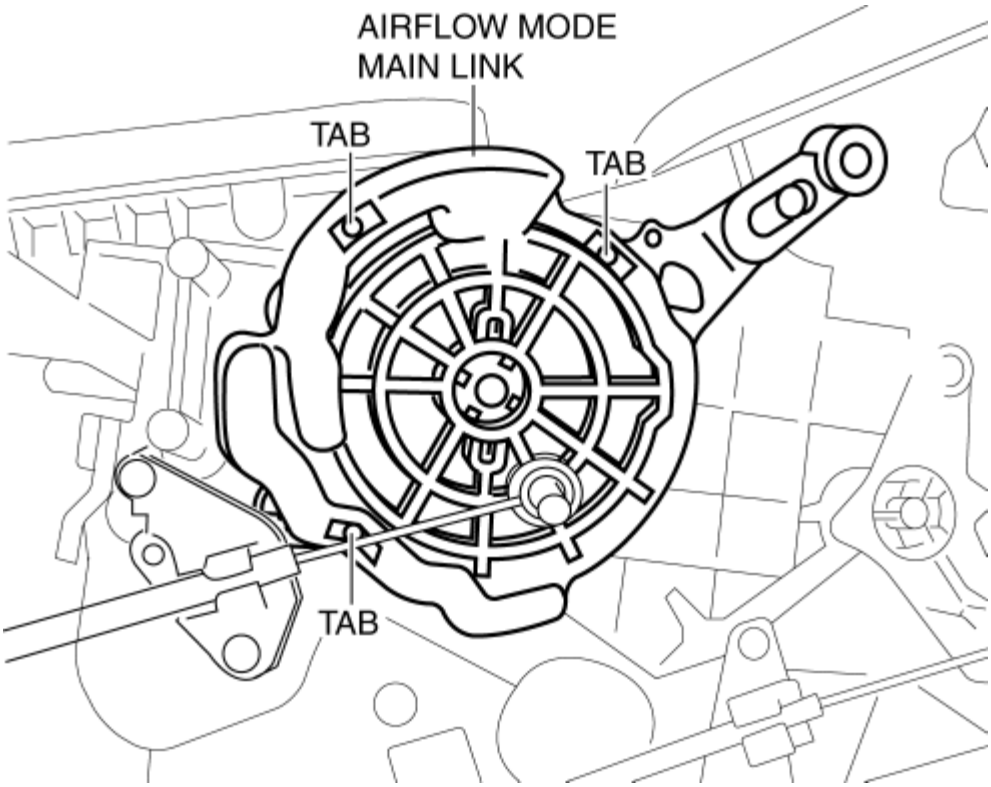

2. Press the airflow mode main link lightly to the A/C unit, then set the projections of each airflow mode sub link into the grooves of the airflow mode main link.

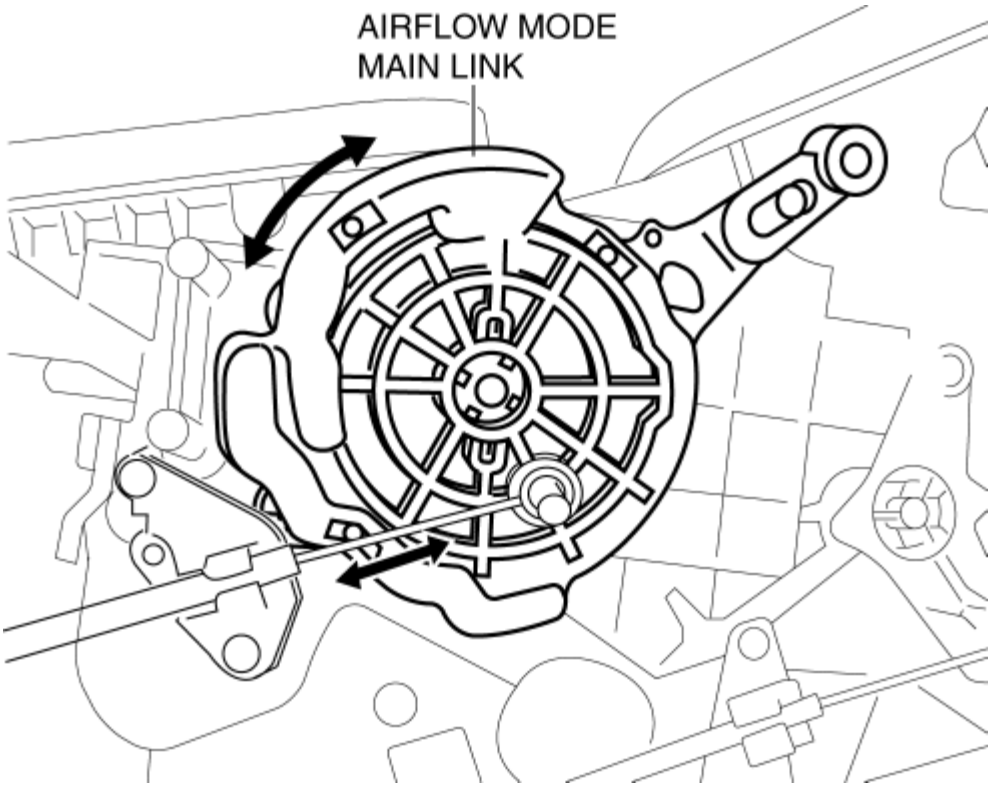

3. Rotate airflow mode main link and verify that each mode is accessed properly.

2014 - Mazda3 - HVAC

FRONT HEAT DUCT REMOVAL/INSTALLATION

Driver-side

1. Remove the side wall (driver-side). (See **SIDE WALL REMOVAL/INSTALLATION**.)
2. Insert a flathead screwdriver in the position shown in the figure, lift it up in the direction of the arrow.

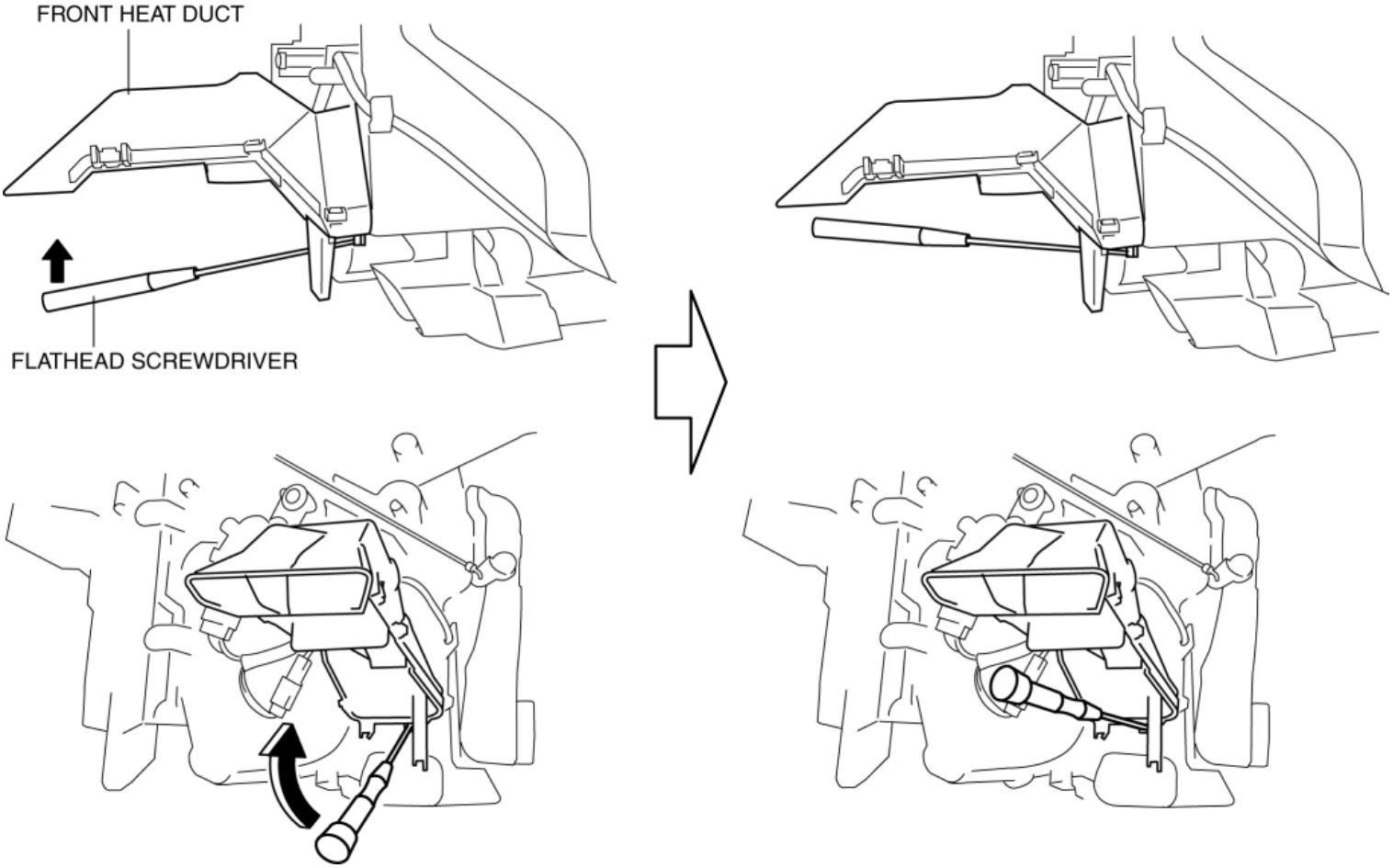

3. Detach the tab while lifting up the front heat duct in the direction of the arrow.

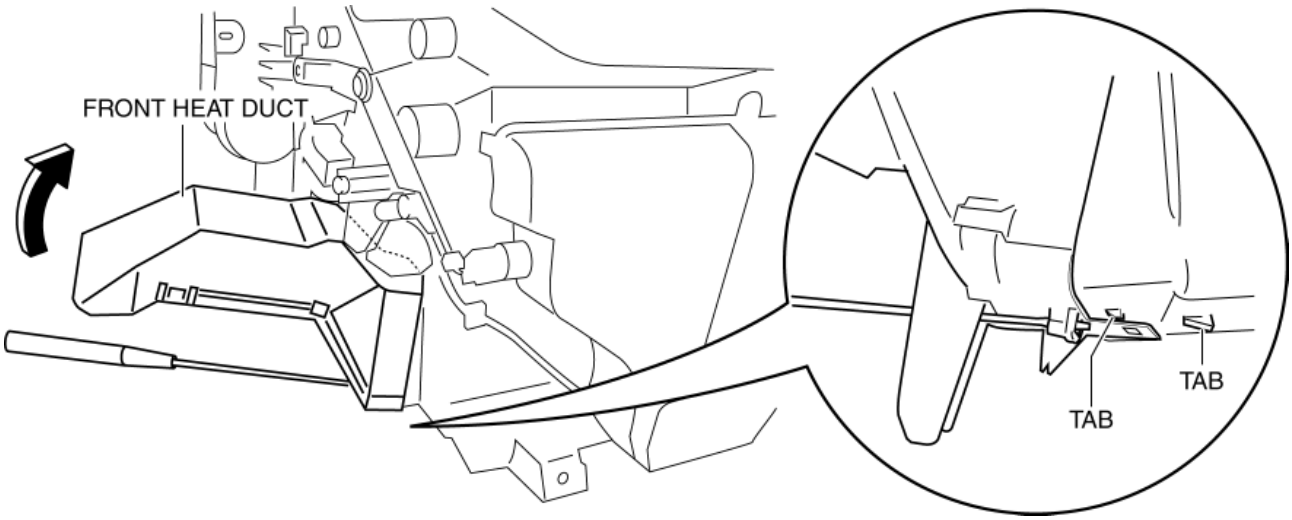

4. Remove the front heat duct.

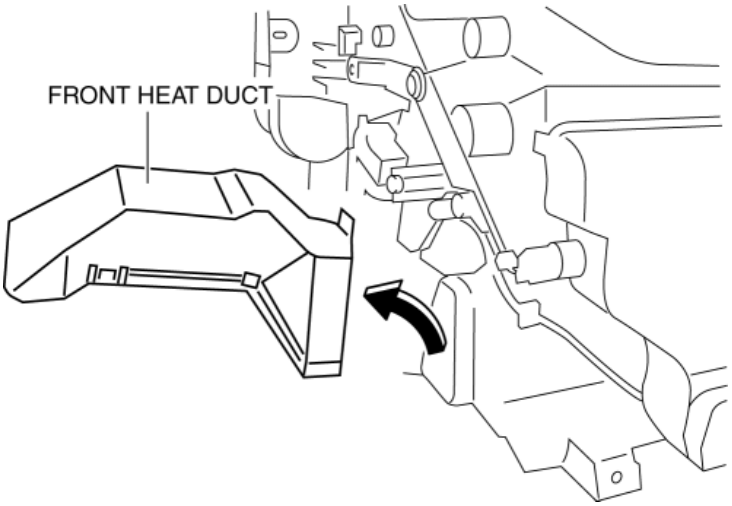

5. Install in the reverse order of removal.

Passenger-side

1. Remove the following parts:
   a. Dashboard under cover (See **DASHBOARD UNDER COVER REMOVAL/INSTALLATION**.)
   b. Side wall (passenger-side) (See **SIDE WALL REMOVAL/INSTALLATION**.)
2. Insert a flathead screwdriver in the position shown in the figure, lift it up in the direction of the arrow.

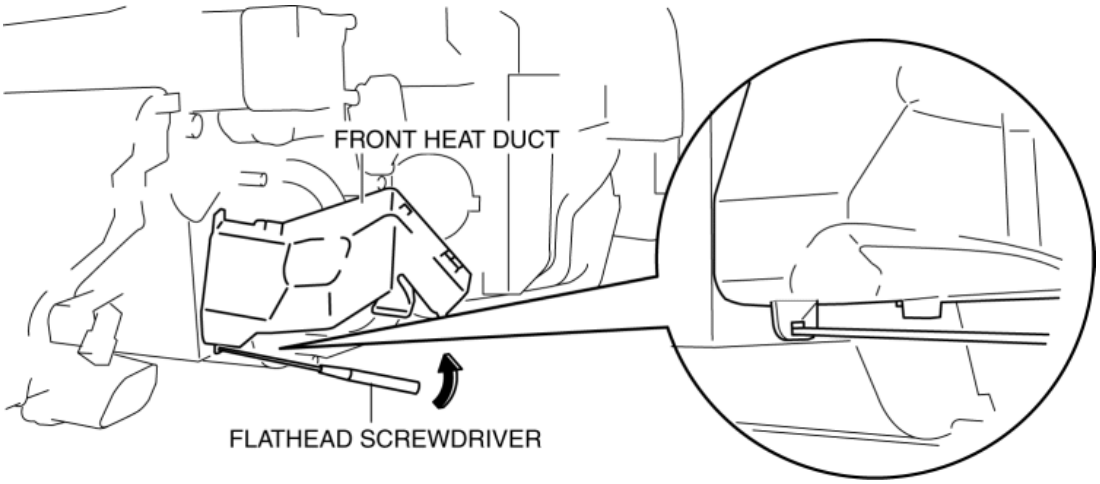

3. Detach the tab while lifting up the front heat duct in the direction of the arrow.

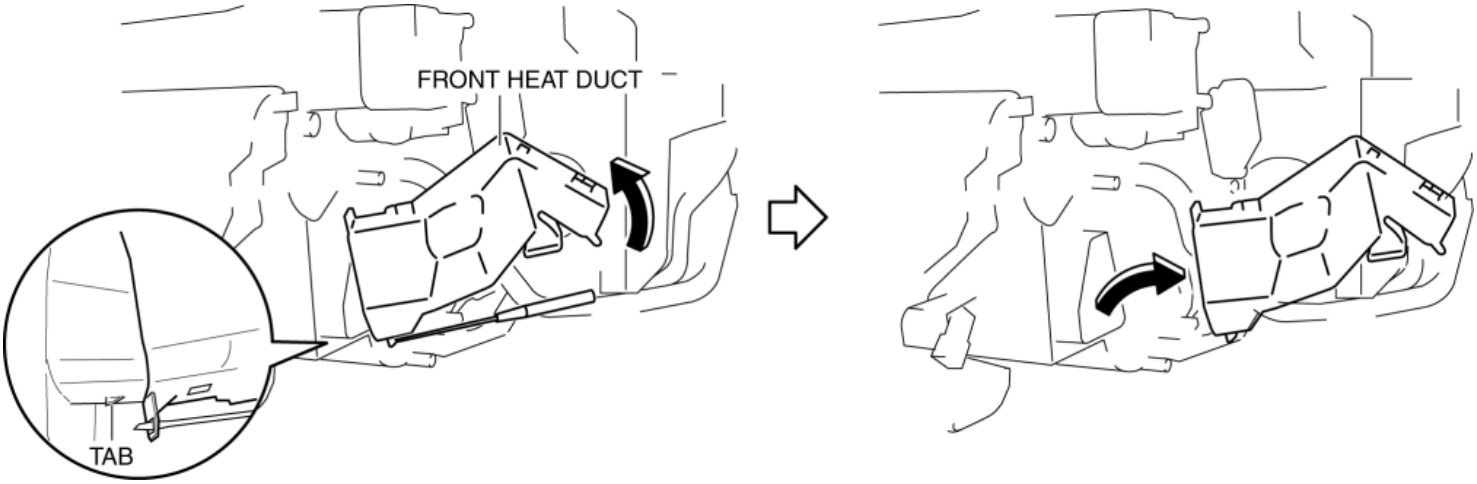

4. Remove the front heat duct.

5. Install in the reverse order of removal.

2014 - Mazda3 - HVAC

REAR HEAT DUCT REMOVAL/INSTALLATION

1. Disconnect the negative battery cable. (See **NEGATIVE BATTERY CABLE DISCONNECTION/CONNECTION [SKYACTIV-G 2.0, SKYACTIV-G 2.5]**.)
2. Slide the front seat rearward.
3. Remove the fastener.

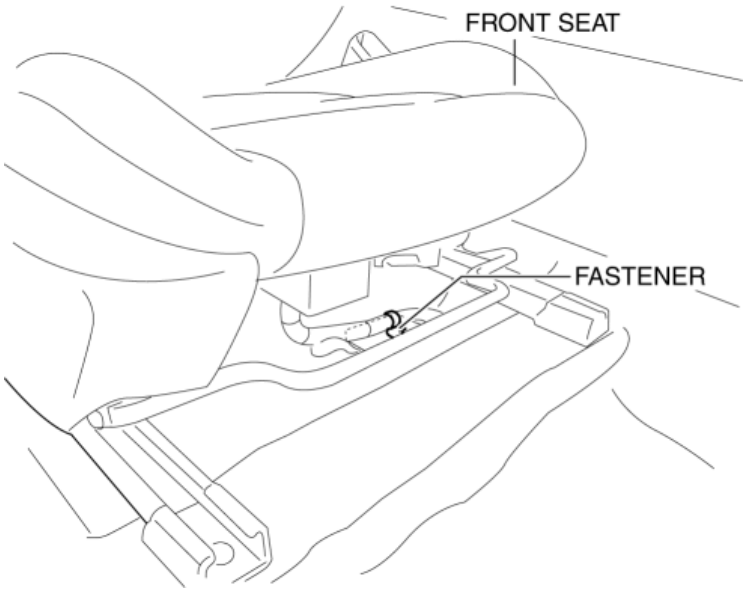

4. Remove the following parts:
   a. Dashboard under cover (See **DASHBOARD UNDER COVER REMOVAL/INSTALLATION**.)
   b. Front scuff plate (See **FRONT SCUFF PLATE REMOVAL/INSTALLATION**.)
   c. Front side trim (See **FRONT SIDE TRIM REMOVAL/INSTALLATION**.)
   d. Side wall (See **SIDE WALL REMOVAL/INSTALLATION**.)
   e. Joint cover (See **STEERING WHEEL AND COLUMN REMOVAL/INSTALLATION**.)
   f. Accelerator pedal (See **ACCELERATOR PEDAL REMOVAL/INSTALLATION [SKYACTIV-G 2.0, SKYACTIV-G 2.5]**.)
5. Turn the floor covering over.
6. Remove in the order indicated in the table.

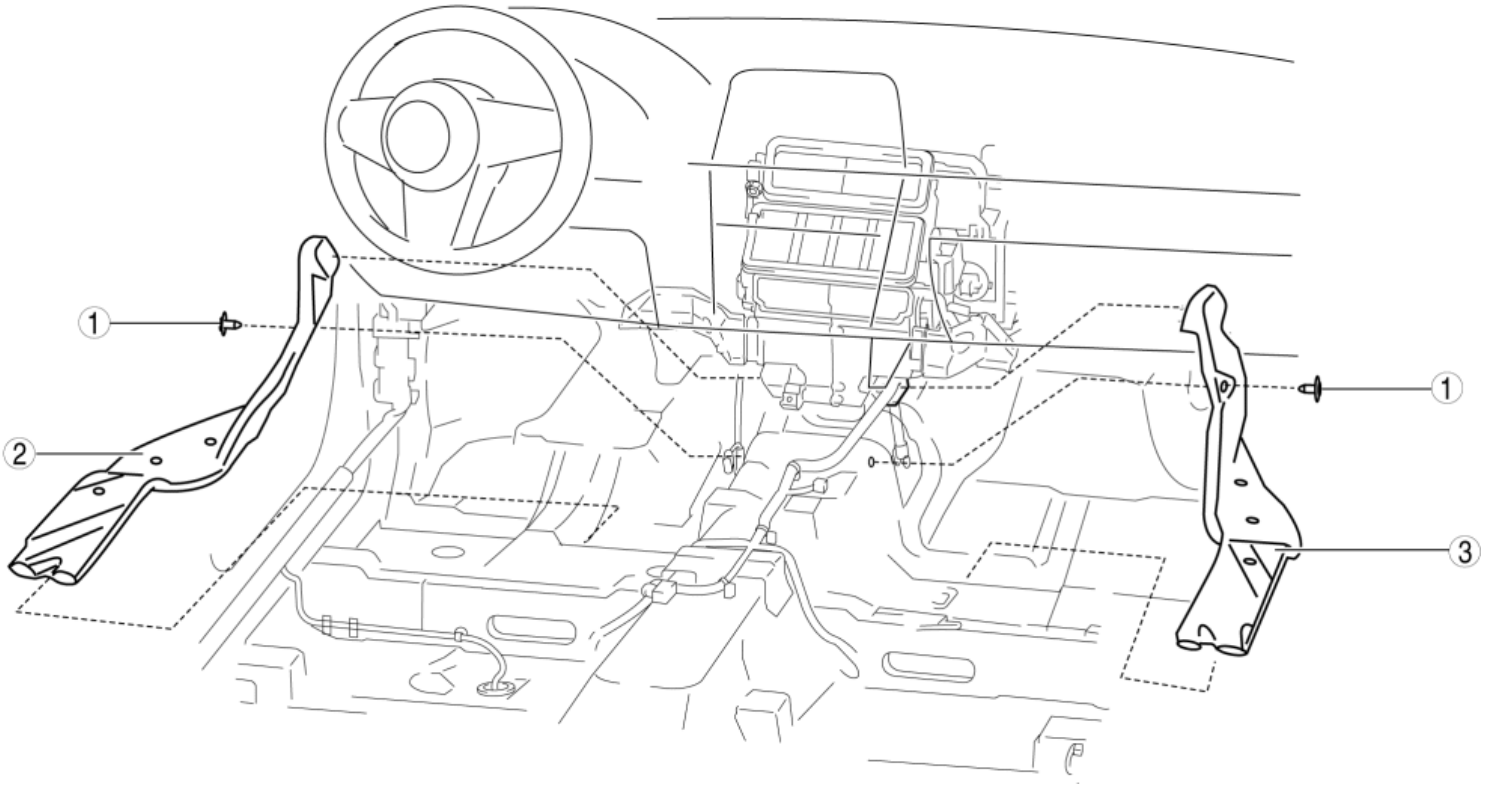

1	Fastener
2	Rear heat duct (1)
3	Rear heat duct (2)

7. Install in the reverse order of removal.

2014 - Mazda3 - HVAC

A/C COMPRESSOR REMOVAL/INSTALLATION

1. Disconnect the negative battery cable. (See **NEGATIVE BATTERY CABLE DISCONNECTION/CONNECTION [SKYACTIV-G 2.0, SKYACTIV-G 2.5]**.)

2. Discharge the refrigerant. (See **REFRIGERANT CHARGING**.)

3. Remove the front under cover No.2. (See **FRONT UNDER COVER No.2 REMOVAL/INSTALLATION**.)

4. Remove the drive belt. (See **DRIVE BELT REMOVAL/INSTALLATION [SKYACTIV-G 2.0, SKYACTIV-G 2.5]**.)

5. Disconnect the connector.

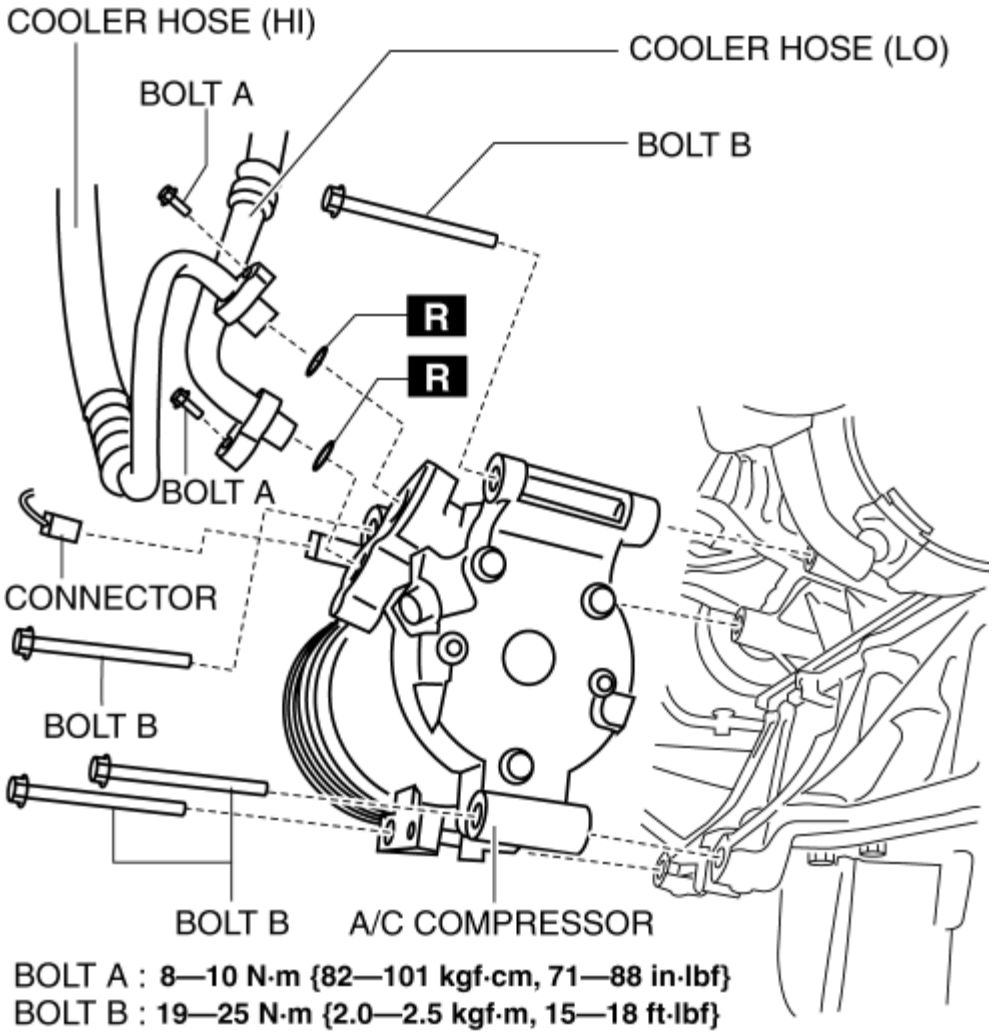

6. Remove bolts A.

CAUTION:

If moisture or foreign matter enters the refrigeration cycle, cooling ability will be lowered and abnormal noise or other malfunctions could occur. Always plug open fittings immediately after removing any refrigeration cycle parts.

7. Remove the cooler hose (LO). (See **REFRIGERANT LINE REMOVAL/INSTALLATION**.)

8. Remove the cooler hose (HI). (See **REFRIGERANT LINE REMOVAL/INSTALLATION**.)

9. Remove bolts B.

10. Remove the A/C compressor. Do not allow compressor oil to spill. (See **A/C Compressor Installation Note**.)

11. Install in the reverse order of removal.

12. Perform the refrigerant system performance test. (See **REFRIGERANT SYSTEM PERFORMANCE TEST**.)

A/C Compressor Installation Note

CAUTION:

- Due to the high moisture-absorption characteristics of the compressor oil, it may absorb moisture if left over a long period of time thereby negatively affecting A/C operation. Drain the compressor oil and refill within 10 min. of each other.

1. Rotate the new A/C compressor shaft six to eight revolutions while pouring refrigerant oil into a clean measuring container. Use this refrigerant oil to refill the new compressor. Do not allow refrigerant oil to become contaminated.

2. Rotate the old A/C compressor shaft six to eight revolutions while adding refrigerant oil to a separate, clean measuring container.

3. Compare the oil amounts. The amount of the oil drained from the new A/C compressor should be more than the old one.

4. Add the same amount oil drained from the old A/C compressor back into the new A/C compressor.

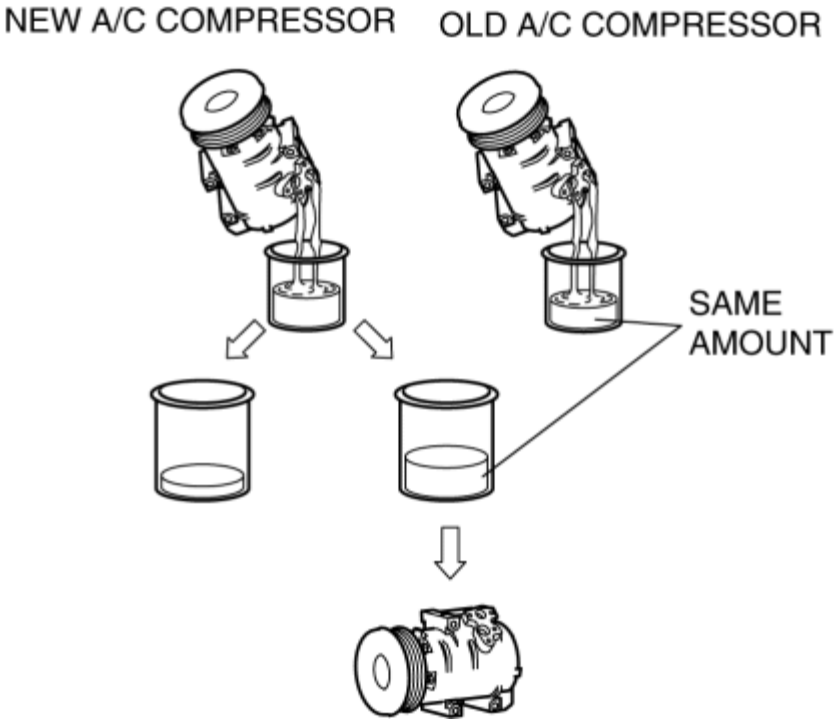

A/C compressor oil type

- FD46XG

A/C compressor oil sealed volume (approx. quantity)

- 100 ml {100 cc, 3.38 fl oz}

2014 - Mazda3 - HVAC

MAGNETIC CLUTCH DISASSEMBLY/ASSEMBLY

Magnetic Clutch is Disassembled/Assembled with A/C Compressor Removed from Vehicle

1. Disconnect the negative battery cable. (See **NEGATIVE BATTERY CABLE DISCONNECTION/CONNECTION [SKYACTIV-G 2.0, SKYACTIV-G 2.5]**.)
2. Discharge the refrigerant. (See **REFRIGERANT CHARGING**.)
3. Remove the front under cover No.2. (See **FRONT UNDER COVER No.2 REMOVAL/INSTALLATION**.)
4. Remove the drive belt. (See **DRIVE BELT REMOVAL/INSTALLATION [SKYACTIV-G 2.0, SKYACTIV-G 2.5]**.)
5. Remove the A/C compressor. (See **A/C COMPRESSOR REMOVAL/INSTALLATION**.)
6. Disassemble in the order indicated in the table.

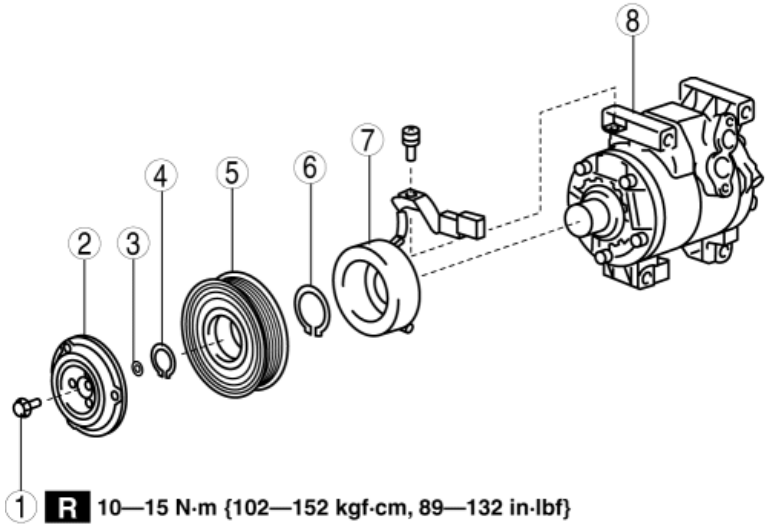

1	Bolt (See **Bolt removal/installation note**.)
2	Pressure plate
3	Shim (See **Shim installation note**.)
4	Snap ring (See **Snap ring removal/installation note**.)
5	A/C compressor pulley
6	Snap ring (See **Snap ring removal/installation note**.)
7	Stator

8	A/C compressor body

7. Assemble in the reverse order of disassembly.

8. Adjust the magnetic clutch clearance. (See **MAGNETIC CLUTCH ADJUSTMENT**.)

Bolt removal/installation note

1. When removing or installing the bolt, lock the A/C compressor pulley against rotation using the following procedure.

CAUTION:

- When connecting the positive battery cable to the magnetic clutch connector, use a cable with a female terminal of the correct size. Otherwise, load will be applied to the terminal, resulting in deformation or damage, and poor contact. In addition, the positive battery cable could disconnect from the connector resulting in a short circuit.

a. Apply battery positive voltage to the magnetic clutch terminal and connect the A/C compressor body to the ground.

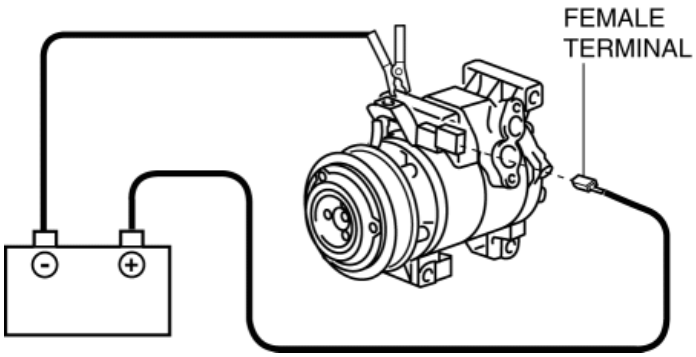

b. Wrap the drive belt, which is no longer of use, tightly around the A/C compressor pulley.

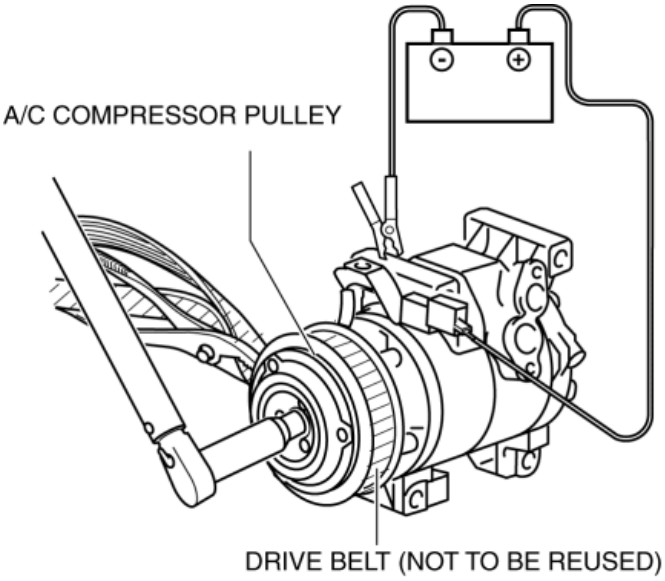

c. Hold the drive belt in place with pliers.

d. Remove/installation the bolt.

Tightening torque

- 10—15 N·m {102 —152 kgf·cm, 89 — 132 in·lbf}

2. When installing a new A/C compressor body, replace the recommended bolt.

Snap ring removal/installation note

1. Remove/install the snap ring using a snap ring pliers.

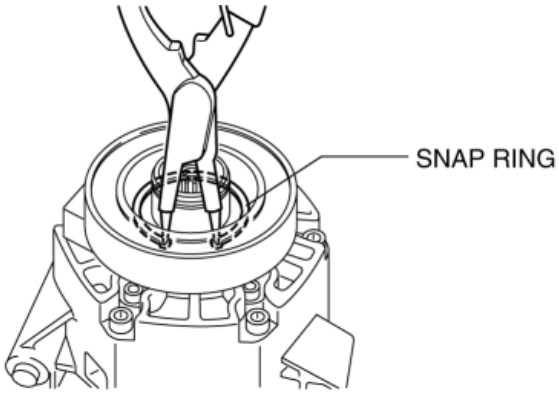

Shim installation note

1. First, insert the **1mm (0.039 in)** thick shim into the shaft.

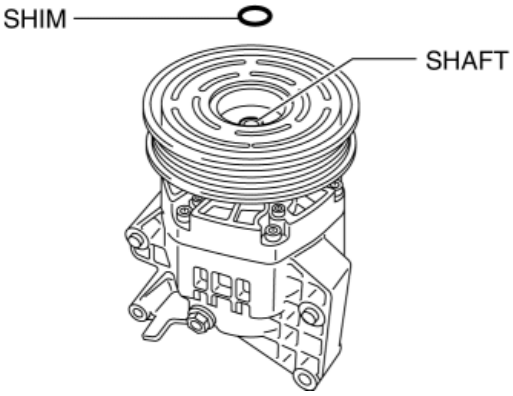

Magnetic Clutch is Disassembled/Assembled with A/C Compressor Equipped to Vehicle

WARNING:

- If A/C compressor operation is performed, do not start the engine. Otherwise, the drive belt could get caught and cause an accident.

1. Remove the front tire (RH). (See **GENERAL PROCEDURES (FRONT AND REAR AXLES)**.)
2. Remove the front splash shield No.1 (RH). (See **SPLASH SHIELD REMOVAL/INSTALLATION**.)
3. Bend back the front side of the mudguard (RH). (See **MUDGUARD REMOVAL/INSTALLATION**.)
4. Remove the front under cover No.2. (See **FRONT UNDER COVER No.2 REMOVAL/INSTALLATION**.)
5. Disassemble in the order indicated in the table.

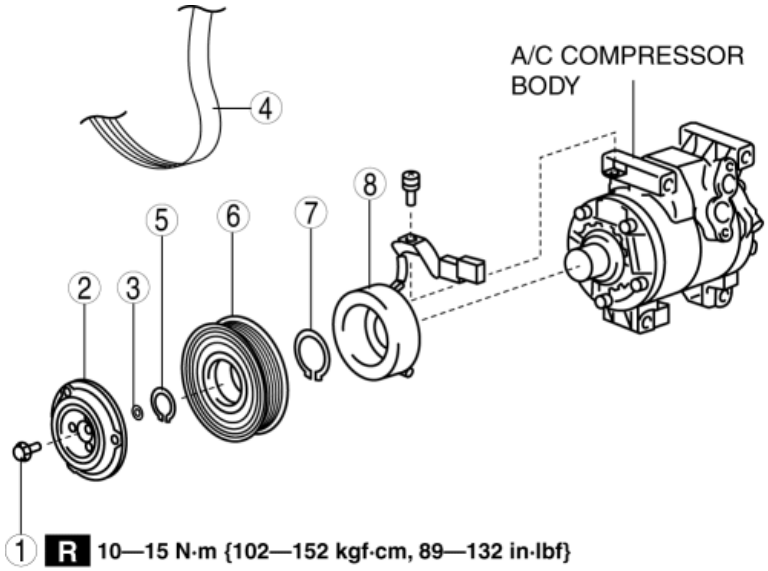

1	Bolt (See **Bolt removal/installation note**.)
2	Pressure plate
3	Shim (See **Shim installation note**.)
4	Drive belt (See **DRIVE BELT REMOVAL/INSTALLATION [SKYACTIV-G 2.0, SKYACTIV-G 2.5]**.)
5	Snap ring (See **Snap ring removal/installation note**.)
6	A/C compressor pulley
7	Snap ring (See **Snap ring removal/installation note**.)
8	Stator (See **Stator removal/installation note**.)

6. Assemble in the reverse order of disassembly.
7. Adjust the magnetic clutch clearance. (See **MAGNETIC CLUTCH ADJUSTMENT**.)

Bolt removal/installation note

1. When removing or installing the bolt, lock the A/C compressor pulley against rotation using the following procedure.
    a. Connect the M-MDS to the DLC 2.
    b. After the vehicle is identified, select the following items from the initialization screen of the M-MDS.
        1. Select “DataLogger”.
        2. Select “Modules”.
        3. Select “PCM”.

4. Select “ACCS”.

c. Turn the A/C relay on using the "ACCS" simulation function.

2. Secure the crankshaft pulley.

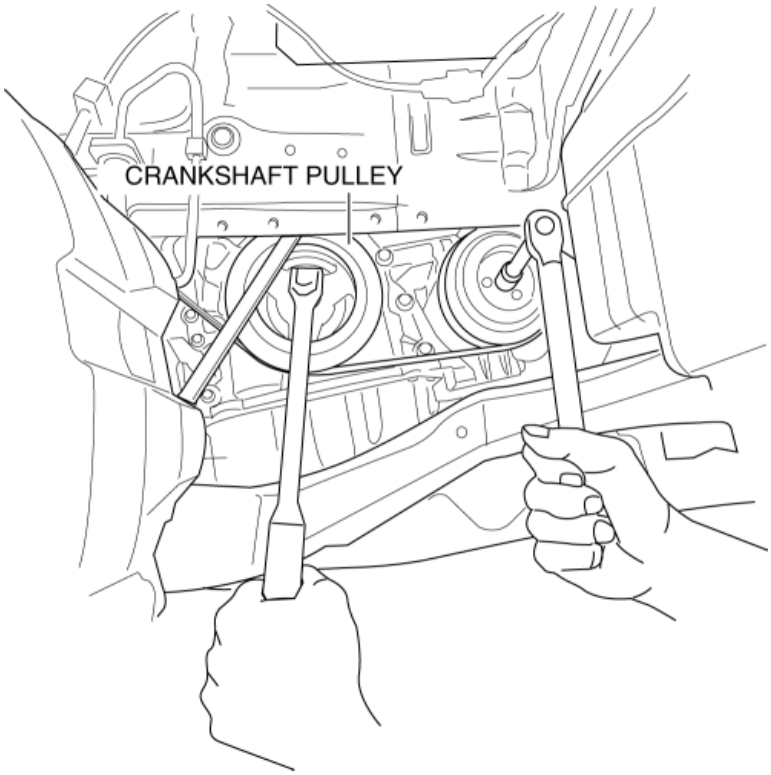

NOTE:

- If the crankshaft pulley is rotated with the magnetic clutch turned on, the magnetic clutch turns off. If the bolt is rotated, fix it so that the crankshaft pulley does not rotate.

3. Remove the bolt with the pressure plate secured.

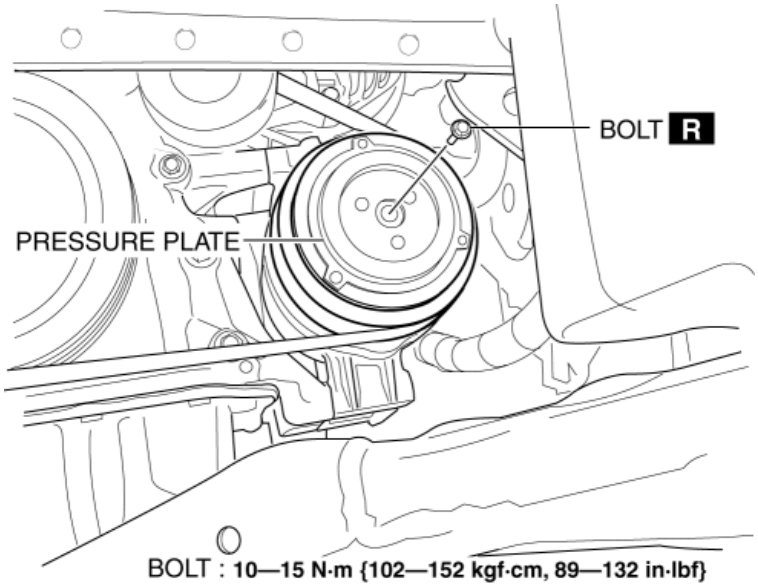

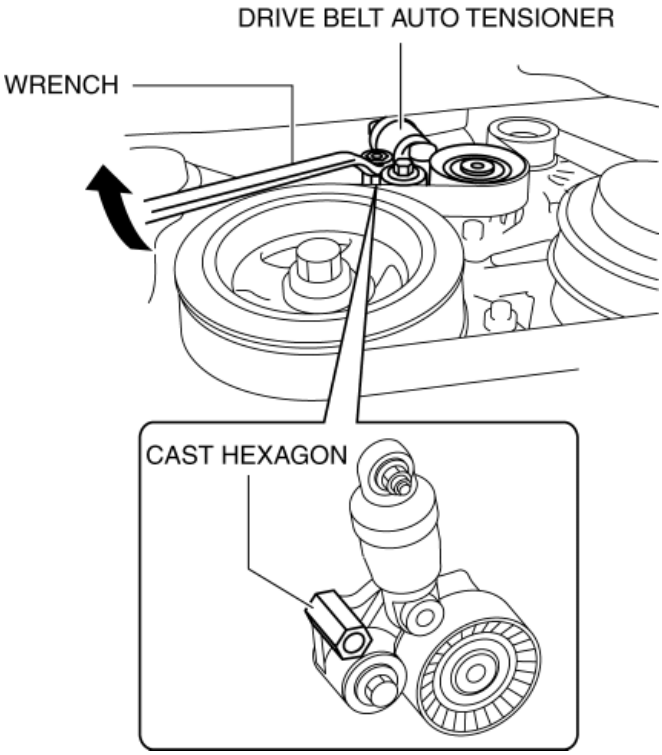

NOTE:

- When turning the bolt, if the pulley slips with little friction on the drive belt and A/C compressor pulley, attach a wrench to the hexagon of the drive belt auto tensioner, slowly turn the wrench in the direction shown in the figure, and increase the tension on the drive belt.

4. Turn the A/C relay off using the "ACCS" simulation function.

Snap ring removal/installation note

1. Remove/install the snap ring using a snap ring pliers.

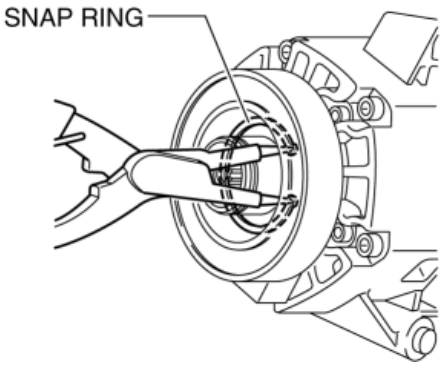

Shim installation note

1. First, insert the **1mm (0.039 in)** thick shim into the shaft.

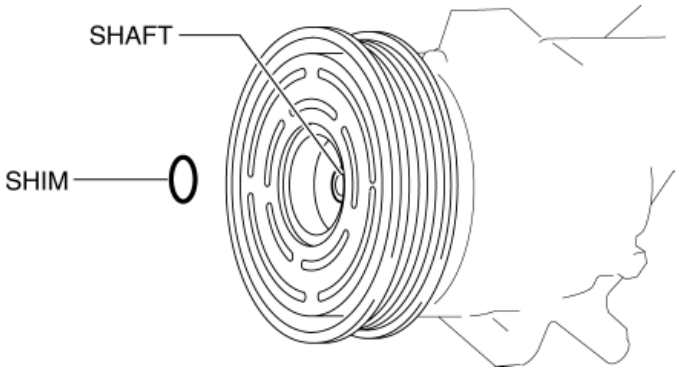

Stator removal/installation note

1. Disconnect the negative battery cable. (See **NEGATIVE BATTERY CABLE DISCONNECTION/CONNECTION [SKYACTIV-G 2.0, SKYACTIV-G 2.5]**.)

2. Disconnect the magnetic clutch connector.

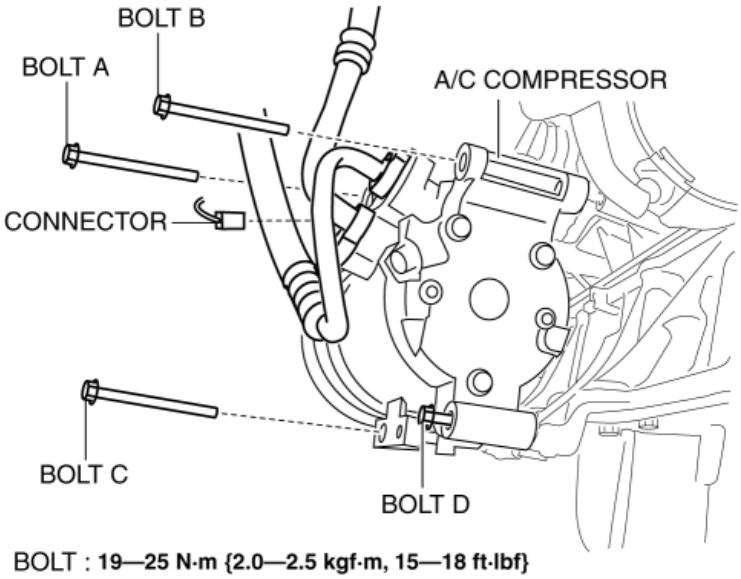

3. Remove the bolts A, B and C.

4. Loose bolt D **approx. 2 mm {0.08 in}**.

5. Tilt the A/C compressor centered around bolt D.

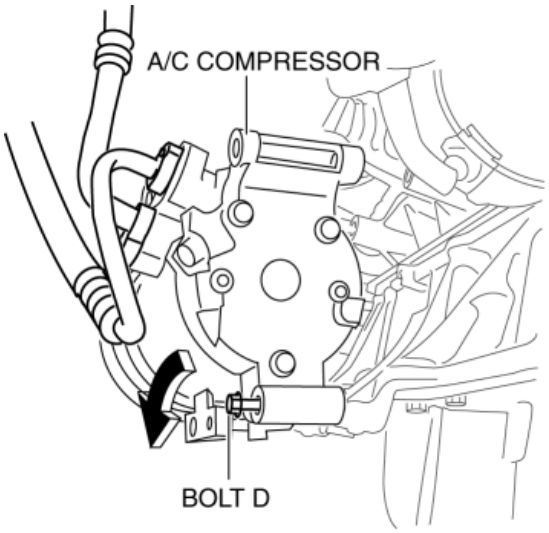

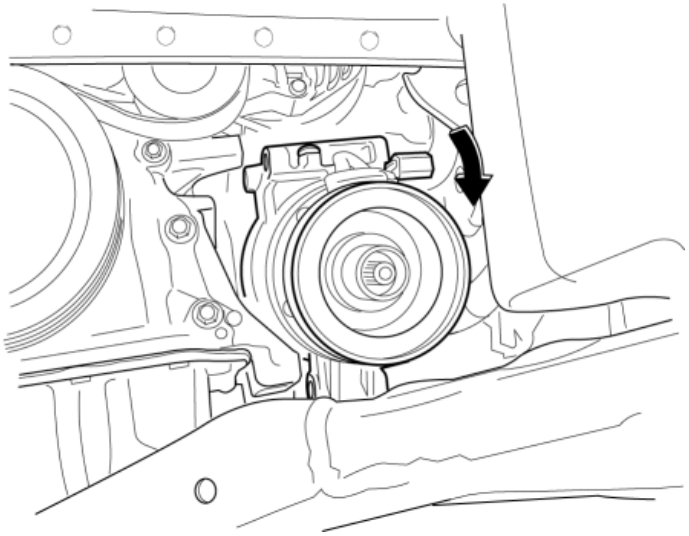

6. Remove the screw.

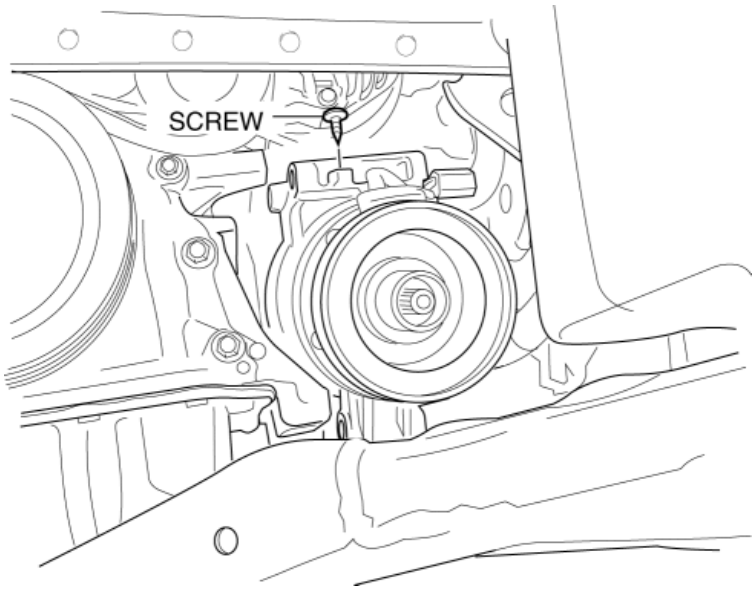

7. Remove the stator.

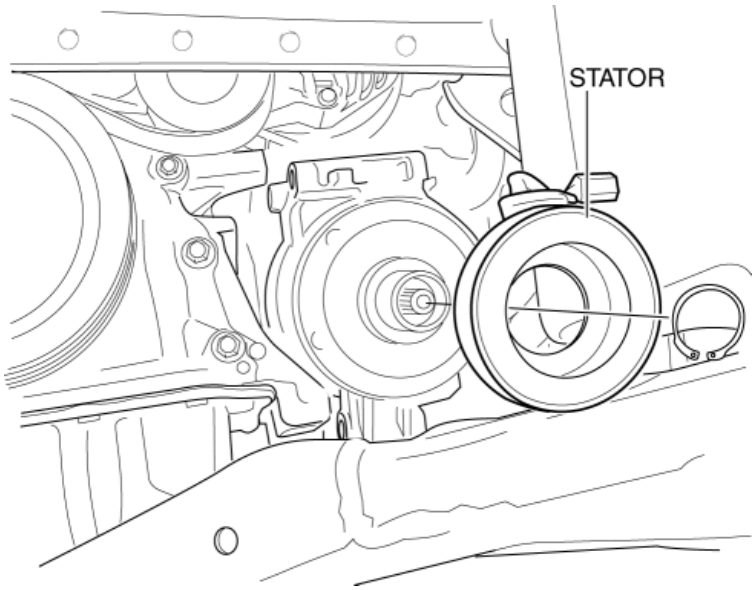

2014 - Mazda3 - HVAC

MAGNETIC CLUTCH ADJUSTMENT

WARNING:

- If A/C compressor operation is performed, do not start the engine. Otherwise, the drive belt could get caught and cause an accident.

1. Remove the front under cover No.2. (See **FRONT UNDER COVER No.2 REMOVAL/INSTALLATION**.)

2. Measure the clearance around the entire circumference between the pressure plate and A/C compressor pulley using a thickness gauge.

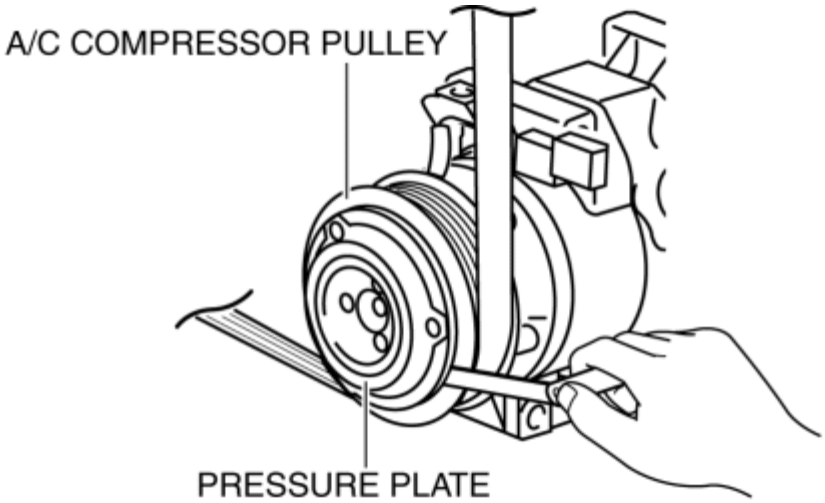

3. Verify the clearance.

- If not within the specification, remove the pressure plate and adjust the clearance by changing the shim (**0.2 mm {0.008 in}, 0.5 mm {0.02 in}**) or the number of shims. (See **MAGNETIC CLUTCH DISASSEMBLY/ASSEMBLY**.)

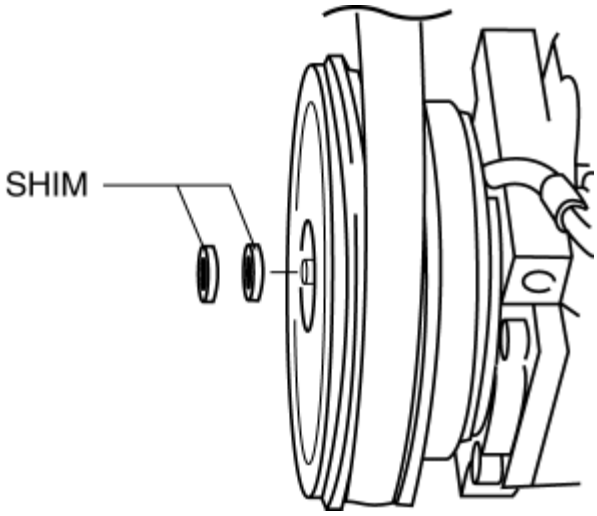

Magnetic clutch clearance

- 0.35—0.65 mm {0.014—0.025 in}

2014 - Mazda3 - HVAC

MAGNETIC CLUTCH INSPECTION

1. Disconnect the negative battery cable. (See **NEGATIVE BATTERY CABLE DISCONNECTION/CONNECTION [SKYACTIV-G 2.0, SKYACTIV-G 2.5]**.)
2. Remove the front under cover No.2. (See **FRONT UNDER COVER No.2 REMOVAL/INSTALLATION**.)
3. Connect battery to terminal A of magnetic clutch and ground to A/C compressor body.

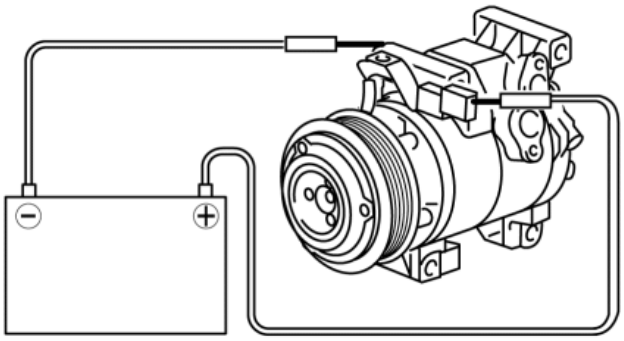

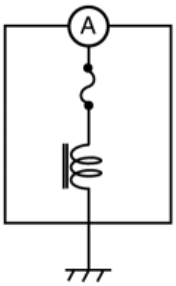

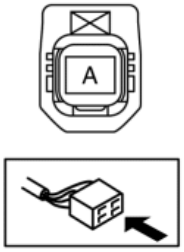

4. Verify that the magnetic clutch operates.
   - If there is any malfunction, replace the magnetic clutch. (See **MAGNETIC CLUTCH DISASSEMBLY/ASSEMBLY**.)

2014 - Mazda3 - HVAC

CONDENSER REMOVAL/INSTALLATION

1. Disconnect the negative battery cable. (See **NEGATIVE BATTERY CABLE DISCONNECTION/CONNECTION [SKYACTIV-G 2.0, SKYACTIV-G 2.5]**.)

2. Discharge the refrigerant. (See **REFRIGERANT CHARGING**.)

3. Remove the front under cover No.1. (See **FRONT UNDER COVER No.1 REMOVAL/INSTALLATION**.)

4. Drain the engine coolant. (See **ENGINE COOLANT REPLACEMENT [SKYACTIV-G 2.0, SKYACTIV-G 2.5]**.)

5. Remove the following parts:

   a. Plug hole plate (See **PLUG HOLE PLATE REMOVAL/INSTALLATION [SKYACTIV-G 2.0, SKYACTIV-G 2.5]**.)

   b. Air cleaner, air hose and fresh air duct component (See **INTAKE-AIR SYSTEM REMOVAL/INSTALLATION [SKYACTIV-G 2.0, SKYACTIV-G 2.5]**.)

   c. Coolant reserve tank (See **COOLANT RESERVE TANK REMOVAL/INSTALLATION [SKYACTIV-G 2.0, SKYACTIV-G 2.5]**.)

   d. Cooling fan component (See **COOLING FAN MOTOR REMOVAL/INSTALLATION [SKYACTIV-G 2.0, SKYACTIV-G 2.5]**.)

   e. Radiator (See **RADIATOR REMOVAL/INSTALLATION [SKYACTIV-G 2.0, SKYACTIV-G 2.5]**.)

6. Remove the bolts.

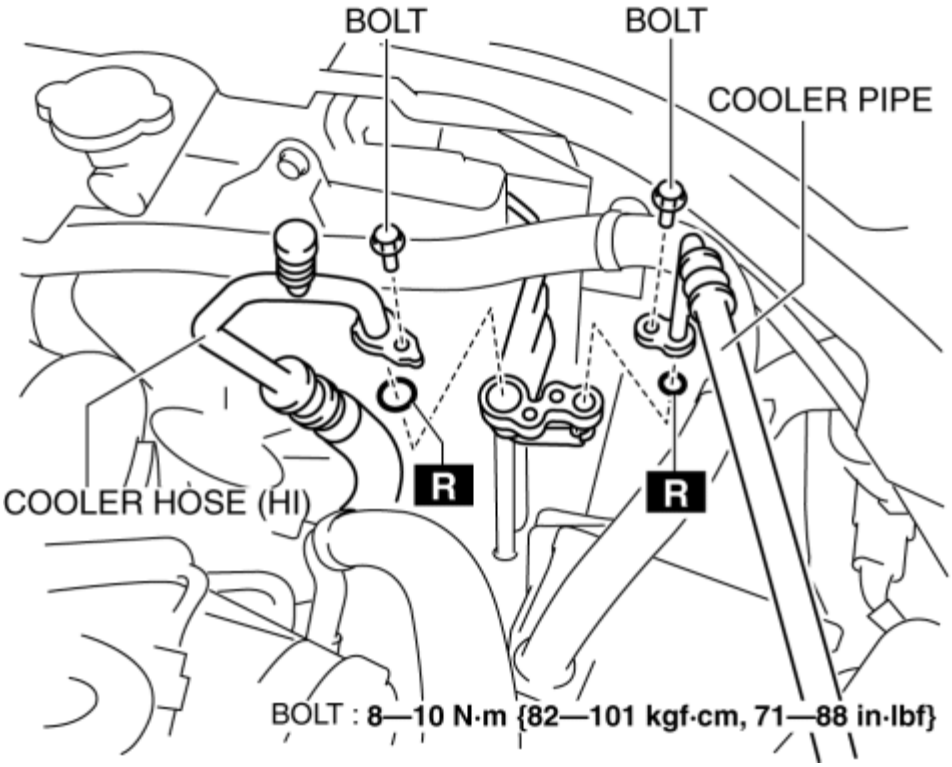

7. Disconnect the cooler hose (HI) and cooler pipe. Do not allow remaining compressor oil in the refrigerant line to spill. (See **REFRIGERANT LINE REMOVAL/INSTALLATION**.)

CAUTION:

- If moisture or foreign matter enters the refrigeration cycle, cooling ability will be lowered and abnormal noise or other malfunctions could occur. Always plug open fittings immediately after removing any refrigeration cycle parts.

8. Remove the condenser, being careful not to allow remaining compressor oil in the condenser to spill. (See **Condenser Installation Note**.)

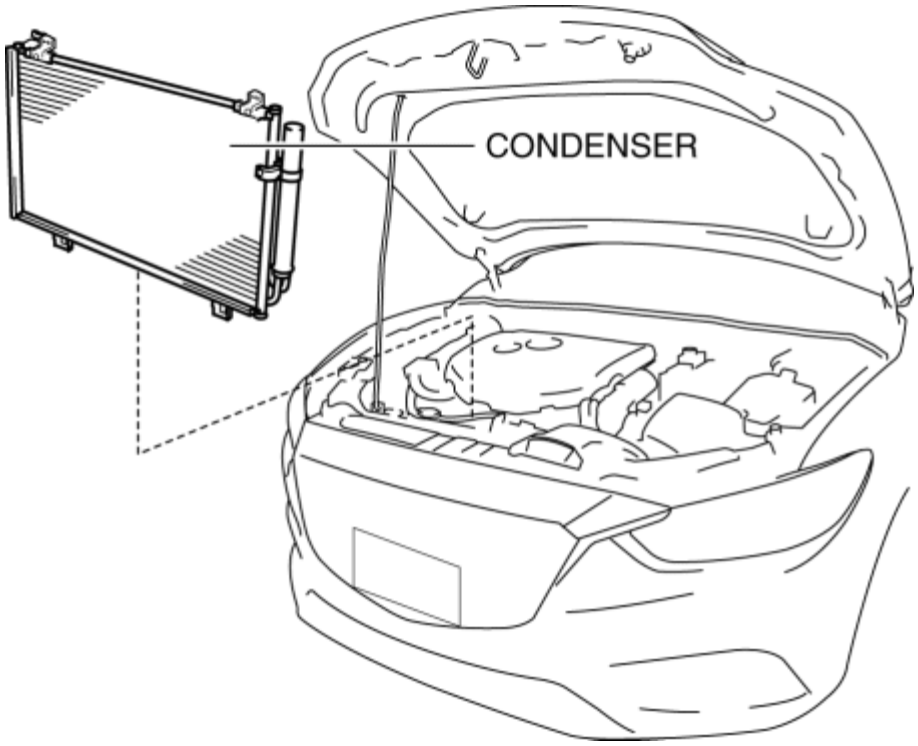

CAUTION:

- If moisture or foreign matter enters the refrigeration cycle, cooling ability will be lowered and abnormal noise or other malfunctions could occur. Always plug open fittings immediately after removing any refrigeration cycle parts.

9. Install in the reverse order of removal.

10. Inspect for engine coolant leakage. (See **ENGINE COOLANT LEAKAGE INSPECTION [SKYACTIV-G 2.0, SKYACTIV-G 2.5]**.)

11. Perform the refrigerant system performance test. (See **REFRIGERANT SYSTEM PERFORMANCE TEST**.)

Condenser Installation Note

1. After replacing the condenser, add compressor oil to the refrigeration cycle.

Supplemental oil amount (approx. quantity)

- 13 ml {13 cc, 0.44 fl oz}

2014 - Mazda3 - HVAC

CONDENSER INSPECTION

1. Disconnect the negative battery cable. (See **NEGATIVE BATTERY CABLE DISCONNECTION/CONNECTION [SKYACTIV-G 2.0, SKYACTIV-G 2.5]**.)

2. Discharge the refrigerant. (See **REFRIGERANT CHARGING**.)

3. Remove the front under cover No.1. (See **FRONT UNDER COVER No.1 REMOVAL/INSTALLATION**.)

4. Drain the engine coolant. (See **ENGINE COOLANT REPLACEMENT [SKYACTIV-G 2.0, SKYACTIV-G 2.5]**.)

5. Remove the radiator. (See **RADIATOR REMOVAL/INSTALLATION [SKYACTIV-G 2.0, SKYACTIV-G 2.5]**.)

6. Remove the condenser. (See **CONDENSER REMOVAL/INSTALLATION**.)

7. Inspect the condenser for cracks, damage, and oil leakage.

    - If there is any malfunction, replace the condenser. (See **CONDENSER REMOVAL/INSTALLATION**.)

8. Visually inspect for bent fins for restriction or foreign matter.

    - If any fins are restricted, remove the foreign matter.

9. Visually inspect for bent fins.

    - If any fins are bent, use the end of a flathead screwdriver to straighten fins.

2014 - Mazda3 - HVAC

RECEIVER/DRIER REMOVAL/INSTALLATION

1. Disconnect the negative battery cable. (See **NEGATIVE BATTERY CABLE DISCONNECTION/CONNECTION [SKYACTIV-G 2.0, SKYACTIV-G 2.5]**.)

2. Discharge the refrigerant. (See **REFRIGERANT CHARGING**.)

3. Remove the front under cover No.1. (See **FRONT UNDER COVER No.1 REMOVAL/INSTALLATION**.)

4. Drain the engine coolant. (See **ENGINE COOLANT REPLACEMENT [SKYACTIV-G 2.0, SKYACTIV-G 2.5]**.)

5. Remove the following parts:

   a. Plug hole plate (See **PLUG HOLE PLATE REMOVAL/INSTALLATION [SKYACTIV-G 2.0, SKYACTIV-G 2.5]**.)

   b. Air cleaner, air hose and fresh air duct component (See **INTAKE-AIR SYSTEM REMOVAL/INSTALLATION [SKYACTIV-G 2.0, SKYACTIV-G 2.5]**.)

   c. Coolant reserve tank (See **COOLANT RESERVE TANK REMOVAL/INSTALLATION [SKYACTIV-G 2.0, SKYACTIV-G 2.5]**.)

   d. Cooling fan component (See **COOLING FAN MOTOR REMOVAL/INSTALLATION [SKYACTIV-G 2.0, SKYACTIV-G 2.5]**.)

   e. Radiator (See **RADIATOR REMOVAL/INSTALLATION [SKYACTIV-G 2.0, SKYACTIV-G 2.5]**.)

6. Remove the condenser. (See **CONDENSER REMOVAL/INSTALLATION**.)

7. Disconnect the block joint type pipes by grasping the female side of the block with a hand firmly, then loosen connection bolt A.

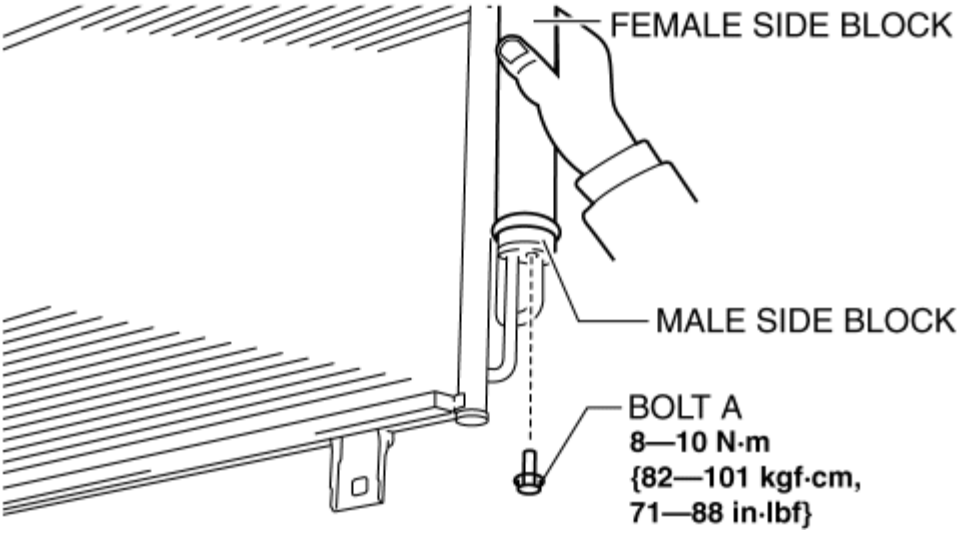

8. Remove bolt B.

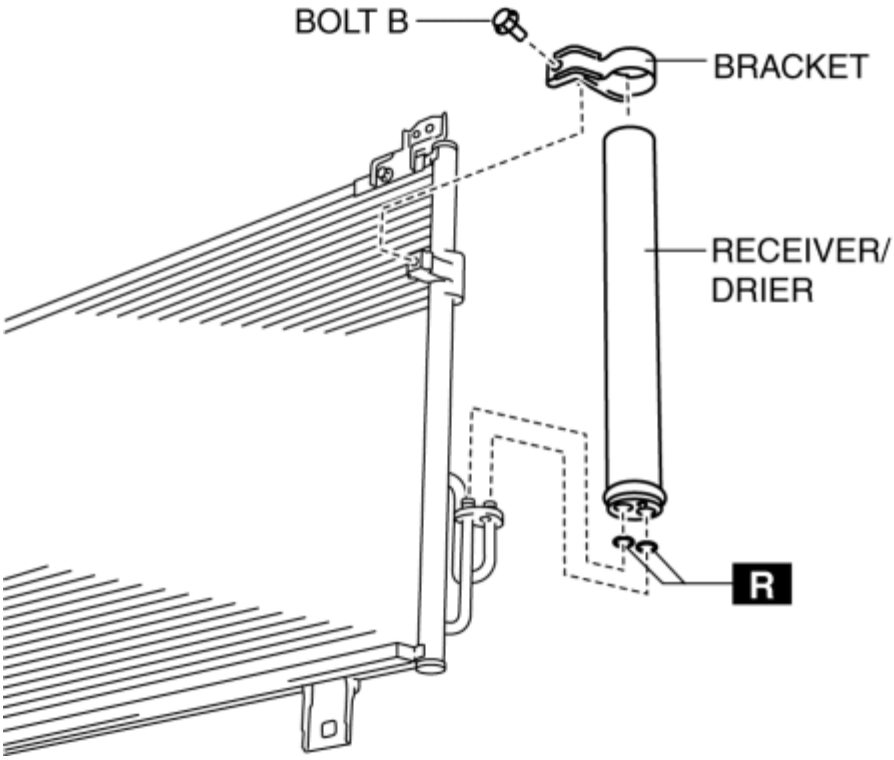

9. Remove the bracket.

10. Remove the receiver/drier. Do not allow compressor oil to spill.

CAUTION:

- If moisture or foreign matter enters the refrigeration cycle, cooling ability will be lowered and abnormal noise will occur. Always immediately plug all open fittings after removing any refrigeration cycle parts to keep moisture or foreign matter out of the cycle.

11. Install in the reverse order of removal.

12. Inspect for engine coolant leakage. (See **ENGINE COOLANT LEAKAGE INSPECTION [SKYACTIV-G 2.0, SKYACTIV-G 2.5]**.)

13. Perform the refrigerant system performance test. (See **REFRIGERANT SYSTEM PERFORMANCE TEST**.)

Receiver/drier Installation Note

1. After replacing the receiver/drier, add compressor oil to the refrigeration cycle.

Supplemental oil amount (approx. quantity)

- 2 ml {2 cc, 0.1 fl oz}

2014 - Mazda3 - HVAC

HEATER HOSE REMOVAL/INSTALLATION

1. Disconnect the negative battery cable. (See **NEGATIVE BATTERY CABLE DISCONNECTION/CONNECTION [SKYACTIV-G 2.0, SKYACTIV-G 2.5]**.)
2. Drain the engine coolant. (See **ENGINE COOLANT REPLACEMENT [SKYACTIV-G 2.0, SKYACTIV-G 2.5]**.)
3. Remove the clips and remove the heater hose.

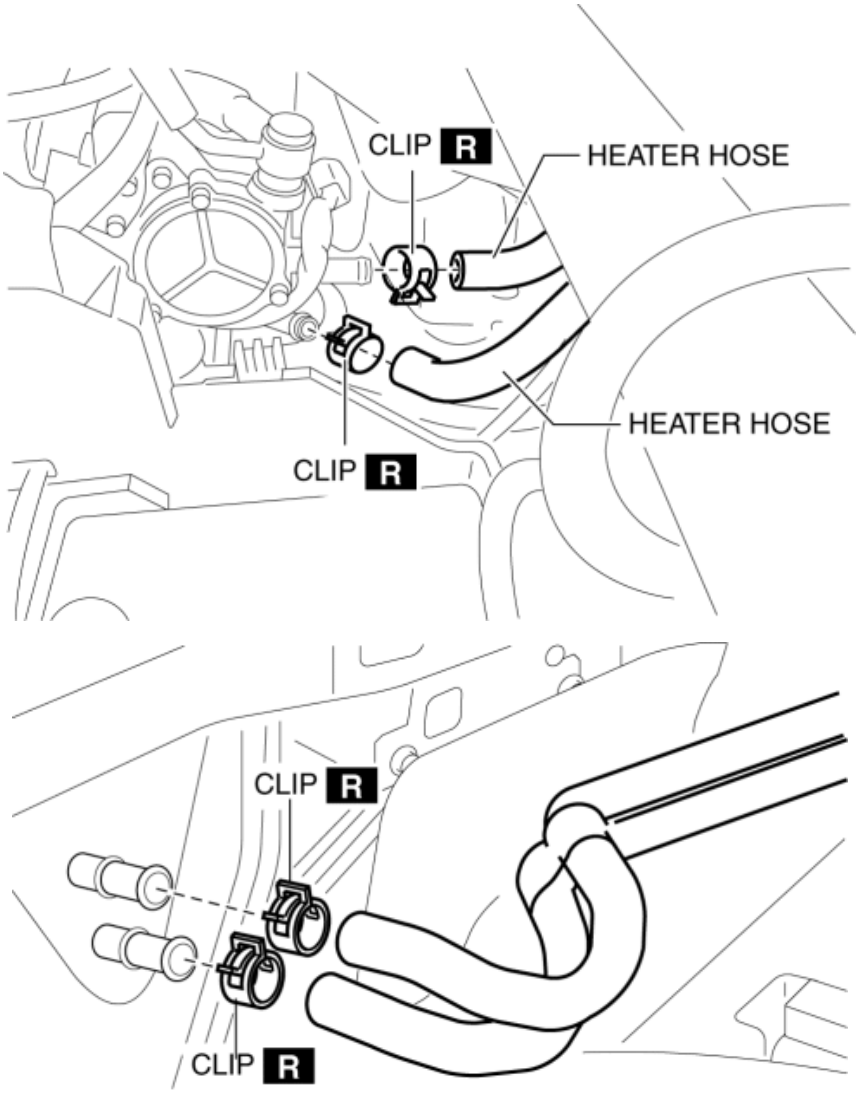

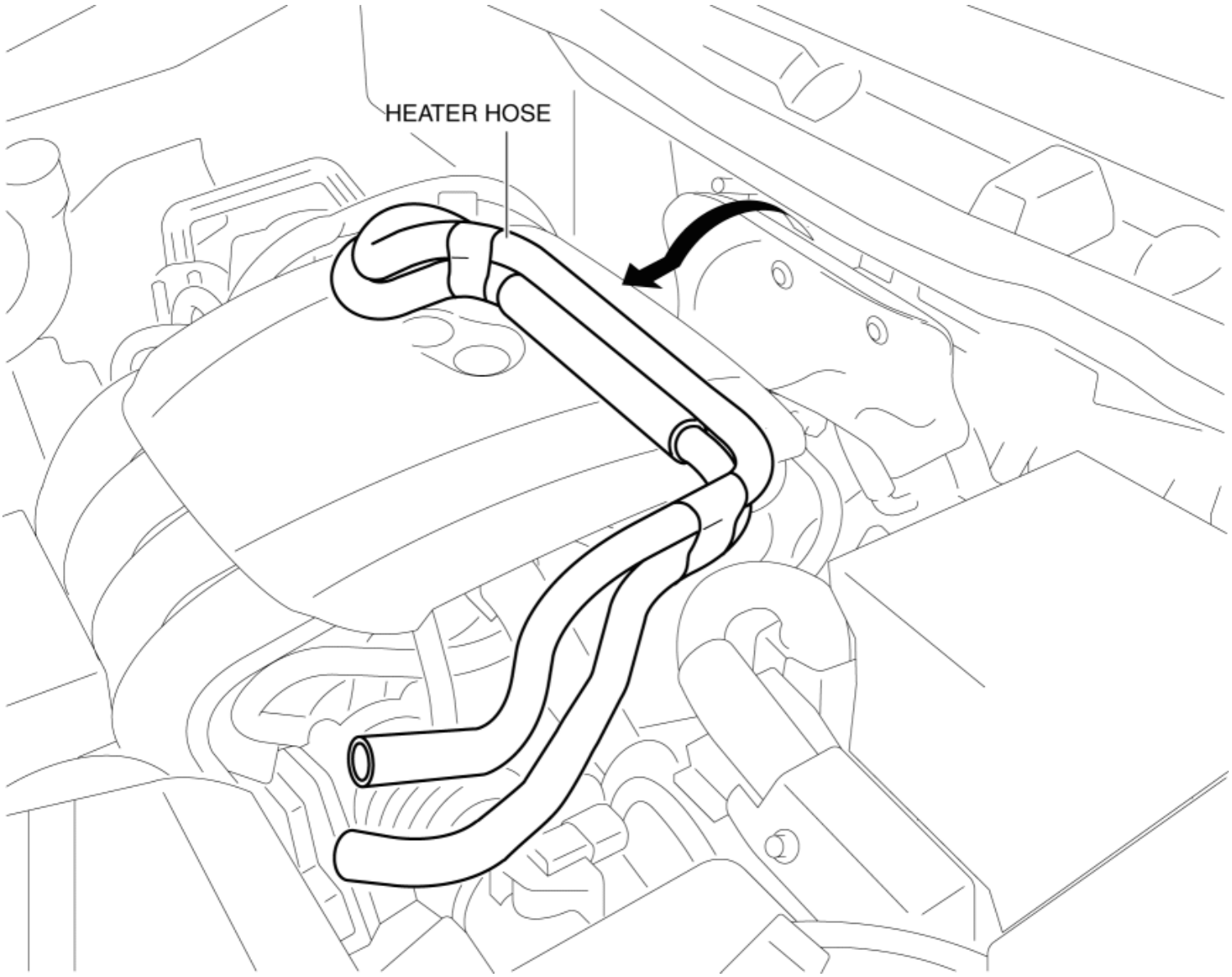

4. Install in the reverse order of the removal.

5. Inspect for engine coolant leakage. (See **ENGINE COOLANT LEAKAGE INSPECTION [SKYACTIV-G 2.0, SKYACTIV-G 2.5]**.)

2014 - Mazda3 - HVAC

REFRIGERANT LINE REMOVAL/INSTALLATION

1. Disconnect the negative battery cable. (See **NEGATIVE BATTERY CABLE DISCONNECTION/CONNECTION [SKYACTIV-G 2.0, SKYACTIV-G 2.5]**.)

2. Discharge the refrigerant. (See **REFRIGERANT CHARGING**.)

3. Disconnect the refrigerant pressure sensor connector.

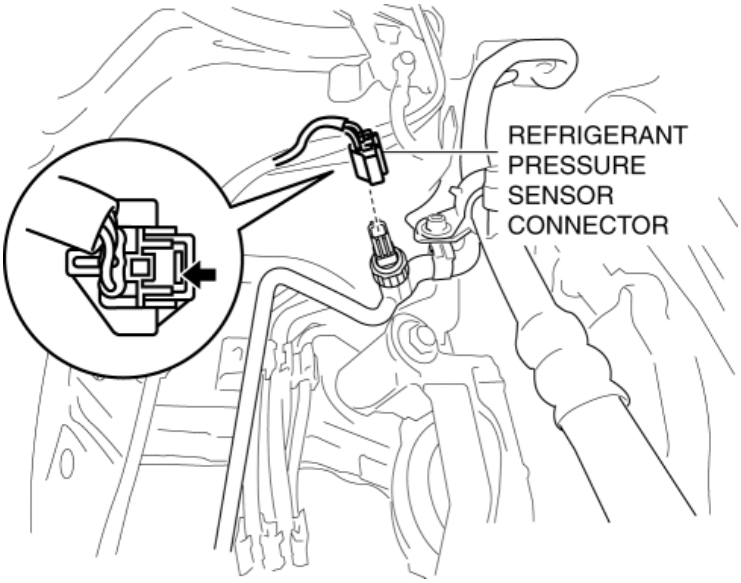

4. Remove in the order indicated in the table. Do not allow compressor oil to spill.

CAUTION:

- If moisture or foreign matter enters the refrigeration cycle, cooling ability will be lowered and abnormal noise will occur. Always immediately plug all open fittings after removing any refrigeration cycle parts to keep moisture or foreign matter out of the cycle.

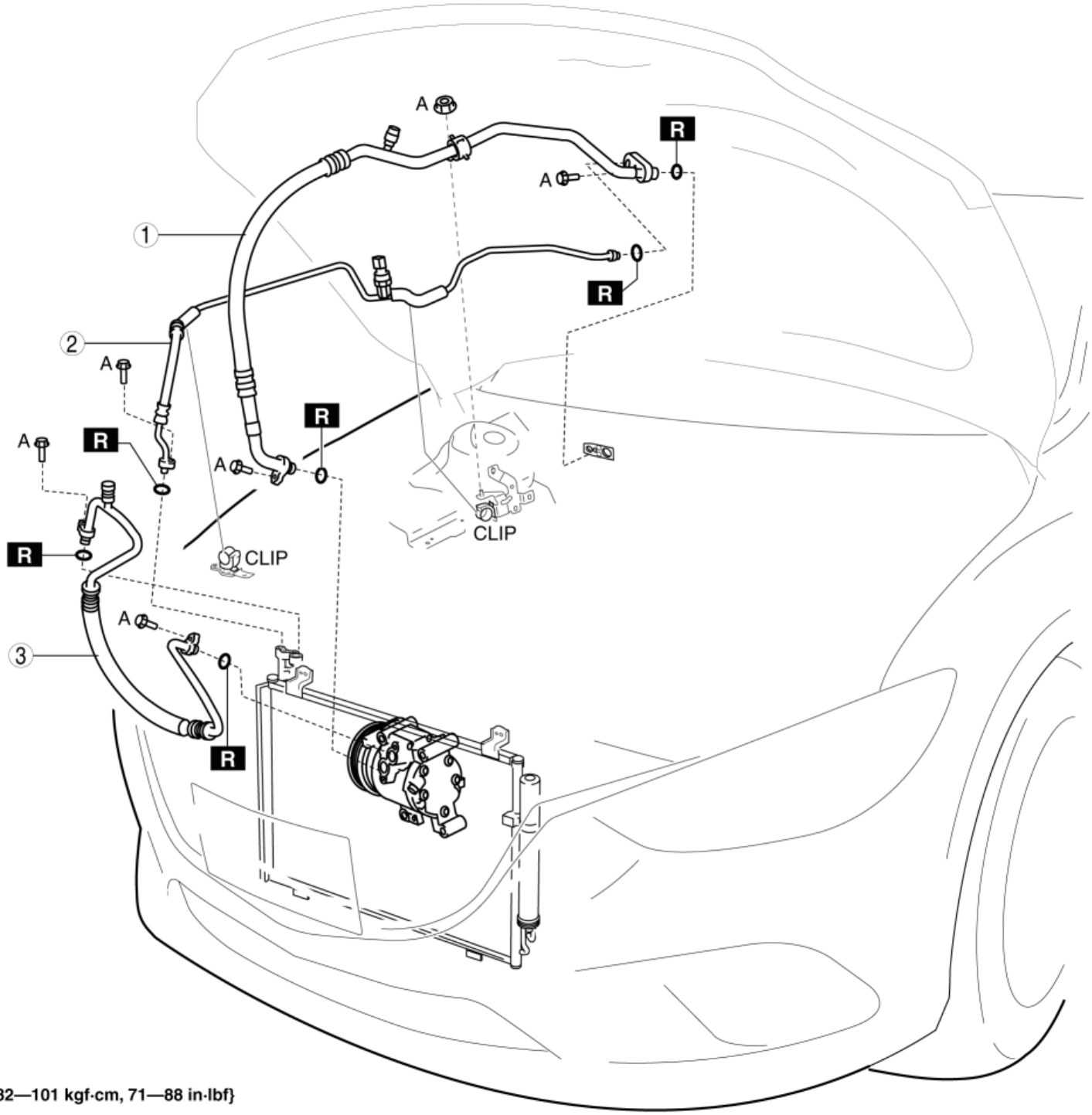

A: 8—10 N·m {82—101 kgf·cm, 71—88 in·lbf}

1	Cooler hose (LO) (See **Refrigerant Line Installation Note (1)**.) (See **Refrigerant Line Installation Note (2)**.)
2	Cooler pipe (See **Refrigerant Line Installation Note (1)**.) (See **Refrigerant Line Installation Note (2)**.)
3	Cooler hose (HI) (See **Refrigerant Line Installation Note (1)**.)

(See **Refrigerant Line Installation Note (2)**.)

5. Install in the reverse order of removal.

6. Perform the refrigerant system performance test. (See **REFRIGERANT SYSTEM PERFORMANCE TEST**.)

Refrigerant Line Installation Note (1)

1. Apply compressor oil to the O-rings and connect the joints.

2. Tighten the joint bolt by hand.

3. Connect the block joint type pipes by grasping the female side of the block with pliers or similar tool and holding firmly, then tighten the connection bolt or nut with a torque wrench.

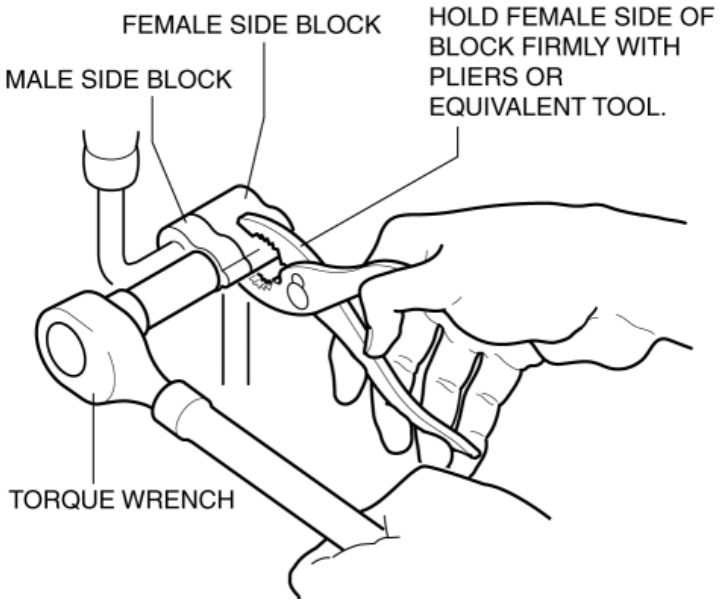

Refrigerant Line Installation Note (2)

1. After replacing the refrigerant line, add compressor oil to the refrigeration cycle.
   - After replacing the cooler hose (HI)

     Supplemental oil amount (approx. quantity)

     - 1 ml {1 cc, 0.03 fl oz}
   - After replacing the cooler hose (LO)

     Supplemental oil amount (approx. quantity)

     - 3 ml {3 cc, 0.1 fl oz}
   - After replacing the cooler pipe

     Supplemental oil amount (approx. quantity)

     - 1 ml {1 cc, 0.03 fl oz}

2014 - Mazda3 - HVAC

HVAC CONTROL SYSTEM LOCATION INDEX [FULL-AUTO AIR CONDITIONER]

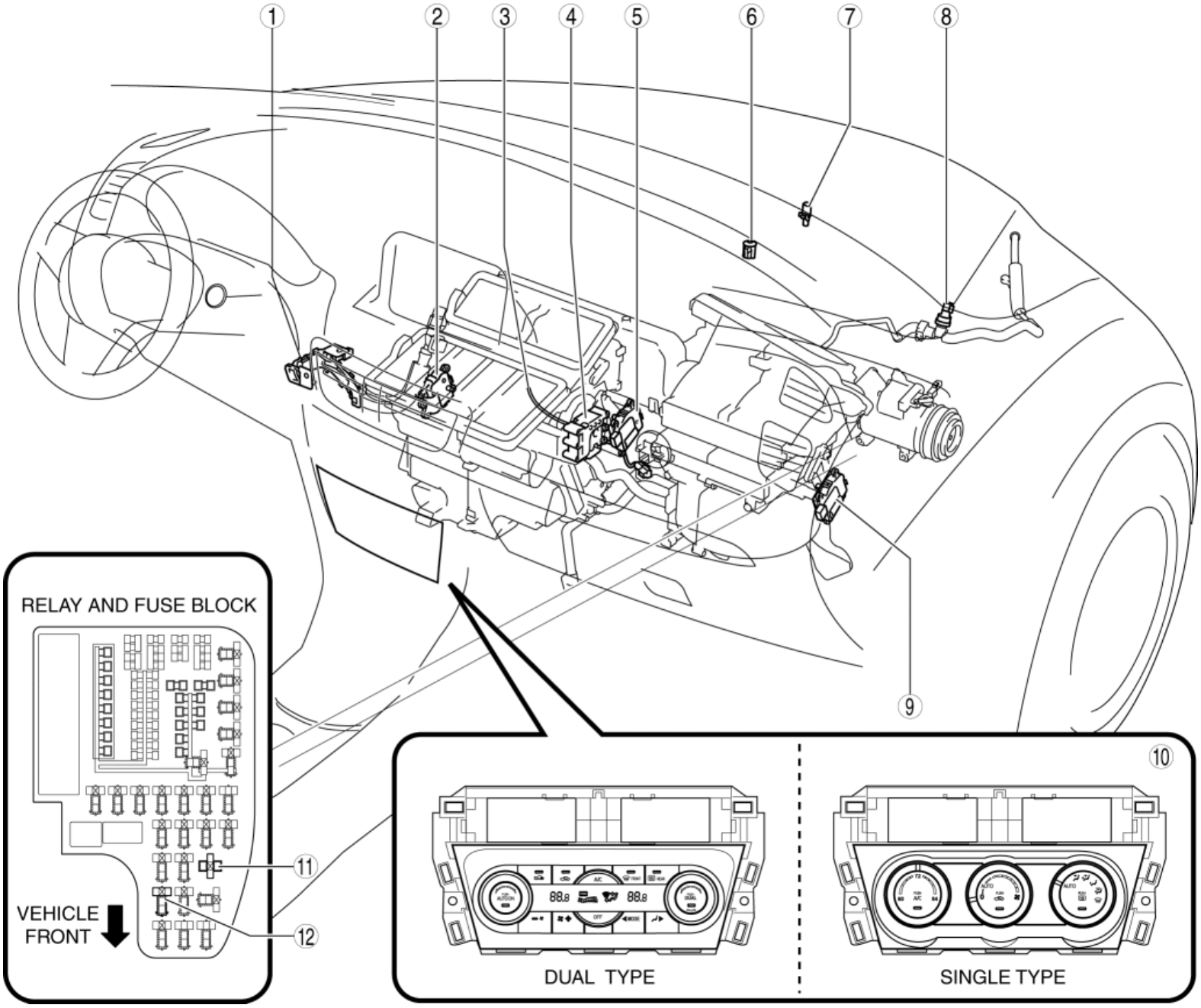

1	Passenger compartment temperature sensor (See **PASSENGER COMPARTMENT TEMPERATURE SENSOR REMOVAL/INSTALLATION [FULL-AUTO AIR CONDITIONER]**.) (See **PASSENGER COMPARTMENT TEMPERATURE SENSOR INSPECTION [FULL-AUTO AIR CONDITIONER]**.)
2	Driver-side air mix actuator (with dual type climate control unit) (See **AIR MIX ACTUATOR REMOVAL/INSTALLATION [FULL-AUTO AIR CONDITIONER]**.) (See **AIR MIX ACTUATOR INSPECTION [FULL-AUTO AIR CONDITIONER]**.)

3	Evaporator temperature sensor (See **EVAPORATOR TEMPERATURE SENSOR REMOVAL/INSTALLATION [FULL-AUTO AIR CONDITIONER]**.) (See **EVAPORATOR TEMPERATURE SENSOR INSPECTION [FULL-AUTO AIR CONDITIONER]**.)
4	Airflow mode actuator (See **AIRFLOW MODE ACTUATOR REMOVAL/INSTALLATION [FULL-AUTO AIR CONDITIONER]**.) (See **AIRFLOW MODE ACTUATOR INSPECTION [FULL-AUTO AIR CONDITIONER]**.)
5	Passenger-side air mix actuator (with dual type climate control unit) (See **AIR MIX ACTUATOR REMOVAL/INSTALLATION [FULL-AUTO AIR CONDITIONER]**.) (See **AIR MIX ACTUATOR INSPECTION [FULL-AUTO AIR CONDITIONER]**.)
	Air mix actuator (with single type climate control unit) (See **AIR MIX ACTUATOR REMOVAL/INSTALLATION [FULL-AUTO AIR CONDITIONER]**.) (See **AIR MIX ACTUATOR INSPECTION [FULL-AUTO AIR CONDITIONER]**.)
6	Solar radiation sensor (See **SOLAR RADIATION SENSOR REMOVAL/INSTALLATION [FULL-AUTO AIR CONDITIONER]**.) (See **SOLAR RADIATION SENSOR INSPECTION [FULL-AUTO AIR CONDITIONER]**.)
7	Ambient temperature sensor (See **AMBIENT TEMPERATURE SENSOR REMOVAL/INSTALLATION [FULL-AUTO AIR CONDITIONER]**.) (See **AMBIENT TEMPERATURE SENSOR INSPECTION [FULL-AUTO AIR CONDITIONER]**.)
8	Refrigerant pressure sensor (See **REFRIGERANT PRESSURE SENSOR REMOVAL/INSTALLATION [FULL-AUTO AIR CONDITIONER]**.) (See **REFRIGERANT PRESSURE SENSOR INSPECTION [FULL-AUTO AIR CONDITIONER]**.)
9	Air intake actuator (See **AIR INTAKE ACTUATOR REMOVAL/INSTALLATION [FULL-AUTO AIR CONDITIONER]**.) (See **AIR INTAKE ACTUATOR INSPECTION [FULL-AUTO AIR CONDITIONER]**.)
10	Climate control unit (See **CLIMATE CONTROL UNIT REMOVAL/INSTALLATION [FULL-AUTO AIR CONDITIONER]**.) (See **CLIMATE CONTROL UNIT INSPECTION [FULL-AUTO AIR CONDITIONER]**.)
11	Blower relay (See **RELAY LOCATION**.) (See **RELAY INSPECTION**.)
12	A/C relay (See **RELAY LOCATION**.) (See **RELAY INSPECTION**.)

2014 - Mazda3 - HVAC

AIR INTAKE ACTUATOR REMOVAL/INSTALLATION [FULL-AUTO AIR CONDITIONER]

1. Disconnect the negative battery cable. (See **NEGATIVE BATTERY CABLE DISCONNECTION/CONNECTION [SKYACTIV-G 2.0, SKYACTIV-G 2.5]**.)

2. Remove the glove compartment. (See **GLOVE COMPARTMENT REMOVAL/INSTALLATION**.)

3. Remove the following parts (with center display)(with Bluetooth® system):

   a. Dashboard under cover (See **DASHBOARD UNDER COVER REMOVAL/INSTALLATION**.)

   b. Front scuff plate (passenger-side) (See **FRONT SCUFF PLATE REMOVAL/INSTALLATION**.)

   c. Front side trim (passenger-side) (See **FRONT SIDE TRIM REMOVAL/INSTALLATION**.)

   d. Tuner and amp unit (TAU) (with center display)(See **TUNER AND AMP UNIT (TAU) REMOVAL/INSTALLATION**.)

   e. Bluetooth® unit (with Bluetooth® system)(See **Bluetooth® UNIT REMOVAL/INSTALLATION**.)

4. Disconnect the air intake actuator connector.

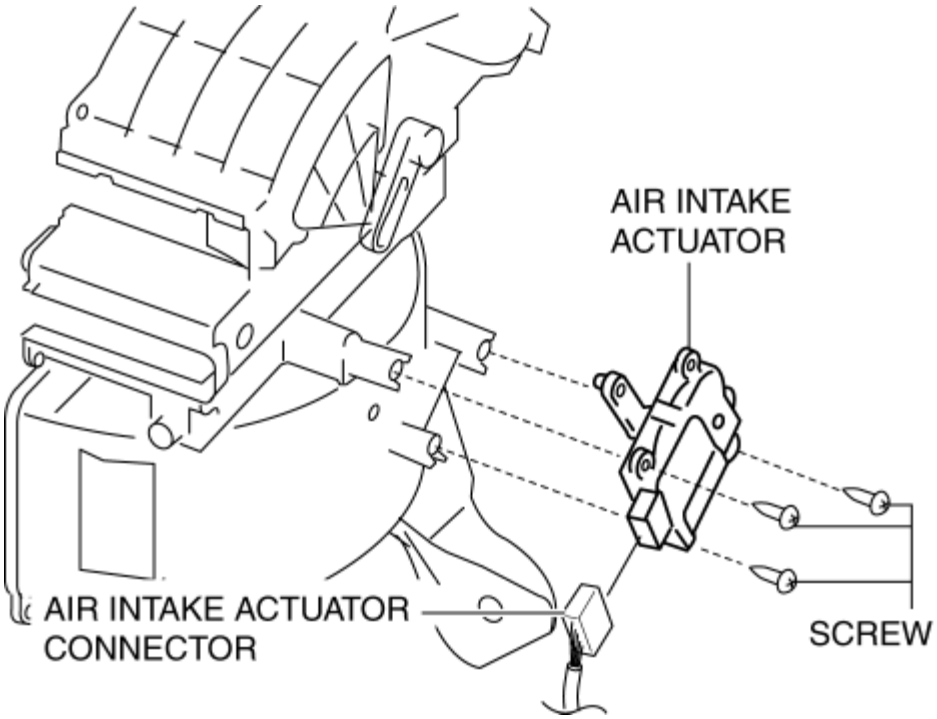

5. Remove the screws, then remove the air intake actuator.

6. Install in the reverse order of removal.

AIR INTAKE ACTUATOR REMOVAL/INSTALLATION [FULL-AUTO AIR CONDITIONER]

2014 - Mazda3 - HVAC

AIR INTAKE ACTUATOR INSPECTION [FULL-AUTO AIR CONDITIONER]

1. Disconnect the negative battery cable. (See **NEGATIVE BATTERY CABLE DISCONNECTION/CONNECTION [SKYACTIV-G 2.0, SKYACTIV-G 2.5]**.)

2. Remove the glove compartment. (See **GLOVE COMPARTMENT REMOVAL/INSTALLATION**.)

3. Remove the following parts (with tuner and amp unit):

   a. Dashboard under cover (See **DASHBOARD UNDER COVER REMOVAL/INSTALLATION**.)

   b. Front scuff plate (passenger-side) (See **FRONT SCUFF PLATE REMOVAL/INSTALLATION**.)

   c. Front side trim (passenger-side) (See **FRONT SIDE TRIM REMOVAL/INSTALLATION**.)

   d. Tuner and amp unit (See **TUNER AND AMP UNIT (TAU) REMOVAL/INSTALLATION**.)

4. Remove the air intake actuator. (See **AIR INTAKE ACTUATOR REMOVAL/INSTALLATION [FULL-AUTO AIR CONDITIONER]**.)

5. Apply battery positive voltage and connect the ground to the air intake actuator terminals as indicated in the table below and verify the operation condition.

B+ Terminal	Ground Terminal	Operation
B	C	FRESH → RECIRCULATE
C	B	RECIRCULATE → FRESH

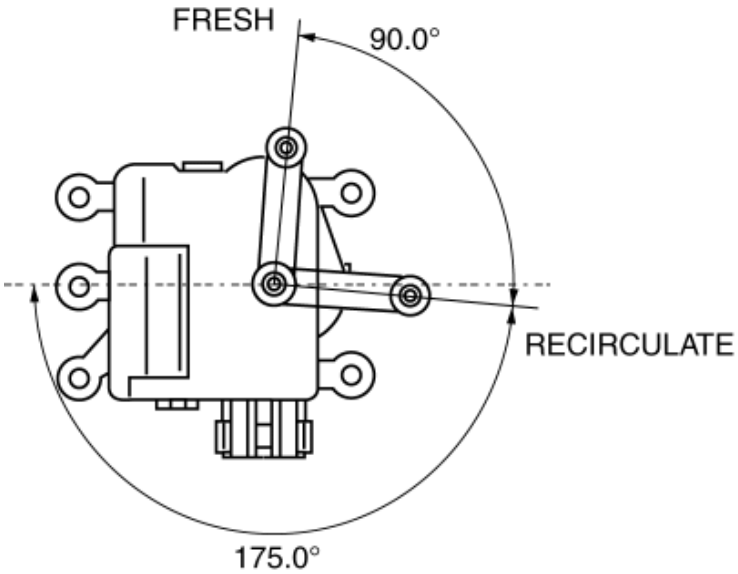

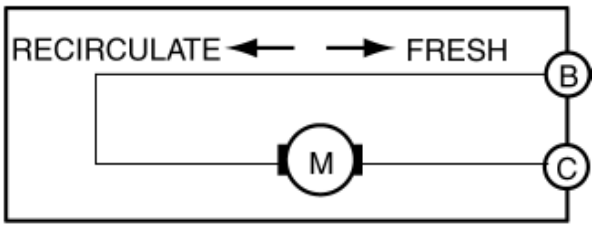

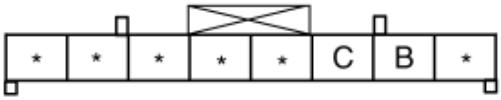

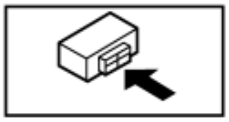

- If not as indicated in the table, replace the air intake actuator. (See **AIR INTAKE ACTUATOR REMOVAL/INSTALLATION [FULL-AUTO AIR CONDITIONER]**.)

2014 - Mazda3 - HVAC

AIR MIX ACTUATOR REMOVAL/INSTALLATION [FULL-AUTO AIR CONDITIONER]

Driver-side (With Dual Type Climate Control Unit)

1. Disconnect the negative battery cable. (See **NEGATIVE BATTERY CABLE DISCONNECTION/CONNECTION [SKYACTIV-G 2.0, SKYACTIV-G 2.5]**.)
2. Remove the following parts:
   a. Side wall (driver-side) (See **SIDE WALL REMOVAL/INSTALLATION**.)
   b. Front heat duct (driver-side) (See **FRONT HEAT DUCT REMOVAL/INSTALLATION**.)
3. Disconnect the air mix actuator connector.

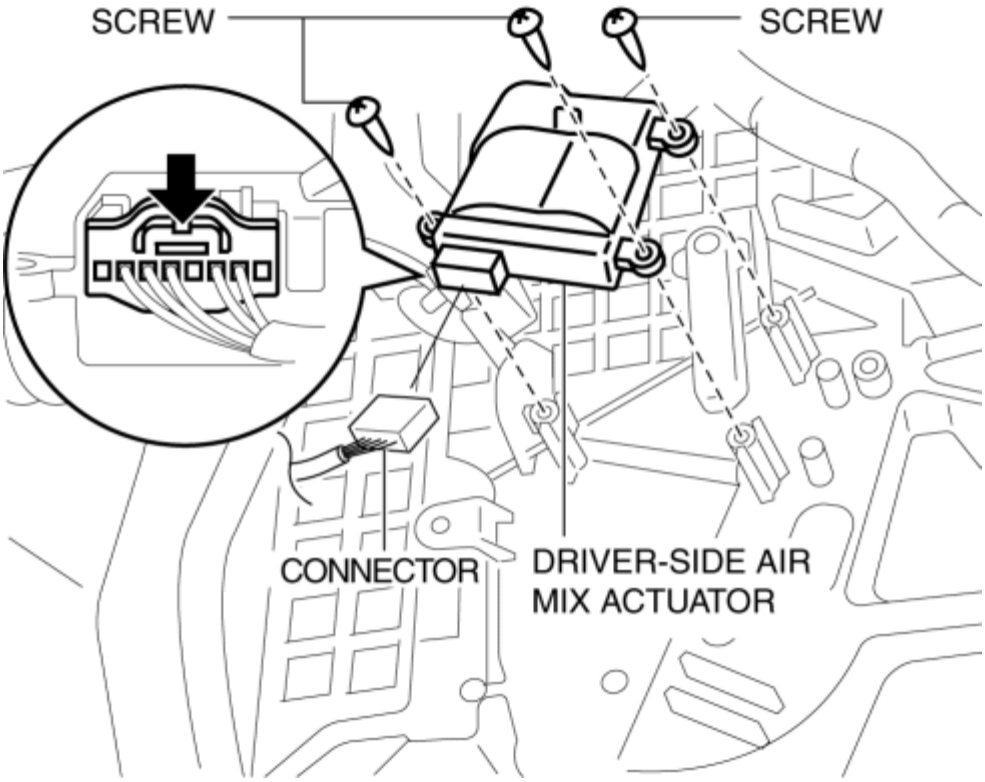

4. Remove the screws.
5. Remove the driver-side air mix actuator.
6. Install in the reverse order of removal.

Passenger-side

1. Disconnect the negative battery cable. (See **NEGATIVE BATTERY CABLE DISCONNECTION/CONNECTION [SKYACTIV-G 2.0, SKYACTIV-G 2.5]**.)

2. Remove the following parts:

   a. Glove compartment (See **GLOVE COMPARTMENT REMOVAL/INSTALLATION**.)

   b. Dashboard under cover (See **DASHBOARD UNDER COVER REMOVAL/INSTALLATION**.)

   c. Side wall (passenger-side) (See **SIDE WALL REMOVAL/INSTALLATION**.)

   d. Front heat duct (passenger-side) (See **FRONT HEAT DUCT REMOVAL/INSTALLATION**.)

3. Disconnect the air mix actuator connector.

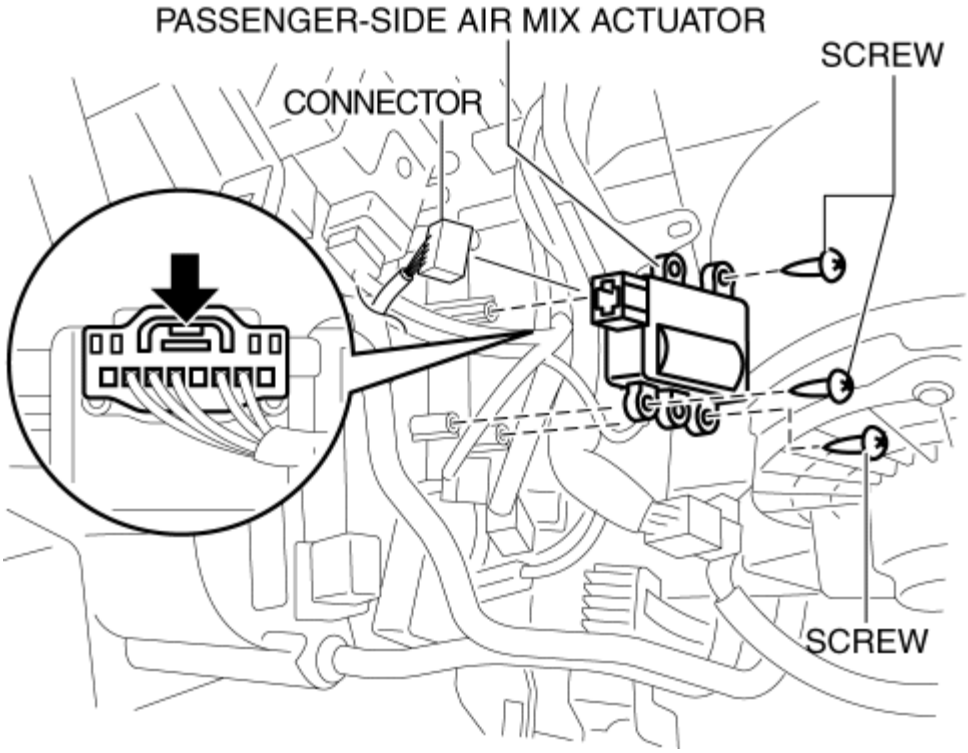

4. Remove the screws.

5. Remove the passenger-side air mix actuator.

6. Install in the reverse order of removal.

2014 - Mazda3 - HVAC

AIR MIX ACTUATOR INSPECTION [FULL-AUTO AIR CONDITIONER]

CAUTION:

- If the lever position exceeds the operation range shown in the figure, the circuit in the actuator could be damaged. Always perform an actuator operation inspection with the lever movement within the range shown in the figure.

Driver-side (With Dual Type Climate Control Unit)

1. Disconnect the negative battery cable. (See **NEGATIVE BATTERY CABLE DISCONNECTION/CONNECTION [SKYACTIV-G 2.0, SKYACTIV-G 2.5]**.)

2. Remove the following parts:

   a. Side wall (driver-side) (See **SIDE WALL REMOVAL/INSTALLATION**.)

   b. Front heat duct (driver-side) (See **FRONT HEAT DUCT REMOVAL/INSTALLATION**.)

3. Remove the driver-side air mix actuator. (See **AIR MIX ACTUATOR REMOVAL/INSTALLATION [FULL-AUTO AIR CONDITIONER]**.)

4. Apply battery positive voltage and connect the ground to the air mix actuator terminals as indicated in the table below and verify the operation condition.

B+ Terminal	Ground Terminal	Operation
B	C	COLD → HOT
C	B	HOT → COLD

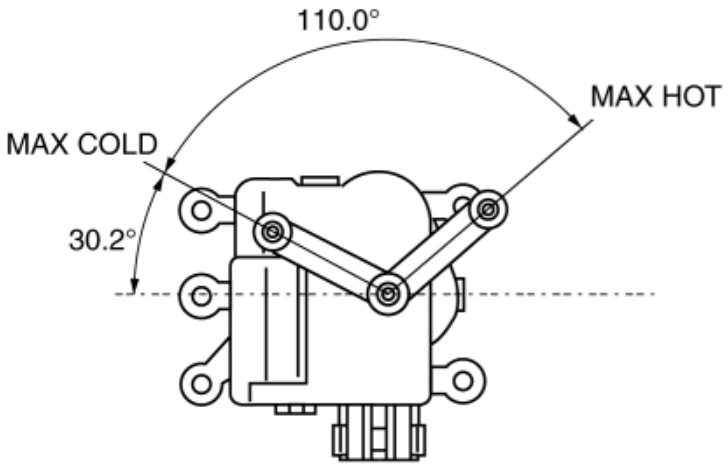

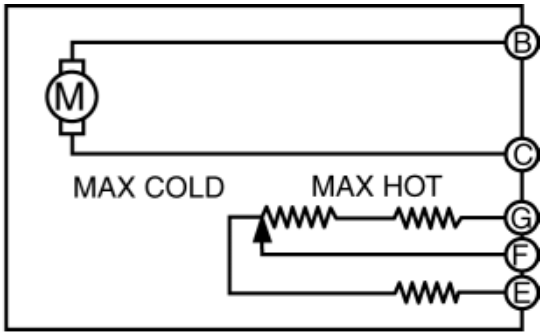

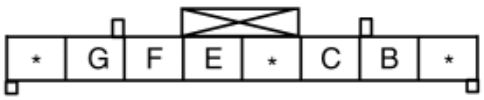

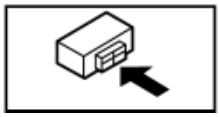

5. Verify that the resistance between terminals F and G, E and F matches the air mix actuator operation as shown in the graph.

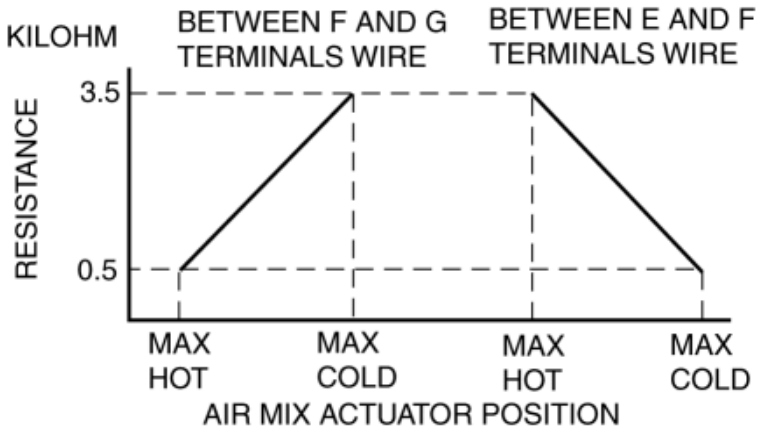

- If the operation condition and resistance are not normal, replace the air mix actuator. (See **AIR MIX ACTUATOR REMOVAL/INSTALLATION [FULL-AUTO AIR CONDITIONER]**.)

Passenger-side

1. Disconnect the negative battery cable. (See **NEGATIVE BATTERY CABLE DISCONNECTION/CONNECTION [SKYACTIV-G 2.0, SKYACTIV-G 2.5]**.)

2. Remove the following parts:

   a. Glove compartment (See **GLOVE COMPARTMENT REMOVAL/INSTALLATION**.)

   b. Dashboard under cover (See **DASHBOARD UNDER COVER REMOVAL/INSTALLATION**.)

   c. Side wall (passenger-side) (See **SIDE WALL REMOVAL/INSTALLATION**.)

   d. Front heat duct (passenger-side) (See **FRONT HEAT DUCT REMOVAL/INSTALLATION**.)

3. Remove the passenger-side air mix actuator. (See **AIR MIX ACTUATOR REMOVAL/INSTALLATION [FULL-AUTO AIR CONDITIONER]**.)

4. Apply battery positive voltage and connect the ground to the air mix actuator terminals as indicated in the table below and verify the operation condition.

B+ Terminal	Ground Terminal	Operation
B	C	HOT → COLD
C	B	COLD → HOT

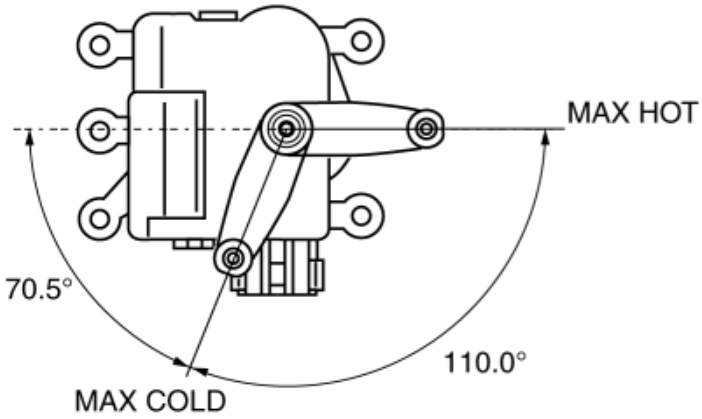

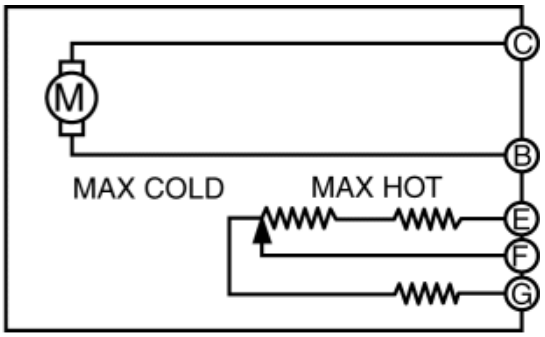

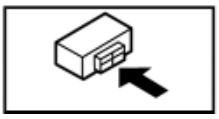

5. Verify that the resistance between terminals F and G, E and F matches the air mix actuator operation as shown in the graph.

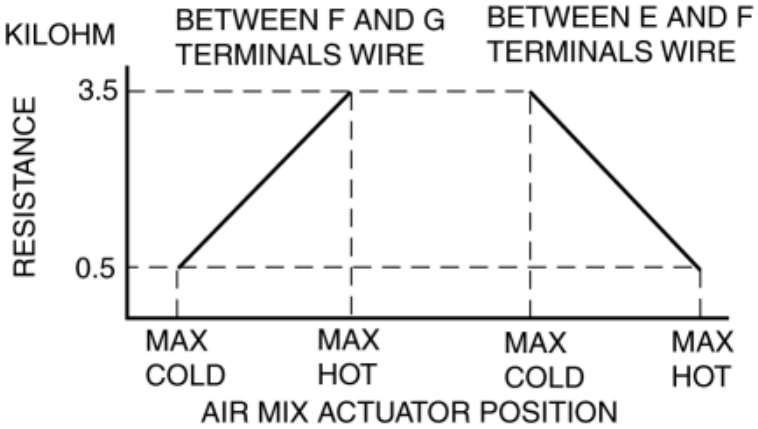

- If the operation condition and resistance are not normal, replace the air mix actuator. (See **AIR MIX ACTUATOR REMOVAL/INSTALLATION [FULL-AUTO AIR CONDITIONER]**.)

2014 - Mazda3 - HVAC

AIRFLOW MODE ACTUATOR REMOVAL/INSTALLATION [FULL-AUTO AIR CONDITIONER]

Removal

1. Disconnect the negative battery cable. (See **NEGATIVE BATTERY CABLE DISCONNECTION/CONNECTION [SKYACTIV-G 2.0, SKYACTIV-G 2.5]**.)
2. Remove the glove compartment. (See **GLOVE COMPARTMENT REMOVAL/INSTALLATION**.)
3. Disconnect the airflow mode actuator connector.
4. Remove the screws.

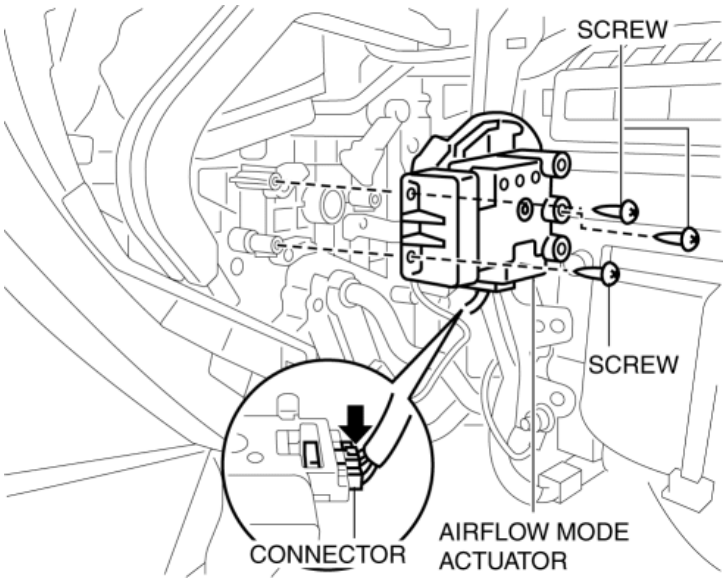

5. Remove the airflow mode actuator.
6. Remove the airflow mode main link.

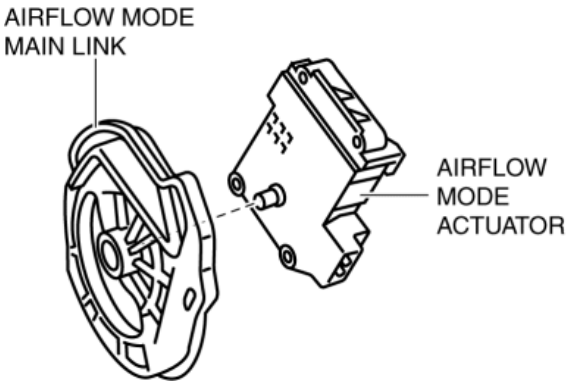

7. Remove the brackets.

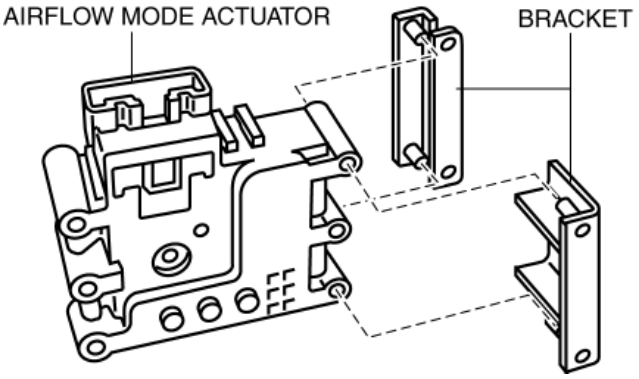

8. Install in the reverse order of removal. (See **Removal**.)

Installation

1. Install the brackets.

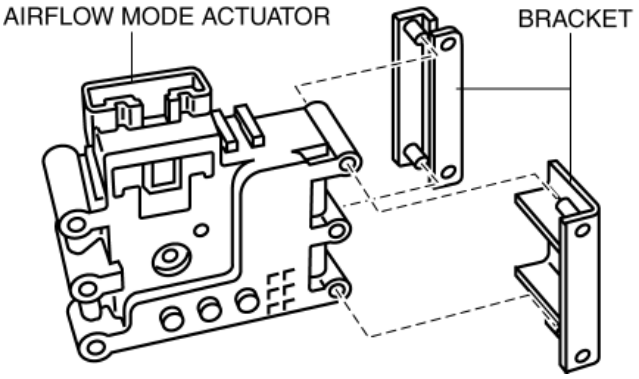

2. Align the airflow mode main link and the airflow mode sub link projection as shown in the figure.

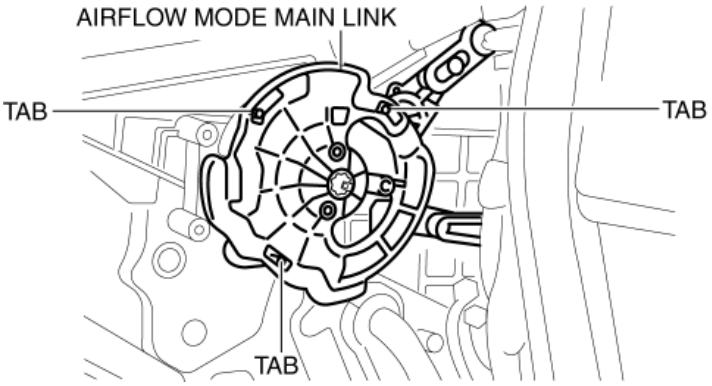

3. When lightly pressing the airflow main link to rotate it in the direction of the arrow, verify that the airflow mode door switches to the position for each mode.

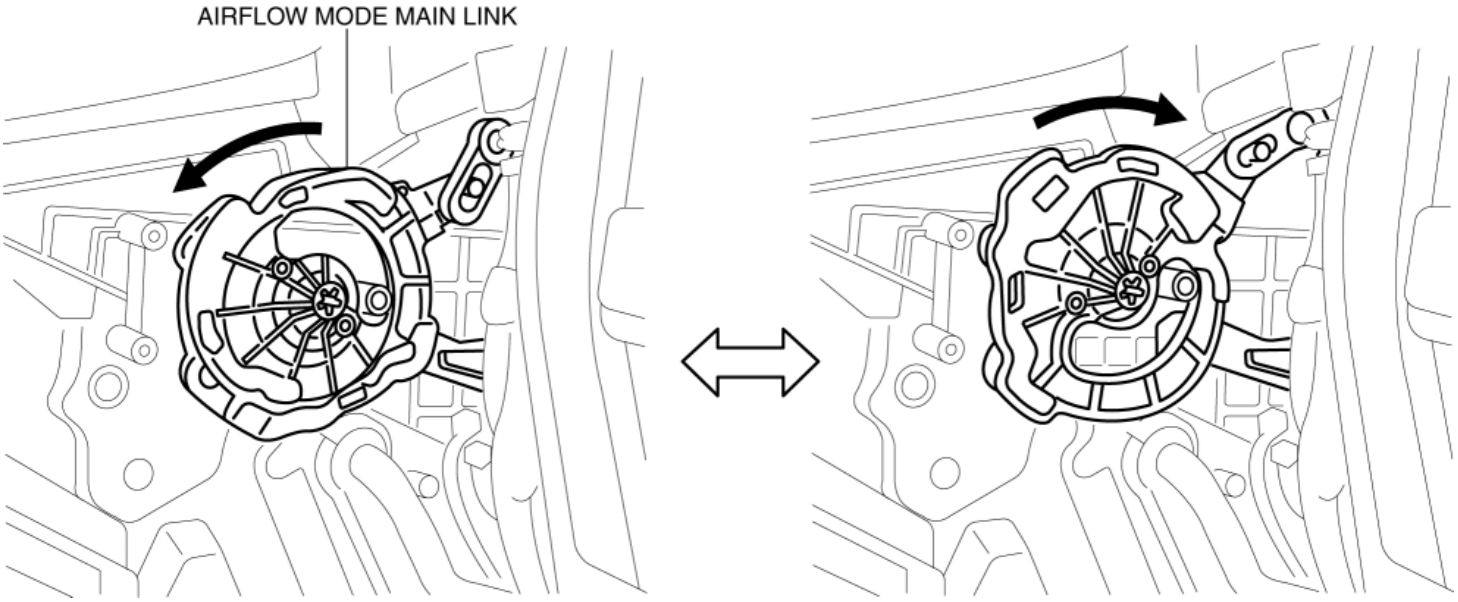

4. Align the airflow mode main link installation hole with the shape of the airflow mode actuator shaft, and install while holding the airflow mode main link.

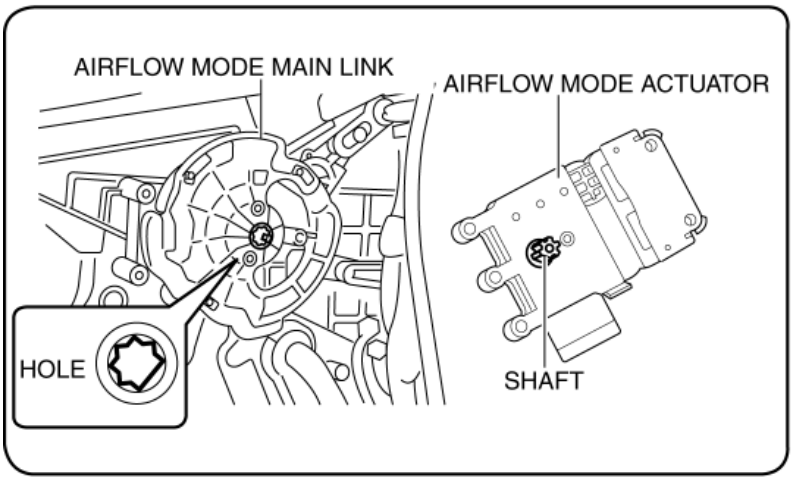

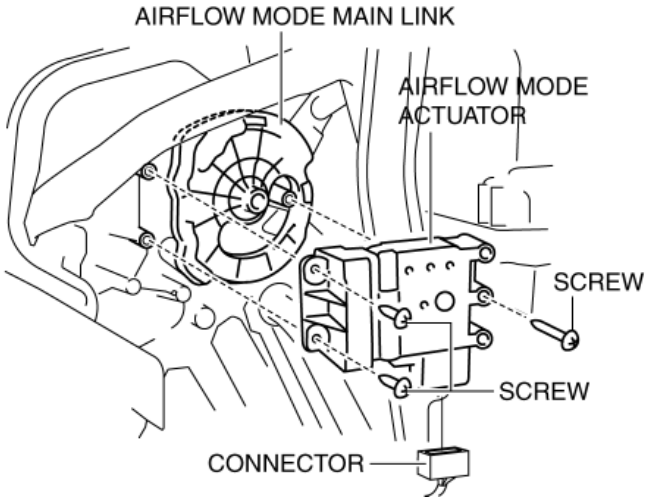

5. Install the airflow mode actuator.

6. Install the screws.

7. Connect the airflow mode actuator connector.

8. Install the glove compartment. (See **GLOVE COMPARTMENT REMOVAL/INSTALLATION**.)

2014 - Mazda3 - HVAC

AIRFLOW MODE ACTUATOR INSPECTION [FULL-AUTO AIR CONDITIONER]

CAUTION:

- If the lever position exceeds the operation range shown in the figure, the circuit in the actuator could be damaged. Always perform an actuator operation inspection with the lever movement within the range shown in the figure.

1. Disconnect the negative battery cable. (See **NEGATIVE BATTERY CABLE DISCONNECTION/CONNECTION [SKYACTIV-G 2.0, SKYACTIV-G 2.5]**.)

2. Remove the glove compartment. (See **GLOVE COMPARTMENT REMOVAL/INSTALLATION**.)

3. Remove the airflow mode actuator. (See **AIRFLOW MODE ACTUATOR REMOVAL/INSTALLATION [FULL-AUTO AIR CONDITIONER]**.)

4. Apply battery positive voltage and connect the ground to the airflow mode actuator terminals as indicated in the table below and verify the operation condition.

B+ Terminal	Ground Terminal	Operation
D	F	DEFROSTER → VENT
F	D	VENT → DEFROSTER

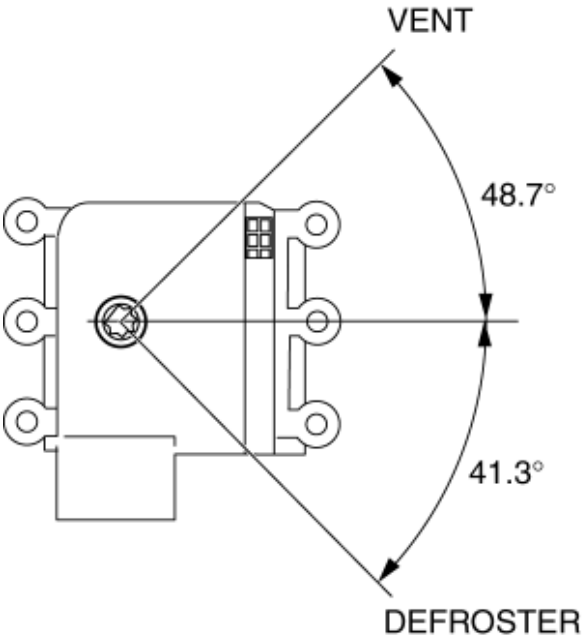

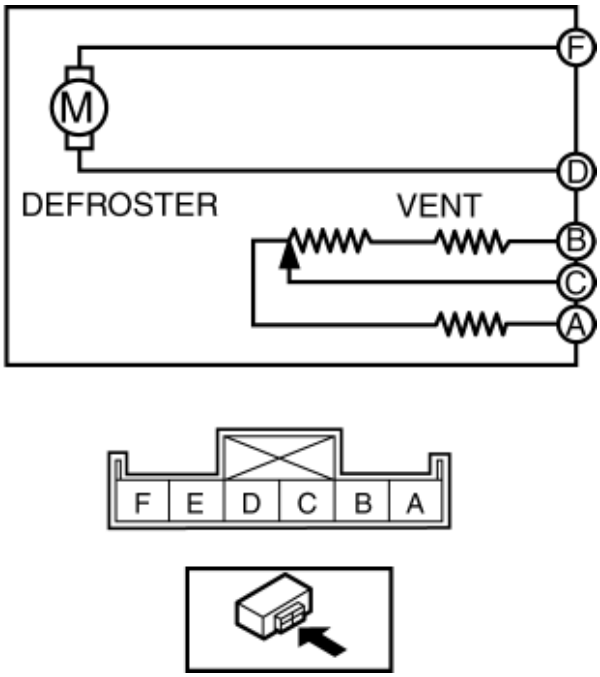

5. Verify that the resistance between terminals B and C, C and A matches the airflow mode actuator

operation as shown in the graph.

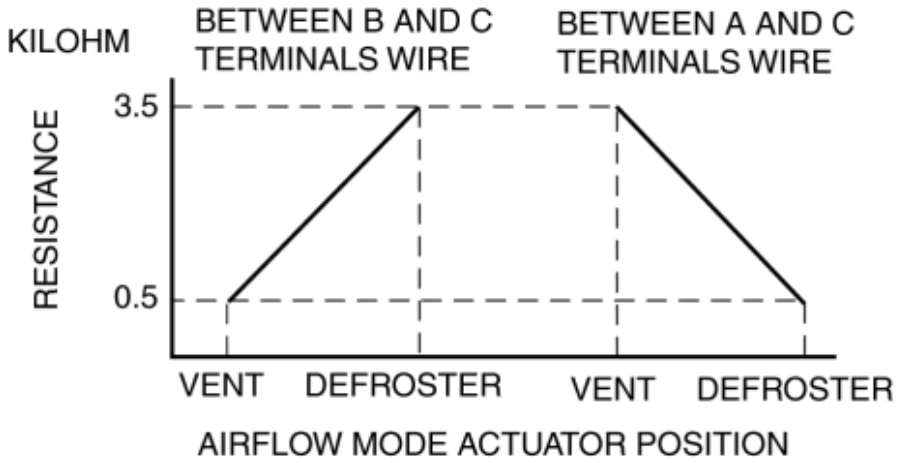

- If the operation condition and resistance are not normal, replace the airflow mode actuator. (See **AIRFLOW MODE ACTUATOR REMOVAL/INSTALLATION [FULL-AUTO AIR CONDITIONER]**.)

2014 - Mazda3 - HVAC

SOLAR RADIATION SENSOR REMOVAL/INSTALLATION [FULL-AUTO AIR CONDITIONER]

NOTE:

- When removing the solar radiation sensor, perform the procedure in the posture shown in the figure.

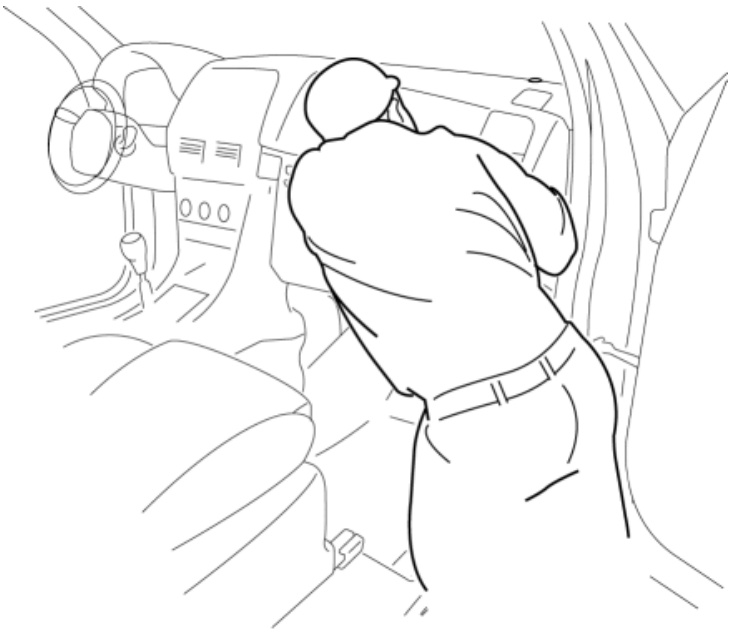

1. Disconnect the negative battery cable. (See **NEGATIVE BATTERY CABLE DISCONNECTION/CONNECTION [SKYACTIV-G 2.0, SKYACTIV-G 2.5]**.)

2. Remove the following parts:

   a. Glove compartment (See **GLOVE COMPARTMENT REMOVAL/INSTALLATION**.)

   b. Decoration panel (See **DECORATION PANEL REMOVAL/INSTALLATION**.)

   c. Dashboard under cover (See **DASHBOARD UNDER COVER REMOVAL/INSTALLATION**.)

   d. Side wall (passenger-side) (See **SIDE WALL REMOVAL/INSTALLATION**.)

   e. Front heat duct (passenger-side) (See **FRONT HEAT DUCT REMOVAL/INSTALLATION**.)

   f. Front scuff plate (passenger-side) (See **FRONT SCUFF PLATE REMOVAL/INSTALLATION**.)

   g. Front side trim (passenger-side) (See **FRONT SIDE TRIM REMOVAL/INSTALLATION**.)

   h. Lower panel (passenger-side) (See **LOWER PANEL REMOVAL/INSTALLATION**.)

   i. Blower unit (See **BLOWER UNIT REMOVAL/INSTALLATION**.)

3. Press out (1) the tab of the solar radiation sensor from the inside of the dashboard using a flathead screwdriver as shown in the figure.

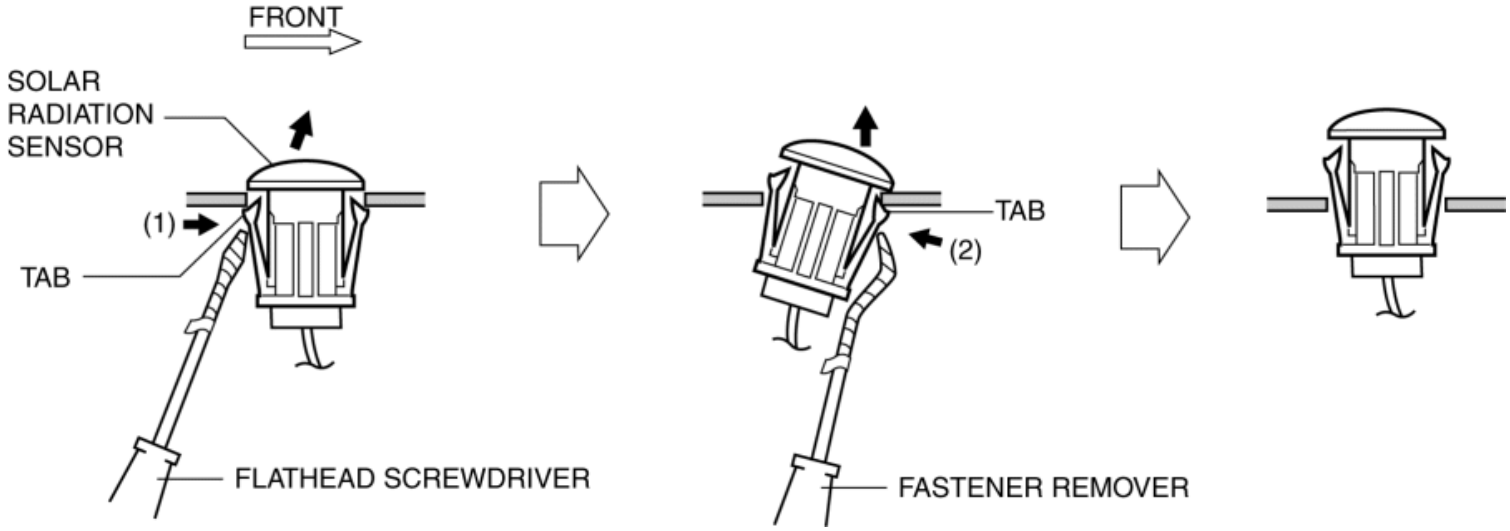

4. Press (2) the tab using a fastener remover as shown in the figure and press out the solar radiation sensor from the inside of the dashboard.

5. Disconnect the solar radiation sensor connector.

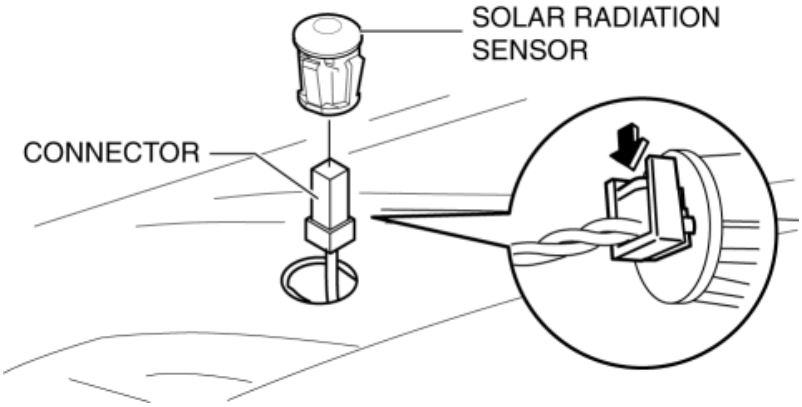

6. Remove the solar radiation sensor.

7. Install in the reverse order of removal. (See **Solar Radiation Sensor Installation Note**.)

Solar Radiation Sensor Installation Note

1. Align the shape of the solar radiation sensor with the shape of the installation hole on the dashboard side, and install as shown in the figure.

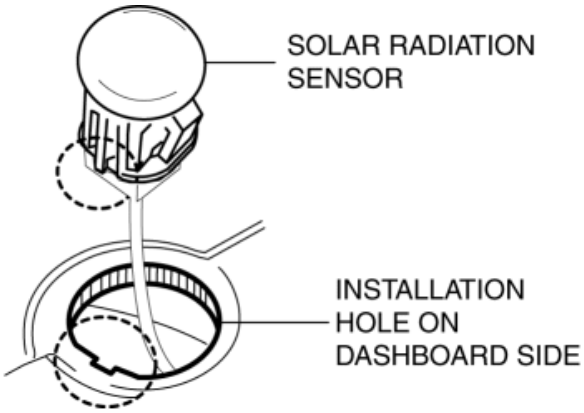

SOLAR RADIATION SENSOR REMOVAL/INSTALLATION [FULL-AUTO AIR CONDITIONER]

2014 - Mazda3 - HVAC

SOLAR RADIATION SENSOR INSPECTION [FULL-AUTO AIR CONDITIONER]

1. Disconnect the negative battery cable. (See **NEGATIVE BATTERY CABLE DISCONNECTION/CONNECTION [SKYACTIV-G 2.0, SKYACTIV-G 2.5]**.)

2. Remove the following parts:

   a. Glove compartment (See **GLOVE COMPARTMENT REMOVAL/INSTALLATION**.)

   b. Dashboard under cover (See **DASHBOARD UNDER COVER REMOVAL/INSTALLATION**.)

   c. Front heat duct (passenger-side) (See **FRONT HEAT DUCT REMOVAL/INSTALLATION**.)

   d. Front scuff plate (passenger-side) (See **FRONT SCUFF PLATE REMOVAL/INSTALLATION**.)

   e. Front side trim (passenger-side) (See **FRONT SIDE TRIM REMOVAL/INSTALLATION**.)

   f. Lower panel (passenger-side) (See **LOWER PANEL REMOVAL/INSTALLATION**.)

   g. Blower unit (See **BLOWER UNIT REMOVAL/INSTALLATION**.)

3. Remove the solar radiation sensor. (See **SOLAR RADIATION SENSOR REMOVAL/INSTALLATION [FULL-AUTO AIR CONDITIONER]**.)

4. Shine a fluorescent light or expose the solar radiation sensor to natural sunlight.

5. Connect the positive (+) lead to terminals B, C and negative (-) lead to terminal A of the solar radiation sensor, and verify that the voltage value is output.

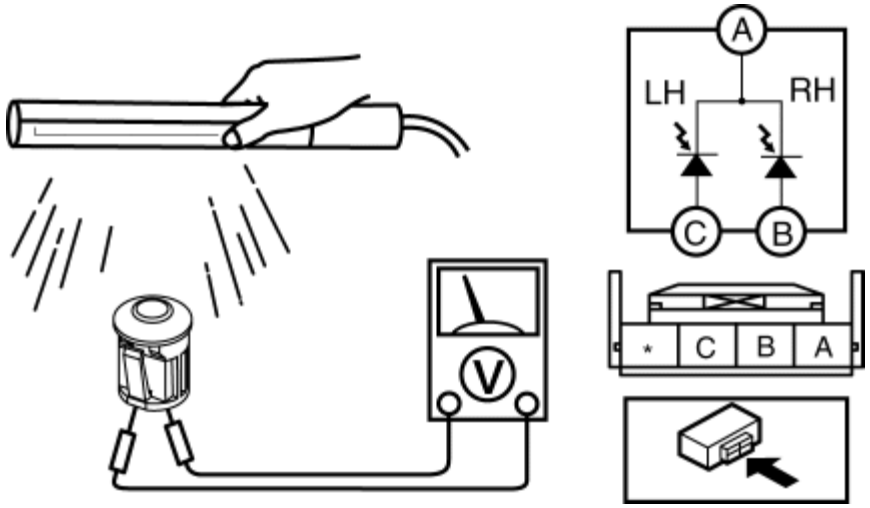

- If the voltage is **0 V**, replace the solar radiation sensor. (See **SOLAR RADIATION SENSOR REMOVAL/INSTALLATION [FULL-AUTO AIR CONDITIONER]**.)

SOLAR RADIATION SENSOR INSPECTION [FULL-AUTO AIR CONDITIONER]

2014 - Mazda3 - HVAC

AMBIENT TEMPERATURE SENSOR REMOVAL/INSTALLATION [FULL-AUTO AIR CONDITIONER]

1. Disconnect the negative battery cable. (See **NEGATIVE BATTERY CABLE DISCONNECTION/CONNECTION [SKYACTIV-G 2.0, SKYACTIV-G 2.5]**.)

2. Remove the front bumper. (See **FRONT BUMPER REMOVAL/INSTALLATION**.)

3. Disconnect the connector.

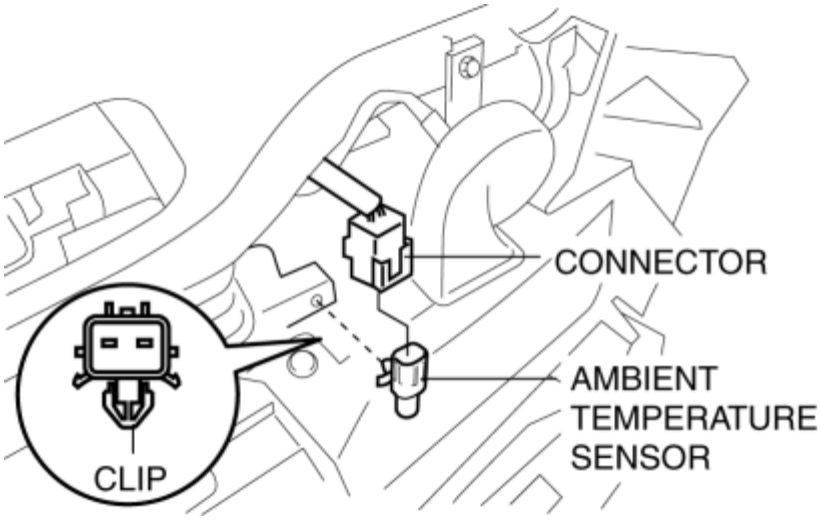

4. Remove the ambient temperature sensor.

5. Install in the reverse order of removal.

2014 - Mazda3 - HVAC

AMBIENT TEMPERATURE SENSOR INSPECTION [FULL-AUTO AIR CONDITIONER]

1. Disconnect the negative battery cable. (See **NEGATIVE BATTERY CABLE DISCONNECTION/CONNECTION [SKYACTIV-G 2.0, SKYACTIV-G 2.5]**.)

2. Remove the front bumper. (See **FRONT BUMPER REMOVAL/INSTALLATION**.)

3. Remove the ambient temperature sensor. (See **AMBIENT TEMPERATURE SENSOR REMOVAL/INSTALLATION [FULL-AUTO AIR CONDITIONER]**.)

4. Measure the temperature around the ambient temperature sensor and measure the resistance between the ambient temperature sensor terminals A and B.

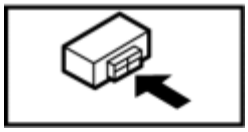

- If the characteristics of the ambient temperature sensor are not as shown in the graph, replace the ambient temperature sensor. (See **AMBIENT TEMPERATURE SENSOR REMOVAL/INSTALLATION [FULL-AUTO AIR CONDITIONER]**.)

AMBIENT TEMPERATURE SENSOR INSPECTION [FULL-AUTO AIR CONDITIONER]

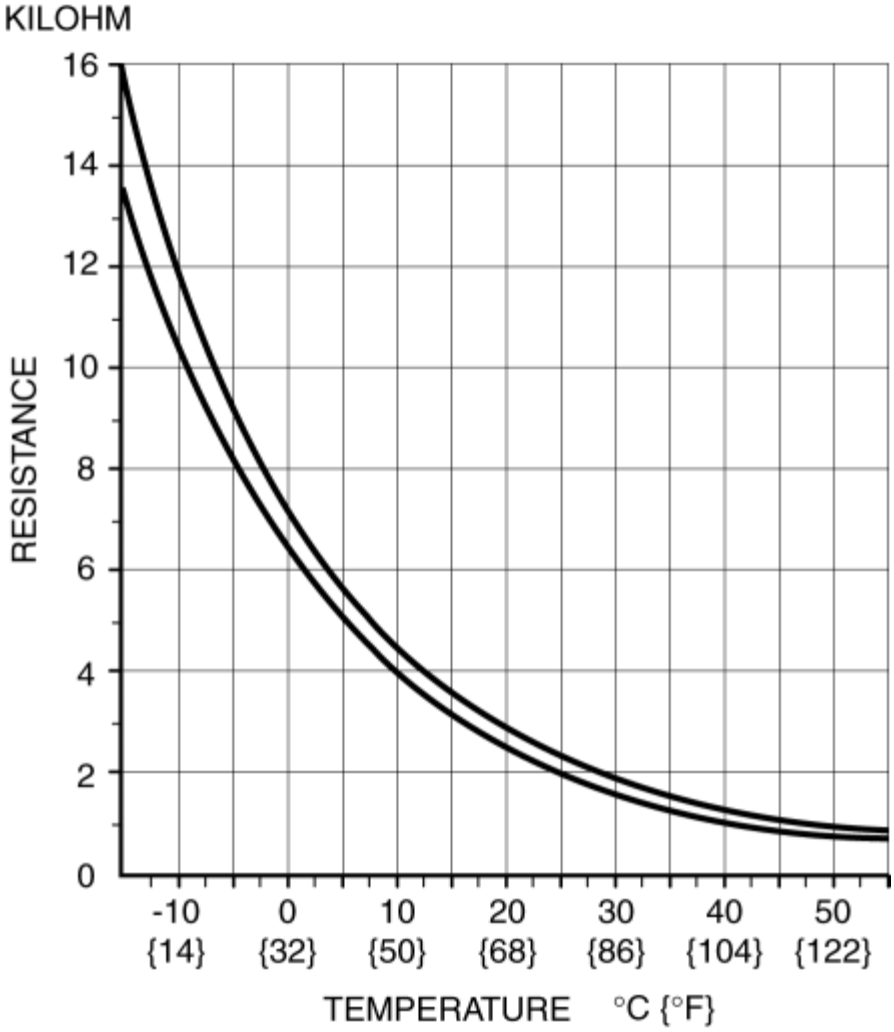

2014 - Mazda3 - HVAC

PASSENGER COMPARTMENT TEMPERATURE SENSOR REMOVAL/INSTALLATION [FULL-AUTO AIR CONDITIONER]

1. Disconnect the negative battery cable. (See **NEGATIVE BATTERY CABLE DISCONNECTION/CONNECTION [SKYACTIV-G 2.0, SKYACTIV-G 2.5]**.)

2. Remove the following parts:

   a. Glove compartment (See **GLOVE COMPARTMENT REMOVAL/INSTALLATION**.)

   b. Decoration panel (See **DECORATION PANEL REMOVAL/INSTALLATION**.)

   c. Upper panel (See **UPPER PANEL REMOVAL**.)(See **UPPER PANEL INSTALLATION**.)

   d. Rear console (See **REAR CONSOLE REMOVAL/INSTALLATION**.)

   e. Selector lever knob (ATX) (See **AUTOMATIC TRANSAXLE SHIFT MECHANISM REMOVAL/INSTALLATION**.)

   f. Shift lever knob (MTX) (See **MANUAL TRANSAXLE SHIFT MECHANISM REMOVAL/INSTALLATION [C66M-R]**.)

   g. Shift panel (See **SHIFT PANEL REMOVAL/INSTALLATION**.)

   h. Front console box (See **FRONT CONSOLE BOX REMOVAL/INSTALLATION**.)

   i. Side wall (See **SIDE WALL REMOVAL/INSTALLATION**.)

   j. CD player (with CD player) (See **CD PLAYER REMOVAL**.)(See **CD PLAYER INSTALLATION**.)

   k. Front console (See **FRONT CONSOLE REMOVAL/INSTALLATION**.)

   l. Front scuff plate (driver-side) (See **FRONT SCUFF PLATE REMOVAL/INSTALLATION**.)

   m. Front side trim (driver-side) (See **FRONT SIDE TRIM REMOVAL/INSTALLATION**.)

   n. Fuel filer lid opener lever (See **FUEL-FILLER LID OPENER AND LEVER REMOVAL/INSTALLATION**.)

   o. Hood release lever (See **HOOD RELEASE LEVER AND RELEASE CABLE REMOVAL/INSTALLATION**.)

   p. Lower panel (driver-side) (See **LOWER PANEL REMOVAL/INSTALLATION**.)

3. Disconnect the aspirator from the passenger compartment temperature sensor.

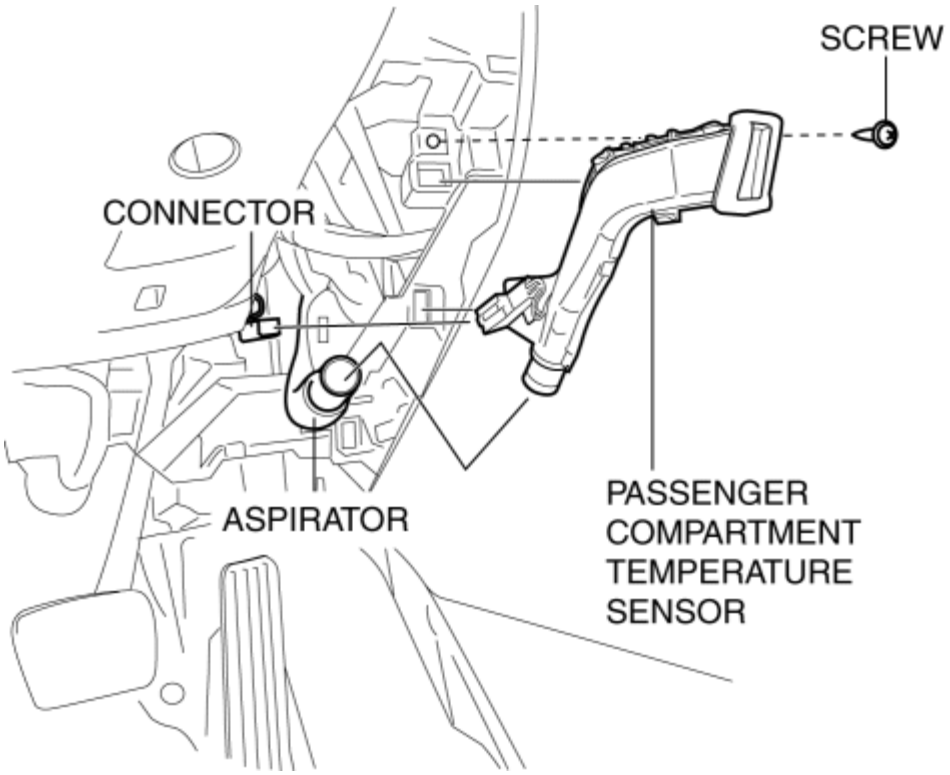

4. Disconnect the connector.

5. Remove the screw.

6. Remove the passenger compartment temperature sensor.

7. Remove the aspirator.

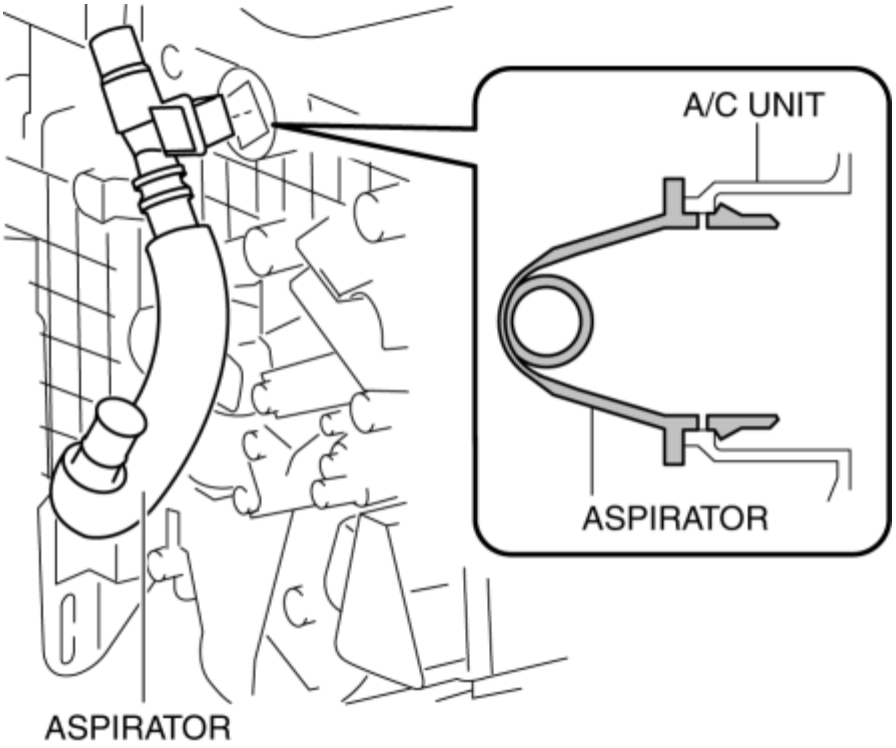

8. Install in the reverse order of removal.

PASSENGER COMPARTMENT TEMPERATURE SENSOR REMOVAL/INSTALLATION [FULL-AUTO AIR CONDITIONER]

2014 - Mazda3 - HVAC

PASSENGER COMPARTMENT TEMPERATURE SENSOR INSPECTION [FULL-AUTO AIR CONDITIONER]

1. Disconnect the negative battery cable. (See **NEGATIVE BATTERY CABLE DISCONNECTION/CONNECTION [SKYACTIV-G 2.0, SKYACTIV-G 2.5]**.)

2. Remove the following parts:

   a. Glove compartment (See **GLOVE COMPARTMENT REMOVAL/INSTALLATION**.)

   b. Decoration panel (See **DECORATION PANEL REMOVAL/INSTALLATION**.)

   c. Upper panel (See **UPPER PANEL REMOVAL**.)(See **UPPER PANEL INSTALLATION**.)

   d. Rear console (See **REAR CONSOLE REMOVAL/INSTALLATION**.)

   e. Selector lever knob (ATX) (See **AUTOMATIC TRANSAXLE SHIFT MECHANISM REMOVAL/INSTALLATION**.)

   f. Shift lever knob (MTX) (See **MANUAL TRANSAXLE SHIFT MECHANISM REMOVAL/INSTALLATION [C66M-R]**.)

   g. Shift panel (See **SHIFT PANEL REMOVAL/INSTALLATION**.)

   h. Front console box (See **FRONT CONSOLE BOX REMOVAL/INSTALLATION**.)

   i. Side wall (See **SIDE WALL REMOVAL/INSTALLATION**.)

   j. CD player (with CD player) (See **CD PLAYER REMOVAL**.)(See **CD PLAYER INSTALLATION**.)

   k. Front console (See **FRONT CONSOLE REMOVAL/INSTALLATION**.)

   l. Front scuff plate (driver-side) (See **FRONT SCUFF PLATE REMOVAL/INSTALLATION**.)

   m. Front side trim (driver-side) (See **FRONT SIDE TRIM REMOVAL/INSTALLATION**.)

   n. Fuel filer lid opener lever (See **FUEL-FILLER LID OPENER AND LEVER REMOVAL/INSTALLATION**.)

   o. Hood release lever (See **HOOD RELEASE LEVER AND RELEASE CABLE REMOVAL/INSTALLATION**.)

   p. Lower panel (driver-side) (See **LOWER PANEL REMOVAL/INSTALLATION**.)

3. Remove the passenger compartment temperature sensor. (See **PASSENGER COMPARTMENT TEMPERATURE SENSOR REMOVAL/INSTALLATION [FULL-AUTO AIR CONDITIONER]**.)

4. Measure the temperature around the passenger compartment temperature sensor and measure the resistance between passenger compartment temperature sensor terminals A and B.

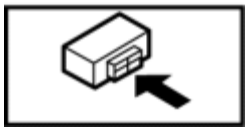

- If the characteristics of the passenger compartment temperature sensor are not as shown in the graph, replace the passenger compartment temperature sensor. (See **PASSENGER COMPARTMENT TEMPERATURE SENSOR REMOVAL / INSTALLATION [FULL-AUTO AIR CONDITIONER]**.)

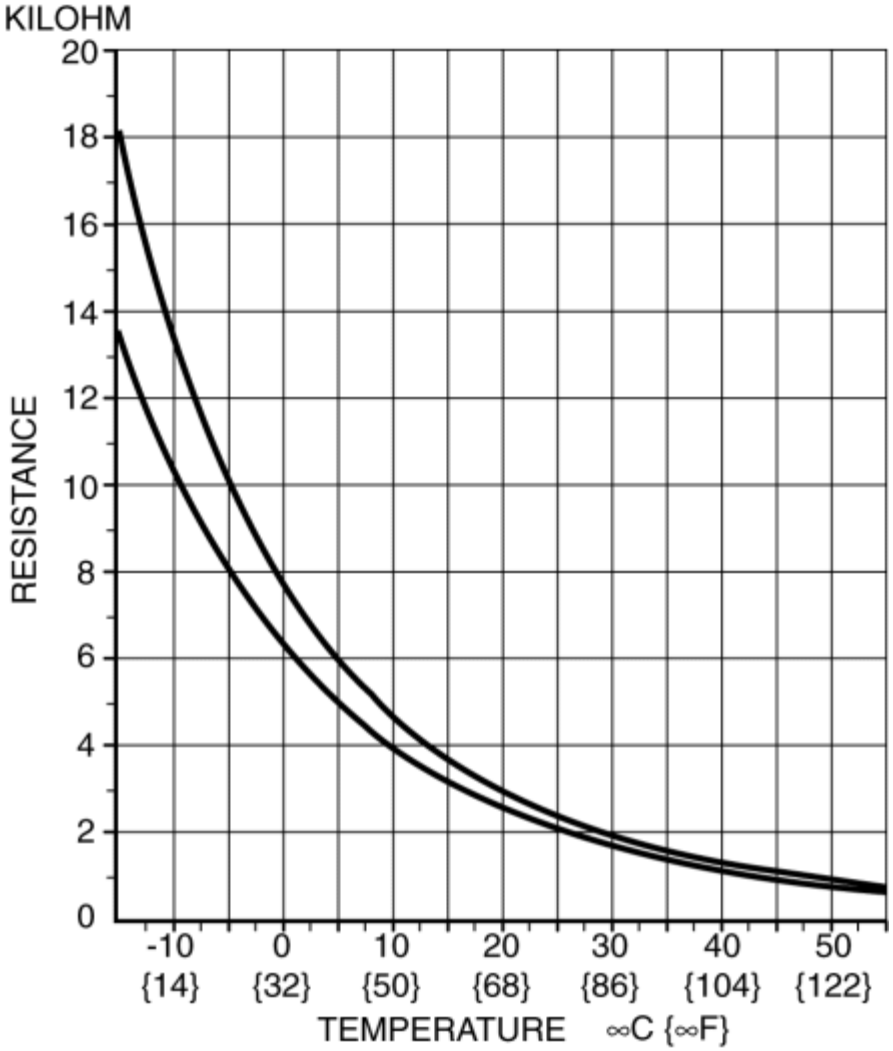

2014 - Mazda3 - HVAC

EVAPORATOR TEMPERATURE SENSOR REMOVAL/INSTALLATION [FULL-AUTO AIR CONDITIONER]

1. Remove the evaporator temperature sensor from the A/C unit. (See **A/C UNIT DISASSEMBLY/ASSEMBLY**.)

2014 - Mazda3 - HVAC

EVAPORATOR TEMPERATURE SENSOR INSPECTION [FULL-AUTO AIR CONDITIONER]

NOTE:

- Inspect the evaporator temperature sensor when it is installed to the A/C unit.

1. Disconnect the negative battery cable. (See **NEGATIVE BATTERY CABLE DISCONNECTION/CONNECTION [SKYACTIV-G 2.0, SKYACTIV-G 2.5]**.)
2. Remove the following parts:
   a. Dashboard under cover (See **DASHBOARD UNDER COVER REMOVAL/INSTALLATION**.)
   b. Side wall (passenger-side) (See **SIDE WALL REMOVAL/INSTALLATION**.)
   c. Front heat duct (passenger-side) (See **FRONT HEAT DUCT REMOVAL/INSTALLATION**.)
3. Connect the negative battery cable.
4. Switch the ignition ON (engine on).
5. Set the fan speed to MAX HI.
6. Set the temperature control to MAX COLD.
7. Set to the RECIRCULATE mode.
8. Turn the A/C switch off.
9. Close all doors and windows.
10. Wait for **5 min**.
11. Switch the ignition off.
12. Disconnect the negative battery cable.
13. Disconnect the evaporator temperature sensor connector.

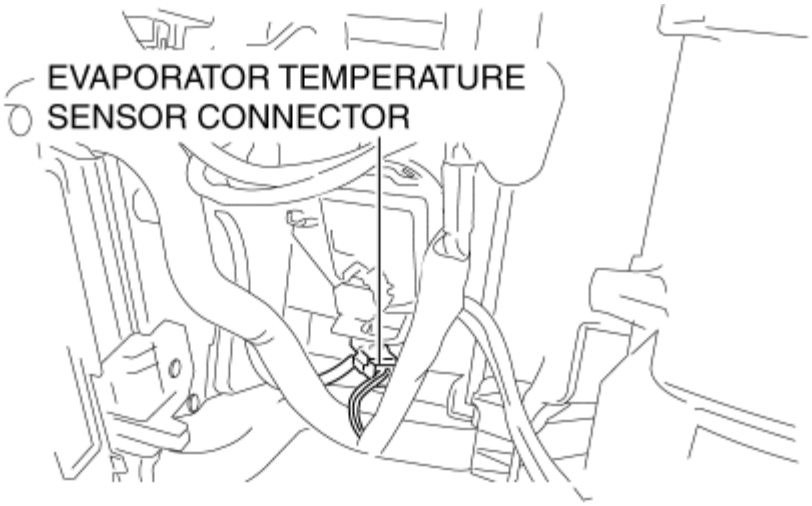

14. Measure the temperature at the blower inlet.

15. Measure the resistance between the evaporator temperature sensor terminals A and B.

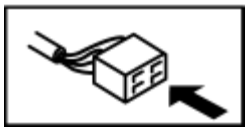

- If the resistance is not as shown in the graph, replace the evaporator temperature sensor. (See **A/C UNIT DISASSEMBLY/ASSEMBLY**.)

EVAPORATOR TEMPERATURE SENSOR INSPECTION [FULL-AUTO AIR CONDITIONER]

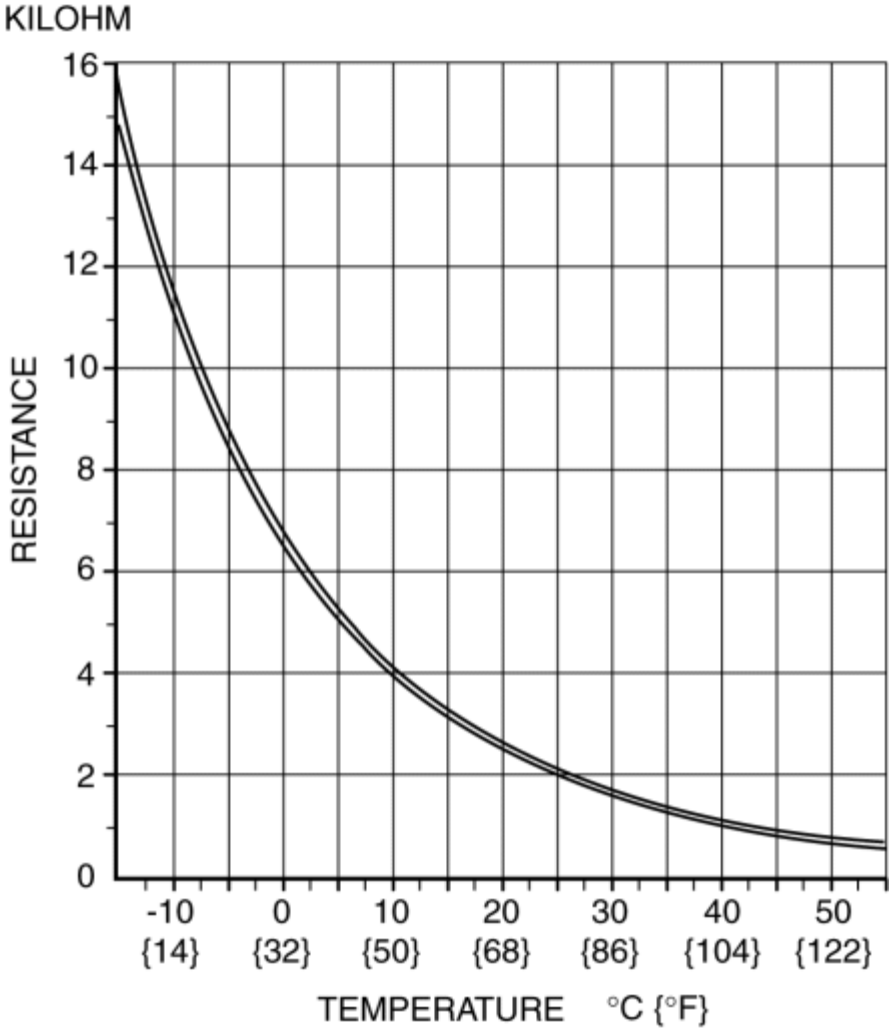

2014 - Mazda3 - HVAC

REFRIGERANT PRESSURE SENSOR REMOVAL/INSTALLATION [FULL-AUTO AIR CONDITIONER]

1. Disconnect the negative battery cable. (See **NEGATIVE BATTERY CABLE DISCONNECTION/CONNECTION [SKYACTIV-G 2.0, SKYACTIV-G 2.5]**.)

2. Discharge the refrigerant. (See **REFRIGERANT CHARGING**.)

3. Disconnect the refrigerant pressure sensor connector.

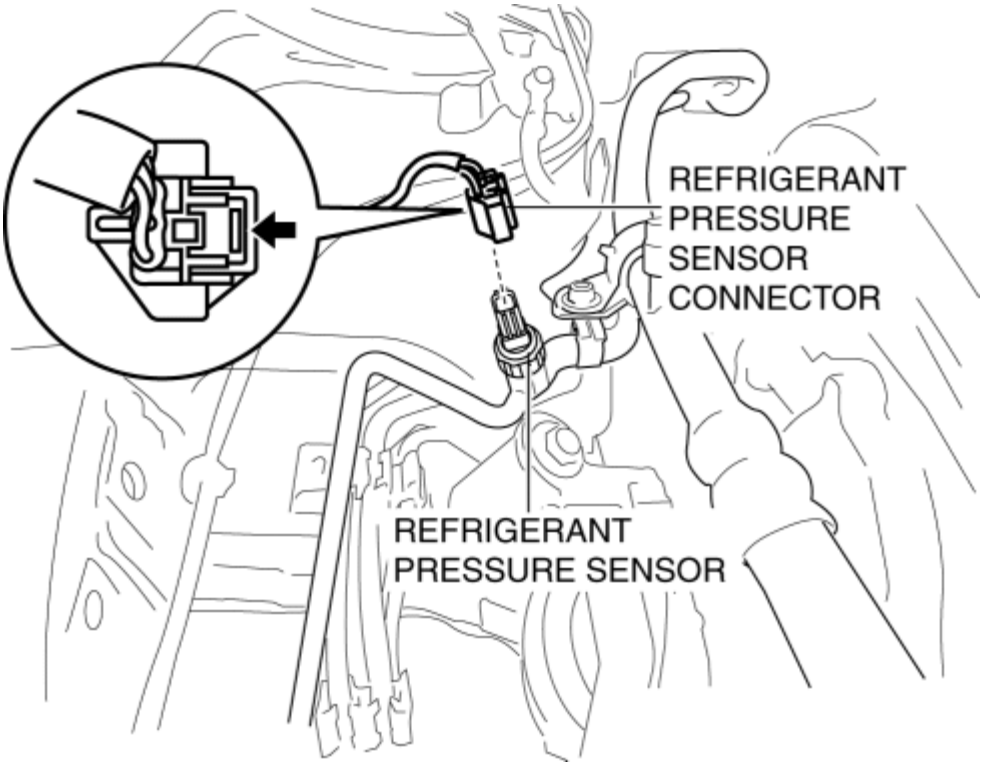

4. Loosen the refrigerant pressure sensor using two spanners.

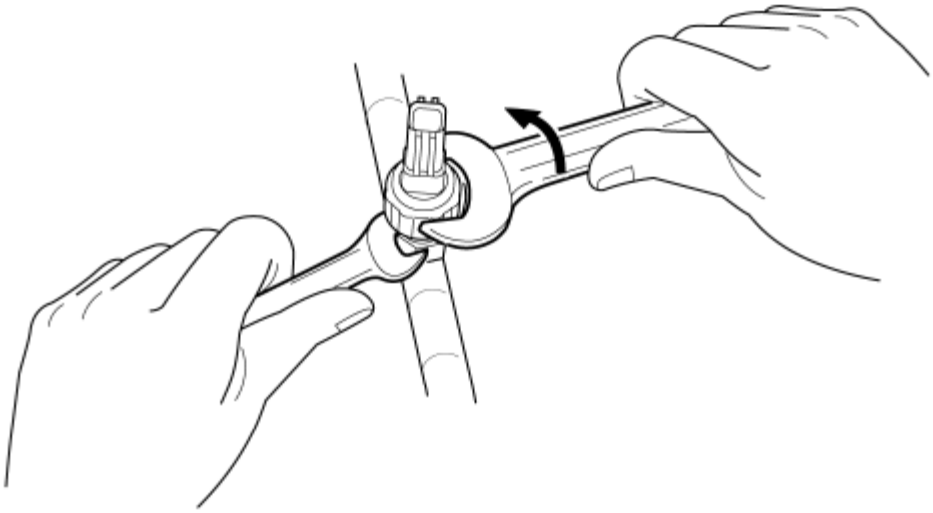

Tightening torque

- 10—11 N·m {102—112 kgf·cm, 89—97 in·lbf}

5. Remove the refrigerant pressure sensor.

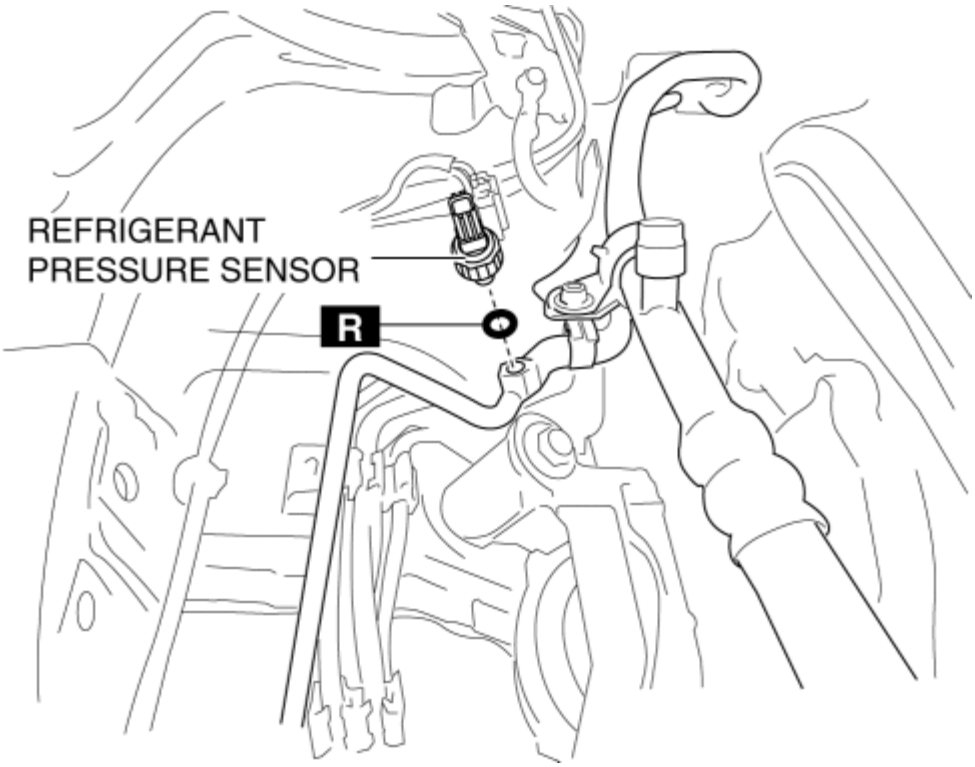

CAUTION:

- If moisture or foreign matter enters the refrigeration cycle, cooling ability will be lowered and abnormal noise will occur. Always immediately plug all open fittings after removing any refrigeration cycle parts to keep moisture or foreign matter out of the cycle.

6. Install in the reverse order of removal. (See **Refrigerant Pressure Sensor Installation Note**.)

7. Perform the refrigerant system performance test. (See **REFRIGERANT SYSTEM PERFORMANCE TEST**.)

Refrigerant Pressure Sensor Installation Note

1. Apply compressor oil to the O-rings and connect the joints.

2014 - Mazda3 - HVAC

REFRIGERANT PRESSURE SENSOR INSPECTION [FULL-AUTO AIR CONDITIONER]

1. Install the manifold gauge. (See **REFRIGERANT SYSTEM GENERAL PROCEDURES**.)
2. Verify the high-pressure side reading of the manifold gauge.
3. Measure the terminal voltage at PCM terminal 2BB, 2AX and 2AJ.
4. Using the graph below, measure and verify the terminal voltages at 2AX.
5. Follow the PCM inspection when measuring the other terminal voltages. (See **PCM INSPECTION [SKYACTIV-G 2.0, SKYACTIV-G 2.5]**.)
    - Terminal 2BB: Approx. 5 V (Ignition switch ON)
    - Terminal 2AJ: 1.0 V or less
        - If each voltage is not normal, inspect the related wiring harness.
            - If there is any malfunction, replace the related wiring harness.
            - If the wiring harness is normal, replace the refrigerant pressure sensor. (See **REFRIGERANT PRESSURE SENSOR REMOVAL/INSTALLATION [FULL-AUTO AIR CONDITIONER]**.)

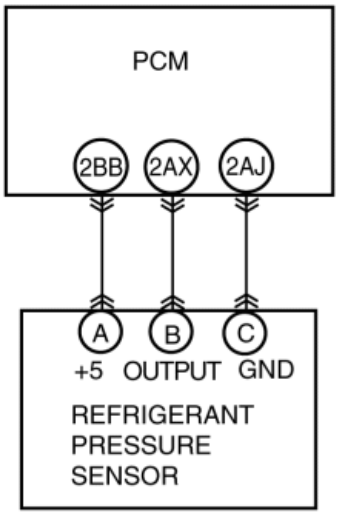

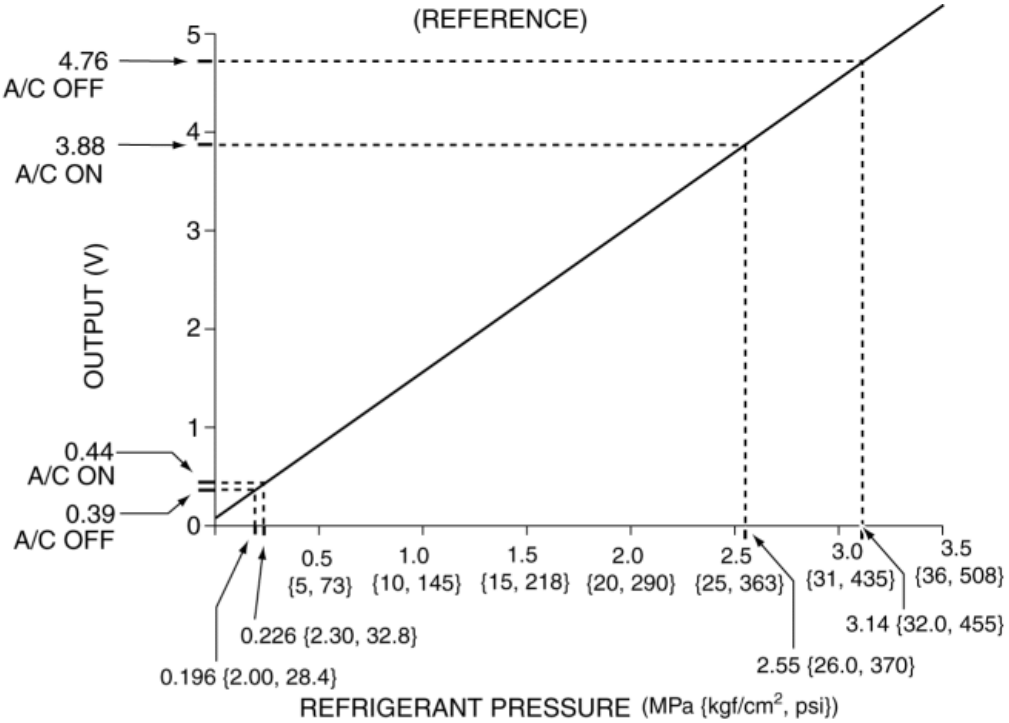

REFRIGERANT PRESSURE SENSOR WIRING HARNESS-SIDE CONNECTOR

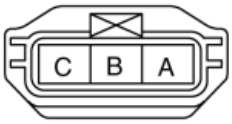

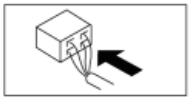

PCM WIRING HARNESS SIDE CONNECTOR

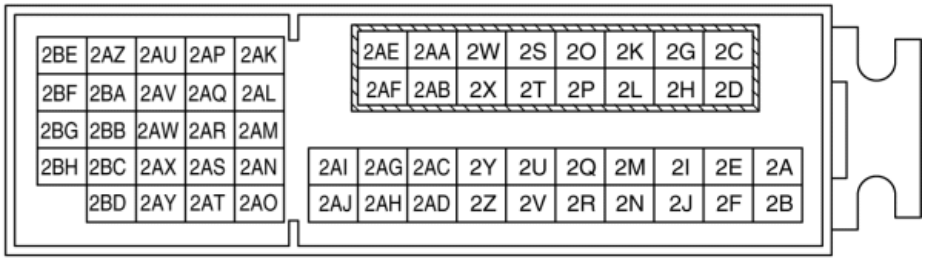

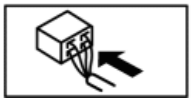

2014 - Mazda3 - HVAC

CLIMATE CONTROL UNIT REMOVAL/INSTALLATION [FULL-AUTO AIR CONDITIONER]

NOTE:

- The climate control unit prior to replacement stores the vehicle specification information.
- The new climate control unit does not store any vehicle specification information.
- When the ignition is switched ON after the climate control unit is replaced, the climate control unit reads the vehicle specification information sent via CAN transmission from the instrument cluster, and stores the vehicle specification information.

1. Disconnect the negative battery cable. (See **NEGATIVE BATTERY CABLE DISCONNECTION/CONNECTION [SKYACTIV-G 2.0, SKYACTIV-G 2.5]**.)
2. Remove the following parts:
   a. Glove compartment (See **GLOVE COMPARTMENT REMOVAL/INSTALLATION**.)
   b. Decoration panel (See **DECORATION PANEL REMOVAL/INSTALLATION**.)
   c. Upper panel (See **UPPER PANEL REMOVAL**.)(See **UPPER PANEL INSTALLATION**.)
   d. Rear console (See **REAR CONSOLE REMOVAL/INSTALLATION**.)
   e. Shift lever knob (MTX) (See **MANUAL TRANSAXLE SHIFT MECHANISM REMOVAL/INSTALLATION [C66M-R]**.)
   f. Selector lever knob (ATX) (See **AUTOMATIC TRANSAXLE SHIFT MECHANISM REMOVAL/INSTALLATION**.)
   g. Shift panel (See **SHIFT PANEL REMOVAL/INSTALLATION**.)
   h. Front console box (See **FRONT CONSOLE BOX REMOVAL/INSTALLATION**.)
   i. CD player (with CD player) (See **CD PLAYER REMOVAL**.)(See **CD PLAYER INSTALLATION**.)
   j. Side wall (See **SIDE WALL REMOVAL/INSTALLATION**.)
   k. Front console (See **FRONT CONSOLE REMOVAL/INSTALLATION**.)
3. Remove the screws.

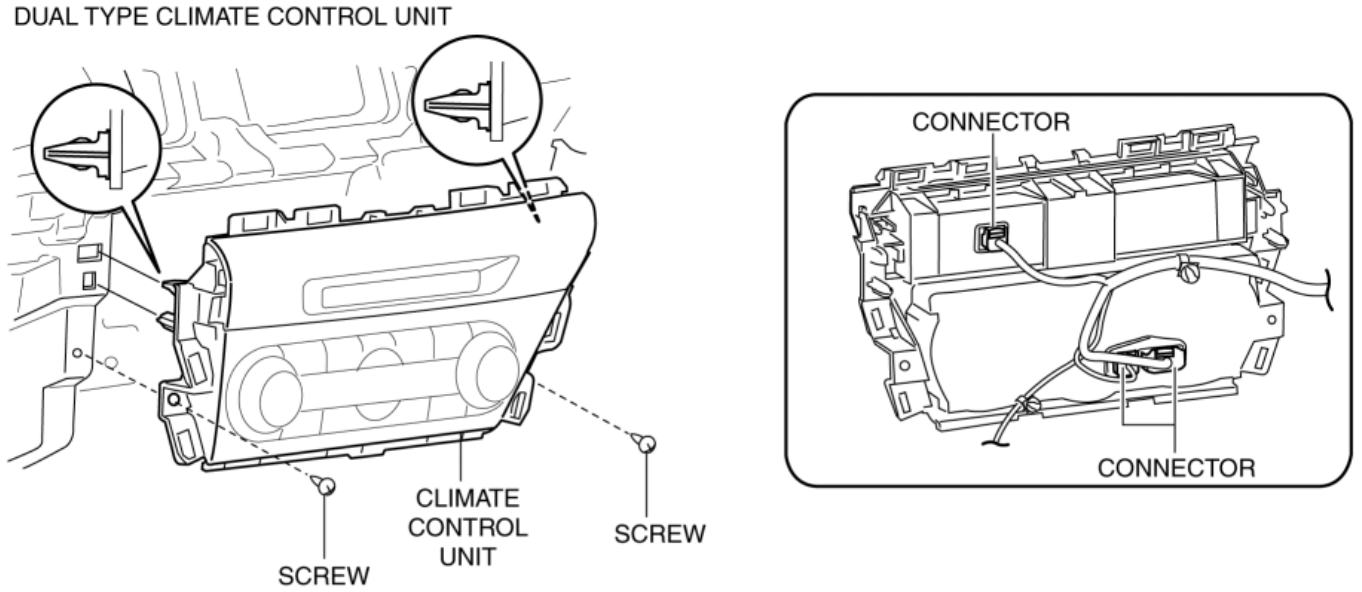

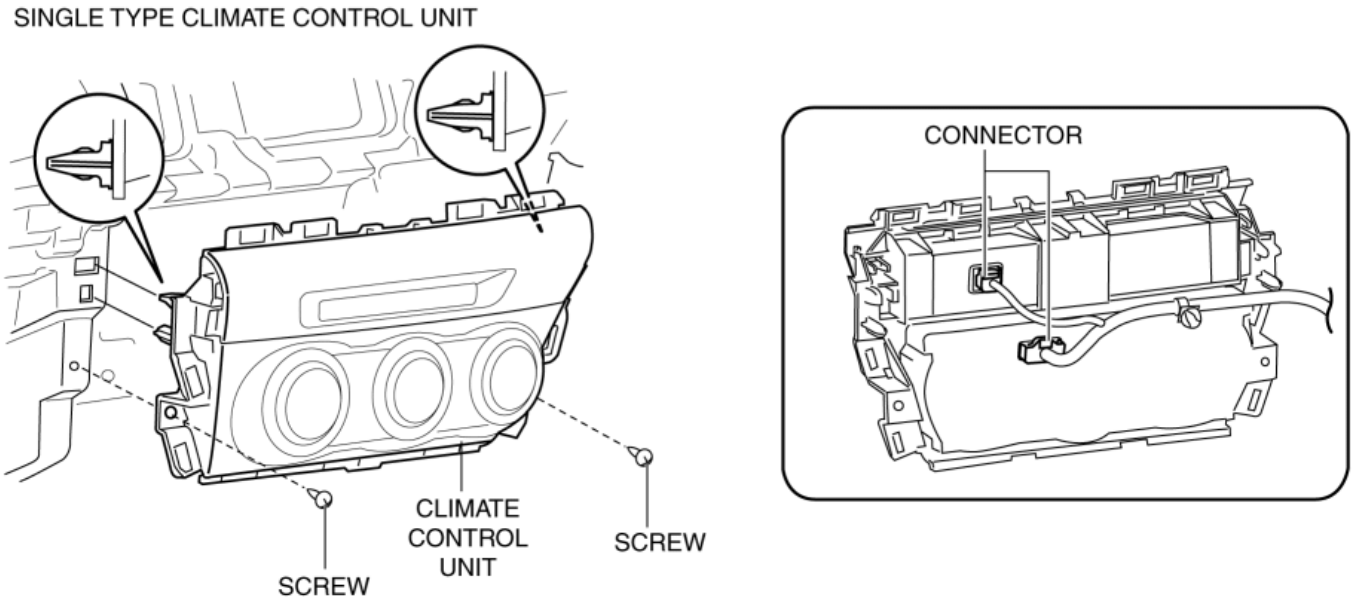

4. Remove the climate control unit. (See **Climate Control Unit Removal Note**.)

5. Disconnect the connector.

6. Install in the reverse order of removal.

7. Switch the ignition ON and perform the climate control unit automatic configuration.

8. Clear the DTCs. (See **CLEARING DTC [FULL-AUTO AIR CONDITIONER]**.)

Climate Control Unit Removal Note

1. The indicator unit can be removed from the climate control unit. Refer to the INDICATOR UNIT REMOVAL/INSTALLATION for the detailed procedure. (See **INDICATOR UNIT REMOVAL/INSTALLATION**.)

2014 - Mazda3 - HVAC

CLIMATE CONTROL UNIT INSPECTION [FULL-AUTO AIR CONDITIONER]

Dual Type

1. Disconnect the negative battery cable. (See **NEGATIVE BATTERY CABLE DISCONNECTION/CONNECTION [SKYACTIV-G 2.0, SKYACTIV-G 2.5]**.)

2. Remove the following parts:

   a. Glove compartment (See **GLOVE COMPARTMENT REMOVAL/INSTALLATION**.)

   b. Decoration panel (See **DECORATION PANEL REMOVAL/INSTALLATION**.)

   c. Upper panel (See **UPPER PANEL REMOVAL**.)(See **UPPER PANEL INSTALLATION**.)

   d. Rear console (See **REAR CONSOLE REMOVAL/INSTALLATION**.)

   e. Shift lever knob (MTX) (See **MANUAL TRANSAXLE SHIFT MECHANISM REMOVAL/INSTALLATION [C66M-R]**.)

   f. Selector lever knob (ATX) (See **AUTOMATIC TRANSAXLE SHIFT MECHANISM REMOVAL/INSTALLATION**.)

   g. Shift panel (See **SHIFT PANEL REMOVAL/INSTALLATION**.)

   h. Front console box (See **FRONT CONSOLE BOX REMOVAL/INSTALLATION**.)

   i. CD player (with CD player) (See **CD PLAYER REMOVAL**.)(See **CD PLAYER INSTALLATION**.)

   j. Side wall (See **SIDE WALL REMOVAL/INSTALLATION**.)

   k. Front console (See **FRONT CONSOLE REMOVAL/INSTALLATION**.)

3. Remove the climate control unit with the connector connected. (See **CLIMATE CONTROL UNIT REMOVAL/INSTALLATION [FULL-AUTO AIR CONDITIONER]**.)

4. Connect the negative battery cable.

5. Switch the ignition ON (engine off or on).

6. Connect the negative (-) lead of the tester to body ground.

7. Insert the positive (+) lead of the tester into each climate control unit terminal and measure the voltage according to the terminal voltage table.

   - If there is any malfunction, inspect the parts under “Inspection item (s)”.
     - If the parts under “Inspection item (s)” are found to be normal (except for terminal 1E), replace the climate control unit. (See **CLIMATE CONTROL UNIT REMOVAL/INSTALLATION [FULL-AUTO AIR CONDITIONER]**.)
     - For terminal 1E, first try replacing the blower fan controller. If there is still any malfunction, replace the climate control unit. (See **CLIMATE CONTROL UNIT REMOVAL/INSTALLATION [FULL-AUTO AIR CONDITIONER]**.)

CLIMATE CONTROL UNIT WIRING HARNESS SIDE CONNECTOR

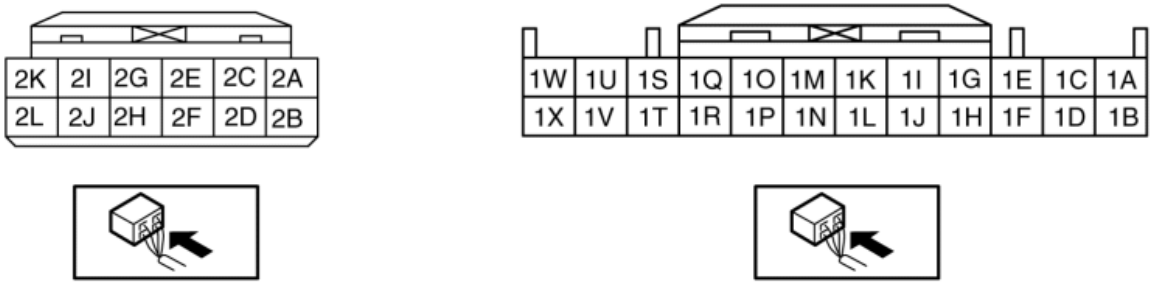

Terminal voltage table (reference)

Terminal	Signal name	Connected to	Measurement condition		Voltage (V)	Inspection item (s)
1A	GND	Body ground	Under any condition		1.0 or less	• Related wiring harness
1B	B+	ROOM 15 A fuse	Under any condition		B+	• Related wiring harness • ROOM 15 A fuse
1C	—	—	—		—	—
1D	IG1	C/U IG1 15 A fuse	Switch the ignition ON (engine off or on)		B+	• Related wiring harness • C/U IG1 15 A fuse
			Switch the ignition off		1.0 or less	
1E	Blower fan speed control	Blower fan controller	Switch the ignition off		1.0 or less	• Related wiring harness • Blower fan controller
			Fan stopped (Switch the ignition ON (engine off or on))		B+	
			• Airflow mode: VENT • Air intake mode: RECIRCULATE	Fan: manual 1st	9.7	
				Fan: manual 3rd	7.1	
				Fan: manual 7th	3.3	
1F	IG2	Front body control module (FBCM)	Switch the ignition ON (engine off or on)		B+	• Related wiring harness • Front body control module (FBCM)
			Switch the ignition off		1.0 or less	
1G	—	—	—		—	—
1H	Passenger compartment temperature sensor input	Passenger compartment temperature sensor	Compared with temperature detected by passenger compartment temperature sensor		Refer to graph 1	• Related wiring harness • Passenger compartment temperature sensor • Climate control unit: terminal

					voltage (1N)
1I	—	—	—	—	—
1J	Sensor GND	• Driver-side air mix actuator • Passenger-side air mix actuator • Airflow mode actuator • Evaporator temperature sensor • Passenger compartment temperature sensor	Under any condition	1.0 or less	• Related wiring harness • Climate control unit: terminal voltage (1N)
1K	—	—	—	—	—
1L	Evaporator temperature sensor input	Evaporator temperature sensor	Compared with temperature detected by evaporator temperature sensor	Refer to graph 2	• Related wiring harness • Evaporator temperature sensor • Climate control unit: terminal voltage (1N)
1M	Solar radiation sensor (LH) input	Solar radiation sensor	Sunlight shined directly on solar radiation sensor	4	• Related wiring harness • Climate control unit: terminal voltage (1N) • Solar radiation sensor
			Blocking light to solar radiation sensor	1.0 or less	
1N	+5V	• Driver-side air mix actuator • Passenger-side air mix actuator • Airflow mode actuator • Solar radiation sensor	Under any condition	5	• Related wiring harness • Driver-side air mix actuator • Passenger-side air mix actuator • Airflow mode actuator • Solar radiation sensor • Climate control unit:

					terminal voltage (1J)
1O	Solar radiation sensor (RH) input	Solar radiation sensor	Sunlight shined directly on solar radiation sensor	4	• Related wiring harness • Climate control unit: terminal voltage (1N) • Solar radiation sensor
			Blocking light to solar radiation sensor	1.0 or less	
1P	—	—	—	—	—
1Q	—	—	—	—	—
1R	—	—	—	—	—
1S	MS_CAN_H	CAN related module	Because this terminal is for communication, integrity determination by terminal voltage is not possible.		• Related wiring harness
1T	—	—	—	—	—
1U	MS_CAN_L	CAN related module	Because this terminal is for communication, integrity determination by terminal voltage is not possible.		• Related wiring harness
1V	—	—	—	—	—
1W	—	—	—	—	—
1X	—	—	—	—	—
2A	Potentiometer input	Airflow mode actuator	VENT	4.3 or more	• Related wiring harness • Airflow mode actuator • Climate control unit: terminal voltage (1N)
			BI-LEVEL	3.4	
			HEAT	2.5	
			HEAT/DEF	1.6	
			DEFROSTER	0.7 or less	
2B	Motor operation (COLD)	Driver-side air mix actuator	Moving towards HOT	1.0 or less	• Related wiring harness • Driver-side air mix actuator
			Moving towards COLD	B+	
2C	—	—	—	—	—
	Motor operation		Moving towards HOT	B+	• Related wiring harness

2D	(HOT)	Driver-side air mix actuator	Moving towards COLD	1.0 or less	• Driver-side air mix actuator
2E	Potentiometer input	Passenger-side air mix actuator	Set temperature at MAX HOT	4.3 or more	• Related wiring harness • Passenger-side air mix actuator • Climate control unit: terminal voltage (1N)
			Set temperature at MAX COLD	1.0 or less	
2F	Motor operation (HOT)	Passenger-side air mix actuator	Moving towards HOT	B+	• Related wiring harness • Passenger-side air mix actuator
			Moving towards COLD	1.0 or less	
2G	Potentiometer input	Driver-side air mix actuator	Set temperature at MAX HOT	4.3 or more	• Related wiring harness • Driver-side air mix actuator • Climate control unit: terminal voltage (1N)
			Set temperature at MAX COLD	1.0 or less	
2H	Motor operation (COLD)	Passenger-side air mix actuator	Moving towards HOT	1.0 or less	• Related wiring harness • Passenger-side air mix actuator
			Moving towards COLD	B+	
2I	Motor operation (VENT)	Airflow mode actuator	Moving towards VENT	B+	• Related wiring harness • Airflow mode actuator
			Moving towards DEFROSTER	1.0 or less	
2J	Motor operation (FRESH)	Air intake actuator	Moving towards RECIRCULATE	1.0 or less	• Related wiring harness • Air intake actuator
			Moving towards FRESH	B+	
2K	Motor operation (DEFROSTER)	Airflow mode actuator	Moving towards DEFROSTER	B+	• Related wiring harness • Airflow mode actuator
			Moving towards VENT	1.0 or less	
	Motor operation		Moving towards RECIRCULATE	B+	• Related wiring harness

2L	(RECIRCULATE)	Air intake actuator	Moving towards FRESH	1.0 or less	• Air intake actuator

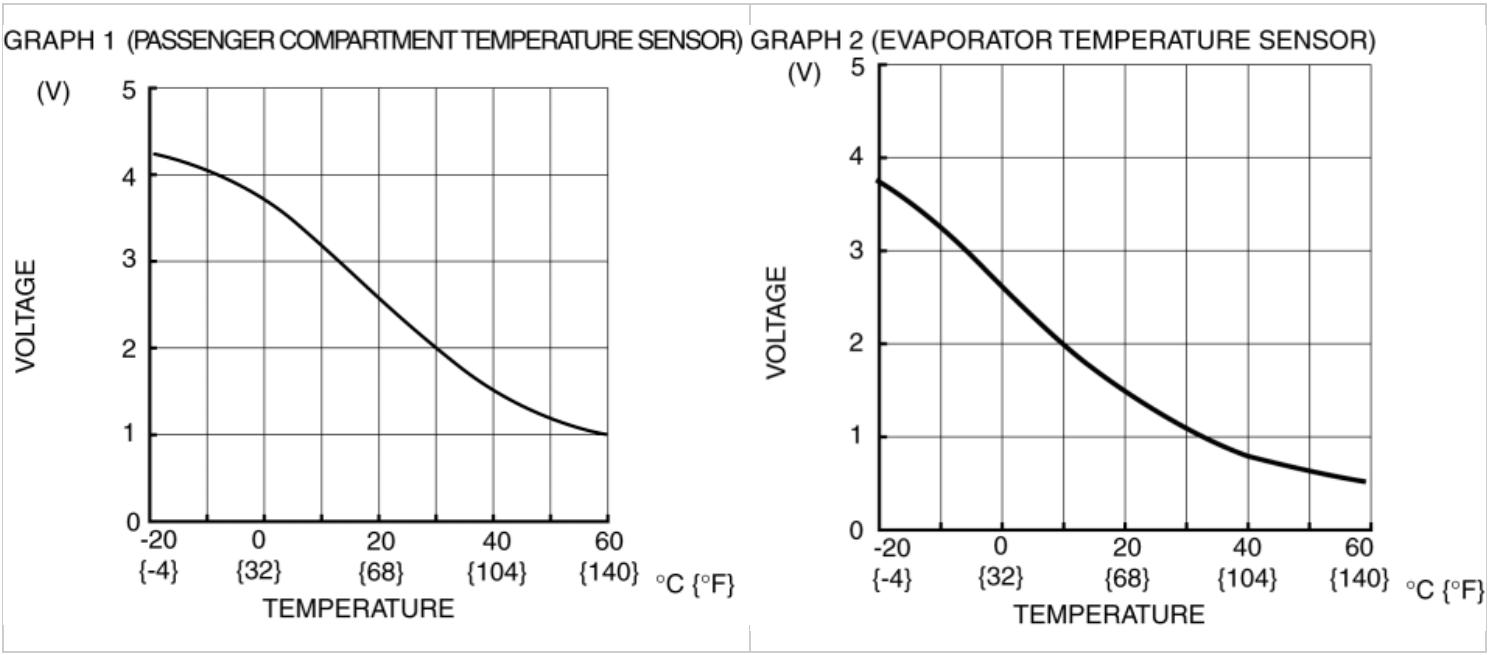

Single Type

1. Disconnect the negative battery cable. (See **NEGATIVE BATTERY CABLE DISCONNECTION/CONNECTION [SKYACTIV-G 2.0, SKYACTIV-G 2.5]**.)

2. Remove the following parts:

   a. Glove compartment (See **GLOVE COMPARTMENT REMOVAL/INSTALLATION**.)

   b. Decoration panel (See **DECORATION PANEL REMOVAL/INSTALLATION**.)

   c. Upper panel (See **UPPER PANEL REMOVAL**.)(See **UPPER PANEL INSTALLATION**.)

   d. Rear console (See **REAR CONSOLE REMOVAL/INSTALLATION**.)

   e. Shift lever knob (MTX) (See **MANUAL TRANSAXLE SHIFT MECHANISM REMOVAL/INSTALLATION [C66M-R]**.)

   f. Selector lever knob (ATX) (See **AUTOMATIC TRANSAXLE SHIFT MECHANISM REMOVAL/INSTALLATION**.)

   g. Shift panel (See **SHIFT PANEL REMOVAL/INSTALLATION**.)

   h. Front console box (See **FRONT CONSOLE BOX REMOVAL/INSTALLATION**.)

   i. CD player (with CD player) (See **CD PLAYER REMOVAL**.)(See **CD PLAYER INSTALLATION**.)

   j. Side wall (See **SIDE WALL REMOVAL/INSTALLATION**.)

   k. Front console (See **FRONT CONSOLE REMOVAL/INSTALLATION**.)

3. Remove the climate control unit with the connector connected. (See **CLIMATE CONTROL UNIT REMOVAL/INSTALLATION [FULL-AUTO AIR CONDITIONER]**.)

4. Connect the negative battery cable.

5. Switch the ignition ON (engine off or on).

6. Connect the negative (-) lead of the tester to body ground.

7. Insert the positive (+) lead of the tester into each climate control unit terminal and measure the voltage according to the terminal voltage table.

   - If there is any malfunction, inspect the parts under “Inspection item (s)”.

- If the parts under “Inspection item (s)” are found to be normal (except for terminal Q), replace the climate control unit. (See **CLIMATE CONTROL UNIT REMOVAL/INSTALLATION [FULL-AUTO AIR CONDITIONER]**.)
- For terminal Q, first try replacing the blower fan controller. If there is still any malfunction, replace the climate control unit. (See **CLIMATE CONTROL UNIT REMOVAL/INSTALLATION [FULL-AUTO AIR CONDITIONER]**.)

CLIMATE CONTROL UNIT WIRING HARNESS SIDE CONNECTOR

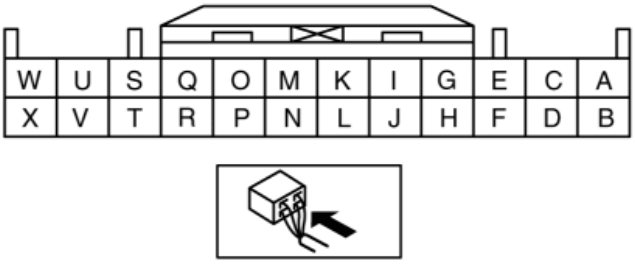

Terminal voltage table (reference)

Terminal	Signal name	Connected to	Measurement condition	Voltage (V)	Inspection item (s)
A	—	—	—	—	—
B	MS_CAN_L	CAN related module	Because this terminal is for communication, integrity determination by terminal voltage is not possible.		• Related wiring harness
C	GND	Body ground	Under any condition	1.0 or less	• Related wiring harness
D	MS_CAN_H	CAN related module	Because this terminal is for communication, integrity determination by terminal voltage is not possible.		• Related wiring harness
E	Sensor GND	• Air mix actuator • Airflow mode actuator • Passenger compartment temperature sensor • Evaporator temperature sensor	Under any condition	1.0 or less	• Related wiring harness • Climate control unit: terminal voltage (H)
F	Passenger compartment temperature sensor input	Passenger compartment temperature sensor	Compared with temperature detected by passenger compartment temperature sensor	Refer to graph 1	• Related wiring harness • Passenger compartment temperature sensor • Climate control unit: terminal voltage (H)

G	Potentiometer input	Passenger-side air mix actuator	Set temperature at MAX HOT	4.3 or more	• Related wiring harness • Passenger-side air mix actuator • Climate control unit: terminal voltage (H)
			Set temperature at MAX COLD	1.0 or less	
H	+5V	• Air mix actuator • Airflow mode actuator • Passenger compartment temperature sensor • Evaporator temperature sensor • Solar radiation sensor	Under any condition	5	• Related wiring harness • Air mix actuator • Airflow mode actuator • Solar radiation sensor • Evaporator temperature sensor • Climate control unit: terminal voltage (E)
I	Potentiometer input	Airflow mode actuator	VENT	4.3 or more	• Related wiring harness • Airflow mode actuator • Climate control unit: terminal voltage (H)
			BI-LEVEL	3.4	
			HEAT	2.5	
			HEAT/DEF	1.6	
			DEFROSTER	0.7 or less	
J	Evaporator temperature sensor input	Evaporator temperature sensor	Compared with temperature detected by evaporator temperature sensor	Refer to graph 2	• Related wiring harness • Evaporator temperature sensor • Climate control unit: terminal voltage (H)
K	Solar radiation sensor (RH) input	Solar radiation sensor	Sunlight shined directly on solar radiation sensor	4	• Related wiring harness • Climate control unit: terminal voltage (H) • Solar
			Blocking light to solar radiation sensor	1.0 or less	

					radiation sensor
L	B+	ROOM 15 A fuse	Under any condition	B+	• Related wiring harness • ROOM 15 A fuse
M	Solar radiation sensor (LH) input	Solar radiation sensor	Sunlight shined directly on solar radiation sensor	4	• Related wiring harness • Climate control unit: terminal voltage (H) • Solar radiation sensor
			Blocking light to solar radiation sensor	1.0 or less	
N	IG2	Front body control module (FBCM)	Switch the ignition ON (engine off or on)	B+	• Related wiring harness • Front body control module (FBCM)
			Switch the ignition off	1.0 or less	
O	—	—	—	—	—
P	—	—	—	—	—
Q	Blower fan speed control	Blower fan controller	Switch the ignition off	1.0 or less	• Related wiring harness • Blower fan controller
			Fan stopped (Switch the ignition ON (engine off or on))	B+	
			• Airflow mode: VENT • Air intake mode: RECIRCULATE — Fan: manual 1st	9.7	
			Fan: manual 3rd	7.1	
			Fan: manual 7th	3.3	
R	—	—	—	—	—
S	Motor operation (RECIRCULATE)	Air intake actuator	Moving towards RECIRCULATE	B+	• Related wiring harness • Air intake actuator
			Moving towards FRESH	1.0 or less	
T	Motor operation (VENT)	Airflow mode actuator	Moving towards VENT	B+	• Related wiring harness
				1.0 or	

			Moving towards DEFROSTER	less	• Airflow mode actuator
U	Motor operation (FRESH)	Air intake actuator	Moving towards RECIRCULATE	1.0 or less	• Related wiring harness • Air intake actuator
			Moving towards FRESH	B+	
V	Motor operation (DEFROSTER)	Airflow mode actuator	Moving towards DEFROSTER	B+	• Related wiring harness • Airflow mode actuator
			Moving towards VENT	1.0 or less	
W	Motor operation (COLD)	Passenger-side air mix actuator	Moving towards HOT	1.0 or less	• Related wiring harness • Passenger-side air mix actuator
			Moving towards COLD	B+	
X	Motor operation (HOT)	Passenger-side air mix actuator	Moving towards HOT	B+	• Related wiring harness • Passenger-side air mix actuator
			Moving towards COLD	1.0 or less	

GRAPH 1 (PASSENGER COMPARTMENT TEMPERATURE SENSOR)

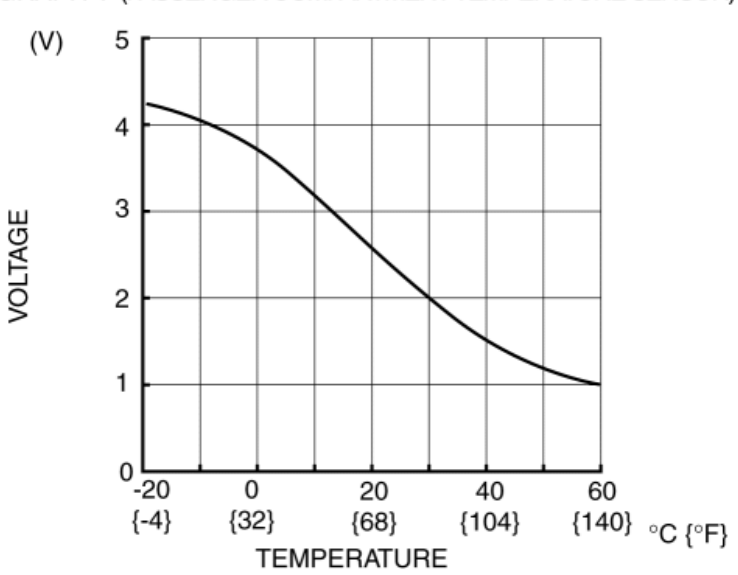

GRAPH 2 (EVAPORATOR TEMPERATURE SENSOR)

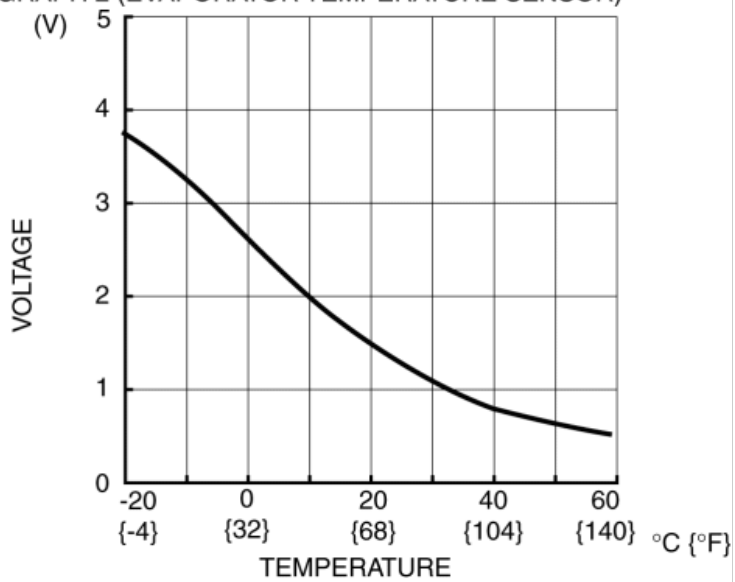

2014 - Mazda3 - HVAC

HVAC CONTROL SYSTEM LOCATION INDEX [MANUAL AIR CONDITIONER]

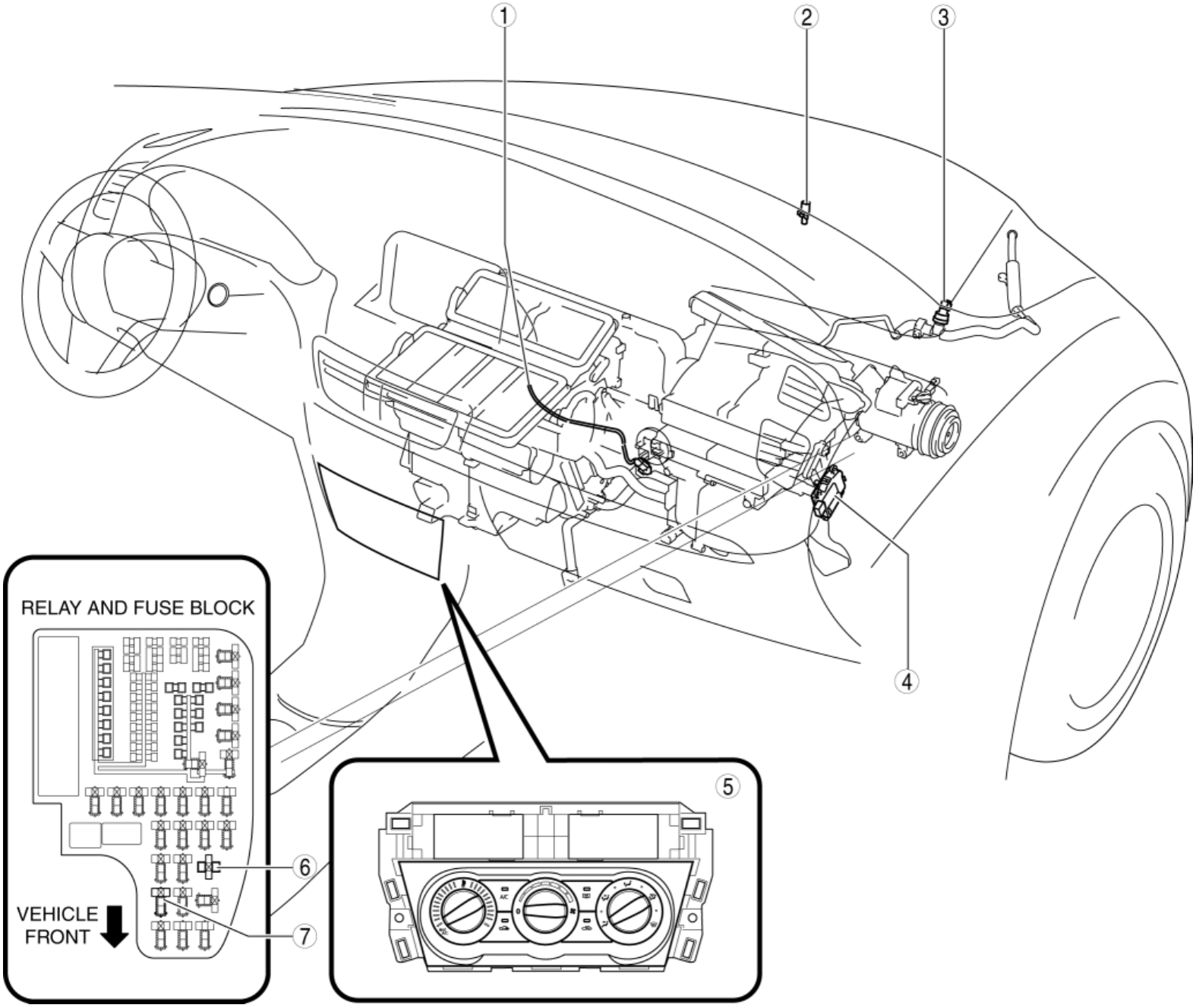

1	Evaporator temperature sensor (See **EVAPORATOR TEMPERATURE SENSOR REMOVAL/INSTALLATION [MANUAL AIR CONDITIONER]**.) (See **EVAPORATOR TEMPERATURE SENSOR INSPECTION [MANUAL AIR CONDITIONER]**.)
2	Ambient temperature sensor (See **AMBIENT TEMPERATURE SENSOR REMOVAL/INSTALLATION [MANUAL AIR CONDITIONER]**.) (See **AMBIENT TEMPERATURE SENSOR INSPECTION [MANUAL AIR CONDITIONER]**.)

3	Refrigerant pressure sensor (See **REFRIGERANT PRESSURE SENSOR REMOVAL / INSTALLATION [MANUAL AIR CONDITIONER]**.) (See **REFRIGERANT PRESSURE SENSOR INSPECTION [MANUAL AIR CONDITIONER]**.)
4	Air intake actuator (See **AIR INTAKE ACTUATOR REMOVAL / INSTALLATION [MANUAL AIR CONDITIONER]**.) (See **AIR INTAKE ACTUATOR INSPECTION [MANUAL AIR CONDITIONER]**.)
5	Climate control unit (See **CLIMATE CONTROL UNIT REMOVAL / INSTALLATION [MANUAL AIR CONDITIONER]**.) (See **CLIMATE CONTROL UNIT INSPECTION [MANUAL AIR CONDITIONER]**.)
6	Blower relay (See **RELAY LOCATION**.) (See **RELAY INSPECTION**.)
7	A/C relay (See **RELAY LOCATION**.) (See **RELAY INSPECTION**.)

2014 - Mazda3 - HVAC

AIR INTAKE ACTUATOR REMOVAL/INSTALLATION [MANUAL AIR CONDITIONER]

1. Disconnect the negative battery cable. (See **NEGATIVE BATTERY CABLE DISCONNECTION/CONNECTION [SKYACTIV-G 2.0, SKYACTIV-G 2.5]**.)

2. Remove the glove compartment. (See **GLOVE COMPARTMENT REMOVAL/INSTALLATION**.)

3. Remove the following parts (with center display)(with Bluetooth® system):

   a. Dashboard under cover (See **DASHBOARD UNDER COVER REMOVAL/INSTALLATION**.)

   b. Front scuff plate (passenger-side) (See **FRONT SCUFF PLATE REMOVAL/INSTALLATION**.)

   c. Front side trim (passenger-side) (See **FRONT SIDE TRIM REMOVAL/INSTALLATION**.)

   d. Tuner and amp unit (TAU) (with center display)(See **TUNER AND AMP UNIT (TAU) REMOVAL/INSTALLATION**.)

   e. Bluetooth® unit (with Bluetooth® system)(See **Bluetooth® UNIT REMOVAL/INSTALLATION**.)

4. Disconnect the air intake actuator connector.

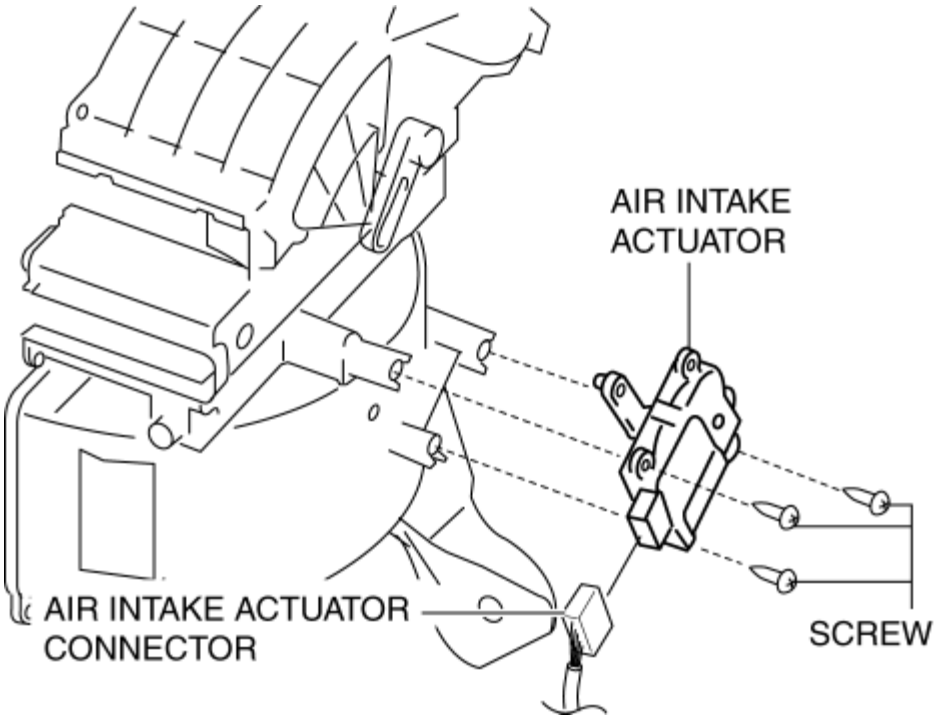

5. Remove the screws, then remove the air intake actuator.

6. Install in the reverse order of removal.

2014 - Mazda3 - HVAC

AIR INTAKE ACTUATOR INSPECTION [MANUAL AIR CONDITIONER]

1. Disconnect the negative battery cable. (See **NEGATIVE BATTERY CABLE DISCONNECTION/CONNECTION [SKYACTIV-G 2.0, SKYACTIV-G 2.5]**.)

2. Remove the glove compartment. (See **GLOVE COMPARTMENT REMOVAL/INSTALLATION**.)

3. Remove the following parts (with tuner and amp unit):

   a. Dashboard under cover (See **DASHBOARD UNDER COVER REMOVAL/INSTALLATION**.)

   b. Front scuff plate (passenger-side) (See **FRONT SCUFF PLATE REMOVAL/INSTALLATION**.)

   c. Front side trim (passenger-side) (See **FRONT SIDE TRIM REMOVAL/INSTALLATION**.)

   d. Tuner and amp unit (See **TUNER AND AMP UNIT (TAU) REMOVAL/INSTALLATION**.)

4. Remove the air intake actuator. (See **AIR INTAKE ACTUATOR REMOVAL/INSTALLATION [MANUAL AIR CONDITIONER]**.)

5. Apply battery positive voltage and connect the ground to the air intake actuator terminals as indicated in the table below and verify the operation condition.

B+ Terminal	Ground Terminal	Operation
B	C	FRESH → RECIRCULATE
C	B	RECIRCULATE → FRESH

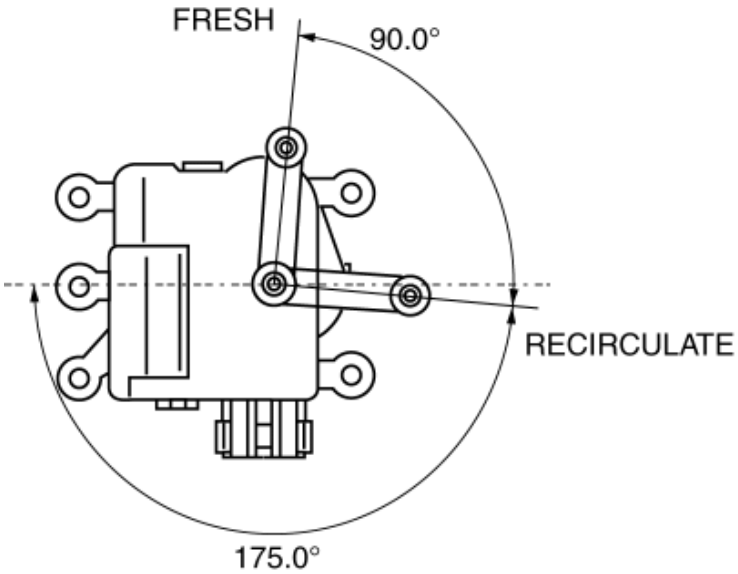

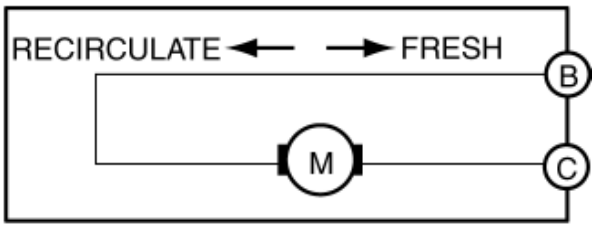

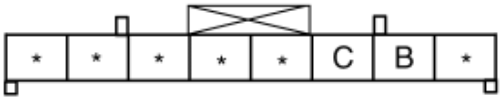

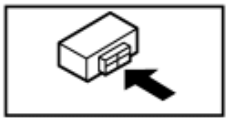

- If not as indicated in the table, replace the air intake actuator. (See **AIR INTAKE ACTUATOR REMOVAL/INSTALLATION [MANUAL AIR CONDITIONER]**.)

2014 - Mazda3 - HVAC

AMBIENT TEMPERATURE SENSOR REMOVAL/INSTALLATION [MANUAL AIR CONDITIONER]

1. Disconnect the negative battery cable. (See **NEGATIVE BATTERY CABLE DISCONNECTION/CONNECTION [SKYACTIV-G 2.0, SKYACTIV-G 2.5]**.)

2. Remove the front bumper. (See **FRONT BUMPER REMOVAL/INSTALLATION**.)

3. Disconnect the connector.

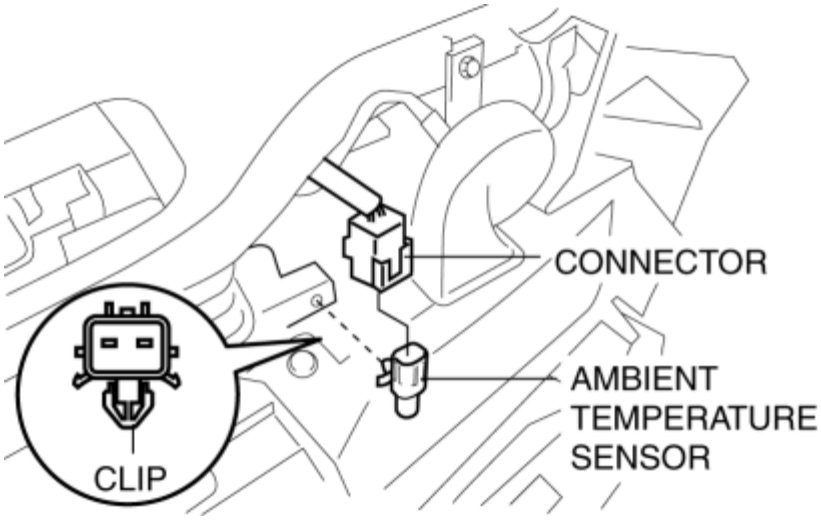

4. Remove the ambient temperature sensor.

5. Install in the reverse order of removal.

2014 - Mazda3 - HVAC

AMBIENT TEMPERATURE SENSOR INSPECTION [MANUAL AIR CONDITIONER]

1. Disconnect the negative battery cable. (See **NEGATIVE BATTERY CABLE DISCONNECTION/CONNECTION [SKYACTIV-G 2.0, SKYACTIV-G 2.5]**.)

2. Remove the front bumper. (See **FRONT BUMPER REMOVAL/INSTALLATION**.)

3. Remove the ambient temperature sensor. (See **AMBIENT TEMPERATURE SENSOR REMOVAL/INSTALLATION [MANUAL AIR CONDITIONER]**.)

4. Measure the temperature around the ambient temperature sensor and measure the resistance between the ambient temperature sensor terminals A and B.

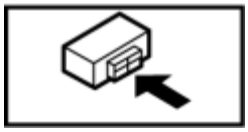

- If the characteristics of the ambient temperature sensor are not as shown in the graph, replace the ambient temperature sensor.(See **AMBIENT TEMPERATURE SENSOR REMOVAL/INSTALLATION [MANUAL AIR CONDITIONER]**.)

AMBIENT TEMPERATURE SENSOR INSPECTION [MANUAL AIR CONDITIONER]

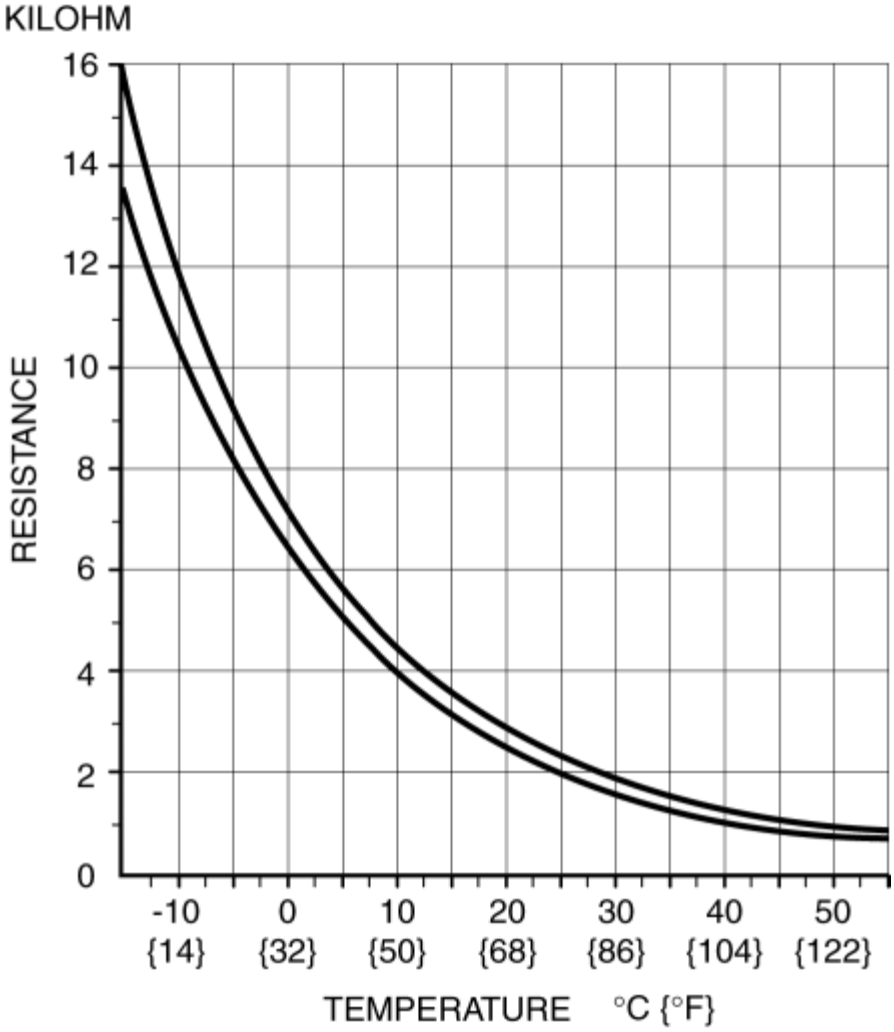

2014 - Mazda3 - HVAC

EVAPORATOR TEMPERATURE SENSOR REMOVAL/INSTALLATION [MANUAL AIR CONDITIONER]

1. Remove the evaporator temperature sensor from the A/C unit. (See **A/C UNIT DISASSEMBLY/ASSEMBLY**.)

2014 - Mazda3 - HVAC

EVAPORATOR TEMPERATURE SENSOR INSPECTION [MANUAL AIR CONDITIONER]

NOTE:

- Inspect the evaporator temperature sensor when it is installed to the A/C unit.

1. Disconnect the negative battery cable. (See **NEGATIVE BATTERY CABLE DISCONNECTION/CONNECTION [SKYACTIV-G 2.0, SKYACTIV-G 2.5]**.)
2. Remove the following parts:
   a. Dashboard under cover (See **DASHBOARD UNDER COVER REMOVAL/INSTALLATION**.)
   b. Side wall (passenger-side) (See **SIDE WALL REMOVAL/INSTALLATION**.)
   c. Front heat duct (passenger-side) (See **FRONT HEAT DUCT REMOVAL/INSTALLATION**.)
3. Connect the negative battery cable.
4. Switch the ignition ON (engine on).
5. Set the fan speed to MAX HI.
6. Set the temperature control to MAX COLD.
7. Set to the RECIRCULATE mode.
8. Turn the A/C switch off.
9. Close all doors and windows.
10. Wait for **5 min**.
11. Switch the ignition off.
12. Disconnect the negative battery cable.
13. Disconnect the evaporator temperature sensor connector.

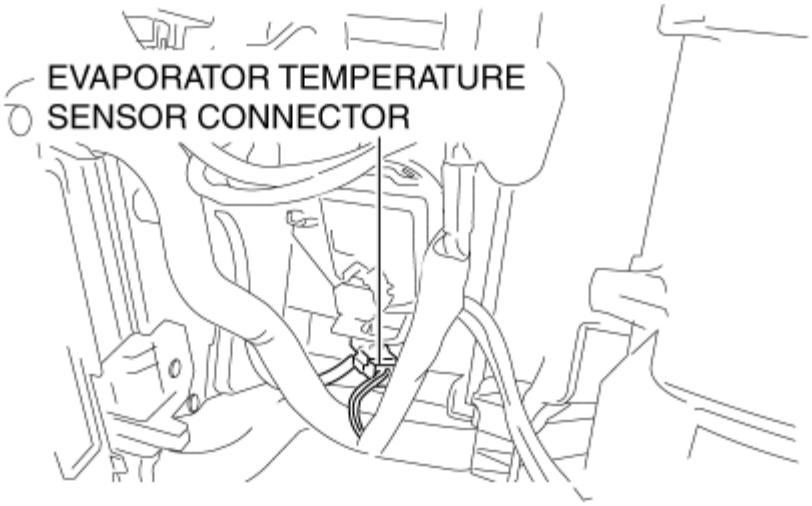

14. Measure the temperature at the blower inlet.

15. Measure the resistance between the evaporator temperature sensor terminals A and B.

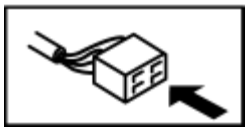

- If the resistance is not as shown in the graph, replace the evaporator temperature sensor. (See **A/C UNIT DISASSEMBLY/ASSEMBLY**.)

EVAPORATOR TEMPERATURE SENSOR INSPECTION [MANUAL AIR CONDITIONER]

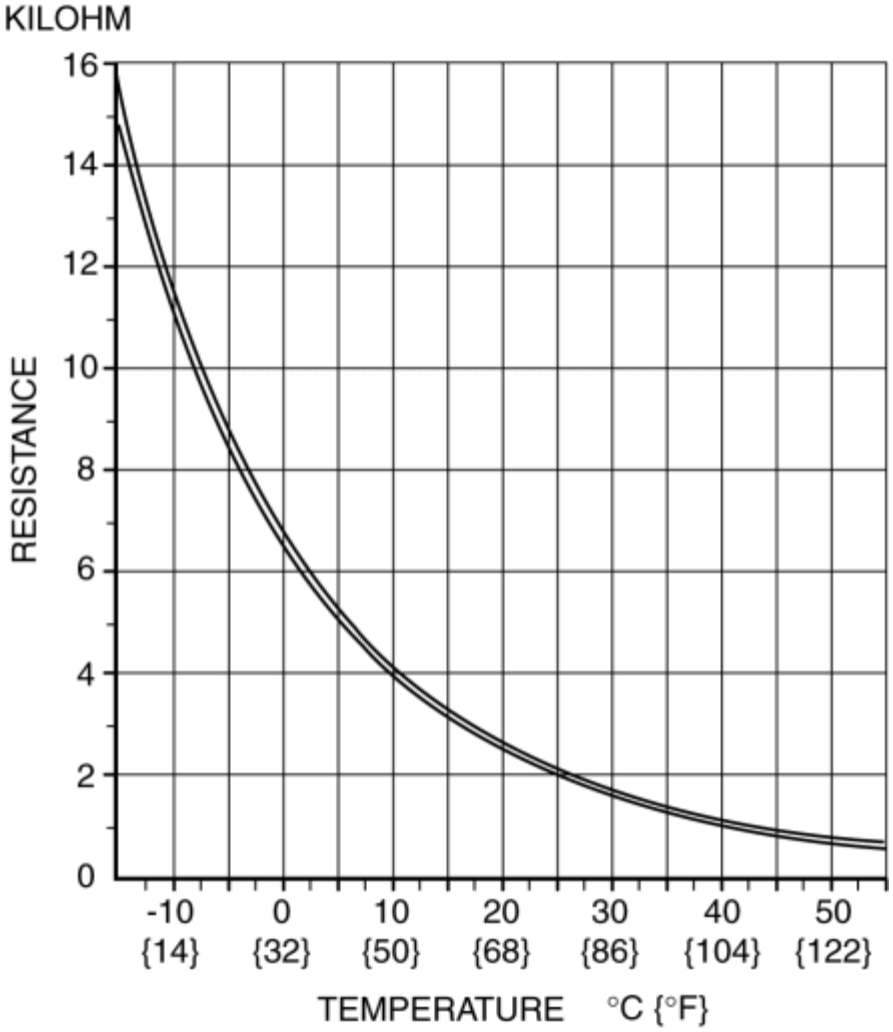

2014 - Mazda3 - HVAC

REFRIGERANT PRESSURE SENSOR REMOVAL/INSTALLATION [MANUAL AIR CONDITIONER]

1. Disconnect the negative battery cable. (See **NEGATIVE BATTERY CABLE DISCONNECTION/CONNECTION [SKYACTIV-G 2.0, SKYACTIV-G 2.5]**.)

2. Discharge the refrigerant. (See **REFRIGERANT CHARGING**.)

3. Disconnect the refrigerant pressure sensor connector.

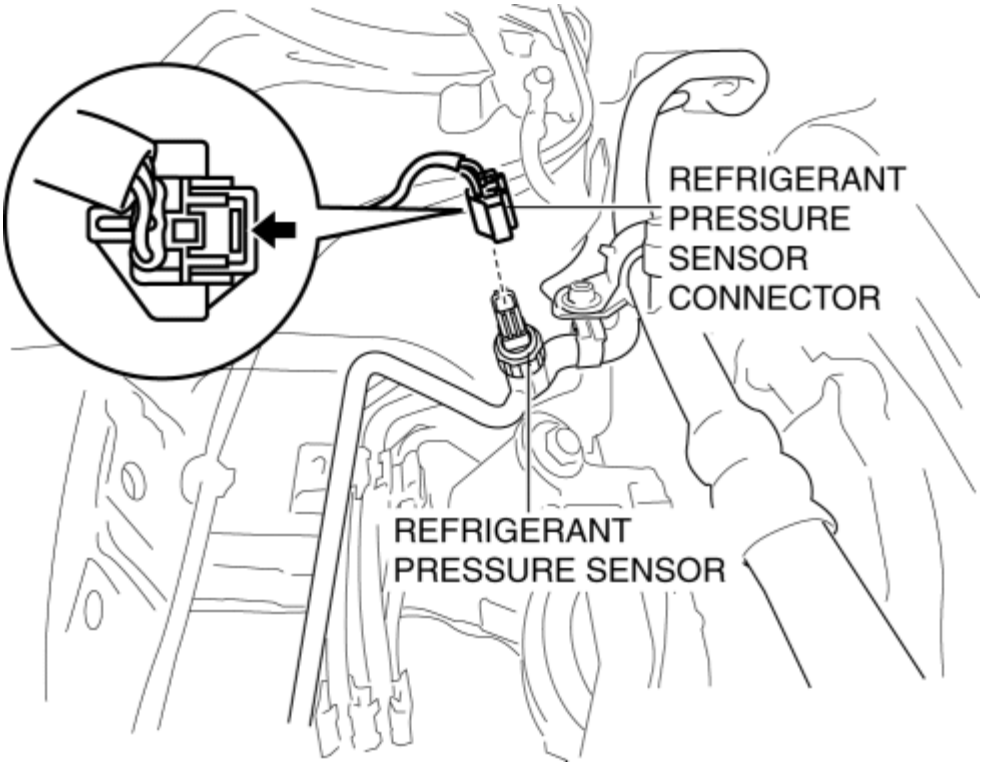

4. Loosen the refrigerant pressure sensor using two spanners.

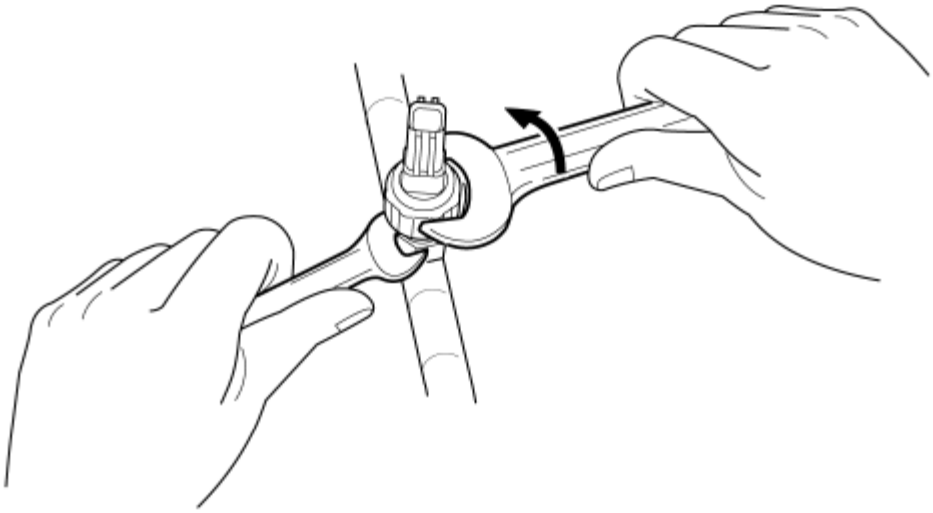

Tightening torque

- 10—11 N·m {102—112 kgf·cm, 89—97 in·lbf}

5. Remove the refrigerant pressure sensor.

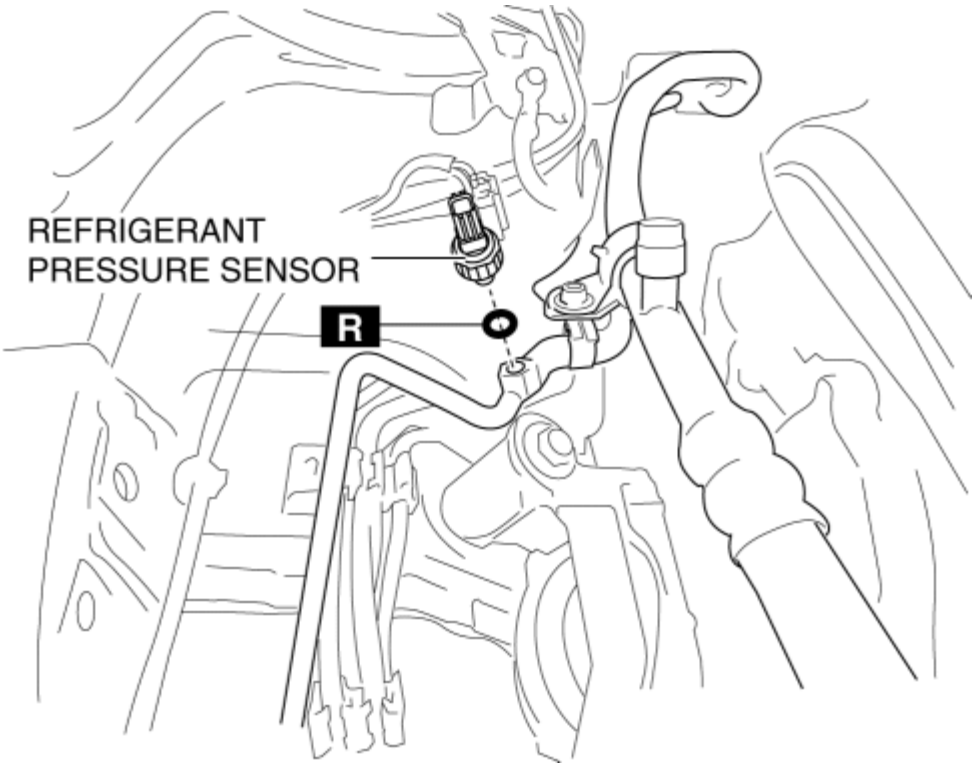

CAUTION:

- If moisture or foreign matter enters the refrigeration cycle, cooling ability will be lowered and abnormal noise will occur. Always immediately plug all open fittings after removing any refrigeration cycle parts to keep moisture or foreign matter out of the cycle.

6. Install in the reverse order of removal. (See **Refrigerant Pressure Sensor Installation Note**.)

7. Perform the refrigerant system performance test. (See **REFRIGERANT SYSTEM PERFORMANCE TEST**.)

Refrigerant Pressure Sensor Installation Note

1. Apply compressor oil to the O-rings and connect the joints.

2014 - Mazda3 - HVAC

REFRIGERANT PRESSURE SENSOR INSPECTION [MANUAL AIR CONDITIONER]

1. Install the manifold gauge. (See **REFRIGERANT SYSTEM GENERAL PROCEDURES**.)
2. Verify the high-pressure side reading of the manifold gauge.
3. Measure the terminal voltage at PCM terminals 2BB, 2AX and 2AJ.
4. Using the graph below, measure and verify the terminal voltage at 2AX.
5. Follow the PCM inspection when measuring the other terminal voltages. (See **PCM INSPECTION [SKYACTIV-G 2.0, SKYACTIV-G 2.5]**.)
    - Terminal 2BB: Approx. 5 V (Ignition switch ON)
    - Terminal 2AJ: 1.0 V or less
        - If each voltage is not normal, inspect the related wiring harness.
            - If there is any malfunction, replace the related wiring harness.
            - If the wiring harness is normal, replace the refrigerant pressure sensor. (See **REFRIGERANT PRESSURE SENSOR REMOVAL/INSTALLATION [MANUAL AIR CONDITIONER]**.)

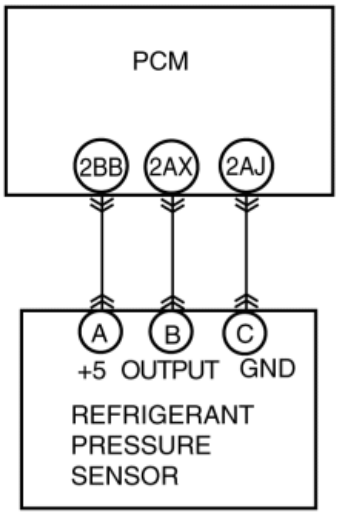

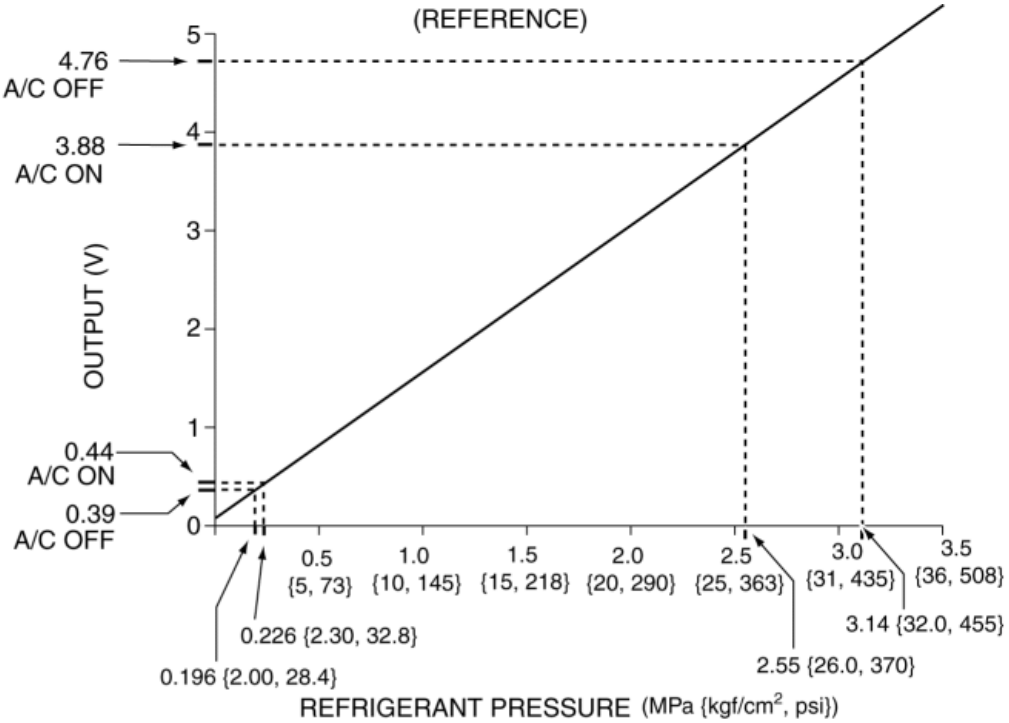

REFRIGERANT PRESSURE SENSOR WIRING HARNESS-SIDE CONNECTOR

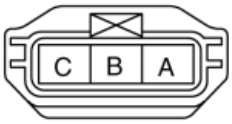

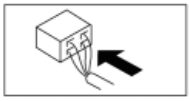

PCM WIRING HARNESS SIDE CONNECTOR

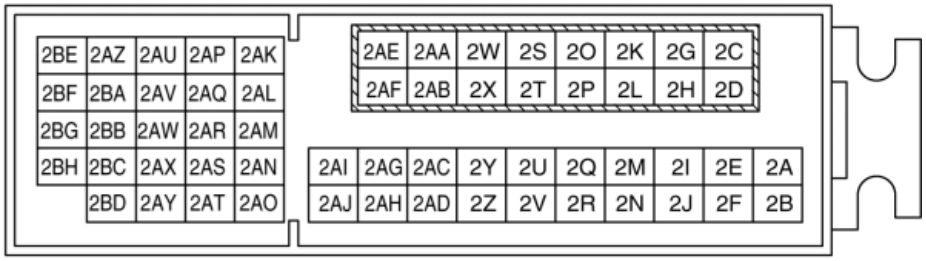

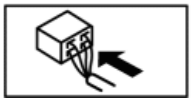

2014 - Mazda3 - HVAC

CLIMATE CONTROL UNIT REMOVAL/INSTALLATION [MANUAL AIR CONDITIONER]

1. Disconnect the negative battery cable. (See **NEGATIVE BATTERY CABLE DISCONNECTION/CONNECTION [SKYACTIV-G 2.0, SKYACTIV-G 2.5]**.)
2. Remove the following parts:
   a. Glove compartment (See **GLOVE COMPARTMENT REMOVAL/INSTALLATION**.)
   b. Decoration panel (See **DECORATION PANEL REMOVAL/INSTALLATION**.)
   c. Upper panel (See **UPPER PANEL REMOVAL**.)(See **UPPER PANEL INSTALLATION**.)
   d. Rear console (See **REAR CONSOLE REMOVAL/INSTALLATION**.)
   e. Shift lever knob (MTX) (See **MANUAL TRANSAXLE SHIFT MECHANISM REMOVAL/INSTALLATION [C66M-R]**.)
   f. Selector lever knob (ATX) (See **AUTOMATIC TRANSAXLE SHIFT MECHANISM REMOVAL/INSTALLATION**.)
   g. Shift panel (See **SHIFT PANEL REMOVAL/INSTALLATION**.)
   h. Front console box (See **FRONT CONSOLE BOX REMOVAL/INSTALLATION**.)
   i. CD player (with CD player) (See **CD PLAYER REMOVAL**.)(See **CD PLAYER INSTALLATION**.)
   j. Side wall (See **SIDE WALL REMOVAL/INSTALLATION**.)
   k. Front console (See **FRONT CONSOLE REMOVAL/INSTALLATION**.)
3. Press the tab down, then slide the wire off the link.

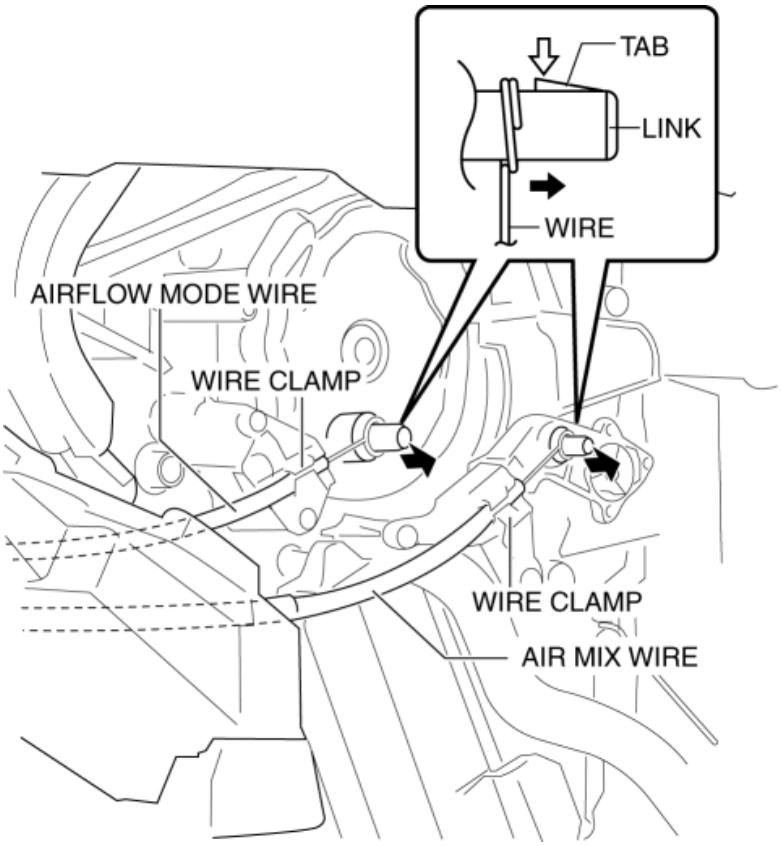

4. Remove the wire from the wire clamp.
5. Remove in the order indicated in the table.

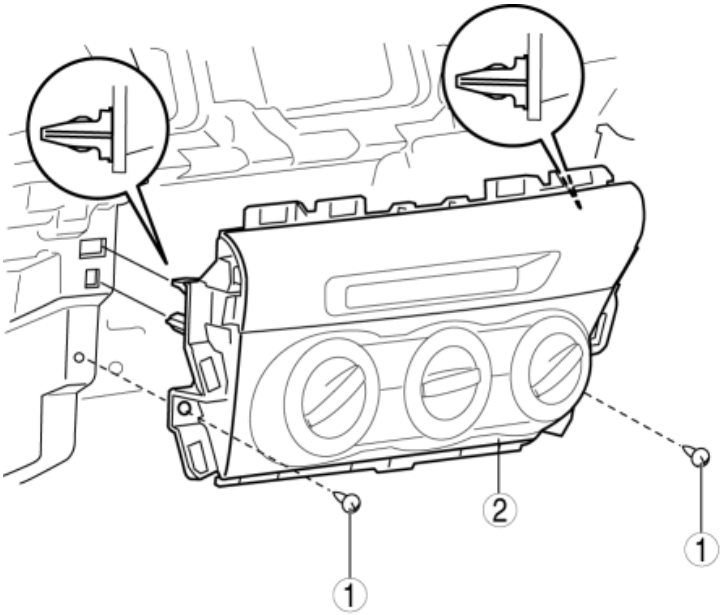

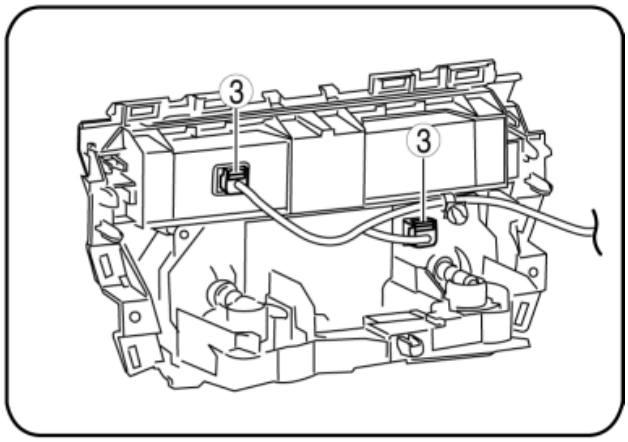

1	Screw
2	Climate control unit (See **Climate Control Unit Removal Note**.)
3	Connector

6. Pull out the air mix wire and airflow mode wire from the hole.

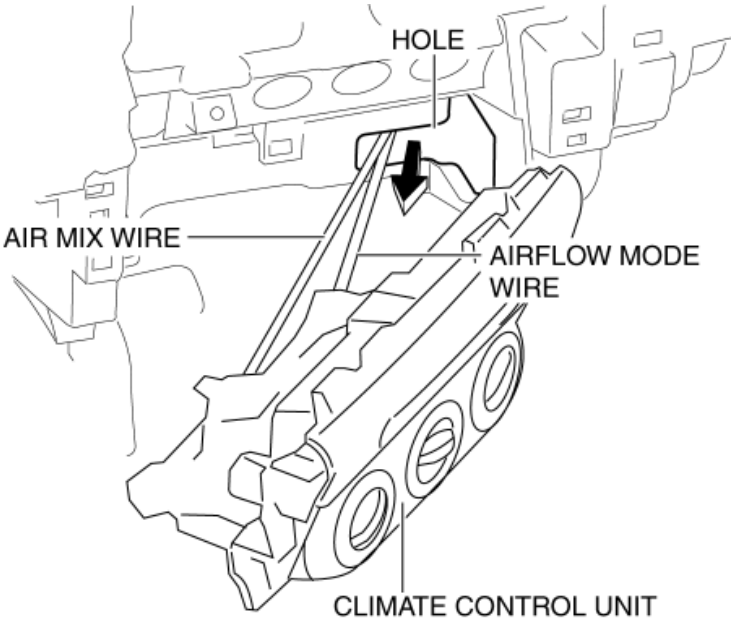

7. Install in the reverse order of removal.

8. Verify that the dial operation is correct by fully turning each of the dials from one end to the other.

Climate Control Unit Removal Note

1. The indicator unit can be removed from the climate control unit. Refer to the INDICATOR UNIT

REMOVAL/INSTALLATION for the detailed procedure. (See **INDICATOR UNIT REMOVAL/INSTALLATION**.)

2014 - Mazda3 - HVAC

CLIMATE CONTROL UNIT DISASSEMBLY/ASSEMBLY [MANUAL AIR CONDITIONER]

1. Disassemble in the order indicated in the figure.

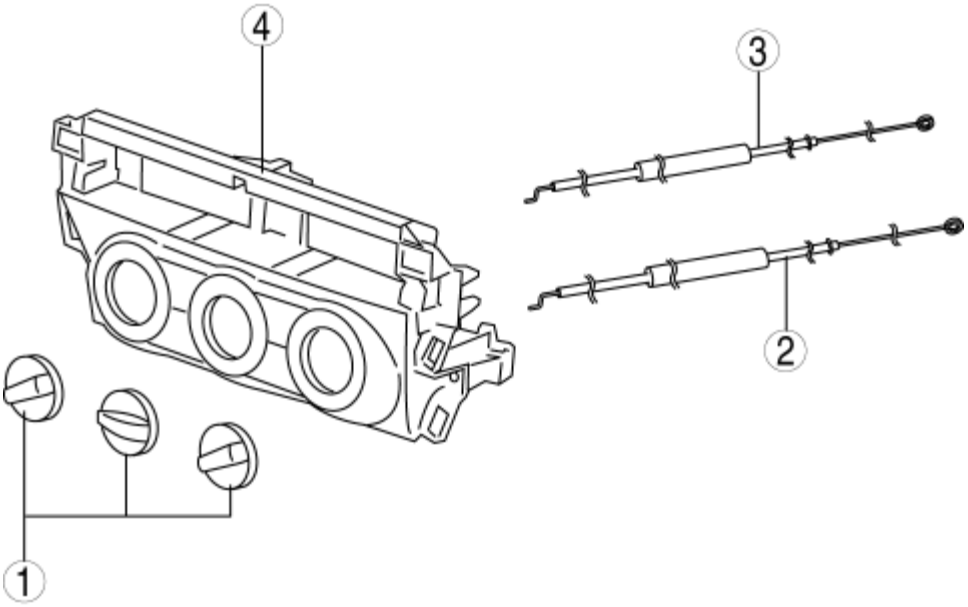

1	Dial
2	Airflow mode wire (See **Wire Removal Note**.)
3	Air mix wire (See **Wire Removal Note**.)
4	Climate control unit

2. Assemble in the reverse order of disassembly.

Wire Removal Note

1. Remove in the order indicated in the figure.

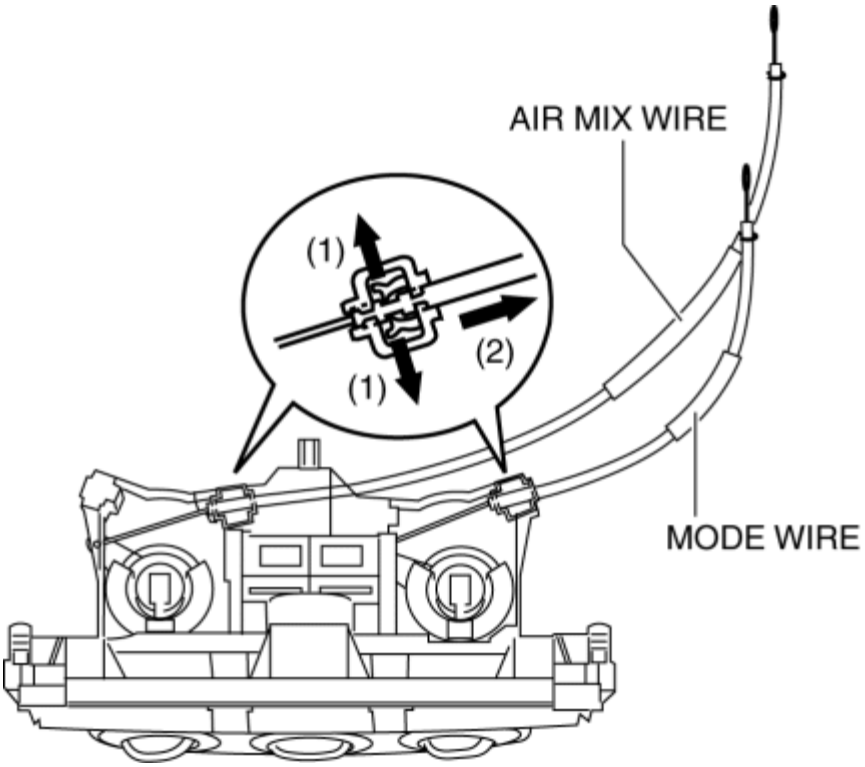
AIR MIX WIRE
(1)
(2)
(1)
MODE WIRE

2014 - Mazda3 - HVAC

CLIMATE CONTROL UNIT INSPECTION [MANUAL AIR CONDITIONER]

1. Disconnect the negative battery cable. (See **NEGATIVE BATTERY CABLE DISCONNECTION/CONNECTION [SKYACTIV-G 2.0, SKYACTIV-G 2.5]**.)

2. Remove the following parts:

   a. Glove compartment (See **GLOVE COMPARTMENT REMOVAL/INSTALLATION**.)

   b. Decoration panel (See **DECORATION PANEL REMOVAL/INSTALLATION**.)

   c. Upper panel (See **UPPER PANEL REMOVAL**.)(See **UPPER PANEL INSTALLATION**.)

   d. Rear console (See **REAR CONSOLE REMOVAL/INSTALLATION**.)

   e. Shift lever knob (MTX) (See **MANUAL TRANSAXLE SHIFT MECHANISM REMOVAL/INSTALLATION [C66M-R]**.)

   f. Selector lever knob (ATX) (See **AUTOMATIC TRANSAXLE SHIFT MECHANISM REMOVAL/INSTALLATION**.)

   g. Shift panel (See **SHIFT PANEL REMOVAL/INSTALLATION**.)

   h. Front console box (See **FRONT CONSOLE BOX REMOVAL/INSTALLATION**.)

   i. CD player (with CD player) (See **CD PLAYER REMOVAL**.)(See **CD PLAYER INSTALLATION**.)

   j. Side wall (See **SIDE WALL REMOVAL/INSTALLATION**.)

   k. Front console (See **FRONT CONSOLE REMOVAL/INSTALLATION**.)

3. Remove the climate control unit with the connector connected. (See **CLIMATE CONTROL UNIT REMOVAL/INSTALLATION [MANUAL AIR CONDITIONER]**.)

4. Switch the ignition ON (engine off or on).

5. Connect the negative (-) lead of the tester to the body ground.

6. By inserting the positive (+) lead of the tester into the climate control unit connector, measure the voltage according to the terminal voltage table.

   - If there is any malfunction, inspect the parts under “Inspection item (s)”.
     - If the parts under “Inspection item (s)” are found to be normal (except for terminal I), replace the climate control unit. (See **CLIMATE CONTROL UNIT REMOVAL/INSTALLATION [MANUAL AIR CONDITIONER]**.)
     - For terminal I, first try replacing the blower fan controller. If there is still any malfunction, replace the climate control unit. (See **CLIMATE CONTROL UNIT REMOVAL/INSTALLATION [MANUAL AIR CONDITIONER]**.)

CLIMATE CONTROL UNIT WIRING HARNESS SIDE CONNECTOR

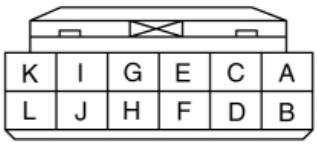

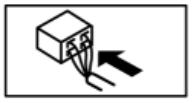

Terminal Voltage Table (Reference)

Terminal	Signal name	Connected to	Measurement condition		Voltage (V)	Inspection item(s)
A	TNS signal	Front body control module (FBCM)	TNS OFF		1.0 or less	• Related wiring harness • Front body control module (FBCM)
			TNS ON		B+	
B	Illumination (-)	Instrument cluster	Headlight ON and panel light control MAX		2.0	• Instrument cluster • Related wiring harness
			Headlight ON and panel light control MIN		9.65	
C	Motor operation	Air intake actuator	Switched to RECIRCULATE		B+	• Related wiring harness • Air intake actuator
			Switched to FRESH		1.0 or less	
D	Ground	Body ground	Under any condition		1.0 or less	• Related wiring harness
E	Motor operation (FRESH)	Air intake actuator	Switched to RECIRCULATE		1.0 or less	• Related wiring harness • Air intake actuator
			Switched to FRESH		B+	
F	Sensor GND	Evaporator temperature sensor	Under any condition		1.0 or less	• Related wiring harness • Climate control unit: terminal voltage (H)
G	—	—	—		—	—
H	Evaporator temperature sensor input	Evaporator temperature sensor	Compared with temperature detected by evaporator temperature sensor		Refer to graph 1	• Related wiring harness • Evaporator temperature sensor • Climate control unit: terminal voltage (F)
I	Blower fan speed control	Blower fan controller	Switch the ignition off		1.0 or less	• Related wiring harness • Blower fan controller
			Fan stopped (Switch the ignition ON (engine off or on))		B+	
			• Airflow mode: VENT • Air intake mode: RECIRCULATE	Fan: manual 1st	9.7	
				Fan: manual 3rd	7.1	
				Fan: manual 7th	3.3	
J	B+	ROOM 15 A fuse	Under any condition		B+	• Related wiring harness

					• ROOM 15 A fuse
K	LIN	Front body control module (FBCM)	Because this terminal is for communication, good/no good judgment by terminal voltage is not possible.		• Related wiring harness • Front body control module (FBCM)
L	IG2	Front body control module (FBCM)	Switch the ignition to ON	B+	• Related wiring harness • Front body control module (FBCM)
			Switch the ignition off	1.0 or less	

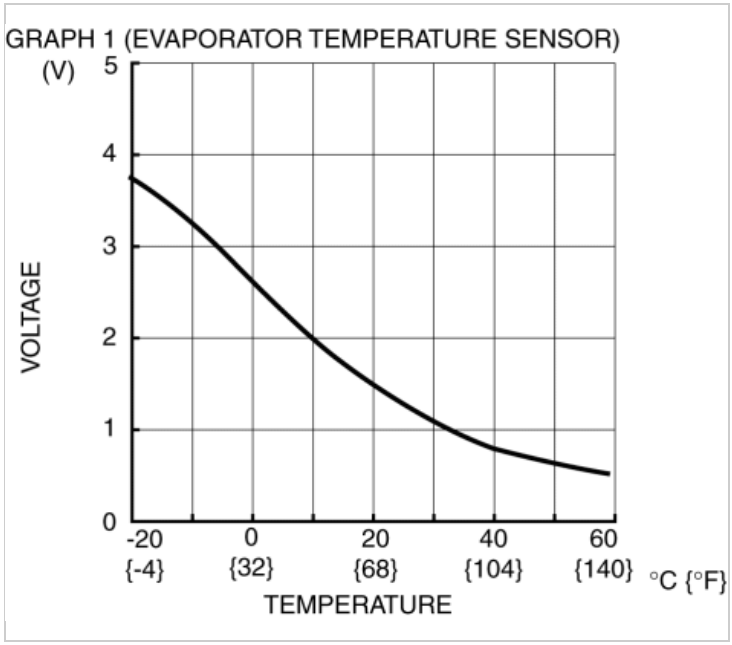

2014 - Mazda3 - HVAC

HVAC TECHNICAL DATA

Item				Specification
REFRIGERANT SYSTEM				
Refrigerant	Type			HFC-134a (R-134a)
	Regular amount (approx. quantity)		(g {oz})	465—515 {16.5—18.1}
BASIC SYSTEM				
A/C compressor	Lubrication oil	Type		FD46XG
		Sealed volume (approx. quantity)	(ml {cc, fl oz})	100 {100, 3.38}
CONTROL SYSTEM				
A/C compressor	Magnetic clutch clearance		(mm {in})	0.35—0.65 {0.014—0.025}

< Previous

2014 - Mazda3 - HVAC

HVAC SST

1: 49 L088 009 2: – Feeler tool kit		—	—

< Previous

Next >

2014 - Mazda3 - Restraints

ON-BOARD DIAGNOSTIC WIRING DIAGRAM [STANDARD DEPLOYMENT CONTROL SYSTEM]

ON-BOARD DIAGNOSTIC WIRING DIAGRAM [STANDARD DEPLOYMENT CONTROL SYSTEM]

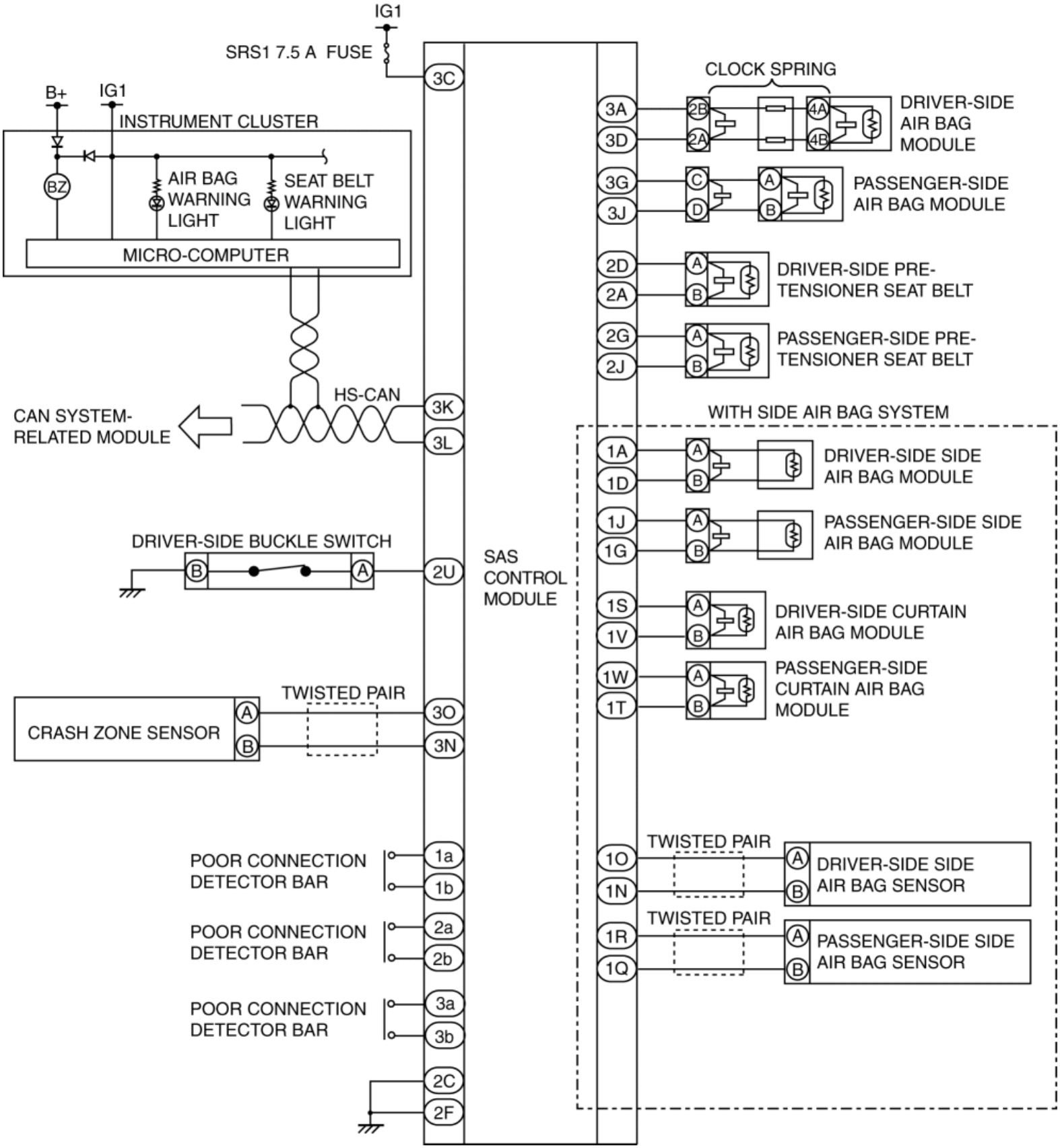

SAS CONTROL MODULE
HARNESS-SIDE CONNECTOR

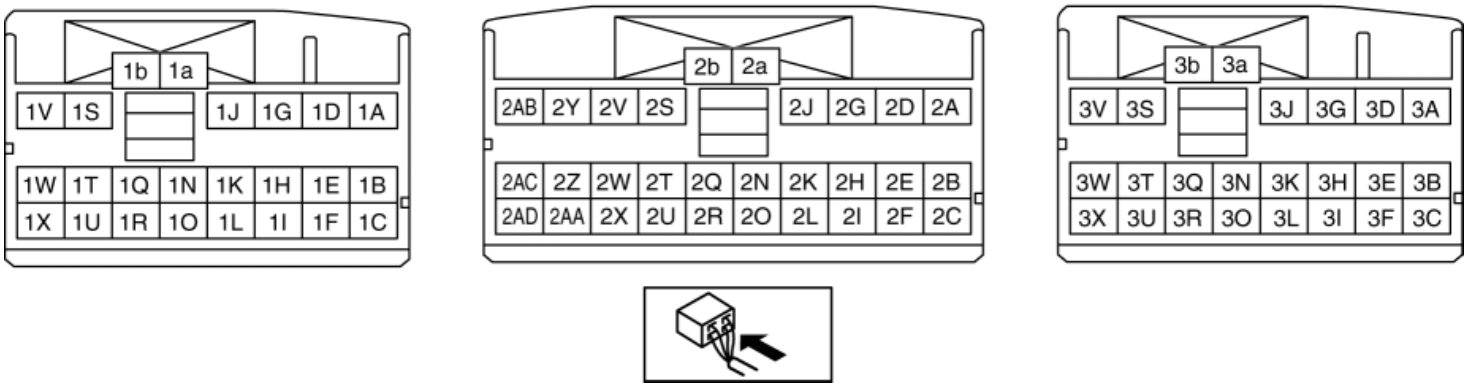

Next >

2014 - Mazda3 - Restraints

FOREWORD [STANDARD DEPLOYMENT CONTROL SYSTEM]

- If there is any vehicle malfunction complaint lodged by a customer, perform malfunction diagnosis according to the troubleshooting procedure.

Troubleshooting Procedure

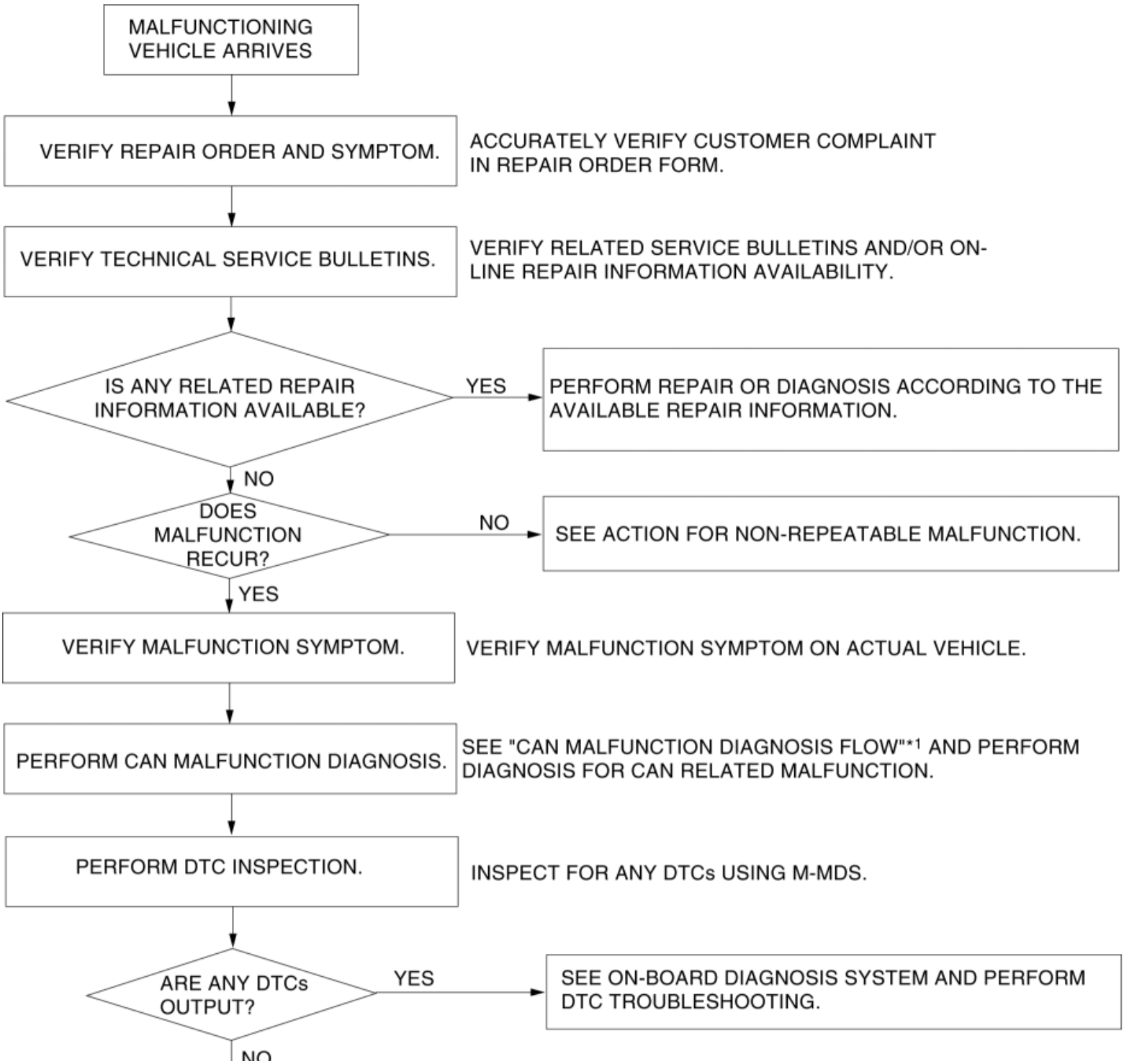

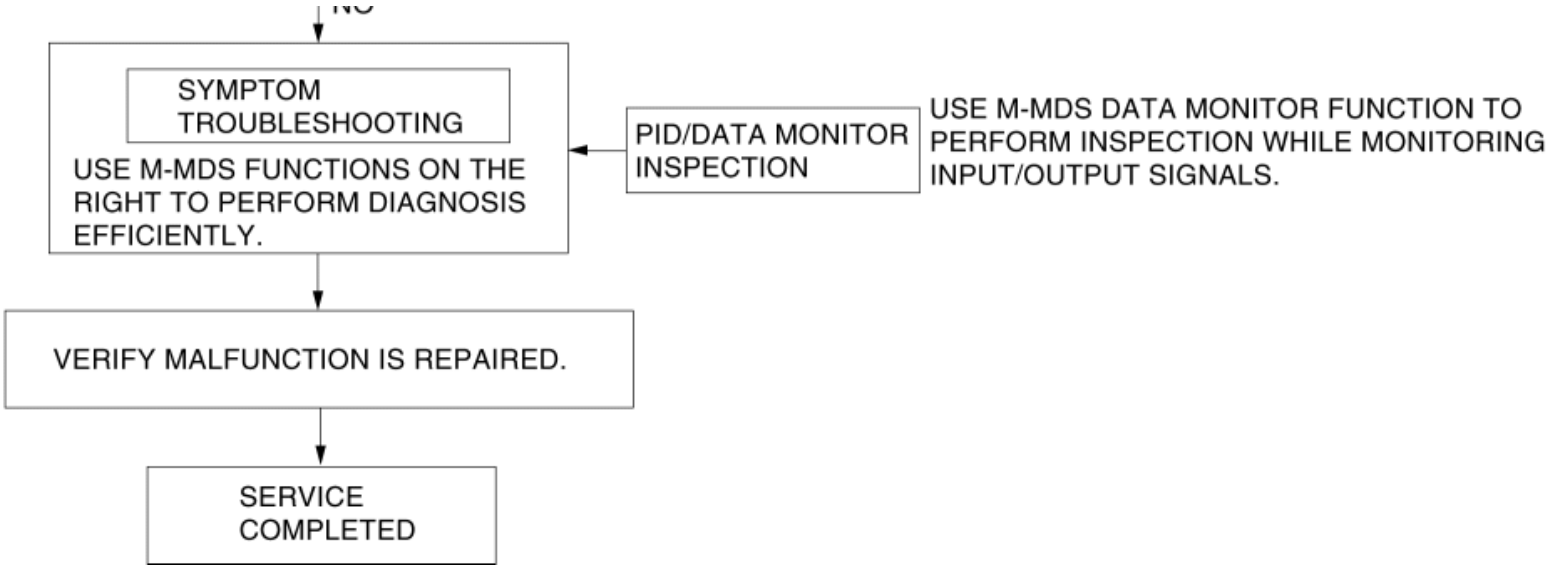

*1 **CONTROLLER AREA NETWORK (CAN) MALFUNCTION DIAGNOSIS FLOW**.

Action for non-repeatable malfunction

- If the malfunction does not recur, verify the malfunction cause by performing the following actions:
  - Verify that a DTC has been recorded in the memory.
  - Based on the repair order form, attempt to drive the vehicle or perform tests to replicate the malfunction, record the data (such as CAN circuit voltage) at that time, and detect the malfunction cause.
  - Refer to [Determining Open Circuit Location] based on the recorded DTC, shake the wiring harness or connector of the electrical component which is suspected to be the cause of the malfunction, and inspect for any changes in CAN system voltage or occurrence of any DTCs.

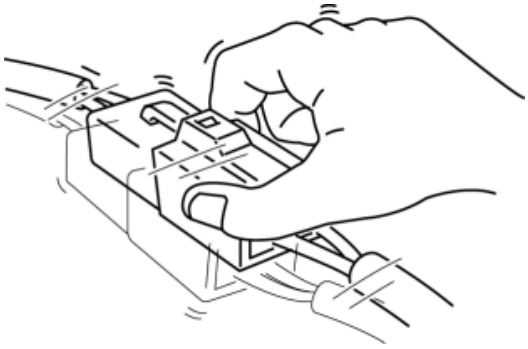

  - Inspect the female terminals on the connector of the electric component which is suspected to be the cause of the malfunction for poor connection.

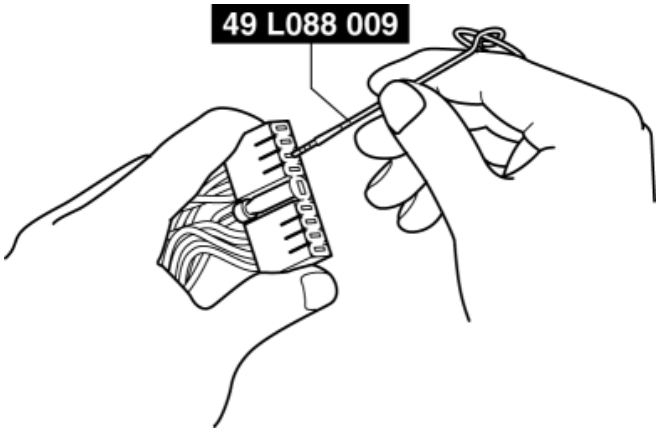

Air Bag System Specification Identification

- Because two types of driver and passenger-side air bag module controls, “Two-step deployment control” and “Standard deployment control”, are available depending on when the vehicle was produced, identify the specification referring to the following identification.

Identification

- In this manual, “Two-step deployment control system” or “Standard deployment control system” is used if the service contents differ depending on the control.
- Control is identified by the following components.

×: Equipped-: Not equipped

Item	Two-step deployment control system	Standard deployment control system
Sophisticated air bag sensor (SAS) control module	×	×
Crash zone sensor	×	×
Side air bag sensor	×	×
Pressure sensor	×	-
Driver-side air bag module	× (Two-step deployment type)	× (Standard deployment type)
Passenger-side air bag module	× (Two-step deployment type)	× (Standard deployment type)
Side air bag module	×	×
Curtain air bag module	×	×
Lap pre-tensioner seat belt	×	-
Pre-tensioner seat belt	×	×
Clock spring	× (Two-step deployment type)	× (Standard deployment type)
Seat weight sensor/control module	×	-

Driver-side buckle switch	×	×
Passenger-side buckle switch	×	-
Air bag system warning light	×	×
PAD indicator	×	-

Outline

- The OBD (on-board diagnostic) system has the following functions:
  - Malfunction detection function: Detects malfunctions in the air bag system and outputs DTCs (Diagnostic Trouble Codes).
  - PID/data monitor function: Reads out specific input/output signals and the system status.
- DTCs can be read/cleared using the M-MDS.

  NOTE:

  - Use the M-MDS to verify DTCs because the DTCs displayed by the air bag system warning light are reference information only.

2014 - Mazda3 - Restraints

FLOWCHART [STANDARD DEPLOYMENT CONTROL SYSTEM]

- Use the following flowchart to verify the cause of the trouble.

NOTE:

- When inspecting past malfunction codes, inspect only the DTCs that were indicated before beginning the inspection. A mis-diagnosis could occur as a result of new DTCs being added while performing an inspection by disconnecting related parts or connectors.
- When DTCs of the present malfunction are no longer output after present or past malfunctions or both have been repaired, be sure to clear the past malfunction from memory to prevent repair of malfunctions that have already been repaired.

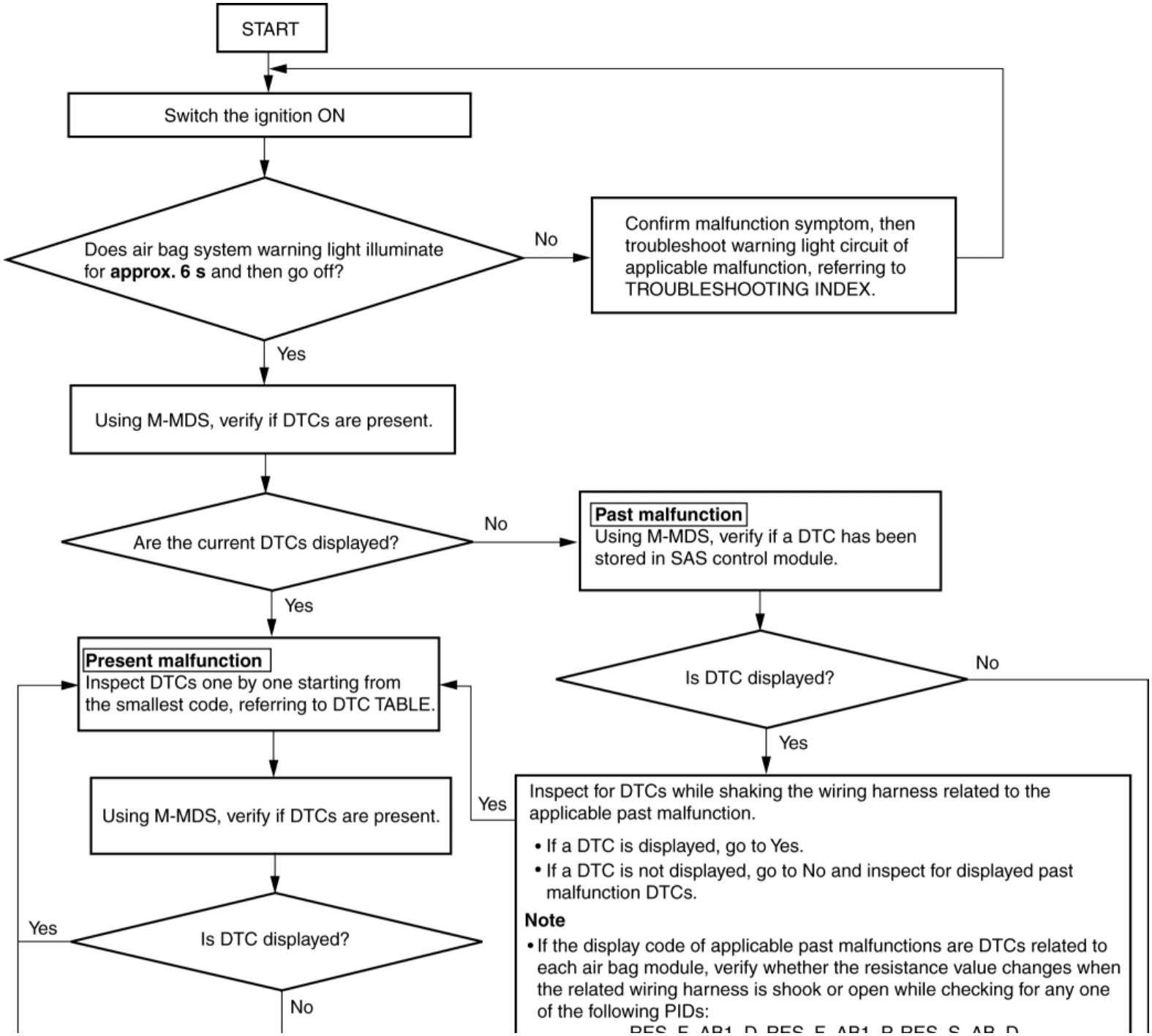

FLOWCHART [STANDARD DEPLOYMENT CONTROL SYSTEM]

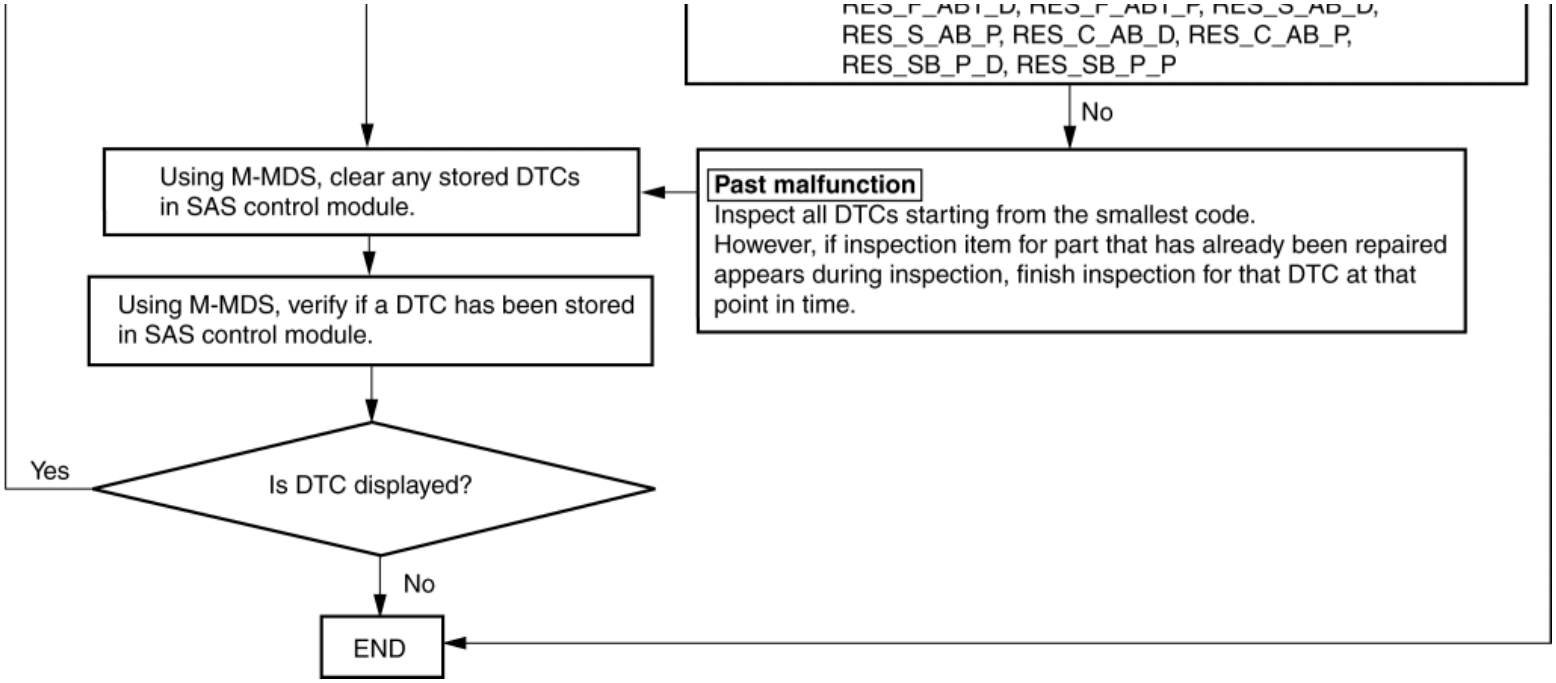

2014 - Mazda3 - Restraints

DTC INSPECTION [STANDARD DEPLOYMENT CONTROL SYSTEM]

CMDTC Self Test

1. Connect the M-MDS to the DLC-2.
2. After the vehicle is identified, select the following items from the initialization screen of the M-MDS.
   a. Select "Self Test".
   b. Select "All CMDTCs".
3. Verify the DTC according to the directions on the screen.
   - If any DTCs are displayed, perform troubleshooting according to the corresponding DTC inspection. (See **DTC TABLE [STANDARD DEPLOYMENT CONTROL SYSTEM]**.)
4. After completion of repairs, clear all DTCs stored in the SAS control module. (See **CLEARING DTC [STANDARD DEPLOYMENT CONTROL SYSTEM]**.)

ODDTC Self Test

1. Connect the M-MDS to the DLC-2.
2. After the vehicle is identified, select the following items from the initialization screen of the M-MDS.
   a. Select "Self Test".
   b. Select "Modules".
   c. Select "RCM".
3. Verify the DTC according to the directions on the screen.
   - If any DTCs are displayed, perform troubleshooting according to the corresponding DTC inspection. (See **DTC TABLE [STANDARD DEPLOYMENT CONTROL SYSTEM]**.)
4. After completion of repairs, clear all DTCs stored in the SAS control module. (See **CLEARING DTC [STANDARD DEPLOYMENT CONTROL SYSTEM]**.)

Snapshot Data Table

NOTE:

- The SAS control module stores the following two types of information when a DTC is detected and displays snap shot data in the M-MDS.
  - Vehicle information detected by SAS control module
  - Vehicle information detected by instrument cluster and received by SAS control module via CAN signal
- The data for all DTCs currently detected is stored.

Snapshot data item	Unit		Definition	Data read/use method	Corresponding PID data monitor item
AAT	°C	°F	Ambient temperature	—	—
	Accelerator Pedal Off/				

APP_STATUS	Under20%/ Over20%/ FAIL	Accelerator pedal position status	—	—
CFG_STATUS	Config Complete/ Not Configured/ Config Error	Instrument cluster configuration status	—	—
ECT_STATUS	Under 0 degrees C/ 0-Under 80 degrees C/ Over 80 degrees C/ FAIL	Engine coolant temperature status	—	—
FAULT_CNT	—	Number of malfunction detections	—	—
FIRST_DET_IG	hh:mm:ss*1	Time when initial malfunction occurs (IG-ON counter) • Elapsed time from when ignition is switched ON (engine off or on) until SAS control module detects first malfunction*3	—	—
IC_VPWR	V	Instrument cluster power supply voltage	• The SAS control module constantly receives the power supply voltage value of the instrument cluster sent via CAN signal from the instrument cluster. • If a DTC is detected, the SAS control module records the power supply voltage of the instrument cluster when the DTC was detected, and it is displayed in the Mazda Modular Diagnostic System (M-MDS).	VPWR*2
IG-ON_TIMER	hh:mm:ss*1	Elapsed time since ignition was switched ON (engine off or on) **NOTE:** • The instrument cluster records the elapsed time since the ignition was switched ON (engine off or on).	• The SAS control module constantly receives the elapsed time since the ignition was switched ON (engine off or on) sent via CAN signal from the instrument cluster. • If a DTC is detected, the SAS control module records the elapsed time since the ignition was switched ON (engine off or on) when the DTC was detected, and it is displayed in the Mazda Modular Diagnostic System (M-MDS).	—
LAST_CLR	hh:mm:ss*1	Repair time for last malfunction (B+ counter) • Elapsed time from when battery is connected until SAS control module detects that last malfunction is repaired*3	—	—

LAST_CLR_IG	hh:mm:ss*1	Repair time for last malfunction (IG-ON counter) • Elapsed time from when ignition is switched ON (engine off or on) until SAS control module detects that last malfunction is repaired*3	—	—
LAST_DET	hh:mm:ss*1	Time when last malfunction occurs (B+ counter) • Elapsed time from when battery is connected until SAS control module detects last malfunction*3	—	—
LAST_DET_IG	hh:mm:ss*1	Time when last malfunction occurs (IG-ON counter) • Elapsed time from when ignition is switched ON (engine off or on) until SAS control module detects last malfunction*3	—	—
PWR_MODE_KEY	Key Out/ Key Recently Out (Position 0)/ Accessory (Position 1)/ Post Ignition (Position 2)/ Ignition On (Position 2)/ Running (Position 2)/ Running - Starting	• Key Out: Ignition switched off • Key Recently Out (Position 0): Elapsed time **within 3 s** since ignition was switched off • Accessory (Position 1): Ignition is switched to ACC • Post Ignition (Position 2): Elapsed time **within 3 s** since ignition was switched ON (engine off or on) • Ignition On (Position 2): Ignition switched ON (engine off) • Running (Position 2): Ignition switched ON (engine on) • Running - Starting: Cranking condition	• The SAS control module constantly receives the ignition switch status sent via CAN signal from the instrument cluster. • If a DTC is detected, the SAS control module records the ignition switch status when the DTC was detected, and it is displayed in the Mazda Modular Diagnostic System (M-MDS).	—
RPM_STATUS	Engine Stop/ Under1500rpm/ Over1500rpm/ FAIL	Engine speed status	• The SAS control module constantly receives the engine speed sent via CAN signal from the instrument cluster. • If a DTC is detected, the SAS control module records the engine speed when the DTC was detected, and it is displayed in the Mazda Modular	TACHOMTR*2

				Diagnostic System (M-MDS).	
SHIFT_STATUS	P/N/ D/ R/ FAIL		Selector lever position status	• The SAS control module constantly receives the selector lever position sent via CAN signal from the instrument cluster. • If a DTC is detected, the SAS control module records the selector lever position when the DTC was detected, and it is displayed in the Mazda Modular Diagnostic System (M-MDS).	—
TOTAL_DIST	km	miles	Accumulated total traveled distance from completion of vehicle until SAS control module detects DTC (Odometer value in instrument cluster)	The total traveled distance from which the SAS control module detects DTCs to the present can be calculated by performing the following procedure. • Verify the odometer value in the instrument cluster. • Verify the snapshot data item TOTAL_DIST. • Subtract 2 from 1.	—
TOTAL_TIME	hh:mm:ss*1		Accumulated total elapsed time since vehicle completion until SAS control module detects a DTC*3 **NOTE:** • When the ROOM fuse is removed, and the ignition is switched off, the time is not included in the elapsed time.	The elapsed time from which the SAS control module detects DTCs to the present can be calculated by performing the following procedure. • Verify the instrument cluster PID item TOTAL_TIME. • Verify the snapshot data item TOTAL_TIME. • Subtract 2 from 1.	TOTAL_TIME*2
VPWR	V		SAS control module power supply malfunction	—	VPWR_IGA
VSPD_STATUS	Stop/ 0-10km/h/ Over10km/h/ FAIL		Vehicle speed status	• The SAS control module constantly receives the vehicle speed sent via CAN signal from the instrument cluster. • If a DTC is detected, the SAS control module records the vehicle speed when the DTC was detected, and it is displayed in the Mazda Modular Diagnostic System (M-MDS).	SPEEDOMTR*2

*1 **The seconds may be indicated after the decimal point.**

*2 **Instrument cluster PID (See PID/DATA MONITOR TABLE [INSTRUMENT CLUSTER].)**

*3 **The snap shot data of the number of stored malfunction detections, B+ counters, or IG ON counters is combined with the DTC detection conditions of the SAS control module, and the point-in-time data in the following table is stored.**

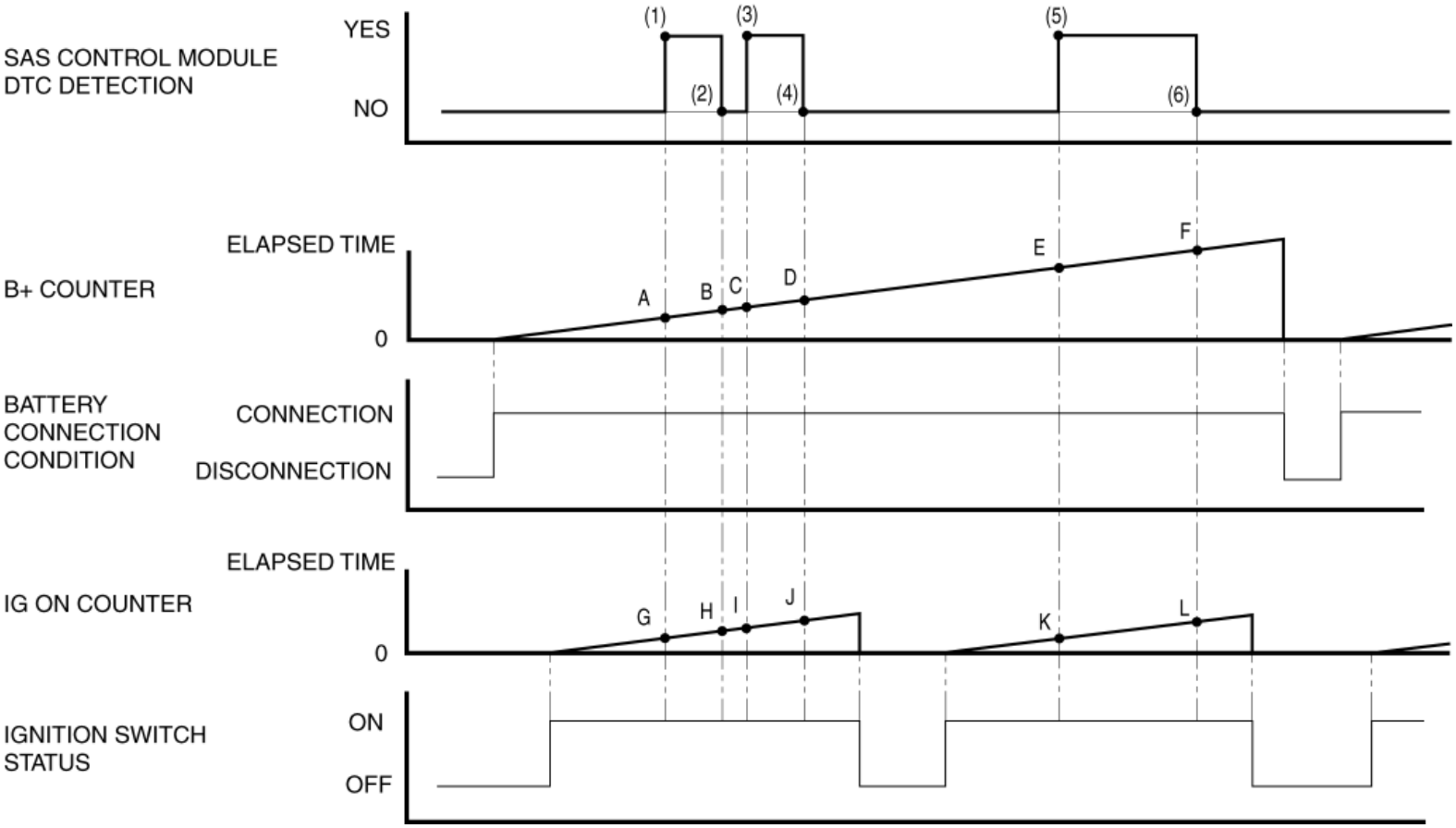

SAS control module DTC detection period	Snapshot data						
	FAULT_CNT (Number of malfunction detections)	TOTAL_TIME	FIRST_DET_IG	LAST_DET	LAST_DET_IG	LAST_CLR	LAST_CLR_IG
	Number of malfunction detections	Time when first malfunction occurs (B+ counter)	Time when initial malfunction occurs (IG-ON counter)	Time when last malfunction occurs (B+ counter)	Time when last malfunction occurs (IG-ON counter)	Repair time for last malfunction (B+ counter)	Repair time for last malfunction (IG-ON counter)
(1)	1	A	G	A	G	-	-
(2)	1	A	G	A	G	B	H
(3)	2	A	G	C	I	B	H
(4)	2	A	G	C	I	D	J
(5)	3	A	G	E	K	D	J
(6)	3	A	G	E	K	F	L

2014 - Mazda3 - Restraints

CLEARING DTC [STANDARD DEPLOYMENT CONTROL SYSTEM]

CMDTC Self Test

1. Connect the M-MDS to the DLC 2.
2. After the vehicle is identified, select the following items from the initialization screen of the M-MDS.
    a. Select “Self Test”.
    b. Select “All CMDTCs”.
3. Verify the DTC according to the directions on the screen.
4. Press the clear button on the DTC screen to clear the DTC.
5. Switch the ignition off.
6. Switch the ignition ON (engine off or on) and wait for **5 s or more**.
7. Perform DTC inspection. (See **DTC INSPECTION [STANDARD DEPLOYMENT CONTROL SYSTEM]**.)
8. Verify that no DTCs are displayed.

ODDTC Self Test

1. Connect the M-MDS to the DLC 2.
2. After the vehicle is identified, select the following items from the initialization screen of the M-MDS.
    a. Select “Self Test”.
    b. Select “Modules”.
    c. Select “RCM”.
3. Verify the DTC according to the directions on the screen.
4. Press the clear button on the DTC screen to clear the DTC.
5. Switch the ignition off.
6. Switch the ignition ON (engine off or on) and wait for **11 s or more**.
7. Perform DTC inspection. (See **DTC INSPECTION [STANDARD DEPLOYMENT CONTROL SYSTEM]**.)
8. Verify that no DTCs are displayed.

CLEARING DTC [STANDARD DEPLOYMENT CONTROL SYSTEM]

2014 - Mazda3 - Restraints

DTC TABLE [STANDARD DEPLOYMENT CONTROL SYSTEM]

CAUTION:

- When DTCs not shown in the DTC table are displayed, perform the inspection for DTCs not shown in the DTC table. (See **Inspection for DTCs not shown in DTC table**.)

X: Applicable—: Not applicable

DTC				System malfunction location	Fail-safe function	Drive cycle	Self test type*1	Memory function	Page
M-MDS display	Air bag system warning light								
	Flashing pattern		Priority ranking						
B0001:11	19		14	Driver-side air bag module circuit short to body ground	—	—	C, D	×	(See **DTC B0001:11/B0001:12/B0001:13/B0001:19/B0001:1A [STANDARD DEPLOYMENT CONTROL SYSTEM]**.)
B0001:12				Driver-side air bag module circuit short to power supply	—	—	C, D	×	
B0001:13				Driver-side air bag module circuit open circuit or resistance high	—	—	C, D	×	
B0001:19				Short circuit to driver-side air bag module and other air bag module circuits	—	—	C, D	×	
B0001:1A				Driver-side air bag module	—	—	C, D	×	

				circuit resistance low					
B0001:55				Configuration setting error (driver-side air bag module structural malfunction)	—	—	C, D	×	(See **DTC B0001:55/B0010:55 [STANDARD DEPLOYMENT CONTROL SYSTEM]**.)
B0003:53	—	Flashing	4	Operation (deployment) inhibited due to configuration setting	—	—	C, D	×	(See **DTC B0003:53 [STANDARD DEPLOYMENT CONTROL SYSTEM]**.)
B0010:11	21		13	Passenger-side air bag module circuit short to body ground	—	—	C, D	×	(See **DTC B0010:11/B0010:12/B0010:13/B0010:19/B0010:1A [STANDARD DEPLOYMENT CONTROL SYSTEM]**.)
B0010:12				Passenger-side air bag module circuit short to power supply	—	—	C, D	×	
B0010:13				Passenger-side air bag module circuit open circuit or resistance high	—	—	C, D	×	
B0010:19				Short circuit to passenger-side air bag module and other air bag module circuits	—	—	C, D	×	
B0010:1A				Passenger-side air bag module circuit resistance low	—	—	C, D	×	
B0010:55				Configuration setting error (passenger-side air bag	—	—	C, D	×	(See **DTC B0001:55/B0010:55 [STANDARD**

				module structural malfunction)					DEPLOYMENT CONTROL SYSTEM].)
B0094:11	42		8	Crash zone sensor circuit short to body ground	—	—	C, D	×	(See DTC B0094:11/B0094:13/B0094:87/B0094:96 [STANDARD DEPLOYMENT CONTROL SYSTEM].)
B0094:13				Crash zone sensor circuit open circuit or short to power supply	—	—	C, D	×	
B0094:87				Signal reception error from crash zone sensor	—	—	C, D	×	
B0094:96				Crash zone sensor internal malfunction	—	—	C, D	×	
B0094:55				Configuration setting error (crash zone sensor structural malfunction)	—	—	C, D	×	(See DTC B0094:55 [STANDARD DEPLOYMENT CONTROL SYSTEM].)
B00D2:01	14		5	Air bag system warning light malfunction	—	—	C, D	×	(See DTC B00D2:01 [STANDARD DEPLOYMENT CONTROL SYSTEM].)
B00D2:29				Invalid signal to air bag system warning light	—	—	C, D	×	(See DTC B00D2:29 [STANDARD DEPLOYMENT CONTROL SYSTEM].)
B1011:95	58		7	SAS control module connectors are poorly connected	—	—	C, D	×	(See DTC B1011:95 [STANDARD DEPLOYMENT CONTROL SYSTEM].)
				Driver-side side air bag					

B10FD:11				sensor circuit short to body ground or power supply	—	—	C, D	×	
B10FD:13				Driver-side side air bag sensor circuit open circuit or resistance high	—	—	C, D	×	(See **DTC B10FD:11/B10FD:13/B10FD:87/B10FD:96 [STANDARD DEPLOYMENT CONTROL SYSTEM]**.)
B10FD:87	43		10	Signal reception error from driver-side side air bag sensor	—	—	C, D	×	
B10FD:96				Driver-side side air bag sensor internal malfunction	—	—	C, D	×	
B10FD:55				Configuration setting error (driver-side side air bag sensor structural malfunction)	—	—	C, D	×	(See **DTC B10FD:55/B10FE:55 [STANDARD DEPLOYMENT CONTROL SYSTEM]**.)
B10FE:11				Passenger-side side air bag sensor circuit short to body ground or power supply	—	—	C, D	×	
B10FE:13				Passenger-side side air bag sensor circuit open circuit or resistance high	—	—	C, D	×	(See **DTC B10FE:11/B10FE:13/B10FE:87/B10FE:96 [STANDARD DEPLOYMENT CONTROL SYSTEM]**.)
B10FE:87	44		9	Signal reception error from passenger-side side air bag sensor	—	—	C, D	×	

B10FE:96				Passenger-side side air bag sensor internal malfunction	—	—	C, D	×	
B10FE:55				Configuration setting error (passenger-side side air bag sensor structural malfunction)	—	—	C, D	×	(See **DTC B10FD:55/B10FE:55 [STANDARD DEPLOYMENT CONTROL SYSTEM]**.)
B1126:11	22		18	Driver-side side air bag module circuit short to body ground	—	—	C, D	×	(See **DTC B1126:11/B1126:12/B1126:13/B1126:19/B1126:1A [STANDARD DEPLOYMENT CONTROL SYSTEM]**.)
B1126:12				Driver-side side air bag module circuit short to power supply	—	—	C, D	×	
B1126:13				Driver-side side air bag module circuit open circuit or resistance high	—	—	C, D	×	
B1126:19				Short circuit to driver-side side air bag module and other air bag module circuits	—	—	C, D	×	
B1126:1A				Driver-side side air bag module circuit resistance low	—	—	C, D	×	
B1126:55				Configuration setting error (driver-side side air bag module structural	—	—	C, D	×	(See **DTC B1126:55/B1127:55 [STANDARD DEPLOYMENT CONTROL SYSTEM]**.)

				malfunction)					
B1127:11				Passenger-side side air bag module circuit short to body ground	—	—	C, D	×	
B1127:12				Passenger-side side air bag module circuit short to power supply	—	—	C, D	×	
B1127:13				Passenger-side side air bag module circuit open circuit or resistance high	—	—	C, D	×	(See **DTC B1127:11/B1127:12/B1127:13/B1127:19/B1127:1A [STANDARD DEPLOYMENT CONTROL SYSTEM]**.)
B1127:19	23		17	Short circuit to passenger-side side air bag module and other air bag module circuits	—	—	C, D	×	
B1127:1A				Passenger-side side air bag module circuit resistance low	—	—	C, D	×	
B1127:55				Configuration setting error (passenger-side side air bag module structural malfunction)	—	—	C, D	×	(See **DTC B1126:55/B1127:55 [STANDARD DEPLOYMENT CONTROL SYSTEM]**.)
B1128:11				Driver-side curtain air bag module circuit short to body ground	—	—	C, D	×	
B1128:12				Driver-side curtain air bag module circuit	—	—	C, D	×	

				short to power supply					
B1128:13				Driver-side curtain air bag module circuit open circuit or resistance high	—	—	C, D	×	(See **DTC B1128:11/B1128:12/B1128:13/B1128:19/B1128:1A [STANDARD DEPLOYMENT CONTROL SYSTEM]**.)
B1128:19	24		20	Short circuit to driver-side curtain air bag module and other air bag module circuits	—	—	C, D	×	
B1128:1A				Driver-side curtain air bag module circuit resistance low	—	—	C, D	×	
B1128:55				Configuration setting error (driver-side curtain air bag module structural malfunction)	—	—	C, D	×	(See **DTC B1128:55/B1129:55 [STANDARD DEPLOYMENT CONTROL SYSTEM]**.)
B1129:11				Passenger-side curtain air bag module circuit short to body ground	—	—	C, D	×	
B1129:12				Passenger-side curtain air bag module circuit short to power supply	—	—	C, D	×	
B1129:13				Passenger-side curtain air bag module circuit open circuit or resistance high	—	—	C, D	×	(See **DTC B1129:11/B1129:12/B1129:13/B1129:19/B1129:1A [STANDARD DEPLOYMENT CONTROL SYSTEM]**.)
	25		19	Short circuit to passenger-side					

B1129:19				curtain air bag module and other air bag module circuits	—	—	C, D	×	
B1129:1A				Passenger-side curtain air bag module circuit resistance low	—	—	C, D	×	
B1129:55				Configuration setting error (passenger-side curtain air bag module structural malfunction)	—	—	C, D	×	(See **DTC B1128:55/B1129:55 [STANDARD DEPLOYMENT CONTROL SYSTEM]**.)
B1193:00	13		3	SAS control module operation (deployment)	—	—	C, D	×	(See **DTC B1193:00 [STANDARD DEPLOYMENT CONTROL SYSTEM]**.)
B1206:00	—	—	—	SAS control module operation (deployment) (fuel cut signal output)	—	—	C, D	×	(See **DTC B1206:00/U2107:00 [STANDARD DEPLOYMENT CONTROL SYSTEM]**.)
B1211:11				Driver-side pre-tensioner seat belt circuit short to body ground	—	—	C, D	×	
B1211:12				Driver-side pre-tensioner seat belt circuit short to power supply	—	—	C, D	×	
B1211:13				Driver-side pre-tensioner seat belt circuit open circuit or resistance high	—	—	C, D	×	(See **DTC B1211:11/B1211:12/B1211:13/B1211:19/B1211:1A [STANDARD DEPLOYMENT CONTROL SYSTEM]**.)
	38		16	Short circuit to					

B1211:19				driver-side pre-tensioner seat belt and other air bag module circuits	—	—	C, D	×	
B1211:1A				Driver-side pre-tensioner seat belt circuit resistance low	—	—	C, D	×	
B1211:55				Configuration setting error (driver-side pre-tensioner seat belt structural malfunction)	—	—	C, D	×	(See **DTC B1211:55, B1214:55 [STANDARD DEPLOYMENT CONTROL SYSTEM]**.)
B1214:11				Passenger-side pre-tensioner seat belt circuit short to body ground	—	—	C, D	×	
B1214:12				Passenger-side pre-tensioner seat belt circuit short to power supply	—	—	C, D	×	
B1214:13				Passenger-side pre-tensioner seat belt circuit open circuit or resistance high	—	—	C, D	×	(See **DTC B1214:11/B1214:12/B1214:13/B1214:19/B1214:1A [STANDARD DEPLOYMENT CONTROL SYSTEM]**.)
B1214:19	39		15	Short circuit to passenger-side pre-tensioner seat belt and other air bag module circuits	—	—	C, D	×	
B1214:1A				Passenger-side pre-tensioner seat belt circuit	—	—	C, D	×	

				resistance low					
B1214:55				Configuration setting error (passenger-side pre-tensioner seat belt structural malfunction)	—	—	C, D	×	(See **DTC B1211:55, B1214:55 [STANDARD DEPLOYMENT CONTROL SYSTEM]**.)
C0061:29	—	—	—	Low-G sensor (lateral-G) in SAS control module (internal circuit disabled)	—	—	C, D	×	(See **DTC C0061:29/C0062:29/C0063:29/P0666:29 [STANDARD DEPLOYMENT CONTROL SYSTEM]**.)
C0062:29				Low-G sensor (forward-G) in SAS control module (internal circuit disabled)	—	—	C, D	×	
C0063:29				Yaw rate sensor in SAS control module (internal circuit disabled)	—	—	C, D	×	
P0666:29				Temperature sensor in SAS control module (internal circuit disabled)	—	—	C, D	×	
U0001:88	14		5	Module communication error (HS-CAN)	—	—	C, D	×	(See **DTC U0001:88/U0155:00 [STANDARD DEPLOYMENT CONTROL SYSTEM]**.)
U0155:00	14		5	Communication error with instrument cluster	—	—	C, D	×	(See **DTC U0001:88/U0155:00 [STANDARD DEPLOYMENT CONTROL SYSTEM]**.)
U2005:68				PCM communication error (vehicle	—	—	C, D	×	(See **DTC U2005:68 [STANDARD DEPLOYMENT CONTROL SYSTEM]**.)

				speed signal)					
U0300:00	54		6	Configuration setting invalid	—	—	C, D	×	(See **DTC U0300:00/U2100:00 [STANDARD DEPLOYMENT CONTROL SYSTEM]**.)
U2100:00	—	Flashing	4	Configuration not set	—	—	C, D	×	
U2107:00	—	—	—	SAS control module operation (deployment) signal output	—	—	C, D	×	(See **DTC B1206:00/U2107:00 [STANDARD DEPLOYMENT CONTROL SYSTEM]**.)
U3000:49	12		2	SAS control module internal malfunction	—	—	C, D	×	(See **DTC U3000:49 [STANDARD DEPLOYMENT CONTROL SYSTEM]**.)
U3003:16	—	Continuously illuminated	1	SAS control module power supply voltage decreases (**less than 8 V**)	—	—	C, D	×	(See **DTC U3003:16/U3003:17 [STANDARD DEPLOYMENT CONTROL SYSTEM]**.)
U3003:17				SAS control module power supply voltage increases (**18 V or more**)	—	—	C, D	×	

*1 **C: CMDTC self test, D: ODDTC self test**

Inspection for DTCs not shown in DTC table

System wiring diagram

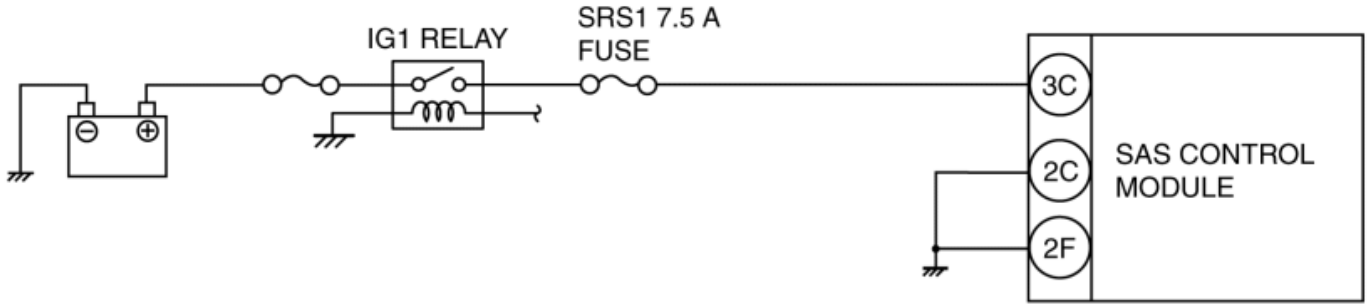

SAS CONTROL MODULE WIRING
HARNESS-SIDE CONNECTOR

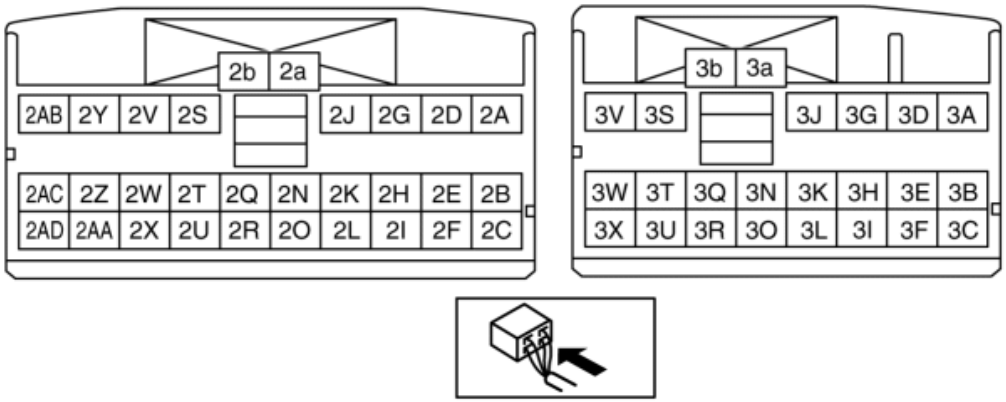

Diagnostic procedure

Step	Inspection		Action
1	**BATTERY INSPECTION** • Refer to the battery inspection and inspect the battery. (See **BATTERY INSPECTION [SKYACTIV-G 2.0, SKYACTIV-G 2.5]**.) • Is the battery normal?	Yes	Go to the next step.
		No	Replace or charge the battery. (See **BATTERY REMOVAL/INSTALLATION [SKYACTIV-G 2.0, SKYACTIV-G 2.5]**.) (See **BATTERY RECHARGING [SKYACTIV-G 2.0, SKYACTIV-G 2.5]**.) Then go to Step 5.
	FUSE INSPECTION		

2	• Switch the ignition off. • Disconnect the negative battery cable and wait **1 min or more**. (See **NEGATIVE BATTERY CABLE DISCONNECTION/CONNECTION [SKYACTIV-G 2.0, SKYACTIV-G 2.5]**.) • Remove the SRS1 7.5 A fuse. • Is the fuse normal?	Yes	Go to the next step.
		No	Replace the SRS1 7.5 A fuse. Then go to Step 5.
3	**INSPECT WIRING HARNESS BETWEEN SAS CONTROL MODULE AND IG1 RELAY** **WARNING:** • Handling the component parts improperly can accidentally operate (deploy) the air bag module, which may seriously injure you. Read the service warnings/cautions and the workshop manual before handling the air bag system components. (See **AIR BAG SYSTEM SERVICE WARNINGS [STANDARD DEPLOYMENT CONTROL SYSTEM]**.) (See **AIR BAG SYSTEM SERVICE CAUTIONS [STANDARD DEPLOYMENT CONTROL SYSTEM]**.) • Remove the column cover. (See **COLUMN COVER REMOVAL/INSTALLATION**.) • Disconnect the clock spring connector. (See **CLOCK SPRING REMOVAL/INSTALLATION [STANDARD DEPLOYMENT CONTROL SYSTEM]**.) • Remove the glove compartment. (See **GLOVE COMPARTMENT REMOVAL/INSTALLATION**.) • Disconnect the passenger-side air bag module connector. (See **PASSENGER-SIDE AIR BAG MODULE REMOVAL [STANDARD DEPLOYMENT CONTROL SYSTEM]**.) • Disconnect the driver and passenger-side front seat connector. (See **FRONT SEAT REMOVAL/INSTALLATION**.) • Remove the B-pillar lower trim. (See **B-PILLAR LOWER TRIM REMOVAL/INSTALLATION**.) • Disconnect the driver and passenger-side pre-tensioner seat belt connector. (See **FRONT SEAT BELT REMOVAL/INSTALLATION**.) • Remove the headliner.	Yes	Go to the next step.
		No	Refer to the wiring diagram and verify whether or not there is a common connector between SAS control module terminal and IG1 relay terminal. **If there is a common connector:** • Determine the malfunctioning part by inspecting the common connector and the terminal for corrosion, damage, or pin disconnection, and the common wiring harness for an open circuit or short to ground. • Replace the malfunctioning part. **If there is no common connector:** • Replace the wiring harness which has an open circuit or short to ground. Go to Step 5.

	(See **HEADLINER REMOVAL/INSTALLATION**.) • Disconnect the driver and passenger-side curtain air bag module connector. (See **CURTAIN AIR BAG MODULE REMOVAL/INSTALLATION [STANDARD DEPLOYMENT CONTROL SYSTEM]**.) • Disconnect all SAS control module connectors. (See **SAS CONTROL MODULE REMOVAL/INSTALLATION [STANDARD DEPLOYMENT CONTROL SYSTEM]**.) • Connect the negative battery cable. (See **NEGATIVE BATTERY CABLE DISCONNECTION/CONNECTION [SKYACTIV-G 2.0, SKYACTIV-G 2.5]**.) • Switch the ignition ON (engine off or on).		
3	• Measure the voltage of SAS control module connector terminal 3C (wiring harness-side). **NOTE:** • Measure the voltage while shaking the wiring harness between the SAS control module and IG1 relay. • Is the voltage **8–17.9 V**?		
4	**INSPECT SAS CONTROL MODULE CIRCUIT FOR OPEN CIRCUIT** • SAS control module connectors are disconnected. • Switch the ignition off. • Disconnect the negative battery cable and wait **1 min or more**. (See **NEGATIVE BATTERY CABLE DISCONNECTION/CONNECTION [SKYACTIV-G 2.0, SKYACTIV-G 2.5]**.) • Inspect the wiring harness between SAS control module connector terminal 2C, 2F (wiring harness-side) and body ground. **NOTE:** • Inspect for continuity while shaking the wiring harness between the SAS control module and body ground. • Is there continuity?	Yes	Go to the next step.
		No	Refer to the wiring diagram and verify whether or not there is a common connector between SAS control module terminal and body ground. **If there is a common connector:** • Determine the malfunctioning part by inspecting the common connector and the terminal for corrosion, damage, or pin disconnection, and the common wiring harness for an open circuit. • Replace the malfunctioning part. **If there is no common connector:** • Replace the wiring harness which has an open circuit. Go to the next step.
5	**PERFORM SAS CONTROL MODULE DTC INSPECTION** • Connect the SAS control module connectors.	Yes	Replace the SAS control module. (See **SAS CONTROL MODULE REMOVAL/INSTALLATION [STANDARD**

	• Reconnect all disconnected connectors. • Connect the negative battery cable. (See **NEGATIVE BATTERY CABLE DISCONNECTION/CONNECTION [SKYACTIV-G 2.0, SKYACTIV-G 2.5]**.) • Switch the ignition ON (engine off or on). • Clear the DTC for the SAS control module using the M-MDS. (See **CLEARING DTC [STANDARD DEPLOYMENT CONTROL SYSTEM]**.) • Perform the DTC inspection for the SAS control module using the M-MDS. (See **DTC INSPECTION [STANDARD DEPLOYMENT CONTROL SYSTEM]**.) • Are the same DTCs present?		**DEPLOYMENT CONTROL SYSTEM]**.)
		No	DTC troubleshooting completed.

2014 - Mazda3 - Restraints

DTC B0001:11/B0001:12/B0001:13/B0001:19/B0001:1A [STANDARD DEPLOYMENT CONTROL SYSTEM]

System malfunction location	• B0001:11: Driver-side air bag module circuit short to body ground • B0001:12: Driver-side air bag module circuit short to power supply • B0001:13: Driver-side air bag module circuit open circuit or resistance high • B0001:19: Short circuit to driver-side air bag module and other air bag module circuits • B0001:1A: Driver-side air bag module circuit resistance low
Detection condition	**WARNING:** • Detection conditions are for understanding the DTC outline before performing an inspection. Performing an inspection according to only the detection conditions may cause injury due to an operating error, or damage the system. When performing an inspection, always follow the inspection procedure. • Resistance **other than 0.99–6.42 ohms** detected in driver-side air bag module circuit • Wiring harness between driver-side air bag module and SAS control module has malfunction
Fail-safe function	Not applicable
Possible cause	• Clock spring connector malfunction • Clock spring malfunction • Short circuit to power supply or body ground in the wiring harness between the clock spring and SAS control module • Open circuit in the wiring harness between the clock spring and SAS control module • Driver-side air bag module malfunction • SAS control module malfunction

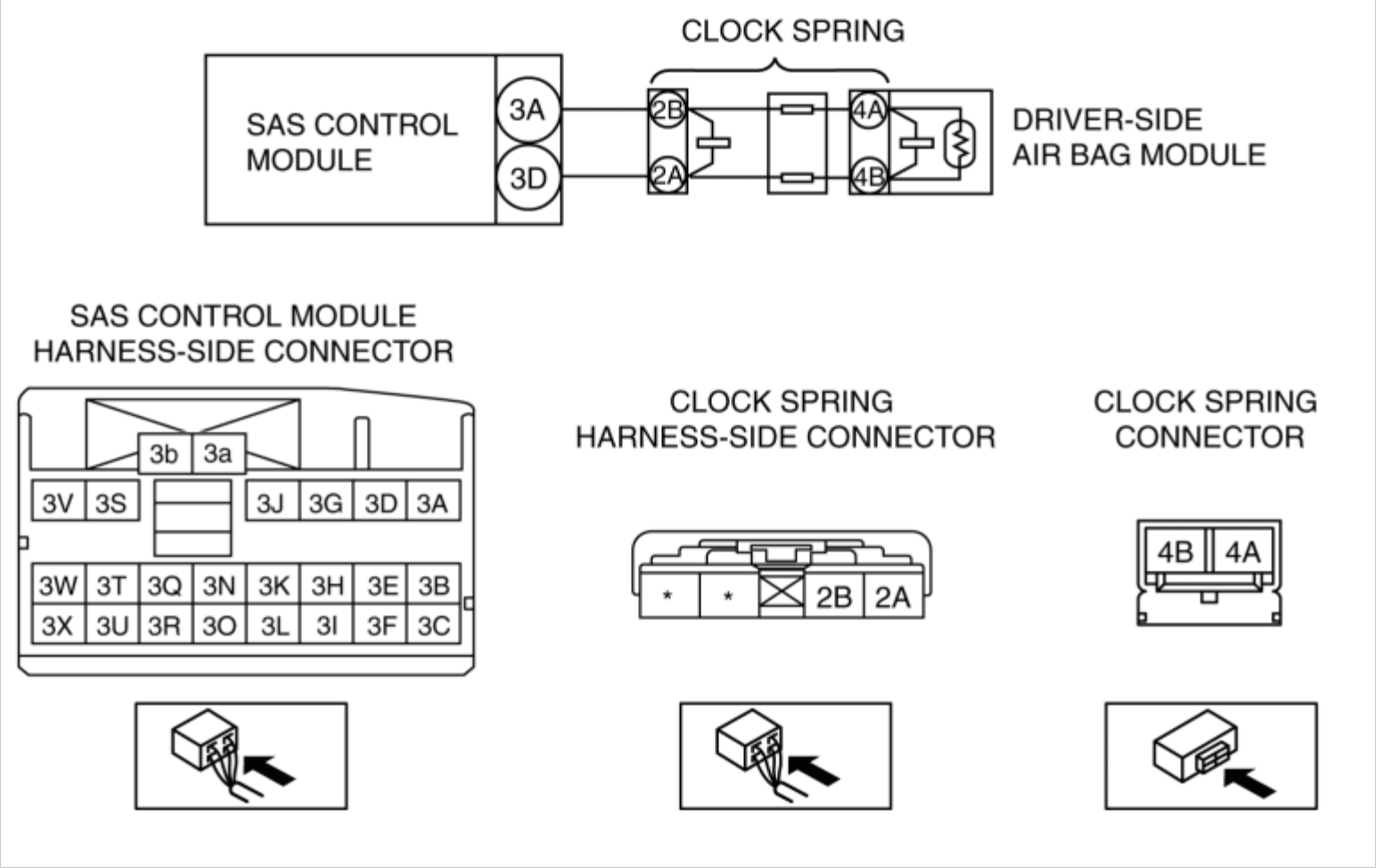

Diagnostic Procedure

Step	Inspection		Action
1	**INSPECT DRIVER-SIDE AIR BAG MODULE CONNECTOR** **WARNING:** • Handling the component parts improperly can accidentally operate (deploy) the air bag module, which may seriously injure you. Read the service warnings/cautions and the workshop manual before handling the air bag system components. (See **AIR BAG SYSTEM SERVICE WARNINGS [STANDARD DEPLOYMENT CONTROL SYSTEM]**.) (See **AIR BAG SYSTEM SERVICE CAUTIONS [STANDARD DEPLOYMENT CONTROL SYSTEM]**.)	Yes	Replace clock spring. (See **CLOCK SPRING REMOVAL/INSTALLATION [STANDARD DEPLOYMENT CONTROL SYSTEM]**.) Then go to Step 7.
		No	Go to the next step.

	Switch the ignition off. • Disconnect the negative battery cable and wait for **1 min or more**. (See **NEGATIVE BATTERY CABLE DISCONNECTION/CONNECTION [SKYACTIV-G 2.0, SKYACTIV-G 2.5]**.) • Remove the driver-side air bag module connector. (See **DRIVER-SIDE AIR BAG MODULE REMOVAL [STANDARD DEPLOYMENT CONTROL SYSTEM]**.) • Inspect the clock spring connector. (Corrosion, damage, and disconnected pins) • Is there any malfunction of the clock spring connector?		
2	**INSPECT CLOCK SPRING** • Remove the steering wheel. (See **STEERING WHEEL AND COLUMN REMOVAL/INSTALLATION**.) • Remove the column cover. (See **COLUMN COVER REMOVAL/INSTALLATION**.) • Remove the clock spring. (See **CLOCK SPRING REMOVAL/INSTALLATION [STANDARD DEPLOYMENT CONTROL SYSTEM]**.) • Inspect for continuity between clock spring connector terminals 2B—4A and 2A—4B. **NOTE:** • Inspect the clock spring wiring harness for continuity while shaking it. • Is there continuity?	Yes	Go to the next step.
		No	Replace clock spring. (See **CLOCK SPRING REMOVAL/INSTALLATION [STANDARD DEPLOYMENT CONTROL SYSTEM]**.) Then go to Step 7.
3	**INSPECT DRIVER-SIDE AIR BAG MODULE CIRCUIT FOR SHORT TO GROUND** • Remove the glove compartment. (See **GLOVE COMPARTMENT REMOVAL/INSTALLATION**.) • Disconnect the passenger-side air bag module connector.	Yes	Refer to the wiring diagram and verify whether or not there is a common connector between SAS control module terminal and clock spring terminal. **If there is a common connector:** • Determine the

	(See **PASSENGER-SIDE AIR BAG MODULE REMOVAL [STANDARD DEPLOYMENT CONTROL SYSTEM]**.) • Disconnect the driver and passenger-side front seat connector. (See **FRONT SEAT REMOVAL/INSTALLATION**.) • Remove the B-pillar lower trim. (See **B-PILLAR LOWER TRIM REMOVAL/INSTALLATION**.) • Disconnect the driver and passenger-side pre-tensioner seat belt connectors. (See **FRONT SEAT BELT REMOVAL/INSTALLATION**.) • Remove the headliner. (See **HEADLINER REMOVAL/INSTALLATION**.) • Disconnect the driver and passenger-side curtain air bag module connectors. (See **CURTAIN AIR BAG MODULE REMOVAL/INSTALLATION [STANDARD DEPLOYMENT CONTROL SYSTEM]**.) • Disconnect the all SAS control module connectors. (See **SAS CONTROL MODULE REMOVAL/INSTALLATION [STANDARD DEPLOYMENT CONTROL SYSTEM]**.) • Inspect for continuity between the following terminals (wiring harness-side) and body ground: ▪ SAS control module terminal 3A ▪ SAS control module terminal 3D **NOTE:** • Inspect for continuity while shaking the wiring harness between the SAS control module and clock spring. • Is there continuity?		malfunctioning part by inspecting the common connector and the terminal for corrosion, damage, or pin disconnection, and the common wiring harness for a short to ground. • Replace the malfunctioning part. **If there is no common connector:** • Replace the wiring harness which has a short to ground. Go to Step 7.
		No	Go to the next step.

4	**INSPECT DRIVER-SIDE AIR BAG MODULE CIRCUIT FOR OPEN CIRCUIT** • SAS control module and clock spring connectors are disconnected. • Inspect for continuity between the following terminals (wiring harness-side): ▪ Clock spring terminal 2B—SAS control module terminal 3A ▪ Clock spring terminal 2A—SAS control module terminal 3D **NOTE:** • Inspect for continuity while shaking the wiring harness between the SAS control module and clock spring. • Is there continuity?	Yes	Go to the next step.
		No	Refer to the wiring diagram and verify whether or not there is a common connector between SAS control module terminal and clock spring terminal. **If there is a common connector:** • Determine the malfunctioning part by inspecting the common connector and the terminal for corrosion, damage, or pin disconnection, and the common wiring harness for an open circuit. • Replace the malfunctioning part. **If there is no common connector:** • Replace the wiring harness which has an open circuit. Go to Step 7.
5	**INSPECT DRIVER-SIDE AIR BAG MODULE CIRCUIT FOR SHORT TO POWER SUPPLY** • SAS control module and clock spring connectors are disconnected. • Connect the negative battery cable. (See **NEGATIVE BATTERY CABLE DISCONNECTION/CONNECTION [SKYACTIV-G 2.0, SKYACTIV-G 2.5]**.) • Switch the ignition ON (engine off or on). • Measure the voltage at the following terminals (wiring harness-side): ▪ SAS control module terminal 3A ▪ SAS control module terminal 3D **NOTE:** • Measure the voltage while shaking the	Yes	Go to the next step.
		No	Refer to the wiring diagram and verify whether or not there is a common connector between SAS control module terminal and clock spring terminal. **If there is a common connector:** • Determine the malfunctioning part by inspecting the common connector and the terminal for corrosion, damage, or pin disconnection, and the common wiring harness for a short to power supply. • Replace the malfunctioning part. **If there is no common**

	wiring harness between the SAS control module and clock spring. • Is the voltage **0 V**?		**connector:** • Replace the wiring harness which has a short to power supply. Go to Step 7.
6	**INSPECT DRIVER-SIDE AIR BAG MODULE** • Switch the ignition off. • Disconnect the negative battery cable and wait for **1 min or more**. • Connect the SAS control module connectors. • Except for the driver-side air bag module connector, reconnect all disconnected connectors. • Connect the **SST (Fuel and thermometer checker)** or apply **2 ohms** resistance to clock spring connector terminals 4A and 4B. • Set the **SST (Fuel and thermometer checker)** to **2 ohms**. • Connect the negative battery cable. (See **NEGATIVE BATTERY CABLE DISCONNECTION/CONNECTION [SKYACTIV-G 2.0, SKYACTIV-G 2.5]**.) • Switch the ignition ON (engine off or on). • Clear the DTC for the SAS control module using the M-MDS. (See **CLEARING DTC [STANDARD DEPLOYMENT CONTROL SYSTEM]**.) • Perform the DTC inspection for the SAS control module using the M-MDS. (See **DTC INSPECTION [STANDARD DEPLOYMENT CONTROL SYSTEM]**.) • Are the same DTCs present?	Yes	Go to the next step.
		No	Replace the driver-side air bag module. (See **DRIVER-SIDE AIR BAG MODULE REMOVAL [STANDARD DEPLOYMENT CONTROL SYSTEM]**.) (See **DRIVER-SIDE AIR BAG MODULE INSTALLATION [STANDARD DEPLOYMENT CONTROL SYSTEM]**.) Then go to the next step.
7	**PERFORM SAS CONTROL MODULE DTC INSPECTION** • Switch the ignition off. • Disconnect the negative battery cable and wait for **1 min or more**.	Yes	Replace the SAS control module. (See **SAS CONTROL MODULE REMOVAL/INSTALLATION [STANDARD DEPLOYMENT CONTROL SYSTEM]**.)

	• Disconnect the **SST (Fuel and thermometer checker)** or the **2 ohms** resistance. • Connect the driver-side air bag module connector. (See **DRIVER-SIDE AIR BAG MODULE INSTALLATION [STANDARD DEPLOYMENT CONTROL SYSTEM]**.) • Connect the negative battery cable. (See **NEGATIVE BATTERY CABLE DISCONNECTION/CONNECTION [SKYACTIV-G 2.0, SKYACTIV-G 2.5]**.) • Switch the ignition ON (engine off or on). • Clear the DTC for the SAS control module using the M-MDS. (See **CLEARING DTC [STANDARD DEPLOYMENT CONTROL SYSTEM]**.) • Perform the DTC inspection for the SAS control module using the M-MDS. (See **DTC INSPECTION [STANDARD DEPLOYMENT CONTROL SYSTEM]**.) • Are the same DTCs present?	No	DTC troubleshooting completed.

2014 - Mazda3 - Restraints

DTC B0001:55/B0010:55 [STANDARD DEPLOYMENT CONTROL SYSTEM]

System malfunction location	• B0001:55: Configuration setting error (driver-side air bag module structural malfunction) • B0010:55: Configuration setting error (passenger-side air bag module structural malfunction)
Detection condition	**WARNING:** • Detection conditions are for understanding the DTC outline before performing an inspection. Performing an inspection according to only the detection conditions may cause injury due to an operating error, or damage the system. When performing an inspection, always follow the inspection procedure. • SAS control module configuration setting has not been done correctly • Parts which have not been set to SAS control module are assembled
Fail-safe function	Not applicable
Possible cause	• SAS control module configuration setting not implemented • SAS control module configuration setting invalid • Driver or passenger-side air bag module assembly incorrect • SAS control module malfunction
System wiring diagram	Not applicable

Diagnostic Procedure

Step	Inspection		Action
1	**PERFORM SAS CONTROL MODULE CONFIGURATION (AS-BUILT DATA USE)**	Yes	Go to the next step.

	• Perform the SAS control module configuration using the M-MDS. (See **SAS CONTROL MODULE CONFIGURATION (USING AS-BUILT DATA) [STANDARD DEPLOYMENT CONTROL SYSTEM]**.) • Clear the DTC for the SAS control module using the M-MDS. (See **CLEARING DTC [STANDARD DEPLOYMENT CONTROL SYSTEM]**.) • Perform the DTC inspection for the SAS control module using the M-MDS. (See **DTC INSPECTION [STANDARD DEPLOYMENT CONTROL SYSTEM]**.) • Are the same DTCs present?	No	DTC troubleshooting completed.
2	**INSPECT AIR BAG MODULE** • Verify that the driver or passenger-side air bag module is correctly installed. • Is the driver or passenger-side air bag module correctly installed?	Yes	Go to the next step.
		No	Correctly Install the driver or passenger-side air bag module. Then go to the next step.
3	**PERFORM SAS CONTROL MODULE DTC INSPECTION** • Clear the DTC for the SAS control module using the M-MDS. (See **CLEARING DTC [STANDARD DEPLOYMENT CONTROL SYSTEM]**.) • Perform the DTC inspection for the SAS control module using the M-MDS. (See **DTC INSPECTION [STANDARD DEPLOYMENT CONTROL SYSTEM]**.) • Are the same DTCs present?	Yes	Replace the SAS control module. (See **SAS CONTROL MODULE REMOVAL/INSTALLATION [STANDARD DEPLOYMENT CONTROL SYSTEM]**.)
		No	DTC troubleshooting completed.

2014 - Mazda3 - Restraints

DTC B0003:53 [STANDARD DEPLOYMENT CONTROL SYSTEM]

System malfunction location	• Operation (deployment) inhibited due to configuration setting
Detection condition	• The SAS control module configuration has not been set
Fail-safe function	Not applicable
Possible cause	• SAS control module configuration error • SAS control module malfunction
System wiring diagram	Not applicable

Diagnostic Procedure

Step	Inspection		Action
1	**PERFORM SAS CONTROL MODULE CONFIGURATION (AS-BUILT DATA USE)** • Perform the SAS control module configuration using the M-MDS. (See **SAS CONTROL MODULE CONFIGURATION (USING AS-BUILT DATA) [STANDARD DEPLOYMENT CONTROL SYSTEM]**.) • Clear the DTC for the SAS control module using the M-MDS. (See **CLEARING DTC [STANDARD DEPLOYMENT CONTROL SYSTEM]**.) • Perform the DTC inspection for the SAS control module using the M-MDS. (See **DTC INSPECTION [STANDARD DEPLOYMENT CONTROL SYSTEM]**.)	Yes	Go to the next step.
		No	DTC troubleshooting completed.

	• Are the same DTCs present?		
2	**PERFORM SAS CONTROL MODULE DTC INSPECTION** • Clear the DTC for the SAS control module using the M-MDS. (See **CLEARING DTC [STANDARD DEPLOYMENT CONTROL SYSTEM]**.) • Perform the DTC inspection for the SAS control module using the M-MDS. (See **DTC INSPECTION [STANDARD DEPLOYMENT CONTROL SYSTEM]**.) • Are the same DTCs present?	Yes	Replace the SAS control module. (See **SAS CONTROL MODULE REMOVAL/INSTALLATION [STANDARD DEPLOYMENT CONTROL SYSTEM]**.) Go to the next step.
		No	DTC troubleshooting completed.
3	**VERIFY THAT NO OTHER DTCs ARE PRESENT** • Clear the DTC for the SAS control module using the M-MDS. (See **CLEARING DTC [STANDARD DEPLOYMENT CONTROL SYSTEM]**.) • Perform the DTC inspection for the SAS control module using the M-MDS. (See **DTC INSPECTION [STANDARD DEPLOYMENT CONTROL SYSTEM]**.) • Are any other DTCs output?	Yes	Go to the applicable DTC inspection.
		No	DTC troubleshooting completed.

2014 - Mazda3 - Restraints

DTC B0010:11/B0010:12/B0010:13/B0010:19/B0010:1A [STANDARD DEPLOYMENT CONTROL SYSTEM]

System malfunction location	• B0010:11: Passenger-side air bag module circuit short to body ground • B0010:12: Passenger-side air bag module circuit short to power supply • B0010:13: Passenger-side air bag module circuit open circuit or resistance high • B0010:19: Short circuit to passenger-side air bag module and other air bag module circuits • B0010:1A: Passenger-side air bag module circuit resistance low
Detection condition	**WARNING:** • Detection conditions are for understanding the DTC outline before performing an inspection. Performing an inspection according to only the detection conditions may cause injury due to an operating error, or damage the system. When performing an inspection, always follow the inspection procedure. • Resistance **other than 0.81–6.42 ohms** detected in passenger-side air bag module circuit • Wiring harness between passenger-side air bag module and SAS control module has malfunction
Fail-safe function	Not applicable
Possible cause	• Passenger-side air bag module connector malfunction • Short circuit to power supply or body ground in the wiring harness between the passenger-side air bag module and SAS control module • Open circuit in the wiring harness between the passenger-side air bag module and SAS control module • Passenger-side air bag module malfunction • SAS control module malfunction

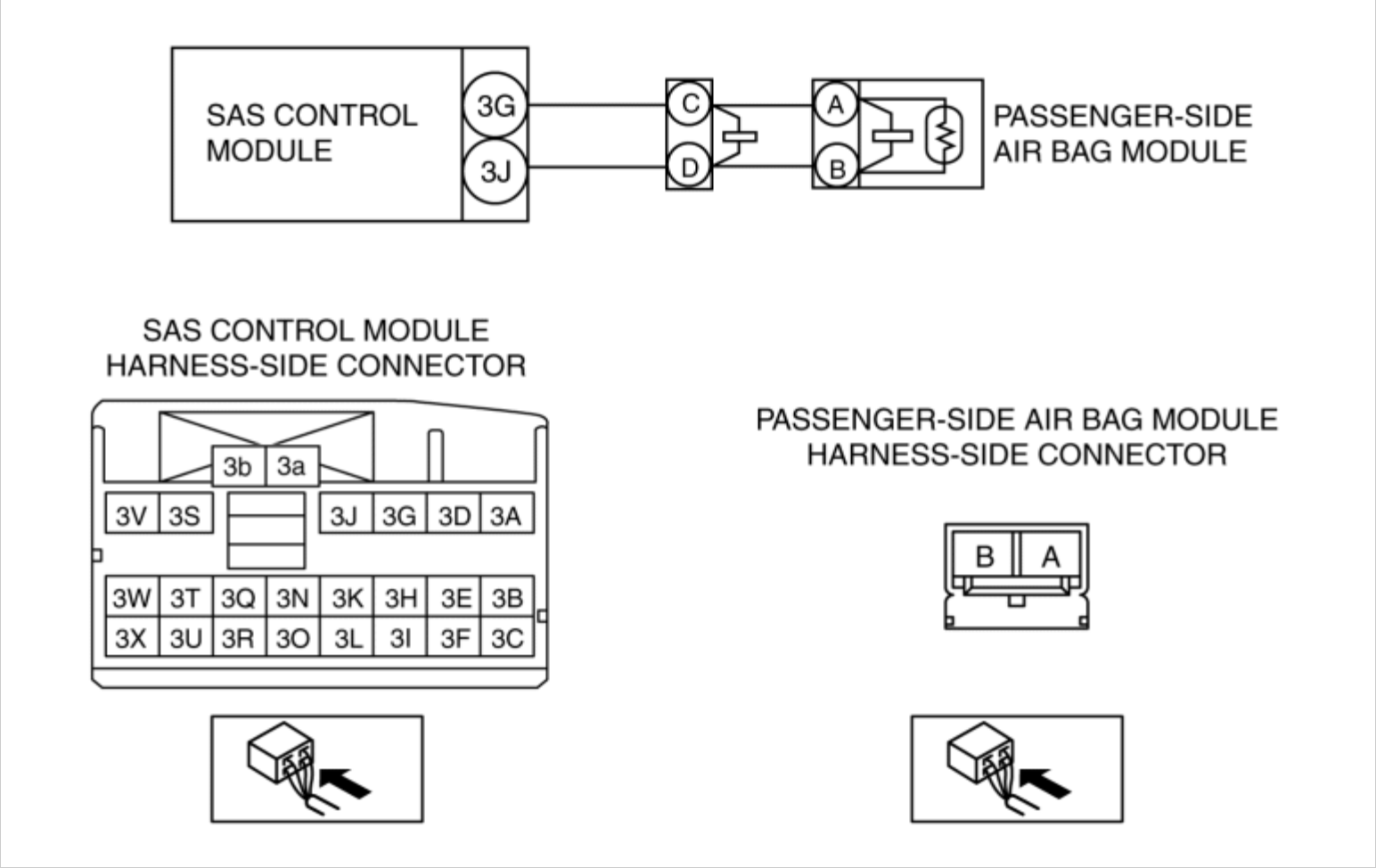

Diagnostic Procedure

Step	Inspection		Action
1	**INSPECT PASSENGER-SIDE AIR BAG MODULE CONNECTOR** **WARNING:** • Handling the component parts improperly can accidentally operate (deploy) the air bag module, which may seriously injure you. Read the service warnings/cautions and the workshop manual before handling the air bag system components. (See **AIR BAG SYSTEM SERVICE WARNINGS [STANDARD DEPLOYMENT CONTROL SYSTEM]**.) (See **AIR BAG SYSTEM SERVICE CAUTIONS [STANDARD DEPLOYMENT CONTROL SYSTEM]**.)	Yes	Replace the malfunctioning part, then go to Step 6.
		No	Go to the next step.

	Switch the ignition off. • Disconnect the negative battery cable and wait for **1 min or more**. (See **NEGATIVE BATTERY CABLE DISCONNECTION/CONNECTION [SKYACTIV-G 2.0, SKYACTIV-G 2.5]**.) • Remove the glove compartment. (See **GLOVE COMPARTMENT REMOVAL/INSTALLATION**.) • Disconnect the passenger-side air bag module connector. (See **PASSENGER-SIDE AIR BAG MODULE REMOVAL [STANDARD DEPLOYMENT CONTROL SYSTEM]**.) • Inspect the passenger-side air bag module connector. (Corrosion, damage, and disconnected pins) • Is there any malfunction of the passenger-side air bag module connector?		
2	**INSPECT PASSENGER-SIDE AIR BAG MODULE CIRCUIT FOR SHORT TO GROUND** • Remove the column cover. (See **COLUMN COVER REMOVAL/INSTALLATION**.) • Disconnect the clock spring connector. (See **CLOCK SPRING REMOVAL/INSTALLATION [STANDARD DEPLOYMENT CONTROL SYSTEM]**.) • Disconnect the driver and passenger-side front seat connector. (See **FRONT SEAT REMOVAL/INSTALLATION**.) • Remove the B-pillar lower trim. (See **B-PILLAR LOWER TRIM REMOVAL/INSTALLATION**.) • Disconnect the driver and passenger-side pre-tensioner seat belt connectors. (See **FRONT SEAT BELT REMOVAL/INSTALLATION**.)	Yes	Refer to the wiring diagram and verify whether or not there is a common connector between SAS control module terminal and passenger-side air bag module terminal. **If there is a common connector:** • Determine the malfunctioning part by inspecting the common connector and the terminal for corrosion, damage, or pin disconnection, and the common wiring harness for a short to ground. • Replace the malfunctioning part. **If there is no common connector:** • Replace the wiring harness which has a short to ground. Go to Step 6.

	Remove the headliner. (See **HEADLINER REMOVAL/INSTALLATION**.) • Disconnect the driver and passenger-side curtain air bag module connectors. (See **CURTAIN AIR BAG MODULE REMOVAL/INSTALLATION [STANDARD DEPLOYMENT CONTROL SYSTEM]**.) • Disconnect the all SAS control module connectors. (See **SAS CONTROL MODULE REMOVAL/INSTALLATION [STANDARD DEPLOYMENT CONTROL SYSTEM]**.) • Inspect for continuity between the following terminals (wiring harness-side) and body ground: ▪ SAS control module terminal 3G ▪ SAS control module terminal 3J **NOTE:** • Inspect for continuity while shaking the wiring harness between the SAS control module and passenger-side air bag module. • Is there continuity?	No	Go to the next step.
3	**INSPECT PASSENGER-SIDE AIR BAG MODULE CIRCUIT FOR OPEN CIRCUIT** • Passenger-side air bag module and SAS control module connectors are disconnected. • Inspect for continuity between the following terminals (wiring harness-side): ▪ Passenger-side air bag module terminal A—SAS control module terminal 3G ▪ Passenger-side air bag module terminal B—SAS control module terminal 3J **NOTE:**	Yes	Go to the next step.
		No	Refer to the wiring diagram and verify whether or not there is a common connector between SAS control module terminal and passenger-side air bag module terminal. **If there is a common connector:** • Determine the malfunctioning part by inspecting the common connector and the terminal for corrosion, damage, or pin disconnection, and the common wiring harness for an open circuit.

	• Inspect for continuity while shaking the wiring harness between the SAS control module and passenger-side air bag module. • Is there continuity?		• Replace the malfunctioning part. **If there is no common connector:** • Replace the wiring harness which has an open circuit. Go to Step 6.
4	**INSPECT PASSENGER-SIDE AIR BAG MODULE CIRCUIT FOR SHORT TO POWER SUPPLY** • Passenger-side air bag module and SAS control module connectors are disconnected. • Connect the negative battery cable. (See **NEGATIVE BATTERY CABLE DISCONNECTION/CONNECTION [SKYACTIV-G 2.0, SKYACTIV-G 2.5]**.) • Switch the ignition ON (engine off or on). • Measure the voltage at the following terminals (wiring harness-side): ▪ SAS control module terminal 3G ▪ SAS control module terminal 3J **NOTE:** • Measure the voltage while shaking the wiring harness between the SAS control module and passenger-side air bag module. • Is the voltage **0 V**?	Yes	Go to the next step.
		No	Refer to the wiring diagram and verify whether or not there is a common connector between SAS control module terminal and passenger-side air bag module terminal. **If there is a common connector:** • Determine the malfunctioning part by inspecting the common connector and the terminal for corrosion, damage, or pin disconnection, and the common wiring harness for a short to power supply. • Replace the malfunctioning part. **If there is no common connector:** • Replace the wiring harness which has a short to power supply. Go to Step 6.
5	**INSPECT PASSENGER-SIDE AIR BAG MODULE** • Switch the ignition off. • Disconnect the negative battery cable and wait for **1 min or more**. • Connect the SAS control module connectors. • Except for the passenger-side air bag module connector, reconnect all	Yes	Go to the next step.
		No	Replace the passenger-side air bag module. (See **PASSENGER-SIDE AIR BAG MODULE REMOVAL [STANDARD DEPLOYMENT CONTROL SYSTEM]**.) (See **PASSENGER-SIDE AIR BAG MODULE**

	disconnected connectors. • Connect the **SST (Fuel and thermometer checker)** or apply **2 ohms** resistance to the passenger-side air bag module connector terminals A and B. • Set the **SST (Fuel and thermometer checker)** to **2 ohms**. • Connect the negative battery cable. (See **NEGATIVE BATTERY CABLE DISCONNECTION/CONNECTION [SKYACTIV-G 2.0, SKYACTIV-G 2.5]**.) • Switch the ignition ON (engine off or on). • Clear the DTC for the SAS control module using the M-MDS. (See **CLEARING DTC [STANDARD DEPLOYMENT CONTROL SYSTEM]**.) • Perform the DTC inspection for the SAS control module using the M-MDS. (See **DTC INSPECTION [STANDARD DEPLOYMENT CONTROL SYSTEM]**.) • Are the same DTCs present?		**INSTALLATION [STANDARD DEPLOYMENT CONTROL SYSTEM]**.) Then go to the next step.
6	**PERFORM SAS CONTROL MODULE DTC INSPECTION** • Switch the ignition off. • Disconnect the negative battery cable and wait for **1 min or more**. • Disconnect the **SST (Fuel and thermometer checker)** or the **2 ohms** resistance. • Connect the passenger-side air bag module connector. (See **PASSENGER-SIDE AIR BAG MODULE INSTALLATION [STANDARD DEPLOYMENT CONTROL SYSTEM]**.) • Connect the negative battery cable. (See **NEGATIVE BATTERY CABLE DISCONNECTION/CONNECTION [SKYACTIV-G 2.0, SKYACTIV-G 2.5]**.) • Switch the ignition ON (engine off or on).	Yes	Replace the SAS control module. (See **SAS CONTROL MODULE REMOVAL/INSTALLATION [STANDARD DEPLOYMENT CONTROL SYSTEM]**.)
		No	DTC troubleshooting completed.

	• Clear the DTC for the SAS control module using the M-MDS. (See **CLEARING DTC [STANDARD DEPLOYMENT CONTROL SYSTEM]**.) • Perform the DTC inspection for the SAS control module using the M-MDS. (See **DTC INSPECTION [STANDARD DEPLOYMENT CONTROL SYSTEM]**.) • Are the same DTCs present?		

2014 - Mazda3 - Restraints

DTC B0094:11/B0094:13/B0094:87/B0094:96 [STANDARD DEPLOYMENT CONTROL SYSTEM]

System malfunction location	• B0094:11: Crash zone sensor circuit short to body ground • B0094:13: Crash zone sensor circuit open circuit or short to power supply • B0094:87: Signal reception error from crash zone sensor • B0094:96: Crash zone sensor internal malfunction
Detection condition	**WARNING:** • Detection conditions are for understanding the DTC outline before performing an inspection. Performing an inspection according to only the detection conditions may cause injury due to an operating error, or damage the system. When performing an inspection, always follow the inspection procedure. • Wiring harness between the crash zone sensor and SAS control module has a malfunction • Crash zone sensor has a malfunction
Fail-safe function	Not applicable
Possible cause	• Crash zone sensor connector malfunction • Short circuit to power supply or body ground in the wiring harness between the crash zone sensor and SAS control module • Open circuit in the wiring harness between the crash zone sensor and SAS control module • Crash zone sensor malfunction • SAS control module malfunction

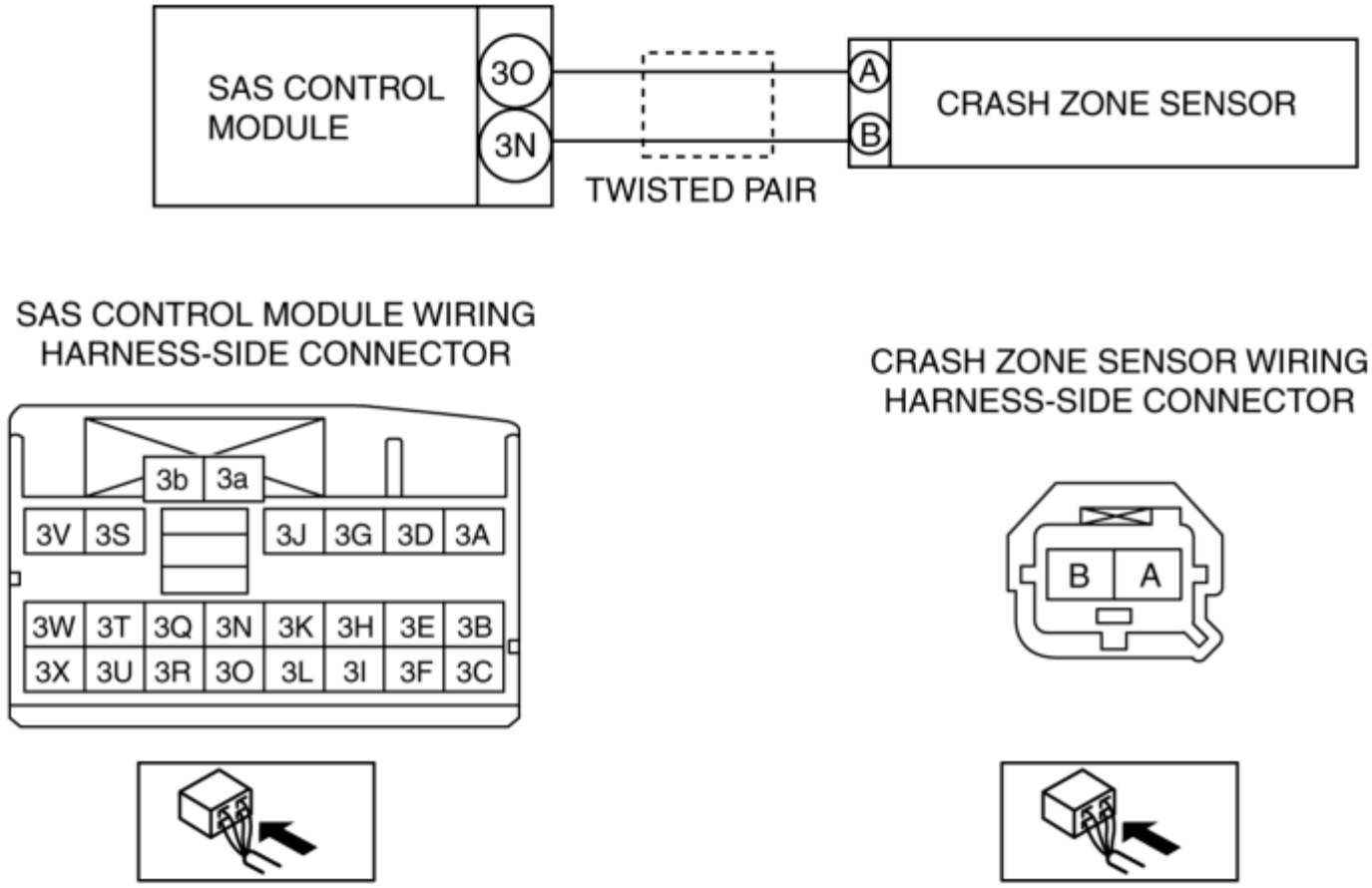

Diagnostic Procedure

Step	Inspection		Action
1	**INSPECT CRASH ZONE SENSOR CONNECTOR** **WARNING:** • Handling the component parts improperly can accidentally operate (deploy) the air bag module, which may seriously injure you. Read the service warnings/cautions and the workshop manual before handling the air bag system components. (See **AIR BAG SYSTEM SERVICE WARNINGS [STANDARD DEPLOYMENT CONTROL SYSTEM]**.) (See **AIR BAG SYSTEM SERVICE CAUTIONS [STANDARD DEPLOYMENT CONTROL SYSTEM]**.) • Switch the ignition off.	Yes	Replace the malfunctioning part, then go to Step 5.
		No	Go to the next step.

	• Disconnect the negative battery cable and wait for **1 min or more**. (See **NEGATIVE BATTERY CABLE DISCONNECTION/CONNECTION [SKYACTIV-G 2.0, SKYACTIV-G 2.5]**.) • Remove the front bumper. (See **FRONT BUMPER REMOVAL/INSTALLATION**.) • Disconnect the crash zone sensor connector. (See **CRASH ZONE SENSOR REMOVAL/INSTALLATION [STANDARD DEPLOYMENT CONTROL SYSTEM]**.) • Inspect the crash zone sensor connector. (Corrosion, damage, and disconnected pins) • Is there any malfunction of the crash zone sensor connector?		
2	**INSPECT CRASH ZONE SENSOR CIRCUIT FOR SHORT TO GROUND** • Remove the column cover. (See **COLUMN COVER REMOVAL/INSTALLATION**.) • Disconnect the clock spring connector. (See **CLOCK SPRING REMOVAL/INSTALLATION [STANDARD DEPLOYMENT CONTROL SYSTEM]**.) • Remove the glove compartment. (See **GLOVE COMPARTMENT REMOVAL/INSTALLATION**.) • Disconnect the passenger-side air bag module connector. (See **PASSENGER-SIDE AIR BAG MODULE REMOVAL [STANDARD DEPLOYMENT CONTROL SYSTEM]**.) • Disconnect the driver and passenger-side front seat connector. (See **FRONT SEAT REMOVAL/INSTALLATION**.) • Remove the B-pillar lower trim. (See **B-PILLAR LOWER TRIM REMOVAL/INSTALLATION**.)	Yes	Refer to the wiring diagram and verify whether or not there is a common connector between SAS control module terminal and crash zone sensor terminal. **If there is a common connector:** • Determine the malfunctioning part by inspecting the common connector and the terminal for corrosion, damage, or pin disconnection, and the common wiring harness for a short to ground. • Replace the malfunctioning part. **If there is no common connector:** • Replace the wiring harness which has a short to ground. Go to Step 5.
		No	Go to the next step.

	Disconnect the driver and passenger-side pre-tensioner seat belt connector. (See **FRONT SEAT BELT REMOVAL/INSTALLATION**.) • Remove the headliner. (See **HEADLINER REMOVAL/INSTALLATION**.) • Disconnect the driver and passenger-side curtain air bag module connector. (See **CURTAIN AIR BAG MODULE REMOVAL/INSTALLATION [STANDARD DEPLOYMENT CONTROL SYSTEM]**.) • Disconnect the all SAS control module connectors. (See **SAS CONTROL MODULE REMOVAL/INSTALLATION [STANDARD DEPLOYMENT CONTROL SYSTEM]**.) • Inspect for continuity between the following terminals (wiring harness-side) and body ground: ▪ SAS control module terminal 3O ▪ SAS control module terminal 3N **NOTE:** • Inspect for continuity while shaking the wiring harness between the SAS control module and crash zone sensor. • Is there continuity?		
3	**INSPECT CRASH ZONE SENSOR CIRCUIT FOR OPEN CIRCUIT** • Crash zone sensor and SAS control module connectors are disconnected. • Inspect for continuity between the following terminals (wiring harness-side): ▪ Crash zone sensor terminal A—SAS control module terminal 3O ▪ Crash zone sensor terminal B—SAS control module	Yes	Go to the next step.
		No	Refer to the wiring diagram and verify whether or not there is a common connector between SAS control module terminal and crash zone sensor terminal. **If there is a common connector:** • Determine the malfunctioning part by inspecting the common connector and the terminal for corrosion, damage, or pin

	terminal 3N **NOTE:** • Inspect for continuity while shaking the wiring harness between the SAS control module and crash zone sensor. • Is there continuity?		disconnection, and the common wiring harness for an open circuit. • Replace the malfunctioning part. **If there is no common connector:** • Replace the wiring harness which has an open circuit. Go to Step 5.
4	**INSPECT CRASH ZONE SENSOR CIRCUIT FOR SHORT TO POWER SUPPLY** • Crash zone sensor and SAS control module connectors are disconnected. • Connect the negative battery cable. (See **NEGATIVE BATTERY CABLE DISCONNECTION/CONNECTION [SKYACTIV-G 2.0, SKYACTIV-G 2.5]**.) • Switch the ignition ON (engine off or on). • Measure the voltage at the following terminals (wiring harness-side): ▪ SAS control module terminal 3O ▪ SAS control module terminal 3N **NOTE:** • Measure the voltage while shaking the wiring harness between the SAS control module and crash zone sensor. • Is the voltage **0 V**?	Yes	Replace the crash zone sensor, then go to the next step. (See **CRASH ZONE SENSOR REMOVAL/INSTALLATION [STANDARD DEPLOYMENT CONTROL SYSTEM]**.)
		No	Refer to the wiring diagram and verify whether or not there is a common connector between SAS control module terminal and crash zone sensor terminal. **If there is a common connector:** • Determine the malfunctioning part by inspecting the common connector and the terminal for corrosion, damage, or pin disconnection, and the common wiring harness for a short to power supply. • Replace the malfunctioning part. **If there is no common connector:** • Replace the wiring harness which has a short to power supply. Go to the next step.
5	**PERFORM SAS CONTROL MODULE DTC INSPECTION** • Switch the ignition off.	Yes	Replace the SAS control module. (See **SAS CONTROL MODULE REMOVAL/INSTALLATION [STANDARD**

	• Disconnect the negative battery cable and wait for **1 min or more**. • Connect the SAS control module connectors. • Reconnect all disconnected connectors. • Connect the negative battery cable. (See **NEGATIVE BATTERY CABLE DISCONNECTION/CONNECTION [SKYACTIV-G 2.0, SKYACTIV-G 2.5]**.) • Switch the ignition ON (engine off or on). • Clear the DTC for the SAS control module using the M-MDS. (See **CLEARING DTC [STANDARD DEPLOYMENT CONTROL SYSTEM]**.) • Perform the DTC inspection for the SAS control module using the M-MDS. (See **DTC INSPECTION [STANDARD DEPLOYMENT CONTROL SYSTEM]**.) • Are the same DTCs present?		**DEPLOYMENT CONTROL SYSTEM]**.)
		No	DTC troubleshooting completed.

2014 - Mazda3 - Restraints

DTC B0094:55 [STANDARD DEPLOYMENT CONTROL SYSTEM]

System malfunction location	• Configuration setting error (crash zone sensor structural malfunction)
Detection condition	**WARNING:** • Detection conditions are for understanding the DTC outline before performing an inspection. Performing an inspection according to only the detection conditions may cause injury due to an operating error, or damage the system. When performing an inspection, always follow the inspection procedure. • SAS control module configuration setting has not been done correctly • Parts which have not been set to SAS control module are assembled
Fail-safe function	Not applicable
Possible cause	• SAS control module configuration setting not implemented • SAS control module configuration setting invalid • Crash zone sensor assembly incorrect • SAS control module malfunction
System wiring diagram	Not applicable

Diagnostic Procedure

Step	Inspection		Action
1	**PERFORM SAS CONTROL MODULE CONFIGURATION (AS-BUILT DATA USE)** • Perform the SAS control module	Yes	Go to the next step.

	configuration using the M-MDS. (See **SAS CONTROL MODULE CONFIGURATION (USING AS-BUILT DATA) [STANDARD DEPLOYMENT CONTROL SYSTEM]**.) • Clear the DTC for the SAS control module using the M-MDS. (See **CLEARING DTC [STANDARD DEPLOYMENT CONTROL SYSTEM]**.) • Perform the DTC inspection for the SAS control module using the M-MDS. (See **DTC INSPECTION [STANDARD DEPLOYMENT CONTROL SYSTEM]**.) • Are the same DTCs present?	No	DTC troubleshooting completed.
2	**INSPECT CRASH ZONE SENSOR** • Verify that the crash zone sensor is correctly installed. • Is the crash zone sensor correctly installed?	Yes	Go to the next step.
		No	Correctly Install the crash zone sensor. Then go to the next step.
3	**PERFORM SAS CONTROL MODULE DTC INSPECTION** • Clear the DTC for the SAS control module using the M-MDS. (See **CLEARING DTC [STANDARD DEPLOYMENT CONTROL SYSTEM]**.) • Perform the DTC inspection for the SAS control module using the M-MDS. (See **DTC INSPECTION [STANDARD DEPLOYMENT CONTROL SYSTEM]**.) • Are the same DTCs present?	Yes	Replace the SAS control module. (See **SAS CONTROL MODULE REMOVAL/INSTALLATION [STANDARD DEPLOYMENT CONTROL SYSTEM]**.)
		No	DTC troubleshooting completed.

2014 - Mazda3 - Restraints

DTC B00D2:01 [STANDARD DEPLOYMENT CONTROL SYSTEM]

System malfunction location	• Air bag system warning light malfunction
Detection condition	**WARNING:** • Detection conditions are for understanding the DTC outline before performing an inspection. Performing an inspection according to only the detection conditions may cause injury due to an operating error, or damage the system. When performing an inspection, always follow the inspection procedure. • Air bag system warning light malfunction detected
Fail-safe function	Not applicable
Possible cause	• Air bag system warning light malfunction
System wiring diagram	Not applicable

Diagnostic Procedure

Action
Replace the instrument cluster. (See **INSTRUMENT CLUSTER REMOVAL/INSTALLATION**.)

DTC B00D2:01 [STANDARD DEPLOYMENT CONTROL SYSTEM]

2014 - Mazda3 - Restraints

DTC B00D2:29 [STANDARD DEPLOYMENT CONTROL SYSTEM]

System malfunction location	• Invalid signal to air bag system warning light
Detection condition	**WARNING:** • Detection conditions are for understanding the DTC outline before performing an inspection. Performing an inspection according to only the detection conditions may cause injury due to an operating error, or damage the system. When performing an inspection, always follow the inspection procedure. • Air bag system warning light illumination request sent from SAS control module does not correspond to air bag system warning light illumination status in instrument cluster
Fail-safe function	Not applicable
Possible cause	• Instrument cluster assembly incorrect • Instrument cluster malfunction • SAS control module malfunction
System wiring diagram	Not applicable

Diagnostic Procedure

Step	Inspection		Action
1	**INSPECT DTCs IN SAS CONTROL MODULE** • Clear the DTC for the SAS control module using the M-MDS.	Yes	Perform the applicable DTC inspection.
		No	Go to the next step.

	(See **CLEARING DTC [STANDARD DEPLOYMENT CONTROL SYSTEM]**.) • Perform the DTC inspection for the SAS control module using the M-MDS. (See **DTC INSPECTION [STANDARD DEPLOYMENT CONTROL SYSTEM]**.) • Is DTC U0001:88 or U0155:00 displayed?		
2	**INSPECT INSTRUMENT CLUSTER** • Verify that the instrument cluster is correctly installed. • Is the instrument cluster correctly installed?	Yes	Go to the next step.
		No	Correctly install the instrument cluster. (See **INSTRUMENT CLUSTER REMOVAL/INSTALLATION**.) Then go to the next step.
3	**INSPECT INSTRUMENT CLUSTER** • Perform the active command mode inspection for the instrument cluster using the M-MDS. (See **ACTIVE COMMAND MODES INSPECTION [INSTRUMENT CLUSTER]**.) ▪ WL+IL (See **ACTIVE COMMAND MODES TABLE [INSTRUMENT CLUSTER]**.) • Does the air bag system warning light illuminate?	Yes	Go to the next step.
		No	Replace the instrument cluster. (See **INSTRUMENT CLUSTER REMOVAL/INSTALLATION**.) Then go to the next step.
4	**PERFORM SAS CONTROL MODULE DTC INSPECTION** • Clear the DTC for the SAS control module using the M-MDS. (See **CLEARING DTC [STANDARD DEPLOYMENT CONTROL SYSTEM]**.) • Perform the DTC inspection for the SAS control module using the M-MDS. (See **DTC INSPECTION [STANDARD DEPLOYMENT CONTROL SYSTEM]**.)	Yes	Replace the SAS control module. (See **SAS CONTROL MODULE REMOVAL/INSTALLATION [STANDARD DEPLOYMENT CONTROL SYSTEM]**.)
		No	DTC troubleshooting completed.

	Is DTC B00D2:29 displayed?		

2014 - Mazda3 - Restraints

DTC B1011:95 [STANDARD DEPLOYMENT CONTROL SYSTEM]

System malfunction location	• SAS control module connectors are poorly connected
Detection condition	**WARNING:** • Detection conditions are for understanding the DTC outline before performing an inspection. Performing an inspection according to only the detection conditions may cause injury due to an operating error, or damage the system. When performing an inspection, always follow the inspection procedure. • No continuity between poorly connected detector bar terminals of the SAS control module
Fail-safe function	Not applicable
Possible cause	• SAS control module connectors are poorly connected • SAS control module connector malfunction • SAS control module malfunction

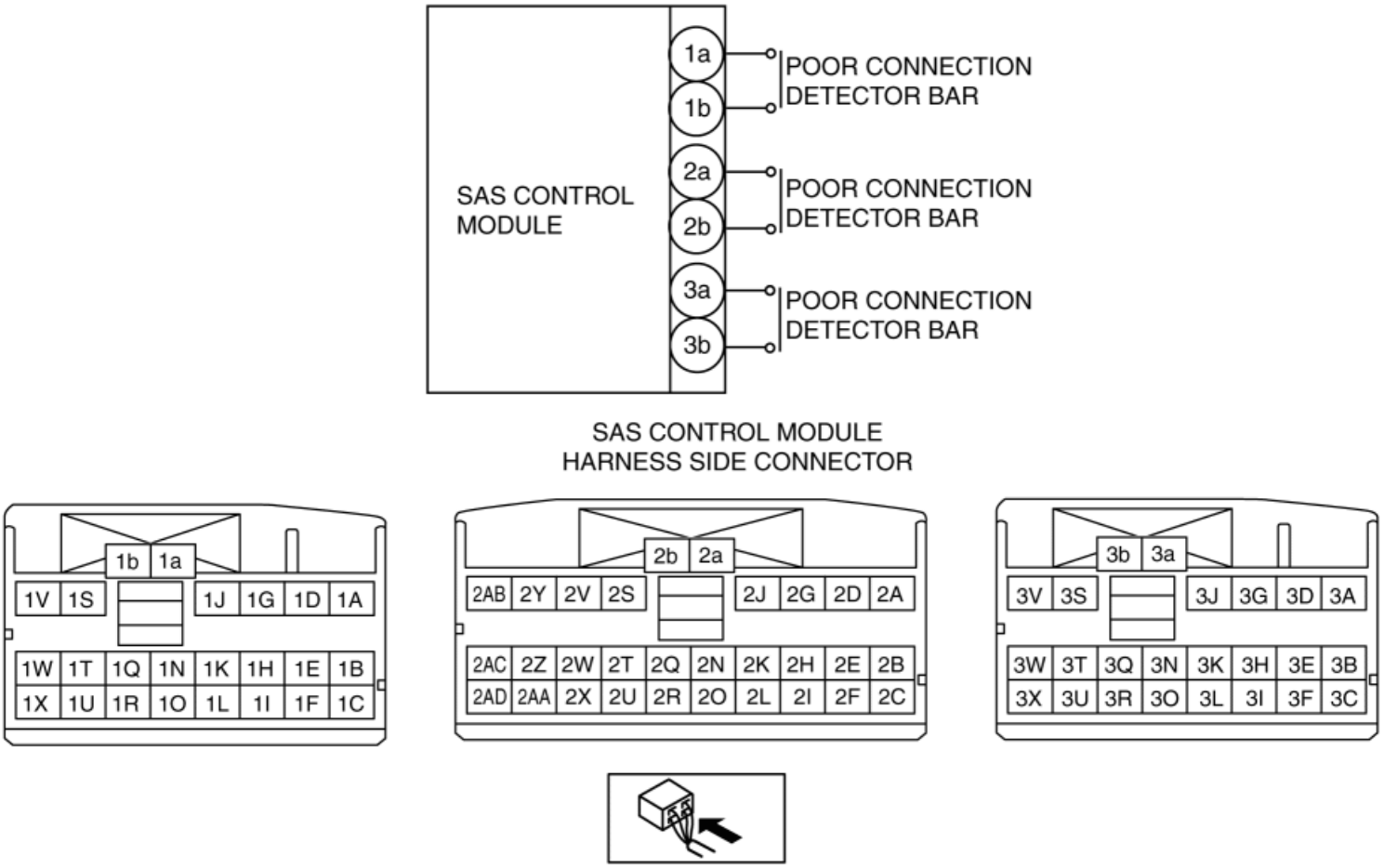

Diagnostic Procedure

Step	Inspection		Action
1	**INSPECT CONTACTS OF SAS CONTROL MODULE CONNECTORS** **WARNING:** • Handling the component parts improperly can accidentally operate (deploy) the air bag module, which may seriously injure you. Read the service warnings/cautions and the workshop manual before handling the air bag system components. (See **AIR BAG SYSTEM SERVICE WARNINGS [STANDARD DEPLOYMENT CONTROL SYSTEM]**.) (See **AIR BAG SYSTEM SERVICE CAUTIONS [STANDARD DEPLOYMENT CONTROL SYSTEM]**.) • Switch the ignition off. • Disconnect the negative battery cable and wait for **1 min or more**. (See **NEGATIVE BATTERY CABLE DISCONNECTION/CONNECTION [SKYACTIV-G 2.0, SKYACTIV-G 2.5]**.) • Remove the column cover. (See **COLUMN COVER REMOVAL/INSTALLATION**.) • Disconnect the clock spring connector. (See **CLOCK SPRING REMOVAL/INSTALLATION [STANDARD DEPLOYMENT CONTROL SYSTEM]**.) • Remove the glove compartment. (See **GLOVE COMPARTMENT REMOVAL/INSTALLATION**.) • Disconnect the passenger-side air bag module connector. (See **PASSENGER-SIDE AIR BAG MODULE REMOVAL [STANDARD DEPLOYMENT CONTROL SYSTEM]**.) • Disconnect the driver and passenger-side front seat connector. (See **FRONT SEAT REMOVAL/INSTALLATION**.) • Remove the B-pillar lower trim. (See **B-PILLAR LOWER TRIM REMOVAL/INSTALLATION**.) • Disconnect the driver and passenger-side pre-tensioner seat belt connector. (See **FRONT SEAT BELT REMOVAL/INSTALLATION**.) • Remove the headliner. (See **HEADLINER REMOVAL/INSTALLATION**.) • Disconnect the driver and passenger-side curtain air bag module connector. (See **CURTAIN AIR BAG MODULE REMOVAL/INSTALLATION [STANDARD DEPLOYMENT CONTROL SYSTEM]**.) • Are all SAS control module connectors securely connected?	Yes	Go to the next step.
		No	Reconnect the SAS control module connectors properly. Then go to the Step 3.
2	**VERIFY DETECTOR BARS OF SAS CONTROL MODULE CONNECTORS FOR POOR CONNECTION** • Disconnect the all SAS control module connectors. (See **SAS CONTROL MODULE REMOVAL/INSTALLATION [STANDARD DEPLOYMENT CONTROL SYSTEM]**.)	Yes	Go to the next step.
		No	Replace the air bag wiring harness.

	• Verify the condition of the detector bars of the SAS control module connectors. (Corrosion, damage, and disconnected pins) • Are the detector bars of the SAS control module connectors normal?		Then go to the next step.
3	**PERFORM SAS CONTROL MODULE DTC INSPECTION** • Connect the SAS control module connectors. • Reconnect all disconnected connectors. • Connect the negative battery cable. (See **NEGATIVE BATTERY CABLE DISCONNECTION/CONNECTION [SKYACTIV-G 2.0, SKYACTIV-G 2.5]**.) • Switch the ignition ON (engine off or on). • Clear the DTC for the SAS control module using the M-MDS. (See **CLEARING DTC [STANDARD DEPLOYMENT CONTROL SYSTEM]**.) • Perform the DTC inspection for the SAS control module using the M-MDS. (See **DTC INSPECTION [STANDARD DEPLOYMENT CONTROL SYSTEM]**.) • Are the same DTCs present?	Yes	Replace the SAS control module. (See **SAS CONTROL MODULE REMOVAL/INSTALLATION [STANDARD DEPLOYMENT CONTROL SYSTEM]**.)
		No	DTC troubleshooting completed.

2014 - Mazda3 - Restraints

DTC B10FD:11/B10FD:13/B10FD:87/B10FD:96 [STANDARD DEPLOYMENT CONTROL SYSTEM]

System malfunction location	• B10FD:11: Driver-side side air bag sensor circuit short to body ground or power supply • B10FD:13: Driver-side side air bag sensor circuit open circuit or resistance high • B10FD:87: Signal reception error from driver-side side air bag sensor • B10FD:96: Driver-side side air bag sensor internal malfunction
Detection condition	**WARNING:** • Detection conditions are for understanding the DTC outline before performing an inspection. Performing an inspection according to only the detection conditions may cause injury due to an operating error, or damage the system. When performing an inspection, always follow the inspection procedure. • Wiring harness between the driver-side side air bag sensor and SAS control module has a malfunction • Driver-side side air bag sensor has a malfunction
Fail-safe function	Not applicable
Possible cause	• Driver-side side air bag sensor connector malfunction • Short circuit to power supply or body ground in the wiring harness between the driver-side side air bag sensor and SAS control module • Open circuit in the wiring harness between the driver-side side air bag sensor and SAS control module • Driver-side side air bag sensor malfunction • SAS control module malfunction

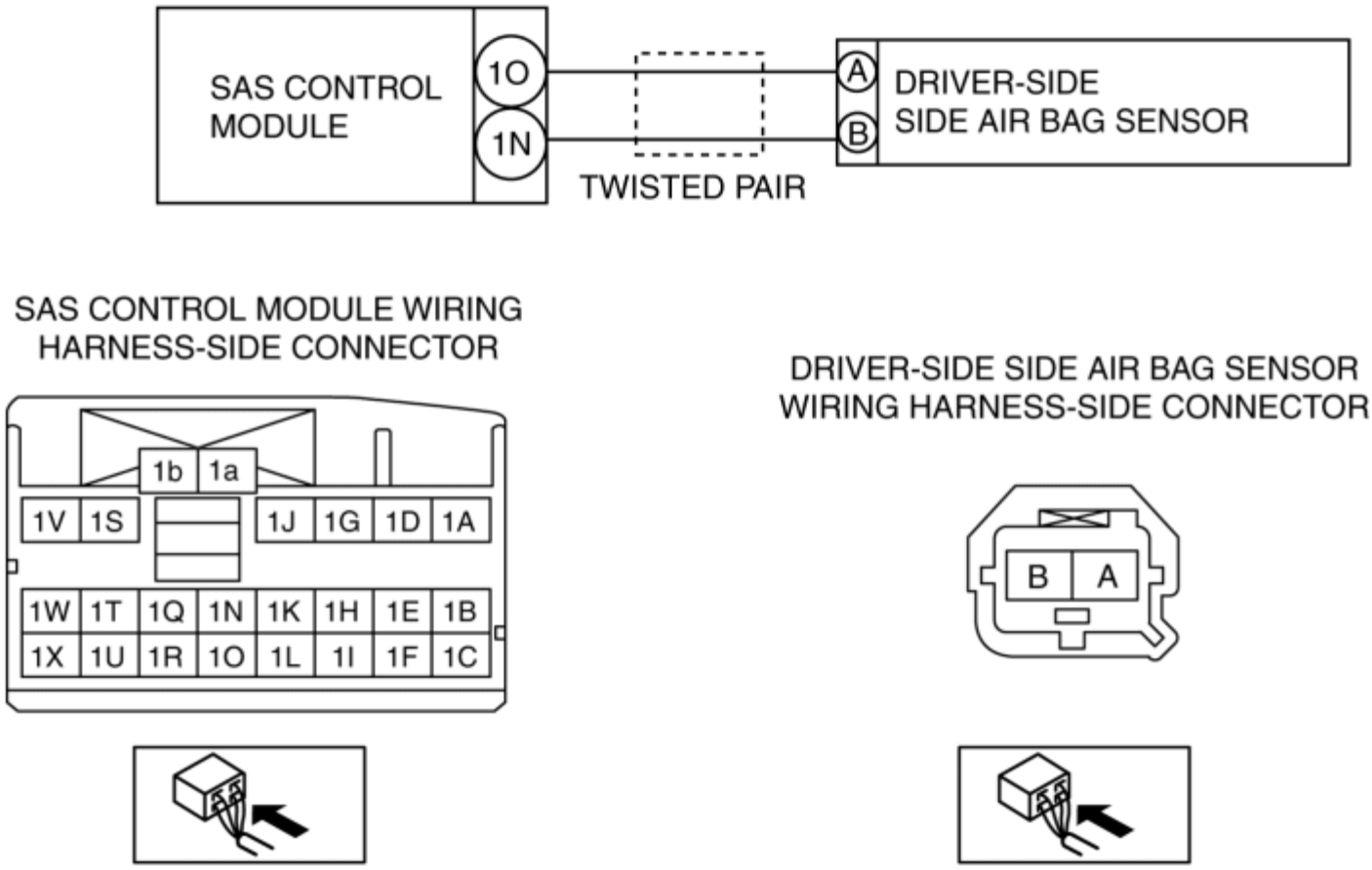

Diagnostic Procedure

Step	Inspection		Action
1	**INSPECT DRIVER-SIDE SIDE AIR BAG SENSOR CONNECTOR** **WARNING:** • Handling the component parts improperly can accidentally operate (deploy) the air bag module, which may seriously injure you. Read the service warnings/cautions and the workshop manual before handling the air bag system components. (See **AIR BAG SYSTEM SERVICE WARNINGS [STANDARD DEPLOYMENT CONTROL SYSTEM]**.) (See **AIR BAG SYSTEM SERVICE CAUTIONS [STANDARD DEPLOYMENT CONTROL SYSTEM]**.)	Yes	Replace the malfunctioning part, then go to Step 5.
		No	Go to the next step.

	Switch the ignition off. • Disconnect the negative battery cable and wait for **1 min or more**. (See **NEGATIVE BATTERY CABLE DISCONNECTION/CONNECTION [SKYACTIV-G 2.0, SKYACTIV-G 2.5]**.) • Remove the driver-side B-pillar lower trim. (See **B-PILLAR LOWER TRIM REMOVAL/INSTALLATION**.) • Disconnect the driver-side side air bag sensor connector. (See **SIDE AIR BAG SENSOR REMOVAL/INSTALLATION [STANDARD DEPLOYMENT CONTROL SYSTEM]**.) • Inspect the driver-side side air bag sensor connector. (Corrosion, damage, and disconnected pins) • Is there any malfunction of the driver-side side air bag sensor connector?		
2	**INSPECT DRIVER-SIDE SIDE AIR BAG SENSOR CIRCUIT FOR SHORT TO GROUND** • Remove the column cover. (See **COLUMN COVER REMOVAL/INSTALLATION**.) • Disconnect the clock spring connector. (See **CLOCK SPRING REMOVAL/INSTALLATION [STANDARD DEPLOYMENT CONTROL SYSTEM]**.) • Remove the glove compartment. (See **GLOVE COMPARTMENT REMOVAL/INSTALLATION**.) • Disconnect the passenger-side air bag module connector. (See **PASSENGER-SIDE AIR BAG MODULE REMOVAL [STANDARD DEPLOYMENT CONTROL SYSTEM]**.) • Disconnect the driver and passenger-side front seat connector. (See **FRONT SEAT REMOVAL/INSTALLATION**.)	Yes	Refer to the wiring diagram and verify whether or not there is a common connector between SAS control module terminal and driver-side side air bag sensor terminal. **If there is a common connector:** • Determine the malfunctioning part by inspecting the common connector and the terminal for corrosion, damage, or pin disconnection, and the common wiring harness for a short to ground. • Replace the malfunctioning part. **If there is no common connector:** • Replace the wiring harness which has a short to ground. Go to Step 5.

	Remove the B-pillar lower trim. (See **B-PILLAR LOWER TRIM REMOVAL/INSTALLATION**.) • Disconnect the driver and passenger-side pre-tensioner seat belt connector. (See **FRONT SEAT BELT REMOVAL/INSTALLATION**.) • Remove the headliner. (See **HEADLINER REMOVAL/INSTALLATION**.) • Disconnect the driver and passenger-side curtain air bag module connector. (See **CURTAIN AIR BAG MODULE REMOVAL/INSTALLATION [STANDARD DEPLOYMENT CONTROL SYSTEM]**.) • Disconnect the all SAS control module connectors. (See **SAS CONTROL MODULE REMOVAL/INSTALLATION [STANDARD DEPLOYMENT CONTROL SYSTEM]**.) • Inspect for continuity between the following terminals (wiring harness-side) and body ground: ▪ SAS control module terminal 1O ▪ SAS control module terminal 1N **NOTE:** • Inspect for continuity while shaking the wiring harness between the SAS control module and driver-side side air bag sensor. • Is there continuity?	No	Go to the next step.
3	**INSPECT DRIVER-SIDE SIDE AIR BAG SENSOR CIRCUIT FOR OPEN CIRCUIT** • Driver-side side air bag sensor and SAS control module connectors are disconnected. • Inspect for continuity between the following terminals (wiring harness-side): ▪ Driver-side side air	Yes	Go to the next step.
		No	Refer to the wiring diagram and verify whether or not there is a common connector between SAS control module terminal and driver-side side air bag sensor terminal. **If there is a common connector:**

	bag sensor terminal A —SAS control module terminal 1O ▪ Driver-side side air bag sensor terminal B —SAS control module terminal 1N **NOTE:** • Inspect for continuity while shaking the wiring harness between the SAS control module and driver-side side air bag sensor. • Is there continuity?		• Determine the malfunctioning part by inspecting the common connector and the terminal for corrosion, damage, or pin disconnection, and the common wiring harness for an open circuit. • Replace the malfunctioning part. **If there is no common connector:** • Replace the wiring harness which has an open circuit. Go to Step 5.
4	**INSPECT DRIVER-SIDE SIDE AIR BAG SENSOR CIRCUIT FOR SHORT TO POWER SUPPLY** • Driver-side side air bag sensor and SAS control module connectors are disconnected. • Connect the negative battery cable. (See **NEGATIVE BATTERY CABLE DISCONNECTION/CONNECTION [SKYACTIV-G 2.0, SKYACTIV-G 2.5]**.) • Switch the ignition ON (engine off or on). • Measure the voltage at the following terminals (wiring harness-side): ▪ SAS control module terminal 1O ▪ SAS control module terminal 1N **NOTE:** • Measure the voltage while shaking the wiring harness between the SAS control module and driver-side side air bag sensor. • Is the voltage **0 V**?	Yes	Replace the driver-side side air bag sensor, then go to the next step. (See **SIDE AIR BAG SENSOR REMOVAL/INSTALLATION [STANDARD DEPLOYMENT CONTROL SYSTEM]**.)
		No	Refer to the wiring diagram and verify whether or not there is a common connector between SAS control module terminal and driver-side side air bag sensor terminal. **If there is a common connector:** • Determine the malfunctioning part by inspecting the common connector and the terminal for corrosion, damage, or pin disconnection, and the common wiring harness for a short to power supply. • Replace the malfunctioning part. **If there is no common connector:** • Replace the wiring harness which has a short

			to power supply. Go to the next step.
5	**PERFORM SAS CONTROL MODULE DTC INSPECTION** • Switch the ignition off. • Disconnect the negative battery cable and wait for **1 min or more**. • Connect the SAS control module connectors. • Reconnect all disconnected connectors. • Connect the negative battery cable. (See **NEGATIVE BATTERY CABLE DISCONNECTION/CONNECTION [SKYACTIV-G 2.0, SKYACTIV-G 2.5]**.) • Switch the ignition ON (engine off or on). • Clear the DTC for the SAS control module using the M-MDS. (See **CLEARING DTC [STANDARD DEPLOYMENT CONTROL SYSTEM]**.) • Perform the DTC inspection for the SAS control module using the M-MDS. (See **DTC INSPECTION [STANDARD DEPLOYMENT CONTROL SYSTEM]**.) • Are the same DTCs present?	Yes	Replace the SAS control module. (See **SAS CONTROL MODULE REMOVAL/INSTALLATION [STANDARD DEPLOYMENT CONTROL SYSTEM]**.)
		No	DTC troubleshooting completed.

2014 - Mazda3 - Restraints

DTC B10FD:55/B10FE:55 [STANDARD DEPLOYMENT CONTROL SYSTEM]

System malfunction location	• B10FD:55: Configuration setting error (driver-side side air bag sensor structural malfunction) • B10FE:55: Configuration setting error (passenger-side side air bag sensor structural malfunction)
Detection condition	**WARNING:** • Detection conditions are for understanding the DTC outline before performing an inspection. Performing an inspection according to only the detection conditions may cause injury due to an operating error, or damage the system. When performing an inspection, always follow the inspection procedure. • SAS control module configuration setting has not been done correctly • Parts which have not been set to SAS control module are assembled
Fail-safe function	Not applicable
Possible cause	• SAS control module configuration setting not implemented • SAS control module configuration setting invalid • Driver or passenger-side side air bag sensor assembly incorrect • SAS control module malfunction
System wiring diagram	Not applicable

Diagnostic Procedure

Step	Inspection		Action
1	**PERFORM SAS CONTROL MODULE CONFIGURATION (AS-BUILT DATA USE)**	Yes	Go to the next step.

	• Perform the SAS control module configuration using the M-MDS. (See **SAS CONTROL MODULE CONFIGURATION (USING AS-BUILT DATA) [STANDARD DEPLOYMENT CONTROL SYSTEM]**.) • Clear the DTC for the SAS control module using the M-MDS. (See **CLEARING DTC [STANDARD DEPLOYMENT CONTROL SYSTEM]**.) • Perform the DTC inspection for the SAS control module using the M-MDS. (See **DTC INSPECTION [STANDARD DEPLOYMENT CONTROL SYSTEM]**.) • Are the same DTCs present?	No	DTC troubleshooting completed.
2	**INSPECT SIDE AIR BAG SENSOR** • Verify that the driver or passenger-side side air bag sensor is correctly installed. • Is the driver or passenger-side side air bag sensor correctly installed?	Yes	Go to the next step.
		No	Correctly Install the driver or passenger-side side air bag sensor. Then go to the next step.
3	**PERFORM SAS CONTROL MODULE DTC INSPECTION** • Clear the DTC for the SAS control module using the M-MDS. (See **CLEARING DTC [STANDARD DEPLOYMENT CONTROL SYSTEM]**.) • Perform the DTC inspection for the SAS control module using the M-MDS. (See **DTC INSPECTION [STANDARD DEPLOYMENT CONTROL SYSTEM]**.) • Are the same DTCs present?	Yes	Replace the SAS control module. (See **SAS CONTROL MODULE REMOVAL/INSTALLATION [STANDARD DEPLOYMENT CONTROL SYSTEM]**.)
		No	DTC troubleshooting completed.

2014 - Mazda3 - Restraints

DTC B10FE:11/B10FE:13/B10FE:87/B10FE:96 [STANDARD DEPLOYMENT CONTROL SYSTEM]

System malfunction location	• B10FE:11: Passenger-side side air bag sensor circuit short to body ground or power supply • B10FE:13: Passenger-side side air bag sensor circuit open circuit or resistance high • B10FE:87: Signal reception error from passenger-side side air bag sensor • B10FE:96: Passenger-side side air bag sensor internal malfunction
Detection condition	**WARNING:** • Detection conditions are for understanding the DTC outline before performing an inspection. Performing an inspection according to only the detection conditions may cause injury due to an operating error, or damage the system. When performing an inspection, always follow the inspection procedure. • Wiring harness between the passenger-side side air bag sensor and SAS control module has a malfunction • Passenger-side side air bag sensor has a malfunction
Fail-safe function	Not applicable
Possible cause	• Passenger-side side air bag sensor connector malfunction • Short circuit to power supply or body ground in the wiring harness between the passenger-side side air bag sensor and SAS control module • Open circuit in the wiring harness between the passenger-side side air bag sensor and SAS control module • Passenger-side side air bag sensor malfunction • SAS control module malfunction

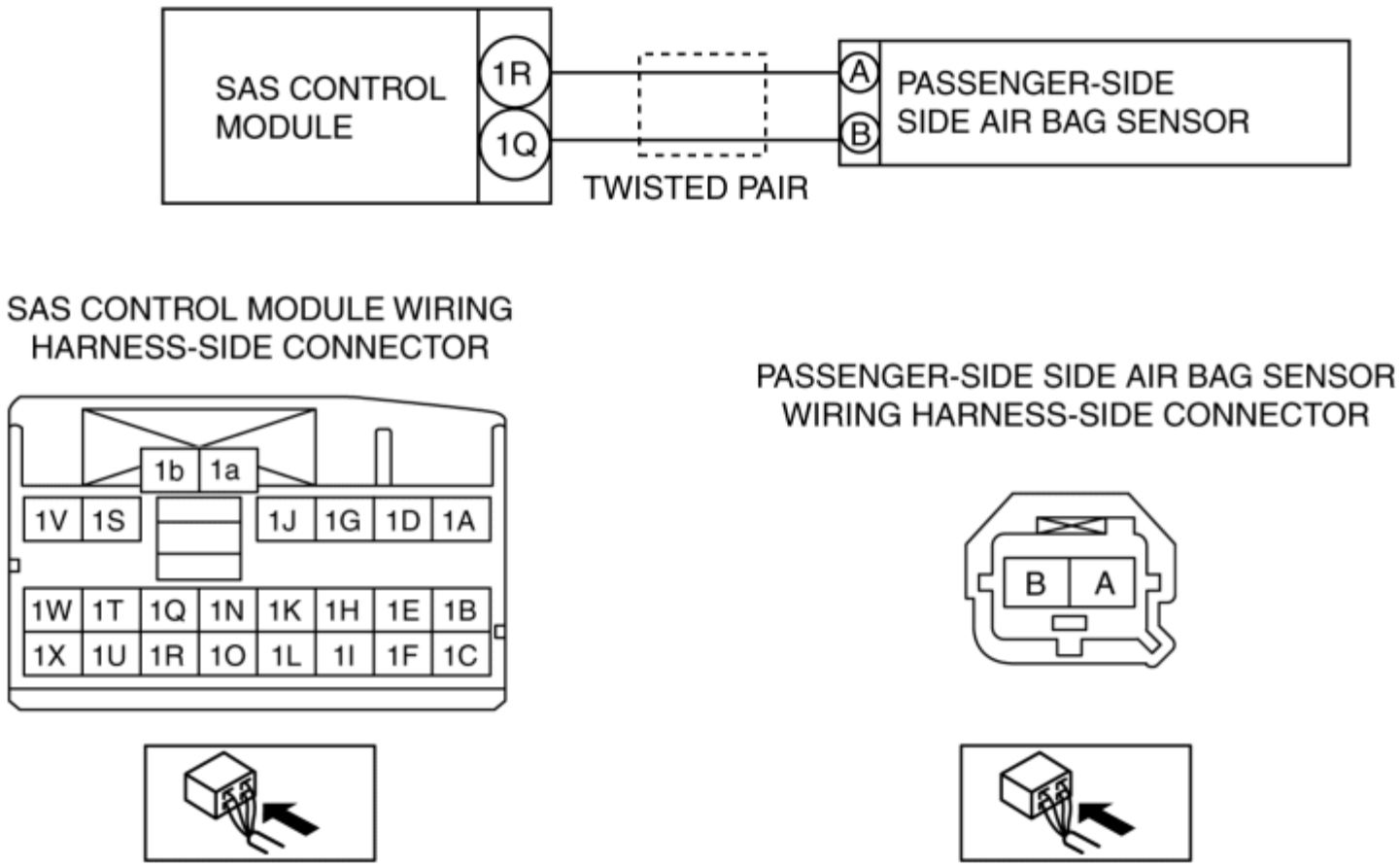

Diagnostic Procedure

Step	Inspection		Action
1	**INSPECT PASSENGER-SIDE SIDE AIR BAG SENSOR CONNECTOR** **WARNING:** • Handling the component parts improperly can accidentally operate (deploy) the air bag module, which may seriously injure you. Read the service warnings/cautions and the workshop manual before handling the air bag system components. (See **AIR BAG SYSTEM SERVICE WARNINGS [STANDARD DEPLOYMENT CONTROL SYSTEM]**.) (See **AIR BAG SYSTEM SERVICE CAUTIONS [STANDARD DEPLOYMENT CONTROL SYSTEM]**.)	Yes	Replace the malfunctioning part, then go to Step 5.
		No	Go to the next step.

	Switch the ignition off. • Disconnect the negative battery cable and wait for **1 min or more**. (See **NEGATIVE BATTERY CABLE DISCONNECTION/CONNECTION [SKYACTIV-G 2.0, SKYACTIV-G 2.5]**.) • Remove the passenger-side B-pillar lower trim. (See **B-PILLAR LOWER TRIM REMOVAL/INSTALLATION**.) • Disconnect the passenger-side side air bag sensor connector. (See **SIDE AIR BAG SENSOR REMOVAL/INSTALLATION [STANDARD DEPLOYMENT CONTROL SYSTEM]**.) • Inspect the passenger-side side air bag sensor connector. (Corrosion, damage, and disconnected pins) • Is there any malfunction of the passenger-side side air bag sensor connector?		
2	**INSPECT PASSENGER-SIDE SIDE AIR BAG SENSOR CIRCUIT FOR SHORT TO GROUND** • Remove the column cover. (See **COLUMN COVER REMOVAL/INSTALLATION**.) • Disconnect the clock spring connector. (See **CLOCK SPRING REMOVAL/INSTALLATION [STANDARD DEPLOYMENT CONTROL SYSTEM]**.) • Remove the glove compartment. (See **GLOVE COMPARTMENT REMOVAL/INSTALLATION**.) • Disconnect the passenger-side air bag module connector. (See **PASSENGER-SIDE AIR BAG MODULE REMOVAL [STANDARD DEPLOYMENT CONTROL SYSTEM]**). • Disconnect the driver and passenger-side front seat connector. (See **FRONT SEAT REMOVAL/INSTALLATION**.)	Yes	Refer to the wiring diagram and verify whether or not there is a common connector between SAS control module terminal and passenger-side side air bag sensor terminal. **If there is a common connector:** • Determine the malfunctioning part by inspecting the common connector and the terminal for corrosion, damage, or pin disconnection, and the common wiring harness for a short to ground. • Replace the malfunctioning part. **If there is no common connector:** • Replace the wiring harness which has a short to ground.

	• Remove the B-pillar lower trim. (See **B-PILLAR LOWER TRIM REMOVAL/INSTALLATION**.) • Disconnect the driver and passenger-side pre-tensioner seat belt connector. (See **FRONT SEAT BELT REMOVAL/INSTALLATION**.) • Remove the headliner. (See **HEADLINER REMOVAL/INSTALLATION**.) • Disconnect the driver and passenger-side curtain air bag module connector. (See **CURTAIN AIR BAG MODULE REMOVAL/INSTALLATION [STANDARD DEPLOYMENT CONTROL SYSTEM]**.) • Disconnect the all SAS control module connectors. (See **SAS CONTROL MODULE REMOVAL/INSTALLATION [STANDARD DEPLOYMENT CONTROL SYSTEM]**.) • Inspect for continuity between the following terminals (wiring harness-side) and body ground: ▪ SAS control module terminal 1R ▪ SAS control module terminal 1Q **NOTE:** • Inspect for continuity while shaking the wiring harness between the SAS control module and passenger-side side air bag sensor. • Is there continuity?		Go to Step 5.
		No	Go to the next step.
3	**INSPECT PASSENGER-SIDE SIDE AIR BAG SENSOR CIRCUIT FOR OPEN CIRCUIT** • Passenger-side side air bag sensor and SAS control module connectors are disconnected. • Inspect for continuity between the following terminals (wiring harness-side):	Yes	Go to the next step.
		No	Refer to the wiring diagram and verify whether or not there is a common connector between SAS control module terminal and passenger-side side air bag sensor terminal. **If there is a common**

	▪ Passenger-side side air bag sensor terminal A—SAS control module terminal 1R ▪ Passenger-side side air bag sensor terminal B—SAS control module terminal 1Q **NOTE:** • Inspect for continuity while shaking the wiring harness between the SAS control module and passenger-side side air bag sensor. • Is there continuity?		**connector:** • Determine the malfunctioning part by inspecting the common connector and the terminal for corrosion, damage, or pin disconnection, and the common wiring harness for an open circuit. • Replace the malfunctioning part. **If there is no common connector:** • Replace the wiring harness which has an open circuit. Go to Step 5.
4	**INSPECT PASSENGER-SIDE SIDE AIR BAG SENSOR CIRCUIT FOR SHORT TO POWER SUPPLY** • Passenger-side side air bag sensor and SAS control module connectors are disconnected. • Connect the negative battery cable. (See **NEGATIVE BATTERY CABLE DISCONNECTION/CONNECTION [SKYACTIV-G 2.0, SKYACTIV-G 2.5]**.) • Switch the ignition ON (engine off or on). • Measure the voltage at the following terminals (wiring harness-side): ▪ SAS control module terminal 1R ▪ SAS control module terminal 1Q **NOTE:** • Measure the voltage while shaking the wiring harness between the SAS control module and passenger-side side air bag sensor. • Is the voltage **0 V**?	Yes	Replace the passenger-side side air bag sensor, then go to the next step. (See **SIDE AIR BAG SENSOR REMOVAL/INSTALLATION [STANDARD DEPLOYMENT CONTROL SYSTEM]**.)
		No	Refer to the wiring diagram and verify whether or not there is a common connector between SAS control module terminal and passenger-side side air bag sensor terminal. **If there is a common connector:** • Determine the malfunctioning part by inspecting the common connector and the terminal for corrosion, damage, or pin disconnection, and the common wiring harness for a short to power supply. • Replace the malfunctioning part. **If there is no common connector:** • Replace the wiring

			harness which has a short to power supply. Go to the next step.
5	**PERFORM SAS CONTROL MODULE DTC INSPECTION** • Switch the ignition off. • Disconnect the negative battery cable and wait for **1 min or more**. • Connect the SAS control module connectors. • Reconnect all disconnected connectors. • Connect the negative battery cable. (See **NEGATIVE BATTERY CABLE DISCONNECTION/CONNECTION [SKYACTIV-G 2.0, SKYACTIV-G 2.5]**.) • Switch the ignition ON (engine off or on). • Clear the DTC for the SAS control module using the M-MDS. (See **CLEARING DTC [STANDARD DEPLOYMENT CONTROL SYSTEM]**.) • Perform the DTC inspection for the SAS control module using the M-MDS. (See **DTC INSPECTION [STANDARD DEPLOYMENT CONTROL SYSTEM]**.) • Are the same DTCs present?	Yes	Replace the SAS control module. (See **SAS CONTROL MODULE REMOVAL/INSTALLATION [STANDARD DEPLOYMENT CONTROL SYSTEM]**.)
		No	DTC troubleshooting completed.

2014 - Mazda3 - Restraints

DTC B1126:11/B1126:12/B1126:13/B1126:19/B1126:1A [STANDARD DEPLOYMENT CONTROL SYSTEM]

System malfunction location	• B1126:11: Driver-side side air bag module circuit short to body ground • B1126:12: Driver-side side air bag module circuit short to power supply • B1126:13: Driver-side side air bag module circuit open circuit or resistance high • B1126:19: Short circuit to driver-side side air bag module and other air bag module circuits • B1126:1A: Driver-side side air bag module circuit resistance low
Detection condition	**WARNING:** • Detection conditions are for understanding the DTC outline before performing an inspection. Performing an inspection according to only the detection conditions may cause injury due to an operating error, or damage the system. When performing an inspection, always follow the inspection procedure. • Resistance **other than 0.81–9.85 ohms** is detected in driver-side side air bag module circuit • Wiring harness between the driver-side side air bag module and SAS control module has a malfunction
Fail-safe function	Not applicable
Possible cause	• Driver-side side air bag module connector malfunction • Short circuit to power supply or body ground in the wiring harness between the driver-side side air bag module and SAS control module • Open circuit in the wiring harness between the driver-side side air bag module and SAS control module • Driver-side side air bag module malfunction • SAS control module malfunction

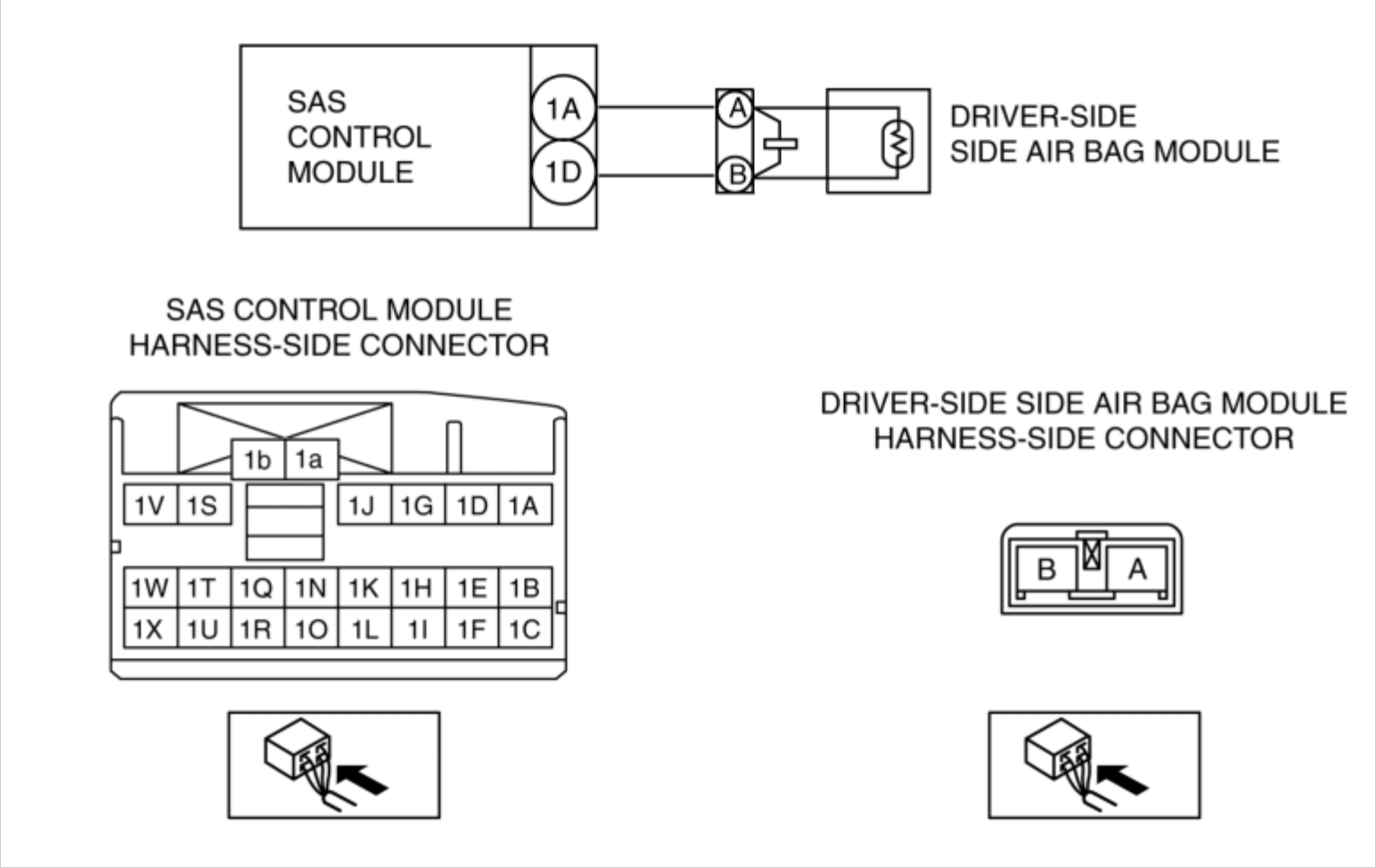

Diagnostic Procedure

Step	Inspection		Action
1	**INSPECT DRIVER-SIDE SIDE AIR BAG MODULE CONNECTOR** **WARNING:** • Handling the component parts improperly can accidentally operate (deploy) the air bag module, which may seriously injure you. Read the service warnings/cautions and the workshop manual before handling the air bag system components. (See **AIR BAG SYSTEM SERVICE WARNINGS [STANDARD DEPLOYMENT CONTROL SYSTEM]**.) (See **AIR BAG SYSTEM SERVICE CAUTIONS [STANDARD DEPLOYMENT CONTROL SYSTEM]**.)	Yes	Replace the malfunctioning part, then go to Step 6.
		No	Go to the next step.

	Switch the ignition off. • Disconnect the negative battery cable and wait for **1 min or more**. (See **NEGATIVE BATTERY CABLE DISCONNECTION/CONNECTION [SKYACTIV-G 2.0, SKYACTIV-G 2.5]**.) • Disconnect the driver-side side air bag module connector installed to the lower side of the seat cushion of the front seat. (See **FRONT SEAT REMOVAL/INSTALLATION**.) • Inspect the driver-side side air bag module connector. (Corrosion, damage, and disconnected pins) • Is there any malfunction of the driver-side side air bag module connector?		
2	**INSPECT DRIVER-SIDE SIDE AIR BAG MODULE CIRCUIT FOR SHORT TO GROUND** • Remove the column cover. (See **COLUMN COVER REMOVAL/INSTALLATION**.) • Disconnect the clock spring connector. (See **CLOCK SPRING REMOVAL/INSTALLATION [STANDARD DEPLOYMENT CONTROL SYSTEM]**.) • Remove the glove compartment. (See **GLOVE COMPARTMENT REMOVAL/INSTALLATION**.) • Disconnect the passenger-side air bag module connector. (See **PASSENGER-SIDE AIR BAG MODULE REMOVAL [STANDARD DEPLOYMENT CONTROL SYSTEM]**.) • Disconnect the passenger-side front seat connector. (See **FRONT SEAT REMOVAL/INSTALLATION**.) • Remove the B-pillar lower trim. (See **B-PILLAR LOWER TRIM REMOVAL/INSTALLATION**.)	Yes	Refer to the wiring diagram and verify whether or not there is a common connector between SAS control module terminal and driver-side side air bag module terminal. **If there is a common connector:** • Determine the malfunctioning part by inspecting the common connector and the terminal for corrosion, damage, or pin disconnection, and the common wiring harness for a short to ground. • Replace the malfunctioning part. **If there is no common connector:** • Replace the wiring harness which has a short to ground. Go to Step 6.
		No	Go to the next step.

	Disconnect the driver and passenger-side pre-tensioner seat belt connectors. (See **FRONT SEAT BELT REMOVAL/INSTALLATION**.) • Remove the headliner. (See **HEADLINER REMOVAL/INSTALLATION**.) • Disconnect the driver and passenger-side curtain air bag module connectors. (See **CURTAIN AIR BAG MODULE REMOVAL/INSTALLATION [STANDARD DEPLOYMENT CONTROL SYSTEM]**.) • Disconnect the all SAS control module connectors. (See **SAS CONTROL MODULE REMOVAL/INSTALLATION [STANDARD DEPLOYMENT CONTROL SYSTEM]**.) • Inspect for continuity between the following terminals (wiring harness-side) and body ground: ▪ SAS control module terminal 1A ▪ SAS control module terminal 1D **NOTE:** • Inspect for continuity while shaking the wiring harness between the SAS control module and the driver-side side air bag module. • Is there continuity?		
3	**INSPECT DRIVER-SIDE SIDE AIR BAG MODULE CIRCUIT FOR OPEN CIRCUIT** • Driver-side side air bag module and SAS control module connectors are disconnected. • Inspect for continuity between the following terminals (wiring harness-side): ▪ Driver-side side air bag module terminal A—SAS control module terminal 1A	Yes	Go to the next step.
		No	Refer to the wiring diagram and verify whether or not there is a common connector between SAS control module terminal and driver-side side air bag module terminal. **If there is a common connector:** • Determine the malfunctioning part by

	▪ Driver-side side air bag module terminal B—SAS control module terminal 1D **NOTE:** • Inspect for continuity while shaking the wiring harness between the SAS control module and driver-side side air bag module. • Is there continuity?		inspecting the common connector and the terminal for corrosion, damage, or pin disconnection, and the common wiring harness for an open circuit. • Replace the malfunctioning part. **If there is no common connector:** • Replace the wiring harness which has an open circuit. Go to Step 6.
4	**INSPECT DRIVER-SIDE SIDE AIR BAG MODULE CIRCUIT FOR SHORT TO POWER SUPPLY** • Driver-side side air bag module and SAS control module connectors are disconnected. • Connect the negative battery cable. (See **NEGATIVE BATTERY CABLE DISCONNECTION/CONNECTION [SKYACTIV-G 2.0, SKYACTIV-G 2.5]**.) • Switch the ignition ON (engine off or on). • Measure the voltage at the following terminals (wiring harness-side): ▪ SAS control module terminal 1A ▪ SAS control module terminal 1D **NOTE:** • Measure the voltage while shaking the wiring harness between the SAS control module and driver-side side air bag module. • Is the voltage **0 V**?	Yes	Go to the next step.
		No	Refer to the wiring diagram and verify whether or not there is a common connector between SAS control module terminal and driver-side side air bag module terminal. **If there is a common connector:** • Determine the malfunctioning part by inspecting the common connector and the terminal for corrosion, damage, or pin disconnection, and the common wiring harness for a short to power supply. • Replace the malfunctioning part. **If there is no common connector:** • Replace the wiring harness which has a short to power supply. Go to Step 6.
5	**INSPECT DRIVER-SIDE SIDE AIR BAG MODULE** • Switch the ignition off. • Disconnect the negative battery cable	Yes	Go to the next step.
		No	Replace the driver-side side air bag

	and wait for **1 min or more**. • Connect the SAS control module connectors. • Except for the driver-side side air bag module connector, reconnect all disconnected connectors. • Connect the **SST (Fuel and thermometer checker)** or apply **2 ohms** resistance to the driver-side side air bag module connector terminals A and B. • Set the **SST (Fuel and thermometer checker)** to **2 ohms**. • Connect the negative battery cable. (See **NEGATIVE BATTERY CABLE DISCONNECTION/CONNECTION [SKYACTIV-G 2.0, SKYACTIV-G 2.5]**.) • Switch the ignition ON (engine off or on). • Clear the DTC for the SAS control module using the M-MDS. (See **CLEARING DTC [STANDARD DEPLOYMENT CONTROL SYSTEM]**.) • Perform the DTC inspection for the SAS control module using the M-MDS. (See **DTC INSPECTION [STANDARD DEPLOYMENT CONTROL SYSTEM]**.) • Are the same DTCs present?		module. (See **SIDE AIR BAG MODULE REMOVAL/INSTALLATION [STANDARD DEPLOYMENT CONTROL SYSTEM]**.) Then go to the next step.
6	**PERFORM SAS CONTROL MODULE DTC INSPECTION** • Switch the ignition off. • Disconnect the negative battery cable and wait for **1 min or more**. • Disconnect the **SST (Fuel and thermometer checker)** or the **2 ohms** resistance. • Connect the driver-side side air bag module connector. • Connect the negative battery cable. (See **NEGATIVE BATTERY CABLE DISCONNECTION/CONNECTION [SKYACTIV-G 2.0, SKYACTIV-G 2.5]**.)	Yes	Replace the SAS control module. (See **SAS CONTROL MODULE REMOVAL/INSTALLATION [STANDARD DEPLOYMENT CONTROL SYSTEM]**.)
		No	DTC troubleshooting completed.

	• Switch the ignition ON (engine off or on). • Clear the DTC for the SAS control module using the M-MDS. (See **CLEARING DTC [STANDARD DEPLOYMENT CONTROL SYSTEM]**.) • Perform the DTC inspection for the SAS control module using the M-MDS. (See **DTC INSPECTION [STANDARD DEPLOYMENT CONTROL SYSTEM]**.) • Are the same DTCs present?		

2014 - Mazda3 - Restraints

DTC B1126:55/B1127:55 [STANDARD DEPLOYMENT CONTROL SYSTEM]

System malfunction location	• B1126:55: Configuration setting error (driver-side side air bag module structural malfunction) • B1127:55: Configuration setting error (passenger-side side air bag module structural malfunction)
Detection condition	**WARNING:** • Detection conditions are for understanding the DTC outline before performing an inspection. Performing an inspection according to only the detection conditions may cause injury due to an operating error, or damage the system. When performing an inspection, always follow the inspection procedure. • SAS control module configuration setting has not been done correctly • Parts which have not been set to SAS control module are assembled
Fail-safe function	Not applicable
Possible cause	• SAS control module configuration setting not implemented • SAS control module configuration setting invalid • Driver or passenger-side side air bag module assembly incorrect • SAS control module malfunction
System wiring diagram	Not applicable

Diagnostic Procedure

Step	Inspection		Action
1	**PERFORM SAS CONTROL MODULE CONFIGURATION (AS-BUILT DATA USE)**	Yes	Go to the next step.

	• Perform the SAS control module configuration using the M-MDS. (See **SAS CONTROL MODULE CONFIGURATION (USING AS-BUILT DATA) [STANDARD DEPLOYMENT CONTROL SYSTEM]**.) • Clear the DTC for the SAS control module using the M-MDS. (See **CLEARING DTC [STANDARD DEPLOYMENT CONTROL SYSTEM]**.) • Perform the DTC inspection for the SAS control module using the M-MDS. (See **DTC INSPECTION [STANDARD DEPLOYMENT CONTROL SYSTEM]**.) • Are the same DTCs present?	No	DTC troubleshooting completed.
2	**INSPECT SIDE AIR BAG MODULE** • Verify that the driver or passenger-side side air bag module is correctly installed. • Is the driver or passenger-side side air bag module correctly installed?	Yes	Go to the next step.
		No	Correctly Install the driver or passenger-side side air bag module. Then go to the next step.
3	**PERFORM SAS CONTROL MODULE DTC INSPECTION** • Clear the DTC for the SAS control module using the M-MDS. (See **CLEARING DTC [STANDARD DEPLOYMENT CONTROL SYSTEM]**.) • Perform the DTC inspection for the SAS control module using the M-MDS. (See **DTC INSPECTION [STANDARD DEPLOYMENT CONTROL SYSTEM]**.) • Are the same DTCs present?	Yes	Replace the SAS control module. (See **SAS CONTROL MODULE REMOVAL/INSTALLATION [STANDARD DEPLOYMENT CONTROL SYSTEM]**.)
		No	DTC troubleshooting completed.

2014 - Mazda3 - Restraints

DTC B1127:11/B1127:12/B1127:13/B1127:19/B1127:1A [STANDARD DEPLOYMENT CONTROL SYSTEM]

System malfunction location	• B1127:11: Passenger-side side air bag module circuit short to body ground • B1127:12: Passenger-side side air bag module circuit short to power supply • B1127:13: Passenger-side side air bag module circuit open circuit or resistance high • B1127:19: Short circuit to passenger-side side air bag module and other air bag module circuits • B1127:1A: Passenger-side side air bag module circuit resistance low
Detection condition	**WARNING:** • Detection conditions are for understanding the DTC outline before performing an inspection. Performing an inspection according to only the detection conditions may cause injury due to an operating error, or damage the system. When performing an inspection, always follow the inspection procedure. • Resistance **other than 0.81–9.85 ohms** detected in passenger-side side air bag module circuit • Wiring harness between the passenger-side side air bag module and SAS control module has a malfunction
Fail-safe function	Not applicable
Possible cause	• Passenger-side side air bag module connector malfunction • Short circuit to power supply or body ground in the wiring harness between the passenger-side side air bag module and SAS control module • Open circuit in the wiring harness between the passenger-side side air bag module and SAS control module • Passenger-side side air bag module malfunction • SAS control module malfunction

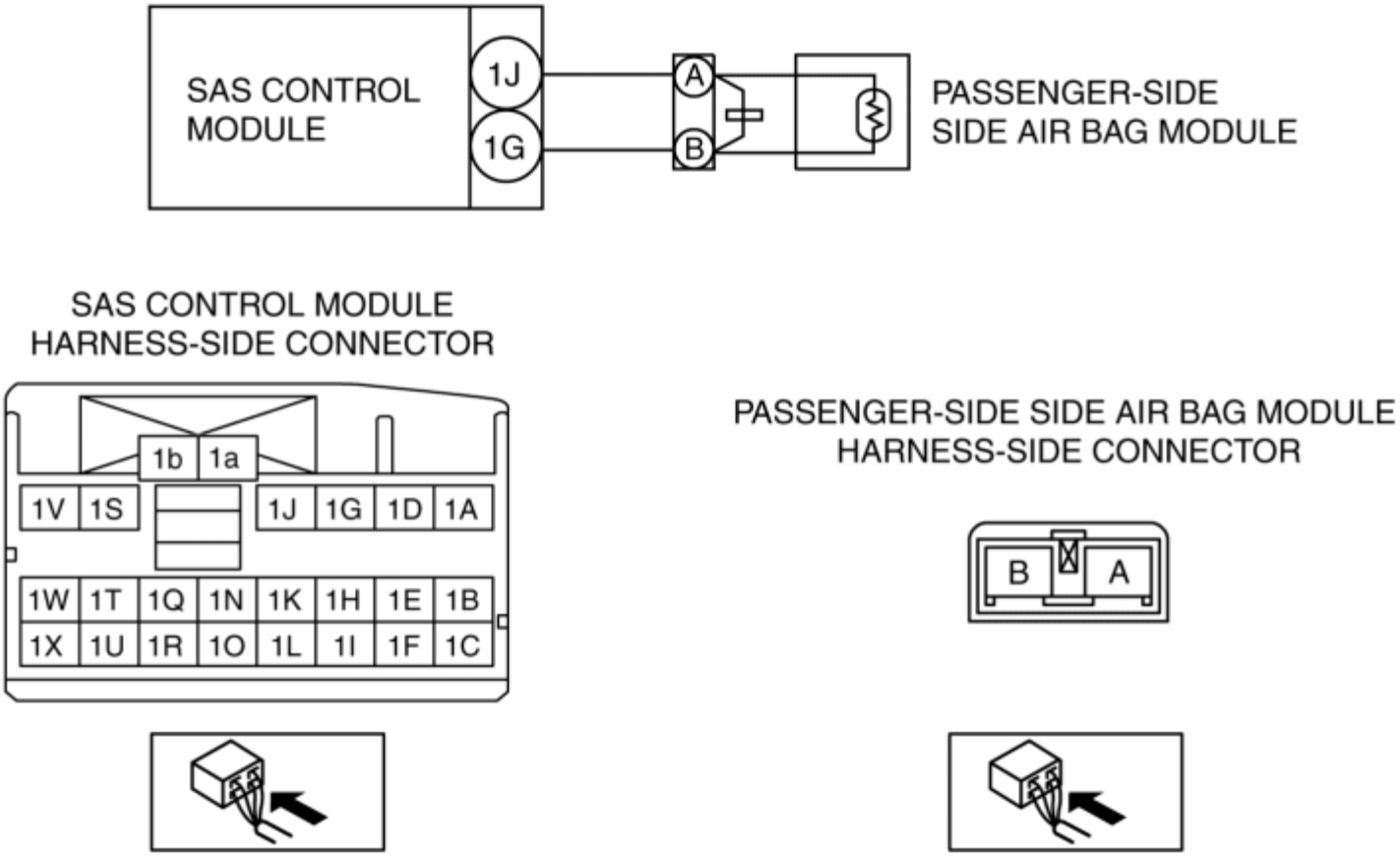

Diagnostic Procedure

Step	Inspection		Action
1	**INSPECT PASSENGER-SIDE SIDE AIR BAG MODULE CONNECTOR** **WARNING:** • Handling the component parts improperly can accidentally operate (deploy) the air bag module, which may seriously injure you. Read the service warnings/cautions and the workshop manual before handling the air bag system components. (See **AIR BAG SYSTEM SERVICE WARNINGS [STANDARD DEPLOYMENT CONTROL SYSTEM]**.) (See **AIR BAG SYSTEM SERVICE CAUTIONS [STANDARD DEPLOYMENT CONTROL SYSTEM]**.)	Yes	Replace the malfunctioning part, then go to Step 6.
		No	Go to the next step.

	Switch the ignition off. • Disconnect the negative battery cable and wait for **1 min or more**. (See **NEGATIVE BATTERY CABLE DISCONNECTION/CONNECTION [SKYACTIV-G 2.0, SKYACTIV-G 2.5]**.) • Disconnect the passenger-side side air bag module connector installed to the lower side of the seat cushion of the front seat. (See **FRONT SEAT REMOVAL/INSTALLATION**.) • Inspect the passenger-side side air bag module connector. (Corrosion, damage, and disconnected pins) • Is there any malfunction of the passenger-side side air bag module connector?		
2	**INSPECT PASSENGER-SIDE SIDE AIR BAG MODULE CIRCUIT FOR SHORT TO GROUND** • Remove the column cover. (See **COLUMN COVER REMOVAL/INSTALLATION**.) • Disconnect the clock spring connector. (See **CLOCK SPRING REMOVAL/INSTALLATION [STANDARD DEPLOYMENT CONTROL SYSTEM]**.) • Remove the glove compartment. (See **GLOVE COMPARTMENT REMOVAL/INSTALLATION**.) • Disconnect the passenger-side air bag module connector. (See **PASSENGER-SIDE AIR BAG MODULE REMOVAL [STANDARD DEPLOYMENT CONTROL SYSTEM]**.) • Disconnect the driver-side front seat connector. (See **FRONT SEAT REMOVAL/INSTALLATION**.) • Remove the B-pillar lower trim. (See **B-PILLAR LOWER TRIM REMOVAL/INSTALLATION**.)	Yes	Refer to the wiring diagram and verify whether or not there is a common connector between SAS control module terminal and passenger-side side air bag module terminal. **If there is a common connector:** • Determine the malfunctioning part by inspecting the common connector and the terminal for corrosion, damage, or pin disconnection, and the common wiring harness for a short to ground. • Replace the malfunctioning part. **If there is no common connector:** • Replace the wiring harness which has a short to ground. Go to Step 6.
		No	Go to the next step.

	• Disconnect the driver and passenger-side pre-tensioner seat belt connectors. (See **FRONT SEAT BELT REMOVAL/INSTALLATION**.) • Remove the headliner. (See **HEADLINER REMOVAL/INSTALLATION**.) • Disconnect the driver and passenger-side curtain air bag module connectors. (See **CURTAIN AIR BAG MODULE REMOVAL/INSTALLATION [STANDARD DEPLOYMENT CONTROL SYSTEM]**.) • Disconnect the all SAS control module connectors. (See **SAS CONTROL MODULE REMOVAL/INSTALLATION [STANDARD DEPLOYMENT CONTROL SYSTEM]**.) • Inspect for continuity between the following terminals (wiring harness-side) and body ground: ▪ SAS control module terminal 1G ▪ SAS control module terminal 1J **NOTE:** • Inspect for continuity while shaking the wiring harness between the SAS control module and the passenger-side side air bag module. • Is there continuity?		
3	**INSPECT PASSENGER-SIDE SIDE AIR BAG MODULE CIRCUIT FOR OPEN CIRCUIT** • Passenger-side side air bag module and SAS control module connectors are disconnected. • Inspect for continuity between the following terminals (wiring harness-side): ▪ Passenger-side side air bag module terminal A—SAS control module	Yes	Go to the next step.
		No	Refer to the wiring diagram and verify whether or not there is a common connector between SAS control module terminal and passenger-side side air bag module terminal. **If there is a common connector:** • Determine the malfunctioning part by

	terminal 1J ▪ Passenger-side side air bag module terminal B—SAS control module terminal 1G **NOTE:** • Inspect for continuity while shaking the wiring harness between the SAS control module and passenger-side side air bag module. • Is there continuity?		inspecting the common connector and the terminal for corrosion, damage, or pin disconnection, and the common wiring harness for an open circuit. • Replace the malfunctioning part. **If there is no common connector:** • Replace the wiring harness which has an open circuit. Go to Step 6.
4	**INSPECT PASSENGER-SIDE SIDE AIR BAG MODULE CIRCUIT FOR SHORT TO POWER SUPPLY** • Passenger-side side air bag module and SAS control module connectors are disconnected. • Connect the negative battery cable. (See **NEGATIVE BATTERY CABLE DISCONNECTION/CONNECTION [SKYACTIV-G 2.0, SKYACTIV-G 2.5]**.) • Switch the ignition ON (engine off or on). • Measure the voltage at the following terminals (wiring harness-side): ▪ SAS control module terminal 1G ▪ SAS control module terminal 1J **NOTE:** • Measure the voltage while shaking the wiring harness between the SAS control module and passenger-side side air bag module. • Is the voltage **0 V**?	Yes	Go to the next step.
		No	Refer to the wiring diagram and verify whether or not there is a common connector between SAS control module terminal and passenger-side side air bag module terminal. **If there is a common connector:** • Determine the malfunctioning part by inspecting the common connector and the terminal for corrosion, damage, or pin disconnection, and the common wiring harness for a short to power supply. • Replace the malfunctioning part. **If there is no common connector:** • Replace the wiring harness which has a short to power supply. Go to Step 6.
5	**INSPECT PASSENGER-SIDE SIDE AIR BAG MODULE** • Switch the ignition off.	Yes	Go to the next step.
		No	Replace the passenger-side side air bag

	• Disconnect the negative battery cable and wait for **1 min or more**. • Connect the SAS control module connectors. • Except for the passenger-side side air bag module connector, reconnect all disconnected connectors. • Connect the **SST (Fuel and thermometer checker)** or apply **2 ohms** resistance to the passenger-side side air bag module connector terminals A and B. • Set the **SST (Fuel and thermometer checker)** to **2 ohms**. • Connect the negative battery cable. (See **NEGATIVE BATTERY CABLE DISCONNECTION/CONNECTION [SKYACTIV-G 2.0, SKYACTIV-G 2.5]**.) • Switch the ignition ON (engine off or on). • Clear the DTC for the SAS control module using the M-MDS. (See **CLEARING DTC [STANDARD DEPLOYMENT CONTROL SYSTEM]**.) • Perform the DTC inspection for the SAS control module using the M-MDS. (See **DTC INSPECTION [STANDARD DEPLOYMENT CONTROL SYSTEM]**.) • Are the same DTCs present?		module. (See **SIDE AIR BAG MODULE REMOVAL/INSTALLATION [STANDARD DEPLOYMENT CONTROL SYSTEM]**.) Then go to the next step.
6	**PERFORM SAS CONTROL MODULE DTC INSPECTION** • Switch the ignition off. • Disconnect the negative battery cable and wait for **1 min or more**. • Disconnect the **SST (Fuel and thermometer checker)** or the **2 ohms** resistance. • Connect the passenger-side side air bag module connector. • Connect the negative battery cable. (See **NEGATIVE BATTERY CABLE DISCONNECTION/CONNECTION**	Yes	Replace the SAS control module. (See **SAS CONTROL MODULE REMOVAL/INSTALLATION [STANDARD DEPLOYMENT CONTROL SYSTEM]**.)
		No	DTC troubleshooting completed.

	[SKYACTIV-G 2.0, SKYACTIV-G 2.5].) • Switch the ignition ON (engine off or on). • Clear the DTC for the SAS control module using the M-MDS. (See **CLEARING DTC [STANDARD DEPLOYMENT CONTROL SYSTEM]**.) • Perform the DTC inspection for the SAS control module using the M-MDS. (See **DTC INSPECTION [STANDARD DEPLOYMENT CONTROL SYSTEM]**.) • Are the same DTCs present?		

2014 - Mazda3 - Restraints

DTC B1128:11/B1128:12/B1128:13/B1128:19/B1128:1A [STANDARD DEPLOYMENT CONTROL SYSTEM]

System malfunction location	• B1128:11: Driver-side curtain air bag module circuit short to body ground • B1128:12: Driver-side curtain air bag module circuit short to power supply • B1128:13: Driver-side curtain air bag module circuit open circuit or resistance high • B1128:19: Short circuit to driver-side curtain air bag module and other air bag module circuits • B1128:1A: Driver-side curtain air bag module circuit resistance low
Detection condition	**WARNING:** • Detection conditions are for understanding the DTC outline before performing an inspection. Performing an inspection according to only the detection conditions may cause injury due to an operating error, or damage the system. When performing an inspection, always follow the inspection procedure. • Resistance **other than 0.81–6.42 ohms** detected in driver-side curtain air bag module circuit • Wiring harness between the driver-side curtain air bag module and SAS control module has a malfunction
Fail-safe function	Not applicable
Possible cause	• Driver-side curtain air bag module connector malfunction • Short circuit to power supply or body ground in the wiring harness between the driver-side curtain air bag module and SAS control module • Open circuit in the wiring harness between the driver-side curtain air bag module and SAS control module • Driver-side curtain air bag module malfunction • SAS control module malfunction

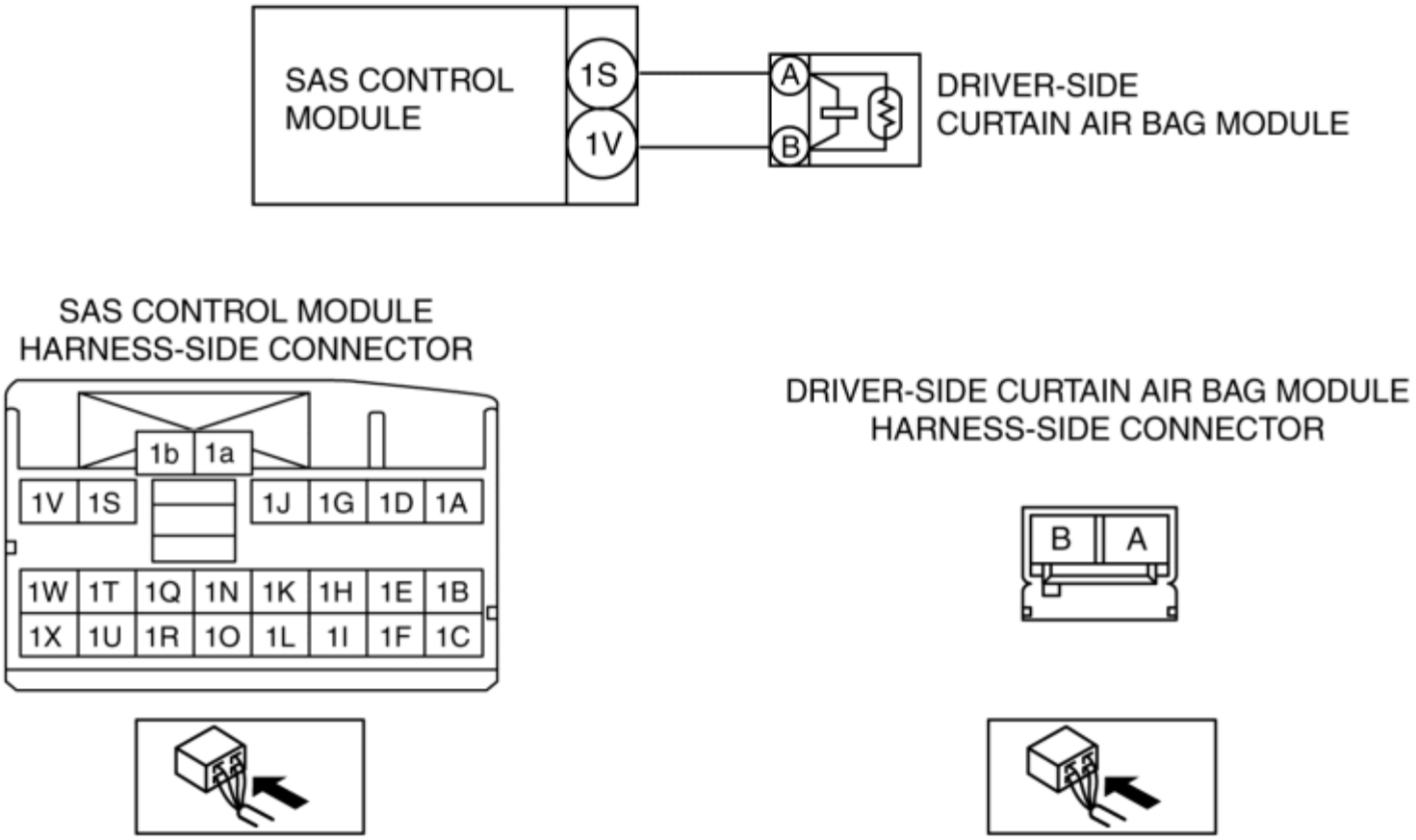

Diagnostic Procedure

Step	Inspection		Action
1	**INSPECT DRIVER-SIDE CURTAIN AIR BAG MODULE CONNECTOR** **WARNING:** • Handling the component parts improperly can accidentally operate (deploy) the air bag module, which may seriously injure you. Read the service warnings/cautions and the workshop manual before handling the air bag system components. (See **AIR BAG SYSTEM SERVICE WARNINGS [STANDARD DEPLOYMENT CONTROL SYSTEM]**.) (See **AIR BAG SYSTEM SERVICE CAUTIONS [STANDARD DEPLOYMENT CONTROL SYSTEM]**.)	Yes	Replace the malfunctioning part, then go to Step 6.
		No	Go to the next step.

	Switch the ignition off. • Disconnect the negative battery cable and wait for **1 min or more**. (See **NEGATIVE BATTERY CABLE DISCONNECTION/CONNECTION [SKYACTIV-G 2.0, SKYACTIV-G 2.5]**.) • Remove the headliner. (See **HEADLINER REMOVAL/INSTALLATION**.) • Disconnect the driver-side curtain air bag module connector. (See **CURTAIN AIR BAG MODULE REMOVAL/INSTALLATION [STANDARD DEPLOYMENT CONTROL SYSTEM]**.) • Inspect the driver-side curtain air bag module connector. (Corrosion, damage, and disconnected pins) • Is there any malfunction of the driver-side curtain air bag module connector?		
2	**INSPECT DRIVER-SIDE CURTAIN AIR BAG MODULE CIRCUIT FOR SHORT TO GROUND** • Remove the column cover. (See **COLUMN COVER REMOVAL/INSTALLATION**.) • Disconnect the clock spring connector. (See **CLOCK SPRING REMOVAL/INSTALLATION [STANDARD DEPLOYMENT CONTROL SYSTEM]**.) • Remove the glove compartment. (See **GLOVE COMPARTMENT REMOVAL/INSTALLATION**.) • Disconnect the passenger-side air bag module connector. (See **PASSENGER-SIDE AIR BAG MODULE REMOVAL [STANDARD DEPLOYMENT CONTROL SYSTEM]**.) • Disconnect the driver and passenger-side front seat connector. (See **FRONT SEAT REMOVAL/INSTALLATION**.) • Disconnect the driver and passenger-	Yes	Refer to the wiring diagram and verify whether or not there is a common connector between SAS control module terminal and driver-side curtain air bag module terminal. **If there is a common connector:** • Determine the malfunctioning part by inspecting the common connector and the terminal for corrosion, damage, or pin disconnection, and the common wiring harness for a short to ground. • Replace the malfunctioning part. **If there is no common connector:** • Replace the wiring harness which has a short to ground. Go to Step 6.

	side pre-tensioner seat belt connectors. (See **FRONT SEAT BELT REMOVAL/INSTALLATION**.) • Disconnect the passenger-side curtain air bag module connector. (See **CURTAIN AIR BAG MODULE REMOVAL/INSTALLATION [STANDARD DEPLOYMENT CONTROL SYSTEM]**.) • Disconnect the all SAS control module connectors. (See **SAS CONTROL MODULE REMOVAL/INSTALLATION [STANDARD DEPLOYMENT CONTROL SYSTEM]**.) • Inspect for continuity between the following terminals (wiring harness-side) and body ground: ▪ SAS control module terminal 1S ▪ SAS control module terminal 1V **NOTE:** • Inspect for continuity while shaking the wiring harness between the SAS control module and the driver-side curtain air bag module. • Is there continuity?	No	Go to the next step.
3	**INSPECT DRIVER-SIDE CURTAIN AIR BAG MODULE CIRCUIT FOR OPEN CIRCUIT** • Driver-side curtain air bag module and SAS control module connectors are disconnected. • Inspect for continuity between the following terminals (wiring harness-side): ▪ Driver-side curtain air bag module terminal A—SAS control module terminal 1S ▪ Driver-side curtain air bag module terminal B—SAS control module terminal 1V **NOTE:**	Yes	Go to the next step.
		No	Refer to the wiring diagram and verify whether or not there is a common connector between SAS control module terminal and driver-side curtain air bag module terminal. **If there is a common connector:** • Determine the malfunctioning part by inspecting the common connector and the terminal for corrosion, damage, or pin disconnection, and the common wiring harness for an open circuit.

	• Inspect for continuity while shaking the wiring harness between the SAS control module and driver-side curtain air bag module. • Is there continuity?		• Replace the malfunctioning part. **If there is no common connector:** • Replace the wiring harness which has an open circuit. Go to Step 6.
4	**INSPECT DRIVER-SIDE CURTAIN AIR BAG MODULE CIRCUIT FOR SHORT TO POWER SUPPLY** • Driver-side curtain air bag module and SAS control module connectors are disconnected. • Connect the negative battery cable. (See **NEGATIVE BATTERY CABLE DISCONNECTION/CONNECTION [SKYACTIV-G 2.0, SKYACTIV-G 2.5]**.) • Switch the ignition ON (engine off or on). • Measure the voltage at the following terminals (wiring harness-side): ▪ SAS control module terminal 1S ▪ SAS control module terminal 1V **NOTE:** • Measure the voltage while shaking the wiring harness between the SAS control module and driver-side curtain air bag module. • Is the voltage **0 V**?	Yes	Go to the next step.
		No	Refer to the wiring diagram and verify whether or not there is a common connector between SAS control module terminal and driver-side curtain air bag module terminal. **If there is a common connector:** • Determine the malfunctioning part by inspecting the common connector and the terminal for corrosion, damage, or pin disconnection, and the common wiring harness for a short to power supply. • Replace the malfunctioning part. **If there is no common connector:** • Replace the wiring harness which has a short to power supply. Go to Step 6.
5	**INSPECT DRIVER-SIDE CURTAIN AIR BAG MODULE** • Switch the ignition off. • Disconnect the negative battery cable and wait for **1 min or more**. • Connect the SAS control module connectors. • Except for the driver-side curtain air	Yes	Go to the next step.
		No	Replace the driver-side curtain air bag module. (See **CURTAIN AIR BAG MODULE REMOVAL/INSTALLATION [STANDARD DEPLOYMENT CONTROL SYSTEM]**.) Then go to the next step.

	bag module connector, reconnect all disconnected connectors. • Connect the **SST (Fuel and thermometer checker)** or apply **2 ohms** resistance to the driver-side curtain air bag module connector terminals A and B. • Set the **SST (Fuel and thermometer checker)** to **2 ohms**. • Connect the negative battery cable. (See **NEGATIVE BATTERY CABLE DISCONNECTION/CONNECTION [SKYACTIV-G 2.0, SKYACTIV-G 2.5]**.) • Switch the ignition ON (engine off or on). • Clear the DTC for the SAS control module using the M-MDS. (See **CLEARING DTC [STANDARD DEPLOYMENT CONTROL SYSTEM]**.) • Perform the DTC inspection for the SAS control module using the M-MDS. (See **DTC INSPECTION [STANDARD DEPLOYMENT CONTROL SYSTEM]**.) • Are the same DTCs present?		
6	**PERFORM SAS CONTROL MODULE DTC INSPECTION** • Switch the ignition off. • Disconnect the negative battery cable and wait for **1 min or more**. • Disconnect the **SST (Fuel and thermometer checker)** or the **2 ohms** resistance. • Connect the driver-side curtain air bag module connector. • Connect the negative battery cable. (See **NEGATIVE BATTERY CABLE DISCONNECTION/CONNECTION [SKYACTIV-G 2.0, SKYACTIV-G 2.5]**.) • Switch the ignition ON (engine off or on). • Clear the DTC for the SAS control module using the M-MDS.	Yes	Replace the SAS control module. (See **SAS CONTROL MODULE REMOVAL/INSTALLATION [STANDARD DEPLOYMENT CONTROL SYSTEM]**.)
		No	DTC troubleshooting completed.

	(See **CLEARING DTC [STANDARD DEPLOYMENT CONTROL SYSTEM]**.) • Perform the DTC inspection for the SAS control module using the M-MDS. (See **DTC INSPECTION [STANDARD DEPLOYMENT CONTROL SYSTEM]**.) • Are the same DTCs present?		

2014 - Mazda3 - Restraints

DTC B1128:55/B1129:55 [STANDARD DEPLOYMENT CONTROL SYSTEM]

System malfunction location	• B1128:55: Configuration setting error (driver-side curtain air bag module structural malfunction) • B1129:55: Configuration setting error (passenger-side curtain air bag module structural malfunction)
Detection condition	**WARNING:** • Detection conditions are for understanding the DTC outline before performing an inspection. Performing an inspection according to only the detection conditions may cause injury due to an operating error, or damage the system. When performing an inspection, always follow the inspection procedure. • SAS control module configuration setting has not been done correctly • Parts which have not been set to SAS control module are assembled
Fail-safe function	Not applicable
Possible cause	• SAS control module configuration setting not implemented • SAS control module configuration setting invalid • Driver or passenger-side curtain air bag module assembly incorrect • SAS control module malfunction
System wiring diagram	Not applicable

Diagnostic Procedure

Step	Inspection		Action
1	**PERFORM SAS CONTROL MODULE CONFIGURATION (AS-BUILT DATA USE)**	Yes	Go to the next step.

	• Perform the SAS control module configuration using the M-MDS. (See **SAS CONTROL MODULE CONFIGURATION (USING AS-BUILT DATA) [STANDARD DEPLOYMENT CONTROL SYSTEM]**.) • Clear the DTC for the SAS control module using the M-MDS. (See **CLEARING DTC [STANDARD DEPLOYMENT CONTROL SYSTEM]**.) • Perform the DTC inspection for the SAS control module using the M-MDS. (See **DTC INSPECTION [STANDARD DEPLOYMENT CONTROL SYSTEM]**.) • Are the same DTCs present?	No	DTC troubleshooting completed.
2	**INSPECT CURTAIN AIR BAG MODULE** • Verify that the driver or passenger-side curtain air bag module is correctly installed. • Is the driver or passenger-side curtain air bag module correctly installed?	Yes	Go to the next step.
		No	Correctly install the driver or passenger-side curtain air bag module. Then go to the next step.
3	**PERFORM SAS CONTROL MODULE DTC INSPECTION** • Clear the DTC for the SAS control module using the M-MDS. (See **CLEARING DTC [STANDARD DEPLOYMENT CONTROL SYSTEM]**.) • Perform the DTC inspection for the SAS control module using the M-MDS. (See **DTC INSPECTION [STANDARD DEPLOYMENT CONTROL SYSTEM]**.) • Are the same DTCs present?	Yes	Replace the SAS control module. (See **SAS CONTROL MODULE REMOVAL/INSTALLATION [STANDARD DEPLOYMENT CONTROL SYSTEM]**.)
		No	DTC troubleshooting completed.

2014 - Mazda3 - Restraints

DTC B1129:11/B1129:12/B1129:13/B1129:19/B1129:1A [STANDARD DEPLOYMENT CONTROL SYSTEM]

System malfunction location	• B1129:11: Passenger-side curtain air bag module circuit short to body ground • B1129:12: Passenger-side curtain air bag module circuit short to power supply • B1129:13: Passenger-side curtain air bag module circuit open circuit or resistance high • B1129:19: Short circuit to passenger-side curtain air bag module and other air bag module circuits • B1129:1A: Passenger-side curtain air bag module circuit resistance low
Detection condition	**WARNING:** • Detection conditions are for understanding the DTC outline before performing an inspection. Performing an inspection according to only the detection conditions may cause injury due to an operating error, or damage the system. When performing an inspection, always follow the inspection procedure. • Resistance **other than 0.81–6.42 ohms** detected in passenger-side curtain air bag module circuit • Wiring harness between the passenger-side curtain air bag module and SAS control module has a malfunction
Fail-safe function	Not applicable
Possible cause	• Passenger-side curtain air bag module connector malfunction • Short circuit to power supply or body ground in the wiring harness between the passenger-side curtain air bag module and SAS control module • Open circuit in the wiring harness between the passenger-side curtain air bag module and SAS control module • Passenger-side curtain air bag module malfunction • SAS control module malfunction

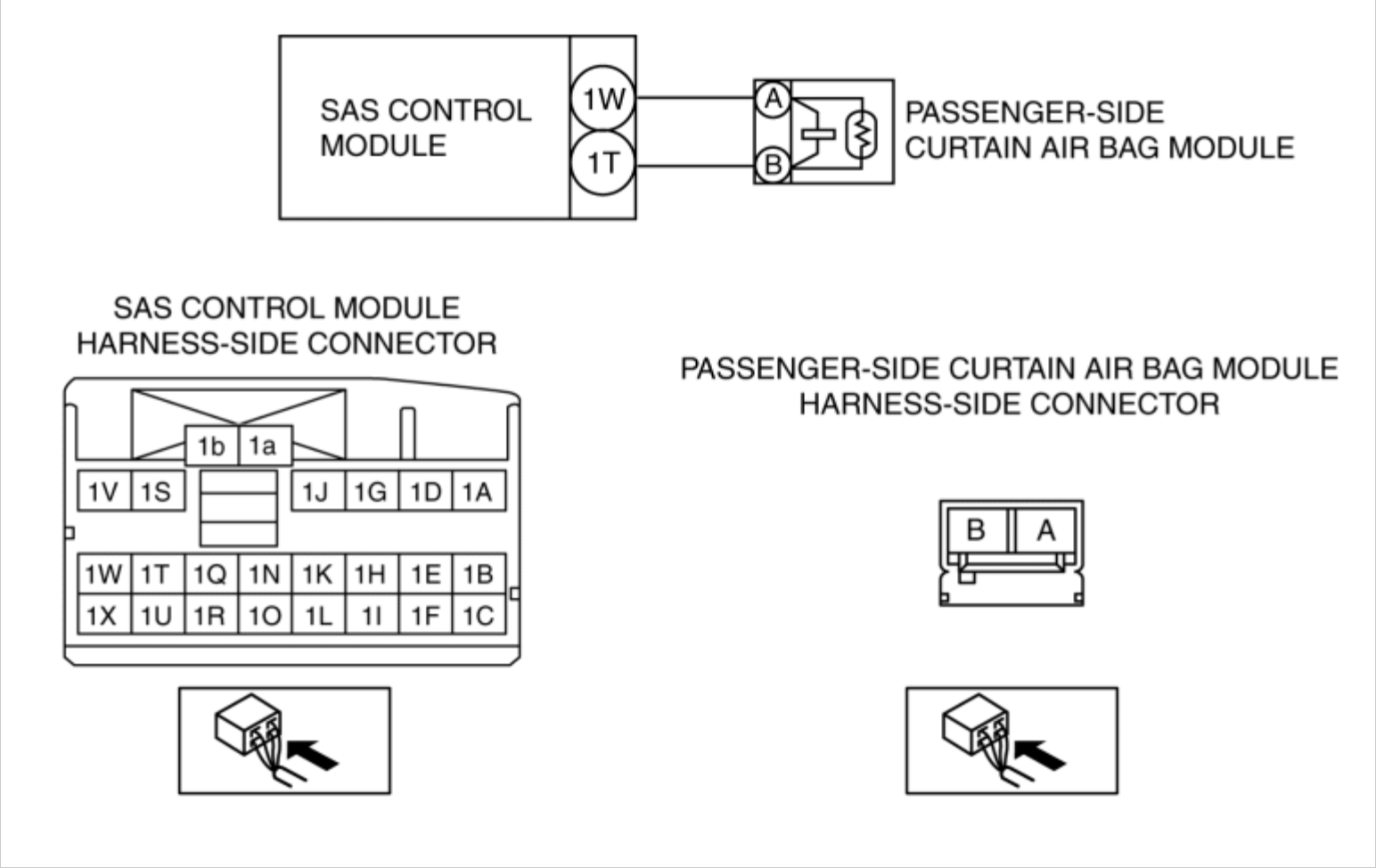

Diagnostic Procedure

Step	Inspection		Action
1	**INSPECT PASSENGER-SIDE CURTAIN AIR BAG MODULE CONNECTOR** **WARNING:** • Handling the component parts improperly can accidentally operate (deploy) the air bag module, which may seriously injure you. Read the service warnings/cautions and the workshop manual before handling the air bag system components. (See **AIR BAG SYSTEM SERVICE WARNINGS [STANDARD DEPLOYMENT CONTROL SYSTEM]**.) (See **AIR BAG SYSTEM SERVICE CAUTIONS [STANDARD DEPLOYMENT CONTROL SYSTEM]**.)	Yes	Replace the malfunctioning part, then go to Step 6.
		No	Go to the next step.

	Switch the ignition off. • Disconnect the negative battery cable and wait for **1 min or more**. (See **NEGATIVE BATTERY CABLE DISCONNECTION/CONNECTION [SKYACTIV-G 2.0, SKYACTIV-G 2.5]**.) • Remove the headliner. (See **HEADLINER REMOVAL/INSTALLATION**.) • Disconnect the passenger-side curtain air bag module connector. (See **CURTAIN AIR BAG MODULE REMOVAL/INSTALLATION [STANDARD DEPLOYMENT CONTROL SYSTEM]**.) • Inspect the passenger-side curtain air bag module connector. (Corrosion, damage, and disconnected pins) • Is there any malfunction of the passenger-side curtain air bag module connector?		
2	**INSPECT PASSENGER-SIDE CURTAIN AIR BAG MODULE CIRCUIT FOR SHORT TO GROUND** • Remove the column cover. (See **COLUMN COVER REMOVAL/INSTALLATION**.) • Disconnect the clock spring connector. (See **CLOCK SPRING REMOVAL/INSTALLATION [STANDARD DEPLOYMENT CONTROL SYSTEM]**.) • Remove the glove compartment. (See **GLOVE COMPARTMENT REMOVAL/INSTALLATION**.) • Disconnect the passenger-side air bag module connector. (See **PASSENGER-SIDE AIR BAG MODULE REMOVAL [STANDARD DEPLOYMENT CONTROL SYSTEM]**.) • Disconnect the driver and passenger-side front seat connector. (See **FRONT SEAT REMOVAL/INSTALLATION**.)	Yes	Refer to the wiring diagram and verify whether or not there is a common connector between SAS control module terminal and passenger-side curtain air bag module terminal. **If there is a common connector:** • Determine the malfunctioning part by inspecting the common connector and the terminal for corrosion, damage, or pin disconnection, and the common wiring harness for a short to ground. • Replace the malfunctioning part. **If there is no common connector:** • Replace the wiring harness which has a short to ground. Go to Step 6.

	Disconnect the driver and passenger-side pre-tensioner seat belt connectors. (See **FRONT SEAT BELT REMOVAL/INSTALLATION**.) • Disconnect the driver-side curtain air bag module connector. (See **CURTAIN AIR BAG MODULE REMOVAL/INSTALLATION [STANDARD DEPLOYMENT CONTROL SYSTEM]**.) • Disconnect the all SAS control module connectors. (See **SAS CONTROL MODULE REMOVAL/INSTALLATION [STANDARD DEPLOYMENT CONTROL SYSTEM]**.) • Inspect for continuity between the following terminals (wiring harness-side) and body ground: ▪ SAS control module terminal 1W ▪ SAS control module terminal 1T **NOTE:** • Inspect for continuity while shaking the wiring harness between the SAS control module and the passenger-side curtain air bag module. • Is there continuity?	No	Go to the next step.
3	**INSPECT PASSENGER-SIDE CURTAIN AIR BAG MODULE CIRCUIT FOR OPEN CIRCUIT** • Passenger-side curtain air bag module and SAS control module connectors are disconnected. • Inspect for continuity between the following terminals (wiring harness-side): ▪ Passenger-side curtain air bag module terminal A—SAS control module terminal 1W ▪ Passenger-side curtain air bag module terminal B—	Yes	Go to the next step.
		No	Refer to the wiring diagram and verify whether or not there is a common connector between SAS control module terminal and passenger-side curtain air bag module terminal. **If there is a common connector:** • Determine the malfunctioning part by inspecting the common connector and the terminal for corrosion, damage, or pin disconnection, and the common wiring harness

	SAS control module terminal 1T **NOTE:** • Inspect for continuity while shaking the wiring harness between the SAS control module and passenger-side curtain air bag module. • Is there continuity?		for an open circuit. • Replace the malfunctioning part. **If there is no common connector:** • Replace the wiring harness which has an open circuit. Go to Step 6.
4	**INSPECT PASSENGER-SIDE CURTAIN AIR BAG MODULE CIRCUIT FOR SHORT TO POWER SUPPLY** • Passenger-side curtain air bag module and SAS control module connectors are disconnected. • Connect the negative battery cable. (See **NEGATIVE BATTERY CABLE DISCONNECTION/CONNECTION [SKYACTIV-G 2.0, SKYACTIV-G 2.5]**.) • Switch the ignition ON (engine off or on). • Measure the voltage at the following terminals (wiring harness-side): ▪ SAS control module terminal 1W ▪ SAS control module terminal 1T **NOTE:** • Measure the voltage while shaking the wiring harness between the SAS control module and passenger-side curtain air bag module. • Is the voltage **0 V**?	Yes	Go to the next step.
		No	Refer to the wiring diagram and verify whether or not there is a common connector between SAS control module terminal and passenger-side curtain air bag module terminal. **If there is a common connector:** • Determine the malfunctioning part by inspecting the common connector and the terminal for corrosion, damage, or pin disconnection, and the common wiring harness for a short to power supply. • Replace the malfunctioning part. **If there is no common connector:** • Replace the wiring harness which has a short to power supply. Go to the next step.
5	**INSPECT PASSENGER-SIDE CURTAIN AIR BAG MODULE** • Switch the ignition off. • Disconnect the negative battery cable and wait for **1 min or more**. • Connect the SAS control module connectors.	Yes	Go to the next step.
		No	Replace the passenger-side curtain air bag module. (See **CURTAIN AIR BAG MODULE REMOVAL/INSTALLATION [STANDARD DEPLOYMENT CONTROL SYSTEM]**.)

	• Except for the passenger-side curtain air bag module connector, reconnect all disconnected connectors. • Connect the **SST (Fuel and thermometer checker)** or apply **2 ohms** resistance to the passenger-side curtain air bag module connector terminals A and B. • Set the **SST (Fuel and thermometer checker)** to **2 ohms**. • Connect the negative battery cable. (See **NEGATIVE BATTERY CABLE DISCONNECTION/CONNECTION [SKYACTIV-G 2.0, SKYACTIV-G 2.5]**.) • Switch the ignition ON (engine off or on). • Clear the DTC for the SAS control module using the M-MDS. (See **CLEARING DTC [STANDARD DEPLOYMENT CONTROL SYSTEM]**.) • Perform the DTC inspection for the SAS control module using the M-MDS. (See **DTC INSPECTION [STANDARD DEPLOYMENT CONTROL SYSTEM]**.) • Are the same DTCs present?		Then go to the next step.
6	**PERFORM SAS CONTROL MODULE DTC INSPECTION** • Switch the ignition off. • Disconnect the negative battery cable and wait for **1 min or more**. • Disconnect the **SST (Fuel and thermometer checker)** or the **2 ohms** resistance. • Connect the passenger-side curtain air bag module connector. • Connect the negative battery cable. (See **NEGATIVE BATTERY CABLE DISCONNECTION/CONNECTION [SKYACTIV-G 2.0, SKYACTIV-G 2.5]**.) • Switch the ignition ON (engine off or on). • Clear the DTC for the SAS control	Yes	Replace the SAS control module. (See **SAS CONTROL MODULE REMOVAL/INSTALLATION [STANDARD DEPLOYMENT CONTROL SYSTEM]**.)
		No	DTC troubleshooting completed.

	module using the M-MDS. (See **CLEARING DTC [STANDARD DEPLOYMENT CONTROL SYSTEM]**.) • Perform the DTC inspection for the SAS control module using the M-MDS. (See **DTC INSPECTION [STANDARD DEPLOYMENT CONTROL SYSTEM]**.) • Are the same DTCs present?		

2014 - Mazda3 - Restraints

DTC B1193:00 [STANDARD DEPLOYMENT CONTROL SYSTEM]

System malfunction location	• SAS control module operation (deployment)
Detection condition	**WARNING:** • Detection conditions are for understanding the DTC outline before performing an inspection. Performing an inspection according to only the detection conditions may cause injury due to an operating error, or damage the system. When performing an inspection, always follow the inspection procedure. • SAS control module operates (deploys) (air bag module or pre-tensioner seat belt)
Fail-safe function	Not applicable
Possible cause	• SAS control module operation (deployment) • SAS control module malfunction
System wiring diagram	Not applicable

Diagnostic Procedure

ACTION
• Replace the SAS control module. (See **SAS CONTROL MODULE REMOVAL/INSTALLATION [STANDARD DEPLOYMENT CONTROL SYSTEM]**.)

DTC B1193:00 [STANDARD DEPLOYMENT CONTROL SYSTEM]

2014 - Mazda3 - Restraints

DTC B1206:00/U2107:00 [STANDARD DEPLOYMENT CONTROL SYSTEM]

System malfunction location	• B1206:00: SAS control module operation (deployment) (fuel cut signal output) • U2107:00: SAS control module operation (deployment) signal output
Detection condition	**WARNING:** • Detection conditions are for understanding the DTC outline before performing an inspection. Performing an inspection according to only the detection conditions may cause injury due to an operating error, or damage the system. When performing an inspection, always follow the inspection procedure. • SAS control module operates (deploys) (air bag module or pre-tensioner seat belt)
Fail-safe function	Not applicable
Possible cause	• SAS control module operation (deployment) • SAS control module malfunction
System wiring diagram	Not applicable

Diagnostic Procedure

ACTION
• Replace the SAS control module. (See **SAS CONTROL MODULE REMOVAL/INSTALLATION [STANDARD DEPLOYMENT CONTROL SYSTEM]**.)

2014 - Mazda3 - Restraints

DTC B1211:11/B1211:12/B1211:13/B1211:19/B1211:1A [STANDARD DEPLOYMENT CONTROL SYSTEM]

System malfunction location	• B1211:11: Driver-side pre-tensioner seat belt circuit short to body ground • B1211:12: Driver-side pre-tensioner seat belt circuit short to power supply • B1211:13: Driver-side pre-tensioner seat belt circuit open circuit or resistance high • B1211:19: Short circuit to driver-side pre-tensioner seat belt and other air bag module circuits • B1211:1A: Driver-side pre-tensioner seat belt circuit resistance low
Detection condition	**WARNING:** • Detection conditions are for understanding the DTC outline before performing an inspection. Performing an inspection according to only the detection conditions may cause injury due to an operating error, or damage the system. When performing an inspection, always follow the inspection procedure. • Resistance other than **0.81—6.42 ohms** detected in driver-side pre-tensioner seat belt circuit • Wiring harness between the driver-side pre-tensioner seat belt and SAS control module has a malfunction
Fail-safe function	Not applicable
Possible cause	• Driver-side pre-tensioner seat belt connector malfunction • Short circuit to power supply or body ground in the wiring harness between the driver-side pre-tensioner seat belt and SAS control module • Open circuit in the wiring harness between the driver-side pre-tensioner seat belt and SAS control module • Driver-side pre-tensioner seat belt malfunction • SAS control module malfunction

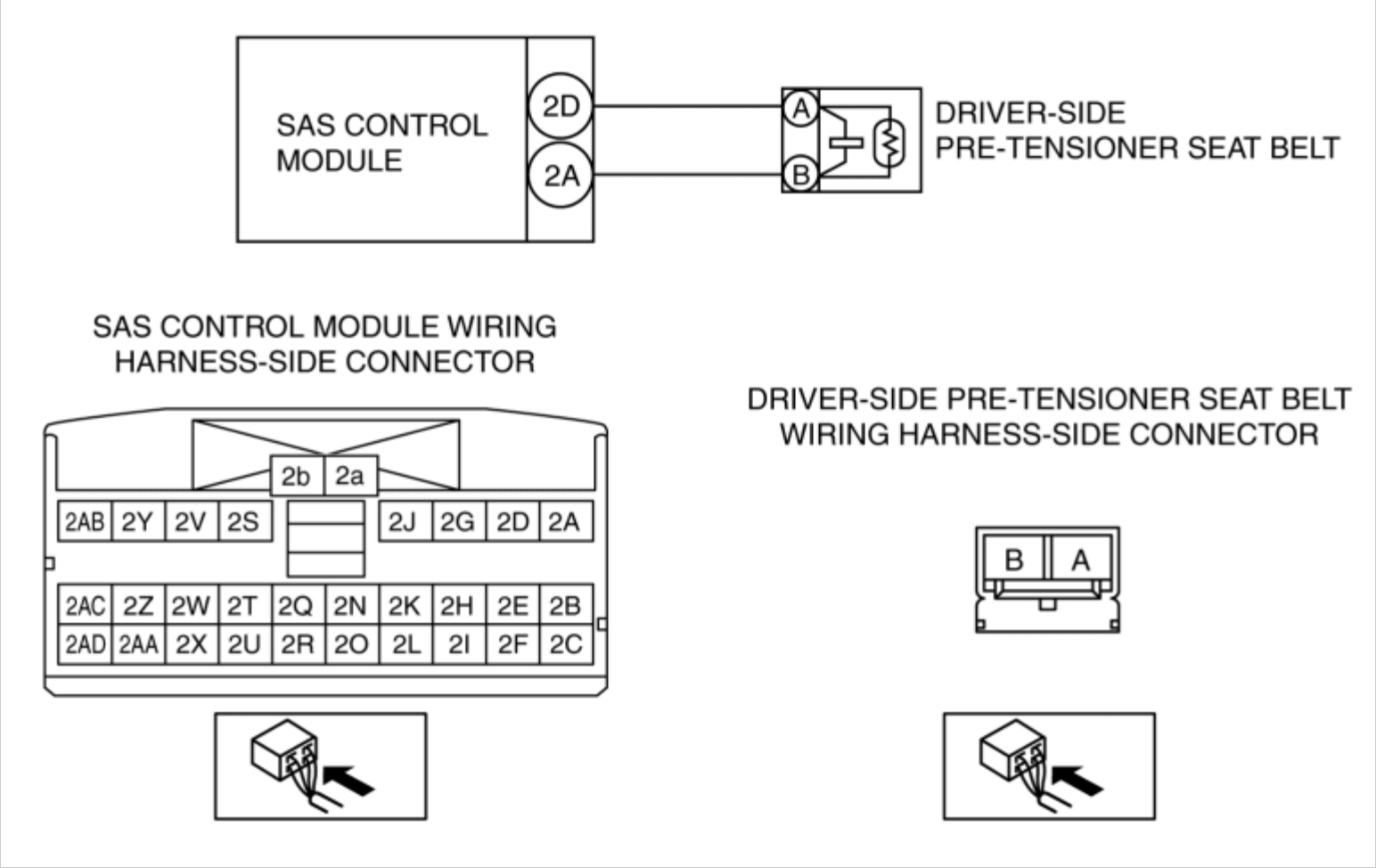

Diagnostic Procedure

Step	Inspection		Action
1	**INSPECT DRIVER-SIDE PRE-TENSIONER SEAT BELT CONNECTOR** **WARNING:** • Handling the component parts improperly can accidentally operate (deploy) the air bag module, which may seriously injure you. Read the service warnings/cautions and the workshop manual before handling the air bag system components. (See **AIR BAG SYSTEM SERVICE WARNINGS [STANDARD DEPLOYMENT CONTROL SYSTEM]**.) (See **AIR BAG SYSTEM SERVICE CAUTIONS [STANDARD DEPLOYMENT CONTROL SYSTEM]**.)	Yes	Replace the malfunctioning part, then go to Step 6.
		No	Go to the next step.

	Switch the ignition off. • Disconnect the negative battery cable and wait for **1 min or more**. (See **NEGATIVE BATTERY CABLE DISCONNECTION/CONNECTION [SKYACTIV-G 2.0, SKYACTIV-G 2.5]**.) • Remove the driver-side B-pillar lower trim. (See **B-PILLAR LOWER TRIM REMOVAL/INSTALLATION**.) • Disconnect the driver-side pre-tensioner seat belt connector. (See **FRONT SEAT BELT REMOVAL/INSTALLATION**.) • Inspect the driver-side pre-tensioner seat belt connector. (Corrosion, damage, and disconnected pins) • Is there any malfunction of the driver-side pre-tensioner seat belt connector?		
2	**INSPECT DRIVER-SIDE PRE-TENSIONER SEAT BELT CIRCUIT FOR SHORT TO GROUND** • Remove the column cover. (See **COLUMN COVER REMOVAL/INSTALLATION**.) • Disconnect the clock spring connector. (See **CLOCK SPRING REMOVAL/INSTALLATION [STANDARD DEPLOYMENT CONTROL SYSTEM]**.) • Remove the glove compartment. (See **GLOVE COMPARTMENT REMOVAL/INSTALLATION**.) • Disconnect the passenger-side air bag module connector. (See **PASSENGER-SIDE AIR BAG MODULE REMOVAL [STANDARD DEPLOYMENT CONTROL SYSTEM]**.) • Disconnect the driver and passenger-side front seat connector. (See **FRONT SEAT REMOVAL/INSTALLATION**.) • Remove the passenger-side B-pillar lower trim.	Yes	Refer to the wiring diagram and verify whether or not there is a common connector between SAS control module terminal and driver-side pre-tensioner seat belt terminal. **If there is a common connector:** • Determine the malfunctioning part by inspecting the common connector and the terminal for corrosion, damage, or pin disconnection, and the common wiring harness for a short to ground. • Replace the malfunctioning part. **If there is no common connector:** • Replace the wiring harness which has a short to ground. Go to Step 6.
		No	Go to the next step.

	(See **B-PILLAR LOWER TRIM REMOVAL/INSTALLATION**.) • Disconnect the passenger-side pre-tensioner seat belt connector. (See **FRONT SEAT BELT REMOVAL/INSTALLATION**.) • Remove the headliner. (See **HEADLINER REMOVAL/INSTALLATION**.) • Disconnect the driver and passenger-side curtain air bag module connector. (See **CURTAIN AIR BAG MODULE REMOVAL/INSTALLATION [STANDARD DEPLOYMENT CONTROL SYSTEM]**.) • Disconnect the all SAS control module connectors. (See **SAS CONTROL MODULE REMOVAL/INSTALLATION [STANDARD DEPLOYMENT CONTROL SYSTEM]**.) • Inspect for continuity between the following terminals (wiring harness-side) and body ground: ▪ SAS control module terminal 2D ▪ SAS control module terminal 2A **NOTE:** • Inspect for continuity while shaking the wiring harness between the SAS control module and driver-side pre-tensioner seat belt. • Is there continuity?		
3	**INSPECT DRIVER-SIDE PRE-TENSIONER SEAT BELT CIRCUIT FOR OPEN CIRCUIT** • Driver-side pre-tensioner seat belt and SAS control module connectors are disconnected. • Inspect for continuity between the following terminals (wiring harness-side): ▪ Driver-side pre-tensioner seat belt terminal A—SAS	Yes	Go to the next step.
		No	Refer to the wiring diagram and verify whether or not there is a common connector between SAS control module terminal and driver-side pre-tensioner seat belt terminal. **If there is a common connector:** • Determine the

	control module terminal 2D ▪ Driver-side pre-tensioner seat belt terminal B—SAS control module terminal 2A **NOTE:** • Inspect for continuity while shaking the wiring harness between the SAS control module and driver-side pre-tensioner seat belt. • Is there continuity?		malfunctioning part by inspecting the common connector and the terminal for corrosion, damage, or pin disconnection, and the common wiring harness for an open circuit. • Replace the malfunctioning part. **If there is no common connector:** • Replace the wiring harness which has an open circuit. Go to Step 6.
4	**INSPECT DRIVER-SIDE PRE-TENSIONER SEAT BELT CIRCUIT FOR SHORT TO POWER SUPPLY** • Driver-side pre-tensioner seat belt and SAS control module connectors are disconnected. • Connect the negative battery cable. (See **NEGATIVE BATTERY CABLE DISCONNECTION/CONNECTION [SKYACTIV-G 2.0, SKYACTIV-G 2.5]**.) • Switch the ignition ON (engine off or on). • Measure the voltage at the following terminals (wiring harness-side): ▪ SAS control module terminal 2D ▪ SAS control module terminal 2A **NOTE:** • Measure the voltage while shaking the wiring harness between the SAS control module and driver-side pre-tensioner seat belt. • Is the voltage **0 V**?	Yes	Go to the next step.
		No	Refer to the wiring diagram and verify whether or not there is a common connector between SAS control module terminal and driver-side pre-tensioner seat belt terminal. **If there is a common connector:** • Determine the malfunctioning part by inspecting the common connector and the terminal for corrosion, damage, or pin disconnection, and the common wiring harness for a short to power supply. • Replace the malfunctioning part. **If there is no common connector:** • Replace the wiring harness which has a short to power supply. Go to Step 6.
5	**INSPECT DRIVER-SIDE PRE-TENSIONER SEAT BELT**	Yes	Go to the next step.

	Switch the ignition off. • Disconnect the negative battery cable and wait for **1 min or more**. • Connect the SAS control module connectors. • Except for the driver-side pre-tensioner seat belt connector, reconnect all disconnected connectors. • Connect the **SST (Fuel and thermometer checker)** or apply **2 ohms** resistance to the driver-side pre-tensioner seat belt connector terminals A–B. • Set the **SST (Fuel and thermometer checker)** to **2 ohms**. • Connect the negative battery cable. (See **NEGATIVE BATTERY CABLE DISCONNECTION/CONNECTION [SKYACTIV-G 2.0, SKYACTIV-G 2.5]**.) • Switch the ignition ON (engine off or on). • Clear the DTC for the SAS control module using the M-MDS. (See **CLEARING DTC [STANDARD DEPLOYMENT CONTROL SYSTEM]**.) • Perform the DTC inspection for the SAS control module using the M-MDS. (See **DTC INSPECTION [STANDARD DEPLOYMENT CONTROL SYSTEM]**.) • Are the same DTCs present?	No	Replace the driver-side pre-tensioner seat belt. (See **FRONT SEAT BELT REMOVAL/INSTALLATION**.) Then go to the next step.
6	**PERFORM SAS CONTROL MODULE DTC INSPECTION** • Switch the ignition off. • Disconnect the negative battery cable and wait for **1 min or more**. • Disconnect the **SST (Fuel and thermometer checker)** or the **2 ohms** resistance. • Connect the driver-side pre-tensioner seat belt connector. • Connect the negative battery cable.	Yes	Replace the SAS control module. (See **SAS CONTROL MODULE REMOVAL/INSTALLATION [STANDARD DEPLOYMENT CONTROL SYSTEM]**.)
		No	DTC troubleshooting completed.

	(See **NEGATIVE BATTERY CABLE DISCONNECTION/CONNECTION [SKYACTIV-G 2.0, SKYACTIV-G 2.5]**.) • Switch the ignition ON (engine off or on). • Clear the DTC for the SAS control module using the M-MDS. (See **CLEARING DTC [STANDARD DEPLOYMENT CONTROL SYSTEM]**.) • Perform the DTC inspection for the SAS control module using the M-MDS. (See **DTC INSPECTION [STANDARD DEPLOYMENT CONTROL SYSTEM]**.) • Are the same DTCs present?		

2014 - Mazda3 - Restraints

DTC B1211:55, B1214:55 [STANDARD DEPLOYMENT CONTROL SYSTEM]

System malfunction location	• B1211:55: Configuration setting error (driver-side pre-tensioner seat belt structural malfunction) • B1214:55: Configuration setting error (passenger-side pre-tensioner seat belt structural malfunction)
Detection condition	**WARNING:** • Detection conditions are for understanding the DTC outline before performing an inspection. Performing an inspection according to only the detection conditions may cause injury due to an operating error, or damage the system. When performing an inspection, always follow the inspection procedure. • SAS control module configuration setting has not been done correctly • Parts which have not been set to SAS control module are assembled
Fail-safe function	Not applicable
Possible cause	• SAS control module configuration setting not implemented • SAS control module configuration setting invalid • Driver or passenger-side pre-tensioner seat belt assembly incorrect • SAS control module malfunction
System wiring diagram	Not applicable

Diagnostic Procedure

Step	Inspection		Action
1	**PERFORM SAS CONTROL MODULE CONFIGURATION (AS-BUILT DATA USE)**	Yes	Go to the next step.

	• Perform the SAS control module configuration using the M-MDS. (See **SAS CONTROL MODULE CONFIGURATION (USING AS-BUILT DATA) [STANDARD DEPLOYMENT CONTROL SYSTEM]**.) • Clear the DTC for the SAS control module using the M-MDS. (See **CLEARING DTC [STANDARD DEPLOYMENT CONTROL SYSTEM]**.) • Perform the DTC inspection for the SAS control module using the M-MDS. (See **DTC INSPECTION [STANDARD DEPLOYMENT CONTROL SYSTEM]**.) • Are the same DTCs present?	No	DTC troubleshooting completed.
2	**INSPECT PRE-TENSIONER SEAT BELT** • Verify that the driver or passenger-side pre-tensioner seat belt is correctly installed. • Is the driver or passenger-side pre-tensioner seat belt correctly installed?	Yes	Go to the next step.
		No	Correctly install the driver or passenger-side pre-tensioner seat belt. Then go to the next step.
3	**PERFORM SAS CONTROL MODULE DTC INSPECTION** • Clear the DTC for the SAS control module using the M-MDS. (See **CLEARING DTC [STANDARD DEPLOYMENT CONTROL SYSTEM]**.) • Perform the DTC inspection for the SAS control module using the M-MDS. (See **DTC INSPECTION [STANDARD DEPLOYMENT CONTROL SYSTEM]**.) • Are the same DTCs present?	Yes	Replace the SAS control module. (See **SAS CONTROL MODULE REMOVAL/INSTALLATION [STANDARD DEPLOYMENT CONTROL SYSTEM]**.)
		No	DTC troubleshooting completed.

2014 - Mazda3 - Restraints

DTC B1214:11/B1214:12/B1214:13/B1214:19/B1214:1A [STANDARD DEPLOYMENT CONTROL SYSTEM]

System malfunction location	• B1214:11: Passenger-side pre-tensioner seat belt circuit short to body ground • B1214:12: Passenger-side pre-tensioner seat belt circuit short to power supply • B1214:13: Passenger-side pre-tensioner seat belt circuit open circuit or resistance high • B1214:19: Short circuit to passenger-side pre-tensioner seat belt and other air bag module circuits • B1214:1A: Passenger-side pre-tensioner seat belt circuit resistance low
Detection condition	**WARNING:** • Detection conditions are for understanding the DTC outline before performing an inspection. Performing an inspection according to only the detection conditions may cause injury due to an operating error, or damage the system. When performing an inspection, always follow the inspection procedure. • Resistance other than **0.81—6.42 ohms** detected in passenger-side pre-tensioner seat belt circuit • Wiring harness between the passenger-side pre-tensioner seat belt and SAS control module has a malfunction
Fail-safe function	Not applicable
Possible cause	• Passenger-side pre-tensioner seat belt connector malfunction • Short circuit to power supply or body ground in the wiring harness between the passenger-side pre-tensioner seat belt and SAS control module • Open circuit in the wiring harness between the passenger-side pre-tensioner seat belt and SAS control module • Passenger-side pre-tensioner seat belt malfunction • SAS control module malfunction

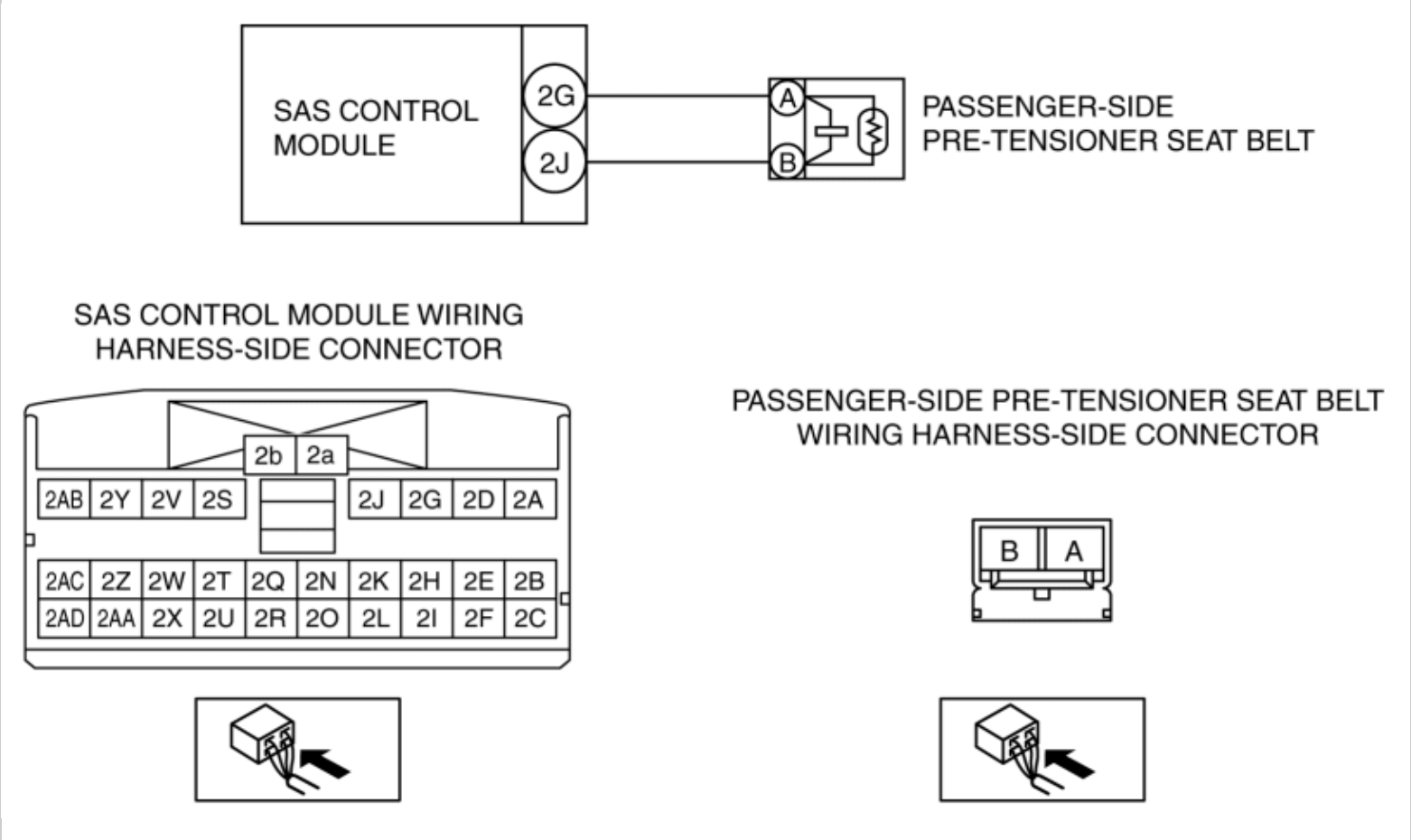

Diagnostic Procedure

Step	Inspection		Action
1	**INSPECT PASSENGER-SIDE PRE-TENSIONER SEAT BELT CONNECTOR** **WARNING:** • Handling the component parts improperly can accidentally operate (deploy) the air bag module, which may seriously injure you. Read the service warnings/cautions and the workshop manual before handling the air bag system components. (See **AIR BAG SYSTEM SERVICE WARNINGS [STANDARD DEPLOYMENT CONTROL SYSTEM]**.) (See **AIR BAG SYSTEM SERVICE CAUTIONS [STANDARD DEPLOYMENT CONTROL SYSTEM]**.) • Switch the ignition off. • Disconnect the negative battery cable and wait for **1 min or more**.	Yes	Replace the malfunctioning part, then go to Step 6.
		No	Go to the next step.

	(See **NEGATIVE BATTERY CABLE DISCONNECTION/CONNECTION [SKYACTIV-G 2.0, SKYACTIV-G 2.5]**.) • Remove the passenger-side B-pillar lower trim. (See **B-PILLAR LOWER TRIM REMOVAL/INSTALLATION**.) • Disconnect the passenger-side pre-tensioner seat belt connector. (See **FRONT SEAT BELT REMOVAL/INSTALLATION**.) • Inspect the passenger-side pre-tensioner seat belt connector. (Corrosion, damage, and disconnected pins) • Is there any malfunction of the passenger-side pre-tensioner seat belt connector?		
2	**INSPECT PASSENGER-SIDE PRE-TENSIONER SEAT BELT CIRCUIT FOR SHORT TO GROUND** • Remove the column cover. (See **COLUMN COVER REMOVAL/INSTALLATION**.) • Disconnect the clock spring connector. (See **CLOCK SPRING REMOVAL/INSTALLATION [STANDARD DEPLOYMENT CONTROL SYSTEM]**.) • Remove the glove compartment. (See **GLOVE COMPARTMENT REMOVAL/INSTALLATION**.) • Disconnect the passenger-side air bag module connector. (See **PASSENGER-SIDE AIR BAG MODULE REMOVAL [STANDARD DEPLOYMENT CONTROL SYSTEM]**.) • Disconnect the driver and passenger-side front seat connector. (See **FRONT SEAT REMOVAL/INSTALLATION**.) • Remove the driver-side B-pillar lower trim. (See **B-PILLAR LOWER TRIM REMOVAL/INSTALLATION**.) • Disconnect the driver-side pre-tensioner seat belt connector.	Yes	Refer to the wiring diagram and verify whether or not there is a common connector between SAS control module terminal and passenger-side pre-tensioner seat belt terminal. **If there is a common connector:** • Determine the malfunctioning part by inspecting the common connector and the terminal for corrosion, damage, or pin disconnection, and the common wiring harness for a short to ground. • Replace the malfunctioning part. **If there is no common connector:** • Replace the wiring harness which has a short to ground. Go to Step 6.
		No	Go to the next step.

	(See **FRONT SEAT BELT REMOVAL/INSTALLATION**.) • Remove the headliner. (See **HEADLINER REMOVAL/INSTALLATION**.) • Disconnect the driver and passenger-side curtain air bag module connector. (See **CURTAIN AIR BAG MODULE REMOVAL/INSTALLATION [STANDARD DEPLOYMENT CONTROL SYSTEM]**.) • Disconnect the all SAS control module connectors. (See **SAS CONTROL MODULE REMOVAL/INSTALLATION [STANDARD DEPLOYMENT CONTROL SYSTEM]**.) • Inspect for continuity between the following terminals (wiring harness-side) and body ground: ▪ SAS control module terminal 2G ▪ SAS control module terminal 2J **NOTE:** • Inspect for continuity while shaking the wiring harness between the SAS control module and passenger-side pre-tensioner seat belt. • Is there continuity?		
3	**INSPECT PASSENGER-SIDE PRE-TENSIONER SEAT BELT CIRCUIT FOR OPEN CIRCUIT** • Passenger-side pre-tensioner seat belt and SAS control module connectors are disconnected. • Inspect for continuity between the following terminals (wiring harness-side): ▪ Passenger-side pre-tensioner seat belt terminal A—SAS control module terminal 2G ▪ Passenger-side pre-tensioner seat belt terminal B—SAS control module terminal 2J **NOTE:**	Yes	Go to the next step.
		No	Refer to the wiring diagram and verify whether or not there is a common connector between SAS control module terminal and passenger-side pre-tensioner seat belt terminal. **If there is a common connector:** • Determine the malfunctioning part by inspecting the common connector and the terminal for corrosion, damage, or pin disconnection, and the common wiring harness for an open circuit.

	Inspect for continuity while shaking the wiring harness between the SAS control module and passenger-side pre-tensioner seat belt. • Is there continuity?		Replace the malfunctioning part. **If there is no common connector:** • Replace the wiring harness which has an open circuit. Go to Step 6.
4	**INSPECT PASSENGER-SIDE PRE-TENSIONER SEAT BELT CIRCUIT FOR SHORT TO POWER SUPPLY** • Passenger-side pre-tensioner seat belt and SAS control module connectors are disconnected. • Connect the negative battery cable. (See **NEGATIVE BATTERY CABLE DISCONNECTION/CONNECTION [SKYACTIV-G 2.0, SKYACTIV-G 2.5]**.) • Switch the ignition ON (engine off or on). • Measure the voltage at the following terminals (wiring harness-side): ▪ SAS control module terminal 2G ▪ SAS control module terminal 2J **NOTE:** • Measure the voltage while shaking the wiring harness between the SAS control module and passenger-side pre-tensioner seat belt. • Is the voltage **0 V**?	Yes	Go to the next step.
		No	Refer to the wiring diagram and verify whether or not there is a common connector between SAS control module terminal and passenger-side pre-tensioner seat belt terminal. **If there is a common connector:** • Determine the malfunctioning part by inspecting the common connector and the terminal for corrosion, damage, or pin disconnection, and the common wiring harness for a short to power supply. • Replace the malfunctioning part. **If there is no common connector:** • Replace the wiring harness which has a short to power supply. Go to Step 6.
5	**INSPECT PASSENGER-SIDE PRE-TENSIONER SEAT BELT** • Switch the ignition off. • Disconnect the negative battery cable and wait for **1 min or more**. • Connect the SAS control module connectors. • Except for the passenger-side pre-tensioner seat belt connector, reconnect all disconnected connectors. • Connect the **SST (Fuel and thermometer checker)** or apply **2 ohms** resistance to the passenger-side pre-tensioner seat belt connector	Yes	Go to the next step.
		No	Replace the passenger-side pre-tensioner seat belt. (See **FRONT SEAT BELT REMOVAL/INSTALLATION**.) Then go to the next step.

	terminals A–B. • Set the **SST (Fuel and thermometer checker)** to **2 ohms**. • Connect the negative battery cable. (See **NEGATIVE BATTERY CABLE DISCONNECTION/CONNECTION [SKYACTIV-G 2.0, SKYACTIV-G 2.5]**.) • Switch the ignition ON (engine off or on). • Clear the DTC for the SAS control module using the M-MDS. (See **CLEARING DTC [STANDARD DEPLOYMENT CONTROL SYSTEM]**.) • Perform the DTC inspection for the SAS control module using the M-MDS. (See **DTC INSPECTION [STANDARD DEPLOYMENT CONTROL SYSTEM]**.) • Are the same DTCs present?		
6	**PERFORM SAS CONTROL MODULE DTC INSPECTION** • Switch the ignition off. • Disconnect the negative battery cable and wait for **1 min or more**. • Disconnect the **SST (Fuel and thermometer checker)** or the **2 ohms** resistance. • Connect the passenger-side pre-tensioner seat belt connector. • Connect the negative battery cable. (See **NEGATIVE BATTERY CABLE DISCONNECTION/CONNECTION [SKYACTIV-G 2.0, SKYACTIV-G 2.5]**.) • Switch the ignition ON (engine off or on). • Clear the DTC for the SAS control module using the M-MDS. (See **DTC INSPECTION [STANDARD DEPLOYMENT CONTROL SYSTEM]**.) • Perform the DTC inspection for the SAS control module using the M-MDS. (See **DTC INSPECTION [STANDARD DEPLOYMENT CONTROL SYSTEM]**.) • Are the same DTCs present?	Yes	Replace the SAS control module. (See **SAS CONTROL MODULE REMOVAL/INSTALLATION [STANDARD DEPLOYMENT CONTROL SYSTEM]**.)
		No	DTC troubleshooting completed.

DTC B1214:11/B1214:12/B1214:13/B1214:19/B1214:1A [STANDARD DEPLOYMENT CONTROL SYSTEM]

2014 - Mazda3 - Restraints

DTC C0061:29/C0062:29/C0063:29/P0666:29 [STANDARD DEPLOYMENT CONTROL SYSTEM]

System malfunction location	• C0061:29: Low-G sensor (lateral-G) in SAS control module (internal circuit disabled) • C0062:29: Low-G sensor (forward-G) in SAS control module (internal circuit disabled) • C0063:29: Yaw rate sensor in SAS control module (internal circuit disabled) • P0666:29: Temperature sensor in SAS control module (internal circuit disabled)
Detection condition	**WARNING:** • Detection conditions are for understanding the DTC outline before performing an inspection. Performing an inspection according to only the detection conditions may cause injury due to an operating error, or damage the system. When performing an inspection, always follow the inspection procedure. • SAS control module internal sensor has a malfunction
Fail-safe function	Not applicable
Possible cause	SAS control module malfunction
System wiring diagram	Not applicable

Diagnostic Procedure

STEP	INSPECTION		ACTION
1	**PERFORM SAS CONTROL MODULE DTC INSPECTION**	Yes	Replace the SAS control module. (See **SAS CONTROL MODULE**

	Clear the DTC for the SAS control module using the M-MDS. (See **CLEARING DTC [STANDARD DEPLOYMENT CONTROL SYSTEM]**.) • Perform the DTC inspection for the SAS control module using the M-MDS. (See **DTC INSPECTION [STANDARD DEPLOYMENT CONTROL SYSTEM]**.) • Are the same DTCs present?		**REMOVAL/INSTALLATION [STANDARD DEPLOYMENT CONTROL SYSTEM]**.)
		No	DTC troubleshooting completed.

2014 - Mazda3 - Restraints

DTC U0001:88/U0155:00 [STANDARD DEPLOYMENT CONTROL SYSTEM]

System malfunction location	• U0001:88: Module communication error (HS-CAN) • U0155:00: Communication error with instrument cluster
Detection condition	**U0001:88** • The SAS control module detects a CAN communication line (HS-CAN) error. **U0155:00** • The SAS control module could not receive CAN signal from the instrument cluster for **5 s or more**.
Fail-safe function	Not applicable
Possible cause	• Malfunction in CAN bus communication line • Malfunction in CAN line between the SAS control module and instrument cluster
System wiring diagram	Not applicable

Diagnostic Procedure

- Perform the malfunction diagnosis according to the troubleshooting procedure for the multiplex communication system. (See **FOREWORD**.)

2014 - Mazda3 - Restraints

DTC U0300:00/U2100:00 [STANDARD DEPLOYMENT CONTROL SYSTEM]

System malfunction location	• U0300:00: Configuration setting invalid • U2100:00: Configuration not set
Detection condition	**WARNING:** • Detection conditions are for understanding the DTC outline before performing an inspection. Performing an inspection according to only the detection conditions may cause injury due to an operating error, or damage the system. When performing an inspection, always follow the inspection procedure. • SAS control module configuration setting has not been done correctly
Fail-safe function	Not applicable
Possible cause	• SAS control module configuration setting not implemented • SAS control module configuration setting invalid • SAS control module malfunction
System wiring diagram	Not applicable

Diagnostic Procedure

Step	Inspection		Action
1	**PERFORM SAS CONTROL MODULE CONFIGURATION (AS-BUILT DATA USE)** • Perform the SAS control module configuration using the M-MDS. (See **SAS CONTROL MODULE**	Yes	Go to the next step.
		No	DTC troubleshooting completed.

	CONFIGURATION (USING AS-BUILT DATA) [STANDARD DEPLOYMENT CONTROL SYSTEM].) • Clear the DTC for the SAS control module using the M-MDS. (See **CLEARING DTC [STANDARD DEPLOYMENT CONTROL SYSTEM]**.) • Perform the DTC inspection for the SAS control module using the M-MDS. (See **DTC INSPECTION [STANDARD DEPLOYMENT CONTROL SYSTEM]**.) • Are the same DTCs present?		
2	**PERFORM SAS CONTROL MODULE DTC INSPECTION** • Clear the DTC for the SAS control module using the M-MDS. (See **CLEARING DTC [STANDARD DEPLOYMENT CONTROL SYSTEM]**.) • Perform the DTC inspection for the SAS control module using the M-MDS. (See **DTC INSPECTION [STANDARD DEPLOYMENT CONTROL SYSTEM]**.) • Are the same DTCs present?	Yes	Replace the SAS control module. (See **SAS CONTROL MODULE REMOVAL/INSTALLATION [STANDARD DEPLOYMENT CONTROL SYSTEM]**.)
		No	DTC troubleshooting completed.

2014 - Mazda3 - Restraints

DTC U2005:68 [STANDARD DEPLOYMENT CONTROL SYSTEM]

System malfunction location	• PCM communication error (vehicle speed signal)
Detection condition	• The SAS control module receives vehicle speed signal error from the PCM for **5 s or more** with the ignition switched ON (engine off or on).
Fail-safe function	Not applicable
Possible cause	• PCM malfunction • SAS control module malfunction
System wiring diagram	Not applicable

Diagnostic Procedure

Step	Inspection		Action
1	**VERIFY SAS CONTROL MODULE DTCs AGAIN** • Clear SAS control module DTCs using the M-MDS. (See **CLEARING DTC [STANDARD DEPLOYMENT CONTROL SYSTEM]**.) • Perform the SAS control module DTC inspection using the M-MDS.(See **DTC INSPECTION [STANDARD DEPLOYMENT CONTROL SYSTEM]**.) • Is the DTC U2005:68 displayed?	Yes	Go to the next step.
		No	Go to Step 5.

2	**VERIFY PCM DTCs** • Perform the DTC inspection for the PCM using the M-MDS. (See **ON-BOARD DIAGNOSTIC TEST [SKYACTIV-G 2.0, SKYACTIV-G 2.5]**.) • Is the DTC displayed?	Yes	Repair the malfunctioning part according to the applicable DTC troubleshooting. (See **DTC TABLE [SKYACTIV-G 2.0, SKYACTIV-G 2.5]**.)
		No	Go to the next step.
3	**PERFORM DTC INSPECTION AND VERIFY IF MALFUNCTIONING PART IS PCM** • Clear SAS control module DTCs using the M-MDS. (See **CLEARING DTC [STANDARD DEPLOYMENT CONTROL SYSTEM]**.) • Perform the SAS control module DTC inspection using the M-MDS. (See **DTC INSPECTION [STANDARD DEPLOYMENT CONTROL SYSTEM]**.) • Is the DTC U2005:68 displayed?	Yes	Replace the PCM, then go to the next step. (See **PCM REMOVAL/INSTALLATION [SKYACTIV-G 2.0, SKYACTIV-G 2.5]**.)
		No	Go to Step 5.
4	**VERIFY THAT REPAIRS HAVE BEEN COMPLETED** • Clear SAS control module DTCs using the M-MDS. (See **CLEARING DTC [STANDARD DEPLOYMENT CONTROL SYSTEM]**.) • Perform the SAS control module DTC inspection using the M-MDS. (See **DTC INSPECTION [STANDARD DEPLOYMENT CONTROL SYSTEM]**.) • Is the DTC U2005:68 displayed?	Yes	Replace the SAS control module, then go to the next step. (See **SAS CONTROL MODULE REMOVAL/INSTALLATION [STANDARD DEPLOYMENT CONTROL SYSTEM]**.)
		No	Go to the next step.
5	**VERIFY IF OTHER DTCs DISPLAYED** • Are any other DTCs displayed?	Yes	Repair the malfunctioning part according to the applicable DTC troubleshooting.
		No	DTC troubleshooting completed.

DTC U2005:68 [STANDARD DEPLOYMENT CONTROL SYSTEM]

2014 - Mazda3 - Restraints

DTC U3000:49 [STANDARD DEPLOYMENT CONTROL SYSTEM]

System malfunction location	SAS control module internal malfunction
Detection condition	**WARNING:** • Detection conditions are for understanding the DTC outline before performing an inspection. Performing an inspection according to only the detection conditions may cause injury due to an operating error, or damage the system. When performing an inspection, always follow the inspection procedure. • SAS control module internal circuit has a malfunction
Fail-safe function	Not applicable
Possible cause	• SAS control module malfunction
System wiring diagram	Not applicable

Diagnostic Procedure

ACTION
Replace the SAS control module. (See **SAS CONTROL MODULE REMOVAL/INSTALLATION [STANDARD DEPLOYMENT CONTROL SYSTEM]**.)

DTC U3000:49 [STANDARD DEPLOYMENT CONTROL SYSTEM]

2014 - Mazda3 - Restraints

DTC U3003:16/U3003:17 [STANDARD DEPLOYMENT CONTROL SYSTEM]

System malfunction location	• U3003:16: SAS control module power supply voltage decreases (**less than 8 V**) • U3003:17: SAS control module power supply voltage increases (**18 V or more**)
Detection condition	**WARNING:** • Detection conditions are for understanding the DTC outline before performing an inspection. Performing an inspection according to only the detection conditions may cause injury due to an operating error, or damage the system. When performing an inspection, always follow the inspection procedure. • SAS control module power supply voltage is other than **8–17.9 V**
Fail-safe function	Not applicable
Possible cause	• Battery malfunction • SRS1 7.5 A fuse malfunction • Open circuit or short to body ground in wiring harness between IG1 relay and SAS control module • Open circuit in the wiring harness between the SAS control module and body ground • SAS control module malfunction

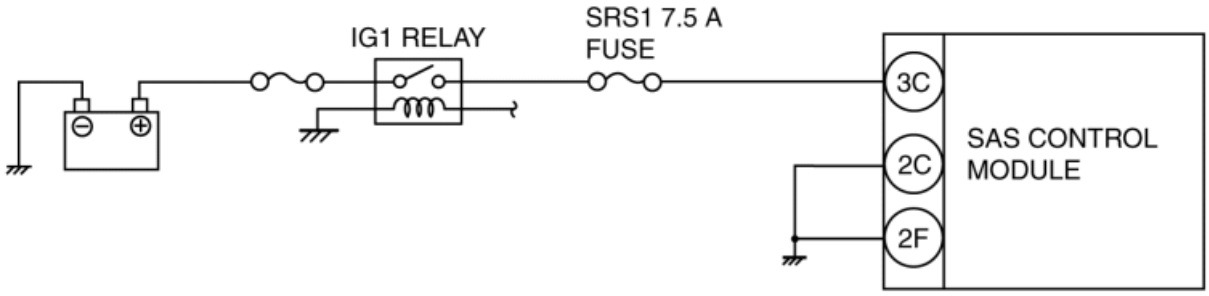

SAS CONTROL MODULE WIRING
HARNESS-SIDE CONNECTOR

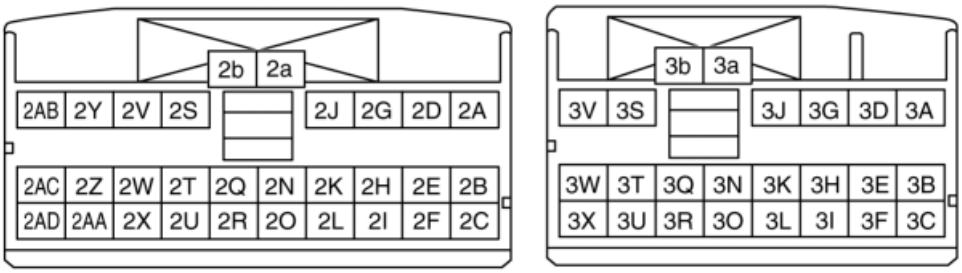

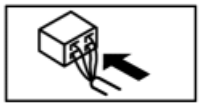

Diagnostic Procedure

Step	Inspection		Action
1	**BATTERY INSPECTION** • Refer to the battery inspection and inspect the battery. (See **BATTERY INSPECTION [SKYACTIV-G 2.0, SKYACTIV-G 2.5]**.) • Is the battery normal?	Yes	Go to the next step.
		No	Replace or charge the battery. (See **BATTERY REMOVAL/INSTALLATION [SKYACTIV-G 2.0, SKYACTIV-G 2.5]**.) (See **BATTERY RECHARGING [SKYACTIV-G 2.0, SKYACTIV-G 2.5]**.) Then go to Step 5.
2	**FUSE INSPECTION** • Switch the ignition off. • Disconnect the negative battery cable and wait **1 min or more**. (See **NEGATIVE BATTERY CABLE DISCONNECTION/CONNECTION [SKYACTIV-G 2.0, SKYACTIV-G 2.5]**.) • Remove the SRS1 7.5 A fuse. • Is the fuse normal?	Yes	Go to the next step.
		No	Replace the SRS1 7.5 A fuse. Then go to Step 5.
3	**INSPECT WIRING HARNESS BETWEEN SAS CONTROL MODULE AND IG1 RELAY** **WARNING:** • Handling the component parts improperly can accidentally operate (deploy) the air bag module, which may seriously injure you. Read the service warnings/cautions and the workshop manual before handling the air bag system components. (See **AIR BAG SYSTEM SERVICE WARNINGS [STANDARD DEPLOYMENT CONTROL SYSTEM]**.) (See **AIR BAG SYSTEM SERVICE CAUTIONS [STANDARD DEPLOYMENT CONTROL SYSTEM]**.) • Install the SRS1 7.5 A fuse. • Remove the column cover. (See **COLUMN COVER REMOVAL/INSTALLATION**.) • Disconnect the clock spring connector. (See **CLOCK SPRING REMOVAL/INSTALLATION [STANDARD DEPLOYMENT CONTROL SYSTEM]**.) • Remove the glove compartment. (See **GLOVE COMPARTMENT REMOVAL/INSTALLATION**.) • Disconnect the driver and passenger-side front seat connector. (See **FRONT SEAT REMOVAL/INSTALLATION**.) • Disconnect the passenger-side air bag module connector. (See **PASSENGER-SIDE AIR BAG MODULE REMOVAL [STANDARD DEPLOYMENT CONTROL SYSTEM]**.) • Remove the B-pillar lower trim. (See **B-PILLAR LOWER TRIM REMOVAL/INSTALLATION**.)	Yes	Go to the next step.
		No	Refer to the wiring diagram and verify whether or not there is a common connector between SAS control module terminal and IG1 relay terminal. **If there is a common connector:** • Determine the malfunctioning part by inspecting the common connector and the terminal for corrosion, damage, or pin disconnection, and the common wiring harness for an open circuit or short to ground. • Replace the malfunctioning part. **If there is no common connector:** • Replace the wiring harness which has an open circuit or short to ground. Go to Step 5.

	Disconnect the driver and passenger-side pre-tensioner seat belt connector. (See **FRONT SEAT BELT REMOVAL/INSTALLATION**.) • Remove the headliner. (See **HEADLINER REMOVAL/INSTALLATION**.) • Disconnect the driver and passenger-side curtain air bag module connector. (See **CURTAIN AIR BAG MODULE REMOVAL/INSTALLATION [STANDARD DEPLOYMENT CONTROL SYSTEM]**.) • Disconnect all SAS control module connectors. (See **SAS CONTROL MODULE REMOVAL/INSTALLATION [STANDARD DEPLOYMENT CONTROL SYSTEM]**.) • Connect the negative battery cable. (See **NEGATIVE BATTERY CABLE DISCONNECTION/CONNECTION [SKYACTIV-G 2.0, SKYACTIV-G 2.5]**.) • Switch the ignition ON (engine off or on).		
	• Measure the voltage of SAS control module connector terminal 3C (wiring harness-side). **NOTE:** • Measure the voltage while shaking the wiring harness between the SAS control module and IG1 relay. • Is the voltage **8–17.9 V**?		
4	**INSPECT SAS CONTROL MODULE CIRCUIT FOR OPEN CIRCUIT** • SAS control module connectors are disconnected. • Switch the ignition off. • Disconnect the negative battery cable and wait **1 min or more**. (See **NEGATIVE BATTERY CABLE DISCONNECTION/CONNECTION [SKYACTIV-G 2.0, SKYACTIV-G 2.5]**.) • Inspect the wiring harness between SAS control module connector terminal 2C, 2F (wiring harness-side) and body ground. **NOTE:** • Inspect for continuity while shaking the wiring harness between the SAS control module and body ground. • Is there continuity?	Yes	Go to the next step.
		No	Refer to the wiring diagram and verify whether or not there is a common connector between SAS control module terminal and body ground. **If there is a common connector:** • Determine the malfunctioning part by inspecting the common connector and the terminal for corrosion, damage, or pin disconnection, and the common wiring harness for an open circuit. • Replace the malfunctioning part. **If there is no common connector:** • Replace the wiring harness which has an open circuit. Go to the next step.
5	**PERFORM SAS CONTROL MODULE DTC INSPECTION** • Connect the SAS control module connectors. • Reconnect all disconnected connectors.	Yes	Replace the SAS control module. (See **SAS CONTROL MODULE REMOVAL/INSTALLATION [STANDARD**

	• Connect the negative battery cable. (See **NEGATIVE BATTERY CABLE DISCONNECTION/CONNECTION [SKYACTIV-G 2.0, SKYACTIV-G 2.5]**.) • Switch the ignition ON (engine off or on). • Clear the DTC for the SAS control module using the M-MDS. (See **CLEARING DTC [STANDARD DEPLOYMENT CONTROL SYSTEM]**.) • Perform the DTC inspection for the SAS control module using the M-MDS. (See **DTC INSPECTION [STANDARD DEPLOYMENT CONTROL SYSTEM]**.) • Are the same DTCs present?		**DEPLOYMENT CONTROL SYSTEM]**.)
		No	DTC troubleshooting completed.

2014 - Mazda3 - Restraints

PID/DATA MONITOR INSPECTION [STANDARD DEPLOYMENT CONTROL SYSTEM]

1. Connect the M-MDS to the DLC 2.

2. After the vehicle is identified, select the following items from the initialization screen of the M-MDS.

    a. Select “DataLogger”.

    b. Select “Modules”.

    c. Select “RCM”.

3. Select the applicable PID from the PID table.

4. Verify the PID data according to the directions on the screen.

NOTE:

- The PID data screen function is used for monitoring the calculated value of input/output signals in the module. Therefore, if the monitored value of the output parts is not within the specification, it is necessary to inspect the monitored value of input parts corresponding to the applicable output part control. In addition, because the system does not display an output part malfunction as an abnormality in the monitored value, it is necessary to inspect the output parts individually.

2014 - Mazda3 - Restraints

PID/DATA MONITOR TABLE [STANDARD DEPLOYMENT CONTROL SYSTEM]

PID	Unit/Condition	Data contents	SAS control module terminal
AB_WL (Air bag system warning light status)	Lamp_Off/Lamp_On/Plant_Mode/Unknown	• Air bag system warning light off: Lamp_Off • Air bag system warning light on: Lamp_On • Air bag system warning light status: Plant_Mode • Air bag system warning light status: Unknown	3K, 3L
B_SW_P_FLT (Passenger-side buckle switch malfunction status)	**NOTE:** • Displays in the M-MDS but it does not operate.		
OCS_DTC_CLR (Seat weight sensor DTC cleared status)	**NOTE:** • Displays in the M-MDS but it does not operate.		
P_OCS_ST	**NOTE:**		

(Seat weight sensor status)	• Displays in the M-MDS but it does not operate.		
P_WEIGHT (Seat weight sensor measured weight of passenger)	**NOTE:** • Displays in the M-MDS but it does not operate.		
RES_C_AB_D (Driver-side curtain air bag module resistance nominal)	ohm	Continuous: 0.81–6.42 ohms	1S, 1V
RES_C_AB_P (Passenger-side curtain air bag module resistance nominal)	ohm	Continuous: 0.81–6.42 ohms	1W, 1T
RES_F_AB1_D (Driver-side air bag module (inflatorNo.1) resistance nominal)	ohm	Continuous: 0.99–6.42 ohms	3A, 3D
RES_F_AB1_P (Passenger-side air bag module (inflatorNo.1) resistance nominal)	ohm	Continuous: 0.81–6.42 ohms	3G, 3J
RES_F_AB2_D (Driver-side air bag module (inflatorNo.2) resistance nominal)	**NOTE:** • Displays in the M-MDS but it does not operate.		
RES_F_AB2_P (Passenger-side air bag module (inflator No.2) resistance nominal)	**NOTE:** • Displays in the M-MDS but it does not operate.		
RES_PCD_BAR (Poorly connected detector bar terminals resistance nominal (all of SAS control module connectors))	ohm	• Normal connected: 100 ohm or less • Poor connected: 20 kilohm or more	1a, 1b, 2a, 2b, 3a, 3b

RES_S_AB_D (Driver-side side air bag module resistance nominal)	ohm	Continuous: 0.81–9.85 ohms	1A, 1D
RES_S_AB_P (Passenger-side side air bag module resistance nominal)	ohm	Continuous: 0.81–9.85 ohms	1J, 1G
RES_SB_LP_D (Driver-side lap pre-tensioner seat belt resistance nominal)	**NOTE:** • Displays in the M-MDS but it does not operate.		
RES_SB_LP_P (Passenger-side lap pre-tensioner seat belt resistance nominal)	**NOTE:** • Displays in the M-MDS but it does not operate.		
RES_SB_P_D (Driver-side pre-tensioner seat belt resistance nominal)	ohm	Continuous: 0.81–6.42 ohms	2D, 2A
RES_SB_P_P (Passenger-side pre-tensioner seat belt resistance nominal)	ohm	Continuous: 0.81–6.42 ohms	2G, 2J
SEAT_B_D (Driver-side buckle switch status)	Unbuckled/Buckled	• Driver-side front seat belt fastened (Driver-side buckle switch off): Buckled • Driver-side front seat belt not fastened (Driver-side buckle switch on): Unbuckled	2U
SEAT_B_P (Passenger-side buckle	**NOTE:**		

switch status)	• Displays in the M-MDS but it does not operate.		
VPWR_IGA (SAS control module power voltage)	V	Ignition is switched ON: IG1 voltage	3C

2014 - Mazda3 - Restraints

ON-BOARD DIAGNOSTIC WIRING DIAGRAM [TWO-STEP DEPLOYMENT CONTROL SYSTEM]

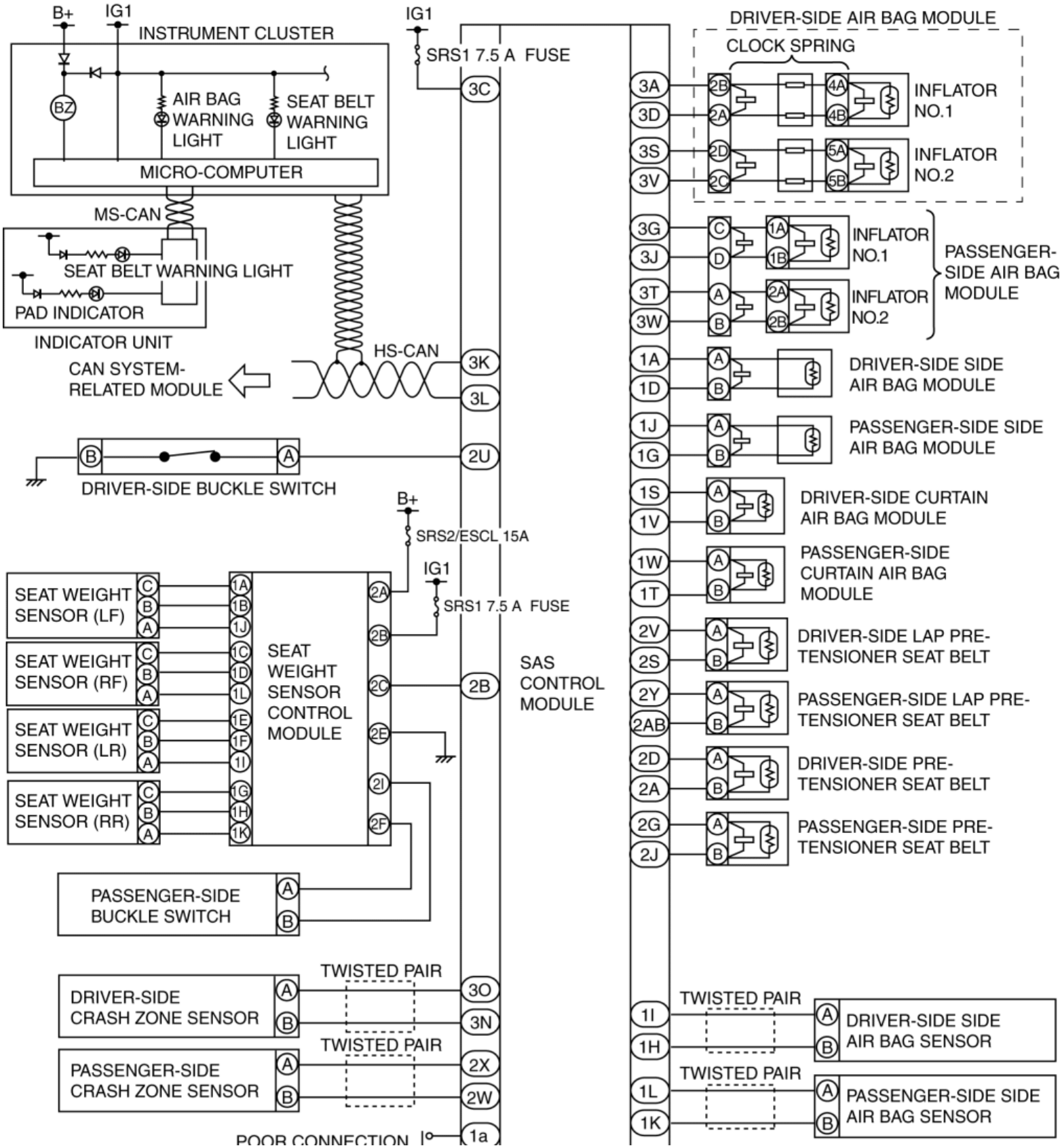

ON-BOARD DIAGNOSTIC WIRING DIAGRAM [TWO-STEP DEPLOYMENT CONTROL SYSTEM]

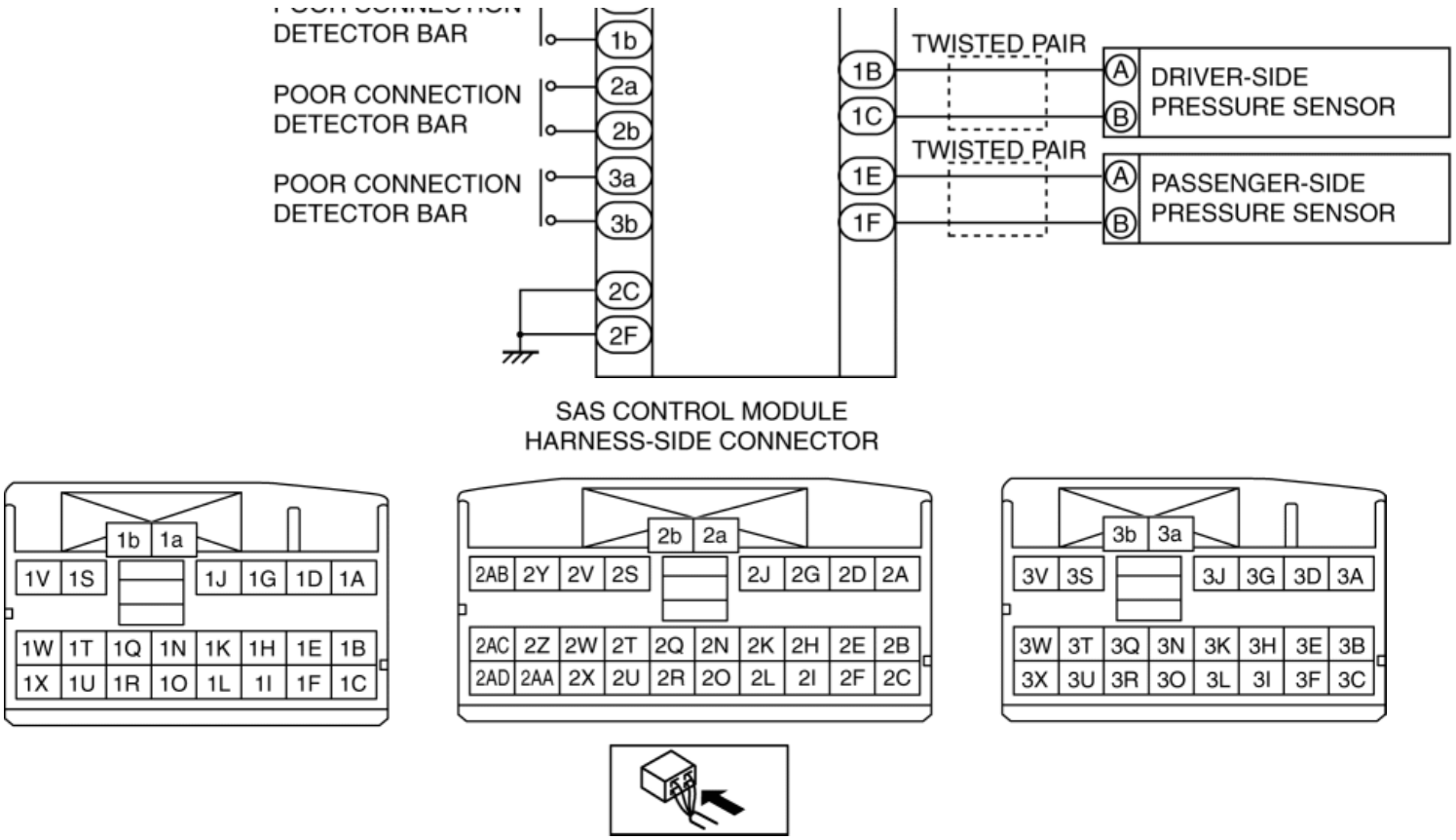

2014 - Mazda3 - Restraints

FOREWORD [TWO-STEP DEPLOYMENT CONTROL SYSTEM]

- If there is any vehicle malfunction complaint lodged by a customer, perform malfunction diagnosis according to the troubleshooting procedure.

Troubleshooting Procedure

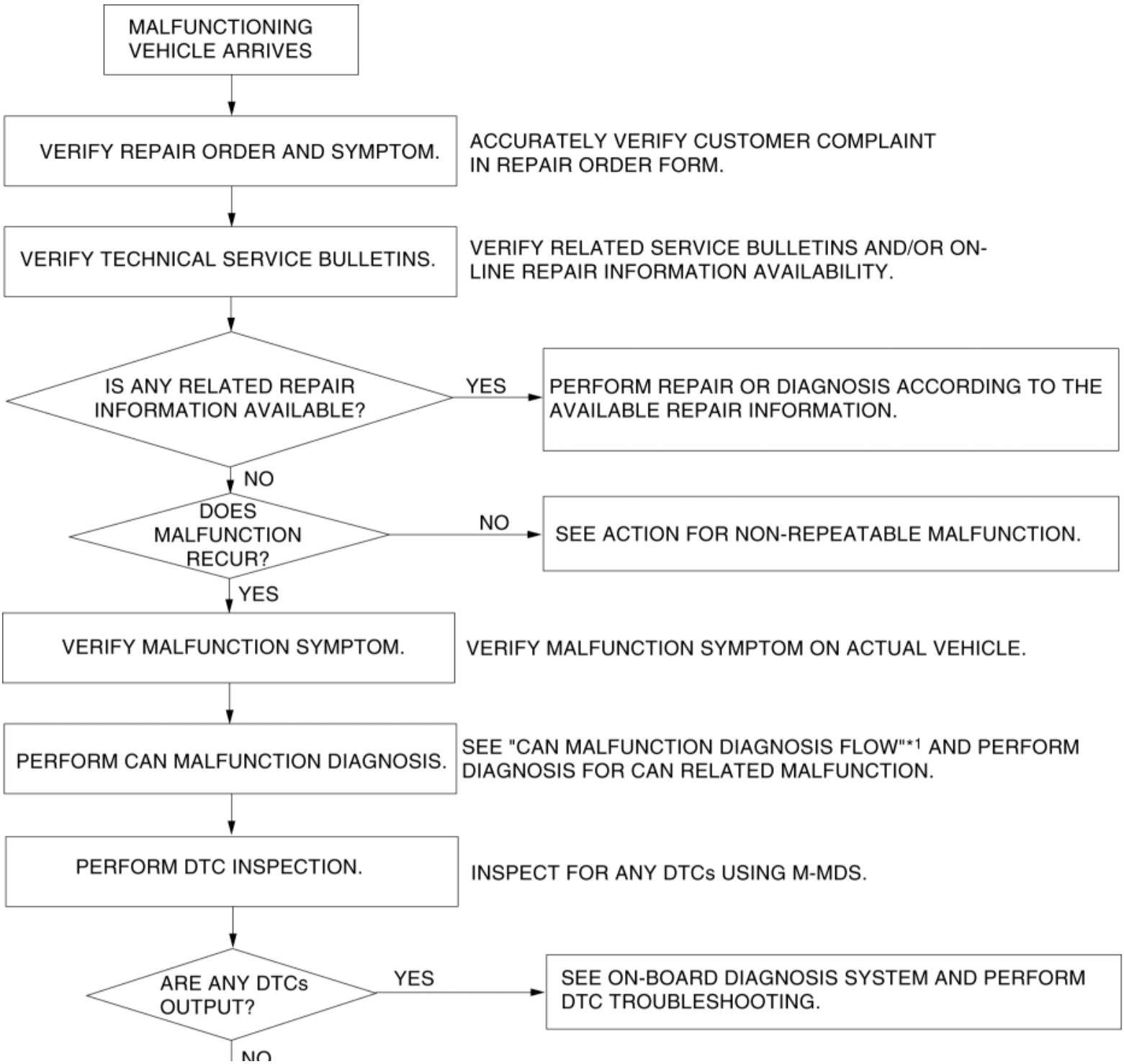

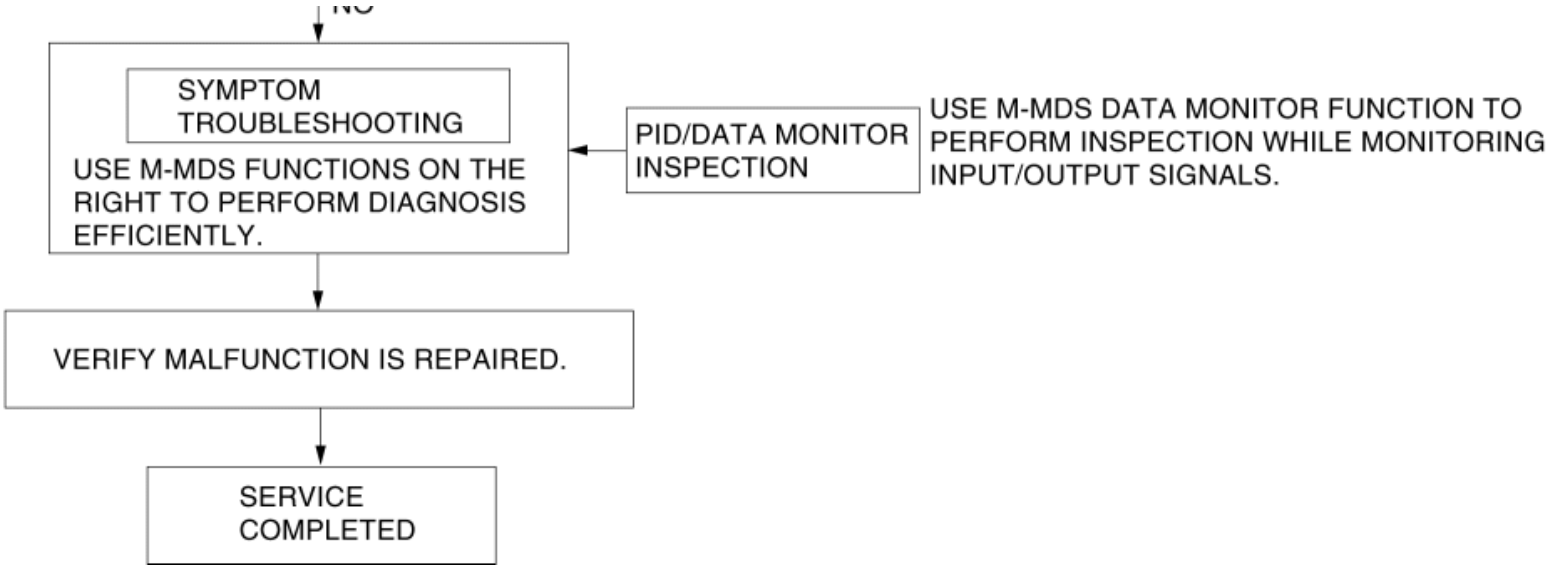

*1 **CONTROLLER AREA NETWORK (CAN) MALFUNCTION DIAGNOSIS FLOW**.

Action for non-repeatable malfunction

- If the malfunction does not recur, verify the malfunction cause by performing the following actions:
  - Verify that a DTC has been recorded in the memory.
  - Based on the repair order form, attempt to drive the vehicle or perform tests to replicate the malfunction, record the data (such as CAN circuit voltage) at that time, and detect the malfunction cause.
  - Refer to [Determining Open Circuit Location] based on the recorded DTC, shake the wiring harness or connector of the electrical component which is suspected to be the cause of the malfunction, and inspect for any changes in CAN system voltage or occurrence of any DTCs.

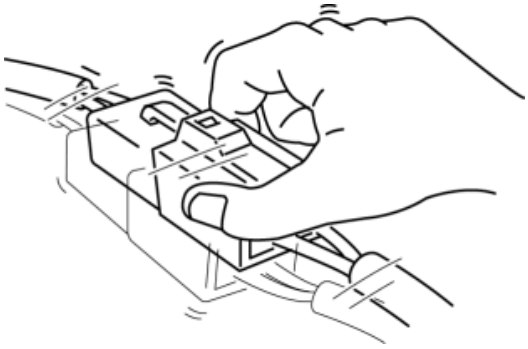

  - Inspect the female terminals on the connector of the electric component which is suspected to be the cause of the malfunction for poor connection.

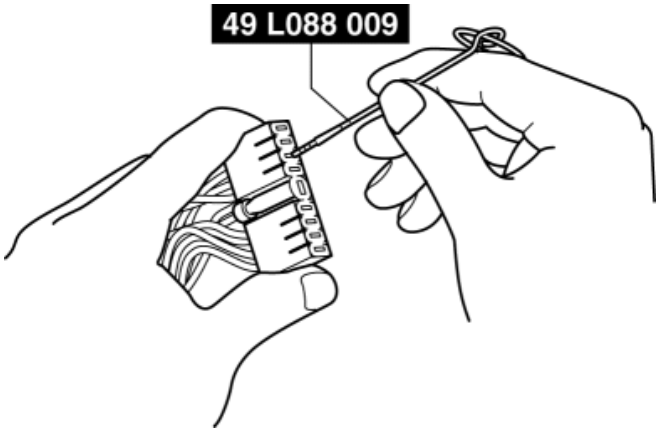

Air Bag System Specification Identification

- Because two types of driver and passenger-side air bag module controls, “Two-step deployment control” and “Standard deployment control”, are available depending on when the vehicle was produced, identify the specification referring to the following identification.

Identification

- In this manual, “Two-step deployment control system” or “Standard deployment control system” is used if the service contents differ depending on the control.
- Control is identified by the following components.

×: Equipped-: Not equipped

Item	Two-step deployment control system	Standard deployment control system
Sophisticated air bag sensor (SAS) control module	×	×
Crash zone sensor	×	×
Side air bag sensor	×	×
Pressure sensor	×	-
Driver-side air bag module	× (Two-step deployment type)	× (Standard deployment type)
Passenger-side air bag module	× (Two-step deployment type)	× (Standard deployment type)
Side air bag module	×	×
Curtain air bag module	×	×
Lap pre-tensioner seat belt	×	-
Pre-tensioner seat belt	×	×
Clock spring	× (Two-step deployment type)	× (Standard deployment type)
Seat weight sensor/control module	×	-

Driver-side buckle switch	×	×
Passenger-side buckle switch	×	-
Air bag system warning light	×	×
PAD indicator	×	-

Outline

- The OBD (on-board diagnostic) system has the following functions:
  - Malfunction detection function: Detects malfunctions in the air bag system and outputs DTCs (Diagnostic Trouble Codes).
  - PID/data monitor function: Reads out specific input/output signals and the system status.
- DTCs can be read/cleared using the M-MDS.

  NOTE:

  - Use the M-MDS to verify DTCs because the DTCs displayed by the air bag system warning light are reference information only.

2014 - Mazda3 - Restraints

FLOWCHART [TWO-STEP DEPLOYMENT CONTROL SYSTEM]

- Use the following flowchart to verify the cause of the trouble.

NOTE:

- When inspecting past malfunction codes, inspect only the DTCs that were indicated before beginning the inspection. A mis-diagnosis could occur as a result of new DTCs being added while performing an inspection by disconnecting related parts or connectors.
- When DTCs of the present malfunction are no longer output after present or past malfunctions or both have been repaired, be sure to clear the past malfunction from memory to prevent repair of malfunctions that have already been repaired.

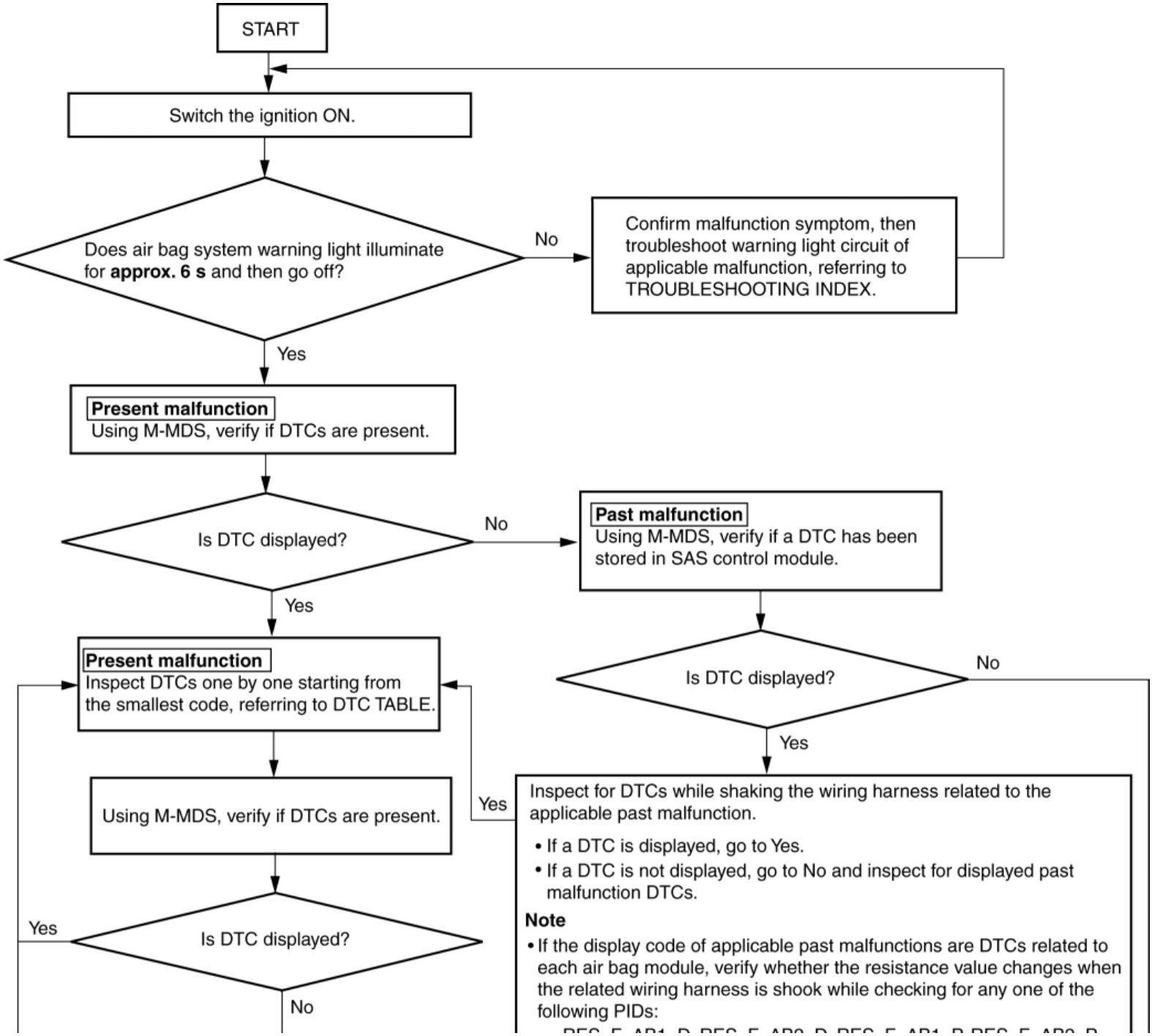

FLOWCHART [TWO-STEP DEPLOYMENT CONTROL SYSTEM]

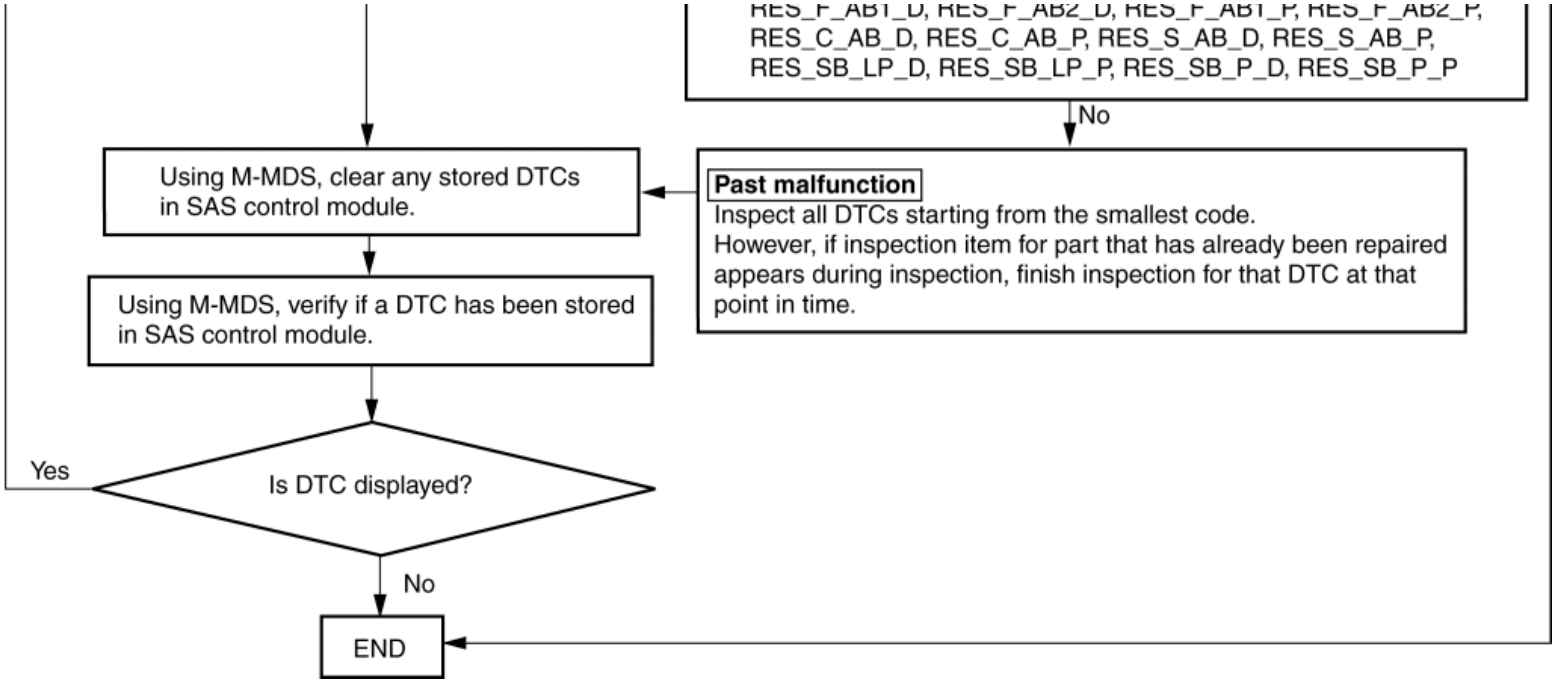

2014 - Mazda3 - Restraints

DTC INSPECTION [TWO-STEP DEPLOYMENT CONTROL SYSTEM]

NOTE:

- If the self-test is implemented, the seat weight sensor calibration is performed. Perform the DTC inspection in accordance with the following conditions:
    - Do not place objects on the front seat (passenger side)
    - Do not touch the front seat (passenger side)
    - Fix the slide position of the front seat (passenger side) to the maximum rearward position.
    - Fix the recliner position of the front seat (passenger side) to the maximum forward position.
    - Set cabin vehicle temperature range between the **-10 to 40 °C {14 to 104 °F}**
    - Other than the above conditions, a “Japan only” command is also displayed, however, do not select the command because it is for use in Japan only.

CMDTC Self Test

1. Connect the M-MDS to the DLC-2.
2. After the vehicle is identified, select the following items from the initialization screen of the M-MDS.
    a. Select "Self Test".
    b. Select "All CMDTCs".
3. Verify the DTC according to the directions on the screen.
    - If any DTCs are displayed, perform troubleshooting according to the corresponding DTC inspection. (See **DTC TABLE [TWO-STEP DEPLOYMENT CONTROL SYSTEM]**.)
4. After completion of repairs, clear all DTCs stored in the SAS control module. (See **CLEARING DTC [TWO-STEP DEPLOYMENT CONTROL SYSTEM]**.)

ODDTC Self Test

1. Connect the M-MDS to the DLC-2.
2. After the vehicle is identified, select the following items from the initialization screen of the M-MDS.
    a. Select "Self Test".
    b. Select "Modules".
    c. Select "RCM".
3. Verify the DTC according to the directions on the screen.
    - If any DTCs are displayed, perform troubleshooting according to the corresponding DTC inspection. (See **DTC TABLE [TWO-STEP DEPLOYMENT CONTROL SYSTEM]**.)
4. After completion of repairs, clear all DTCs stored in the SAS control module. (See **CLEARING DTC [TWO-STEP DEPLOYMENT CONTROL SYSTEM]**.)

Snapshot Data Table

NOTE:

- The SAS control module stores the following two types of information when a DTC is detected and displays snap shot data in the M-MDS.
    - Vehicle information detected by SAS control module

- Vehicle information detected by instrument cluster and received by SAS control module via CAN signal

- The data for all DTCs currently detected is stored.

Snapshot data item	Unit		Definition	Data read/use method	Corresponding PID data monitor item
AAT	°C	°F	Ambient temperature	—	—
APP_STATUS	Accelerator Pedal Off/ Under20%/ Over20%/ FAIL		Accelerator pedal position status	—	—
CFG_STATUS	Config Complete/ Not Configured/ Config Error		Instrument cluster configuration status	—	—
ECT_STATUS	Under 0 degrees C/ 0-Under 80 degrees C/ Over 80 degrees C/ FAIL		Engine coolant temperature status	—	—
FAULT_CNT	—		Number of malfunction detections	—	—
FIRST_DET_IG	hh:mm:ss*1		Time when initial malfunction occurs (IG-ON counter) • Elapsed time from when ignition is switched ON (engine off or on) until SAS control module detects first malfunction*3	—	—
IC_VPWR	V		Instrument cluster power supply voltage	• The SAS control module constantly receives the power supply voltage value of the instrument cluster sent via CAN signal from the instrument cluster. • If a DTC is detected, the SAS control module records the power supply voltage of the instrument cluster when the DTC was detected, and it is displayed in the Mazda Modular Diagnostic System (M-MDS).	VPWR*2
IG-ON_TIMER	hh:mm:ss*1		Elapsed time since ignition was switched ON (engine off or on) **NOTE:** • The instrument cluster records the elapsed time since	• The SAS control module constantly receives the elapsed time since the ignition was switched ON (engine off or on) sent via CAN signal from the instrument cluster. • If a DTC is detected, the SAS control module records the elapsed time since	—

		the ignition was switched ON (engine off or on).	the ignition was switched ON (engine off or on) when the DTC was detected, and it is displayed in the Mazda Modular Diagnostic System (M-MDS).	
LAST_CLR	hh:mm:ss*1	Repair time for last malfunction (B+ counter) • Elapsed time from when battery is connected until SAS control module detects that last malfunction is repaired*3	—	—
LAST_CLR_IG	hh:mm:ss*1	Repair time for last malfunction (IG-ON counter) • Elapsed time from when ignition is switched ON (engine off or on) until SAS control module detects that last malfunction is repaired*3	—	—
LAST_DET	hh:mm:ss*1	Time when last malfunction occurs (B+ counter) • Elapsed time from when battery is connected until SAS control module detects last malfunction*3	—	—
LAST_DET_IG	hh:mm:ss*1	Time when last malfunction occurs (IG-ON counter) • Elapsed time from when ignition is switched ON (engine off or on) until SAS control module detects last malfunction*3	—	—
PWR_MODE_KEY	Key Out/ Key Recently Out (Position 0)/ Accessory (Position 1)/ Post Ignition (Position 2)/ Ignition On (Position 2)/ Running (Position 2)/ Running -	• Key Out: Ignition switched off • Key Recently Out (Position 0): Elapsed time **within 3 s** since ignition was switched off • Accessory (Position 1): Ignition is switched to ACC • Post Ignition (Position 2): Elapsed time **within 3 s** since ignition was switched ON (engine off or on) • Ignition On (Position 2): Ignition switched ON (engine off)	• The SAS control module constantly receives the ignition switch status sent via CAN signal from the instrument cluster. • If a DTC is detected, the SAS control module records the ignition switch status when the DTC was detected, and it is displayed in the Mazda Modular Diagnostic System (M-MDS).	—

	Starting		• Running (Position 2): Ignition switched ON (engine on) • Running - Starting: Cranking condition		
RPM_STATUS	Engine Stop/ Under1500rpm/ Over1500rpm/ FAIL		Engine speed status	• The SAS control module constantly receives the engine speed sent via CAN signal from the instrument cluster. • If a DTC is detected, the SAS control module records the engine speed when the DTC was detected, and it is displayed in the Mazda Modular Diagnostic System (M-MDS).	TACHOMTR*2
SHIFT_STATUS	P/N/ D/ R/ FAIL		Selector lever position status	• The SAS control module constantly receives the selector lever position sent via CAN signal from the instrument cluster. • If a DTC is detected, the SAS control module records the selector lever position when the DTC was detected, and it is displayed in the Mazda Modular Diagnostic System (M-MDS).	—
TOTAL_DIST	km	miles	Accumulated total traveled distance from completion of vehicle until SAS control module detects DTC (Odometer value in instrument cluster)	The total traveled distance from which the SAS control module detects DTCs to the present can be calculated by performing the following procedure. • Verify the odometer value in the instrument cluster. • Verify the snapshot data item TOTAL_DIST. • Subtract 2 from 1.	—
TOTAL_TIME	hh:mm:ss*1		Accumulated total elapsed time since vehicle completion until SAS control module detects a DTC*3 **NOTE:** • When the ROOM fuse is removed, and the ignition is switched off, the time is not included in the elapsed time.	The elapsed time from which the SAS control module detects DTCs to the present can be calculated by performing the following procedure. • Verify the instrument cluster PID item TOTAL_TIME. • Verify the snapshot data item TOTAL_TIME. • Subtract 2 from 1.	TOTAL_TIME*2
VPWR	V		SAS control module power supply malfunction	—	VPWR_IGA
VSPD_STATUS	Stop/ 0-10km/h/ Over10km/h/ FAIL		Vehicle speed status	• The SAS control module constantly receives the vehicle speed sent via CAN signal from the instrument cluster. • If a DTC is detected, the SAS control module records the vehicle speed when the DTC was detected, and it is displayed in the Mazda Modular Diagnostic System (M-MDS).	SPEEDOMTR*2

*1 **The seconds may be indicated after the decimal point.**

*2 **Instrument cluster PID (See PID/DATA MONITOR TABLE [INSTRUMENT CLUSTER].)**

*3

The snap shot data of the number of stored malfunction detections, B+ counters, or IG ON counters is combined with the DTC detection conditions of the SAS control module, and the point-in-time data in the following table is stored.

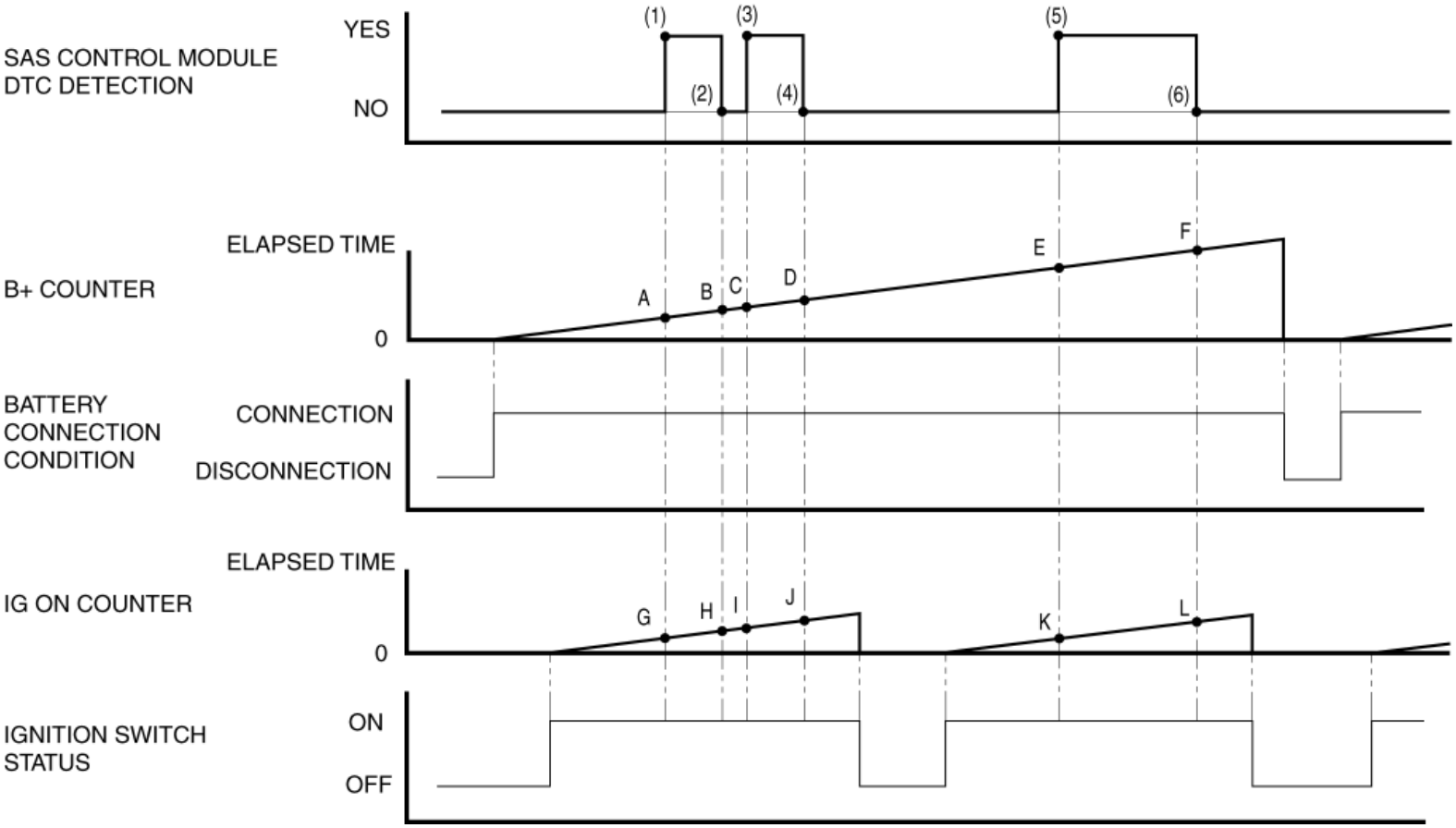

SAS control module DTC detection period	Snapshot data						
	FAULT_CNT (Number of malfunction detections)	TOTAL_TIME	FIRST_DET_IG	LAST_DET	LAST_DET_IG	LAST_CLR	LAST_CLR_IG
	Number of malfunction detections	Time when first malfunction occurs (B+ counter)	Time when initial malfunction occurs (IG-ON counter)	Time when last malfunction occurs (B+ counter)	Time when last malfunction occurs (IG-ON counter)	Repair time for last malfunction (B+ counter)	Repair time for last malfunction (IG-ON counter)
(1)	1	A	G	A	G	-	-
(2)	1	A	G	A	G	B	H
(3)	2	A	G	C	I	B	H
(4)	2	A	G	C	I	D	J
(5)	3	A	G	E	K	D	J
(6)	3	A	G	E	K	F	L

2014 - Mazda3 - Restraints

CLEARING DTC [TWO-STEP DEPLOYMENT CONTROL SYSTEM]

CMDTC Self Test

1. Connect the M-MDS to the DLC 2.
2. After the vehicle is identified, select the following items from the initialization screen of the M-MDS.
    a. Select “Self Test”.
    b. Select “All CMDTCs”.
3. Verify the DTC according to the directions on the screen.
4. Press the clear button on the DTC screen to clear the DTC.
5. Switch the ignition off.
6. Switch the ignition ON (engine off or on) and wait for **5 s or more**.
7. Perform DTC inspection. (See **DTC INSPECTION [TWO-STEP DEPLOYMENT CONTROL SYSTEM]**.)
8. Verify that no DTCs are displayed.

ODDTC Self Test

1. Connect the M-MDS to the DLC 2.
2. After the vehicle is identified, select the following items from the initialization screen of the M-MDS.
    a. Select “Self Test”.
    b. Select “Modules”.
    c. Select “RCM”.
3. Verify the DTC according to the directions on the screen.
4. Press the clear button on the DTC screen to clear the DTC.
5. Switch the ignition off.
6. Switch the ignition ON (engine off or on) and wait for **11 s or more**.
7. Perform DTC inspection. (See **DTC INSPECTION [TWO-STEP DEPLOYMENT CONTROL SYSTEM]**.)
8. Verify that no DTCs are displayed.

CLEARING DTC [TWO-STEP DEPLOYMENT CONTROL SYSTEM]

2014 - Mazda3 - Restraints

DTC TABLE [TWO-STEP DEPLOYMENT CONTROL SYSTEM]

CAUTION:

- When DTCs not shown in the DTC table are displayed, perform the inspection for DTCs not shown in the DTC table. (See **Inspection for DTCs not shown in DTC table**.)

X: Applicable—: Not applicable

DTC				System malfunction location	Fail-safe function	Drive cycle	Self test type*1	Memory function	Page
M-MDS display	Air bag system warning light								
	Flashing pattern		Priority ranking						
B0001:11	19		18	Driver-side air bag module (inflator No.1) circuit short to body ground	—	—	C, D	×	(See **DTC B0001:11/B0001:12/B0001:13/B0001:19/B0001:1A [TWO-STEP DEPLOYMENT CONTROL SYSTEM]**.)
B0001:12				Driver-side air bag module (inflator No.1) circuit short to power supply	—	—	C, D	×	
B0001:13				Driver-side air bag module (inflator No.1) circuit open circuit or resistance high	—	—	C, D	×	
B0001:19				Short circuit to driver-side air bag module (inflator No.1) and other air bag module circuits	—	—	C, D	×	

B0001:1A				Driver-side air bag module (inflator No.1) circuit resistance low	—	—	C, D	×	
B0001:55				Configuration setting error (driver-side air bag module (inflator No.1) structural malfunction)	—	—	C, D	×	(See **DTC B0001:55/B0010:55 [TWO-STEP DEPLOYMENT CONTROL SYSTEM]**.)
B0002:11	19		18	Driver-side air bag module (inflator No.2) circuit short to body ground	—	—	C, D	×	(See **DTC B0002:11/B0002:12/B0002:13/B0002:19/B0002:1A [TWO-STEP DEPLOYMENT CONTROL SYSTEM]**.)
B0002:12				Driver-side air bag module (inflator No.2) circuit short to power supply	—	—	C, D	×	
B0002:13				Driver-side air bag module (inflator No.2) circuit open circuit or resistance high	—	—	C, D	×	
B0002:19				Short circuit to driver-side air bag module (inflator No.2) and other air bag module circuits	—	—	C, D	×	
B0002:1A				Driver-side air bag module (inflator No.2) circuit resistance low	—	—	C, D	×	
				Configuration					

B0002:55				setting error (driver-side air bag module (inflator No.2) structural malfunction)	—	—	C, D	×	(See **DTC B0002:55/B0011:55 [TWO-STEP DEPLOYMENT CONTROL SYSTEM]**.)
B0003:53	—	Flashing	4	Operation (deployment) inhibited due to configuration setting	—	—	C, D	×	(See **DTC B0003:53 [TWO-STEP DEPLOYMENT CONTROL SYSTEM]**.)
B0010:11	21		17	Passenger-side air bag module (inflator No.1) circuit short to body ground	—	—	C, D	×	(See **DTC B0010:11/B0010:12/B0010:13/B0010:19/B0010:1A [TWO-STEP DEPLOYMENT CONTROL SYSTEM]**.)
B0010:12				Passenger-side air bag module (inflator No.1) circuit short to power supply	—	—	C, D	×	
B0010:13				Passenger-side air bag module (inflator No.1) circuit open circuit or resistance high	—	—	C, D	×	
B0010:19				Short circuit to passenger-side air bag module (inflator No.1) and other air bag module circuits	—	—	C, D	×	
B0010:1A				Passenger-side air bag module (inflator No.1) circuit resistance low	—	—	C, D	×	
				Configuration setting error					

B0010:55				(passenger-side air bag module (inflator No.1) structural malfunction)	—	—	C, D	×	(See **DTC B0001:55/B0010:55 [TWO-STEP DEPLOYMENT CONTROL SYSTEM]**.)
B0011:11	21		17	Passenger-side air bag module (inflator No.2) circuit short to body ground	—	—	C, D	×	(See **DTC B0011:11/B0011:12/B0011:13/B0011:19/B0011:1A [TWO-STEP DEPLOYMENT CONTROL SYSTEM]**.)
B0011:12				Passenger-side air bag module (inflator No.2) circuit short to power supply	—	—	C, D	×	
B0011:13				Passenger-side air bag module (inflator No.2) circuit open circuit or resistance high	—	—	C, D	×	
B0011:19				Short circuit to passenger-side air bag module (inflator No.2) and other air bag module circuits	—	—	C, D	×	
B0011:1A				Passenger-side air bag module (inflator No.2) circuit resistance low	—	—	C, D	×	
B0011:55				Configuration setting error (passenger-side air bag module (inflator No.2) structural malfunction)	—	—	C, D	×	(See **DTC B0002:55/B0011:55 [TWO-STEP DEPLOYMENT CONTROL SYSTEM]**.)

B0052:09	52		27	Passenger-side buckle switch undefined	—	—	C, D	×	(See **DTC B0052:09/B0052:11/B0052:14 [TWO-STEP DEPLOYMENT CONTROL SYSTEM]**.)
B0052:11				Passenger-side buckle switch circuit open or short to power supply	—	—	C, D	×	
B0052:14				Passenger-side buckle switch circuit short to body ground	—	—	C, D	×	
B0072:11	34		19	Passenger-side lap pre-tensioner seat belt circuit short to body ground	—	—	C, D	×	(See **DTC B0072:11/B0072:12/B0072:13/B0072:19/B0072:1A [TWO-STEP DEPLOYMENT CONTROL SYSTEM]**.)
B0072:12				Passenger-side lap pre-tensioner seat belt circuit short to power supply	—	—	C, D	×	
B0072:13				Passenger-side lap pre-tensioner seat belt circuit open circuit or resistance high	—	—	C, D	×	
B0072:19				Short circuit to passenger-side lap pre-tensioner seat belt and other air bag module circuits	—	—	C, D	×	
B0072:1A				Passenger-side lap pre-tensioner seat belt circuit resistance low	—	—	C, D	×	

B0072:55				Configuration setting error (passenger-side lap pre-tensioner seat belt structural malfunction)	—	—	C, D	×	(See **DTC B0072:55/B1228:55 [TWO-STEP DEPLOYMENT CONTROL SYSTEM]**.)
B0094:11	42		10	Driver-side crash zone sensor circuit short to body ground	—	—	C, D	×	(See **DTC B0094:11/B0094:13/B0094:87/B0094:96 [TWO-STEP DEPLOYMENT CONTROL SYSTEM]**.)
B0094:13				Driver-side crash zone sensor circuit open circuit or short to power supply	—	—	C, D	×	
B0094:87				Signal reception error from driver-side crash zone sensor	—	—	C, D	×	
B0094:96				Driver-side crash zone sensor internal malfunction	—	—	C, D	×	
B0094:55				Configuration setting error (driver-side crash zone sensor structural malfunction)	—	—	C, D	×	(See **DTC B0094:55/B1417:55 [TWO-STEP DEPLOYMENT CONTROL SYSTEM]**.)
B00A0:07				Seat weight sensor collision detection	—	—	C, D	×	(See **DTC B00A0:07 [TWO-STEP DEPLOYMENT CONTROL SYSTEM]**.)
B00A0:09				Seat weight sensor control module internal malfunction	—	—	C, D	×	(See **DTC B00A0:09 [TWO-STEP DEPLOYMENT CONTROL SYSTEM]**.)

B00A0:1C	16		28	Seat weight sensor control module circuit open to power supply	—	—	C, D	×	(See **DTC B00A0:1C [TWO-STEP DEPLOYMENT CONTROL SYSTEM]**.)
B00A0:28				Seat weight sensor calibration setting invalid	—	—	D	×	(See **DTC B00A0:28 [TWO-STEP DEPLOYMENT CONTROL SYSTEM]**.)
B00A0:4A	15		6	Seat weight sensor ID mismatch	—	—	C, D	×	(See **DTC B00A0:4A [TWO-STEP DEPLOYMENT CONTROL SYSTEM]**.)
B00A0:54	16		28	Seat weight sensor calibration setting not set	—	—	C, D	×	(See **DTC B00A0:54 [TWO-STEP DEPLOYMENT CONTROL SYSTEM]**.)
B00A0:81				Invalid signal to SAS control module	—	—	C, D	×	(See **DTC B00A0:81/B00A0:87/B00A0:8F [TWO-STEP DEPLOYMENT CONTROL SYSTEM]**.)
B00A0:87				Error signal from seat weight sensor control module	—	—	C, D	×	
B00A0:8F				Seat weight sensor communication error	—	—	C, D	×	
B00C0:93	16		28	Seat weight sensor (LF) communication error	—	—	C, D	×	(See **DTC B00C0:93 [TWO-STEP DEPLOYMENT CONTROL SYSTEM]**.)
B00C1:93				Seat weight sensor (LR) communication error	—	—	C, D	×	(See **DTC B00C1:93 [TWO-STEP DEPLOYMENT CONTROL SYSTEM]**.)
B00C2:93				Seat weight sensor (RF)	—	—	C, D	×	(See **DTC B00C2:93 [TWO-STEP DEPLOYMENT CONTROL SYSTEM]**

				communication error					.)
B00C3:93				Seat weight sensor (RR) communication error	—	—	C, D	×	(See **DTC B00C3:93 [TWO-STEP DEPLOYMENT CONTROL SYSTEM]**.)
B00D2:01	14		5	Air bag system warning light malfunction	—	—	C, D	×	(See **DTC B00D2:01 [TWO-STEP DEPLOYMENT CONTROL SYSTEM]**.)
B00D2:29				Invalid signal to air bag system warning light	—	—	C, D	×	(See **DTC B00D2:29 [TWO-STEP DEPLOYMENT CONTROL SYSTEM]**.)
B00D5:01	18		29	PAD indicator circuit open circuit or short to power supply	—	—	C, D	×	(See **DTC B00D5:01/B00D5:29 [TWO-STEP DEPLOYMENT CONTROL SYSTEM]**.)
B00D5:29				PAD indicator communication error	—	—	C, D	×	
B1011:95	58		8	SAS control module connectors are poorly connected	—	—	C, D	×	(See **DTC B1011:95 [TWO-STEP DEPLOYMENT CONTROL SYSTEM]**.)
B1126:11				Driver-side side air bag module circuit short to body ground	—	—	C, D	×	
B1126:12				Driver-side side air bag module circuit short to power supply	—	—	C, D	×	
B1126:13				Driver-side side air bag module circuit	—	—	C, D	×	(See **DTC B1126:11/B1126:12/B1126:13/B1126:19/B1126:1A**

				open circuit or resistance high					[TWO-STEP DEPLOYMENT CONTROL SYSTEM].)
B1126:19	22		24	Short circuit to driver-side side air bag module and other air bag module circuits	—	—	C, D	×	
B1126:1A				Driver-side side air bag module circuit resistance low	—	—	C, D	×	
B1126:55				Configuration setting error (driver-side side air bag module structural malfunction)	—	—	C, D	×	(See DTC B1126:55/B1127:55 [TWO-STEP DEPLOYMENT CONTROL SYSTEM].)
B1127:11				Passenger-side side air bag module circuit short to body ground	—	—	C, D	×	
B1127:12				Passenger-side side air bag module circuit short to power supply	—	—	C, D	×	
B1127:13				Passenger-side side air bag module circuit open circuit or resistance high	—	—	C, D	×	(See DTC B1127:11/B1127:12/B1127:13/B1127:19/B1127:1A [TWO-STEP DEPLOYMENT CONTROL SYSTEM].)
B1127:19	23		23	Short circuit to passenger-side side air bag module and other air bag module circuits	—	—	C, D	×	
				Passenger-side					

B1127:1A				side air bag module circuit resistance low	—	—	C, D	×	
B1127:55				Configuration setting error (passenger-side side air bag module structural malfunction)	—	—	C, D	×	(See **DTC B1126:55/B1127:55 [TWO-STEP DEPLOYMENT CONTROL SYSTEM]**.)
B1128:11	24		26	Driver-side curtain air bag module circuit short to body ground	—	—	C, D	×	(See **DTC B1128:11/B1128:12/B1128:13/B1128:19/B1128:1A [TWO-STEP DEPLOYMENT CONTROL SYSTEM]**.)
B1128:12				Driver-side curtain air bag module circuit short to power supply	—	—	C, D	×	
B1128:13				Driver-side curtain air bag module circuit open circuit or resistance high	—	—	C, D	×	
B1128:19				Short circuit to driver-side curtain air bag module and other air bag module circuits	—	—	C, D	×	
B1128:1A				Driver-side curtain air bag module circuit resistance low	—	—	C, D	×	
B1128:55				Configuration setting error (driver-side curtain air bag module structural malfunction)	—	—	C, D	×	(See **DTC B1128:55/B1129:55 [TWO-STEP DEPLOYMENT CONTROL SYSTEM]**.)

B1129:11	25		25	Passenger-side curtain air bag module circuit short to body ground	—	—	C, D	×	(See **DTC B1129:11/B1129:12/B1129:13/B1129:19/B1129:1A [TWO-STEP DEPLOYMENT CONTROL SYSTEM]**.)
B1129:12				Passenger-side curtain air bag module circuit short to power supply	—	—	C, D	×	
B1129:13				Passenger-side curtain air bag module circuit open circuit or resistance high	—	—	C, D	×	
B1129:19				Short circuit to passenger-side curtain air bag module and other air bag module circuits	—	—	C, D	×	
B1129:1A				Passenger-side curtain air bag module circuit resistance low	—	—	C, D	×	
B1129:55				Configuration setting error (passenger-side curtain air bag module structural malfunction)	—	—	C, D	×	(See **DTC B1128:55/B1129:55 [TWO-STEP DEPLOYMENT CONTROL SYSTEM]**.)
B1193:00	13		3	SAS control module operation (deployment)	—	—	C, D	×	(See **DTC B1193:00 [TWO-STEP DEPLOYMENT CONTROL SYSTEM]**.)
B1196:11				Driver-side side air bag sensor circuit short to body ground	—	—	C, D	×	

B1196:13				Driver-side side air bag sensor circuit open circuit or short to power supply	—	—	C, D	×	(See **DTC B1196:11/B1196:13/B1196:87/B1196:96 [TWO-STEP DEPLOYMENT CONTROL SYSTEM]**.)
B1196:87	45		16	Signal reception error from driver-side side air bag sensor	—	—	C, D	×	
B1196:96				Driver-side side air bag sensor internal malfunction	—	—	C, D	×	
B1196:55				Configuration setting error (driver-side side air bag sensor structural malfunction)	—	—	C, D	×	(See **DTC B1196:55/B1197:55 [TWO-STEP DEPLOYMENT CONTROL SYSTEM]**.)
B1197:11				Passenger-side side air bag sensor circuit short to body ground	—	—	C, D	×	
B1197:13				Passenger-side side air bag sensor circuit open circuit or short to power supply	—	—	C, D	×	(See **DTC B1197:11/B1197:13/B1197:87/B1197:96 [TWO-STEP DEPLOYMENT CONTROL SYSTEM]**.)
B1197:87	46		15	Signal reception error from passenger-side side air bag sensor	—	—	C, D	×	
B1197:96				Passenger-side side air bag sensor internal	—	—	C, D	×	

				malfunction					
B1197:55				Configuration setting error (passenger-side side air bag sensor structural malfunction)	—	—	C, D	×	(See **DTC B1196:55/B1197:55 [TWO-STEP DEPLOYMENT CONTROL SYSTEM]**.)
B1206:00	—	—	—	SAS control module operation (deployment) (fuel cut signal output)	—	—	C, D	×	(See **DTC B1206:00/U2107:00 [TWO-STEP DEPLOYMENT CONTROL SYSTEM]**.)
B1211:11	38		22	Driver-side pre-tensioner seat belt circuit short to body ground	—	—	C, D	×	(See **DTC B1211:11/B1211:12/B1211:13/B1211:19/B1211:1A [TWO-STEP DEPLOYMENT CONTROL SYSTEM]**.)
B1211:12				Driver-side pre-tensioner seat belt circuit short to power supply	—	—	C, D	×	
B1211:13				Driver-side pre-tensioner seat belt circuit open circuit or resistance high	—	—	C, D	×	
B1211:19				Short circuit to driver-side pre-tensioner seat belt and other air bag module circuits	—	—	C, D	×	
B1211:1A				Driver-side pre-tensioner seat belt circuit resistance low	—	—	C, D	×	
				Configuration setting error					

B1211:55				(driver-side pre-tensioner seat belt structural malfunction)	—	—	C, D	×	(See **DTC B1211:55, B1214:55 [TWO-STEP DEPLOYMENT CONTROL SYSTEM]**.)
B1214:11				Passenger-side pre-tensioner seat belt circuit short to body ground	—	—	C, D	×	
B1214:12				Passenger-side pre-tensioner seat belt circuit short to power supply	—	—	C, D	×	
B1214:13				Passenger-side pre-tensioner seat belt circuit open circuit or resistance high	—	—	C, D	×	(See **DTC B1214:11/B1214:12/B1214:13/B1214:19/B1214:1A [TWO-STEP DEPLOYMENT CONTROL SYSTEM]**.)
B1214:19	39		21	Short circuit to passenger-side pre-tensioner seat belt and other air bag module circuits	—	—	C, D	×	
B1214:1A				Passenger-side pre-tensioner seat belt circuit resistance low	—	—	C, D	×	
B1214:55				Configuration setting error (passenger-side pre-tensioner seat belt structural malfunction)	—	—	C, D	×	(See **DTC B1211:55, B1214:55 [TWO-STEP DEPLOYMENT CONTROL SYSTEM]**.)
B1226:11				Driver-side pressure sensor circuit short to body ground	—	—	C, D	×	

B1226:13				Driver-side pressure sensor circuit open circuit or short to power supply	—	—	C, D	×	(See **DTC B1226:11/B1226:13/B1226:87/B1226:96 [TWO-STEP DEPLOYMENT CONTROL SYSTEM]**.)
B1226:87	36		12	Signal reception error from driver-side pressure sensor	—	—	C, D	×	
B1226:96				Driver-side pressure sensor internal malfunction	—	—	C, D	×	
B1226:55				Configuration setting error (driver-side pressure sensor structural malfunction)	—	—	C, D	×	(See **DTC B1226:55, B1227:55 [TWO-STEP DEPLOYMENT CONTROL SYSTEM]**.)
B1227:11				Passenger-side pressure sensor circuit short to body ground	—	—	C, D	×	
B1227:13				Passenger-side pressure sensor circuit open circuit or short to power supply	—	—	C, D	×	(See **DTC B1227:11/B1227:13/B1227:87/B1227:96 [TWO-STEP DEPLOYMENT CONTROL SYSTEM]**.)
B1227:87	37		11	Signal reception error from passenger-side pressure sensor	—	—	C, D	×	
B1227:96				Passenger-side pressure sensor internal	—	—	C, D	×	

				malfunction					
B1227:55				Configuration setting error (passenger-side pressure sensor structural malfunction)	—	—	C, D	×	(See **DTC B1226:55, B1227:55 [TWO-STEP DEPLOYMENT CONTROL SYSTEM]**.)
B1228:11	35		20	Driver-side lap pre-tensioner seat belt circuit short to body ground	—	—	C, D	×	(See **DTC B1228:11/B1228:12/B1228:13/B1228:19/B1228:1A [TWO-STEP DEPLOYMENT CONTROL SYSTEM]**.)
B1228:12				Driver-side lap pre-tensioner seat belt circuit short to power supply	—	—	C, D	×	
B1228:13				Driver-side lap pre-tensioner seat belt circuit open circuit or resistance high	—	—	C, D	×	
B1228:19				Short circuit to driver-side lap pre-tensioner seat belt and other air bag module circuits	—	—	C, D	×	
B1228:1A				Driver-side lap pre-tensioner seat belt circuit resistance low	—	—	C, D	×	
B1228:55				Configuration setting error (driver-side lap pre-tensioner seat belt structural malfunction)	—	—	C, D	×	(See **DTC B0072:55/B1228:55 [TWO-STEP DEPLOYMENT CONTROL SYSTEM]**.)
				Passenger-side					

B1417:11	41		9	crash zone sensor circuit short to body ground	—	—	C, D	×	(See **DTC B1417:11/B1417:13/B1417:87/B1417:96 [TWO-STEP DEPLOYMENT CONTROL SYSTEM]**.)
B1417:13				Passenger-side crash zone sensor circuit open circuit or short to power supply	—	—	C, D	×	
B1417:87				Signal reception error from passenger-side crash zone sensor	—	—	C, D	×	
B1417:96				Passenger-side crash zone sensor internal malfunction	—	—	C, D	×	
B1417:55				Configuration setting error (passenger-side crash zone sensor structural malfunction)	—	—	C, D	×	(See **DTC B0094:55/B1417:55 [TWO-STEP DEPLOYMENT CONTROL SYSTEM]**.)
C0061:29	—	—	—	Low-G sensor (lateral-G) in SAS control module (internal circuit disabled)	—	—	C, D	×	(See **DTC C0061:29/C0062:29/C0063:29/P0666:29 [TWO-STEP DEPLOYMENT CONTROL SYSTEM]**.)
C0062:29				Low-G sensor (forward-G) in SAS control module (internal circuit disabled)	—	—	C, D	×	
C0063:29				Yaw rate sensor in SAS control module	—	—	C, D	×	

				(internal circuit disabled)					
P0666:29				Temperature sensor in SAS control module (internal circuit disabled)	—	—	C, D	×	
U0001:88	14		5	Module communication error (HS-CAN)	—	—	C, D	×	(See **DTC U0001:88/U0155:00 [TWO-STEP DEPLOYMENT CONTROL SYSTEM]**.)
U0155:00	14		5	Communication error with instrument cluster	—	—	C, D	×	(See **DTC U0001:88/U0155:00 [TWO-STEP DEPLOYMENT CONTROL SYSTEM]**.)
U2005:68				PCM communication error (vehicle speed signal)	—	—	C, D	×	(See **DTC U2005:68 [TWO-STEP DEPLOYMENT CONTROL SYSTEM]**.)
U0300:00	54		7	Configuration setting invalid	—	—	C, D	×	(See **DTC U0300:00/U2100:00 [TWO-STEP DEPLOYMENT CONTROL SYSTEM]**.)
U2100:00	—	Flashing	4	Configuration not set	—	—	C, D	×	
U2107:00	—	—	—	SAS control module operation (deployment) signal output	—	—	C, D	×	(See **DTC B1206:00/U2107:00 [TWO-STEP DEPLOYMENT CONTROL SYSTEM]**.)
U3000:49	12		2	SAS control module internal malfunction	—	—	C, D	×	(See **DTC U3000:49 [TWO-STEP DEPLOYMENT CONTROL SYSTEM]**.)
U3003:16	—	Continuously illuminated	1	SAS control module power supply voltage decreases (**less than 8 V**)	—	—	C, D	×	(See **DTC U3003:16/U3003:17 [TWO-STEP**

									DEPLOYMENT CONTROL SYSTEM].)
U3003:17				SAS control module power supply voltage increases (**18 V or more**)	—	—	C, D	×	

*1
C: CMDTC self test, D: ODDTC self test

Inspection for DTCs not shown in DTC table

System wiring diagram

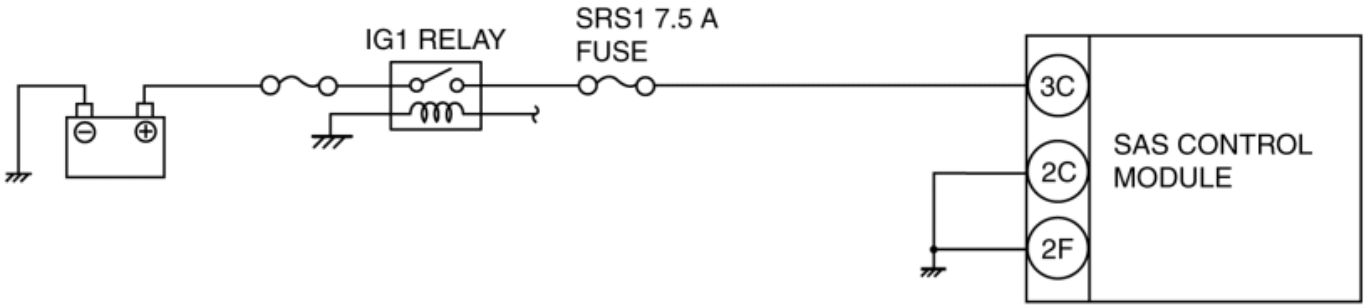

SAS CONTROL MODULE WIRING
HARNESS-SIDE CONNECTOR

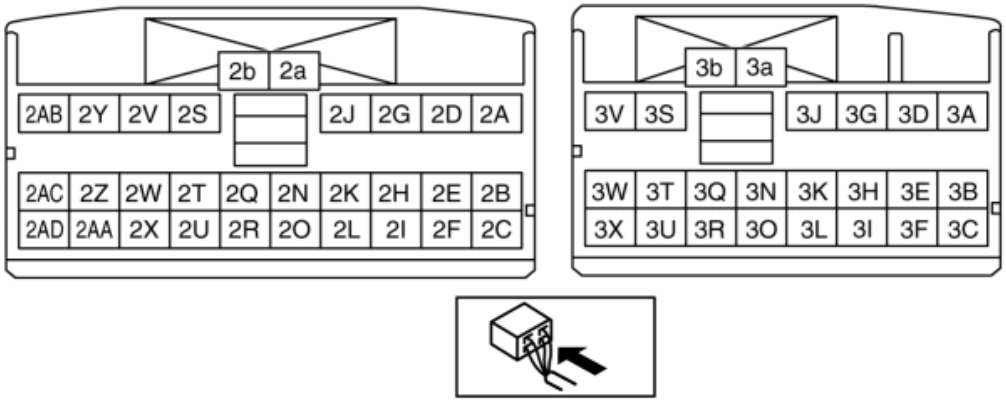

Diagnostic procedure

Step	Inspection		Action
1	**BATTERY INSPECTION** • Refer to the battery inspection and inspect the battery. (See **BATTERY INSPECTION [SKYACTIV-G 2.0, SKYACTIV-G 2.5]**.) • Is the battery normal?	Yes	Go to the next step.
		No	Replace or charge the battery. (See **BATTERY REMOVAL/INSTALLATION [SKYACTIV-G 2.0, SKYACTIV-G 2.5]**.) (See **BATTERY RECHARGING [SKYACTIV-G 2.0, SKYACTIV-G 2.5]**.) Then go to Step 5.
2	**FUSE INSPECTION** • Switch the ignition off. • Disconnect the negative battery cable and wait **1 min or more**. (See **NEGATIVE BATTERY CABLE DISCONNECTION/CONNECTION [SKYACTIV-G 2.0, SKYACTIV-G 2.5]**.) • Remove the SRS1 7.5 A fuse. • Is the fuse normal?	Yes	Go to the next step.
		No	Replace the SRS1 7.5 A fuse. Then go to Step 5.
3	**INSPECT WIRING HARNESS BETWEEN IG1 RELAY AND SAS CONTROL MODULE** **WARNING:** • Handling the component parts improperly can accidentally operate (deploy) the air bag module, which may seriously injure you. Read the service warnings/cautions and the workshop manual before handling the air bag system components. (See **AIR BAG SYSTEM SERVICE WARNINGS [TWO-STEP DEPLOYMENT CONTROL SYSTEM]**.) (See **AIR BAG SYSTEM SERVICE CAUTIONS [TWO-STEP DEPLOYMENT CONTROL SYSTEM]**.) • Install the SRS1 7.5 A fuse. • Remove the column cover. (See **COLUMN COVER REMOVAL/INSTALLATION**.) • Disconnect the clock spring connector. (See **CLOCK SPRING REMOVAL/INSTALLATION [TWO-STEP DEPLOYMENT CONTROL SYSTEM]**.) • Remove the glove compartment.	Yes	Go to the next step.
		No	Refer to the wiring diagram and verify whether or not there is a common connector between SAS control module terminal and IG1 relay terminal. **If there is a common connector:** • Determine the malfunctioning part by inspecting the common connector and the terminal for corrosion, damage, or pin disconnection, and the common wiring harness for an open circuit or short to ground. • Replace the malfunctioning part. **If there is no common connector:** • Replace the wiring harness which has an open circuit or short to ground. Go to Step 5.

	(See **GLOVE COMPARTMENT REMOVAL/INSTALLATION**.) • Disconnect the passenger-side air bag module connector. (See **PASSENGER-SIDE AIR BAG MODULE REMOVAL [TWO-STEP DEPLOYMENT CONTROL SYSTEM]**.) • Disconnect the driver and passenger-side front seat connector. (See **FRONT SEAT REMOVAL/INSTALLATION**.) • Remove the B-pillar lower trim. (See **B-PILLAR LOWER TRIM REMOVAL/INSTALLATION**.) • Disconnect the driver and passenger-side pre-tensioner seat belt connectors. • Disconnect the driver and passenger-side lap pre-tensioner seat belt connector. (See **FRONT SEAT BELT REMOVAL/INSTALLATION**.) • Remove the headliner. (See **HEADLINER REMOVAL/INSTALLATION**.) • Disconnect the driver and passenger-side curtain air bag module connectors. (See **CURTAIN AIR BAG MODULE REMOVAL/INSTALLATION [TWO-STEP DEPLOYMENT CONTROL SYSTEM]**.)		
3	• Disconnect the all SAS control module connectors. (See **SAS CONTROL MODULE REMOVAL/INSTALLATION [TWO-STEP DEPLOYMENT CONTROL SYSTEM]**.) • Connect the negative battery cable. (See **NEGATIVE BATTERY CABLE DISCONNECTION/CONNECTION [SKYACTIV-G 2.0, SKYACTIV-G 2.5]**.) • Switch the ignition ON (engine off or on). • Measure the voltage of SAS control module terminal 3C (wiring harness-side). **NOTE:** • Measure the voltage while shaking the wiring harness between the SAS control module and IG1 relay. • Is the voltage between **8–17.9 V**?		
4	**INSPECT SAS CONTROL MODULE CIRCUIT FOR OPEN CIRCUIT** • SAS control module connectors are disconnected.	Yes	Go to the next step.

	• Switch the ignition off. • Disconnect the negative battery cable and wait **1 min or more**. (See **NEGATIVE BATTERY CABLE DISCONNECTION/CONNECTION [SKYACTIV-G 2.0, SKYACTIV-G 2.5]**.) • Inspect the wiring harness between SAS control module connector terminal 2C, 2F (wiring harness-side) and body ground. **NOTE:** • Inspect for continuity while shaking the wiring harness between the SAS control module and body ground. • Is there continuity?	No	Refer to the wiring diagram and verify whether or not there is a common connector between SAS control module terminal and body ground. **If there is a common connector:** • Determine the malfunctioning part by inspecting the common connector and the terminal for corrosion, damage, or pin disconnection, and the common wiring harness for an open circuit. • Replace the malfunctioning part. **If there is no common connector:** • Replace the wiring harness which has an open circuit. Go to the next step.
5	**PERFORM SAS CONTROL MODULE DTC INSPECTION** • Connect the SAS control module connectors. • Reconnect all disconnected connectors. • Connect the negative battery cable. (See **NEGATIVE BATTERY CABLE DISCONNECTION/CONNECTION [SKYACTIV-G 2.0, SKYACTIV-G 2.5]**.) • Switch the ignition ON (engine off or on). • Clear the DTC for the SAS control module using the M-MDS. (See **CLEARING DTC [TWO-STEP DEPLOYMENT CONTROL SYSTEM]**.) • Perform the DTC inspection for the SAS control module using the M-MDS. (See **DTC INSPECTION [TWO-STEP DEPLOYMENT CONTROL SYSTEM]**.) • Are the same DTCs present?	Yes	Replace the SAS control module. (See **SAS CONTROL MODULE REMOVAL/INSTALLATION [TWO-STEP DEPLOYMENT CONTROL SYSTEM]**.)
		No	DTC troubleshooting completed.

2014 - Mazda3 - Restraints

DTC B0001:11/B0001:12/B0001:13/B0001:19/B0001:1A [TWO-STEP DEPLOYMENT CONTROL SYSTEM]

System malfunction location	• B0001:11:Driver-side air bag module (inflator No.1) circuit short to body ground • B0001:12:Driver-side air bag module (inflator No.1) circuit short to power supply • B0001:13:Driver-side air bag module (inflator No.1) circuit resistance high • B0001:19:Short circuit to driver-side air bag module (inflator No.1) and other air bag module circuits • B0001:1A:Driver-side air bag module (inflator No.1) circuit resistance low
Detection condition	**WARNING:** • Detection conditions are for understanding the DTC outline before performing an inspection. Performing an inspection according to only the detection conditions may cause injury due to an operating error, or damage the system. When performing an inspection, always follow the inspection procedure. • Resistance **other than 0.99—6.42 ohms** detected in driver-side air bag module (inflator No.1) circuit • Wiring harness between driver-side air bag module (inflator No.1) and SAS control module has malfunction
Fail-safe function	Not applicable
Possible cause	• Clock spring connector malfunction • Clock spring malfunction • Short circuit to power supply or body ground in the wiring harness between the clock spring and SAS control module • Open circuit in the wiring harness between the clock spring and SAS control module • Driver-side air bag module (inflator No.1) malfunction • SAS control module malfunction

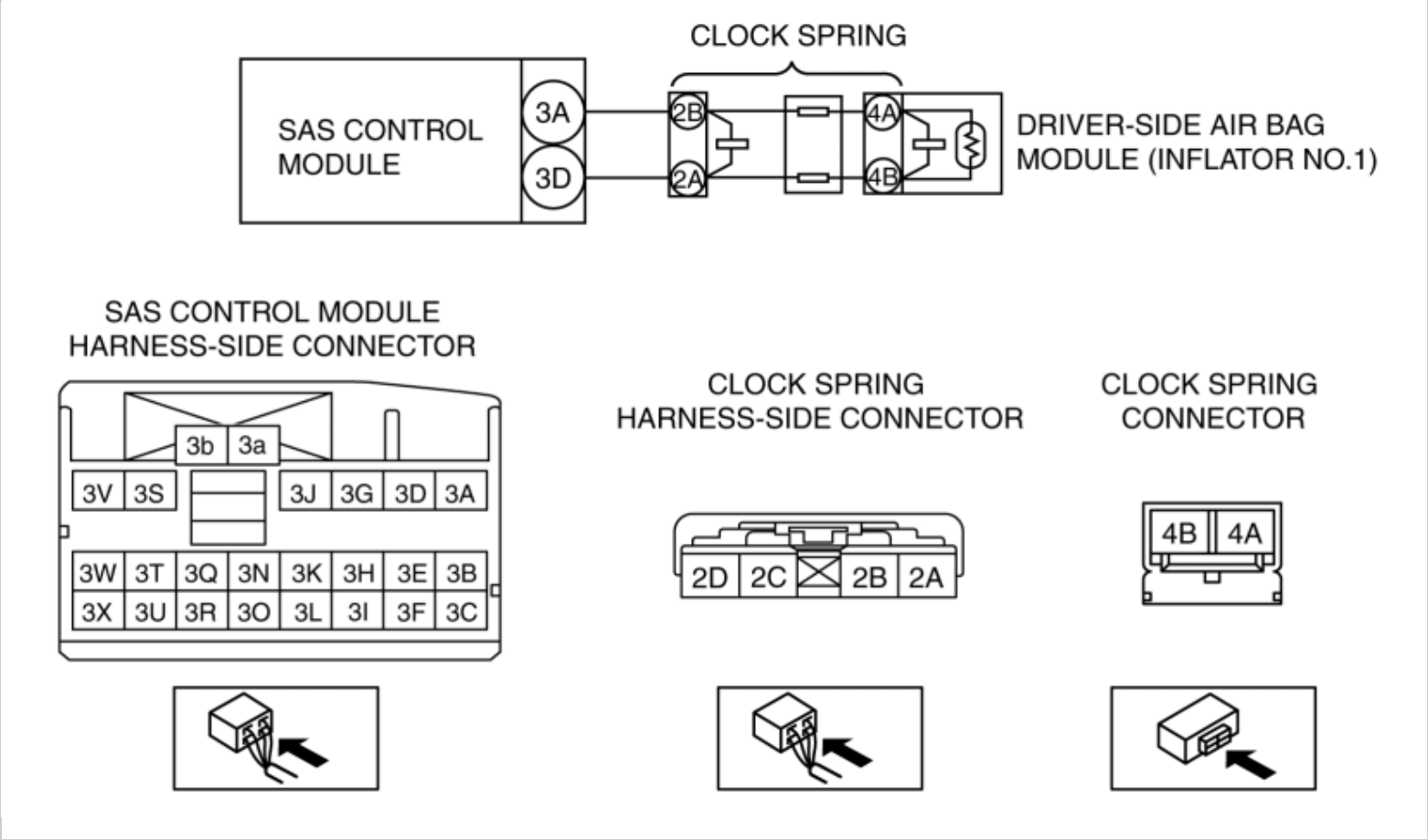

Diagnostic Procedure

Step	Inspection		Action
1	**INSPECT DRIVER-SIDE AIR BAG MODULE (INFLATOR NO.1) CONNECTOR** **WARNING:** • Handling the component parts improperly can accidentally operate (deploy) the air bag module, which may seriously injure you. Read the service warnings/cautions and the workshop manual before handling the air bag system components. (See **AIR BAG SYSTEM SERVICE WARNINGS [TWO-STEP DEPLOYMENT CONTROL SYSTEM]**.) (See **AIR BAG SYSTEM SERVICE CAUTIONS [TWO-STEP DEPLOYMENT CONTROL SYSTEM]**.) • Switch the ignition off. • Disconnect the negative battery cable and wait for **1 min or more**.	Yes	Replace clock spring. (See **CLOCK SPRING REMOVAL/INSTALLATION [TWO-STEP DEPLOYMENT CONTROL SYSTEM]**.) Then go to Step 7.
		No	Go to the next step.

	(See **NEGATIVE BATTERY CABLE DISCONNECTION/CONNECTION [SKYACTIV-G 2.0, SKYACTIV-G 2.5]**.) • Disconnect the driver-side air bag module (inflator No.1) connector. (See **DRIVER-SIDE AIR BAG MODULE REMOVAL [TWO-STEP DEPLOYMENT CONTROL SYSTEM]**.) • Inspect the clock spring connector. (Corrosion, damage, and disconnected pins) • Is there any malfunction of the clock spring connector?		
2	**INSPECT CLOCK SPRING** • Remove the steering wheel. (See **STEERING WHEEL AND COLUMN REMOVAL/INSTALLATION**.) • Remove the column cover. (See **COLUMN COVER REMOVAL/INSTALLATION**.) • Remove the clock spring. (See **CLOCK SPRING REMOVAL/INSTALLATION [TWO-STEP DEPLOYMENT CONTROL SYSTEM]**.) • Inspect for continuity between clock spring connector terminals 2B—4A and 2A—4B. **NOTE:** • Inspect the clock spring wiring harness for continuity while shaking it. • Is there continuity?	Yes	Go to the next step.
		No	Replace clock spring. (See **CLOCK SPRING REMOVAL/INSTALLATION [TWO-STEP DEPLOYMENT CONTROL SYSTEM]**.) Then go to Step 7.
3	**INSPECT DRIVER-SIDE AIR BAG MODULE (INFLATOR NO.1) CIRCUIT FOR SHORT TO GROUND** • Remove the glove compartment. (See **GLOVE COMPARTMENT REMOVAL/INSTALLATION**.) • Disconnect the passenger-side air bag module connector. (See **PASSENGER-SIDE AIR BAG MODULE REMOVAL [TWO-STEP DEPLOYMENT CONTROL SYSTEM]**.) • Disconnect the driver and passenger-side front seat connector.	Yes	Refer to the wiring diagram and verify whether or not there is a common connector between SAS control module terminal and clock spring terminal. **If there is a common connector:** • Determine the malfunctioning part by inspecting the common connector and the terminal for corrosion, damage, or pin disconnection, and the common wiring harness for a short to ground.

	(See **FRONT SEAT REMOVAL/INSTALLATION**.) • Remove the B-pillar lower trim. (See **B-PILLAR LOWER TRIM REMOVAL/INSTALLATION**.) • Disconnect the driver and passenger-side pre-tensioner seat belt connectors. • Disconnect the driver and passenger-side lap pre-tensioner seat belt connectors. (See **FRONT SEAT BELT REMOVAL/INSTALLATION**.) • Remove the headliner. (See **HEADLINER REMOVAL/INSTALLATION**.) • Disconnect the driver and passenger-side curtain air bag module connectors. (See **CURTAIN AIR BAG MODULE REMOVAL/INSTALLATION [TWO-STEP DEPLOYMENT CONTROL SYSTEM]**.) • Disconnect the all SAS control module connectors. (See **SAS CONTROL MODULE REMOVAL/INSTALLATION [TWO-STEP DEPLOYMENT CONTROL SYSTEM]**.) • Inspect for continuity between the following terminals (wiring harness-side) and body ground: ▪ SAS control module terminal 3A ▪ SAS control module terminal 3D **NOTE:** • Inspect for continuity while shaking the wiring harness between the SAS control module and clock spring. • Is there continuity?		• Replace the malfunctioning part. **If there is no common connector:** • Replace the wiring harness which has a short to ground. Go to Step 7.
		No	Go to the next step.
4	**INSPECT DRIVER-SIDE AIR BAG MODULE (INFLATOR NO.1) CIRCUIT FOR OPEN CIRCUIT** • Clock spring and SAS control module connectors are disconnected. • Inspect for continuity between the following terminals (wiring harness-side): ▪ Clock spring terminal 2B —SAS control module	Yes	Go to the next step.
		No	Refer to the wiring diagram and verify whether or not there is a common connector between SAS control module terminal and clock spring terminal. **If there is a common connector:**

	terminal 3A ▪ Clock spring terminal 2A —SAS control module terminal 3D **NOTE:** • Inspect for continuity while shaking the wiring harness between the SAS control module and clock spring. • Is there continuity?		• Determine the malfunctioning part by inspecting the common connector and the terminal for corrosion, damage, or pin disconnection, and the common wiring harness for an open circuit. • Replace the malfunctioning part. **If there is no common connector:** • Replace the wiring harness which has an open circuit. Go to Step 7.
5	**INSPECT DRIVER-SIDE AIR BAG MODULE (INFLATOR NO.1) CIRCUIT FOR SHORT TO POWER SUPPLY** • Clock spring and SAS control module connectors are disconnected. • Connect the negative battery cable. (See **NEGATIVE BATTERY CABLE DISCONNECTION/CONNECTION [SKYACTIV-G 2.0, SKYACTIV-G 2.5]**.) • Switch the ignition ON (engine off or on). • Measure the voltage at the following terminals (wiring harness-side): ▪ SAS control module terminal 3A ▪ SAS control module terminal 3D **NOTE:** • Measure the voltage while shaking the wiring harness between the SAS control module and clock spring. • Is the voltage **0 V**?	Yes	Go to the next step.
		No	Refer to the wiring diagram and verify whether or not there is a common connector between SAS control module terminal and clock spring terminal. **If there is a common connector:** • Determine the malfunctioning part by inspecting the common connector and the terminal for corrosion, damage, or pin disconnection, and the common wiring harness for a short to power supply. • Replace the malfunctioning part. **If there is no common connector:** • Replace the wiring harness which has a short to power supply. Go to Step 7.
6	**INSPECT DRIVER-SIDE AIR BAG MODULE** • Switch the ignition off. • Disconnect the negative battery cable and wait for **1 min or more**. • Connect the SAS control module connectors. • Except for the driver-side air bag module	Yes	Go to the next step.
		No	Replace the driver-side air bag module. (See **DRIVER-SIDE AIR BAG MODULE REMOVAL [TWO-STEP DEPLOYMENT CONTROL SYSTEM]**.) (See **DRIVER-SIDE AIR BAG MODULE INSTALLATION [TWO-STEP DEPLOYMENT**

	(inflator No.1) connector, reconnect all disconnected connectors. • Connect the **SST (Fuel and thermometer checker)** or apply **2 ohms** resistance to clock spring connector terminals 4A and 4B. • Set the **SST (Fuel and thermometer checker)** to **2 ohms**. • Connect the negative battery cable. (See **NEGATIVE BATTERY CABLE DISCONNECTION/CONNECTION [SKYACTIV-G 2.0, SKYACTIV-G 2.5]**.) • Switch the ignition ON (engine off or on). • Clear the DTC for the SAS control module using the M-MDS. (See **CLEARING DTC [TWO-STEP DEPLOYMENT CONTROL SYSTEM]**.) • Perform the DTC inspection for the SAS control module using the M-MDS. (See **DTC INSPECTION [TWO-STEP DEPLOYMENT CONTROL SYSTEM]**.) • Are the same DTCs present?		**CONTROL SYSTEM]**.) Then go to the next step.
7	**PERFORM SAS CONTROL MODULE DTC INSPECTION** • Switch the ignition off. • Disconnect the negative battery cable and wait for **1 min or more**. • Disconnect the **SST (Fuel and thermometer checker)** or the **2 ohms** resistance. • Connect the driver-side air bag module (inflator No.1) connector. (See **DRIVER-SIDE AIR BAG MODULE INSTALLATION [TWO-STEP DEPLOYMENT CONTROL SYSTEM]**.) • Connect the negative battery cable. (See **NEGATIVE BATTERY CABLE DISCONNECTION/CONNECTION [SKYACTIV-G 2.0, SKYACTIV-G 2.5]**.) • Switch the ignition ON (engine off or on). • Clear the DTC for the SAS control module using the M-MDS. (See **CLEARING DTC [TWO-STEP DEPLOYMENT CONTROL SYSTEM]**.)	Yes	Replace the SAS control module. (See **SAS CONTROL MODULE REMOVAL/INSTALLATION [TWO-STEP DEPLOYMENT CONTROL SYSTEM]**.)
		No	DTC troubleshooting completed.

	• Perform the DTC inspection for the SAS control module using the M-MDS. (See **DTC INSPECTION [TWO-STEP DEPLOYMENT CONTROL SYSTEM]**.) • Are the same DTCs present?		

2014 - Mazda3 - Restraints

DTC B0001:55/B0010:55 [TWO-STEP DEPLOYMENT CONTROL SYSTEM]

System malfunction location	• B0001:55:Configuration setting error (driver-side air bag module (inflator No.1) structural malfunction) • B0010:55:Configuration setting error (passenger-side air bag module (inflator No.1) structural malfunction)
Detection condition	**WARNING:** • Detection conditions are for understanding the DTC outline before performing an inspection. Performing an inspection according to only the detection conditions may cause injury due to an operating error, or damage the system. When performing an inspection, always follow the inspection procedure. • SAS control module configuration setting has not been done correctly • Parts which have not been set to SAS control module are assembled
Fail-safe function	Not applicable
Possible cause	• SAS control module configuration setting not implemented • SAS control module configuration setting invalid • Driver or passenger-side air bag module assembly incorrect • SAS control module malfunction
System wiring diagram	Not applicable

Diagnostic Procedure

Step	Inspection	Action
	PERFORM SAS CONTROL MODULE CONFIGURATION	

1	**(AS-BUILT DATA USE)** • Perform the SAS control module configuration using the M-MDS. (See **SAS CONTROL MODULE CONFIGURATION (USING AS-BUILT DATA) [TWO-STEP DEPLOYMENT CONTROL SYSTEM]**.) • Clear the DTC for the SAS control module using the M-MDS. (See **CLEARING DTC [TWO-STEP DEPLOYMENT CONTROL SYSTEM]**.) • Perform the DTC inspection for the SAS control module using the M-MDS. (See **DTC INSPECTION [TWO-STEP DEPLOYMENT CONTROL SYSTEM]**.) • Are the same DTCs present?	Yes	Go to the next step.
		No	DTC troubleshooting completed.
2	**INSPECT AIR BAG MODULE** • Verify that the driver or passenger-side air bag module is correctly installed. • Is the driver or passenger-side air bag module correctly installed?	Yes	Go to the next step.
		No	Correctly Install the driver or passenger-side air bag module. Then go to the next step.
3	**PERFORM SAS CONTROL MODULE DTC INSPECTION** • Clear the DTC for the SAS control module using the M-MDS. (See **CLEARING DTC [TWO-STEP DEPLOYMENT CONTROL SYSTEM]**.) • Perform the DTC inspection for the SAS control module using the M-MDS. (See **DTC INSPECTION [TWO-STEP DEPLOYMENT CONTROL SYSTEM]**.) • Are the same DTCs present?	Yes	Replace the SAS control module. (See **SAS CONTROL MODULE REMOVAL/INSTALLATION [TWO-STEP DEPLOYMENT CONTROL SYSTEM]**.)
		No	DTC troubleshooting completed.

2014 - Mazda3 - Restraints

DTC B0002:11/B0002:12/B0002:13/B0002:19/B0002:1A [TWO-STEP DEPLOYMENT CONTROL SYSTEM]

System malfunction location	• B0002:11:Driver-side air bag module (inflator No.2) circuit short to body ground • B0002:12:Driver-side air bag module (inflator No.2) circuit short to power supply • B0002:13:Driver-side air bag module (inflator No.2) circuit open circuit or resistance high • B0002:19:Short circuit to driver-side air bag module (inflator No.2) and other air bag module circuits • B0002:1A:Driver-side air bag module (inflator No.2) circuit resistance low
Detection condition	**WARNING:** • Detection conditions are for understanding the DTC outline before performing an inspection. Performing an inspection according to only the detection conditions may cause injury due to an operating error, or damage the system. When performing an inspection, always follow the inspection procedure. • Resistance other than **0.99—6.42 ohms** detected in the driver-side air bag module (inflator No.2) circuit • Malfunction in the wiring harness between the driver-side air bag module (inflator No.2) and SAS control module
Fail-safe function	Not applicable
Possible cause	• Clock spring connector malfunction • Clock spring malfunction • Short circuit to power supply or body ground in the wiring harness between the clock spring and SAS control module • Open circuit in the wiring harness between the clock spring and SAS control module • Driver-side air bag module malfunction • SAS control module malfunction

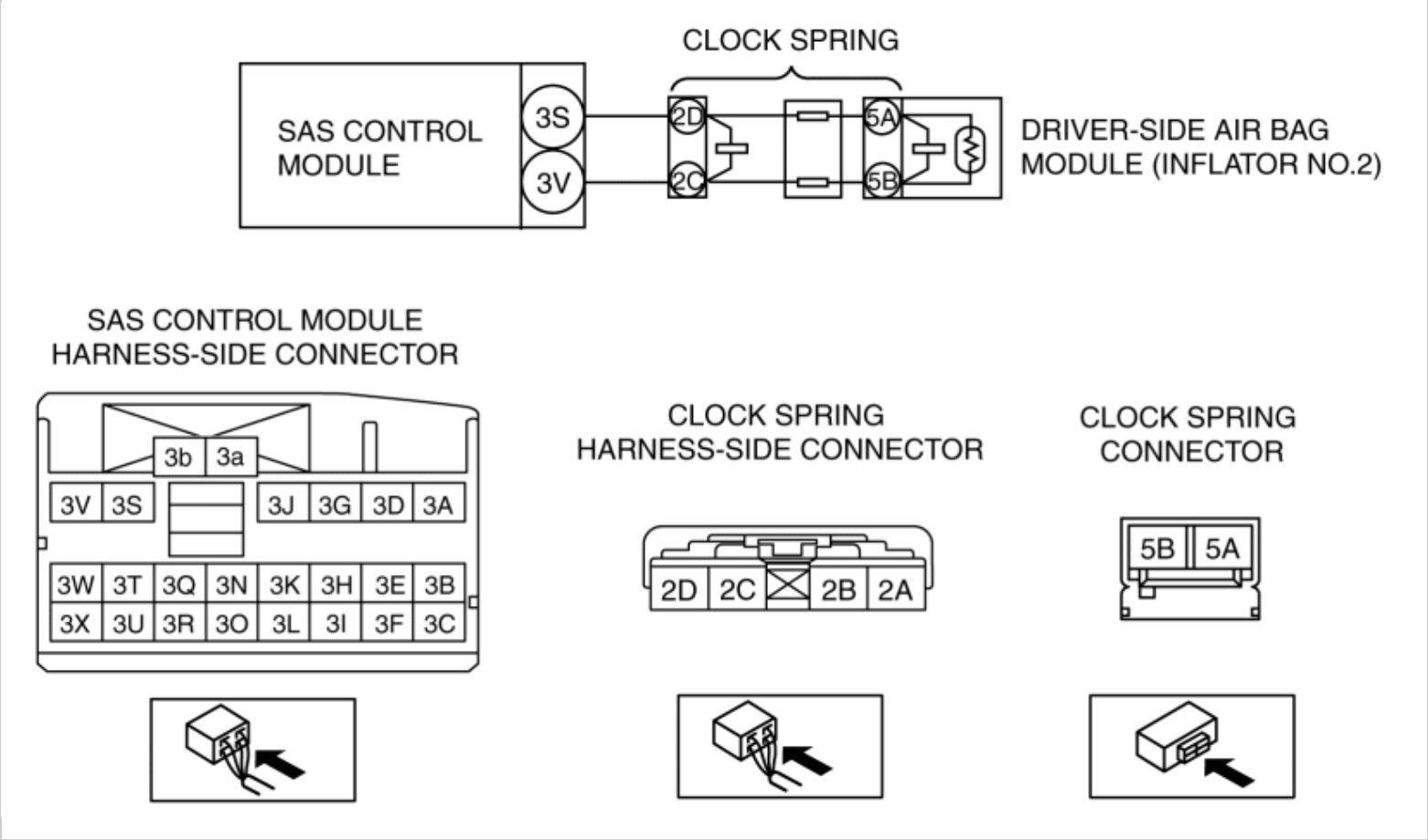

Diagnostic Procedure

Step	Inspection		Action
1	**INSPECT DRIVER-SIDE AIR BAG MODULE (INFLATOR NO.2) CONNECTOR** **WARNING:** • Handling the component parts improperly can accidentally operate (deploy) the air bag module, which may seriously injure you. Read the service warnings/cautions and the workshop manual before handling the air bag system components. (See **AIR BAG SYSTEM SERVICE WARNINGS [TWO-STEP DEPLOYMENT CONTROL SYSTEM]**.) (See **AIR BAG SYSTEM SERVICE CAUTIONS [TWO-STEP DEPLOYMENT CONTROL SYSTEM]**.) • Switch the ignition off. • Disconnect the negative battery cable and wait for **1 min or more**.	Yes	Replace clock spring. (See **CLOCK SPRING REMOVAL/INSTALLATION [TWO-STEP DEPLOYMENT CONTROL SYSTEM]**.) Then go to Step 7.
		No	Go to the next step.

	(See **NEGATIVE BATTERY CABLE DISCONNECTION/CONNECTION [SKYACTIV-G 2.0, SKYACTIV-G 2.5]**.) • Disconnect the driver-side air bag module (inflator No.2) connector. (See **DRIVER-SIDE AIR BAG MODULE REMOVAL [TWO-STEP DEPLOYMENT CONTROL SYSTEM]**.) • Inspect the clock spring connector. (Corrosion, damage, and disconnected pins) • Is there any malfunction of the clock spring connector?		
2	**INSPECT CLOCK SPRING** • Remove the steering wheel. (See **STEERING WHEEL AND COLUMN REMOVAL/INSTALLATION**.) • Remove the column cover. (See **COLUMN COVER REMOVAL/INSTALLATION**.) • Remove the clock spring. (See **CLOCK SPRING REMOVAL/INSTALLATION [TWO-STEP DEPLOYMENT CONTROL SYSTEM]**.) • Inspect for continuity between clock spring connector terminals 2D—5A and 2C—5B. **NOTE:** • Inspect the clock spring wiring harness for continuity while shaking it. • Is there continuity?	Yes	Go to the next step.
		No	Replace clock spring. (See **CLOCK SPRING REMOVAL/INSTALLATION [TWO-STEP DEPLOYMENT CONTROL SYSTEM]**.) Then go to Step 7.
3	**INSPECT DRIVER-SIDE AIR BAG MODULE (INFLATOR NO.2) CIRCUIT FOR SHORT TO GROUND** • Remove the glove compartment. (See **GLOVE COMPARTMENT REMOVAL/INSTALLATION**.) • Disconnect the passenger-side air bag module connector. (See **PASSENGER-SIDE AIR BAG MODULE REMOVAL [TWO-STEP DEPLOYMENT CONTROL SYSTEM]**.) • Disconnect the driver and passenger-side front seat connector.	Yes	Refer to the wiring diagram and verify whether or not there is a common connector between SAS control module terminal and clock spring terminal. **If there is a common connector:** • Determine the malfunctioning part by inspecting the common connector and the terminal for corrosion, damage, or pin disconnection, and the common wiring harness for a short to ground.

	(See **FRONT SEAT REMOVAL/INSTALLATION**.) • Remove the B-pillar lower trim. (See **B-PILLAR LOWER TRIM REMOVAL/INSTALLATION**.) • Disconnect the driver and passenger-side pre-tensioner seat belt connectors. • Disconnect the driver and passenger-side lap pre-tensioner seat belt connectors. (See **FRONT SEAT BELT REMOVAL/INSTALLATION**.) • Remove the headliner. (See **HEADLINER REMOVAL/INSTALLATION**.) • Disconnect the driver and passenger-side curtain air bag module connectors. (See **CURTAIN AIR BAG MODULE REMOVAL/INSTALLATION [TWO-STEP DEPLOYMENT CONTROL SYSTEM]**.) • Disconnect the all SAS control module connectors. (See **SAS CONTROL MODULE REMOVAL/INSTALLATION [TWO-STEP DEPLOYMENT CONTROL SYSTEM]**.) • Inspect for continuity between the following terminals (wiring harness-side) and body ground: ▪ SAS control module terminal 3S ▪ SAS control module terminal 3V **NOTE:** • Inspect for continuity while shaking the wiring harness between the SAS control module and clock spring. • Is there continuity?		• Replace the malfunctioning part. **If there is no common connector:** • Replace the wiring harness which has a short to ground. Go to Step 7.
		No	Go to the next step.
4	**INSPECT DRIVER-SIDE AIR BAG MODULE (INFLATOR NO.2) CIRCUIT FOR OPEN CIRCUIT** • Clock spring and SAS control module connectors are disconnected. • Inspect for continuity between the following terminals (wiring harness-side): ▪ Clock spring terminal 2D —SAS control module	Yes	Go to the next step.
		No	Refer to the wiring diagram and verify whether or not there is a common connector between SAS control module terminal and clock spring terminal. **If there is a common connector:**

	terminal 3S ▪ Clock spring terminal 2C —SAS control module terminal 3V **NOTE:** • Inspect for continuity while shaking the wiring harness between the SAS control module and clock spring. • Is there continuity?		• Determine the malfunctioning part by inspecting the common connector and the terminal for corrosion, damage, or pin disconnection, and the common wiring harness for an open circuit. • Replace the malfunctioning part. **If there is no common connector:** • Replace the wiring harness which has an open circuit. Go to Step 7.
5	**INSPECT DRIVER-SIDE AIR BAG MODULE (INFLATOR NO.2) CIRCUIT FOR SHORT TO POWER SUPPLY** • Clock spring and SAS control module connectors are disconnected. • Connect the negative battery cable. (See **NEGATIVE BATTERY CABLE DISCONNECTION/CONNECTION [SKYACTIV-G 2.0, SKYACTIV-G 2.5]**.) • Switch the ignition ON (engine off or on). • Measure the voltage at the following terminals (wiring harness-side): ▪ SAS control module terminal 3S ▪ SAS control module terminal 3V **NOTE:** • Measure the voltage while shaking the wiring harness between the SAS control module and clock spring. • Is the voltage **0 V**?	Yes	Go to the next step.
		No	Refer to the wiring diagram and verify whether or not there is a common connector between SAS control module terminal and clock spring terminal. **If there is a common connector:** • Determine the malfunctioning part by inspecting the common connector and the terminal for corrosion, damage, or pin disconnection, and the common wiring harness for a short to power supply. • Replace the malfunctioning part. **If there is no common connector:** • Replace the wiring harness which has a short to power supply. Go to Step 7.
6	**INSPECT DRIVER-SIDE AIR BAG MODULE** • Switch the ignition off. • Disconnect the negative battery cable and wait for **1 min or more**. • Connect the SAS control module connectors. • Except for the driver-side air bag module	Yes	Go to the next step.
		No	Replace the driver-side air bag module. (See **DRIVER-SIDE AIR BAG MODULE REMOVAL [TWO-STEP DEPLOYMENT CONTROL SYSTEM]**.) (See **DRIVER-SIDE AIR BAG MODULE INSTALLATION [TWO-STEP DEPLOYMENT**

	(inflator No.2) connector, reconnect all disconnected connectors. • Connect the **SST (Fuel and thermometer checker)** or apply **2 ohms** resistance to clock spring connector terminals 5A and 5B. • Set the **SST (Fuel and thermometer checker)** to **2 ohms**. • Connect the negative battery cable. (See **NEGATIVE BATTERY CABLE DISCONNECTION/CONNECTION [SKYACTIV-G 2.0, SKYACTIV-G 2.5]**.) • Switch the ignition ON (engine off or on). • Clear the DTC for the SAS control module using the M-MDS. (See **CLEARING DTC [TWO-STEP DEPLOYMENT CONTROL SYSTEM]**.) • Perform the DTC inspection for the SAS control module using the M-MDS. (See **DTC INSPECTION [TWO-STEP DEPLOYMENT CONTROL SYSTEM]**.) • Are the same DTCs present?		**CONTROL SYSTEM]**.) Then go to the next step.
7	**PERFORM SAS CONTROL MODULE DTC INSPECTION** • Switch the ignition off. • Disconnect the negative battery cable and wait for **1 min or more**. • Disconnect the **SST (Fuel and thermometer checker)** or the **2 ohms** resistance. • Connect the driver-side air bag module (inflator No.2) connector. (See **DRIVER-SIDE AIR BAG MODULE INSTALLATION [TWO-STEP DEPLOYMENT CONTROL SYSTEM]**.) • Connect the negative battery cable. (See **NEGATIVE BATTERY CABLE DISCONNECTION/CONNECTION [SKYACTIV-G 2.0, SKYACTIV-G 2.5]**.) • Switch the ignition ON (engine off or on). • Clear the DTC for the SAS control module using the M-MDS. (See **CLEARING DTC [TWO-STEP DEPLOYMENT CONTROL SYSTEM]**.)	Yes	Replace the SAS control module. (See **SAS CONTROL MODULE REMOVAL/INSTALLATION [TWO-STEP DEPLOYMENT CONTROL SYSTEM]**.)
		No	DTC troubleshooting completed.

	• Perform the DTC inspection for the SAS control module using the M-MDS. (See **DTC INSPECTION [TWO-STEP DEPLOYMENT CONTROL SYSTEM]**.) • Are the same DTCs present?		

2014 - Mazda3 - Restraints

DTC B0002:55/B0011:55 [TWO-STEP DEPLOYMENT CONTROL SYSTEM]

System malfunction location	• B0002:55:Configuration setting error (driver-side air bag module (inflator No.2) structural malfunction) • B0011:55:Configuration setting error (passenger-side air bag module (inflator No.2) structural malfunction)
Detection condition	**WARNING:** • Detection conditions are for understanding the DTC outline before performing an inspection. Performing an inspection according to only the detection conditions may cause injury due to an operating error, or damage the system. When performing an inspection, always follow the inspection procedure. • SAS control module configuration setting has not been done correctly • Parts which have not been set to SAS control module are assembled
Fail-safe function	Not applicable
Possible cause	• SAS control module configuration setting not implemented • SAS control module configuration setting invalid • Driver or passenger-side air bag module assembly incorrect • SAS control module malfunction
System wiring diagram	Not applicable

Diagnostic Procedure

Step	Inspection	Action
	PERFORM SAS CONTROL MODULE CONFIGURATION	

1	**(AS-BUILT DATA USE)** • Perform the SAS control module configuration using the M-MDS. (See **SAS CONTROL MODULE CONFIGURATION (USING AS-BUILT DATA) [TWO-STEP DEPLOYMENT CONTROL SYSTEM]**.) • Clear the DTC for the SAS control module using the M-MDS. (See **CLEARING DTC [TWO-STEP DEPLOYMENT CONTROL SYSTEM]**.) • Perform the DTC inspection for the SAS control module using the M-MDS. (See **DTC INSPECTION [TWO-STEP DEPLOYMENT CONTROL SYSTEM]**.) • Are the same DTCs present?	Yes	Go to the next step.
		No	DTC troubleshooting completed.
2	**INSPECT AIR BAG MODULE** • Verify that the driver or passenger-side air bag module is correctly installed. • Is the driver or passenger-side air bag module correctly installed?	Yes	Go to the next step.
		No	Correctly Install the driver or passenger-side air bag module. Then go to the next step.
3	**PERFORM SAS CONTROL MODULE DTC INSPECTION** • Clear the DTC for the SAS control module using the M-MDS. (See **CLEARING DTC [TWO-STEP DEPLOYMENT CONTROL SYSTEM]**.) • Perform the DTC inspection for the SAS control module using the M-MDS. (See **DTC INSPECTION [TWO-STEP DEPLOYMENT CONTROL SYSTEM]**.) • Are the same DTCs present?	Yes	Replace the SAS control module. (See **SAS CONTROL MODULE REMOVAL/INSTALLATION [TWO-STEP DEPLOYMENT CONTROL SYSTEM]**.)
		No	DTC troubleshooting completed.

2014 - Mazda3 - Restraints

DTC B0003:53 [TWO-STEP DEPLOYMENT CONTROL SYSTEM]

System malfunction location	• Operation (deployment) inhibited due to configuration setting
Detection condition	**WARNING:** • Detection conditions are for understanding the DTC outline before performing an inspection. Performing an inspection according to only the detection conditions may cause injury due to an operating error, or damage the system. When performing an inspection, always follow the inspection procedure. • The SAS control module configuration has not been set and other DTCs present
Fail-safe function	Not applicable
Possible cause	• SAS control module configuration error • SAS control module malfunction
System wiring diagram	Not applicable

Diagnostic Procedure

Step	Inspection		Action
1	**PERFORM SAS CONTROL MODULE CONFIGURATION (AS-BUILT DATA USE)** • Perform the SAS control module configuration using the M-MDS. (See **SAS CONTROL MODULE**	Yes	Go to the next step.
		No	DTC troubleshooting completed.

	CONFIGURATION (USING AS-BUILT DATA) [TWO-STEP DEPLOYMENT CONTROL SYSTEM].) • Clear the DTC for the SAS control module using the M-MDS. (See **CLEARING DTC [TWO-STEP DEPLOYMENT CONTROL SYSTEM]**.) • Perform the DTC inspection for the SAS control module using the M-MDS. (See **DTC INSPECTION [TWO-STEP DEPLOYMENT CONTROL SYSTEM]**.) • Are the same DTCs present?		
2	**PERFORM SAS CONTROL MODULE DTC INSPECTION** • Clear the DTC for the SAS control module using the M-MDS. (See **CLEARING DTC [TWO-STEP DEPLOYMENT CONTROL SYSTEM]**.) • Perform the DTC inspection for the SAS control module using the M-MDS. (See **DTC INSPECTION [TWO-STEP DEPLOYMENT CONTROL SYSTEM]**.) • Are the same DTCs present?	Yes	Replace the SAS control module. (See **SAS CONTROL MODULE REMOVAL/INSTALLATION [TWO-STEP DEPLOYMENT CONTROL SYSTEM]**.) Go to the next step.
		No	DTC troubleshooting completed.
3	**VERIFY THAT NO OTHER DTCs ARE PRESENT** • Clear the DTC for the SAS control module using the M-MDS. (See **CLEARING DTC [TWO-STEP DEPLOYMENT CONTROL SYSTEM]**.) • Perform the DTC inspection for the SAS control module using the M-MDS. (See **DTC INSPECTION [TWO-STEP DEPLOYMENT CONTROL SYSTEM]**.) • Are any other DTCs output?	Yes	Go to the applicable DTC inspection.
		No	DTC troubleshooting completed.

2014 - Mazda3 - Restraints

DTC B0010:11/B0010:12/B0010:13/B0010:19/B0010:1A [TWO-STEP DEPLOYMENT CONTROL SYSTEM]

System malfunction location	• B0010:11:Passenger-side air bag module (inflator No.1) circuit short to body ground • B0010:12:Passenger-side air bag module (inflator No.1) circuit short to power supply • B0010:13:Passenger-side air bag module (inflator No.1) circuit open circuit or resistance high • B0010:19:Short circuit to passenger-side air bag module (inflator No.1) and other air bag module circuits • B0010:1A:Passenger-side air bag module (inflator No.1) circuit resistance low
Detection condition	**WARNING:** • Detection conditions are for understanding the DTC outline before performing an inspection. Performing an inspection according to only the detection conditions may cause injury due to an operating error, or damage the system. When performing an inspection, always follow the inspection procedure. • Resistance other than **0.81–6.42 ohms** detected in passenger-side air bag module (inflator No.1) circuit • Wiring harness between passenger-side air bag module (inflator No.1) and SAS control module has malfunction
Fail-safe function	Not applicable
Possible cause	• Passenger-side air bag module (inflator No.1) connector malfunction • Short circuit to power supply or body ground in the wiring harness between the passenger-side air bag module (inflator No.1) and SAS control module • Open circuit in the wiring harness between the passenger-side air bag module (inflator No.1) and SAS control module • Passenger-side air bag module malfunction • SAS control module malfunction

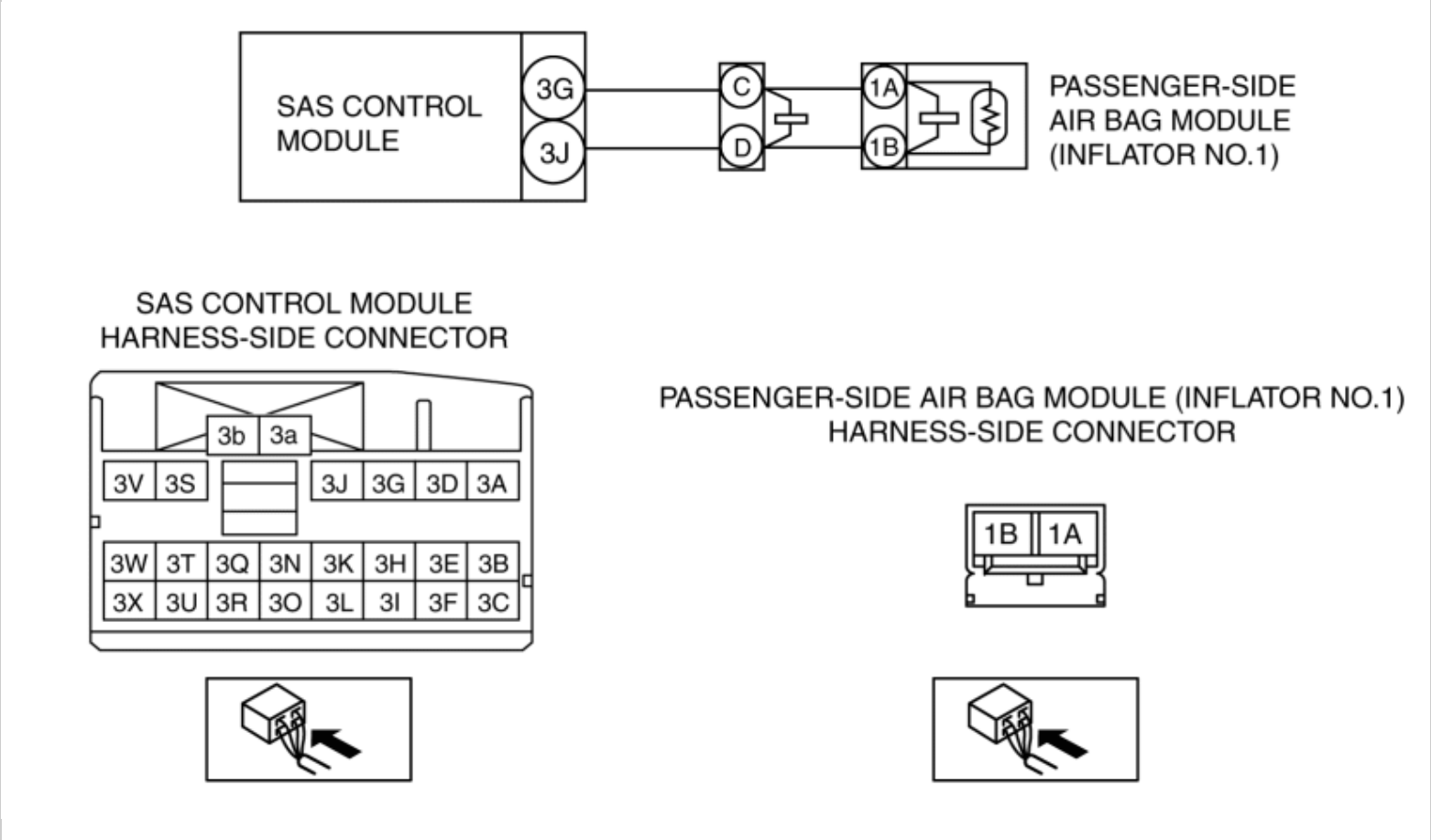

Diagnostic Procedure

Step	Inspection		Action
1	**INSPECT PASSENGER-SIDE AIR BAG MODULE CONNECTOR** **WARNING:** • Handling the component parts improperly can accidentally operate (deploy) the air bag module, which may seriously injure you. Read the service warnings/cautions and the workshop manual before handling the air bag system components. (See **AIR BAG SYSTEM SERVICE WARNINGS [TWO-STEP DEPLOYMENT CONTROL SYSTEM]**.) (See **AIR BAG SYSTEM SERVICE CAUTIONS [TWO-STEP DEPLOYMENT CONTROL SYSTEM]**.) • Switch the ignition off. • Disconnect the negative battery cable and wait for **1 min or more**.	Yes	Replace the malfunctioning part, then go to Step 6.
		No	Go to the next step.

	(See **NEGATIVE BATTERY CABLE DISCONNECTION/CONNECTION [SKYACTIV-G 2.0, SKYACTIV-G 2.5]**.) • Remove the glove compartment. (See **GLOVE COMPARTMENT REMOVAL/INSTALLATION**.) • Disconnect the passenger-side air bag module (inflator No.1) connector. (See **PASSENGER-SIDE AIR BAG MODULE REMOVAL [TWO-STEP DEPLOYMENT CONTROL SYSTEM]**.) • Inspect the passenger-side air bag module (inflator No.1) connector. (Corrosion, damage, and disconnected pins) • Is there any malfunction of the passenger-side air bag module (inflator No.1) connector?		
2	**INSPECT PASSENGER-SIDE AIR BAG MODULE (INFLATOR NO.1) CIRCUIT FOR SHORT TO GROUND** • Remove the column cover. (See **COLUMN COVER REMOVAL/INSTALLATION**.) • Disconnect the clock spring connector. (See **CLOCK SPRING REMOVAL/INSTALLATION [TWO-STEP DEPLOYMENT CONTROL SYSTEM]**.) • Disconnect the driver and passenger-side front seat connector. (See **FRONT SEAT REMOVAL/INSTALLATION**.) • Remove the B-pillar lower trim. (See **B-PILLAR LOWER TRIM REMOVAL/INSTALLATION**.) • Disconnect the driver and passenger-side pre-tensioner seat belt connectors. • Disconnect the driver and passenger-side lap pre-tensioner seat belt connectors. (See **FRONT SEAT BELT REMOVAL/INSTALLATION**.) • Remove the headliner. (See **HEADLINER REMOVAL/INSTALLATION**.) • Disconnect the driver and passenger-side curtain air bag module connectors.	Yes	Refer to the wiring diagram and verify whether or not there is a common connector between SAS control module terminal and passenger-side air bag module terminal. **If there is a common connector:** • Determine the malfunctioning part by inspecting the common connector and the terminal for corrosion, damage, or pin disconnection, and the common wiring harness for a short to ground. • Replace the malfunctioning part. **If there is no common connector:** • Replace the wiring harness which has a short to ground. Go to Step 6.
		No	Go to the next step.

	(See **CURTAIN AIR BAG MODULE REMOVAL/INSTALLATION [TWO-STEP DEPLOYMENT CONTROL SYSTEM]**.) • Disconnect the all SAS control module connectors. (See **SAS CONTROL MODULE REMOVAL/INSTALLATION [TWO-STEP DEPLOYMENT CONTROL SYSTEM]**.) • Inspect for continuity between the following terminals (wiring harness-side) and body ground: ▪ SAS control module terminal 3G ▪ SAS control module terminal 3J **NOTE:** • Inspect for continuity while shaking the wiring harness between the SAS control module and passenger-side air bag module. • Is there continuity?		
3	**INSPECT PASSENGER-SIDE AIR BAG MODULE (INFLATOR NO.1) CIRCUIT FOR OPEN CIRCUIT** • Passenger-side air bag module and SAS control module connectors are disconnected. • Inspect for continuity between the following terminals (wiring harness-side): ▪ Passenger-side air bag module terminal 1A—SAS control module terminal 3G ▪ Passenger-side air bag module terminal 1B—SAS control module terminal 3J **NOTE:** • Inspect for continuity while shaking the wiring harness between the SAS control module and passenger-side air bag module. • Is there continuity?	Yes	Go to the next step.
		No	Refer to the wiring diagram and verify whether or not there is a common connector between SAS control module terminal and passenger-side air bag module terminal. **If there is a common connector:** • Determine the malfunctioning part by inspecting the common connector and the terminal for corrosion, damage, or pin disconnection, and the common wiring harness for an open circuit. • Replace the malfunctioning part. **If there is no common connector:** • Replace the wiring harness which has an open circuit. Go to Step 6.
4	**INSPECT PASSENGER-SIDE AIR BAG MODULE (INFLATOR NO.1) CIRCUIT FOR SHORT TO POWER**	Yes	Go to the next step.

	SUPPLY • Passenger-side air bag module and SAS control module connectors are disconnected. • Connect the negative battery cable. (See **NEGATIVE BATTERY CABLE DISCONNECTION/CONNECTION [SKYACTIV-G 2.0, SKYACTIV-G 2.5]**.) • Switch the ignition ON (engine off or on). • Measure the voltage at the following terminals (wiring harness-side): ▪ SAS control module terminal 3G ▪ SAS control module terminal 3J **NOTE:** • Measure the voltage while shaking the wiring harness between the SAS control module and passenger-side air bag module. • Is the voltage **0 V**?	No	Refer to the wiring diagram and verify whether or not there is a common connector between SAS control module terminal and passenger-side air bag module terminal. **If there is a common connector:** • Determine the malfunctioning part by inspecting the common connector and the terminal for corrosion, damage, or pin disconnection, and the common wiring harness for a short to power supply. • Replace the malfunctioning part. **If there is no common connector:** • Replace the wiring harness which has a short to power supply. Go to Step 6.
5	**INSPECT PASSENGER-SIDE AIR BAG MODULE** • Switch the ignition off. • Disconnect the negative battery cable and wait for **1 min or more**. • Connect the SAS control module connectors. • Except for the passenger-side air bag module (inflator No.1) connector, reconnect all disconnected connectors. • Connect the **SST (Fuel and thermometer checker)** or apply **2 ohms** resistance to the passenger-side air bag module (inflator No.1) connector terminals 1A and 1B. • Set the **SST (Fuel and thermometer checker)** to **2 ohms**. • Connect the negative battery cable. (See **NEGATIVE BATTERY CABLE DISCONNECTION/CONNECTION [SKYACTIV-G 2.0, SKYACTIV-G 2.5]**.) • Switch the ignition ON (engine off or on). • Clear the DTC for the SAS control module using the M-MDS.	Yes	Go to the next step.
		No	Replace the passenger-side air bag module. (See **PASSENGER-SIDE AIR BAG MODULE REMOVAL [TWO-STEP DEPLOYMENT CONTROL SYSTEM]**.) (See **PASSENGER-SIDE AIR BAG MODULE INSTALLATION [TWO-STEP DEPLOYMENT CONTROL SYSTEM]**.) Then go to the next step.

	(See **CLEARING DTC [TWO-STEP DEPLOYMENT CONTROL SYSTEM]**.) • Perform the DTC inspection for the SAS control module using the M-MDS. (See **DTC INSPECTION [TWO-STEP DEPLOYMENT CONTROL SYSTEM]**.) • Are the same DTCs present?		
6	**PERFORM SAS CONTROL MODULE DTC INSPECTION** • Switch the ignition off. • Disconnect the negative battery cable and wait for **1 min or more**. • Disconnect the **SST (Fuel and thermometer checker)** or the **2 ohms** resistance. • Connect the passenger-side air bag module (inflator No.1) connector. (See **PASSENGER-SIDE AIR BAG MODULE INSTALLATION [TWO-STEP DEPLOYMENT CONTROL SYSTEM]**.) • Connect the negative battery cable. (See **NEGATIVE BATTERY CABLE DISCONNECTION/CONNECTION [SKYACTIV-G 2.0, SKYACTIV-G 2.5]**.) • Switch the ignition ON (engine off or on). • Clear the DTC for the SAS control module using the M-MDS. (See **CLEARING DTC [TWO-STEP DEPLOYMENT CONTROL SYSTEM]**.) • Perform the DTC inspection for the SAS control module using the M-MDS. (See **DTC INSPECTION [TWO-STEP DEPLOYMENT CONTROL SYSTEM]**.) • Are the same DTCs present?	Yes	Replace the SAS control module. (See **SAS CONTROL MODULE REMOVAL/INSTALLATION [TWO-STEP DEPLOYMENT CONTROL SYSTEM]**.)
		No	DTC troubleshooting completed.

2014 - Mazda3 - Restraints

DTC B0011:11/B0011:12/B0011:13/B0011:19/B0011:1A [TWO-STEP DEPLOYMENT CONTROL SYSTEM]

System malfunction location	• B0011:11:Passenger-side air bag module (inflator No.2) circuit short to body ground • B0011:12:Passenger-side air bag module (inflator No.2) circuit short to power supply • B0011:13:Passenger-side air bag module (inflator No.2) circuit open circuit or resistance high • B0011:19:Short circuit to passenger-side air bag module (inflator No.2) and other air bag module circuits • B0011:1A:Passenger-side air bag module (inflator No.2) circuit resistance low
Detection condition	**WARNING:** • Detection conditions are for understanding the DTC outline before performing an inspection. Performing an inspection according to only the detection conditions may cause injury due to an operating error, or damage the system. When performing an inspection, always follow the inspection procedure. • Resistance other than **0.81—6.42 ohms** detected in the passenger-side air bag module (inflator No.2) circuit • Wiring harness between passenger-side air bag module (inflator No.2) and SAS control module has malfunction
Fail-safe function	Not applicable
Possible cause	• Passenger-side air bag module (inflator No.2) connector malfunction • Short circuit to power supply or body ground in the wiring harness between the passenger-side air bag module (inflator No.2) and SAS control module • Open circuit in the wiring harness between the passenger-side air bag module (inflator No.2) and SAS control module • Passenger-side air bag module (inflator No.2) malfunction • SAS control module malfunction

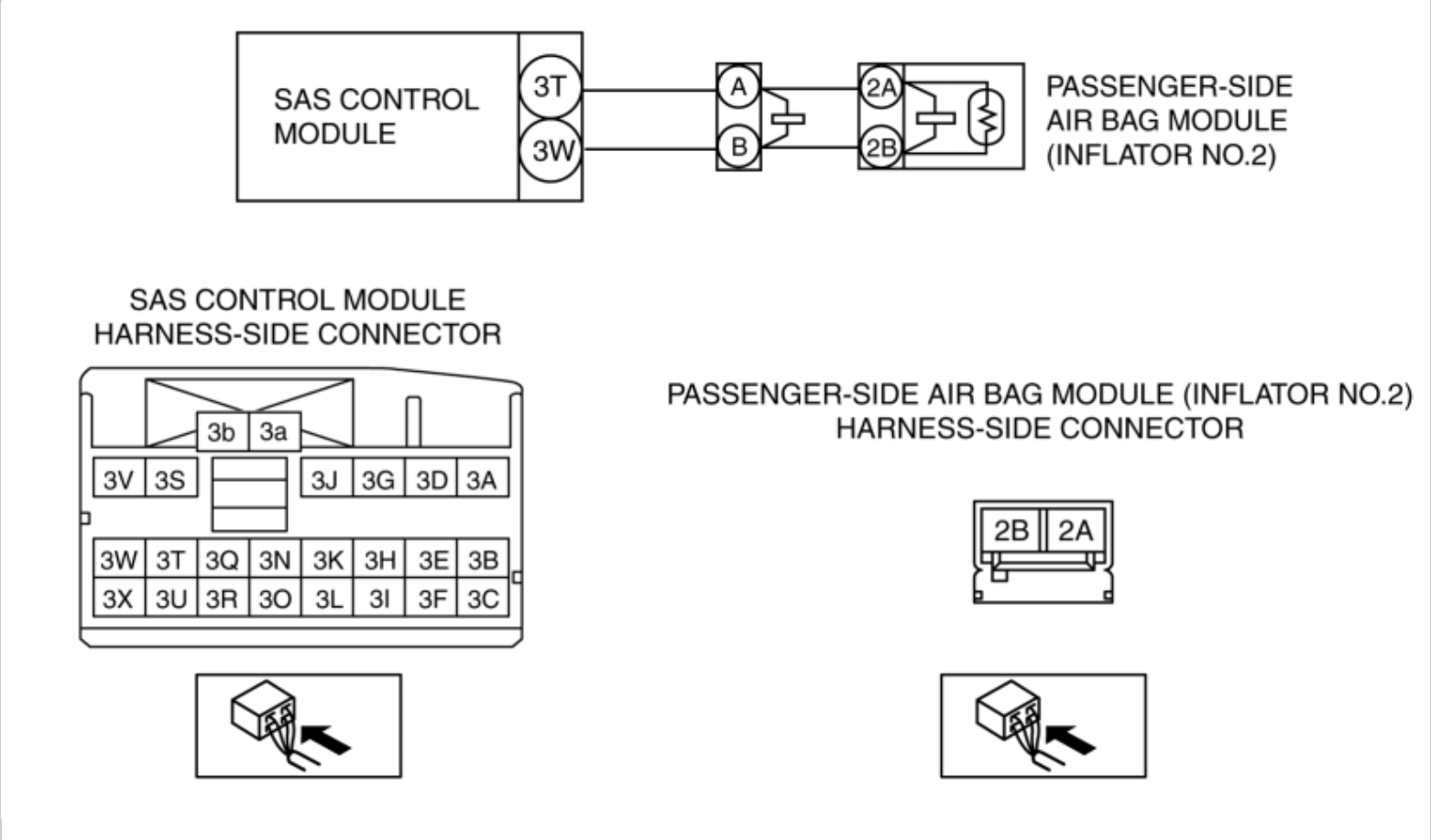

Diagnostic Procedure

Step	Inspection		Action
1	**INSPECT PASSENGER-SIDE AIR BAG MODULE CONNECTOR** **WARNING:** • Handling the component parts improperly can accidentally operate (deploy) the air bag module, which may seriously injure you. Read the service warnings/cautions and the workshop manual before handling the air bag system components. (See **AIR BAG SYSTEM SERVICE WARNINGS [TWO-STEP DEPLOYMENT CONTROL SYSTEM]**.) (See **AIR BAG SYSTEM SERVICE CAUTIONS [TWO-STEP DEPLOYMENT CONTROL SYSTEM]**.) • Switch the ignition off. • Disconnect the negative battery cable and wait for **1 min or more**.	Yes	Replace the malfunctioning part, then go to Step 6.
		No	Go to the next step.

	(See **NEGATIVE BATTERY CABLE DISCONNECTION/CONNECTION [SKYACTIV-G 2.0, SKYACTIV-G 2.5]**.) • Remove the glove compartment. (See **GLOVE COMPARTMENT REMOVAL/INSTALLATION**.) • Disconnect the passenger-side air bag module (inflator No.2) connector. (See **PASSENGER-SIDE AIR BAG MODULE REMOVAL [TWO-STEP DEPLOYMENT CONTROL SYSTEM]**.) • Inspect the passenger-side air bag module (inflator No.2) connector. (Corrosion, damage, and disconnected pins) • Is there any malfunction of the passenger-side air bag module (inflator No.2) connector?		
2	**INSPECT PASSENGER-SIDE AIR BAG MODULE (INFLATOR NO.2) CIRCUIT FOR SHORT TO GROUND** • Remove the column cover. (See **COLUMN COVER REMOVAL/INSTALLATION**.) • Disconnect the clock spring connector. (See **CLOCK SPRING REMOVAL/INSTALLATION [TWO-STEP DEPLOYMENT CONTROL SYSTEM]**.) • Disconnect the driver and passenger-side front seat connector. (See **FRONT SEAT REMOVAL/INSTALLATION**.) • Remove the B-pillar lower trim. (See **B-PILLAR LOWER TRIM REMOVAL/INSTALLATION**.) • Disconnect the driver and passenger-side pre-tensioner seat belt connectors. • Disconnect the driver and passenger-side lap pre-tensioner seat belt connectors. (See **FRONT SEAT BELT REMOVAL/INSTALLATION**.) • Remove the headliner. (See **HEADLINER REMOVAL/INSTALLATION**.) • Disconnect the driver and passenger-side curtain air bag module connectors.	Yes	Refer to the wiring diagram and verify whether or not there is a common connector between SAS control module terminal and passenger-side air bag module terminal. **If there is a common connector:** • Determine the malfunctioning part by inspecting the common connector and the terminal for corrosion, damage, or pin disconnection, and the common wiring harness for a short to ground. • Replace the malfunctioning part. **If there is no common connector:** • Replace the wiring harness which has a short to ground. Go to Step 6.
		No	Go to the next step.

	(See **CURTAIN AIR BAG MODULE REMOVAL/INSTALLATION [TWO-STEP DEPLOYMENT CONTROL SYSTEM]**.) • Disconnect the all SAS control module connectors. (See **SAS CONTROL MODULE REMOVAL/INSTALLATION [TWO-STEP DEPLOYMENT CONTROL SYSTEM]**.) • Inspect for continuity between the following terminals (wiring harness-side) and body ground: ▪ SAS control module terminal 3T ▪ SAS control module terminal 3W **NOTE:** • Inspect for continuity while shaking the wiring harness between the SAS control module and passenger-side air bag module. • Is there continuity?		
3	**INSPECT PASSENGER-SIDE AIR BAG MODULE (INFLATOR NO.2) CIRCUIT FOR OPEN CIRCUIT** • Passenger-side air bag module and SAS control module connectors are disconnected. • Inspect for continuity between the following terminals (wiring harness-side): ▪ Passenger-side air bag module terminal 2A—SAS control module terminal 3T ▪ Passenger-side air bag module terminal 2B—SAS control module terminal 3W **NOTE:** • Inspect for continuity while shaking the wiring harness between the SAS control module and passenger-side air bag module. • Is there continuity?	Yes	Go to the next step.
		No	Refer to the wiring diagram and verify whether or not there is a common connector between SAS control module terminal and passenger-side air bag module terminal. **If there is a common connector:** • Determine the malfunctioning part by inspecting the common connector and the terminal for corrosion, damage, or pin disconnection, and the common wiring harness for an open circuit. • Replace the malfunctioning part. **If there is no common connector:** • Replace the wiring harness which has an open circuit. Go to Step 6.
4	**INSPECT PASSENGER-SIDE AIR BAG MODULE (INFLATOR NO.2) CIRCUIT FOR SHORT TO POWER**	Yes	Go to the next step.

	SUPPLY • Passenger-side air bag module and SAS control module connectors are disconnected. • Connect the negative battery cable. (See **NEGATIVE BATTERY CABLE DISCONNECTION/CONNECTION [SKYACTIV-G 2.0, SKYACTIV-G 2.5]**.) • Switch the ignition ON (engine off or on). • Measure the voltage at the following terminals (wiring harness-side): ▪ SAS control module terminal 3T ▪ SAS control module terminal 3W **NOTE:** • Measure the voltage while shaking the wiring harness between the SAS control module and passenger-side air bag module. • Is the voltage **0 V**?	No	Refer to the wiring diagram and verify whether or not there is a common connector between SAS control module terminal and passenger-side air bag module terminal. **If there is a common connector:** • Determine the malfunctioning part by inspecting the common connector and the terminal for corrosion, damage, or pin disconnection, and the common wiring harness for a short to power supply. • Replace the malfunctioning part. **If there is no common connector:** • Replace the wiring harness which has a short to power supply. Go to Step 6.
5	**INSPECT PASSENGER-SIDE AIR BAG MODULE** • Switch the ignition off. • Disconnect the negative battery cable and wait for **1 min or more**. • Connect the SAS control module connectors. • Except for the passenger-side air bag module (inflator No.2) connector, reconnect all disconnected connectors. • Connect the **SST (Fuel and thermometer checker)** or apply **2 ohms** resistance to the passenger-side air bag module (inflator No.2) connector terminals 2A and 2B. • Set the **SST (Fuel and thermometer checker)** to **2 ohms**. • Connect the negative battery cable. (See **NEGATIVE BATTERY CABLE DISCONNECTION/CONNECTION [SKYACTIV-G 2.0, SKYACTIV-G 2.5]**.) • Switch the ignition ON (engine off or on). • Clear the DTC for the SAS control module using the M-MDS.	Yes	Go to the next step.
		No	Replace the passenger-side air bag module. (See **PASSENGER-SIDE AIR BAG MODULE REMOVAL [TWO-STEP DEPLOYMENT CONTROL SYSTEM]**.) (See **PASSENGER-SIDE AIR BAG MODULE INSTALLATION [TWO-STEP DEPLOYMENT CONTROL SYSTEM]**.) Then go to the next step.

	(See **CLEARING DTC [TWO-STEP DEPLOYMENT CONTROL SYSTEM]**.) • Perform the DTC inspection for the SAS control module using the M-MDS. (See **DTC INSPECTION [TWO-STEP DEPLOYMENT CONTROL SYSTEM]**.) • Are the same DTCs present?		
6	**PERFORM SAS CONTROL MODULE DTC INSPECTION** • Switch the ignition off. • Disconnect the negative battery cable and wait for **1 min or more**. • Disconnect the **SST (Fuel and thermometer checker)** or the **2 ohms** resistance. • Connect the passenger-side air bag module (inflator No.2) connector. (See **PASSENGER-SIDE AIR BAG MODULE INSTALLATION [TWO-STEP DEPLOYMENT CONTROL SYSTEM]**.) • Connect the negative battery cable. (See **NEGATIVE BATTERY CABLE DISCONNECTION/CONNECTION [SKYACTIV-G 2.0, SKYACTIV-G 2.5]**.) • Switch the ignition ON (engine off or on). • Clear the DTC for the SAS control module using the M-MDS. (See **CLEARING DTC [TWO-STEP DEPLOYMENT CONTROL SYSTEM]**.) • Perform the DTC inspection for the SAS control module using the M-MDS. (See **DTC INSPECTION [TWO-STEP DEPLOYMENT CONTROL SYSTEM]**.) • Are the same DTCs present?	Yes	Replace the SAS control module. (See **SAS CONTROL MODULE REMOVAL/INSTALLATION [TWO-STEP DEPLOYMENT CONTROL SYSTEM]**.)
		No	DTC troubleshooting completed.

2014 - Mazda3 - Restraints

DTC B0052:09/B0052:11/B0052:14 [TWO-STEP DEPLOYMENT CONTROL SYSTEM]

System malfunction location	• B0052:09:Passenger-side buckle switch undefined • B0052:11:Passenger-side buckle switch circuit open or short to power supply • B0052:14:Passenger-side buckle switch circuit short to body ground
Detection condition	**WARNING:** • Detection conditions are for understanding the DTC outline before performing an inspection. Performing an inspection according to only the detection conditions may cause injury due to an operating error, or damage the system. When performing an inspection, always follow the inspection procedure. • Wiring harness between the passenger-side buckle switch and seat weight sensor control module has a malfunction • Passenger-side buckle switch has a malfunction
Fail-safe function	Not applicable
Possible cause	• Passenger-side buckle switch connector malfunction • Short circuit to power supply or body ground in the wiring harness between passenger-side buckle switch and SAS control module • Open circuit in the wiring harness between passenger-side buckle switch and SAS control module • Passenger-side buckle switch malfunction • Seat weight sensor control module malfunction • SAS control module malfunction

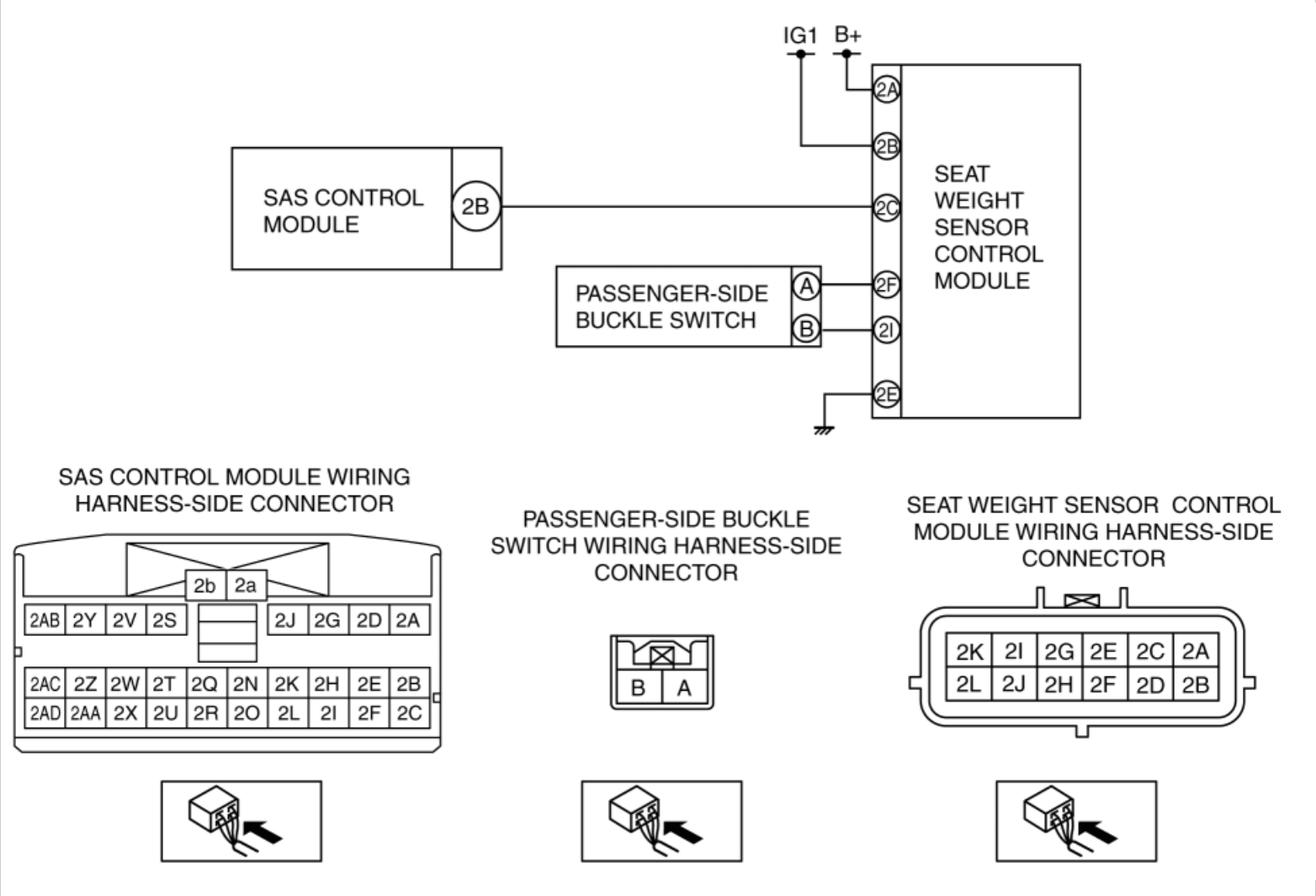

Diagnostic Procedure

Step	Inspection		Action
1	**INSPECT PASSENGER-SIDE BUCKLE SWITCH CONNECTOR** **WARNING:** • Handling the air bag system components improperly can accidentally deploy the air bag modules and pre-tensioner seat belts, which may seriously injure you. Read the service warnings and cautions before handling the air bag system components. (See **AIR BAG SYSTEM SERVICE WARNINGS [TWO-STEP DEPLOYMENT CONTROL SYSTEM]**.) (See **AIR BAG SYSTEM SERVICE CAUTIONS [TWO-STEP DEPLOYMENT CONTROL SYSTEM]**.) • Switch the ignition off. • Disconnect the negative battery cable and wait for **1 min or more**. (See **NEGATIVE BATTERY CABLE DISCONNECTION/CONNECTION [SKYACTIV-G 2.0, SKYACTIV-G 2.5]**.)	Yes	Replace the malfunctioning part, then go to Step 5.
		No	Go to the next step.

	• Disconnect the passenger-side buckle switch connector. (See **FRONT BUCKLE REMOVAL/INSTALLATION**.) • Inspect the passenger-side buckle switch connector. (Corrosion, damage, and disconnected pins) • Is there any malfunction of the passenger-side buckle switch connector?		
2	**INSPECT PASSENGER-SIDE BUCKLE SWITCH CIRCUIT FOR SHORT TO GROUND** • Inspect for continuity between the following terminals (wiring harness-side) and body ground: ▪ Seat weight sensor control module terminal 2F ▪ Seat weight sensor control module terminal 2I **NOTE:** • Inspect for continuity while shaking the wiring harness between the seat weight sensor control module and passenger-side buckle switch. • Is there continuity?	Yes	Refer to the wiring diagram and verify whether or not there is a common connector between seat weight sensor control module terminal and passenger-side buckle switch terminal. **If there is a common connector:** • Determine the malfunctioning part by inspecting the common connector and the terminal for corrosion, damage, or pin disconnection, and the common wiring harness for a short to ground. • Replace the malfunctioning part. **If there is no common connector:** • Replace the wiring harness which has a short to ground. Go to Step 5.
		No	Go to the next step.
3	**INSPECT PASSENGER-SIDE BUCKLE SWITCH CIRCUIT FOR OPEN CIRCUIT** • Passenger-side buckle switch and seat weight sensor control module connectors are disconnected. • Inspect for continuity between the following terminals (wiring harness-side): ▪ Passenger-side buckle switch terminal A—seat weight sensor control module 2F ▪ Passenger-side buckle switch terminal B—seat weight sensor control module 2I **NOTE:** • Inspect for continuity while shaking the wiring harness between the seat weight sensor control module and passenger-side buckle switch. • Is there continuity?	Yes	Go to the next step.
		No	Refer to the wiring diagram and verify whether or not there is a common connector between seat weight sensor control module terminal and passenger-side buckle switch terminal. **If there is a common connector:** • Determine the malfunctioning part by inspecting the common connector and the terminal for corrosion, damage, or pin disconnection, and the common wiring harness for an open circuit. • Replace the malfunctioning part. **If there is no common connector:** • Replace the wiring harness which has an open circuit. Go to Step 5.
4	**INSPECT PASSENGER-SIDE BUCKLE SWITCH CIRCUIT FOR SHORT TO POWER SUPPLY** • Passenger-side buckle switch and seat weight sensor control module connectors are disconnected. • Connect the negative battery cable. (See **NEGATIVE BATTERY CABLE DISCONNECTION/CONNECTION [SKYACTIV-G 2.0, SKYACTIV-G 2.5]**.)	Yes	Go to the next step.
		No	Refer to the wiring diagram and verify whether or not there is a common connector between seat weight sensor control module terminal and passenger-side buckle switch terminal. **If there is a common connector:** • Determine the malfunctioning part by

	• Switch the ignition ON (engine off or on). • Measure the voltage at the following terminals (wiring harness-side): ▪ Seat weight sensor control module 2F ▪ Seat weight sensor control module 2I **NOTE:** • Measure the voltage while shaking the wiring harness between the seat weight sensor control module and passenger-side buckle switch. • Is the voltage **0 V**?		inspecting the common connector and the terminal for corrosion, damage, or pin disconnection, and the common wiring harness for a short to power supply. • Replace the malfunctioning part. **If there is no common connector:** • Replace the wiring harness which has a short to power supply. Go to the next step.
5	**INSPECT PASSENGER-SIDE BUCKLE SWITCH** • Check the following PID/DATA monitor, using M-MDS. (See **PID/DATA MONITOR TABLE [TWO-STEP DEPLOYMENT CONTROL SYSTEM]**.) ▪ B_SW_P_FLT • Is passenger-side buckle switch normal?	Yes	Replace the seat weight sensor control module. (See **SEAT WEIGHT SENSOR CONTROL MODULE REMOVAL/INSTALLATION [TWO-STEP DEPLOYMENT CONTROL SYSTEM]**.) Then go to the next step.
		No	Replace the passenger-side front buckle. (See **FRONT BUCKLE REMOVAL/INSTALLATION**.) Then go to the next step.
6	**INSPECT SAS CONTROL MODULE** • Switch the ignition off. • Disconnect the negative battery cable and wait for **1 min or more**. • Reconnect all disconnected connectors. • Connect the negative battery cable. (See **NEGATIVE BATTERY CABLE DISCONNECTION/CONNECTION [SKYACTIV-G 2.0, SKYACTIV-G 2.5]**.) • Switch the ignition ON (engine off or on). • Clear the DTC for the SAS control module using the M-MDS. (See **CLEARING DTC [TWO-STEP DEPLOYMENT CONTROL SYSTEM]**.) • Perform the DTC inspection for the SAS control module using the M-MDS. (See **DTC INSPECTION [TWO-STEP DEPLOYMENT CONTROL SYSTEM]**.) • Are the same DTCs present?	Yes	Replace the SAS control module. (See **SAS CONTROL MODULE REMOVAL/INSTALLATION [TWO-STEP DEPLOYMENT CONTROL SYSTEM]**)
		No	DTC troubleshooting completed.

2014 - Mazda3 - Restraints

DTC B0072:11/B0072:12/B0072:13/B0072:19/B0072:1A [TWO-STEP DEPLOYMENT CONTROL SYSTEM]

System malfunction location	• B0072:11:Passenger-side lap pre-tensioner seat belt circuit short to body ground • B0072:12:Passenger-side lap pre-tensioner seat belt circuit short to power supply • B0072:13:Passenger-side lap pre-tensioner seat belt circuit open circuit or resistance high • B0072:19:Short circuit to passenger-side lap pre-tensioner seat belt and other air bag module circuits • B0072:1A:Passenger-side lap pre-tensioner seat belt circuit resistance low
Detection condition	**WARNING:** • Detection conditions are for understanding the DTC outline before performing an inspection. Performing an inspection according to only the detection conditions may cause injury due to an operating error, or damage the system. When performing an inspection, always follow the inspection procedure. • Resistance **other than 0.81—6.42 ohms** detected in passenger-side lap pre-tensioner seat belt circuit • Wiring harness between the passenger-side lap pre-tensioner seat belt and SAS control module has a malfunction
Fail-safe function	Not applicable
Possible cause	• Passenger-side lap pre-tensioner seat belt connector malfunction • Short circuit to power supply or body ground in the wiring harness between the passenger-side lap pre-tensioner seat belt and SAS control module • Open circuit in the wiring harness between the passenger-side lap pre-tensioner seat belt and SAS control module • Passenger-side lap pre-tensioner seat belt malfunction • SAS control module malfunction

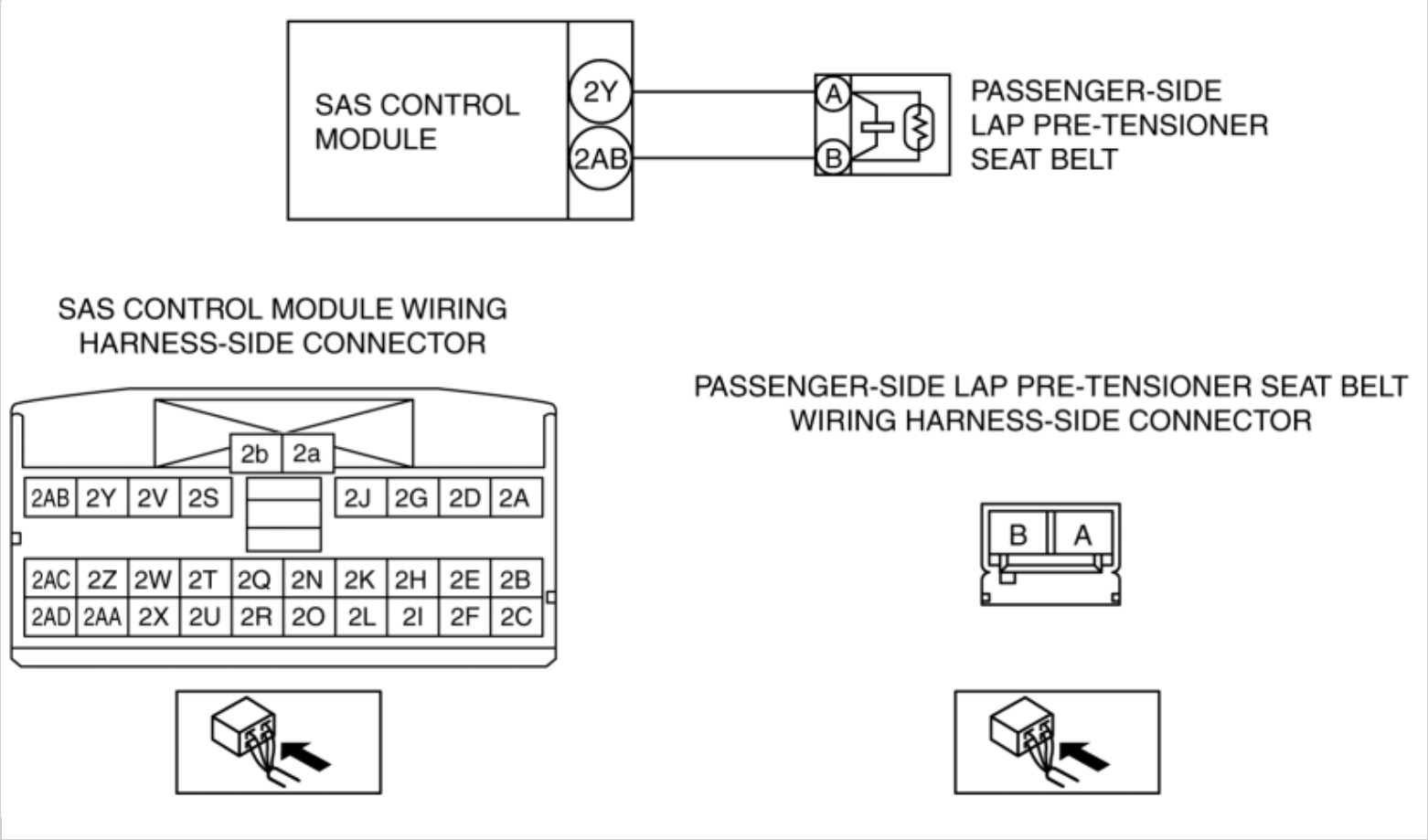

Diagnostic Procedure

Step	Inspection		Action
1	**INSPECT PASSENGER-SIDE LAP PRE-TENSIONER SEAT BELT CONNECTOR** **WARNING:** • Handling the component parts improperly can accidentally operate (deploy) the air bag module, which may seriously injure you. Read the service warnings/cautions and the workshop manual before handling the air bag system components. (See **AIR BAG SYSTEM SERVICE WARNINGS [TWO-STEP DEPLOYMENT CONTROL SYSTEM]**.) (See **AIR BAG SYSTEM SERVICE CAUTIONS [TWO-STEP DEPLOYMENT CONTROL SYSTEM]**.) • Switch the ignition off. • Disconnect the negative battery cable and wait for **1 min or more**.	Yes	Replace the malfunctioning part, then go to Step 6.
		No	Go to the next step.

	(See **NEGATIVE BATTERY CABLE DISCONNECTION/CONNECTION [SKYACTIV-G 2.0, SKYACTIV-G 2.5]**.) • Remove the cover. (See **FRONT SEAT BELT REMOVAL/INSTALLATION**.) • Disconnect the passenger-side lap pre-tensioner seat belt connector. (See **FRONT SEAT BELT REMOVAL/INSTALLATION**.) • Inspect the passenger-side lap pre-tensioner seat belt connector. (Corrosion, damage, and disconnected pins) • Is there any malfunction of the passenger-side lap pre-tensioner seat belt connector?		
2	**INSPECT PASSENGER-SIDE LAP PRE-TENSIONER SEAT BELT CIRCUIT FOR SHORT TO GROUND** • Remove the column cover. (See **COLUMN COVER REMOVAL/INSTALLATION**.) • Disconnect the clock spring connector. (See **CLOCK SPRING REMOVAL/INSTALLATION [TWO-STEP DEPLOYMENT CONTROL SYSTEM]**.) • Remove the glove compartment. (See **GLOVE COMPARTMENT REMOVAL/INSTALLATION**.) • Disconnect the passenger-side air bag module connector. (See **PASSENGER-SIDE AIR BAG MODULE REMOVAL [TWO-STEP DEPLOYMENT CONTROL SYSTEM]**.) • Disconnect the driver and passenger-side front seat connector. (See **FRONT SEAT REMOVAL/INSTALLATION**.) • Remove the B-pillar lower trim. (See **B-PILLAR LOWER TRIM REMOVAL/INSTALLATION**.) • Disconnect the driver and passenger-side pre-tensioner seat belt connectors. • Disconnect the driver-side lap pre-tensioner seat belt connector.	Yes	Refer to the wiring diagram and verify whether or not there is a common connector between SAS control module terminal and passenger-side lap pre-tensioner seat belt terminal. **If there is a common connector:** • Determine the malfunctioning part by inspecting the common connector and the terminal for corrosion, damage, or pin disconnection, and the common wiring harness for a short to ground. • Replace the malfunctioning part. **If there is no common connector:** • Replace the wiring harness which has a short to ground. Go to Step 6.
		No	Go to the next step.

	(See **FRONT SEAT BELT REMOVAL/INSTALLATION**.) • Remove the headliner. (See **HEADLINER REMOVAL/INSTALLATION**.) • Disconnect the driver and passenger-side curtain air bag module connector. (See **CURTAIN AIR BAG MODULE REMOVAL/INSTALLATION [TWO-STEP DEPLOYMENT CONTROL SYSTEM]**.) • Disconnect the all SAS control module connectors. (See **SAS CONTROL MODULE REMOVAL/INSTALLATION [TWO-STEP DEPLOYMENT CONTROL SYSTEM]**.) • Inspect for continuity between the following terminals (wiring harness-side) and body ground: ▪ SAS control module terminal 2Y ▪ SAS control module terminal 2AB **NOTE:** • Inspect for continuity while shaking the wiring harness between the SAS control module and passenger-side lap pre-tensioner seat belt. • Is there continuity?		
3	**INSPECT PASSENGER-SIDE LAP PRE-TENSIONER SEAT BELT CIRCUIT FOR OPEN CIRCUIT** • Lap pre-tensioner seat belt and SAS control module connectors are disconnected. • Inspect for continuity between the following terminals (wiring harness-side): ▪ Passenger-side lap pre-tensioner seat belt terminal A—SAS control module terminal 2Y ▪ Passenger-side lap pre-tensioner seat belt terminal B—SAS control module terminal 2AB **NOTE:** • Inspect for continuity while shaking the	Yes	Go to the next step.
		No	Refer to the wiring diagram and verify whether or not there is a common connector between SAS control module terminal and passenger-side lap pre-tensioner seat belt terminal. **If there is a common connector:** • Determine the malfunctioning part by inspecting the common connector and the terminal for corrosion, damage, or pin disconnection, and the common wiring harness for an open circuit. • Replace the malfunctioning

	wiring harness between the SAS control module and passenger-side lap pre-tensioner seat belt. • Is there continuity?		part. **If there is no common connector:** • Replace the wiring harness which has an open circuit. Go to Step 6.
4	**INSPECT PASSENGER-SIDE LAP PRE-TENSIONER SEAT BELT CIRCUIT FOR SHORT TO POWER SUPPLY** • Passenger-side lap pre-tensioner seat belt and SAS control module connectors are disconnected. • Connect the negative battery cable. (See **NEGATIVE BATTERY CABLE DISCONNECTION/CONNECTION [SKYACTIV-G 2.0, SKYACTIV-G 2.5]**.) • Switch the ignition ON (engine off or on). • Measure the voltage at the following terminals (wiring harness-side): ▪ SAS control module terminal 2Y ▪ SAS control module terminal 2AB **NOTE:** • Measure the voltage while shaking the wiring harness between the SAS control module and passenger-side lap pre-tensioner seat belt. • Is the voltage **0 V**?	Yes	Go to the next step.
		No	Refer to the wiring diagram and verify whether or not there is a common connector between SAS control module terminal and passenger-side lap pre-tensioner seat belt terminal. **If there is a common connector:** • Determine the malfunctioning part by inspecting the common connector and the terminal for corrosion, damage, or pin disconnection, and the common wiring harness for a short to power supply. • Replace the malfunctioning part. **If there is no common connector:** • Replace the wiring harness which has a short to power supply. Go to Step 6.
5	**INSPECT PASSENGER-SIDE LAP PRE-TENSIONER SEAT BELT** • Switch the ignition off. • Disconnect the negative battery cable and wait for **1 min or more**. • Connect the SAS control module connectors. • Except for the passenger-side lap pre-tensioner seat belt connector, reconnect all disconnected connectors. • Connect the **SST (Fuel and thermometer checker)** or apply **2 ohms** resistance to the passenger-side lap pre-tensioner seat belt connector terminals A–B.	Yes	Go to the next step.
		No	Replace the passenger-side lap pre-tensioner seat belt. (See **FRONT SEAT BELT REMOVAL/INSTALLATION**.) Then go to the next step.

	• Set the **SST (Fuel and thermometer checker)** to **2 ohms**. • Connect the negative battery cable. (See **NEGATIVE BATTERY CABLE DISCONNECTION/CONNECTION [SKYACTIV-G 2.0, SKYACTIV-G 2.5]**.) • Switch the ignition ON (engine off or on). • Clear the DTC for the SAS control module using the M-MDS. (See **CLEARING DTC [TWO-STEP DEPLOYMENT CONTROL SYSTEM]**.) • Perform the DTC inspection for the SAS control module using the M-MDS. (See **DTC INSPECTION [TWO-STEP DEPLOYMENT CONTROL SYSTEM]**.) • Are the same DTCs present?		
6	**PERFORM SAS CONTROL MODULE DTC INSPECTION** • Switch the ignition off. • Disconnect the negative battery cable and wait for **1 min or more**. • Disconnect the **SST (Fuel and thermometer checker)** or the **2 ohms** resistance. • Connect the passenger-side lap pre-tensioner seat belt connector. • Connect the negative battery cable. (See **NEGATIVE BATTERY CABLE DISCONNECTION/CONNECTION [SKYACTIV-G 2.0, SKYACTIV-G 2.5]**.) • Switch the ignition ON (engine off or on). • Clear the DTC for the SAS control module using the M-MDS. (See **CLEARING DTC [TWO-STEP DEPLOYMENT CONTROL SYSTEM]**.) • Perform the DTC inspection for the SAS control module using the M-MDS. (See **DTC INSPECTION [TWO-STEP DEPLOYMENT CONTROL SYSTEM]**.) • Are the same DTCs present?	Yes	Replace the SAS control module. (See **SAS CONTROL MODULE REMOVAL/INSTALLATION [TWO-STEP DEPLOYMENT CONTROL SYSTEM]**.)
		No	DTC troubleshooting completed.

DTC B0072:11/B0072:12/B0072:13/B0072:19/B0072:1A [TWO-STEP DEPLOYMENT CONTROL SYSTEM]

2014 - Mazda3 - Restraints

DTC B0072:55/B1228:55 [TWO-STEP DEPLOYMENT CONTROL SYSTEM]

System malfunction location	• B0072:55:Configuration setting error (passenger-side lap pre-tensioner seat belt structural malfunction) • B1228:55:Configuration setting error (driver-side lap pre-tensioner seat belt structural malfunction)
Detection condition	**WARNING:** • Detection conditions are for understanding the DTC outline before performing an inspection. Performing an inspection according to only the detection conditions may cause injury due to an operating error, or damage the system. When performing an inspection, always follow the inspection procedure. • SAS control module configuration setting has not been done correctly • Parts which have not been set to SAS control module are assembled
Fail-safe function	Not applicable
Possible cause	• SAS control module configuration setting not implemented • SAS control module configuration setting invalid • Driver or passenger-side lap pre-tensioner seat belt assembly incorrect • SAS control module malfunction
System wiring diagram	Not applicable

Diagnostic Procedure

Step	Inspection	Action
	PERFORM SAS CONTROL MODULE CONFIGURATION	

1	**(AS-BUILT DATA USE)** • Perform the SAS control module configuration using the M-MDS. (See **SAS CONTROL MODULE CONFIGURATION (USING AS-BUILT DATA) [TWO-STEP DEPLOYMENT CONTROL SYSTEM]**.) • Clear the DTC for the SAS control module using the M-MDS. (See **CLEARING DTC [TWO-STEP DEPLOYMENT CONTROL SYSTEM]**.) • Perform the DTC inspection for the SAS control module using the M-MDS. (See **DTC INSPECTION [TWO-STEP DEPLOYMENT CONTROL SYSTEM]**.) • Are the same DTCs present?	Yes	Go to the next step.
		No	DTC troubleshooting completed.
2	**INSPECT LAP PRE-TENSIONER SEAT BELT** • Verify that the driver or passenger-side lap pre-tensioner seat belt is correctly installed. • Is the driver or passenger-side lap pre-tensioner seat belt correctly installed?	Yes	Go to the next step.
		No	Correctly install the driver or passenger-side lap pre-tensioner seat belt. Then go to the next step.
3	**PERFORM SAS CONTROL MODULE DTC INSPECTION** • Clear the DTC for the SAS control module using the M-MDS. (See **CLEARING DTC [TWO-STEP DEPLOYMENT CONTROL SYSTEM]**.) • Perform the DTC inspection for the SAS control module using the M-MDS. (See **DTC INSPECTION [TWO-STEP DEPLOYMENT CONTROL SYSTEM]**.) • Are the same DTCs present?	Yes	Replace the SAS control module. (See **SAS CONTROL MODULE REMOVAL/INSTALLATION [TWO-STEP DEPLOYMENT CONTROL SYSTEM]**.)
		No	DTC troubleshooting completed.

2014 - Mazda3 - Restraints

DTC B0094:11/B0094:13/B0094:87/B0094:96 [TWO-STEP DEPLOYMENT CONTROL SYSTEM]

System malfunction location	• B0094:11:Driver-side crash zone sensor circuit short to body ground • B0094:13:Driver-side crash zone sensor circuit open circuit or short to power supply • B0094:87:Signal reception error from driver-side crash zone sensor • B0094:96:Driver-side crash zone sensor internal malfunction
Detection condition	**WARNING:** • Detection conditions are for understanding the DTC outline before performing an inspection. Performing an inspection according to only the detection conditions may cause injury due to an operating error, or damage the system. When performing an inspection, always follow the inspection procedure. • Wiring harness between the driver-side crash zone sensor and SAS control module has a malfunction • Driver-side crash zone sensor has a malfunction
Fail-safe function	Not applicable
Possible cause	• Driver-side crash zone sensor connector malfunction • Short circuit to power supply or body ground in the wiring harness between the driver-side crash zone sensor and SAS control module • Open circuit in the wiring harness between the driver-side crash zone sensor and SAS control module • Driver-side crash zone sensor malfunction • SAS control module malfunction

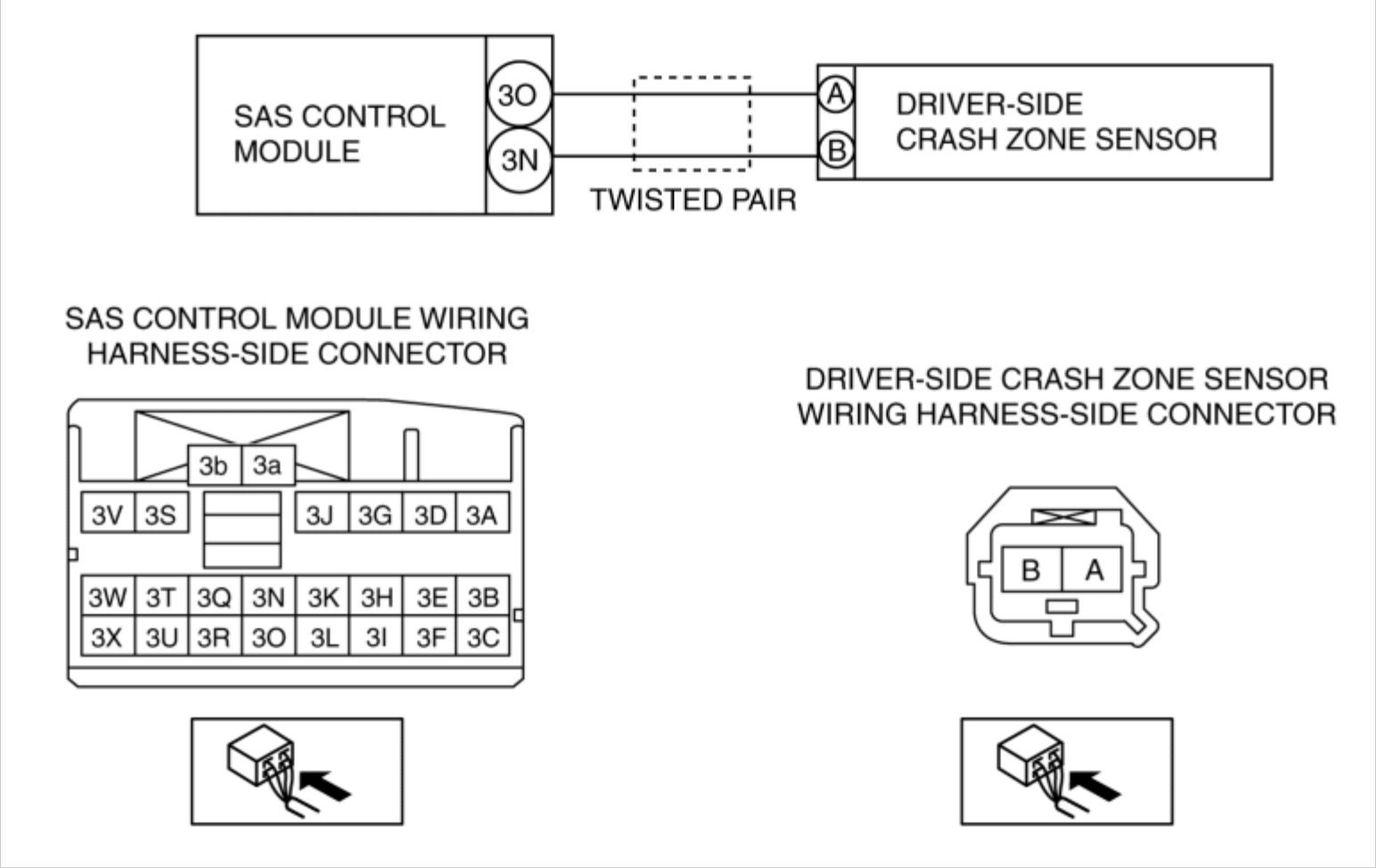

Diagnostic Procedure

Step	Inspection		Action
1	**INSPECT DRIVER-SIDE CRASH ZONE SENSOR CONNECTOR** **WARNING:** • Handling the component parts improperly can accidentally operate (deploy) the air bag module, which may seriously injure you. Read the service warnings/cautions and the workshop manual before handling the air bag system components. (See **AIR BAG SYSTEM SERVICE WARNINGS [TWO-STEP DEPLOYMENT CONTROL SYSTEM]**.) (See **AIR BAG SYSTEM SERVICE CAUTIONS [TWO-STEP DEPLOYMENT CONTROL SYSTEM]**.)	Yes	Replace the malfunctioning part, then go to Step 5.
		No	Go to the next step.

	Switch the ignition off. • Disconnect the negative battery cable and wait for **1 min or more**. (See **NEGATIVE BATTERY CABLE DISCONNECTION/CONNECTION [SKYACTIV-G 2.0, SKYACTIV-G 2.5]**.) • Remove the front combination light. (See **FRONT COMBINATION LIGHT REMOVAL/INSTALLATION**.) • Disconnect the driver-side crash zone sensor connector. (See **CRASH ZONE SENSOR REMOVAL/INSTALLATION [TWO-STEP DEPLOYMENT CONTROL SYSTEM]**.) • Inspect the driver-side crash zone sensor connector. (Corrosion, damage, and disconnected pins) • Is there any malfunction of the driver-side crash zone sensor connector?		
2	**INSPECT DRIVER-SIDE CRASH ZONE SENSOR CIRCUIT FOR SHORT TO GROUND** • Remove the column cover. (See **COLUMN COVER REMOVAL/INSTALLATION**.) • Disconnect the clock spring connector. (See **CLOCK SPRING REMOVAL/INSTALLATION [TWO-STEP DEPLOYMENT CONTROL SYSTEM]**.) • Remove the glove compartment. (See **GLOVE COMPARTMENT REMOVAL/INSTALLATION**.) • Disconnect the passenger-side air bag module connector. (See **PASSENGER-SIDE AIR BAG MODULE REMOVAL [TWO-STEP DEPLOYMENT CONTROL SYSTEM]**.) • Disconnect the driver and passenger-side front seat connector. (See **FRONT SEAT REMOVAL/INSTALLATION**.) • Remove the B-pillar lower trim.	Yes	Refer to the wiring diagram and verify whether or not there is a common connector between SAS control module terminal and driver-side crash zone sensor terminal. **If there is a common connector:** • Determine the malfunctioning part by inspecting the common connector and the terminal for corrosion, damage, or pin disconnection, and the common wiring harness for a short to ground. • Replace the malfunctioning part. **If there is no common connector:** • Replace the wiring harness which has a short to ground. Go to Step 5.

	(See **B-PILLAR LOWER TRIM REMOVAL/INSTALLATION**.) • Disconnect the driver and passenger-side pre-tensioner seat belt connectors. • Disconnect the driver and passenger-side lap pre-tensioner seat belt connectors. (See **FRONT SEAT BELT REMOVAL/INSTALLATION**.) • Remove the headliner. (See **HEADLINER REMOVAL/INSTALLATION**.) • Disconnect the driver and passenger-side curtain air bag module connector. (See **CURTAIN AIR BAG MODULE REMOVAL/INSTALLATION [TWO-STEP DEPLOYMENT CONTROL SYSTEM]**.) • Disconnect the all SAS control module connectors. (See **SAS CONTROL MODULE REMOVAL/INSTALLATION [TWO-STEP DEPLOYMENT CONTROL SYSTEM]**.) • Inspect for continuity between the following terminals (wiring harness-side) and body ground: ▪ SAS control module terminal 3O ▪ SAS control module terminal 3N **NOTE:** • Inspect for continuity while shaking the wiring harness between the SAS control module and driver-side crash zone sensor. • Is there continuity?	No	Go to the next step.
3	**INSPECT DRIVER-SIDE CRASH ZONE SENSOR CIRCUIT FOR OPEN CIRCUIT** • Driver-side crash zone sensor and SAS control module connectors are disconnected. • Inspect for continuity between the following terminals (wiring harness-	Yes	Go to the next step.
		No	Refer to the wiring diagram and verify whether or not there is a common connector between SAS control module terminal and driver-side crash zone sensor terminal.

	side): ▪ Driver-side crash zone sensor terminal A—SAS control module terminal 3O ▪ Driver-side crash zone sensor terminal B—SAS control module terminal 3N **NOTE:** • Inspect for continuity while shaking the wiring harness between the SAS control module and driver-side crash zone sensor. • Is there continuity?		**If there is a common connector:** • Determine the malfunctioning part by inspecting the common connector and the terminal for corrosion, damage, or pin disconnection, and the common wiring harness for an open circuit. • Replace the malfunctioning part. **If there is no common connector:** • Replace the wiring harness which has an open circuit. Go to Step 5.
4	**INSPECT DRIVER-SIDE CRASH ZONE SENSOR CIRCUIT FOR SHORT TO POWER SUPPLY** • Driver-side crash zone sensor and SAS control module connectors are disconnected. • Connect the negative battery cable. (See **NEGATIVE BATTERY CABLE DISCONNECTION/CONNECTION [SKYACTIV-G 2.0, SKYACTIV-G 2.5]**.) • Switch the ignition ON (engine off or on). • Measure the voltage at the following terminals (wiring harness-side): ▪ SAS control module terminal 3O ▪ SAS control module terminal 3N **NOTE:** • Measure the voltage while shaking the wiring harness between the SAS control module and driver-side crash zone sensor. • Is the voltage **0 V**?	Yes	Replace the driver-side crash zone sensor, then go to the next step. (See **CRASH ZONE SENSOR REMOVAL/INSTALLATION [TWO-STEP DEPLOYMENT CONTROL SYSTEM]**.)
		No	Refer to the wiring diagram and verify whether or not there is a common connector between SAS control module terminal and driver-side crash zone sensor terminal. **If there is a common connector:** • Determine the malfunctioning part by inspecting the common connector and the terminal for corrosion, damage, or pin disconnection, and the common wiring harness for a short to power supply. • Replace the malfunctioning part. **If there is no common connector:**

			• Replace the wiring harness which has a short to power supply. Go to the next step.
5	**PERFORM SAS CONTROL MODULE DTC INSPECTION** • Switch the ignition off. • Disconnect the negative battery cable and wait for **1 min or more**. • Connect the SAS control module connectors. • Reconnect all disconnected connectors. • Connect the negative battery cable. (See **NEGATIVE BATTERY CABLE DISCONNECTION/CONNECTION [SKYACTIV-G 2.0, SKYACTIV-G 2.5]**.) • Switch the ignition ON (engine off or on). • Clear the DTC for the SAS control module using the M-MDS. (See **CLEARING DTC [TWO-STEP DEPLOYMENT CONTROL SYSTEM]**.) • Perform the DTC inspection for the SAS control module using the M-MDS. (See **DTC INSPECTION [TWO-STEP DEPLOYMENT CONTROL SYSTEM]**.) • Are the same DTCs present?	Yes	Replace the SAS control module. (See **SAS CONTROL MODULE REMOVAL/INSTALLATION [TWO-STEP DEPLOYMENT CONTROL SYSTEM]**.)
		No	DTC troubleshooting completed.

2014 - Mazda3 - Restraints

DTC B0094:55/B1417:55 [TWO-STEP DEPLOYMENT CONTROL SYSTEM]

System malfunction location	• B0094:55:Configuration setting error (driver-side crash zone sensor structural malfunction) • B1417:55:Configuration setting error (passenger-side crash zone sensor structural malfunction)
Detection condition	**WARNING:** • Detection conditions are for understanding the DTC outline before performing an inspection. Performing an inspection according to only the detection conditions may cause injury due to an operating error, or damage the system. When performing an inspection, always follow the inspection procedure. • SAS control module configuration setting has not been done correctly • Parts which have not been set to SAS control module are assembled
Fail-safe function	Not applicable
Possible cause	• SAS control module configuration setting not implemented • SAS control module configuration setting invalid • Driver or passenger-side crash zone sensor assembly incorrect • SAS control module malfunction
System wiring diagram	Not applicable

Diagnostic Procedure

Step	Inspection	Action
	PERFORM SAS CONTROL MODULE CONFIGURATION	

1	**(AS-BUILT DATA USE)** • Perform the SAS control module configuration using the M-MDS. (See **SAS CONTROL MODULE CONFIGURATION (USING AS-BUILT DATA) [TWO-STEP DEPLOYMENT CONTROL SYSTEM]**.) • Clear the DTC for the SAS control module using the M-MDS. (See **CLEARING DTC [TWO-STEP DEPLOYMENT CONTROL SYSTEM]**.) • Perform the DTC inspection for the SAS control module using the M-MDS. (See **DTC INSPECTION [TWO-STEP DEPLOYMENT CONTROL SYSTEM]**.) • Are the same DTCs present?	Yes	Go to the next step.
		No	DTC troubleshooting completed.
2	**INSPECT CRASH ZONE SENSOR** • Verify that the driver or passenger-side crash zone sensor is correctly installed. • Is the driver or passenger-side crash zone sensor correctly installed?	Yes	Go to the next step.
		No	Correctly Install the driver or passenger-side crash zone sensor. Then go to the next step.
3	**PERFORM SAS CONTROL MODULE DTC INSPECTION** • Clear the DTC for the SAS control module using the M-MDS. (See **CLEARING DTC [TWO-STEP DEPLOYMENT CONTROL SYSTEM]**.) • Perform the DTC inspection for the SAS control module using the M-MDS. (See **DTC INSPECTION [TWO-STEP DEPLOYMENT CONTROL SYSTEM]**.) • Are the same DTCs present?	Yes	Replace the SAS control module. (See **SAS CONTROL MODULE REMOVAL/INSTALLATION [TWO-STEP DEPLOYMENT CONTROL SYSTEM]**.)
		No	DTC troubleshooting completed.

2014 - Mazda3 - Restraints

DTC B00A0:07 [TWO-STEP DEPLOYMENT CONTROL SYSTEM]

System malfunction location	• Seat weight sensor collision detection
Detection condition	**WARNING:** • Detection conditions are for understanding the DTC outline before performing an inspection. Performing an inspection according to only the detection conditions may cause injury due to an operating error, or damage the system. When performing an inspection, always follow the inspection procedure. • The pressure from the seat weight sensor is not within specification
Fail-safe function	Not applicable
Possible cause	• Seat weight sensor deformation or malfunction • Foreign object under seat causing load on or deformation of the seat belt rail • Front passenger-side seat under-bracket or frame deformed • Weight acting on front passenger-side seat during calibration • Front passenger-side seat part improperly installed at time of calibration • Floor deformed where front passenger-side seat attached • Seat weight sensor calibration setting not implemented • Seat weight sensor calibration setting invalid • Seat weight sensor control module malfunction • SAS control module malfunction
System wiring diagram	Not applicable

Diagnostic Procedure

Step	Inspection		Action
1	**INSPECT PASSENGER-SIDE FRONT SEAT** • Visually inspect the passenger-side front seat for the following: ▪ Seat under-bracket deformation ▪ Seat frame deformation ▪ Seat weight sensor deformation ▪ Foreign objects stuck under seat • Are any of the parts deformed or are any foreign objects stuck under the seat?	Yes	Replace any deformed parts or remove any foreign objects, then go to the next step.
		No	Go to the next step.
2	**INSPECT FLOOR** • Visually inspect the installation parts of the front passenger-side seat for the following: ▪ Abnormal floor deformation ▪ Installation hole of front passenger-side seat is improperly positioned • Is the floor normal?	Yes	Go to the next step.
		No	Repair floor deformation, then go to the next step.
3	**INSPECT SEAT WEIGHT SENSOR CONTROL MODULE** • Install the passenger-side front seat. (See **FRONT SEAT REMOVAL/INSTALLATION**.)	Yes	• Replace the seat weight sensor control module. (See **SEAT WEIGHT SENSOR CONTROL MODULE REMOVAL/INSTALLATION [TWO-STEP DEPLOYMENT CONTROL**

	• Reconnect the disconnected connectors. • Connect the negative battery cable. (See **NEGATIVE BATTERY CABLE DISCONNECTION/CONNECTION [SKYACTIV-G 2.0, SKYACTIV-G 2.5]**.) • Switch the ignition ON (engine off or on). • Perform seat weight sensor calibration. (See **SEAT WEIGHT SENSOR CALIBRATION [TWO-STEP DEPLOYMENT CONTROL SYSTEM]**.) • Clear the DTC for the SAS control module using the M-MDS. (See **CLEARING DTC [TWO-STEP DEPLOYMENT CONTROL SYSTEM]**.) • Perform the DTC inspection for the SAS control module using the M-MDS. (See **DTC INSPECTION [TWO-STEP DEPLOYMENT CONTROL SYSTEM]**.) • Is the same DTCs present?		**SYSTEM]**.) • Perform seat weight sensor calibration. (See **SEAT WEIGHT SENSOR CALIBRATION [TWO-STEP DEPLOYMENT CONTROL SYSTEM]**.) • Go to the next step.
		No	DTC troubleshooting completed.
4	**PERFORM SAS CONTROL MODULE DTC INSPECTION** • Connect the negative battery cable. (See **NEGATIVE BATTERY CABLE DISCONNECTION/CONNECTION [SKYACTIV-G 2.0, SKYACTIV-G 2.5]**.) • Switch the ignition ON (engine off or on). • Clear the DTC for the SAS control module using the M-MDS.	Yes	Replace the SAS control module. (See **SAS CONTROL MODULE REMOVAL/INSTALLATION [TWO-STEP DEPLOYMENT CONTROL SYSTEM]**.)
		No	DTC troubleshooting completed.

	(See **CLEARING DTC [TWO-STEP DEPLOYMENT CONTROL SYSTEM]**.) • Perform the DTC inspection for the SAS control module using the M-MDS. (See **DTC INSPECTION [TWO-STEP DEPLOYMENT CONTROL SYSTEM]**.) • Is the same DTCs present?		

2014 - Mazda3 - Restraints

DTC B00A0:09 [TWO-STEP DEPLOYMENT CONTROL SYSTEM]

System malfunction location	• Seat weight sensor control module internal malfunction
Detection condition	**WARNING:** • Detection conditions are for understanding the DTC outline before performing an inspection. Performing an inspection according to only the detection conditions may cause injury due to an operating error, or damage the system. When performing an inspection, always follow the inspection procedure. • Seat weight sensor control module internal malfunction
Fail-safe function	Not applicable
Possible cause	• Seat weight sensor control module malfunction • SAS control module malfunction
System wiring diagram	Not applicable

Diagnostic Procedure

Step	Inspection		Action
1	**PERFORM DTC INSPECTION** • Clear DTCs using the M-MDS. (See **CLEARING DTC [TWO-STEP DEPLOYMENT CONTROL SYSTEM]**.)	Yes	Replace the seat weight sensor control module. (See **SEAT WEIGHT SENSOR CONTROL MODULE REMOVAL/INSTALLATION [TWO-STEP DEPLOYMENT CONTROL SYSTEM]**.) Then go to the next step.

	• Verify DTCs using the M-MDS. (See **DTC INSPECTION [TWO-STEP DEPLOYMENT CONTROL SYSTEM]**.) • Is DTC B00A0:09 displayed?	No	DTC troubleshooting completed.
2	**PERFORM SAS CONTROL MODULE DTC INSPECTION** • Clear the DTC for the SAS control module using the M-MDS. (See **CLEARING DTC [TWO-STEP DEPLOYMENT CONTROL SYSTEM]**.) • Perform the DTC inspection for the SAS control module using the M-MDS. (See **DTC INSPECTION [TWO-STEP DEPLOYMENT CONTROL SYSTEM]**.) • Is the same DTC present?	Yes	Replace the SAS control module. (See **SAS CONTROL MODULE REMOVAL/INSTALLATION [TWO-STEP DEPLOYMENT CONTROL SYSTEM]**.)
		No	DTC troubleshooting completed.

2014 - Mazda3 - Restraints

DTC B00A0:1C [TWO-STEP DEPLOYMENT CONTROL SYSTEM]

System malfunction location	• Seat weight sensor control module circuit open to power supply
Detection condition	**WARNING:** • Detection conditions are for understanding the DTC outline before performing an inspection. Performing an inspection according to only the detection conditions may cause injury due to an operating error, or damage the system. When performing an inspection, always follow the inspection procedure. • Malfunction in seat weight sensor control module circuit.
Fail-safe function	Not applicable
Possible cause	• SRS2/ESCL 15A fuse malfunction • Seat weight sensor control module connector malfunction • Short circuit to power supply or body ground in the wiring harness between fuse block and seat weight sensor control module • Open circuit in the wiring harness between fuse block and seat weight sensor control module • Seat weight sensor control module malfunction

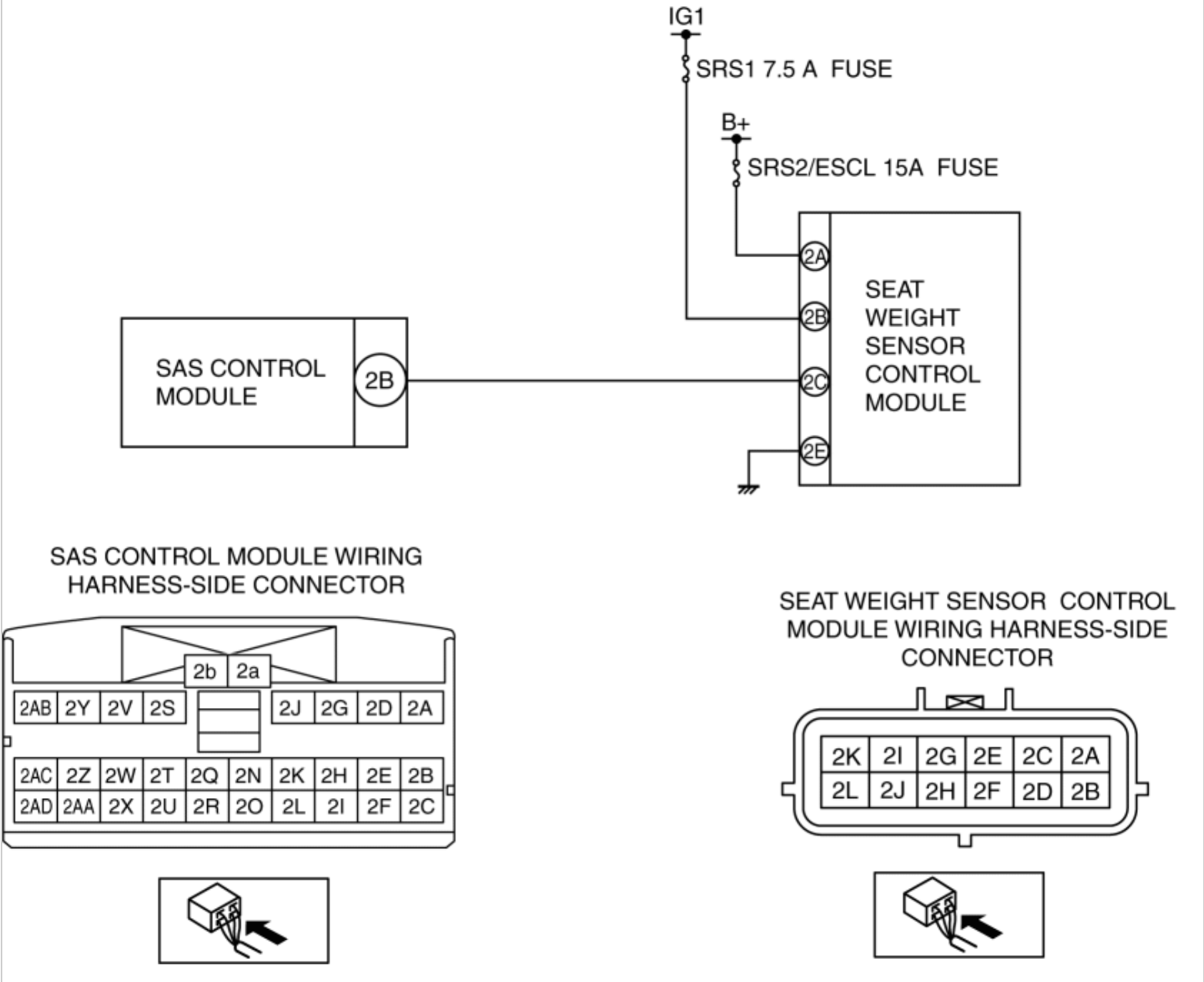

Diagnostic Procedure

Step	Inspection		Action
1	**INSPECT FUSE** • Switch the ignition off. • Disconnect the negative battery cable and wait for **1 min or more**. (See **NEGATIVE BATTERY CABLE DISCONNECTION/CONNECTION [SKYACTIV-G 2.0, SKYACTIV-G 2.5]**.) • Remove the SRS2/ESCL 15A fuse.	Yes	Install the fuse, then go to the next step.
		No	Replace the fuse.

	• Is the fuse normal?		
2	**INSPECT SEAT WEIGHT SENSOR CONTROL MODULE CONNECTOR** **WARNING:** • Handling the component parts improperly can accidentally operate (deploy) the air bag module, which may seriously injure you. Read the service warnings/cautions and the workshop manual before handling the air bag system components. (See **AIR BAG SYSTEM SERVICE WARNINGS [TWO-STEP DEPLOYMENT CONTROL SYSTEM]**.) (See **AIR BAG SYSTEM SERVICE CAUTIONS [TWO-STEP DEPLOYMENT CONTROL SYSTEM]**.) • Disconnect the seat weight sensor control module connector. • Is there any malfunction of the seat weight sensor control module connector?	Yes	Replace the malfunctioning part, then go to Step 6.
		No	Replace the wiring harness.
3	**INSPECT SEAT WEIGHT SENSOR CONTROL MODULE CIRCUIT FOR SHORT TO GROUND** • Seat weight sensor control module and fuse block connectors are disconnected. • Inspect for continuity between the following terminals (wiring harness-side): ▪ Seat weight sensor control module terminal 2A **NOTE:** • Inspect for continuity while shaking the wiring harness between the seat weight sensor control module and fuse block. • Is there continuity?	Yes	Refer to the wiring diagram and verify whether or not there is a common connector between seat weight sensor control module terminal and fuse block terminal. **If there is a common connector:** • Determine the malfunctioning part by inspecting the common connector and the terminal for corrosion, damage, or pin disconnection, and the common wiring harness for a short to ground. • Replace the malfunctioning part. **If there is no common connector:** • Replace the wiring harness which has a short to ground. Go to Step 6.
		No	Go to the next step.
4	**INSPECT SEAT WEIGHT SENSOR CONTROL MODULE CIRCUIT FOR OPEN CIRCUIT** • Seat weight sensor control module and fuse block connectors are disconnected. • Inspect for continuity between the following terminals (wiring harness-side):	Yes	Go to the next step.
		No	Refer to the wiring diagram and verify whether or not there is a common connector between seat weight sensor control module terminal and fuse block terminal.

	▪ Seat weight sensor control module terminal 2A—fuse block terminal **NOTE:** • Inspect for continuity while shaking the wiring harness between the seat weight sensor control module and fuse block. • Is there continuity?		**If there is a common connector:** • Determine the malfunctioning part by inspecting the common connector and the terminal for corrosion, damage, or pin disconnection, and the common wiring harness for an open circuit. • Replace the malfunctioning part. **If there is no common connector:** • Replace the wiring harness which has an open circuit. Go to Step 6.
5	**INSPECT SEAT WEIGHT SENSOR CONTROL MODULE CIRCUIT FOR SHORT TO POWER SUPPLY** • Seat weight sensor control module and SAS control module connectors are disconnected. • Connect the negative battery cable. (See **NEGATIVE BATTERY CABLE DISCONNECTION/CONNECTION [SKYACTIV-G 2.0, SKYACTIV-G 2.5]**.) • Measure the voltage at the following terminals (wiring harness-side): ▪ Seat weight sensor control module terminal 2A **NOTE:** • Measure the voltage while shaking the wiring harness between the seat weight sensor control module and fuse block. • Is the voltage **0 V**?	Yes	Go to the next step.
		No	Refer to the wiring diagram and verify whether or not there is a common connector between seat weight sensor control module terminal and fuse block terminal. **If there is a common connector:** • Determine the malfunctioning part by inspecting the common connector and the terminal for corrosion, damage, or pin disconnection, and the common wiring harness for a short to power supply. • Replace the malfunctioning part. **If there is no common connector:** • Replace the wiring harness which has a short to power supply. Go to the next step.
6	**PERFORM SAS CONTROL MODULE DTC INSPECTION** • Reconnect the disconnected connectors. • Connect the negative battery cable. (See **NEGATIVE BATTERY CABLE DISCONNECTION/CONNECTION [SKYACTIV-G 2.0, SKYACTIV-G 2.5]**.) • Switch the ignition ON (engine off or on).	Yes	Replace the seat weight sensor control module. (See **SEAT WEIGHT SENSOR CONTROL MODULE REMOVAL/INSTALLATION [TWO-STEP DEPLOYMENT CONTROL SYSTEM]**.)
		No	DTC troubleshooting completed.

	• Clear the DTC for the SAS control module using the M-MDS. (See **CLEARING DTC [TWO-STEP DEPLOYMENT CONTROL SYSTEM]**.) • Perform the DTC inspection for the SAS control module using the M-MDS. (See **DTC INSPECTION [TWO-STEP DEPLOYMENT CONTROL SYSTEM]**.) • Is the same DTC present?		

2014 - Mazda3 - Restraints

DTC B00A0:28 [TWO-STEP DEPLOYMENT CONTROL SYSTEM]

System malfunction location	• Seat weight sensor calibration setting invalid
Detection condition	**WARNING:** • Detection conditions are for understanding the DTC outline before performing an inspection. Performing an inspection according to only the detection conditions may cause injury due to an operating error, or damage the system. When performing an inspection, always follow the inspection procedure. • Calibration set value not within valid range
Fail-safe function	Not applicable
Possible cause	• Seat weight sensor deformed or malfunction • Load to or deformation of the seat belt rail • Deformed front passenger-side seat under-bracket or frame • Weight acting on front passenger-side seat during calibration • Improperly installed front passenger-side seat part at time of calibration • Deformed floor where attached to front passenger-side seat • Seat weight sensor control module malfunction • SAS control module malfunction
System wiring diagram	Not applicable

Diagnostic Procedure

Step	Inspection		Action
1	**PERFORM SAS CONTROL MODULE CONFIGURATION (AS-BUILT DATA USE)** • Perform the SAS control module configuration using the M-MDS. (See **SAS CONTROL MODULE CONFIGURATION (USING AS-BUILT DATA) [TWO-STEP DEPLOYMENT CONTROL SYSTEM]**.) • Clear the DTC for the SAS control module using the M-MDS. (See **CLEARING DTC [TWO-STEP DEPLOYMENT CONTROL SYSTEM]**.) • Perform the DTC inspection for the SAS control module using the M-MDS. (See **DTC INSPECTION [TWO-STEP DEPLOYMENT CONTROL SYSTEM]**.) • Is the same DTC present?	Yes	Go to the next step.
		No	DTC troubleshooting completed.
2	**INSPECT PASSENGER-SIDE FRONT SEAT** • Switch the ignition off. • Disconnect the negative battery cable and wait for **1 min or more**. (See **NEGATIVE BATTERY CABLE DISCONNECTION/CONNECTION [SKYACTIV-G 2.0, SKYACTIV-G 2.5]**.) • Remove the passenger-side seat and visually inspect for the following: ▪ Seat under-bracket deformation ▪ Seat frame deformation ▪ Seat weight sensor	Yes	Replace any deformed parts or remove any foreign objects. • After replacement, perform seat weight sensor calibration and reperform the DTC inspection. If the DTC is displayed, go to the next step. (See **SEAT WEIGHT SENSOR CALIBRATION [TWO-STEP DEPLOYMENT CONTROL SYSTEM]**.)
		No	Go to the next step.

	deformation ▪ Foreign objects stuck in seat • Are any of the parts deformed or are any foreign objects stuck in the seat?		
3	**INSPECT FLOOR** • Visually inspect the installation parts of the front passenger-side seat for the following: ▪ Abnormal floor deformation ▪ Installation hole of front passenger-side seat is improperly positioned • Is the floor normal?	Yes	Go to the next step.
		No	Repair floor deformation. • After repair, perform seat weight sensor calibration and reperform the DTC inspection. If the DTC is displayed even though the floor has been repaired, go to the next step. (See **SEAT WEIGHT SENSOR CALIBRATION [TWO-STEP DEPLOYMENT CONTROL SYSTEM]**.)
4	**INSPECT SEAT WEIGHT SENSOR CONTROL MODULE** • Replace the seat weight sensor. • Connect the negative battery cable. (See **NEGATIVE BATTERY CABLE DISCONNECTION/CONNECTION [SKYACTIV-G 2.0, SKYACTIV-G 2.5]**.) • Switch the ignition ON (engine off or on). • After replacement, perform seat weight sensor calibration. (See **SEAT WEIGHT SENSOR CALIBRATION [TWO-STEP DEPLOYMENT CONTROL SYSTEM]**.) • Perform the DTC inspection for the SAS control module using the M-MDS.	Yes	Replace the seat weight sensor control module. (See **SEAT WEIGHT SENSOR CONTROL MODULE REMOVAL/INSTALLATION [TWO-STEP DEPLOYMENT CONTROL SYSTEM]**.) • After replacement, perform seat weight sensor calibration and reperform the DTC inspection. If the DTC is displayed even though the seat weight sensor control module has been replaced, replace the SAS control module. (See **SAS CONTROL MODULE REMOVAL/INSTALLATION [TWO-STEP DEPLOYMENT CONTROL SYSTEM]**.)
		No	DTC troubleshooting completed.

	(See **DTC INSPECTION [TWO-STEP DEPLOYMENT CONTROL SYSTEM]**) • Is the same DTC present?		

2014 - Mazda3 - Restraints

DTC B00A0:4A [TWO-STEP DEPLOYMENT CONTROL SYSTEM]

System malfunction location	• Seat weight sensor ID mismatch
Detection condition	**WARNING:** • Detection conditions are for understanding the DTC outline before performing an inspection. Performing an inspection according to only the detection conditions may cause injury due to an operating error, or damage the system. When performing an inspection, always follow the inspection procedure. • Seat weight sensor ID mismatch
Fail-safe function	Not applicable
Possible cause	• Seat weight sensor control module malfunction • SAS control module malfunction
System wiring diagram	Not applicable

Diagnostic Procedure

Step	Inspection		Action
1	**PERFORM SEAT WEIGHT SENSOR CONTROL MODULE DTC INSPECTION** • Clear the DTC for the SAS control module using the M-MDS. (See **CLEARING DTC [TWO-**	Yes	Replace the seat weight sensor control module. (See **SEAT WEIGHT SENSOR CONTROL MODULE REMOVAL/INSTALLATION [TWO-STEP DEPLOYMENT CONTROL SYSTEM]**.)
		No	Go to the next step

	STEP DEPLOYMENT CONTROL SYSTEM].) • Perform the DTC inspection for the SAS control module using the M-MDS. (See **DTC INSPECTION [TWO-STEP DEPLOYMENT CONTROL SYSTEM]**.) • Is the same DTC present?		
2	**PERFORM SAS CONTROL MODULE DTC INSPECTION** • Clear the DTC for the SAS control module using the M-MDS. (See **CLEARING DTC [TWO-STEP DEPLOYMENT CONTROL SYSTEM]**.) • Perform the DTC inspection for the SAS control module using the M-MDS. (See **DTC INSPECTION [TWO-STEP DEPLOYMENT CONTROL SYSTEM]**.) • Is the same DTC present? • Are there other DTCs output?	Yes	Replace the SAS control module. (See **SAS CONTROL MODULE REMOVAL/INSTALLATION [TWO-STEP DEPLOYMENT CONTROL SYSTEM]**.)
		No	DTC troubleshooting completed.

2014 - Mazda3 - Restraints

DTC B00A0:54 [TWO-STEP DEPLOYMENT CONTROL SYSTEM]

System malfunction location	• Seat weight sensor calibration setting not set
Detection condition	**WARNING:** • Detection conditions are for understanding the DTC outline before performing an inspection. Performing an inspection according to only the detection conditions may cause injury due to an operating error, or damage the system. When performing an inspection, always follow the inspection procedure. • Seat weight sensor calibration setting has not been done correctly
Fail-safe function	Not applicable
Possible cause	• Seat weight sensor calibration setting not implemented • Seat weight sensor calibration setting invalid • Seat weight sensor control module malfunction
System wiring diagram	Not applicable

Diagnostic Procedure

Step	Inspection		Action
1	**PERFORM SEAT WEIGHT SENSOR CALIBRATION** • Perform the calibration for the seat weight sensor using the M-MDS.	Yes	Perform the seat weight sensor calibration, then go to the next step. (See **SEAT WEIGHT SENSOR CALIBRATION [TWO-STEP DEPLOYMENT CONTROL SYSTEM]**.)

	(See **SEAT WEIGHT SENSOR CALIBRATION [TWO-STEP DEPLOYMENT CONTROL SYSTEM]**.) • Clear the DTC for the SAS control module using the M-MDS. (See **CLEARING DTC [TWO-STEP DEPLOYMENT CONTROL SYSTEM]**.) • Perform the DTC inspection for the SAS control module using the M-MDS. (See **DTC INSPECTION [TWO-STEP DEPLOYMENT CONTROL SYSTEM]**.) • Is the same DTC present?	No	Go to the next step.
2	**PERFORM SAS CONTROL MODULE DTC INSPECTION** • Clear the DTC for the SAS control module using the M-MDS. (See **CLEARING DTC [TWO-STEP DEPLOYMENT CONTROL SYSTEM]**.) • Perform the DTC inspection for the SAS control module using the M-MDS. (See **DTC INSPECTION [TWO-STEP DEPLOYMENT CONTROL SYSTEM]**.) • Is the same DTC present?	Yes	Replace the seat weight sensor control module. (See **SEAT WEIGHT SENSOR CONTROL MODULE REMOVAL/INSTALLATION [TWO-STEP DEPLOYMENT CONTROL SYSTEM]**.)
		No	DTC troubleshooting completed.

2014 - Mazda3 - Restraints

DTC B00A0:81/B00A0:87/B00A0:8F [TWO-STEP DEPLOYMENT CONTROL SYSTEM]

System malfunction location	• B00A0:81:Invalid signal to SAS control module • B00A0:87:Error signal from seat weight sensor control module • B00A0:8F:Seat weight sensor communication error
Detection condition	**WARNING:** • Detection conditions are for understanding the DTC outline before performing an inspection. Performing an inspection according to only the detection conditions may cause injury due to an operating error, or damage the system. When performing an inspection, always follow the inspection procedure. • Error signal is detected between SAS control module and seat weight sensor control module
Fail-safe function	Not applicable
Possible cause	• Seat weight sensor connector malfunction • Short circuit to power supply or body ground in the wiring harness between the SAS control module and seat weight sensor control module • Open circuit in the wiring harness between the SAS control module and seat weight sensor control module • Seat weight sensor control module malfunction • SAS control module malfunction

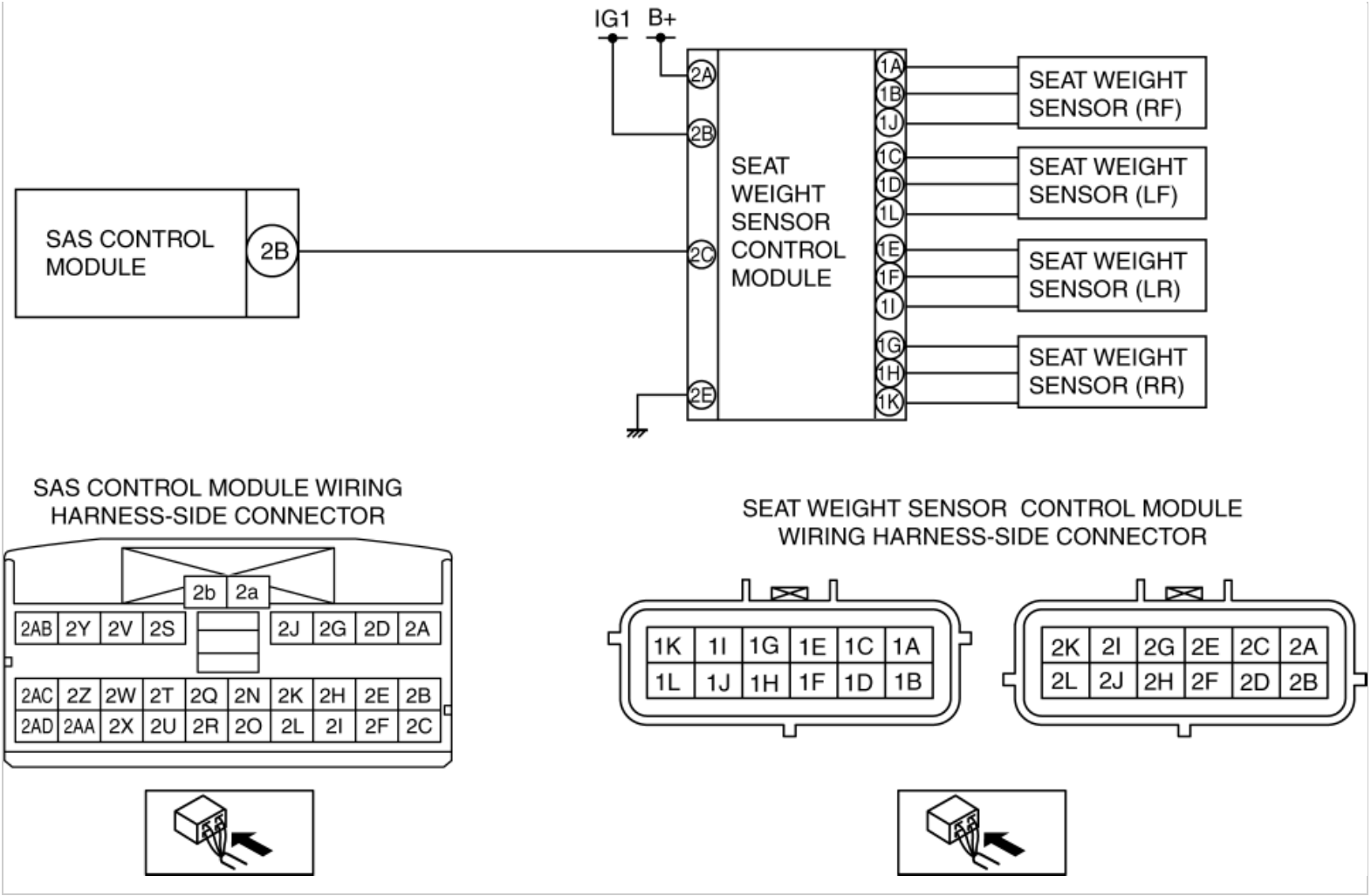

Diagnostic Procedure

Step	Inspection		Action
1	**INSPECT SEAT WEIGHT SENSOR CONTROL MODULE CONNECTOR** **WARNING:** • Handling the component parts improperly can accidentally operate (deploy) the air bag module, which may seriously injure you. Read the service warnings/cautions and the workshop manual before handling the air bag system components. (See **AIR BAG SYSTEM SERVICE WARNINGS [TWO-STEP DEPLOYMENT CONTROL SYSTEM]**.) (See **AIR BAG SYSTEM SERVICE CAUTIONS [TWO-STEP DEPLOYMENT CONTROL SYSTEM]**.) • Switch the ignition off. • Disconnect the negative battery cable and wait for **1 min or more**. (See **NEGATIVE BATTERY CABLE DISCONNECTION/CONNECTION [SKYACTIV-G 2.0, SKYACTIV-G 2.5]**.)	Yes	Replace the malfunctioning part, then go to Step 5.
		No	Go to the next step.

	• Disconnect the seat weight sensor control module connector. (See **SEAT WEIGHT SENSOR CONTROL MODULE REMOVAL/INSTALLATION [TWO-STEP DEPLOYMENT CONTROL SYSTEM]**.) • Is there any malfunction of the seat weight sensor control module connector or seat connector?		
2	**INSPECT SEAT WEIGHT SENSOR CONTROL MODULE CIRCUIT FOR SHORT TO GROUND** • Seat weight sensor control module and fuse block connectors are disconnected. • Inspect for continuity between the following terminals (wiring harness-side): ▪ SAS control module connector terminal 2B **NOTE:** • Inspect for continuity while shaking the wiring harness between the SAS control module and seat weight sensor control module. • Is there continuity?	Yes	Refer to the wiring diagram and verify whether or not there is a common connector between SAS control module terminal and seat weight sensor control module terminal. **If there is a common connector:** • Determine the malfunctioning part by inspecting the common connector and the terminal for corrosion, damage, or pin disconnection, and the common wiring harness for a short to ground. • Replace the malfunctioning part. **If there is no common connector:** • Replace the wiring harness which has a short to ground. Go to Step 5.
		No	Go to the next step.
3	**INSPECT SEAT WEIGHT SENSOR CONTROL MODULE CIRCUIT FOR OPEN CIRCUIT** • Seat weight sensor control module and fuse block connectors are disconnected. • Inspect for continuity between the following terminals (wiring harness-side): ▪ Seat weight sensor control module terminal 2C—SAS control module connector terminal 2B **NOTE:** • Inspect for continuity while shaking the wiring harness between the SAS control module and seat weight sensor control module. • Is there continuity?	Yes	Go to the next step.
		No	Refer to the wiring diagram and verify whether or not there is a common connector between SAS control module terminal and seat weight sensor control module terminal. **If there is a common connector:** • Determine the malfunctioning part by inspecting the common connector and the terminal for corrosion, damage, or pin disconnection, and the common wiring harness for an open circuit. • Replace the malfunctioning part. **If there is no common connector:** • Replace the wiring harness which has an open circuit. Go to Step 5.
4	**INSPECT SEAT WEIGHT SENSOR CONTROL MODULE CIRCUIT FOR SHORT TO POWER SUPPLY** • Seat weight sensor control module and fuse block connectors are disconnected. • Connect the negative battery cable. (See **NEGATIVE BATTERY CABLE DISCONNECTION/CONNECTION [SKYACTIV-G 2.0, SKYACTIV-G 2.5]**.) • Switch the ignition ON (engine off or on).	Yes	Go to the next step.
		No	Refer to the wiring diagram and verify whether or not there is a common connector between SAS control module terminal and seat weight sensor control module terminal. **If there is a common connector:** • Determine the malfunctioning part by inspecting the common connector and the terminal for corrosion, damage, or

	Measure the voltage at the following terminals (wiring harness-side): ▪ SAS control module connector terminal 2B **NOTE:** • Measure the voltage while shaking the wiring harness between the SAS control module and seat weight sensor control module. • Is the voltage **0 V**?		pin disconnection, and the common wiring harness for a short to power supply. • Replace the malfunctioning part. **If there is no common connector:** • Replace the wiring harness which has a short to power supply. Go to the next step.
5	**PERFORM SAS CONTROL MODULE DTC INSPECTION** • Reconnect the disconnected connectors. • Connect the negative battery cable. (See **NEGATIVE BATTERY CABLE DISCONNECTION/CONNECTION [SKYACTIV-G 2.0, SKYACTIV-G 2.5]**.) • Switch the ignition ON (engine off or on). • Clear the DTC for the SAS control module using the M-MDS. (See **CLEARING DTC [TWO-STEP DEPLOYMENT CONTROL SYSTEM]**.) • Perform the DTC inspection for the SAS control module using the M-MDS. (See **DTC INSPECTION [TWO-STEP DEPLOYMENT CONTROL SYSTEM]**.) • Are DTCs B00A0:81, B00A0:87 and/or B00A0:8F displayed?	Yes	Replace the seat weight sensor control module. (See **SEAT WEIGHT SENSOR CONTROL MODULE REMOVAL/INSTALLATION [TWO-STEP DEPLOYMENT CONTROL SYSTEM]**.) Then go to the next step.
		No	DTC troubleshooting completed.
6	**VERIFY TROUBLESHOOTING COMPLETED** • Clear DTCs using the M-MDS. (See **CLEARING DTC [TWO-STEP DEPLOYMENT CONTROL SYSTEM]**.) • Verify DTCs using the M-MDS. (See **DTC INSPECTION [TWO-STEP DEPLOYMENT CONTROL SYSTEM]**.) • Are DTCs B00A0:81, B00A0:87 and/or B00A0:8F displayed?	Yes	Replace the SAS control module. (See **SAS CONTROL MODULE REMOVAL/INSTALLATION [TWO-STEP DEPLOYMENT CONTROL SYSTEM]**.)
		No	DTC troubleshooting completed.

2014 - Mazda3 - Restraints

DTC B00C0:93 [TWO-STEP DEPLOYMENT CONTROL SYSTEM]

System malfunction location	• Seat weight sensor (LF) communication error
Detection condition	**WARNING:** • Detection conditions are for understanding the DTC outline before performing an inspection. Performing an inspection according to only the detection conditions may cause injury due to an operating error, or damage the system. When performing an inspection, always follow the inspection procedure. • Seat weight sensor malfunction is detected
Fail-safe function	Not applicable
Possible cause	• Seat weight sensor connector malfunction • Seat weight sensor control module connector malfunction • Short circuit to power supply or body ground in the wiring harness between seat weight sensor control module and seat weight sensor • Open circuit in the wiring harness between seat weight sensor control module and seat weight sensor • Seat weight sensor malfunction • Seat weight sensor control module malfunction • SAS control module malfunction

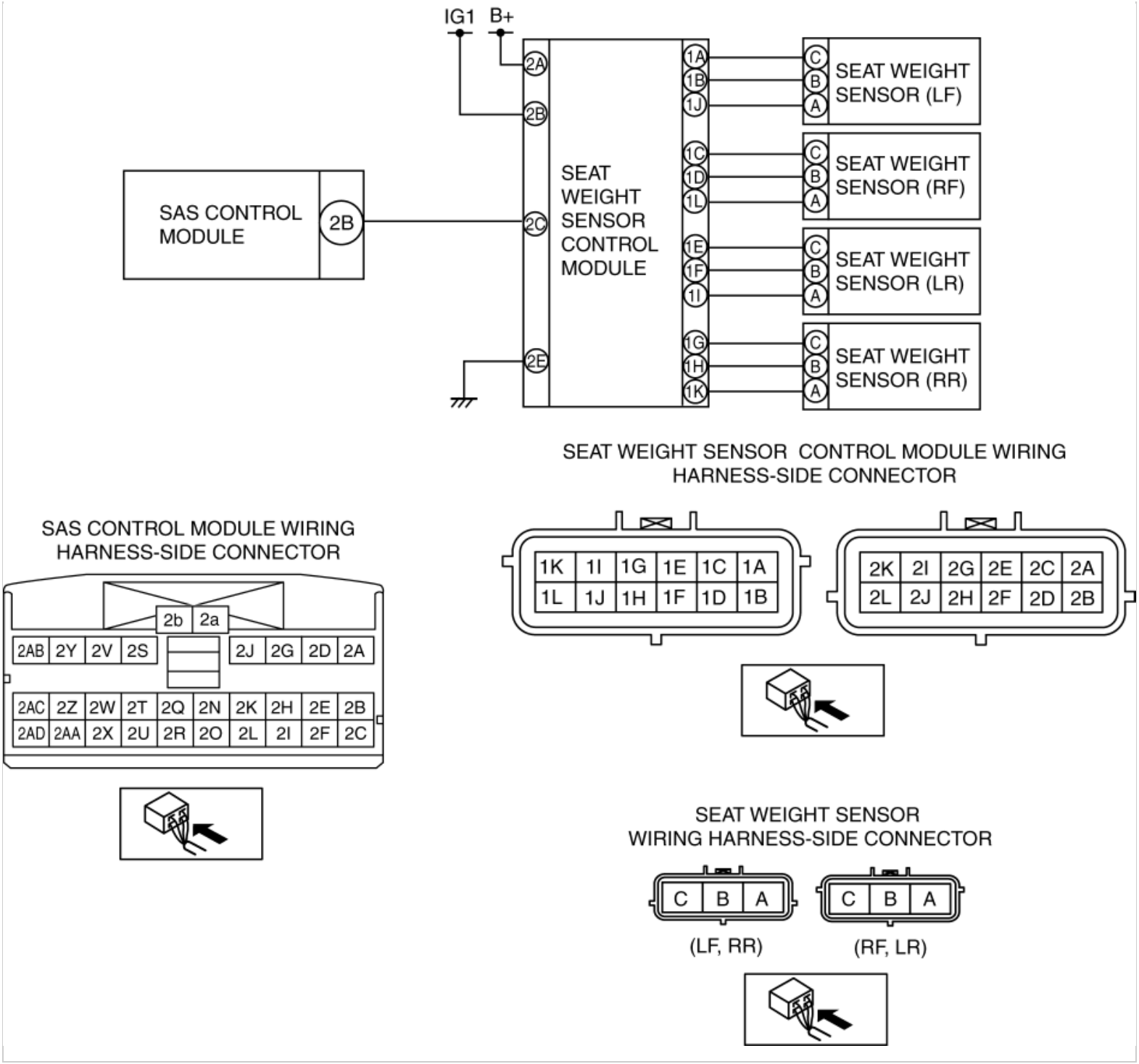

Diagnostic Procedure

Step	Inspection		Action
1	**INSPECT SEAT WEIGHT SENSOR CONNECTOR** • Switch the ignition off. • Disconnect the negative battery cable and wait for **1 min or more**. (See **NEGATIVE BATTERY CABLE**	Yes	Replace the malfunctioning part, then go to Step 4.
		No	Go to the next step.

	DISCONNECTION/CONNECTION [SKYACTIV-G 2.0, SKYACTIV-G 2.5].) • Disconnect the all seat weight sensor connectors. • Inspect the all seat weight sensor connector terminals for poor connection (such as damaged/pulled-out pins, and corrosion). • Is there any malfunction?		
2	**INSPECT SEAT WEIGHT SENSOR CONTROL MODULE CONNECTOR** • Disconnect seat weight sensor control module connector. • Inspect the seat weight sensor control module connector terminal for poor connection (such as damaged/pulled-out pins, and corrosion). • Is there any malfunction?	Yes	Replace the malfunctioning part, then go to Step 4.
		No	Go to the next step.
3	**INSPECT WIRING HARNESS BETWEEN SEAT WEIGHT SENSOR CONTROL MODULE AND SEAT WEIGHT SENSOR** • Inspect the wiring harness between seat weight sensor control module and seat weight sensor for short to ground, short to power supply, and open circuit: **Seat weight sensor (LF)** ▪ 1A—C ▪ 1B—B ▪ 1J—A **Seat weight sensor (RF)** ▪ 1C—C ▪ 1D—B ▪ 1L—A **Seat weight sensor (LR)** ▪ 1E—C ▪ 1F—B ▪ 1I—A **Seat weight sensor (RR)** ▪ 1G—C ▪ 1H—B ▪ 1K—A **NOTE:** • Inspect for continuity while shaking the wiring harness between the seat weight	Yes	Go to the next step.
		No	Refer to the wiring diagram and verify whether or not there is a common connector between seat weight sensor control module terminal and seat weight sensor terminal. **If there is a common connector:** • Determine the malfunctioning part by inspecting the common connector and the terminal for corrosion, damage, or pin disconnection, and the common wiring harness. • Replace the malfunctioning part. **If there is no common connector:** • Replace the wiring harness. Go to the next step.

	sensor control module and seat weight sensor. • Is the wiring harness normal?		
4	**PERFORM SAS CONTROL MODULE DTC INSPECTION** • Reconnect the disconnected connectors. • Connect the negative battery cable. (See **NEGATIVE BATTERY CABLE DISCONNECTION/CONNECTION [SKYACTIV-G 2.0, SKYACTIV-G 2.5]**.) • Clear the DTC for the SAS control module using the M-MDS. (See **CLEARING DTC [TWO-STEP DEPLOYMENT CONTROL SYSTEM]**.) • Perform the DTC inspection for the SAS control module using the M-MDS. (See **DTC INSPECTION [TWO-STEP DEPLOYMENT CONTROL SYSTEM]**.) • Is the same DTC present?	Yes	• Replace the seat weight sensor control module. (See **SEAT WEIGHT SENSOR CONTROL MODULE REMOVAL/INSTALLATION [TWO-STEP DEPLOYMENT CONTROL SYSTEM]**.) • Perform the DTC inspection again. ▪ If the same DTC is displayed, replace the front seat slide adjuster, then go to the next step.
		No	DTC troubleshooting completed.
5	**INSPECT PASSENGER SENSING SYSTEM** • Switch the ignition off. • Disconnect the negative battery cable and wait for **1 min or more**. • Reconnect the disconnected connectors. • Connect the negative battery cable. (See **NEGATIVE BATTERY CABLE DISCONNECTION/CONNECTION [SKYACTIV-G 2.0, SKYACTIV-G 2.5]**.) • Switch the ignition ON (engine off or on). • Clear the DTC for the SAS control module using the M-MDS. (See **CLEARING DTC [TWO-STEP DEPLOYMENT CONTROL SYSTEM]**.) • Perform the DTC inspection for the SAS control module using the M-MDS. (See **DTC INSPECTION [TWO-STEP DEPLOYMENT CONTROL SYSTEM]**.) • Is the same DTC present?	Yes	Replace the SAS control module. (See **SAS CONTROL MODULE REMOVAL/INSTALLATION [TWO-STEP DEPLOYMENT CONTROL SYSTEM]**.)
		No	DTC troubleshooting completed.

2014 - Mazda3 - Restraints

DTC B00C1:93 [TWO-STEP DEPLOYMENT CONTROL SYSTEM]

System malfunction location	• Seat weight sensor (LR) communication error
Detection condition	**WARNING:** • Detection conditions are for understanding the DTC outline before performing an inspection. Performing an inspection according to only the detection conditions may cause injury due to an operating error, or damage the system. When performing an inspection, always follow the inspection procedure. • Seat weight sensor (LR) malfunction is detected
Fail-safe function	Not applicable
Possible cause	• Seat weight sensor (LR) connector malfunction • Seat weight sensor control module connector malfunction • Short circuit to power supply or body ground in the wiring harness between seat weight sensor control module and seat weight sensor (LR) • Open circuit in the wiring harness between seat weight sensor control module and seat weight sensor (LR) • Seat weight sensor (LR) malfunction • Seat weight sensor control module malfunction • SAS control module malfunction

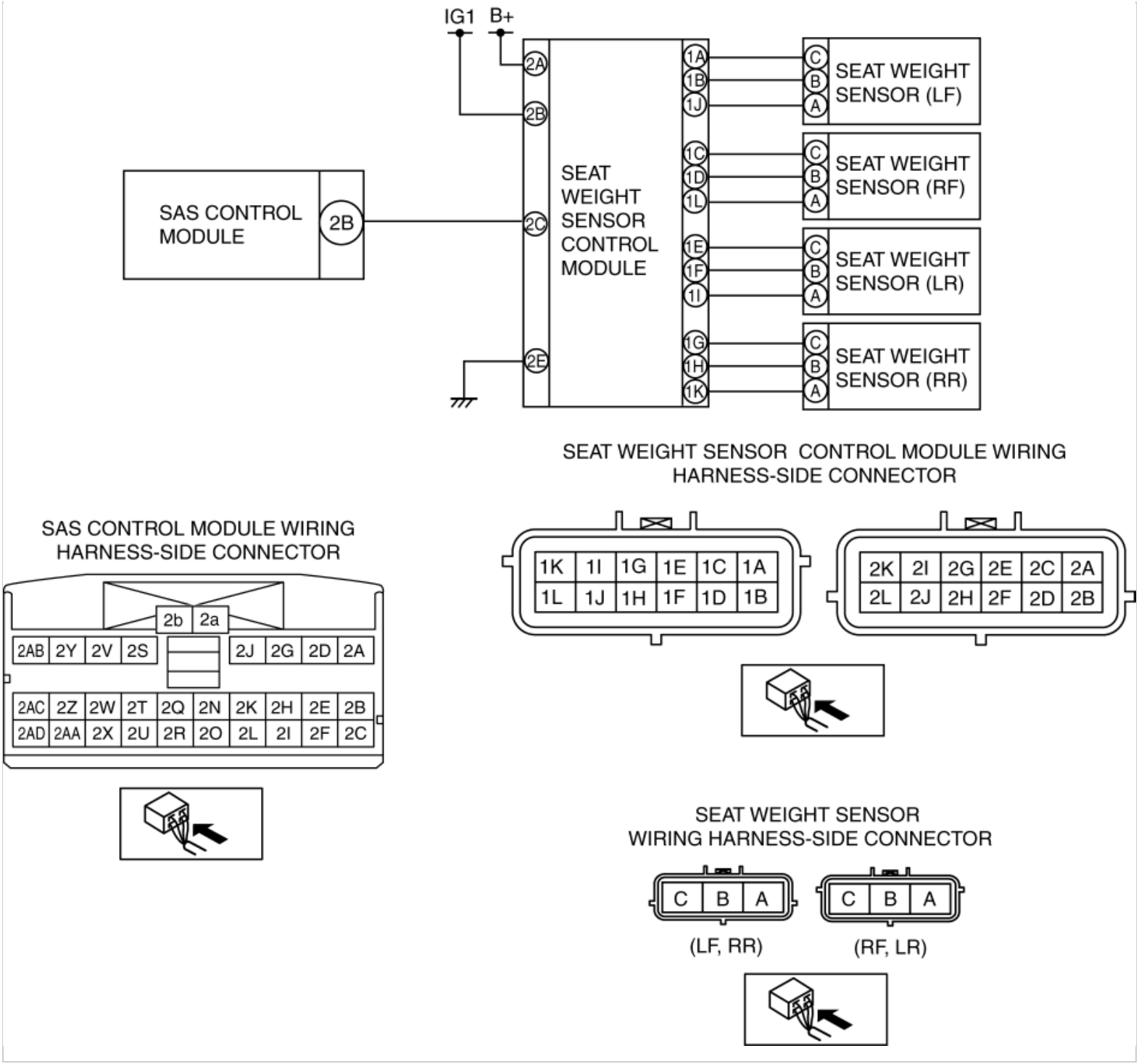

Diagnostic Procedure

Step	Inspection		Action
1	**INSPECT SEAT WEIGHT SENSOR CONNECTOR** • Switch the ignition off. • Disconnect the negative battery cable and wait for **1 min or more**. (See **NEGATIVE BATTERY CABLE**	Yes	Replace the malfunctioning part, then go to Step 4.
		No	Go to the next step.

	DISCONNECTION/CONNECTION [SKYACTIV-G 2.0, SKYACTIV-G 2.5].) • Disconnect the seat weight sensor (LR) connector. • Inspect the seat weight sensor (LR) connector terminals for poor connection (such as damaged/pulled-out pins, and corrosion). • Is there any malfunction?		
2	**INSPECT SEAT WEIGHT SENSOR CONTROL MODULE CONNECTOR** • Disconnect seat weight sensor control module connector. • Inspect the seat weight sensor control module connector terminal for poor connection (such as damaged/pulled-out pins, and corrosion). • Is there any malfunction?	Yes	Replace the malfunctioning part, then go to Step 4.
		No	Go to the next step.
3	**INSPECT WIRING HARNESS BETWEEN SEAT WEIGHT SENSOR CONTROL MODULE AND SEAT WEIGHT SENSOR** • Inspect the wiring harness between seat weight sensor control module and seat weight sensor for short to ground, short to power supply, and open circuit: **Seat weight sensor (LR)** ▪ 1E—C ▪ 1F—B ▪ 1I—A **NOTE:** • Inspect for continuity while shaking the wiring harness between the seat weight sensor control module and seat weight sensor. • Is the wiring harness normal?	Yes	Go to the next step.
		No	Refer to the wiring diagram and verify whether or not there is a common connector between seat weight sensor control module terminal and seat weight sensor terminal. **If there is a common connector:** • Determine the malfunctioning part by inspecting the common connector and the terminal for corrosion, damage, or pin disconnection, and the common wiring harness. • Replace the malfunctioning part. **If there is no common connector:** • Replace the wiring harness. Go to the next step.
4	**PERFORM SAS CONTROL MODULE DTC INSPECTION** • Reconnect the disconnected connectors. • Connect the negative battery cable. (See **NEGATIVE BATTERY CABLE DISCONNECTION/CONNECTION [SKYACTIV-G 2.0, SKYACTIV-G 2.5]**.) • Clear the DTC for the SAS control module using the M-MDS. (See **CLEARING DTC [TWO-STEP DEPLOYMENT CONTROL SYSTEM]**.) • Perform the DTC inspection for the SAS control module using the M-MDS. (See **DTC INSPECTION [TWO-STEP DEPLOYMENT CONTROL SYSTEM]**.)	Yes	• Replace the seat weight sensor control module. (See **SEAT WEIGHT SENSOR CONTROL MODULE REMOVAL/INSTALLATION [TWO-STEP DEPLOYMENT CONTROL SYSTEM]**.) • Perform the DTC inspection again. ▪ If the same DTC is displayed, replace the front seat slide adjuster, then go to the next step.
		No	DTC troubleshooting completed.

	• Is the DTC B00C0:93 displayed?		
5	**INSPECT PASSENGER SENSING SYSTEM** • Switch the ignition off. • Disconnect the negative battery cable and wait for **1 min or more**. • Reconnect the disconnected connectors. • Connect the negative battery cable. (See **NEGATIVE BATTERY CABLE DISCONNECTION/CONNECTION [SKYACTIV-G 2.0, SKYACTIV-G 2.5]**.) • Switch the ignition ON (engine off or on). • Clear the DTC for the SAS control module using the M-MDS. (See **CLEARING DTC [TWO-STEP DEPLOYMENT CONTROL SYSTEM]**.) • Perform the DTC inspection for the SAS control module using the M-MDS. (See **DTC INSPECTION [TWO-STEP DEPLOYMENT CONTROL SYSTEM]**.) • Is the DTC B00C0:93 displayed?	Yes	Replace the SAS control module. (See **SAS CONTROL MODULE REMOVAL/INSTALLATION [TWO-STEP DEPLOYMENT CONTROL SYSTEM]**.)
		No	DTC troubleshooting completed.

2014 - Mazda3 - Restraints

DTC B00C2:93 [TWO-STEP DEPLOYMENT CONTROL SYSTEM]

System malfunction location	• Seat weight sensor (RF) communication error
Detection condition	**WARNING:** • Detection conditions are for understanding the DTC outline before performing an inspection. Performing an inspection according to only the detection conditions may cause injury due to an operating error, or damage the system. When performing an inspection, always follow the inspection procedure. • Seat weight sensor (RF) malfunction is detected
Fail-safe function	Not applicable
Possible cause	• Seat weight sensor (RF) connector malfunction • Seat weight sensor control module connector malfunction • Short circuit to power supply or body ground in the wiring harness between seat weight sensor control module and seat weight sensor (RF) • Open circuit in the wiring harness between seat weight sensor control module and seat weight sensor (RF) • Seat weight sensor (RF) malfunction • Seat weight sensor control module malfunction • SAS control module malfunction

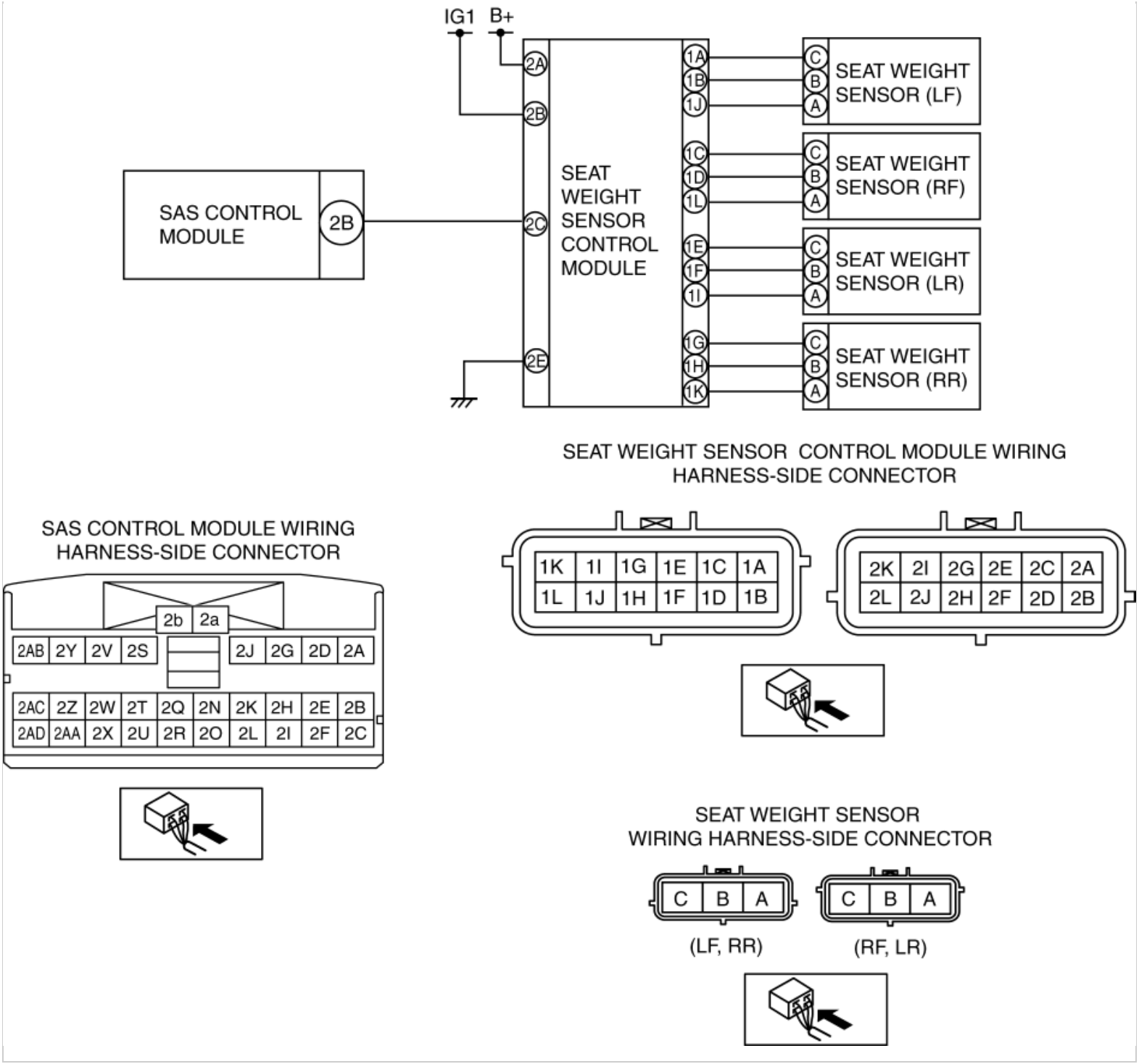

Diagnostic Procedure

Step	Inspection		Action
1	**INSPECT SEAT WEIGHT SENSOR CONNECTOR** • Switch the ignition off. • Disconnect the negative battery cable and wait for **1 min or more**. (See **NEGATIVE BATTERY CABLE**	Yes	Replace the malfunctioning part, then go to Step 4.
		No	Go to the next step.

	DISCONNECTION/CONNECTION [SKYACTIV-G 2.0, SKYACTIV-G 2.5].) • Disconnect the seat weight sensor (RF) connector. • Inspect the seat weight sensor (RF) connector terminals for poor connection (such as damaged/pulled-out pins, and corrosion). • Is there any malfunction?		
2	**INSPECT SEAT WEIGHT SENSOR CONTROL MODULE CONNECTOR** • Disconnect seat weight sensor control module connector. • Inspect the seat weight sensor control module connector terminal for poor connection (such as damaged/pulled-out pins, and corrosion). • Is there any malfunction?	Yes	Replace the malfunctioning part, then go to Step 4.
		No	Go to the next step.
3	**INSPECT WIRING HARNESS BETWEEN SEAT WEIGHT SENSOR CONTROL MODULE AND SEAT WEIGHT SENSOR** • Inspect the wiring harness between seat weight sensor control module and seat weight sensor for short to ground, short to power supply, and open circuit: **Seat weight sensor (RF)** ▪ 1C—C ▪ 1D—B ▪ 1L—A **NOTE:** • Inspect for continuity while shaking the wiring harness between the seat weight sensor control module and seat weight sensor. • Is the wiring harness normal?	Yes	Go to the next step.
		No	Refer to the wiring diagram and verify whether or not there is a common connector between seat weight sensor control module terminal and seat weight sensor terminal. **If there is a common connector:** • Determine the malfunctioning part by inspecting the common connector and the terminal for corrosion, damage, or pin disconnection, and the common wiring harness. • Replace the malfunctioning part. **If there is no common connector:** • Replace the wiring harness. Go to the next step.
4	**PERFORM SAS CONTROL MODULE DTC INSPECTION** • Reconnect the disconnected connectors. • Connect the negative battery cable. (See **NEGATIVE BATTERY CABLE DISCONNECTION/CONNECTION [SKYACTIV-G 2.0, SKYACTIV-G 2.5]**.) • Clear the DTC for the SAS control module using the M-MDS. (See **CLEARING DTC [TWO-STEP DEPLOYMENT CONTROL SYSTEM]**.) • Perform the DTC inspection for the SAS control module using the M-MDS. (See **DTC INSPECTION [TWO-STEP DEPLOYMENT CONTROL SYSTEM]**.)	Yes	• Replace the seat weight sensor control module. (See **SEAT WEIGHT SENSOR CONTROL MODULE REMOVAL/INSTALLATION [TWO-STEP DEPLOYMENT CONTROL SYSTEM]**.) • Perform the DTC inspection again. ▪ If the same DTC is displayed, replace the front seat slide adjuster, then go to the next step.
		No	DTC troubleshooting completed.

	• Is the DTC B00C0:93 displayed?		
5	**INSPECT PASSENGER SENSING SYSTEM** • Switch the ignition off. • Disconnect the negative battery cable and wait for **1 min or more**. • Reconnect the disconnected connectors. • Connect the negative battery cable. (See **NEGATIVE BATTERY CABLE DISCONNECTION/CONNECTION [SKYACTIV-G 2.0, SKYACTIV-G 2.5]**.) • Switch the ignition ON (engine off or on). • Clear the DTC for the SAS control module using the M-MDS. (See **CLEARING DTC [TWO-STEP DEPLOYMENT CONTROL SYSTEM]**.) • Perform the DTC inspection for the SAS control module using the M-MDS. (See **DTC INSPECTION [TWO-STEP DEPLOYMENT CONTROL SYSTEM]**.) • Is the DTC B00C0:93 displayed?	Yes	Replace the SAS control module. (See **SAS CONTROL MODULE REMOVAL/INSTALLATION [TWO-STEP DEPLOYMENT CONTROL SYSTEM]**.)
		No	DTC troubleshooting completed.

2014 - Mazda3 - Restraints

DTC B00C3:93 [TWO-STEP DEPLOYMENT CONTROL SYSTEM]

System malfunction location	• Seat weight sensor (RR) communication error
Detection condition	**WARNING:** • Detection conditions are for understanding the DTC outline before performing an inspection. Performing an inspection according to only the detection conditions may cause injury due to an operating error, or damage the system. When performing an inspection, always follow the inspection procedure. • Seat weight sensor (RR) malfunction is detected
Fail-safe function	Not applicable
Possible cause	• Seat weight sensor (RR) connector malfunction • Seat weight sensor control module connector malfunction • Short circuit to power supply or body ground in the wiring harness between seat weight sensor control module and seat weight sensor (RR) • Open circuit in the wiring harness between seat weight sensor control module and seat weight sensor (RR) • Seat weight sensor (RR) malfunction • Seat weight sensor control module malfunction • SAS control module malfunction

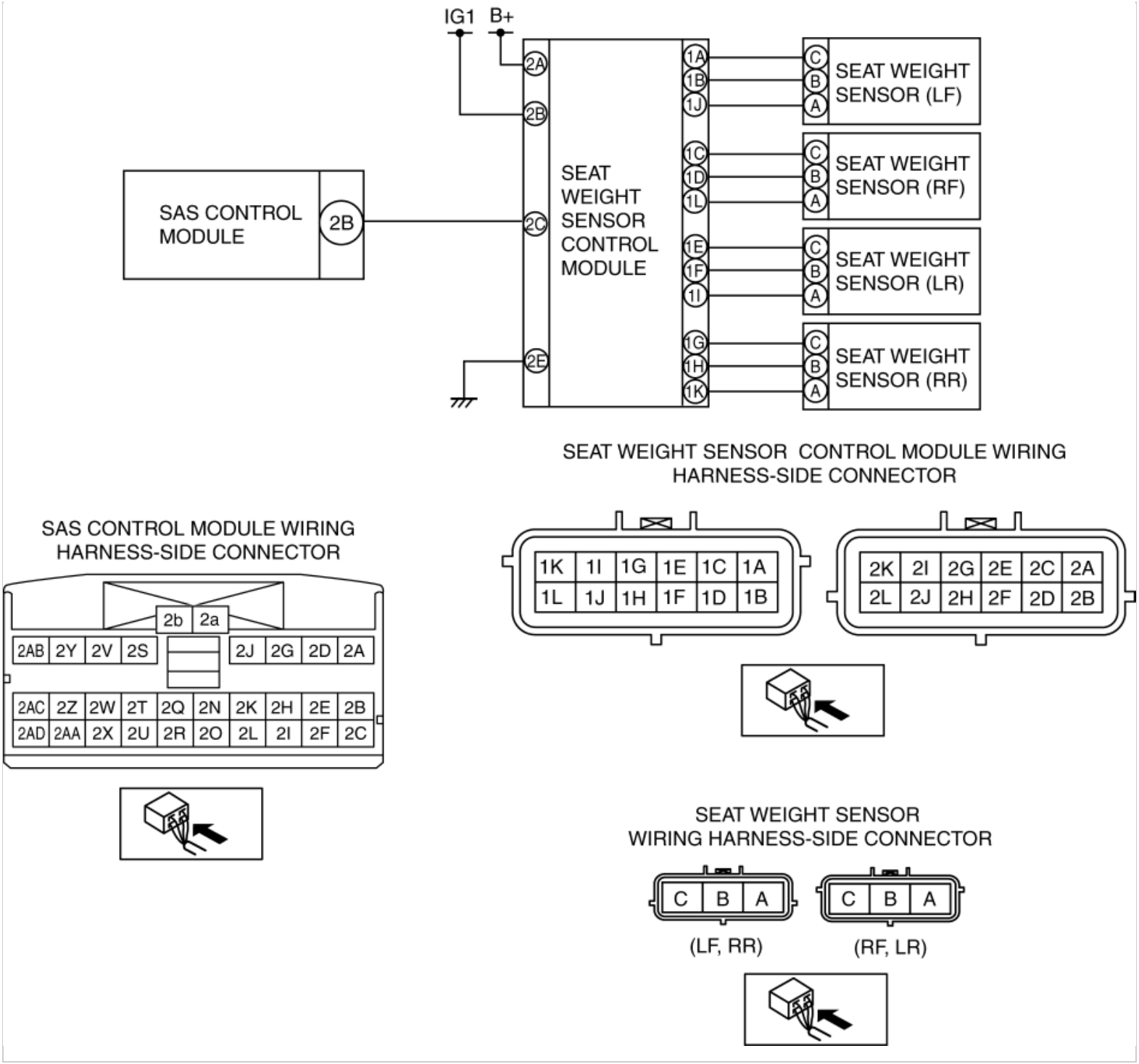

Diagnostic Procedure

Step	Inspection		Action
1	**INSPECT SEAT WEIGHT SENSOR CONNECTOR** • Switch the ignition off. • Disconnect the negative battery cable and wait for **1 min or more**. (See **NEGATIVE BATTERY CABLE**	Yes	Replace the malfunctioning part, then go to Step 4.
		No	Go to the next step.

	DISCONNECTION/CONNECTION [SKYACTIV-G 2.0, SKYACTIV-G 2.5].) • Disconnect the seat weight sensor (RR) connector. • Inspect the seat weight sensor (RR) connector terminals for poor connection (such as damaged/pulled-out pins, and corrosion). • Is there any malfunction?		
2	**INSPECT SEAT WEIGHT SENSOR CONTROL MODULE CONNECTOR** • Disconnect seat weight sensor control module connector. • Inspect the seat weight sensor control module connector terminal for poor connection (such as damaged/pulled-out pins, and corrosion). • Is there any malfunction?	Yes	Replace the malfunctioning part, then go to Step 4.
		No	Go to the next step.
3	**INSPECT WIRING HARNESS BETWEEN SEAT WEIGHT SENSOR CONTROL MODULE AND SEAT WEIGHT SENSOR** • Inspect the wiring harness between seat weight sensor control module and seat weight sensor for short to ground, short to power supply, and open circuit: **Seat weight sensor (RR)** ▪ 1G—C ▪ 1H—B ▪ 1K—A **NOTE:** • Inspect for continuity while shaking the wiring harness between the seat weight sensor control module and seat weight sensor. • Is the wiring harness normal?	Yes	Go to the next step.
		No	Refer to the wiring diagram and verify whether or not there is a common connector between seat weight sensor control module terminal and seat weight sensor terminal. **If there is a common connector:** • Determine the malfunctioning part by inspecting the common connector and the terminal for corrosion, damage, or pin disconnection, and the common wiring harness. • Replace the malfunctioning part. **If there is no common connector:** • Replace the wiring harness. Go to the next step.
4	**PERFORM SAS CONTROL MODULE DTC INSPECTION** • Reconnect the disconnected connectors. • Connect the negative battery cable. (See **NEGATIVE BATTERY CABLE DISCONNECTION/CONNECTION [SKYACTIV-G 2.0, SKYACTIV-G 2.5]**.) • Clear the DTC for the SAS control module using the M-MDS. (See **CLEARING DTC [TWO-STEP DEPLOYMENT CONTROL SYSTEM]**.) • Perform the DTC inspection for the SAS control module using the M-MDS. (See **DTC INSPECTION [TWO-STEP DEPLOYMENT CONTROL SYSTEM]**.)	Yes	• Replace the seat weight sensor control module. (See **SEAT WEIGHT SENSOR CONTROL MODULE REMOVAL/INSTALLATION [TWO-STEP DEPLOYMENT CONTROL SYSTEM]**.) • Perform the DTC inspection again. ▪ If the same DTC is displayed, replace the front seat slide adjuster, then go to the next step.
		No	DTC troubleshooting completed.

	• Is the DTC B00C0:93 displayed?		
5	**INSPECT PASSENGER SENSING SYSTEM** • Switch the ignition off. • Disconnect the negative battery cable and wait for **1 min or more**. • Reconnect the disconnected connectors. • Connect the negative battery cable. (See **NEGATIVE BATTERY CABLE DISCONNECTION/CONNECTION [SKYACTIV-G 2.0, SKYACTIV-G 2.5]**.) • Switch the ignition ON (engine off or on). • Clear the DTC for the SAS control module using the M-MDS. (See **CLEARING DTC [TWO-STEP DEPLOYMENT CONTROL SYSTEM]**.) • Perform the DTC inspection for the SAS control module using the M-MDS. (See **DTC INSPECTION [TWO-STEP DEPLOYMENT CONTROL SYSTEM]**.) • Is the DTC B00C0:93 displayed?	Yes	Replace the SAS control module. (See **SAS CONTROL MODULE REMOVAL/INSTALLATION [TWO-STEP DEPLOYMENT CONTROL SYSTEM]**.)
		No	DTC troubleshooting completed.

2014 - Mazda3 - Restraints

DTC B00D2:01 [TWO-STEP DEPLOYMENT CONTROL SYSTEM]

System malfunction location	• Air bag system warning light malfunction
Detection condition	**WARNING:** • Detection conditions are for understanding the DTC outline before performing an inspection. Performing an inspection according to only the detection conditions may cause injury due to an operating error, or damage the system. When performing an inspection, always follow the inspection procedure. • Air bag system warning light malfunction detected
Fail-safe function	Not applicable
Possible cause	• Air bag system warning light malfunction
System wiring diagram	Not applicable

Diagnostic Procedure

Action
Replace the instrument cluster. (See **INSTRUMENT CLUSTER REMOVAL/INSTALLATION**.)

DTC B00D2:01 [TWO-STEP DEPLOYMENT CONTROL SYSTEM]

2014 - Mazda3 - Restraints

DTC B00D2:29 [TWO-STEP DEPLOYMENT CONTROL SYSTEM]

System malfunction location	• Invalid signal to air bag system warning light
Detection condition	**WARNING:** • Detection conditions are for understanding the DTC outline before performing an inspection. Performing an inspection according to only the detection conditions may cause injury due to an operating error, or damage the system. When performing an inspection, always follow the inspection procedure. • Air bag system warning light illumination request sent from SAS control module does not correspond to air bag system warning light illumination status in instrument cluster
Fail-safe function	Not applicable
Possible cause	• Instrument cluster assembly incorrect • Instrument cluster malfunction • SAS control module malfunction
System wiring diagram	Not applicable

Diagnostic Procedure

Step	Inspection		Action
1	**INSPECT DTCs IN SAS CONTROL MODULE** • Clear the DTC for the SAS control module using the M-MDS.	Yes	Perform the applicable DTC inspection.
		No	Go to the next step.

	(See **CLEARING DTC [TWO-STEP DEPLOYMENT CONTROL SYSTEM]**.) • Perform the DTC inspection for the SAS control module using the M-MDS. (See **DTC INSPECTION [TWO-STEP DEPLOYMENT CONTROL SYSTEM]**.) • Is DTC U0001:88 or U0155:00 displayed?		
2	**INSPECT INSTRUMENT CLUSTER** • Verify that the instrument cluster is correctly installed. • Is the instrument cluster correctly installed?	Yes	Go to the next step.
		No	Correctly install the instrument cluster. (See **INSTRUMENT CLUSTER REMOVAL/INSTALLATION**.) Then go to the next step.
3	**INSPECT INSTRUMENT CLUSTER** • Perform the active command mode inspection for the instrument cluster using the M-MDS. (See **ACTIVE COMMAND MODES INSPECTION [INSTRUMENT CLUSTER]**.) ▪ WL+IL (See **ACTIVE COMMAND MODES TABLE [INSTRUMENT CLUSTER]**.) • Does the air bag system warning light illuminate?	Yes	Go to the next step.
		No	Replace the instrument cluster. (See **INSTRUMENT CLUSTER REMOVAL/INSTALLATION**.) Then go to the next step.
4	**PERFORM SAS CONTROL MODULE DTC INSPECTION** • Clear the DTC for the SAS control module using the M-MDS. (See **CLEARING DTC [TWO-STEP DEPLOYMENT CONTROL SYSTEM]**.) • Perform the DTC inspection for the SAS control module using the M-MDS. (See **DTC INSPECTION [TWO-STEP DEPLOYMENT CONTROL SYSTEM]**.)	Yes	Replace the SAS control module. (See **SAS CONTROL MODULE REMOVAL/INSTALLATION [TWO-STEP DEPLOYMENT CONTROL SYSTEM]**.)
		No	DTC troubleshooting completed.

	Is DTC B00D2:29 displayed?		

2014 - Mazda3 - Restraints

DTC B00D5:01/B00D5:29 [TWO-STEP DEPLOYMENT CONTROL SYSTEM]

System malfunction location	• B00D5:01:PAD indicator circuit open circuit or short to power supply • B00D5:29:PAD indicator communication error
Detection condition	**WARNING:** • Detection conditions are for understanding the DTC outline before performing an inspection. Performing an inspection according to only the detection conditions may cause injury due to an operating error, or damage the system. When performing an inspection, always follow the inspection procedure. • Malfunction in PAD indicator circuit
Fail-safe function	Not applicable
Possible cause	• Indicator unit malfunction • Instrument cluster malfunction • SAS control module malfunction
System wiring diagram	Not applicable

Diagnostic Procedure

STEP	INSPECTION		ACTION
1	**INSPECT INDICATOR UNIT** • Inspect the indicator unit. (See **INDICATOR UNIT INSPECTION**.)	Yes	Go to the next step.
		No	Replace the indicator unit, then go to the next step.

	• Is the indicator unit normal?		(See **INDICATOR UNIT REMOVAL/INSTALLATION**.)
2	**VERIFY DTCs FOR INSTRUMENT CLUSTER** • Verify DTCs for the instrument cluster using the M-MDS. (See **DTC INSPECTION [INSTRUMENT CLUSTER]**.) • Is the DTC displayed?	Yes	Perform the applicable DTC inspection. (See **DTC TABLE [INSTRUMENT CLUSTER]**.)
		No	Go to the next step.
3	**VERIFY THAT REPAIRS HAVE BEEN COMPLETED** • Clear the DTC for the SAS control module using the M-MDS. (See **CLEARING DTC [TWO-STEP DEPLOYMENT CONTROL SYSTEM]**.) • Perform the DTC inspection for the SAS control module using the M-MDS. (See **DTC INSPECTION [TWO-STEP DEPLOYMENT CONTROL SYSTEM]**.) • Are the same DTCs displayed?	Yes	Replace the SAS control module. (See **SAS CONTROL MODULE REMOVAL/INSTALLATION [TWO-STEP DEPLOYMENT CONTROL SYSTEM]**.)
		No	Go to the next step.
4	**VERIFY IF OTHER DTCs DISPLAYED** • Are any other DTCs displayed?	Yes	Repair the malfunctioning part according to the applicable DTC troubleshooting.
		No	DTC troubleshooting completed.

2014 - Mazda3 - Restraints

DTC B1011:95 [TWO-STEP DEPLOYMENT CONTROL SYSTEM]

System malfunction location	• SAS control module connectors are poorly connected
Detection condition	**WARNING:** • Detection conditions are for understanding the DTC outline before performing an inspection. Performing an inspection according to only the detection conditions may cause injury due to an operating error, or damage the system. When performing an inspection, always follow the inspection procedure. • No continuity between poorly connected detector bar terminals of the SAS control module
Fail-safe function	Not applicable
Possible cause	• SAS control module connectors are poorly connected • SAS control module connector malfunction • SAS control module malfunction

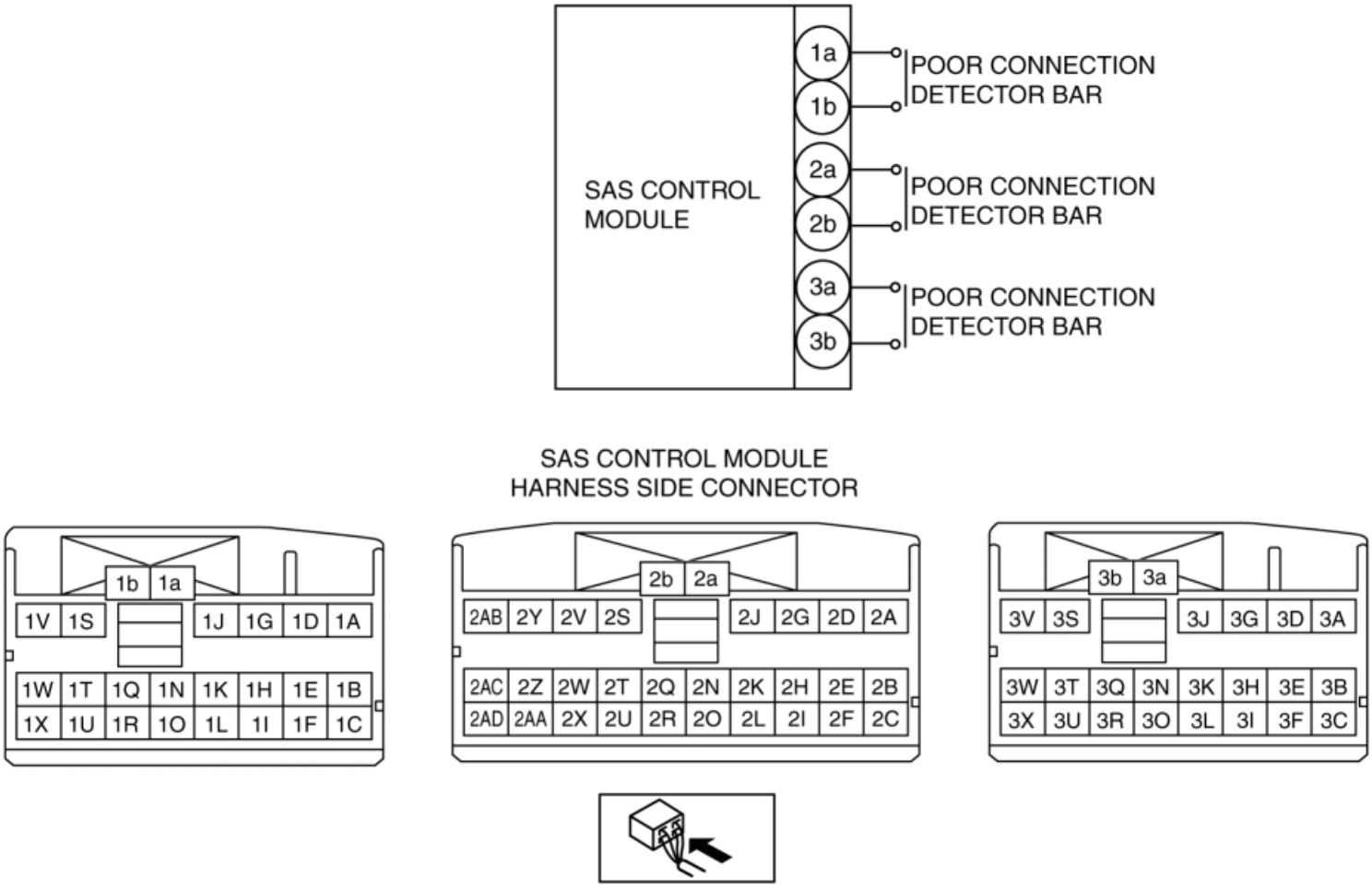

Diagnostic Procedure

Step	Inspection		Action
1	**INSPECT CONTACTS OF SAS CONTROL MODULE CONNECTORS** **WARNING:** • Handling the component parts improperly can accidentally operate (deploy) the air bag module, which may seriously injure you. Read the service warnings/cautions and the workshop manual before handling the air bag system components. (See **AIR BAG SYSTEM SERVICE WARNINGS [TWO-STEP DEPLOYMENT CONTROL SYSTEM]**.) (See **AIR BAG SYSTEM SERVICE CAUTIONS [TWO-STEP DEPLOYMENT CONTROL SYSTEM]**.) • Switch the ignition off. • Disconnect the negative battery cable and wait for **1 min or more**. (See **NEGATIVE BATTERY CABLE DISCONNECTION/CONNECTION [SKYACTIV-G 2.0, SKYACTIV-G 2.5]**.) • Remove the column cover. (See **COLUMN COVER REMOVAL/INSTALLATION**.) • Disconnect the clock spring connector.	Yes	Go to the next step.
		No	Reconnect the SAS control module connectors properly. Then go to the Step 3.

	(See **CLOCK SPRING REMOVAL/INSTALLATION [TWO-STEP DEPLOYMENT CONTROL SYSTEM]**.) • Remove the glove compartment. (See **GLOVE COMPARTMENT REMOVAL/INSTALLATION**.) • Disconnect the passenger-side air bag module connector. (See **PASSENGER-SIDE AIR BAG MODULE REMOVAL [TWO-STEP DEPLOYMENT CONTROL SYSTEM]**.) • Disconnect the driver and passenger-side front seat connector. (See **FRONT SEAT REMOVAL/INSTALLATION**.) • Remove the B-pillar lower trim. (See **B-PILLAR LOWER TRIM REMOVAL/INSTALLATION**.) • Disconnect the driver and passenger-side pre-tensioner seat belt connectors. • Disconnect the driver and passenger-side lap pre-tensioner seat belt connector. (See **FRONT SEAT BELT REMOVAL/INSTALLATION**.) • Remove the headliner. (See **HEADLINER REMOVAL/INSTALLATION**.) • Disconnect the driver and passenger-side curtain air bag module connectors. (See **CURTAIN AIR BAG MODULE REMOVAL/INSTALLATION [TWO-STEP DEPLOYMENT CONTROL SYSTEM]**.) • Are all SAS control module connectors securely connected?		
2	**VERIFY DETECTOR BARS OF SAS CONTROL MODULE CONNECTORS FOR POOR CONNECTION** • Disconnect the all SAS control module connectors. (See **SAS CONTROL MODULE REMOVAL/INSTALLATION [TWO-STEP DEPLOYMENT CONTROL SYSTEM]**.) • Verify the condition of the detector bars of the SAS control module connectors. (Corrosion, damage, and disconnected pins) • Are the detector bars of the SAS control module connectors normal?	Yes	Go to the next step.
		No	Replace the air bag wiring harness. Then go to the next step.
3	**PERFORM SAS CONTROL MODULE DTC INSPECTION** • Connect the SAS control module connectors. • Reconnect all disconnected connectors. • Connect the negative battery cable. (See **NEGATIVE BATTERY CABLE DISCONNECTION/CONNECTION [SKYACTIV-G 2.0, SKYACTIV-G 2.5]**.) • Switch the ignition ON (engine off or on). • Clear the DTC for the SAS control module using the M-MDS. (See **CLEARING DTC [TWO-STEP DEPLOYMENT CONTROL SYSTEM]**.) • Perform the DTC inspection for the SAS control module using the M-MDS. (See **DTC INSPECTION [TWO-STEP DEPLOYMENT CONTROL SYSTEM]**.) • Are the same DTCs present?	Yes	Replace the SAS control module. (See **SAS CONTROL MODULE REMOVAL/INSTALLATION [TWO-STEP DEPLOYMENT CONTROL SYSTEM]**.)
		No	DTC troubleshooting completed.

2014 - Mazda3 - Restraints

DTC B1126:11/B1126:12/B1126:13/B1126:19/B1126:1A [TWO-STEP DEPLOYMENT CONTROL SYSTEM]

System malfunction location	• B1126:11:Driver-side side air bag module circuit short to body ground • B1126:12:Driver-side side air bag module circuit short to power supply • B1126:13:Driver-side side air bag module circuit open circuit or resistance high • B1126:19:Short circuit to driver-side side air bag module and other air bag module circuits • B1126:1A:Driver-side side air bag module circuit resistance low
Detection condition	**WARNING:** • Detection conditions are for understanding the DTC outline before performing an inspection. Performing an inspection according to only the detection conditions may cause injury due to an operating error, or damage the system. When performing an inspection, always follow the inspection procedure. • Resistance **other than 0.81—9.85 ohms** is detected in driver-side side air bag module circuit • Wiring harness between the driver-side side air bag module and SAS control module has a malfunction
Fail-safe function	Not applicable
Possible cause	• Driver-side side air bag module connector malfunction • Short circuit to power supply or body ground in the wiring harness between the driver-side side air bag module and SAS control module • Open circuit in the wiring harness between the driver-side side air bag module and SAS control module • Driver-side side air bag module malfunction • SAS control module malfunction

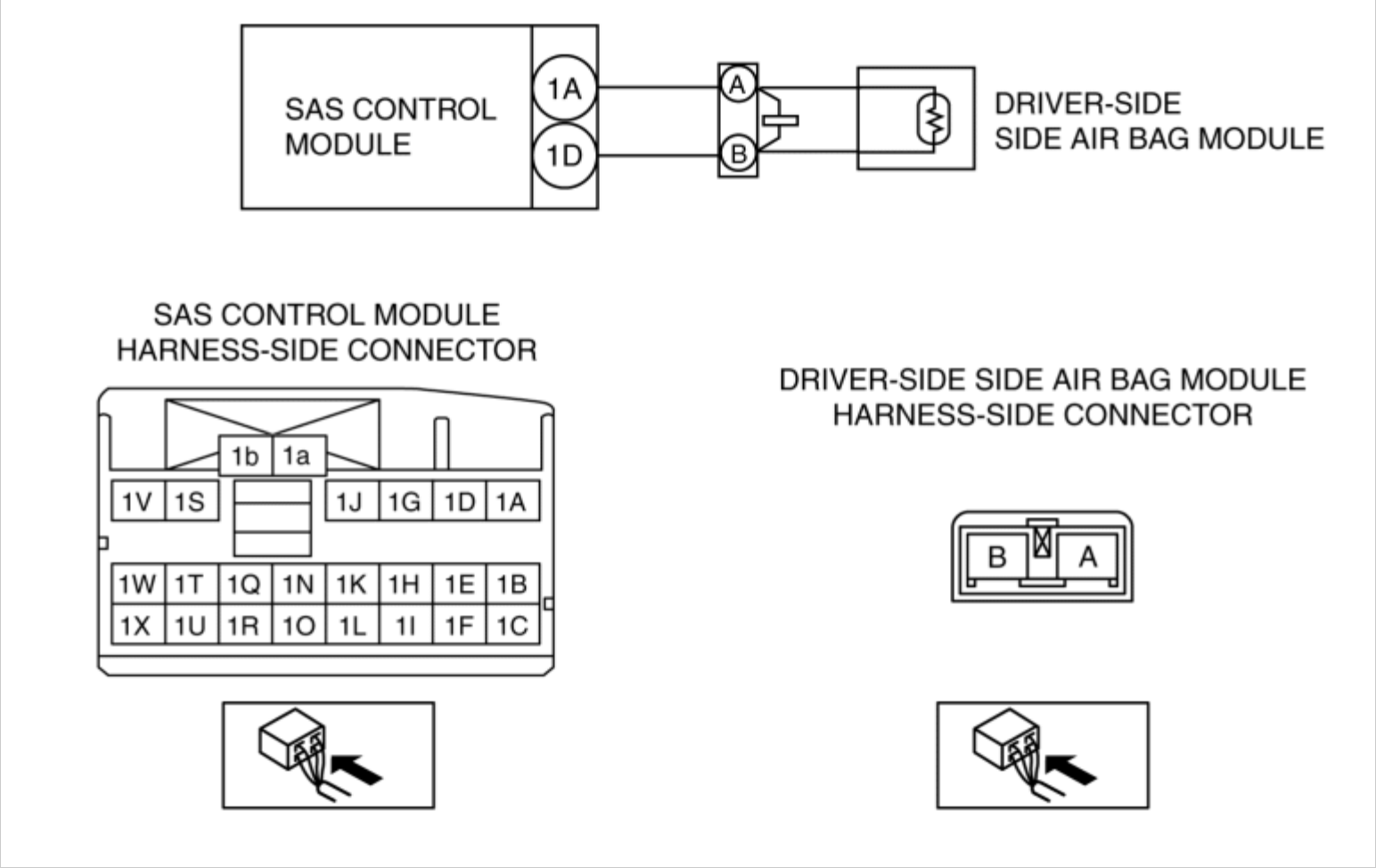

Diagnostic Procedure

Step	Inspection		Action
1	**INSPECT DRIVER-SIDE SIDE AIR BAG MODULE CONNECTOR** **WARNING:** • Handling the component parts improperly can accidentally operate (deploy) the air bag module, which may seriously injure you. Read the service warnings/cautions and the workshop manual before handling the air bag system components. (See **AIR BAG SYSTEM SERVICE WARNINGS [TWO-STEP DEPLOYMENT CONTROL SYSTEM]**.) (See **AIR BAG SYSTEM SERVICE CAUTIONS [TWO-STEP DEPLOYMENT CONTROL SYSTEM]**.)	Yes	Replace the malfunctioning part, then go to Step 6.
		No	Go to the next step.

	Switch the ignition off. • Disconnect the negative battery cable and wait for **1 min or more**. (See **NEGATIVE BATTERY CABLE DISCONNECTION/CONNECTION [SKYACTIV-G 2.0, SKYACTIV-G 2.5]**.) • Disconnect the driver-side side air bag module connector installed to the lower side of the seat cushion of the front seat. (See **FRONT SEAT REMOVAL/INSTALLATION**.) • Inspect the driver-side side air bag module connector. (Corrosion, damage, and disconnected pins) • Is there any malfunction of the driver-side side air bag module connector?		
2	**INSPECT DRIVER-SIDE SIDE AIR BAG MODULE CIRCUIT FOR SHORT TO GROUND** • Remove the column cover. (See **COLUMN COVER REMOVAL/INSTALLATION**.) • Disconnect the clock spring connector. (See **CLOCK SPRING REMOVAL/INSTALLATION [TWO-STEP DEPLOYMENT CONTROL SYSTEM]**.) • Remove the glove compartment. (See **GLOVE COMPARTMENT REMOVAL/INSTALLATION**.) • Disconnect the passenger-side air bag module connector. (See **PASSENGER-SIDE AIR BAG MODULE REMOVAL [TWO-STEP DEPLOYMENT CONTROL SYSTEM]**.) • Disconnect the passenger-side front seat connector. (See **FRONT SEAT REMOVAL/INSTALLATION**.) • Remove the B-pillar lower trim. (See **B-PILLAR LOWER TRIM REMOVAL/INSTALLATION**.)	Yes	Refer to the wiring diagram and verify whether or not there is a common connector between SAS control module terminal and driver-side side air bag module terminal. **If there is a common connector:** • Determine the malfunctioning part by inspecting the common connector and the terminal for corrosion, damage, or pin disconnection, and the common wiring harness for a short to ground. • Replace the malfunctioning part. **If there is no common connector:** • Replace the wiring harness which has a short to ground. Go to Step 6.
		No	Go to the next step.

	Disconnect the driver and passenger-side pre-tensioner seat belt connectors. • Disconnect the driver and passenger-side lap pre-tensioner seat belt connectors. (See **FRONT SEAT BELT REMOVAL/INSTALLATION**.) • Remove the headliner. (See **HEADLINER REMOVAL/INSTALLATION**.) • Disconnect the driver and passenger-side curtain air bag module connectors. (See **CURTAIN AIR BAG MODULE REMOVAL/INSTALLATION [TWO-STEP DEPLOYMENT CONTROL SYSTEM]**.) • Disconnect the all SAS control module connectors. (See **SAS CONTROL MODULE REMOVAL/INSTALLATION [TWO-STEP DEPLOYMENT CONTROL SYSTEM]**.) • Inspect for continuity between the following terminals (wiring harness-side) and body ground: ▪ SAS control module terminal 1A ▪ SAS control module terminal 1D **NOTE:** • Inspect for continuity while shaking the wiring harness between the SAS control module and the driver-side side air bag module. • Is there continuity?		
3	**INSPECT DRIVER-SIDE SIDE AIR BAG MODULE CIRCUIT FOR OPEN CIRCUIT** • Driver-side side air bag module and SAS control module connectors are disconnected. • Inspect for continuity between the following terminals (wiring harness-side):	Yes	Go to the next step.
		No	Refer to the wiring diagram and verify whether or not there is a common connector between SAS control module terminal and driver-side side air bag module terminal. **If there is a common**

	▪ Driver-side side air bag module terminal A—SAS control module terminal 1A ▪ Driver-side side air bag module terminal B—SAS control module terminal 1D **NOTE:** • Inspect for continuity while shaking the wiring harness between the SAS control module and driver-side side air bag module. • Is there continuity?		**connector:** • Determine the malfunctioning part by inspecting the common connector and the terminal for corrosion, damage, or pin disconnection, and the common wiring harness for an open circuit. • Replace the malfunctioning part. **If there is no common connector:** • Replace the wiring harness which has an open circuit. Go to Step 6.
4	**INSPECT DRIVER-SIDE SIDE AIR BAG MODULE CIRCUIT FOR SHORT TO POWER SUPPLY** • Driver-side side air bag module and SAS control module connectors are disconnected. • Connect the negative battery cable. (See **NEGATIVE BATTERY CABLE DISCONNECTION/CONNECTION [SKYACTIV-G 2.0, SKYACTIV-G 2.5]**.) • Switch the ignition ON (engine off or on). • Measure the voltage at the following terminals (wiring harness-side): ▪ SAS control module terminal 1A ▪ SAS control module terminal 1D **NOTE:** • Measure the voltage while shaking the wiring harness between the SAS control module and driver-side side air bag module. • Is the voltage **0 V**?	Yes	Go to the next step.
		No	Refer to the wiring diagram and verify whether or not there is a common connector between SAS control module terminal and driver-side side air bag module terminal. **If there is a common connector:** • Determine the malfunctioning part by inspecting the common connector and the terminal for corrosion, damage, or pin disconnection, and the common wiring harness for a short to power supply. • Replace the malfunctioning part. **If there is no common connector:** • Replace the wiring harness which has a short to power supply. Go to Step 6.

5	**INSPECT DRIVER-SIDE SIDE AIR BAG MODULE** • Switch the ignition off. • Disconnect the negative battery cable and wait for **1 min or more**. • Connect the SAS control module connectors. • Except for the driver-side side air bag module connector, reconnect all disconnected connectors. • Connect the **SST (Fuel and thermometer checker)** or apply **2 ohms** resistance to the driver-side side air bag module connector terminals A and B. • Set the **SST (Fuel and thermometer checker)** to **2 ohms**. • Connect the negative battery cable. (See **NEGATIVE BATTERY CABLE DISCONNECTION/CONNECTION [SKYACTIV-G 2.0, SKYACTIV-G 2.5]**.) • Switch the ignition ON (engine off or on). • Clear the DTC for the SAS control module using the M-MDS. (See **CLEARING DTC [TWO-STEP DEPLOYMENT CONTROL SYSTEM]**.) • Perform the DTC inspection for the SAS control module using the M-MDS. (See **DTC INSPECTION [TWO-STEP DEPLOYMENT CONTROL SYSTEM]**.) • Are the same DTCs present?	Yes	Go to the next step.
		No	Replace the driver-side side air bag module. (See **SIDE AIR BAG MODULE REMOVAL/INSTALLATION [TWO-STEP DEPLOYMENT CONTROL SYSTEM]**.) Then go to the next step.
6	**PERFORM SAS CONTROL MODULE DTC INSPECTION** • Switch the ignition off. • Disconnect the negative battery cable and wait for **1 min or more**. • Disconnect the **SST (Fuel and thermometer checker)** or the **2 ohms** resistance. • Connect the driver-side side air bag module connector.	Yes	Replace the SAS control module. (See **SAS CONTROL MODULE REMOVAL/INSTALLATION [TWO-STEP DEPLOYMENT CONTROL SYSTEM]**.)
		No	DTC troubleshooting completed.

	Connect the negative battery cable. (See **NEGATIVE BATTERY CABLE DISCONNECTION/CONNECTION [SKYACTIV-G 2.0, SKYACTIV-G 2.5]**.) • Switch the ignition ON (engine off or on). • Clear the DTC for the SAS control module using the M-MDS. (See **CLEARING DTC [TWO-STEP DEPLOYMENT CONTROL SYSTEM]**.) • Perform the DTC inspection for the SAS control module using the M-MDS. (See **DTC INSPECTION [TWO-STEP DEPLOYMENT CONTROL SYSTEM]**.) • Are the same DTCs present?		

2014 - Mazda3 - Restraints

DTC B1126:55/B1127:55 [TWO-STEP DEPLOYMENT CONTROL SYSTEM]

System malfunction location	• B1126:55:Configuration setting error (driver-side side air bag module structural malfunction) • B1127:55:Configuration setting error (passenger-side side air bag module structural malfunction)
Detection condition	**WARNING:** • Detection conditions are for understanding the DTC outline before performing an inspection. Performing an inspection according to only the detection conditions may cause injury due to an operating error, or damage the system. When performing an inspection, always follow the inspection procedure. • SAS control module configuration setting has not been done correctly • Parts which have not been set to SAS control module are assembled
Fail-safe function	Not applicable
Possible cause	• SAS control module configuration setting not implemented • SAS control module configuration setting invalid • Driver or passenger-side side air bag module assembly incorrect • SAS control module malfunction
System wiring diagram	Not applicable

Diagnostic Procedure

Step	Inspection	Action
	PERFORM SAS CONTROL MODULE CONFIGURATION	

1	**(AS-BUILT DATA USE)** • Perform the SAS control module configuration using the M-MDS. (See **SAS CONTROL MODULE CONFIGURATION (USING AS-BUILT DATA) [TWO-STEP DEPLOYMENT CONTROL SYSTEM]**.) • Clear the DTC for the SAS control module using the M-MDS. (See **CLEARING DTC [TWO-STEP DEPLOYMENT CONTROL SYSTEM]**.) • Perform the DTC inspection for the SAS control module using the M-MDS. (See **DTC INSPECTION [TWO-STEP DEPLOYMENT CONTROL SYSTEM]**.) • Are the same DTCs present?	Yes	Go to the next step.
		No	DTC troubleshooting completed.
2	**INSPECT SIDE AIR BAG MODULE** • Verify that the driver or passenger-side side air bag module is correctly installed. • Is the driver or passenger-side side air bag module correctly installed?	Yes	Go to the next step.
		No	Correctly Install the driver or passenger-side side air bag module. Then go to the next step.
3	**PERFORM SAS CONTROL MODULE DTC INSPECTION** • Clear the DTC for the SAS control module using the M-MDS. (See **CLEARING DTC [TWO-STEP DEPLOYMENT CONTROL SYSTEM]**.) • Perform the DTC inspection for the SAS control module using the M-MDS. (See **DTC INSPECTION [TWO-STEP DEPLOYMENT CONTROL SYSTEM]**.) • Are the same DTCs present?	Yes	Replace the SAS control module. (See **SAS CONTROL MODULE REMOVAL/INSTALLATION [TWO-STEP DEPLOYMENT CONTROL SYSTEM]**.)
		No	DTC troubleshooting completed.

2014 - Mazda3 - Restraints

DTC B1127:11/B1127:12/B1127:13/B1127:19/B1127:1A [TWO-STEP DEPLOYMENT CONTROL SYSTEM]

System malfunction location	• B1127:11:Passenger-side side air bag module circuit short to body ground • B1127:12:Passenger-side side air bag module circuit short to power supply • B1127:13:Passenger-side side air bag module circuit open circuit or resistance high • B1127:19:Short circuit to passenger-side side air bag module and other air bag module circuits • B1127:1A:Passenger-side side air bag module circuit resistance low
Detection condition	**WARNING:** • Detection conditions are for understanding the DTC outline before performing an inspection. Performing an inspection according to only the detection conditions may cause injury due to an operating error, or damage the system. When performing an inspection, always follow the inspection procedure. • Resistance **other than 0.81—9.85 ohms** detected in passenger-side side air bag module circuit • Wiring harness between the passenger-side side air bag module and SAS control module has a malfunction
Fail-safe function	Not applicable
Possible cause	• Passenger-side side air bag module connector malfunction • Short circuit to power supply or body ground in the wiring harness between the passenger-side side air bag module and SAS control module • Open circuit in the wiring harness between the passenger-side side air bag module and SAS control module • Passenger-side side air bag module malfunction • SAS control module malfunction

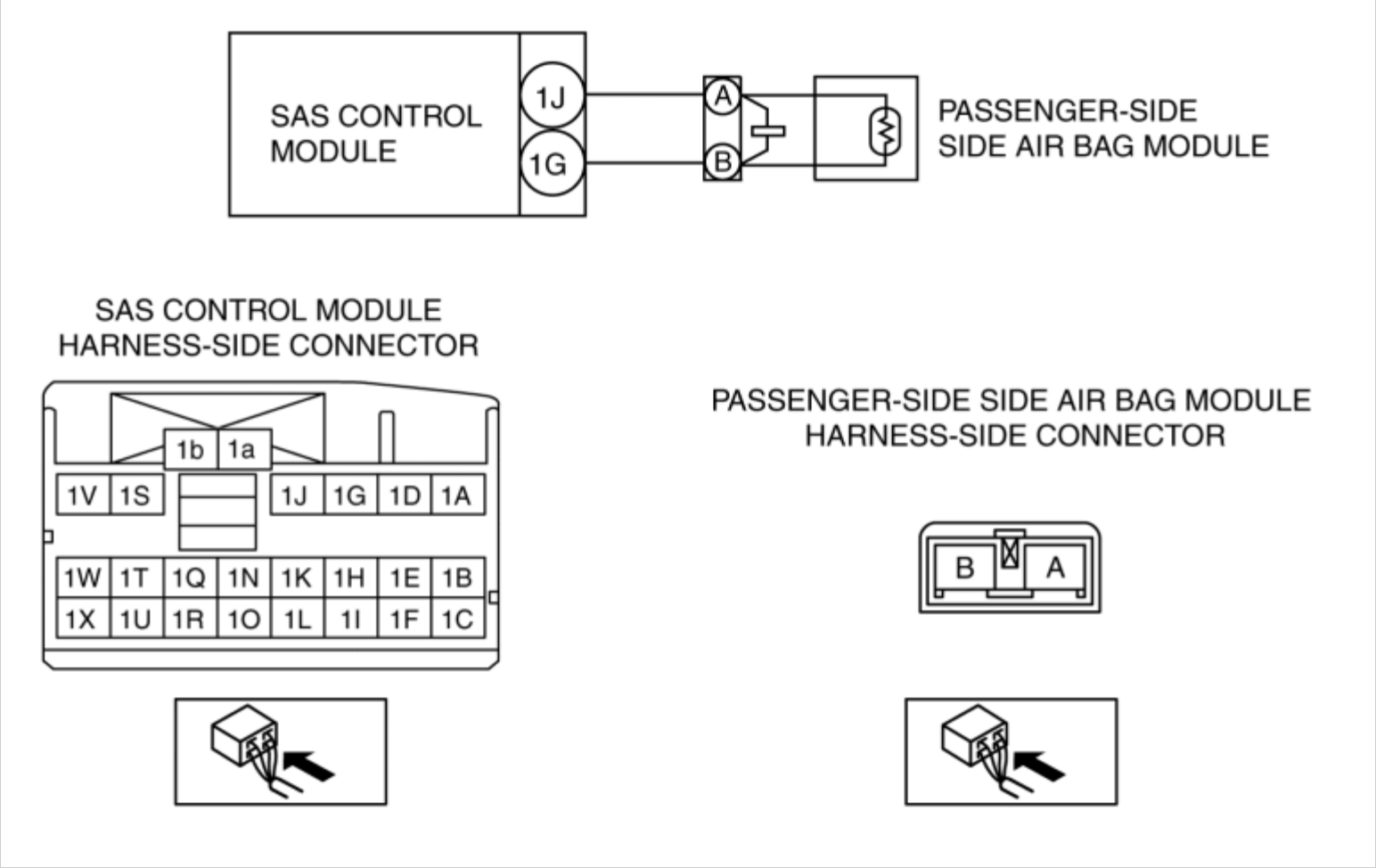

Diagnostic Procedure

Step	Inspection		Action
1	**INSPECT PASSENGER-SIDE SIDE AIR BAG MODULE CONNECTOR** **WARNING:** • Handling the component parts improperly can accidentally operate (deploy) the air bag module, which may seriously injure you. Read the service warnings/cautions and the workshop manual before handling the air bag system components. (See **AIR BAG SYSTEM SERVICE WARNINGS [TWO-STEP DEPLOYMENT CONTROL SYSTEM]**.) (See **AIR BAG SYSTEM SERVICE CAUTIONS [TWO-STEP DEPLOYMENT CONTROL SYSTEM]**.)	Yes	Replace the malfunctioning part, then go to Step 6.
		No	Go to the next step.

	Switch the ignition off. • Disconnect the negative battery cable and wait for **1 min or more**. (See **NEGATIVE BATTERY CABLE DISCONNECTION/CONNECTION [SKYACTIV-G 2.0, SKYACTIV-G 2.5]**.) • Disconnect the passenger-side side air bag module connector installed to the lower side of the seat cushion of the front seat. (See **FRONT SEAT REMOVAL/INSTALLATION**.) • Inspect the passenger-side side air bag module connector. (Corrosion, damage, and disconnected pins) • Is there any malfunction of the passenger-side side air bag module connector?		
2	**INSPECT PASSENGER-SIDE SIDE AIR BAG MODULE CIRCUIT FOR SHORT TO GROUND** • Remove the column cover. (See **COLUMN COVER REMOVAL/INSTALLATION**.) • Disconnect the clock spring connector. (See **CLOCK SPRING REMOVAL/INSTALLATION [TWO-STEP DEPLOYMENT CONTROL SYSTEM]**.) • Remove the glove compartment. (See **GLOVE COMPARTMENT REMOVAL/INSTALLATION**.) • Disconnect the passenger-side air bag module connector. (See **PASSENGER-SIDE AIR BAG MODULE REMOVAL [TWO-STEP DEPLOYMENT CONTROL SYSTEM]**.) • Disconnect the driver-side front seat connector. (See **FRONT SEAT REMOVAL/INSTALLATION**.) • Remove the B-pillar lower trim. (See **B-PILLAR LOWER TRIM REMOVAL/INSTALLATION**.)	Yes	Refer to the wiring diagram and verify whether or not there is a common connector between SAS control module terminal and passenger-side side air bag module terminal. **If there is a common connector:** • Determine the malfunctioning part by inspecting the common connector and the terminal for corrosion, damage, or pin disconnection, and the common wiring harness for a short to ground. • Replace the malfunctioning part. **If there is no common connector:** • Replace the wiring harness which has a short to ground. Go to Step 6.
		No	Go to the next step.

	• Disconnect the driver and passenger-side pre-tensioner seat belt connectors. • Disconnect the driver and passenger-side lap pre-tensioner seat belt connectors. (See **FRONT SEAT BELT REMOVAL/INSTALLATION**.) • Remove the headliner. (See **HEADLINER REMOVAL/INSTALLATION**.) • Disconnect the driver and passenger-side curtain air bag module connectors. (See **CURTAIN AIR BAG MODULE REMOVAL/INSTALLATION [TWO-STEP DEPLOYMENT CONTROL SYSTEM]**.) • Disconnect the all SAS control module connectors. (See **SAS CONTROL MODULE REMOVAL/INSTALLATION [TWO-STEP DEPLOYMENT CONTROL SYSTEM]**.) • Inspect for continuity between the following terminals (wiring harness-side) and body ground: ▪ SAS control module terminal 1G ▪ SAS control module terminal 1J **NOTE:** • Inspect for continuity while shaking the wiring harness between the SAS control module and the passenger-side side air bag module. • Is there continuity?		
3	**INSPECT PASSENGER-SIDE SIDE AIR BAG MODULE CIRCUIT FOR OPEN CIRCUIT** • Passenger-side side air bag module and SAS control module connectors are disconnected. • Inspect for continuity between the following terminals (wiring harness-side):	Yes	Go to the next step.
		No	Refer to the wiring diagram and verify whether or not there is a common connector between SAS control module terminal and passenger-side side air bag module terminal. **If there is a common**

	▪ Passenger-side side air bag module terminal A—SAS control module terminal 1J ▪ Passenger-side side air bag module terminal B—SAS control module terminal 1G **NOTE:** • Inspect for continuity while shaking the wiring harness between the SAS control module and passenger-side side air bag module. • Is there continuity?		**connector:** • Determine the malfunctioning part by inspecting the common connector and the terminal for corrosion, damage, or pin disconnection, and the common wiring harness for an open circuit. • Replace the malfunctioning part. **If there is no common connector:** • Replace the wiring harness which has an open circuit. Go to Step 6.
4	**INSPECT PASSENGER-SIDE SIDE AIR BAG MODULE CIRCUIT FOR SHORT TO POWER SUPPLY** • Passenger-side side air bag module and SAS control module connectors are disconnected. • Connect the negative battery cable. (See **NEGATIVE BATTERY CABLE DISCONNECTION/CONNECTION [SKYACTIV-G 2.0, SKYACTIV-G 2.5]**.) • Switch the ignition ON (engine off or on). • Measure the voltage at the following terminals (wiring harness-side): ▪ SAS control module terminal 1G ▪ SAS control module terminal 1J **NOTE:** • Measure the voltage while shaking the wiring harness between the SAS control module and passenger-side side air bag module. • Is the voltage **0 V**?	Yes	Go to the next step.
		No	Refer to the wiring diagram and verify whether or not there is a common connector between SAS control module terminal and passenger-side side air bag module terminal. **If there is a common connector:** • Determine the malfunctioning part by inspecting the common connector and the terminal for corrosion, damage, or pin disconnection, and the common wiring harness for a short to power supply. • Replace the malfunctioning part. **If there is no common connector:** • Replace the wiring harness which has a short to power supply. Go to Step 6.

5	**INSPECT PASSENGER-SIDE SIDE AIR BAG MODULE** • Switch the ignition off. • Disconnect the negative battery cable and wait for **1 min or more**. • Connect the SAS control module connectors. • Except for the passenger-side side air bag module connector, reconnect all disconnected connectors. • Connect the **SST (Fuel and thermometer checker)** or apply **2 ohms** resistance to the passenger-side side air bag module connector terminals A and B. • Set the **SST (Fuel and thermometer checker)** to **2 ohms**. • Connect the negative battery cable. (See **NEGATIVE BATTERY CABLE DISCONNECTION/CONNECTION [SKYACTIV-G 2.0, SKYACTIV-G 2.5]**.) • Switch the ignition ON (engine off or on). • Clear the DTC for the SAS control module using the M-MDS. (See **CLEARING DTC [TWO-STEP DEPLOYMENT CONTROL SYSTEM]**.) • Perform the DTC inspection for the SAS control module using the M-MDS. (See **DTC INSPECTION [TWO-STEP DEPLOYMENT CONTROL SYSTEM]**.) • Are the same DTCs present?	Yes	Go to the next step.
		No	Replace the passenger-side side air bag module. (See **SIDE AIR BAG MODULE REMOVAL/INSTALLATION [TWO-STEP DEPLOYMENT CONTROL SYSTEM]**.) Then go to the next step.
6	**PERFORM SAS CONTROL MODULE DTC INSPECTION** • Switch the ignition off. • Disconnect the negative battery cable and wait for **1 min or more**. • Disconnect the **SST (Fuel and thermometer checker)** or the **2 ohms** resistance. • Connect the passenger-side side air bag module connector.	Yes	Replace the SAS control module. (See **SAS CONTROL MODULE REMOVAL/INSTALLATION [TWO-STEP DEPLOYMENT CONTROL SYSTEM]**.)
		No	DTC troubleshooting completed.

	• Connect the negative battery cable. (See **NEGATIVE BATTERY CABLE DISCONNECTION/CONNECTION [SKYACTIV-G 2.0, SKYACTIV-G 2.5]**.) • Switch the ignition ON (engine off or on). • Clear the DTC for the SAS control module using the M-MDS. (See **CLEARING DTC [TWO-STEP DEPLOYMENT CONTROL SYSTEM]**.) • Perform the DTC inspection for the SAS control module using the M-MDS. (See **DTC INSPECTION [TWO-STEP DEPLOYMENT CONTROL SYSTEM]**.) • Are the same DTCs present?		

2014 - Mazda3 - Restraints

DTC B1128:11/B1128:12/B1128:13/B1128:19/B1128:1A [TWO-STEP DEPLOYMENT CONTROL SYSTEM]

System malfunction location	• B1128:11:Driver-side curtain air bag module circuit short to body ground • B1128:12:Driver-side curtain air bag module circuit short to power supply • B1128:13:Driver-side curtain air bag module circuit open circuit or resistance high • B1128:19:Short circuit to driver-side curtain air bag module and other air bag module circuits • B1128:1A:Driver-side curtain air bag module circuit resistance low
Detection condition	**WARNING:** • Detection conditions are for understanding the DTC outline before performing an inspection. Performing an inspection according to only the detection conditions may cause injury due to an operating error, or damage the system. When performing an inspection, always follow the inspection procedure. • Resistance **other than 0.81—6.42 ohms** detected in driver-side curtain air bag module circuit • Wiring harness between the driver-side curtain air bag module and SAS control module has a malfunction
Fail-safe function	Not applicable
Possible cause	• Driver-side curtain air bag module connector malfunction • Short circuit to power supply or body ground in the wiring harness between the driver-side curtain air bag module and SAS control module • Open circuit in the wiring harness between the driver-side curtain air bag module and SAS control module • Driver-side curtain air bag module malfunction • SAS control module malfunction

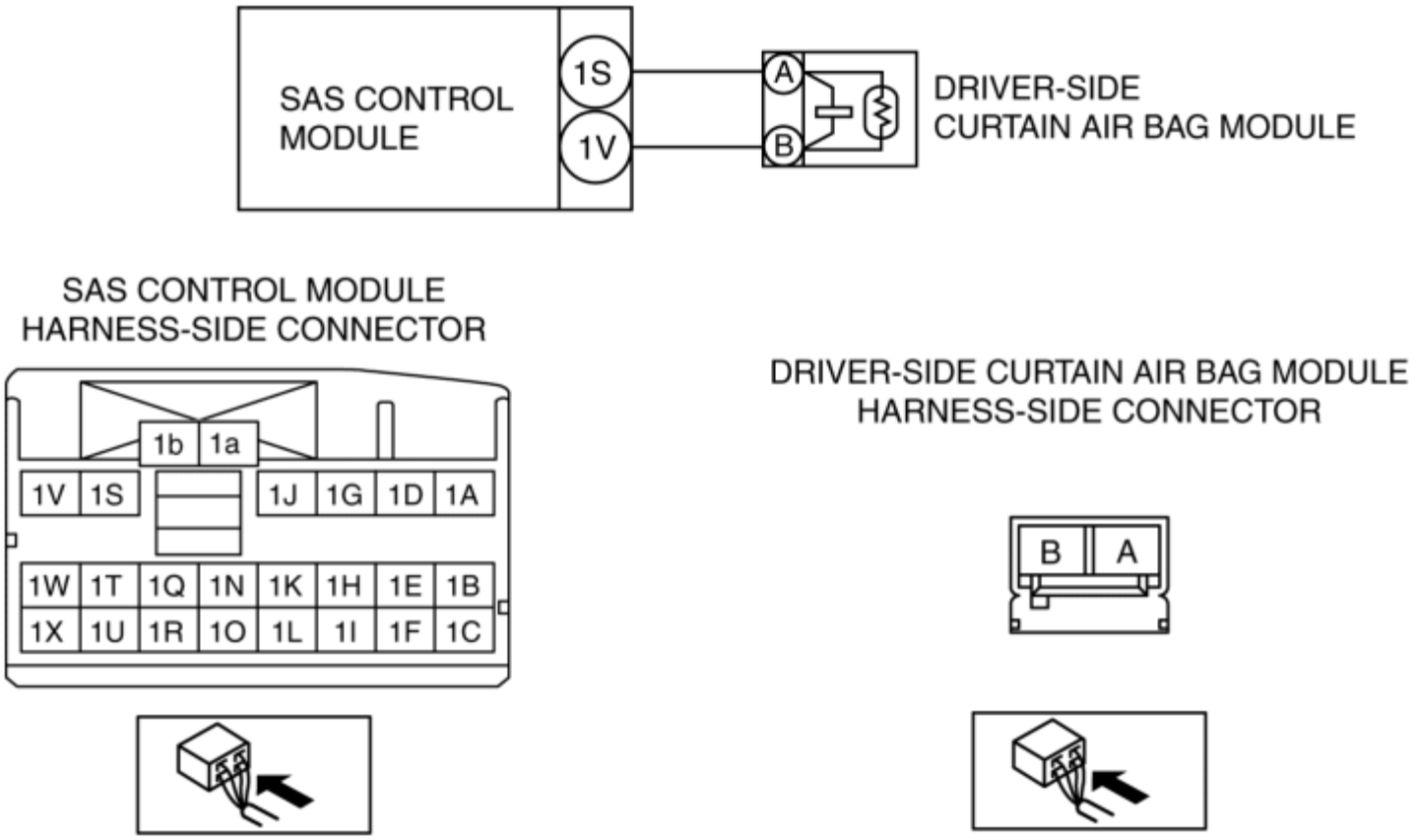

Diagnostic Procedure

Step	Inspection		Action
1	**INSPECT DRIVER-SIDE CURTAIN AIR BAG MODULE CONNECTOR** **WARNING:** • Handling the component parts improperly can accidentally operate (deploy) the air bag module, which may seriously injure you. Read the service warnings/cautions and the workshop manual before handling the air bag system components. (See **AIR BAG SYSTEM SERVICE WARNINGS [TWO-STEP DEPLOYMENT CONTROL SYSTEM]**.) (See **AIR BAG SYSTEM SERVICE CAUTIONS [TWO-STEP DEPLOYMENT CONTROL SYSTEM]**.)	Yes	Replace the malfunctioning part, then go to Step 6.
		No	Go to the next step.

	Switch the ignition off. • Disconnect the negative battery cable and wait for **1 min or more**. (See **NEGATIVE BATTERY CABLE DISCONNECTION/CONNECTION [SKYACTIV-G 2.0, SKYACTIV-G 2.5]**.) • Remove the headliner. (See **HEADLINER REMOVAL/INSTALLATION**.) • Disconnect the driver-side curtain air bag module connector. (See **CURTAIN AIR BAG MODULE REMOVAL/INSTALLATION [TWO-STEP DEPLOYMENT CONTROL SYSTEM]**.) • Inspect the driver-side curtain air bag module connector. (Corrosion, damage, and disconnected pins) • Is there any malfunction of the driver-side curtain air bag module connector?		
2	**INSPECT DRIVER-SIDE CURTAIN AIR BAG MODULE CIRCUIT FOR SHORT TO GROUND** • Remove the column cover. (See **COLUMN COVER REMOVAL/INSTALLATION**.) • Disconnect the clock spring connector. (See **CLOCK SPRING REMOVAL/INSTALLATION [TWO-STEP DEPLOYMENT CONTROL SYSTEM]**.) • Remove the glove compartment. (See **GLOVE COMPARTMENT REMOVAL/INSTALLATION**.) • Disconnect the passenger-side air bag module connector. (See **PASSENGER-SIDE AIR BAG MODULE REMOVAL [TWO-STEP DEPLOYMENT CONTROL SYSTEM]**.) • Disconnect the driver and passenger-side front seat connector. (See **FRONT SEAT REMOVAL/INSTALLATION**.) • Disconnect the driver and passenger-	Yes	Refer to the wiring diagram and verify whether or not there is a common connector between SAS control module terminal and driver-side curtain air bag module terminal. **If there is a common connector:** • Determine the malfunctioning part by inspecting the common connector and the terminal for corrosion, damage, or pin disconnection, and the common wiring harness for a short to ground. • Replace the malfunctioning part. **If there is no common connector:** • Replace the wiring harness which has a short to ground. Go to Step 6.

	side pre-tensioner seat belt connectors. • Disconnect the driver and passenger-side lap pre-tensioner seat belt connectors. (See **FRONT SEAT BELT REMOVAL/INSTALLATION**.) • Disconnect the passenger-side curtain air bag module connector. (See **CURTAIN AIR BAG MODULE REMOVAL/INSTALLATION [TWO-STEP DEPLOYMENT CONTROL SYSTEM]**.) • Disconnect the all SAS control module connectors. (See **SAS CONTROL MODULE REMOVAL/INSTALLATION [TWO-STEP DEPLOYMENT CONTROL SYSTEM]**.) • Inspect for continuity between the following terminals (wiring harness-side) and body ground: ▪ SAS control module terminal 1S ▪ SAS control module terminal 1V **NOTE:** • Inspect for continuity while shaking the wiring harness between the SAS control module and the driver-side curtain air bag module. • Is there continuity?	No	Go to the next step.
3	**INSPECT DRIVER-SIDE CURTAIN AIR BAG MODULE CIRCUIT FOR OPEN CIRCUIT** • Driver-side curtain air bag module and SAS control module connectors are disconnected. • Inspect for continuity between the following terminals (wiring harness-side): ▪ Driver-side curtain air bag module terminal A—SAS control module terminal 1S ▪ Driver-side curtain air bag module terminal	Yes	Go to the next step.
		No	Refer to the wiring diagram and verify whether or not there is a common connector between SAS control module terminal and driver-side curtain air bag module terminal. **If there is a common connector:** • Determine the malfunctioning part by inspecting the common connector and the terminal for corrosion,

	B—SAS control module terminal 1V **NOTE:** • Inspect for continuity while shaking the wiring harness between the SAS control module and driver-side curtain air bag module. • Is there continuity?		damage, or pin disconnection, and the common wiring harness for an open circuit. • Replace the malfunctioning part. **If there is no common connector:** • Replace the wiring harness which has an open circuit. Go to Step 6.
4	**INSPECT DRIVER-SIDE CURTAIN AIR BAG MODULE CIRCUIT FOR SHORT TO POWER SUPPLY** • Driver-side curtain air bag module and SAS control module connectors are disconnected. • Connect the negative battery cable. (See **NEGATIVE BATTERY CABLE DISCONNECTION/CONNECTION [SKYACTIV-G 2.0, SKYACTIV-G 2.5]**.) • Switch the ignition ON (engine off or on). • Measure the voltage at the following terminals (wiring harness-side): ▪ SAS control module terminal 1S ▪ SAS control module terminal 1V **NOTE:** • Measure the voltage while shaking the wiring harness between the SAS control module and driver-side curtain air bag module. • Is the voltage **0 V**?	Yes	Go to the next step.
		No	Refer to the wiring diagram and verify whether or not there is a common connector between SAS control module terminal and driver-side curtain air bag module terminal. **If there is a common connector:** • Determine the malfunctioning part by inspecting the common connector and the terminal for corrosion, damage, or pin disconnection, and the common wiring harness for a short to power supply. • Replace the malfunctioning part. **If there is no common connector:** • Replace the wiring harness which has a short to power supply. Go to Step 6.
5	**INSPECT DRIVER-SIDE CURTAIN AIR BAG MODULE** • Switch the ignition off. • Disconnect the negative battery cable and wait for **1 min or more**.	Yes	Go to the next step.
		No	Replace the driver-side curtain air bag module. (See **CURTAIN AIR BAG MODULE**

	• Connect the SAS control module connectors. • Except for the driver-side curtain air bag module connector, reconnect all disconnected connectors. • Connect the **SST (Fuel and thermometer checker)** or apply **2 ohms** resistance to the driver-side curtain air bag module connector terminals A and B. • Set the **SST (Fuel and thermometer checker)** to **2 ohms**. • Connect the negative battery cable. (See **NEGATIVE BATTERY CABLE DISCONNECTION/CONNECTION [SKYACTIV-G 2.0, SKYACTIV-G 2.5]**.) • Switch the ignition ON (engine off or on). • Clear the DTC for the SAS control module using the M-MDS. (See **CLEARING DTC [TWO-STEP DEPLOYMENT CONTROL SYSTEM]**.) • Perform the DTC inspection for the SAS control module using the M-MDS. (See **DTC INSPECTION [TWO-STEP DEPLOYMENT CONTROL SYSTEM]**.) • Are the same DTCs present?		**REMOVAL/INSTALLATION [TWO-STEP DEPLOYMENT CONTROL SYSTEM]**.) Then go to the next step.
6	**PERFORM SAS CONTROL MODULE DTC INSPECTION** • Switch the ignition off. • Disconnect the negative battery cable and wait for **1 min or more**. • Disconnect the **SST (Fuel and thermometer checker)** or the **2 ohms** resistance. • Connect the driver-side curtain air bag module connector. • Connect the negative battery cable. (See **NEGATIVE BATTERY CABLE DISCONNECTION/CONNECTION [SKYACTIV-G 2.0, SKYACTIV-G 2.5]**.) • Switch the ignition ON (engine off or	Yes	Replace the SAS control module. (See **SAS CONTROL MODULE REMOVAL/INSTALLATION [TWO-STEP DEPLOYMENT CONTROL SYSTEM]**.)
		No	DTC troubleshooting completed.

	on). • Clear the DTC for the SAS control module using the M-MDS. (See **CLEARING DTC [TWO-STEP DEPLOYMENT CONTROL SYSTEM]**.) • Perform the DTC inspection for the SAS control module using the M-MDS. (See **DTC INSPECTION [TWO-STEP DEPLOYMENT CONTROL SYSTEM]**.) • Are the same DTCs present?		

2014 - Mazda3 - Restraints

DTC B1128:55/B1129:55 [TWO-STEP DEPLOYMENT CONTROL SYSTEM]

System malfunction location	• B1128:55:Configuration setting error (driver-side curtain air bag module structural malfunction) • B1129:55:Configuration setting error (passenger-side curtain air bag module structural malfunction)
Detection condition	**WARNING:** • Detection conditions are for understanding the DTC outline before performing an inspection. Performing an inspection according to only the detection conditions may cause injury due to an operating error, or damage the system. When performing an inspection, always follow the inspection procedure. • SAS control module configuration setting has not been done correctly • Parts which have not been set to SAS control module are assembled
Fail-safe function	Not applicable
Possible cause	• SAS control module configuration setting not implemented • SAS control module configuration setting invalid • Driver or passenger-side curtain air bag module assembly incorrect • SAS control module malfunction
System wiring diagram	Not applicable

Diagnostic Procedure

Step	Inspection	Action
	PERFORM SAS CONTROL MODULE CONFIGURATION	

1	**(AS-BUILT DATA USE)** • Perform the SAS control module configuration using the M-MDS. (See **SAS CONTROL MODULE CONFIGURATION (USING AS-BUILT DATA) [TWO-STEP DEPLOYMENT CONTROL SYSTEM]**.) • Clear the DTC for the SAS control module using the M-MDS. (See **CLEARING DTC [TWO-STEP DEPLOYMENT CONTROL SYSTEM]**.) • Perform the DTC inspection for the SAS control module using the M-MDS. (See **DTC INSPECTION [TWO-STEP DEPLOYMENT CONTROL SYSTEM]**.) • Are the same DTCs present?	Yes	Go to the next step.
		No	DTC troubleshooting completed.
2	**INSPECT CURTAIN AIR BAG MODULE** • Verify that the driver or passenger-side curtain air bag module is correctly installed. • Is the driver or passenger-side curtain air bag module correctly installed?	Yes	Go to the next step.
		No	Correctly install the driver or passenger-side curtain air bag module. Then go to the next step.
3	**PERFORM SAS CONTROL MODULE DTC INSPECTION** • Clear the DTC for the SAS control module using the M-MDS. (See **CLEARING DTC [TWO-STEP DEPLOYMENT CONTROL SYSTEM]**.) • Perform the DTC inspection for the SAS control module using the M-MDS. (See **DTC INSPECTION [TWO-STEP DEPLOYMENT CONTROL SYSTEM]**.) • Are the same DTCs present?	Yes	Replace the SAS control module. (See **SAS CONTROL MODULE REMOVAL/INSTALLATION [TWO-STEP DEPLOYMENT CONTROL SYSTEM]**.)
		No	DTC troubleshooting completed.

2014 - Mazda3 - Restraints

DTC B1129:11/B1129:12/B1129:13/B1129:19/B1129:1A [TWO-STEP DEPLOYMENT CONTROL SYSTEM]

System malfunction location	• B1129:11:Passenger-side curtain air bag module circuit short to body ground • B1129:12:Passenger-side curtain air bag module circuit short to power supply • B1129:13:Passenger-side curtain air bag module circuit open circuit or resistance high • B1129:19:Short circuit to passenger-side curtain air bag module and other air bag module circuits • B1129:1A:Passenger-side curtain air bag module circuit resistance low
Detection condition	**WARNING:** • Detection conditions are for understanding the DTC outline before performing an inspection. Performing an inspection according to only the detection conditions may cause injury due to an operating error, or damage the system. When performing an inspection, always follow the inspection procedure. • Resistance **other than 0.81—6.42 ohms** detected in passenger-side curtain air bag module circuit • Wiring harness between the passenger-side curtain air bag module and SAS control module has a malfunction
Fail-safe function	Not applicable
Possible cause	• Passenger-side curtain air bag module connector malfunction • Short circuit to power supply or body ground in the wiring harness between the passenger-side curtain air bag module and SAS control module • Open circuit in the wiring harness between the passenger-side curtain air bag module and SAS control module • Passenger-side curtain air bag module malfunction • SAS control module malfunction

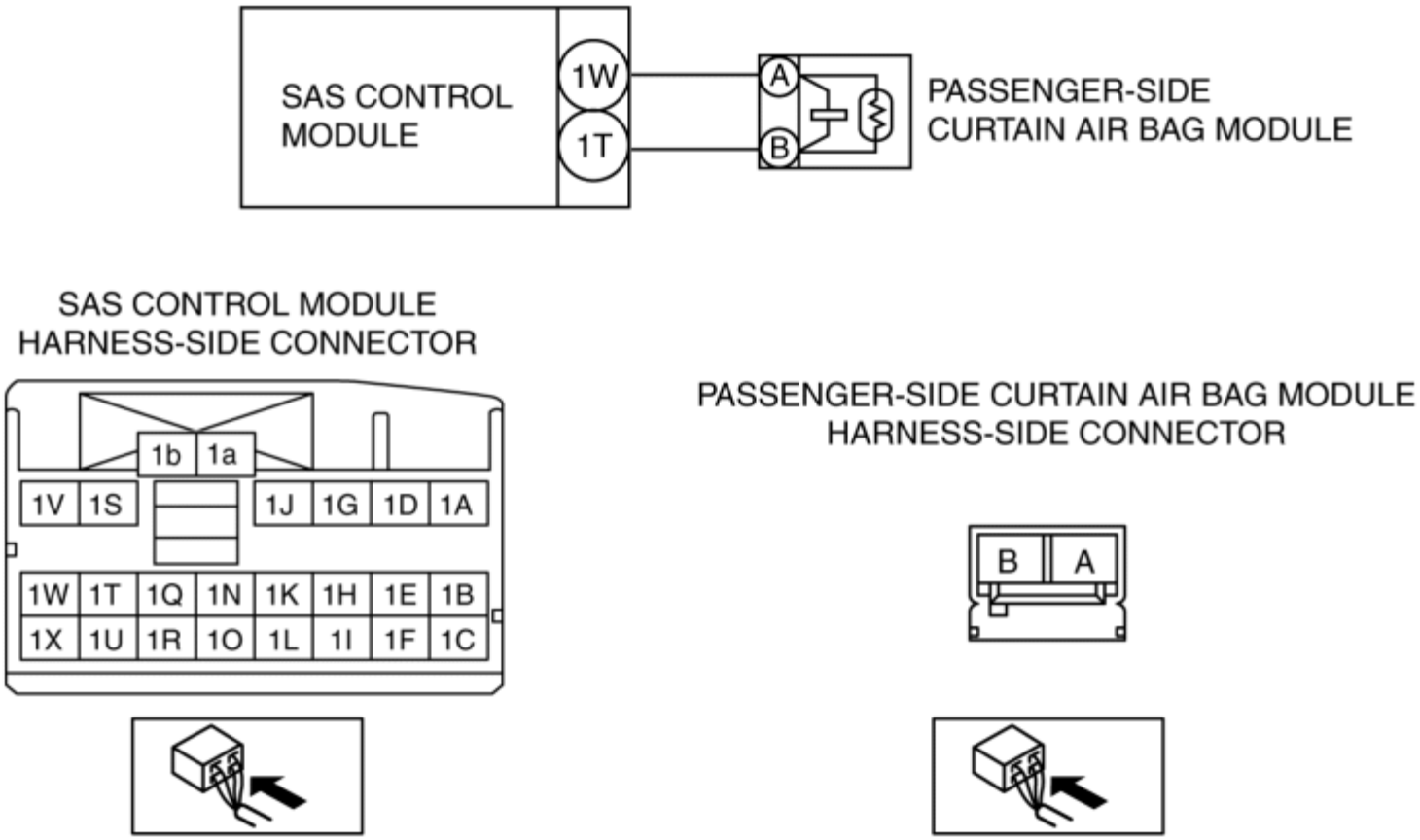

Diagnostic Procedure

Step	Inspection		Action
1	**INSPECT PASSENGER-SIDE CURTAIN AIR BAG MODULE CONNECTOR** **WARNING:** • Handling the component parts improperly can accidentally operate (deploy) the air bag module, which may seriously injure you. Read the service warnings/cautions and the workshop manual before handling the air bag system components. (See **AIR BAG SYSTEM SERVICE WARNINGS [TWO-STEP DEPLOYMENT CONTROL SYSTEM]**.) (See **AIR BAG SYSTEM SERVICE CAUTIONS [TWO-STEP DEPLOYMENT CONTROL SYSTEM]**.)	Yes	Replace the malfunctioning part, then go to Step 6.
		No	Go to the next step.

	Switch the ignition off. • Disconnect the negative battery cable and wait for **1 min or more**. (See **NEGATIVE BATTERY CABLE DISCONNECTION/CONNECTION [SKYACTIV-G 2.0, SKYACTIV-G 2.5]**.) • Remove the headliner. (See **HEADLINER REMOVAL/INSTALLATION**.) • Disconnect the passenger-side curtain air bag module connector. (See **CURTAIN AIR BAG MODULE REMOVAL/INSTALLATION [TWO-STEP DEPLOYMENT CONTROL SYSTEM]**.) • Inspect the passenger-side curtain air bag module connector. (Corrosion, damage, and disconnected pins) • Is there any malfunction of the passenger-side curtain air bag module connector?		
2	**INSPECT PASSENGER-SIDE CURTAIN AIR BAG MODULE CIRCUIT FOR SHORT TO GROUND** • Remove the column cover. (See **COLUMN COVER REMOVAL/INSTALLATION**.) • Disconnect the clock spring connector. (See **CLOCK SPRING REMOVAL/INSTALLATION [TWO-STEP DEPLOYMENT CONTROL SYSTEM]**.) • Remove the glove compartment. (See **GLOVE COMPARTMENT REMOVAL/INSTALLATION**.) • Disconnect the passenger-side air bag module connector. (See **PASSENGER-SIDE AIR BAG MODULE REMOVAL [TWO-STEP DEPLOYMENT CONTROL SYSTEM]**.) • Disconnect the driver and passenger-side front seat connector. (See **FRONT SEAT REMOVAL/INSTALLATION**.)	Yes	Refer to the wiring diagram and verify whether or not there is a common connector between SAS control module terminal and passenger-side curtain air bag module terminal. **If there is a common connector:** • Determine the malfunctioning part by inspecting the common connector and the terminal for corrosion, damage, or pin disconnection, and the common wiring harness for a short to ground. • Replace the malfunctioning part. **If there is no common connector:** • Replace the wiring harness which has a short to ground. Go to Step 6.

	Disconnect the driver and passenger-side pre-tensioner seat belt connectors. • Disconnect the driver and passenger-side lap pre-tensioner seat belt connectors. (See **FRONT SEAT BELT REMOVAL/INSTALLATION**.) • Disconnect the driver-side curtain air bag module connector. (See **CURTAIN AIR BAG MODULE REMOVAL/INSTALLATION [TWO-STEP DEPLOYMENT CONTROL SYSTEM]**.) • Disconnect the all SAS control module connectors. (See **SAS CONTROL MODULE REMOVAL/INSTALLATION [TWO-STEP DEPLOYMENT CONTROL SYSTEM]**.) • Inspect for continuity between the following terminals (wiring harness-side) and body ground: ▪ SAS control module terminal 1W ▪ SAS control module terminal 1T **NOTE:** • Inspect for continuity while shaking the wiring harness between the SAS control module and the passenger-side curtain air bag module. • Is there continuity?	No	Go to the next step.
3	**INSPECT PASSENGER-SIDE CURTAIN AIR BAG MODULE CIRCUIT FOR OPEN CIRCUIT** • Passenger-side curtain air bag module and SAS control module connectors are disconnected. • Inspect for continuity between the following terminals (wiring harness-side): ▪ Passenger-side curtain air bag module terminal A—SAS control module terminal 1W	Yes	Go to the next step.
		No	Refer to the wiring diagram and verify whether or not there is a common connector between SAS control module terminal and passenger-side curtain air bag module terminal. **If there is a common connector:** • Determine the malfunctioning part by inspecting the common connector and the

	▪ Passenger-side curtain air bag module terminal B—SAS control module terminal 1T **NOTE:** • Inspect for continuity while shaking the wiring harness between the SAS control module and passenger-side curtain air bag module. • Is there continuity?		terminal for corrosion, damage, or pin disconnection, and the common wiring harness for an open circuit. • Replace the malfunctioning part. **If there is no common connector:** • Replace the wiring harness which has an open circuit. Go to Step 6.
4	**INSPECT PASSENGER-SIDE CURTAIN AIR BAG MODULE CIRCUIT FOR SHORT TO POWER SUPPLY** • Passenger-side curtain air bag module and SAS control module connectors are disconnected. • Connect the negative battery cable. (See **NEGATIVE BATTERY CABLE DISCONNECTION/CONNECTION [SKYACTIV-G 2.0, SKYACTIV-G 2.5]**.) • Switch the ignition ON (engine off or on). • Measure the voltage at the following terminals (wiring harness-side): ▪ SAS control module terminal 1W ▪ SAS control module terminal 1T **NOTE:** • Measure the voltage while shaking the wiring harness between the SAS control module and passenger-side curtain air bag module. • Is the voltage **0 V**?	Yes	Go to the next step.
		No	Refer to the wiring diagram and verify whether or not there is a common connector between SAS control module terminal and passenger-side curtain air bag module terminal. **If there is a common connector:** • Determine the malfunctioning part by inspecting the common connector and the terminal for corrosion, damage, or pin disconnection, and the common wiring harness for a short to power supply. • Replace the malfunctioning part. **If there is no common connector:** • Replace the wiring harness which has a short to power supply. Go to the next step.
5	**INSPECT PASSENGER-SIDE CURTAIN AIR BAG MODULE** • Switch the ignition off. • Disconnect the negative battery cable and wait for **1 min or more**.	Yes	Go to the next step.
		No	Replace the passenger-side curtain air bag module.

	• Connect the SAS control module connectors. • Except for the passenger-side curtain air bag module connector, reconnect all disconnected connectors. • Connect the **SST (Fuel and thermometer checker)** or apply **2 ohms** resistance to the passenger-side curtain air bag module connector terminals A and B. • Set the **SST (Fuel and thermometer checker)** to **2 ohms**. • Connect the negative battery cable. (See **NEGATIVE BATTERY CABLE DISCONNECTION/CONNECTION [SKYACTIV-G 2.0, SKYACTIV-G 2.5]**.) • Switch the ignition ON (engine off or on). • Clear the DTC for the SAS control module using the M-MDS. (See **CLEARING DTC [TWO-STEP DEPLOYMENT CONTROL SYSTEM]**.) • Perform the DTC inspection for the SAS control module using the M-MDS. (See **DTC INSPECTION [TWO-STEP DEPLOYMENT CONTROL SYSTEM]**.) • Are the same DTCs present?		(See **CURTAIN AIR BAG MODULE REMOVAL/INSTALLATION [TWO-STEP DEPLOYMENT CONTROL SYSTEM]**.) Then go to the next step.
6	**PERFORM SAS CONTROL MODULE DTC INSPECTION** • Switch the ignition off. • Disconnect the negative battery cable and wait for **1 min or more**. • Disconnect the **SST (Fuel and thermometer checker)** or the **2 ohms** resistance. • Connect the passenger-side curtain air bag module connector. • Connect the negative battery cable. (See **NEGATIVE BATTERY CABLE DISCONNECTION/CONNECTION [SKYACTIV-G 2.0, SKYACTIV-G 2.5]**.)	Yes	Replace the SAS control module. (See **SAS CONTROL MODULE REMOVAL/INSTALLATION [TWO-STEP DEPLOYMENT CONTROL SYSTEM]**.)
		No	DTC troubleshooting completed.

	• Switch the ignition ON (engine off or on). • Clear the DTC for the SAS control module using the M-MDS. (See **CLEARING DTC [TWO-STEP DEPLOYMENT CONTROL SYSTEM]**.) • Perform the DTC inspection for the SAS control module using the M-MDS. (See **DTC INSPECTION [TWO-STEP DEPLOYMENT CONTROL SYSTEM]**.) • Are the same DTCs present?		

2014 - Mazda3 - Restraints

DTC B1193:00 [TWO-STEP DEPLOYMENT CONTROL SYSTEM]

System malfunction location	• SAS control module operation (deployment)
Detection condition	**WARNING:** • Detection conditions are for understanding the DTC outline before performing an inspection. Performing an inspection according to only the detection conditions may cause injury due to an operating error, or damage the system. When performing an inspection, always follow the inspection procedure. • SAS control module operates (deploys) (air bag module, pre-tensioner seat belt or lap pre-tensioner seat belt)
Fail-safe function	Not applicable
Possible cause	• SAS control module operation (deployment) • SAS control module malfunction
System wiring diagram	Not applicable

Diagnostic Procedure

ACTION
• Replace the SAS control module. (See **SAS CONTROL MODULE REMOVAL/INSTALLATION [TWO-STEP DEPLOYMENT CONTROL SYSTEM]**.)

DTC B1193:00 [TWO-STEP DEPLOYMENT CONTROL SYSTEM]

2014 - Mazda3 - Restraints

DTC B1196:11/B1196:13/B1196:87/B1196:96 [TWO-STEP DEPLOYMENT CONTROL SYSTEM]

System malfunction location	• B1196:11:Driver-side side air bag sensor circuit short to body ground • B1196:13:Driver-side side air bag sensor circuit open circuit or short to power supply • B1196:87:Signal reception error from driver-side side air bag sensor • B1196:96:Driver-side side air bag sensor internal malfunction
Detection condition	**WARNING:** • Detection conditions are for understanding the DTC outline before performing an inspection. Performing an inspection according to only the detection conditions may cause injury due to an operating error, or damage the system. When performing an inspection, always follow the inspection procedure. • Wiring harness between the driver-side side air bag sensor and SAS control module has a malfunction • Driver-side side air bag sensor has a malfunction
Fail-safe function	Not applicable
Possible cause	• Driver-side side air bag sensor connector malfunction • Short circuit to power supply or body ground in the wiring harness between the driver-side side air bag sensor and SAS control module • Open circuit in the wiring harness between the driver-side side air bag sensor and SAS control module • Driver-side side air bag sensor malfunction • SAS control module malfunction

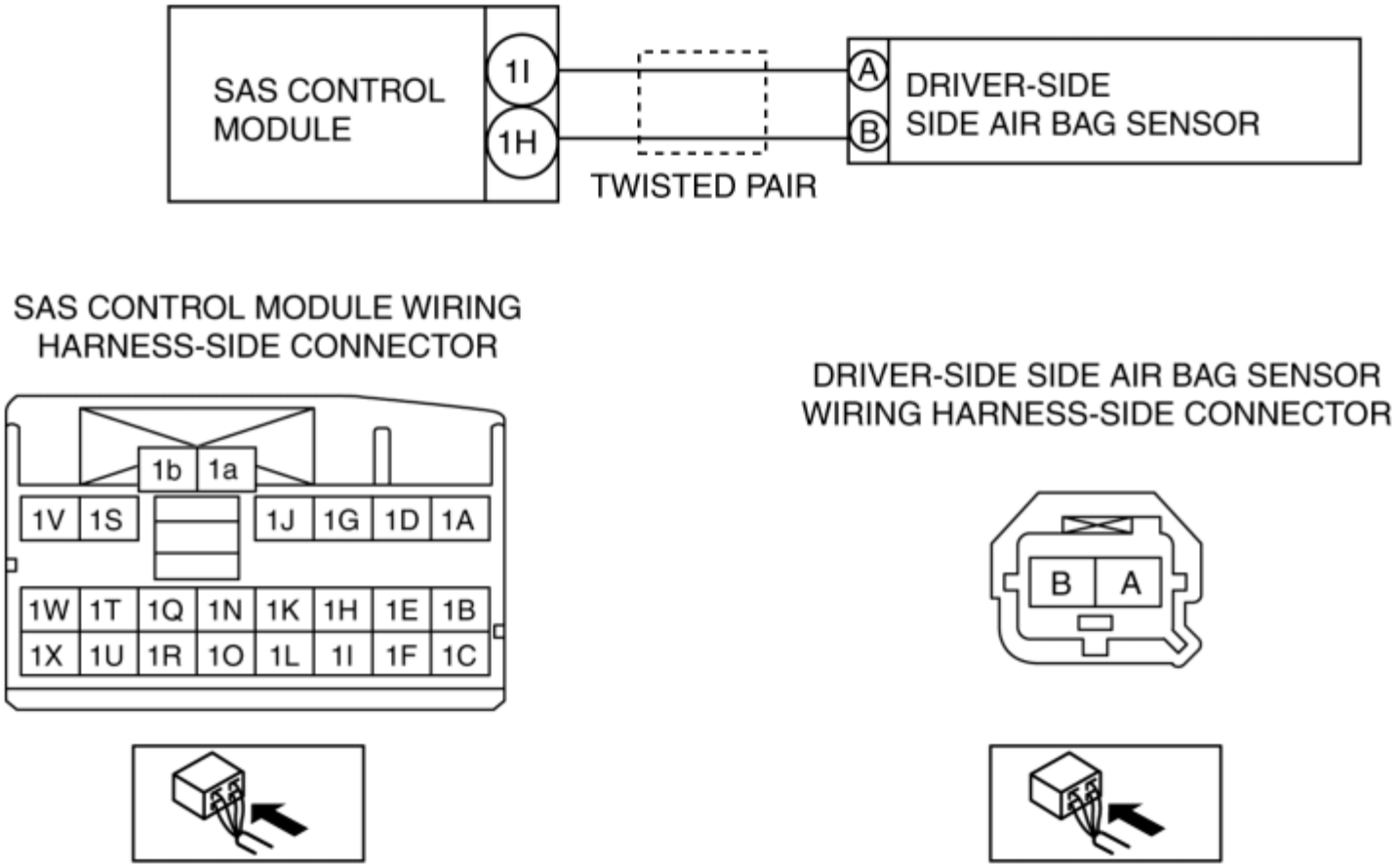

Diagnostic Procedure

Step	Inspection		Action
1	**INSPECT DRIVER-SIDE SIDE AIR BAG SENSOR CONNECTOR** **WARNING:** • Handling the component parts improperly can accidentally operate (deploy) the air bag module, which may seriously injure you. Read the service warnings/cautions and the workshop manual before handling the air bag system components. (See **AIR BAG SYSTEM SERVICE WARNINGS [TWO-STEP DEPLOYMENT CONTROL SYSTEM]**.) (See **AIR BAG SYSTEM SERVICE CAUTIONS [TWO-STEP DEPLOYMENT CONTROL SYSTEM]**.)	Yes	Replace the malfunctioning part, then go to Step 5.
		No	Go to the next step.

	Switch the ignition off. • Disconnect the negative battery cable and wait for **1 min or more**. (See **NEGATIVE BATTERY CABLE DISCONNECTION/CONNECTION [SKYACTIV-G 2.0, SKYACTIV-G 2.5]**.) • Remove the driver-side tire house trim. (See **TIRE HOUSE TRIM REMOVAL/INSTALLATION**.) • Disconnect the driver-side side air bag sensor connector. (See **SIDE AIR BAG SENSOR REMOVAL/INSTALLATION [TWO-STEP DEPLOYMENT CONTROL SYSTEM]**.) • Inspect the driver-side side air bag sensor connector. (Corrosion, damage, and disconnected pins) • Is there any malfunction of the driver-side side air bag sensor connector?		
2	**INSPECT DRIVER-SIDE SIDE AIR BAG SENSOR CIRCUIT FOR SHORT TO GROUND** • Remove the column cover. (See **COLUMN COVER REMOVAL/INSTALLATION**.) • Disconnect the clock spring connector. (See **CLOCK SPRING REMOVAL/INSTALLATION [TWO-STEP DEPLOYMENT CONTROL SYSTEM]**.) • Remove the glove compartment. (See **GLOVE COMPARTMENT REMOVAL/INSTALLATION**.) • Disconnect the passenger-side air bag module connector. (See **PASSENGER-SIDE AIR BAG MODULE REMOVAL [TWO-STEP DEPLOYMENT CONTROL SYSTEM]**.) • Disconnect the driver and passenger-side front seat connector. (See **FRONT SEAT REMOVAL/INSTALLATION**.)	Yes	Refer to the wiring diagram and verify whether or not there is a common connector between SAS control module terminal and driver-side side air bag sensor terminal. **If there is a common connector:** • Determine the malfunctioning part by inspecting the common connector and the terminal for corrosion, damage, or pin disconnection, and the common wiring harness for a short to ground. • Replace the malfunctioning part. **If there is no common connector:** • Replace the wiring harness which has a short to ground. Go to Step 5.

	Remove the B-pillar lower trim. (See **B-PILLAR LOWER TRIM REMOVAL/INSTALLATION**.) • Disconnect the driver and passenger-side pre-tensioner seat belt connectors. • Disconnect the driver and passenger-side lap pre-tensioner seat belt connectors. (See **FRONT SEAT BELT REMOVAL/INSTALLATION**.) • Remove the headliner. (See **HEADLINER REMOVAL/INSTALLATION**.) • Disconnect the driver and passenger-side curtain air bag module connector. (See **CURTAIN AIR BAG MODULE REMOVAL/INSTALLATION [TWO-STEP DEPLOYMENT CONTROL SYSTEM]**.) • Disconnect the all SAS control module connectors. (See **SAS CONTROL MODULE REMOVAL/INSTALLATION [TWO-STEP DEPLOYMENT CONTROL SYSTEM]**.) • Inspect for continuity between the following terminals (wiring harness-side) and body ground: ▪ SAS control module terminal 1I ▪ SAS control module terminal 1H **NOTE:** • Inspect for continuity while shaking the wiring harness between the SAS control module and driver-side side air bag sensor. • Is there continuity?	No	Go to the next step.
3	**INSPECT DRIVER-SIDE SIDE AIR BAG SENSOR CIRCUIT FOR OPEN CIRCUIT** • Driver-side side air bag sensor and SAS control module connectors are disconnected.	Yes	Go to the next step.
		No	Refer to the wiring diagram and verify whether or not there is a common connector between SAS control module

	• Inspect for continuity between the following terminals (wiring harness-side): ▪ Driver-side side air bag sensor terminal A —SAS control module terminal 1I ▪ Driver-side side air bag sensor terminal B —SAS control module terminal 1H **NOTE:** • Inspect for continuity while shaking the wiring harness between the SAS control module and driver-side side air bag sensor. • Is there continuity?		terminal and driver-side side air bag sensor terminal. **If there is a common connector:** • Determine the malfunctioning part by inspecting the common connector and the terminal for corrosion, damage, or pin disconnection, and the common wiring harness for an open circuit. • Replace the malfunctioning part. **If there is no common connector:** • Replace the wiring harness which has an open circuit. Go to Step 5.
4	**INSPECT DRIVER-SIDE SIDE AIR BAG SENSOR CIRCUIT FOR SHORT TO POWER SUPPLY** • Driver-side side air bag sensor and SAS control module connectors are disconnected. • Connect the negative battery cable. (See **NEGATIVE BATTERY CABLE DISCONNECTION/CONNECTION [SKYACTIV-G 2.0, SKYACTIV-G 2.5]**.) • Switch the ignition ON (engine off or on). • Measure the voltage at the following terminals (wiring harness-side): ▪ SAS control module terminal 1I ▪ SAS control module terminal 1H **NOTE:** • Measure the voltage while shaking the wiring harness between the SAS control module and driver-side side air bag sensor. • Is the voltage **0 V**?	Yes	Replace the driver-side side air bag sensor, then go to the next step. (See **SIDE AIR BAG SENSOR REMOVAL/INSTALLATION [TWO-STEP DEPLOYMENT CONTROL SYSTEM]**.)
		No	Refer to the wiring diagram and verify whether or not there is a common connector between SAS control module terminal and driver-side side air bag sensor terminal. **If there is a common connector:** • Determine the malfunctioning part by inspecting the common connector and the terminal for corrosion, damage, or pin disconnection, and the common wiring harness for a short to power supply. • Replace the malfunctioning part.

			If there is no common connector: • Replace the wiring harness which has a short to power supply. Go to the next step.
5	**PERFORM SAS CONTROL MODULE DTC INSPECTION** • Switch the ignition off. • Disconnect the negative battery cable and wait for **1 min or more**. • Connect the SAS control module connectors. • Reconnect all disconnected connectors. • Connect the negative battery cable. (See **NEGATIVE BATTERY CABLE DISCONNECTION/CONNECTION [SKYACTIV-G 2.0, SKYACTIV-G 2.5]**.) • Switch the ignition ON (engine off or on). • Clear the DTC for the SAS control module using the M-MDS. (See **CLEARING DTC [TWO-STEP DEPLOYMENT CONTROL SYSTEM]**.) • Perform the DTC inspection for the SAS control module using the M-MDS. (See **DTC INSPECTION [TWO-STEP DEPLOYMENT CONTROL SYSTEM]**.) • Are the same DTCs present?	Yes	Replace the SAS control module. (See **SAS CONTROL MODULE REMOVAL/INSTALLATION [TWO-STEP DEPLOYMENT CONTROL SYSTEM]**.)
		No	DTC troubleshooting completed.

2014 - Mazda3 - Restraints

DTC B1196:55/B1197:55 [TWO-STEP DEPLOYMENT CONTROL SYSTEM]

System malfunction location	• B1196:55:Configuration setting error (driver-side side air bag sensor structural malfunction) • B1197:55:Configuration setting error (passenger-side side air bag sensor structural malfunction)
Detection condition	**WARNING:** • Detection conditions are for understanding the DTC outline before performing an inspection. Performing an inspection according to only the detection conditions may cause injury due to an operating error, or damage the system. When performing an inspection, always follow the inspection procedure. • SAS control module configuration setting has not been done correctly • Parts which have not been set to SAS control module are assembled
Fail-safe function	Not applicable
Possible cause	• SAS control module configuration setting not implemented • SAS control module configuration setting invalid • Driver or passenger-side side air bag sensor assembly incorrect • SAS control module malfunction
System wiring diagram	Not applicable

Diagnostic Procedure

Step	Inspection	Action
	PERFORM SAS CONTROL MODULE CONFIGURATION	

1	**(AS-BUILT DATA USE)** • Perform the SAS control module configuration using the M-MDS. (See **SAS CONTROL MODULE CONFIGURATION (USING AS-BUILT DATA) [TWO-STEP DEPLOYMENT CONTROL SYSTEM]**.) • Clear the DTC for the SAS control module using the M-MDS. (See **CLEARING DTC [TWO-STEP DEPLOYMENT CONTROL SYSTEM]**.) • Perform the DTC inspection for the SAS control module using the M-MDS. (See **DTC INSPECTION [TWO-STEP DEPLOYMENT CONTROL SYSTEM]**.) • Are the same DTCs present?	Yes	Go to the next step.
		No	DTC troubleshooting completed.
2	**INSPECT SIDE AIR BAG SENSOR** • Verify that the driver or passenger-side side air bag sensor is correctly installed. • Is the driver or passenger-side side air bag sensor correctly installed?	Yes	Go to the next step.
		No	Correctly install the driver or passenger-side side air bag sensor. Then go to the next step.
3	**PERFORM SAS CONTROL MODULE DTC INSPECTION** • Clear the DTC for the SAS control module using the M-MDS. (See **CLEARING DTC [TWO-STEP DEPLOYMENT CONTROL SYSTEM]**.) • Perform the DTC inspection for the SAS control module using the M-MDS. (See **DTC INSPECTION [TWO-STEP DEPLOYMENT CONTROL SYSTEM]**.) • Are the same DTCs present?	Yes	Replace the SAS control module. (See **SAS CONTROL MODULE REMOVAL/INSTALLATION [TWO-STEP DEPLOYMENT CONTROL SYSTEM]**.)
		No	DTC troubleshooting completed.

2014 - Mazda3 - Restraints

DTC B1197:11/B1197:13/B1197:87/B1197:96 [TWO-STEP DEPLOYMENT CONTROL SYSTEM]

System malfunction location	• B1197:11: Passenger-side side air bag sensor circuit short to body ground • B1197:13: Passenger-side side air bag sensor circuit open circuit or short to power supply • B1197:87: Signal reception error from passenger-side side air bag sensor • B1197:96: Passenger-side side air bag sensor internal malfunction
Detection condition	**WARNING:** • Detection conditions are for understanding the DTC outline before performing an inspection. Performing an inspection according to only the detection conditions may cause injury due to an operating error, or damage the system. When performing an inspection, always follow the inspection procedure. • Wiring harness between the passenger-side side air bag sensor and SAS control module has a malfunction • Passenger-side side air bag sensor has a malfunction
Fail-safe function	Not applicable
Possible cause	• Passenger-side side air bag sensor connector malfunction • Short circuit to power supply or body ground in the wiring harness between the passenger-side side air bag sensor and SAS control module • Open circuit in the wiring harness between the passenger-side side air bag sensor and SAS control module • Passenger-side side air bag sensor malfunction • SAS control module malfunction

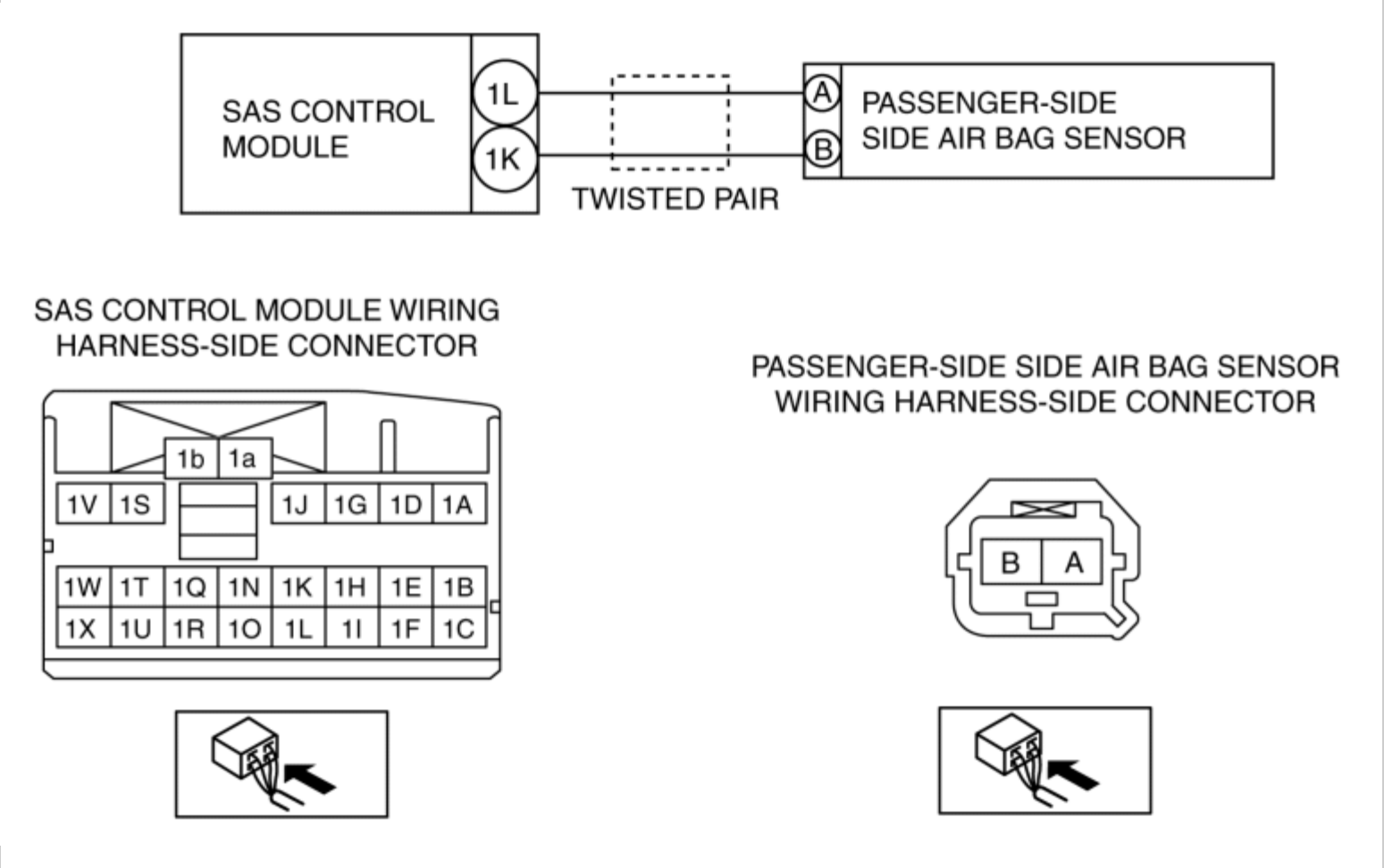

Diagnostic Procedure

Step	Inspection		Action
1	**INSPECT PASSENGER-SIDE SIDE AIR BAG SENSOR CONNECTOR** **WARNING:** • Handling the component parts improperly can accidentally operate (deploy) the air bag module, which may seriously injure you. Read the service warnings/cautions and the workshop manual before handling the air bag system components. (See **AIR BAG SYSTEM SERVICE WARNINGS [TWO-STEP DEPLOYMENT CONTROL SYSTEM]**.) (See **AIR BAG SYSTEM SERVICE CAUTIONS [TWO-STEP DEPLOYMENT CONTROL SYSTEM]**.)	Yes	Replace the malfunctioning part, then go to Step 5.
		No	Go to the next step.

	Switch the ignition off. • Disconnect the negative battery cable and wait for **1 min or more**. (See **NEGATIVE BATTERY CABLE DISCONNECTION/CONNECTION [SKYACTIV-G 2.0, SKYACTIV-G 2.5]**.) • Remove the passenger-side tire house trim. (See **TIRE HOUSE TRIM REMOVAL/INSTALLATION**.) • Disconnect the passenger-side side air bag sensor connector. (See **SIDE AIR BAG SENSOR REMOVAL/INSTALLATION [TWO-STEP DEPLOYMENT CONTROL SYSTEM]**.) • Inspect the passenger-side side air bag sensor connector. (Corrosion, damage, and disconnected pins) • Is there any malfunction of the passenger-side side air bag sensor connector?		
2	**INSPECT PASSENGER-SIDE SIDE AIR BAG SENSOR CIRCUIT FOR SHORT TO GROUND** • Remove the column cover. (See **COLUMN COVER REMOVAL/INSTALLATION**.) • Disconnect the clock spring connector. (See **CLOCK SPRING REMOVAL/INSTALLATION [TWO-STEP DEPLOYMENT CONTROL SYSTEM]**.) • Remove the glove compartment. (See **GLOVE COMPARTMENT REMOVAL/INSTALLATION**.) • Disconnect the passenger-side air bag module connector. (See **PASSENGER-SIDE AIR BAG MODULE REMOVAL [TWO-STEP DEPLOYMENT CONTROL SYSTEM]**.) • Disconnect the driver and passenger-side front seat connector. (See **FRONT SEAT REMOVAL/INSTALLATION**.)	Yes	Refer to the wiring diagram and verify whether or not there is a common connector between SAS control module terminal and passenger-side side air bag sensor terminal. **If there is a common connector:** • Determine the malfunctioning part by inspecting the common connector and the terminal for corrosion, damage, or pin disconnection, and the common wiring harness for a short to ground. • Replace the malfunctioning part. **If there is no common connector:** • Replace the wiring harness which has a short to ground.

	• Remove the B-pillar lower trim. (See **B-PILLAR LOWER TRIM REMOVAL/INSTALLATION**.) • Disconnect the driver and passenger-side pre-tensioner seat belt connectors. • Disconnect the driver and passenger-side lap pre-tensioner seat belt connectors. (See **FRONT SEAT BELT REMOVAL/INSTALLATION**.) • Remove the headliner. (See **HEADLINER REMOVAL/INSTALLATION**.) • Disconnect the driver and passenger-side curtain air bag module connector. (See **CURTAIN AIR BAG MODULE REMOVAL/INSTALLATION [TWO-STEP DEPLOYMENT CONTROL SYSTEM]**.) • Disconnect the all SAS control module connectors. (See **SAS CONTROL MODULE REMOVAL/INSTALLATION [TWO-STEP DEPLOYMENT CONTROL SYSTEM]**.) • Inspect for continuity between the following terminals (wiring harness-side) and body ground: ▪ SAS control module terminal 1L ▪ SAS control module terminal 1K **NOTE:** • Inspect for continuity while shaking the wiring harness between the SAS control module and passenger-side side air bag sensor. • Is there continuity?		Go to Step 5.
		No	Go to the next step.
3	**INSPECT PASSENGER-SIDE SIDE AIR BAG SENSOR CIRCUIT FOR OPEN CIRCUIT** • Passenger-side side air bag sensor and SAS control module connectors are disconnected.	Yes	Go to the next step.
		No	Refer to the wiring diagram and verify whether or not there is a common

	• Inspect for continuity between the following terminals (wiring harness-side): ▪ Passenger-side side air bag sensor terminal A—SAS control module terminal 1L ▪ Passenger-side side air bag sensor terminal B—SAS control module terminal 1K **NOTE:** • Inspect for continuity while shaking the wiring harness between the SAS control module and passenger-side side air bag sensor. • Is there continuity?		connector between SAS control module terminal and passenger-side side air bag sensor terminal. **If there is a common connector:** • Determine the malfunctioning part by inspecting the common connector and the terminal for corrosion, damage, or pin disconnection, and the common wiring harness for an open circuit. • Replace the malfunctioning part. **If there is no common connector:** • Replace the wiring harness which has an open circuit. Go to Step 5.
4	**INSPECT PASSENGER-SIDE SIDE AIR BAG SENSOR CIRCUIT FOR SHORT TO POWER SUPPLY** • Passenger-side side air bag sensor and SAS control module connectors are disconnected. • Connect the negative battery cable. (See **NEGATIVE BATTERY CABLE DISCONNECTION/CONNECTION [SKYACTIV-G 2.0, SKYACTIV-G 2.5]**.) • Switch the ignition ON (engine off or on). • Measure the voltage at the following terminals (wiring harness-side): ▪ SAS control module terminal 1L ▪ SAS control module terminal 1K **NOTE:** • Measure the voltage while shaking the wiring harness between the SAS control module and passenger-side side air bag sensor.	Yes	Replace the passenger-side side air bag sensor, then go to the next step. (See **SIDE AIR BAG SENSOR REMOVAL/INSTALLATION [TWO-STEP DEPLOYMENT CONTROL SYSTEM]**.)
		No	Refer to the wiring diagram and verify whether or not there is a common connector between SAS control module terminal and passenger-side side air bag sensor terminal. **If there is a common connector:** • Determine the malfunctioning part by inspecting the common connector and the terminal for corrosion, damage, or pin disconnection, and the common wiring harness for a short to power supply. • Replace the malfunctioning part.

	• Is the voltage **0 V**?		**If there is no common connector:** • Replace the wiring harness which has a short to power supply. Go to the next step.
5	**PERFORM SAS CONTROL MODULE DTC INSPECTION** • Switch the ignition off. • Disconnect the negative battery cable and wait for **1 min or more**. • Connect the SAS control module connectors. • Reconnect all disconnected connectors. • Connect the negative battery cable. (See **NEGATIVE BATTERY CABLE DISCONNECTION/CONNECTION [SKYACTIV-G 2.0, SKYACTIV-G 2.5]**.) • Switch the ignition ON (engine off or on). • Clear the DTC for the SAS control module using the M-MDS. (See **CLEARING DTC [TWO-STEP DEPLOYMENT CONTROL SYSTEM]**.) • Perform the DTC inspection for the SAS control module using the M-MDS. (See **DTC INSPECTION [TWO-STEP DEPLOYMENT CONTROL SYSTEM]**.) • Are the same DTCs present?	Yes	Replace the SAS control module. (See **SAS CONTROL MODULE REMOVAL/INSTALLATION [TWO-STEP DEPLOYMENT CONTROL SYSTEM]**.)
		No	DTC troubleshooting completed.

2014 - Mazda3 - Restraints

DTC B1206:00/U2107:00 [TWO-STEP DEPLOYMENT CONTROL SYSTEM]

System malfunction location	• B1206:00:SAS control module operation (deployment) (fuel cut signal output) • U2107:00:SAS control module operation (deployment) signal output
Detection condition	**WARNING:** • Detection conditions are for understanding the DTC outline before performing an inspection. Performing an inspection according to only the detection conditions may cause injury due to an operating error, or damage the system. When performing an inspection, always follow the inspection procedure. • SAS control module operates (deploys) (air bag module, pre-tensioner seat belt or lap pre-tensioner seat belt)
Fail-safe function	Not applicable
Possible cause	• SAS control module operation (deployment) • SAS control module malfunction
System wiring diagram	Not applicable

Diagnostic Procedure

ACTION
• Replace the SAS control module. (See **SAS CONTROL MODULE REMOVAL/INSTALLATION [TWO-STEP DEPLOYMENT CONTROL SYSTEM]**.)

DTC B1206:00/U2107:00 [TWO-STEP DEPLOYMENT CONTROL SYSTEM]

2014 - Mazda3 - Restraints

DTC B1211:11/B1211:12/B1211:13/B1211:19/B1211:1A [TWO-STEP DEPLOYMENT CONTROL SYSTEM]

System malfunction location	• B1211:11:Driver-side pre-tensioner seat belt circuit short to body ground • B1211:12:Driver-side pre-tensioner seat belt circuit short to power supply • B1211:13:Driver-side pre-tensioner seat belt circuit open circuit or resistance high • B1211:19:Short circuit to driver-side pre-tensioner seat belt and other air bag module circuits • B1211:1A:Driver-side pre-tensioner seat belt circuit resistance low
Detection condition	**WARNING:** • Detection conditions are for understanding the DTC outline before performing an inspection. Performing an inspection according to only the detection conditions may cause injury due to an operating error, or damage the system. When performing an inspection, always follow the inspection procedure. • Resistance other than **0.81—6.42 ohms** detected in driver-side pre-tensioner seat belt circuit • Wiring harness between the driver-side pre-tensioner seat belt and SAS control module has a malfunction
Fail-safe function	Not applicable
Possible cause	• Driver-side pre-tensioner seat belt connector malfunction • Short circuit to power supply or body ground in the wiring harness between the driver-side pre-tensioner seat belt and SAS control module • Open circuit in the wiring harness between the driver-side pre-tensioner seat belt and SAS control module • Driver-side pre-tensioner seat belt malfunction • SAS control module malfunction

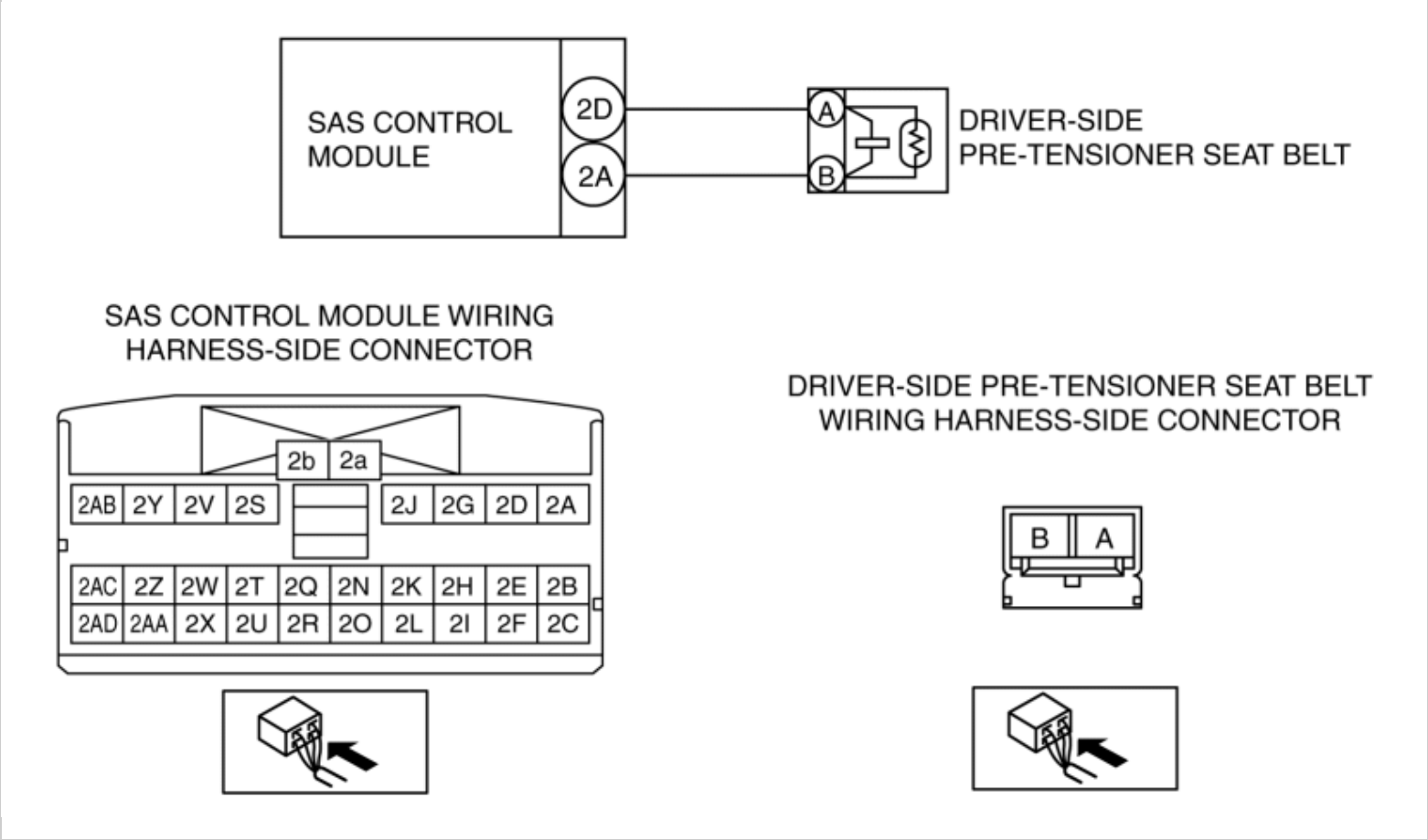

Diagnostic Procedure

Step	Inspection		Action
1	**INSPECT DRIVER-SIDE PRE-TENSIONER SEAT BELT CONNECTOR** **WARNING:** • Handling the component parts improperly can accidentally operate (deploy) the air bag module, which may seriously injure you. Read the service warnings/cautions and the workshop manual before handling the air bag system components. (See **AIR BAG SYSTEM SERVICE WARNINGS [TWO-STEP DEPLOYMENT CONTROL SYSTEM]**.) (See **AIR BAG SYSTEM SERVICE CAUTIONS [TWO-STEP DEPLOYMENT CONTROL SYSTEM]**.) • Switch the ignition off. • Disconnect the negative battery cable and wait for **1 min or more**.	Yes	Replace the malfunctioning part, then go to Step 6.
		No	Go to the next step.

	(See **NEGATIVE BATTERY CABLE DISCONNECTION/CONNECTION [SKYACTIV-G 2.0, SKYACTIV-G 2.5]**.) • Remove the driver-side B-pillar lower trim. (See **B-PILLAR LOWER TRIM REMOVAL/INSTALLATION**.) • Disconnect the driver-side pre-tensioner seat belt connector. (See **FRONT SEAT BELT REMOVAL/INSTALLATION**.) • Inspect the driver-side pre-tensioner seat belt connector. (Corrosion, damage, and disconnected pins) • Is there any malfunction of the driver-side pre-tensioner seat belt connector?		
2	**INSPECT DRIVER-SIDE PRE-TENSIONER SEAT BELT CIRCUIT FOR SHORT TO GROUND** • Remove the column cover. (See **COLUMN COVER REMOVAL/INSTALLATION**.) • Disconnect the clock spring connector. (See **CLOCK SPRING REMOVAL/INSTALLATION [TWO-STEP DEPLOYMENT CONTROL SYSTEM]**.) • Remove the glove compartment. (See **GLOVE COMPARTMENT REMOVAL/INSTALLATION**.) • Disconnect the passenger-side air bag module connector. (See **PASSENGER-SIDE AIR BAG MODULE REMOVAL [TWO-STEP DEPLOYMENT CONTROL SYSTEM]**.) • Disconnect the driver and passenger-side front seat connector. (See **FRONT SEAT REMOVAL/INSTALLATION**.) • Remove the passenger-side B-pillar lower trim. (See **B-PILLAR LOWER TRIM REMOVAL/INSTALLATION**.) • Disconnect the passenger-side pre-tensioner seat belt connector. • Disconnect the driver and passenger-side	Yes	Refer to the wiring diagram and verify whether or not there is a common connector between SAS control module terminal and driver-side pre-tensioner seat belt terminal. **If there is a common connector:** • Determine the malfunctioning part by inspecting the common connector and the terminal for corrosion, damage, or pin disconnection, and the common wiring harness for a short to ground. • Replace the malfunctioning part. **If there is no common connector:** • Replace the wiring harness which has a short to ground. Go to Step 6.
		No	Go to the next step.

	lap pre-tensioner seat belt connectors. (See **FRONT SEAT BELT REMOVAL/INSTALLATION**.) • Remove the headliner. (See **HEADLINER REMOVAL/INSTALLATION**.) • Disconnect the driver and passenger-side curtain air bag module connector. (See **CURTAIN AIR BAG MODULE REMOVAL/INSTALLATION [TWO-STEP DEPLOYMENT CONTROL SYSTEM]**.) • Disconnect the all SAS control module connectors. (See **SAS CONTROL MODULE REMOVAL/INSTALLATION [TWO-STEP DEPLOYMENT CONTROL SYSTEM]**.) • Inspect for continuity between the following terminals (wiring harness-side) and body ground: ▪ SAS control module terminal 2D ▪ SAS control module terminal 2A **NOTE:** • Inspect for continuity while shaking the wiring harness between the SAS control module and driver-side pre-tensioner seat belt. • Is there continuity?		
3	**INSPECT DRIVER-SIDE PRE-TENSIONER SEAT BELT CIRCUIT FOR OPEN CIRCUIT** • Driver-side pre-tensioner seat belt and SAS control module connectors are disconnected. • Inspect for continuity between the following terminals (wiring harness-side): ▪ Driver-side pre-tensioner seat belt terminal A—SAS control module terminal 2D ▪ Driver-side pre-tensioner seat belt terminal B—SAS control module terminal 2A **NOTE:**	Yes	Go to the next step.
		No	Refer to the wiring diagram and verify whether or not there is a common connector between SAS control module terminal and driver-side pre-tensioner seat belt terminal. **If there is a common connector:** • Determine the malfunctioning part by inspecting the common connector and the terminal for corrosion, damage, or pin disconnection, and the common wiring harness for an open circuit. • Replace the malfunctioning

	• Inspect for continuity while shaking the wiring harness between the SAS control module and driver-side pre-tensioner seat belt. • Is there continuity?		part. **If there is no common connector:** • Replace the wiring harness which has an open circuit. Go to Step 6.
4	**INSPECT DRIVER-SIDE PRE-TENSIONER SEAT BELT CIRCUIT FOR SHORT TO POWER SUPPLY** • Driver-side pre-tensioner seat belt and SAS control module connectors are disconnected. • Connect the negative cable. (See **NEGATIVE BATTERY CABLE DISCONNECTION/CONNECTION [SKYACTIV-G 2.0, SKYACTIV-G 2.5]**.) • Switch the ignition ON (engine off or on). • Measure the voltage at the following terminals (wiring harness-side): ▪ SAS control module terminal 2D ▪ SAS control module terminal 2A **NOTE:** • Measure the voltage while shaking the wiring harness between the SAS control module and driver-side pre-tensioner seat belt. • Is the voltage **0 V**?	Yes	Go to the next step.
		No	Refer to the wiring diagram and verify whether or not there is a common connector between SAS control module terminal and driver-side pre-tensioner seat belt terminal. **If there is a common connector:** • Determine the malfunctioning part by inspecting the common connector and the terminal for corrosion, damage, or pin disconnection, and the common wiring harness for a short to power supply. • Replace the malfunctioning part. **If there is no common connector:** • Replace the wiring harness which has a short to power supply. Go to Step 6.
5	**INSPECT DRIVER-SIDE PRE-TENSIONER SEAT BELT** • Switch the ignition off. • Disconnect the negative battery cable and wait for **1 min or more**. • Connect the SAS control module connectors. • Except for the driver-side pre-tensioner seat belt connector, reconnect all disconnected connectors. • Connect the **SST (Fuel and thermometer checker)** or apply **2 ohms** resistance to the driver-side pre-tensioner seat belt connector terminals A–B. • Set the **SST (Fuel and thermometer checker)** to **2 ohms**.	Yes	Go to the next step.
		No	Replace the driver-side pre-tensioner seat belt. (See **FRONT SEAT BELT REMOVAL/INSTALLATION**.) Then go to the next step.

	• Connect the negative battery cable. (See **NEGATIVE BATTERY CABLE DISCONNECTION/CONNECTION [SKYACTIV-G 2.0, SKYACTIV-G 2.5]**.) • Switch the ignition ON (engine off or on). • Clear the DTC for the SAS control module using the M-MDS. (See **CLEARING DTC [TWO-STEP DEPLOYMENT CONTROL SYSTEM]**.) • Perform the DTC inspection for the SAS control module using the M-MDS. (See **DTC INSPECTION [TWO-STEP DEPLOYMENT CONTROL SYSTEM]**.) • Are the same DTCs present?		
6	**PERFORM SAS CONTROL MODULE DTC INSPECTION** • Switch the ignition off. • Disconnect the negative battery cable and wait for **1 min or more**. • Disconnect the **SST (Fuel and thermometer checker)** or the **2 ohms** resistance. • Connect the driver-side pre-tensioner seat belt connector. • Connect the negative battery cable. (See **NEGATIVE BATTERY CABLE DISCONNECTION/CONNECTION [SKYACTIV-G 2.0, SKYACTIV-G 2.5]**.) • Switch the ignition ON (engine off or on). • Clear the DTC for the SAS control module using the M-MDS. (See **CLEARING DTC [TWO-STEP DEPLOYMENT CONTROL SYSTEM]**.) • Perform the DTC inspection for the SAS control module using the M-MDS. (See **DTC INSPECTION [TWO-STEP DEPLOYMENT CONTROL SYSTEM]**.) • Are the same DTCs present?	Yes	Replace the SAS control module. (See **SAS CONTROL MODULE REMOVAL/INSTALLATION [TWO-STEP DEPLOYMENT CONTROL SYSTEM]**.)
		No	DTC troubleshooting completed.

2014 - Mazda3 - Restraints

DTC B1211:55, B1214:55 [TWO-STEP DEPLOYMENT CONTROL SYSTEM]

System malfunction location	• B1211:55:Configuration setting error (driver-side pre-tensioner seat belt structural malfunction) • B1214:55:Configuration setting error (passenger-side pre-tensioner seat belt structural malfunction)
Detection condition	**WARNING:** • Detection conditions are for understanding the DTC outline before performing an inspection. Performing an inspection according to only the detection conditions may cause injury due to an operating error, or damage the system. When performing an inspection, always follow the inspection procedure. • SAS control module configuration setting has not been done correctly • Parts which have not been set to SAS control module are assembled
Fail-safe function	Not applicable
Possible cause	• SAS control module configuration setting not implemented • SAS control module configuration setting invalid • Driver or passenger-side pre-tensioner seat belt assembly incorrect • SAS control module malfunction
System wiring diagram	Not applicable

Diagnostic Procedure

Step	Inspection	Action
	PERFORM SAS CONTROL MODULE CONFIGURATION	

1	**(AS-BUILT DATA USE)** • Perform the SAS control module configuration using the M-MDS. (See **SAS CONTROL MODULE CONFIGURATION (USING AS-BUILT DATA) [TWO-STEP DEPLOYMENT CONTROL SYSTEM]**.) • Clear the DTC for the SAS control module using the M-MDS. (See **CLEARING DTC [TWO-STEP DEPLOYMENT CONTROL SYSTEM]**.) • Perform the DTC inspection for the SAS control module using the M-MDS. (See **DTC INSPECTION [TWO-STEP DEPLOYMENT CONTROL SYSTEM]**.) • Are the same DTCs present?	Yes	Go to the next step.
		No	DTC troubleshooting completed.
2	**INSPECT PRE-TENSIONER SEAT BELT** • Verify that the driver or passenger-side pre-tensioner seat belt is correctly installed. • Is the driver or passenger-side pre-tensioner seat belt correctly installed?	Yes	Go to the next step.
		No	Correctly install the driver or passenger-side pre-tensioner seat belt. Then go to the next step.
3	**PERFORM SAS CONTROL MODULE DTC INSPECTION** • Clear the DTC for the SAS control module using the M-MDS. (See **CLEARING DTC [TWO-STEP DEPLOYMENT CONTROL SYSTEM]**.) • Perform the DTC inspection for the SAS control module using the M-MDS. (See **DTC INSPECTION [TWO-STEP DEPLOYMENT CONTROL SYSTEM]**.) • Are the same DTCs present?	Yes	Replace the SAS control module. (See **SAS CONTROL MODULE REMOVAL/INSTALLATION [TWO-STEP DEPLOYMENT CONTROL SYSTEM]**.)
		No	DTC troubleshooting completed.

2014 - Mazda3 - Restraints

DTC B1214:11/B1214:12/B1214:13/B1214:19/B1214:1A [TWO-STEP DEPLOYMENT CONTROL SYSTEM]

System malfunction location	• B1214:11:Passenger-side pre-tensioner seat belt circuit short to body ground • B1214:12:Passenger-side pre-tensioner seat belt circuit short to power supply • B1214:13:Passenger-side pre-tensioner seat belt circuit open circuit or resistance high • B1214:19:Short circuit to passenger-side pre-tensioner seat belt and other air bag module circuits • B1214:1A:Passenger-side pre-tensioner seat belt circuit resistance low
Detection condition	**WARNING:** • Detection conditions are for understanding the DTC outline before performing an inspection. Performing an inspection according to only the detection conditions may cause injury due to an operating error, or damage the system. When performing an inspection, always follow the inspection procedure. • Resistance other than **0.81—6.42 ohms** detected in passenger-side pre-tensioner seat belt circuit • Wiring harness between the passenger-side pre-tensioner seat belt and SAS control module has a malfunction
Fail-safe function	Not applicable
Possible cause	• Passenger-side pre-tensioner seat belt connector malfunction • Short circuit to power supply or body ground in the wiring harness between the passenger-side pre-tensioner seat belt and SAS control module • Open circuit in the wiring harness between the passenger-side pre-tensioner seat belt and SAS control module • Passenger-side pre-tensioner seat belt malfunction • SAS control module malfunction

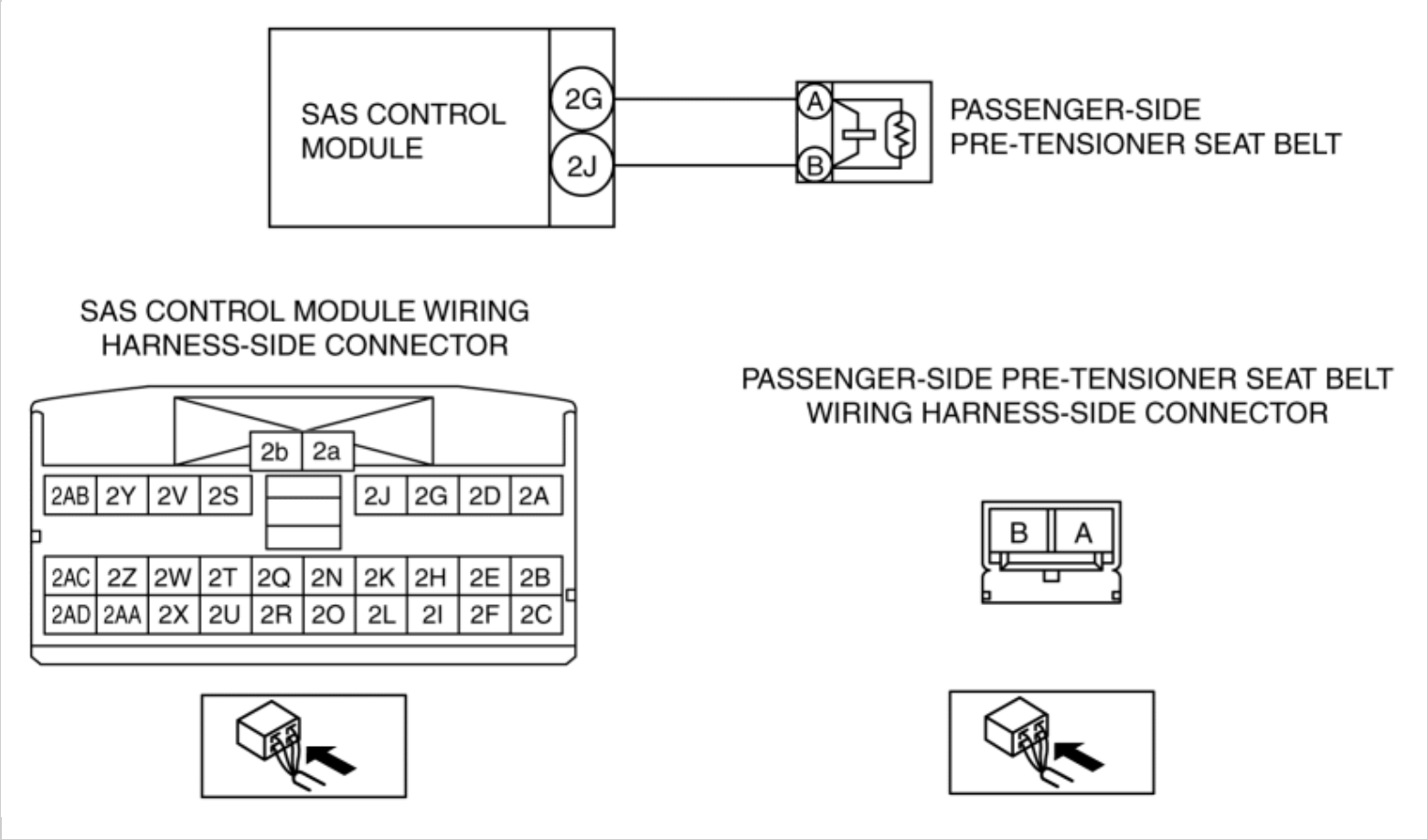

Diagnostic Procedure

Step	Inspection		Action
1	**INSPECT PASSENGER-SIDE PRE-TENSIONER SEAT BELT CONNECTOR** **WARNING:** • Handling the component parts improperly can accidentally operate (deploy) the air bag module, which may seriously injure you. Read the service warnings/cautions and the workshop manual before handling the air bag system components. (See **AIR BAG SYSTEM SERVICE WARNINGS [TWO-STEP DEPLOYMENT CONTROL SYSTEM]**.) (See **AIR BAG SYSTEM SERVICE CAUTIONS [TWO-STEP DEPLOYMENT CONTROL SYSTEM]**.) • Switch the ignition off. • Disconnect the negative battery cable and wait for **1 min or more**.	Yes	Replace the malfunctioning part, then go to Step 6.
		No	Go to the next step.

	(See **NEGATIVE BATTERY CABLE DISCONNECTION/CONNECTION [SKYACTIV-G 2.0, SKYACTIV-G 2.5]**.) • Remove the passenger-side B-pillar lower trim. (See **B-PILLAR LOWER TRIM REMOVAL/INSTALLATION**.) • Disconnect the passenger-side pre-tensioner seat belt connector. (See **FRONT SEAT BELT REMOVAL/INSTALLATION**.) • Inspect the passenger-side pre-tensioner seat belt connector. (Corrosion, damage, and disconnected pins) • Is there any malfunction of the passenger-side pre-tensioner seat belt connector?		
2	**INSPECT PASSENGER-SIDE PRE-TENSIONER SEAT BELT CIRCUIT FOR SHORT TO GROUND** • Remove the column cover. (See **COLUMN COVER REMOVAL/INSTALLATION**.) • Disconnect the clock spring connector. (See **CLOCK SPRING REMOVAL/INSTALLATION [TWO-STEP DEPLOYMENT CONTROL SYSTEM]**.) • Remove the glove compartment. (See **GLOVE COMPARTMENT REMOVAL/INSTALLATION**.) • Disconnect the passenger-side air bag module connector. (See **PASSENGER-SIDE AIR BAG MODULE REMOVAL [TWO-STEP DEPLOYMENT CONTROL SYSTEM]**.) • Disconnect the driver and passenger-side front seat connector. (See **FRONT SEAT REMOVAL/INSTALLATION**.) • Remove the driver-side B-pillar lower trim. (See **B-PILLAR LOWER TRIM REMOVAL/INSTALLATION**.) • Disconnect the driver-side pre-tensioner seat belt connector.	Yes	Refer to the wiring diagram and verify whether or not there is a common connector between SAS control module terminal and passenger-side pre-tensioner seat belt terminal. **If there is a common connector:** • Determine the malfunctioning part by inspecting the common connector and the terminal for corrosion, damage, or pin disconnection, and the common wiring harness for a short to ground. • Replace the malfunctioning part. **If there is no common connector:** • Replace the wiring harness which has a short to ground. Go to Step 6.
		No	Go to the next step.

	• Disconnect the driver and passenger-side lap pre-tensioner seat belt connectors. (See **FRONT SEAT BELT REMOVAL/INSTALLATION**.) • Remove the headliner. (See **HEADLINER REMOVAL/INSTALLATION**.) • Disconnect the driver and passenger-side curtain air bag module connector. (See **CURTAIN AIR BAG MODULE REMOVAL/INSTALLATION [TWO-STEP DEPLOYMENT CONTROL SYSTEM]**.) • Disconnect the all SAS control module connectors. (See **SAS CONTROL MODULE REMOVAL/INSTALLATION [TWO-STEP DEPLOYMENT CONTROL SYSTEM]**.) • Inspect for continuity between the following terminals (wiring harness-side) and body ground: ▪ SAS control module terminal 2G ▪ SAS control module terminal 2J **NOTE:** • Inspect for continuity while shaking the wiring harness between the SAS control module and passenger-side pre-tensioner seat belt. • Is there continuity?		
3	**INSPECT PASSENGER-SIDE PRE-TENSIONER SEAT BELT CIRCUIT FOR OPEN CIRCUIT** • Passenger-side pre-tensioner seat belt and SAS control module connectors are disconnected. • Inspect for continuity between the following terminals (wiring harness-side): ▪ Passenger-side pre-tensioner seat belt terminal A—SAS control module terminal 2G ▪ Passenger-side pre-tensioner seat belt terminal B—SAS control module terminal 2J **NOTE:**	Yes	Go to the next step.
		No	Refer to the wiring diagram and verify whether or not there is a common connector between SAS control module terminal and passenger-side pre-tensioner seat belt terminal. **If there is a common connector:** • Determine the malfunctioning part by inspecting the common connector and the terminal for corrosion, damage, or pin disconnection, and the common wiring harness for an open circuit.

	• Inspect for continuity while shaking the wiring harness between the SAS control module and passenger-side pre-tensioner seat belt. • Is there continuity?		• Replace the malfunctioning part. **If there is no common connector:** • Replace the wiring harness which has an open circuit. Go to Step 6.
4	**INSPECT PASSENGER-SIDE PRE-TENSIONER SEAT BELT CIRCUIT FOR SHORT TO POWER SUPPLY** • Passenger-side pre-tensioner seat belt and SAS control module connectors are disconnected. • Connect the negative battery cable. (See **NEGATIVE BATTERY CABLE DISCONNECTION/CONNECTION [SKYACTIV-G 2.0, SKYACTIV-G 2.5]**.) • Switch the ignition ON (engine off or on). • Measure the voltage at the following terminals (wiring harness-side): ▪ SAS control module terminal 2G ▪ SAS control module terminal 2J **NOTE:** • Measure the voltage while shaking the wiring harness between the SAS control module and passenger-side pre-tensioner seat belt. • Is the voltage **0 V**?	Yes	Go to the next step.
		No	Refer to the wiring diagram and verify whether or not there is a common connector between SAS control module terminal and passenger-side pre-tensioner seat belt terminal. **If there is a common connector:** • Determine the malfunctioning part by inspecting the common connector and the terminal for corrosion, damage, or pin disconnection, and the common wiring harness for a short to power supply. • Replace the malfunctioning part. **If there is no common connector:** • Replace the wiring harness which has a short to power supply. Go to Step 6.
5	**INSPECT PASSENGER-SIDE PRE-TENSIONER SEAT BELT** • Switch the ignition off. • Disconnect the negative battery cable and wait for **1 min or more**. • Connect the SAS control module connectors. • Except for the passenger-side pre-tensioner seat belt connector, reconnect all disconnected connectors. • Connect the **SST (Fuel and thermometer checker)** or apply **2 ohms** resistance to the passenger-side pre-tensioner seat belt connector terminals A–	Yes	Go to the next step.
		No	Replace the passenger-side pre-tensioner seat belt. (See **FRONT SEAT BELT REMOVAL/INSTALLATION**.) Then go to the next step.

	B. • Set the **SST (Fuel and thermometer checker)** to **2 ohms**. • Connect the negative battery cable. (See **NEGATIVE BATTERY CABLE DISCONNECTION/CONNECTION [SKYACTIV-G 2.0, SKYACTIV-G 2.5]**.) • Switch the ignition ON (engine off or on). • Clear the DTC for the SAS control module using the M-MDS. (See **CLEARING DTC [TWO-STEP DEPLOYMENT CONTROL SYSTEM]**.) • Perform the DTC inspection for the SAS control module using the M-MDS. (See **DTC INSPECTION [TWO-STEP DEPLOYMENT CONTROL SYSTEM]**.) • Are the same DTCs present?		
6	**PERFORM SAS CONTROL MODULE DTC INSPECTION** • Switch the ignition off. • Disconnect the negative battery cable and wait for **1 min or more**. • Disconnect the **SST (Fuel and thermometer checker)** or the **2 ohms** resistance. • Connect the passenger-side pre-tensioner seat belt connector. • Connect the negative battery cable. (See **NEGATIVE BATTERY CABLE DISCONNECTION/CONNECTION [SKYACTIV-G 2.0, SKYACTIV-G 2.5]**.) • Switch the ignition ON (engine off or on). • Clear the DTC for the SAS control module using the M-MDS. (See **CLEARING DTC [TWO-STEP DEPLOYMENT CONTROL SYSTEM]**.) • Perform the DTC inspection for the SAS control module using the M-MDS. (See **DTC INSPECTION [TWO-STEP DEPLOYMENT CONTROL SYSTEM]**.) • Are the same DTCs present?	Yes	Replace the SAS control module. (See **SAS CONTROL MODULE REMOVAL/INSTALLATION [TWO-STEP DEPLOYMENT CONTROL SYSTEM]**.)
		No	DTC troubleshooting completed.

DTC B1214:11/B1214:12/B1214:13/B1214:19/B1214:1A [TWO-STEP DEPLOYMENT CONTROL SYSTEM]

2014 - Mazda3 - Restraints

DTC B1226:11/B1226:13/B1226:87/B1226:96 [TWO-STEP DEPLOYMENT CONTROL SYSTEM]

System malfunction location	• B1226:11:Driver-side pressure sensor circuit short to body ground • B1226:13:Driver-side pressure sensor circuit open circuit or short to power supply • B1226:87:Signal reception error from driver-side pressure sensor • B1226:96:Driver-side pressure sensor internal malfunction
Detection condition	**WARNING:** • Detection conditions are for understanding the DTC outline before performing an inspection. Performing an inspection according to only the detection conditions may cause injury due to an operating error, or damage the system. When performing an inspection, always follow the inspection procedure. • Wiring harness between the driver-side pressure sensor and SAS control module has a malfunction • Driver-side pressure sensor has a malfunction
Fail-safe function	Not applicable
Possible cause	• Driver-side pressure sensor connector malfunction • Short circuit to power supply or body ground in the wiring harness between the driver-side pressure sensor and SAS control module • Open circuit in the wiring harness between the driver-side pressure sensor and SAS control module • Driver-side pressure sensor malfunction • SAS control module malfunction

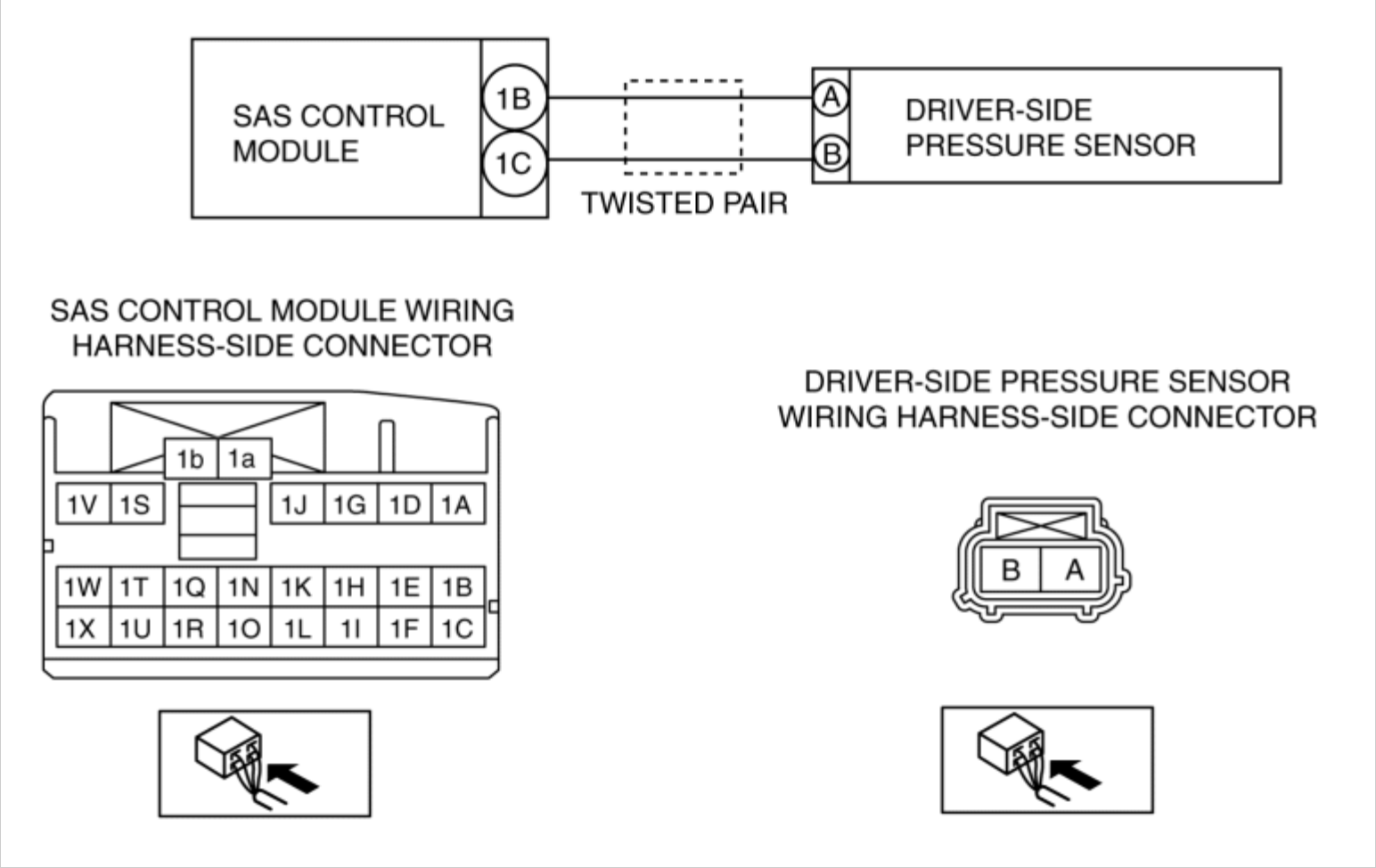

Diagnostic Procedure

Step	Inspection		Action
1	**INSPECT DRIVER-SIDE PRESSURE SENSOR CONNECTOR** **WARNING:** • Handling the component parts improperly can accidentally operate (deploy) the air bag module, which may seriously injure you. Read the service warnings/cautions and the workshop manual before handling the air bag system components. (See **AIR BAG SYSTEM SERVICE WARNINGS [TWO-STEP DEPLOYMENT CONTROL SYSTEM]**.) (See **AIR BAG SYSTEM SERVICE CAUTIONS [TWO-STEP DEPLOYMENT CONTROL SYSTEM]**.)	Yes	Replace the malfunctioning part, then go to Step 5.
		No	Go to the next step.

	Switch the ignition off. • Disconnect the negative battery cable and wait for **1 min or more**. (See **NEGATIVE BATTERY CABLE DISCONNECTION/CONNECTION [SKYACTIV-G 2.0, SKYACTIV-G 2.5]**.) • Remove the driver-side front door trim. (See **FRONT DOOR TRIM REMOVAL/INSTALLATION**.) • Disconnect the driver-side pressure sensor connector. (See **PRESSURE SENSOR REMOVAL/INSTALLATION [TWO-STEP DEPLOYMENT CONTROL SYSTEM]**.) • Inspect the driver-side pressure sensor connector. (Corrosion, damage, and disconnected pins) • Is there any malfunction of the driver-side pressure sensor connector?		
2	**INSPECT DRIVER-SIDE PRESSURE SENSOR CIRCUIT FOR SHORT TO GROUND** • Remove the column cover. (See **COLUMN COVER REMOVAL/INSTALLATION**.) • Disconnect the clock spring connector. (See **CLOCK SPRING REMOVAL/INSTALLATION [TWO-STEP DEPLOYMENT CONTROL SYSTEM]**.) • Remove the glove compartment. (See **GLOVE COMPARTMENT REMOVAL/INSTALLATION**.) • Disconnect the passenger-side air bag module connector. (See **PASSENGER-SIDE AIR BAG MODULE REMOVAL [TWO-STEP DEPLOYMENT CONTROL SYSTEM]**.) • Disconnect the driver and passenger-side front seat connector. (See **FRONT SEAT REMOVAL/INSTALLATION**.)	Yes	Refer to the wiring diagram and verify whether or not there is a common connector between SAS control module terminal and driver-side pressure sensor terminal. **If there is a common connector:** • Determine the malfunctioning part by inspecting the common connector and the terminal for corrosion, damage, or pin disconnection, and the common wiring harness for a short to ground. • Replace the malfunctioning part. **If there is no common connector:** • Replace the wiring harness which has a short to ground. Go to Step 5.

	Remove the B-pillar lower trim. (See **B-PILLAR LOWER TRIM REMOVAL/INSTALLATION**.) • Disconnect the driver and passenger-side pre-tensioner seat belt connector. • Disconnect the driver and passenger-side lap pre-tensioner seat belt connectors. (See **FRONT SEAT BELT REMOVAL/INSTALLATION**.) • Remove the headliner. (See **HEADLINER REMOVAL/INSTALLATION**.) • Disconnect the driver and passenger-side curtain air bag module connector. (See **CURTAIN AIR BAG MODULE REMOVAL/INSTALLATION [TWO-STEP DEPLOYMENT CONTROL SYSTEM]**.) • Disconnect the all SAS control module connectors. (See **SAS CONTROL MODULE REMOVAL/INSTALLATION [TWO-STEP DEPLOYMENT CONTROL SYSTEM]**.) • Inspect for continuity between the following terminals (wiring harness-side) and body ground: ▪ SAS control module terminal 1B ▪ SAS control module terminal 1C **NOTE:** • Inspect for continuity while shaking the wiring harness between the SAS control module and driver-side pressure sensor. • Is there continuity?	No	Go to the next step.
3	**INSPECT DRIVER-SIDE PRESSURE SENSOR CIRCUIT FOR OPEN CIRCUIT** • Driver-side pressure sensor and SAS control module connectors are disconnected. • Inspect for continuity between the	Yes	Go to the next step.
		No	Refer to the wiring diagram and verify whether or not there is a common connector between SAS control module terminal and driver-side pressure sensor

	following terminals (wiring harness-side): ▪ Driver-side pressure sensor terminal A—SAS control module terminal 1B ▪ Driver-side pressure sensor terminal B—SAS control module terminal 1C **NOTE:** • Inspect for continuity while shaking the wiring harness between the SAS control module and driver-side pressure sensor. • Is there continuity?		terminal. **If there is a common connector:** • Determine the malfunctioning part by inspecting the common connector and the terminal for corrosion, damage, or pin disconnection, and the common wiring harness for an open circuit. • Replace the malfunctioning part. **If there is no common connector:** • Replace the wiring harness which has an open circuit. Go to Step 5.
4	**INSPECT DRIVER-SIDE PRESSURE SENSOR CIRCUIT FOR SHORT TO POWER SUPPLY** • Driver-side pressure sensor and SAS control module connectors are disconnected. • Connect the negative battery cable. (See **NEGATIVE BATTERY CABLE DISCONNECTION/CONNECTION [SKYACTIV-G 2.0, SKYACTIV-G 2.5]**.) • Switch the ignition ON (engine off or on). • Measure the voltage at the following terminals (wiring harness-side): ▪ SAS control module terminal 1B ▪ SAS control module terminal 1C **NOTE:** • Measure the voltage while shaking the wiring harness between the SAS control module and driver-side pressure sensor. • Is the voltage **0 V**?	Yes	Replace the driver-side pressure sensor, then go to the next step. (See **PRESSURE SENSOR REMOVAL/INSTALLATION [TWO-STEP DEPLOYMENT CONTROL SYSTEM]**.)
		No	Refer to the wiring diagram and verify whether or not there is a common connector between SAS control module terminal and driver-side pressure sensor terminal. **If there is a common connector:** • Determine the malfunctioning part by inspecting the common connector and the terminal for corrosion, damage, or pin disconnection, and the common wiring harness for a short to power supply. • Replace the malfunctioning part. **If there is no common**

			connector: • Replace the wiring harness which has a short to power supply. Go to the next step.
5	**PERFORM SAS CONTROL MODULE DTC INSPECTION** • Switch the ignition off. • Disconnect the negative battery cable and wait for **1 min or more**. • Connect the SAS control module connectors. • Reconnect all disconnected connectors. • Connect the negative battery cable. (See **NEGATIVE BATTERY CABLE DISCONNECTION/CONNECTION [SKYACTIV-G 2.0, SKYACTIV-G 2.5]**.) • Switch the ignition ON (engine off or on). • Clear the DTC for the SAS control module using the M-MDS. (See **CLEARING DTC [TWO-STEP DEPLOYMENT CONTROL SYSTEM]**.) • Perform the DTC inspection for the SAS control module using the M-MDS. (See **DTC INSPECTION [TWO-STEP DEPLOYMENT CONTROL SYSTEM]**.) • Are the same DTCs present?	Yes	Replace the SAS control module. (See **SAS CONTROL MODULE REMOVAL/INSTALLATION [TWO-STEP DEPLOYMENT CONTROL SYSTEM]**.)
		No	DTC troubleshooting completed.

2014 - Mazda3 - Restraints

DTC B1226:55, B1227:55 [TWO-STEP DEPLOYMENT CONTROL SYSTEM]

System malfunction location	• B1226:55:Configuration setting error (driver-side pressure sensor structural malfunction) • B1227:55:Configuration setting error (passenger-side pressure sensor structural malfunction)
Detection condition	**WARNING:** • Detection conditions are for understanding the DTC outline before performing an inspection. Performing an inspection according to only the detection conditions may cause injury due to an operating error, or damage the system. When performing an inspection, always follow the inspection procedure. • SAS control module configuration setting has not been done correctly • Parts which have not been set to SAS control module are assembled
Fail-safe function	Not applicable
Possible cause	• SAS control module configuration setting not implemented • SAS control module configuration setting invalid • Driver or passenger-side pressure sensor assembly incorrect • SAS control module malfunction
System wiring diagram	Not applicable

Diagnostic Procedure

Step	Inspection	Action
	PERFORM SAS CONTROL MODULE CONFIGURATION	

1	**(AS-BUILT DATA USE)** • Perform the SAS control module configuration using the M-MDS. (See **SAS CONTROL MODULE CONFIGURATION (USING AS-BUILT DATA) [TWO-STEP DEPLOYMENT CONTROL SYSTEM]**.) • Clear the DTC for the SAS control module using the M-MDS. (See **CLEARING DTC [TWO-STEP DEPLOYMENT CONTROL SYSTEM]**.) • Perform the DTC inspection for the SAS control module using the M-MDS. (See **DTC INSPECTION [TWO-STEP DEPLOYMENT CONTROL SYSTEM]**.) • Are the same DTCs present?	Yes	Go to the next step.
		No	DTC troubleshooting completed.
2	**INSPECT PRESSURE SENSOR** • Verify that the driver or passenger-side pressure sensor is correctly installed. • Is the driver or passenger-side pressure sensor correctly installed?	Yes	Go to the next step.
		No	Correctly install the driver or passenger-side pressure sensor. Then go to the next step.
3	**PERFORM SAS CONTROL MODULE DTC INSPECTION** • Clear the DTC for the SAS control module using the M-MDS. (See **CLEARING DTC [TWO-STEP DEPLOYMENT CONTROL SYSTEM]**.) • Perform the DTC inspection for the SAS control module using the M-MDS. (See **DTC INSPECTION [TWO-STEP DEPLOYMENT CONTROL SYSTEM]**.) • Are the same DTCs present?	Yes	Replace the SAS control module. (See **SAS CONTROL MODULE REMOVAL/INSTALLATION [TWO-STEP DEPLOYMENT CONTROL SYSTEM]**.)
		No	DTC troubleshooting completed.

2014 - Mazda3 - Restraints

DTC B1227:11/B1227:13/B1227:87/B1227:96 [TWO-STEP DEPLOYMENT CONTROL SYSTEM]

System malfunction location	• B1227:11:Passenger-side pressure sensor circuit short to body ground • B1227:13:Passenger-side pressure sensor circuit open circuit or short to power supply • B1227:87:Signal reception error from passenger-side pressure sensor • B1227:96:Passenger-side pressure sensor internal malfunction
Detection condition	**WARNING:** • Detection conditions are for understanding the DTC outline before performing an inspection. Performing an inspection according to only the detection conditions may cause injury due to an operating error, or damage the system. When performing an inspection, always follow the inspection procedure. • Wiring harness between the passenger-side pressure sensor and SAS control module has a malfunction • Passenger-side pressure sensor has a malfunction
Fail-safe function	Not applicable
Possible cause	• Passenger-side pressure sensor connector malfunction • Short circuit to power supply or body ground in the wiring harness between the passenger-side pressure sensor and SAS control module • Open circuit in the wiring harness between the passenger-side pressure sensor and SAS control module • Passenger-side pressure sensor malfunction • SAS control module malfunction

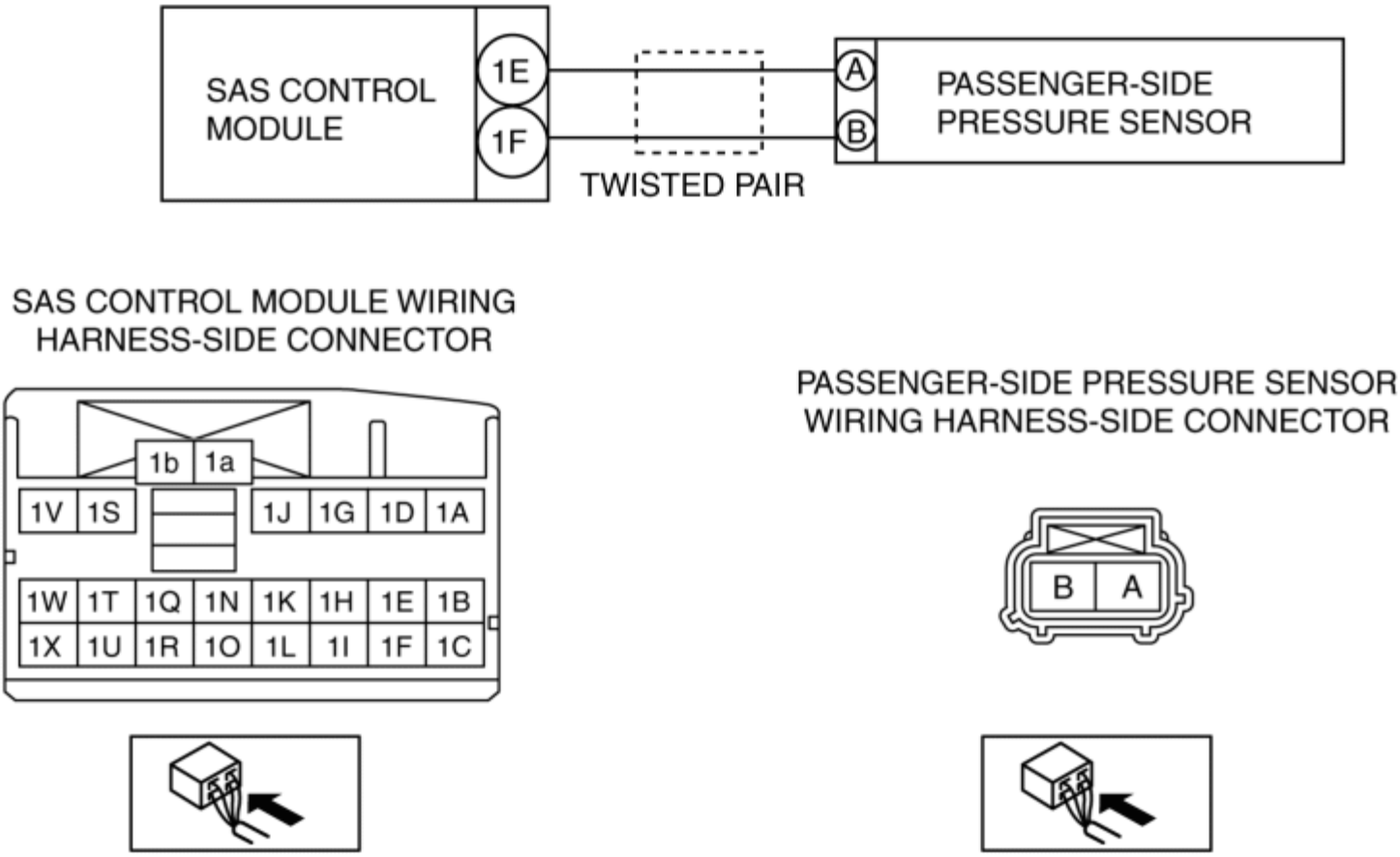

Diagnostic Procedure

Step	Inspection		Action
1	**INSPECT PASSENGER-SIDE PRESSURE SENSOR CONNECTOR** **WARNING:** • Handling the component parts improperly can accidentally operate (deploy) the air bag module, which may seriously injure you. Read the service warnings/cautions and the workshop manual before handling the air bag system components. (See **AIR BAG SYSTEM SERVICE WARNINGS [TWO-STEP DEPLOYMENT CONTROL SYSTEM]**.) (See **AIR BAG SYSTEM SERVICE CAUTIONS [TWO-STEP DEPLOYMENT CONTROL SYSTEM]**.)	Yes	Replace the malfunctioning part, then go to Step 5.
		No	Go to the next step.

	Switch the ignition off. • Disconnect the negative battery cable and wait for **1 min or more**. (See **NEGATIVE BATTERY CABLE DISCONNECTION/CONNECTION [SKYACTIV-G 2.0, SKYACTIV-G 2.5]**.) • Remove the passenger-side front door trim. (See **FRONT DOOR TRIM REMOVAL/INSTALLATION**.) • Disconnect the passenger-side pressure sensor connector. (See **PRESSURE SENSOR REMOVAL/INSTALLATION [TWO-STEP DEPLOYMENT CONTROL SYSTEM]**.) • Inspect the passenger-side pressure sensor connector. (Corrosion, damage, and disconnected pins) • Is there any malfunction of the passenger-side pressure sensor connector?		
2	**INSPECT PASSENGER-SIDE PRESSURE SENSOR CIRCUIT FOR SHORT TO GROUND** • Remove the column cover. (See **COLUMN COVER REMOVAL/INSTALLATION**.) • Disconnect the clock spring connector. (See **CLOCK SPRING REMOVAL/INSTALLATION [TWO-STEP DEPLOYMENT CONTROL SYSTEM]**.) • Remove the glove compartment. (See **GLOVE COMPARTMENT REMOVAL/INSTALLATION**.) • Disconnect the passenger-side air bag module connector. (See **PASSENGER-SIDE AIR BAG MODULE REMOVAL [TWO-STEP DEPLOYMENT CONTROL SYSTEM]**.) • Disconnect the driver and passenger-side front seat connector. (See **FRONT SEAT REMOVAL/INSTALLATION**.)	Yes	Refer to the wiring diagram and verify whether or not there is a common connector between SAS control module terminal and passenger-side pressure sensor terminal. **If there is a common connector:** • Determine the malfunctioning part by inspecting the common connector and the terminal for corrosion, damage, or pin disconnection, and the common wiring harness for a short to ground. • Replace the malfunctioning part. **If there is no common connector:** • Replace the wiring harness which has a short to ground.

	• Remove the B-pillar lower trim. (See **B-PILLAR LOWER TRIM REMOVAL/INSTALLATION**.) • Disconnect the driver and passenger-side pre-tensioner seat belt connectors. • Disconnect the driver and passenger-side lap pre-tensioner seat belt connectors. (See **FRONT SEAT BELT REMOVAL/INSTALLATION**.) • Remove the headliner. (See **HEADLINER REMOVAL/INSTALLATION**.) • Disconnect the driver and passenger-side curtain air bag module connector. (See **CURTAIN AIR BAG MODULE REMOVAL/INSTALLATION [TWO-STEP DEPLOYMENT CONTROL SYSTEM]**.) • Disconnect the all SAS control module connectors. (See **SAS CONTROL MODULE REMOVAL/INSTALLATION [TWO-STEP DEPLOYMENT CONTROL SYSTEM]**.) • Inspect for continuity between the following terminals (wiring harness-side) and body ground: ▪ SAS control module terminal 1E ▪ SAS control module terminal 1F **NOTE:** • Inspect for continuity while shaking the wiring harness between the SAS control module and passenger-side pressure sensor. • Is there continuity?		Go to Step 5.
		No	Go to the next step.
3	**INSPECT PASSENGER-SIDE PRESSURE SENSOR CIRCUIT FOR OPEN CIRCUIT** • Passenger-side pressure sensor and SAS control module connectors are disconnected.	Yes	Go to the next step.
		No	Refer to the wiring diagram and verify whether or not there is a common

	• Inspect for continuity between the following terminals (wiring harness-side): ▪ Passenger-side pressure sensor terminal A—SAS control module terminal 1E ▪ Passenger-side pressure sensor terminal B—SAS control module terminal 1F **NOTE:** • Inspect for continuity while shaking the wiring harness between the SAS control module and passenger-side pressure sensor. • Is there continuity?		connector between SAS control module terminal and passenger-side pressure sensor terminal. **If there is a common connector:** • Determine the malfunctioning part by inspecting the common connector and the terminal for corrosion, damage, or pin disconnection, and the common wiring harness for an open circuit. • Replace the malfunctioning part. **If there is no common connector:** • Replace the wiring harness which has an open circuit. Go to Step 5.
4	**INSPECT PASSENGER-SIDE PRESSURE SENSOR CIRCUIT FOR SHORT TO POWER SUPPLY** • Passenger-side pressure sensor and SAS control module connectors are disconnected. • Connect the negative battery cable. (See **NEGATIVE BATTERY CABLE DISCONNECTION/CONNECTION [SKYACTIV-G 2.0, SKYACTIV-G 2.5]**.) • Switch the ignition ON (engine off or on). • Measure the voltage at the following terminals (wiring harness-side): ▪ SAS control module terminal 1E ▪ SAS control module terminal 1F **NOTE:** • Measure the voltage while shaking the wiring harness between the SAS control module and passenger-side pressure sensor.	Yes	Replace the driver-side pressure sensor, then go to the next step. (See **PRESSURE SENSOR REMOVAL/INSTALLATION [TWO-STEP DEPLOYMENT CONTROL SYSTEM]**.)
		No	Refer to the wiring diagram and verify whether or not there is a common connector between SAS control module terminal and passenger-side pressure sensor terminal. **If there is a common connector:** • Determine the malfunctioning part by inspecting the common connector and the terminal for corrosion, damage, or pin disconnection, and the common wiring harness for a short to power supply. • Replace the malfunctioning part.

	• Is the voltage **0 V**?		**If there is no common connector:** • Replace the wiring harness which has a short to power supply. Go to the next step.
5	**PERFORM SAS CONTROL MODULE DTC INSPECTION** • Switch the ignition off. • Disconnect the negative battery cable and wait for **1 min or more**. • Connect the SAS control module connectors. • Reconnect all disconnected connectors. • Connect the negative battery cable. (See **NEGATIVE BATTERY CABLE DISCONNECTION/CONNECTION [SKYACTIV-G 2.0, SKYACTIV-G 2.5]**.) • Switch the ignition ON (engine off or on). • Clear the DTC for the SAS control module using the M-MDS. (See **CLEARING DTC [TWO-STEP DEPLOYMENT CONTROL SYSTEM]**.) • Perform the DTC inspection for the SAS control module using the M-MDS. (See **DTC INSPECTION [TWO-STEP DEPLOYMENT CONTROL SYSTEM]**.) • Are the same DTCs present?	Yes	Replace the SAS control module. (See **SAS CONTROL MODULE REMOVAL/INSTALLATION [TWO-STEP DEPLOYMENT CONTROL SYSTEM]**.)
		No	DTC troubleshooting completed.

2014 - Mazda3 - Restraints

DTC B1228:11/B1228:12/B1228:13/B1228:19/B1228:1A [TWO-STEP DEPLOYMENT CONTROL SYSTEM]

System malfunction location	• B1228:11:Driver-side lap pre-tensioner seat belt circuit short to body ground • B1228:12:Driver-side lap pre-tensioner seat belt circuit short to power supply • B1228:13:Driver-side lap pre-tensioner seat belt circuit open circuit or resistance high • B1228:19:Short circuit to driver-side lap pre-tensioner seat belt and other air bag module circuits • B1228:1A:Driver-side lap pre-tensioner seat belt circuit resistance low
Detection condition	**WARNING:** • Detection conditions are for understanding the DTC outline before performing an inspection. Performing an inspection according to only the detection conditions may cause injury due to an operating error, or damage the system. When performing an inspection, always follow the inspection procedure. • Resistance **other than 0.81—6.42 ohms** detected in driver-side lap pre-tensioner seat belt circuit • Wiring harness between the driver-side lap pre-tensioner seat belt and SAS control module has a malfunction
Fail-safe function	Not applicable
Possible cause	• Driver-side lap pre-tensioner seat belt connector malfunction • Short circuit to power supply or body ground in the wiring harness between the driver-side lap pre-tensioner seat belt and SAS control module • Open circuit in the wiring harness between the driver-side lap pre-tensioner seat belt and SAS control module • Driver-side lap pre-tensioner seat belt malfunction • SAS control module malfunction

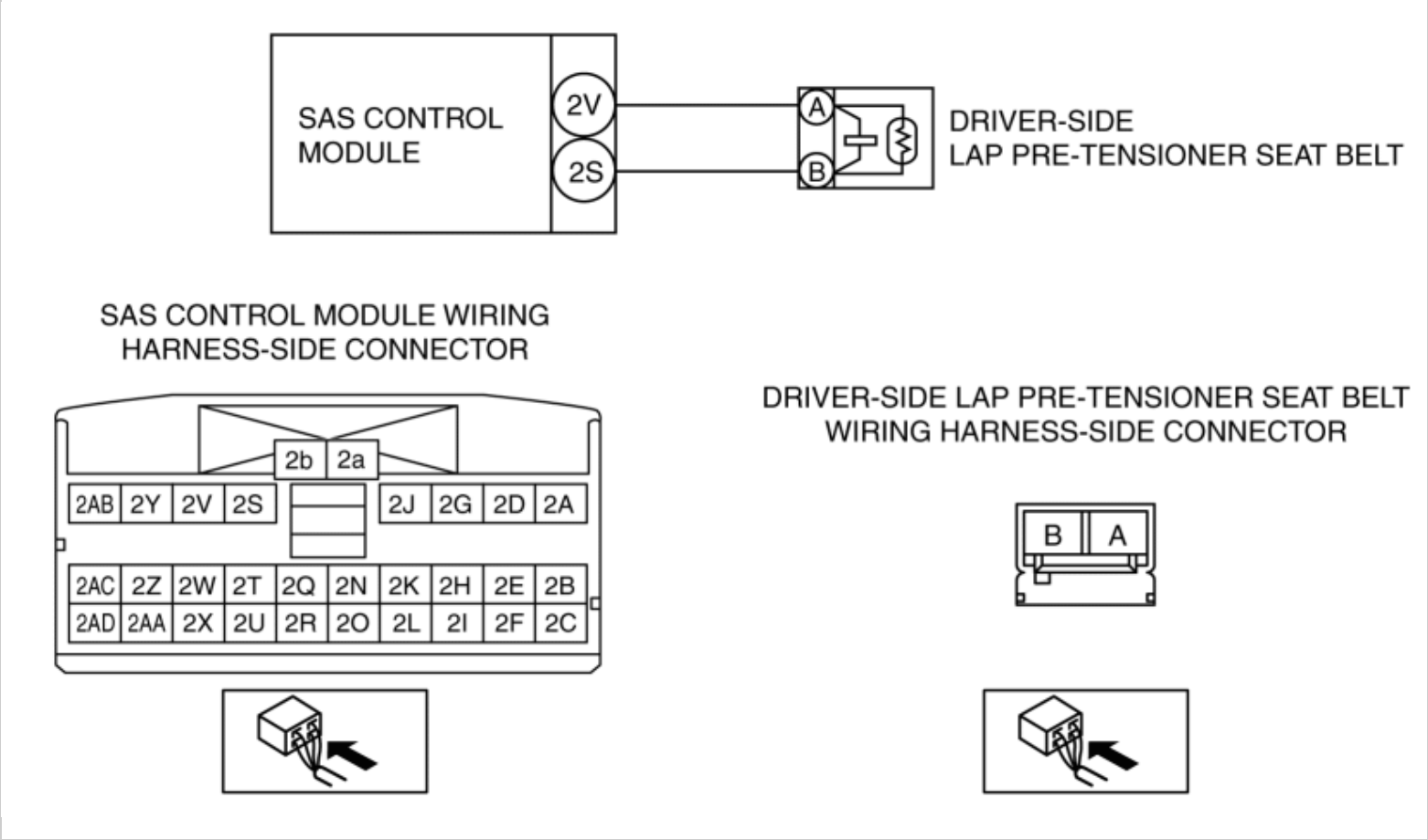

Diagnostic Procedure

Step	Inspection		Action
1	**INSPECT DRIVER-SIDE LAP PRE-TENSIONER SEAT BELT CONNECTOR** **WARNING:** • Handling the component parts improperly can accidentally operate (deploy) the air bag module, which may seriously injure you. Read the service warnings/cautions and the workshop manual before handling the air bag system components. (See **AIR BAG SYSTEM SERVICE WARNINGS [TWO-STEP DEPLOYMENT CONTROL SYSTEM]**.) (See **AIR BAG SYSTEM SERVICE CAUTIONS [TWO-STEP DEPLOYMENT CONTROL SYSTEM]**.) • Switch the ignition off. • Disconnect the negative battery cable and wait for **1 min or more**.	Yes	Replace the malfunctioning part, then go to Step 6.
		No	Go to the next step.

	(See **NEGATIVE BATTERY CABLE DISCONNECTION/CONNECTION [SKYACTIV-G 2.0, SKYACTIV-G 2.5]**.) • Disconnect the driver-side lap pre-tensioner seat belt connector. (See **FRONT SEAT BELT REMOVAL/INSTALLATION**.) • Inspect the driver-side lap pre-tensioner seat belt connector. (Corrosion, damage, and disconnected pins) • Is there any malfunction of the driver-side lap pre-tensioner seat belt connector?		
2	**INSPECT DRIVER-SIDE LAP PRE-TENSIONER SEAT BELT CIRCUIT FOR SHORT TO GROUND** • Remove the column cover. (See **COLUMN COVER REMOVAL/INSTALLATION**.) • Disconnect the clock spring connector. (See **CLOCK SPRING REMOVAL/INSTALLATION [TWO-STEP DEPLOYMENT CONTROL SYSTEM]**.) • Remove the glove compartment. (See **GLOVE COMPARTMENT REMOVAL/INSTALLATION**.) • Disconnect the passenger-side air bag module connector. (See **PASSENGER-SIDE AIR BAG MODULE REMOVAL [TWO-STEP DEPLOYMENT CONTROL SYSTEM]**.) • Disconnect the driver and passenger-side front seat connector. (See **FRONT SEAT REMOVAL/INSTALLATION**.) • Remove the B-pillar lower trim. (See **B-PILLAR LOWER TRIM REMOVAL/INSTALLATION**.) • Disconnect the driver and passenger-side pre-tensioner seat belt connectors. • Disconnect the passenger-side lap pre-tensioner seat belt connector. (See **FRONT SEAT BELT REMOVAL/INSTALLATION**.) • Remove the headliner.	Yes	Refer to the wiring diagram and verify whether or not there is a common connector between SAS control module terminal and driver-side lap pre-tensioner seat belt terminal. **If there is a common connector:** • Determine the malfunctioning part by inspecting the common connector and the terminal for corrosion, damage, or pin disconnection, and the common wiring harness for a short to ground. • Replace the malfunctioning part. **If there is no common connector:** • Replace the wiring harness which has a short to ground. Go to Step 6.
		No	Go to the next step.

	(See **HEADLINER REMOVAL/INSTALLATION**.) • Disconnect the driver and passenger-side curtain air bag module connector. (See **CURTAIN AIR BAG MODULE REMOVAL/INSTALLATION [TWO-STEP DEPLOYMENT CONTROL SYSTEM]**.) • Disconnect the all SAS control module connectors. (See **SAS CONTROL MODULE REMOVAL/INSTALLATION [TWO-STEP DEPLOYMENT CONTROL SYSTEM]**.) • Inspect for continuity between the following terminals (wiring harness-side) and body ground: ▪ SAS control module terminal 2V ▪ SAS control module terminal 2S **NOTE:** • Inspect for continuity while shaking the wiring harness between the SAS control module and driver-side lap pre-tensioner seat belt. • Is there continuity?		
3	**INSPECT DRIVER-SIDE LAP PRE-TENSIONER SEAT BELT CIRCUIT FOR OPEN CIRCUIT** • Driver-side lap pre-tensioner seat belt and SAS control module connectors are disconnected. • Inspect for continuity between the following terminals (wiring harness-side): ▪ Driver-side lap pre-tensioner seat belt terminal A—SAS control module terminal 2V ▪ Driver-side lap pre-tensioner seat belt terminal B—SAS control module terminal 2S **NOTE:** • Inspect for continuity while shaking the wiring harness between the SAS control module and driver-side lap pre-tensioner seat belt. • Is there continuity?	Yes	Go to the next step.
		No	Refer to the wiring diagram and verify whether or not there is a common connector between SAS control module terminal and driver-side lap pre-tensioner seat belt terminal. **If there is a common connector:** • Determine the malfunctioning part by inspecting the common connector and the terminal for corrosion, damage, or pin disconnection, and the common wiring harness for an open circuit. • Replace the malfunctioning part. **If there is no common connector:**

			Replace the wiring harness which has an open circuit. Go to Step 6.
4	**INSPECT DRIVER-SIDE LAP PRE-TENSIONER SEAT BELT CIRCUIT FOR SHORT TO POWER SUPPLY** • Driver-side lap pre-tensioner seat belt and SAS control module connectors are disconnected. • Connect the negative battery cable. (See **NEGATIVE BATTERY CABLE DISCONNECTION/CONNECTION [SKYACTIV-G 2.0, SKYACTIV-G 2.5]**.) • Switch the ignition ON (engine off or on). • Measure the voltage at the following terminals (wiring harness-side): ▪ SAS control module terminal 2V ▪ SAS control module terminal 2S **NOTE:** • Measure the voltage while shaking the wiring harness between the SAS control module and driver-side lap pre-tensioner seat belt. • Is the voltage **0 V**?	Yes	Go to the next step.
		No	Refer to the wiring diagram and verify whether or not there is a common connector between SAS control module terminal and driver-side lap pre-tensioner seat belt terminal. **If there is a common connector:** • Determine the malfunctioning part by inspecting the common connector and the terminal for corrosion, damage, or pin disconnection, and the common wiring harness for a short to power supply. • Replace the malfunctioning part. **If there is no common connector:** • Replace the wiring harness which has a short to power supply. Go to Step 6.
5	**INSPECT DRIVER-SIDE LAP PRE-TENSIONER SEAT BELT** • Switch the ignition off. • Disconnect the negative battery cable and wait for **1 min or more**. • Connect the SAS control module connectors. • Except for the driver-side lap pre-tensioner seat belt connector, reconnect all disconnected connectors. • Connect the **SST (Fuel and thermometer checker)** or apply **2 ohms** resistance to the driver-side lap pre-tensioner seat belt connector terminals A–B. • Set the **SST (Fuel and thermometer checker)** to **2 ohms**. • Connect the negative battery cable.	Yes	Go to the next step.
		No	Replace the driver-side lap pre-tensioner seat belt. (See **FRONT SEAT BELT REMOVAL/INSTALLATION**.) Then go to the next step.

	(See **NEGATIVE BATTERY CABLE DISCONNECTION/CONNECTION [SKYACTIV-G 2.0, SKYACTIV-G 2.5]**.) • Switch the ignition ON (engine off or on). • Clear the DTC for the SAS control module using the M-MDS. (See **CLEARING DTC [TWO-STEP DEPLOYMENT CONTROL SYSTEM]**.) • Perform the DTC inspection for the SAS control module using the M-MDS. (See **DTC INSPECTION [TWO-STEP DEPLOYMENT CONTROL SYSTEM]**.) • Are the same DTCs present?		
6	**PERFORM SAS CONTROL MODULE DTC INSPECTION** • Switch the ignition off. • Disconnect the negative battery cable and wait for **1 min or more**. • Disconnect the **SST (Fuel and thermometer checker)** or the **2 ohms** resistance. • Connect the driver-side lap pre-tensioner seat belt connector. • Connect the negative battery cable. (See **NEGATIVE BATTERY CABLE DISCONNECTION/CONNECTION [SKYACTIV-G 2.0, SKYACTIV-G 2.5]**.) • Switch the ignition ON (engine off or on). • Clear the DTC for the SAS control module using the M-MDS. (See **CLEARING DTC [TWO-STEP DEPLOYMENT CONTROL SYSTEM]**.) • Perform the DTC inspection for the SAS control module using the M-MDS. (See **DTC INSPECTION [TWO-STEP DEPLOYMENT CONTROL SYSTEM]**.) • Are the same DTCs present?	Yes	Replace the SAS control module. (See **SAS CONTROL MODULE REMOVAL/INSTALLATION [TWO-STEP DEPLOYMENT CONTROL SYSTEM]**.)
		No	DTC troubleshooting completed.

2014 - Mazda3 - Restraints

DTC B1417:11/B1417:13/B1417:87/B1417:96 [TWO-STEP DEPLOYMENT CONTROL SYSTEM]

System malfunction location	• B1417:11:Passenger-side crash zone sensor circuit short to body ground • B1417:13:Passenger-side crash zone sensor circuit open circuit or short to power supply • B1417:87:Signal reception error from passenger-side crash zone sensor • B1417:96:Passenger-side crash zone sensor internal malfunction
Detection condition	**WARNING:** • Detection conditions are for understanding the DTC outline before performing an inspection. Performing an inspection according to only the detection conditions may cause injury due to an operating error, or damage the system. When performing an inspection, always follow the inspection procedure. • Wiring harness between the passenger-side crash zone sensor and SAS control module has a malfunction • Passenger-side crash zone sensor has a malfunction
Fail-safe function	Not applicable
Possible cause	• Passenger-side crash zone sensor connector malfunction • Short circuit to power supply or body ground in the wiring harness between the passenger-side crash zone sensor and SAS control module • Open circuit in the wiring harness between the passenger-side crash zone sensor and SAS control module • Passenger-side crash zone sensor malfunction • SAS control module malfunction

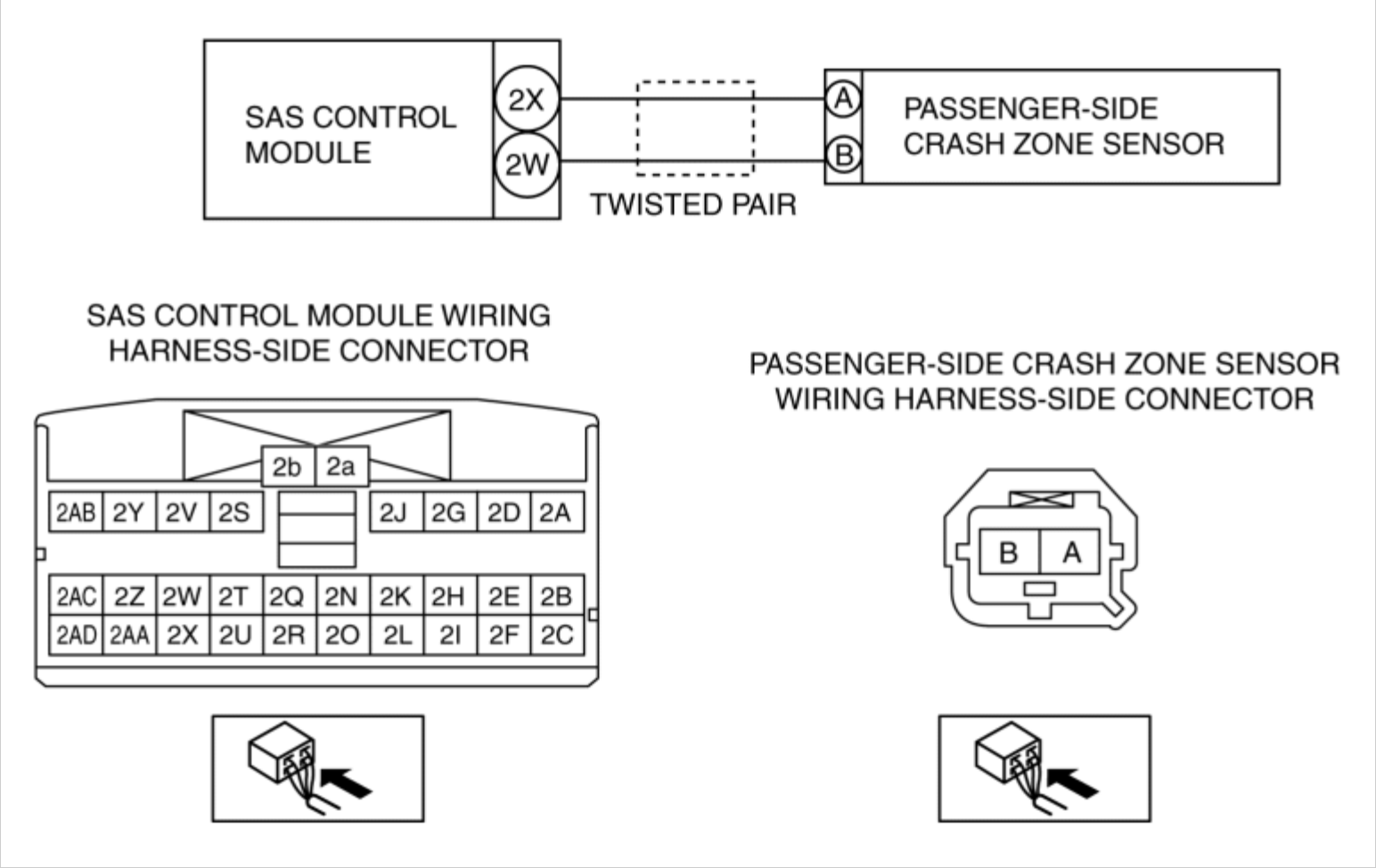

Diagnostic Procedure

Step	Inspection		Action
1	**INSPECT PASSENGER-SIDE CRASH ZONE SENSOR CONNECTOR** **WARNING:** • Handling the component parts improperly can accidentally operate (deploy) the air bag module, which may seriously injure you. Read the service warnings/cautions and the workshop manual before handling the air bag system components. (See **AIR BAG SYSTEM SERVICE WARNINGS [TWO-STEP DEPLOYMENT CONTROL SYSTEM]**.) (See **AIR BAG SYSTEM SERVICE CAUTIONS [TWO-STEP DEPLOYMENT CONTROL SYSTEM]**.)	Yes	Replace the malfunctioning part, then go to Step 5.
		No	Go to the next step.

	Switch the ignition off. • Disconnect the negative battery cable and wait for **1 min or more**. (See **NEGATIVE BATTERY CABLE DISCONNECTION/CONNECTION [SKYACTIV-G 2.0, SKYACTIV-G 2.5]**.) • Remove the front combination light. (See **FRONT COMBINATION LIGHT REMOVAL/INSTALLATION**.) • Disconnect the passenger-side crash zone sensor connector. (See **CRASH ZONE SENSOR REMOVAL/INSTALLATION [TWO-STEP DEPLOYMENT CONTROL SYSTEM]**.) • Inspect the passenger-side crash zone sensor connector. (Corrosion, damage, and disconnected pins) • Is there any malfunction of the passenger-side crash zone sensor connector?		
2	**INSPECT PASSENGER-SIDE CRASH ZONE SENSOR CIRCUIT FOR SHORT TO GROUND** • Remove the column cover. (See **COLUMN COVER REMOVAL/INSTALLATION**.) • Disconnect the clock spring connector. (See **CLOCK SPRING REMOVAL/INSTALLATION [TWO-STEP DEPLOYMENT CONTROL SYSTEM]**.) • Remove the glove compartment. (See **GLOVE COMPARTMENT REMOVAL/INSTALLATION**.) • Disconnect the passenger-side air bag module connector. (See **PASSENGER-SIDE AIR BAG MODULE REMOVAL [TWO-STEP DEPLOYMENT CONTROL SYSTEM]**.) • Disconnect the driver and passenger-side front seat connector. (See **FRONT SEAT REMOVAL/INSTALLATION**.)	Yes	Refer to the wiring diagram and verify whether or not there is a common connector between SAS control module terminal and passenger-side crash zone sensor terminal. **If there is a common connector:** • Determine the malfunctioning part by inspecting the common connector and the terminal for corrosion, damage, or pin disconnection, and the common wiring harness for a short to ground. • Replace the malfunctioning part. **If there is no common connector:** • Replace the wiring harness which has a short to ground. Go to Step 5.

	Remove the B-pillar lower trim. (See **B-PILLAR LOWER TRIM REMOVAL/INSTALLATION**.) • Disconnect the driver and passenger-side pre-tensioner seat belt connectors. • Disconnect the passenger-side lap pre-tensioner seat belt connector. (See **FRONT SEAT BELT REMOVAL/INSTALLATION**.) • Remove the headliner. (See **HEADLINER REMOVAL/INSTALLATION**.) • Disconnect the driver and passenger-side curtain air bag module connector. (See **CURTAIN AIR BAG MODULE REMOVAL/INSTALLATION [TWO-STEP DEPLOYMENT CONTROL SYSTEM]**.) • Disconnect the all SAS control module connectors. (See **SAS CONTROL MODULE REMOVAL/INSTALLATION [TWO-STEP DEPLOYMENT CONTROL SYSTEM]**.) • Inspect for continuity between the following terminals (wiring harness-side) and body ground: ▪ SAS control module terminal 2X ▪ SAS control module terminal 2W **NOTE:** • Inspect for continuity while shaking the wiring harness between the SAS control module and passenger-side crash zone sensor. • Is there continuity?	No	Go to the next step.
3	**INSPECT PASSENGER-SIDE CRASH ZONE SENSOR CIRCUIT FOR OPEN CIRCUIT** • Passenger-side crash zone sensor and SAS control module connectors are disconnected. • Inspect for continuity between the	Yes	Go to the next step.
		No	Refer to the wiring diagram and verify whether or not there is a common connector between SAS control module terminal and passenger-side crash zone

	following terminals (wiring harness-side): ▪ Passenger-side crash zone sensor terminal A—SAS control module terminal 2X ▪ Passenger-side crash zone sensor terminal B—SAS control module terminal 2W **NOTE:** • Inspect for continuity while shaking the wiring harness between the SAS control module and passenger-side crash zone sensor. • Is there continuity?		sensor terminal. **If there is a common connector:** • Determine the malfunctioning part by inspecting the common connector and the terminal for corrosion, damage, or pin disconnection, and the common wiring harness for an open circuit. • Replace the malfunctioning part. **If there is no common connector:** • Replace the wiring harness which has an open circuit. Go to Step 5.
4	**INSPECT PASSENGER-SIDE CRASH ZONE SENSOR CIRCUIT FOR SHORT TO POWER SUPPLY** • Passenger-side crash zone sensor and SAS control module connectors are disconnected. • Connect the negative battery cable. (See **NEGATIVE BATTERY CABLE DISCONNECTION/CONNECTION [SKYACTIV-G 2.0, SKYACTIV-G 2.5]**.) • Switch the ignition ON (engine off or on). • Measure the voltage at the following terminals (wiring harness-side): ▪ SAS control module terminal 2X ▪ SAS control module terminal 2W **NOTE:** • Measure the voltage while shaking the wiring harness between the SAS control module and passenger-side crash zone sensor. • Is the voltage **0 V**?	Yes	Replace the Passenger-side crash zone sensor, then go to the next step. (See **CRASH ZONE SENSOR REMOVAL/INSTALLATION [TWO-STEP DEPLOYMENT CONTROL SYSTEM]**.)
		No	Refer to the wiring diagram and verify whether or not there is a common connector between SAS control module terminal and passenger-side crash zone sensor terminal. **If there is a common connector:** • Determine the malfunctioning part by inspecting the common connector and the terminal for corrosion, damage, or pin disconnection, and the common wiring harness for a short to power supply. • Replace the malfunctioning part. **If there is no common**

			connector: • Replace the wiring harness which has a short to power supply. Go to the next step.
5	**PERFORM SAS CONTROL MODULE DTC INSPECTION** • Switch the ignition off. • Disconnect the negative battery cable and wait for **1 min or more**. • Connect the SAS control module connectors. • Reconnect all disconnected connectors. • Connect the negative battery cable. (See **NEGATIVE BATTERY CABLE DISCONNECTION/CONNECTION [SKYACTIV-G 2.0, SKYACTIV-G 2.5]**.) • Switch the ignition ON (engine off or on). • Clear the DTC for the SAS control module using the M-MDS. (See **CLEARING DTC [TWO-STEP DEPLOYMENT CONTROL SYSTEM]**.) • Perform the DTC inspection for the SAS control module using the M-MDS. (See **DTC INSPECTION [TWO-STEP DEPLOYMENT CONTROL SYSTEM]**.) • Are the same DTCs present?	Yes	Replace the SAS control module. (See **SAS CONTROL MODULE REMOVAL/INSTALLATION [TWO-STEP DEPLOYMENT CONTROL SYSTEM]**.)
		No	DTC troubleshooting completed.

2014 - Mazda3 - Restraints

DTC C0061:29/C0062:29/C0063:29/P0666:29 [TWO-STEP DEPLOYMENT CONTROL SYSTEM]

System malfunction location	• C0061:29:Low-G sensor (lateral-G) in SAS control module (internal circuit disabled) • C0062:29:Low-G sensor (forward-G) in SAS control module (internal circuit disabled) • C0063:29:Yaw rate sensor in SAS control module (internal circuit disabled) • P0666:29:Temperature sensor in SAS control module (internal circuit disabled)
Detection condition	**WARNING:** • Detection conditions are for understanding the DTC outline before performing an inspection. Performing an inspection with only detection conditions may cause injury due to an operating error, or damage the system. When performing an inspection, always follow the inspection procedure. • SAS control module internal sensor has a malfunction
Fail-safe function	Not applicable
Possible cause	• SAS control module malfunction
System wiring diagram	Not applicable

Diagnostic Procedure

Step	Inspection		Action
1	**PERFORM SAS CONTROL MODULE DTC INSPECTION**	Yes	Replace the SAS control module. (See **SAS CONTROL MODULE**

	Clear the DTC for the SAS control module using the M-MDS. (See **CLEARING DTC [TWO-STEP DEPLOYMENT CONTROL SYSTEM]**.) • Perform the DTC inspection for the SAS control module using the M-MDS. (See **DTC INSPECTION [TWO-STEP DEPLOYMENT CONTROL SYSTEM]**.) • Are the same DTCs present?		**REMOVAL/INSTALLATION [TWO-STEP DEPLOYMENT CONTROL SYSTEM]**.)
		No	DTC troubleshooting completed.

2014 - Mazda3 - Restraints

DTC U0001:88/U0155:00 [TWO-STEP DEPLOYMENT CONTROL SYSTEM]

System malfunction location	• U0001:88: Module communication error (HS-CAN) • U0155:00: Communication error with instrument cluster
Detection condition	**U0001:88** • The SAS control module detects a CAN communication line (HS-CAN) error. **U0155:00** • The SAS control module could not receive CAN signal from the instrument cluster for **5 s** or more.
Fail-safe function	Not applicable
Possible cause	• Malfunction in CAN bus communication line • Malfunction in CAN line between the SAS control module and instrument cluster
System wiring diagram	Not applicable

Diagnostic Procedure

- Perform the malfunction diagnosis according to the troubleshooting procedure for the multiplex communication system. (See **FOREWORD**.)

2014 - Mazda3 - Restraints

DTC U0300:00/U2100:00 [TWO-STEP DEPLOYMENT CONTROL SYSTEM]

System malfunction location	• U0300:00:Configuration setting invalid • U2100:00:Configuration not set
Detection condition	**WARNING:** • Detection conditions are for understanding the DTC outline before performing an inspection. Performing an inspection according to only the detection conditions may cause injury due to an operating error, or damage the system. When performing an inspection, always follow the inspection procedure. • SAS control module configuration setting has not been done correctly
Fail-safe function	Not applicable
Possible cause	• SAS control module configuration setting not implemented • SAS control module configuration setting invalid • SAS control module malfunction
System wiring diagram	Not applicable

Diagnostic Procedure

Step	Inspection		Action
1	**PERFORM SAS CONTROL MODULE CONFIGURATION (AS-BUILT DATA USE)** • Perform the SAS control module configuration using the M-MDS.	Yes	Go to the next step.
		No	DTC troubleshooting completed.

	(See **SAS CONTROL MODULE CONFIGURATION (USING AS-BUILT DATA) [TWO-STEP DEPLOYMENT CONTROL SYSTEM]**.) • Clear the DTC for the SAS control module using the M-MDS. (See **CLEARING DTC [TWO-STEP DEPLOYMENT CONTROL SYSTEM]**.) • Perform the DTC inspection for the SAS control module using the M-MDS. (See **DTC INSPECTION [TWO-STEP DEPLOYMENT CONTROL SYSTEM]**.) • Are the same DTCs present?		
2	**PERFORM SAS CONTROL MODULE DTC INSPECTION** • Clear the DTC for the SAS control module using the M-MDS. (See **CLEARING DTC [TWO-STEP DEPLOYMENT CONTROL SYSTEM]**.) • Perform the DTC inspection for the SAS control module using the M-MDS. (See **DTC INSPECTION [TWO-STEP DEPLOYMENT CONTROL SYSTEM]**.) • Are the same DTCs present?	Yes	Replace the SAS control module. (See **SAS CONTROL MODULE REMOVAL/INSTALLATION [TWO-STEP DEPLOYMENT CONTROL SYSTEM]**.)
		No	DTC troubleshooting completed.

2014 - Mazda3 - Restraints

DTC U2005:68 [TWO-STEP DEPLOYMENT CONTROL SYSTEM]

System malfunction location	• PCM communication error (vehicle speed signal)
Detection condition	• The SAS control module receives vehicle speed signal error from the PCM for **5 s or more** with the ignition switched ON (engine off or on).
Fail-safe function	Not applicable
Possible cause	• PCM malfunction • SAS control module malfunction
System wiring diagram	Not applicable

Diagnostic Procedure

Step	Inspection		Action
1	**VERIFY SAS CONTROL MODULE DTCs AGAIN** • Clear SAS control module DTCs using the M-MDS. (See **CLEARING DTC [TWO-STEP DEPLOYMENT CONTROL SYSTEM]**.) • Perform the SAS control module DTC inspection using the M-MDS. (See **DTC INSPECTION [TWO-STEP DEPLOYMENT CONTROL**	Yes	Go to the next step.
		No	Go to Step 5.

	SYSTEM].) • Is the DTC U2005:68 displayed?		
2	**VERIFY PCM DTCs** • Perform the DTC inspection for the PCM using the M-MDS. (See **ON-BOARD DIAGNOSTIC TEST [SKYACTIV-G 2.0, SKYACTIV-G 2.5]**.) • Is the DTC displayed?	Yes	Repair the malfunctioning part according to the applicable DTC troubleshooting. (See **DTC TABLE [SKYACTIV-G 2.0, SKYACTIV-G 2.5]**.)
		No	Go to the next step.
3	**PERFORM DTC INSPECTION AND VERIFY IF MALFUNCTIONING PART IS PCM** • Clear SAS control module DTCs using the M-MDS. (See **CLEARING DTC [TWO-STEP DEPLOYMENT CONTROL SYSTEM]**.) • Perform the SAS control module DTC inspection using the M-MDS. (See **DTC INSPECTION [TWO-STEP DEPLOYMENT CONTROL SYSTEM]**.) • Is the DTC U2005:68 displayed?	Yes	Replace the PCM, then go to the next step. (See **PCM REMOVAL/INSTALLATION [SKYACTIV-G 2.0, SKYACTIV-G 2.5]**.)
		No	Go to Step 5.
4	**VERIFY THAT REPAIRS HAVE BEEN COMPLETED** • Clear the DTC for the SAS control module using the M-MDS. (See **CLEARING DTC [TWO-STEP DEPLOYMENT CONTROL SYSTEM]**.) • Perform the SAS control module DTC inspection using the M-MDS. (See **DTC INSPECTION [TWO-STEP DEPLOYMENT CONTROL SYSTEM]**.) • Is the DTC U2005:68 displayed?	Yes	Replace the SAS control module, then go to the next step. (See **SAS CONTROL MODULE REMOVAL/INSTALLATION [TWO-STEP DEPLOYMENT CONTROL SYSTEM]**.)
		No	Go to the next step.
5	**VERIFY IF OTHER DTCs DISPLAYED**	Yes	Repair the malfunctioning part according to the

	• Are any other DTCs displayed?		applicable DTC troubleshooting.
		No	DTC troubleshooting completed.

2014 - Mazda3 - Restraints

DTC U3000:49 [TWO-STEP DEPLOYMENT CONTROL SYSTEM]

System malfunction location	• SAS control module internal malfunction
Detection condition	**WARNING:** • Detection conditions are for understanding the DTC outline before performing an inspection. Performing an inspection according to only the detection conditions may cause injury due to an operating error, or damage the system. When performing an inspection, always follow the inspection procedure. • SAS control module internal circuit has a malfunction
Fail-safe function	Not applicable
Possible cause	• SAS control module malfunction
System wiring diagram	Not applicable

Diagnostic Procedure

ACTION
• Replace the SAS control module. (See **SAS CONTROL MODULE REMOVAL/INSTALLATION [TWO-STEP DEPLOYMENT CONTROL SYSTEM]**.)

DTC U3000:49 [TWO-STEP DEPLOYMENT CONTROL SYSTEM]

2014 - Mazda3 - Restraints

DTC U3003:16/U3003:17 [TWO-STEP DEPLOYMENT CONTROL SYSTEM]

System malfunction location	• U3003:16:SAS control module power supply voltage decreases (**less than 8 V**) • U3003:17:SAS control module power supply voltage increases (**18 V or more**)
Detection condition	**WARNING:** • Detection conditions are for understanding the DTC outline before performing an inspection. Performing an inspection according to only the detection conditions may cause injury due to an operating error, or damage the system. When performing an inspection, always follow the inspection procedure. • SAS control module power supply voltage is other than **8–17.9 V**
Fail-safe function	Not applicable
Possible cause	• Battery malfunction • SRS1 7.5 A fuse malfunction • Open circuit or short to body ground in wiring harness between IG1 relay and SAS control module • Open circuit in the wiring harness between the SAS control module and body ground • SAS control module malfunction

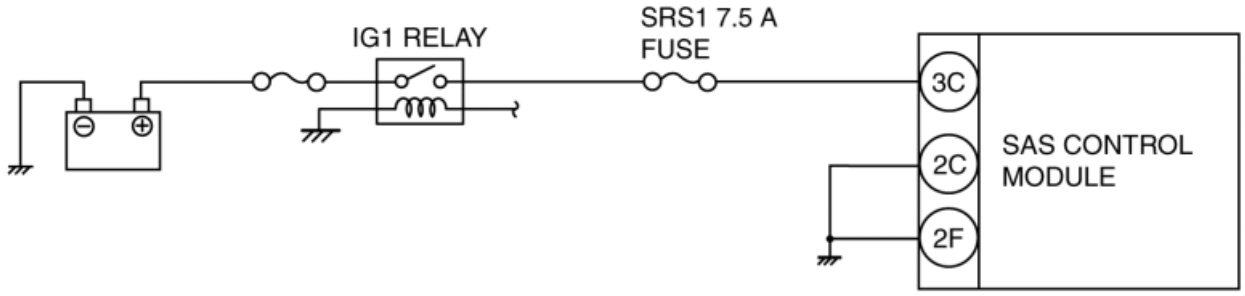

SAS CONTROL MODULE WIRING
HARNESS-SIDE CONNECTOR

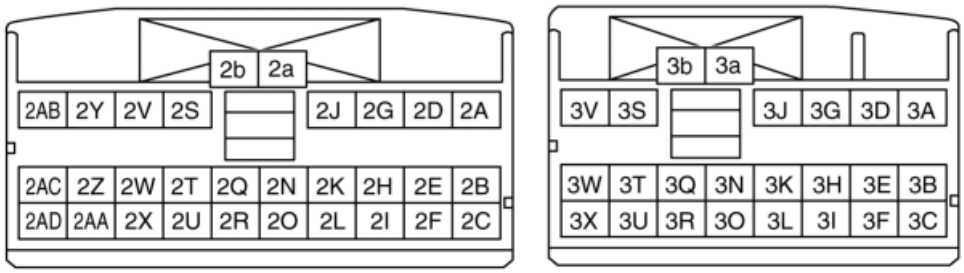

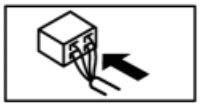

Diagnostic Procedure

Step	Inspection		Action
1	**BATTERY INSPECTION** • Refer to the battery inspection and inspect the battery. (See **BATTERY INSPECTION [SKYACTIV-G 2.0, SKYACTIV-G 2.5]**.) • Is the battery normal?	Yes	Go to the next step.
		No	Replace or charge the battery. (See **BATTERY REMOVAL/INSTALLATION [SKYACTIV-G 2.0, SKYACTIV-G 2.5]**.) (See **BATTERY RECHARGING [SKYACTIV-G 2.0, SKYACTIV-G 2.5]**.) Then go to Step 5.
2	**FUSE INSPECTION** • Switch the ignition off. • Disconnect the negative battery cable and wait **1 min or more**. (See **NEGATIVE BATTERY CABLE DISCONNECTION/CONNECTION [SKYACTIV-G 2.0, SKYACTIV-G 2.5]**.) • Remove the SRS1 7.5 A fuse. • Is the fuse normal?	Yes	Go to the next step.
		No	Replace the SRS1 7.5 A fuse. Then go to Step 5.
3	**INSPECT WIRING HARNESS BETWEEN IG1 RELAY AND SAS CONTROL MODULE** **WARNING:** • Handling the component parts improperly can accidentally operate (deploy) the air bag module, which may seriously injure you. Read the service warnings/cautions and the workshop manual before handling the air bag system components. (See **AIR BAG SYSTEM SERVICE WARNINGS [TWO-STEP DEPLOYMENT CONTROL SYSTEM]**.) (See **AIR BAG SYSTEM SERVICE CAUTIONS [TWO-STEP DEPLOYMENT CONTROL SYSTEM]**.) • Install the SRS1 7.5 A fuse. • Remove the column cover. (See **COLUMN COVER REMOVAL/INSTALLATION**.) • Disconnect the clock spring connector. (See **CLOCK SPRING REMOVAL/INSTALLATION [TWO-STEP DEPLOYMENT CONTROL SYSTEM]**.) • Remove the glove compartment. (See **GLOVE COMPARTMENT REMOVAL/INSTALLATION**.) • Disconnect the passenger-side air bag module connector. (See **PASSENGER-SIDE AIR BAG MODULE REMOVAL [TWO-STEP DEPLOYMENT CONTROL SYSTEM]**.) • Disconnect the driver and passenger-side front seat connector.	Yes	Go to the next step.
		No	Refer to the wiring diagram and verify whether or not there is a common connector between SAS control module terminal and IG1 relay terminal. **If there is a common connector:** • Determine the malfunctioning part by inspecting the common connector and the terminal for corrosion, damage, or pin disconnection, and the common wiring harness for an open circuit or short to ground. • Replace the malfunctioning part. **If there is no common connector:** • Replace the wiring harness which has an open circuit or short to ground. Go to Step 5.

	(See **FRONT SEAT REMOVAL/INSTALLATION**.) • Remove the B-pillar lower trim. (See **B-PILLAR LOWER TRIM REMOVAL/INSTALLATION**.) • Disconnect the driver and passenger-side pre-tensioner seat belt connectors. • Disconnect the driver and passenger-side lap pre-tensioner seat belt connector. (See **FRONT SEAT BELT REMOVAL/INSTALLATION**.) • Remove the headliner. (See **HEADLINER REMOVAL/INSTALLATION**.) • Disconnect the driver and passenger-side curtain air bag module connectors. (See **CURTAIN AIR BAG MODULE REMOVAL/INSTALLATION [TWO-STEP DEPLOYMENT CONTROL SYSTEM]**.)		
3	• Disconnect the all SAS control module connectors. (See **SAS CONTROL MODULE REMOVAL/INSTALLATION [TWO-STEP DEPLOYMENT CONTROL SYSTEM]**.) • Connect the negative battery cable. (See **NEGATIVE BATTERY CABLE DISCONNECTION/CONNECTION [SKYACTIV-G 2.0, SKYACTIV-G 2.5]**.) • Switch the ignition ON (engine off or on). • Measure the voltage of SAS control module terminal 3C (wiring harness-side). **NOTE:** • Measure the voltage while shaking the wiring harness between the SAS control module and IG1 relay. • Is the voltage between **8–17.9 V**?		
4	**INSPECT SAS CONTROL MODULE CIRCUIT FOR OPEN CIRCUIT** • SAS control module connectors are disconnected. • Switch the ignition off. • Disconnect the negative battery cable and wait **1 min or more**. (See **NEGATIVE BATTERY CABLE DISCONNECTION/CONNECTION [SKYACTIV-G 2.0, SKYACTIV-G 2.5]**.) • Inspect the wiring harness between SAS control module connector terminal 2C, 2F (wiring harness-side) and body ground. **NOTE:** • Inspect for continuity while shaking the wiring harness between the SAS control module and body ground. • Is there continuity?	Yes	Go to the next step.
		No	Refer to the wiring diagram and verify whether or not there is a common connector between SAS control module terminal and body ground. **If there is a common connector:** • Determine the malfunctioning part by inspecting the common connector and the terminal for corrosion, damage, or pin disconnection, and the common wiring harness for an open circuit. • Replace the malfunctioning part. **If there is no common connector:** • Replace the wiring harness which has an open circuit. Go to the next step.

5	**PERFORM SAS CONTROL MODULE DTC INSPECTION** • Connect the SAS control module connectors. • Reconnect all disconnected connectors. • Connect the negative battery cable. (See **NEGATIVE BATTERY CABLE DISCONNECTION/CONNECTION [SKYACTIV-G 2.0, SKYACTIV-G 2.5]**.) • Switch the ignition ON (engine off or on). • Clear the DTC for the SAS control module using the M-MDS. (See **CLEARING DTC [TWO-STEP DEPLOYMENT CONTROL SYSTEM]**.) • Perform the DTC inspection for the SAS control module using the M-MDS. (See **DTC INSPECTION [TWO-STEP DEPLOYMENT CONTROL SYSTEM]**.) • Are the same DTCs present?	Yes	Replace the SAS control module. (See **SAS CONTROL MODULE REMOVAL/INSTALLATION [TWO-STEP DEPLOYMENT CONTROL SYSTEM]**.)
		No	DTC troubleshooting completed.

2014 - Mazda3 - Restraints

PID/DATA MONITOR INSPECTION [TWO-STEP DEPLOYMENT CONTROL SYSTEM]

1. Connect the M-MDS to the DLC-2.

2. After the vehicle is identified, select the following items from the initialization screen of the M-MDS.

    a. Select “DataLogger”.

    b. Select “Modules”.

    c. Select “RCM”.

3. Select the applicable PID from the PID table.

4. Verify the PID data according to the directions on the screen.

NOTE:

- The PID data screen function is used for monitoring the calculated value of input/output signals in the module. Therefore, if the monitored value of the output parts is not within the specification, it is necessary to inspect the monitored value of input parts corresponding to the applicable output part control. In addition, because the system does not display an output part malfunction as an abnormality in the monitored value, it is necessary to inspect the output parts individually.

2014 - Mazda3 - Restraints

PID/DATA MONITOR TABLE [TWO-STEP DEPLOYMENT CONTROL SYSTEM]

PID	Unit/Condition	Data contents	SAS control module terminal
AB_WL (Air bag system warning light status)	Lamp_Off/Lamp_On/Plant_Mode/Unknown	• Air bag system warning light off: Lamp_Off • Air bag system warning light on: Lamp_On • Air bag system warning light status: Plant_Mode • Air bag system warning light status: Unknown	3K, 3L
B_SW_P_FLT (Passenger-side buckle switch malfunction status)	O.K./FAULT	• Passenger-side buckle switch normal: O.K. • Passenger-side buckle switch abnormal: Fault	2B
OCS_DTC_CLR (Seat weight sensor DTC cleared status)	Starting/ Normal End/ In Process/ OCS Fault	Fault information cleared at seat weight sensor	2B
P_OCS_ST (Seat weight sensor status)	Empty/ SMALL/ Indeterminate/ LARGE	Occupant classification status determined by seat weight sensor	2B

P_WEIGHT (Seat weight sensor measured weight of passenger)	Kg	Display of load (body weight) on passenger-side seat	2B
RES_C_AB_D (Driver-side curtain air bag module resistance nominal)	ohm	Continuous: **0.81–6.42 ohms**	1S, 1V
RES_C_AB_P (Passenger-side curtain air bag module resistance nominal)	ohm	Continuous: **0.81–6.42 ohms**	1W, 1T
RES_F_AB1_D (Driver-side air bag module (inflatorNo.1) resistance nominal)	ohm	Continuous: **0.99–6.42 ohms**	3A, 3D
RES_F_AB1_P (Passenger-side air bag module (inflatorNo.1) resistance nominal)	ohm	Continuous: **0.81–6.42 ohms**	3G, 3J
RES_F_AB2_D (Driver-side air bag module (inflatorNo.2) resistance nominal)	ohm	Continuous: **0.99–6.42 ohms**	3S, 3V
RES_F_AB2_P (Passenger-side air bag module (inflator No.2) resistance nominal)	ohm	Continuous: **0.81–6.42 ohms**	3T, 3W

RES_PCD_BAR (Poorly connected detector bar terminals resistance nominal (all of SAS control module connectors))	ohm	• Normal connected: **100 ohm or less** • Poor connected: **20 kilohm or more**	1a, 1b, 2a, 2b, 3a, 3b
RES_S_AB_D (Driver-side side air bag module resistance nominal)	ohm	Continuous: **0.81–9.85 ohms**	1A, 1D
RES_S_AB_P (Passenger-side side air bag module resistance nominal)	ohm	Continuous: **0.81–9.85 ohms**	1J, 1G
RES_SB_LP_D (Driver-side lap pre-tensioner seat belt resistance nominal)	ohm	Continuous: **0.81–6.42 ohms**	2V, 2S
RES_SB_LP_P (Passenger-side lap pre-tensioner seat belt resistance nominal)	ohm	Continuous: **0.81–6.42 ohms**	2Y, 2AB
RES_SB_P_D (Driver-side pre-tensioner seat belt resistance nominal)	ohm	Continuous: **0.81–6.42 ohms**	2D, 2A
RES_SB_P_P (Passenger-side			

pre-tensioner seat belt resistance nominal)	ohm	Continuous: **0.81–6.42 ohms**		2G, 2J
SEAT_B_D (Driver-side buckle switch status)	Unbuckled/Buckled	• Driver-side front seat belt fastened (Driver-side buckle switch off): Buckled • Driver-side front seat belt not fastened (Driver-side buckle switch on): Unbuckled		2U
SEAT_B_P (Passenger-side buckle switch status)	Unbuckled/Buckled	Occupant seated in passenger-side front seat: On	• Passenger-side front seat belt fastened (Passenger-side buckle switch off): Buckled • Passenger-side front seat belt not fastened (Passenger-side buckle switch on): Unbuckled	2B
VPWR_IGA (SAS control module power voltage)	V	Ignition is switched ON: IG1 voltage		3C

2014 - Mazda3 - Restraints

AIR BAG SYSTEM WIRING DIAGRAM (SYMPTOM TROUBLESHOOTING)

Two-step Deployment Control System

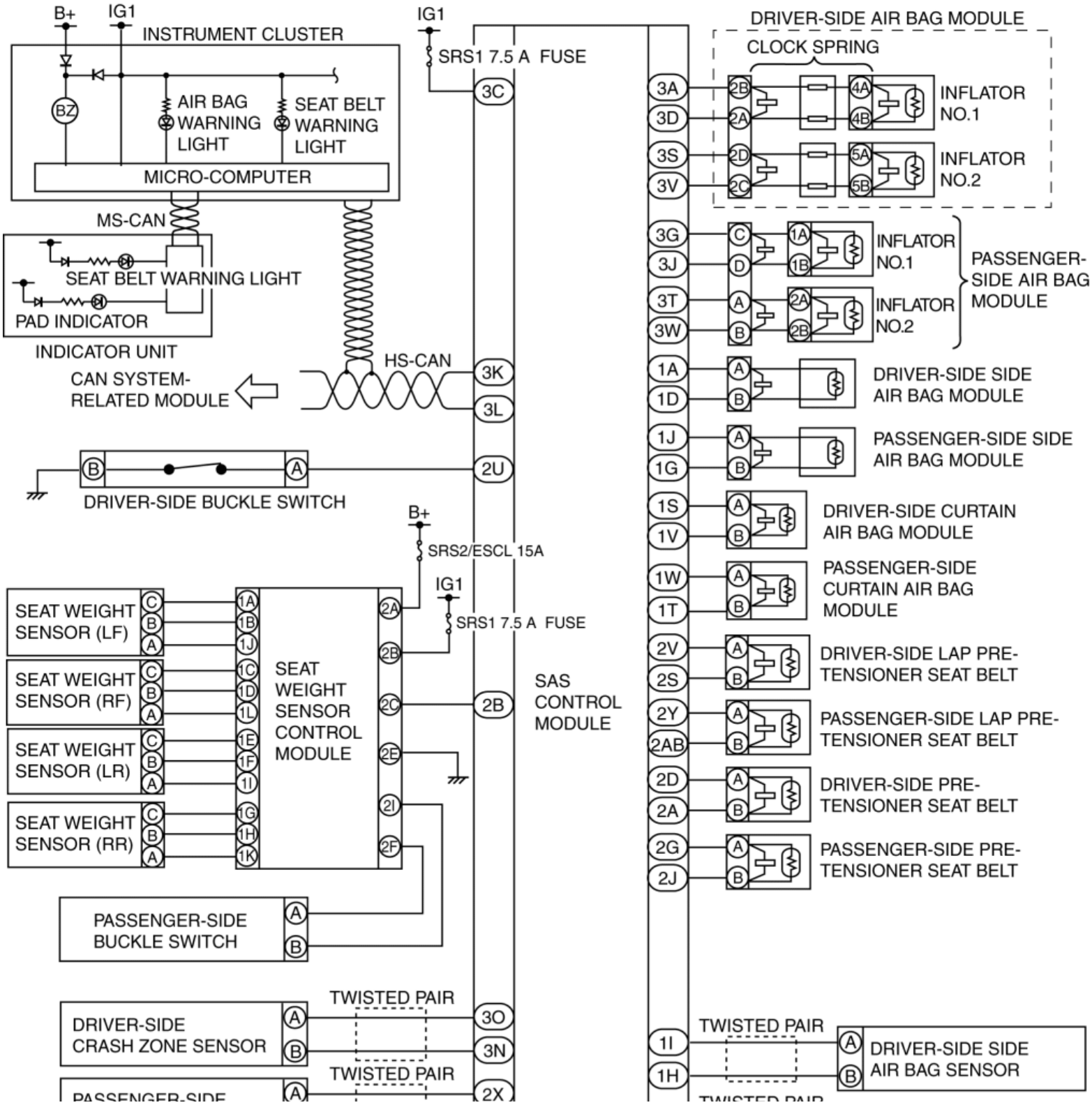

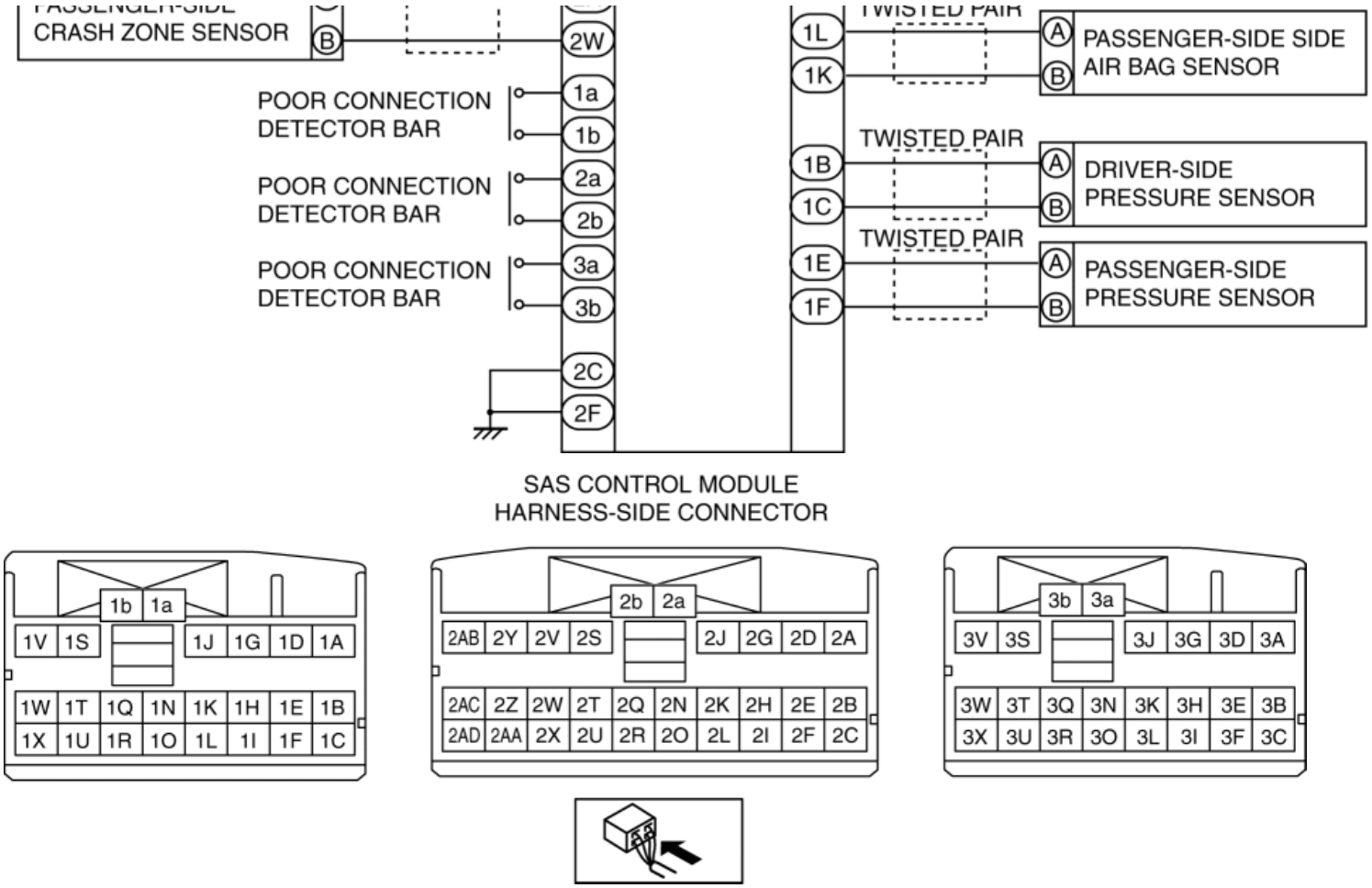

Standard Deployment Control System

AIR BAG SYSTEM WIRING DIAGRAM (SYMPTOM TROUBLESHOOTING)

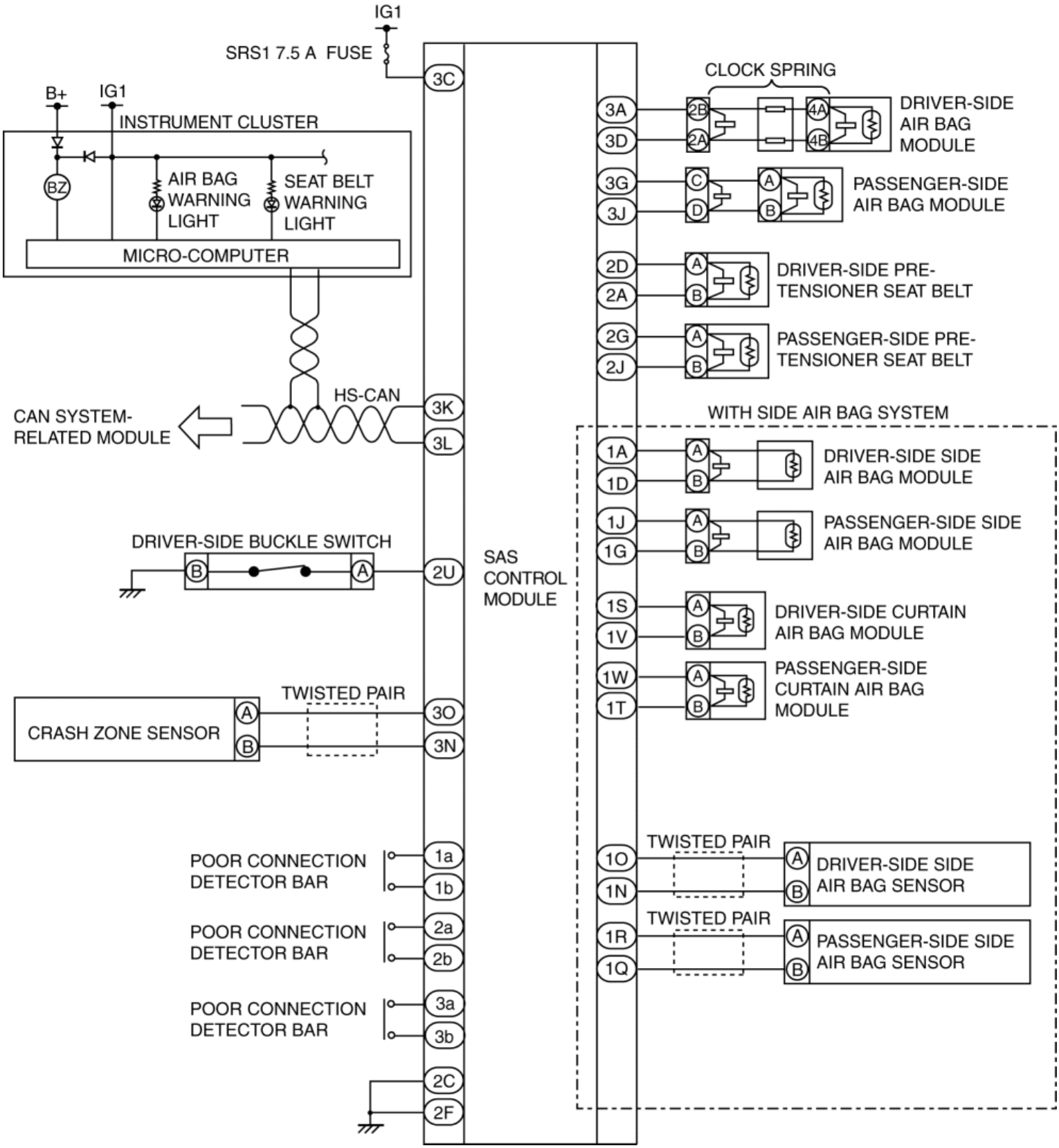

SAS CONTROL MODULE
HARNESS-SIDE CONNECTOR

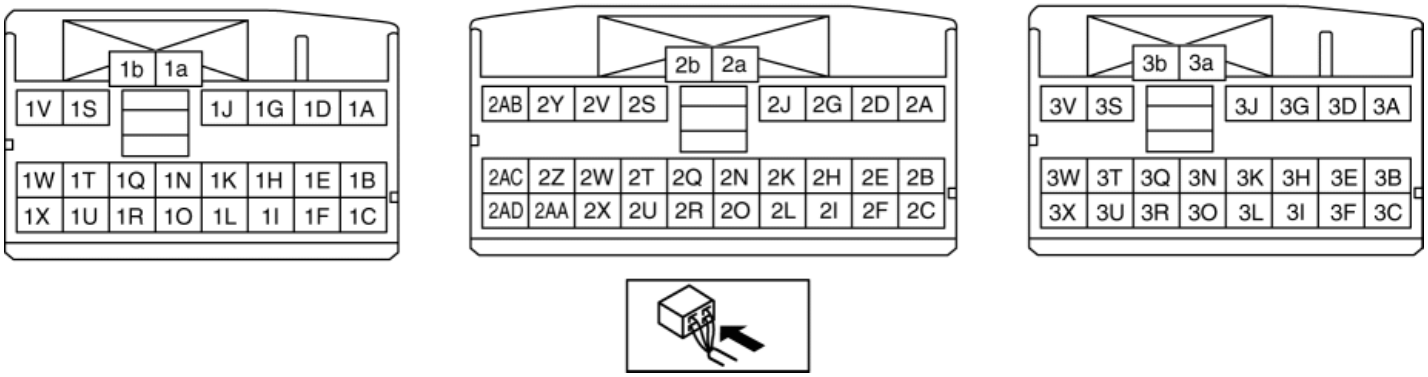

2014 - Mazda3 - Restraints

FOREWORD

- If there is any vehicle malfunction complaint lodged by a customer, perform malfunction diagnosis according to the troubleshooting procedure.

Troubleshooting Procedure

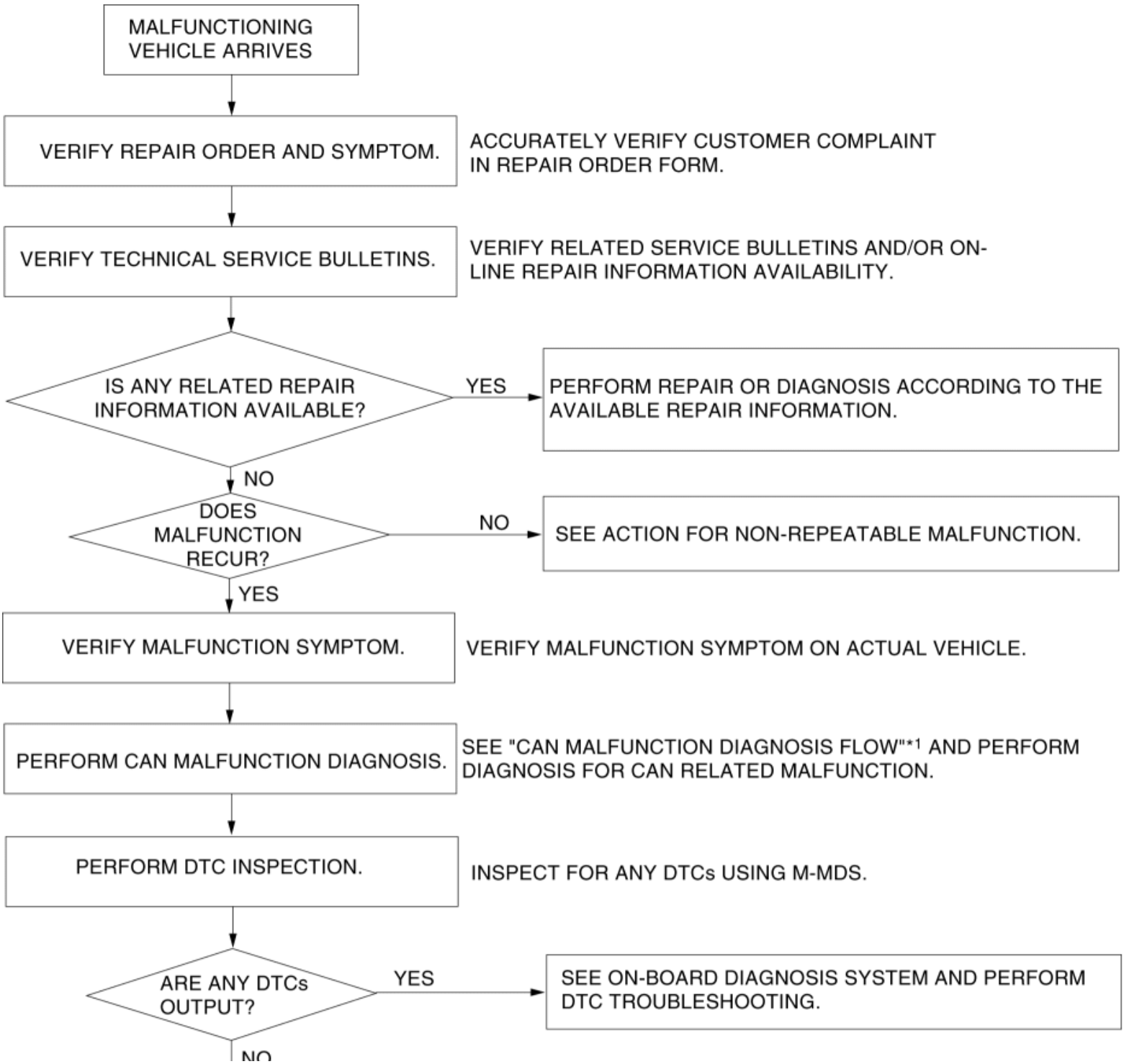

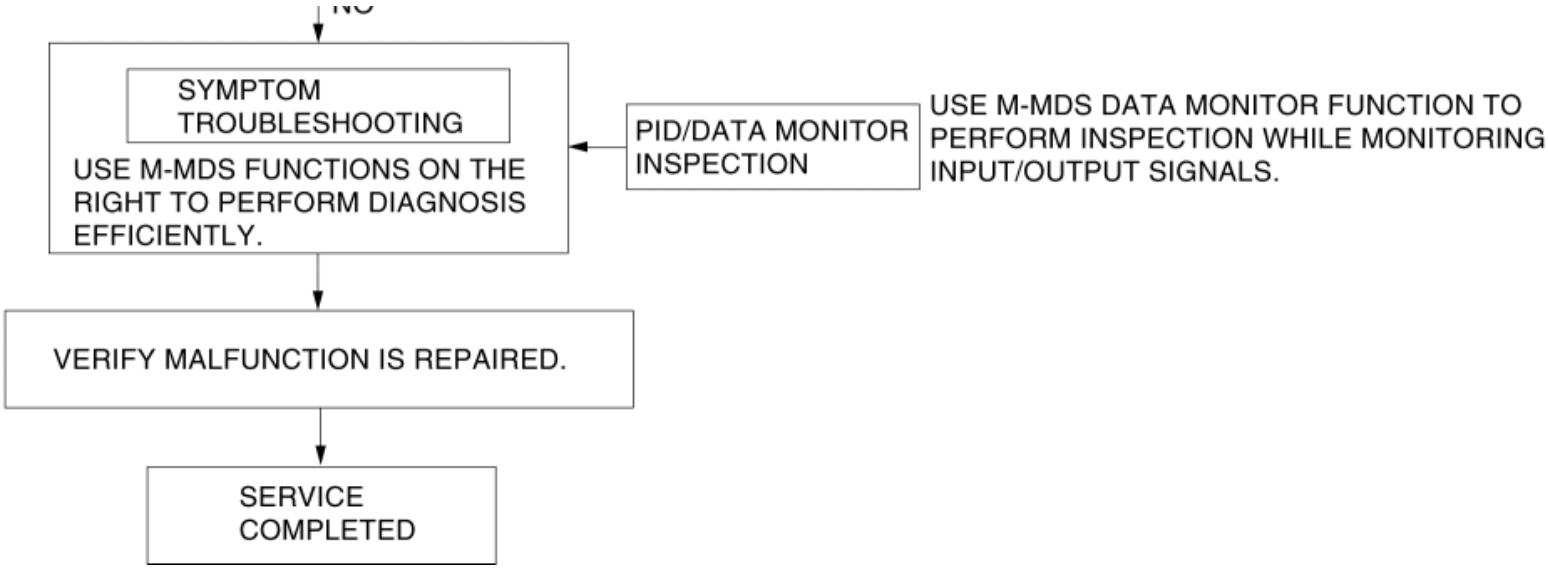

*1 **CONTROLLER AREA NETWORK (CAN) MALFUNCTION DIAGNOSIS FLOW**.

Action for non-repeatable malfunction

- If the malfunction does not recur, verify the malfunction cause by performing the following actions:
  - Verify that a DTC has been recorded in the memory.
  - Based on the repair order form, attempt to drive the vehicle or perform tests to replicate the malfunction, record the data (such as CAN circuit voltage) at that time, and detect the malfunction cause.
  - Refer to [Determining Open Circuit Location] based on the recorded DTC, shake the wiring harness or connector of the electrical component which is suspected to be the cause of the malfunction, and inspect for any changes in CAN system voltage or occurrence of any DTCs.

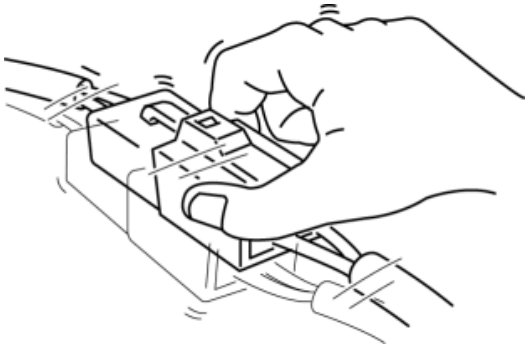

  - Inspect the female terminals on the connector of the electric component which is suspected to be the cause of the malfunction for poor connection.

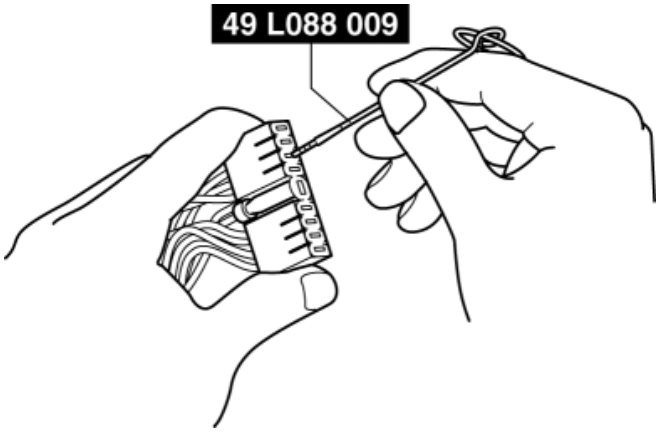

Air Bag System Specification Identification

- Because two types of driver and passenger-side air bag module controls, “Two-step deployment control” and “Standard deployment control”, are available depending on when the vehicle was produced, identify the specification referring to the following identification.

Identification

- In this manual, “Two-step deployment control system” or “Standard deployment control system” is used if the service contents differ depending on the control.
- Control is identified by the following components.

×:Equipped-:Not equipped

Item	Two-step deployment control system	Standard deployment control system
Sophisticated air bag sensor (SAS) control module	×	×
Crash zone sensor	×	×
Side air bag sensor	×	×
Pressure sensor	×	-
Driver-side air bag module	× (Two-step deployment type)	× (Standard deployment type)
Passenger-side air bag module	× (Two-step deployment type)	× (Standard deployment type)
Side air bag module	×	×
Curtain air bag module	×	×
Lap pre-tensioner seat belt	×	-
Pre-tensioner seat belt	×	×
Clock spring	× (Two-step deployment type)	× (Standard deployment type)
Seat weight sensor/control module	×	-

Driver-side buckle switch	×	×
Passenger-side buckle switch	×	-
Air bag system warning light	×	×
PAD indicator	×	-

Outline

- The OBD (on-board diagnostic) system has the following functions:
  - Malfunction detection function: Detects malfunctions in the air bag system and outputs DTCs (Diagnostic Trouble Codes).
  - PID/data monitor function: Reads out specific input/output signals and the system status.
- DTCs can be read/cleared using the M-MDS.

  NOTE:

  - Use the M-MDS to verify DTCs because the DTCs displayed by the air bag system warning light are reference information only.

2014 - Mazda3 - Restraints

TROUBLESHOOTING INDEX

- Use the chart below verify the symptoms of the trouble in order to diagnose the appropriate area.

Troubleshooting item	Description
AIR BAG SYSTEM WARNING LIGHT DOES NOT ILLUMINATE	Air bag system warning light does not illuminate while the air bag system is performing initialization.
AIR BAG SYSTEM WARNING LIGHT ILLUMINATES CONSTANTLY	Air bag system warning light is illuminated constantly and remains illuminated after 6 s have elapsed.

2014 - Mazda3 - Restraints

AIR BAG SYSTEM WARNING LIGHT DOES NOT ILLUMINATE

Description	• Air bag system warning light does not illuminate while the air bag system is performing initialization.
Possible cause	• Air bag system warning light circuit malfunction • Air bag system warning light (LED) malfunction • Instrument cluster malfunction • Communication error between SAS control module and instrument cluster • SAS control module malfunction

Diagnostic Procedure

STEP	INSPECTION		ACTION
1	**INSPECT OTHER WARNING AND INDICATOR LIGHTS CIRCUIT IN INSTRUMENT CLUSTER** • Switch the ignition ON (engine off or on). • Do other warning and indicator lights illuminate?	Yes	Go to the next step.
		No	Inspect the instrument cluster power supply system and ground system, then go to Step 3.
2	**INSPECT DTCs IN SAS CONTROL MODULE** • Inspect the DTC for the SAS control module on-board diagnostic system. (See **DTC INSPECTION [TWO-STEP DEPLOYMENT CONTROL SYSTEM]**.) (See **DTC INSPECTION [STANDARD DEPLOYMENT CONTROL SYSTEM]**.) • Have DTCs been recorded in memory?	Yes	Perform the applicable DTC inspection, then go to Step 5. (See **DTC TABLE [STANDARD DEPLOYMENT CONTROL SYSTEM]**.) (See **DTC TABLE [TWO-STEP DEPLOYMENT CONTROL SYSTEM]**.)
		No	Go to the next step.
3	**VERIFY WHERE MALFUNCTION IS IN WARNING LIGHTS INDICATION CIRCUIT OR ELSEWHERE**	Yes	Go to the next step.

	• Turn on all warning lights and indicator lights using the instrument cluster PID WL+IL of simulation function using the M-MDS. (See **ACTIVE COMMAND MODES INSPECTION [INSTRUMENT CLUSTER]**.) • Do other waning and indicator lights illuminate?	No	Replace the instrument cluster. (See **INSTRUMENT CLUSTER REMOVAL/INSTALLATION**.) Then go to Step 5.
4	**INSPECT DTCs IN INSTRUMENT CLUSTER** • Inspect the DTC for the instrument cluster on-board diagnostic system. (See **DTC INSPECTION [INSTRUMENT CLUSTER]**.) • Have DTCs been recorded in memory?	Yes	Perform the applicable DTC inspection, then go to the next step. (See **DTC TABLE [INSTRUMENT CLUSTER]**.)
		No	Go to the next step.
5	**VERIFY THAT MALFUNCTION SYMPTOMS DO NOT RECUR AFTER REPAIR** • Switch the ignition off. • Switch the ignition ON (engine off or on). • Does the air bag system warning light operate properly?	Yes	Verify that there are no DTCs in the memory. If there are no DTCs, the troubleshooting is completed.
		No	Recheck malfunction symptoms, then repeat from Step 1 if malfunction recurs.

2014 - Mazda3 - Restraints

AIR BAG SYSTEM WARNING LIGHT ILLUMINATES CONSTANTLY

Description	• Air bag system warning light is illuminated constantly and remains illuminated after 6 s have elapsed.
Possible cause	• Weak battery • SAS control module connectors are poorly connected • Instrument cluster connector is poorly connected • SAS control module malfunction • Instrument cluster malfunction • SAS control module power supply circuit malfunction ▪ Short to ground in wiring harness between SRS1 7.5 A fuse and SAS control module terminal 3C ▪ SRS1 7.5 A fuse malfunction ▪ Open circuit in wiring harness between IG1 relay and SAS control module terminal 3C

System Wiring Diagram

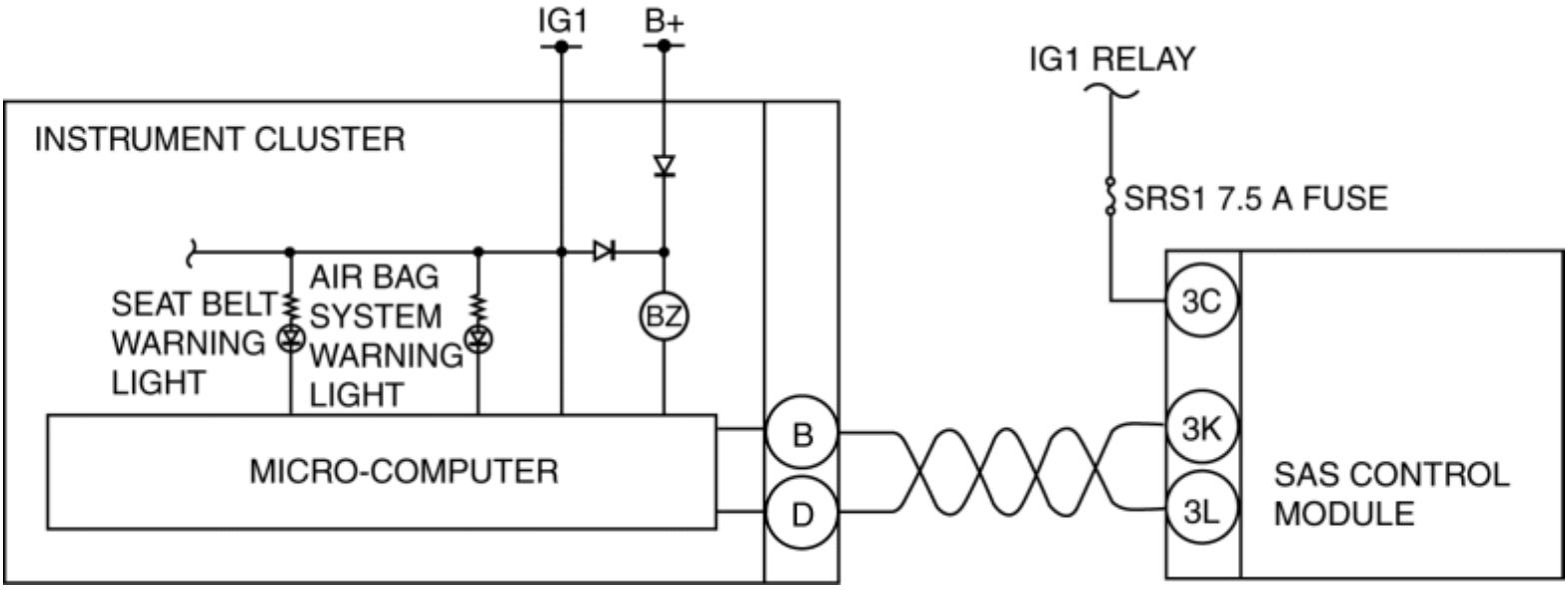

Diagnostic Procedure

STEP	INSPECTION		ACTION
1	**INSPECT BATTERY** • Measure the voltage of battery. • Is the voltage **8 V or more**?	Yes	Go to the next step.
		No	Battery is weak. Inspect charge/discharge system, then go to Step 8. (See **BATTERY INSPECTION [SKYACTIV-G 2.0, SKYACTIV-G 2.5]**.)
2	**VERIFY THAT SAS CONTROL MODULE CONNECTOR IS CONNECTED** **WARNING:** • Handling the air bag system components improperly can accidentally deploy the air bag modules and pre-tensioner seat belts, which may seriously injure you. Read the air bag system service warnings and cautions before handling the air bag system components. (See **AIR BAG SYSTEM SERVICE WARNINGS [STANDARD DEPLOYMENT CONTROL SYSTEM]**.) (See **AIR BAG SYSTEM SERVICE CAUTIONS [STANDARD DEPLOYMENT CONTROL SYSTEM]**.) (See **AIR BAG SYSTEM SERVICE WARNINGS [TWO-STEP DEPLOYMENT CONTROL SYSTEM]**.) (See **AIR BAG SYSTEM SERVICE CAUTIONS [TWO-STEP DEPLOYMENT CONTROL SYSTEM]**.) • Switch the ignition off. • Disconnect the negative battery cable and wait for **1 min or more**. (See **NEGATIVE BATTERY CABLE DISCONNECTION/CONNECTION [SKYACTIV-G 2.0, SKYACTIV-G 2.5]**.) • Remove the rear console.	Yes	Go to the next step.
		No	Reconnect the connector properly, then go to Step 8.

	(See **REAR CONSOLE REMOVAL/INSTALLATION**.) • Are all SAS control module connectors securely connected?		
3	**VERIFY THAT INSTRUMENT CLUSTER CONNECTOR IS CONNECTED** • Disconnect the instrument cluster connector. (See **INSTRUMENT CLUSTER REMOVAL/INSTALLATION**.) • Are all instrument cluster connectors securely connected?	Yes	Go to the next step.
		No	Reconnect the connector properly, then go to Step 8.
4	**INSPECT DTCs IN SAS CONTROL MODULE** • Connect the negative battery cable. (See **NEGATIVE BATTERY CABLE DISCONNECTION/CONNECTION [SKYACTIV-G 2.0, SKYACTIV-G 2.5]**.) • Switch the ignition ON (engine off or on). • Clear DTCs using the M-MDS. (See **CLEARING DTC [STANDARD DEPLOYMENT CONTROL SYSTEM]**.) (See **CLEARING DTC [TWO-STEP DEPLOYMENT CONTROL SYSTEM]**.) • Inspect the DTC for the SAS control module on-board diagnostic system. (See **DTC INSPECTION [TWO-STEP DEPLOYMENT CONTROL SYSTEM]**.) (See **DTC INSPECTION [STANDARD DEPLOYMENT CONTROL SYSTEM]**.) • Have DTCs been recorded in memory?	Yes	Perform the applicable DTC inspection, then go to Step 8. (See **DTC TABLE [STANDARD DEPLOYMENT CONTROL SYSTEM]**.)(See **DTC TABLE [TWO-STEP DEPLOYMENT CONTROL SYSTEM]**.)
		No	Go to the next step.
5	**INSPECT DTCs IN INSTRUMENT CLUSTER** • Inspect the DTC for the instrument cluster on-board diagnostic system. (See **DTC INSPECTION [INSTRUMENT CLUSTER]**.) • Have DTCs been recorded in memory?	Yes	Perform the applicable DTC inspection, then go to Step 8. (See **DTC TABLE [INSTRUMENT CLUSTER]**.)
		No	Go to the next step.
6	**VERIFY WHERE MALFUNCTION IS IN WARNING LIGHTS INDICATION CIRCUIT OR ELSEWHERE** • Turn on all warning lights and indicator	Yes	Go to the next step.

	lights using the instrument cluster PID WL+IL of simulation function using the M-MDS. (See **ACTIVE COMMAND MODES INSPECTION [INSTRUMENT CLUSTER]**.) • Do other warning and indicator lights illuminate?	No	Repair the instrument cluster. (See **INSTRUMENT CLUSTER REMOVAL/INSTALLATION**.) Then go to Step 8.
7	**INSPECT POWER SUPPLY CIRCUIT OF SAS CONTROL MODULE (TERMINAL 3C)** **WARNING:** • Handling the component parts improperly can accidentally operate (deploy) the air bag module, which may seriously injure you. Read the service warnings/cautions and the workshop manual before handling the air bag system components. (See **AIR BAG SYSTEM SERVICE WARNINGS [STANDARD DEPLOYMENT CONTROL SYSTEM]**.) (See **AIR BAG SYSTEM SERVICE CAUTIONS [STANDARD DEPLOYMENT CONTROL SYSTEM]**.)(See **AIR BAG SYSTEM SERVICE WARNINGS [TWO-STEP DEPLOYMENT CONTROL SYSTEM]**.) (See **AIR BAG SYSTEM SERVICE CAUTIONS [TWO-STEP DEPLOYMENT CONTROL SYSTEM]**.) • Switch the ignition off. • Disconnect the negative battery cable and wait for **1 min or more**. • Remove the column cover. (See **COLUMN COVER REMOVAL/INSTALLATION**.) • Disconnect the clock spring connector. (See **CLOCK SPRING REMOVAL/INSTALLATION [STANDARD DEPLOYMENT CONTROL SYSTEM]**.)(See **CLOCK SPRING REMOVAL/INSTALLATION [TWO-STEP DEPLOYMENT CONTROL SYSTEM]**.) • Remove the glove compartment. (See **GLOVE COMPARTMENT REMOVAL/INSTALLATION**.) • Disconnect the passenger-side air bag module connector.	Yes	Go to the next step.

		No	Inspect the SRS1 7.5 A fuse.
			
			• If a fuse is burnt out:
			  ▪ Repair or replace the wiring harness which is shorted to ground.
			  ▪ Replace the fuse.
			
			• Replace the fuse.
			  ▪ Replace the fuse.
			
			• If the fuse is normal:
			  ▪ Repair or replace the wiring harness which has an open circuit.
			
			Go to the next step.

	(See **PASSENGER-SIDE AIR BAG MODULE REMOVAL [TWO-STEP DEPLOYMENT CONTROL SYSTEM]**.) (See **PASSENGER-SIDE AIR BAG MODULE INSTALLATION [TWO-STEP DEPLOYMENT CONTROL SYSTEM]**.) (See **PASSENGER-SIDE AIR BAG MODULE REMOVAL [STANDARD DEPLOYMENT CONTROL SYSTEM]**.) (See **PASSENGER-SIDE AIR BAG MODULE INSTALLATION [STANDARD DEPLOYMENT CONTROL SYSTEM]**.) • Disconnect the driver and passenger-side front seat connector. (See **FRONT SEAT REMOVAL/INSTALLATION**.) • Remove the headliner. (See **HEADLINER REMOVAL/INSTALLATION**.) • Disconnect the driver and passenger-side curtain air bag module connectors. (See **CURTAIN AIR BAG MODULE REMOVAL/INSTALLATION [STANDARD DEPLOYMENT CONTROL SYSTEM]**.)(See **CURTAIN AIR BAG MODULE REMOVAL/INSTALLATION [TWO-STEP DEPLOYMENT CONTROL SYSTEM]**.)		
	• Remove the B-pillar lower trim. (See **B-PILLAR LOWER TRIM REMOVAL/INSTALLATION**.) • Disconnect the driver and passenger-side pre-tensioner seat belt connectors. • Disconnect the driver and passenger-side lap pre-tensioner seat belt connector. (See **FRONT SEAT BELT REMOVAL/INSTALLATION**.) • Disconnect all SAS control module connectors. (See **SAS CONTROL MODULE REMOVAL/INSTALLATION [STANDARD DEPLOYMENT CONTROL SYSTEM]**.)(See **SAS CONTROL MODULE REMOVAL/INSTALLATION [TWO-STEP**		

	DEPLOYMENT CONTROL SYSTEM].) • Connect the negative battery cable. (See **NEGATIVE BATTERY CABLE DISCONNECTION/CONNECTION [SKYACTIV-G 2.0, SKYACTIV-G 2.5]**.) • Switch the ignition ON (engine off or on). • Measure the voltage at SAS control module at wiring harness-side connector terminal 3C. • Is the voltage **8 V—16 V**?		
8	**VERIFY THAT MALFUNCTION SYMPTOMS DO NOT RECUR AFTER REPAIR** • Connect the SAS control module connectors. • Reconnect all disconnected connectors. • Connect the negative battery cable. (See **NEGATIVE BATTERY CABLE DISCONNECTION/CONNECTION [SKYACTIV-G 2.0, SKYACTIV-G 2.5]**.) • Switch the ignition ON (engine off or on). • Does the air bag system warning light illuminate for **approx. 6 s** and turn off?	Yes	Complete troubleshooting, then explain repairs to customer.
		No	Recheck malfunction symptoms, then repeat from Step 1 if malfunction recurs.

2014 - Mazda3 - Restraints

AIR BAG SYSTEM LOCATION INDEX [TWO-STEP DEPLOYMENT CONTROL SYSTEM]

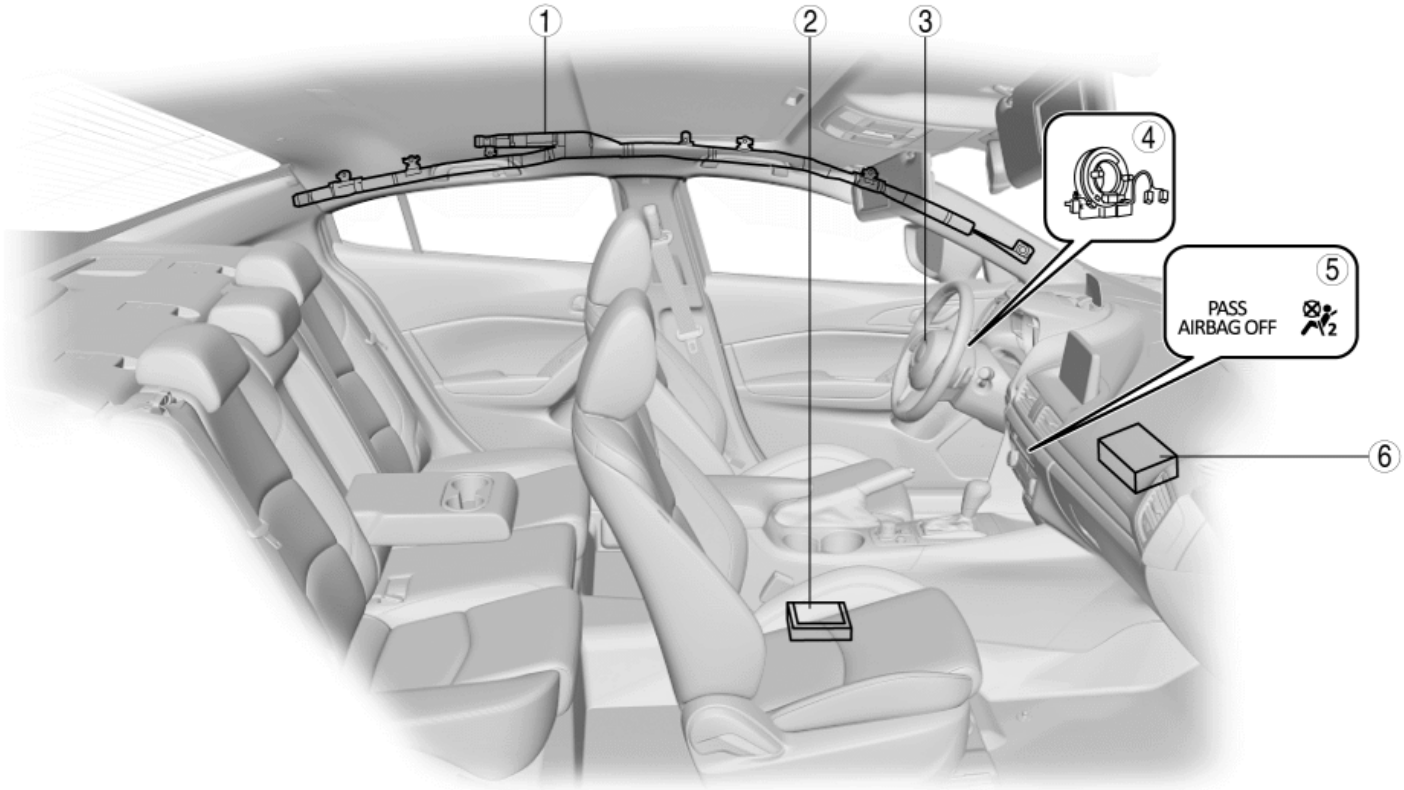

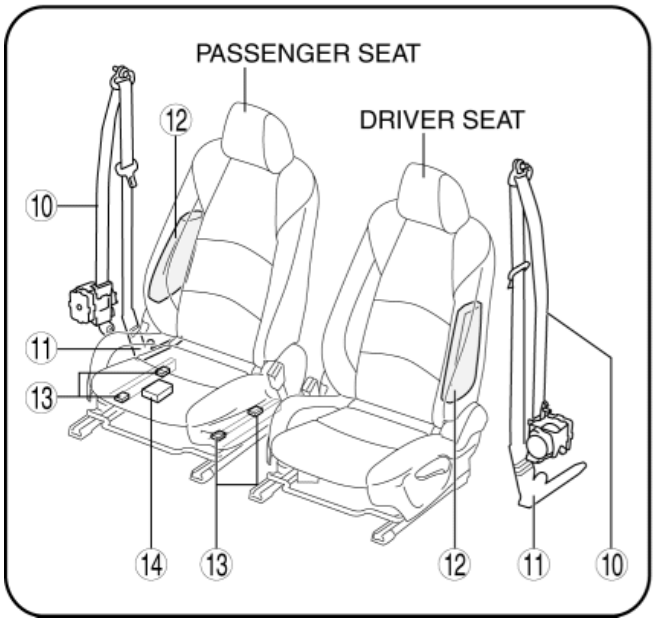

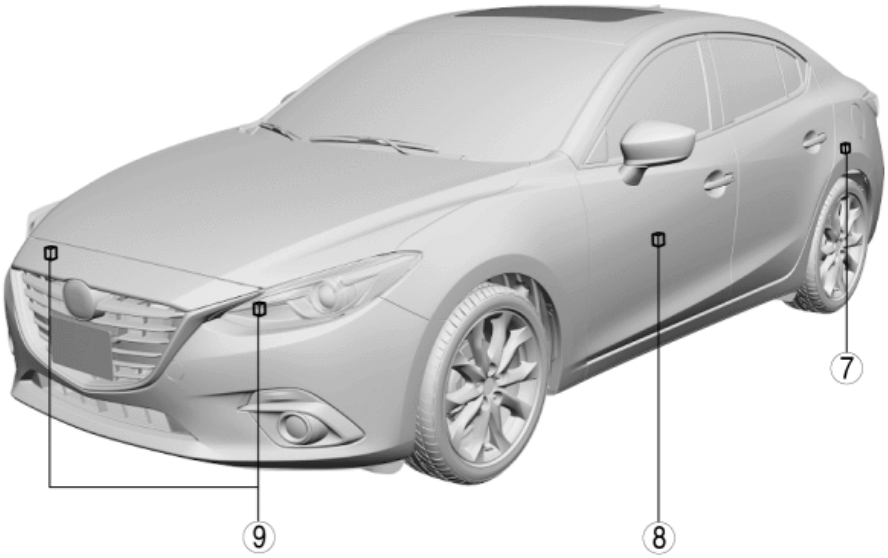

1	Curtain air bag module (See **CURTAIN AIR BAG MODULE REMOVAL/INSTALLATION [TWO-STEP DEPLOYMENT CONTROL SYSTEM]**.) (See **AIR BAG MODULE AND PRE-TENSIONER SEAT BELT DEPLOYMENT PROCEDURES [TWO-STEP DEPLOYMENT CONTROL SYSTEM]**.)

2	SAS control module (See **SAS CONTROL MODULE REMOVAL/INSTALLATION [TWO-STEP DEPLOYMENT CONTROL SYSTEM]**.) (See **SAS CONTROL MODULE CONFIGURATION (USING READ/WRITE FUNCTION) [TWO-STEP DEPLOYMENT CONTROL SYSTEM]**.) (See **SAS CONTROL MODULE CONFIGURATION (USING AS-BUILT DATA) [TWO-STEP DEPLOYMENT CONTROL SYSTEM]**.)
3	Driver-side air bag module (See **DRIVER-SIDE AIR BAG MODULE REMOVAL [TWO-STEP DEPLOYMENT CONTROL SYSTEM]**.) (See **DRIVER-SIDE AIR BAG MODULE INSTALLATION [TWO-STEP DEPLOYMENT CONTROL SYSTEM]**.) (See **AIR BAG MODULE AND PRE-TENSIONER SEAT BELT DEPLOYMENT PROCEDURES [TWO-STEP DEPLOYMENT CONTROL SYSTEM]**.)
4	Clock spring (See **CLOCK SPRING REMOVAL/INSTALLATION [TWO-STEP DEPLOYMENT CONTROL SYSTEM]**.) (See **CLOCK SPRING ADJUSTMENT [TWO-STEP DEPLOYMENT CONTROL SYSTEM]**.) (See **CLOCK SPRING INSPECTION [TWO-STEP DEPLOYMENT CONTROL SYSTEM]**.)
5	Passenger air bag deactivation (PAD) indicator light (See **PASSENGER AIR BAG DEACTIVATION (PAD) INDICATOR LIGHT REMOVAL/INSTALLATION [TWO-STEP DEPLOYMENT CONTROL SYSTEM]**.)
6	Passenger-side air bag module (See **PASSENGER-SIDE AIR BAG MODULE REMOVAL [TWO-STEP DEPLOYMENT CONTROL SYSTEM]**.) (See **PASSENGER-SIDE AIR BAG MODULE INSTALLATION [TWO-STEP DEPLOYMENT CONTROL SYSTEM]**.) (See **AIR BAG MODULE AND PRE-TENSIONER SEAT BELT DEPLOYMENT PROCEDURES [TWO-STEP DEPLOYMENT CONTROL SYSTEM]**.)
7	Side air bag sensor (See **SIDE AIR BAG SENSOR REMOVAL/INSTALLATION [TWO-STEP DEPLOYMENT CONTROL SYSTEM]**.)
8	Pressure sensor (See **PRESSURE SENSOR REMOVAL/INSTALLATION [TWO-STEP DEPLOYMENT CONTROL SYSTEM]**.)
9	Crash zone sensor (See **CRASH ZONE SENSOR REMOVAL/INSTALLATION [TWO-STEP DEPLOYMENT CONTROL SYSTEM]**.)
10	Pre-tensioner seat belt (See **FRONT SEAT BELT REMOVAL/INSTALLATION**.) (See **AIR BAG MODULE AND PRE-TENSIONER SEAT BELT DEPLOYMENT PROCEDURES [TWO-STEP DEPLOYMENT CONTROL SYSTEM]**.)
11	Lap pre-tensioner seat belt (See **FRONT SEAT BELT REMOVAL/INSTALLATION**.) (See **AIR BAG MODULE AND PRE-TENSIONER SEAT BELT DEPLOYMENT PROCEDURES [TWO-STEP DEPLOYMENT CONTROL SYSTEM]**.)
12	Side air bag module (See **SIDE AIR BAG MODULE REMOVAL/INSTALLATION [TWO-STEP DEPLOYMENT CONTROL SYSTEM]**.) (See **AIR BAG MODULE AND PRE-TENSIONER SEAT BELT DEPLOYMENT PROCEDURES [TWO-STEP DEPLOYMENT CONTROL SYSTEM]**.)
13	Seat weight sensor (See **SEAT WEIGHT SENSOR REMOVAL/INSTALLATION [TWO-STEP DEPLOYMENT CONTROL SYSTEM]**.) (See **SEAT WEIGHT SENSOR CALIBRATION [TWO-STEP DEPLOYMENT CONTROL SYSTEM]**.) (See **SEAT WEIGHT SENSOR INSPECTION [TWO-STEP DEPLOYMENT CONTROL SYSTEM]**.)

14	Seat weight sensor control module (See **SEAT WEIGHT SENSOR CONTROL MODULE REMOVAL / INSTALLATION [TWO-STEP DEPLOYMENT CONTROL SYSTEM]**.)

2014 - Mazda3 - Restraints

AIR BAG SYSTEM SERVICE WARNINGS [TWO-STEP DEPLOYMENT CONTROL SYSTEM]

Air Bag Module Inspection

- **Inspecting an air bag module using a tester can operate (deploy) the air bag module, which may cause serious injury. Do not use a tester to inspect an air bag module. Always use the on-board diagnostic function to diagnose the air bag module for malfunctions.**

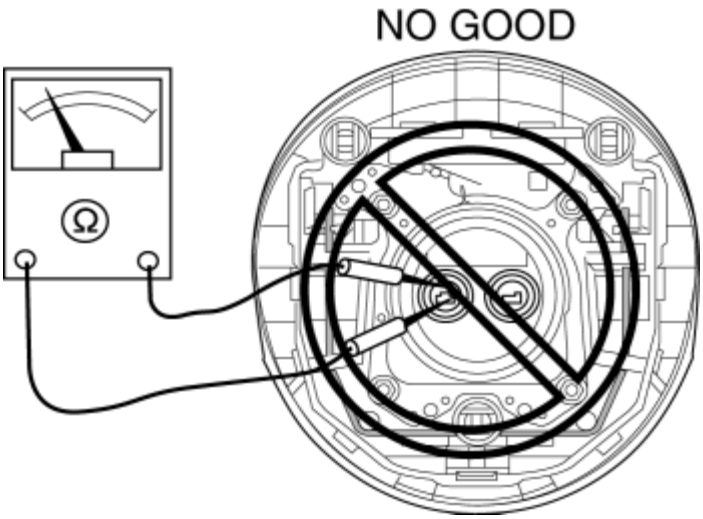

Air Bag Module Handling

- **Before removing the air bag module or disconnecting the air bag module connector, always switch the ignition off, disconnect the negative battery cable, and then wait for 1 min or more to allow the backup power supply of the SAS control module to deplete its stored power.**
- **Handling a live (undeployed) air bag module that is pointed toward your body could result in serious injury if the air bag module were to accidentally operate (deploy). When carrying a live (undeployed) air bag module, point the deployment surface away from your body to lessen the chance of injury in case it operates (deploys).**

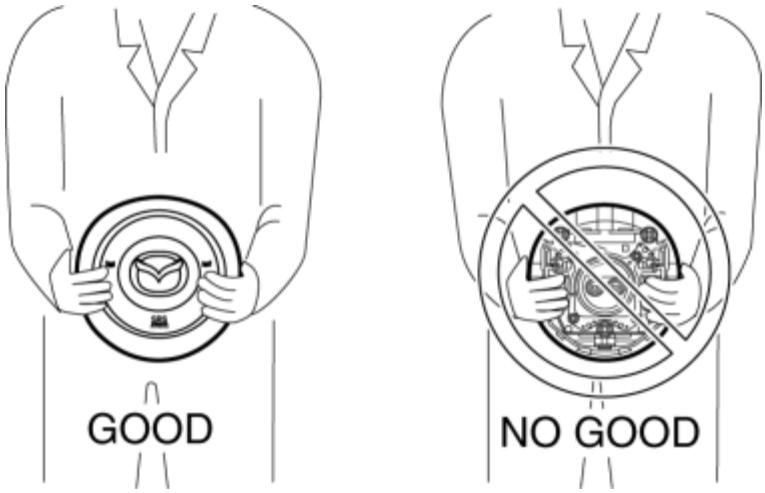

- **A live (undeployed) air bag module placed with its deployment surface to the ground is dangerous. If the air bag module were to accidentally operate (deploy), it could cause serious injury. Always place a live (undeployed) air bag module with its deployment surface up.**

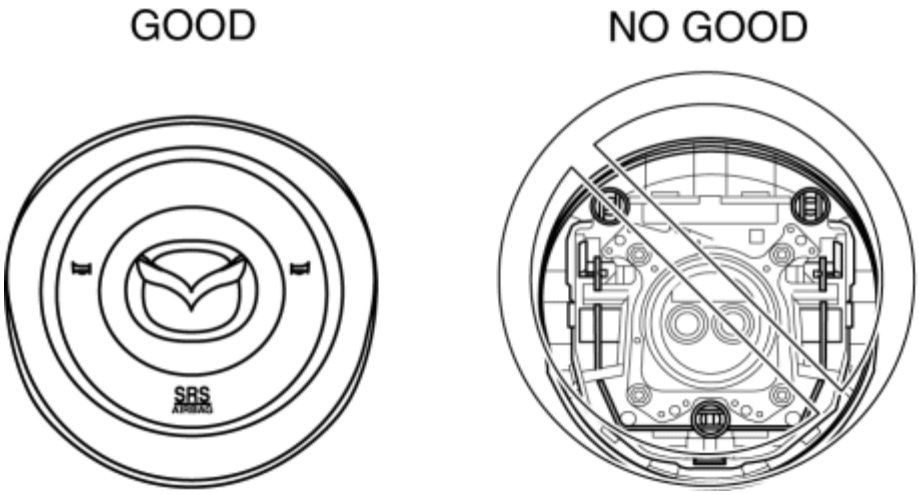

Side Air Bag Module Handling

- **Before removing the side air bag module or disconnecting the side air bag module connector, always switch the ignition off, disconnect the negative battery cable, and then wait for 1 min or more to allow the backup power supply of the SAS control module to deplete its stored power.**
- **When a side air bag module operates (deploys) due to a collision, the interior of the seat back (pad, frame, trim) may become damaged. If a side air bag does not operate (deploy) normally from a seat back that has been reused, a serious accident may result. After a side air bag has operated (deployed), always replace both the side air bag module and the seat back (pad, frame, trim) with new parts. After servicing, verify that the seat operates normally and that the wiring harness is not caught.**

SAS Control Module Handling

- **When connecting or disconnecting the SAS control module connector, a person**

charged with static electricity could accidentally operate (deploy) each air bag module and pre-tensioner seat belt. Before connecting or disconnecting the SAS control module connector, discharge any charged static electricity from your body.

- **Removing the SAS control module or disconnecting the SAS control module connector with the ignition ON can activate the sensor in the SAS control module and operate (deploy) the air bags, pre-tensioner seat belts and lap pre-tensioner seat belts which may cause serious injury. Before removing the SAS control module or disconnecting the SAS control module connector, always switch the ignition off, disconnect the negative battery cable, and then wait for 1 min or more to allow the backup power supply of the SAS control module to deplete its stored power.**
- **Connecting the SAS control module connector with the SAS control module not securely fixed to the vehicle is dangerous. The sensor in the SAS control module could send an electrical signal to the air bag modules, pre-tensioner seat belts and lap pre-tensioner seat belts. This will operate (deploy) the air bags, pre-tensioner seat belts and lap pre-tensioner seat belts, which may result in serious injury. Therefore, before connecting the connector, securely fix the SAS control module to the vehicle.**
- **Because a sensor is built into the SAS control module, once the air bags, pre-tensioner seat belts and lap pre-tensioner seat belts have operated (deployed) due to a collision or other causes, the SAS control module must be replaced with a new one even if the used one does not have any visible external damage or deformation. The used SAS control module may have been damaged internally, which may cause improper operation. If the SAS control module is reused, the air bags, pre-tensioner seat belts and lap pre-tensioner seat belts may not operate (deploy) normally, which could result in a serious accident. Always replace the SAS control module with a new one. The SAS control module cannot be bench-checked or self-checked.**

Crash Zone Sensor Handling

- **Removing the crash zone sensor or disconnecting the crash zone sensor connector with the ignition ON can activate the crash zone sensor and operate (deploy) the air bags, pre-tensioner seat belts and lap pre-tensioner seat belts which may cause serious injury. Before removing the crash zone sensor or disconnecting the crash zone sensor connector, always switch the ignition off, disconnect the negative battery cable, and then wait for 1 min or more to allow the backup power supply of the SAS control module to deplete its stored power.**
- **If the crash zone sensor is subjected to shock or the sensor is disassembled, the air bags, pre-tensioner seat belts and lap pre-tensioner seat belts may accidentally operate (deploy) and cause injury, or the system may fail to operate normally and cause a serious accident. Do not subject the crash zone sensor to shock or disassemble the sensor.**
- **Because a sensor is built into the crash zone sensor, once the air bags, pre-tensioner seat belts and lap pre-tensioner seat belts have operated (deployed) due to a collision or other causes, the crash zone sensor must be replaced with a new one even if the used one does not have any visible external damage or deformation. If the crash zone sensor is reused, the air bags, pre-tensioner seat belts and lap pre-tensioner seat belts may not operate (deploy) normally, which could result in a serious accident. Always replace the crash zone sensor with a**

new one. The crash zone sensor cannot be bench-checked or self-checked.

Side Air Bag Sensor Handling

- **Removing the side air bag sensor or disconnecting the side air bag sensor connector with the ignition ON can activate the side air bag sensor and operate (deploy) the side air bag, which may cause serious injury. Before removing the side air bag sensor or disconnecting the side air bag sensor connector, always switch the ignition off, disconnect the negative battery cable, and then wait for 1 min or more to allow the backup power supply of the SAS control module to deplete its stored power.**
- **If the side air bag sensor is subjected to shock or the sensor is disassembled, the side air bag may accidentally operate (deploy) and cause injury, or the system may fail to operate normally and cause a serious accident. Do not subject the side air bag sensor to shock or disassemble the sensor.**
- **Because a sensor is built into the side air bag sensor, once the air bag has operated (deployed) due to a collision or other causes, the side air bag sensor must be replaced with a new one even if the used one does not have any visible external damage or deformation. If the side air bag sensor is reused, the side air bag may not operate (deploy) normally, which could result in a serious accident. Always replace the side air bag sensor with a new one. The side air bag sensor cannot be bench-checked or self-checked.**

Pressure Sensor Handling

- **Removing the pressure sensor or disconnecting the pressure sensor connector with the ignition ON can activate the pressure sensor and operate (deploy) the side air bag, which may cause serious injury. Before removing the pressure sensor or disconnecting the pressure sensor connector, always switch the ignition off, disconnect the negative battery cable, and then wait for 1 min or more to allow the backup power supply of the SAS control module to deplete its stored power.**
- **If the pressure sensor is subjected to shock or the sensor is disassembled, the side air bag may accidentally operate (deploy) and cause injury, or the system may fail to operate normally and cause a serious accident. Do not subject the pressure sensor to shock or disassemble the sensor.**
- **Because a sensor is built into the pressure sensor, once the air bag has operated (deployed) due to a collision or other causes, the pressure sensor must be replaced with a new one even if the used one does not have any visible external damage or deformation. If the pressure sensor is reused, the side air bag may not operate (deploy) normally, which could result in a serious accident. Always replace the pressure sensor with a new one. The pressure sensor cannot be bench-checked or self-checked.**

Pre-tensioner Seat Belt Inspection

- **Inspecting a pre-tensioner seat belt using a tester can operate (deploy) the pre-tensioner seat belt, which may cause serious injury. Do not use a tester to**

inspect a pre-tensioner seat belt. Always use the on-board diagnostic function to diagnose the pre-tensioner seat belt for malfunctions.

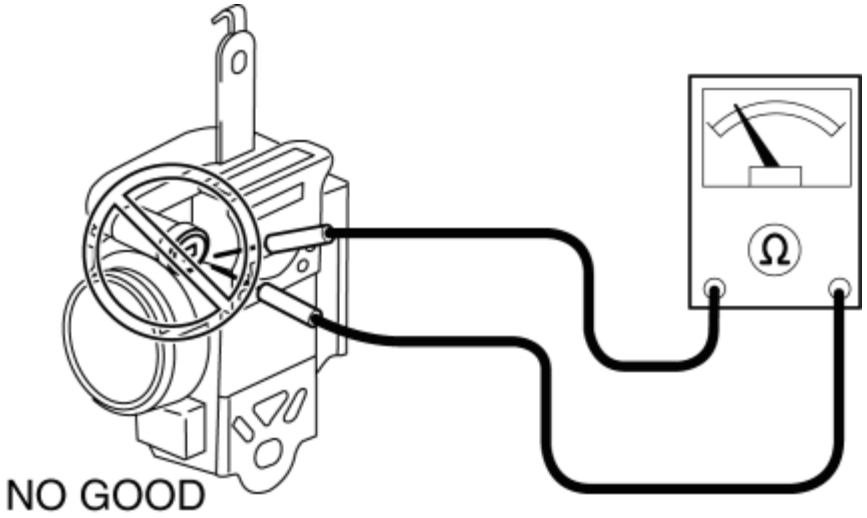

Lap Pre-tensioner Seat Belt Inspection

- **Inspecting a lap pre-tensioner seat belt using a tester can operate (deploy) the lap pre-tensioner seat belt, which may cause serious injury. Do not use a tester to inspect a lap pre-tensioner seat belt. Always use the on-board diagnostic function to diagnose the lap pre-tensioner seat belt for malfunctions.**

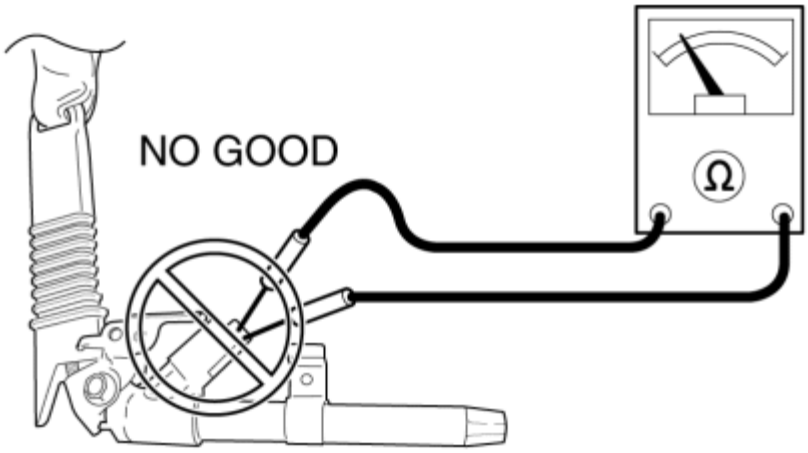

2014 - Mazda3 - Restraints

AIR BAG SYSTEM SERVICE CAUTIONS [TWO-STEP DEPLOYMENT CONTROL SYSTEM]

Air Bag System Component Disassembly

- **Disassembling the air bag system components could cause it to not operate (deploy) normally. Never disassemble any air bag system components.**

Air Bag Module, Pre-tensioner Seat Belt, Lap Pre-tensioner Seat Belt Handling

- **Oil, grease, or water on the air bag modules may cause the air bags to fail to operate (deploy) in an accident. Never allow oil, grease, or water to get on the air bag modules.**
- **Inserting a screwdriver or similar object into the connector of an air bag module, pre-tensioner seat belt or lap pre-tensioner seat belt may damage the connector and cause the air bag module, pre-tensioner seat belt or lap pre-tensioner seat belt to operate (deploy) improperly, which may cause serious injury. Never insert any foreign objects into the air bag module, pre-tensioner seat belt or lap pre-tensioner seat belt connectors.**

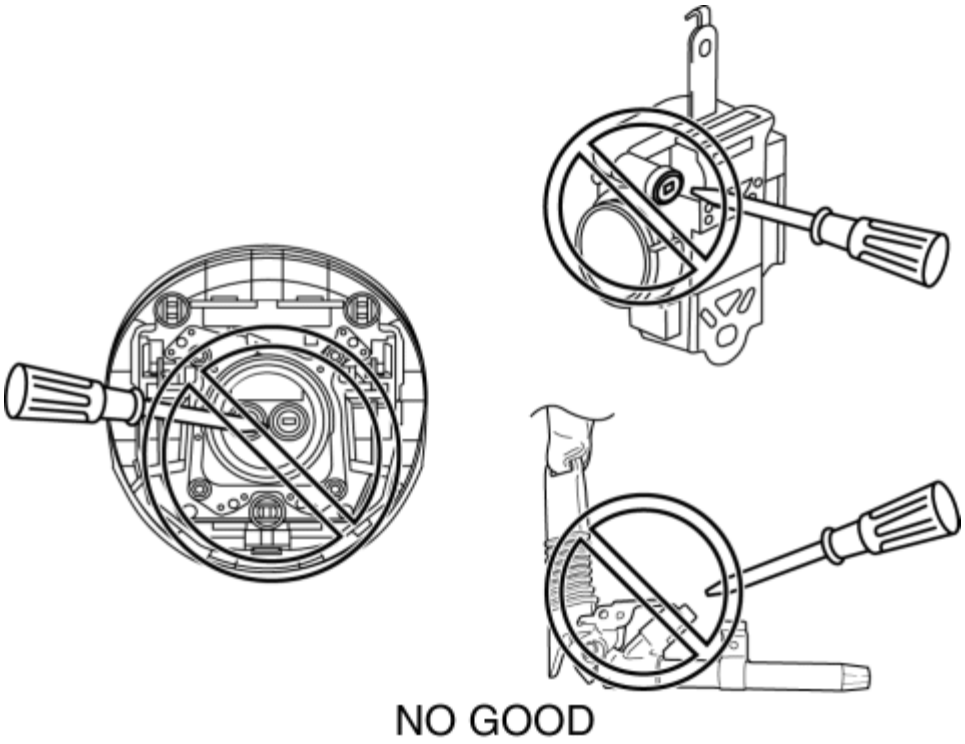

Seat Weight Sensor Handling

- **The seat weight sensor has a built-in strain gauge which may operate improperly if the sensor is dropped by itself or when installed to the seat. If it is dropped, replace the seat weight sensor with a new one.**
- **Oil, grease, or water on the seat weight sensor may cause the system to operate (deploy) improperly. Never allow oil, grease, or water to get on the seat weight sensor.**
- **Foreign matter in the seat weight sensor components may cause the system to operate (deploy) improperly. Always make sure that no foreign matter can get into the seat weight sensor.**
- **Disassembling the seat weight sensor, or tightening any of the nuts and bolts installed to the sensor body may cause it to operate (deploy) improperly. Never disassemble the seat weight sensor or tighten any of the nuts or bolts installed to the body of the sensor.**

Air Bag Module, Pre-tensioner Seat Belt, Lap re-tensioner Seat Belt Reuse

- **Even if an air bag module, pre-tensioner seat belt or a lap pre-tensioner seat belt does not operate (deploy) in a collision and does not have any external signs of damage, it may have been damaged internally, which may cause improper operation. Before reusing a live (undeployed) air bag module, pre-tensioner seat belt or a lap pre-tensioner seat belt, always use the on-board diagnostic to diagnose the air bag module, pre-tensioner seat belt or a lap pre-tensioner seat belt to verify that they have no malfunction.**

Air Bag Wiring Harness Repair

- **Incorrectly repairing an air bag wiring harness can accidentally operate (deploy) the air bag modules, pre-tensioner seat belts or a lap pre-tensioner seat belts. If a problem is found in the air bag wiring harness, always replace the wiring harness with a new one.**

2014 - Mazda3 - Restraints

DRIVER-SIDE AIR BAG MODULE REMOVAL [TWO-STEP DEPLOYMENT CONTROL SYSTEM]

WARNING:

- Handling the air bag module improperly can accidentally deploy the air bag module, which may seriously injure you. Read the air bag system service warnings and cautions before handling the air bag module. (See **AIR BAG SYSTEM SERVICE WARNINGS [TWO-STEP DEPLOYMENT CONTROL SYSTEM]**.) (See **AIR BAG SYSTEM SERVICE CAUTIONS [TWO-STEP DEPLOYMENT CONTROL SYSTEM]**.)
- Due to the adoption of 2-step deployment control in the driver-side air bag module, depending on the impact force, it is possible that inflator No.2 might not deploy. In such cases, before disposing of the air bag module, make sure to follow the inflator deployment procedures and verify complete deployment of inflators No.1 and 2.

NOTE:

- The driver-side air bag module is installed to the steering wheel by the following connections.
  - Driver-side air bag module tab A and steering wheel hook A
  - Driver-side air bag module tab B and steering wheel hook B
  - Driver-side air bag module tab C and steering wheel hook C
  - Spring and steering wheel hook D
  - Spring and steering wheel hook E

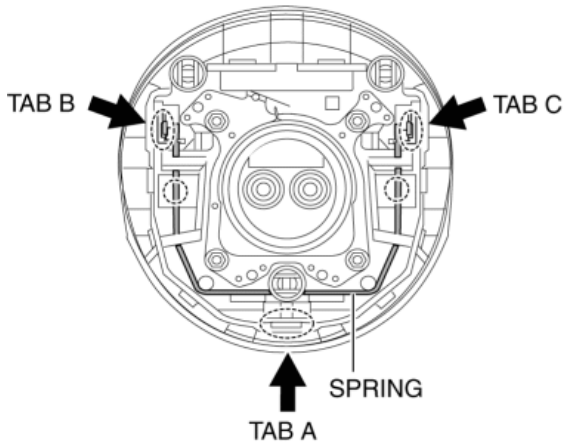

DRIVER-SIDE AIR BAG MODULE SIDE

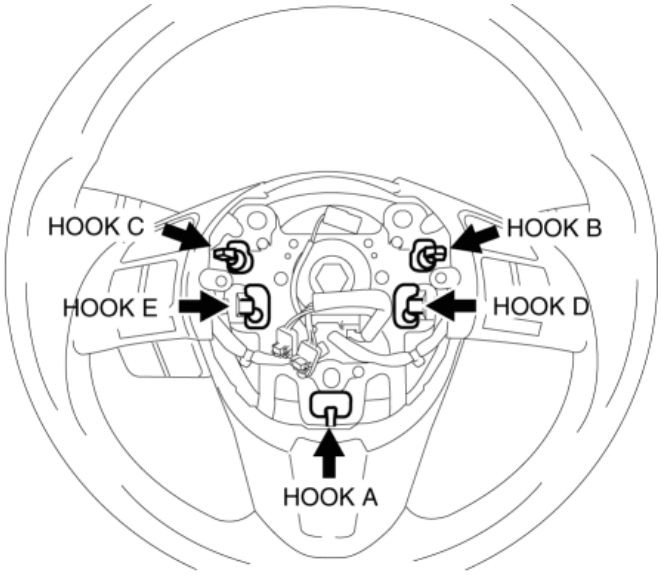

STEERING WHEEL SIDE

1. Switch the ignition off.

2. Disconnect the negative battery cable and wait for **1 min or more**. (See **NEGATIVE BATTERY CABLE DISCONNECTION/CONNECTION [SKYACTIV-G 2.0, SKYACTIV-G 2.5]**.)

3. Lower the steering wheel to the bottommost position.

4. Pull the steering wheel to furthest position rearward.

5. Verify the service hole on the back side of the steering wheel.

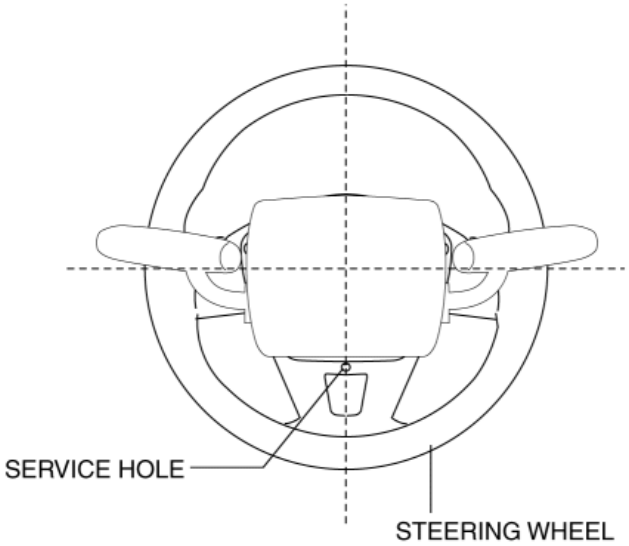

6. Insert the tool from the service hole.

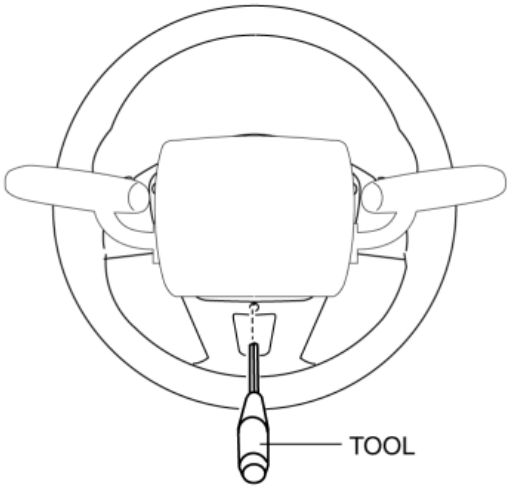

Recommended tool

- TORX driver (T30 (diam. 6))

7. Insert the tool in the direction of the arrow shown in the figure and disengage driver-side air bag module tab A from steering wheel hook A.

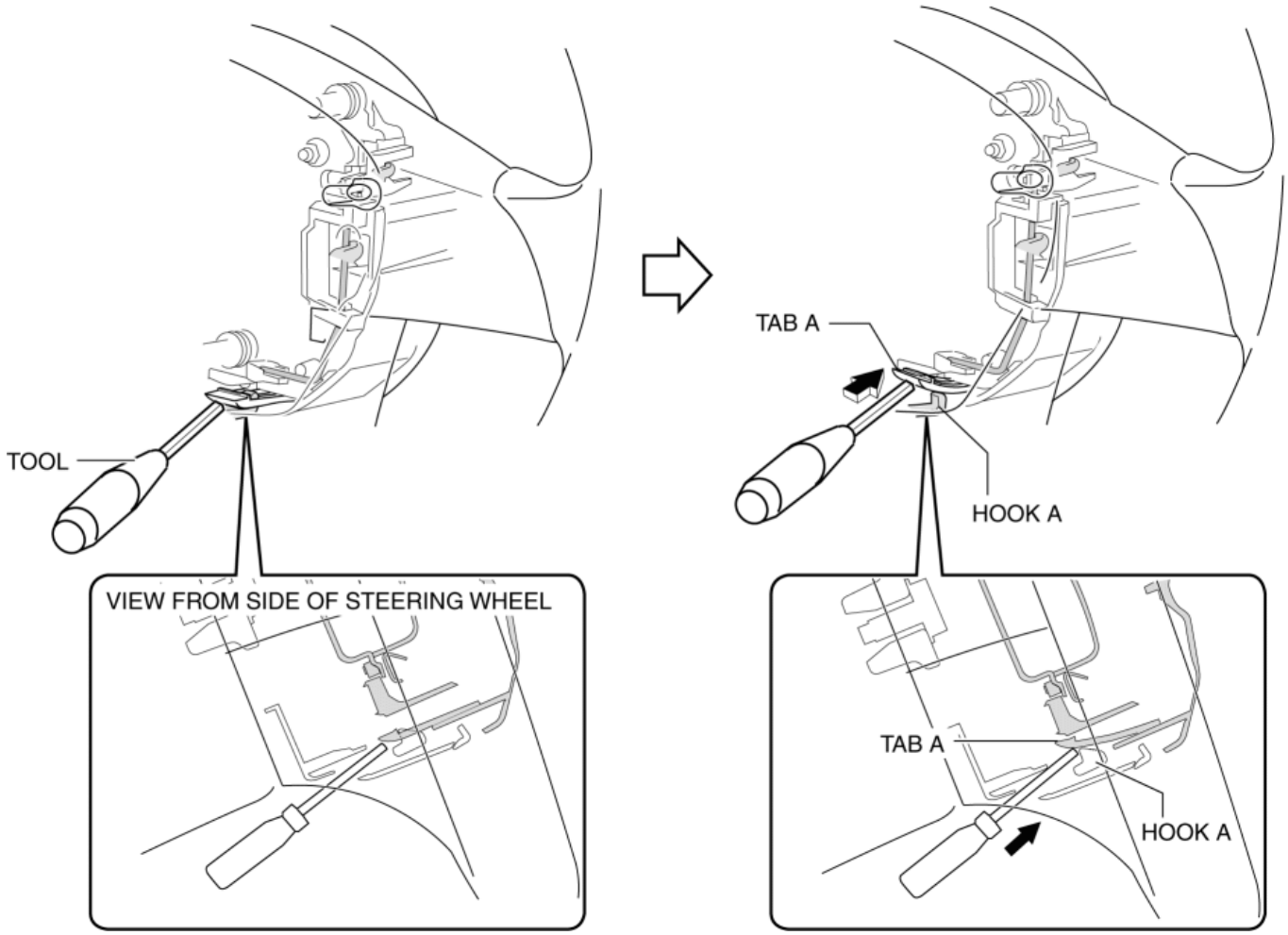

8. Rotate the steering wheel until the service hole can be seen from behind the steering wheel.

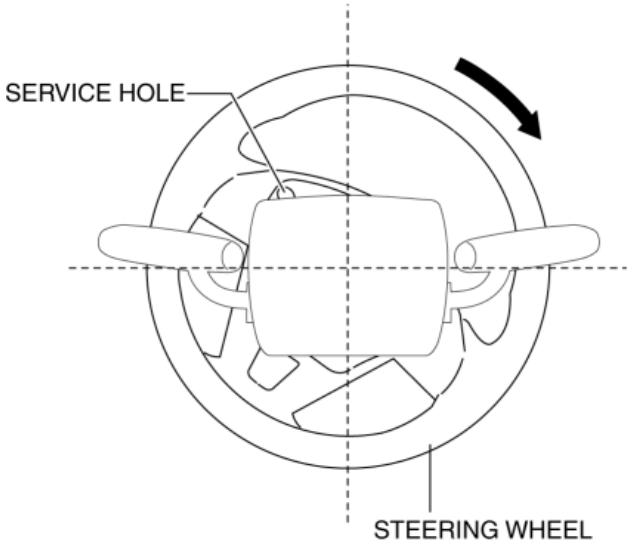

9. Insert the tool from the service hole.

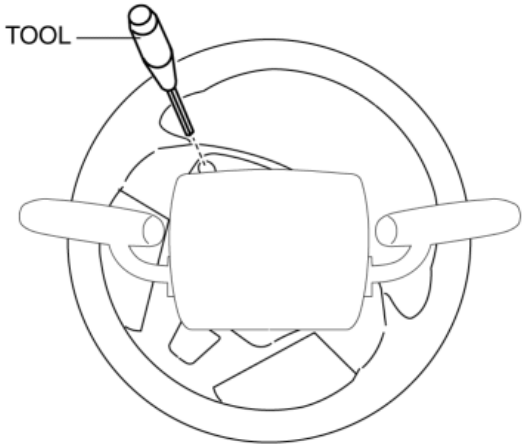

10. Insert the tool in the direction of the arrow shown in the figure and disengage driver-side air bag module tab B from steering wheel hook B.

NOTE:

- By moving the tool, the spring is pressed at the same time allowing the spring to be removed from steering wheel hook D.

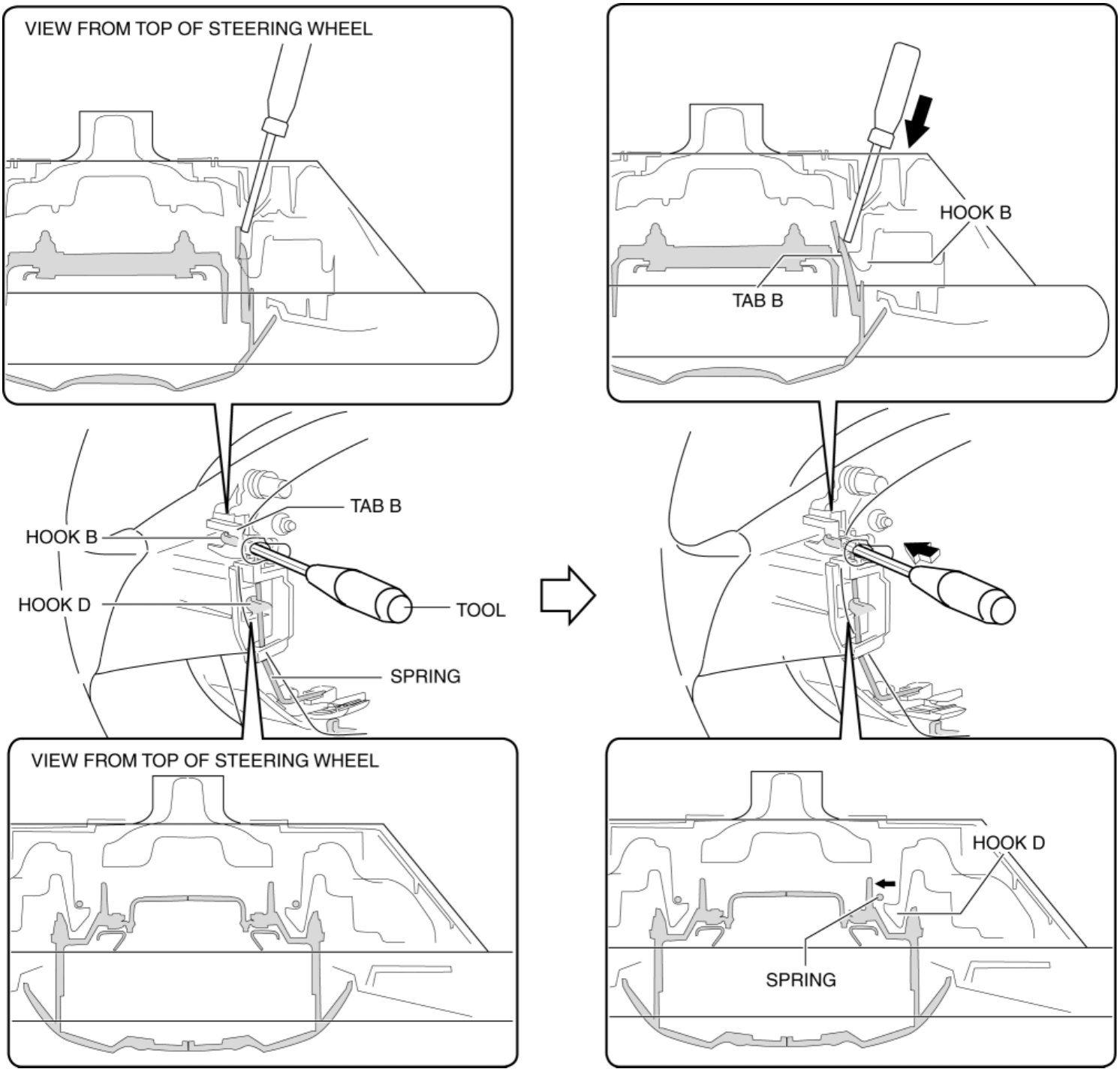

11. Rotate the steering wheel until the service hole can be seen from behind the steering wheel.

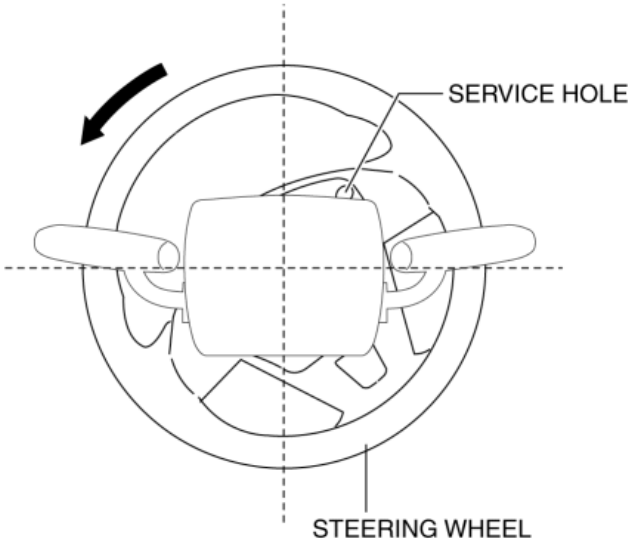

12. Insert the tool from the service hole.

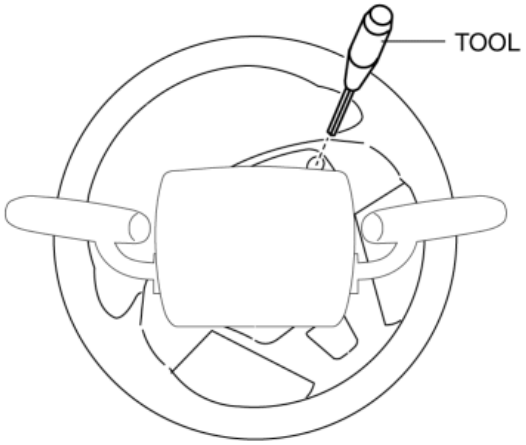

CAUTION:

- The driver-side air bag module could be damaged if it is dropped while it is completely disengaged from the steering wheel. Hold the driver-side air bag module securely with a hand while it is completely disengaged.

13. Insert the tool in the direction of the arrow shown in the figure and disengage driver-side air bag module tab C from steering wheel hook C.

NOTE:

- By moving the tool, the spring is pressed at the same time allowing the spring to be removed from steering wheel hook E.

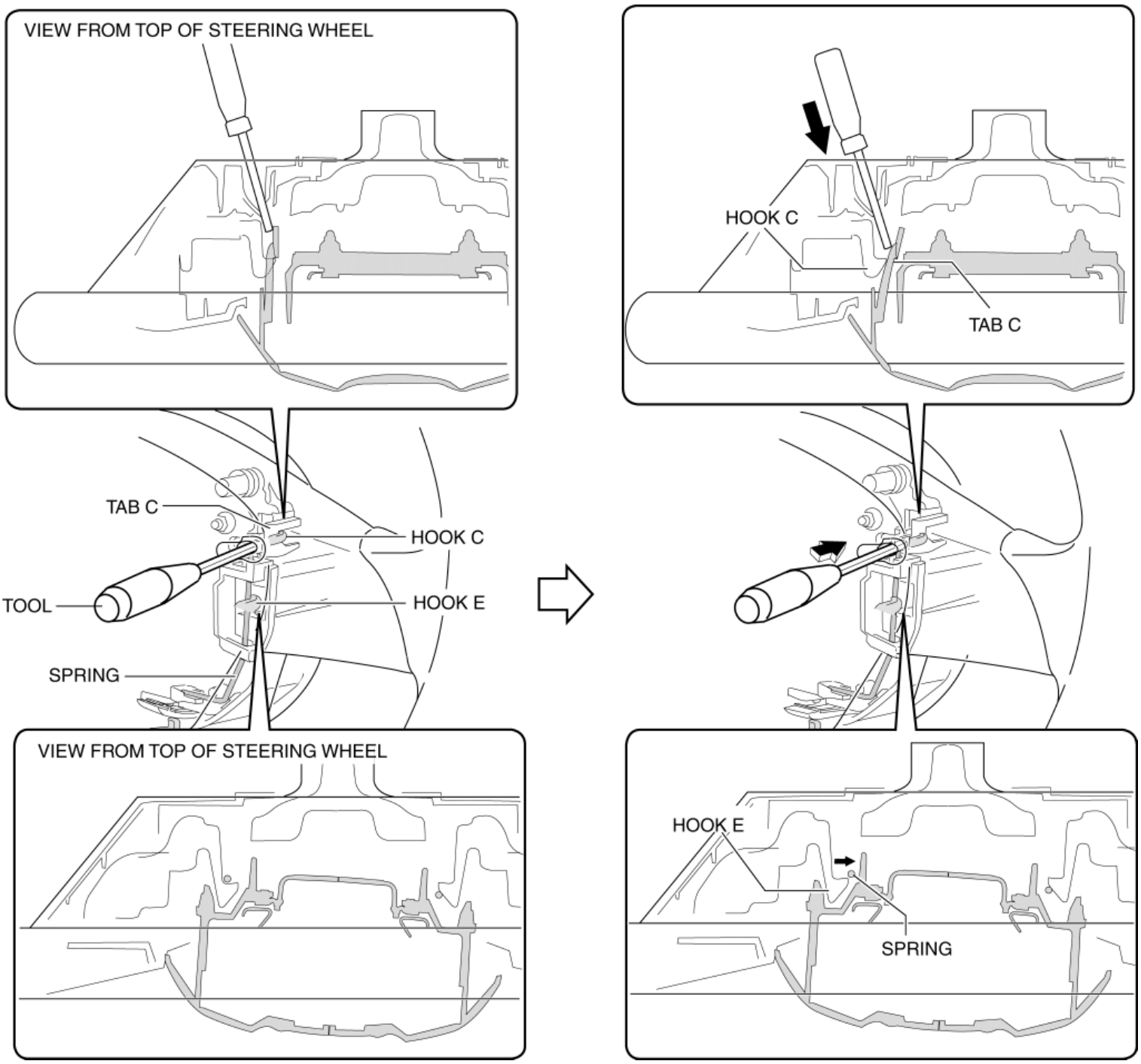

14. Remove the air bag module from the steering wheel.

15. Using a flathead screwdriver, lift the locking device carefully, however do not remove it.

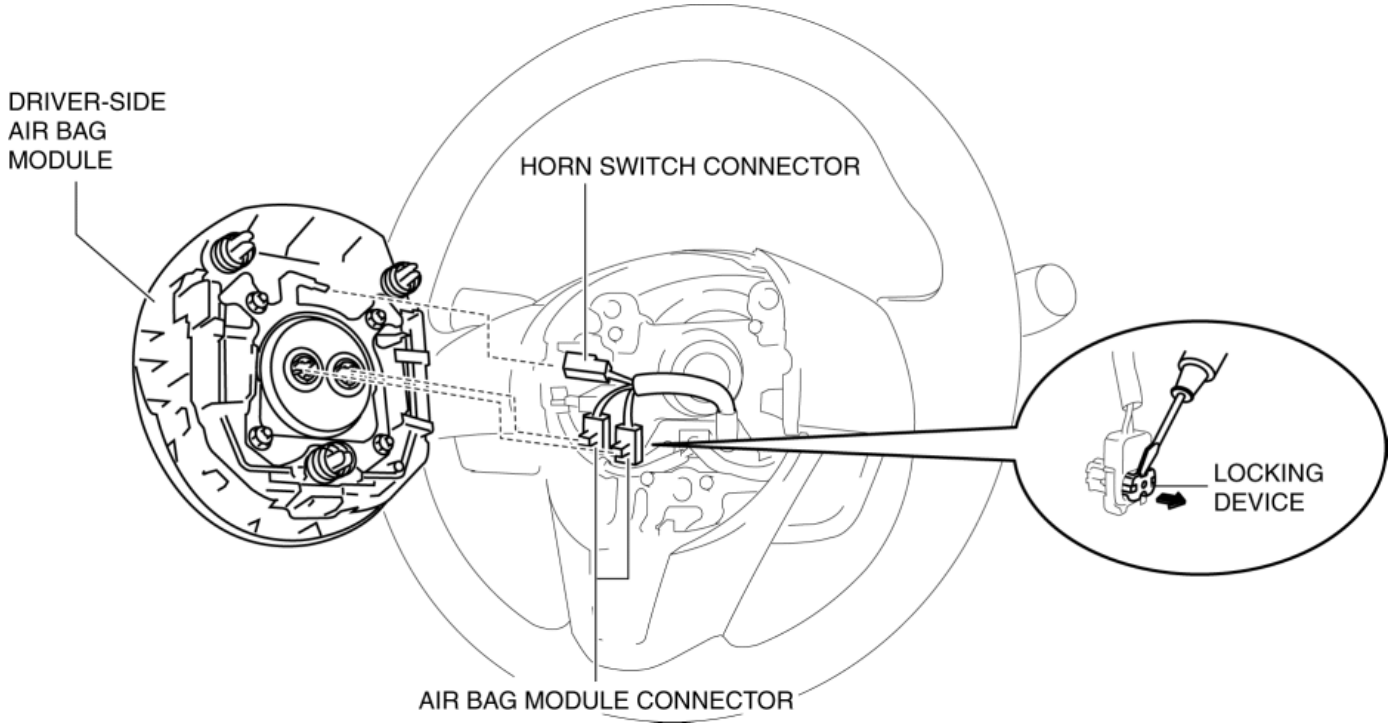

16. Disconnect the air bag module connector.
17. Disconnect the horn switch connector.
18. Remove the driver-side air bag module.

2014 - Mazda3 - Restraints

DRIVER-SIDE AIR BAG MODULE INSTALLATION [TWO-STEP DEPLOYMENT CONTROL SYSTEM]

WARNING:

- Handling the air bag module improperly can accidentally deploy the air bag module, which may seriously injure you. Read the air bag system service warnings and cautions before handling the air bag module. (See **AIR BAG SYSTEM SERVICE WARNINGS [TWO-STEP DEPLOYMENT CONTROL SYSTEM]**.) (See **AIR BAG SYSTEM SERVICE CAUTIONS [TWO-STEP DEPLOYMENT CONTROL SYSTEM]**.)
- Due to the adoption of 2-step deployment control in the driver-side air bag module, depending on the impact force, it is possible that inflator No.2 might not deploy. In such cases, before disposing of the air bag module, make sure to follow the inflator deployment procedures and verify complete deployment of inflators No.1 and 2.

CAUTION:

- If the driver-side air bag module is connected with the air bag module wiring harness and the horn switch wiring harness crossing over each other, the wiring harnesses could become tangled and damaged. When connecting the connectors, be careful that the wiring harnesses are not crossed over each other.

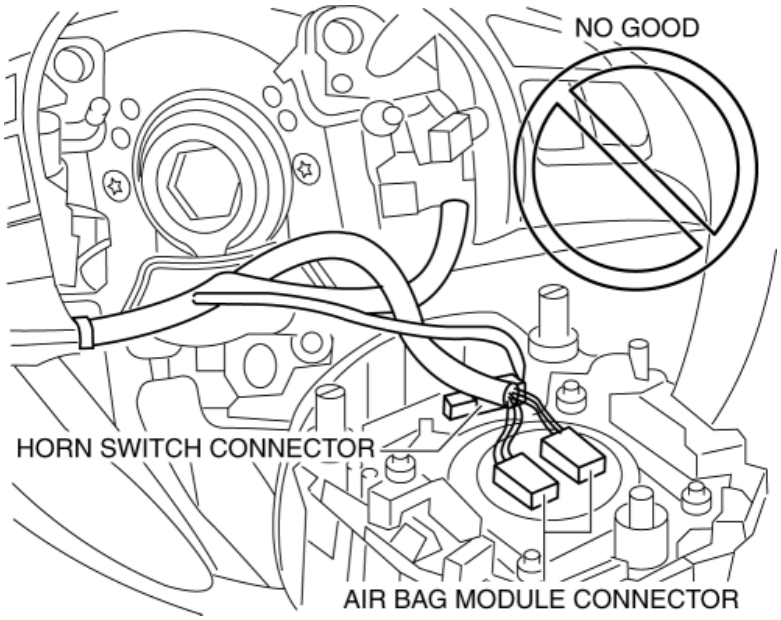

1. Point the upper side of the driver-side air bag module towards the steering wheel and connect the following connectors as shown in the figure.

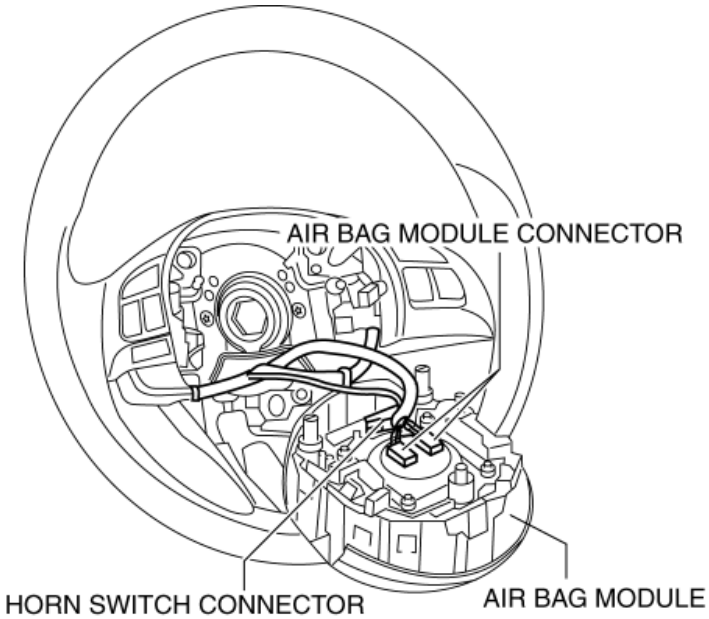

- Air bag module connector.
- Horn switch connector

2. Rotate the driver-side air bag module counterclockwise 180 degrees.

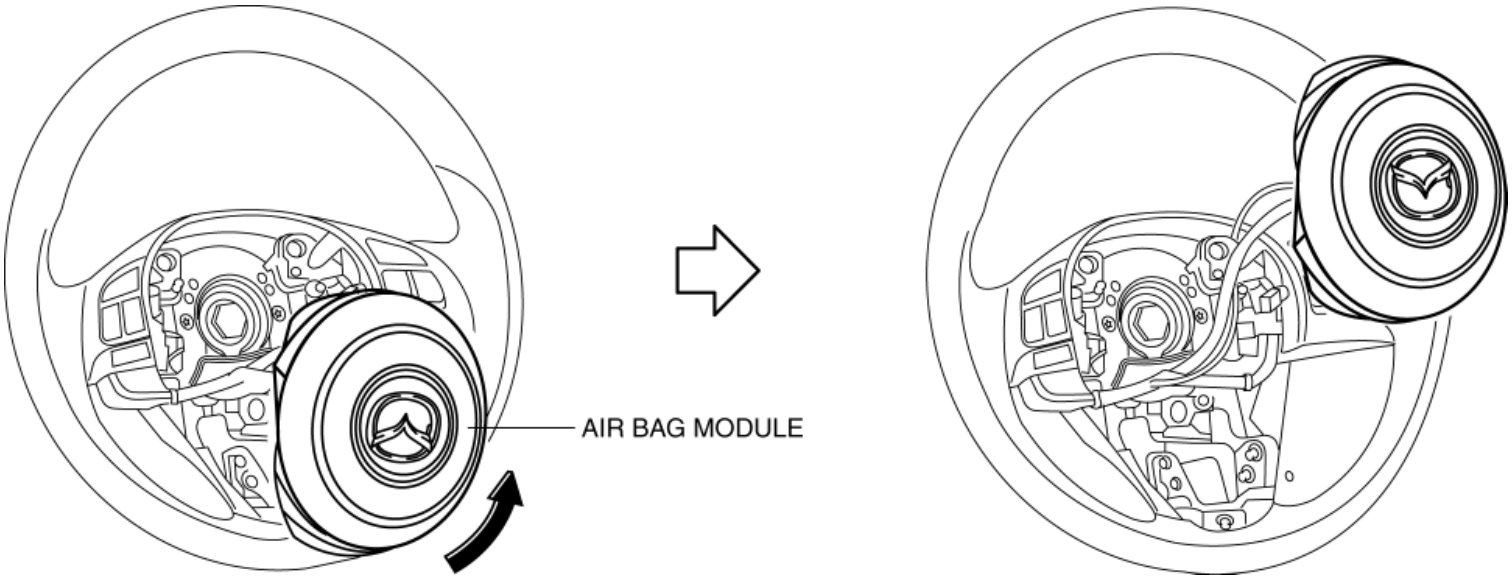

3. Align the driver-side air bag module pin with the steering wheel hole.

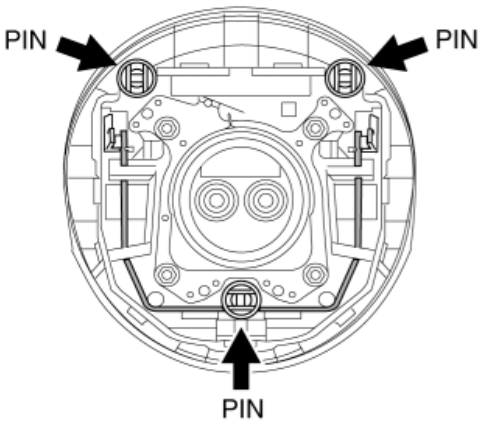

DRIVER-SIDE AIR BAG MODULE SIDE

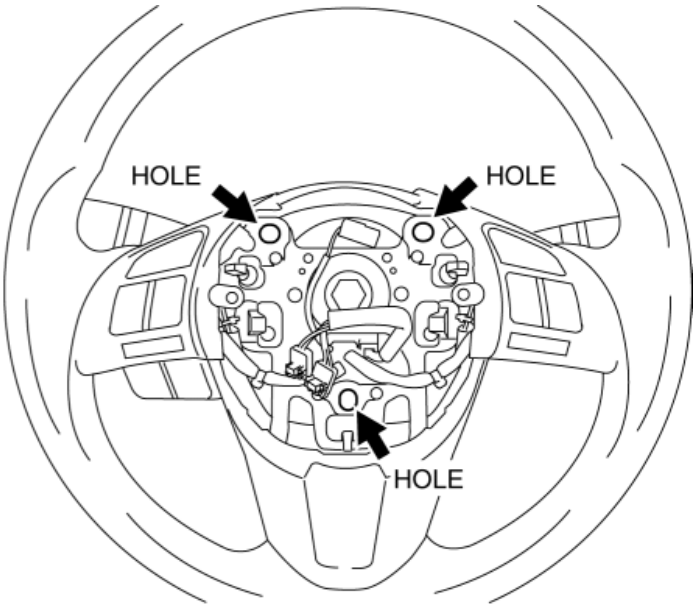

STEERING WHEEL SIDE

4. Press the pin of the driver-side air bag module until a click sound is heard.

5. Verify that the quick release connector is securely attached by lightly pulling the driver-side air bag module.

6. Connect the negative battery cable. (See **NEGATIVE BATTERY CABLE DISCONNECTION/CONNECTION [SKYACTIV-G 2.0, SKYACTIV-G 2.5]**.)

7. Switch the ignition ON (engine off or on).

8. Verify that the air bag system warning light illuminates for **approx. 6 s** and goes out.

- If the air bag system warning light does not operate normally, refer to the on-board diagnostic system (air bag system) and perform inspection of the system. (See **FLOWCHART [TWO-STEP DEPLOYMENT CONTROL SYSTEM]**.)

2014 - Mazda3 - Restraints

PASSENGER-SIDE AIR BAG MODULE REMOVAL [TWO-STEP DEPLOYMENT CONTROL SYSTEM]

WARNING:

- Handling the air bag module improperly can accidentally deploy the air bag module, which may seriously injure you. Read the air bag system service warnings and cautions before handling the air bag module. (See **AIR BAG SYSTEM SERVICE WARNINGS [TWO-STEP DEPLOYMENT CONTROL SYSTEM]**.) (See **AIR BAG SYSTEM SERVICE CAUTIONS [TWO-STEP DEPLOYMENT CONTROL SYSTEM]**.)
- Due to the adoption of 2-step deployment control in the passenger-side air bag module, depending on the impact force, it is possible that inflator No.2 might not deploy. In such cases, before disposing of the air bag module, make sure to follow the inflator deployment procedures and verify complete deployment of inflators No.1 and 2.

NOTE:

- When removing the passenger-side air bag module, perform the procedure in the posture shown in the figure.

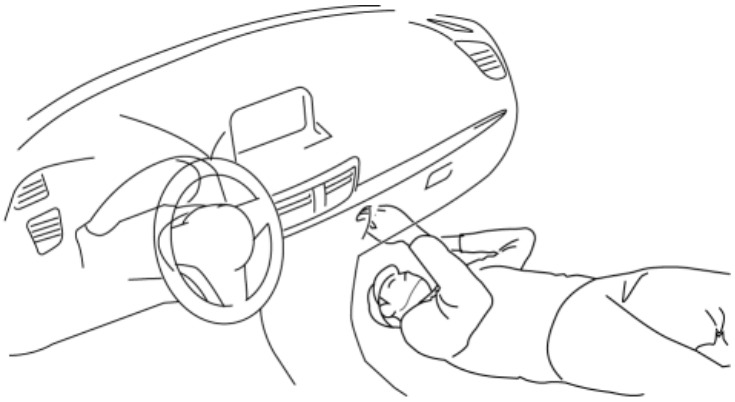

1. Switch the ignition off.

2. Disconnect the negative battery cable and wait for **1 min or more**. (See **NEGATIVE BATTERY CABLE DISCONNECTION/CONNECTION [SKYACTIV-G 2.0, SKYACTIV-G 2.5]**.)

3. Remove the following parts:

   a. Glove compartment (See **GLOVE COMPARTMENT REMOVAL/INSTALLATION**.)

   b. Decoration panel (See **DECORATION PANEL DISASSEMBLY/ASSEMBLY**.)

   c. Dashboard under cover (See **DASHBOARD UNDER COVER REMOVAL/INSTALLATION**.)

   d. Front scuff plate (passenger-side) (See **FRONT SCUFF PLATE REMOVAL/INSTALLATION**.)

   e. Front side trim (passenger-side) (See **FRONT SIDE TRIM REMOVAL/INSTALLATION**.)

   f. Lower panel (passenger-side) (See **LOWER PANEL REMOVAL/INSTALLATION**.)

4. Remove the cap.

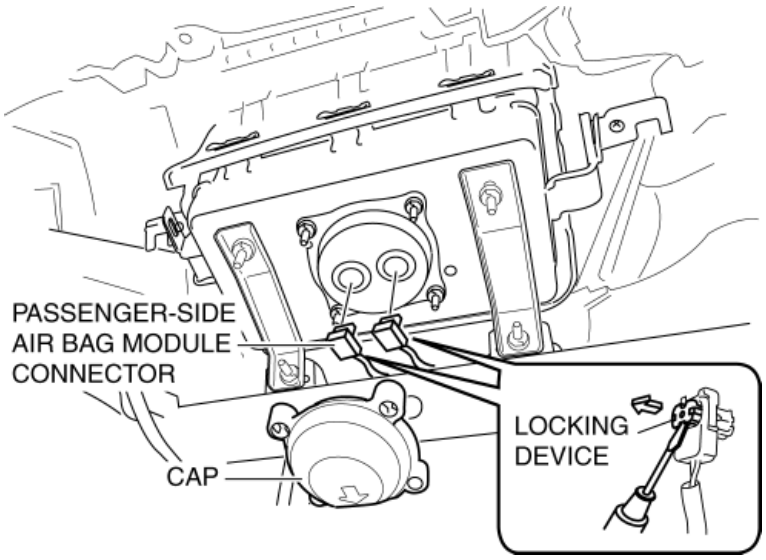

5. Using a flathead screwdriver, lift the locking device carefully, however do not remove it.
6. Disconnect the passenger-side air bag module connector.
7. Remove the fastener.

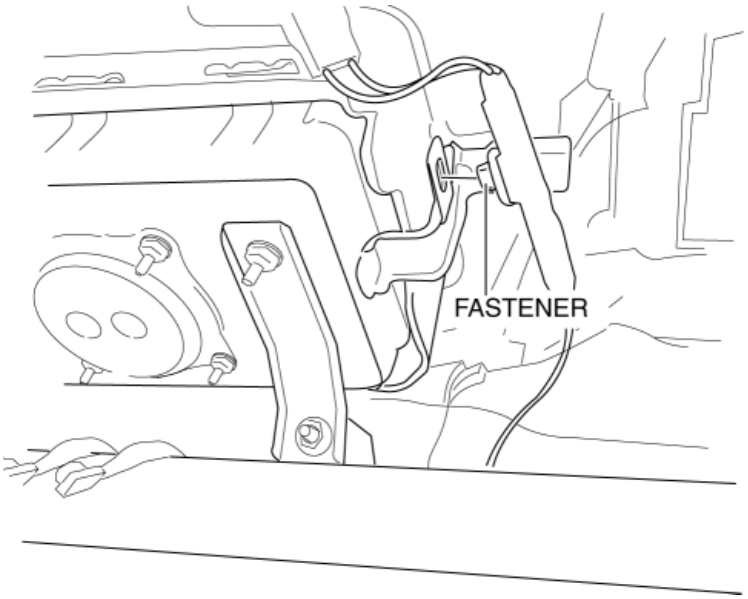

8. Remove the nuts.

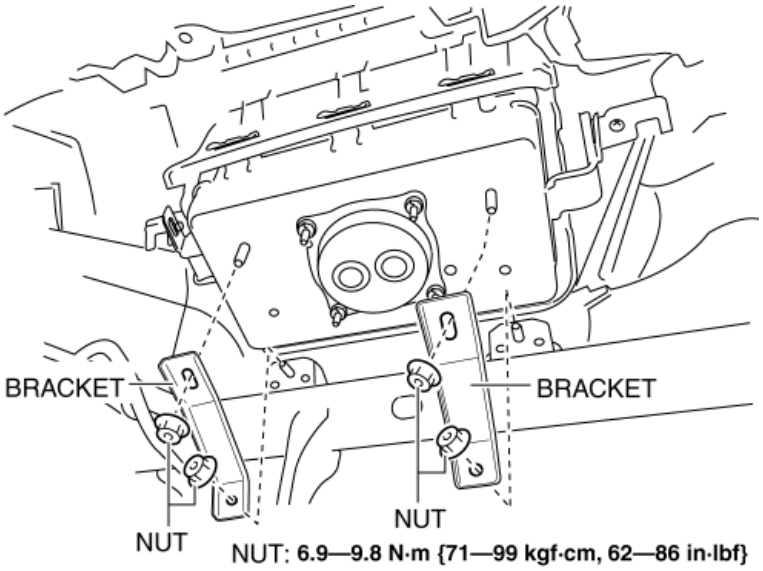

9. Remove the brackets.

10. Remove the screws.

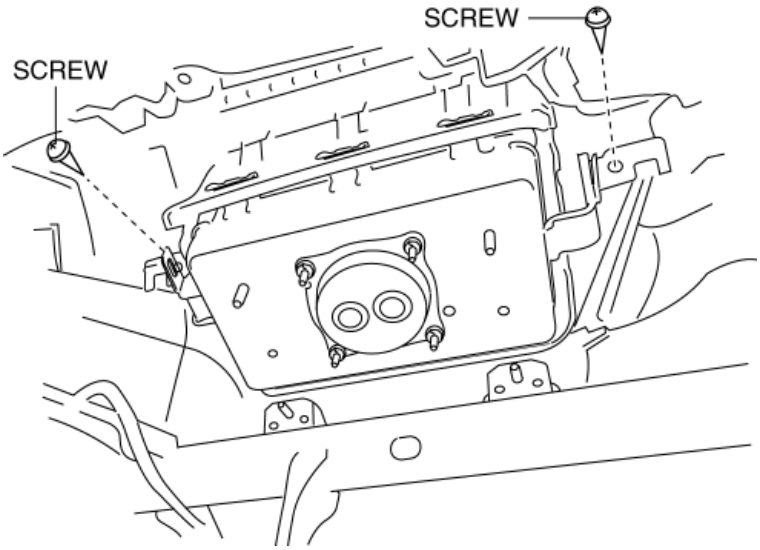

11. Move the passenger-side air bag module in the direction of arrow (2) shown in the figure and detach guide A from the dashboard while spreading the dashboard in the direction of arrow (1).

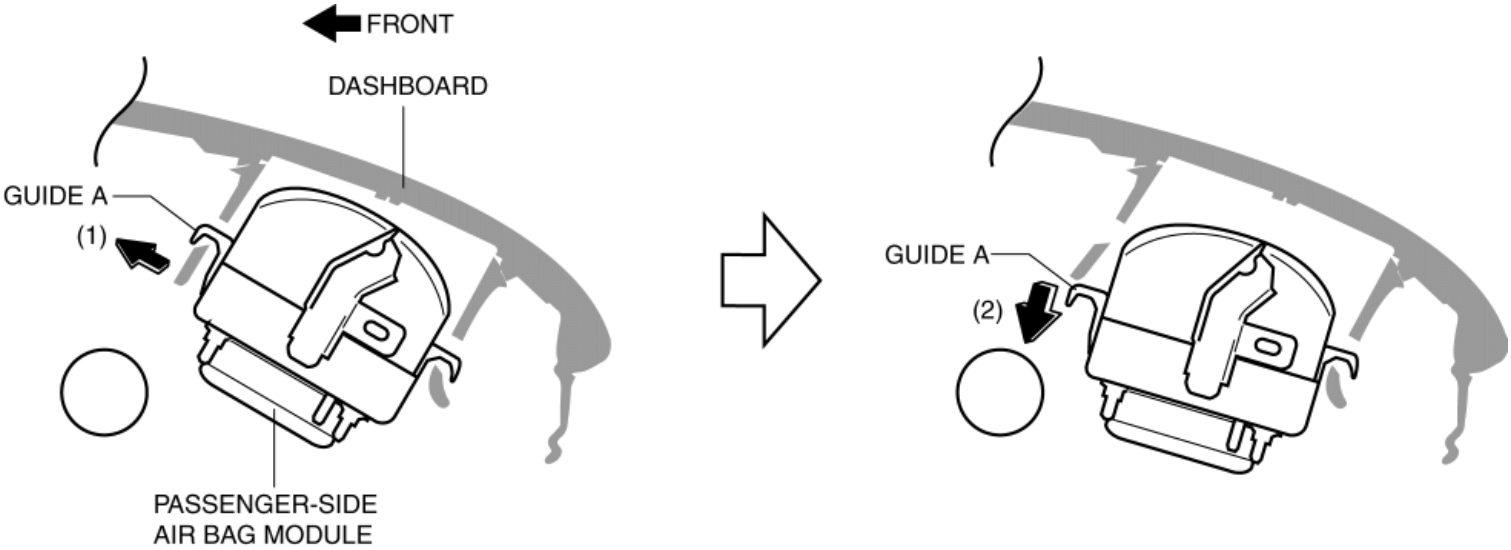

12. While avoiding area A shown in the figure, pull the front side of the passenger-side air bag module in the direction of the arrows shown in the figure (3).

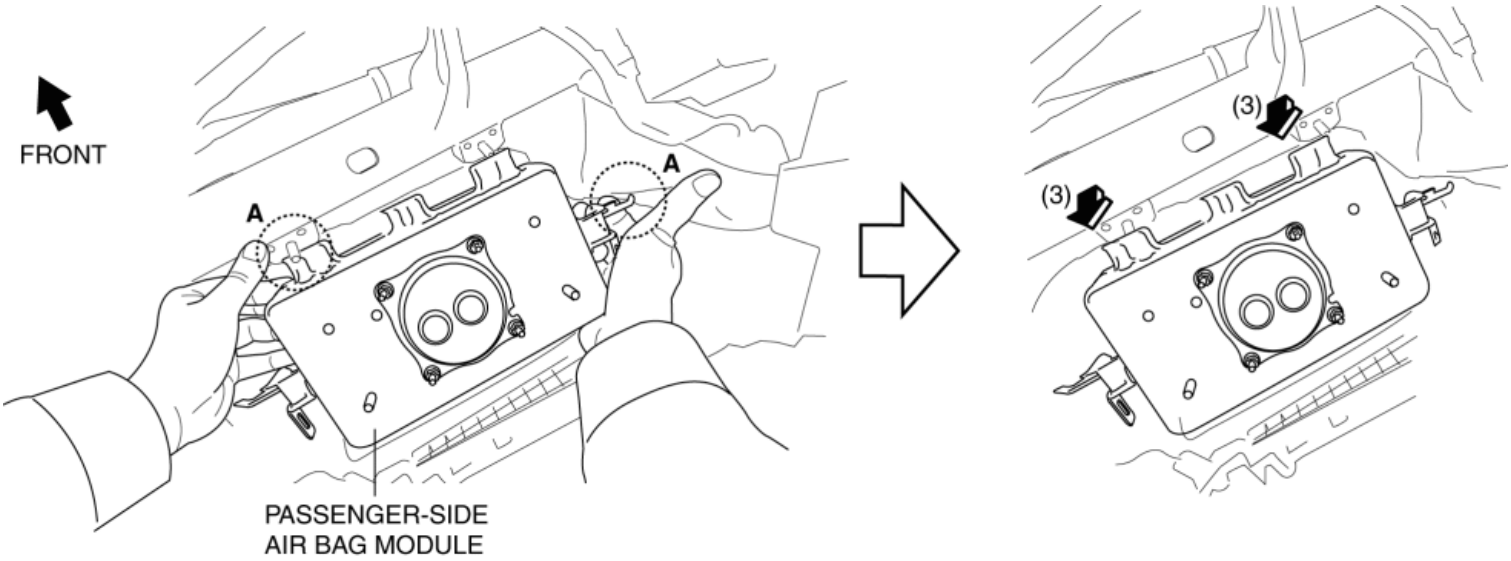

13. Move the passenger-side air bag module in the direction of the arrow (4) and detach guides B from the dashboard (5).

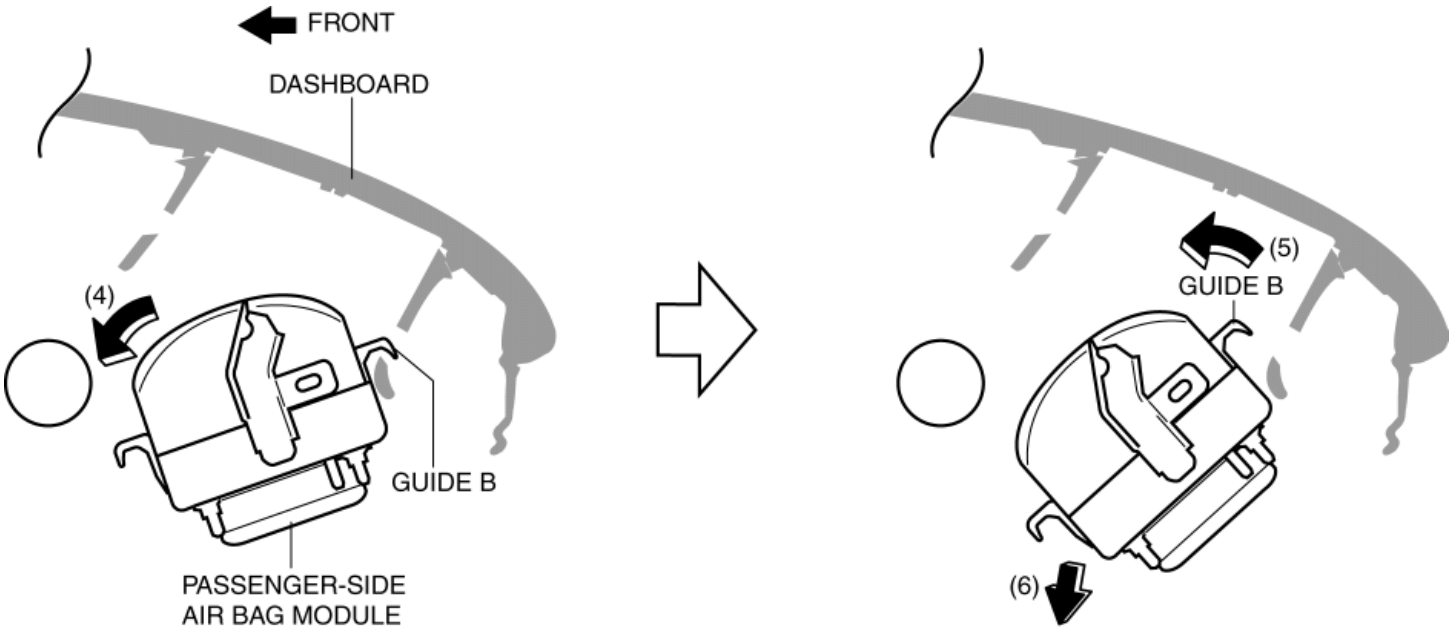

14. Remove the passenger-side air bag module (6).

2014 - Mazda3 - Restraints

PASSENGER-SIDE AIR BAG MODULE INSTALLATION [TWO-STEP DEPLOYMENT CONTROL SYSTEM]

WARNING:

- Handling the air bag module improperly can accidentally deploy the air bag module, which may seriously injure you. Read the air bag system service warnings and cautions before handling the air bag module. (See **AIR BAG SYSTEM SERVICE WARNINGS [TWO-STEP DEPLOYMENT CONTROL SYSTEM]**.) (See **AIR BAG SYSTEM SERVICE CAUTIONS [TWO-STEP DEPLOYMENT CONTROL SYSTEM]**.)
- Due to the adoption of 2-step deployment control in the passenger-side air bag module, depending on the impact force, it is possible that inflator No.2 might not deploy. In such cases, before disposing of the air bag module, make sure to follow the inflator deployment procedures and verify complete deployment of inflators No.1 and 2.

1. Install guide A to the dashboard (1).

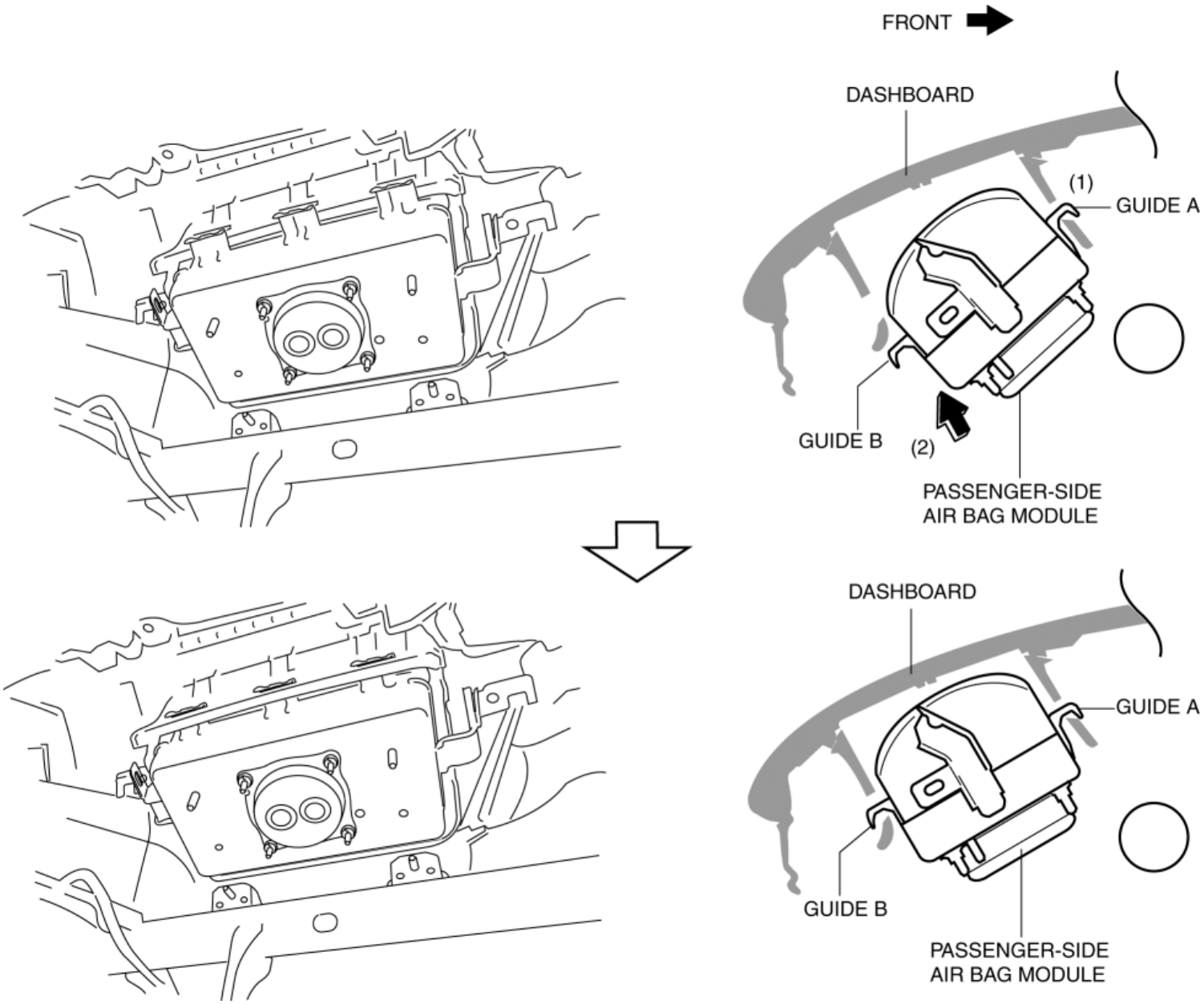

2. Press the passenger-side air bag module in the direction of the arrow shown in the figure and attach guides B (2).
3. Install the screws.

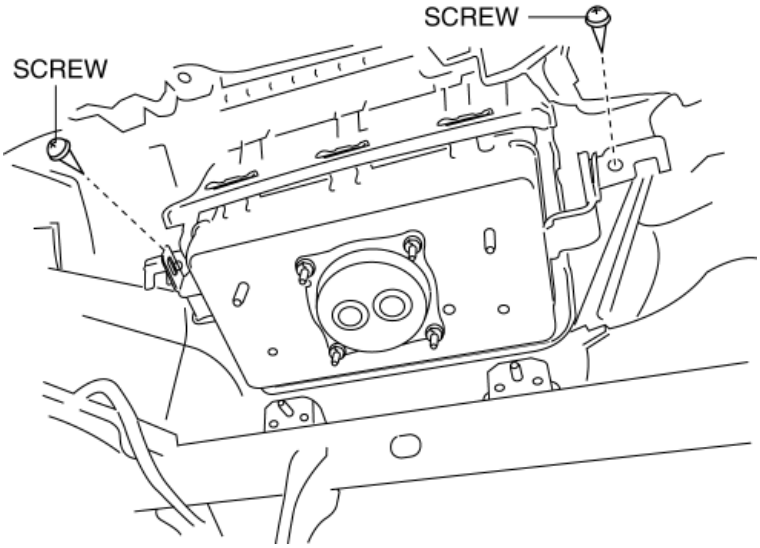

4. Install the brackets.

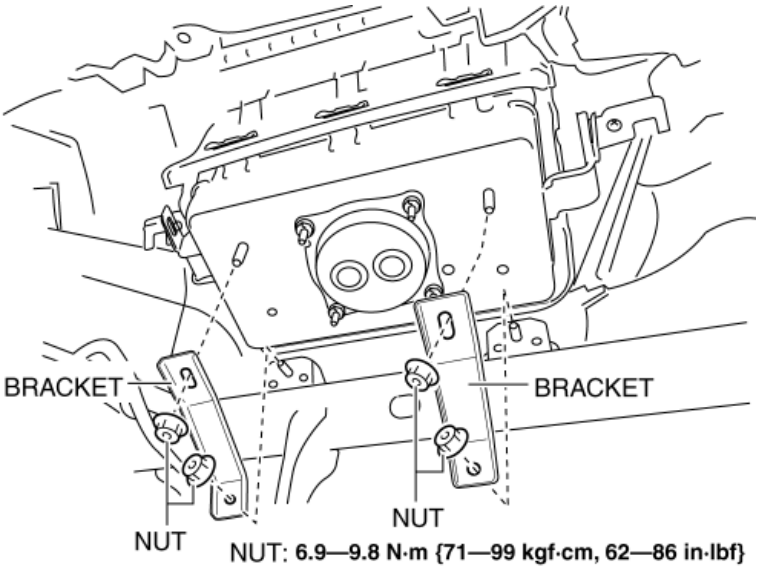

5. Install the nuts.

6. Install the fastener.

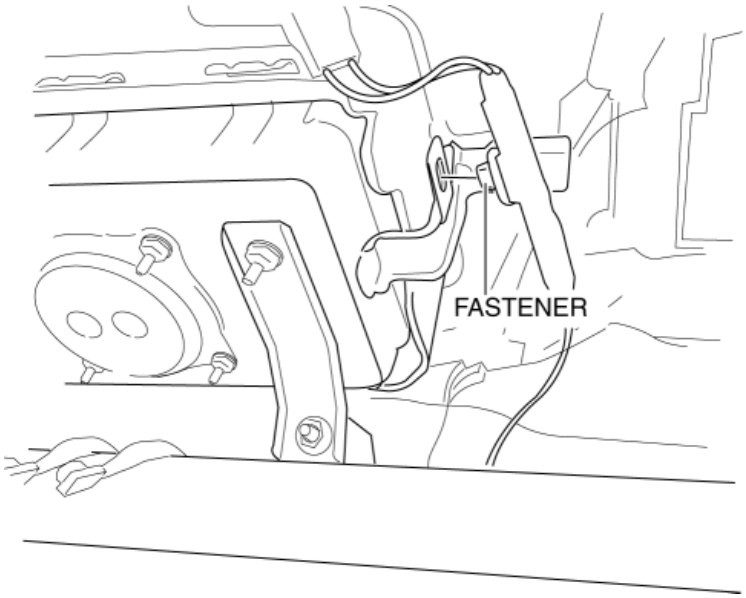

7. Connect the passenger-side air bag module connector.

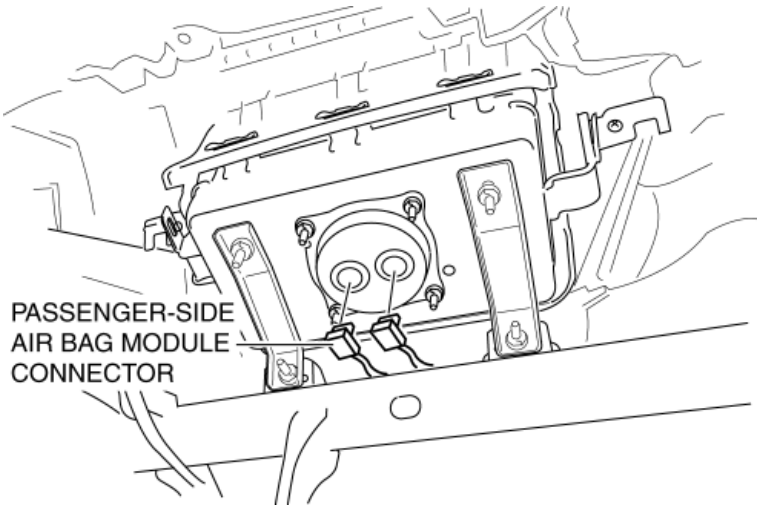

8. Install the cap with the arrow pointing toward the front.

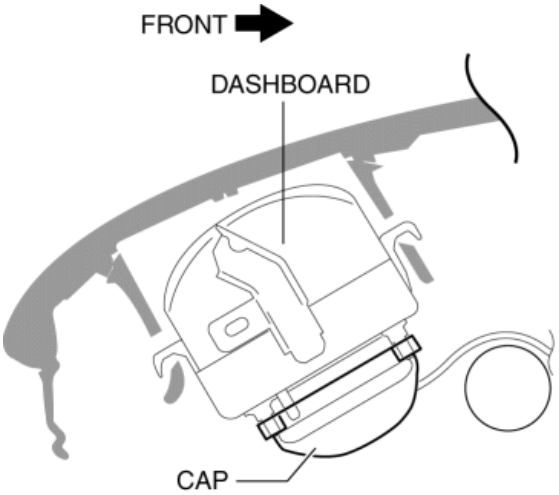

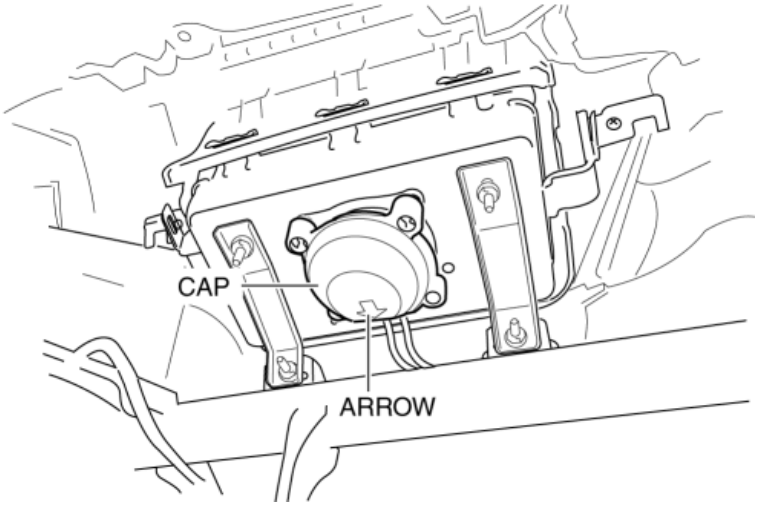

9. Install the following parts:

a. Lower panel (passenger-side) (See **LOWER PANEL REMOVAL/INSTALLATION**.)

b. Front side trim (passenger-side) (See **FRONT SIDE TRIM REMOVAL/INSTALLATION**.)

c. Front scuff plate (passenger-side) (See **FRONT SCUFF PLATE REMOVAL/INSTALLATION**.)

d. Dashboard under cover (See **DASHBOARD UNDER COVER REMOVAL/INSTALLATION**.)

e. Decoration panel (See **DECORATION PANEL REMOVAL/INSTALLATION**.)

f. Glove compartment (See **GLOVE COMPARTMENT REMOVAL/INSTALLATION**.)

10. Connect the negative battery cable. (See **NEGATIVE BATTERY CABLE DISCONNECTION/CONNECTION [SKYACTIV-G 2.0, SKYACTIV-G 2.5]**.)

11. Switch the ignition ON (engine off or on).

12. Verify that the air bag system warning light illuminates for **approx. 6 s** and turns off.

- If the air bag system warning light does not operate, refer to the on-board diagnostic system (air bag system) and perform inspection of the system. (See **FLOWCHART [TWO-STEP DEPLOYMENT CONTROL SYSTEM]**.)

2014 - Mazda3 - Restraints

SIDE AIR BAG MODULE REMOVAL/INSTALLATION [TWO-STEP DEPLOYMENT CONTROL SYSTEM]

WARNING:

- Handling the air bag module improperly can accidentally operate (deploy) the air bag module, which may seriously injure you. Read the air bag system service warnings and cautions before handling the air bag module. (See **AIR BAG SYSTEM SERVICE WARNINGS [TWO-STEP DEPLOYMENT CONTROL SYSTEM]**.) (See **AIR BAG SYSTEM SERVICE CAUTIONS [TWO-STEP DEPLOYMENT CONTROL SYSTEM]**.)
- If the side air bag module is installed with debris in the seat back, the foreign material may be scattered when the side air bag module operates (deploys), causing injury. Verify that there is no foreign material in the seat back before installing the side air bag module.

1. Switch the ignition off.
2. Disconnect the negative battery cable and wait for **1 min or more**. (See **NEGATIVE BATTERY CABLE DISCONNECTION/CONNECTION [SKYACTIV-G 2.0, SKYACTIV-G 2.5]**.)
3. Remove the front seat. (See **FRONT SEAT REMOVAL/INSTALLATION**.)
4. Remove the seat back trim and the seat back pad. (See **FRONT SEAT BACK TRIM REMOVAL/INSTALLATION**.)
5. Partially peel back the front seat trim and remove the hook.

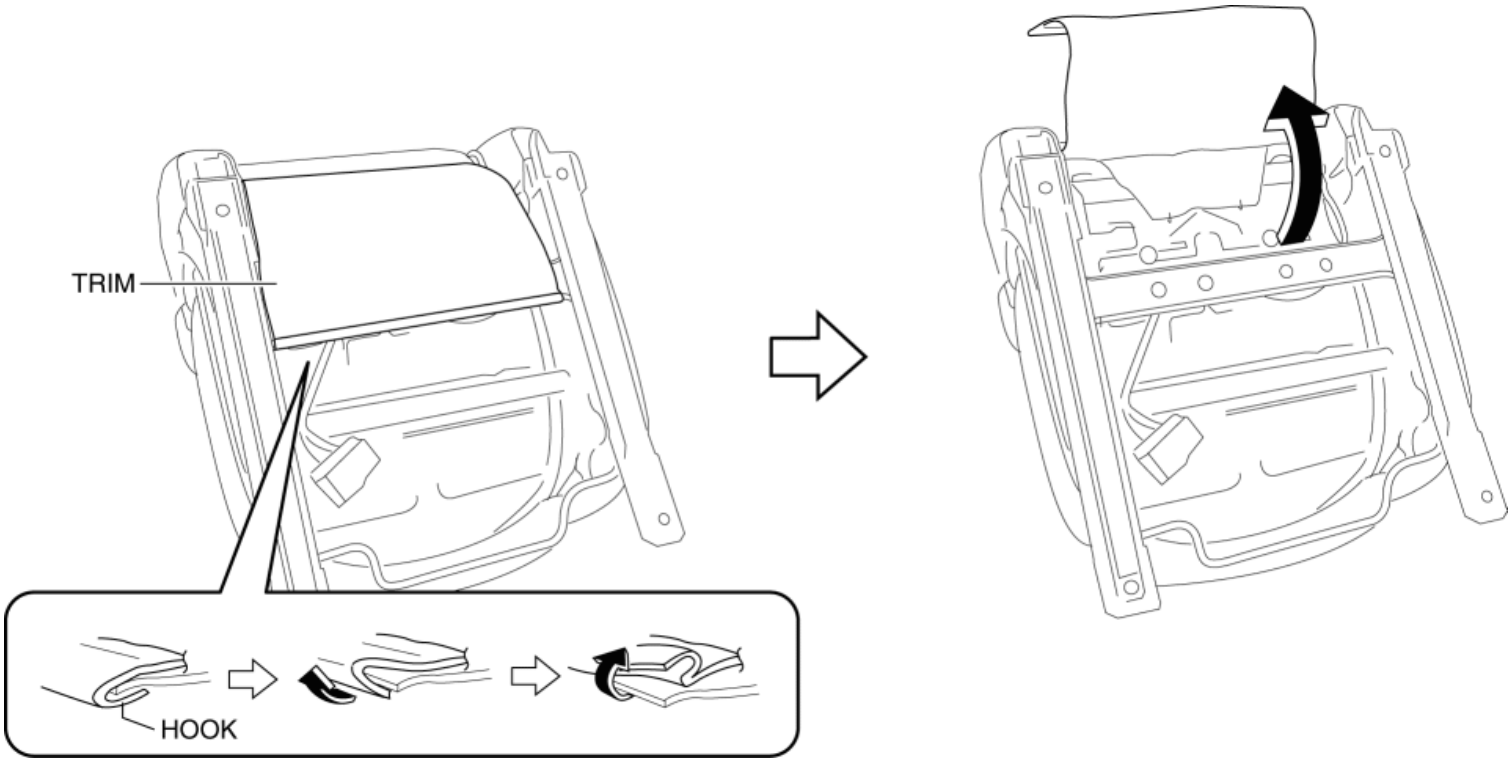

6. Disconnect the side air bag module connector.

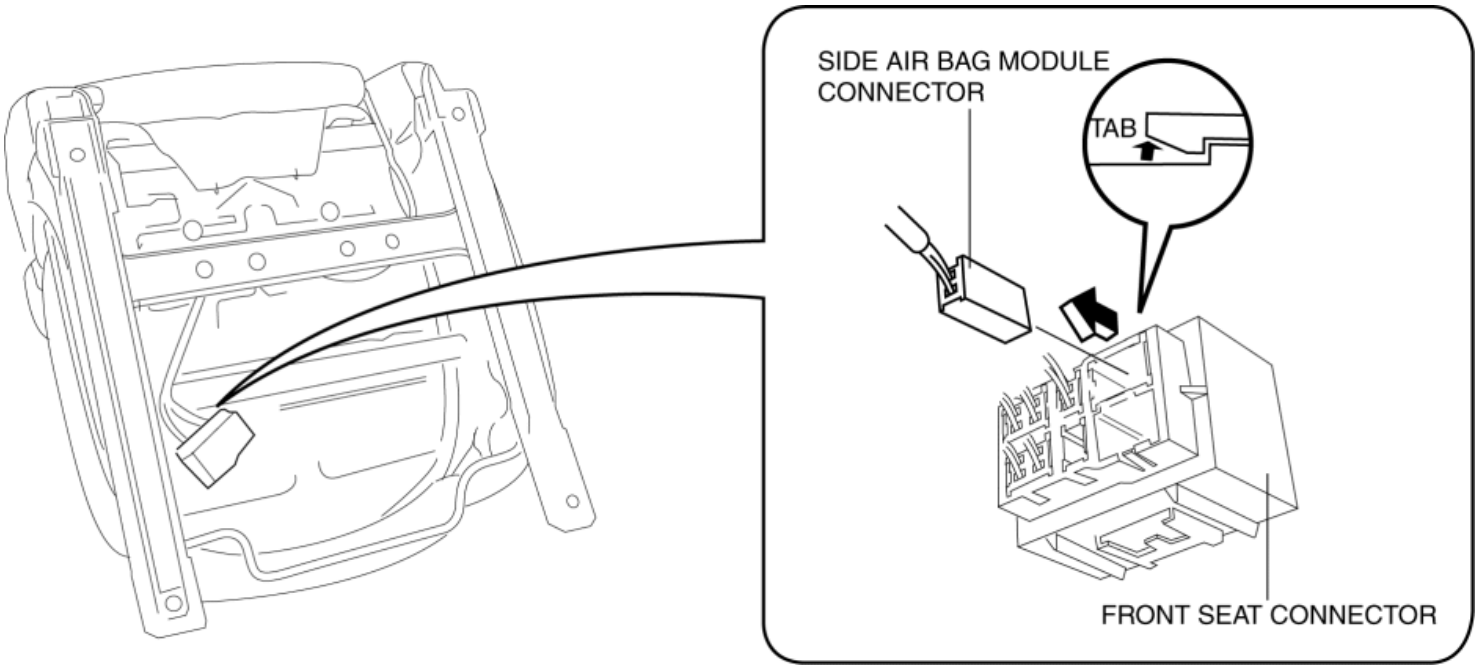

7. Remove the side air bag module wiring harness from the hook.

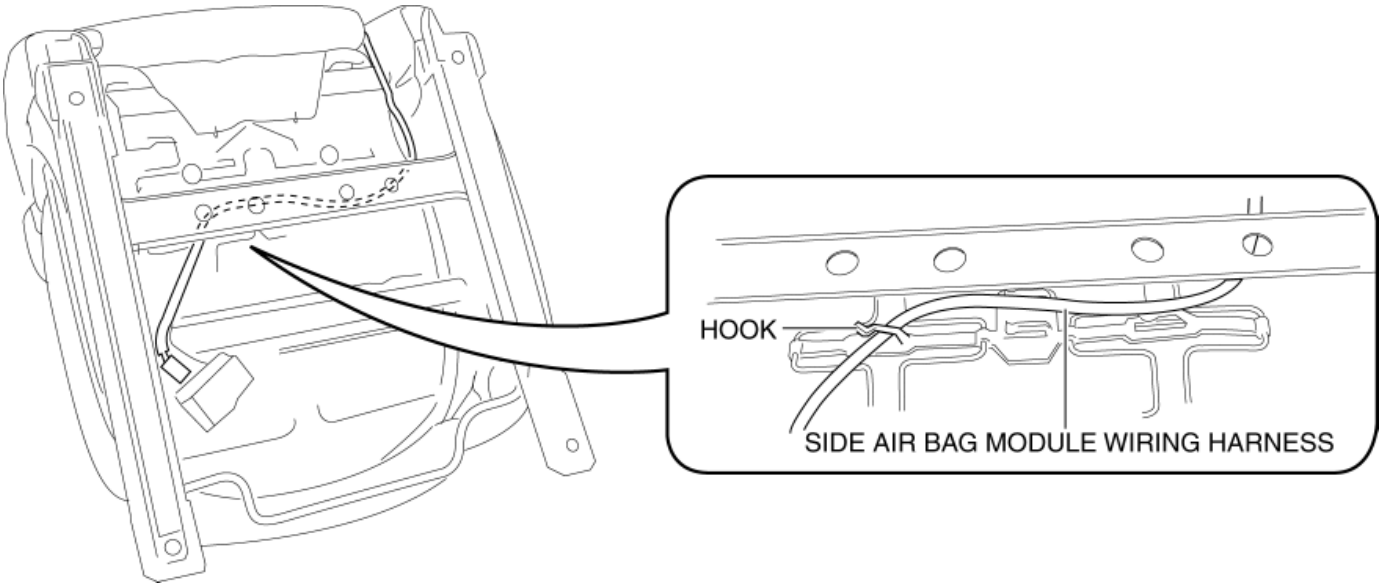

8. Remove the band.

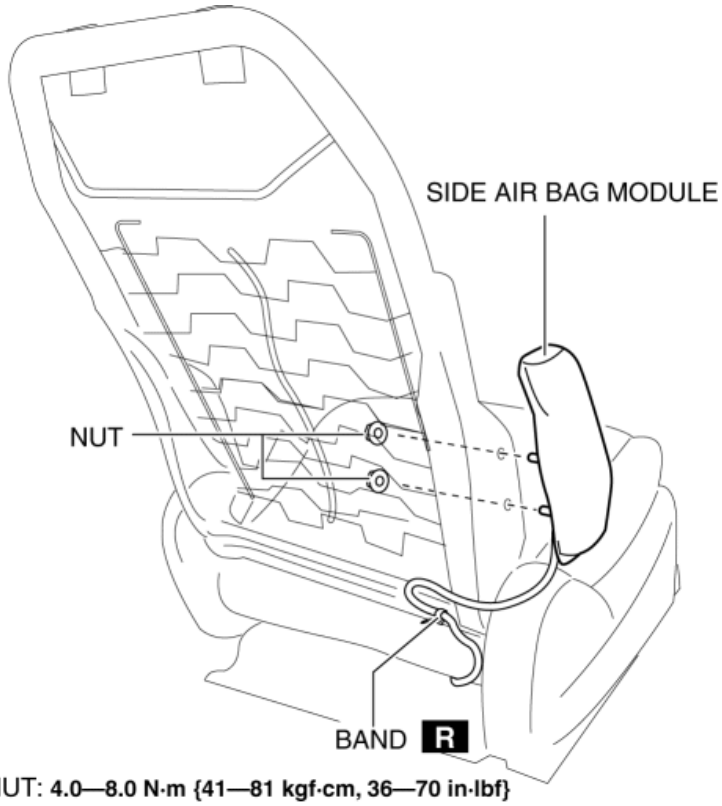

9. Remove the nuts.

10. Remove the side air bag module.

11. Install in the reverse order of removal.

12. Switch the ignition ON (engine off or on).

13. Verify that the air bag system warning light illuminates for **approx. 6 s** and turns off.

    - If the air bag system warning light does not operate normally, refer to the on-board diagnostic system (air bag system) and perform inspection of the system. (See **FLOWCHART [TWO-STEP DEPLOYMENT CONTROL SYSTEM]**.)

2014 - Mazda3 - Restraints

CURTAIN AIR BAG MODULE REMOVAL/INSTALLATION [TWO-STEP DEPLOYMENT CONTROL SYSTEM]

WARNING:

- Handling the air bag module improperly can accidentally deploy the air bag module, which may seriously injure you. Read the air bag system service warnings and cautions before handling the air bag module. (See **AIR BAG SYSTEM SERVICE WARNINGS [TWO-STEP DEPLOYMENT CONTROL SYSTEM]**.) (See **AIR BAG SYSTEM SERVICE CAUTIONS [TWO-STEP DEPLOYMENT CONTROL SYSTEM]**.)

4SD

1. Switch the ignition off.
2. Disconnect the negative battery cable and wait for **1 min or more**. (See **NEGATIVE BATTERY CABLE DISCONNECTION/CONNECTION [SKYACTIV-G 2.0, SKYACTIV-G 2.5]**.)
3. Remove the following parts:
   a. Sunroof seaming welt (with sunroof system) (See **SUNROOF UNIT REMOVAL/INSTALLATION**.)
   b. A-pillar trim (See **A-PILLAR TRIM REMOVAL/INSTALLATION**.)
   c. Sunvisor (See **SUNVISOR REMOVAL/INSTALLATION**.)
   d. Front map light (dual light type) (See **FRONT MAP LIGHT REMOVAL/INSTALLATION**.)
   e. Assist handle (See **ASSIST HANDLE REMOVAL/INSTALLATION**.)
   f. Front scuff plate (See **FRONT SCUFF PLATE REMOVAL/INSTALLATION**.)
   g. Rear scuff plate (See **REAR SCUFF PLATE REMOVAL/INSTALLATION**.)
   h. B-pillar lower trim (See **B-PILLAR LOWER TRIM REMOVAL/INSTALLATION**.)
   i. Adjust anchor cover (See **FRONT SEAT BELT REMOVAL/INSTALLATION**.)
   j. Upper anchor installation bolt on the seat belt (See **FRONT SEAT BELT REMOVAL/INSTALLATION**.)
   k. B-pillar upper trim (See **B-PILLAR UPPER TRIM REMOVAL/INSTALLATION**.)
4. Set the tire house trim aside. (See **TIRE HOUSE TRIM REMOVAL/INSTALLATION**.)
5. Remove the following parts:
   a. C-pillar trim (See **C-PILLAR TRIM REMOVAL/INSTALLATION**.)
   b. Upper panel (See **UPPER PANEL REMOVAL**.)(See **UPPER PANEL INSTALLATION**.)
   c. Rear console (See **REAR CONSOLE REMOVAL/INSTALLATION**.)
   d. Shift lever knob (MTX) (See **MANUAL TRANSAXLE SHIFT MECHANISM REMOVAL/INSTALLATION [C66M-R]**.)
   e. Selector lever knob (ATX) (See **AUTOMATIC TRANSAXLE SHIFT MECHANISM REMOVAL/INSTALLATION**.)
   f. Shift panel (See **SHIFT PANEL REMOVAL/INSTALLATION**.)
   g. Front console box (See **FRONT CONSOLE BOX REMOVAL/INSTALLATION**.)
   h. CD player (with CD player) (See **CD PLAYER REMOVAL**.)(See **CD PLAYER INSTALLATION**.)
   i. Glove compartment (See **GLOVE COMPARTMENT REMOVAL/INSTALLATION**.)
   j. Decoration panel (See **DECORATION PANEL REMOVAL/INSTALLATION**.)
   k. Side wall (See **SIDE WALL REMOVAL/INSTALLATION**.)
   l. Front console (See **FRONT CONSOLE REMOVAL/INSTALLATION**.)
6. Remove the headliner. (See **HEADLINER REMOVAL/INSTALLATION**.)
7. Using a flathead screwdriver, lift the locking device carefully, however do not remove it.

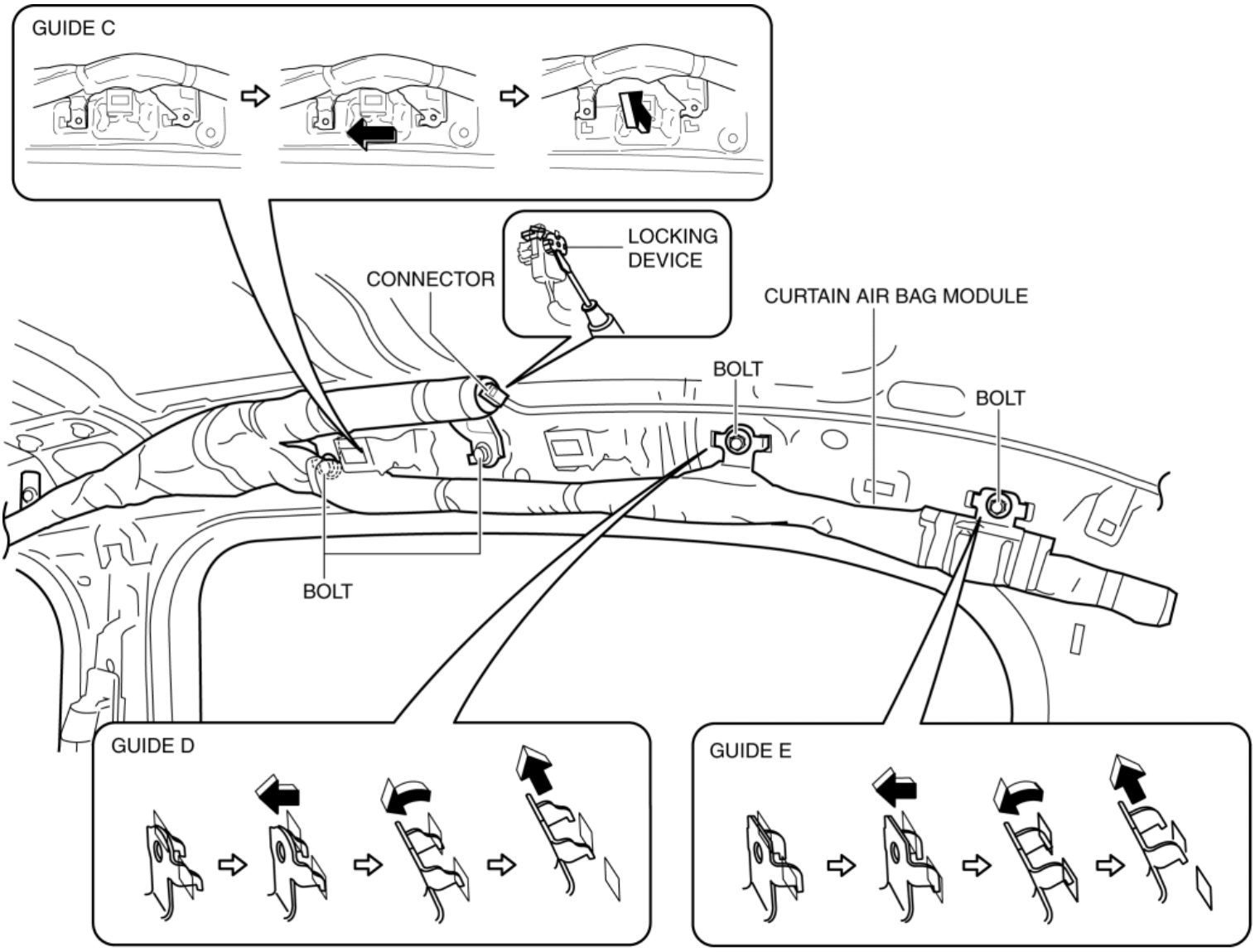

BOLT : **9—12 N·m {92—122 kgf·cm, 80—106 in·lbf}**

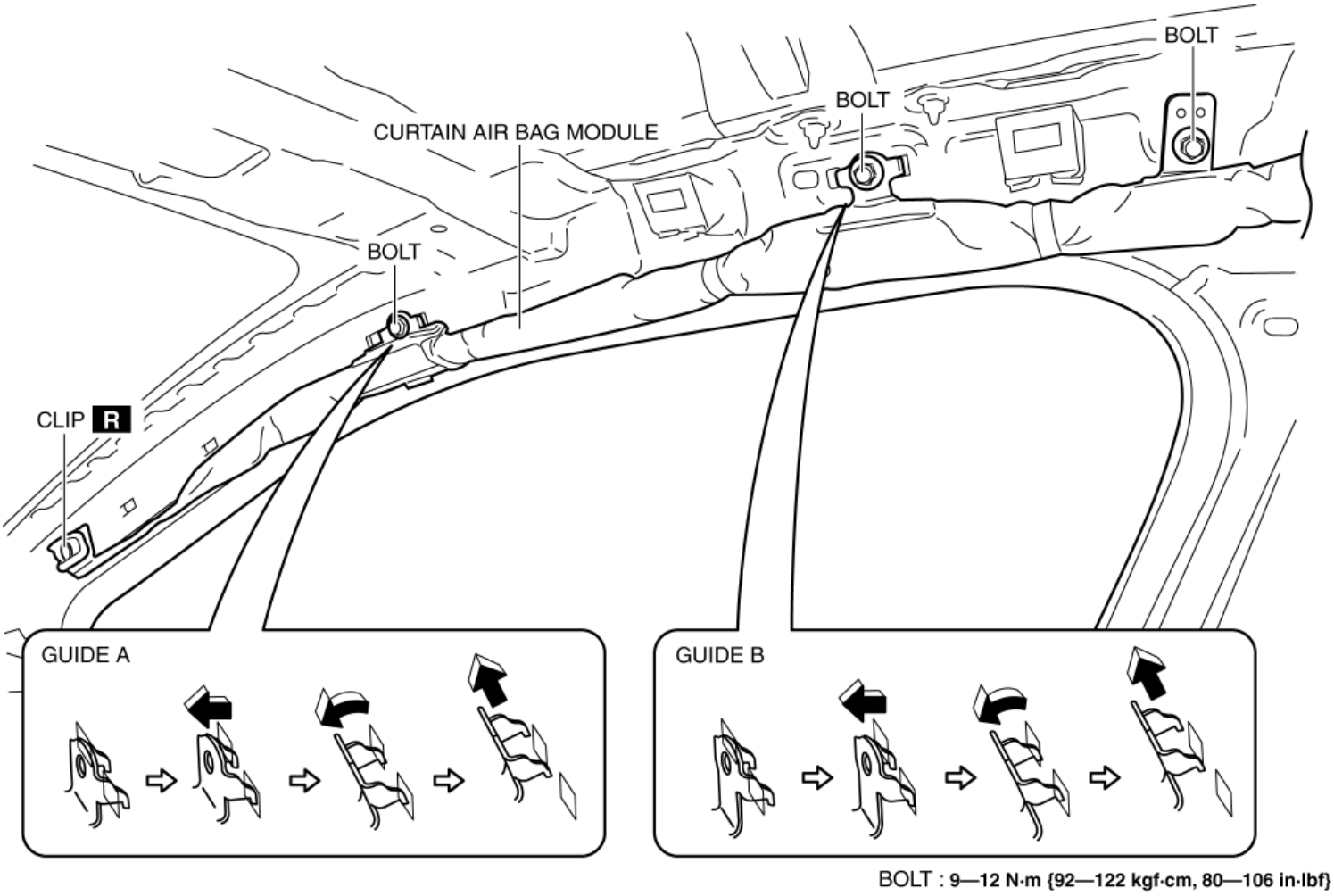

8. Disconnect the connector.

9. Remove the clip. (See **Clip Removal Note**.)

10. Remove the bolts.

11. Pull guide A, B, C, D and E in the direction shown in the figure and remove it from the body.

12. Remove the curtain air bag module.

13. Install in the reverse order of removal.

14. Switch the ignition ON (engine off or on).

15. Verify that the air bag system warning light illuminates for **approx. 6 s** and turns off.

- If the air bag system warning light does not operate normally, refer to the on-board diagnostic system (air bag system) and perform inspection of the system. (See **FLOWCHART [TWO-STEP DEPLOYMENT CONTROL SYSTEM]**.)

5HB

1. Switch the ignition off.

2. Disconnect the negative battery cable and wait for **1 min or more**. (See **NEGATIVE BATTERY CABLE DISCONNECTION/CONNECTION [SKYACTIV-G 2.0, SKYACTIV-G 2.5]**.)

3. Remove the following parts:

   a. Sunroof seaming welt (with sunroof system) (See **SUNROOF UNIT REMOVAL/INSTALLATION**.)

   b. A-pillar trim (See **A-PILLAR TRIM REMOVAL/INSTALLATION**.)

   c. Sunvisor (See **SUNVISOR REMOVAL/INSTALLATION**.)

   d. Front map light (dual light type) (See **FRONT MAP LIGHT REMOVAL/INSTALLATION**.)

   e. Assist handle (See **ASSIST HANDLE REMOVAL/INSTALLATION**.)

f. Front scuff plate (See **FRONT SCUFF PLATE REMOVAL/INSTALLATION**.)

g. Rear scuff plate (See **REAR SCUFF PLATE REMOVAL/INSTALLATION**.)

h. B-pillar lower trim (See **B-PILLAR LOWER TRIM REMOVAL/INSTALLATION**.)

i. Adjust anchor cover (See **FRONT SEAT BELT REMOVAL/INSTALLATION**.)

j. Upper anchor installation bolt on the seat belt (See **FRONT SEAT BELT REMOVAL/INSTALLATION**.)

k. B-pillar upper trim (See **B-PILLAR UPPER TRIM REMOVAL/INSTALLATION**.)

4. Set the tire house trim aside. (See **TIRE HOUSE TRIM REMOVAL/INSTALLATION**.)

5. Remove the following parts:

a. Rear package tray (See **REAR PACKAGE TRAY REMOVAL/INSTALLATION**.)

b. Trunk covering (See **TRUNK COVERING REMOVAL/INSTALLATION**.)

c. Trunk board (See **TRUNK BOARD REMOVAL/INSTALLATION**.)

d. Trunk end trim (See **TRUNK END TRIM REMOVAL/INSTALLATION**.)

e. Trunk side upper trim (See **TRUNK SIDE UPPER TRIM REMOVAL/INSTALLATION**.)

f. Trunk side trim (LH only) (See **TRUNK SIDE TRIM REMOVAL/INSTALLATION**.)

g. C-pillar trim (See **C-PILLAR TRIM REMOVAL/INSTALLATION**.)

h. Upper panel (See **UPPER PANEL REMOVAL**.)(See **UPPER PANEL INSTALLATION**.)

i. Rear console (See **REAR CONSOLE REMOVAL/INSTALLATION**.)

j. Shift lever knob (MTX) (See **MANUAL TRANSAXLE SHIFT MECHANISM REMOVAL/INSTALLATION [C66M-R]**.)

k. Selector lever knob (ATX) (See **AUTOMATIC TRANSAXLE SHIFT MECHANISM REMOVAL/INSTALLATION**.)

l. Shift panel (See **SHIFT PANEL REMOVAL/INSTALLATION**.)

m. Front console box (See **FRONT CONSOLE BOX REMOVAL/INSTALLATION**.)

n. CD player (with CD player) (See **CD PLAYER REMOVAL**.)(See **CD PLAYER INSTALLATION**.)

o. Glove compartment (See **GLOVE COMPARTMENT REMOVAL/INSTALLATION**.)

p. Decoration panel (See **DECORATION PANEL REMOVAL/INSTALLATION**.)

q. Side wall (See **SIDE WALL REMOVAL/INSTALLATION**.)

r. Front console (See **FRONT CONSOLE REMOVAL/INSTALLATION**.)

6. Remove the headliner. (See **HEADLINER REMOVAL/INSTALLATION**.)

7. Using a flathead screwdriver, lift the locking device carefully, however do not remove it.

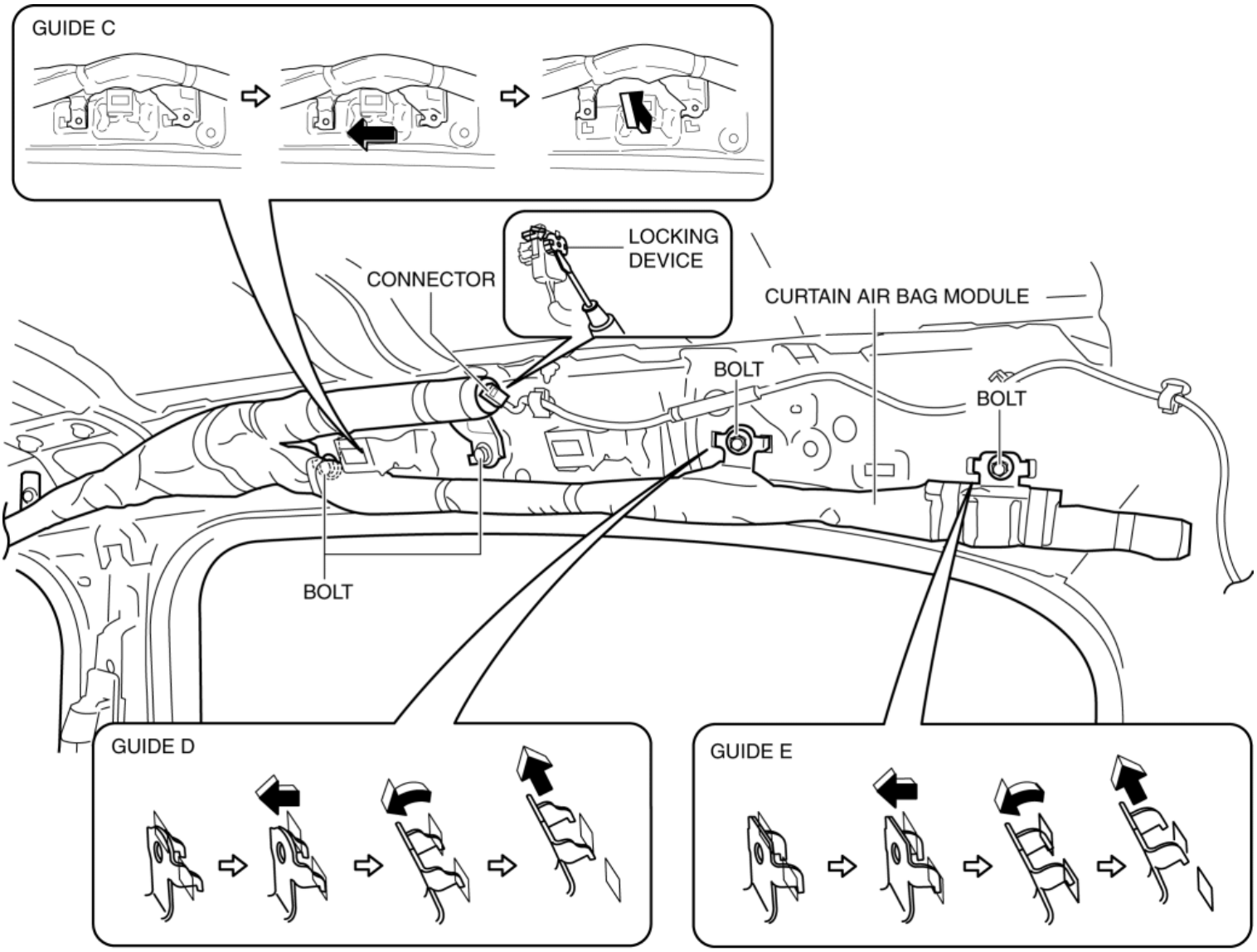

BOLT : **9—12 N·m {92—122 kgf·cm, 80—106 in·lbf}**

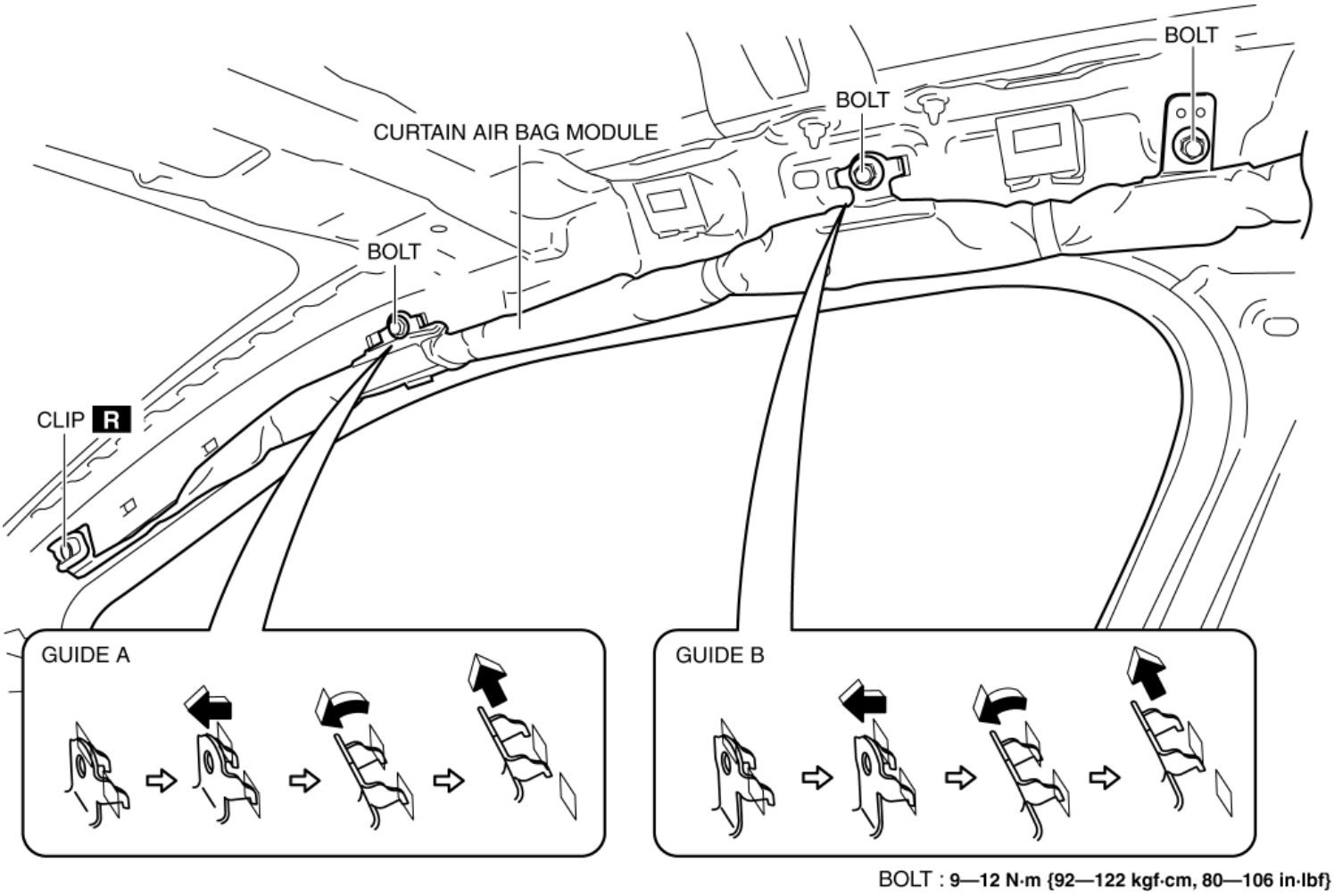

8. Disconnect the connector.
9. Remove the clip. (See **Clip Removal Note**.)
10. Remove the bolts.
11. Pull guide A, B, C, D and E in the direction shown in the figure and remove it from the body.
12. Remove the curtain air bag module.
13. Install in the reverse order of removal.
14. Switch the ignition ON (engine off or on).
15. Verify that the air bag system warning light illuminates for **approx. 6 s** and turns off.
    - If the air bag system warning light does not operate normally, refer to the on-board diagnostic system (air bag system) and perform inspection of the system. (See **FLOWCHART [TWO-STEP DEPLOYMENT CONTROL SYSTEM]**.)

Clip Removal Note

1. Pull out the pin with flathead screwdriver as shown in the figure.

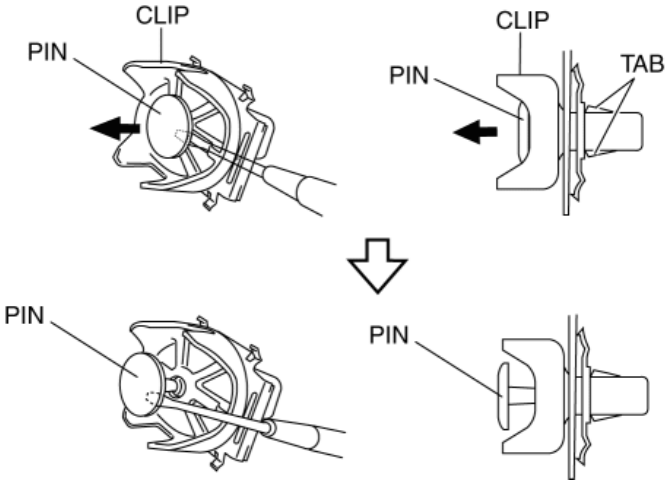

2. Insert a flathead screwdriver into shown in the figure.

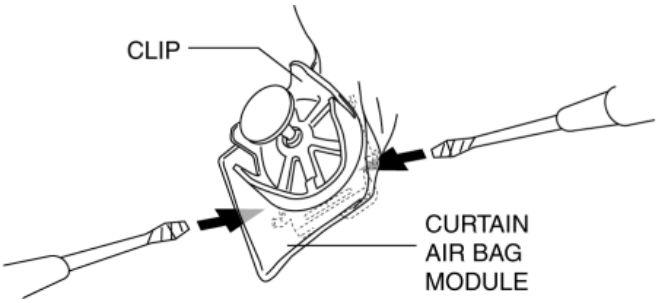

3. While pulling the curtain air bag in the direction of the arrow shown in the figure (1), detach tabs by prying with a flathead screwdriver in the direction of the arrow (2) (3).

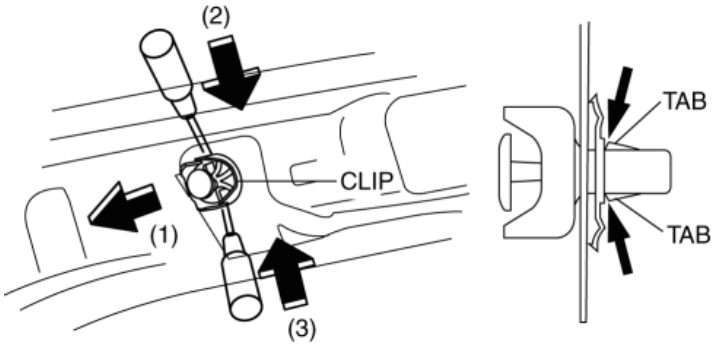

4. Remove the clip from the body.

2014 - Mazda3 - Restraints

CRASH ZONE SENSOR REMOVAL/INSTALLATION [TWO-STEP DEPLOYMENT CONTROL SYSTEM]

WARNING:

- Handling the crash zone sensor improperly can accidentally deploy the air bags and pre-tensioner seat belts, which may seriously injure you. Read the air bag system service warnings and cautions before handling the crash zone sensor. (See **AIR BAG SYSTEM SERVICE WARNINGS [TWO-STEP DEPLOYMENT CONTROL SYSTEM]**.) (See **AIR BAG SYSTEM SERVICE CAUTIONS [TWO-STEP DEPLOYMENT CONTROL SYSTEM]**.)

1. Switch the ignition off.
2. Disconnect the negative battery cable and wait for **1 min or more**. (See **NEGATIVE BATTERY CABLE DISCONNECTION/CONNECTION [SKYACTIV-G 2.0, SKYACTIV-G 2.5]**.)
3. Remove the set plate. (See **SET PLATE REMOVAL/INSTALLATION**.)
4. Remove the front bumper. (See **FRONT BUMPER REMOVAL/INSTALLATION**.)
5. Remove the front combination light. (See **FRONT COMBINATION LIGHT REMOVAL/INSTALLATION**.)
6. Remove the bolt.

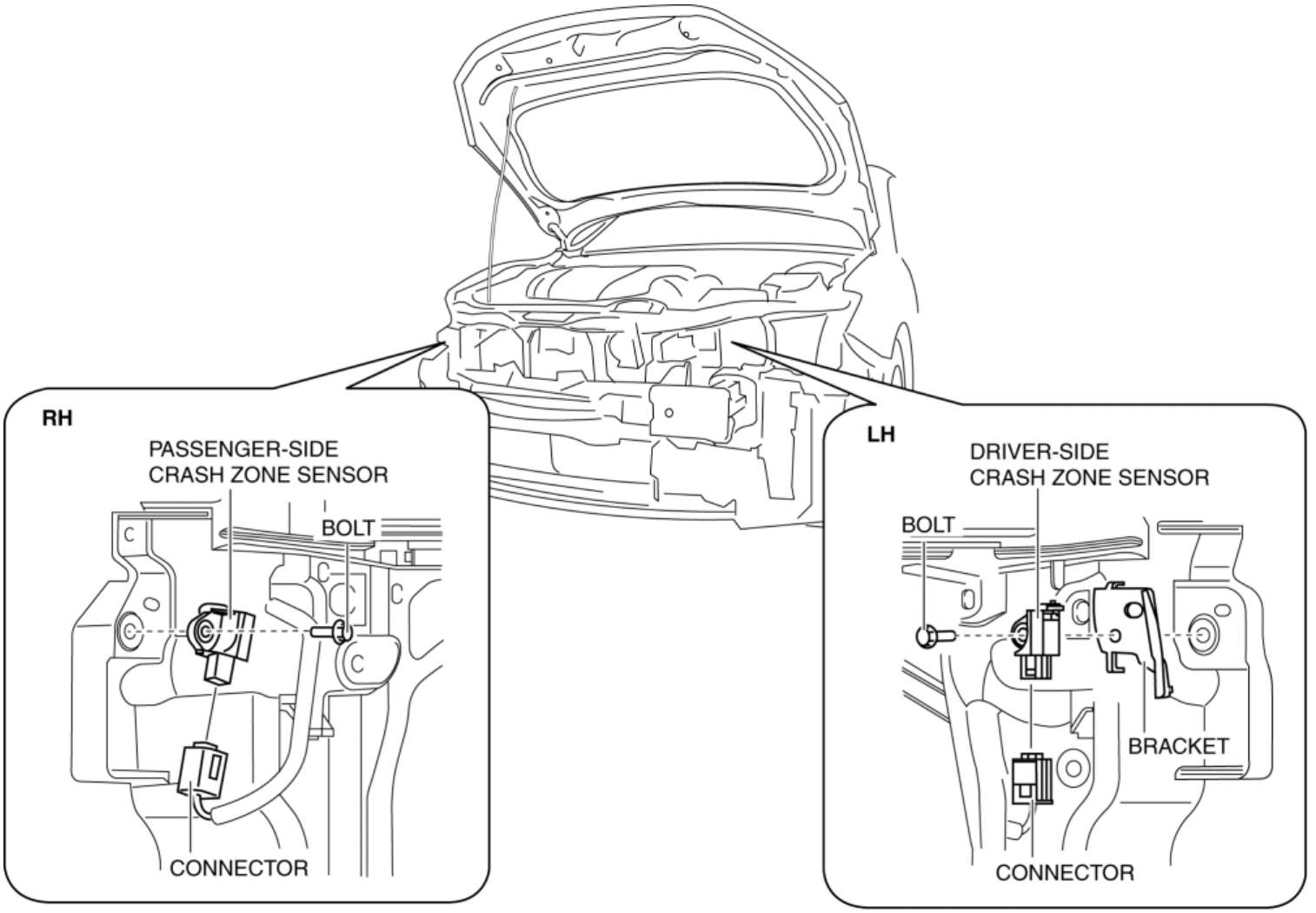

BOLT : **8—11 N·m {82—112 kgf·cm, 71—97 in·lbf}**

7. Disconnect the connector. (See **Connector Disconnect Note**.)
8. Remove the crash zone sensor.
9. Remove the bracket.

10. Install in the reverse order of removal.

11. Switch the ignition ON (engine off or on).

12. Verify that the air bag system warning light illuminates for **approx. 6 s** and turns off.

    - If the air bag system warning light does not operate normally, refer to the on-board diagnostic system (air bag system) and perform inspection of the system. (See **FLOWCHART [TWO-STEP DEPLOYMENT CONTROL SYSTEM]**.)

Connector Disconnect Note

1. Press the area (1) indicated by the arrow and slide it as shown in the figure (2).

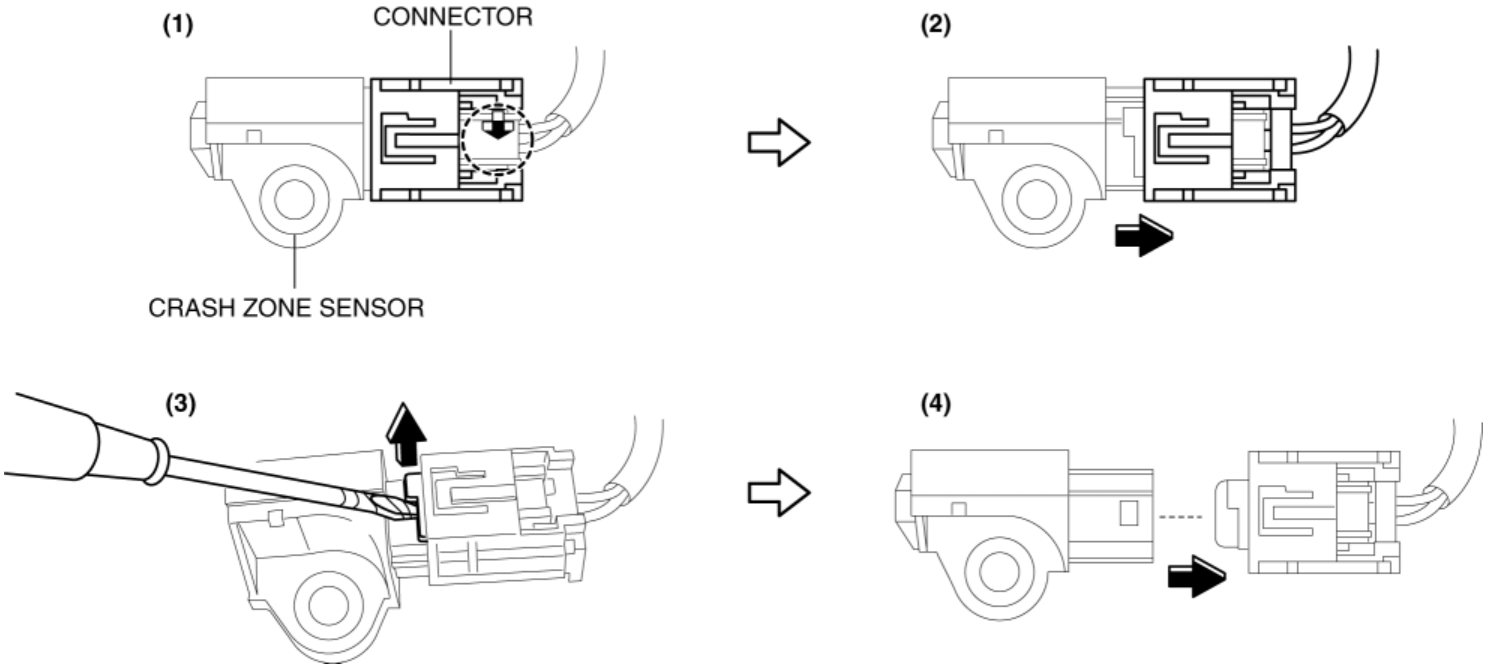

2. Lift up the location shown in the figure using a tape-wrapped flathead screwdriver (3) and disconnect the connector (4).

2014 - Mazda3 - Restraints

SAS CONTROL MODULE REMOVAL/INSTALLATION [TWO-STEP DEPLOYMENT CONTROL SYSTEM]

WARNING:

- Handling the SAS control module or air bag module improperly can accidentally deploy the air bag modules, pre-tensioner seat belts and lap pre-tensioner seat belts which may seriously injure you. Read the air bag system service warnings and cautions before handling the air bag module. (See **AIR BAG SYSTEM SERVICE WARNINGS [TWO-STEP DEPLOYMENT CONTROL SYSTEM]**.) (See **AIR BAG SYSTEM SERVICE CAUTIONS [TWO-STEP DEPLOYMENT CONTROL SYSTEM]**.)
- If the connector is connected and the ignition switch is turned to the ON position with the SAS control module not secured completely using the installation nuts, the SAS control module may detect a degree of impact even when something contacts it lightly, deploying the air bag module, pre-tensioner seat belt and lap pre-tensioner seat belt accidentally.
- If the DSC related parts sensor initialization procedure is not completed, it could result in an unexpected accident due to the DSC being inoperative. Therefore, after the SAS control module is replaced, always perform the DSC related parts sensor initialization procedure to ensure proper DSC operation.
- If configuration is not performed when the SAS control module is replaced with a new one, the vehicle specification information is not stored in the SAS control module and the system will not operate normally.

CAUTION:

- When replacing the SAS control module, always perform the configuration procedure before removing the SAS control module. If the configuration is not performed and the SAS control module is removed, DTC B0003:53 will be displayed.
- When performing configuration, it is necessary to read the vehicle specification information from the SAS control module before replacing it. Connect the M-MDS to the vehicle and perform vehicle identification before removing the SAS control module. The vehicle specification information is temporarily stored in the M-MDS.

NOTE:

- The SAS control module prior to replacement stores the vehicle specification information.
- A new SAS control module does not store any vehicle specification information.
- If the vehicle specification information from the SAS control module prior to replacement cannot be read, perform the configuration using As-Built data.

1. Perform SAS control module configuration when replacing it. (See **SAS CONTROL MODULE CONFIGURATION (USING READ/WRITE FUNCTION) [TWO-STEP DEPLOYMENT CONTROL SYSTEM]**.)

2. Switch the ignition off.

3. Disconnect the negative battery cable and wait for **1 min or more**. (See **NEGATIVE BATTERY CABLE DISCONNECTION/CONNECTION [SKYACTIV-G 2.0, SKYACTIV-G 2.5]**.)

4. Remove the following parts:

   a. Upper panel (See **UPPER PANEL REMOVAL**.)(See **UPPER PANEL INSTALLATION**.)

   b. Rear console (See **REAR CONSOLE REMOVAL/INSTALLATION**.)

5. Remove the parking brake lever. (See **PARKING BRAKE LEVER REMOVAL/INSTALLATION**.)

6. Remove the bolts.

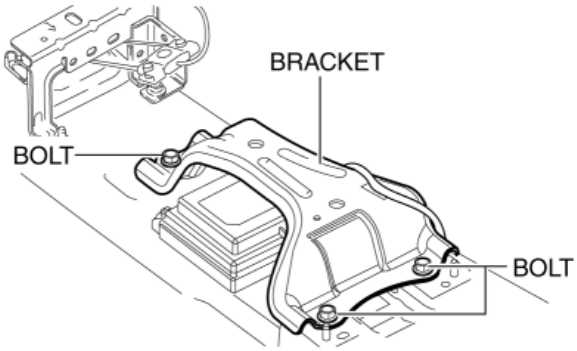

BOLT : **19—25 {2.0—2.5, 15—18} N·m {kgf·m, ft·lbf}**

7. Set the bracket out of the way.

8. Remove the nuts.

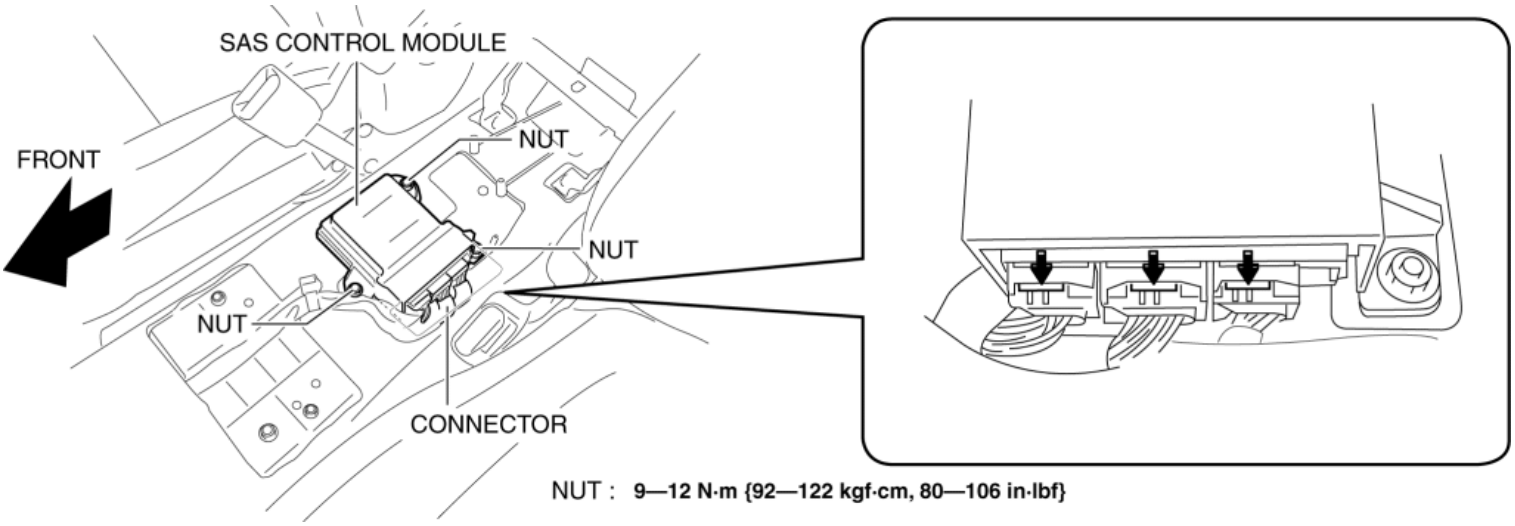

9. Remove the SAS control module.

10. Disconnect the connectors.

11. Install in the reverse order of removal.

12. Switch the ignition ON (engine off or on).

13. Verify that the air bag system warning light illuminates for **approx. 6 s** and turns off.

- If the air bag system warning light does not operate normally, refer to the on-board diagnostic system (air bag system) and perform inspection of the system. (See **FLOWCHART [TWO-STEP DEPLOYMENT CONTROL SYSTEM]**.)

14. Perform the DSC related parts sensor initialization procedure (only when replacing the SAS control module with a new one). (See **DSC RELATED PARTS SENSOR INITIALIZATION PROCEDURE**.)

NOTE:

- If configuration cannot be performed by reading/writing of the vehicle specification information, perform the configuration using As-Built information after replacing the SAS control module. (See **SAS CONTROL MODULE CONFIGURATION (USING AS-BUILT DATA) [TWO-STEP DEPLOYMENT CONTROL SYSTEM]**.)

2014 - Mazda3 - Restraints

SAS CONTROL MODULE CONFIGURATION (USING READ/WRITE FUNCTION) [TWO-STEP DEPLOYMENT CONTROL SYSTEM]

NOTE:

- When performing configuration, it is necessary to read the vehicle specification information from the SAS control module before replacing it. Connect the M-MDS to the vehicle and perform vehicle identification before removing the SAS control module. The vehicle specification information is temporarily stored in the M-MDS.

1. Connect the M-MDS to the DLC 2.

2. After the vehicle is identified, select the following items from the initialization screen of the M-MDS.

   a. Select “Module Programming”.

3. Then, select items from the screen menu in the following order.

   a. Select “Programmable Module Installation”.

   b. Select “RCM”.

4. Perform the configuration according to the directions on the screen.

CAUTION:

- When the configuration is performed, CAN communication between the SAS control module and control module connected to the CAN line is cut temporarily, and communication error DTCs may be detected. After performing the configuration, verify the DTCs for the control module connected to the CAN line and clear it if any DTC is detected.

5. Verify the DTCs for all of the control modules connected to the CAN line.

   - If any DTC is stored, clear it.
   - If the DTC is cleared, finish the procedure because the configuration has been completed normally.
   - If the DTC remains, perform troubleshooting according to the DTC.

2014 - Mazda3 - Restraints

SAS CONTROL MODULE CONFIGURATION (USING AS-BUILT DATA) [TWO-STEP DEPLOYMENT CONTROL SYSTEM]

NOTE:

- If the configuration is performed using As-Built data, the set value of the personalization function is reset to the initial value (condition when shipped from factory). Verify the set value with the customer and perform the personalization function setting after performing the configuration using As-Built data.

1. Connect the M-MDS to the DLC 2.

2. After the vehicle is identified, select the following items from the initialization screen of the M-MDS.

   a. Select “Module Programming”.

3. Then, select items from the screen menu in the following order.

   a. Select “As-Built”.

   b. Select “RCM”.

4. Perform the as-built according to the directions on the screen.

CAUTION:

- When the configuration is performed, CAN communication between the SAS control module and control module connected to the CAN line is cut temporarily, and communication error DTCs may be detected. After performing the configuration, verify the DTCs for the control module connected to the CAN line and clear it if any DTC is detected.

5. Verify the DTCs for all of the control modules connected to the CAN line.

   - If any DTC is stored, clear it.
   - If the DTC is cleared, finish the procedure because the configuration has been completed normally.
   - If the DTC remains, perform troubleshooting according to the DTC.

2014 - Mazda3 - Restraints

SEAT WEIGHT SENSOR CONTROL MODULE REMOVAL/INSTALLATION [TWO-STEP DEPLOYMENT CONTROL SYSTEM]

CAUTION:

- When the seat weight sensor control module is replaced with a new one, perform the seat weight sensor calibration using the M MDS. (See **SEAT WEIGHT SENSOR CALIBRATION [TWO-STEP DEPLOYMENT CONTROL SYSTEM]**.)

1. Switch the ignition off.

2. Disconnect the negative battery cable and wait for **1 min or more**. (See **NEGATIVE BATTERY CABLE DISCONNECTION/CONNECTION [SKYACTIV-G 2.0, SKYACTIV-G 2.5]**.)

3. Disconnect the connectors.

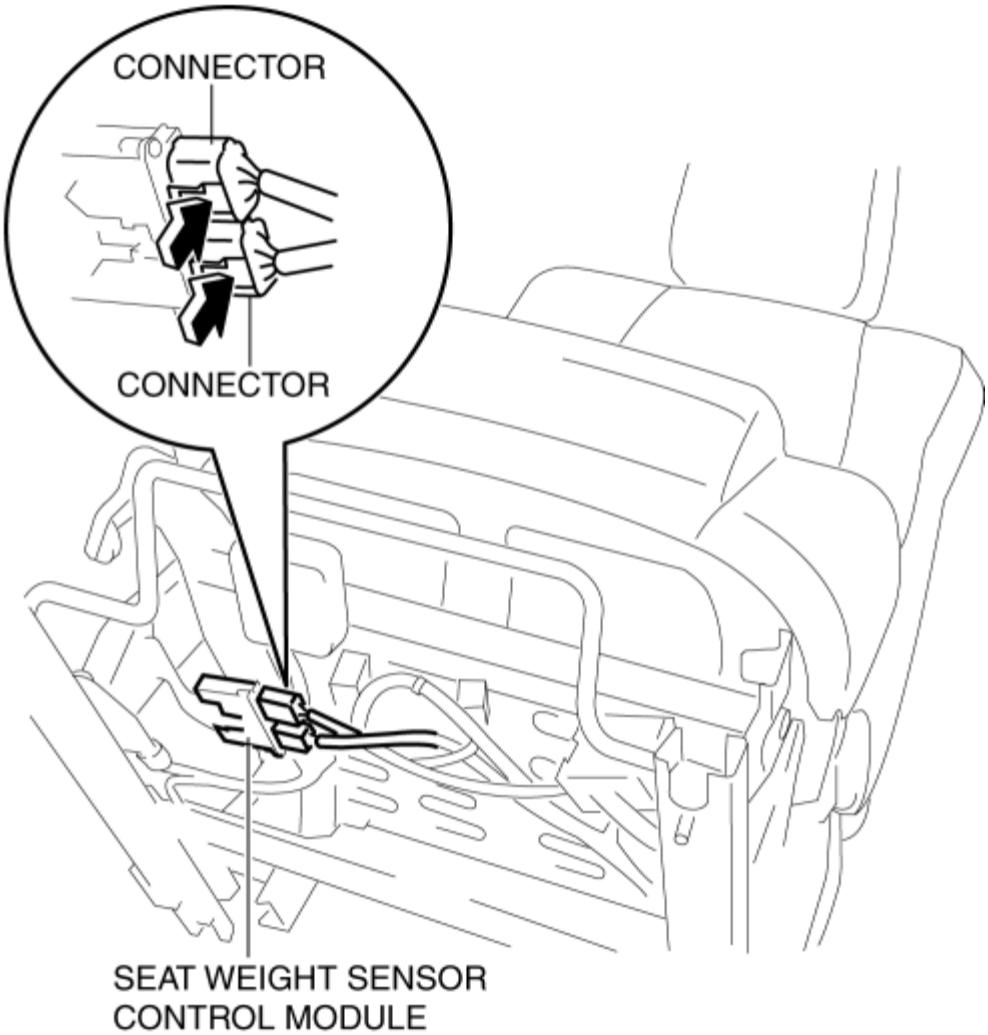

4. Remove the seat weight sensor control module from the bracket by lifting the tab in the direction of the arrow.

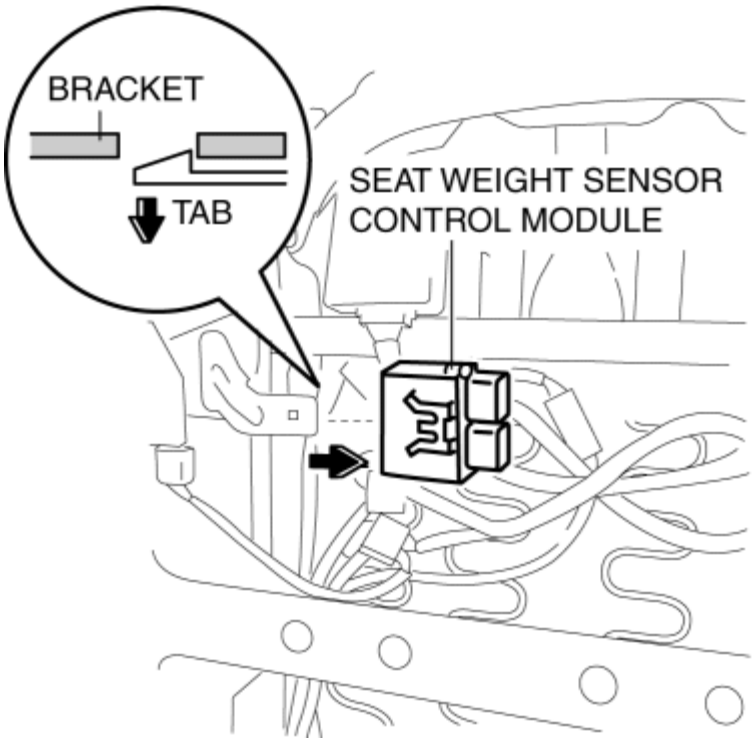

5. Install in the reverse order of removal.

6. Switch the ignition ON (engine off or on).

7. Verify that the air bag system warning light illuminates for **approx. 6 s** and turns off.

   - If the air bag system warning light does not operate normally, refer to the on-board diagnostic system (air bag system) and perform inspection of the system. (See **FLOWCHART [TWO-STEP DEPLOYMENT CONTROL SYSTEM]**.)

2014 - Mazda3 - Restraints

SEAT WEIGHT SENSOR REMOVAL/INSTALLATION [TWO-STEP DEPLOYMENT CONTROL SYSTEM]

CAUTION:

- When the seat weight sensor is replaced with a new one, perform the seat weight sensor calibration using the M MDS. (See **SEAT WEIGHT SENSOR CALIBRATION [TWO-STEP DEPLOYMENT CONTROL SYSTEM]**.)
- When replacing the seat weight sensor, replace it together with the passenger-side seat slide adjuster (because seat weight sensor is integrated with passenger-side seat slide adjuster).

  (See **FRONT SEAT REMOVAL/INSTALLATION**.)

2014 - Mazda3 - Restraints

SEAT WEIGHT SENSOR CALIBRATION [TWO-STEP DEPLOYMENT CONTROL SYSTEM]

CAUTION:

- If any of the following work is performed, perform the seat weight sensor calibration using the M-MDS.
    - Replacement with a new seat weight sensor
    - Replacement with a new seat weight sensor control module
    - Replacement with new passenger-side seat parts
    - Disassembly of the passenger-side seat
- If any of the following work is performed, perform the seat weight sensor inspection using the M-MDS. (See **SEAT WEIGHT SENSOR INSPECTION [TWO-STEP DEPLOYMENT CONTROL SYSTEM]**.)
    - Removal of the passenger-side seat
    - Loosening and retightening of passenger's seat fixing bolts
    - Or, the vehicle is involved in a collision

NOTE:

- When seat weight sensor calibration is performed causing the SAS control module to detect the DTC, perform the following procedure.

1. Have two **20 kg {44 lb}** weights ready to use.
2. Connect the M-MDS to the DLC-2.
3. After the vehicle is identified, select the following items from the initialization screen of the M-MDS.
    a. Select "Body".
    b. Select "SWS Calibration".
4. Perform calibration following the procedures on the M-MDS screen.

2014 - Mazda3 - Restraints

SEAT WEIGHT SENSOR INSPECTION [TWO-STEP DEPLOYMENT CONTROL SYSTEM]

CAUTION:

- If any of the following work is performed, perform the seat weight sensor inspection using the M-MDS.
    - Removal of the passenger-side seat
    - Loosening and retightening of passenger's seat fixing bolts
    - Or, the vehicle was involved in a collision
- If any of the following work is performed, perform the seat weight sensor calibration using the M-MDS. (See **SEAT WEIGHT SENSOR CALIBRATION [TWO-STEP DEPLOYMENT CONTROL SYSTEM]**.)
    - Replacement with a new seat weight sensor
    - Replacement with a new seat weight sensor control module
    - Replacement with new passenger-side seat parts
    - Disassembly of the passenger-side seat

1. Connect the M-MDS to the DLC-2.
2. Verify that SAS control module DTC B00A0:28 is detected using the M-MDS.
    - If DTC B00A0:28 is detected, perform the on-board diagnostic system procedure. (See **DTC B00A0:28 [TWO-STEP DEPLOYMENT CONTROL SYSTEM]**.)

2014 - Mazda3 - Restraints

SIDE AIR BAG SENSOR REMOVAL/INSTALLATION [TWO-STEP DEPLOYMENT CONTROL SYSTEM]

WARNING:

- Handling the side air bag sensor improperly can accidentally operate (deploy) the air bag module, which may seriously injure you. Read the air bag system service warnings and cautions before handling the side air bag sensor. (See **AIR BAG SYSTEM SERVICE WARNINGS [TWO-STEP DEPLOYMENT CONTROL SYSTEM]**.) (See **AIR BAG SYSTEM SERVICE CAUTIONS [TWO-STEP DEPLOYMENT CONTROL SYSTEM]**.)

1. Switch the ignition off.
2. Disconnect the negative battery cable and wait for **1 min or more**. (See **NEGATIVE BATTERY CABLE DISCONNECTION/CONNECTION [SKYACTIV-G 2.0, SKYACTIV-G 2.5]**.)
3. Remove the following parts:
   a. Rear seat cushion (See **REAR SEAT CUSHION REMOVAL/INSTALLATION**.)
   b. Rear scuff plate (See **REAR SCUFF PLATE REMOVAL/INSTALLATION**.)
   c. Tire house trim (See **TIRE HOUSE TRIM REMOVAL/INSTALLATION**.)
4. Remove the bolt.

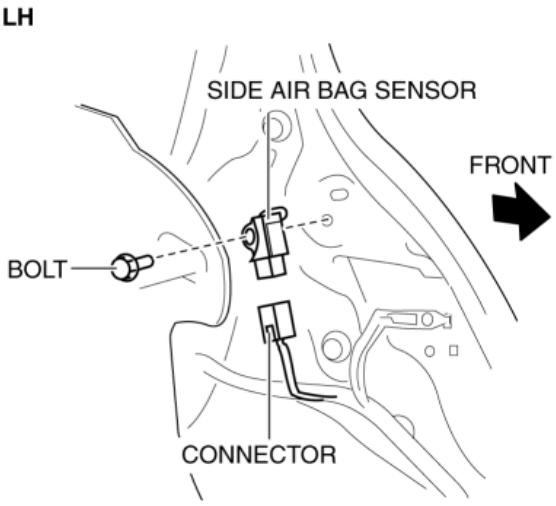

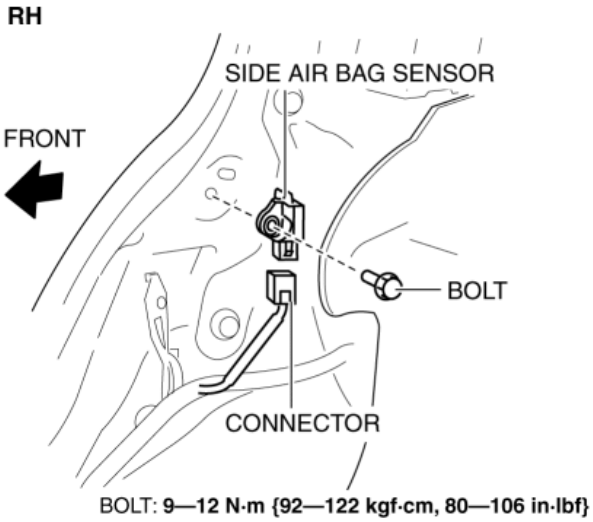

5. Disconnect the connector. (See **Connector Disconnect Note**.)
6. Remove the side air bag sensor.
7. Install in the reverse order of removal.
8. Switch the ignition ON (engine off or on).
9. Verify that the air bag system warning light illuminates for **approx. 6 s** and turns off.
   - If the air bag system warning light does not operate normally, refer to the on-board diagnostic system (air bag system) and perform inspection of the system. (See **FLOWCHART [TWO-STEP DEPLOYMENT CONTROL SYSTEM]**.)

Connector Disconnect Note

1. Press the area (1) indicated by the arrow and slide it as shown in the figure (2).

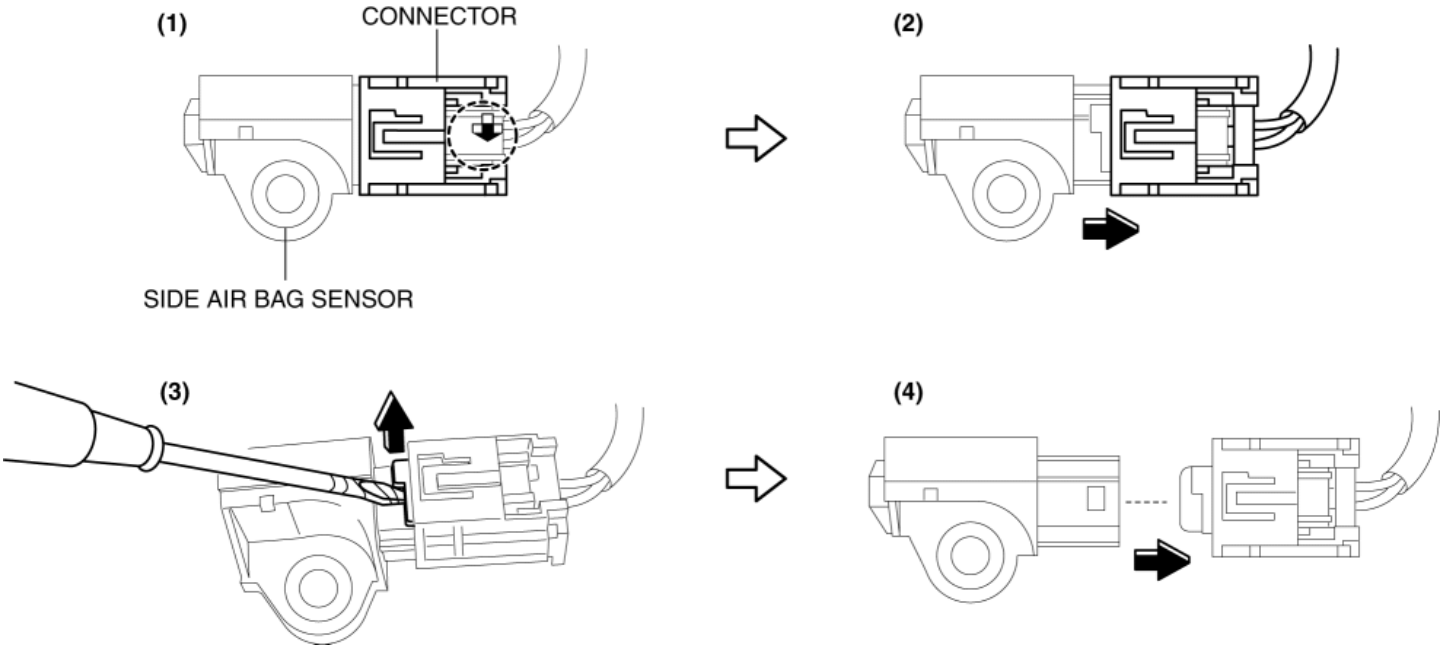

2. Lift up the location shown in the figure using a tape-wrapped flathead screwdriver (3) and disconnect the connector (4).

2014 - Mazda3 - Restraints

PRESSURE SENSOR REMOVAL/INSTALLATION [TWO-STEP DEPLOYMENT CONTROL SYSTEM]

WARNING:

- Handling the pressure sensor improperly can accidentally operate (deploy) the air bag module, which may seriously injure you. Read the air bag system service warnings and cautions before handling the pressure sensor. (See **AIR BAG SYSTEM SERVICE WARNINGS [TWO-STEP DEPLOYMENT CONTROL SYSTEM]**.) (See **AIR BAG SYSTEM SERVICE CAUTIONS [TWO-STEP DEPLOYMENT CONTROL SYSTEM]**.)

1. Switch the ignition off.

2. Disconnect the negative battery cable and wait for **1 min or more**. (See **NEGATIVE BATTERY CABLE DISCONNECTION/CONNECTION [SKYACTIV-G 2.0, SKYACTIV-G 2.5]**.)

3. Remove the front door trim. (See **FRONT DOOR TRIM REMOVAL/INSTALLATION**.)

4. Remove the bolts.

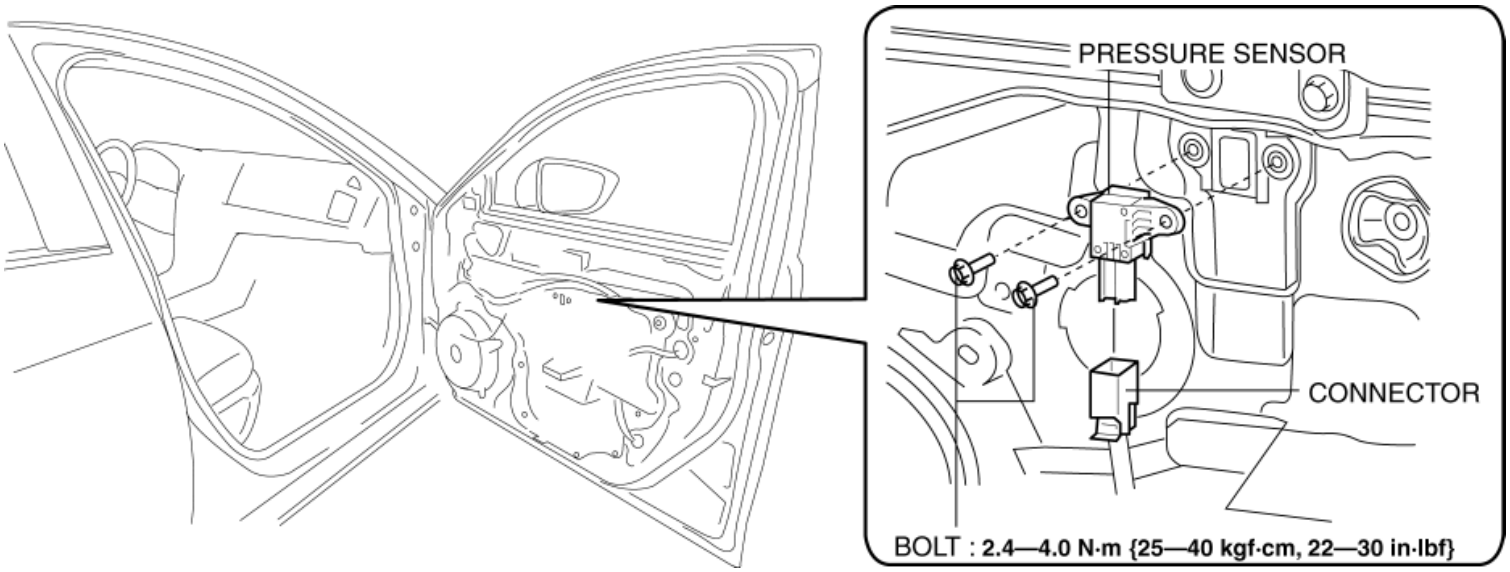

5. Remove the pressure sensor.

6. Disconnect the connector from the pressure sensor by pressing the connector tab and pulling out the lock lever in the direction of the arrow.

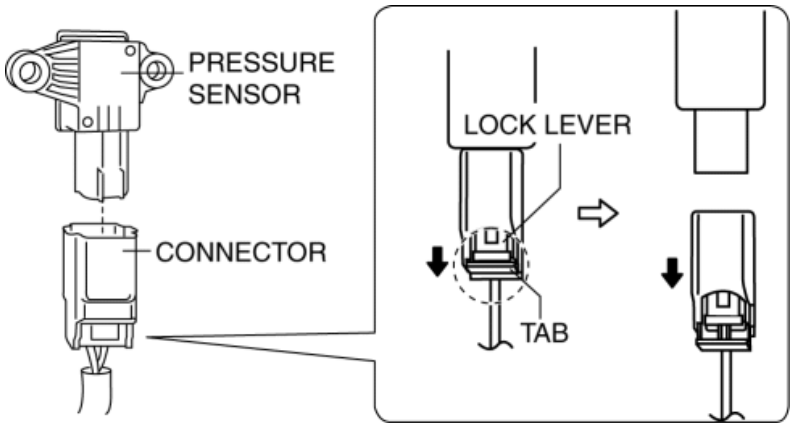

- When connecting the pressure sensor connector, insert the lock lever (connector disconnection prevention lever) completely.

7. Install in the reverse order of removal.

8. Switch the ignition ON (engine off or on).

9. Verify that the air bag system warning light illuminates for **approx. 6 s** and turns off.

    - If the air bag system warning light does not operate normally, refer to the on-board diagnostic system (air bag system) and perform inspection of the system. (See **FLOWCHART [TWO-STEP DEPLOYMENT CONTROL SYSTEM]**.)

2014 - Mazda3 - Restraints

CLOCK SPRING REMOVAL/INSTALLATION [TWO-STEP DEPLOYMENT CONTROL SYSTEM]

CAUTION:

- If the disc on the combination switch is deformed or has foreign matter adhering to it, performance of the steering angle sensor may be reduced, causing abnormal operation. When handling the clock spring, be careful not to deform the disc and make sure there is no foreign matter on it.

1. Switch the ignition off.

2. Disconnect the negative battery cable and wait for **1 min or more**. (See **NEGATIVE BATTERY CABLE DISCONNECTION/CONNECTION [SKYACTIV-G 2.0, SKYACTIV-G 2.5]**.)

3. Remove the driver side air bag module. (See **DRIVER-SIDE AIR BAG MODULE REMOVAL [TWO-STEP DEPLOYMENT CONTROL SYSTEM]**.)(See **DRIVER-SIDE AIR BAG MODULE INSTALLATION [TWO-STEP DEPLOYMENT CONTROL SYSTEM]**.)

4. Remove the steering wheel. (See **STEERING WHEEL AND COLUMN REMOVAL/INSTALLATION**.)

5. Remove the column cover. (See **COLUMN COVER REMOVAL/INSTALLATION**.)

6. Disconnect the clock spring connector.

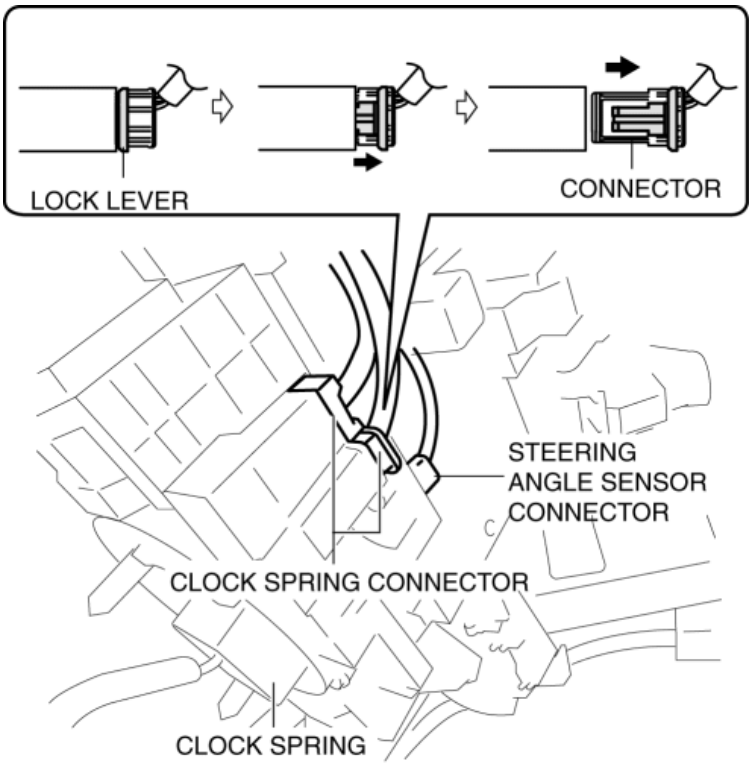

7. Disconnect the steering angle sensor connector. (with steering angle sensor)

8. Remove the tab direction of the arrow shown in the figure and remove the clock spring.

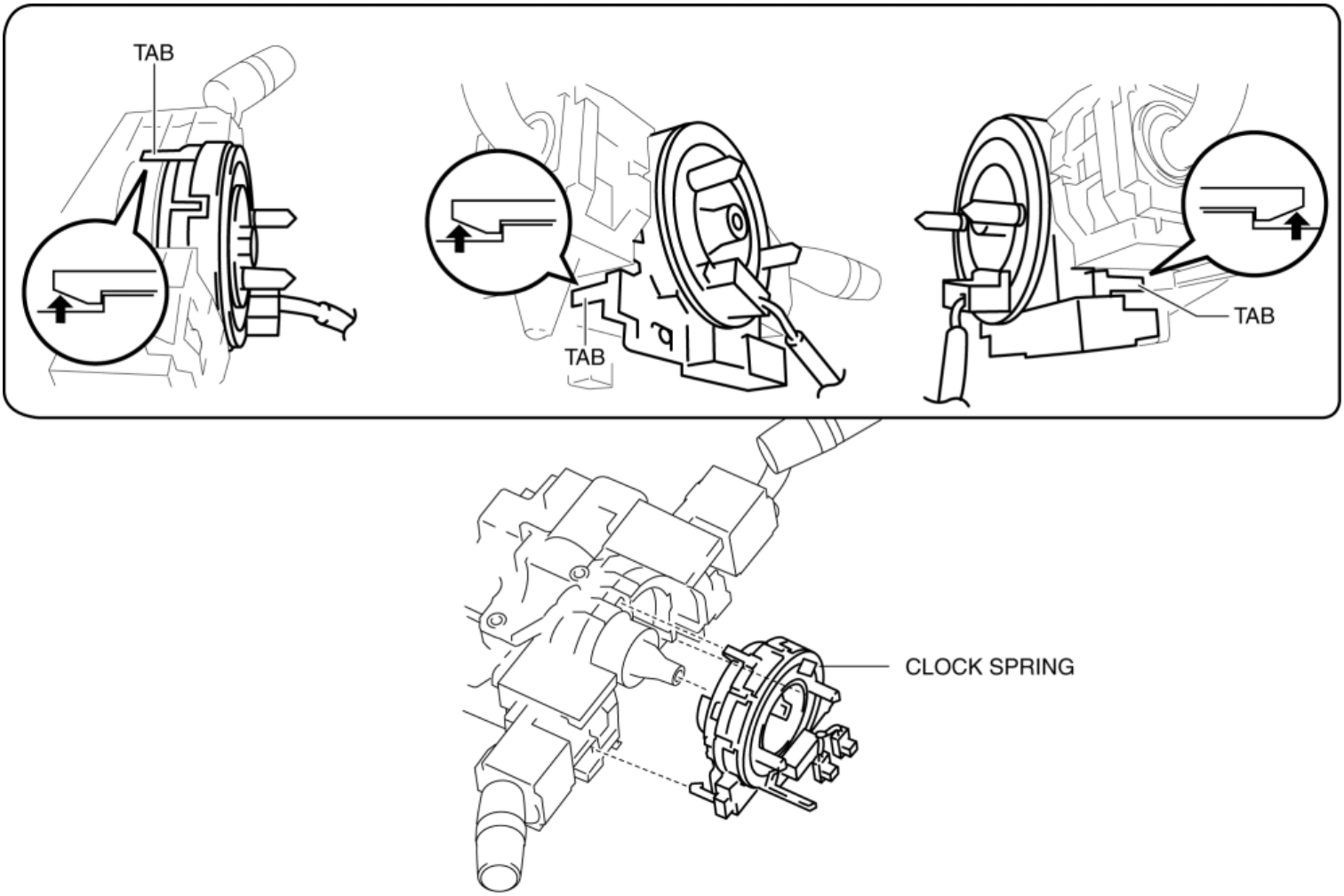

9. Install in the reverse order of removal. (See **Clock Spring Installation Note**.)

10. Verify that the air bag system warning light illuminates for **approx. 6 s** and turns off.

    - If the air bag system warning light does not operate in the manner described above, there are malfunctions in the system. Inspect the system using the on-board diagnostic. (See **FLOWCHART [TWO-STEP DEPLOYMENT CONTROL SYSTEM]**.)

Clock Spring Installation Note

CAUTION:

- If the clock spring is not adjusted, the spring wire in the clock spring will break due to overtension when the steering wheel is turned. Always adjust the clock spring after installing it.
- Adjust the clock spring after installing it. (See **CLOCK SPRING ADJUSTMENT [TWO-STEP DEPLOYMENT CONTROL SYSTEM]**.)

2014 - Mazda3 - Restraints

CLOCK SPRING ADJUSTMENT [TWO-STEP DEPLOYMENT CONTROL SYSTEM]

1. Set the front wheels straight ahead.

CAUTION:

- The clock spring will break if over wound. Do not forcibly turn the clock spring.

2. Turn the clock spring clockwise until it stops.

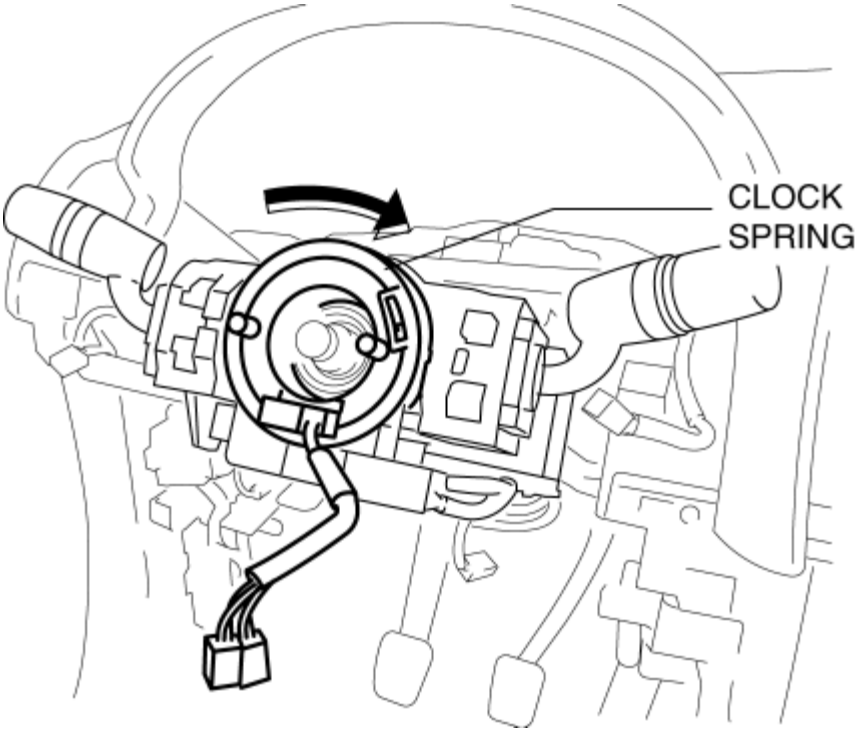

3. Turn the clock spring counterclockwise **approx. 2 turns**.

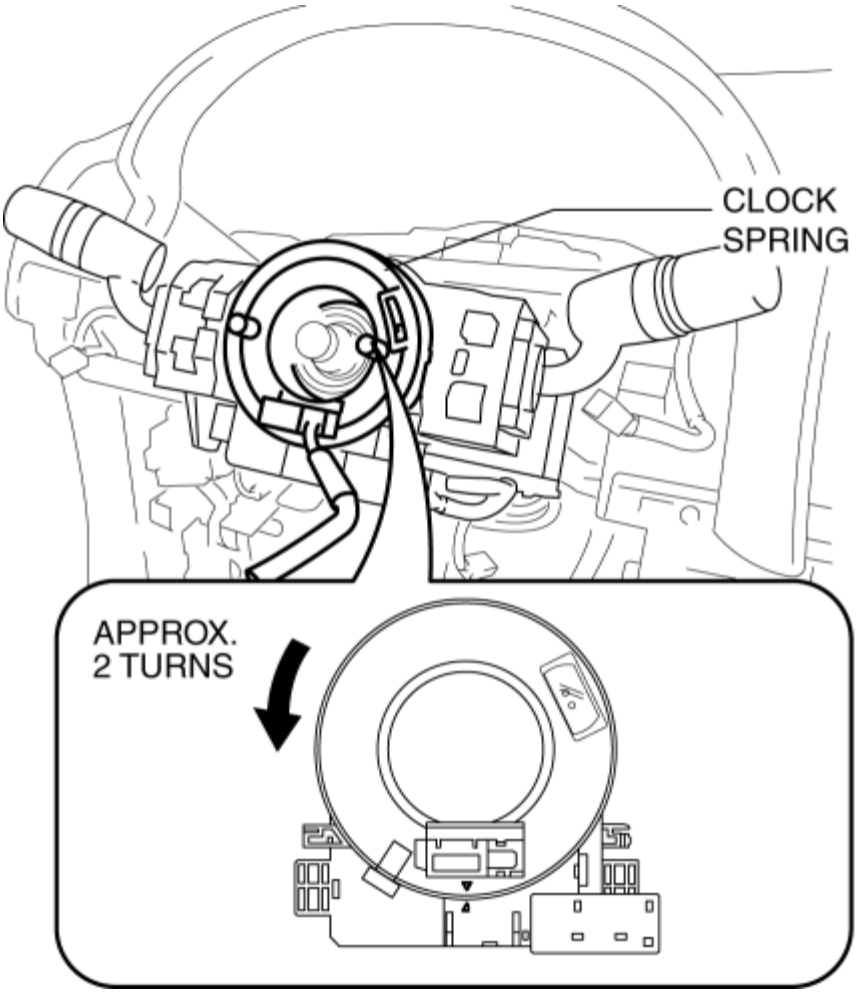

4. Align the mark on the clock spring with the mark on the outer housing.

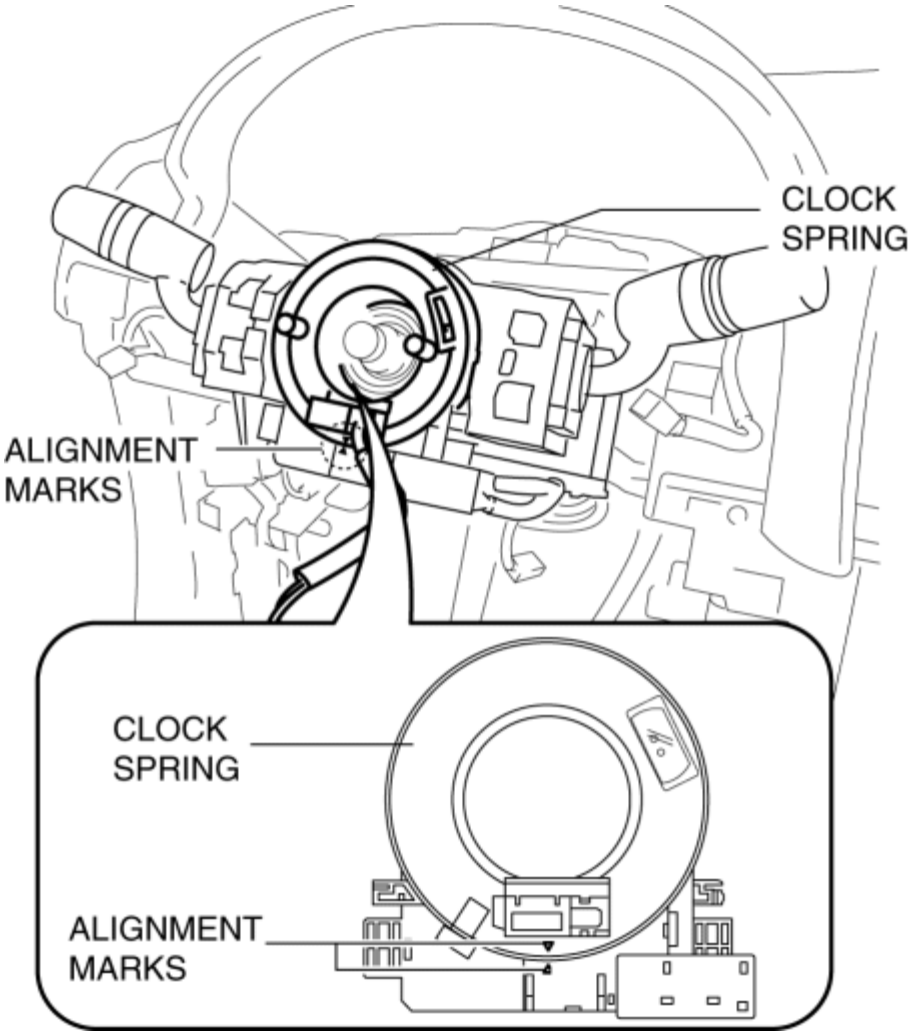

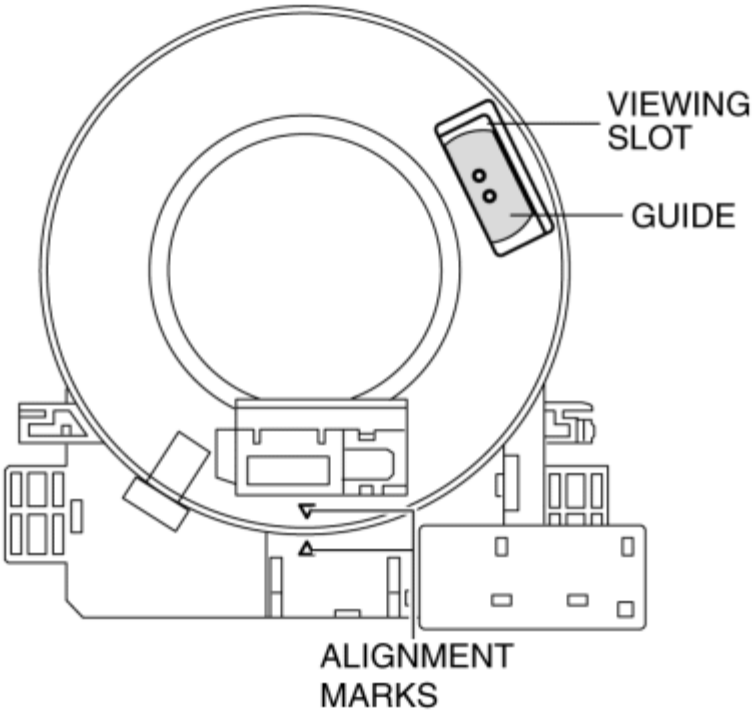

NOTE:

- After adjusting the alignment marks, the guides can be verified in the viewing slots shown

in the figure.

2014 - Mazda3 - Restraints

CLOCK SPRING INSPECTION [TWO-STEP DEPLOYMENT CONTROL SYSTEM]

1. Disconnect the negative battery cable and wait for **1 min or more**. (See **NEGATIVE BATTERY CABLE DISCONNECTION/CONNECTION [SKYACTIV-G 2.0, SKYACTIV-G 2.5]**.)

2. Remove the driver side air bag module. (See **DRIVER-SIDE AIR BAG MODULE REMOVAL [TWO-STEP DEPLOYMENT CONTROL SYSTEM]**.)(See **DRIVER-SIDE AIR BAG MODULE INSTALLATION [TWO-STEP DEPLOYMENT CONTROL SYSTEM]**.)

3. Remove the steering wheel. (See **STEERING WHEEL AND COLUMN REMOVAL/INSTALLATION**.)

4. Remove the column cover. (See **COLUMN COVER REMOVAL/INSTALLATION**.)

5. Remove the clock spring. (See **CLOCK SPRING REMOVAL/INSTALLATION [TWO-STEP DEPLOYMENT CONTROL SYSTEM]**.)

6. Verify that the continuity is as indicated in the table.

   - If not as indicated in the table, replace the clock spring. (See **CLOCK SPRING REMOVAL/INSTALLATION [TWO-STEP DEPLOYMENT CONTROL SYSTEM]**.)

NOTE:

- When the vehicle-side connector for the clock spring is disconnected, terminals 2A, 2B, 2C and 2D are shorted to prevent unexpected operation (deployment) of the air bag module.

○—○ : Continuity

Test condition	Terminal																											
	2A	2B	2C	2D	1A	1B	1C	1E	1G	1I	1J	1K	1M	1N	4A	4B	5A	5B	3N	3M	3L	3J	3H	3F	3E	3D	3B	3A
Under any condition	○	○													○	○												
			○	○													○	○										
					○														○									
						○														○								
							○														○							
								○														○						
									○														○					
										○														○				
											○														○			
												○														○		
													○														○	
														○														○

○—○ : Continuity

Test condition	Terminal					
	1D	1F	1H	3K	3I	3G
Under any condition	○			○		
		○			○	
			○			○

CLOCK SPRING INSPECTION [TWO-STEP DEPLOYMENT CONTROL SYSTEM]

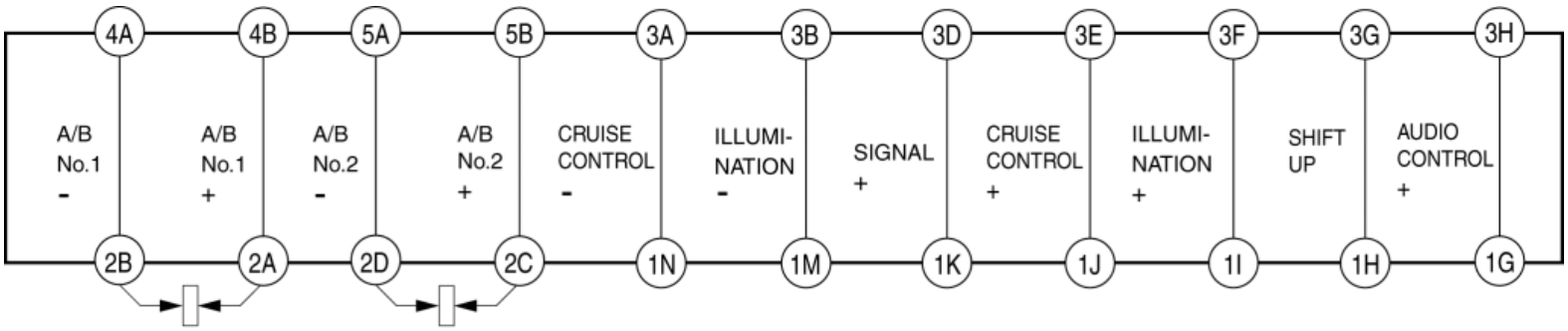

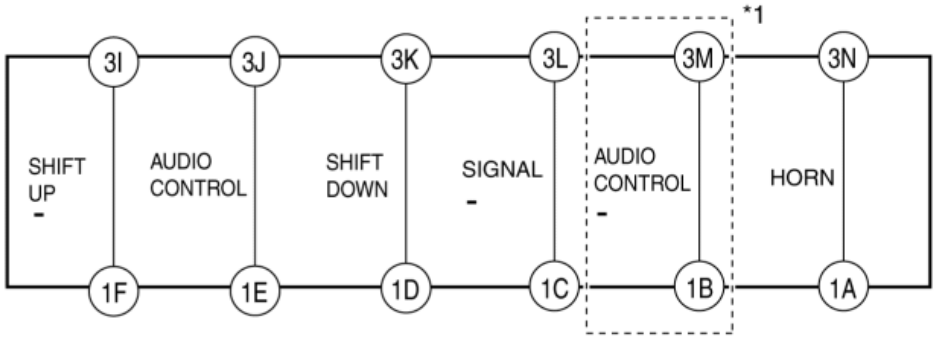

*1 : WITH Bluetooth® SYSTEM (HANDS-FREE TELEPHONE (HF/TEL) SYSTEM)

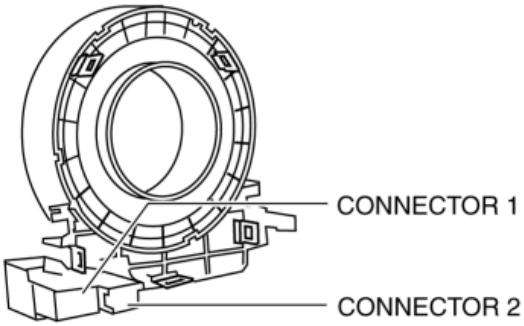

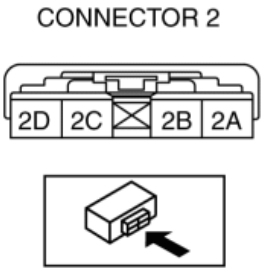

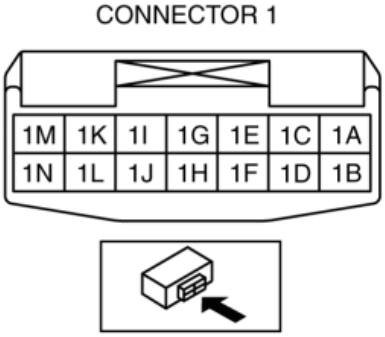

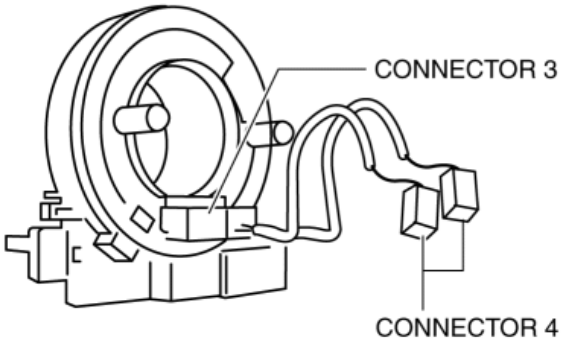

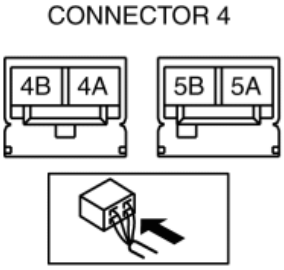

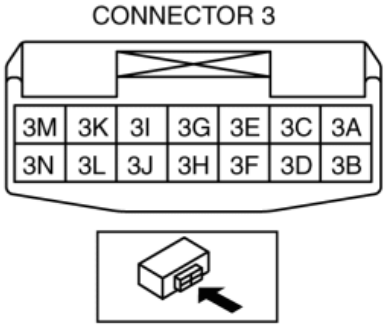

2014 - Mazda3 - Restraints

PASSENGER AIR BAG DEACTIVATION (PAD) INDICATOR LIGHT REMOVAL/INSTALLATION [TWO-STEP DEPLOYMENT CONTROL SYSTEM]

NOTE:

- The PAD indicator light (LED) is built into the indicator unit.

1. Remove the indicator unit. (See **INDICATOR UNIT REMOVAL/INSTALLATION**.)

2014 - Mazda3 - Restraints

AIR BAG MODULE AND PRE-TENSIONER SEAT BELT DEPLOYMENT PROCEDURES [TWO-STEP DEPLOYMENT CONTROL SYSTEM]

WARNING:

- A live (undeployed) air bag module, pre-tensioner seat belt or lap pre-tensioner seat belt may accidentally operate (deploy) when it is disposed of and cause serious injury. Do not dispose of a live (undeployed) air bag module, pre-tensioner seat belt or lap pre-tensioner seat belt. If the SSTs (Deployment tool and Adapter harness) are not available, consult the nearest Mazda representative for assistance.
- The lap pre-tensioner seat belt may not have operated (deployed) even if the pre-tensioner seat belt has due to a vehicle collision. A live (non-deployed) pre-tensioner may accidentally operate (deploy) when it is disposed of and cause serious injury. When disposing of the front seat belt, verify that the pre-tensioner seat belt and lap pre-tensioner seat belt have operated (deployed).

CAUTION:

- Deploying the air bag modules, pre-tensioner seat belts or lap pre-tensioner seat belts inside the vehicle may cause damage to the vehicle interior. When the vehicle is not to be scrapped, always deploy the air bag modules, pre-tensioner seat belts or lap pre-tensioner seat belts outside the vehicle.
- If the vehicle is to be scrapped, or when disposing of any air bag modules, pre-tensioner seat belts or lap pre-tensioner seat belts, operate (deploy) them inside the vehicle by following the deployment procedure below and using the **SST (Deployment tool)**.
- When disposing of an operated (deployed) air bag module, pre-tensioner seat belt and lap pre-tensioner seat belt, refer to “AIR BAG MODULE AND PRE-TENSIONER SEAT BELT DISPOSAL PROCEDURES”.

Deployment Procedure for Inside of Vehicle

1. Inspect the **SST (Deployment tool)**. (See **INSPECTION OF SST (DEPLOYMENT TOOL) [TWO-STEP DEPLOYMENT CONTROL SYSTEM]**.)

2. Move the vehicle to an open space, away from strong winds, and close all of the vehicle doors and windows.

3. Switch the ignition off.

4. Disconnect the negative battery cable and wait for **1 min or more**. (See **NEGATIVE BATTERY CABLE DISCONNECTION/CONNECTION [SKYACTIV-G 2.0, SKYACTIV-G 2.5]**.)

5. Follow the procedure below for operating (deploying) the applicable air bag module, pre-tensioner seat belt or lap pre-tensioner seat belt.

NOTE:

- The connector part of the air bag module and the SST (adapter wiring harness) burns out from the high heat when the inflator is operated (deployed).

Driver-side Air Bag Module

WARNING:

- The driver-side air bag module is a dual inflator type. If one inflator is forced to operate (deploy), the other may operate (deploy) accidentally. To prevent injury while disposing of the air bag module, make sure to operate (deploy) both driver-side air bag module inflators simultaneously, following the procedure below.

NOTE:

- The SSTs, two types of adapter harnesses (for inflators No.1 and No.2) and two deployment tools are to be used to operate (deploy) the driver-side air bag module.

1. Remove the driver-side air bag module. (See **DRIVER-SIDE AIR BAG MODULE REMOVAL [TWO-STEP DEPLOYMENT CONTROL SYSTEM]**.)

2. Connect the **SST (Adapter harness)** to the driver-side air bag module as shown in the figure.

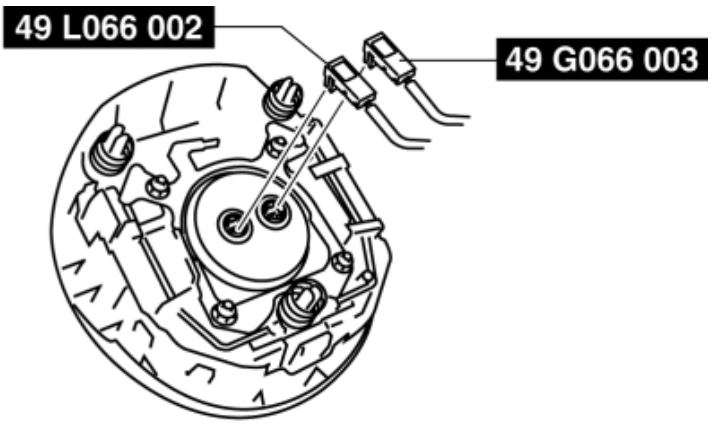

3. Install the driver-side air bag module. (See **DRIVER-SIDE AIR BAG MODULE INSTALLATION [TWO-STEP DEPLOYMENT CONTROL SYSTEM]**.)

4. Connect the **SST (Deployment tool)** to the **SST (Adapter harness)**.

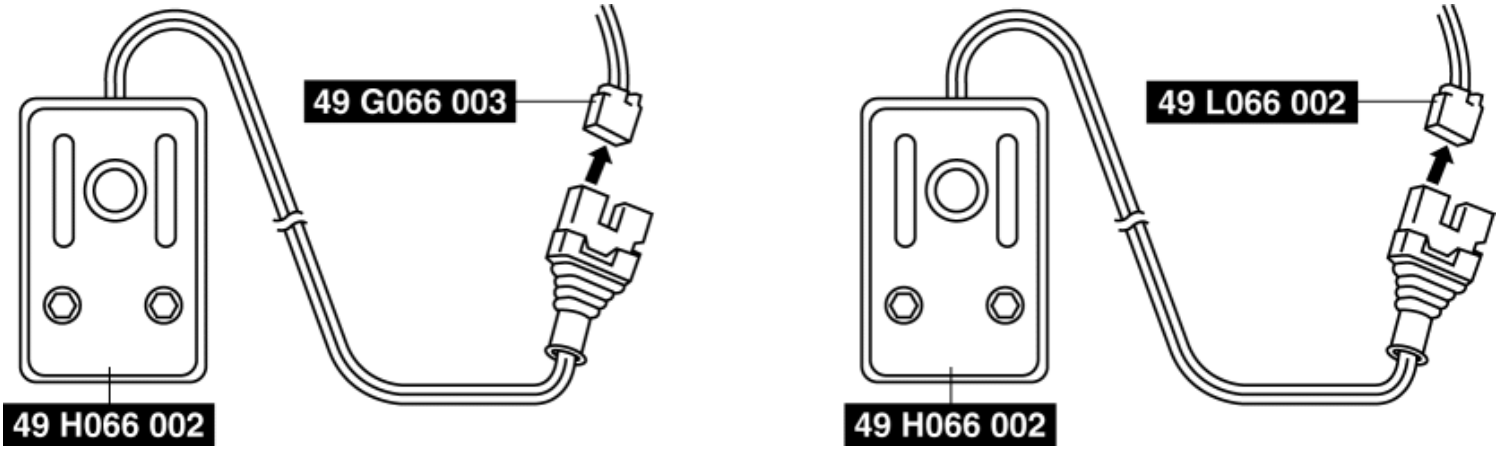

5. Connect the **SST (Deployment tool)** to the battery. Connect the power supply red clip to the positive battery terminal, and the black clip to the negative battery terminal.

6. Verify that the red lamp on the **SST (Deployment tool)** is illuminated.

7. Verify that all persons are standing **at least 6 m {20 ft}** away from the vehicle.

8. Press the activation switch on the **SST (Deployment tool)** connected with **49 L066 002** (a yellow connector) of the **SST (Adapter harness)**, and after **3 s**, press the activation switch on the other **SST (Deployment tool)** to operate (deploy) the air bag module (both inflators).

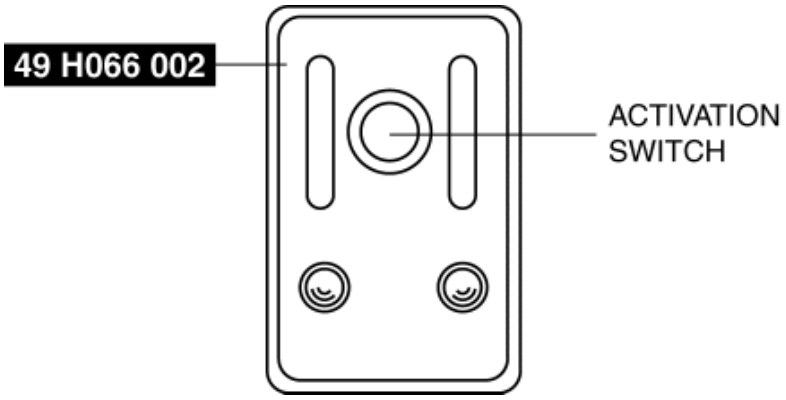

WARNING:

- Verify that air bag module operation (explosive) sound occurs twice. If no operation (explosive) sound was heard or a single operation (explosive) sound was heard, both inflators would not have operated (deployed) properly. This may cause serious injury if the air bag module operates (deploy) unexpectedly. If the two operation (explosive) sounds are not heard, perform Step 8 again. If a total of two operation (explosive) sounds cannot be verified even though Step 8 is performed again, leave the air bag module alone for 30 min or more before approaching it again.
- The air bag module is very hot immediately after it is operated (deployed). You can get burned. Do not touch the air bag module for at least 15 min after deployment.

9. Disconnect the **SST (Deployment tool)** from the **SST (Adapter harness)**.

Passenger-side Air Bag Module

WARNING:

- The passenger-side air bag module is a dual inflator type. If one inflator is forced to operate (deploy), the other may operate (deploy) accidentally. To prevent injury while disposing of the air bag module, make sure to operate (deploy) both passenger-side air bag module inflators simultaneously, following the procedure below.

NOTE:

- The SSTs, two types of adapter harnesses (for inflators No.1 and No.2) and two deployment tools are to be used to operate (deploy) the passenger-side air bag module.

1. Remove the glove compartment. (See **GLOVE COMPARTMENT REMOVAL/INSTALLATION**.)
2. Remove the cap.

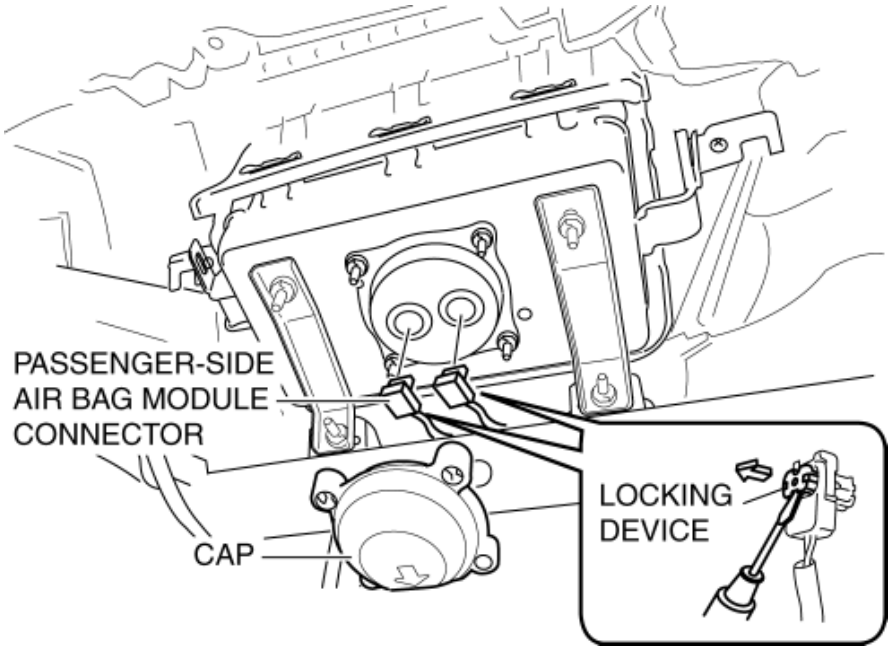

3. Using a flathead screwdriver, lift the locking device carefully, however do not remove it.
4. Disconnect the passenger-side air bag module connector.
5. Connect the **SST (Adapter harness)** to the passenger-side air bag module as shown in the figure.

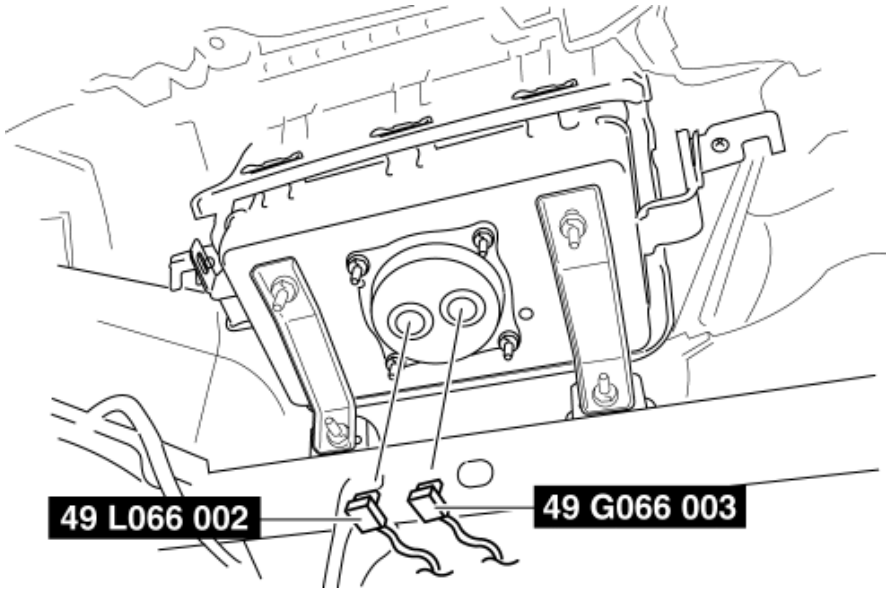

6. Connect the **SST (Deployment tool)** to the **SST (Adapter harness)**.

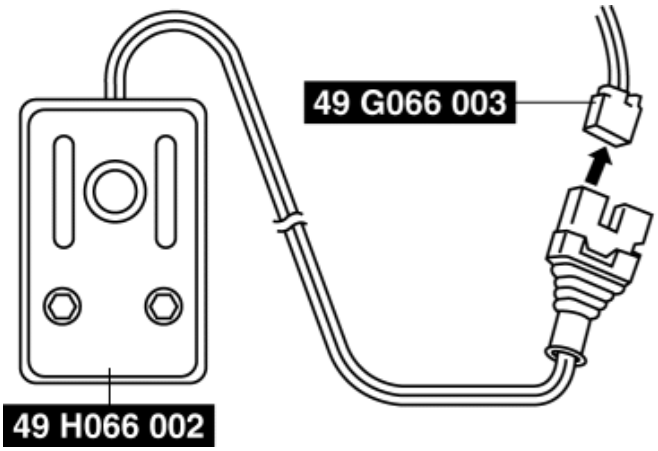

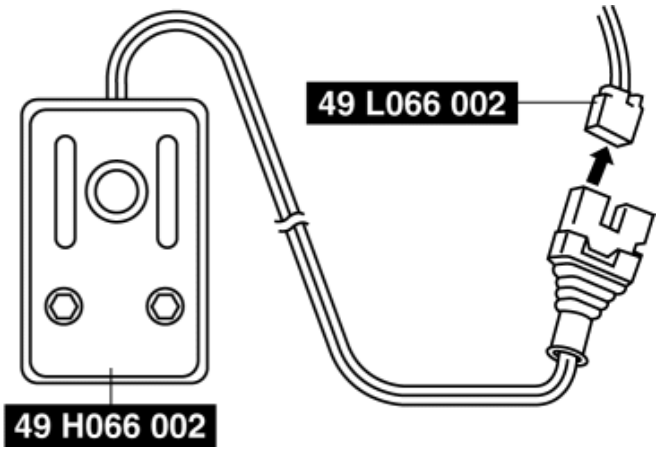

7. Connect the **SST (Deployment tool)** to the battery. Connect the power supply red clip to the positive battery terminal, and the black clip to the negative battery terminal.

8. Verify that the red lamp on the **SST (Deployment tool)** is illuminated.

9. Verify that all persons are standing **at least 6 m {20 ft}** away from the vehicle.

10. Press the activation switch on the **SST (Deployment tool)** connected with **49 L066 002** (a yellow connector) of the **SST (Adapter harness)**, and after **3 s**, press the activation switch on the other **SST (Deployment tool)** to operate (deploy) the air bag module (both inflators).

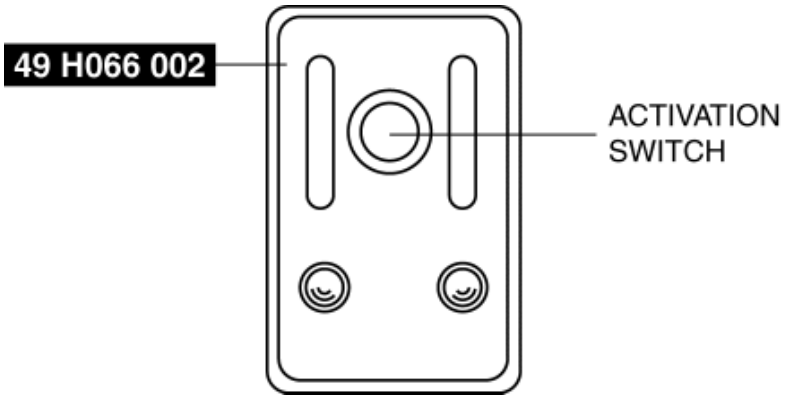

WARNING:

- Verify that air bag module operation (explosive) sound occurs twice. If no operation (explosive) sound was heard or a single operation (explosive) sound was heard, both inflators would not have operated (deployed) properly. This may cause serious injury if the air bag module operates (deploy) unexpectedly. If the two operation (explosive) sounds are not heard, perform Step 11 again. If a total of two operation (explosive) sounds cannot be verified even though Step 11 is performed again, leave the air bag module alone for 30 min or more before approaching it again.
- The air bag module is very hot immediately after it is operated (deployed). You can get burned. Do not touch the air bag module for at least 15 min after deployment.

11. Disconnect the **SST (Deployment tool)** from the **SST (Adapter harness)**.

Side Air Bag Module

1. Disconnect the front seat connector.

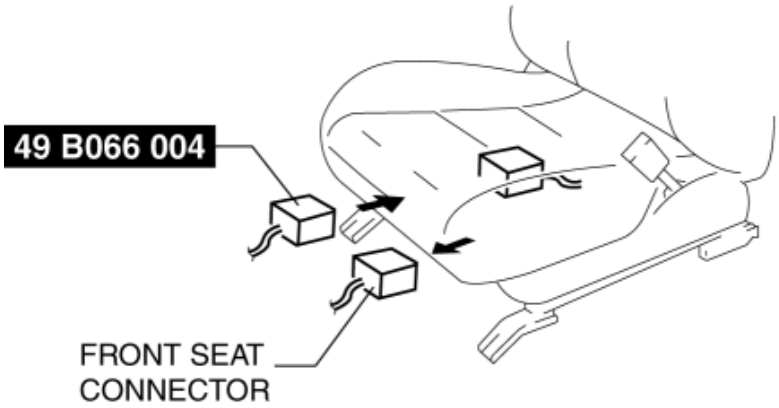

2. Connect the **SST (Adapter harness)** to the front seat connector as shown in the figure.

3. Connect the **SST (Deployment tool)** to the **SST (Adapter harness)**.

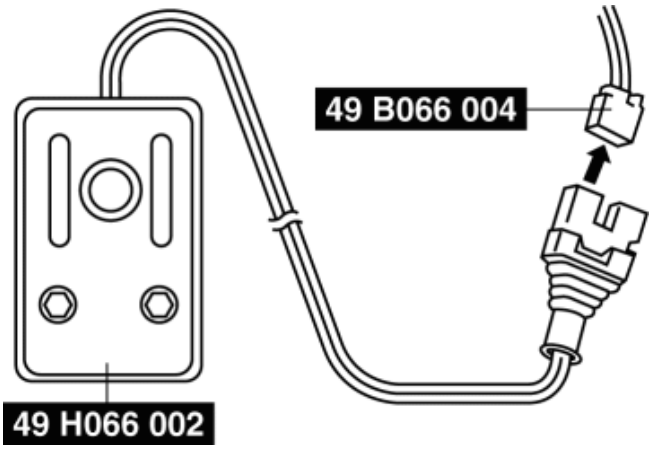

4. Connect the **SST (Deployment tool)** to the battery. Connect the power supply red clip to the positive battery terminal, and the black clip to the negative battery terminal.

5. Verify that the red lamp on the **SST (Deployment tool)** is illuminated.

6. Verify that all persons are standing **at least 6 m {20 ft}** away from the vehicle.

7. Press the activation switch on the **SST (Deployment tool)** to operate (deploy) the side air bag module.

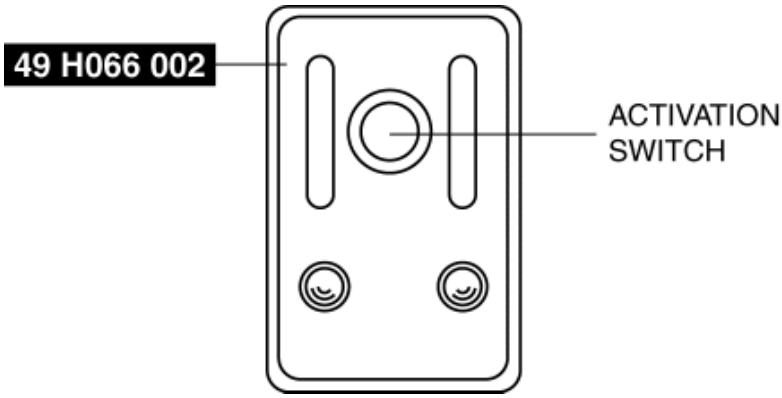

WARNING:

- The air bag module is very hot immediately after it is operated (deployed). You can be burned. Do not touch the air bag module for at least 15 min after deployment.

8. Disconnect the **SST (Deployment tool)** from the **SST (Adapter harness)**.

Curtain Air Bag Module

1. Remove the following parts:

   a. Sunroof seaming welt (with sunroof) (See **SUNROOF UNIT REMOVAL/INSTALLATION**.)

   b. A-pillar trim (See **A-PILLAR TRIM REMOVAL/INSTALLATION**.)

   c. Sunvisor (See **SUNVISOR REMOVAL/INSTALLATION**.)

   d. Front map light (See **FRONT MAP LIGHT REMOVAL/INSTALLATION**.)

   e. Assist handle (See **ASSIST HANDLE REMOVAL/INSTALLATION**.)

   f. Front scuff plate (See **FRONT SCUFF PLATE REMOVAL/INSTALLATION**.)

   g. Rear scuff plate (See **REAR SCUFF PLATE REMOVAL/INSTALLATION**.)

   h. B-pillar lower trim (See **B-PILLAR LOWER TRIM REMOVAL/INSTALLATION**.)

i. Adjust anchor cover (See **FRONT SEAT BELT REMOVAL/INSTALLATION**.)

j. Upper anchor installation bolt on the seat belt (See **FRONT SEAT BELT REMOVAL/INSTALLATION**.)

k. B-pillar upper trim (See **B-PILLAR UPPER TRIM REMOVAL/INSTALLATION**.)

l. Rear seat cushion (See **REAR SEAT CUSHION REMOVAL/INSTALLATION**.)

m. Tire house trim (See **TIRE HOUSE TRIM REMOVAL/INSTALLATION**.)

n. C-pillar trim (See **C-PILLAR TRIM REMOVAL/INSTALLATION**.)

2. Peel back the headliner.

3. Using a flathead screwdriver, lift the locking device carefully, however do not remove it.

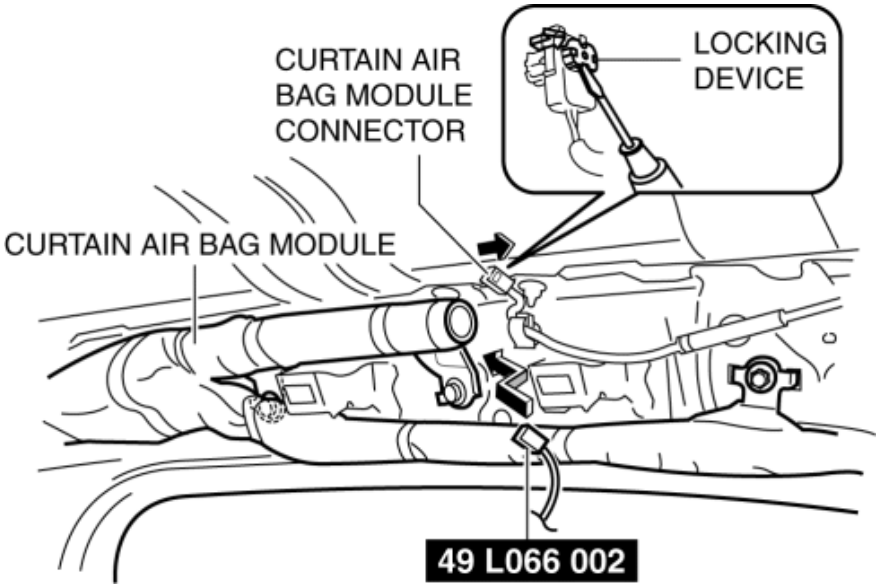

4. Disconnect the curtain air bag module connector.

5. Connect the **SST (Adapter harness)** to the curtain air bag module as shown in the figure.

6. Connect the **SST (Deployment tool)** to the **SST (Adapter harness)**.

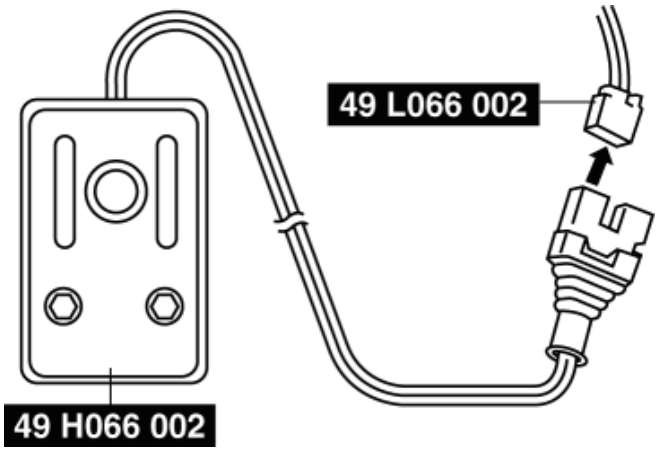

7. Connect the **SST (Deployment tool)** to the battery. Connect the power supply red clip to the positive battery terminal, and the black clip to the negative battery terminal.

8. Verify that the red lamp on the **SST (Deployment tool)** is illuminated.

9. Verify that all persons are standing **at least 6 m {20 ft}** away from the vehicle.

10. Press the activation switch on the **SST (Deployment tool)** to operate (deploy) the curtain air bag module.

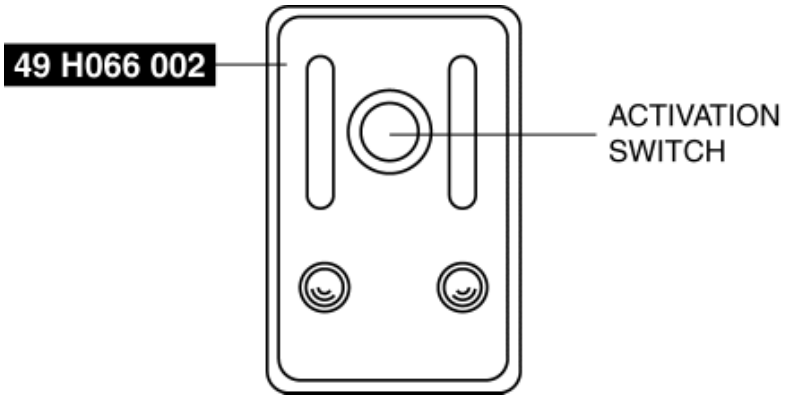

WARNING:

- The air bag module is very hot immediately after it is operated (deployed). You can be burned. Do not touch the air bag module for at least 15 min after deployment.

11. Disconnect the **SST (Deployment tool)** from the **SST (Adapter harness)**.

Pre-tensioner Seat Belt

1. Remove the following parts:
   a. Front scuff plate (See **FRONT SCUFF PLATE REMOVAL/INSTALLATION**.)
   b. Rear scuff plate (See **REAR SCUFF PLATE REMOVAL/INSTALLATION**.)
   c. B-pillar lower trim (See **B-PILLAR LOWER TRIM REMOVAL/INSTALLATION**.)
2. Using a flathead screwdriver, lift the locking device carefully, however do not remove it.

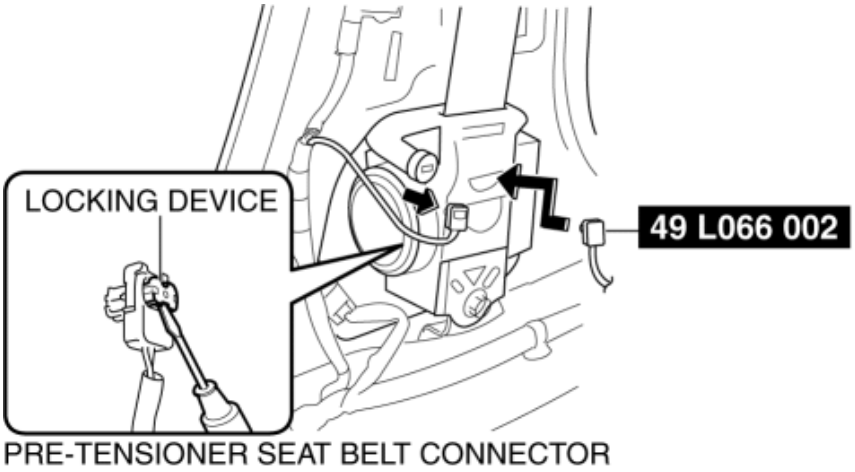

3. Disconnect the pre-tensioner seat belt connector.
4. Connect the **SST (Adapter harness)** as shown in the figure.
5. Connect the **SST (Deployment tool)** to the **SST (Adapter harness)**.

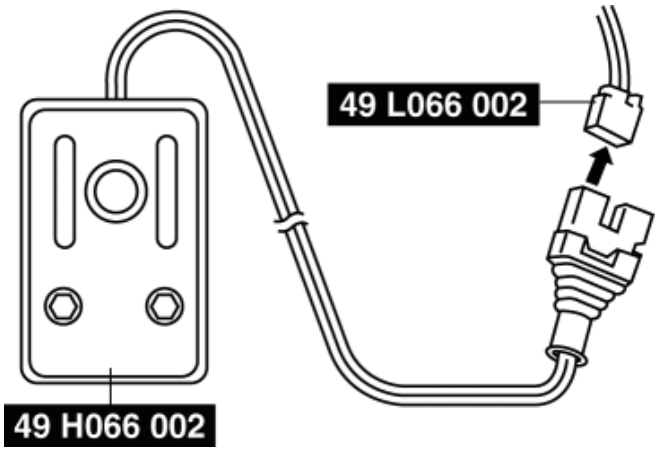

6. Connect the **SST (Deployment tool)** to the battery. Connect the power supply red clip to the positive battery terminal, and the black clip to the negative battery terminal.

7. Verify that the red lamp on the **SST (Deployment tool)** is illuminated.

8. Verify that all persons are standing **at least 6 m {20 ft}** away from the vehicle.

9. Press the activation switch on the **SST (Deployment tool)** to operate (deploy) the pre-tensioner seat belt.

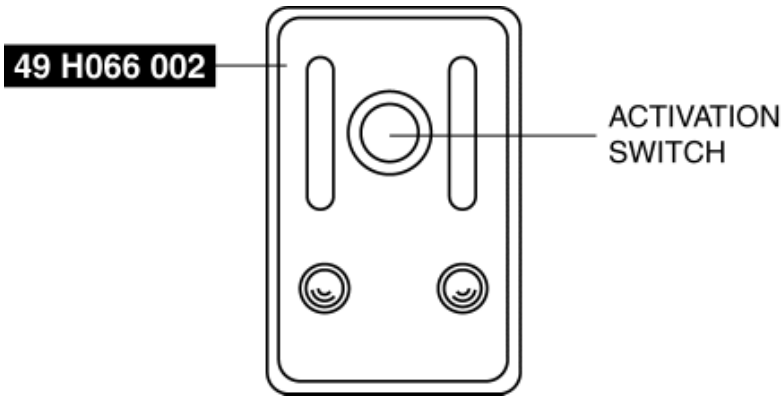

WARNING:

- The pre-tensioner seat belt is very hot immediately after it is operated (deployed). You can be burned. Do not touch the pre-tensioner seat belt for at least 15 min after deployment.

10. Disconnect the **SST (Deployment tool)** from the **SST (Adapter harness)**.

Lap Pre-tensioner Seat Belt

1. Remove the fastener.

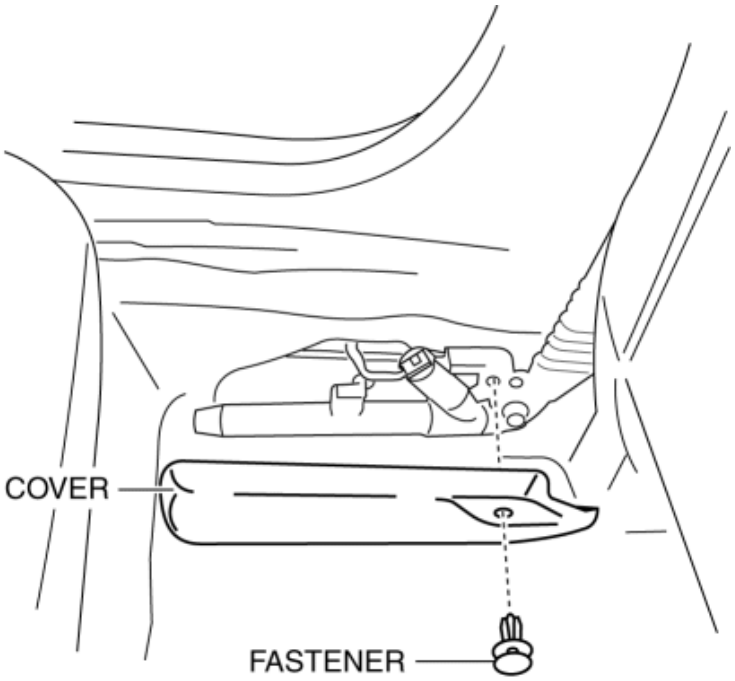

2. Remove the cover.

3. Using a flathead screwdriver, lift the locking device carefully, however do not remove it.

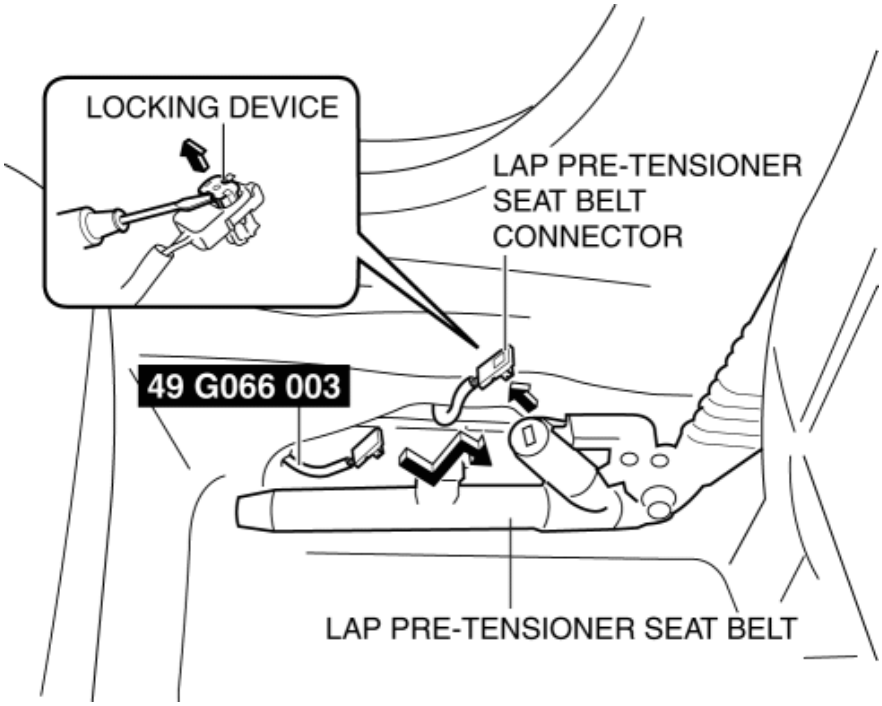

4. Disconnect the lap pre-tensioner seat belt connector.

5. Connect the **SST (Adapter harness)** as shown in the figure.

6. Connect the **SST (Deployment tool)** to the **SST (Adapter harness)**.

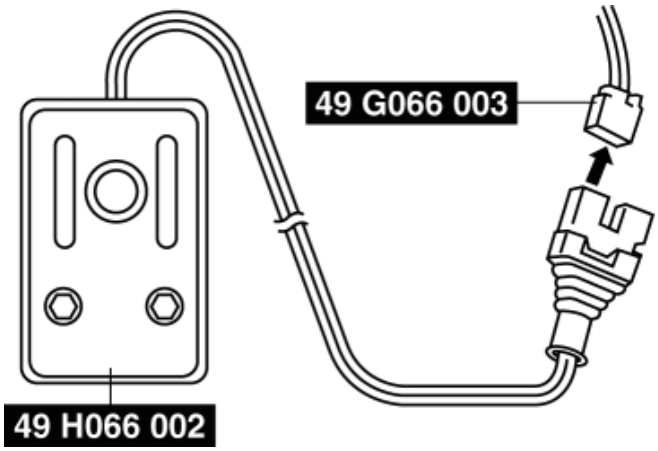

7. Connect the **SST (Deployment tool)** to the battery. Connect the power supply red clip to the positive battery terminal, and the black clip to the negative battery terminal.

8. Verify that the red lamp on the **SST (Deployment tool)** is illuminated.

9. Verify that all persons are standing **at least 6 m {20 ft}** away from the vehicle.

10. Press the activation switch on the **SST (Deployment tool)** to operate (deploy) the lap pre-tensioner seat belt.

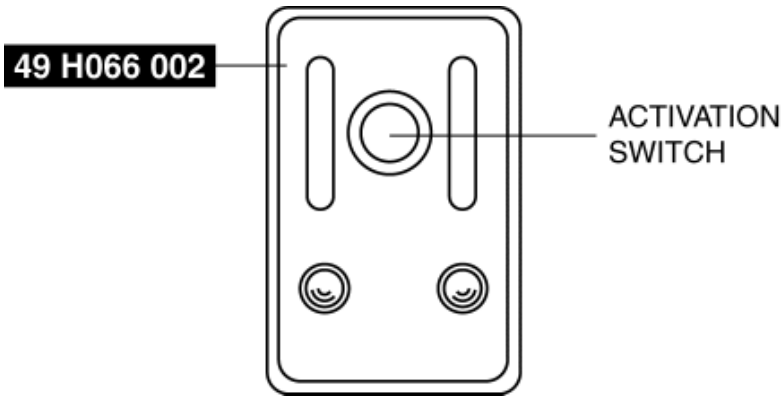

WARNING:

- The lap pre-tensioner seat belt is very hot immediately after it is operated (deployed). You can be burned. Do not touch the lap pre-tensioner seat belt for at least 15 min after deployment.

11. Disconnect the **SST (Deployment tool)** from the **SST (Adapter harness)**.

Deployment Procedure for Outside of Vehicle

1. Inspect the **SST (Deployment tool)**. (See **INSPECTION OF SST (DEPLOYMENT TOOL) [TWO-STEP DEPLOYMENT CONTROL SYSTEM]**.)

2. Switch the ignition off.

3. Disconnect the negative battery cable and wait for **1 min or more**. (See **NEGATIVE BATTERY CABLE DISCONNECTION/CONNECTION [SKYACTIV-G 2.0, SKYACTIV-G 2.5]**.)

4. Follow the procedure below for operating (deploying) the applicable air bag module, pre-tensioner seat belt or lap pre-tensioner seat belt.

NOTE:

- The connector part of the air bag module and the SST (adapter wiring harness) burns out from the high heat when the inflator is operated (deployed).

Driver-side Air Bag Module

WARNING:

- The driver-side air bag module is a dual inflator type. If one inflator is forced to operate (deploy), the other may operate (deploy) accidentally. To prevent injury while disposing of the air bag module, make sure to operate (deploy) both driver-side air bag module inflators simultaneously, following the procedure below.

NOTE:

- The SSTs, two types of adapter harnesses (for inflators No.1 and No.2) and two deployment tools are to be used to operate (deploy) the driver-side air bag module.

1. Remove the driver-side air bag module. (See **DRIVER-SIDE AIR BAG MODULE REMOVAL [TWO-STEP DEPLOYMENT CONTROL SYSTEM]**.)

2. Wrap the wiring harness (cross section **1.25 mm^2 {0.002 in^2} or more**) at least four times around the position shown in the figure for the driver-side air bag module.

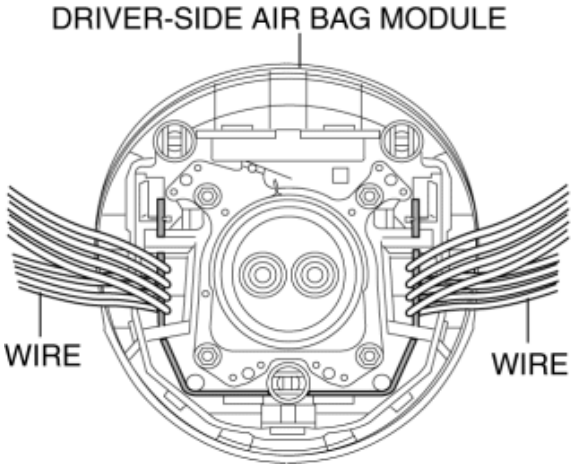

3. Connect the **SST (Adapter harness)** to the driver-side air bag module.

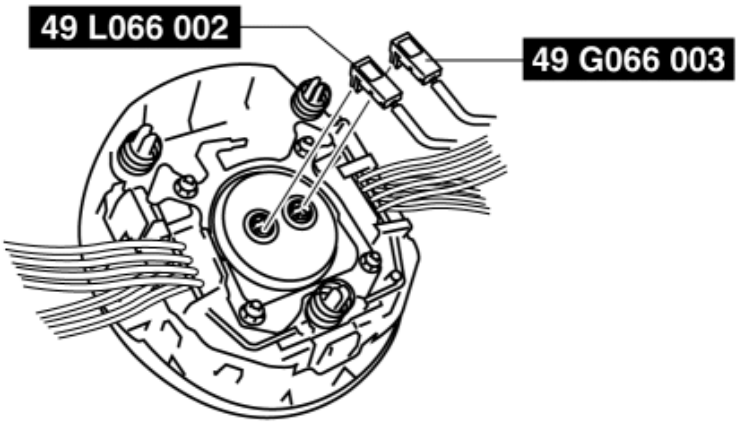

4. Place the driver-side air bag module on the center of the tire wheel with the padded surface facing up. To secure the air bag module to the tire wheel, wrap a wire (cross section **1.25 mm^2 {0.002 in^2} or more**) through the wheel and the bolt installation holes of the air bag module **at least 4 times**.

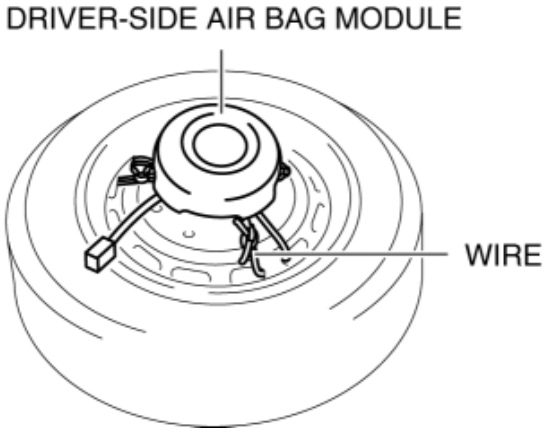

WARNING:

- If the air bag module is not properly installed to the tire wheel, serious injury may occur when the module is operated (deployed). When installing the air bag module to the tire wheel, make sure the padded surface is facing up.

5. Stack three tires without wheels on top of the tire with the driver-side air bag module, and then stack another tire with a wheel on the very top.

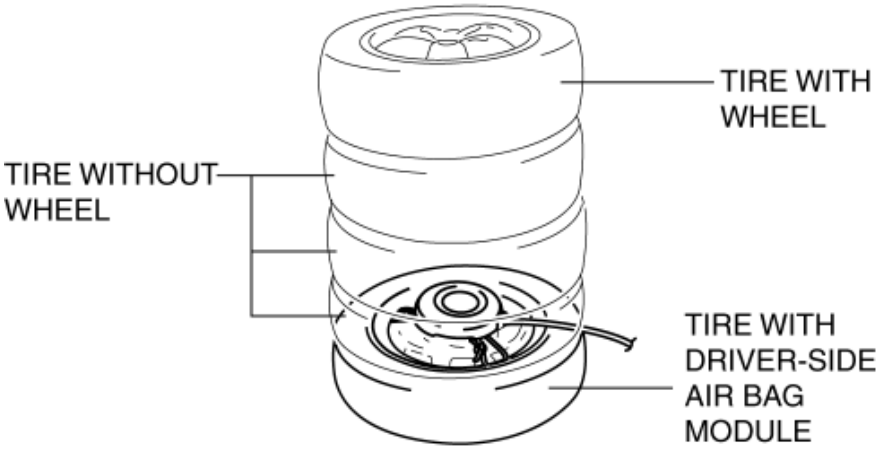

6. Secure the tires with wire.

7. Connect the **SST (Deployment tool)** to the **SST (Adapter harness)**.

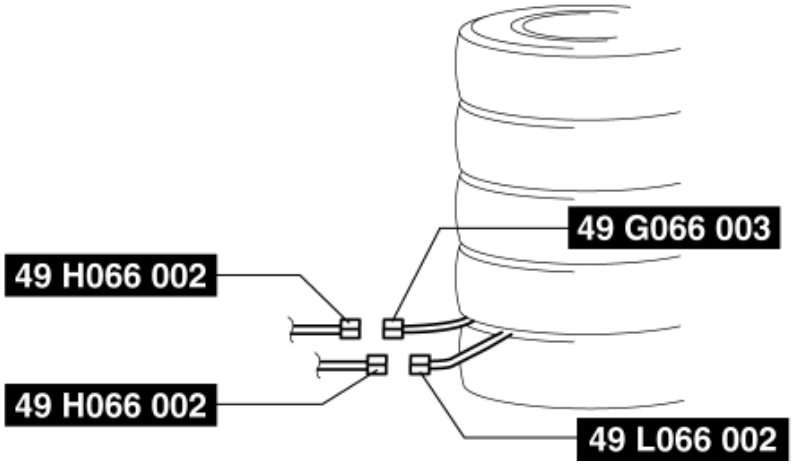

8. Connect the **SST (Deployment tool)** to the battery. Connect the power supply red clip to the positive battery terminal, and the black clip to the negative battery terminal.

9. Verify that the red lamp on the **SST (Deployment tool)** is illuminated.

10. Verify that all persons are standing **at least 6 m {20 ft}** away from the vehicle.

11. Press the activation switch on the **SST (Deployment tool)** connected with **49 L066 002** (a yellow connector) of the **SST (Adapter harness)**, and **after 3 s**, press the activation switch on the other **SST (Deployment tool)** to operate (deploy) the air bag module (both inflators).

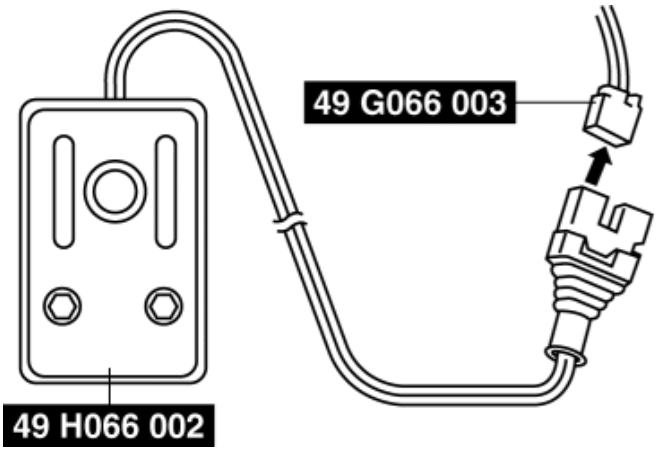

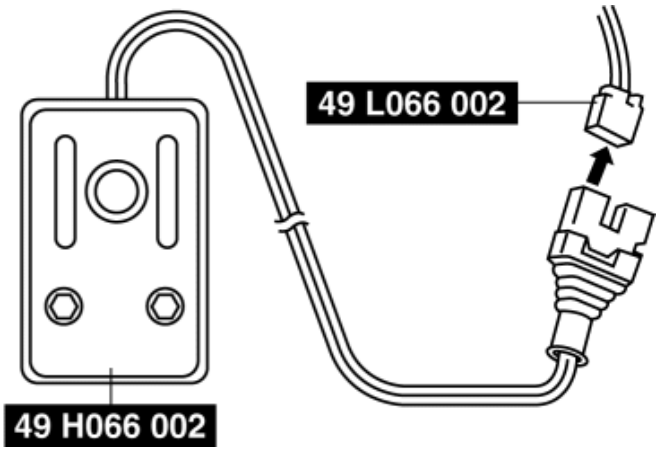

WARNING:

- Verify that air bag module operation (explosive) sound occurs twice. If no operation (explosive) sound was heard or a single operation (explosive) sound was heard, both inflators would not have operated (deployed) properly. This may cause serious injury if the air bag module operates (deploy) unexpectedly. If the two operation (explosive) sounds are not heard, perform Step 12 again. If a total of two operation (explosive) sounds cannot be verified even though Step 12 is performed again, leave the air bag module alone for 30 min or more before approaching it again.
- The air bag module is very hot immediately after it is operated (deployed). You can be burned. Do not touch the air bag module for at least 15 min after deployment.

12. Disconnect the **SST (Deployment tool)** from the **SST (Adapter harness)**.

Passenger-side Air Bag Module

WARNING:

- The passenger-side air bag module is a dual inflator type. If one inflator is forced to operate (deploy), the other may operate (deploy) accidentally. To prevent injury while disposing of the air bag module,

make sure to operate (deploy) both passenger-side air bag module inflators simultaneously, following the procedure below.

NOTE:

- The SSTs, two types of adapter harnesses (for inflators No.1 and No.2) and two deployment tools are to be used to operate (deploy) the passenger-side air bag module.

1. Remove the following parts:

   a. Glove compartment (See **GLOVE COMPARTMENT REMOVAL / INSTALLATION**.)

   b. Decoration panel (See **DECORATION PANEL REMOVAL / INSTALLATION**.)

   c. Dashboard under cover (See **DASHBOARD UNDER COVER REMOVAL / INSTALLATION**.)

   d. Front scuff plate (passenger-side) (See **FRONT SCUFF PLATE REMOVAL / INSTALLATION**.)

   e. Front side trim (passenger-side) (See **FRONT SIDE TRIM REMOVAL / INSTALLATION**.)

   f. Lower panel (passenger-side) (See **LOWER PANEL REMOVAL / INSTALLATION**.)

2. Remove the passenger-side air bag module. (See **PASSENGER-SIDE AIR BAG MODULE REMOVAL [TWO-STEP DEPLOYMENT CONTROL SYSTEM]**.)

3. Connect the **SST (Adapter harness)** to the passenger-side air bag module as shown in the figure.

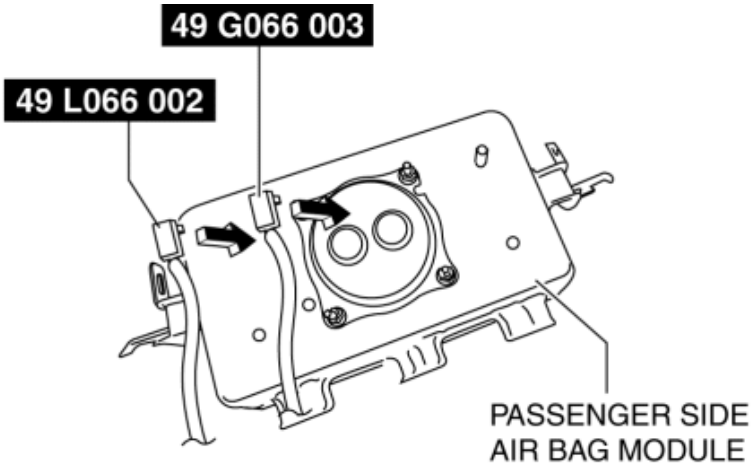

4. Place the padded surface of the passenger-side air bag module facing the center of the tire as shown in the figure. To secure the air bag module to the tire wheel, wrap a wire (cross section **1.25 mm^2 {0.002 in^2} or more**) through the tire and the bolt installation holes **at least 4 times** as shown in the figure.

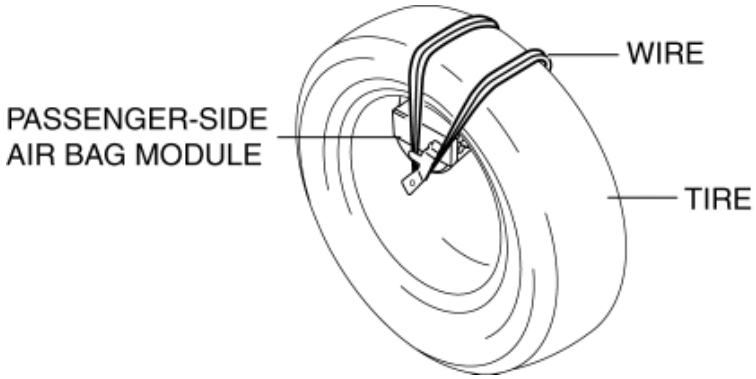

WARNING:

- If the air bag module is not properly secured to the tire, the tires may fall over by the impact of operation (deployment) and cause serious injury. To prevent this, secure the air bag module properly with the padded surface facing the center of the tire.

5. Stack the tire with the passenger-side air bag module on top of two tires without wheels. Stack a tire

without a wheel on top of the tire with the passenger-side air bag module, and then stack another tire with a wheel on the very top.

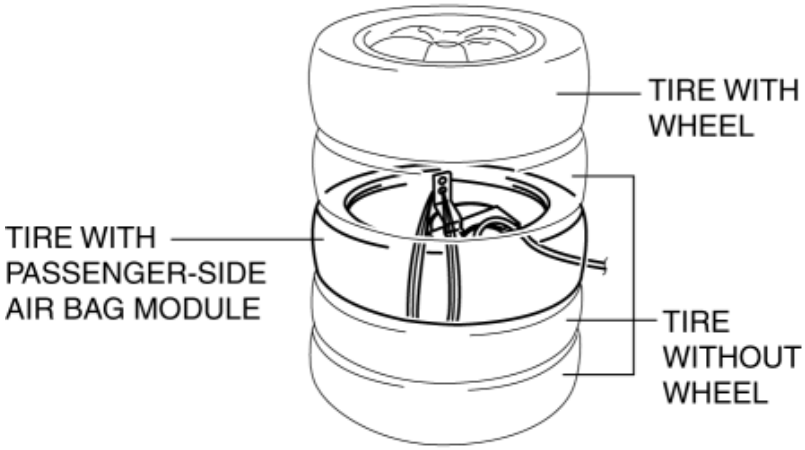

6. Secure the tires with wire.

7. Connect the **SST (Deployment tool)** to the **SST (Adapter harness)**.

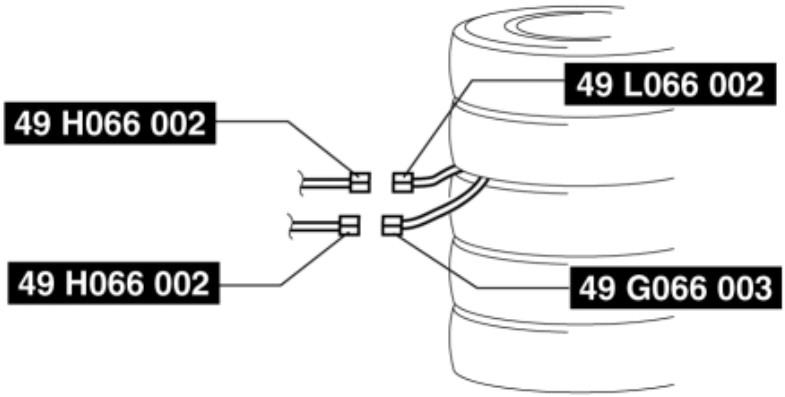

8. Connect the **SST (Deployment tool)** to the battery. Connect the power supply red clip to the positive battery terminal, and the black clip to the negative battery terminal.

9. Verify that the red lamp on the **SST (Deployment tool)** is illuminated.

10. Verify that all persons are standing **at least 6 m {20 ft}** away from the vehicle.

11. Press the activation switch on the **SST (Deployment tool)** connected with **49 L066 002** (a yellow connector) of the **SST (Adapter harness)**, and **after 3 s**, press the activation switch on the other **SST (Deployment tool)** to operate (deploy) the air bag module (both inflators).

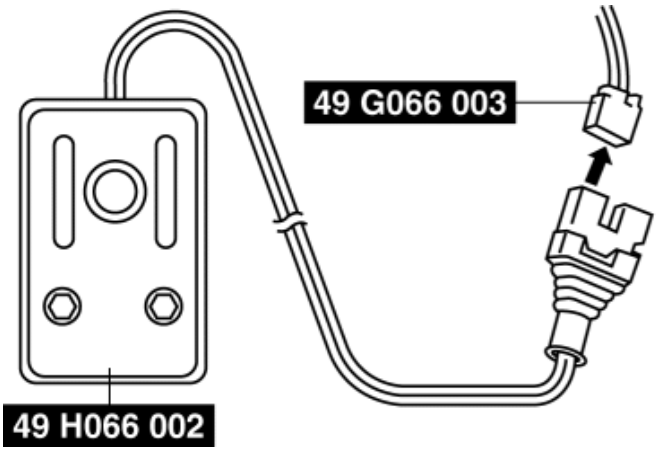

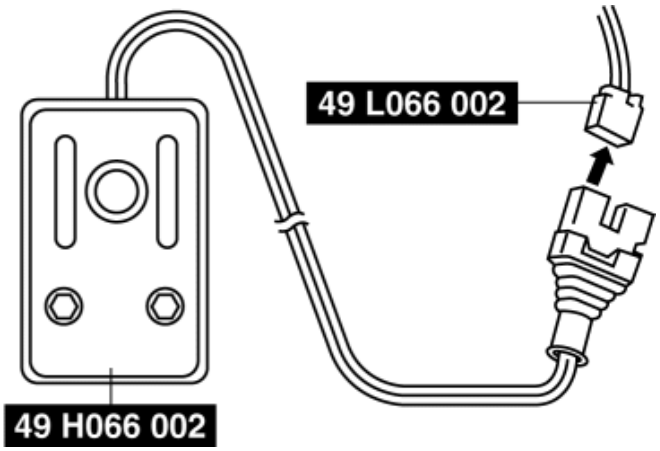

WARNING:

- Verify that air bag module operation (explosive) sound occurs twice. If no operation (explosive) sound was heard or a single operation (explosive) sound was heard, both inflators would not have operated (deployed) properly. This may cause serious injury if the air bag module operates (deploy) unexpectedly. If the two operation (explosive) sounds are not heard, perform Step 13 again. If a total of two operation (explosive) sounds cannot be verified even though Step 13 is performed again, leave the air bag module alone for 30 min or more before approaching it again.
- The air bag module is very hot immediately after it is operated (deployed). You can be burned. Do not touch the air bag module for at least 15 min after deployment.

12. Disconnect the **SST (Deployment tool)** from the **SST (Adapter harness)**.

Side Air Bag Module

1. Remove the following parts:

   a. Front seat (See **FRONT SEAT REMOVAL/INSTALLATION**.)

   b. Front seat back trim and pad (See **FRONT SEAT BACK TRIM REMOVAL/INSTALLATION**.)

2. Remove the side air bag module. (See **SIDE AIR BAG MODULE REMOVAL/INSTALLATION [TWO-STEP DEPLOYMENT CONTROL SYSTEM]**.)

3. Install the nuts.

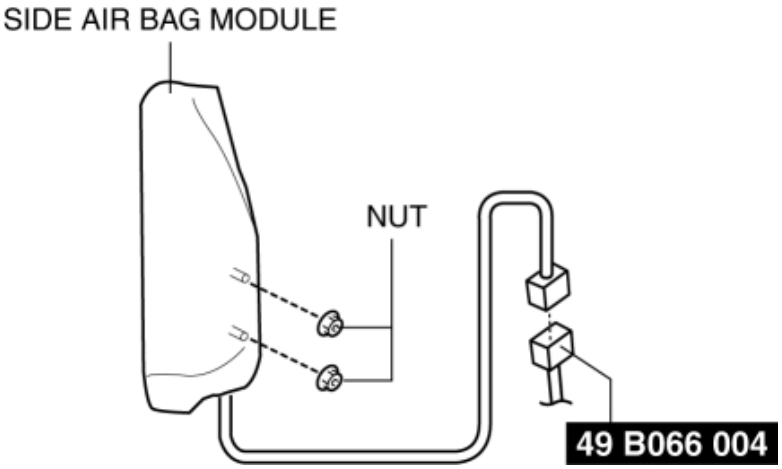

4. Connect the **SST (Adapter harness)** to the side air bag module as shown in the figure.

5. Put the side air bag module inside the tire and secure it to the tire by wrapping a wire (cross section of **1.25 mm^2 {0.002 in^2} or more**) through the tire and the bolt **at least 4 times**.

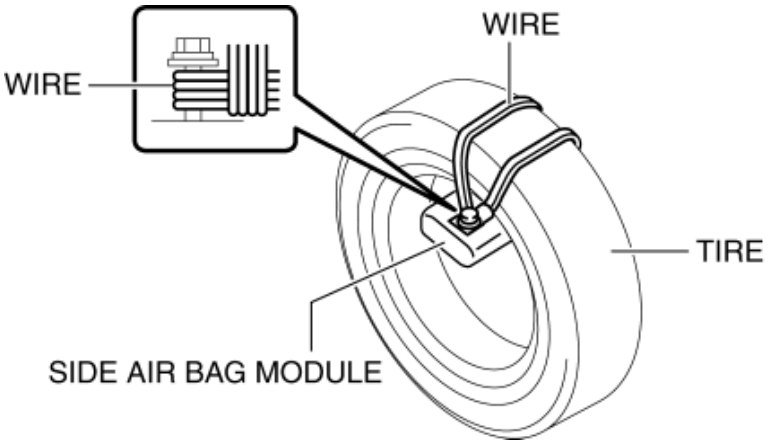

WARNING:

- If the air bag module is not properly secured to the tire, the tires may fall over by the impact of operation (deployment) and cause serious injury. To prevent this, secure the air bag module properly with the padded surface facing the center of the tire.

6. Stack the tire with the side air bag module on top of two tires without wheels. Stack a tire without a wheel on top of the tire with the side air bag module, and then stack another tire with a wheel on the very top.

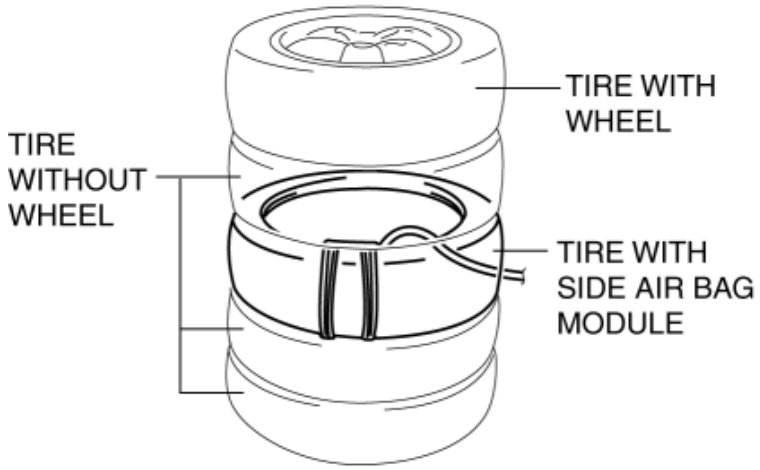

7. Secure the tires with wire.

8. Connect the **SST (Deployment tool)** to the **SST (Adapter harness).**

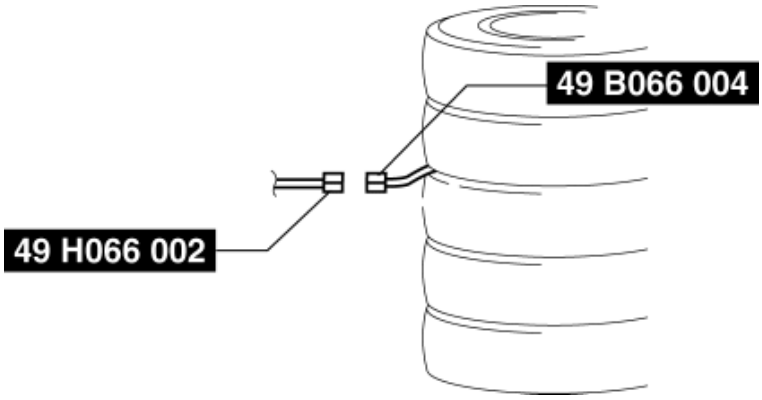

9. Connect the **SST (Deployment tool)** to the battery. Connect the power supply red clip to the positive battery terminal, and the black clip to the negative battery terminal.

10. Verify that the red lamp on the **SST (Deployment tool)** is illuminated.

11. Verify that all persons are standing **at least 6 m {20 ft}** away from the vehicle.

12. Press the activation switch on the **SST (Deployment tool)** to operate (deploy) the side air bag module.

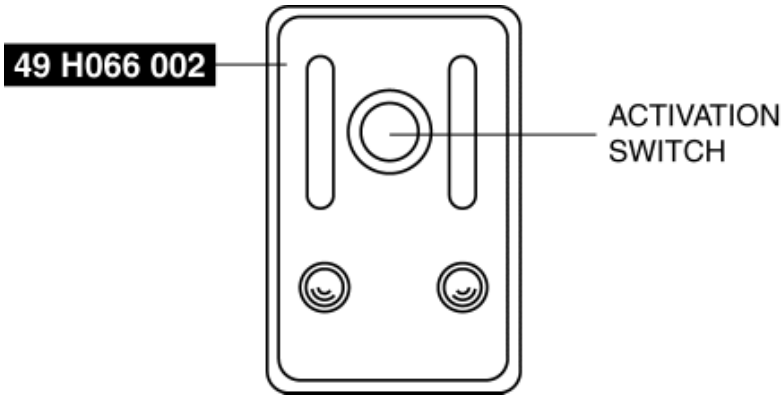

WARNING:

- The air bag module is very hot immediately after it is operated (deployed). You can be burned. Do not touch the air bag module for at least 15 min after deployment.

13. Disconnect the **SST (Deployment tool)** from the **SST (Adapter harness)**.

Curtain Air Bag Module

1. Remove the following parts (4SD):

   a. Sunroof seaming welt (with sunroof system) (See **SUNROOF UNIT REMOVAL/INSTALLATION**.)

   b. A-pillar trim (See **A-PILLAR TRIM REMOVAL/INSTALLATION**.)

   c. Sunvisor (See **SUNVISOR REMOVAL/INSTALLATION**.)

   d. Front map light (dual light type) (See **FRONT MAP LIGHT REMOVAL/INSTALLATION**.)

   e. Assist handle (See **ASSIST HANDLE REMOVAL/INSTALLATION**.)

   f. Front scuff plate (See **FRONT SCUFF PLATE REMOVAL/INSTALLATION**.)

   g. Rear scuff plate (See **REAR SCUFF PLATE REMOVAL/INSTALLATION**.)

   h. B-pillar lower trim (See **B-PILLAR LOWER TRIM REMOVAL/INSTALLATION**.)

   i. Adjust anchor cover (See **FRONT SEAT BELT REMOVAL/INSTALLATION**.)

j. Upper anchor installation bolt on the seat belt (See **FRONT SEAT BELT REMOVAL/INSTALLATION**.)

k. B-pillar upper trim (See **B-PILLAR UPPER TRIM REMOVAL/INSTALLATION**.)

2. Set the tire house trim aside. (See **TIRE HOUSE TRIM REMOVAL/INSTALLATION**.)

3. Remove the following parts:

a. C-pillar trim (See **C-PILLAR TRIM REMOVAL/INSTALLATION**.)

b. Upper panel (See **UPPER PANEL REMOVAL**.)(See **UPPER PANEL INSTALLATION**.)

c. Rear console (See **REAR CONSOLE REMOVAL/INSTALLATION**.)

d. Shift lever knob (MTX) (See **MANUAL TRANSAXLE SHIFT MECHANISM REMOVAL/INSTALLATION [C66M-R]**.)

e. Selector lever knob (ATX) (See **AUTOMATIC TRANSAXLE SHIFT MECHANISM REMOVAL/INSTALLATION**.)

f. Shift panel (See **SHIFT PANEL REMOVAL/INSTALLATION**.)

g. Front console box (See **FRONT CONSOLE BOX REMOVAL/INSTALLATION**.)

h. CD player (with CD player) (See **CD PLAYER REMOVAL**.)(See **CD PLAYER INSTALLATION**.)

i. Glove compartment (See **GLOVE COMPARTMENT REMOVAL/INSTALLATION**.)

j. Decoration panel (See **DECORATION PANEL REMOVAL/INSTALLATION**.)

k. Side wall (See **SIDE WALL REMOVAL/INSTALLATION**.)

l. Front console (See **FRONT CONSOLE REMOVAL/INSTALLATION**.)

4. Remove the following parts (5HB):

a. Sunroof seaming welt (with sunroof system) (See **SUNROOF UNIT REMOVAL/INSTALLATION**.)

b. A-pillar trim (See **A-PILLAR TRIM REMOVAL/INSTALLATION**.)

c. Sunvisor (See **SUNVISOR REMOVAL/INSTALLATION**.)

d. Front map light (dual light type) (See **FRONT MAP LIGHT REMOVAL/INSTALLATION**.)

e. Assist handle (See **ASSIST HANDLE REMOVAL/INSTALLATION**.)

f. Front scuff plate (See **FRONT SCUFF PLATE REMOVAL/INSTALLATION**.)

g. Rear scuff plate (See **REAR SCUFF PLATE REMOVAL/INSTALLATION**.)

h. B-pillar lower trim (See **B-PILLAR LOWER TRIM REMOVAL/INSTALLATION**.)

i. Adjust anchor cover (See **FRONT SEAT BELT REMOVAL/INSTALLATION**.)

j. Upper anchor installation bolt on the seat belt (See **FRONT SEAT BELT REMOVAL/INSTALLATION**.)

k. B-pillar upper trim (See **B-PILLAR UPPER TRIM REMOVAL/INSTALLATION**.)

5. Set the tire house trim aside. (See **TIRE HOUSE TRIM REMOVAL/INSTALLATION**.)

6. Remove the following parts:

a. Rear package tray (See **REAR PACKAGE TRAY REMOVAL/INSTALLATION**.)

b. Trunk covering (See **TRUNK COVERING REMOVAL/INSTALLATION**.)

c. Trunk board (See **TRUNK BOARD REMOVAL/INSTALLATION**.)

d. Trunk end trim (See **TRUNK END TRIM REMOVAL/INSTALLATION**.)

e. Trunk side upper trim (See **TRUNK SIDE UPPER TRIM REMOVAL/INSTALLATION**.)

f. Trunk side trim (LH only) (See **TRUNK SIDE TRIM REMOVAL/INSTALLATION**.)

g. C-pillar trim (See **C-PILLAR TRIM REMOVAL/INSTALLATION**.)

h. Upper panel (See **UPPER PANEL REMOVAL**.)(See **UPPER PANEL INSTALLATION**.)

i. Rear console (See **REAR CONSOLE REMOVAL/INSTALLATION**.)

j. Shift lever knob (MTX) (See **MANUAL TRANSAXLE SHIFT MECHANISM REMOVAL/INSTALLATION [C66M-R]**.)

k. Selector lever knob (ATX) (See **AUTOMATIC TRANSAXLE SHIFT MECHANISM REMOVAL/INSTALLATION**.)

l. Shift panel (See **SHIFT PANEL REMOVAL/INSTALLATION**.)

m. Front console box (See **FRONT CONSOLE BOX REMOVAL/INSTALLATION**.)

n. CD player (with CD player) (See **CD PLAYER REMOVAL**.)(See **CD PLAYER INSTALLATION**.)

o. Glove compartment (See **GLOVE COMPARTMENT REMOVAL/INSTALLATION**.)

p. Decoration panel (See **DECORATION PANEL REMOVAL/INSTALLATION**.)

q. Side wall (See **SIDE WALL REMOVAL/INSTALLATION**.)

r. Front console (See **FRONT CONSOLE REMOVAL/INSTALLATION**.)

7. Remove the headliner. (See **HEADLINER REMOVAL/INSTALLATION**.)

8. Remove the curtain air bag module. (See **CURTAIN AIR BAG MODULE REMOVAL/INSTALLATION [TWO-STEP DEPLOYMENT CONTROL SYSTEM]**.)

9. Cut off the air bag part of the curtain air bag module at the position shown in the figure.

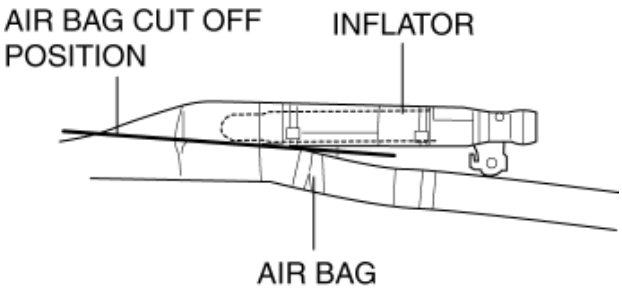

WARNING:

- Never crush the pipe on the side where it is cut. If it is crushed completely, the interior pressure of the pipe will build up and can cause it to explode during air bag module operation (deployment).

10. Disconnect the curtain air bag module connector.

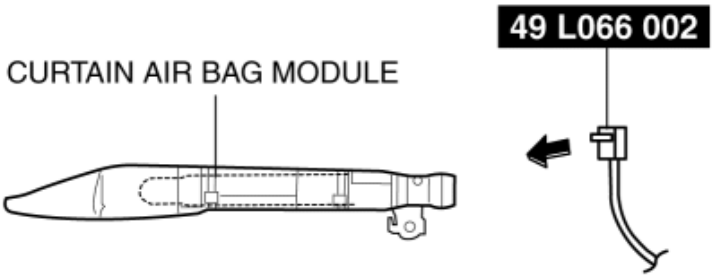

11. Connect the **SST (Adapter harness)** to the curtain air bag module as shown in the figure.

12. Secure the curtain air bag module to the tire, by wrapping a wire (cross section **1.25 mm^2 {0.002 in^2} or more**) through the tire and the bolt installation holes **at least 4 times** as shown in the figure.

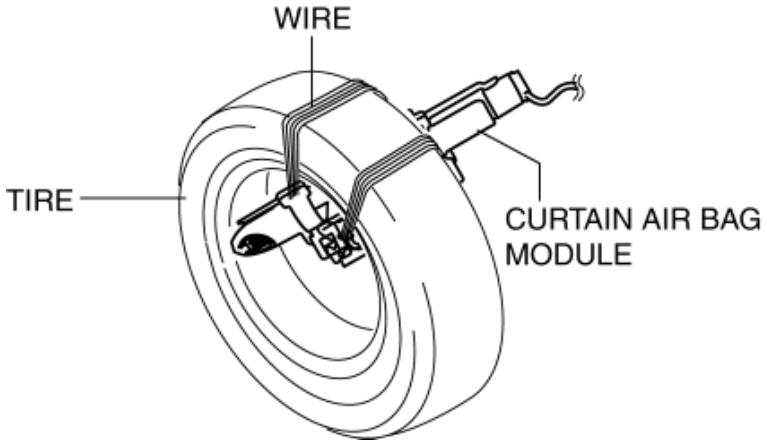

WARNING:

- If the air bag module is not properly installed to the tire, serious injury may occur when the module is operated (deployed). Always install the air bag module securely.

13. Stack the tire with the curtain air bag module on top of two tires without wheels. Stack a tire without a wheel on top of the tire with the curtain air bag module, and then stack another tire with a wheel on the very top.

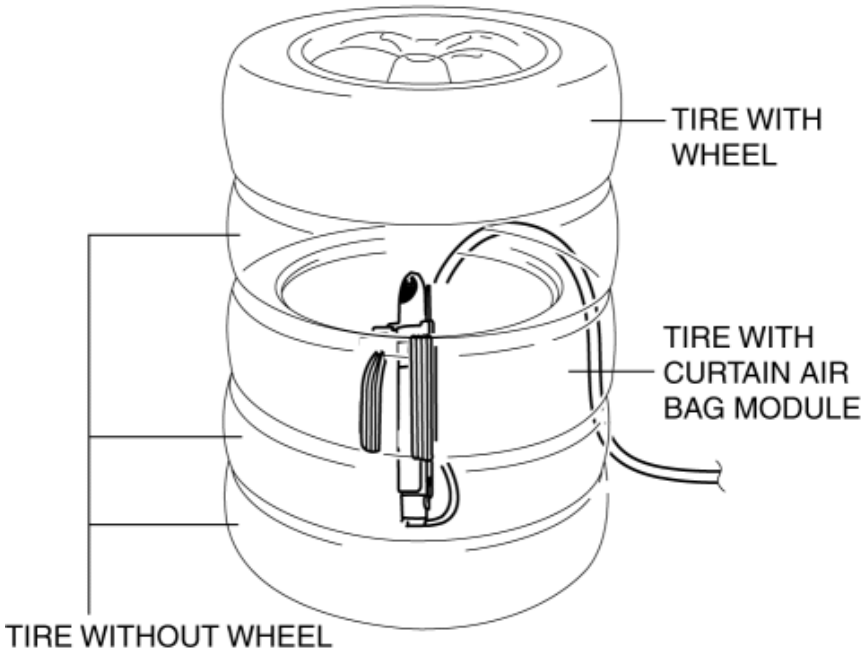

14. Secure the tires with wire.

15. Connect the **SST (Deployment tool)** to the **SST (Adapter harness)**.

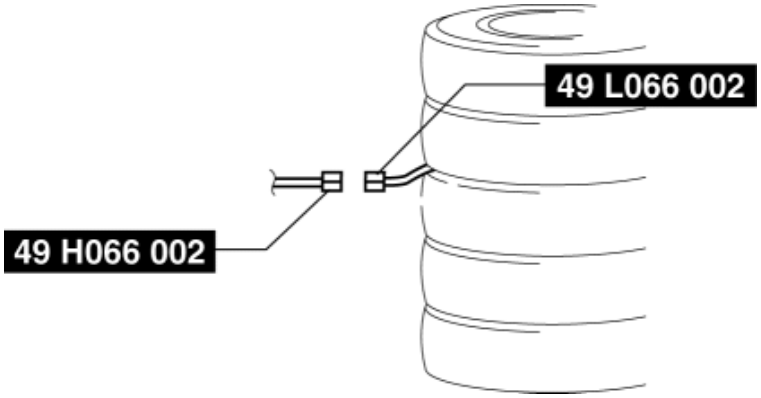

16. Connect the **SST (Deployment tool)** to the battery. Connect the power supply red clip to the positive battery terminal, and the black clip to the negative battery terminal.

17. Verify that the red lamp on the **SST (Deployment tool)** is illuminated.

18. Verify that all persons are standing **at least 6 m {20 ft}** away from the vehicle.

19. Press the activation switch on the **SST (Deployment tool)** to operate (deploy) the curtain air bag module.

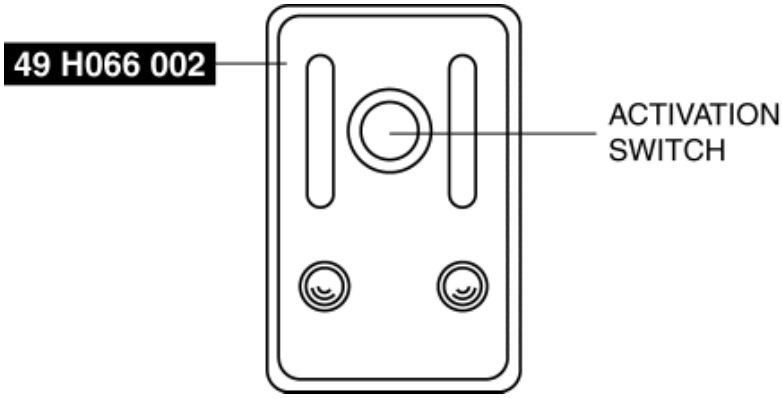

WARNING:

- The air bag module is very hot immediately after it is operated (deployed). You can be burned. Do not touch the air bag module for at least 15 min after deployment.

20. Disconnect the **SST (Deployment tool)** from the **SST (Adapter harness)**.

Pre-tensioner Seat Belt

1. Remove the following parts:

   a. Front scuff plate (See **FRONT SCUFF PLATE REMOVAL/INSTALLATION**.)

   b. Rear scuff plate (See **REAR SCUFF PLATE REMOVAL/INSTALLATION**.)

   c. B-pillar lower trim (See **B-PILLAR LOWER TRIM REMOVAL/INSTALLATION**.)

2. Remove the front seat belt (See **FRONT SEAT BELT REMOVAL/INSTALLATION**.)

3. Connect the **SST (Adapter harness)** as shown in the figure.

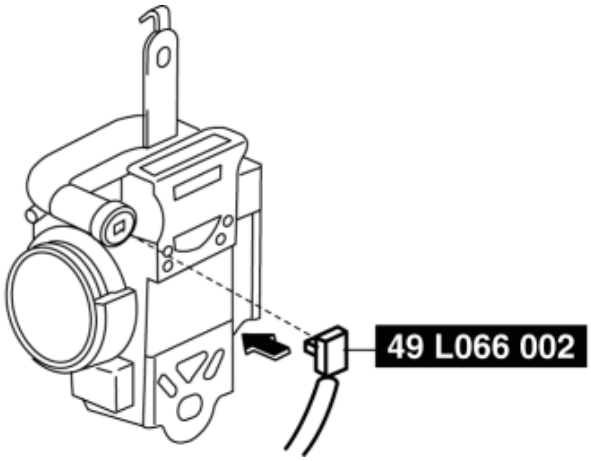

4. Put the pre-tensioner seat belt inside the tire and secure it to the tire by wrapping a wire (cross section of **1.25 mm^2 {0.002 in^2} or more**) through the tire and the bolt installation holes **at least 4 times**.

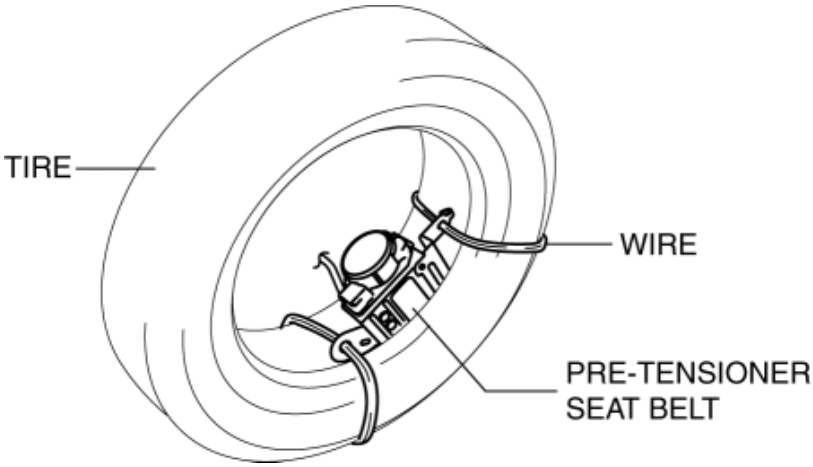

WARNING:

- If the pre-tensioner seat belt is not properly installed to the tire, serious injury may occur when the pre-tensioner part is operated (deployed). When installing the pre-tensioner seat belt to the tire, verify that the pre-tensioner part is inside the tire.

5. Stack the tire with the pre-tensioner seat belt on to of two tires without wheels. Stack a tire without a wheel on top of the tire with the pre-tensioner seat belt, and then stack another tire with a wheel on the very top.

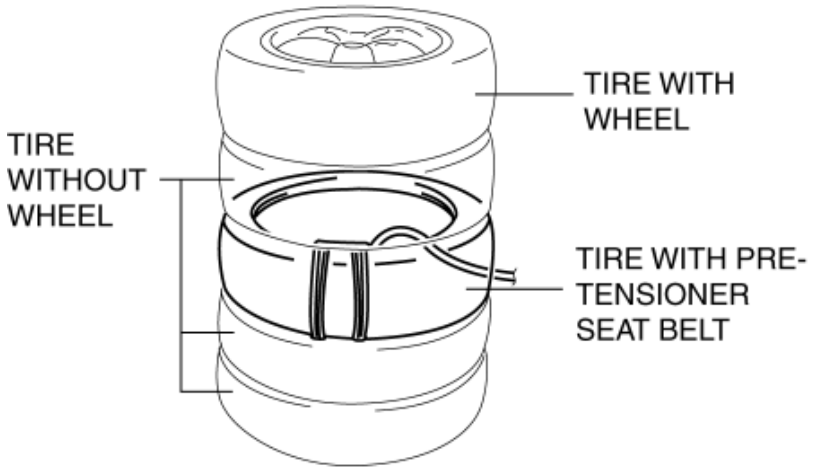

6. Secure the tires with wire.

7. Connect the **SST (Deployment tool)** to the **SST (Adapter harness)**.

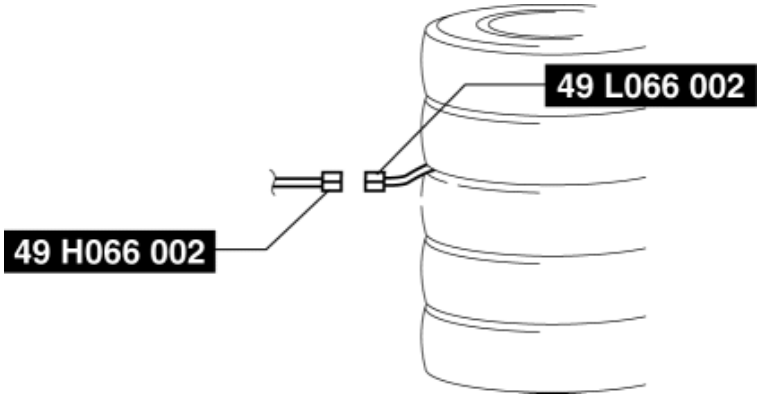

8. Connect the **SST (Deployment tool)** to the battery. Connect the power supply red clip to the positive battery terminal, and the black clip to the negative battery terminal.

9. Verify that the red lamp on the **SST (Deployment tool)** is illuminated.

10. Verify that all persons are standing **at least 6 m {20 ft}** away from the vehicle.

11. Press the activation switch on the **SST (Deployment tool)** to operate (deploy) the pre-tensioner seat belt.

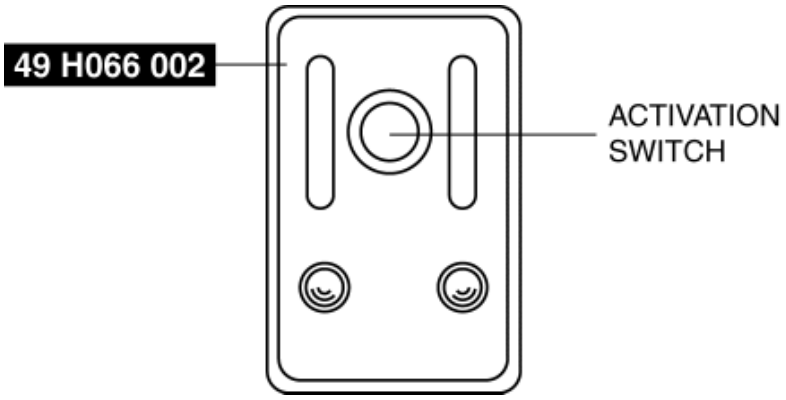

WARNING:

- The pre-tensioner seat belt is very hot immediately after it is operated (deployed). You can be burned. Do not touch the pre-tensioner seat belt for at least 15 min after deployment.

12. Disconnect the **SST (Deployment tool)** from the **SST (Adapter harness)**.

Lap Pre-tensioner Seat Belt

1. Remove the following parts:
   a. Front scuff plate (See **FRONT SCUFF PLATE REMOVAL/INSTALLATION**.)
   b. Rear scuff plate (See **REAR SCUFF PLATE REMOVAL/INSTALLATION**.)
   c. B-pillar lower trim (See **B-PILLAR LOWER TRIM REMOVAL/INSTALLATION**.)
2. Remove the front seat belt (See **FRONT SEAT BELT REMOVAL/INSTALLATION**.)
3. Cut off the seat belt part of the lap pre-tensioner seat belt at the position shown in the figure.

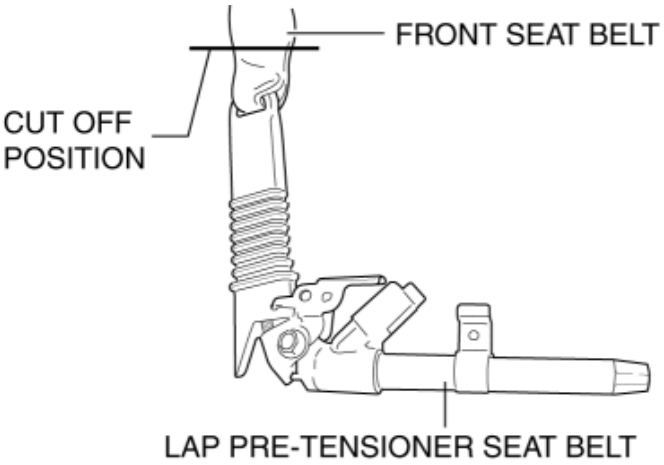

4. Connect the **SST (Adapter harness)** as shown in the figure.

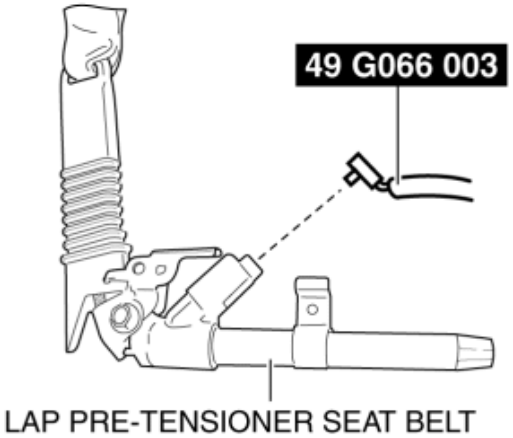

5. Secure the lap pre-tensioner seat belt to the vise as shown in the figure. Set the lap pre-tensioner piston so that the ejection end is pointed downward. Place the bottom surface of the housing so that it contacts the upper surface of the vise.

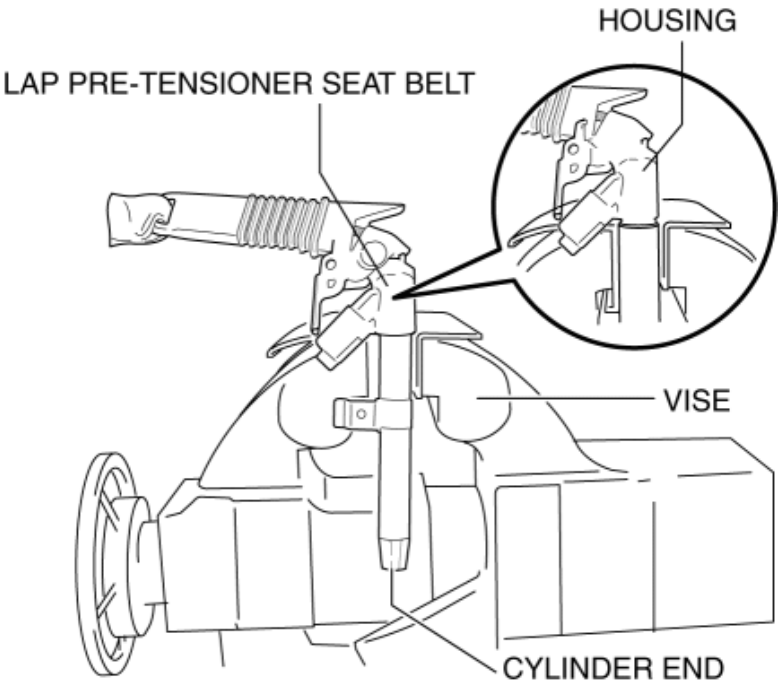

WARNING:

- When the lap pre-tensioner seat belt operates (deploys), the piston ejects from the end of the cylinder. If an object lies in the ejection path within 40 mm of the cylinder end, the piston could hit the object, rebound and hit the lap pre-tensioner seat belt. The force of the piston hitting the lap pre-tensioner seat belt could dislodge it from the vice and cause injury. When securing the lap pre-tensioner in the vice, position it so that there is no obstruction in the ejection path within 40 mm of the cylinder end.

6. Secure the lap pre-tensioner seat belt in the vise with a wire (cross section of **1.25 mm^2 {0.002 in^2} or more**) through the shaft of vice and the lap pre-tensioner seat belt bracket hole **at least 4 times**.

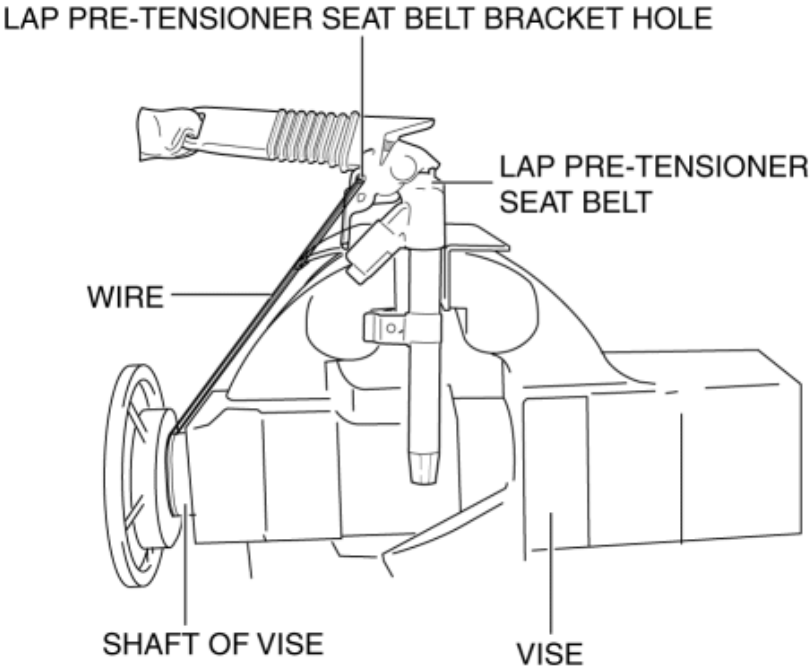

WARNING:

- If the lap pre-tensioner seat belt is not properly installed to the vice, serious injury may occur when the lap pre-tensioner part is operated (deployed). When installing the lap pre-tensioner seat belt to the vice, verify that the lap pre-tensioner part is properly installed to the vise.

7. Connect the **SST (Deployment tool)** to the **SST (Adapter harness)**.

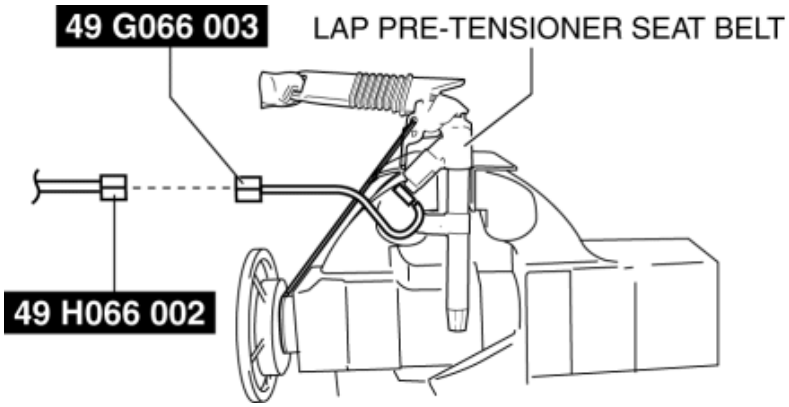

8. Connect the **SST (Deployment tool)** to the battery. Connect the power supply red clip to the positive battery terminal, and the black clip to the negative battery terminal.

9. Verify that the red lamp on the **SST (Deployment tool)** is illuminated.

10. Verify that all persons are standing **at least 6 m {20 ft}** away from the vehicle.

11. Press the activation switch on the **SST (Deployment tool)** to operate (deploy) the lap pre-tensioner seat belt.

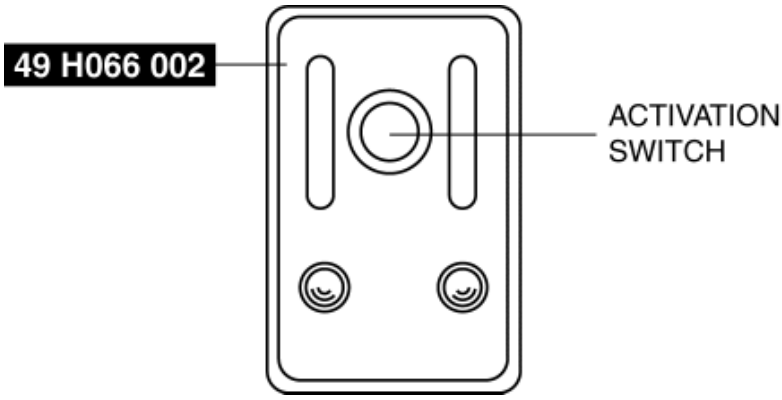

WARNING:

- The lap pre-tensioner seat belt is very hot immediately after it is operated (deployed). You can be burned. Do not touch the lap pre-tensioner seat belt for at least 15 min after deployment.

12. Disconnect the **SST (Deployment tool)** from the **SST (Adapter harness)**.

2014 - Mazda3 - Restraints

AIR BAG MODULE AND PRE-TENSIONER SEAT BELT DISPOSAL PROCEDURES [TWO-STEP DEPLOYMENT CONTROL SYSTEM]

WARNING:

- A live (undeployed) air bag module, pre-tensioner seat belt or lap pre-tensioner seat belt may accidentally operate (deploy) when it is disposed of and cause serious injury. Always refer to the “AIR BAG MODULE AND PRE-TENSIONER SEAT BELT DEPLOYMENT PROCEDURES” and dispose of air bag modules, pre-tensioner seat belts and lap pre-tensioner seat belts in a deployed condition.
- The air bag modules, pre-tensioner seat belts and lap pre-tensioner seat belts are very hot immediately after they are deployed. You can be burned. Do not touch an air bag module, pre-tensioner seat belt and lap pre-tensioner seat belt for at least 15 min after deployment.
- Pouring water on the deployed air bag module, pre-tensioner seat belt and lap pre-tensioner seat belt is dangerous. The water will mix with the residual gases to form a gas that can make breathing difficult. Do not pour water on the deployed air bag module, pre-tensioner seat belt and lap pre-tensioner seat belt.
- The deployed air bag module, pre-tensioner seat belt or lap pre-tensioner seat belt may contain deposits of sodium hydroxide, a caustic byproduct of the gas-generated combustion. If this substance gets into your eyes or on your hands, it can cause irritation and itching. When handling the deployed air bag module, pre-tensioner seat belt and lap pre-tensioner seat belt, wear gloves and safety glasses.

1. Remove the deployed air bag module, pre-tensioner seat belt or lap pre-tensioner seat belt.

2. Put the air bag module, pre-tensioner seat belt or lap pre-tensioner seat belt in a plastic bag, seal the bag, and then dispose of it.

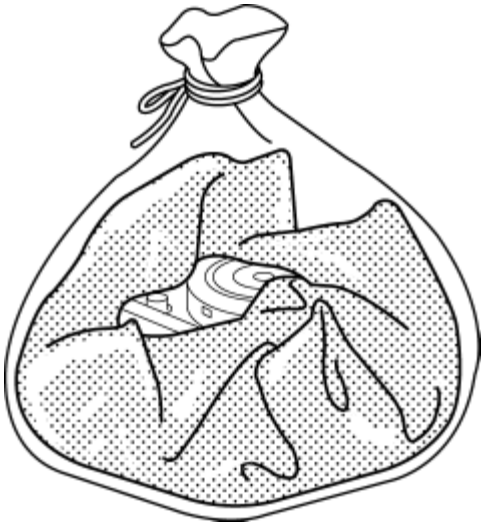

AIR BAG MODULE AND PRE-TENSIONER SEAT BELT DISPOSAL PROCEDURES [TWO-STEP DEPLOYMENT CONTROL SYSTEM]

2014 - Mazda3 - Restraints

INSPECTION OF SST (DEPLOYMENT TOOL) [TWO-STEP DEPLOYMENT CONTROL SYSTEM]

1. Before using the **SST** (49 H066 002), inspect its operation.

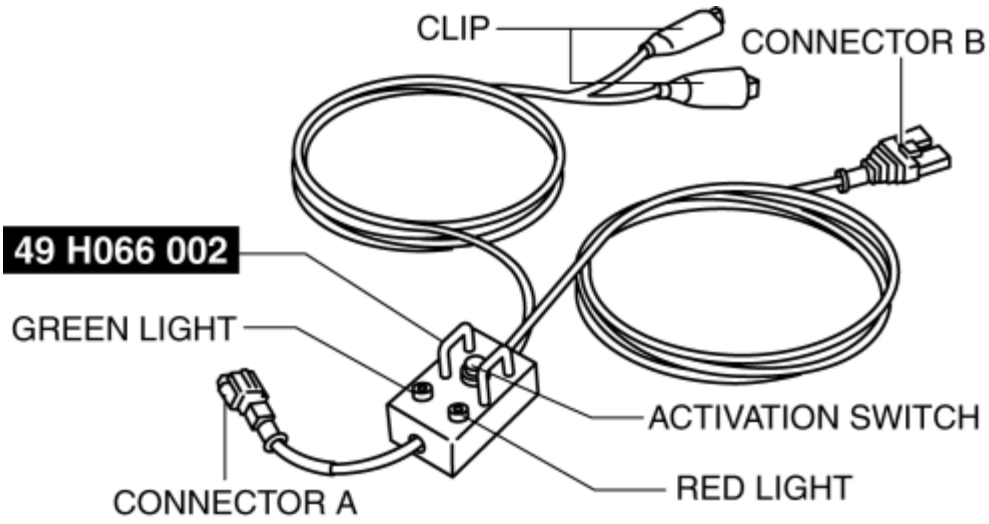

Inspection Procedure

1. Follow the steps below to inspect the **SST** (49 H066 002).

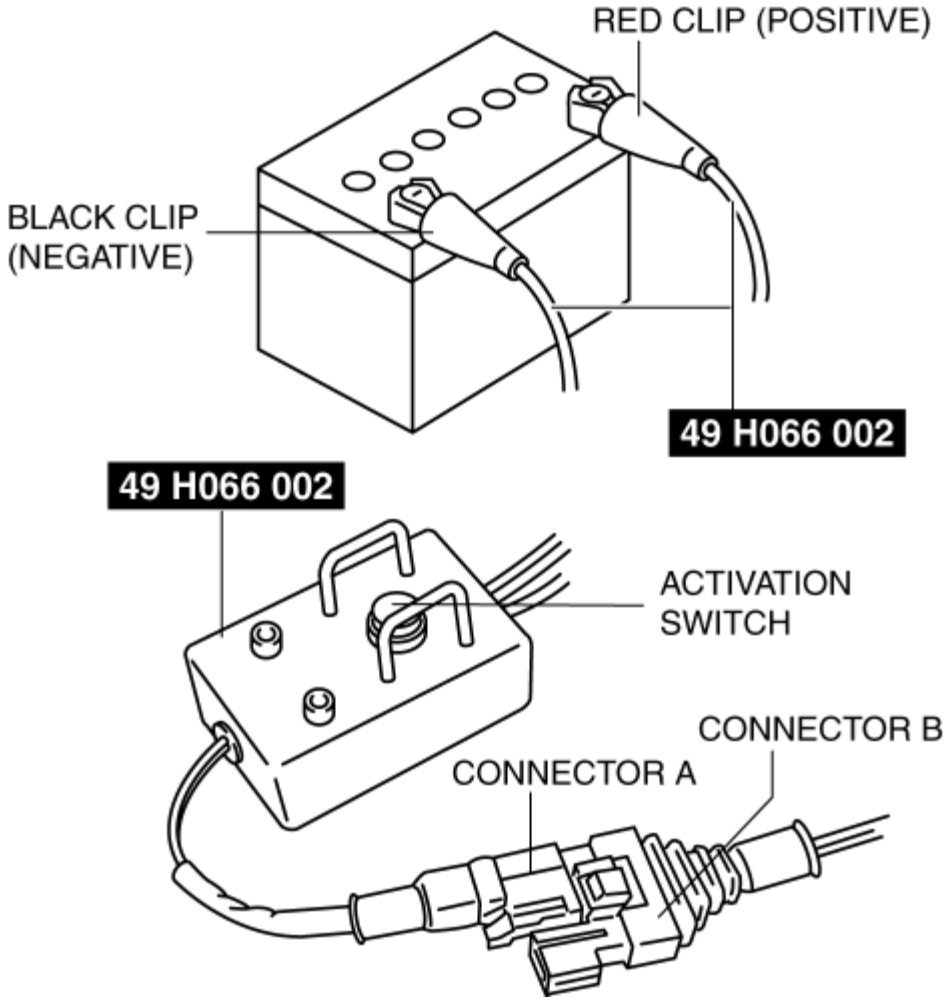

- If not as indicated in the table, replace the **SST** (49 H066 002) because it has a malfunction.

WARNING:

- Do not use a malfunctioning SST (49 H066 002), otherwise it could cause the air bag module, pre-tensioner seat belt or lap pre-tensioner seat belt to accidentally operate (deploy).

CAUTION:

- Because the permissible voltage for the SST (49 H066 002) is 12 V, do not connect a 24 V power source because it will damage the SST. Always connect only a 12 V power source.

Step	Inspection procedure	Light condition	
		Green	Red
1	Connect the power supply red clip to the positive battery terminal, and the black clip to the negative battery terminal.	On	Off

2	Connect connectors A and B.	Off	On
3	Press the activation switch.	On	Off

2014 - Mazda3 - Restraints

AIR BAG SYSTEM LOCATION INDEX [STANDARD DEPLOYMENT CONTROL SYSTEM]

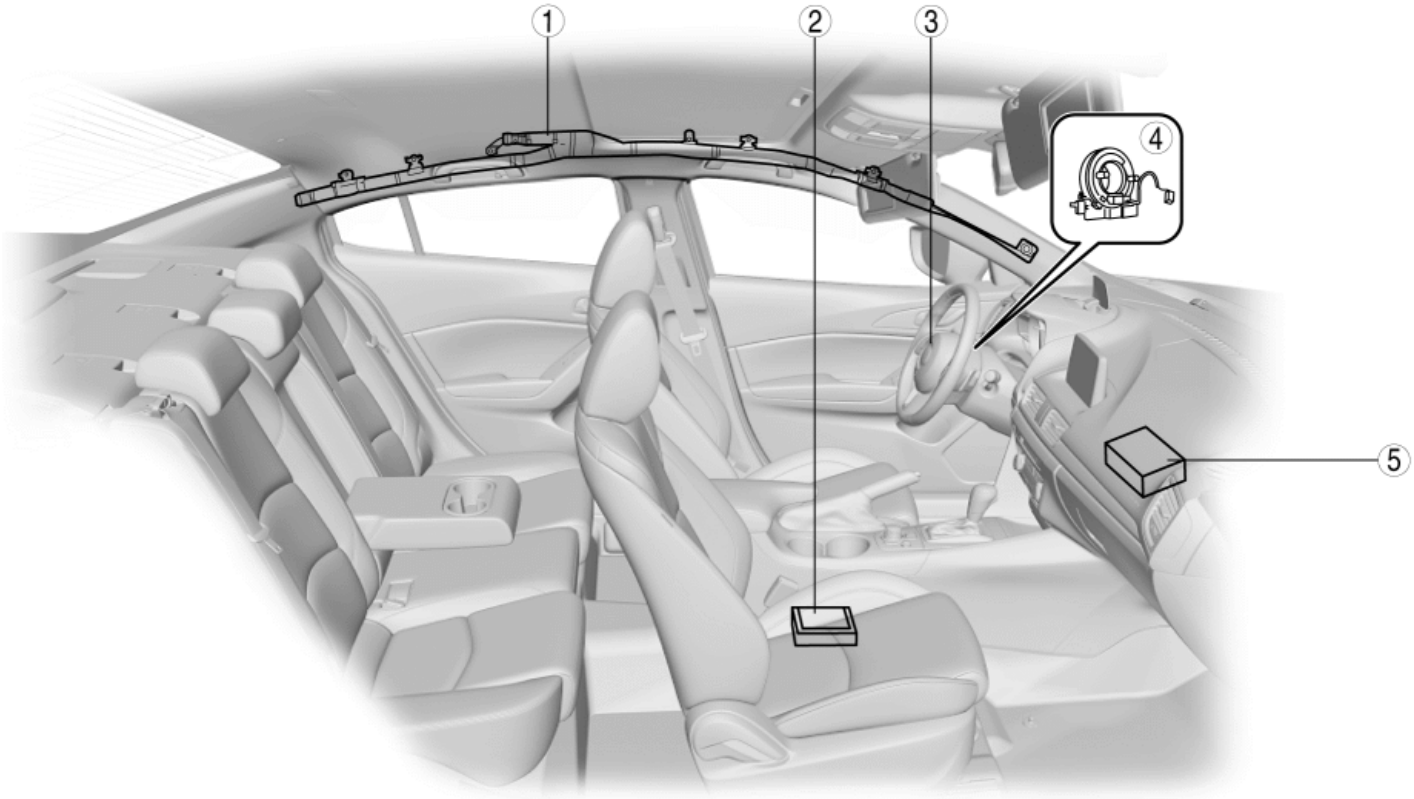

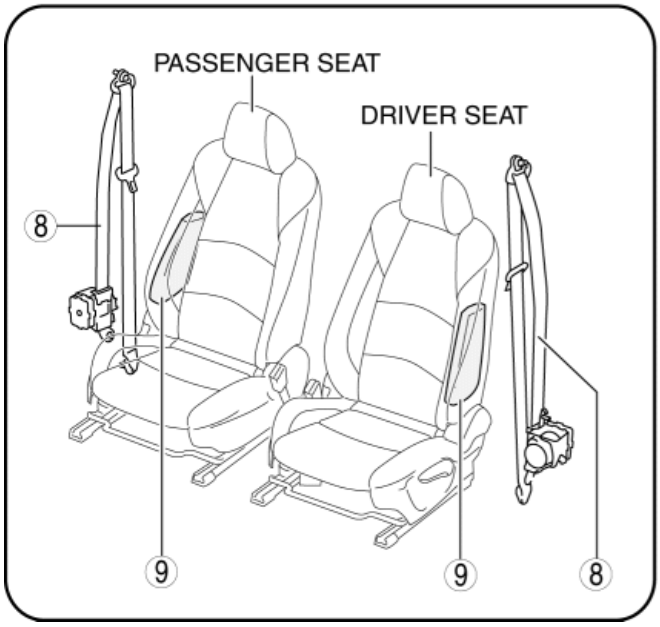

1	Curtain air bag module (See **CURTAIN AIR BAG MODULE REMOVAL/INSTALLATION [STANDARD DEPLOYMENT CONTROL SYSTEM]**.) (See **AIR BAG MODULE AND PRE-TENSIONER SEAT BELT DEPLOYMENT PROCEDURES [STANDARD DEPLOYMENT CONTROL SYSTEM]**.)

2	SAS control module (See **SAS CONTROL MODULE REMOVAL / INSTALLATION [STANDARD DEPLOYMENT CONTROL SYSTEM]**.) (See **SAS CONTROL MODULE CONFIGURATION (USING READ / WRITE FUNCTION) [STANDARD DEPLOYMENT CONTROL SYSTEM]**.) (See **SAS CONTROL MODULE CONFIGURATION (USING AS-BUILT DATA) [STANDARD DEPLOYMENT CONTROL SYSTEM]**.)
3	Driver-side air bag module (See **DRIVER-SIDE AIR BAG MODULE REMOVAL [STANDARD DEPLOYMENT CONTROL SYSTEM]**.) (See **DRIVER-SIDE AIR BAG MODULE INSTALLATION [STANDARD DEPLOYMENT CONTROL SYSTEM]**.) (See **AIR BAG MODULE AND PRE-TENSIONER SEAT BELT DEPLOYMENT PROCEDURES [STANDARD DEPLOYMENT CONTROL SYSTEM]**.)
4	Clock spring (See **CLOCK SPRING REMOVAL / INSTALLATION [STANDARD DEPLOYMENT CONTROL SYSTEM]**.) (See **CLOCK SPRING ADJUSTMENT [STANDARD DEPLOYMENT CONTROL SYSTEM]**.) (See **CLOCK SPRING INSPECTION [STANDARD DEPLOYMENT CONTROL SYSTEM]**.)
5	Passenger-side air bag module (See **PASSENGER-SIDE AIR BAG MODULE REMOVAL [STANDARD DEPLOYMENT CONTROL SYSTEM]**.) (See **PASSENGER-SIDE AIR BAG MODULE INSTALLATION [STANDARD DEPLOYMENT CONTROL SYSTEM]**.) (See **AIR BAG MODULE AND PRE-TENSIONER SEAT BELT DEPLOYMENT PROCEDURES [STANDARD DEPLOYMENT CONTROL SYSTEM]**.)
6	Side air bag sensor (See **SIDE AIR BAG SENSOR REMOVAL / INSTALLATION [STANDARD DEPLOYMENT CONTROL SYSTEM]**.)
7	Crash zone sensor (See **CRASH ZONE SENSOR REMOVAL / INSTALLATION [STANDARD DEPLOYMENT CONTROL SYSTEM]**.)
8	Pre-tensioner seat belt (See **FRONT SEAT BELT REMOVAL / INSTALLATION**.) (See **AIR BAG MODULE AND PRE-TENSIONER SEAT BELT DEPLOYMENT PROCEDURES [STANDARD DEPLOYMENT CONTROL SYSTEM]**.)
9	Side air bag module (See **SIDE AIR BAG MODULE REMOVAL / INSTALLATION [STANDARD DEPLOYMENT CONTROL SYSTEM]**.) (See **AIR BAG MODULE AND PRE-TENSIONER SEAT BELT DEPLOYMENT PROCEDURES [STANDARD DEPLOYMENT CONTROL SYSTEM]**.)

2014 - Mazda3 - Restraints

AIR BAG SYSTEM SERVICE WARNINGS [STANDARD DEPLOYMENT CONTROL SYSTEM]

Air Bag Module Inspection

- **Inspecting an air bag module using a tester can operate (deploy) the air bag module, which may cause serious injury. Do not use a tester to inspect an air bag module. Always use the on-board diagnostic function to diagnose the air bag module for malfunctions.**

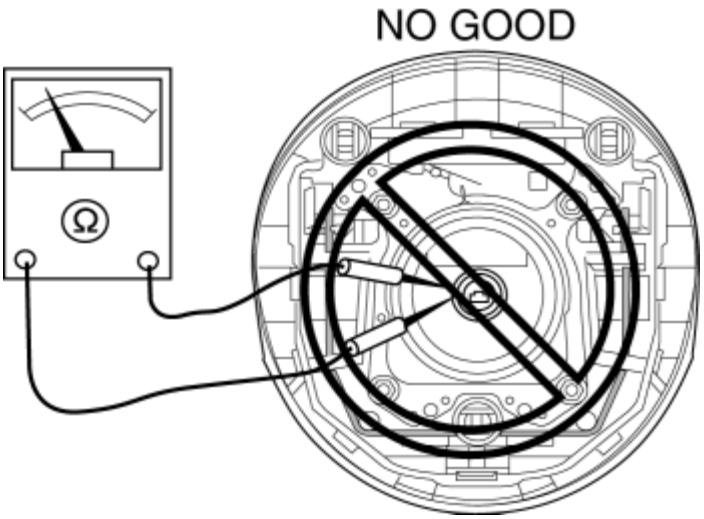

Air Bag Module Handling

- **Before removing the air bag module or disconnecting the air bag module connector, always switch the ignition off, disconnect the negative battery cable, and then wait for 1 min or more to allow the backup power supply of the SAS control module to deplete its stored power.**
- **Handling a live (undeployed) air bag module that is pointed toward your body could result in serious injury if the air bag module were to accidentally operate (deploy). When carrying a live (undeployed) air bag module, point the deployment surface away from your body to lessen the chance of injury in case it operates (deploys).**

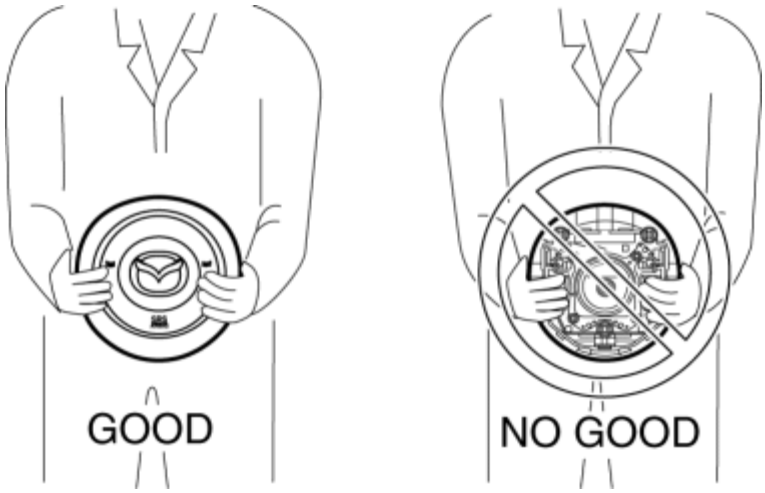

- **A live (undeployed) air bag module placed with its deployment surface to the ground is dangerous. If the air bag module were to accidentally operate (deploy), it could cause serious injury. Always place a live (undeployed) air bag module with its deployment surface up.**

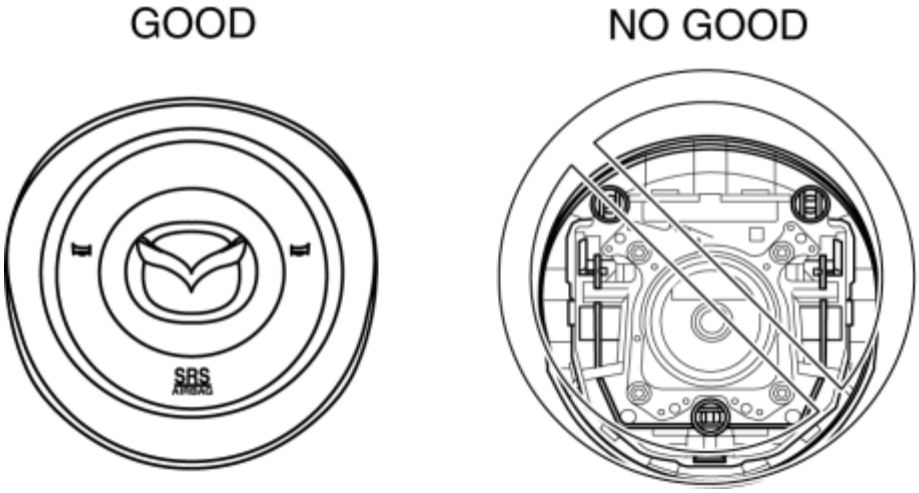

Side Air Bag Module Handling

- **Before removing the side air bag module or disconnecting the side air bag module connector, always switch the ignition off, disconnect the negative battery cable, and then wait for 1 min or more to allow the backup power supply of the SAS control module to deplete its stored power.**
- **When a side air bag module operates (deploys) due to a collision, the interior of the seat back (pad, frame, trim) may become damaged. If a side air bag does not operate (deploy) normally from a seat back that has been reused, a serious accident may result. After a side air bag has operated (deployed), always replace both the side air bag module and the seat back (pad, frame, trim) with new parts. After servicing, verify that the seat operates normally and that the wiring harness is not caught.**

SAS Control Module Handling

- **When connecting or disconnecting the SAS control module connector, a person**

charged with static electricity could accidentally operate (deploy) each air bag module. Before connecting or disconnecting the SAS control module connector, discharge any charged static electricity from your body.

- **Removing the SAS control module or disconnecting the SAS control module connector with the ignition ON can activate the sensor in the SAS control module and operate (deploy) the air bags and pre-tensioner seat belts, which may cause serious injury. Before removing the SAS control module or disconnecting the SAS control module connector, always switch the ignition off, disconnect the negative battery cable, and then wait for 1 min or more to allow the backup power supply of the SAS control module to deplete its stored power.**
- **Connecting the SAS control module connector with the SAS control module not securely fixed to the vehicle is dangerous. The sensor in the SAS control module could send an electrical signal to the air bag modules and pre-tensioner seat belts. This will operate (deploy) the air bags and pre-tensioner seat belts, which may result in serious injury. Therefore, before connecting the connector, securely fix the SAS control module to the vehicle.**
- **Because a sensor is built into the SAS control module, once the air bags and pre-tensioner seat belts have operated (deployed) due to a collision or other causes, the SAS control module must be replaced with a new one even if the used one does not have any visible external damage or deformation. The used SAS control module may have been damaged internally, which may cause improper operation. If the SAS control module is reused, the air bags and pre-tensioner seat belts may not operate (deploy) normally, which could result in a serious accident. Always replace the SAS control module with a new one. The SAS control module cannot be bench-checked or self-checked.**

Crash Zone Sensor Handling

- **Removing the crash zone sensor or disconnecting the crash zone sensor connector with the ignition ON can activate the crash zone sensor and operate (deploy) the air bags and pre-tensioner seat belts, which may cause serious injury. Before removing the crash zone sensor or disconnecting the crash zone sensor connector, always switch the ignition off, disconnect the negative battery cable, and then wait for 1 min or more to allow the backup power supply of the SAS control module to deplete its stored power.**
- **If the crash zone sensor is subjected to shock or the sensor is disassembled, the air bags and pre-tensioner seat belts may accidentally operate (deploy) and cause injury, or the system may fail to operate normally and cause a serious accident. Do not subject the crash zone sensor to shock or disassemble the sensor.**
- **Because a sensor is built into the crash zone sensor, once the air bags and pre-tensioner seat belts have operated (deployed) due to a collision or other causes, the crash zone sensor must be replaced with a new one even if the used one does not have any visible external damage or deformation. If the crash zone sensor is reused, the air bags and pre-tensioner seat belts may not operate (deploy) normally, which could result in a serious accident. Always replace the crash zone sensor with a new one. The crash zone sensor cannot be bench-checked or self-checked.**

Side Air Bag Sensor Handling

- **Removing the side air bag sensor or disconnecting the side air bag sensor connector with the ignition ON can activate the side air bag sensor and operate (deploy) the side air bag, which may cause serious injury. Before removing the side air bag sensor or disconnecting the side air bag sensor connector, always switch the ignition off, disconnect the negative battery cable, and then wait for 1 min or more to allow the backup power supply of the SAS control module to deplete its stored power.**
- **If the side air bag sensor is subjected to shock or the sensor is disassembled, the side air bag may accidentally operate (deploy) and cause injury, or the system may fail to operate normally and cause a serious accident. Do not subject the side air bag sensor to shock or disassemble the sensor.**
- **Because a sensor is built into the side air bag sensor, once the air bag has operated (deployed) due to a collision or other causes, the side air bag sensor must be replaced with a new one even if the used one does not have any visible external damage or deformation. If the side air bag sensor is reused, the side air bag may not operate (deploy) normally, which could result in a serious accident. Always replace the side air bag sensor with a new one. The side air bag sensor cannot be bench-checked or self-checked.**

Pre-tensioner Seat Belt Inspection

- **Inspecting a pre-tensioner seat belt using a tester can operate (deploy) the pre-tensioner seat belt, which may cause serious injury. Do not use a tester to inspect a pre-tensioner seat belt. Always use the on-board diagnostic function to diagnose the pre-tensioner seat belt for malfunctions.**

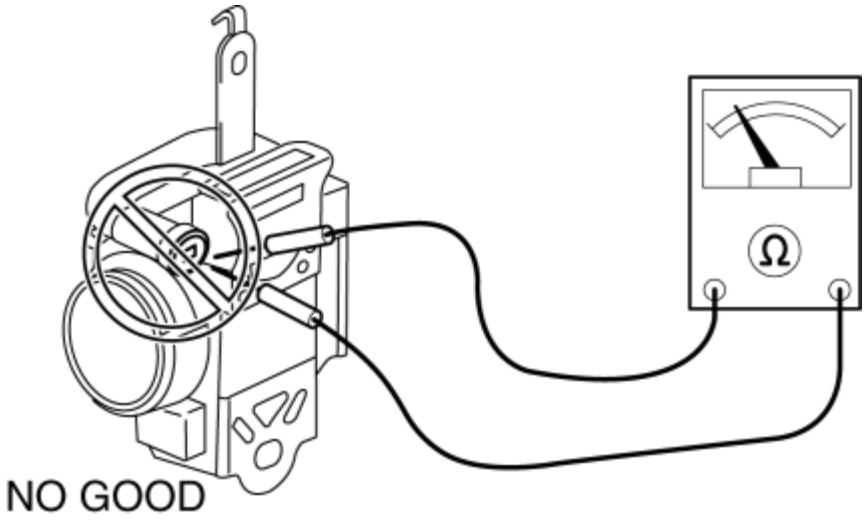

2014 - Mazda3 - Restraints

AIR BAG SYSTEM SERVICE CAUTIONS [STANDARD DEPLOYMENT CONTROL SYSTEM]

Air Bag System Component Disassembly

- **Disassembling the air bag system components could cause it to not operate (deploy) normally. Never disassemble any air bag system components.**

Air Bag Module, Pre-tensioner Seat Belt Handling

- **Oil, grease, or water on the air bag modules may cause the air bags to fail to operate (deploy) in an accident. Never allow oil, grease, or water to get on the air bag modules.**
- **Inserting a screwdriver or similar object into the connector of an air bag module or pre-tensioner seat belt may damage the connector and cause the air bag module or pre-tensioner seat belt to operate (deploy) improperly, which may cause serious injury. Never insert any foreign objects into the air bag module or pre-tensioner seat belt connectors.**

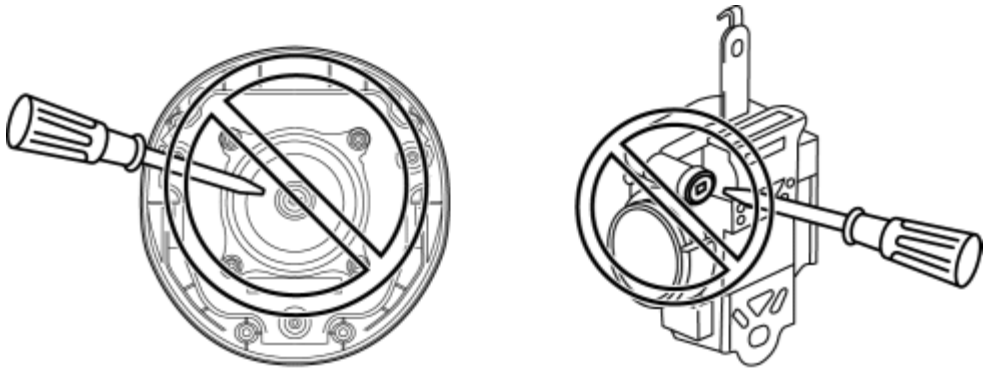

NO GOOD

Air Bag Module, Pre-tensioner Seat Belt Reuse

- **Even if an air bag module or pre-tensioner seat belt does not operate (deploy) in a collision and does not have any external signs of damage, it may have been damaged internally, which may cause improper operation. Before reusing a live (undeployed) air bag module or pre-tensioner seat belt always use the on-board diagnostic to diagnose the air bag module or pre-tensioner seat belt to verify that they have no malfunction.**

Air Bag Wiring Harness Repair

- **Incorrectly repairing an air bag wiring harness can accidentally operate (deploy) the air bag modules or pre-tensioner seat belts. If a problem is found in the air bag wiring harness, always replace the wiring harness with a new one.**

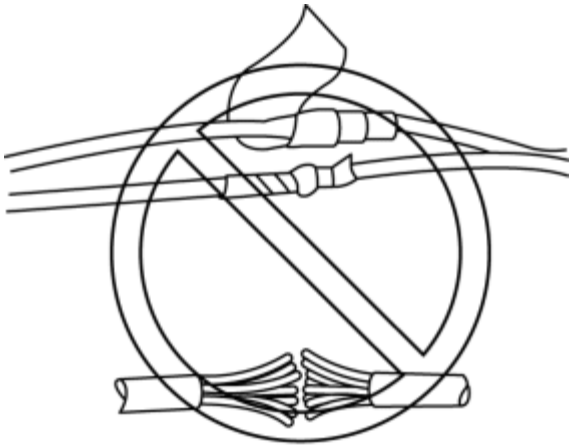

NO GOOD

2014 - Mazda3 - Restraints

DRIVER-SIDE AIR BAG MODULE REMOVAL [STANDARD DEPLOYMENT CONTROL SYSTEM]

WARNING:

- Handling the air bag module improperly can accidentally deploy the air bag module, which may seriously injure you. Read the air bag system service warnings and cautions before handling the air bag module. (See **AIR BAG SYSTEM SERVICE WARNINGS [STANDARD DEPLOYMENT CONTROL SYSTEM]**.) (See **AIR BAG SYSTEM SERVICE CAUTIONS [STANDARD DEPLOYMENT CONTROL SYSTEM]**.)

NOTE:

- The driver-side air bag module is installed to the steering wheel by the following connections.
  - Driver-side air bag module tab A and steering wheel hook A
  - Driver-side air bag module tab B and steering wheel hook B
  - Driver-side air bag module tab C and steering wheel hook C
  - Spring and steering wheel hook D
  - Spring and steering wheel hook E

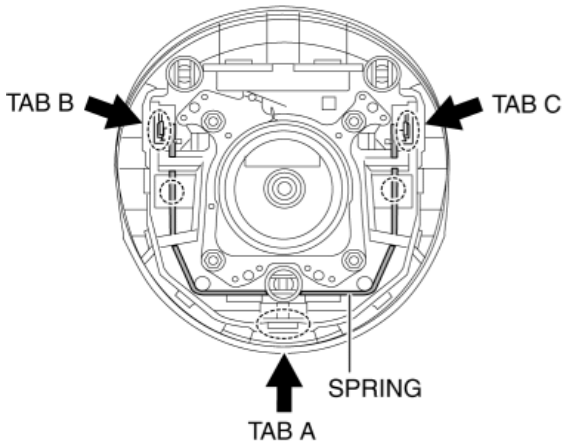

DRIVER-SIDE AIR BAG MODULE SIDE

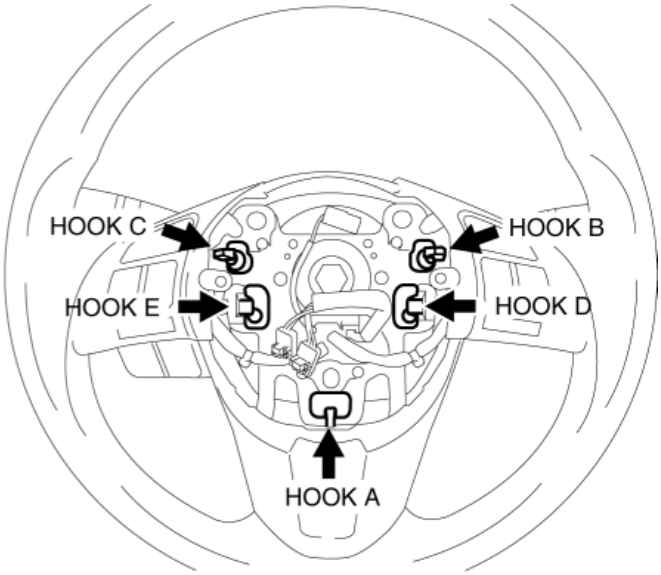

STEERING WHEEL SIDE

1. Switch the ignition off.

2. Disconnect the negative battery cable and wait for **1 min or more**. (See **NEGATIVE BATTERY CABLE DISCONNECTION/CONNECTION [SKYACTIV-G 2.0, SKYACTIV-G 2.5]**.)

3. Lower the steering wheel to the bottommost position.

4. Pull the steering wheel to furthest position rearward.

5. Verify the service hole on the back side of the steering wheel.

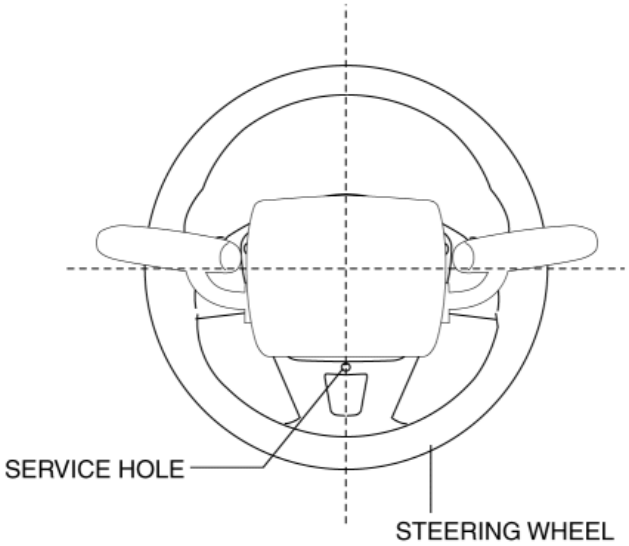

6. Insert the tool from the service hole.

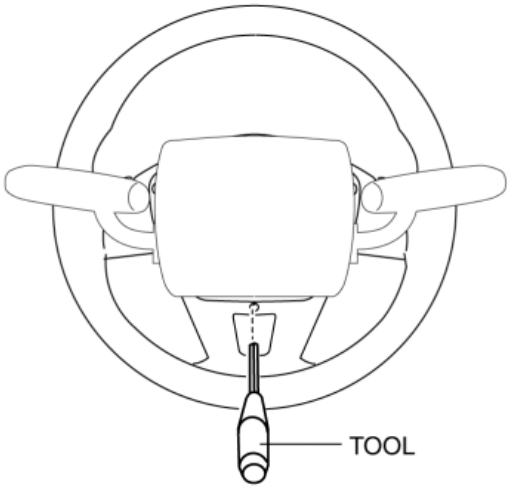

Recommended tool

- TORX driver (T30 (diam. 6))

7. Insert the tool in the direction of the arrow shown in the figure and disengage driver-side air bag module tab A from steering wheel hook A.

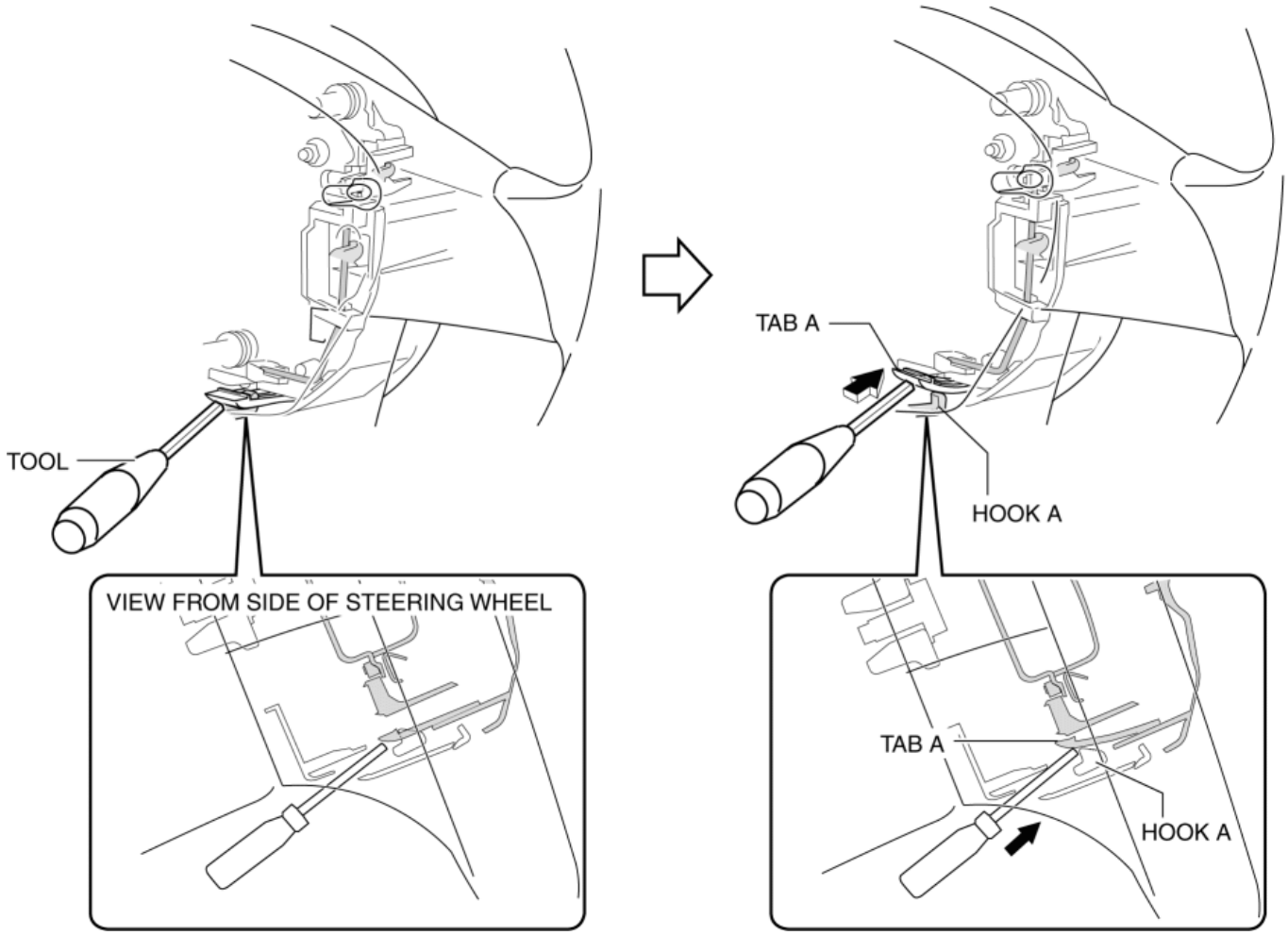

8. Rotate the steering wheel until the service hole can be seen from behind the steering wheel.

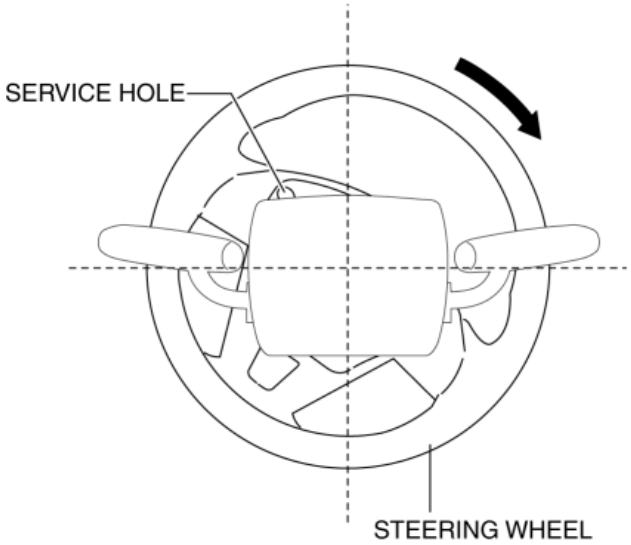

9. Insert the tool from the service hole.

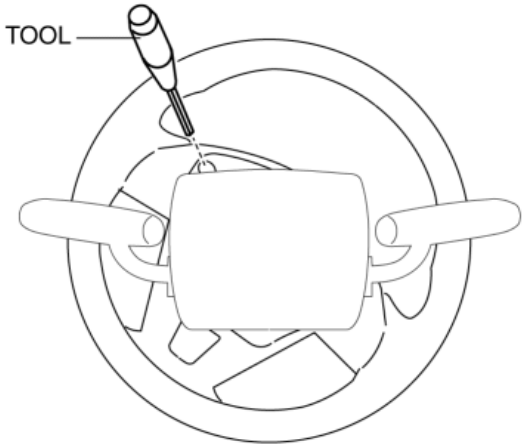

10. Insert the tool in the direction of the arrow shown in the figure and disengage driver-side air bag module tab B from steering wheel hook B.

NOTE:

- By moving the tool, the spring is pressed at the same time allowing the spring to be removed from steering wheel hook D.

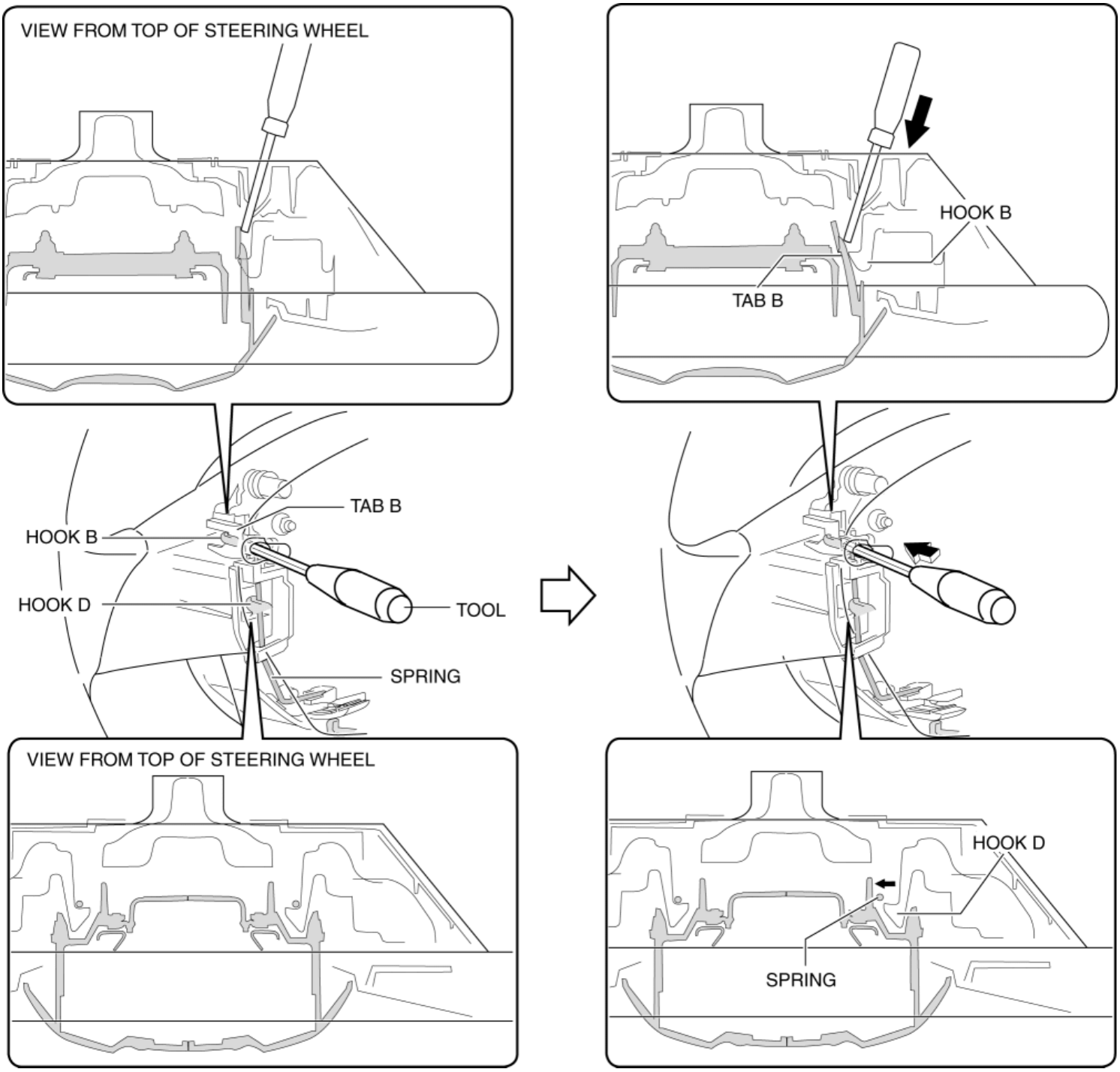

11. Rotate the steering wheel until the service hole can be seen from behind the steering wheel.

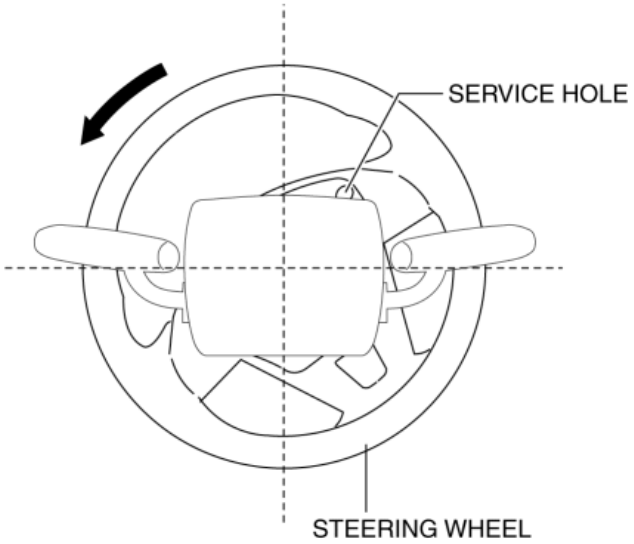

12. Insert the tool from the service hole.

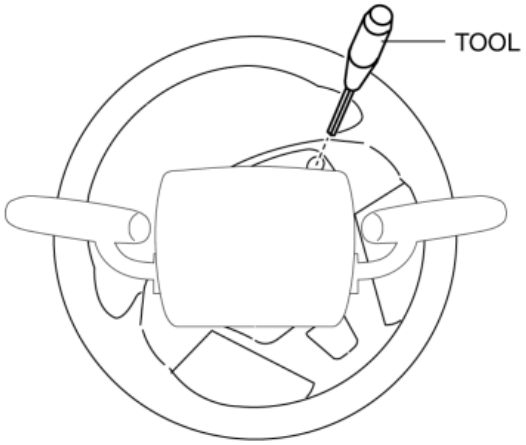

CAUTION:

- The driver-side air bag module could be damaged if it is dropped while it is completely disengaged from the steering wheel. Hold the driver-side air bag module securely with a hand while it is completely disengaged.

13. Insert the tool in the direction of the arrow shown in the figure and disengage driver-side air bag module tab C from steering wheel hook C.

NOTE:

- By moving the tool, the spring is pressed at the same time allowing the spring to be removed from steering wheel hook E.

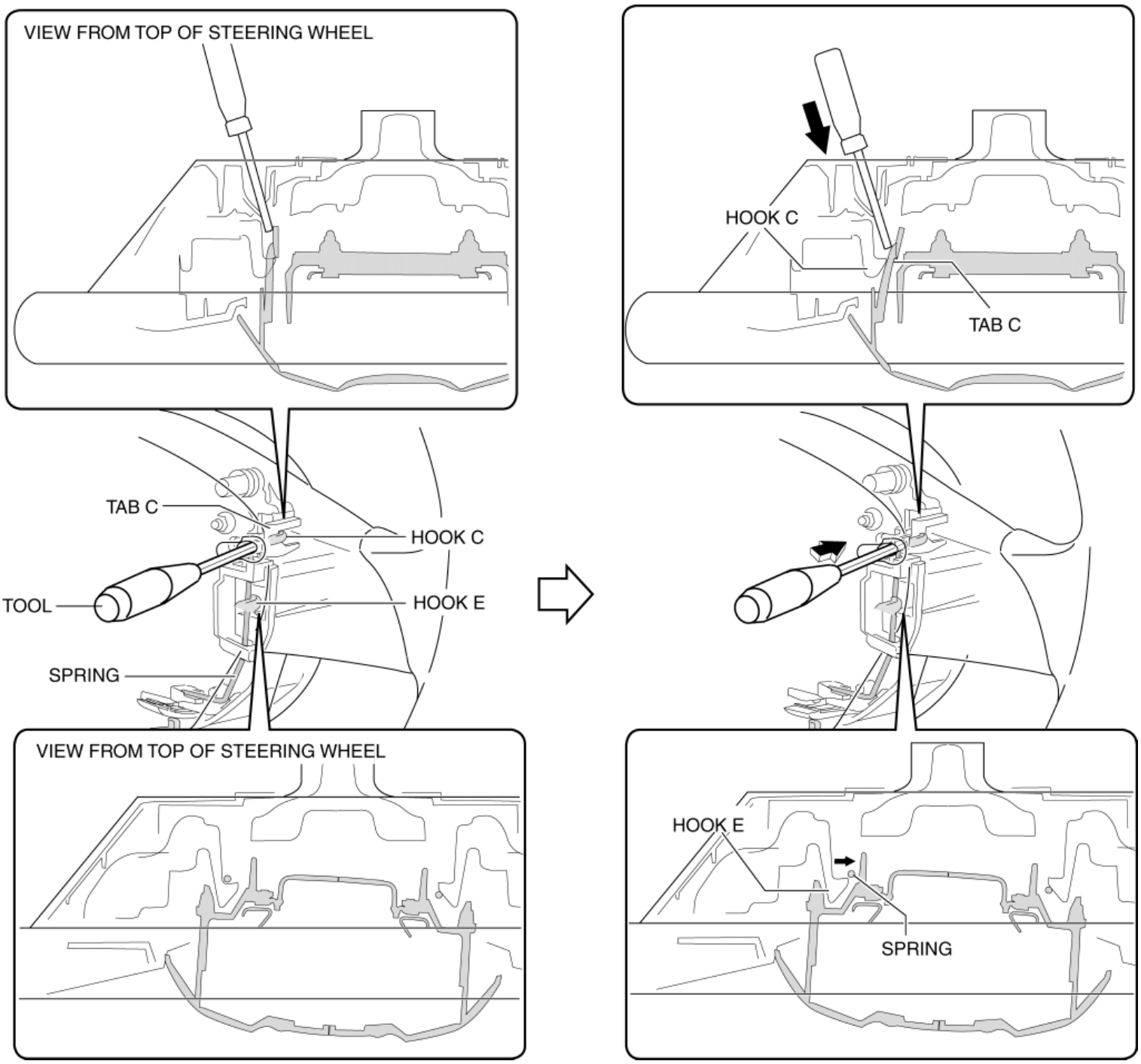

14. Remove the air bag module from the steering wheel.

15. Using a flathead screwdriver, lift the locking device carefully, however do not remove it.

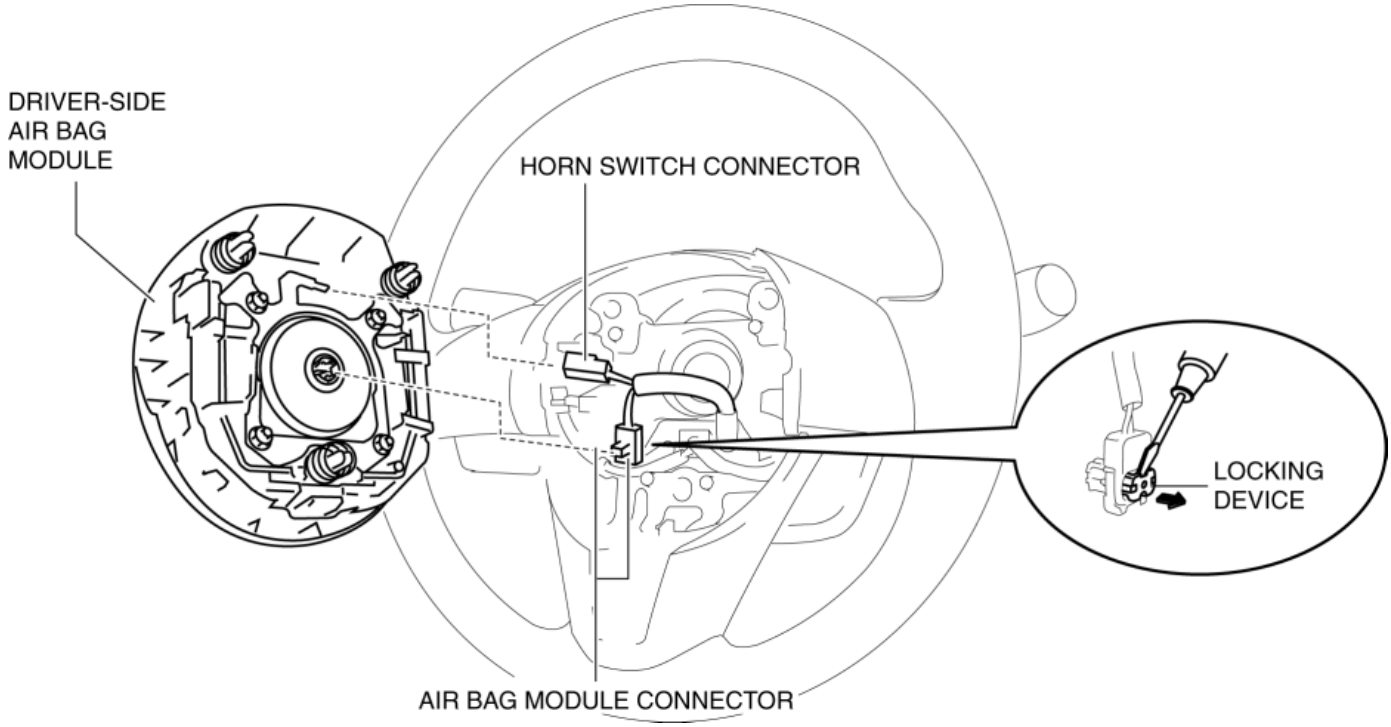

16. Disconnect the air bag module connector.
17. Disconnect the horn switch connector.
18. Remove the driver-side air bag module.

2014 - Mazda3 - Restraints

DRIVER-SIDE AIR BAG MODULE INSTALLATION [STANDARD DEPLOYMENT CONTROL SYSTEM]

WARNING:

- Handling the air bag module improperly can accidentally deploy the air bag module, which may seriously injure you. Read the air bag system service warnings and cautions before handling the air bag module. (See **AIR BAG SYSTEM SERVICE WARNINGS [STANDARD DEPLOYMENT CONTROL SYSTEM]**.) (See **AIR BAG SYSTEM SERVICE CAUTIONS [STANDARD DEPLOYMENT CONTROL SYSTEM]**.)

CAUTION:

- If the driver-side air bag module is connected with the air bag module wiring harness and the horn switch wiring harness crossing over each other, the wiring harnesses could become tangled and damaged. When connecting the connectors, be careful that the wiring harnesses are not crossed over each other.

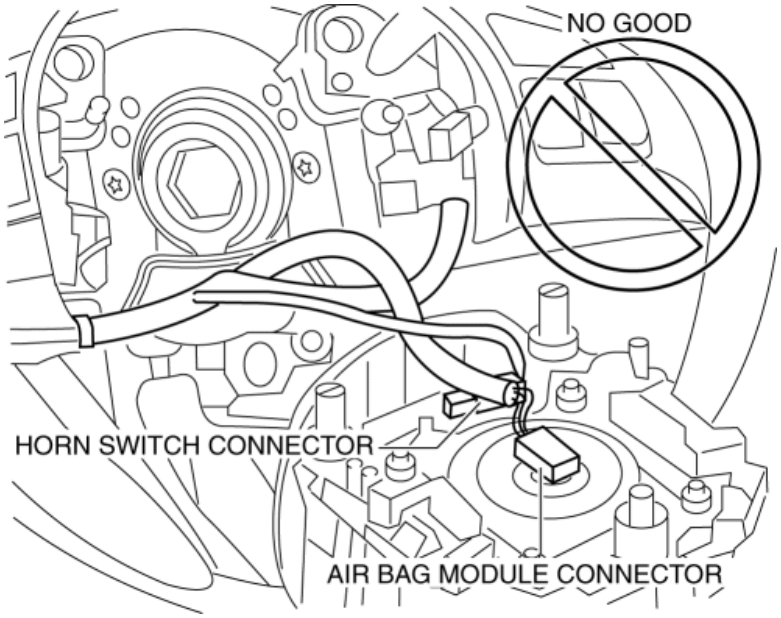

1. Point the upper side of the driver-side air bag module towards the steering wheel and connect the following connectors as shown in the figure.

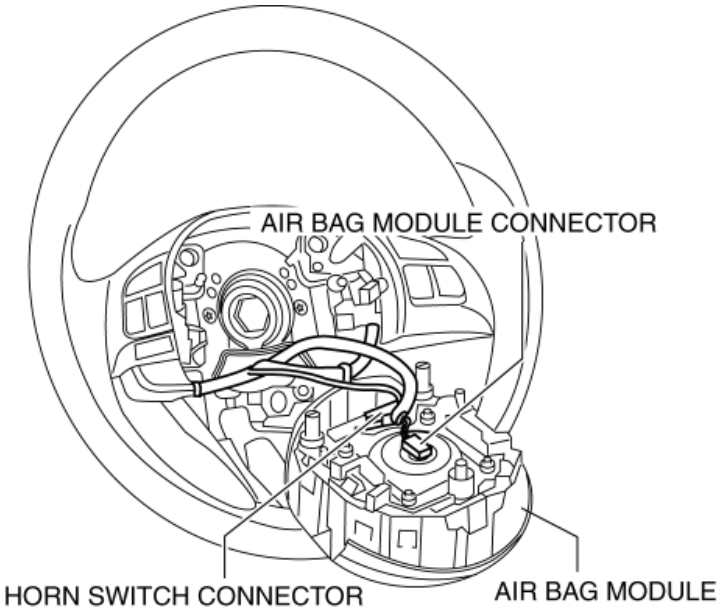

- Air bag module connector.

- Horn switch connector

2. Rotate the driver-side air bag module counterclockwise 180 degrees.

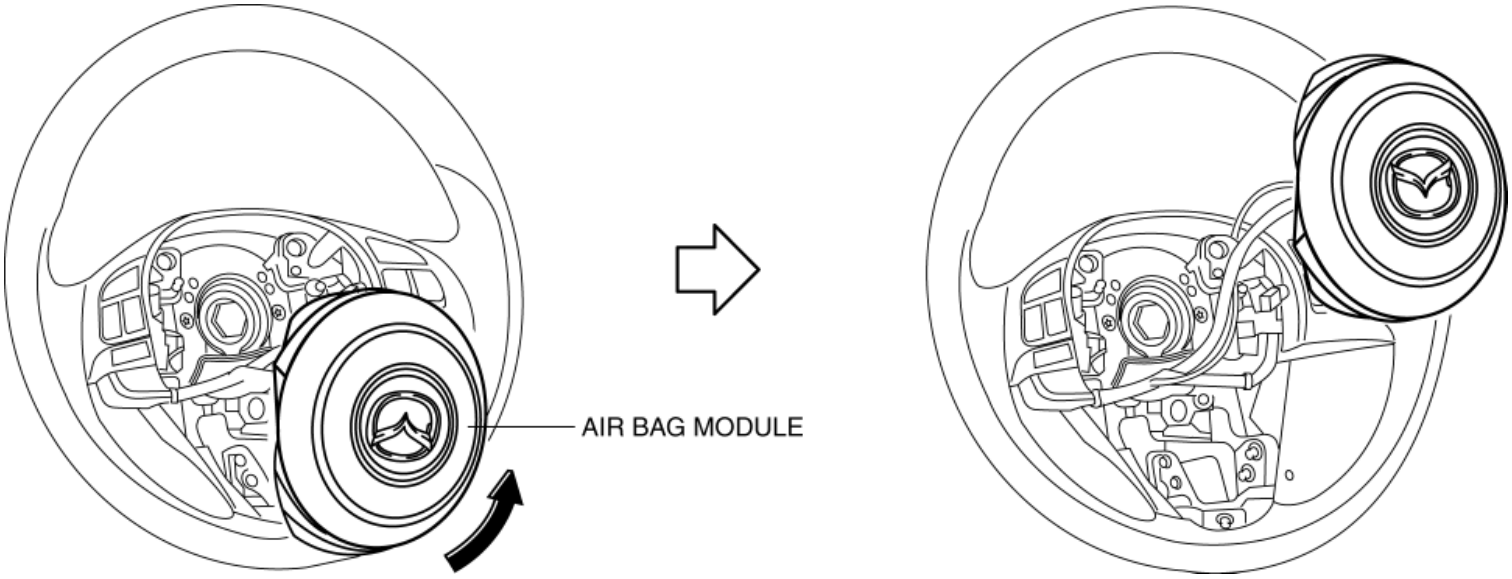

3. Align the driver-side air bag module pin with the steering wheel hole.

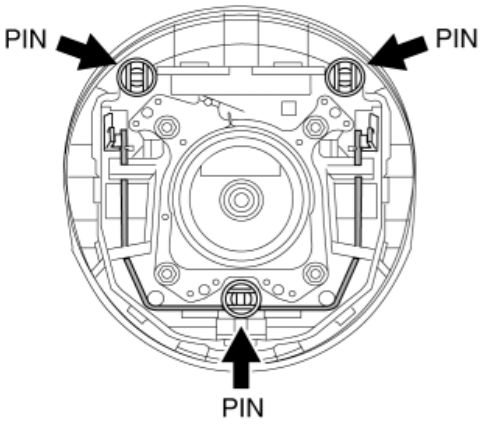

DRIVER-SIDE AIR BAG MODULE SIDE

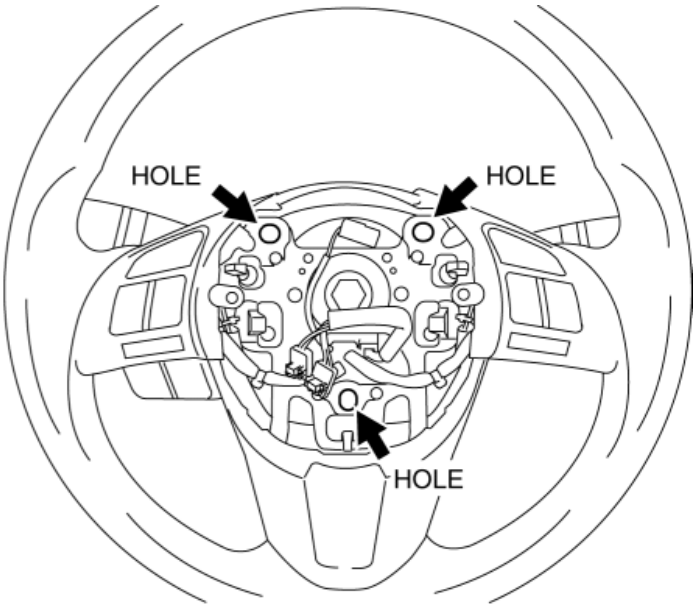

STEERING WHEEL SIDE

4. Press the pin of the driver-side air bag module until a click sound is heard.

5. Verify that the quick release connector is securely attached by lightly pulling the driver-side air bag module.

6. Connect the negative battery cable. (See **NEGATIVE BATTERY CABLE DISCONNECTION/CONNECTION [SKYACTIV-G 2.0, SKYACTIV-G 2.5]**.)

7. Switch the ignition ON (engine off or on).

8. Verify that the air bag system warning light illuminates for **approx. 6 s** and goes out.

- If the air bag system warning light does not operate normally, refer to the on-board diagnostic system (air bag system) and perform inspection of the system. (See **FLOWCHART [STANDARD DEPLOYMENT CONTROL SYSTEM]**.)

2014 - Mazda3 - Restraints

PASSENGER-SIDE AIR BAG MODULE REMOVAL [STANDARD DEPLOYMENT CONTROL SYSTEM]

WARNING:

- Handling the air bag module improperly can accidentally deploy the air bag module, which may seriously injure you. Read the air bag system service warnings and cautions before handling the air bag module. (See **AIR BAG SYSTEM SERVICE WARNINGS [STANDARD DEPLOYMENT CONTROL SYSTEM]**.) (See **AIR BAG SYSTEM SERVICE CAUTIONS [STANDARD DEPLOYMENT CONTROL SYSTEM]**.)

NOTE:

- When removing the passenger-side air bag module, perform the procedure in the posture shown in the figure.

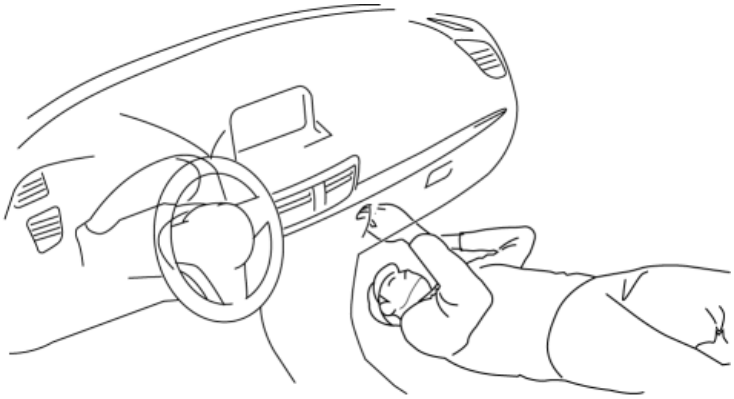

1. Switch the ignition off.

2. Disconnect the negative battery cable and wait for **1 min or more**. (See **NEGATIVE BATTERY CABLE DISCONNECTION/CONNECTION [SKYACTIV-G 2.0, SKYACTIV-G 2.5]**.)

3. Remove the following parts:

   a. Glove compartment (See **GLOVE COMPARTMENT REMOVAL/INSTALLATION**.)

   b. Decoration panel (See **DECORATION PANEL REMOVAL/INSTALLATION**.)

   c. Dashboard under cover (See **DASHBOARD UNDER COVER REMOVAL/INSTALLATION**.)

   d. Front scuff plate (passenger-side) (See **FRONT SCUFF PLATE REMOVAL/INSTALLATION**.)

   e. Front side trim (passenger-side) (See **FRONT SIDE TRIM REMOVAL/INSTALLATION**.)

   f. Lower panel (passenger-side) (See **LOWER PANEL REMOVAL/INSTALLATION**.)

4. Remove the cap.

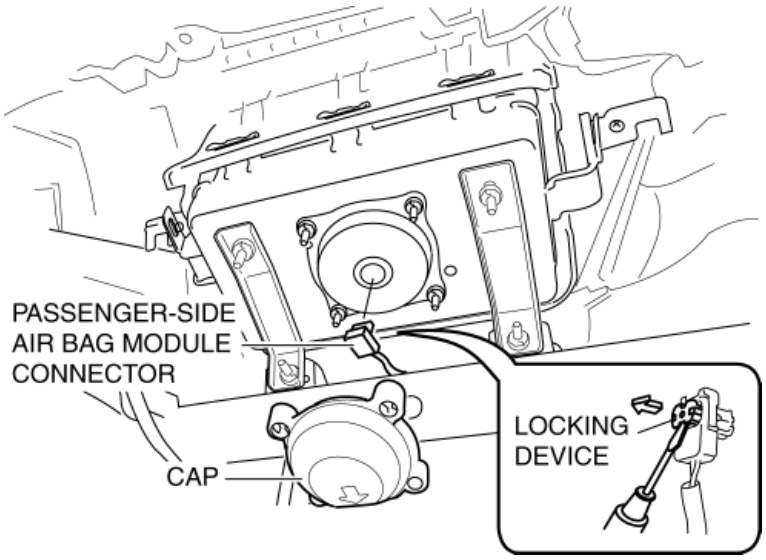

5. Using a flathead screwdriver, lift the locking device carefully, however do not remove it.
6. Disconnect the passenger-side air bag module connector.
7. Remove the fastener.

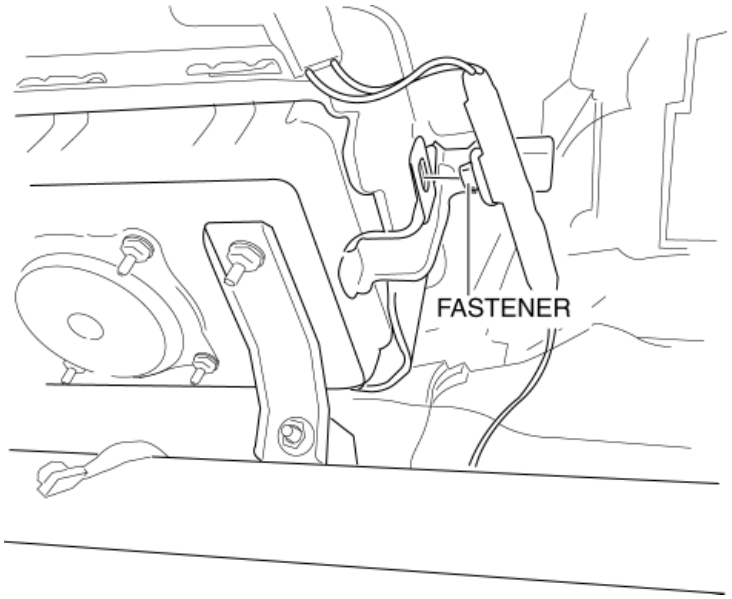

8. Remove the nuts.

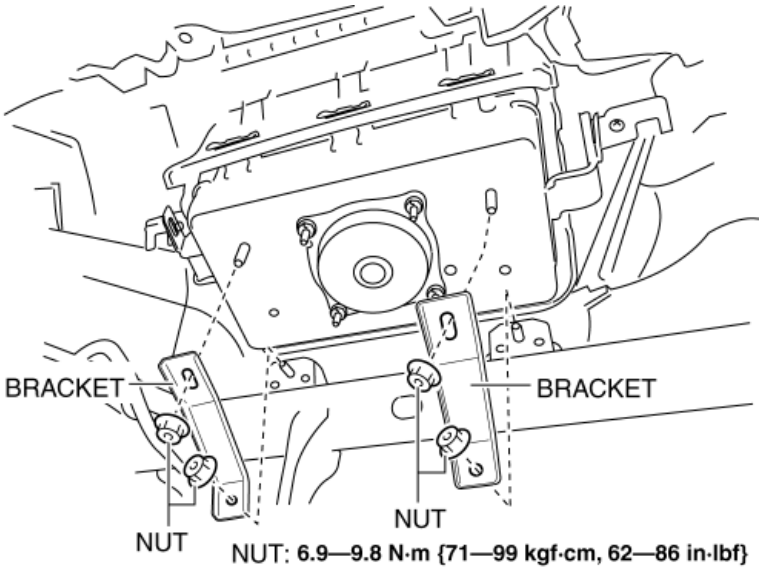

9. Remove the brackets.

10. Remove the screws.

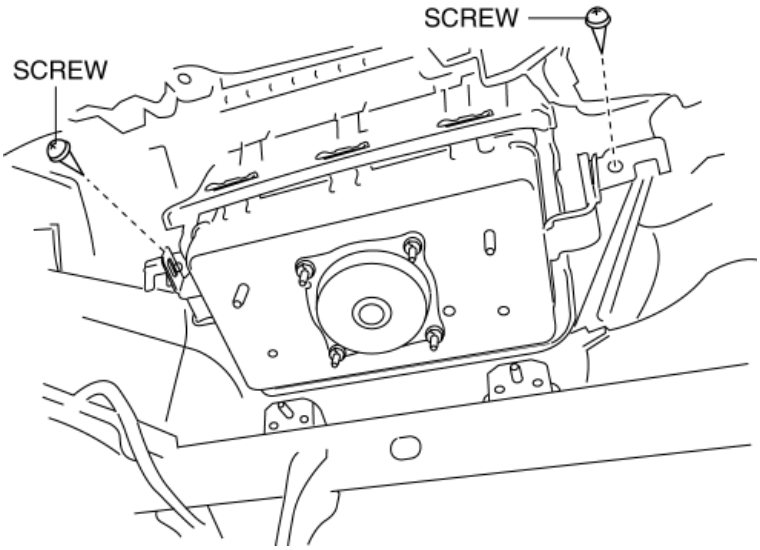

11. Move the passenger-side air bag module in the direction of arrow (2) shown in the figure and detach guide A from the dashboard while spreading the dashboard in the direction of arrow (1).

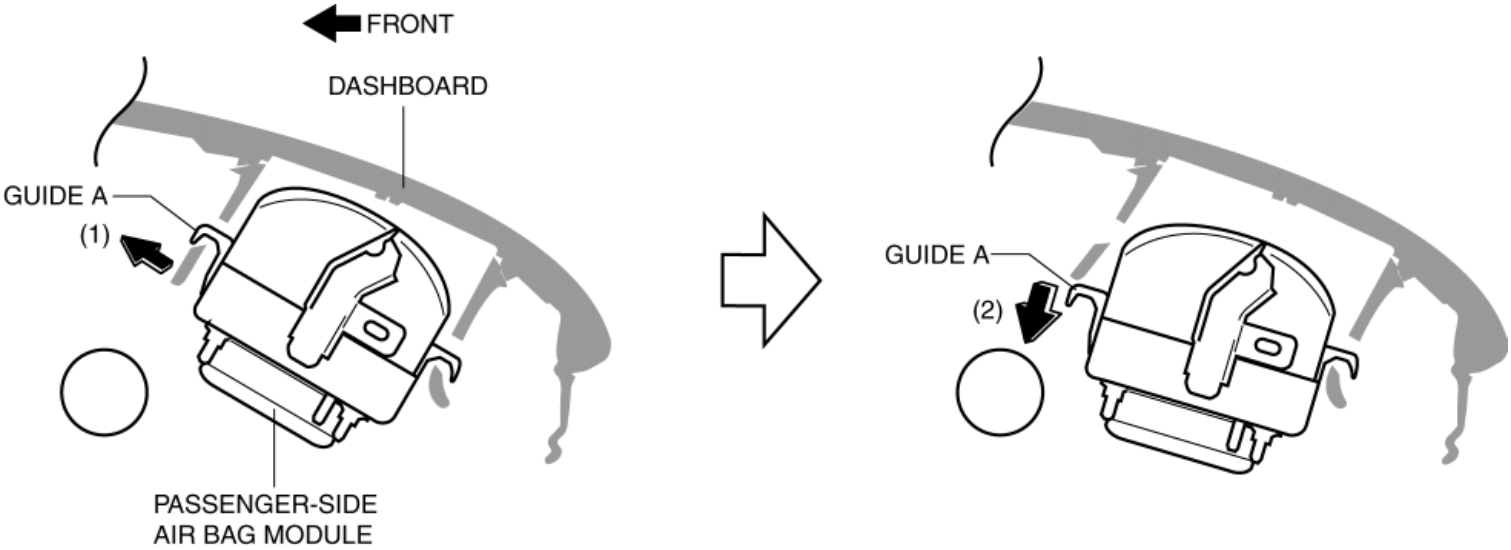

12. While avoiding area A shown in the figure, pull the front side of the passenger-side air bag module in the direction of the arrows shown in the figure (3).

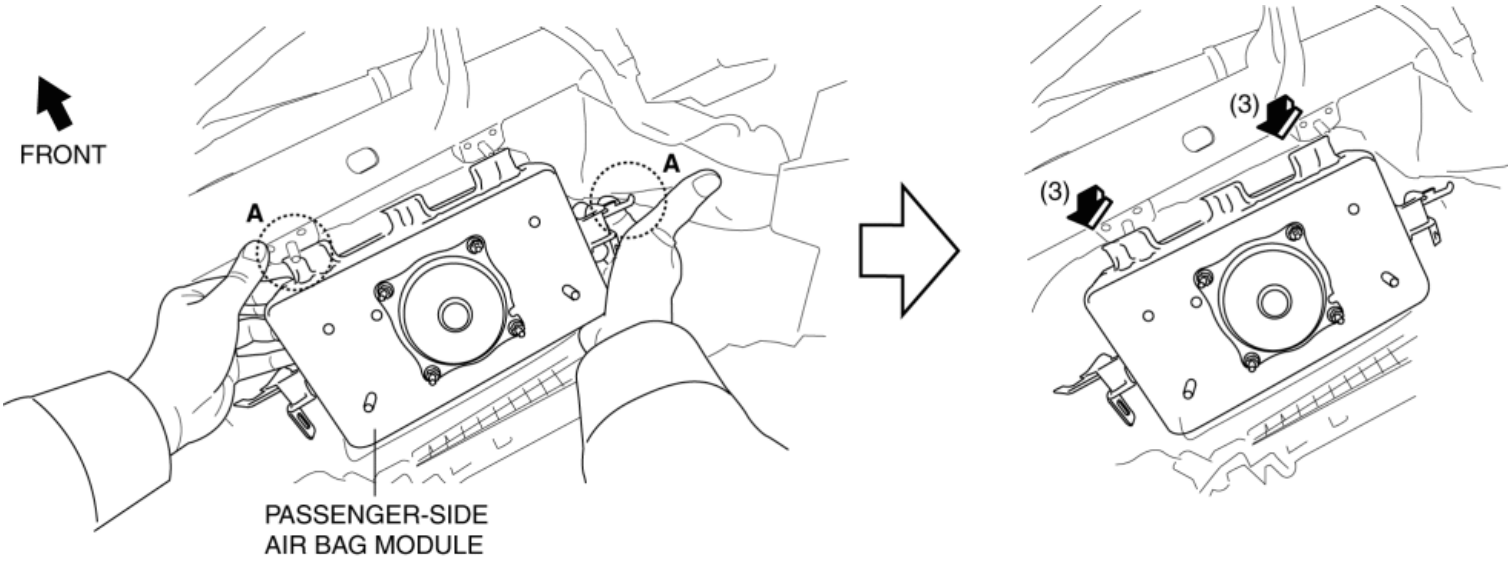

13. Move the passenger-side air bag module in the direction of the arrow (4) and detach guides B from the dashboard (5).

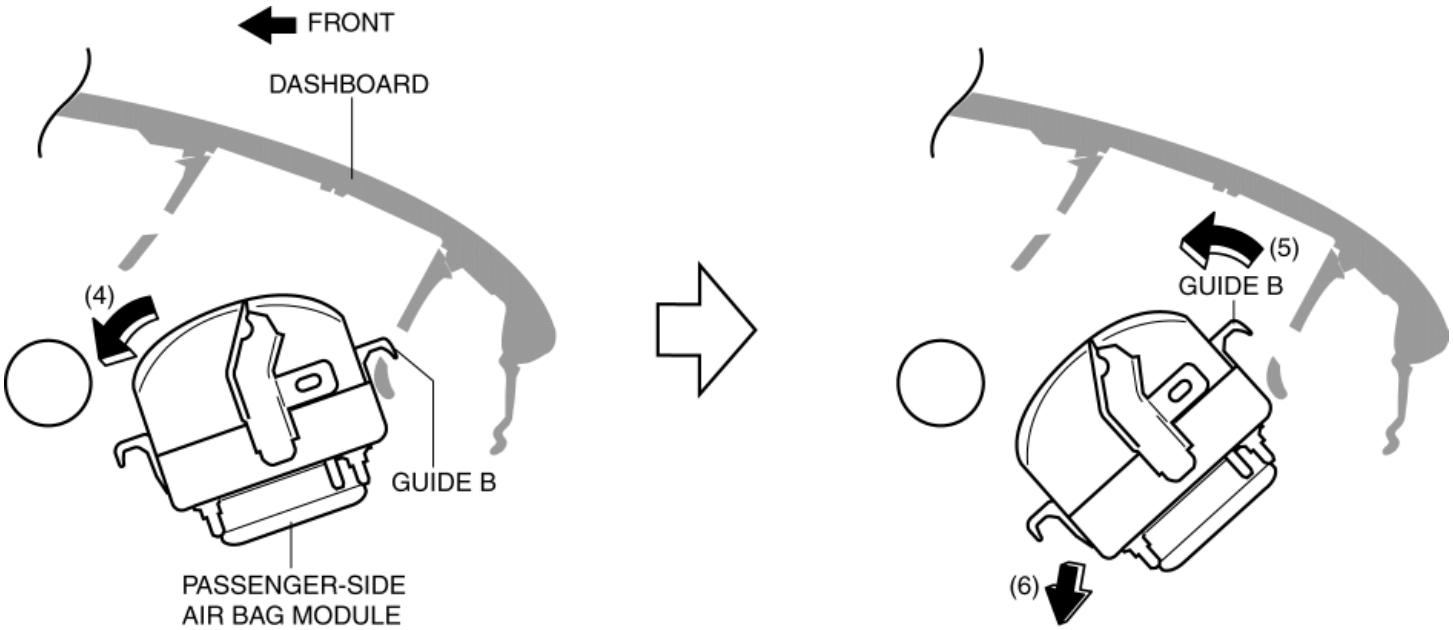

14. Remove the passenger-side air bag module (6).

2014 - Mazda3 - Restraints

PASSENGER-SIDE AIR BAG MODULE INSTALLATION [STANDARD DEPLOYMENT CONTROL SYSTEM]

WARNING:

- Handling the air bag module improperly can accidentally deploy the air bag module, which may seriously injure you. Read the air bag system service warnings and cautions before handling the air bag module. (See **AIR BAG SYSTEM SERVICE WARNINGS [STANDARD DEPLOYMENT CONTROL SYSTEM]**.) (See **AIR BAG SYSTEM SERVICE CAUTIONS [STANDARD DEPLOYMENT CONTROL SYSTEM]**.)

1. Install guide A to the dashboard (1).

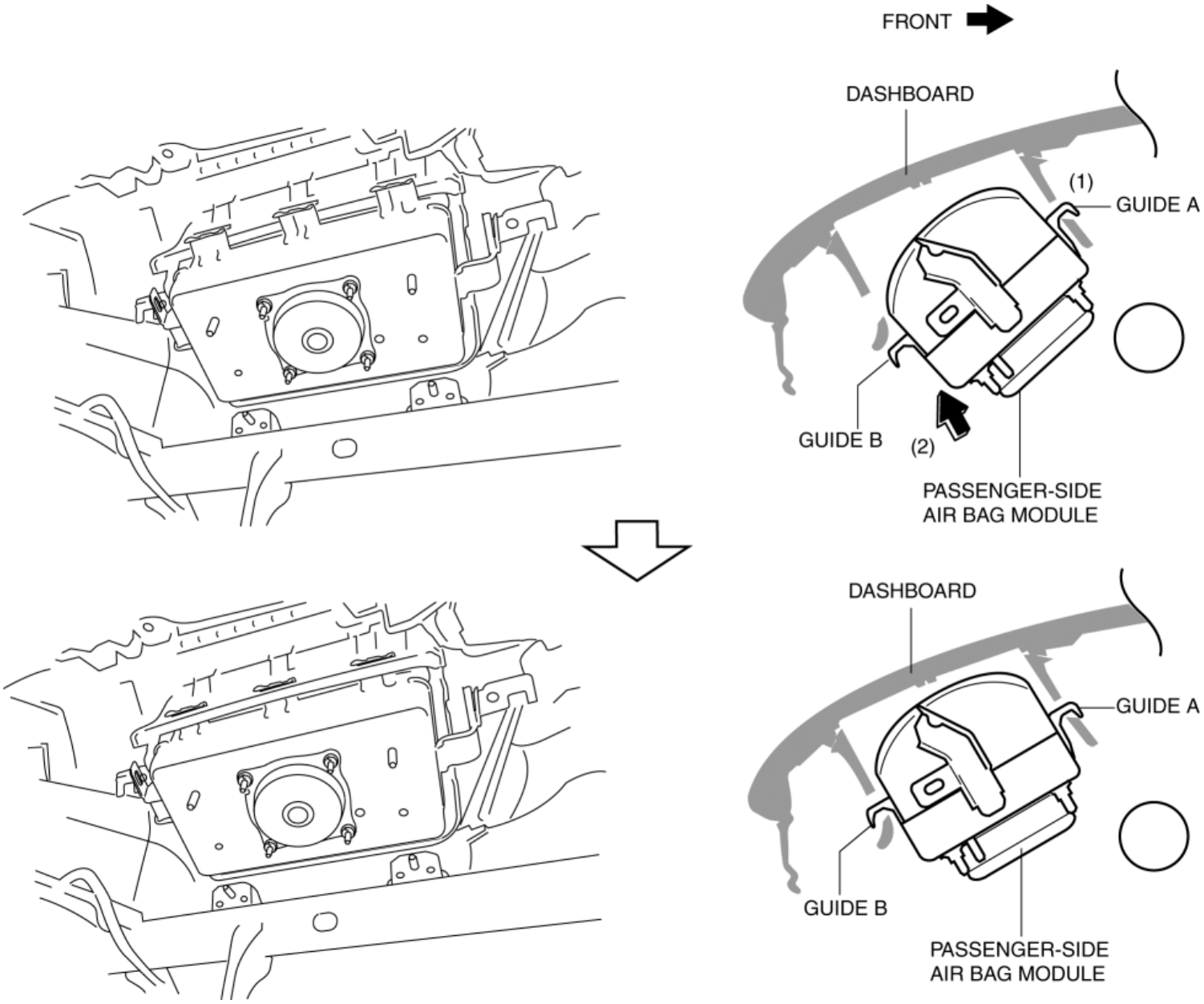

2. Press the passenger-side air bag module in the direction of the arrow shown in the figure and attach guides B (2).
3. Install the screws.

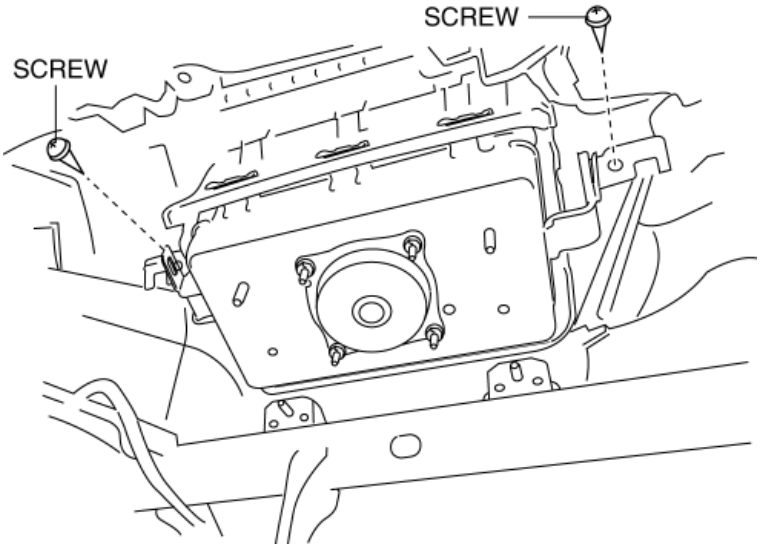

4. Install the brackets.

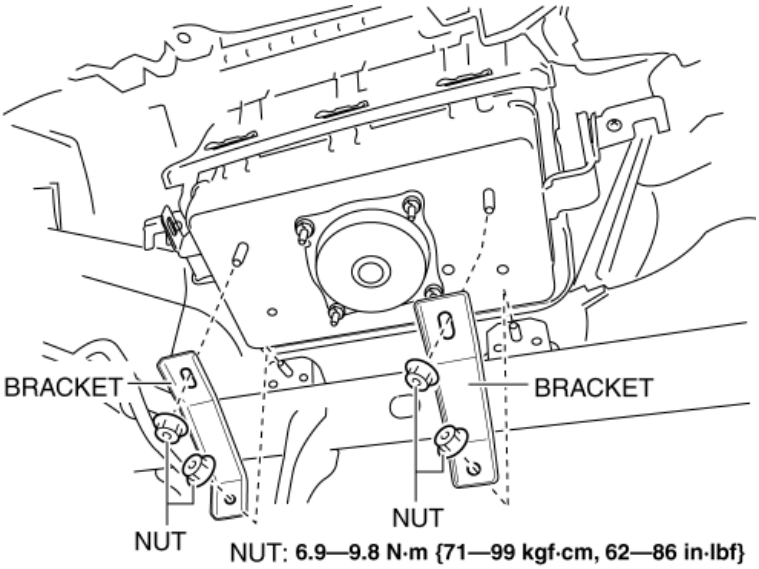

5. Install the nuts.

6. Install the fastener.

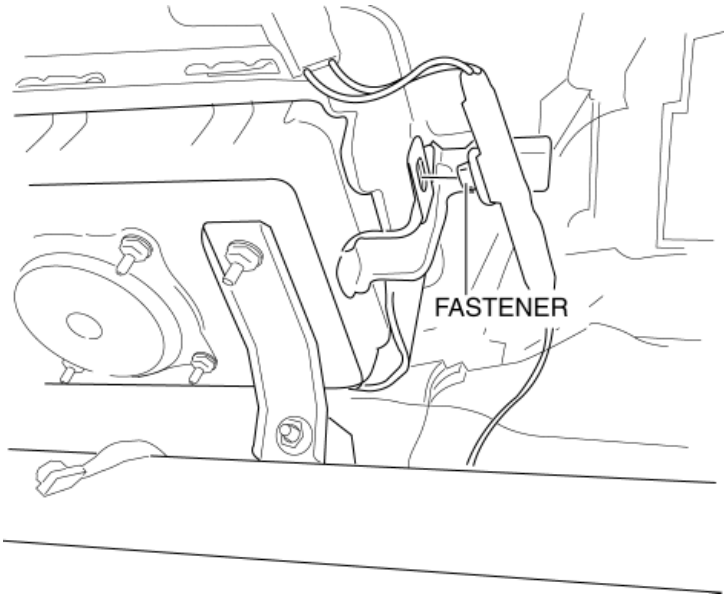

7. Connect the passenger-side air bag module connector.

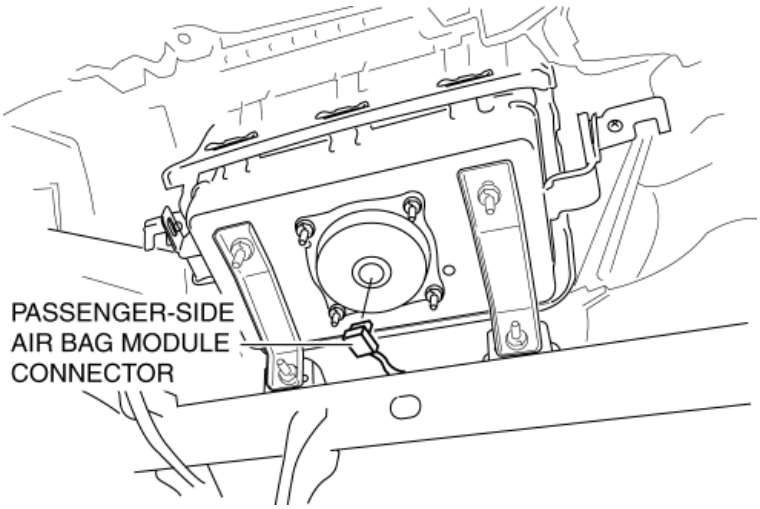

8. Install the cap with the arrow pointing toward the front.

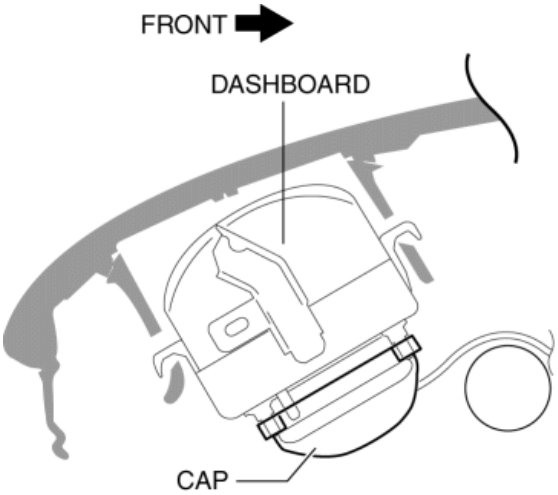

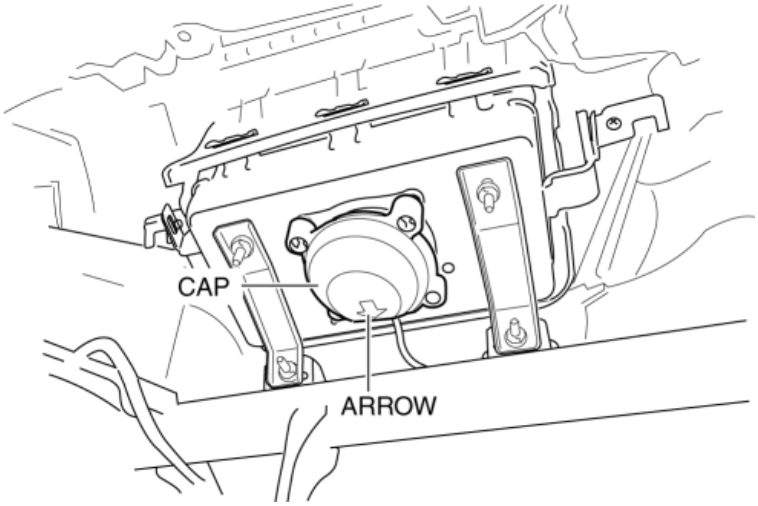

9. Install the following parts:

a. Lower panel (passenger-side) (See **LOWER PANEL REMOVAL/INSTALLATION**.)

b. Front side trim (passenger-side) (See **FRONT SIDE TRIM REMOVAL/INSTALLATION**.)

c. Front scuff plate (passenger-side) (See **FRONT SCUFF PLATE REMOVAL/INSTALLATION**.)

d. Dashboard under cover (See **DASHBOARD UNDER COVER REMOVAL/INSTALLATION**.)

e. Decoration panel (See **DECORATION PANEL REMOVAL/INSTALLATION**.)

f. Glove compartment (See **GLOVE COMPARTMENT REMOVAL/INSTALLATION**.)

10. Connect the negative battery cable. (See **NEGATIVE BATTERY CABLE DISCONNECTION/CONNECTION [SKYACTIV-G 2.0, SKYACTIV-G 2.5]**.)

11. Switch the ignition ON (engine off or on).

12. Verify that the air bag system warning light illuminates for **approx. 6 s** and turns off.

- If the air bag system warning light does not operate, refer to the on-board diagnostic system (air bag system) and perform inspection of the system. (See **FLOWCHART [STANDARD DEPLOYMENT CONTROL SYSTEM]**.)

2014 - Mazda3 - Restraints

SIDE AIR BAG MODULE REMOVAL/INSTALLATION [STANDARD DEPLOYMENT CONTROL SYSTEM]

WARNING:

- Handling the air bag module improperly can accidentally operate (deploy) the air bag module, which may seriously injure you. Read the air bag system service warnings and cautions before handling the air bag module. (See **AIR BAG SYSTEM SERVICE WARNINGS [STANDARD DEPLOYMENT CONTROL SYSTEM]**.) (See **AIR BAG SYSTEM SERVICE CAUTIONS [STANDARD DEPLOYMENT CONTROL SYSTEM]**.)
- If the side air bag module is installed with debris in the seat back, the foreign material may be scattered when the side air bag module operates (deploys), causing injury. Verify that there is no foreign material in the seat back before installing the side air bag module.

1. Switch the ignition off.
2. Disconnect the negative battery cable and wait for **1 min or more**. (See **NEGATIVE BATTERY CABLE DISCONNECTION/CONNECTION [SKYACTIV-G 2.0, SKYACTIV-G 2.5]**.)
3. Remove the front seat. (See **FRONT SEAT REMOVAL/INSTALLATION**.)
4. Remove the seat back trim and the seat back pad. (See **FRONT SEAT BACK TRIM REMOVAL/INSTALLATION**.)
5. Partially peel back the trim and remove the hook.

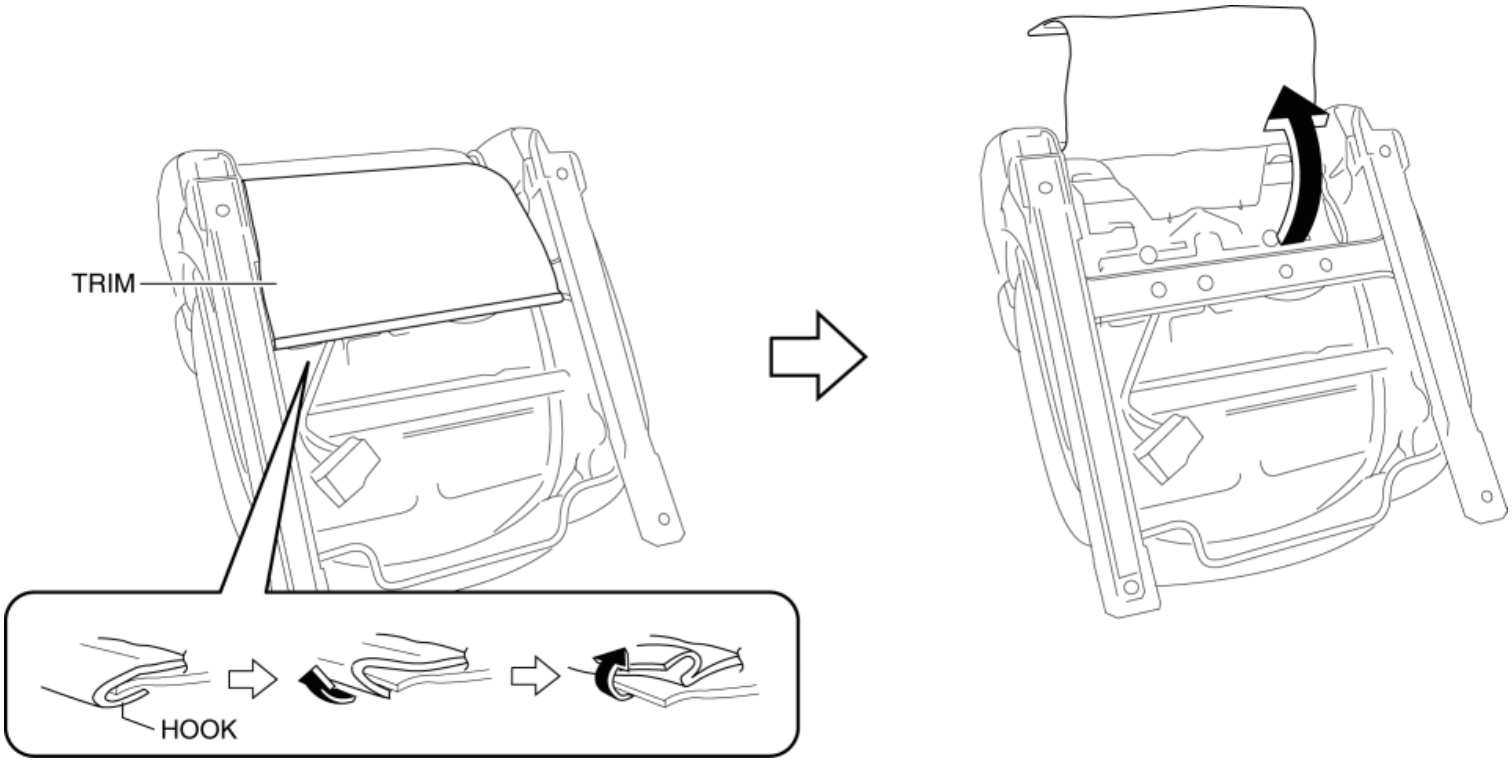

6. Disconnect the side air bag module connector.

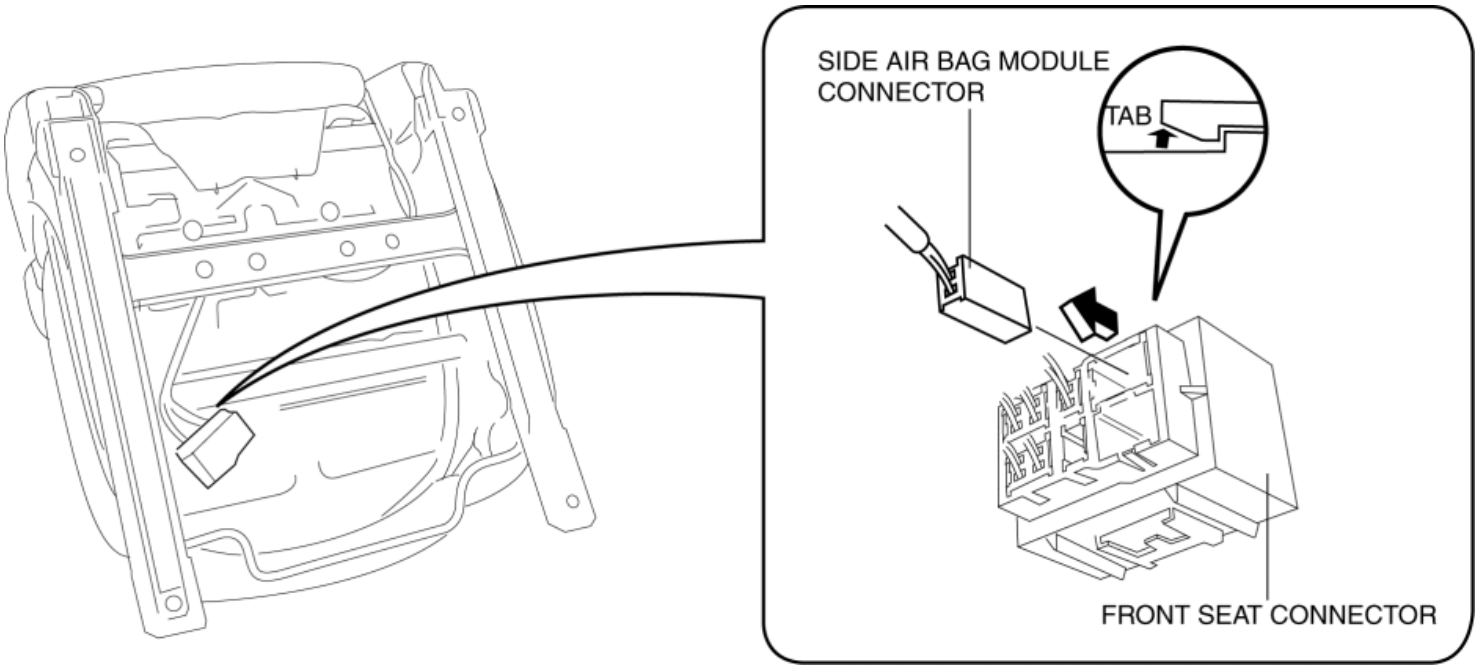

7. Remove the side air bag module wiring harness from the hook.

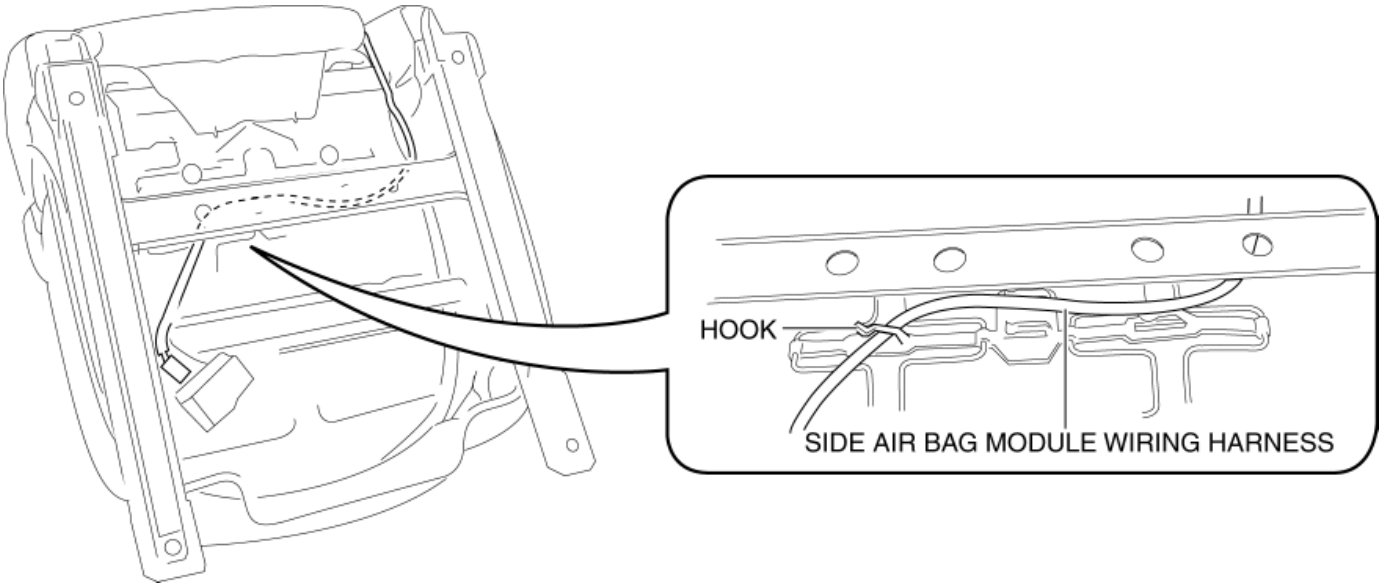

8. Remove the band.

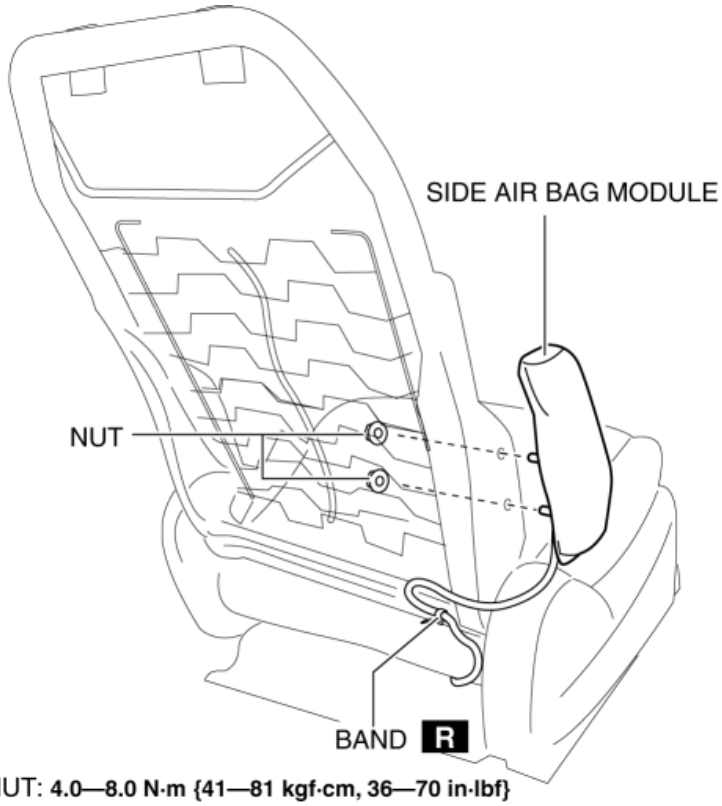

9. Remove the nuts.

10. Remove the side air bag module.

11. Install in the reverse order of removal.

12. Switch the ignition ON (engine off or on).

13. Verify that the air bag system warning light illuminates for **approx. 6 s** and turns off.

    - If the air bag system warning light does not operate normally, refer to the on-board diagnostic system (air bag system) and perform inspection of the system. (See **FLOWCHART [STANDARD DEPLOYMENT CONTROL SYSTEM]**.)

2014 - Mazda3 - Restraints

CURTAIN AIR BAG MODULE REMOVAL/INSTALLATION [STANDARD DEPLOYMENT CONTROL SYSTEM]

WARNING:

- Handling the air bag module improperly can accidentally deploy the air bag module, which may seriously injure you. Read the air bag system service warnings and cautions before handling the air bag module. (See **AIR BAG SYSTEM SERVICE WARNINGS [STANDARD DEPLOYMENT CONTROL SYSTEM]**.) (See **AIR BAG SYSTEM SERVICE CAUTIONS [STANDARD DEPLOYMENT CONTROL SYSTEM]**.)

1. Switch the ignition off.
2. Disconnect the negative battery cable and wait for **1 min or more**. (See **NEGATIVE BATTERY CABLE DISCONNECTION/CONNECTION [SKYACTIV-G 2.0, SKYACTIV-G 2.5]**.)
3. Remove the following parts:
   a. Sunroof seaming welt (with sunroof system) (See **SUNROOF UNIT REMOVAL/INSTALLATION**.)
   b. A-pillar trim (See **A-PILLAR TRIM REMOVAL/INSTALLATION**.)
   c. Sunvisor (See **SUNVISOR REMOVAL/INSTALLATION**.)
   d. Front map light (dual light type) (See **FRONT MAP LIGHT REMOVAL/INSTALLATION**.)
   e. Assist handle (See **ASSIST HANDLE REMOVAL/INSTALLATION**.)
   f. Front scuff plate (See **FRONT SCUFF PLATE REMOVAL/INSTALLATION**.)
   g. Rear scuff plate (See **REAR SCUFF PLATE REMOVAL/INSTALLATION**.)
   h. B-pillar lower trim (See **B-PILLAR LOWER TRIM REMOVAL/INSTALLATION**.)
   i. Adjust anchor cover (See **FRONT SEAT BELT REMOVAL/INSTALLATION**.)
   j. Upper anchor installation bolt on the seat belt (See **FRONT SEAT BELT REMOVAL/INSTALLATION**.)
   k. B-pillar upper trim (See **B-PILLAR UPPER TRIM REMOVAL/INSTALLATION**.)
4. Set the tire house trim aside. (See **TIRE HOUSE TRIM REMOVAL/INSTALLATION**.)
5. Remove the following parts:
   a. C-pillar trim (See **C-PILLAR TRIM REMOVAL/INSTALLATION**.)
   b. Upper panel (See **UPPER PANEL REMOVAL**.)(See **UPPER PANEL INSTALLATION**.)
   c. Rear console (See **REAR CONSOLE REMOVAL/INSTALLATION**.)
   d. Shift lever knob (MTX) (See **MANUAL TRANSAXLE SHIFT MECHANISM REMOVAL/INSTALLATION [C66M-R]**.)
   e. Selector lever knob (ATX) (See **AUTOMATIC TRANSAXLE SHIFT MECHANISM REMOVAL/INSTALLATION**.)
   f. Shift panel (See **SHIFT PANEL REMOVAL/INSTALLATION**.)
   g. Front console box (See **FRONT CONSOLE BOX REMOVAL/INSTALLATION**.)
   h. CD player (with CD player) (See **CD PLAYER REMOVAL**.)(See **CD PLAYER INSTALLATION**.)
   i. Glove compartment (See **GLOVE COMPARTMENT REMOVAL/INSTALLATION**.)
   j. Decoration panel (See **DECORATION PANEL REMOVAL/INSTALLATION**.)
   k. Side wall (See **SIDE WALL REMOVAL/INSTALLATION**.)
   l. Front console (See **FRONT CONSOLE REMOVAL/INSTALLATION**.)
6. Remove the headliner. (See **HEADLINER REMOVAL/INSTALLATION**.)
7. Using a flathead screwdriver, lift the locking device carefully, however do not remove it.

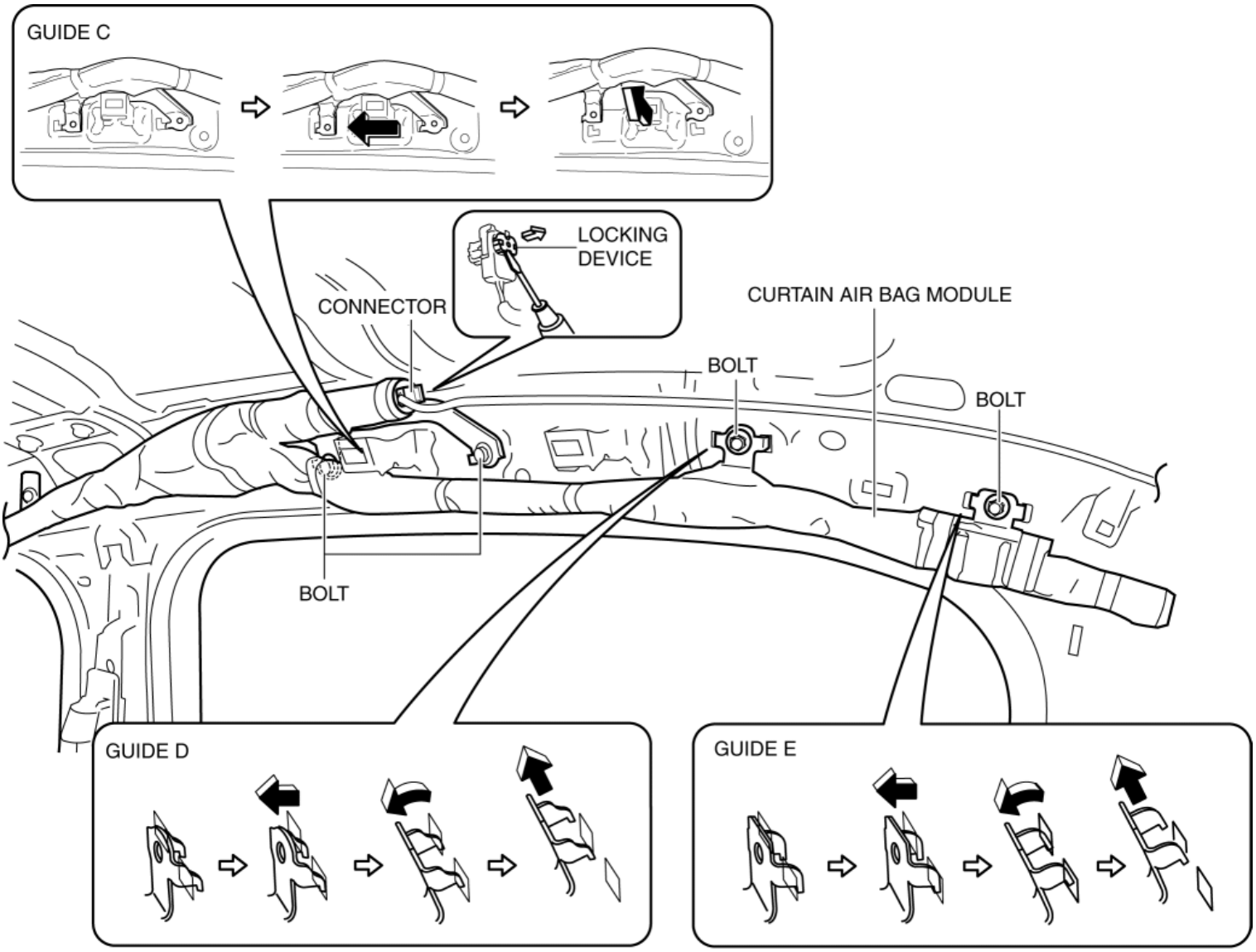

BOLT : **9—12 N·m {92—122 kgf·cm, 80—106 in·lbf}**

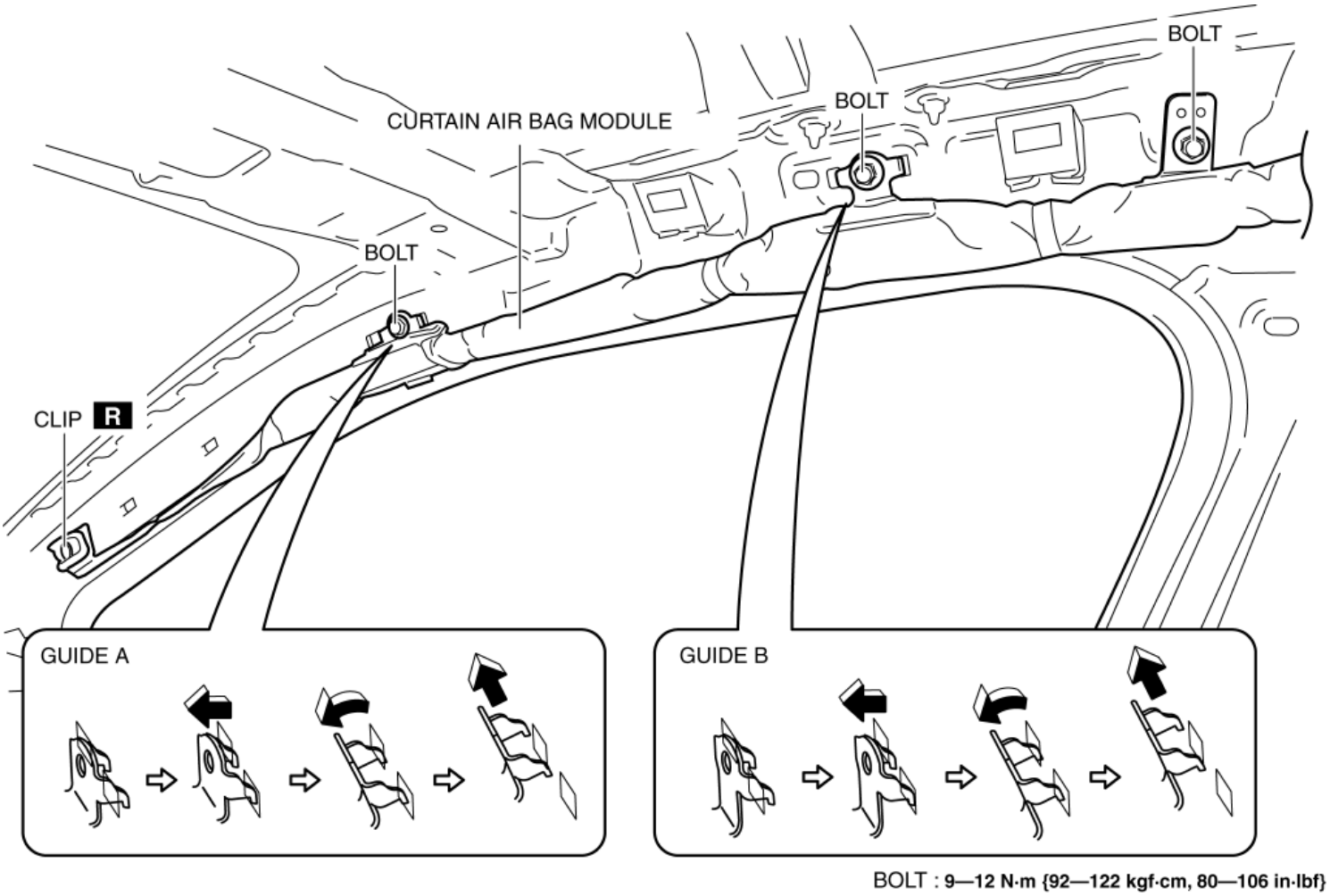

8. Disconnect the connector.
9. Remove the clip. (See **Clip Removal Note**.)
10. Remove the bolts.
11. Pull guide A, B, C, D and E in the direction shown in the figure and remove it from the body.
12. Remove the curtain air bag module.
13. Install in the reverse order of removal.
14. Switch the ignition ON (engine off or on).
15. Verify that the air bag system warning light illuminates for **approx. 6 s** and turns off.
    - If the air bag system warning light does not operate normally, refer to the on-board diagnostic system (air bag system) and perform inspection of the system. (See **FLOWCHART [STANDARD DEPLOYMENT CONTROL SYSTEM]**.)

Clip Removal Note

1. Pull out the pin with flathead screwdriver as shown in the figure.

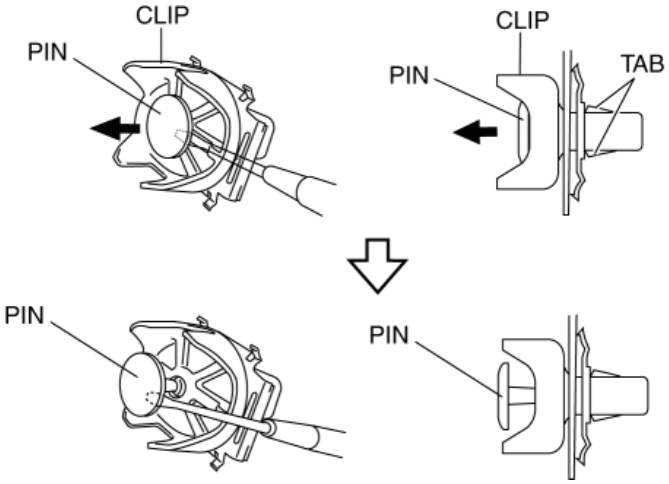

2. Insert a flathead screwdriver into shown in the figure.

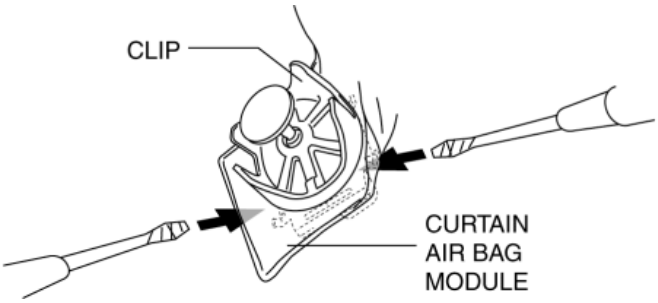

3. While pulling the curtain air bag in the direction of the arrow shown in the figure (1), detach tabs by prying with a flathead screwdriver in the direction of the arrow (2) (3).

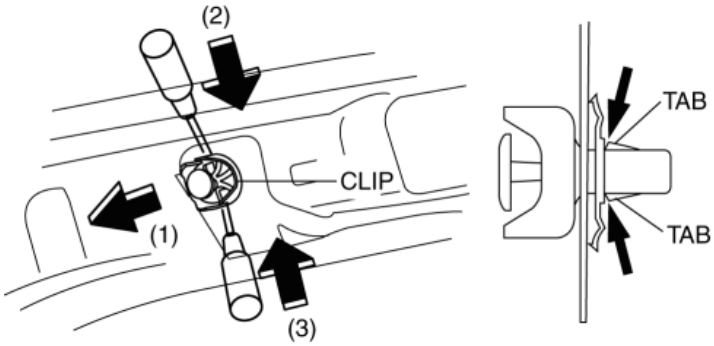

4. Remove the clip from the body.

2014 - Mazda3 - Restraints

CRASH ZONE SENSOR REMOVAL/INSTALLATION [STANDARD DEPLOYMENT CONTROL SYSTEM]

WARNING:

- Handling the crash zone sensor improperly can accidentally deploy the air bags and pre-tensioner seat belts, which may seriously injure you. Read the air bag system service warnings and cautions before handling the crash zone sensor. (See **AIR BAG SYSTEM SERVICE WARNINGS [STANDARD DEPLOYMENT CONTROL SYSTEM]**.) (See **AIR BAG SYSTEM SERVICE CAUTIONS [STANDARD DEPLOYMENT CONTROL SYSTEM]**.)

1. Switch the ignition off.
2. Disconnect the negative battery cable and wait for **1 min or more**. (See **NEGATIVE BATTERY CABLE DISCONNECTION/CONNECTION [SKYACTIV-G 2.0, SKYACTIV-G 2.5]**.)
3. Remove the set plate. (See **SET PLATE REMOVAL/INSTALLATION**.)
4. Remove the front bumper. (See **FRONT BUMPER REMOVAL/INSTALLATION**.)
5. Remove the nut.

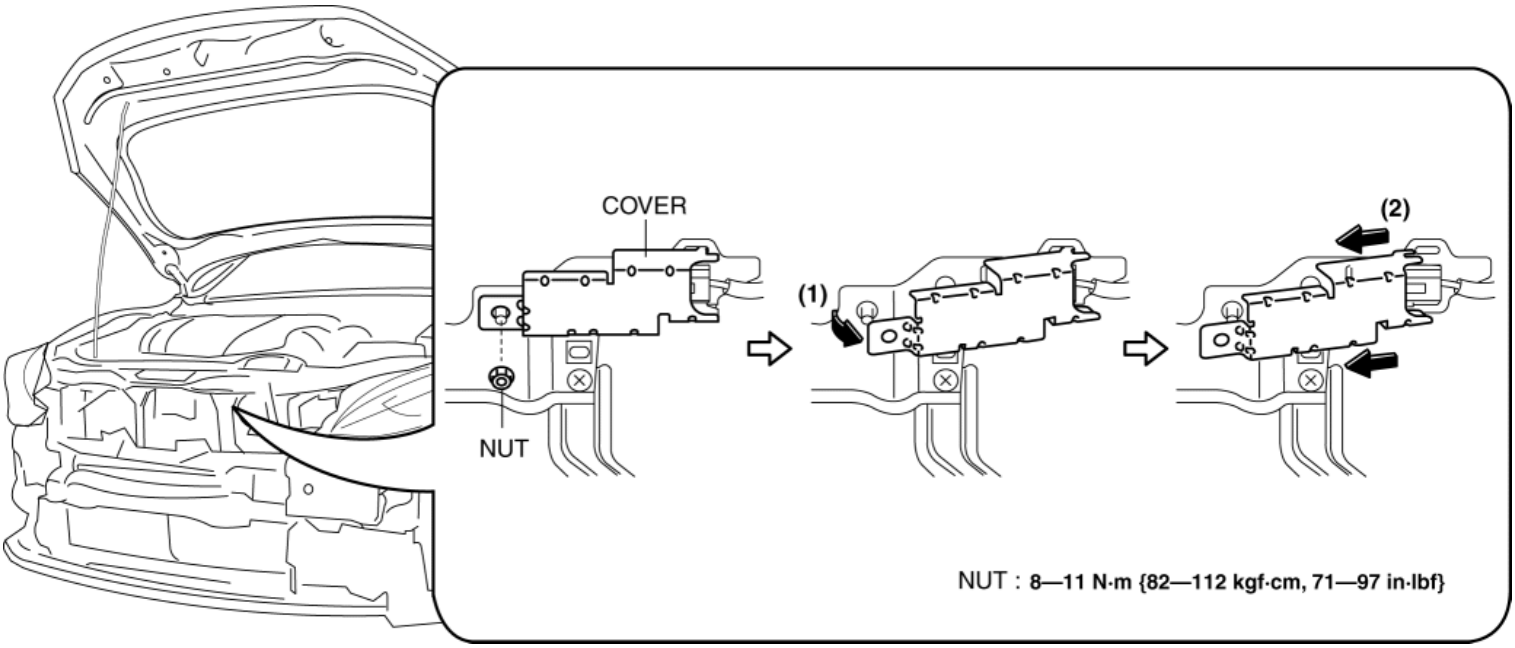

6. Remove the cover.
7. Remove the bolt.

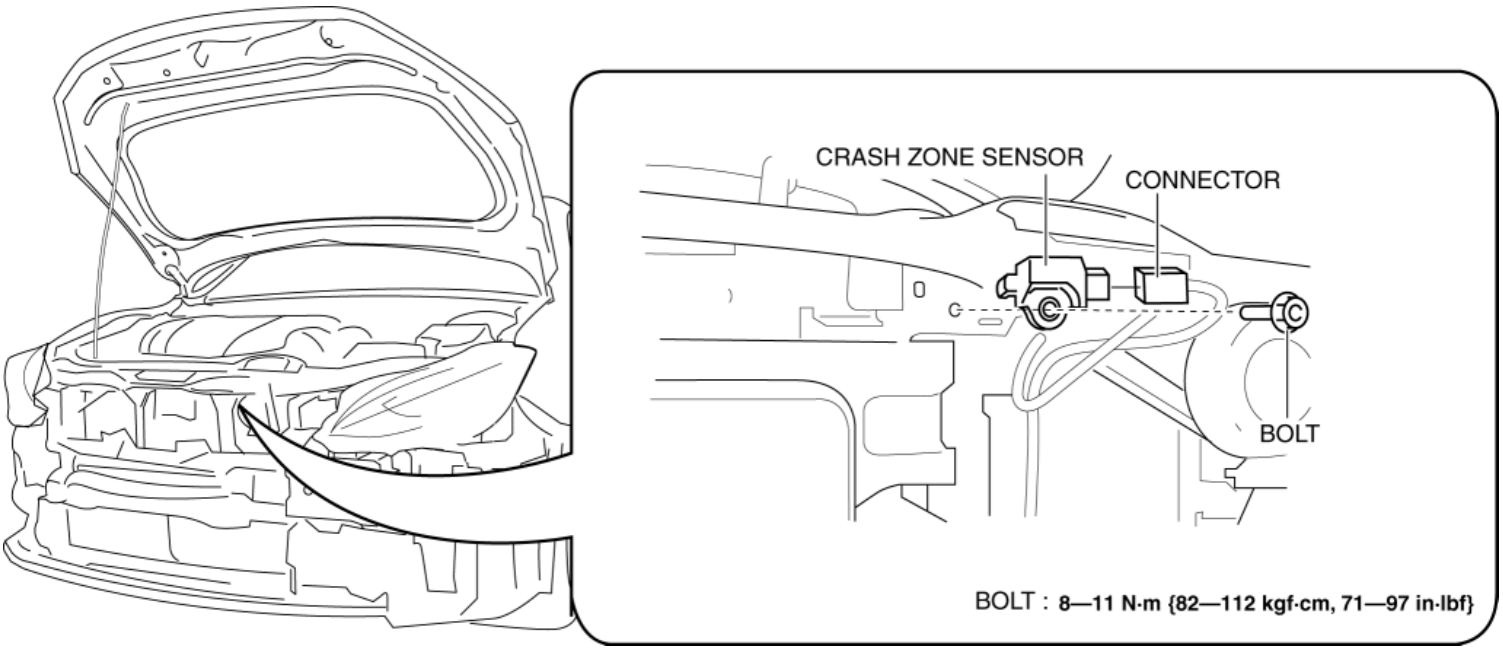

8. Disconnect the connector. (See **Connector Disconnect Note**.)

9. Remove the crash zone sensor.

10. Install in the reverse order of removal.

11. Switch the ignition ON (engine off or on).

12. Verify that the air bag system warning light illuminates for **approx. 6 s** and turns off.

- If the air bag system warning light does not operate normally, refer to the on-board diagnostic system (air bag system) and perform inspection of the system. (See **FLOWCHART [STANDARD DEPLOYMENT CONTROL SYSTEM]**.)

Connector Disconnect Note

1. Press the area (1) indicated by the arrow and slide it as shown in the figure (2).

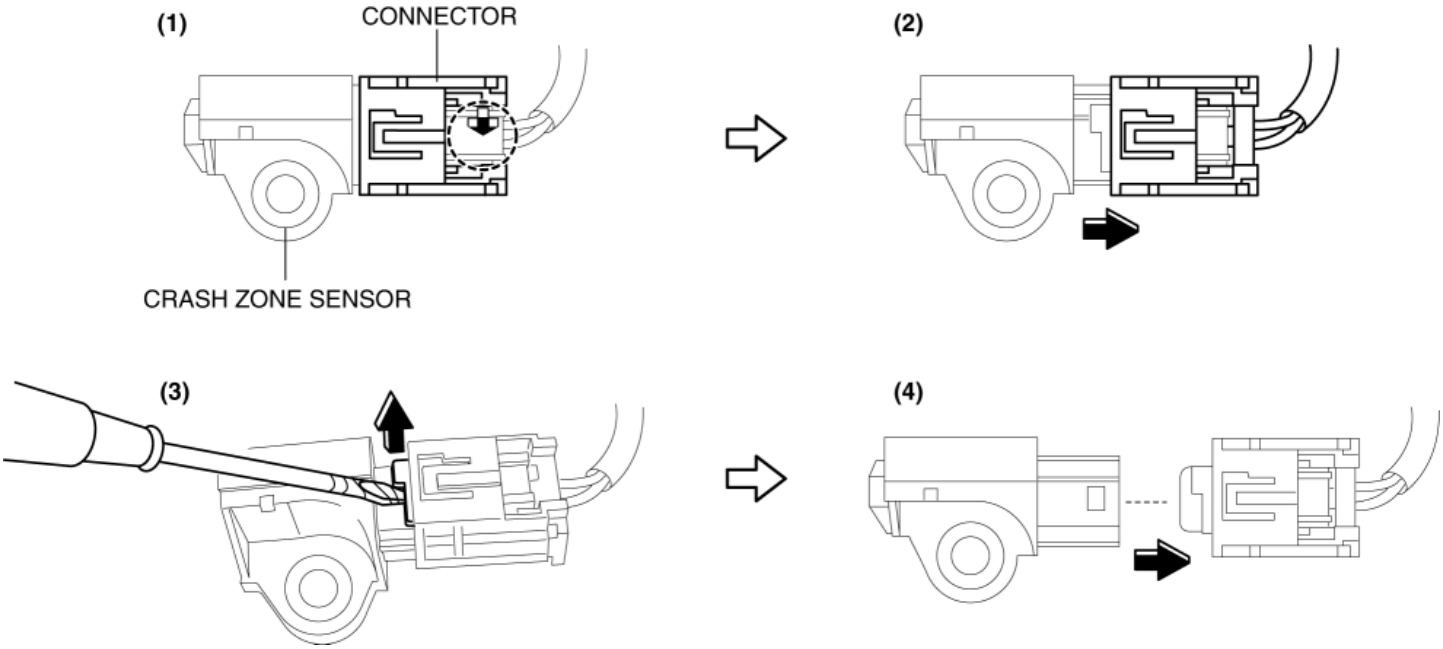

2. Lift up the location shown in the figure using a tape-wrapped flathead screwdriver (3) and disconnect the connector (4).

2014 - Mazda3 - Restraints

SAS CONTROL MODULE REMOVAL/INSTALLATION [STANDARD DEPLOYMENT CONTROL SYSTEM]

WARNING:

- Handling the SAS control module or air bag module improperly can accidentally deploy the air bag modules and pre-tensioner seat belts, which may seriously injure you. Read the air bag system service warnings and cautions before handling the air bag module. (See **AIR BAG SYSTEM SERVICE WARNINGS [STANDARD DEPLOYMENT CONTROL SYSTEM]**.) (See **AIR BAG SYSTEM SERVICE CAUTIONS [STANDARD DEPLOYMENT CONTROL SYSTEM]**.)
- If the connector is connected and the ignition switch is turned to the ON position with the SAS control module not secured completely using the installation nuts, the SAS control module may detect a degree of impact even when something contacts it lightly, deploying the air bag module and pre-tensioner seat belt accidentally.
- If the DSC related parts sensor initialization procedure is not completed, it could result in an unexpected accident due to the DSC being inoperative. Therefore, after the SAS control module is replaced, always perform the DSC related parts sensor initialization procedure to ensure proper DSC operation.
- If configuration is not performed when the SAS control module is replaced with a new one, the vehicle specification information is not stored in the SAS control module and the system will not operate normally.

CAUTION:

- When replacing the SAS control module, always perform the configuration procedure before removing the SAS control module. If the configuration is not performed and the SAS control module is removed, DTC B0003:53 will be displayed.
- When performing configuration, it is necessary to read the vehicle specification information from the SAS control module before replacing it. Connect the M-MDS to the vehicle and perform vehicle identification before removing the SAS control module. The vehicle specification information is temporarily stored in the M-MDS.

NOTE:

- The SAS control module prior to replacement stores the vehicle specification information.
- A new SAS control module does not store any vehicle specification information.
- If the vehicle specification information from the SAS control module prior to replacement cannot be read, perform the configuration using As-Built data.

1. Perform SAS control module configuration when replacing it. (See **SAS CONTROL MODULE CONFIGURATION (USING READ/WRITE FUNCTION) [STANDARD DEPLOYMENT CONTROL SYSTEM]**.)

2. Switch the ignition off.

3. Disconnect the negative battery cable and wait for **1 min or more**. (See **NEGATIVE BATTERY CABLE DISCONNECTION/CONNECTION [SKYACTIV-G 2.0, SKYACTIV-G 2.5]**.)

4. Remove the following parts:

   a. Upper panel (See **UPPER PANEL REMOVAL**.)(See **UPPER PANEL INSTALLATION**.)

   b. Rear console (See **REAR CONSOLE REMOVAL/INSTALLATION**.)

5. Remove the parking brake lever. (See **PARKING BRAKE LEVER REMOVAL/INSTALLATION**.)

6. Remove the bolts.

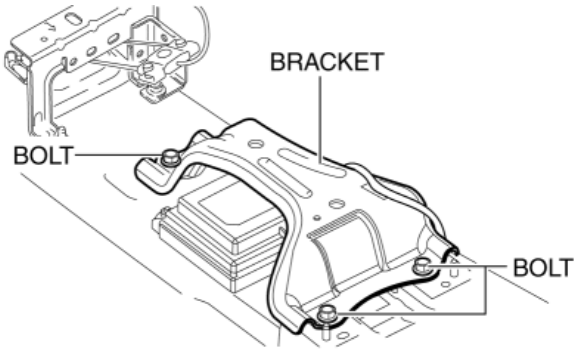

BOLT : **19—25 {2.0—2.5, 15—18} N·m {kgf·m, ft·lbf}**

7. Set the bracket out of the way.

8. Remove the nuts.

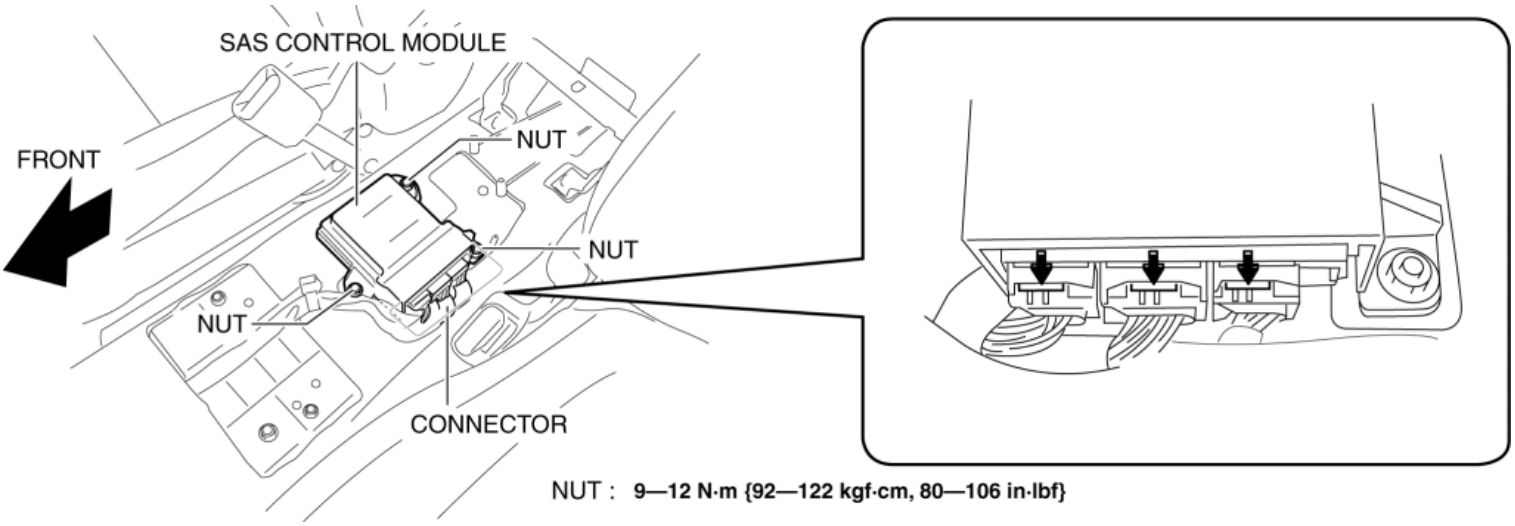

9. Remove the SAS control module.

10. Disconnect the connectors.

11. Install in the reverse order of removal.

12. Switch the ignition ON (engine off or on).

13. Verify that the air bag system warning light illuminates for **approx. 6 s** and turns off.

- If the air bag system warning light does not operate normally, refer to the on-board diagnostic system (air bag system) and perform inspection of the system. (See **FLOWCHART [STANDARD DEPLOYMENT CONTROL SYSTEM]**.)

14. Perform the DSC related parts sensor initialization procedure (only when replacing the SAS control module with a new one). (See **DSC RELATED PARTS SENSOR INITIALIZATION PROCEDURE**.)

NOTE:

- If configuration cannot be performed by reading/writing of the vehicle specification information, perform the configuration using As-Built information after replacing the SAS control module. (See **SAS CONTROL MODULE CONFIGURATION (USING AS-BUILT DATA) [STANDARD DEPLOYMENT CONTROL SYSTEM]**.)

2014 - Mazda3 - Restraints

SAS CONTROL MODULE CONFIGURATION (USING READ/WRITE FUNCTION) [STANDARD DEPLOYMENT CONTROL SYSTEM]

NOTE:

- When performing configuration, it is necessary to read the vehicle specification information from the SAS control module before replacing it. Connect the M-MDS to the vehicle and perform vehicle identification before removing the SAS control module. The vehicle specification information is temporarily stored in the M-MDS.

1. Connect the M-MDS to the DLC 2.

2. After the vehicle is identified, select the following items from the initialization screen of the M-MDS.

   a. Select “Module Programming”.

3. Then, select items from the screen menu in the following order.

   a. Select “Programmable Module Installation”.

   b. Select “RCM”.

4. Perform the configuration according to the directions on the screen.

CAUTION:

- When the configuration is performed, CAN communication between the SAS control module and control module connected to the CAN line is cut temporarily, and communication error DTCs may be detected. After performing the configuration, verify the DTCs for the control module connected to the CAN line and clear it if any DTC is detected.

5. Verify the DTCs for all of the control modules connected to the CAN line.

   - If any DTC is stored, clear it.
   - If the DTC is cleared, finish the procedure because the configuration has been completed normally.
   - If the DTC remains, perform troubleshooting according to the DTC.

2014 - Mazda3 - Restraints

SAS CONTROL MODULE CONFIGURATION (USING AS-BUILT DATA) [STANDARD DEPLOYMENT CONTROL SYSTEM]

NOTE:

- If the configuration is performed using As-Built data, the set value of the personalization function is reset to the initial value (condition when shipped from factory). Verify the set value with the customer and perform the personalization function setting after performing the configuration using As-Built data.

1. Connect the M-MDS to the DLC 2.

2. After the vehicle is identified, select the following items from the initialization screen of the M-MDS.

   a. Select “Module Programming”.

3. Then, select items from the screen menu in the following order.

   a. Select “As-Built”.

   b. Select “RCM”.

4. Perform the as-built according to the directions on the screen.

CAUTION:

- When the configuration is performed, CAN communication between the SAS control module and control module connected to the CAN line is cut temporarily, and communication error DTCs may be detected. After performing the configuration, verify the DTCs for the control module connected to the CAN line and clear it if any DTC is detected.

5. Verify the DTCs for all of the control modules connected to the CAN line.

   - If any DTC is stored, clear it.
   - If the DTC is cleared, finish the procedure because the configuration has been completed normally.
   - If the DTC remains, perform troubleshooting according to the DTC.

2014 - Mazda3 - Restraints

SIDE AIR BAG SENSOR REMOVAL/INSTALLATION [STANDARD DEPLOYMENT CONTROL SYSTEM]

WARNING:

- Handling the side air bag sensor improperly can accidentally operate (deploy) the air bag module, which may seriously injure you. Read the air bag system service warnings and cautions before handling the side air bag sensor. (See **AIR BAG SYSTEM SERVICE WARNINGS [STANDARD DEPLOYMENT CONTROL SYSTEM]**.) (See **AIR BAG SYSTEM SERVICE CAUTIONS [STANDARD DEPLOYMENT CONTROL SYSTEM]**.)

1. Switch the ignition off.
2. Disconnect the negative battery cable and wait for **1 min or more**. (See **NEGATIVE BATTERY CABLE DISCONNECTION/CONNECTION [SKYACTIV-G 2.0, SKYACTIV-G 2.5]**.)
3. Remove the following parts:
   a. Front scuff plate (See **FRONT SCUFF PLATE REMOVAL/INSTALLATION**.)
   b. Rear scuff plate (See **REAR SCUFF PLATE REMOVAL/INSTALLATION**.)
   c. B-pillar lower trim (See **B-PILLAR LOWER TRIM REMOVAL/INSTALLATION**.)
4. Remove the bolt.

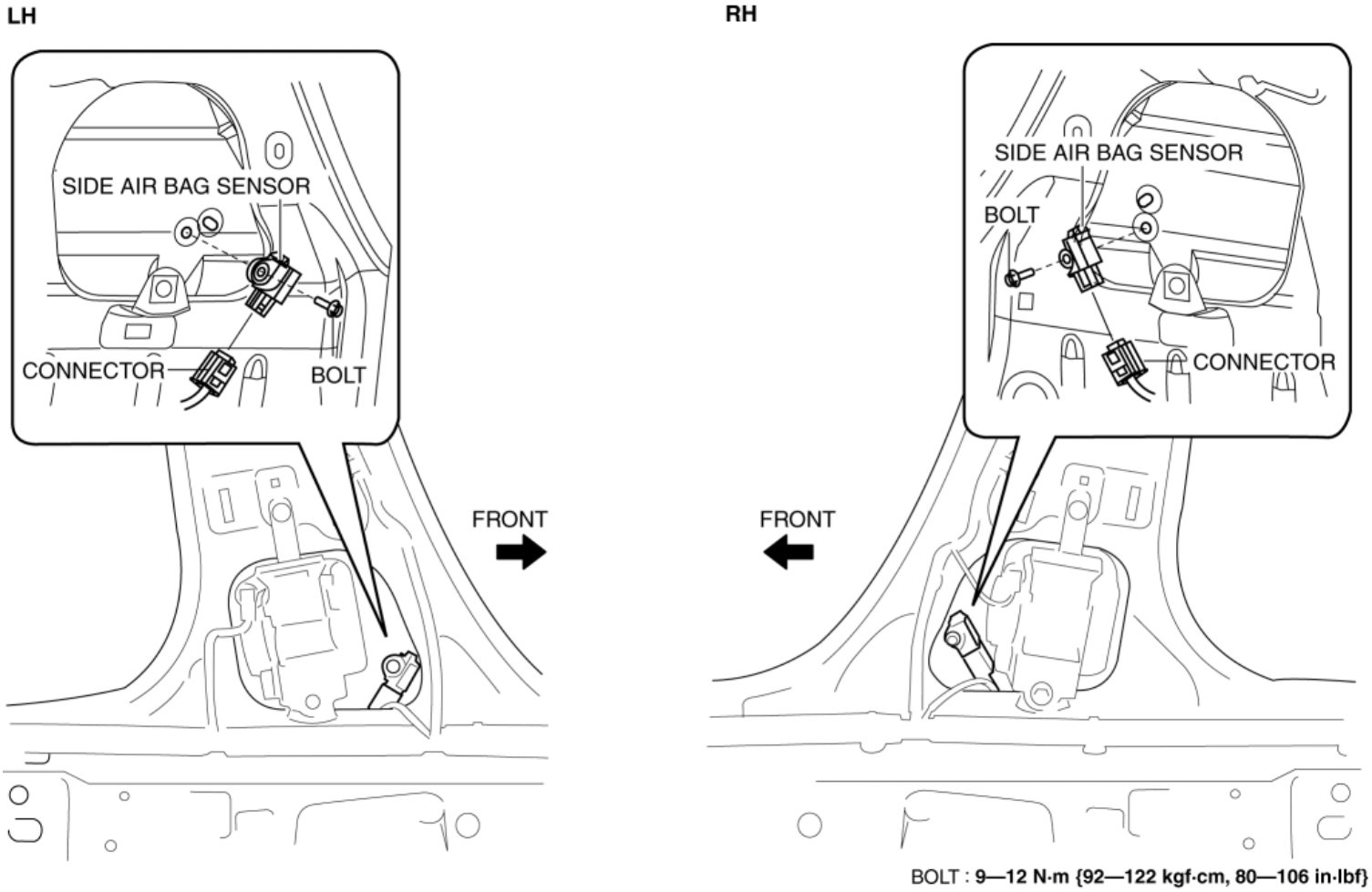

5. Disconnect the connector. (See **Connector Disconnect Note**.)
6. Remove the side air bag sensor.
7. Install in the reverse order of removal.
8. Switch the ignition ON (engine off or on).
9. Verify that the air bag system warning light illuminates for **approx. 6 s** and turns off.

- If the air bag system warning light does not operate normally, refer to the on-board diagnostic system (air bag system) and perform inspection of the system. (See **FLOWCHART [STANDARD DEPLOYMENT CONTROL SYSTEM]**.)

Connector Disconnect Note

1. Press the area (1) indicated by the arrow and slide it as shown in the figure (2).

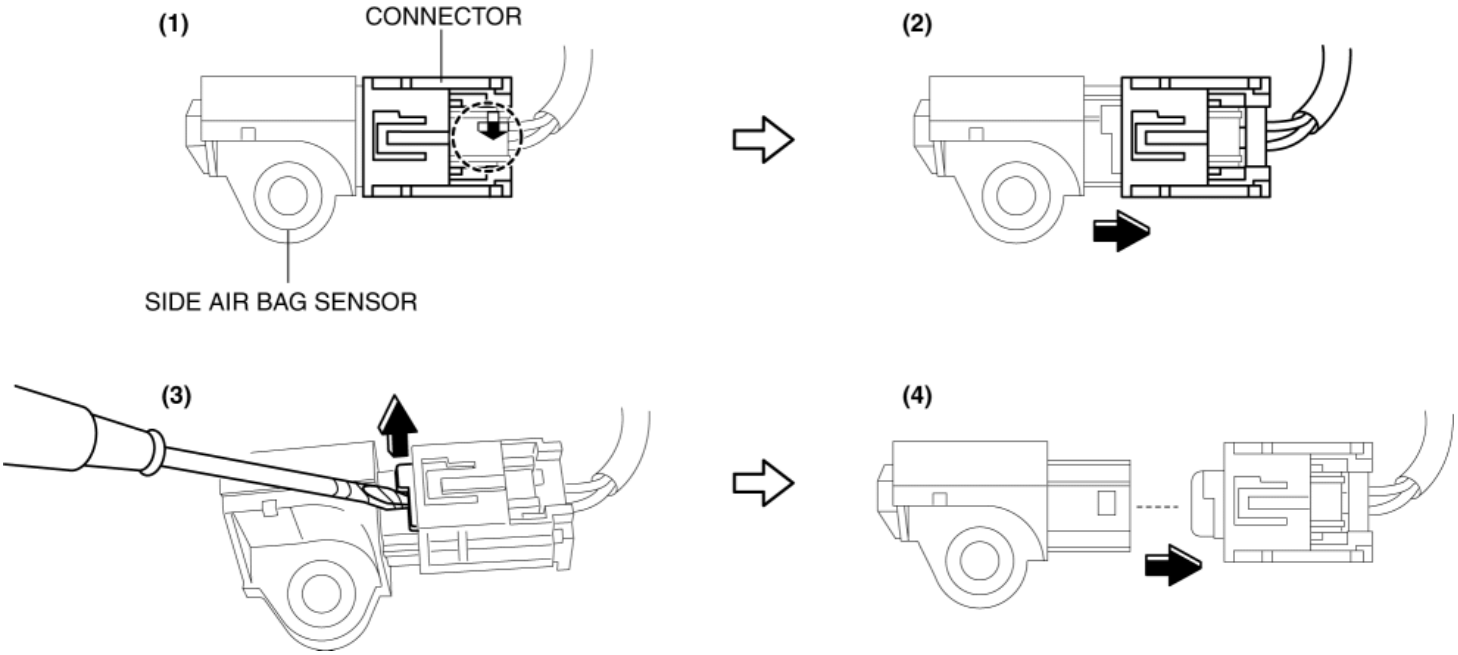

2. Lift up the location shown in the figure using a tape-wrapped flathead screwdriver (3) and disconnect the connector (4).

2014 - Mazda3 - Restraints

CLOCK SPRING REMOVAL/INSTALLATION [STANDARD DEPLOYMENT CONTROL SYSTEM]

CAUTION:

- If the disc on the combination switch is deformed or has foreign matter adhering to it, performance of the steering angle sensor may be reduced, causing abnormal operation. When handling the clock spring, be careful not to deform the disc and make sure there is no foreign matter on it.

1. Switch the ignition off.

2. Disconnect the negative battery cable and wait for **1 min or more**. (See **NEGATIVE BATTERY CABLE DISCONNECTION/CONNECTION [SKYACTIV-G 2.0, SKYACTIV-G 2.5]**.)

3. Remove the driver side air bag module. (See **DRIVER-SIDE AIR BAG MODULE REMOVAL [STANDARD DEPLOYMENT CONTROL SYSTEM]**.)(See **DRIVER-SIDE AIR BAG MODULE INSTALLATION [STANDARD DEPLOYMENT CONTROL SYSTEM]**.)

4. Remove the steering wheel. (See **STEERING WHEEL AND COLUMN REMOVAL/INSTALLATION**.)

5. Remove the column cover. (See **COLUMN COVER REMOVAL/INSTALLATION**.)

6. Disconnect the clock spring connector.

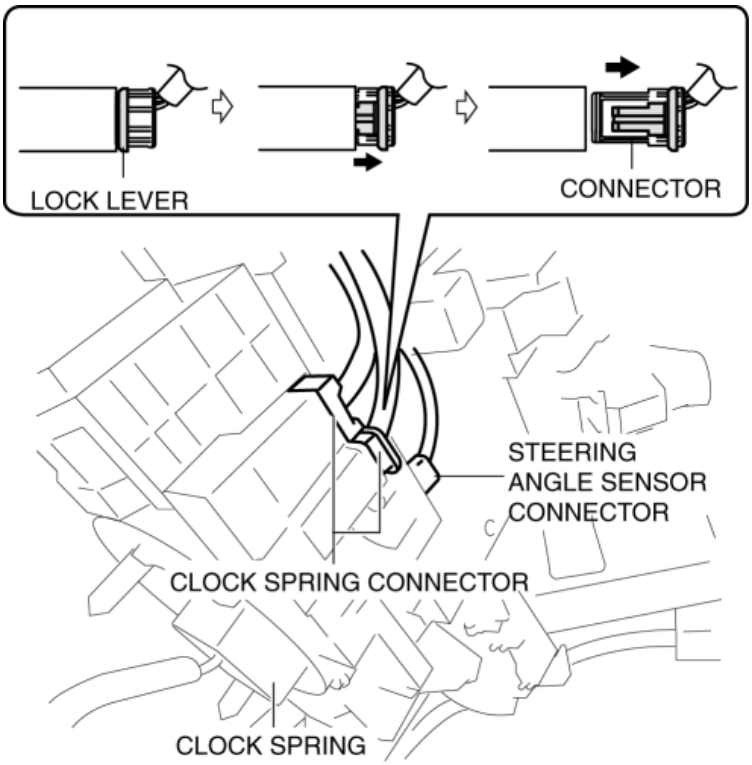

7. Disconnect the steering angle sensor connector. (with steering angle sensor)

8. Remove the tab direction of the arrow shown in the figure and remove the clock spring.

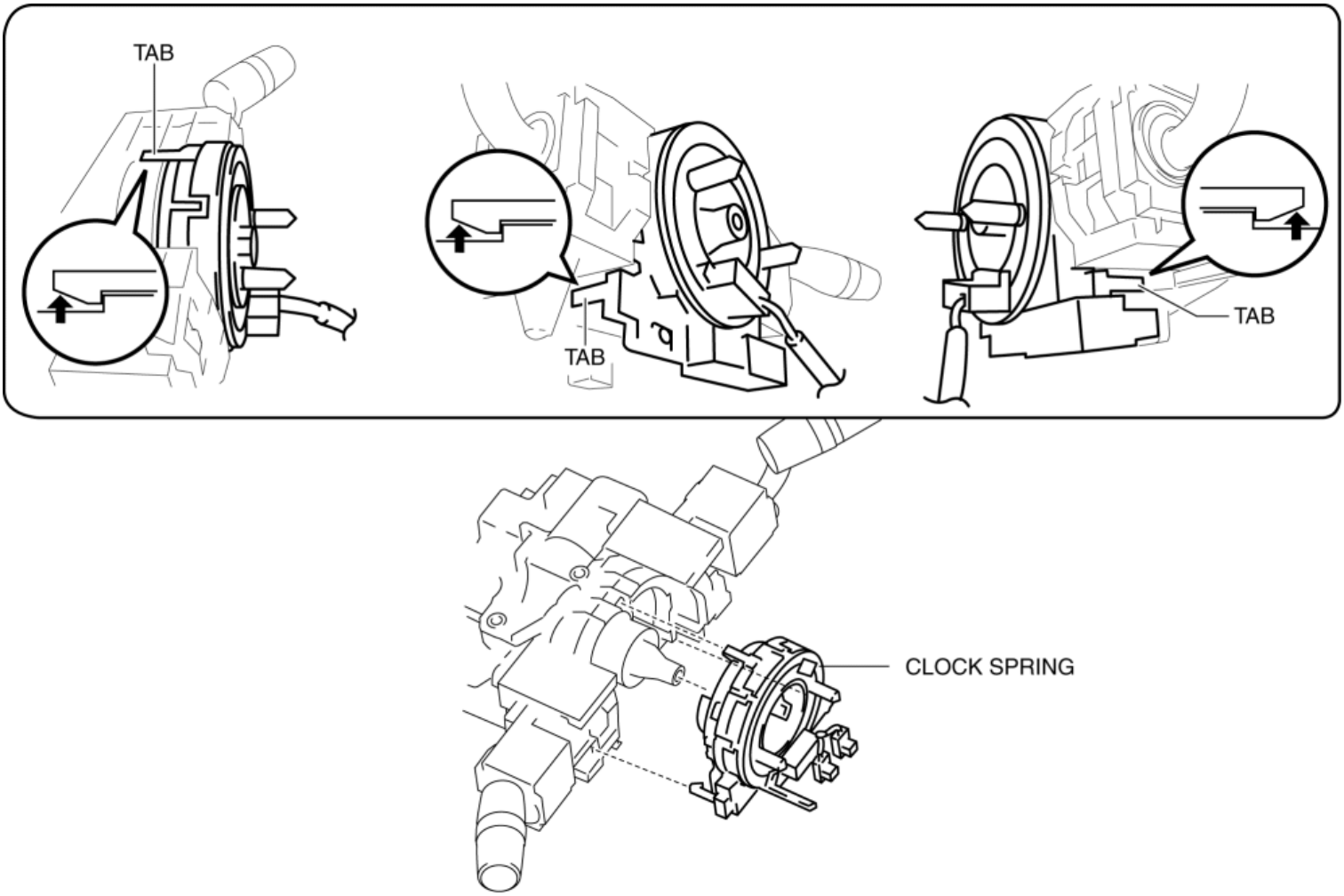

9. Install in the reverse order of removal. (See **Clock Spring Installation Note**.)

10. Verify that the air bag system warning light illuminates for **approx. 6 s** and turns off.

    - If the air bag system warning light does not operate in the manner described above, there are malfunctions in the system. Inspect the system using the on-board diagnostic. (See **FLOWCHART [STANDARD DEPLOYMENT CONTROL SYSTEM]**.)

Clock Spring Installation Note

CAUTION:

- If the clock spring is not adjusted, the spring wire in the clock spring will break due to overtension when the steering wheel is turned. Always adjust the clock spring after installing it.
- Adjust the clock spring after installing it. (See **CLOCK SPRING ADJUSTMENT [STANDARD DEPLOYMENT CONTROL SYSTEM]**.)

2014 - Mazda3 - Restraints

CLOCK SPRING ADJUSTMENT [STANDARD DEPLOYMENT CONTROL SYSTEM]

1. Set the front wheels straight ahead.

CAUTION:

- The clock spring will break if over wound. Do not forcibly turn the clock spring.

2. Turn the clock spring clockwise until it stops.

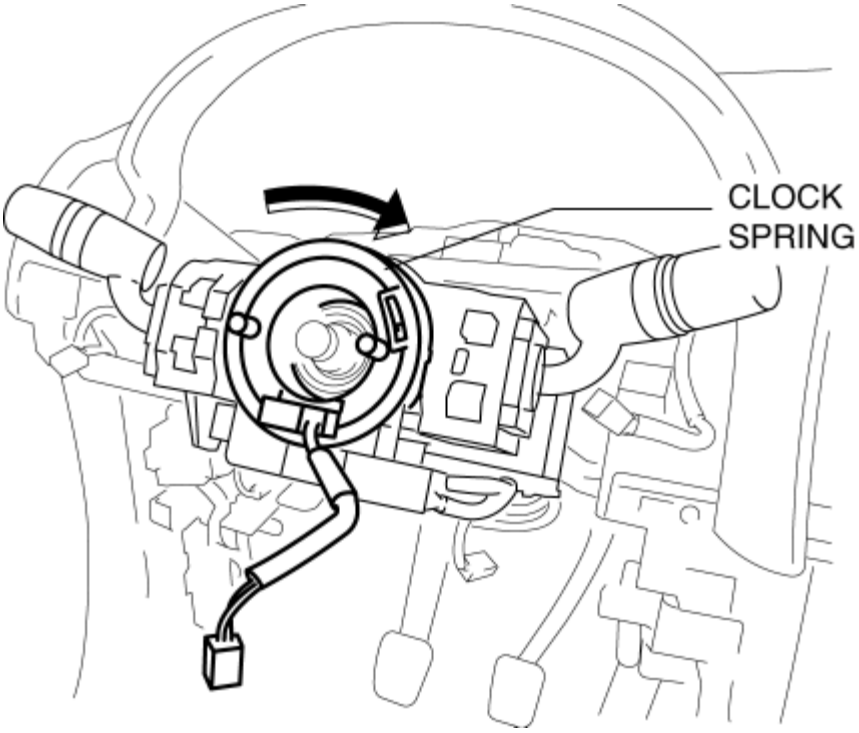

3. Turn the clock spring counterclockwise **approx. 2 turns**.

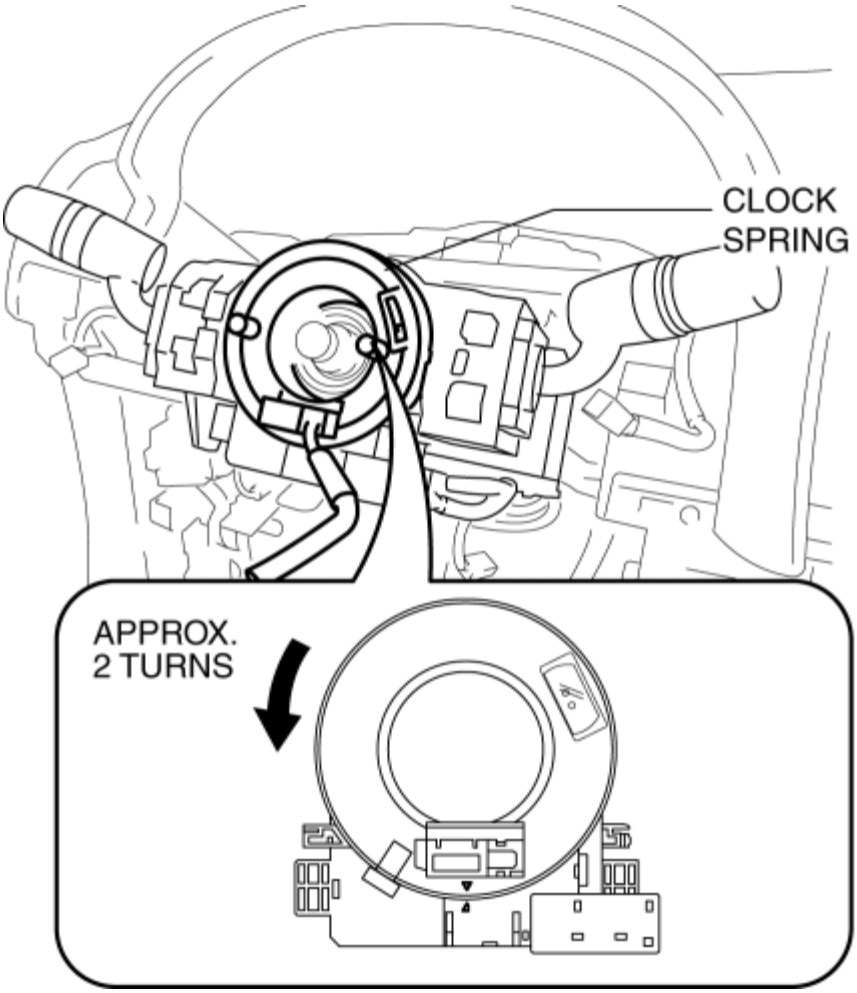

4. Align the mark on the clock spring with the mark on the outer housing.

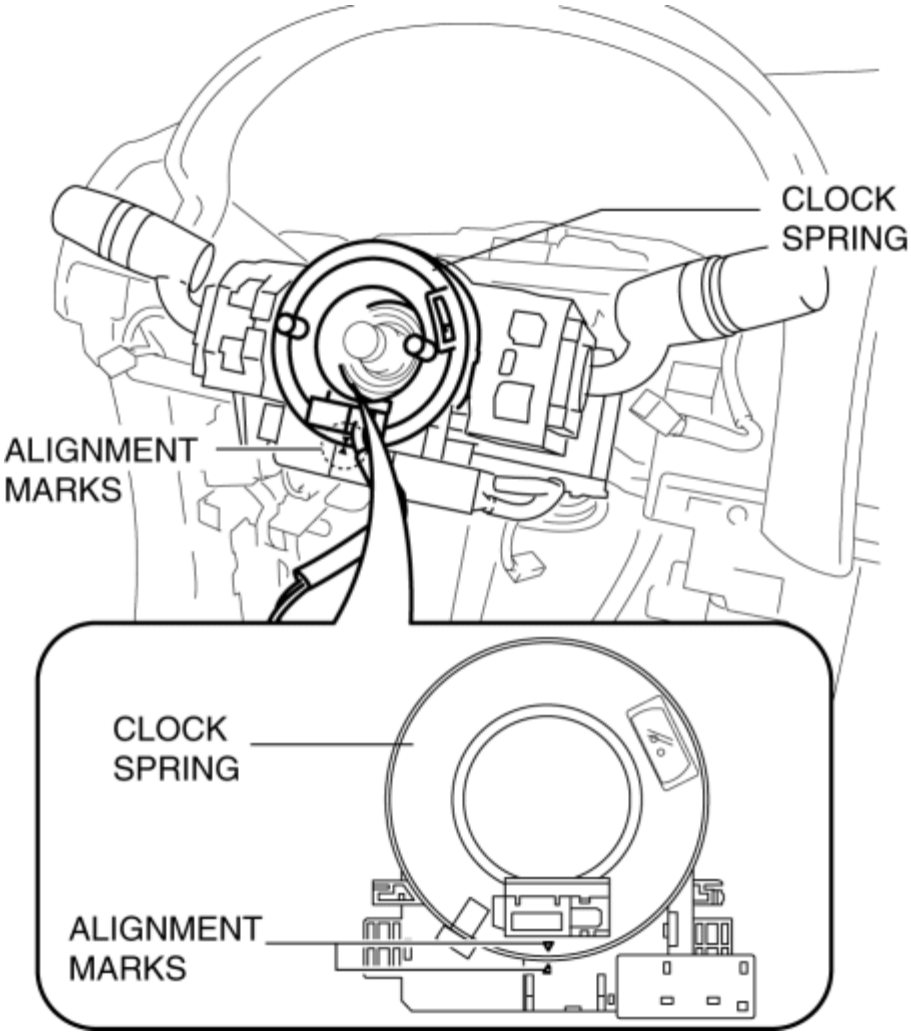

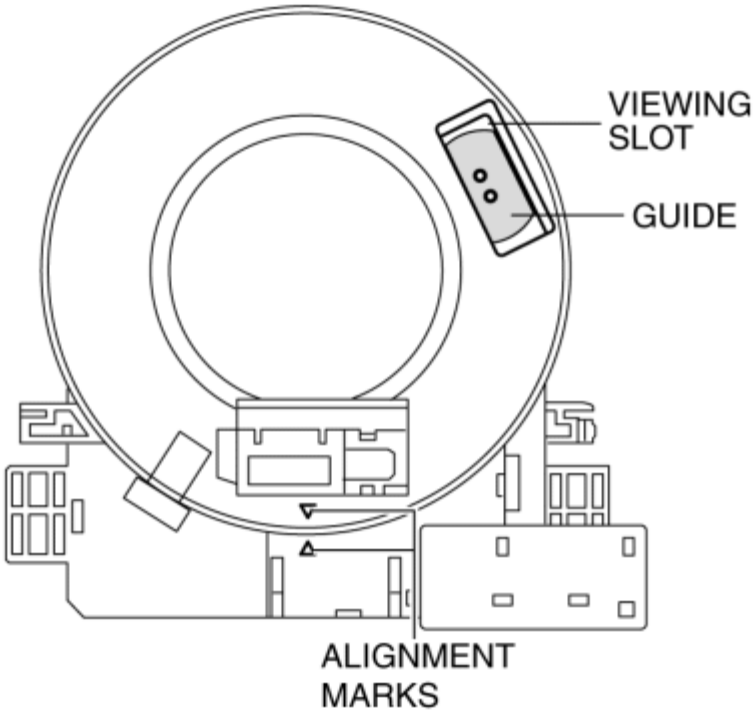

NOTE:

- After adjusting the alignment marks, the guides can be verified in the viewing slots shown

in the figure.

2014 - Mazda3 - Restraints

CLOCK SPRING INSPECTION [STANDARD DEPLOYMENT CONTROL SYSTEM]

1. Disconnect the negative battery cable and wait for **1 min or more**. (See **NEGATIVE BATTERY CABLE DISCONNECTION/CONNECTION [SKYACTIV-G 2.0, SKYACTIV-G 2.5]**.)

2. Remove the driver side air bag module. (See **DRIVER-SIDE AIR BAG MODULE REMOVAL [STANDARD DEPLOYMENT CONTROL SYSTEM]**.)(See **DRIVER-SIDE AIR BAG MODULE INSTALLATION [STANDARD DEPLOYMENT CONTROL SYSTEM]**.)

3. Remove the steering wheel. (See **STEERING WHEEL AND COLUMN REMOVAL/INSTALLATION**.)

4. Remove the column cover. (See **COLUMN COVER REMOVAL/INSTALLATION**.)

5. Remove the clock spring. (See **CLOCK SPRING REMOVAL/INSTALLATION [STANDARD DEPLOYMENT CONTROL SYSTEM]**.)

6. Verify that the continuity is as indicated in the table.

   - If not as indicated in the table, replace the clock spring. (See **CLOCK SPRING REMOVAL/INSTALLATION [STANDARD DEPLOYMENT CONTROL SYSTEM]**.)

NOTE:

- When the vehicle-side connector for the clock spring is disconnected, terminals 2A and 2B are shorted to prevent unexpected operation (deployment) of the air bag module.

○—○ : Continuity

Test condition	Terminal																							
	2A	2B	1A	1B	1C	1E	1G	1I	1J	1K	1M	1N	4A	4B	3N	3M	3L	3J	3H	3F	3E	3D	3B	3A
Under any condition	○	○											○	○										
			○												○									
				○												○								
					○												○							
						○												○						
							○												○					
								○												○				
									○												○			
										○												○		
											○												○	
												○												○

○—○ : Continuity

Test condition	Terminal					
	1D	1F	1H	3K	3I	3G
Under any condition	○			○		
		○			○	
			○			○

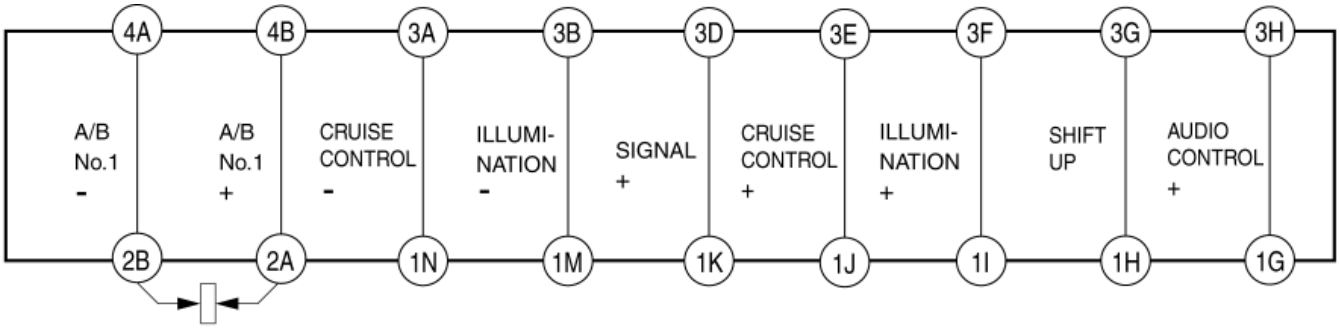

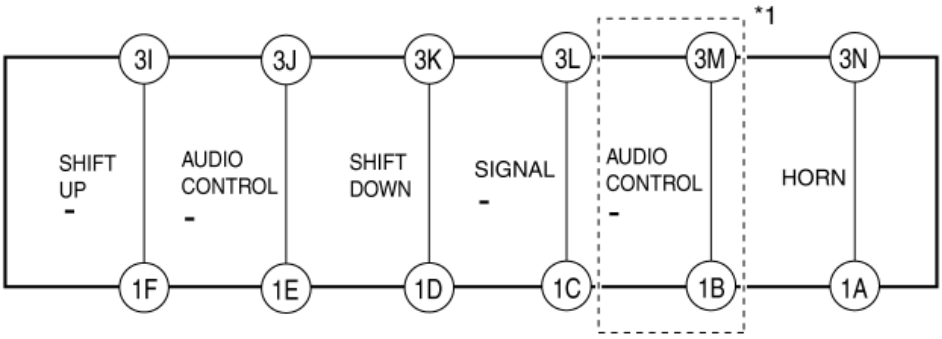

*1 : WITH Bluetooth® SYSTEM (HANDS-FREE TELEPHONE (HF/TEL) SYSTEM)

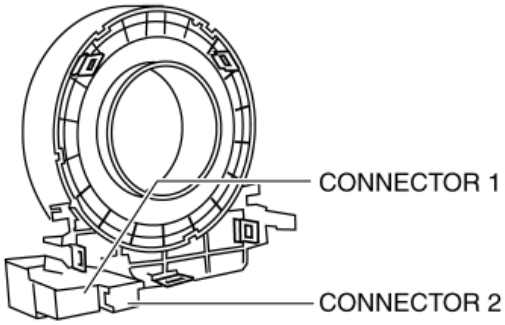

CONNECTOR 2

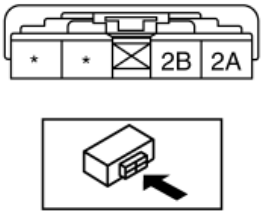

CONNECTOR 1

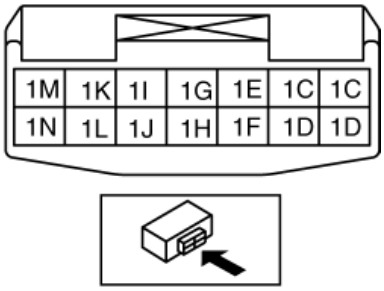

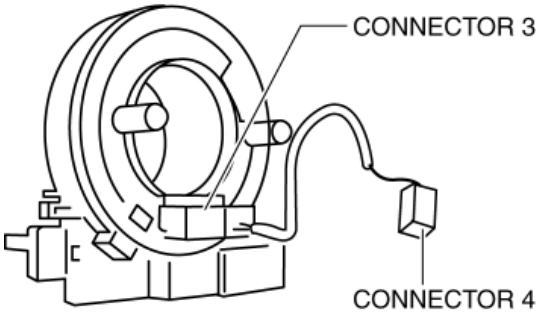

CONNECTOR 4

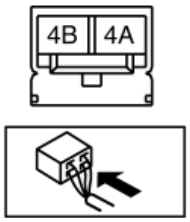

CONNECTOR 3

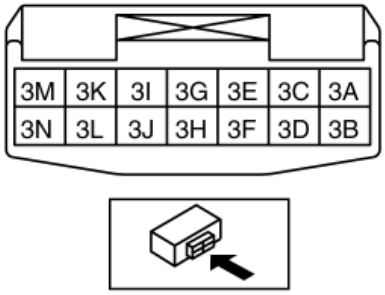

2014 - Mazda3 - Restraints

AIR BAG MODULE AND PRE-TENSIONER SEAT BELT DEPLOYMENT PROCEDURES [STANDARD DEPLOYMENT CONTROL SYSTEM]

WARNING:

- A live (undeployed) air bag module or pre-tensioner seat belt may accidentally operate (deploy) when it is disposed of and cause serious injury. Do not dispose of a live (undeployed) air bag module or pre-tensioner seat belt. If the SSTs (Deployment tool and Adapter harness) are not available, consult the nearest Mazda representative for assistance.

CAUTION:

- Deploying the air bag modules and pre-tensioner seat belts inside the vehicle may cause damage to the vehicle interior. When the vehicle is not to be scrapped, always deploy the air bag modules and pre-tensioner seat belts outside the vehicle.
- If the vehicle is to be scrapped, or when disposing of any air bag modules or pre-tensioner seat belts, operate (deploy) them inside the vehicle by following the deployment procedure below and using the **SST (Deployment tool)**.
- When disposing of an operated (deployed) air bag module and pre-tensioner seat belt, refer to “AIR BAG MODULE AND PRE-TENSIONER SEAT BELT DISPOSAL PROCEDURES”.

Deployment Procedure for Inside of Vehicle

1. Inspect the **SST (Deployment tool)**. (See **INSPECTION OF SST (DEPLOYMENT TOOL) [STANDARD DEPLOYMENT CONTROL SYSTEM]**.)

2. Move the vehicle to an open space, away from strong winds, and close all of the vehicle doors and windows.

3. Switch the ignition off.

4. Disconnect the negative battery cable and wait for **1 min or more**. (See **NEGATIVE BATTERY CABLE DISCONNECTION/CONNECTION [SKYACTIV-G 2.0, SKYACTIV-G 2.5]**.)

5. Follow the procedure below for operating (deploying) the applicable air bag module or pre-tensioner seat belt.

NOTE:

- The connector part of the air bag module and the SST (adapter wiring harness) burns out from the high heat when the inflator is operated (deployed).

Driver-side Air Bag Module

1. Remove the driver-side air bag module. (See **DRIVER-SIDE AIR BAG MODULE REMOVAL**

[STANDARD DEPLOYMENT CONTROL SYSTEM].)

2. Connect the **SST (Adapter harness)** to the driver-side air bag module as shown in the figure.

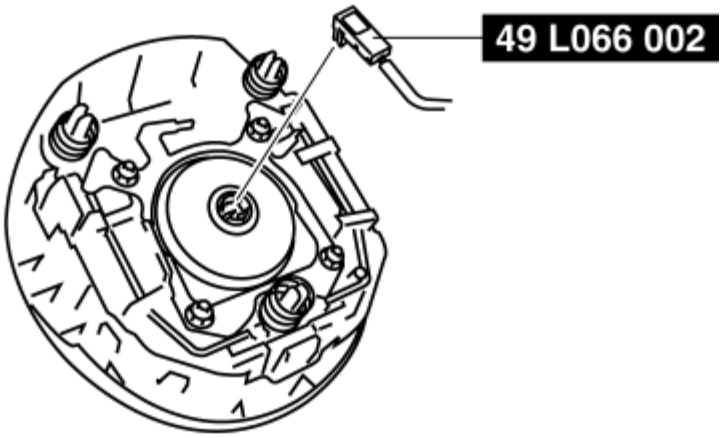

3. Install the driver-side air bag module. (See **DRIVER-SIDE AIR BAG MODULE INSTALLATION [STANDARD DEPLOYMENT CONTROL SYSTEM]**.)

4. Connect the **SST (Deployment tool)** to the **SST (Adapter harness)**.

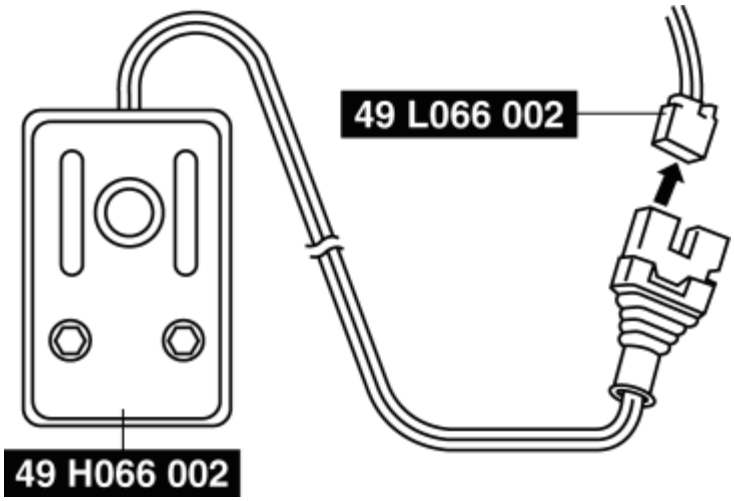

5. Connect the **SST (Deployment tool)** to the battery. Connect the power supply red clip to the positive battery terminal, and the black clip to the negative battery terminal.

6. Verify that the red lamp on the **SST (Deployment tool)** is illuminated.

7. Verify that all persons are standing **at least 6 m {20 ft}** away from the vehicle.

8. Press the activation switch on the **SST (Deployment tool)** to operate (deploy) the air bag module.

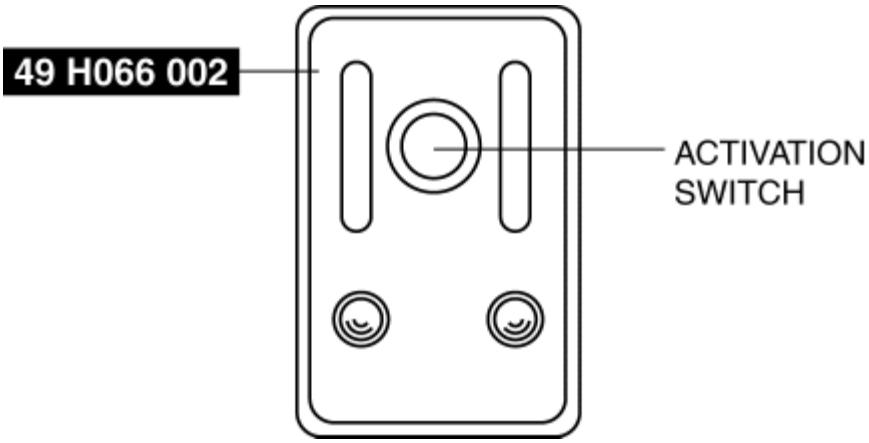

WARNING:

- The air bag module is very hot immediately after it is operated (deployed). You can get burned. Do not touch the air bag module for at least 15 min after deployment.

9. Disconnect the **SST (Deployment tool)** from the **SST (Adapter harness)**.

Passenger-side Air Bag Module

1. Remove the glove compartment. (See **GLOVE COMPARTMENT REMOVAL / INSTALLATION**.)

2. Remove the cap.

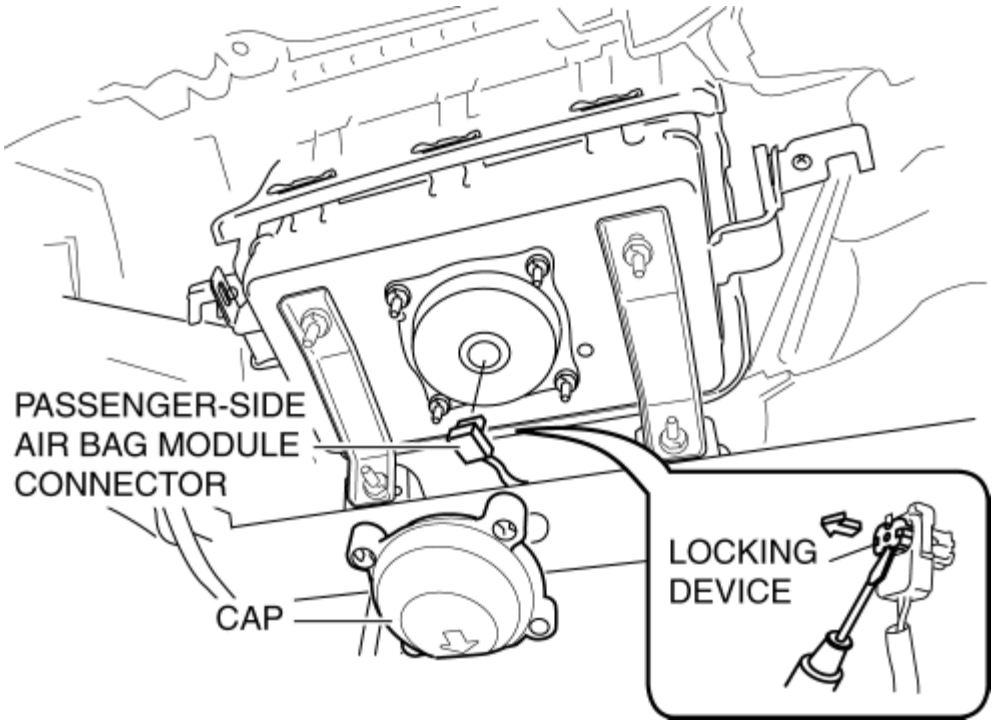

3. Using a flathead screwdriver, lift the locking device carefully, however do not remove it.

4. Disconnect the passenger-side air bag module connector.

5. Connect the **SST (Adapter harness)** to the passenger-side air bag module as shown in the figure.

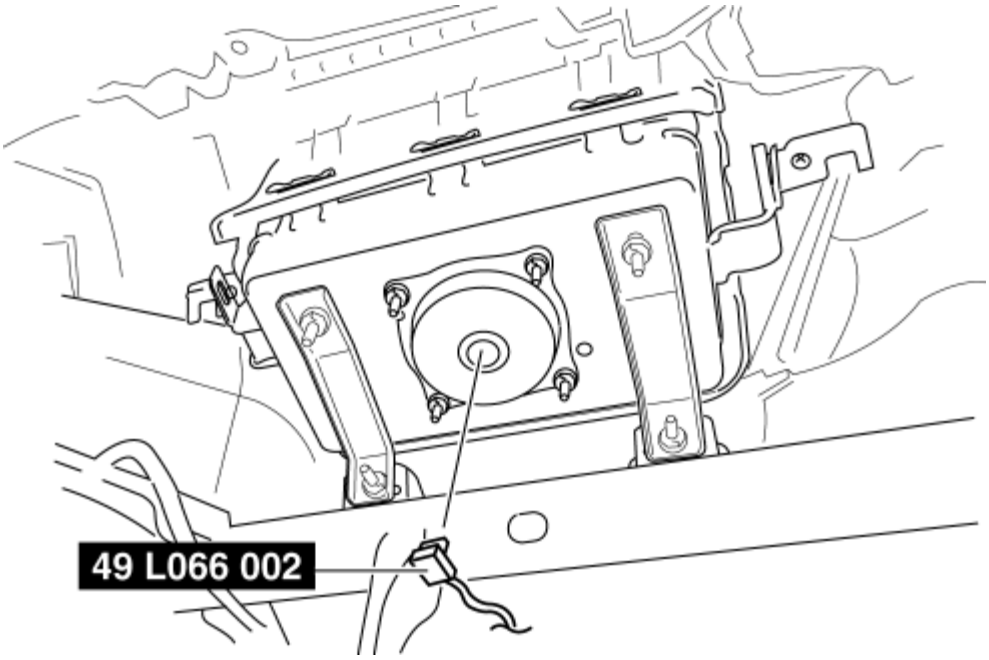

6. Connect the **SST (Deployment tool)** to the **SST (Adapter harness)**.

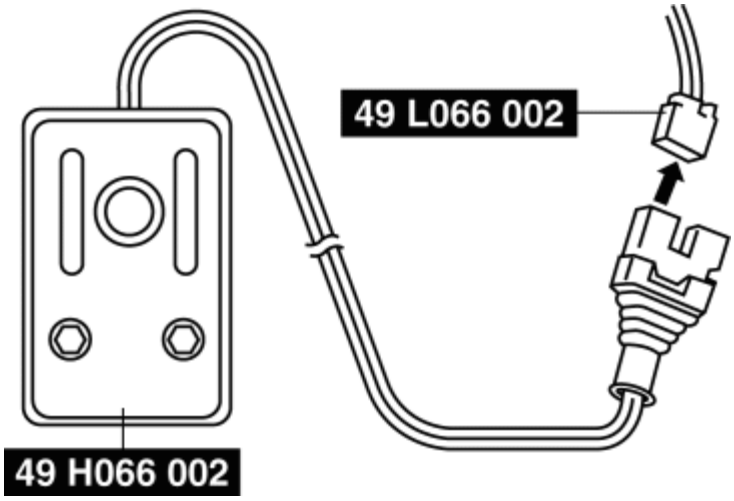

7. Connect the **SST (Deployment tool)** to the battery. Connect the power supply red clip to the positive battery terminal, and the black clip to the negative battery terminal.

8. Verify that the red lamp on the **SST (Deployment tool)** is illuminated.

9. Verify that all persons are standing **at least 6 m {20 ft}** away from the vehicle.

10. Press the activation switch on the **SST (Deployment tool)** to operate (deploy) the air bag module.

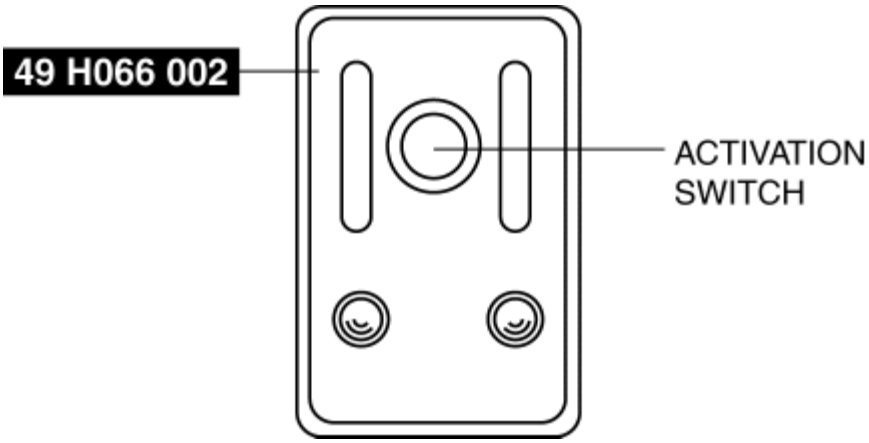

WARNING:

- The air bag module is very hot immediately after it is operated (deployed). You can be burned. Do not touch the air bag module for at least 15 min after deployment.

11. Disconnect the **SST (Deployment tool)** from the **SST (Adapter harness)**.

Side Air Bag Module

1. Disconnect the front seat connector.

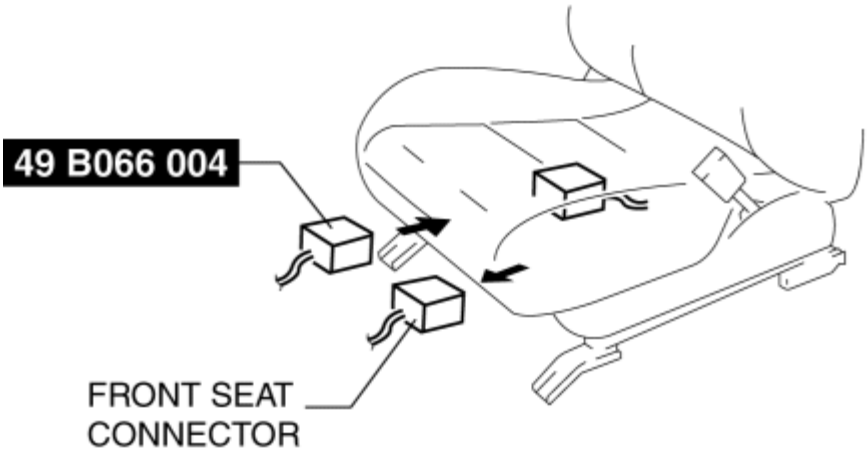

2. Connect the **SST (Adapter harness)** to the front seat connector as shown in the figure.
3. Connect the **SST (Deployment tool)** to the **SST (Adapter harness)**.

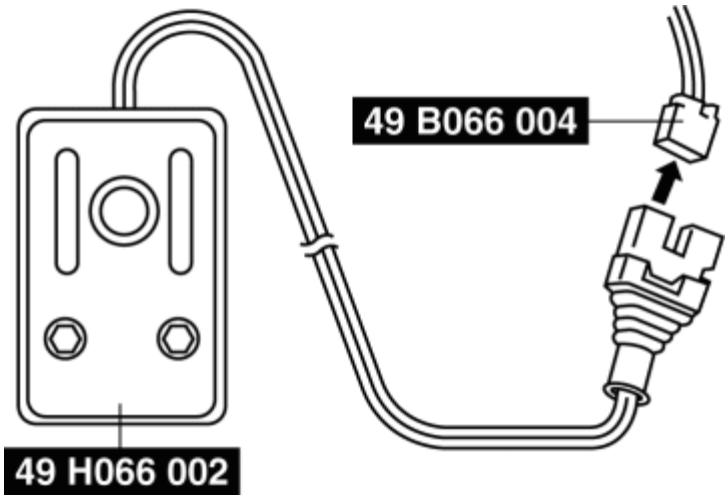

4. Connect the **SST (Deployment tool)** to the battery. Connect the power supply red clip to the positive battery terminal, and the black clip to the negative battery terminal.

5. Verify that the red lamp on the **SST (Deployment tool)** is illuminated.

6. Verify that all persons are standing **at least 6 m {20 ft}** away from the vehicle.

7. Press the activation switch on the **SST (Deployment tool)** to operate (deploy) the side air bag module.

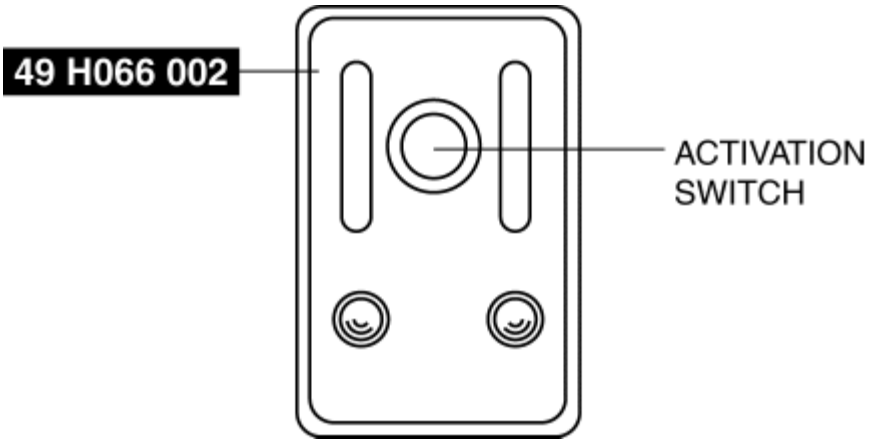

WARNING:

- The air bag module is very hot immediately after it is operated (deployed). You can be burned. Do not touch the air bag module for at least 15 min after deployment.

8. Disconnect the **SST (Deployment tool)** from the **SST (Adapter harness)**.

Curtain Air Bag Module

1. Remove the following parts:

   a. Sunroof seaming welt (with sunroof) (See **SUNROOF UNIT REMOVAL/INSTALLATION**.)

   b. A-pillar trim (See **A-PILLAR TRIM REMOVAL/INSTALLATION**.)

   c. Sunvisor (See **SUNVISOR REMOVAL/INSTALLATION**.)

d. Front map light (See **FRONT MAP LIGHT REMOVAL/INSTALLATION**.)

e. Assist handle (See **ASSIST HANDLE REMOVAL/INSTALLATION**.)

f. Front scuff plate (See **FRONT SCUFF PLATE REMOVAL/INSTALLATION**.)

g. Rear scuff plate (See **REAR SCUFF PLATE REMOVAL/INSTALLATION**.)

h. B-pillar lower trim (See **B-PILLAR LOWER TRIM REMOVAL/INSTALLATION**.)

i. Adjust anchor cover (See **FRONT SEAT BELT REMOVAL/INSTALLATION**.)

j. Upper anchor installation bolt on the seat belt (See **FRONT SEAT BELT REMOVAL/INSTALLATION**.)

k. B-pillar upper trim (See **B-PILLAR UPPER TRIM REMOVAL/INSTALLATION**.)

l. Rear seat cushion (See **REAR SEAT CUSHION REMOVAL/INSTALLATION**.)

m. Tire house trim (See **TIRE HOUSE TRIM REMOVAL/INSTALLATION**.)

n. C-pillar trim (See **C-PILLAR TRIM REMOVAL/INSTALLATION**.)

2. Peel back the headliner.

3. Using a flathead screwdriver, lift the locking device carefully, however do not remove it.

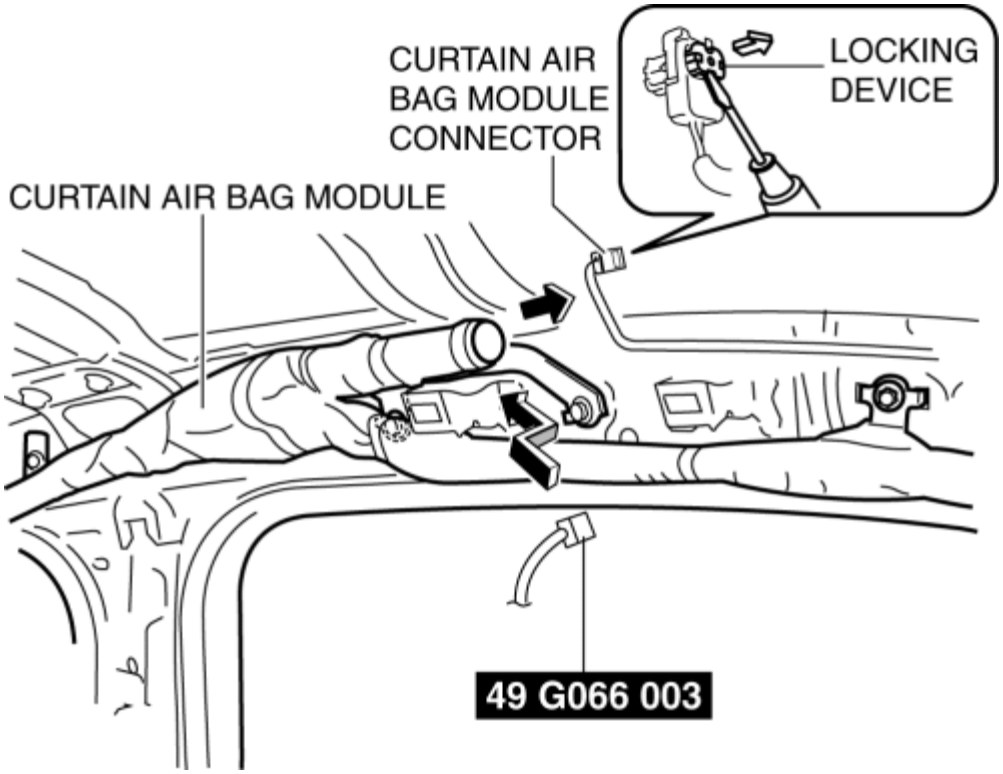

4. Disconnect the curtain air bag module connector.

5. Connect the **SST (Adapter harness)** to the curtain air bag module as shown in the figure.

6. Connect the **SST (Deployment tool)** to the **SST (Adapter harness)**.

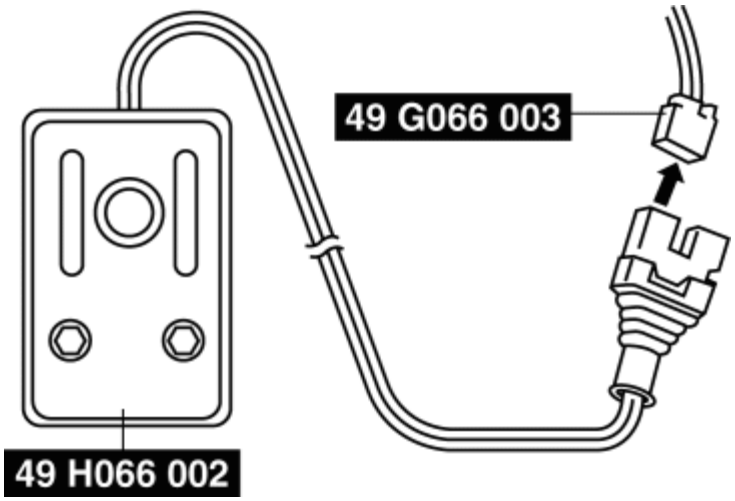

7. Connect the **SST (Deployment tool)** to the battery. Connect the power supply red clip to the positive battery terminal, and the black clip to the negative battery terminal.

8. Verify that the red lamp on the **SST (Deployment tool)** is illuminated.

9. Verify that all persons are standing **at least 6 m {20 ft}** away from the vehicle.

10. Press the activation switch on the **SST (Deployment tool)** to operate (deploy) the curtain air bag module.

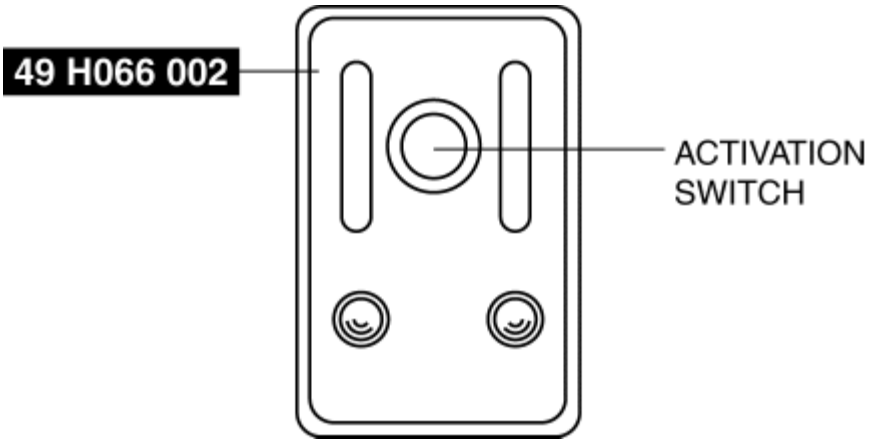

WARNING:

- The air bag module is very hot immediately after it is operated (deployed). You can be burned. Do not touch the air bag module for at least 15 min after deployment.

11. Disconnect the **SST (Deployment tool)** from the **SST (Adapter harness)**.

Pre-tensioner Seat Belt

1. Remove the following parts:

   a. Front scuff plate (See **FRONT SCUFF PLATE REMOVAL/INSTALLATION**.)

   b. Rear scuff plate (See **REAR SCUFF PLATE REMOVAL/INSTALLATION**.)

   c. B-pillar lower trim (See **B-PILLAR LOWER TRIM REMOVAL/INSTALLATION**.)

2. Using a flathead screwdriver, lift the locking device carefully, however do not remove it.

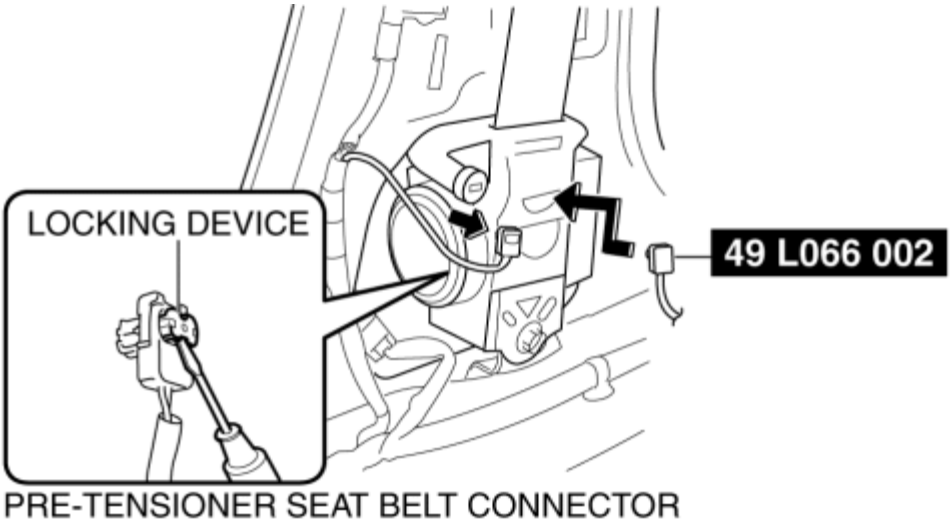

3. Disconnect the pre-tensioner seat belt connector.

4. Connect the **SST (Adapter harness)** as shown in the figure.

5. Connect the **SST (Deployment tool)** to the **SST (Adapter harness)**.

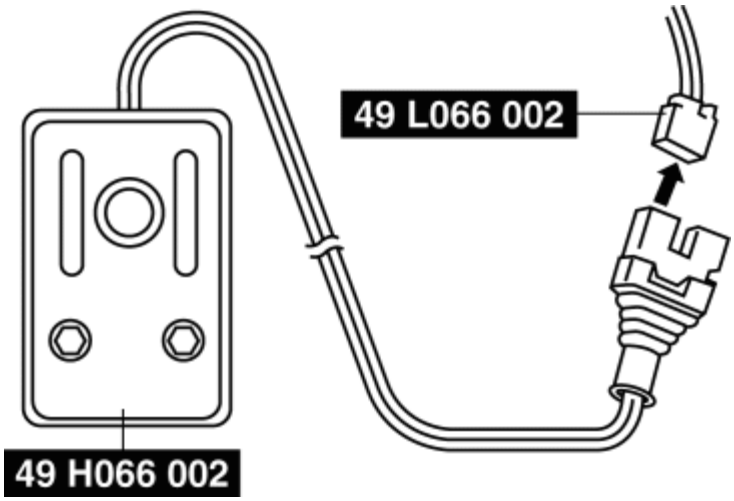

6. Connect the **SST (Deployment tool)** to the battery. Connect the power supply red clip to the positive battery terminal, and the black clip to the negative battery terminal.

7. Verify that the red lamp on the **SST (Deployment tool)** is illuminated.

8. Verify that all persons are standing **at least 6 m {20 ft}** away from the vehicle.

9. Press the activation switch on the **SST (Deployment tool)** to operate (deploy) the pre-tensioner seat belt.

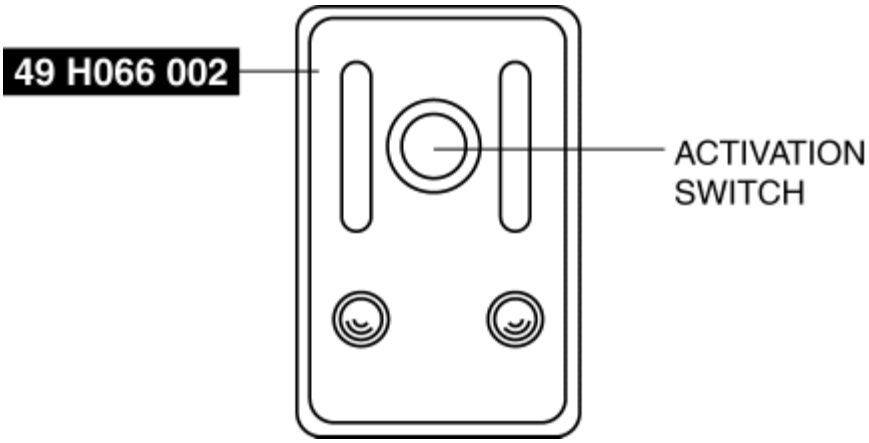

WARNING:

- The pre-tensioner seat belt is very hot immediately after it is operated (deployed). You can be burned. Do not touch the pre-tensioner seat belt for at least 15 min after deployment.

10. Disconnect the **SST (Deployment tool)** from the **SST (Adapter harness)**.

Deployment Procedure for Outside of Vehicle

1. Inspect the **SST (Deployment tool)**. (See **INSPECTION OF SST (DEPLOYMENT TOOL) [STANDARD DEPLOYMENT CONTROL SYSTEM]**.)

2. Switch the ignition off.

3. Disconnect the negative battery cable and wait for **1 min or more**. (See **NEGATIVE BATTERY CABLE DISCONNECTION/CONNECTION [SKYACTIV-G 2.0, SKYACTIV-G 2.5]**.)

4. Follow the procedure below for operating (deploying) the applicable air bag module or pre-tensioner seat belt.

NOTE:

- The connector part of the air bag module and the SST (adapter wiring harness) burns out from the high heat when the inflator is operated (deployed).

Driver-side Air Bag Module

1. Remove the driver-side air bag module. (See **DRIVER-SIDE AIR BAG MODULE REMOVAL [STANDARD DEPLOYMENT CONTROL SYSTEM]**.)

2. Wrap the wiring harness (cross section **1.25 mm^2 {0.002 in^2} or more**) at least four times around the position shown in the figure for the driver-side air bag module.

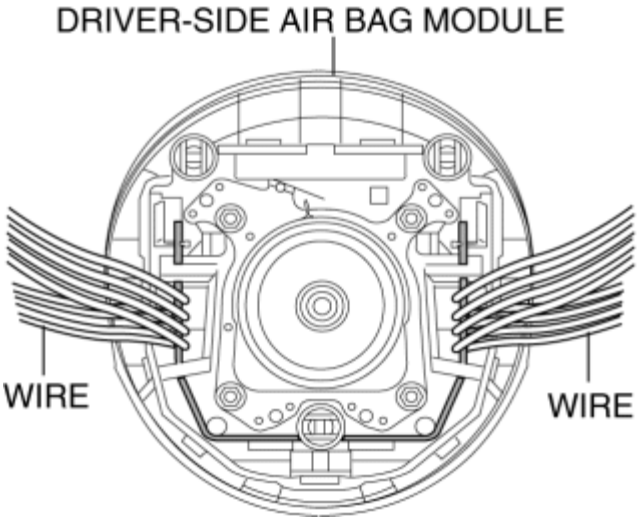

3. Connect the **SST (Adapter harness)** to the driver-side air bag module.

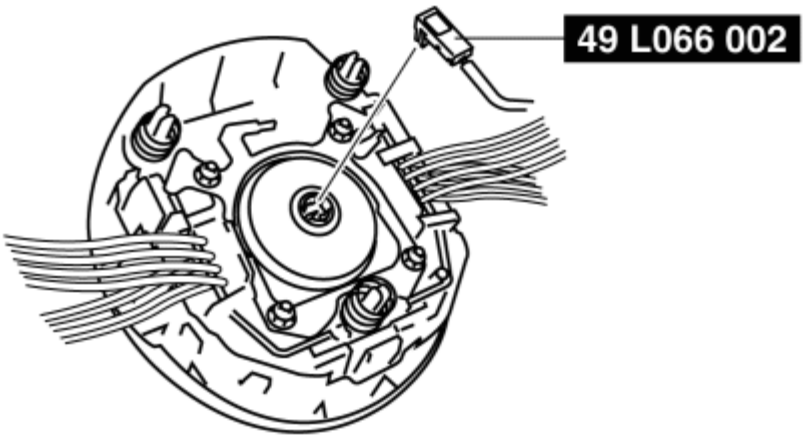

4. Place the driver-side air bag module on the center of the tire wheel with the padded surface facing up. To secure the air bag module to the tire wheel, wrap a wire (cross section **1.25 mm^2 {0.002 in^2} or more**) through the wheel and the bolt installation holes of the air bag module **at least 4 times**.

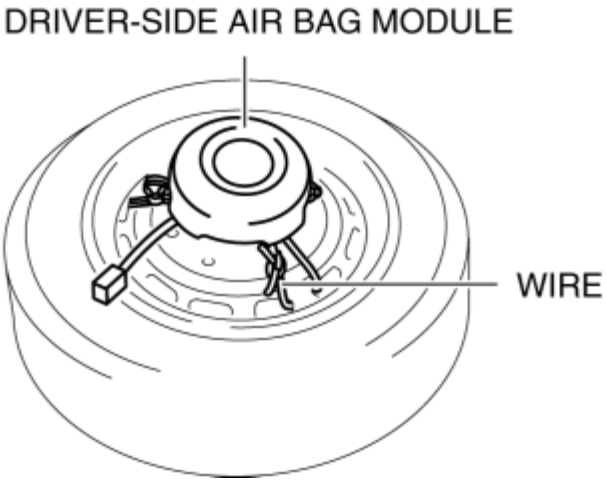

WARNING:

- If the air bag module is not properly installed to the tire wheel, serious injury may occur when the module is operated (deployed). When installing the air bag

module to the tire wheel, make sure the padded surface is facing up.

5. Stack three tires without wheels on top of the tire with the driver-side air bag module, and then stack another tire with a wheel on the very top.

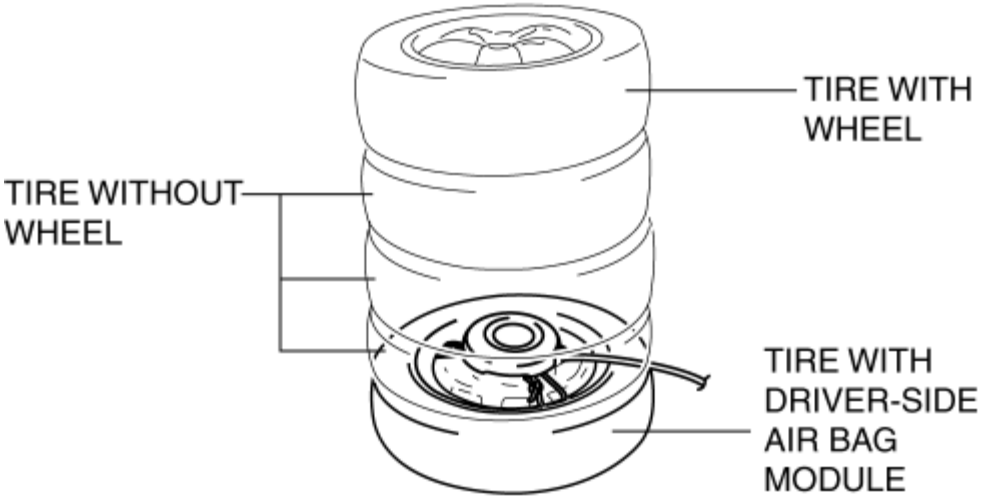

6. Secure the tires with wire.

7. Connect the **SST (Deployment tool)** to the **SST (Adapter harness)**.

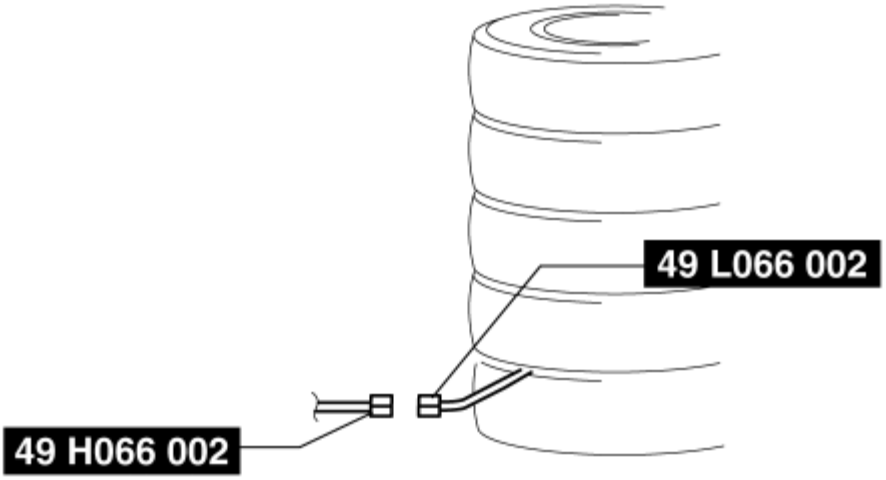

8. Connect the **SST (Deployment tool)** to the battery. Connect the power supply red clip to the positive battery terminal, and the black clip to the negative battery terminal.

9. Verify that the red lamp on the **SST (Deployment tool)** is illuminated.

10. Verify that all persons are standing **at least 6 m {20 ft}** away from the vehicle.

11. Press the activation switch on the **SST (Deployment tool)** to operate (deploy) the air bag module.

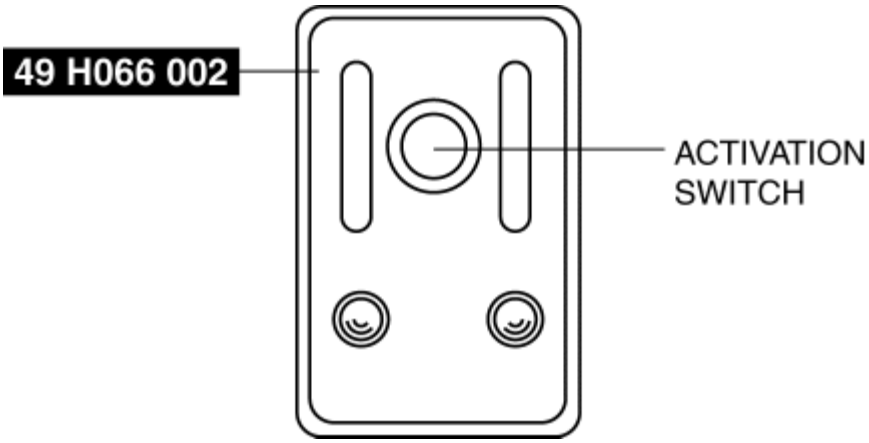

WARNING:

- The air bag module is very hot immediately after it is operated (deployed). You can be burned. Do not touch the air bag module for at least 15 min after deployment.

12. Disconnect the **SST (Deployment tool)** from the **SST (Adapter harness)**.

Passenger-side Air Bag Module

1. Remove the following parts:

   a. Glove compartment (See **GLOVE COMPARTMENT REMOVAL/INSTALLATION**.)

   b. Decoration panel (See **DECORATION PANEL REMOVAL/INSTALLATION**.)

   c. Dashboard under cover (See **DASHBOARD UNDER COVER REMOVAL/INSTALLATION**.)

   d. Front scuff plate (passenger-side) (See **FRONT SCUFF PLATE REMOVAL/INSTALLATION**.)

   e. Front side trim (passenger-side) (See **FRONT SIDE TRIM REMOVAL/INSTALLATION**.)

   f. Lower panel (passenger-side) (See **LOWER PANEL REMOVAL/INSTALLATION**.)

2. Remove the passenger-side air bag module. (See **PASSENGER-SIDE AIR BAG MODULE REMOVAL [STANDARD DEPLOYMENT CONTROL SYSTEM]**.)

3. Connect the **SST (Adapter harness)** to the passenger-side air bag module as shown in the figure.

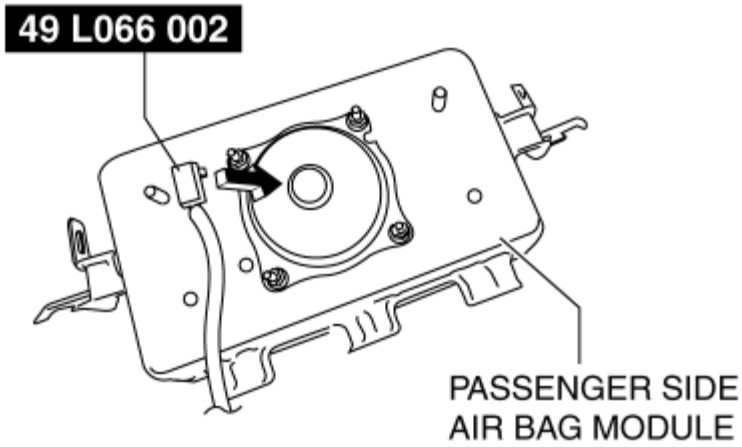

4. Place the padded surface of the passenger-side air bag module facing the center of the tire as shown in the figure. To secure the air bag module to the tire wheel, wrap a wire (cross section **1.25 mm^2 {0.002 in^2} or more**) through the tire and the bolt installation holes **at least 4 times** as shown in the figure.

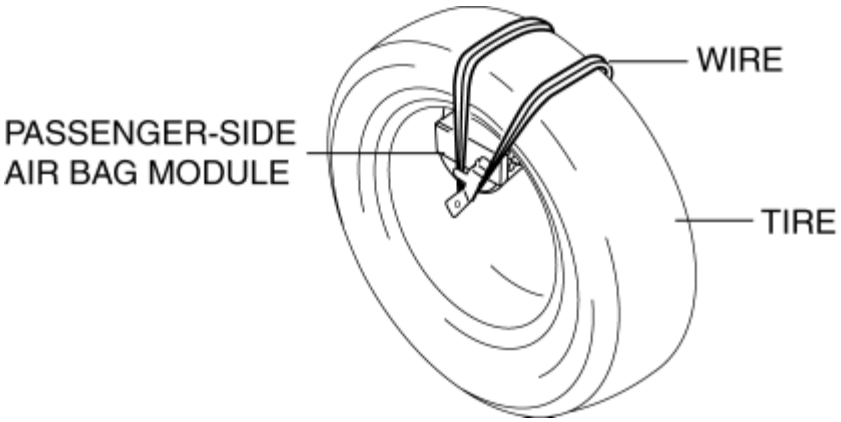

WARNING:

- If the air bag module is not properly secured to the tire, the tires may fall over by the impact of operation (deployment) and cause serious injury. To prevent this, secure the air bag module properly with the padded surface facing the center of the tire.

5. Stack the tire with the passenger-side air bag module on top of two tires without wheels. Stack a tire without a wheel on top of the tire with the passenger-side air bag module, and then stack another tire with a wheel on the very top.

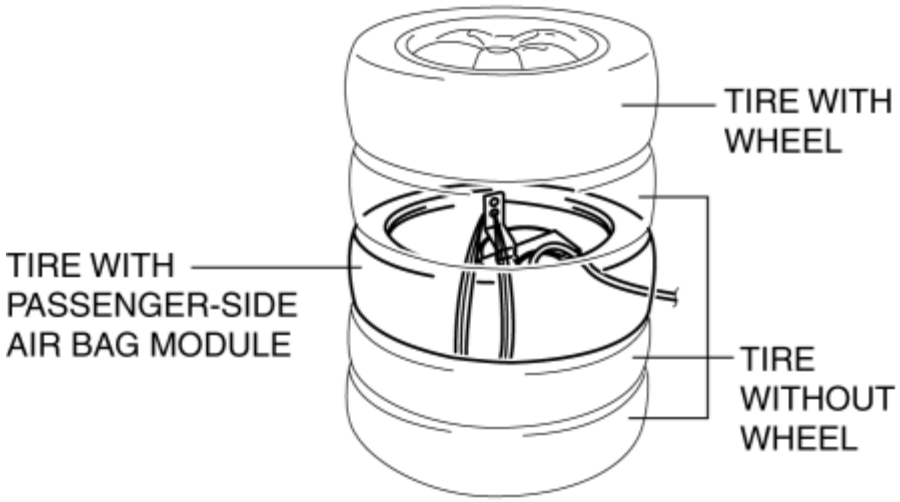

6. Secure the tires with wire.

7. Connect the **SST (Deployment tool)** to the **SST (Adapter harness)**.

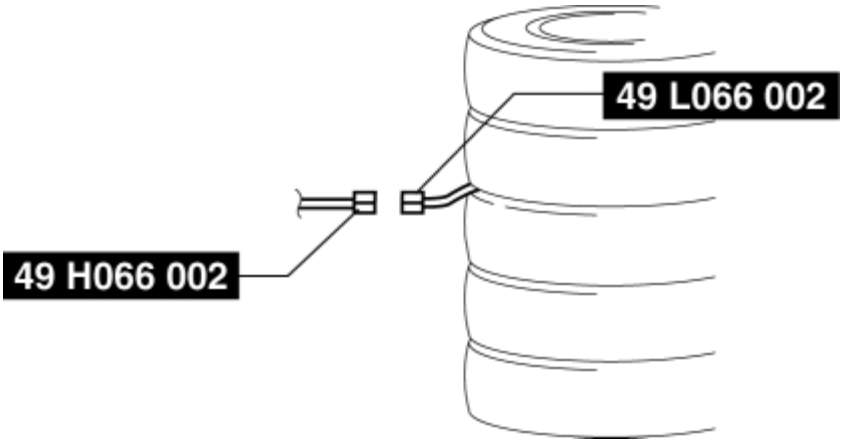

8. Connect the **SST (Deployment tool)** to the battery. Connect the power supply red clip to the positive battery terminal, and the black clip to the negative battery terminal.

9. Verify that the red lamp on the **SST (Deployment tool)** is illuminated.

10. Verify that all persons are standing **at least 6 m {20 ft}** away from the vehicle.

11. Press the activation switch on the **SST (Deployment tool)** to operate (deploy) the air bag module.

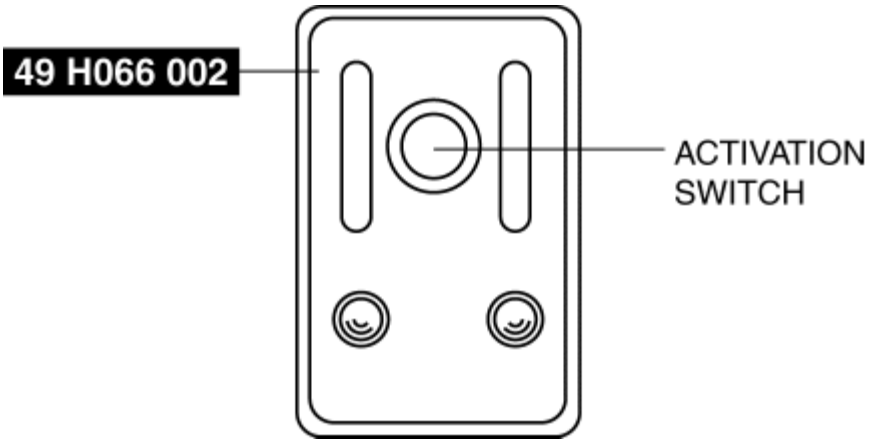

WARNING:

- The air bag module is very hot immediately after it is operated (deployed). You can be burned. Do not touch the air bag module for at least 15 min after deployment.

12. Disconnect the **SST (Deployment tool)** from the **SST (Adapter harness)**.

Side Air Bag Module

1. Remove the following parts:

   a. Front seat (See **FRONT SEAT REMOVAL/INSTALLATION**.)

   b. Front seat back trim and pad (See **FRONT SEAT BACK TRIM REMOVAL/INSTALLATION**.)

2. Remove the side air bag module. (See **SIDE AIR BAG MODULE REMOVAL/INSTALLATION [STANDARD DEPLOYMENT CONTROL SYSTEM]**.)

3. Install the nuts.

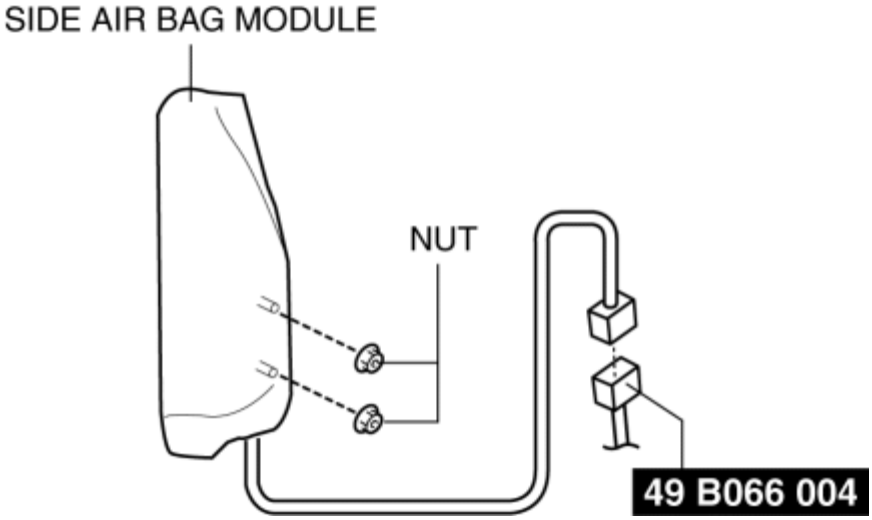

4. Connect the **SST (Adapter harness)** to the side air bag module as shown in the figure.

5. Put the side air bag module inside the tire and secure it to the tire by wrapping a wire (cross section of **1.25 mm^2 {0.002 in^2} or more**) through the tire and the bolt **at least 4 times**.

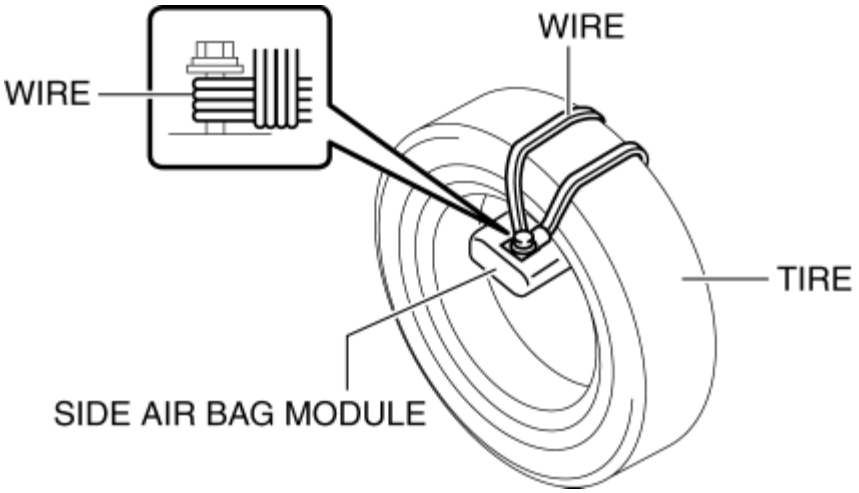

WARNING:

- If the air bag module is not properly secured to the tire, the tires may fall over by the impact of operation (deployment) and cause serious injury. To prevent this, secure the air bag module properly with the padded surface facing the center of the tire.

6. Stack the tire with the side air bag module on top of two tires without wheels. Stack a tire without a wheel on top of the tire with the side air bag module, and then stack another tire with a wheel on the very top.

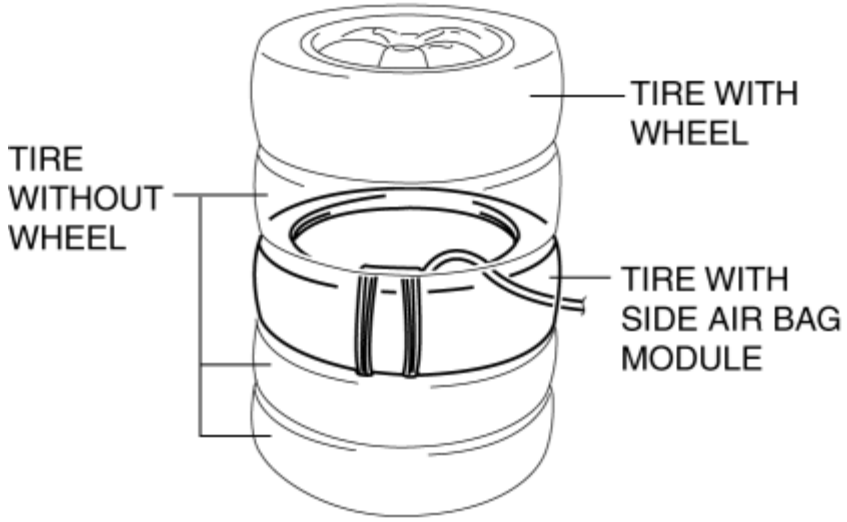

7. Secure the tires with wire.

8. Connect the **SST (Deployment tool)** to the **SST (Adapter harness).**

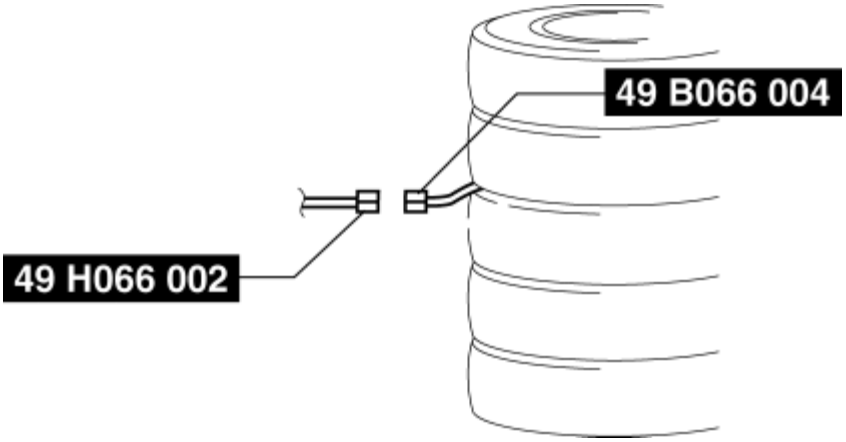

9. Connect the **SST (Deployment tool)** to the battery. Connect the power supply red clip to the positive battery terminal, and the black clip to the negative battery terminal.

10. Verify that the red lamp on the **SST (Deployment tool)** is illuminated.

11. Verify that all persons are standing **at least 6 m {20 ft}** away from the vehicle.

12. Press the activation switch on the **SST (Deployment tool)** to operate (deploy) the side air bag module.

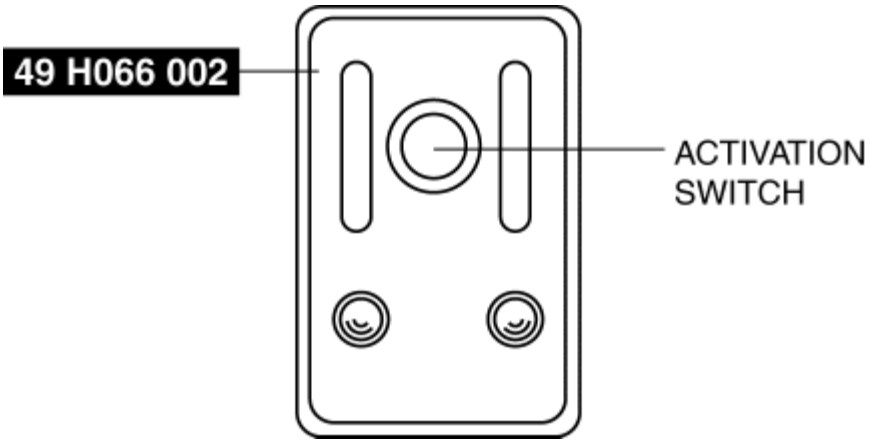

WARNING:

- The air bag module is very hot immediately after it is operated (deployed). You can be burned. Do not touch the air bag module for at least 15 min after deployment.

13. Disconnect the **SST (Deployment tool)** from the **SST (Adapter harness)**.

Curtain Air Bag Module

1. Remove the following parts:

   a. Sunroof seaming welt (with sunroof system) (See **SUNROOF UNIT REMOVAL/INSTALLATION**.)

   b. A-pillar trim (See **A-PILLAR TRIM REMOVAL/INSTALLATION**.)

   c. Sunvisor (See **SUNVISOR REMOVAL/INSTALLATION**.)

   d. Front map light (dual light type) (See **FRONT MAP LIGHT REMOVAL/INSTALLATION**.)

   e. Assist handle (See **ASSIST HANDLE REMOVAL/INSTALLATION**.)

   f. Front scuff plate (See **FRONT SCUFF PLATE REMOVAL/INSTALLATION**.)

   g. Rear scuff plate (See **REAR SCUFF PLATE REMOVAL/INSTALLATION**.)

   h. B-pillar lower trim (See **B-PILLAR LOWER TRIM REMOVAL/INSTALLATION**.)

   i. Adjust anchor cover (See **FRONT SEAT BELT REMOVAL/INSTALLATION**.)

   j. Upper anchor installation bolt on the seat belt (See **FRONT SEAT BELT REMOVAL/INSTALLATION**.)

   k. B-pillar upper trim (See **B-PILLAR UPPER TRIM REMOVAL/INSTALLATION**.)

2. Set the tire house trim aside. (See **TIRE HOUSE TRIM REMOVAL/INSTALLATION**.)

3. Remove the following parts:

   a. C-pillar trim (See **C-PILLAR TRIM REMOVAL/INSTALLATION**.)

   b. Upper panel (See **UPPER PANEL REMOVAL**.)(See **UPPER PANEL INSTALLATION**.)

   c. Rear console (See **REAR CONSOLE REMOVAL/INSTALLATION**.)

   d. Shift lever knob (MTX) (See **MANUAL TRANSAXLE SHIFT MECHANISM REMOVAL/INSTALLATION [C66M-R]**.)

   e. Selector lever knob (ATX) (See **AUTOMATIC TRANSAXLE SHIFT MECHANISM REMOVAL/INSTALLATION**.)

   f. Shift panel (See **SHIFT PANEL REMOVAL/INSTALLATION**.)

   g. Front console box (See **FRONT CONSOLE BOX REMOVAL/INSTALLATION**.)

   h. CD player (with CD player) (See **CD PLAYER REMOVAL**.)(See **CD PLAYER INSTALLATION**.)

   i. Glove compartment (See **GLOVE COMPARTMENT REMOVAL/INSTALLATION**.)

   j. Decoration panel (See **DECORATION PANEL REMOVAL/INSTALLATION**.)

   k. Side wall (See **SIDE WALL REMOVAL/INSTALLATION**.)

   l. Front console (See **FRONT CONSOLE REMOVAL/INSTALLATION**.)

4. Remove the headliner. (See **HEADLINER REMOVAL/INSTALLATION**.)

5. Remove the curtain air bag module. (See **CURTAIN AIR BAG MODULE REMOVAL/INSTALLATION [STANDARD DEPLOYMENT CONTROL SYSTEM]**.)

6. Cut off the air bag part of the curtain air bag module at the position shown in the figure.

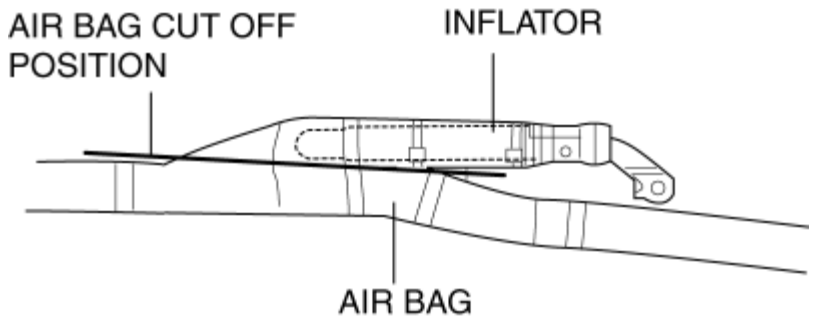

WARNING:

- Never crush the pipe on the side where it is cut. If it is crushed completely, the interior pressure of the pipe will build up and can cause it to explode during air bag module operation (deployment).

7. Disconnect the curtain air bag module connector.

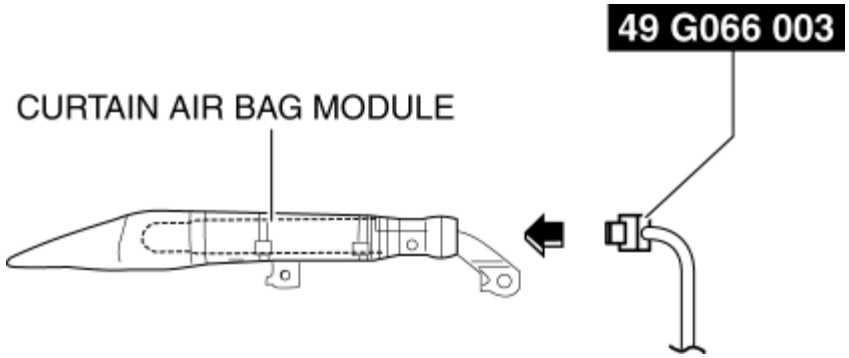

8. Connect the **SST (Adapter harness)** to the curtain air bag module as shown in the figure.

9. Secure the curtain air bag module to the tire, by wrapping a wire (cross section **1.25 mm^2 {0.002 in^2} or more**) through the tire and the bolt installation holes **at least 4 times** as shown in the figure.

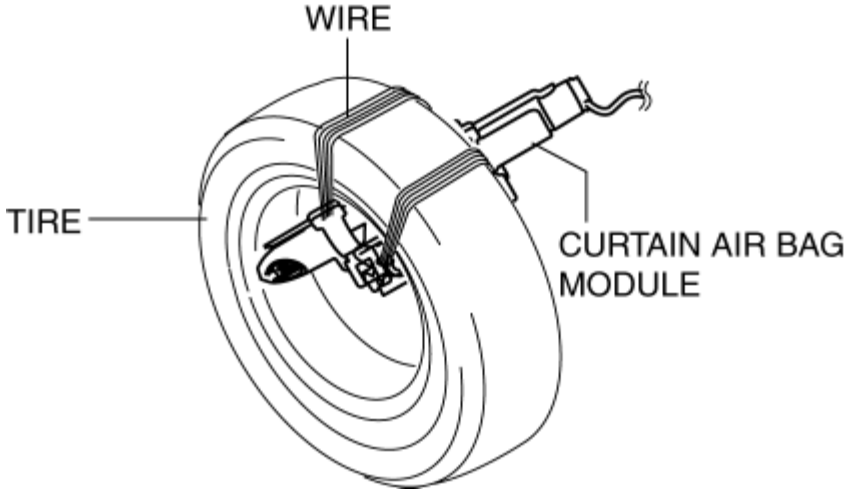

WARNING:

- If the air bag module is not properly installed to the tire, serious injury may occur when the module is operated (deployed). Always install the air bag module securely.

10. Stack the tire with the curtain air bag module on top of two tires without wheels. Stack a tire without a wheel on top of the tire with the curtain air bag module, and then stack another tire with a wheel on the very top.

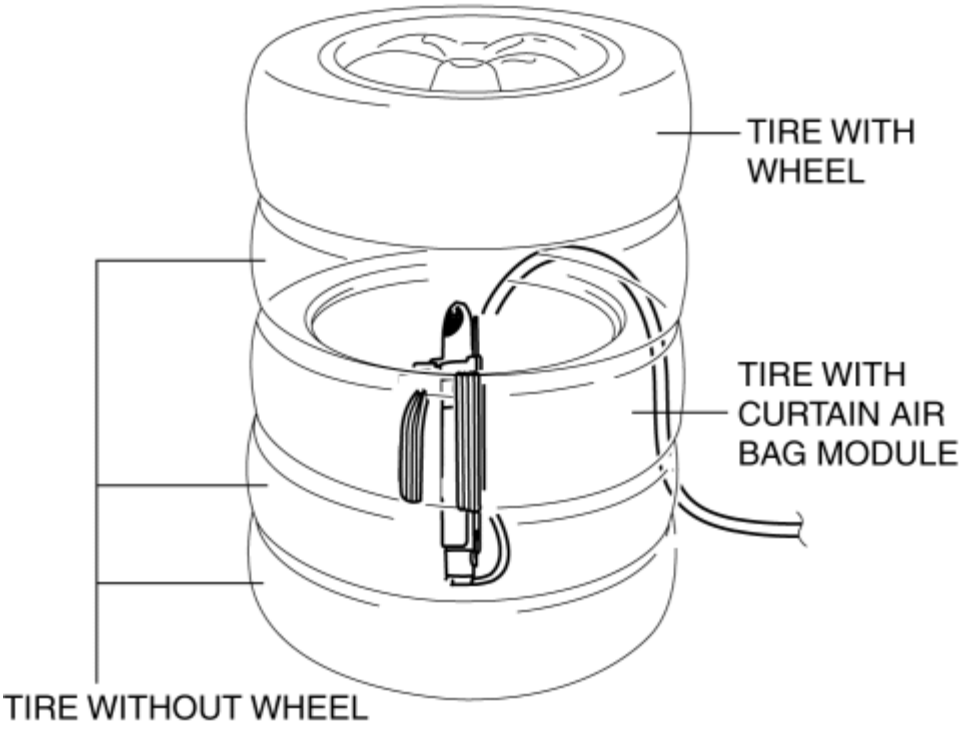

11. Secure the tires with wire.

12. Connect the **SST (Deployment tool)** to the **SST (Adapter harness)**.

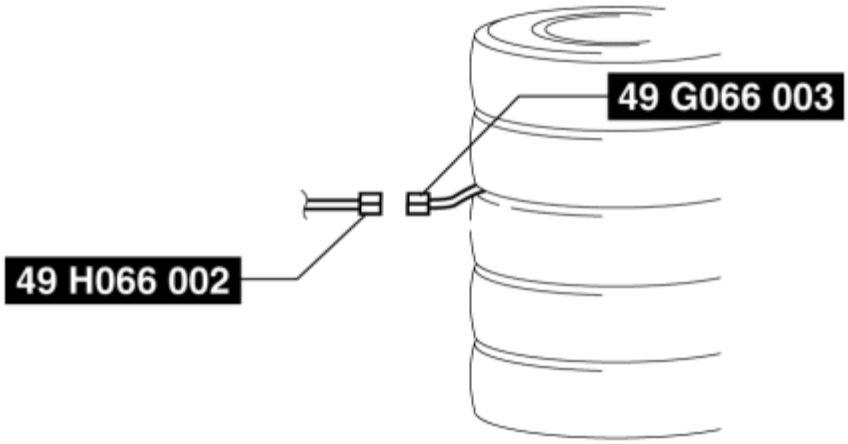

13. Connect the **SST (Deployment tool)** to the battery. Connect the power supply red clip to the positive battery terminal, and the black clip to the negative battery terminal.

14. Verify that the red lamp on the **SST (Deployment tool)** is illuminated.

15. Verify that all persons are standing **at least 6 m {20 ft}** away from the vehicle.

16. Press the activation switch on the **SST (Deployment tool)** to operate (deploy) the curtain air bag module.

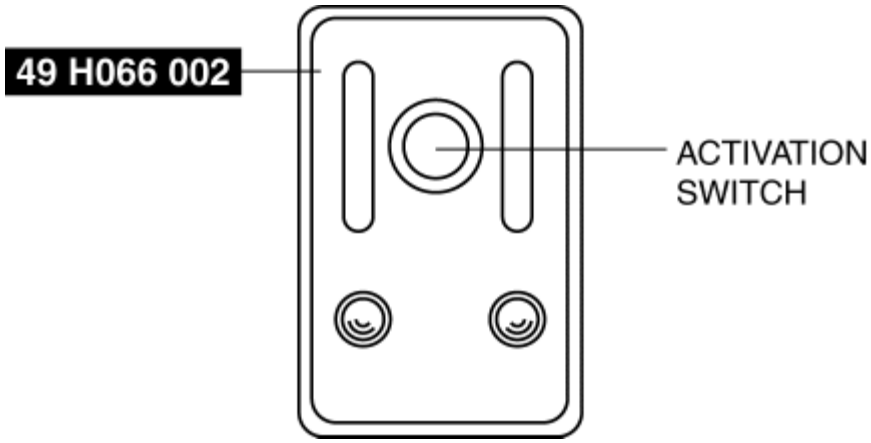

WARNING:

- The air bag module is very hot immediately after it is operated (deployed). You can be burned. Do not touch the air bag module for at least 15 min after deployment.

17. Disconnect the **SST (Deployment tool)** from the **SST (Adapter harness)**.

Pre-tensioner Seat Belt

1. Remove the following parts:

   a. Front scuff plate (See **FRONT SCUFF PLATE REMOVAL/INSTALLATION**.)

   b. Rear scuff plate (See **REAR SCUFF PLATE REMOVAL/INSTALLATION**.)

   c. B-pillar lower trim (See **B-PILLAR LOWER TRIM REMOVAL/INSTALLATION**.)

2. Remove the front seat belt (See **FRONT SEAT BELT REMOVAL/INSTALLATION**.)

3. Connect the **SST (Adapter harness)** as shown in the figure.

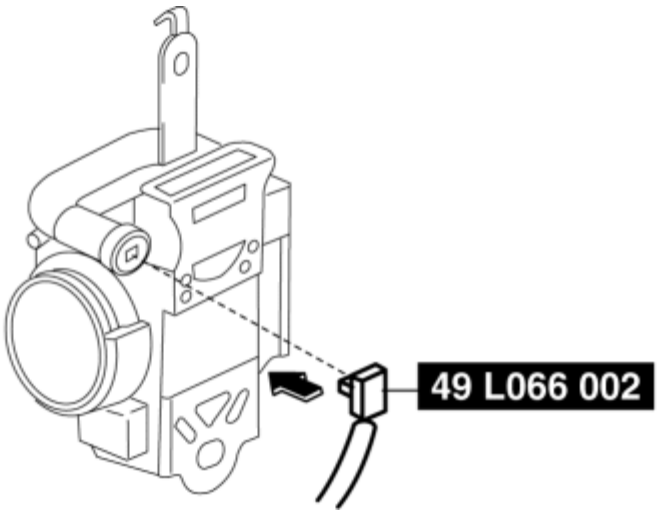

4. Put the pre-tensioner seat belt inside the tire and secure it to the tire by wrapping a wire (cross section of **1.25 mm^2 {0.002 in^2} or more**) through the tire and the bolt installation holes **at least 4 times**.

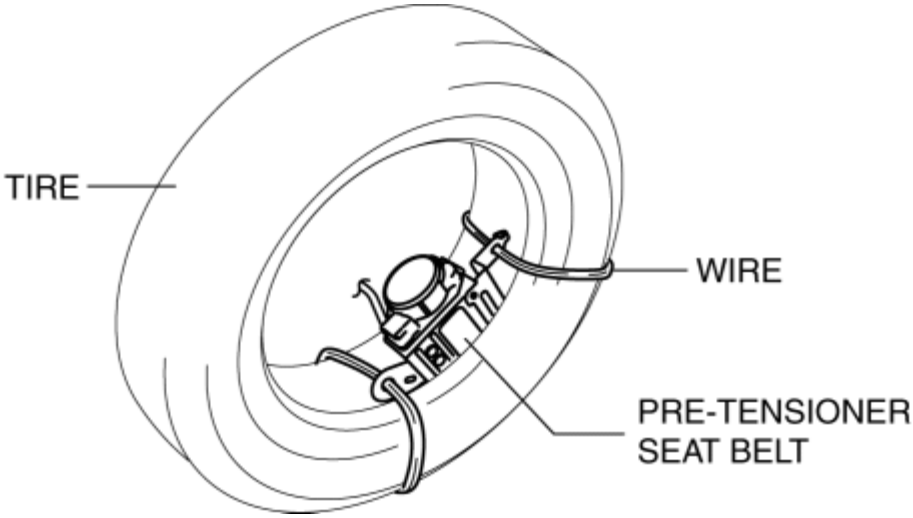

WARNING:

- If the pre-tensioner seat belt is not properly installed to the tire, serious injury may occur when the pre-tensioner part is operated (deployed). When installing the pre-tensioner seat belt to the tire, verify that the pre-tensioner part is inside the tire.

5. Stack the tire with the pre-tensioner seat belt on to of two tires without wheels. Stack a tire without a wheel on top of the tire with the pre-tensioner seat belt, and then stack another tire with a wheel on the very top.

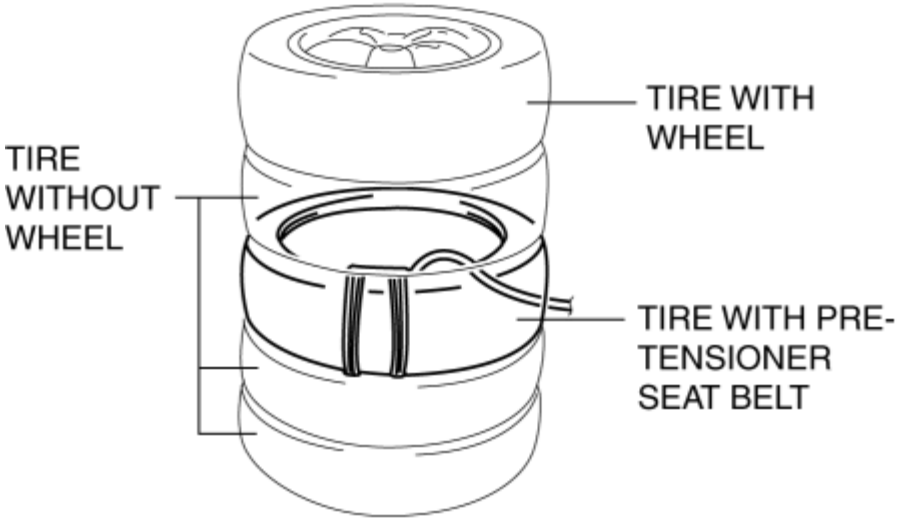

6. Secure the tires with wire.

7. Connect the **SST (Deployment tool)** to the **SST (Adapter harness)**.

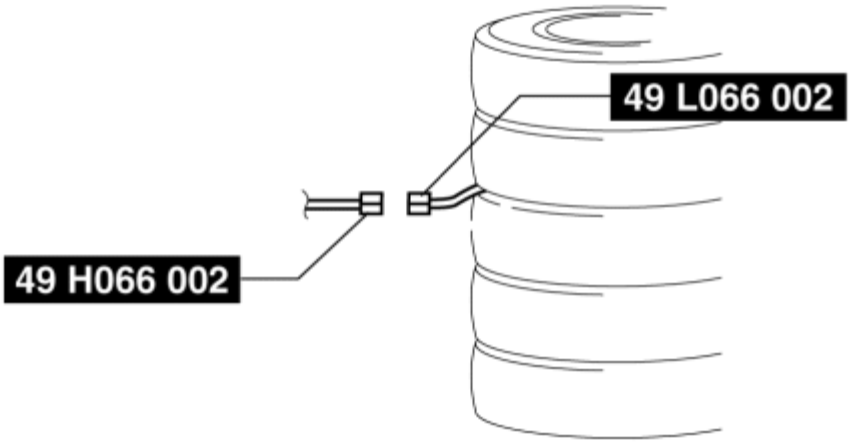

8. Connect the **SST (Deployment tool)** to the battery. Connect the power supply red clip to the positive battery terminal, and the black clip to the negative battery terminal.

9. Verify that the red lamp on the **SST (Deployment tool)** is illuminated.

10. Verify that all persons are standing **at least 6 m {20 ft}** away from the vehicle.

11. Press the activation switch on the **SST (Deployment tool)** to operate (deploy) the pre-tensioner seat belt.

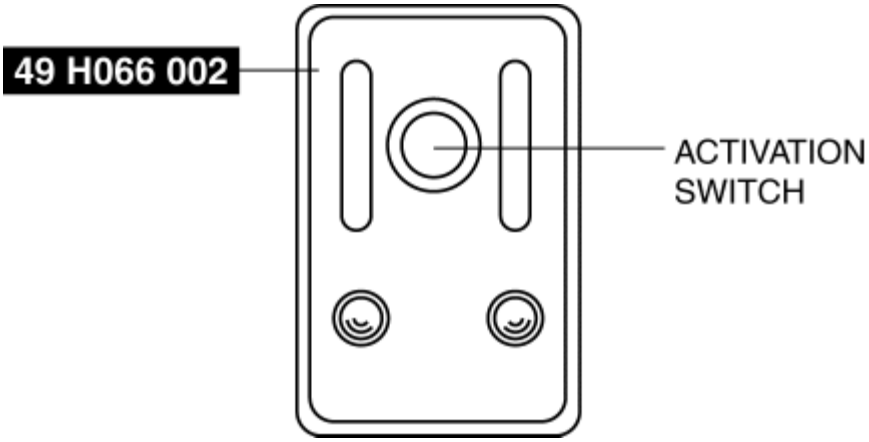

WARNING:

- The pre-tensioner seat belt is very hot immediately after it is operated (deployed). You can be burned. Do not touch the pre-tensioner seat belt for at least 15 min after deployment.

12. Disconnect the **SST (Deployment tool)** from the **SST (Adapter harness)**.

2014 - Mazda3 - Restraints

AIR BAG MODULE AND PRE-TENSIONER SEAT BELT DISPOSAL PROCEDURES [STANDARD DEPLOYMENT CONTROL SYSTEM]

WARNING:

- A live (undeployed) air bag module or pre-tensioner seat belt may accidentally operate (deploy) when it is disposed of and cause serious injury. Always refer to the “AIR BAG MODULE AND PRE-TENSIONER SEAT BELT DEPLOYMENT PROCEDURES” and dispose of air bag modules and pre-tensioner seat belts in a deployed condition.
- The air bag modules and the pre-tensioner seat belts are very hot immediately after they are deployed. You can be burned. Do not touch an air bag module and pre-tensioner seat belt for at least 15 min after deployment.
- Pouring water on the deployed air bag module and pre-tensioner seat belt is dangerous. The water will mix with the residual gases to form a gas that can make breathing difficult. Do not pour water on the deployed air bag module and pre-tensioner seat belt.
- The deployed air bag module or pre-tensioner seat belt may contain deposits of sodium hydroxide, a caustic byproduct of the gas-generated combustion. If this substance gets into your eyes or on your hands, it can cause irritation and itching. When handling the deployed air bag module and pre-tensioner seat belt, wear gloves and safety glasses.

1. Remove the deployed air bag module or pre-tensioner seat belt.

2. Put the air bag module or pre-tensioner seat belt in a plastic bag, seal the bag, and then dispose of it.

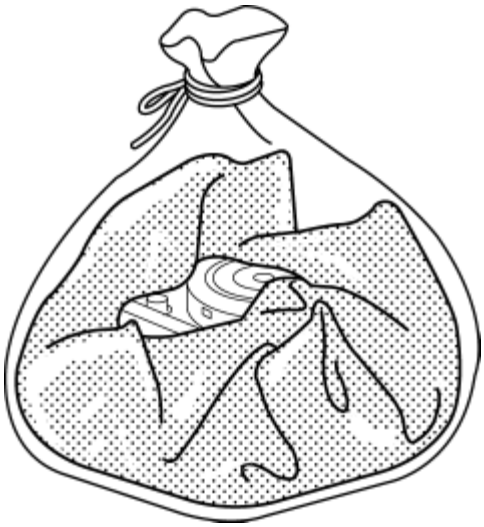

2014 - Mazda3 - Restraints

INSPECTION OF SST (DEPLOYMENT TOOL) [STANDARD DEPLOYMENT CONTROL SYSTEM]

1. Before using the **SST** (49 H066 002), inspect its operation.

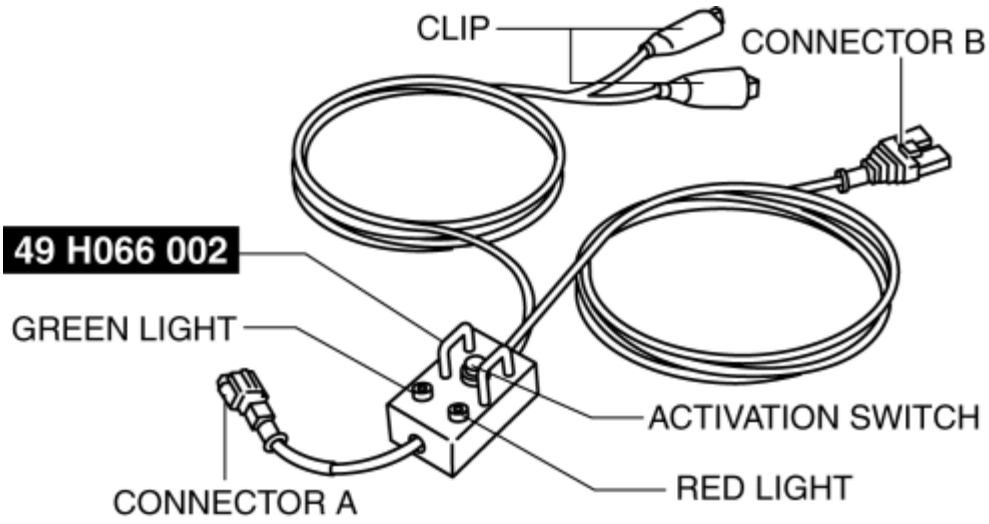

Inspection Procedure

1. Follow the steps below to inspect the **SST** (49 H066 002).

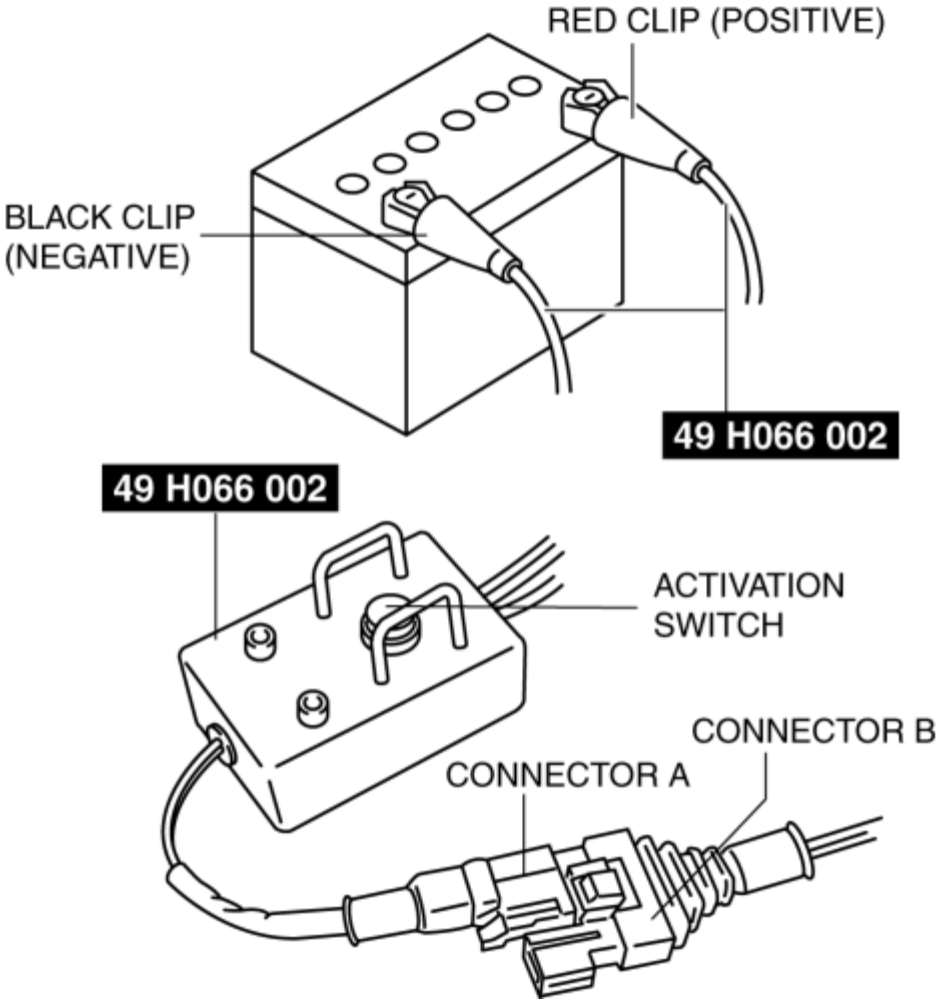

- If not as indicated in the table, replace the **SST** (49 H066 002) because it has a malfunction.

WARNING:

- Do not use a malfunctioning SST (49 H066 002), otherwise it could cause the air bag module or pre-tensioner seat belt to accidentally operate (deploy).

CAUTION:

- Because the permissible voltage for the SST (49 H066 002) is 12 V, do not connect a 24 V power source because it will damage the SST. Always connect only a 12 V power source.

Step	Inspection procedure	Light condition	
		Green	Red
1	Connect the power supply red clip to the positive battery terminal, and the black clip to the negative battery terminal.	On	Off
2	Connect connectors A and B.	Off	On

3	Press the activation switch.	On	Off

2014 - Mazda3 - Restraints

SEAT BELT LOCATION INDEX

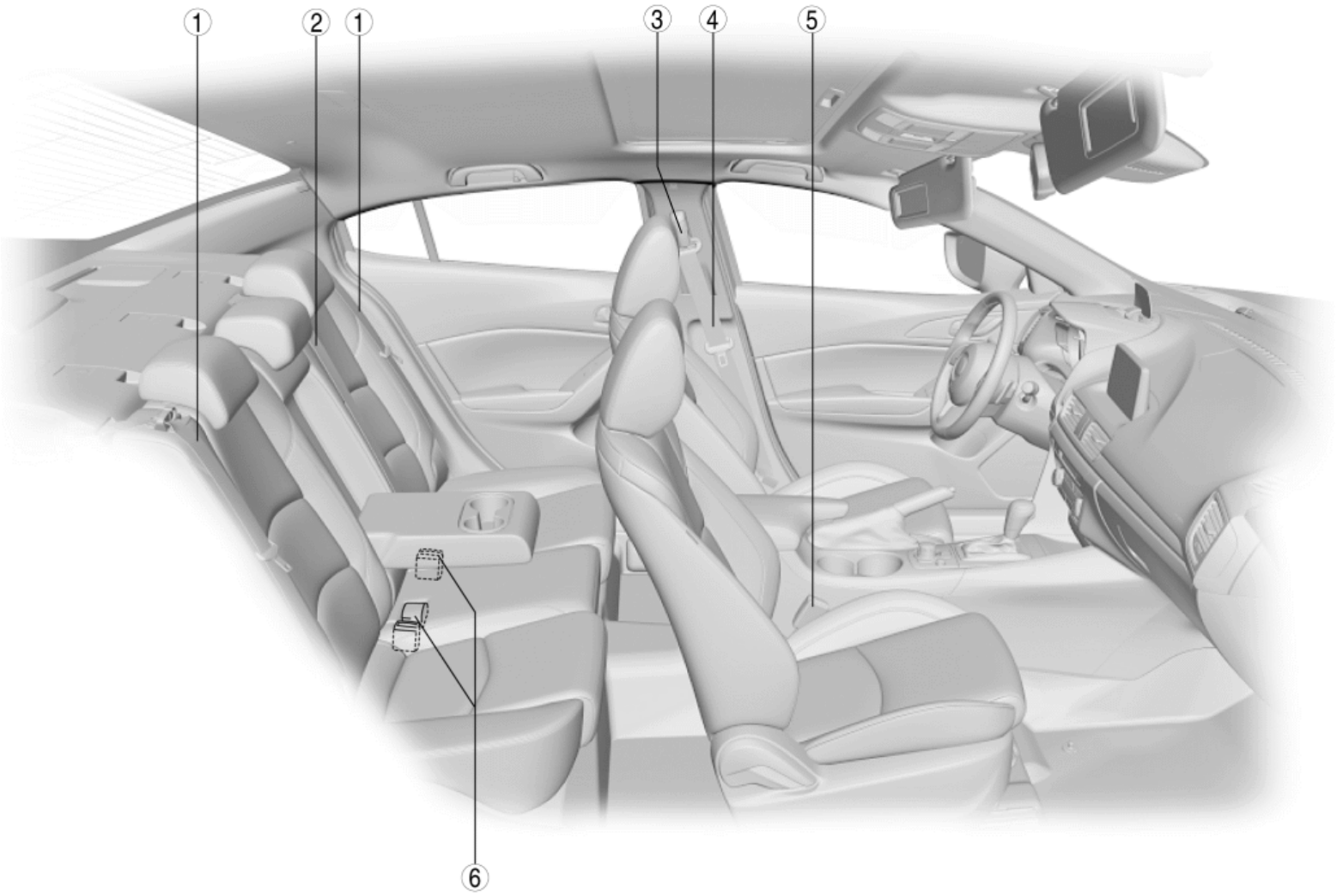

1	Rear seat belt (See **REAR SEAT BELT REMOVAL/INSTALLATION**.) (See **SEAT BELT INSPECTION**.)
2	Rear center seat belt (See **REAR CENTER SEAT BELT REMOVAL/INSTALLATION**.) (See **SEAT BELT INSPECTION**.)
3	Adjuster anchor (See **ADJUSTER ANCHOR REMOVAL/INSTALLATION**.)
4	Front seat belt (See **FRONT SEAT BELT REMOVAL/INSTALLATION**.) (See **SEAT BELT INSPECTION**.)

5	Front buckle (See **FRONT BUCKLE REMOVAL/INSTALLATION**.) (See **BUCKLE SWITCH INSPECTION**.)
6	Rear buckle (See **REAR BUCKLE REMOVAL/INSTALLATION**.) (See **BUCKLE SWITCH INSPECTION**.)

2014 - Mazda3 - Restraints

FRONT SEAT BELT REMOVAL/INSTALLATION

WARNING:

- Handling the front seat belt (pre-tensioner seat belt) improperly can accidentally deploy the pre-tensioner seat belt, which may seriously injure you. Read the air bag system service warnings and cautions before handling the front seat belt.

  (See **AIR BAG SYSTEM SERVICE WARNINGS [STANDARD DEPLOYMENT CONTROL SYSTEM]**.)

  (See **AIR BAG SYSTEM SERVICE CAUTIONS [STANDARD DEPLOYMENT CONTROL SYSTEM]**.)

  (See **AIR BAG SYSTEM SERVICE WARNINGS [TWO-STEP DEPLOYMENT CONTROL SYSTEM]**.)

  (See **AIR BAG SYSTEM SERVICE CAUTIONS [TWO-STEP DEPLOYMENT CONTROL SYSTEM]**.)

- The side air bag sensor is attached to the lower part of the B-pillar. When working around the B-pillar, disconnect the negative battery cable avoiding excessive impact to the lower part of the B-pillar (with side air bag sensor No.1).

CAUTION:

- If the retractor is disassembled, it will not operate correctly due to looseness and excessive play of the internal parts, therefore, do not disassemble the retractor.

Front Seat Belt With Lap Pre-tensioner Seat Belt

1. Switch the ignition off.

2. Disconnect the negative battery cable and wait for **1 min or more**. (See **NEGATIVE BATTERY CABLE DISCONNECTION/CONNECTION [SKYACTIV-G 2.0, SKYACTIV-G 2.5]**.)

3. Remove the fastener.

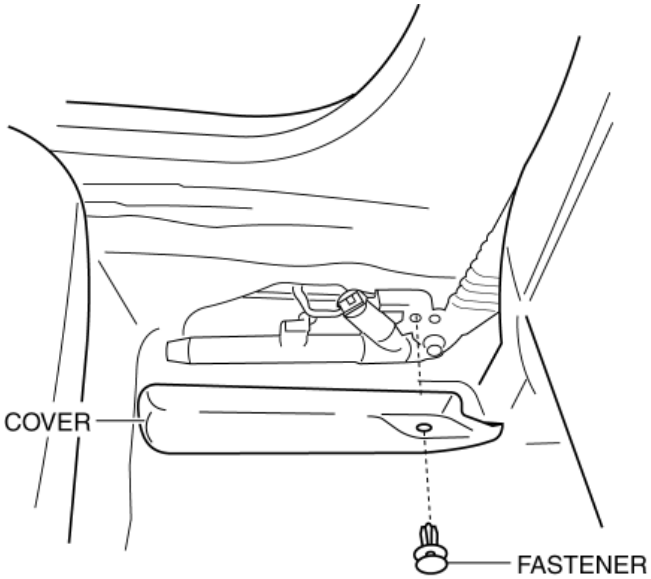

4. Remove the cover.

5. Remove the following parts:

   a. Front scuff plate (See **FRONT SCUFF PLATE REMOVAL/INSTALLATION**.)

   b. Rear scuff plate (See **REAR SCUFF PLATE REMOVAL/INSTALLATION**.)

   c. B-pillar lower trim (See **B-PILLAR LOWER TRIM REMOVAL/INSTALLATION**.)

6. Remove the adjuster anchor cover. (See **Adjuster Anchor Cover Removal Note**.)

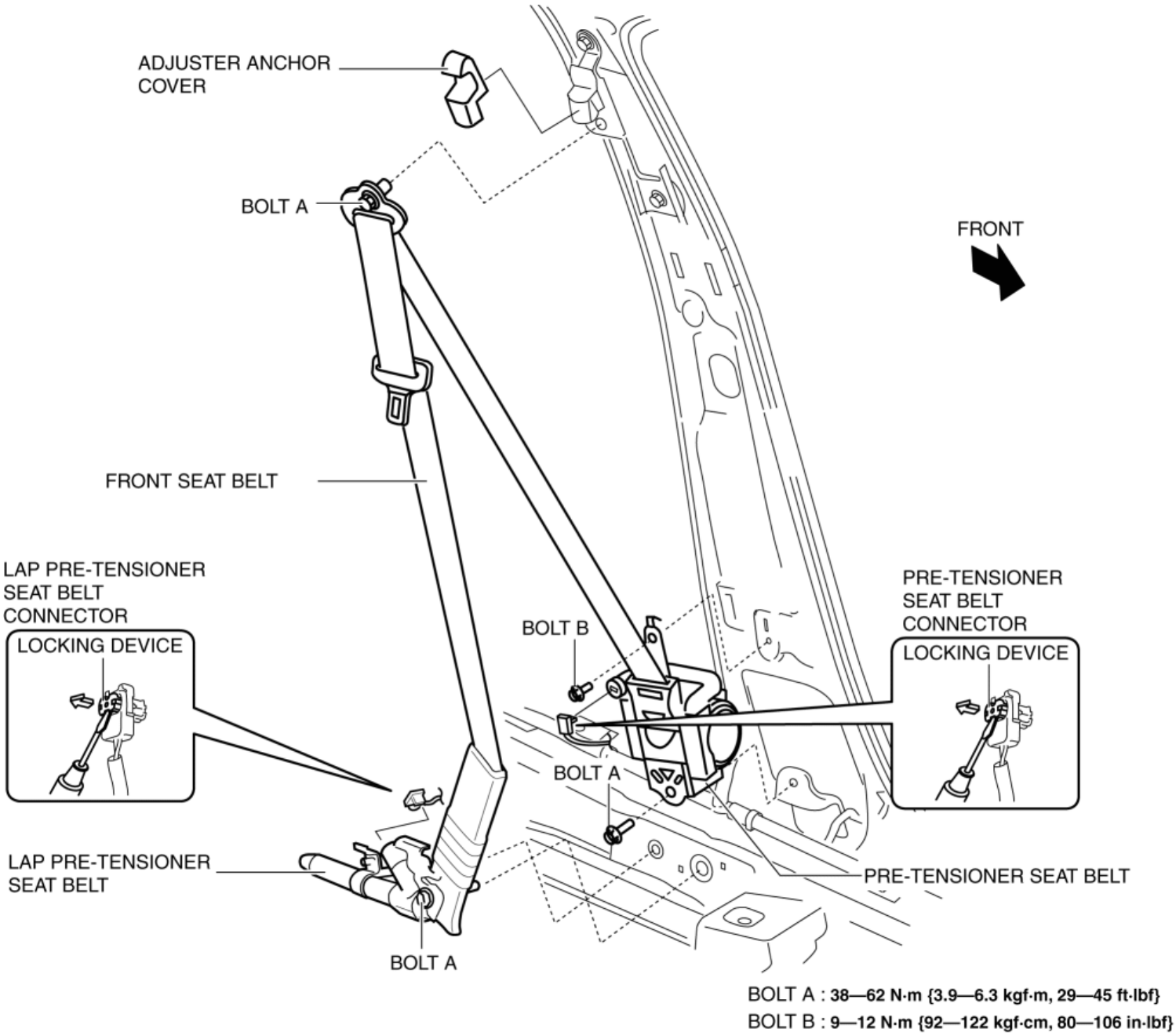

7. Using a flathead screwdriver, lift the locking device carefully, however do not remove it.

8. Disconnect the lap pre-tensioner seat belt connector.

9. Disconnect the pre-tensioner seat belt connector.

10. Remove bolt A.

11. Remove bolt B.

12. Remove the lap pre-tensioner seat belt.

13. Remove the pre-tensioner seat belt.

14. Remove the front seat belt.

15. Install in the reverse order of removal.

16. Switch the ignition ON (engine off or on).

17. Verify that the air bag system warning light illuminates for **approx. 6 s** and turns off.

    - If the air bag system warning light does not operate, refer to the on-board diagnostic system (air bag system) and perform inspection of the system. (See **FLOWCHART [TWO-STEP DEPLOYMENT CONTROL SYSTEM]**.)

Front Seat Belt Without Lap Pre-tensioner Seat Belt

1. Switch the ignition off.

2. Disconnect the negative battery cable and wait for **1 min or more**. (See **NEGATIVE BATTERY CABLE DISCONNECTION/CONNECTION [SKYACTIV-G 2.0, SKYACTIV-G 2.5]**.)

3. Remove the following parts:

   a. Front scuff plate (See **FRONT SCUFF PLATE REMOVAL/INSTALLATION**.)

   b. Rear scuff plate (See **REAR SCUFF PLATE REMOVAL/INSTALLATION**.)

   c. B-pillar lower trim (See **B-PILLAR LOWER TRIM REMOVAL/INSTALLATION**.)

4. Remove the adjuster anchor cover. (See **Adjuster Anchor Cover Removal Note**.)

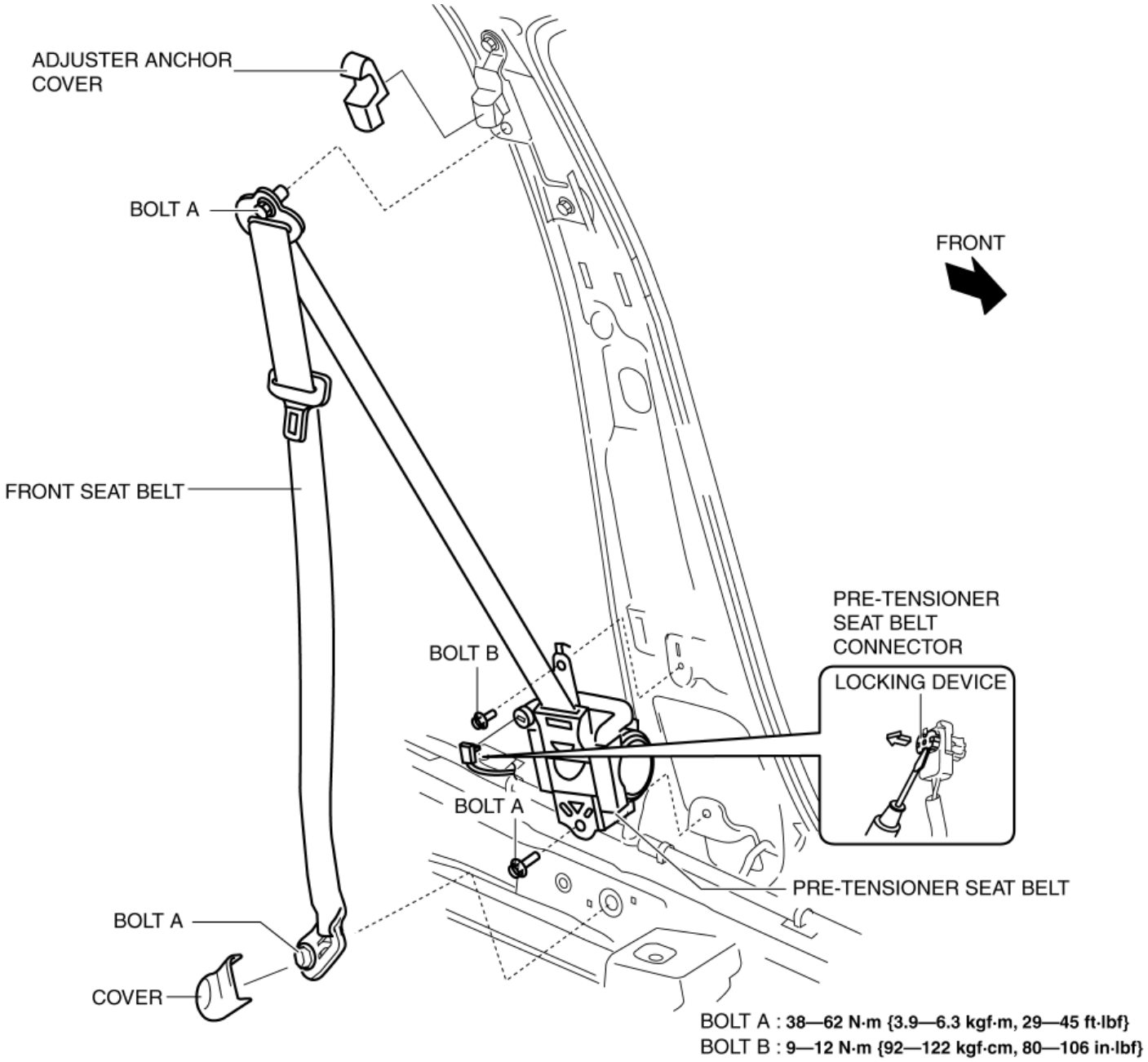

5. Using a flathead screwdriver, lift the locking device carefully, however do not remove it.

6. Disconnect the pre-tensioner seat belt connector.

7. Remove the cover.

8. Remove bolt A.

9. Remove bolt B.

10. Remove the pre-tensioner seat belt.
11. Remove the front seat belt.
12. Install in the reverse order of removal.
13. Switch the ignition ON (engine off or on).
14. Verify that the air bag system warning light illuminates for **approx. 6 s** and turns off.
    - If the air bag system warning light does not operate, refer to the on-board diagnostic system (air bag system) and perform inspection of the system. (See **FLOWCHART [STANDARD DEPLOYMENT CONTROL SYSTEM]**.)

Adjuster Anchor Cover Removal Note

- The adjuster anchor cover is installed to the adjuster anchor by engaging the tab.

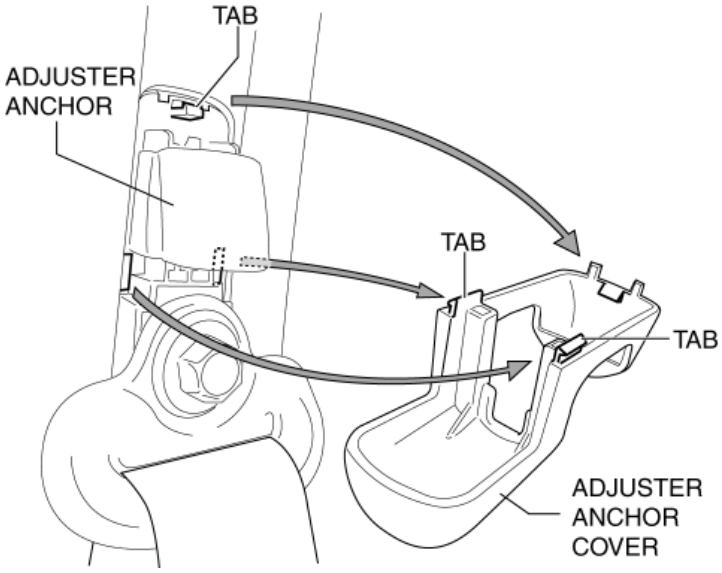

1. Press the adjuster anchor cover in the directions of arrows (1) shown in the figure and pull it in the direction of arrow (2).

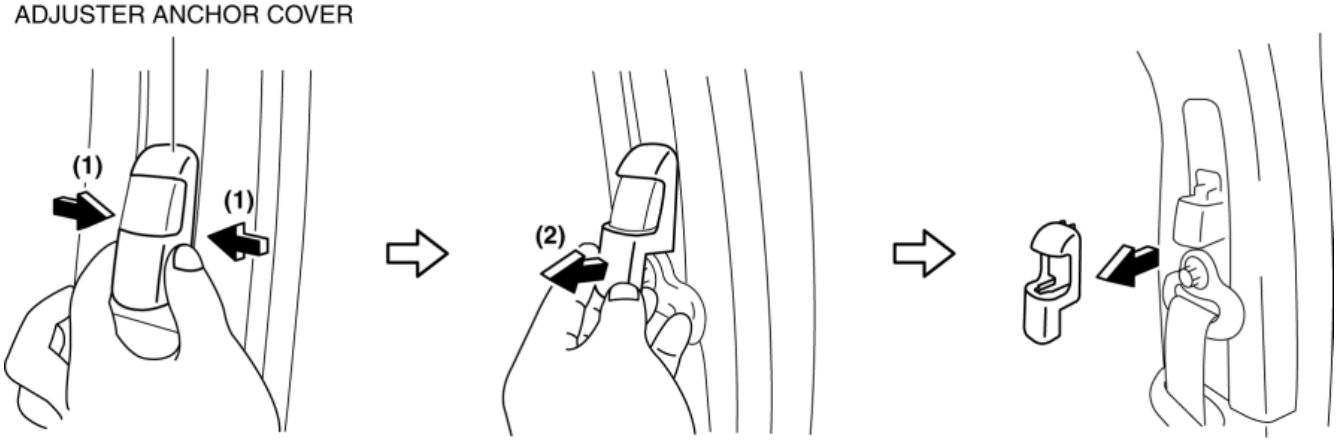

2. Remove the adjuster anchor cover.

2014 - Mazda3 - Restraints

ADJUSTER ANCHOR REMOVAL/INSTALLATION

WARNING:

- The side air bag sensor is attached to the lower part of the B-pillar. When working around the B-pillar, disconnect the negative battery cable or work carefully, avoiding excessive impact to the lower part of the B-pillar (with side air bag sensor No.1).

1. Switch the ignition off.

2. Disconnect the negative battery cable and wait for **1 min or more**. (See **NEGATIVE BATTERY CABLE DISCONNECTION/CONNECTION [SKYACTIV-G 2.0, SKYACTIV-G 2.5]**.)

3. Set the adjuster to the lowest position.

4. Remove the adjuster anchor cover. (See **FRONT SEAT BELT REMOVAL/INSTALLATION**.)

5. Remove the following parts:

   a. Front scuff plate (See **FRONT SCUFF PLATE REMOVAL/INSTALLATION**.)

   b. Rear scuff plate (See **REAR SCUFF PLATE REMOVAL/INSTALLATION**.)

   c. B-pillar lower trim (See **B-PILLAR LOWER TRIM REMOVAL/INSTALLATION**.)

   d. Front seat belt upper anchor installation bolt (See **FRONT SEAT BELT REMOVAL/INSTALLATION**.)

   e. B-pillar upper trim (See **B-PILLAR UPPER TRIM REMOVAL/INSTALLATION**.)

6. Remove bolt A.

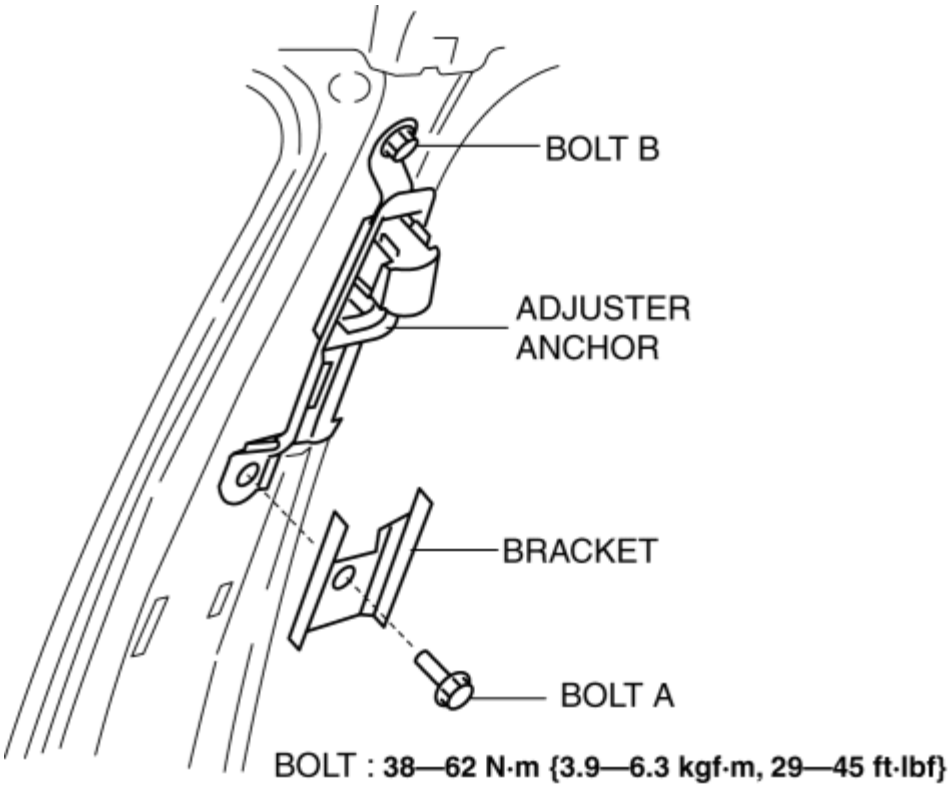

7. Remove the bracket.

8. Remove bolt B.

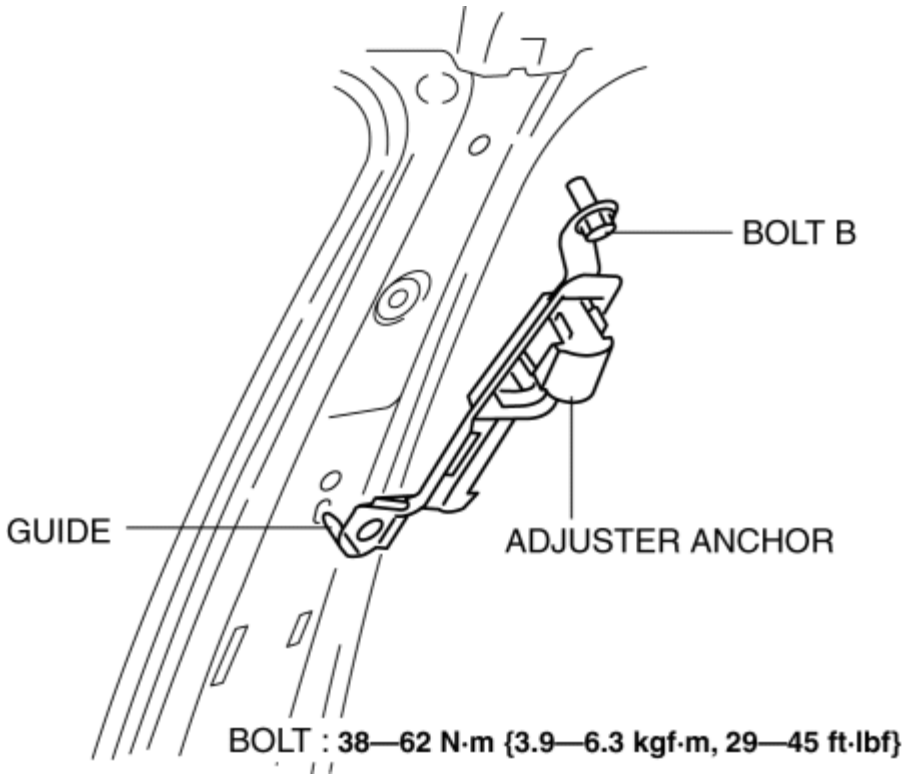

9. Remove the guide.

10. Remove the adjuster anchor.

11. Install in the reverse order of removal.

ADJUSTER ANCHOR REMOVAL/INSTALLATION

2014 - Mazda3 - Restraints

REAR SEAT BELT REMOVAL/INSTALLATION

CAUTION:

- If the retractor is disassembled, it will not operate correctly due to looseness and excessive play of the internal parts, therefore, do not disassemble the retractor.

4SD

1. Remove the rear seat belt from the guide.

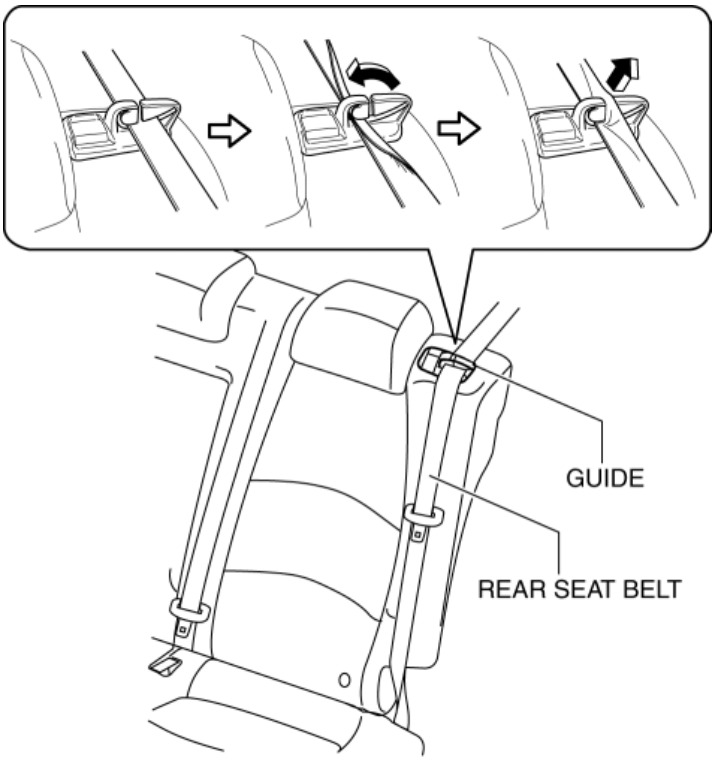

2. Remove the following parts:
   a. Rear seat cushion (See **REAR SEAT CUSHION REMOVAL/INSTALLATION**.)
   b. Rear scuff plate (See **REAR SCUFF PLATE REMOVAL/INSTALLATION**.)
   c. Rear seat back (See **REAR SEAT BACK REMOVAL/INSTALLATION**.)
   d. Tire house trim (See **TIRE HOUSE TRIM REMOVAL/INSTALLATION**.)
   e. C-pillar trim (See **C-PILLAR TRIM REMOVAL/INSTALLATION**.)
   f. Rear package trim (See **REAR PACKAGE TRIM REMOVAL/INSTALLATION**.)
3. Remove the bolts.

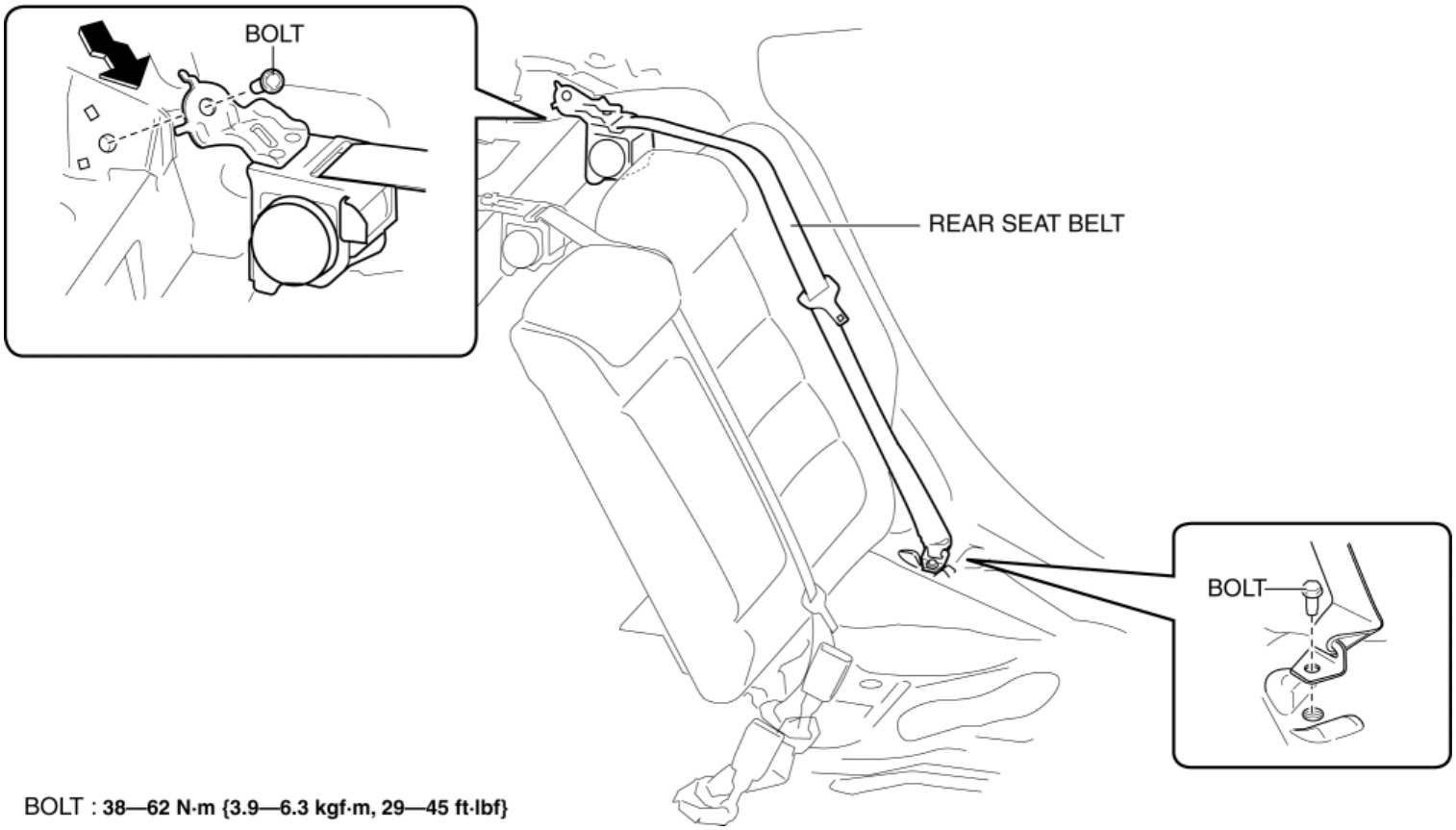

BOLT : **38—62 N·m {3.9—6.3 kgf·m, 29—45 ft·lbf}**

4. Remove the rear seat belt in the direction of the arrow.
5. Install in the reverse order of removal.

5HB

1. Remove the rear seat belt from the guide.

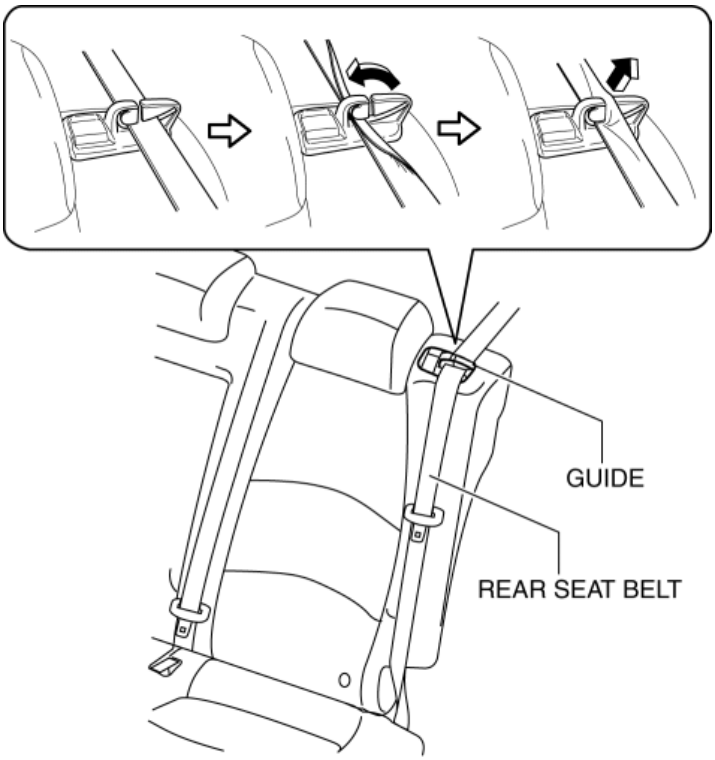

2. Remove the following parts:

a. Rear seat cushion (See **REAR SEAT CUSHION REMOVAL/INSTALLATION**.)

b. Rear scuff plate (See **REAR SCUFF PLATE REMOVAL/INSTALLATION**.)

c. Rear package tray (See **REAR PACKAGE TRAY REMOVAL/INSTALLATION**.)

d. Trunk covering (See **TRUNK COVERING REMOVAL/INSTALLATION**.)

e. Trunk end trim (See **TRUNK END TRIM REMOVAL/INSTALLATION**.)

3. Set the tire house trim aside. (See **TIRE HOUSE TRIM REMOVAL/INSTALLATION**.)

4. Remove the trunk side upper trim. (See **TRUNK SIDE UPPER TRIM REMOVAL/INSTALLATION**.)

5. Remove the bolts.

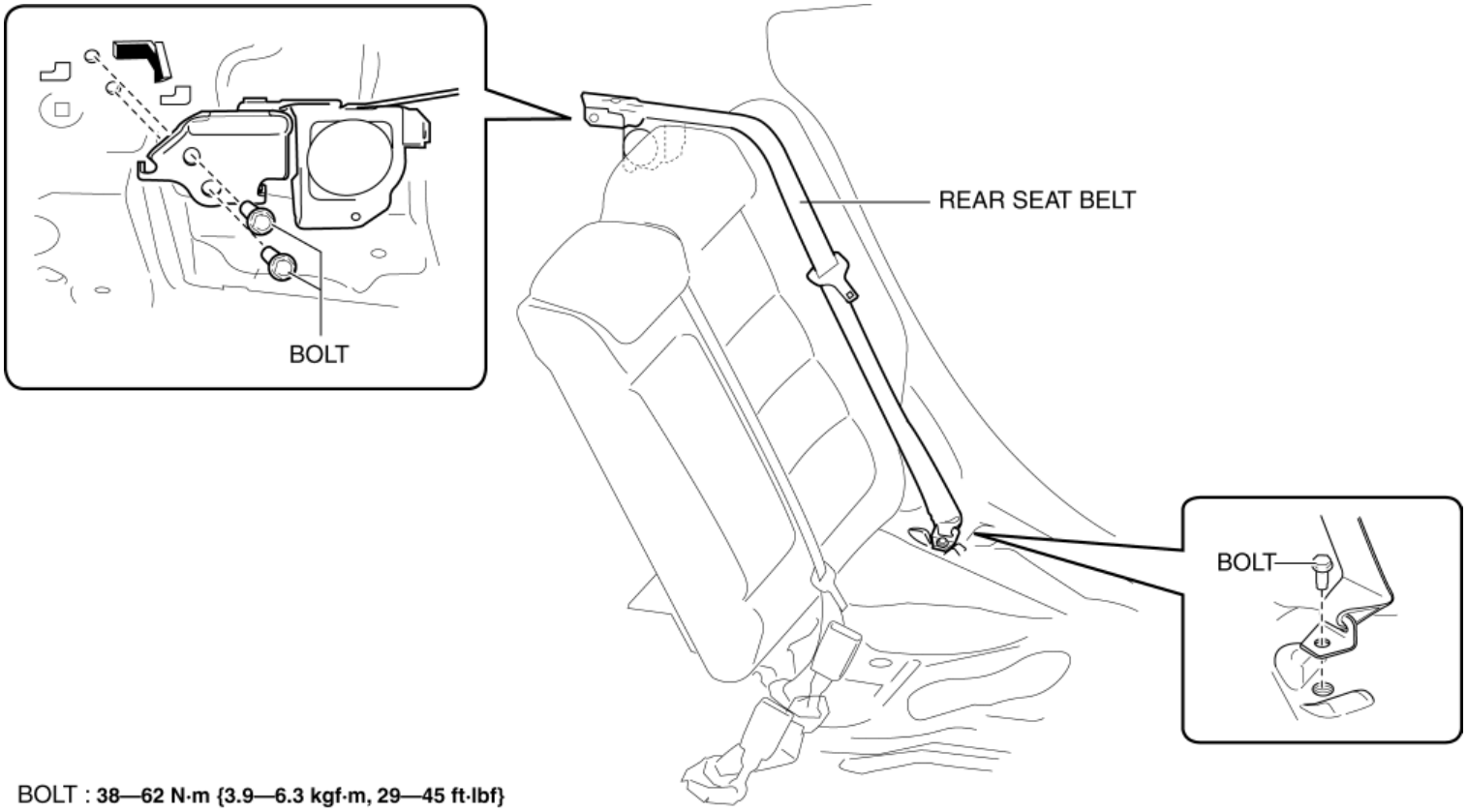

BOLT : **38—62 N·m {3.9—6.3 kgf·m, 29—45 ft·lbf}**

6. Remove the rear seat belt in the direction of the arrow.

7. Install in the reverse order of removal.

2014 - Mazda3 - Restraints

REAR CENTER SEAT BELT REMOVAL/INSTALLATION

CAUTION:

- If the retractor is disassembled, it will not operate correctly due to looseness and excessive play of the internal parts, therefore, do not disassemble the retractor.

4SD (three-point type rear center seat belt)

1. Remove the following parts:
   a. Rear seat cushion (See **REAR SEAT CUSHION REMOVAL/INSTALLATION**.)
   b. Rear scuff plate (See **REAR SCUFF PLATE REMOVAL/INSTALLATION**.)
   c. Rear seat back (See **REAR SEAT BACK REMOVAL/INSTALLATION**.)
   d. Tire house trim (See **TIRE HOUSE TRIM REMOVAL/INSTALLATION**.)
   e. C-pillar trim (See **C-PILLAR TRIM REMOVAL/INSTALLATION**.)
   f. Rear package trim (See **REAR PACKAGE TRIM REMOVAL/INSTALLATION**.)
2. Remove the bolts.

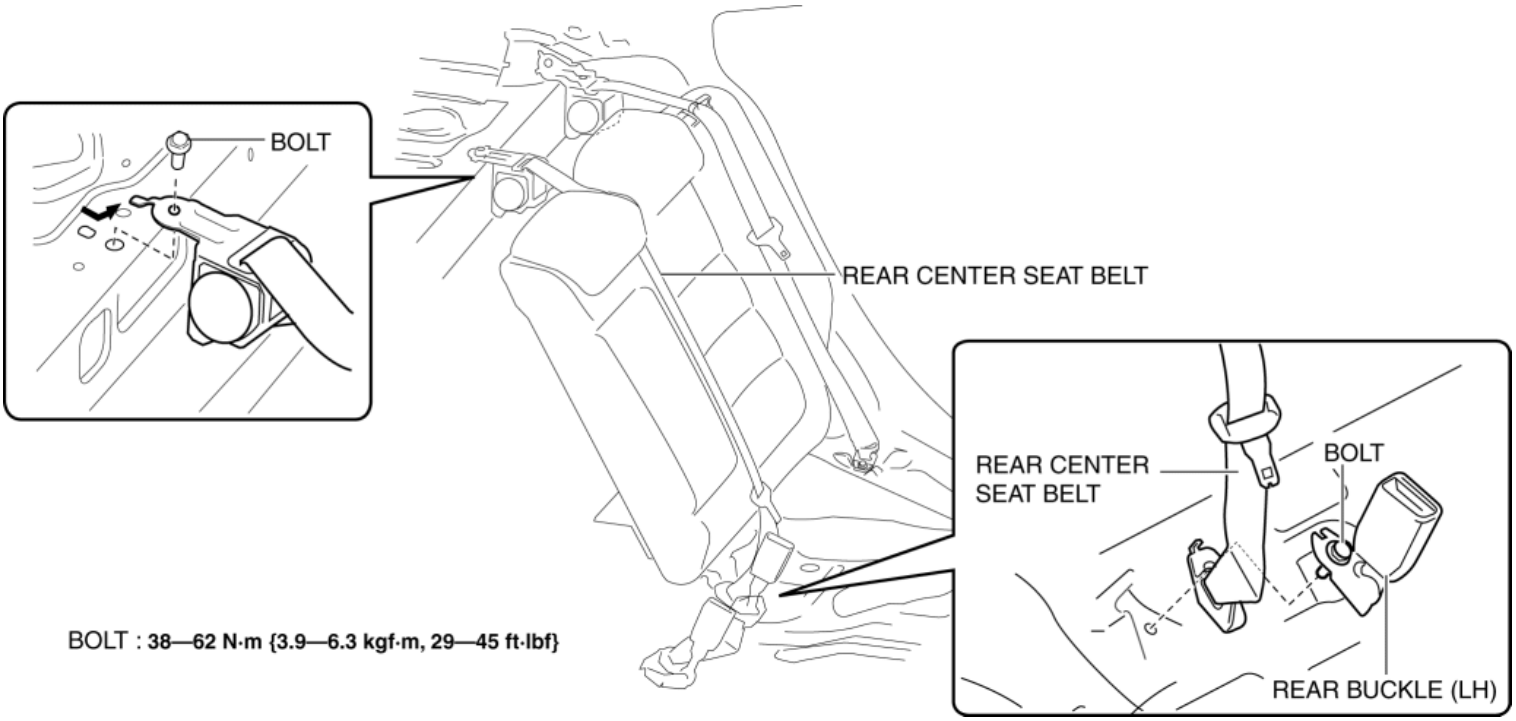

BOLT : **38—62 N·m {3.9—6.3 kgf·m, 29—45 ft·lbf}**

3. Remove the rear center seat belt with the rear buckle (LH).
4. Install in the reverse order of removal. (See **Rear Center Seat Belt Installation Note**.)

4SD (two-point type rear center seat belt)

1. Remove the rear seat cushion. (See **REAR SEAT CUSHION REMOVAL/INSTALLATION**.)
2. Remove the bolt.

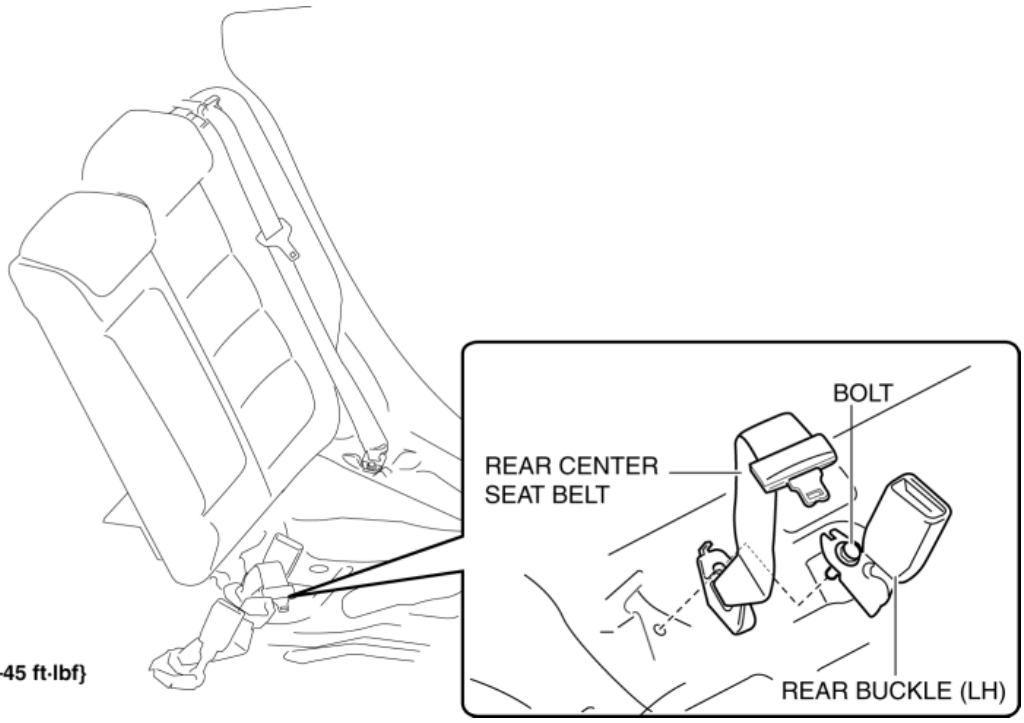

BOLT : **38—62 N·m {3.9—6.3 kgf·m, 29—45 ft·lbf}**

3. Remove the rear center seat belt with the rear buckle (LH).
4. Install in the reverse order of removal. (See **Rear Center Seat Belt Installation Note**.)

5HB

NOTE:

- The rear center seat belt is building into the rear seat back.

1. Remove the rear seat cushion. (See **REAR SEAT CUSHION REMOVAL/INSTALLATION**.)
2. Remove the bolt.

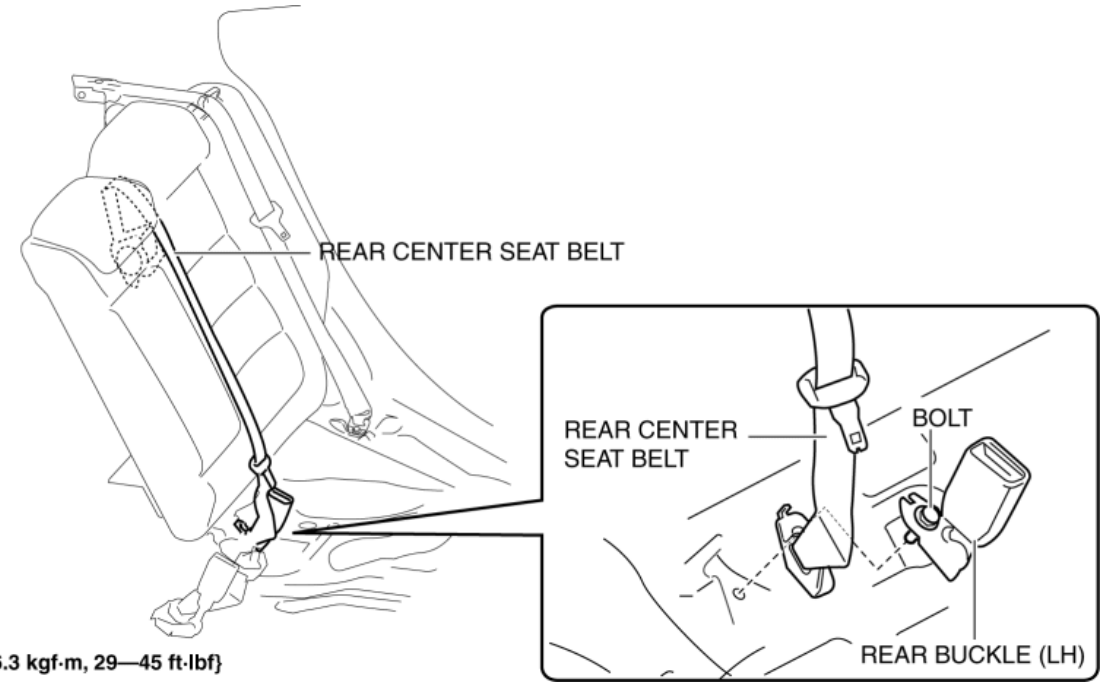

BOLT : **38—62 N·m {3.9—6.3 kgf·m, 29—45 ft·lbf}**

3. Remove the rear seat back frame. (See **REAR SEAT BACK FRAME REMOVAL/INSTALLATION**.)
4. Remove the rear center seat belt from the rear seat back frame.

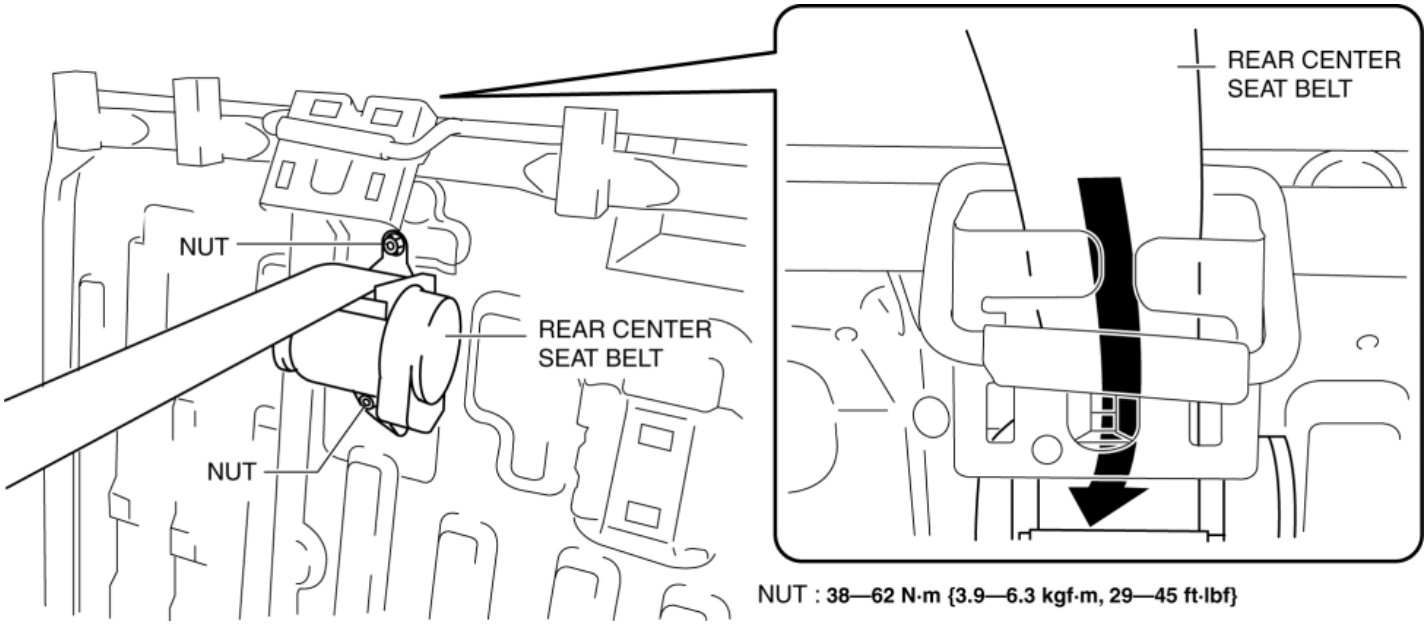

5. Install in the reverse order of removal. (See **Rear Center Seat Belt Installation Note**.)

Rear Center Seat Belt Installation Note

1. After installing the rear center seat belt, place it as shown in the figure.

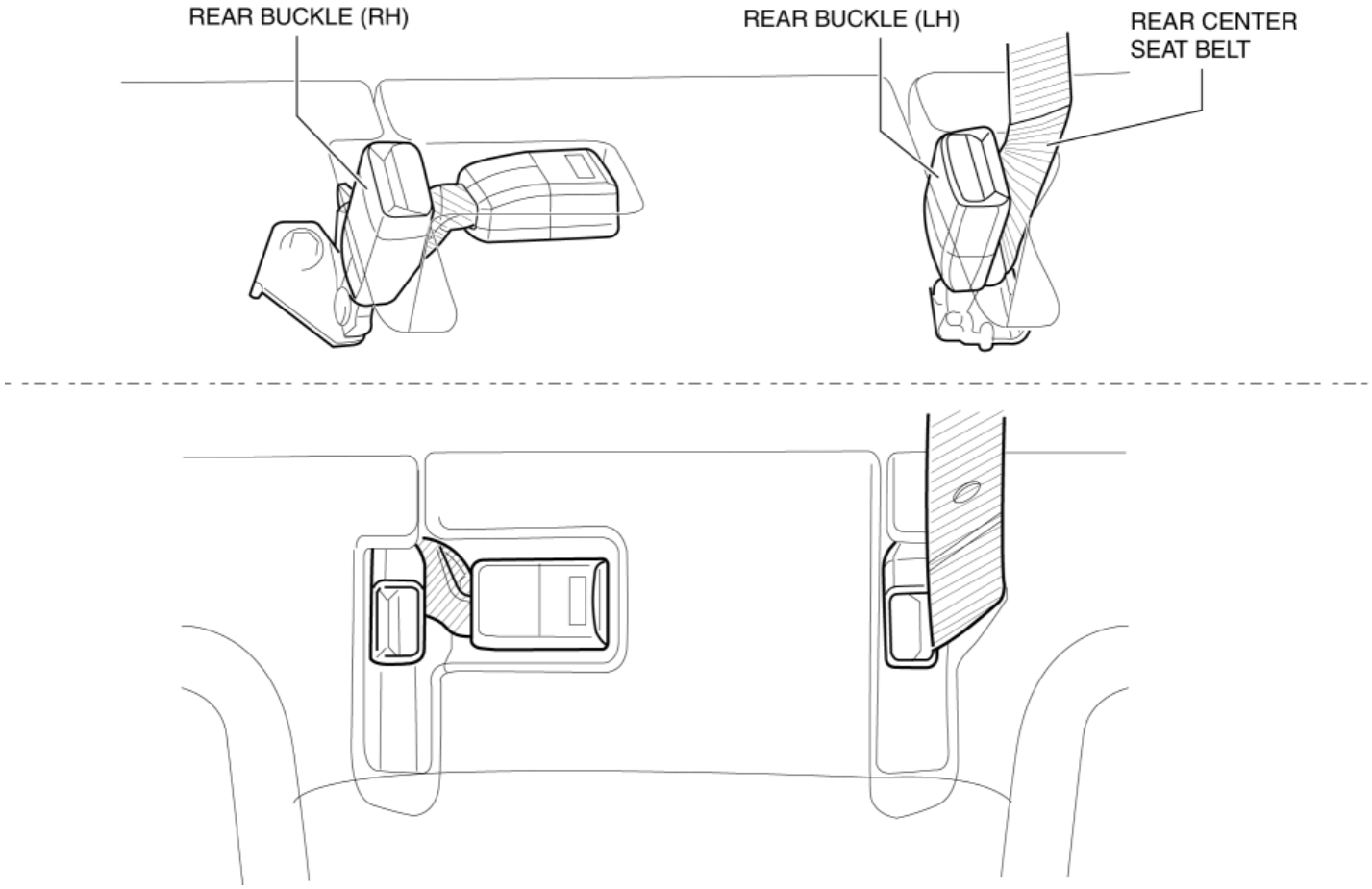

2014 - Mazda3 - Restraints

SEAT BELT INSPECTION

Belt

1. Verify that the belt is installed properly with no twists or kinks.
2. Verify that there is no damage to the seat belt and no deformation of the metal fittings.
    - If there is any malfunction, replace the seat belt. (See **FRONT SEAT BELT REMOVAL/INSTALLATION**.)(See **REAR SEAT BELT REMOVAL/INSTALLATION**.)(See **REAR CENTER SEAT BELT REMOVAL/INSTALLATION**.)

ELR (Emergency Locking Retractor)

Except rear center seat belt (5HB)

1. Verify that the belt can be pulled out smoothly, and that it retracts smoothly.

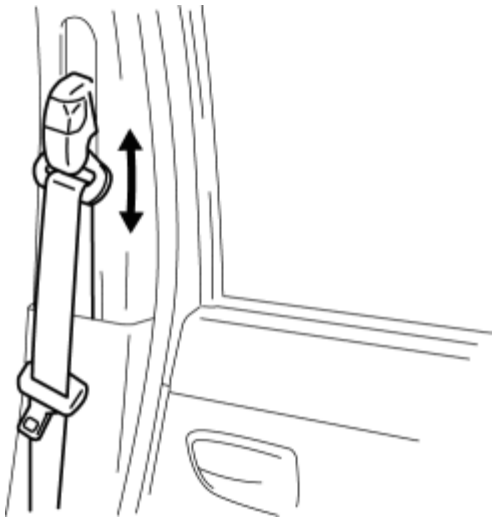

    - If there is any malfunction, replace the seat belt. (See **FRONT SEAT BELT REMOVAL/INSTALLATION**.)(See **REAR SEAT BELT REMOVAL/INSTALLATION**.)(See **REAR CENTER SEAT BELT REMOVAL/INSTALLATION**.)
2. Verify that the retractor locks when the belt is pulled quickly.
    - If there is any malfunction, replace the seat belt. (See **FRONT SEAT BELT REMOVAL/INSTALLATION**.)(See **REAR SEAT BELT REMOVAL/INSTALLATION**.)(See **REAR CENTER SEAT BELT REMOVAL/INSTALLATION**.)
3. Remove the retractor. (See **FRONT SEAT BELT REMOVAL/INSTALLATION**.)(See **REAR SEAT BELT**

REMOVAL/INSTALLATION.)(See **REAR CENTER SEAT BELT REMOVAL/INSTALLATION**.)

4. While pulling the seat belt out, verify that the seat belt does not lock when the retractor is tilted slowly up to **15°** from the mounted position and locks when the retractor is tilted **40° or more.**

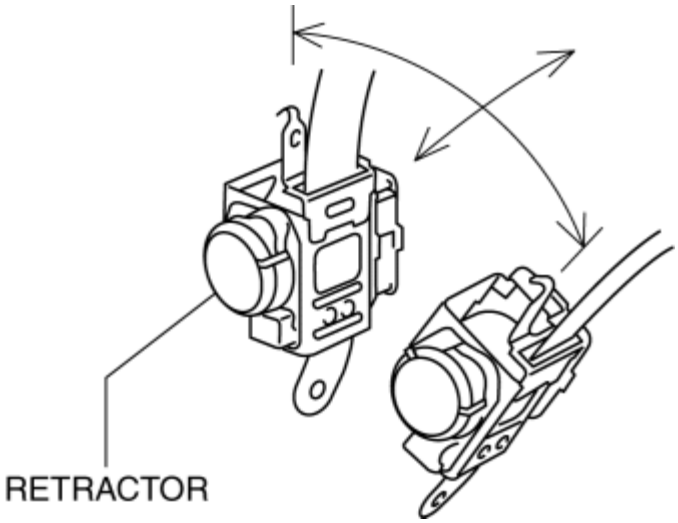

- If there is any malfunction, replace the seat belt. (See **FRONT SEAT BELT REMOVAL/INSTALLATION**.)(See **REAR SEAT BELT REMOVAL/INSTALLATION**.)(See **REAR CENTER SEAT BELT REMOVAL/INSTALLATION**.)

Rear center seat belt (5HB)

CAUTION:

- The rear center seat belt ELR only becomes operable after a certain amount of belt webbing is pulled out. For the ELR inspection, fasten the rear center seat belt to the rear buckle (center) and perform the inspection after pulling out the rear center seat belt 130 mm {5.12 in} (ELR operable condition). If the inspection is performed while the ELR is not in an operable condition, the integrity of the system cannot be determined.

1. Fasten the rear center seat belt to the rear buckle (center) and pull out the rear center seat belt **130 mm {5.12 in}**.

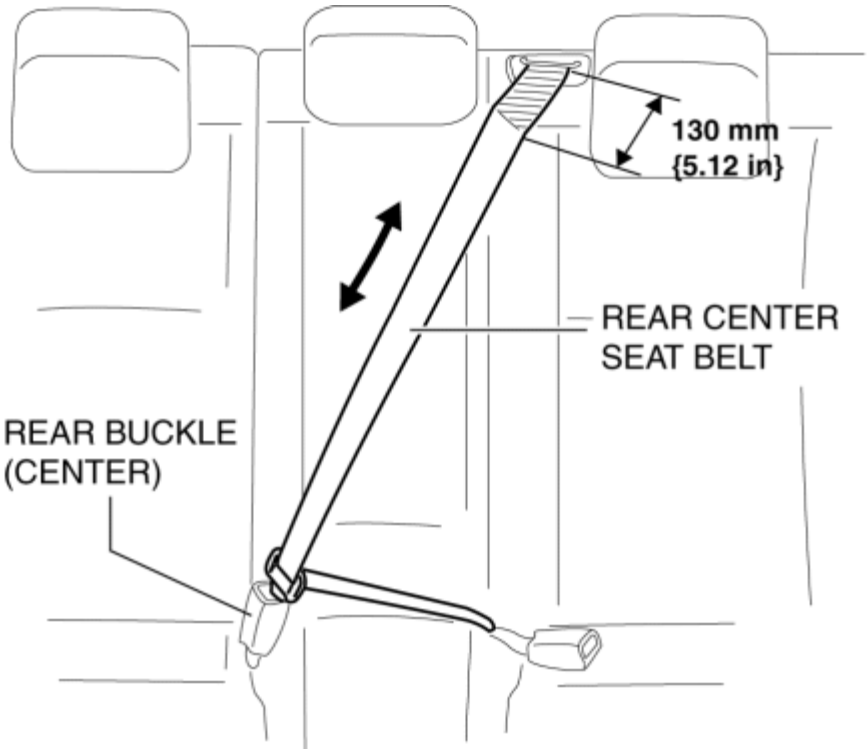

2. Verify that the belt can be pulled out smoothly, and that it retracts smoothly.

- If there is any malfunction, replace the rear center seat belt. (See **REAR CENTER SEAT BELT REMOVAL/INSTALLATION**.)

3. Verify that the retractor locks when the belt is pulled quickly.

- If there is any malfunction, replace the rear center seat belt. (See **REAR CENTER SEAT BELT REMOVAL/INSTALLATION**.)

4. Remove the retractor. (See **REAR CENTER SEAT BELT REMOVAL/INSTALLATION**.)

5. While pulling the seat belt out, make sure that the seat belt does not lock when the retractor is tilted slowly up to **15°** from the mounted position and locks when the retractor is tilted **40° or more.**

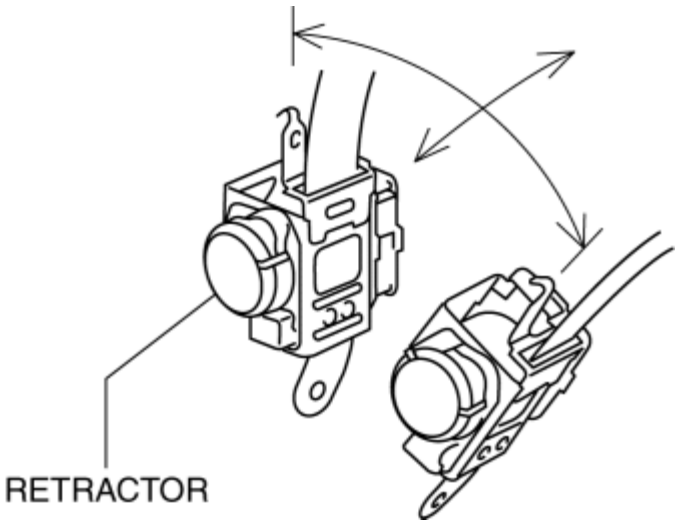

- If there is any malfunction, replace the rear center seat belt. (See **REAR CENTER SEAT BELT REMOVAL/INSTALLATION**.)

ALR (Automatic Locking Retractor)

1. Pull the belt out fully to change the lock mode from ELR to ALR.

2. Verify that the retractor makes a clicking sound as the belt slowly retracts. If no sound is heard, the lock mode has not changed to ALR. If necessary, repeat Step 1.

- If there is any malfunction, replace the seat belt. (See **FRONT SEAT BELT REMOVAL/INSTALLATION**.)(See **REAR SEAT BELT REMOVAL/INSTALLATION**.)(See **REAR CENTER SEAT BELT REMOVAL/INSTALLATION**.)

3. Verify that the retractor locks when pulled.

- If there is any malfunction, replace the seat belt. (See **FRONT SEAT BELT REMOVAL/INSTALLATION**.)(See **REAR SEAT BELT REMOVAL/INSTALLATION**.)(See **REAR CENTER SEAT BELT REMOVAL/INSTALLATION**.)

4. Verify that the lock mode changes to ELR when the belt is fully pulled out.

- If there is any malfunction, replace the seat belt. (See **FRONT SEAT BELT REMOVAL/INSTALLATION**.)(See **REAR SEAT BELT REMOVAL/INSTALLATION**.)(See **REAR CENTER SEAT BELT REMOVAL/INSTALLATION**.)

Load Limiter Retractor

WARNING:

- When the load limiter operates, the belt and anchor rub against each other strongly leaving wear tracks. If the seat belt is used in this state, the seat belt will not function at its full capability and there is the possibility of serious injury to passengers. Always replace the seat belt once the load limiter operates.

1. If the vehicle has been subjected to a shock in an accident, pull the belt from the retractor and confirm that there are no wear tracks (the load limiter has not operated) by visually inspecting and feeling the belt.

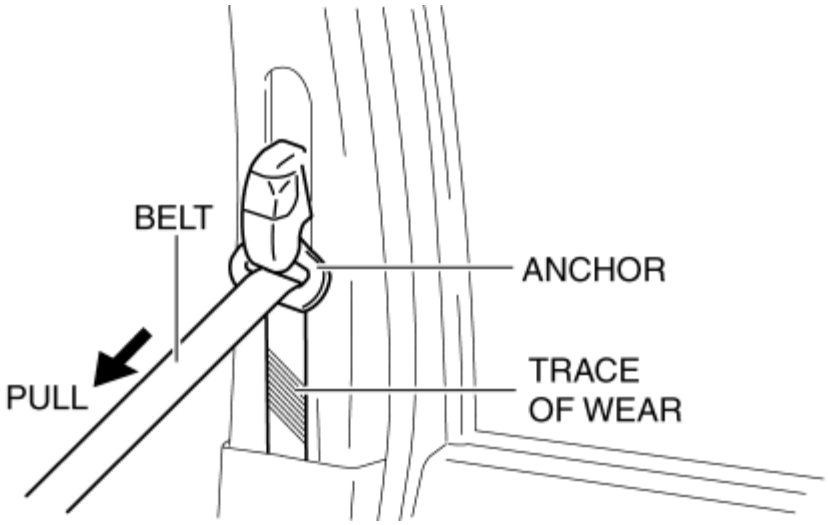

- If there is any malfunction, replace the seat belt. (See **FRONT SEAT BELT REMOVAL/INSTALLATION**.)(See **REAR SEAT BELT REMOVAL/INSTALLATION**.)(See **REAR CENTER SEAT BELT REMOVAL/INSTALLATION**.)

SEAT BELT INSPECTION

2014 - Mazda3 - Restraints

FRONT BUCKLE REMOVAL/INSTALLATION

Driver-side

1. Disconnect the negative battery cable and wait for **1 min or more**. (See **NEGATIVE BATTERY CABLE DISCONNECTION/CONNECTION [SKYACTIV-G 2.0, SKYACTIV-G 2.5]**.)

2. Remove the front seat. (See **FRONT SEAT REMOVAL/INSTALLATION**.)

3. Disconnect the front buckle connector.

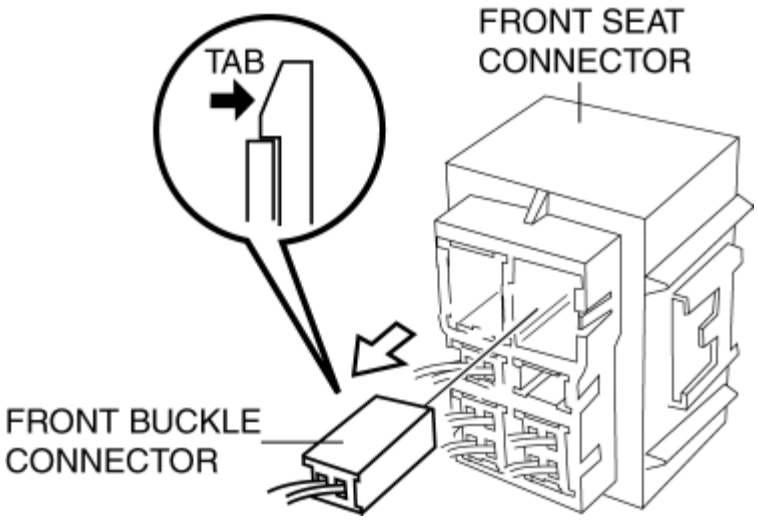

4. Remove the bolt.

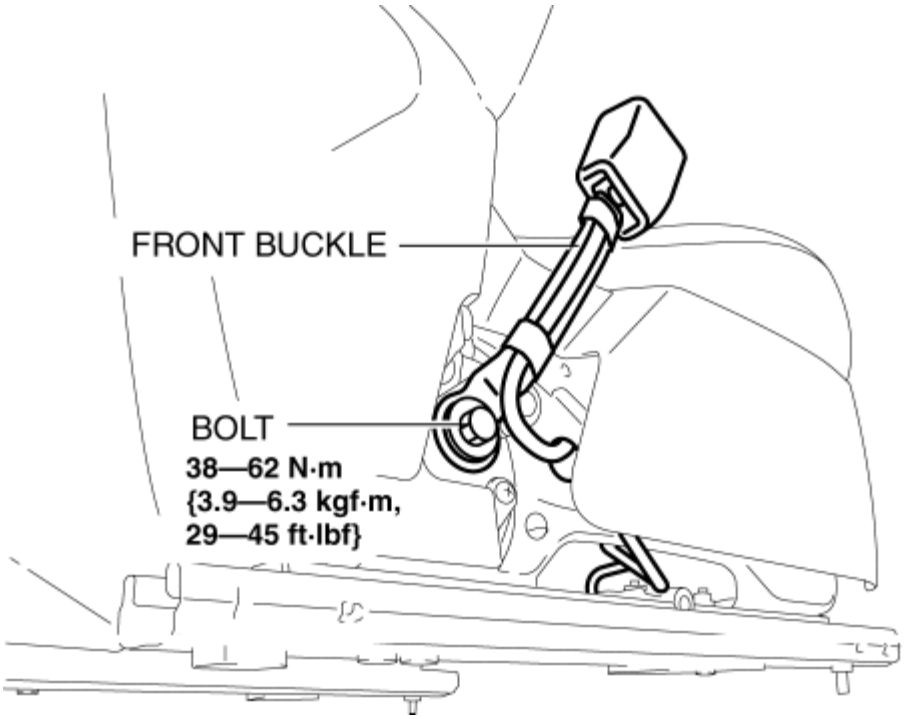

5. Remove the front buckle.

6. Install in the reverse order of removal.

Passenger-side (With Buckle Switch)

1. Disconnect the negative battery cable and wait for **1 min or more**. (See **NEGATIVE BATTERY CABLE DISCONNECTION/CONNECTION [SKYACTIV-G 2.0, SKYACTIV-G 2.5]**.)

2. Remove the front seat. (See **FRONT SEAT REMOVAL/INSTALLATION**.)

3. Detach the clip.

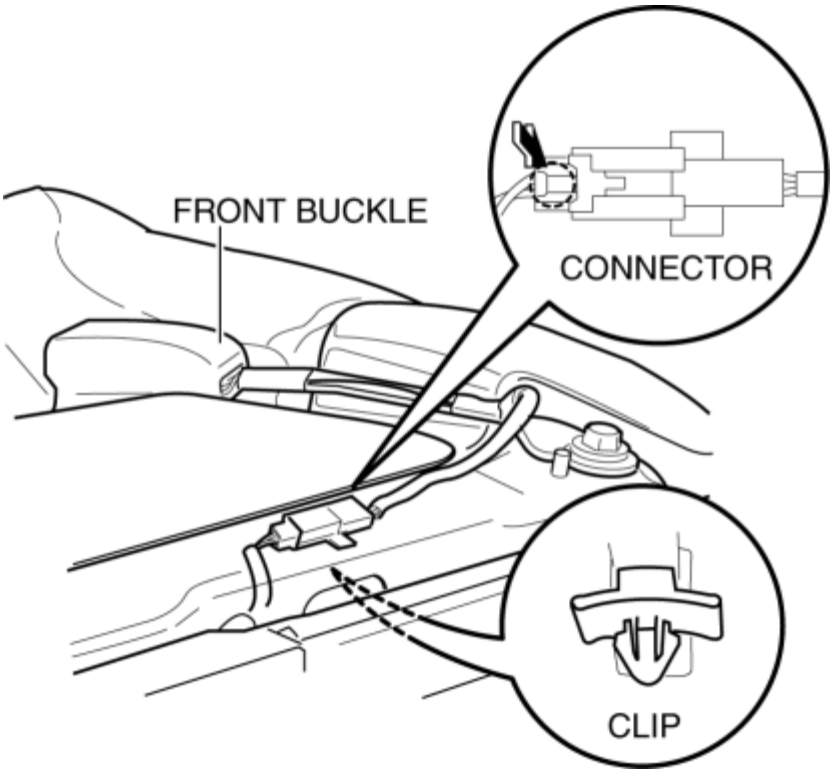

4. Disconnect the connector.

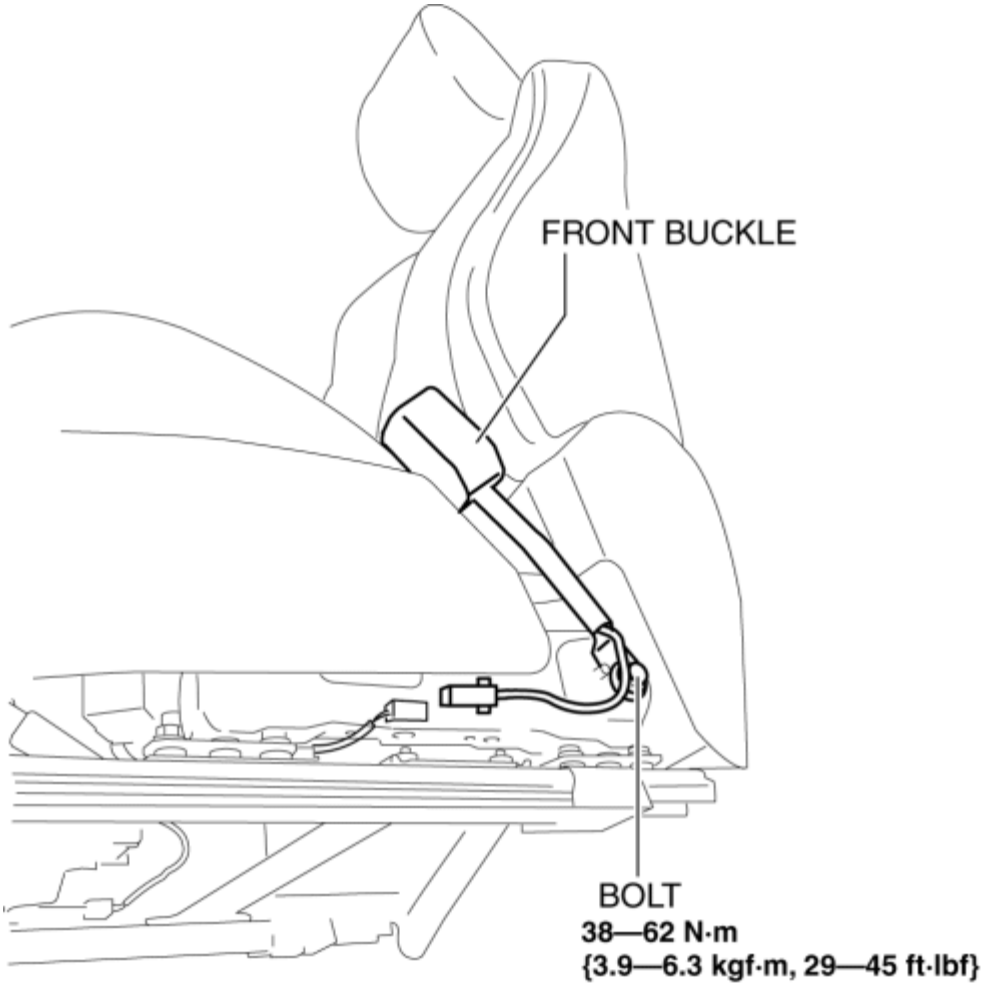

5. Remove the bolt.

6. Remove the front buckle.

7. Install in the reverse order of removal.

Passenger-side (Without Buckle Switch)

1. Disconnect the negative battery cable and wait for **1 min or more**. (See **NEGATIVE BATTERY CABLE DISCONNECTION/CONNECTION [SKYACTIV-G 2.0, SKYACTIV-G 2.5]**.)

2. Remove the front seat. (See **FRONT SEAT REMOVAL/INSTALLATION**.)

3. Remove the bolt.

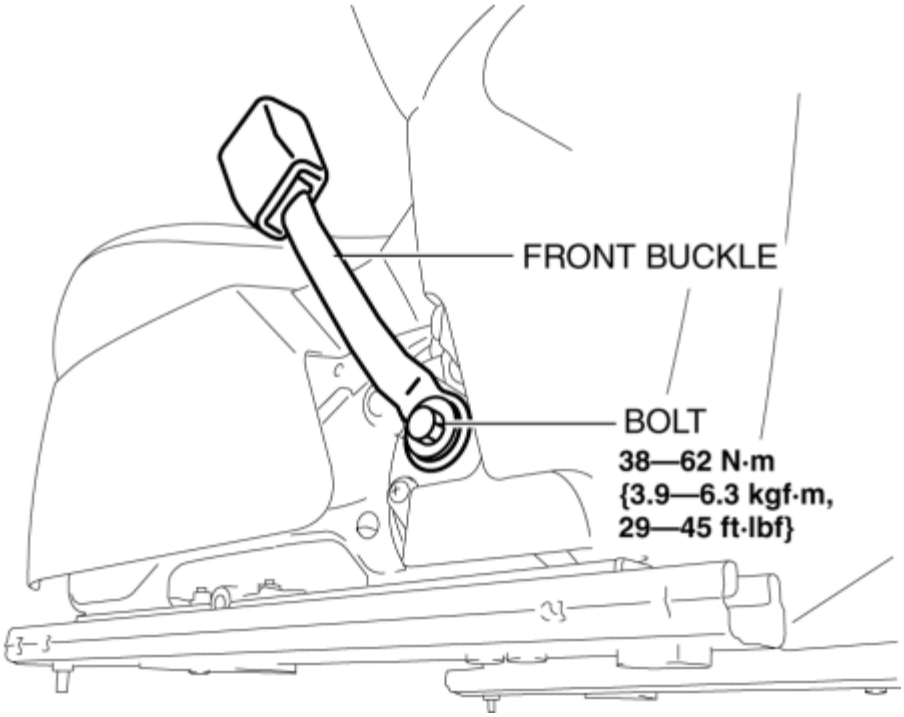

4. Remove the front buckle.

5. Install in the reverse order of removal.

2014 - Mazda3 - Restraints

REAR BUCKLE REMOVAL/INSTALLATION

1. Remove the rear seat cushion. (See **REAR SEAT CUSHION REMOVAL/INSTALLATION**.)
2. Remove the bolts.

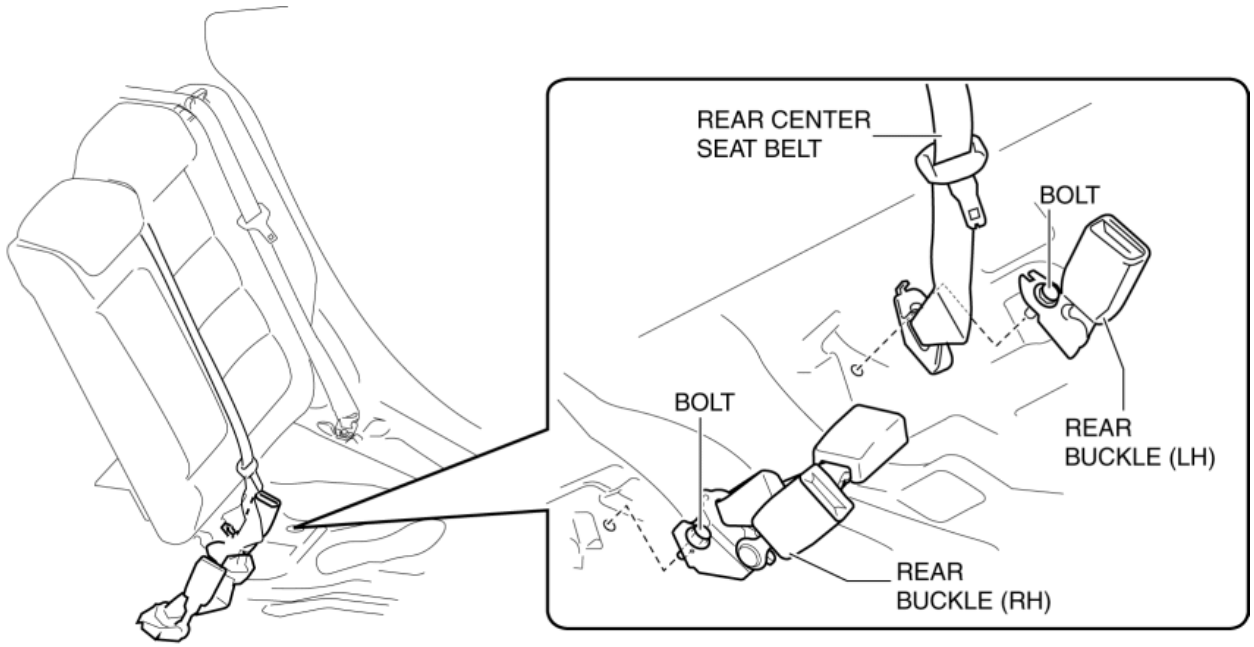

BOLT : **38—62 N·m {3.9—6.3 kgf·m, 29—45 ft·lbf}**

3. Remove the rear buckle (RH) and rear buckle (LH).
4. Install in the reverse order of removal. (See **Rear Buckle Installation Note**.)

Rear Buckle Installation Note

1. After installing the rear buckle, place it as shown in the figure.

REAR BUCKLE REMOVAL/INSTALLATION

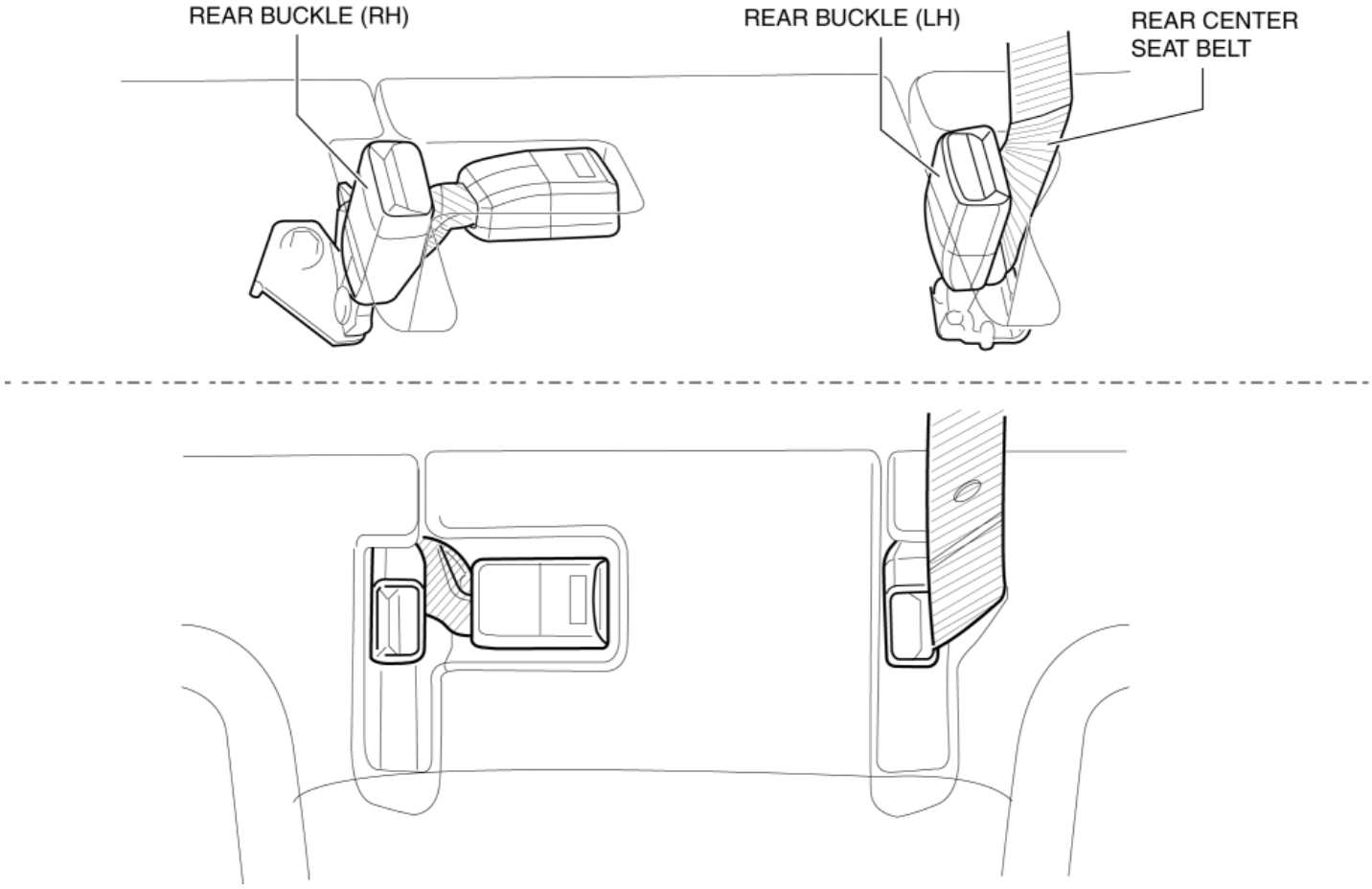

2014 - Mazda3 - Restraints

BUCKLE SWITCH INSPECTION

Driver-side

1. Switch the ignition off.

2. Disconnect the negative battery cable and wait for **1 min or more**. (See **NEGATIVE BATTERY CABLE DISCONNECTION/CONNECTION [SKYACTIV-G 2.0, SKYACTIV-G 2.5]**.)

3. Remove the front seat. (See **FRONT SEAT REMOVAL/INSTALLATION**.)

4. Remove the front buckle. (See **FRONT BUCKLE REMOVAL/INSTALLATION**.)

5. Inspect for continuity between the buckle switch terminals using a tester.

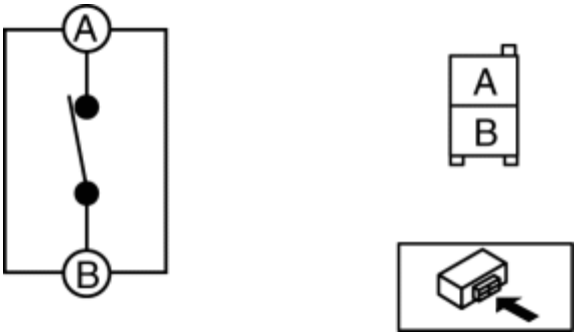

- If not as indicated in the table, replace the front buckle. (See **FRONT BUCKLE REMOVAL/INSTALLATION**.)

○—○ : Continuity

Seat belt	Terminal	
	A	B
Fastened		
Unfastened	○	○

Passenger-side (with buckle switch)

1. Since the buckle switch cannot be inspected separately, perform air bag DTC inspection.

(See **DTC B0052:09/B0052:11/B0052:14 [TWO-STEP DEPLOYMENT CONTROL SYSTEM]**.)

BUCKLE SWITCH INSPECTION

< Previous

2014 - Mazda3 - Restraints

RESTRAINTS SST

49 H066 002 Deployment tool	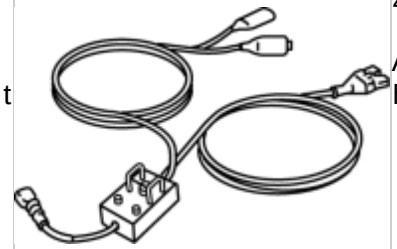	49 B066 004 Adapter harness	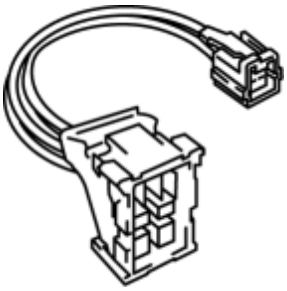	49 L066 002 Adapter harness	
49 G066 003 Adapter harness		49 N088 0A0 Fuel and Thermometer checker	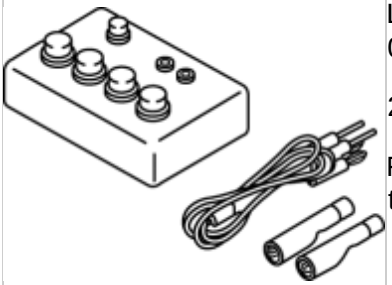	1: 49 L088 009 2: – Feeler tool kit	

< Previous

Next >

2014 - Mazda3 - Body and Accessories

ON-BOARD DIAGNOSTIC WIRING DIAGRAM [ADAPTIVE FRONT LIGHTING SYSTEM (AFS)]

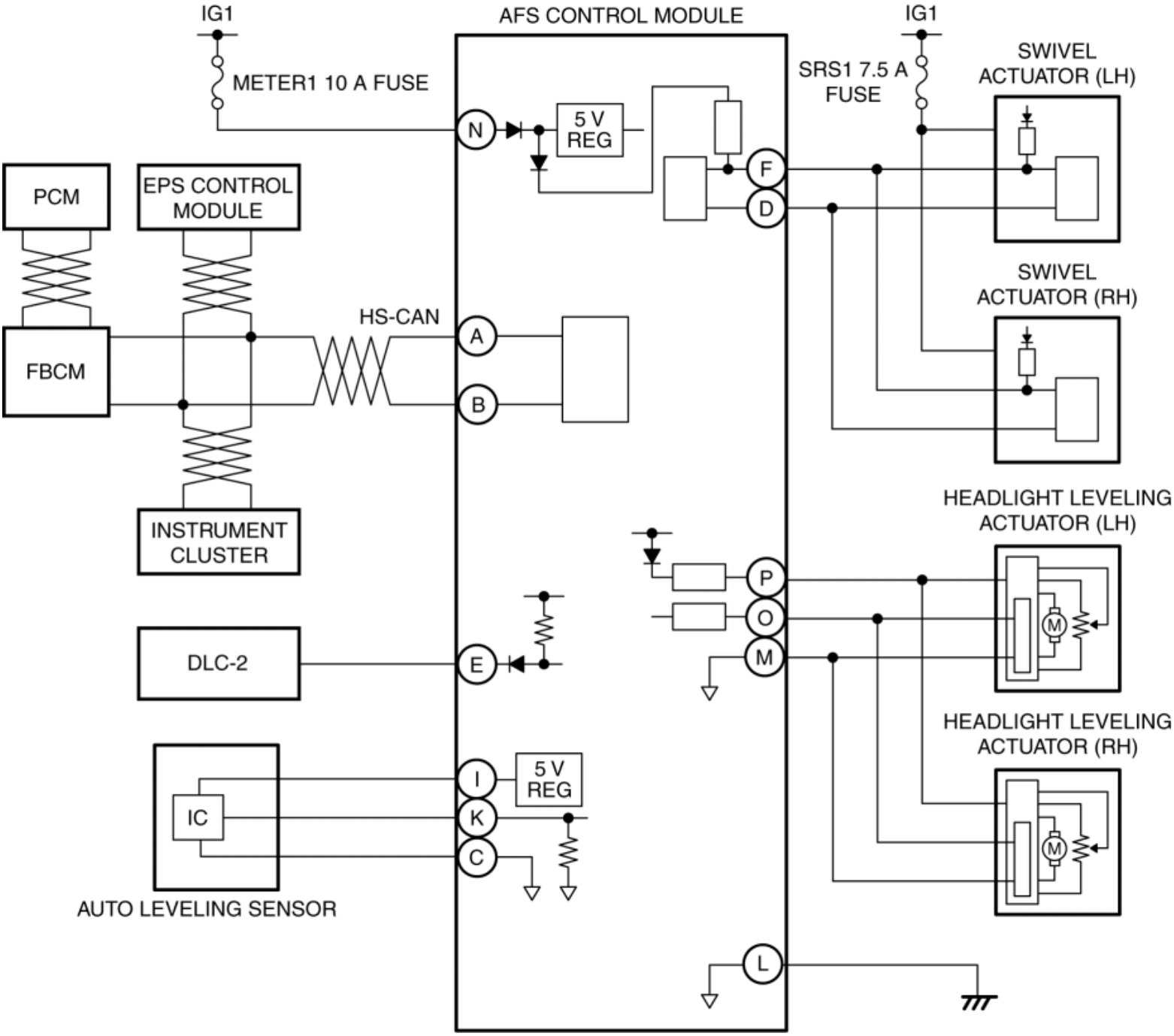

Next >

2014 - Mazda3 - Body and Accessories

FOREWORD [ADAPTIVE FRONT LIGHTING SYSTEM (AFS)]

- If there is any vehicle malfunction complaint lodged by a customer, perform malfunction diagnosis according to the troubleshooting procedure.

Troubleshooting Procedure

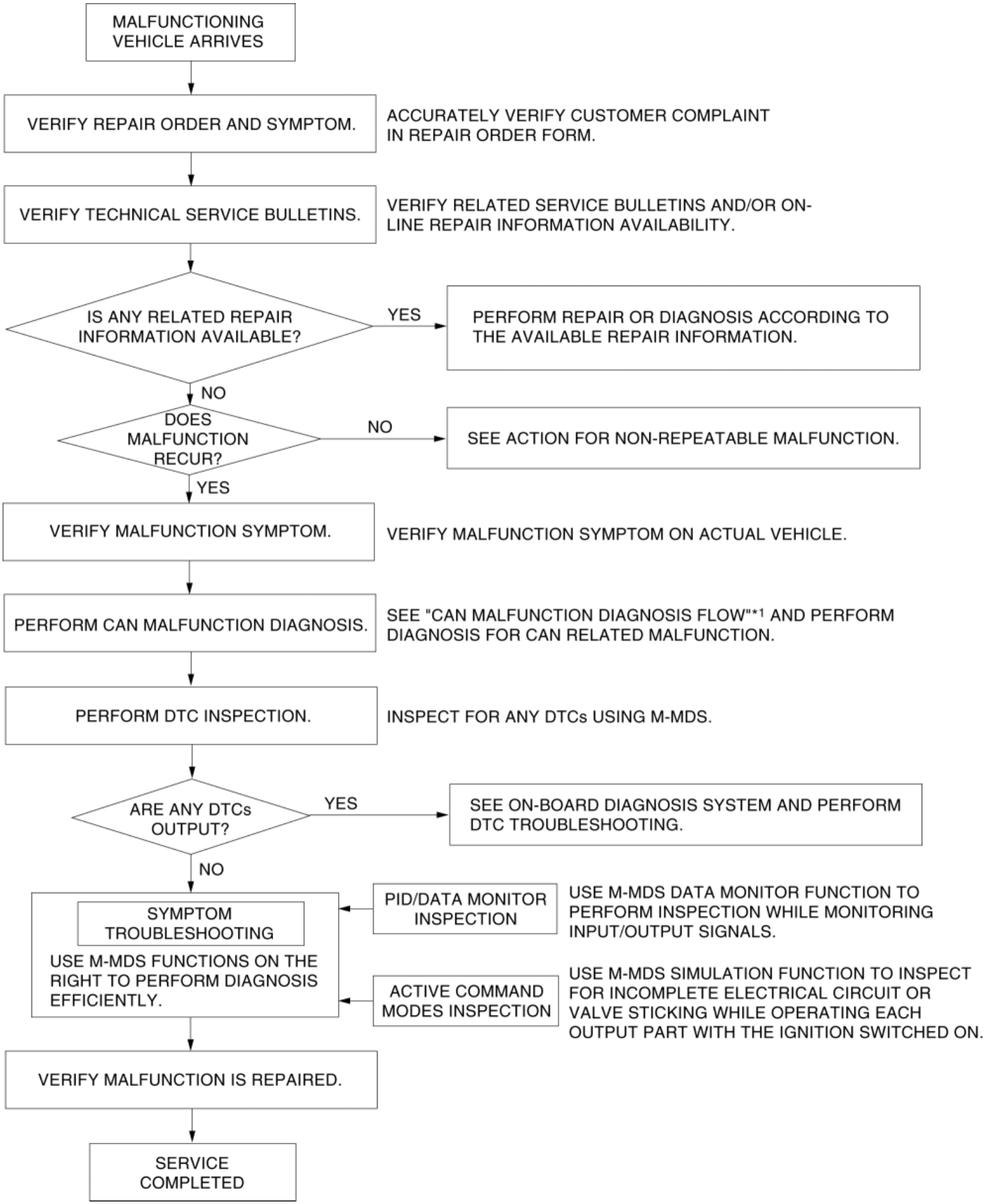
MALFUNCTIONING VEHICLE ARRIVES
VERIFY REPAIR ORDER AND SYMPTOM.
ACCURATELY VERIFY CUSTOMER COMPLAINT IN REPAIR ORDER FORM.
VERIFY TECHNICAL SERVICE BULLETINS.
VERIFY RELATED SERVICE BULLETINS AND/OR ON-LINE REPAIR INFORMATION AVAILABILITY.
IS ANY RELATED REPAIR INFORMATION AVAILABLE?
YES
PERFORM REPAIR OR DIAGNOSIS ACCORDING TO THE AVAILABLE REPAIR INFORMATION.
NO
DOES MALFUNCTION RECUR?
NO
SEE ACTION FOR NON-REPEATABLE MALFUNCTION.
YES
VERIFY MALFUNCTION SYMPTOM.
VERIFY MALFUNCTION SYMPTOM ON ACTUAL VEHICLE.
PERFORM CAN MALFUNCTION DIAGNOSIS.
SEE "CAN MALFUNCTION DIAGNOSIS FLOW"*1 AND PERFORM DIAGNOSIS FOR CAN RELATED MALFUNCTION.
PERFORM DTC INSPECTION.
INSPECT FOR ANY DTCs USING M-MDS.
ARE ANY DTCs OUTPUT?
YES
SEE ON-BOARD DIAGNOSIS SYSTEM AND PERFORM DTC TROUBLESHOOTING.
NO
SYMPTOM TROUBLESHOOTING
USE M-MDS FUNCTIONS ON THE RIGHT TO PERFORM DIAGNOSIS EFFICIENTLY.
PID/DATA MONITOR INSPECTION
USE M-MDS DATA MONITOR FUNCTION TO PERFORM INSPECTION WHILE MONITORING INPUT/OUTPUT SIGNALS.
ACTIVE COMMAND MODES INSPECTION
USE M-MDS SIMULATION FUNCTION TO INSPECT FOR INCOMPLETE ELECTRICAL CIRCUIT OR VALVE STICKING WHILE OPERATING EACH OUTPUT PART WITH THE IGNITION SWITCHED ON.
VERIFY MALFUNCTION IS REPAIRED.
SERVICE COMPLETED

*1

(See CONTROLLER AREA NETWORK (CAN) MALFUNCTION DIAGNOSIS FLOW.)

Action for Non-repeatable Malfunction

- If the malfunction does not recur, verify the malfunction cause by performing the following actions:
  - Based on the repair order form, attempt to drive the vehicle or perform tests to replicate the malfunction, record the data at that time, and detect the malfunction cause.
  - Shake the wiring harness or connector of the electrical component which is suspected to be the cause of the malfunction, and inspect for malfunction or occurrence of any DTCs.

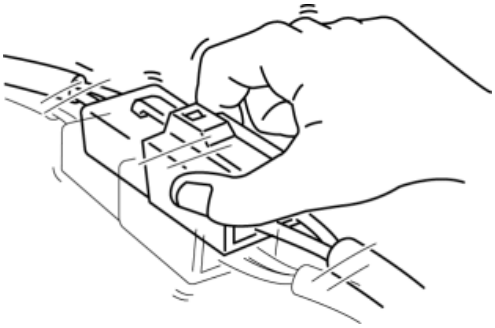

  - Inspect the female terminals on the connector of the electric component which is suspected to be the cause of the malfunction for poor connection.

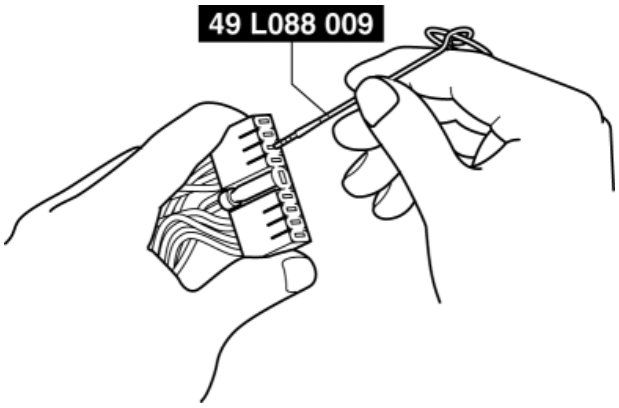

2014 - Mazda3 - Body and Accessories

DTC INSPECTION [ADAPTIVE FRONT LIGHTING SYSTEM (AFS)]

CMDTC Self Test

1. Connect the M-MDS to the DLC-2.
2. After the vehicle is identified, select the following items from the initialization screen of the M-MDS.
   a. Select “Self Test”.
   b. Select “All CMDTCs”.
3. Verify the DTC according to the directions on the screen.
   - If any DTCs are displayed, perform troubleshooting according to the corresponding DTC inspection after recording the snapshot data.
4. After completion of repairs, clear all DTCs stored in the AFS control module. (See **CLEARING DTC [ADAPTIVE FRONT LIGHTING SYSTEM (AFS)]**.)

ODDTC Self Test

1. Connect the M-MDS to the DLC-2.
2. After the vehicle is identified, select the following items from the initialization screen of the M-MDS.
   a. Select “Self Test”.
   b. Select “Modules”.
   c. Select “AFS/ALM”.
3. Verify the DTC according to the directions on the screen.
   - If any DTCs are displayed, perform troubleshooting according to the corresponding DTC inspection after recording the snapshot data.
4. After completion of repairs, clear all DTCs stored in the AFS control module. (See **CLEARING DTC [ADAPTIVE FRONT LIGHTING SYSTEM (AFS)]**.)

Snapshot Data

NOTE:

- The AFS control module stores the following two types of snapshot data (vehicle information) when a DTC is detected and displays them in the M-MDS.
  - Vehicle information detected by AFS control module
  - Vehicle information detected by instrument cluster and received by AFS control module via CAN signal
- The data for all DTCs currently detected is stored.

—: Not applicable

Snapshot data				Corresponding

item	Unit		Data contents	Data read/use method	data monitor items
AAT	°C	°F	Ambient temperature	—	—
APP_STATUS	Accelerator Pedal Off/Under20%/Over20%/FAIL		Accelerator pedal position status	—	—
CFG_STATUS	Config Complete/Not Configured/Config Error		Instrument cluster configuration status	—	—
ECT_STATUS	Under 0 degrees C/0 - Under 80 degrees C/Over 80 degrees C/FAIL		Engine coolant temperature status	—	—
IC_VPWR	V		Instrument cluster power supply voltage	• The AFS control module constantly receives the power supply voltage value of the instrument cluster sent via CAN signal from the instrument cluster. • If a DTC is detected, the AFS control module records the power supply voltage of the instrument cluster when the DTC was detected, and it is displayed in the M-MDS.	VPWR*1
IG-ON_TIMER	hh:mm:ss*2		Elapsed time since ignition was switched ON (engine off or on) **NOTE:** • The instrument cluster records the elapsed	• The AFS control module constantly receives the elapsed time since the ignition was switched ON (engine off or on) sent via CAN signal from the instrument cluster. • If a DTC is	—

		time since the ignition was switched ON (engine off or on).	detected, the AFS control module records the elapsed time since the ignition was switched ON (engine off or on) when the DTC was detected, and it is displayed in the M-MDS.	
PWR_MODE_KEY	Key Out/Key Recently Out (Position 0)/Accessory (Position 1)/Post Ignition (Position 2)/Ignition On (Position 2)/Running (Position 2)/Running - Starting	• Key Out: Ignition switched off • Key Recently Out (Position 0): Elapsed time **within 3 s** since ignition was switched off • Accessory (Position 1): Ignition is switched to ACC • Post Ignition (Position 2): Elapsed time **within 3 s** since ignition was switched ON (engine off or on) • Ignition On (Position 2): Ignition switched ON (engine off) • Running	• The AFS control module constantly receives the ignition switch status sent via CAN signal from the instrument cluster. • If a DTC is detected, the AFS control module records the ignition switch status when the DTC was detected, and it is displayed in the M-MDS.	—

		(Position 2): Ignition switched ON (engine on) • Running - Starting: Cranking condition		
RPM_STATUS	Engine Stop/Under1500rpm/Over1500rpm/FAIL	Engine speed status	• The AFS control module constantly receives the engine speed sent via CAN signal from the instrument cluster. • If a DTC is detected, the AFS control module records the engine speed when the DTC was detected, and it is displayed in the M-MDS.	TACHOMTR*1
SHIFT_STATUS	P/N/D/R/FAIL	Selector lever position status	• The AFS control module constantly receives the selector lever position sent via CAN signal from the instrument cluster. • If a DTC is detected, the AFS control module records the selector lever position when the DTC was detected, and it is displayed in the M-MDS.	—

TOTAL_DIST	km	Miles	Accumulated total traveled distance from completion of vehicle until AFS control module detects DTC (Odometer value in instrument cluster)	The total traveled distance from which the AFS control module detects DTCs to the present can be calculated by performing the following procedure. • Verify the odometer value in the instrument cluster. • Verify the snapshot data item TOTAL_DIST. • Subtract 2 from 1.	—
TOTAL_TIME	hh:mm:ss*2		Accumulated total elapsed time since vehicle completion until AFS control module detects a DTC **NOTE:** • When the ROOM fuse is removed, and the ignition is switched off, the time is not included in the elapsed time.	The elapsed time from which the AFS control module detects DTCs to the present can be calculated by performing the following procedure. • Verify the instrument cluster PID item TOTAL_TIME. • Verify the snapshot data item TOTAL_TIME. • Subtract 2 from 1.	TOTAL_TIME*1
VPWR	V		AFS control module power supply voltage	—	VPWR_IG
VSPD_STATUS	Stop/0-10km/h/Over10km/h/FAIL		Vehicle speed status	• The AFS control module constantly receives the vehicle speed sent via CAN signal from the instrument cluster. • If a DTC is detected, the AFS control module records the vehicle speed when the DTC was	SPEEDOMTR*1

			detected, and it is displayed in the M-MDS.	

*1

Instrument cluster PID (See PID/DATA MONITOR TABLE [INSTRUMENT CLUSTER].)

*2

The seconds may be indicated after the decimal point.

2014 - Mazda3 - Body and Accessories

CLEARING DTC [ADAPTIVE FRONT LIGHTING SYSTEM (AFS)]

CMDTC Memory Clearing Procedure

1. Connect the M-MDS to the DLC-2.
2. After the vehicle is identified, select the following items from the initialization screen of the M-MDS.
    a. Select “Self Test”.
    b. Select “All CMDTCs”.
3. Verify the DTC according to the directions on the screen.
4. Press the clear button on the DTC screen to clear the DTC.
5. Switch the ignition off.
6. Switch the ignition ON (engine off or on) and wait for **5 s or more**.
7. Perform DTC inspection. (See **DTC INSPECTION [ADAPTIVE FRONT LIGHTING SYSTEM (AFS)]**.)
8. Verify that no DTCs are displayed.

ODDTC Memory Clearing Procedure

1. Connect the M-MDS to the DLC-2.
2. After the vehicle is identified, select the following items from the initialization screen of the M-MDS.
    a. Select “Self Test”.
    b. Select “Modules”.
    c. Select “AFS/ALM”.
3. Verify the DTC according to the directions on the screen.
4. Press the clear button on the DTC screen to clear the DTC.
5. Switch the ignition off.
6. Switch the ignition ON (engine off or on) and wait for **5 s or more**.
7. Perform DTC inspection. (See **DTC INSPECTION [ADAPTIVE FRONT LIGHTING SYSTEM (AFS)]**.)
8. Verify that no DTCs are displayed.

CLEARING DTC [ADAPTIVE FRONT LIGHTING SYSTEM (AFS)]

2014 - Mazda3 - Body and Accessories

DTC TABLE [ADAPTIVE FRONT LIGHTING SYSTEM (AFS)]

NOTE:

- AFS control module flashes the AFS OFF indicator light as follows if there is a malfunction in the system.

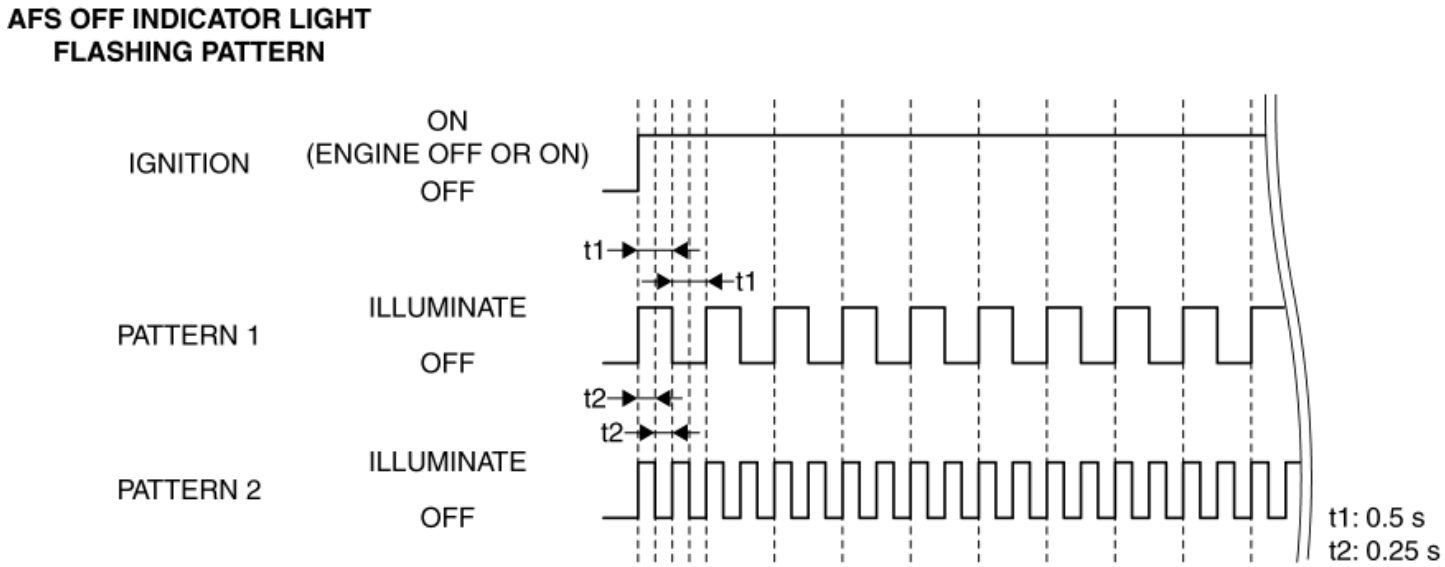

×: Applicable—: Not applicable

DTC No.	AFS OFF indicator light	Description	Fail-safe function	Drive cycle	Self test type*1	Memory function	Page
B1041:54	Flash (Pattern 2)	Headlight auto leveling system initialization error	×	—	D	×	(See **DTC B1041:54 [ADAPTIVE FRONT LIGHTING SYSTEM (AFS)]**.)
B1044:01	Flash (Pattern 1)	Auto leveling sensor circuit malfunction	×	—	D	×	(See **DTC B1044:01 [ADAPTIVE FRONT LIGHTING SYSTEM (AFS)]**.)
B10A3:86	Flash (Pattern 1)	Communication error with swivel actuator (LH)	×	—	D	×	(See **DTC B10A3:86 [ADAPTIVE FRONT LIGHTING SYSTEM (AFS)]**.)
B10A3:87	Flash (Pattern 1)	Communication error with swivel actuator (LH)	×	—	D	×	(See **DTC B10A3:87 [ADAPTIVE FRONT LIGHTING SYSTEM (AFS)]**.)
B10A4:86	Flash (Pattern 1)	Communication error with swivel actuator (RH)	×	—	D	×	(See **DTC B10A4:86 [ADAPTIVE FRONT LIGHTING SYSTEM (AFS)]**.)
B10A4:87	Flash (Pattern 1)	Communication error with swivel actuator (RH)	×	—	D	×	(See **DTC B10A4:87 [ADAPTIVE FRONT LIGHTING SYSTEM (AFS)]**.)

C0051:86	Flash (Pattern 1)	Steering angle error signal received from EPS control module	×	—	C, D	×	(See **DTC C0051:86 [ADAPTIVE FRONT LIGHTING SYSTEM (AFS)]**.)
U0001:88	Flash (Pattern 1)	Unit communication error (HS-CAN)	×	—	C, D	×	(See **DTC U0001:88/U0100:00/U0131:00/U0140:00/U0155:00 [ADAPTIVE FRONT LIGHTING SYSTEM (AFS)]**.)
U0100:00	Flash (Pattern 1)	Communication error with PCM	×	—	C, D	×	
U0131:00	Flash (Pattern 1)	Communication error with EPS control module	×	—	C, D	×	
U0140:00	Flash (Pattern 1)	Communication error with front body control module (FBCM)	×	—	C, D	×	
U0155:00	Flash (Pattern 1)	Communication error with instrument cluster	×	—	C, D	×	
U0320:09	Flash (Pattern 1)	Error signal received from EPS control module	×	—	C, D	×	(See **DTC U0320:09 [ADAPTIVE FRONT LIGHTING SYSTEM (AFS)]**.)
U0420:68	Flash (Pattern 1)	Error signal received from EPS control module	×	—	C, D	×	(See **DTC U0420:68 [ADAPTIVE FRONT LIGHTING SYSTEM (AFS)]**.)
U0423:68	—	Error signal received from instrument cluster • AFS OFF switch error signal	×	—	C, D	—	(See **DTC U0423:68 [ADAPTIVE FRONT LIGHTING SYSTEM (AFS)]**.)
	—	Error signal received from instrument cluster • Ignition switch error signal	×	—	C, D	—	
	Flash (Pattern 1)	Error signal received from instrument cluster • Selector lever R position (ATX)/shift lever reverse (MTX) signal error	×	—	C, D	×	
	—	Error signal received from instrument cluster • Selector lever R position (ATX)/shift lever reverse (MTX) signal not determined	×	—	C, D	—	

U2005:86	Flash (Pattern 1)	Error signal received from PCM	×	—	C, D	×	(See **DTC U2005:86 [ADAPTIVE FRONT LIGHTING SYSTEM (AFS)]**.)
U2300:54	Flash (Pattern 1)	Error configuration data received from instrument cluster	×	—	C, D	×	(See **DTC U2300:54 [ADAPTIVE FRONT LIGHTING SYSTEM (AFS)]**.)
U2300:55	—	Instrument cluster configuration not implemented	×	—	C, D	×	(See **DTC U2300:55 [ADAPTIVE FRONT LIGHTING SYSTEM (AFS)]**.)
U2300:56	Flash (Pattern 1)	Configuration data unmatched with instrument cluster	×	—	C, D	×	(See **DTC U2300:56 [ADAPTIVE FRONT LIGHTING SYSTEM (AFS)]**.)
U3000:42	Flash (Pattern 1)	AFS control module internal malfunction	×	—	C, D	×	(See **DTC U3000:42 [ADAPTIVE FRONT LIGHTING SYSTEM (AFS)]**.)
U3000:49	Flash (Pattern 1)	AFS control module internal malfunction • RAM/ROM malfunction	×	—	C, D	×	(See **DTC U3000:49 [ADAPTIVE FRONT LIGHTING SYSTEM (AFS)]**.)
	—	AFS control module internal malfunction • AFS function malfunction	—	—	C, D	—	
	Flash (Pattern 1)	AFS control module internal malfunction • CAN hardware malfunction	×	—	C, D	×	
U3003:16	—	AFS control module low power supply voltage input	×	—	C, D	—	(See **DTC U3003:16 [ADAPTIVE FRONT LIGHTING SYSTEM (AFS)]**.)
U3003:17	—	AFS control module high power supply voltage input	×	—	C, D	—	(See **DTC U3003:17 [ADAPTIVE FRONT LIGHTING SYSTEM (AFS)]**.)

*1

C: CMDTC self test, D: ODDTC self test

2014 - Mazda3 - Body and Accessories

DTC B1041:54 [ADAPTIVE FRONT LIGHTING SYSTEM (AFS)]

Description	Headlight auto leveling system initialization error
Detection condition	• Headlight auto leveling system initialization is not performed with the ignition switched ON (engine off or on).
Fail-safe function	• The swivel actuator is moved to the center. • The headlight leveling actuator is stopped at the position when the malfunction is determined.
Possible cause	• Headlight auto leveling system initialization is not performed. • AFS control module malfunction
System wiring diagram	Not applicable

Diagnostic Procedure

Step	Inspection		Action
1	**PERFORM HEADLIGHT AUTO LEVELING SYSTEM INITIALIZATION** • Perform the headlight auto leveling system initialization. (See **HEADLIGHT AUTO LEVELING SYSTEM INITIALIZATION**.) • Clear the DTC for the AFS control module using the M-MDS. (See **CLEARING DTC [ADAPTIVE FRONT LIGHTING SYSTEM (AFS)]**.) • Retrieve the AFS control module DTCs using the M-	Yes	Perform the headlight auto leveling system initialization again, then go to the next step. (See **HEADLIGHT AUTO LEVELING SYSTEM INITIALIZATION**.)
		No	Go to Step 3.

	MDS. (See **DTC INSPECTION [ADAPTIVE FRONT LIGHTING SYSTEM (AFS)]**.) • Is the same DTC displayed?		
2	**VERIFY THAT REPAIRS HAVE BEEN COMPLETED** • Clear the DTC for the AFS control module using the M-MDS. (See **CLEARING DTC [ADAPTIVE FRONT LIGHTING SYSTEM (AFS)]**.) • Retrieve the AFS control module DTCs using the M-MDS. (See **DTC INSPECTION [ADAPTIVE FRONT LIGHTING SYSTEM (AFS)]**.) • Is the same DTC displayed?	Yes	Repeat the inspection from Step 1. • If the malfunction recurs, replace the AFS control module. (See **ADAPTIVE FRONT LIGHTING SYSTEM (AFS) CONTROL MODULE REMOVAL/INSTALLATION**.) Go to the next step.
		No	Go to the next step.
3	**VERIFY IF OTHER DTCs DISPLAYED** • Are any other DTCs displayed?	Yes	Repair or replace the malfunctioning part according to the applicable DTC troubleshooting. (See **DTC TABLE [ADAPTIVE FRONT LIGHTING SYSTEM (AFS)]**.)
		No	DTC troubleshooting completed.

2014 - Mazda3 - Body and Accessories

DTC B1044:01 [ADAPTIVE FRONT LIGHTING SYSTEM (AFS)]

Description	Auto leveling sensor circuit malfunction
Detection condition	• AFS control module detected the auto leveling sensor circuit voltage of **0.25 V or less** or **4.75 V or more** for **10 s or more** with the ignition switched ON (engine off or on).
Fail-safe function	• The swivel actuator is moved to the center. • The headlight leveling actuator is stopped at the position when the malfunction is determined.
Possible cause	• Auto leveling sensor connector or terminal malfunction • AFS control module connector or terminal malfunction • Short to ground in wiring harness between the following terminals: ▪ AFS control module terminal I—Auto leveling sensor terminal C ▪ AFS control module terminal K—Auto leveling sensor terminal B ▪ AFS control module terminal C—Auto leveling sensor terminal A • Short to power supply in wiring harness between the following terminals: ▪ AFS control module terminal I—Auto leveling sensor terminal C ▪ AFS control module terminal K—Auto leveling sensor terminal B ▪ AFS control module terminal C—Auto leveling sensor terminal A • Open circuit in wiring harness between the following terminals: ▪ AFS control module terminal I—Auto leveling sensor terminal C ▪ AFS control module terminal K—Auto leveling sensor terminal B ▪ AFS control module terminal C—Auto leveling sensor terminal A • Auto leveling sensor malfunction • AFS control module malfunction

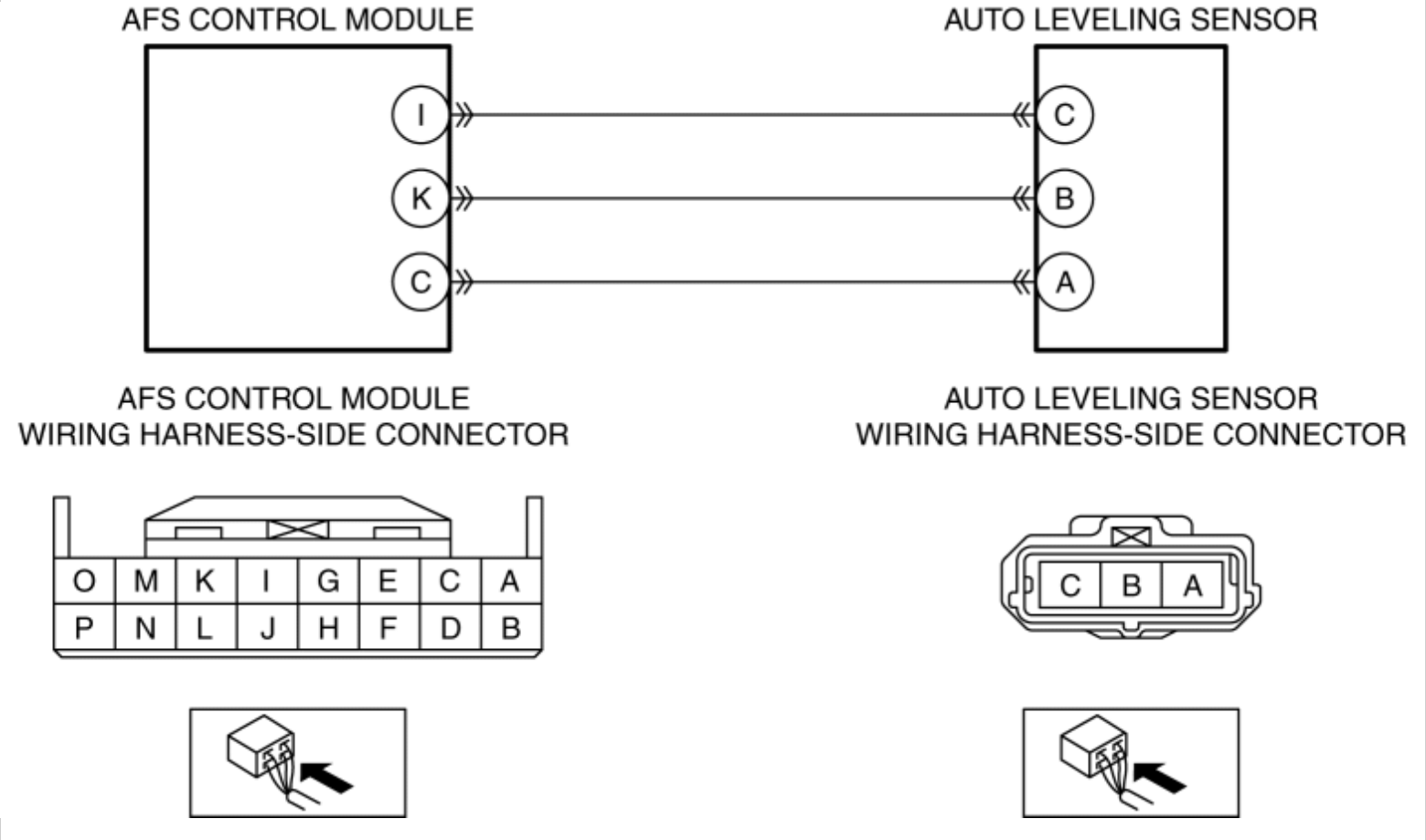

Diagnostic Procedure

Step	Inspection		Action
1	**INSPECT AUTO LEVELING SENSOR CONNECTOR CONDITION** • Switch the ignition off. • Disconnect the negative battery cable. (See **NEGATIVE BATTERY CABLE DISCONNECTION/CONNECTION [SKYACTIV-G 2.0, SKYACTIV-G 2.5]**.) • Disconnect the auto leveling sensor connector. • Inspect the connector engagement and connection condition and inspect the terminals for damage, deformation, corrosion, or disconnection. • Is the connector normal?	Yes	Go to the next step.
		No	Repair or replace the connector, then go to Step 7.

2	**INSPECT AFS CONTROL MODULE CONNECTOR CONDITION** • Disconnect the AFS control module connector. • Inspect the connector engagement and connection condition and inspect the terminals for damage, deformation, corrosion, or disconnection. • Is the connector normal?	Yes	Go to the next step.
		No	Repair or replace the connector, then go to Step 7.
3	**INSPECT FOR SHORT TO GROUND IN AUTO LEVELING SENSOR CIRCUIT** • Verify that the auto leveling sensor and AFS control module connectors are disconnected. • Inspect for continuity between the following terminals (wiring harness-side) and body ground: ▪ Auto leveling sensor terminal C ▪ Auto leveling sensor terminal B ▪ Auto leveling sensor terminal A • Is there continuity?	Yes	Refer to the wiring diagram and verify whether or not there is a common connector between the following terminals: • AFS control module terminal I—Auto leveling sensor terminal C • AFS control module terminal K—Auto leveling sensor terminal B • AFS control module terminal C—Auto leveling sensor terminal A **If there is a common connector:** • Determine the malfunctioning part by inspecting the common connector and the terminal for corrosion, damage, or pin disconnection, and the common wiring harness for a short to ground. • Repair or replace the malfunctioning part. **If there is no common connector:** • Repair or replace the wiring harness which has a short to ground. Go to Step 7.
		No	Go to the next step.
4	**INSPECT FOR SHORT TO POWER SUPPLY IN AUTO LEVELING SENSOR CIRCUIT** • Verify that the auto leveling sensor and AFS control module connectors are disconnected.	Yes	Go to the next step.
		No	Refer to the wiring diagram and verify whether or not there is a common connector between the following terminals:

	• Reconnect the negative battery cable.
	
	(See **NEGATIVE BATTERY CABLE DISCONNECTION/CONNECTION [SKYACTIV-G 2.0, SKYACTIV-G 2.5]**.)
	
	• Switch the ignition ON (engine off or on).
	
	• Measure the voltage at the following terminals (wiring harness-side):
	  ▪ Auto leveling sensor terminal C
	  ▪ Auto leveling sensor terminal B
	  ▪ Auto leveling sensor terminal A
	
	• Is the voltage **0 V**?
			• AFS control module terminal I—Auto leveling sensor terminal C
			
			• AFS control module terminal K—Auto leveling sensor terminal B
			
			• AFS control module terminal C—Auto leveling sensor terminal A
			
			If there is a common connector:
			
			• Determine the malfunctioning part by inspecting the common connector and the terminal for corrosion, damage, or pin disconnection, and the common wiring harness for a short to power supply.
			
			• Repair or replace the malfunctioning part.
			
			If there is no common connector:
			
			• Repair or replace the wiring harness which has a short to power supply.
			
			Go to Step 7.

5	**INSPECT FOR OPEN CIRCUIT IN AUTO LEVELING SENSOR CIRCUIT** • Verify that the auto leveling sensor and AFS control module connectors are disconnected. • Switch the ignition off. • Disconnect the negative battery cable. (See **NEGATIVE BATTERY CABLE DISCONNECTION/CONNECTION [SKYACTIV-G 2.0, SKYACTIV-G 2.5]**.) • Inspect for continuity between the following terminals (wiring harness-side): ▪ AFS control module terminal I—Auto leveling sensor terminal C	Yes	Go to the next step.
		No	Refer to the wiring diagram and verify whether or not there is a common connector between the following terminals: • AFS control module terminal I—Auto leveling sensor terminal C • AFS control module terminal K—Auto leveling sensor terminal B • AFS control module terminal C—Auto leveling sensor terminal A **If there is a common connector:** • Determine the malfunctioning part by inspecting the common connector and the terminal for corrosion, damage, or pin disconnection, and the common wiring harness for an open circuit. • Repair or replace the malfunctioning part. **If there is no common**

	▪ AFS control module terminal K—Auto leveling sensor terminal B ▪ AFS control module terminal C—Auto leveling sensor terminal A • Is there continuity?		**connector:** • Repair or replace the wiring harness which has an open circuit. Go to Step 7.
6	**INSPECT AUTO LEVELING SENSOR** • Inspect the auto leveling sensor. (See **AUTO LEVELING SENSOR INSPECTION**.) • Is the auto leveling sensor normal?	Yes	Go to the next step.
		No	Replace the auto leveling sensor, then go to the next step. (See **AUTO LEVELING SENSOR REMOVAL/INSTALLATION**.)
7	**VERIFY THAT REPAIRS HAVE BEEN COMPLETED** • Always reconnect all disconnected connectors. • Reconnect the disconnected negative battery cable. (See **NEGATIVE BATTERY CABLE DISCONNECTION/CONNECTION [SKYACTIV-G 2.0, SKYACTIV-G 2.5]**.) • Clear the DTC for the AFS control module using the M-MDS. (See **CLEARING DTC [ADAPTIVE FRONT LIGHTING SYSTEM (AFS)]**.) • Switch the ignition ON (engine off or on) and wait for **10 s or more**. • Retrieve the AFS control module DTCs using the M-MDS. (See **DTC INSPECTION**	Yes	Repeat the inspection from Step 1. • If the malfunction recurs, replace the AFS control module. (See **ADAPTIVE FRONT LIGHTING SYSTEM (AFS) CONTROL MODULE REMOVAL/INSTALLATION**.) Go to the next step.
		No	Go to the next step.

	[ADAPTIVE FRONT LIGHTING SYSTEM (AFS)].) • Is the same DTC displayed?		
8	**VERIFY IF OTHER DTCs DISPLAYED** • Are any other DTCs displayed?	Yes	Repair or replace the malfunctioning part according to the applicable DTC troubleshooting. (See **DTC TABLE [ADAPTIVE FRONT LIGHTING SYSTEM (AFS)]**.)
		No	DTC troubleshooting completed.

2014 - Mazda3 - Body and Accessories

DTC B10A3:86 [ADAPTIVE FRONT LIGHTING SYSTEM (AFS)]

Description	Communication error with swivel actuator (LH)
Detection condition	• AFS control module received error signals from the swivel actuator (LH) **three times** continuously with the ignition switched ON (engine off or on). • AFS control module could not receive the signal from the swivel actuator (LH) for **5 s or more** with the ignition switched ON (engine off or on).
Fail-safe function	• The swivel actuator (LH) is stopped at the position when the malfunction is determined. • The swivel actuator (RH) is moved to the center. • Control of the headlight auto leveling system is continued with the headlight leveling actuator positioned **−0.6°** from where the malfunction is determined.
Possible cause	• Igniter (LH) poor connection • Front combination light (LH) connector or terminal malfunction • AFS control module connector or terminal malfunction • Open circuit in wiring harness between the following terminals: ▪ AFS control module terminal D—Front combination light (LH) terminal K ▪ AFS control module terminal F—Front combination light (LH) terminal J • Swivel actuator (LH) malfunction • AFS control module malfunction

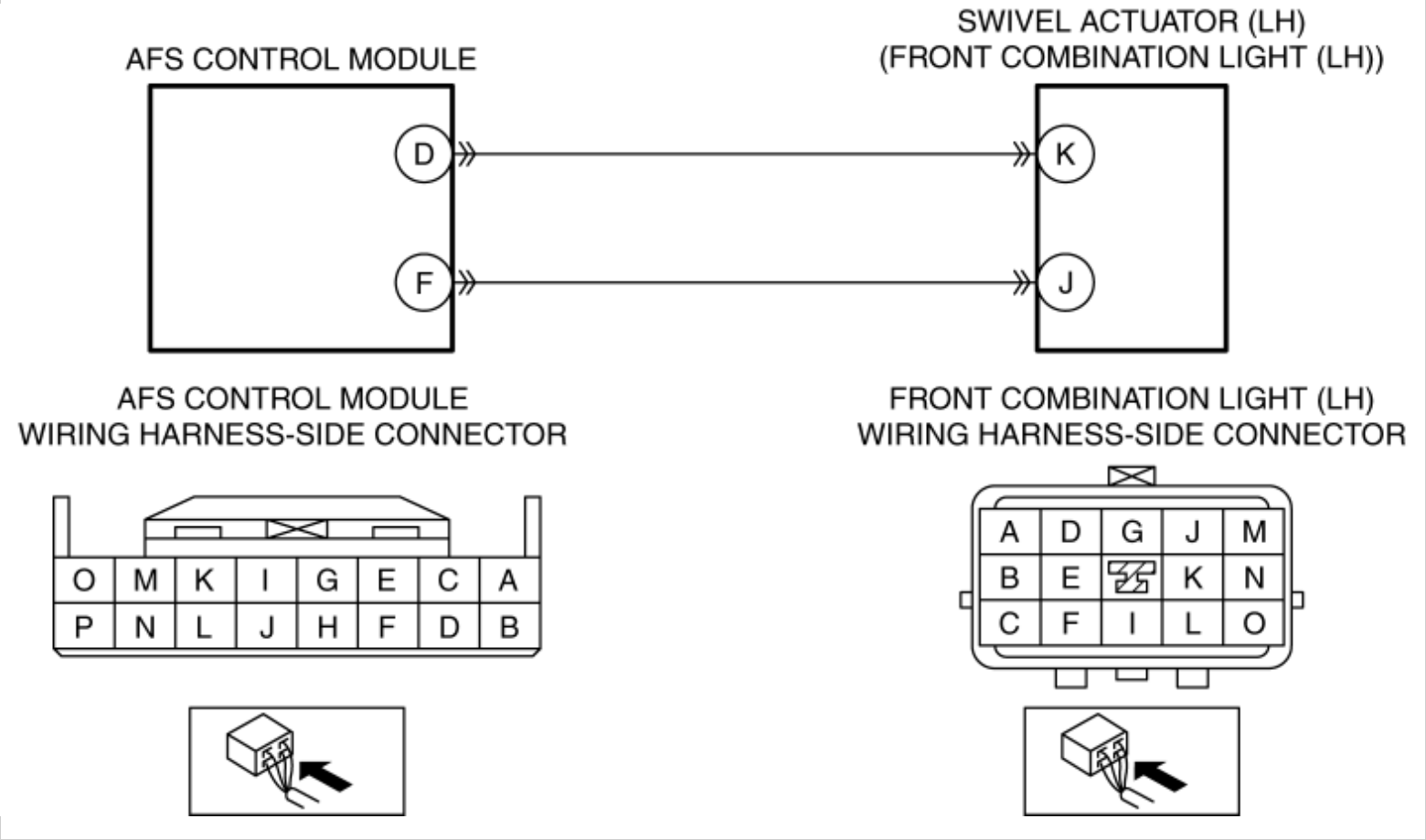

Diagnostic Procedure

Step	Inspection		Action
1	**VERIFY IGNITER (LH) INSTALLATION CONDITION** • Verify the installation condition of the igniter (LH). (See **IGNITER REMOVAL/INSTALLATION**.) • Is the igniter (LH) installed correctly?	Yes	Go to the next step.
		No	Install the igniter (LH) correctly, then go to Step 6. (See **IGNITER REMOVAL/INSTALLATION**.)
2	**INSPECT FRONT COMBINATION LIGHT (LH) CONNECTOR CONDITION** • Switch the ignition off. • Disconnect the negative battery cable. (See **NEGATIVE BATTERY CABLE DISCONNECTION/CONNECTION [SKYACTIV-G 2.0, SKYACTIV-G 2.5]**.)	Yes	Go to the next step.
		No	Repair or replace the connector, then go to Step 6.

	• Disconnect the front combination light (LH) connector. • Inspect the connector engagement and connection condition and inspect the terminals for damage, deformation, corrosion, or disconnection. • Is the connector normal?		
3	**INSPECT AFS CONTROL MODULE CONNECTOR CONDITION** • Disconnect the AFS control module connector. • Inspect the connector engagement and connection condition and inspect the terminals for damage, deformation, corrosion, or disconnection. • Is the connector normal?	Yes	Go to the next step.
		No	Repair or replace the connector, then go to Step 6.
4	**INSPECT FOR OPEN CIRCUIT IN SWIVEL ACTUATOR (LH) CIRCUIT** • Verify that the front combination light (LH) and AFS control module connectors are disconnected. • Inspect for continuity between the following terminals (wiring harness-side): ▪ AFS control module terminal D—Front combination light (LH) terminal K ▪ AFS control module terminal F—Front combination light (LH) terminal J • Is there continuity?	Yes	Go to the next step.
		No	Refer to the wiring diagram and verify whether or not there is a common connector between the following terminals: • AFS control module terminal D—Front combination light (LH) terminal K • AFS control module terminal F—Front combination light (LH) terminal J **If there is a common connector:** • Determine the malfunctioning part by inspecting the common connector and the terminal for corrosion, damage, or pin disconnection, and the common wiring harness for an open circuit. • Repair or replace the malfunctioning part. **If there is no common connector:** • Repair or replace the wiring harness which has an open circuit.

			Go to Step 6.
5	**PERFORM DTC INSPECTION AND VERIFY SWIVEL ACTUATOR (LH) MALFUNCTION** • Always reconnect all disconnected connectors. • Reconnect the disconnected negative battery cable. (See **NEGATIVE BATTERY CABLE DISCONNECTION/CONNECTION [SKYACTIV-G 2.0, SKYACTIV-G 2.5]**.) • Clear the DTC for the AFS control module using the M-MDS. (See **CLEARING DTC [ADAPTIVE FRONT LIGHTING SYSTEM (AFS)]**.) • Switch the ignition ON (engine off or on) and wait for **5 s or more**. • Retrieve the AFS control module DTCs using the M-MDS. (See **DTC INSPECTION [ADAPTIVE FRONT LIGHTING SYSTEM (AFS)]**.) • Is the same DTC displayed?	Yes	Replace the front combination light (LH), then go to the next step. (See **FRONT COMBINATION LIGHT REMOVAL/INSTALLATION**.)
		No	Go to Step 7.
6	**VERIFY THAT REPAIRS HAVE BEEN COMPLETED** • Always reconnect all disconnected connectors. • Reconnect the disconnected negative battery cable. (See **NEGATIVE BATTERY CABLE DISCONNECTION/CONNECTION [SKYACTIV-G 2.0, SKYACTIV-G 2.5]**.) • Clear the DTC for the AFS control module using the M-MDS. (See **CLEARING DTC [ADAPTIVE FRONT LIGHTING SYSTEM (AFS)]**.)	Yes	Repeat the inspection from Step 1. • If the malfunction recurs, replace the AFS control module. (See **ADAPTIVE FRONT LIGHTING SYSTEM (AFS) CONTROL MODULE REMOVAL/INSTALLATION**.) Go to the next step.
		No	Go to the next step.

	• Switch the ignition ON (engine off or on) and wait for **5 s or more**. • Retrieve the AFS control module DTCs using the M-MDS. (See **DTC INSPECTION [ADAPTIVE FRONT LIGHTING SYSTEM (AFS)]**.) • Is the same DTC displayed?		
7	**VERIFY IF OTHER DTCs DISPLAYED** • Are any other DTCs displayed?	Yes	Repair or replace the malfunctioning part according to the applicable DTC troubleshooting. (See **DTC TABLE [ADAPTIVE FRONT LIGHTING SYSTEM (AFS)]**.)
		No	DTC troubleshooting completed.

2014 - Mazda3 - Body and Accessories

DTC B10A3:87 [ADAPTIVE FRONT LIGHTING SYSTEM (AFS)]

Description	Communication error with swivel actuator (LH)
Detection condition	• AFS control module detected communication error with the swivel actuator (LH) for **5 s or more** with the ignition switched ON (engine off or on).
Fail-safe function	• The swivel actuator (LH) is stopped at the position when the malfunction is determined. • The swivel actuator (RH) is moved to the center, or the swivel actuators (LH) and (RH) are moved to the center. • Control of the headlight auto leveling system is continued with the headlight leveling actuator positioned **−0.6°** from where the malfunction is determined.
Possible cause	• Front combination light (LH) connector or terminal malfunction • AFS control module connector or terminal malfunction • Short to ground in wiring harness between the following terminals: ▪ AFS control module terminal D—Front combination light (LH) terminal K ▪ AFS control module terminal F—Front combination light (LH) terminal J • Short to power supply in wiring harness between the following terminals: ▪ AFS control module terminal D—Front combination light (LH) terminal K ▪ AFS control module terminal F—Front combination light (LH) terminal J • Open circuit in wiring harness between the following terminals: ▪ AFS control module terminal D—Front combination light (LH) terminal K ▪ AFS control module terminal F—Front combination light (LH) terminal J • Swivel actuator (LH) malfunction • AFS control module malfunction

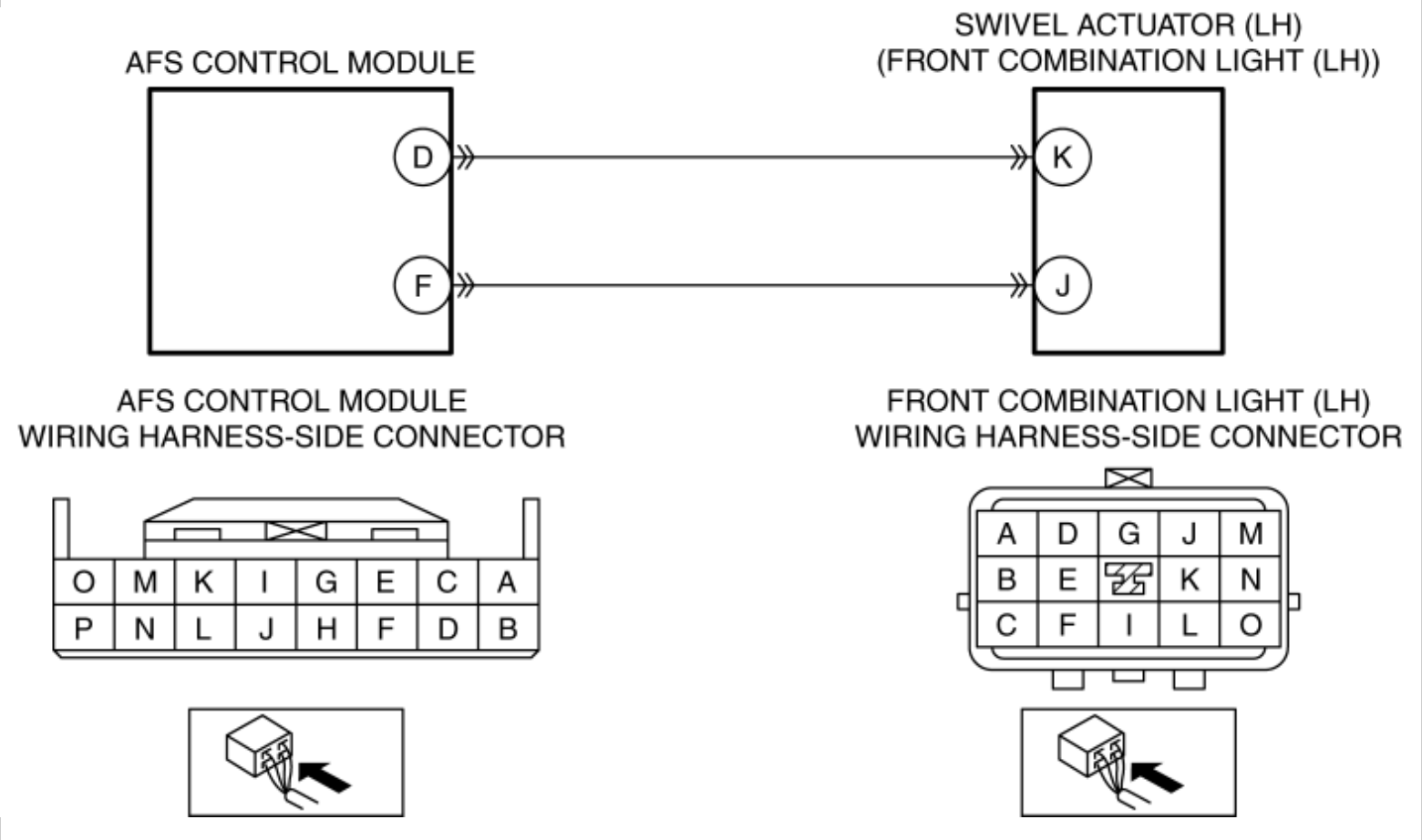

Diagnostic Procedure

Step	Inspection		Action
1	**INSPECT FRONT COMBINATION LIGHT (LH) CONNECTOR CONDITION** • Switch the ignition off. • Disconnect the negative battery cable. (See **NEGATIVE BATTERY CABLE DISCONNECTION/CONNECTION [SKYACTIV-G 2.0, SKYACTIV-G 2.5]**.) • Disconnect the front combination light (LH) connector. • Inspect the connector engagement and connection condition and inspect the terminals for damage, deformation, corrosion, or disconnection. • Is the connector normal?	Yes	Go to the next step.
		No	Repair or replace the connector, then go to Step 7.

2	**INSPECT AFS CONTROL MODULE CONNECTOR CONDITION** • Disconnect the AFS control module connector. • Inspect the connector engagement and connection condition and inspect the terminals for damage, deformation, corrosion, or disconnection. • Is the connector normal?	Yes	Go to the next step.
		No	Repair or replace the connector, then go to Step 7.
3	**INSPECT FOR SHORT TO GROUND IN SWIVEL ACTUATOR (LH) CIRCUIT** • Verify that the front combination light (LH) and AFS control module connectors are disconnected. • Inspect for continuity between the following terminals (wiring harness-side) and body ground: ▪ Front combination light (LH) terminal K ▪ Front combination light (LH) terminal J • Is there continuity?	Yes	Refer to the wiring diagram and verify whether or not there is a common connector between the following terminals: • AFS control module terminal D—Front combination light (LH) terminal K • AFS control module terminal F—Front combination light (LH) terminal J **If there is a common connector:** • Determine the malfunctioning part by inspecting the common connector and the terminal for corrosion, damage, or pin disconnection, and the common wiring harness for a short to ground. • Repair or replace the malfunctioning part. **If there is no common connector:** • Repair or replace the wiring harness which has a short to ground. Go to Step 7.
		No	Go to the next step.
4	**INSPECT FOR SHORT TO POWER SUPPLY IN SWIVEL ACTUATOR (LH) CIRCUIT** • Verify that the front combination light (LH) and AFS control module connectors are disconnected. • Reconnect the negative	Yes	Go to the next step.
		No	Refer to the wiring diagram and verify whether or not there is a common connector between the following terminals: • AFS control module terminal D—

	battery cable. (See **NEGATIVE BATTERY CABLE DISCONNECTION/CONNECTION [SKYACTIV-G 2.0, SKYACTIV-G 2.5]**.) • Switch the ignition ON (engine off or on). • Measure the voltage at the following terminals (wiring harness-side): ▪ Front combination light (LH) terminal K ▪ Front combination light (LH) terminal J • Is the voltage **0 V**?		Front combination light (LH) terminal K • AFS control module terminal F—Front combination light (LH) terminal J **If there is a common connector:** • Determine the malfunctioning part by inspecting the common connector and the terminal for corrosion, damage, or pin disconnection, and the common wiring harness for a short to power supply. • Repair or replace the malfunctioning part. **If there is no common connector:** • Repair or replace the wiring harness which has a short to power supply. Go to Step 7.
5	**INSPECT FOR OPEN CIRCUIT IN SWIVEL ACTUATOR (LH) CIRCUIT** • Verify that the front combination light (LH) and AFS control module connectors are disconnected. • Switch the ignition off. • Disconnect the negative battery cable. (See **NEGATIVE BATTERY CABLE DISCONNECTION/CONNECTION [SKYACTIV-G 2.0, SKYACTIV-G 2.5]**.) • Inspect for continuity between the following terminals (wiring harness-side): ▪ AFS control module terminal D—Front combination light (LH) terminal K ▪ AFS control	Yes	Go to the next step.
		No	Refer to the wiring diagram and verify whether or not there is a common connector between the following terminals: • AFS control module terminal D—Front combination light (LH) terminal K • AFS control module terminal F—Front combination light (LH) terminal J **If there is a common connector:** • Determine the malfunctioning part by inspecting the common connector and the terminal for corrosion, damage, or pin disconnection, and the common wiring harness for an open circuit. • Repair or replace the malfunctioning part. **If there is no common connector:** • Repair or replace the wiring harness which has an open circuit.

	module terminal F— Front combination light (LH) terminal J • Is there continuity?		Go to Step 7.
6	**PERFORM DTC INSPECTION AND VERIFY SWIVEL ACTUATOR (LH) MALFUNCTION** • Always reconnect all disconnected connectors. • Reconnect the disconnected negative battery cable. (See **NEGATIVE BATTERY CABLE DISCONNECTION/CONNECTION [SKYACTIV-G 2.0, SKYACTIV-G 2.5]**.) • Clear the DTC for the AFS control module using the M-MDS. (See **CLEARING DTC [ADAPTIVE FRONT LIGHTING SYSTEM (AFS)]**.) • Switch the ignition ON (engine off or on) and wait for **5 s or more**. • Retrieve the AFS control module DTCs using the M-MDS. (See **DTC INSPECTION [ADAPTIVE FRONT LIGHTING SYSTEM (AFS)]**.) • Is the same DTC displayed?	Yes	Replace the front combination light (LH), then go to the next step. (See **FRONT COMBINATION LIGHT REMOVAL/INSTALLATION**.)
		No	Go to Step 8.
7	**VERIFY THAT REPAIRS HAVE BEEN COMPLETED** • Always reconnect all disconnected connectors. • Reconnect the disconnected negative battery cable. (See **NEGATIVE BATTERY CABLE DISCONNECTION/CONNECTION [SKYACTIV-G 2.0, SKYACTIV-G 2.5]**.)	Yes	Repeat the inspection from Step 1. • If the malfunction recurs, replace the AFS control module. (See **ADAPTIVE FRONT LIGHTING SYSTEM (AFS) CONTROL MODULE REMOVAL/INSTALLATION**.) Go to the next step.
		No	Go to the next step.

	• Clear the DTC for the AFS control module using the M-MDS. (See **CLEARING DTC [ADAPTIVE FRONT LIGHTING SYSTEM (AFS)]**.) • Switch the ignition ON (engine off or on) and wait for **5 s or more**. • Retrieve the AFS control module DTCs using the M-MDS. (See **DTC INSPECTION [ADAPTIVE FRONT LIGHTING SYSTEM (AFS)]**.) • Is the same DTC displayed?		
8	**VERIFY IF OTHER DTCs DISPLAYED** • Are any other DTCs displayed?	Yes	Repair or replace the malfunctioning part according to the applicable DTC troubleshooting. (See **DTC TABLE [ADAPTIVE FRONT LIGHTING SYSTEM (AFS)]**.)
		No	DTC troubleshooting completed.

2014 - Mazda3 - Body and Accessories

DTC B10A4:86 [ADAPTIVE FRONT LIGHTING SYSTEM (AFS)]

Description	Communication error with swivel actuator (RH)
Detection condition	• AFS control module received error signals from the swivel actuator (RH) **three times** continuously with the ignition switched ON (engine off or on). • AFS control module could not receive the signal from the swivel actuator (RH) for **5 s or more** with the ignition switched ON (engine off or on).
Fail-safe function	• The swivel actuator (RH) is stopped at the position when the malfunction is determined. • The swivel actuator (LH) is moved to the center. • Control of the headlight auto leveling system is continued with the headlight leveling actuator positioned **−0.6°** from where the malfunction is determined.

Possible cause	• Igniter (RH) poor connection
	• Front combination light (RH) connector or terminal malfunction
	• AFS control module connector or terminal malfunction
	• Open circuit in wiring harness between the following terminals:
	  ▪ AFS control module terminal D—Front combination light (RH) terminal K
	  ▪ AFS control module terminal F—Front combination light (RH) terminal J
	• Swivel actuator (RH) malfunction
	• AFS control module malfunction

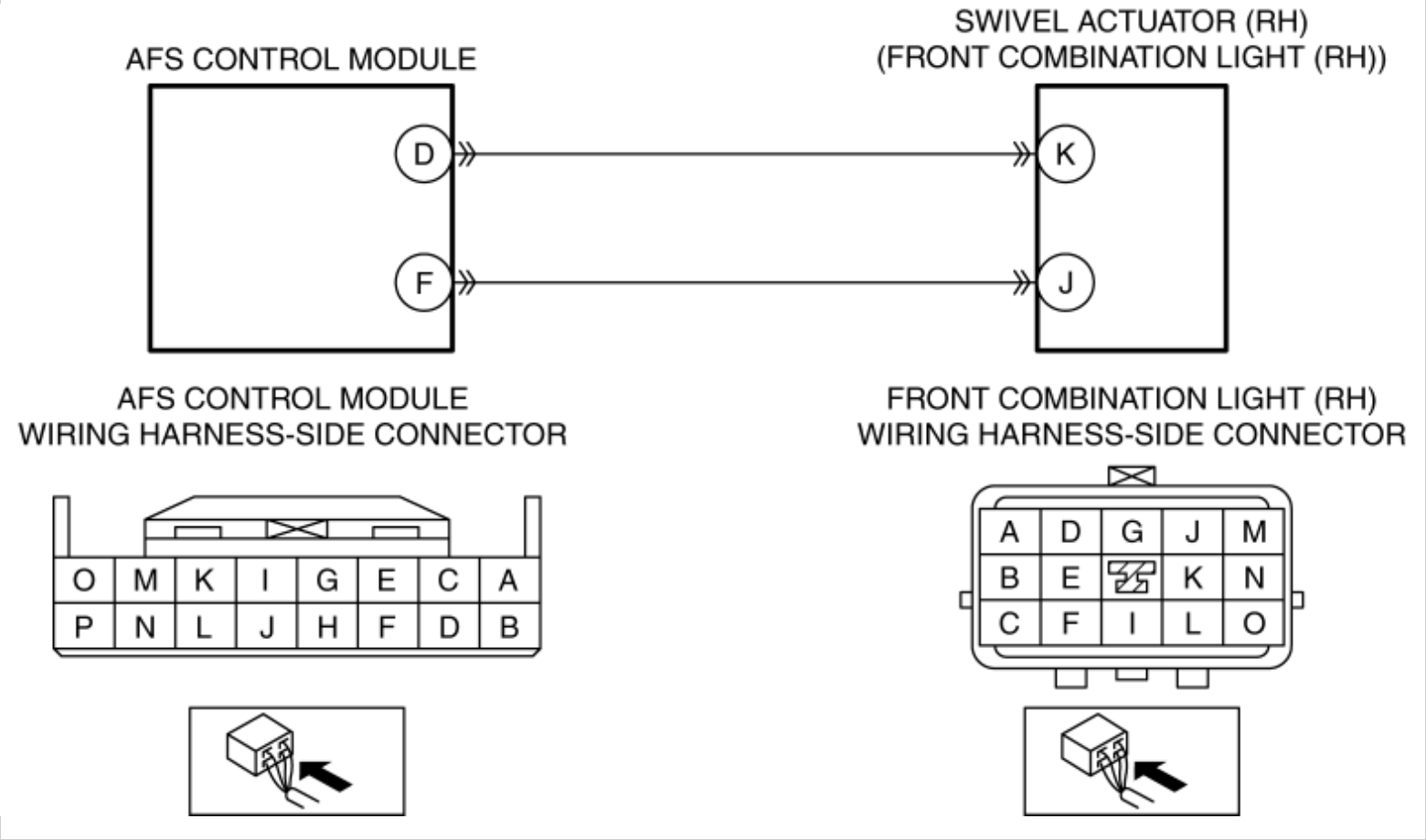

Diagnostic Procedure

Step	Inspection		Action
1	**VERIFY IGNITER (RH) INSTALLATION CONDITION** • Verify the installation condition of the igniter (RH). (See **IGNITER REMOVAL/INSTALLATION**.) • Is the igniter (RH) installed correctly?	Yes	Go to the next step.
		No	Install the igniter (RH) correctly, then go to Step 6. (See **IGNITER REMOVAL/INSTALLATION**.)
2	**INSPECT FRONT COMBINATION LIGHT (RH) CONNECTOR CONDITION** • Switch the ignition off. • Disconnect the negative battery cable. (See **NEGATIVE BATTERY CABLE DISCONNECTION/CONNECTION [SKYACTIV-G 2.0, SKYACTIV-G 2.5]**.)	Yes	Go to the next step.
		No	Repair or replace the connector, then go to Step 6.

	• Disconnect the front combination light (RH) connector. • Inspect the connector engagement and connection condition and inspect the terminals for damage, deformation, corrosion, or disconnection. • Is the connector normal?		
3	**INSPECT AFS CONTROL MODULE CONNECTOR CONDITION** • Disconnect the AFS control module connector. • Inspect the connector engagement and connection condition and inspect the terminals for damage, deformation, corrosion, or disconnection. • Is the connector normal?	Yes	Go to the next step.
		No	Repair or replace the connector, then go to Step 6.
4	**INSPECT FOR OPEN CIRCUIT IN SWIVEL ACTUATOR (RH) CIRCUIT** • Verify that the front combination light (RH) and AFS control module connectors are disconnected. • Inspect for continuity between the following terminals (wiring harness-side): ▪ AFS control module terminal D—Front combination light (RH) terminal K ▪ AFS control module terminal F—Front combination light (RH) terminal J • Is there continuity?	Yes	Go to the next step.
		No	Refer to the wiring diagram and verify whether or not there is a common connector between the following terminals: • AFS control module terminal D—Front combination light (RH) terminal K • AFS control module terminal F—Front combination light (RH) terminal J **If there is a common connector:** • Determine the malfunctioning part by inspecting the common connector and the terminal for corrosion, damage, or pin disconnection, and the common wiring harness for an open circuit. • Repair or replace the malfunctioning part. **If there is no common connector:** • Repair or replace the wiring harness which has an open circuit.

			Go to Step 6.
5	**PERFORM DTC INSPECTION AND VERIFY SWIVEL ACTUATOR (RH) MALFUNCTION** • Always reconnect all disconnected connectors. • Reconnect the disconnected negative battery cable. (See **NEGATIVE BATTERY CABLE DISCONNECTION/CONNECTION [SKYACTIV-G 2.0, SKYACTIV-G 2.5]**.) • Clear the DTC for the AFS control module using the M-MDS. (See **CLEARING DTC [ADAPTIVE FRONT LIGHTING SYSTEM (AFS)]**.) • Switch the ignition ON (engine off or on) and wait for **5 s or more**. • Retrieve the AFS control module DTCs using the M-MDS. (See **DTC INSPECTION [ADAPTIVE FRONT LIGHTING SYSTEM (AFS)]**.) • Is the same DTC displayed?	Yes	Replace the front combination light (RH), then go to the next step. (See **FRONT COMBINATION LIGHT REMOVAL/INSTALLATION**.)
		No	Go to Step 7.
6	**VERIFY THAT REPAIRS HAVE BEEN COMPLETED** • Always reconnect all disconnected connectors. • Reconnect the disconnected negative battery cable. (See **NEGATIVE BATTERY CABLE DISCONNECTION/CONNECTION [SKYACTIV-G 2.0, SKYACTIV-G 2.5]**.) • Clear the DTC for the AFS control module using the M-MDS. (See **CLEARING DTC [ADAPTIVE FRONT LIGHTING SYSTEM (AFS)]**.)	Yes	Repeat the inspection from Step 1. • If the malfunction recurs, replace the AFS control module. (See **ADAPTIVE FRONT LIGHTING SYSTEM (AFS) CONTROL MODULE REMOVAL/INSTALLATION**.) Go to the next step.
		No	Go to the next step.

	• Switch the ignition ON (engine off or on) and wait for **5 s or more**. • Retrieve the AFS control module DTCs using the M-MDS. (See **DTC INSPECTION [ADAPTIVE FRONT LIGHTING SYSTEM (AFS)]**.) • Is the same DTC displayed?		
7	**VERIFY IF OTHER DTCs DISPLAYED** • Are any other DTCs displayed?	Yes	Repair or replace the malfunctioning part according to the applicable DTC troubleshooting. (See **DTC TABLE [ADAPTIVE FRONT LIGHTING SYSTEM (AFS)]**.)
		No	DTC troubleshooting completed.

2014 - Mazda3 - Body and Accessories

DTC B10A4:87 [ADAPTIVE FRONT LIGHTING SYSTEM (AFS)]

Description	Communication error with swivel actuator (RH)
Detection condition	• AFS control module detected communication error with the swivel actuator (RH) for **5 s or more** with the ignition switched ON (engine off or on).
Fail-safe function	• The swivel actuator (RH) is stopped at the position when the malfunction is determined. • The swivel actuator (LH) is moved to the center, or the swivel actuators (LH) and (RH) are moved to the center. • Control of the headlight auto leveling system is continued with the headlight leveling actuator positioned **−0.6°** from where the malfunction is determined.
Possible cause	• Front combination light (RH) connector or terminal malfunction • AFS control module connector or terminal malfunction • Short to ground in wiring harness between the following terminals: ▪ AFS control module terminal D—Front combination light (RH) terminal K ▪ AFS control module terminal F—Front combination light (RH) terminal J • Short to power supply in wiring harness between the following terminals: ▪ AFS control module terminal D—Front combination light (RH) terminal K ▪ AFS control module terminal F—Front combination light (RH) terminal J • Open circuit in wiring harness between the following terminals: ▪ AFS control module terminal D—Front combination light (RH) terminal K ▪ AFS control module terminal F—Front combination light (RH) terminal J • Swivel actuator (RH) malfunction • AFS control module malfunction

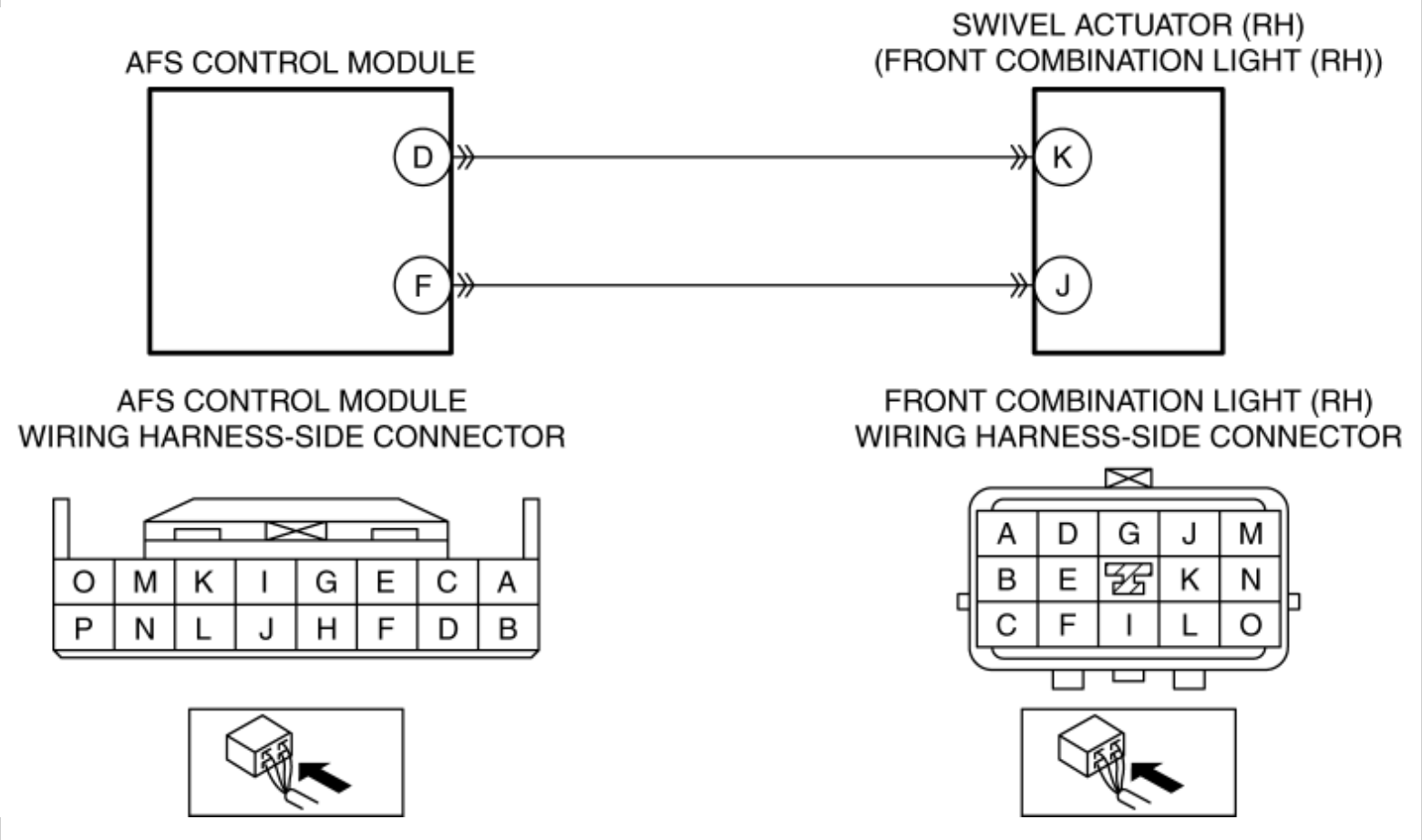

Diagnostic Procedure

Step	Inspection		Action
1	**INSPECT FRONT COMBINATION LIGHT (RH) CONNECTOR CONDITION** • Switch the ignition off. • Disconnect the negative battery cable. (See **NEGATIVE BATTERY CABLE DISCONNECTION/CONNECTION [SKYACTIV-G 2.0, SKYACTIV-G 2.5]**.) • Disconnect the front combination light (RH) connector. • Inspect the connector engagement and connection condition and inspect the terminals for damage, deformation, corrosion, or disconnection. • Is the connector normal?	Yes	Go to the next step.
		No	Repair or replace the connector, then go to Step 7.

2	**INSPECT AFS CONTROL MODULE CONNECTOR CONDITION** • Disconnect the AFS control module connector. • Inspect the connector engagement and connection condition and inspect the terminals for damage, deformation, corrosion, or disconnection. • Is the connector normal?	Yes	Go to the next step.
		No	Repair or replace the connector, then go to Step 7.
3	**INSPECT FOR SHORT TO GROUND IN SWIVEL ACTUATOR (RH) CIRCUIT** • Verify that the front combination light (RH) and AFS control module connectors are disconnected. • Inspect for continuity between the following terminals (wiring harness-side) and body ground: ▪ Front combination light (RH) terminal K ▪ Front combination light (RH) terminal J • Is there continuity?	Yes	Refer to the wiring diagram and verify whether or not there is a common connector between the following terminals: • AFS control module terminal D—Front combination light (RH) terminal K • AFS control module terminal F—Front combination light (RH) terminal J **If there is a common connector:** • Determine the malfunctioning part by inspecting the common connector and the terminal for corrosion, damage, or pin disconnection, and the common wiring harness for a short to ground. • Repair or replace the malfunctioning part. **If there is no common connector:** • Repair or replace the wiring harness which has a short to ground. Go to Step 7.
		No	Go to the next step.
4	**INSPECT FOR SHORT TO POWER SUPPLY IN SWIVEL ACTUATOR (RH) CIRCUIT** • Verify that the front combination light (RH) and AFS control module connectors are disconnected. • Reconnect the negative	Yes	Go to the next step.
		No	Refer to the wiring diagram and verify whether or not there is a common connector between the following terminals: • AFS control module terminal D—

	battery cable. (See **NEGATIVE BATTERY CABLE DISCONNECTION/CONNECTION [SKYACTIV-G 2.0, SKYACTIV-G 2.5]**.) • Switch the ignition ON (engine off or on). • Measure the voltage at the following terminals (wiring harness-side): ▪ Front combination light (RH) terminal K ▪ Front combination light (RH) terminal J • Is the voltage **0 V**?		Front combination light (RH) terminal K • AFS control module terminal F—Front combination light (RH) terminal J **If there is a common connector:** • Determine the malfunctioning part by inspecting the common connector and the terminal for corrosion, damage, or pin disconnection, and the common wiring harness for a short to power supply. • Repair or replace the malfunctioning part. **If there is no common connector:** • Repair or replace the wiring harness which has a short to power supply. Go to Step 7.
5	**INSPECT FOR OPEN CIRCUIT IN SWIVEL ACTUATOR (RH) CIRCUIT** • Verify that the front combination light (RH) and AFS control module connectors are disconnected. • Switch the ignition off. • Disconnect the negative battery cable. (See **NEGATIVE BATTERY CABLE DISCONNECTION/CONNECTION [SKYACTIV-G 2.0, SKYACTIV-G 2.5]**.) • Inspect for continuity between the following terminals (wiring harness-side): ▪ AFS control module terminal D—Front combination light (RH) terminal K ▪ AFS control	Yes	Go to the next step.
		No	Refer to the wiring diagram and verify whether or not there is a common connector between the following terminals: • AFS control module terminal D—Front combination light (RH) terminal K • AFS control module terminal F—Front combination light (RH) terminal J **If there is a common connector:** • Determine the malfunctioning part by inspecting the common connector and the terminal for corrosion, damage, or pin disconnection, and the common wiring harness for an open circuit. • Repair or replace the malfunctioning part. **If there is no common connector:** • Repair or replace the wiring harness which has an open circuit.

	module terminal F— Front combination light (RH) terminal J • Is there continuity?		Go to Step 7.
6	**PERFORM DTC INSPECTION AND VERIFY SWIVEL ACTUATOR (RH) MALFUNCTION** • Always reconnect all disconnected connectors. • Reconnect the disconnected negative battery cable. (See **NEGATIVE BATTERY CABLE DISCONNECTION/CONNECTION [SKYACTIV-G 2.0, SKYACTIV-G 2.5]**.) • Clear the DTC for the AFS control module using the M-MDS. (See **CLEARING DTC [ADAPTIVE FRONT LIGHTING SYSTEM (AFS)]**.) • Switch the ignition ON (engine off or on) and wait for **5 s or more**. • Retrieve the AFS control module DTCs using the M-MDS. (See **DTC INSPECTION [ADAPTIVE FRONT LIGHTING SYSTEM (AFS)]**.) • Is the same DTC displayed?	Yes	Replace the front combination light (RH), then go to the next step. (See **FRONT COMBINATION LIGHT REMOVAL/INSTALLATION**.)
		No	Go to Step 8.
7	**VERIFY THAT REPAIRS HAVE BEEN COMPLETED** • Always reconnect all disconnected connectors. • Reconnect the disconnected negative battery cable. (See **NEGATIVE BATTERY CABLE DISCONNECTION/CONNECTION [SKYACTIV-G 2.0, SKYACTIV-G 2.5]**.)	Yes	Repeat the inspection from Step 1. • If the malfunction recurs, replace the AFS control module. (See **ADAPTIVE FRONT LIGHTING SYSTEM (AFS) CONTROL MODULE REMOVAL/INSTALLATION**.) Go to the next step.
		No	Go to the next step.

	• Clear the DTC for the AFS control module using the M-MDS. (See **CLEARING DTC [ADAPTIVE FRONT LIGHTING SYSTEM (AFS)]**.) • Switch the ignition ON (engine off or on) and wait for **5 s or more**. • Retrieve the AFS control module DTCs using the M-MDS. (See **DTC INSPECTION [ADAPTIVE FRONT LIGHTING SYSTEM (AFS)]**.) • Is the same DTC displayed?		
8	**VERIFY IF OTHER DTCs DISPLAYED** • Are any other DTCs displayed?	Yes	Repair or replace the malfunctioning part according to the applicable DTC troubleshooting. (See **DTC TABLE [ADAPTIVE FRONT LIGHTING SYSTEM (AFS)]**.)
		No	DTC troubleshooting completed.

2014 - Mazda3 - Body and Accessories

DTC C0051:86 [ADAPTIVE FRONT LIGHTING SYSTEM (AFS)]

Description	Steering angle error signal received from EPS control module
Detection condition	• Either a condition in which the steering angle sensor has a malfunction and the EPS control module has not performed steering angle neutral position auto learning, or a condition in which the EPS control module has a malfunction is detected for **5 s or more** with the ignition switched ON (engine off or on).
Fail-safe function	• The swivel actuator is moved to the center. • Control of the headlight auto leveling system is continued.
Possible cause	• DTCs are stored in the start stop unit. • DTCs are stored in the EPS control module. • EPS control module malfunction • AFS control module malfunction
System wiring diagram	Not applicable

Diagnostic Procedure

Step	Inspection		Action
1	**VERIFY START STOP UNIT DTCs** • Retrieve the start stop unit DTCs using the M-MDS. (See **DTC INSPECTION [START STOP UNIT]**.) • Are any DTCs displayed?	Yes	Repair or replace the malfunctioning part according to the applicable DTC troubleshooting. (See **DTC TABLE [START STOP UNIT]**.)
		No	Go to the next step.
2	**VERIFY EPS CONTROL MODULE DTCs** • Retrieve the EPS control module DTCs using the M-MDS.	Yes	Repair or replace the malfunctioning part according to the applicable DTC troubleshooting. (See **ELECTRIC POWER STEERING (EPS) ON-BOARD**

	(See **ELECTRIC POWER STEERING (EPS) ON-BOARD DIAGNOSIS**.) • Are any DTCs displayed?		**DIAGNOSIS**.)
		No	Go to the next step.
3	**PERFORM DTC INSPECTION AND VERIFY EPS CONTROL MODULE MALFUNCTION** • Clear the DTC for the AFS control module using the M-MDS. (See **CLEARING DTC [ADAPTIVE FRONT LIGHTING SYSTEM (AFS)]**.) • Switch the ignition ON (engine off or on) and wait for **5 s or more**. • Retrieve the AFS control module DTCs using the M-MDS. (See **DTC INSPECTION [ADAPTIVE FRONT LIGHTING SYSTEM (AFS)]**.) • Is the same DTC displayed?	Yes	Replace the EPS control module, then go to the next step. (See **STEERING WHEEL AND COLUMN REMOVAL/INSTALLATION**.)
		No	Go to Step 5.
4	**VERIFY THAT REPAIRS HAVE BEEN COMPLETED** • Clear the DTC for the AFS control module using the M-MDS. (See **CLEARING DTC [ADAPTIVE FRONT LIGHTING SYSTEM (AFS)]**.) • Switch the ignition ON (engine off or on) and wait for **5 s or more**. • Retrieve the AFS control module DTCs using the M-MDS. (See **DTC INSPECTION [ADAPTIVE FRONT LIGHTING SYSTEM (AFS)]**.) • Is the same DTC displayed?	Yes	Repeat the inspection from Step 1. • If the malfunction recurs, replace the AFS control module. (See **ADAPTIVE FRONT LIGHTING SYSTEM (AFS) CONTROL MODULE REMOVAL/INSTALLATION**.) Go to the next step.
		No	Go to the next step.
5	**VERIFY IF OTHER DTCs DISPLAYED** • Are any other DTCs displayed?	Yes	Repair or replace the malfunctioning part according to the applicable DTC troubleshooting.

			(See **DTC TABLE [ADAPTIVE FRONT LIGHTING SYSTEM (AFS)]**.)
		No	DTC troubleshooting completed.

2014 - Mazda3 - Body and Accessories

DTC U0001:88/U0100:00/U0131:00/U0140:00/U0155:00 [ADAPTIVE FRONT LIGHTING SYSTEM (AFS)]

Description	• U0001:88
	  ▪ Unit communication error (HS-CAN)
	• U0100:00
	  ▪ Communication error with PCM
	• U0131:00
	  ▪ Communication error with EPS control module
	• U0140:00
	  ▪ Communication error with front body control module (FBCM)
	• U0155:00
	  ▪ Communication error with instrument cluster

Detection condition	• U0001:88
	  ▪ AFS control module detected the CAN bus communication line (HS-CAN) malfunction **10 times** continuously.
	• U0100:00
	  ▪ AFS control module could not receive the CAN signal from the PCM for **5 s or more**.
	• U0131:00
	  ▪ AFS control module could not receive the CAN signal from the EPS control module for **5 s or more**.
	• U0140:00
	  ▪ AFS control module could not receive the CAN signal from the front body control module (FBCM) for **5 s or more**.
	• U0155:00
	  ▪ AFS control module could not receive the CAN signal from the instrument cluster for **5 s or more**.

Fail-safe function	• U0001:88 ▪ The swivel actuator is moved to the center. ▪ The headlight leveling actuator is stopped at the position when the malfunction is determined. • U0100:00 ▪ The swivel actuator is moved to the center. ▪ The headlight leveling actuator is stopped at the position when the malfunction is determined. • U0131:00 ▪ The swivel actuator is moved to the center. ▪ Control of the headlight auto leveling system is continued. • U0140:00 ▪ The swivel actuator is moved to the center. ▪ The headlight leveling actuator is stopped at the position when the malfunction is determined. • U0155:00 ▪ The swivel actuator is moved to the center. ▪ Control of the headlight auto leveling system is continued.
Possible cause	• Malfunction in CAN bus communication line • Malfunction in CAN communication line between PCM and AFS control module • Malfunction in CAN communication line between EPS control module and AFS control module • Malfunction in CAN communication line between front body control module (FBCM) and AFS control module • Malfunction in CAN communication line between instrument cluster and AFS control module
System wiring diagram	Not applicable

Diagnostic Procedure

- Perform the malfunction diagnosis according to the troubleshooting procedure for the multiplex communication system. (See **FOREWORD**.)

DTC U0001:88/U0100:00/U0131:00/U0140:00/U0155:00 [ADAPTIVE FRONT LIGHTING SYSTEM (AFS)]

2014 - Mazda3 - Body and Accessories

DTC U0320:09 [ADAPTIVE FRONT LIGHTING SYSTEM (AFS)]

Description	Error signal received from EPS control module
Detection condition	• AFS control module received the error signal from the EPS control module for **5 s or more** with the ignition switched ON (engine off or on).
Fail-safe function	• The swivel actuator is moved to the center. • Control of the headlight auto leveling system is continued.
Possible cause	• DTCs are stored in the EPS control module. • EPS control module malfunction • AFS control module malfunction
System wiring diagram	Not applicable

Diagnostic Procedure

Step	Inspection		Action
1	**VERIFY EPS CONTROL MODULE DTCs** • Retrieve the EPS control module DTCs using the M-MDS. (See **ELECTRIC POWER STEERING (EPS) ON-BOARD DIAGNOSIS**.) • Are any DTCs displayed?	Yes	Repair or replace the malfunctioning part according to the applicable DTC troubleshooting. (See **ELECTRIC POWER STEERING (EPS) ON-BOARD DIAGNOSIS**.)
		No	Go to the next step.
2	**PERFORM DTC INSPECTION AND VERIFY EPS CONTROL MODULE MALFUNCTION** • Clear the DTC for the AFS control module using the M-MDS.	Yes	Replace the EPS control module, then go to the next step. (See **STEERING WHEEL AND COLUMN REMOVAL/INSTALLATION**.)

	(See **CLEARING DTC [ADAPTIVE FRONT LIGHTING SYSTEM (AFS)]**.) • Switch the ignition ON (engine off or on) and wait for **5 s or more**. • Retrieve the AFS control module DTCs using the M-MDS. (See **DTC INSPECTION [ADAPTIVE FRONT LIGHTING SYSTEM (AFS)]**.) • Is the same DTC displayed?	No	Go to Step 4.
3	**VERIFY THAT REPAIRS HAVE BEEN COMPLETED** • Clear the DTC for the AFS control module using the M-MDS. (See **CLEARING DTC [ADAPTIVE FRONT LIGHTING SYSTEM (AFS)]**.) • Switch the ignition ON (engine off or on) and wait for **5 s or more**. • Retrieve the AFS control module DTCs using the M-MDS. (See **DTC INSPECTION [ADAPTIVE FRONT LIGHTING SYSTEM (AFS)]**.) • Is the same DTC displayed?	Yes	Repeat the inspection from Step 1. • If the malfunction recurs, replace the AFS control module. (See **ADAPTIVE FRONT LIGHTING SYSTEM (AFS) CONTROL MODULE REMOVAL/INSTALLATION**.) Go to the next step.
		No	Go to the next step.
4	**VERIFY IF OTHER DTCs DISPLAYED** • Are any other DTCs displayed?	Yes	Repair or replace the malfunctioning part according to the applicable DTC troubleshooting. (See **DTC TABLE [ADAPTIVE FRONT LIGHTING SYSTEM (AFS)]**.)
		No	DTC troubleshooting completed.

2014 - Mazda3 - Body and Accessories

DTC U0420:68 [ADAPTIVE FRONT LIGHTING SYSTEM (AFS)]

Description	Error signal received from EPS control module
Detection condition	• AFS control module received the error signal from the EPS control module for **5 s or more** with the ignition switched ON (engine off or on).
Fail-safe function	• The swivel actuator is moved to the center. • Control of the headlight auto leveling system is continued.
Possible cause	• DTCs are stored in the EPS control module. • EPS control module malfunction • AFS control module malfunction
System wiring diagram	Not applicable

Diagnostic Procedure

Step	Inspection		Action
1	**VERIFY EPS CONTROL MODULE DTCs** • Retrieve the EPS control module DTCs using the M-MDS. (See **ELECTRIC POWER STEERING (EPS) ON-BOARD DIAGNOSIS**.) • Are any DTCs displayed?	Yes	Repair or replace the malfunctioning part according to the applicable DTC troubleshooting. (See **ELECTRIC POWER STEERING (EPS) ON-BOARD DIAGNOSIS**.)
		No	Go to the next step.
2	**PERFORM DTC INSPECTION AND VERIFY EPS CONTROL MODULE MALFUNCTION** • Clear the DTC for the AFS control module using the M-MDS.	Yes	Replace the EPS control module, then go to the next step. (See **STEERING WHEEL AND COLUMN REMOVAL/INSTALLATION**.)

	(See **CLEARING DTC [ADAPTIVE FRONT LIGHTING SYSTEM (AFS)]**.) • Switch the ignition ON (engine off or on) and wait for **5 s or more**. • Retrieve the AFS control module DTCs using the M-MDS. (See **DTC INSPECTION [ADAPTIVE FRONT LIGHTING SYSTEM (AFS)]**.) • Is the same DTC displayed?	No	Go to Step 4.
3	**VERIFY THAT REPAIRS HAVE BEEN COMPLETED** • Clear the DTC for the AFS control module using the M-MDS. (See **CLEARING DTC [ADAPTIVE FRONT LIGHTING SYSTEM (AFS)]**.) • Switch the ignition ON (engine off or on) and wait for **5 s or more**. • Retrieve the AFS control module DTCs using the M-MDS. (See **DTC INSPECTION [ADAPTIVE FRONT LIGHTING SYSTEM (AFS)]**.) • Is the same DTC displayed?	Yes	Repeat the inspection from Step 1. • If the malfunction recurs, replace the AFS control module. (See **ADAPTIVE FRONT LIGHTING SYSTEM (AFS) CONTROL MODULE REMOVAL/INSTALLATION**.) Go to the next step.
		No	Go to the next step.
4	**VERIFY IF OTHER DTCs DISPLAYED** • Are any other DTCs displayed?	Yes	Repair or replace the malfunctioning part according to the applicable DTC troubleshooting. (See **DTC TABLE [ADAPTIVE FRONT LIGHTING SYSTEM (AFS)]**.)
		No	DTC troubleshooting completed.

2014 - Mazda3 - Body and Accessories

DTC U0423:68 [ADAPTIVE FRONT LIGHTING SYSTEM (AFS)]

Description	Error signal received from instrument cluster • AFS OFF switch error signal • Ignition switch error signal • Selector lever R position (ATX)/shift lever reverse (MTX) signal error • Selector lever R position (ATX)/shift lever reverse (MTX) signal not determined

Detection condition	• AFS OFF switch error signal
	  ▪ AFS control module received the AFS OFF switch error signal for **5 s or more** with the ignition switched ON (engine off or on).
	• Ignition switch error signal
	  ▪ AFS control module received the ignition switch error signal for **5 s or more** with the ignition switched ON (engine off or on).
	• Selector lever R position (ATX)/shift lever reverse (MTX) signal error
	  ▪ AFS control module received the selector lever R position (ATX)/shift lever reverse (MTX) signal error for **5 s or more** with the ignition switched ON (engine off or on).
	• Selector lever R position (ATX)/shift lever reverse (MTX) signal not determined
	  ▪ AFS control module detected the undetermined selector lever R position (ATX)/shift lever reverse (MTX) signal.

Fail-safe	• AFS OFF switch error signal
	  ▪ Control of the swivel actuator is continued with the AFS OFF switch fixed in the condition when the malfunction is detected.
	  ▪ Control of the headlight auto leveling system is continued.
	• Ignition switch error signal
	  ▪ Control of the AFS is continued with the ignition switched ON (engine on).
	  ▪ Control of the headlight auto leveling system is continued.

function	• Selector lever R position (ATX)/shift lever reverse (MTX) signal error ▪ The swivel actuator is moved to the center. ▪ Control of the headlight auto leveling system is continued. • Selector lever R position (ATX)/shift lever reverse (MTX) signal not determined ▪ Control of the swivel actuator is continued with the transaxle range sensor (ATX)/back-up light switch (MTX) fixed in the condition when the malfunction is determined. ▪ Control of the headlight auto leveling system is continued.
Possible cause	• DTCs are stored in the instrument cluster. • Instrument cluster malfunction • AFS control module malfunction
System wiring diagram	Not applicable

Diagnostic Procedure

Step	Inspection		Action
1	**VERIFY INSTRUMENT CLUSTER DTCs** • Retrieve the instrument cluster DTCs using the M-MDS. (See **DTC INSPECTION [INSTRUMENT CLUSTER]**.) • Are any DTCs displayed?	Yes	Repair or replace the malfunctioning part according to the applicable DTC troubleshooting. (See **DTC TABLE [INSTRUMENT CLUSTER]**.)
		No	Go to the next step.
2	**PERFORM DTC INSPECTION AND VERIFY INSTRUMENT CLUSTER MALFUNCTION** • Clear the DTC for the AFS control module using the M-MDS. (See **CLEARING DTC [ADAPTIVE FRONT LIGHTING SYSTEM (AFS)]**.) • Switch the ignition ON (engine off or on) and wait for **5 s or more**. • Retrieve the AFS control module DTCs using the M-MDS.	Yes	Replace the instrument cluster, then go to the next step. (See **INSTRUMENT CLUSTER REMOVAL/INSTALLATION**.)
		No	Go to Step 4.

	(See **DTC INSPECTION [ADAPTIVE FRONT LIGHTING SYSTEM (AFS)]**.) • Is the same DTC displayed?		
3	**VERIFY THAT REPAIRS HAVE BEEN COMPLETED** • Clear the DTC for the AFS control module using the M-MDS. (See **CLEARING DTC [ADAPTIVE FRONT LIGHTING SYSTEM (AFS)]**.) • Switch the ignition ON (engine off or on) and wait for **5 s or more**. • Retrieve the AFS control module DTCs using the M-MDS. (See **DTC INSPECTION [ADAPTIVE FRONT LIGHTING SYSTEM (AFS)]**.) • Is the same DTC displayed?	Yes	Repeat the inspection from Step 1. • If the malfunction recurs, replace the AFS control module. (See **ADAPTIVE FRONT LIGHTING SYSTEM (AFS) CONTROL MODULE REMOVAL/INSTALLATION**.) Go to the next step.
		No	Go to the next step.
4	**VERIFY IF OTHER DTCs DISPLAYED** • Are any other DTCs displayed?	Yes	Repair or replace the malfunctioning part according to the applicable DTC troubleshooting. (See **DTC TABLE [ADAPTIVE FRONT LIGHTING SYSTEM (AFS)]**.)
		No	DTC troubleshooting completed.

2014 - Mazda3 - Body and Accessories

DTC U2005:86 [ADAPTIVE FRONT LIGHTING SYSTEM (AFS)]

Description	Error signal received from PCM
Detection condition	• AFS control module received the vehicle speed signal error from the PCM for **5 s or more** with the ignition switched ON (engine off or on).
Fail-safe function	• The swivel actuator is moved to the center. • The headlight leveling actuator is stopped at the position when the malfunction is determined.
Possible cause	• DTCs are stored in the PCM. • PCM malfunction • AFS control module malfunction
System wiring diagram	Not applicable

Diagnostic Procedure

Step	Inspection		Action
1	**VERIFY PCM DTCs** • Retrieve the PCM DTCs using the M-MDS. (See **ON-BOARD DIAGNOSTIC TEST [SKYACTIV-G 2.0, SKYACTIV-G 2.5]**.) • Are any DTCs displayed?	Yes	Repair or replace the malfunctioning part according to the applicable DTC troubleshooting. (See **DTC TABLE [SKYACTIV-G 2.0, SKYACTIV-G 2.5]**.)
		No	Go to the next step.
2	**PERFORM DTC INSPECTION AND VERIFY PCM MALFUNCTION** • Clear the DTC for the AFS control module using the M-MDS.	Yes	Replace the PCM, then go to the next step. (See **PCM REMOVAL/INSTALLATION [SKYACTIV-G 2.0, SKYACTIV-G 2.5]**.)

	(See **CLEARING DTC [ADAPTIVE FRONT LIGHTING SYSTEM (AFS)]**.) • Switch the ignition ON (engine off or on) and wait for **5 s or more**. • Retrieve the AFS control module DTCs using the M-MDS. (See **DTC INSPECTION [ADAPTIVE FRONT LIGHTING SYSTEM (AFS)]**.) • Is the same DTC displayed?	No	Go to Step 4.
3	**VERIFY THAT REPAIRS HAVE BEEN COMPLETED** • Clear the DTC for the AFS control module using the M-MDS. (See **CLEARING DTC [ADAPTIVE FRONT LIGHTING SYSTEM (AFS)]**.) • Switch the ignition ON (engine off or on) and wait for **5 s or more**. • Retrieve the AFS control module DTCs using the M-MDS. (See **DTC INSPECTION [ADAPTIVE FRONT LIGHTING SYSTEM (AFS)]**.) • Is the same DTC displayed?	Yes	Repeat the inspection from Step 1. • If the malfunction recurs, replace the AFS control module. (See **ADAPTIVE FRONT LIGHTING SYSTEM (AFS) CONTROL MODULE REMOVAL/INSTALLATION**.) Go to the next step.
		No	Go to the next step.
4	**VERIFY IF OTHER DTCs DISPLAYED** • Are any other DTCs displayed?	Yes	Repair or replace the malfunctioning part according to the applicable DTC troubleshooting. (See **DTC TABLE [ADAPTIVE FRONT LIGHTING SYSTEM (AFS)]**.)
		No	DTC troubleshooting completed.

2014 - Mazda3 - Body and Accessories

DTC U2300:54 [ADAPTIVE FRONT LIGHTING SYSTEM (AFS)]

Description	Error configuration data received from instrument cluster
Detection condition	• AFS control module received the error configuration data from the instrument cluster for **30 s or more** with the ignition switched ON (engine off or on).
Fail-safe function	• Control of the AFS is continued. • Control of the headlight auto leveling system is continued.

Possible cause	• DTCs are stored in the instrument cluster.
	  ▪ Instrument cluster configuration not implemented
	  ▪ Instrument cluster internal memory malfunction
	• Instrument cluster configuration data error
	• AFS control module malfunction

System wiring diagram	Not applicable

Diagnostic Procedure

Step	Inspection		Action
1	**VERIFY INSTRUMENT CLUSTER DTCs** • Retrieve the instrument cluster DTCs using the M-MDS. (See **DTC INSPECTION [INSTRUMENT CLUSTER]**.) • Are any DTCs displayed?	Yes	Repair or replace the malfunctioning part according to the applicable DTC troubleshooting. (See **DTC TABLE [INSTRUMENT CLUSTER]**.)
		No	Go to the next step.
2	**RESET INSTRUMENT CLUSTER CONFIGURATION DATA**	Yes	Using the M-MDS, perform the instrument cluster configuration (using As-Built data) again, then go

	Using the M-MDS, perform the instrument cluster configuration (using As-Built data). (See **INSTRUMENT CLUSTER CONFIGURATION (USING AS-BUILT DATA)**.) • Clear the DTC for the AFS control module using the M-MDS. (See **CLEARING DTC [ADAPTIVE FRONT LIGHTING SYSTEM (AFS)]**.) • Switch the ignition ON (engine off or on) and wait for **30 s or more**. • Retrieve the AFS control module DTCs using the M-MDS. (See **DTC INSPECTION [ADAPTIVE FRONT LIGHTING SYSTEM (AFS)]**.) • Is the same DTC displayed?		to the next step. (See **INSTRUMENT CLUSTER CONFIGURATION (USING AS-BUILT DATA)**.)
		No	Go to Step 4.
3	**VERIFY THAT REPAIRS HAVE BEEN COMPLETED** • Clear the DTC for the AFS control module using the M-MDS. (See **CLEARING DTC [ADAPTIVE FRONT LIGHTING SYSTEM (AFS)]**.) • Switch the ignition ON (engine off or on) and wait for **30 s or more**. • Retrieve the AFS control module DTCs using the M-MDS. (See **DTC INSPECTION [ADAPTIVE FRONT LIGHTING SYSTEM (AFS)]**.) • Is the same DTC displayed?	Yes	Repeat the inspection from Step 1. • If the malfunction recurs, replace the AFS control module. (See **ADAPTIVE FRONT LIGHTING SYSTEM (AFS) CONTROL MODULE REMOVAL/INSTALLATION**.) Go to the next step.
		No	Go to the next step.
4	**VERIFY IF OTHER DTCs DISPLAYED** • Are any other DTCs displayed?	Yes	Repair or replace the malfunctioning part according to the applicable DTC troubleshooting. (See **DTC TABLE [ADAPTIVE FRONT LIGHTING SYSTEM**

			(AFS)].)
		No	DTC troubleshooting completed.

2014 - Mazda3 - Body and Accessories

DTC U2300:55 [ADAPTIVE FRONT LIGHTING SYSTEM (AFS)]

Description	Instrument cluster configuration not implemented
Detection condition	• AFS control module received a signal which indicates the instrument cluster configuration is not performed.
Fail-safe function	• The swivel actuator is moved to the center. • The headlight leveling actuator is stopped at the position when the malfunction is determined.
Possible cause	**NOTE:** • To correctly write the configuration data sent from the instrument cluster to the AFS control module to the AFS control module, **30 s or more** need to have elapsed since the ignition was switched ON (engine off or on). • Instrument cluster configuration is not completed. • AFS control module malfunction
System wiring diagram	Not applicable

Diagnostic Procedure

Step	Inspection		Action
1	**RESET CONFIGURATION DATA FROM INSTRUMENT CLUSTER TO AFS CONTROL MODULE** • Clear the DTC for the AFS control module using the M-MDS. (See **CLEARING DTC [ADAPTIVE FRONT LIGHTING SYSTEM (AFS)]**.) • Switch the ignition ON (engine off or on) and wait for **30 s or**	Yes	Repeat the inspection from Step 1. • If the malfunction recurs, replace the AFS control module. (See **ADAPTIVE FRONT LIGHTING SYSTEM (AFS) CONTROL MODULE REMOVAL/INSTALLATION**.) Go to the next step.
		No	Go to the next step.

	more. • Retrieve the AFS control module DTCs using the M-MDS. (See **DTC INSPECTION [ADAPTIVE FRONT LIGHTING SYSTEM (AFS)]**.) • Is the same DTC displayed?		
2	**VERIFY IF OTHER DTCs DISPLAYED** • Are any other DTCs displayed?	Yes	Repair or replace the malfunctioning part according to the applicable DTC troubleshooting. (See **DTC TABLE [ADAPTIVE FRONT LIGHTING SYSTEM (AFS)]**.)
		No	DTC troubleshooting completed.

2014 - Mazda3 - Body and Accessories

DTC U2300:56 [ADAPTIVE FRONT LIGHTING SYSTEM (AFS)]

Description	Configuration data unmatched with instrument cluster
Detection condition	• Configuration data of the AFS control module and instrument cluster are not matched.
Fail-safe function	• Control of the AFS is continued. • Control of the headlight auto leveling system is continued.

Possible cause	• DTCs are stored in the instrument cluster.
	  ▪ Instrument cluster configuration not implemented
	  ▪ Instrument cluster internal memory malfunction
	• Instrument cluster configuration data error
	• AFS control module malfunction

System wiring diagram	Not applicable

Diagnostic Procedure

Step	Inspection		Action
1	**VERIFY INSTRUMENT CLUSTER DTCs** • Retrieve the instrument cluster DTCs using the M-MDS. (See **DTC INSPECTION [INSTRUMENT CLUSTER]**.) • Are any DTCs displayed?	Yes	Repair or replace the malfunctioning part according to the applicable DTC troubleshooting. (See **DTC TABLE [INSTRUMENT CLUSTER]**.)
		No	Go to the next step.
2	**RESET INSTRUMENT CLUSTER CONFIGURATION DATA** • Using the M-MDS, perform the instrument cluster	Yes	Using the M-MDS, perform the instrument cluster configuration (using As-Built data) again, then go to the next step. (See **INSTRUMENT CLUSTER CONFIGURATION (USING**

	configuration (using As-Built data). (See **INSTRUMENT CLUSTER CONFIGURATION (USING AS-BUILT DATA)**.) • Clear the DTC for the AFS control module using the M-MDS. (See **CLEARING DTC [ADAPTIVE FRONT LIGHTING SYSTEM (AFS)]**.) • Retrieve the AFS control module DTCs using the M-MDS. (See **DTC INSPECTION [ADAPTIVE FRONT LIGHTING SYSTEM (AFS)]**.) • Is the same DTC displayed?		**AS-BUILT DATA)**.)
		No	Go to Step 4.
3	**VERIFY THAT REPAIRS HAVE BEEN COMPLETED** • Clear the DTC for the AFS control module using the M-MDS. (See **CLEARING DTC [ADAPTIVE FRONT LIGHTING SYSTEM (AFS)]**.) • Retrieve the AFS control module DTCs using the M-MDS. (See **DTC INSPECTION [ADAPTIVE FRONT LIGHTING SYSTEM (AFS)]**.) • Is the same DTC displayed?	Yes	Repeat the inspection from Step 1. • If the malfunction recurs, replace the AFS control module. (See **ADAPTIVE FRONT LIGHTING SYSTEM (AFS) CONTROL MODULE REMOVAL/INSTALLATION**.) Go to the next step.
		No	Go to the next step.
4	**VERIFY IF OTHER DTCs DISPLAYED** • Are any other DTCs displayed?	Yes	Repair or replace the malfunctioning part according to the applicable DTC troubleshooting. (See **DTC TABLE [ADAPTIVE FRONT LIGHTING SYSTEM (AFS)]**.)
		No	DTC troubleshooting completed.

DTC U2300:56 [ADAPTIVE FRONT LIGHTING SYSTEM (AFS)]

2014 - Mazda3 - Body and Accessories

DTC U3000:42 [ADAPTIVE FRONT LIGHTING SYSTEM (AFS)]

Description	AFS control module internal malfunction
Detection condition	• AFS control module detects the internal EEPROM malfunction.
Fail-safe function	• The swivel actuator is moved to the center. • The headlight leveling actuator is stopped at the position when the malfunction is determined.
Possible cause	• AFS control module internal malfunction
System wiring diagram	Not applicable

Diagnostic Procedure

Step	Inspection		Action
1	**PERFORM DTC INSPECTION AND VERIFY AFS CONTROL MODULE MALFUNCTION** • Clear the DTC for the AFS control module using the M-MDS. (See **CLEARING DTC [ADAPTIVE FRONT LIGHTING SYSTEM (AFS)]**.) • Retrieve the AFS control module DTCs using the M-MDS. (See **DTC INSPECTION [ADAPTIVE FRONT LIGHTING SYSTEM (AFS)]**.) • Is the same DTC displayed?	Yes	Repeat the inspection from Step 1. • If the malfunction recurs, replace the AFS control module. (See **ADAPTIVE FRONT LIGHTING SYSTEM (AFS) CONTROL MODULE REMOVAL/INSTALLATION**.) Go to the next step.
		No	Go to the next step.
2	**VERIFY IF OTHER DTCs DISPLAYED**	Yes	Repair or replace the malfunctioning part according

	• Are any other DTCs displayed?		to the applicable DTC troubleshooting. (See **DTC TABLE [ADAPTIVE FRONT LIGHTING SYSTEM (AFS)]**.)
		No	DTC troubleshooting completed.

2014 - Mazda3 - Body and Accessories

DTC U3000:49 [ADAPTIVE FRONT LIGHTING SYSTEM (AFS)]

Description	AFS control module internal malfunction • RAM/ROM malfunction • AFS function malfunction • CAN hardware malfunction
Detection condition	• RAM/ROM malfunction ▪ AFS control module detected a malfunction in the internal RAM/ROM. • AFS function malfunction ▪ AFS control module detected AFS function malfunction **three times** continuously. • CAN hardware malfunction ▪ AFS control module detected CAN hardware malfunction **three times** continuously.
Fail-safe function	• RAM/ROM malfunction ▪ The swivel actuator is moved to the center. ▪ The headlight leveling actuator is stopped at the position when the malfunction is determined. • AFS function malfunction ▪ Not applicable • CAN hardware malfunction ▪ The swivel actuator is moved to the center. ▪ The headlight leveling actuator is stopped at the position when the malfunction is determined.
Possible cause	• AFS control module internal malfunction
System wiring diagram	Not applicable

Diagnostic Procedure

Step	Inspection		Action
1	**PERFORM DTC INSPECTION AND VERIFY AFS CONTROL MODULE MALFUNCTION** • Clear the DTC for the AFS control module using the M-MDS. (See **CLEARING DTC [ADAPTIVE FRONT LIGHTING SYSTEM (AFS)]**.) • Retrieve the AFS control module DTCs using the M-MDS. (See **DTC INSPECTION [ADAPTIVE FRONT LIGHTING SYSTEM (AFS)]**.) • Is the same DTC displayed?	Yes	Repeat the inspection from Step 1. • If the malfunction recurs, replace the AFS control module. (See **ADAPTIVE FRONT LIGHTING SYSTEM (AFS) CONTROL MODULE REMOVAL/INSTALLATION**.) Go to the next step.
		No	Go to the next step.
2	**VERIFY IF OTHER DTCs DISPLAYED** • Are any other DTCs displayed?	Yes	Repair or replace the malfunctioning part according to the applicable DTC troubleshooting. (See **DTC TABLE [ADAPTIVE FRONT LIGHTING SYSTEM (AFS)]**.)
		No	DTC troubleshooting completed.

2014 - Mazda3 - Body and Accessories

DTC U3003:16 [ADAPTIVE FRONT LIGHTING SYSTEM (AFS)]

Description	AFS control module low power supply voltage input
Detection condition	• AFS control module power supply circuit voltage of **9.0 V or less** is detected for **5 s or more** with the ignition switched ON (engine off or on).
Fail-safe function	• The swivel actuator is stopped at the position when the malfunction is determined. • The headlight leveling actuator is stopped at the position when the malfunction is determined.

Possible cause	• DTCs are stored in the PCM.
	• Battery malfunction
	• Generator malfunction
	• AFS control module connector or terminal malfunction
	• AFS control module power supply circuit malfunction
	  ▪ Short to ground in wiring harness between METER1 10 A fuse and AFS control module terminal N
	  ▪ METER1 10 A fuse malfunction
	  ▪ Open circuit in wiring harness between IG1 relay and AFS control module terminal N
	• AFS control module malfunction

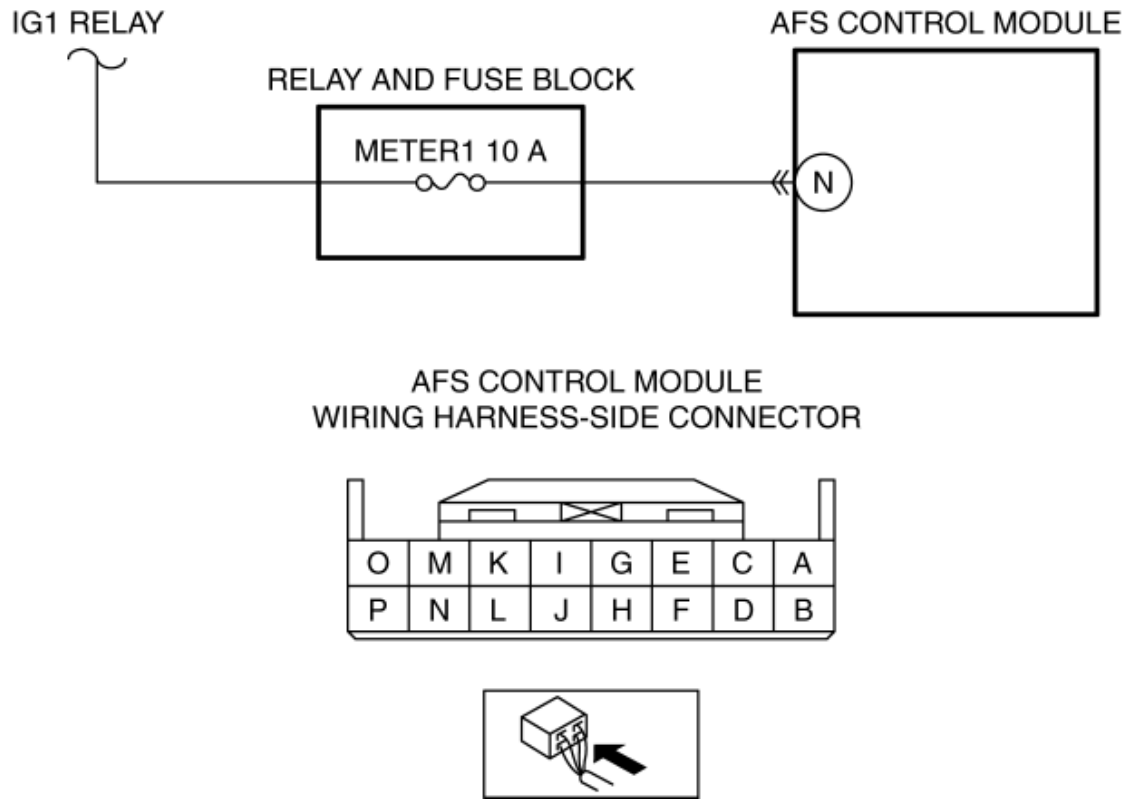

Diagnostic Procedure

Step	Inspection		Action
1	**VERIFY PCM DTCs** • Retrieve the PCM DTCs using the M-MDS. (See **ON-BOARD DIAGNOSTIC TEST [SKYACTIV-G 2.0, SKYACTIV-G 2.5]**.) • Are any DTCs displayed?	Yes	Repair or replace the malfunctioning part according to the applicable DTC troubleshooting. (See **DTC TABLE [SKYACTIV-G 2.0, SKYACTIV-G 2.5]**.)
		No	Go to the next step.
2	**INSPECT BATTERY** • Inspect the battery. (See **BATTERY INSPECTION [SKYACTIV-G 2.0, SKYACTIV-G 2.5]**.) • Is the battery normal?	Yes	Go to the next step.
		No	Recharge or replace the battery, then go to Step 6. (See **BATTERY RECHARGING [SKYACTIV-G 2.0, SKYACTIV-G 2.5]**.) (See **BATTERY REMOVAL/INSTALLATION [SKYACTIV-G 2.0, SKYACTIV-G 2.5]**.)
3	**INSPECT GENERATOR** • Inspect the generator. (See **GENERATOR INSPECTION [SKYACTIV-G 2.0, SKYACTIV-G 2.5 (WITHOUT i-ELOOP)]**.) (See **GENERATOR INSPECTION [SKYACTIV-G 2.0, SKYACTIV-G 2.5 (WITH i-ELOOP)]**.)	Yes	Go to the next step.
		No	Replace the generator, then go to Step 6. (See **GENERATOR REMOVAL/INSTALLATION [SKYACTIV-G 2.0, SKYACTIV-G 2.5 (WITHOUT i-ELOOP)]**.) (See **GENERATOR REMOVAL/INSTALLATION [SKYACTIV-G 2.0, SKYACTIV-G 2.5 (WITH i-ELOOP)]**.)

	• Is the generator normal?		
4	**INSPECT AFS CONTROL MODULE CONNECTOR CONDITION** • Switch the ignition off. • Disconnect the negative battery cable. (See **NEGATIVE BATTERY CABLE DISCONNECTION/CONNECTION [SKYACTIV-G 2.0, SKYACTIV-G 2.5]**.) • Disconnect the AFS control module connector. • Inspect the connector engagement and connection condition and inspect the terminals for damage, deformation, corrosion, or disconnection. • Is the connector normal?	Yes	Go to the next step.
		No	Repair or replace the connector, then go to Step 6.
5	**VERIFY AFS CONTROL MODULE POWER SUPPLY VOLTAGE** • Always reconnect all disconnected connectors. • Reconnect the negative battery cable. (See **NEGATIVE BATTERY CABLE DISCONNECTION/CONNECTION [SKYACTIV-G 2.0, SKYACTIV-G 2.5]**.) • Display PID VPWR_IG using the M-MDS. (See **PID/DATA MONITOR INSPECTION [ADAPTIVE FRONT LIGHTING SYSTEM (AFS)]**.) • Is the voltage **B+**?	Yes	Go to the next step.
		No	Inspect the METER1 10 A fuse. • If the fuse is blown: ▪ Refer to the wiring diagram and verify whether or not there is a common connector between METER1 10 A fuse and AFS control module terminal N. **If there is a common connector:** • Determine the malfunctioning part by inspecting the common connector and the terminal for corrosion, damage, or pin disconnection, and the common wiring harness for a short to ground. • Repair or replace the

malfunctioning part.

If there is no common connector:

- Repair or replace the wiring harness which has a short to ground.
- Replace the fuse.

- If the fuse is damaged:
  - Replace the fuse.
- If the fuse is normal:
  - Refer to the wiring diagram and verify whether or not there is a common connector between IG1 relay and AFS control module terminal N.

If there is a common connector:

- Determine the malfunctioning part by inspecting the common connector and the terminal for corrosion, damage, or pin disconnection, and the common wiring harness for an open circuit.
- Repair or replace the malfunctioning part.

If there is no common connector:

- Repair or replace the wiring harness which has an open circuit.

Go to the next step.

6	**VERIFY THAT REPAIRS HAVE BEEN COMPLETED** • Always reconnect all disconnected connectors. • Reconnect the disconnected negative battery cable. (See **NEGATIVE BATTERY CABLE DISCONNECTION/CONNECTION [SKYACTIV-G 2.0, SKYACTIV-G 2.5]**.) • Clear the DTC for the AFS control module using the M-MDS. (See **CLEARING DTC [ADAPTIVE FRONT LIGHTING SYSTEM (AFS)]**.) • Switch the ignition ON (engine off or on) and wait for **5 s or more**. • Retrieve the AFS control module DTCs using the M-MDS. (See **DTC INSPECTION [ADAPTIVE FRONT LIGHTING SYSTEM (AFS)]**.) • Is the same DTC displayed?	Yes	Repeat the inspection from Step 1. • If the malfunction recurs, replace the AFS control module. (See **ADAPTIVE FRONT LIGHTING SYSTEM (AFS) CONTROL MODULE REMOVAL/INSTALLATION**.) Go to the next step.
		No	Go to the next step.
7	**VERIFY IF OTHER DTCs DISPLAYED** • Are any other DTCs displayed?	Yes	Repair or replace the malfunctioning part according to the applicable DTC troubleshooting. (See **DTC TABLE [ADAPTIVE FRONT LIGHTING SYSTEM (AFS)]**.)
		No	DTC troubleshooting completed.

2014 - Mazda3 - Body and Accessories

DTC U3003:17 [ADAPTIVE FRONT LIGHTING SYSTEM (AFS)]

Description	AFS control module high power supply voltage input
Detection condition	• AFS control module power supply circuit voltage of **18.1 V or more** is detected for **5 s or more** with the ignition switched ON (engine off or on).
Fail-safe function	• The swivel actuator is stopped at the position when the malfunction is determined. • The headlight leveling actuator is stopped at the position when the malfunction is determined.
Possible cause	• DTCs are stored in the PCM. • Battery malfunction • Generator malfunction • AFS control module malfunction
System wiring diagram	Not applicable

Diagnostic Procedure

Step	Inspection		Action
1	**VERIFY PCM DTCs** • Retrieve the PCM DTCs using the M-MDS. (See **ON-BOARD DIAGNOSTIC TEST [SKYACTIV-G 2.0, SKYACTIV-G 2.5]**.) • Are any DTCs displayed?	Yes	Repair or replace the malfunctioning part according to the applicable DTC troubleshooting. (See **DTC TABLE [SKYACTIV-G 2.0, SKYACTIV-G 2.5]**.)
		No	Go to the next step.
2	**INSPECT BATTERY** • Inspect the battery.	Yes	Go to the next step.
		No	Replace the battery, then go to Step 4.

	(See **BATTERY INSPECTION [SKYACTIV-G 2.0, SKYACTIV-G 2.5]**.) • Is the battery normal?		(See **BATTERY REMOVAL/INSTALLATION [SKYACTIV-G 2.0, SKYACTIV-G 2.5]**.)
3	**INSPECT GENERATOR** • Inspect the generator. (See **GENERATOR INSPECTION [SKYACTIV-G 2.0, SKYACTIV-G 2.5 (WITHOUT i-ELOOP)]**.) (See **GENERATOR INSPECTION [SKYACTIV-G 2.0, SKYACTIV-G 2.5 (WITH i-ELOOP)]**.) • Is the generator normal?	Yes	Go to the next step.
		No	Replace the generator, then go to the next step. (See **GENERATOR REMOVAL/INSTALLATION [SKYACTIV-G 2.0, SKYACTIV-G 2.5 (WITHOUT i-ELOOP)]**.) (See **GENERATOR REMOVAL/INSTALLATION [SKYACTIV-G 2.0, SKYACTIV-G 2.5 (WITH i-ELOOP)]**.)
4	**VERIFY THAT REPAIRS HAVE BEEN COMPLETED** • Clear the DTC for the AFS control module using the M-MDS. (See **CLEARING DTC [ADAPTIVE FRONT LIGHTING SYSTEM (AFS)]**.) • Switch the ignition ON (engine off or on) and wait for **5 s or more**. • Retrieve the AFS control module DTCs using the M-MDS. (See **DTC INSPECTION [ADAPTIVE FRONT LIGHTING SYSTEM (AFS)]**.) • Is the same DTC displayed?	Yes	Repeat the inspection from Step 1. • If the malfunction recurs, replace the AFS control module, then go to the next step. (See **ADAPTIVE FRONT LIGHTING SYSTEM (AFS) CONTROL MODULE REMOVAL/INSTALLATION**.)
		No	Go to the next step.
5	**VERIFY IF OTHER DTCs DISPLAYED** • Are any other DTCs displayed?	Yes	Repair or replace the malfunctioning part according to the applicable DTC troubleshooting. (See **DTC TABLE [ADAPTIVE FRONT LIGHTING SYSTEM (AFS)]**.)
		No	DTC troubleshooting completed.

2014 - Mazda3 - Body and Accessories

PID/DATA MONITOR INSPECTION [ADAPTIVE FRONT LIGHTING SYSTEM (AFS)]

1. Connect the M-MDS to the DLC-2.

2. After the vehicle is identified, select the following items from the initialization screen of the M-MDS.

    a. Select “DataLogger”.

    b. Select “Modules”.

    c. Select “AFS/ALM”.

3. Select the applicable PID from the PID table.

4. Verify the PID data according to the directions on the screen.

NOTE:

- The PID data screen function is used for monitoring the calculated value of input/output signals in the module. Therefore, if the monitored value of the output parts is not within the specification, it is necessary to inspect the monitored value of input parts corresponding to the applicable output part control. In addition, because the system does not display an output part malfunction as an abnormality in the monitored value, it is necessary to inspect the output parts individually.
- When detecting DTCs, PIDs related to a malfunctioning system may not display even if the module is normal. Therefore, if a PID is not displayed, it is necessary to verify the DTC, perform malfunction diagnosis of the DTC that was detected, and do repairs.

2014 - Mazda3 - Body and Accessories

PID/DATA MONITOR TABLE [ADAPTIVE FRONT LIGHTING SYSTEM (AFS)]

PID	Unit/Operation	Data contents	Module control terminal
AFS_ST	Off/On	• Off: AFS is not operated. • On: AFS is operated.	A, B (CAN)
R_HGT_S	V	Displays voltage at auto leveling sensor	C, I, K (Auto leveling sensor output voltage)
R_HGT_S_INI	V	Displays voltage at headlight auto leveling system initial setting	C, I, K (Auto leveling sensor output voltage)
VPWR_IG	V	Displays AFS control module power supply voltage	• N (Power supply) • L (Ground)
VSPD	KPH, MPH	Displays vehicle speed	A, B (CAN)

2014 - Mazda3 - Body and Accessories

HEADLIGHT LEVELING ACTUATOR OPERATION CHECK MODE [ADAPTIVE FRONT LIGHTING SYSTEM (AFS)]

1. Connect the M-MDS to the DLC-2.
2. Switch the ignition ON (engine off or on).
3. Verify that AFS OFF indicator light is illuminated for **3 s** and then turned off.

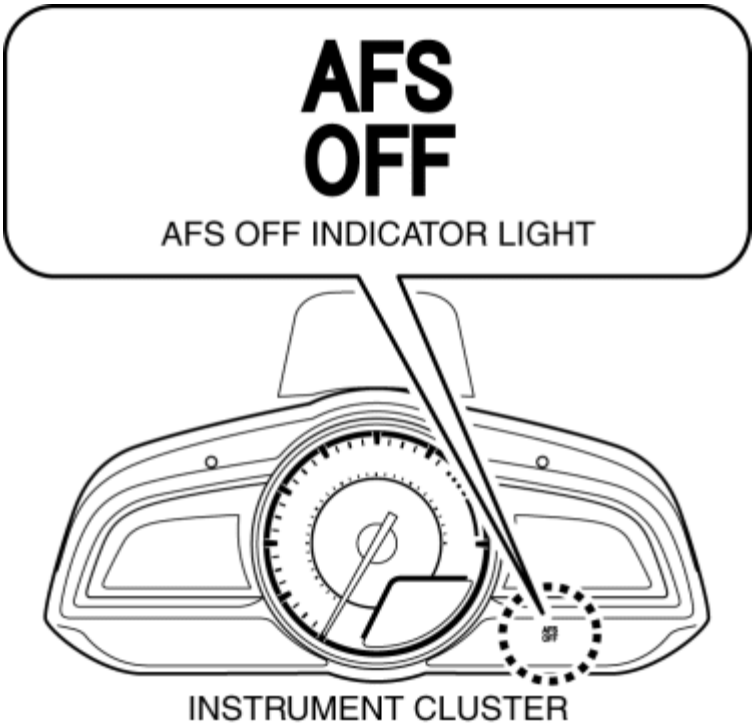

4. Turn on the headlights.
5. After vehicle identification, select in the following order from the M-MDS initial screen.
   a. "Electrical"
   b. "ExteriorLighting"
   c. "Headlamp"
   d. "Auto Leveling Sensor"
   e. "Auto Leveling Actuator Test"
6. Verify that the headlight optical axis lowers from the current position and returns the original position after **2 s**.
   - If the headlight leveling actuator does not operate normally, replace the front combination light. (See **FRONT COMBINATION LIGHT REMOVAL/INSTALLATION**.)

HEADLIGHT LEVELING ACTUATOR OPERATION CHECK MODE [ADAPTIVE FRONT LIGHTING SYSTEM (AFS)]

2014 - Mazda3 - Body and Accessories

ON-BOARD DIAGNOSTIC WIRING DIAGRAM [IMMOBILIZER SYSTEM]

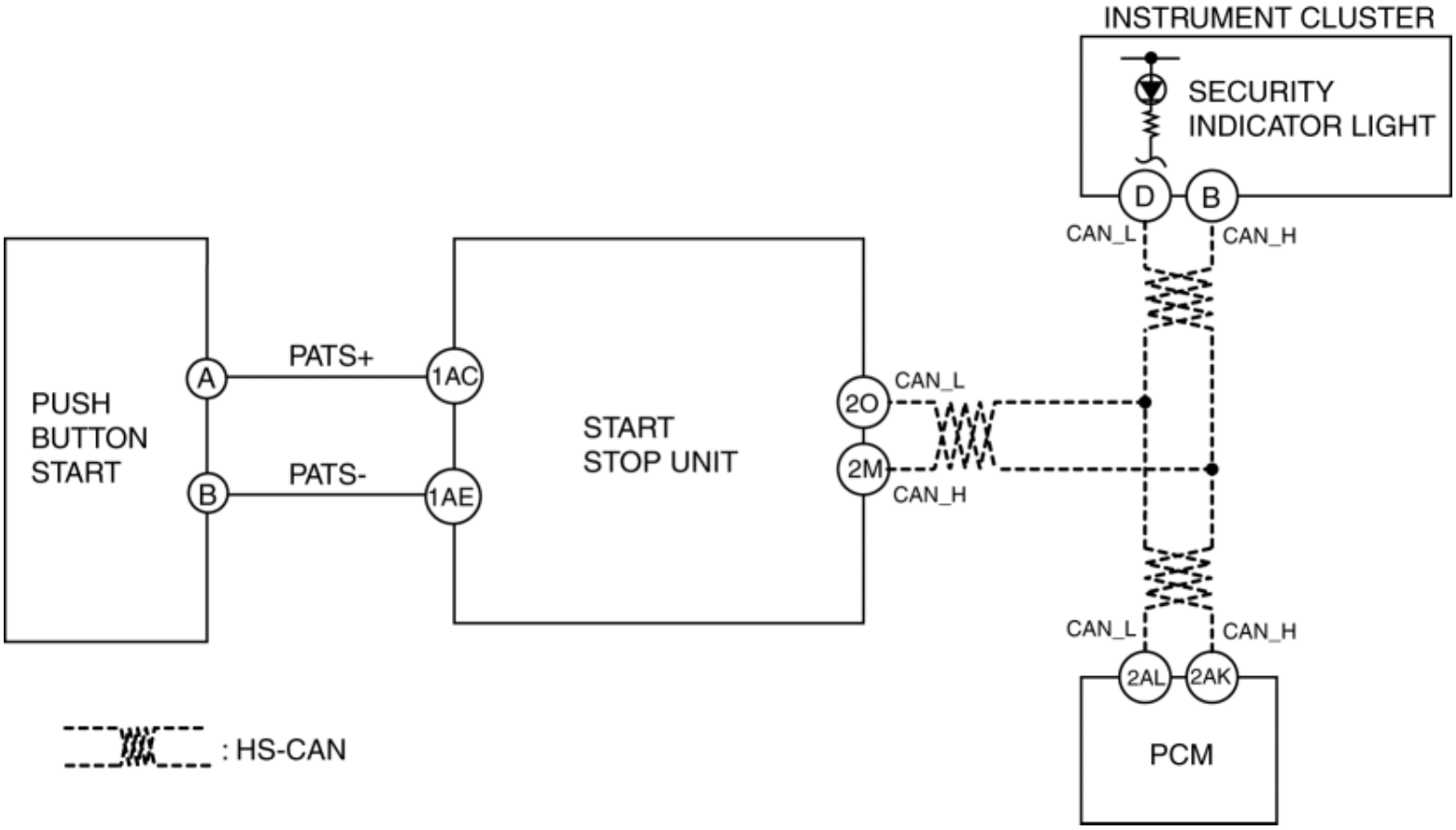

2014 - Mazda3 - Body and Accessories

FOREWORD [IMMOBILIZER SYSTEM]

- If there is any vehicle malfunction complaint lodged by a customer, perform malfunction diagnosis according to the troubleshooting procedure.
- Due to the possibility that the engine cannot be started because signal transmission between the remote transmitter and the vehicle is obstructed, do not allow the following items to contact the remote transmitter.
    - Any metallic object
    - Spare keys or other keys for immobilizer system
    - Device such as a mobile phone which generates radio waves.

Troubleshooting Procedure

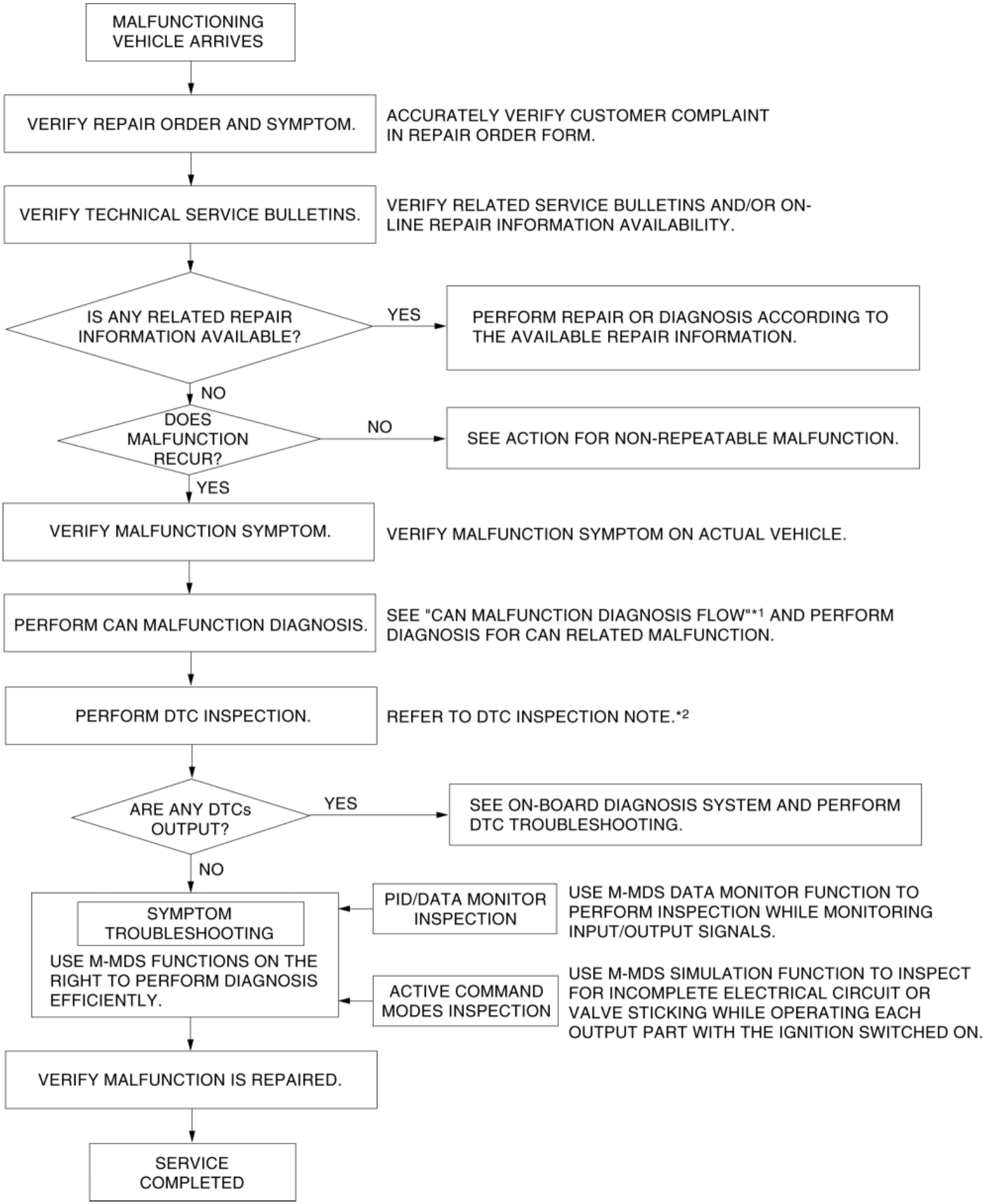
MALFUNCTIONING VEHICLE ARRIVES
VERIFY REPAIR ORDER AND SYMPTOM.
ACCURATELY VERIFY CUSTOMER COMPLAINT IN REPAIR ORDER FORM.
VERIFY TECHNICAL SERVICE BULLETINS.
VERIFY RELATED SERVICE BULLETINS AND/OR ON-LINE REPAIR INFORMATION AVAILABILITY.
IS ANY RELATED REPAIR INFORMATION AVAILABLE?
YES
PERFORM REPAIR OR DIAGNOSIS ACCORDING TO THE AVAILABLE REPAIR INFORMATION.
NO
DOES MALFUNCTION RECUR?
NO
SEE ACTION FOR NON-REPEATABLE MALFUNCTION.
YES
VERIFY MALFUNCTION SYMPTOM.
VERIFY MALFUNCTION SYMPTOM ON ACTUAL VEHICLE.
PERFORM CAN MALFUNCTION DIAGNOSIS.
SEE "CAN MALFUNCTION DIAGNOSIS FLOW"*1 AND PERFORM DIAGNOSIS FOR CAN RELATED MALFUNCTION.
PERFORM DTC INSPECTION.
REFER TO DTC INSPECTION NOTE.*2
ARE ANY DTCs OUTPUT?
YES
SEE ON-BOARD DIAGNOSIS SYSTEM AND PERFORM DTC TROUBLESHOOTING.
NO
SYMPTOM TROUBLESHOOTING
USE M-MDS FUNCTIONS ON THE RIGHT TO PERFORM DIAGNOSIS EFFICIENTLY.
PID/DATA MONITOR INSPECTION
USE M-MDS DATA MONITOR FUNCTION TO PERFORM INSPECTION WHILE MONITORING INPUT/OUTPUT SIGNALS.
ACTIVE COMMAND MODES INSPECTION
USE M-MDS SIMULATION FUNCTION TO INSPECT FOR INCOMPLETE ELECTRICAL CIRCUIT OR VALVE STICKING WHILE OPERATING EACH OUTPUT PART WITH THE IGNITION SWITCHED ON.
VERIFY MALFUNCTION IS REPAIRED.
SERVICE COMPLETED

*1

(See CONTROLLER AREA NETWORK (CAN) MALFUNCTION DIAGNOSIS FLOW.)

*2

(See DTC Inspection Note.)

Action for Non-repeatable Malfunction

- If the malfunction does not recur, verify the malfunction cause by performing the following actions:
  - Based on the repair order form, attempt to drive the vehicle or perform tests to replicate the malfunction, record the data at that time, and detect the malfunction cause.
  - Shake the wiring harness or connector of the electrical component which is suspected to be the cause of the malfunction, and inspect for malfunction or occurrence of any DTCs.

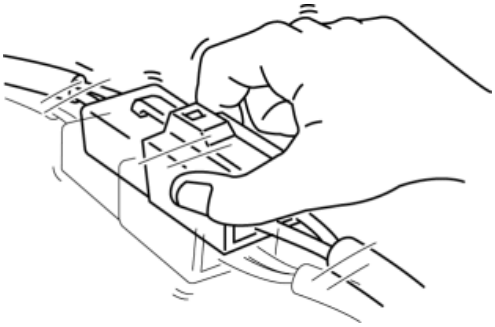

  - Inspect the female terminals on the connector of the electric component which is suspected to be the cause of the malfunction for poor connection.

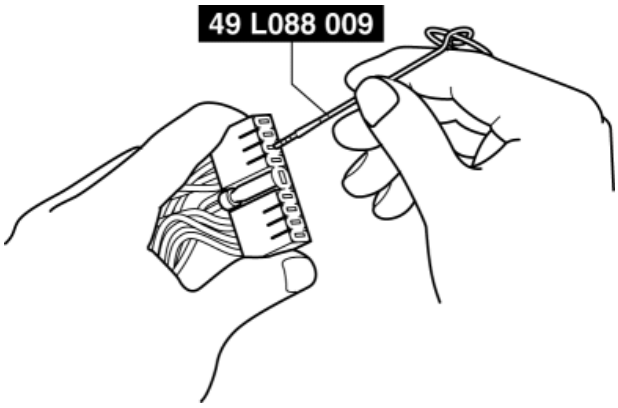

DTC Inspection Note

- When there is a malfunction in the immobilizer system, DTCs are recorded in the start stop unit and PCM.
- The DTCs stored in the start stop unit can be verified using the flashing pattern of the security indicator light and M-MDS.
- If immobilizer system DTCs are not recorded even if the engine cannot be started, perform symptom troubleshooting. (See **NO.3 WILL NOT CRANK [SKYACTIV-G 2.0, SKYACTIV-G 2.5]**.)

2014 - Mazda3 - Body and Accessories

DTC INSPECTION [IMMOBILIZER SYSTEM]

Verifying DTCs Using Security Indicator Light

NOTE:

- If multiple DTCs are detected, only those having the lowest numbers of those detected will be indicated by the security indicator light.
- A DTC is displayed **10 times** by switching the ignition ON (engine off or on) once.

1. Switch the ignition ON (engine off or on).
2. Wait for **approx. 1 min** until the security indicator light displays a DTC.

NOTE:

- If the following DTCs are detected when the ignition is switched ON (engine off or on), the DTC is displayed after the security indicator light is flashed or illuminated for **approx. 1 min**.
  - If a DTC 16 or below is detected, the security indicator light flashes for **approx. 1 min**.
  - If a DTC 22 or 23 is detected, the security indicator light illuminates for **approx. 1 min**.
- DTC 21 is displayed when the ignition is switched ON (engine off or on) and the security indicator light illumination turns off for **approx. 1 min**.

3. Read DTCs by the number of times the security indicator light flashes as shown in the figure.

Example: DTC 13

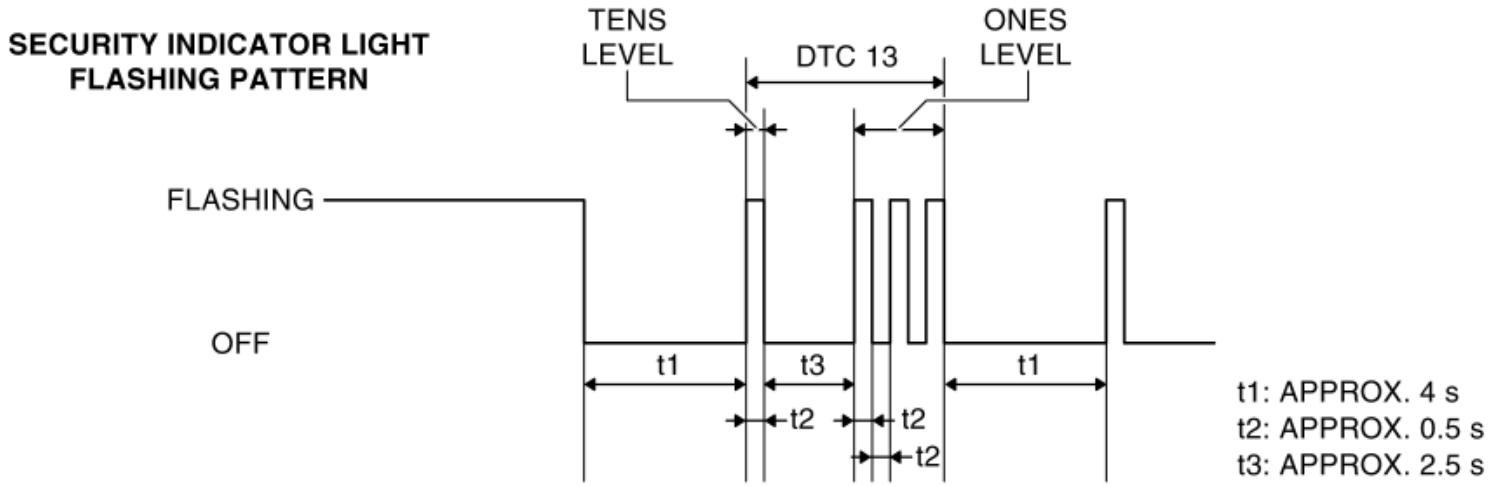

4. Repair the malfunctioning part according to the applicable DTC troubleshooting based on the DTC which was verified by the number of times the security indicator light flashed. (See **DTC TABLE [IMMOBILIZER SYSTEM]**.)

Detecting DTCs Using M-MDS

1. Connect the M-MDS to the DLC-2.

2. After the vehicle is identified, select the following items from the initialization screen of the M-MDS.

   a. Select “Self Test”.

   b. Select “All CMDTCs”.

3. Verify the DTC according to the directions on the screen.

   - If any DTCs are displayed, perform troubleshooting according to the corresponding DTC inspection.

4. After completion of repairs, clear all DTCs stored in the start stop unit. (See **CLEARING DTC [IMMOBILIZER SYSTEM]**.)

2014 - Mazda3 - Body and Accessories

CLEARING DTC [IMMOBILIZER SYSTEM]

1. Connect the M-MDS to the DLC-2.
2. After the vehicle is identified, select the following items from the initialization screen of the M-MDS.
    a. Select “Self Test”.
    b. Select “All CMDTCs”.
3. Verify the DTC according to the directions on the screen.
4. Press the clear button on the DTC screen to clear the DTC.
5. Switch the ignition off.
6. Switch the ignition ON (engine off or on) and wait for **5 s or more**.
7. Perform DTC inspection. (See **DTC INSPECTION [IMMOBILIZER SYSTEM]**.)
8. Verify that no DTCs are displayed.

2014 - Mazda3 - Body and Accessories

DTC TABLE [IMMOBILIZER SYSTEM]

×: Applicable—: Not applicable

DTC				KEY warning light (red)	Push button start indicator light (amber)	Description	Fail-safe function	Drive cycle	Self test type*2	Memory function	Page
M-MDS display*1		Security indicator light flash pattern									
Start stop unit	PCM										
U3000:96	P1260:00	09		On	Flash	Start stop unit malfunction	—	—	C	×	(See **SECURITY INDICATOR LIGHT: 09, DTC: U3000:96/P1260:00 [IMMOBILIZER SYSTEM]**.)
B10D9:87	P1260:00	11		—	Flash	Coil antenna (built into push button start) error	—	—	C	—	(See **SECURITY INDICATOR LIGHT: 11, DTC: B10D9:87/P1260:00 [IMMOBILIZER SYSTEM]**.)
B13D3:05	P1260:00	13		—	—	Remote transmitter program error	—	—	C	—	(See **SECURITY INDICATOR LIGHT: 13, DTC: B13D3:05/P1260:00 [IMMOBILIZER SYSTEM]**.)
B13D3:94	P1260:00	13		—	—	Communication error with remote transmitter	—	—	C	—	(See **SECURITY INDICATOR LIGHT: 13, DTC: B13D3:94/P1260:00 [IMMOBILIZER SYSTEM]**.)
B13D3:51	P1260:00	15		—	Flash	Unregistered remote transmitter is detected	—	—	C	—	(See **SECURITY INDICATOR LIGHT: 15, DTC: B13D3:51/P1260:00 [IMMOBILIZER SYSTEM]**.)
U0100:87	P1260:00	16		—	—	Communication error with PCM (no response or data mis-match)	—	—	C	—	(See **SECURITY INDICATOR LIGHT: 16, DTC: U0100:87/P1260:00 [IMMOBILIZER SYSTEM]**.)
B13D4:00	P1260:00	21		On	—	Insufficient remote transmitter programming	—	—	C	—	(See **SECURITY INDICATOR LIGHT: 21, DTC: B13D4:00/P1260:00 [IMMOBILIZER**

						number					**SYSTEM]**.)
B10DA:51	P1260:00	22		—	—	Communication error with PCM (data received failure)	—	—	C	—	(See **SECURITY INDICATOR LIGHT: 22, DTC: B10DA:51/P1260:00 [IMMOBILIZER SYSTEM]**.)
B10DA:62	P1260:00	23		—	—	Communication error with PCM (code mis-matched)	—	—	C	—	(See **SECURITY INDICATOR LIGHT: 23, DTC: B10DA:62/P1260:00 [IMMOBILIZER SYSTEM]**.)

*1

The letters at the beginning of each DTC are only displayed when using the M-MDS, and refer to the following: B= Body system, P= Powertrain system, U= Network communication system.

*2

C: CMDTC self test, D: ODDTC self test

2014 - Mazda3 - Body and Accessories

SECURITY INDICATOR LIGHT: 09, DTC: U3000:96/P1260:00 [IMMOBILIZER SYSTEM]

Description	Start stop unit malfunction
Detection condition	• Start stop unit malfunction detected.
Fail-safe function	Not applicable
Possible cause	• Start stop unit malfunction
System wiring diagram	Not applicable

Diagnostic Procedure

Step	Inspection		Action
1	**PERFORM DTC INSPECTION AND VERIFY START STOP UNIT MALFUNCTION** • Clear the DTC for the immobilizer system using the M-MDS. (See **CLEARING DTC [IMMOBILIZER SYSTEM]**.) • Retrieve the immobilizer system DTCs using the M-MDS. (See **DTC INSPECTION [IMMOBILIZER SYSTEM]**.) • Is the security indicator light: 09, DTC U3000:96/P1260:00 displayed?	Yes	Repeat the inspection from Step 1. • If the malfunction recurs, replace the start stop unit. (See **START STOP UNIT REMOVAL/INSTALLATION**.) Go to the next step.
		No	Go to the next step.
2	**VERIFY IF OTHER DTCs DISPLAYED** • Are any other DTCs displayed?	Yes	Repair or replace the malfunctioning part according to the applicable DTC troubleshooting. (See **DTC TABLE [IMMOBILIZER SYSTEM]**.)
		No	DTC troubleshooting completed.

SECURITY INDICATOR LIGHT: 09, DTC: U3000:96/P1260:00 [IMMOBILIZER SYSTEM]

2014 - Mazda3 - Body and Accessories

SECURITY INDICATOR LIGHT: 11, DTC: B10D9:87/P1260:00 [IMMOBILIZER SYSTEM]

Description	Coil antenna (built into push button start) error
Detection condition	• Start stop unit detected a malfunction in the coil antenna, and remote transmitter communication is not possible.
Fail-safe function	Not applicable

Possible cause	• Push button start connector or terminal malfunction
	• Start stop unit connector or terminal malfunction
	• Short to ground in wiring harness between the following terminals:
	  ▪ Start stop unit terminal 1AC—Push button start terminal A
	  ▪ Start stop unit terminal 1AE—Push button start terminal B
	• Open circuit in wiring harness between the following terminals:
	  ▪ Start stop unit terminal 1AC—Push button start terminal A
	  ▪ Start stop unit terminal 1AE—Push button start terminal B
	• Coil antenna malfunction
	• Start stop unit malfunction

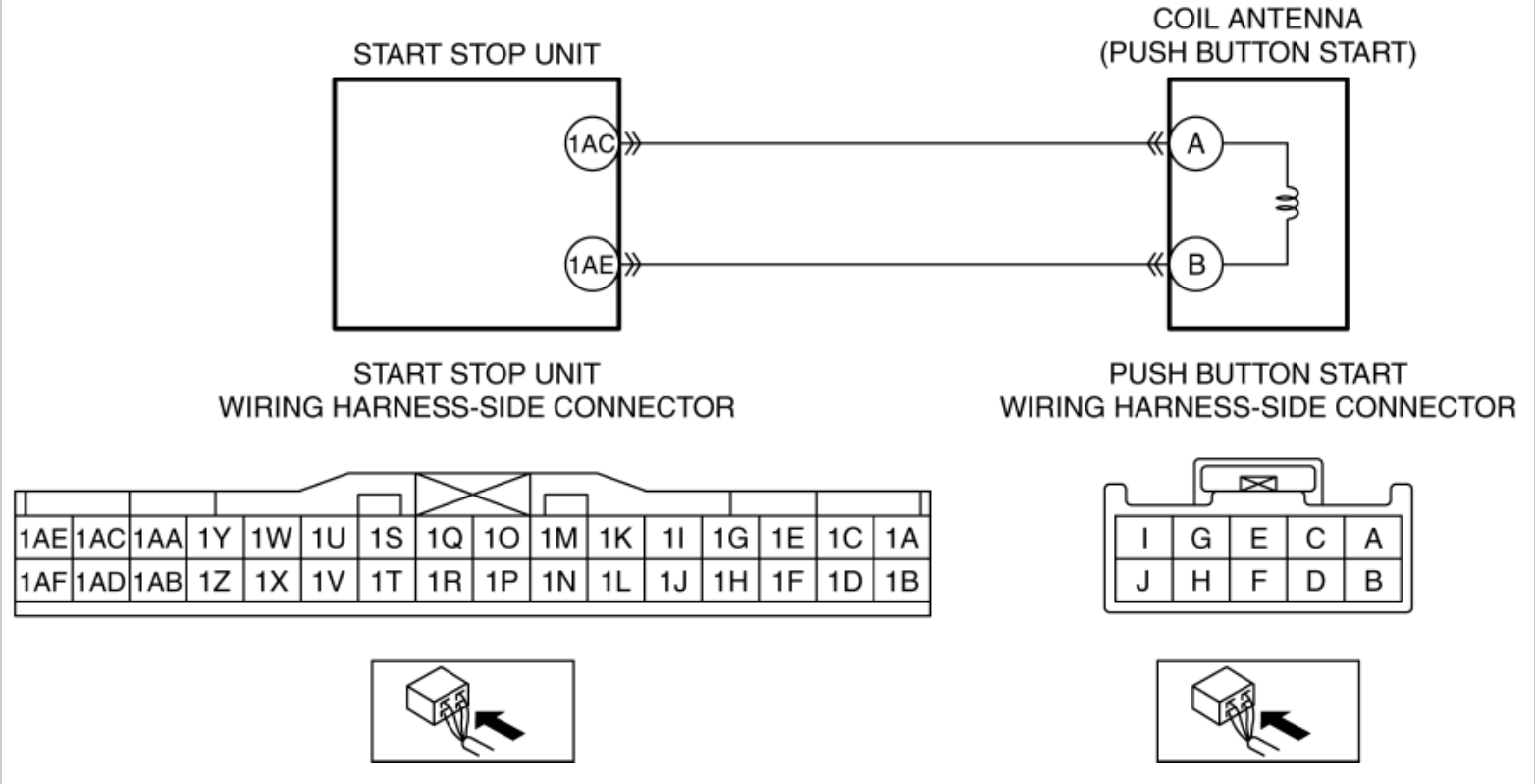

Diagnostic Procedure

Step	Inspection		Action
1	**INSPECT PUSH BUTTON START CONNECTOR CONDITION** • Switch the ignition off. • Disconnect the negative battery cable. (See **NEGATIVE BATTERY CABLE DISCONNECTION/CONNECTION [SKYACTIV-G 2.0, SKYACTIV-G 2.5]**.) • Disconnect the push button start connector. • Inspect the connector engagement and connection condition and inspect the terminals for damage, deformation, corrosion, or disconnection. • Is the connector normal?	Yes	Go to the next step.
		No	Repair or replace the connector, then go to Step 6.
2	**INSPECT START STOP UNIT CONNECTOR CONDITION** • Disconnect the start stop unit connector. • Inspect the connector engagement and connection condition and inspect the terminals for damage,	Yes	Go to the next step.
		No	Repair or replace the connector, then go to Step 6.

	deformation, corrosion, or disconnection. • Is the connector normal?		
3	**INSPECT FOR SHORT TO GROUND IN COIL ANTENNA CIRCUIT** • Verify that the push button start and start stop unit connectors are disconnected. • Inspect for continuity between the following terminals (wiring harness-side) and body ground: ▪ Push button start terminal A ▪ Push button start terminal B • Is there continuity?	Yes	Refer to the wiring diagram and verify whether or not there is a common connector between the following terminals: • Start stop unit terminal 1AC—Push button start terminal A • Start stop unit terminal 1AE—Push button start terminal B **If there is a common connector:** • Determine the malfunctioning part by inspecting the common connector and the terminal for corrosion, damage, or pin disconnection, and the common wiring harness for a short to ground. • Repair or replace the malfunctioning part. **If there is no common connector:** • Repair or replace the wiring harness which has a short to ground. Go to Step 6.
		No	Go to the next step.
4	**INSPECT FOR OPEN CIRCUIT IN COIL ANTENNA CIRCUIT** • Verify that the push button start and start stop unit connectors are disconnected. • Inspect for continuity between the following terminals (wiring harness-side): ▪ Start stop unit terminal 1AC—Push button start terminal A ▪ Start stop unit terminal 1AE—Push button start terminal B • Is there continuity?	Yes	Go to the next step.
		No	Refer to the wiring diagram and verify whether or not there is a common connector between the following terminals: • Start stop unit terminal 1AC—Push button start terminal A • Start stop unit terminal 1AE—Push button start terminal B **If there is a common connector:** • Determine the malfunctioning part by inspecting the common connector and the terminal for corrosion, damage, or pin disconnection, and the common wiring harness for an open circuit. • Repair or replace the malfunctioning part. **If there is no common connector:** • Repair or replace the wiring harness which has an open circuit. Go to Step 6.
5	**PERFORM DTC INSPECTION AND VERIFY COIL ANTENNA MALFUNCTION** • Always reconnect all disconnected connectors. • Remove the ROOM 15 A fuse.	Yes	Replace the push button start, then go to the next step. (See **PUSH BUTTON START REMOVAL/INSTALLATION**.)
		No	Go to Step 7.

	• Reconnect the negative battery cable. (See **NEGATIVE BATTERY CABLE DISCONNECTION/CONNECTION [SKYACTIV-G 2.0, SKYACTIV-G 2.5]**.) • Clear the DTC for the immobilizer system using the M-MDS. (See **CLEARING DTC [IMMOBILIZER SYSTEM]**.) • Retrieve the immobilizer system DTCs using the M-MDS. (See **DTC INSPECTION [IMMOBILIZER SYSTEM]**.) • Is the security indicator light: 11, DTC B10D9:87/P1260:00 displayed?		
6	**VERIFY THAT REPAIRS HAVE BEEN COMPLETED** • Always reconnect all disconnected connectors. • Remove the ROOM 15 A fuse. • Reconnect the negative battery cable. (See **NEGATIVE BATTERY CABLE DISCONNECTION/CONNECTION [SKYACTIV-G 2.0, SKYACTIV-G 2.5]**.) • Clear the DTC for the immobilizer system using the M-MDS. (See **CLEARING DTC [IMMOBILIZER SYSTEM]**.) • Retrieve the immobilizer system DTCs using the M-MDS. (See **DTC INSPECTION [IMMOBILIZER SYSTEM]**.) • Is the security indicator light: 11, DTC B10D9:87/P1260:00 displayed?	Yes	Repeat the inspection from Step 1. • If the malfunction recurs, replace the start stop unit. (See **START STOP UNIT REMOVAL/INSTALLATION**.) Go to the next step.
		No	Go to the next step.
7	**VERIFY IF OTHER DTCs DISPLAYED** • Are any other DTCs displayed?	Yes	Repair or replace the malfunctioning part according to the applicable DTC troubleshooting. (See **DTC TABLE [IMMOBILIZER SYSTEM]**.)
		No	DTC troubleshooting completed.

SECURITY INDICATOR LIGHT: 11, DTC: B10D9:87/P1260:00 [IMMOBILIZER SYSTEM]

2014 - Mazda3 - Body and Accessories

SECURITY INDICATOR LIGHT: 13, DTC: B13D3:05/P1260:00 [IMMOBILIZER SYSTEM]

Description	Remote transmitter program error
Detection condition	• Start stop unit detects a remote transmitter program error.
Fail-safe function	Not applicable
Possible cause	• Push button start connector or terminal malfunction • Start stop unit connector or terminal malfunction • Remote transmitter program error • Start stop unit malfunction **NOTE:** • If any of the following items are touching or near the remote transmitter, signal communication between the remote transmitter and the vehicle is negatively affected, resulting in the engine not starting. ▪ Spare keys ▪ Keys for other vehicles equipped with an immobilizer system ▪ Any metallic object ▪ Any electronic device, or any credit or other card with magnetic strips ▪ Radio wave outputting device nearby
System wiring diagram	Not applicable

Diagnostic Procedure

Step	Inspection		Action
1	**INSPECT PUSH BUTTON START CONNECTOR**	Yes	Go to the next step.

	CONDITION • Switch the ignition off. • Disconnect the negative battery cable. (See **NEGATIVE BATTERY CABLE DISCONNECTION/CONNECTION [SKYACTIV-G 2.0, SKYACTIV-G 2.5]**.) • Disconnect the push button start connector. • Inspect the connector engagement and connection condition and inspect the terminals for damage, deformation, corrosion, or disconnection. • Is the connector normal?		
		No	Repair or replace the connector, then go to Step 4.
2	**INSPECT START STOP UNIT CONNECTOR CONDITION** • Disconnect the start stop unit connector. • Inspect the connector engagement and connection condition and inspect the terminals for damage, deformation, corrosion, or disconnection. • Is the connector normal?	Yes	Go to the next step.
		No	Repair or replace the connector, then go to Step 4.
3	**VERIFY IF MALFUNCTION CAUSE IS REMOTE TRANSMITTER** • Always reconnect all disconnected connectors. • Reconnect the negative battery cable. (See **NEGATIVE BATTERY CABLE DISCONNECTION/CONNECTION [SKYACTIV-G 2.0, SKYACTIV-G 2.5]**.) • Clear the DTC for the immobilizer system using the M-MDS. (See **CLEARING DTC [IMMOBILIZER SYSTEM]**.) • Re-program key ID number of the remote transmitter. (See **IMMOBILIZER SYSTEM-RELATED PARTS PROGRAMMING**.) • Retrieve the immobilizer system DTCs using the M-MDS. (See **DTC INSPECTION [IMMOBILIZER**	Yes	Replace the remote transmitter, then go to the next step. (See **IMMOBILIZER SYSTEM-RELATED PARTS PROGRAMMING**.)
		No	Go to Step 5.

	SYSTEM].) • Is the security indicator light: 13, DTC B13D3:05/P1260:00 displayed?		
4	**VERIFY THAT REPAIRS HAVE BEEN COMPLETED** • Always reconnect all disconnected connectors. • Reconnect the negative battery cable. (See **NEGATIVE BATTERY CABLE DISCONNECTION/CONNECTION [SKYACTIV-G 2.0, SKYACTIV-G 2.5]**.) • Clear the DTC for the immobilizer system using the M-MDS. (See **CLEARING DTC [IMMOBILIZER SYSTEM]**.) • Re-program key ID number of the remote transmitter. (See **IMMOBILIZER SYSTEM-RELATED PARTS PROGRAMMING**.) • Retrieve the immobilizer system DTCs using the M-MDS. (See **DTC INSPECTION [IMMOBILIZER SYSTEM]**.) • Is the security indicator light: 13, DTC B13D3:05/P1260:00 displayed?	Yes	Repeat the inspection from Step 1. • If the malfunction recurs, replace the start stop unit. (See **START STOP UNIT REMOVAL/INSTALLATION**.) Go to the next step.
		No	Go to the next step.
5	**VERIFY IF OTHER DTCs DISPLAYED** • Are any other DTCs displayed?	Yes	Repair or replace the malfunctioning part according to the applicable DTC troubleshooting. (See **DTC TABLE [IMMOBILIZER SYSTEM]**.)
		No	DTC troubleshooting completed.

2014 - Mazda3 - Body and Accessories

SECURITY INDICATOR LIGHT: 13, DTC: B13D3:94/P1260:00 [IMMOBILIZER SYSTEM]

Description	Communication error with remote transmitter
Detection condition	• Start stop unit could not detect the remote transmitter communication or communication error was detected.
Fail-safe function	Not applicable
Possible cause	• When the ignition is switched ON (engine off or on), it is detected that the remote transmitter is outside of the vehicle. • Push button start connector or terminal malfunction • Start stop unit connector or terminal malfunction • Remote transmitter malfunction • Start stop unit malfunction **NOTE:** • If any of the following items are touching or near the remote transmitter, signal communication between the remote transmitter and the vehicle is negatively affected, resulting in the engine not starting. ▪ Spare keys ▪ Keys for other vehicles equipped with an immobilizer system ▪ Any metallic object ▪ Any electronic device, or any credit or other card with magnetic strips ▪ Radio wave outputting device nearby
System wiring diagram	Not applicable

Diagnostic Procedure

Step	Inspection	Action

1	**VERIFY DTCs WITH REMOTE TRANSMITTER IN DIFFERENT LOCATIONS**
	• Perform the following procedure **3 times** with the remote transmitter inside the cabin with certainty.
	  ◦ Switch the ignition off.
	  ◦ Switch the ignition ON (engine off or on).
	  ◦ Retrieve the immobilizer system DTCs using the M-MDS.
	  (See **DTC INSPECTION [IMMOBILIZER SYSTEM]**.)
	  ◦ Move the remote transmitter to a different location.
	• Is the security indicator light: 13, DTC B13D3:94/P1260:00 displayed?
		Yes	Go to the next step.

		No	Go to Step 6.
2	**INSPECT PUSH BUTTON START CONNECTOR CONDITION** • Switch the ignition off. • Disconnect the negative battery cable. (See **NEGATIVE BATTERY CABLE DISCONNECTION/CONNECTION [SKYACTIV-G 2.0, SKYACTIV-G 2.5]**.) • Disconnect the push button start connector. • Inspect the connector engagement and connection condition and inspect the terminals for damage, deformation, corrosion, or disconnection. • Is the connector normal?	Yes	Go to the next step.
		No	Repair or replace the connector, then go to Step 5.
3	**INSPECT START STOP UNIT CONNECTOR CONDITION** • Disconnect the start stop unit connector. • Inspect the connector engagement and connection condition and inspect the terminals for damage, deformation, corrosion, or disconnection.	Yes	Go to the next step.
		No	Repair or replace the connector, then go to Step 5.

	• Is the connector normal?		
4	**VERIFY IF MALFUNCTION CAUSE IS REMOTE TRANSMITTER** • Always reconnect all disconnected connectors. • Reconnect the negative battery cable. (See **NEGATIVE BATTERY CABLE DISCONNECTION/CONNECTION [SKYACTIV-G 2.0, SKYACTIV-G 2.5]**.) • Clear the DTC for the immobilizer system using the M-MDS. (See **CLEARING DTC [IMMOBILIZER SYSTEM]**.) • Re-program key ID number of the remote transmitter. (See **IMMOBILIZER SYSTEM-RELATED PARTS PROGRAMMING**.) • Retrieve the immobilizer system DTCs using the M-MDS. (See **DTC INSPECTION [IMMOBILIZER SYSTEM]**.) • Is the security indicator light: 13, DTC B13D3:94/P1260:00 displayed?	Yes	Replace the remote transmitter, then go to the next step. (See **IMMOBILIZER SYSTEM-RELATED PARTS PROGRAMMING**.)
		No	Go to Step 6.
5	**VERIFY THAT REPAIRS HAVE BEEN COMPLETED** • Always reconnect all disconnected connectors. • Reconnect the disconnected negative battery cable. (See **NEGATIVE BATTERY CABLE DISCONNECTION/CONNECTION [SKYACTIV-G 2.0, SKYACTIV-G 2.5]**.) • Clear the DTC for the immobilizer system using the M-MDS. (See **CLEARING DTC [IMMOBILIZER SYSTEM]**.) • Retrieve the immobilizer system DTCs using the M-MDS. (See **DTC INSPECTION [IMMOBILIZER SYSTEM]**.) • Is the security indicator light: 13, DTC B13D3:94/P1260:00 displayed?	Yes	Repeat the inspection from Step 1. • If the malfunction recurs, replace the start stop unit. (See **START STOP UNIT REMOVAL/INSTALLATION**.) Go to the next step.
		No	Go to the next step.

6	**VERIFY IF OTHER DTCs DISPLAYED** • Are any other DTCs displayed?	Yes	Repair or replace the malfunctioning part according to the applicable DTC troubleshooting. (See **DTC TABLE [IMMOBILIZER SYSTEM]**.)
		No	DTC troubleshooting completed.

2014 - Mazda3 - Body and Accessories

SECURITY INDICATOR LIGHT: 15, DTC: B13D3:51/P1260:00 [IMMOBILIZER SYSTEM]

Description	Unregistered remote transmitter is detected
Detection condition	• Start stop unit detects that the remote transmitter has not been programmed.
Fail-safe function	Not applicable

Possible cause	• Remote transmitter malfunction
	  ▪ The remote transmitter is not programmed after replacing the start stop unit.
	  ▪ Unprogrammed remote transmitter was used.
	• Start stop unit malfunction

System wiring diagram	Not applicable

Diagnostic Procedure

Step	Inspection		Action
1	**VERIFY IF REMOTE TRANSMITTER BROUGHT INTO VEHICLE IS FOR THAT VEHICLE** • Does the remote transmitter belong to another vehicle?	Yes	Have the correct transmitter for the vehicle ready inside the vehicle, then go to Step 3.
		No	Go to the next step.
2	**PERFORM DTC INSPECTION AND DETERMINE WHICH KEY HAS MALFUNCTION** • Perform the following work for each of the programmed remote transmitters: ▪ Clear the DTC for the immobilizer system using the M-MDS.	Yes	Replace the malfunctioning remote transmitter, then go to the next step. (See **IMMOBILIZER SYSTEM-RELATED PARTS PROGRAMMING**.)
		No	Go to Step 4.

	(See **CLEARING DTC [IMMOBILIZER SYSTEM]**.) ▪ Retrieve the immobilizer system DTCs using the M-MDS. (See **DTC INSPECTION [IMMOBILIZER SYSTEM]**.) • Is the security indicator light: 15, DTC B13D3:51/P1260:00 displayed?		
3	**VERIFY THAT REPAIRS HAVE BEEN COMPLETED** • Clear the DTC for the immobilizer system using the M-MDS. (See **CLEARING DTC [IMMOBILIZER SYSTEM]**.) • Retrieve the immobilizer system DTCs using the M-MDS. (See **DTC INSPECTION [IMMOBILIZER SYSTEM]**.) • Is the security indicator light: 15, DTC B13D3:51/P1260:00 displayed?	Yes	Repeat the inspection from Step 1. • If the malfunction recurs, replace the start stop unit. (See **START STOP UNIT REMOVAL/INSTALLATION**.) Go to the next step.
		No	Go to the next step.
4	**VERIFY IF OTHER DTCs DISPLAYED** • Are any other DTCs displayed?	Yes	Repair or replace the malfunctioning part according to the applicable DTC troubleshooting. (See **DTC TABLE [IMMOBILIZER SYSTEM]**.)
		No	DTC troubleshooting completed.

2014 - Mazda3 - Body and Accessories

SECURITY INDICATOR LIGHT: 16, DTC: U0100:87/P1260:00 [IMMOBILIZER SYSTEM]

Description	Communication error with PCM (no response or data mis-match)
Detection condition	• Start stop unit detects a communication error (no response or immobilizer system cancel not possible) with the PCM.
Fail-safe function	Not applicable
Possible cause	• The immobilizer system-related parts have not been programmed when replacing the PCM or start stop unit. • Start stop unit malfunction • PCM malfunction
System wiring diagram	Not applicable

Diagnostic Procedure

Step	Inspection		Action
1	**PERFORM IMMOBILIZER SYSTEM-RELATED PART PROGRAMMING** • Perform the start stop unit replacement and programming due to simultaneous replacement of start stop unit/PCM. (See **IMMOBILIZER SYSTEM-RELATED PARTS PROGRAMMING**.) • Clear the DTC for the immobilizer system using the M-MDS. (See **CLEARING DTC [IMMOBILIZER SYSTEM]**.) • Retrieve the immobilizer system DTCs using the M-MDS. (See **DTC INSPECTION [IMMOBILIZER**	Yes	Go to the next step.
		No	Go to Step 4.

	SYSTEM].) • Is the security indicator light: 16, DTC U0100:87/P1260:00 displayed?		
2	**PERFORM DTC INSPECTION AND VERIFY START STOP UNIT MALFUNCTION** • Clear the DTC for the immobilizer system using the M-MDS. (See **CLEARING DTC [IMMOBILIZER SYSTEM]**.) • Retrieve the immobilizer system DTCs using the M-MDS. (See **DTC INSPECTION [IMMOBILIZER SYSTEM]**.) • Is the security indicator light: 16, DTC U0100:87/P1260:00 displayed?	Yes	Replace the start stop unit, then go to the next step. (See **START STOP UNIT REMOVAL/INSTALLATION**.)
		No	Go to Step 4.
3	**PERFORM DTC INSPECTION AND VERIFY PCM MALFUNCTION** • Clear the DTC for the immobilizer system using the M-MDS. (See **CLEARING DTC [IMMOBILIZER SYSTEM]**.) • Retrieve the immobilizer system DTCs using the M-MDS. (See **DTC INSPECTION [IMMOBILIZER SYSTEM]**.) • Is the security indicator light: 16, DTC U0100:87/P1260:00 displayed?	Yes	Replace the PCM, then go to the next step. (See **PCM REMOVAL/INSTALLATION [SKYACTIV-G 2.0, SKYACTIV-G 2.5]**.)
		No	Go to the next step.
4	**VERIFY IF OTHER DTCs DISPLAYED** • Are any other DTCs displayed?	Yes	Repair or replace the malfunctioning part according to the applicable DTC troubleshooting. (See **DTC TABLE [IMMOBILIZER SYSTEM]**.)
		No	DTC troubleshooting completed.

2014 - Mazda3 - Body and Accessories

SECURITY INDICATOR LIGHT: 21, DTC: B13D4:00/P1260:00 [IMMOBILIZER SYSTEM]

Description	Insufficient remote transmitter programming number
Detection condition	• Start stop unit detects that the number of programmed remote transmitters is **less than 2**.
Fail-safe function	Not applicable
Possible cause	• Insufficient number of remote transmitters programmed • Start stop unit malfunction
System wiring diagram	Not applicable

Diagnostic Procedure

Step	Inspection		Action
1	**VERIFY NUMBER OF PROGRAMMED REMOTE TRANSMITTER** • Display PID NUM_TRNSMIT using the M-MDS. (See **PID/DATA MONITOR INSPECTION [IMMOBILIZER SYSTEM]**.) • Is the number of programmed remote transmitters **less than 2**?	Yes	Perform the additional remote transmitter programming, then go to the next step. (See **IMMOBILIZER SYSTEM-RELATED PARTS PROGRAMMING**.)
		No	Go to the next step.
2	**VERIFY THAT REPAIRS HAVE BEEN COMPLETED** • Clear the DTC for the immobilizer system using the M-MDS. (See **CLEARING DTC [IMMOBILIZER SYSTEM]**.)	Yes	Repeat the inspection from Step 1. • If the malfunction recurs, replace the start stop unit. (See **START STOP UNIT REMOVAL/INSTALLATION**.) Go to the next step.

	• Retrieve the immobilizer system DTCs using the M-MDS. (See **DTC INSPECTION [IMMOBILIZER SYSTEM]**.) • Is the security indicator light: 21, DTC B13D4:00/P1260:00 displayed?		
		No	Go to the next step.
3	**VERIFY IF OTHER DTCs DISPLAYED** • Are any other DTCs displayed?	Yes	Repair or replace the malfunctioning part according to the applicable DTC troubleshooting. (See **DTC TABLE [IMMOBILIZER SYSTEM]**.)
		No	DTC troubleshooting completed.

2014 - Mazda3 - Body and Accessories

SECURITY INDICATOR LIGHT: 22, DTC: B10DA:51/P1260:00 [IMMOBILIZER SYSTEM]

Description	Communication error with PCM (data received failure)
Detection condition	• Start stop unit detects a communication error (data received failure) with PCM.
Fail-safe function	Not applicable
Possible cause	• The immobilizer system-related part programming has not been performed when replacing the PCM or start stop unit. • Start stop unit malfunction • PCM malfunction
System wiring diagram	Not applicable

Diagnostic Procedure

Step	Inspection		Action
1	**PERFORM IMMOBILIZER SYSTEM-RELATED PART PROGRAMMING** • Perform the start stop unit replacement and programming due to simultaneous replacement of start stop unit/PCM. (See **IMMOBILIZER SYSTEM-RELATED PARTS PROGRAMMING**.) • Clear the DTC for the immobilizer system using the M-MDS. (See **CLEARING DTC [IMMOBILIZER SYSTEM]**.) • Retrieve the immobilizer system DTCs using the M-MDS. (See **DTC INSPECTION [IMMOBILIZER**	Yes	Go to the next step.
		No	Go to Step 4.

	SYSTEM].) • Is the security indicator light: 22, DTC B10DA:51/P1260:00 displayed?		
2	**PERFORM DTC INSPECTION AND VERIFY START STOP UNIT MALFUNCTION** • Clear the DTC for the immobilizer system using the M-MDS. (See **CLEARING DTC [IMMOBILIZER SYSTEM]**.) • Retrieve the immobilizer system DTCs using the M-MDS. (See **DTC INSPECTION [IMMOBILIZER SYSTEM]**.) • Is the security indicator light: 22, DTC B10DA:51/P1260:00 displayed?	Yes	Replace the start stop unit, then go to the next step. (See **START STOP UNIT REMOVAL/INSTALLATION**.)
		No	Go to Step 4.
3	**PERFORM DTC INSPECTION AND VERIFY PCM MALFUNCTION** • Clear the DTC for the immobilizer system using the M-MDS. (See **CLEARING DTC [IMMOBILIZER SYSTEM]**.) • Retrieve the immobilizer system DTCs using the M-MDS. (See **DTC INSPECTION [IMMOBILIZER SYSTEM]**.) • Is the security indicator light: 22, DTC B10DA:51/P1260:00 displayed?	Yes	Replace the PCM, then go to the next step. (See **PCM REMOVAL/INSTALLATION [SKYACTIV-G 2.0, SKYACTIV-G 2.5]**.)
		No	Go to the next step.
4	**VERIFY IF OTHER DTCs DISPLAYED** • Are any other DTCs displayed?	Yes	Repair or replace the malfunctioning part according to the applicable DTC troubleshooting. (See **DTC TABLE [IMMOBILIZER SYSTEM]**.)
		No	DTC troubleshooting completed.

2014 - Mazda3 - Body and Accessories

SECURITY INDICATOR LIGHT: 23, DTC: B10DA:62/P1260:00 [IMMOBILIZER SYSTEM]

Description	Communication error with PCM (code mis-matched)
Detection condition	• Start stop unit detects a communication error (code mis-matched) with the PCM.
Fail-safe function	Not applicable
Possible cause	• The immobilizer system-related part programming has not been performed when replacing the PCM or start stop unit. • PCM malfunction
System wiring diagram	Not applicable

Diagnostic Procedure

Step	Inspection		Action
1	**PERFORM IMMOBILIZER SYSTEM-RELATED PART PROGRAMMING** • Perform the start stop unit replacement and programming due to simultaneous replacement of start stop unit/PCM. (See **IMMOBILIZER SYSTEM-RELATED PARTS PROGRAMMING**.) • Clear the DTC for the immobilizer system using the M-MDS. (See **CLEARING DTC [IMMOBILIZER SYSTEM]**.) • Retrieve the immobilizer system DTCs using the M-MDS. (See **DTC INSPECTION [IMMOBILIZER SYSTEM]**.)	Yes	Go to the next step.
		No	Go to Step 3.

	• Is the security indicator light: 23, DTC B10DA:62/P1260:00 displayed?		
2	**PERFORM DTC INSPECTION AND VERIFY PCM MALFUNCTION** • Clear the DTC for the immobilizer system using the M-MDS. (See **CLEARING DTC [IMMOBILIZER SYSTEM]**.) • Retrieve the immobilizer system DTCs using the M-MDS. (See **DTC INSPECTION [IMMOBILIZER SYSTEM]**.) • Is the security indicator light: 23, DTC B10DA:62/P1260:00 displayed?	Yes	Replace the PCM, then go to the next step. (See **PCM REMOVAL/INSTALLATION [SKYACTIV-G 2.0, SKYACTIV-G 2.5]**.)
		No	Go to the next step.
3	**VERIFY IF OTHER DTCs DISPLAYED** • Are any other DTCs displayed?	Yes	Repair or replace the malfunctioning part according to the applicable DTC troubleshooting. (See **DTC TABLE [IMMOBILIZER SYSTEM]**.)
		No	DTC troubleshooting completed.

2014 - Mazda3 - Body and Accessories

PID/DATA MONITOR INSPECTION [IMMOBILIZER SYSTEM]

1. Connect the M-MDS to the DLC-2.

2. After the vehicle is identified, select the following items from the initialization screen of the M-MDS.

    a. Select “Data Logger”.

    b. Select “Modules”.

    c. Select “SSU”.

3. Select the applicable PID from the PID table.

4. Verify the PID data according to the directions on the screen.

NOTE:

- The PID data screen function is used for monitoring the calculated value of input/output signals in the module. Therefore, if the monitored value of the output parts is not within the specification, it is necessary to inspect the monitored value of input parts corresponding to the applicable output part control. In addition, because the system does not display an output part malfunction as an abnormality in the monitored value, it is necessary to inspect the output parts individually.
- When detecting DTCs, PIDs related to a malfunctioning system may not display even if the module is normal. Therefore, if a PID is not displayed, it is necessary to verify the DTC, perform malfunction diagnosis of the DTC that was detected, and do repairs.

2014 - Mazda3 - Body and Accessories

PID/DATA MONITOR TABLE [IMMOBILIZER SYSTEM]

—: Not applicable

PID	Unit/Operation	Data contents	Data read/use method	Module control terminal
NUM_TRNSMIT	—	Displays number of the remote transmitters programmed to the start stop unit	—	—

2014 - Mazda3 - Body and Accessories

ON-BOARD DIAGNOSTIC WIRING DIAGRAM [INSTRUMENT CLUSTER]

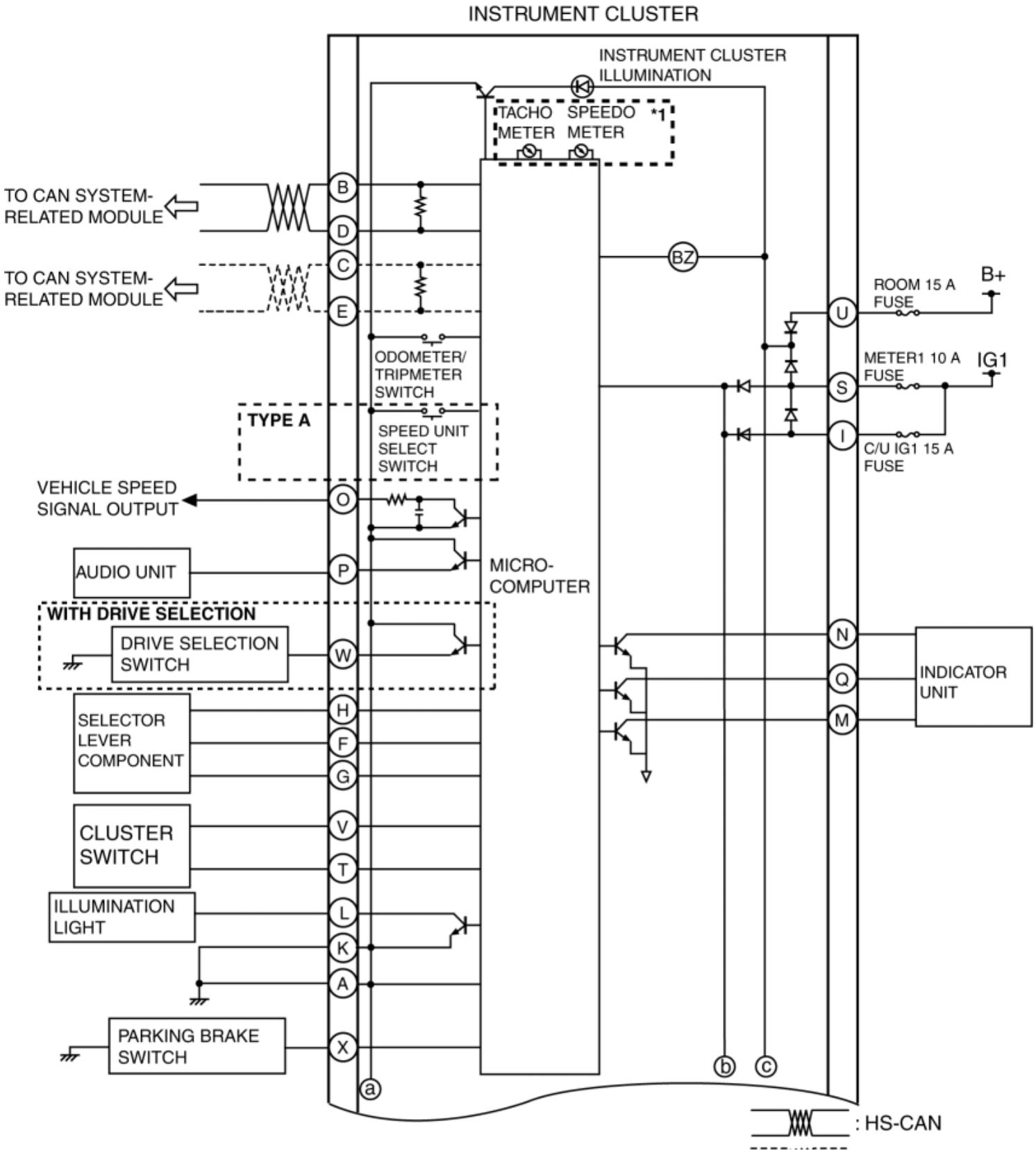

ON-BOARD DIAGNOSTIC WIRING DIAGRAM [INSTRUMENT CLUSTER]

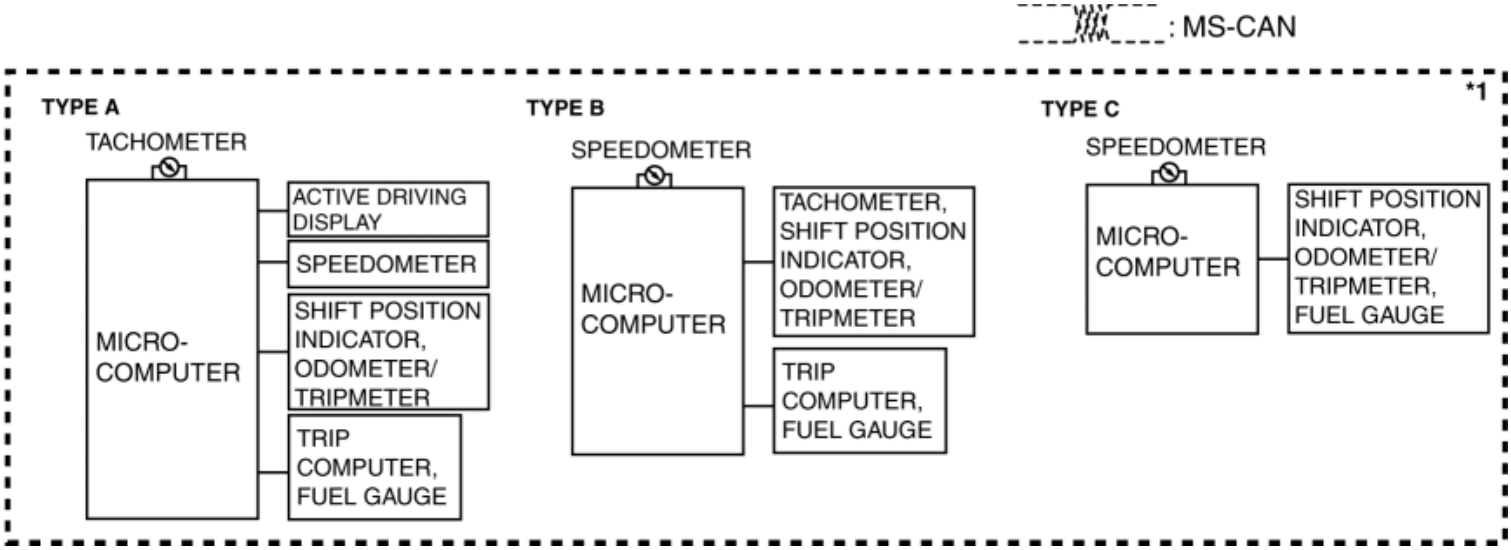

ON-BOARD DIAGNOSTIC WIRING DIAGRAM [INSTRUMENT CLUSTER]

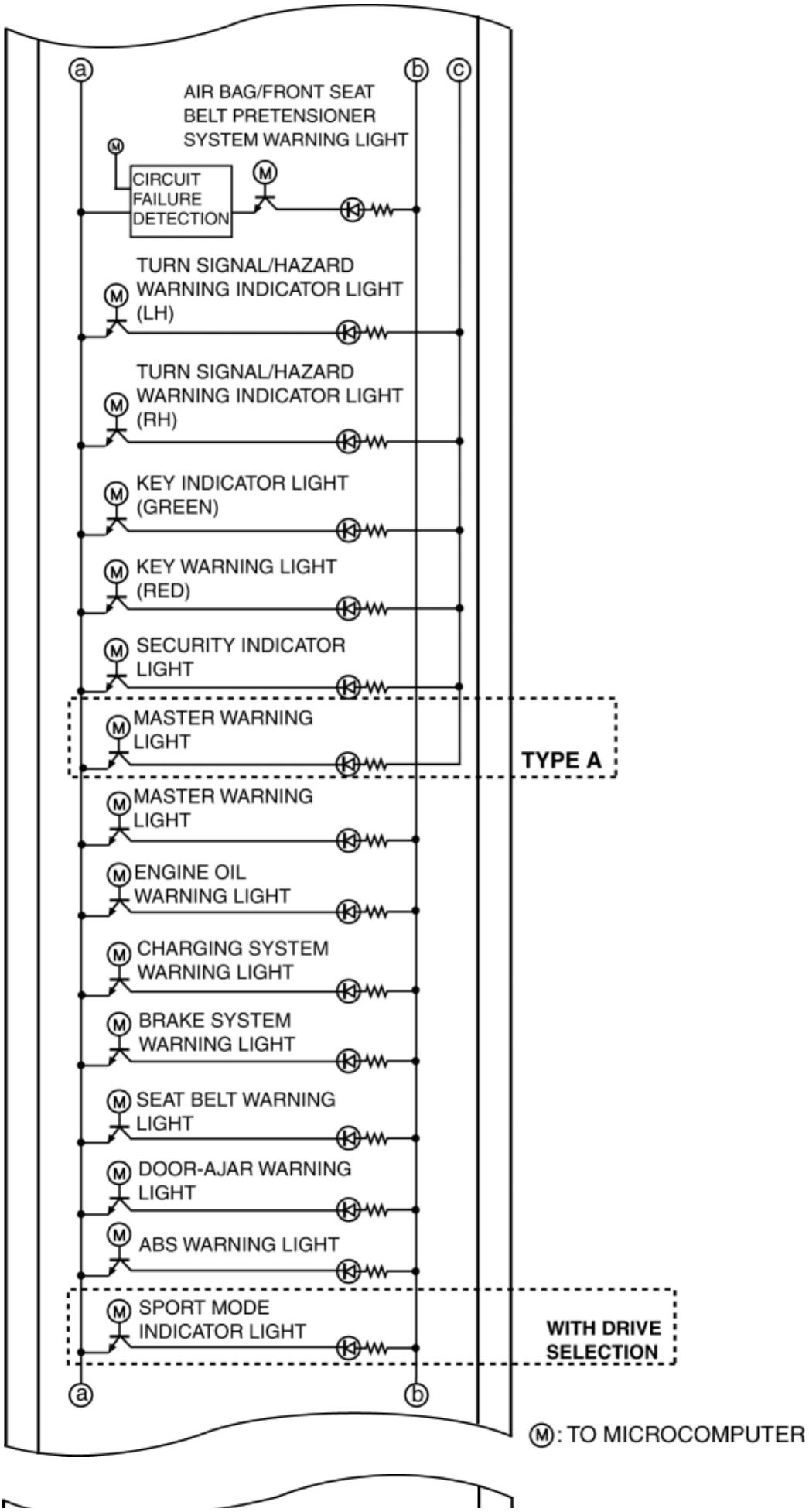

ON-BOARD DIAGNOSTIC WIRING DIAGRAM [INSTRUMENT CLUSTER]

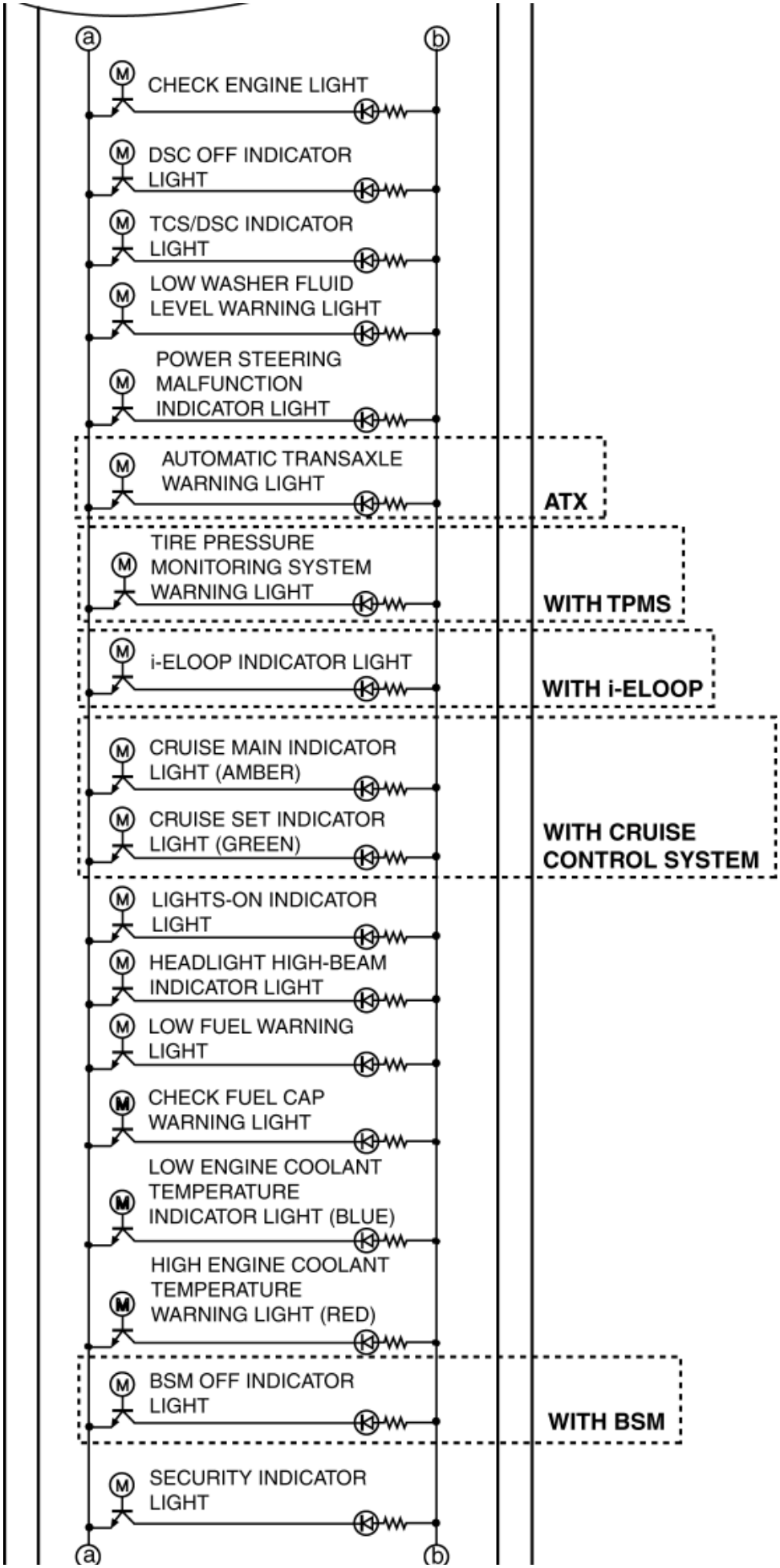

ON-BOARD DIAGNOSTIC WIRING DIAGRAM [INSTRUMENT CLUSTER]

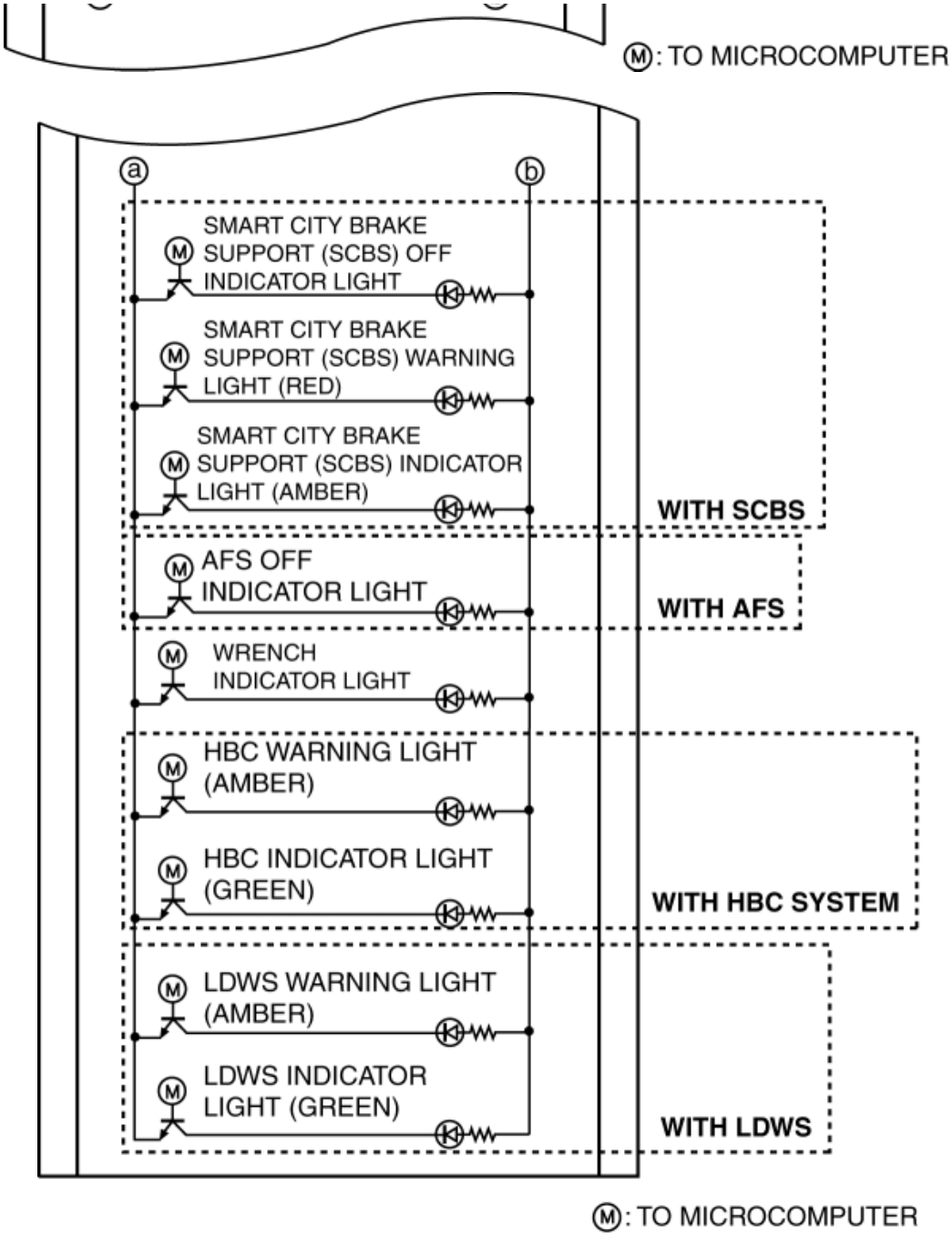

2014 - Mazda3 - Body and Accessories

FOREWORD [INSTRUMENT CLUSTER]

- If there is any vehicle malfunction complaint lodged by a customer, perform malfunction diagnosis according to the troubleshooting procedure.

Troubleshooting Procedure

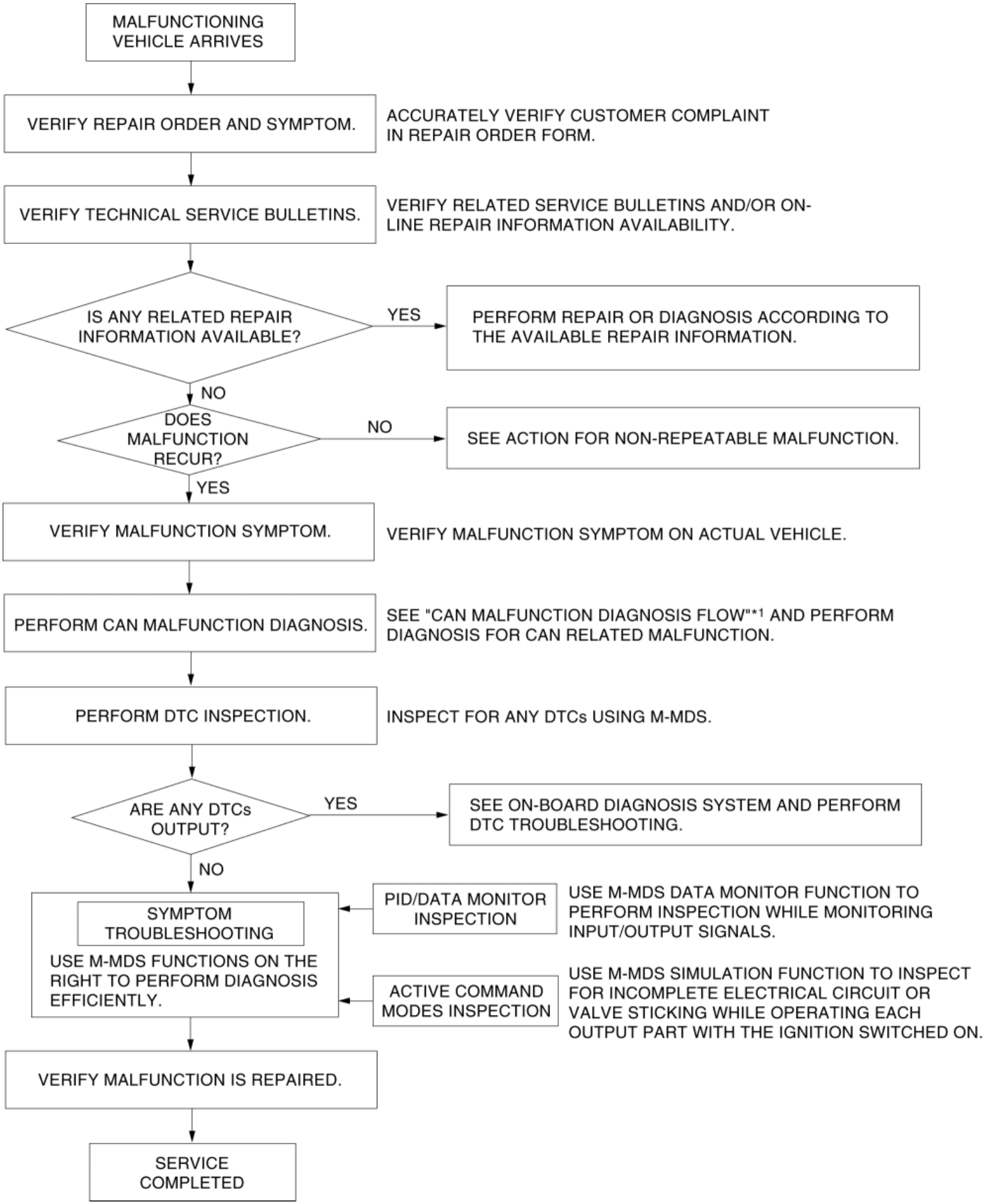
MALFUNCTIONING VEHICLE ARRIVES
VERIFY REPAIR ORDER AND SYMPTOM.
ACCURATELY VERIFY CUSTOMER COMPLAINT IN REPAIR ORDER FORM.
VERIFY TECHNICAL SERVICE BULLETINS.
VERIFY RELATED SERVICE BULLETINS AND/OR ON-LINE REPAIR INFORMATION AVAILABILITY.
IS ANY RELATED REPAIR INFORMATION AVAILABLE?
YES
PERFORM REPAIR OR DIAGNOSIS ACCORDING TO THE AVAILABLE REPAIR INFORMATION.
NO
DOES MALFUNCTION RECUR?
NO
SEE ACTION FOR NON-REPEATABLE MALFUNCTION.
YES
VERIFY MALFUNCTION SYMPTOM.
VERIFY MALFUNCTION SYMPTOM ON ACTUAL VEHICLE.
PERFORM CAN MALFUNCTION DIAGNOSIS.
SEE "CAN MALFUNCTION DIAGNOSIS FLOW"*1 AND PERFORM DIAGNOSIS FOR CAN RELATED MALFUNCTION.
PERFORM DTC INSPECTION.
INSPECT FOR ANY DTCs USING M-MDS.
ARE ANY DTCs OUTPUT?
YES
SEE ON-BOARD DIAGNOSIS SYSTEM AND PERFORM DTC TROUBLESHOOTING.
NO
SYMPTOM TROUBLESHOOTING
USE M-MDS FUNCTIONS ON THE RIGHT TO PERFORM DIAGNOSIS EFFICIENTLY.
PID/DATA MONITOR INSPECTION
USE M-MDS DATA MONITOR FUNCTION TO PERFORM INSPECTION WHILE MONITORING INPUT/OUTPUT SIGNALS.
ACTIVE COMMAND MODES INSPECTION
USE M-MDS SIMULATION FUNCTION TO INSPECT FOR INCOMPLETE ELECTRICAL CIRCUIT OR VALVE STICKING WHILE OPERATING EACH OUTPUT PART WITH THE IGNITION SWITCHED ON.
VERIFY MALFUNCTION IS REPAIRED.
SERVICE COMPLETED

*1

(See CONTROLLER AREA NETWORK (CAN) MALFUNCTION DIAGNOSIS FLOW.)

Action for Non-repeatable Malfunction

- If the malfunction does not recur, verify the malfunction cause by performing the following actions:
  - Based on the repair order form, attempt to drive the vehicle or perform tests to replicate the malfunction, record the data at that time, and detect the malfunction cause.
  - Shake the wiring harness or connector of the electrical component which is suspected to be the cause of the malfunction, and inspect for malfunction or occurrence of any DTCs.

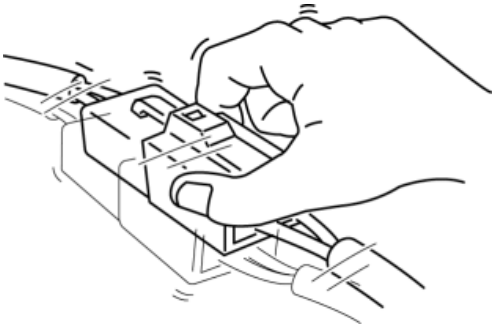

  - Inspect the female terminals on the connector of the electric component which is suspected to be the cause of the malfunction for poor connection.

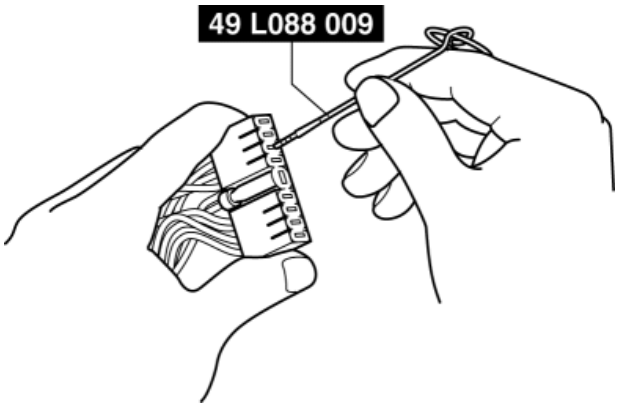

2014 - Mazda3 - Body and Accessories

DTC INSPECTION [INSTRUMENT CLUSTER]

CMDTC Self Test

1. Connect the M-MDS to the DLC-2.
2. After the vehicle is identified, select the following items from the initialization screen of the M-MDS.
   a. Select “Self Test”.
   b. Select “All CMDTCs”.
3. Verify the DTC according to the directions on the screen.
   - If any DTCs are displayed, perform troubleshooting according to the corresponding DTC inspection after recording the snapshot data.
4. After completion of repairs, clear all DTCs stored in the instrument cluster. (See **CLEARING DTC [INSTRUMENT CLUSTER]**.)

ODDTC Self Test

1. Connect the M-MDS to the DLC-2.
2. After the vehicle is identified, select the following items from the initialization screen of the M-MDS.
   a. Select “Self Test”.
   b. Select “Modules”.
   c. Select “IC”.
3. Verify the DTC according to the directions on the screen.
   - If any DTCs are displayed, perform troubleshooting according to the corresponding DTC inspection after recording the snapshot data.
4. After completion of repairs, clear all DTCs stored in the instrument cluster. (See **CLEARING DTC [INSTRUMENT CLUSTER]**.)

Snapshot Data

- The data for all DTCs currently detected is stored.

—: Not applicable

Snapshot data item	Unit		Data contents	Data read/use method	Corresponding data monitor items
AAT	°C	°F	Ambient temperature	—	—
APP_STATUS	Accelerator Pedal Off/Under20%/Over20%/FAIL		Accelerator pedal position status	—	—

CFG_STATUS	Config Complete/Not Configured/Config Error	Instrument cluster configuration status	—	—
ECT_STATUS	Under 0 degrees C/0 - Under 80 degrees C/Over 80 degrees C/FAIL	Engine coolant temperature status	—	—
IC_VPWR	V	Instrument cluster power supply voltage	When DTC is detected, instrument cluster displays power supply voltage value of instrument cluster in M-MDS.	VPWR
IG-ON_TIMER	hh:mm:ss*1	Elapsed time since ignition was switched ON (engine off or on) **NOTE:** • The instrument cluster records the elapsed time since the ignition was switched ON (engine off or on).	When DTC is detected, instrument cluster displays elapsed time since ignition was switched ON (engine off or on) in M-MDS.	—
PWR_MODE_KEY	Key Out/Key Recently Out (Position 0)/Accessory (Position 1)/Post Ignition (Position 2)/Ignition On (Position 2)/Running (Position 2)/Running - Starting	• Key Out: Ignition switched off • Key Recently Out (Position 0): Elapsed time **within 3 s** since ignition was switched off • Accessory (Position 1): Ignition is switched to ACC • Post Ignition (Position 2): Elapsed time **within 3 s** since	When DTC is detected, instrument cluster displays ignition switch status in M-MDS.	—

			ignition was switched ON (engine off or on) • Ignition On (Position 2): Ignition switched ON (engine off) • Running (Position 2): Ignition switched ON (engine on) • Running - Starting: Cranking condition		
RPM_STATUS	Engine Stop/Under1500rpm/Over1500rpm/FAIL		Engine speed status	When DTC is detected, instrument cluster displays engine speed in M-MDS.	TACHOMTR
SHIFT_STATUS	P/N/D/R/FAIL		Selector lever position status	When DTC is detected, instrument cluster displays selector lever position in M-MDS.	—
TOTAL_DIST	km	Miles	Accumulated total traveled distance from completion of vehicle until instrument cluster detects DTC (Odometer value in instrument cluster)	The total traveled distance from which the instrument cluster detects DTCs to the present can be calculated by performing the following procedure. • Verify the odometer value in the instrument cluster. • Verify the snapshot data item TOTAL_DIST. • Subtract 2 from 1.	—
			Accumulated total elapsed time since vehicle completion until instrument cluster detects a DTC **NOTE:**	The elapsed time from which the instrument cluster detects DTCs to the present can be calculated by performing the following procedure.	

TOTAL_TIME	hh:mm:ss*1	• When the ROOM fuse is removed, and the ignition is switched off, the time is not included in the elapsed time.	• Verify the instrument cluster PID item TOTAL_TIME. • Verify the snapshot data item TOTAL_TIME. • Subtract 2 from 1.	TOTAL_TIME
VPWR	V	Instrument cluster power supply voltage	—	VPWR
VSPD_STATUS	Stop/0-10km/h/Over10km/h/FAIL	Vehicle speed status	When DTC is detected, instrument cluster displays vehicle speed in M-MDS.	SPEEDOMTR

*1

The seconds may be indicated after the decimal point.

2014 - Mazda3 - Body and Accessories

CLEARING DTC [INSTRUMENT CLUSTER]

CMDTC Memory Clearing Procedure

1. Connect the M-MDS to the DLC-2.
2. After the vehicle is identified, select the following items from the initialization screen of the M-MDS.
    a. Select “Self Test”.
    b. Select “All CMDTCs”.
3. Verify the DTC according to the directions on the screen.
4. Press the clear button on the DTC screen to clear the DTC.
5. Switch the ignition off.
6. Switch the ignition ON (engine off or on) and wait for **5 s or more**.
7. Perform DTC inspection. (See **DTC INSPECTION [INSTRUMENT CLUSTER]**.)
8. Verify that no DTCs are displayed.

ODDTC Memory Clearing Procedure

1. Connect the M-MDS to the DLC-2.
2. After the vehicle is identified, select the following items from the initialization screen of the M-MDS.
    a. Select “Self Test”.
    b. Select “Modules”.
    c. Select “IC”.
3. Verify the DTC according to the directions on the screen.
4. Press the clear button on the DTC screen to clear the DTC.
5. Switch the ignition off.
6. Switch the ignition ON (engine off or on) and wait for **5 s or more**.
7. Perform DTC inspection. (See **DTC INSPECTION [INSTRUMENT CLUSTER]**.)
8. Verify that no DTCs are displayed.

CLEARING DTC [INSTRUMENT CLUSTER]

2014 - Mazda3 - Body and Accessories

DTC TABLE [INSTRUMENT CLUSTER]

×: Applicable—: Not applicable

DTC No.	Warning/indicator light	Description	Fail-safe function	Drive cycle	Self test type*1	Memory function	Page
B11D4:53*2	—	Laser sensor malfunction	×	—	C, D	×	(See **DTC B11D4:53 [INSTRUMENT CLUSTER]**.)
U0001:88	—	Module communication error (HS-CAN)	—	—	C, D	×	(See **DTC U0001:88/U0010:88/U0100:00/U0101:00/U0121:00/U0131:00/U0140:00/U0142:00/U0151:00/U0182:00/U0214:00/U0232:00/U0235:00/U023A:00 [INSTRUMENT CLUSTER]**.)
U0010:88	—	Module communication error (MS-CAN)	—	—	C, D	×	
U0100:00	Illuminated/Flash	Communication error with PCM	—	—	C, D	×	
U0101:00*3	—	Communication error with TCM	—	—	C, D	×	
U0121:00	Illuminated/Flash	Communication error with DSC HU/CM	—	—	C, D	×	
U0131:00	Illuminated/Flash	Communication error with EPS control module	—	—	C, D	×	
U0140:00	Illuminated/Flash	Communication error with front body control module (FBCM)	—	—	C, D	×	
U0142:00	—	Communication error with rear body control module (RBCM)	—	—	C, D	×	
U0151:00	Illuminated/Flash	Communication error with SAS control module	—	—	C, D	×	
U0182:00*4	Illuminated/Flash	Communication error with AFS control module	—	—	C, D	×	
U0214:00	Illuminated/Flash	Communication error with start stop unit	—	—	C, D	×	
U0232:00*5	Illuminated/Flash	Communication error with BSM control module (LH)	—	—	C, D	×	
U0235:00*2	—	Communication error	×	—	C, D	×	

		with laser sensor					
U023A:00*6	Illuminated/Flash	Communication error with forward sensing camera (FSC)	—	—	C, D	×	
U0300:00	—	Instrument cluster configuration error	—	—	C, D	×	(See **DTC U0300:00 [INSTRUMENT CLUSTER]**.)
U0401:68	Illuminated/Flash	Error signal received from PCM	—	—	C, D	×	(See **DTC U0401:68 [INSTRUMENT CLUSTER]**.)
U0402:68*3	—	Error signal received from transmission/transaxle	—	—	C, D	×	(See **DTC U0402:68 [INSTRUMENT CLUSTER]**.)
U0422:68	Illuminated/Flash	Error signal received from front body control module (FBCM)	—	—	C, D	×	(See **DTC U0422:68 [INSTRUMENT CLUSTER]**.)
U0433:00*2	—	Error signal received from laser sensor	×	—	C, D	×	(See **DTC U0433:00 [INSTRUMENT CLUSTER]**.)
U0433:68*2	—	Error signal received from laser sensor	×	—	C, D	×	(See **DTC U0433:68 [INSTRUMENT CLUSTER]**.)
U0515:68	Illuminated/Flash	Error signal received from start stop unit	—	—	C, D	×	(See **DTC U0515:68 [INSTRUMENT CLUSTER]**.)
U053B:00*6	Illuminated/Flash	Error signal received from forward sensing camera (FSC)	—	—	C, D	×	(See **DTC U053B:00 [INSTRUMENT CLUSTER]**.)
U2005:86	—	Error signal received from PCM	—	—	C, D	×	(See **DTC U2005:86 [INSTRUMENT CLUSTER]**.)
U2013:13	—	Cluster switch circuit malfunction	—	—	C, D	×	(See **DTC U2013:13 [INSTRUMENT CLUSTER]**.)
U2100:00	—	Instrument cluster configuration error	—	—	C, D	×	(See **DTC U2100:00 [INSTRUMENT CLUSTER]**.)
U2300:41	—	Instrument cluster configuration error	—	—	C, D	×	(See **DTC U2300:41 [INSTRUMENT CLUSTER]**.)
U2300:51	—	Instrument cluster configuration error	—	—	C, D	×	(See **DTC U2300:51 [INSTRUMENT CLUSTER]**.)
U2300:56	—	Instrument cluster configuration error	—	—	C, D	×	(See **DTC U2300:56 [INSTRUMENT CLUSTER]**.)
U2300:57	—	Instrument cluster configuration error	—	—	C, D	×	(See **DTC U2300:57 [INSTRUMENT CLUSTER]**.)
U3000:41	—	Instrument cluster internal malfunction	—	—	C, D	×	(See **DTC U3000:41 [INSTRUMENT CLUSTER]**.)
U3003:16	—	Low power supply voltage input to instrument cluster	—	—	C, D	×	(See **DTC U3003:16 [INSTRUMENT CLUSTER]**.)

*1

*2 **C: CMDTC self test, D: ODDTC self test**

*3 **With smart city brake support (SCBS)**

*4 **ATX**

*5 **With AFS**

*6 **With blind spot monitoring (BSM) system**

With forward sensing camera (FSC)

2014 - Mazda3 - Body and Accessories

DTC B11D4:53 [INSTRUMENT CLUSTER]

Description	Laser sensor malfunction
Detection condition	• The instrument cluster detects any of the following error signals: ▪ Laser sensor error signal ▪ Smart city brake support related system (laser sensor, DSC HU/CM, PCM) error signal
Fail-safe function	• Inhibits the smart city brake support control. • Warning message related to the smart city brake support is displayed in the center display.
Possible cause	• System related to the smart city brake support stores DTCs. • Laser sensor malfunction
System wiring diagram	Not applicable

Diagnostic Procedure

Step	Inspection		Action
1	**VERIFY ALL SYSTEM DTCs** • Switch the ignition off. • Switch the ignition ON (engine off or on) and wait for **10 s or more**. • Perform a CMDTC self-test using the M-MDS. (See **DTC INSPECTION [INSTRUMENT CLUSTER]**.) • Are any DTCs other than DTC B11D4:53?	Yes	Repair or replace the malfunctioning part according to the applicable DTC troubleshooting.
		No	Go to the next step.

2	**VERIFY THAT REPAIRS HAVE BEEN COMPLETED** • Clear the DTC for the instrument cluster using the M-MDS. (See **CLEARING DTC [INSTRUMENT CLUSTER]**.) • Switch the ignition ON (engine off or on) and wait for **10 s or more**. • Perform a CMDTC self-test using the M-MDS. (See **DTC INSPECTION [INSTRUMENT CLUSTER]**.) • Is the same DTC displayed?	Yes	Repeat the inspection from Step 1. • If the malfunction recurs, replace the laser sensor. (See **LASER SENSOR REMOVAL/INSTALLATION**.) Go to the next step.
		No	Go to the next step.
3	**VERIFY IF OTHER DTCs DISPLAYED** • Are any other DTCs displayed?	Yes	Repair or replace the malfunctioning part according to the applicable DTC troubleshooting. (See **DTC TABLE [INSTRUMENT CLUSTER]**.)
		No	DTC troubleshooting completed.

2014 - Mazda3 - Body and Accessories

DTC U0001:88/U0010:88/U0100:00/U0101:00/U0121:00/U0131:00/U0140:00/U0142:00/U0151:00/U0182:00/U0214:00/U0232:00/U0235:00/U023A:00 [INSTRUMENT CLUSTER]

Description	• U0001:88
	  ▪ Module communication error (HS-CAN)
	• U0010:88
	  ▪ Module communication error (MS-CAN)
	• U0100:00
	  ▪ Communication error with PCM
	• U0101:00
	  ▪ Communication error with TCM
	• U0121:00
	  ▪ Communication error with DSC HU/CM
	• U0131:00
	  ▪ Communication error with EPS control module
	• U0140:00
	  ▪ Communication error with front body control module (FBCM)
	• U0142:00
	  ▪ Communication error with rear body control module (RBCM)
	• U0151:00
	  ▪ Communication error with SAS control module
	• U0182:00
	  ▪ Communication error with AFS control module
	• U0214:00
	  ▪ Communication error with start stop unit
	• U0232:00

	Communication error with BSM control module (LH) • U0235:00 ▪ Communication error with laser sensor • U023A:00 ▪ Communication error with forward sensing camera (FSC)
Detection condition	• U0001:88 ▪ Instrument cluster detects a CAN bus communication line (HS-CAN) malfunction. • U0010:88 ▪ Instrument cluster detects a CAN bus communication line (MS-CAN) malfunction. • U0100:00 ▪ Instrument cluster cannot receive the CAN signal from the PCM. • U0101:00 ▪ Instrument cluster cannot receive the CAN signal from the TCM for **1 s or more**. • U0121:00 ▪ Instrument cluster cannot receive the CAN signal from the DSC HU/CM for **1 s or more**. • U0131:00 ▪ Instrument cluster cannot receive the CAN signal from the EPS control module for **1 s or more**. • U0140:00 ▪ Instrument cluster cannot receive the CAN signal from the front body control module (FBCM) for **5 s or more**. • U0142:00 ▪ Instrument cluster cannot receive the CAN signal from the rear body control module (RBCM) for **5 s or more**. • U0151:00 ▪ Instrument cluster cannot receive the CAN signal from the SAS control module for **2 s or more**. • U0182:00 ▪ Instrument cluster cannot receive the CAN signal from the AFS control module for **5 s or more**. • U0214:00 ▪ Instrument cluster cannot receive the CAN signal from the start stop unit for **5 s or more**. • U0232:00 ▪ Instrument cluster cannot receive the CAN signal from the BSM control module (LH) for **1.5 s or more**. • U0235:00

	▪ Instrument cluster cannot receive the CAN signal from the laser sensor for **1 s or more**. • U023A:00 ▪ Instrument cluster cannot receive the CAN signal from the forward sensing camera (FSC) for **1 s or more**.
Fail-safe function	• U0001:88 ▪ Not applicable • U0010:88 ▪ Not applicable • U0100:00 ▪ Not applicable • U0101:00 ▪ Not applicable • U0121:00 ▪ Not applicable • U0131:00 ▪ Not applicable • U0140:00 ▪ Not applicable • U0142:00 ▪ Not applicable • U0151:00 ▪ Not applicable • U0182:00 ▪ Not applicable • U0214:00 ▪ Not applicable • U0232:00 ▪ Not applicable • U0235:00 ▪ Inhibits the smart city brake support control. ▪ Warning message related to the smart city brake support is displayed in the center display. • U023A:00

	▪ Not applicable
Possible cause	• Malfunction in CAN bus communication line • Malfunction in CAN line between PCM and instrument cluster • Malfunction in CAN line between TCM and instrument cluster • Malfunction in CAN line between DSC HU/CM and instrument cluster • Malfunction in CAN line between EPS control module and instrument cluster • Malfunction in CAN line between front body control module (FBCM) and instrument cluster • Malfunction in CAN line between rear body control module (RBCM) and instrument cluster • Malfunction in CAN line between SAS control module and instrument cluster • Malfunction in CAN line between AFS control module and instrument cluster • Malfunction in CAN line between start stop unit and instrument cluster • Malfunction in CAN line between BSM control module (LH) and instrument cluster • Malfunction in CAN line between laser sensor and instrument cluster • Malfunction in CAN line between forward sensing camera (FSC) and instrument cluster
System wiring diagram	Not applicable

Diagnostic Procedure

- Perform the malfunction diagnosis according to the troubleshooting procedure for the multiplex communication system. (See **FOREWORD**.)

2014 - Mazda3 - Body and Accessories

DTC U0300:00 [INSTRUMENT CLUSTER]

Description	Instrument cluster configuration error
Detection condition	• Instrument cluster configuration error (incorrect value write) detected.
Fail-safe function	Not applicable
Possible cause	• Instrument cluster configuration error • Instrument cluster malfunction
System wiring diagram	Not applicable

Diagnostic Procedure

Step	Inspection		Action
1	**PERFORM INSTRUMENT CLUSTER CONFIGURATION (USING AS-BUILT DATA)** • Using the M-MDS, perform the instrument cluster configuration (using As-Built data). (See **INSTRUMENT CLUSTER CONFIGURATION (USING AS-BUILT DATA)**.) • Clear the DTC for the instrument cluster using the M-MDS. (See **CLEARING DTC [INSTRUMENT CLUSTER]**.) • Retrieve the instrument cluster DTCs using the M-MDS.	Yes	Using the M-MDS, perform the instrument cluster configuration (using As-Built data) again, then go to the next step. (See **INSTRUMENT CLUSTER CONFIGURATION (USING AS-BUILT DATA)**.)
		No	Go to Step 3.

	(See **DTC INSPECTION [INSTRUMENT CLUSTER]**.) • Is the same DTC displayed?		
2	**VERIFY THAT REPAIRS HAVE BEEN COMPLETED** • Clear the DTC for the instrument cluster using the M-MDS. (See **CLEARING DTC [INSTRUMENT CLUSTER]**.) • Retrieve the instrument cluster DTCs using the M-MDS. (See **DTC INSPECTION [INSTRUMENT CLUSTER]**.) • Is the same DTC displayed?	Yes	Repeat the inspection from Step 1. • If the malfunction recurs, replace the instrument cluster. (See **INSTRUMENT CLUSTER REMOVAL/INSTALLATION**.) Go to the next step.
		No	Go to the next step.
3	**VERIFY IF OTHER DTCs DISPLAYED** • Are any other DTCs displayed?	Yes	Repair or replace the malfunctioning part according to the applicable DTC troubleshooting. (See **DTC TABLE [INSTRUMENT CLUSTER]**.)
		No	DTC troubleshooting completed.

2014 - Mazda3 - Body and Accessories

DTC U0401:68 [INSTRUMENT CLUSTER]

Description	Error signal received from PCM
Detection condition	• Instrument cluster receives the error signals from the PCM with the ignition switched ON (engine off or on).
Fail-safe function	Not applicable
Possible cause	• DTCs are stored in the PCM. • PCM malfunction • Instrument cluster malfunction
System wiring diagram	Not applicable

Diagnostic Procedure

Step	Inspection		Action
1	**VERIFY PCM DTCs** • Retrieve the PCM DTCs using the M-MDS. (See **ON-BOARD DIAGNOSTIC TEST [SKYACTIV-G 2.0, SKYACTIV-G 2.5]**.) • Are any DTCs displayed?	Yes	Repair or replace the malfunctioning part according to the applicable DTC troubleshooting. (See **DTC TABLE [SKYACTIV-G 2.0, SKYACTIV-G 2.5]**.)
		No	Go to the next step.
2	**PERFORM DTC INSPECTION AND VERIFY PCM MALFUNCTION** • Clear the DTC for the instrument cluster using the M-MDS. (See **CLEARING DTC [INSTRUMENT CLUSTER]**.)	Yes	Replace the PCM, then go to the next step. (See **PCM REMOVAL/INSTALLATION [SKYACTIV-G 2.0, SKYACTIV-G 2.5]**.)
		No	Go to Step 4.

	• Switch the ignition ON (engine off or on) and wait for **20 s or more**. • Retrieve the instrument cluster DTCs using the M-MDS. (See **DTC INSPECTION [INSTRUMENT CLUSTER]**.) • Is the same DTC displayed?		
3	**VERIFY THAT REPAIRS HAVE BEEN COMPLETED** • Clear the DTC for the instrument cluster using the M-MDS. (See **CLEARING DTC [INSTRUMENT CLUSTER]**.) • Switch the ignition ON (engine off or on) and wait for **20 s or more**. • Retrieve the instrument cluster DTCs using the M-MDS. (See **DTC INSPECTION [INSTRUMENT CLUSTER]**.) • Is the same DTC displayed?	Yes	Repeat the inspection from Step 1. • If the malfunction recurs, replace the instrument cluster. (See **INSTRUMENT CLUSTER REMOVAL/INSTALLATION**.) Go to the next step.
		No	Go to the next step.
4	**VERIFY IF OTHER DTCs DISPLAYED** • Are any other DTCs displayed?	Yes	Repair or replace the malfunctioning part according to the applicable DTC troubleshooting. (See **DTC TABLE [INSTRUMENT CLUSTER]**.)
		No	DTC troubleshooting completed.

2014 - Mazda3 - Body and Accessories

DTC U0402:68 [INSTRUMENT CLUSTER]

Description	Error signal received from transmission/transaxle
Detection condition	• Instrument cluster received the error signals from the transmission/transaxle for **1 s or more** with the ignition switched ON (engine off or on).
Fail-safe function	Not applicable
Possible cause	• The transaxle could not send a normal signal temporarily. (DTCs are stored in the TCM.) • TCM malfunction • Instrument cluster malfunction
System wiring diagram	Not applicable

Diagnostic Procedure

Step	Inspection		Action
1	**VERIFY TCM DTCs** • Retrieve the TCM DTCs using the M-MDS. (See **ON-BOARD DIAGNOSTIC SYSTEM DTC INSPECTION [FW6A-EL]**.) • Are any DTCs displayed?	Yes	Repair or replace the malfunctioning part according to the applicable DTC troubleshooting. (See **ON-BOARD DIAGNOSTIC SYSTEM DTC TABLE [FW6A-EL]**.)
		No	Go to the next step.
2	**DRIVE VEHICLE THEN VERIFY DTCs FOR TCM AGAIN**	Yes	Repair or replace the malfunctioning part according to the applicable DTC

	• Drive the vehicle at a vehicle speed of **30 km/h {19 mph} or more** for **100 s or more**. • Retrieve the TCM DTCs using the M-MDS. (See **ON-BOARD DIAGNOSTIC SYSTEM DTC INSPECTION [FW6A-EL]**.) • Are any DTCs displayed?		troubleshooting. (See **ON-BOARD DIAGNOSTIC SYSTEM DTC TABLE [FW6A-EL]**.)
		No	Go to the next step.
3	**VERIFY THAT REPAIRS HAVE BEEN COMPLETED** • Clear the DTC for the instrument cluster using the M-MDS. (See **CLEARING DTC [INSTRUMENT CLUSTER]**.) • Switch the ignition ON (engine off or on) and wait for **20 s or more**. • Retrieve the instrument cluster DTCs using the M-MDS. (See **DTC INSPECTION [INSTRUMENT CLUSTER]**.) • Is the same DTC displayed?	Yes	Repeat the inspection from Step 1. • If the malfunction recurs, replace the instrument cluster. (See **INSTRUMENT CLUSTER REMOVAL/INSTALLATION**.) Go to the next step.
		No	Go to the next step.
4	**VERIFY IF OTHER DTCs DISPLAYED** • Are any other DTCs displayed?	Yes	Repair or replace the malfunctioning part according to the applicable DTC troubleshooting. (See **DTC TABLE [INSTRUMENT CLUSTER]**.)
		No	DTC troubleshooting completed.

2014 - Mazda3 - Body and Accessories

DTC U0422:68 [INSTRUMENT CLUSTER]

Description	Error signal received from front body control module (FBCM)
Detection condition	• Instrument cluster receives the error signals from the front body control module (FBCM) for **5 s or more** with the ignition switched ON (engine off or on).
Fail-safe function	Not applicable
Possible cause	• DTCs are stored in the front body control module (FBCM). • Front body control module (FBCM) malfunction • Instrument cluster malfunction
System wiring diagram	Not applicable

Diagnostic Procedure

Step	Inspection		Action
1	**VERIFY FRONT BODY CONTROL MODULE (FBCM) DTCs** • Retrieve the front body control module (FBCM) DTCs using the M-MDS. (See **DTC INSPECTION [FRONT BODY CONTROL MODULE (FBCM)]**.) • Are any DTCs displayed?	Yes	Repair or replace the malfunctioning part according to the applicable DTC troubleshooting. (See **DTC TABLE [FRONT BODY CONTROL MODULE (FBCM)]**.)
		No	Go to the next step.
2	**PERFORM DTC INSPECTION AND VERIFY FRONT BODY CONTROL MODULE (FBCM) MALFUNCTION** • Clear the DTC for the instrument cluster using the M-MDS. (See **CLEARING DTC [INSTRUMENT**	Yes	Replace the front body control module (FBCM), then go to the next step. (See **FRONT BODY CONTROL MODULE (FBCM) REMOVAL/INSTALLATION**.)

	CLUSTER].) • Switch the ignition ON (engine off or on) and wait for **20 s or more**. • Retrieve the instrument cluster DTCs using the M-MDS. (See **DTC INSPECTION [INSTRUMENT CLUSTER]**.) • Is the same DTC displayed?	No	Go to Step 4.
3	**VERIFY THAT REPAIRS HAVE BEEN COMPLETED** • Clear the DTC for the instrument cluster using the M-MDS. (See **CLEARING DTC [INSTRUMENT CLUSTER]**.) • Switch the ignition ON (engine off or on) and wait for **20 s or more**. • Retrieve the instrument cluster DTCs using the M-MDS. (See **DTC INSPECTION [INSTRUMENT CLUSTER]**.) • Is the same DTC displayed?	Yes	Repeat the inspection from Step 1. • If the malfunction recurs, replace the instrument cluster. (See **INSTRUMENT CLUSTER REMOVAL/INSTALLATION**.) Go to the next step.
		No	Go to the next step.
4	**VERIFY IF OTHER DTCs DISPLAYED** • Are any other DTCs displayed?	Yes	Repair or replace the malfunctioning part according to the applicable DTC troubleshooting. (See **DTC TABLE [INSTRUMENT CLUSTER]**.)
		No	DTC troubleshooting completed.

2014 - Mazda3 - Body and Accessories

DTC U0433:00 [INSTRUMENT CLUSTER]

Description	Error signal received from laser sensor

Detection condition	• Instrument cluster detects the following conditions:
	  ▪ The smart city brake support operated normally in the past.
	  ▪ Malfunction of laser sensor or smart city brake support related system (laser sensor, DSC HU/CM, PCM)
	  ▪ Laser sensor control is temporarily inhibited.

Fail-safe function	• Detection condition: The smart city brake support operated normally in the past.
	  ▪ Not applicable
	• Detection condition: Malfunction in laser sensor or smart city brake support related system (laser sensor, DSC HU/CM, PCM)
	  ▪ Inhibits the smart city brake support control.
	  ▪ Warning message related to the smart city brake support is displayed on the center display.
	• Detection condition: Laser sensor control is temporarily inhibited.
	  ▪ Temporarily inhibits the smart city brake support control.

Possible cause	**NOTE:** • Instrument cluster stores DTC U0433:00 as a record that the smart city brake support operated normally. • System related to the smart city brake support stores DTCs. • The laser sensor cannot temporarily function due to dirt on the windshield. • Laser sensor malfunction • Instrument cluster malfunction
System wiring diagram	Not applicable

Diagnostic Procedure

Step	Inspection		Action
1	**VERIFY ALL SYSTEM DTCs** • Switch the ignition off. • Switch the ignition ON (engine off or on) and wait for **10 s or more**. • Perform a CMDTC self-test using the M-MDS. (See **DTC INSPECTION [INSTRUMENT CLUSTER]**.) • Are any DTCs other than DTC U0433:00 displayed?	Yes	Repair or replace the malfunctioning part according to the applicable DTC troubleshooting. (See **ON-BOARD DIAGNOSIS [LASER SENSOR]**.) (See **ON-BOARD DIAGNOSIS [DYNAMIC STABILITY CONTROL (DSC)]**.) (See **DTC TABLE [SKYACTIV-G 2.0, SKYACTIV-G 2.5]**.) (See **DTC TABLE [INSTRUMENT CLUSTER]**.)
		No	Go to the next step.
2	**VERIFY DTCs AGAIN** • Clear the DTC for the instrument cluster using the M-MDS. (See **CLEARING DTC [INSTRUMENT CLUSTER]**.) • Switch the ignition ON (engine off or on) and wait for **10 s or more**. • Perform a CMDTC self-test using the M-MDS. (See **DTC INSPECTION [INSTRUMENT CLUSTER]**.) • Is the same DTC displayed?	Yes	Go to the next step.
		No	Go to Step 6.
3	**VERIFY CENTER DISPLAY** • Verify the center display. • Is the “SCBS Clean front windshield” displayed in the center display?	Yes	Clean the windshield, then go to the next step.
		No	Go to Step 5.
4	**PERFORM DTC INSPECTION AND VERIFY IF MALFUNCTION CAUSE IS LASER SENSOR** • Clear the DTC for the instrument cluster using the M-MDS. (See **CLEARING DTC [INSTRUMENT CLUSTER]**.) • Switch the ignition ON (engine off	Yes	Repeat the inspection from Step 1. • If the malfunction recurs, replace the laser sensor. (See **LASER SENSOR REMOVAL/INSTALLATION**.) Go to the next step.

	or on) and wait for **10 s or more**. • Perform a CMDTC self-test using the M-MDS. (See **DTC INSPECTION [INSTRUMENT CLUSTER]**.) • Is the same DTC displayed?	No	Go to Step 6.
5	**VERIFY THAT REPAIRS HAVE BEEN COMPLETED** • Clear the DTC for the instrument cluster using the M-MDS. (See **CLEARING DTC [INSTRUMENT CLUSTER]**.) • Switch the ignition ON (engine off or on) and wait for **10 s or more**. • Perform a CMDTC self-test using the M-MDS. (See **DTC INSPECTION [INSTRUMENT CLUSTER]**.) • Is the same DTC displayed?	Yes	Repeat the inspection from Step 1. • If the malfunction recurs, replace the instrument cluster. (See **INSTRUMENT CLUSTER REMOVAL/INSTALLATION**.) Go to the next step.
		No	Go to the next step.
6	**VERIFY IF OTHER DTCs DISPLAYED** • Are any other DTCs displayed?	Yes	Repair or replace the malfunctioning part according to the applicable DTC troubleshooting. (See **DTC TABLE [INSTRUMENT CLUSTER]**.)
		No	DTC troubleshooting completed.

2014 - Mazda3 - Body and Accessories

DTC U0433:68 [INSTRUMENT CLUSTER]

Description	Error signal received from laser sensor
Detection condition	• Instrument cluster receives the error signals from the laser sensor.
Fail-safe function	• Inhibits the smart city brake support control. • Warning message related to the smart city brake support is displayed in the center display.
Possible cause	• DTCs are stored in the laser sensor. • Laser sensor malfunction
System wiring diagram	Not applicable

Diagnostic Procedure

Step	Inspection		Action
1	**VERIFY LASER SENSOR DTCs** • Switch the ignition off. • Switch the ignition ON (engine on) and wait for **10 s or more**. • Retrieve the laser sensor DTCs using the M-MDS. (See **ON-BOARD DIAGNOSIS [LASER SENSOR]**.) • Are any DTCs displayed?	Yes	Repair or replace the malfunctioning part according to the applicable DTC troubleshooting. (See **ON-BOARD DIAGNOSIS [LASER SENSOR]**.)
		No	Go to the next step.
2	**VERIFY THAT REPAIRS HAVE BEEN COMPLETED** • Clear the DTC for the instrument cluster using the	Yes	Repeat the inspection from Step 1. • If the malfunction recurs, replace the laser sensor.

	M-MDS. (See **CLEARING DTC [INSTRUMENT CLUSTER]**.) • Switch the ignition ON (engine on) and wait for **10 s or more**. • Retrieve the instrument cluster DTCs using the M-MDS. (See **DTC INSPECTION [INSTRUMENT CLUSTER]**.) • Is the same DTC displayed?		(See **LASER SENSOR REMOVAL/INSTALLATION**.) Go to the next step.
		No	Go to the next step.
3	**VERIFY IF OTHER DTCs DISPLAYED** • Are any other DTCs displayed?	Yes	Repair or replace the malfunctioning part according to the applicable DTC troubleshooting. (See **DTC TABLE [INSTRUMENT CLUSTER]**.)
		No	DTC troubleshooting completed.

2014 - Mazda3 - Body and Accessories

DTC U0515:68 [INSTRUMENT CLUSTER]

Description	Error signal received from start stop unit
Detection condition	• Instrument cluster receives the error signals from the start stop unit with the ignition switched ON (engine off or on).
Fail-safe function	Not applicable
Possible cause	• DTCs are stored in the start stop unit. • Start stop unit malfunction • Instrument cluster malfunction
System wiring diagram	Not applicable

Diagnostic Procedure

Step	Inspection		Action
1	**VERIFY START STOP UNIT DTCs** • Retrieve the start stop unit DTCs using the M-MDS. (See **DTC INSPECTION [START STOP UNIT]**.) • Are any DTCs displayed?	Yes	Repair or replace the malfunctioning part according to the applicable DTC troubleshooting. (See **DTC TABLE [START STOP UNIT]**.)
		No	Go to the next step.
2	**PERFORM DTC INSPECTION AND VERIFY START STOP UNIT MALFUNCTION** • Clear the DTC for the instrument cluster using the M-MDS. (See **CLEARING DTC [INSTRUMENT CLUSTER]**.) • Switch the ignition ON (engine	Yes	Replace the start stop unit, then go to the next step. (See **START STOP UNIT REMOVAL/INSTALLATION**.)
		No	Go to Step 4.

	off or on) and wait for **20 s or more**. • Retrieve the instrument cluster DTCs using the M-MDS. (See **DTC INSPECTION [INSTRUMENT CLUSTER]**.) • Is the same DTC displayed?		
3	**VERIFY THAT REPAIRS HAVE BEEN COMPLETED** • Clear the DTC for the instrument cluster using the M-MDS. (See **CLEARING DTC [INSTRUMENT CLUSTER]**.) • Switch the ignition ON (engine off or on) and wait for **20 s or more**. • Retrieve the instrument cluster DTCs using the M-MDS. (See **DTC INSPECTION [INSTRUMENT CLUSTER]**.) • Is the same DTC displayed?	Yes	Repeat the inspection from Step 1. • If the malfunction recurs, replace the instrument cluster. (See **INSTRUMENT CLUSTER REMOVAL/INSTALLATION**.) Go to the next step.
		No	Go to the next step.
4	**VERIFY IF OTHER DTCs DISPLAYED** • Are any other DTCs displayed?	Yes	Repair or replace the malfunctioning part according to the applicable DTC troubleshooting. (See **DTC TABLE [INSTRUMENT CLUSTER]**.)
		No	DTC troubleshooting completed.

2014 - Mazda3 - Body and Accessories

DTC U053B:00 [INSTRUMENT CLUSTER]

Description	Error signal received from forward sensing camera (FSC)
Detection condition	• Instrument cluster receives the error signals from the forward sensing camera (FSC) for **1 s or more** with the ignition switched ON (engine off or on).
Fail-safe function	Not applicable
Possible cause	• DTCs are stored in the forward sensing camera (FSC). • Forward sensing camera (FSC) malfunction • Instrument cluster malfunction
System wiring diagram	Not applicable

Diagnostic Procedure

Step	Inspection		Action
1	**VERIFY FORWARD SENSING CAMERA (FSC) DTCs** • Retrieve the forward sensing camera (FSC) DTCs using the M-MDS. (See **DTC INSPECTION [FORWARD SENSING CAMERA (FSC)]**.) • Are any DTCs displayed?	Yes	Repair or replace the malfunctioning part according to the applicable DTC troubleshooting. (See **DTC TABLE [FORWARD SENSING CAMERA (FSC)]**.)
		No	Go to the next step.
2	**PERFORM DTC INSPECTION AND VERIFY FORWARD SENSING CAMERA (FSC) MALFUNCTION** • Clear the DTC for the instrument cluster using the M-MDS. (See **CLEARING DTC [INSTRUMENT**	Yes	Replace the forward sensing camera (FSC), then go to the next step. (See **FORWARD SENSING CAMERA (FSC) REMOVAL/INSTALLATION**.)

	CLUSTER].) • Switch the ignition ON (engine off or on) and wait for **20 s or more**. • Retrieve the instrument cluster DTCs using the M-MDS. (See **DTC INSPECTION [INSTRUMENT CLUSTER]**.) • Is the same DTC displayed?	No	Go to Step 4.
3	**VERIFY THAT REPAIRS HAVE BEEN COMPLETED** • Clear the DTC for the instrument cluster using the M-MDS. (See **CLEARING DTC [INSTRUMENT CLUSTER]**.) • Switch the ignition ON (engine off or on) and wait for **20 s or more**. • Retrieve the instrument cluster DTCs using the M-MDS. (See **DTC INSPECTION [INSTRUMENT CLUSTER]**.) • Is the same DTC displayed?	Yes	Repeat the inspection from Step 1. • If the malfunction recurs, replace the instrument cluster. (See **INSTRUMENT CLUSTER REMOVAL/INSTALLATION**.) Go to the next step.
		No	Go to the next step.
4	**VERIFY IF OTHER DTCs DISPLAYED** • Are any other DTCs displayed?	Yes	Repair or replace the malfunctioning part according to the applicable DTC troubleshooting. (See **DTC TABLE [INSTRUMENT CLUSTER]**.)
		No	DTC troubleshooting completed.

2014 - Mazda3 - Body and Accessories

DTC U2005:86 [INSTRUMENT CLUSTER]

Description	Error signal received from PCM
Detection condition	• Instrument cluster receives the vehicle speed signal error from the PCM for **1 s or more** with the ignition switched ON (engine off or on).
Fail-safe function	Not applicable
Possible cause	• DTCs are stored in the PCM. • PCM malfunction • Instrument cluster malfunction
System wiring diagram	Not applicable

Diagnostic Procedure

Step	Inspection		Action
1	**VERIFY PCM DTCs** • Retrieve the PCM DTCs using the M-MDS. (See **ON-BOARD DIAGNOSTIC TEST [SKYACTIV-G 2.0, SKYACTIV-G 2.5]**.) • Are any DTCs displayed?	Yes	Repair or replace the malfunctioning part according to the applicable DTC troubleshooting. (See **DTC TABLE [SKYACTIV-G 2.0, SKYACTIV-G 2.5]**.)
		No	Go to the next step.
2	**PERFORM DTC INSPECTION AND VERIFY PCM MALFUNCTION** • Clear the DTC for the instrument cluster using the M-MDS. (See **CLEARING DTC [INSTRUMENT CLUSTER]**.)	Yes	Replace the PCM, then go to the next step. (See **PCM REMOVAL/INSTALLATION [SKYACTIV-G 2.0, SKYACTIV-G 2.5]**.)
		No	Go to Step 4.

	• Switch the ignition ON (engine off or on) and wait for **20 s or more**. • Retrieve the instrument cluster DTCs using the M-MDS. (See **DTC INSPECTION [INSTRUMENT CLUSTER]**.) • Is the same DTC displayed?		
3	**VERIFY THAT REPAIRS HAVE BEEN COMPLETED** • Clear the DTC for the instrument cluster using the M-MDS. (See **CLEARING DTC [INSTRUMENT CLUSTER]**.) • Switch the ignition ON (engine off or on) and wait for **20 s or more**. • Retrieve the instrument cluster DTCs using the M-MDS. (See **DTC INSPECTION [INSTRUMENT CLUSTER]**.) • Is the same DTC displayed?	Yes	Repeat the inspection from Step 1. • If the malfunction recurs, replace the instrument cluster. (See **INSTRUMENT CLUSTER REMOVAL/INSTALLATION**.) Go to the next step.
		No	Go to the next step.
4	**VERIFY IF OTHER DTCs DISPLAYED** • Are any other DTCs displayed?	Yes	Repair or replace the malfunctioning part according to the applicable DTC troubleshooting. (See **DTC TABLE [INSTRUMENT CLUSTER]**.)
		No	DTC troubleshooting completed.

2014 - Mazda3 - Body and Accessories

DTC U2013:13 [INSTRUMENT CLUSTER]

Description	Cluster switch circuit malfunction
Detection condition	• Instrument cluster detects an open circuit in the cluster switch circuit for **5 s or more** with the ignition switched ON (engine off or on).
Fail-safe function	Not applicable

Possible cause	• Cluster switch connector or terminal malfunction
	• Instrument cluster connector or terminal malfunction
	• Open circuit in wiring harness between the following terminals:
	  ▪ Instrument cluster terminal V—Cluster switch terminal B
	  ▪ Instrument cluster terminal T—Cluster switch terminal C
	• Cluster switch malfunction
	• Instrument cluster malfunction

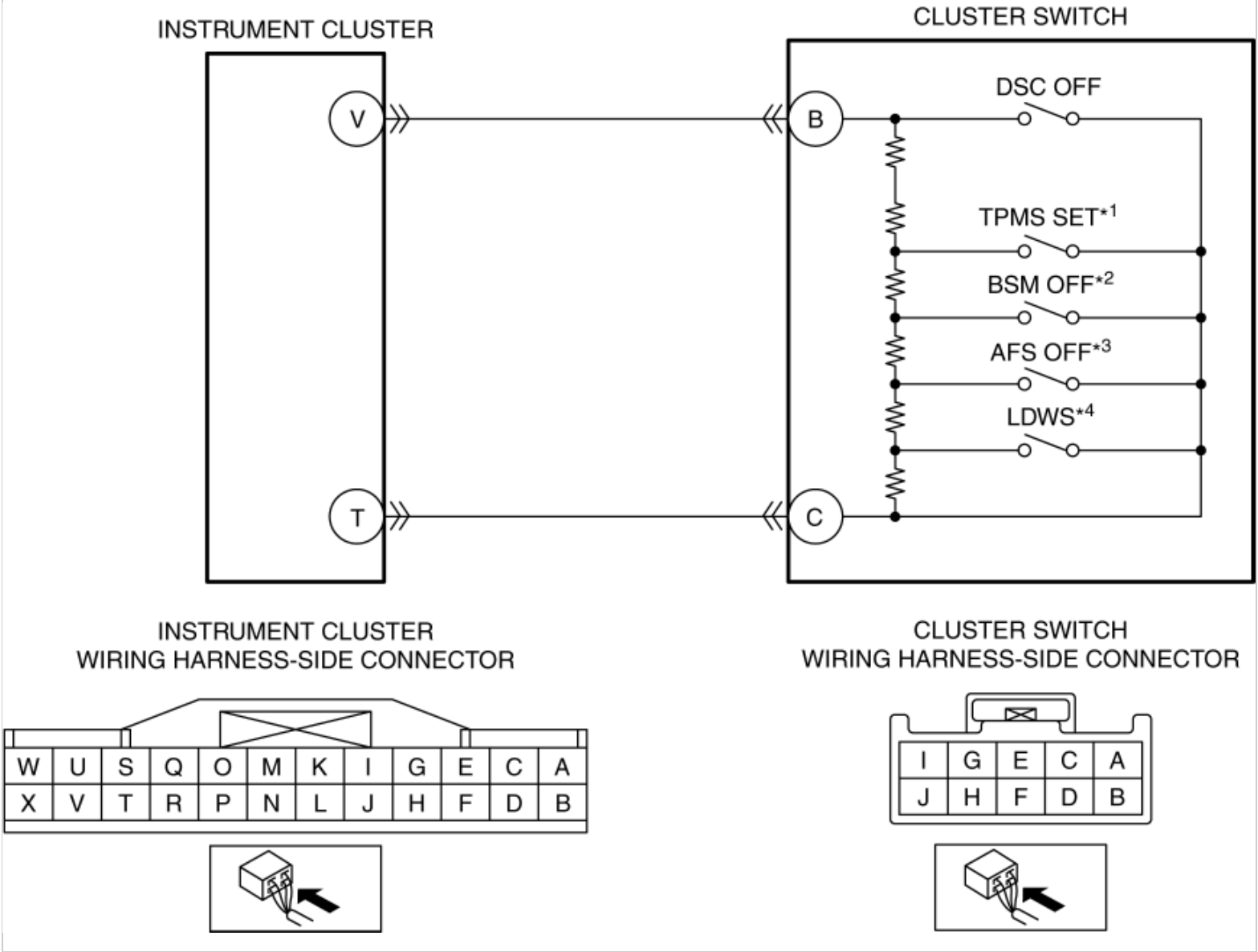

*1 **With tire pressure monitoring system (TPMS)**

*2 **With blind spot monitoring (BSM) system**

*3 **With AFS**

*4 **With lane departure warning system (LDWS)**

Diagnostic Procedure

Step	Inspection		Action
1	**INSPECT CLUSTER SWITCH CONNECTOR CONDITION** • Switch the ignition off. • Disconnect the negative battery cable. (See **NEGATIVE BATTERY CABLE**	Yes	Go to the next step.
		No	Repair or replace the connector, then go to Step 5.

	DISCONNECTION/CONNECTION [SKYACTIV-G 2.0, SKYACTIV-G 2.5].) • Disconnect the cluster switch connector. • Inspect the connector engagement and connection condition and inspect the terminals for damage, deformation, corrosion, or disconnection. • Is the connector normal?		
2	**INSPECT INSTRUMENT CLUSTER CONNECTOR CONDITION** • Disconnect the instrument cluster connector. • Inspect the connector engagement and connection condition and inspect the terminals for damage, deformation, corrosion, or disconnection. • Is the connector normal?	Yes	Go to the next step.
		No	Repair or replace the connector, then go to Step 5.
3	**INSPECT FOR OPEN CIRCUIT IN CLUSTER SWITCH CIRCUIT** • Verify that the cluster switch and instrument cluster connectors are disconnected. • Inspect for continuity between the following terminals (wiring harness-side): ▪ Instrument cluster terminal V—Cluster switch terminal B ▪ Instrument cluster terminal T—Cluster switch terminal C • Is there continuity?	Yes	Go to the next step.
		No	Refer to the wiring diagram and verify whether or not there is a common connector between the following terminals: • Instrument cluster terminal V—Cluster switch terminal B • Instrument cluster terminal T—Cluster switch terminal C **If there is a common connector:** • Determine the malfunctioning part by inspecting the common connector and the terminal for corrosion, damage, or pin disconnection, and the common wiring harness for an open circuit. • Repair or replace the malfunctioning part. **If there is no common connector:** • Repair or replace the wiring harness which has an open circuit. Go to Step 5.
4	**INSPECT CLUSTER SWITCH** • Inspect the cluster switch. (See **DSC OFF SWITCH INSPECTION**.)	Yes	Go to the next step.
		No	Replace the cluster switch, then go to the next step. (See **CLUSTER SWITCH REMOVAL/INSTALLATION**.)

	(See **TIRE PRESSURE MONITORING SYSTEM SET SWITCH INSPECTION**.) (See **BLIND SPOT MONITORING (BSM) OFF SWITCH INSPECTION**.) (See **ADAPTIVE FRONT LIGHTING SYSTEM (AFS) OFF SWITCH INSPECTION**.) (See **LDWS SWITCH INSPECTION**.) • Is the cluster switch normal?		
5	**VERIFY THAT REPAIRS HAVE BEEN COMPLETED** • Always reconnect all disconnected connectors. • Reconnect the negative battery cable. (See **NEGATIVE BATTERY CABLE DISCONNECTION/CONNECTION [SKYACTIV-G 2.0, SKYACTIV-G 2.5]**.) • Clear the DTC for the instrument cluster using the M-MDS. (See **CLEARING DTC [INSTRUMENT CLUSTER]**.) • Switch the ignition ON (engine off or on) and wait for **5 s or more**. • Retrieve the instrument cluster DTCs using the M-MDS. (See **DTC INSPECTION [INSTRUMENT CLUSTER]**.) • Is the same DTC displayed?	Yes	Repeat the inspection from Step 1. • If the malfunction recurs, replace the instrument cluster. (See **INSTRUMENT CLUSTER REMOVAL/INSTALLATION**.) Go to the next step.
		No	Go to the next step.
6	**VERIFY IF OTHER DTCs DISPLAYED** • Are any other DTCs displayed?	Yes	Repair or replace the malfunctioning part according to the applicable DTC troubleshooting. (See **DTC TABLE [INSTRUMENT CLUSTER]**.)
		No	DTC troubleshooting completed.

2014 - Mazda3 - Body and Accessories

DTC U2100:00 [INSTRUMENT CLUSTER]

Description	Instrument cluster configuration error
Detection condition	• Instrument cluster configuration error detected as follows: ▪ No configuration of instrument cluster ▪ Instrument cluster configuration has not been correctly performed.
Fail-safe function	Not applicable
Possible cause	• Instrument cluster configuration error • Instrument cluster malfunction
System wiring diagram	Not applicable

Diagnostic Procedure

Step	Inspection		Action
1	**PERFORM INSTRUMENT CLUSTER CONFIGURATION (USING AS-BUILT DATA)** • Using the M-MDS, perform the instrument cluster configuration (using As-Built data). (See **INSTRUMENT CLUSTER CONFIGURATION (USING AS-BUILT DATA)**.) • Clear the DTC for the instrument cluster using the M-MDS. (See **CLEARING DTC [INSTRUMENT CLUSTER]**.)	Yes	Using the M-MDS, perform the instrument cluster configuration (using As-Built data) again, then go to the next step. (See **INSTRUMENT CLUSTER CONFIGURATION (USING AS-BUILT DATA)**.)
		No	Go to Step 3.

	• Retrieve the instrument cluster DTCs using the M-MDS. (See **DTC INSPECTION [INSTRUMENT CLUSTER]**.) • Is the same DTC displayed?		
2	**VERIFY THAT REPAIRS HAVE BEEN COMPLETED** • Clear the DTC for the instrument cluster using the M-MDS. (See **CLEARING DTC [INSTRUMENT CLUSTER]**.) • Retrieve the instrument cluster DTCs using the M-MDS. (See **DTC INSPECTION [INSTRUMENT CLUSTER]**.) • Is the same DTC displayed?	Yes	Repeat the inspection from Step 1. • If the malfunction recurs, replace the instrument cluster. (See **INSTRUMENT CLUSTER REMOVAL/INSTALLATION**.) Go to the next step.
		No	Go to the next step.
3	**VERIFY IF OTHER DTCs DISPLAYED** • Are any other DTCs displayed?	Yes	Repair or replace the malfunctioning part according to the applicable DTC troubleshooting. (See **DTC TABLE [INSTRUMENT CLUSTER]**.)
		No	DTC troubleshooting completed.

2014 - Mazda3 - Body and Accessories

DTC U2300:41 [INSTRUMENT CLUSTER]

Description	Instrument cluster configuration error
Detection condition	• Instrument cluster configuration error (data error) detected.
Fail-safe function	Not applicable
Possible cause	• Instrument cluster configuration error • Instrument cluster malfunction
System wiring diagram	Not applicable

Diagnostic Procedure

Step	Inspection		Action
1	**PERFORM INSTRUMENT CLUSTER CONFIGURATION (USING AS-BUILT DATA)** • Using the M-MDS, perform the instrument cluster configuration (using As-Built data). (See **INSTRUMENT CLUSTER CONFIGURATION (USING AS-BUILT DATA)**.) • Clear the DTC for the instrument cluster using the M-MDS. (See **CLEARING DTC [INSTRUMENT CLUSTER]**.) • Retrieve the instrument cluster DTCs using the M-MDS. (See **DTC INSPECTION [INSTRUMENT CLUSTER]**.)	Yes	Using the M-MDS, perform the instrument cluster configuration (using As-Built data) again, then go to the next step. (See **INSTRUMENT CLUSTER CONFIGURATION (USING AS-BUILT DATA)**.)
		No	Go to Step 3.

	• Is the same DTC displayed?		
2	**VERIFY THAT REPAIRS HAVE BEEN COMPLETED** • Clear the DTC for the instrument cluster using the M-MDS. (See **CLEARING DTC [INSTRUMENT CLUSTER]**.) • Retrieve the instrument cluster DTCs using the M-MDS. (See **DTC INSPECTION [INSTRUMENT CLUSTER]**.) • Is the same DTC displayed?	Yes	Repeat the inspection from Step 1. • If the malfunction recurs, replace the instrument cluster. (See **INSTRUMENT CLUSTER REMOVAL/INSTALLATION**.) Go to the next step.
		No	Go to the next step.
3	**VERIFY IF OTHER DTCs DISPLAYED** • Are any other DTCs displayed?	Yes	Repair or replace the malfunctioning part according to the applicable DTC troubleshooting. (See **DTC TABLE [INSTRUMENT CLUSTER]**.)
		No	DTC troubleshooting completed.

2014 - Mazda3 - Body and Accessories

DTC U2300:51 [INSTRUMENT CLUSTER]

Description	Instrument cluster configuration error
Detection condition	• Instrument cluster configuration error (no configuration) detected.
Fail-safe function	Not applicable
Possible cause	• Instrument cluster configuration error • Instrument cluster malfunction
System wiring diagram	Not applicable

Diagnostic Procedure

Step	Inspection		Action
1	**PERFORM INSTRUMENT CLUSTER CONFIGURATION (USING AS-BUILT DATA)** • Using the M-MDS, perform the instrument cluster configuration (using As-Built data). (See **INSTRUMENT CLUSTER CONFIGURATION (USING AS-BUILT DATA)**.) • Clear the DTC for the instrument cluster using the M-MDS. (See **CLEARING DTC [INSTRUMENT CLUSTER]**.) • Retrieve the instrument cluster DTCs using the M-MDS.	Yes	Using the M-MDS, perform the instrument cluster configuration (using As-Built data) again, then go to the next step. (See **INSTRUMENT CLUSTER CONFIGURATION (USING AS-BUILT DATA)**.)
		No	Go to Step 3.

	(See **DTC INSPECTION [INSTRUMENT CLUSTER]**.) • Is the same DTC displayed?		
2	**VERIFY THAT REPAIRS HAVE BEEN COMPLETED** • Clear the DTC for the instrument cluster using the M-MDS. (See **CLEARING DTC [INSTRUMENT CLUSTER]**.) • Retrieve the instrument cluster DTCs using the M-MDS. (See **DTC INSPECTION [INSTRUMENT CLUSTER]**.) • Is the same DTC displayed?	Yes	Repeat the inspection from Step 1. • If the malfunction recurs, replace the instrument cluster. (See **INSTRUMENT CLUSTER REMOVAL/INSTALLATION**.) Go to the next step.
		No	Go to the next step.
3	**VERIFY IF OTHER DTCs DISPLAYED** • Are any other DTCs displayed?	Yes	Repair or replace the malfunctioning part according to the applicable DTC troubleshooting. (See **DTC TABLE [INSTRUMENT CLUSTER]**.)
		No	DTC troubleshooting completed.

2014 - Mazda3 - Body and Accessories

DTC U2300:56 [INSTRUMENT CLUSTER]

Description	Instrument cluster configuration error
Detection condition	• Instrument cluster configuration error (incorrect value write) detected.
Fail-safe function	Not applicable
Possible cause	• Instrument cluster configuration error • Instrument cluster malfunction
System wiring diagram	Not applicable

Diagnostic Procedure

Step	Inspection		Action
1	**PERFORM INSTRUMENT CLUSTER CONFIGURATION (USING AS-BUILT DATA)** • Using the M-MDS, perform the instrument cluster configuration (using As-Built data). (See **INSTRUMENT CLUSTER CONFIGURATION (USING AS-BUILT DATA)**.) • Clear the DTC for the instrument cluster using the M-MDS. (See **CLEARING DTC [INSTRUMENT CLUSTER]**.) • Retrieve the instrument cluster DTCs using the M-MDS.	Yes	Using the M-MDS, perform the instrument cluster configuration (using As-Built data) again, then go to the next step. (See **INSTRUMENT CLUSTER CONFIGURATION (USING AS-BUILT DATA)**.)
		No	Go to Step 3.

	(See **DTC INSPECTION [INSTRUMENT CLUSTER]**.) • Is the same DTC displayed?		
2	**VERIFY THAT REPAIRS HAVE BEEN COMPLETED** • Clear the DTC for the instrument cluster using the M-MDS. (See **CLEARING DTC [INSTRUMENT CLUSTER]**.) • Retrieve the instrument cluster DTCs using the M-MDS. (See **DTC INSPECTION [INSTRUMENT CLUSTER]**.) • Is the same DTC displayed?	Yes	Repeat the inspection from Step 1. • If the malfunction recurs, replace the instrument cluster. (See **INSTRUMENT CLUSTER REMOVAL/INSTALLATION**.) Go to the next step.
		No	Go to the next step.
3	**VERIFY IF OTHER DTCs DISPLAYED** • Are any other DTCs displayed?	Yes	Repair or replace the malfunctioning part according to the applicable DTC troubleshooting. (See **DTC TABLE [INSTRUMENT CLUSTER]**.)
		No	DTC troubleshooting completed.

2014 - Mazda3 - Body and Accessories

DTC U2300:57 [INSTRUMENT CLUSTER]

Description	Instrument cluster configuration error
Detection condition	• Instrument cluster configuration error (data size error) detected.
Fail-safe function	Not applicable
Possible cause	• Instrument cluster configuration error • Instrument cluster malfunction
System wiring diagram	Not applicable

Diagnostic Procedure

Step	Inspection		Action
1	**PERFORM INSTRUMENT CLUSTER CONFIGURATION (USING AS-BUILT DATA)** • Using the M-MDS, perform the instrument cluster configuration (using As-Built data). (See **INSTRUMENT CLUSTER CONFIGURATION (USING AS-BUILT DATA)**.) • Clear the DTC for the instrument cluster using the M-MDS. (See **CLEARING DTC [INSTRUMENT CLUSTER]**.) • Retrieve the instrument cluster DTCs using the M-MDS. (See **DTC INSPECTION [INSTRUMENT CLUSTER]**.)	Yes	Using the M-MDS, perform the instrument cluster configuration (using As-Built data) again, then go to the next step. (See **INSTRUMENT CLUSTER CONFIGURATION (USING AS-BUILT DATA)**.)
		No	Go to Step 3.

	• Is the same DTC displayed?		
2	**VERIFY THAT REPAIRS HAVE BEEN COMPLETED** • Clear the DTC for the instrument cluster using the M-MDS. (See **CLEARING DTC [INSTRUMENT CLUSTER]**.) • Retrieve the instrument cluster DTCs using the M-MDS. (See **DTC INSPECTION [INSTRUMENT CLUSTER]**.) • Is the same DTC displayed?	Yes	Repeat the inspection from Step 1. • If the malfunction recurs, replace the instrument cluster. (See **INSTRUMENT CLUSTER REMOVAL/INSTALLATION**.) Go to the next step.
		No	Go to the next step.
3	**VERIFY IF OTHER DTCs DISPLAYED** • Are any other DTCs displayed?	Yes	Repair or replace the malfunctioning part according to the applicable DTC troubleshooting. (See **DTC TABLE [INSTRUMENT CLUSTER]**.)
		No	DTC troubleshooting completed.

2014 - Mazda3 - Body and Accessories

DTC U3000:41 [INSTRUMENT CLUSTER]

Description	Instrument cluster internal malfunction
Detection condition	• Instrument cluster detects the internal malfunction.
Fail-safe function	Not applicable
Possible cause	• Instrument cluster malfunction
System wiring diagram	Not applicable

Diagnostic Procedure

Step	Inspection		Action
1	**PERFORM DTC INSPECTION AND VERIFY INSTRUMENT CLUSTER MALFUNCTION** • Clear the DTC for the instrument cluster using the M-MDS. (See **CLEARING DTC [INSTRUMENT CLUSTER]**.) • Retrieve the instrument cluster DTCs using the M-MDS. (See **DTC INSPECTION [INSTRUMENT CLUSTER]**.) • Is the same DTC displayed?	Yes	Repeat the inspection from Step 1. • If the malfunction recurs, replace the instrument cluster. (See **INSTRUMENT CLUSTER REMOVAL/INSTALLATION**.) Go to the next step.
		No	Go to the next step.
2	**VERIFY IF OTHER DTCs DISPLAYED** • Are any other DTCs displayed?	Yes	Repair or replace the malfunctioning part according to the applicable DTC troubleshooting. (See **DTC TABLE [INSTRUMENT CLUSTER]**.)
		No	DTC troubleshooting completed.

DTC U3000:41 [INSTRUMENT CLUSTER]

2014 - Mazda3 - Body and Accessories

DTC U3003:16 [INSTRUMENT CLUSTER]

Description	Low power supply voltage input to instrument cluster
Detection condition	• Instrument cluster power supply circuit voltage of **less than 10 V** is detected.
Fail-safe function	Not applicable

Possible cause	• DTCs are stored in the PCM.
	• Battery malfunction
	• Generator malfunction
	• Instrument cluster connector or terminal malfunction
	• Instrument cluster power supply circuit malfunction
	  ▪ Short to ground in wiring harness between METER1 10 A fuse and instrument cluster terminal S
	  ▪ METER1 10 A fuse malfunction
	  ▪ Open circuit in wiring harness between IG1 relay and instrument cluster terminal S
	• Instrument cluster malfunction

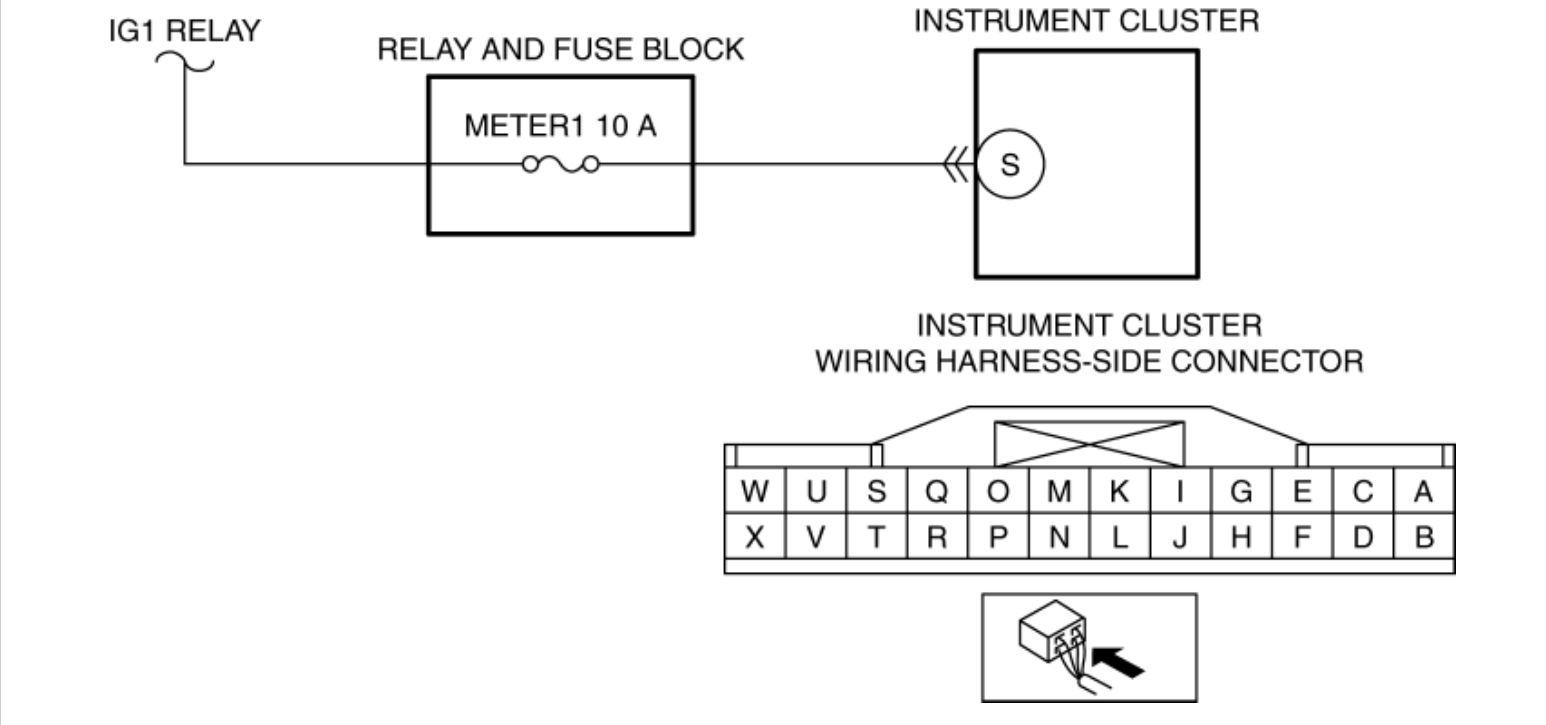

Diagnostic Procedure

Step	Inspection		Action
1	**VERIFY PCM DTCs** • Retrieve the PCM DTCs using the M-MDS. (See **ON-BOARD DIAGNOSTIC TEST [SKYACTIV-G 2.0, SKYACTIV-G 2.5]**.) • Are any DTCs displayed?	Yes	Repair or replace the malfunctioning part according to the applicable DTC troubleshooting. (See **DTC TABLE [SKYACTIV-G 2.0, SKYACTIV-G 2.5]**.)
		No	Go to the next step.
2	**INSPECT BATTERY** • Inspect the battery. (See **BATTERY INSPECTION [SKYACTIV-G 2.0, SKYACTIV-G 2.5]**.) • Is the battery normal?	Yes	Go to the next step.
		No	Recharge or replace the battery, then go to Step 6. (See **BATTERY RECHARGING [SKYACTIV-G 2.0, SKYACTIV-G 2.5]**.) (See **BATTERY REMOVAL/INSTALLATION [SKYACTIV-G 2.0, SKYACTIV-G 2.5]**.)
3	**INSPECT GENERATOR** • Inspect the generator. (See **GENERATOR INSPECTION [SKYACTIV-G 2.0, SKYACTIV-G 2.5 (WITHOUT i-ELOOP)]**.) (See **GENERATOR INSPECTION [SKYACTIV-G 2.0, SKYACTIV-G 2.5 (WITH i-ELOOP)]**.) • Is the generator normal?	Yes	Go to the next step.
		No	Replace the generator, then go to Step 6. (See **GENERATOR REMOVAL/INSTALLATION [SKYACTIV-G 2.0, SKYACTIV-G 2.5 (WITHOUT i-ELOOP)]**.) (See **GENERATOR REMOVAL/INSTALLATION [SKYACTIV-G 2.0, SKYACTIV-G 2.5 (WITH i-ELOOP)]**.)
	INSPECT INSTRUMENT CLUSTER		

4	**CONNECTOR CONDITION** • Switch the ignition off. • Disconnect the negative battery cable. (See **NEGATIVE BATTERY CABLE DISCONNECTION/CONNECTION [SKYACTIV-G 2.0, SKYACTIV-G 2.5]**.) • Disconnect the instrument cluster connector. • Inspect the connector engagement and connection condition and inspect the terminals for damage, deformation, corrosion, or disconnection. • Is the connector normal?	Yes	Go to the next step.
		No	Repair or replace the connector, then go to Step 6.
5	**VERIFY INSTRUMENT CLUSTER POWER SUPPLY VOLTAGE** • Always reconnect all disconnected connectors. • Reconnect the negative battery cable. (See **NEGATIVE BATTERY CABLE DISCONNECTION/CONNECTION [SKYACTIV-G 2.0, SKYACTIV-G 2.5]**.) • Display the PID VPWR using the M-MDS. (See **PID/DATA MONITOR INSPECTION [INSTRUMENT CLUSTER]**.) • Is the voltage **B+**?	Yes	Go to the next step.
		No	Inspect the METER1 10 A fuse. • If the fuse is blown: ▪ Refer to the wiring diagram and verify whether or not there is a common connector between METER1 10 A fuse and instrument cluster terminal S. **If there is a common connector:** • Determine the malfunctioning part by inspecting the common connector and the terminal for corrosion, damage, or pin disconnection, and the common wiring harness for a short to ground. • Repair or replace the malfunctioning part.

			If there is no common connector: • Repair or replace the wiring harness which has a short to ground. • Replace the fuse. • If the fuse is damaged: ▪ Replace the fuse. • If the fuse is normal: ▪ Refer to the wiring diagram and verify whether or not there is a common connector between IG1 relay and instrument cluster terminal S. **If there is a common connector:** • Determine the malfunctioning part by inspecting the common connector and the terminal for corrosion, damage, or pin disconnection, and the common wiring harness for an open circuit. • Repair or replace the malfunctioning part. **If there is no common connector:** • Repair or replace the wiring harness which has an open circuit. Go to the next step.
6	**VERIFY THAT REPAIRS HAVE BEEN COMPLETED**	Yes	Repeat the inspection from Step 1.

	• Always reconnect all disconnected connectors. • Reconnect the negative battery cable. (See **NEGATIVE BATTERY CABLE DISCONNECTION/CONNECTION [SKYACTIV-G 2.0, SKYACTIV-G 2.5]**.) • Clear the DTC for the instrument cluster using the M-MDS. (See **CLEARING DTC [INSTRUMENT CLUSTER]**.) • Retrieve the instrument cluster DTCs using the M-MDS. (See **DTC INSPECTION [INSTRUMENT CLUSTER]**.) • Is the same DTC displayed?		• If the malfunction recurs, replace the instrument cluster. (See **INSTRUMENT CLUSTER REMOVAL/INSTALLATION**.) Go to the next step.
		No	Go to the next step.
7	**VERIFY IF OTHER DTCs DISPLAYED** • Are any other DTCs displayed?	Yes	Repair or replace the malfunctioning part according to the applicable DTC troubleshooting. (See **DTC TABLE [INSTRUMENT CLUSTER]**.)
		No	DTC troubleshooting completed.

2014 - Mazda3 - Body and Accessories

PID/DATA MONITOR INSPECTION [INSTRUMENT CLUSTER]

1. Connect the M-MDS to the DLC-2.

2. After the vehicle is identified, select the following items from the initialization screen of the M-MDS.

    a. Select “DataLogger”.

    b. Select “Modules”.

    c. Select “IC”.

3. Select the applicable PID from the PID table.

4. Verify the PID data according to the directions on the screen.

NOTE:

- The PID data screen function is used for monitoring the calculated value of input/output signals in the module. Therefore, if the monitored value of the output parts is not within the specification, it is necessary to inspect the monitored value of input parts corresponding to the applicable output part control. In addition, because the system does not display an output part malfunction as an abnormality in the monitored value, it is necessary to inspect the output parts individually.
- When detecting DTCs, PIDs related to a malfunctioning system may not display even if the module is normal. Therefore, if a PID is not displayed, it is necessary to verify the DTC, perform malfunction diagnosis of the DTC that was detected, and do repairs.

2014 - Mazda3 - Body and Accessories

PID/DATA MONITOR TABLE [INSTRUMENT CLUSTER]

—: Not applicable

PID	Unit/Operation	Data contents	Module control terminal
AFS_ST*1	Off/On	• Off: AFS not operated • On: AFS operated	B, D (CAN)
AT_MAN_M_SW*2	Off/On/Unknown	• Off: M position switch is off. • On: M position switch is on. • Unknown: M position switch signal is not determined.	H (M position switch signal)
AT_S_DWN_SW*2	Off/On/Unknown	• Off: Down switch is off. • On: Down switch is on. • Unknown: Down switch signal is not determined.	G (Down switch signal)
AT_S_UP_SW*2	Off/On/Unknown	• Off: Up switch is off. • On: Up switch is on. • Unknown: Up switch signal is not determined.	F (UP switch signal)
BSM/RVM_SW*3	Off/On	• Off: BSM OFF switch is off. • On: BSM OFF switch is on.	T, V (BSM OFF switch operation signal)

DSC_OFF_SW	Off/On	• Off: DSC OFF switch is off. • On: DSC OFF switch is on.	T, V (DSC OFF switch operation signal)
FUEL_GAUGE	L	Displays fuel level detected by the fuel gauge	—
FUEL_SEN_M	ohm	Displays fuel gauge sender unit resistance value	—
FUEL_SEN_S	ohm	**NOTE:** • Displays in the M-MDS but it does not operate.	—
I_ILLUMI_M	Off (Day)/On (Night)	• Off (Day): TNS switch is off. • On (Night): TNS switch is on.	B, D (CAN)
I-ST_OFF_SW	Off/On	**NOTE:** • Displays in the M-MDS but it does not operate.	—
LDWS_ON_SW*4	Off/On	• Off: LDWS switch is off. • On: LDWS switch is on.	T, V (LDWS switch operation signal)
MULTI_SW_ST	O.K./FAULT	• O.K.: Cluster switch is normal. • FAULT: Cluster switch is malfunctioning.	T, V (Cluster switch operation signal)
ODO_CNT	km, ft, mi	Displays rolling count of the odometer	—
P_BRAKE_SW	Off/On	• Off: Parking brake not applied • On: Parking brake applied	X (Parking brake switch signal)

R_GEAR_SW	Off/On	**ATX** • Off: Selector lever is in other than R position. • On: Selector lever is in R position. **MTX** • Off: Back-up light switch is off. • On: Back-up light switch is on.	B, D (CAN)
R_LMP	Off/On/Unknown/Fault	• Off: Back-up light is turned off. • On: Back-up light is turned on. • Unknown: Back-up light signal is not determined. • Fault: Back-up light malfunction	B, D (CAN)
SPEEDOMTR	KPH, MPH	Displays vehicle speed (**100 %** = **300 km/h {186 mph}**)	—
TACHOMTR*5	RPM	Displays engine speed (**100 %** = **10,000 rpm**)	—
TOTAL_TIME	hh:mm:ss	Displays cumulative elapsed time since vehicle completion	—
TPMS_CAL_SW*6	Off/On	• Off: Tire pressure monitoring system (TPMS) set switch is off. • On: Tire pressure monitoring system (TPMS) set switch is on.	T, V (Tire pressure monitoring system (TPMS) set switch status signal)
VPWR	V	Displays power supply voltage	S, U (Power supply)

*1

With AFS

*2

ATX

*3

With blind spot monitoring (BSM) system

*4

With lane departure warning system (LDWS)

*5

Type A or type B instrument cluster only

*6

With tire pressure monitoring system (TPMS)

2014 - Mazda3 - Body and Accessories

ACTIVE COMMAND MODES INSPECTION [INSTRUMENT CLUSTER]

1. Connect the M-MDS to the DLC-2.

2. After the vehicle is identified, select the following items from the initialization screen of the M-MDS.

    a. Select “DataLogger”.

    b. Select “Modules”.

    c. Select “IC”.

3. Select the simulation items from the PID table.

4. Perform the active command modes function, inspect the operations for each parts.

    - If the operation of output parts cannot be verified after the active command mode inspection is performed, this could indicate the possibility of an open or short circuit, sticking, or operation malfunction in the output parts.

2014 - Mazda3 - Body and Accessories

ACTIVE COMMAND MODES TABLE [INSTRUMENT CLUSTER]

Simulation item	Unit/Operation	Data contents	Output part name
ALARM	On/Off	• On: Warning alarm sounds. • Off: Warning alarm does not sound.	Warning alarm (instrument cluster)
LCD_SEG	Off/On	• Off: Turns off the LCD. • On: Fully displays LCD.	LCD
SPEEDOMTR*1	Off/60 Km/h/120 Km/h	• Off: Speedometer needle moves to the bottommost position. • 60 Km/h: Speedometer needle moves to **approx. 57—63 km/h {35—40 mph}**. • 120 Km/h: Speedometer needle moves to **approx. 116—124 km/h {72—77 mph}**.	Speedometer (instrument cluster)
TACHOMTR*2	Off/3000 RPM/6000 RPM	• Off: Tachometer needle moves to bottommost position. • 3000 RPM: Tachometer needle moves to **approx. 3,050 rpm**. • 6000 RPM: Tachometer needle moves to **approx. 6,100 rpm**.	Tachometer (instrument cluster)
WL+IL	Off/On	• Off: Turns off all warning lights, indicator lights. • On: Illuminates all warning lights, indicator lights.	Warning lights, indicator lights (instrument cluster)

*1 **Analog speedometer type**

*2

Analog tachometer type

2014 - Mazda3 - Body and Accessories

ON-BOARD DIAGNOSTIC WIRING DIAGRAM [AUDIO]

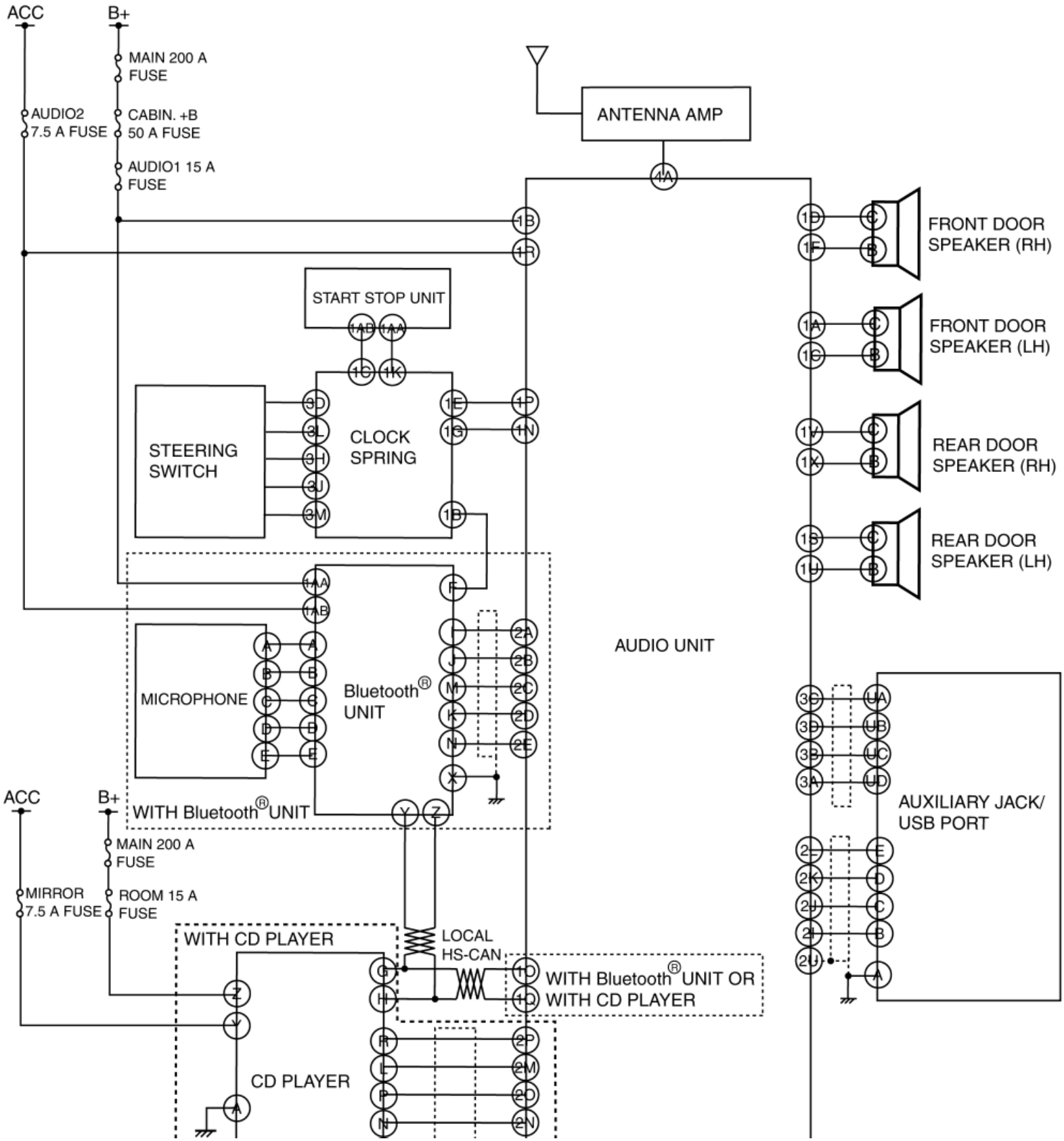

ON-BOARD DIAGNOSTIC WIRING DIAGRAM [AUDIO]

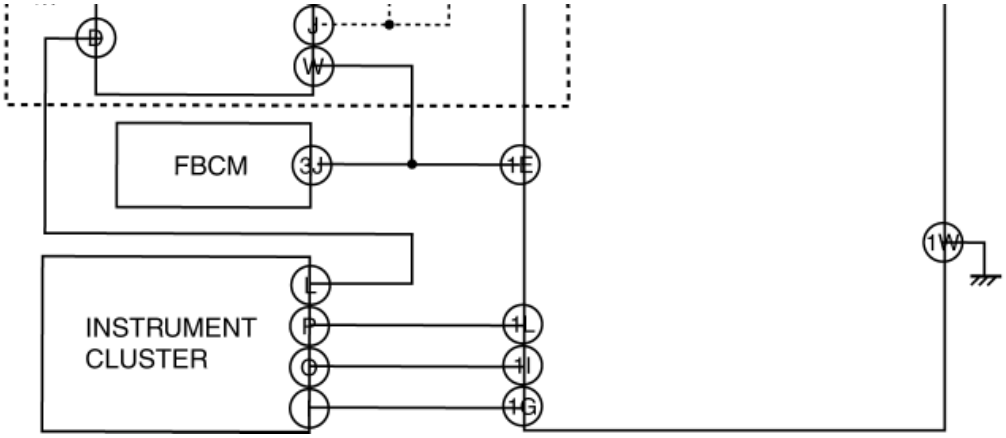

2014 - Mazda3 - Body and Accessories

FOREWORD [AUDIO]

- If there is any vehicle malfunction complaint lodged by a customer, perform malfunction diagnosis according to the troubleshooting procedure.

Troubleshooting Procedure

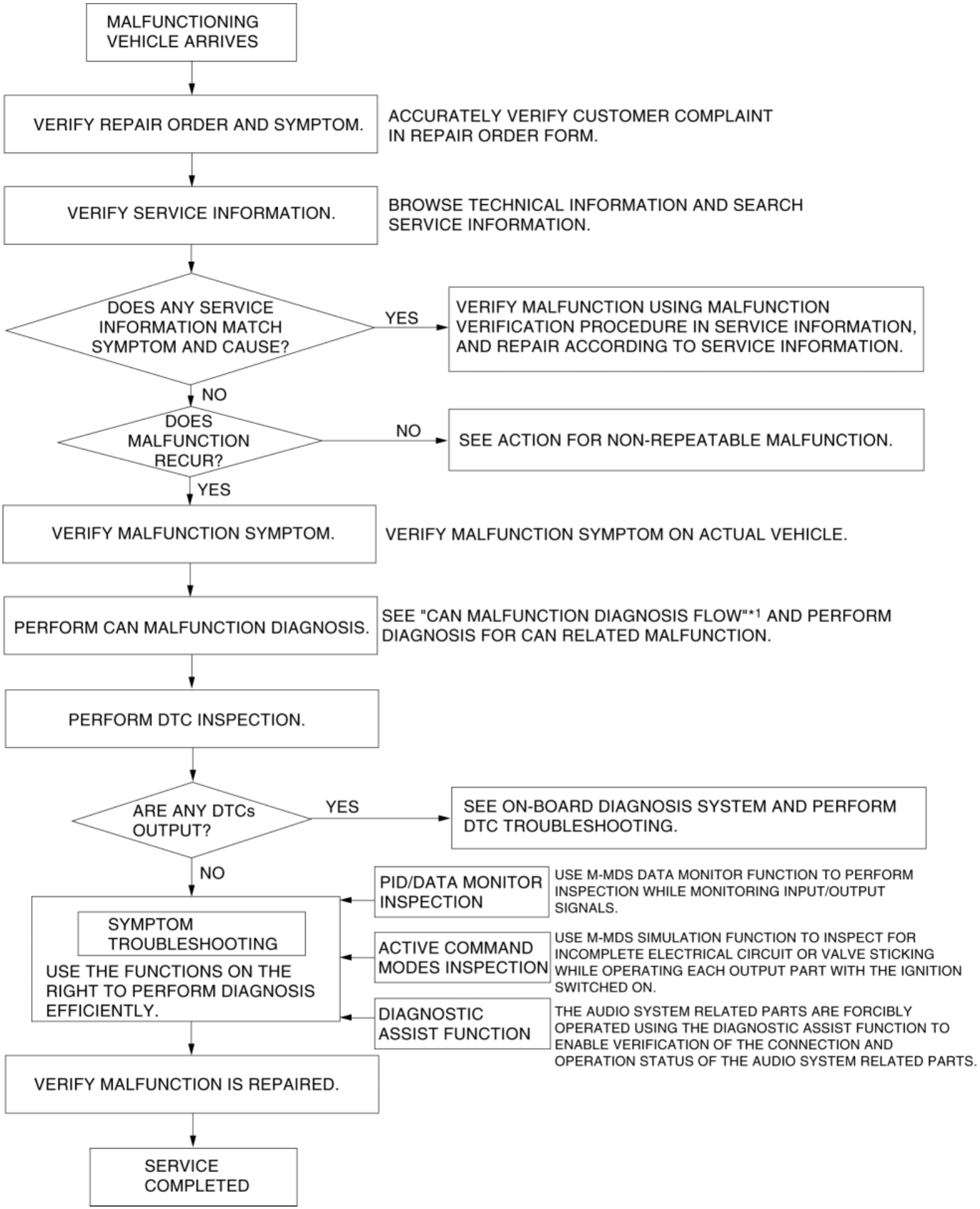
MALFUNCTIONING VEHICLE ARRIVES
VERIFY REPAIR ORDER AND SYMPTOM.
ACCURATELY VERIFY CUSTOMER COMPLAINT IN REPAIR ORDER FORM.
VERIFY SERVICE INFORMATION.
BROWSE TECHNICAL INFORMATION AND SEARCH SERVICE INFORMATION.
DOES ANY SERVICE INFORMATION MATCH SYMPTOM AND CAUSE?
YES
VERIFY MALFUNCTION USING MALFUNCTION VERIFICATION PROCEDURE IN SERVICE INFORMATION, AND REPAIR ACCORDING TO SERVICE INFORMATION.
NO
DOES MALFUNCTION RECUR?
NO
SEE ACTION FOR NON-REPEATABLE MALFUNCTION.
YES
VERIFY MALFUNCTION SYMPTOM.
VERIFY MALFUNCTION SYMPTOM ON ACTUAL VEHICLE.
PERFORM CAN MALFUNCTION DIAGNOSIS.
SEE "CAN MALFUNCTION DIAGNOSIS FLOW"*1 AND PERFORM DIAGNOSIS FOR CAN RELATED MALFUNCTION.
PERFORM DTC INSPECTION.
ARE ANY DTCs OUTPUT?
YES
SEE ON-BOARD DIAGNOSIS SYSTEM AND PERFORM DTC TROUBLESHOOTING.
NO
SYMPTOM TROUBLESHOOTING
USE THE FUNCTIONS ON THE RIGHT TO PERFORM DIAGNOSIS EFFICIENTLY.
PID/DATA MONITOR INSPECTION
USE M-MDS DATA MONITOR FUNCTION TO PERFORM INSPECTION WHILE MONITORING INPUT/OUTPUT SIGNALS.
ACTIVE COMMAND MODES INSPECTION
USE M-MDS SIMULATION FUNCTION TO INSPECT FOR INCOMPLETE ELECTRICAL CIRCUIT OR VALVE STICKING WHILE OPERATING EACH OUTPUT PART WITH THE IGNITION SWITCHED ON.
DIAGNOSTIC ASSIST FUNCTION
THE AUDIO SYSTEM RELATED PARTS ARE FORCIBLY OPERATED USING THE DIAGNOSTIC ASSIST FUNCTION TO ENABLE VERIFICATION OF THE CONNECTION AND OPERATION STATUS OF THE AUDIO SYSTEM RELATED PARTS.
VERIFY MALFUNCTION IS REPAIRED.
SERVICE COMPLETED

*1

CONTROLLER AREA NETWORK (CAN) MALFUNCTION DIAGNOSIS FLOW

Action for non-repeatable malfunction

- If the malfunction does not recur, verify the malfunction cause by performing the following actions:
  - Verify that a DTC has been recorded in the memory. (See **DTC INSPECTION [AUDIO]**.)
  - Based on the repair order form, attempt to drive the vehicle or perform tests to replicate the malfunction, record the data at that time, and detect the malfunction cause.
  - Shake the wiring harness or connector of the electrical component which is suspected to be the cause of the malfunction, and inspect for occurrence of any malfunction or DTCs.

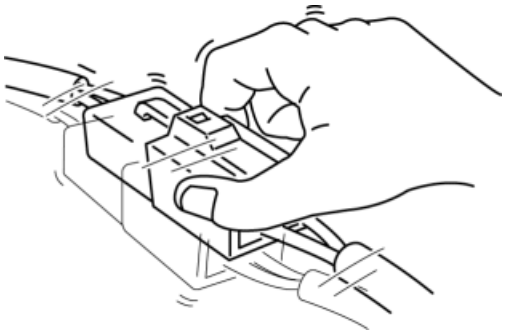

  - Inspect the female terminals on the connector of the electric component which is suspected to be the cause of the malfunction for poor connection.

DTC Inspection Note

The audio system code can be verified using the on-board diagnostic test mode to activate the on-board diagnostic function by operating audio unit. (See **DTC INSPECTION [AUDIO]**.)

2014 - Mazda3 - Body and Accessories

DTC INSPECTION [AUDIO]

NOTE:

- The audio system DTC can be verified using the on-board diagnostic test mode to activate the on-board diagnostic function by operating audio unit.
- All of DTCs displayed by the DTC inspection is recorded in the audio repair order form.
- If an audio unit malfunction is suspected, select For Audio below.
- If a Bluetooth® unit malfunction is suspected, select For Bluetooth® Unit below.
- If a CD player malfunction is suspected, select For CD Player below.

For Audio

1. Switch the ignition to ACC or ON (engine off or on).

2. Turn the audio unit power off.

3. While pressing the POWER/VOLUME button, press the MEDIA/SCAN button and FM/AM/CLOCK button for **3 s or more**.

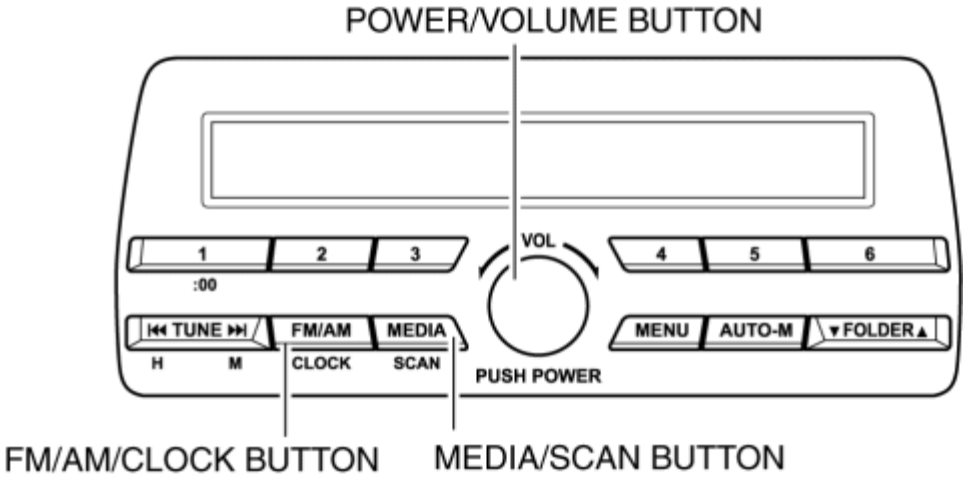

- If a DTC is displayed, repair the malfunctioning location according to the applicable DTC troubleshooting. (See **DTC TABLE [AUDIO]**.)

NOTE:

- A maximum of 3 DTCs are displayed.
- If several DTCs are displayed, press the TUNE button to switch the display.
- If there are no DTCs, "No Err" is displayed.

4. After completion of repairs, clear all DTCs are stored in the audio unit. (See **CLEARING DTC [AUDIO]**.)

For Bluetooth® Unit

1. Switch the ignition to ACC or ON (engine off or on).

2. While pressing the POWER/VOLUME button, press the PRESET 4 button and FOLDER button (down) for **3 s or more**.

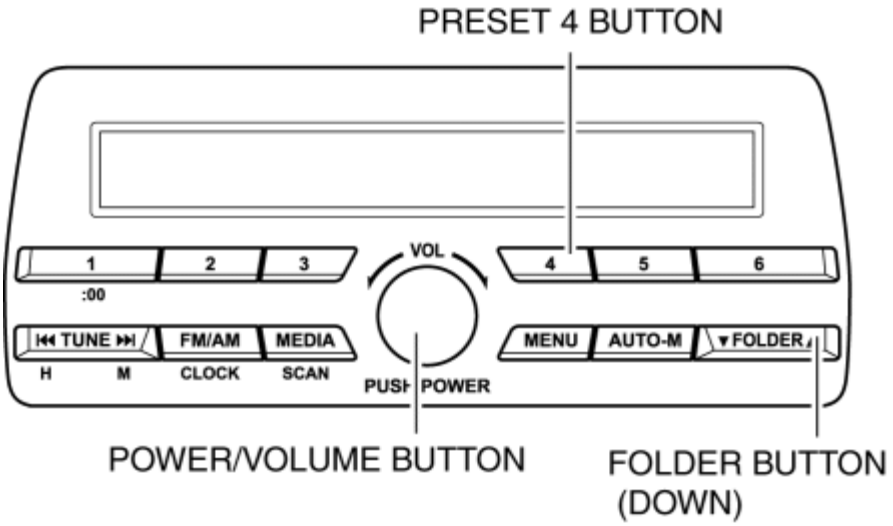

- If a DTC is displayed, repair the malfunctioning location according to the applicable DTC troubleshooting. (See **DTC TABLE [AUDIO]**.)

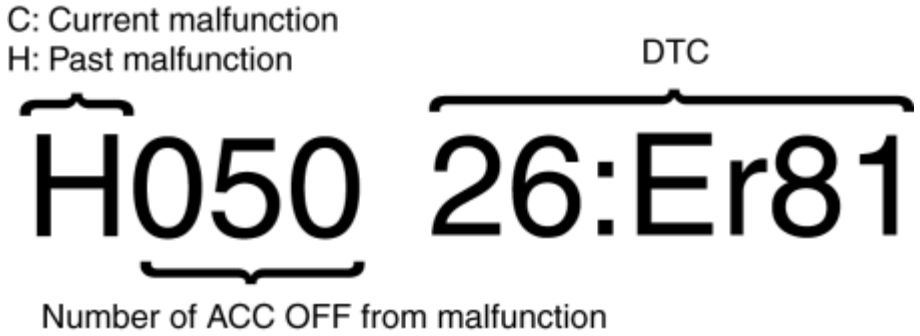

NOTE:

- A maximum of 12 DTCs can be displayed.
- If several DTCs are displayed, press the TUNE button to switch the display.
- If there are no DTCs, "No Err" is displayed.
- If the TUNE button (down) is operated while the last DTC is displayed, the software version is displayed.
- If the TUNE button (down) is operated while the software version is displayed, the connected unit information is displayed.

3. After completion of repairs, clear all DTCs stored in the Bluetooth® unit. (See **CLEARING DTC [AUDIO]**.)

CD Player

1. Switch the ignition to ACC or ON (engine off or on).

2. While pressing the AUTO-M button, press the PRESET 5 button for **3 s or more**.

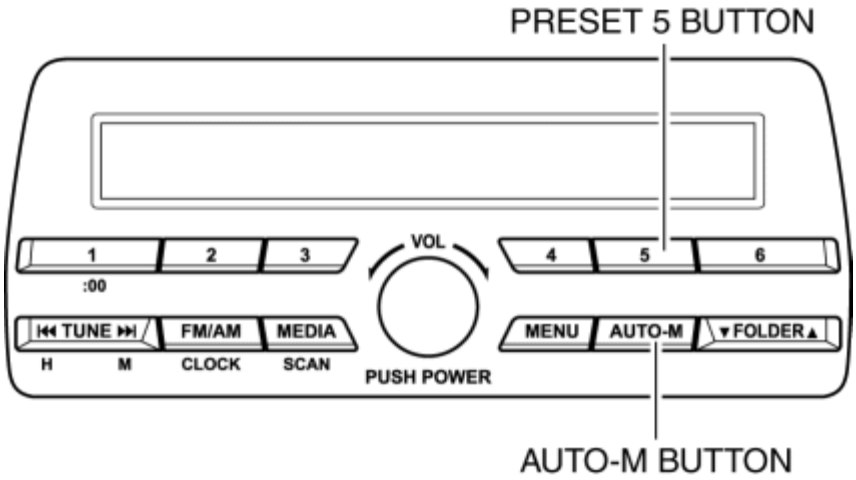

- If a DTC is displayed, repair the malfunctioning location according to the applicable DTC troubleshooting.

NOTE:

- A maximum of 3 DTCs can be displayed.
- If several DTCs are displayed, press the TUNE button to switch the display.
- If there are no DTCs, "No Err" is displayed.
- If the TUNE button (down) is operated while the last DTC or "No Err" is displayed, the software version of the CD player is displayed.

3. After completion of repairs, clear all DTCs stored in the CD player. (See **CLEARING DTC [AUDIO]**.)

2014 - Mazda3 - Body and Accessories

SUPPLIER IDENTIFICATION PROCEDURE [AUDIO]

NOTE:

- The supplier varies depending on the units. When asking the supplier (service center) for repair or replacement, identify the supplier and fill in the Audio Repair Order Form using the following procedures.

Identification with the label

1. Disconnect the negative battery cable. (See **NEGATIVE BATTERY CABLE DISCONNECTION/CONNECTION [SKYACTIV-G 2.0, SKYACTIV-G 2.5]**.)
2. Remove the glove compartment. (See **GLOVE COMPARTMENT REMOVAL/INSTALLATION**.)
3. Remove the decoration panel. (See **DECORATION PANEL REMOVAL/INSTALLATION**.)
4. Remove the audio unit. (See **AUDIO UNIT REMOVAL/INSTALLATION**.)
5. Verify the supplier name by referring to the label attached to the unit.

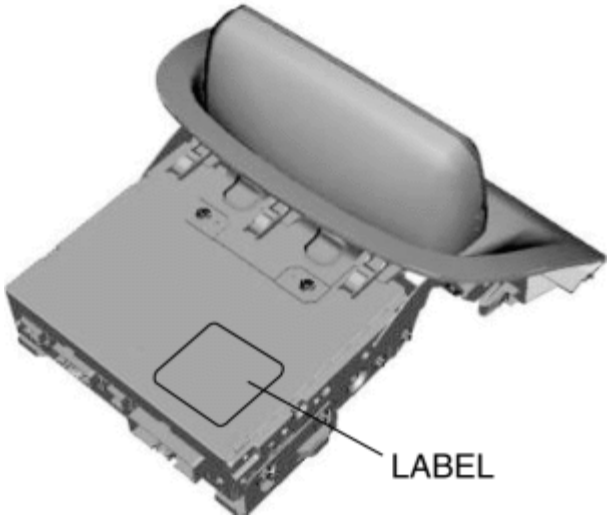

NOTE:

- The supplier varies depending on the units. When asking the supplier (service center) for repair or replacement, identify the supplier and fill in the Audio Repair Order Form using the following procedures.

Verify Using the Diagnostic Assist Function

1. Switch the ignition to ACC or ON (engine off or on).

2. While pressing the POWER/VOLUME button, press PRESET 5 button for **3 s or more**.

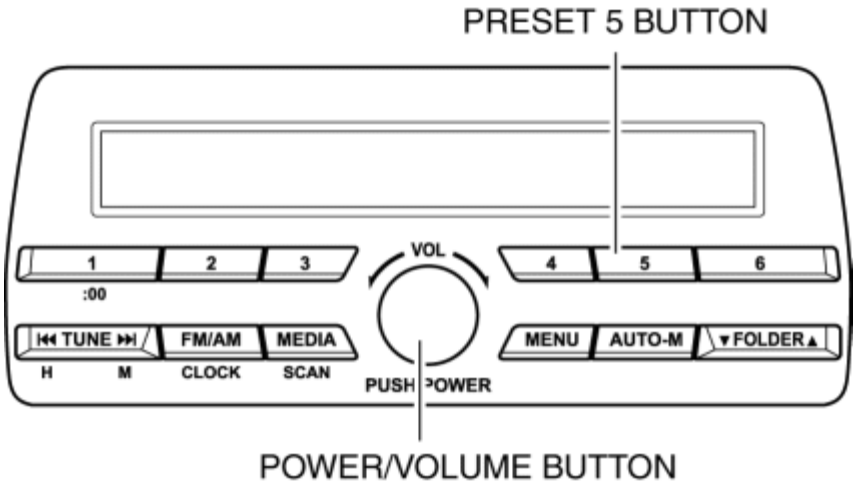

3. Identify the supplier code by referring to the display.

Supplier code	Supplier name
01	—
02	Panasonic
03	CLARION
04	PIONEER
05	Visteon
06	DESAY

NOTE:

- DTCs can also be identified from the DTC displays screen.

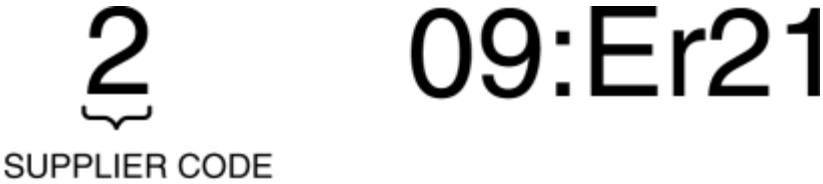

4. Switch the ignition off to end the diagnostic assist function.

2014 - Mazda3 - Body and Accessories

CLEARING DTC [AUDIO]

NOTE:

- The audio system DTC can be verified using the on-board diagnostic test mode to activate the on-board diagnostic function by operating the audio unit.
- Before clearing the memory, be sure to enter all of the DTCs displayed by the DTC inspection in the Audio Repair Order Form.
- If an audio unit DTC is cleared, select For Audio below.
- If a Bluetooth® unit DTC is cleared, select For Bluetooth® Unit below.
- If a CD player DTC is cleared, select For CD Player below.

For Audio

1. DTCs are displayed. (See **DTC INSPECTION [AUDIO]**.)
2. While pressing the POWER/VOLUME button, press the MENU button for **3 s or more**.

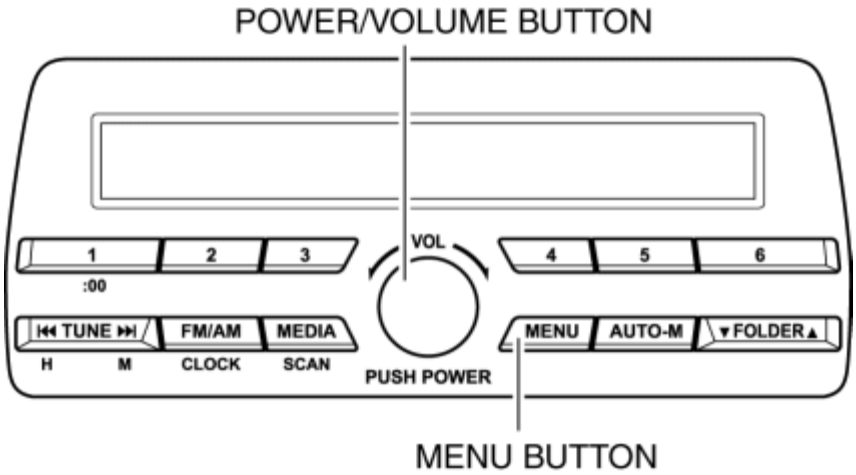

NOTE:

- After clearing the DTCs, "No Err" is displayed and a beep sounds.

3. Switch the ignition off to end the on-board diagnostic test mode.

For Bluetooth® Unit

1. DTCs are displayed. (See **DTC INSPECTION [AUDIO]**.)
2. While pressing the AUTO-M button, press the PRESET 4 button for **3 s or more**.

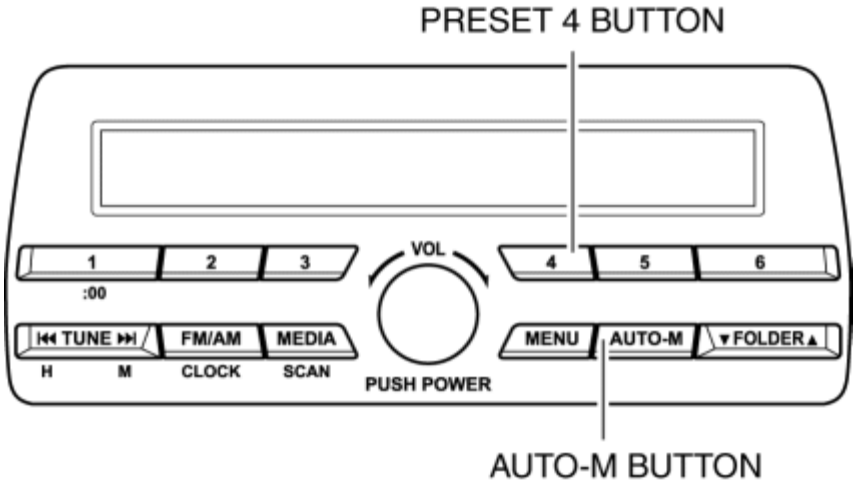

NOTE:

- After clearing, "No Err" is displayed.

3. Switch the ignition off to end the on-board diagnostic test mode.

CD Player

1. DTCs are displayed. (See **DTC INSPECTION [AUDIO]**.)
2. While pressing the AUTO-M button, press the PRESET6 button for **3 s or more**.

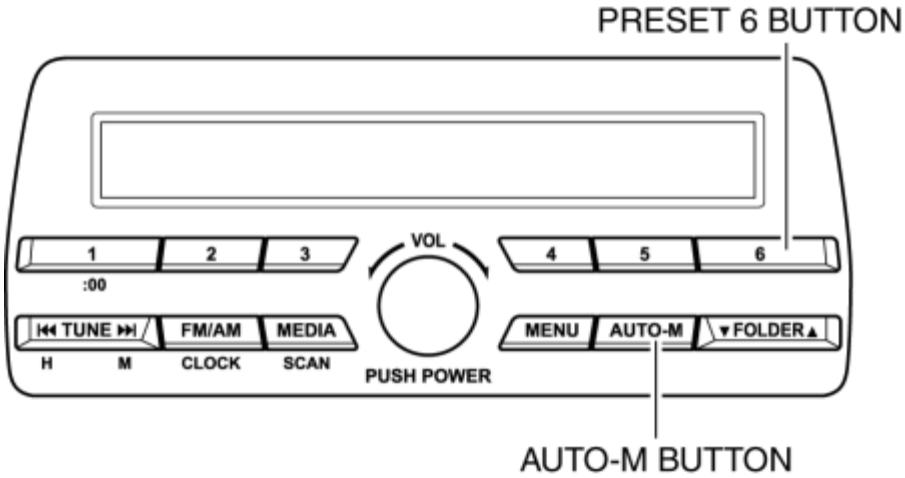

NOTE:

- After clearing the DTCs, "No Err" is displayed.

3. Switch the ignition off to end the diagnostic assist function.

2014 - Mazda3 - Body and Accessories

DTC TABLE [AUDIO]

NOTE:

- "iPod" is a registered trademark of Apple Inc. in the United States and other countries.
- If an audio unit DTC is indicated, refer to For Audio below.
- If a Bluetooth® unit DTC is indicated, refer to For Bluetooth® Unit below.
- If a CD player DTC is indicated, refer to For CD Player below.

× **Applicable**

— **Not applicable**

For Audio

DTC	Warning / indicator light	Description	Fail-safe	Drive cycle	Memory function	Reference
09:Er20	—	Low voltage input from battery	—	—	×	(See **DTC: 09:Er20 [AUDIO]**.)
09:Er21	—	Audio unit internal malfunction	—	—	×	(See **DTC: 09:Er21 [AUDIO]**.)
16:Er12	—	CAN system communication error	—	—	×	(See **DTC: 16:Er12, 26:Er81 [AUDIO]**.)
28:Er01	—	USB mechanism malfunction	—	—	×	(See **DTC: 28:Er01, 28:Er09 [AUDIO]**.)
28:Er09	—	No USB playback function file/track	—	—	×	
29:Er01	—	iPod mechanism malfunction	—	—	×	(See **DTC: 29:Er01, 29:Er09 [AUDIO]**.)
29:Er09	—	No iPod playback file/track	—	—	×	
No Err	—	DTCs are not stored.	—	—	—	—

For Bluetooth® unit

DTC	Warning / indicator light	Description	Fail-safe	Drive cycle	Memory function	Reference
26:Er81	—	CAN system communication error	—	—	×	(See **DTC: 16:Er12, 26:Er81 [AUDIO]**.)
26:Er82	—	Microphone circuit malfunction	—	—	×	(See **DTC: 26:Er82 [AUDIO]**.)
26:Er83	—	Microphone circuit malfunction	—	—	×	(See **DTC: 26:Er83 [AUDIO]**.)
26:Er84	—	Microphone circuit malfunction	—	—	×	(See **DTC: 26:Er84 [AUDIO]**.)
26:Er85	—	Steering switch circuit malfunction	—	—	×	(See **DTC: 26:Er85 [AUDIO]**.)
26:Er86	—	Bluetooth® unit internal malfunction	—	—	×	(See **DTC: 26:Er86 [AUDIO]**.)
No Err	—	DTCs are not stored.	—	—	—	—

For CD player

DTC	Warning / indicator light	Description	Fail-safe	Drive cycle	Memory function	Reference
30:Er01	—	CD player mechanism malfunction	—	—	×	(See **DTC: 30:Er01 [AUDIO]**.)
30:Er07	—	CD player data read error	—	—	×	(See **DTC: 30:Er07 [AUDIO]**.)
30:Er30	—	CD player temperature abnormality	—	—	×	(See **DTC: 30:Er30 [AUDIO]**.)
No Err	—	DTCs are not stored.	—	—	—	—

2014 - Mazda3 - Body and Accessories

DTC: 16:Er12, 26:Er81 [AUDIO]

Description	CAN system communication error

Detection condition	• 16:Er12
	  ▪ The audio unit cannot receive CAN signal.
	• 26:Er81
	  ▪ The audio unit cannot receive CAN signal from the Bluetooth® unit.

Fail-safe function	• 16:Er12
	  ▪ Not applicable
	• 26:Er81
	  ▪ Not applicable

Possible cause	• Audio unit connector or terminal malfunction
	• Bluetooth® unit connector or terminal malfunction
	• CD player connector or terminal malfunction
	• Connector C-36 connector or terminal malfunction
	• Short to power supply in wiring harness between the following terminals:
	  ▪ Audio unit terminal 1O and Bluetooth® unit terminal Y
	  ▪ Audio unit terminal 1O and CD player terminal G
	• Short to ground in wiring harness between the following terminals:
	  ▪ Audio unit terminal 1Q and Bluetooth® unit terminal Z
	  ▪ Audio unit terminal 1Q and CD player terminal H
	• Short circuit in the following wiring harnesses:
	  ▪ Audio unit terminal 1O and Bluetooth® unit terminal Y
	  ▪ Audio unit terminal 1Q and Bluetooth® unit terminal Z
	  ▪ Audio unit terminal 1O and CD player terminal G
	  ▪ Audio unit terminal 1Q and CD player terminal H
	• Open circuit in wiring harness between the following terminals:
	  ▪ Bluetooth® unit terminal Y and connector C-36
	  ▪ Bluetooth® unit terminal Z and connector C-36
	  ▪ CD player terminal G and connector C-36
	  ▪ CD player terminal H and connector C-36
	  ▪ Audio unit terminal 1O and connector C-36
	  ▪ Audio unit terminal 1Q and connector C-36
	• CD player malfunction
	• Bluetooth® unit malfunction
	• Audio unit malfunction

: INSTRUMENT PANEL HARNESS

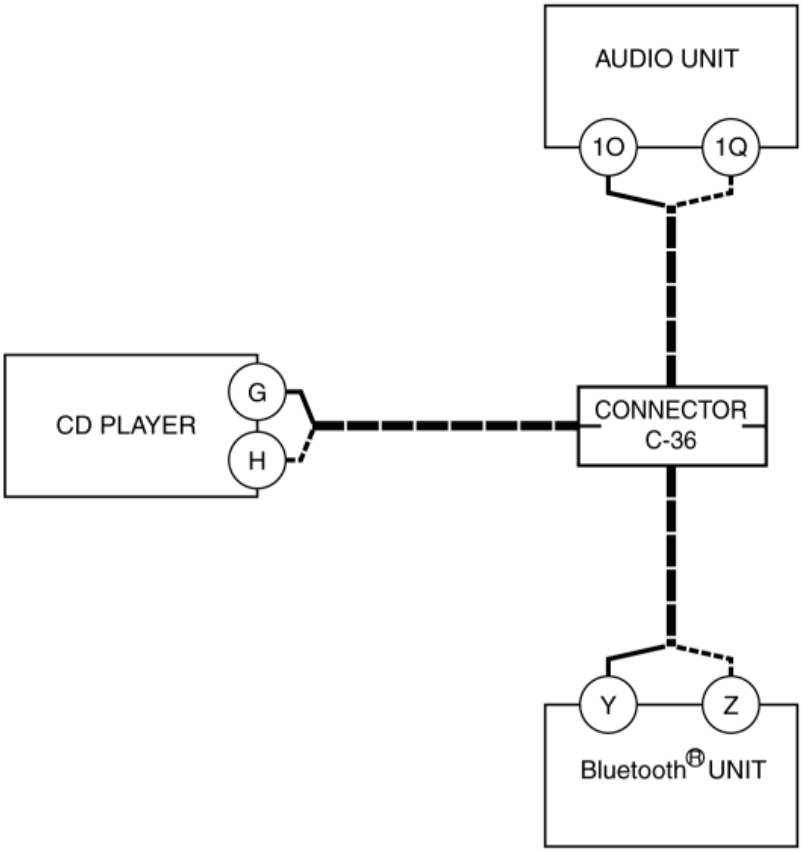

AUDIO UNIT
WIRING HARNESS-SIDE CONNECTOR

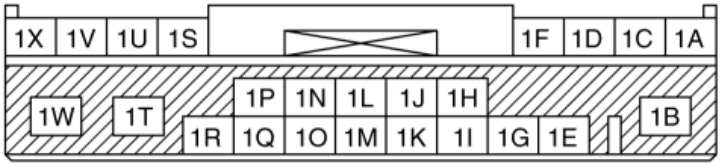

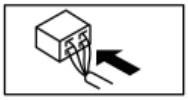

Bluetooth® UNIT
WIRING HARNESS-SIDE CONNECTOR

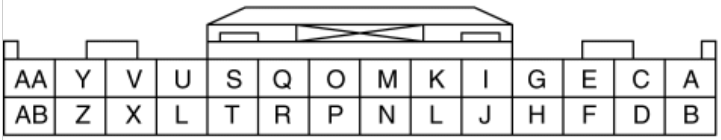

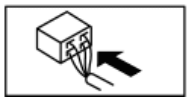

CD PLAYER
WIRING HARNESS-SIDE CONNECTOR

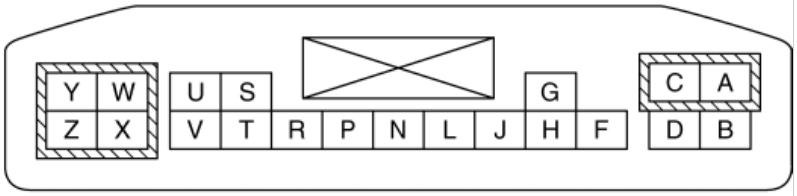

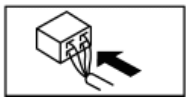

CAUTION:

- When disconnecting the connector, verify that there is no looseness, damage, deformation, corrosion, or poor connection of the connector terminals.

Diagnostic Procedure

Step	Inspection		Action
1	**INSPECT FOR SHORT TO POWER SUPPLY IN CAN_H SIDE CIRCUIT OF PRIVATE-CAN** • Measure the voltage between audio unit terminal 1O (PRIVATE-CAN CAN_H side) and body ground. • Is the voltage **B+**? **NOTE:** • If a short to power supply other than the B+ power supply has occurred, a constant voltage other than B+ can be measured.	Yes	A short to power supply in CAN_H side of PRIVATE-CAN has occurred. Go to Step 5.
		No	Go to the next step.
2	**INSPECT FOR SHORT TO GROUND IN CAN_L SIDE CIRCUIT OF PRIVATE-CAN** • Measure the voltage between audio unit terminal 1Q and body ground. • Is the voltage **0 V**?	Yes	A short to ground in CAN_L side of PRIVATE-CAN has occurred. Go to Step 8.
		No	Go to the next step.
3	**INSPECT BETWEEN PRIVATE-CAN_H AND CAN_L SIDES FOR SHORT BETWEEN CIRCUITS** • Inspect for continuity at the following terminals: ▪ Audio unit terminal 1O ▪ Audio unit terminal 1Q • Is there continuity?	Yes	A short between circuits has occurred in PRIVATE-CAN. Go to Step 11.
		No	Go to the next step.
4	**DETERMINE OPEN CIRCUIT LOCATION** • Clear the audio unit DTCs. (See **CLEARING DTC [AUDIO]**.) • Switch the ignition ON (engine off or on) and wait for **12 s or more**. • Perform the audio unit DTC inspection. (See **DTC INSPECTION [AUDIO]**.) • Are any DTCs of the following displayed? ▪ 16:Er12 ▪ 26:Er81	Yes	16:Er12 is displayed • Go to Step 14. 26:Er81 is displayed • Go to Step 17.
		No	Go to Step 20.
5	**INSPECT WIRING HARNESS FOR SHORT TO POWER SUPPLY** • Switch the ignition off. • Disconnect the negative battery cable. (See **NEGATIVE BATTERY CABLE DISCONNECTION/CONNECTION [SKYACTIV-G 2.0, SKYACTIV-G 2.5]**.) • Disconnect the following connectors: ▪ Audio unit ▪ Bluetooth® unit ▪ CD player ▪ Connector C-36	Yes	Go to the next step.
		No	Repair or replace the wiring harness which is shorted to power supply, then go to Step 19.

	• Connect the negative battery cable. (See **NEGATIVE BATTERY CABLE DISCONNECTION/CONNECTION [SKYACTIV-G 2.0, SKYACTIV-G 2.5]**.) • Switch the ignition ON (engine off or on). • Measure the voltage at the following terminals (wiring harness-side). ▪ Audio unit terminal 1O ▪ Bluetooth® unit terminal Y ▪ CD player terminal G • Is the voltage **0 V**?		
6	**PERFORM DTC INSPECTION AND VERIFY IF MALFUNCTIONING LOCATION IS CD PLAYER** • Always reconnect all disconnected connectors. • Connect the negative battery cable. (See **NEGATIVE BATTERY CABLE DISCONNECTION/CONNECTION [SKYACTIV-G 2.0, SKYACTIV-G 2.5]**.) • Clear the audio unit DTCs. (See **CLEARING DTC [AUDIO]**.) • Switch the ignition ON (engine off or on) and wait for **12 s or more**. • Perform the audio unit DTC inspection. (See **DTC INSPECTION [AUDIO]**.) • Is the same DTC displayed?	Yes	Replace the CD player, then go to the next step. (See **CD PLAYER REMOVAL**.) (See **CD PLAYER INSTALLATION**.)
		No	Go to Step 20.
7	**PERFORM DTC INSPECTION AND VERIFY IF MALFUNCTIONING LOCATION IS Bluetooth® UNIT** • Clear the audio unit DTCs. (See **CLEARING DTC [AUDIO]**.) • Switch the ignition ON (engine off or on) and wait for **12 s or more**. • Perform the audio unit DTC inspection. (See **DTC INSPECTION [AUDIO]**.) • Is the same DTC displayed?	Yes	Replace the Bluetooth® unit, then go to Step 19. (See **Bluetooth® UNIT REMOVAL/INSTALLATION**.)
		No	Go to Step 20.
8	**INSPECT WIRING HARNESS FOR SHORT TO GROUND** • Switch the ignition off. • Disconnect the negative battery cable. (See **NEGATIVE BATTERY CABLE DISCONNECTION/CONNECTION [SKYACTIV-G 2.0, SKYACTIV-G 2.5]**.) • Disconnect the following connectors: ▪ Audio unit ▪ Bluetooth® unit ▪ CD player ▪ Connector C-36 • Inspect for continuity between the following terminals (wiring harness-side) and body ground. ▪ Audio unit terminal 1Q ▪ Bluetooth® unit terminal Z	Yes	Repair or replace the wiring harness which is shorted to ground, then go to Step 19.
		No	Go to the next step.

	CD player terminal H • Is there continuity?		
9	**PERFORM DTC INSPECTION AND VERIFY IF MALFUNCTIONING LOCATION IS CD PLAYER** • Always reconnect all disconnected connectors. • Connect the negative battery cable. (See **NEGATIVE BATTERY CABLE DISCONNECTION/CONNECTION [SKYACTIV-G 2.0, SKYACTIV-G 2.5]**.) • Clear the audio unit DTCs. (See **CLEARING DTC [AUDIO]**.) • Switch the ignition ON (engine off or on) and wait for **12 s or more**. • Perform the audio unit DTC inspection. (See **DTC INSPECTION [AUDIO]**.) • Is the same DTC displayed?	Yes	Replace the CD player, then go to the next step. (See **CD PLAYER REMOVAL**.) (See **CD PLAYER INSTALLATION**.)
		No	Go to Step 20.
10	**PERFORM DTC INSPECTION AND VERIFY IF MALFUNCTIONING LOCATION IS Bluetooth® UNIT** • Clear the audio unit DTCs. (See **CLEARING DTC [AUDIO]**.) • Switch the ignition ON (engine off or on) and wait for **12 s or more**. • Perform the audio unit DTC inspection. (See **DTC INSPECTION [AUDIO]**.) • Is the same DTC displayed?	Yes	Replace the Bluetooth® unit, then go to Step 19. (See **Bluetooth® UNIT REMOVAL/INSTALLATION**.)
		No	Go to Step 20.
11	**INSPECT WIRING HARNESS FOR SHORT BETWEEN CIRCUITS** • Switch the ignition off. • Disconnect the negative battery cable. (See **NEGATIVE BATTERY CABLE DISCONNECTION/CONNECTION [SKYACTIV-G 2.0, SKYACTIV-G 2.5]**.) • Disconnect the following connectors: ▪ Audio unit ▪ Bluetooth® unit ▪ CD player ▪ Connector C-36 • Inspect between the following terminals (wiring harness-side) for continuity. ▪ Audio unit terminals 1O and 1Q ▪ Bluetooth® unit terminals Y and Z ▪ CD player terminals G and H • Is there continuity?	Yes	Repair or replace the wiring harness which is shorted between circuits, then go to Step 19.
		No	Go to the next step.
12	**PERFORM DTC INSPECTION AND VERIFY IF MALFUNCTIONING LOCATION IS CD PLAYER** • Always reconnect all disconnected connectors. • Connect the negative battery cable. (See **NEGATIVE BATTERY CABLE DISCONNECTION/CONNECTION [SKYACTIV-G 2.0, SKYACTIV-G 2.5]**.)	Yes	Replace the CD player, then go to the next step. (See **CD PLAYER REMOVAL**.) (See **CD PLAYER INSTALLATION**.)
		No	Go to Step 20.

	Clear the audio unit DTCs. (See **CLEARING DTC [AUDIO]**.) • Switch the ignition ON (engine off or on) and wait for **12 s or more**. • Perform the audio unit DTC inspection. (See **DTC INSPECTION [AUDIO]**.) • Is the same DTC displayed?		
13	**PERFORM DTC INSPECTION AND VERIFY IF MALFUNCTIONING LOCATION IS Bluetooth® UNIT** • Clear the audio unit DTCs. (See **CLEARING DTC [AUDIO]**.) • Switch the ignition ON (engine off or on) and wait for **12 s or more**. • Perform the audio unit DTC inspection. (See **DTC INSPECTION [AUDIO]**.) • Is the same DTC displayed?	Yes	Replace the Bluetooth® unit, then go to Step 19. (See **Bluetooth® UNIT REMOVAL/INSTALLATION**.)
		No	Go to Step 20.
14	**INSPECT WIRING HARNESS BETWEEN CONNECTOR C-36 AND AUDIO UNIT FOR OPEN CIRCUIT** • Switch the ignition off. • Disconnect the negative battery cable. (See **NEGATIVE BATTERY CABLE DISCONNECTION/CONNECTION [SKYACTIV-G 2.0, SKYACTIV-G 2.5]**.) • Disconnect the following connectors: ▪ Audio unit ▪ Connector C-36 • Inspect the wiring harness for continuity between the following terminals (wiring harness-side). ▪ Audio unit terminal 1O and connector C-36 ▪ Audio unit terminal 1Q and connector C-36 • Is there continuity?	Yes	Go to the next step.
		No	Repair or replace the wiring harness which has an open circuit, then go to the next step.
15	**INSPECT WIRING HARNESS BETWEEN CONNECTOR C-36 AND CD PLAYER FOR OPEN CIRCUIT** • Switch the ignition off. • Disconnect the negative battery cable. (See **NEGATIVE BATTERY CABLE DISCONNECTION/CONNECTION [SKYACTIV-G 2.0, SKYACTIV-G 2.5]**.) • Disconnect the following connectors: ▪ CD player ▪ Connector C-36 • Inspect the wiring harness for continuity between the following terminals (wiring harness-side). ▪ CD player terminal G and connector C-36 ▪ CD player terminal H and connector C-36 • Is there continuity?	Yes	Go to the next step.
		No	Repair or replace the wiring harness which has an open circuit, then go to Step 19.
16	**PERFORM DTC INSPECTION AND VERIFY IF MALFUNCTIONING LOCATION IS CD PLAYER** • Always reconnect all disconnected connectors.	Yes	Replace the CD player, then go to Step 20. (See **CD PLAYER REMOVAL**.)

	• Connect the negative battery cable. (See **NEGATIVE BATTERY CABLE DISCONNECTION/CONNECTION [SKYACTIV-G 2.0, SKYACTIV-G 2.5]**.) • Clear the audio unit DTCs. (See **CLEARING DTC [AUDIO]**.) • Switch the ignition ON (engine off or on) and wait for **12 s or more**. • Perform the audio unit DTC inspection. (See **DTC INSPECTION [AUDIO]**.) • Is the same DTC displayed?		(See **CD PLAYER INSTALLATION**.)
		No	Go to Step 20.
17	**INSPECT WIRING HARNESS BETWEEN Bluetooth® UNIT AND CONNECTOR C-36 FOR OPEN CIRCUIT** • Switch the ignition off. • Disconnect the negative battery cable. (See **NEGATIVE BATTERY CABLE DISCONNECTION/CONNECTION [SKYACTIV-G 2.0, SKYACTIV-G 2.5]**.) • Disconnect the following connectors: ▪ Bluetooth® unit ▪ Connector C-36 • Inspect the wiring harness for continuity between the following terminals (wiring harness-side). ▪ Bluetooth® unit terminal Y and connector C-36 ▪ Bluetooth® unit terminal Z and connector C-36 • Is there continuity?	Yes	Go to the next step.
		No	Repair or replace the wiring harness which has an open circuit, then go to Step 19.
18	**PERFORM DTC INSPECTION AND VERIFY IF MALFUNCTIONING LOCATION IS Bluetooth® UNIT** • Always reconnect all disconnected connectors. • Connect the negative battery cable. (See **NEGATIVE BATTERY CABLE DISCONNECTION/CONNECTION [SKYACTIV-G 2.0, SKYACTIV-G 2.5]**.) • Clear the audio unit DTCs. (See **CLEARING DTC [AUDIO]**.) • Switch the ignition ON (engine off or on) and wait for **12 s or more**. • Perform the audio unit DTC inspection. (See **DTC INSPECTION [AUDIO]**.) • Is the same DTC displayed?	Yes	Replace the Bluetooth® unit, then go to next step. (See **Bluetooth® UNIT REMOVAL/INSTALLATION**.)
		No	Go to Step 20.
19	**VERIFY THAT REPAIRS HAVE BEEN COMPLETED** • Always reconnect all disconnected connectors. • Connect the negative battery cable. (See **NEGATIVE BATTERY CABLE DISCONNECTION/CONNECTION [SKYACTIV-G 2.0, SKYACTIV-G 2.5]**.) • Clear the audio unit DTCs. (See **CLEARING DTC [AUDIO]**.) • Switch the ignition ON (engine off or on) and wait for **12 s or more**. • Perform the audio unit DTC inspection.	Yes	Repeat the inspection from Step 1. • If the malfunction recurs, replace the audio unit. (See **AUDIO UNIT REMOVAL/INSTALLATION**.) Go to the next step.
		No	Go to the next step.

	(See **DTC INSPECTION [AUDIO]**.) • Is the same DTC displayed?		
20	**VERIFY IF OTHER DTCs DISPLAYED** • Are any other DTCs displayed?	Yes	Repair the malfunctioning location according to the applicable DTC troubleshooting. (See **DTC TABLE [AUDIO]**.)
		No	DTC troubleshooting completed.

2014 - Mazda3 - Body and Accessories

DTC: 28:Er01, 28:Er09 [AUDIO]

NOTE:

- "iPod" is a registered trademark of Apple Inc. in the United States and other countries.

Description	28:Er01 : USB mechanism malfunction 28:Er09 : No USB playback function file/track
Detection condition	• When USB device/iPod connected, connection error detected • When USB device/iPod connected, audio unit internal malfunction detected • When USB device connected, read error detected
Fail-safe function	Not applicable

Possible cause	• USB device/iPod malfunction
	• Incompatible USB device (format) used
	• Auxiliary jack/USB port connector or terminal malfunction
	• Auxiliary jack/USB port malfunction
	• Audio unit connector or terminal malfunction
	• Open circuit in wiring harness between the following terminals:
	  ▪ Audio unit terminal 3A and auxiliary jack/USB port terminal UD
	  ▪ Audio unit terminal 3B and auxiliary jack/USB port terminal UC
	  ▪ Audio unit terminal 3C and auxiliary jack/USB port terminal UA
	  ▪ Audio unit terminal 3D and auxiliary jack/USB port terminal UB
	• Short to ground in wiring harness between the following terminals:
	  ▪ Audio unit terminal 3A and auxiliary jack/USB port terminal UD

	Audio unit terminal 3B and auxiliary jack/USB port terminal UC ▪ Audio unit terminal 3C and auxiliary jack/USB port terminal UA ▪ Audio unit terminal 3D and auxiliary jack/USB port terminal UB • Audio unit malfunction

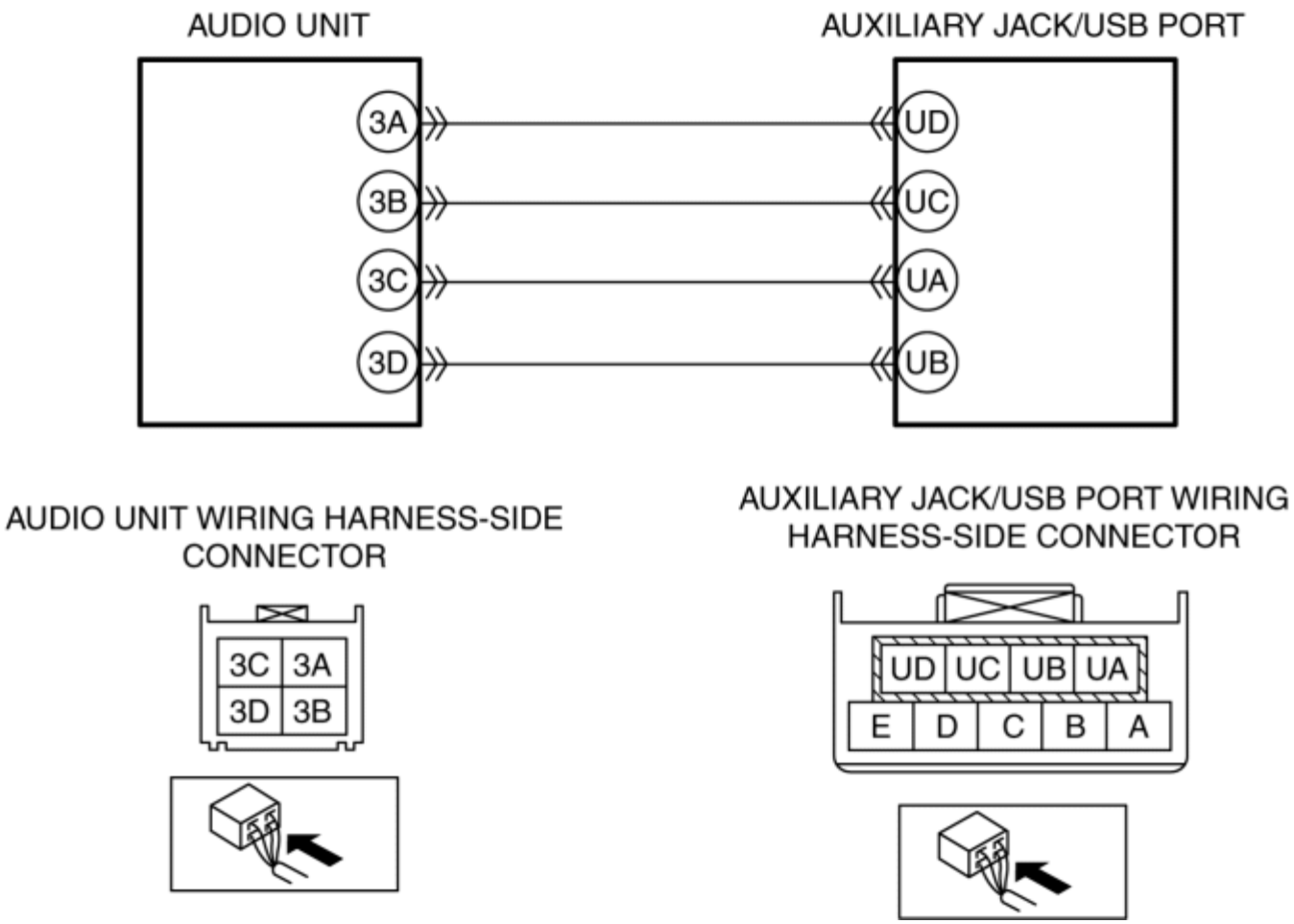

Diagnostic Procedure

Step	Inspection		Action
1	**INSPECT USB DEVICE/iPod** • Connect the USB device/iPod to another vehicle (model/unit). • Is the USB device/iPod connection detected/unit plays back.	Yes	Go to the next step.
		No	System is normal. (USB device/iPod malfunction or incompatible USB device.) Go to Step 7.

2	**INSPECT AUXILIARY JACK/USB PORT CONNECTOR CONDITION** • Disconnect the auxiliary jack/USB port connector. • Inspect the connector engagement and connection condition and inspect the terminals for damage, deformation, corrosion, or disconnection. • Is there any malfunctioning part?	Yes	Repair or replace the connector, then go to Step 7.
		No	Go to the next step.
3	**INSPECT AUXILIARY JACK/USB PORT** • Inspect the auxiliary jack/USB port. (See **AUXILIARY JACK/USB PORT INSPECTION**.) • Is there any malfunctioning part?	Yes	Replace the auxiliary jack/USB port, then go to Step 7. (See **AUXILIARY JACK/USB PORT REMOVAL/INSTALLATION**.)
		No	Go to the next step.
4	**INSPECT AUDIO UNIT CONNECTOR CONDITION** • Switch the ignition off. • Disconnect the negative battery cable. (See **NEGATIVE BATTERY CABLE DISCONNECTION/CONNECTION [SKYACTIV-G 2.0, SKYACTIV-G 2.5]**.) • Disconnect the audio unit connector. • Inspect the connector engagement and connection condition and inspect the terminals for damage, deformation, corrosion, or disconnection. • Is there any malfunctioning part?	Yes	Repair or replace the connector, then go to Step 7.
		No	Go to the next step.
5	**INSPECT WIRING HARNESS FOR OPEN**	Yes	Go to the next step.

	CIRCUIT BETWEEN AUDIO UNIT AND AUXILIARY JACK/USB PORT • Verify that the connectors for the audio unit and the auxiliary jack/USB port are disconnected. • Inspect for continuity between the following terminals (vehicle wiring harness). ▪ Audio unit terminal 3A and auxiliary jack/USB port terminal UD ▪ Audio unit terminal 3B and auxiliary jack/USB port terminal UC ▪ Audio unit terminal 3C and auxiliary jack/USB port terminal UA ▪ Audio unit terminal 3D and auxiliary jack/USB port terminal UB • Is there continuity?	No	Refer to the wiring diagram and verify if there is a common connector between the following terminals (vehicle wiring harness side). • Audio unit terminal 3A and auxiliary jack/USB port terminal UD • Audio unit terminal 3B and auxiliary jack/USB port terminal UC • Audio unit terminal 3C and auxiliary jack/USB port terminal UA • Audio unit terminal 3D and auxiliary jack/USB port terminal UB If there is a common connector: • Determine the malfunctioning part by inspecting the common connector and the terminal for corrosion, damage, or pin disconnection, and the common wiring harness for an open circuit. • Repair or replace the malfunctioning part. If there is no common connector: • Repair or replace the wiring harness which has an open circuit. Go to Step 7.
6	**INSPECT WIRING HARNESS FOR SHORT TO GROUND BETWEEN AUDIO UNIT AND AUXILIARY JACK/USB PORT** • Inspect for continuity between the following wiring harness terminals (vehicle wiring harness side) and body ground. ▪ Auxiliary jack/USB	Yes	Refer to the wiring diagram and verify if there is a common connector between the following terminals (vehicle wiring harness side). • Auxiliary jack/USB port terminal UD • Auxiliary jack/USB port terminal UC • Auxiliary jack/USB port terminal UA • Auxiliary jack/USB port terminal UB If there is a common connector:

	port terminal UD ▪ Auxiliary jack/USB port terminal UC ▪ Auxiliary jack/USB port terminal UA ▪ Auxiliary jack/USB port terminal UB • Is there continuity?		• Determine the malfunctioning part by inspecting the common connector and the terminal for corrosion, damage, or pin disconnection, and the common wiring harness for a short to ground. • Repair or replace the malfunctioning part. If there is no common connector: • Repair or replace the wiring harness which has a short to ground. Go to Step 7.
		No	Go to the next step.
7	**VERIFY THAT REPAIRS HAVE BEEN COMPLETED** • Reconnect all the disconnected connectors. • Connect the negative battery cable. (See **NEGATIVE BATTERY CABLE DISCONNECTION/CONNECTION [SKYACTIV-G 2.0, SKYACTIV-G 2.5]**.) • Clear the audio unit DTCs. (See **CLEARING DTC [AUDIO]**.) • Perform the audio unit DTC inspection. (See **DTC INSPECTION [AUDIO]**.) • Is the same DTC displayed?	Yes	Return to Step 1 and inspect for other possible causes. If the malfunction recurs, replace the audio unit, then go to the next step. (See **AUDIO UNIT REMOVAL/INSTALLATION**.)
		No	Go to the next step.
8	**VERIFY IF OTHER DTCs DISPLAYED** • Are any other DTCs displayed?	Yes	Repair the malfunctioning part according to the applicable DTC troubleshooting. (See **DTC TABLE [AUDIO]**.)
		No	DTC troubleshooting completed.

DTC: 28:Er01, 28:Er09 [AUDIO]

2014 - Mazda3 - Body and Accessories

DTC: 29:Er01, 29:Er09 [AUDIO]

NOTE:

- "iPod" is a registered trademark of Apple Inc. in the United States and other countries.

Description	29:Er01 : iPod mechanism malfunction 29:Er09 : No iPod playback file/track
Detection condition	When iPod is connected, audio unit read error is detected
Fail-safe function	Not applicable
Possible cause	• All files in iPod are not playable (including copyright protected files) • No playable file in iPod • iPod malfunction • Audio unit malfunction
System wiring diagram	Not applicable

Diagnostic Procedure

Step	Inspection		Action
1	**VERIFY MUSIC FILES IN iPod** • Is there any playable music file in the iPod?	Yes	Go to the next step.
		No	System is normal. (No playable file in USB device/iPod) Go to Step 3.
2	**INSPECT iPod** • Connect the iPod to a same-model vehicle (model/unit).	Yes	Replace the audio unit, then go to Step 3. (See **AUDIO UNIT REMOVAL/INSTALLATION**.)

	Is the iPod connection detected/unit plays back.		
		No	System is normal. (iPod malfunction or incompatible USB device.) Go to the next step.
3	**VERIFY THAT REPAIRS HAVE BEEN COMPLETED** • Reconnect all the disconnected connectors. • Connect the negative battery cable. (See **NEGATIVE BATTERY CABLE DISCONNECTION/CONNECTION [SKYACTIV-G 2.0, SKYACTIV-G 2.5]**.) • Clear the audio unit DTCs. (See **CLEARING DTC [AUDIO]**.) • Perform the audio unit DTC inspection. (See **DTC INSPECTION [AUDIO]**.) • Is the same DTC displayed?	Yes	Return to Step 1 and inspect for other possible causes. If the malfunction recurs, replace the audio unit, then go to the next step. (See **AUDIO UNIT REMOVAL/INSTALLATION**.)
		No	Go to the next step.
4	**VERIFY IF OTHER DTCs DISPLAYED** • Are any other DTCs displayed?	Yes	Repair the malfunctioning part according to the applicable DTC troubleshooting. (See **DTC TABLE [AUDIO]**.)
		No	DTC troubleshooting completed.

2014 - Mazda3 - Body and Accessories

DTC: 09:Er20 [AUDIO]

DESCRIPTION	Low voltage input from battery
DETECTION CONDITION	Audio unit power supply voltage of **less than 10 V** is detected continuously for **10 s**.

POSSIBLE CAUSE	• PCM DTC is stored
	• Battery malfunction
	• Generator malfunction
	• Audio unit connector or terminals malfunction
	• Open circuit or short to ground in audio unit power supply circuit
	  ▪ Short to ground in wiring harness between the following terminal:
	  • Audio unit terminal 1B—Battery positive terminal
	  ▪ MAIN 200 A fuse malfunction
	  ▪ CABIN+B 50 A fuse malfunction
	  ▪ AUDIO1 15 A fuse malfunction
	  ▪ Open circuit in wiring harness between the following terminal:
	  • Audio unit terminal 1B—Battery positive terminal
	• Audio unit malfunction

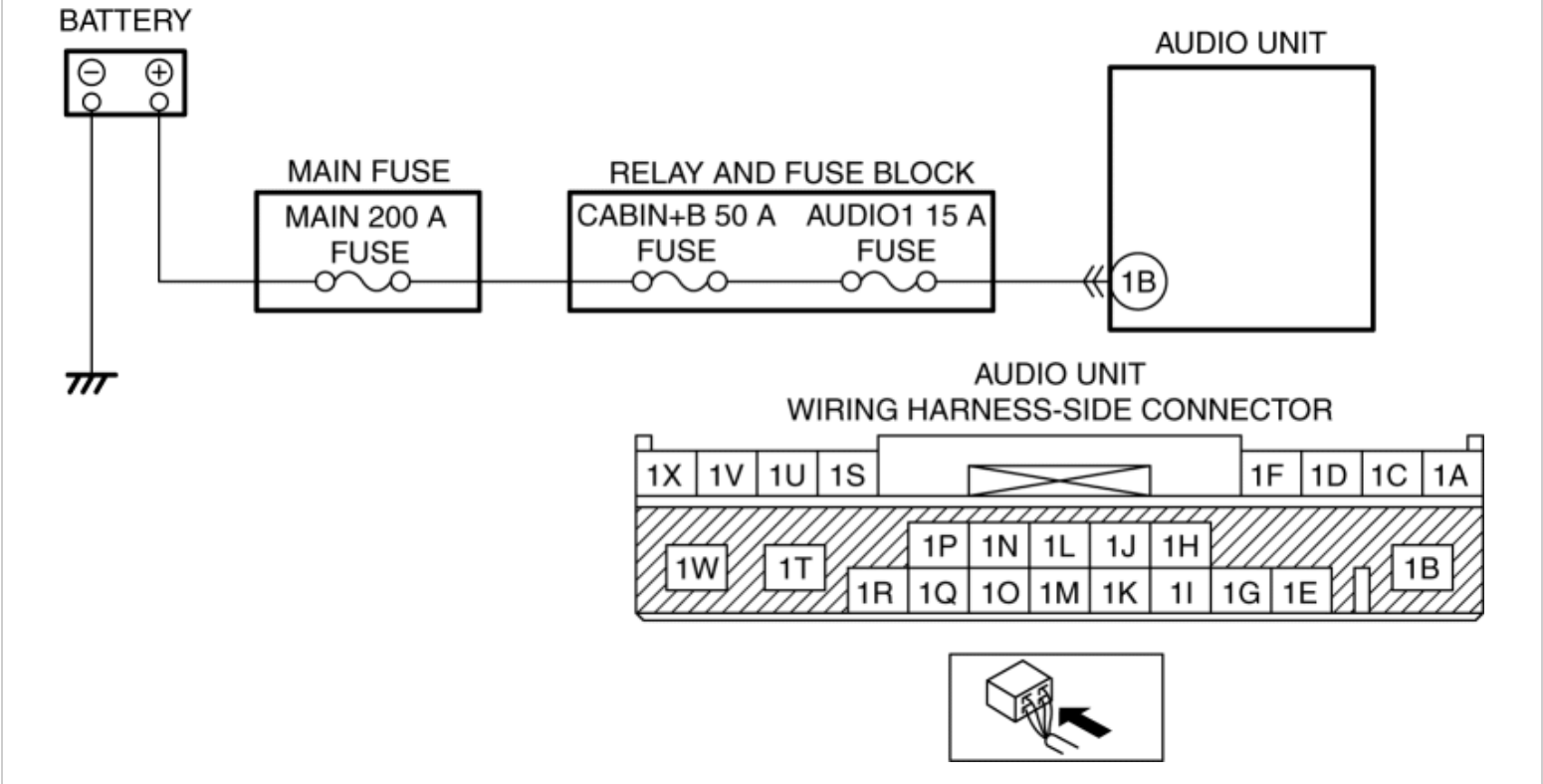

Diagnostic Procedure

Step	Inspection		Action
1	**PERFORM PCM DTC INSPECTION** • Perform the PCM DTC inspection using the M-MDS. (See **ON-BOARD DIAGNOSTIC TEST [SKYACTIV-G 2.0, SKYACTIV-G 2.5]**.) • Are any DTCs present?	Yes	Go to the applicable DTC inspection. (See **DTC TABLE [SKYACTIV-G 2.0, SKYACTIV-G 2.5]**.)
		No	Go to the next step.
2	**INSPECT BATTERY** • Inspect the battery. (See **BATTERY INSPECTION [SKYACTIV-G 2.0, SKYACTIV-G 2.5]**.) • Is there any malfunction?	Yes	Recharge or replace the battery, then go to Step 6. (See **BATTERY RECHARGING [SKYACTIV-G 2.0, SKYACTIV-G 2.5]**.) (See **BATTERY REMOVAL/INSTALLATION [SKYACTIV-G 2.0, SKYACTIV-G 2.5]**.)
		No	Go to the next step.
3	**INSPECT GENERATOR** • Inspect the generator. (See **GENERATOR INSPECTION [SKYACTIV-G 2.0, SKYACTIV-G 2.5 (WITHOUT i-ELOOP)]**.) • Is there any malfunction?	Yes	Replace the generator, then go to Step 6. (See **GENERATOR REMOVAL/INSTALLATION [SKYACTIV-G 2.0, SKYACTIV-G 2.5 (WITHOUT i-ELOOP)]**.)
		No	Go to the next step.
4	**INSPECT AUDIO UNIT CONNECTOR CONDITION**	Yes	Repair or replace the connector or terminal, then go to Step 6.

	• Switch the ignition off. • Disconnect the negative battery cable. (See **NEGATIVE BATTERY CABLE DISCONNECTION/CONNECTION [SKYACTIV-G 2.0, SKYACTIV-G 2.5]**.) • Disconnect the audio unit connector. • Inspect the connector for poor connection (such as damaged/pulled-out pins, and corrosion). • Is there any malfunction?	No	Go to the next step.
5	**INSPECT POWER SUPPLY CIRCUIT FOR OPEN CIRCUIT OR SHORT TO GROUND** • Audio unit connector is disconnected. • Connect the negative battery cable. (See **NEGATIVE BATTERY CABLE DISCONNECTION/CONNECTION [SKYACTIV-G 2.0, SKYACTIV-G 2.5]**.) • Switch the ignition to ACC or ON (engine off). • Measure the voltage at the following terminals (vehicle wiring harness side): ▪ Audio unit terminal 1B • Is the voltage **B+**?	Yes	Go to the next step.
		No	If the audio unit terminal 1B voltage is not **B+**: • Inspect the MAIN 200 A fuse or CABIN+B 50 A fuse or AUDIO1 15 A fuse. ▪ If the fuse is blown: • Repair or replace the wiring harness for a possible short to ground. • Replace the malfunctioning fuse. ▪ If the fuse is damaged: • Replace the malfunctioning fuse. ▪ If the fuse is normal: • Repair or replace the wiring harness for a possible open circuit. Go to the next Step.
6	**VERIFY TROUBLESHOOTING COMPLETED** • Switch the ignition off. • Make sure reconnect the	Yes	Replace the audio unit, then go to the next step. (See **AUDIO UNIT REMOVAL/INSTALLATION**.)
		No	Go to the next step.

	disconnected connectors. • Connect the negative battery cable. (See **NEGATIVE BATTERY CABLE DISCONNECTION/CONNECTION [SKYACTIV-G 2.0, SKYACTIV-G 2.5]**.) • Clear the DTC from the audio unit memory. (See **CLEARING DTC [AUDIO]**.) • Perform the audio unit DTC inspection. (See **DTC INSPECTION [AUDIO]**.) • Is the same DTC present?		
7	**VERIFY THAT NO OTHER DTCs ARE RECORDED** • Are any DTCs present?	Yes	Go to the applicable DTC inspection. (See **DTC TABLE [AUDIO]**.)
		No	DTC troubleshooting completed.

2014 - Mazda3 - Body and Accessories

DTC: 09:Er21 [AUDIO]

DESCRIPTION	Audio unit internal malfunction
DETECTION CONDITION	• Audio unit internal ECU (Power amplifier peripheral circuit) is faulted. • Audio unit protection function operates due to short to ground in speaker wiring harness and speaker lead wire
POSSIBLE CAUSE	• Audio unit connector or terminals malfunction • Speaker connector or terminals malfunction • Open circuit in wiring harness between the following terminals: ▪ Audio unit terminal 1A—Front door speaker (LH) terminal C ▪ Audio unit terminal 1C—Front door speaker (LH) terminal B ▪ Audio unit terminal 1D—Front door speaker (RH) terminal C ▪ Audio unit terminal 1F—Front door speaker (RH) terminal B ▪ Audio unit terminal 1S—Rear door speaker (LH) terminal C ▪ Audio unit terminal 1U—Rear door speaker (LH) terminal B ▪ Audio unit terminal 1V—Rear door speaker (RH) terminal C ▪ Audio unit terminal 1X—Rear door speaker (RH) terminal B • Short to ground in wiring harness between the following terminals: ▪ Audio unit terminal 1A—Front door speaker (LH) terminal C ▪ Audio unit terminal 1C—Front door speaker (LH) terminal B ▪ Audio unit terminal 1D—Front door speaker (RH) terminal C ▪ Audio unit terminal 1F—Front door speaker (RH) terminal B ▪ Audio unit terminal 1S—Rear door speaker (LH) terminal C ▪ Audio unit terminal 1U—Rear door speaker (LH) terminal B ▪ Audio unit terminal 1V—Rear door speaker (RH) terminal C ▪ Audio unit terminal 1X—Rear door speaker (RH) terminal B • Speaker malfunction • Audio unit malfunction

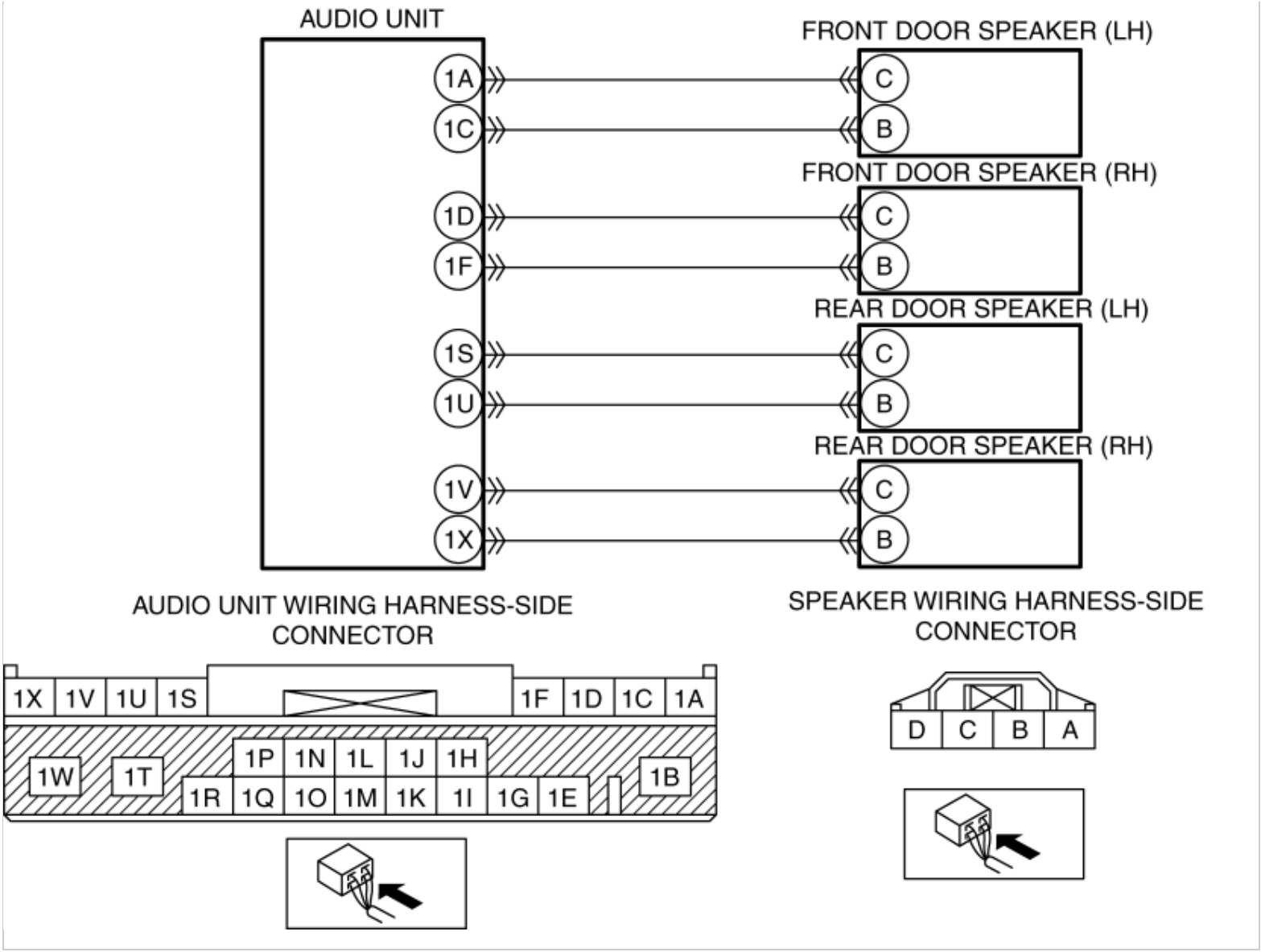

Diagnostic Procedure

Step	Inspection		Action
1	**INSPECT AUDIO UNIT CONNECTOR CONDITION** • Switch the ignition off. • Disconnect the negative battery cable. (See **NEGATIVE BATTERY CABLE DISCONNECTION/CONNECTION [SKYACTIV-G 2.0, SKYACTIV-G 2.5]**.) • Disconnect the audio unit connector. • Inspect the connector	Yes	Repair or replace the connector, then go to Step 6.
		No	Go to the next step.

	engagement and connection condition and inspect the terminals for damage, deformation, corrosion, or disconnection. • Is there any malfunctioning part?		
2	**INSPECT SPEAKER CONNECTOR CONDITION** • Disconnect the speaker connector. • Inspect the connector engagement and connection condition and inspect the terminals for damage, deformation, corrosion, or disconnection. • Is there any malfunctioning part?	Yes	Repair or replace the connector, then go to Step 6.
		No	Go to the next step.
3	**INSPECT SPEAKER CIRCUIT FOR OPEN CIRCUIT** • Audio unit connector and speaker connector are disconnected. • Inspect for continuity between the following terminals (vehicle wiring harness). ▪ Audio unit terminal 1A and front door speaker (LH) terminal C ▪ Audio unit terminal 1C and front door speaker (LH) terminal B ▪ Audio unit terminal 1D and front door speaker (RH) terminal C ▪ Audio unit terminal 1F	Yes	Go to the next step.
		No	Refer to the wiring diagram and verify if there is a common connector between the following terminals (vehicle wiring harness side). • Audio unit terminal 1A and front door speaker (LH) terminal C • Audio unit terminal 1C and front door speaker (LH) terminal B • Audio unit terminal 1D and front door speaker (RH) terminal C • Audio unit terminal 1F and front door speaker (RH) terminal B • Audio unit terminal 1S and rear door speaker (LH) terminal C • Audio unit terminal 1U and front door speaker (LH) terminal B • Audio unit terminal 1V and rear door speaker (RH) terminal C • Audio unit terminal 1X and rear door speaker (RH) terminal B If there is a common connector: • Determine the malfunctioning part by inspecting the common connector and the terminal for corrosion, damage, or pin disconnection, and the common wiring harness for an open circuit.

	and front door speaker (RH) terminal B ▪ Audio unit terminal 1S and rear door speaker (LH) terminal C ▪ Audio unit terminal 1U and front door speaker (LH) terminal B ▪ Audio unit terminal 1V and rear door speaker (RH) terminal C ▪ Audio unit terminal 1X and rear door speaker (RH) terminal B • Is there continuity?		• Repair or replace the malfunctioning part. If there is no common connector: • Repair or replace the wiring harness which has an open circuit. Go to Step 6.
4	**INSPECT SPEAKER CIRCUIT FOR SHORT TO GROUND** • Inspect for continuity between the following wiring harness terminals (vehicle wiring harness side) and body ground. ▪ Speaker terminal C ▪ Speaker terminal B • Is there continuity?	Yes	Refer to the wiring diagram and verify if there is a common connector between the following terminals (vehicle wiring harness side). • Speaker terminal C • Speaker terminal B If there is a common connector: • Determine the malfunctioning part by inspecting the common connector and the terminal for corrosion, damage, or pin disconnection, and the common wiring harness for a short to ground. • Repair or replace the malfunctioning part. If there is no common connector: • Repair or replace the wiring harness which has a short to ground. Go to Step 6.
		No	Go to the next step.

5	**INSPECT SPEAKERS** • Inspect the speakers. (See **FRONT DOOR SPEAKER INSPECTION**.) (See **REAR DOOR SPEAKER INSPECTION**.) • Is there any malfunctioning part?	Yes	Replace the speaker, then go to Step 6. (See **FRONT DOOR SPEAKER REMOVAL/INSTALLATION**.) (See **REAR DOOR SPEAKER REMOVAL/INSTALLATION**.)
		No	Go to the next step.
6	**VERIFY THAT REPAIRS HAVE BEEN COMPLETED** • Reconnect all the disconnected connectors. • Connect the negative battery cable. (See **NEGATIVE BATTERY CABLE DISCONNECTION/CONNECTION [SKYACTIV-G 2.0, SKYACTIV-G 2.5]**.) • Clear the audio unit DTCs. (See **CLEARING DTC [AUDIO]**.) • Perform the audio unit DTC inspection. (See **DTC INSPECTION [AUDIO]**.) • Is the same DTC displayed?	Yes	Return to Step 1 and inspect for other possible causes. If the malfunction recurs, replace the audio unit, then go to the next step. (See **AUDIO UNIT REMOVAL/INSTALLATION**.)
		No	Go to the next step.
7	**VERIFY IF OTHER DTCs DISPLAYED** • Are any other DTCs displayed?	Yes	Repair the malfunctioning part according to the applicable DTC troubleshooting. (See **DTC TABLE [AUDIO]**.)
		No	DTC troubleshooting completed.

2014 - Mazda3 - Body and Accessories

DTC: 26:Er82 [AUDIO]

Description	Microphone circuit malfunction
Detection condition	Short to power supply detected in microphone input circuit
Fail-safe function	Not applicable
Possible cause	• Connector or terminal malfunction • Short to power supply in wiring harness between Bluetooth® unit terminal A and microphone terminal A • Microphone malfunction • Bluetooth® unit malfunction

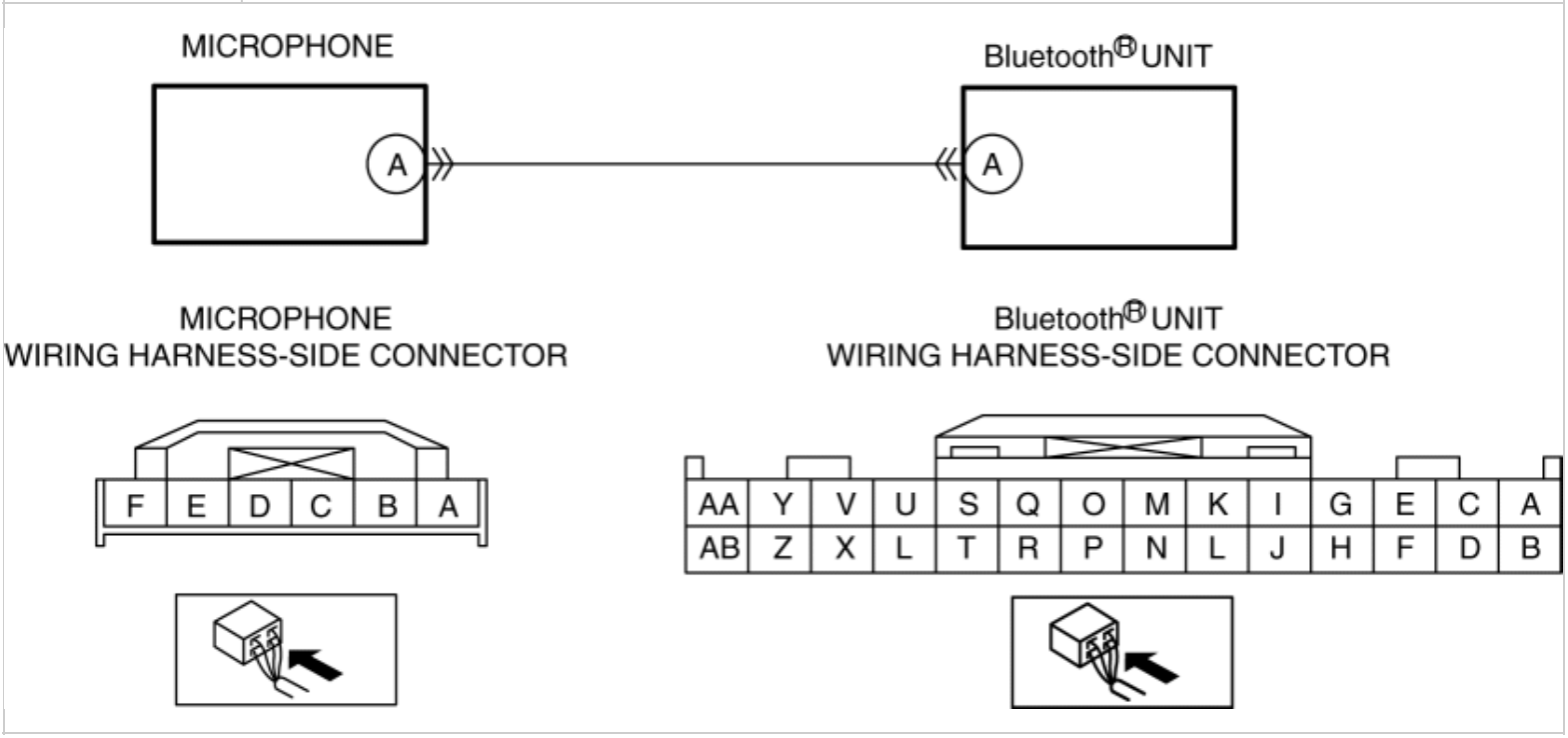

Diagnostic Procedure

Step	Inspection		Action
1	**INSPECT MICROPHONE CONNECTOR**	Yes	Repair or replace the connector, then go to Step 4.

	STATUS • Switch the ignition off. • Disconnect the negative battery cable. (See **NEGATIVE BATTERY CABLE DISCONNECTION/CONNECTION [SKYACTIV-G 2.0, SKYACTIV-G 2.5]**.) • Disconnect the microphone connector. • Inspect the connector engagement and connection condition and inspect the terminals for damage, deformation, corrosion, or disconnection. • Is there any malfunctioning part?	No	Go to the next step.
2	**INSPECT Bluetooth® UNIT CONNECTOR CONDITION** • Disconnect the Bluetooth® unit connector. • Inspect the connector engagement and connection condition and inspect the terminals for damage, deformation, corrosion, or disconnection. • Is there any malfunctioning part?	Yes	Repair or replace the connector, then go to Step 4.
		No	Go to the next step.
3	**INSPECT FOR SHORT TO POWER SUPPLY IN MICROPHONE INPUT CIRCUIT** • Reconnect all the disconnected connectors. • Connect the negative battery cable. (See **NEGATIVE BATTERY CABLE DISCONNECTION/CONNECTION [SKYACTIV-G 2.0, SKYACTIV-G 2.5]**.) • Switch the ignition ON (engine off or on). • Measure the voltage of Bluetooth® unit terminal A (vehicle wiring harness side). • Is the voltage **B+**?	Yes	Refer to the wiring diagram and verify whether or not there is a common connector between Bluetooth® unit terminal A and microphone terminal A. **If there is a common connector:** • Determine the malfunctioning part by inspecting the common connector and the terminal for corrosion, damage, or pin disconnection, and the common wiring harness for a short to power supply. • Repair or replace the malfunctioning part. **If there is no common connector:** • Repair or replace the wiring harness which has a short to power supply. Go to the next step.

		No	Go to the next step.
4	**PERFORM DTC INSPECTION AND VERIFY IF MALFUNCTIONING PART IS MICROPHONE OR Bluetooth® UNIT** • Perform an inspection of the Bluetooth® unit DTCs. (See **DTC INSPECTION [AUDIO]**.) • Is the same DTC displayed?	Yes	Replace the microphone, then go to the next step. (See **MICROPHONE REMOVAL / INSTALLATION**.)
		No	Go to Step 6.
5	**VERIFY THAT REPAIRS HAVE BEEN COMPLETED** • Perform an inspection of the Bluetooth® unit DTCs. (See **DTC INSPECTION [AUDIO]**.) • Is the same DTC displayed?	Yes	Replace the Bluetooth® unit, then go to the next step. (See **Bluetooth® UNIT REMOVAL / INSTALLATION**.)
		No	Go to the next step.
6	**VERIFY IF OTHER DTCs DISPLAYED** • Are any other DTCs displayed?	Yes	Repair the malfunctioning part according to the applicable DTC troubleshooting. (See **DTC TABLE [AUDIO]**.)
		No	DTC troubleshooting completed.

2014 - Mazda3 - Body and Accessories

DTC: 26:Er83 [AUDIO]

DESCRIPTION	Microphone circuit malfunction
DETECTION CONDITION	Short to ground in microphone power supply circuit
Fail-safe function	Not applicable
POSSIBLE CAUSE	• Connector or terminal malfunction • Short to ground in wiring harness between the following terminals: ▪ Bluetooth® unit terminal C and microphone terminal C • Microphone malfunction • Bluetooth® unit malfunction

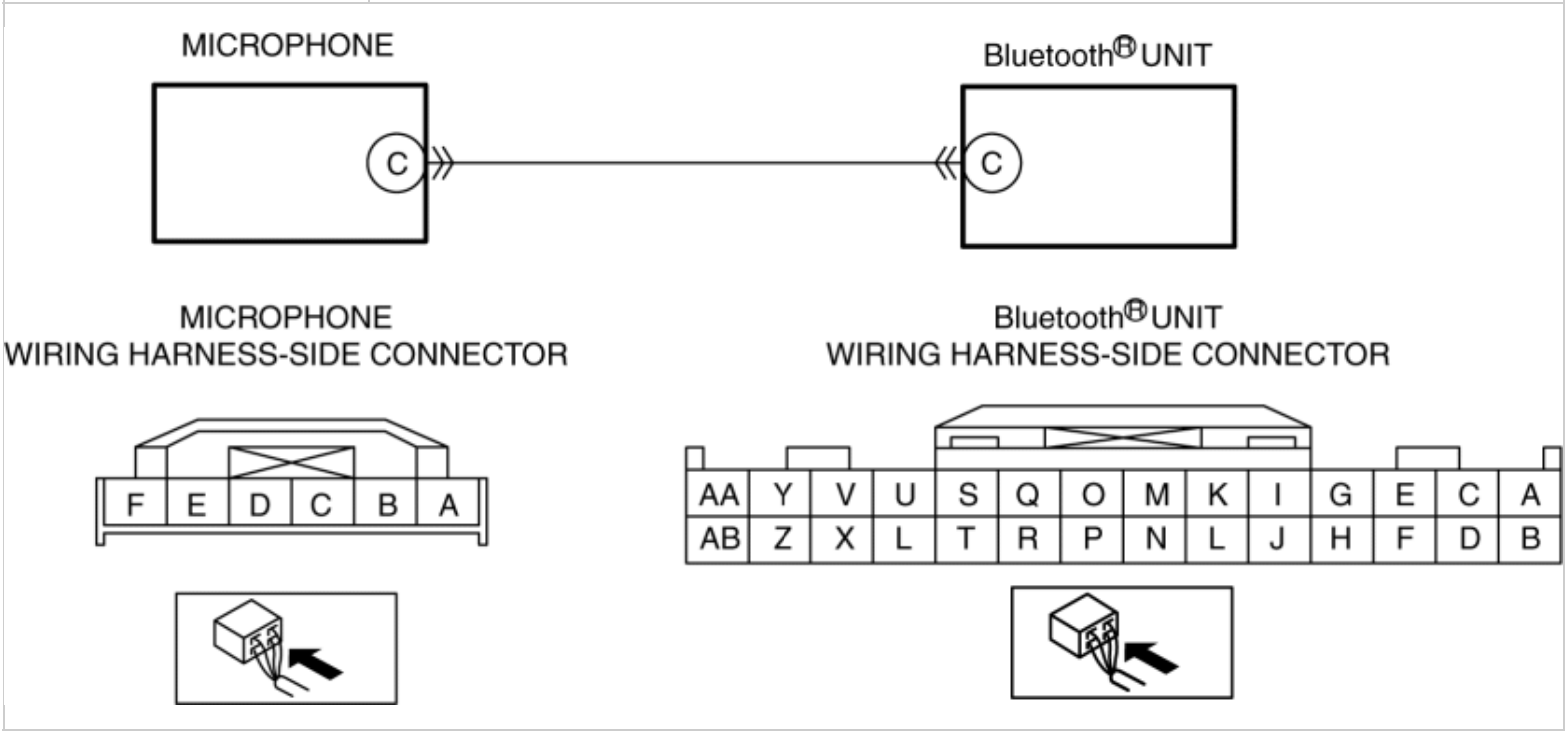

Diagnostic Procedure

Step	Inspection		Action
1	**INSPECT MICROPHONE CONNECTOR CONDITION**	Yes	Repair or replace the connector or terminal, then go to Step 5.

	• Switch the ignition off. • Disconnect the negative battery cable. (See **NEGATIVE BATTERY CABLE DISCONNECTION/CONNECTION [SKYACTIV-G 2.0, SKYACTIV-G 2.5]**.) • Disconnect the microphone connector. • Inspect the connector for poor connection (such as damaged/pulled-out pins, and corrosion). • Is there any malfunction?		
		No	Go to the next step.
2	**INSPECT Bluetooth® UNIT CONNECTOR CONDITION** • Disconnect the Bluetooth® unit connector. • Inspect the connector for poor connection (such as damaged/pulled-out pins, and corrosion). • Is there any malfunction?	Yes	Repair or replace the connector or terminal, then go to Step 5.
		No	Go to the next step.
3	**INSPECT MICROPHONE POWER SUPPLY CIRCUIT FOR SHORT TO GROUND** • Inspect for continuity between the following terminals (vehicle wiring harness) and body ground: ▪ Microphone terminal C • Is there continuity?	Yes	Refer to the wiring diagram and verify whether or not there is a common connector between Bluetooth® unit terminal C and microphone terminal C. **If there is a common connector:** • Determine the malfunctioning part by inspecting the common connector and the terminal for corrosion, damage, or pin disconnection, and the common wiring harness for a short to ground. • Repair or replace the malfunctioning part. **If there is no common connector:** • Repair or replace the wiring harness which has a short to ground. Go to Step 5.
		No	Go to the next step.
4	**INSPECT Bluetooth® UNIT POWER SUPPLY CIRCUIT** • Make sure reconnect the disconnected connectors. • Connect the negative battery	Yes	Replace the microphone, then go to the next step. (See **MICROPHONE REMOVAL/INSTALLATION**.)
		No	Go to the next step.

	cable. (See **NEGATIVE BATTERY CABLE DISCONNECTION/CONNECTION [SKYACTIV-G 2.0, SKYACTIV-G 2.5]**.) • Switch the ignition ON (engine off or on). • Measure the voltage at the following terminal (vehicle wiring harness): ▪ Bluetooth® unit terminal C • Is there any voltage?		
5	**VERIFY TROUBLESHOOTING COMPLETED** • Clear the DTC from the Bluetooth® unit memory. (See **CLEARING DTC [AUDIO]**.) • Perform the Bluetooth® unit DTC inspection. (See **DTC INSPECTION [AUDIO]**.) • Is the same DTC present?	Yes	Repeat the inspection from Step 1. • If the malfunction recurs, replace the Bluetooth® unit. (See **Bluetooth® UNIT REMOVAL/INSTALLATION**.) Go to the next step.
		No	Go to the next step.
6	**VERIFY THAT NO OTHER DTCs ARE RECORDED** • Are any DTCs present?	Yes	Go to the applicable DTC inspection. (See **DTC TABLE [AUDIO]**.)
		No	DTC troubleshooting completed.

2014 - Mazda3 - Body and Accessories

DTC: 26:Er84 [AUDIO]

DESCRIPTION	Microphone circuit malfunction
DETECTION CONDITION	Microphone non-connection signal detected continuously
POSSIBLE CAUSE	• Connector or terminal malfunction • Open circuit in wiring harness between the following terminals: ▪ Bluetooth® unit terminal E and microphone terminal E • Short to ground in wiring harness between the following terminals: ▪ Bluetooth® unit terminal A and microphone terminal A • Microphone malfunction • Bluetooth® unit malfunction

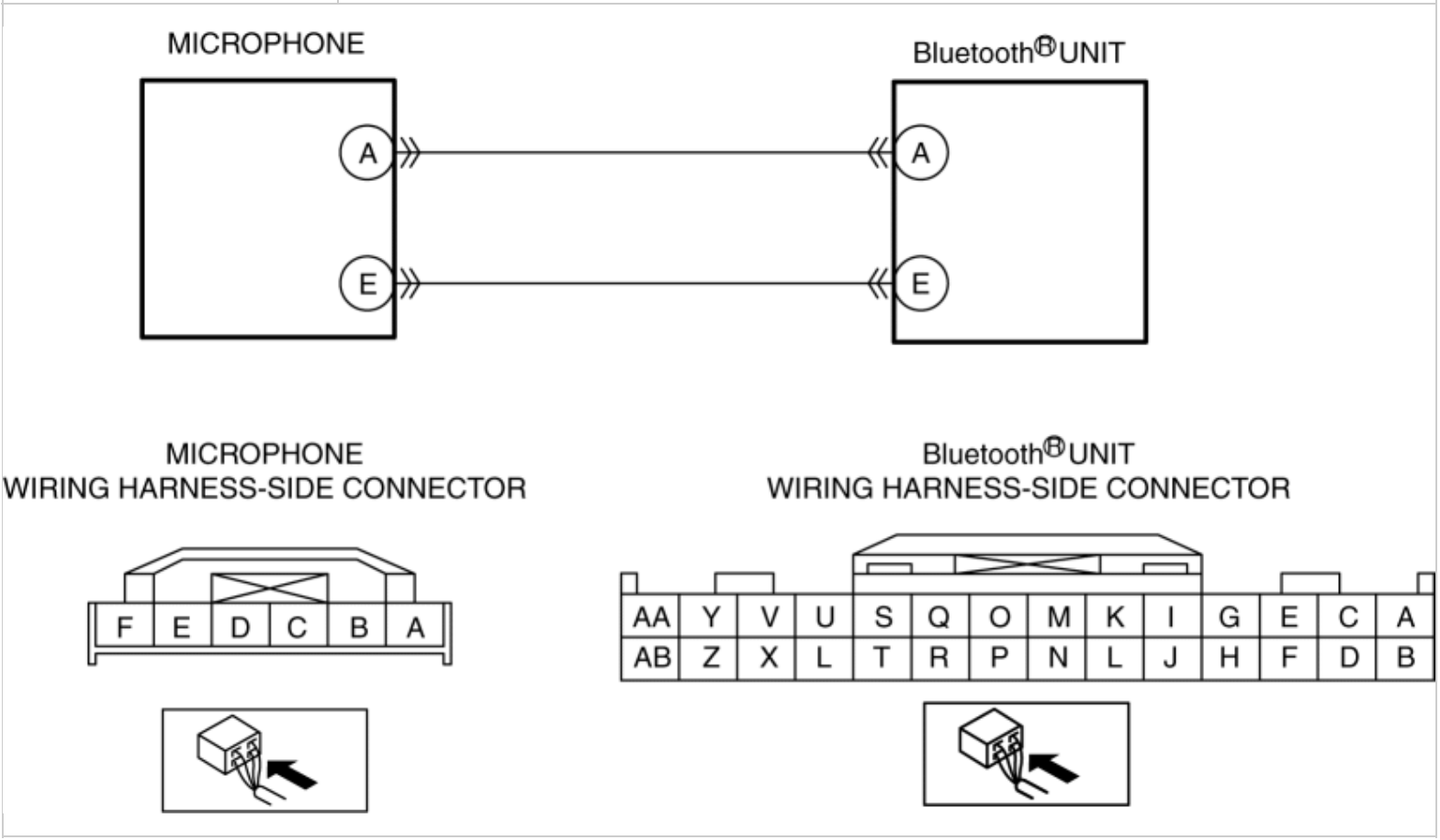

Diagnostic Procedure

Step	Inspection		Action
1	**INSPECT MICROPHONE CONNECTOR CONDITION** • Switch the ignition off. • Disconnect the negative battery cable. (See **NEGATIVE BATTERY CABLE DISCONNECTION/CONNECTION [SKYACTIV-G 2.0, SKYACTIV-G 2.5]**.) • Disconnect the microphone connector. • Inspect the connector for poor connection (such as damaged/pulled-out pins, and corrosion). • Is there any malfunction?	Yes	Repair or replace the connector or terminal, then go to Step 5.
		No	Go to the next step.
2	**INSPECT Bluetooth® UNIT CONNECTOR CONDITION** • Disconnect the Bluetooth® unit connector. • Inspect the connector for poor connection (such as damaged/pulled-out pins, and corrosion). • Is there any malfunction?	Yes	Repair or replace the connector or terminal, then go to Step 5.
		No	Go to the next step.
3	**INSPECT MICROPHONE CIRCUIT FOR OPEN CIRCUIT** • Inspect for continuity between the following terminals (wiring harness-side): ▪ Bluetooth® unit terminal E and microphone terminal E • Is there continuity?	Yes	Go to the next step.
		No	Refer to the wiring diagram and verify whether or not there is a common connector between Bluetooth® unit terminal E and microphone terminal E. **If there is a common connector:** • Determine the malfunctioning part by inspecting the common connector and the terminal for corrosion, damage, or pin disconnection, and the common wiring harness for an open circuit. • Repair or replace the malfunctioning part. **If there is no common connector:** • Repair or replace the wiring harness which has an open circuit.

			Go to Step 5.
4	**INSPECT MICROPHONE INPUT CIRCUIT FOR SHORT TO GROUND** • Inspect for continuity between the following terminals (wiring harness-side) and body ground: ▪ Bluetooth® unit terminal A and body ground • Is there continuity?	Yes	Refer to the wiring diagram and verify whether or not there is a common connector between Bluetooth® unit terminal A and microphone terminal A. **If there is a common connector:** • Determine the malfunctioning part by inspecting the common connector and the terminal for corrosion, damage, or pin disconnection, and the common wiring harness for a short to ground. • Repair or replace the malfunctioning part. **If there is no common connector:** • Repair or replace the wiring harness which has a short to ground. Go to the next step.
		No	Go to the next step.
5	**VERIFY TROUBLESHOOTING COMPLETED** • Make sure reconnect the disconnected connectors. • Connect the negative battery cable. (See **NEGATIVE BATTERY CABLE DISCONNECTION/CONNECTION [SKYACTIV-G 2.0, SKYACTIV-G 2.5]**.) • Clear the DTC from the Bluetooth® unit memory. (See **CLEARING DTC [AUDIO]**.) • Perform the Bluetooth® unit DTC inspection. (See **DTC INSPECTION [AUDIO]**.) • Is the same DTC present?	Yes	Replace the microphone then go to the next step. (See **MICROPHONE REMOVAL/INSTALLATION**.)
		No	Go to Step 7.
6	**VERIFY TROUBLESHOOTING COMPLETED** • Clear the DTC from the Bluetooth® unit memory. (See **CLEARING DTC [AUDIO]**.) • Perform the Bluetooth® unit DTC inspection. (See **DTC INSPECTION**	Yes	Repeat the inspection from Step 1. • If the malfunction recurs, replace the Bluetooth® unit. (See **Bluetooth® UNIT REMOVAL/INSTALLATION**.) Go to the next step.

	[AUDIO].) • Is the same DTC present?	No	Go to the next step.
7	**VERIFY THAT NO OTHER DTCs ARE RECORDED** • Are any DTCs present?	Yes	Go to the applicable DTC inspection. (See **DTC TABLE [AUDIO]**.)
		No	DTC troubleshooting completed.

2014 - Mazda3 - Body and Accessories

DTC: 26:Er85 [AUDIO]

DESCRIPTION	Steering switch circuit malfunction
DETECTION CONDITION	Steering switch input signal is detected continuously for **2 min or more**
Fail-safe function	Not applicable
POSSIBLE CAUSE	• Connector or terminal malfunction • Steering switch malfunction • Clock spring malfunction • Short to ground in wiring harness between the following terminals: ▪ Steering switch terminal M and Bluetooth® unit terminal F • Bluetooth® unit malfunction

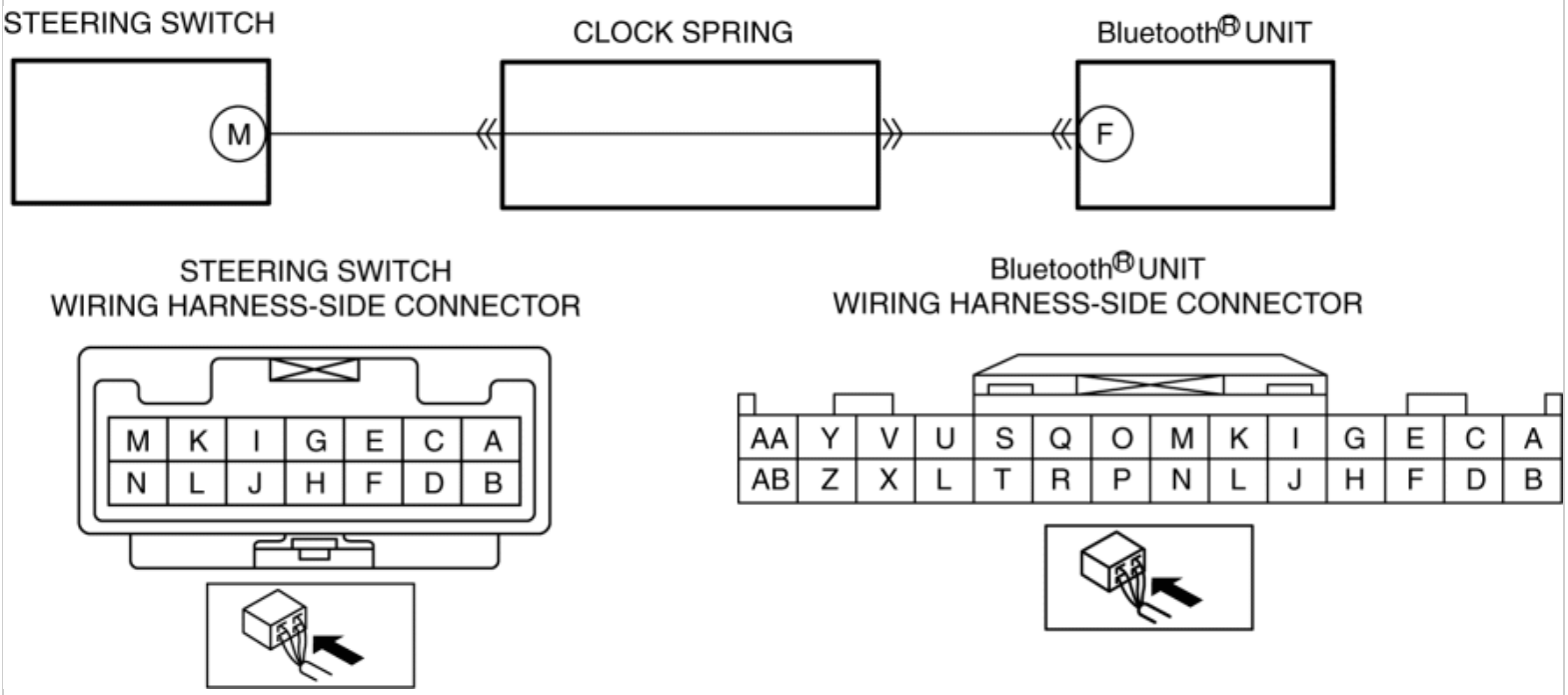

Diagnostic Procedure

Step	Inspection		Action
1	**INSPECT STEERING SWITCH CONNECTOR CONDITION**	Yes	Repair or replace the connector or terminal, then go to Step 7.

	Switch the ignition off. • Disconnect the negative battery cable. (See **NEGATIVE BATTERY CABLE DISCONNECTION/CONNECTION [SKYACTIV-G 2.0, SKYACTIV-G 2.5]**.) • Disconnect the steering switch connector. • Inspect the connector for poor connection (such as damaged/pulled-out pins, and corrosion). • Is there any malfunction?	No	Go to the next step.
2	**INSPECT CLOCK SPRING CONNECTOR CONDITION** • Disconnect the clock spring connector. • Inspect the connector for poor connection (such as damaged/pulled-out pins, and corrosion). • Is there any malfunction?	Yes	Repair or replace the connector or terminal, then go to Step 7.
		No	Go to the next step.
3	**INSPECT Bluetooth® UNIT CONNECTOR CONDITION** • Disconnect the Bluetooth® unit connector. • Inspect the connector for poor connection (such as damaged/pulled-out pins, and corrosion). • Is there any malfunction?	Yes	Repair or replace the connector or terminal, then go to Step 7.
		No	Go to the next step.
4	**INSPECT STEERING SWITCH** • Inspect the steering switch. (See **STEERING SWITCH INSPECTION**.) • Is there any malfunction?	Yes	Replace the steering switch, then go to Step 7. (See **STEERING SWITCH REMOVAL/INSTALLATION**.)
		No	Go to the next step.
5	**INSPECT CLOCK SPRING** • Inspect the crock spring. (See **CLOCK SPRING INSPECTION [STANDARD DEPLOYMENT CONTROL SYSTEM]**.) (See **CLOCK SPRING INSPECTION [TWO-STEP DEPLOYMENT CONTROL SYSTEM]**.)	Yes	Replace the crock spring, then go to Step 7. (See **CLOCK SPRING REMOVAL/INSTALLATION [STANDARD DEPLOYMENT CONTROL SYSTEM]**.) (See **CLOCK SPRING REMOVAL/INSTALLATION [TWO-STEP DEPLOYMENT CONTROL SYSTEM]**.)
		No	Go to the next step.

	• Is there any malfunction?		
6	**INSPECT STEERING SWITCH INPUT CIRCUIT FOR SHORT TO GROUND** • Make sure reconnect the disconnected connectors. • Inspect for continuity between the following terminals (wiring harness-side) and body ground: ▪ Bluetooth® unit terminal F • Is there continuity?	Yes	Refer to the wiring diagram and verify whether or not there is a common connector between Bluetooth® unit terminal F and steering switch terminal M. **If there is a common connector:** • Determine the malfunctioning part by inspecting the common connector and the terminal for corrosion, damage, or pin disconnection, and the common wiring harness for a short to ground. • Repair or replace the malfunctioning part. **If there is no common connector:** • Repair or replace the wiring harness which has a short to ground. Go to the next step.
		No	Go to the next step.
7	**VERIFY TROUBLESHOOTING COMPLETED** • Switch the ignition off. • Connect the negative battery cable. (See **NEGATIVE BATTERY CABLE DISCONNECTION/CONNECTION [SKYACTIV-G 2.0, SKYACTIV-G 2.5]**.) • Clear the DTC from the Bluetooth® unit memory. (See **CLEARING DTC [AUDIO]**.) • Perform the Bluetooth® unit DTC inspection. (See **DTC INSPECTION [AUDIO]**.) • Is the same DTC present?	Yes	Repeat the inspection from Step 1. • If the malfunction recurs, replace the Bluetooth® unit. (See **Bluetooth® UNIT REMOVAL/INSTALLATION**.) Go to the next step.
		No	Go to the next step.
8	**VERIFY THAT NO OTHER DTCs ARE RECORDED** • Are any DTCs present?	Yes	Go to the applicable DTC inspection. (See **DTC TABLE [AUDIO]**.)
		No	DTC troubleshooting completed.

2014 - Mazda3 - Body and Accessories

DTC: 26:Er86 [AUDIO]

DESCRIPTION	Bluetooth® unit internal malfunction
DETECTION CONDITION	Bluetooth® unit detects the internal malfunction.
Fail-safe function	Not applicable
POSSIBLE CAUSE	• Bluetooth® unit malfunction
System wiring diagram	Not applicable

Diagnostic Procedure

Step	Inspection		Action
1	**CONFIRM Bluetooth® UNIT DTC** • Clear the DTC from the Bluetooth® unit memory. (See **CLEARING DTC [AUDIO]**.) • Perform the Bluetooth® unit DTC inspection. (See **DTC INSPECTION [AUDIO]**.) • Is the same DTC present?	Yes	Replace the Bluetooth® unit, then go to the next step. (See **Bluetooth® UNIT REMOVAL/INSTALLATION**.)
		No	Go to the next step.
2	**VERIFY THAT NO OTHER DTCs ARE RECORDED** • Are any DTCs present?	Yes	Go to the applicable DTC inspection. (See **DTC TABLE [AUDIO]**.)
		No	DTC troubleshooting completed.

2014 - Mazda3 - Body and Accessories

DTC: 30:Er01 [AUDIO]

Description	CD player mechanism malfunction
Detection condition	CD player mechanism malfunction detected.
Fail-safe function	Not applicable
Possible cause	• CD insertion direction mistaken • CD scratching or soiling • Incompatible CD used • Support error • CD player malfunction
System wiring diagram	Not applicable

Diagnostic Procedure

Step	Inspection		Action
1	**INSPECT CD** • Clear the CD player DTCs. (See **DIAGNOSTIC ASSIST FUNCTION [AUDIO]**.) • Perform CD troubleshooting using the diagnostic assist function. (See **DIAGNOSTIC ASSIST FUNCTION [AUDIO]**.) • Perform a CD player DTC inspection. (See **DIAGNOSTIC ASSIST FUNCTION [AUDIO]**.) • Is the same DTC displayed?	Yes	Go to the next step.
		No	Go to Step 3.

2	**CD PLAYER SOFTWARE INSPECTION** • Perform a CD software reset using the diagnostic assist function. (See **DIAGNOSTIC ASSIST FUNCTION [AUDIO]**.) • Perform a CD software update using the diagnostic assist function. (See **DIAGNOSTIC ASSIST FUNCTION [AUDIO]**.) • Perform a DTC inspection of the CD player. (See **DIAGNOSTIC ASSIST FUNCTION [AUDIO]**.) • Is the same DTC displayed?	Yes	Replace the CD player, then go to the next step. (See **CD PLAYER REMOVAL**.) (See **CD PLAYER INSTALLATION**.)
		No	Go to the next step.
3	**VERIFY OTHER DTCs** • Are any other DTCs displayed?	Yes	Repair the malfunctioning location according to the applicable DTC troubleshooting. (See **DTC TABLE [AUDIO]**.)
		No	DTC troubleshooting completed.

2014 - Mazda3 - Body and Accessories

DTC: 30:Er07 [AUDIO]

Description	CD player data read error
Detection condition	CD player read error detected.
Fail-safe function	Not applicable
Possible cause	• CD insertion direction mistaken • CD scratching or soiling • Incompatible CD used • Support error • CD player malfunction
System wiring diagram	Not applicable

Diagnostic Procedure

Step	Inspection		Action
1	**INSPECT CD** • Clear the CD player DTCs. (See **DIAGNOSTIC ASSIST FUNCTION [AUDIO]**.) • Perform CD troubleshooting using the diagnostic assist function. (See **DIAGNOSTIC ASSIST FUNCTION [AUDIO]**.) • Perform a CD player DTC inspection. (See **DIAGNOSTIC ASSIST FUNCTION [AUDIO]**.) • Is the same DTC displayed?	Yes	Go to the next step.
		No	Go to Step 3.

2	**CD PLAYER SOFTWARE INSPECTION** • Perform a CD software reset using the diagnostic assist function. (See **DIAGNOSTIC ASSIST FUNCTION [AUDIO]**.) • Perform a CD software update using the diagnostic assist function. (See **DIAGNOSTIC ASSIST FUNCTION [AUDIO]**.) • Perform a DTC inspection of the CD player. (See **DIAGNOSTIC ASSIST FUNCTION [AUDIO]**.) • Is the same DTC displayed?	Yes	Replace the CD player, then go to the next step. (See **CD PLAYER REMOVAL**.) (See **CD PLAYER INSTALLATION**.)
		No	Go to the next step.
3	**VERIFY OTHER DTCs** • Are any other DTCs displayed?	Yes	Repair the malfunctioning location according to the applicable DTC troubleshooting. (See **DTC TABLE [AUDIO]**.)
		No	DTC troubleshooting completed.

2014 - Mazda3 - Body and Accessories

DTC: 30:Er30 [AUDIO]

Description	CD player temperature abnormality
Detection condition	Abnormal temperature in CD player is detected.
Fail-safe function	Not applicable
Possible cause	• Temporary abnormality due to continuous use • CD player malfunction
System wiring diagram	Not applicable

Diagnostic Procedure

Step	Inspection		Action
1	**VERIFY IF MALFUNCTION CAUSE IS CD PLAYER** • Clear the CD player DTCs. (See **DIAGNOSTIC ASSIST FUNCTION [AUDIO]**.) • Turn off the CD player to return it to normal temperature conditions. • Perform a DTC inspection of the CD player. (See **DIAGNOSTIC ASSIST FUNCTION [AUDIO]**.) • Is the same DTC displayed?	Yes	Replace the CD player, then go to the next step. (See **CD PLAYER REMOVAL**.) (See **CD PLAYER INSTALLATION**.)
		No	• CD player is normal. (Explain to the customer that the CD player malfunction was temporary due to continuous use of the CD player.) ▪ If the malfunction recurs, replace the CD player. (See **CD PLAYER REMOVAL**.) (See **CD PLAYER INSTALLATION**.) • Go to the next step.

2	**VERIFY OTHER DTCs** • Are any other DTCs displayed?	Yes	Repair the malfunctioning location according to the applicable DTC troubleshooting. (See **DTC TABLE [AUDIO]**.)
		No	DTC troubleshooting completed.

2014 - Mazda3 - Body and Accessories

DIAGNOSTIC ASSIST FUNCTION [AUDIO]

LCD inspection

1. Switch the ignition to ACC or ON (engine off or on).
2. Turn the audio unit power on.
3. While pressing the POWER/VOLUME button, press the TUNE button (up) for **0.5 s or more**.

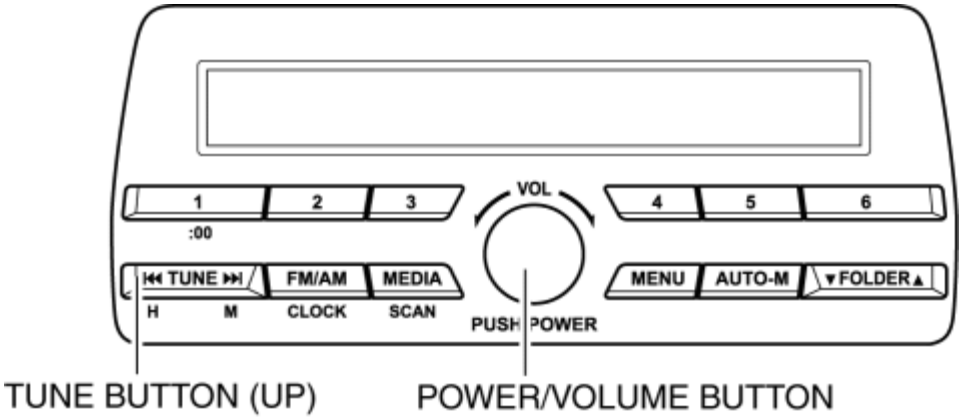

4. Inspect according to the following table:

Inspection	Display	Action	
• Verify the displayed screen. • Is the LCD content truncated or faint?	Appended figure	Yes	Replace the audio unit. (See **AUDIO UNIT REMOVAL / INSTALLATION**.)
		No	Display is normal.

Appended figure

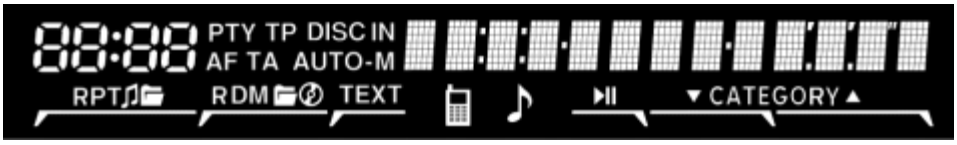

5. Switch the audio power supply off or switch the ignition OFF to end the diagnostic assist function.

Button Inspection

1. Switch the ignition to ACC or ON (engine off or on).
2. Turn the audio unit power on.
3. While pressing the POWER/VOLUME button, press the PRESET 3 button for **0.5 s or more**.

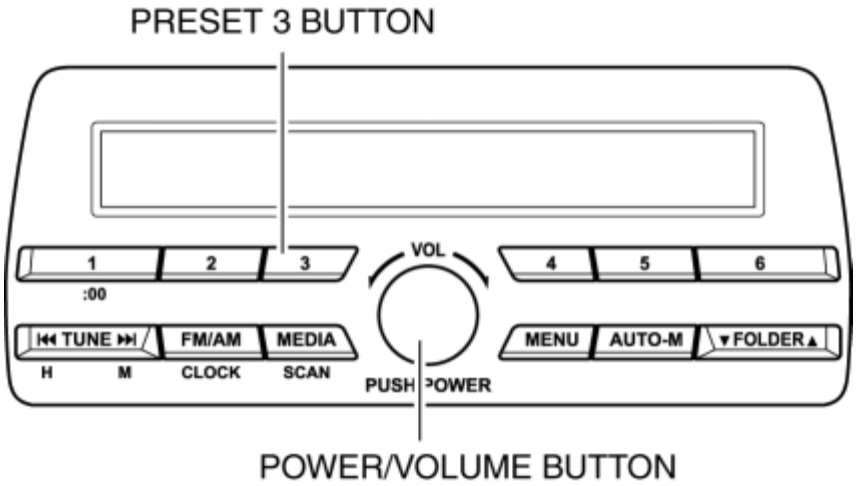

4. Inspect according to the following table:

Inspection	Display	Action	
• Operate all of the switches (press). • Does the buzzer sound?	—	Yes	The switch is normal.
		No	Verify the switch.

5. Switch the audio power supply off or switch the ignition OFF to end the diagnostic assist function.

Speaker Inspection

1. Switch the ignition to ACC or ON (engine off or on).
2. Turn the audio unit power on.
3. Tune in the radio.
4. While pressing the POWER/VOLUME button, press the AUTO-M button for **0.5 s or more**.

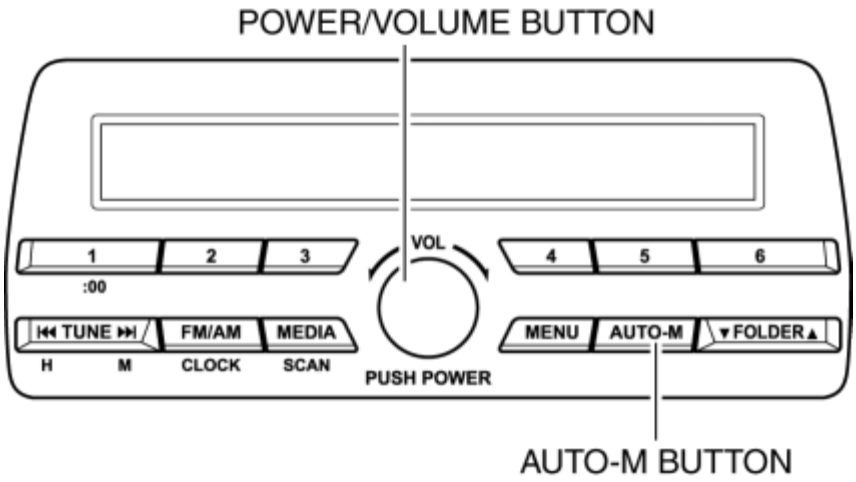

5. Inspect according to the following table:

Inspection	Display	Action	
• Does each speaker output sound in the following order?: 1. Front door speaker (LH) and tweeter (LH) 2. Front door speaker (RH) and tweeter (RH) 3. Rear door speaker (RH) 4. Rear door speaker (LH)	—	Yes	The speakers and the wiring harness between the audio unit and speakers are normal.
		No	• If no sound is produced from some of the speakers. (See **NO SOUND OUTPUT IN ALL MODES [ENTERTAINMENT SYSTEM [WITHOUT CENTER DISPLAY]]**.)

6. Switch the audio power supply off or switch the ignition OFF to end the diagnostic assist function.

Radio Reception Condition Inspection

1. Switch the ignition to ACC or ON (engine off or on).

2. Turn the audio unit power on.

3. Tune in the radio.

4. While pressing the POWER/VOLUME button, press the PRESET 2 button for **0.5 s or more**.

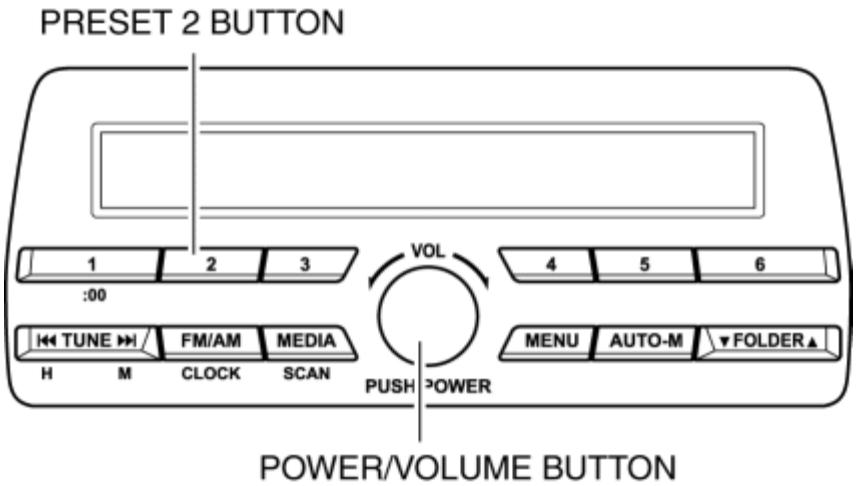

5. Inspect according to the following table:

CAUTION:

- Even if the system is normal, radio reception may be difficult depending on where the system is inspected (indoors/outdoors, or conditions at the location). Before inspecting the system, verify that radio reception is adequate.
- When performing the inspection, select the best area for receiving radio frequencies.

Inspection	Display	Action
Verify the displayed screen.	LEV 10 — LEV 5	Glass antenna, antenna amplifier, antenna feeder and audio unit are normal.
	LEV 4 — LEV 3	Change frequencies and re-perform the inspection.
		• Inspect the glass antenna, antenna amplifier, and antenna feeder. (See **GLASS ANTENNA INSPECTION**.) (See **ANTENNA AMPLIFIER INSPECTION**.) (See **ANTENNA FEEDER NO.1 INSPECTION**.) (See **ANTENNA FEEDER NO.2 INSPECTION**.) (See **ANTENNA FEEDER NO.3 INSPECTION**.)

	LEV 2 — LEV 0	• If the glass antenna, antenna amplifier, or antenna feeder is not normal, replace the malfunctioning part. (See **FILAMENT REPAIR**.) (See **ANTENNA AMPLIFIER REMOVAL/INSTALLATION**.) (See **ANTENNA FEEDER NO.1 REMOVAL/INSTALLATION**.) (See **ANTENNA FEEDER NO.2 REMOVAL**.) (See **ANTENNA FEEDER NO.2 INSTALLATION**.) (See **ANTENNA FEEDER NO.3 REMOVAL/INSTALLATION**.) • If the glass antenna, antenna amplifier, and antenna feeder are normal, replace the audio unit. (See **AUDIO UNIT REMOVAL/INSTALLATION**.)

6. Switch the audio power supply off or switch the ignition OFF to end the diagnostic assist function.

Antenna control inspection

1. Switch the ignition to ACC or ON (engine off or on).

2. Turn the audio unit power on.

3. Tune in the radio.

4. While pressing the POWER/VOLUME button, press the FM/AM/CLOCK button for **0.5 s or more**.

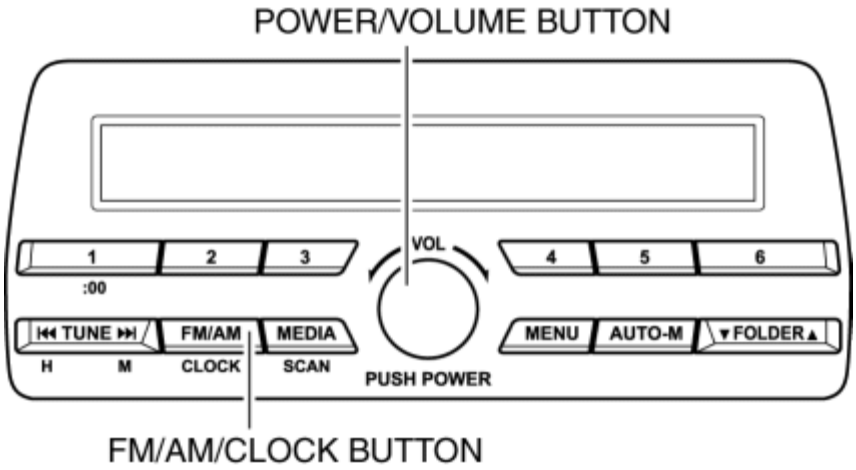

5. Inspect according to the following table:

Inspection	Display	Action	
• Verify the displayed screen. • Take action according to the audio.	ANT—ON	Good sound quality	System is normal.
		Bad sound quality	• Inspect the glass antenna, antenna amplifier, and antenna feeder. (See **GLASS ANTENNA INSPECTION**.) (See **ANTENNA AMPLIFIER INSPECTION**.) (See **ANTENNA FEEDER NO.1 INSPECTION**.) (See **ANTENNA FEEDER NO.2 INSPECTION**.) (See **ANTENNA FEEDER NO.3 INSPECTION**.) • If the glass antenna, antenna amplifier, or antenna feeder is not normal, replace the malfunctioning part. (See **FILAMENT REPAIR**.) (See **ANTENNA AMPLIFIER REMOVAL/INSTALLATION**.) (See **ANTENNA FEEDER NO.1 REMOVAL/INSTALLATION**.) (See **ANTENNA FEEDER NO.2 REMOVAL**.) (See **ANTENNA FEEDER NO.2 INSTALLATION**.) (See **ANTENNA FEEDER NO.3 REMOVAL/INSTALLATION**.) • If the glass antenna, antenna amplifier, and antenna feeder are normal, replace the audio unit. (See **AUDIO UNIT REMOVAL/INSTALLATION**.)
	ANT—OFF	Replace the audio unit. (See **AUDIO UNIT REMOVAL/INSTALLATION**.)	

6. Switch the audio power supply off or switch the ignition OFF to end the diagnostic assist function.

Dial inspection

1. Switch the ignition to ACC or ON (engine off or on).

2. Turn the audio unit power on.

3. While pressing the AUTO-M button, press the PRESET 1 button for **3 s or more**.

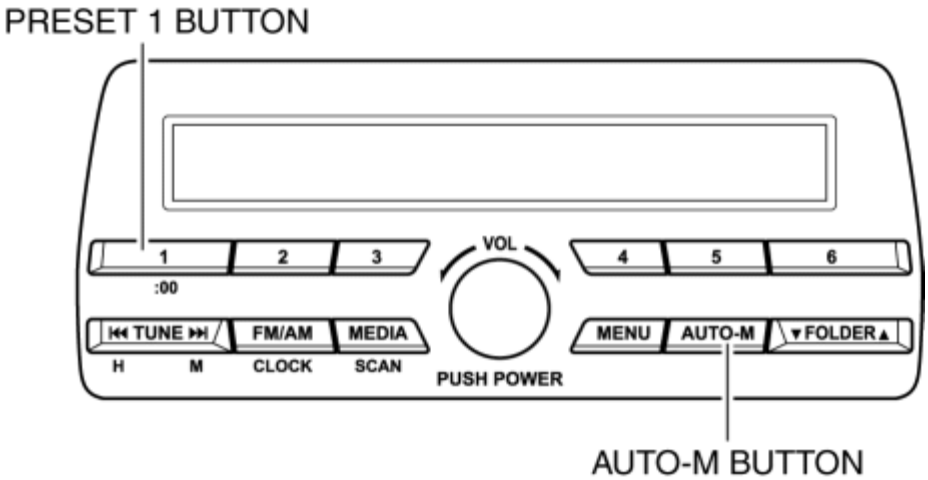

4. Inspect according to the following table:

Inspection	Display	Action	
• Turn the POWER/VOLUME button. • Does the switch rotation direction correspond to the direction indicated in the display?	→	Yes	System is normal.
	←	No	Replace the audio unit. (See **AUDIO UNIT REMOVAL/INSTALLATION**.)

5. Switch the audio power supply off or switch the ignition OFF to end the diagnostic assist function.

Audio amplifier specification verification

1. Switch the ignition to ACC or ON (engine off or on).

2. Turn the audio unit power on.

3. While pressing the POWER/VOLUME button, press the TUNE button (down) for **3 s or more**.

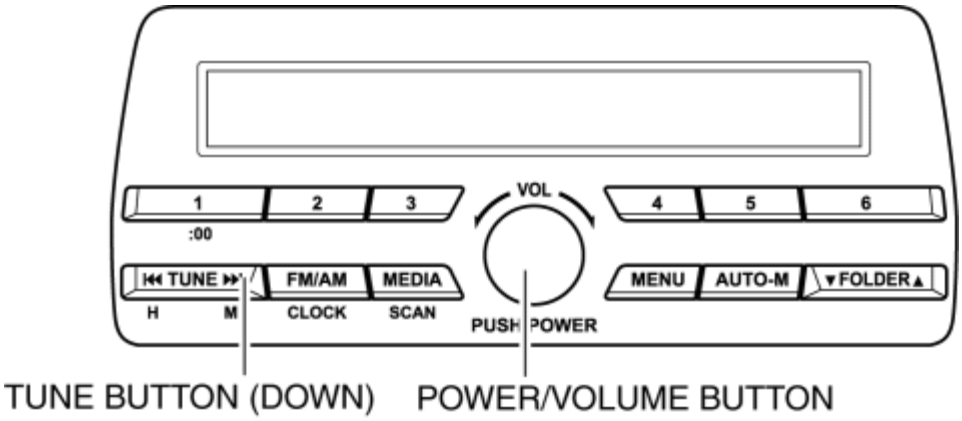

4. Inspect according to the following table:

Inspection	Display	Action	
• Verify the audio amplifier specifications. • Are the audio amplifier specifications correct?	**Vehicle without Bose ®** • N (Normal)	Yes	System is normal.
		No	Replace the audio unit. (See **AUDIO UNIT REMOVAL / INSTALLATION**.)

5. Switch the ignition OFF to end the diagnostic assist function.

CD inspection

1. Switch the ignition to ACC or ON (engine off or on).
2. Turn the audio unit power on.
3. While pressing the POWER/VOLUME button, press the PRESET 6 button for **3 s or more**.

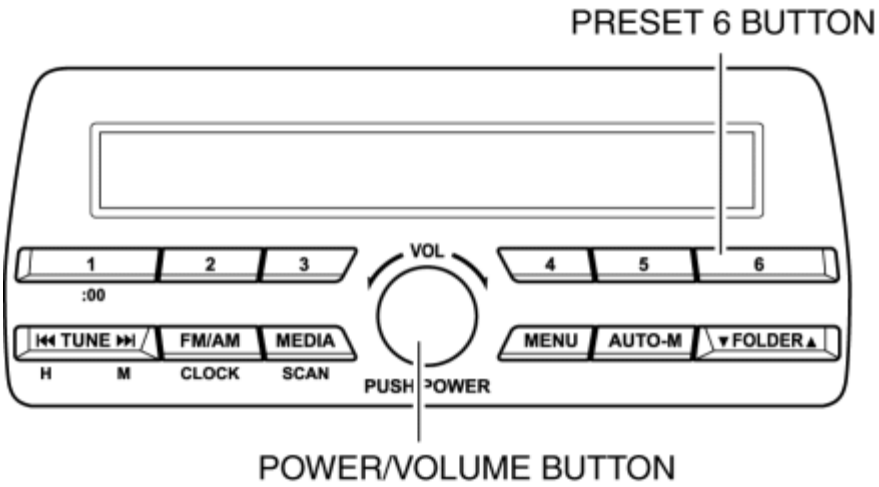

4. Verify that LOAD NEW DISC is displayed and insert a CD.

NOTE:

- If TEST REJECTED is displayed, return to the normal mode because an on-market installed CD player cannot transition to the CD troubleshooting mode.

5. CHECKING is displayed and enters troubleshooting status.

6. Inspect according to the following table:

Inspection	Display	Action
Verify the displayed screen.	CD DEFECTIVE	System is normal. CD is malfunctioning.
	CD-DRIVE MALFUNCTION	Replace the audio unit. (See **AUDIO UNIT REMOVAL/INSTALLATION**.)

7. Switch the ignition OFF to end the diagnostic assist function.

Hands-free password clearing

1. Switch the ignition to ACC or ON (engine off or on).

2. While pressing AUTO-M button, press the PRESET 2 button for **3 s or more**.

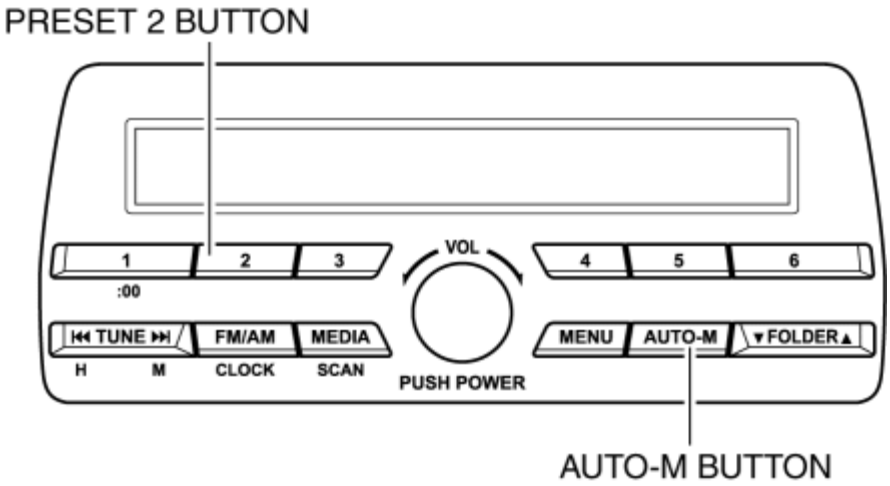

3. "Cleared" is indicated in the display, and verify that the password is cleared.

4. Switch the ignition OFF to end the diagnostic assist function.

Software reset

1. Switch the ignition to ACC or ON (engine off or on).

2. While pressing the POWER/VOLUME button, press the FOLDER button (down) and TUNE button (up) for **3 s or more**.

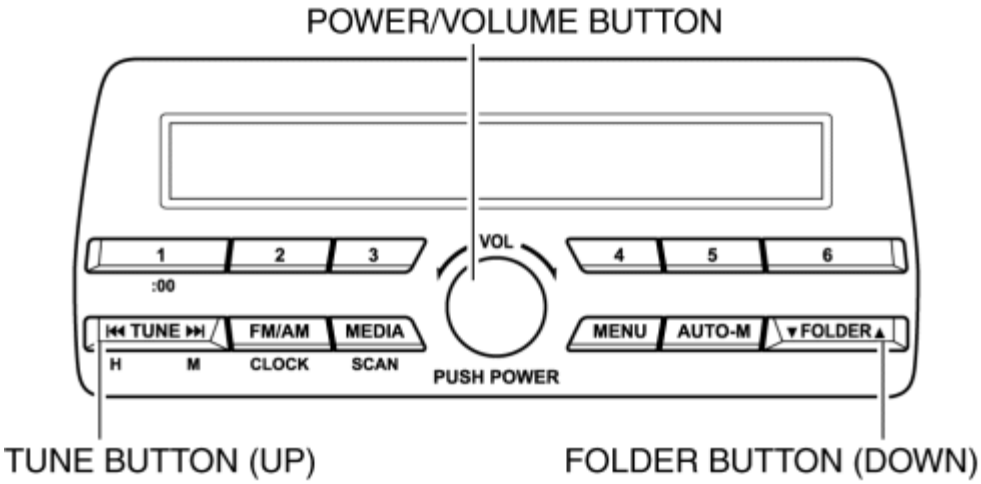

NOTE:

- Radio preset is also initialized.

CD software reset

1. Switch the ignition to ACC or ON (engine off or on).

2. While pressing the POWER/VOLUME button, press the FOLDER button (up) and TUNE button (down) for **3 s or more**.

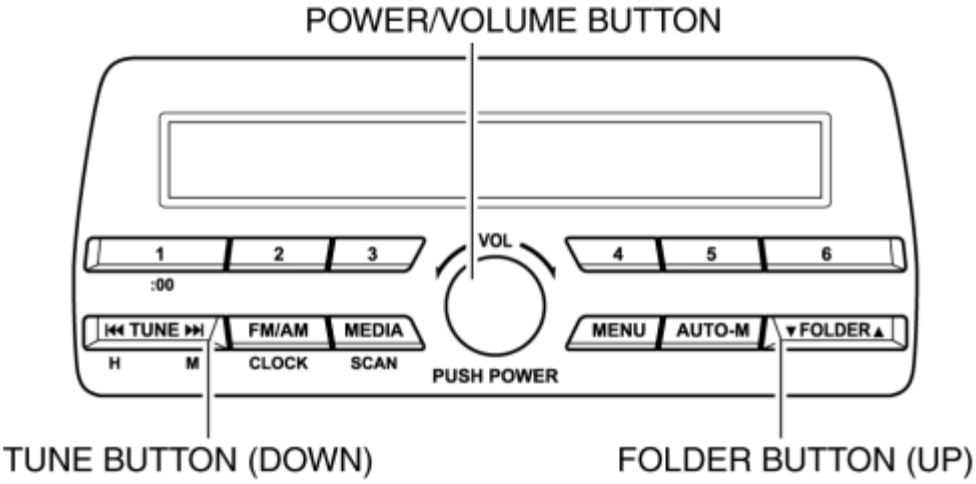

NOTE:

- After resetting, CD RESET is displayed for approx. 5 s.

CD software update

1. Switch the ignition to ACC or ON (engine off or on).

2. Insert the software update disc into the CD player.

NOTE:

- When the update begins, "CD UPDATING" is displayed.

3. After the update is completed, verify that the disc is automatically ejected and the screen returns to the normal display.

CD part number verification

1. Switch the ignition to ACC or ON (engine off or on).

2. While pressing the AUTO-M button, press the PRESET 3 button for **3 s or more**.

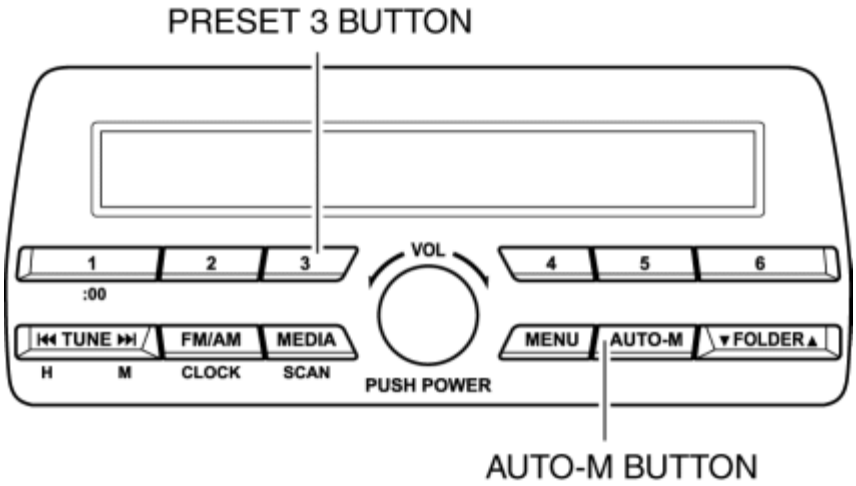

NOTE:

- The CD part number is displayed in the audio unit display.

3. Switch the ignition OFF to end the diagnostic assist function.

2014 - Mazda3 - Body and Accessories

FOREWORD [AUDIO AMPLIFIER]

- If there is any vehicle malfunction complaint lodged by a customer, perform malfunction diagnosis according to the troubleshooting procedure.

Troubleshooting Procedure

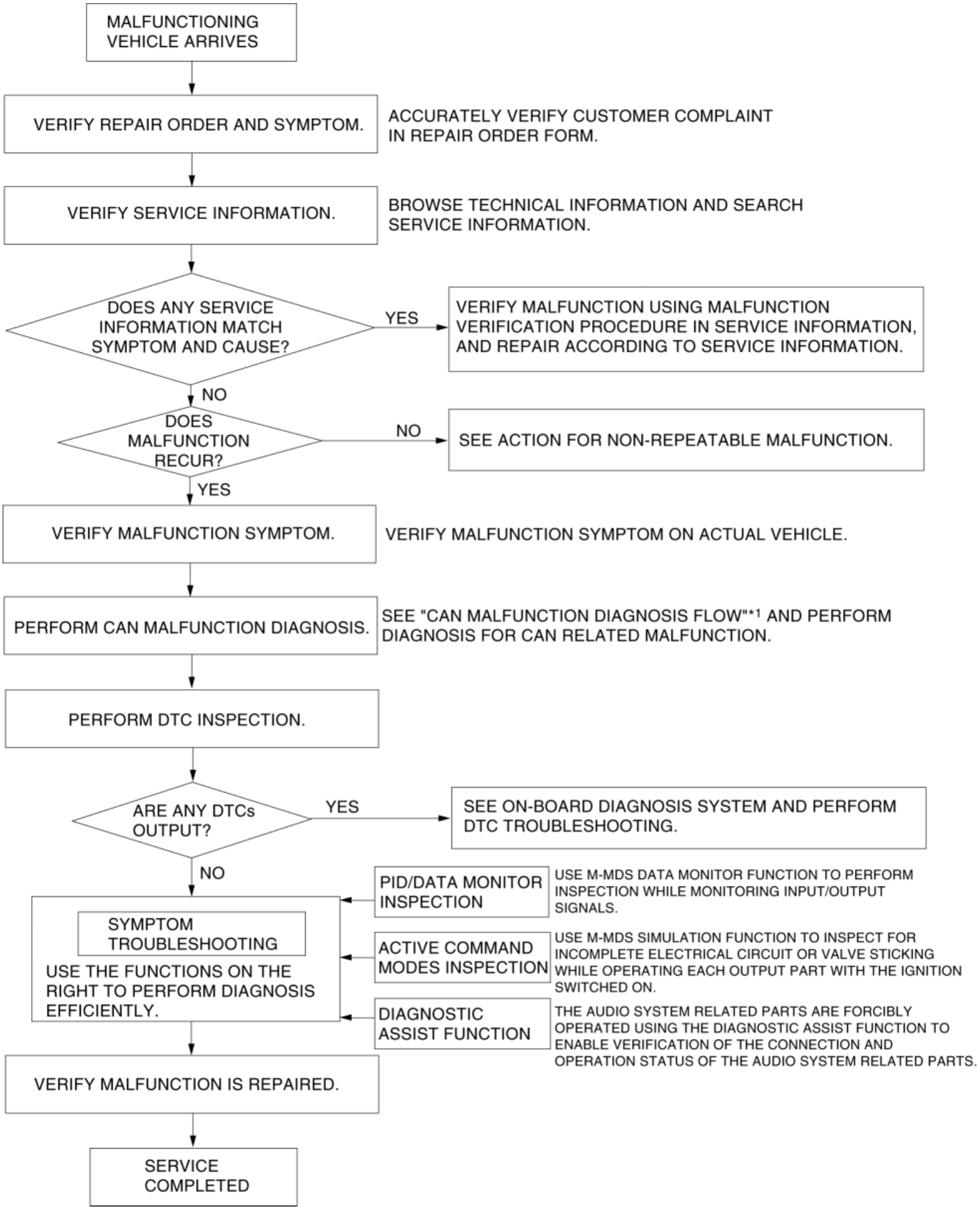
MALFUNCTIONING VEHICLE ARRIVES
VERIFY REPAIR ORDER AND SYMPTOM.
ACCURATELY VERIFY CUSTOMER COMPLAINT IN REPAIR ORDER FORM.
VERIFY SERVICE INFORMATION.
BROWSE TECHNICAL INFORMATION AND SEARCH SERVICE INFORMATION.
DOES ANY SERVICE INFORMATION MATCH SYMPTOM AND CAUSE?
YES
VERIFY MALFUNCTION USING MALFUNCTION VERIFICATION PROCEDURE IN SERVICE INFORMATION, AND REPAIR ACCORDING TO SERVICE INFORMATION.
NO
DOES MALFUNCTION RECUR?
NO
SEE ACTION FOR NON-REPEATABLE MALFUNCTION.
YES
VERIFY MALFUNCTION SYMPTOM.
VERIFY MALFUNCTION SYMPTOM ON ACTUAL VEHICLE.
PERFORM CAN MALFUNCTION DIAGNOSIS.
SEE "CAN MALFUNCTION DIAGNOSIS FLOW"*1 AND PERFORM DIAGNOSIS FOR CAN RELATED MALFUNCTION.
PERFORM DTC INSPECTION.
ARE ANY DTCs OUTPUT?
YES
SEE ON-BOARD DIAGNOSIS SYSTEM AND PERFORM DTC TROUBLESHOOTING.
NO
SYMPTOM TROUBLESHOOTING
USE THE FUNCTIONS ON THE RIGHT TO PERFORM DIAGNOSIS EFFICIENTLY.
PID/DATA MONITOR INSPECTION
USE M-MDS DATA MONITOR FUNCTION TO PERFORM INSPECTION WHILE MONITORING INPUT/OUTPUT SIGNALS.
ACTIVE COMMAND MODES INSPECTION
USE M-MDS SIMULATION FUNCTION TO INSPECT FOR INCOMPLETE ELECTRICAL CIRCUIT OR VALVE STICKING WHILE OPERATING EACH OUTPUT PART WITH THE IGNITION SWITCHED ON.
DIAGNOSTIC ASSIST FUNCTION
THE AUDIO SYSTEM RELATED PARTS ARE FORCIBLY OPERATED USING THE DIAGNOSTIC ASSIST FUNCTION TO ENABLE VERIFICATION OF THE CONNECTION AND OPERATION STATUS OF THE AUDIO SYSTEM RELATED PARTS.
VERIFY MALFUNCTION IS REPAIRED.
SERVICE COMPLETED

*1

CONTROLLER AREA NETWORK (CAN) MALFUNCTION DIAGNOSIS FLOW

Action for non-repeatable malfunction

- If the malfunction does not recur, verify the malfunction cause by performing the following actions:
  - Verify that a DTC has been recorded in the memory. (See **DTC INSPECTION [AUDIO AMPLIFIER]**.)
  - Based on the repair order form, attempt to drive the vehicle or perform tests to replicate the malfunction, record the data at that time, and detect the malfunction cause.
  - Shake the wiring harness or connector of the electrical component which is suspected to be the cause of the malfunction, and inspect for occurrence of any malfunction or DTCs.

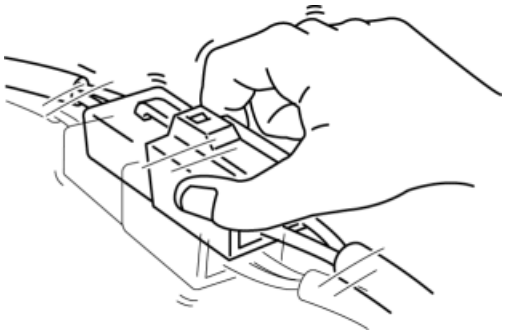

  - Inspect the female terminals on the connector of the electric component which is suspected to be the cause of the malfunction for poor connection.

2014 - Mazda3 - Body and Accessories

DTC INSPECTION [AUDIO AMPLIFIER]

CMDTC Self Test

1. Connect the M-MDS to the DLC-2.

2. After the vehicle is identified, select the following items from the initialization screen of the M-MDS.

    a. Select “Self-test”

    b. Select “All CMDTCs”

3. Verify the DTC according to the directions on the screen.

    - If a DTC is displayed, repair the malfunctioning part according to the applicable DTC troubleshooting. (See **DTC TABLE [AUDIO AMPLIFIER]**.)

2014 - Mazda3 - Body and Accessories

CLEARING DTC [AUDIO AMPLIFIER]

CAUTION:

- If the memory is cleared, past malfunctions may no longer be displayed, therefore before clearing DTCs, record all DTCs displayed in the DTC inspection on the Audio Repair Order Form.

CMDTC Self Test

1. Connect the M-MDS to the DLC 2.
2. After the vehicle is identified, select the following items from the initialization screen of the M-MDS.
   a. Select “Self Test”
   b. Select “All CMDTCs”
3. Verify the DTC according to the directions on the screen.
4. Press the clear button on the DTC screen to clear the DTC.
5. Switch the ignition to off.
6. Switch the ignition ON (engine off or on) and wait for **5 s or more**.
7. Perform DTC inspection. (See **DTC INSPECTION [AUDIO AMPLIFIER]**.)
8. Verify that no DTCs are displayed.

2014 - Mazda3 - Body and Accessories

DTC TABLE [AUDIO AMPLIFIER]

× **Applicable**

— **Not applicable**

DTC	Security indicator light	Description	Fail-safe	Drive cycle	Self-test type*1	Memory function	Reference
U0001:88	—	Module communication error (HS-CAN)	—	—	C	×	(See **DTC U0001:88 [AUDIO AMPLIFIER]**.)
U2300:54	—	Configuration error (data not received)	—	—	C	×	(See **DTC U2300:54/U2300:55/U2300:56/U2300:64 [AUDIO AMPLIFIER]**.)
U2300:55	—	Configuration error (not configured)	—	—	C	×	
U2300:56	—	Configuration error (Ineffective/ non-interchangeable data read)	—	—	C	×	
U2300:64	—	Configuration error (error value read)	—	—	C	×	
U3003:16	—	Voltage decrease input from battery	—	—	C	×	(See **DTC U3003:16 [AUDIO AMPLIFIER]**.)
U3003:17	—	Audio amplifier high power supply voltage input	—	—	C	×	(See **DTC U3003:17 [AUDIO AMPLIFIER]**.)
U3000:49	—	Audio amplifier internal malfunction	—	—	C	×	(See **DTC U3000:49 [AUDIO AMPLIFIER]**.)

*1

C: CMDTC self test

2014 - Mazda3 - Body and Accessories

DTC U0001:88 [AUDIO AMPLIFIER]

Description	Module communication error (HS-CAN)
Detection condition	The audio amplifier detects a CAN bus communication line (HS-CAN) malfunction.
Fail-safe function	Not applicable
Possible cause	• Malfunction in CAN bus communication line • Malfunction in CAN line between the audio amplifier and instrument cluster
System wiring diagram	Not applicable

Diagnostic Procedure

- Perform the malfunction diagnosis according to the troubleshooting procedure for the multiplex communication system. (See **FOREWORD**.)

2014 - Mazda3 - Body and Accessories

DTC U3003:16 [AUDIO AMPLIFIER]

Description	Voltage decrease input from battery
Detection condition	With the ignition switched to ACC or ON, the audio amplifier detects voltage from the battery of 10 V or less for 5 s or more.
Fail-safe function	Not applicable

Possible cause	• Battery malfunction
	• Generator malfunction
	• Audio amplifier connector or terminal malfunction
	• Audio amplifier power supply circuit malfunction
	  ▪ Short to ground in the wiring harness between audio amplifier terminal 3A and battery (+) terminal.
	  ▪ Short to ground in wiring harness between audio amplifier terminal 2D and ACC RELAY
	  ▪ BOSE 25A fuse malfunction
	  ▪ AUDIO2 7.5 A fuse malfunction
	  ▪ Open circuit in wiring harness between audio amplifier terminal 2D and ACC RELAY
	  ▪ CABIN+B 50 A fuse malfunction
	  ▪ MAIN 200 A fuse malfunction
	  ▪ Open circuit in wiring harness between audio amplifier terminal 3A and battery (+) terminal
	• Audio amplifier malfunction

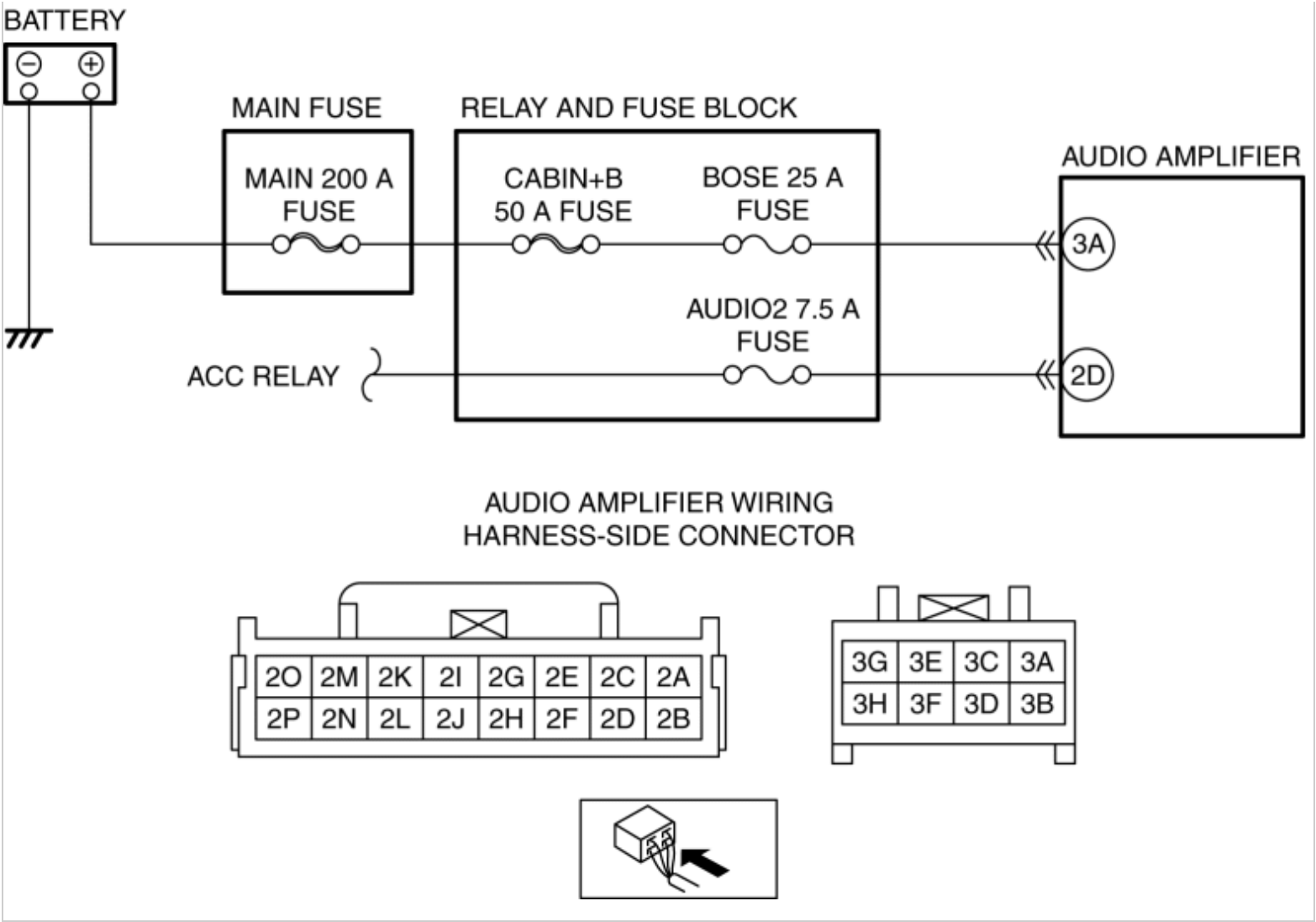

Diagnostic Procedure

Step	Inspection		Action
1	**VERIFY PCM DTCs** • Perform the DTC inspection for the PCM using the M-MDS. (See **ON-BOARD DIAGNOSTIC TEST [SKYACTIV-G 2.0, SKYACTIV-G 2.5]**.) • Is the DTC displayed?	Yes	Repair the malfunctioning part according to the applicable DTC troubleshooting. (See **DTC TABLE [SKYACTIV-G 2.0, SKYACTIV-G 2.5]**.)
		No	Go to the next step.
2	**INSPECT BATTERY** • Inspect the battery. (See **BATTERY INSPECTION [SKYACTIV-G 2.0, SKYACTIV-G 2.5]**.) • Is there any malfunctioning part?	Yes	Recharge or replace the battery, then go to Step 8. (See **BATTERY RECHARGING [SKYACTIV-G 2.0, SKYACTIV-G 2.5]**.) (See **BATTERY REMOVAL/INSTALLATION [SKYACTIV-G 2.0, SKYACTIV-G 2.5]**.)

		No	Go to the next step.
3	**INSPECT GENERATOR** • Inspect the generator. (See **GENERATOR INSPECTION [SKYACTIV-G 2.0, SKYACTIV-G 2.5 (WITHOUT i-ELOOP)]**.) • Is there any malfunctioning part?	Yes	Replace the generator, then go to Step 8. (See **GENERATOR REMOVAL/INSTALLATION [SKYACTIV-G 2.0, SKYACTIV-G 2.5 (WITHOUT i-ELOOP)]**.)
		No	Go to the next step.
4	**INSPECT AUDIO AMPLIFIER CONNECTOR CONDITION** • Switch the ignition off. • Disconnect the negative battery cable. (See **NEGATIVE BATTERY CABLE DISCONNECTION/CONNECTION [SKYACTIV-G 2.0, SKYACTIV-G 2.5]**.) • Disconnect the audio amplifier connector. • Inspect the connector engagement and connection condition and inspect the terminals for damage, deformation, corrosion, or disconnection. • Is there any malfunctioning part?	Yes	Repair or replace the connector, then go to Step 8.
		No	Go to the next step.
5	**INSPECT POWER SUPPLY CIRCUIT OF AUDIO AMPLIFIER FOR MALFUNCTION** • Verify that the following audio amplifier connectors are disconnected. • Connect the negative battery cable. (See **NEGATIVE BATTERY CABLE DISCONNECTION/CONNECTION [SKYACTIV-G 2.0, SKYACTIV-G 2.5]**.) • Switch the ignition to ACC (engine off). • Measure the voltage at the following terminals (vehicle wiring harness side). ▪ Audio amplifier terminal 3A ▪ Audio amplifier	Yes	Go to Step 8.
		No	• Terminal 3A voltage is not B+ ▪ Go to Step 7. • Terminal 2D voltage is not B+ ▪ Go to the next step.

	terminal 2D • Is the voltage B+?		
6	**INSPECT THE AUDIO2 7.5 A FUSE** • Switch the ignition off. • Disconnect the negative battery cable. (See **NEGATIVE BATTERY CABLE DISCONNECTION/CONNECTION [SKYACTIV-G 2.0, SKYACTIV-G 2.5]**.) • Inspect the AUDIO2 7.5 A fuse. • Is there any malfunctioning part?	Yes	• If a fuse is blown: ▪ Repair or replace the wiring harness which is shorted to ground. ▪ Replace the malfunctioning fuse. • If a fuse is damaged: ▪ Replace the malfunctioning fuse. Go to Step 8.
		No	Repair or replace the wiring harness for a possible open circuit, then go to Step 8.
7	**INSPECT THE CABIN+B 50 A FUSE, BOSE 25 A FUSE AND MAIN 200 A FUSE** • Switch the ignition off. • Disconnect the negative battery cable. (See **NEGATIVE BATTERY CABLE DISCONNECTION/CONNECTION [SKYACTIV-G 2.0, SKYACTIV-G 2.5]**.) • Inspect the CABIN+B 50 A fuse, BOSE 25 A fuse and MAIN 200 A fuse. • Is there any malfunctioning part?	Yes	• If a fuse is blown: ▪ Repair or replace the wiring harness which is shorted to ground. ▪ Replace the malfunctioning fuse. • If a fuse is damaged: ▪ Replace the malfunctioning fuse. Go to the next step.
		No	Repair or replace the wiring harness for a possible open circuit, go to the next step.
8	**VERIFY THAT REPAIRS HAVE BEEN COMPLETED** • Switch the ignition off. • Reconnect all the disconnected	Yes	Return to Step 1 and inspect for other possible causes. If the malfunction recurs, replace the audio amplifier, then go to the next step.

	connectors. • Connect the negative battery cable. (See **NEGATIVE BATTERY CABLE DISCONNECTION/CONNECTION [SKYACTIV-G 2.0, SKYACTIV-G 2.5]**.) • Clear the audio amplifier DTCs. (See **CLEARING DTC [AUDIO AMPLIFIER]**.) • Perform the audio amplifier DTC inspection. (See **DTC INSPECTION [AUDIO AMPLIFIER]**.) • Is the same DTC displayed?		(See **AUDIO AMPLIFIER REMOVAL/INSTALLATION**.)
		No	Go to the next step.
9	**VERIFY IF OTHER DTCs DISPLAYED** • Verify if other DTCs are displayed. • Are any other DTCs displayed?	Yes	Repair the malfunctioning part according to the applicable DTC troubleshooting. (See **DTC TABLE [AUDIO AMPLIFIER]**.)
		No	DTC troubleshooting completed.

2014 - Mazda3 - Body and Accessories

DTC U3003:17 [AUDIO AMPLIFIER]

Description	Audio amplifier high power supply voltage input
Detection condition	Larger value than audio amplifier power supply circuit voltage of 16 V is detected with ignition switched ON (engine off or on)
Fail-safe function	Not applicable
Possible cause	• Battery malfunction • Generator malfunction • Audio amplifier malfunction
System wiring diagram	Not applicable

Diagnostic Procedure

Step	Inspection		Action
1	**VERIFY PCM DTCs** • Perform the DTC inspection for the PCM using the M-MDS. (See **ON-BOARD DIAGNOSTIC TEST [SKYACTIV-G 2.0, SKYACTIV-G 2.5]**.) • Is the DTC displayed?	Yes	Repair the malfunctioning part according to the applicable DTC troubleshooting. (See **DTC TABLE [SKYACTIV-G 2.0, SKYACTIV-G 2.5]**.)
		No	Go to the next step.
2	**INSPECT BATTERY** • Inspect the battery. (See **BATTERY INSPECTION [SKYACTIV-G 2.0, SKYACTIV-G 2.5]**.) • Is there any malfunctioning part?	Yes	Recharge or replace the battery, then go to Step 4. (See **BATTERY RECHARGING [SKYACTIV-G 2.0, SKYACTIV-G 2.5]**.) (See **BATTERY REMOVAL/INSTALLATION [SKYACTIV-G 2.0, SKYACTIV-G 2.5]**.)
		No	Go to the next step.

3	**INSPECT GENERATOR** • Inspect the generator. (See **GENERATOR INSPECTION [SKYACTIV-G 2.0, SKYACTIV-G 2.5 (WITHOUT i-ELOOP)]**.) • Is there any malfunctioning part?	Yes	Replace the generator, then go to the next step. (See **GENERATOR REMOVAL/INSTALLATION [SKYACTIV-G 2.0, SKYACTIV-G 2.5 (WITHOUT i-ELOOP)]**.)
		No	Go to the next step.
4	**VERIFY THAT REPAIRS HAVE BEEN COMPLETED** • Switch the ignition off. • Reconnect all the disconnected connectors. • Connect the negative battery cable. (See **NEGATIVE BATTERY CABLE DISCONNECTION/CONNECTION [SKYACTIV-G 2.0, SKYACTIV-G 2.5]**.) • Clear the audio unit DTCs. (See **CLEARING DTC [AUDIO AMPLIFIER]**.) • Perform the audio unit DTC inspection. (See **DTC INSPECTION [AUDIO AMPLIFIER]**.) • Is the same DTC displayed?	Yes	Return to Step 1 and inspect for other possible causes. If the malfunction recurs, replace the audio amplifier, then go to the next step. (See **AUDIO AMPLIFIER REMOVAL/INSTALLATION**.)
		No	Go to the next step.
5	**VERIFY IF OTHER DTCs DISPLAYED** • Verify if other DTCs are displayed. • Are any other DTCs displayed?	Yes	Repair the malfunctioning part according to the applicable DTC troubleshooting. (See **DTC TABLE [AUDIO AMPLIFIER]**.)
		No	DTC troubleshooting completed.

2014 - Mazda3 - Body and Accessories

DTC U3000:49 [AUDIO AMPLIFIER]

Description	Audio amplifier internal malfunction
Detection condition	Audio amplifier internal malfunction detected
Fail-safe function	Not applicable
Possible cause	Audio amplifier malfunction
System wiring diagram	Not applicable

Diagnostic Procedure

Step	Inspection		Action
1	**PERFORM INSPECTION OF AUDIO AMPLIFIER DTCs** • Clear the DTC from the audio amplifier memory. Perform an inspection of the audio amplifier DTCs. (See **DTC INSPECTION [AUDIO AMPLIFIER]**.) • Is the same DTC displayed?	Yes	Replace the audio amplifier, then go to the next step. (See **AUDIO AMPLIFIER REMOVAL/INSTALLATION**.)
		No	Go to the next step.
2	**VERIFY IF OTHER DTCs DISPLAYED** • Are any other DTCs displayed?	Yes	Repair the malfunctioning part according to the applicable DTC troubleshooting. (See **DTC TABLE [AUDIO AMPLIFIER]**.)
		No	DTC troubleshooting completed.

DTC U3000:49 [AUDIO AMPLIFIER]

2014 - Mazda3 - Body and Accessories

DTC U2300:54/U2300:55/U2300:56/U2300:64 [AUDIO AMPLIFIER]

Description	• U2300:54: Configuration error (data not received) • U2300:55: Configuration error (not configured) • U2300:56: Configuration error (ineffective/non-interchangeable data read) • U2300:64: Configuration error (error value read)
Detection condition	• Audio amplifier detects configuration data not record or data error
Fail-safe function	Not applicable
Possible cause	• Module configuration procedure was not completed properly • Correct data cannot be received from instrument cluster • Audio amplifier malfunction
System wiring diagram	Not applicable

Diagnostic Procedure

Step	Inspection	Action
1	**RECORD THE CAR CONFIGURATION DATA** • Switch the ignition ON (engine off) and wait for 6 s or more. • Switch the ignition off. • Switch the ignition ON (engine off).	Go to the next step.

2	**VERIFY THAT THE SAME DTC IS NOT PRESENT** • Clear the DTCs from the memory. (See **CLEARING DTC [AUDIO AMPLIFIER]**.) • Perform the audio amplifier DTC inspection using the M-MDS. (See **DTC INSPECTION [AUDIO AMPLIFIER]**.) • Are the same DTCs present?	Yes	Repeat the inspection from Step 1. If the malfunction recurs, go to the next step.
		No	Go to Step 5.
3	**INSPECT FOR INSTRUMENT CLUSTER MALFUNCTION** • Switch the ignition off. • Perform the instrument cluster DTC inspection using the M-MDS. (See **DTC INSPECTION [INSTRUMENT CLUSTER]**.) • Are any DTCs present?	Yes	Go to applicable DTC inspection. (See **DTC TABLE [INSTRUMENT CLUSTER]**.) After repairing the instrument cluster, perform the instrument cluster configuration. (See **INSTRUMENT CLUSTER CONFIGURATION (USING AS-BUILT DATA)**.) Then go to the next step.
		No	Go to the next step.
4	**VERIFY THAT THE SAME DTC IS NOT PRESENT** • Clear the DTCs from the memory. (See **CLEARING DTC [AUDIO AMPLIFIER]**.) • Perform the audio amplifier DTC inspection using the M-MDS. (See **DTC INSPECTION [AUDIO AMPLIFIER]**.) • Are the same DTCs present?	Yes	Repeat the inspection from Step 1. • If the malfunction does not recur, go to the next step. • If the malfunction recurs, replace the audio amplifier. (See **AUDIO AMPLIFIER REMOVAL/INSTALLATION**.) Go to the next step.
		No	Go to the next step.
5	**VERIFY THAT NO OTHER DTCs ARE PRESENT** • Verify other DTCs displayed.	Yes	Perform the corresponding DTC inspection.
		No	DTC troubleshooting completed.

	• Are any other DTCs output?		

2014 - Mazda3 - Body and Accessories

ON-BOARD DIAGNOSTIC WIRING DIAGRAM [BLIND SPOT MONITORING (BSM)]

ON-BOARD DIAGNOSTIC WIRING DIAGRAM [BLIND SPOT MONITORING (BSM)]

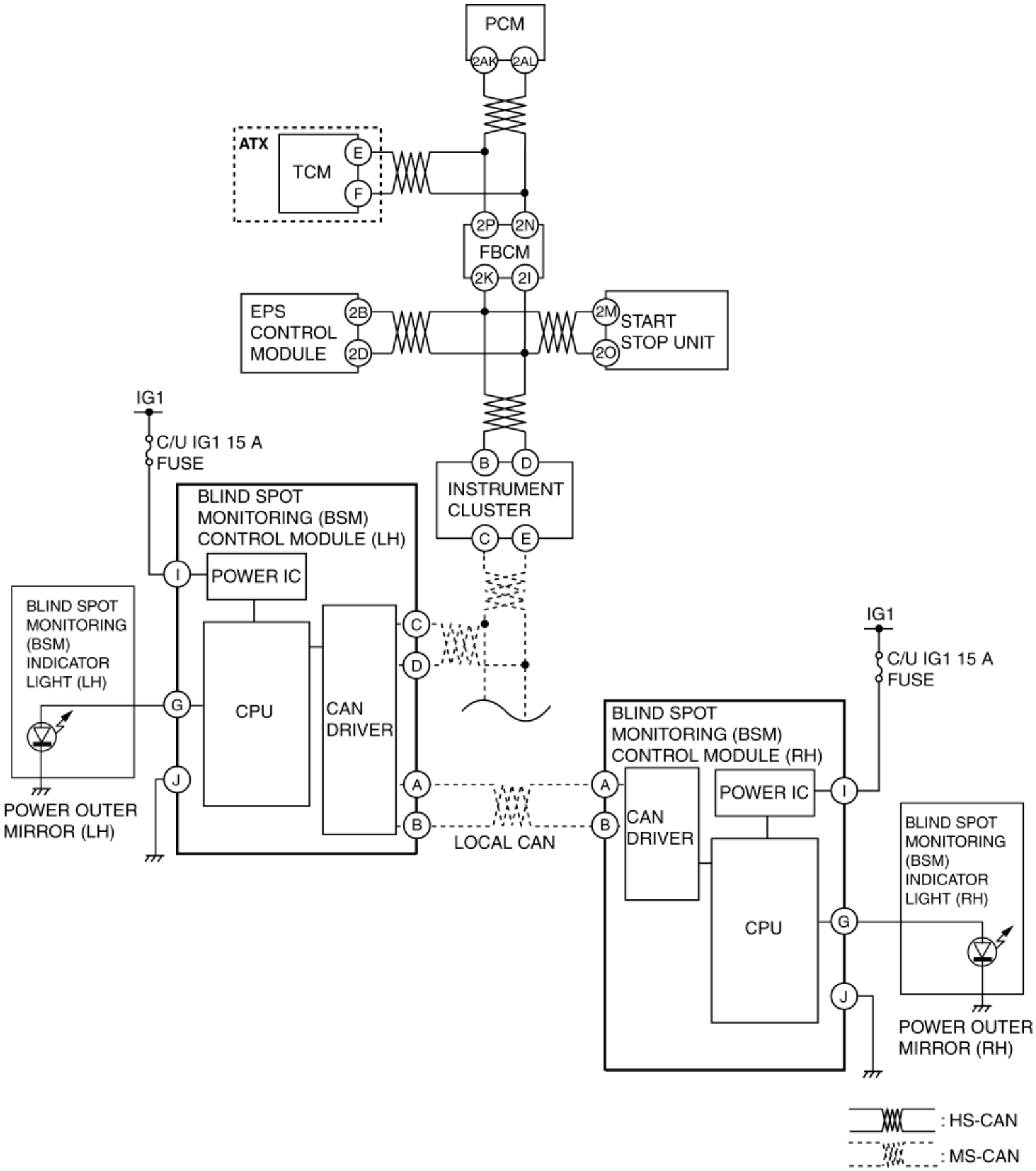

2014 - Mazda3 - Body and Accessories

FOREWORD [BLIND SPOT MONITORING (BSM)]

- If there is any vehicle malfunction complaint lodged by a customer, perform malfunction diagnosis according to the troubleshooting procedure.

Troubleshooting Procedure

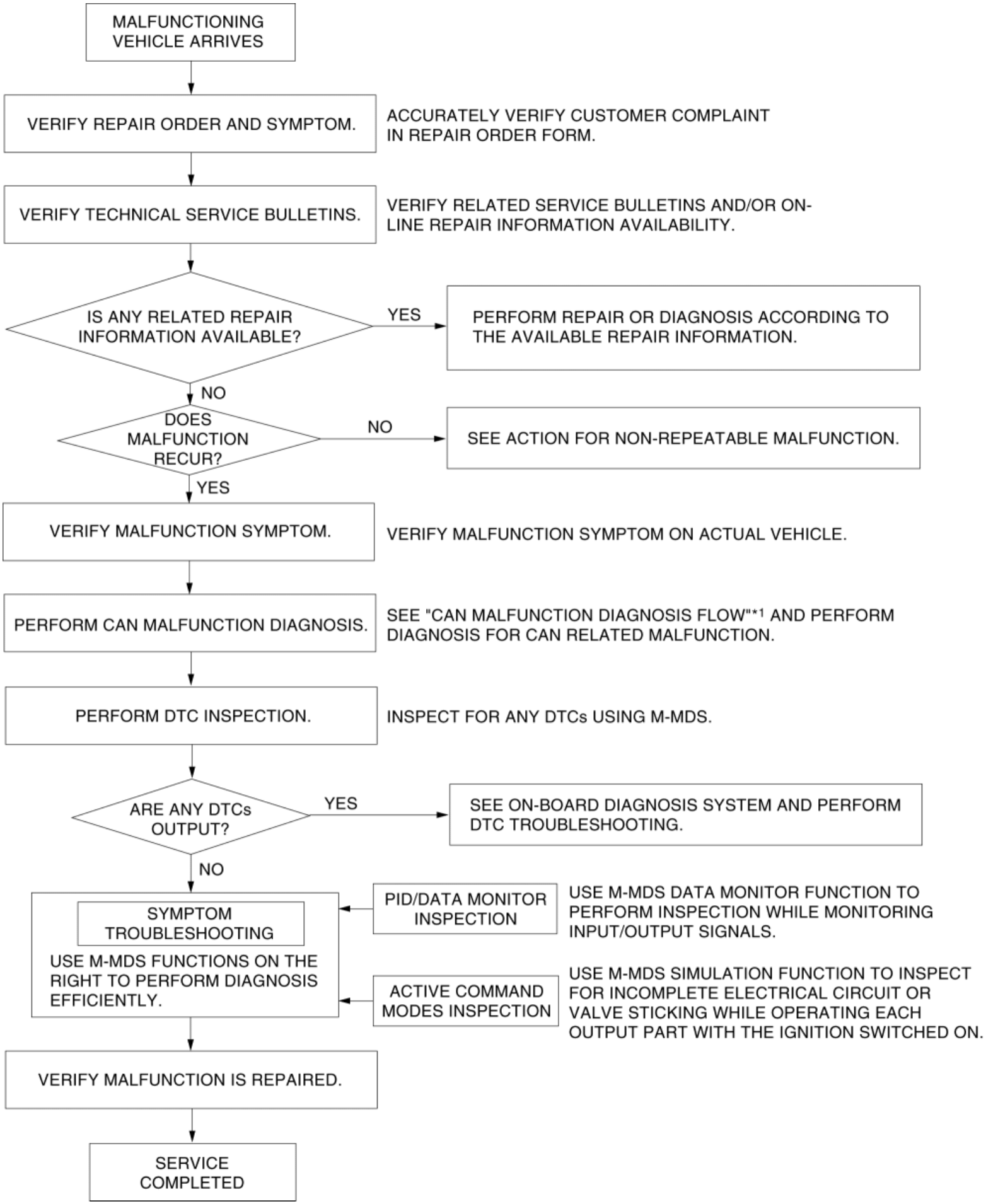
MALFUNCTIONING VEHICLE ARRIVES
VERIFY REPAIR ORDER AND SYMPTOM.
ACCURATELY VERIFY CUSTOMER COMPLAINT IN REPAIR ORDER FORM.
VERIFY TECHNICAL SERVICE BULLETINS.
VERIFY RELATED SERVICE BULLETINS AND/OR ON-LINE REPAIR INFORMATION AVAILABILITY.
IS ANY RELATED REPAIR INFORMATION AVAILABLE?
YES
PERFORM REPAIR OR DIAGNOSIS ACCORDING TO THE AVAILABLE REPAIR INFORMATION.
NO
DOES MALFUNCTION RECUR?
NO
SEE ACTION FOR NON-REPEATABLE MALFUNCTION.
YES
VERIFY MALFUNCTION SYMPTOM.
VERIFY MALFUNCTION SYMPTOM ON ACTUAL VEHICLE.
PERFORM CAN MALFUNCTION DIAGNOSIS.
SEE "CAN MALFUNCTION DIAGNOSIS FLOW"*1 AND PERFORM DIAGNOSIS FOR CAN RELATED MALFUNCTION.
PERFORM DTC INSPECTION.
INSPECT FOR ANY DTCs USING M-MDS.
ARE ANY DTCs OUTPUT?
YES
SEE ON-BOARD DIAGNOSIS SYSTEM AND PERFORM DTC TROUBLESHOOTING.
NO
SYMPTOM TROUBLESHOOTING
USE M-MDS FUNCTIONS ON THE RIGHT TO PERFORM DIAGNOSIS EFFICIENTLY.
PID/DATA MONITOR INSPECTION
USE M-MDS DATA MONITOR FUNCTION TO PERFORM INSPECTION WHILE MONITORING INPUT/OUTPUT SIGNALS.
ACTIVE COMMAND MODES INSPECTION
USE M-MDS SIMULATION FUNCTION TO INSPECT FOR INCOMPLETE ELECTRICAL CIRCUIT OR VALVE STICKING WHILE OPERATING EACH OUTPUT PART WITH THE IGNITION SWITCHED ON.
VERIFY MALFUNCTION IS REPAIRED.
SERVICE COMPLETED

*1

(See CONTROLLER AREA NETWORK (CAN) MALFUNCTION DIAGNOSIS FLOW.)

Action for Non-repeatable Malfunction

- If the malfunction does not recur, verify the malfunction cause by performing the following actions:
  - Based on the repair order form, attempt to drive the vehicle or perform tests to replicate the malfunction, record the data at that time, and detect the malfunction cause.
  - Shake the wiring harness or connector of the electrical component which is suspected to be the cause of the malfunction, and inspect for malfunction or occurrence of any DTCs.

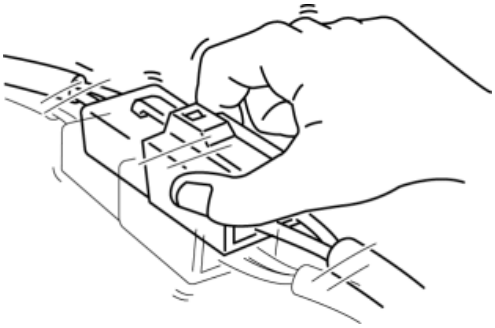

  - Inspect the female terminals on the connector of the electric component which is suspected to be the cause of the malfunction for poor connection.

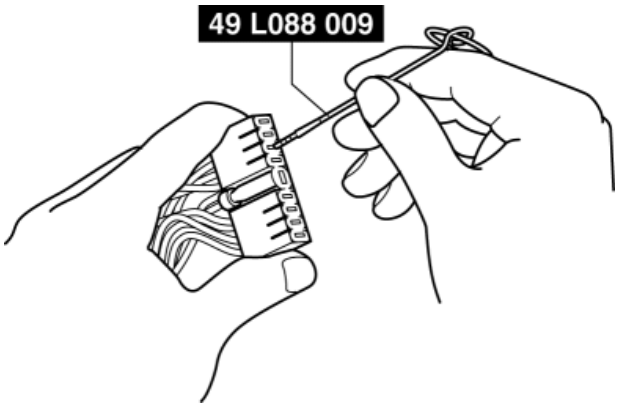

2014 - Mazda3 - Body and Accessories

DTC INSPECTION [BLIND SPOT MONITORING (BSM)]

CMDTC Self Test

1. Connect the M-MDS to the DLC-2.
2. After the vehicle is identified, select the following items from the initialization screen of the M-MDS.
   a. Select “Self Test”.
   b. Select “All CMDTCs”.
3. Verify the DTC according to the directions on the screen.
   - If any DTCs are displayed, perform troubleshooting according to the corresponding DTC inspection after recording the snapshot data.
4. After completion of repairs, clear all DTCs stored in the BSM control module (LH) or (RH). (See **CLEARING DTC [BLIND SPOT MONITORING (BSM)]**.)

ODDTC Self Test

1. Connect the M-MDS to the DLC-2.
2. After the vehicle is identified, select the following items from the initialization screen of the M-MDS.
   a. Select “Self Test”.
   b. Select “Modules”.
   c. Select “BSML” or “BSMR”.
3. Verify the DTC according to the directions on the screen.
   - If any DTCs are displayed, perform troubleshooting according to the corresponding DTC inspection after recording the snapshot data.
4. After completion of repairs, clear all DTCs stored in the BSM control module (LH) or (RH). (See **CLEARING DTC [BLIND SPOT MONITORING (BSM)]**.)

Snapshot Data

NOTE:

- The BSM control module (LH) or (RH) stores the following two types of snapshot data (vehicle information) when a DTC is detected and displays them in the M-MDS.
  - Vehicle information detected by BSM control module (LH) or (RH)
  - Vehicle information detected by instrument cluster and received by BSM control module (LH) or (RH) via CAN signal
- The data for all DTCs currently detected is stored.

—: Not applicable

Snapshot data				Corresponding

item	Unit		Data contents	Data read/use method	data monitor items
AAT	°C	°F	Ambient temperature	—	—
APP_STATUS	Accelerator Pedal Off/Under20%/Over20%/FAIL		Accelerator pedal position status	—	—
CFG_STATUS	Config Complete/Not Configured/Config Error		Instrument cluster configuration status	—	—
ECT_STATUS	Under 0 degrees C/0 - Under 80 degrees C/Over 80 degrees C/FAIL		Engine coolant temperature status	—	—
IC_VPWR	V		Instrument cluster power supply voltage	• The BSM control module (LH) or (RH) constantly receives the power supply voltage value of the instrument cluster sent via CAN signal from the instrument cluster. • If a DTC is detected, the BSM control module (LH) or (RH) records the power supply voltage of the instrument cluster when the DTC was detected, and it is displayed in the M-MDS.	VPWR*1
			Elapsed time since ignition was switched ON (engine off or on) **NOTE:** • The instrument cluster	• The BSM control module (LH) or (RH) constantly receives the elapsed time since the ignition was switched ON (engine off or on) sent via CAN signal from the instrument	

IG-ON_TIMER	hh:mm:ss*2	records the elapsed time since the ignition was switched ON (engine off or on).	cluster. • If a DTC is detected, the BSM control module (LH) or (RH) records the elapsed time since the ignition was switched ON (engine off or on) when the DTC was detected, and it is displayed in the M-MDS.	—
PWR_MODE_KEY	Key Out/Key Recently Out (Position 0)/Accessory (Position 1)/Post Ignition (Position 2)/Ignition On (Position 2)/Running (Position 2)/Running - Starting	• Key Out: Ignition switched off • Key Recently Out (Position 0): Elapsed time **within 3 s** since ignition was switched off • Accessory (Position 1): Ignition is switched to ACC • Post Ignition (Position 2): Elapsed time **within 3 s** since ignition was switched ON (engine off or on) • Ignition On (Position 2): Ignition switched ON	• The BSM control module (LH) or (RH) constantly receives the ignition switch status sent via CAN signal from the instrument cluster. • If a DTC is detected, the BSM control module (LH) or (RH) records the ignition switch status when the DTC was detected, and it is displayed in the M-MDS.	—

		(engine off) • Running (Position 2): Ignition switched ON (engine on) • Running - Starting: Cranking condition		
RPM_STATUS	Engine Stop/Under1500rpm/Over1500rpm/FAIL	Engine speed status	• The BSM control module (LH) or (RH) constantly receives the engine speed sent via CAN signal from the instrument cluster. • If a DTC is detected, the BSM control module (LH) or (RH) records the engine speed when the DTC was detected, and it is displayed in the M-MDS.	TACHOMTR*1
SHIFT_STATUS	P/N/D/R/FAIL	Selector lever position status	• The BSM control module (LH) or (RH) constantly receives the selector lever position sent via CAN signal from the instrument cluster. • If a DTC is detected, the BSM control module (LH) or (RH) records the selector lever	—

				position when the DTC was detected, and it is displayed in the M-MDS.	
TOTAL_DIST	km	Miles	Accumulated total traveled distance from completion of vehicle until BSM control module (LH) or (RH) detects DTC (Odometer value in instrument cluster)	The total traveled distance from which the BSM control module (LH) or (RH) detects DTCs to the present can be calculated by performing the following procedure. • Verify the odometer value in the instrument cluster. • Verify the snapshot data item TOTAL_DIST. • Subtract 2 from 1.	—
TOTAL_TIME	hh:mm:ss*2		Accumulated total elapsed time since vehicle completion until BSM control module (LH) or (RH) detects a DTC **NOTE:** • When the ROOM fuse is removed, and the ignition is switched off, the time is not included in the elapsed time.	The elapsed time from which the BSM control module (LH) or (RH) detects DTCs to the present can be calculated by performing the following procedure. • Verify the instrument cluster PID item TOTAL_TIME. • Verify the snapshot data item TOTAL_TIME. • Subtract 2 from 1.	TOTAL_TIME*1
VPWR	V		BSM control module (LH) or (RH) power supply voltage	—	VPWR_IG1
				• The BSM control module (LH) or (RH) constantly receives the vehicle speed sent via CAN signal from the	

VSPD_STATUS	Stop/0-10km/h/Over10km/h/FAIL	Vehicle speed status	instrument cluster. • If a DTC is detected, the BSM control module (LH) or (RH) records the vehicle speed when the DTC was detected, and it is displayed in the M-MDS.	SPEEDOMTR*1

*1 **Instrument cluster PID (See PID/DATA MONITOR TABLE [INSTRUMENT CLUSTER].)**

*2 **The seconds may be indicated after the decimal point.**

2014 - Mazda3 - Body and Accessories

CLEARING DTC [BLIND SPOT MONITORING (BSM)]

CMDTC Memory Clearing Procedure

1. Connect the M-MDS to the DLC-2.
2. After the vehicle is identified, select the following items from the initialization screen of the M-MDS.
    a. Select “Self Test”.
    b. Select “All CMDTCs”.
3. Verify the DTC according to the directions on the screen.
4. Press the clear button on the DTC screen to clear the DTC.
5. Switch the ignition off.
6. Switch the ignition ON (engine off or on) and wait for **5 s or more**.
7. Perform DTC inspection. (See **DTC INSPECTION [BLIND SPOT MONITORING (BSM)]**.)
8. Verify that no DTCs are displayed.

ODDTC Memory Clearing Procedure

1. Connect the M-MDS to the DLC-2.
2. After the vehicle is identified, select the following items from the initialization screen of the M-MDS.
    a. Select “Self Test”.
    b. Select “Modules”.
    c. Select “BSML” or “BSMR”.
3. Verify the DTC according to the directions on the screen.
4. Press the clear button on the DTC screen to clear the DTC.
5. Switch the ignition off.
6. Switch the ignition ON (engine off or on) and wait for **5 s or more**.
7. Perform DTC inspection. (See **DTC INSPECTION [BLIND SPOT MONITORING (BSM)]**.)
8. Verify that no DTCs are displayed.

CLEARING DTC [BLIND SPOT MONITORING (BSM)]

2014 - Mazda3 - Body and Accessories

DTC TABLE [BLIND SPOT MONITORING (BSM)]

BSM Control Module (LH)

×: Applicable—: Not applicable

DTC No.	BSM OFF indicator light	Description	Fail-safe function	Drive cycle	Self test type*1	Memory function	Page
B118C:11	Flash	BSM indicator light (LH) circuit malfunction	×	—	C, D	×	(See **DTC B118C:11 [BLIND SPOT MONITORING (BSM)]**.)
B118C:15	Flash	BSM indicator light (LH) circuit malfunction	×	—	C, D	×	(See **DTC B118C:15 [BLIND SPOT MONITORING (BSM)]**.)
U0001:88	Flash	Module communication error (HS-CAN)	×	—	C, D	×	(See **DTC U0001:88/U0100:00/U0131:00/U0155:00/U0214:00 [BLIND SPOT MONITORING (BSM)]**.)
U0100:00	Flash	Communication error with PCM	×	—	C, D	×	
U0131:00	Flash	Communication error with EPS control module	×	—	C, D	×	
U0155:00	Flash	Communication error with instrument cluster	×	—	C, D	×	
U0214:00	Flash	Communication error with start stop unit	×	—	C, D	×	
		Communication					

U0233:00	Flash	error with BSM control module (RH)	×	—	C, D	×	(See **DTC U0233:00 [BLIND SPOT MONITORING (BSM)]**.)
U0401:68	Flash	Error signal received from PCM	×	—	C, D	×	(See **DTC U0401:68 [BLIND SPOT MONITORING (BSM)]**.)
U0420:68	Flash	Error signal received from EPS control module	×	—	C, D	×	(See **DTC U0420:68 [BLIND SPOT MONITORING (BSM)]**.)
U0423:68	Flash	Error signal received from instrument cluster	×	—	C, D	×	(See **DTC U0423:68 [BLIND SPOT MONITORING (BSM)]**.)
U0515:68	Flash	Error signal received from start stop unit	×	—	C, D	×	(See **DTC U0515:68 [BLIND SPOT MONITORING (BSM)]**.)
U2300:54	Flash	Configuration signal not received	×	—	C, D	×	(See **DTC U2300:54 [BLIND SPOT MONITORING (BSM)]**.)
U2300:56	Flash	Configuration data unmatched with instrument cluster	×	—	C, D	×	(See **DTC U2300:56 [BLIND SPOT MONITORING (BSM)]**.)
U2300:64	Flash	Instrument cluster configuration error	×	—	C, D	×	(See **DTC U2300:64 [BLIND SPOT MONITORING (BSM)]**.)
U3000:01	Flash	Electrical malfunction inside BSM control module	×	—	C, D	×	(See **DTC U3000:01 [BLIND SPOT MONITORING (BSM)]**.)
U3000:09	Flash	BSM control module internal malfunction	×	—	C, D	×	(See **DTC U3000:09 [BLIND SPOT MONITORING (BSM)]**.)
U3000:54	Flash	Radar performance malfunction	×	—	C, D	×	(See **DTC U3000:54 [BLIND SPOT MONITORING (BSM)]**.)

U3000:97	Flash	Radar performance malfunction	×	—	C, D	×	(See **DTC U3000:97 [BLIND SPOT MONITORING (BSM)]**.)
U3003:04	Flash	Instrument cluster configuration error	×	—	C, D	×	(See **DTC U3003:04 [BLIND SPOT MONITORING (BSM)]**.)
U3003:16	Flash	BSM control module low power supply voltage input (**less than 8.2 V**)	×	—	C, D	×	(See **DTC U3003:16 [BLIND SPOT MONITORING (BSM)]**.)
U3003:17	Flash	BSM control module high power supply voltage input (**16.8 V or more**)	×	—	C, D	×	(See **DTC U3003:17 [BLIND SPOT MONITORING (BSM)]**.)

*1

C: CMDTC self test, D: ODDTC self test

BSM Control Module (RH)

×: Applicable—: Not applicable

DTC No.	BSM OFF indicator light	Description	Fail-safe function	Drive cycle	Self test type*1	Memory function	Page
B118D:11	Flash	BSM indicator light (RH) circuit malfunction	×	—	C, D	×	(See **DTC B118D:11 [BLIND SPOT MONITORING (BSM)]**.)
B118D:15	Flash	BSM indicator light (RH) circuit malfunction	×	—	C, D	×	(See **DTC B118D:15 [BLIND SPOT MONITORING (BSM)]**.)
U0001:88	Flash	Module communication error (HS-CAN)	×	—	C, D	×	

U0100:00	Flash	Communication error with PCM	×	—	C, D	×	(See **DTC U0001:88/U0100:00/U0131:00/U0155:00/U0214:00 [BLIND SPOT MONITORING (BSM)]**.)
U0131:00	Flash	Communication error with EPS control module	×	—	C, D	×	
U0155:00	Flash	Communication error with instrument cluster	×	—	C, D	×	
U0214:00	Flash	Communication error with start stop unit	×	—	C, D	×	
U0232:00	Flash	Communication error with BSM control module (LH)	×	—	C, D	×	(See **DTC U0232:00 [BLIND SPOT MONITORING (BSM)]**.)
U0401:68	Flash	Error signal received from PCM	×	—	C, D	×	(See **DTC U0401:68 [BLIND SPOT MONITORING (BSM)]**.)
U0420:68	Flash	Error signal received from EPS control module	×	—	C, D	×	(See **DTC U0420:68 [BLIND SPOT MONITORING (BSM)]**.)
U0423:68	Flash	Error signal received from instrument cluster	×	—	C, D	×	(See **DTC U0423:68 [BLIND SPOT MONITORING (BSM)]**.)
U0515:68	Flash	Error signal received from start stop unit	×	—	C, D	×	(See **DTC U0515:68 [BLIND SPOT MONITORING (BSM)]**.)
U2300:54	Flash	Configuration signal not received	×	—	C, D	×	(See **DTC U2300:54 [BLIND SPOT MONITORING (BSM)]**.)
U2300:56	Flash	Instrument cluster configuration error	×	—	C, D	×	(See **DTC U2300:56 [BLIND SPOT MONITORING (BSM)]**.)
U2300:64	Flash	Configuration data unmatched with	×	—	C, D	×	(See **DTC U2300:64 [BLIND SPOT MONITORING (BSM)]**.)

		instrument cluster					
U3000:01	Flash	Electrical malfunction inside BSM control module	×	—	C, D	×	(See **DTC U3000:01 [BLIND SPOT MONITORING (BSM)]**.)
U3000:09	Flash	BSM control module internal malfunction	×	—	C, D	×	(See **DTC U3000:09 [BLIND SPOT MONITORING (BSM)]**.)
U3000:54	Flash	Radar performance malfunction	×	—	C, D	×	(See **DTC U3000:54 [BLIND SPOT MONITORING (BSM)]**.)
U3000:97	Flash	Radar performance malfunction	×	—	C, D	×	(See **DTC U3000:97 [BLIND SPOT MONITORING (BSM)]**.)
U3003:04	Flash	Instrument cluster configuration error	×	—	C, D	×	(See **DTC U3003:04 [BLIND SPOT MONITORING (BSM)]**.)
U3003:16	Flash	BSM control module low power supply voltage input (**less than 8.2 V**)	×	—	C, D	×	(See **DTC U3003:16 [BLIND SPOT MONITORING (BSM)]**.)
U3003:17	Flash	BSM control module high power supply voltage input (**16.8 V or more**)	×	—	C, D	×	(See **DTC U3003:17 [BLIND SPOT MONITORING (BSM)]**.)

*1

C: CMDTC self test, D: ODDTC self test

2014 - Mazda3 - Body and Accessories

DTC B118C:11 [BLIND SPOT MONITORING (BSM)]

Description	BSM indicator light (LH) circuit malfunction
Detection condition	• BSM control module (LH) performs measurement at **0.01 s** intervals and a short to ground in the BSM indicator light (LH) circuit is detected **48 times** continuously.
Fail-safe function	• Blind spot monitoring (BSM) system is stopped.
Possible cause	• Power outer mirror (LH) connector or terminal malfunction • BSM control module (LH) connector or terminal malfunction • Short to ground in wiring harness between BSM control module (LH) terminal G and power outer mirror (LH) terminal D • Power outer mirror (LH) malfunction • BSM indicator light (LH) malfunction • BSM control module (LH) malfunction

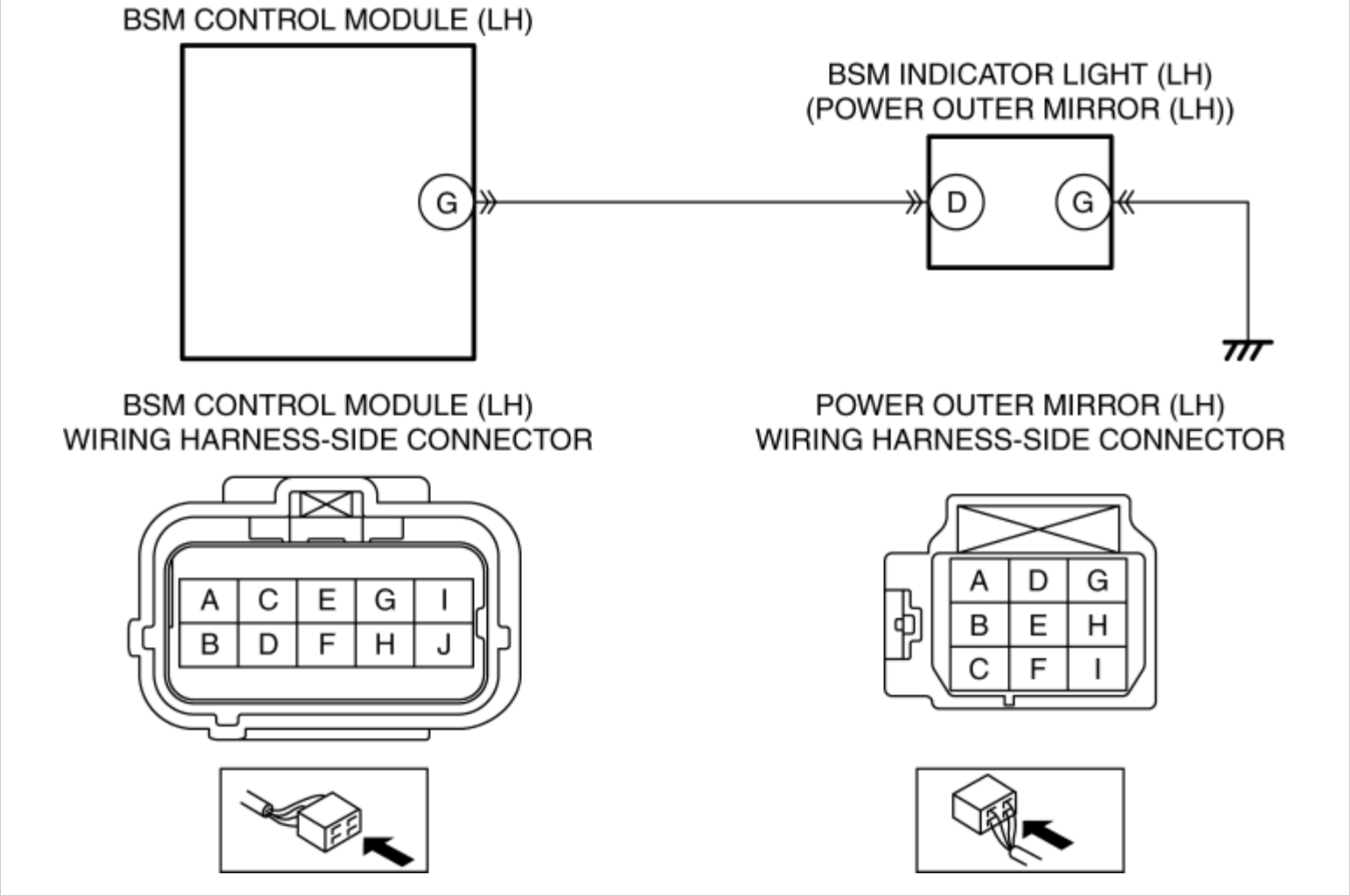

Diagnostic Procedure

Step	Inspection		Action
1	**INSPECT POWER OUTER MIRROR (LH) CONNECTOR CONDITION** • Switch the ignition off. • Disconnect the negative battery cable. (See **NEGATIVE BATTERY CABLE DISCONNECTION/CONNECTION [SKYACTIV-G 2.0, SKYACTIV-G 2.5]**.) • Disconnect the power outer mirror (LH) connector. • Inspect the connector engagement and connection condition and inspect the terminals for damage, deformation, corrosion, or	Yes	Go to the next step.
		No	Repair or replace the connector, then go to Step 6.

	disconnection. • Is the connector normal?		
2	**INSPECT BSM CONTROL MODULE (LH) CONNECTOR CONDITION** • Disconnect the BSM control module (LH) connector. • Inspect the connector engagement and connection condition and inspect the terminals for damage, deformation, corrosion, or disconnection. • Is the connector normal?	Yes	Go to the next step.
		No	Repair or replace the connector, then go to Step 6.
3	**INSPECT FOR SHORT TO GROUND IN BSM INDICATOR LIGHT (LH) CIRCUIT** • Verify that the BSM control module (LH) and power outer mirror (LH) connectors are disconnected. • Inspect for continuity between power outer mirror (LH) terminal D (wiring harness-side) and body ground. • Is there continuity?	Yes	Refer to the wiring diagram and verify whether or not there is a common connector between BSM control module (LH) terminal G and power outer mirror (LH) terminal D. **If there is a common connector:** • Determine the malfunctioning part by inspecting the common connector and the terminal for corrosion, damage, or pin disconnection, and the common wiring harness for a short to ground. • Repair or replace the malfunctioning part. **If there is no common connector:** • Repair or replace the wiring harness which has a short to ground. Go to Step 6.
		No	Go to the next step.
4	**INSPECT POWER OUTER MIRROR (LH)** • Inspect the power outer mirror (LH). (See **POWER OUTER MIRROR INSPECTION**.) • Is the power outer mirror (LH) normal?	Yes	Go to the next step.
		No	Replace the power outer mirror (LH), then go to Step 6. (See **POWER OUTER MIRROR REMOVAL/INSTALLATION**.)

5	**INSPECT BSM INDICATOR LIGHT (LH)** • Inspect the BSM indicator light (LH). (See **OUTER MIRROR GLASS INSPECTION**.) • Is the BSM indicator light (LH) normal?	Yes	Go to the next step.
		No	Replace the outer mirror glass (LH), then go to the next step. (See **OUTER MIRROR GLASS REMOVAL**.) (See **OUTER MIRROR GLASS INSTALLATION**.)
6	**VERIFY THAT REPAIRS HAVE BEEN COMPLETED** • Always reconnect all disconnected connectors. • Reconnect the negative battery cable. (See **NEGATIVE BATTERY CABLE DISCONNECTION/CONNECTION [SKYACTIV-G 2.0, SKYACTIV-G 2.5]**.) • Clear the BSM control module (LH) DTCs using the M-MDS. (See **CLEARING DTC [BLIND SPOT MONITORING (BSM)]**.) • Retrieve the BSM control module (LH) DTCs using the M-MDS. (See **DTC INSPECTION [BLIND SPOT MONITORING (BSM)]**.) • Is the same DTC displayed?	Yes	Repeat the inspection from Step 1. • If the malfunction recurs, replace the BSM control module (LH). (See **BLIND SPOT MONITORING (BSM) CONTROL MODULE REMOVAL/INSTALLATION**.) Go to the next step.
		No	Go to the next step.
7	**VERIFY IF OTHER DTCs DISPLAYED** • Are any other DTCs displayed?	Yes	Repair or replace the malfunctioning part according to the applicable DTC troubleshooting. (See **DTC TABLE [BLIND SPOT MONITORING (BSM)]**.)
		No	DTC troubleshooting completed.

2014 - Mazda3 - Body and Accessories

DTC B118C:15 [BLIND SPOT MONITORING (BSM)]

Description	BSM indicator light (LH) circuit malfunction
Detection condition	• BSM control module (LH) performs measurement at **0.01 s** intervals and an open circuit or short to power supply in the BSM indicator light (LH) circuit is detected **48 times** continuously.
Fail-safe function	• Blind spot monitoring (BSM) system is stopped.
Possible cause	• Power outer mirror (LH) connector or terminal malfunction • Open circuit in wiring harness between power outer mirror (LH) terminal G and body ground • BSM control module (LH) connector or terminal malfunction • Short to power supply in wiring harness between BSM control module (LH) terminal G and power outer mirror (LH) terminal D • Power outer mirror (LH) malfunction • BSM indicator light (LH) malfunction • Open circuit in wiring harness between BSM control module (LH) terminal G and power outer mirror (LH) terminal D • BSM control module (LH) malfunction

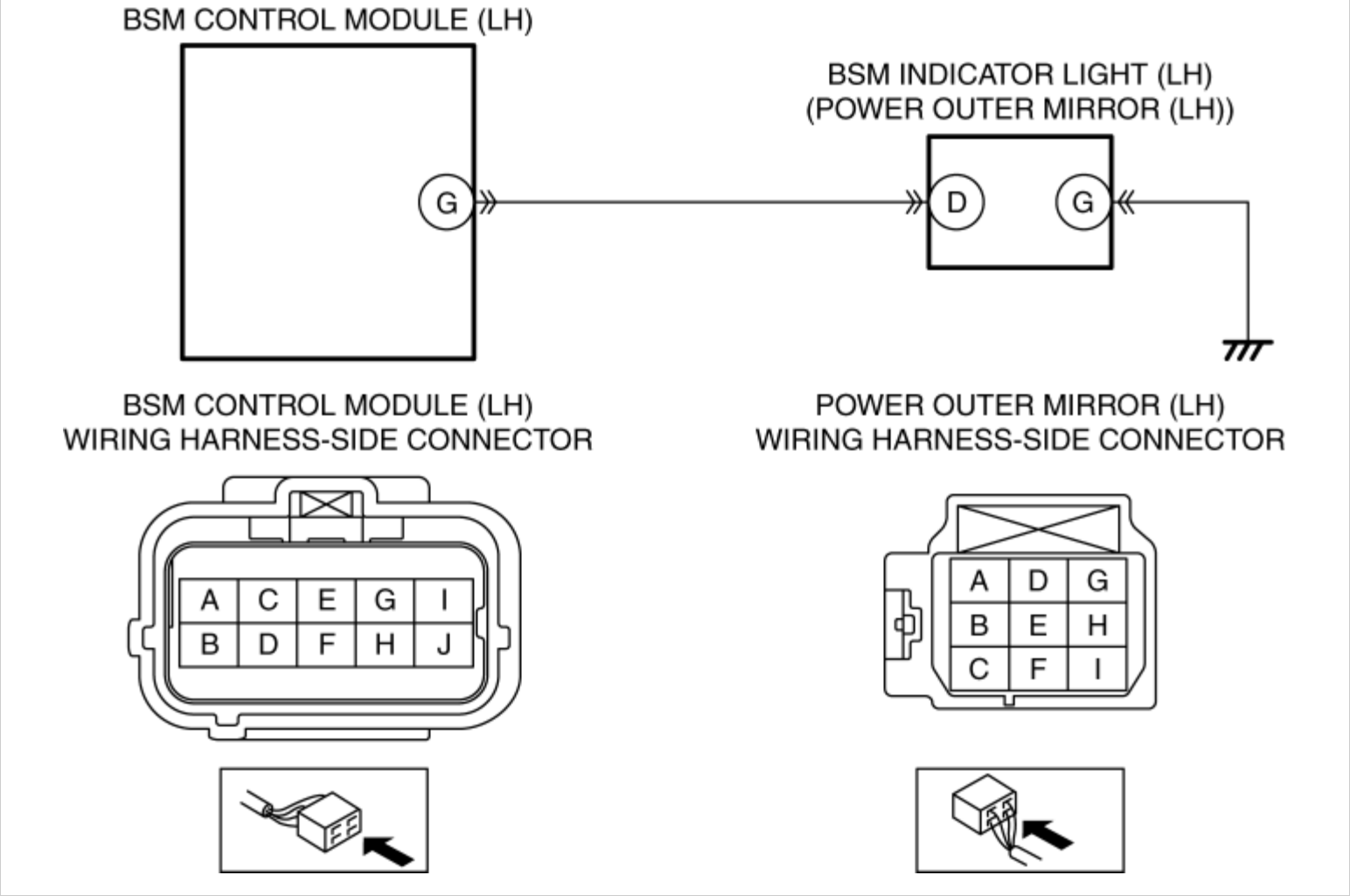

Diagnostic Procedure

Step	Inspection		Action
1	**INSPECT POWER OUTER MIRROR (LH) CONNECTOR CONDITION** • Switch the ignition off. • Disconnect the negative battery cable. (See **NEGATIVE BATTERY CABLE DISCONNECTION/CONNECTION [SKYACTIV-G 2.0, SKYACTIV-G 2.5]**.) • Disconnect the power outer mirror (LH) connector. • Inspect the connector engagement and connection condition and inspect the terminals for damage, deformation, corrosion, or	Yes	Go to the next step.
		No	Repair or replace the connector, then go to Step 8.

	disconnection. • Is the connector normal?		
2	**INSPECT FOR OPEN CIRCUIT IN BSM INDICATOR LIGHT (LH) GROUND CIRCUIT** • Verify that the power outer mirror (LH) connector is disconnected. • Inspect for continuity between power outer mirror (LH) terminal G (wiring harness-side) and body ground. • Is there continuity?	Yes	Go to the next step.
		No	Refer to the wiring diagram and verify whether or not there is a common connector between power outer mirror (LH) terminal G and body ground. **If there is a common connector:** • Determine the malfunctioning part by inspecting the common connector and the terminal for corrosion, damage, or pin disconnection, and the common wiring harness for an open circuit. • Repair or replace the malfunctioning part. **If there is no common connector:** • Repair or replace the wiring harness which has an open circuit. Go to Step 8.
3	**INSPECT BSM CONTROL MODULE (LH) CONNECTOR CONDITION** • Disconnect the BSM control module (LH) connector. • Inspect the connector engagement and connection condition and inspect the terminals for damage, deformation, corrosion, or disconnection. • Is the connector normal?	Yes	Go to the next step.
		No	Repair or replace the connector, then go to Step 8.
4	**INSPECT FOR SHORT TO POWER SUPPLY IN BSM INDICATOR LIGHT (LH) SIGNAL CIRCUIT** • Verify that the BSM control module (LH) and power outer mirror (LH) connectors are disconnected. • Reconnect the negative battery cable. (See **NEGATIVE BATTERY**	Yes	Go to the next step.
		No	Refer to the wiring diagram and verify whether or not there is a common connector between BSM control module (LH) terminal G and power outer mirror (LH) terminal D. **If there is a common connector:** • Determine the malfunctioning part

	CABLE DISCONNECTION/CONNECTION [SKYACTIV-G 2.0, SKYACTIV-G 2.5].) • Switch the ignition ON (engine off or on). • Measure the voltage at the power outer mirror (LH) terminal D (wiring harness-side). • Is the voltage **0 V**?		by inspecting the common connector and the terminal for corrosion, damage, or pin disconnection, and the common wiring harness for a short to power supply. • Repair or replace the malfunctioning part. **If there is no common connector:** • Repair or replace the wiring harness which has a short to power supply. Go to Step 8.
5	**INSPECT POWER OUTER MIRROR (LH)** • Inspect the power outer mirror (LH). (See **POWER OUTER MIRROR INSPECTION**.) • Is the power outer mirror (LH) normal?	Yes	Go to the next step.
		No	Replace the power outer mirror (LH), then go to Step 8. (See **POWER OUTER MIRROR REMOVAL/INSTALLATION**.)
6	**INSPECT BSM INDICATOR LIGHT (LH)** • Inspect the BSM indicator light (LH). (See **OUTER MIRROR GLASS INSPECTION**.) • Is the BSM indicator light (LH) normal?	Yes	Go to the next step.
		No	Replace the outer mirror glass (LH), then go to Step 8. (See **OUTER MIRROR GLASS REMOVAL**.) (See **OUTER MIRROR GLASS INSTALLATION**.)
7	**INSPECT FOR OPEN CIRCUIT IN BSM INDICATOR LIGHT (LH) SIGNAL CIRCUIT** • Verify that the BSM control module (LH) and power outer mirror (LH) connectors are disconnected. • Switch the ignition off. • Disconnect the negative battery cable. (See **NEGATIVE BATTERY CABLE DISCONNECTION/CONNECTION [SKYACTIV-G 2.0, SKYACTIV-G 2.5]**.) • Inspect for continuity	Yes	Go to the next step.
		No	Refer to the wiring diagram and verify whether or not there is a common connector between BSM control module (LH) terminal G and power outer mirror (LH) terminal D. **If there is a common connector:** • Determine the malfunctioning part by inspecting the common connector and the terminal for corrosion, damage, or pin disconnection, and the common wiring harness for an open circuit. • Repair or replace the

	between BSM control module (LH) terminal G (wiring harness-side) and power outer mirror (LH) terminal D (wiring harness-side). • Is there continuity?		malfunctioning part. **If there is no common connector:** • Repair or replace the wiring harness which has an open circuit. Go to the next step.
8	**VERIFY THAT REPAIRS HAVE BEEN COMPLETED** • Always reconnect all disconnected connectors. • Reconnect the negative battery cable. (See **NEGATIVE BATTERY CABLE DISCONNECTION/CONNECTION [SKYACTIV-G 2.0, SKYACTIV-G 2.5]**.) • Clear the BSM control module (LH) DTCs using the M-MDS. (See **CLEARING DTC [BLIND SPOT MONITORING (BSM)]**.) • Retrieve the BSM control module (LH) DTCs using the M-MDS. (See **DTC INSPECTION [BLIND SPOT MONITORING (BSM)]**.) • Is the same DTC displayed?	Yes	Repeat the inspection from Step 1. • If the malfunction recurs, replace the BSM control module (LH). (See **BLIND SPOT MONITORING (BSM) CONTROL MODULE REMOVAL/INSTALLATION**.) Go to the next step.
		No	Go to the next step.
9	**VERIFY IF OTHER DTCs DISPLAYED** • Are any other DTCs displayed?	Yes	Repair or replace the malfunctioning part according to the applicable DTC troubleshooting. (See **DTC TABLE [BLIND SPOT MONITORING (BSM)]**.)
		No	DTC troubleshooting completed.

2014 - Mazda3 - Body and Accessories

DTC B118D:11 [BLIND SPOT MONITORING (BSM)]

Description	BSM indicator light (RH) circuit malfunction
Detection condition	• BSM control module (RH) performs measurement at **0.01 s** intervals and a short to ground in the BSM indicator light (RH) circuit is detected **48 times** continuously.
Fail-safe function	• Blind spot monitoring (BSM) system is stopped.
Possible cause	• Power outer mirror (RH) connector or terminal malfunction • BSM control module (RH) connector or terminal malfunction • Short to ground in wiring harness between BSM control module (RH) terminal G and power outer mirror (RH) terminal D • Power outer mirror (RH) malfunction • BSM indicator light (RH) malfunction • BSM control module (RH) malfunction

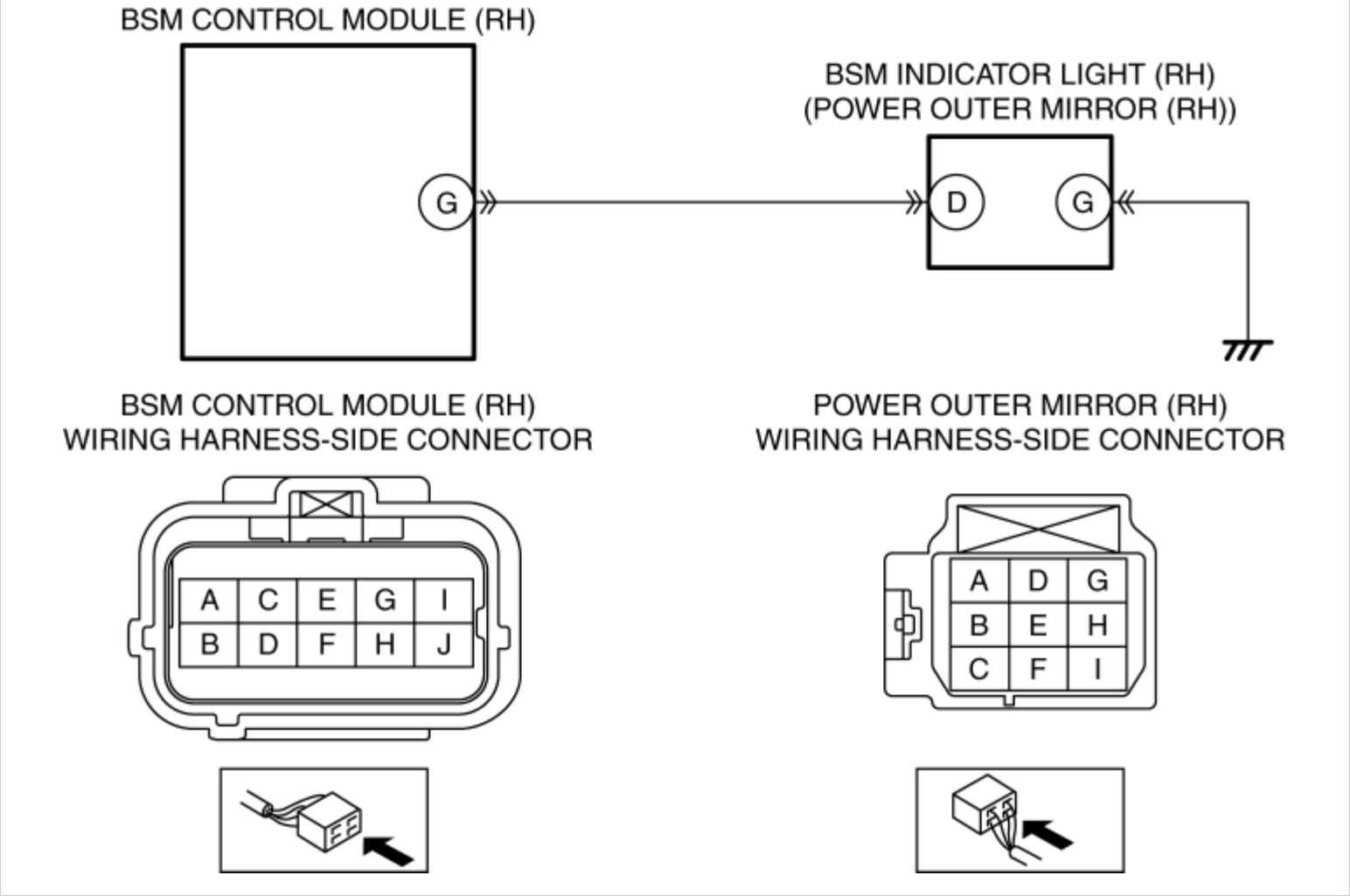

Diagnostic Procedure

Step	Inspection		Action
1	**INSPECT POWER OUTER MIRROR (RH) CONNECTOR CONDITION** • Switch the ignition off. • Disconnect the negative battery cable. (See **NEGATIVE BATTERY CABLE DISCONNECTION/CONNECTION [SKYACTIV-G 2.0, SKYACTIV-G 2.5]**.) • Disconnect the power outer mirror (RH) connector. • Inspect the connector engagement and connection condition and inspect the terminals for damage, deformation, corrosion, or	Yes	Go to the next step.
		No	Repair or replace the connector, then go to Step 6.

	disconnection. • Is the connector normal?		
2	**INSPECT BSM CONTROL MODULE (RH) CONNECTOR CONDITION** • Disconnect the BSM control module (RH) connector. • Inspect the connector engagement and connection condition and inspect the terminals for damage, deformation, corrosion, or disconnection. • Is the connector normal?	Yes	Go to the next step.
		No	Repair or replace the connector, then go to Step 6.
3	**INSPECT FOR SHORT TO GROUND IN BSM INDICATOR LIGHT (RH) CIRCUIT** • Verify that the BSM control module (RH) and power outer mirror (RH) connectors are disconnected. • Inspect for continuity between power outer mirror (RH) terminal D (wiring harness-side) and body ground. • Is there continuity?	Yes	Refer to the wiring diagram and verify whether or not there is a common connector between BSM control module (RH) terminal G and power outer mirror (RH) terminal D. **If there is a common connector:** • Determine the malfunctioning part by inspecting the common connector and the terminal for corrosion, damage, or pin disconnection, and the common wiring harness for a short to ground. • Repair or replace the malfunctioning part. **If there is no common connector:** • Repair or replace the wiring harness which has a short to ground. Go to Step 6.
		No	Go to the next step.
4	**INSPECT POWER OUTER MIRROR (RH)** • Inspect the power outer mirror (RH). (See **POWER OUTER MIRROR INSPECTION**.) • Is the power outer mirror (RH) normal?	Yes	Go to the next step.
		No	Replace the power outer mirror (RH), then go to Step 6. (See **POWER OUTER MIRROR REMOVAL/INSTALLATION**.)

5	**INSPECT BSM INDICATOR LIGHT (RH)** • Inspect the BSM indicator light (RH). (See **OUTER MIRROR GLASS INSPECTION**.) • Is the BSM indicator light (RH) normal?	Yes	Go to the next step.
		No	Replace the outer mirror glass (RH), then go to the next step. (See **OUTER MIRROR GLASS REMOVAL**.) (See **OUTER MIRROR GLASS INSTALLATION**.)
6	**VERIFY THAT REPAIRS HAVE BEEN COMPLETED** • Always reconnect all disconnected connectors. • Reconnect the negative battery cable. (See **NEGATIVE BATTERY CABLE DISCONNECTION/CONNECTION [SKYACTIV-G 2.0, SKYACTIV-G 2.5]**.) • Clear the BSM control module (RH) DTCs using the M-MDS. (See **CLEARING DTC [BLIND SPOT MONITORING (BSM)]**.) • Retrieve the BSM control module (RH) DTCs using the M-MDS. (See **DTC INSPECTION [BLIND SPOT MONITORING (BSM)]**.) • Is the same DTC displayed?	Yes	Repeat the inspection from Step 1. • If the malfunction recurs, replace the BSM control module (RH). (See **BLIND SPOT MONITORING (BSM) CONTROL MODULE REMOVAL/INSTALLATION**.) Go to the next step.
		No	Go to the next step.
7	**VERIFY IF OTHER DTCs DISPLAYED** • Are any other DTCs displayed?	Yes	Repair or replace the malfunctioning part according to the applicable DTC troubleshooting. (See **DTC TABLE [BLIND SPOT MONITORING (BSM)]**.)
		No	DTC troubleshooting completed.

2014 - Mazda3 - Body and Accessories

DTC B118D:15 [BLIND SPOT MONITORING (BSM)]

Description	BSM indicator light (RH) circuit malfunction
Detection condition	• BSM control module (RH) performs measurement at **0.01 s** intervals and an open circuit or short to power supply in the BSM indicator light (RH) circuit is detected **48 times** continuously.
Fail-safe function	• Blind spot monitoring (BSM) system is stopped.
Possible cause	• Power outer mirror (RH) connector or terminal malfunction • Open circuit in wiring harness between power outer mirror (RH) terminal G and body ground • BSM control module (RH) connector or terminal malfunction • Short to power supply in wiring harness between BSM control module (RH) terminal G and power outer mirror (RH) terminal D • Power outer mirror (RH) malfunction • BSM indicator light (RH) malfunction • Open circuit in wiring harness between BSM control module (RH) terminal G and power outer mirror (RH) terminal D • BSM control module (RH) malfunction

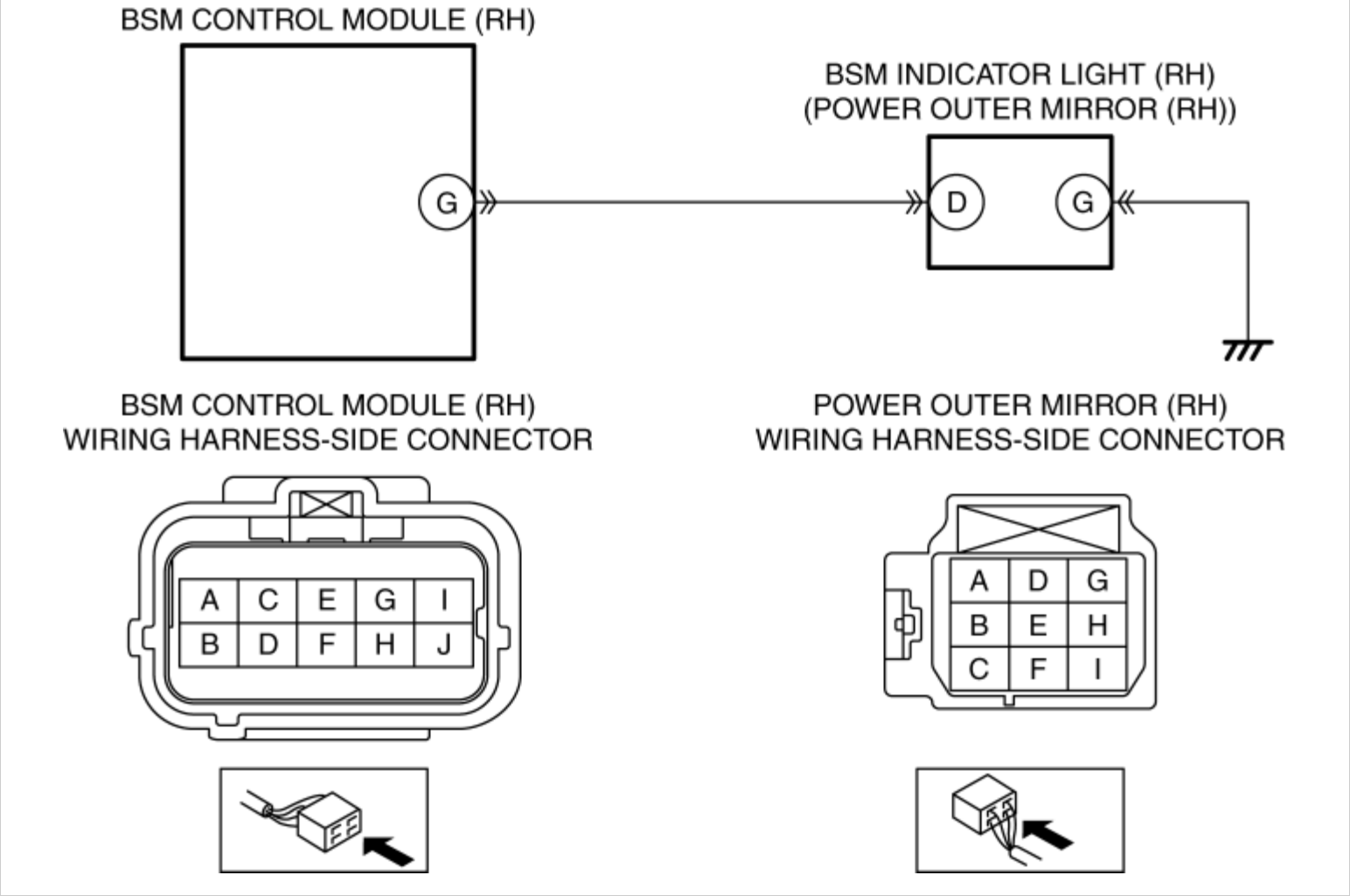

Diagnostic Procedure

Step	Inspection		Action
1	**INSPECT POWER OUTER MIRROR (RH) CONNECTOR CONDITION** • Switch the ignition off. • Disconnect the negative battery cable. (See **NEGATIVE BATTERY CABLE DISCONNECTION/CONNECTION [SKYACTIV-G 2.0, SKYACTIV-G 2.5]**.) • Disconnect the power outer mirror (RH) connector. • Inspect the connector engagement and connection condition and inspect the terminals for damage, deformation, corrosion, or	Yes	Go to the next step.
		No	Repair or replace the connector, then go to Step 8.

	disconnection. • Is the connector normal?		
2	**INSPECT FOR OPEN CIRCUIT IN BSM INDICATOR LIGHT (RH) GROUND CIRCUIT** • Verify that the power outer mirror (RH) connector is disconnected. • Inspect for continuity between power outer mirror (RH) terminal G (wiring harness-side) and body ground. • Is there continuity?	Yes	Go to the next step.
		No	Refer to the wiring diagram and verify whether or not there is a common connector between power outer mirror (RH) terminal G and body ground. **If there is a common connector:** • Determine the malfunctioning part by inspecting the common connector and the terminal for corrosion, damage, or pin disconnection, and the common wiring harness for an open circuit. • Repair or replace the malfunctioning part. **If there is no common connector:** • Repair or replace the wiring harness which has an open circuit. Go to Step 8.
3	**INSPECT BSM CONTROL MODULE (RH) CONNECTOR CONDITION** • Disconnect the BSM control module (RH) connector. • Inspect the connector engagement and connection condition and inspect the terminals for damage, deformation, corrosion, or disconnection. • Is the connector normal?	Yes	Go to the next step.
		No	Repair or replace the connector, then go to Step 8.
4	**INSPECT FOR SHORT TO POWER SUPPLY IN BSM INDICATOR LIGHT (RH) SIGNAL CIRCUIT** • Verify that the BSM control module (RH) and power outer mirror (RH) connectors are disconnected. • Reconnect the negative battery cable. (See **NEGATIVE BATTERY**	Yes	Go to the next step.
		No	Refer to the wiring diagram and verify whether or not there is a common connector between BSM control module (RH) terminal G and power outer mirror (RH) terminal D. **If there is a common connector:** • Determine the malfunctioning part

	CABLE DISCONNECTION/CONNECTION [SKYACTIV-G 2.0, SKYACTIV-G 2.5].) • Switch the ignition ON (engine off or on). • Measure the voltage at the power outer mirror (RH) terminal D (wiring harness-side). • Is the voltage **0 V**?		by inspecting the common connector and the terminal for corrosion, damage, or pin disconnection, and the common wiring harness for a short to power supply. • Repair or replace the malfunctioning part. **If there is no common connector:** • Repair or replace the wiring harness which has a short to power supply. Go to Step 8.
5	**INSPECT POWER OUTER MIRROR (RH)** • Inspect the power outer mirror (RH). (See **POWER OUTER MIRROR INSPECTION**.) • Is the power outer mirror (RH) normal?	Yes	Go to the next step.
		No	Replace the power outer mirror (RH), then go to Step 8. (See **POWER OUTER MIRROR REMOVAL/INSTALLATION**.)
6	**INSPECT BSM INDICATOR LIGHT (RH)** • Inspect the BSM indicator light (RH). (See **OUTER MIRROR GLASS INSPECTION**.) • Is the BSM indicator light (RH) normal?	Yes	Go to the next step.
		No	Replace the outer mirror glass (RH), then go to Step 8. (See **OUTER MIRROR GLASS REMOVAL**.) (See **OUTER MIRROR GLASS INSTALLATION**.)
7	**INSPECT FOR OPEN CIRCUIT IN BSM INDICATOR LIGHT (RH) SIGNAL CIRCUIT** • Verify that the BSM control module (RH) and power outer mirror (RH) connectors are disconnected. • Switch the ignition off. • Disconnect the negative battery cable. (See **NEGATIVE BATTERY CABLE DISCONNECTION/CONNECTION [SKYACTIV-G 2.0, SKYACTIV-G 2.5]**.) • Inspect for continuity	Yes	Go to the next step.
		No	Refer to the wiring diagram and verify whether or not there is a common connector between BSM control module (RH) terminal G and power outer mirror (RH) terminal D. **If there is a common connector:** • Determine the malfunctioning part by inspecting the common connector and the terminal for corrosion, damage, or pin disconnection, and the common wiring harness for an open circuit. • Repair or replace the

	between BSM control module (RH) terminal G (wiring harness-side) and power outer mirror (RH) terminal D (wiring harness-side). • Is there continuity?		malfunctioning part. **If there is no common connector:** • Repair or replace the wiring harness which has an open circuit. Go to the next step.
8	**VERIFY THAT REPAIRS HAVE BEEN COMPLETED** • Always reconnect all disconnected connectors. • Reconnect the negative battery cable. (See **NEGATIVE BATTERY CABLE DISCONNECTION/CONNECTION [SKYACTIV-G 2.0, SKYACTIV-G 2.5]**.) • Clear the BSM control module (RH) DTCs using the M-MDS. (See **CLEARING DTC [BLIND SPOT MONITORING (BSM)]**.) • Retrieve the BSM control module (RH) DTCs using the M-MDS. (See **DTC INSPECTION [BLIND SPOT MONITORING (BSM)]**.) • Is the same DTC displayed?	Yes	Repeat the inspection from Step 1. • If the malfunction recurs, replace the BSM control module (RH). (See **BLIND SPOT MONITORING (BSM) CONTROL MODULE REMOVAL/INSTALLATION**.) Go to the next step.
		No	Go to the next step.
9	**VERIFY IF OTHER DTCs DISPLAYED** • Are any other DTCs displayed?	Yes	Repair or replace the malfunctioning part according to the applicable DTC troubleshooting. (See **DTC TABLE [BLIND SPOT MONITORING (BSM)]**.)
		No	DTC troubleshooting completed.

2014 - Mazda3 - Body and Accessories

DTC U0001:88/U0100:00/U0131:00/U0155:00/U0214:00 [BLIND SPOT MONITORING (BSM)]

Description	• U0001:88
	  ▪ Module communication error (HS-CAN)
	• U0100:00
	  ▪ Communication error with PCM
	• U0131:00
	  ▪ Communication error with EPS control module
	• U0155:00
	  ▪ Communication error with instrument cluster
	• U0214:00
	  ▪ Communication error with start stop unit

Detection condition	• U0001:88
	  ▪ BSM control module detected a CAN bus communication line (HS-CAN) malfunction for **0.4 s or more**.
	• U0100:00
	  ▪ BSM control module cannot receive a CAN signal from the PCM for **1.5 s or more**.
	• U0131:00
	  ▪ BSM control module cannot receive a CAN signal from the EPS control module for **1.5 s or more**.
	• U0155:00
	  ▪ BSM control module cannot receive a CAN signal from the instrument cluster.
	• U0214:00
	  ▪ BSM control module cannot receive a CAN signal from the start stop unit for **1.5 s or more**.

	• U0001:88

Fail-safe function	Blind spot monitoring (BSM) system is stopped. • U0100:00 ▪ Blind spot monitoring (BSM) system is stopped. • U0131:00 ▪ Blind spot monitoring (BSM) system is stopped. • U0155:00 ▪ Blind spot monitoring (BSM) system is stopped. • U0214:00 ▪ Blind spot monitoring (BSM) system is stopped.
Possible cause	• Malfunction in CAN bus communication line • Malfunction in CAN communication line between PCM and BSM control module • Malfunction in CAN communication line between EPS control module and BSM control module • Malfunction in CAN communication line between instrument cluster and BSM control module • Malfunction in CAN communication line between start stop unit and BSM control module
System wiring diagram	Not applicable

Diagnostic Procedure

- Perform the malfunction diagnosis according to the troubleshooting procedure for the multiplex communication system. (See **FOREWORD**.)

2014 - Mazda3 - Body and Accessories

DTC U0232:00 [BLIND SPOT MONITORING (BSM)]

Description	Communication error with BSM control module (LH)
Detection condition	• No communication between BSM control module (LH) and (RH) for **1 s or more**.
Fail-safe function	• Blind spot monitoring (BSM) system is stopped.
Possible cause	• BSM control module (LH) connector or terminal malfunction • BSM control module (RH) connector or terminal malfunction • Short to ground in wiring harness between the following terminals: ▪ BSM control module (LH) terminal A—BSM control module (RH) terminal A ▪ BSM control module (LH) terminal B—BSM control module (RH) terminal B • Short to power supply in wiring harness between the following terminals: ▪ BSM control module (LH) terminal A—BSM control module (RH) terminal A ▪ BSM control module (LH) terminal B—BSM control module (RH) terminal B • Open circuit in wiring harness between the following terminals: ▪ BSM control module (LH) terminal A—BSM control module (RH) terminal A ▪ BSM control module (LH) terminal B—BSM control module (RH) terminal B • BSM control module (LH) malfunction • BSM control module (RH) malfunction

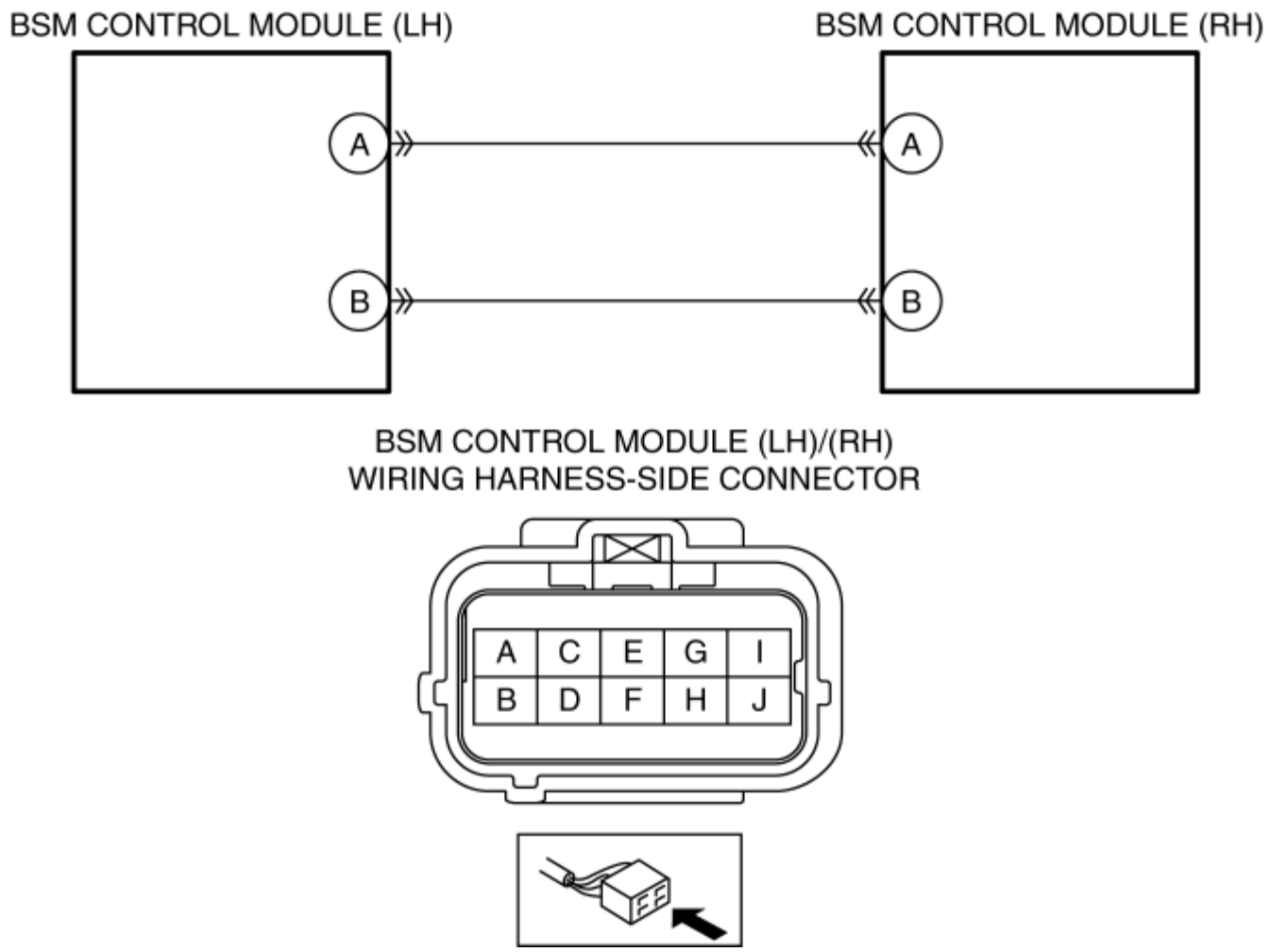

Diagnostic Procedure

Step	Inspection		Action
1	**INSPECT BSM CONTROL MODULE (LH) CONNECTOR CONDITION** • Switch the ignition off. • Disconnect the negative battery cable. (See **NEGATIVE BATTERY CABLE DISCONNECTION/CONNECTION [SKYACTIV-G 2.0, SKYACTIV-G 2.5]**.) • Disconnect the BSM control module (LH) connector. • Inspect the connector engagement and connection condition and inspect the terminals for damage, deformation, corrosion, or	Yes	Go to the next step.
		No	Repair or replace the connector, then go to Step 6.

	disconnection. • Is the connector normal?		
2	**INSPECT BSM CONTROL MODULE (RH) CONNECTOR CONDITION** • Disconnect the BSM control module (RH) connector. • Inspect the connector engagement and connection condition and inspect the terminals for damage, deformation, corrosion, or disconnection. • Is the connector normal?	Yes	Go to the next step.
		No	Repair or replace the connector, then go to Step 6.
3	**INSPECT FOR SHORT TO GROUND IN CAN COMMUNICATION CIRCUIT BETWEEN BSM CONTROL MODULE (LH) AND (RH)** • Verify that the BSM control module (LH) and (RH) connectors are disconnected. • Inspect for continuity between the following terminals (wiring harness-side) and body ground: ▪ BSM control module (LH) terminal A ▪ BSM control module (LH) terminal B • Is there continuity?	Yes	Refer to the wiring diagram and verify whether or not there is a common connector between the following terminals: • BSM control module (LH) terminal A—BSM control module (RH) terminal A • BSM control module (LH) terminal B—BSM control module (RH) terminal B **If there is a common connector:** • Determine the malfunctioning part by inspecting the common connector and the terminal for corrosion, damage, or pin disconnection, and the common wiring harness for a short to ground. • Repair or replace the malfunctioning part. **If there is no common connector:** • Repair or replace the wiring harness which has a short to ground. Go to Step 6.
		No	Go to the next step.
4	**INSPECT FOR SHORT TO POWER SUPPLY IN CAN COMMUNICATION CIRCUIT BETWEEN BSM CONTROL MODULE (LH)**	Yes	Go to the next step.

	AND (RH) • Verify that the BSM control module (LH) and (RH) connectors are disconnected. • Reconnect the negative battery cable. (See **NEGATIVE BATTERY CABLE DISCONNECTION/CONNECTION [SKYACTIV-G 2.0, SKYACTIV-G 2.5]**.) • Switch the ignition ON (engine off or on). • Measure the voltage at the following terminals (wiring harness-side): ▪ BSM control module (LH) terminal A ▪ BSM control module (LH) terminal B • Is the voltage **0 V**?	No	Refer to the wiring diagram and verify whether or not there is a common connector between following terminals: • BSM control module (LH) terminal A—BSM control module (RH) terminal A • BSM control module (LH) terminal B—BSM control module (RH) terminal B **If there is a common connector:** • Determine the malfunctioning part by inspecting the common connector and the terminal for corrosion, damage, or pin disconnection, and the common wiring harness for a short to power supply. • Repair or replace the malfunctioning part. **If there is no common connector:** • Repair or replace the wiring harness which has a short to power supply. Go to Step 6.
5	**INSPECT FOR OPEN CIRCUIT IN CAN COMMUNICATION CIRCUIT BETWEEN BSM CONTROL MODULE (LH) AND (RH)** • Verify that the BSM control module (LH) and (RH) connectors are disconnected. • Switch the ignition off. • Disconnect the negative battery cable. (See **NEGATIVE BATTERY CABLE DISCONNECTION/CONNECTION [SKYACTIV-G 2.0, SKYACTIV-G 2.5]**.) • Inspect for continuity between the following terminals (wiring harness-side): ▪ BSM control	Yes	Go to the next step.
		No	Refer to the wiring diagram and verify whether or not there is a common connector between the following terminals: • BSM control module (LH) terminal A—BSM control module (RH) terminal A • BSM control module (LH) terminal B—BSM control module (RH) terminal B **If there is a common connector:** • Determine the malfunctioning part by inspecting the common connector and the terminal for corrosion, damage, or pin disconnection, and the common wiring harness for an open circuit.

	module (LH) terminal A—BSM control module (RH) terminal A ▪ BSM control module (LH) terminal B—BSM control module (RH) terminal B • Is there continuity?		• Repair or replace the malfunctioning part. **If there is no common connector:** • Repair or replace the wiring harness which has an open circuit. Go to the next step.
6	**PERFORM DTC INSPECTION AND VERIFY BSM CONTROL MODULE (LH) MALFUNCTION** • Always reconnect all disconnected connectors. • Reconnect the negative battery cable. (See **NEGATIVE BATTERY CABLE DISCONNECTION/CONNECTION [SKYACTIV-G 2.0, SKYACTIV-G 2.5]**.) • Clear the DTC for the BSM control module (RH) using the M-MDS. (See **CLEARING DTC [BLIND SPOT MONITORING (BSM)]**.) • Switch the ignition ON (engine off or on) and wait for **1 s or more**. • Retrieve the BSM control module (RH) DTCs using the M-MDS. (See **DTC INSPECTION [BLIND SPOT MONITORING (BSM)]**.) • Is the same DTC displayed?	Yes	Repeat the inspection from Step 1. • If the malfunction recurs, replace the BSM control module (LH). (See **BLIND SPOT MONITORING (BSM) CONTROL MODULE REMOVAL/INSTALLATION**.) Go to the next step.
		No	Go to Step 8.
7	**PERFORM DTC INSPECTION AND VERIFY BSM CONTROL MODULE (RH) MALFUNCTION** • Clear the DTC for the BSM control module (RH) using the M-MDS. (See **CLEARING DTC [BLIND**	Yes	Replace the BSM control module (RH), then go to the next step. (See **BLIND SPOT MONITORING (BSM) CONTROL MODULE REMOVAL/INSTALLATION**.)
		No	Go to the next step.

	SPOT MONITORING (BSM)].) • Switch the ignition ON (engine off or on) and wait for **1 s or more**. • Retrieve the BSM control module (RH) DTCs using the M-MDS. (See **DTC INSPECTION [BLIND SPOT MONITORING (BSM)]**.) • Is the same DTC displayed?		
8	**VERIFY IF OTHER DTCs DISPLAYED** • Are any other DTCs displayed?	Yes	Repair or replace the malfunctioning part according to the applicable DTC troubleshooting. (See **DTC TABLE [BLIND SPOT MONITORING (BSM)]**.)
		No	DTC troubleshooting completed.

2014 - Mazda3 - Body and Accessories

DTC U0233:00 [BLIND SPOT MONITORING (BSM)]

Description	Communication error with BSM control module (RH)
Detection condition	• No communication between BSM control module (LH) and (RH) for **1 s or more**.
Fail-safe function	• Blind spot monitoring (BSM) system is stopped.
Possible cause	• BSM control module (RH) connector or terminal malfunction • BSM control module (LH) connector or terminal malfunction • Short to ground in wiring harness between the following terminals: ▪ BSM control module (LH) terminal A—BSM control module (RH) terminal A ▪ BSM control module (LH) terminal B—BSM control module (RH) terminal B • Short to power supply in wiring harness between the following terminals: ▪ BSM control module (LH) terminal A—BSM control module (RH) terminal A ▪ BSM control module (LH) terminal B—BSM control module (RH) terminal B • Open circuit in wiring harness between the following terminals: ▪ BSM control module (LH) terminal A—BSM control module (RH) terminal A ▪ BSM control module (LH) terminal B—BSM control module (RH) terminal B • BSM control module (RH) malfunction • BSM control module (LH) malfunction

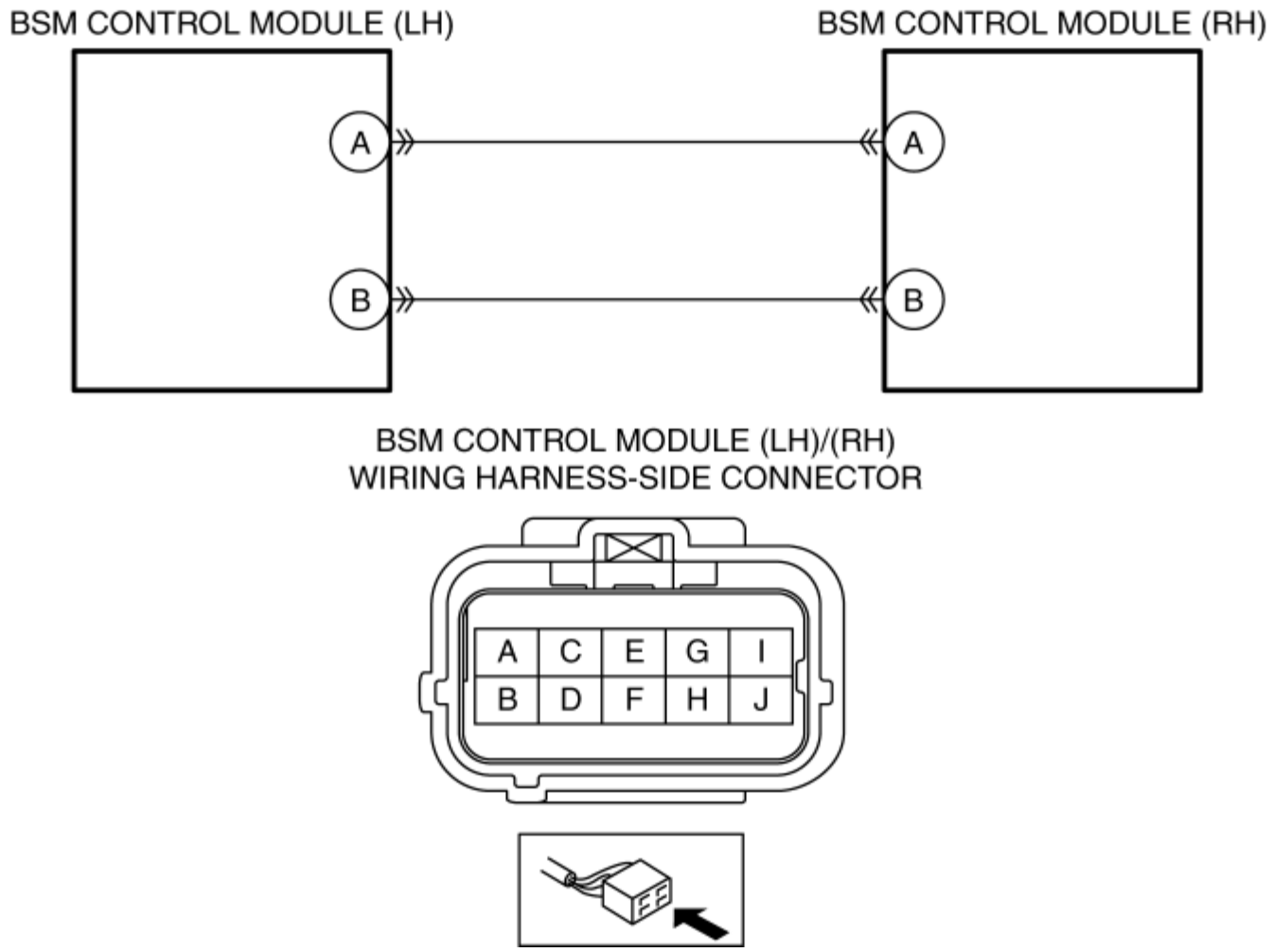

Diagnostic Procedure

Step	Inspection		Action
1	**INSPECT BSM CONTROL MODULE (RH) CONNECTOR CONDITION** • Switch the ignition off. • Disconnect the negative battery cable. (See **NEGATIVE BATTERY CABLE DISCONNECTION/CONNECTION [SKYACTIV-G 2.0, SKYACTIV-G 2.5]**.) • Disconnect the BSM control module (RH) connector. • Inspect the connector engagement and connection condition and inspect the terminals for damage, deformation, corrosion, or	Yes	Go to the next step.
		No	Repair or replace the connector, then go to Step 6.

	disconnection. • Is the connector normal?		
2	**INSPECT BSM CONTROL MODULE (LH) CONNECTOR CONDITION** • Disconnect the BSM control module (LH) connector. • Inspect the connector engagement and connection condition and inspect the terminals for damage, deformation, corrosion, or disconnection. • Is the connector normal?	Yes	Go to the next step.
		No	Repair or replace the connector, then go to Step 6.
3	**INSPECT FOR SHORT TO GROUND IN CAN COMMUNICATION CIRCUIT BETWEEN BSM CONTROL MODULE (LH) AND (RH)** • Verify that the BSM control module (LH) and (RH) connectors are disconnected. • Inspect for continuity between the following terminals (wiring harness-side) and body ground: ▪ BSM control module (RH) terminal A ▪ BSM control module (RH) terminal B • Is there continuity?	Yes	Refer to the wiring diagram and verify whether or not there is a common connector between the following terminals: • BSM control module (LH) terminal A—BSM control module (RH) terminal A • BSM control module (LH) terminal B—BSM control module (RH) terminal B **If there is a common connector:** • Determine the malfunctioning part by inspecting the common connector and the terminal for corrosion, damage, or pin disconnection, and the common wiring harness for a short to ground. • Repair or replace the malfunctioning part. **If there is no common connector:** • Repair or replace the wiring harness which has a short to ground. Go to Step 6.
		No	Go to the next step.
4	**INSPECT FOR SHORT TO POWER SUPPLY IN CAN COMMUNICATION CIRCUIT BETWEEN BSM CONTROL MODULE (LH)**	Yes	Go to the next step.

	AND (RH) • Verify that the BSM control module (LH) and (RH) connectors are disconnected. • Reconnect the negative battery cable. (See **NEGATIVE BATTERY CABLE DISCONNECTION/CONNECTION [SKYACTIV-G 2.0, SKYACTIV-G 2.5]**.) • Switch the ignition ON (engine off or on). • Measure the voltage at the following terminals (wiring harness-side): ▪ BSM control module (RH) terminal A ▪ BSM control module (RH) terminal B • Is the voltage **0 V**?	No	Refer to the wiring diagram and verify whether or not there is a common connector between following terminals: • BSM control module (LH) terminal A—BSM control module (RH) terminal A • BSM control module (LH) terminal B—BSM control module (RH) terminal B **If there is a common connector:** • Determine the malfunctioning part by inspecting the common connector and the terminal for corrosion, damage, or pin disconnection, and the common wiring harness for a short to power supply. • Repair or replace the malfunctioning part. **If there is no common connector:** • Repair or replace the wiring harness which has a short to power supply. Go to Step 6.
5	**INSPECT FOR OPEN CIRCUIT IN CAN COMMUNICATION CIRCUIT BETWEEN BSM CONTROL MODULE (LH) AND (RH)** • Verify that the BSM control module (LH) and (RH) connectors are disconnected. • Switch the ignition off. • Disconnect the negative battery cable. (See **NEGATIVE BATTERY CABLE DISCONNECTION/CONNECTION [SKYACTIV-G 2.0, SKYACTIV-G 2.5]**.) • Inspect for continuity between the following terminals (wiring harness-side): ▪ BSM control	Yes	Go to the next step.
		No	Refer to the wiring diagram and verify whether or not there is a common connector between the following terminals: • BSM control module (LH) terminal A—BSM control module (RH) terminal A • BSM control module (LH) terminal B—BSM control module (RH) terminal B **If there is a common connector:** • Determine the malfunctioning part by inspecting the common connector and the terminal for corrosion, damage, or pin disconnection, and the common wiring harness for an open circuit.

	module (LH) terminal A—BSM control module (RH) terminal A ▪ BSM control module (LH) terminal B—BSM control module (RH) terminal B • Is there continuity?		• Repair or replace the malfunctioning part. **If there is no common connector:** • Repair or replace the wiring harness which has an open circuit. Go to the next step.
6	**PERFORM DTC INSPECTION AND VERIFY BSM CONTROL MODULE (RH) MALFUNCTION** • Always reconnect all disconnected connectors. • Reconnect the negative battery cable. (See **NEGATIVE BATTERY CABLE DISCONNECTION/CONNECTION [SKYACTIV-G 2.0, SKYACTIV-G 2.5]**.) • Clear the DTC for the BSM control module (LH) using the M-MDS. (See **CLEARING DTC [BLIND SPOT MONITORING (BSM)]**.) • Switch the ignition ON (engine off or on) and wait for **1 s or more**. • Retrieve the BSM control module (LH) DTCs using the M-MDS. (See **DTC INSPECTION [BLIND SPOT MONITORING (BSM)]**.) • Is the same DTC displayed?	Yes	Repeat the inspection from Step 1. • If the malfunction recurs, replace the BSM control module (RH). (See **BLIND SPOT MONITORING (BSM) CONTROL MODULE REMOVAL/INSTALLATION**.) Go to the next step.
		No	Go to Step 8.
7	**PERFORM DTC INSPECTION AND VERIFY BSM CONTROL MODULE (LH) MALFUNCTION** • Clear the DTC for the BSM control module (LH) using the M-MDS. (See **CLEARING DTC [BLIND**	Yes	Replace the BSM control module (LH), then go to the next step. (See **BLIND SPOT MONITORING (BSM) CONTROL MODULE REMOVAL/INSTALLATION**.)
		No	Go to the next step.

	SPOT MONITORING (BSM)].) • Switch the ignition ON (engine off or on) and wait for **1 s or more**. • Retrieve the BSM control module (LH) DTCs using the M-MDS. (See **DTC INSPECTION [BLIND SPOT MONITORING (BSM)]**.) • Is the same DTC displayed?		
8	**VERIFY IF OTHER DTCs DISPLAYED** • Are any other DTCs displayed?	Yes	Repair or replace the malfunctioning part according to the applicable DTC troubleshooting. (See **DTC TABLE [BLIND SPOT MONITORING (BSM)]**.)
		No	DTC troubleshooting completed.

2014 - Mazda3 - Body and Accessories

DTC U0401:68 [BLIND SPOT MONITORING (BSM)]

Description	Error signal received from PCM
Detection condition	• BSM control module receives the error signal from the PCM for **1 s or more**.
Fail-safe function	• Blind spot monitoring (BSM) system is stopped.
Possible cause	• DTCs are stored in the PCM. • PCM malfunction • BSM control module malfunction
System wiring diagram	Not applicable

Diagnostic Procedure

Step	Inspection		Action
1	**VERIFY PCM DTCs** • Retrieve the PCM DTCs using the M-MDS. (See **ON-BOARD DIAGNOSTIC TEST [SKYACTIV-G 2.0, SKYACTIV-G 2.5]**.) • Are any DTCs displayed?	Yes	Repair or replace the malfunctioning part according to the applicable DTC troubleshooting. (See **DTC TABLE [SKYACTIV-G 2.0, SKYACTIV-G 2.5]**.)
		No	Go to the next step.
2	**PERFORM DTC INSPECTION AND VERIFY PCM MALFUNCTION** • Clear the DTC for the BSM control module using the M-MDS. (See **CLEARING DTC [BLIND SPOT MONITORING (BSM)]**.) • Switch the ignition ON	Yes	Replace the PCM, then go to the next step. (See **PCM REMOVAL/INSTALLATION [SKYACTIV-G 2.0, SKYACTIV-G 2.5]**.)
		No	Go to Step 4.

	(engine off or on) and wait for **1 s or more**. • Retrieve the BSM control module DTCs using the M-MDS. (See **DTC INSPECTION [BLIND SPOT MONITORING (BSM)]**.) • Is the same DTC displayed?		
3	**VERIFY THAT REPAIRS HAVE BEEN COMPLETED** • Clear the DTC for the BSM control module using the M-MDS. (See **CLEARING DTC [BLIND SPOT MONITORING (BSM)]**.) • Switch the ignition ON (engine off or on) and wait for **1 s or more**. • Retrieve the BSM control module DTCs using the M-MDS. (See **DTC INSPECTION [BLIND SPOT MONITORING (BSM)]**.) • Is the same DTC displayed?	Yes	Repeat the inspection from Step 1. • If the malfunction recurs, replace the BSM control module. (See **BLIND SPOT MONITORING (BSM) CONTROL MODULE REMOVAL/INSTALLATION**.) Go to the next step.
		No	Go to the next step.
4	**VERIFY IF OTHER DTCs DISPLAYED** • Are any other DTCs displayed?	Yes	Repair or replace the malfunctioning part according to the applicable DTC troubleshooting. (See **DTC TABLE [BLIND SPOT MONITORING (BSM)]**.)
		No	DTC troubleshooting completed.

2014 - Mazda3 - Body and Accessories

DTC U0420:68 [BLIND SPOT MONITORING (BSM)]

Description	Error signal received from EPS control module
Detection condition	• BSM control module receives the error signal from the EPS control module for **1 s or more**.
Fail-safe function	• Blind spot monitoring (BSM) system is stopped.
Possible cause	• DTCs are stored in the EPS control module. • EPS control module malfunction • BSM control module malfunction
System wiring diagram	Not applicable

Diagnostic Procedure

Step	Inspection		Action
1	**VERIFY EPS CONTROL MODULE DTCs** • Retrieve the EPS control module DTCs using the M-MDS. (See **ELECTRIC POWER STEERING (EPS) ON-BOARD DIAGNOSIS**.) • Are any DTCs displayed?	Yes	Repair or replace the malfunctioning part according to the applicable DTC troubleshooting. (See **ELECTRIC POWER STEERING (EPS) ON-BOARD DIAGNOSIS**.)
		No	Go to the next step.
2	**PERFORM DTC INSPECTION AND VERIFY EPS CONTROL MODULE MALFUNCTION** • Clear the DTC for the BSM control module using the M-MDS. (See **CLEARING DTC [BLIND SPOT MONITORING (BSM)]**.)	Yes	Replace the EPS control module, then go to the next step. (See **STEERING WHEEL AND COLUMN REMOVAL/INSTALLATION**.)
		No	Go to Step 4.

	• Switch the ignition ON (engine off or on) and wait for **1 s or more**. • Retrieve the BSM control module DTCs using the M-MDS. (See **DTC INSPECTION [BLIND SPOT MONITORING (BSM)]**.) • Is the same DTC displayed?		
3	**VERIFY THAT REPAIRS HAVE BEEN COMPLETED** • Clear the DTC for the BSM control module using the M-MDS. (See **CLEARING DTC [BLIND SPOT MONITORING (BSM)]**.) • Switch the ignition ON (engine off or on) and wait for **1 s or more**. • Retrieve the BSM control module DTCs using the M-MDS. (See **DTC INSPECTION [BLIND SPOT MONITORING (BSM)]**.) • Is the same DTC displayed?	Yes	Repeat the inspection from Step 1. • If the malfunction recurs, replace the BSM control module. (See **BLIND SPOT MONITORING (BSM) CONTROL MODULE REMOVAL/INSTALLATION**.) Go to the next step.
		No	Go to the next step.
4	**VERIFY IF OTHER DTCs DISPLAYED** • Are any other DTCs displayed?	Yes	Repair or replace the malfunctioning part according to the applicable DTC troubleshooting. (See **DTC TABLE [BLIND SPOT MONITORING (BSM)]**.)
		No	DTC troubleshooting completed.

2014 - Mazda3 - Body and Accessories

DTC U0423:68 [BLIND SPOT MONITORING (BSM)]

Description	Error signal received from instrument cluster
Detection condition	• BSM control module receives the error signal from the instrument cluster for **1 s or more**.
Fail-safe function	• Blind spot monitoring (BSM) system is stopped.
Possible cause	• DTCs are stored in the instrument cluster. • Instrument cluster malfunction • BSM control module malfunction
System wiring diagram	Not applicable

Diagnostic Procedure

Step	Inspection		Action
1	**VERIFY INSTRUMENT CLUSTER DTCs** • Retrieve the instrument cluster DTCs using the M-MDS. (See **DTC INSPECTION [INSTRUMENT CLUSTER]**.) • Are any DTCs displayed?	Yes	Repair or replace the malfunctioning part according to the applicable DTC troubleshooting. (See **DTC TABLE [INSTRUMENT CLUSTER]**.)
		No	Go to the next step.
2	**PERFORM DTC INSPECTION AND VERIFY INSTRUMENT CLUSTER MALFUNCTION** • Clear the DTC for the BSM control module using the M-MDS. (See **CLEARING DTC [BLIND SPOT MONITORING (BSM)]**.) • Switch the ignition ON (engine	Yes	Replace the instrument cluster, then go to the next step. (See **INSTRUMENT CLUSTER REMOVAL/INSTALLATION**.)
		No	Go to Step 4.

	off or on) and wait for **1 s or more**. • Retrieve the BSM control module DTCs using the M-MDS. (See **DTC INSPECTION [BLIND SPOT MONITORING (BSM)]**.) • Is the same DTC displayed?		
3	**VERIFY THAT REPAIRS HAVE BEEN COMPLETED** • Clear the DTC for the BSM control module using the M-MDS. (See **CLEARING DTC [BLIND SPOT MONITORING (BSM)]**.) • Switch the ignition ON (engine off or on) and wait for **1 s or more**. • Retrieve the BSM control module DTCs using the M-MDS. (See **DTC INSPECTION [BLIND SPOT MONITORING (BSM)]**.) • Is the same DTC displayed?	Yes	Repeat the inspection from Step 1. • If the malfunction recurs, replace the BSM control module. (See **BLIND SPOT MONITORING (BSM) CONTROL MODULE REMOVAL/INSTALLATION**.) Go to the next step.
		No	Go to the next step.
4	**VERIFY IF OTHER DTCs DISPLAYED** • Are any other DTCs displayed?	Yes	Repair or replace the malfunctioning part according to the applicable DTC troubleshooting. (See **DTC TABLE [BLIND SPOT MONITORING (BSM)]**.)
		No	DTC troubleshooting completed.

2014 - Mazda3 - Body and Accessories

DTC U0515:68 [BLIND SPOT MONITORING (BSM)]

Description	Error signal received from start stop unit
Detection condition	• BSM control module receives the error signal from the start stop unit for **1 s or more**.
Fail-safe function	• Blind spot monitoring (BSM) system is stopped.
Possible cause	• DTCs are stored in the start stop unit. • Start stop unit malfunction • BSM control module malfunction
System wiring diagram	Not applicable

Diagnostic Procedure

Step	Inspection		Action
1	**VERIFY START STOP UNIT DTCs** • Retrieve the start stop unit DTCs using the M-MDS. (See **DTC INSPECTION [START STOP UNIT]**.) • Are any DTCs displayed?	Yes	Repair or replace the malfunctioning part according to the applicable DTC troubleshooting. (See **DTC TABLE [START STOP UNIT]**.)
		No	Go to the next step.
2	**PERFORM DTC INSPECTION AND VERIFY START STOP UNIT MALFUNCTION** • Clear the DTC for the BSM control module using the M-MDS. (See **CLEARING DTC [BLIND SPOT MONITORING (BSM)]**.) • Switch the ignition ON (engine off or on) and wait	Yes	Replace the start stop unit, then go to the next step. (See **START STOP UNIT REMOVAL/INSTALLATION**.)
		No	Go to Step 4.

	for **1 s or more**. • Retrieve the BSM control module DTCs using the M-MDS. (See **DTC INSPECTION [BLIND SPOT MONITORING (BSM)]**.) • Is the same DTC displayed?		
3	**VERIFY THAT REPAIRS HAVE BEEN COMPLETED** • Clear the DTC for the BSM control module using the M-MDS. (See **CLEARING DTC [BLIND SPOT MONITORING (BSM)]**.) • Switch the ignition ON (engine off or on) and wait for **1 s or more**. • Retrieve the BSM control module DTCs using the M-MDS. (See **DTC INSPECTION [BLIND SPOT MONITORING (BSM)]**.) • Is the same DTC displayed?	Yes	Repeat the inspection from Step 1. • If the malfunction recurs, replace the BSM control module. (See **BLIND SPOT MONITORING (BSM) CONTROL MODULE REMOVAL/INSTALLATION**.) Go to the next step.
		No	Go to the next step.
4	**VERIFY IF OTHER DTCs DISPLAYED** • Are any other DTCs displayed?	Yes	Repair or replace the malfunctioning part according to the applicable DTC troubleshooting. (See **DTC TABLE [BLIND SPOT MONITORING (BSM)]**.)
		No	DTC troubleshooting completed.

2014 - Mazda3 - Body and Accessories

DTC U2300:54 [BLIND SPOT MONITORING (BSM)]

Description	Configuration signal not received
Detection condition	• BSM control module cannot receive the configuration signal it is supposed to receive.
Fail-safe function	• Blind spot monitoring (BSM) system is stopped.
Possible cause	• Instrument cluster configuration error • BSM control module malfunction
System wiring diagram	Not applicable

Diagnostic Procedure

Step	Inspection		Action
1	**PERFORM INSTRUMENT CLUSTER CONFIGURATION (USING AS-BUILT DATA)** • Using the M-MDS, perform the instrument cluster configuration (using As-Built data). (See **INSTRUMENT CLUSTER CONFIGURATION (USING AS-BUILT DATA)**.) • Clear the DTC for the BSM control module using the M-MDS. (See **CLEARING DTC [BLIND SPOT MONITORING (BSM)]**.) • Retrieve the BSM control module DTCs using the M-MDS.	Yes	Using the M-MDS, perform the instrument cluster configuration (using As-Built data) again, then go to the next step. (See **INSTRUMENT CLUSTER CONFIGURATION (USING AS-BUILT DATA)**.)
		No	Go to Step 3.

	(See **DTC INSPECTION [BLIND SPOT MONITORING (BSM)]**.) • Is the same DTC displayed?		
2	**VERIFY THAT REPAIRS HAVE BEEN COMPLETED** • Clear the DTC for the BSM control module using the M-MDS. (See **CLEARING DTC [BLIND SPOT MONITORING (BSM)]**.) • Retrieve the BSM control module DTCs using the M-MDS. (See **DTC INSPECTION [BLIND SPOT MONITORING (BSM)]**.) • Is the same DTC displayed?	Yes	Repeat the inspection from Step 1. • If the malfunction recurs, replace the BSM control module. (See **BLIND SPOT MONITORING (BSM) CONTROL MODULE REMOVAL/INSTALLATION**.) Go to the next step.
		No	Go to the next step.
3	**VERIFY IF OTHER DTCs DISPLAYED** • Are any other DTCs displayed?	Yes	Repair or replace the malfunctioning part according to the applicable DTC troubleshooting. (See **DTC TABLE [BLIND SPOT MONITORING (BSM)]**.)
		No	DTC troubleshooting completed.

2014 - Mazda3 - Body and Accessories

DTC U2300:56 [BLIND SPOT MONITORING (BSM)]

Description	Configuration data unmatched with instrument cluster
Detection condition	• Configuration data of the BSM control module and instrument cluster are not matched.
Fail-safe function	• Blind spot monitoring (BSM) system is stopped.

Possible cause	• DTCs are stored in the instrument cluster.
	  ▪ Instrument cluster configuration not implemented
	  ▪ Instrument cluster internal memory malfunction
	• Instrument cluster configuration data error
	• BSM control module malfunction

System wiring diagram	Not applicable

Diagnostic Procedure

Step	Inspection		Action
1	**VERIFY INSTRUMENT CLUSTER DTCs** • Retrieve the instrument cluster DTCs using the M-MDS. (See **DTC INSPECTION [INSTRUMENT CLUSTER]**.) • Are any DTCs displayed?	Yes	Repair or replace the malfunctioning part according to the applicable DTC troubleshooting. (See **DTC TABLE [INSTRUMENT CLUSTER]**.)
		No	Go to the next step.
2	**RESET INSTRUMENT CLUSTER CONFIGURATION DATA** • Using the M-MDS, perform the instrument cluster configuration (using As-Built data).	Yes	Using the M-MDS, perform the instrument cluster configuration (using As-Built data) again, then go to the next step. (See **INSTRUMENT CLUSTER CONFIGURATION (USING AS-BUILT DATA)**.)

	(See **INSTRUMENT CLUSTER CONFIGURATION (USING AS-BUILT DATA)**.) • Clear the DTC for the BSM control module using the M-MDS. (See **CLEARING DTC [BLIND SPOT MONITORING (BSM)]**.) • Switch the ignition ON (engine off or on) and wait for **30 s or more**. • Retrieve the BSM control module DTCs using the M-MDS. (See **DTC INSPECTION [BLIND SPOT MONITORING (BSM)]**.) • Is the same DTC displayed?	No	Go to Step 4.
3	**VERIFY THAT REPAIRS HAVE BEEN COMPLETED** • Clear the DTC for the BSM control module using the M-MDS. (See **CLEARING DTC [BLIND SPOT MONITORING (BSM)]**.) • Switch the ignition ON (engine off or on) and wait for **30 s or more**. • Retrieve the BSM control module DTCs using the M-MDS. (See **DTC INSPECTION [BLIND SPOT MONITORING (BSM)]**.) • Is the same DTC displayed?	Yes	Repeat the inspection from Step 1. • If the malfunction recurs, replace the BSM control module. (See **BLIND SPOT MONITORING (BSM) CONTROL MODULE REMOVAL/INSTALLATION**.) Go to the next step.
		No	Go to the next step.
4	**VERIFY IF OTHER DTCs DISPLAYED** • Are any other DTCs displayed?	Yes	Repair or replace the malfunctioning part according to the applicable DTC troubleshooting. (See **DTC TABLE [BLIND SPOT MONITORING (BSM)]**.)
		No	DTC troubleshooting completed.

DTC U2300:56 [BLIND SPOT MONITORING (BSM)]

2014 - Mazda3 - Body and Accessories

DTC U2300:64 [BLIND SPOT MONITORING (BSM)]

Description	Instrument cluster configuration error
Detection condition	• Instrument cluster configuration error (signal error) detected.
Fail-safe function	• Blind spot monitoring (BSM) system is stopped.
Possible cause	• Instrument cluster configuration error • BSM control module malfunction
System wiring diagram	Not applicable

Diagnostic Procedure

Step	Inspection		Action
1	**PERFORM INSTRUMENT CLUSTER CONFIGURATION (USING AS-BUILT DATA)** • Using the M-MDS, perform the instrument cluster configuration (using As-Built data). (See **INSTRUMENT CLUSTER CONFIGURATION (USING AS-BUILT DATA)**.) • Clear the DTC for the BSM control module using the M-MDS. (See **CLEARING DTC [BLIND SPOT MONITORING (BSM)]**.) • Retrieve the BSM control module DTCs using the M-MDS. (See **DTC INSPECTION [BLIND SPOT MONITORING (BSM)]**.)	Yes	Using the M-MDS, perform the instrument cluster configuration (using As-Built data) again, then go to the next step. (See **INSTRUMENT CLUSTER CONFIGURATION (USING AS-BUILT DATA)**.)
		No	Go to Step 3.

	• Is the same DTC displayed?		
2	**VERIFY THAT REPAIRS HAVE BEEN COMPLETED** • Clear the DTC for the BSM control module using the M-MDS. (See **CLEARING DTC [BLIND SPOT MONITORING (BSM)]**.) • Retrieve the BSM control module DTCs using the M-MDS. (See **DTC INSPECTION [BLIND SPOT MONITORING (BSM)]**.) • Is the same DTC displayed?	Yes	Repeat the inspection from Step 1. • If the malfunction recurs, replace the BSM control module. (See **BLIND SPOT MONITORING (BSM) CONTROL MODULE REMOVAL/INSTALLATION**.) Go to the next step.
		No	Go to the next step.
3	**VERIFY IF OTHER DTCs DISPLAYED** • Are any other DTCs displayed?	Yes	Repair or replace the malfunctioning part according to the applicable DTC troubleshooting. (See **DTC TABLE [BLIND SPOT MONITORING (BSM)]**.)
		No	DTC troubleshooting completed.

2014 - Mazda3 - Body and Accessories

DTC U3000:01 [BLIND SPOT MONITORING (BSM)]

Description	Electrical malfunction inside BSM control module
Detection condition	• BSM control module is detected an electrical malfunction inside.
Fail-safe function	• Blind spot monitoring (BSM) system is stopped.
Possible cause	• BSM control module malfunction
System wiring diagram	Not applicable

Diagnostic Procedure

Step	Inspection		Action
1	**PERFORM DTC INSPECTION AND VERIFY BSM CONTROL MODULE MALFUNCTION** • Clear the DTC for the BSM control module using the M-MDS. (See **CLEARING DTC [BLIND SPOT MONITORING (BSM)]**.) • Retrieve the BSM control module DTCs using the M-MDS. (See **DTC INSPECTION [BLIND SPOT MONITORING (BSM)]**.) • Is the same DTC displayed?	Yes	Replace the BSM control module, then go to the next step. (See **BLIND SPOT MONITORING (BSM) CONTROL MODULE REMOVAL/INSTALLATION**.)
		No	Go to the next step.
2	**VERIFY IF OTHER DTCs DISPLAYED** • Are any other DTCs displayed?	Yes	Repair or replace the malfunctioning part according to the applicable DTC troubleshooting. (See **DTC TABLE [BLIND SPOT MONITORING (BSM)]**.)
		No	DTC troubleshooting completed.

DTC U3000:01 [BLIND SPOT MONITORING (BSM)]

2014 - Mazda3 - Body and Accessories

DTC U3000:09 [BLIND SPOT MONITORING (BSM)]

Description	BSM control module internal malfunction
Detection condition	• BSM control module detected a malfunction inside the voltage control oscillator.
Fail-safe function	• Blind spot monitoring (BSM) system is stopped.
Possible cause	• BSM control module malfunction
System wiring diagram	Not applicable

Diagnostic Procedure

Step	Inspection		Action
1	**PERFORM DTC INSPECTION AND VERIFY BSM CONTROL MODULE MALFUNCTION** • Clear the DTC for the BSM control module using the M-MDS. (See **CLEARING DTC [BLIND SPOT MONITORING (BSM)]**.) • Retrieve the BSM control module DTCs using the M-MDS. (See **DTC INSPECTION [BLIND SPOT MONITORING (BSM)]**.) • Is the same DTC displayed?	Yes	Replace the BSM control module, then go to the next step. (See **BLIND SPOT MONITORING (BSM) CONTROL MODULE REMOVAL/INSTALLATION**.)
		No	Go to the next step.
2	**VERIFY IF OTHER DTCs DISPLAYED** • Are any other DTCs displayed?	Yes	Repair or replace the malfunctioning part according to the applicable DTC troubleshooting. (See **DTC TABLE [BLIND SPOT MONITORING (BSM)]**.)

		No	DTC troubleshooting completed.

2014 - Mazda3 - Body and Accessories

DTC U3000:54 [BLIND SPOT MONITORING (BSM)]

Description	Radar performance malfunction
Detection condition	• BSM control module detected malfunction in misalignment.
Fail-safe function	• Blind spot monitoring (BSM) system is stopped.
Possible cause	• Rear bumper dirt or foreign matter (reflective object) is adhered. • Dirt or foreign matter (reflective object) on BSM control module. • Blind spot monitoring (BSM) radar test was not performed. • Deviation of blind spot monitoring (BSM) radar sensor axis • BSM control module malfunction
System wiring diagram	Not applicable

Diagnostic Procedure

Step	Inspection		Action
1	**INSPECT REAR BUMPER SURFACE** • Visually inspect the rear bumper surface for the following: ▪ Dirt ▪ Adhered foreign matter (reflective object) • Is the rear bumper normal?	Yes	Go to the next step.
		No	Remove dirt or foreign matter (reflective object), then go to Step 5.
2	**INSPECT AREA AROUND BSM CONTROL MODULE**	Yes	Go to the next step.

	Visually inspect the area around the BSM control module for the following: ▪ Dirt ▪ Adhered foreign matter (reflective object) • Is the area around the BSM control module normal?	No	Remove dirt or foreign matter (reflective object), then go to Step 5.
3	**VERIFY CONTROL MODULE INSTALLATION CONDITION** • Inspect the following: ▪ Deformation of body or bracket around BSM control module ▪ BSM control module installation condition • Is the BSM control module installed correctly?	Yes	Go to the next step.
		No	Repair or replace the malfunctioning part, then go to Step 5.
4	**PERFORM BLIND SPOT MONITORING (BSM) RADAR TEST** • Perform the blind spot monitoring (BSM) radar test. (See **BLIND SPOT MONITORING (BSM) RADAR TEST**.) • Drive the vehicle. • Retrieve the BSM control module DTCs using the M-MDS. (See **DTC INSPECTION [BLIND SPOT MONITORING (BSM)]**.) • Is the same DTC displayed?	Yes	Go to the next step.
		No	Go to Step 6.
5	**VERIFY THAT REPAIRS HAVE BEEN COMPLETED** • Perform the blind spot monitoring (BSM) radar test. (See **BLIND SPOT MONITORING (BSM) RADAR TEST**.)	Yes	Repeat the inspection from Step 1. • If the malfunction recurs, replace the BSM control module. (See **BLIND SPOT MONITORING (BSM) CONTROL MODULE REMOVAL/INSTALLATION**.)

	• Drive the vehicle. • Retrieve the BSM control module DTCs using the M-MDS. (See **DTC INSPECTION [BLIND SPOT MONITORING (BSM)]**.) • Is the same DTC displayed?		Go to the next step.
		No	Go to the next step.
6	**VERIFY IF OTHER DTCs DISPLAYED** • Are any other DTCs displayed?	Yes	Repair or replace the malfunctioning part according to the applicable DTC troubleshooting. (See **DTC TABLE [BLIND SPOT MONITORING (BSM)]**.)
		No	DTC troubleshooting completed.

2014 - Mazda3 - Body and Accessories

DTC U3000:97 [BLIND SPOT MONITORING (BSM)]

Description	Radar performance malfunction
Detection condition	• BSM control module internal radar sensor sensitivity is decreased. • BSM control module internal radar sensor axis is deviated.
Fail-safe function	• Blind spot monitoring (BSM) system is stopped.
Possible cause	• Rear bumper malfunction (Dirt or foreign matter (reflective object) is adhered.) • BSM control module malfunction (Dirt or foreign matter (reflective object) is adhered.) • Concavity and convexity on the surface of the repaired rear bumper • BSM control module malfunction
System wiring diagram	Not applicable

Diagnostic Procedure

Step	Inspection		Action
1	**INSPECT REAR BUMPER SURFACE** • Visually inspect the rear bumper surface for the following: ▪ Dirt ▪ Adhered foreign matter (reflective object) • Is the rear bumper normal?	Yes	Go to the next step.
		No	Remove dirt or foreign matter (reflective object), then go to Step 4.
2	**INSPECT AREA AROUND BSM CONTROL MODULE**	Yes	Go to the next step.

	• Visually inspect the area around the BSM control module for the following:
	  ▪ Dirt
	  ▪ Adhered foreign matter (reflective object)
	• Is the area around the BSM control module normal?
		No	Remove dirt or foreign matter (reflective object), then go to Step 4.

3	**VERIFY REAR BUMPER REPAIR HISTORY** • Verify if the rear bumper had been repaired or repainted before. • Is the paint Mazda genuine?	Yes	Go to the next step.
		No	Replace the rear bumper, then go to the next step. (See **REAR BUMPER REMOVAL/INSTALLATION**.)
4	**VERIFY THAT REPAIRS HAVE BEEN COMPLETED** • Clear the DTC for the BSM control module using the M-MDS. (See **CLEARING DTC [BLIND SPOT MONITORING (BSM)]**.) • Retrieve the BSM control module DTCs using the M-MDS. (See **DTC INSPECTION [BLIND SPOT MONITORING (BSM)]**.) • Is the same DTC displayed?	Yes	Repeat the inspection from Step 1. • If the malfunction recurs, replace the BSM control module. (See **BLIND SPOT MONITORING (BSM) CONTROL MODULE REMOVAL/INSTALLATION**.) Go to the next step.
		No	Go to the next step.
5	**VERIFY IF OTHER DTCs DISPLAYED** • Are any other DTCs displayed?	Yes	Repair or replace the malfunctioning part according to the applicable DTC troubleshooting. (See **DTC TABLE [BLIND SPOT MONITORING (BSM)]**.)
		No	DTC troubleshooting completed.

2014 - Mazda3 - Body and Accessories

DTC U3003:04 [BLIND SPOT MONITORING (BSM)]

Description	Instrument cluster configuration error
Detection condition	• Instrument cluster configuration error detected.
Fail-safe function	• Blind spot monitoring (BSM) system is stopped.
Possible cause	• Instrument cluster configuration error • BSM control module malfunction
System wiring diagram	Not applicable

Diagnostic Procedure

Step	Inspection		Action
1	**PERFORM INSTRUMENT CLUSTER CONFIGURATION (USING AS-BUILT DATA)** • Using the M-MDS, perform the instrument cluster configuration (using As-Built data). (See **INSTRUMENT CLUSTER CONFIGURATION (USING AS-BUILT DATA)**.) • Clear the DTC for the BSM control module using the M-MDS. (See **CLEARING DTC [BLIND SPOT MONITORING (BSM)]**.) • Retrieve the BSM control module DTCs using the M-MDS. (See **DTC INSPECTION [BLIND SPOT MONITORING (BSM)]**.)	Yes	Using the M-MDS, perform the instrument cluster configuration (using As-Built data) again, then go to the next step. (See **INSTRUMENT CLUSTER CONFIGURATION (USING AS-BUILT DATA)**.)
		No	Go to Step 3.

	• Is the same DTC displayed?		
2	**VERIFY THAT REPAIRS HAVE BEEN COMPLETED** • Clear the DTC for the BSM control module using the M-MDS. (See **CLEARING DTC [BLIND SPOT MONITORING (BSM)]**.) • Retrieve the BSM control module DTCs using the M-MDS. (See **DTC INSPECTION [BLIND SPOT MONITORING (BSM)]**.) • Is the same DTC displayed?	Yes	Repeat the inspection from Step 1. • If the malfunction recurs, replace the BSM control module. (See **BLIND SPOT MONITORING (BSM) CONTROL MODULE REMOVAL/INSTALLATION**.) Go to the next step.
		No	Go to the next step.
3	**VERIFY IF OTHER DTCs DISPLAYED** • Are any other DTCs displayed?	Yes	Repair or replace the malfunctioning part according to the applicable DTC troubleshooting. (See **DTC TABLE [BLIND SPOT MONITORING (BSM)]**.)
		No	DTC troubleshooting completed.

2014 - Mazda3 - Body and Accessories

DTC U3003:16 [BLIND SPOT MONITORING (BSM)]

Description	BSM control module low power supply voltage input (**less than 8.2 V**)
Detection condition	• BSM control module power supply voltage of **less than 8.2 V** is detected for **2 s or more**.
Fail-safe function	• Blind spot monitoring (BSM) system is stopped.
Possible cause	• DTCs are stored in the PCM. • Battery malfunction • Generator malfunction • BSM control module (LH) connector or terminal malfunction • BSM control module (RH) connector or terminal malfunction • BSM control module power supply circuit malfunction ▪ Short to ground in wiring harness between C/U IG1 15 A fuse and BSM control module terminal I ▪ C/U IG1 15 A fuse malfunction ▪ Open circuit in wiring harness between IG1 relay and BSM control module terminal I • BSM control module malfunction

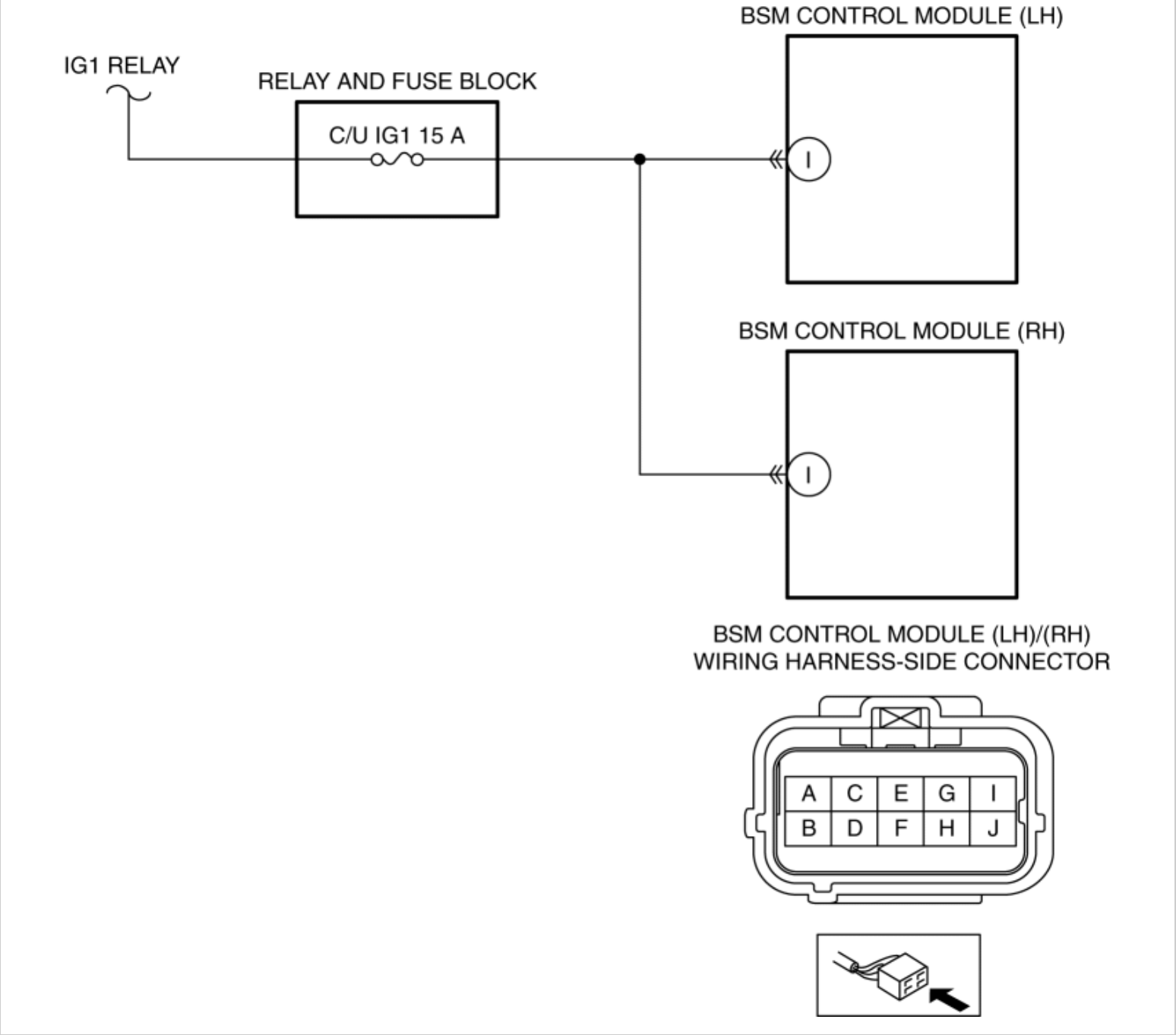

Diagnostic Procedure

Step	Inspection		Action
1	**VERIFY PCM DTCs** • Retrieve the PCM DTCs using the M-MDS. (See **ON-BOARD DIAGNOSTIC TEST [SKYACTIV-G 2.0, SKYACTIV-G 2.5]**.) • Are any DTCs displayed?	Yes	Repair or replace the malfunctioning part according to the applicable DTC troubleshooting. (See **DTC TABLE [SKYACTIV-G 2.0, SKYACTIV-G 2.5]**.)
		No	Go to the next step.
2	**INSPECT BATTERY** • Inspect the battery.	Yes	Go to the next step.

	(See **BATTERY INSPECTION [SKYACTIV-G 2.0, SKYACTIV-G 2.5]**.) • Is the battery normal?	No	Recharge or replace the battery, then go to Step 7. (See **BATTERY RECHARGING [SKYACTIV-G 2.0, SKYACTIV-G 2.5]**.) (See **BATTERY REMOVAL/INSTALLATION [SKYACTIV-G 2.0, SKYACTIV-G 2.5]**.)
3	**INSPECT GENERATOR** • Inspect the generator. (See **GENERATOR INSPECTION [SKYACTIV-G 2.0, SKYACTIV-G 2.5 (WITHOUT i-ELOOP)]**.) (See **GENERATOR INSPECTION [SKYACTIV-G 2.0, SKYACTIV-G 2.5 (WITH i-ELOOP)]**.) • Is the generator normal?	Yes	Go to the next step.
		No	Replace the generator, then go to Step 7. (See **GENERATOR REMOVAL/INSTALLATION [SKYACTIV-G 2.0, SKYACTIV-G 2.5 (WITHOUT i-ELOOP)]**.) (See **GENERATOR REMOVAL/INSTALLATION [SKYACTIV-G 2.0, SKYACTIV-G 2.5 (WITH i-ELOOP)]**.)
4	**INSPECT BSM CONTROL MODULE (LH) CONNECTOR CONDITION** • Switch the ignition off. • Disconnect the negative battery cable. (See **NEGATIVE BATTERY CABLE DISCONNECTION/CONNECTION [SKYACTIV-G 2.0, SKYACTIV-G 2.5]**.) • Disconnect the BSM control module (LH) connector. • Inspect the connector engagement and connection condition and inspect the terminals for damage, deformation, corrosion, or disconnection. • Is the connector normal?	Yes	Go to the next step.
		No	Repair or replace the connector, then go to Step 7.
5	**INSPECT BSM CONTROL MODULE (RH) CONNECTOR CONDITION** • Disconnect the BSM control module (RH) connector. • Inspect the connector engagement and connection condition and inspect the terminals for damage, deformation, corrosion, or disconnection. • Is the connector normal?	Yes	Go to the next step.
		No	Repair or replace the connector, then go to Step 7.
6	**VERIFY BSM CONTROL MODULE POWER SUPPLY VOLTAGE** • Always reconnect all disconnected connectors.	Yes	Go to the next step.
		No	Inspect the C/U IG1 15A fuse.

- Reconnect the negative battery cable.

  (See **NEGATIVE BATTERY CABLE DISCONNECTION/CONNECTION [SKYACTIV-G 2.0, SKYACTIV-G 2.5]**.)

- Display PID VPWR_IG1 using the M-MDS.

  (See **PID/DATA MONITOR INSPECTION [BLIND SPOT MONITORING (BSM)]**.)

- Is the voltage **B+**?

- If the fuse is blown:
  - Refer to the wiring diagram and verify whether or not there is a common connector between C/U IG1 15A fuse and BSM control module terminal I.

    If there is a common connector:

    - Determine the malfunctioning part by inspecting the common connector and the terminal for corrosion, damage, or pin disconnection, and the common wiring harness for a short to ground.
    - Repair or replace the malfunctioning part.

    If there is no common connector:

    - Repair or replace the wiring harness which has a short to ground.
    - Replace the fuse.

- If the fuse is damaged:
  - Replace the fuse.

- If the fuse is normal:
  - Refer to the wiring diagram and verify whether or not there is a common connector between IG1 relay and BSM control module terminal I.

    If there is a common connector:

    - Determine the malfunctioning

			part by inspecting the common connector and the terminal for corrosion, damage, or pin disconnection, and the common wiring harness for an open circuit. • Repair or replace the malfunctioning part. **If there is no common connector:** • Repair or replace the wiring harness which has an open circuit. Go to the next step.
7	**VERIFY THAT REPAIRS HAVE BEEN COMPLETED** • Always reconnect all disconnected connectors. • Reconnect the negative battery cable. (See **NEGATIVE BATTERY CABLE DISCONNECTION/CONNECTION [SKYACTIV-G 2.0, SKYACTIV-G 2.5]**.) • Clear the DTC for the BSM control module using the M-MDS. (See **CLEARING DTC [BLIND SPOT MONITORING (BSM)]**.) • Switch the ignition ON (engine off or on) and wait for **2 s or more**. • Retrieve the BSM control module DTCs using the M-MDS. (See **DTC INSPECTION [BLIND SPOT MONITORING (BSM)]**.) • Is the same DTC displayed?	Yes	Repeat the inspection from Step 1. • If the malfunction recurs, replace the BSM control module. (See **BLIND SPOT MONITORING (BSM) CONTROL MODULE REMOVAL/INSTALLATION**.) Go to the next step.
		No	Go to the next step.

8	**VERIFY IF OTHER DTCs DISPLAYED** • Are any other DTCs displayed?	Yes	Repair or replace the malfunctioning part according to the applicable DTC troubleshooting. (See **DTC TABLE [BLIND SPOT MONITORING (BSM)]**.)
		No	DTC troubleshooting completed.

2014 - Mazda3 - Body and Accessories

DTC U3003:17 [BLIND SPOT MONITORING (BSM)]

Description	BSM control module high power supply voltage input (**16.8 V or more**)
Detection condition	• BSM control module power supply voltage of **16.8 V or more** is detected for **2 s or more**.
Fail-safe function	• Blind spot monitoring (BSM) system is stopped.
Possible cause	• DTCs are stored in the PCM. • Battery malfunction • Generator malfunction • BSM control module malfunction
System wiring diagram	Not applicable

Diagnostic Procedure

Step	Inspection		Action
1	**VERIFY PCM DTCs** • Retrieve the PCM DTCs using the M-MDS. (See **ON-BOARD DIAGNOSTIC TEST [SKYACTIV-G 2.0, SKYACTIV-G 2.5]**.) • Are any DTCs displayed?	Yes	Repair or replace the malfunctioning part according to the applicable DTC troubleshooting. (See **DTC TABLE [SKYACTIV-G 2.0, SKYACTIV-G 2.5]**.)
		No	Go to the next step.
2	**INSPECT BATTERY** • Inspect the battery. (See **BATTERY INSPECTION [SKYACTIV-G 2.0, SKYACTIV-G 2.5]**.) • Is the battery normal?	Yes	Go to the next step.
		No	Replace the battery, then go to Step 4. (See **BATTERY REMOVAL/INSTALLATION [SKYACTIV-G 2.0, SKYACTIV-G 2.5]**.)

3	**INSPECT GENERATOR** • Inspect the generator. (See **GENERATOR INSPECTION [SKYACTIV-G 2.0, SKYACTIV-G 2.5 (WITHOUT i-ELOOP)]**.) (See **GENERATOR INSPECTION [SKYACTIV-G 2.0, SKYACTIV-G 2.5 (WITH i-ELOOP)]**.) • Is the generator normal?	Yes	Go to the next step.
		No	Replace the generator, then go to the next step. (See **GENERATOR REMOVAL/INSTALLATION [SKYACTIV-G 2.0, SKYACTIV-G 2.5 (WITHOUT i-ELOOP)]**.) (See **GENERATOR REMOVAL/INSTALLATION [SKYACTIV-G 2.0, SKYACTIV-G 2.5 (WITH i-ELOOP)]**.)
4	**VERIFY THAT REPAIRS HAVE BEEN COMPLETED** • Clear the DTC for the BSM control module using the M-MDS. (See **CLEARING DTC [BLIND SPOT MONITORING (BSM)]**.) • Switch the ignition ON (engine off or on) and wait for **2 s or more**. • Retrieve the BSM control module DTCs using the M-MDS. (See **DTC INSPECTION [BLIND SPOT MONITORING (BSM)]**.) • Is the same DTC displayed?	Yes	Repeat the inspection from Step 1. • If the malfunction recurs, replace the BSM control module. (See **BLIND SPOT MONITORING (BSM) CONTROL MODULE REMOVAL/INSTALLATION**.) Go to the next step.
		No	Go to the next step.
5	**VERIFY IF OTHER DTCs DISPLAYED** • Are any other DTCs displayed?	Yes	Repair or replace the malfunctioning part according to the applicable DTC troubleshooting. (See **DTC TABLE [BLIND SPOT MONITORING (BSM)]**.)
		No	DTC troubleshooting completed.

2014 - Mazda3 - Body and Accessories

PID/DATA MONITOR INSPECTION [BLIND SPOT MONITORING (BSM)]

1. Connect the M-MDS to the DLC-2.

2. After the vehicle is identified, select the following items from the initialization screen of the M-MDS.

    a. Select “DataLogger”.

    b. Select “Modules”.

    c. Select “BSML” or “BSMR”.

3. Select the applicable PID from the PID table.

4. Verify the PID data according to the directions on the screen.

NOTE:

- The PID data screen function is used for monitoring the calculated value of input/output signals in the module. Therefore, if the monitored value of the output parts is not within the specification, it is necessary to inspect the monitored value of input parts corresponding to the applicable output part control. In addition, because the system does not display an output part malfunction as an abnormality in the monitored value, it is necessary to inspect the output parts individually.
- When detecting DTCs, PIDs related to a malfunctioning system may not display even if the module is normal. Therefore, if a PID is not displayed, it is necessary to verify the DTC, perform malfunction diagnosis of the DTC that was detected, and do repairs.

2014 - Mazda3 - Body and Accessories

PID/DATA MONITOR TABLE [BLIND SPOT MONITORING (BSM)]

BSM Control Module (LH)

—: Not applicable

PID	Unit/Operation	Data contents	Module control terminal
DTC_CNT	—	Displays number of DTCs stored in the BSM control module (LH)	—
IL_MODE	Off/On	• Off: BSM OFF indicator light is illuminated in night mode. • On: BSM OFF indicator light is illuminated in daytime mode.	C, D (CAN)
RCTA_BUZZER	Off/On	• Off: RCTA warning alarm does not sound. • On: RCTA warning alarm sounds.	C, D (CAN)
RCTA_OFF_IL	Off/On	• Off: BSM OFF indicator light is not illuminated. • On: BSM OFF indicator light is illuminated.	C, D (CAN)
RCTA_WARN	Off/On	• Off: BSM indicator lights are not illuminated. • On: BSM indicator lights are illuminated.	C, D (CAN)
SHIFT_R	Not_R/R	**ATX** • Not_R: Selector lever is in position other than R. • R: Selector lever is in R position. **MTX**	C, D (CAN)

		• Not_R: Shift lever is in position other than reverse. • R: Shift lever is in reverse position.	
SWA_POS	° (deg)	Displays steering angle signal (estimated absolute angle) • Steering wheel in neutral position: Near **0 degrees** • Steering wheel turned to left: Changes from **0 degrees** to positive • Steering wheel turned to right: Changes from **0 degrees** to negative	C, D (CAN)
VPWR_IG1	V	Displays BSM control module (LH) power supply voltage	I (Power supply)
VSPD	KPH, MPH	Displays vehicle speed	C, D (CAN)
WRN_IND_L	Off/On	• Off: BSM indicator light (LH) is not illuminated. • On: BSM indicator light (LH) is illuminated.	• G (BSM indicator light (LH) signal) • J (Ground)

BSM Control Module (RH)

—: Not applicable

PID	Unit/Operation	Data contents	Module control terminal
DTC_CNT	—	Displays number of DTCs stored in the BSM control module (RH)	—
IL_MODE	Off/On	• Off: BSM OFF indicator light is illuminated in night mode. • On: BSM OFF indicator light is illuminated in daytime mode.	A, B (CAN)
RCTA_OFF_IL	Off/On	• Off: BSM OFF indicator light is not illuminated.	A, B (CAN)

		• On: BSM OFF indicator light is illuminated.	
SHIFT_R	Not_R/R	**ATX** • Not_R: Selector lever is in position other than R. • R: Selector lever is in R position. **MTX** • Not_R: Shift lever is in position other than reverse. • R: Shift lever is in reverse position.	A, B (CAN)
SWA_POS	° (deg)	Displays steering angle signal (estimated absolute angle) • Steering wheel in neutral position: Near **0 degrees** • Steering wheel turned to left: Changes from **0 degrees** to positive • Steering wheel turned to right: Changes from **0 degrees** to negative	A, B (CAN)
VPWR_IG1	V	Displays BSM control module (RH) power supply voltage	I (Power supply)
VSPD	KPH, MPH	Displays vehicle speed	A, B (CAN)
WRN_IND_R	Off/On	• Off: BSM indicator light (RH) is not illuminated. • On: BSM indicator light (RH) is illuminated.	• G (BSM indicator light (RH) signal) • J (Ground)

2014 - Mazda3 - Body and Accessories

ACTIVE COMMAND MODES INSPECTION [BLIND SPOT MONITORING (BSM)]

1. Connect the M-MDS to the DLC-2.

2. After the vehicle is identified, select the following items from the initialization screen of the M-MDS.

    a. Select “DataLogger”.

    b. Select “Modules”.

    c. Select “BSML” or “BSMR”.

3. Select the simulation items from the PID table.

4. Perform the active command modes function, inspect the operations for each parts.

    - If the operation of output parts cannot be verified after the active command mode inspection is performed, this could indicate the possibility of an open or short circuit, sticking, or operation malfunction in the output parts.

2014 - Mazda3 - Body and Accessories

ACTIVE COMMAND MODES TABLE [BLIND SPOT MONITORING (BSM)]

BSM Control Module (LH)

Simulation item	Unit/Operation	Data contents	Output part name
BSM_OFF_IL	On/Off	• On: Illuminates BSM OFF indicator light. • Off: Turns off BSM OFF indicator light.	BSM OFF indicator light (Instrument cluster)
Buzzer	On/Off	• On: Operates BSM warning alarm. • Off: Stops BSM warning alarm.	BSM warning alarm (Instrument cluster)
IL_MODE	Off/On	• Off: Illuminates BSM OFF indicator light in night mode. • On: Illuminates BSM OFF indicator light in daytime mode.	BSM OFF indicator light (Instrument cluster)
RCTA_BUZZER	Off/On	• Off: RCTA warning alarm does not sound. • On: RCTA warning alarm sounds.	RCTA warning alarm (Instrument cluster)
VSPD	OFF/ON	• OFF: Does not input vehicle speed. • ON: Inputs vehicle speed of **34 km/h {21 mph}**.	BSM control module (LH)
WRN_IND_L	Off/On	• Off: Turns off BSM indicator light (LH). • On: Illuminates BSM	BSM indicator light (LH) (Power outer mirror (LH))

		indicator light (LH).	

BSM Control Module (RH)

Simulation item	Unit/Operation	Data contents	Output part name
IL_MODE	Off/On	• Off: Illuminates BSM OFF indicator light in night mode. • On: Illuminates BSM OFF indicator light in daytime mode.	BSM OFF indicator light (Instrument cluster)
RCTA_BUZZER	Off/On	• Off: RCTA warning alarm does not sound. • On: RCTA warning alarm sounds.	RCTA warning alarm (Instrument cluster)
VSPD	OFF/ON	• OFF: Does not input vehicle speed. • ON: Inputs vehicle speed of **34 km/h {21 mph}**.	BSM control module (RH)
WRN_IND_R	Off/On	• Off: Turns off BSM indicator light (RH). • On: Illuminates BSM indicator light (RH).	BSM indicator light (RH) (Power outer mirror (RH))

2014 - Mazda3 - Body and Accessories

ON-BOARD DIAGNOSTIC WIRING DIAGRAM [CONNECTIVITY MASTER UNIT]

Without Bose ®

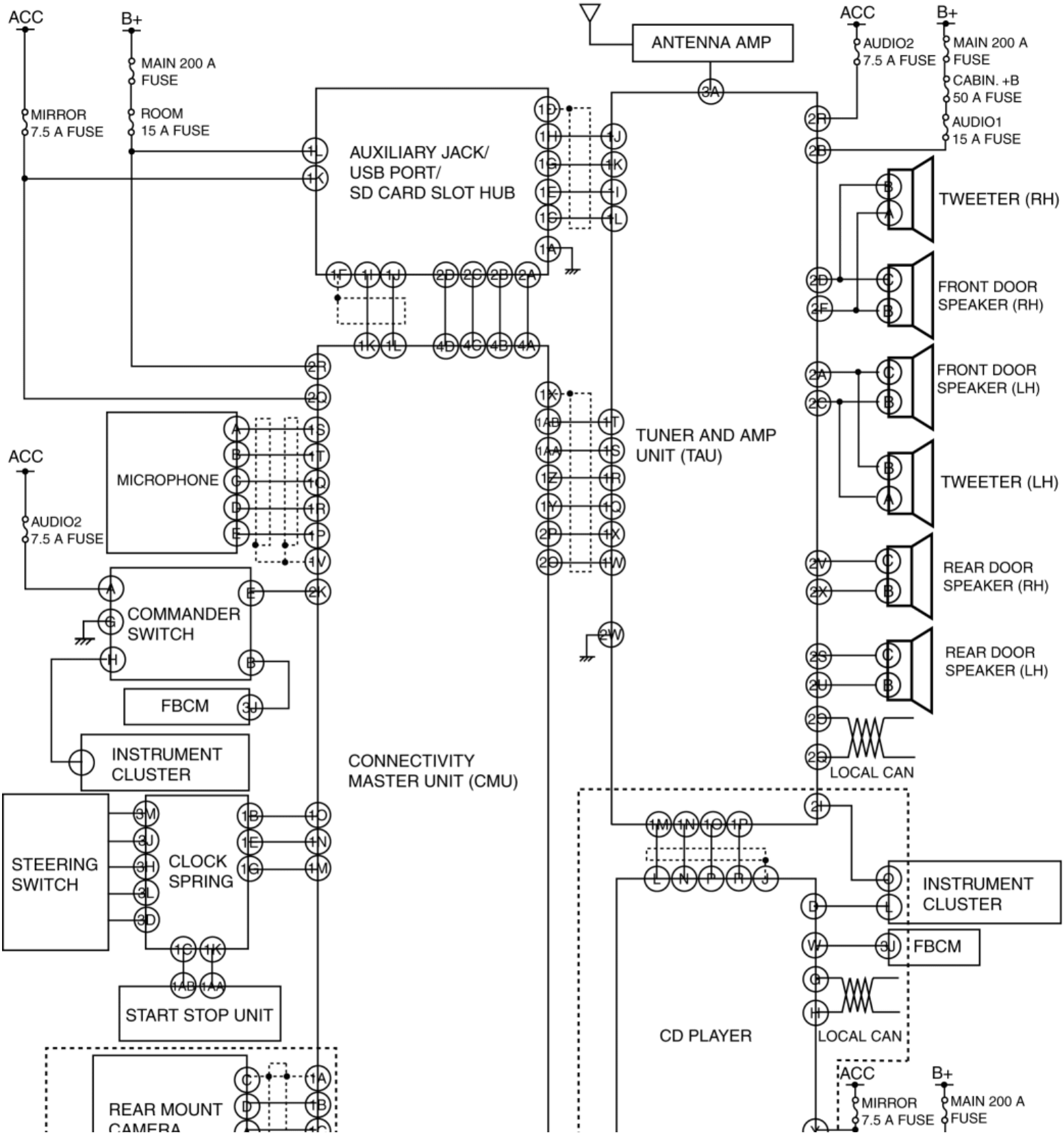

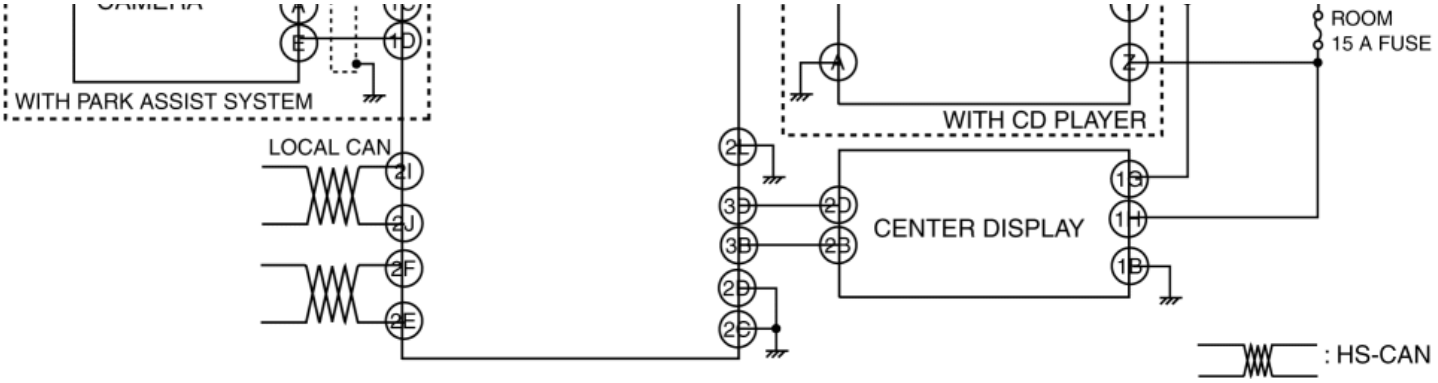
WITH PARK ASSIST SYSTEM
LOCAL CAN
WITH CD PLAYER
ROOM
15 A FUSE
CENTER DISPLAY
: HS-CAN

With Bose ®

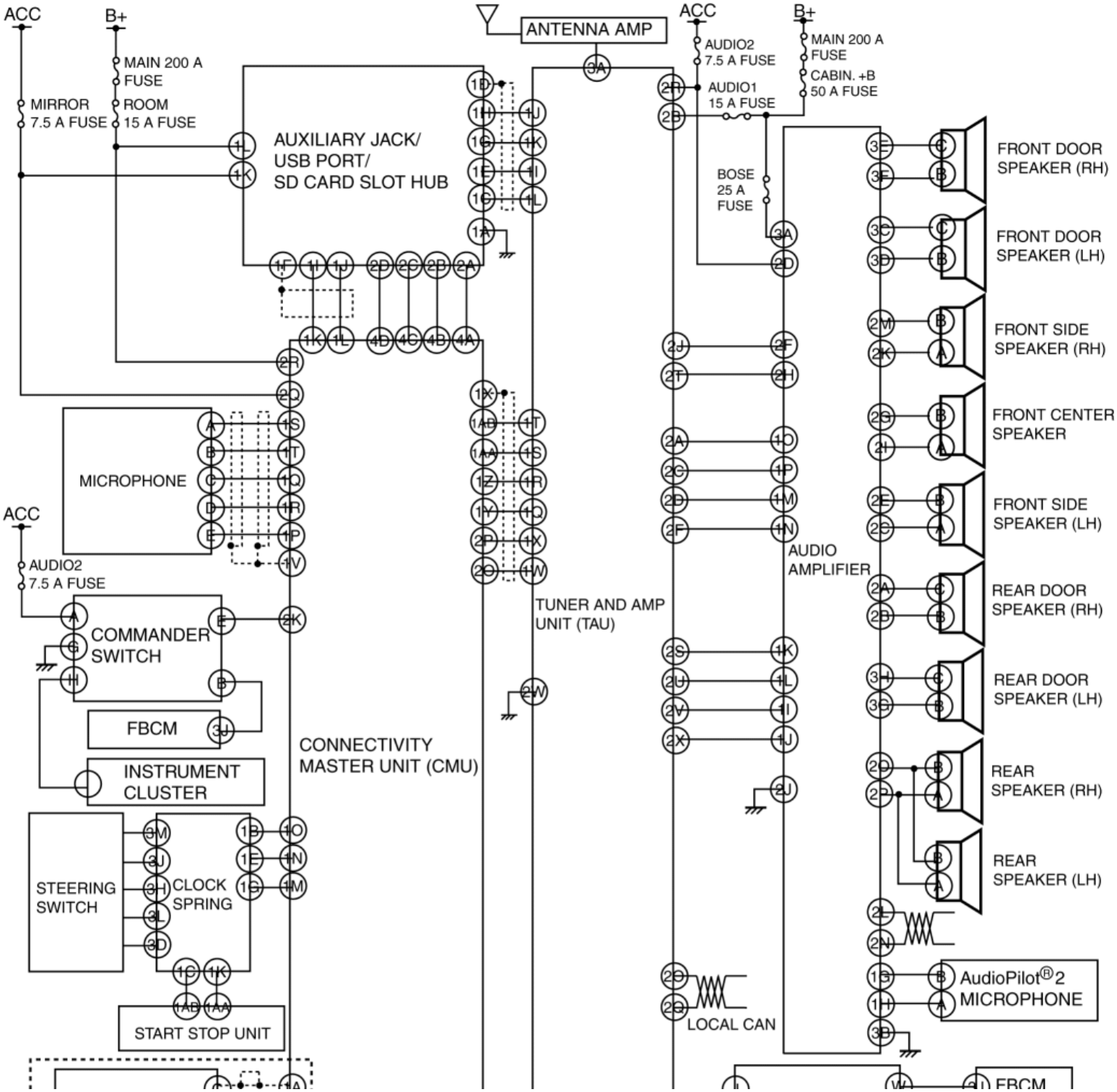
ACC
B+
MAIN 200 A
FUSE
MIRROR
7.5 A FUSE
ROOM
15 A FUSE
AUXILIARY JACK/
USB PORT/
SD CARD SLOT HUB
ANTENNA AMP
ACC
B+
AUDIO2
7.5 A FUSE
MAIN 200 A
FUSE
CABIN. +B
50 A FUSE
AUDIO1
15 A FUSE
BOSE
25 A
FUSE
FRONT DOOR
SPEAKER (RH)
FRONT DOOR
SPEAKER (LH)
FRONT SIDE
SPEAKER (RH)
FRONT CENTER
SPEAKER
FRONT SIDE
SPEAKER (LH)
REAR DOOR
SPEAKER (RH)
REAR DOOR
SPEAKER (LH)
REAR
SPEAKER (RH)
REAR
SPEAKER (LH)
MICROPHONE
ACC
AUDIO2
7.5 A FUSE
COMMANDER
SWITCH
FBCM
INSTRUMENT
CLUSTER
CONNECTIVITY
MASTER UNIT (CMU)
TUNER AND AMP
UNIT (TAU)
AUDIO
AMPLIFIER
STEERING
SWITCH
CLOCK
SPRING
START STOP UNIT
LOCAL CAN
AudioPilot® 2
MICROPHONE
FBCM

ON-BOARD DIAGNOSTIC WIRING DIAGRAM [CONNECTIVITY MASTER UNIT]

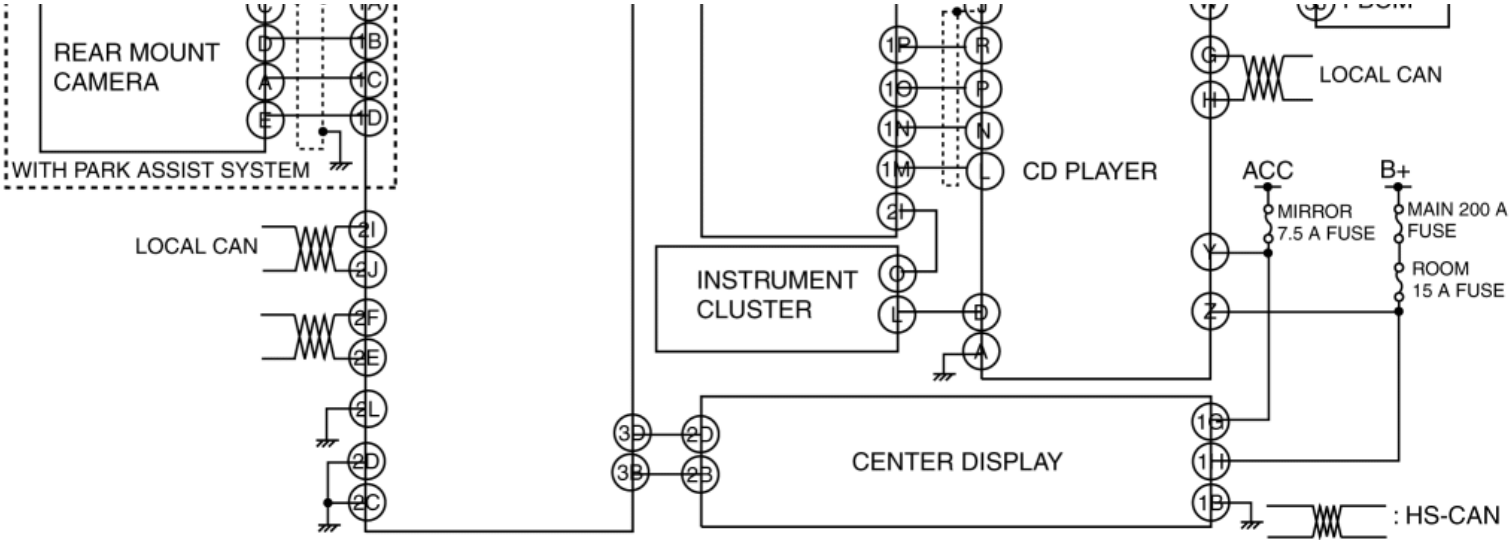

2014 - Mazda3 - Body and Accessories

FOREWORD [CONNECTIVITY MASTER UNIT]

- If there is any vehicle malfunction complaint lodged by a customer, perform malfunction diagnosis according to troubleshooting procedure. (See **Troubleshooting Procedure**.)

Troubleshooting Procedure

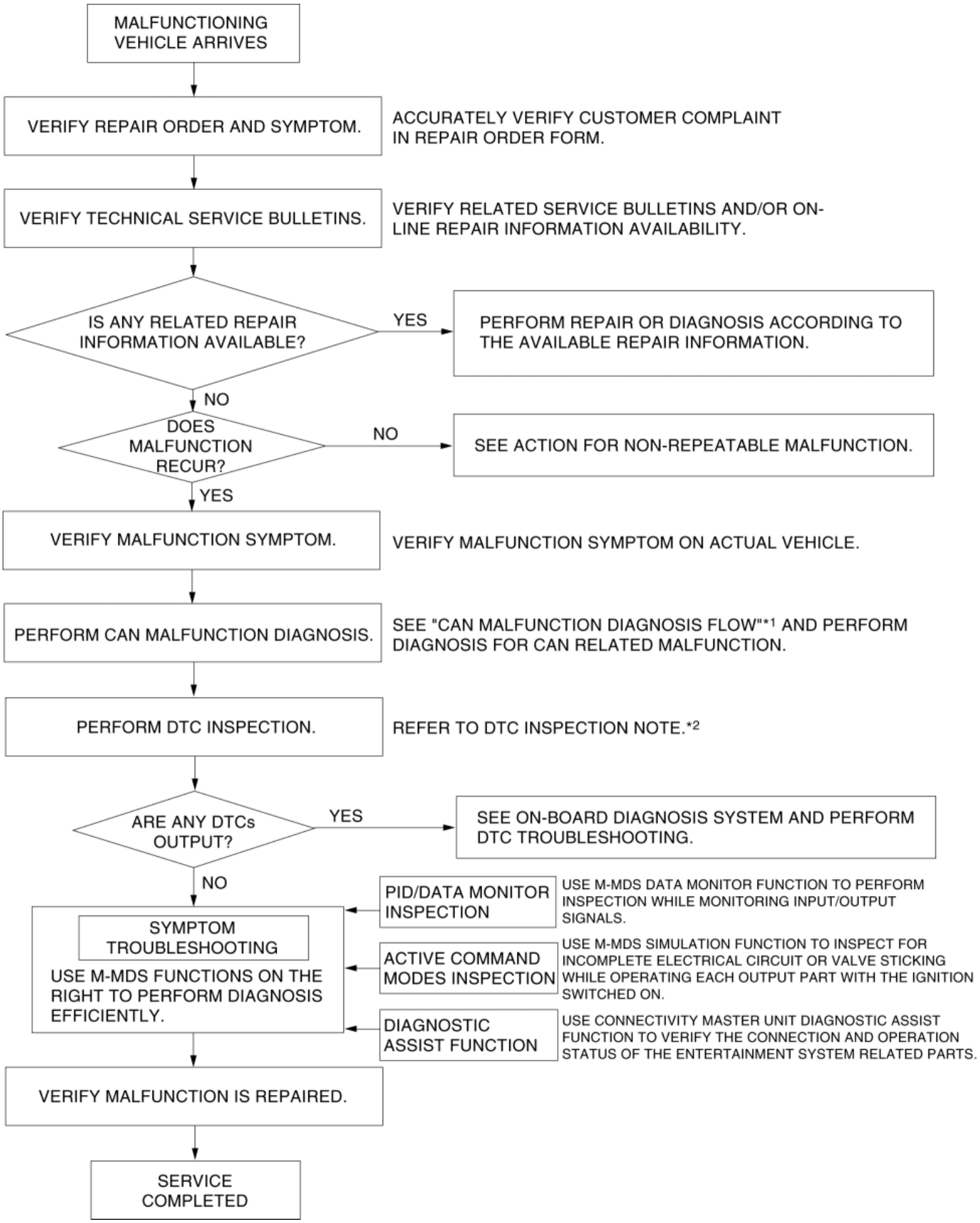
MALFUNCTIONING VEHICLE ARRIVES
VERIFY REPAIR ORDER AND SYMPTOM.
ACCURATELY VERIFY CUSTOMER COMPLAINT IN REPAIR ORDER FORM.
VERIFY TECHNICAL SERVICE BULLETINS.
VERIFY RELATED SERVICE BULLETINS AND/OR ON-LINE REPAIR INFORMATION AVAILABILITY.
IS ANY RELATED REPAIR INFORMATION AVAILABLE?
YES
PERFORM REPAIR OR DIAGNOSIS ACCORDING TO THE AVAILABLE REPAIR INFORMATION.
NO
DOES MALFUNCTION RECUR?
NO
SEE ACTION FOR NON-REPEATABLE MALFUNCTION.
YES
VERIFY MALFUNCTION SYMPTOM.
VERIFY MALFUNCTION SYMPTOM ON ACTUAL VEHICLE.
PERFORM CAN MALFUNCTION DIAGNOSIS.
SEE "CAN MALFUNCTION DIAGNOSIS FLOW"*1 AND PERFORM DIAGNOSIS FOR CAN RELATED MALFUNCTION.
PERFORM DTC INSPECTION.
REFER TO DTC INSPECTION NOTE.*2
ARE ANY DTCs OUTPUT?
YES
SEE ON-BOARD DIAGNOSIS SYSTEM AND PERFORM DTC TROUBLESHOOTING.
NO
SYMPTOM TROUBLESHOOTING
USE M-MDS FUNCTIONS ON THE RIGHT TO PERFORM DIAGNOSIS EFFICIENTLY.
PID/DATA MONITOR INSPECTION
USE M-MDS DATA MONITOR FUNCTION TO PERFORM INSPECTION WHILE MONITORING INPUT/OUTPUT SIGNALS.
ACTIVE COMMAND MODES INSPECTION
USE M-MDS SIMULATION FUNCTION TO INSPECT FOR INCOMPLETE ELECTRICAL CIRCUIT OR VALVE STICKING WHILE OPERATING EACH OUTPUT PART WITH THE IGNITION SWITCHED ON.
DIAGNOSTIC ASSIST FUNCTION
USE CONNECTIVITY MASTER UNIT DIAGNOSTIC ASSIST FUNCTION TO VERIFY THE CONNECTION AND OPERATION STATUS OF THE ENTERTAINMENT SYSTEM RELATED PARTS.
VERIFY MALFUNCTION IS REPAIRED.
SERVICE COMPLETED

*1

(See CONTROLLER AREA NETWORK (CAN) MALFUNCTION DIAGNOSIS FLOW.)

*2

(See DTC Inspection Note.)

Action for non-repeatable malfunction

- If the malfunction does not recur, verify the malfunction cause by performing the following actions:
  - Verify that a DTC has been recorded in the memory. (See **DTC INSPECTION [CONNECTIVITY MASTER UNIT]**.)
  - Based on the repair order form, attempt to drive the vehicle or perform tests to replicate the malfunction, record the data at that time, and detect the malfunction cause.
  - Shake the wiring harness or connector of the electrical component which is suspected to be the cause of the malfunction, and inspect for occurrence of any malfunction or DTCs.

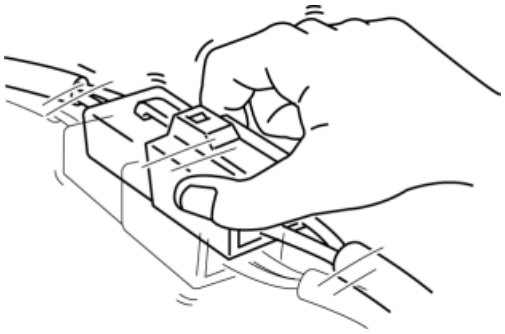

  - Inspect the female terminals on the connector of the electric component which is suspected to be the cause of the malfunction for poor connection.

DTC Inspection Note

DTCs for the connectivity master unit can be verified using the M-MDS or the on-board diagnostic test mode in which the on-board diagnostic function can be launched by operating the commander switch or center display.

2014 - Mazda3 - Body and Accessories

DTC INSPECTION [CONNECTIVITY MASTER UNIT]

When using M-MDS

CMDTC self test

1. Connect the M-MDS to the DLC-2.

2. After the vehicle is identified, select the following items from the initialization screen of the M-MDS.

    a. Select “Self Test”.

    b. Select “All CMDTCs”.

3. Verify the DTC according to the directions on the screen.

    - If any DTCs are displayed, perform troubleshooting according to the corresponding DTC inspection.

4. After completion of repairs, clear all DTCs stored in the connectivity master unit. (See **CLEARING DTC [CONNECTIVITY MASTER UNIT]**.)

ODDTC self test

1. Connect the M-MDS to the DLC-2.

2. After the vehicle is identified, select the following items from the initialization screen of the M-MDS.

    a. Select “Self Test”.

    b. Select “Modules”.

    c. Select “CMU”.

3. Verify the DTC according to the directions on the screen.

    - If any DTCs are displayed, perform troubleshooting according to the corresponding DTC inspection.

4. After completion of repairs, clear all DTCs stored in the connectivity master unit. (See **CLEARING DTC [CONNECTIVITY MASTER UNIT]**.)

When using Diagnostic Assist Function

DTC inspection can also be performed by launching the diagnostic assist function of the connectivity master unit. (See **DIAGNOSTIC ASSIST FUNCTION [CONNECTIVITY MASTER UNIT]**.)

2014 - Mazda3 - Body and Accessories

CLEARING DTC [CONNECTIVITY MASTER UNIT]

When using M-MDS

CMDTC Memory Clearing Procedure

1. Connect the M-MDS to the DLC-2.
2. After the vehicle is identified, select the following items from the initialization screen of the M-MDS.
    a. Select “Self Test”.
    b. Select “All CMDTCs”.
3. Verify the DTC according to the directions on the screen.
4. Press the clear button on the DTC screen to clear the DTC.
5. Switch the ignition off.
6. Switch the ignition ON (engine off or on) and wait for **5 s or more**.
7. Perform DTC inspection. (See **DTC INSPECTION [CONNECTIVITY MASTER UNIT]**.)
8. Verify that no DTCs are displayed.

ODDTC Memory Clearing Procedure

1. Connect the M-MDS to the DLC-2.
2. After the vehicle is identified, select the following items from the initialization screen of the M-MDS.
    a. Select “Self Test”.
    b. Select “Modules”.
    c. Select “CMU”.
3. Verify the DTC according to the directions on the screen.
4. Press the clear button on the DTC screen to clear the DTC.
5. Switch the ignition off.
6. Switch the ignition ON (engine off or on) and wait for **5 s or more**.

7. Perform DTC inspection. (See **DTC INSPECTION [CONNECTIVITY MASTER UNIT]**.)

8. Verify that no DTCs are displayed.

When using Diagnostic Assist Function

Clearing DTC can also be performed by launching the diagnostic assist function of the connectivity master unit. (See **DIAGNOSTIC ASSIST FUNCTION [CONNECTIVITY MASTER UNIT]**.)

2014 - Mazda3 - Body and Accessories

DTC TABLE [CONNECTIVITY MASTER UNIT]

×: Applicable—: Not applicable

DTC No.	Diagnostic assist code*1	Warning/indicator lights	Description	Fail-safe function	Drive cycle	Self test type*2	Memory function	Page
B1087:87	03/04	—	Communication error with commander switch	—	—	C, D	×	(See **DTC B1087:87 [CONNECTIVITY MASTER UNIT]**.)
B108E:04	03/04	—	Center display internal malfunction	—	—	C, D	×	(See **DTC B108E:04 [CONNECTIVITY MASTER UNIT]**.)
B108E:06	03/04	—	HDCP authorization error	—	—	C, D	×	(See **DTC B108E:06 [CONNECTIVITY MASTER UNIT]**.)
B108E:1C	03/04	—	Low power supply voltage input to center display	×	—	C, D	×	(See **DTC B108E:1C [CONNECTIVITY MASTER UNIT]**.)
B108E:87	03/04	—	Center display circuit malfunction	—	—	C, D	×	(See **DTC B108E:87 [CONNECTIVITY MASTER UNIT]**.)
B116A:11	03/04	—	Microphone circuit malfunction	—	—	C, D	×	(See **DTC B116A:11 [CONNECTIVITY MASTER UNIT]**.)
B116A:12	03/04	—	Microphone circuit malfunction	—	—	C, D	×	(See **DTC B116A:12 [CONNECTIVITY MASTER UNIT]**.)
B116A:92	03/04	—	Microphone circuit malfunction	—	—	C, D	×	(See **DTC B116A:92 [CONNECTIVITY MASTER UNIT]**.)
B119F:11	03/04	—	GPS antenna circuit malfunction	—	—	C, D	×	(See **DTC B119F:11 [CONNECTIVITY MASTER UNIT]**.)
B119F:13	03/04	—	GPS antenna circuit malfunction	—	—	C, D	×	(See **DTC B119F:13 [CONNECTIVITY MASTER UNIT]**.)
B119F:1D	03/04	—	GPS antenna circuit malfunction	—	—	C, D	×	(See **DTC B119F:1D [CONNECTIVITY MASTER UNIT]**.)
B119F:92	03/04	—	GPS antenna circuit malfunction	—	—	C, D	×	(See **DTC B119F:92 [CONNECTIVITY MASTER UNIT]**.)
B11BA:11	03/04	—	Steering switch circuit malfunction	—	—	C, D	×	(See **DTC B11BA:11 [CONNECTIVITY MASTER UNIT]**.)
B11BA:15	03/04	—	Steering switch circuit malfunction	—	—	C, D	×	(See **DTC B11BA:15 [CONNECTIVITY MASTER UNIT]**.)
B1201:11	03/04	—	Steering switch circuit malfunction	—	—	C, D	×	(See **DTC B1201:11 [CONNECTIVITY MASTER UNIT]**.)
B1201:15	03/04	—	Steering switch circuit malfunction	—	—	C, D	×	(See **DTC B1201:15 [CONNECTIVITY MASTER UNIT]**.)

B1238:01	03/05	—	**Without Bose®** • Speaker circuit malfunction **With Bose®** • Audio amplifier circuit malfunction	—	—	C, D	×	(See **DTC B1238:01 [CONNECTIVITY MASTER UNIT]**.)
B1238:16	03/05	—	Tuner and amp unit low power supply voltage input	—	—	C, D	×	(See **DTC B1238:16 [CONNECTIVITY MASTER UNIT]**.)
B1238:87	03/04	—	HD image transfer circuit error	—	—	C, D	×	(See **DTC B1238:87 [CONNECTIVITY MASTER UNIT]**.)
B1252:09	03/04	—	Auxiliary jack/USB port/SD card slot hub circuit malfunction	—	—	C, D	×	(See **DTC B1252:09 [CONNECTIVITY MASTER UNIT]**.)
B1252:1D	03/04	—	Auxiliary jack/USB port/SD card slot hub circuit malfunction	—	—	C, D	×	(See **DTC B1252:1D [CONNECTIVITY MASTER UNIT]**.)
B1252:87	03/04	—	Communication error with auxiliary jack/USB port/SD card slot hub	—	—	C, D	×	(See **DTC B1252:87 [CONNECTIVITY MASTER UNIT]**.)
B12BD:11*3	03/04	—	Rear mount camera circuit malfunction	—	—	C, D	×	(See **DTC B12BD:11 [CONNECTIVITY MASTER UNIT]**.)
B12BD:87*3	03/04	—	Rear mount camera transmission error	—	—	C, D	×	(See **DTC B12BD:87 [CONNECTIVITY MASTER UNIT]**.)
B1A89:13*4	03/05	—	SiriusXM satellite radio antenna feeder malfunction	—	—	C, D	×	(See **DTC B1A89:13 [CONNECTIVITY MASTER UNIT]**.)
B1A89:42*4	03/05	—	Tuner and amp unit internal malfunction	—	—	C, D	×	(See **DTC B1A89:42 [CONNECTIVITY MASTER UNIT]**.)
B1D19:64*5	03/06	—	Incompatible disc inserted	×	—	C, D	×	(See **DTC B1A89:42 [CONNECTIVITY MASTER UNIT]**.)
B1D19:79*5	03/06	—	CD player disc read error	×	—	C, D	×	(See **DTC B1A89:42 [CONNECTIVITY MASTER UNIT]**.)
B1D19:98*5	03/06	—	Abnormal CD player temperature	×	—	C, D	×	(See **DTC B1A89:42 [CONNECTIVITY MASTER UNIT]**.)
U0001:88	03/04	—	Module communication error (HS-CAN)	—	—	C, D	×	(See **DTC U0001:88/U0100:00/U0101:00/U0121:00/U0131:00/U0140:00/U0151:00/U0155:00/U0182:00/U0214:00/U0235:00/U023A:00 [CONNECTIVITY MASTER UNIT]**.)
U0028:88	03/04	—	Unit communication error (PRIVATE-CAN)	—	—	C, D	×	(See **DTC U0028:88 [CONNECTIVITY MASTER UNIT]**.)
U0100:00	03/04	—	Communication error with PCM	—	—	C, D	×	
U0101:00*6	03/04	—	Communication error with TCM	—	—	C, D	×	

U0121:00	03/04	—	Communication error with DSC HU/CM	—	—	C, D	×	(See DTC U0001:88/U0100:00/U0101:00/U0121:00/U0131:00/U0140:00/U0151:00/U0155:00/U0182:00/U0214:00/U0235:00/U023A:00 [CONNECTIVITY MASTER UNIT].)
U0131:00	03/04	—	Communication error with EPS control module	—	—	C, D	×	
U0140:00	03/04	—	Communication error with front body control module (FBCM)	—	—	C, D	×	
U0151:00	03/04	—	Communication error with SAS control module	—	—	C, D	×	
U0155:00	03/04	—	Communication error with instrument cluster	—	—	C, D	×	
U0182:00*7	03/04	—	Communication error with AFS control module	—	—	C, D	×	
U0184:00	03/04	—	Communication error with tuner and amp unit	—	—	C, D	×	(See DTC U0184:00/U0187:00 [CONNECTIVITY MASTER UNIT].)
U0187:00	03/04	—	Communication error with CD player	—	—	C, D	×	
U0214:00	03/04	—	Communication error with start stop unit	—	—	C, D	×	(See DTC U0001:88/U0100:00/U0101:00/U0121:00/U0131:00/U0140:00/U0151:00/U0155:00/U0182:00/U0214:00/U0235:00/U023A:00 [CONNECTIVITY MASTER UNIT].)
U0235:00*8	03/04	—	Communication error with laser sensor	—	—	C, D	×	
U023A:00*9	03/04	—	Communication error with forward sensing camera (FSC)	—	—	C, D	×	
U2300:54	03/04	—	Configuration data not received from instrument cluster	—	—	C, D	×	(See DTC U2300:54 [CONNECTIVITY MASTER UNIT].)
U2300:55	03/04	—	Instrument cluster configuration not implemented	—	—	C, D	×	(See DTC U2300:55 [CONNECTIVITY MASTER UNIT].)
U3000:42	03/04	—	Connectivity master unit internal malfunction (poor data read-outs)	—	—	C, D	×	(See DTC U3000:42 [CONNECTIVITY MASTER UNIT].)
U3003:16	03/04	—	Low ACC power supply voltage input to connectivity master unit	—	—	C, D	×	(See DTC U3003:16 [CONNECTIVITY MASTER UNIT].)

*1

The double-digit number indicates the diagnostic assist code with which DTCs can be detected during the DTC inspection using the diagnostic assist function.(See DIAGNOSTIC ASSIST FUNCTION [CONNECTIVITY MASTER UNIT].)

*2

C: CMDTC self test, D:ODDTC self test

*3

With rear mount camera

*4

With SiriusXM satellite radio system

*5

*6 **With CD player**

*7 **ATX**

*8 **With AFS**

*9 **With smart city brake support (SCBS)**

With forward sensing camera (FSC)

2014 - Mazda3 - Body and Accessories

DTC B1087:87 [CONNECTIVITY MASTER UNIT]

Description	Communication error with commander switch
Detection condition	• The connectivity master unit cannot receive a LIN signal from the commander switch for **5 s or more** with the ignition switched ACC or ON (engine off or on).
Fail-safe function	Not applicable
Possible cause	• Commander switch connector or terminal malfunction • Connectivity master unit connector or terminal malfunction • Short to ground in wiring harness between connectivity master unit terminal 2K and commander switch terminal E • Short to power supply in wiring harness between connectivity master unit terminal 2K and commander switch terminal E • Open circuit in wiring harness between connectivity master unit terminal 2K and commander switch terminal E • Commander switch malfunction • Connectivity master unit malfunction

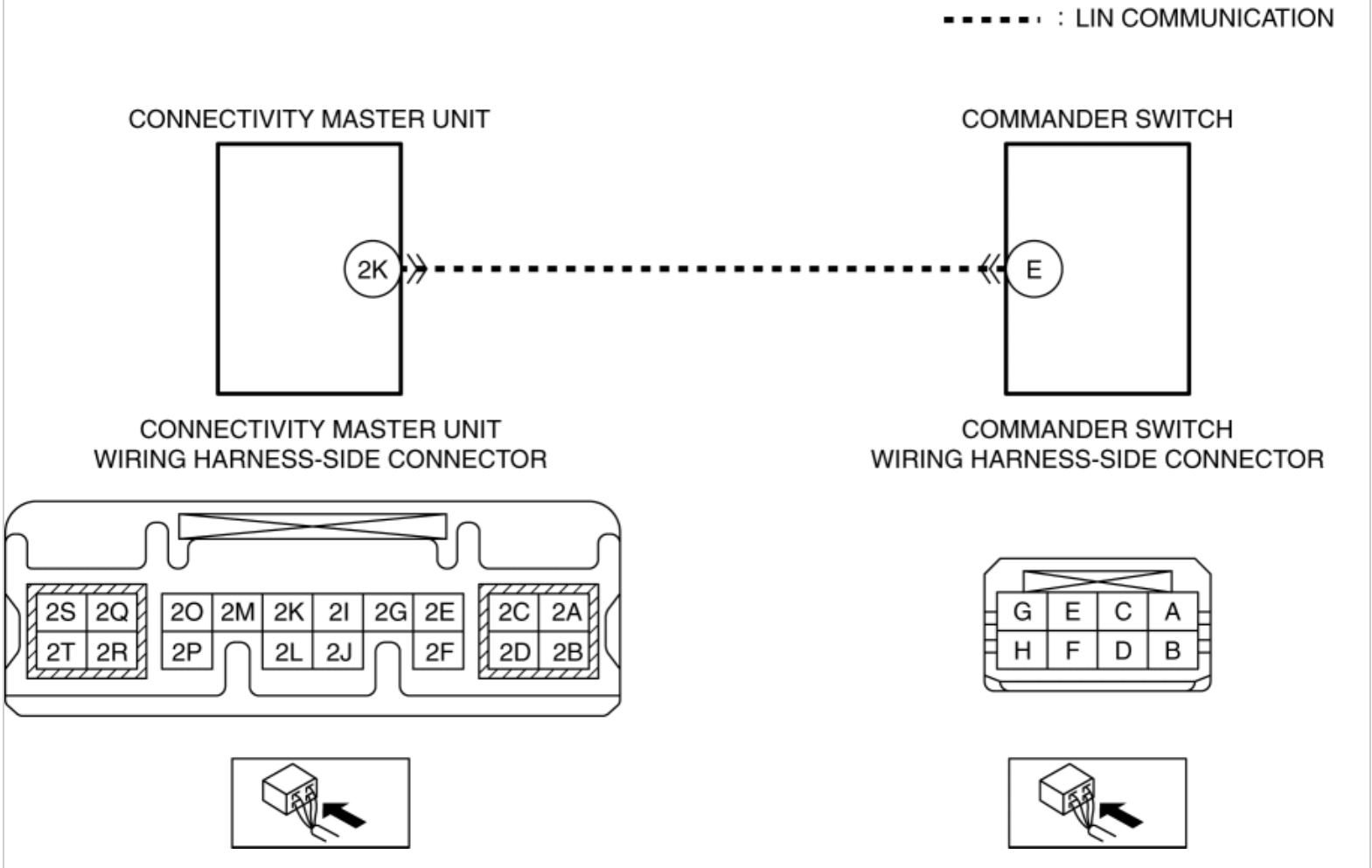

Diagnostic Procedure

Step	Inspection		Action
1	**INSPECT COMMANDER SWITCH CONNECTOR CONDITION** • Switch the ignition off. • Disconnect the negative battery cable. (See **NEGATIVE BATTERY CABLE DISCONNECTION/CONNECTION [SKYACTIV-G 2.0, SKYACTIV-G 2.5]**.) • Disconnect the commander switch connector. • Inspect the connector engagement and connection condition and inspect the terminals for damage, deformation, corrosion, or disconnection. • Is the connector normal?	Yes	Go to the next step.
		No	Repair or replace the connector, then go to Step 7.
2	**INSPECT CONNECTIVITY MASTER UNIT CONNECTOR CONDITION** • Disconnect the connectivity master unit connector. • Inspect the connector engagement and connection condition and inspect the	Yes	Go to the next step.
		No	Repair or replace the connector, then go to Step 7.

	terminals for damage, deformation, corrosion, or disconnection. • Is the connector normal?		
3	**INSPECT COMMANDER SWITCH CIRCUIT FOR SHORT TO GROUND** • Verify that the commander switch and connectivity master unit connectors are disconnected. • Inspect for continuity between commander switch terminal E (wiring harness-side) and body ground. • Is there continuity?	Yes	Refer to the wiring diagram and verify if there is a common connector between connectivity master unit terminal 2K and commander switch terminal E. **If there is a common connector:** • Inspect the common connector and terminals for corrosion, damage, or disconnection and the common wiring harnesses for short to ground to determine the malfunctioning location. • Repair or replace the malfunctioning location. **If there is no common connector:** • Repair or replace the wiring harness which is shorted to ground. Go to Step 7.
		No	Go to the next step.
4	**INSPECT COMMANDER SWITCH CIRCUIT FOR SHORT TO POWER SUPPLY** • Verify that the commander switch and connectivity master unit connectors are disconnected. • Reconnect the negative battery cable. (See **NEGATIVE BATTERY CABLE DISCONNECTION/CONNECTION [SKYACTIV-G 2.0, SKYACTIV-G 2.5]**.) • Switch the ignition ON (engine off or on). • Measure the voltage at commander switch terminal E (wiring harness-side). • Is the voltage **0 V**?	Yes	Go to the next step.
		No	Refer to the wiring diagram and verify if there is a common connector between connectivity master unit terminal 2K and commander switch terminal E. **If there is a common connector:** • Inspect the common connector and terminals for corrosion, damage, or disconnection and the common wiring harnesses for short to power supply to determine the malfunctioning location. • Repair or replace the malfunctioning location. **If there is no common connector:** • Repair or replace the wiring harness which is shorted to power supply. Go to Step 7.
5	**INSPECT COMMANDER SWITCH CIRCUIT FOR OPEN CIRCUIT** • Verify that the commander switch and connectivity master unit connectors are disconnected. • Switch the ignition off. • Disconnect the negative battery cable. (See **NEGATIVE BATTERY CABLE DISCONNECTION/CONNECTION [SKYACTIV-G 2.0, SKYACTIV-G 2.5]**.)	Yes	Go to the next step.
		No	Refer to the wiring diagram and verify if there is a common connector between connectivity master unit terminal 2K and commander switch terminal E. **If there is a common connector:** • Inspect the common connector and terminals for corrosion, damage, or disconnection and the common wiring harnesses for an open circuit to determine the malfunctioning location.

	Inspect the wiring harness for continuity between connectivity master unit terminal 2K (wiring harness-side) and commander switch terminal E (wiring harness-side). • Is there continuity?		• Repair or replace the malfunctioning location. **If there is no common connector:** • Repair or replace the wiring harness which has an open circuit. Go to Step 7.
6	**PERFORM DTC INSPECTION AND VERIFY IF MALFUNCTIONING LOCATION IS COMMANDER SWITCH** • Always reconnect all disconnected connectors. • Reconnect the negative battery cable. (See **NEGATIVE BATTERY CABLE DISCONNECTION/CONNECTION [SKYACTIV-G 2.0, SKYACTIV-G 2.5]**.) • Clear the DTC for the connectivity master unit using the M-MDS. (See **CLEARING DTC [CONNECTIVITY MASTER UNIT]**.) • Switch the ignition ON (engine off or on) and wait for **12 s or more**. • Perform the DTC inspection for the connectivity master unit using the M-MDS. (See **DTC INSPECTION [CONNECTIVITY MASTER UNIT]**.) • Is the same DTC displayed?	Yes	Replace the commander switch, then go to the next step. (See **COMMANDER SWITCH REMOVAL/INSTALLATION**.)
		No	Go to Step 8.
7	**VERIFY THAT REPAIRS HAVE BEEN COMPLETED** • Always reconnect all disconnected connectors. • Reconnect the negative battery cable. (See **NEGATIVE BATTERY CABLE DISCONNECTION/CONNECTION [SKYACTIV-G 2.0, SKYACTIV-G 2.5]**.) • Clear the DTC for the connectivity master unit using the M-MDS. (See **CLEARING DTC [CONNECTIVITY MASTER UNIT]**.) • Switch the ignition ON (engine off or on) and wait for **12 s or more**. • Perform the DTC inspection for the connectivity master unit using the M-MDS. (See **DTC INSPECTION [CONNECTIVITY MASTER UNIT]**.) • Is the same DTC displayed?	Yes	Repeat the inspection from Step 1. • If the malfunction recurs, replace the connectivity master unit. (See **CONNECTIVITY MASTER UNIT (CMU) REMOVAL/INSTALLATION**.) Go to the next step.
		No	Go to the next step.
	VERIFY IF OTHER DTCs DISPLAYED		

8	• Are any other DTCs displayed?	Yes	Repair the malfunctioning location according to the applicable DTC troubleshooting. (See **DTC TABLE [CONNECTIVITY MASTER UNIT]**.)
		No	DTC troubleshooting completed.

2014 - Mazda3 - Body and Accessories

DTC B108E:04 [CONNECTIVITY MASTER UNIT]

Description	Center display internal malfunction
Detection condition	• The connectivity master unit detected a center display internal malfunction for **5 s or more** with the ignition switched ON (engine off or on).
Fail-safe function	Not applicable
Possible cause	• Center display internal malfunction • Connectivity master unit malfunction
System wiring diagram	Not applicable

Step	Inspection		Action
1	**PERFORM DTC INSPECTION AND VERIFY IF MALFUNCTIONING LOCATION IS CENTER DISPLAY** • Clear the DTC for the connectivity master unit using the M-MDS. (See **CLEARING DTC [CONNECTIVITY MASTER UNIT]**.) • Switch the ignition ON (engine off or on) and wait for **12 s or more**. • Perform the DTC inspection for the connectivity master unit using the M-MDS. (See **DTC INSPECTION [CONNECTIVITY MASTER UNIT]**.) • Is the same DTC displayed?	Yes	Replace the center display, then go to the next step. (See **CENTER DISPLAY REMOVAL/INSTALLATION**.)
		No	Go to Step 3.
	VERIFY THAT REPAIRS HAVE BEEN COMPLETED		

2	• Clear the DTC for the connectivity master unit using the M-MDS. (See **CLEARING DTC [CONNECTIVITY MASTER UNIT]**.) • Switch the ignition ON (engine off or on) and wait for **12 s or more**. • Perform the DTC inspection for the connectivity master unit using the M-MDS. (See **DTC INSPECTION [CONNECTIVITY MASTER UNIT]**.) • Is the same DTC displayed?	Yes	Repeat the inspection from Step 1. • If the malfunction recurs, replace the connectivity master unit. (See **CONNECTIVITY MASTER UNIT (CMU) REMOVAL/INSTALLATION**.) Go to the next step.
		No	Go to the next step.
3	**VERIFY IF OTHER DTCs DISPLAYED** • Are any other DTCs displayed?	Yes	Repair the malfunctioning location according to the applicable DTC troubleshooting. (See **DTC TABLE [CONNECTIVITY MASTER UNIT]**.)
		No	DTC troubleshooting completed.

2014 - Mazda3 - Body and Accessories

DTC B108E:06 [CONNECTIVITY MASTER UNIT]

Description	HDCP authorization error
Detection condition	• The connectivity master unit detected an HDCP authorization error with the ignition switched ON (engine off or on).
Fail-safe function	Not applicable

Possible cause	• Center display connector or terminal malfunction
	• Connectivity master unit connector or terminal malfunction
	• Short to ground in wiring harness between the following terminals:
	  ▪ Connectivity master unit terminal 3B and center display terminal 2B
	  ▪ Connectivity master unit terminal 3D and center display terminal 2D
	• Short to power supply in wiring harness between the following terminals:
	  ▪ Connectivity master unit terminal 3B and center display terminal 2B
	  ▪ Connectivity master unit terminal 3D and center display terminal 2D
	• Open circuit in wiring harness between the following terminals:
	  ▪ Connectivity master unit terminal 3B and center display terminal 2B
	  ▪ Connectivity master unit terminal 3D and center display terminal 2D
	• Center display malfunction
	  ▪ Incorrect display is equipped
	  ▪ Display is malfunctioning
	• Connectivity master unit malfunction

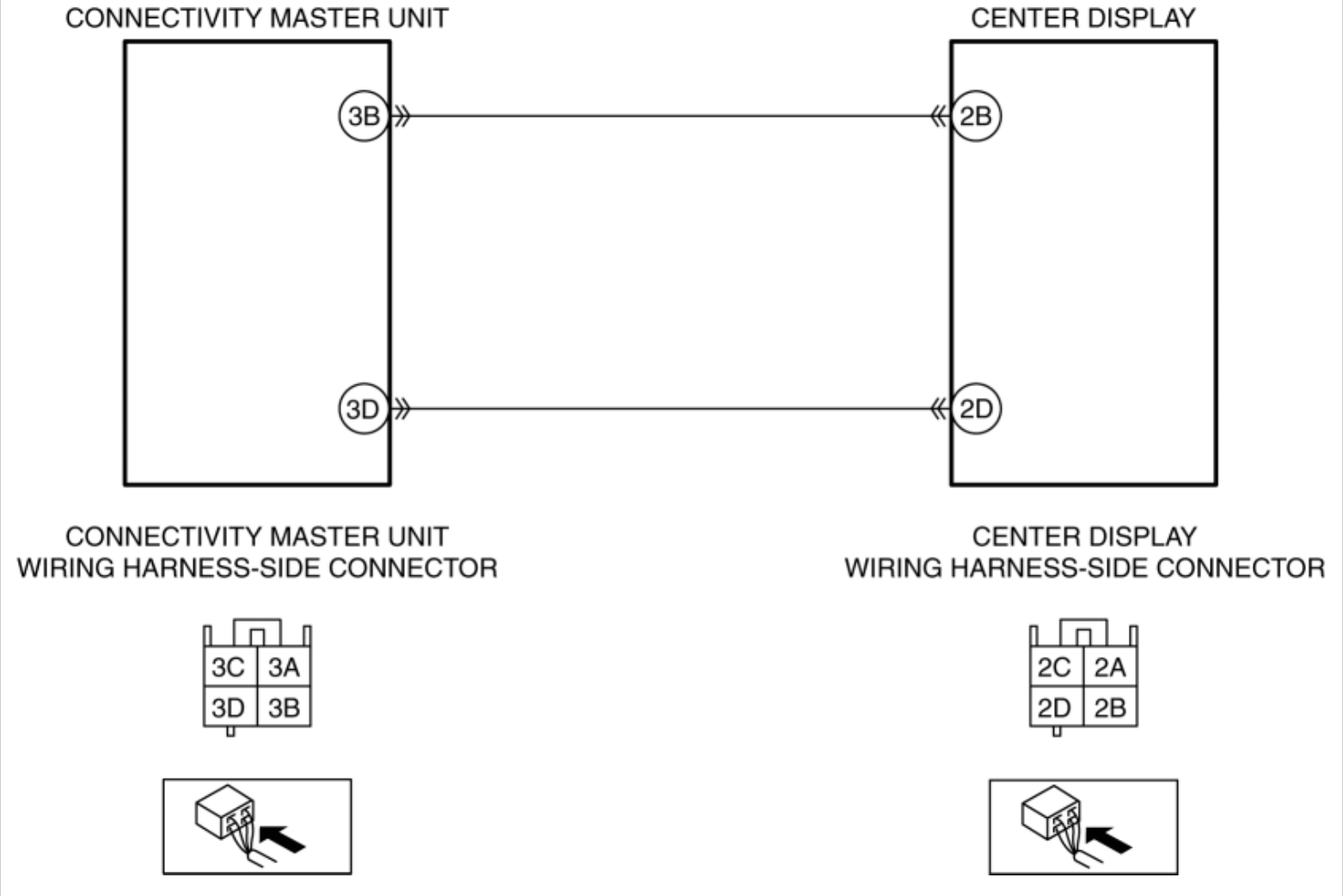

Diagnostic Procedure

Step	Inspection		Action
1	**INSPECT CENTER DISPLAY CONNECTOR CONDITION** • Switch the ignition off. • Disconnect the negative battery cable. (See **NEGATIVE BATTERY CABLE DISCONNECTION/CONNECTION [SKYACTIV-G 2.0, SKYACTIV-G 2.5]**.) • Disconnect the center display connector. • Inspect the connector engagement and connection condition and inspect the terminals for damage, deformation, corrosion, or disconnection. • Is the connector normal?	Yes	Go to the next step.
		No	Repair or replace the connector, then go to Step 7.

2	**INSPECT CONNECTIVITY MASTER UNIT CONNECTOR CONDITION** • Disconnect the connectivity master unit connector. • Inspect the connector engagement and connection condition and inspect the terminals for damage, deformation, corrosion, or disconnection. • Is the connector normal?	Yes	Go to the next step.
		No	Repair or replace the connector, then go to Step 7.
3	**INSPECT CENTER DISPLAY CIRCUIT FOR SHORT TO GROUND** • Verify that the center display and connectivity master unit connectors are disconnected. • Inspect for continuity between the following terminals (wiring harness-side) and body ground. ▪ Center display terminal 2B ▪ Center display terminal 2D • Is there continuity?	Yes	Refer to the wiring diagram and verify if there is a common connector between the following terminals. • Connectivity master unit terminal 3B and center display terminal 2B • Connectivity master unit terminal 3D and center display terminal 2D **If there is a common connector:** • Inspect the common connector and terminals for corrosion, damage, or disconnection and the common wiring harnesses for short to ground to determine the malfunctioning location. • Repair or replace the malfunctioning location. **If there is no common connector:** • Repair or replace the wiring harness which is shorted to ground. Go to Step 7.
		No	Go to the next step.
4	**INSPECT CENTER DISPLAY CIRCUIT FOR SHORT TO POWER SUPPLY** • Verify that the center display and connectivity master unit connectors are disconnected. • Reconnect the negative battery cable. (See **NEGATIVE BATTERY CABLE DISCONNECTION/CONNECTION [SKYACTIV-G 2.0, SKYACTIV-G 2.5]**.) • Switch the ignition ON (engine off or on). • Measure the voltage at the following terminals (wiring	Yes	Go to the next step.
		No	Refer to the wiring diagram and verify if there is a common connector between the following terminals. • Connectivity master unit terminal 3B and center display terminal 2B • Connectivity master unit terminal 3D and center display terminal 2D **If there is a common connector:** • Inspect the common connector and terminals for corrosion, damage, or disconnection and the common wiring harnesses for short to power supply to determine the malfunctioning location.

	harness-side). ▪ Center display terminal 2B ▪ Center display terminal 2D • Is the voltage **0 V**?		• Repair or replace the malfunctioning location. **If there is no common connector:** • Repair or replace the wiring harness which is shorted to the power supply. Go to Step 7.
5	**INSPECT CENTER DISPLAY CIRCUIT FOR OPEN CIRCUIT** • Verify that the center display and connectivity master unit connectors are disconnected. • Switch the ignition off. • Disconnect the negative battery cable. (See **NEGATIVE BATTERY CABLE DISCONNECTION/CONNECTION [SKYACTIV-G 2.0, SKYACTIV-G 2.5]**.) • Inspect the wiring harness for continuity between the following terminals (wiring harness-side). ▪ Connectivity master unit terminal 3B and center display terminal 2B ▪ Connectivity master unit terminal 3D and center display terminal 2D • Is there continuity?	Yes	Go to the next step.
		No	Refer to the wiring diagram and verify if there is a common connector between the following terminals. • Connectivity master unit terminal 3B and center display terminal 2B • Connectivity master unit terminal 3D and center display terminal 2D **If there is a common connector:** • Inspect the common connector and terminals for corrosion, damage, or disconnection and the common wiring harnesses for an open circuit to determine the malfunctioning location. • Repair or replace the malfunctioning location. **If there is no common connector:** • Repair or replace the wiring harness which has an open circuit. Go to Step 7.
6	**PERFORM DTC INSPECTION AND VERIFY IF MALFUNCTIONING LOCATION IS CENTER DISPLAY** • Always reconnect all disconnected connectors. • Reconnect the negative battery cable. (See **NEGATIVE BATTERY CABLE DISCONNECTION/CONNECTION [SKYACTIV-G 2.0, SKYACTIV-G 2.5]**.) • Clear the DTC for the connectivity master unit using	Yes	Replace the center display, then go to the next step. (See **CENTER DISPLAY REMOVAL/INSTALLATION**.)
		No	Go to Step 8.

	the M-MDS. (See **CLEARING DTC [CONNECTIVITY MASTER UNIT]**.) • Switch the ignition ON (engine off or on) and wait for **7 s or more**. • Perform the DTC inspection for the connectivity master unit using the M-MDS. (See **DTC INSPECTION [CONNECTIVITY MASTER UNIT]**.) • Is the same DTC displayed?		
7	**VERIFY THAT REPAIRS HAVE BEEN COMPLETED** • Always reconnect all disconnected connectors. • Reconnect the negative battery cable. (See **NEGATIVE BATTERY CABLE DISCONNECTION/CONNECTION [SKYACTIV-G 2.0, SKYACTIV-G 2.5]**.) • Clear the DTC for the connectivity master unit using the M-MDS. (See **CLEARING DTC [CONNECTIVITY MASTER UNIT]**.) • Switch the ignition ON (engine off or on) and wait for **7 s or more**. • Perform the DTC inspection for the connectivity master unit using the M-MDS. (See **DTC INSPECTION [CONNECTIVITY MASTER UNIT]**.) • Is the same DTC displayed?	Yes	Repeat the inspection from Step 1. • If the malfunction recurs, replace the connectivity master unit. (See **CONNECTIVITY MASTER UNIT (CMU) REMOVAL/INSTALLATION**.) Go to the next step.
		No	Go to the next step.
8	**VERIFY IF OTHER DTCs DISPLAYED** • Are any other DTCs displayed?	Yes	Repair the malfunctioning location according to the applicable DTC troubleshooting. (See **DTC TABLE [CONNECTIVITY MASTER UNIT]**.)
		No	DTC troubleshooting completed.

DTC B108E:06 [CONNECTIVITY MASTER UNIT]

2014 - Mazda3 - Body and Accessories

DTC B108E:1C [CONNECTIVITY MASTER UNIT]

Description	Low power supply voltage input to center display
Detection condition	• The connectivity master unit detected any of the following conditions for **5 s or more** with the ignition switched ON (engine off or on). ▪ TFT LCD driver voltage **3.8 V or less** ▪ LED drive voltage **14.0 V or less** ▪ Touch panel IC voltage **3.9 V or less**
Fail-safe function	• Stops operation of the center display.
Possible cause	• DTCs are stored in the PCM. • Battery malfunction • Generator malfunction • Center display connector or terminal malfunction • Center display B+ power supply circuit malfunction ▪ Short to ground in wiring harness between MAIN 200 A fuse and center display terminal 1H ▪ ROOM 15 A fuse malfunction ▪ MAIN 200 A fuse malfunction ▪ Open circuit in wiring harness between battery and center display terminal 1H • Center display ACC power supply circuit malfunction ▪ Short to ground in wiring harness between MIRROR 7.5 A fuse and center display terminal 1G ▪ MIRROR 7.5 A fuse malfunction ▪ Open circuit in wiring harness between ACC relay and center display terminal 1G • Center display malfunction • Connectivity master unit malfunction

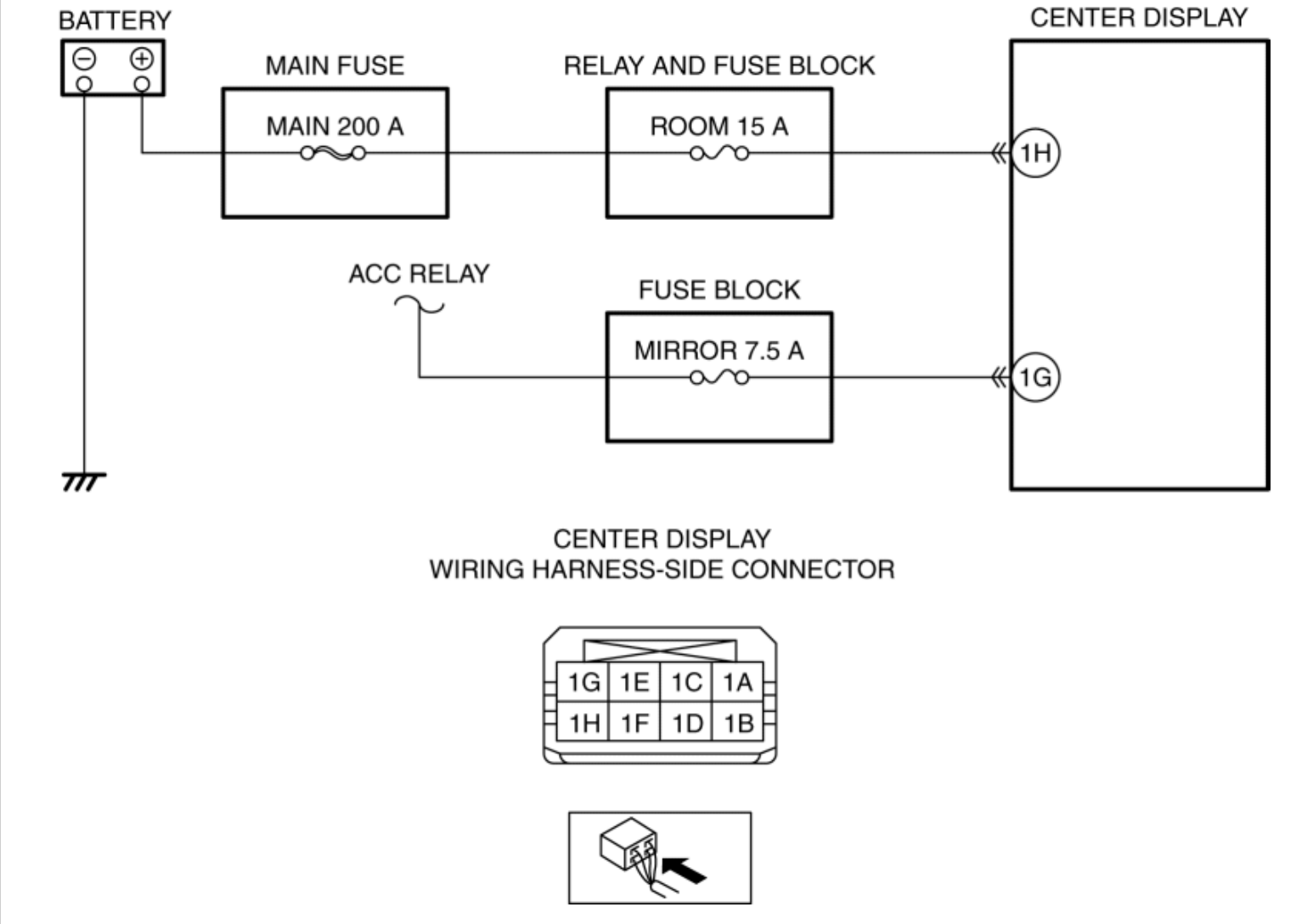

Step	Inspection		Action
1	**VERIFY PCM DTCs** • Perform the DTC inspection for the PCM using the M-MDS. (See **ON-BOARD DIAGNOSTIC TEST [SKYACTIV-G 2.0, SKYACTIV-G 2.5]**.) • Is a DTC displayed?	Yes	Repair the malfunctioning location according to the applicable DTC troubleshooting. (See **DTC TABLE [SKYACTIV-G 2.0, SKYACTIV-G 2.5]**.)
		No	Go to the next step.
2	**INSPECT BATTERY** • Inspect the battery. (See **BATTERY INSPECTION [SKYACTIV-G 2.0, SKYACTIV-G 2.5]**.) • Is the battery normal?	Yes	Go to the next step.
		No	Recharge or replace the battery, then go to Step 8. (See **BATTERY RECHARGING [SKYACTIV-G 2.0, SKYACTIV-G 2.5]**.) (See **BATTERY REMOVAL/INSTALLATION [SKYACTIV-G 2.0, SKYACTIV-G 2.5]**.)
	INSPECT GENERATOR		

3	• Inspect the generator. (See **GENERATOR INSPECTION [SKYACTIV-G 2.0, SKYACTIV-G 2.5 (WITHOUT i-ELOOP)]**.) (See **GENERATOR INSPECTION [SKYACTIV-G 2.0, SKYACTIV-G 2.5 (WITH i-ELOOP)]**.) • Is the generator normal?	Yes	Go to the next step.
		No	Replace the generator, then go to Step 8. (See **GENERATOR REMOVAL/INSTALLATION [SKYACTIV-G 2.0, SKYACTIV-G 2.5 (WITHOUT i-ELOOP)]**.) (See **GENERATOR REMOVAL/INSTALLATION [SKYACTIV-G 2.0, SKYACTIV-G 2.5 (WITH i-ELOOP)]**.)
4	**INSPECT CENTER DISPLAY CONNECTOR CONDITION** • Switch the ignition off. • Disconnect the negative battery cable. (See **NEGATIVE BATTERY CABLE DISCONNECTION/CONNECTION [SKYACTIV-G 2.0, SKYACTIV-G 2.5]**.) • Disconnect the center display connector. • Inspect the connector engagement and connection condition and inspect the terminals for damage, deformation, corrosion, or disconnection. • Is the connector normal?	Yes	Go to the next step.
		No	Repair or replace the connector, then go to Step 8.
5	**VERIFY CENTER DISPLAY B+ POWER SUPPLY VOLTAGE** • Reconnect the negative battery cable. (See **NEGATIVE BATTERY CABLE DISCONNECTION/CONNECTION [SKYACTIV-G 2.0, SKYACTIV-G 2.5]**.) • Measure the voltage at center display terminal 1H (wiring harness-side). • Is the voltage **B+**?	Yes	Go to the next step.
		No	Install the ROOM 15 A fuse and MAIN 200 A fuse. • If any fuse is blown: ▪ Refer to the wiring diagram and verify if there is a common connector between MAIN 200 A fuse and center display terminal 1H. **If there is a common connector:** • Inspect the common connector and terminals for corrosion, damage, or disconnection and the common wiring

harnesses for short to ground to determine the malfunctioning location.

- Repair or replace the malfunctioning location.

If there is no common connector:

- Repair or replace the wiring harness which is shorted to ground.
- Replace the fuse.

- If any fuse is damaged:
  - Replace the fuse.
- If the fuses are normal:
  - Refer to the wiring diagram and verify if there is a common connector between positive battery terminal and center display terminal 1H.

If there is a common connector:

- Inspect the common connector and terminals for corrosion, damage, or disconnection and the common wiring harnesses for an open circuit to determine the malfunctioning location.
- Repair or replace the malfunctioning location.

If there is no common

			connector: • Repair or replace the wiring harness which has an open circuit. Go to Step 8.
6	**VERIFY CENTER DISPLAY ACC POWER SUPPLY VOLTAGE** • Measure the voltage at center display terminal 1G (wiring harness-side). • Is the voltage **B+**?	Yes	Go to the next step.
		No	Inspect the MIRROR 7.5 A fuse. • If the fuse is blown: ▪ Refer to the wiring diagram and verify if there is a common connector between MIRROR 7.5 A fuse and center display terminal 1G. **If there is a common connector:** • Inspect the common connector and terminals for corrosion, damage, or disconnection and the common wiring harnesses for short to ground to determine the malfunctioning location. • Repair or replace the malfunctioning location. **If there is no common connector:** • Repair or replace the wiring harness which is shorted to ground. • Replace the fuse. • If the fuse is damaged:

			Replace the fuse. • If the fuse is normal: ▪ Refer to the wiring diagram and verify if there is a common connector between ACC relay and center display terminal 1G. **If there is a common connector:** • Inspect the common connector and terminals for corrosion, damage, or disconnection and the common wiring harnesses for an open circuit to determine the malfunctioning location. • Repair or replace the malfunctioning location. **If there is no common connector:** • Repair or replace the wiring harness which has an open circuit. Go to Step 8.
7	**PERFORM DTC INSPECTION AND VERIFY IF MALFUNCTIONING LOCATION IS CENTER DISPLAY** • Clear the DTC for the connectivity master unit using the M-MDS. (See **CLEARING DTC [CONNECTIVITY MASTER UNIT]**.) • Switch the ignition ON (engine off or on) and wait for **12 s or more**. • Perform the DTC inspection for the connectivity master	Yes	Replace the center display, then go to the next step. (See **CENTER DISPLAY REMOVAL/INSTALLATION**.)
		No	Go to Step 9.

	unit using the M-MDS. (See **DTC INSPECTION [CONNECTIVITY MASTER UNIT]**.) • Is the same DTC displayed?		
8	**VERIFY THAT REPAIRS HAVE BEEN COMPLETED** • Always reconnect all disconnected connectors. • Reconnect the negative battery cable. (See **NEGATIVE BATTERY CABLE DISCONNECTION/CONNECTION [SKYACTIV-G 2.0, SKYACTIV-G 2.5]**.) • Clear the DTC for the connectivity master unit using the M-MDS. (See **CLEARING DTC [CONNECTIVITY MASTER UNIT]**.) • Switch the ignition ON (engine off or on) and wait for **12 s or more**. • Perform the DTC inspection for the connectivity master unit using the M-MDS. (See **DTC INSPECTION [CONNECTIVITY MASTER UNIT]**.) • Is the same DTC displayed?	Yes	Repeat the inspection from Step 1. • If the malfunction recurs, replace the connectivity master unit. (See **CONNECTIVITY MASTER UNIT (CMU) REMOVAL/INSTALLATION**.) Go to the next step.
		No	Go to the next step.
9	**VERIFY IF OTHER DTCs DISPLAYED** • Are any other DTCs displayed?	Yes	Repair the malfunctioning location according to the applicable DTC troubleshooting. (See **DTC TABLE [CONNECTIVITY MASTER UNIT]**.)
		No	DTC troubleshooting completed.

2014 - Mazda3 - Body and Accessories

DTC B108E:87 [CONNECTIVITY MASTER UNIT]

Description	Center display circuit malfunction
Detection condition	• The connectivity master unit cannot receive a signal from the center display for **5 s or more** with the ignition switched ON (engine off or on).
Fail-safe function	Not applicable

Possible cause	• Center display connector or terminal malfunction
	• Connectivity master unit connector or terminal malfunction
	• Short to ground in wiring harness between the following terminals:
	  ▪ Connectivity master unit terminal 3B and center display terminal 2B
	  ▪ Connectivity master unit terminal 3D and center display terminal 2D
	• Short to power supply in wiring harness between the following terminals:
	  ▪ Connectivity master unit terminal 3B and center display terminal 2B
	  ▪ Connectivity master unit terminal 3D and center display terminal 2D
	• Open circuit in wiring harness between the following terminals:
	  ▪ Connectivity master unit terminal 3B and center display terminal 2B
	  ▪ Connectivity master unit terminal 3D and center display terminal 2D
	• Center display malfunction
	• Connectivity master unit malfunction

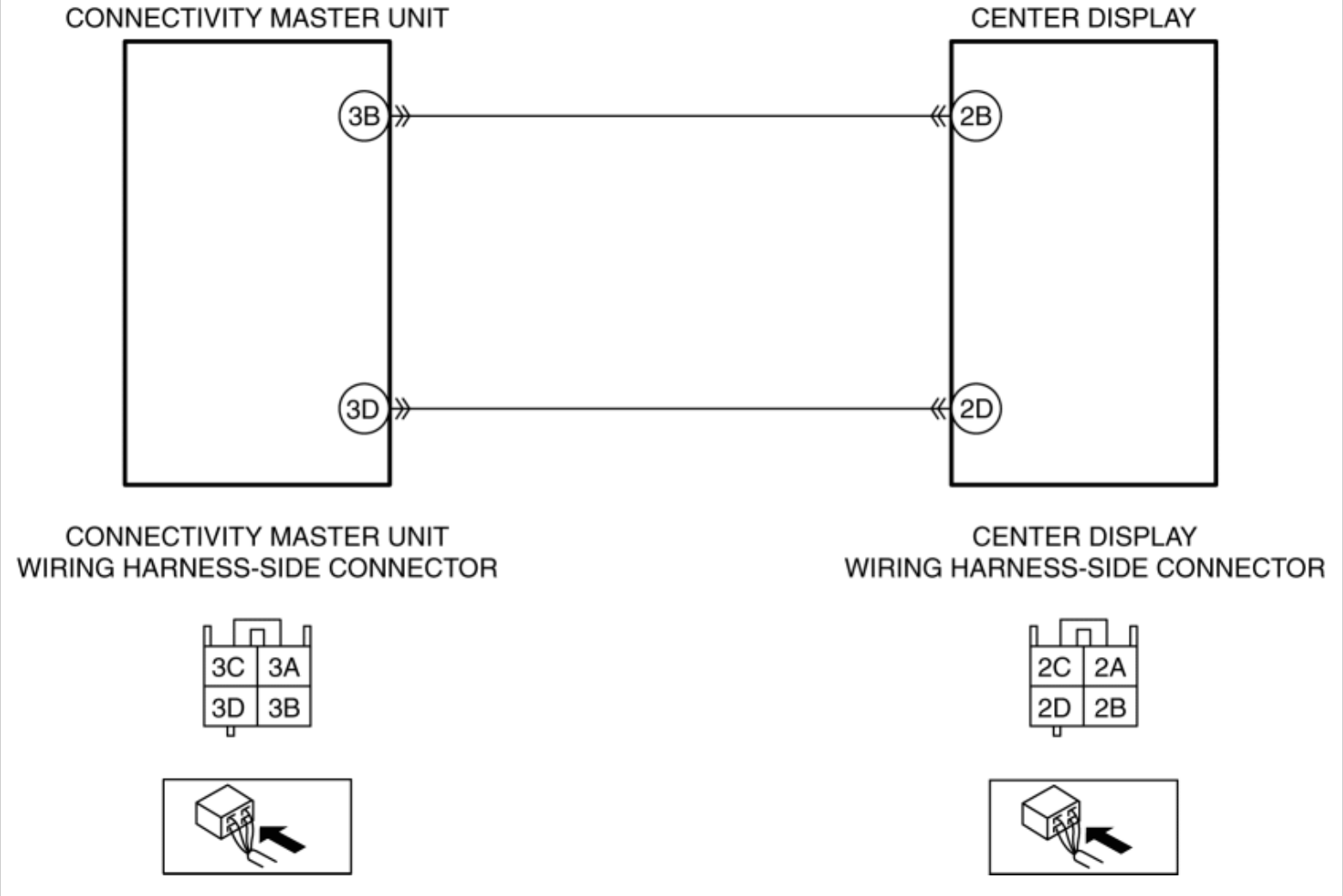

Diagnostic Procedure

Step	Inspection		Action
1	**INSPECT CENTER DISPLAY CONNECTOR CONDITION** • Switch the ignition off. • Disconnect the negative battery cable. (See **NEGATIVE BATTERY CABLE DISCONNECTION/CONNECTION [SKYACTIV-G 2.0, SKYACTIV-G 2.5]**.) • Disconnect the center display connector. • Inspect the connector engagement and connection condition and inspect the terminals for damage, deformation, corrosion, or disconnection. • Is the connector normal?	Yes	Go to the next step.
		No	Repair or replace the connector, then go to Step 7.

2	**INSPECT CONNECTIVITY MASTER UNIT CONNECTOR CONDITION** • Disconnect the connectivity master unit connector. • Inspect the connector engagement and connection condition and inspect the terminals for damage, deformation, corrosion, or disconnection. • Is the connector normal?	Yes	Go to the next step.
		No	Repair or replace the connector, then go to Step 7.
3	**INSPECT CENTER DISPLAY CIRCUIT FOR SHORT TO GROUND** • Verify that the center display and connectivity master unit connectors are disconnected. • Inspect for continuity between the following terminals (wiring harness-side) and body ground. ▪ Center display terminal 2B ▪ Center display terminal 2D • Is there continuity?	Yes	Refer to the wiring diagram and verify if there is a common connector between the following terminals. • Connectivity master unit terminal 3B and center display terminal 2B • Connectivity master unit terminal 3D and center display terminal 2D **If there is a common connector:** • Inspect the common connector and terminals for corrosion, damage, or disconnection and the common wiring harnesses for short to ground to determine the malfunctioning location. • Repair or replace the malfunctioning location. **If there is no common connector:** • Repair or replace the wiring harness which is shorted to ground. Go to Step 7.
		No	Go to the next step.
4	**INSPECT CENTER DISPLAY CIRCUIT FOR SHORT TO POWER SUPPLY** • Verify that the center display and connectivity master unit connectors are disconnected. • Reconnect the negative battery cable. (See **NEGATIVE BATTERY CABLE DISCONNECTION/CONNECTION [SKYACTIV-G 2.0, SKYACTIV-G 2.5]**.) • Switch the ignition ON (engine off or on). • Measure the voltage at the following terminals (wiring	Yes	Go to the next step.
		No	Refer to the wiring diagram and verify if there is a common connector between the following terminals. • Connectivity master unit terminal 3B and center display terminal 2B • Connectivity master unit terminal 3D and center display terminal 2D **If there is a common connector:** • Inspect the common connector and terminals for corrosion, damage, or disconnection and the common wiring harnesses for short to power supply to determine the malfunctioning location.

	harness-side). ▪ Center display terminal 2B ▪ Center display terminal 2D • Is the voltage **0 V**?		• Repair or replace the malfunctioning location. **If there is no common connector:** • Repair or replace the wiring harness which is shorted to the power supply. Go to Step 7.
5	**INSPECT CENTER DISPLAY CIRCUIT FOR OPEN CIRCUIT** • Verify that the center display and connectivity master unit connectors are disconnected. • Switch the ignition off. • Disconnect the negative battery cable. (See **NEGATIVE BATTERY CABLE DISCONNECTION/CONNECTION [SKYACTIV-G 2.0, SKYACTIV-G 2.5]**.) • Inspect the wiring harness for continuity between the following terminals (wiring harness-side). ▪ Connectivity master unit terminal 3B and center display terminal 2B ▪ Connectivity master unit terminal 3D and center display terminal 2D • Is there continuity?	Yes	Go to the next step.
		No	Refer to the wiring diagram and verify if there is a common connector between the following terminals. • Connectivity master unit terminal 3B and center display terminal 2B • Connectivity master unit terminal 3D and center display terminal 2D **If there is a common connector:** • Inspect the common connector and terminals for corrosion, damage, or disconnection and the common wiring harnesses for an open circuit to determine the malfunctioning location. • Repair or replace the malfunctioning location. **If there is no common connector:** • Repair or replace the wiring harness which has an open circuit. Go to Step 7.
6	**PERFORM DTC INSPECTION AND VERIFY IF MALFUNCTIONING LOCATION IS CENTER DISPLAY** • Always reconnect all disconnected connectors. • Reconnect the negative battery cable. (See **NEGATIVE BATTERY CABLE DISCONNECTION/CONNECTION [SKYACTIV-G 2.0, SKYACTIV-G 2.5]**.) • Clear the DTC for the connectivity master unit using	Yes	Replace the center display, then go to the next step. (See **CENTER DISPLAY REMOVAL/INSTALLATION**.)
		No	Go to Step 8.

	the M-MDS. (See **CLEARING DTC [CONNECTIVITY MASTER UNIT]**.) • Switch the ignition ON (engine off or on) and wait for **12 s or more**. • Perform the DTC inspection for the connectivity master unit using the M-MDS. (See **DTC INSPECTION [CONNECTIVITY MASTER UNIT]**.) • Is the same DTC displayed?		
7	**VERIFY THAT REPAIRS HAVE BEEN COMPLETED** • Always reconnect all disconnected connectors. • Reconnect the negative battery cable. (See **NEGATIVE BATTERY CABLE DISCONNECTION/CONNECTION [SKYACTIV-G 2.0, SKYACTIV-G 2.5]**.) • Clear the DTC for the connectivity master unit using the M-MDS. (See **CLEARING DTC [CONNECTIVITY MASTER UNIT]**.) • Switch the ignition ON (engine off or on) and wait for **12 s or more**. • Perform the DTC inspection for the connectivity master unit using the M-MDS. (See **DTC INSPECTION [CONNECTIVITY MASTER UNIT]**.) • Is the same DTC displayed?	Yes	Repeat the inspection from Step 1. • If the malfunction recurs, replace the connectivity master unit. (See **CONNECTIVITY MASTER UNIT (CMU) REMOVAL/INSTALLATION**.) Go to the next step.
		No	Go to the next step.
8	**VERIFY IF OTHER DTCs DISPLAYED** • Are any other DTCs displayed?	Yes	Repair the malfunctioning location according to the applicable DTC troubleshooting. (See **DTC TABLE [CONNECTIVITY MASTER UNIT]**.)
		No	DTC troubleshooting completed.

DTC B108E:87 [CONNECTIVITY MASTER UNIT]

2014 - Mazda3 - Body and Accessories

DTC B116A:11 [CONNECTIVITY MASTER UNIT]

Description	Microphone circuit malfunction
Detection condition	• The connectivity master unit detected a short to ground in the microphone circuit for **5 s or more** with the ignition switched ON (engine off or on).
Fail-safe function	Not applicable

Possible cause	• Microphone connector or terminal malfunction
	• Connectivity master unit connector or terminal malfunction
	• Short to ground in wiring harness between the following terminals:
	  ▪ Connectivity master unit terminal 1S and microphone terminal A
	  ▪ Connectivity master unit terminal 1T and microphone terminal B
	• Microphone malfunction
	• Connectivity master unit malfunction

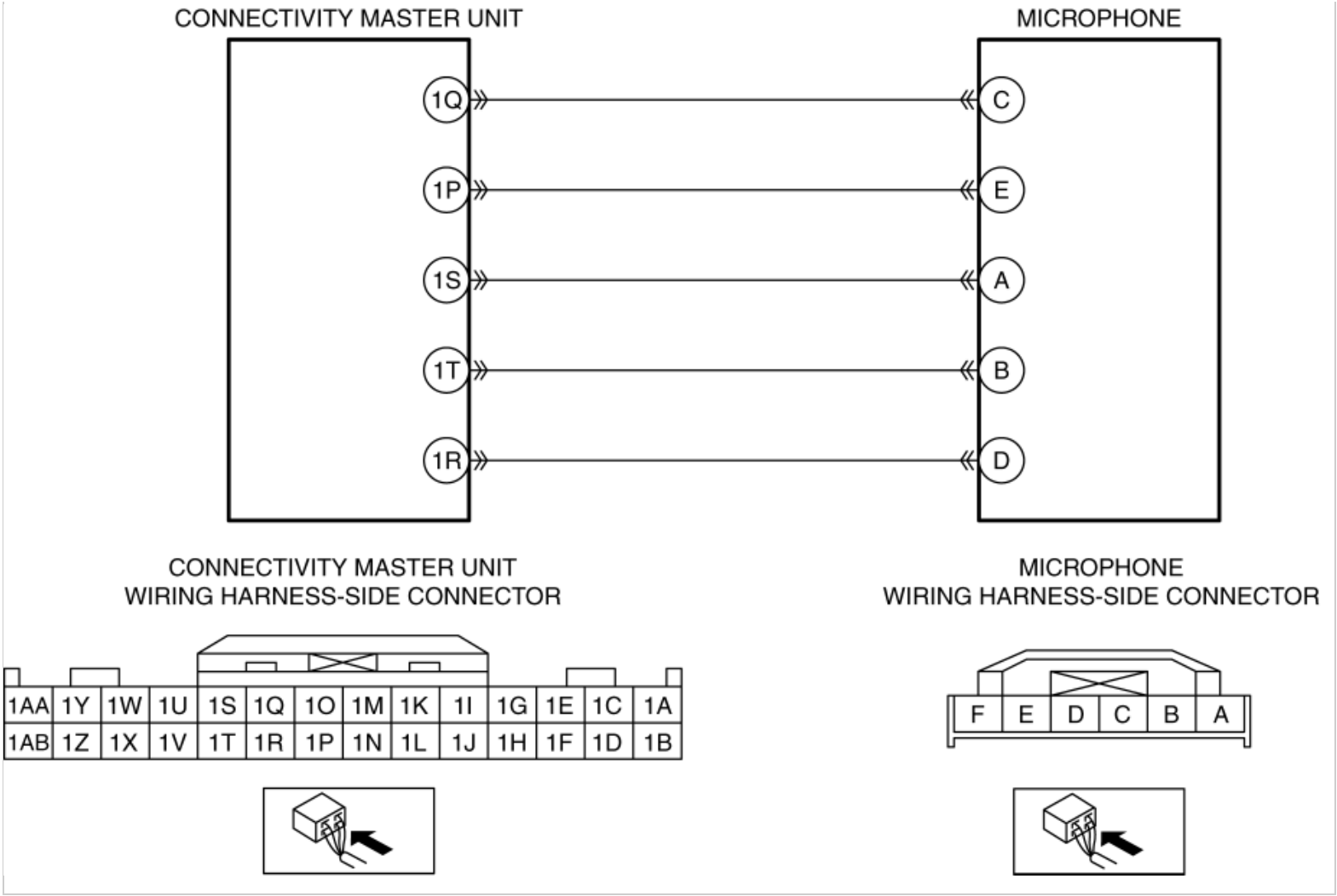

Diagnostic Procedure

Step	Inspection		Action
1	**INSPECT MICROPHONE CONNECTOR CONDITION** • Switch the ignition off. • Disconnect the negative battery cable. (See **NEGATIVE BATTERY CABLE DISCONNECTION/CONNECTION [SKYACTIV-G 2.0, SKYACTIV-G 2.5]**.) • Disconnect the microphone connector. • Inspect the connector engagement and connection condition and inspect the terminals for damage, deformation, corrosion, or disconnection. • Is the connector normal?	Yes	Go to the next step.
		No	Repair or replace the connector, then go to Step 5.
2	**INSPECT CONNECTIVITY MASTER UNIT CONNECTOR CONDITION** • Disconnect the connectivity master	Yes	Go to the next step.

	unit connector. • Inspect the connector engagement and connection condition and inspect the terminals for damage, deformation, corrosion, or disconnection. • Is the connector normal?	No	Repair or replace the connector, then go to Step 5.
3	**INSPECT MICROPHONE CIRCUIT FOR SHORT TO GROUND** • Verify that the microphone and connectivity master unit connectors are disconnected. • Inspect for continuity between the following terminals (wiring harness-side) and body ground. ▪ Connectivity master unit terminal 1S ▪ Connectivity master unit terminal 1T • Is there continuity?	Yes	Refer to the wiring diagram and verify if there is a common connector between the following terminals. • Connectivity master unit terminal 1S and microphone terminal A • Connectivity master unit terminal 1T and microphone terminal B **If there is a common connector:** • Inspect the common connector and terminals for corrosion, damage, or disconnection and the common wiring harnesses for short to ground to determine the malfunctioning location. • Repair or replace the malfunctioning location. **If there is no common connector:** • Repair or replace the wiring harness which is shorted to ground. Go to Step 5.
		No	Go to the next step.
4	**PERFORM DTC INSPECTION AND VERIFY IF MALFUNCTIONING LOCATION IS MICROPHONE** • Always reconnect all disconnected connectors. • Reconnect the negative battery cable. (See **NEGATIVE BATTERY CABLE DISCONNECTION/CONNECTION [SKYACTIV-G 2.0, SKYACTIV-G 2.5]**.) • Clear the DTC for the connectivity master unit using the M-MDS. (See **CLEARING DTC [CONNECTIVITY MASTER UNIT]**.) • Switch the ignition ON (engine off or on) and wait for **12 s or more**. • Perform the DTC inspection for the connectivity master unit using the M-MDS. (See **DTC INSPECTION [CONNECTIVITY MASTER UNIT]**.) • Is the same DTC displayed?	Yes	Replace the microphone, then go to the next step. (See **MICROPHONE REMOVAL/INSTALLATION**.)
		No	Go to Step 6.
5	**VERIFY THAT REPAIRS HAVE BEEN COMPLETED** • Always reconnect all disconnected	Yes	Repeat the inspection from Step 1.

	connectors. • Reconnect the negative battery cable. (See **NEGATIVE BATTERY CABLE DISCONNECTION/CONNECTION [SKYACTIV-G 2.0, SKYACTIV-G 2.5]**.) • Clear the DTC for the connectivity master unit using the M-MDS. (See **CLEARING DTC [CONNECTIVITY MASTER UNIT]**.) • Switch the ignition ON (engine off or on) and wait for **12 s or more**. • Perform the DTC inspection for the connectivity master unit using the M-MDS. (See **DTC INSPECTION [CONNECTIVITY MASTER UNIT]**.) • Is the same DTC displayed?		• If the malfunction recurs, replace the connectivity master unit. (See **CONNECTIVITY MASTER UNIT (CMU) REMOVAL/INSTALLATION**.) Go to the next step.
		No	Go to the next step.
6	**VERIFY IF OTHER DTCs DISPLAYED** • Are any other DTCs displayed?	Yes	Repair the malfunctioning location according to the applicable DTC troubleshooting. (See **DTC TABLE [CONNECTIVITY MASTER UNIT]**.)
		No	DTC troubleshooting completed.

2014 - Mazda3 - Body and Accessories

DTC B116A:12 [CONNECTIVITY MASTER UNIT]

Description	Microphone circuit malfunction
Detection condition	• The connectivity master unit detected a short to power supply in the microphone circuit for **5 s or more** with the ignition switched ON (engine off or on).
Fail-safe function	Not applicable

Possible cause	• Microphone connector or terminal malfunction
	• Connectivity master unit connector or terminal malfunction
	• Short to power supply in wiring harness between the following terminals:
	  ▪ Connectivity master unit terminal 1S and microphone terminal A
	  ▪ Connectivity master unit terminal 1T and microphone terminal B
	• Microphone malfunction
	• Connectivity master unit malfunction

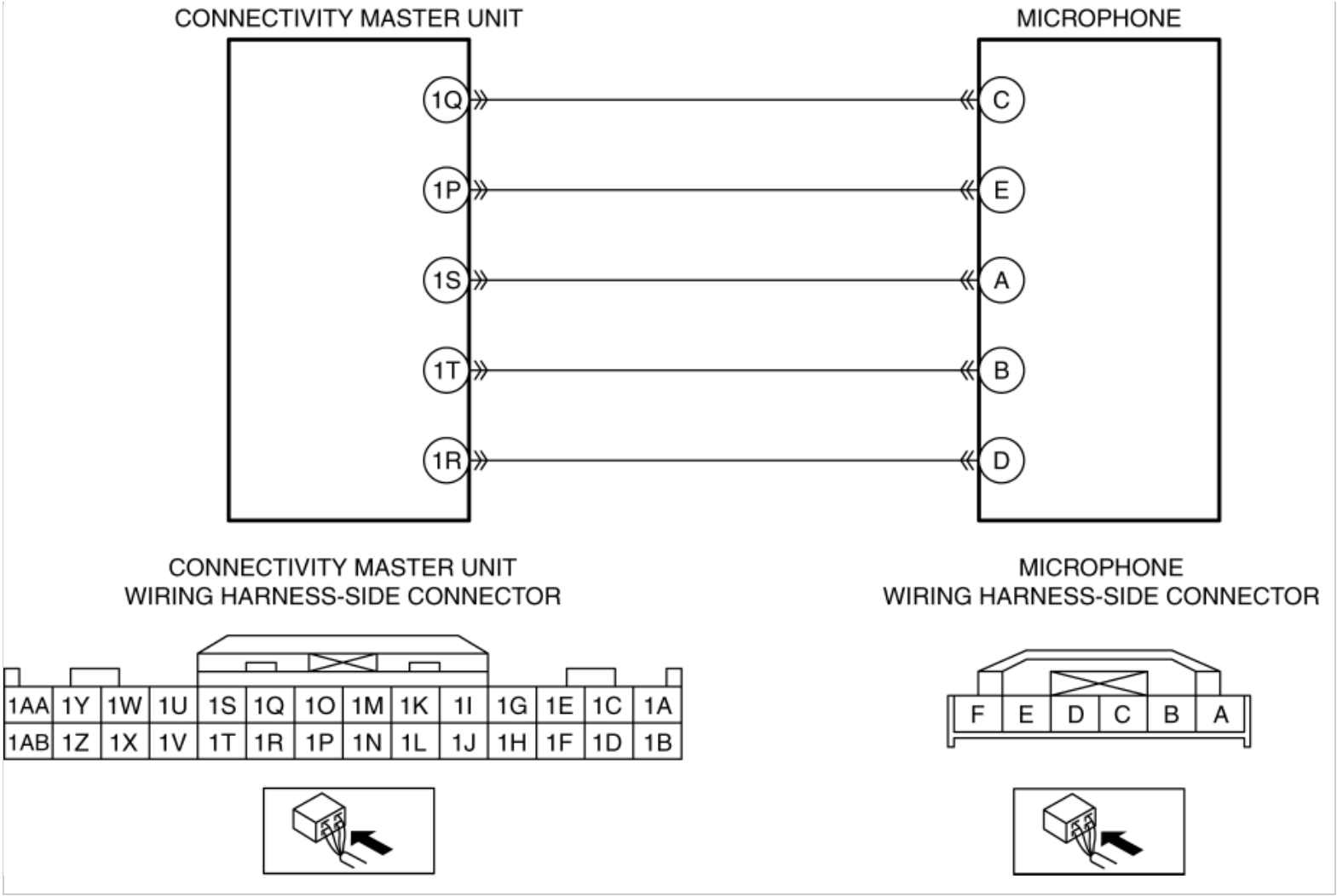

Diagnostic Procedure

Step	Inspection		Action
1	**INSPECT MICROPHONE CONNECTOR CONDITION** • Switch the ignition off. • Disconnect the negative battery cable. (See **NEGATIVE BATTERY CABLE DISCONNECTION/CONNECTION [SKYACTIV-G 2.0, SKYACTIV-G 2.5]**.) • Disconnect the microphone connector. • Inspect the connector engagement and connection condition and inspect the terminals for damage, deformation, corrosion, or disconnection. • Is the connector normal?	Yes	Go to the next step.
		No	Repair or replace the connector, then go to Step 5.
2	**INSPECT CONNECTIVITY MASTER UNIT CONNECTOR CONDITION** • Disconnect the connectivity master	Yes	Go to the next step.

	unit connector. • Inspect the connector engagement and connection condition and inspect the terminals for damage, deformation, corrosion, or disconnection. • Is the connector normal?	No	Repair or replace the connector, then go to Step 5.
3	**INSPECT MICROPHONE CIRCUIT FOR SHORT TO POWER SUPPLY** • Verify that the microphone and connectivity master unit connectors are disconnected. • Reconnect the negative battery cable. (See **NEGATIVE BATTERY CABLE DISCONNECTION/CONNECTION [SKYACTIV-G 2.0, SKYACTIV-G 2.5]**.) • Switch the ignition ON (engine off or on). • Measure the voltage at the following terminals (wiring harness-side). ▪ Microphone terminal A ▪ Microphone terminal B • Is the voltage **0 V**?	Yes	Go to the next step.
		No	Refer to the wiring diagram and verify if there is a common connector between the following terminals. • Connectivity master unit terminal 1S and microphone terminal A • Connectivity master unit terminal 1T and microphone terminal B **If there is a common connector:** • Inspect the common connector and terminals for corrosion, damage, or disconnection and the common wiring harnesses for short to power supply to determine the malfunctioning location. • Repair or replace the malfunctioning location. **If there is no common connector:** • Repair or replace the wiring harness which is shorted to the power supply. Go to Step 5.
4	**PERFORM DTC INSPECTION AND VERIFY IF MALFUNCTIONING LOCATION IS MICROPHONE** • Always reconnect all disconnected connectors. • Clear the DTC for the connectivity master unit using the M-MDS. (See **CLEARING DTC [CONNECTIVITY MASTER UNIT]**.) • Switch the ignition ON (engine off or on) and wait for **12 s or more**. • Perform the DTC inspection for the connectivity master unit using the M-MDS. (See **DTC INSPECTION [CONNECTIVITY MASTER UNIT]**.) • Is the same DTC displayed?	Yes	Replace the microphone, then go to the next step. (See **MICROPHONE REMOVAL/INSTALLATION**.)
		No	Go to Step 6.
5	**VERIFY THAT REPAIRS HAVE BEEN COMPLETED** • Always reconnect all disconnected connectors. • Reconnect the negative battery cable. (See **NEGATIVE BATTERY CABLE**	Yes	Repeat the inspection from Step 1. • If the malfunction recurs, replace the connectivity master unit. (See **CONNECTIVITY MASTER UNIT (CMU) REMOVAL/INSTALLATION**.)

	DISCONNECTION/CONNECTION [SKYACTIV-G 2.0, SKYACTIV-G 2.5].) • Clear the DTC for the connectivity master unit using the M-MDS. (See **CLEARING DTC [CONNECTIVITY MASTER UNIT]**.) • Switch the ignition ON (engine off or on) and wait for **12 s or more**. • Perform the DTC inspection for the connectivity master unit using the M-MDS. (See **DTC INSPECTION [CONNECTIVITY MASTER UNIT]**.) • Is the same DTC displayed?		Go to the next step.
		No	Go to the next step.
6	**VERIFY IF OTHER DTCs DISPLAYED** • Are any other DTCs displayed?	Yes	Repair the malfunctioning location according to the applicable DTC troubleshooting. (See **DTC TABLE [CONNECTIVITY MASTER UNIT]**.)
		No	DTC troubleshooting completed.

2014 - Mazda3 - Body and Accessories

DTC B116A:92 [CONNECTIVITY MASTER UNIT]

Description	Microphone circuit malfunction
Detection condition	• The connectivity master unit detected microphone circuit voltage of **less than 7.7 V** or **more than 8.6 V** with the ignition switched ON (engine off or on).
Fail-safe function	Not applicable
Possible cause	• Microphone connector or terminal malfunction • Connectivity master unit connector or terminal malfunction • Short to ground in wiring harness between connectivity master unit terminal 1Q and microphone terminal C • Short to power supply in wiring harness between connectivity master unit terminal 1Q and microphone terminal C • Open circuit in wiring harness between connectivity master unit terminal 1Q and microphone terminal C • Microphone malfunction • Connectivity master unit malfunction

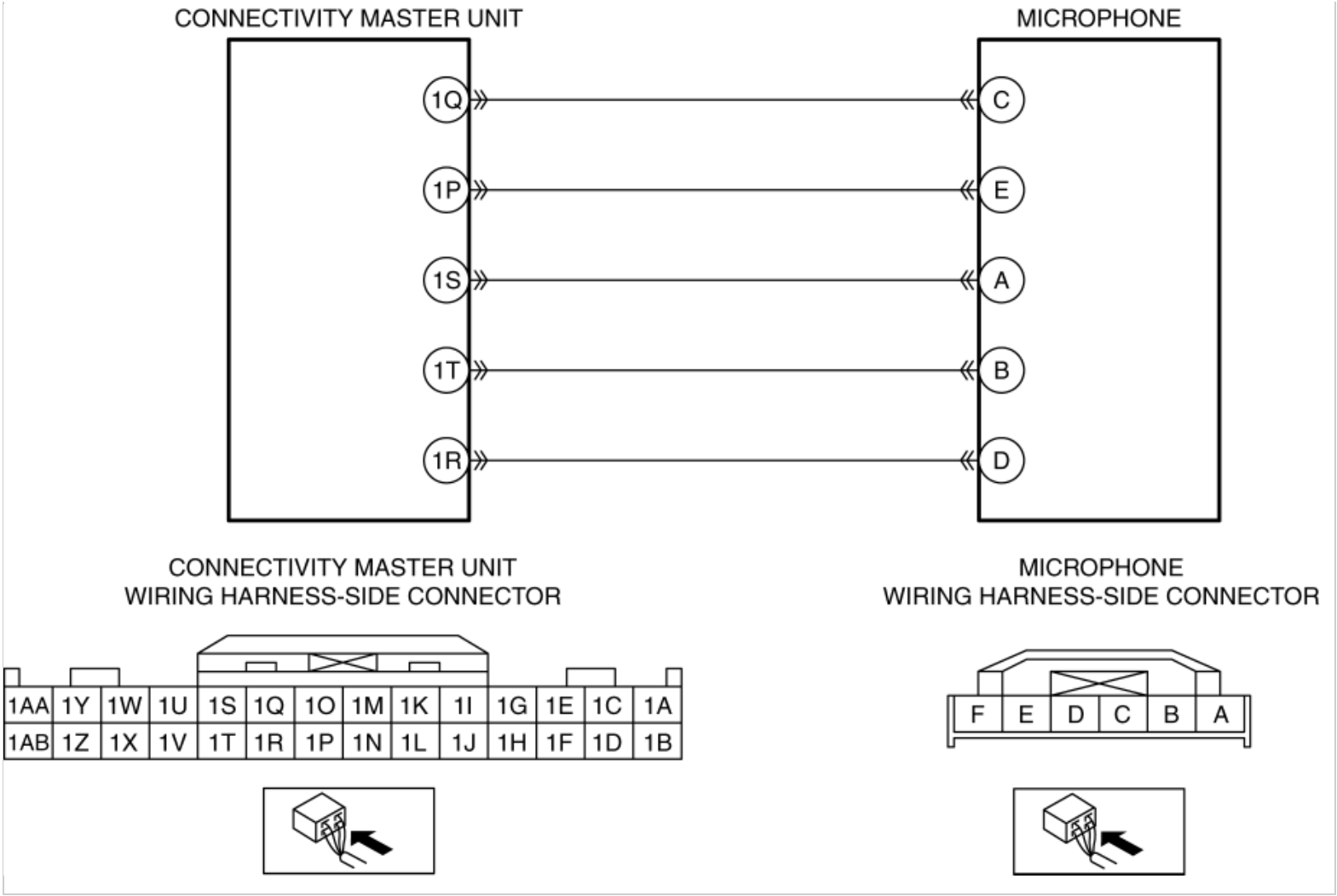

Diagnostic Procedure

Step	Inspection		Action
1	**INSPECT MICROPHONE CONNECTOR CONDITION** • Switch the ignition off. • Disconnect the negative battery cable. (See **NEGATIVE BATTERY CABLE DISCONNECTION/CONNECTION [SKYACTIV-G 2.0, SKYACTIV-G 2.5]**.) • Disconnect the microphone connector. • Inspect the connector engagement and connection condition and inspect the terminals for damage, deformation, corrosion, or disconnection. • Is the connector normal?	Yes	Go to the next step.
		No	Repair or replace the connector, then go to Step 7.
2	**INSPECT CONNECTIVITY MASTER UNIT CONNECTOR CONDITION** • Disconnect the connectivity master unit connector. • Inspect the connector engagement and connection condition and inspect the	Yes	Go to the next step.
		No	Repair or replace the connector, then go to Step 7.

	terminals for damage, deformation, corrosion, or disconnection. • Is the connector normal?		
3	**INSPECT MICROPHONE CIRCUIT FOR SHORT TO GROUND** • Verify that the microphone and connectivity master unit connectors are disconnected. • Inspect for continuity between connectivity master unit terminal 1Q (wiring harness-side) and body ground. • Is there continuity?	Yes	Refer to the wiring diagram and verify if there is a common connector between connectivity master unit terminal 1Q and microphone terminal C. **If there is a common connector:** • Inspect the common connector and terminals for corrosion, damage, or disconnection and the common wiring harnesses for short to ground to determine the malfunctioning location. • Repair or replace the malfunctioning location. **If there is no common connector:** • Repair or replace the wiring harness which is shorted to ground. Go to Step 7.
		No	Go to the next step.
4	**INSPECT MICROPHONE CIRCUIT FOR SHORT TO POWER SUPPLY** • Verify that the microphone and connectivity master unit connectors are disconnected. • Reconnect the negative battery cable. (See **NEGATIVE BATTERY CABLE DISCONNECTION/CONNECTION [SKYACTIV-G 2.0, SKYACTIV-G 2.5]**.) • Switch the ignition ON (engine off or on). • Measure the voltage at microphone terminal C (wiring harness-side). • Is the voltage **0 V**?	Yes	Go to the next step.
		No	Refer to the wiring diagram and verify if there is a common connector between connectivity master unit terminal 1Q and microphone terminal C. **If there is a common connector:** • Inspect the common connector and terminals for corrosion, damage, or disconnection and the common wiring harnesses for short to power supply to determine the malfunctioning location. • Repair or replace the malfunctioning location. **If there is no common connector:** • Repair or replace the wiring harness which is shorted to the power supply. Go to Step 7.
5	**INSPECT MICROPHONE CIRCUIT FOR OPEN CIRCUIT** • Verify that the microphone and connectivity master unit connectors are disconnected. • Switch the ignition off. • Disconnect the negative battery cable. (See **NEGATIVE BATTERY CABLE DISCONNECTION/CONNECTION [SKYACTIV-G 2.0, SKYACTIV-G 2.5]**.) • Inspect the wiring harness for continuity between connectivity master unit terminal 1Q (wiring harness-side)	Yes	Go to the next step.
		No	Refer to the wiring diagram and verify if there is a common connector between connectivity master unit terminal 1Q and microphone terminal C. **If there is a common connector:** • Inspect the common connector and terminals for corrosion, damage, or disconnection and the common wiring harnesses for an open circuit to determine the malfunctioning location. • Repair or replace the malfunctioning location. **If there is no common connector:**

	and microphone terminal C (wiring harness-side). • Is there continuity?		• Repair or replace the wiring harness which has an open circuit. Go to Step 7.
6	**PERFORM DTC INSPECTION AND VERIFY IF MALFUNCTIONING LOCATION IS MICROPHONE** • Always reconnect all disconnected connectors. • Reconnect the negative battery cable. (See **NEGATIVE BATTERY CABLE DISCONNECTION/CONNECTION [SKYACTIV-G 2.0, SKYACTIV-G 2.5]**.) • Clear the DTC for the connectivity master unit using the M-MDS. (See **CLEARING DTC [CONNECTIVITY MASTER UNIT]**.) • Switch the ignition ON (engine off or on) and wait for **7 s or more**. • Perform the DTC inspection for the connectivity master unit using the M-MDS. (See **DTC INSPECTION [CONNECTIVITY MASTER UNIT]**.) • Is the same DTC displayed?	Yes	Replace the microphone, then go to the next step. (See **MICROPHONE REMOVAL/INSTALLATION**.)
		No	Go to Step 8.
7	**VERIFY THAT REPAIRS HAVE BEEN COMPLETED** • Always reconnect all disconnected connectors. • Reconnect the negative battery cable. (See **NEGATIVE BATTERY CABLE DISCONNECTION/CONNECTION [SKYACTIV-G 2.0, SKYACTIV-G 2.5]**.) • Clear the DTC for the connectivity master unit using the M-MDS. (See **CLEARING DTC [CONNECTIVITY MASTER UNIT]**.) • Switch the ignition ON (engine off or on) and wait for **7 s or more**. • Perform the DTC inspection for the connectivity master unit using the M-MDS. (See **DTC INSPECTION [CONNECTIVITY MASTER UNIT]**.) • Is the same DTC displayed?	Yes	Repeat the inspection from Step 1. • If the malfunction recurs, replace the connectivity master unit. (See **CONNECTIVITY MASTER UNIT (CMU) REMOVAL/INSTALLATION**.) Go to the next step.
		No	Go to the next step.
8	**VERIFY IF OTHER DTCs DISPLAYED** • Are any other DTCs displayed?	Yes	Repair the malfunctioning location according to the applicable DTC troubleshooting. (See **DTC TABLE [CONNECTIVITY MASTER UNIT]**.)
		No	DTC troubleshooting completed.

DTC B116A:92 [CONNECTIVITY MASTER UNIT]

2014 - Mazda3 - Body and Accessories

DTC B119F:11 [CONNECTIVITY MASTER UNIT]

Description	GPS antenna circuit malfunction
Detection condition	• Connectivity master unit detects GPS antenna circuit voltage of **4.45 V or less** with the ignition switched ON (engine off or on).
Fail-safe function	Not applicable
Possible cause	• GPS antenna connector or terminal malfunction • Connectivity master unit connector or terminal malfunction • Short to ground in wiring harness between connectivity master unit terminal 5A and GPS antenna terminal A • GPS antenna malfunction • Connectivity master unit malfunction

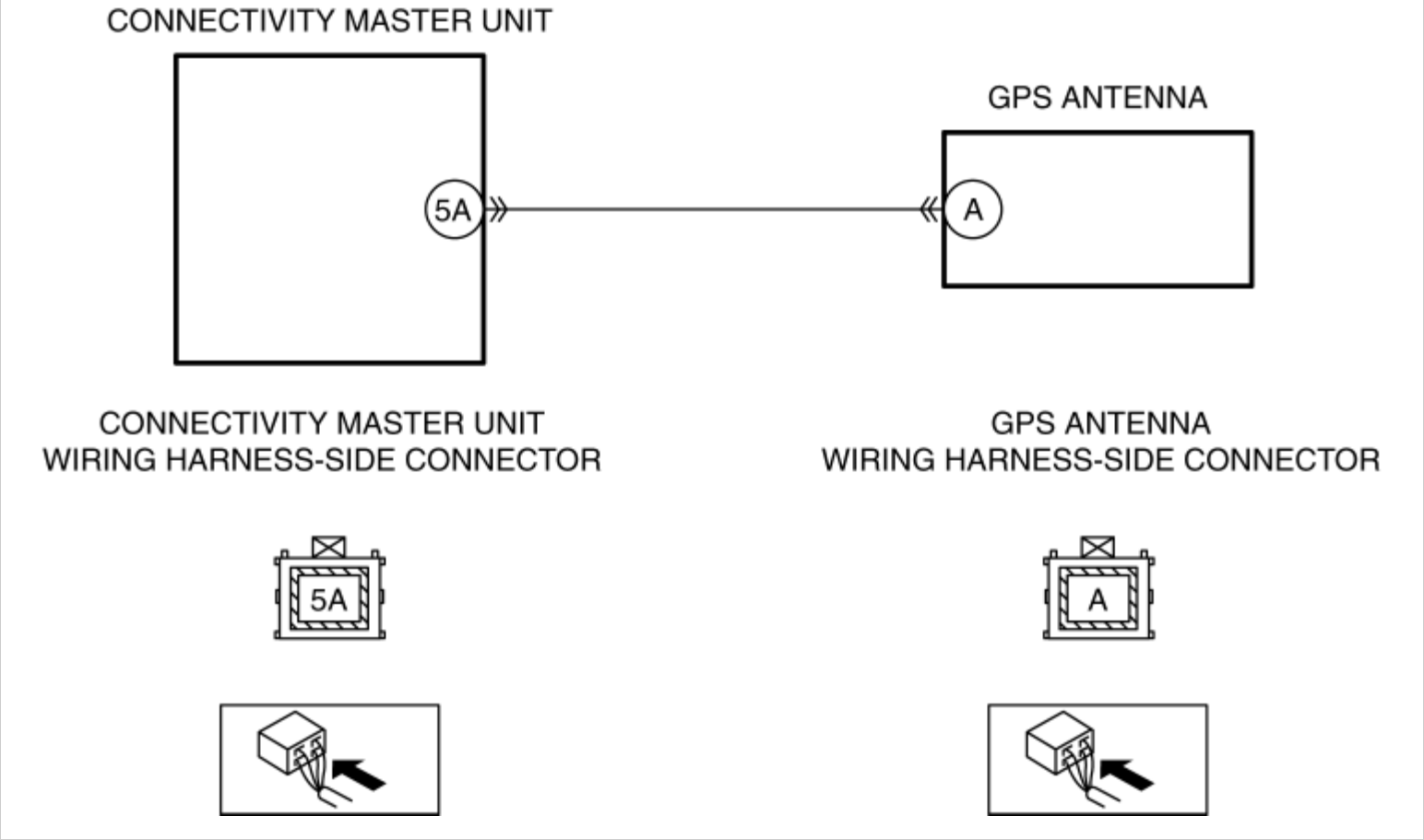

Step	Inspection		Action
1	**INSPECT GPS ANTENNA CONNECTOR CONDITION** • Switch the ignition off. • Disconnect the negative battery cable. (See **NEGATIVE BATTERY CABLE DISCONNECTION/CONNECTION [SKYACTIV-G 2.0, SKYACTIV-G 2.5]**.) • Disconnect the GPS antenna connector. • Inspect the connector engagement and connection condition and inspect the terminals for damage, deformation, corrosion, or disconnection. • Is the connector normal?	Yes	Go to the next step.
		No	Repair or replace the connector, then go to Step 5.

2	**INSPECT CONNECTIVITY MASTER UNIT CONNECTOR CONDITION** • Disconnect the connectivity master unit connector. • Inspect the connector engagement and connection condition and inspect the terminals for damage, deformation, corrosion, or disconnection. • Is the connector normal?	Yes	Go to the next step.
		No	Repair or replace the connector, then go to Step 5.
3	**INSPECT GPS ANTENNA CIRCUIT FOR SHORT TO GROUND** • Verify that the GPS antenna and connectivity master unit connectors are disconnected. • Inspect for continuity between GPS antenna terminal A (wiring harness-side) and body ground. • Is there continuity?	Yes	Refer to the wiring diagram and verify if there is a common connector between connectivity master unit terminal 5A and GPS antenna terminal A. **If there is a common connector:** • Inspect the common connector and terminals for corrosion, damage, or disconnection and the common wiring harnesses for short to ground to determine the malfunctioning location. • Repair or replace the malfunctioning location. **If there is no common connector:** • Repair or replace the wiring harness which is shorted to ground. Go to Step 5.
		No	Go to the next step.
4	**PERFORM DTC INSPECTION AND VERIFY IF GPS ANTENNA IS MALFUNCTIONING PART** • Always reconnect all disconnected connectors. • Reconnect the negative battery cable. (See **NEGATIVE BATTERY CABLE DISCONNECTION/CONNECTION [SKYACTIV-G 2.0, SKYACTIV-G 2.5]**.)	Yes	Replace the GPS antenna, then go to the next step. (See **GLOBAL POSITIONING SYSTEM (GPS) ANTENNA REMOVAL/INSTALLATION**.)
		No	Go to Step 6.

	• Clear the DTC for the connectivity master unit using the M-MDS. (See **CLEARING DTC [CONNECTIVITY MASTER UNIT]**.) • Switch the ignition ON (engine off or on) and wait for **7 s or more**. • Perform the DTC inspection for the connectivity master unit using the M-MDS. (See **DTC INSPECTION [CONNECTIVITY MASTER UNIT]**.) • Is the same DTC displayed?		
5	**VERIFY THAT REPAIRS HAVE BEEN COMPLETED** • Always reconnect all disconnected connectors. • Reconnect the negative battery cable. (See **NEGATIVE BATTERY CABLE DISCONNECTION/CONNECTION [SKYACTIV-G 2.0, SKYACTIV-G 2.5]**.) • Clear the DTC for the connectivity master unit using the M-MDS. (See **CLEARING DTC [CONNECTIVITY MASTER UNIT]**.) • Switch the ignition ON (engine off or on) and wait for **7 s or more**. • Perform the DTC inspection for the connectivity master unit using the M-MDS. (See **DTC INSPECTION [CONNECTIVITY MASTER UNIT]**.) • Is the same DTC displayed?	Yes	Repeat the inspection from Step 1. • If the malfunction recurs, replace the connectivity master unit. (See **CONNECTIVITY MASTER UNIT (CMU) REMOVAL/INSTALLATION**.) Go to the next step.
		No	Go to the next step.
6	**VERIFY IF OTHER DTCs DISPLAYED**	Yes	Repair the malfunctioning location according to the

	• Are any other DTCs displayed?		applicable DTC troubleshooting. (See **DTC TABLE [CONNECTIVITY MASTER UNIT]**.)
		No	DTC troubleshooting completed.

2014 - Mazda3 - Body and Accessories

DTC B119F:13 [CONNECTIVITY MASTER UNIT]

Description	GPS antenna circuit malfunction
Detection condition	• The connectivity master unit detects an open circuit in the GPS antenna circuit with the ignition switched ON (engine off or on).
Fail-safe function	Not applicable
Possible cause	• GPS antenna connector or terminal malfunction • Connectivity master unit connector or terminal malfunction • Open circuit in wiring harness between connectivity master unit terminal 5A and GPS antenna terminal A • GPS antenna malfunction • Connectivity master unit malfunction

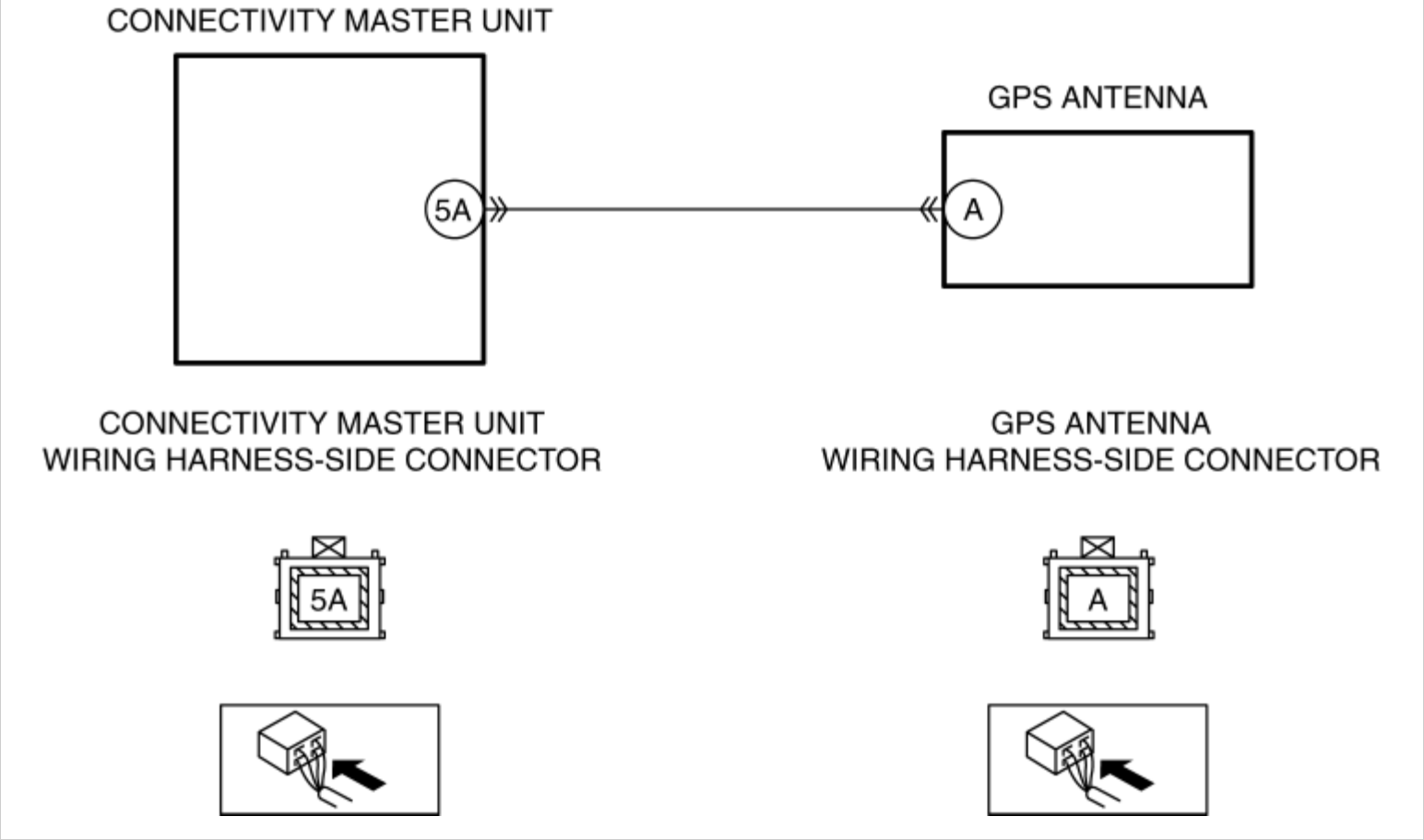

Step	Inspection		Action
1	**INSPECT GPS ANTENNA CONNECTOR CONDITION** • Switch the ignition off. • Disconnect the negative battery cable. (See **NEGATIVE BATTERY CABLE DISCONNECTION/CONNECTION [SKYACTIV-G 2.0, SKYACTIV-G 2.5]**.) • Disconnect the GPS antenna connector. • Inspect the connector engagement and connection condition and inspect the terminals for damage, deformation, corrosion, or disconnection. • Is the connector normal?	Yes	Go to the next step.
		No	Repair or replace the connector, then go to Step 5.
	INSPECT CONNECTIVITY MASTER UNIT		

2	**CONNECTOR CONDITION** • Disconnect the connectivity master unit connector. • Inspect the connector engagement and connection condition and inspect the terminals for damage, deformation, corrosion, or disconnection. • Is the connector normal?	Yes	Go to the next step.
		No	Repair or replace the connector, then go to Step 5.
3	**INSPECT GPS ANTENNA CIRCUIT FOR OPEN CIRCUIT** • Verify that the GPS antenna and connectivity master unit connectors are disconnected. • Disconnect the negative battery cable. (See **NEGATIVE BATTERY CABLE DISCONNECTION/CONNECTION [SKYACTIV-G 2.0, SKYACTIV-G 2.5]**.) • Inspect the wiring harness for continuity between connectivity master unit terminal 5A (wiring harness-side) and GPS antenna terminal A (wiring harness-side). • Is there continuity?	Yes	Go to the next step.
		No	Refer to the wiring diagram and verify if there is a common connector between connectivity master unit terminal 5A and GPS antenna terminal A. **If there is a common connector:** • Inspect the common connector and terminals for corrosion, damage, or disconnection and the common wiring harnesses for an open circuit to determine the malfunctioning location. • Repair or replace the malfunctioning location. **If there is no common connector:** • Repair or replace the wiring harness which has an open circuit. Go to Step 5.
4	**PERFORM DTC INSPECTION AND VERIFY IF GPS ANTENNA IS MALFUNCTIONING PART** • Always reconnect all disconnected connectors. • Reconnect the negative battery cable. (See **NEGATIVE BATTERY CABLE DISCONNECTION/CONNECTION [SKYACTIV-G 2.0, SKYACTIV-G 2.5]**.) • Clear the DTC for the connectivity master unit using	Yes	Replace the GPS antenna, then go to the next step. (See **GLOBAL POSITIONING SYSTEM (GPS) ANTENNA REMOVAL/INSTALLATION**.)
		No	Go to Step 6.

	the M-MDS. (See **CLEARING DTC [CONNECTIVITY MASTER UNIT]**.) • Switch the ignition ON (engine off or on) and wait for **7 s or more**. • Perform the DTC inspection for the connectivity master unit using the M-MDS. (See **DTC INSPECTION [CONNECTIVITY MASTER UNIT]**.) • Is the same DTC displayed?		
5	**VERIFY THAT REPAIRS HAVE BEEN COMPLETED** • Always reconnect all disconnected connectors. • Reconnect the negative battery cable. (See **NEGATIVE BATTERY CABLE DISCONNECTION/CONNECTION [SKYACTIV-G 2.0, SKYACTIV-G 2.5]**.) • Clear the DTC for the connectivity master unit using the M-MDS. (See **CLEARING DTC [CONNECTIVITY MASTER UNIT]**.) • Switch the ignition ON (engine off or on) and wait for **7 s or more**. • Perform the DTC inspection for the connectivity master unit using the M-MDS. (See **DTC INSPECTION [CONNECTIVITY MASTER UNIT]**.) • Is the same DTC displayed?	Yes	Repeat the inspection from Step 1. • If the malfunction recurs, replace the connectivity master unit. (See **CONNECTIVITY MASTER UNIT (CMU) REMOVAL/INSTALLATION**.) Go to the next step.
		No	Go to the next step.
6	**VERIFY IF OTHER DTCs DISPLAYED** • Are any other DTCs displayed?	Yes	Repair the malfunctioning location according to the applicable DTC troubleshooting. (See **DTC TABLE [CONNECTIVITY MASTER UNIT]**.)

		No	DTC troubleshooting completed.

2014 - Mazda3 - Body and Accessories

DTC B119F:1D [CONNECTIVITY MASTER UNIT]

Description	GPS antenna circuit malfunction
Detection condition	• The connectivity master unit detects a current value in the GPS antenna circuit of (**31 mA or more**) with the ignition switched ON (engine off or on).
Fail-safe function	Not applicable
Possible cause	• GPS antenna connector or terminal malfunction • Connectivity master unit connector or terminal malfunction • Short to ground in wiring harness between connectivity master unit terminal 5A and GPS antenna terminal A • GPS antenna malfunction • Connectivity master unit malfunction

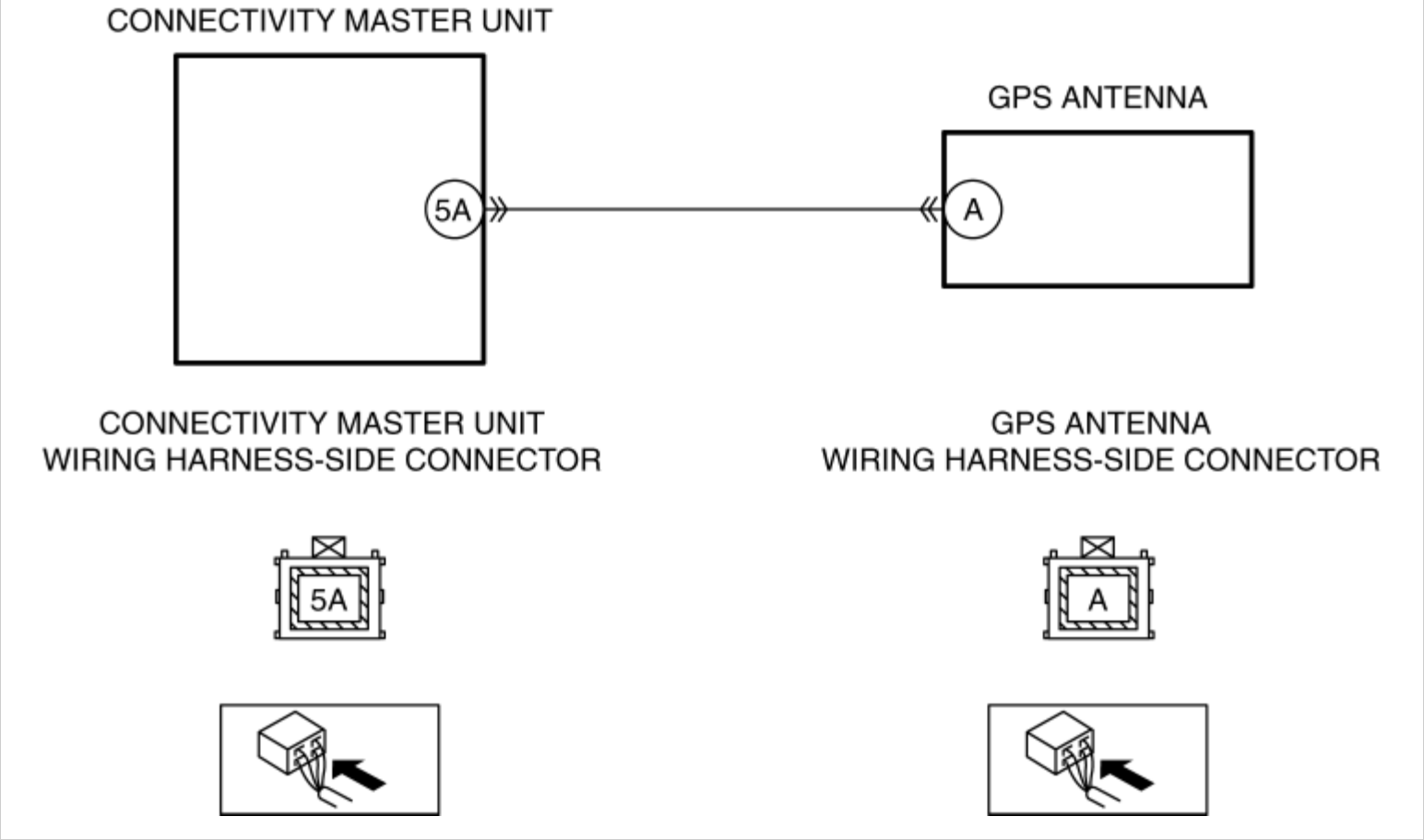

Step	Inspection		Action
1	**INSPECT GPS ANTENNA CONNECTOR CONDITION** • Switch the ignition off. • Disconnect the negative battery cable. (See **NEGATIVE BATTERY CABLE DISCONNECTION/CONNECTION [SKYACTIV-G 2.0, SKYACTIV-G 2.5]**.) • Disconnect the GPS antenna connector. • Inspect the connector engagement and connection condition and inspect the terminals for damage, deformation, corrosion, or disconnection. • Is the connector normal?	Yes	Go to the next step.
		No	Repair or replace the connector, then go to Step 5.

2	**INSPECT CONNECTIVITY MASTER UNIT CONNECTOR CONDITION** • Disconnect the connectivity master unit connector. • Inspect the connector engagement and connection condition and inspect the terminals for damage, deformation, corrosion, or disconnection. • Is the connector normal?	Yes	Go to the next step.
		No	Repair or replace the connector, then go to Step 5.
3	**INSPECT GPS ANTENNA CIRCUIT FOR SHORT TO GROUND** • Verify that the GPS antenna and connectivity master unit connectors are disconnected. • Inspect for continuity between GPS antenna terminal A (wiring harness-side) and body ground. • Is there continuity?	Yes	Refer to the wiring diagram and verify if there is a common connector between connectivity master unit terminal 5A and GPS antenna terminal A. **If there is a common connector:** • Inspect the common connector and terminals for corrosion, damage, or disconnection and the common wiring harnesses for short to ground to determine the malfunctioning location. • Repair or replace the malfunctioning location. **If there is no common connector:** • Repair or replace the wiring harness which is shorted to ground. Go to Step 5.
		No	Go to the next step.
4	**PERFORM DTC INSPECTION AND VERIFY IF GPS ANTENNA IS MALFUNCTIONING PART** • Always reconnect all disconnected connectors. • Reconnect the negative battery cable. (See **NEGATIVE BATTERY CABLE DISCONNECTION/CONNECTION [SKYACTIV-G 2.0, SKYACTIV-G 2.5]**.)	Yes	Replace the GPS antenna, then go to the next step. (See **GLOBAL POSITIONING SYSTEM (GPS) ANTENNA REMOVAL/INSTALLATION**.)
		No	Go to Step 6.

	• Clear the DTC for the connectivity master unit using the M-MDS. (See **CLEARING DTC [CONNECTIVITY MASTER UNIT]**.) • Switch the ignition ON (engine off or on) and wait for **7 s or more**. • Perform the DTC inspection for the connectivity master unit using the M-MDS. (See **DTC INSPECTION [CONNECTIVITY MASTER UNIT]**.) • Is the same DTC displayed?		
5	**VERIFY THAT REPAIRS HAVE BEEN COMPLETED** • Always reconnect all disconnected connectors. • Reconnect the negative battery cable. (See **NEGATIVE BATTERY CABLE DISCONNECTION/CONNECTION [SKYACTIV-G 2.0, SKYACTIV-G 2.5]**.) • Clear the DTC for the connectivity master unit using the M-MDS. (See **CLEARING DTC [CONNECTIVITY MASTER UNIT]**.) • Switch the ignition ON (engine off or on) and wait for **7 s or more**. • Perform the DTC inspection for the connectivity master unit using the M-MDS. (See **DTC INSPECTION [CONNECTIVITY MASTER UNIT]**.) • Is the same DTC displayed?	Yes	Repeat the inspection from Step 1. • If the malfunction recurs, replace the connectivity master unit. (See **CONNECTIVITY MASTER UNIT (CMU) REMOVAL/INSTALLATION**.) Go to the next step.
		No	Go to the next step.
6	**VERIFY IF OTHER DTCs DISPLAYED**	Yes	Repair the malfunctioning location according to the

	• Are any other DTCs displayed?		applicable DTC troubleshooting. (See **DTC TABLE [CONNECTIVITY MASTER UNIT]**.)
		No	DTC troubleshooting completed.

2014 - Mazda3 - Body and Accessories

DTC B119F:92 [CONNECTIVITY MASTER UNIT]

Description	GPS antenna circuit malfunction
Detection condition	• The connectivity master unit cannot receive signals from the GPS antenna for **5 s or more** with the ignition switched ON (engine off or on).
Fail-safe function	Not applicable
Possible cause	• GPS antenna connector or terminal malfunction • Connectivity master unit connector or terminal malfunction • Short to ground in the wiring harness between connectivity master unit terminal 5A and GPS antenna terminal A • Short to power supply in the wiring harness between connectivity master unit terminal 5A and GPS antenna terminal A • Open circuit in wiring harness between connectivity master unit terminal 5A and GPS antenna terminal A • GPS antenna malfunction • Connectivity master unit malfunction

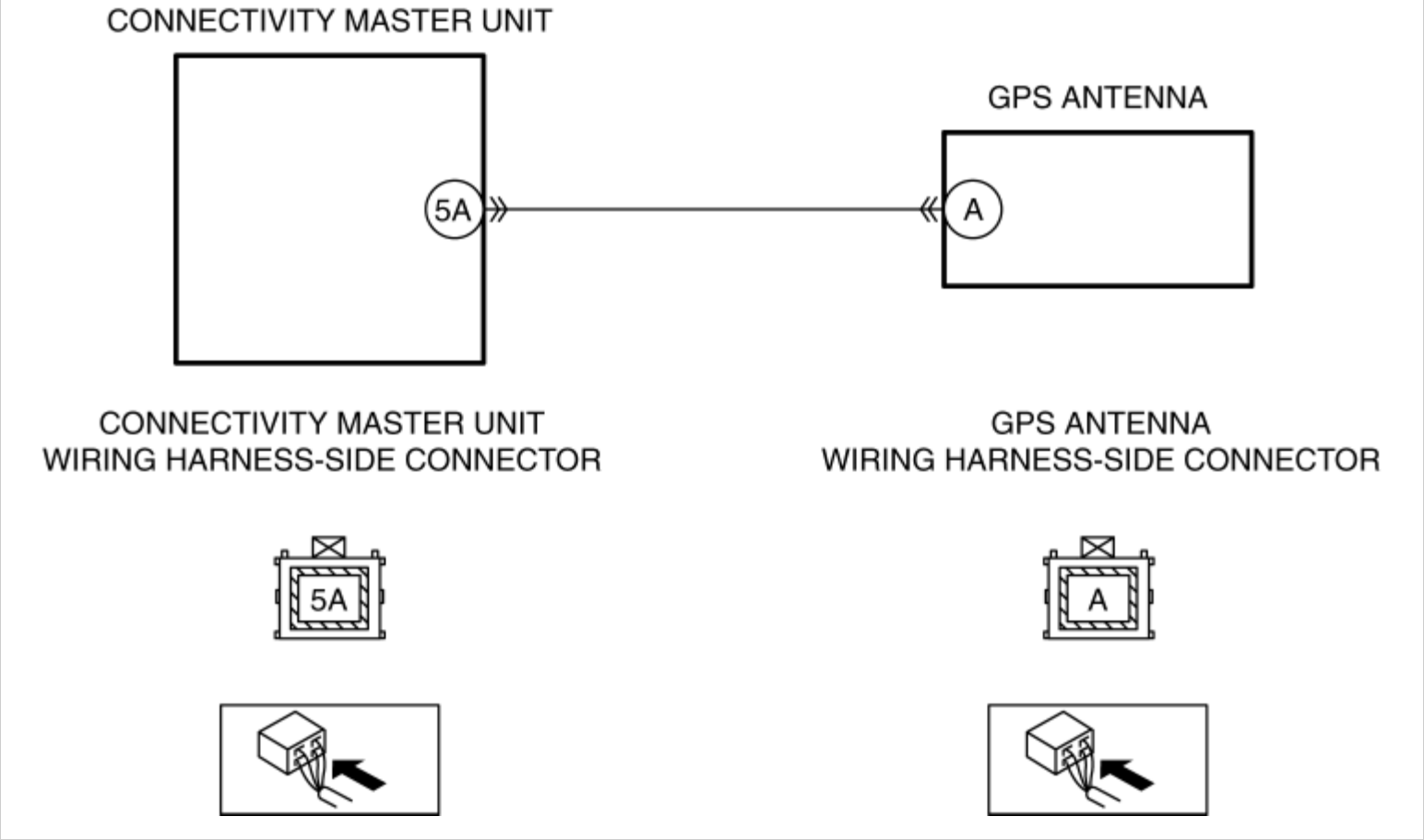

Step	Inspection		Action
1	**INSPECT GPS ANTENNA CONNECTOR CONDITION** • Switch the ignition off. • Disconnect the negative battery cable. (See **NEGATIVE BATTERY CABLE DISCONNECTION/CONNECTION [SKYACTIV-G 2.0, SKYACTIV-G 2.5]**.) • Disconnect the GPS antenna connector. • Inspect the connector engagement and connection condition and inspect the terminals for damage, deformation, corrosion, or disconnection. • Is the connector normal?	Yes	Go to the next step.
		No	Repair or replace the connector, then go to Step 7.

2	**INSPECT CONNECTIVITY MASTER UNIT CONNECTOR CONDITION** • Disconnect the connectivity master unit connector. • Inspect the connector engagement and connection condition and inspect the terminals for damage, deformation, corrosion, or disconnection. • Is the connector normal?	Yes	Go to the next step.
		No	Repair or replace the connector, then go to Step 7.
3	**INSPECT GPS ANTENNA CIRCUIT FOR SHORT TO GROUND** • Verify that the GPS antenna and connectivity master unit connectors are disconnected. • Inspect for continuity between GPS antenna terminal A (wiring harness-side) and body ground. • Is there continuity?	Yes	Refer to the wiring diagram and confirm if there is a common connector between connectivity master unit terminal 5A and GPS antenna terminal A. **If there is a common connector:** • Inspect the common connector and terminals for corrosion, damage, or disconnection and the common wiring harnesses for short to ground to determine the malfunctioning location. • Repair or replace the malfunctioning location. **If there is no common connector:** • Repair or replace the wiring harness which is shorted to ground. Go to Step 7.
		No	Go to the next step.
4	**INSPECT GPS ANTENNA CIRCUIT FOR SHORT TO POWER SUPPLY** • Verify that the GPS antenna and connectivity master unit connectors are disconnected. • Reconnect the negative battery cable. (See **NEGATIVE BATTERY CABLE DISCONNECTION/CONNECTION [SKYACTIV-G 2.0, SKYACTIV-G 2.5]**.)	Yes	Go to the next step.
		No	Refer to the wiring diagram and confirm if there is a common connector between connectivity master unit terminal 5A and GPS antenna terminal A. **If there is a common connector:** • Perform an inspection of the common connector and terminals for corrosion, damage or loss, and the common wiring harness for a short to power supply to determine

	• Switch the ignition ON (engine off or on). • Measure the voltage at GPS antenna terminal A (wiring harness-side). • Is the voltage **0 V**?		the malfunctioning location. • Repair or replace the malfunctioning location. **If there is no common connector:** • Repair or replace the wiring harness which is shorted to the power supply. Go to Step 7.
5	**INSPECT GPS ANTENNA CIRCUIT FOR OPEN CIRCUIT** • Verify that the GPS antenna and connectivity master unit connectors are disconnected. • Inspect the wiring harness for continuity between connectivity master unit terminal 5A (wiring harness-side) and GPS antenna terminal A (wiring harness-side). • Is there continuity?	Yes	Go to the next step.
		No	Refer to the wiring diagram and confirm if there is a common connector between connectivity master unit terminal 5A and GPS antenna terminal A. **If there is a common connector:** • Inspect the common connector and terminals for corrosion, damage, or disconnection and the common wiring harnesses for an open circuit to determine the malfunctioning location. • Repair or replace the malfunctioning location. **If there is no common connector:** • Repair or replace the wiring harness which has an open circuit. Go to Step 6.
6	**PERFORM DTC INSPECTION AND VERIFY IF GPS ANTENNA IS MALFUNCTIONING PART** • Always reconnect all disconnected connectors. • Reconnect the negative battery cable. (See **NEGATIVE BATTERY CABLE DISCONNECTION/CONNECTION [SKYACTIV-G 2.0, SKYACTIV-G 2.5]**.) • Clear the DTC for the connectivity master unit using	Yes	Replace the GPS antenna, then go to the next step. (See **GLOBAL POSITIONING SYSTEM (GPS) ANTENNA REMOVAL/INSTALLATION**.)
		No	Go to Step 7.

	the M-MDS. (See **CLEARING DTC [CONNECTIVITY MASTER UNIT]**.) • Switch the ignition ON (engine off or on) and wait for **12 s or more**. • Perform the DTC inspection for the connectivity master unit using the M-MDS. (See **DTC INSPECTION [CONNECTIVITY MASTER UNIT]**.) • Is the same DTC displayed?		
7	**VERIFY THAT REPAIRS HAVE BEEN COMPLETED** • Always reconnect all disconnected connectors. • Reconnect the negative battery cable. (See **NEGATIVE BATTERY CABLE DISCONNECTION/CONNECTION [SKYACTIV-G 2.0, SKYACTIV-G 2.5]**.) • Clear the DTC for the connectivity master unit using the M-MDS. (See **CLEARING DTC [CONNECTIVITY MASTER UNIT]**.) • Switch the ignition ON (engine off or on) and wait for **12 s or more**. • Perform the DTC inspection for the connectivity master unit using the M-MDS. (See **DTC INSPECTION [CONNECTIVITY MASTER UNIT]**.) • Is the same DTC displayed?	Yes	Repeat the inspection from Step 1. • If the malfunction recurs, replace the connectivity master unit. (See **CONNECTIVITY MASTER UNIT (CMU) REMOVAL/INSTALLATION**.) Go to the next step.
		No	Go to the next step.
8	**VERIFY IF OTHER DTCs DISPLAYED** • Are any other DTCs displayed?	Yes	Repair the malfunctioning location according to the applicable DTC troubleshooting.

			(See **DTC TABLE [CONNECTIVITY MASTER UNIT]**.)
		No	DTC troubleshooting completed.

2014 - Mazda3 - Body and Accessories

DTC B11BA:11 [CONNECTIVITY MASTER UNIT]

Description	Steering switch circuit malfunction
Detection condition	• The connectivity master unit detected a short to ground in the steering switch circuit for **5 s or more** with the ignition switched ON (engine off or on).
Fail-safe function	Not applicable
Possible cause	• Clock spring connector or terminal malfunction • Connectivity master unit connector or terminal malfunction • Clock spring malfunction • Short to ground in wiring harness between connectivity master unit terminal 1M and clock spring (instrument panel harness-side) terminal 1G • Steering switch malfunction • Connectivity master unit malfunction

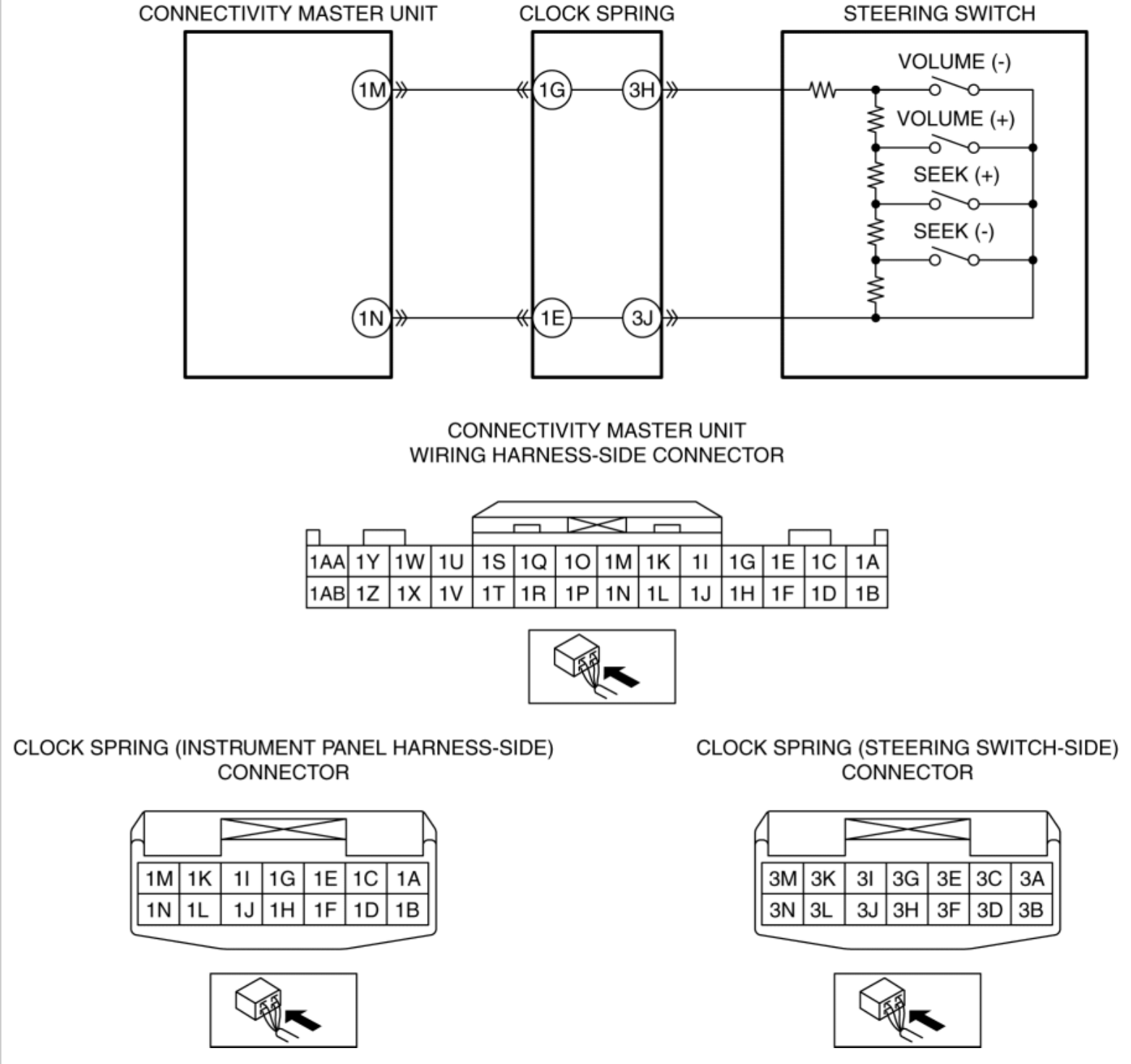

Diagnostic Procedure

Step	Inspection		Action
1	**INSPECT CLOCK SPRING CONNECTOR CONDITION** • Switch the ignition off. • Disconnect the negative battery cable. (See **NEGATIVE BATTERY CABLE DISCONNECTION/CONNECTION [SKYACTIV-G 2.0, SKYACTIV-G 2.5]**.)	Yes	Go to the next step.
		No	Repair or replace the connector, then go to Step 6.

	• Disconnect the clock spring connector. • Inspect the connector engagement and connection condition and inspect the terminals for damage, deformation, corrosion, or disconnection. • Is the connector normal?		
2	**INSPECT CONNECTIVITY MASTER UNIT CONNECTOR CONDITION** • Disconnect the connectivity master unit connector. • Inspect the connector engagement and connection condition and inspect the terminals for damage, deformation, corrosion, or disconnection. • Is the connector normal?	Yes	Go to the next step.
		No	Repair or replace the connector, then go to Step 6.
3	**INSPECT CLOCK SPRING** • Inspect the clock spring. (See **CLOCK SPRING INSPECTION [STANDARD DEPLOYMENT CONTROL SYSTEM]**.) (See **CLOCK SPRING INSPECTION [TWO-STEP DEPLOYMENT CONTROL SYSTEM]**.) • Is the clock spring normal?	Yes	Go to the next step.
		No	Replace the clock spring, then go to Step 6. (See **CLOCK SPRING REMOVAL/INSTALLATION [STANDARD DEPLOYMENT CONTROL SYSTEM]**.) (See **CLOCK SPRING REMOVAL/INSTALLATION [TWO-STEP DEPLOYMENT CONTROL SYSTEM]**.)
4	**INSPECT STEERING SWITCH CIRCUIT FOR SHORT TO GROUND** • Verify that the clock spring and connectivity master unit connectors are disconnected. • Inspect for continuity between clock spring (instrument panel harness-side) terminal 1G (wiring harness-side) and body ground. • Is there continuity?	Yes	Refer to the wiring diagram and verify if there is a common connector between connectivity master unit terminal 1M and clock spring (instrument panel harness-side) terminal 1G. **If there is a common connector:** • Inspect the common connector and terminals for corrosion, damage, or disconnection and the common wiring harnesses for short to ground to determine the malfunctioning location. • Repair or replace the malfunctioning location. **If there is no common connector:** • Repair or replace the wiring harness which is shorted to ground. Go to Step 6.
		No	Go to the next step.
5	**INSPECT STEERING SWITCH** • Inspect the steering switch. (See **STEERING SWITCH INSPECTION**.) • Is the steering switch normal?	Yes	Go to the next step.
		No	Replace the steering switch, then go to the next step. (See **STEERING SWITCH REMOVAL/INSTALLATION**.)

6	**VERIFY THAT REPAIRS HAVE BEEN COMPLETED** • Always reconnect all disconnected connectors. • Reconnect the negative battery cable. (See **NEGATIVE BATTERY CABLE DISCONNECTION/CONNECTION [SKYACTIV-G 2.0, SKYACTIV-G 2.5]**.) • Clear the DTC for the connectivity master unit using the M-MDS. (See **CLEARING DTC [CONNECTIVITY MASTER UNIT]**.) • Switch the ignition ON (engine off or on) and wait for **12 s or more**. • Perform the DTC inspection for the connectivity master unit using the M-MDS. (See **DTC INSPECTION [CONNECTIVITY MASTER UNIT]**.) • Is the same DTC displayed?	Yes	Repeat the inspection from Step 1. • If the malfunction recurs, replace the connectivity master unit. (See **CONNECTIVITY MASTER UNIT (CMU) REMOVAL/INSTALLATION**.) Go to the next step.
		No	Go to the next step.
7	**VERIFY IF OTHER DTCs DISPLAYED** • Are any other DTCs displayed?	Yes	Repair the malfunctioning location according to the applicable DTC troubleshooting. (See **DTC TABLE [CONNECTIVITY MASTER UNIT]**.)
		No	DTC troubleshooting completed.

2014 - Mazda3 - Body and Accessories

DTC B11BA:15 [CONNECTIVITY MASTER UNIT]

Description	Steering switch circuit malfunction
Detection condition	• The connectivity master unit detected an open circuit in the steering switch circuit or a short to the power supply for **5 s or more** with the ignition switched ON (engine off or on).
Fail-safe function	Not applicable

Possible cause	• Clock spring connector or terminal malfunction
	• Connectivity master unit connector or terminal malfunction
	• Clock spring malfunction
	• Short to power supply in wiring harness between connectivity master unit terminal 1M and clock spring (instrument panel harness-side) terminal 1G
	• Open circuit in wiring harness between the following terminals:
	  ▪ Connectivity master unit terminal 1M and clock spring (instrument panel harness-side) terminal 1G
	  ▪ Connectivity master unit terminal 1N and clock spring (instrument panel harness-side) terminal 1E
	• Steering switch malfunction
	• Connectivity master unit malfunction

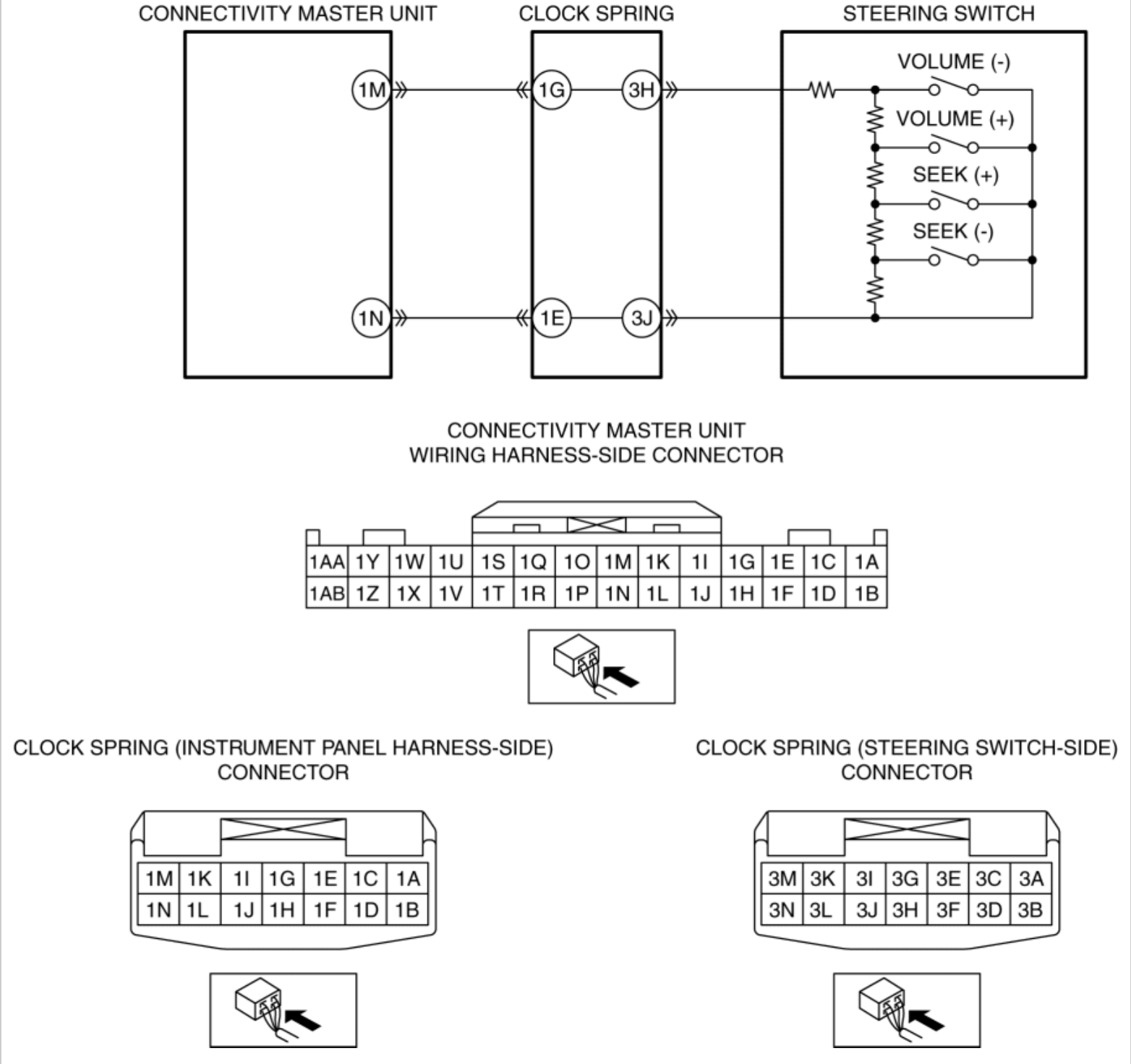

Diagnostic Procedure

Step	Inspection		Action
1	**INSPECT CLOCK SPRING CONNECTOR CONDITION** • Switch the ignition off. • Disconnect the negative battery cable. (See **NEGATIVE BATTERY CABLE DISCONNECTION/CONNECTION [SKYACTIV-G 2.0, SKYACTIV-G**	Yes	Go to the next step.
		No	Repair or replace the connector, then go to Step 7.

	2.5].) • Disconnect the clock spring connector. • Inspect the connector engagement and connection condition and inspect the terminals for damage, deformation, corrosion, or disconnection. • Is the connector normal?		
2	**INSPECT CONNECTIVITY MASTER UNIT CONNECTOR CONDITION** • Disconnect the connectivity master unit connector. • Inspect the connector engagement and connection condition and inspect the terminals for damage, deformation, corrosion, or disconnection. • Is the connector normal?	Yes	Go to the next step.
		No	Repair or replace the connector, then go to Step 7.
3	**INSPECT CLOCK SPRING** • Inspect the clock spring. (See **CLOCK SPRING INSPECTION [STANDARD DEPLOYMENT CONTROL SYSTEM]**.) (See **CLOCK SPRING INSPECTION [TWO-STEP DEPLOYMENT CONTROL SYSTEM]**.) • Is the clock spring normal?	Yes	Go to the next step.
		No	Replace the clock spring, then go to Step 7. (See **CLOCK SPRING REMOVAL/INSTALLATION [STANDARD DEPLOYMENT CONTROL SYSTEM]**.) (See **CLOCK SPRING REMOVAL/INSTALLATION [TWO-STEP DEPLOYMENT CONTROL SYSTEM]**.)
4	**INSPECT STEERING SWITCH CIRCUIT FOR SHORT TO POWER SUPPLY** • Verify that the clock spring and connectivity master unit connectors are disconnected. • Reconnect the negative battery cable. (See **NEGATIVE BATTERY CABLE DISCONNECTION/CONNECTION [SKYACTIV-G 2.0, SKYACTIV-G 2.5]**.) • Switch the ignition ON (engine off or on). • Measure the voltage at clock spring (instrument panel harness-side) terminal 1G (wiring harness-side). • Is the voltage **0 V**?	Yes	Go to the next step.
		No	Refer to the wiring diagram and verify if there is a common connector between connectivity master unit terminal 1M and clock spring (instrument panel harness-side) terminal 1G. **If there is a common connector:** • Inspect the common connector and terminals for corrosion, damage, or disconnection and the common wiring harnesses for short to power supply to determine the malfunctioning location. • Repair or replace the malfunctioning location. **If there is no common connector:** • Repair or replace the wiring harness which is shorted to the power supply. Go to Step 7.
5	**INSPECT STEERING SWITCH CIRCUIT FOR OPEN CIRCUIT** • Verify that the clock spring and connectivity master unit	Yes	Go to the next step.
		No	Refer to the wiring diagram and verify if there is a common connector between the following terminals.

	connectors are disconnected. • Switch the ignition off. • Disconnect the negative battery cable. (See **NEGATIVE BATTERY CABLE DISCONNECTION/CONNECTION [SKYACTIV-G 2.0, SKYACTIV-G 2.5]**.) • Inspect the wiring harness for continuity between the following terminals (wiring harness-side). ▪ Connectivity master unit terminal 1M and clock spring (instrument panel harness-side) terminal 1G ▪ Connectivity master unit terminal 1N and clock spring (instrument panel harness-side) terminal 1E • Is there continuity?		• Connectivity master unit terminal 1M and clock spring (instrument panel harness-side) terminal 1G • Connectivity master unit terminal 1N and clock spring (instrument panel harness-side) terminal 1E **If there is a common connector:** • Inspect the common connector and terminals for corrosion, damage, or disconnection and the common wiring harnesses for an open circuit to determine the malfunctioning location. • Repair or replace the malfunctioning location. **If there is no common connector:** • Repair or replace the wiring harness which has an open circuit. Go to Step 7.
6	**INSPECT STEERING SWITCH** • Inspect the steering switch. (See **STEERING SWITCH INSPECTION**.) • Is the steering switch normal?	Yes	Go to the next step.
		No	Replace the steering switch, then go to the next step. (See **STEERING SWITCH REMOVAL/INSTALLATION**.)
7	**VERIFY THAT REPAIRS HAVE BEEN COMPLETED** • Always reconnect all disconnected connectors. • Reconnect the negative battery cable. (See **NEGATIVE BATTERY CABLE DISCONNECTION/CONNECTION [SKYACTIV-G 2.0, SKYACTIV-G 2.5]**.) • Clear the DTC for the connectivity master unit using the M-MDS. (See **CLEARING DTC [CONNECTIVITY MASTER UNIT]**.) • Switch the ignition ON (engine off or on) and wait for **12 s or more**. • Perform the DTC inspection for the connectivity master unit using the M-MDS. (See **DTC INSPECTION**	Yes	Repeat the inspection from Step 1. • If the malfunction recurs, replace the connectivity master unit. (See **CONNECTIVITY MASTER UNIT (CMU) REMOVAL/INSTALLATION**.) Go to the next step.
		No	Go to the next step.

	[CONNECTIVITY MASTER UNIT].) • Is the same DTC displayed?		
8	**VERIFY IF OTHER DTCs DISPLAYED** • Are any other DTCs displayed?	Yes	Repair the malfunctioning location according to the applicable DTC troubleshooting. (See **DTC TABLE [CONNECTIVITY MASTER UNIT]**.)
		No	DTC troubleshooting completed.

2014 - Mazda3 - Body and Accessories

DTC B1201:11 [CONNECTIVITY MASTER UNIT]

Description	Steering switch circuit malfunction
Detection condition	• The connectivity master unit detected a short to ground in the steering switch circuit for **5 s or more** with the ignition switched ON (engine off or on).
Fail-safe function	Not applicable
Possible cause	• Clock spring connector or terminal malfunction • Connectivity master unit connector or terminal malfunction • Clock spring malfunction • Short to ground in wiring harness between connectivity master unit terminal 1O and clock spring (instrument panel harness-side) terminal 1B • Steering switch malfunction • Connectivity master unit malfunction

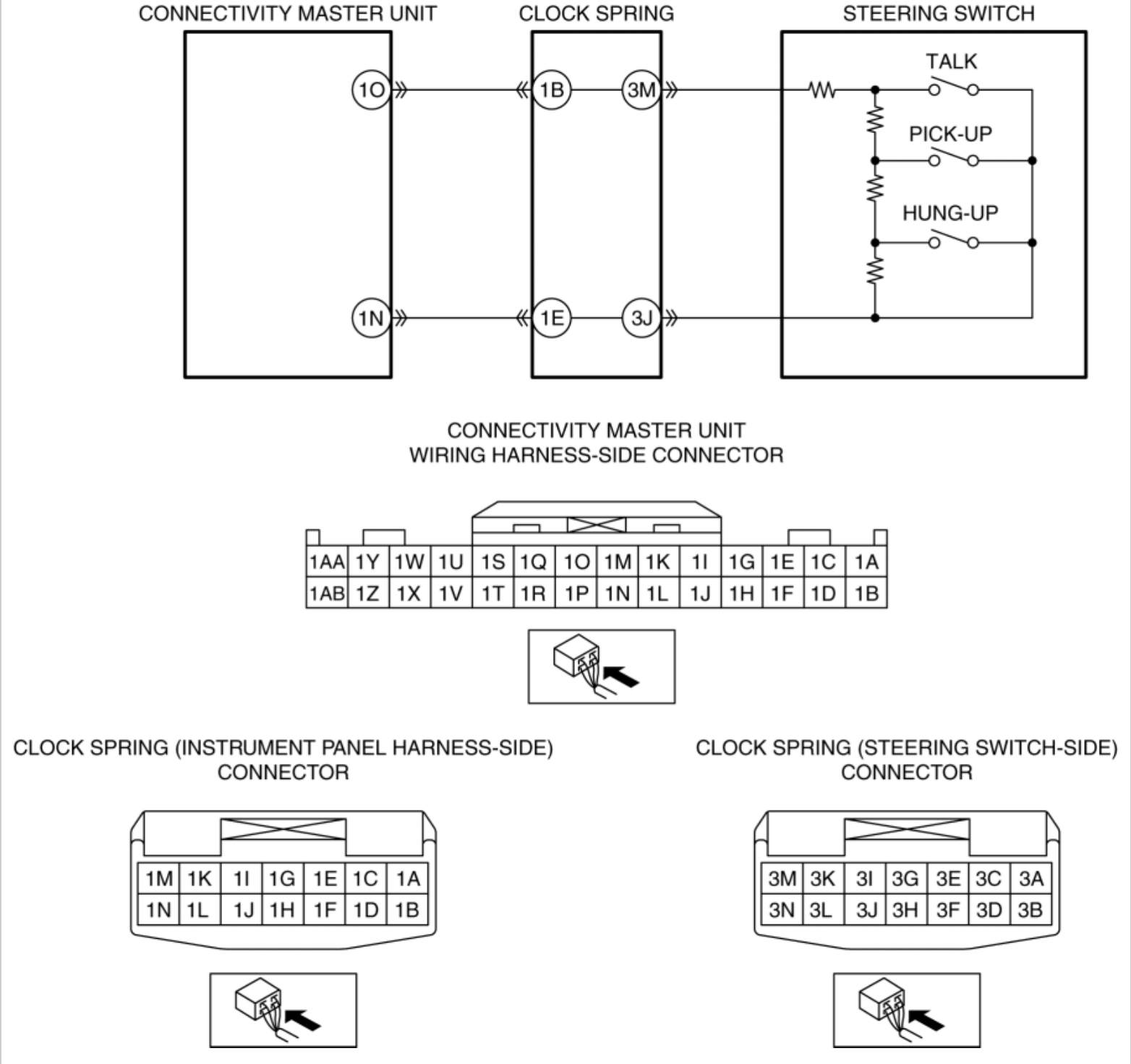

Diagnostic Procedure

Step	Inspection		Action
1	**INSPECT CLOCK SPRING CONNECTOR CONDITION** • Switch the ignition off. • Disconnect the negative battery cable. (See **NEGATIVE BATTERY CABLE DISCONNECTION/CONNECTION [SKYACTIV-G 2.0, SKYACTIV-G 2.5]**.)	Yes	Go to the next step.
		No	Repair or replace the connector, then go to Step 6.

	• Disconnect the clock spring connector. • Inspect the connector engagement and connection condition and inspect the terminals for damage, deformation, corrosion, or disconnection. • Is the connector normal?		
2	**INSPECT CONNECTIVITY MASTER UNIT CONNECTOR CONDITION** • Disconnect the connectivity master unit connector. • Inspect the connector engagement and connection condition and inspect the terminals for damage, deformation, corrosion, or disconnection. • Is the connector normal?	Yes	Go to the next step.
		No	Repair or replace the connector, then go to Step 6.
3	**INSPECT CLOCK SPRING** • Inspect the clock spring. (See **CLOCK SPRING INSPECTION [STANDARD DEPLOYMENT CONTROL SYSTEM]**.) (See **CLOCK SPRING INSPECTION [TWO-STEP DEPLOYMENT CONTROL SYSTEM]**.) • Is the clock spring normal?	Yes	Go to the next step.
		No	Replace the clock spring, then go to Step 6. (See **CLOCK SPRING REMOVAL/INSTALLATION [STANDARD DEPLOYMENT CONTROL SYSTEM]**.) (See **CLOCK SPRING REMOVAL/INSTALLATION [TWO-STEP DEPLOYMENT CONTROL SYSTEM]**.)
4	**INSPECT STEERING SWITCH CIRCUIT FOR SHORT TO GROUND** • Verify that the clock spring and connectivity master unit connectors are disconnected. • Inspect for continuity between clock spring (instrument panel harness-side) terminal 1B (wiring harness-side) and body ground. • Is there continuity?	Yes	Refer to the wiring diagram and verify if there is a common connector between connectivity master unit terminal 1O and clock spring (instrument panel harness-side) terminal 1B. **If there is a common connector:** • Inspect the common connector and terminals for corrosion, damage, or disconnection and the common wiring harnesses for short to ground to determine the malfunctioning location. • Repair or replace the malfunctioning location. **If there is no common connector:** • Repair or replace the wiring harness which is shorted to ground. Go to Step 6.
		No	Go to the next step.
5	**INSPECT STEERING SWITCH** • Inspect the steering switch. (See **STEERING SWITCH INSPECTION**.) • Is the steering switch normal?	Yes	Go to the next step.
		No	Replace the steering switch, then go to the next step. (See **STEERING SWITCH REMOVAL/INSTALLATION**.)

6	**VERIFY THAT REPAIRS HAVE BEEN COMPLETED** • Always reconnect all disconnected connectors. • Reconnect the negative battery cable. (See **NEGATIVE BATTERY CABLE DISCONNECTION/CONNECTION [SKYACTIV-G 2.0, SKYACTIV-G 2.5]**.) • Clear the DTC for the connectivity master unit using the M-MDS. (See **CLEARING DTC [CONNECTIVITY MASTER UNIT]**.) • Switch the ignition ON (engine off or on) and wait for **12 s or more**. • Perform the DTC inspection for the connectivity master unit using the M-MDS. (See **DTC INSPECTION [CONNECTIVITY MASTER UNIT]**.) • Is the same DTC displayed?	Yes	Repeat the inspection from Step 1. • If the malfunction recurs, replace the connectivity master unit. (See **CONNECTIVITY MASTER UNIT (CMU) REMOVAL/INSTALLATION**.) Go to the next step.
		No	Go to the next step.
7	**VERIFY IF OTHER DTCs DISPLAYED** • Are any other DTCs displayed?	Yes	Repair the malfunctioning location according to the applicable DTC troubleshooting. (See **DTC TABLE [CONNECTIVITY MASTER UNIT]**.)
		No	DTC troubleshooting completed.

2014 - Mazda3 - Body and Accessories

DTC B1201:15 [CONNECTIVITY MASTER UNIT]

Description	Steering switch circuit malfunction
Detection condition	• The connectivity master unit detected an open circuit in the steering switch circuit or a short to the power supply for **5 s or more** with the ignition switched ON (engine off or on).
Fail-safe function	Not applicable

Possible cause	• Clock spring connector or terminal malfunction
	• Connectivity master unit connector or terminal malfunction
	• Clock spring malfunction
	• Short to power supply in wiring harness between connectivity master unit terminal 1O and clock spring (instrument panel harness-side) terminal 1B
	• Open circuit in wiring harness between the following terminals:
	  ▪ Connectivity master unit terminal 1O and clock spring (instrument panel harness-side) terminal 1B
	  ▪ Connectivity master unit terminal 1N and clock spring (instrument panel harness-side) terminal 1E
	• Steering switch malfunction
	• Connectivity master unit malfunction

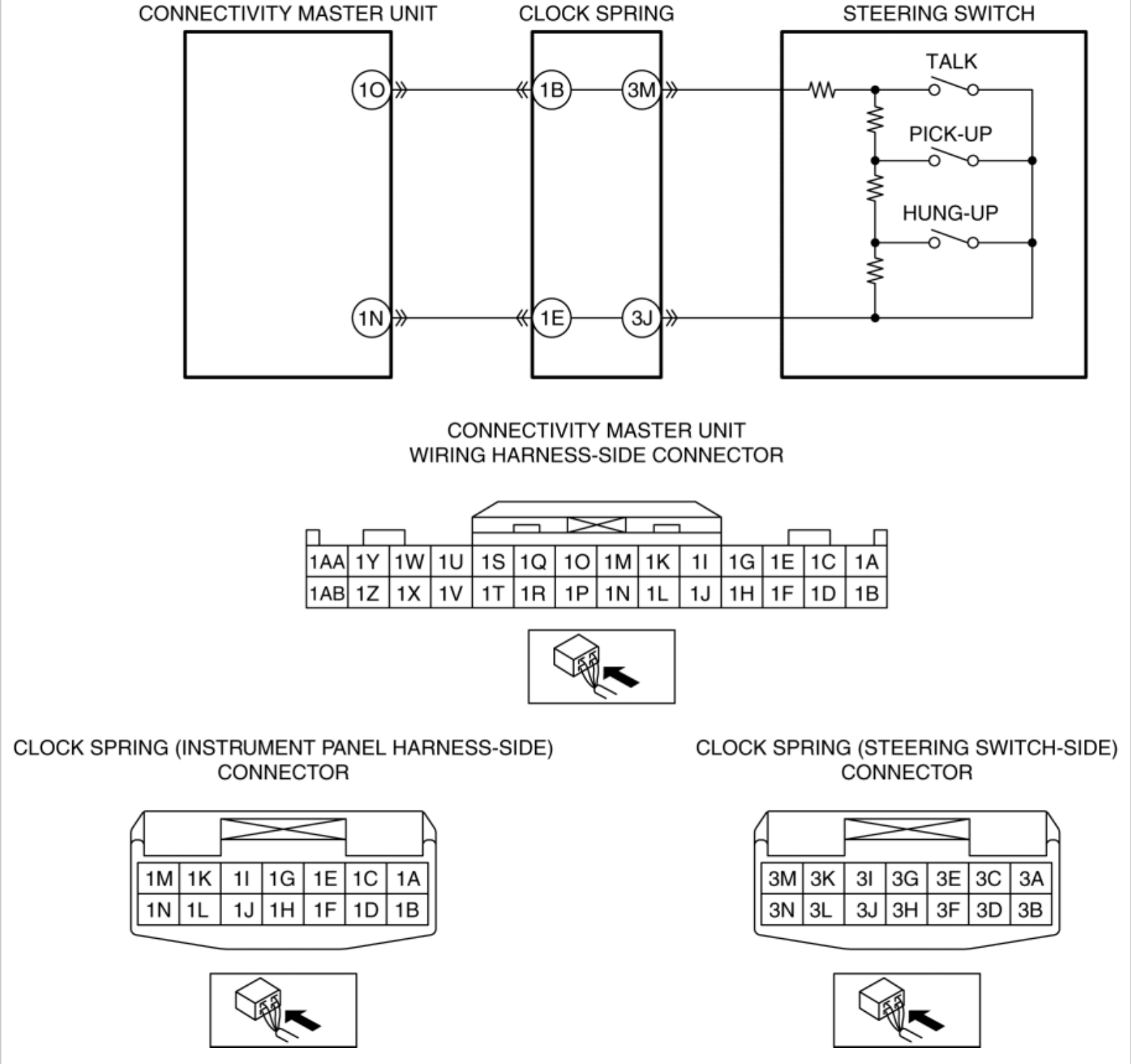

Diagnostic Procedure

Step	Inspection		Action
1	**INSPECT CLOCK SPRING CONNECTOR CONDITION** • Switch the ignition off. • Disconnect the negative battery cable. (See **NEGATIVE BATTERY CABLE DISCONNECTION/CONNECTION [SKYACTIV-G 2.0, SKYACTIV-G**	Yes	Go to the next step.
		No	Repair or replace the connector, then go to Step 7.

	2.5].) • Disconnect the clock spring connector. • Inspect the connector engagement and connection condition and inspect the terminals for damage, deformation, corrosion, or disconnection. • Is the connector normal?		
2	**INSPECT CONNECTIVITY MASTER UNIT CONNECTOR CONDITION** • Disconnect the connectivity master unit connector. • Inspect the connector engagement and connection condition and inspect the terminals for damage, deformation, corrosion, or disconnection. • Is the connector normal?	Yes	Go to the next step.
		No	Repair or replace the connector, then go to Step 7.
3	**INSPECT CLOCK SPRING** • Inspect the clock spring. (See **CLOCK SPRING INSPECTION [STANDARD DEPLOYMENT CONTROL SYSTEM]**.) (See **CLOCK SPRING INSPECTION [TWO-STEP DEPLOYMENT CONTROL SYSTEM]**.) • Is the clock spring normal?	Yes	Go to the next step.
		No	Replace the clock spring, then go to Step 7. (See **CLOCK SPRING REMOVAL/INSTALLATION [STANDARD DEPLOYMENT CONTROL SYSTEM]**.) (See **CLOCK SPRING REMOVAL/INSTALLATION [TWO-STEP DEPLOYMENT CONTROL SYSTEM]**.)
4	**INSPECT STEERING SWITCH CIRCUIT FOR SHORT TO POWER SUPPLY** • Verify that the clock spring and connectivity master unit connectors are disconnected. • Reconnect the negative battery cable. (See **NEGATIVE BATTERY CABLE DISCONNECTION/CONNECTION [SKYACTIV-G 2.0, SKYACTIV-G 2.5]**.) • Switch the ignition ON (engine off or on). • Measure the voltage at clock spring (instrument panel harness-side) terminal 1B (wiring harness-side). • Is the voltage **0 V**?	Yes	Go to the next step.
		No	Refer to the wiring diagram and verify if there is a common connector between connectivity master unit terminal 1O and clock spring (instrument panel harness-side) terminal 1B. **If there is a common connector:** • Inspect the common connector and terminals for corrosion, damage, or disconnection and the common wiring harnesses for short to power supply to determine the malfunctioning location. • Repair or replace the malfunctioning location. **If there is no common connector:** • Repair or replace the wiring harness which is shorted to the power supply. Go to Step 7.
5	**INSPECT STEERING SWITCH CIRCUIT FOR OPEN CIRCUIT** • Verify that the clock spring and connectivity master unit	Yes	Go to the next step.
		No	Refer to the wiring diagram and verify if there is a common connector between the following terminals.

	connectors are disconnected. • Switch the ignition off. • Disconnect the negative battery cable. (See **NEGATIVE BATTERY CABLE DISCONNECTION/CONNECTION [SKYACTIV-G 2.0, SKYACTIV-G 2.5]**.) • Inspect the wiring harness for continuity between the following terminals (wiring harness-side). ▪ Connectivity master unit terminal 1O and clock spring (instrument panel harness-side) terminal 1B ▪ Connectivity master unit terminal 1N and clock spring (instrument panel harness-side) terminal 1E • Is there continuity?		• Connectivity master unit terminal 1O and clock spring (instrument panel harness-side) terminal 1B • Connectivity master unit terminal 1N and clock spring (instrument panel harness-side) terminal 1E **If there is a common connector:** • Inspect the common connector and terminals for corrosion, damage, or disconnection and the common wiring harnesses for an open circuit to determine the malfunctioning location. • Repair or replace the malfunctioning location. **If there is no common connector:** • Repair or replace the wiring harness which has an open circuit. Go to Step 7.
6	**INSPECT STEERING SWITCH** • Inspect the steering switch. (See **STEERING SWITCH INSPECTION**.) • Is the steering switch normal?	Yes	Go to the next step.
		No	Replace the steering switch, then go to the next step. (See **STEERING SWITCH REMOVAL/INSTALLATION**.)
7	**VERIFY THAT REPAIRS HAVE BEEN COMPLETED** • Always reconnect all disconnected connectors. • Reconnect the negative battery cable. (See **NEGATIVE BATTERY CABLE DISCONNECTION/CONNECTION [SKYACTIV-G 2.0, SKYACTIV-G 2.5]**.) • Clear the DTC for the connectivity master unit using the M-MDS. (See **CLEARING DTC [CONNECTIVITY MASTER UNIT]**.) • Switch the ignition ON (engine off or on) and wait for **12 s or more**. • Perform the DTC inspection for the connectivity master unit using the M-MDS. (See **DTC INSPECTION**	Yes	Repeat the inspection from Step 1. • If the malfunction recurs, replace the connectivity master unit. (See **CONNECTIVITY MASTER UNIT (CMU) REMOVAL/INSTALLATION**.) Go to the next step.
		No	Go to the next step.

	[CONNECTIVITY MASTER UNIT].) • Is the same DTC displayed?		
8	**VERIFY IF OTHER DTCs DISPLAYED** • Are any other DTCs displayed?	Yes	Repair the malfunctioning location according to the applicable DTC troubleshooting. (See **DTC TABLE [CONNECTIVITY MASTER UNIT]**.)
		No	DTC troubleshooting completed.

2014 - Mazda3 - Body and Accessories

DTC B1238:01 [CONNECTIVITY MASTER UNIT]

Without Bose®

Description	Speaker circuit malfunction
Detection condition	• The connectivity master unit detected a short to ground or short to power supply in the speaker circuit with the ignition switched ON (engine off or on).
Fail-safe function	Not applicable
Possible cause	• Tuner and amp unit connector or terminal malfunction • Front door speaker (LH) connector or terminal malfunction • Tweeter (LH) connector or terminal malfunction • Short to ground in wiring harness between the following terminals: ▪ Tuner and amp unit terminal 2A and front door speaker (LH) terminal C ▪ Tuner and amp unit terminal 2C and front door speaker (LH) terminal B ▪ Tuner and amp unit terminal 2A and tweeter (LH) terminal B ▪ Tuner and amp unit terminal 2C and tweeter (LH) terminal A • Short to power supply in wiring harness between the following terminals: ▪ Tuner and amp unit terminal 2A and front door speaker (LH) terminal C ▪ Tuner and amp unit terminal 2C and front door speaker (LH) terminal B ▪ Tuner and amp unit terminal 2A and tweeter (LH) terminal B ▪ Tuner and amp unit terminal 2C and tweeter (LH) terminal A • Front door speaker (LH) malfunction • Tweeter (LH) malfunction • Front door speaker (RH) connector or terminal malfunction • Tweeter (RH) connector or terminal malfunction • Short to ground in wiring harness between the following terminals: ▪ Tuner and amp unit terminal 2D and front door speaker (RH) terminal C ▪ Tuner and amp unit terminal 2F and front door speaker (RH) terminal B ▪ Tuner and amp unit terminal 2D and tweeter (RH) terminal B ▪ Tuner and amp unit terminal 2F and tweeter (RH) terminal A • Short to power supply in wiring harness between the following terminals: ▪ Tuner and amp unit terminal 2D and front door speaker (RH) terminal C ▪ Tuner and amp unit terminal 2F and front door speaker (RH) terminal B ▪ Tuner and amp unit terminal 2D and tweeter (RH) terminal B

Tuner and amp unit terminal 2F and tweeter (RH) terminal A

- Front door speaker (RH) malfunction
- Tweeter (RH) malfunction
- Rear door speaker (LH) connector or terminal malfunction
- Short to ground in wiring harness between the following terminals:
  - Tuner and amp unit terminal 2S and rear door speaker (LH) terminal C
  - Tuner and amp unit terminal 2U and rear door speaker (LH) terminal B
- Short to power supply in wiring harness between the following terminals:
  - Tuner and amp unit terminal 2S and rear door speaker (LH) terminal C
  - Tuner and amp unit terminal 2U and rear door speaker (LH) terminal B
- Rear door speaker (LH) malfunction
- Rear door speaker (RH) connector or terminal malfunction
- Short to ground in wiring harness between the following terminals:
  - Tuner and amp unit terminal 2V and rear door speaker (RH) terminal C
  - Tuner and amp unit terminal 2X and rear door speaker (RH) terminal B
- Short to power supply in wiring harness between the following terminals:
  - Tuner and amp unit terminal 2V and rear door speaker (RH) terminal C
  - Tuner and amp unit terminal 2X and rear door speaker (RH) terminal B
- Rear door speaker (RH) malfunction
- Tuner and amp unit malfunction

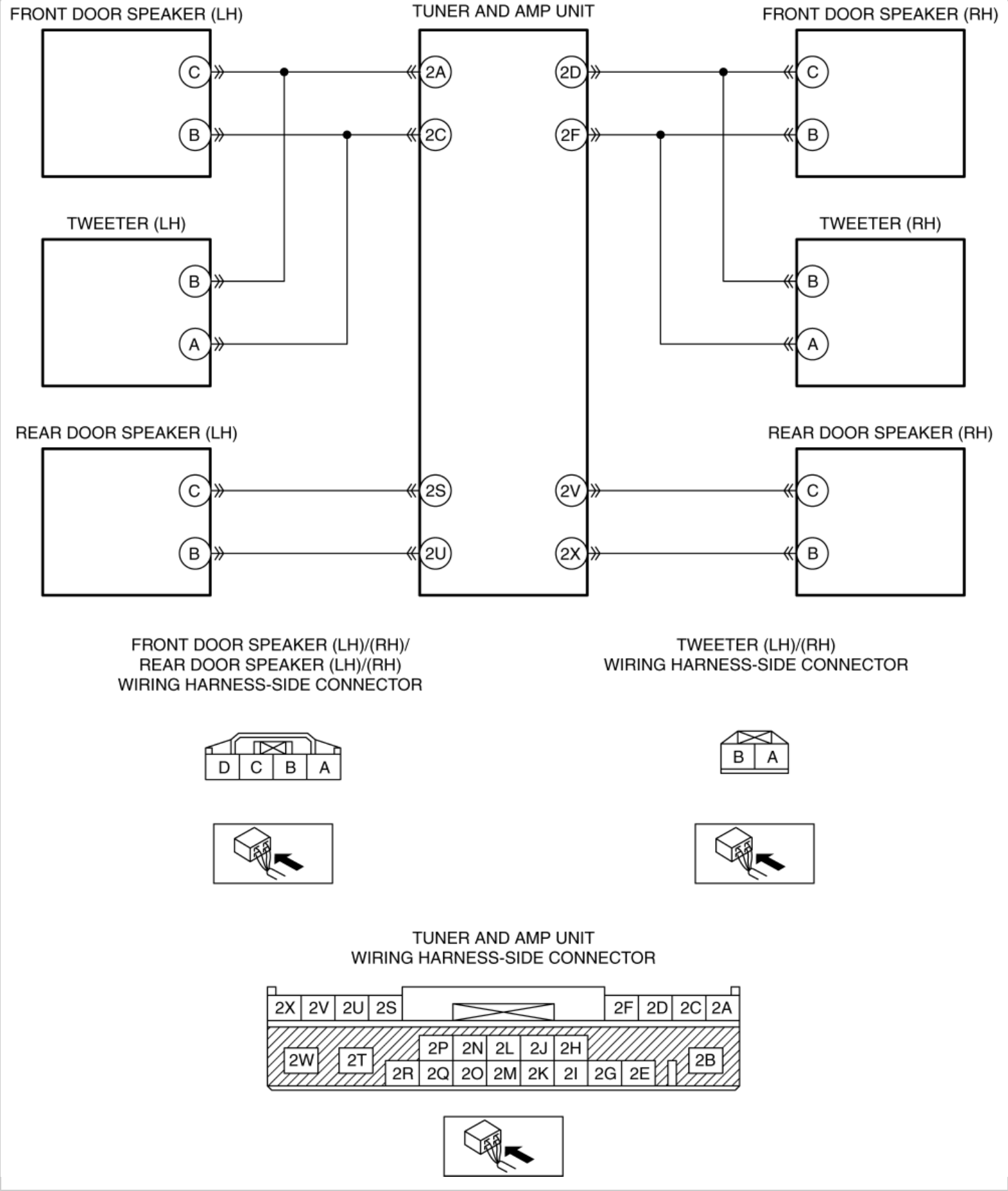

Diagnostic Procedure

Step	Inspection		Action
1	**DETERMINE MALFUNCTIONING SPEAKER** • Perform diagnostic assist code “94” speaker inspection. (See **DIAGNOSTIC ASSIST FUNCTION [CONNECTIVITY MASTER UNIT]**.) • Is audio produced from each speaker in order?	Yes	Go to Step 27.
		No	No audio produced from front door speaker (LH) and tweeter (LH) • Go to the next step. No audio produced from front door speaker (RH) and tweeter (RH) • Go to Step 9. No sound produced from rear door speaker (LH) • Go to Step 16. No audio produced from rear door speaker (RH) • Go to Step 21. No audio produced from all speakers. • Go to Step 26.
2	**INSPECT TUNER AND AMP UNIT CONNECTOR CONDITION** • Switch the ignition off. • Disconnect the negative battery cable. (See **NEGATIVE BATTERY CABLE DISCONNECTION/CONNECTION [SKYACTIV-G 2.0, SKYACTIV-G 2.5]**.) • Disconnect the tuner and amp unit connector. • Inspect the connector engagement and connection condition and inspect the terminals for damage, deformation, corrosion, or disconnection. • Is the connector normal?	Yes	Go to the next step.
		No	Repair or replace the connector, then go to Step 27.
3	**INSPECT FRONT DOOR SPEAKER (LH) CONNECTOR CONDITION** • Disconnect the front door speaker (LH) connector. • Inspect the connector engagement and connection condition and inspect the terminals for damage, deformation, corrosion, or disconnection. • Is the connector normal?	Yes	Go to the next step.
		No	Repair or replace the connector, then go to Step 27.
4	**INSPECT TWEETER (LH) CONNECTOR CONDITION** • Disconnect the tweeter (LH) connector. • Inspect the connector engagement and connection condition and inspect the terminals for damage, deformation, corrosion, or disconnection. • Is the connector normal?	Yes	Go to the next step.
		No	Repair or replace the connector, then go to Step 27.
5	**INSPECT FRONT DOOR SPEAKER (LH) CIRCUIT FOR SHORT TO GROUND** • Verify that the following connectors are disconnected. ▪ Tuner and amp unit ▪ Front door speaker	Yes	Refer to the wiring diagram and verify if there is a common connector between the following terminals. • Tuner and amp unit terminal 2A and front door speaker (LH) terminal C • Tuner and amp unit terminal 2C and front door speaker (LH) terminal B

	(LH) ▪ Tweeter (LH) • Inspect for continuity between the following terminals (wiring harness-side) and body ground. ▪ Front door speaker (LH) terminal C ▪ Front door speaker (LH) terminal B • Is there continuity?		• Tuner and amp unit terminal 2A and tweeter (LH) terminal B • Tuner and amp unit terminal 2C and tweeter (LH) terminal A **If there is a common connector:** • Inspect the common connector and terminals for corrosion, damage, or disconnection and the common wiring harnesses for short to ground to determine the malfunctioning location. • Repair or replace the malfunctioning location. **If there is no common connector:** • Repair or replace the wiring harness which is shorted to ground. Go to Step 27.
		No	Go to the next step.
6	**INSPECT FRONT DOOR SPEAKER (LH) CIRCUIT FOR SHORT TO POWER SUPPLY** • Verify that the following connectors are disconnected. ▪ Tuner and amp unit ▪ Front door speaker (LH) ▪ Tweeter (LH) • Reconnect the negative battery cable. (See **NEGATIVE BATTERY CABLE DISCONNECTION/CONNECTION [SKYACTIV-G 2.0, SKYACTIV-G 2.5]**.) • Switch the ignition ON (engine off or on). • Measure the voltage at the following terminals (wiring harness-side). ▪ Front door speaker (LH) terminal C ▪ Front door speaker (LH) terminal B • Is the voltage **0 V**?	Yes	Go to the next step.
		No	Refer to the wiring diagram and verify if there is a common connector between the following terminals. • Tuner and amp unit terminal 2A and front door speaker (LH) terminal C • Tuner and amp unit terminal 2C and front door speaker (LH) terminal B • Tuner and amp unit terminal 2A and tweeter (LH) terminal B • Tuner and amp unit terminal 2C and tweeter (LH) terminal A **If there is a common connector:** • Inspect the common connector and terminals for corrosion, damage, or disconnection and the common wiring harnesses for short to power supply to determine the malfunctioning location. • Repair or replace the malfunctioning location. **If there is no common connector:** • Repair or replace the wiring harness which is shorted to the power supply. Go to Step 27.
7	**INSPECT FRONT DOOR SPEAKER (LH)** • Inspect the front door speaker (LH). (See **FRONT DOOR SPEAKER INSPECTION**.) • Is the front door speaker (LH) normal?	Yes	Go to the next step.
		No	Replace the front door speaker (LH), then go to Step 27. (See **FRONT DOOR SPEAKER REMOVAL/INSTALLATION**.)
8	**INSPECT TWEETER (LH)** • Inspect the tweeter (LH) (See **TWEETER INSPECTION**.) • Is the tweeter (LH) normal?	Yes	Go to Step 27.
		No	Replace the tweeter (LH), then go to Step 27. (See **TWEETER REMOVAL/INSTALLATION**.)
9	**INSPECT TUNER AND AMP UNIT CONNECTOR CONDITION**	Yes	Go to the next step.

	• Switch the ignition off. • Disconnect the negative battery cable. (See **NEGATIVE BATTERY CABLE DISCONNECTION/CONNECTION [SKYACTIV-G 2.0, SKYACTIV-G 2.5]**.) • Disconnect the tuner and amp unit connector. • Inspect the connector engagement and connection condition and inspect the terminals for damage, deformation, corrosion, or disconnection. • Is the connector normal?	No	Repair or replace the connector, then go to Step 27.
10	**INSPECT FRONT DOOR SPEAKER (RH) CONNECTOR CONDITION** • Disconnect the front door speaker (RH) connector. • Inspect the connector engagement and connection condition and inspect the terminals for damage, deformation, corrosion, or disconnection. • Is the connector normal?	Yes	Go to the next step.
		No	Repair or replace the connector, then go to Step 27.
11	**INSPECT TWEETER (RH) CONNECTOR CONDITION** • Disconnect the tweeter (RH) connector. • Inspect the connector engagement and connection condition and inspect the terminals for damage, deformation, corrosion, or disconnection. • Is the connector normal?	Yes	Go to the next step.
		No	Repair or replace the connector, then go to Step 27.

12	**INSPECT FRONT DOOR SPEAKER (RH) CIRCUIT FOR SHORT TO GROUND**
	• Verify that the following connectors are disconnected.
	  ▪ Tuner and amp unit
	  ▪ Front door speaker (RH)
	  ▪ Tweeter (RH)
	• Inspect for continuity between the following terminals (wiring harness-side) and body ground.
	  ▪ Front door speaker (RH) terminal C
	  ▪ Front door speaker (RH) terminal B
	• Is there continuity?
		Yes	Refer to the wiring diagram and verify if there is a common connector between the following terminals.
			• Tuner and amp unit terminal 2D and front door speaker (RH) terminal C
			• Tuner and amp unit terminal 2F and front door speaker (RH) terminal B
			• Tuner and amp unit terminal 2D and tweeter (RH) terminal B
			• Tuner and amp unit terminal 2F and tweeter (RH) terminal A
			If there is a common connector:
			• Inspect the common connector and terminals for corrosion, damage, or disconnection and the common wiring harnesses for short to ground to determine the malfunctioning location.
			• Repair or replace the malfunctioning location.
			If there is no common connector:
			• Repair or replace the wiring harness which is shorted to ground.
			Go to Step 27.

		No	Go to the next step.
13	**INSPECT FRONT DOOR SPEAKER (RH) CIRCUIT FOR SHORT TO POWER SUPPLY**	Yes	Go to the next step.

	• Verify that the following connectors are disconnected.
	  ▪ Tuner and amp unit
	  ▪ Front door speaker (RH)
	  ▪ Tweeter (RH)
	• Reconnect the negative battery cable.
	(See **NEGATIVE BATTERY CABLE DISCONNECTION/CONNECTION [SKYACTIV-G 2.0, SKYACTIV-G 2.5]**.)
	• Switch the ignition ON (engine off or on).
	• Measure the voltage at the following terminals (wiring harness-side).
	  ▪ Front door speaker (RH) terminal C
	  ▪ Front door speaker (RH) terminal B
	• Is the voltage **0 V**?
		No	Refer to the wiring diagram and verify if there is a common connector between the following terminals.
			• Tuner and amp unit terminal 2D and front door speaker (RH) terminal C
			• Tuner and amp unit terminal 2F and front door speaker (RH) terminal B
			• Tuner and amp unit terminal 2D and tweeter (RH) terminal B
			• Tuner and amp unit terminal 2F and tweeter (RH) terminal A
			If there is a common connector:
			• Inspect the common connector and terminals for corrosion, damage, or disconnection and the common wiring harnesses for short to power supply to determine the malfunctioning location.
			• Repair or replace the malfunctioning location.
			If there is no common connector:
			• Repair or replace the wiring harness which is shorted to the power supply.
			Go to Step 27.

14	**INSPECT FRONT DOOR SPEAKER (RH)** • Inspect the front door speaker (RH). (See **FRONT DOOR SPEAKER INSPECTION**.) • Is the front door speaker (RH) normal?	Yes	Go to the next step.
		No	Replace the front door speaker (RH), then go to Step 27. (See **FRONT DOOR SPEAKER REMOVAL/INSTALLATION**.)
15	**INSPECT TWEETER (RH)** • Inspect the tweeter (RH). (See **TWEETER INSPECTION**.) • Is the tweeter (RH) normal?	Yes	Go to Step 27.
		No	Replace the tweeter (RH), then go to Step 27. (See **TWEETER REMOVAL/INSTALLATION**.)
16	**INSPECT TUNER AND AMP UNIT CONNECTOR CONDITION** • Switch the ignition off. • Disconnect the negative battery cable. (See **NEGATIVE BATTERY CABLE DISCONNECTION/CONNECTION [SKYACTIV-G 2.0, SKYACTIV-G 2.5]**.) • Disconnect the tuner and amp unit connector. • Inspect the connector engagement and connection condition and inspect the terminals for damage, deformation, corrosion, or disconnection. • Is the connector normal?	Yes	Go to the next step.
		No	Repair or replace the connector, then go to Step 27.
17	**INSPECT REAR DOOR SPEAKER (LH) CONNECTOR CONDITION** • Disconnect the rear door speaker (LH) connector. • Inspect the connector engagement and connection condition and inspect the terminals for damage, deformation, corrosion, or disconnection.	Yes	Go to the next step.
		No	Repair or replace the connector, then go to Step 27.

	• Is the connector normal?		
18	**INSPECT REAR DOOR SPEAKER (LH) CIRCUIT FOR SHORT TO GROUND** • Verify that the rear door speaker (LH) and tuner and amp unit connectors are disconnected. • Inspect for continuity between the following terminals (wiring harness-side) and body ground. ▪ Rear door speaker (LH) terminal C ▪ Rear door speaker (LH) terminal B • Is there continuity?	Yes	Refer to the wiring diagram and verify if there is a common connector between the following terminals. • Tuner and amp unit terminal 2S and rear door speaker (LH) terminal C • Tuner and amp unit terminal 2U and rear door speaker (LH) terminal B **If there is a common connector:** • Inspect the common connector and terminals for corrosion, damage, or disconnection and the common wiring harnesses for short to ground to determine the malfunctioning location. • Repair or replace the malfunctioning location. **If there is no common connector:** • Repair or replace the wiring harness which is shorted to ground. Go to Step 27.
		No	Go to the next step.
19	**INSPECT REAR DOOR SPEAKER (LH) CIRCUIT FOR SHORT TO POWER SUPPLY** • Verify that the rear door speaker (LH) and tuner and amp unit connectors are disconnected. • Reconnect the negative battery cable. (See **NEGATIVE BATTERY CABLE DISCONNECTION/CONNECTION [SKYACTIV-G 2.0, SKYACTIV-G 2.5]**.) • Switch the ignition ON (engine off or on). • Measure the voltage at the following terminals (wiring harness-side). ▪ Rear door speaker (LH) terminal C ▪ Rear door speaker (LH) terminal B • Is the voltage **0 V**?	Yes	Go to the next step.
		No	Refer to the wiring diagram and verify if there is a common connector between the following terminals. • Tuner and amp unit terminal 2S and rear door speaker (LH) terminal C • Tuner and amp unit terminal 2U and rear door speaker (LH) terminal B **If there is a common connector:** • Inspect the common connector and terminals for corrosion, damage, or disconnection and the common wiring harnesses for short to power supply to determine the malfunctioning location. • Repair or replace the malfunctioning location. **If there is no common connector:** • Repair or replace the wiring harness which is shorted to the power supply. Go to Step 27.
20	**INSPECT REAR DOOR SPEAKER (LH)** • Inspect the rear door speaker (LH). (See **REAR DOOR SPEAKER INSPECTION**.) • Is the rear door speaker (LH) normal?	Yes	Go to Step 27.
		No	Replace the rear door speaker (LH), then go to Step 27. (See **REAR DOOR SPEAKER REMOVAL/INSTALLATION**.)
21	**INSPECT TUNER AND AMP UNIT CONNECTOR CONDITION** • Switch the ignition off. • Disconnect the negative battery cable. (See **NEGATIVE BATTERY CABLE DISCONNECTION/CONNECTION [SKYACTIV-G 2.0, SKYACTIV-G 2.5]**.) • Disconnect the tuner and amp unit	Yes	Go to the next step.
		No	Repair or replace the connector, then go to Step 27.

	connector. • Inspect the connector engagement and connection condition and inspect the terminals for damage, deformation, corrosion, or disconnection. • Is the connector normal?		
22	**INSPECT REAR DOOR SPEAKER (RH) CONNECTOR CONDITION** • Disconnect the rear door speaker (RH) connector. • Inspect the connector engagement and connection condition and inspect the terminals for damage, deformation, corrosion, or disconnection. • Is the connector normal?	Yes	Go to the next step.
		No	Repair or replace the connector, then go to Step 27.
23	**INSPECT REAR DOOR SPEAKER (RH) CIRCUIT FOR SHORT TO GROUND** • Verify that the rear door speaker (RH) and tuner and amp unit connectors are disconnected. • Inspect for continuity between the following terminals (wiring harness-side) and body ground. ▪ Rear door speaker (RH) terminal C ▪ Rear door speaker (RH) terminal B • Is there continuity?	Yes	Refer to the wiring diagram and verify if there is a common connector between the following terminals. • Tuner and amp unit terminal 2V and rear door speaker (RH) terminal C • Tuner and amp unit terminal 2X and rear door speaker (RH) terminal B **If there is a common connector:** • Inspect the common connector and terminals for corrosion, damage, or disconnection and the common wiring harnesses for short to ground to determine the malfunctioning location. • Repair or replace the malfunctioning location. **If there is no common connector:** • Repair or replace the wiring harness which is shorted to ground. Go to Step 27.
		No	Go to the next step.
24	**INSPECT REAR DOOR SPEAKER (RH) CIRCUIT FOR SHORT TO POWER SUPPLY** • Verify that the rear door speaker (RH) and tuner and amp unit connectors are disconnected. • Reconnect the negative battery cable. (See **NEGATIVE BATTERY CABLE DISCONNECTION/CONNECTION [SKYACTIV-G 2.0, SKYACTIV-G 2.5]**.) • Switch the ignition ON (engine off or on). • Measure the voltage at the following terminals (wiring harness-side). ▪ Rear door speaker (RH) terminal C ▪ Rear door speaker (RH) terminal B • Is the voltage **0 V**?	Yes	Go to the next step.
		No	Refer to the wiring diagram and verify if there is a common connector between the following terminals. • Tuner and amp unit terminal 2V and rear door speaker (RH) terminal C • Tuner and amp unit terminal 2X and rear door speaker (RH) terminal B **If there is a common connector:** • Inspect the common connector and terminals for corrosion, damage, or disconnection and the common wiring harnesses for short to power supply to determine the malfunctioning location. • Repair or replace the malfunctioning location. **If there is no common connector:** • Repair or replace the wiring harness which is shorted to the power supply. Go to Step 27.

25	**INSPECT REAR DOOR SPEAKER (RH)** • Inspect the rear door speaker (RH). (See **REAR DOOR SPEAKER INSPECTION**.) • Is the rear door speaker (RH) normal?	Yes	Go to Step 27.
		No	Replace the rear door speaker (RH), then go to Step 27. (See **REAR DOOR SPEAKER REMOVAL/INSTALLATION**.)
26	**INSPECT TUNER AND AMP UNIT CONNECTOR CONDITION** • Switch the ignition off. • Disconnect the negative battery cable. (See **NEGATIVE BATTERY CABLE DISCONNECTION/CONNECTION [SKYACTIV-G 2.0, SKYACTIV-G 2.5]**.) • Disconnect the tuner and amp unit connector. • Inspect the connector engagement and connection condition and inspect the terminals for damage, deformation, corrosion, or disconnection. • Is the connector normal?	Yes	Go to the next step.
		No	Repair or replace the connector, then go to the next step.
27	**VERIFY THAT REPAIRS HAVE BEEN COMPLETED** • Always reconnect all disconnected connectors. • Reconnect the negative battery cable. (See **NEGATIVE BATTERY CABLE DISCONNECTION/CONNECTION [SKYACTIV-G 2.0, SKYACTIV-G 2.5]**.) • Clear the DTC for the connectivity master unit using the M-MDS. (See **CLEARING DTC [CONNECTIVITY MASTER UNIT]**.) • Switch the ignition ON (engine off or on) and wait for **7 s or more**. • Perform the DTC inspection for the connectivity master unit using the M-MDS. (See **DTC INSPECTION [CONNECTIVITY MASTER UNIT]**.) • Is the same DTC displayed?	Yes	Repeat the inspection from Step 1. • If the malfunction recurs, replace the tuner and amp unit. (See **TUNER AND AMP UNIT (TAU) REMOVAL/INSTALLATION**.) Go to the next step.
		No	Go to the next step.
28	**VERIFY IF OTHER DTCs DISPLAYED** • Are any other DTCs displayed?	Yes	Repair the malfunctioning location according to the applicable DTC troubleshooting. (See **DTC TABLE [CONNECTIVITY MASTER UNIT]**.)
		No	DTC troubleshooting completed.

With Bose®

Description	Audio amplifier circuit malfunction
Detection	• The connectivity master unit detected a short to ground or short to power supply in the audio amplifier

condition	circuit with the ignition switched ON (engine off or on).
Fail-safe function	Not applicable
Possible cause	• Audio amplifier connector or terminal malfunction • Tuner and amp unit connector or terminal malfunction • Short to ground in wiring harness between the following terminals: ▪ Tuner and amp unit terminal 2A and audio amplifier terminal 1O ▪ Tuner and amp unit terminal 2C and audio amplifier terminal 1P ▪ Tuner and amp unit terminal 2D and audio amplifier terminal 1M ▪ Tuner and amp unit terminal 2F and audio amplifier terminal 1N ▪ Tuner and amp unit terminal 2J and audio amplifier terminal 2F ▪ Tuner and amp unit terminal 2S and audio amplifier terminal 1K ▪ Tuner and amp unit terminal 2T and audio amplifier terminal 2H ▪ Tuner and amp unit terminal 2U and audio amplifier terminal 1L ▪ Tuner and amp unit terminal 2V and audio amplifier terminal 1I ▪ Tuner and amp unit terminal 2X and audio amplifier terminal 1J • Short to power supply in wiring harness between the following terminals: ▪ Tuner and amp unit terminal 2A and audio amplifier terminal 1O ▪ Tuner and amp unit terminal 2C and audio amplifier terminal 1P ▪ Tuner and amp unit terminal 2D and audio amplifier terminal 1M ▪ Tuner and amp unit terminal 2F and audio amplifier terminal 1N ▪ Tuner and amp unit terminal 2J and audio amplifier terminal 2F ▪ Tuner and amp unit terminal 2S and audio amplifier terminal 1K ▪ Tuner and amp unit terminal 2T and audio amplifier terminal 2H ▪ Tuner and amp unit terminal 2U and audio amplifier terminal 1L ▪ Tuner and amp unit terminal 2V and audio amplifier terminal 1I ▪ Tuner and amp unit terminal 2X and audio amplifier terminal 1J • Audio amplifier malfunction • Tuner and amp unit malfunction

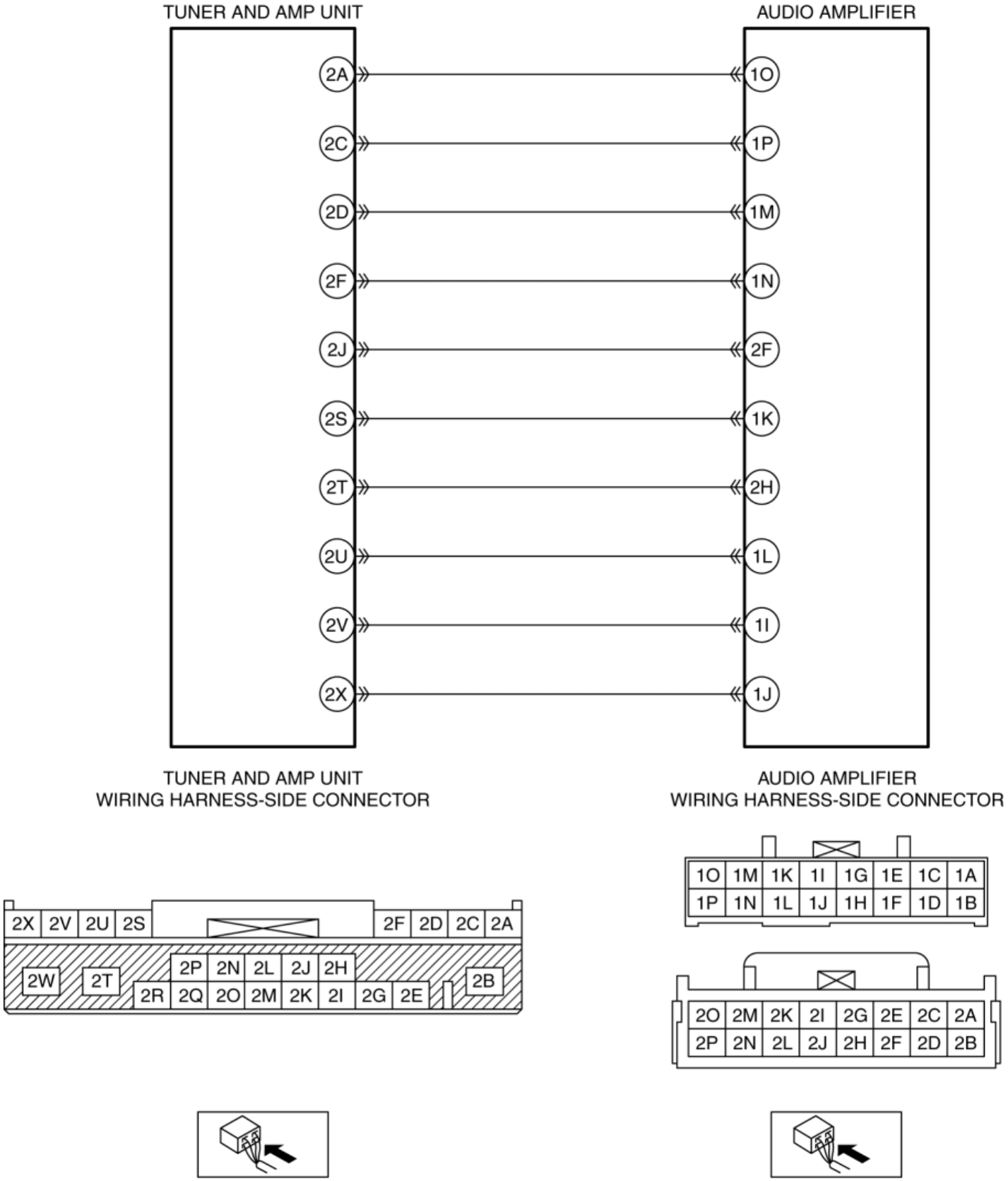

Diagnostic Procedure

Step	Inspection		Action
1	**INSPECT AUDIO AMPLIFIER CONNECTOR CONDITION** • Switch the ignition off.	Yes	Go to the next step.

	• Disconnect the negative battery cable. (See **NEGATIVE BATTERY CABLE DISCONNECTION/CONNECTION [SKYACTIV-G 2.0, SKYACTIV-G 2.5]**.) • Disconnect the audio amplifier connector. • Inspect the connector engagement and connection condition and inspect the terminals for damage, deformation, corrosion, or disconnection. • Is the connector normal?	No	Repair or replace the connector, then go to Step 6.
2	**INSPECT TUNER AND AMP UNIT CONNECTOR CONDITION** • Disconnect the tuner and amp unit connector. • Inspect the connector engagement and connection condition and inspect the terminals for damage, deformation, corrosion, or disconnection. • Is the connector normal?	Yes	Go to the next step.
		No	Repair or replace the connector, then go to Step 6.
3	**INSPECT AUDIO AMPLIFIER CIRCUIT FOR SHORT TO GROUND** • Verify that the audio amplifier and tuner and amp unit connectors are disconnected. • Inspect for continuity between the following terminals (wiring harness-side) and body ground. ▪ Audio amplifier terminal 1O ▪ Audio amplifier terminal 1P ▪ Audio amplifier terminal 1M ▪ Audio amplifier terminal 1N ▪ Audio amplifier terminal 2F ▪ Audio amplifier terminal 1K ▪ Audio amplifier terminal 2H ▪ Audio amplifier terminal 1L ▪ Audio amplifier terminal 1I ▪ Audio amplifier terminal 1J • Is there continuity?	Yes	Refer to the wiring diagram and verify if there is a common connector between the following terminals. • Tuner and amp unit terminal 2A and audio amplifier terminal 1O • Tuner and amp unit terminal 2C and audio amplifier terminal 1P • Tuner and amp unit terminal 2D and audio amplifier terminal 1M • Tuner and amp unit terminal 2F and audio amplifier terminal 1N • Tuner and amp unit terminal 2J and audio amplifier terminal 2F • Tuner and amp unit terminal 2S and audio amplifier terminal 1K • Tuner and amp unit terminal 2T and audio amplifier terminal 2H • Tuner and amp unit terminal 2U and audio amplifier terminal 1L • Tuner and amp unit terminal 2V and audio amplifier terminal 1I • Tuner and amp unit terminal 2X and audio amplifier terminal 1J **If there is a common connector:** • Inspect the common connector and terminals for corrosion, damage, or disconnection and the common wiring harnesses for short to ground to determine the malfunctioning location. • Repair or replace the malfunctioning location. **If there is no common connector:** • Repair or replace the wiring harness which is shorted to ground. Go to Step 6.

		No	Go to the next step.
4	**INSPECT AUDIO AMPLIFIER CIRCUIT FOR SHORT TO POWER SUPPLY** • Verify that the audio amplifier and tuner and amp unit connectors are disconnected. • Reconnect the negative battery cable. (See **NEGATIVE BATTERY CABLE DISCONNECTION/CONNECTION [SKYACTIV-G 2.0, SKYACTIV-G 2.5]**.) • Switch the ignition ON (engine off or on). • Measure the voltage at the following terminals (wiring harness-side). ▪ Audio amplifier terminal 1O ▪ Audio amplifier terminal 1P ▪ Audio amplifier terminal 1M ▪ Audio amplifier terminal 1N ▪ Audio amplifier terminal 2F ▪ Audio amplifier terminal 1K ▪ Audio amplifier terminal 2H ▪ Audio amplifier terminal 1L ▪ Audio amplifier terminal 1I ▪ Audio amplifier terminal 1J • Is the voltage **0 V**?	Yes	Go to the next step.
		No	Refer to the wiring diagram and verify if there is a common connector between the following terminals. • Tuner and amp unit terminal 2A and audio amplifier terminal 1O • Tuner and amp unit terminal 2C and audio amplifier terminal 1P • Tuner and amp unit terminal 2D and audio amplifier terminal 1M • Tuner and amp unit terminal 2F and audio amplifier terminal 1N • Tuner and amp unit terminal 2J and audio amplifier terminal 2F • Tuner and amp unit terminal 2S and audio amplifier terminal 1K • Tuner and amp unit terminal 2T and audio amplifier terminal 2H • Tuner and amp unit terminal 2U and audio amplifier terminal 1L • Tuner and amp unit terminal 2V and audio amplifier terminal 1I • Tuner and amp unit terminal 2X and audio amplifier terminal 1J **If there is a common connector:** • Inspect the common connector and terminals for corrosion, damage, or disconnection and the common wiring harnesses for short to power supply to determine the malfunctioning location. • Repair or replace the malfunctioning location. **If there is no common connector:** • Repair or replace the wiring harness which is shorted to the power supply. Go to Step 6.
5	**PERFORM DTC INSPECTION AND VERIFY IF MALFUNCTIONING PART IS AUDIO AMPLIFIER** • Always reconnect all disconnected connectors. • Reconnect the negative battery cable. (See **NEGATIVE BATTERY CABLE DISCONNECTION/CONNECTION [SKYACTIV-G 2.0, SKYACTIV-G 2.5]**.) • Clear the DTC for the connectivity master unit using the M-MDS. (See **CLEARING DTC [CONNECTIVITY MASTER UNIT]**.) • Switch the ignition ON (engine off or on) and wait for **7 s or more**. • Perform the DTC inspection for the connectivity master unit using the M-	Yes	Replace the audio amplifier, then go to the next step. (See **AUDIO AMPLIFIER REMOVAL/INSTALLATION**.)
		No	Go to Step 7.

	MDS. (See **DTC INSPECTION [CONNECTIVITY MASTER UNIT]**.) • Is the same DTC displayed?		
6	**VERIFY THAT REPAIRS HAVE BEEN COMPLETED** • Always reconnect all disconnected connectors. • Reconnect the negative battery cable. (See **NEGATIVE BATTERY CABLE DISCONNECTION/CONNECTION [SKYACTIV-G 2.0, SKYACTIV-G 2.5]**.) • Clear the DTC for the connectivity master unit using the M-MDS. (See **CLEARING DTC [CONNECTIVITY MASTER UNIT]**.) • Switch the ignition ON (engine off or on) and wait for **7 s or more**. • Perform the DTC inspection for the connectivity master unit using the M-MDS. (See **DTC INSPECTION [CONNECTIVITY MASTER UNIT]**.) • Is the same DTC displayed?	Yes	Repeat the inspection from Step 1. • If the malfunction recurs, replace the tuner and amp unit. (See **TUNER AND AMP UNIT (TAU) REMOVAL/INSTALLATION**.) Go to the next step.
		No	Go to the next step.
7	**VERIFY IF OTHER DTCs DISPLAYED** • Are any other DTCs displayed?	Yes	Repair the malfunctioning location according to the applicable DTC troubleshooting. (See **DTC TABLE [CONNECTIVITY MASTER UNIT]**.)
		No	DTC troubleshooting completed.

2014 - Mazda3 - Body and Accessories

DTC B1238:16 [CONNECTIVITY MASTER UNIT]

Description	Tuner and amp unit low power supply voltage input
Detection condition	• Connectivity master unit detects power supply circuit voltage for tuner and amp unit of **less than 10 V** for **10 s or more** with the ignition switched ON (engine off or on).
Fail-safe function	Not applicable

Possible cause	• DTCs are stored in the PCM.
	• Battery malfunction
	• Generator malfunction
	• Tuner and amp unit connector or terminal malfunction
	• Tuner and amp unit power supply circuit malfunction
	  ▪ Short to ground in wiring harness between MAIN 200 A fuse and tuner and amp unit terminal 2B
	  ▪ AUDIO1 15 A fuse malfunction
	  ▪ CABIN+B 50 A fuse malfunction
	  ▪ MAIN 200 A fuse malfunction
	  ▪ Open circuit in wiring harness between battery positive terminal and tuner and amp unit terminal 2B
	• Tuner and amp unit malfunction

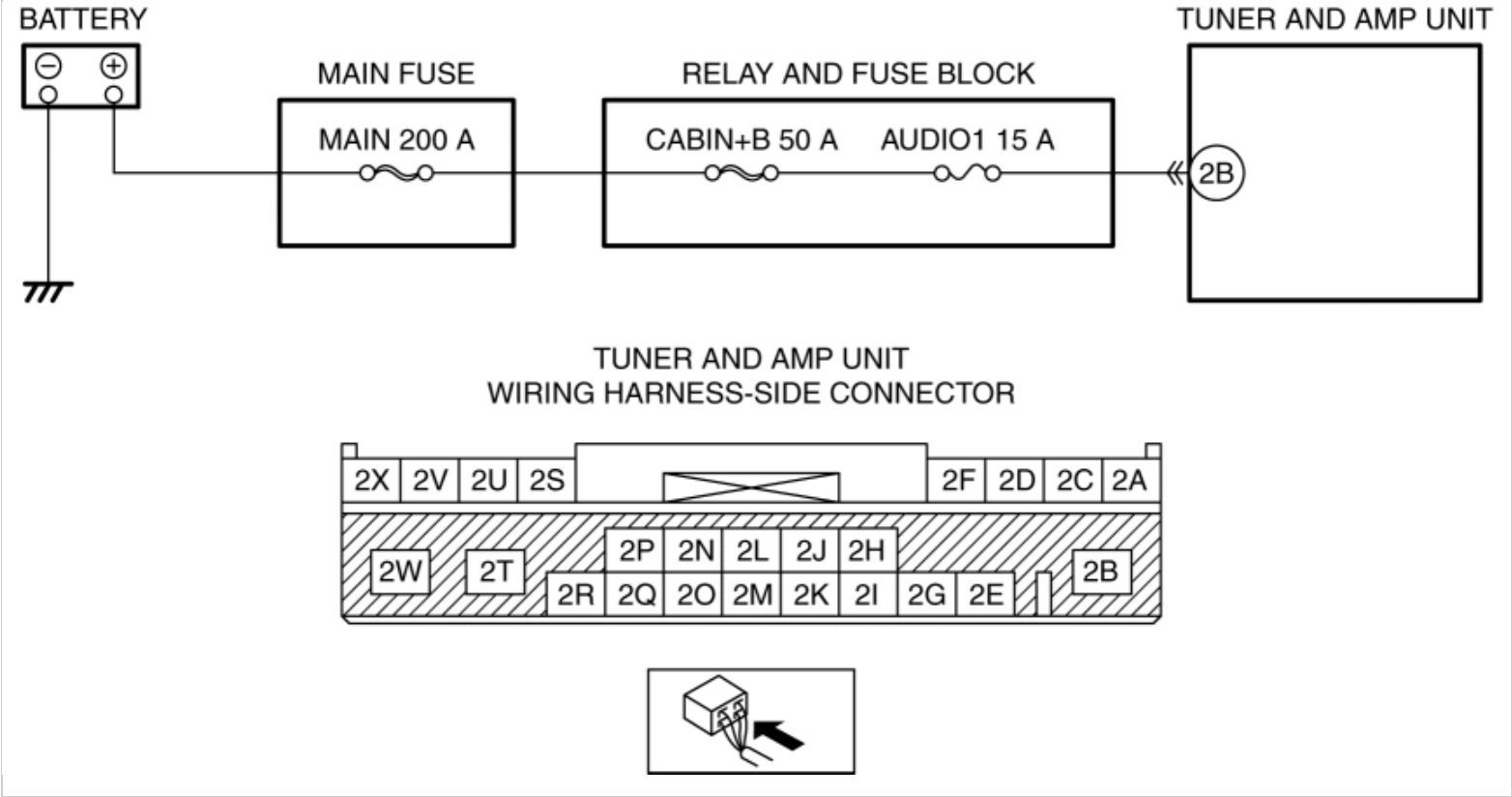

Diagnostic Procedure

Step	Inspection		Action
1	**VERIFY PCM DTCs** • Perform the DTC inspection for the PCM using the M-MDS. (See **ON-BOARD DIAGNOSTIC TEST [SKYACTIV-G 2.0, SKYACTIV-G 2.5]**.) • Is a DTC displayed?	Yes	Repair the malfunctioning location according to the applicable DTC troubleshooting. (See **DTC TABLE [SKYACTIV-G 2.0, SKYACTIV-G 2.5]**.)
		No	Go to the next step.
2	**INSPECT BATTERY** • Inspect the battery. (See **BATTERY INSPECTION [SKYACTIV-G 2.0, SKYACTIV-G 2.5]**.) • Is the battery normal?	Yes	Go to the next step.
		No	Recharge or replace the battery, then go to Step 6. (See **BATTERY RECHARGING [SKYACTIV-G 2.0, SKYACTIV-G 2.5]**.) (See **BATTERY REMOVAL/INSTALLATION [SKYACTIV-G 2.0, SKYACTIV-G 2.5]**.)
3	**INSPECT GENERATOR** • Inspect the generator. (See **GENERATOR INSPECTION [SKYACTIV-G 2.0, SKYACTIV-G 2.5 (WITHOUT i-ELOOP)]**.) (See **GENERATOR INSPECTION [SKYACTIV-G 2.0, SKYACTIV-G**	Yes	Go to the next step.
		No	Replace the generator, then go to Step 6. (See **GENERATOR REMOVAL/INSTALLATION [SKYACTIV-G 2.0, SKYACTIV-G 2.5 (WITHOUT i-ELOOP)]**.) (See **GENERATOR REMOVAL/INSTALLATION [SKYACTIV-G 2.0, SKYACTIV-G 2.5 (WITH i-ELOOP)]**.)

	2.5 (WITH i-ELOOP)].) • Is the generator normal?		
4	**INSPECT TUNER AND AMP UNIT CONNECTOR CONDITION** • Switch the ignition off. • Disconnect the negative battery cable. (See **NEGATIVE BATTERY CABLE DISCONNECTION/CONNECTION [SKYACTIV-G 2.0, SKYACTIV-G 2.5]**.) • Disconnect the tuner and amp unit connector. • Inspect the connector engagement and connection condition and inspect the terminals for damage, deformation, corrosion, or disconnection. • Is the connector normal?	Yes	Go to the next step.
		No	Repair or replace the connector, then go to Step 6.
5	**VERIFY TUNER AND AMP UNIT POWER SUPPLY VOLTAGE** • Verify that the tuner and amp unit connector is disconnected. • Reconnect the negative battery cable. (See **NEGATIVE BATTERY CABLE DISCONNECTION/CONNECTION [SKYACTIV-G 2.0, SKYACTIV-G 2.5]**.) • Measure the voltage at tuner and amp unit terminal 2B (wiring harness-side). • Is the voltage **10 V or more**?	Yes	Go to the next step.
		No	Inspect the AUDIO1 15 A fuse, CABIN+B 50A fuse and MAIN 200 A fuse. • If the fuse is blown: ▪ Refer to the wiring diagram and verify if there is a common connector between MAIN 200 A fuse and tuner and amp unit terminal 2B. **If there is a common connector:** • Inspect the common connector and terminals for corrosion, damage, or disconnection and the common wiring harnesses for short to ground to determine the malfunctioning location. • Repair or

replace the malfunctioning location.

If there is no common connector:

- Repair or replace the wiring harness which is shorted to ground.
- Replace the fuse.

- If the fuse is damaged:
  - Replace the fuse.
- If the fuse is normal:
  - Refer to the wiring diagram and verify if there is a common connector between battery positive terminal and the tuner and amp unit terminal 2B.

If there is a common connector:

- Inspect the common connector and terminals for corrosion, damage, or disconnection and the common wiring harnesses for an open circuit to determine the malfunctioning location.
- Repair or replace the malfunctioning location.

If there is no common connector:

- Repair or replace the wiring harness which has an open circuit.

			Go to the next step.
6	**VERIFY THAT REPAIRS HAVE BEEN COMPLETED** • Always reconnect all disconnected connectors. • Reconnect the negative battery cable. (See **NEGATIVE BATTERY CABLE DISCONNECTION/CONNECTION [SKYACTIV-G 2.0, SKYACTIV-G 2.5]**.) • Clear the DTC for the connectivity master unit using the M-MDS. (See **CLEARING DTC [CONNECTIVITY MASTER UNIT]**.) • Switch the ignition ON (engine off or on) and wait for **17 s or more**. • Perform the DTC inspection for the connectivity master unit using the M-MDS. (See **DTC INSPECTION [CONNECTIVITY MASTER UNIT]**.) • Is the same DTC displayed?	Yes	Repeat the inspection from Step 1. • If the malfunction recurs, replace the tuner and amp unit. (See **TUNER AND AMP UNIT (TAU) REMOVAL/INSTALLATION**.) Go to the next step.
		No	Go to the next step.
7	**VERIFY IF OTHER DTCs DISPLAYED** • Are any other DTCs displayed?	Yes	Repair the malfunctioning location according to the applicable DTC troubleshooting. (See **DTC TABLE [CONNECTIVITY MASTER UNIT]**.)
		No	DTC troubleshooting completed.

2014 - Mazda3 - Body and Accessories

DTC B1238:87 [CONNECTIVITY MASTER UNIT]

Description	HD image transfer circuit error
Detection condition	• The connectivity master unit detects a communication error in the HD image transfer circuit for **5 s or more** with the ignition switched ON (engine off or on).
Fail-safe function	Not applicable
Possible cause	• Tuner and amp unit connector or terminal malfunction • Connectivity master unit connector or terminal malfunction • Short to ground in wiring harness between the following terminals: ▪ Connectivity master unit terminal 2O and tuner and amp unit terminal 1W ▪ Connectivity master unit terminal 2P and tuner and amp unit terminal 1X • Short to power supply in wiring harness between the following terminals: ▪ Connectivity master unit terminal 2O and tuner and amp unit terminal 1W ▪ Connectivity master unit terminal 2P and tuner and amp unit terminal 1X • Open circuit in wiring harness between the following terminals: ▪ Connectivity master unit terminal 2O and tuner and amp unit terminal 1W ▪ Connectivity master unit terminal 2P and tuner and amp unit terminal 1X • Tuner and amp unit malfunction • Connectivity master unit malfunction

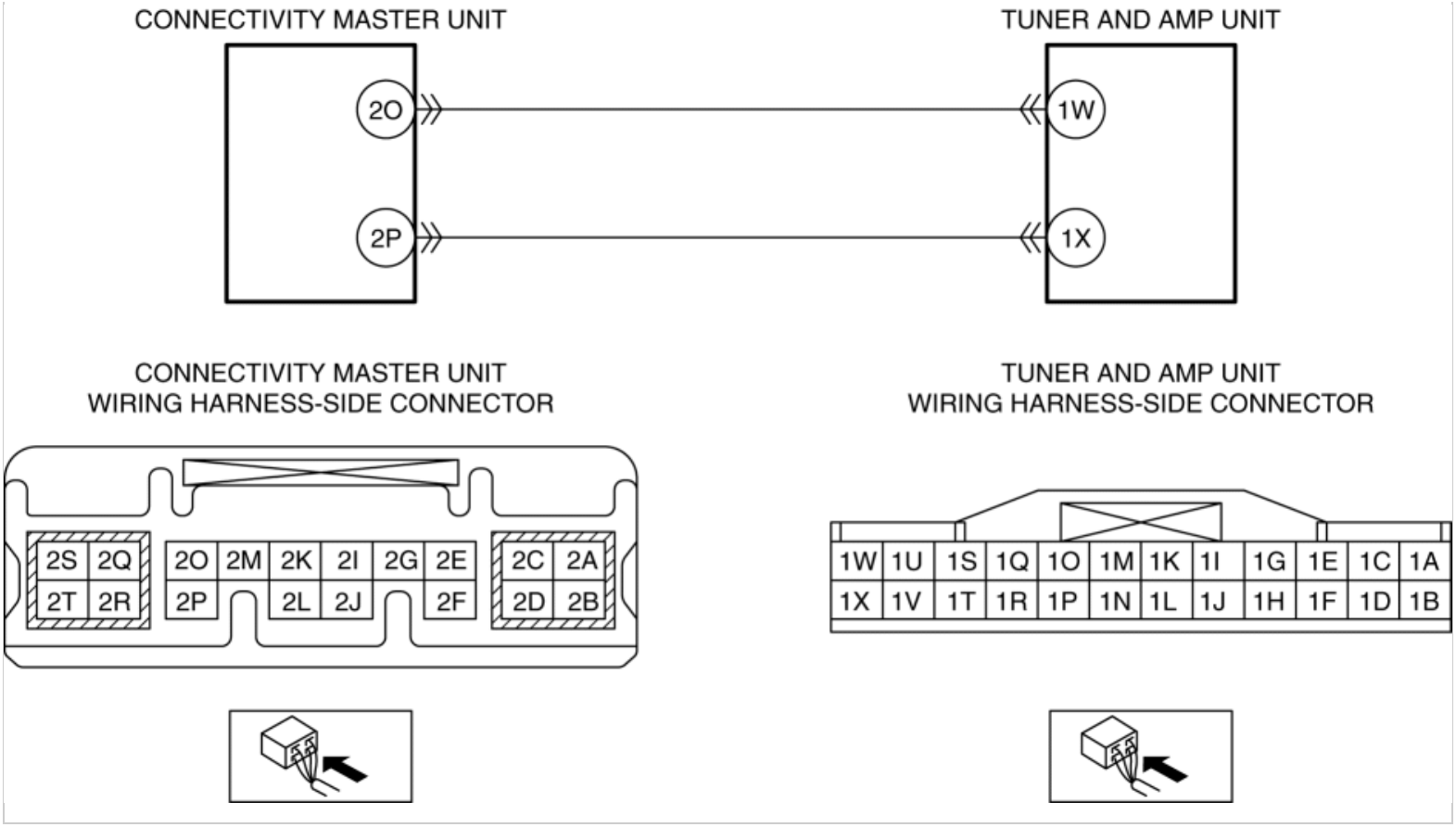

Diagnostic Procedure

Step	Inspection		Action
1	**INSPECT TUNER AND AMP UNIT CONNECTOR CONDITION** • Switch the ignition off. • Disconnect the negative battery cable. (See **NEGATIVE BATTERY CABLE DISCONNECTION/CONNECTION [SKYACTIV-G 2.0, SKYACTIV-G 2.5]**.) • Disconnect the tuner and amp unit connector. • Inspect the connector engagement and connection condition and inspect the terminals for damage, deformation, corrosion, or disconnection. • Is the connector normal?	Yes	Go to the next step.
		No	Repair or replace the connector, then go to Step 7.
2	**INSPECT CONNECTIVITY MASTER UNIT CONNECTOR CONDITION** • Disconnect the connectivity master unit connector. • Inspect the connector engagement and connection condition and inspect the terminals for damage, deformation, corrosion, or	Yes	Go to the next step.
		No	Repair or replace the connector, then go to Step 7.

	disconnection. • Is the connector normal?		
3	**INSPECT HD IMAGE TRANSFER CIRCUIT FOR SHORT TO GROUND** • Verify that the tuner and amp unit and connectivity master unit connectors are disconnected. • Inspect for continuity between the following terminals (wiring harness-side) and body ground. ▪ Tuner and amp unit terminal 1W ▪ Tuner and amp unit terminal 1X • Is there continuity?	Yes	Refer to the wiring diagram and verify if there is a common connector between the following terminals. • Connectivity master unit terminal 2O and tuner and amp unit terminal 1W • Connectivity master unit terminal 2P and tuner and amp unit terminal 1X **If there is a common connector:** • Inspect the common connector and terminals for corrosion, damage, or disconnection and the common wiring harnesses for short to ground to determine the malfunctioning location. • Repair or replace the malfunctioning location. **If there is no common connector:** • Repair or replace the wiring harness which is shorted to ground. Go to Step 7.
		No	Go to the next step.
4	**INSPECT HD IMAGE TRANSFER CIRCUIT FOR SHORT TO POWER SUPPLY** • Verify that the tuner and amp unit and connectivity master unit connectors are disconnected. • Reconnect the negative battery cable. (See **NEGATIVE BATTERY CABLE DISCONNECTION/CONNECTION [SKYACTIV-G 2.0, SKYACTIV-G 2.5]**.) • Switch the ignition ON (engine off or on). • Measure the voltage at the following terminals (wiring harness-side). ▪ Tuner and amp unit terminal 1W ▪ Tuner and amp unit terminal 1X • Is the voltage **0 V**?	Yes	Go to the next step.
		No	Refer to the wiring diagram and verify if there is a common connector between the following terminals. • Connectivity master unit terminal 2O and tuner and amp unit terminal 1W • Connectivity master unit terminal 2P and tuner and amp unit terminal 1X **If there is a common connector:** • Inspect the common connector and terminals for corrosion, damage, or disconnection and the common wiring harnesses for short to power supply to determine the malfunctioning location. • Repair or replace the malfunctioning location. **If there is no common connector:** • Repair or replace the wiring harness which is shorted to the power supply. Go to Step 7.
5	**INSPECT HD IMAGE TRANSFER CIRCUIT FOR OPEN CIRCUIT** • Verify that the tuner and amp unit and connectivity master unit connectors are disconnected. • Switch the ignition off. • Disconnect the negative battery cable. (See **NEGATIVE BATTERY CABLE**	Yes	Go to the next step.
		No	Refer to the wiring diagram and verify if there is a common connector between the following terminals. • Connectivity master unit terminal 2O and tuner and amp unit terminal 1W • Connectivity master unit terminal 2P and tuner and amp unit terminal 1X **If there is a common connector:**

	DISCONNECTION/CONNECTION [SKYACTIV-G 2.0, SKYACTIV-G 2.5].) • Inspect the wiring harness for continuity between the following terminals (wiring harness-side). ▪ Connectivity master unit terminal 2O and tuner and amp unit terminal 1W ▪ Connectivity master unit terminal 2P and tuner and amp unit terminal 1X • Is there continuity?		• Inspect the common connector and terminals for corrosion, damage, or disconnection and the common wiring harnesses for an open circuit to determine the malfunctioning location. • Repair or replace the malfunctioning location. **If there is no common connector:** • Repair or replace the wiring harness which has an open circuit. Go to Step 7.
6	**PERFORM DTC INSPECTION AND VERIFY IF MALFUNCTIONING LOCATION IS TUNER AND AMP UNIT** • Always reconnect all disconnected connectors. • Reconnect the negative battery cable. (See NEGATIVE BATTERY CABLE DISCONNECTION/CONNECTION [SKYACTIV-G 2.0, SKYACTIV-G 2.5].) • Clear the DTC for the connectivity master unit using the M-MDS. (See CLEARING DTC [CONNECTIVITY MASTER UNIT].) • Switch the ignition ON (engine off or on) and wait for **12 s or more**. • Perform the DTC inspection for the connectivity master unit using the M-MDS. (See DTC INSPECTION [CONNECTIVITY MASTER UNIT].) • Is the same DTC displayed?	Yes	Replace the tuner and amp unit, then go to the next step. (See TUNER AND AMP UNIT (TAU) REMOVAL/INSTALLATION.)
		No	Go to Step 8.
7	**VERIFY THAT REPAIRS HAVE BEEN COMPLETED** • Always reconnect all disconnected connectors. • Reconnect the negative battery cable. (See NEGATIVE BATTERY CABLE DISCONNECTION/CONNECTION [SKYACTIV-G 2.0, SKYACTIV-G 2.5].) • Clear the DTC for the connectivity master unit using the M-MDS. (See CLEARING DTC [CONNECTIVITY MASTER UNIT].) • Switch the ignition ON (engine off or on) and wait for **12 s or more**. • Perform the DTC inspection for the connectivity master unit using the	Yes	Repeat the inspection from Step 1. • If the malfunction recurs, replace the connectivity master unit. (See CONNECTIVITY MASTER UNIT (CMU) REMOVAL/INSTALLATION.) Go to the next step.
		No	Go to the next step.

	M-MDS. (See **DTC INSPECTION [CONNECTIVITY MASTER UNIT]**.) • Is the same DTC displayed?		
8	**VERIFY IF OTHER DTCs DISPLAYED** • Are any other DTCs displayed?	Yes	Repair the malfunctioning location according to the applicable DTC troubleshooting. (See **DTC TABLE [CONNECTIVITY MASTER UNIT]**.)
		No	DTC troubleshooting completed.

2014 - Mazda3 - Body and Accessories

DTC B1252:09 [CONNECTIVITY MASTER UNIT]

Description	Auxiliary jack/USB port/SD card slot hub circuit malfunction
Detection condition	• With the ignition switched ON (engine off or on), the connectivity master unit detects a voltage value for the auxiliary jack/USB port/SD card slot hub circuit of **within 4.8 V** or **exceeding 5.2 V**.
Fail-safe function	Not applicable
Possible cause	• Auxiliary jack/USB port/SD card slot hub connector or terminal malfunction • Connectivity master unit connector or terminal malfunction • Short to ground in wiring harness between connectivity master unit terminal 4C and auxiliary jack/USB port/SD card slot hub terminal 2C • Short to power supply in wiring harness between connectivity master unit terminal 4C and auxiliary jack/USB port/SD card slot hub terminal 2C • Open circuit in wiring harness between connectivity master unit terminal 4C and auxiliary jack/USB port/SD card slot hub terminal 2C • Auxiliary jack/USB port/SD card slot hub malfunction • Connectivity master unit malfunction

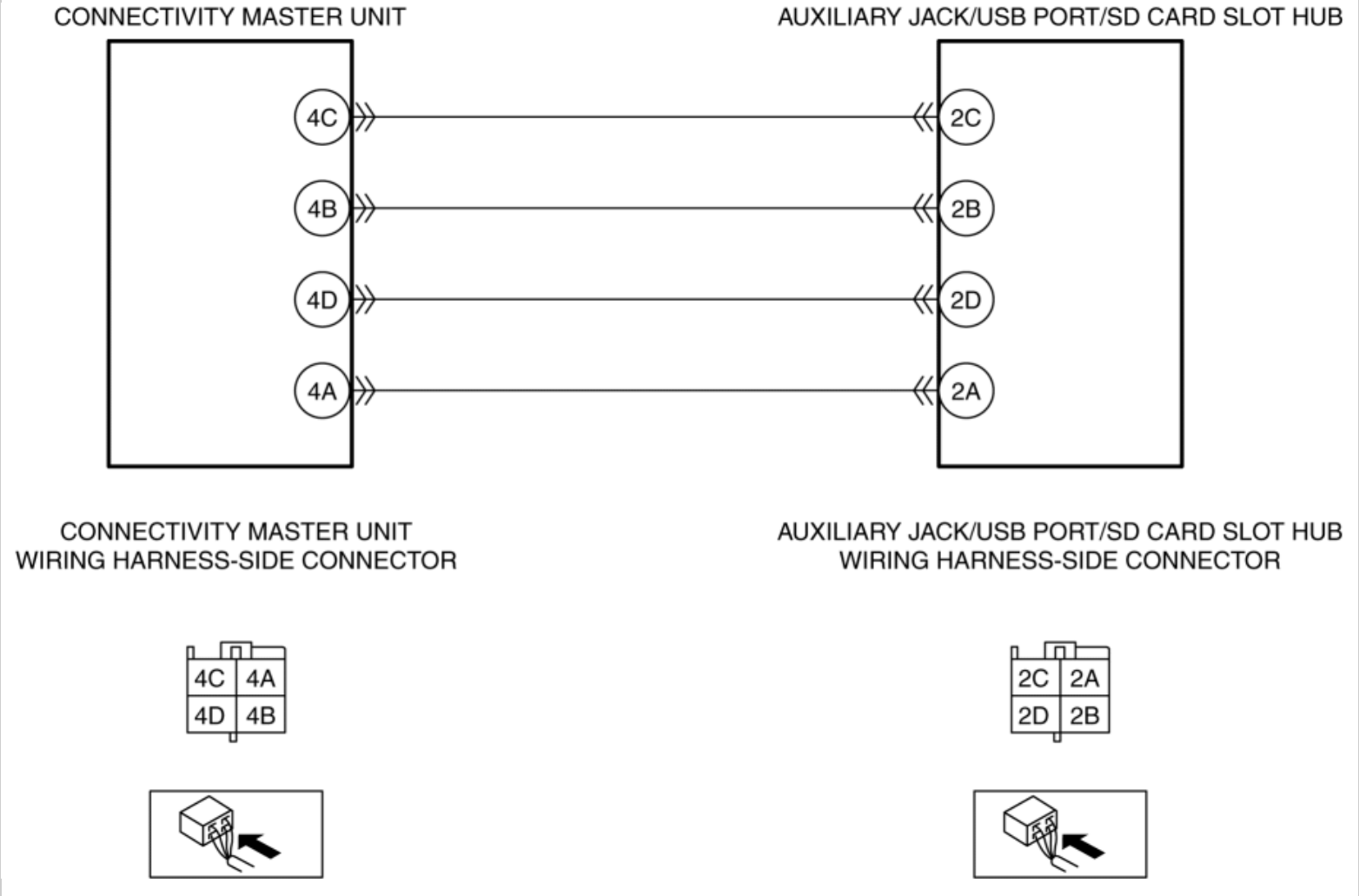

Diagnostic Procedure

Step	Inspection		Action
1	**INSPECT AUXILIARY JACK/USB PORT/SD CARD SLOT HUB CONNECTOR CONDITION** • Switch the ignition off. • Disconnect the negative battery cable. (See **NEGATIVE BATTERY CABLE DISCONNECTION/CONNECTION [SKYACTIV-G 2.0, SKYACTIV-G 2.5]**.) • Disconnect the auxiliary jack/USB port/SD card slot hub connector. • Inspect the connector engagement and connection condition and inspect the terminals for damage, deformation, corrosion, or disconnection. • Is the connector normal?	Yes	Go to the next step.
		No	Repair or replace the connector, then go to Step 7.
2	**INSPECT CONNECTIVITY MASTER UNIT CONNECTOR CONDITION** • Disconnect the connectivity master unit connector. • Inspect the connector engagement and	Yes	Go to the next step.
		No	Repair or replace the connector, then go to Step 7.

	connection condition and inspect the terminals for damage, deformation, corrosion, or disconnection. • Is the connector normal?		
3	**INSPECT AUXILIARY JACK/USB PORT/SD CARD SLOT HUB CIRCUIT FOR SHORT TO GROUND** • Verify that the auxiliary jack/USB port/SD card slot hub connector and the connectivity master unit connector are disconnected. • Inspect for continuity between auxiliary jack/USB port/SD card slot hub terminal 2C (wiring harness-side) and body ground. • Is there continuity?	Yes	Refer to the wiring diagram and verify if there is a common connector between connectivity master unit terminal 4C and auxiliary jack/USB port/SD card slot hub terminal 2C. **If there is a common connector:** • Inspect the common connector and terminals for corrosion, damage, or disconnection and the common wiring harnesses for short to ground to determine the malfunctioning location. • Repair or replace the malfunctioning location. **If there is no common connector:** • Repair or replace the wiring harness which is shorted to ground. Go to Step 7.
		No	Go to the next step.
4	**INSPECT AUXILIARY JACK/USB PORT/SD CARD SLOT HUB CIRCUIT FOR SHORT TO POWER SUPPLY** • Verify that the auxiliary jack/USB port/SD card slot hub connector and the connectivity master unit connector are disconnected. • Reconnect the negative battery cable. (See **NEGATIVE BATTERY CABLE DISCONNECTION/CONNECTION [SKYACTIV-G 2.0, SKYACTIV-G 2.5]**.) • Switch the ignition ON (engine off or on). • Measure the voltage at the auxiliary jack/USB port/SD card slot hub terminal 2C (wiring harness-side). • Is the voltage **0 V**?	Yes	Go to the next step.
		No	Refer to the wiring diagram and verify if there is a common connector between auxiliary jack/USB port/SD card slot hub terminal 2C and connectivity master unit terminal 4C. **If there is a common connector:** • Inspect the common connector and terminals for corrosion, damage, or disconnection and the common wiring harnesses for short to power supply to determine the malfunctioning location. • Repair or replace the malfunctioning location. **If there is no common connector:** • Repair or replace the wiring harness which is shorted to the power supply. Go to Step 7.
5	**INSPECT AUXILIARY JACK/USB PORT/SD CARD SLOT HUB CIRCUIT FOR OPEN CIRCUIT** • Verify that the auxiliary jack/USB port/SD card slot hub connector and the connectivity master unit connector are disconnected. • Switch the ignition off. • Disconnect the negative battery cable. (See **NEGATIVE BATTERY CABLE DISCONNECTION/CONNECTION [SKYACTIV-G 2.0, SKYACTIV-G 2.5]**.)	Yes	Go to the next step.
		No	Refer to the wiring diagram and verify if there is a common connector between connectivity master unit terminal 4C and auxiliary jack/USB port/SD card slot hub terminal 2C. **If there is a common connector:** • Inspect the common connector and terminals for corrosion, damage, or disconnection and the common wiring

	• Inspect for continuity in the wiring harness between connectivity master unit terminal 4C (wiring harness-side) and auxiliary jack/USB port/SD card slot hub terminal 2C (wiring harness-side). • Is there continuity?		harnesses for an open circuit to determine the malfunctioning location. • Repair or replace the malfunctioning location. **If there is no common connector:** • Repair or replace the wiring harness which has an open circuit. Go to Step 7.
6	**PERFORM DTC INSPECTION AND VERIFY IF MALFUNCTIONING LOCATION IS AUXILIARY JACK/USB PORT/SD CARD SLOT HUB** • Always reconnect all disconnected connectors. • Reconnect the negative battery cable. (See **NEGATIVE BATTERY CABLE DISCONNECTION/CONNECTION [SKYACTIV-G 2.0, SKYACTIV-G 2.5]**.) • Clear the DTC for the connectivity master unit using the M-MDS. (See **CLEARING DTC [CONNECTIVITY MASTER UNIT]**.) • Switch the ignition ON (engine off or on) and wait for **7 s or more**. • Perform the DTC inspection for the connectivity master unit using the M-MDS. (See **DTC INSPECTION [CONNECTIVITY MASTER UNIT]**.) • Is the same DTC displayed?	Yes	Replace the auxiliary jack/USB port/SD card slot hub, then go to the next step. (See **AUXILIARY JACK/USB PORT/SD CARD SLOT HUB REMOVAL/INSTALLATION**.)
		No	Go to Step 8.
7	**VERIFY THAT REPAIRS HAVE BEEN COMPLETED** • Always reconnect all disconnected connectors. • Reconnect the negative battery cable. (See **NEGATIVE BATTERY CABLE DISCONNECTION/CONNECTION [SKYACTIV-G 2.0, SKYACTIV-G 2.5]**.) • Clear the DTC for the connectivity master unit using the M-MDS. (See **CLEARING DTC [CONNECTIVITY MASTER UNIT]**.) • Switch the ignition ON (engine off or on) and wait for **7 s or more**. • Perform the DTC inspection for the connectivity master unit using the M-MDS. (See **DTC INSPECTION [CONNECTIVITY MASTER UNIT]**.) • Is the same DTC displayed?	Yes	Repeat the inspection from Step 1. • If the malfunction recurs, replace the connectivity master unit. (See **CONNECTIVITY MASTER UNIT (CMU) REMOVAL/INSTALLATION**.) Go to the next step.
		No	Go to the next step.
8	**VERIFY IF OTHER DTCs DISPLAYED** • Are any other DTCs displayed?	Yes	Repair the malfunctioning location according to the applicable DTC troubleshooting.

			(See **DTC TABLE [CONNECTIVITY MASTER UNIT]**.)
		No	DTC troubleshooting completed.

2014 - Mazda3 - Body and Accessories

DTC B1252:1D [CONNECTIVITY MASTER UNIT]

Description	Auxiliary jack/USB port/SD card slot hub circuit malfunction
Detection condition	• The connectivity master unit detects over-current (**550 mA or more**) in auxiliary jack/USB port/SD card slot hub circuit with the ignition switched ON (engine off or on).
Fail-safe function	Not applicable
Possible cause	• Auxiliary jack/USB port/SD card slot hub connector or terminal malfunction • Connectivity master unit connector or terminal malfunction • Short to ground in wiring harness between connectivity master unit terminal 4C and auxiliary jack/USB port/SD card slot hub terminal 2C • Auxiliary jack/USB port/SD card slot hub malfunction • Connectivity master unit malfunction

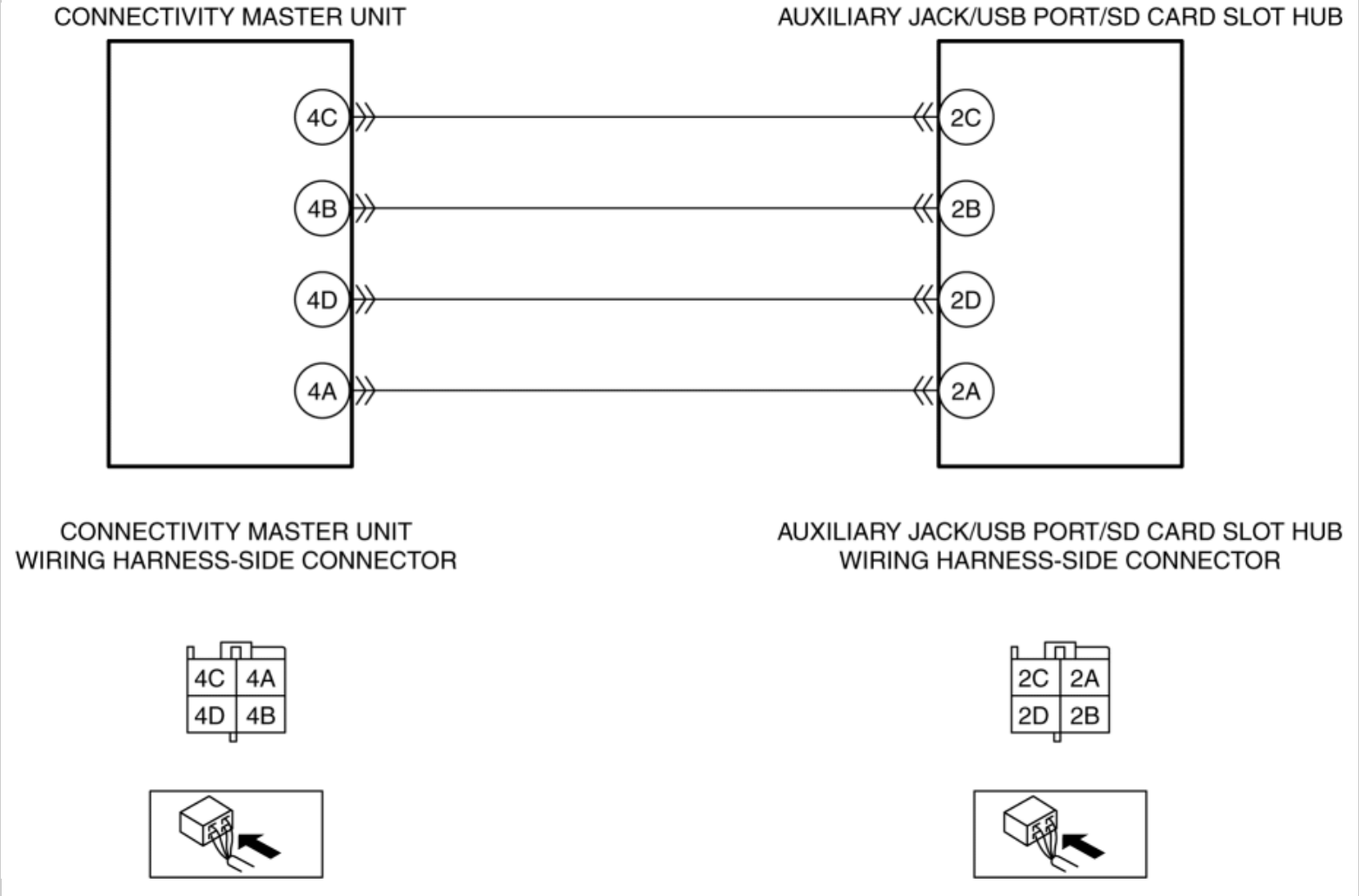

Diagnostic Procedure

Step	Inspection		Action
1	**INSPECT AUXILIARY JACK/USB PORT/SD CARD SLOT HUB CONNECTOR CONDITION** • Switch the ignition off. • Disconnect the negative battery cable. (See **NEGATIVE BATTERY CABLE DISCONNECTION/CONNECTION [SKYACTIV-G 2.0, SKYACTIV-G 2.5]**.) • Disconnect the auxiliary jack/USB port/SD card slot hub connector. • Inspect the connector engagement and connection condition and inspect the terminals for damage, deformation, corrosion, or disconnection. • Is the connector normal?	Yes	Go to the next step.
		No	Repair or replace the connector, then go to Step 5.
2	**INSPECT CONNECTIVITY MASTER UNIT CONNECTOR CONDITION** • Disconnect the connectivity master unit connector.	Yes	Go to the next step.
		No	Repair or replace the connector, then go to Step 5.

	• Inspect the connector engagement and connection condition and inspect the terminals for damage, deformation, corrosion, or disconnection. • Is the connector normal?		
3	**INSPECT AUXILIARY JACK/USB PORT/SD CARD SLOT HUB CIRCUIT FOR SHORT TO GROUND** • Verify that the auxiliary jack/USB port/SD card slot hub connector and the connectivity master unit connector are disconnected. • Inspect for continuity between auxiliary jack/USB port/SD card slot hub terminal 2C (wiring harness-side) and body ground. • Is there continuity?	Yes	Refer to the wiring diagram and verify if there is a common connector between connectivity master unit terminal 4C and auxiliary jack/USB port/SD card slot hub terminal 2C. **If there is a common connector:** • Inspect the common connector and terminals for corrosion, damage, or disconnection and the common wiring harnesses for short to ground to determine the malfunctioning location. • Repair or replace the malfunctioning location. **If there is no common connector:** • Repair or replace the wiring harness which is shorted to ground. Go to Step 5.
		No	Go to the next step.
4	**PERFORM DTC INSPECTION AND VERIFY IF MALFUNCTIONING LOCATION IS AUXILIARY JACK/USB PORT/SD CARD SLOT HUB** • Always reconnect all disconnected connectors. • Reconnect the negative battery cable. (See **NEGATIVE BATTERY CABLE DISCONNECTION/CONNECTION [SKYACTIV-G 2.0, SKYACTIV-G 2.5]**.) • Clear the DTC for the connectivity master unit using the M-MDS. (See **CLEARING DTC [CONNECTIVITY MASTER UNIT]**.) • Switch the ignition ON (engine off or on) and wait for **7 s or more**. • Perform the DTC inspection for the connectivity master unit using the M-MDS. (See **DTC INSPECTION [CONNECTIVITY MASTER UNIT]**.) • Is the same DTC displayed?	Yes	Replace the auxiliary jack/USB port/SD card slot hub, then go to the next step. (See **AUXILIARY JACK/USB PORT/SD CARD SLOT HUB REMOVAL/INSTALLATION**.)
		No	Go to Step 6.
5	**VERIFY THAT REPAIRS HAVE BEEN COMPLETED** • Always reconnect all disconnected connectors. • Reconnect the negative battery cable. (See **NEGATIVE BATTERY CABLE**	Yes	Repeat the inspection from Step 1. • If the malfunction recurs, replace the connectivity master unit. (See **CONNECTIVITY MASTER UNIT (CMU) REMOVAL/INSTALLATION**.)

	DISCONNECTION/CONNECTION [SKYACTIV-G 2.0, SKYACTIV-G 2.5].) • Clear the DTC for the connectivity master unit using the M-MDS. (See **CLEARING DTC [CONNECTIVITY MASTER UNIT]**.) • Switch the ignition ON (engine off or on) and wait for **7 s or more**. • Perform the DTC inspection for the connectivity master unit using the M-MDS. (See **DTC INSPECTION [CONNECTIVITY MASTER UNIT]**.) • Is the same DTC displayed?		Go to the next step.
		No	Go to the next step.
6	**VERIFY IF OTHER DTCs DISPLAYED** • Are any other DTCs displayed?	Yes	Repair the malfunctioning location according to the applicable DTC troubleshooting. (See **DTC TABLE [CONNECTIVITY MASTER UNIT]**.)
		No	DTC troubleshooting completed.

2014 - Mazda3 - Body and Accessories

DTC B1252:87 [CONNECTIVITY MASTER UNIT]

Description	Communication error with auxiliary jack/USB port/SD card slot hub
Detection condition	• With the ignition switched ON (engine off or on), the connectivity master unit cannot receive a signal from the auxiliary jack/USB port/SD card slot hub.
Fail-safe function	Not applicable

Possible cause	• Auxiliary jack/USB port/SD card slot hub connector or terminal malfunction
	• Connectivity master unit connector or terminal malfunction
	• Open circuit in wiring harness between the following terminals:
	  ▪ Connectivity master unit terminal 4B and auxiliary jack/USB port/SD card slot hub terminal 2B
	  ▪ Connectivity master unit terminal 4D and auxiliary jack/USB port/SD card slot hub terminal 2D
	• Software error
	  ▪ USB driver malfunction
	• Auxiliary jack/USB port/SD card slot hub malfunction
	• Connectivity master unit malfunction

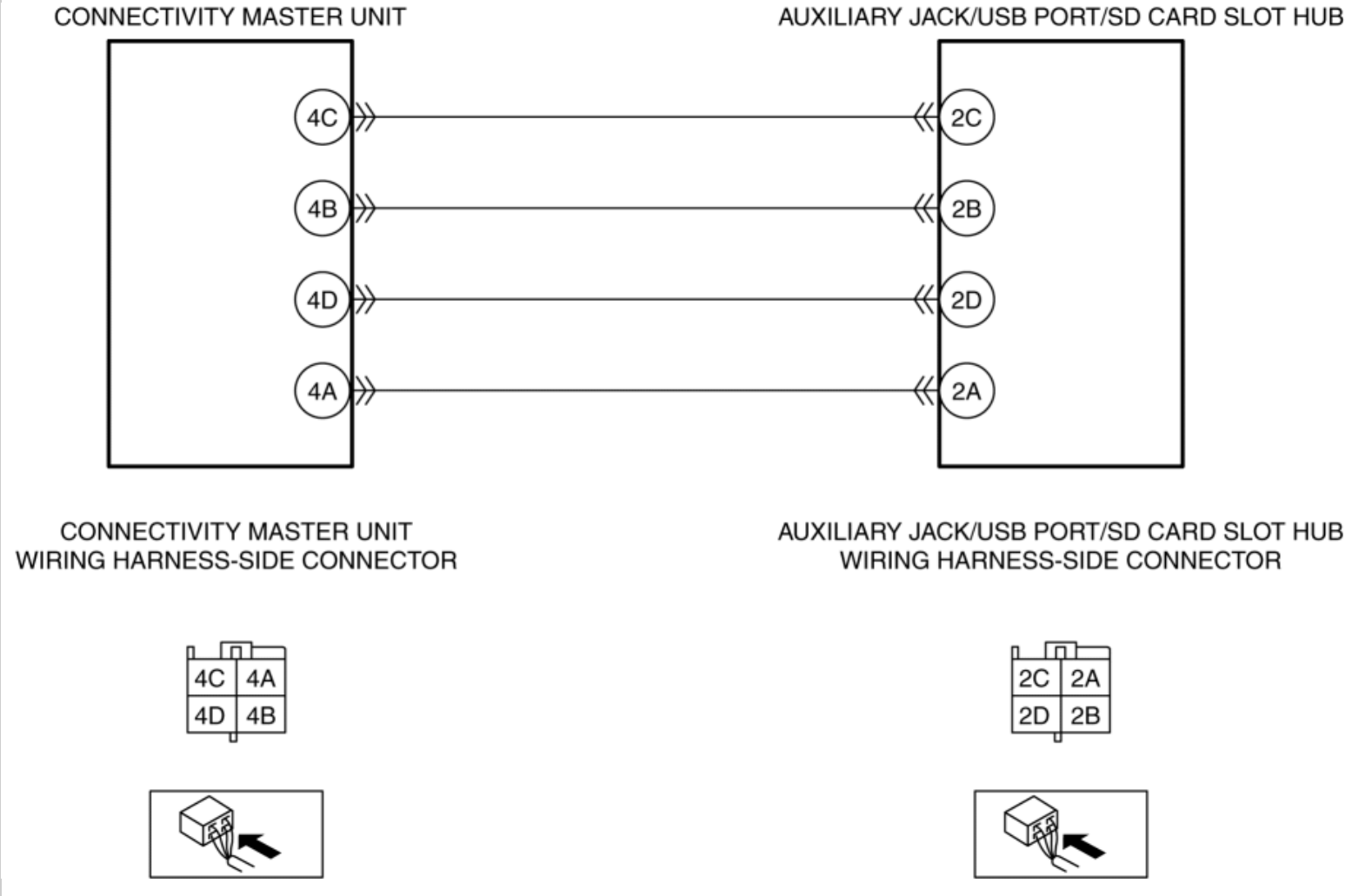

Diagnostic Procedure

Step	Inspection		Action
1	**INSPECT AUXILIARY JACK/USB PORT/SD CARD SLOT HUB CONNECTOR CONDITION** • Switch the ignition off. • Disconnect the negative battery cable. (See **NEGATIVE BATTERY CABLE DISCONNECTION/CONNECTION [SKYACTIV-G 2.0, SKYACTIV-G 2.5]**.) • Disconnect the auxiliary jack/USB port/SD card slot hub connector. • Inspect the connector engagement and connection condition and inspect the terminals for damage, deformation, corrosion, or disconnection. • Is the connector normal?	Yes	Go to the next step.
		No	Repair or replace the connector, then go to Step 6.
2	**INSPECT CONNECTIVITY MASTER UNIT CONNECTOR CONDITION** • Disconnect the connectivity master unit connector.	Yes	Go to the next step.
		No	Repair or replace the connector, then go to Step 6.

	• Inspect the connector engagement and connection condition and inspect the terminals for damage, deformation, corrosion, or disconnection. • Is the connector normal?		
3	**INSPECT AUXILIARY JACK/USB PORT/SD CARD SLOT HUB CIRCUIT FOR OPEN CIRCUIT** • Verify that the auxiliary jack/USB port/SD card slot hub connector and the connectivity master unit connector are disconnected. • Inspect the wiring harness for continuity between the following terminals (wiring harness-side). ▪ Connectivity master unit terminal 4B and auxiliary jack/USB port/SD card slot hub terminal 2B ▪ Connectivity master unit terminal 4D and auxiliary jack/USB port/SD card slot hub terminal 2D • Is there continuity?	Yes	Go to the next step.
		No	Refer to the wiring diagram and verify if there is a common connector between the following terminals. • Connectivity master unit terminal 4B and auxiliary jack/USB port/SD card slot hub terminal 2B • Connectivity master unit terminal 4D and auxiliary jack/USB port/SD card slot hub terminal 2D **If there is a common connector:** • Inspect the common connector and terminals for corrosion, damage, or disconnection and the common wiring harnesses for an open circuit to determine the malfunctioning location. • Repair or replace the malfunctioning location. **If there is no common connector:** • Repair or replace the wiring harness which has an open circuit. Go to Step 6.
4	**PERFORM SOFTWARE RESET** • Always reconnect all disconnected connectors. • Reconnect the negative battery cable. (See **NEGATIVE BATTERY CABLE DISCONNECTION/CONNECTION [SKYACTIV-G 2.0, SKYACTIV-G 2.5]**.) • Perform diagnostic assist code “08” software reset. (See **DIAGNOSTIC ASSIST FUNCTION [CONNECTIVITY MASTER UNIT]**.) • Clear the DTC for the connectivity master unit using the M-MDS. (See **CLEARING DTC [CONNECTIVITY MASTER UNIT]**.) • Switch the ignition ON (engine off or on) and wait for **7 s or more**. • Perform the DTC inspection for the connectivity master unit using the M-MDS. (See **DTC INSPECTION [CONNECTIVITY MASTER UNIT]**.)	Yes	Go to the next step.
		No	Go to Step 7.

	• Is the same DTC displayed?		
5	**PERFORM DTC INSPECTION AND VERIFY IF MALFUNCTIONING LOCATION IS AUXILIARY JACK/USB PORT/SD CARD SLOT HUB** • Clear the DTC for the connectivity master unit using the M-MDS. (See **CLEARING DTC [CONNECTIVITY MASTER UNIT]**.) • Switch the ignition ON (engine off or on) and wait for **7 s or more**. • Perform the DTC inspection for the connectivity master unit using the M-MDS. (See **DTC INSPECTION [CONNECTIVITY MASTER UNIT]**.) • Is the same DTC displayed?	Yes	Replace the auxiliary jack/USB port/SD card slot hub, then go to the next step. (See **AUXILIARY JACK/USB PORT/SD CARD SLOT HUB REMOVAL/INSTALLATION**.)
		No	Go to Step 7.
6	**VERIFY THAT REPAIRS HAVE BEEN COMPLETED** • Always reconnect all disconnected connectors. • Reconnect the negative battery cable. (See **NEGATIVE BATTERY CABLE DISCONNECTION/CONNECTION [SKYACTIV-G 2.0, SKYACTIV-G 2.5]**.) • Clear the DTC for the connectivity master unit using the M-MDS. (See **CLEARING DTC [CONNECTIVITY MASTER UNIT]**.) • Switch the ignition ON (engine off or on) and wait for **7 s or more**. • Perform the DTC inspection for the connectivity master unit using the M-MDS. (See **DTC INSPECTION [CONNECTIVITY MASTER UNIT]**.) • Is the same DTC displayed?	Yes	Repeat the inspection from Step 1. • If the malfunction recurs, replace the connectivity master unit. (See **CONNECTIVITY MASTER UNIT (CMU) REMOVAL/INSTALLATION**.) Go to the next step.
		No	Go to the next step.
7	**VERIFY IF OTHER DTCs DISPLAYED** • Are any other DTCs displayed?	Yes	Repair the malfunctioning location according to the applicable DTC troubleshooting. (See **DTC TABLE [CONNECTIVITY MASTER UNIT]**.)
		No	DTC troubleshooting completed.

2014 - Mazda3 - Body and Accessories

DTC B12BD:11 [CONNECTIVITY MASTER UNIT]

Description	Rear mount camera circuit malfunction
Detection condition	• The connectivity master unit detects a voltage value for the rear mount camera circuit of **within 5.8 V** or **exceeding 6.2 V** with the ignition switched ON (engine off or on).
Fail-safe function	Not applicable
Possible cause	• Rear mount camera connector or terminal malfunction • Connectivity master unit connector or terminal malfunction • Short to ground in wiring harness between connectivity master unit terminal 1C and rear mount camera terminal A • Rear mount camera malfunction • Connectivity master unit malfunction

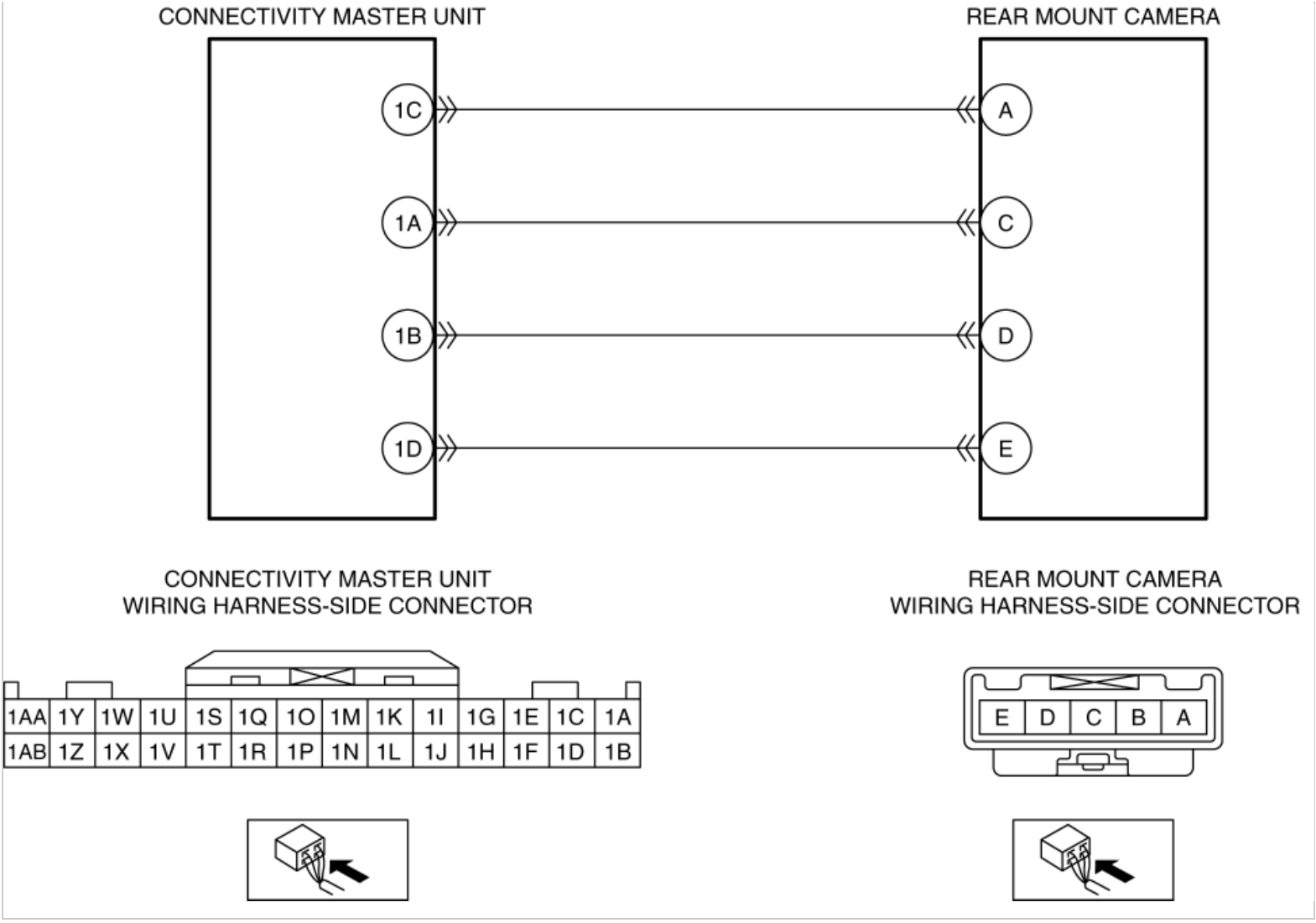

Diagnostic Procedure

Step	Inspection		Action
1	**INSPECT REAR MOUNT CAMERA CONNECTOR CONDITION** • Switch the ignition off. • Disconnect the negative battery cable. (See **NEGATIVE BATTERY CABLE DISCONNECTION/CONNECTION [SKYACTIV-G 2.0, SKYACTIV-G 2.5]**.) • Disconnect the rear mount camera connector. • Inspect the connector engagement and connection condition and inspect the terminals for damage, deformation, corrosion, or disconnection. • Is the connector normal?	Yes	Go to the next step.
		No	Repair or replace the connector, then go to Step 5.
2	**INSPECT CONNECTIVITY MASTER UNIT CONNECTOR CONDITION** • Disconnect the connectivity master unit connector.	Yes	Go to the next step.
		No	Repair or replace the connector, then go to Step 5.

	• Inspect the connector engagement and connection condition and inspect the terminals for damage, deformation, corrosion, or disconnection. • Is the connector normal?		
3	**INSPECT REAR MOUNT CAMERA CIRCUIT FOR SHORT TO GROUND** • Verify that the rear mount camera and connectivity master unit connectors are disconnected. • Inspect for continuity between rear mount camera terminal A (wiring harness-side) and body ground. • Is there continuity?	Yes	Refer to the wiring diagram and verify if there is a common connector between connectivity master unit terminal 1C and rear mount camera terminal A. **If there is a common connector:** • Inspect the common connector and terminals for corrosion, damage, or disconnection and the common wiring harnesses for short to ground to determine the malfunctioning location. • Repair or replace the malfunctioning location. **If there is no common connector:** • Repair or replace the wiring harness which is shorted to ground. Go to Step 5.
		No	Go to the next step.
4	**PERFORM DTC INSPECTION AND VERIFY IF REAR MOUNT CAMERA IS MALFUNCTIONING** • Always reconnect all disconnected connectors. • Reconnect the negative battery cable. (See **NEGATIVE BATTERY CABLE DISCONNECTION/CONNECTION [SKYACTIV-G 2.0, SKYACTIV-G 2.5]**.) • Clear the DTC for the connectivity master unit using the M-MDS. (See **CLEARING DTC [CONNECTIVITY MASTER UNIT]**.) • Switch the ignition ON (engine off or on) and wait for **12 s or more**. • Perform the DTC inspection for the connectivity master unit using the M-MDS. (See **DTC INSPECTION [CONNECTIVITY MASTER UNIT]**.) • Is the same DTC displayed?	Yes	Replace the rear mount camera, then go to the next step. (See **REAR MOUNT CAMERA REMOVAL/INSTALLATION**.)
		No	Go to Step 6.
5	**VERIFY THAT REPAIRS HAVE BEEN COMPLETED** • Always reconnect all disconnected connectors. • Reconnect the negative battery cable. (See **NEGATIVE BATTERY CABLE DISCONNECTION/CONNECTION [SKYACTIV-G 2.0, SKYACTIV-G 2.5]**.) • Clear the DTC for the connectivity master unit using the M-MDS. (See **CLEARING DTC [CONNECTIVITY MASTER UNIT]**.)	Yes	Repeat the inspection from Step 1. • If the malfunction recurs, replace the connectivity master unit. (See **CONNECTIVITY MASTER UNIT (CMU) REMOVAL/INSTALLATION**.) Go to the next step.
		No	Go to the next step.

	• Switch the ignition ON (engine off or on) and wait for **12 s or more**. • Perform the DTC inspection for the connectivity master unit using the M-MDS. (See **DTC INSPECTION [CONNECTIVITY MASTER UNIT]**.) • Is the same DTC displayed?		
6	**VERIFY IF OTHER DTCs DISPLAYED** • Are any other DTCs displayed?	Yes	Repair the malfunctioning location according to the applicable DTC troubleshooting. (See **DTC TABLE [CONNECTIVITY MASTER UNIT]**.)
		No	DTC troubleshooting completed.

2014 - Mazda3 - Body and Accessories

DTC B12BD:87 [CONNECTIVITY MASTER UNIT]

Description	Rear mount camera transmission error
Detection condition	• The connectivity master unit cannot receive a signal from the rear mount camera for **5 s or more** with the ignition switched ON (engine off or on).
Fail-safe function	Not applicable
Possible cause	• Rear mount camera connector or terminal malfunction • Connectivity master unit connector or terminal malfunction • Short to ground in wiring harness between connectivity master unit terminal 1A and rear mount camera terminal C • Short to power supply in wiring harness between connectivity master unit terminal 1A and rear mount camera terminal C • Open circuit in wiring harness between connectivity master unit terminal 1A and rear mount camera terminal C • Rear mount camera malfunction • Connectivity master unit malfunction

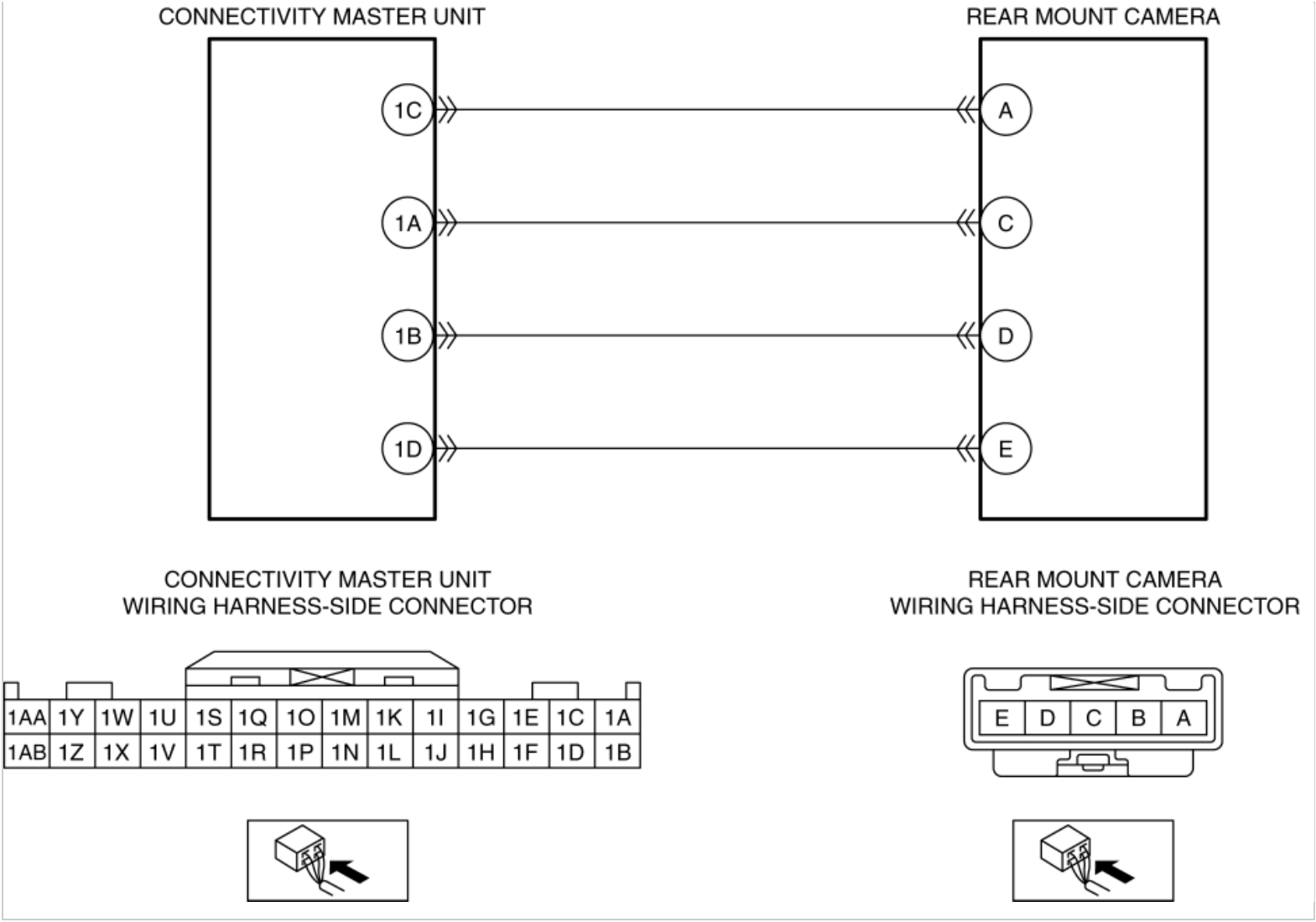

Diagnostic Procedure

Step	Inspection		Action
1	**INSPECT REAR MOUNT CAMERA CONNECTOR CONDITION** • Switch the ignition off. • Disconnect the negative battery cable. (See **NEGATIVE BATTERY CABLE DISCONNECTION/CONNECTION [SKYACTIV-G 2.0, SKYACTIV-G 2.5]**.) • Disconnect the rear mount camera connector. • Inspect the connector engagement and connection condition and inspect the terminals for damage, deformation, corrosion, or disconnection. • Is the connector normal?	Yes	Go to the next step.
		No	Repair or replace the connector, then go to Step 7.
2	**INSPECT CONNECTIVITY MASTER UNIT CONNECTOR CONDITION** • Disconnect the connectivity master unit connector.	Yes	Go to the next step.
		No	Repair or replace the connector, then go to Step 7.

	• Inspect the connector engagement and connection condition and inspect the terminals for damage, deformation, corrosion, or disconnection. • Is the connector normal?		
3	**INSPECT REAR MOUNT CAMERA CIRCUIT FOR SHORT TO GROUND** • Verify that the rear mount camera and connectivity master unit connectors are disconnected. • Inspect for continuity between rear mount camera terminal C (wiring harness-side) and body ground. • Is there continuity?	Yes	Refer to the wiring diagram and verify if there is a common connector between connectivity master unit terminal 1A and rear mount camera terminal C. **If there is a common connector:** • Inspect the common connector and terminals for corrosion, damage, or disconnection and the common wiring harnesses for short to ground to determine the malfunctioning location. • Repair or replace the malfunctioning location. **If there is no common connector:** • Repair or replace the wiring harness which is shorted to ground. Go to Step 7.
		No	Go to the next step.
4	**INSPECT REAR MOUNT CAMERA CIRCUIT FOR SHORT TO POWER SUPPLY** • Verify that the rear mount camera and connectivity master unit connectors are disconnected. • Reconnect the negative battery cable. (See **NEGATIVE BATTERY CABLE DISCONNECTION/CONNECTION [SKYACTIV-G 2.0, SKYACTIV-G 2.5]**.) • Switch the ignition ON (engine off or on). • Measure the voltage at rear mount camera terminal C (wiring harness-side). • Is the voltage **0 V**?	Yes	Go to the next step.
		No	Refer to the wiring diagram and verify if there is a common connector between rear camera terminal C and connectivity master unit terminal 1A. **If there is a common connector:** • Inspect the common connector and terminals for corrosion, damage, or disconnection and the common wiring harnesses for short to power supply to determine the malfunctioning location. • Repair or replace the malfunctioning location. **If there is no common connector:** • Repair or replace the wiring harness which is shorted to the power supply. Go to Step 7.
5	**INSPECT REAR MOUNT CAMERA CIRCUIT FOR OPEN CIRCUIT** • Verify that the rear mount camera and connectivity master unit connectors are disconnected. • Switch the ignition off. • Disconnect the negative battery cable. (See **NEGATIVE BATTERY CABLE DISCONNECTION/CONNECTION [SKYACTIV-G 2.0, SKYACTIV-G 2.5]**.) • Inspect the wiring harness for continuity between connectivity master unit terminal 1A (wiring harness-side) and rear mount camera terminal C (wiring harness-side). • Is there continuity?	Yes	Go to the next step.
		No	Refer to the wiring diagram and verify if there is a common connector between connectivity master unit terminal 1A and rear mount camera terminal C. **If there is a common connector:** • Inspect the common connector and terminals for corrosion, damage, or disconnection and the common wiring harnesses for an open circuit to determine the malfunctioning location. • Repair or replace the malfunctioning location. **If there is no common connector:** • Repair or replace the wiring harness which has an open circuit.

			Go to Step 7.
6	**PERFORM DTC INSPECTION AND VERIFY IF MALFUNCTIONING LOCATION IS REAR MOUNT CAMERA** • Always reconnect all disconnected connectors. • Reconnect the negative battery cable. (See **NEGATIVE BATTERY CABLE DISCONNECTION/CONNECTION [SKYACTIV-G 2.0, SKYACTIV-G 2.5]**.) • Clear the DTC for the connectivity master unit using the M-MDS. (See **CLEARING DTC [CONNECTIVITY MASTER UNIT]**.) • Switch the ignition ON (engine off or on) and wait for **12 s or more**. • Perform the DTC inspection for the connectivity master unit using the M-MDS. (See **DTC INSPECTION [CONNECTIVITY MASTER UNIT]**.) • Is the same DTC displayed?	Yes	Replace the rear mount camera, then go to the next step. (See **REAR MOUNT CAMERA REMOVAL/INSTALLATION**.)
		No	Go to Step 8.
7	**VERIFY THAT REPAIRS HAVE BEEN COMPLETED** • Always reconnect all disconnected connectors. • Reconnect the negative battery cable. (See **NEGATIVE BATTERY CABLE DISCONNECTION/CONNECTION [SKYACTIV-G 2.0, SKYACTIV-G 2.5]**.) • Clear the DTC for the connectivity master unit using the M-MDS. (See **CLEARING DTC [CONNECTIVITY MASTER UNIT]**.) • Switch the ignition ON (engine off or on) and wait for **12 s or more**. • Perform the DTC inspection for the connectivity master unit using the M-MDS. (See **DTC INSPECTION [CONNECTIVITY MASTER UNIT]**.) • Is the same DTC displayed?	Yes	Repeat the inspection from Step 1. • If the malfunction recurs, replace the connectivity master unit. (See **CONNECTIVITY MASTER UNIT (CMU) REMOVAL/INSTALLATION**.) Go to the next step.
		No	Go to the next step.
8	**VERIFY IF OTHER DTCs DISPLAYED** • Are any other DTCs displayed?	Yes	Repair the malfunctioning location according to the applicable DTC troubleshooting. (See **DTC TABLE [CONNECTIVITY MASTER UNIT]**.)
		No	DTC troubleshooting completed.

2014 - Mazda3 - Body and Accessories

DTC B1A89:13 [CONNECTIVITY MASTER UNIT]

Description	SiriusXM satellite radio antenna feeder malfunction
Detection condition	• The connectivity master unit detects an open circuit in SiriusXM satellite radio antenna feeder with the ignition switched ON (engine off or on).
Fail-safe function	Not applicable
Possible cause	• Tuner and amp unit connector or terminal malfunction • Antenna feeder No.1 connector or terminal malfunction • Open circuit in antenna feeder No.1 • Antenna feeder No.2 connector or terminal malfunction • Open circuit in antenna feeder No.2 • Antenna feeder No.3 connector or terminal malfunction (5HB) • Open circuit in antenna feeder No.3 (5HB) • Center roof antenna malfunction ▪ SiriusXM satellite radio antenna feeder malfunction • Tuner and amp unit malfunction
System wiring diagram	Not applicable

Diagnostic Procedure

Step	Inspection		Action
1	**INSPECT TUNER AND AMP UNIT CONNECTOR CONDITION** • Switch the ignition off. • Disconnect the negative battery cable.	Yes	Go to the next step.
		No	Repair or replace the connector, then go to Step 9.

	(See **NEGATIVE BATTERY CABLE DISCONNECTION/CONNECTION [SKYACTIV-G 2.0, SKYACTIV-G 2.5]**.) • Disconnect the tuner and amp unit connector. • Inspect the connector engagement and connection condition and inspect the terminals for damage, deformation, corrosion, or disconnection. • Is the connector normal?		
2	**INSPECT ANTENNA FEEDER NO.1 CONNECTOR CONDITION** • Disconnect the antenna feeder No.1 connector. • Inspect the connector engagement and connection condition and inspect the terminals for damage, deformation, corrosion, or disconnection. • Is the connector normal?	Yes	Go to the next step.
		No	Repair or replace the connector, then go to Step 9.
3	**INSPECT ANTENNA FEEDER NO.1** • Inspect antenna feeder No.1. (See **ANTENNA FEEDER NO.1 INSPECTION**.) • Is antenna feeder No.1 normal?	Yes	Go to the next step.
		No	Replace antenna feeder No.1, then go to Step 9. (See **ANTENNA FEEDER NO.1 REMOVAL/INSTALLATION**.)
4	**INSPECT ANTENNA FEEDER NO.2 CONNECTOR CONDITION** • Disconnect the antenna feeder No.1 connector. • Inspect the connector engagement and connection condition and inspect the terminals for damage, deformation, corrosion, or disconnection. • Is the connector normal?	Yes	Go to the next step.
		No	Repair or replace the connector, then go to Step 9.
5	**INSPECT ANTENNA FEEDER NO.2** • Inspect antenna feeder No.2. (See **ANTENNA FEEDER NO.2 INSPECTION**.) • Is antenna feeder No.2 normal?	Yes	**4SD** • Go to Step 8. **5HB** • Go to the next step.
		No	Replace antenna feeder No.2, then go to Step 9.

			(See **ANTENNA FEEDER NO.2 REMOVAL**.) (See **ANTENNA FEEDER NO.2 INSTALLATION**.)
6	**INSPECT ANTENNA FEEDER NO.3 CONNECTOR CONDITION** • Disconnect the antenna feeder No.3 connector. • Inspect the connector engagement and connection condition and inspect the terminals for damage, deformation, corrosion, or disconnection. • Is the connector normal?	Yes	Go to the next step.
		No	Repair or replace the connector, then go to Step 9.
7	**INSPECT ANTENNA FEEDER NO.3** • Inspect antenna feeder No.3. (See **ANTENNA FEEDER NO.3 INSPECTION**.) • Is antenna feeder No.3 normal?	Yes	Go to the next step.
		No	Replace antenna feeder No.3, then go to Step 9. (See **ANTENNA FEEDER NO.3 REMOVAL/INSTALLATION**.)
8	**INSPECT SIRIUSXM SATELLITE RADIO ANTENNA FEEDER** • Inspect the SiriusXM satellite radio antenna feeder. (See **CENTER ROOF ANTENNA INSPECTION**.) • Is the SiriusXM satellite radio antenna feeder normal?	Yes	Go to the next step.
		No	Replace the center roof antenna, then go to the next step. (See **CENTER ROOF ANTENNA REMOVAL/INSTALLATION**.)
9	**VERIFY THAT REPAIRS HAVE BEEN COMPLETED** • Always reconnect all disconnected connectors. • Reconnect the negative battery cable. (See **NEGATIVE BATTERY CABLE DISCONNECTION/CONNECTION [SKYACTIV-G 2.0, SKYACTIV-G 2.5]**.) • Clear the DTC for the connectivity master unit using the M-MDS. (See **CLEARING DTC [CONNECTIVITY MASTER UNIT]**.) • Switch the ignition ON (engine off or on) and wait for **7 s or more**. • Perform the DTC inspection for the	Yes	Repeat the inspection from Step 1. • If the malfunction recurs, replace the tuner and amp unit. (See **TUNER AND AMP UNIT (TAU) REMOVAL/INSTALLATION**.) Go to the next step.
		No	Go to the next step.

	connectivity master unit using the M-MDS. (See **DTC INSPECTION [CONNECTIVITY MASTER UNIT]**.) • Is the same DTC displayed?		
10	**VERIFY IF OTHER DTCs DISPLAYED** • Are any other DTCs displayed?	Yes	Repair the malfunctioning location according to the applicable DTC troubleshooting. (See **DTC TABLE [CONNECTIVITY MASTER UNIT]**.)
		No	DTC troubleshooting completed.

2014 - Mazda3 - Body and Accessories

DTC B1A89:42 [CONNECTIVITY MASTER UNIT]

Description	Tuner and amp unit internal malfunction
Detection condition	• The connectivity master unit detects an XM module malfunction in the tuner and amp unit with the ignition switched ON (engine off or on).
Fail-safe function	Not applicable
Possible cause	• Tuner and amp unit malfunction ▪ XM module malfunction
System wiring diagram	Not applicable

Diagnostic Procedure

Step	Inspection		Action
1	**PERFORM DTC INSPECTION AND VERIFY IF TUNER AND AMP UNIT IS MALFUNCTIONING PART** • Clear the DTC for the connectivity master unit using the M-MDS. (See **CLEARING DTC [CONNECTIVITY MASTER UNIT]**.) • Switch the ignition ON (engine off or on) and wait for **7 s or more**. • Perform the DTC inspection for the connectivity master unit using the M-MDS. (See **DTC INSPECTION [CONNECTIVITY MASTER UNIT]**.) • Is the same DTC displayed?	Yes	Repeat the inspection from Step 1. • If the malfunction recurs, replace the tuner and amp unit. (See **TUNER AND AMP UNIT (TAU) REMOVAL/INSTALLATION**.) Go to the next step.
		No	Go to the next step.

2	**VERIFY IF OTHER DTCs DISPLAYED** • Are any other DTCs displayed?	Yes	Repair the malfunctioning location according to the applicable DTC troubleshooting. (See **DTC TABLE [CONNECTIVITY MASTER UNIT]**.)
		No	DTC troubleshooting completed.

2014 - Mazda3 - Body and Accessories

DTC B1D19:64 [CONNECTIVITY MASTER UNIT]

Description	Incompatible disc inserted
Detection condition	• With the ignition switched ON (engine on or off), the connectivity master unit (CMU) detects a disc having a data format that is incompatible with the CD player.
Fail-safe function	Eject a disc.
Possible cause	• Use of incompatible disc ▪ Data format other than music data (CD-DA)/MP3/WMA (Windows Media Audio)/ACC (Advance Audio Coding) is stored in the disc. • Use of blank disc • Disc insertion direction mistaken • Disc scratched or dirty • CD player internal malfunction
System wiring diagram	Not applicable

Step	Inspection		Action
1	**INSPECT CD PLAYER** • Clear the DTC for the connectivity master unit (CMU) using the M-MDS. (See **CLEARING DTC [CONNECTIVITY MASTER UNIT]**.) • Perform diagnostic assist code “01” CD player inspection.	Yes	Replace the CD player, then go to the next step. (See **CD PLAYER REMOVAL**.) (See **CD PLAYER INSTALLATION**.)
		No	Go to the next step.

	(See **DIAGNOSTIC ASSIST FUNCTION [CONNECTIVITY MASTER UNIT]**.) • Perform the DTC inspection for the connectivity master unit (CMU) using the M-MDS. (See **DTC INSPECTION [CONNECTIVITY MASTER UNIT]**.) • Is the same DTC displayed?		
2	**VERIFY OTHER DTCs** • Are any other DTCs displayed?	Yes	Repair the malfunctioning location according to the applicable DTC troubleshooting. (See **DTC TABLE [CONNECTIVITY MASTER UNIT]**.)
		No	DTC troubleshooting completed.

2014 - Mazda3 - Body and Accessories

DTC B1D19:79 [CONNECTIVITY MASTER UNIT]

Description	CD player disc read error
Detection condition	• With the ignition switched ON (engine off or on), the connectivity master unit (CMU) detects a disc read error.
Fail-safe function	Eject a disc.
Possible cause	**CAUTION:** • An unexpected load is applied to the CD player causing the output of a DTC due to the way the user uses the CD player, such as intentionally holding onto a disc when inserting it. The orientation of the disc should be checked before inserting it and it should be released from the fingers as soon as the disc begins to be read. • Use of incompatible disc • CD player internal malfunction
System wiring diagram	Not applicable

Step	Inspection		Action
1	**INSPECT CD PLAYER** • Clear the DTC for the connectivity master unit (CMU) using the M-MDS. (See **CLEARING DTC [CONNECTIVITY MASTER UNIT]**.) • Perform diagnostic assist code “01” CD player inspection. (See **DIAGNOSTIC ASSIST FUNCTION [CONNECTIVITY MASTER UNIT]**.)	Yes	Replace the CD player, then go to the next step. (See **CD PLAYER REMOVAL**.) (See **CD PLAYER INSTALLATION**.)
		No	Go to the next step.

	• Perform the DTC inspection for the connectivity master unit (CMU) using the M-MDS. (See **DTC INSPECTION [CONNECTIVITY MASTER UNIT]**.) • Is the same DTC displayed?		
2	**VERIFY OTHER DTCs** • Are any other DTCs displayed?	Yes	Repair the malfunctioning location according to the applicable DTC troubleshooting. (See **DTC TABLE [CONNECTIVITY MASTER UNIT]**.)
		No	DTC troubleshooting completed.

2014 - Mazda3 - Body and Accessories

DTC B1D19:98 [CONNECTIVITY MASTER UNIT]

Description	Abnormal CD player temperature
Detection condition	• With the ignition switched ON (engine off or on), the connectivity master unit (CMU) detects an abnormally high temperature condition in the CD player.
Fail-safe function	CD playback stopped.
Possible cause	**CAUTION:** • If the CD player is used for long periods in a hot environment, the temperature of the CD player will increase and a DTC may be output. The CD player should not be used continuously for long periods with the cabin under high temperature conditions from being left under direct sunlight. • Temperature increase due to continuous use for long periods. • CD player malfunction
System wiring diagram	Not applicable

Step	Inspection		Action
1	**VERIFY IF CD PLAYER TEMPERATURE WAS TEMPORARILY HIGH** • Clear the DTC for the connectivity master unit (CMU) using the M-MDS. (See **CLEARING DTC [CONNECTIVITY MASTER UNIT]**.) • Switch the ignition ON (engine off or on) and wait for **7 s or more**. • Perform the DTC inspection for the connectivity master unit (CMU) using the M-MDS.	Yes	Leave the vehicle in a cool location for **30 min** or more, then go to the next step.
		No	Go to Step 3.

	(See **DTC INSPECTION [CONNECTIVITY MASTER UNIT]**.) • Is the same DTC displayed?		
2	**VERIFY THAT REPAIRS HAVE BEEN COMPLETED** • Clear the DTC for the connectivity master unit (CMU) using the M-MDS. (See **CLEARING DTC [CONNECTIVITY MASTER UNIT]**.) • Switch the ignition ON (engine off or on) and wait for **7 s or more**. • Perform the DTC inspection for the connectivity master unit (CMU) using the M-MDS. (See **DTC INSPECTION [CONNECTIVITY MASTER UNIT]**.) • Is the same DTC displayed?	Yes	Replace the CD player, then go to the next step. (See **CD PLAYER REMOVAL**.) (See **CD PLAYER INSTALLATION**.)
		No	Go to the next step.
3	**VERIFY OTHER DTCs** • Are any other DTCs displayed?	Yes	Repair the malfunctioning location according to the applicable DTC troubleshooting. (See **DTC TABLE [CONNECTIVITY MASTER UNIT]**.)
		No	DTC troubleshooting completed.

2014 - Mazda3 - Body and Accessories

DTC U0001:88/U0100:00/U0101:00/U0121:00/U0131:00/U0140:00/U0151:00/U0155:00/U0182:00/U0214:00/U0235:00/U023A:00 [CONNECTIVITY MASTER UNIT]

Description	• U0001:88 ▪ Module communication error (HS-CAN) • U0100:00 ▪ Communication error with PCM • U0101:00 ▪ Communication error with TCM • U0121:00 ▪ Communication error with DSC HU/CM • U0131:00 ▪ Communication error with EPS control module • U0140:00 ▪ Communication error with front body control module (FBCM) • U0151:00 ▪ Communication error with SAS control module • U0155:00 ▪ Communication error with instrument cluster • U0182:00 ▪ Communication error with AFS control module • U0214:00 ▪ Communication error with start stop unit • U0235:00 ▪ Communication error with laser sensor • U023A:00 ▪ Communication error with forward sensing camera (FSC)
	• U0001:88 ▪ With the ignition switched ON (engine off or on), the connectivity master unit cannot detect a CAN bus communication line (HS-CAN) signal for **1 s or more**. ▪ With the ignition switched ON (engine off or on), the connectivity master unit detects malfunction in the CAN bus communication line (HS-CAN) **10 times** continuously. • U0100:00 ▪ With the ignition switched ON (engine off or on), the connectivity master unit cannot receive a CAN signal from the PCM for **5 s or more**. • U0101:00 ▪ With the ignition switched ON (engine off or on), the connectivity master unit cannot receive a CAN signal from the TCM for **5 s or more**.

Detection condition	U0121:00 ▪ With the ignition switched ON (engine off or on), the connectivity master unit cannot receive a CAN signal from the DSC HU/CM for **5 s or more**. • U0131:00 ▪ With the ignition switched ON (engine off or on), the connectivity master unit cannot receive a CAN signal from the EPS control module for **5 s or more**. • U0140:00 ▪ With the ignition switched ON (engine off or on), the connectivity master unit cannot receive a CAN signal from the front body control module (FBCM) for **5 s or more**. • U0151:00 ▪ With the ignition switched ON (engine off or on), the connectivity master unit cannot receive a CAN signal from the SAS control module for **5 s or more**. • U0155:00 ▪ With the ignition switched ON (engine off or on), the connectivity master unit cannot receive a CAN signal from the instrument cluster for **5 s or more**. • U0182:00 ▪ With the ignition switched ON (engine off or on), the connectivity master unit cannot receive a CAN signal from the AFS control module for **5 s or more**. • U0214:00 ▪ With the ignition switched ON (engine off or on), the connectivity master unit cannot receive a CAN signal from the start stop unit for **5 s or more**. • U0235:00 ▪ With the ignition switched ON (engine off or on), the connectivity master unit cannot receive a CAN signal from the laser sensor for **5 s or more**. • U023A:00 ▪ With the ignition switched ON (engine off or on), the connectivity master unit cannot receive a CAN signal from the forward sensing camera (FSC) for **5 s or more**.
Fail-safe function	• U0001:88 ▪ Not applicable • U0100:00 ▪ Not applicable • U0101:00 ▪ Not applicable • U0121:00 ▪ Not applicable • U0131:00 ▪ Not applicable • U0140:00 ▪ Not applicable • U0151:00 ▪ Not applicable • U0155:00 ▪ Not applicable • U0182:00 ▪ Not applicable • U0214:00

	▪ Not applicable • U0235:00 ▪ Not applicable • U023A:00 ▪ Not applicable
Possible cause	• Malfunction in CAN bus communication line • Malfunction in CAN communication line between the PCM and connectivity master unit • Malfunction in CAN communication line between the TCM and connectivity master unit • Malfunction in CAN communication line between the DSC HU/CM and connectivity master unit • Malfunction in CAN communication line between the EPS control module and connectivity master unit • Malfunction in CAN communication line between the front body control module (FBCM) and connectivity master unit • Malfunction in CAN communication line between the SAS control module and connectivity master unit • Malfunction in CAN communication line between the instrument cluster and connectivity master unit • Malfunction in CAN communication line between the AFS control module and connectivity master unit • Malfunction in CAN communication line between the start stop unit and connectivity master unit • Malfunction in CAN communication line between the laser sensor and connectivity master unit • Malfunction in CAN communication line between the forward sensing camera (FSC) and connectivity master unit
System wiring diagram	Not applicable

Diagnostic procedure

- Perform the malfunction diagnosis according to the troubleshooting procedure for the multiplex communication system. (See **FOREWORD**.)

2014 - Mazda3 - Body and Accessories

DTC U0028:88 [CONNECTIVITY MASTER UNIT]

Description	Unit communication error (PRIVATE-CAN)
Detection condition	• The connectivity master unit detects CAN bus communication line (PRIVATE-CAN) malfunction **10 times** continuously.
Fail-safe function	• Not applicable
Possible cause	• Malfunction in CAN bus communication line • Connectivity master unit malfunction ▪ Malfunction in CAN bus communication line
System wiring diagram	• Not applicable

Diagnostic Procedure

Step	Inspection		Action
1	**VERIFY IF OTHER DTCs DISPLAYED FOR CONNECTIVITY MASTER UNIT** • Clear the DTC for the connectivity master unit using the M-MDS. (See **CLEARING DTC [CONNECTIVITY MASTER UNIT]**.) • Switch the ignition ON (engine off or on) and wait for **7 s or more**. • Perform the DTC inspection for the connectivity master unit using the M-MDS. (See **DTC INSPECTION [CONNECTIVITY MASTER UNIT]**.) • Is DTC U00184:00 or U0187:00 displayed?	Yes	Repair the malfunctioning location according to the applicable DTC troubleshooting. (See **DTC TABLE [CONNECTIVITY MASTER UNIT]**.)
		No	Go to the next step.

2	**PERFORM DTC INSPECTION AND VERIFY IF MALFUNCTIONING LOCATION IS CONNECTIVITY MASTER UNIT** • Clear the DTC for the connectivity master unit using the M-MDS. (See **CLEARING DTC [CONNECTIVITY MASTER UNIT]**.) • Switch the ignition ON (engine off or on) and wait for **7 s or more**. • Perform the DTC inspection for the connectivity master unit using the M-MDS. (See **DTC INSPECTION [CONNECTIVITY MASTER UNIT]**.) • Is the same DTC displayed?	Yes	Replace the connectivity master unit, then go to the next step. (See **CONNECTIVITY MASTER UNIT (CMU) REMOVAL/INSTALLATION**.)
		No	Go to the next step.
3	**VERIFY IF OTHER DTCs DISPLAYED** • Are any other DTCs displayed?	Yes	Repair the malfunctioning location according to the applicable DTC troubleshooting. (See **DTC TABLE [CONNECTIVITY MASTER UNIT]**.)
		No	DTC troubleshooting completed.

2014 - Mazda3 - Body and Accessories

DTC U0184:00/U0187:00 [CONNECTIVITY MASTER UNIT]

Description	• U0184:00
	  ▪ Communication error with tuner and amp unit
	• U0187:00
	  ▪ Communication error with CD player

Detection condition	• U0184:00
	  ▪ The connectivity master unit cannot receive CAN signal from the tuner and amp unit for **5 s or more**.
	• U0187:00
	  ▪ The connectivity master unit cannot receive CAN signal from the CD player for **5 s or more**.

Fail-safe function	• U0184:00
	  ▪ Not applicable
	• U0187:00
	  ▪ Not applicable

Possible cause	• Connectivity master unit connector or terminal malfunction
	• Tuner and amp unit connector or terminal malfunction
	• CD player connector or terminal malfunction
	• Connector C-36 connector or terminal malfunction
	• Short to power supply in wiring harness between the following terminals:
	  ▪ Connectivity master unit terminal 2I and tuner and amp unit terminal 2O
	  ▪ Connectivity master unit terminal 2I and CD player terminal G
	• Short to ground in wiring harness between the following terminals:
	  ▪ Connectivity master unit terminal 2J and tuner and amp unit terminal 2Q
	  ▪ Connectivity master unit terminal 2J and CD player terminal H
	• Short circuit in the following wiring harnesses:
	  ▪ Connectivity master unit terminal 2I and tuner and amp unit terminal 2O
	  ▪ Connectivity master unit terminal 2J and tuner and amp unit terminal 2Q
	  ▪ Connectivity master unit terminal 2I and CD player terminal G
	  ▪ Connectivity master unit terminal 2J and CD player terminal H
	• Open circuit in wiring harness between the following terminals:
	  ▪ Tuner and amp unit terminal 2O and connector C-36
	  ▪ Tuner and amp unit terminal 2Q and connector C-36
	  ▪ CD player terminal G and connector C-36
	  ▪ CD player terminal H and connector C-36
	  ▪ Connectivity master unit terminal 2I and connector C-36

	▪ Connectivity master unit terminal 2J and connector C-36 • CD player malfunction • Tuner and amp unit malfunction • Connectivity master unit malfunction

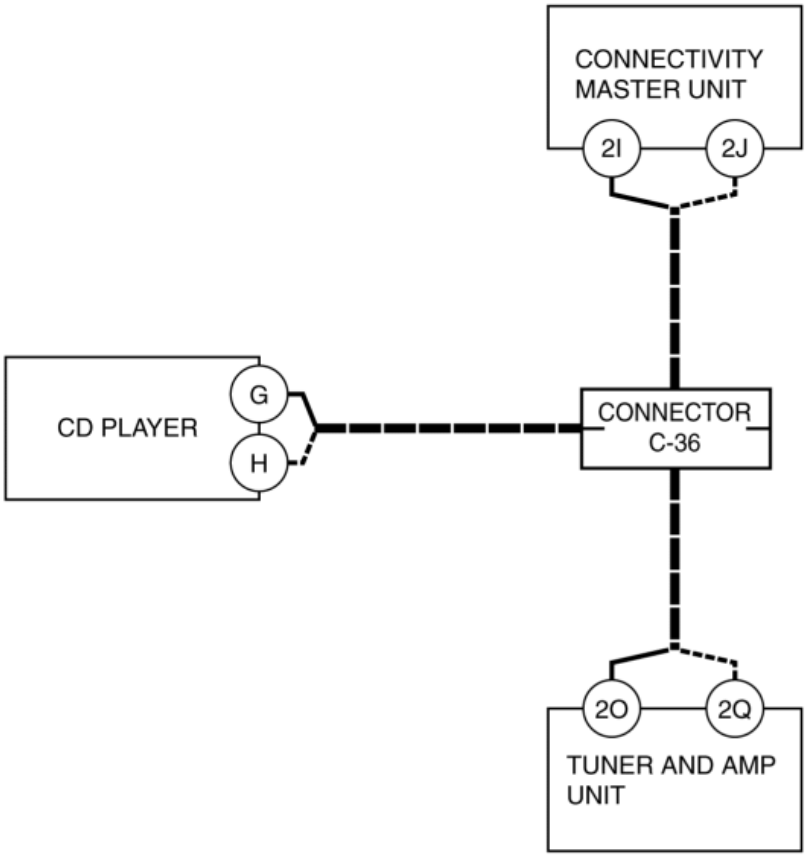

CONNECTIVITY MASTER UNIT
WIRING HARNESS-SIDE CONNECTOR

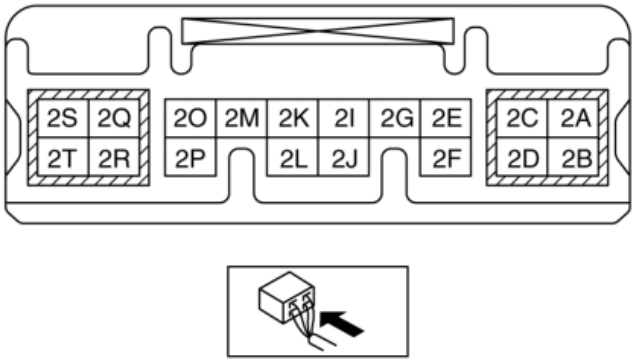

TUNER AND AMP UNIT
WIRING HARNESS-SIDE CONNECTOR

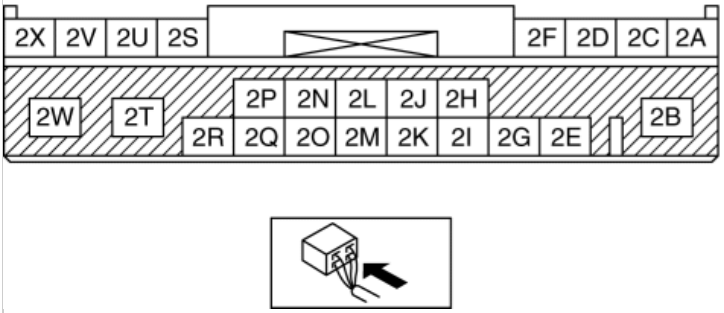

CD PLAYER
WIRING HARNESS-SIDE CONNECTOR

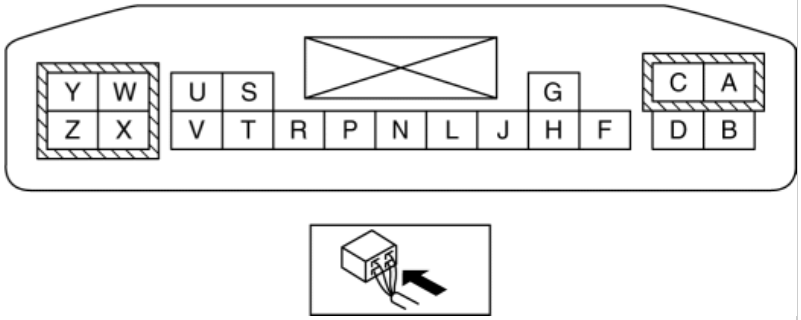

CAUTION:

- When disconnecting the connector, verify that there is no looseness, damage, deformation, corrosion, or poor connection of the connector terminals.

Diagnostic Procedure

Step	Inspection		Action
1	**INSPECT FOR SHORT TO POWER SUPPLY IN CAN_H SIDE CIRCUIT OF PRIVATE-CAN** • Measure the voltage between connectivity master unit terminal 2I (PRIVATE-CAN CAN_H side) and body ground. • Is the voltage **B+**? **NOTE:** • If a short to power supply other than the B+ power supply has occurred, a constant voltage other than B+ can be measured.	Yes	A short to power supply in CAN_H side of PRIVATE-CAN has occurred. Go to Step 5.
		No	Go to the next step.
2	**INSPECT FOR SHORT TO GROUND IN CAN_L SIDE CIRCUIT OF PRIVATE-CAN** • Measure the voltage between connectivity master unit terminal 2J and body ground. • Is the voltage **0 V**?	Yes	A short to ground in CAN_L side of PRIVATE-CAN has occurred. Go to Step 8.
		No	Go to the next step.
3	**INSPECT BETWEEN PRIVATE-CAN_H AND CAN_L SIDES FOR SHORT BETWEEN CIRCUITS** • Inspect for continuity at the following terminals: ▪ Connectivity master unit terminal 2I ▪ Connectivity master unit terminal 2J • Is there continuity?	Yes	A short between circuits has occurred in PRIVATE-CAN. Go to Step 11.
		No	Go to the next step.
4	**DETERMINE OPEN CIRCUIT LOCATION** • Clear the DTC for the connectivity master unit using the M-MDS. (See **CLEARING DTC [CONNECTIVITY MASTER UNIT]**.) • Switch the ignition ON (engine off or on) and wait for **12 s or more**. • Perform the DTC inspection for the connectivity master unit using the M-MDS. (See **DTC INSPECTION [CONNECTIVITY MASTER UNIT]**.) • Are any DTCs of the following displayed? ▪ U0184:00 ▪ U0187:00	Yes	Only U0184:00 is displayed • Go to Step 14. Only U0187:00 is displayed • Go to Step 16. All DTCs are displayed • Go to Step 18.
		No	Go to Step 20.
5	**INSPECT WIRING HARNESS FOR SHORT TO POWER SUPPLY** • Switch the ignition off. • Disconnect the negative battery cable. (See **NEGATIVE BATTERY CABLE DISCONNECTION/CONNECTION [SKYACTIV-G 2.0, SKYACTIV-G 2.5]**.) • Disconnect the following connectors: ▪ Connectivity master unit ▪ Tuner and amp unit ▪ CD player ▪ Connector C-36	Yes	Go to the next step.
		No	Repair or replace the wiring harness which is shorted to power supply, then go to Step 19.

	• Reconnect the negative battery cable. (See **NEGATIVE BATTERY CABLE DISCONNECTION/CONNECTION [SKYACTIV-G 2.0, SKYACTIV-G 2.5]**.) • Switch the ignition ON (engine off or on). • Measure the voltage at the following terminals (wiring harness-side). ▪ Connectivity master unit terminal 2I ▪ Tuner and amp unit terminal 2O ▪ CD player terminal G • Is the voltage **0 V**?		
6	**PERFORM DTC INSPECTION AND VERIFY IF MALFUNCTIONING LOCATION IS CD PLAYER** • Always reconnect all disconnected connectors. • Reconnect the negative battery cable. (See **NEGATIVE BATTERY CABLE DISCONNECTION/CONNECTION [SKYACTIV-G 2.0, SKYACTIV-G 2.5]**.) • Clear the DTC for the connectivity master unit using the M-MDS. (See **CLEARING DTC [CONNECTIVITY MASTER UNIT]**.) • Switch the ignition ON (engine off or on) and wait for **12 s or more**. • Perform the DTC inspection for the connectivity master unit using the M-MDS. (See **DTC INSPECTION [CONNECTIVITY MASTER UNIT]**.) • Is the same DTC displayed?	Yes	Replace the CD player, then go to the next step. (See **CD PLAYER REMOVAL**.) (See **CD PLAYER INSTALLATION**.)
		No	Go to Step 20.
7	**PERFORM DTC INSPECTION AND VERIFY IF MALFUNCTIONING LOCATION IS TUNER AND AMP UNIT** • Clear the DTC for the connectivity master unit using the M-MDS. (See **CLEARING DTC [CONNECTIVITY MASTER UNIT]**.) • Switch the ignition ON (engine off or on) and wait for **12 s or more**. • Perform the DTC inspection for the connectivity master unit using the M-MDS. (See **DTC INSPECTION [CONNECTIVITY MASTER UNIT]**.) • Is the same DTC displayed?	Yes	Replace the tuner and amp unit, then go to Step 19. (See **TUNER AND AMP UNIT (TAU) REMOVAL/INSTALLATION**.)
		No	Go to Step 20.
8	**INSPECT WIRING HARNESS FOR SHORT TO GROUND** • Switch the ignition off. • Disconnect the negative battery cable. (See **NEGATIVE BATTERY CABLE DISCONNECTION/CONNECTION [SKYACTIV-G 2.0, SKYACTIV-G 2.5]**.) • Disconnect the following connectors: ▪ Connectivity master unit ▪ Tuner and amp unit ▪ CD player ▪ Connector C-36 • Inspect for continuity between the following terminals (wiring harness-side) and body ground. ▪ Connectivity master unit terminal 2J	Yes	Repair or replace the wiring harness which is shorted to ground, then go to Step 19.
		No	Go to the next step.

	▪ Tuner and amp unit terminal 2Q ▪ CD player terminal H • Is there continuity?		
9	**PERFORM DTC INSPECTION AND VERIFY IF MALFUNCTIONING LOCATION IS CD PLAYER** • Always reconnect all disconnected connectors. • Reconnect the negative battery cable. (See **NEGATIVE BATTERY CABLE DISCONNECTION/CONNECTION [SKYACTIV-G 2.0, SKYACTIV-G 2.5]**.) • Clear the DTC for the connectivity master unit using the M-MDS. (See **CLEARING DTC [CONNECTIVITY MASTER UNIT]**.) • Switch the ignition ON (engine off or on) and wait for **12 s or more**. • Perform the DTC inspection for the connectivity master unit using the M-MDS. (See **DTC INSPECTION [CONNECTIVITY MASTER UNIT]**.) • Is the same DTC displayed?	Yes	Replace the CD player, then go to the next step. (See **CD PLAYER REMOVAL**.) (See **CD PLAYER INSTALLATION**.)
		No	Go to Step 20.
10	**PERFORM DTC INSPECTION AND VERIFY IF MALFUNCTIONING LOCATION IS TUNER AND AMP UNIT** • Clear the DTC for the connectivity master unit using the M-MDS. (See **CLEARING DTC [CONNECTIVITY MASTER UNIT]**.) • Switch the ignition ON (engine off or on) and wait for **12 s or more**. • Perform the DTC inspection for the connectivity master unit using the M-MDS. (See **DTC INSPECTION [CONNECTIVITY MASTER UNIT]**.) • Is the same DTC displayed?	Yes	Replace the tuner and amp unit, then go to Step 19. (See **TUNER AND AMP UNIT (TAU) REMOVAL/INSTALLATION**.)
		No	Go to Step 20.
11	**INSPECT WIRING HARNESS FOR SHORT BETWEEN CIRCUITS** • Switch the ignition off. • Disconnect the negative battery cable. (See **NEGATIVE BATTERY CABLE DISCONNECTION/CONNECTION [SKYACTIV-G 2.0, SKYACTIV-G 2.5]**.) • Disconnect the following connectors: ▪ Connectivity master unit ▪ Tuner and amp unit ▪ CD player ▪ Connector C-36 • Inspect between the following terminals (wiring harness-side) for continuity. ▪ Connectivity master unit terminals 2I and 2J ▪ Tuner and amp unit terminals 2O and 2Q ▪ CD player terminals G and H • Is there continuity?	Yes	Repair or replace the wiring harness which is shorted between circuits, then go to Step 19.
		No	Go to the next step.
12	**PERFORM DTC INSPECTION AND VERIFY IF MALFUNCTIONING LOCATION IS CD PLAYER** • Always reconnect all disconnected connectors. • Reconnect the negative battery cable.	Yes	Replace the CD player, then go to the next step. (See **CD PLAYER REMOVAL**.) (See **CD PLAYER INSTALLATION**.)

	(See **NEGATIVE BATTERY CABLE DISCONNECTION/CONNECTION [SKYACTIV-G 2.0, SKYACTIV-G 2.5]**.) • Clear the DTC for the connectivity master unit using the M-MDS. (See **CLEARING DTC [CONNECTIVITY MASTER UNIT]**.) • Switch the ignition ON (engine off or on) and wait for **12 s or more**. • Perform the DTC inspection for the connectivity master unit using the M-MDS. (See **DTC INSPECTION [CONNECTIVITY MASTER UNIT]**.) • Is the same DTC displayed?	No	Go to Step 20.
13	**PERFORM DTC INSPECTION AND VERIFY IF MALFUNCTIONING LOCATION IS TUNER AND AMP UNIT** • Clear the DTC for the connectivity master unit using the M-MDS. (See **CLEARING DTC [CONNECTIVITY MASTER UNIT]**.) • Switch the ignition ON (engine off or on) and wait for **12 s or more**. • Perform the DTC inspection for the connectivity master unit using the M-MDS. (See **DTC INSPECTION [CONNECTIVITY MASTER UNIT]**.) • Is the same DTC displayed?	Yes	Replace the tuner and amp unit, then go to Step 19. (See **TUNER AND AMP UNIT (TAU) REMOVAL/INSTALLATION**.)
		No	Go to Step 20.
14	**INSPECT WIRING HARNESS BETWEEN TUNER AND AMP UNIT AND CONNECTOR C-36 FOR OPEN CIRCUIT** • Switch the ignition off. • Disconnect the negative battery cable. (See **NEGATIVE BATTERY CABLE DISCONNECTION/CONNECTION [SKYACTIV-G 2.0, SKYACTIV-G 2.5]**.) • Disconnect the following connectors: ▪ Tuner and amp unit ▪ Connector C-36 • Inspect the wiring harness for continuity between the following terminals (wiring harness-side). ▪ Tuner and amp unit terminal 2O and connector C-36 ▪ Tuner and amp unit terminal 2Q and connector C-36 • Is there continuity?	Yes	Go to the next step.
		No	Repair or replace the wiring harness which has an open circuit, then go to Step 19.
15	**PERFORM DTC INSPECTION AND VERIFY IF MALFUNCTIONING LOCATION IS TUNER AND AMP UNIT** • Always reconnect all disconnected connectors. • Reconnect the negative battery cable. (See **NEGATIVE BATTERY CABLE DISCONNECTION/CONNECTION [SKYACTIV-G 2.0, SKYACTIV-G 2.5]**.) • Clear the DTC for the connectivity master unit using the M-MDS. (See **CLEARING DTC [CONNECTIVITY MASTER UNIT]**.) • Switch the ignition ON (engine off or on) and wait for **12 s or more**. • Perform the DTC inspection for the connectivity master unit using the M-MDS. (See **DTC INSPECTION [CONNECTIVITY MASTER UNIT]**.)	Yes	Replace the tuner and amp unit, then go to Step 19. (See **TUNER AND AMP UNIT (TAU) REMOVAL/INSTALLATION**.)
		No	Go to Step 20.

	• Is the same DTC displayed?		
16	**INSPECT WIRING HARNESS BETWEEN CONNECTOR C-36 AND CD PLAYER FOR OPEN CIRCUIT** • Switch the ignition off. • Disconnect the negative battery cable. (See **NEGATIVE BATTERY CABLE DISCONNECTION/CONNECTION [SKYACTIV-G 2.0, SKYACTIV-G 2.5]**.) • Disconnect the following connectors: ▪ CD player ▪ Connector C-36 • Inspect the wiring harness for continuity between the following terminals (wiring harness-side). ▪ CD player terminal G and connector C-36 ▪ CD player terminal H and connector C-36 • Is there continuity?	Yes	Go to the next step.
		No	Repair or replace the wiring harness which has an open circuit, then go to Step 19.
17	**PERFORM DTC INSPECTION AND VERIFY IF MALFUNCTIONING LOCATION IS CD PLAYER** • Always reconnect all disconnected connectors. • Reconnect the negative battery cable. (See **NEGATIVE BATTERY CABLE DISCONNECTION/CONNECTION [SKYACTIV-G 2.0, SKYACTIV-G 2.5]**.) • Clear the DTC for the connectivity master unit using the M-MDS. (See **CLEARING DTC [CONNECTIVITY MASTER UNIT]**.) • Switch the ignition ON (engine off or on) and wait for **12 s or more**. • Perform the DTC inspection for the connectivity master unit using the M-MDS. (See **DTC INSPECTION [CONNECTIVITY MASTER UNIT]**.) • Is the same DTC displayed?	Yes	Replace the CD player, then go to Step 20. (See **CD PLAYER REMOVAL**.) (See **CD PLAYER INSTALLATION**.)
		No	Go to Step 20.
18	**INSPECT WIRING HARNESS BETWEEN CONNECTOR C-36 AND CONNECTIVITY MASTER UNIT FOR OPEN CIRCUIT** • Switch the ignition off. • Disconnect the negative battery cable. (See **NEGATIVE BATTERY CABLE DISCONNECTION/CONNECTION [SKYACTIV-G 2.0, SKYACTIV-G 2.5]**.) • Disconnect the following connectors: ▪ Connectivity master unit ▪ Connector C-36 • Inspect the wiring harness for continuity between the following terminals (wiring harness-side). ▪ Connectivity master unit terminal 2I and connector C-36 ▪ Connectivity master unit terminal 2J and connector C-36 • Is there continuity?	Yes	Go to the next step.
		No	Repair or replace the wiring harness which has an open circuit, then go to the next step.
19	**VERIFY THAT REPAIRS HAVE BEEN COMPLETED** • Always reconnect all disconnected connectors. • Reconnect the negative battery cable.	Yes	Repeat the inspection from Step 1. • If the malfunction recurs, replace the connectivity master unit.

	(See **NEGATIVE BATTERY CABLE DISCONNECTION/CONNECTION [SKYACTIV-G 2.0, SKYACTIV-G 2.5]**.) • Clear the DTC for the connectivity master unit using the M-MDS. (See **CLEARING DTC [CONNECTIVITY MASTER UNIT]**.) • Switch the ignition ON (engine off or on) and wait for **12 s or more**. • Perform the DTC inspection for the connectivity master unit using the M-MDS. (See **DTC INSPECTION [CONNECTIVITY MASTER UNIT]**.) • Is the same DTC displayed?		(See **CONNECTIVITY MASTER UNIT (CMU) REMOVAL/INSTALLATION**.) Go to the next step.
		No	Go to the next step.
20	**VERIFY IF OTHER DTCs DISPLAYED** • Are any other DTCs displayed?	Yes	Repair the malfunctioning location according to the applicable DTC troubleshooting. (See **DTC TABLE [CONNECTIVITY MASTER UNIT]**.)
		No	DTC troubleshooting completed.

2014 - Mazda3 - Body and Accessories

DTC U2300:54 [CONNECTIVITY MASTER UNIT]

Description	Configuration data not received from instrument cluster
Detection condition	• The connectivity master unit cannot receive the configuration data from the instrument cluster for **30 s or more** with the ignition switched ON (engine off or on).
Fail-safe function	Not applicable

Possible cause	• DTCs are stored in the instrument cluster.
	  ▪ Instrument cluster configuration not implemented
	  ▪ Instrument cluster internal memory malfunction
	• Instrument cluster configuration data error
	• Connectivity master unit malfunction

System wiring diagram	Not applicable

Diagnostic Procedure

Step	Inspection		Action
1	**VERIFY INSTRUMENT CLUSTER DTCs** • Perform the DTC inspection for the instrument cluster using the M-MDS. (See **DTC INSPECTION [INSTRUMENT CLUSTER]**.) • Is a DTC displayed?	Yes	Repair the malfunctioning location according to the applicable DTC troubleshooting. (See **DTC TABLE [INSTRUMENT CLUSTER]**.)
		No	Go to the next step.
2	**RESET INSTRUMENT CLUSTER CONFIGURATION DATA** • Using the M-MDS, perform the	Yes	Using the M-MDS, re-perform the instrument cluster configuration using the As-Built data, then go to the next step.

	instrument cluster configuration with the As-Built data. (See **INSTRUMENT CLUSTER CONFIGURATION (USING READ/WRITE FUNCTION)**.) • Clear the DTC for the connectivity master unit using the M-MDS. (See **CLEARING DTC [CONNECTIVITY MASTER UNIT]**.) • Switch the ignition ON (engine off or on) and wait for **37 s or more**. • Perform the DTC inspection for the connectivity master unit using the M-MDS. (See **DTC INSPECTION [CONNECTIVITY MASTER UNIT]**.) • Is the same DTC displayed?		(See **INSTRUMENT CLUSTER CONFIGURATION (USING AS-BUILT DATA)**.)
		No	Go to Step 4.
3	**VERIFY THAT REPAIRS HAVE BEEN COMPLETED** • Clear the DTC for the connectivity master unit using the M-MDS. (See **CLEARING DTC [CONNECTIVITY MASTER UNIT]**.) • Switch the ignition ON (engine off or on) and wait for **37 s or more**. • Perform the DTC inspection for the connectivity master unit using the M-MDS. (See **DTC INSPECTION [CONNECTIVITY MASTER UNIT]**.) • Is the same DTC displayed?	Yes	Repeat the inspection from Step 1. • If the malfunction recurs, replace the connectivity master unit. (See **CONNECTIVITY MASTER UNIT (CMU) REMOVAL/INSTALLATION**.) Go to the next step.
		No	Go to the next step.
4	**VERIFY IF OTHER DTCs DISPLAYED** • Are any other DTCs displayed?	Yes	Repair the malfunctioning location according to the applicable DTC troubleshooting. (See **DTC TABLE [CONNECTIVITY MASTER UNIT]**.)

		No	DTC troubleshooting completed.

2014 - Mazda3 - Body and Accessories

DTC U2300:55 [CONNECTIVITY MASTER UNIT]

Description	Instrument cluster configuration not implemented
Detection condition	• The connectivity master unit detected any of the following conditions with the ignition switched to ACC or ON (engine off or on). ▪ Instrument cluster configuration not read ▪ Configuration data cannot be written to connectivity master unit memory.
Fail-safe function	Not applicable
Possible cause	**NOTE:** • To correctly write the configuration data, which is sent from the instrument cluster to the connectivity master unit, to the connectivity master unit, **3 s or more** must have elapsed since the ignition was switched ON (engine off or on). • Instrument cluster configuration is not completed. • Connectivity master unit malfunction
System wiring diagram	Not applicable

Diagnostic Procedure

Step	Inspection		Action
1	**RESET CONFIGURATION DATA FROM INSTRUMENT CLUSTER TO CONNECTIVITY MASTER UNIT** • Using the M-MDS, perform the instrument cluster configuration with the As-Built data. (See **INSTRUMENT CLUSTER**	Yes	Using the M-MDS, re-perform the instrument cluster configuration using the As-Built data, then go to the next step. (See **INSTRUMENT CLUSTER CONFIGURATION (USING AS-BUILT DATA)**.)
		No	Go to Step 3

	CONFIGURATION (USING READ/WRITE FUNCTION).) • Clear the DTC for the connectivity master unit using the M-MDS. (See **CLEARING DTC [CONNECTIVITY MASTER UNIT]**.) • Switch the ignition ON (engine off or on) and wait for **10 s or more**. • Perform the DTC inspection for the connectivity master unit using the M-MDS. (See **DTC INSPECTION [CONNECTIVITY MASTER UNIT]**.) • Is the same DTC displayed?		
2	**VERIFY THAT REPAIRS HAVE BEEN COMPLETED** • Clear the DTC for the connectivity master unit using the M-MDS. (See **CLEARING DTC [CONNECTIVITY MASTER UNIT]**.) • Switch the ignition ON (engine off or on) and wait for **10 s or more**. • Perform the DTC inspection for the connectivity master unit using the M-MDS. (See **DTC INSPECTION [CONNECTIVITY MASTER UNIT]**.) • Is the same DTC displayed?	Yes	Repeat the inspection from Step 1. • If the malfunction recurs, replace the connectivity master unit. (See **CONNECTIVITY MASTER UNIT (CMU) REMOVAL/INSTALLATION**.) Go to the next step.
		No	Go to the next step.
3	**VERIFY IF OTHER DTCs DISPLAYED** • Are any other DTCs displayed?	Yes	Repair the malfunctioning location according to the applicable DTC troubleshooting. (See **DTC TABLE [CONNECTIVITY MASTER UNIT]**.)
		No	DTC troubleshooting completed.

DTC U2300:55 [CONNECTIVITY MASTER UNIT]

2014 - Mazda3 - Body and Accessories

DTC U3000:42 [CONNECTIVITY MASTER UNIT]

Description	Connectivity master unit internal malfunction (poor data read-outs)
Detection condition	• The connectivity master unit cannot read data from the NVRAM in the connectivity master unit with the ignition switched to ACC or ON (engine off or on).
Fail-safe function	Not applicable
Possible cause	• Connectivity master unit malfunction
System wiring diagram	Not applicable

Diagnostic Procedure

Step	Inspection		Action
1	**PERFORM DTC INSPECTION AND VERIFY IF MALFUNCTIONING LOCATION IS CONNECTIVITY MASTER UNIT** • Clear the DTC for the connectivity master unit using the M-MDS. (See **CLEARING DTC [CONNECTIVITY MASTER UNIT]**.) • Switch the ignition ON (engine off or on) and wait for **7 s or more**. • Perform the DTC inspection for the connectivity master unit using the M-MDS. (See **DTC INSPECTION [CONNECTIVITY MASTER UNIT]**.) • Is the same DTC displayed?	Yes	Repeat the inspection from Step 1. • If the malfunction recurs, replace the connectivity master unit. (See **CONNECTIVITY MASTER UNIT (CMU) REMOVAL/INSTALLATION**.) Go to the next step.
		No	Go to the next step.

2	**VERIFY IF OTHER DTCs DISPLAYED** • Are any other DTCs displayed?	Yes	Repair the malfunctioning location according to the applicable DTC troubleshooting. (See **DTC TABLE [CONNECTIVITY MASTER UNIT]**.)
		No	DTC troubleshooting completed.

2014 - Mazda3 - Body and Accessories

DTC U3003:16 [CONNECTIVITY MASTER UNIT]

Description	Low ACC power supply voltage input to connectivity master unit
Detection condition	• The connectivity master unit detects ACC power supply circuit voltage of **8.0 ± 0.8 V or less** for **10 s or more** with the ignition switched to ACC or ON (engine off or on).
Fail-safe function	Not applicable

Possible cause	• DTCs are stored in the PCM.
	• Battery malfunction
	• Generator malfunction
	• Connectivity master unit connector or terminal malfunction
	• Connectivity master unit ACC power supply circuit malfunction
	  ▪ Short to ground in wiring harness between MIRROR 7.5 A fuse and connectivity master unit terminal 2Q
	  ▪ MIRROR 7.5 A fuse malfunction
	  ▪ Open circuit in wiring harness between ACC relay and connectivity master unit terminal 2Q
	• Connectivity master unit malfunction

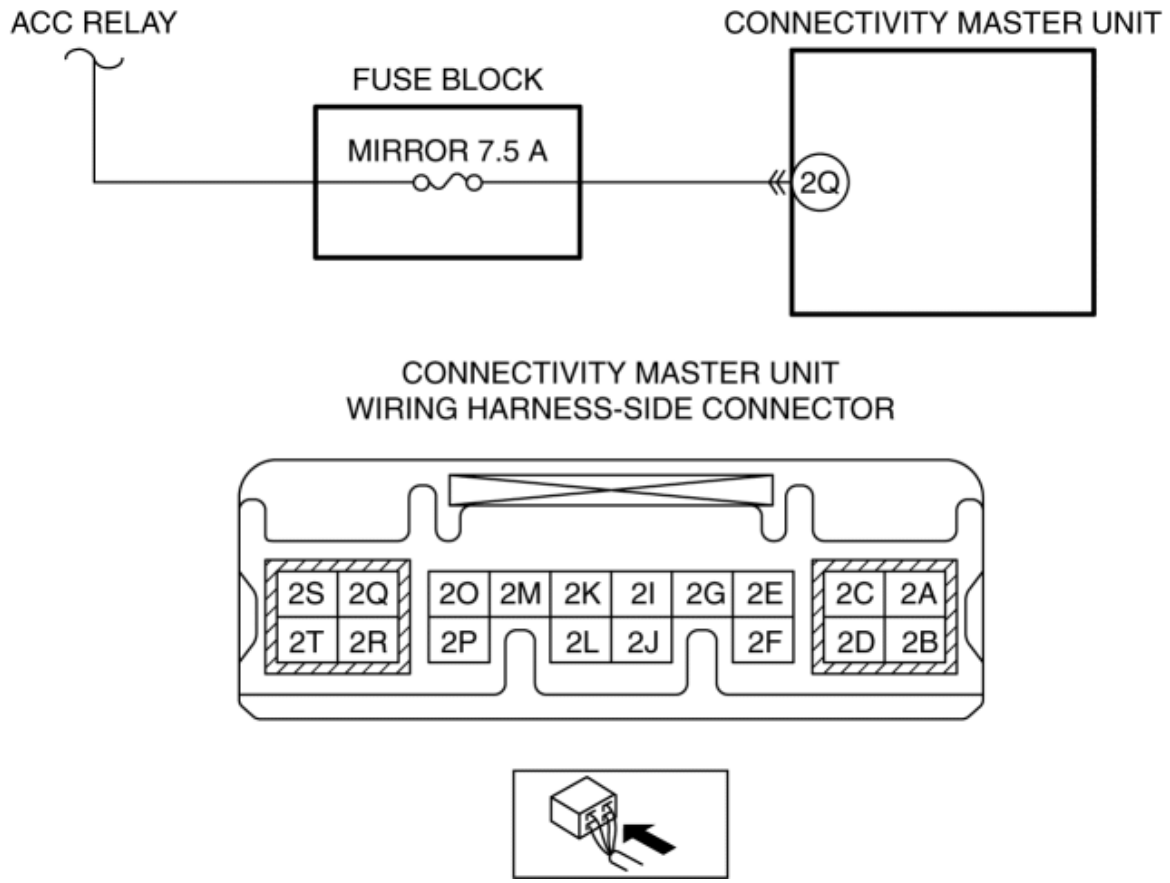

Step	Inspection		Action
1	**VERIFY PCM DTCs** • Perform the DTC inspection for the PCM using the M-MDS. (See **ON-BOARD DIAGNOSTIC TEST [SKYACTIV-G 2.0, SKYACTIV-G 2.5]**.) • Is a DTC displayed?	Yes	Repair the malfunctioning location according to the applicable DTC troubleshooting. (See **DTC TABLE [SKYACTIV-G 2.0, SKYACTIV-G 2.5]**.)
		No	Go to the next step.
2	**INSPECT BATTERY** • Inspect the battery. (See **BATTERY INSPECTION [SKYACTIV-G 2.0, SKYACTIV-G 2.5]**.) • Is the battery normal?	Yes	Go to the next step.
		No	Recharge or replace the battery, then go to Step 6. (See **BATTERY RECHARGING [SKYACTIV-G 2.0, SKYACTIV-G 2.5]**.) (See **BATTERY REMOVAL/INSTALLATION [SKYACTIV-G 2.0, SKYACTIV-G 2.5]**.)
3	**INSPECT GENERATOR** • Inspect the generator. (See **GENERATOR INSPECTION [SKYACTIV-G 2.0, SKYACTIV-G 2.5 (WITHOUT i-ELOOP)]**.)	Yes	Go to the next step.
		No	Replace the generator, then go to Step 6. (See **GENERATOR REMOVAL/INSTALLATION [SKYACTIV-G 2.0, SKYACTIV-G 2.5 (WITHOUT i-ELOOP)]**.)

	(See **GENERATOR INSPECTION [SKYACTIV-G 2.0, SKYACTIV-G 2.5 (WITH i-ELOOP)]**.) • Is the generator normal?		(See **GENERATOR REMOVAL/INSTALLATION [SKYACTIV-G 2.0, SKYACTIV-G 2.5 (WITH i-ELOOP)]**.)
4	**INSPECT CONNECTIVITY MASTER UNIT CONNECTOR CONDITION** • Switch the ignition off. • Disconnect the negative battery cable. (See **NEGATIVE BATTERY CABLE DISCONNECTION/CONNECTION [SKYACTIV-G 2.0, SKYACTIV-G 2.5]**.) • Disconnect the connectivity master unit connector. • Inspect the connector engagement and connection condition and inspect the terminals for damage, deformation, corrosion, or disconnection. • Is the connector normal?	Yes	Go to the next step.
		No	Repair or replace the connector, then go to Step 6.
5	**VERIFY CONNECTIVITY MASTER UNIT ACC POWER SUPPLY VOLTAGE** • Reconnect the negative battery cable. (See **NEGATIVE BATTERY CABLE DISCONNECTION/CONNECTION [SKYACTIV-G 2.0, SKYACTIV-G 2.5]**.) • Measure the voltage at connectivity master unit terminal 2Q (wiring harness-side). • Is the voltage **B+**?	Yes	Go to the next step.
		No	Inspect the MIRROR 7.5 A fuse. • If the fuse is blown: ▪ Refer to the wiring diagram and verify if there is a common connector between MIRROR 7.5 A fuse and connectivity master unit terminal 2Q. **If there is a common connector:** • Inspect the common connector and terminals for corrosion, damage, or disconnection and the common wiring harnesses for short to ground to determine the malfunctioning

location.

- Repair or replace the malfunctioning location.

If there is no common connector:

- Repair or replace the wiring harness which is shorted to ground.
- Replace the fuse.

- If the fuse is damaged:
  - Replace the fuse.
- If the fuse is normal:
  - Refer to the wiring diagram and verify if there is a common connector between ACC relay and connectivity master unit terminal 2Q.

If there is a common connector:

- Inspect the common connector and terminals for corrosion, damage, or disconnection and the common wiring harnesses for an open circuit to determine the malfunctioning location.
- Repair or replace the malfunctioning location.

If there is no common connector:

- Repair or replace the wiring harness

			which has an open circuit. Go to the next step.
6	**VERIFY THAT REPAIRS HAVE BEEN COMPLETED** • Always reconnect all disconnected connectors. • Reconnect the negative battery cable. (See **NEGATIVE BATTERY CABLE DISCONNECTION/CONNECTION [SKYACTIV-G 2.0, SKYACTIV-G 2.5]**.) • Clear the DTC for the connectivity master unit using the M-MDS. (See **CLEARING DTC [CONNECTIVITY MASTER UNIT]**.) • Switch the ignition ON (engine off or on) and wait for **17 s or more**. • Perform the DTC inspection for the connectivity master unit using the M-MDS. (See **DTC INSPECTION [CONNECTIVITY MASTER UNIT]**.) • Is the same DTC displayed?	Yes	Repeat the inspection from Step 1. • If the malfunction recurs, replace the connectivity master unit. (See **CONNECTIVITY MASTER UNIT (CMU) REMOVAL/INSTALLATION**.) Go to the next step.
		No	Go to the next step.
7	**VERIFY IF OTHER DTCs DISPLAYED** • Are any other DTCs displayed?	Yes	Repair the malfunctioning location according to the applicable DTC troubleshooting. (See **DTC TABLE [CONNECTIVITY MASTER UNIT]**.)
		No	DTC troubleshooting completed.

2014 - Mazda3 - Body and Accessories

DIAGNOSTIC ASSIST FUNCTION [CONNECTIVITY MASTER UNIT]

Activation Procedure

Using commander switch

1. Switch the ignition to ACC or ON (engine off or on).
2. Press the following buttons simultaneously for **2 s or more**.
   - Volume dial
   - AUDIO button
   - FAVORITE button

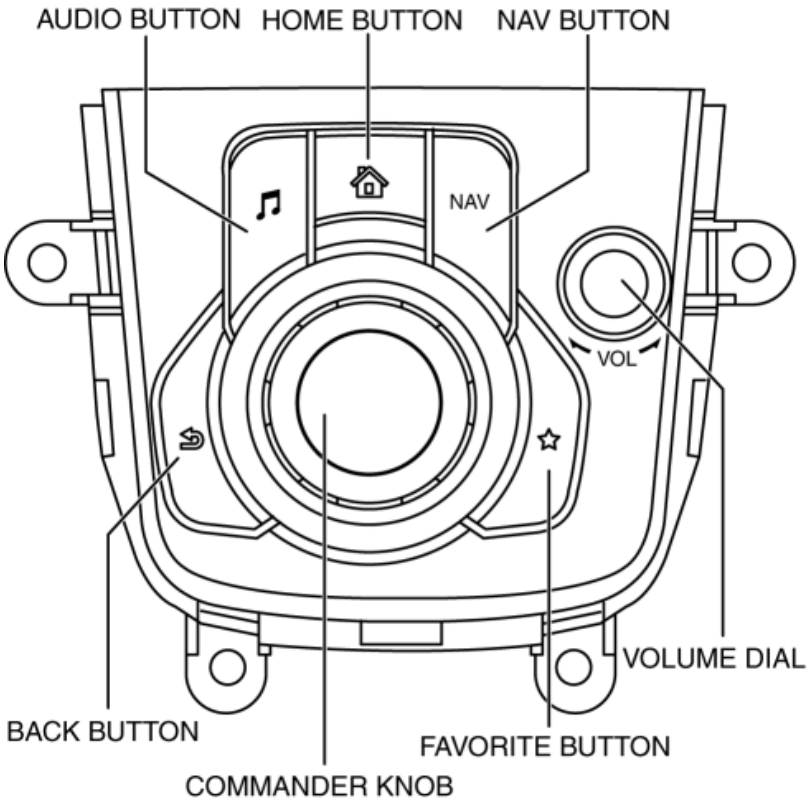

Using center display

1. Switch the ignition to ACC or ON (engine off or on).
2. Display the display setting screen in the center display.
   - Select [Settings] on the center display.
   - Select [Display] on the center display.
3. Operate the center display in the following order.

Touch the right upper area of the screen (area A in figure) for **5 s or more**.

- Touch the left upper area of the screen (area B in figure) for **5 s or more**.

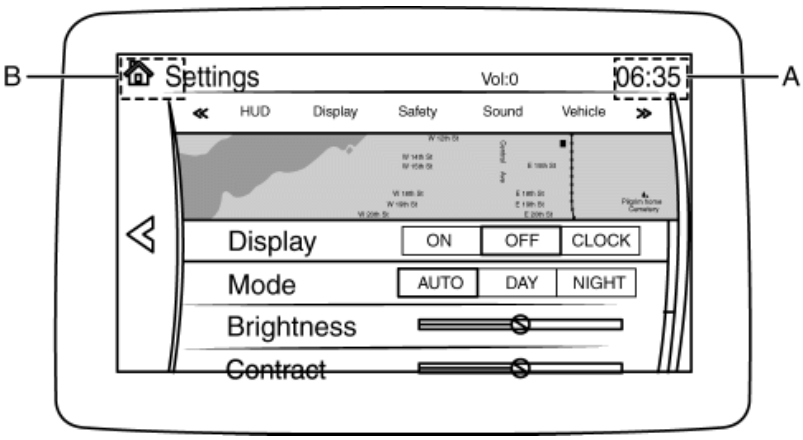

Diagnostic Assist Code Input Procedure

Diagnostic assist code input screen

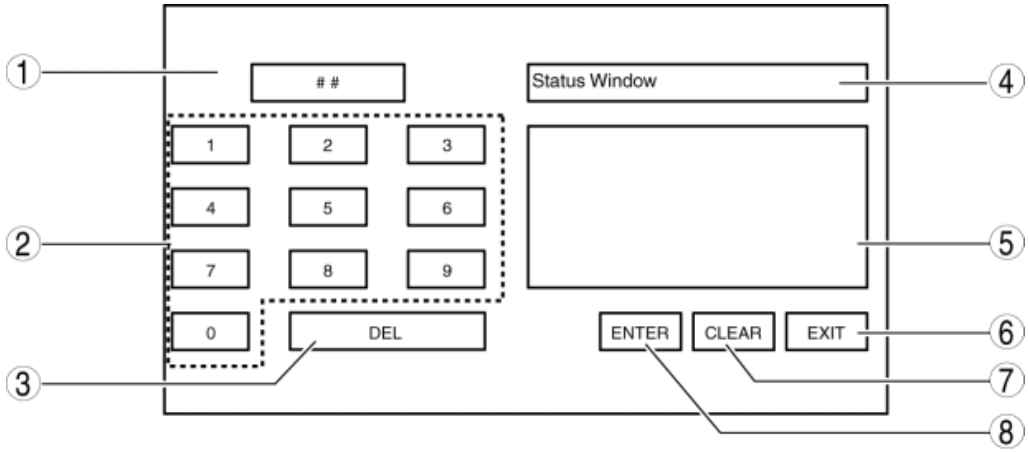

No.	Name	Content/function
1	Diagnostic assist code display screen	Displays the diagnostic assist code.
2	Diagnostic assist code input switch	Inputs the diagnostic assist code.
3	DEL switch	Clears the diagnostic assist code.
4	Diagnostic content display screen	Displays the diagnostic content.
5	Diagnostic results display screen	Displays the diagnostic results.
6	EXIT switch*1/END switch*2	Cancels the diagnostic assist function./Stops the diagnostic assist function being performed.
7	CLEAR switch	Clears the diagnostic result display
8	ENTER switch	Transfers to the diagnostic assist function.

*1 **Displayed while the diagnostic assist function is not performed.**

*2 **Displayed while the diagnostic assist function is being performed.**

Using commander switch

1. Input the diagnostic assist code by rotating the commander knob.

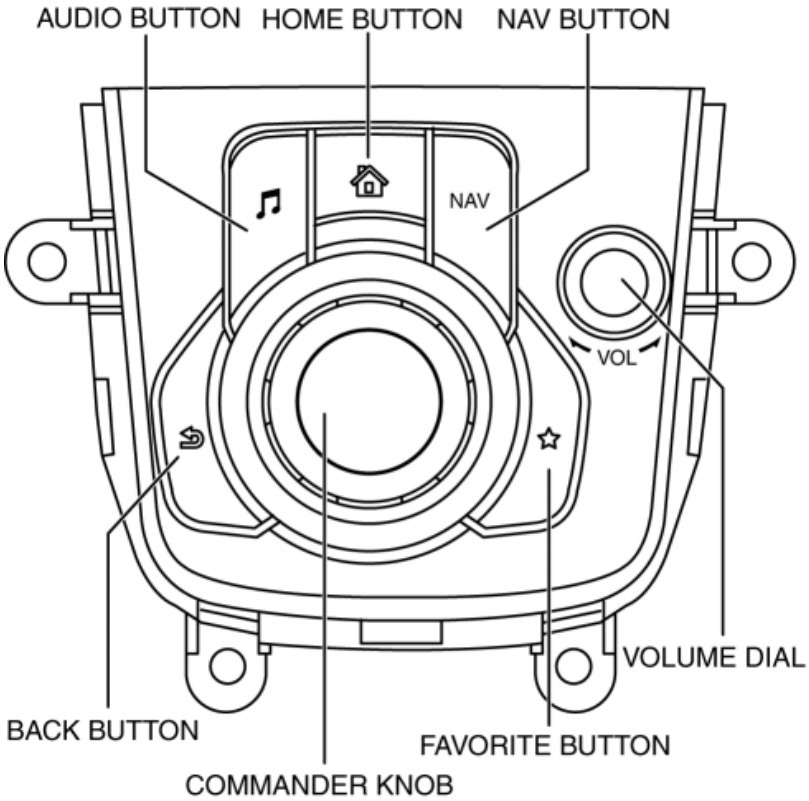

2. Press the commander knob.
3. Perform inspection according to diagnostic assist code list. (See **Diagnostic assist code list**.)

CAUTION:

- If [- REJECTED] is displayed, the inspection cannot be performed because communication is not enabled between the related parts, or the conditions are not met even if communication is enabled.

Using center display

1. Input the diagnostic assist code by pressing the “Diagnostic assist code input switch”.
2. Press “ENTER”.
3. Perform inspection according to diagnostic assist code list. (See **Diagnostic assist code list**.)

CAUTION:

- If [- REJECTED] is displayed, the inspection cannot be performed because communication is not enabled between the related parts, or the conditions are not met even if communication is enabled.

Ending Procedure

1. When the inspection is being performed, press “END” to return to the diagnostic assist code input screen.

NOTE:

- The diagnostic assist function cannot be canceled while the diagnostic assist function is being inspected.

2. Cancel the diagnostic assist function by pressing the “EXIT”.

NOTE:

- When the diagnostic assist function is canceled, it returns to a different screen depending on the way in which the diagnostic assist function was launched.
    - If launched using the commander switch: The previous screen before launching the diagnostic assist function
    - If launched not using the commander switch: The setting screen

Diagnostic assist code list

No.	Center display (diagnostic content)	Content/function
01	CD Test	(See **Diagnostic Assist Code “01” CD Player Inspection**.)
02	Clear DTC	(See **Diagnostic Assist Code “02” DTC Clear**.)
03	Read AVC DTC	(See **Diagnostic Assist Code “03/04/05/06” DTC Inspection**.)
04	Read CMU DTC	(See **Diagnostic Assist Code “03/04/05/06” DTC Inspection**.)
05	Read TAU DTC	(See **Diagnostic Assist Code “03/04/05/06” DTC Inspection**.)
06	Read CD DTC	(See **Diagnostic Assist Code “03/04/05/06” DTC Inspection**.)
07	Read DTV DTC	**CAUTION:** • Do not operate because not equipped to vehicle.
08	Software Reset AVC	(See **Diagnostic Assist Code “08” Software Reset**.)
09	Software Version Display (CD)	(See **Diagnostic Assist Code “09/53/57/68/69/93” Software Version Verification**.)
10	Part Number Readout CD/DVD	(See **Diagnostic Assist Code “10/85” Part Number Verification**.)
25	Antenna Continuity Status	(See **Diagnostic Assist Code “25” Antenna Control Output Condition Inspection**.)
26	DTV TEST ON	**CAUTION:** • Do not operate because item is for manufacturer use.
27	DTV TEST OFF	**CAUTION:** • Do not operate because item is for manufacturer use.
53	Software Version Display (CMU)	(See **Diagnostic Assist Code “09/53/57/68/69/93” Software Version Verification**.)
57	Software Version Display (VIP)	(See **Diagnostic Assist Code “09/53/57/68/69/93” Software Version Verification**.)
58	Vehicle Info	(See **Diagnostic Assist Code “58” Configuration Information Verification**.)

59	CMU Serial Number Readout	(See **Diagnostic Assist Code "59" Individual Number Verification**.)
61	Vehicle Signal (Unit Status)	(See **Diagnostic Assist Code "61" Vehicle Signal Verification**.)
65	Commander and Switch Check	(See **Diagnostic Assist Code "65" Switch Inspection**.)
68	Software version display (TFT Display)	(See **Diagnostic Assist Code "09/53/57/68/69/93" Software Version Verification**.)
69	Software version display (Touch Panel)	(See **Diagnostic Assist Code "09/53/57/68/69/93" Software Version Verification**.)
70	Display Check	(See **Diagnostic Assist Code "70" Display/Touch Panel Inspection**.)
72	GPS Data	(See **Diagnostic Assist Code "72" GPS Information Verification**.)
84	Maker code Display TAU	(See **Diagnostic Assist Code "84" Manufacturer Name Verification**.)
85	Part Number Readout TAU	(See **Diagnostic Assist Code "10/85" Part Number Verification**.)
87	HD Certification (Main Tuner)	**CAUTION:** • Do not operate because item is for manufacturer use.
88	HD Certification (Sub Tuner)	**CAUTION:** • Do not operate because item is for manufacturer use.
89	XM Certification	**CAUTION:** • Do not operate because item is for manufacturer use.
90	AM Reception Sensitivity Level Test	(See **Diagnostic Assist Code "90" Radio Reception Condition Inspection**.)
91	Radio Test Mode (Main)	**CAUTION:** • Do not operate because item is for manufacturer use.
92	Radio Test Mode (Sub)	**CAUTION:** • Do not operate because item is for manufacturer use.
93	Software Version Display (TAU)	(See **Diagnostic Assist Code "09/53/57/68/69/93" Software Version Verification**.)
94	Speaker Cyclic Test	(See **Diagnostic Assist Code "94" Speaker Inspection**.)
95	Vehicle Info Display (TAU)	**CAUTION:** • Do not operate because item is for manufacturer use.
96	XM Serial Number	(See **Diagnostic Assist Code "96" XM tuner Unique Number Verification**.)
97	Radio Electric Field Strength (AM)	(See **Diagnostic Assist Code "97" AM Radio Field Strength Verification**.)
98	Radio Electric Field Strength (FM)	(See **Diagnostic Assist Code "98" FM Radio Field Strength Verification**.)
99	Software Update	**CAUTION:** • Do not operate because item is for manufacturer use.

Diagnostic Assist Code “01” CD Player Inspection

1. Input diagnostic assist code “01” according to diagnostic assist code input procedure. (See **Diagnostic Assist Code Input Procedure**.)

2. After inputting diagnostic assist code, insert the CD into the CD player **within 10 s**.

Inspection	Display of center display	Action
• Launch the CD player inspection mode. • Verify the inspection results.	CD OK	CD player is normal.
	CD Mechanical Linkage Failure	Verify if CD is damaged or deformed. **If there is a malfunction:** • Re-perform the inspection using a normal disc. **If there is no malfunction:** • Replace the CD player. (See **CD PLAYER REMOVAL**.) (See **CD PLAYER INSTALLATION**.)
	CD Signal Plausibility Failure	Replace with a CD that does not include data types other than Music data (CD-DA)/MP3/WMA (Windows Media Audio)/AAC (Advanced Audio Coding).

3. Cancel the diagnostic assist function according to ending procedure. (See **Ending Procedure**.)

Diagnostic Assist Code “02” DTC Clear

1. Input diagnostic assist code “02” according to diagnostic assist code input procedure. (See **Diagnostic Assist Code Input Procedure**.)

2. Verify that all DTCs are cleared.

3. Cancel the diagnostic assist function according to ending procedure. (See **Ending Procedure**.)

Diagnostic Assist Code “03/04/05/06” DTC Inspection

1. Verify the module to be inspected for DTCs referring to the chart, then input diagnostic assist code according to diagnostic assist code input procedure. (See **Diagnostic Assist Code Input Procedure**.)

NOTE:

- Combination of DTC and diagnostic assist code can be verified in the DTC table. (See **DTC TABLE [CONNECTIVITY MASTER UNIT]**.)
- Detection of DTCs is limited if the ignition is in the ACC position.

×: Applicable—: Not applicable

Diagnostic assist code	Modules which can be verified for DTC		
	Connectivity master unit (CMU)	Tuner and amp unit (TAU)	CD player

03	×	×	×
04	×	—	—
05	—	×	—
06	—	—	×

2. If a DTC is displayed, repair the malfunctioning location according to the applicable DTC troubleshooting. (See **DTC TABLE [CONNECTIVITY MASTER UNIT]**.)

3. Cancel the diagnostic assist function according to ending procedure. (See **Ending Procedure**.)

Diagnostic Assist Code “08” Software Reset

1. Input diagnostic assist code “08” according to diagnostic assist code input procedure. (See **Diagnostic Assist Code Input Procedure**.)

2. The software is automatically reset.

3. Cancel the diagnostic assist function according to ending procedure. (See **Ending Procedure**.)

Diagnostic Assist Code “09/53/57/68/69/93” Software Version Verification

1. Verify the module to be inspected for the software version referring to the chart, then input the diagnostic assist code according to diagnostic assist code input procedure. (See **Diagnostic Assist Code Input Procedure**.)

Diagnostic assist code	Software version to be verified
09	CD player
53	Connectivity master unit (overall entertainment system)
57	Connectivity master unit (overall communication system between vehicle)
68	Center display (TFT LCD screen control system)
69	Center display (Touch panel control system)
93	Tuner and amp unit

2. Cancel the diagnostic assist function according to ending procedure. (See **Ending Procedure**.)

Diagnostic Assist Code “10/85” Part Number Verification

1. Verify the module to be inspected for the part number referring to the chart, then input diagnostic assist code according to diagnostic assist code input procedure. (See **Diagnostic Assist Code Input Procedure**.)

Diagnostic assist code	Module to be verified for part number
10	CD player

85	Tuner and amp unit

2. Verify the part number.

NOTE:

- Only upper 4 digits of the part number are displayed.

3. Cancel the diagnostic assist function according to ending procedure. (See **Ending Procedure**.)

Diagnostic Assist Code “25” Antenna Control Output Condition Inspection

1. Input diagnostic assist code “25” according to diagnostic assist code input procedure. (See **Diagnostic Assist Code Input Procedure**.)

2. Inspect the malfunctioning location according to the following table:

CAUTION:

- Even if the system is normal, radio reception may be difficult depending on where the system is inspected (indoors/outdoors, or conditions at the location). Before inspecting the system, verify that radio reception is adequate.
- When performing the inspection, select the best area for receiving radio frequencies.

Inspection	Display of center display	Action	
• Verify that the launched antenna control output condition inspection mode is displayed on the screen.	ANT-ON	Good sound quality	System is normal.
		Bad sound quality	Inspect the glass antenna, antenna amplifier (4SD)/center roof antenna (5HB), and antenna feeder. (See **GLASS ANTENNA INSPECTION**.) (See **ANTENNA AMPLIFIER INSPECTION**.) (See **CENTER ROOF ANTENNA INSPECTION**.) (See **ANTENNA FEEDER NO.1 INSPECTION**.) (See **ANTENNA FEEDER NO.2 INSPECTION**.) (See **ANTENNA FEEDER NO.3 INSPECTION**.) • If the glass antenna, antenna amplifier (4SD)/center roof antenna (5HB), or antenna feeder is malfunctioning: ▪ Replace the malfunctioning part. (See **FILAMENT REPAIR**.) (See **ANTENNA AMPLIFIER REMOVAL/INSTALLATION**.) (See **CENTER ROOF ANTENNA REMOVAL/INSTALLATION**.) (See **ANTENNA FEEDER NO.1**

			REMOVAL/INSTALLATION.) (See **ANTENNA FEEDER NO.2 REMOVAL**.) (See **ANTENNA FEEDER NO.2 INSTALLATION**.) (See **ANTENNA FEEDER NO.3 REMOVAL/INSTALLATION**.) • If the glass antenna, antenna amplifier (4SD)/center roof antenna (5HB), and antenna feeder are normal: ▪ Replace the tuner and amp unit (TAU). (See **TUNER AND AMP UNIT (TAU) REMOVAL/INSTALLATION**.)
	ANT-OFF	Replace the tuner and amp unit (TAU). (See **TUNER AND AMP UNIT (TAU) REMOVAL/INSTALLATION**.)	

3. Cancel the diagnostic assist function according to ending procedure. (See **Ending Procedure**.)

Diagnostic Assist Code “58” Configuration Information Verification

1. Input diagnostic assist code “58” according to diagnostic assist code input procedure. (See **Diagnostic Assist Code Input Procedure**.)

2. Verify the configuration information.

Display of center display	Content
Destination	Destination information
CMU Types	Recognition condition whether connectivity master unit is equipped or not

3. Cancel the diagnostic assist function according to ending procedure. (See **Ending Procedure**.)

Diagnostic Assist Code “59” Individual Number Verification

1. Input diagnostic assist code “59” according to diagnostic assist code input procedure. (See **Diagnostic Assist Code Input Procedure**.)

2. Verify the individual number of the connectivity master unit.

3. Cancel the diagnostic assist function according to ending procedure. (See **Ending Procedure**.)

Diagnostic Assist Code “61” Vehicle Signal Verification

1. Input diagnostic assist code “61” according to diagnostic assist code input procedure. (See **Diagnostic Assist Code Input Procedure**.)

2. Verify the vehicle signal.

Display of center display	Content
ST-SW	Steering switch signal input condition
Commander	Commander switch signal input condition
GPS	GPS antenna signal input condition
Microphone	Microphone signal input condition
HUB1	HUB1 signal input condition
HUB2	HUB2 signal input condition
RS-485	RS-485 signal input condition
NAVI (SD)	SD card insertion condition
CD/DVD	CD or DVD equipment recognition condition
DTV	DVD equipment recognition condition

3. Cancel the diagnostic assist function according to ending procedure. (See **Ending Procedure**.)

Diagnostic Assist Code “65” Switch Inspection

1. Input diagnostic assist code “65” according to diagnostic assist code input procedure. (See **Diagnostic Assist Code Input Procedure**.)

2. Perform the steering switch inspection or commander switch inspection.

NOTE:

- When the switch is operated, the switch operation content detected by the connectivity master unit is displayed in the center display.
- If the switch operation content previously detected is being displayed in the center display, newly detected content is added over it.

Steering switch inspection

Inspection	Display of center display	Action	
• Launch the switch inspection mode. • Operate each switch of the steering switch. • Does the display in the center display correspond	• ST-SW Talk Button Pressed: TALK switch is pressed • ST-SW Talk Button Released: TALK switch is released	Yes	The steering switch is normal.
			Inspect the steering switch. (See **STEERING SWITCH INSPECTION**.) • If there is a malfunction: ▪ Replace the steering switch. (See **STEERING SWITCH REMOVAL/INSTALLATION**.) • If the steering switch is normal: ▪ Replace the connectivity

to each switch operation?	ST-SW Pick-Up Button Pressed: Pick-Up switch is pressed • ST-SW Pick-Up Button Released: Pick-Up switch is released • ST-SW Hang-Up Button Pressed: Hang-Up switch is pressed • ST-SW Hang-Up Button Released: Hang-Up switch is released • ST-SW Volume + Button Pressed: VOLUME (+) switch is pressed • ST-SW Volume + Button Released: VOLUME (+) switch is released • ST-SW Volume - Button Pressed: VOLUME (-) switch is pressed • ST-SW Volume - Button Released: VOLUME (-) switch is released • ST-SW Seek + Button Pressed: Seek (+) switch is pressed	No	master unit. (See **CONNECTIVITY MASTER UNIT (CMU) REMOVAL/INSTALLATION**.)

	• ST-SW Seek + Button Released: SEEK (+) switch is released • ST-SW Seek - Button Pressed: Seek (-) switch is pressed • ST-SW Seek - Button Released: Seek (-) switch is released		

Commander switch inspection

Inspection	Display of center display	Action	
• Launch the switch inspection mode. • Operate each button and knob of the commander switch. • Does the display in the center display correspond to each operation?	• Home Button Pressed: HOME button is pressed • Home Button Released: HOME button is released • Navi Button Pressed: NAV button is pressed • Navi Button Released: NAV button is released • Audio Button Pressed: AUDIO button is pressed • Audio Button Released: AUDIO button is released • Favorites Button Pressed: FAVORITE button is pressed • Favorites Button Released: FAVORITE button is released • Back Button Pressed: BACK button is pressed • Back Button Released: BACK button is released • Commander Pushed In: Commander knob is pressed • Commander Released: Commander knob is released • Tilt Up Pressed: Commander knob is tilted up • Tilt Up Released: Commander knob is released from tilted up condition	Yes	Commander switch is normal.
			Replace the commander switch. (See **COMMANDER SWITCH REMOVAL / INSTALLATION**.)

	• Tilt Right Pressed: Commander knob is tilted to the right • Tilt Right Released: Commander knob is released from tilted right condition • Tilt Down Pressed: Commander knob is tilted down • Tilt Down Released: Commander knob is released from tilted down condition • Tilt Left Pressed: Commander knob is tilted to the left • Tilt Left Released: Commander knob is released from tilted left condition • Commander Turned Clockwise: Commander knob is turned clockwise • Commander Turned Counter Clockwise: Commander knob is turned counterclockwise • Volume Knob Pushed In: Volume dial is pressed • Volume Knob Released: Volume dial is released • Volume Knob Turned Clockwise: Volume dial is turned clockwise • Volume Knob Turned Counter Clockwise: Volume dial is turned counterclockwise	No	

3. Cancel the diagnostic assist function according to ending procedure. (See **Ending Procedure**.)

Diagnostic Assist Code “70” Display/Touch Panel Inspection

1. Input diagnostic assist code “70” according to diagnostic assist code input procedure. (See **Diagnostic Assist Code Input Procedure**.)

NOTE:

- The display/touch panel inspection is repeated periodically until a same location in the center display is touched for **10 s or more**.

Inspection	Display of center display	Action	
• Launch the display/touch panel inspection mode. • Verify the center display.	If normal, [+] cursor is displayed centering around the touched area, and at the same time, the display switches in the following order. • Unicolor screen in the following colors ▪ White→Black→Red→Green→Blue • Horizontal-striped screen in black and the	Yes	Center display is normal.
			Replace the center display. (See **CENTER DISPLAY REMOVAL/INSTALLATION**.)

• Does the center display normally?	following colors ▪ Red→Green→Blue • Vertical-striped screen in black and the following colors ▪ Red→Green→Blue • Checkered screen in black and the following colors ▪ Red→Green→Blue • Returns to 1.	No	

2. Continuously touch the same location for **10 s or more**.

NOTE:

- When the display/touch panel inspection is finished, the diagnostic assist function is canceled without returning to the diagnostic assist code input screen.
- When the diagnostic assist function is canceled, it returns to a different screen depending on the way in which the diagnostic assist function was launched.
  - If launched using the commander switch: The previous screen before launching the diagnostic assist function
  - If launched not using the commander switch: The setting screen

Diagnostic Assist Code “72” GPS Information Verification

1. Input diagnostic assist code “72” according to diagnostic assist code input procedure. (See **Diagnostic Assist Code Input Procedure**.)

2. Verify the GPS information.

NOTE:

- GPS reception signal is updated **every 1 s**.

Display of center display	Content
Longitude (X)	Degree of longitude in GPS information of the current location
Latitude (Y)	Degree of latitude in GPS information of the current location
Absolute Time (Z)	Date and time information (GMT)
Number of Satellites	Number of satellites being receipt

3. Cancel the diagnostic assist function according to ending procedure. (See **Ending Procedure**.)

Diagnostic Assist Code “84” Manufacturer Name Verification

1. Input diagnostic assist code “84” according to diagnostic assist code input procedure. (See **Diagnostic Assist Code Input Procedure**.)

2. Verify the manufacturer name.

3. Cancel the diagnostic assist function according to ending procedure. (See **Ending Procedure**.)

Diagnostic Assist Code “90” Radio Reception Condition Inspection

1. Tune in the radio.

2. Input diagnostic assist code “90” according to diagnostic assist code input procedure. (See **Diagnostic Assist Code Input Procedure**.)

3. Inspect the malfunctioning location according to the following table:

CAUTION:

- Even if the system is normal, radio reception may be difficult depending on where the system is inspected (indoors/outdoors, or conditions at the location). Before inspecting the system, verify that radio reception is adequate.
- When performing the inspection, select a frequency (radio station) with optimum reception in the area.

Inspection	Display of center display	Action
• Start the radio reception condition inspection mode. • Select frequency (radio station) by operating the commander knob. • Verify the inspection results.	TAU AM Reception Level Test Result:10—5	Glass antenna, antenna amplifier (4SD)/center roof antenna (5HB), antenna feeder and tuner and amp unit are normal.
	TAU AM Reception Level Test Result:4—3	Change frequencies and re-perform the inspection.
	TAU AM Reception Level Test Result:2—0	Inspect the glass antenna, antenna amplifier (4SD)/center roof antenna (5HB), and antenna feeder. (See **GLASS ANTENNA INSPECTION**.) (See **ANTENNA AMPLIFIER INSPECTION**.) (See **CENTER ROOF ANTENNA INSPECTION**.) (See **ANTENNA FEEDER NO.1 INSPECTION**.) (See **ANTENNA FEEDER NO.2 INSPECTION**.) (See **ANTENNA FEEDER NO.3 INSPECTION**.) • If the glass antenna, antenna amplifier (4SD)/center roof antenna (5HB), or antenna feeder is malfunctioning: ▪ Replace the malfunctioning part. (See **FILAMENT REPAIR**.) (See **ANTENNA AMPLIFIER REMOVAL/INSTALLATION**.) (See **CENTER ROOF ANTENNA REMOVAL/INSTALLATION**.) (See **ANTENNA FEEDER NO.1 REMOVAL/INSTALLATION**.) (See **ANTENNA FEEDER NO.2 REMOVAL**.)

		(See **ANTENNA FEEDER NO.2 INSTALLATION**.) (See **ANTENNA FEEDER NO.3 REMOVAL/INSTALLATION**.) • If the glass antenna, antenna amplifier (4SD)/center roof antenna (5HB), and antenna feeder are normal: ▪ Replace the tuner and amp unit. (See **TUNER AND AMP UNIT (TAU) REMOVAL/INSTALLATION**.)

4. Cancel the diagnostic assist function according to ending procedure. (See **Ending Procedure**.)

Diagnostic Assist Code “94” Speaker Inspection

1. Input diagnostic assist code “94” according to diagnostic assist code input procedure. (See **Diagnostic Assist Code Input Procedure**.)

Inspection	Display of center display	Action	
• Launch the speaker inspection mode. • Does each speaker output sound in the following order?: **Without Bose®** 1. Front door speaker (LH) and tweeter (LH) 2. Front door speaker (RH) and tweeter (RH) 3. Rear door speaker (RH) 4. Rear door speaker (LH) **With**		Yes	**Without Bose®** • The speaker tuner and amp unit, and the wiring harness between the tuner and amp unit and speaker are normal. **With Bose®** • The speaker tuner and amp unit, audio amplifier, wiring harness between audio amplifier and speaker, and wiring harness between tuner and amp unit and audio amplifier are normal.
			Refer to the symptom troubleshooting. (See **NO SOUND OUTPUT IN ALL MODES [ENTERTAINMENT SYSTEM [WITH CENTER DISPLAY]]**.)

Bose® 1. Front door speaker (LH), front side speaker (LH) and front center speaker 2. Front door speaker (RH), front side speaker (RH) and front center speaker 3. Rear door speaker (RH) ,rear speaker (LH) and rear speaker (RH) 4. Rear door speaker (LH) ,rear speaker (LH) and rear speaker (RH)	—	No	

2. Cancel the diagnostic assist function according to ending procedure. (See **Ending Procedure**.)

Diagnostic Assist Code “96” XM tuner Unique Number Verification

1. Input diagnostic assist code “96” according to diagnostic assist code input procedure. (See **Diagnostic Assist Code Input Procedure**.)

2. Verify the unique number of the XM tuner inside the tuner and amp unit.

3. Cancel the diagnostic assist function according to ending procedure. (See **Ending Procedure**.)

Diagnostic Assist Code “97” AM Radio Field Strength Verification

1. Input diagnostic assist code “97” according to diagnostic assist code input procedure. (See **Diagnostic Assist Code Input Procedure**.)

2. Verify the AM radio field strength.

- Frequencies can be changed by turning the commander knob.

Display of center display	Content
AM Frequency	AM radio station frequency (kHz) being received
Strength	Frequency field strength (dBuV)

3. Cancel the diagnostic assist function according to ending procedure. (See **Ending Procedure**.)

Diagnostic Assist Code “98” FM Radio Field Strength Verification

1. Input diagnostic assist code “98” according to diagnostic assist code input procedure. (See **Diagnostic Assist Code Input Procedure**.)

2. Verify the FM radio field strength.

- Frequencies can be changed by turning the commander knob.

Display of center display	Content
FM Frequency	FM radio station frequency (MHz) being received
Strength	Frequency field strength (dBuV)

3. Cancel the diagnostic assist function according to ending procedure. (See **Ending Procedure**.)

2014 - Mazda3 - Body and Accessories

ON-BOARD DIAGNOSTIC WIRING DIAGRAM [FRONT BODY CONTROL MODULE (FBCM)]

Rear defroster, blower motor

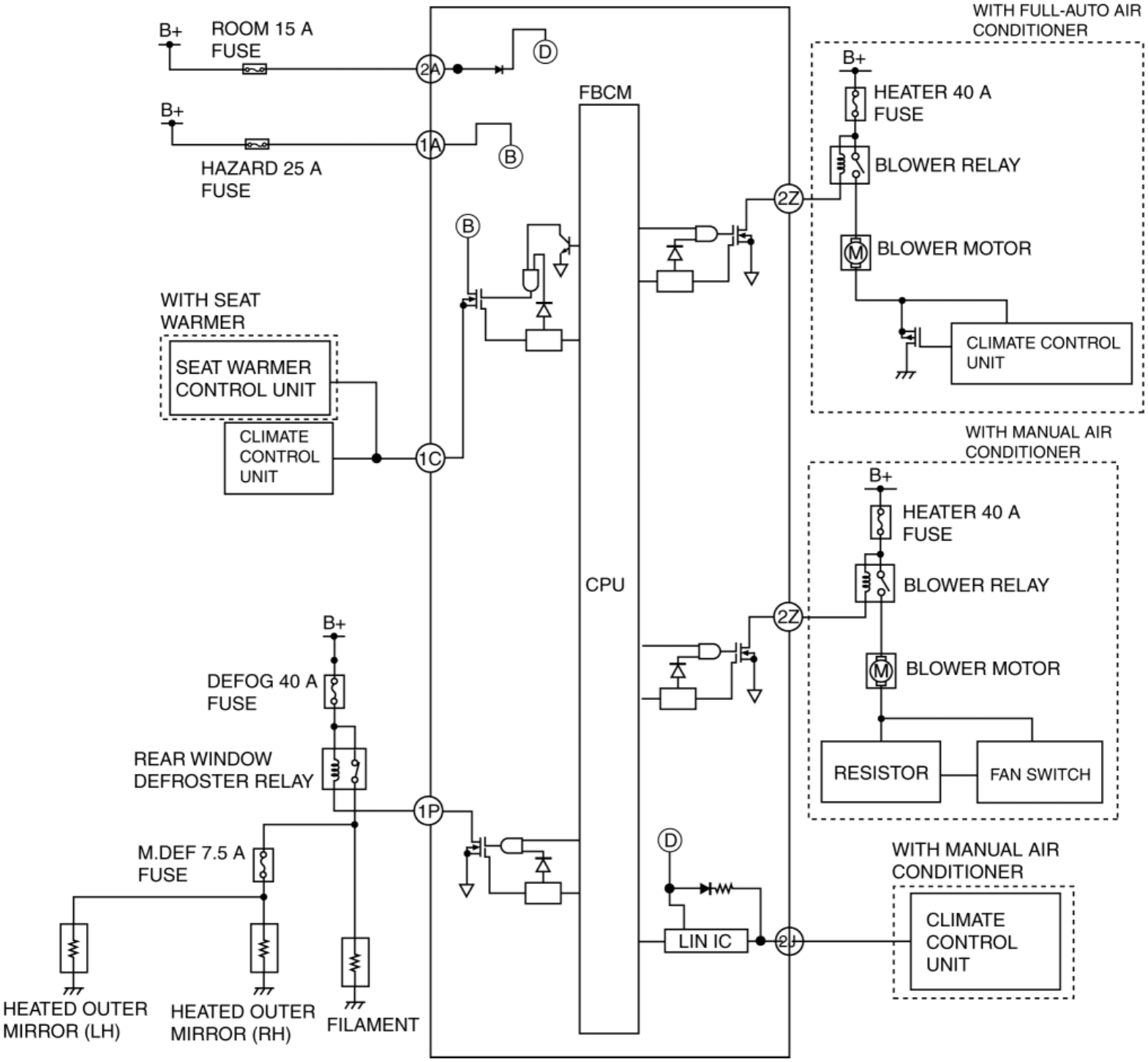

Headlights, turn lights, front fog lights

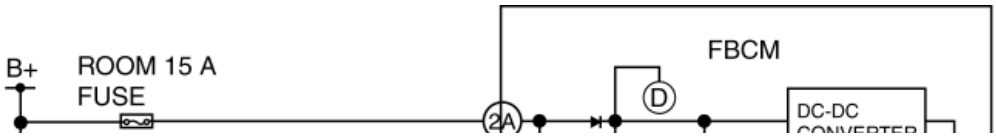

ON-BOARD DIAGNOSTIC WIRING DIAGRAM [FRONT BODY CONTROL MODULE (FBCM)]

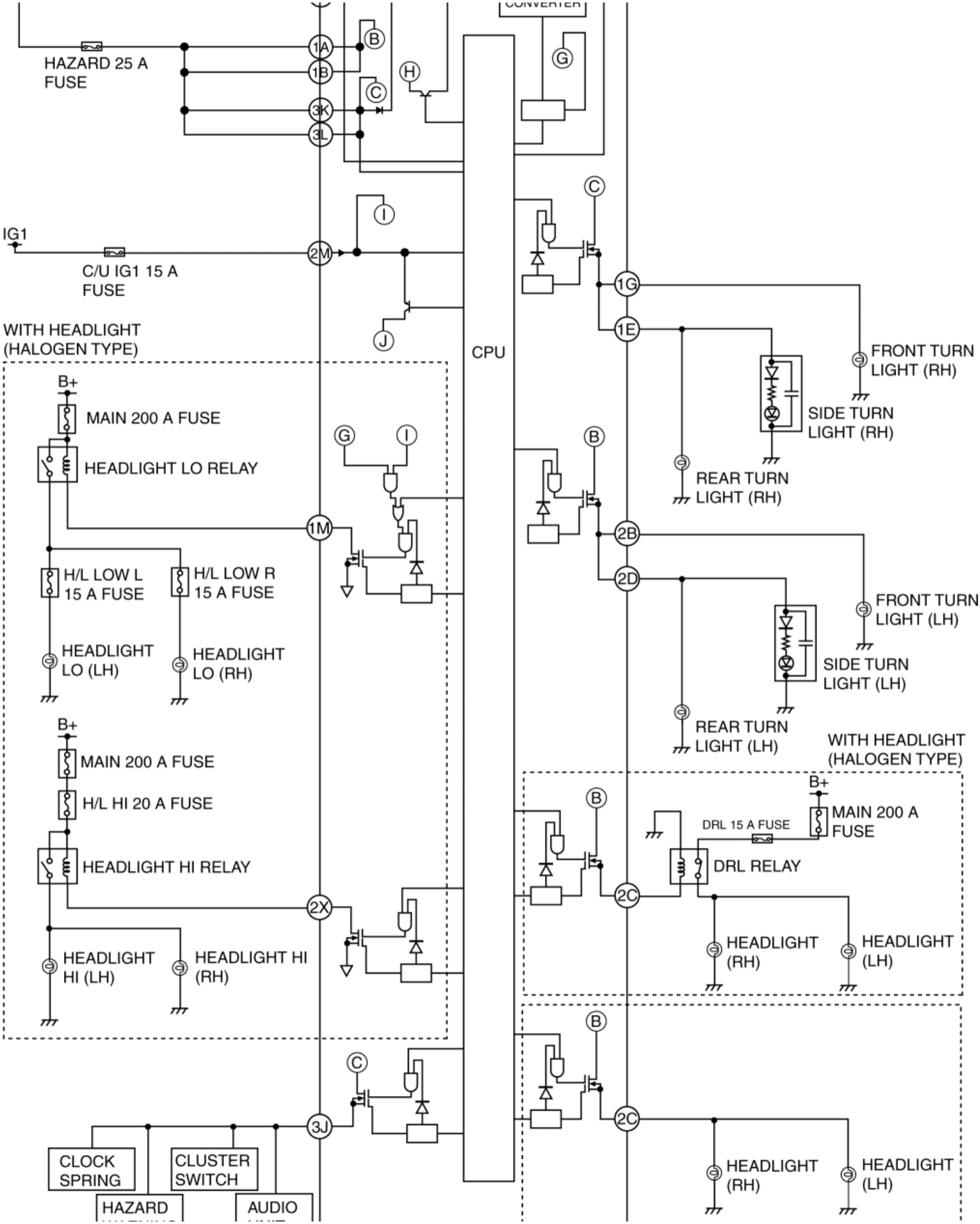

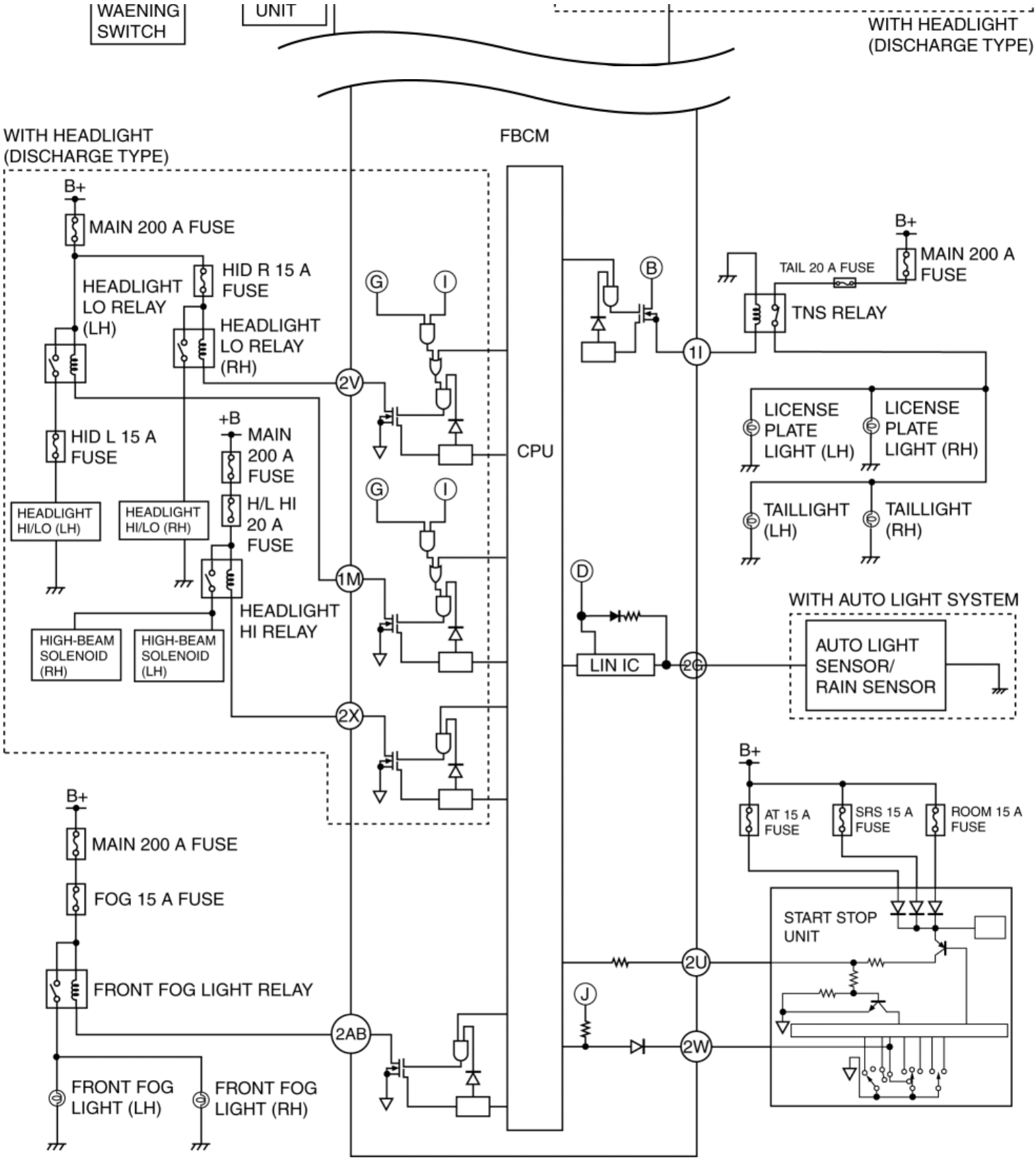

Windshield wipers, front washer

ON-BOARD DIAGNOSTIC WIRING DIAGRAM [FRONT BODY CONTROL MODULE (FBCM)]

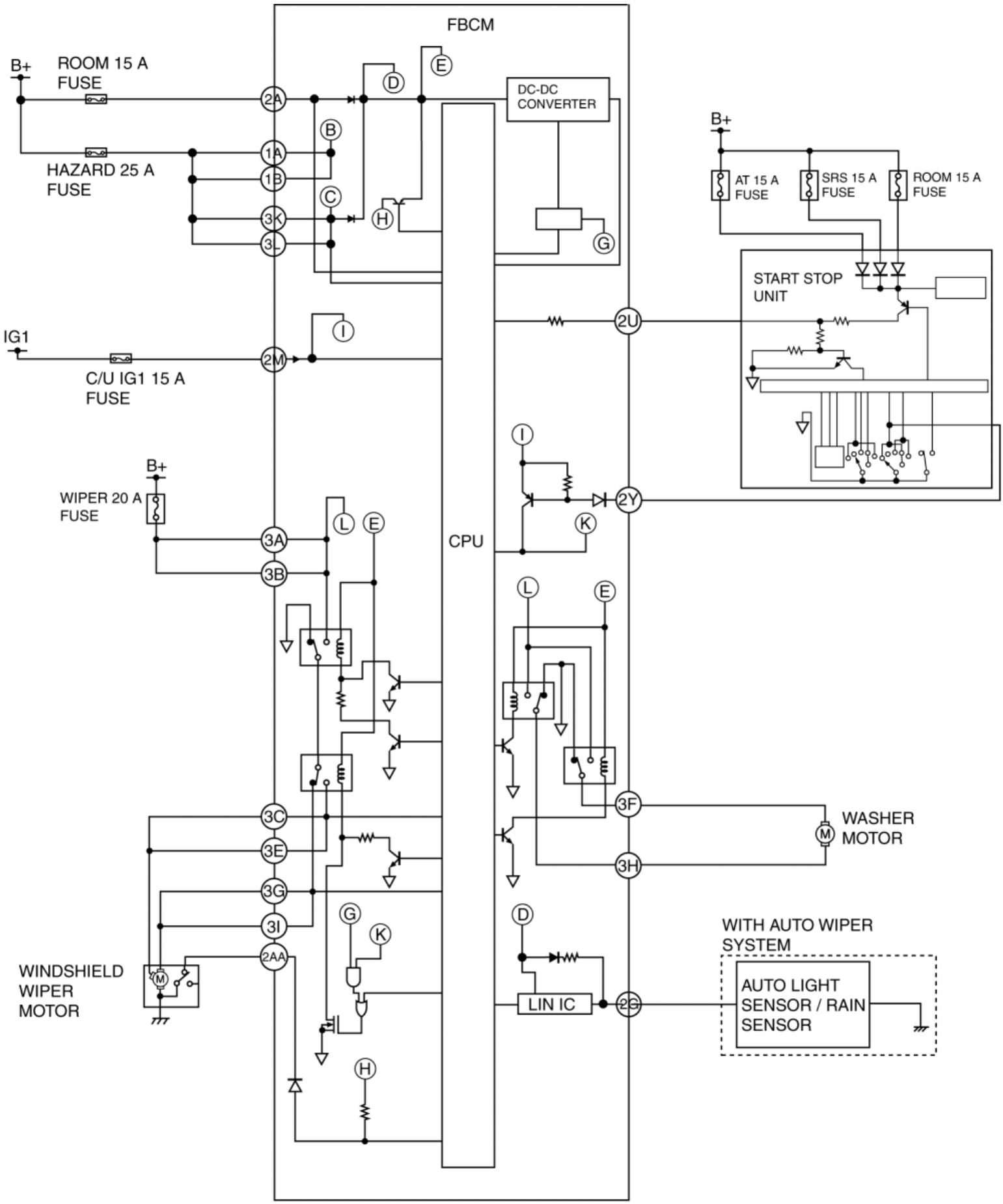

Theft-deterrent system, horn, sensors

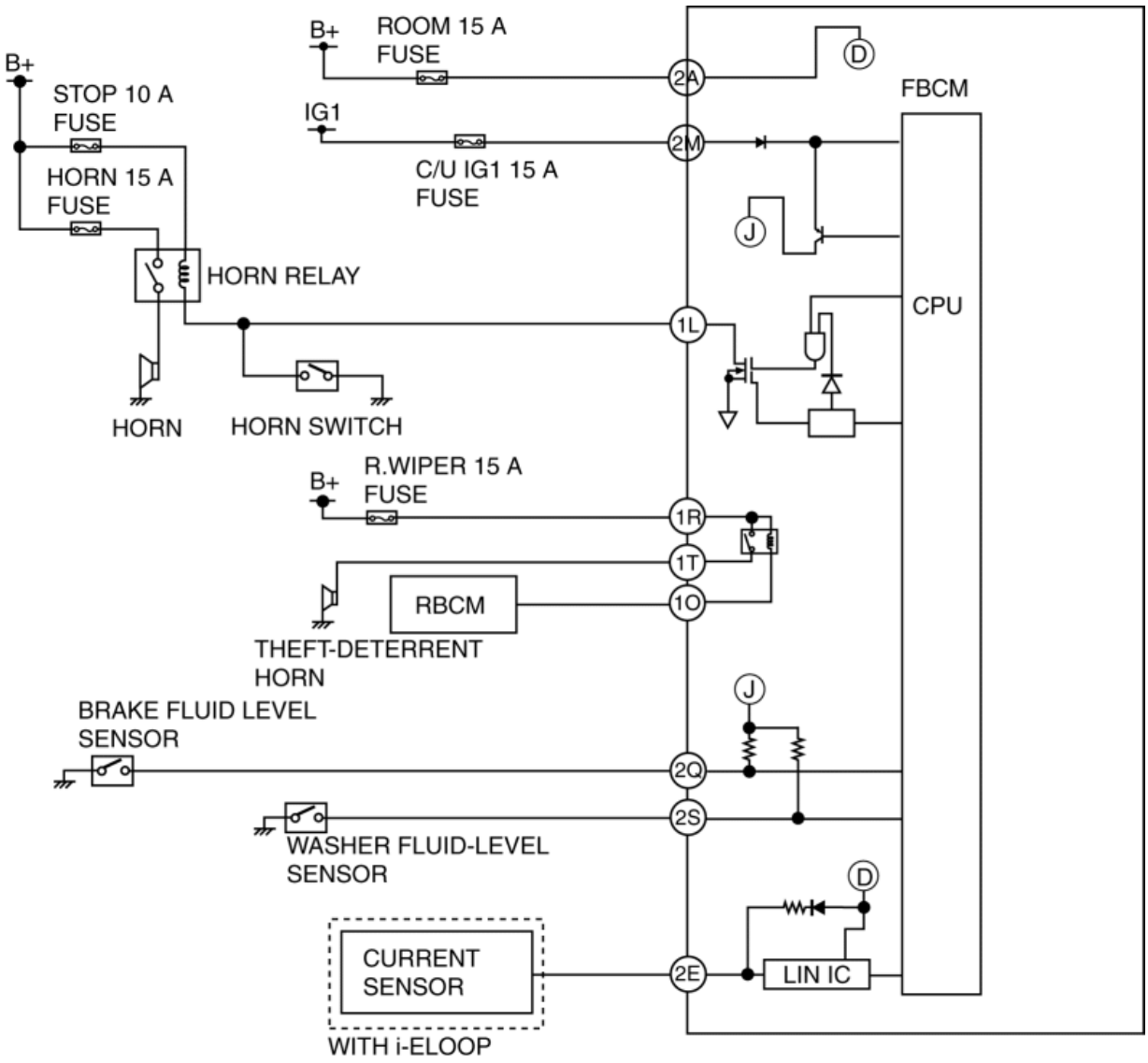
B+
ROOM 15 A
FUSE
B+
STOP 10 A
FUSE
IG1
C/U IG1 15 A
FUSE
HORN 15 A
FUSE
HORN RELAY
HORN
HORN SWITCH
FBCM
CPU
2A
2M
1L
D
J
B+
R.WIPER 15 A
FUSE
1R
1T
1O
RBCM
THEFT-DETERRENT
HORN
BRAKE FLUID LEVEL
SENSOR
2Q
2S
WASHER FLUID-LEVEL
SENSOR
CURRENT
SENSOR
2E
LIN IC
WITH i-ELOOP

CAN system

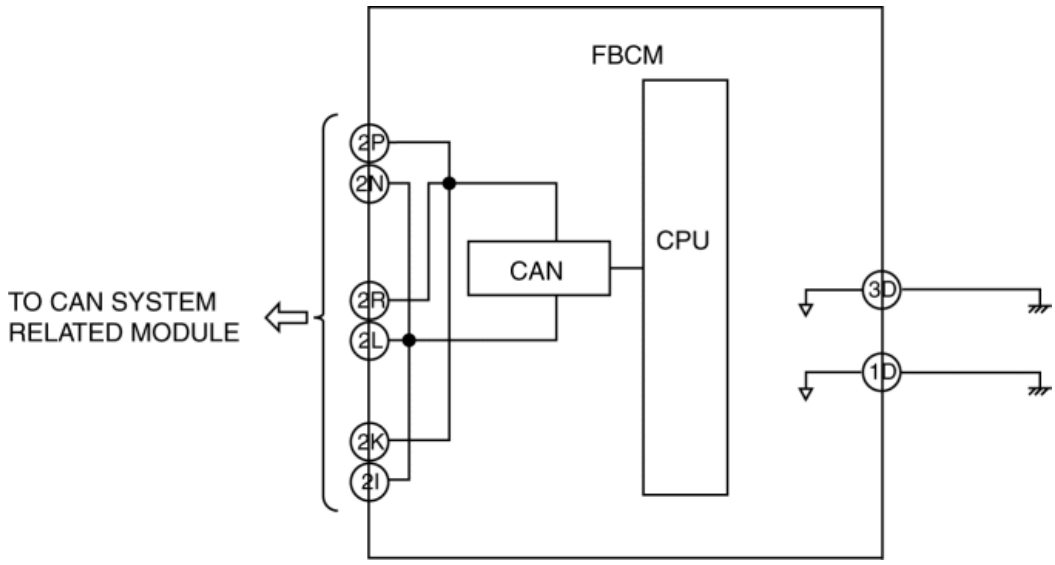
FBCM
CPU
CAN
2P
2N
2R
2L
2K
2I
TO CAN SYSTEM
RELATED MODULE
3D
1D

2014 - Mazda3 - Body and Accessories

FOREWORD [FRONT BODY CONTROL MODULE (FBCM)]

- If there is any vehicle malfunction complaint lodged by a customer, perform malfunction diagnosis according to the troubleshooting procedure.

Troubleshooting Procedure

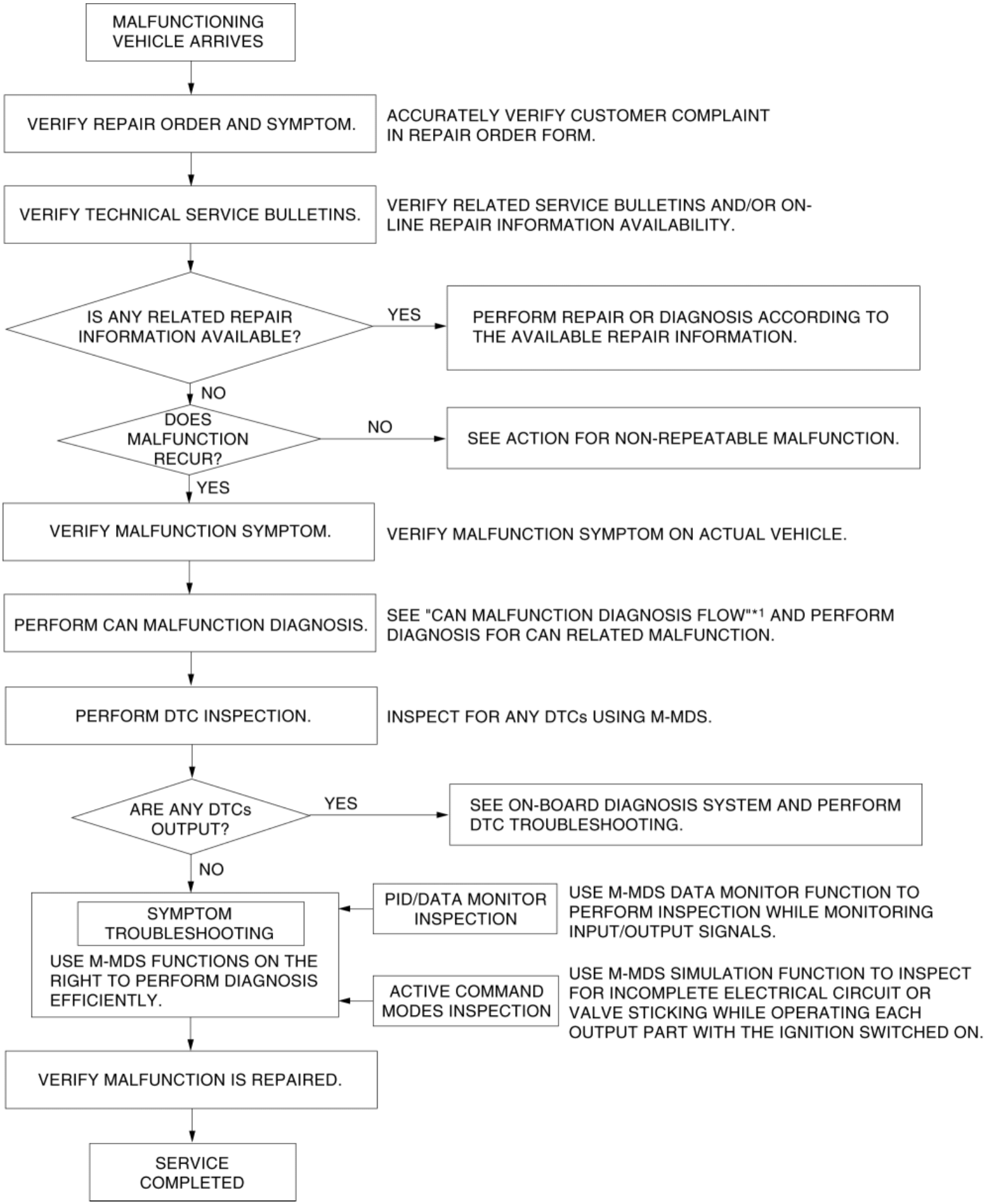
MALFUNCTIONING VEHICLE ARRIVES
VERIFY REPAIR ORDER AND SYMPTOM.
ACCURATELY VERIFY CUSTOMER COMPLAINT IN REPAIR ORDER FORM.
VERIFY TECHNICAL SERVICE BULLETINS.
VERIFY RELATED SERVICE BULLETINS AND/OR ON-LINE REPAIR INFORMATION AVAILABILITY.
IS ANY RELATED REPAIR INFORMATION AVAILABLE?
YES
PERFORM REPAIR OR DIAGNOSIS ACCORDING TO THE AVAILABLE REPAIR INFORMATION.
NO
DOES MALFUNCTION RECUR?
NO
SEE ACTION FOR NON-REPEATABLE MALFUNCTION.
YES
VERIFY MALFUNCTION SYMPTOM.
VERIFY MALFUNCTION SYMPTOM ON ACTUAL VEHICLE.
PERFORM CAN MALFUNCTION DIAGNOSIS.
SEE "CAN MALFUNCTION DIAGNOSIS FLOW"*1 AND PERFORM DIAGNOSIS FOR CAN RELATED MALFUNCTION.
PERFORM DTC INSPECTION.
INSPECT FOR ANY DTCs USING M-MDS.
ARE ANY DTCs OUTPUT?
YES
SEE ON-BOARD DIAGNOSIS SYSTEM AND PERFORM DTC TROUBLESHOOTING.
NO
SYMPTOM TROUBLESHOOTING
USE M-MDS FUNCTIONS ON THE RIGHT TO PERFORM DIAGNOSIS EFFICIENTLY.
PID/DATA MONITOR INSPECTION
USE M-MDS DATA MONITOR FUNCTION TO PERFORM INSPECTION WHILE MONITORING INPUT/OUTPUT SIGNALS.
ACTIVE COMMAND MODES INSPECTION
USE M-MDS SIMULATION FUNCTION TO INSPECT FOR INCOMPLETE ELECTRICAL CIRCUIT OR VALVE STICKING WHILE OPERATING EACH OUTPUT PART WITH THE IGNITION SWITCHED ON.
VERIFY MALFUNCTION IS REPAIRED.
SERVICE COMPLETED

*1

(See CONTROLLER AREA NETWORK (CAN) MALFUNCTION DIAGNOSIS FLOW.)

Action for non-repeatable malfunction

- If the malfunction does not recur, verify the malfunction cause by performing the following actions:
  - Based on the repair order form, attempt to drive the vehicle or perform tests to replicate the malfunction, record the data at that time, and detect the malfunction cause.
  - Shake the wiring harness or connector of the electrical component which is suspected to be the cause of the malfunction, and inspect for malfunction or occurrence of any DTCs.

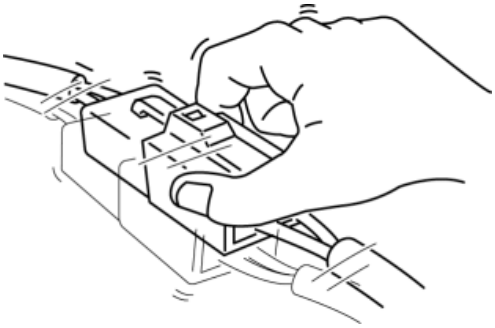

  - Inspect the female terminals on the connector of the electric component which is suspected to be the cause of the malfunction for poor connection.

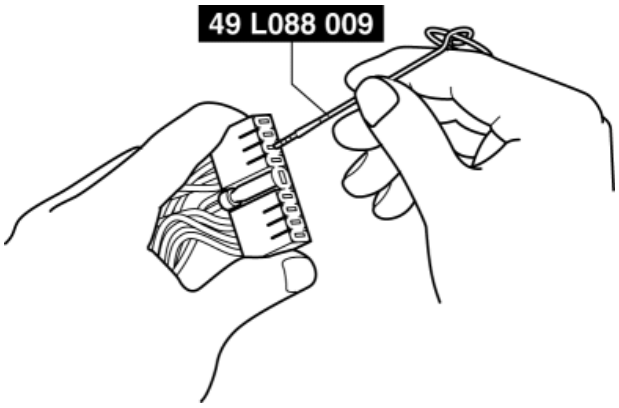

2014 - Mazda3 - Body and Accessories

DTC INSPECTION [FRONT BODY CONTROL MODULE (FBCM)]

CMDTC Self Test

1. Connect the M-MDS to the DLC-2.
2. Verify the following vehicle conditions:
    - All the switches are turned off (except the ignition switch).
    - All the doors, hood, and trunk (4SD)/liftgate (5HB) are closed.
    - All the doors, and trunk (4SD)/liftgate (5HB) are unlocked.
    - All the seat belts are unbuckled.
    - Parking brake lever is pulled.
3. After the vehicle is identified, select the following items from the initialization screen of the M-MDS.
    a. Select “Self Test”.
    b. Select “All CMDTCs”.
4. Verify the DTC according to the directions on the screen.
    - If any DTCs are displayed, perform troubleshooting according to the corresponding DTC inspection after recording the snapshot data.
5. After completion of repairs, clear all DTCs stored in the front body control module (FBCM). (See **CLEARING DTC [FRONT BODY CONTROL MODULE (FBCM)]**.)

ODDTC Self Test

1. Connect the M-MDS to the DLC-2.
2. Verify the following vehicle conditions:
    - All the switches are turned off (except the ignition switch).
    - All the doors, hood, and trunk (4SD)/liftgate (5HB) are closed.
    - All the doors, and trunk (4SD)/liftgate (5HB) are unlocked.
    - All the seat belts are unbuckled.
    - Parking brake lever is pulled.
3. After the vehicle is identified, select the following items from the initialization screen of the M-MDS.
    a. Select “Self Test”.
    b. Select “Modules”.
    c. Select “F_BCM”.
4. Verify the DTC according to the directions on the screen.
    - If any DTCs are displayed, perform troubleshooting according to the corresponding DTC inspection after recording the snapshot data.

CLEARING DTC

5. After completion of repairs, clear all DTCs stored in the front body control module (FBCM). (See **[FRONT BODY CONTROL MODULE (FBCM)]**.)

Snapshot Data

NOTE:

- The front body control module (FBCM) stores the following two types of snapshot data (vehicle information) when a DTC is detected and displays them in the M-MDS.
  - Vehicle information detected by front body control module (FBCM)
  - Vehicle information detected by instrument cluster and received by front body control module (FBCM) via CAN signal
- The data for all DTCs currently detected is stored.

—: Not applicable

Snapshot data item	Unit		Data contents	Data read/use method	Corresponding data monitor items
AAT	°C	°F	Ambient temperature	—	—
APP_STATUS	Accelerator Pedal Off/Under20%/Over20%/FAIL		Accelerator pedal position status	—	—
CFG_STATUS	Config Complete/Not Configured/Config Error		Instrument cluster configuration status	—	—
ECT_STATUS	Under 0 degrees C/0 - Under 80 degrees C/Over 80 degrees C/FAIL		Engine coolant temperature status	—	—
IC_VPWR	V		Instrument cluster power supply voltage	• The front body control module (FBCM) constantly receives the power supply voltage value of the instrument cluster sent via CAN signal from the instrument cluster. • If a DTC is detected, the front body control module (FBCM) records the power supply voltage of the instrument cluster when	VPWR*1

			the DTC was detected, and it is displayed in the M-MDS.	
IG-ON_TIMER	hh:mm:ss*2	Elapsed time since ignition was switched ON (engine off or on) **NOTE:** • The instrument cluster records the elapsed time since the ignition was switched ON (engine off or on).	• The front body control module (FBCM) constantly receives the elapsed time since the ignition was switched ON (engine off or on) sent via CAN signal from the instrument cluster. • If a DTC is detected, the front body control module (FBCM) records the elapsed time since the ignition was switched ON (engine off or on) when the DTC was detected, and it is displayed in the M-MDS.	—
		• Key Out: Ignition switched off • Key Recently Out (Position 0): Elapsed time **within 3 s** since ignition was switched off • Accessory (Position 1): Ignition is switched	• The front body control module (FBCM) constantly receives the ignition	

PWR_MODE_KEY	Key Out/Key Recently Out (Position 0)/Accessory (Position 1)/Post Ignition (Position 2)/Ignition On (Position 2)/Running (Position 2)/Running - Starting	to ACC • Post Ignition (Position 2): Elapsed time **within 3 s** since ignition was switched ON (engine off or on) • Ignition On (Position 2): Ignition switched ON (engine off) • Running (Position 2): Ignition switched ON (engine on) • Running - Starting: Cranking condition	switch status sent via CAN signal from the instrument cluster. • If a DTC is detected, the front body control module (FBCM) records the ignition switch status when the DTC was detected, and it is displayed in the M-MDS.	—
RPM_STATUS	Engine Stop/Under1500rpm/Over1500rpm/FAIL	Engine speed status	• The front body control module (FBCM) constantly receives the engine speed sent via CAN signal from the instrument cluster. • If a DTC is detected, the front body control module (FBCM) records the engine speed when the DTC was detected, and it is displayed in the M-MDS.	TACHOMTR*1

SHIFT_STATUS	P/N/D/R/FAIL		Selector lever position status	• The front body control module (FBCM) constantly receives the selector lever position sent via CAN signal from the instrument cluster. • If a DTC is detected, the front body control module (FBCM) records the selector lever position when the DTC was detected, and it is displayed in the M-MDS.	—
TOTAL_DIST	km	Miles	Accumulated total traveled distance from completion of vehicle until front body control module (FBCM) detects DTC (Odometer value in instrument cluster)	The total traveled distance from which the front body control module (FBCM) detects DTCs to the present can be calculated by performing the following procedure. • Verify the odometer value in the instrument cluster. • Verify the snapshot data item TOTAL_DIST. • Subtract 2 from 1.	—
TOTAL_TIME	hh:mm:ss*2		Accumulated total elapsed time since vehicle completion until front body control module (FBCM) detects a DTC **NOTE:** • When the ROOM fuse is removed, and the	The elapsed time from which the front body control module (FBCM) detects DTCs to the present can be calculated by performing the following procedure. • Verify the instrument cluster PID item TOTAL_TIME.	TOTAL_TIME*1

		ignition is switched off, the time is not included in the elapsed time.	• Verify the snapshot data item TOTAL_TIME. • Subtract 2 from 1.	
VPWR	V	Front body control module (FBCM) power supply voltage	—	VPWR_B
VSPD_STATUS	Stop/0-10km/h/Over10km/h/FAIL	Vehicle speed status	• The front body control module (FBCM) constantly receives the vehicle speed sent via CAN signal from the instrument cluster. • If a DTC is detected, the front body control module (FBCM) records the vehicle speed when the DTC was detected, and it is displayed in the M-MDS.	SPEEDOMTR*1

*1 **Instrument cluster PID (See PID/DATA MONITOR TABLE [INSTRUMENT CLUSTER].)**

*2 **The seconds may be indicated after the decimal point.**

2014 - Mazda3 - Body and Accessories

CLEARING DTC [FRONT BODY CONTROL MODULE (FBCM)]

CMDTC Memory Clearing Procedure

1. Connect the M-MDS to the DLC-2.
2. After the vehicle is identified, select the following items from the initialization screen of the M-MDS.
    a. Select “Self Test”.
    b. Select “All CMDTCs”.
3. Verify the DTC according to the directions on the screen.
4. Press the clear button on the DTC screen to clear the DTC.
5. Switch the ignition off.
6. Switch the ignition ON (engine off or on) and wait for **5 s or more**.
7. Perform DTC inspection. (See **DTC INSPECTION [FRONT BODY CONTROL MODULE (FBCM)]**.)
8. Verify that no DTCs are displayed.

ODDTC Memory Clearing Procedure

1. Connect the M-MDS to the DLC-2.
2. After the vehicle is identified, select the following items from the initialization screen of the M-MDS.
    a. Select “Self Test”.
    b. Select “Modules”.
    c. Select “F_BCM”.
3. Verify the DTC according to the directions on the screen.
4. Press the clear button on the DTC screen to clear the DTC.
5. Switch the ignition off.
6. Switch the ignition ON (engine off or on) and wait for **5 s or more**.
7. Perform DTC inspection. (See **DTC INSPECTION [FRONT BODY CONTROL MODULE (FBCM)]**.)
8. Verify that no DTCs are displayed.

CLEARING DTC [FRONT BODY CONTROL MODULE (FBCM)]

2014 - Mazda3 - Body and Accessories

DTC TABLE [FRONT BODY CONTROL MODULE (FBCM)]

×: Applicable—: Not applicable

DTC No.	Warning/indicator light	Description	Fail-safe function	Drive cycle	Self test type*1	Memory function	Page
B1008:02	—	Windshield wiper control signal mismatch	×	—	C, D	×	(See **DTC B1008:02 [FRONT BODY CONTROL MODULE (FBCM)]**.)
B1008:62	—	Windshield wiper LO switch signal mismatch	×	—	C, D	×	(See **DTC B1008:62 [FRONT BODY CONTROL MODULE (FBCM)]**.)
B1048:7B	—	Brake fluid level sensor circuit malfunction	—	—	C, D	×	(See **DTC B1048:7B [FRONT BODY CONTROL MODULE (FBCM)]**.)
B1087:88	—	LIN communication error	—	—	C, D	×	(See **DTC B1087:88 [FRONT BODY CONTROL MODULE (FBCM)]**.)
B1088:88	—	LIN communication error	—	—	C, D	×	(See **DTC B1088:88 [FRONT BODY CONTROL MODULE (FBCM)]**.)
B1092:11*2	—	DRL relay circuit malfunction	—	—	C, D	×	(See **DTC B1092:11 [FRONT BODY CONTROL MODULE (FBCM)]**.)
B109A:12	—	Headlight HI relay circuit malfunction	—	—	C, D	×	(See **DTC B109A:12 [FRONT BODY CONTROL MODULE (FBCM)]**.)
B109A:14	—	Headlight HI relay circuit malfunction	—	—	C, D	×	(See **DTC B109A:14 [FRONT BODY CONTROL MODULE (FBCM)]**.)
B10A6:64*3	—	Light switch error signal received	×	—	C, D	×	(See **DTC B10A6:64 [FRONT BODY CONTROL MODULE (FBCM)]**.)
B10A8:12*2	—	Headlight LO relay circuit malfunction	—	—	C, D	×	(See **DTC B10A8:12 [FRONT BODY CONTROL MODULE (FBCM)]**.)
B10AD:86*4	—	Error signal received from auto light sensor/rain sensor	—	—	C, D	×	(See **DTC B10AD:86 [FRONT BODY CONTROL MODULE (FBCM)]**.)
B10AF:12	—	Blower relay circuit malfunction	—	—	C, D	×	(See **DTC B10AF:12 [FRONT BODY CONTROL MODULE (FBCM)]**.)

B1142:13	—	IG1 relay circuit malfunction	—	—	C, D	×	(See **DTC B1142:13 [FRONT BODY CONTROL MODULE (FBCM)]**.)
B1143:13	—	IG2 relay control circuit malfunction	—	—	C, D	×	(See **DTC B1143:13 [FRONT BODY CONTROL MODULE (FBCM)]**.)
B11DB:86*5	—	Error signal received from current sensor	—	—	C, D	×	(See **DTC B11DB:86 [FRONT BODY CONTROL MODULE (FBCM)]**.)
B1314:11	—	Illumination output circuit malfunction	—	—	C, D	×	(See **DTC B1314:11 [FRONT BODY CONTROL MODULE (FBCM)]**.)
B134D:02	—	Headlight control signal error	×	—	C, D	×	(See **DTC B134D:02 [FRONT BODY CONTROL MODULE (FBCM)]**.)
B13CF:19	—	IG2 power supply output circuit malfunction	—	—	C, D	×	(See **DTC B13CF:19 [FRONT BODY CONTROL MODULE (FBCM)]**.)
B13D0:11	—	TNS circuit malfunction	—	—	C, D	×	(See **DTC B13D0:11 [FRONT BODY CONTROL MODULE (FBCM)]**.)
B13D2:12*6	—	Front fog light relay circuit malfunction	—	—	C, D	×	(See **DTC B13D2:12 [FRONT BODY CONTROL MODULE (FBCM)]**.)
B13FE:12*7	—	Headlight LO relay (RH) circuit malfunction	—	—	C, D	×	(See **DTC B13FE:12 [FRONT BODY CONTROL MODULE (FBCM)]**.)
B13FE:14*7	—	Headlight LO relay (RH) circuit malfunction	—	—	C, D	×	(See **DTC B13FE:14 [FRONT BODY CONTROL MODULE (FBCM)]**.)
B141E:12*7	—	Headlight LO relay (LH) circuit malfunction	—	—	C, D	×	(See **DTC B141E:12 [FRONT BODY CONTROL MODULE (FBCM)]**.)
B1C84:12	—	Rear window defroster relay circuit malfunction	—	—	C, D	×	(See **DTC B1C84:12 [FRONT BODY CONTROL MODULE (FBCM)]**.)
B1C84:14	—	Rear window defroster relay circuit malfunction	—	—	C, D	×	(See **DTC B1C84:14 [FRONT BODY CONTROL MODULE (FBCM)]**.)
B1D06:11	—	Turn light (LH) circuit malfunction	—	—	C, D	×	(See **DTC B1D06:11 [FRONT BODY CONTROL MODULE (FBCM)]**.)
B1D06:13	—	Turn light (LH) circuit malfunction	—	—	C, D	×	(See **DTC B1D06:13 [FRONT BODY CONTROL MODULE (FBCM)]**.)
		Turn light (RH)					

B1D07:11	—	circuit malfunction	—	—	C, D	×	(See **DTC B1D07:11 [FRONT BODY CONTROL MODULE (FBCM)]**.)
B1D07:13	—	Turn light (RH) circuit malfunction	—	—	C, D	×	(See **DTC B1D07:13 [FRONT BODY CONTROL MODULE (FBCM)]**.)
U0001:88	—	Module communication error (HS-CAN)	×	—	C, D	×	(See **DTC U0001:88/U0100:00/U0101:00/U0151:00/U0155:00/U0214:00/U023A:00 [FRONT BODY CONTROL MODULE (FBCM)]**.)
U0100:00	—	Communication error with PCM	×	—	C, D	×	
U0101:00*8	—	Communication error with TCM	×	—	C, D	×	
U0151:00	—	Communication error with SAS control module	×	—	C, D	×	
U0155:00	—	Communication error with instrument cluster	×	—	C, D	×	
U0164:68*9	—	Communication error with climate control unit	—	—	C, D	×	(See **DTC U0164:68 [FRONT BODY CONTROL MODULE (FBCM)]**.)
U0214:00	—	Communication error with start stop unit	×	—	C, D	×	(See **DTC U0001:88/U0100:00/U0101:00/U0151:00/U0155:00/U0214:00/U023A:00 [FRONT BODY CONTROL MODULE (FBCM)]**.)
U0231:68*4	—	Communication error with auto light sensor/rain sensor	—	—	C, D	×	(See **DTC U0231:68 [FRONT BODY CONTROL MODULE (FBCM)]**.)
U023A:00*10	—	Communication error with forward sensing camera (FSC)	×	—	C, D	×	(See **DTC U0001:88/U0100:00/U0101:00/U0151:00/U0155:00/U0214:00/U023A:00 [FRONT BODY CONTROL MODULE (FBCM)]**.)
U0338:09	—	Error light switch signal received from start stop unit	×	—	C, D	×	(See **DTC U0338:09 [FRONT BODY CONTROL MODULE (FBCM)]**.)
U0401:68	—	Error signal received from PCM	—	—	C, D	×	(See **DTC U0401:68 [FRONT BODY CONTROL MODULE (FBCM)]**.)
U053B:68*10	—	Error signal received from forward sensing camera (FSC)	—	—	C, D	×	(See **DTC U053B:68 [FRONT BODY CONTROL MODULE (FBCM)]**.)
U1007:68*5	—	Communication error with current sensor	—	—	C, D	×	(See **DTC U1007:68 [FRONT BODY CONTROL MODULE (FBCM)]**.)

U2005:68	—	Error vehicle speed signal received from PCM	—	—	C, D	×	(See **DTC U2005:68 [FRONT BODY CONTROL MODULE (FBCM)]**.)
U2100:00	—	Front body control module (FBCM) configuration error	—	—	C, D	×	(See **DTC U2100:00 [FRONT BODY CONTROL MODULE (FBCM)]**.)
U2101:00	—	Front body control module (FBCM) configuration error	—	—	C, D	×	(See **DTC U2101:00 [FRONT BODY CONTROL MODULE (FBCM)]**.)
U3000:49	—	Front body control module (FBCM) internal malfunction	—	—	C, D	×	(See **DTC U3000:49 [FRONT BODY CONTROL MODULE (FBCM)]**.)
U3000:56	—	Front body control module (FBCM) configuration error	—	—	C, D	×	(See **DTC U3000:56 [FRONT BODY CONTROL MODULE (FBCM)]**.)
U3003:16	—	Front body control module (FBCM) power supply voltage (+B power supply) low input	—	—	C, D	×	(See **DTC U3003:16 [FRONT BODY CONTROL MODULE (FBCM)]**.)
U3003:17	—	Front body control module (FBCM) power supply voltage high input	—	—	C, D	×	(See **DTC U3003:17 [FRONT BODY CONTROL MODULE (FBCM)]**.)
U3006:62	—	Front body control module (FBCM) power supply voltage mismatch	—	—	C, D	×	(See **DTC U3006:62 [FRONT BODY CONTROL MODULE (FBCM)]**.)

*1 **C: CMDTC self test, D: ODDTC self test**

*2 **Without discharge headlight system**

*3 **Without auto light sensor/rain sensor**

*4 **With auto light sensor/rain sensor**

*5 **With i-ELOOP**

*6 **With front fog light**

*7 **With discharge headlight system**

*8 **ATX**

*9 **With manual A/C**

*10 **With forward sensing camera (FSC)**

DTC TABLE [FRONT BODY CONTROL MODULE (FBCM)]

2014 - Mazda3 - Body and Accessories

DTC B1008:02 [FRONT BODY CONTROL MODULE (FBCM)]

Description	Windshield wiper control signal mismatch
Detection condition	• Front body control module (FBCM) receives the error signals from the start stop unit with the ignition switched ON (engine off or on).
Fail-safe function	• If the front body control module (FBCM) cannot receive a windshield wiper switch position signal because of a malfunction in the start stop unit or a CAN communication error between the start stop unit, or if it detects an error in the windshield wiper switch position signal, it continues the control before detecting the malfunction. However, if the driver operates the wiper and washer switch, it controls as follows: ▪ When the front body control module (FBCM) detects LO/HI ON using the LO/HI detection function: The windshield wipers are operated at low speed. ▪ When the front body control module (FBCM) detects LO/HI OFF using the LO/HI detection function: The windshield wipers are stopped at the park position.
Possible cause	• Start stop unit malfunction • Front body control module (FBCM) malfunction
System wiring diagram	Not applicable

Diagnostic Procedure

Step	Inspection		Action
1	**PERFORM DTC INSPECTION AND VERIFY START STOP UNIT MALFUNCTION** • Clear the DTC for the front body control module (FBCM) using the M-MDS. (See **CLEARING DTC [FRONT BODY CONTROL MODULE (FBCM)]**.)	Yes	Replace the start stop unit, then go to the next step. (See **START STOP UNIT REMOVAL/INSTALLATION**.)
		No	Go to Step 3.

	• Retrieve the front body control module (FBCM) DTCs using the M-MDS. (See **DTC INSPECTION [FRONT BODY CONTROL MODULE (FBCM)]**.) • Is the same DTC displayed?		
2	**VERIFY THAT REPAIRS HAVE BEEN COMPLETED** • Clear the front body control module (FBCM) DTCs using the M-MDS. (See **CLEARING DTC [FRONT BODY CONTROL MODULE (FBCM)]**.) • Retrieve the front body control module (FBCM) DTCs using the M-MDS. (See **DTC INSPECTION [FRONT BODY CONTROL MODULE (FBCM)]**.) • Is the same DTC displayed?	Yes	Repeat the inspection from Step 1. • If the malfunction recurs, replace the front body control module (FBCM). (See **FRONT BODY CONTROL MODULE (FBCM) REMOVAL/INSTALLATION**.) Go to the next step.
		No	Go to the next step.
3	**VERIFY IF OTHER DTCs DISPLAYED** • Are any other DTCs displayed?	Yes	Repair or replace the malfunctioning part according to the applicable DTC troubleshooting. (See **DTC TABLE [FRONT BODY CONTROL MODULE (FBCM)]**.)
		No	DTC troubleshooting completed.

2014 - Mazda3 - Body and Accessories

DTC B1008:62 [FRONT BODY CONTROL MODULE (FBCM)]

Description	Windshield wiper LO switch signal mismatch
Detection condition	• The condition in which the CAN and module signals are compared and no match is detected between the signals for **5 s or more** with the ignition switched ON (engine off or on).
Fail-safe function	• If the windshield wiper switch position which is monitored by the LO/HI detection function of the front body control module (FBCM) does not match the one which is sent from the start stop unit as a CAN signal, the windshield wipers are controlled according to the CAN signal for a certain period of time. After a certain period of time has elapsed, they are controlled as follows: ▪ When the front body control module (FBCM) detects LO/HI ON using the LO/HI detection function: The windshield wipers are operated at low speed. ▪ When the front body control module (FBCM) detects LO/HI OFF using the LO/HI detection function: The windshield wipers are stopped at the park position.
Possible cause	• Start stop unit malfunction • Windshield wiper switch malfunction • Short to ground in wiring harness between start stop unit terminal 1V and front body control module (FBCM) terminal 2Y • Short to power supply in wiring harness between start stop unit terminal 1V and front body control module (FBCM) terminal 2Y • Open circuit in wiring harness between start stop unit terminal 1V and front body control module (FBCM) terminal 2Y • Front body control module (FBCM) malfunction

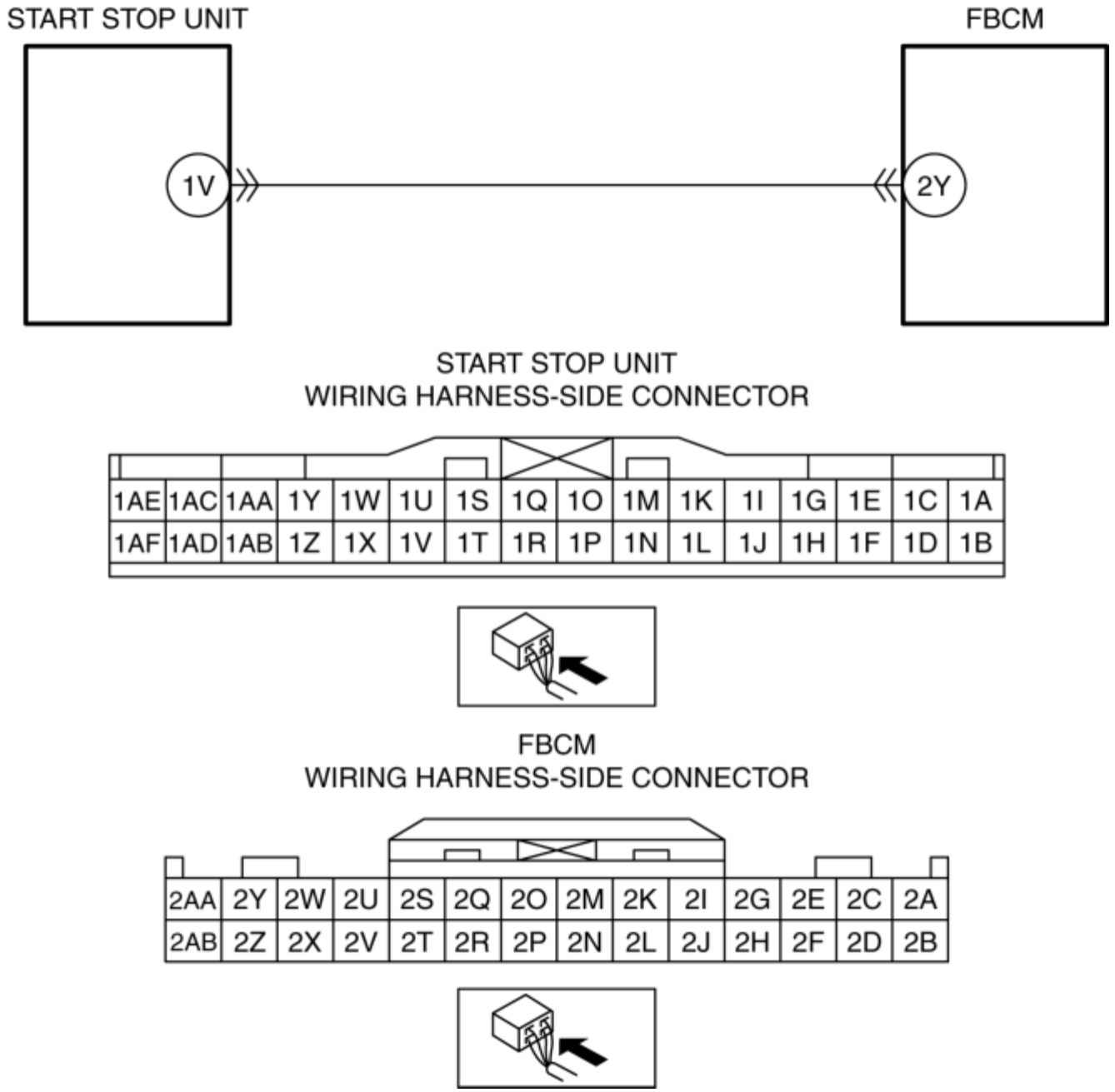

Diagnostic Procedure

Step	Inspection		Action
1	**INSPECT IF MALFUNCTION CAUSE IS START STOP UNIT OR FRONT BODY CONTROL MODULE (FBCM)** • Display the start stop unit PID WIP_F_LOW using the M-MDS. (See **PID/DATA MONITOR INSPECTION [START STOP UNIT]**.) • Verify the PID while operating	Yes	Go to Step 3.
		No	Go to the next step.

	the windshield wiper switch. • Is the PID displayed normally?		
2	**INSPECT WINDSHIELD WIPER SWITCH** • Inspect the windshield wiper switch. (See **WIPER AND WASHER SWITCH INSPECTION**.) • Is the windshield wiper switch normal?	Yes	Replace the start stop unit, then go to Step 7. (See **START STOP UNIT REMOVAL/INSTALLATION**.)
		No	Replace the wiper and washer switch, then go to Step 7. (See **WIPER AND WASHER SWITCH REMOVAL/INSTALLATION**.)
3	**INSPECT IF MALFUNCTION CAUSE IS FRONT BODY CONTROL MODULE (FBCM) OR WIRING HARNESS** • Display the front body control module (FBCM) PID WIP_F using the M-MDS. (See **PID/DATA MONITOR INSPECTION [FRONT BODY CONTROL MODULE (FBCM)]**.) • Verify the PID while operating the windshield wiper switch. • Is the PID displayed normally?	Yes	Go to the next step.
		No	Perform the CAN malfunction diagnosis flow and inspect the CAN for a malfunction. (See **CONTROLLER AREA NETWORK (CAN) MALFUNCTION DIAGNOSIS FLOW**.) • If there is no malfunction in the CAN, replace the front body control module (FBCM), then go to Step 7. (See **FRONT BODY CONTROL MODULE (FBCM) REMOVAL/INSTALLATION**.)
4	**INSPECT FOR SHORT TO GROUND IN WIRING HARNESS BETWEEN START STOP UNIT AND FRONT BODY CONTROL MODULE (FBCM)** • Switch the ignition off. • Disconnect the negative battery cable. (See **NEGATIVE BATTERY CABLE DISCONNECTION/CONNECTION [SKYACTIV-G 2.0, SKYACTIV-G 2.5]**.) • Disconnect the front body control module (FBCM) connector. • Disconnect the start stop unit connector. • Inspect for continuity between front body control module (FBCM) terminal 2Y	Yes	Refer to the wiring diagram and verify whether or not there is a common connector between start stop unit terminal 1V and front body control module (FBCM) terminal 2Y. **If there is a common connector:** • Determine the malfunctioning part by inspecting the common connector and the terminal for corrosion, damage, or pin disconnection, and the common wiring harness for a short to ground. • Repair or replace the malfunctioning part. **If there is no common connector:** • Repair or replace the wiring harness which has a short to ground.

	(wiring harness-side) and body ground. • Is there continuity?		Go to Step 7.
		No	Go to the next step.
5	**INSPECT FOR SHORT TO POWER SUPPLY IN WIRING HARNESS BETWEEN START STOP UNIT AND FRONT BODY CONTROL MODULE (FBCM)** • Verify that the front body control module (FBCM) and start stop unit connectors are disconnected. • Reconnect the negative battery cable. (See **NEGATIVE BATTERY CABLE DISCONNECTION/CONNECTION [SKYACTIV-G 2.0, SKYACTIV-G 2.5]**.) • Switch the ignition ON (engine off or on). • Measure the voltage at the front body control module (FBCM) terminal 2Y (wiring harness-side). • Is the voltage **0 V**?	Yes	Go to the next step.
		No	Refer to the wiring diagram and verify whether or not there is a common connector between start stop unit terminal 1V and front body control module (FBCM) terminal 2Y. **If there is a common connector:** • Determine the malfunctioning part by inspecting the common connector and the terminal for corrosion, damage, or pin disconnection, and the common wiring harness for a short to power supply. • Repair or replace the malfunctioning part. **If there is no common connector:** • Repair or replace the wiring harness which has a short to power supply. Go to Step 7.
6	**INSPECT FOR OPEN CIRCUIT IN WIRING HARNESS BETWEEN START STOP UNIT AND FRONT BODY CONTROL MODULE (FBCM)** • Verify that the front body control module (FBCM) and start stop unit connectors are disconnected. • Switch the ignition off. • Disconnect the negative battery cable. (See **NEGATIVE BATTERY CABLE DISCONNECTION/CONNECTION [SKYACTIV-G 2.0, SKYACTIV-G 2.5]**.) • Inspect for continuity between start stop unit	Yes	Go to the next step.
		No	Refer to the wiring diagram and verify whether or not there is a common connector between start stop unit terminal 1V and front body control module (FBCM) terminal 2Y. **If there is a common connector:** • Determine the malfunctioning part by inspecting the common connector and the terminal for corrosion, damage, or pin disconnection, and the common wiring harness for an open circuit. • Repair or replace the malfunctioning part. **If there is no common**

	terminal 1V (wiring harness-side) and front body control module (FBCM) terminal 2Y (wiring harness-side). • Is there continuity?		**connector:** • Repair or replace the wiring harness which has an open circuit. Go to the next step.
7	**VERIFY THAT REPAIRS HAVE BEEN COMPLETED** • Always reconnect all disconnected connectors. • Reconnect the negative battery cable. (See **NEGATIVE BATTERY CABLE DISCONNECTION/CONNECTION [SKYACTIV-G 2.0, SKYACTIV-G 2.5]**.) • Clear the front body control module (FBCM) DTCs using the M-MDS. (See **CLEARING DTC [FRONT BODY CONTROL MODULE (FBCM)]**.) • Switch the ignition ON (engine off or on) and wait for **5 s or more**. • Retrieve the front body control module (FBCM) DTCs using the M-MDS. (See **DTC INSPECTION [FRONT BODY CONTROL MODULE (FBCM)]**.) • Is the same DTC displayed?	Yes	Repeat the inspection from Step 1. • If the malfunction recurs, replace the front body control module (FBCM). (See **FRONT BODY CONTROL MODULE (FBCM) REMOVAL/INSTALLATION**.) Go to the next step.
		No	Go to the next step.
8	**VERIFY IF OTHER DTCs DISPLAYED** • Are any other DTCs displayed?	Yes	Repair or replace the malfunctioning part according to the applicable DTC troubleshooting. (See **DTC TABLE [FRONT BODY CONTROL MODULE (FBCM)]**.)
		No	DTC troubleshooting completed.

2014 - Mazda3 - Body and Accessories

DTC B1048:7B [FRONT BODY CONTROL MODULE (FBCM)]

Description	Brake fluid level sensor circuit malfunction
Detection condition	• Front body control module (FBCM) detected that the brake fluid level is less than MIN with the ignition switched ON (engine off or on).
Fail-safe function	Not applicable
Possible cause	• Insufficient brake fluid level • Brake fluid level sensor connector or terminal malfunction • Front body control module (FBCM) connector or terminal malfunction • Short to ground in wiring harness between brake fluid level sensor terminal A and front body control module (FBCM) terminal 2Q • Brake fluid level sensor malfunction • Front body control module (FBCM) malfunction

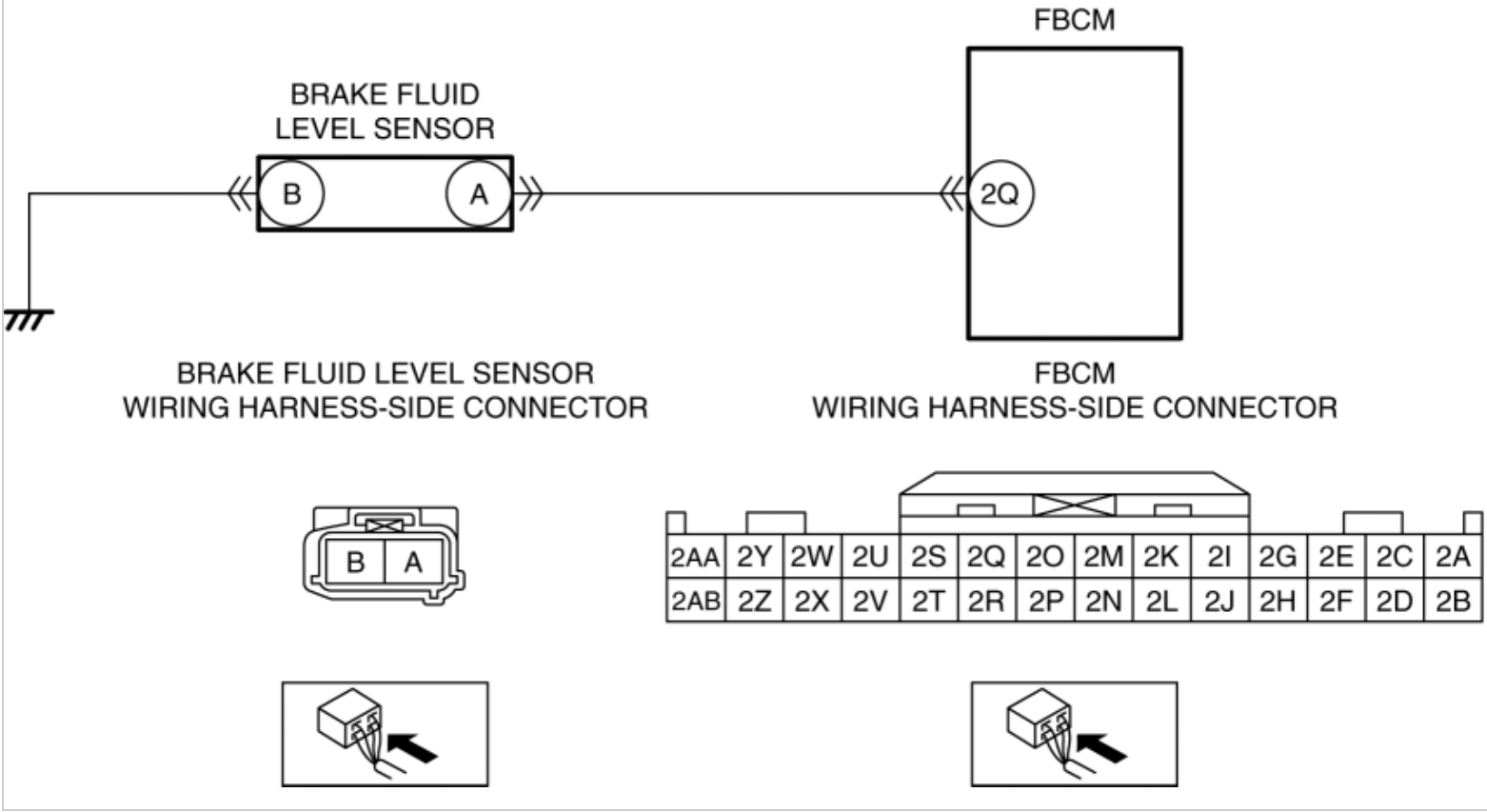

Diagnostic Procedure

Step	Inspection		Action
1	**VERIFY FRONT BODY CONTROL MODULE (FBCM) DTCs AGAIN** • Clear the DTC for the front body control module (FBCM) using the M-MDS. (See **CLEARING DTC [FRONT BODY CONTROL MODULE (FBCM)]**.) • Retrieve the front body control module (FBCM) DTCs using the M-MDS. (See **DTC INSPECTION [FRONT BODY CONTROL MODULE (FBCM)]**.) • Is the same DTC displayed?	Yes	Go to the next step.
		No	Go to Step 8.
2	**INSPECT BRAKE FLUID LEVEL** • Inspect the brake fluid level. (See **BRAKE FLUID INSPECTION**.) • Is the brake fluid level normal?	Yes	Go to the next step.
		No	Add genuine brake fluid, then go to Step 7.
3	**INSPECT BRAKE FLUID LEVEL SENSOR CONNECTOR CONDITION** • Switch the ignition off. • Disconnect the negative battery cable. (See **NEGATIVE BATTERY CABLE DISCONNECTION/CONNECTION [SKYACTIV-G 2.0, SKYACTIV-G 2.5]**.) • Disconnect the brake fluid level sensor connector. • Inspect the connector engagement and connection condition and inspect the terminals for damage, deformation, corrosion, or disconnection. • Is the connector normal?	Yes	Go to the next step.
		No	Repair or replace the connector, then go to Step 7.
4	**INSPECT FRONT BODY CONTROL MODULE (FBCM) CONNECTOR CONDITION** • Disconnect the front body control module (FBCM) connector.	Yes	Go to the next step.
		No	Repair or replace the connector, then go to Step 7.

	• Inspect the connector engagement and connection condition and inspect the terminals for damage, deformation, corrosion, or disconnection. • Is the connector normal?		
5	**INSPECT FOR SHORT TO GROUND IN BRAKE FLUID LEVEL SENSOR SIGNAL CIRCUIT** • Verify that the brake fluid level sensor and front body control module (FBCM) connectors are disconnected. • Inspect for continuity between front body control module (FBCM) terminal 2Q (wiring harness-side) and body ground. • Is there continuity?	Yes	Refer to the wiring diagram and verify whether or not there is a common connector between brake fluid level sensor terminal A and front body control module (FBCM) terminal 2Q. **If there is a common connector:** • Determine the malfunctioning part by inspecting the common connector and the terminal for corrosion, damage, or pin disconnection, and the common wiring harness for a short to ground. • Repair or replace the malfunctioning part. **If there is no common connector:** • Repair or replace the wiring harness which has a short to ground. Go to Step 7.
		No	Go to the next step.
6	**INSPECT BRAKE FLUID LEVEL SENSOR** • Inspect the brake fluid level sensor. (See **BRAKE FLUID LEVEL SENSOR INSPECTION**.) • Is the brake fluid level sensor normal?	Yes	Go to the next step.
		No	Replace the brake fluid level sensor, then go to the next step. (See **MASTER CYLINDER REMOVAL/INSTALLATION**.)
7	**VERIFY THAT REPAIRS HAVE BEEN COMPLETED** • Always reconnect all disconnected connectors. • Reconnect the negative battery cable. (See **NEGATIVE BATTERY CABLE DISCONNECTION/CONNECTION [SKYACTIV-G 2.0, SKYACTIV-G 2.5]**.) • Clear the DTC for the front body control module (FBCM) using the M-MDS. (See **CLEARING DTC [FRONT BODY CONTROL MODULE**	Yes	Repeat the inspection from Step 1. • If the malfunction recurs, replace the front body control module (FBCM). (See **FRONT BODY CONTROL MODULE (FBCM) REMOVAL/INSTALLATION**.) Go to the next step.
		No	Go to the next step.

	(FBCM)].) • Retrieve the front body control module (FBCM) DTCs using the M-MDS. (See **DTC INSPECTION [FRONT BODY CONTROL MODULE (FBCM)]**.) • Is the same DTC displayed?		
8	**VERIFY IF OTHER DTCs DISPLAYED** • Are any other DTCs displayed?	Yes	Repair or replace the malfunctioning part according to the applicable DTC troubleshooting. (See **DTC TABLE [FRONT BODY CONTROL MODULE (FBCM)]**.)
		No	DTC troubleshooting completed.

2014 - Mazda3 - Body and Accessories

DTC B1087:88 [FRONT BODY CONTROL MODULE (FBCM)]

Description	LIN communication error
Detection condition	• LIN bus communication line malfunction detected for **1 s or more**
Fail-safe function	Not applicable
Possible cause	• Malfunction in LIN bus communication line ▪ Current sensor terminal B—Front body control module (FBCM) terminal 2E (With i-ELOOP) • Front body control module (FBCM) malfunction

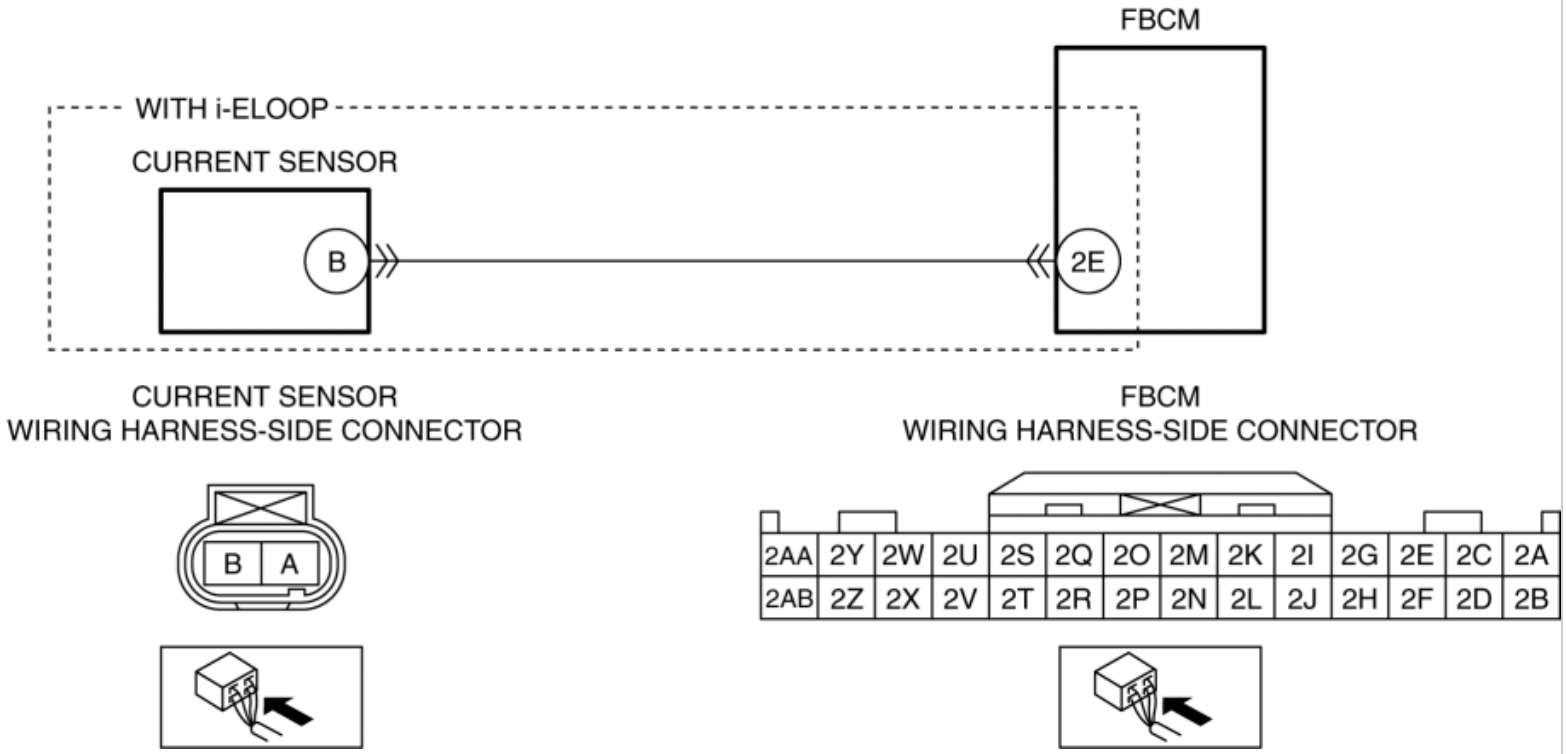

Diagnostic Procedure

Step	Inspection		Action
1	**VERIFY FRONT BODY CONTROL MODULE (FBCM) DTCs AGAIN** • Clear the DTC	Yes	LIN communication line can be considered the cause. • Refer to the wiring diagram and verify whether or not there is a common connector between following terminals:

	for the front body control module (FBCM) using the M-MDS. (See **CLEARING DTC [FRONT BODY CONTROL MODULE (FBCM)]**.) • Switch the ignition ON (engine off or on) and wait for **1 s or more**. • Retrieve the front body control module (FBCM) DTCs using the M-MDS. (See **DTC INSPECTION [FRONT BODY CONTROL MODULE (FBCM)]**.) • Is the same DTC displayed?		▪ Current sensor terminal B—Front body control module (FBCM) terminal 2E (With i-ELOOP) **If there is a common connector:** • Determine the malfunctioning part by inspecting the common connector and the terminal for corrosion, damage, or pin disconnection, and the common wiring harness for a malfunction. • Repair or replace the malfunctioning part. **If there is no common connector:** • Repair or replace the wiring harness. • Go to the next step.
		No	Go to Step 3.
2	**VERIFY THAT REPAIRS HAVE BEEN COMPLETED** • Clear the DTC for the front body control module (FBCM) using the M-MDS. (See **CLEARING DTC [FRONT BODY CONTROL MODULE (FBCM)]**.) • Switch the ignition ON (engine off or on) and wait for **1 s or more**. • Retrieve the front body control module (FBCM) DTCs using the M-MDS. (See **DTC INSPECTION [FRONT BODY CONTROL MODULE**	Yes	Repeat the inspection from Step 1. • If the malfunction recurs, replace the front body control module (FBCM). (See **FRONT BODY CONTROL MODULE (FBCM) REMOVAL/INSTALLATION**.) Go to the next step.
		No	Go to the next step.

	(FBCM)].) • Is the same DTC displayed?		
3	**VERIFY IF OTHER DTCs DISPLAYED** • Are any other DTCs displayed?	Yes	Repair or replace the malfunctioning part according to the applicable DTC troubleshooting. (See **DTC TABLE [FRONT BODY CONTROL MODULE (FBCM)]**.)
		No	DTC troubleshooting completed.

2014 - Mazda3 - Body and Accessories

DTC B1088:88 [FRONT BODY CONTROL MODULE (FBCM)]

Description	LIN communication error
Detection condition	• LIN bus communication line malfunction detected for **1 s or more**
Fail-safe function	Not applicable

Possible cause	• Malfunction in LIN bus communication line
	  ▪ Auto light sensor/rain sensor terminal A—Front body control module (FBCM) terminal 2G (With auto light sensor/rain sensor)
	  ▪ Climate control unit terminal K—Front body control module (FBCM) terminal 2J (With manual A/C)
	• Front body control module (FBCM) malfunction

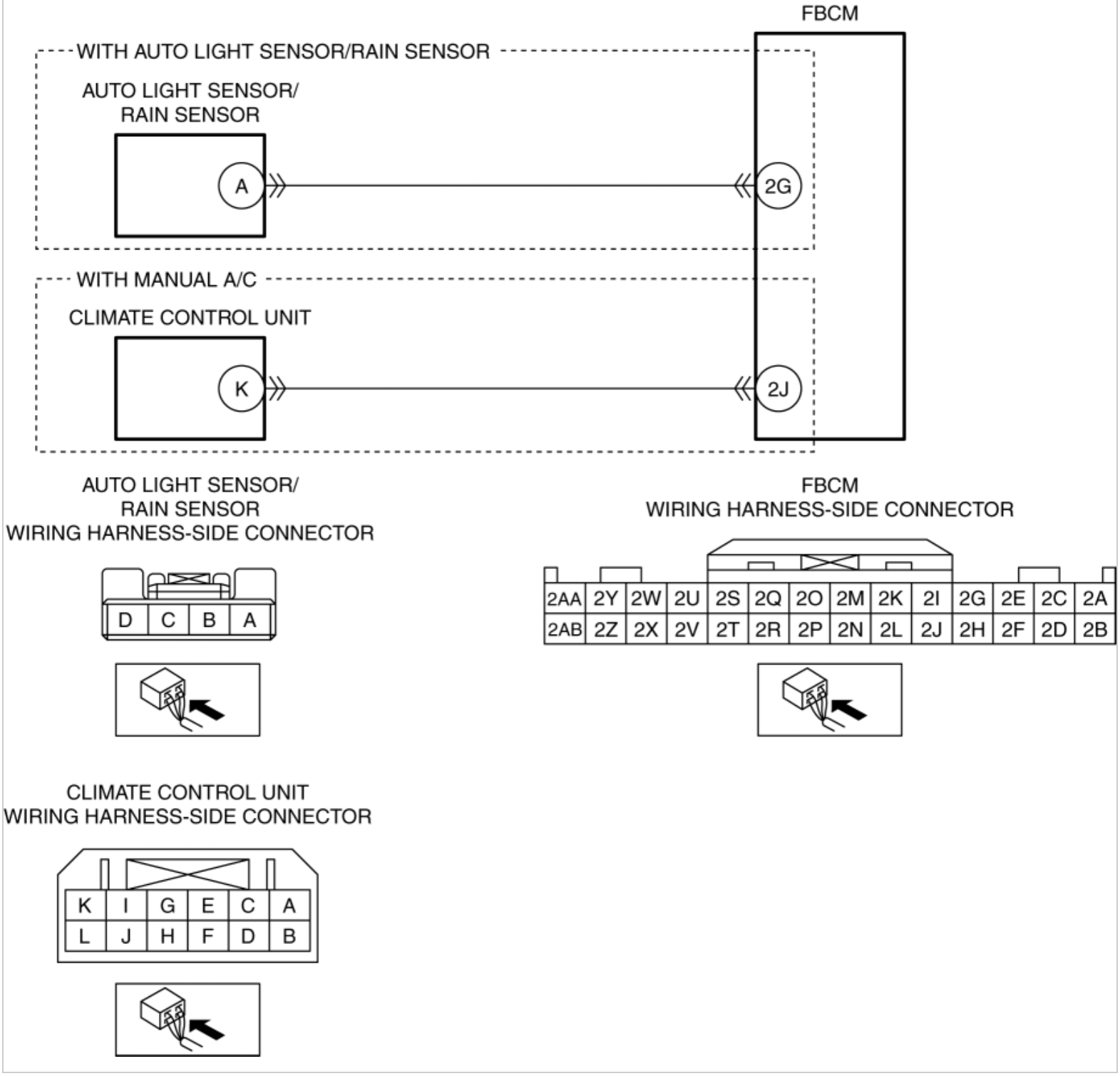

Diagnostic Procedure

Step	Inspection		Action
1	**VERIFY FRONT BODY CONTROL MODULE (FBCM) DTCs AGAIN** • Clear the DTC for the front body control module (FBCM) using the M-	Yes	LIN communication line can be considered the cause. • Refer to the wiring diagram and verify whether or not there is a common connector between following terminals: ▪ Auto light sensor/rain sensor terminal A—Front body control module (FBCM) terminal 2G (With auto light sensor/rain sensor)

	MDS. (See **CLEARING DTC [FRONT BODY CONTROL MODULE (FBCM)]**.) • Switch the ignition ON (engine off or on) and wait for **1 s or more**. • Retrieve the front body control module (FBCM) DTCs using the M-MDS. (See **DTC INSPECTION [FRONT BODY CONTROL MODULE (FBCM)]**.) • Is the same DTC displayed?		▪ Climate control unit terminal K—Front body control module (FBCM) terminal 2J (With manual A/C) **If there is a common connector:** • Determine the malfunctioning part by inspecting the common connector and the terminal for corrosion, damage, or pin disconnection, and the common wiring harness for a malfunction. • Repair or replace the malfunctioning part. **If there is no common connector:** • Repair or replace the wiring harness. • Go to the next step.
		No	Go to Step 3.
2	**VERIFY THAT REPAIRS HAVE BEEN COMPLETED** • Clear the DTC for the front body control module (FBCM) using the M-MDS. (See **CLEARING DTC [FRONT BODY CONTROL MODULE (FBCM)]**.) • Switch the ignition ON (engine off or on) and wait for **1 s or more**. • Retrieve the front body control module (FBCM) DTCs using the M-MDS. (See **DTC INSPECTION [FRONT BODY CONTROL MODULE (FBCM)]**.) • Is the same DTC displayed?	Yes	Repeat the inspection from Step 1. • If the malfunction recurs, replace the front body control module (FBCM). (See **FRONT BODY CONTROL MODULE (FBCM) REMOVAL/INSTALLATION**.) Go to the next step.
		No	Go to the next step.

3	**VERIFY IF OTHER DTCs DISPLAYED** • Are any other DTCs displayed?	Yes	Repair or replace the malfunctioning part according to the applicable DTC troubleshooting. (See **DTC TABLE [FRONT BODY CONTROL MODULE (FBCM)]**.)
		No	DTC troubleshooting completed.

2014 - Mazda3 - Body and Accessories

DTC B1092:11 [FRONT BODY CONTROL MODULE (FBCM)]

Description	DRL relay circuit malfunction
Detection condition	• Front body control module (FBCM) detects a short to ground in the DRL relay circuit with the ignition switched ON (engine off or on).
Fail-safe function	Not applicable
Possible cause	• DRL relay malfunction • Front body control module (FBCM) connector or terminal malfunction • Short to ground in wiring harness between DRL relay terminal A and front body control module (FBCM) terminal 2C • Front body control module (FBCM) malfunction

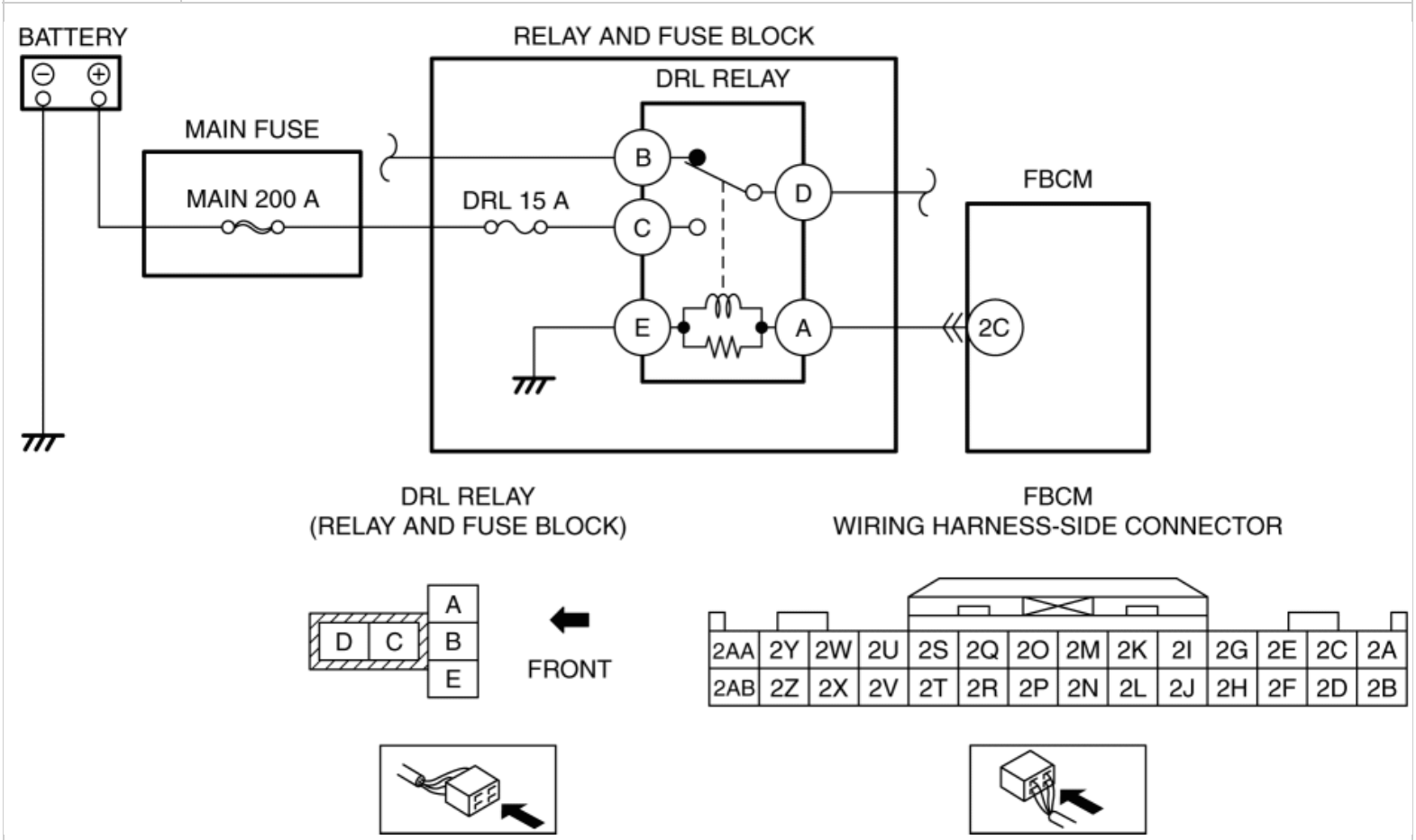

Diagnostic Procedure

Step	Inspection	Action

1	**VERIFY FRONT BODY CONTROL MODULE (FBCM) DTCs AGAIN** • Clear the DTC for the front body control module (FBCM) using the M-MDS. (See **CLEARING DTC [FRONT BODY CONTROL MODULE (FBCM)]**.) • Retrieve the front body control module (FBCM) DTCs using the M-MDS. (See **DTC INSPECTION [FRONT BODY CONTROL MODULE (FBCM)]**.) • Is the same DTC displayed?	Yes	Go to the next step.
		No	Go to Step 6.
2	**INSPECT DRL RELAY** • Switch the ignition off. • Disconnect the negative battery cable. (See **NEGATIVE BATTERY CABLE DISCONNECTION/CONNECTION [SKYACTIV-G 2.0, SKYACTIV-G 2.5]**.) • Remove the DRL relay. (See **RELAY LOCATION**.) • Inspect the DRL relay. (See **RELAY INSPECTION**.) • Is the DRL relay normal?	Yes	Go to the next step.
		No	Replace the DRL relay, then go to Step 5. (See **RELAY LOCATION**.)
3	**INSPECT FRONT BODY CONTROL MODULE (FBCM) CONNECTOR CONDITION** • Disconnect the front body control module (FBCM) connector. • Inspect the connector engagement and connection condition and inspect the terminals for damage, deformation, corrosion, or disconnection. • Is the connector normal?	Yes	Go to the next step.
		No	Repair or replace the connector, then go to Step 5.
4	**INSPECT FOR SHORT TO GROUND IN DRL RELAY CONTROL CIRCUIT** • Verify that the DRL relay is removed. • Verify that the front body control module (FBCM) connector is disconnected. • Inspect for continuity between front body control module (FBCM) terminal 2C (wiring harness-side) and body ground. • Is there continuity?	Yes	Refer to the wiring diagram and verify whether or not there is a common connector between DRL relay terminal A and front body control module (FBCM) terminal 2C. **If there is a common connector:** • Determine the malfunctioning part by inspecting the common connector and the terminal for corrosion, damage, or pin disconnection, and the common wiring harness for a short to ground. • Repair or replace the malfunctioning part. **If there is no common connector:** • Repair or replace the wiring harness which has a short to ground. Go to the next step.

		No	Go to the next step.
5	**VERIFY THAT REPAIRS HAVE BEEN COMPLETED** • Always reconnect all disconnected connectors. • Reconnect the negative battery cable. (See **NEGATIVE BATTERY CABLE DISCONNECTION/CONNECTION [SKYACTIV-G 2.0, SKYACTIV-G 2.5]**.) • Clear the DTC for the front body control module (FBCM) using the M-MDS. (See **CLEARING DTC [FRONT BODY CONTROL MODULE (FBCM)]**.) • Retrieve the front body control module (FBCM) DTCs using the M-MDS. (See **DTC INSPECTION [FRONT BODY CONTROL MODULE (FBCM)]**.) • Is the same DTC displayed?	Yes	Repeat the inspection from Step 1. • If the malfunction recurs, replace the front body control module (FBCM). (See **FRONT BODY CONTROL MODULE (FBCM) REMOVAL/INSTALLATION**.) Go to the next step.
		No	Go to the next step.
6	**VERIFY IF OTHER DTCs DISPLAYED** • Are any other DTCs displayed?	Yes	Repair or replace the malfunctioning part according to the applicable DTC troubleshooting. (See **DTC TABLE [FRONT BODY CONTROL MODULE (FBCM)]**.)
		No	DTC troubleshooting completed.

2014 - Mazda3 - Body and Accessories

DTC B109A:12 [FRONT BODY CONTROL MODULE (FBCM)]

Description	Headlight HI relay circuit malfunction
Detection condition	• Front body control module (FBCM) detects a short to power supply in the headlight HI relay circuit with the ignition switched ON (engine off or on).
Fail-safe function	Not applicable
Possible cause	• Headlight HI relay malfunction • Front body control module (FBCM) connector or terminal malfunction • Short to power supply in the wiring harness between headlight HI relay terminal E and front body control module (FBCM) terminal 2X • Front body control module (FBCM) malfunction

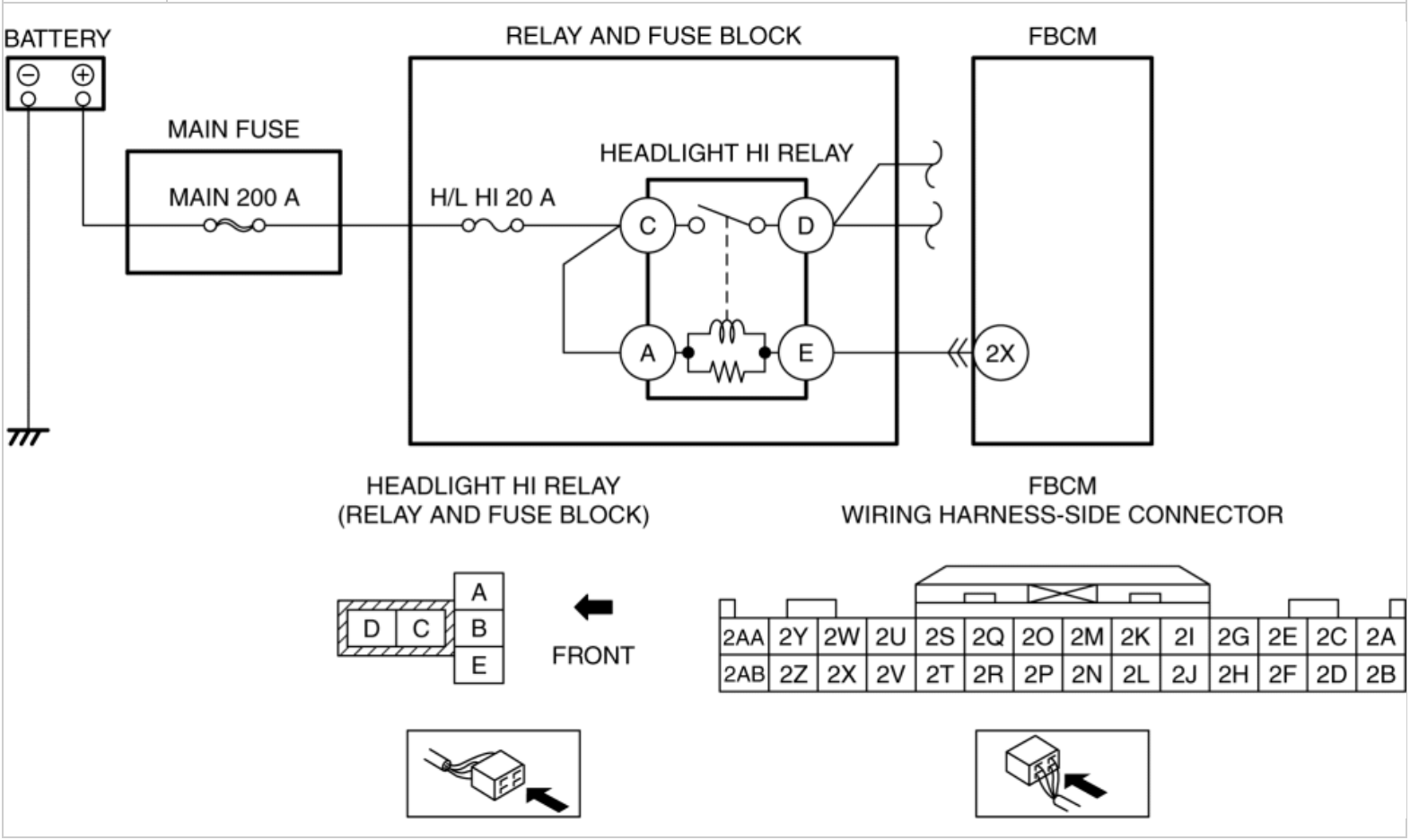

Diagnostic Procedure

Step	Inspection	Action

1	**VERIFY FRONT BODY CONTROL MODULE (FBCM) DTCs AGAIN** • Clear the DTC for the front body control module (FBCM) using the M-MDS. (See **CLEARING DTC [FRONT BODY CONTROL MODULE (FBCM)]**.) • Operate the light switch to the HEAD position and the dimmer switch to the HI position. • Retrieve the front body control module (FBCM) DTCs using the M-MDS. (See **DTC INSPECTION [FRONT BODY CONTROL MODULE (FBCM)]**.) • Is the same DTC displayed?	Yes	Go to the next step.
		No	Go to Step 6.
2	**INSPECT HEADLIGHT HI RELAY** • Switch the ignition off. • Disconnect the negative battery cable. (See **NEGATIVE BATTERY CABLE DISCONNECTION/CONNECTION [SKYACTIV-G 2.0, SKYACTIV-G 2.5]**.) • Remove the headlight HI relay. (See **RELAY LOCATION**.) • Inspect the headlight HI relay. (See **RELAY INSPECTION**.) • Is the headlight HI relay normal?	Yes	Go to the next step.
		No	Replace the headlight HI relay, then go to Step 5. (See **RELAY LOCATION**.)
3	**INSPECT FRONT BODY CONTROL MODULE (FBCM) CONNECTOR CONDITION** • Disconnect the front body control module (FBCM) connector. • Inspect the connector engagement and connection condition and inspect the terminals for damage, deformation, corrosion, or disconnection. • Is the connector normal?	Yes	Go to the next step.
		No	Repair or replace the connector, then go to Step 5.
4	**INSPECT FOR SHORT TO POWER SUPPLY IN HEADLIGHT HI RELAY CONTROL CIRCUIT** • Verify that the headlight HI relay is removed. • Verify that the front body control module (FBCM) connector is disconnected. • Reconnect the negative battery cable. (See **NEGATIVE BATTERY CABLE DISCONNECTION/CONNECTION [SKYACTIV-G 2.0, SKYACTIV-G 2.5]**.) • Switch the ignition ON (engine off or	Yes	Go to the next step.
		No	Refer to the wiring diagram and verify whether or not there is a common connector between headlight HI relay terminal E and front body control module (FBCM) terminal 2X. **If there is a common connector:** • Determine the malfunctioning part by inspecting the common connector and the terminal for corrosion, damage, or pin disconnection, and the common wiring harness for a short to power supply. • Repair or replace the malfunctioning part. **If there is no common connector:**

	on). • Measure the voltage at the front body control module (FBCM) terminal 2X (wiring harness-side). • Is the voltage **0 V**?		• Repair or replace the wiring harness which has a short to power supply. Go to the next step.
5	**VERIFY THAT REPAIRS HAVE BEEN COMPLETED** • Always reconnect all disconnected connectors. • Reconnect the negative battery cable. (See **NEGATIVE BATTERY CABLE DISCONNECTION/CONNECTION [SKYACTIV-G 2.0, SKYACTIV-G 2.5]**.) • Clear the DTC for the front body control module (FBCM) using the M-MDS. (See **CLEARING DTC [FRONT BODY CONTROL MODULE (FBCM)]**.) • Operate the light switch to the HEAD position and the dimmer switch to the HI position. • Retrieve the front body control module (FBCM) DTCs using the M-MDS. (See **DTC INSPECTION [FRONT BODY CONTROL MODULE (FBCM)]**.) • Is the same DTC displayed?	Yes	Repeat the inspection from Step 1. • If the malfunction recurs, replace the front body control module (FBCM). (See **FRONT BODY CONTROL MODULE (FBCM) REMOVAL/INSTALLATION**.) Go to the next step.
		No	Go to the next step.
6	**VERIFY IF OTHER DTCs DISPLAYED** • Are any other DTCs displayed?	Yes	Repair or replace the malfunctioning part according to the applicable DTC troubleshooting. (See **DTC TABLE [FRONT BODY CONTROL MODULE (FBCM)]**.)
		No	DTC troubleshooting completed.

2014 - Mazda3 - Body and Accessories

DTC B109A:14 [FRONT BODY CONTROL MODULE (FBCM)]

Description	Headlight HI relay circuit malfunction
Detection condition	• Front body control module (FBCM) detects an open circuit or short to ground in the headlight HI relay circuit with the ignition switched ON (engine off or on).
Fail-safe function	Not applicable
Possible cause	• Headlight HI relay malfunction • Front body control module (FBCM) connector or terminal malfunction • Short to ground in wiring harness between headlight HI relay terminal E and front body control module (FBCM) terminal 2X • Open circuit in wiring harness between headlight HI relay terminal E and front body control module (FBCM) terminal 2X • Front body control module (FBCM) malfunction

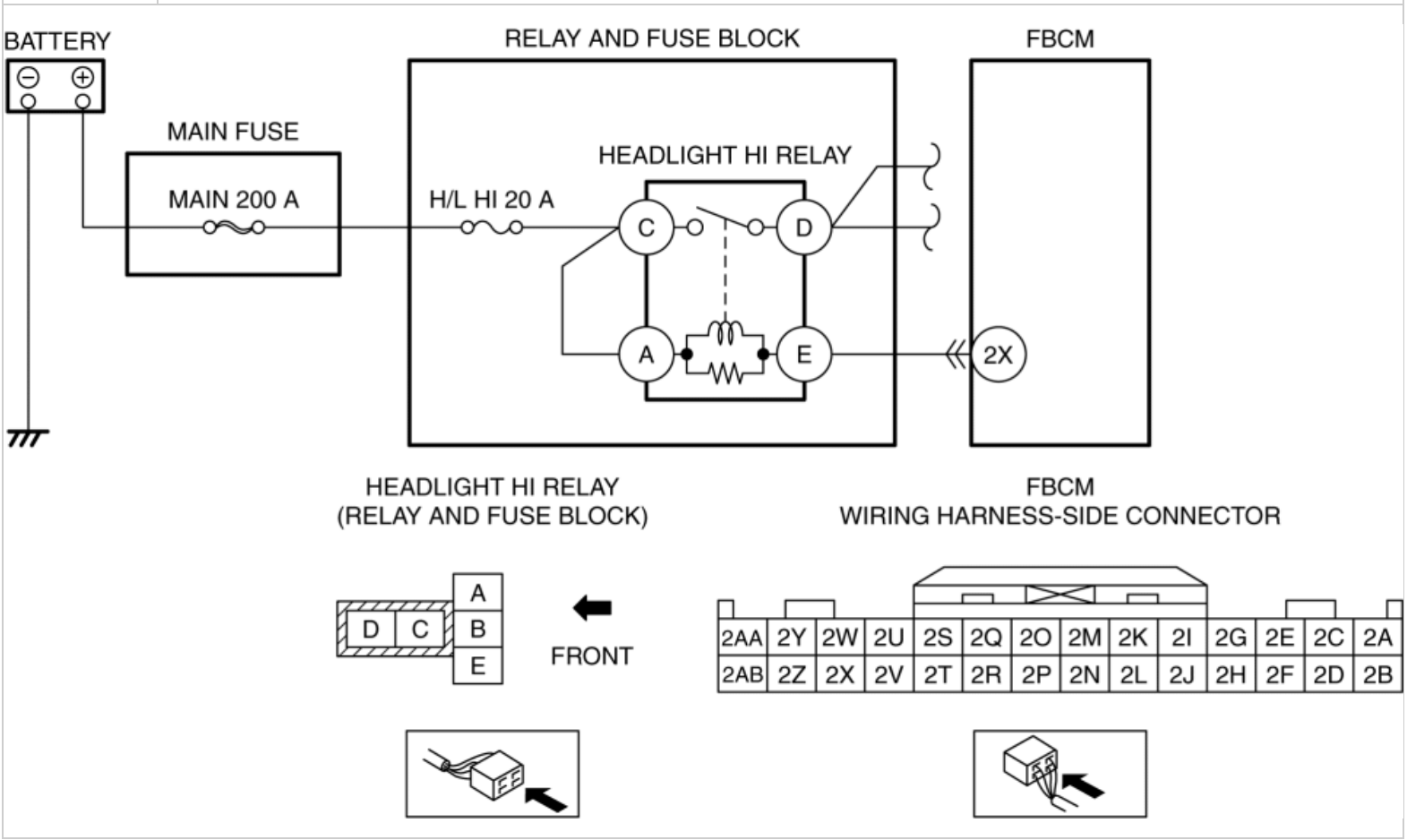

Diagnostic Procedure

Step	Inspection		Action
1	**VERIFY FRONT BODY CONTROL MODULE (FBCM) DTCs AGAIN** • Clear the DTC for the front body control module (FBCM) using the M-MDS. (See **CLEARING DTC [FRONT BODY CONTROL MODULE (FBCM)]**.) • Retrieve the front body control module (FBCM) DTCs using the M-MDS. (See **DTC INSPECTION [FRONT BODY CONTROL MODULE (FBCM)]**.) • Is the same DTC displayed?	Yes	Go to the next step.
		No	Go to Step 7.
2	**INSPECT HEADLIGHT HI RELAY** • Switch the ignition off. • Disconnect the negative battery cable. (See **NEGATIVE BATTERY CABLE DISCONNECTION/CONNECTION [SKYACTIV-G 2.0, SKYACTIV-G 2.5]**.) • Remove the headlight HI relay. (See **RELAY LOCATION**.) • Inspect the headlight HI relay. (See **RELAY INSPECTION**.) • Is the headlight HI relay normal?	Yes	Go to the next step.
		No	Replace the headlight HI relay, then go to Step 6. (See **RELAY LOCATION**.)
3	**INSPECT FRONT BODY CONTROL MODULE (FBCM) CONNECTOR CONDITION** • Disconnect the front body control module (FBCM) connector. • Inspect the connector engagement and connection condition and inspect the terminals for damage, deformation, corrosion, or disconnection. • Is the connector normal?	Yes	Go to the next step.
		No	Repair or replace the connector, then go to Step 6.
4	**INSPECT FOR SHORT TO GROUND IN HEADLIGHT HI RELAY CONTROL CIRCUIT** • Verify that the headlight HI relay is removed. • Verify that the front body control module (FBCM) connector is disconnected. • Inspect for continuity between front body control module (FBCM) terminal 2X (wiring harness-side) and body ground. • Is there continuity?	Yes	Refer to the wiring diagram and verify whether or not there is a common connector between headlight HI relay terminal E and front body control module (FBCM) terminal 2X. **If there is a common connector:** • Determine the malfunctioning part by inspecting the common connector and the terminal for corrosion, damage, or pin disconnection, and the common wiring harness for a short to ground. • Repair or replace the malfunctioning part. **If there is no common connector:** • Repair or replace the wiring harness which has a short to ground. Go to Step 6.
		No	Go to the next step.

5	**INSPECT FOR OPEN CIRCUIT IN HEADLIGHT HI RELAY CONTROL CIRCUIT** • Verify that the headlight HI relay is removed. • Verify that the front body control module (FBCM) connector is disconnected. • Inspect for continuity between headlight HI relay terminal E (wiring harness-side) and front body control module (FBCM) terminal 2X (wiring harness-side). • Is there continuity?	Yes	Go to the next step.
		No	Refer to the wiring diagram and verify whether or not there is a common connector between headlight HI relay terminal E and front body control module (FBCM) terminal 2X. **If there is a common connector:** • Determine the malfunctioning part by inspecting the common connector and the terminal for corrosion, damage, or pin disconnection, and the common wiring harness for an open circuit. • Repair or replace the malfunctioning part. **If there is no common connector:** • Repair or replace the wiring harness which has an open circuit. Go to the next step.
6	**VERIFY THAT REPAIRS HAVE BEEN COMPLETED** • Always reconnect all disconnected connectors. • Reconnect the negative battery cable. (See **NEGATIVE BATTERY CABLE DISCONNECTION/CONNECTION [SKYACTIV-G 2.0, SKYACTIV-G 2.5]**.) • Clear the DTC for the front body control module (FBCM) using the M-MDS. (See **CLEARING DTC [FRONT BODY CONTROL MODULE (FBCM)]**.) • Retrieve the front body control module (FBCM) DTCs using the M-MDS. (See **DTC INSPECTION [FRONT BODY CONTROL MODULE (FBCM)]**.) • Is the same DTC displayed?	Yes	Repeat the inspection from Step 1. • If the malfunction recurs, replace the front body control module (FBCM). (See **FRONT BODY CONTROL MODULE (FBCM) REMOVAL/INSTALLATION**.) Go to the next step.
		No	Go to the next step.
7	**VERIFY IF OTHER DTCs DISPLAYED** • Are any other DTCs displayed?	Yes	Repair or replace the malfunctioning part according to the applicable DTC troubleshooting. (See **DTC TABLE [FRONT BODY CONTROL MODULE (FBCM)]**.)
		No	DTC troubleshooting completed.

2014 - Mazda3 - Body and Accessories

DTC B10A6:64 [FRONT BODY CONTROL MODULE (FBCM)]

Description	Light switch error signal received
Detection condition	• Front body control module (FBCM) receives the error signals from the start stop unit for **5 s or more** with the ignition switched ON (engine off or on).
Fail-safe function	• If DTC B10A6:64 is detected when the ignition is switched ON (engine off or on), the headlight LO and the TNS are illuminated. • If DTC B10A6:64 is cleared, the headlight LO and the TNS are turned off, and the operation returns to normal.
Possible cause	• Start stop unit malfunction • Light switch malfunction • Front body control module (FBCM) malfunction
System wiring diagram	Not applicable

Diagnostic Procedure

Step	Inspection		Action
1	**VERIFY FRONT BODY CONTROL MODULE (FBCM) DTCs AGAIN** • Clear the DTC for the front body control module (FBCM) using the M-MDS. (See **CLEARING DTC [FRONT BODY CONTROL MODULE (FBCM)]**.) • Switch the ignition ON (engine off or on) and wait for **5 s or more**. • Retrieve the front body control module (FBCM) DTCs using the M-MDS.	Yes	Go to the next step.
		No	Go to Step 4.

	(See **DTC INSPECTION [FRONT BODY CONTROL MODULE (FBCM)]**.) • Is the same DTC displayed?		
2	**INSPECT LIGHT SWITCH** • Inspect the light switch. (See **LIGHT SWITCH INSPECTION**.) • Is the light switch normal?	Yes	Replace the start stop unit, then go to the next step. (See **START STOP UNIT REMOVAL/INSTALLATION**.)
		No	Replace the light switch, then go to the next step. (See **LIGHT SWITCH REMOVAL/INSTALLATION**.)
3	**VERIFY THAT REPAIRS HAVE BEEN COMPLETED** • Clear the DTC for the front body control module (FBCM) using the M-MDS. (See **CLEARING DTC [FRONT BODY CONTROL MODULE (FBCM)]**.) • Switch the ignition ON (engine off or on) and wait for **5 s or more**. • Retrieve the front body control module (FBCM) DTCs using the M-MDS. (See **DTC INSPECTION [FRONT BODY CONTROL MODULE (FBCM)]**.) • Is the same DTC displayed?	Yes	Repeat the inspection from Step 1. • If the malfunction recurs, replace the front body control module (FBCM). (See **FRONT BODY CONTROL MODULE (FBCM) REMOVAL/INSTALLATION**.) Go to the next step.
		No	Go to the next step.
4	**VERIFY IF OTHER DTCs DISPLAYED** • Are any other DTCs displayed?	Yes	Repair or replace the malfunctioning part according to the applicable DTC troubleshooting. (See **DTC TABLE [FRONT BODY CONTROL MODULE (FBCM)]**.)
		No	DTC troubleshooting completed.

2014 - Mazda3 - Body and Accessories

DTC B10A8:12 [FRONT BODY CONTROL MODULE (FBCM)]

Description	Headlight LO relay circuit malfunction
Detection condition	• Front body control module (FBCM) detects a short to power supply in the headlight LO relay circuit with the ignition switched ON (engine off or on).
Fail-safe function	Not applicable
Possible cause	• Headlight LO relay malfunction • Front body control module (FBCM) connector or terminal malfunction • Short to power supply in the wiring harness between headlight LO relay terminal A and front body control module (FBCM) terminal 1M • Front body control module (FBCM) malfunction

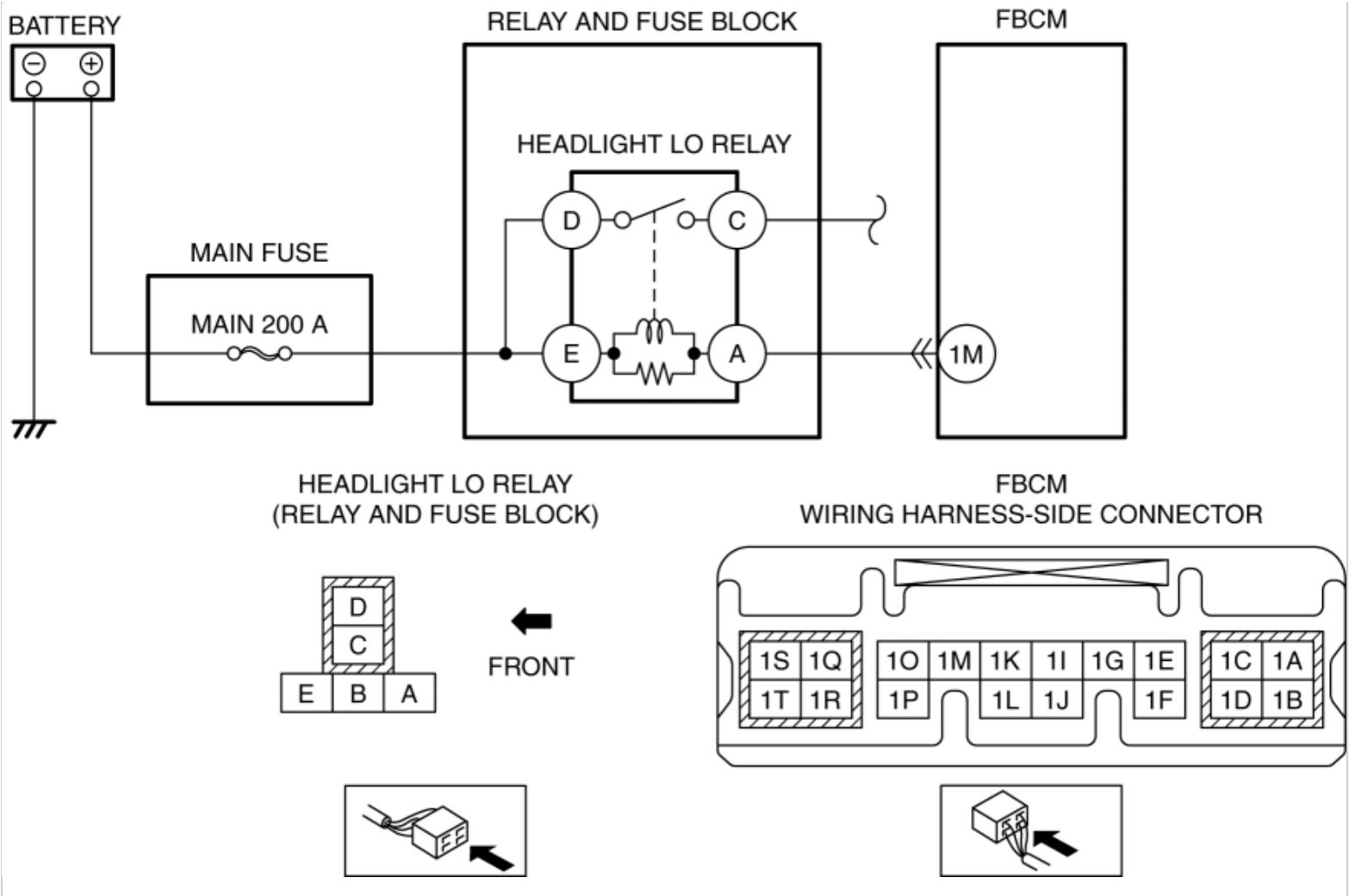

Diagnostic Procedure

Step	Inspection		Action
1	**VERIFY FRONT BODY CONTROL MODULE (FBCM) DTCs AGAIN** • Clear the DTC for the front body control module (FBCM) using the M-MDS. (See **CLEARING DTC [FRONT BODY CONTROL MODULE (FBCM)]**.) • Retrieve the front body control module (FBCM) DTCs using the M-MDS. (See **DTC INSPECTION [FRONT BODY CONTROL MODULE (FBCM)]**.) • Is the same DTC displayed?	Yes	Go to the next step.
		No	Go to Step 6.
2	**INSPECT HEADLIGHT LO RELAY** • Switch the ignition off. • Disconnect the negative battery	Yes	Go to the next step.
		No	Replace the headlight LO relay, then go to Step 5.

	cable. (See **NEGATIVE BATTERY CABLE DISCONNECTION/CONNECTION [SKYACTIV-G 2.0, SKYACTIV-G 2.5]**.) • Remove the headlight LO relay. (See **RELAY LOCATION**.) • Inspect the headlight LO relay. (See **RELAY INSPECTION**.) • Is the headlight LO relay normal?		(See **RELAY LOCATION**.)
3	**INSPECT FRONT BODY CONTROL MODULE (FBCM) CONNECTOR CONDITION** • Disconnect the front body control module (FBCM) connector. • Inspect the connector engagement and connection condition and inspect the terminals for damage, deformation, corrosion, or disconnection. • Is the connector normal?	Yes	Go to the next step.
		No	Repair or replace the connector, then go to Step 5.
4	**INSPECT FOR SHORT TO POWER SUPPLY IN HEADLIGHT LO RELAY CONTROL CIRCUIT** • Verify that the headlight LO relay is removed. • Verify that the front body control module (FBCM) connector is disconnected. • Reconnect the negative battery cable. (See **NEGATIVE BATTERY CABLE DISCONNECTION/CONNECTION [SKYACTIV-G 2.0, SKYACTIV-G 2.5]**.) • Switch the ignition ON (engine off or on). • Measure the voltage at the front body control module (FBCM) terminal 1M (wiring harness-side). • Is the voltage **0 V**?	Yes	Go to the next step.
		No	Refer to the wiring diagram and verify whether or not there is a common connector between headlight LO relay terminal A and front body control module (FBCM) terminal 1M. **If there is a common connector:** • Determine the malfunctioning part by inspecting the common connector and the terminal for corrosion, damage, or pin disconnection, and the common wiring harness for a short to power supply. • Repair or replace the malfunctioning part. **If there is no common connector:** • Repair or replace the wiring harness which has a short to power supply. Go to the next step.
5	**VERIFY THAT REPAIRS HAVE BEEN COMPLETED** • Always reconnect all disconnected connectors. • Reconnect the negative battery	Yes	Repeat the inspection from Step 1. • If the malfunction recurs, replace the front body control module (FBCM). (See **FRONT BODY CONTROL MODULE (FBCM)**

	cable. (See **NEGATIVE BATTERY CABLE DISCONNECTION/CONNECTION [SKYACTIV-G 2.0, SKYACTIV-G 2.5]**.) • Clear the DTC for the front body control module (FBCM) using the M-MDS. (See **CLEARING DTC [FRONT BODY CONTROL MODULE (FBCM)]**.) • Retrieve the front body control module (FBCM) DTCs using the M-MDS. (See **DTC INSPECTION [FRONT BODY CONTROL MODULE (FBCM)]**.) • Is the same DTC displayed?		**REMOVAL/INSTALLATION**.) Go to the next step.
		No	Go to the next step.
6	**VERIFY IF OTHER DTCs DISPLAYED** • Are any other DTCs displayed?	Yes	Repair or replace the malfunctioning part according to the applicable DTC troubleshooting. (See **DTC TABLE [FRONT BODY CONTROL MODULE (FBCM)]**.)
		No	DTC troubleshooting completed.

2014 - Mazda3 - Body and Accessories

DTC B10AD:86 [FRONT BODY CONTROL MODULE (FBCM)]

Description	Error signal received from auto light sensor/rain sensor
Detection condition	• Front body control module (FBCM) receives the error signals from the auto light sensor/rain sensor **10 times** continuously with the ignition switched ON (engine off or on).
Fail-safe function	Not applicable
Possible cause	• Auto light sensor/rain sensor malfunction • Front body control module (FBCM) malfunction
System wiring diagram	Not applicable

Diagnostic Procedure

Step	Inspection		Action
1	**PERFORM DTC INSPECTION AND VERIFY AUTO LIGHT SENSOR/RAIN SENSOR MALFUNCTION** • Clear the DTC for the front body control module (FBCM) using the M-MDS. (See **CLEARING DTC [FRONT BODY CONTROL MODULE (FBCM)]**.) • Retrieve the front body control module (FBCM) DTCs using the M-MDS. (See **DTC INSPECTION [FRONT BODY CONTROL MODULE (FBCM)]**.) • Is the same DTC displayed?	Yes	Replace the auto light sensor/rain sensor, then go to the next step. (See **RAIN SENSOR REMOVAL/INSTALLATION**.)
		No	Go to Step 3.
2	**VERIFY THAT REPAIRS HAVE BEEN COMPLETED**	Yes	Repeat the inspection from Step 1.

	• Clear the DTC for the front body control module (FBCM) using the M-MDS. (See **CLEARING DTC [FRONT BODY CONTROL MODULE (FBCM)]**.) • Retrieve the front body control module (FBCM) DTCs using the M-MDS. (See **DTC INSPECTION [FRONT BODY CONTROL MODULE (FBCM)]**.) • Is the same DTC displayed?		• If the malfunction recurs, replace the front body control module (FBCM). (See **FRONT BODY CONTROL MODULE (FBCM) REMOVAL/INSTALLATION**.) Go to the next step.
		No	Go to the next step.
3	**VERIFY IF OTHER DTCs DISPLAYED** • Are any other DTCs displayed?	Yes	Repair or replace the malfunctioning part according to the applicable DTC troubleshooting. (See **DTC TABLE [FRONT BODY CONTROL MODULE (FBCM)]**.)
		No	DTC troubleshooting completed.

2014 - Mazda3 - Body and Accessories

DTC B10AF:12 [FRONT BODY CONTROL MODULE (FBCM)]

Description	Blower relay circuit malfunction
Detection condition	• Front body control module (FBCM) detects a short to power supply in the blower relay circuit with the ignition switched ON (engine off or on).
Fail-safe function	Not applicable
Possible cause	• Blower relay malfunction • Front body control module (FBCM) connector or terminal malfunction • Short to power supply in the wiring harness between blower relay terminal D and the front body control module (FBCM) terminal 2Z • Front body control module (FBCM) malfunction

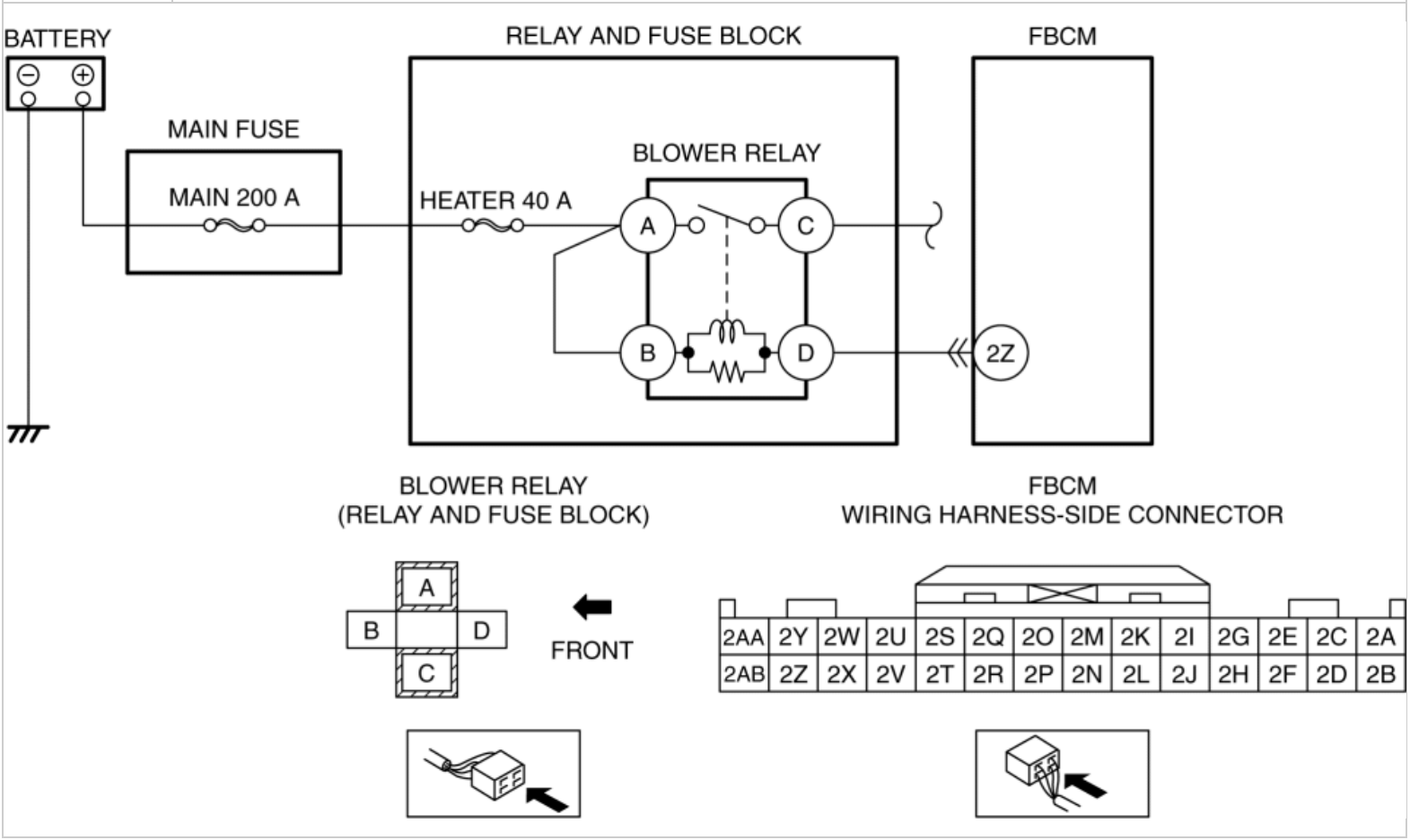

Diagnostic Procedure

Step	Inspection	Action

1	**VERIFY FRONT BODY CONTROL MODULE (FBCM) DTCs AGAIN** • Clear the DTC for the front body control module (FBCM) using the M-MDS. (See **CLEARING DTC [FRONT BODY CONTROL MODULE (FBCM)]**.) • Retrieve the front body control module (FBCM) DTCs using the M-MDS. (See **DTC INSPECTION [FRONT BODY CONTROL MODULE (FBCM)]**.) • Is the same DTC displayed?	Yes	Go to the next step.
		No	Go to Step 6.
2	**INSPECT BLOWER RELAY** • Switch the ignition off. • Disconnect the negative battery cable. (See **NEGATIVE BATTERY CABLE DISCONNECTION/CONNECTION [SKYACTIV-G 2.0, SKYACTIV-G 2.5]**.) • Remove the blower relay. (See **RELAY LOCATION**.) • Inspect the blower relay. (See **RELAY INSPECTION**.) • Is the blower relay normal?	Yes	Go to the next step.
		No	Replace the blower relay, then go to Step 5. (See **RELAY LOCATION**.)
3	**INSPECT FRONT BODY CONTROL MODULE (FBCM) CONNECTOR CONDITION** • Disconnect the front body control module (FBCM) connector. • Inspect the connector engagement and connection condition and inspect the terminals for damage, deformation, corrosion, or disconnection. • Is the connector normal?	Yes	Go to the next step.
		No	Repair or replace the connector, then go to Step 5.
4	**INSPECT FOR SHORT TO POWER SUPPLY IN BLOWER RELAY CONTROL CIRCUIT** • Verify that the blower relay is removed. • Verify that the front body control module (FBCM) connector is disconnected. • Reconnect the negative battery cable. (See **NEGATIVE BATTERY CABLE DISCONNECTION/CONNECTION [SKYACTIV-G 2.0, SKYACTIV-G 2.5]**.) • Switch the ignition ON (engine off or on). • Measure the voltage at the front body control module (FBCM)	Yes	Go to the next step.
		No	Refer to the wiring diagram and verify whether or not there is a common connector between blower relay terminal D and the front body control module (FBCM) terminal 2Z. **If there is a common connector:** • Determine the malfunctioning part by inspecting the common connector and the terminal for corrosion, damage, or pin disconnection, and the common wiring harness for a short to power supply. • Repair or replace the malfunctioning part. **If there is no common connector:** • Repair or replace the wiring harness which has a short to power supply.

	terminal 2Z (wiring harness-side). • Is the voltage **0 V**?		Go to the next step.
5	**VERIFY THAT REPAIRS HAVE BEEN COMPLETED** • Always reconnect all disconnected connectors. • Reconnect the negative battery cable. (See **NEGATIVE BATTERY CABLE DISCONNECTION/CONNECTION [SKYACTIV-G 2.0, SKYACTIV-G 2.5]**.) • Clear the DTC for the front body control module (FBCM) using the M-MDS. (See **CLEARING DTC [FRONT BODY CONTROL MODULE (FBCM)]**.) • Retrieve the front body control module (FBCM) DTCs using the M-MDS. (See **DTC INSPECTION [FRONT BODY CONTROL MODULE (FBCM)]**.) • Is the same DTC displayed?	Yes	Repeat the inspection from Step 1. • If the malfunction recurs, replace the front body control module (FBCM). (See **FRONT BODY CONTROL MODULE (FBCM) REMOVAL/INSTALLATION**.) Go to the next step.
		No	Go to the next step.
6	**VERIFY IF OTHER DTCs DISPLAYED** • Are any other DTCs displayed?	Yes	Repair or replace the malfunctioning part according to the applicable DTC troubleshooting. (See **DTC TABLE [FRONT BODY CONTROL MODULE (FBCM)]**.)
		No	DTC troubleshooting completed.

2014 - Mazda3 - Body and Accessories

DTC B1142:13 [FRONT BODY CONTROL MODULE (FBCM)]

Description	IG1 relay circuit malfunction
Detection condition	• Front body control module (FBCM) detects an open circuit in the IG1 relay circuit for **2 s or more** with the ignition switched ON (engine off or on).
Fail-safe function	Not applicable

Possible cause	• IG1 relay malfunction
	• Front body control module (FBCM) connector or terminal malfunction
	• IG1 relay circuit malfunction
	  ▪ C/U IG1 15 A fuse malfunction
	  ▪ Open circuit in the wiring harness between IG1 relay terminal C and front body control module (FBCM) terminal 2M
	• Front body control module (FBCM) malfunction

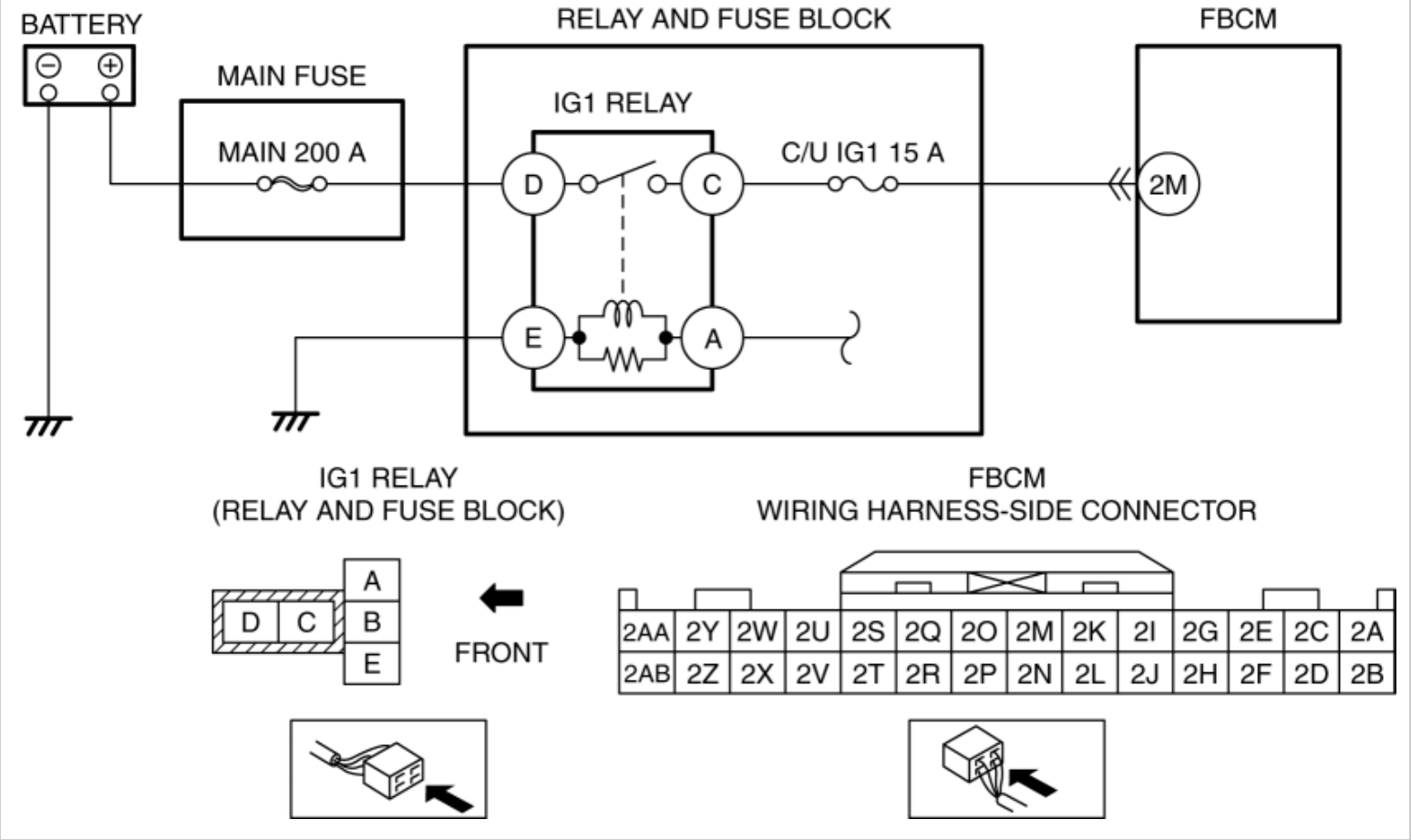

Diagnostic Procedure

Step	Inspection		Action
1	**VERIFY FRONT BODY CONTROL MODULE (FBCM) DTCs AGAIN** • Clear the DTC for the front body control module (FBCM) using the M-MDS. (See **CLEARING DTC [FRONT BODY CONTROL MODULE (FBCM)]**.) • Switch the ignition ON (engine off or on) and wait for **2 s or more**. • Retrieve the front body control module (FBCM) DTCs using the M-MDS. (See **DTC INSPECTION [FRONT BODY CONTROL MODULE (FBCM)]**.) • Is the same DTC displayed?	Yes	Go to the next step.
		No	Go to Step 6.
2	**INSPECT IG1 RELAY** • Switch the ignition off.	Yes	Go to the next step.

	• Disconnect the negative battery cable. (See **NEGATIVE BATTERY CABLE DISCONNECTION/CONNECTION [SKYACTIV-G 2.0, SKYACTIV-G 2.5]**.) • Remove the IG1 relay. (See **RELAY LOCATION**.) • Inspect the IG1 relay. (See **RELAY INSPECTION**.) • Is the IG1 relay normal?	No	Replace the IG1 relay, then go to Step 5. (See **RELAY LOCATION**.)
3	**INSPECT FRONT BODY CONTROL MODULE (FBCM) CONNECTOR CONDITION** • Disconnect the front body control module (FBCM) connector. • Inspect the connector engagement and connection condition and inspect the terminals for damage, deformation, corrosion, or disconnection. • Is the connector normal?	Yes	Go to the next step.
		No	Repair or replace the connector, then go to Step 5.
4	**INSPECT FRONT BODY CONTROL MODULE (FBCM) POWER SUPPLY VOLTAGE (IGNITION POWER SUPPLY) INPUT CIRCUIT** • Always reconnect all disconnected connectors. • Reconnect the negative battery cable. (See **NEGATIVE BATTERY CABLE DISCONNECTION/CONNECTION [SKYACTIV-G 2.0, SKYACTIV-G 2.5]**.) • Switch the ignition ON (engine off or on). • Measure the voltage at the front body control module (FBCM) terminal 2M (wiring harness-side). • Is the voltage **B+**?	Yes	Go to the next step.
		No	Inspect the C/U IG1 15 A fuse. • If the fuse is damaged: ▪ Replace the fuse. • If the fuse is normal: ▪ Refer to the wiring diagram and verify whether or not there is a common connector between IG1 relay terminal C and front body control module (FBCM) terminal 2M. **If there is a common connector:** • Determine the malfunctioning part by inspecting the common connector and the terminal for corrosion, damage, or

			pin disconnection, and the common wiring harness for an open circuit. • Repair or replace the malfunctioning part. **If there is no common connector:** • Repair or replace the wiring harness which has an open circuit. Go to the next step.
5	**VERIFY THAT REPAIRS HAVE BEEN COMPLETED** • Always reconnect all disconnected connectors. • Reconnect the negative battery cable. (See **NEGATIVE BATTERY CABLE DISCONNECTION/CONNECTION [SKYACTIV-G 2.0, SKYACTIV-G 2.5]**.) • Clear the DTC for the front body control module (FBCM) using the M-MDS. (See **CLEARING DTC [FRONT BODY CONTROL MODULE (FBCM)]**.) • Switch the ignition ON (engine off or on) and wait for **2 s or more**. • Retrieve the front body control module (FBCM) DTCs using the M-MDS. (See **DTC INSPECTION [FRONT BODY CONTROL MODULE (FBCM)]**.) • Is the same DTC displayed?	Yes	Repeat the inspection from Step 1. • If the malfunction recurs, replace the front body control module (FBCM). (See **FRONT BODY CONTROL MODULE (FBCM) REMOVAL/INSTALLATION**.) Go to the next step.
		No	Go to the next step.
6	**VERIFY IF OTHER DTCs DISPLAYED** • Are any other DTCs displayed?	Yes	Repair or replace the malfunctioning part according to the applicable DTC troubleshooting. (See **DTC TABLE [FRONT BODY CONTROL MODULE (FBCM)]**.)

		No	DTC troubleshooting completed.

2014 - Mazda3 - Body and Accessories

DTC B1143:13 [FRONT BODY CONTROL MODULE (FBCM)]

Description	IG2 relay control circuit malfunction
Detection condition	• Front body control module (FBCM) detects an open circuit in the IG2 relay control circuit for **2 s or more** with the ignition switched ON (engine off or on).
Fail-safe function	Not applicable
Possible cause	• Start stop unit connector or terminal malfunction • Front body control module (FBCM) connector or terminal malfunction • Open circuit in the wiring harness between start stop unit terminal 2D and front body control module (FBCM) terminal 2U • Start stop unit malfunction • Front body control module (FBCM) malfunction

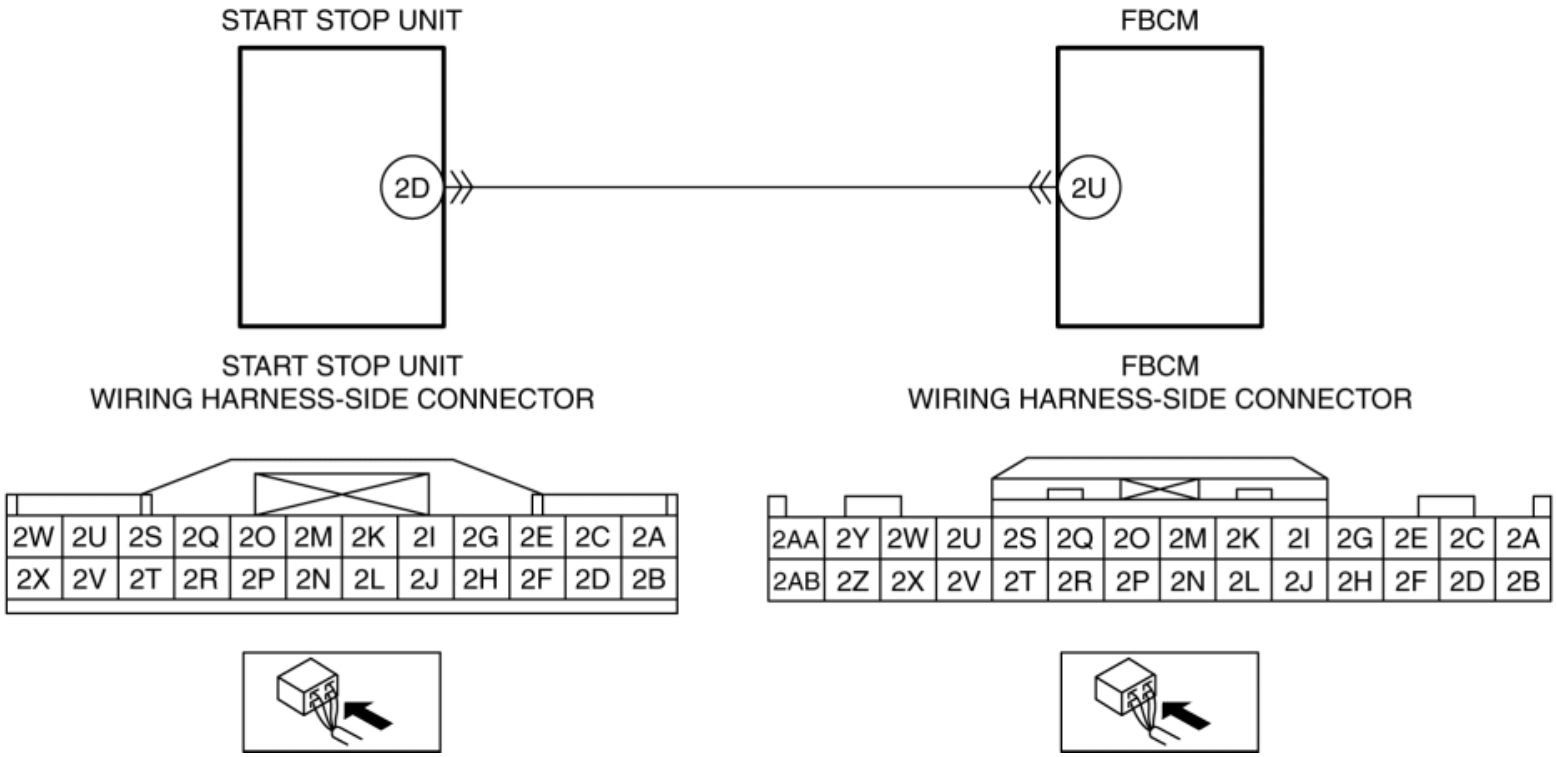

Diagnostic Procedure

Step	Inspection		Action
1	**VERIFY FRONT BODY CONTROL MODULE (FBCM) DTCs AGAIN**	Yes	Go to the next step.

	• Clear the DTC for the front body control module (FBCM) using the M-MDS. (See **CLEARING DTC [FRONT BODY CONTROL MODULE (FBCM)]**.) • Switch the ignition ON (engine off or on) and wait for **2 s or more**. • Retrieve the front body control module (FBCM) DTCs using the M-MDS. (See **DTC INSPECTION [FRONT BODY CONTROL MODULE (FBCM)]**.) • Is the same DTC displayed?	No	Go to Step 7.
2	**INSPECT START STOP UNIT CONNECTOR CONDITION** • Switch the ignition off. • Disconnect the negative battery cable. (See **NEGATIVE BATTERY CABLE DISCONNECTION/CONNECTION [SKYACTIV-G 2.0, SKYACTIV-G 2.5]**.) • Disconnect the start stop unit connector. • Inspect the connector engagement and connection condition and inspect the terminals for damage, deformation, corrosion, or disconnection. • Is the connector normal?	Yes	Go to the next step.
		No	Repair or replace the connector, then go to Step 6.
3	**INSPECT FRONT BODY CONTROL MODULE (FBCM) CONNECTOR CONDITION** • Disconnect the front body control module (FBCM) connector. • Inspect the connector engagement and connection condition and inspect the terminals for damage, deformation, corrosion, or disconnection. • Is the connector normal?	Yes	Go to the next step.
		No	Repair or replace the connector, then go to Step 6.
4	**INSPECT FOR OPEN CIRCUIT IN IG2 RELAY CONTROL CIRCUIT** • Verify that the start stop unit and front body control module (FBCM) connectors are disconnected. • Inspect for continuity between start stop unit terminal 2D (wiring harness-side) and front body control module (FBCM) terminal 2U (wiring harness-side). • Is there continuity?	Yes	Go to the next step.
		No	Refer to the wiring diagram and verify whether or not there is a common connector between start stop unit terminal 2D and front body control module (FBCM) terminal 2U. **If there is a common connector:** • Determine the malfunctioning part by inspecting the common connector and the terminal for corrosion, damage, or pin disconnection, and the common wiring harness for an open circuit. • Repair or replace the malfunctioning part. **If there is no common connector:** • Repair or replace the wiring harness which has an open circuit.

			Go to Step 6.
5	**INSPECT START STOP UNIT** • Inspect the start stop unit. (See **START STOP UNIT INSPECTION**.) • Is the start stop unit normal?	Yes	Go to the next step.
		No	Replace the start stop unit, then go to the next step. (See **START STOP UNIT REMOVAL/INSTALLATION**.)
6	**VERIFY THAT REPAIRS HAVE BEEN COMPLETED** • Always reconnect all disconnected connectors. • Reconnect the negative battery cable. (See **NEGATIVE BATTERY CABLE DISCONNECTION/CONNECTION [SKYACTIV-G 2.0, SKYACTIV-G 2.5]**.) • Clear the DTC for the front body control module (FBCM) using the M-MDS. (See **CLEARING DTC [FRONT BODY CONTROL MODULE (FBCM)]**.) • Switch the ignition ON (engine off or on) and wait for **2 s or more**. • Retrieve the front body control module (FBCM) DTCs using the M-MDS. (See **DTC INSPECTION [FRONT BODY CONTROL MODULE (FBCM)]**.) • Is the same DTC displayed?	Yes	Repeat the inspection from Step 1. • If the malfunction recurs, replace the front body control module (FBCM). (See **FRONT BODY CONTROL MODULE (FBCM) REMOVAL/INSTALLATION**.) Go to the next step.
		No	Go to the next step.
7	**VERIFY IF OTHER DTCs DISPLAYED** • Are any other DTCs displayed?	Yes	Repair or replace the malfunctioning part according to the applicable DTC troubleshooting. (See **DTC TABLE [FRONT BODY CONTROL MODULE (FBCM)]**.)
		No	DTC troubleshooting completed.

2014 - Mazda3 - Body and Accessories

DTC B11DB:86 [FRONT BODY CONTROL MODULE (FBCM)]

Description	Error signal received from current sensor
Detection condition	• Front body control module (FBCM) receives the error signals from the current sensor for **5 s or more** with the ignition switched ON (engine off or on).
Fail-safe function	Not applicable
Possible cause	• Current sensor connector or terminal malfunction • Front body control module (FBCM) connector or terminal malfunction • Short to ground in wiring harness between current sensor terminal B and front body control module (FBCM) terminal 2E • Short to power supply in wiring harness between current sensor terminal B and front body control module (FBCM) terminal 2E • Open circuit in wiring harness between current sensor terminal B and front body control module (FBCM) terminal 2E • Current sensor malfunction • Front body control module (FBCM) malfunction

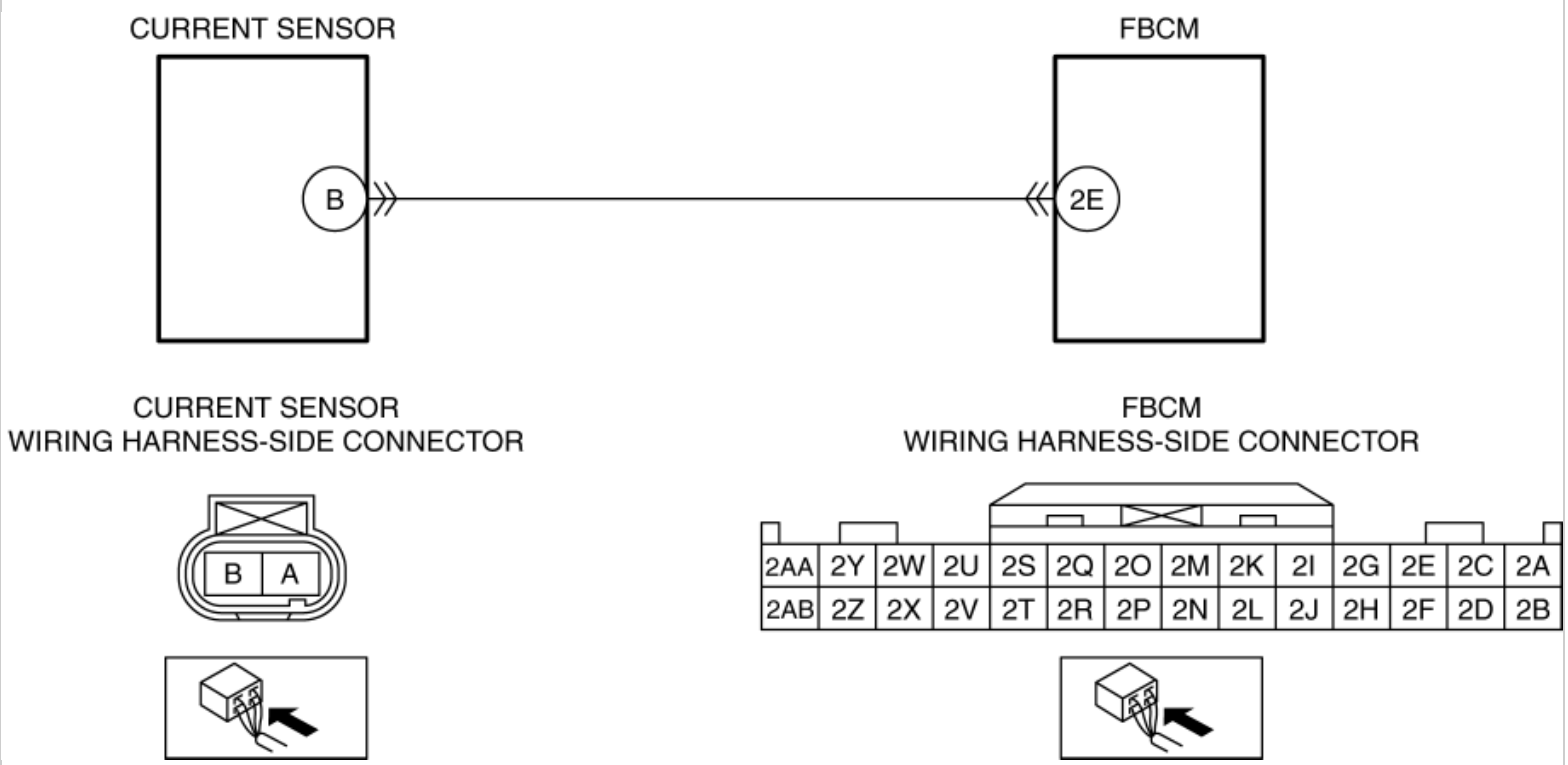

Diagnostic Procedure

Step	Inspection		Action
1	**VERIFY FRONT BODY CONTROL MODULE (FBCM) DTCs AGAIN** • Clear the DTC for the front body control module (FBCM) using the M-MDS. (See **CLEARING DTC [FRONT BODY CONTROL MODULE (FBCM)]**.) • Switch the ignition ON (engine off or on) and wait for **5 s or more**. • Retrieve the front body control module (FBCM) DTCs using the M-MDS. (See **DTC INSPECTION [FRONT BODY CONTROL MODULE (FBCM)]**.) • Is the same DTC displayed?	Yes	Go to the next step.
		No	Go to Step 9.
2	**INSPECT CURRENT SENSOR CONNECTOR CONDITION** • Switch the ignition off. • Disconnect the negative battery cable. (See **NEGATIVE BATTERY CABLE DISCONNECTION/CONNECTION [SKYACTIV-G 2.0, SKYACTIV-G 2.5]**.) • Disconnect the current sensor connector. • Inspect the connector engagement and connection condition and inspect the terminals for damage, deformation, corrosion, or disconnection. • Is the connector normal?	Yes	Go to the next step.
		No	Repair or replace the connector, then go to Step 8.
3	**INSPECT FRONT BODY CONTROL MODULE (FBCM) CONNECTOR CONDITION** • Disconnect the front body control module (FBCM) connector. • Inspect the connector engagement and connection condition and inspect the terminals for damage, deformation, corrosion, or disconnection. • Is the connector normal?	Yes	Go to the next step.
		No	Repair or replace the connector, then go to Step 8.
4	**INSPECT FOR SHORT TO GROUND IN CURRENT SENSOR CIRCUIT** • Verify that the current sensor and front body control module (FBCM) connectors are disconnected. • Inspect for continuity between front body control module (FBCM) terminal 2E (wiring harness-side) and body ground. • Is there continuity?	Yes	Refer to the wiring diagram and verify whether or not there is a common connector between current sensor terminal B and front body control module (FBCM) terminal 2E. **If there is a common connector:** • Determine the malfunctioning part by inspecting the common connector and the terminal for corrosion, damage, or pin disconnection, and the common wiring harness for a short to ground.

			• Repair or replace the malfunctioning part. **If there is no common connector:** • Repair or replace the wiring harness which has a short to ground. Go to Step 8.
		No	Go to the next step.
5	**INSPECT FOR SHORT TO POWER SUPPLY IN CURRENT SENSOR CIRCUIT** • Verify that the current sensor and front body control module (FBCM) connectors are disconnected. • Reconnect the negative battery cable. (See **NEGATIVE BATTERY CABLE DISCONNECTION/CONNECTION [SKYACTIV-G 2.0, SKYACTIV-G 2.5]**.) • Switch the ignition ON (engine off or on). • Measure the voltage at the front body control module (FBCM) terminal 2E (wiring harness-side). • Is the voltage **0 V**?	Yes	Go to the next step.
		No	Refer to the wiring diagram and verify whether or not there is a common connector between current sensor terminal B and front body control module (FBCM) terminal 2E. **If there is a common connector:** • Determine the malfunctioning part by inspecting the common connector and the terminal for corrosion, damage, or pin disconnection, and the common wiring harness for a short to power supply. • Repair or replace the malfunctioning part. **If there is no common connector:** • Repair or replace the wiring harness which has a short to power supply. Go to Step 8.
6	**INSPECT FOR OPEN CIRCUIT IN CURRENT SENSOR CIRCUIT** • Verify that the current sensor and front body control module (FBCM) connectors are disconnected. • Switch the ignition off. • Disconnect the negative battery cable. (See **NEGATIVE BATTERY CABLE DISCONNECTION/CONNECTION [SKYACTIV-G 2.0, SKYACTIV-G 2.5]**.) • Inspect the wiring harness for continuity between current sensor terminal B (wiring harness-side) and front body control module (FBCM) terminal 2E (wiring harness-side). • Is there continuity?	Yes	Go to the next step.
		No	Refer to the wiring diagram and verify whether or not there is a common connector between current sensor terminal B and front body control module (FBCM) terminal 2E. **If there is a common connector:** • Determine the malfunctioning part by inspecting the common connector and the terminal for corrosion, damage, or pin disconnection, and the common wiring harness for an open circuit. • Repair or replace the malfunctioning part. **If there is no common connector:** • Repair or replace the wiring harness which has an open circuit. Go to Step 8.
7	**INSPECT CURRENT SENSOR** • Inspect the current sensor. (See **CURRENT SENSOR INSPECTION [SKYACTIV-G 2.0, SKYACTIV-G 2.5]**.) • Is the current sensor normal?	Yes	Go to the next step.
		No	Replace the current sensor, then go to the next step. (See **CURRENT SENSOR REMOVAL/INSTALLATION [SKYACTIV-G 2.0, SKYACTIV-G 2.5]**.)
8	**VERIFY THAT REPAIRS HAVE BEEN COMPLETED** • Always reconnect all disconnected	Yes	Repeat the inspection from Step 1.

	connectors. • Reconnect the negative battery cable. (See **NEGATIVE BATTERY CABLE DISCONNECTION/CONNECTION [SKYACTIV-G 2.0, SKYACTIV-G 2.5]**.) • Clear the DTC for the front body control module (FBCM) using the M-MDS. (See **CLEARING DTC [FRONT BODY CONTROL MODULE (FBCM)]**.) • Switch the ignition ON (engine off or on) and wait for **5 s or more**. • Retrieve the front body control module (FBCM) DTCs using the M-MDS. (See **DTC INSPECTION [FRONT BODY CONTROL MODULE (FBCM)]**.) • Is the same DTC displayed?		• If the malfunction recurs, replace the front body control module (FBCM). (See **FRONT BODY CONTROL MODULE (FBCM) REMOVAL/INSTALLATION**.) Go to the next step.
		No	Go to the next step.
9	**VERIFY IF OTHER DTCs DISPLAYED** • Are any other DTCs displayed?	Yes	Repair or replace the malfunctioning part according to the applicable DTC troubleshooting. (See **DTC TABLE [FRONT BODY CONTROL MODULE (FBCM)]**.)
		No	DTC troubleshooting completed.

2014 - Mazda3 - Body and Accessories

DTC B1314:11 [FRONT BODY CONTROL MODULE (FBCM)]

Description	Illumination output circuit malfunction
Detection condition	• Front body control module (FBCM) detects a short to ground in the illumination output circuit with the ignition switched ON (engine off or on).
Fail-safe function	Not applicable
Possible cause	• Front body control module (FBCM) connector or terminal malfunction • Illuminations malfunction • Short to ground in front body control module (FBCM) illumination output circuit • Front body control module (FBCM) malfunction

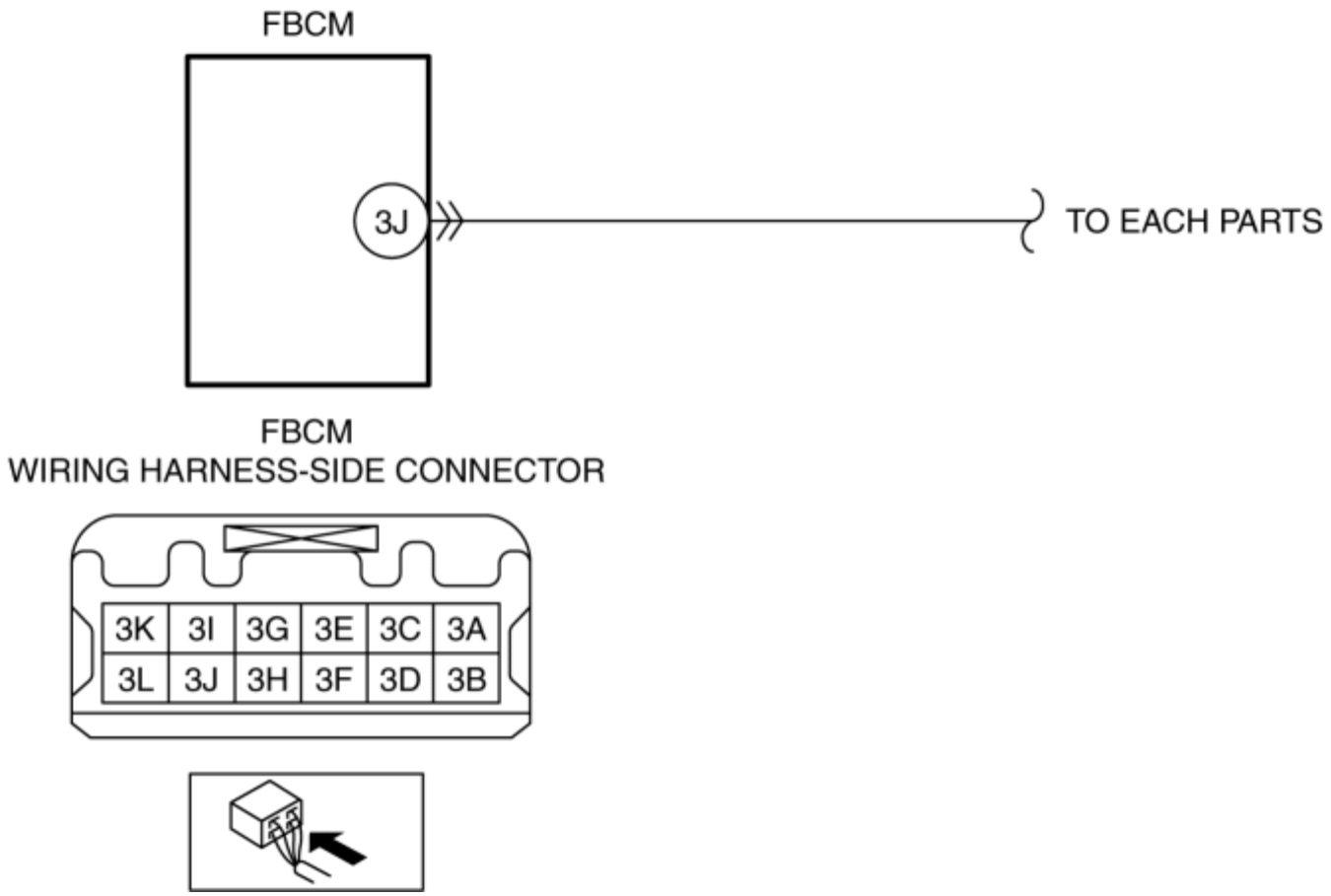

Diagnostic Procedure

Step	Inspection		Action
1	**VERIFY FRONT BODY CONTROL MODULE (FBCM) DTCs AGAIN** • Clear the DTC for the front body control module (FBCM) using the M-MDS. (See **CLEARING DTC [FRONT BODY CONTROL MODULE (FBCM)]**.) • Retrieve the front body control module (FBCM) DTCs using the M-MDS. (See **DTC INSPECTION [FRONT BODY CONTROL MODULE (FBCM)]**.) • Is the same DTC displayed?	Yes	Go to the next step.
		No	Go to Step 6.
2	**INSPECT FRONT BODY CONTROL MODULE (FBCM) CONNECTOR CONDITION** • Switch the ignition off.	Yes	Go to the next step.
		No	Repair or replace the connector, then go to Step 5.

	• Disconnect the negative battery cable. (See **NEGATIVE BATTERY CABLE DISCONNECTION/CONNECTION [SKYACTIV-G 2.0, SKYACTIV-G 2.5]**.) • Disconnect the front body control module (FBCM) connector. • Inspect the connector engagement and connection condition and inspect the terminals for damage, deformation, corrosion, or disconnection. • Is the connector normal?		
3	**INSPECT FOR SHORT TO GROUND IN FRONT BODY CONTROL MODULE (FBCM) ILLUMINATION OUTPUT CIRCUIT** • Verify that the front body control module (FBCM) connector is disconnected. • Turn the light switch to the TNS position. • Inspect for continuity between front body control module (FBCM) terminal 3J (wiring harness-side) and body ground. • Is there continuity?	Yes	Go to the next step.
		No	Go to Step 5.
4	**INSPECT ILLUMINATIONS** • Inspect the following parts: ▪ Hazard warning switch (See **HAZARD WARNING SWITCH INSPECTION**.) ▪ Steering switch (See **STEERING SWITCH**	Yes	Refer to the wiring diagram and verify whether or not there is a common connector between following: • Hazard warning switch—Front body control module (FBCM) terminal 3J • Steering switch—Front body control module (FBCM) terminal 3J • Cruise control switch—Front body control module (FBCM) terminal 3J (With cruise control switch) • Cluster switch—Front body control module (FBCM) terminal 3J

	INSPECTION.) ▪ Cruise control switch (With cruise control switch) (See **CRUISE CONTROL SWITCH INSPECTION [SKYACTIV-G 2.0, SKYACTIV-G 2.5]**.) ▪ Cluster switch (See **DSC OFF SWITCH INSPECTION**.) ▪ Trunk lid opener switch (interior) (With trunk lid opener switch (interior)) (See **TRUNK LID OPENER SWITCH INSPECTION**.) • Are all parts normal?		Trunk lid opener switch (interior)—Front body control module (FBCM) terminal 3J (With trunk lid opener switch (interior)) **If there is a common connector:** • Determine the malfunctioning part by inspecting the common connector and the terminal for corrosion, damage, or pin disconnection, and the common wiring harness for a short to ground. • Repair or replace the malfunctioning part. **If there is no common connector:** • Repair or replace the wiring harness which has a short to ground. Go to the next step.
		No	Repair or replace the malfunctioning part, then go to the next step. (See **HAZARD WARNING SWITCH REMOVAL/INSTALLATION**.) (See **STEERING SWITCH REMOVAL/INSTALLATION**.) (See **CLUSTER SWITCH REMOVAL/INSTALLATION**.) (See **TRUNK LID OPENER SWITCH REMOVAL/INSTALLATION**.)
5	**VERIFY THAT REPAIRS HAVE BEEN COMPLETED** • Always reconnect all disconnected connectors. • Reconnect the negative battery cable. (See **NEGATIVE BATTERY CABLE DISCONNECTION/CONNECTION [SKYACTIV-G 2.0, SKYACTIV-G 2.5]**.) • Clear the DTC for the front body control module (FBCM) using the M-MDS.	Yes	Repeat the inspection from Step 1. • If the malfunction recurs, replace the front body control module (FBCM). (See **FRONT BODY CONTROL MODULE (FBCM) REMOVAL/INSTALLATION**.) Go to the next step.
		No	Go to the next step.

	(See **CLEARING DTC [FRONT BODY CONTROL MODULE (FBCM)]**.) • Retrieve the front body control module (FBCM) DTCs using the M-MDS. (See **DTC INSPECTION [FRONT BODY CONTROL MODULE (FBCM)]**.) • Is the same DTC displayed?		
6	**VERIFY IF OTHER DTCs DISPLAYED** • Are any other DTCs displayed?	Yes	Repair or replace the malfunctioning part according to the applicable DTC troubleshooting. (See **DTC TABLE [FRONT BODY CONTROL MODULE (FBCM)]**.)
		No	DTC troubleshooting completed.

2014 - Mazda3 - Body and Accessories

DTC B134D:02 [FRONT BODY CONTROL MODULE (FBCM)]

Description	Headlight control signal error
Detection condition	• Front body control module (FBCM) receives the error signal from the start stop unit for **5 s or more** with the ignition switched ON (engine off or on).
Fail-safe function	• If DTC B134D:02 is detected when the ignition is switched ON (engine off or on), the headlight LO and the TNS are illuminated. • If DTC B134D:02 is cleared, the headlight LO and the TNS are turned off, and the operation returns to normal.
Possible cause	• DTCs are stored in the start stop unit. • Front body control module (FBCM) malfunction
System wiring diagram	Not applicable

Diagnostic Procedure

Step	Inspection		Action
1	**VERIFY FRONT BODY CONTROL MODULE (FBCM) DTCs AGAIN** • Clear the DTC for the front body control module (FBCM) using the M-MDS. (See **CLEARING DTC [FRONT BODY CONTROL MODULE (FBCM)]**.) • Switch the ignition ON (engine off or on) and wait for **5 s or more**. • Retrieve the front body control module (FBCM) DTCs using the M-MDS. (See **DTC INSPECTION [FRONT BODY CONTROL MODULE**	Yes	Go to the next step.
		No	Go to Step 4.

	(FBCM)].) • Is the same DTC displayed?		
2	**VERIFY START STOP UNIT DTCs** • Retrieve the start stop unit DTCs using the M-MDS. (See **DTC INSPECTION [START STOP UNIT]**.) • Are any DTCs displayed?	Yes	Repair or replace the malfunctioning part according to the applicable DTC troubleshooting. (See **DTC TABLE [START STOP UNIT]**.)
		No	Go to the next step.
3	**VERIFY THAT REPAIRS HAVE BEEN COMPLETED** • Clear the DTC for the front body control module (FBCM) using the M-MDS. (See **CLEARING DTC [FRONT BODY CONTROL MODULE (FBCM)]**.) • Switch the ignition ON (engine off or on) and wait for **5 s or more**. • Retrieve the front body control module (FBCM) DTCs using the M-MDS. (See **DTC INSPECTION [FRONT BODY CONTROL MODULE (FBCM)]**.) • Is the same DTC displayed?	Yes	Repeat the inspection from Step 1. • If the malfunction recurs, replace the front body control module (FBCM). (See **FRONT BODY CONTROL MODULE (FBCM) REMOVAL/INSTALLATION**.) Go to the next step.
		No	Go to the next step.
4	**VERIFY IF OTHER DTCs DISPLAYED** • Are any other DTCs displayed?	Yes	Repair or replace the malfunctioning part according to the applicable DTC troubleshooting. (See **DTC TABLE [FRONT BODY CONTROL MODULE (FBCM)]**.)
		No	DTC troubleshooting completed.

2014 - Mazda3 - Body and Accessories

DTC B13CF:19 [FRONT BODY CONTROL MODULE (FBCM)]

Description	IG2 power supply output circuit malfunction
Detection condition	• Front body control module (FBCM) detects over-current in the IG2 power supply output circuit with the ignition switched ON (engine off or on).
Fail-safe function	Not applicable
Possible cause	• Front body control module (FBCM) connector or terminal malfunction • Short to ground in front body control module (FBCM) IG2 power supply output circuit • IG2 power supply output circuit related parts malfunction • Front body control module (FBCM) malfunction

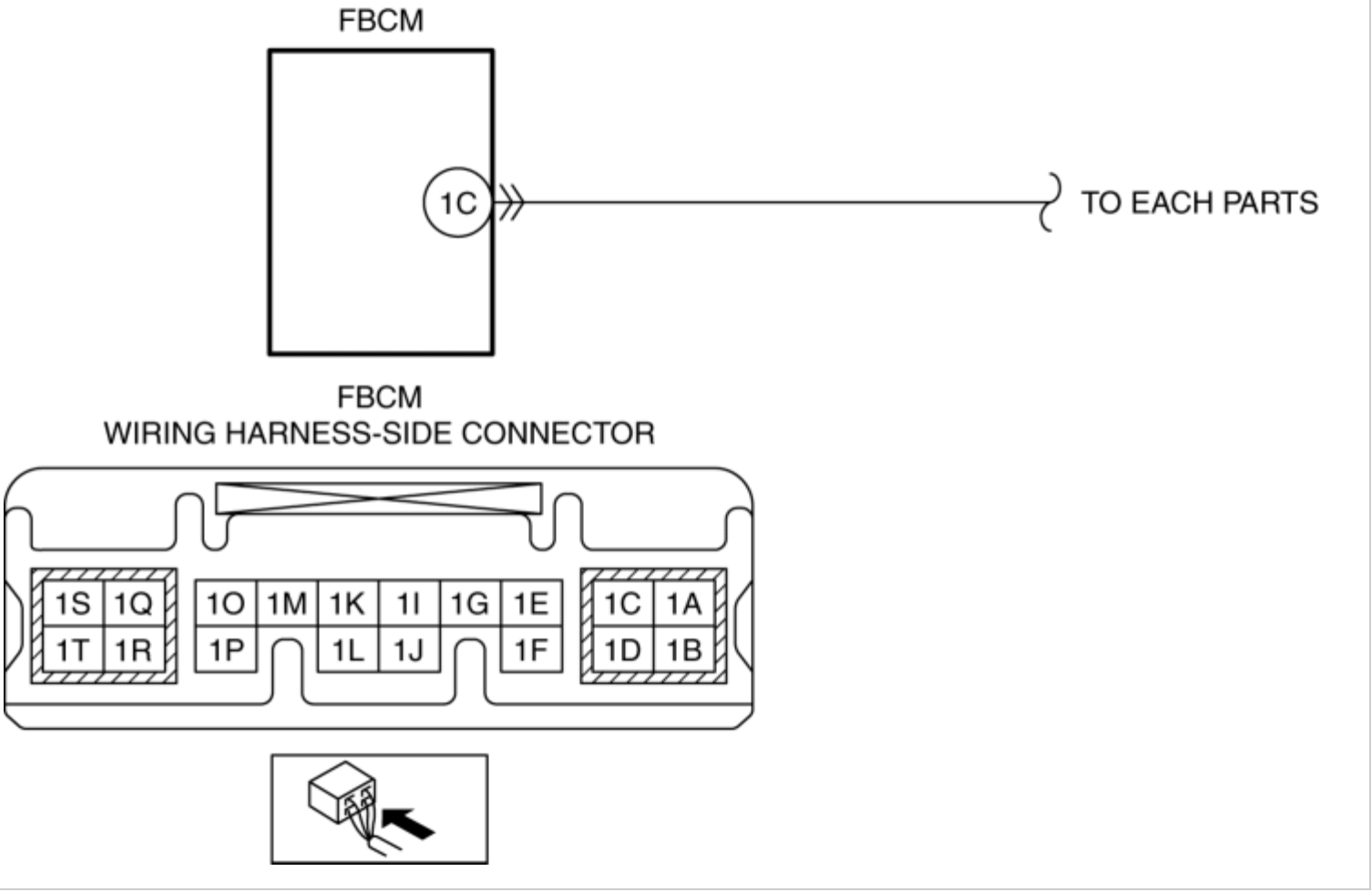

Diagnostic Procedure

Step	Inspection		Action
1	**VERIFY FRONT BODY CONTROL MODULE (FBCM) DTCs AGAIN** • Clear the DTC for the front body control module (FBCM) using the M-MDS. (See **CLEARING DTC [FRONT BODY CONTROL MODULE (FBCM)]**.) • Retrieve the front body control module (FBCM) DTCs using the M-MDS. (See **DTC INSPECTION [FRONT BODY CONTROL MODULE (FBCM)]**.) • Is the same DTC displayed?	Yes	Go to the next step.
		No	Go to Step 6.
2	**INSPECT FRONT BODY CONTROL MODULE (FBCM) CONNECTOR CONDITION**	Yes	Go to the next step.

	• Switch the ignition off. • Disconnect the negative battery cable. (See **NEGATIVE BATTERY CABLE DISCONNECTION/CONNECTION [SKYACTIV-G 2.0, SKYACTIV-G 2.5]**.) • Disconnect the front body control module (FBCM) connector. • Inspect the connector engagement and connection condition and inspect the terminals for damage, deformation, corrosion, or disconnection. • Is the connector normal?	No	Repair or replace the connector, then go to Step 5.
3	**INSPECT FOR SHORT TO GROUND IN FRONT BODY CONTROL MODULE (FBCM) IG2 POWER SUPPLY OUTPUT CIRCUIT** • Verify that the front body control module (FBCM) connector is disconnected. • Inspect for continuity between front body control module (FBCM) terminal 1C (wiring harness-side) and body ground. • Is there continuity?	Yes	Go to the next step.
		No	Go to Step 5.
4	**INSPECT IG2 POWER SUPPLY OUTPUT CIRCUIT RELATED PARTS** • Inspect the following parts: ▪ Climate control unit (See **CLIMATE CONTROL UNIT INSPECTION [MANUAL AIR CONDITIONER]**.) (See **CLIMATE CONTROL UNIT INSPECTION [FULL-AUTO AIR CONDITIONER]**.) ▪ A/C relay	Yes	Refer to the wiring diagram and verify whether or not there is a common connector between the following: • Climate control unit—Front body control module (FBCM) terminal 1C • A/C relay—Front body control module (FBCM) terminal 1C • Seat warmer control unit—Front body control module (FBCM) terminal 1C (With seat warmer) **If there is a common connector:** • Determine the malfunctioning part by inspecting the common connector and the terminal for

	(See **RELAY INSPECTION**.) ▪ Seat warmer control unit (With seat warmer) (See **SEAT WARMER FUNCTION IS INOPERATIVE [SEAT WARMER SYSTEM]**.) • Are all parts normal?		corrosion, damage, or pin disconnection, and the common wiring harness for a short to ground. • Repair or replace the malfunctioning part. **If there is no common connector:** • Repair or replace the wiring harness which has a short to ground. Go to the next step.
		No	Repair or replace the malfunctioning part, then go to the next step. (See **CLIMATE CONTROL UNIT REMOVAL/INSTALLATION [MANUAL AIR CONDITIONER]**.) (See **CLIMATE CONTROL UNIT REMOVAL/INSTALLATION [FULL-AUTO AIR CONDITIONER]**.) (See **RELAY LOCATION**.) (See **FRONT SEAT REMOVAL/INSTALLATION**.)
5	**VERIFY THAT REPAIRS HAVE BEEN COMPLETED** • Always reconnect all disconnected connectors. • Reconnect the negative battery cable. (See **NEGATIVE BATTERY CABLE DISCONNECTION/CONNECTION [SKYACTIV-G 2.0, SKYACTIV-G 2.5]**.) • Clear the DTC for the front body control module (FBCM) using the M-MDS. (See **CLEARING DTC [FRONT BODY CONTROL MODULE (FBCM)]**.) • Retrieve the front body control module (FBCM) DTCs using the M-MDS. (See **DTC INSPECTION [FRONT BODY CONTROL MODULE**	Yes	Repeat the inspection from Step 1. • If the malfunction recurs, replace the front body control module (FBCM). (See **FRONT BODY CONTROL MODULE (FBCM) REMOVAL/INSTALLATION**.) Go to the next step.
		No	Go to the next step.

	(FBCM)].) • Is the same DTC displayed?		
6	**VERIFY IF OTHER DTCs DISPLAYED** • Are any other DTCs displayed?	Yes	Repair or replace the malfunctioning part according to the applicable DTC troubleshooting. (See **DTC TABLE [FRONT BODY CONTROL MODULE (FBCM)]**.)
		No	DTC troubleshooting completed.

2014 - Mazda3 - Body and Accessories

DTC B13D0:11 [FRONT BODY CONTROL MODULE (FBCM)]

Description	TNS circuit malfunction
Detection condition	• Front body control module (FBCM) detects a short to ground in the TNS relay circuit with the ignition switched ON (engine off or on).
Fail-safe function	Not applicable
Possible cause	• TNS relay malfunction • Front body control module (FBCM) connector or terminal malfunction • Short to ground in wiring harness between TNS relay terminal A and front body control module (FBCM) terminal 1I • Front body control module (FBCM) malfunction

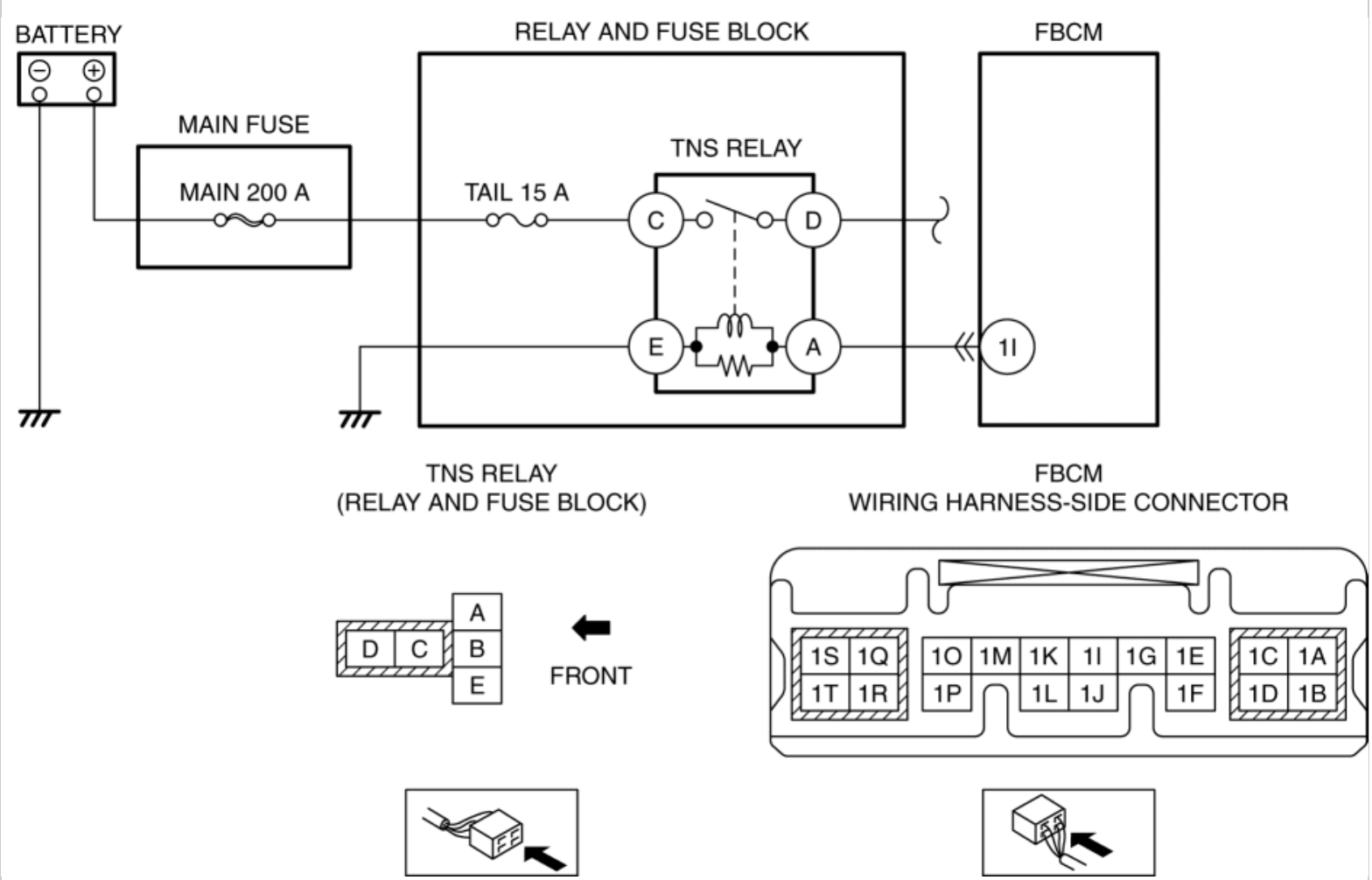

Diagnostic Procedure

Step	Inspection		Action
1	**VERIFY FRONT BODY CONTROL MODULE (FBCM) DTCs AGAIN** • Clear the DTC for the front body control module (FBCM) using the M-MDS. (See **CLEARING DTC [FRONT BODY CONTROL MODULE (FBCM)]**.) • Operate the light switch to the TNS position. • Retrieve the front body control module (FBCM) DTCs using the M-MDS. (See **DTC INSPECTION [FRONT BODY CONTROL MODULE (FBCM)]**.) • Is the same DTC displayed?	Yes	Go to the next step.
		No	Go to Step 6.
2	**INSPECT TNS RELAY** • Switch the ignition off. • Disconnect the negative battery cable. (See **NEGATIVE BATTERY CABLE DISCONNECTION/CONNECTION [SKYACTIV-G 2.0, SKYACTIV-G 2.5]**.) • Remove the TNS relay. (See **RELAY LOCATION**.) • Inspect the TNS relay. (See **RELAY INSPECTION**.) • Is the TNS relay normal?	Yes	Go to the next step.
		No	Replace the TNS relay, then go to Step 5. (See **RELAY LOCATION**.)
3	**INSPECT FRONT BODY CONTROL MODULE (FBCM) CONNECTOR CONDITION** • Disconnect the front body control module (FBCM) connector. • Inspect the connector engagement and connection condition and inspect the terminals for damage, deformation, corrosion, or disconnection. • Is the connector normal?	Yes	Go to the next step.
		No	Repair or replace the connector, then go to Step 5.
4	**INSPECT FOR SHORT TO GROUND IN TNS RELAY CONTROL CIRCUIT** • Verify that the TNS relay is removed. • Verify that the front body control module (FBCM) connector is disconnected. • Inspect for continuity between front body control module (FBCM) terminal 1I (wiring harness-side)	Yes	Refer to the wiring diagram and verify whether or not there is a common connector between TNS relay terminal A and front body control module (FBCM) terminal 1I. **If there is a common connector:** • Determine the malfunctioning part by inspecting the common connector and the terminal for corrosion, damage, or pin disconnection, and the common wiring harness for a short to ground. • Repair or replace the malfunctioning part.

	and body ground. • Is there continuity?		**If there is no common connector:** • Repair or replace the wiring harness which has a short to ground. Go to the next step.
		No	Go to the next step.
5	**VERIFY THAT REPAIRS HAVE BEEN COMPLETED** • Always reconnect all disconnected connectors. • Reconnect the negative battery cable. (See **NEGATIVE BATTERY CABLE DISCONNECTION/CONNECTION [SKYACTIV-G 2.0, SKYACTIV-G 2.5]**.) • Clear the DTC for the front body control module (FBCM) using the M-MDS. (See **CLEARING DTC [FRONT BODY CONTROL MODULE (FBCM)]**.) • Operate the light switch to the TNS position. • Retrieve the front body control module (FBCM) DTCs using the M-MDS. (See **DTC INSPECTION [FRONT BODY CONTROL MODULE (FBCM)]**.) • Is the same DTC displayed?	Yes	Repeat the inspection from Step 1. • If the malfunction recurs, replace the front body control module (FBCM). (See **FRONT BODY CONTROL MODULE (FBCM) REMOVAL/INSTALLATION**.) Go to the next step.
		No	Go to the next step.
6	**VERIFY IF OTHER DTCs DISPLAYED** • Are any other DTCs displayed?	Yes	Repair or replace the malfunctioning part according to the applicable DTC troubleshooting. (See **DTC TABLE [FRONT BODY CONTROL MODULE (FBCM)]**.)
		No	DTC troubleshooting completed.

2014 - Mazda3 - Body and Accessories

DTC B13D2:12 [FRONT BODY CONTROL MODULE (FBCM)]

Description	Front fog light relay circuit malfunction
Detection condition	• Front body control module (FBCM) detects a short to power supply in the front fog light relay circuit with the ignition switched ON (engine off or on).
Fail-safe function	Not applicable
Possible cause	• Front fog light relay malfunction • Front body control module (FBCM) connector or terminal malfunction • Short to power supply in wiring harness between front fog light relay terminal E and front body control module (FBCM) terminal 2AB • Front body control module (FBCM) malfunction

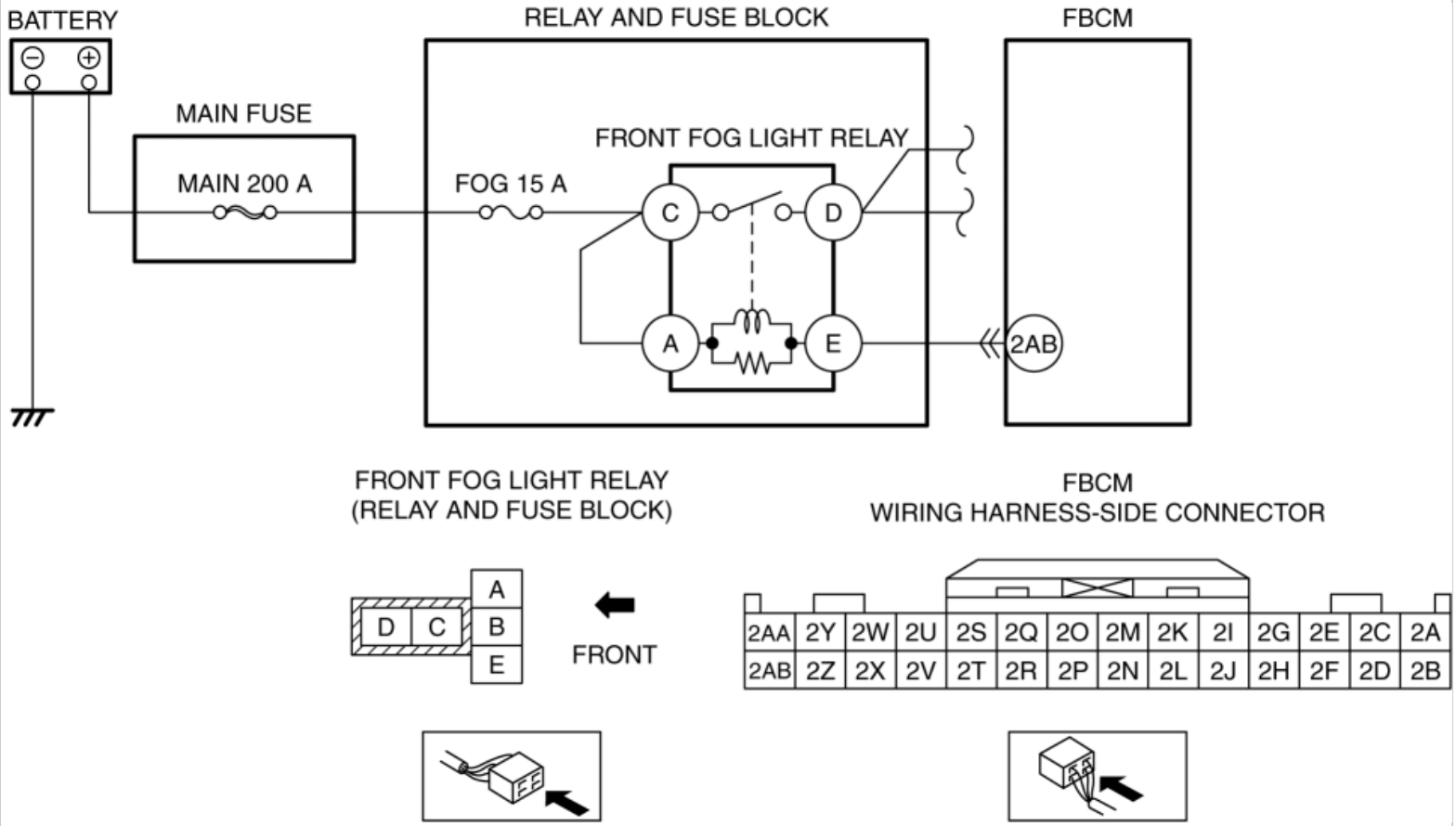

Diagnostic Procedure

Step	Inspection	Action

1	**VERIFY FRONT BODY CONTROL MODULE (FBCM) DTCs AGAIN** • Clear the DTC for the front body control module (FBCM) using the M-MDS. (See **CLEARING DTC [FRONT BODY CONTROL MODULE (FBCM)]**.) • Operate the light switch to the HEAD position and the fog light switch to the F.FOG position. • Retrieve the front body control module (FBCM) DTCs using the M-MDS. (See **DTC INSPECTION [FRONT BODY CONTROL MODULE (FBCM)]**.) • Is the same DTC displayed?	Yes	Go to the next step.
		No	Go to Step 6.
2	**INSPECT FRONT FOG LIGHT RELAY** • Switch the ignition off. • Disconnect the negative battery cable. (See **NEGATIVE BATTERY CABLE DISCONNECTION/CONNECTION [SKYACTIV-G 2.0, SKYACTIV-G 2.5]**.) • Remove the front fog light relay. (See **RELAY LOCATION**.) • Inspect the front fog light relay. (See **RELAY INSPECTION**.) • Is the front fog light relay normal?	Yes	Go to the next step.
		No	Replace the front fog light relay, then go to Step 5. (See **RELAY LOCATION**.)
3	**INSPECT FRONT BODY CONTROL MODULE (FBCM) CONNECTOR CONDITION** • Disconnect the front body control module (FBCM) connector. • Inspect the connector engagement and connection condition and inspect the terminals for damage, deformation, corrosion, or disconnection. • Is the connector normal?	Yes	Go to the next step.
		No	Repair or replace the connector, then go to Step 5.
4	**INSPECT FOR SHORT TO POWER SUPPLY IN FRONT FOG LIGHT RELAY CONTROL CIRCUIT** • Verify that the front fog light relay is removed. • Verify that the front body control module (FBCM) connector is disconnected. • Reconnect the negative battery cable. (See **NEGATIVE BATTERY CABLE DISCONNECTION/CONNECTION [SKYACTIV-G 2.0, SKYACTIV-G 2.5]**.) • Switch the ignition ON (engine off or	Yes	Go to the next step.
		No	Refer to the wiring diagram and verify whether or not there is a common connector between front fog light relay terminal E and front body control module (FBCM) terminal 2AB. **If there is a common connector:** • Determine the malfunctioning part by inspecting the common connector and the terminal for corrosion, damage, or pin disconnection, and the common wiring harness for a short to power supply. • Repair or replace the malfunctioning part. **If there is no common connector:**

	on). • Measure the voltage at the front body control module (FBCM) terminal 2AB (wiring harness-side). • Is the voltage **0 V**?		• Repair or replace the wiring harness which has a short to power supply. Go to the next step.
5	**VERIFY THAT REPAIRS HAVE BEEN COMPLETED** • Always reconnect all disconnected connectors. • Reconnect the negative battery cable. (See **NEGATIVE BATTERY CABLE DISCONNECTION/CONNECTION [SKYACTIV-G 2.0, SKYACTIV-G 2.5]**.) • Clear the DTC for the front body control module (FBCM) using the M-MDS. (See **CLEARING DTC [FRONT BODY CONTROL MODULE (FBCM)]**.) • Operate the light switch to the HEAD position and the fog light switch to the F.FOG position. • Retrieve the front body control module (FBCM) DTCs using the M-MDS. (See **DTC INSPECTION [FRONT BODY CONTROL MODULE (FBCM)]**.) • Is the same DTC displayed?	Yes	Repeat the inspection from Step 1. • If the malfunction recurs, replace the front body control module (FBCM). (See **FRONT BODY CONTROL MODULE (FBCM) REMOVAL/INSTALLATION**.) Go to the next step.
		No	Go to the next step.
6	**VERIFY IF OTHER DTCs DISPLAYED** • Are any other DTCs displayed?	Yes	Repair or replace the malfunctioning part according to the applicable DTC troubleshooting. (See **DTC TABLE [FRONT BODY CONTROL MODULE (FBCM)]**.)
		No	DTC troubleshooting completed.

2014 - Mazda3 - Body and Accessories

DTC B13FE:12 [FRONT BODY CONTROL MODULE (FBCM)]

Description	Headlight LO relay (RH) circuit malfunction
Detection condition	• Front body control module (FBCM) detects a short to power supply in the headlight LO relay (RH) circuit with the ignition switched ON (engine off or on).
Fail-safe function	Not applicable
Possible cause	• Headlight LO relay (RH) malfunction • Front body control module (FBCM) connector or terminal malfunction • Short to power supply in the wiring harness between headlight LO relay (RH) terminal E and front body control module (FBCM) terminal 2V • Front body control module (FBCM) malfunction

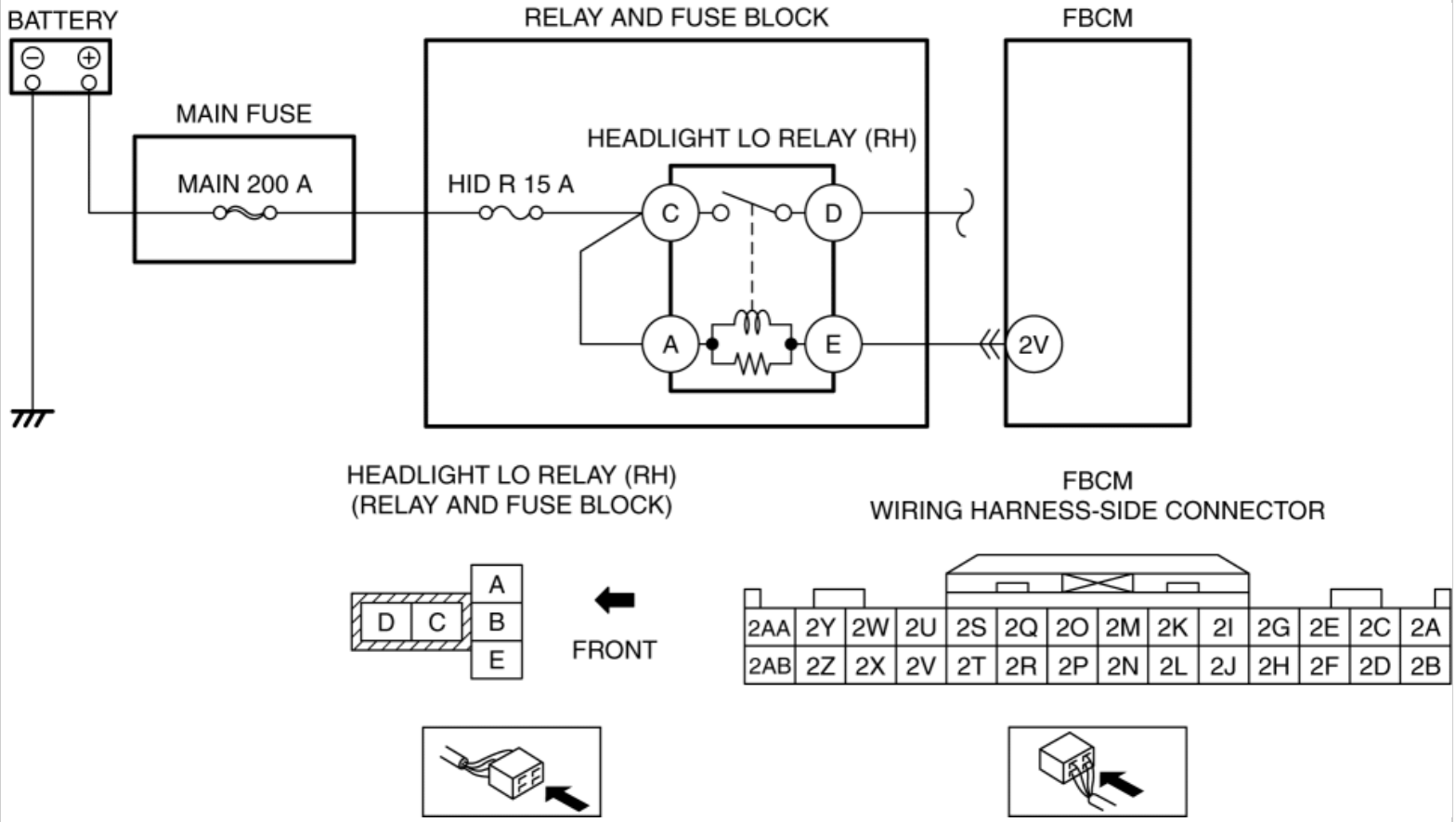

Diagnostic Procedure

Step	Inspection	Action

1	**VERIFY FRONT BODY CONTROL MODULE (FBCM) DTCs AGAIN** • Clear the DTC for the front body control module (FBCM) using the M-MDS. (See **CLEARING DTC [FRONT BODY CONTROL MODULE (FBCM)]**.) • Operate the light switch to the HEAD position. • Retrieve the front body control module (FBCM) DTCs using the M-MDS. (See **DTC INSPECTION [FRONT BODY CONTROL MODULE (FBCM)]**.) • Is the same DTC displayed?	Yes	Go to the next step.
		No	Go to Step 6.
2	**INSPECT HEADLIGHT LO RELAY (RH)** • Switch the ignition off. • Disconnect the negative battery cable. (See **NEGATIVE BATTERY CABLE DISCONNECTION/CONNECTION [SKYACTIV-G 2.0, SKYACTIV-G 2.5]**.) • Remove the headlight LO relay (RH). (See **RELAY LOCATION**.) • Inspect the headlight LO relay (RH). (See **RELAY INSPECTION**.) • Is the headlight LO relay (RH) normal?	Yes	Go to the next step.
		No	Replace the headlight LO relay (RH), then go to Step 5. (See **RELAY LOCATION**.)
3	**INSPECT FRONT BODY CONTROL MODULE (FBCM) CONNECTOR CONDITION** • Disconnect the front body control module (FBCM) connector. • Inspect the connector engagement and connection condition and inspect the terminals for damage, deformation, corrosion, or disconnection. • Is the connector normal?	Yes	Go to the next step.
		No	Repair or replace the connector, then go to Step 5.
4	**INSPECT FOR SHORT TO POWER SUPPLY IN HEADLIGHT LO RELAY (RH) CONTROL CIRCUIT** • Verify that the headlight LO relay (RH) is removed. • Verify that the front body control module (FBCM) connector is disconnected. • Reconnect the negative battery cable. (See **NEGATIVE BATTERY CABLE DISCONNECTION/CONNECTION [SKYACTIV-G 2.0, SKYACTIV-G 2.5]**.) • Switch the ignition ON (engine off or	Yes	Go to the next step.
		No	Refer to the wiring diagram and verify whether or not there is a common connector between headlight LO relay (RH) terminal E and front body control module (FBCM) terminal 2V. **If there is a common connector:** • Determine the malfunctioning part by inspecting the common connector and the terminal for corrosion, damage, or pin disconnection, and the common wiring harness for a short to power supply. • Repair or replace the malfunctioning part. **If there is no common connector:**

	on). • Measure the voltage at the front body control module (FBCM) terminal 2V (wiring harness-side). • Is the voltage **0 V**?		• Repair or replace the wiring harness which has a short to power supply. Go to the next step.
5	**VERIFY THAT REPAIRS HAVE BEEN COMPLETED** • Always reconnect all disconnected connectors. • Reconnect the negative battery cable. (See **NEGATIVE BATTERY CABLE DISCONNECTION/CONNECTION [SKYACTIV-G 2.0, SKYACTIV-G 2.5]**.) • Clear the DTC for the front body control module (FBCM) using the M-MDS. (See **CLEARING DTC [FRONT BODY CONTROL MODULE (FBCM)]**.) • Operate the light switch to the HEAD position. • Retrieve the front body control module (FBCM) DTCs using the M-MDS. (See **DTC INSPECTION [FRONT BODY CONTROL MODULE (FBCM)]**.) • Is the same DTC displayed?	Yes	Repeat the inspection from Step 1. • If the malfunction recurs, replace the front body control module (FBCM). (See **FRONT BODY CONTROL MODULE (FBCM) REMOVAL/INSTALLATION**.) Go to the next step.
		No	Go to the next step.
6	**VERIFY IF OTHER DTCs DISPLAYED** • Are any other DTCs displayed?	Yes	Repair or replace the malfunctioning part according to the applicable DTC troubleshooting. (See **DTC TABLE [FRONT BODY CONTROL MODULE (FBCM)]**.)
		No	DTC troubleshooting completed.

2014 - Mazda3 - Body and Accessories

DTC B13FE:14 [FRONT BODY CONTROL MODULE (FBCM)]

Description	Headlight LO relay (RH) circuit malfunction
Detection condition	• Front body control module (FBCM) detects an open circuit or short to ground in the headlight LO relay (RH) circuit with the ignition switched ON (engine off or on).
Fail-safe function	Not applicable
Possible cause	• Headlight LO relay (RH) malfunction • Front body control module (FBCM) connector or terminal malfunction • Short to ground in the wiring harness between headlight LO relay (RH) terminal E and front body control module (FBCM) terminal 2V • Open circuit in the wiring harness between headlight LO relay (RH) terminal E and front body control module (FBCM) terminal 2V • Front body control module (FBCM) malfunction

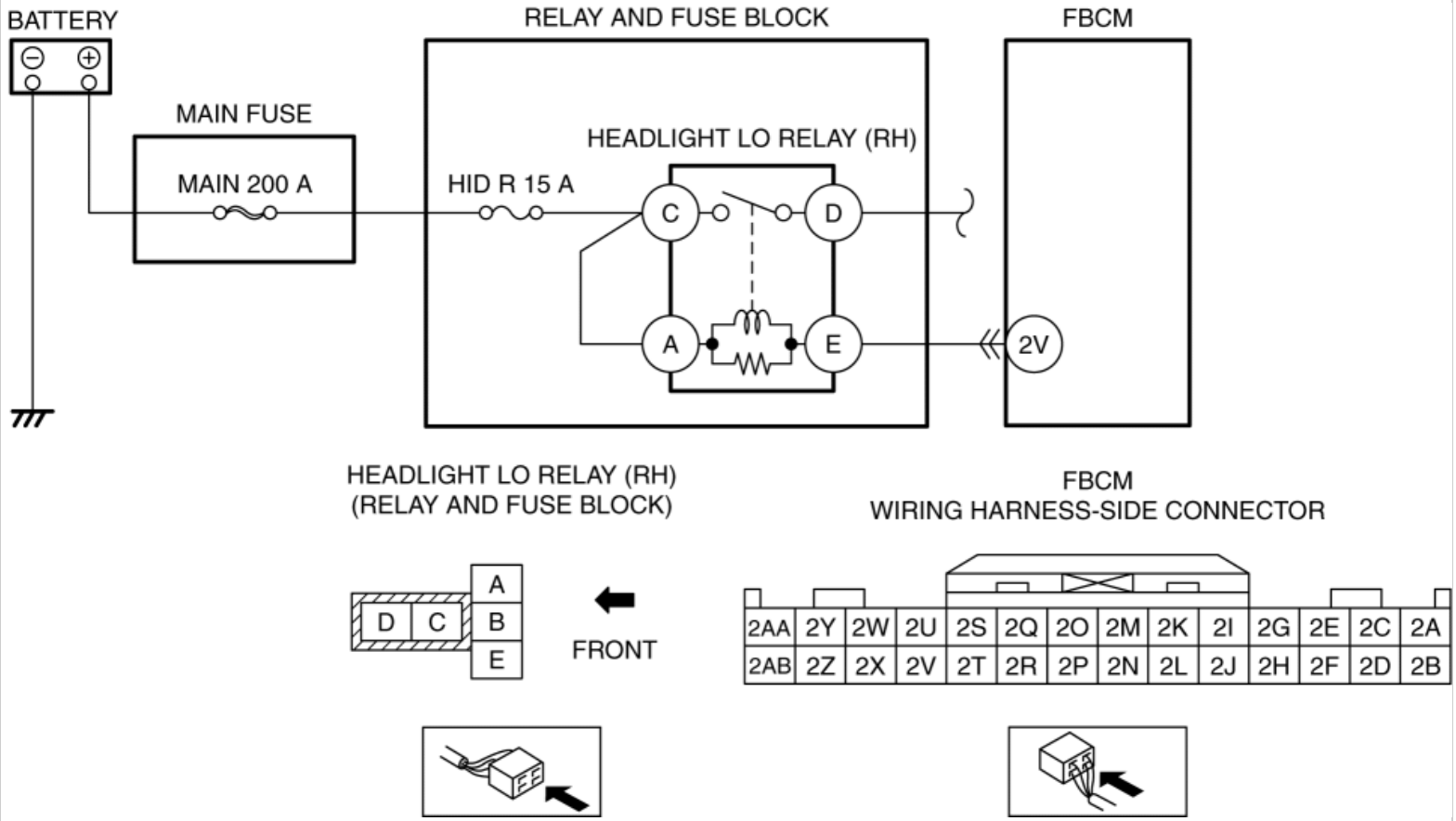

Diagnostic Procedure

Step	Inspection		Action
1	**VERIFY FRONT BODY CONTROL MODULE (FBCM) DTCs AGAIN** • Clear the DTC for the front body control module (FBCM) using the M-MDS. (See **CLEARING DTC [FRONT BODY CONTROL MODULE (FBCM)]**.) • Operate the light switch to the OFF position. • Retrieve the front body control module (FBCM) DTCs using the M-MDS. (See **DTC INSPECTION [FRONT BODY CONTROL MODULE (FBCM)]**.) • Is the same DTC displayed?	Yes	Go to the next step.
		No	Go to Step 7.
2	**INSPECT HEADLIGHT LO RELAY (RH)** • Switch the ignition off. • Disconnect the negative battery cable. (See **NEGATIVE BATTERY CABLE DISCONNECTION/CONNECTION [SKYACTIV-G 2.0, SKYACTIV-G 2.5]**.) • Remove the headlight LO relay (RH). (See **RELAY LOCATION**.) • Inspect the headlight LO relay (RH). (See **RELAY INSPECTION**.) • Is the headlight LO relay (RH) normal?	Yes	Go to the next step.
		No	Replace the headlight LO relay (RH), then go to Step 6. (See **RELAY LOCATION**.)
3	**INSPECT FRONT BODY CONTROL MODULE (FBCM) CONNECTOR CONDITION** • Disconnect the front body control module (FBCM) connector. • Inspect the connector engagement and connection condition and inspect the terminals for damage, deformation, corrosion, or disconnection. • Is the connector normal?	Yes	Go to the next step.
		No	Repair or replace the connector, then go to Step 6.
4	**INSPECT FOR SHORT TO GROUND IN HEADLIGHT LO RELAY (RH) CONTROL CIRCUIT** • Verify that the headlight LO relay (RH) is removed. • Verify that the front body control module (FBCM) connector is disconnected. • Inspect for continuity between front body control module (FBCM) terminal 2V (wiring harness-side) and body ground. • Is there continuity?	Yes	Refer to the wiring diagram and verify whether or not there is a common connector between headlight LO relay (RH) terminal E and front body control module (FBCM) terminal 2V. **If there is a common connector:** • Determine the malfunctioning part by inspecting the common connector and the terminal for corrosion, damage, or pin disconnection, and the common wiring harness for a short to ground. • Repair or replace the malfunctioning part. **If there is no common connector:** • Repair or replace the wiring harness which has a short to ground. Go to Step 6.

		No	Go to the next step.
5	**INSPECT FOR OPEN CIRCUIT IN HEADLIGHT LO RELAY (RH) CONTROL CIRCUIT** • Verify that the headlight LO relay (RH) is removed. • Verify that the front body control module (FBCM) connector is disconnected. • Inspect the wiring harness for continuity between headlight LO relay (RH) terminal E (wiring harness-side) and front body control module (FBCM) terminal 2V (wiring harness-side). • Is there continuity?	Yes	Go to the next step.
		No	Refer to the wiring diagram and verify whether or not there is a common connector between headlight LO relay (RH) terminal E and front body control module (FBCM) terminal 2V. **If there is a common connector:** • Determine the malfunctioning part by inspecting the common connector and the terminal for corrosion, damage, or pin disconnection, and the common wiring harness for an open circuit. • Repair or replace the malfunctioning part. **If there is no common connector:** • Repair or replace the wiring harness which has an open circuit. Go to the next step.
6	**VERIFY THAT REPAIRS HAVE BEEN COMPLETED** • Always reconnect all disconnected connectors. • Reconnect the negative battery cable. (See **NEGATIVE BATTERY CABLE DISCONNECTION/CONNECTION [SKYACTIV-G 2.0, SKYACTIV-G 2.5]**.) • Clear the DTC for the front body control module (FBCM) using the M-MDS. (See **CLEARING DTC [FRONT BODY CONTROL MODULE (FBCM)]**.) • Operate the light switch to the OFF position. • Retrieve the front body control module (FBCM) DTCs using the M-MDS. (See **DTC INSPECTION [FRONT BODY CONTROL MODULE (FBCM)]**.) • Is the same DTC displayed?	Yes	Repeat the inspection from Step 1. • If the malfunction recurs, replace the front body control module (FBCM). (See **FRONT BODY CONTROL MODULE (FBCM) REMOVAL/INSTALLATION**.) Go to the next step.
		No	Go to the next step.
7	**VERIFY IF OTHER DTCs DISPLAYED** • Are any other DTCs displayed?	Yes	Repair or replace the malfunctioning part according to the applicable DTC troubleshooting. (See **DTC TABLE [FRONT BODY CONTROL MODULE (FBCM)]**.)
		No	DTC troubleshooting completed.

2014 - Mazda3 - Body and Accessories

DTC B141E:12 [FRONT BODY CONTROL MODULE (FBCM)]

Description	Headlight LO relay (LH) circuit malfunction
Detection condition	• Front body control module (FBCM) detects a short to power supply in the headlight LO relay (LH) circuit with the ignition switched ON (engine off or on).
Fail-safe function	Not applicable
Possible cause	• Headlight LO relay (LH) malfunction • Front body control module (FBCM) connector or terminal malfunction • Short to power supply in the wiring harness between headlight LO relay (LH) terminal A and front body control module (FBCM) terminal 1M • Front body control module (FBCM) malfunction

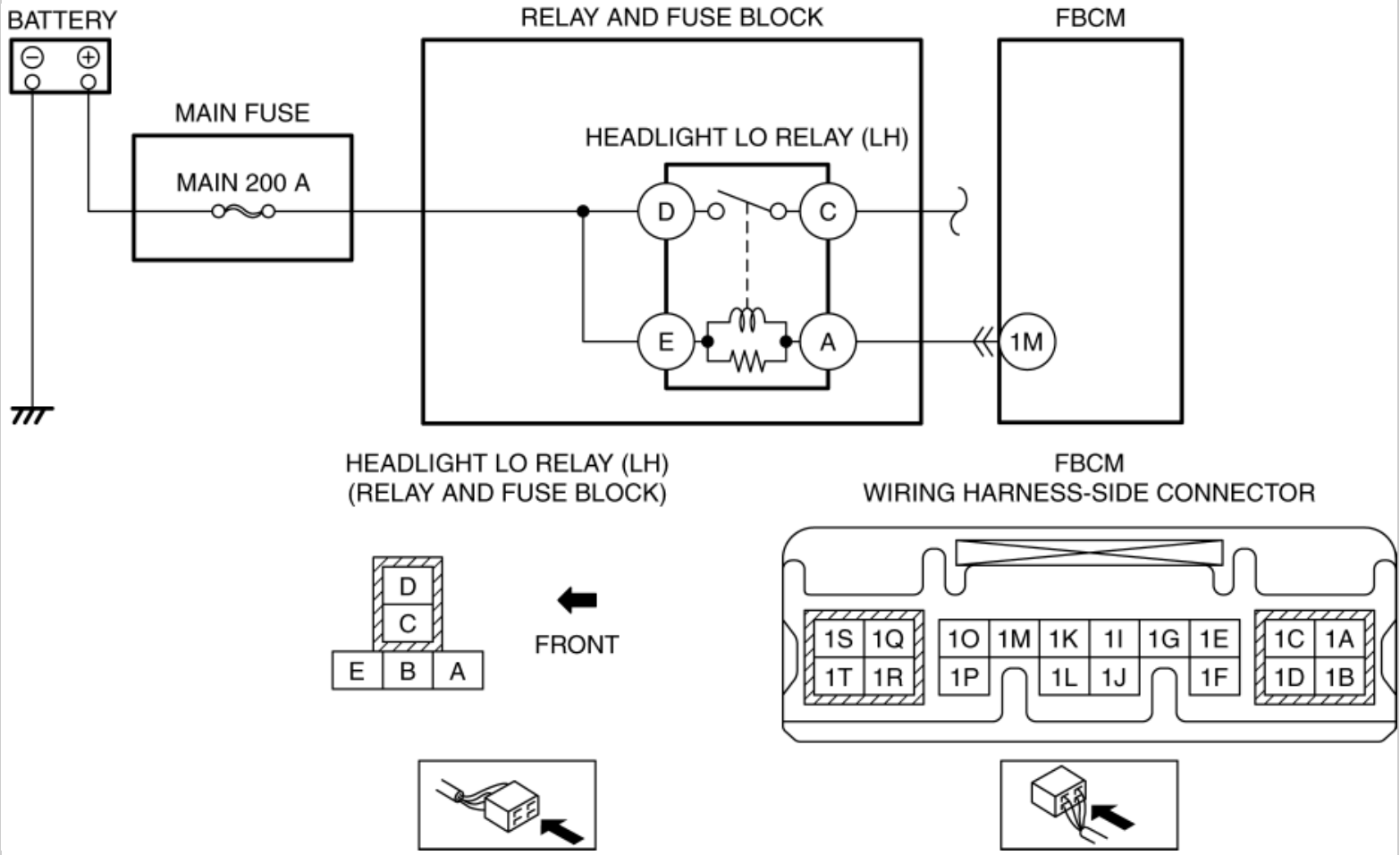

Diagnostic Procedure

Step	Inspection		Action
1	**VERIFY FRONT BODY CONTROL MODULE (FBCM) DTCs AGAIN** • Clear the DTC for the front body control module (FBCM) using the M-MDS. (See **CLEARING DTC [FRONT BODY CONTROL MODULE (FBCM)]**.) • Operate the light switch to the HEAD position. • Retrieve the front body control module (FBCM) DTCs using the M-MDS. (See **DTC INSPECTION [FRONT BODY CONTROL MODULE (FBCM)]**.) • Is the same DTC displayed?	Yes	Go to the next step.
		No	Go to Step 6.
2	**INSPECT HEADLIGHT LO RELAY (LH)** • Switch the ignition off. • Disconnect the negative battery cable. (See **NEGATIVE BATTERY CABLE DISCONNECTION/CONNECTION [SKYACTIV-G 2.0, SKYACTIV-G 2.5]**.) • Remove the headlight LO relay (LH). (See **RELAY LOCATION**.) • Inspect the headlight LO relay (LH). (See **RELAY INSPECTION**.) • Is the headlight LO relay (LH) normal?	Yes	Go to the next step.
		No	Replace the headlight LO relay (LH), then go to Step 5. (See **RELAY LOCATION**.)
3	**INSPECT FRONT BODY CONTROL MODULE (FBCM) CONNECTOR CONDITION** • Disconnect the front body control module (FBCM) connector. • Inspect the connector engagement and connection condition and inspect the terminals for damage, deformation, corrosion, or disconnection. • Is the connector normal?	Yes	Go to the next step.
		No	Repair or replace the connector, then go to Step 5.
4	**INSPECT FOR SHORT TO POWER SUPPLY IN HEADLIGHT LO RELAY (LH) CONTROL CIRCUIT** • Verify that the headlight LO relay (LH) is removed. • Verify that the front body control module (FBCM) connector is disconnected.	Yes	Go to the next step.
		No	Refer to the wiring diagram and verify whether or not there is a common connector between headlight LO relay (LH) terminal A and front body control module (FBCM) terminal 1M. **If there is a common connector:**

	• Reconnect the negative battery cable. (See **NEGATIVE BATTERY CABLE DISCONNECTION/CONNECTION [SKYACTIV-G 2.0, SKYACTIV-G 2.5]**.) • Switch the ignition ON (engine off or on). • Measure the voltage at the front body control module (FBCM) terminal 1M (wiring harness-side). • Is the voltage **0 V**?		• Determine the malfunctioning part by inspecting the common connector and the terminal for corrosion, damage, or pin disconnection, and the common wiring harness for a short to power supply. • Repair or replace the malfunctioning part. **If there is no common connector:** • Repair or replace the wiring harness which has a short to power supply. Go to the next step.
5	**VERIFY THAT REPAIRS HAVE BEEN COMPLETED** • Always reconnect all disconnected connectors. • Reconnect the negative battery cable. (See **NEGATIVE BATTERY CABLE DISCONNECTION/CONNECTION [SKYACTIV-G 2.0, SKYACTIV-G 2.5]**.) • Clear the DTC for the front body control module (FBCM) using the M-MDS. (See **CLEARING DTC [FRONT BODY CONTROL MODULE (FBCM)]**.) • Operate the light switch to the HEAD position. • Retrieve the front body control module (FBCM) DTCs using the M-MDS. (See **DTC INSPECTION [FRONT BODY CONTROL MODULE (FBCM)]**.) • Is the same DTC displayed?	Yes	Repeat the inspection from Step 1. • If the malfunction recurs, replace the front body control module (FBCM). (See **FRONT BODY CONTROL MODULE (FBCM) REMOVAL/INSTALLATION**.) Go to the next step.
		No	Go to the next step.
6	**VERIFY IF OTHER DTCs DISPLAYED** • Are any other DTCs displayed?	Yes	Repair or replace the malfunctioning part according to the applicable DTC troubleshooting. (See **DTC TABLE [FRONT BODY CONTROL MODULE (FBCM)]**.)
		No	DTC troubleshooting completed.

2014 - Mazda3 - Body and Accessories

DTC B1C84:12 [FRONT BODY CONTROL MODULE (FBCM)]

Description	Rear window defroster relay circuit malfunction
Detection condition	• Front body control module (FBCM) detects a short to power supply in the rear window defroster relay circuit with the ignition switched ON (engine off or on).
Fail-safe function	Not applicable
Possible cause	• Rear window defroster relay malfunction • Front body control module (FBCM) connector or terminal malfunction • Short to power supply in wiring harness between rear window defroster relay terminal E and front body control module (FBCM) terminal 1P • Front body control module (FBCM) malfunction

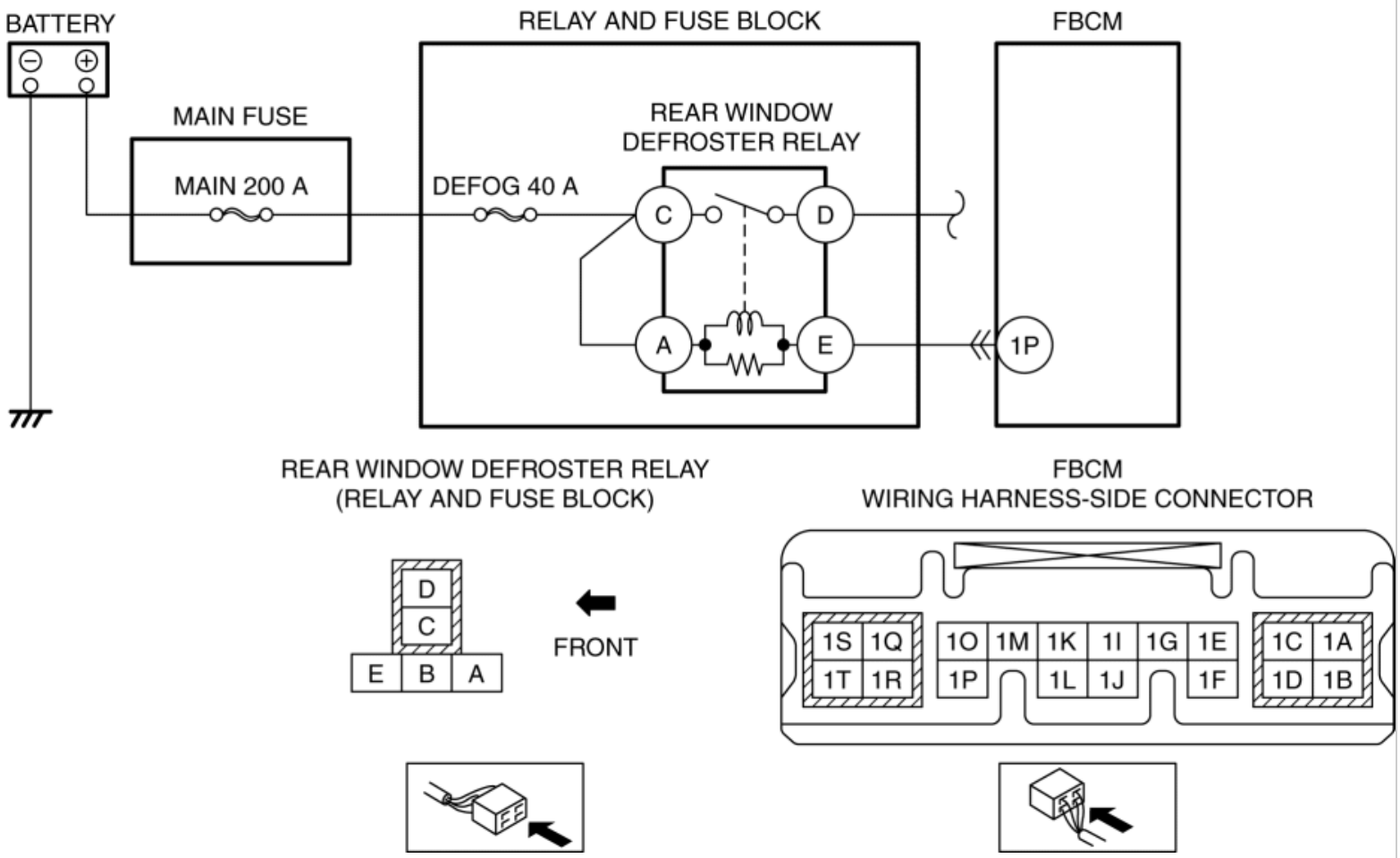

Diagnostic Procedure

Step	Inspection		Action
1	**VERIFY FRONT BODY CONTROL MODULE (FBCM) DTCs AGAIN** • Clear the DTC for the front body control module (FBCM) using the M-MDS. (See **CLEARING DTC [FRONT BODY CONTROL MODULE (FBCM)]**.) • Operate the rear window defroster by pushing the rear window defroster switch. • Retrieve the front body control module (FBCM) DTCs using the M-MDS. (See **DTC INSPECTION [FRONT BODY CONTROL MODULE (FBCM)]**.) • Is the same DTC displayed?	Yes	Go to the next step.
		No	Go to Step 6.
2	**INSPECT REAR WINDOW DEFROSTER RELAY** • Switch the ignition off. • Disconnect the negative battery cable. (See **NEGATIVE BATTERY CABLE DISCONNECTION/CONNECTION [SKYACTIV-G 2.0, SKYACTIV-G 2.5]**.) • Remove the rear window defroster relay. (See **RELAY LOCATION**.) • Inspect the rear window defroster relay. (See **RELAY INSPECTION**.) • Is the rear window defroster relay normal?	Yes	Go to the next step.
		No	Replace the rear window defroster relay, then go to Step 5. (See **RELAY LOCATION**.)
3	**INSPECT FRONT BODY CONTROL MODULE (FBCM) CONNECTOR CONDITION** • Disconnect the front body control module (FBCM) connector. • Inspect the connector engagement and connection condition and inspect the terminals for damage, deformation, corrosion, or disconnection. • Is the connector normal?	Yes	Go to the next step.
		No	Repair or replace the connector, then go to Step 5.
4	**INSPECT FOR SHORT TO POWER SUPPLY IN REAR WINDOW DEFROSTER RELAY CONTROL CIRCUIT** • Verify that the rear window defroster relay is removed. • Verify that the front body control module (FBCM) connector is	Yes	Go to the next step.
		No	Refer to the wiring diagram and verify whether or not there is a common connector between rear window defroster relay terminal E and front body control module (FBCM) terminal 1P. **If there is a common connector:**

	disconnected. • Reconnect the negative battery cable. (See **NEGATIVE BATTERY CABLE DISCONNECTION/CONNECTION [SKYACTIV-G 2.0, SKYACTIV-G 2.5]**.) • Switch the ignition ON (engine off or on). • Measure the voltage at the front body control module (FBCM) terminal 1P (wiring harness-side). • Is the voltage **0 V**?		• Determine the malfunctioning part by inspecting the common connector and the terminal for corrosion, damage, or pin disconnection, and the common wiring harness for a short to power supply. • Repair or replace the malfunctioning part. **If there is no common connector:** • Repair or replace the wiring harness which has a short to power supply. Go to the next step.
5	**VERIFY THAT REPAIRS HAVE BEEN COMPLETED** • Always reconnect all disconnected connectors. • Reconnect the negative battery cable. (See **NEGATIVE BATTERY CABLE DISCONNECTION/CONNECTION [SKYACTIV-G 2.0, SKYACTIV-G 2.5]**.) • Clear the DTC for the front body control module (FBCM) using the M-MDS. (See **CLEARING DTC [FRONT BODY CONTROL MODULE (FBCM)]**.) • Operate the rear window defroster by pushing the rear window defroster switch. • Retrieve the front body control module (FBCM) DTCs using the M-MDS. (See **DTC INSPECTION [FRONT BODY CONTROL MODULE (FBCM)]**.) • Is the same DTC displayed?	Yes	Repeat the inspection from Step 1. • If the malfunction recurs, replace the front body control module (FBCM). (See **FRONT BODY CONTROL MODULE (FBCM) REMOVAL/INSTALLATION**.) Go to the next step.
		No	Go to the next step.
6	**VERIFY IF OTHER DTCs DISPLAYED** • Are any other DTCs displayed?	Yes	Repair or replace the malfunctioning part according to the applicable DTC troubleshooting. (See **DTC TABLE [FRONT BODY CONTROL MODULE (FBCM)]**.)
		No	DTC troubleshooting completed.

2014 - Mazda3 - Body and Accessories

DTC B1C84:14 [FRONT BODY CONTROL MODULE (FBCM)]

Description	Rear window defroster relay circuit malfunction
Detection condition	• Front body control module (FBCM) detects an open circuit or short to ground in the rear window defroster relay circuit with the ignition switched ON (engine off or on).
Fail-safe function	Not applicable
Possible cause	• Rear window defroster relay malfunction • Front body control module (FBCM) connector or terminal malfunction • Short to ground in wiring harness between rear window defroster relay terminal E and front body control module (FBCM) terminal 1P • Open circuit in wiring harness between rear window defroster relay terminal E and front body control module (FBCM) terminal 1P • Front body control module (FBCM) malfunction

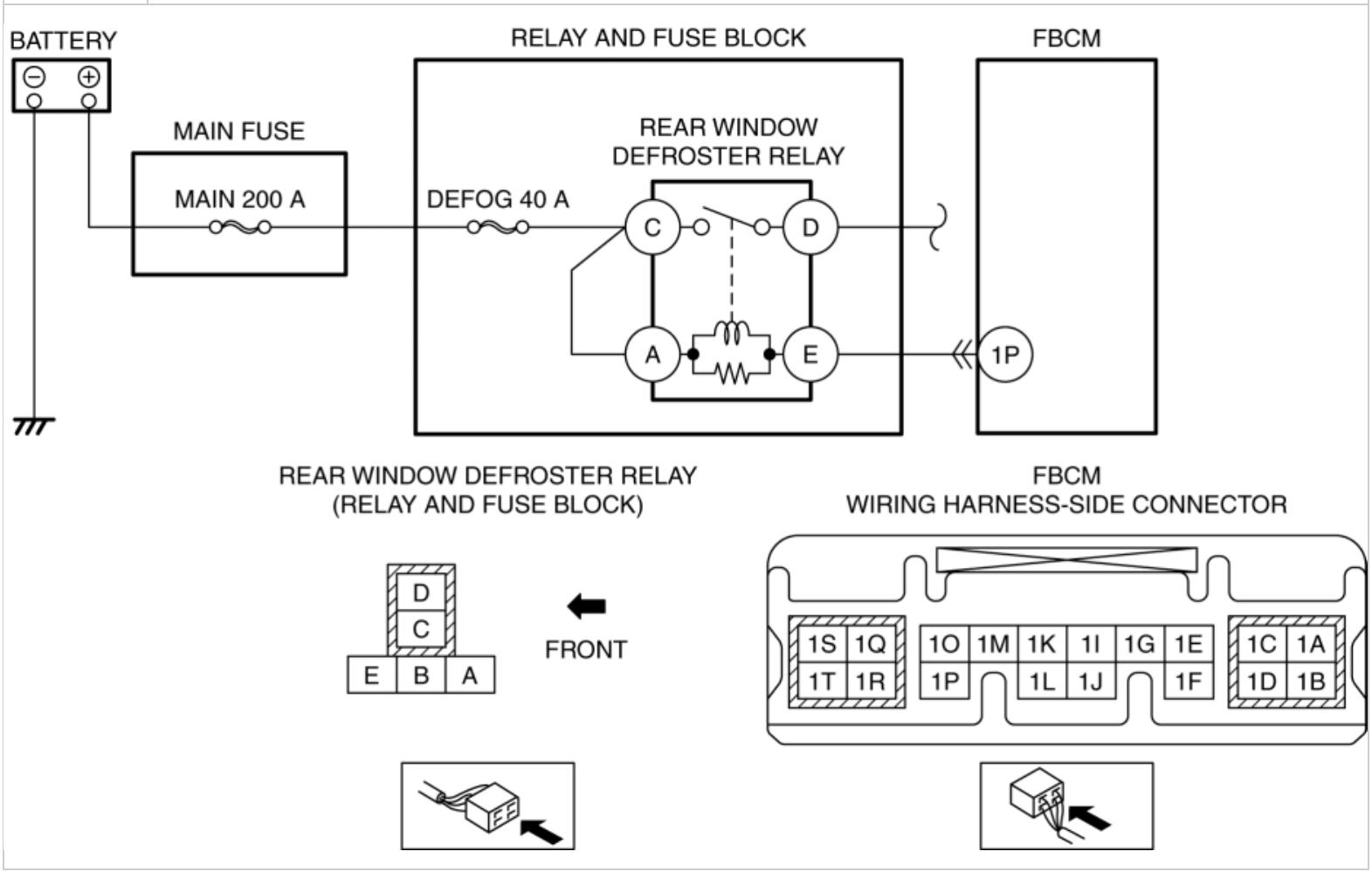

Diagnostic Procedure

Step	Inspection		Action
1	**VERIFY FRONT BODY CONTROL MODULE (FBCM) DTCs AGAIN** • Clear the DTC for the front body control module (FBCM) using the M-MDS. (See **CLEARING DTC [FRONT BODY CONTROL MODULE (FBCM)]**.) • Retrieve the front body control module (FBCM) DTCs using the M-MDS. (See **DTC INSPECTION [FRONT BODY CONTROL MODULE (FBCM)]**.) • Is the same DTC displayed?	Yes	Go to the next step.
		No	Go to Step 7.
2	**INSPECT REAR WINDOW DEFROSTER RELAY** • Switch the ignition off. • Disconnect the negative battery cable. (See **NEGATIVE BATTERY CABLE DISCONNECTION/CONNECTION [SKYACTIV-G 2.0, SKYACTIV-G 2.5]**.) • Remove the rear window defroster relay. (See **RELAY LOCATION**.) • Inspect the rear window defroster relay. (See **RELAY INSPECTION**.) • Is the rear window defroster relay normal?	Yes	Go to the next step.
		No	Replace the rear window defroster relay, then go to Step 6. (See **RELAY LOCATION**.)
3	**INSPECT FRONT BODY CONTROL MODULE (FBCM) CONNECTOR CONDITION** • Disconnect the front body control module (FBCM) connector. • Inspect the connector engagement and connection condition and inspect the terminals for damage, deformation, corrosion, or disconnection. • Is the connector normal?	Yes	Go to the next step.
		No	Repair or replace the connector, then go to Step 6.
4	**INSPECT FOR SHORT TO GROUND IN REAR WINDOW DEFROSTER RELAY CONTROL CIRCUIT** • Verify that the rear window defroster relay is removed. • Verify that the front body control module (FBCM) connector is disconnected. • Inspect for continuity between front body control module (FBCM) terminal 1P (wiring harness-side) and body ground. • Is there continuity?	Yes	Refer to the wiring diagram and verify whether or not there is a common connector between rear window defroster relay terminal E and front body control module (FBCM) terminal 1P. **If there is a common connector:** • Determine the malfunctioning part by inspecting the common connector and the terminal for corrosion, damage, or pin disconnection, and the common wiring harness for a short to ground. • Repair or replace the malfunctioning part. **If there is no common connector:**

			• Repair or replace the wiring harness which has a short to ground. Go to Step 6.
		No	Go to the next step.
5	**INSPECT FOR OPEN CIRCUIT IN REAR WINDOW DEFROSTER RELAY CONTROL CIRCUIT** • Verify that the rear window defroster relay is removed. • Verify that the front body control module (FBCM) connector is disconnected. • Inspect for continuity between rear window defroster relay terminal E (wiring harness-side) and front body control module (FBCM) terminal 1P (wiring harness-side). • Is there continuity?	Yes	Go to the next step.
		No	Refer to the wiring diagram and verify whether or not there is a common connector between rear window defroster relay terminal E and front body control module (FBCM) terminal 1P. **If there is a common connector:** • Determine the malfunctioning part by inspecting the common connector and the terminal for corrosion, damage, or pin disconnection, and the common wiring harness for an open circuit. • Repair or replace the malfunctioning part. **If there is no common connector:** • Repair or replace the wiring harness which has an open circuit. Go to the next step.
6	**VERIFY THAT REPAIRS HAVE BEEN COMPLETED** • Always reconnect all disconnected connectors. • Reconnect the negative battery cable. (See **NEGATIVE BATTERY CABLE DISCONNECTION/CONNECTION [SKYACTIV-G 2.0, SKYACTIV-G 2.5]**.) • Clear the DTC for the front body control module (FBCM) using the M-MDS. (See **CLEARING DTC [FRONT BODY CONTROL MODULE (FBCM)]**.) • Retrieve the front body control module (FBCM) DTCs using the M-MDS. (See **DTC INSPECTION [FRONT BODY CONTROL MODULE (FBCM)]**.) • Is the same DTC displayed?	Yes	Repeat the inspection from Step 1. • If the malfunction recurs, replace the front body control module (FBCM). (See **FRONT BODY CONTROL MODULE (FBCM) REMOVAL/INSTALLATION**.) Go to the next step.
		No	Go to the next step.
7	**VERIFY IF OTHER DTCs DISPLAYED** • Are any other DTCs displayed?	Yes	Repair or replace the malfunctioning part according to the applicable DTC troubleshooting. (See **DTC TABLE [FRONT BODY CONTROL MODULE (FBCM)]**.)
		No	DTC troubleshooting completed.

2014 - Mazda3 - Body and Accessories

DTC B1D06:11 [FRONT BODY CONTROL MODULE (FBCM)]

Description	Turn light (LH) circuit malfunction
Detection condition	• Front body control module (FBCM) detects a short to ground in the turn light (LH) circuit with the ignition switched ON (engine off or on).
Fail-safe function	Not applicable

Possible cause	• Front body control module (FBCM) connector or terminal malfunction
	• Front turn light bulb (LH) malfunction
	• Front turn light (LH) connector or terminal malfunction
	• Short to ground in wiring harness between front turn light (LH) terminal A and front body control module (FBCM) terminal 2B
	• Rear turn light bulb (LH) malfunction
	• Rear turn light (LH) connector or terminal malfunction
	• Power outer mirror (LH) connector or terminal malfunction (With side turn light)
	• Side turn light (LH) malfunction (With side turn light)
	• Short to ground in wiring harness between the following terminals:
	  ▪ Rear turn light (LH) terminal A—Front body control module (FBCM) terminal 2D
	  ▪ Power outer mirror (LH) terminal E—Front body control module (FBCM) terminal 2D (With side turn light)
	• Front body control module (FBCM) malfunction

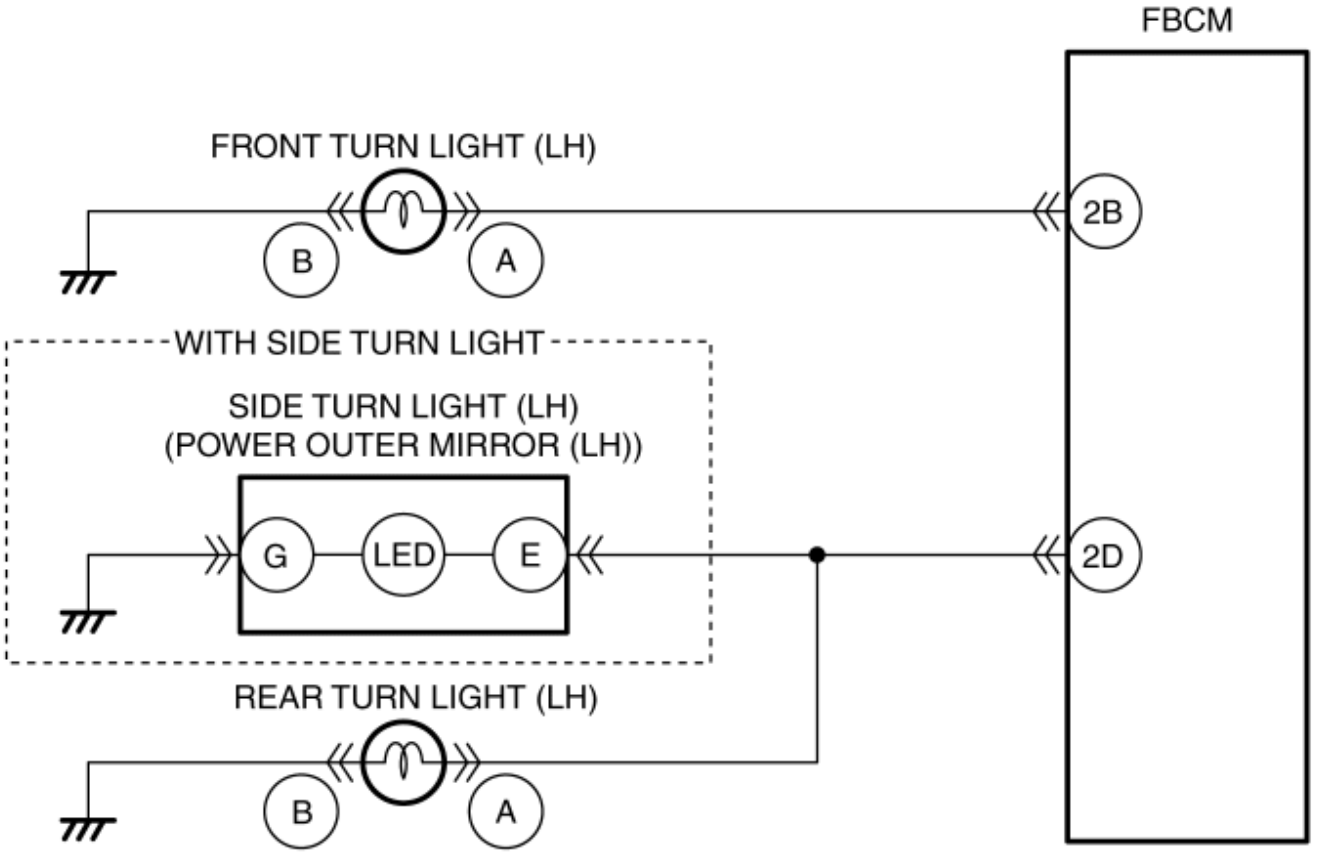

FRONT TURN LIGHT (LH)
WIRING HARNESS-SIDE CONNECTOR

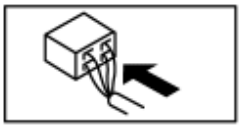

POWER OUTER MIRROR (LH)
WIRING HARNESS-SIDE CONNECTOR

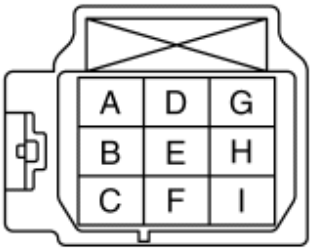

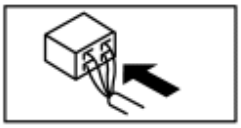

FBCM
WIRING HARNESS-SIDE CONNECTOR

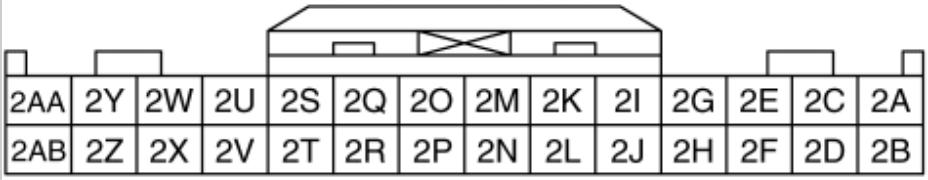

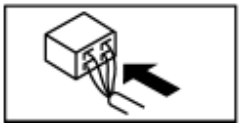

REAR TURN LIGHT (LH)
WIRING HARNESS-SIDE CONNECTOR

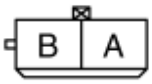

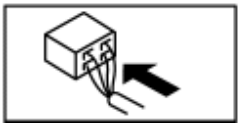

Diagnostic Procedure

Step	Inspection		Action
1	**VERIFY FRONT BODY CONTROL MODULE (FBCM) DTCs AGAIN** • Clear the DTC for the front body control module (FBCM) using the M-MDS. (See **CLEARING DTC [FRONT BODY CONTROL MODULE (FBCM)]**.) • Operate the turn switch to the LH position. • Retrieve the front body control module (FBCM) DTCs using the M-MDS. (See **DTC INSPECTION [FRONT BODY CONTROL MODULE (FBCM)]**.) • Is the same DTC displayed?	Yes	Go to the next step.
		No	Go to Step 15.
2	**DETERMINE MALFUNCTIONING LIGHT** • Operate the turn switch to the LH position. • Are there any lights among the following which do not flash? ▪ Front turn light (LH) ▪ Side turn light (LH) (With side turn light) ▪ Rear turn light (LH)	Yes	All lights do not flash: • Go to the next step. Front turn light (LH) do not flash: • Go to Step 4. Side turn light (LH) (With side turn light) and rear turn light (LH) do not flash: • Go to Step 8.
		No	Go to Step 14.
3	**INSPECT FRONT BODY CONTROL MODULE (FBCM) CONNECTOR CONDITION** • Switch the ignition off. • Disconnect the negative battery cable. (See **NEGATIVE BATTERY CABLE DISCONNECTION/CONNECTION [SKYACTIV-G 2.0, SKYACTIV-G 2.5]**.)	Yes	Go to Step 14.
		No	Repair or replace the connector, then go to Step 14.

	• Disconnect the front body control module (FBCM) connector. • Inspect the connector engagement and connection condition and inspect the terminals for damage, deformation, corrosion, or disconnection. • Is the connector normal?		
4	**INSPECT FRONT TURN LIGHT BULB (LH)** • Inspect the front turn light bulb (LH). • Is the bulb normal?	Yes	Go to the next step.
		No	Replace the bulb, then go to Step 14. (See **FRONT TURN LIGHT BULB REMOVAL/INSTALLATION**.)
5	**INSPECT FRONT TURN LIGHT (LH) CONNECTOR CONDITION** • Switch the ignition off. • Disconnect the negative battery cable. (See **NEGATIVE BATTERY CABLE DISCONNECTION/CONNECTION [SKYACTIV-G 2.0, SKYACTIV-G 2.5]**.) • Disconnect the front turn light (LH) connector. • Inspect the connector engagement and connection condition and inspect the terminals for damage, deformation, corrosion, or disconnection. • Is the connector normal?	Yes	Go to the next step.
		No	Repair or replace the connector, then go to Step 14.
6	**INSPECT FRONT BODY CONTROL MODULE (FBCM) CONNECTOR CONDITION** • Disconnect the front body control module (FBCM) connector. • Inspect the connector engagement and connection condition and inspect the terminals for damage, deformation, corrosion, or disconnection.	Yes	Go to the next step.
		No	Repair or replace the connector, then go to Step 14.

	• Is the connector normal?		
7	**INSPECT FOR SHORT TO GROUND IN FRONT TURN LIGHT (LH) CONTROL CIRCUIT** • Verify that the front turn light (LH) and front body control module (FBCM) connectors are disconnected. • Inspect for continuity between front body control module (FBCM) terminal 2B (wiring harness-side) and body ground. • Is there continuity?	Yes	Refer to the wiring diagram and verify whether or not there is a common connector between front turn light (LH) terminal A and front body control module (FBCM) terminal 2B. **If there is a common connector:** • Determine the malfunctioning part by inspecting the common connector and the terminal for corrosion, damage, or pin disconnection, and the common wiring harness for a short to ground. • Repair or replace the malfunctioning part. **If there is no common connector:** • Repair or replace the wiring harness which has a short to ground. Go to Step 14.
		No	Go to Step 14.
8	**INSPECT REAR TURN LIGHT BULB (LH)** • Inspect the rear turn light bulb (LH). • Is the rear turn light bulb (LH) normal?	Yes	Go to the next step.
		No	Replace the rear turn light bulb (LH), then go to Step 14. (See **REAR TURN LIGHT BULB REMOVAL/INSTALLATION**.)
9	**INSPECT REAR TURN LIGHT (LH) CONNECTOR CONDITION** • Switch the ignition off. • Disconnect the negative battery cable. (See **NEGATIVE BATTERY CABLE DISCONNECTION/CONNECTION [SKYACTIV-G 2.0, SKYACTIV-G 2.5]**.) • Disconnect the rear turn light (LH) connector. • Inspect the connector engagement and connection condition and inspect the terminals for damage, deformation, corrosion, or disconnection.	Yes	With side turn light • Go to the next step. Without side turn light • Go to Step 13.
		No	Repair or replace the connector, then go to Step 14.

	• Is the connector normal?		
10	**INSPECT POWER OUTER MIRROR (LH) CONNECTOR CONDITION** • Disconnect the power outer mirror (LH) connector. • Inspect the connector engagement and connection condition and inspect the terminals for damage, deformation, corrosion, or disconnection. • Is the connector normal?	Yes	Go to the next step.
		No	Repair or replace the connector, then go to Step 14.
11	**INSPECT SIDE TURN LIGHT (LH)** • Inspect the side turn light (LH). (See **SIDE TURN LIGHT INSPECTION**.) • Is the side turn light (LH) normal?	Yes	Go to the next step.
		No	Replace the power outer mirror (LH), then go to Step 14. (See **POWER OUTER MIRROR REMOVAL/INSTALLATION**.) (See **SIDE TURN LIGHT REMOVAL/INSTALLATION**.)
12	**INSPECT FRONT BODY CONTROL MODULE (FBCM) CONNECTOR CONDITION** • Disconnect the front body control module (FBCM) connector. • Inspect the connector engagement and connection condition and inspect the terminals for damage, deformation, corrosion, or disconnection. • Is the connector normal?	Yes	Go to the next step.
		No	Repair or replace the connector, then go to Step 14.
13	**INSPECT FOR SHORT TO GROUND IN TURN LIGHT (LH) CONTROL CIRCUIT** • Verify that the power outer mirror (LH) (With side turn light), rear turn light (LH) and front body control module (FBCM) connectors are disconnected. • Inspect for continuity between front body control module (FBCM) terminal 2D (wiring harness-side) and body ground. • Is there continuity?	Yes	Refer to the wiring diagram and verify whether or not there is a common connector between the following terminals: • Rear turn light (LH) terminal A—Front body control module (FBCM) terminal 2D • Power outer mirror (LH) terminal E—Front body control module (FBCM) terminal 2D (With side turn light) **If there is a common connector:** • Determine the malfunctioning part by inspecting the common connector and the terminal for corrosion, damage,

			or pin disconnection, and the common wiring harness for a short to ground. • Repair or replace the malfunctioning part. **If there is no common connector:** • Repair or replace the wiring harness which has a short to ground. Go to the next step.
		No	Go to the next step.
14	**VERIFY THAT REPAIRS HAVE BEEN COMPLETED** • Always reconnect all disconnected connectors. • Reconnect the negative battery cable. (See **NEGATIVE BATTERY CABLE DISCONNECTION/CONNECTION [SKYACTIV-G 2.0, SKYACTIV-G 2.5]**.) • Clear the DTC for the front body control module (FBCM) using the M-MDS. (See **CLEARING DTC [FRONT BODY CONTROL MODULE (FBCM)]**.) • Operate the turn switch to the LH position. • Retrieve the front body control module (FBCM) DTCs using the M-MDS. (See **DTC INSPECTION [FRONT BODY CONTROL MODULE (FBCM)]**.) • Is the same DTC displayed?	Yes	Repeat the inspection from Step 1. • If the malfunction recurs, replace the front body control module (FBCM). (See **FRONT BODY CONTROL MODULE (FBCM) REMOVAL/INSTALLATION**.) Go to the next step.
		No	Go to the next step.
15	**VERIFY IF OTHER DTCs DISPLAYED** • Are any other DTCs displayed?	Yes	Repair or replace the malfunctioning part according to the applicable DTC troubleshooting. (See **DTC TABLE [FRONT BODY CONTROL MODULE (FBCM)]**.)
		No	DTC troubleshooting completed.

DTC B1D06:11 [FRONT BODY CONTROL MODULE (FBCM)]

2014 - Mazda3 - Body and Accessories

DTC B1D06:13 [FRONT BODY CONTROL MODULE (FBCM)]

Description	Turn light (LH) circuit malfunction
Detection condition	• Front body control module (FBCM) detects an open circuit or short to power supply in the turn light (LH) circuit with the ignition switched ON (engine off or on).
Fail-safe function	Not applicable

Possible cause	• Front body control module (FBCM) connector or terminal malfunction
	• Front turn light bulb (LH) malfunction
	• Front turn light (LH) connector or terminal malfunction
	• Open circuit in wiring harness between front turn light (LH) terminal B and body ground
	• Short to power supply in wiring harness between front turn light (LH) terminal A and front body control module (FBCM) terminal 2B
	• Open circuit in wiring harness between front turn light (LH) terminal A and front body control module (FBCM) terminal 2B
	• Rear turn light bulb (LH) malfunction
	• Rear turn light (LH) connector or terminal malfunction
	• Open circuit in wiring harness between rear turn light (LH) terminal B and body ground
	• Power outer mirror (LH) connector or terminal malfunction (With side turn light)
	• Side turn light (LH) malfunction (With side turn light)
	• Open circuit in wiring harness between power outer mirror (LH) terminal G and body ground (With side turn light)
	• Short to power supply in wiring harness between the following terminals:
	  ▪ Rear turn light (LH) terminal A—Front body control module (FBCM) terminal 2D
	  ▪ Power outer mirror (LH) terminal E—Front body control module (FBCM) terminal 2D (With side turn light)
	• Open circuit in wiring harness between the following terminals:

	▪ Rear turn light (LH) terminal A—Front body control module (FBCM) terminal 2D ▪ Power outer mirror (LH) terminal E—Front body control module (FBCM) terminal 2D (With side turn light) • Front body control module (FBCM) malfunction

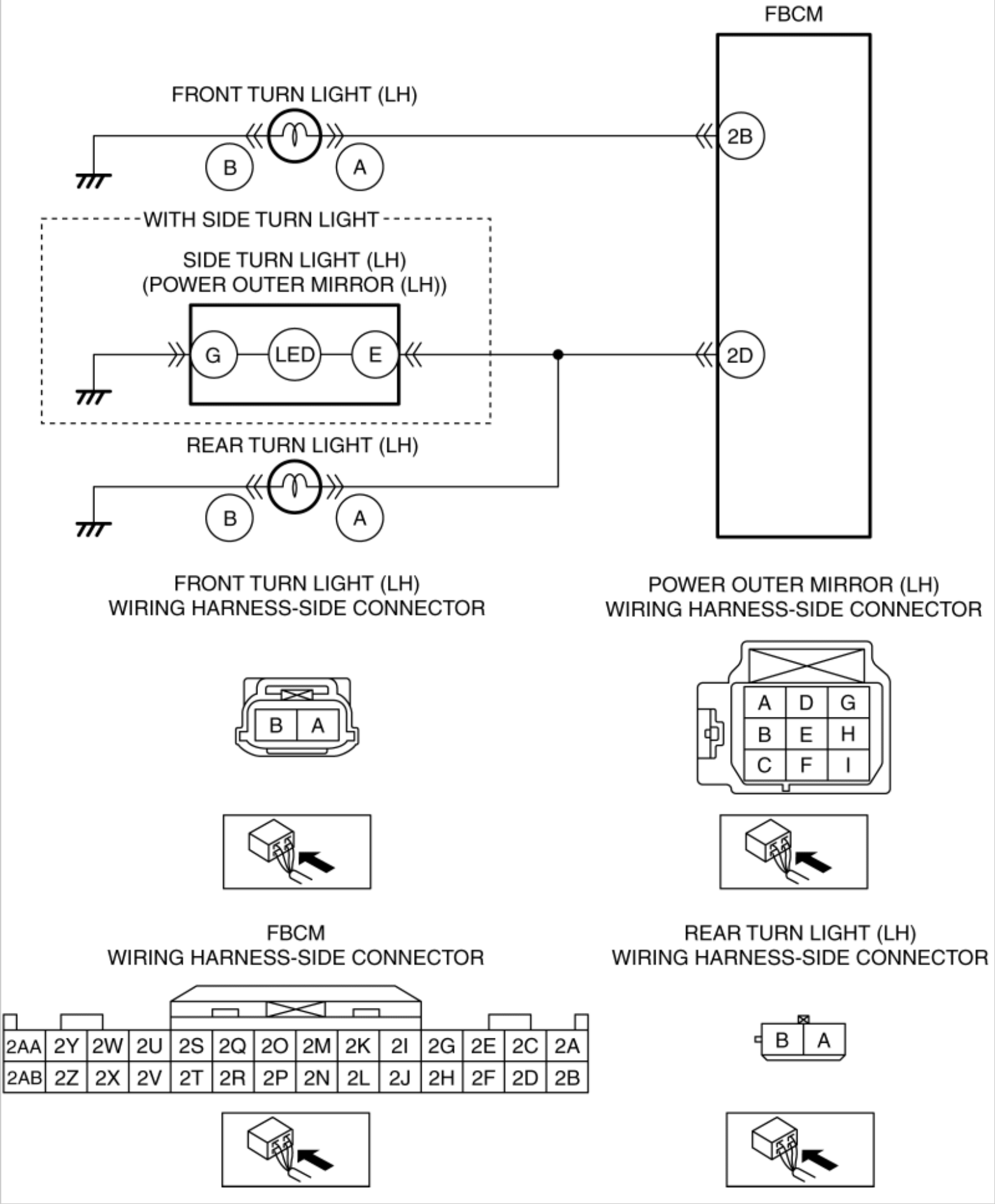
FBCM
FRONT TURN LIGHT (LH)
B
A
2B
WITH SIDE TURN LIGHT
SIDE TURN LIGHT (LH)
(POWER OUTER MIRROR (LH))
G
LED
E
2D
REAR TURN LIGHT (LH)
B
A
FRONT TURN LIGHT (LH)
WIRING HARNESS-SIDE CONNECTOR
B A
POWER OUTER MIRROR (LH)
WIRING HARNESS-SIDE CONNECTOR
A D G
B E H
C F I
FBCM
WIRING HARNESS-SIDE CONNECTOR
2AA 2Y 2W 2U 2S 2Q 2O 2M 2K 2I 2G 2E 2C 2A
2AB 2Z 2X 2V 2T 2R 2P 2N 2L 2J 2H 2F 2D 2B
REAR TURN LIGHT (LH)
WIRING HARNESS-SIDE CONNECTOR
B A

Diagnostic Procedure

Step	Inspection		Action
1	**VERIFY FRONT BODY CONTROL MODULE (FBCM) DTCs AGAIN** • Clear the DTC for the front body control module (FBCM) using the M-MDS. (See **CLEARING DTC [FRONT BODY CONTROL MODULE (FBCM)]**.) • Retrieve the front body control module (FBCM) DTCs using the M-MDS. (See **DTC INSPECTION [FRONT BODY CONTROL MODULE (FBCM)]**.) • Is the same DTC displayed?	Yes	Go to the next step.
		No	Go to Step 20.
2	**DETERMINE MALFUNCTIONING LIGHT** • Operate the turn switch to the LH position. • Are there any lights among the following which do not flash or continue to be illuminated? ▪ Front turn light (LH) ▪ Side turn light (LH) (With side turn light) ▪ Rear turn light (LH)	Yes	All lights do not flash or continue to be illuminated: • Go to the next step. Front turn light (LH) do not flash or continue to be illuminated: • Go to Step 4. Side turn light (LH) (With side turn light) and rear turn light (LH) do not flash or continue to be illuminated: • Go to Step 10.
		No	Go to Step 19.
3	**INSPECT FRONT BODY CONTROL MODULE (FBCM) CONNECTOR CONDITION** • Switch the ignition off. • Disconnect the negative battery cable. (See **NEGATIVE BATTERY CABLE DISCONNECTION/CONNECTION [SKYACTIV-G 2.0, SKYACTIV-G 2.5]**.) • Disconnect the front body	Yes	Go to Step 19.
		No	Repair or replace the connector, then go to Step 19.

	control module (FBCM) connector. • Inspect the connector engagement and connection condition and inspect the terminals for damage, deformation, corrosion, or disconnection. • Is the connector normal?		
4	**INSPECT FRONT TURN LIGHT BULB (LH)** • Inspect the front turn light bulb (LH). • Is the bulb normal?	Yes	Go to the next step.
		No	Replace the bulb, then go to Step 19. (See **FRONT TURN LIGHT BULB REMOVAL/INSTALLATION**.)
5	**INSPECT FRONT TURN LIGHT (LH) CONNECTOR CONDITION** • Switch the ignition off. • Disconnect the negative battery cable. (See **NEGATIVE BATTERY CABLE DISCONNECTION/CONNECTION [SKYACTIV-G 2.0, SKYACTIV-G 2.5]**.) • Disconnect the front turn light (LH) connector. • Inspect the connector engagement and connection condition and inspect the terminals for damage, deformation, corrosion, or disconnection. • Is the connector normal?	Yes	Go to the next step.
		No	Repair or replace the connector, then go to Step 19.
6	**INSPECT FOR OPEN CIRCUIT IN FRONT TURN LIGHT (LH) GROUND CIRCUIT** • Verify that the front turn light (LH) connector is disconnected. • Inspect for continuity between front turn light (LH) terminal B (wiring harness-side) and body ground. • Is there continuity?	Yes	Go to the next step.
		No	Refer to the wiring diagram and verify whether or not there is a common connector between front turn light (LH) terminal B and body ground. **If there is a common connector:** • Determine the malfunctioning part by inspecting the common connector and the terminal for corrosion, damage, or pin disconnection, and the common wiring harness for an open circuit.

			• Repair or replace the malfunctioning part. **If there is no common connector:** • Repair or replace the wiring harness which has an open circuit. Go to Step 19.
7	**INSPECT FRONT BODY CONTROL MODULE (FBCM) CONNECTOR CONDITION** • Disconnect the front body control module (FBCM) connector. • Inspect the connector engagement and connection condition and inspect the terminals for damage, deformation, corrosion, or disconnection. • Is the connector normal?	Yes	Go to the next step.
		No	Repair or replace the connector, then go to Step 19.
8	**INSPECT FOR SHORT TO POWER SUPPLY IN FRONT TURN LIGHT (LH) CONTROL CIRCUIT** • Verify that the front turn light (LH) and front body control module (FBCM) connectors are disconnected. • Reconnect the negative battery cable. (See **NEGATIVE BATTERY CABLE DISCONNECTION/CONNECTION [SKYACTIV-G 2.0, SKYACTIV-G 2.5]**.) • Switch the ignition ON (engine off or on). • Measure the voltage at the front body control module (FBCM) terminal 2B (wiring harness-side). • Is the voltage **0 V**?	Yes	Go to the next step.
		No	Refer to the wiring diagram and verify whether or not there is a common connector between front turn light (LH) terminal A and front body control module (FBCM) terminal 2B. **If there is a common connector:** • Determine the malfunctioning part by inspecting the common connector and the terminal for corrosion, damage, or pin disconnection, and the common wiring harness for a short to power supply. • Repair or replace the malfunctioning part. **If there is no common connector:** • Repair or replace the wiring harness which has a short to power supply. Go to Step 19.
9	**INSPECT FOR OPEN CIRCUIT IN FRONT TURN LIGHT (LH) CONTROL CIRCUIT** • Verify that the front turn light (LH) and front body control module (FBCM) connectors are disconnected.	Yes	Go to Step 19.
		No	Refer to the wiring diagram and verify whether or not there is a common connector between front turn light (LH) terminal A and front body control module (FBCM) terminal 2B.

	• Switch the ignition off. • Disconnect the negative battery cable. (See **NEGATIVE BATTERY CABLE DISCONNECTION/CONNECTION [SKYACTIV-G 2.0, SKYACTIV-G 2.5]**.) • Inspect for continuity between front turn light (LH) terminal A (wiring harness-side) and front body control module (FBCM) terminal 2B. • Is there continuity?		**If there is a common connector:** • Determine the malfunctioning part by inspecting the common connector and the terminal for corrosion, damage, or pin disconnection, and the common wiring harness for an open circuit. • Repair or replace the malfunctioning part. **If there is no common connector:** • Repair or replace the wiring harness which has an open circuit. Go to Step 19.
10	**INSPECT REAR TURN LIGHT BULB (LH)** • Inspect the rear turn light bulb (LH). • Is the rear turn light bulb (LH) normal?	Yes	Go to the next step.
		No	Replace the rear turn light bulb (LH), then go to Step 19. (See **REAR TURN LIGHT BULB REMOVAL/INSTALLATION**.)
11	**INSPECT REAR TURN LIGHT (LH) CONNECTOR CONDITION** • Switch the ignition off. • Disconnect the negative battery cable. (See **NEGATIVE BATTERY CABLE DISCONNECTION/CONNECTION [SKYACTIV-G 2.0, SKYACTIV-G 2.5]**.) • Disconnect the rear turn light (LH) connector. • Inspect the connector engagement and connection condition and inspect the terminals for damage, deformation, corrosion, or disconnection. • Is the connector normal?	Yes	Go to the next step.
		No	Repair or replace the connector, then go to Step 19.
12	**INSPECT FOR OPEN CIRCUIT IN REAR TURN LIGHT (LH) GROUND CIRCUIT** • Verify that the rear turn light (LH) connector is disconnected.	Yes	With side turn light • Go to the next step. Without side turn light • Go to Step 16.

	Inspect for continuity between rear turn light (LH) terminal B (wiring harness-side) and body ground. • Is there continuity?		
		No	Refer to the wiring diagram and verify whether or not there is a common connector between rear turn light (LH) terminal B and body ground. **If there is a common connector:** • Determine the malfunctioning part by inspecting the common connector and the terminal for corrosion, damage, or pin disconnection, and the common wiring harness for an open circuit. • Repair or replace the malfunctioning part. **If there is no common connector:** • Repair or replace the wiring harness which has an open circuit. Go to Step 19.
13	**INSPECT POWER OUTER MIRROR (LH) CONNECTOR CONDITION** • Disconnect the power outer mirror (LH) connector. • Inspect the connector engagement and connection condition and inspect the terminals for damage, deformation, corrosion, or disconnection. • Is the connector normal?	Yes	Go to the next step.
		No	Repair or replace the connector, then go to Step 19.
14	**INSPECT SIDE TURN LIGHT (LH)** • Inspect the side turn light (LH). (See **SIDE TURN LIGHT INSPECTION**.) • Is the side turn light (LH) normal?	Yes	Go to the next step.
		No	Replace the power outer mirror (LH), then go to Step 19. (See **POWER OUTER MIRROR REMOVAL/INSTALLATION**.) (See **SIDE TURN LIGHT REMOVAL/INSTALLATION**.)
15	**INSPECT FOR OPEN CIRCUIT IN SIDE TURN LIGHT (LH) GROUND CIRCUIT** • Verify that the power outer mirror (LH) connector is disconnected. • Inspect for continuity between power outer mirror (LH) terminal G (wiring harness-side) and body ground.	Yes	Go to the next step.
		No	Refer to the wiring diagram and verify whether or not there is a common connector between power outer mirror (LH) terminal G and body ground. **If there is a common connector:** • Determine the malfunctioning part by inspecting the common connector and

	• Is there continuity?		the terminal for corrosion, damage, or pin disconnection, and the common wiring harness for an open circuit. • Repair or replace the malfunctioning part. **If there is no common connector:** • Repair or replace the wiring harness which has an open circuit. Go to Step 19.
16	**INSPECT FRONT BODY CONTROL MODULE (FBCM) CONNECTOR CONDITION** • Disconnect the front body control module (FBCM) connector. • Inspect the connector engagement and connection condition and inspect the terminals for damage, deformation, corrosion, or disconnection. • Is the connector normal?	Yes	Go to the next step.
		No	Repair or replace the connector, then go to Step 19.
17	**INSPECT FOR SHORT TO POWER SUPPLY IN TURN LIGHT (LH) CONTROL CIRCUIT** • Verify that the side turn light (LH) (With side turn light), rear turn light (LH) and front body control module (FBCM) connectors are disconnected. • Reconnect the negative battery cable. (See **NEGATIVE BATTERY CABLE DISCONNECTION/CONNECTION [SKYACTIV-G 2.0, SKYACTIV-G 2.5]**.) • Switch the ignition ON (engine off or on). • Measure the voltage at the front body control module (FBCM) terminal 2D (wiring harness-side). • Is the voltage **0 V**?	Yes	Go to the next step.
		No	Refer to the wiring diagram and verify whether or not there is a common connector between the following terminals: • Rear turn light (LH) terminal A—Front body control module (FBCM) terminal 2D • Power outer mirror (LH) terminal E—Front body control module (FBCM) terminal 2D (With side turn light) **If there is a common connector:** • Determine the malfunctioning part by inspecting the common connector and the terminal for corrosion, damage, or pin disconnection, and the common wiring harness for a short to power supply. • Repair or replace the malfunctioning part. **If there is no common connector:** • Repair or replace the wiring harness which has a short to power supply.

			Go to Step 19.
18	**INSPECT FOR OPEN CIRCUIT IN TURN LIGHT (LH) CONTROL CIRCUIT** • Verify that the side turn light (LH) (With side turn light), rear turn light (LH) and front body control module (FBCM) connectors are disconnected. • Switch the ignition off. • Disconnect the negative battery cable. (See **NEGATIVE BATTERY CABLE DISCONNECTION/CONNECTION [SKYACTIV-G 2.0, SKYACTIV-G 2.5]**.) • Inspect for continuity between the following terminals (wiring harness-side): ▪ Rear turn light (LH) terminal A—Front body control module (FBCM) terminal 2D ▪ Power outer mirror (LH) terminal E—Front body control module (FBCM) terminal 2D (With side turn light) • Is there continuity?	Yes	Go to the next step.
		No	Refer to the wiring diagram and verify whether or not there is a common connector between the following terminals: • Rear turn light (LH) terminal A—Front body control module (FBCM) terminal 2D • Power outer mirror (LH) terminal E—Front body control module (FBCM) terminal 2D (With side turn light) **If there is a common connector:** • Determine the malfunctioning part by inspecting the common connector and the terminal for corrosion, damage, or pin disconnection, and the common wiring harness for an open circuit. • Repair or replace the malfunctioning part. **If there is no common connector:** • Repair or replace the wiring harness which has an open circuit. Go to the next step.
19	**VERIFY THAT REPAIRS HAVE BEEN COMPLETED** • Always reconnect all disconnected connectors. • Reconnect the negative battery cable. (See **NEGATIVE BATTERY CABLE DISCONNECTION/CONNECTION**	Yes	Repeat the inspection from Step 1. • If the malfunction recurs, replace the front body control module (FBCM). (See **FRONT BODY CONTROL MODULE (FBCM) REMOVAL/INSTALLATION**.) Go to the next step.
		No	Go to the next step.

	[SKYACTIV-G 2.0, SKYACTIV-G 2.5].) • Clear the DTC for the front body control module (FBCM) using the M-MDS. (See **CLEARING DTC [FRONT BODY CONTROL MODULE (FBCM)]**.) • Retrieve the front body control module (FBCM) DTCs using the M-MDS. (See **DTC INSPECTION [FRONT BODY CONTROL MODULE (FBCM)]**.) • Is the same DTC displayed?		
20	**VERIFY IF OTHER DTCs DISPLAYED** • Are any other DTCs displayed?	Yes	Repair or replace the malfunctioning part according to the applicable DTC troubleshooting. (See **DTC TABLE [FRONT BODY CONTROL MODULE (FBCM)]**.)
		No	DTC troubleshooting completed.

2014 - Mazda3 - Body and Accessories

DTC B1D07:11 [FRONT BODY CONTROL MODULE (FBCM)]

Description	Turn light (RH) circuit malfunction
Detection condition	• Front body control module (FBCM) detects a short to ground in the turn light (RH) circuit with the ignition switched ON (engine off or on).
Fail-safe function	Not applicable

Possible cause	• Front body control module (FBCM) connector or terminal malfunction
	• Front turn light bulb (RH) malfunction
	• Front turn light (RH) connector or terminal malfunction
	• Short to ground in wiring harness between front turn light (RH) terminal A and front body control module (FBCM) terminal 1G
	• Rear turn light bulb (RH) malfunction
	• Rear turn light (RH) connector or terminal malfunction
	• Power outer mirror (RH) connector or terminal malfunction (With side turn light)
	• Side turn light (RH) malfunction (With side turn light)
	• Short to ground in wiring harness between the following terminals:
	  ▪ Rear turn light (RH) terminal A—Front body control module (FBCM) terminal 1E
	  ▪ Power outer mirror (RH) terminal E—Front body control module (FBCM) terminal 1E (With side turn light)
	• Front body control module (FBCM) malfunction

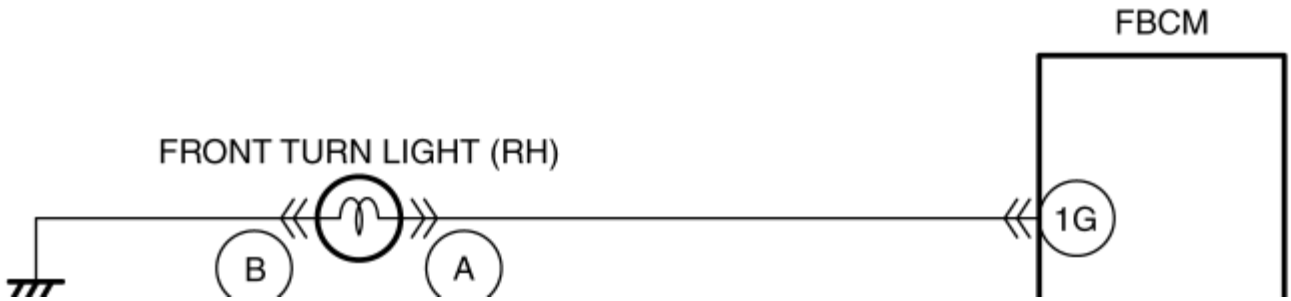

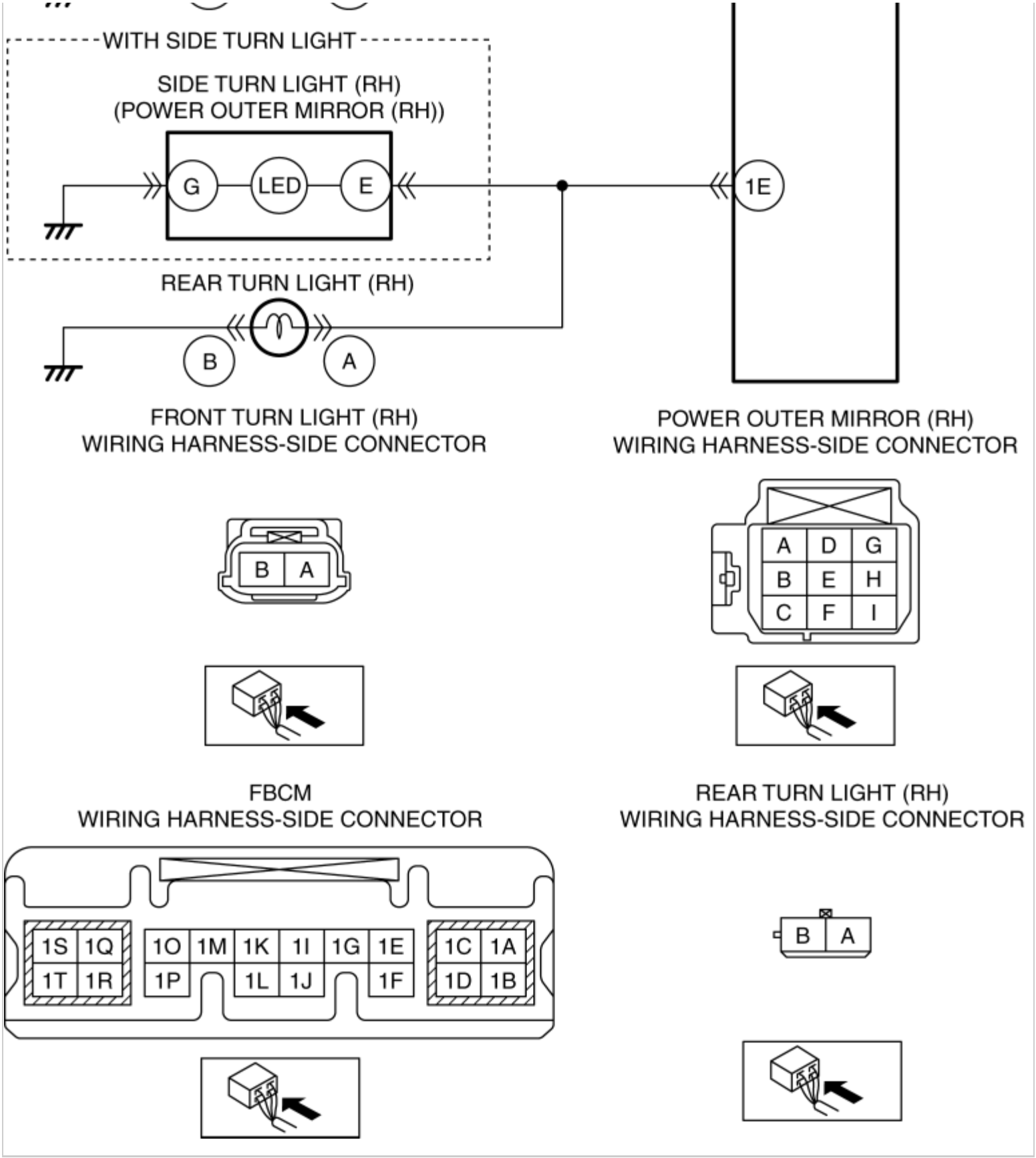

Diagnostic Procedure

Step	Inspection	Action

1	**VERIFY FRONT BODY CONTROL MODULE (FBCM) DTCs AGAIN** • Clear the DTC for the front body control module (FBCM) using the M-MDS. (See **CLEARING DTC [FRONT BODY CONTROL MODULE (FBCM)]**.) • Operate the turn switch to the RH position. • Retrieve the front body control module (FBCM) DTCs using the M-MDS. (See **DTC INSPECTION [FRONT BODY CONTROL MODULE (FBCM)]**.) • Is the same DTC displayed?	Yes	Go to the next step.
		No	Go to Step 15.
2	**DETERMINE MALFUNCTIONING LIGHT** • Operate the turn switch to the RH position. • Are there any lights among the following which do not flash? ▪ Front turn light (RH) ▪ Side turn light (RH) (With side turn light) ▪ Rear turn light (RH)	Yes	All lights do not flash: • Go to the next step. Front turn light (RH) do not flash: • Go to Step 4. Side turn light (RH) (With side turn light) and rear turn light (RH) do not flash: • Go to Step 8.
		No	Go to Step 14.
3	**INSPECT FRONT BODY CONTROL MODULE (FBCM) CONNECTOR CONDITION** • Switch the ignition off. • Disconnect the negative battery cable. (See **NEGATIVE BATTERY CABLE DISCONNECTION/CONNECTION [SKYACTIV-G 2.0, SKYACTIV-G 2.5]**.) • Disconnect the front body control module (FBCM) connector.	Yes	Go to Step 14.
		No	Repair or replace the connector, then go to Step 14.

	• Inspect the connector engagement and connection condition and inspect the terminals for damage, deformation, corrosion, or disconnection. • Is the connector normal?		
4	**INSPECT FRONT TURN LIGHT BULB (RH)** • Inspect the front turn light bulb (RH). • Is the bulb normal?	Yes	Go to the next step.
		No	Replace the bulb, then go to Step 14. (See **FRONT TURN LIGHT BULB REMOVAL/INSTALLATION**.)
5	**INSPECT FRONT TURN LIGHT (RH) CONNECTOR CONDITION** • Switch the ignition off. • Disconnect the negative battery cable. (See **NEGATIVE BATTERY CABLE DISCONNECTION/CONNECTION [SKYACTIV-G 2.0, SKYACTIV-G 2.5]**.) • Disconnect the front turn light (RH) connector. • Inspect the connector engagement and connection condition and inspect the terminals for damage, deformation, corrosion, or disconnection. • Is the connector normal?	Yes	Go to the next step.
		No	Repair or replace the connector, then go to Step 14.
6	**INSPECT FRONT BODY CONTROL MODULE (FBCM) CONNECTOR CONDITION** • Disconnect the front body control module (FBCM) connector. • Inspect the connector engagement and connection condition and inspect the terminals for damage, deformation, corrosion, or disconnection. • Is the connector normal?	Yes	Go to the next step.
		No	Repair or replace the connector, then go to Step 14.

7	**INSPECT FOR SHORT TO GROUND IN FRONT TURN LIGHT (RH) CONTROL CIRCUIT** • Verify that the front turn light (RH) and front body control module (FBCM) connectors are disconnected. • Inspect for continuity between front body control module (FBCM) terminal 1G (wiring harness-side) and body ground. • Is there continuity?	Yes	Refer to the wiring diagram and verify whether or not there is a common connector between front turn light (RH) terminal A and front body control module (FBCM) terminal 1G. **If there is a common connector:** • Determine the malfunctioning part by inspecting the common connector and the terminal for corrosion, damage, or pin disconnection, and the common wiring harness for a short to ground. • Repair or replace the malfunctioning part. **If there is no common connector:** • Repair or replace the wiring harness which has a short to ground. Go to Step 14.
		No	Go to Step 14.
8	**INSPECT REAR TURN LIGHT BULB (RH)** • Inspect the rear turn light bulb (RH). • Is the rear turn light bulb (RH) normal?	Yes	Go to the next step.
		No	Replace the rear turn light bulb (RH), then go to Step 14. (See **REAR TURN LIGHT BULB REMOVAL/INSTALLATION**.)
9	**INSPECT REAR TURN LIGHT (RH) CONNECTOR CONDITION** • Switch the ignition off. • Disconnect the negative battery cable. (See **NEGATIVE BATTERY CABLE DISCONNECTION/CONNECTION [SKYACTIV-G 2.0, SKYACTIV-G 2.5]**.) • Disconnect the rear turn light (RH) connector. • Inspect the connector engagement and connection	Yes	With side turn light • Go to the next step. Without side turn light • Go to Step 13.
		No	Repair or replace the connector, then go to Step 14.

	condition and inspect the terminals for damage, deformation, corrosion, or disconnection. • Is the connector normal?		
10	**INSPECT POWER OUTER MIRROR (RH) CONNECTOR CONDITION** • Disconnect the power outer mirror (RH) connector. • Inspect the connector engagement and connection condition and inspect the terminals for damage, deformation, corrosion, or disconnection. • Is the connector normal?	Yes	Go to the next step.
		No	Repair or replace the connector, then go to Step 14.
11	**INSPECT SIDE TURN LIGHT (RH)** • Inspect the side turn light (RH). (See **SIDE TURN LIGHT INSPECTION**.) • Is the side turn light (RH) normal?	Yes	Go to the next step.
		No	Replace the power outer mirror (RH), then go to Step 14. (See **POWER OUTER MIRROR REMOVAL/INSTALLATION**.) (See **SIDE TURN LIGHT REMOVAL/INSTALLATION**.)
12	**INSPECT FRONT BODY CONTROL MODULE (FBCM) CONNECTOR CONDITION** • Disconnect the front body control module (FBCM) connector. • Inspect the connector engagement and connection condition and inspect the terminals for damage, deformation, corrosion, or disconnection. • Is the connector normal?	Yes	Go to the next step.
		No	Repair or replace the connector, then go to Step 14.
13	**INSPECT FOR SHORT TO GROUND IN TURN LIGHT (RH) CONTROL CIRCUIT** • Verify that the power outer mirror (RH) (With side turn light), rear turn light (RH) and front body control module (FBCM) connectors are disconnected. • Inspect for continuity	Yes	Refer to the wiring diagram and verify whether or not there is a common connector between the following terminals: • Rear turn light (RH) terminal A—Front body control module (FBCM) terminal 1E • Power outer mirror (RH) terminal E—Front body control module

	between front body control module (FBCM) terminal 1E (wiring harness-side) and body ground. • Is there continuity?		(FBCM) terminal 1E (With side turn light) **If there is a common connector:** • Determine the malfunctioning part by inspecting the common connector and the terminal for corrosion, damage, or pin disconnection, and the common wiring harness for a short to ground. • Repair or replace the malfunctioning part. **If there is no common connector:** • Repair or replace the wiring harness which has a short to ground. Go to the next step.
		No	Go to the next step.
14	**VERIFY THAT REPAIRS HAVE BEEN COMPLETED** • Always reconnect all disconnected connectors. • Reconnect the negative battery cable. (See **NEGATIVE BATTERY CABLE DISCONNECTION/CONNECTION [SKYACTIV-G 2.0, SKYACTIV-G 2.5]**.) • Clear the DTC for the front body control module (FBCM) using the M-MDS. (See **CLEARING DTC [FRONT BODY CONTROL MODULE (FBCM)]**.) • Operate the turn switch to the RH position. • Retrieve the front body control module (FBCM) DTCs using the M-MDS. (See **DTC INSPECTION [FRONT BODY CONTROL MODULE**	Yes	Repeat the inspection from Step 1. • If the malfunction recurs, replace the front body control module (FBCM). (See **FRONT BODY CONTROL MODULE (FBCM) REMOVAL/INSTALLATION**.) Go to the next step.
		No	Go to the next step.

	(FBCM)].) • Is the same DTC displayed?		
15	**VERIFY IF OTHER DTCs DISPLAYED** • Are any other DTCs displayed?	Yes	Repair or replace the malfunctioning part according to the applicable DTC troubleshooting. (See **DTC TABLE [FRONT BODY CONTROL MODULE (FBCM)]**.)
		No	DTC troubleshooting completed.

2014 - Mazda3 - Body and Accessories

DTC B1D07:13 [FRONT BODY CONTROL MODULE (FBCM)]

Description	Turn light (RH) circuit malfunction
Detection condition	• Front body control module (FBCM) detects an open circuit or short to power supply in the turn light (RH) circuit with the ignition switched ON (engine off or on).
Fail-safe function	Not applicable

Possible cause	• Front body control module (FBCM) connector or terminal malfunction
	• Front turn light bulb (RH) malfunction
	• Front turn light (RH) connector or terminal malfunction
	• Open circuit in wiring harness between front turn light (RH) terminal B and body ground
	• Short to power supply in wiring harness between front turn light (RH) terminal A and front body control module (FBCM) terminal 1G
	• Open circuit in wiring harness between front turn light (RH) terminal A and front body control module (FBCM) terminal 1G
	• Rear turn light bulb (RH) malfunction
	• Rear turn light (RH) connector or terminal malfunction
	• Open circuit in wiring harness between rear turn light (RH) terminal B and body ground
	• Power outer mirror (RH) connector or terminal malfunction (With side turn light)
	• Side turn light (RH) malfunction (With side turn light)
	• Open circuit in wiring harness between power outer mirror (RH) terminal G and body ground (With side turn light)
	• Short to power supply in wiring harness between the following terminals:
	  ▪ Rear turn light (RH) terminal A—Front body control module (FBCM) terminal 1E
	  ▪ Power outer mirror (RH) terminal E—Front body control module (FBCM) terminal 1E (With side turn light)

	• Open circuit in wiring harness between the following terminals:
	  ▪ Rear turn light (RH) terminal A—Front body control module (FBCM) terminal 1E
	  ▪ Power outer mirror (RH) terminal E—Front body control module (FBCM) terminal 1E (With side turn light)
	• Front body control module (FBCM) malfunction

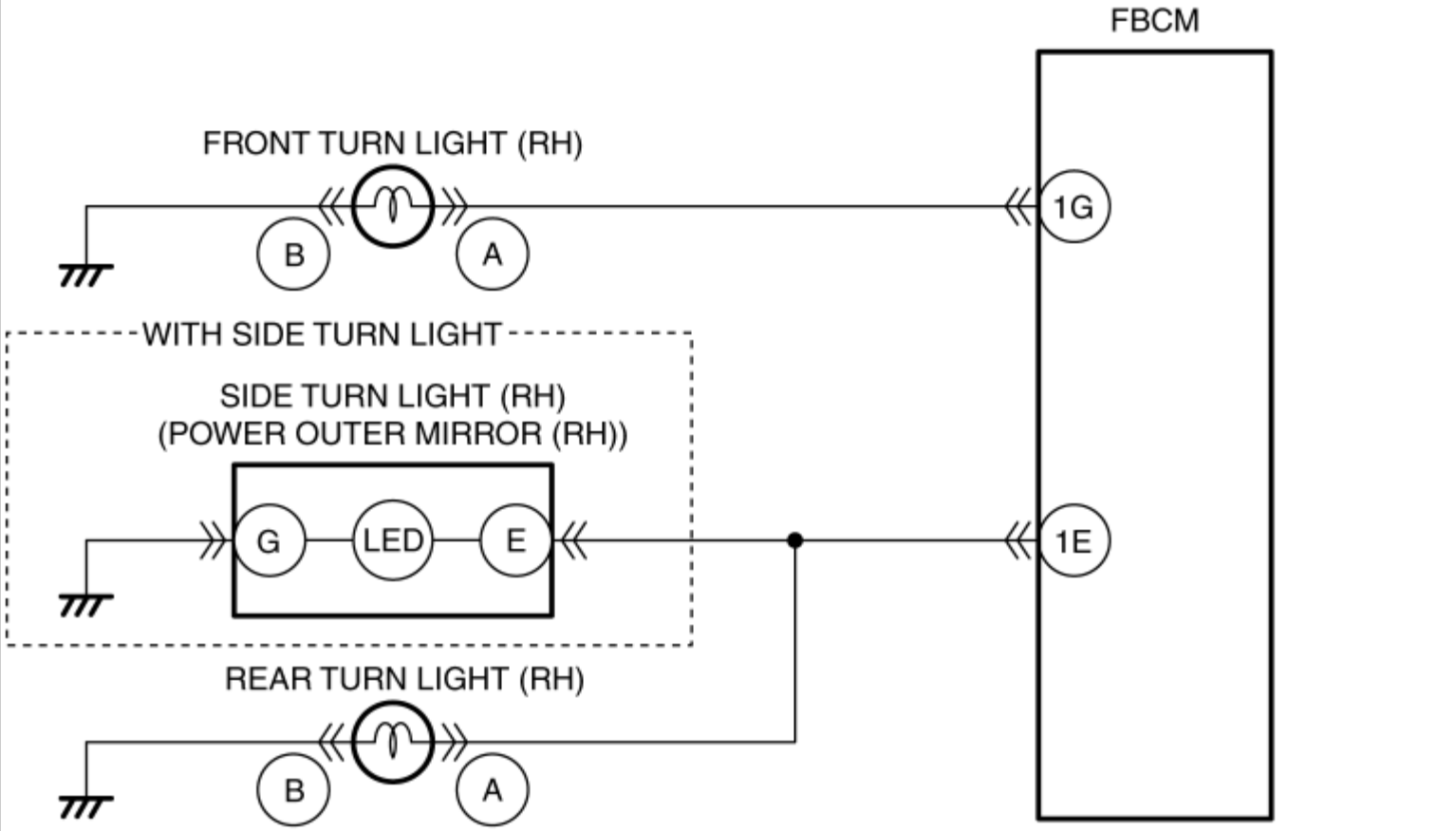

FRONT TURN LIGHT (RH)
WIRING HARNESS-SIDE CONNECTOR

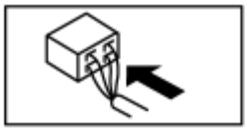

POWER OUTER MIRROR (RH)
WIRING HARNESS-SIDE CONNECTOR

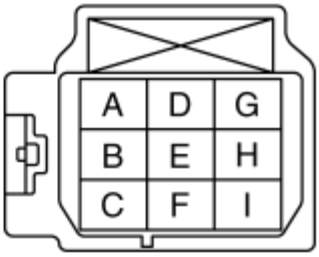

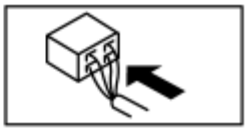

FBCM
WIRING HARNESS-SIDE CONNECTOR

REAR TURN LIGHT (RH)
WIRING HARNESS-SIDE CONNECTOR

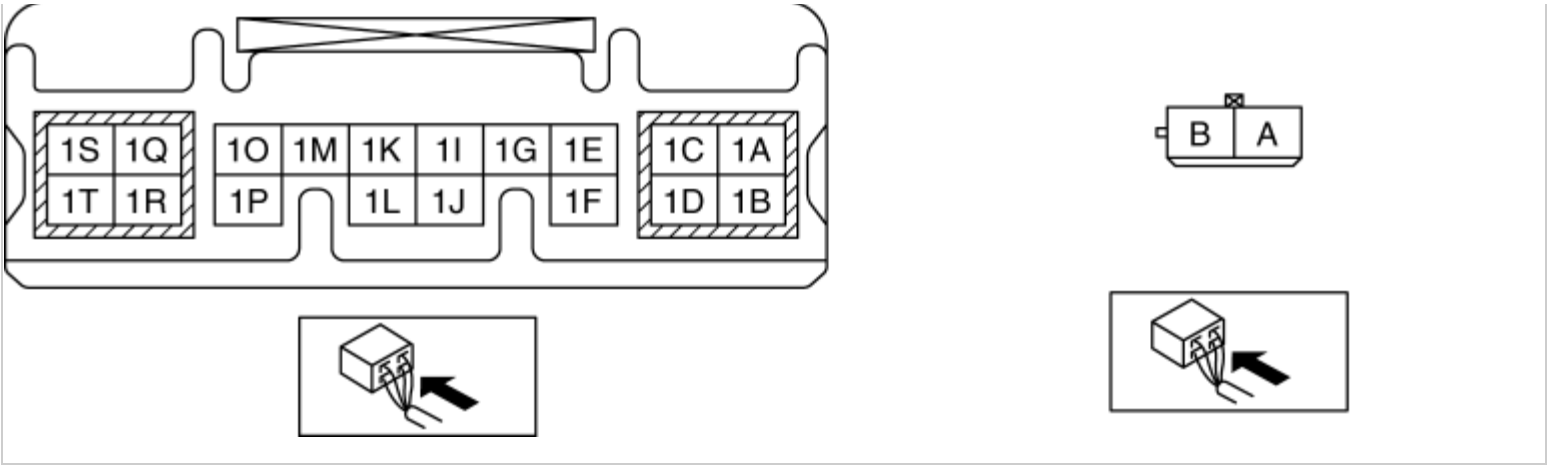

Diagnostic Procedure

Step	Inspection		Action
1	**VERIFY FRONT BODY CONTROL MODULE (FBCM) DTCs AGAIN** • Clear the DTC for the front body control module (FBCM) using the M-MDS. (See **CLEARING DTC [FRONT BODY CONTROL MODULE (FBCM)]**.) • Retrieve the front body control module (FBCM) DTCs using the M-MDS. (See **DTC INSPECTION [FRONT BODY CONTROL MODULE (FBCM)]**.) • Is the same DTC displayed?	Yes	Go to the next step.
		No	Go to Step 20.
2	**DETERMINE MALFUNCTIONING LIGHT** • Operate the turn switch to the RH position. • Are there any lights among the following which do not flash or continue to be illuminated? ▪ Front turn light (RH) ▪ Side turn light (RH) (With side turn light) ▪ Rear turn	Yes	All lights do not flash or continue to be illuminated: • Go to the next step. Front turn light (RH) do not flash or continue to be illuminated: • Go to Step 4. Side turn light (RH) (With side turn light) and rear turn light (RH) do not flash or continue to be illuminated: • Go to Step 10.
		No	Go to Step 19.

	light (RH)		
3	**INSPECT FRONT BODY CONTROL MODULE (FBCM) CONNECTOR CONDITION** • Switch the ignition off. • Disconnect the negative battery cable. (See **NEGATIVE BATTERY CABLE DISCONNECTION/CONNECTION [SKYACTIV-G 2.0, SKYACTIV-G 2.5]**.) • Disconnect the front body control module (FBCM) connector. • Inspect the connector engagement and connection condition and inspect the terminals for damage, deformation, corrosion, or disconnection. • Is the connector normal?	Yes	Go to Step 19.
		No	Repair or replace the connector, then go to Step 19.
4	**INSPECT FRONT TURN LIGHT BULB (RH)** • Inspect the front turn light bulb (RH). • Is the bulb normal?	Yes	Go to the next step.
		No	Replace the bulb, then go to Step 19. (See **FRONT TURN LIGHT BULB REMOVAL/INSTALLATION**.)
5	**INSPECT FRONT TURN LIGHT (RH) CONNECTOR CONDITION** • Switch the ignition off. • Disconnect the negative battery cable. (See **NEGATIVE BATTERY CABLE DISCONNECTION/CONNECTION [SKYACTIV-G 2.0, SKYACTIV-G 2.5]**.) • Disconnect the front turn light (RH) connector. • Inspect the connector engagement and connection condition and inspect the terminals for damage, deformation, corrosion, or disconnection.	Yes	Go to the next step.
		No	Repair or replace the connector, then go to Step 19.

	• Is the connector normal?		
6	**INSPECT FOR OPEN CIRCUIT IN FRONT TURN LIGHT (RH) GROUND CIRCUIT** • Verify that the front turn light (RH) connector is disconnected. • Inspect for continuity between front turn light (RH) terminal B (wiring harness-side) and body ground. • Is there continuity?	Yes	Go to the next step.
		No	Refer to the wiring diagram and verify whether or not there is a common connector between front turn light (RH) terminal B and body ground. **If there is a common connector:** • Determine the malfunctioning part by inspecting the common connector and the terminal for corrosion, damage, or pin disconnection, and the common wiring harness for an open circuit. • Repair or replace the malfunctioning part. **If there is no common connector:** • Repair or replace the wiring harness which has an open circuit. Go to Step 19.
7	**INSPECT FRONT BODY CONTROL MODULE (FBCM) CONNECTOR CONDITION** • Disconnect the front body control module (FBCM) connector. • Inspect the connector engagement and connection condition and inspect the terminals for damage, deformation, corrosion, or disconnection. • Is the connector normal?	Yes	Go to the next step.
		No	Repair or replace the connector, then go to Step 19.
8	**INSPECT FOR SHORT TO POWER SUPPLY IN FRONT TURN LIGHT (RH) CONTROL CIRCUIT** • Verify that the front turn light (RH) and front body control module (FBCM) connectors are disconnected. • Reconnect the negative battery cable. (See **NEGATIVE BATTERY**	Yes	Go to the next step.
		No	Refer to the wiring diagram and verify whether or not there is a common connector between front turn light (RH) terminal A and front body control module (FBCM) terminal 1G. **If there is a common connector:** • Determine the malfunctioning part by inspecting the common

	CABLE DISCONNECTION/CONNECTION [SKYACTIV-G 2.0, SKYACTIV-G 2.5].) • Switch the ignition ON (engine off or on). • Measure the voltage at the front body control module (FBCM) terminal 1G (wiring harness-side). • Is the voltage **0 V**?		connector and the terminal for corrosion, damage, or pin disconnection, and the common wiring harness for a short to power supply. • Repair or replace the malfunctioning part. **If there is no common connector:** • Repair or replace the wiring harness which has a short to power supply. Go to Step 19.
9	**INSPECT FOR OPEN CIRCUIT IN FRONT TURN LIGHT (RH) CONTROL CIRCUIT** • Verify that the front turn light (RH) and front body control module (FBCM) connectors are disconnected. • Switch the ignition off. • Disconnect the negative battery cable. (See **NEGATIVE BATTERY CABLE DISCONNECTION/CONNECTION [SKYACTIV-G 2.0, SKYACTIV-G 2.5]**.) • Inspect for continuity between front turn light (RH) terminal A (wiring harness-side) and front body control module (FBCM) terminal 1G. • Is there continuity?	Yes	Go to Step 19.
		No	Refer to the wiring diagram and verify whether or not there is a common connector between front turn light (RH) terminal A and front body control module (FBCM) terminal 1G. **If there is a common connector:** • Determine the malfunctioning part by inspecting the common connector and the terminal for corrosion, damage, or pin disconnection, and the common wiring harness for an open circuit. • Repair or replace the malfunctioning part. **If there is no common connector:** • Repair or replace the wiring harness which has an open circuit. Go to Step 19.
10	**INSPECT REAR TURN LIGHT BULB (RH)** • Inspect the rear turn light bulb (RH). • Is the rear turn light bulb (RH) normal?	Yes	Go to the next step.
		No	Replace the rear turn light bulb (RH), then go to Step 19. (See **REAR TURN LIGHT BULB REMOVAL/INSTALLATION**.)
11	**INSPECT REAR TURN LIGHT (RH) CONNECTOR CONDITION**	Yes	Go to the next step.

	• Switch the ignition off. • Disconnect the negative battery cable. (See **NEGATIVE BATTERY CABLE DISCONNECTION/CONNECTION [SKYACTIV-G 2.0, SKYACTIV-G 2.5]**.) • Disconnect the rear turn light (RH) connector. • Inspect the connector engagement and connection condition and inspect the terminals for damage, deformation, corrosion, or disconnection. • Is the connector normal?	No	Repair or replace the connector, then go to Step 19.
12	**INSPECT FOR OPEN CIRCUIT IN REAR TURN LIGHT (RH) GROUND CIRCUIT** • Verify that the rear turn light (RH) connector is disconnected. • Inspect for continuity between rear turn light (RH) terminal B (wiring harness-side) and body ground. • Is there continuity?	Yes	With side turn light • Go to the next step. Without side turn light • Go to Step 16.
		No	Refer to the wiring diagram and verify whether or not there is a common connector between rear turn light (RH) terminal B and body ground. **If there is a common connector:** • Determine the malfunctioning part by inspecting the common connector and the terminal for corrosion, damage, or pin disconnection, and the common wiring harness for an open circuit. • Repair or replace the malfunctioning part. **If there is no common connector:** • Repair or replace the wiring harness which has an open circuit. Go to Step 19.
13	**INSPECT POWER OUTER MIRROR (RH) CONNECTOR CONDITION**	Yes	Go to the next step.

	Disconnect the power outer mirror (RH) connector. • Inspect the connector engagement and connection condition and inspect the terminals for damage, deformation, corrosion, or disconnection. • Is the connector normal?	No	Repair or replace the connector, then go to Step 19.
14	**INSPECT SIDE TURN LIGHT (RH)** • Inspect the side turn light (RH). (See **SIDE TURN LIGHT INSPECTION**.) • Is the side turn light (RH) normal?	Yes	Go to the next step.
		No	Replace the power outer mirror (RH), then go to Step 19. (See **POWER OUTER MIRROR REMOVAL/INSTALLATION**.) (See **SIDE TURN LIGHT REMOVAL/INSTALLATION**.)
15	**INSPECT FOR OPEN CIRCUIT IN SIDE TURN LIGHT (RH) GROUND CIRCUIT** • Verify that the power outer mirror (RH) connector is disconnected. • Inspect for continuity between power outer mirror (RH) terminal G (wiring harness-side) and body ground. • Is there continuity?	Yes	Go to the next step.
		No	Refer to the wiring diagram and verify whether or not there is a common connector between power outer mirror (RH) terminal G and body ground. **If there is a common connector:** • Determine the malfunctioning part by inspecting the common connector and the terminal for corrosion, damage, or pin disconnection, and the common wiring harness for an open circuit. • Repair or replace the malfunctioning part. **If there is no common connector:** • Repair or replace the wiring harness which has an open circuit. Go to Step 19.
16	**INSPECT FRONT BODY CONTROL MODULE (FBCM) CONNECTOR CONDITION** • Disconnect the front body control module (FBCM) connector. • Inspect the connector	Yes	Go to the next step.
		No	Repair or replace the connector, then go to Step 19.

	engagement and connection condition and inspect the terminals for damage, deformation, corrosion, or disconnection. • Is the connector normal?		
17	**INSPECT FOR SHORT TO POWER SUPPLY IN TURN LIGHT (RH) CONTROL CIRCUIT** • Verify that the side turn light (RH) (With side turn light), rear turn light (RH) and front body control module (FBCM) connectors are disconnected. • Reconnect the negative battery cable. (See **NEGATIVE BATTERY CABLE DISCONNECTION/CONNECTION [SKYACTIV-G 2.0, SKYACTIV-G 2.5]**.) • Switch the ignition ON (engine off or on). • Measure the voltage at the front body control module (FBCM) terminal 1E (wiring harness-side). • Is the voltage **0 V**?	Yes	Go to the next step.
		No	Refer to the wiring diagram and verify whether or not there is a common connector between the following terminals: • Rear turn light (RH) terminal A—Front body control module (FBCM) terminal 1E • Power outer mirror (RH) terminal E—Front body control module (FBCM) terminal 1E (With side turn light) **If there is a common connector:** • Determine the malfunctioning part by inspecting the common connector and the terminal for corrosion, damage, or pin disconnection, and the common wiring harness for a short to power supply. • Repair or replace the malfunctioning part. **If there is no common connector:** • Repair or replace the wiring harness which has a short to power supply. Go to Step 19.
18	**INSPECT FOR OPEN CIRCUIT IN TURN LIGHT (RH) CONTROL CIRCUIT** • Verify that the side turn light (RH) (With side turn light), rear turn light (RH) and front body control module (FBCM) connectors are disconnected. • Switch the ignition off. • Disconnect the negative battery cable.	Yes	Go to the next step.
		No	Refer to the wiring diagram and verify whether or not there is a common connector between the following terminals: • Rear turn light (RH) terminal A—Front body control module (FBCM) terminal 1E • Power outer mirror (RH) terminal E

	(See **NEGATIVE BATTERY CABLE DISCONNECTION/CONNECTION [SKYACTIV-G 2.0, SKYACTIV-G 2.5]**.) • Inspect for continuity between the following terminals (wiring harness-side): ▪ Rear turn light (RH) terminal A—Front body control module (FBCM) terminal 1E ▪ Power outer mirror (RH) terminal E—Front body control module (FBCM) terminal 1E (With side turn light) • Is there continuity?		—Front body control module (FBCM) terminal 1E (With side turn light) **If there is a common connector:** • Determine the malfunctioning part by inspecting the common connector and the terminal for corrosion, damage, or pin disconnection, and the common wiring harness for an open circuit. • Repair or replace the malfunctioning part. **If there is no common connector:** • Repair or replace the wiring harness which has an open circuit. Go to the next step.
19	**VERIFY THAT REPAIRS HAVE BEEN COMPLETED** • Always reconnect all disconnected connectors. • Reconnect the negative battery cable. (See **NEGATIVE BATTERY CABLE DISCONNECTION/CONNECTION [SKYACTIV-G 2.0, SKYACTIV-G 2.5]**.) • Clear the DTC for the front body control module (FBCM) using the M-MDS. (See **CLEARING DTC [FRONT BODY CONTROL MODULE (FBCM)]**.) • Retrieve the front body control module (FBCM) DTCs	Yes	Repeat the inspection from Step 1. • If the malfunction recurs, replace the front body control module (FBCM). (See **FRONT BODY CONTROL MODULE (FBCM) REMOVAL/INSTALLATION**.) Go to the next step.
		No	Go to the next step.

	using the M-MDS. (See **DTC INSPECTION [FRONT BODY CONTROL MODULE (FBCM)]**.) • Is the same DTC displayed?		
20	**VERIFY IF OTHER DTCs DISPLAYED** • Are any other DTCs displayed?	Yes	Repair or replace the malfunctioning part according to the applicable DTC troubleshooting. (See **DTC TABLE [FRONT BODY CONTROL MODULE (FBCM)]**.)
		No	DTC troubleshooting completed.

2014 - Mazda3 - Body and Accessories

DTC U0001:88/U0100:00/U0101:00/U0151:00/U0155:00/U0214:00/U023A:00 [FRONT BODY CONTROL MODULE (FBCM)]

Description	• U0001:88
	  ▪ Module communication error (HS-CAN)
	• U0100:00
	  ▪ Communication error with PCM
	• U0101:00
	  ▪ Communication error with TCM
	• U0151:00
	  ▪ Communication error with SAS control module
	• U0155:00
	  ▪ Communication error with instrument cluster
	• U0214:00
	  ▪ Communication error with start stop unit
	• U023A:00
	  ▪ Communication error with forward sensing camera (FSC)

Detection condition	• U0001:88
	  ▪ Front body control module (FBCM) detects a CAN bus communication line (HS-CAN) malfunction **10 times** continuously.
	• U0100:00
	  ▪ Front body control module (FBCM) could not receive the CAN signal from the PCM for **5 s or more**.
	• U0101:00
	  ▪ Front body control module (FBCM) could not receive the CAN signal from the TCM for **5 s or more**.
	• U0151:00
	  ▪ Front body control module (FBCM) could not receive the

	CAN signal from the SAS control module for **5 s or more**. • U0155:00 ▪ Front body control module (FBCM) could not receive the CAN signal from the instrument cluster for **5 s or more**. • U0214:00 ▪ Front body control module (FBCM) could not receive the CAN signal from the start stop unit for **5 s or more**. • U023A:00 ▪ Front body control module (FBCM) could not receive the CAN signal from the forward sensing camera (FSC) for **5 s or more**.
Fail-safe function	• U0001:88 ▪ Control at the default signal value after holding the previous value for **5 s**. • U0100:00 ▪ Control at the default signal value after holding the previous value for **5 s**. • U0101:00 ▪ Control at the default signal value after holding the previous value for **5 s**. • U0151:00 ▪ Control at the default signal value after holding the previous value for **5 s**. • U0155:00 ▪ Control at the default signal value after holding the previous value for **5 s**. • U0214:00 ▪ Control at the default signal value after holding the previous value for **5 s**. • U023A:00 ▪ Control at the default signal value after holding the previous value for **5 s**.
	• Malfunction in CAN bus communication line • Malfunction in CAN line between the PCM and front body control module (FBCM) • Malfunction in CAN line between the TCM and front body control module (FBCM)

Possible cause	• Malfunction in CAN line between the SAS control module and front body control module (FBCM) • Malfunction in CAN line between the instrument cluster and front body control module (FBCM) • Malfunction in CAN line between the start stop unit and front body control module (FBCM) • Malfunction in CAN line between the forward sensing camera (FSC) and front body control module (FBCM)
System wiring diagram	Not applicable

Diagnostic Procedure

- Perform the malfunction diagnosis according to the troubleshooting procedure for the multiplex communication system. (See **FOREWORD**.)

2014 - Mazda3 - Body and Accessories

DTC U0164:68 [FRONT BODY CONTROL MODULE (FBCM)]

Description	Communication error with climate control unit
Detection condition	• Front body control module (FBCM) could not receive signals from the climate control unit for **5 s or more** with the ignition switched ON (engine off or on).
Fail-safe function	Not applicable
Possible cause	• Climate control unit connector or terminal malfunction • Front body control module (FBCM) connector or terminal malfunction • Short to ground in wiring harness between climate control unit terminal K and front body control module (FBCM) terminal 2J • Short to power supply in wiring harness between climate control unit terminal K and front body control module (FBCM) terminal 2J • Open circuit in wiring harness between climate control unit terminal K and front body control module (FBCM) terminal 2J • Climate control unit malfunction • Front body control module (FBCM) malfunction

CLIMATE CONTROL UNIT
WIRING HARNESS-SIDE CONNECTOR

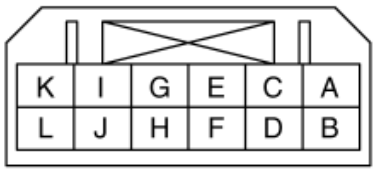

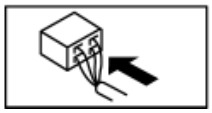

FBCM
WIRING HARNESS-SIDE CONNECTOR

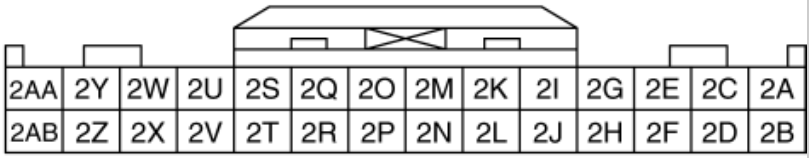

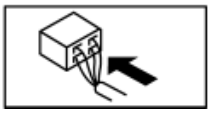

Diagnostic Procedure

Step	Inspection		Action
1	**VERIFY FRONT BODY CONTROL MODULE (FBCM) DTCs AGAIN** • Clear the DTC for the front body control module (FBCM) using the M-MDS. (See **CLEARING DTC [FRONT BODY CONTROL MODULE (FBCM)]**.) • Switch the ignition ON (engine off or on) and wait for **5 s or more**. • Retrieve the front body control module (FBCM) DTCs using the M-MDS. (See **DTC INSPECTION [FRONT BODY CONTROL MODULE (FBCM)]**.) • Is the same DTC displayed?	Yes	Go to the next step.
		No	Go to Step 9.
2	**INSPECT CLIMATE CONTROL UNIT CONNECTOR CONDITION** • Switch the ignition off. • Disconnect the negative battery cable. (See **NEGATIVE BATTERY CABLE DISCONNECTION/CONNECTION [SKYACTIV-G 2.0, SKYACTIV-G 2.5]**.) • Disconnect the climate control unit connector. • Inspect the connector engagement and connection condition and inspect the terminals for damage, deformation, corrosion, or disconnection. • Is the connector normal?	Yes	Go to the next step.
		No	Repair or replace the connector, then go to Step 8.
3	**INSPECT FRONT BODY CONTROL MODULE (FBCM) CONNECTOR CONDITION** • Disconnect the front body control module (FBCM) connector. • Inspect the connector engagement and connection condition and inspect the terminals for damage, deformation, corrosion, or disconnection. • Is the connector normal?	Yes	Go to the next step.
		No	Repair or replace the connector, then go to Step 8.
4	**INSPECT FOR SHORT TO GROUND IN WIRING HARNESS BETWEEN CLIMATE CONTROL UNIT AND FRONT BODY CONTROL MODULE (FBCM)** • Verify that the climate control unit and front body control module (FBCM) connectors are disconnected.	Yes	Refer to the wiring diagram and verify whether or not there is a common connector between climate control unit terminal K and front body control module (FBCM) terminal 2J. **If there is a common connector:** • Determine the malfunctioning part by

	• Inspect for continuity between front body control module (FBCM) terminal 2J (wiring harness-side) and body ground. • Is there continuity?		inspecting the common connector and the terminal for corrosion, damage, or pin disconnection, and the common wiring harness for a short to ground. • Repair or replace the malfunctioning part. **If there is no common connector:** • Repair or replace the wiring harness which has a short to ground. Go to Step 8.
		No	Go to the next step.
5	**INSPECT FOR SHORT TO POWER SUPPLY IN WIRING HARNESS BETWEEN CLIMATE CONTROL UNIT AND FRONT BODY CONTROL MODULE (FBCM)** • Verify that the climate control unit and front body control module (FBCM) connectors are disconnected. • Reconnect the negative battery cable. (See **NEGATIVE BATTERY CABLE DISCONNECTION/CONNECTION [SKYACTIV-G 2.0, SKYACTIV-G 2.5]**.) • Switch the ignition ON (engine off or on). • Measure the voltage at the front body control module (FBCM) terminal 2J (wiring harness-side). • Is the voltage **0 V**?	Yes	Go to the next step.
		No	Refer to the wiring diagram and verify whether or not there is a common connector between climate control unit terminal K and front body control module (FBCM) terminal 2J. **If there is a common connector:** • Determine the malfunctioning part by inspecting the common connector and the terminal for corrosion, damage, or pin disconnection, and the common wiring harness for a short to power supply. • Repair or replace the malfunctioning part. **If there is no common connector:** • Repair or replace the wiring harness which has a short to power supply. Go to Step 8.
6	**INSPECT FOR OPEN CIRCUIT IN WIRING HARNESS BETWEEN CLIMATE CONTROL UNIT AND FRONT BODY CONTROL MODULE (FBCM)** • Verify that the climate control unit and front body control module (FBCM) connectors are disconnected. • Switch the ignition off. • Disconnect the negative battery cable. (See **NEGATIVE BATTERY CABLE DISCONNECTION/CONNECTION [SKYACTIV-G 2.0, SKYACTIV-G 2.5]**.) • Inspect for continuity between climate control unit terminal K (wiring harness-side) and front body control module (FBCM) terminal 2J (wiring harness-side). • Is there continuity?	Yes	Go to the next step.
		No	Refer to the wiring diagram and verify whether or not there is a common connector between climate control unit terminal K and front body control module (FBCM) terminal 2J. **If there is a common connector:** • Determine the malfunctioning part by inspecting the common connector and the terminal for corrosion, damage, or pin disconnection, and the common wiring harness for an open circuit. • Repair or replace the malfunctioning part. **If there is no common connector:** • Repair or replace the wiring harness which has an open circuit. Go to Step 8.
7	**PERFORM DTC INSPECTION AND VERIFY IF MALFUNCTIONING PART IS CLIMATE CONTROL UNIT** • Always reconnect all disconnected	Yes	Replace the climate control unit, then go to the next step. (See **CLIMATE CONTROL UNIT REMOVAL/INSTALLATION [MANUAL AIR CONDITIONER]**.)

	connectors. • Reconnect the negative battery cable. (See **NEGATIVE BATTERY CABLE DISCONNECTION/CONNECTION [SKYACTIV-G 2.0, SKYACTIV-G 2.5]**.) • Clear the DTC for the front body control module (FBCM) using the M-MDS. (See **CLEARING DTC [FRONT BODY CONTROL MODULE (FBCM)]**.) • Switch the ignition ON (engine off or on) and wait for **5 s or more**. • Retrieve the front body control module (FBCM) DTCs using the M-MDS. (See **DTC INSPECTION [FRONT BODY CONTROL MODULE (FBCM)]**.) • Is the same DTC displayed?	No	Go to Step 9.
8	**VERIFY THAT REPAIRS HAVE BEEN COMPLETED** • Always reconnect all disconnected connectors. • Reconnect the negative battery cable. (See **NEGATIVE BATTERY CABLE DISCONNECTION/CONNECTION [SKYACTIV-G 2.0, SKYACTIV-G 2.5]**.) • Clear the DTC for the front body control module (FBCM) using the M-MDS. (See **CLEARING DTC [FRONT BODY CONTROL MODULE (FBCM)]**.) • Switch the ignition ON (engine off or on) and wait for **5 s or more**. • Retrieve the front body control module (FBCM) DTCs using the M-MDS. (See **DTC INSPECTION [FRONT BODY CONTROL MODULE (FBCM)]**.) • Is the same DTC displayed?	Yes	Replace the front body control module (FBCM), then go to the next step. (See **FRONT BODY CONTROL MODULE (FBCM) REMOVAL/INSTALLATION**.)
		No	Go to the next step.
9	**VERIFY IF OTHER DTCs DISPLAYED** • Are any other DTCs displayed?	Yes	Repair the malfunctioning part according to the applicable DTC troubleshooting. (See **DTC TABLE [FRONT BODY CONTROL MODULE (FBCM)]**.)
		No	DTC troubleshooting completed.

2014 - Mazda3 - Body and Accessories

DTC U0231:68 [FRONT BODY CONTROL MODULE (FBCM)]

Description	Communication error with auto light sensor/rain sensor
Detection condition	• Front body control module (FBCM) could not receive the signals from the auto light sensor/rain sensor for **5 s or more** with the ignition switched ON (engine off or on).
Fail-safe function	Not applicable
Possible cause	• Auto light sensor/rain sensor connector or terminal malfunction • Front body control module (FBCM) connector or terminal malfunction • Short to ground in wiring harness between auto light sensor/rain sensor terminal A and front body control module (FBCM) terminal 2G • Short to power supply in wiring harness between auto light sensor/rain sensor terminal A and front body control module (FBCM) terminal 2G • Open circuit in wiring harness between auto light sensor/rain sensor terminal A and front body control module (FBCM) terminal 2G • Auto light sensor/rain sensor malfunction • Front body control module (FBCM) malfunction

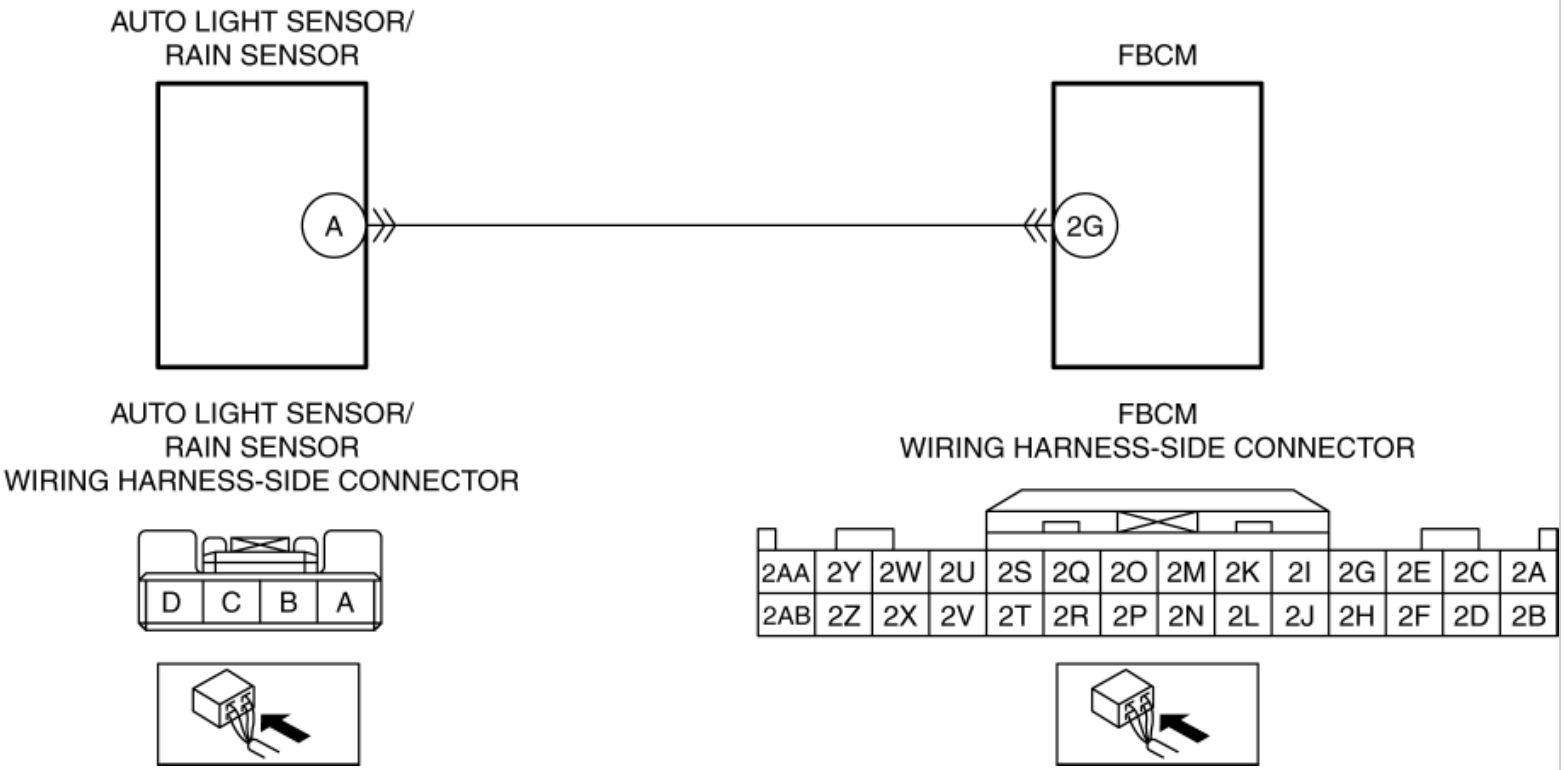

Diagnostic Procedure

Step	Inspection		Action
1	**VERIFY FRONT BODY CONTROL MODULE (FBCM) DTCs AGAIN** • Clear the DTC for the front body control module (FBCM) using the M-MDS. (See **CLEARING DTC [FRONT BODY CONTROL MODULE (FBCM)]**.) • Switch the ignition ON (engine off or on) and wait for **5 s or more**. • Retrieve the front body control module (FBCM) DTCs using the M-MDS. (See **DTC INSPECTION [FRONT BODY CONTROL MODULE (FBCM)]**.) • Is the same DTC displayed?	Yes	Go to the next step.
		No	Go to Step 9.
2	**INSPECT AUTO LIGHT SENSOR/RAIN SENSOR CONNECTOR CONDITION** • Switch the ignition off. • Disconnect the negative battery cable. (See **NEGATIVE BATTERY CABLE DISCONNECTION/CONNECTION [SKYACTIV-G 2.0, SKYACTIV-G 2.5]**.) • Disconnect the auto light sensor/rain sensor connector. • Inspect the connector engagement and connection condition and inspect the terminals for damage, deformation, corrosion, or disconnection. • Is the connector normal?	Yes	Go to the next step.
		No	Repair or replace the connector, then go to Step 8.
3	**INSPECT FRONT BODY CONTROL MODULE (FBCM) CONNECTOR CONDITION** • Disconnect the front body control module (FBCM) connector. • Inspect the connector engagement and connection condition and inspect the terminals for damage, deformation, corrosion, or disconnection. • Is the connector normal?	Yes	Go to the next step.
		No	Repair or replace the connector, then go to Step 8.
4	**INSPECT FOR SHORT TO GROUND IN AUTO LIGHT SENSOR/RAIN SENSOR CIRCUIT** • Verify that the auto light sensor/rain sensor and front body control module (FBCM) connectors are disconnected. • Inspect for continuity between front body control module (FBCM) terminal 2G (wiring harness-side) and body ground. • Is there continuity?	Yes	Refer to the wiring diagram and verify whether or not there is a common connector between auto light sensor/rain sensor terminal A and front body control module (FBCM) terminal 2G. **If there is a common connector:** • Determine the malfunctioning part by inspecting the common connector and the terminal for corrosion, damage, or pin disconnection, and the common wiring harness for a short to ground.

			• Repair or replace the malfunctioning part. **If there is no common connector:** • Repair or replace the wiring harness which has a short to ground. Go to Step 8.
		No	Go to the next step.
5	**INSPECT FOR SHORT TO POWER SUPPLY IN AUTO LIGHT SENSOR/RAIN SENSOR CIRCUIT** • Verify that the auto light sensor/rain sensor and front body control module (FBCM) connectors are disconnected. • Reconnect the negative battery cable. (See **NEGATIVE BATTERY CABLE DISCONNECTION/CONNECTION [SKYACTIV-G 2.0, SKYACTIV-G 2.5]**.) • Switch the ignition ON (engine off or on). • Measure the voltage at the front body control module (FBCM) terminal 2G (wiring harness-side). • Is the voltage **0 V**?	Yes	Go to the next step.
		No	Refer to the wiring diagram and verify whether or not there is a common connector between auto light sensor/rain sensor terminal A and front body control module (FBCM) terminal 2G. **If there is a common connector:** • Determine the malfunctioning part by inspecting the common connector and the terminal for corrosion, damage, or pin disconnection, and the common wiring harness for a short to power supply. • Repair or replace the malfunctioning part. **If there is no common connector:** • Repair or replace the wiring harness which has a short to power supply. Go to Step 8.
6	**INSPECT FOR OPEN CIRCUIT IN AUTO LIGHT SENSOR/RAIN SENSOR CIRCUIT** • Verify that the auto light sensor/rain sensor and front body control module (FBCM) connectors are disconnected. • Switch the ignition off. • Disconnect the negative battery cable. (See **NEGATIVE BATTERY CABLE DISCONNECTION/CONNECTION [SKYACTIV-G 2.0, SKYACTIV-G 2.5]**.) • Inspect the wiring harness for continuity between auto light sensor/rain sensor terminal A (wiring harness-side) and front body control module (FBCM) terminal 2G (wiring harness-side). • Is there continuity?	Yes	Go to the next step.
		No	Refer to the wiring diagram and verify whether or not there is a common connector between auto light sensor/rain sensor terminal A and front body control module (FBCM) terminal 2G. **If there is a common connector:** • Determine the malfunctioning part by inspecting the common connector and the terminal for corrosion, damage, or pin disconnection, and the common wiring harness for an open circuit. • Repair or replace the malfunctioning part. **If there is no common connector:** • Repair or replace the wiring harness which has an open circuit. Go to Step 8.
7	**PERFORM DTC INSPECTION AND VERIFY AUTO LIGHT SENSOR/RAIN SENSOR MALFUNCTION** • Always reconnect all disconnected connectors. • Reconnect the negative battery cable. (See **NEGATIVE BATTERY CABLE**	Yes	Replace the auto light sensor/rain sensor, then go to the next step. (See **RAIN SENSOR REMOVAL/INSTALLATION**.)
		No	Go to Step 9.

	DISCONNECTION/CONNECTION [SKYACTIV-G 2.0, SKYACTIV-G 2.5].) • Clear the DTC for the front body control module (FBCM) using the M-MDS. (See **CLEARING DTC [FRONT BODY CONTROL MODULE (FBCM)]**.) • Switch the ignition ON (engine off or on) and wait for **5 s or more**. • Retrieve the front body control module (FBCM) DTCs using the M-MDS. (See **DTC INSPECTION [FRONT BODY CONTROL MODULE (FBCM)]**.) • Is the same DTC displayed?		
8	**VERIFY THAT REPAIRS HAVE BEEN COMPLETED** • Always reconnect all disconnected connectors. • Reconnect the negative battery cable. (See **NEGATIVE BATTERY CABLE DISCONNECTION/CONNECTION [SKYACTIV-G 2.0, SKYACTIV-G 2.5]**.) • Clear the DTC for the front body control module (FBCM) using the M-MDS. (See **CLEARING DTC [FRONT BODY CONTROL MODULE (FBCM)]**.) • Switch the ignition ON (engine off or on) and wait for **5 s or more**. • Retrieve the front body control module (FBCM) DTCs using the M-MDS. (See **DTC INSPECTION [FRONT BODY CONTROL MODULE (FBCM)]**.) • Is the same DTC displayed?	Yes	Repeat the inspection from Step 1. • If the malfunction recurs, replace the front body control module (FBCM). (See **FRONT BODY CONTROL MODULE (FBCM) REMOVAL/INSTALLATION**.) Go to the next step.
		No	Go to the next step.
9	**VERIFY IF OTHER DTCs DISPLAYED** • Are any other DTCs displayed?	Yes	Repair or replace the malfunctioning part according to the applicable DTC troubleshooting. (See **DTC TABLE [FRONT BODY CONTROL MODULE (FBCM)]**.)
		No	DTC troubleshooting completed.

2014 - Mazda3 - Body and Accessories

DTC U0338:09 [FRONT BODY CONTROL MODULE (FBCM)]

Description	Error light switch signal received from start stop unit
Detection condition	• Front body control module (FBCM) receives the CAN error signals from the start stop unit **3 times** continuously with the ignition switched ON (engine off or on).
Fail-safe function	• If DTC U0338:09 is detected when the ignition is switched ON (engine off or on), the headlight LO and the TNS are illuminated. • If DTC U0338:09 is cleared, the headlight LO and the TNS are turned off, and the operation returns to normal.
Possible cause	• Light switch malfunction • Start stop unit malfunction • Front body control module (FBCM) malfunction
System wiring diagram	Not applicable

Diagnostic Procedure

Step	Inspection		Action
1	**VERIFY FRONT BODY CONTROL MODULE (FBCM) DTCs AGAIN** • Clear the DTC for the front body control module (FBCM) using the M-MDS. (See **CLEARING DTC [FRONT BODY CONTROL MODULE (FBCM)]**.) • Retrieve the front body control module (FBCM) DTCs using the M-MDS. (See **DTC INSPECTION [FRONT BODY CONTROL MODULE**	Yes	Go to the next step.
		No	Go to Step 6.

	(FBCM)].) • Is the same DTC displayed?		
2	**VERIFY START STOP UNIT DTCs** • Retrieve the start stop unit DTCs using the M-MDS. (See **DTC INSPECTION [START STOP UNIT]**.) • Are any DTCs displayed?	Yes	Repair or replace the malfunctioning part according to the applicable DTC troubleshooting. (See **DTC TABLE [START STOP UNIT]**.)
		No	Go to the next step.
3	**INSPECT LIGHT SWITCH** • Inspect the light switch. (See **LIGHT SWITCH INSPECTION**.) • Is the light switch normal?	Yes	Go to the next step.
		No	Replace the light switch, then go to Step 5. (See **LIGHT SWITCH REMOVAL/INSTALLATION**.)
4	**PERFORM DTC INSPECTION AND VERIFY START STOP UNIT MALFUNCTION** • Clear the DTC for the front body control module (FBCM) using the M-MDS. (See **CLEARING DTC [FRONT BODY CONTROL MODULE (FBCM)]**.) • Retrieve the front body control module (FBCM) DTCs using the M-MDS. (See **DTC INSPECTION [FRONT BODY CONTROL MODULE (FBCM)]**.) • Is the same DTC displayed?	Yes	Replace the start stop unit, then go to the next step. (See **START STOP UNIT REMOVAL/INSTALLATION**.)
		No	Go to Step 6.
5	**VERIFY THAT REPAIRS HAVE BEEN COMPLETED** • Clear the DTC for the front body control module (FBCM) using the M-MDS. (See **CLEARING DTC [FRONT BODY CONTROL MODULE (FBCM)]**.) • Retrieve the front body control module (FBCM) DTCs using the M-MDS. (See **DTC INSPECTION [FRONT BODY CONTROL MODULE (FBCM)]**.)	Yes	Repeat the inspection from Step 1. • If the malfunction recurs, replace the front body control module (FBCM). (See **FRONT BODY CONTROL MODULE (FBCM) REMOVAL/INSTALLATION**.) Go to the next step.
		No	Go to the next step.

	Is the same DTC displayed?		
6	**VERIFY IF OTHER DTCs DISPLAYED** • Are any other DTCs displayed?	Yes	Repair or replace the malfunctioning part according to the applicable DTC troubleshooting. (See **DTC TABLE [FRONT BODY CONTROL MODULE (FBCM)]**.)
		No	DTC troubleshooting completed.

2014 - Mazda3 - Body and Accessories

DTC U0401:68 [FRONT BODY CONTROL MODULE (FBCM)]

Description	Error signal received from PCM
Detection condition	• Front body control module (FBCM) receives the error ECT sensor or ambient temperature sensor signals from the PCM for **5 s or more** with the ignition switched ON (engine off or on).
Fail-safe function	Not applicable
Possible cause	• ECT sensor malfunction • Ambient temperature sensor malfunction • PCM malfunction • Front body control module (FBCM) malfunction
System wiring diagram	Not applicable

Diagnostic Procedure

Step	Inspection		Action
1	**VERIFY FRONT BODY CONTROL MODULE (FBCM) DTCs AGAIN** • Clear the DTC for the front body control module (FBCM) using the M-MDS. (See **CLEARING DTC [FRONT BODY CONTROL MODULE (FBCM)]**.) • Switch the ignition ON (engine off or on) and wait for **5 s or more**. • Retrieve the front body control module (FBCM) DTCs using the M-MDS.	Yes	Go to the next step.
		No	Go to Step 7.

	(See **DTC INSPECTION [FRONT BODY CONTROL MODULE (FBCM)]**.) • Is the same DTC displayed?		
2	**VERIFY PCM DTCs** • Retrieve the PCM DTCs using the M-MDS. (See **ON-BOARD DIAGNOSTIC TEST [SKYACTIV-G 2.0, SKYACTIV-G 2.5]**.) • Are any DTCs displayed?	Yes	Repair or replace the malfunctioning part according to the applicable DTC troubleshooting. (See **DTC TABLE [SKYACTIV-G 2.0, SKYACTIV-G 2.5]**.)
		No	Go to the next step.
3	**INSPECT ECT SENSOR** • Inspect the ECT sensor. (See **ENGINE COOLANT TEMPERATURE (ECT) SENSOR INSPECTION [SKYACTIV-G 2.0, SKYACTIV-G 2.5]**.) • Is the ECT sensor normal?	Yes	Go to the next step.
		No	Replace the ECT sensor, then go to Step 6. (See **ENGINE COOLANT TEMPERATURE (ECT) SENSOR REMOVAL/INSTALLATION [SKYACTIV-G 2.0, SKYACTIV-G 2.5]**.)
4	**INSPECT AMBIENT TEMPERATURE SENSOR** • Inspect the ambient temperature sensor. (See **AMBIENT TEMPERATURE SENSOR INSPECTION [MANUAL AIR CONDITIONER]**.) (See **AMBIENT TEMPERATURE SENSOR INSPECTION [FULL-AUTO AIR CONDITIONER]**.) • Is the ambient temperature sensor normal?	Yes	Go to the next step.
		No	Replace the ambient temperature sensor, then go to Step 6. (See **AMBIENT TEMPERATURE SENSOR INSPECTION [MANUAL AIR CONDITIONER]**.) (See **AMBIENT TEMPERATURE SENSOR REMOVAL/INSTALLATION [FULL-AUTO AIR CONDITIONER]**.)
5	**PERFORM DTC INSPECTION AND VERIFY PCM MALFUNCTION** • Clear the DTC for the front body control module (FBCM) using the M-MDS. (See **CLEARING DTC [FRONT BODY CONTROL MODULE (FBCM)]**.) • Switch the ignition ON (engine off or on) and wait for **5 s or more**. • Retrieve the front body control module (FBCM) DTCs using the M-MDS. (See **DTC INSPECTION [FRONT**	Yes	Replace the PCM, then go to the next step. (See **PCM REMOVAL/INSTALLATION [SKYACTIV-G 2.0, SKYACTIV-G 2.5]**.)
		No	Go to Step 7.

	BODY CONTROL MODULE (FBCM)].) • Is the same DTC displayed?		
6	**VERIFY THAT REPAIRS HAVE BEEN COMPLETED** • Clear the DTC for the front body control module (FBCM) using the M-MDS. (See **CLEARING DTC [FRONT BODY CONTROL MODULE (FBCM)]**.) • Switch the ignition ON (engine off or on) and wait for **5 s or more**. • Retrieve the front body control module (FBCM) DTCs using the M-MDS. (See **DTC INSPECTION [FRONT BODY CONTROL MODULE (FBCM)]**.) • Is the same DTC displayed?	Yes	Repeat the inspection from Step 1. • If the malfunction recurs, replace the front body control module (FBCM). (See **FRONT BODY CONTROL MODULE (FBCM) REMOVAL/INSTALLATION**.) Go to the next step.
		No	Go to the next step.
7	**VERIFY IF OTHER DTCs DISPLAYED** • Are any other DTCs displayed?	Yes	Repair or replace the malfunctioning part according to the applicable DTC troubleshooting. (See **DTC TABLE [FRONT BODY CONTROL MODULE (FBCM)]**.)
		No	DTC troubleshooting completed.

2014 - Mazda3 - Body and Accessories

DTC U053B:68 [FRONT BODY CONTROL MODULE (FBCM)]

Description	Error signal received from forward sensing camera (FSC)
Detection condition	• Front body control module (FBCM) receives the error signals from the forward sensing camera (FSC) for **5 s or more** with the ignition switched ON (engine off or on).
Fail-safe function	Not applicable
Possible cause	• Forward sensing camera (FSC) malfunction • Front body control module (FBCM) malfunction
System wiring diagram	Not applicable

Diagnostic Procedure

Step	Inspection		Action
1	**VERIFY FRONT BODY CONTROL MODULE (FBCM) DTCs AGAIN** • Clear the DTC for the front body control module (FBCM) using the M-MDS. (See **CLEARING DTC [FRONT BODY CONTROL MODULE (FBCM)]**.) • Switch the ignition ON (engine off or on) and wait for **5 s or more**. • Retrieve the front body control module (FBCM) DTCs using the M-MDS. (See **DTC INSPECTION [FRONT BODY CONTROL MODULE (FBCM)]**.) • Is the same DTC displayed?	Yes	Go to the next step.
		No	Go to Step 5.

2	**VERIFY FORWARD SENSING CAMERA (FSC) DTCs** • Retrieve the forward sensing camera (FSC) DTCs using the M-MDS. (See **DTC INSPECTION [FORWARD SENSING CAMERA (FSC)]**.) • Are any DTCs displayed?	Yes	Repair or replace the malfunctioning part according to the applicable DTC troubleshooting. (See **DTC TABLE [FORWARD SENSING CAMERA (FSC)]**.)
		No	Go to the next step.
3	**PERFORM DTC INSPECTION AND VERIFY FORWARD SENSING CAMERA (FSC) MALFUNCTION** • Clear the DTC for the front body control module (FBCM) using the M-MDS. (See **CLEARING DTC [FRONT BODY CONTROL MODULE (FBCM)]**.) • Switch the ignition ON (engine off or on) and wait for **5 s or more**. • Retrieve the front body control module (FBCM) DTCs using the M-MDS. (See **DTC INSPECTION [FRONT BODY CONTROL MODULE (FBCM)]**.) • Is the same DTC displayed?	Yes	Replace the forward sensing camera (FSC), then go to the next step. (See **FORWARD SENSING CAMERA (FSC) REMOVAL/INSTALLATION**.)
		No	Go to Step 5.
4	**VERIFY THAT REPAIRS HAVE BEEN COMPLETED** • Clear the DTC for the front body control module (FBCM) using the M-MDS. (See **CLEARING DTC [FRONT BODY CONTROL MODULE (FBCM)]**.) • Switch the ignition ON (engine off or on) and wait for **5 s or more**. • Retrieve the front body control module (FBCM) DTCs using the M-MDS. (See **DTC INSPECTION [FRONT BODY CONTROL MODULE (FBCM)]**.) • Is the same DTC displayed?	Yes	Repeat the inspection from Step 1. • If the malfunction recurs, replace the front body control module (FBCM). (See **FRONT BODY CONTROL MODULE (FBCM) REMOVAL/INSTALLATION**.) Go to the next step.
		No	Go to the next step.
5	**VERIFY IF OTHER DTCs DISPLAYED** • Are any other DTCs displayed?	Yes	Repair or replace the malfunctioning part according to the applicable DTC troubleshooting. (See **DTC TABLE [FRONT BODY CONTROL**

			MODULE (FBCM)].)
		No	DTC troubleshooting completed.

2014 - Mazda3 - Body and Accessories

DTC U1007:68 [FRONT BODY CONTROL MODULE (FBCM)]

Description	Communication error with current sensor
Detection condition	• Front body control module (FBCM) could not receive signals from the current sensor for **5 s or more** with the ignition switched ON (engine off or on).
Fail-safe function	Not applicable

Possible cause	• Current sensor connector or terminal malfunction
	• Current sensor power supply circuit malfunction
	  ▪ Short to ground in wiring harness between ENG+B 7.5 A fuse and current sensor terminal A
	  ▪ ENG+B 7.5 A fuse malfunction
	  ▪ MAIN 200 A fuse malfunction
	  ▪ Open circuit in wiring harness between battery positive terminal and current sensor terminal A
	• Front body control module (FBCM) connector or terminal malfunction
	• Short to ground in wiring harness between current sensor terminal B and front body control module (FBCM) terminal 2E
	• Open circuit in wiring harness between current sensor terminal B and front body control module (FBCM) terminal 2E
	• Current sensor malfunction
	• Front body control module (FBCM) malfunction

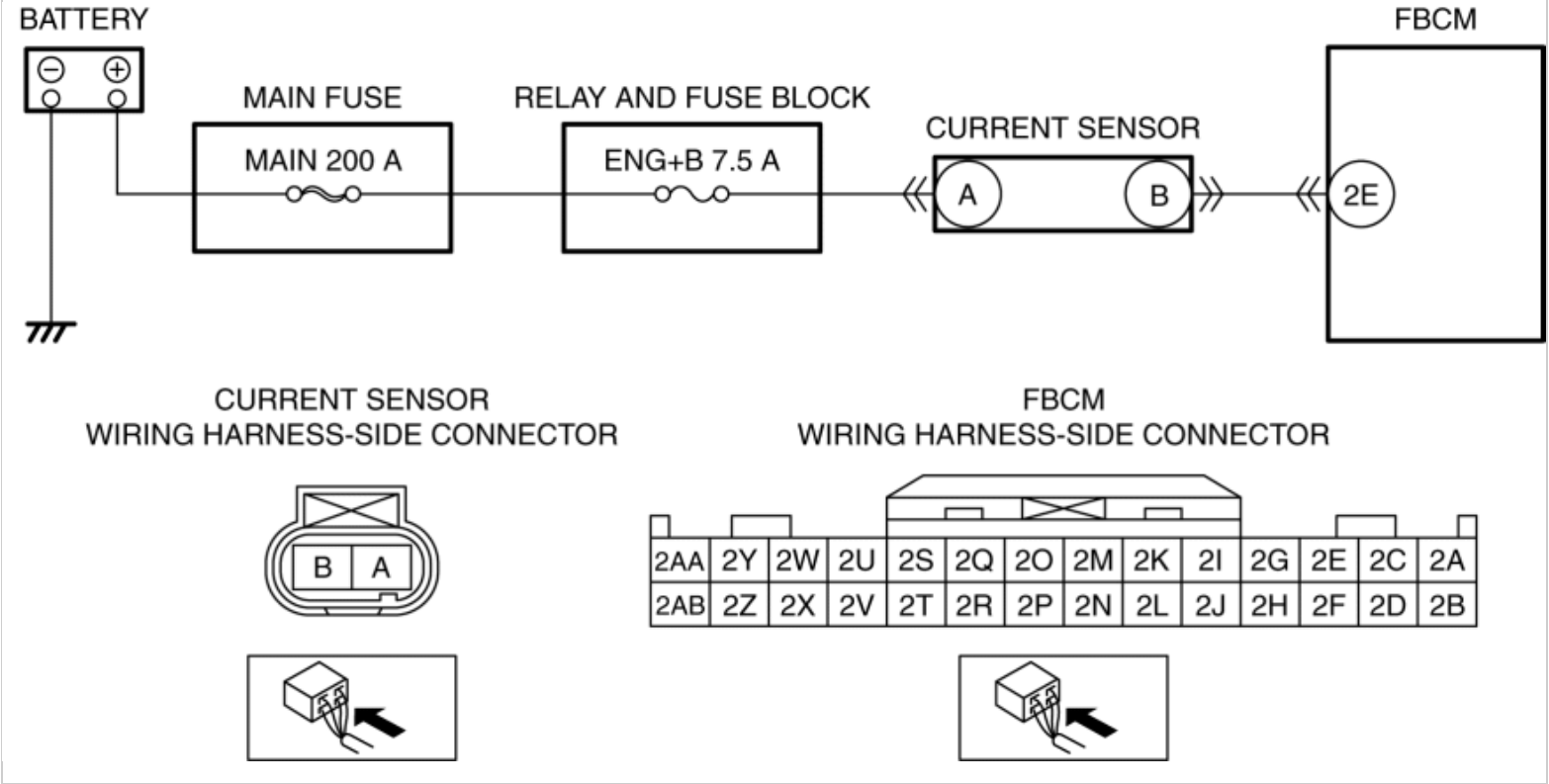

Diagnostic Procedure

Step	Inspection		Action
1	**VERIFY FRONT BODY CONTROL MODULE (FBCM) DTCs AGAIN** • Clear the DTC for the front body control module (FBCM) using the M-MDS. (See **CLEARING DTC [FRONT BODY CONTROL MODULE (FBCM)]**.) • Switch the ignition ON (engine off or on) and wait for **5 s or more**. • Retrieve the front body control module (FBCM) DTCs using the M-MDS. (See **DTC INSPECTION [FRONT BODY CONTROL MODULE (FBCM)]**.) • Is the same DTC displayed?	Yes	Go to the next step.
		No	Go to Step 9.
2	**INSPECT CURRENT SENSOR CONNECTOR CONDITION** **NOTE:** • Always disconnect current sensor connector before disconnecting the negative battery cable.	Yes	Go to the next step.
		No	Repair or replace the connector, then go to Step 8.

	• Switch the ignition off. • Disconnect the current sensor connector. • Disconnect the negative battery cable. (See **NEGATIVE BATTERY CABLE DISCONNECTION/CONNECTION [SKYACTIV-G 2.0, SKYACTIV-G 2.5]**.) • Inspect the connector engagement and connection condition and inspect the terminals for damage, deformation, corrosion, or disconnection. • Is the connector normal?		
3	**INSPECT FOR OPEN CIRCUIT OR SHORT TO GROUND IN CURRENT SENSOR POWER SUPPLY CIRCUIT** • Verify that the current sensor connector is disconnected. • Reconnect the negative battery cable. (See **NEGATIVE BATTERY CABLE DISCONNECTION/CONNECTION [SKYACTIV-G 2.0, SKYACTIV-G 2.5]**.) • Switch the ignition ON (engine off or on). • Measure the voltage at the current sensor terminal A (wiring harness-side). • Is the voltage **B+**?	Yes	Go to the next step.
		No	Inspect the ENG+B 7.5 A fuse and MAIN 200A fuse. • If the fuse is blown: ▪ Refer to the wiring diagram and verify whether or not there is a common connector between ENG+B 7.5 A fuse and current sensor terminal A. **If there is a common connector:** • Determine the malfunctioning part by inspecting the common connector and the terminal for corrosion, damage, or pin disconnection, and the common wiring harness for a short to ground. • Repair or replace the malfunctioning part. **If there is no common connector:** • Repair or

			replace the wiring harness which has a short to ground. • Replace the fuse. • If the fuse is damaged: ▪ Replace the fuse. • If the fuse is normal: ▪ Refer to the wiring diagram and verify whether or not there is a common connector between battery positive terminal and current sensor terminal A. **If there is a common connector:** • Determine the malfunctioning part by inspecting the common connector and the terminal for corrosion, damage, or pin disconnection, and the common wiring harness for an open circuit. • Repair or replace the malfunctioning part. **If there is no common connector:** • Repair or replace the wiring harness which has an open circuit. Go to Step 8.
4	**INSPECT FRONT BODY CONTROL MODULE (FBCM) CONNECTOR CONDITION** • Disconnect the negative battery cable. (See **NEGATIVE BATTERY CABLE**	Yes	Go to the next step.
		No	Repair or replace the connector, then go to Step 8.

	DISCONNECTION/CONNECTION [SKYACTIV-G 2.0, SKYACTIV-G 2.5].) • Disconnect the front body control module (FBCM) connector. • Inspect the connector engagement and connection condition and inspect the terminals for damage, deformation, corrosion, or disconnection. • Is the connector normal?		
5	**INSPECT FOR SHORT TO GROUND IN CURRENT SENSOR LIN COMMUNICATION CIRCUIT** • Verify that the current sensor and front body control module (FBCM) connectors are disconnected. • Inspect for continuity between current sensor terminal B (wiring harness-side) and body ground. • Is there continuity?	Yes	Refer to the wiring diagram and verify whether or not there is a common connector between current sensor terminal B and front body control module (FBCM) terminal 2E. **If there is a common connector:** • Determine the malfunctioning part by inspecting the common connector and the terminal for corrosion, damage, or pin disconnection, and the common wiring harness for a short to ground. • Repair or replace the malfunctioning part. **If there is no common connector:** • Repair or replace the wiring harness which has a short to ground. Go to Step 8.
		No	Go to the next step.
6	**INSPECT FOR OPEN CIRCUIT IN CURRENT SENSOR LIN COMMUNICATION CIRCUIT** • Verify that the current sensor and front body control module (FBCM) connectors are disconnected. • Inspect the wiring harness for continuity between current sensor terminal B (wiring harness-side) and front body control module (FBCM) terminal 2E (wiring harness-side). • Is there continuity?	Yes	Go to the next step.
		No	Refer to the wiring diagram and verify whether or not there is a common connector between current sensor terminal B and front body control module (FBCM) terminal 2E. **If there is a common connector:** • Determine the malfunctioning part by inspecting the common connector and the terminal for corrosion, damage, or pin disconnection, and the common wiring harness for an open circuit. • Repair or replace the malfunctioning part. **If there is no common connector:** • Repair or replace the wiring harness which has an open circuit. Go to Step 8.
7	**INSPECT CURRENT SENSOR** • Inspect the current sensor.	Yes	Go to the next step.

	(See **CURRENT SENSOR INSPECTION [SKYACTIV-G 2.0, SKYACTIV-G 2.5]**.) • Is the current sensor normal?	No	Replace the current sensor, then go to the next step. (See **CURRENT SENSOR REMOVAL/INSTALLATION [SKYACTIV-G 2.0, SKYACTIV-G 2.5]**.)
8	**VERIFY THAT REPAIRS HAVE BEEN COMPLETED** • Always reconnect all disconnected connectors. • Reconnect the negative battery cable. (See **NEGATIVE BATTERY CABLE DISCONNECTION/CONNECTION [SKYACTIV-G 2.0, SKYACTIV-G 2.5]**.) • Clear the DTC for the front body control module (FBCM) using the M-MDS. (See **CLEARING DTC [FRONT BODY CONTROL MODULE (FBCM)]**.) • Switch the ignition ON (engine off or on) and wait for **5 s or more**. • Retrieve the front body control module (FBCM) DTCs using the M-MDS. (See **DTC INSPECTION [FRONT BODY CONTROL MODULE (FBCM)]**.) • Is the same DTC displayed?	Yes	Repeat the inspection from Step 1. • If the malfunction recurs, replace the front body control module (FBCM). (See **FRONT BODY CONTROL MODULE (FBCM) REMOVAL/INSTALLATION**.) Go to the next step.
		No	Go to the next step.
9	**VERIFY IF OTHER DTCs DISPLAYED** • Are any other DTCs displayed?	Yes	Repair or replace the malfunctioning part according to the applicable DTC troubleshooting. (See **DTC TABLE [FRONT BODY CONTROL MODULE (FBCM)]**.)
		No	DTC troubleshooting completed.

2014 - Mazda3 - Body and Accessories

DTC U2005:68 [FRONT BODY CONTROL MODULE (FBCM)]

Description	Error vehicle speed signal received from PCM
Detection condition	• Front body control module (FBCM) receives the vehicle speed signal error from the PCM for **5 s or more** with the ignition switched ON (engine off or on).
Fail-safe function	Not applicable
Possible cause	• ABS wheel-speed sensor malfunction • PCM malfunction • Front body control module (FBCM) malfunction
System wiring diagram	Not applicable

Diagnostic Procedure

Step	Inspection		Action
1	**VERIFY FRONT BODY CONTROL MODULE (FBCM) DTCs AGAIN** • Clear the DTC for the front body control module (FBCM) using the M-MDS. (See **CLEARING DTC [FRONT BODY CONTROL MODULE (FBCM)]**.) • Switch the ignition ON (engine off or on) and wait for **5 s or more**. • Retrieve the front body control module (FBCM) DTCs using the M-MDS. (See **DTC INSPECTION [FRONT BODY CONTROL MODULE**	Yes	Go to the next step.
		No	Go to Step 7.

	(FBCM)].) • Is the same DTC displayed?		
2	**VERIFY DSC HU/CM DTCs** • Retrieve the DSC HU/CM DTCs using the M-MDS. (See **ON-BOARD DIAGNOSIS [DYNAMIC STABILITY CONTROL (DSC)]**.) • Are any DTCs displayed?	Yes	Repair or replace the malfunctioning part according to the applicable DTC troubleshooting. (See **ON-BOARD DIAGNOSIS [DYNAMIC STABILITY CONTROL (DSC)]**.)
		No	Go to the next step.
3	**VERIFY PCM DTCs** • Retrieve the PCM DTCs using the M-MDS. (See **ON-BOARD DIAGNOSTIC TEST [SKYACTIV-G 2.0, SKYACTIV-G 2.5]**.) • Are any DTCs displayed?	Yes	Repair or replace the malfunctioning part according to the applicable DTC troubleshooting. (See **DTC TABLE [SKYACTIV-G 2.0, SKYACTIV-G 2.5]**.)
		No	Go to the next step.
4	**INSPECT ABS WHEEL-SPEED SENSOR** • Inspect the ABS wheel-speed sensor (LF), (RF), (LR) and (RR). (See **FRONT ABS WHEEL-SPEED SENSOR INSPECTION**.) (See **REAR ABS WHEEL-SPEED SENSOR INSPECTION**.) • Are ABS wheel-speed sensor (LF), (RF), (LR) and (RR) normal?	Yes	Go to the next step.
		No	Replace the ABS wheel-speed sensor, then go to Step 6. (See **FRONT ABS WHEEL-SPEED SENSOR REMOVAL/INSTALLATION**.) (See **REAR ABS WHEEL-SPEED SENSOR REMOVAL/INSTALLATION**.)
5	**PERFORM DTC INSPECTION AND VERIFY PCM MALFUNCTION** • Clear the DTC for the front body control module (FBCM) using the M-MDS. (See **CLEARING DTC [FRONT BODY CONTROL MODULE (FBCM)]**.) • Switch the ignition ON (engine off or on) and wait for **5 s or more**. • Retrieve the front body control module (FBCM) DTCs using the M-MDS. (See **DTC INSPECTION [FRONT BODY CONTROL MODULE (FBCM)]**.)	Yes	Replace the PCM, then go to the next step. (See **PCM REMOVAL/INSTALLATION [SKYACTIV-G 2.0, SKYACTIV-G 2.5]**.)
		No	Go to Step 7.

	• Is the same DTC displayed?		
6	**VERIFY THAT REPAIRS HAVE BEEN COMPLETED** • Clear the DTC for the front body control module (FBCM) using the M-MDS. (See **CLEARING DTC [FRONT BODY CONTROL MODULE (FBCM)]**.) • Switch the ignition ON (engine off or on) and wait for **5 s or more**. • Retrieve the front body control module (FBCM) DTCs using the M-MDS. (See **DTC INSPECTION [FRONT BODY CONTROL MODULE (FBCM)]**.) • Is the same DTC displayed?	Yes	Repeat the inspection from Step 1. • If the malfunction recurs, replace the front body control module (FBCM). (See **FRONT BODY CONTROL MODULE (FBCM) REMOVAL/INSTALLATION**.) Go to the next step.
		No	Go to the next step.
7	**VERIFY IF OTHER DTCs DISPLAYED** • Are any other DTCs displayed?	Yes	Repair or replace the malfunctioning part according to the applicable DTC troubleshooting. (See **DTC TABLE [FRONT BODY CONTROL MODULE (FBCM)]**.)
		No	DTC troubleshooting completed.

2014 - Mazda3 - Body and Accessories

DTC U2100:00 [FRONT BODY CONTROL MODULE (FBCM)]

Description	Front body control module (FBCM) configuration error
Detection condition	• Front body control module (FBCM) configuration error (no configuration) detected.
Fail-safe function	Not applicable
Possible cause	• Front body control module (FBCM) configuration error • Front body control module (FBCM) malfunction
System wiring diagram	Not applicable

Diagnostic Procedure

Step	Inspection		Action
1	**VERIFY FRONT BODY CONTROL MODULE (FBCM) DTCs AGAIN** • Clear the DTC for the front body control module (FBCM) using the M-MDS. (See **CLEARING DTC [FRONT BODY CONTROL MODULE (FBCM)]**.) • Retrieve the front body control module (FBCM) DTCs using the M-MDS. (See **DTC INSPECTION [FRONT BODY CONTROL MODULE (FBCM)]**.) • Is the same DTC displayed?	Yes	Go to the next step.
		No	Go to Step 4.
2	**PERFORM FRONT BODY CONTROL MODULE (FBCM) CONFIGURATION (USING AS-BUILT DATA)**	Yes	Using the M-MDS, perform the front body control module (FBCM) configuration (using As-Built data)

	• Using the M-MDS, perform the front body control module (FBCM) configuration (using As-Built data). (See **FRONT BODY CONTROL MODULE (FBCM) CONFIGURATION (USING AS-BUILT DATA)**.) • Clear the DTC for the front body control module (FBCM) using the M-MDS. (See **CLEARING DTC [FRONT BODY CONTROL MODULE (FBCM)]**.) • Retrieve the front body control module (FBCM) DTCs using the M-MDS. (See **DTC INSPECTION [FRONT BODY CONTROL MODULE (FBCM)]**.) • Is the same DTC displayed?		again, then go to the next step. (See **FRONT BODY CONTROL MODULE (FBCM) CONFIGURATION (USING AS-BUILT DATA)**.)
		No	Go to Step 4.
3	**VERIFY THAT REPAIRS HAVE BEEN COMPLETED** • Clear the DTC for the front body control module (FBCM) using the M-MDS. (See **CLEARING DTC [FRONT BODY CONTROL MODULE (FBCM)]**.) • Retrieve the front body control module (FBCM) DTCs using the M-MDS. (See **DTC INSPECTION [FRONT BODY CONTROL MODULE (FBCM)]**.) • Is the same DTC displayed?	Yes	Repeat the inspection from Step 1. • If the malfunction recurs, replace the front body control module (FBCM). (See **FRONT BODY CONTROL MODULE (FBCM) REMOVAL/INSTALLATION**.) Go to the next step.
		No	Go to the next step.
4	**VERIFY IF OTHER DTCs DISPLAYED** • Are any other DTCs displayed?	Yes	Repair or replace the malfunctioning part according to the applicable DTC troubleshooting. (See **DTC TABLE [FRONT BODY CONTROL MODULE (FBCM)]**.)
		No	DTC troubleshooting completed.

DTC U2100:00 [FRONT BODY CONTROL MODULE (FBCM)]

2014 - Mazda3 - Body and Accessories

DTC U2101:00 [FRONT BODY CONTROL MODULE (FBCM)]

Description	Front body control module (FBCM) configuration error
Detection condition	• Front body control module (FBCM) configuration error detected.
Fail-safe function	Not applicable
Possible cause	• Front body control module (FBCM) configuration error • Front body control module (FBCM) malfunction
System wiring diagram	Not applicable

Diagnostic Procedure

Step	Inspection		Action
1	**VERIFY FRONT BODY CONTROL MODULE (FBCM) DTCs AGAIN** • Clear the DTC for the front body control module (FBCM) using the M-MDS. (See **CLEARING DTC [FRONT BODY CONTROL MODULE (FBCM)]**.) • Retrieve the front body control module (FBCM) DTCs using the M-MDS. (See **DTC INSPECTION [FRONT BODY CONTROL MODULE (FBCM)]**.) • Is the same DTC displayed?	Yes	Go to the next step.
		No	Go to Step 4.
2	**PERFORM FRONT BODY CONTROL MODULE (FBCM) CONFIGURATION (USING AS-BUILT DATA)** • Using the M-MDS, perform the	Yes	Using the M-MDS, perform the front body control module (FBCM) configuration (using As-Built data) again, then go to the next step.

	front body control module (FBCM) configuration (using As-Built data). (See **FRONT BODY CONTROL MODULE (FBCM) CONFIGURATION (USING AS-BUILT DATA)**.) • Clear the DTC for the front body control module (FBCM) using the M-MDS. (See **CLEARING DTC [FRONT BODY CONTROL MODULE (FBCM)]**.) • Retrieve the front body control module (FBCM) DTCs using the M-MDS. (See **DTC INSPECTION [FRONT BODY CONTROL MODULE (FBCM)]**.) • Is the same DTC displayed?		(See **FRONT BODY CONTROL MODULE (FBCM) CONFIGURATION (USING AS-BUILT DATA)**.)
		No	Go to Step 4.
3	**VERIFY THAT REPAIRS HAVE BEEN COMPLETED** • Clear the DTC for the front body control module (FBCM) using the M-MDS. (See **CLEARING DTC [FRONT BODY CONTROL MODULE (FBCM)]**.) • Retrieve the front body control module (FBCM) DTCs using the M-MDS. (See **DTC INSPECTION [FRONT BODY CONTROL MODULE (FBCM)]**.) • Is the same DTC displayed?	Yes	Repeat the inspection from Step 1. • If the malfunction recurs, replace the front body control module (FBCM). (See **FRONT BODY CONTROL MODULE (FBCM) REMOVAL/INSTALLATION**.) Go to the next step.
		No	Go to the next step.
4	**VERIFY IF OTHER DTCs DISPLAYED** • Are any other DTCs displayed?	Yes	Repair or replace the malfunctioning part according to the applicable DTC troubleshooting. (See **DTC TABLE [FRONT BODY CONTROL MODULE (FBCM)]**.)
		No	DTC troubleshooting completed.

DTC U2101:00 [FRONT BODY CONTROL MODULE (FBCM)]

2014 - Mazda3 - Body and Accessories

DTC U3000:49 [FRONT BODY CONTROL MODULE (FBCM)]

Description	Front body control module (FBCM) internal malfunction
Detection condition	• Front body control module (FBCM) detects the internal malfunction.
Fail-safe function	Not applicable
Possible cause	• Front body control module (FBCM) malfunction
System wiring diagram	Not applicable

Diagnostic Procedure

Step	Inspection		Action
1	**PERFORM DTC INSPECTION AND VERIFY FRONT BODY CONTROL MODULE (FBCM) MALFUNCTION** • Clear the DTC for the front body control module (FBCM) using the M-MDS. (See **CLEARING DTC [FRONT BODY CONTROL MODULE (FBCM)]**.) • Retrieve the front body control module (FBCM) DTCs using the M-MDS. (See **DTC INSPECTION [FRONT BODY CONTROL MODULE (FBCM)]**.) • Is the same DTC displayed?	Yes	Repeat the inspection from Step 1. • If the malfunction recurs, replace the front body control module (FBCM). (See **FRONT BODY CONTROL MODULE (FBCM) REMOVAL/INSTALLATION**.) Go to the next step.
		No	Go to the next step.
2	**VERIFY IF OTHER DTCs DISPLAYED** • Are any other DTCs displayed?	Yes	Repair or replace the malfunctioning part according to the applicable DTC troubleshooting. (See **DTC TABLE [FRONT BODY CONTROL MODULE (FBCM)]**.)

		No	DTC troubleshooting completed.

2014 - Mazda3 - Body and Accessories

DTC U3000:56 [FRONT BODY CONTROL MODULE (FBCM)]

Description	Front body control module (FBCM) configuration error
Detection condition	• Front body control module (FBCM) configuration error detected.
Fail-safe function	Not applicable
Possible cause	• Front body control module (FBCM) configuration error • Front body control module (FBCM) malfunction
System wiring diagram	Not applicable

Diagnostic Procedure

Step	Inspection		Action
1	**VERIFY FRONT BODY CONTROL MODULE (FBCM) DTCs AGAIN** • Clear the DTC for the front body control module (FBCM) using the M-MDS. (See **CLEARING DTC [FRONT BODY CONTROL MODULE (FBCM)]**.) • Retrieve the front body control module (FBCM) DTCs using the M-MDS. (See **DTC INSPECTION [FRONT BODY CONTROL MODULE (FBCM)]**.) • Is the same DTC displayed?	Yes	Go to the next step.
		No	Go to Step 4.
2	**PERFORM FRONT BODY CONTROL MODULE (FBCM) CONFIGURATION (USING AS-BUILT DATA)** • Using the M-MDS, perform the	Yes	Using the M-MDS, perform the front body control module (FBCM) configuration (using As-Built data) again, then go to the next step.

	front body control module (FBCM) configuration (using As-Built data). (See **FRONT BODY CONTROL MODULE (FBCM) CONFIGURATION (USING AS-BUILT DATA)**.) • Clear the DTC for the front body control module (FBCM) using the M-MDS. (See **CLEARING DTC [FRONT BODY CONTROL MODULE (FBCM)]**.) • Retrieve the front body control module (FBCM) DTCs using the M-MDS. (See **DTC INSPECTION [FRONT BODY CONTROL MODULE (FBCM)]**.) • Is the same DTC displayed?		(See **FRONT BODY CONTROL MODULE (FBCM) CONFIGURATION (USING AS-BUILT DATA)**.)
		No	Go to Step 4.
3	**VERIFY THAT REPAIRS HAVE BEEN COMPLETED** • Clear the DTC for the front body control module (FBCM) using the M-MDS. (See **CLEARING DTC [FRONT BODY CONTROL MODULE (FBCM)]**.) • Retrieve the front body control module (FBCM) DTCs using the M-MDS. (See **DTC INSPECTION [FRONT BODY CONTROL MODULE (FBCM)]**.) • Is the same DTC displayed?	Yes	Repeat the inspection from Step 1. • If the malfunction recurs, replace the front body control module (FBCM). (See **FRONT BODY CONTROL MODULE (FBCM) REMOVAL/INSTALLATION**.) Go to the next step.
		No	Go to the next step.
4	**VERIFY IF OTHER DTCs DISPLAYED** • Are any other DTCs displayed?	Yes	Repair or replace the malfunctioning part according to the applicable DTC troubleshooting. (See **DTC TABLE [FRONT BODY CONTROL MODULE (FBCM)]**.)
		No	DTC troubleshooting completed.

DTC U3000:56 [FRONT BODY CONTROL MODULE (FBCM)]

2014 - Mazda3 - Body and Accessories

DTC U3003:16 [FRONT BODY CONTROL MODULE (FBCM)]

Description	Front body control module (FBCM) power supply voltage (+B power supply) low input
Detection condition	• Front body control module (FBCM) power supply circuit voltage of **8.8 V or less** is detected for **10 s or more** with the ignition switched ON (engine off or on).
Fail-safe function	Not applicable
Possible cause	• DTCs are stored in the PCM. • Battery malfunction • Generator malfunction • Front body control module (FBCM) connector or terminal malfunction • Front body control module (FBCM) power supply circuit malfunction ▪ Short to ground in the wiring harness between the following: • MAIN 200 A fuse—Front body control module (FBCM) terminal 2A • MAIN 200 A fuse—Front body control module (FBCM) terminal 1A • MAIN 200 A fuse—Front body control module (FBCM) terminal 1B • MAIN 200 A fuse—Front body control module (FBCM) terminal 3K • MAIN 200 A fuse—Front body control module (FBCM) terminal 3L ▪ ROOM 15 A fuse malfunction ▪ HAZARD 25 A fuse malfunction ▪ MAIN 200 A fuse malfunction ▪ Open circuit in wiring harness between the following terminals: • Battery positive terminal—Front body control module (FBCM) terminal 2A • Battery positive terminal—Front body control module (FBCM) terminal 1A • Battery positive terminal—Front body control module (FBCM) terminal 1B • Battery positive terminal—Front body control module (FBCM) terminal 3K • Battery positive terminal—Front body control module (FBCM)

	terminal 3L • Front body control module (FBCM) malfunction

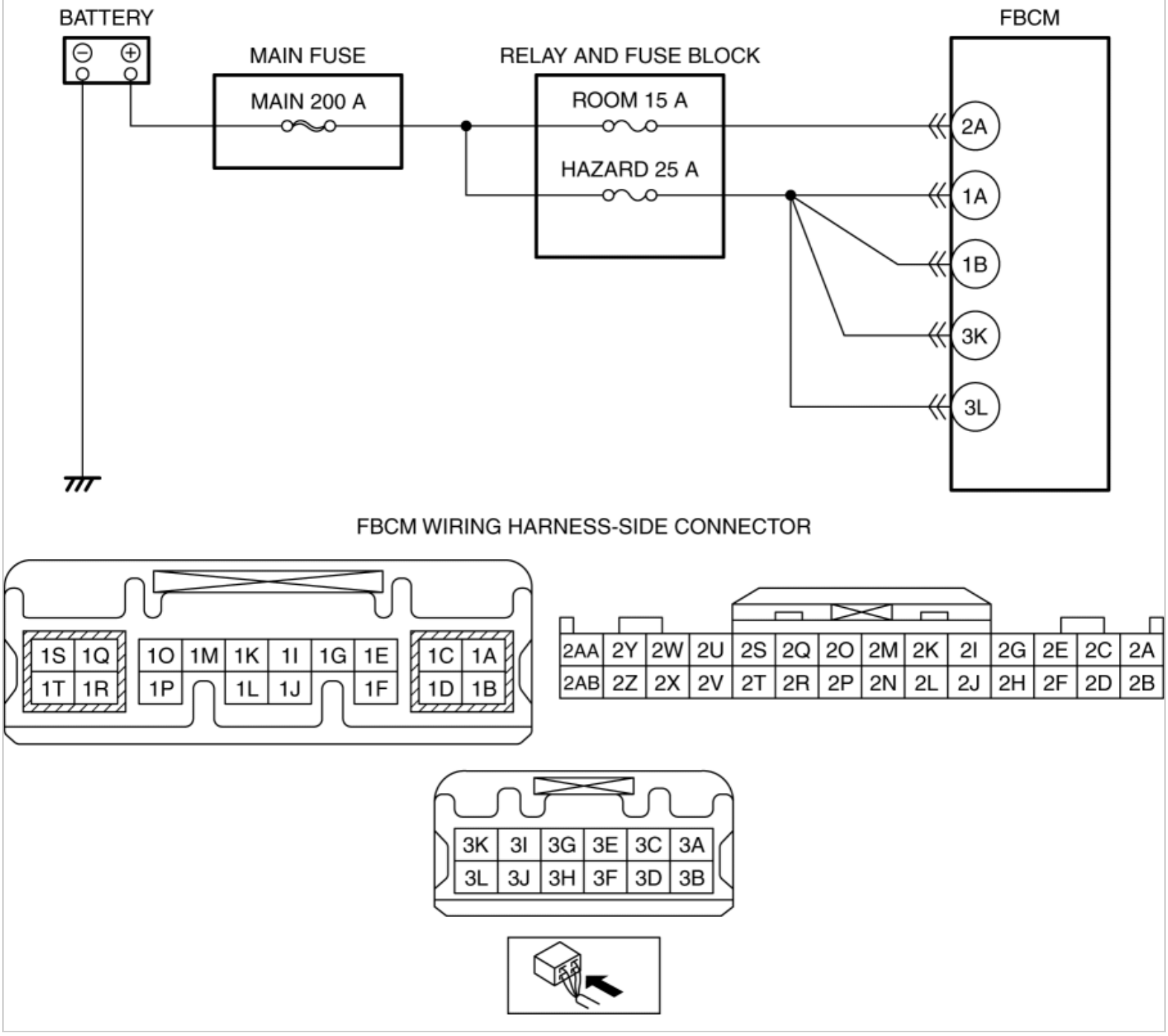

Diagnostic Procedure

Step	Inspection		Action
1	**VERIFY FRONT BODY CONTROL MODULE (FBCM) DTCs AGAIN** • Clear the DTC for the front body control module (FBCM) using the M-MDS. (See **CLEARING DTC [FRONT BODY CONTROL MODULE**	Yes	Go to the next step.
		No	Go to Step 8.

	(FBCM)].) • Switch the ignition ON (engine off or on) and wait for **10 s or more**. • Retrieve the front body control module (FBCM) DTCs using the M-MDS. (See **DTC INSPECTION [FRONT BODY CONTROL MODULE (FBCM)]**.) • Is the same DTC displayed?		
2	**VERIFY PCM DTCs** • Retrieve the PCM DTCs using the M-MDS. (See **ON-BOARD DIAGNOSTIC TEST [SKYACTIV-G 2.0, SKYACTIV-G 2.5]**.) • Are any DTCs displayed?	Yes	Repair or replace the malfunctioning part according to the applicable DTC troubleshooting. (See **DTC TABLE [SKYACTIV-G 2.0, SKYACTIV-G 2.5]**.)
		No	Go to the next step.
3	**INSPECT BATTERY** • Inspect the battery. (See **BATTERY INSPECTION [SKYACTIV-G 2.0, SKYACTIV-G 2.5]**.) • Is the battery normal?	Yes	Go to the next step.
		No	Recharge or replace the battery, then go to Step 7. (See **BATTERY RECHARGING [SKYACTIV-G 2.0, SKYACTIV-G 2.5]**.) (See **BATTERY REMOVAL/INSTALLATION [SKYACTIV-G 2.0, SKYACTIV-G 2.5]**.)
4	**INSPECT GENERATOR** • Inspect the generator. (See **GENERATOR INSPECTION [SKYACTIV-G 2.0, SKYACTIV-G 2.5 (WITHOUT i-ELOOP)]**.) (See **GENERATOR INSPECTION [SKYACTIV-G 2.0, SKYACTIV-G 2.5 (WITH i-ELOOP)]**.) • Is the generator normal?	Yes	Go to the next step.
		No	Replace the generator, then go to Step 7. (See **GENERATOR REMOVAL/INSTALLATION [SKYACTIV-G 2.0, SKYACTIV-G 2.5 (WITHOUT i-ELOOP)]**.) (See **GENERATOR REMOVAL/INSTALLATION [SKYACTIV-G 2.0, SKYACTIV-G 2.5 (WITH i-ELOOP)]**.)
5	**INSPECT FRONT BODY CONTROL MODULE (FBCM) CONNECTOR CONDITION** • Switch the ignition off. • Disconnect the negative battery cable. (See **NEGATIVE BATTERY CABLE DISCONNECTION/CONNECTION [SKYACTIV-G 2.0, SKYACTIV-G 2.5]**.) • Disconnect the front body control module (FBCM) connector. • Inspect the connector	Yes	Go to the next step.
		No	Repair or replace the connector, then go to Step 7.

	engagement and connection condition and inspect the terminals for damage, deformation, corrosion, or disconnection. • Is the connector normal?		
6	**VERIFY FRONT BODY CONTROL MODULE (FBCM) POWER SUPPLY VOLTAGE** • Always reconnect all disconnected connectors. • Reconnect the negative battery cable. (See **NEGATIVE BATTERY CABLE DISCONNECTION/CONNECTION [SKYACTIV-G 2.0, SKYACTIV-G 2.5]**.) • Display the PID VPWR_B using the M-MDS. (See **PID/DATA MONITOR INSPECTION [FRONT BODY CONTROL MODULE (FBCM)]**.) • Is the voltage **B+**?	Yes	Go to the next step.
		No	Inspect the ROOM 15 A fuse, HAZARD 25 A fuse and MAIN 200 A fuse. • If the fuse is blown: ▪ Refer to the wiring diagram and verify whether or not there is a common connector between the following: • MAIN 200 A fuse—Front body control module (FBCM) terminal 2A • MAIN 200 A fuse—Front body control module (FBCM) terminal 1A • MAIN 200 A fuse—Front body control module (FBCM) terminal 1B • MAIN 200 A fuse—Front body control module (FBCM) terminal 3K • MAIN 200 A fuse—Front body control module (FBCM) terminal 3L **If there is a common connector:** • Determine the malfunctioning part by inspecting the common connector and the terminal for corrosion, damage, or pin disconnection, and the common wiring harness for a short to ground. • Repair or replace the malfunctioning part. **If there is no**

common connector:

- Repair or replace the wiring harness which has a short to ground.
- Replace the fuse.

- If the fuse is damaged:
  - Replace the fuse.
- If the fuse is normal:
  - Refer to the wiring diagram and verify whether or not there is a common connector between the following:
    - Battery positive terminal—Front body control module (FBCM) terminal 2A
    - Battery positive terminal—Front body control module (FBCM) terminal 1A
    - Battery positive terminal—Front body control module (FBCM) terminal 1B
    - Battery positive terminal—Front body control module (FBCM) terminal 3K
    - Battery positive terminal—Front body control module (FBCM) terminal 3L

    If there is a common connector:

    - Determine the malfunctioning part by inspecting the common connector and the terminal for corrosion, damage, or pin disconnection, and the common wiring harness for an open circuit.
    - Repair or replace

			the malfunctioning part. **If there is no common connector:** • Repair or replace the wiring harness which has an open circuit. Go to the next step.
7	**VERIFY THAT REPAIRS HAVE BEEN COMPLETED** • Always reconnect all disconnected connectors. • Reconnect the negative battery cable. (See **NEGATIVE BATTERY CABLE DISCONNECTION/CONNECTION [SKYACTIV-G 2.0, SKYACTIV-G 2.5]**.) • Clear the DTC for the front body control module (FBCM) using the M-MDS. (See **CLEARING DTC [FRONT BODY CONTROL MODULE (FBCM)]**.) • Switch the ignition ON (engine off or on) and wait for **10 s or more**. • Retrieve the front body control module (FBCM) DTCs using the M-MDS. (See **DTC INSPECTION [FRONT BODY CONTROL MODULE (FBCM)]**.) • Is the same DTC displayed?	Yes	Repeat the inspection from Step 1. • If the malfunction recurs, replace the front body control module (FBCM). (See **FRONT BODY CONTROL MODULE (FBCM) REMOVAL/INSTALLATION**.) Go to the next step.
		No	Go to the next step.
8	**VERIFY IF OTHER DTCs DISPLAYED** • Are any other DTCs displayed?	Yes	Repair or replace the malfunctioning part according to the applicable DTC troubleshooting. (See **DTC TABLE [FRONT BODY CONTROL MODULE (FBCM)]**.)
		No	DTC troubleshooting completed.

2014 - Mazda3 - Body and Accessories

DTC U3003:17 [FRONT BODY CONTROL MODULE (FBCM)]

Description	Front body control module (FBCM) power supply voltage high input
Detection condition	• Front body control module (FBCM) power supply circuit voltage of **14.2 V or more** is detected for **10 s or more** with the ignition switched ON (engine off or on).
Fail-safe function	Not applicable
Possible cause	• DTCs are stored in the PCM. • Battery malfunction • Generator malfunction • Front body control module (FBCM) malfunction
System wiring diagram	Not applicable

Diagnostic Procedure

Step	Inspection		Action
1	**VERIFY FRONT BODY CONTROL MODULE (FBCM) DTCs AGAIN** • Clear the DTC for the front body control module (FBCM) using the M-MDS. (See **CLEARING DTC [FRONT BODY CONTROL MODULE (FBCM)]**.) • Switch the ignition ON (engine off or on) and wait for **10 s or more**. • Retrieve the front body control module (FBCM) DTCs using the M-MDS.	Yes	Go to the next step.
		No	Go to Step 6.

	(See **DTC INSPECTION [FRONT BODY CONTROL MODULE (FBCM)]**.) • Is the same DTC displayed?		
2	**VERIFY PCM DTCs** • Retrieve the PCM DTCs using the M-MDS. (See **ON-BOARD DIAGNOSTIC TEST [SKYACTIV-G 2.0, SKYACTIV-G 2.5]**.) • Are any DTCs displayed?	Yes	Repair or replace the malfunctioning part according to the applicable DTC troubleshooting. (See **DTC TABLE [SKYACTIV-G 2.0, SKYACTIV-G 2.5]**.)
		No	Go to the next step.
3	**INSPECT BATTERY** • Inspect the battery. (See **BATTERY INSPECTION [SKYACTIV-G 2.0, SKYACTIV-G 2.5]**.) • Is the battery normal?	Yes	Go to the next step.
		No	Replace the battery, then go to Step 5. (See **BATTERY REMOVAL/INSTALLATION [SKYACTIV-G 2.0, SKYACTIV-G 2.5]**.)
4	**INSPECT GENERATOR** • Inspect the generator. (See **GENERATOR INSPECTION [SKYACTIV-G 2.0, SKYACTIV-G 2.5 (WITHOUT i-ELOOP)]**.) (See **GENERATOR INSPECTION [SKYACTIV-G 2.0, SKYACTIV-G 2.5 (WITH i-ELOOP)]**.) • Is the generator normal?	Yes	Go to the next step.
		No	Replace the generator, then go to the next step. (See **GENERATOR REMOVAL/INSTALLATION [SKYACTIV-G 2.0, SKYACTIV-G 2.5 (WITHOUT i-ELOOP)]**.) (See **GENERATOR REMOVAL/INSTALLATION [SKYACTIV-G 2.0, SKYACTIV-G 2.5 (WITH i-ELOOP)]**.)
5	**VERIFY THAT REPAIRS HAVE BEEN COMPLETED** • Clear the DTC for the front body control module (FBCM) using the M-MDS. (See **CLEARING DTC [FRONT BODY CONTROL MODULE (FBCM)]**.) • Switch the ignition ON (engine off or on) and wait for **10 s or more**. • Retrieve the front body control module (FBCM) DTCs using the M-MDS. (See **DTC INSPECTION [FRONT BODY CONTROL MODULE (FBCM)]**.) • Is the same DTC displayed?	Yes	Repeat the inspection from Step 1. • If the malfunction recurs, replace the front body control module (FBCM). (See **FRONT BODY CONTROL MODULE (FBCM) REMOVAL/INSTALLATION**.) Go to the next step.
		No	Go to the next step.

6	**VERIFY IF OTHER DTCs DISPLAYED** • Are any other DTCs displayed?	Yes	Repair or replace the malfunctioning part according to the applicable DTC troubleshooting. (See **DTC TABLE [FRONT BODY CONTROL MODULE (FBCM)]**.)
		No	DTC troubleshooting completed.

2014 - Mazda3 - Body and Accessories

DTC U3006:62 [FRONT BODY CONTROL MODULE (FBCM)]

Description	Front body control module (FBCM) power supply voltage mismatch
Detection condition	• Front body control module (FBCM) terminal 1A, 1B, 3K, and 3L voltages of **2 V or more** lower than the voltage of terminal 2A are detected for **5 s or more** with the ignition switched ON (engine off or on).
Fail-safe function	Not applicable

Possible cause	• Front body control module (FBCM) connector or terminal malfunction
	• Front body control module (FBCM) power supply circuit malfunction
	  ▪ Short to ground in the wiring harness between the following:
	  • MAIN 200 A fuse—Front body control module (FBCM) terminal 2A
	  • MAIN 200 A fuse—Front body control module (FBCM) terminal 1A
	  • MAIN 200 A fuse—Front body control module (FBCM) terminal 1B
	  • MAIN 200 A fuse—Front body control module (FBCM) terminal 3K
	  • MAIN 200 A fuse—Front body control module (FBCM) terminal 3L
	  ▪ ROOM 15 A fuse malfunction
	  ▪ HAZARD 25 A fuse malfunction
	  ▪ MAIN 200 A fuse malfunction
	  ▪ Open circuit in wiring harness between the following terminals:
	  • Battery positive terminal—Front body control module (FBCM) terminal 2A
	  • Battery positive terminal—Front body control module (FBCM) terminal 1A
	  • Battery positive terminal—Front body control module (FBCM) terminal 1B
	  • Battery positive terminal—Front body control module (FBCM) terminal 3K
	  • Battery positive terminal—Front body control module (FBCM) terminal 3L
	• Front body control module (FBCM) malfunction

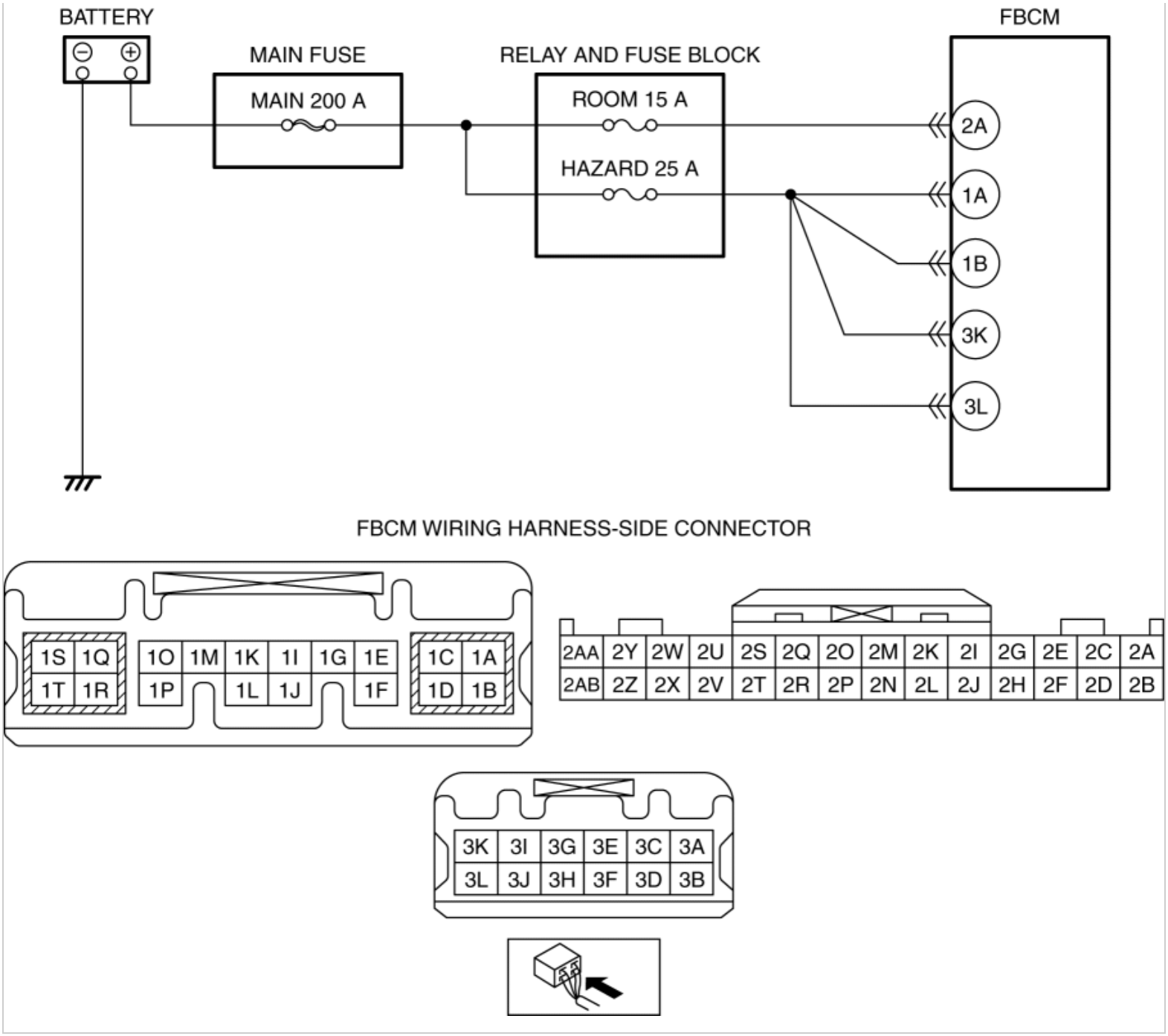

Diagnostic Procedure

Step	Inspection		Action
1	**VERIFY FRONT BODY CONTROL MODULE (FBCM) DTCs AGAIN** • Clear the DTC for the front body control module (FBCM) using the M-MDS. (See **CLEARING DTC [FRONT BODY CONTROL MODULE (FBCM)]**.) • Switch the ignition ON (engine off or on) and wait for **5 s or more**.	Yes	Go to the next step.
		No	Go to Step 5.

	• Retrieve the front body control module (FBCM) DTCs using the M-MDS. (See **DTC INSPECTION [FRONT BODY CONTROL MODULE (FBCM)]**.) • Is the same DTC displayed?		
2	**INSPECT FRONT BODY CONTROL MODULE (FBCM) CONNECTOR CONDITION** • Switch the ignition off. • Disconnect the negative battery cable. (See **NEGATIVE BATTERY CABLE DISCONNECTION/CONNECTION [SKYACTIV-G 2.0, SKYACTIV-G 2.5]**.) • Disconnect the front body control module (FBCM) connector. • Inspect the connector engagement and connection condition and inspect the terminals for damage, deformation, corrosion, or disconnection. • Is the connector normal?	Yes	Go to the next step.
		No	Repair or replace the connector, then go to Step 4.
3	**VERIFY FRONT BODY CONTROL MODULE (FBCM) POWER SUPPLY VOLTAGE** • Always reconnect all disconnected connectors. • Reconnect the negative battery cable. (See **NEGATIVE BATTERY CABLE DISCONNECTION/CONNECTION [SKYACTIV-G 2.0, SKYACTIV-G 2.5]**.) • Display the PID VPWR_B using the M-MDS. (See **PID/DATA MONITOR INSPECTION [FRONT BODY CONTROL MODULE (FBCM)]**.) • Is the voltage **B+**?	Yes	Go to the next step.
		No	Inspect the ROOM 15A fuse, HAZARD 25 A fuse and MAIN 200 A fuse. • If the fuse is blown: ▪ Refer to the wiring diagram and verify whether or not there is a common connector between the following: • MAIN 200 A fuse—Front body control module (FBCM) terminal 2A • MAIN 200 A fuse—Front body control module (FBCM) terminal 1A • MAIN 200 A fuse—Front body control module (FBCM) terminal 1B • MAIN 200 A fuse—Front body control module (FBCM)

terminal 3K

- MAIN 200 A fuse—Front body control module (FBCM) terminal 3L

If there is a common connector:

- Determine the malfunctioning part by inspecting the common connector and the terminal for corrosion, damage, or pin disconnection, and the common wiring harness for a short to ground.
- Repair or replace the malfunctioning part.

If there is no common connector:

- Repair or replace the wiring harness which has a short to ground.
- Replace the fuse.

- If the fuse is damaged:
  - Replace the fuse.
- If the fuse is normal:
  - Refer to the wiring diagram and verify whether or not there is a common connector between the following:
    - Battery positive terminal—Front body control module (FBCM) terminal 2A
    - Battery positive terminal—Front body control module (FBCM) terminal 1A
    - Battery positive terminal—Front body control module (FBCM) terminal 1B
    - Battery positive

			terminal—Front body control module (FBCM) terminal 3K • Battery positive terminal—Front body control module (FBCM) terminal 3L **If there is a common connector:** • Determine the malfunctioning part by inspecting the common connector and the terminal for corrosion, damage, or pin disconnection, and the common wiring harness for an open circuit. • Repair or replace the malfunctioning part. **If there is no common connector:** • Repair or replace the wiring harness which has an open circuit. Go to the next step.
4	**VERIFY THAT REPAIRS HAVE BEEN COMPLETED** • Always reconnect all disconnected connectors. • Reconnect the negative battery cable. (See **NEGATIVE BATTERY CABLE DISCONNECTION/CONNECTION [SKYACTIV-G 2.0, SKYACTIV-G 2.5]**.) • Clear the DTC for the front body control module (FBCM) using the M-MDS. (See **CLEARING DTC [FRONT BODY CONTROL MODULE (FBCM)]**.) • Switch the ignition ON (engine off or on) and wait for **5 s or more**.	Yes	Repeat the inspection from Step 1. • If the malfunction recurs, replace the front body control module (FBCM). (See **FRONT BODY CONTROL MODULE (FBCM) REMOVAL/INSTALLATION**.) Go to the next step.
		No	Go to the next step.

	• Retrieve the front body control module (FBCM) DTCs using the M-MDS. (See **DTC INSPECTION [FRONT BODY CONTROL MODULE (FBCM)]**.) • Is the same DTC displayed?		
5	**VERIFY IF OTHER DTCs DISPLAYED** • Are any other DTCs displayed?	Yes	Repair or replace the malfunctioning part according to the applicable DTC troubleshooting. (See **DTC TABLE [FRONT BODY CONTROL MODULE (FBCM)]**.)
		No	DTC troubleshooting completed.

2014 - Mazda3 - Body and Accessories

PID/DATA MONITOR INSPECTION [FRONT BODY CONTROL MODULE (FBCM)]

1. Connect the M-MDS to the DLC-2.

2. After the vehicle is identified, select the following items from the initialization screen of the M-MDS.

    a. Select “DataLogger”.

    b. Select “Modules”.

    c. Select “F_BCM”.

3. Select the applicable PID from the PID table.

4. Verify the PID data according to the directions on the screen.

NOTE:

- The PID data screen function is used for monitoring the calculated value of input/output signals in the module. Therefore, if the monitored value of the output parts is not within the specification, it is necessary to inspect the monitored value of input parts corresponding to the applicable output part control. In addition, because the system does not display an output part malfunction as an abnormality in the monitored value, it is necessary to inspect the output parts individually.
- When detecting DTCs, PIDs related to a malfunctioning system may not display even if the module is normal. Therefore, if a PID is not displayed, it is necessary to verify the DTC, perform malfunction diagnosis of the DTC that was detected, and do repairs.

2014 - Mazda3 - Body and Accessories

PID/DATA MONITOR TABLE [FRONT BODY CONTROL MODULE (FBCM)]

—: Not applicable

PID	Unit/Operation	Data contents	Data read/use method	Module control terminal
ABK_CS_BG*1	Off/On	Theft-deterrent system answer-back signal input status • Off: Theft-deterrent system answer-back signal is not received. • On: Theft-deterrent system answer-back signal is received.	Theft-deterrent system answer-back request signal input from rear body control module (RBCM) **NOTE:** • Operates only if the ignition is switched off.	2I, 2K (CAN)
ABK_CS_KEY	Off/On	Keyless entry system answer-back signal input status • Off: Keyless entry system answer-back signal is not received. • On: Keyless entry system answer-back signal is received.	Answer-back request signal input for keyless entry system from rear body control module (RBCM)	2I, 2K (CAN)
ABK_HD_CS_R	Off/On	**NOTE:** • It is displayed, however, if an accessory part is installed, it cannot be used.	—	—
ABK_HN_CS_R	Off/On	**NOTE:** • It is displayed, however, if an accessory part is installed, it cannot be used.	—	—
		Keyless entry system horn answer-back signal input status • Off: Keyless		

ABK_HN_KEY	Off/On	entry system horn answer-back signal is not received. • On: Keyless entry system horn answer-back signal is received.	Keyless entry system horn answer-back request signal input from rear body control module (RBCM)	2I, 2K (CAN)
BAT_TMP	°C, °F	Displays battery temperature (estimated).	Estimated battery temperature transmitted by LIN communication from current sensor	2E (LIN)
BG_ALARM_CS*1	Off/On	Theft-deterrent system alarm signal input status • Off: Hazard warning light flashing request signal is not received • On: Hazard warning light flashing request signal is received	Theft-deterrent system alarm request signal input from rear body control module (RBCM) **NOTE:** • Operates only if the ignition is switched off.	2I, 2K (CAN)
BLWR_MT_RY	Off/On	Blower motor relay output signal status • Off: Blower relay is off. • On: Blower relay is on.	—	2Z (Blower motor relay control)
BRAKE_SW	Off/On	Brake switch operation status • Off: Brake switch (No. 2 signal) is off. (Brake pedal is depressed.) • On: Brake switch (No. 2 signal) is on. (Brake pedal is not depressed.)	Brake switch signal status detected by PCM	2N, 2P (CAN)
BRK_F_L_SW	Normal/Low/Unknown	Brake fluid level condition • Normal: Brake fluid level is between MAX and MIN. • Low: Brake fluid level is lower than MIN. • Unknown: Brake fluid level is not determined.	—	2Q (Brake fluid level switch signal)

DCDC_CVT_ST	**NOTE:** • Displays in the M-MDS but it does not operate.			
DCDC_VLT_I	**NOTE:** • Displays in the M-MDS but it does not operate.			
DCDC_VLT_O	**NOTE:** • Displays in the M-MDS but it does not operate.			
DEFOG_F_CS	Off/On	**NOTE:** • It is displayed, however, if an accessory part is installed, it cannot be used.	—	—
DEFOG_R_CS	Off/On	Rear defroster operation request signal from heater control unit • Off: Rear window defroster control signal is not received. • On: Rear window defroster control signal is received.	For manual A/C vehicles, request signal transmission is via LIN communication.	2I, 2K (CAN)
ENG_C_TMP	°C, °F	Displays the engine coolant temperature value from the PCM.	—	2N, 2P (CAN)
ESS_ST	**NOTE:** • Displays in the M-MDS but it does not operate.			
F_FOG_LMP*2	Off/On	Front fog light control signal • Off: Front fog light is turned off. • On: Front fog light is turned on.	—	—
F_FOG_SW*2	Off/On	Front fog light switch input signal from start stop unit • Off: Front fog light switch F.FOG signal is not received. • On: Front fog light switch F.FOG signal is received.	—	2I, 2K (CAN)

H/L	OFF/DRL/TNS/H/L_LOW/H/L_HI	Headlight control signal • OFF: Headlight is turned off. • DRL: DRL is turned on. • TNS: TNS is turned on. • H/L_LOW: Headlight (LO) is turned on. • H/L_HI: Headlight (HI) is turned on.	—	—
H/L_CLN_RY	**NOTE:** • Displays in the M-MDS but it does not operate.			
H/L_CS_RLS*3	Off/TNS_On/TNS+H/L_On	Headlight control input signal from auto light sensor/rain sensor • Off: TNS and headlight on request signal is not received from auto light sensor. • TNS_On: TNS on signal is received from auto light sensor. • TNS+H/L_On: TNS and headlight LO on signal is received from auto light sensor.	—	2G (LIN)
H/L_HI	Off/On	Headlight HI beams • Off: Headlight HI is turned off. • On: Headlight HI is turned on.	—	—
H/L_SW_HI	Off/On	Light switch position (HI) condition via CAN signal from start stop unit • Off: Light switch HI signal is not received. • On: Light switch HI signal is received.	—	2I, 2K (CAN)

H/L_SW_LOW1	Off/On	Displays dimmer switch position of light switch sent from start stop unit via CAN signal • Off: Other than dimmer switch LO position of light switch is received • On: Dimmer switch LO position of light switch is received	Verify if the monitor value switches when the dimmer switch of the light switch is switched between LO and HI positions. If the dimmer switch operation and monitor values do not match, inspect the start stop unit or CAN communication.	2I, 2K (CAN)
H/L_SW_OFF	Off/On	Light switch position (OFF) condition via CAN signal from start stop unit • Off: Light switch OFF signal is not received. • On: Light switch OFF signal is received.	—	2I, 2K (CAN)
H/L_SW_PASS	Off/On	Light switch position (PASS) condition via CAN signal from start stop unit • Off: Light switch FLASH-TO-PASS signal is not received. • On: Light switch FLASH-TO-PASS signal is received.	—	2I, 2K (CAN)
H/L_SW_TNS	Off/On	Light switch position (TNS) status via CAN signal from start stop unit • Off: Light switch TNS signal is not received. • On: Light switch TNS signal is received.	—	2I, 2K (CAN)
H/L_TNS	Off/On	Light switch (TNS) output signal • Off: TNS is turned off. • On: TNS is turned on.	—	—
		Hazard light output signal • Off: Hazard		

HAZARD_LMP	Off/On	light is turned off. • On: Hazard light is turned on.	—	—
HAZARD_SW	Off/On/Unknown	Hazard switch input signal from start stop unit • Off: Hazard warning switch is not pressed. • On: Hazard warning switch is pressed. • Unknown: Hazard warning switch on/off is not determined.	—	2I, 2K (CAN)
HBC_CS*4	Off/On/Invalid	High beam control (HBC) system control signal input from forward sensing camera (FSC) • Off: High beam control (HBC) system signal is not received. • On: High beam control (HBC) system signal is received. • Invalid: High beam control (HBC) system signal has error.	—	2I, 2K (CAN)
HBC_ST*4	Off/On	Operation status of high beam control (HBC) system • Off: High beam control (HBC) system is not operated. • On: High beam control (HBC) system is operated.	Control status of high beam control (HBC) system of front body control module (FBCM) by signal from forward sensing camera (FSC)	2I, 2K (CAN)
HEAT_CS_R	**NOTE:** • Displays in the M-MDS but it does not operate.			
IG_ST	Off/On	Ignition switch status • Off: IG1 is off. • On: IG1 is on.	—	2I, 2K (CAN)
		Operation status of lights off function by auto-light function		

L_OFF_AUTO	Off/On	Off: TNS or headlight off control by auto light off system is not operated. • On: TNS or headlight off control by auto light off system is operated.	If the lights are turned off by the auto-light function (ignition is switched off), the value becomes On.	—
L_OFF_BS	**NOTE:** • Displays in the M-MDS but it does not operate.			
OIL_P_SW	**NOTE:** • Displays in the M-MDS but it does not operate.			
OUT_CAR_TMP	°C, °F	Displays the ambient temperature value input from the PCM.	—	2N, 2P (CAN)
P_BRAKE_SW	Off/On	Parking brake switch status having input from instrument cluster • Off: Parking brake switch is off. (Parking brake lever is not pulled.) • On: Parking brake switch is on. (Parking brake lever is pulled.)	—	2I, 2K (CAN)
PNC_CS	Off/On	Panic signal input from rear body control module (RBCM) • Off: Panic control signal is not received. • On: Panic control signal is received.	—	2I, 2K (CAN)
PNC_HD_CS_R	Off/On	**NOTE:** • It is displayed, however, if an accessory part is installed, it cannot be used.	—	—
PNC_HN_CS_R	Off/On	**NOTE:** • It is displayed, however, if an accessory part is installed, it cannot be used.	—	—

PTC_HEAT_CS	**NOTE:** • Displays in the M-MDS but it does not operate.			
R_FOG_LMP	**NOTE:** • Displays in the M-MDS but it does not operate.			
R_FOG_SW	**NOTE:** • Displays in the M-MDS but it does not operate.			
RES_CS	Off/On	**NOTE:** • It is displayed, however, if an accessory part is installed, it cannot be used.	—	—
RLS_FLT*3	O.K./FAULT	Fail determination signal of auto light sensor/rain sensor • O.K.: Rain sensor is normal. • FAULT: Rain sensor has a malfunction.	If normal, the value is O.K.. If abnormal, FAULT.	2G (LIN)
S_HT_CUT*5	No_Request/Cut	Seat warmer cut status • No_Request: Except below • Cut: Seat warmer is turned off or lowered.	—	—
SHIFT_L_POS*6	Between/P/R/N/D/S(2)/L(1)	Selector lever position signal from TCM • Between: Selector lever is between two positions. • P: Selector lever is in P position. • R: Selector lever is in R position. • N: Selector lever is in N position. • D: Selector lever is in D position. • S(2): Selector lever is in D position 2nd gear.	—	2I, 2K (CAN)

		• L(1): Selector lever is in D position 1st gear.		
TURN_L_L	Off/On	Turn light (LH) output signal • Off: Turn light (LH) is turned off. • On: Turn light (LH) is turned on.	—	—
TURN_L_R	Off/On	Turn light (RH) output signal • Off: Turn light (RH) is turned off. • On: Turn light (RH) is turned on.	—	—
TURN_SW	Off/Turn_R_On/Turn_L_On/Unknown	Turn switch signal input from start stop unit • Off: Turn switch is in OFF position. • Turn_R_On: Turn switch is in RH position. • Turn_L_On: Turn switch is in LH position. • Unknown: Turn switch position is not determined.	—	2I, 2K (CAN)
VPWR_B	V	Displays front body control module (FBCM) power supply voltage	—	2A, 3K, 3L (Power supply)
VSPD	KPH, MPH	Displays the vehicle speed signal from the PCM.	—	2N, 2P (CAN)
WAS_FLUID_L*7	Normal/Low/Unknown	Washer fluid level • Normal: Washer fluid level is normal. • Low: Washer fluid level is low. • Unknown: Washer fluid level is not determined.	—	2S (Washer level switch signal)
		Windshield washer motor relay operation signal • Off: Windshield		3F

WAS_MT_RY_F	Off/On	washer motor relay is off. • On: Windshield washer motor relay is on.	—	(Windshield washer motor control)
WAS_MT_RY_R*8	Off/On	Rear washer motor relay operation signal • Off: Rear washer motor relay is off. • On: Rear washer motor relay is on.	—	3H (Rear window washer motor control)
WASHER_F	Off/On	Windshield washer switch input signal from start stop unit • Off: Windshield washer switch is off. • On: Windshield washer switch is on.	—	2I, 2K (CAN)
WASHER_R*8	Off/On	Rear washer switch input signal from start stop unit • Off: Rear wiper and washer switch is not in rear washer position. • On: Rear wiper and washer switch is in rear washer position.	—	2I, 2K (CAN)
WIP_CS_RLS*3	Off/Single_Wipe/F_Wiper_LOW/F_Wiper_HI/Failure	Auto wiper input signal from auto light sensor/rain sensor • Off: Wiper operation signal is not received from rain sensor. • Single_Wipe: Signal to operate wiper once is received from rain sensor. • F_Wiper_LOW: Signal to operate wiper at low speed is received from rain sensor. • F_Wiper_HI: Signal to operate wiper at high speed is received	—	2G (LIN)

		from rain sensor. • Failure: Communication with rain sensor is failed.		
WIP_F	OFF/LOW/HI/INT / AUTO	Windshield wiper switch input signal from start stop unit • OFF: Windshield wiper switch is in OFF position. • LOW: Windshield wiper switch is in LO position. • HI: Windshield wiper switch is in HI position. • INT / AUTO: Windshield wiper switch is in INT or AUTO position.	—	2I, 2K (CAN)
WIP_F_INT_L	%	Displays the windshield wiper intermittent interval time input signal from start stop unit.	—	2I, 2K (CAN)
WIP_F_LOW	Off/On	Windshield wiper LO switch input status • Off: Windshield wiper switch is not in LO position. • On: Windshield wiper switch is in LO position.	—	2Y (Windshield wiper (LO) switch signal)
WIP_F_MST	Stop/Move	Windshield wiper stop position signal input • Stop: Windshield wipers stop at normal position • Move: Windshield wipers do not stop at normal position	If windshield wipers are operating, Move-Stop is repeated.	2AA (Autostop switch signal)
WIP_F_RY_HI	Off/On	Windshield wiper HI relay output signal • Off: Windshield wiper HI relay is off.	—	3C, 3E (Windshield wiper motor (HI) control)

		On: Windshield wiper HI relay is on.		
WIP_F_RY_LO	Off/On	Windshield wiper relay LO output signal • Off: Windshield wiper LO relay is off. • On: Windshield wiper LO relay is on.	—	3G, 3I (Windshield wiper motor (LOW) control)
WIP_R*8	OFF/LOW/INT	Rear wiper operation condition input signal from start stop unit • OFF: Rear wiper switch is in OFF position. • LOW: Rear wiper switch is in ON position. • INT: Rear wiper switch is in INT position.	—	2I, 2K (CAN)
WIP_R_RY*8	Off/On	Rear wiper relay drive signal • Off: Rear wiper motor is not operated. • On: Rear wiper motor is operated.	—	2I, 2K (CAN)

*1 **With theft-deterrent system**

*2 **With front fog light**

*3 **With auto light sensor/rain sensor**

*4 **With high beam control (HBC) system**

*5 **With seat warmer**

*6 **ATX**

*7 **With washer fluid-level sensor**

*8 **With rear wiper and washer**

2014 - Mazda3 - Body and Accessories

ACTIVE COMMAND MODES INSPECTION [FRONT BODY CONTROL MODULE (FBCM)]

1. Connect the M-MDS to the DLC-2.

2. After the vehicle is identified, select the following items from the initialization screen of the M-MDS.

    a. Select “DataLogger”.

    b. Select “Modules”.

    c. Select “F_BCM”.

3. Select the simulation items from the PID table.

4. Perform the active command modes function, inspect the operations for each parts.

    - If the operation of output parts cannot be verified after the active command mode inspection is performed, this could indicate the possibility of an open or short circuit, sticking, or operation malfunction in the output parts.

2014 - Mazda3 - Body and Accessories

ACTIVE COMMAND MODES TABLE [FRONT BODY CONTROL MODULE (FBCM)]

Simulation item	Unit/Operation	Data contents	Output part name
DEFOG_R_ST	Off/On	• Off: Stops rear window defroster. • On: Operates rear window defroster.	Filament
ESS_ST	**NOTE:** • Displays in the M-MDS but it does not operate.		
F_FOG_LMP*1	Off/On	• Off: Turns off front fog light. • On: Illuminates front fog light.	Front fog light
H/L	OFF/DRL/TNS/H/L_LOW/H/L_HI	• Off: Turns off headlight. • DRL: Illuminates DRL. • TNS: Illuminates TNS. • H/L_LOW: Illuminates headlight LO. • H/L_HI: Illuminates headlight HI.	• Headlight LO/HI • Parking light • Taillight • License plate light • DRL
H/L_CLN_RY	**NOTE:** • Displays in the M-MDS but it does not operate.		

HAZARD_LMP	Off/On	• Off: Turns off hazard warning light. • On: Flashes hazard warning light.	• Front turn light • Side turn light*3 • Rear turn light
PTC_HEAT_ST	**NOTE:** • Displays in the M-MDS but it does not operate.		
WAS_MT_RY_F	Off/On	• Off: Turns front washer motor relay off. • On: Turns front washer motor relay on.	Front body control module (FBCM)
WAS_MT_RY_R*2	Off/On	• Off: Turns rear washer motor relay off. • On: Turns rear washer motor relay on.	Front body control module (FBCM)

*1 **With front fog light**

*2 **With rear wiper and washer**

*3 **With side turn light**

2014 - Mazda3 - Body and Accessories

ON-BOARD DIAGNOSTIC WIRING DIAGRAM [REAR BODY CONTROL MODULE (RBCM)]

Power window system, Auto dimming mirror

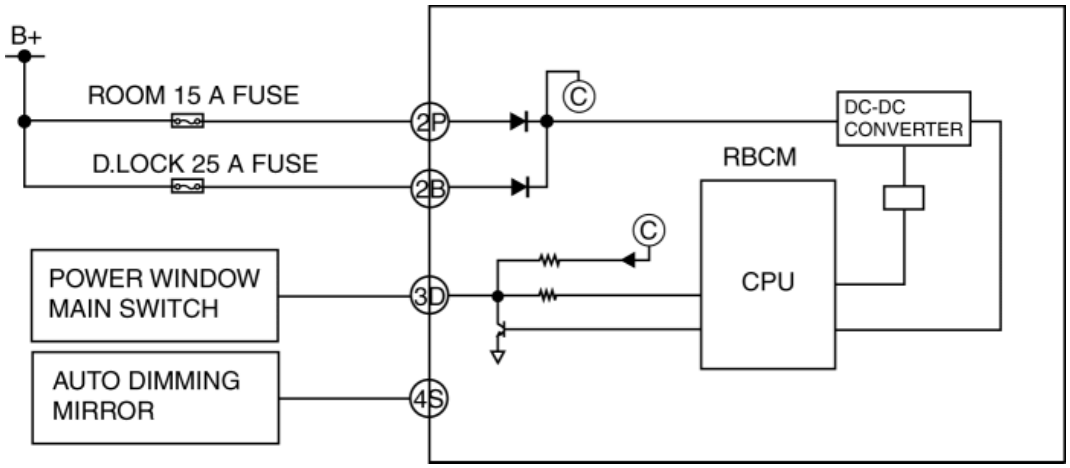

Power door lock system, theft-deterrent system

ON-BOARD DIAGNOSTIC WIRING DIAGRAM [REAR BODY CONTROL MODULE (RBCM)]

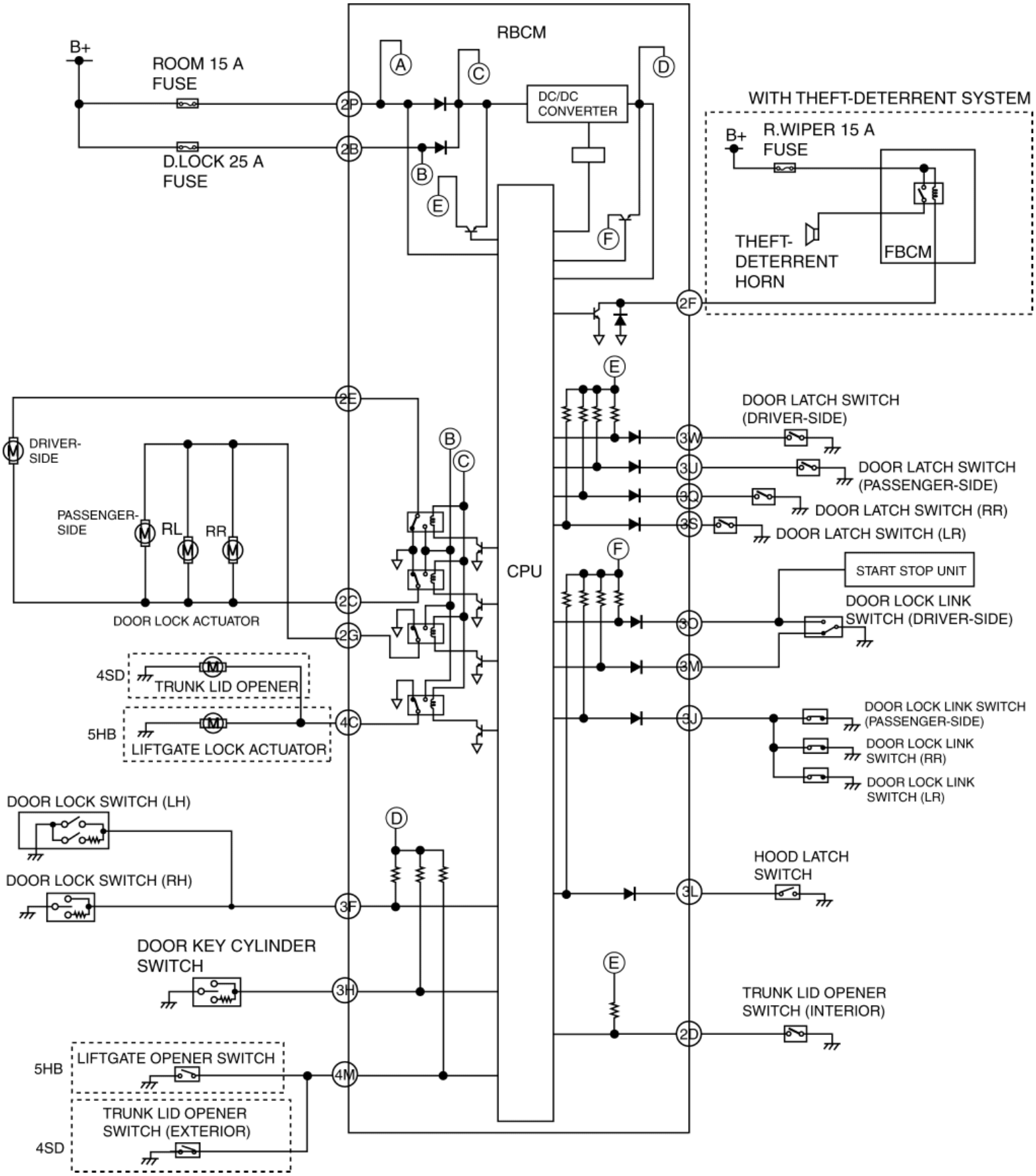

Room lights, brake light system

ON-BOARD DIAGNOSTIC WIRING DIAGRAM [REAR BODY CONTROL MODULE (RBCM)]

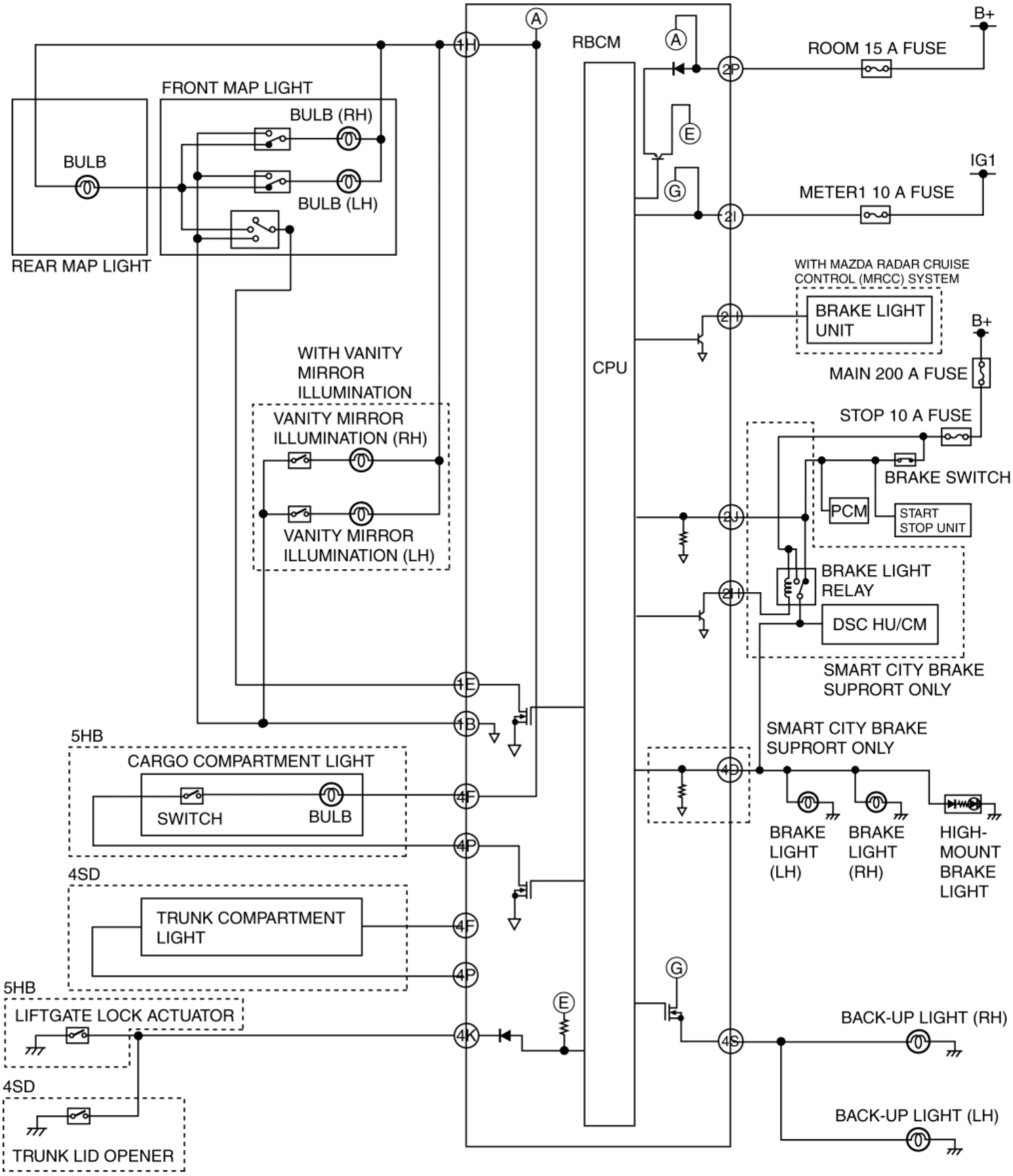

Rear wiper system

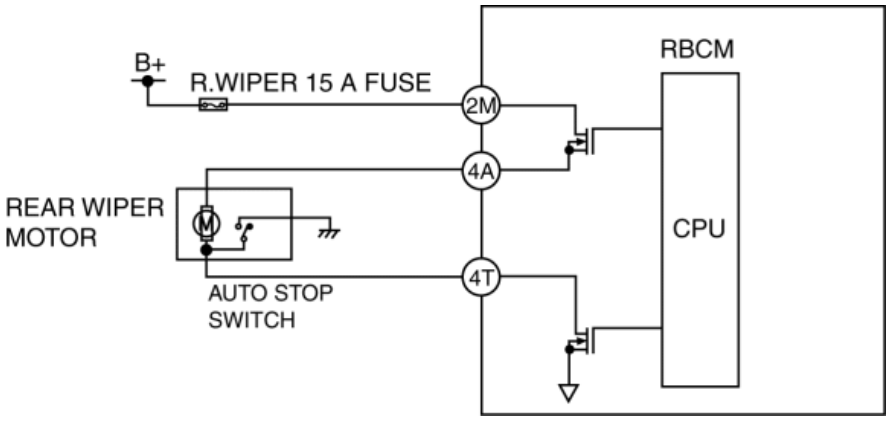

Fuel-level sensor, rear seat belt reminder system

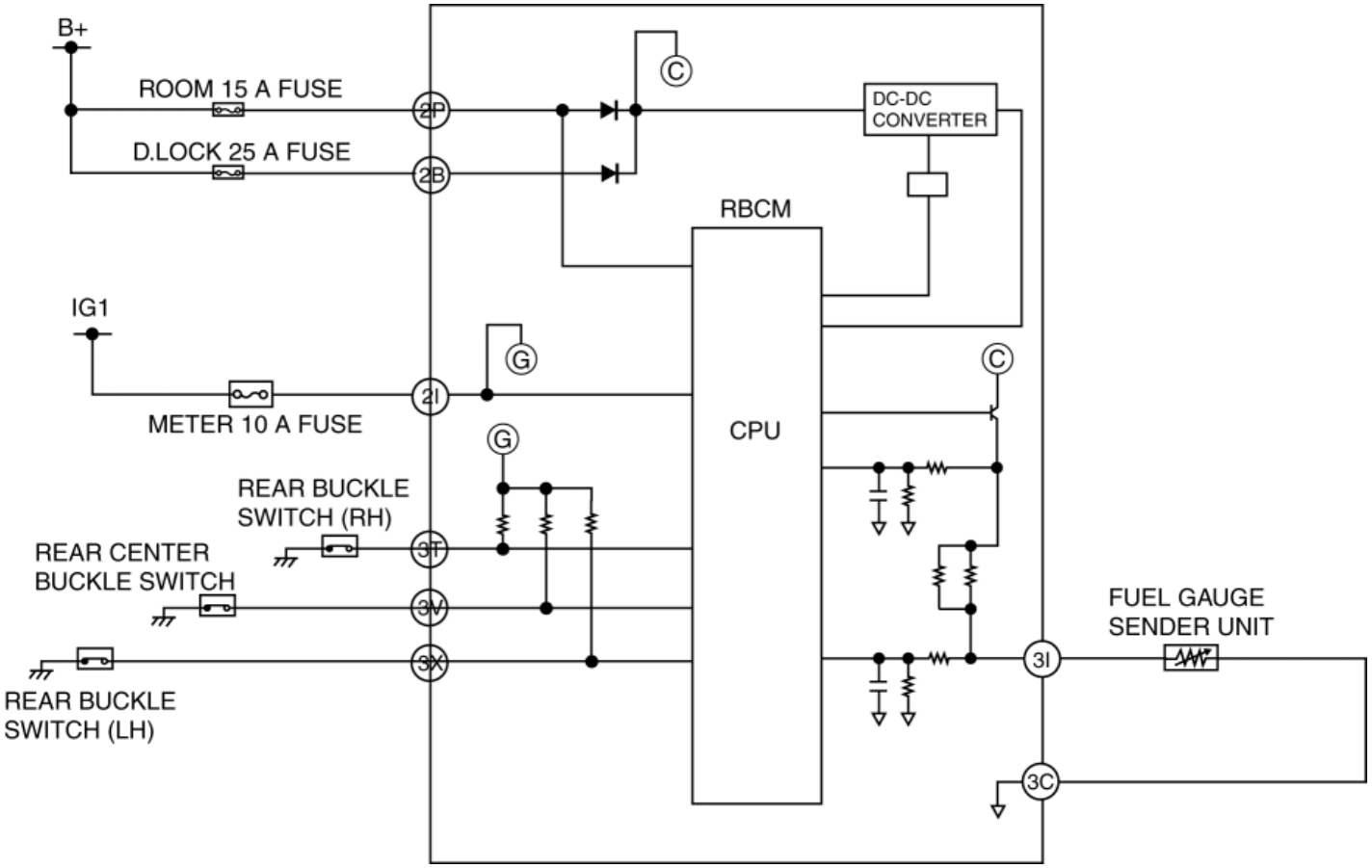

CAN system

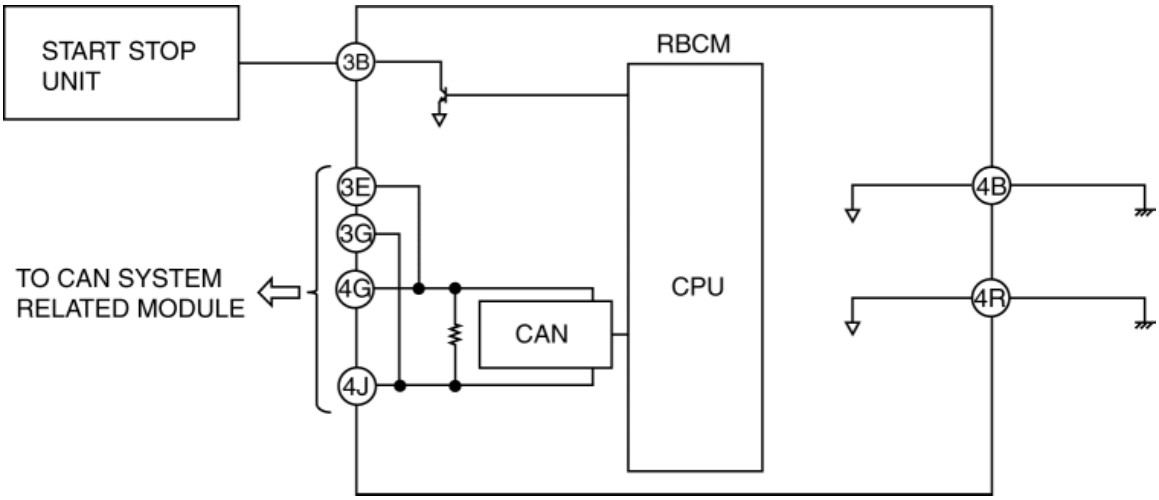

ON-BOARD DIAGNOSTIC WIRING DIAGRAM [REAR BODY CONTROL MODULE (RBCM)]

2014 - Mazda3 - Body and Accessories

FOREWORD [REAR BODY CONTROL MODULE (RBCM)]

- If there is any vehicle malfunction complaint lodged by a customer, perform malfunction diagnosis according to the troubleshooting procedure.

Troubleshooting Procedure

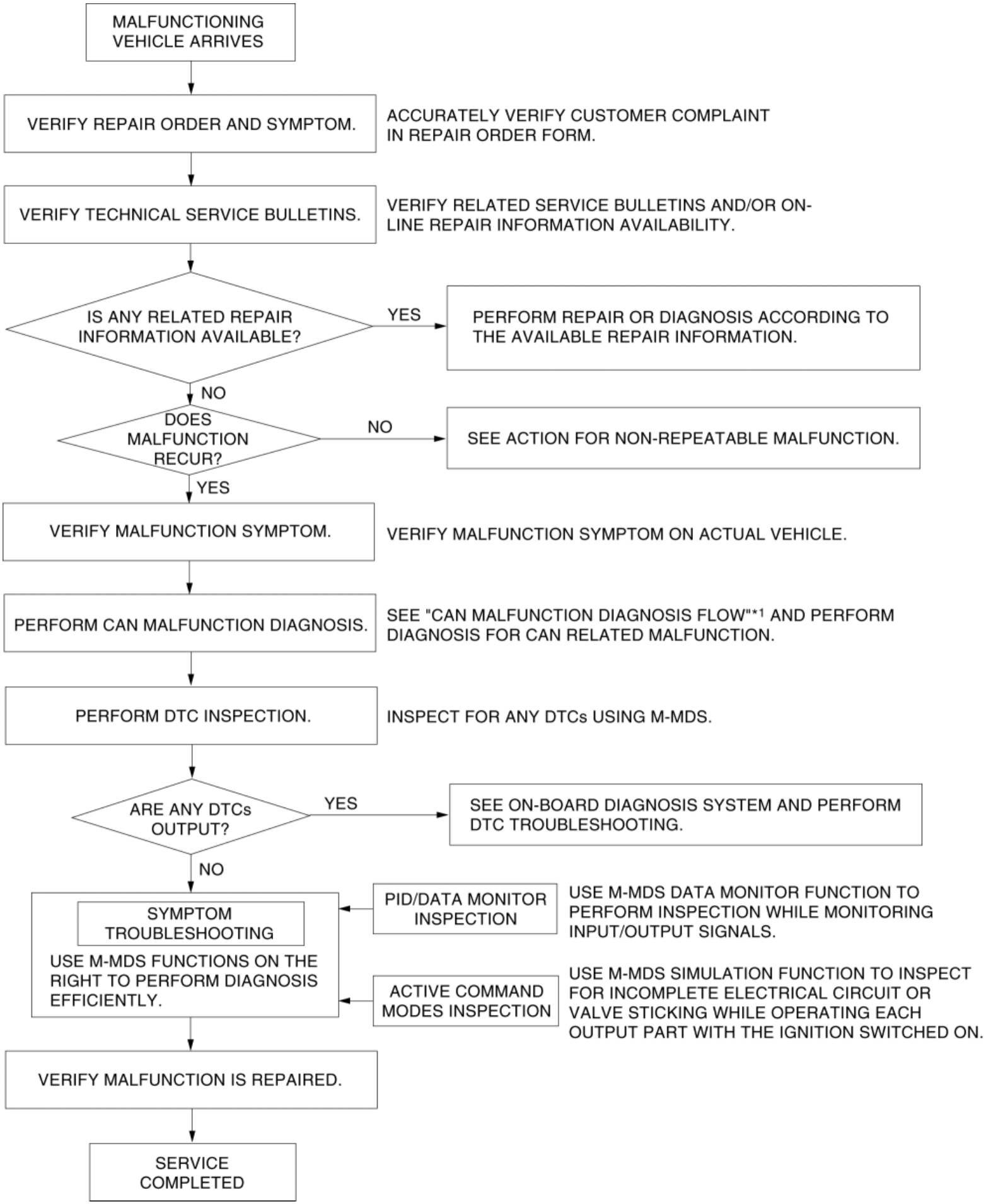
MALFUNCTIONING VEHICLE ARRIVES
VERIFY REPAIR ORDER AND SYMPTOM.
ACCURATELY VERIFY CUSTOMER COMPLAINT IN REPAIR ORDER FORM.
VERIFY TECHNICAL SERVICE BULLETINS.
VERIFY RELATED SERVICE BULLETINS AND/OR ON-LINE REPAIR INFORMATION AVAILABILITY.
IS ANY RELATED REPAIR INFORMATION AVAILABLE?
YES
PERFORM REPAIR OR DIAGNOSIS ACCORDING TO THE AVAILABLE REPAIR INFORMATION.
NO
DOES MALFUNCTION RECUR?
NO
SEE ACTION FOR NON-REPEATABLE MALFUNCTION.
YES
VERIFY MALFUNCTION SYMPTOM.
VERIFY MALFUNCTION SYMPTOM ON ACTUAL VEHICLE.
PERFORM CAN MALFUNCTION DIAGNOSIS.
SEE "CAN MALFUNCTION DIAGNOSIS FLOW"*1 AND PERFORM DIAGNOSIS FOR CAN RELATED MALFUNCTION.
PERFORM DTC INSPECTION.
INSPECT FOR ANY DTCs USING M-MDS.
ARE ANY DTCs OUTPUT?
YES
SEE ON-BOARD DIAGNOSIS SYSTEM AND PERFORM DTC TROUBLESHOOTING.
NO
SYMPTOM TROUBLESHOOTING
USE M-MDS FUNCTIONS ON THE RIGHT TO PERFORM DIAGNOSIS EFFICIENTLY.
PID/DATA MONITOR INSPECTION
USE M-MDS DATA MONITOR FUNCTION TO PERFORM INSPECTION WHILE MONITORING INPUT/OUTPUT SIGNALS.
ACTIVE COMMAND MODES INSPECTION
USE M-MDS SIMULATION FUNCTION TO INSPECT FOR INCOMPLETE ELECTRICAL CIRCUIT OR VALVE STICKING WHILE OPERATING EACH OUTPUT PART WITH THE IGNITION SWITCHED ON.
VERIFY MALFUNCTION IS REPAIRED.
SERVICE COMPLETED

*1

(See CONTROLLER AREA NETWORK (CAN) MALFUNCTION DIAGNOSIS FLOW.)

Action for non-repeatable malfunction

- If the malfunction does not recur, verify the malfunction cause by performing the following actions:
  - Based on the repair order form, attempt to drive the vehicle or perform tests to replicate the malfunction, record the data at that time, and detect the malfunction cause.
  - Shake the wiring harness or connector of the electrical component which is suspected to be the cause of the malfunction, and inspect for malfunction or occurrence of any DTCs.

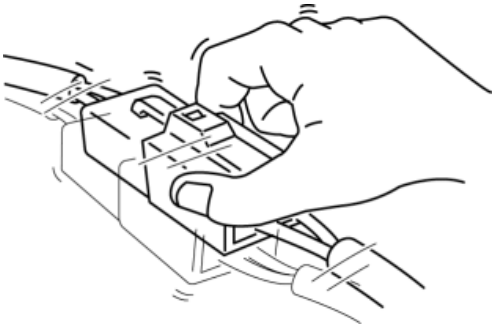

  - Inspect the female terminals on the connector of the electric component which is suspected to be the cause of the malfunction for poor connection.

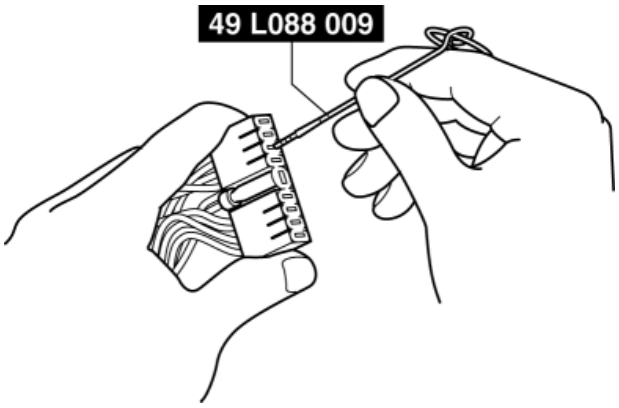

2014 - Mazda3 - Body and Accessories

DTC INSPECTION [REAR BODY CONTROL MODULE (RBCM)]

CMDTC Self Test

1. Connect the M-MDS to the DLC-2.
2. Verify the following vehicle conditions:
    - All the switches are turned off (except the ignition switch).
    - All the doors, hood, and trunk (4SD)/liftgate (5HB) are closed.
    - All the doors, and trunk (4SD)/liftgate (5HB) are unlocked.
    - All the seat belts are unbuckled.
    - Parking brake lever is pulled.
3. After the vehicle is identified, select the following items from the initialization screen of the M-MDS.
    a. Select “Self Test”.
    b. Select “All CMDTCs”.
4. Verify the DTC according to the directions on the screen.
    - If any DTCs are displayed, perform troubleshooting according to the corresponding DTC inspection after recording the snapshot data.
5. After completion of repairs, clear all DTCs stored in the rear body control module (RBCM). (See **CLEARING DTC [REAR BODY CONTROL MODULE (RBCM)]**.)

ODDTC Self Test

1. Connect the M-MDS to the DLC-2.
2. Verify the following vehicle conditions:
    - All the switches are turned off (except the ignition switch).
    - All the doors, hood, and trunk (4SD)/liftgate (5HB) are closed.
    - All the doors, and trunk (4SD)/liftgate (5HB) are unlocked.
    - All the seat belts are unbuckled.
    - Parking brake lever is pulled.
3. After the vehicle is identified, select the following items from the initialization screen of the M-MDS.
    a. Select “Self Test”.
    b. Select “Modules”.
    c. Select “R_BCM”.
4. Verify the DTC according to the directions on the screen.
    - If any DTCs are displayed, perform troubleshooting according to the corresponding DTC inspection after recording the snapshot data.

CLEARING DTC

5. After completion of repairs, clear all DTCs stored in the rear body control module (RBCM). (See **[REAR BODY CONTROL MODULE (RBCM)]**.)

Snapshot Data

NOTE:

- The rear body control module (RBCM) stores the following two types of snapshot data (vehicle information) when a DTC is detected and displays them in the M-MDS.
  - Vehicle information detected by rear body control module (RBCM)
  - Vehicle information detected by instrument cluster and received by rear body control module (RBCM) via CAN signal
- The data for all DTCs currently detected is stored.

—: Not applicable

Snapshot data item	Unit		Data contents	Data read/use method	Corresponding data monitor items
AAT	°C	°F	Ambient temperature	—	—
APP_STATUS	Accelerator Pedal Off/Under20%/Over20%/FAIL		Accelerator pedal position status	—	—
CFG_STATUS	Config Complete/Not Configured/Config Error		Instrument cluster configuration status	—	—
ECT_STATUS	Under 0 degrees C/0 - Under 80 degrees C/Over 80 degrees C/FAIL		Engine coolant temperature status	—	—
IC_VPWR	V		Instrument cluster power supply voltage	• The rear body control module (RBCM) constantly receives the power supply voltage value of the instrument cluster sent via CAN signal from the instrument cluster. • If a DTC is detected, the rear body control module (RBCM) records the power supply voltage of the instrument cluster when	VPWR*1

			the DTC was detected, and it is displayed in the M-MDS.	
IG-ON_TIMER	hh:mm:ss*2	Elapsed time since ignition was switched ON (engine off or on) **NOTE:** • The instrument cluster records the elapsed time since the ignition was switched ON (engine off or on).	• The rear body control module (RBCM) constantly receives the elapsed time since the ignition was switched ON (engine off or on) sent via CAN signal from the instrument cluster. • If a DTC is detected, the rear body control module (RBCM) records the elapsed time since the ignition was switched ON (engine off or on) when the DTC was detected, and it is displayed in the M-MDS.	—
		• Key Out: Ignition switched off • Key Recently Out (Position 0): Elapsed time **within 3 s** since ignition was switched off • Accessory (Position 1): Ignition is switched	• The rear body control module (RBCM) constantly receives the ignition	

PWR_MODE_KEY	Key Out/Key Recently Out (Position 0)/Accessory (Position 1)/Post Ignition (Position 2)/Ignition On (Position 2)/Running (Position 2)/Running - Starting	to ACC • Post Ignition (Position 2): Elapsed time **within 3 s** since ignition was switched ON (engine off or on) • Ignition On (Position 2): Ignition switched ON (engine off) • Running (Position 2): Ignition switched ON (engine on) • Running - Starting: Cranking condition	switch status sent via CAN signal from the instrument cluster. • If a DTC is detected, the rear body control module (RBCM) records the ignition switch status when the DTC was detected, and it is displayed in the M-MDS.	—
RPM_STATUS	Engine Stop/Under1500rpm/Over1500rpm/FAIL	Engine speed status	• The rear body control module (RBCM) constantly receives the engine speed sent via CAN signal from the instrument cluster. • If a DTC is detected, the rear body control module (RBCM) records the engine speed when the DTC was detected, and it is displayed in the M-MDS.	TACHOMTR*1

SHIFT_STATUS	P/N/D/R/FAIL		Selector lever position status	• The rear body control module (RBCM) constantly receives the selector lever position sent via CAN signal from the instrument cluster. • If a DTC is detected, the rear body control module (RBCM) records the selector lever position when the DTC was detected, and it is displayed in the M-MDS.	—
TOTAL_DIST	km	Miles	Accumulated total traveled distance from completion of vehicle until rear body control module (RBCM) detects DTC (Odometer value in instrument cluster)	The total traveled distance from which the rear body control module (RBCM) detects DTCs to the present can be calculated by performing the following procedure. • Verify the odometer value in the instrument cluster. • Verify the snapshot data item TOTAL_DIST. • Subtract 2 from 1.	—
TOTAL_TIME	hh:mm:ss*2		Accumulated total elapsed time since vehicle completion until rear body control module (RBCM) detects a DTC **NOTE:** • When the ROOM fuse is removed, and the	The elapsed time from which the rear body control module (RBCM) detects DTCs to the present can be calculated by performing the following procedure. • Verify the instrument cluster PID item TOTAL_TIME.	TOTAL_TIME*1

		ignition is switched off, the time is not included in the elapsed time.	• Verify the snapshot data item TOTAL_TIME. • Subtract 2 from 1.	
VPWR	V	Rear body control module (RBCM) power supply voltage	—	VPWR_IG1
VSPD_STATUS	Stop/0-10km/h/Over10km/h/FAIL	Vehicle speed status	• The rear body control module (RBCM) constantly receives the vehicle speed sent via CAN signal from the instrument cluster. • If a DTC is detected, the rear body control module (RBCM) records the vehicle speed when the DTC was detected, and it is displayed in the M-MDS.	SPEEDOMTR*1

*1 **Instrument cluster PID (See PID/DATA MONITOR TABLE [INSTRUMENT CLUSTER].)**

*2 **The seconds may be indicated after the decimal point.**

2014 - Mazda3 - Body and Accessories

CLEARING DTC [REAR BODY CONTROL MODULE (RBCM)]

CMDTC Memory Clearing Procedure

1. Connect the M-MDS to the DLC-2.
2. After the vehicle is identified, select the following items from the initialization screen of the M-MDS.
    a. Select “Self Test”.
    b. Select “All CMDTCs”.
3. Verify the DTC according to the directions on the screen.
4. Press the clear button on the DTC screen to clear the DTC.
5. Switch the ignition off.
6. Switch the ignition ON (engine off or on) and wait for **5 s or more**.
7. Perform DTC inspection. (See **DTC INSPECTION [REAR BODY CONTROL MODULE (RBCM)]**.)
8. Verify that no DTCs are displayed.

ODDTC Memory Clearing Procedure

1. Connect the M-MDS to the DLC-2.
2. After the vehicle is identified, select the following items from the initialization screen of the M-MDS.
    a. Select “Self Test”.
    b. Select “Modules”.
    c. Select “R_BCM”.
3. Verify the DTC according to the directions on the screen.
4. Press the clear button on the DTC screen to clear the DTC.
5. Switch the ignition off.
6. Switch the ignition ON (engine off or on) and wait for **5 s or more**.
7. Perform DTC inspection. (See **DTC INSPECTION [REAR BODY CONTROL MODULE (RBCM)]**.)
8. Verify that no DTCs are displayed.

CLEARING DTC [REAR BODY CONTROL MODULE (RBCM)]

2014 - Mazda3 - Body and Accessories

DTC TABLE [REAR BODY CONTROL MODULE (RBCM)]

×: Applicable—: Not applicable

DTC No.	Warning/indicator light	Description	Fail-safe function	Drive cycle	Self test type*1	Memory function	Page
B1079:13*2	—	Hood latch switch circuit malfunction	—	—	D	—	(See **DTC B1079:13 [REAR BODY CONTROL MODULE (RBCM)]**.)
B108F:16	—	Door lock switch circuit malfunction	—	—	D	—	(See **DTC B108F:16 [REAR BODY CONTROL MODULE (RBCM)]**.)
B109E:87	—	Communication error with start stop unit	—	—	C, D	×	(See **DTC B109E:87 [REAR BODY CONTROL MODULE (RBCM)]**.)
B113E:11*3, *4	—	**4SD** • Trunk lid opener switch (exterior) circuit malfunction **5HB** • Liftgate opener switch circuit malfunction	—	—	D	—	(See **DTC B113E:11 [REAR BODY CONTROL MODULE (RBCM)]**.)
B1172:11	—	Front door lock-link switch (LH) unlock circuit malfunction	—	—	D	—	(See **DTC B1172:11 [REAR BODY CONTROL MODULE (RBCM)]**.)

B1172:13	—	Front door lock-link switch (LH) unlock circuit malfunction	—	—	D	—	(See **DTC B1172:13 [REAR BODY CONTROL MODULE (RBCM)]**.)
B1174:11	—	**Without theft-deterrent system** • Front door lock-link switch (RH) unlock circuit malfunction **With theft-deterrent system** • Door lock-link switch unlock circuit malfunction	—	—	D	—	(See **DTC B1174:11 [REAR BODY CONTROL MODULE (RBCM)]**.)
B1174:13	—	**Without theft-deterrent system** • Front door lock-link switch (RH) unlock circuit malfunction **With theft-deterrent system** • Door lock-link switch unlock circuit malfunction	—	—	D	—	(See **DTC B1174:13 [REAR BODY CONTROL MODULE (RBCM)]**.)
B1175:11	—	Front door latch switch (LH) circuit malfunction	—	—	D	—	(See **DTC B1175:11 [REAR BODY CONTROL MODULE (RBCM)]**.)
B1176:11	—	Front door latch switch (RH) circuit malfunction	—	—	D	—	(See **DTC B1176:11 [REAR BODY CONTROL MODULE (RBCM)]**.)
		4SD • Trunk lid latch					

B1178:11	—	switch circuit malfunction **5HB** • Liftgate latch switch circuit malfunction	—	—	D	—	(See **DTC B1178:11 [REAR BODY CONTROL MODULE (RBCM)]**.)
B11DA:16	—	Front door key cylinder switch (LH) circuit malfunction	—	—	D	—	(See **DTC B11DA:16 [REAR BODY CONTROL MODULE (RBCM)]**.)
B11E9:11	—	Rear door latch switch (LH) circuit malfunction	—	—	D	—	(See **DTC B11E9:11 [REAR BODY CONTROL MODULE (RBCM)]**.)
B11EA:11	—	Rear door latch switch (RH) circuit malfunction	—	—	D	—	(See **DTC B11EA:11 [REAR BODY CONTROL MODULE (RBCM)]**.)
B1219:11*5	—	Trunk lid opener switch (interior) circuit malfunction	—	—	D	—	(See **DTC B1219:11 [REAR BODY CONTROL MODULE (RBCM)]**.)
B126A:11	—	Front door lock-link switch (LH) lock circuit malfunction	—	—	D	—	(See **DTC B126A:11 [REAR BODY CONTROL MODULE (RBCM)]**.)
B126A:13	—	Front door lock-link switch (LH) lock circuit malfunction	—	—	D	—	(See **DTC B126A:13 [REAR BODY CONTROL MODULE (RBCM)]**.)
C0023:14*6	—	Brake light circuit malfunction	—	—	C, D	×	(See **DTC C0023:14 [REAR BODY CONTROL MODULE (RBCM)]**.)
U0010:88	—	Unit communication error (MS-CAN)	—	—	C, D	×	(See **DTC U0010:88/U0155:00 [REAR BODY CONTROL MODULE (RBCM)]**.)
U0155:00	—	Communication error with instrument cluster	—	—	C, D	×	

U2100:00	—	Rear body control module (RBCM) configuration error	—	—	C, D	×	(See **DTC U2100:00 [REAR BODY CONTROL MODULE (RBCM)]**.)
U3000:49	—	Rear body control module (RBCM) internal malfunction	—	—	C, D	×	(See **DTC U3000:49 [REAR BODY CONTROL MODULE (RBCM)]**.)
U3003:16	—	Rear body control module (RBCM) power supply voltage low input	—	—	C, D	×	(See **DTC U3003:16 [REAR BODY CONTROL MODULE (RBCM)]**.)

*1 **C: CMDTC self test, D: ODDTC self test**

*2 **With hood latch switch**

*3 **5HB**

*4 **With trunk lid opener switch (exterior)**

*5 **With trunk lid opener switch (interior)**

*6 **With smart city brake support (SCBS)**

2014 - Mazda3 - Body and Accessories

DTC B1079:13 [REAR BODY CONTROL MODULE (RBCM)]

Description	Hood latch switch circuit malfunction
Detection condition	• Rear body control module (RBCM) detects an open circuit in hood latch switch circuit.
Fail-safe function	Not applicable
Possible cause	• Hood latch switch connector or terminal malfunction • Open circuit in wiring harness between hood latch switch terminal B and body ground • Hood latch switch malfunction • Rear body control module (RBCM) connector or terminal malfunction • Open circuit in wiring harness between rear body control module (RBCM) terminal 3L and hood latch switch terminal A • Rear body control module (RBCM) malfunction

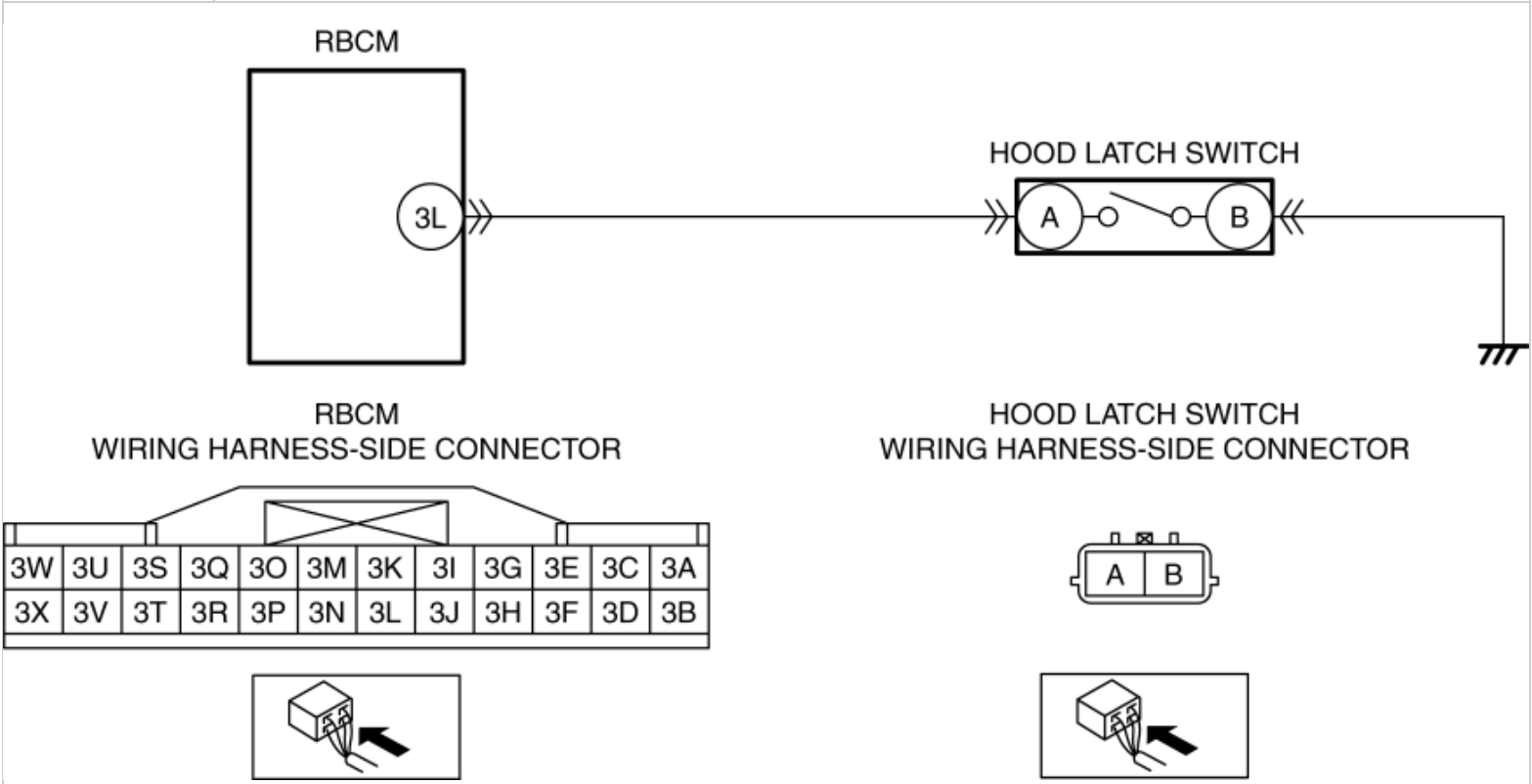

Diagnostic Procedure

Step	Inspection		Action
1	**VERIFY REAR BODY CONTROL MODULE (RBCM) DTCs AGAIN** • Clear the DTC for the rear body control module (RBCM) using the M-MDS. (See **CLEARING DTC [REAR BODY CONTROL MODULE (RBCM)]**.) • Retrieve the rear body control module (RBCM) DTCs using the M-MDS. (See **DTC INSPECTION [REAR BODY CONTROL MODULE (RBCM)]**.) • Is the same DTC displayed?	Yes	Go to the next step.
		No	Go to Step 8.
2	**INSPECT HOOD LATCH SWITCH CONNECTOR CONDITION** • Switch the ignition off. • Disconnect the negative battery cable. (See **NEGATIVE BATTERY CABLE DISCONNECTION/CONNECTION [SKYACTIV-G 2.0, SKYACTIV-G 2.5]**.) • Disconnect the hood latch switch connector. • Inspect the connector engagement and connection condition and inspect the terminals for damage, deformation, corrosion, or disconnection. • Is the connector normal?	Yes	Go to the next step.
		No	Repair or replace the connector, then go to Step 7.
3	**INSPECT FOR OPEN CIRCUIT IN HOOD LATCH SWITCH GROUND CIRCUIT** • Verify that the hood latch switch connector is disconnected. • Inspect for continuity between hood latch switch terminal B (wiring harness-side) and body ground. • Is there continuity?	Yes	Go to the next step.
		No	Refer to the wiring diagram and verify whether or not there is a common connector between hood latch switch terminal B and body ground. **If there is a common connector:** • Determine the malfunctioning part by inspecting the common connector and the terminal for corrosion, damage, or pin disconnection, and the common wiring harness for an open circuit. • Repair or replace the malfunctioning part. **If there is no common connector:** • Repair or replace the wiring harness which has an open circuit.

			Go to Step 7.
4	**INSPECT HOOD LATCH SWITCH** • Inspect the hood latch switch. (See **HOOD LATCH SWITCH INSPECTION**.) • Is the hood latch switch normal?	Yes	Go to the next step.
		No	Replace the hood latch switch, then go to Step 7. (See **HOOD LATCH REMOVAL/INSTALLATION**.)
5	**INSPECT REAR BODY CONTROL MODULE (RBCM) CONNECTOR CONDITION** • Disconnect the rear body control module (RBCM) connector. • Inspect the connector engagement and connection condition and inspect the terminals for damage, deformation, corrosion, or disconnection. • Is the connector normal?	Yes	Go to the next step.
		No	Repair or replace the connector, then go to Step 7.
6	**INSPECT FOR OPEN CIRCUIT IN HOOD LATCH SWITCH CIRCUIT** • Verify that the hood latch switch and rear body control module (RBCM) connectors are disconnected. • Inspect for continuity between rear body control module (RBCM) terminal 3L (wiring harness-side) and hood latch switch terminal A (wiring harness-side). • Is there continuity?	Yes	Go to the next step.
		No	Refer to the wiring diagram and verify whether or not there is a common connector between rear body control module (RBCM) terminal 3L and hood latch switch terminal A. **If there is a common connector:** • Determine the malfunctioning part by inspecting the common connector and the terminal for corrosion, damage, or pin disconnection, and the common wiring harness for an open circuit. • Repair or replace the malfunctioning part. **If there is no common connector:** • Repair or replace the wiring harness which has an open circuit. Go to the next step.
7	**VERIFY THAT REPAIRS HAVE BEEN COMPLETED** • Always reconnect all disconnected connectors. • Reconnect the negative battery cable. (See **NEGATIVE BATTERY CABLE DISCONNECTION/CONNECTION [SKYACTIV-G 2.0, SKYACTIV-G 2.5]**.) • Clear the DTC for the rear body control module (RBCM) using the M-MDS. (See **CLEARING DTC [REAR BODY CONTROL MODULE (RBCM)]**.)	Yes	Repeat the inspection from Step 1. • If the malfunction recurs, replace the rear body control module (RBCM). (See **REAR BODY CONTROL MODULE (RBCM) REMOVAL/INSTALLATION**.) Go to the next step.
		No	Go to the next step.

	• Retrieve the rear body control module (RBCM) DTCs using the M-MDS. (See **DTC INSPECTION [REAR BODY CONTROL MODULE (RBCM)]**.) • Is the same DTC displayed?		
8	**VERIFY IF OTHER DTCs DISPLAYED** • Are any other DTCs displayed?	Yes	Repair or replace the malfunctioning part according to the applicable DTC troubleshooting. (See **DTC TABLE [REAR BODY CONTROL MODULE (RBCM)]**.)
		No	DTC troubleshooting completed.

2014 - Mazda3 - Body and Accessories

DTC B108F:16 [REAR BODY CONTROL MODULE (RBCM)]

Description	Door lock switch circuit malfunction
Detection condition	• With the door lock switch off, the rear body control module (RBCM) detects door lock switch circuit voltage of **4 V or less**.
Fail-safe function	Not applicable

Possible cause	• Power window main switch connector or terminal malfunction
	• Door lock switch (LH) malfunction
	• Door lock switch (RH) connector or terminal malfunction
	• Door lock switch (RH) malfunction
	• Rear body control module (RBCM) connector or terminal malfunction
	• Short to ground in wiring harness between the following terminals:
	  ▪ Rear body control module (RBCM) terminal 3F—Power window main switch terminal 2M
	  ▪ Rear body control module (RBCM) terminal 3F—Door lock switch (RH) terminal C
	• Rear body control module (RBCM) malfunction

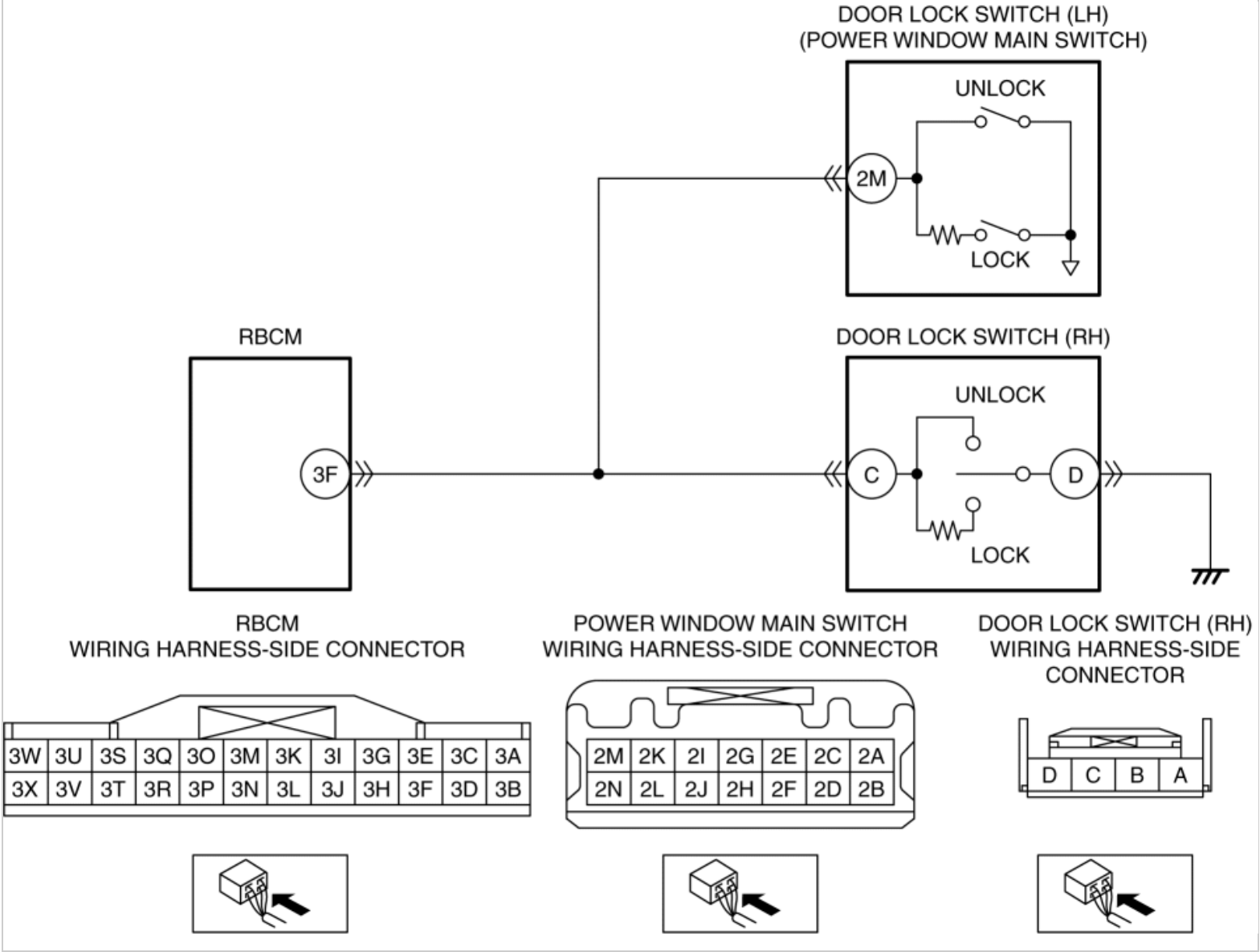

Diagnostic Procedure

Step	Inspection		Action
1	**VERIFY REAR BODY CONTROL MODULE (RBCM) DTCs AGAIN** • Clear the DTC for the rear body control module (RBCM) using the M-MDS. (See **CLEARING DTC [REAR BODY CONTROL MODULE (RBCM)]**.) • Retrieve the rear body control module (RBCM) DTCs using the M-MDS. (See **DTC INSPECTION [REAR BODY CONTROL MODULE (RBCM)]**.) • Is the same DTC displayed?	Yes	Go to the next step.
		No	Go to Step 9.
2	**INSPECT POWER WINDOW MAIN SWITCH CONNECTOR CONDITION** • Switch the ignition off.	Yes	Go to the next step.
		No	Repair or replace the connector, then go to Step 8.

	Disconnect the negative battery cable. (See **NEGATIVE BATTERY CABLE DISCONNECTION/CONNECTION [SKYACTIV-G 2.0, SKYACTIV-G 2.5]**.) • Disconnect the power window main switch connector. • Inspect the connector engagement and connection condition and inspect the terminals for damage, deformation, corrosion, or disconnection. • Is the connector normal?		
3	**INSPECT DOOR LOCK SWITCH (LH)** • Inspect the door lock switch (LH). (See **DOOR LOCK SWITCH INSPECTION**.) • Is the door lock switch (LH) normal?	Yes	Go to the next step.
		No	Replace the power window main switch, then go to Step 8. (See **POWER WINDOW MAIN SWITCH REMOVAL/INSTALLATION**.)
4	**INSPECT DOOR LOCK SWITCH (RH) CONNECTOR CONDITION** • Disconnect the door lock switch (RH) connector. • Inspect the connector engagement and connection condition and inspect the terminals for damage, deformation, corrosion, or disconnection. • Is the connector normal?	Yes	Go to the next step.
		No	Repair or replace the connector, then go to Step 8.
5	**INSPECT DOOR LOCK SWITCH (RH)** • Inspect the door lock switch (RH). (See **DOOR LOCK SWITCH INSPECTION**.) • Is the door lock switch (RH) normal?	Yes	Go to the next step.
		No	Replace the door lock switch (RH), then go to Step 8. (See **DOOR LOCK SWITCH REMOVAL/INSTALLATION**.)
6	**INSPECT REAR BODY CONTROL MODULE (RBCM) CONNECTOR CONDITION** • Disconnect the rear body control module (RBCM) connector. • Inspect the connector engagement and connection condition and inspect the terminals for damage, deformation, corrosion, or disconnection. • Is the connector normal?	Yes	Go to the next step.
		No	Repair or replace the connector, then go to Step 8.
7	**INSPECT FOR SHORT TO GROUND IN DOOR LOCK SWITCH CIRCUIT** • Verify that the power window main switch, door lock switch (LH) and rear body control module (RBCM) connectors are disconnected. • Inspect for continuity between rear body control module (RBCM) terminal 3F (wiring harness-side) and body	Yes	Refer to the wiring diagram and verify whether or not there is a common connector between the following terminals: • Rear body control module (RBCM) terminal 3F—Power window main switch terminal 2M • Rear body control module (RBCM) terminal 3F—Door lock switch (RH) terminal C **If there is a common connector:**

	ground. • Is there continuity?		• Determine the malfunctioning part by inspecting the common connector and the terminal for corrosion, damage, or pin disconnection, and the common wiring harness for a short to ground. • Repair or replace the malfunctioning part. **If there is no common connector:** • Repair or replace the wiring harness which has a short to ground. Go to the next step.
		No	Go to the next step.
8	**VERIFY THAT REPAIRS HAVE BEEN COMPLETED** • Always reconnect all disconnected connectors. • Reconnect the negative battery cable. (See **NEGATIVE BATTERY CABLE DISCONNECTION/CONNECTION [SKYACTIV-G 2.0, SKYACTIV-G 2.5]**.) • Clear the DTC for the rear body control module (RBCM) using the M-MDS. (See **CLEARING DTC [REAR BODY CONTROL MODULE (RBCM)]**.) • Retrieve the rear body control module (RBCM) DTCs using the M-MDS. (See **DTC INSPECTION [REAR BODY CONTROL MODULE (RBCM)]**.) • Is the same DTC displayed?	Yes	Repeat the inspection from Step 1. • If the malfunction recurs, replace the rear body control module (RBCM). (See **REAR BODY CONTROL MODULE (RBCM) REMOVAL/INSTALLATION**.) Go to the next step.
		No	Go to the next step.
9	**VERIFY IF OTHER DTCs DISPLAYED** • Are any other DTCs displayed?	Yes	Repair or replace the malfunctioning part according to the applicable DTC troubleshooting. (See **DTC TABLE [REAR BODY CONTROL MODULE (RBCM)]**.)
		No	DTC troubleshooting completed.

2014 - Mazda3 - Body and Accessories

DTC B109E:87 [REAR BODY CONTROL MODULE (RBCM)]

Description	Communication error with start stop unit
Detection condition	• Rear body control module (RBCM) detects a communication error with the start stop unit for **10 times continuously**.
Fail-safe function	Not applicable
Possible cause	• Start stop unit connector or terminal malfunction • Rear body control module (RBCM) connector or terminal malfunction • Short to ground in wiring harness between rear body control module (RBCM) terminal 3B and start stop unit terminal 1Q • Open circuit in wiring harness between rear body control module (RBCM) terminal 3B and start stop unit terminal 1Q • Start stop unit malfunction • Rear body control module (RBCM) malfunction

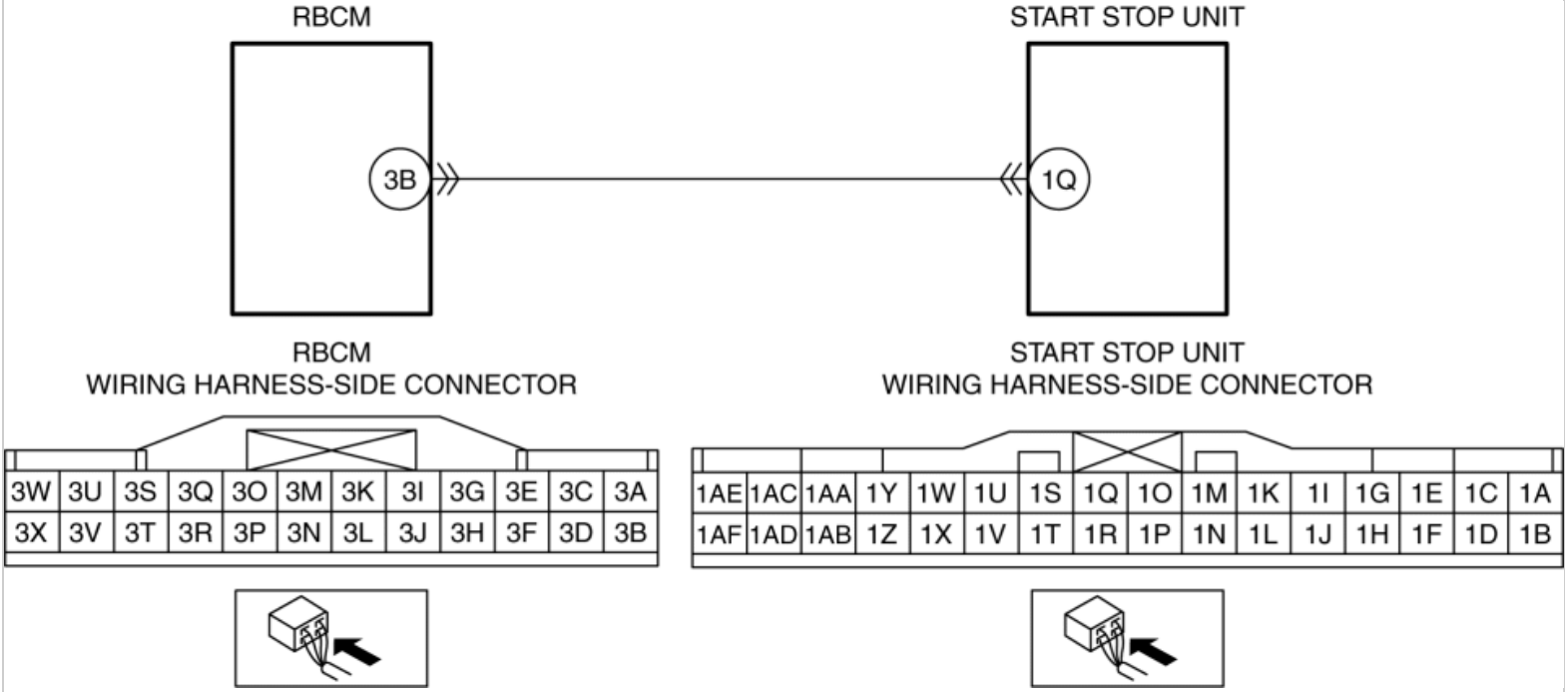

Diagnostic Procedure

Step	Inspection		Action
1	**VERIFY REAR BODY CONTROL MODULE (RBCM) DTCs AGAIN**	Yes	Go to the next step.

	• Clear the DTC for the rear body control module (RBCM) using the M-MDS. (See **CLEARING DTC [REAR BODY CONTROL MODULE (RBCM)]**.) • Retrieve the rear body control module (RBCM) DTCs using the M-MDS. (See **DTC INSPECTION [REAR BODY CONTROL MODULE (RBCM)]**.) • Is the same DTC displayed?	No	Go to Step 8.
2	**INSPECT START STOP UNIT CONNECTOR CONDITION** • Switch the ignition off. • Disconnect the negative battery cable. (See **NEGATIVE BATTERY CABLE DISCONNECTION/CONNECTION [SKYACTIV-G 2.0, SKYACTIV-G 2.5]**.) • Disconnect the start stop unit connector. • Inspect the connector engagement and connection condition and inspect the terminals for damage, deformation, corrosion, or disconnection. • Is the connector normal?	Yes	Go to the next step.
		No	Repair or replace the connector, then go to Step 7.
3	**INSPECT REAR BODY CONTROL MODULE (RBCM) CONNECTOR CONDITION** • Disconnect the rear body control module (RBCM) connector. • Inspect the connector engagement and connection condition and inspect the terminals for damage, deformation, corrosion, or disconnection. • Is the connector normal?	Yes	Go to the next step.
		No	Repair or replace the connector, then go to Step 7.
4	**INSPECT FOR SHORT TO GROUND IN WIRING HARNESS BETWEEN START STOP UNIT AND REAR BODY CONTROL MODULE (RBCM)** • Verify that the rear body control module (RBCM) and start stop unit connectors are disconnected. • Inspect for continuity between start stop unit terminal 1Q (wiring harness-side) and body ground. • Is there continuity?	Yes	Refer to the wiring diagram and verify whether or not there is a common connector between rear body control module (RBCM) terminal 3B and start stop unit terminal 1Q. **If there is a common connector:** • Determine the malfunctioning part by inspecting the common connector and the terminal for corrosion, damage, or pin disconnection, and the common wiring harness for a short to ground. • Repair or replace the malfunctioning part. **If there is no common connector:** • Repair or replace the wiring harness which has a short to ground. Go to Step 7.
		No	Go to the next step.
5	**INSPECT FOR OPEN CIRCUIT IN WIRING HARNESS BETWEEN START STOP UNIT AND REAR BODY CONTROL MODULE (RBCM)**	Yes	Go to the next step.

	• Verify that the rear body control module (RBCM) and start stop unit connectors are disconnected. • Inspect for continuity between rear body control module (RBCM) terminal 3B (wiring harness-side) and start stop unit terminal 1Q (wiring harness-side). • Is there continuity?	No	Refer to the wiring diagram and verify whether or not there is a common connector between rear body control module (RBCM) terminal 3B and start stop unit terminal 1Q. **If there is a common connector:** • Determine the malfunctioning part by inspecting the common connector and the terminal for corrosion, damage, or pin disconnection, and the common wiring harness for an open circuit. • Repair or replace the malfunctioning part. **If there is no common connector:** • Repair or replace the wiring harness which has an open circuit. Go to Step 7.
6	**PERFORM DTC INSPECTION AND VERIFY START STOP UNIT MALFUNCTION** • Always reconnect all disconnected connectors. • Reconnect the negative battery cable. (See **NEGATIVE BATTERY CABLE DISCONNECTION/CONNECTION [SKYACTIV-G 2.0, SKYACTIV-G 2.5]**.) • Clear the DTC for the rear body control module (RBCM) using the M-MDS. (See **CLEARING DTC [REAR BODY CONTROL MODULE (RBCM)]**.) • Retrieve the rear body control module (RBCM) DTCs using the M-MDS. (See **DTC INSPECTION [REAR BODY CONTROL MODULE (RBCM)]**.) • Is the same DTC displayed?	Yes	Replace the start stop unit, then go to the next step. (See **START STOP UNIT REMOVAL/INSTALLATION**.)
		No	Go to Step 8.
7	**VERIFY THAT REPAIRS HAVE BEEN COMPLETED** • Always reconnect all disconnected connectors. • Reconnect the negative battery cable. (See **NEGATIVE BATTERY CABLE DISCONNECTION/CONNECTION [SKYACTIV-G 2.0, SKYACTIV-G 2.5]**.) • Clear the DTC for the rear body control module (RBCM) using the M-MDS. (See **CLEARING DTC [REAR BODY CONTROL MODULE (RBCM)]**.) • Retrieve the rear body control module (RBCM) DTCs using the M-MDS. (See **DTC INSPECTION [REAR BODY CONTROL MODULE (RBCM)]**.) • Is the same DTC displayed?	Yes	Repeat the inspection from Step 1. • If the malfunction recurs, replace the rear body control module (RBCM). (See **REAR BODY CONTROL MODULE (RBCM) REMOVAL/INSTALLATION**.) Go to the next step.
		No	Go to the next step.
8	**VERIFY IF OTHER DTCs DISPLAYED** • Are any other DTCs displayed?	Yes	Repair or replace the malfunctioning part according to the applicable DTC troubleshooting. (See **DTC TABLE [REAR BODY CONTROL MODULE (RBCM)]**.)

		No	DTC troubleshooting completed.

2014 - Mazda3 - Body and Accessories

DTC B113E:11 [REAR BODY CONTROL MODULE (RBCM)]

Description	**4SD** • Trunk lid opener switch (exterior) circuit malfunction **5HB** • Liftgate opener switch circuit malfunction
Detection condition	• Rear body control module (RBCM) detects a short to ground in the trunk lid opener switch (exterior) (4SD)/liftgate opener switch (5HB) circuit
Fail-safe function	Not applicable
Possible cause	• Trunk lid opener switch (exterior) (4SD)/liftgate opener switch (5HB) connector or terminal malfunction • Trunk lid opener switch (exterior) (4SD)/liftgate opener switch (5HB) malfunction • Rear body control module (RBCM) connector or terminal malfunction • Short to ground in wiring harness between rear body control module (RBCM) terminal 4M and trunk lid opener switch (exterior) (4SD)/liftgate opener switch (5HB) terminal C • Rear body control module (RBCM) malfunction

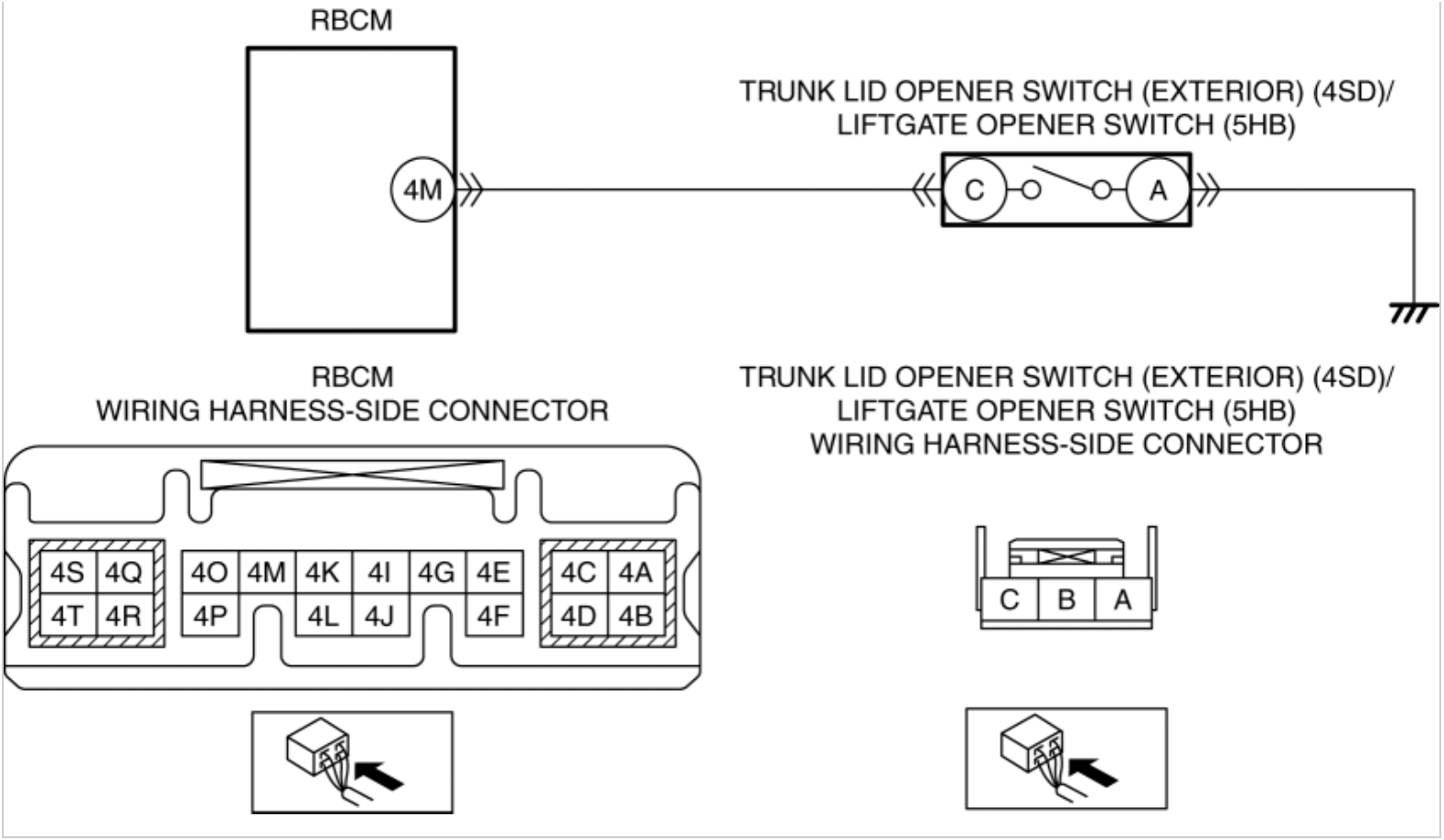

Diagnostic Procedure

Step	Inspection		Action
1	**VERIFY REAR BODY CONTROL MODULE (RBCM) DTCs AGAIN** • Clear the DTC for the rear body control module (RBCM) using the M-MDS. (See **CLEARING DTC [REAR BODY CONTROL MODULE (RBCM)]**.) • Retrieve the rear body control module (RBCM) DTCs using the M-MDS. (See **DTC INSPECTION [REAR BODY CONTROL MODULE (RBCM)]**.) • Is the same DTC displayed?	Yes	Go to the next step.
		No	Go to Step 7.
2	**INSPECT TRUNK LID OPENER SWITCH (EXTERIOR) (4SD)/LIFTGATE OPENER SWITCH (5HB) CONNECTOR CONDITION** • Switch the ignition off. • Disconnect the negative battery cable.	Yes	Go to the next step.
		No	Repair or replace the connector, then go to Step 6.

	(See **NEGATIVE BATTERY CABLE DISCONNECTION/CONNECTION [SKYACTIV-G 2.0, SKYACTIV-G 2.5]**.) • Disconnect the trunk lid opener switch (exterior) (4SD)/liftgate opener switch (5HB) connector. • Inspect the connector engagement and connection condition and inspect the terminals for damage, deformation, corrosion, or disconnection. • Is the connector normal?		
3	**INSPECT TRUNK LID OPENER SWITCH (EXTERIOR) (4SD)/LIFTGATE OPENER SWITCH (5HB)** • Inspect the trunk lid opener switch (exterior) (4SD)/liftgate opener switch (5HB). (See **TRUNK LID OPENER SWITCH INSPECTION**.) (See **LIFTGATE OPENER SWITCH INSPECTION**.) • Is the trunk lid opener switch (exterior) (4SD)/liftgate opener switch (5HB) normal?	Yes	Go to the next step.
		No	Replace the trunk lid opener switch (exterior) (4SD)/liftgate opener switch (5HB), then go to Step 6. (See **TRUNK LID OPENER SWITCH REMOVAL/INSTALLATION**.) (See **LIFTGATE OPENER SWITCH REMOVAL/INSTALLATION**.)
4	**INSPECT REAR BODY CONTROL MODULE (RBCM) CONNECTOR CONDITION** • Disconnect the rear body control module (RBCM) connector. • Inspect the connector engagement and connection condition and inspect the terminals for damage, deformation, corrosion, or disconnection. • Is the connector normal?	Yes	Go to the next step.
		No	Repair or replace the connector, then go to Step 6.
5	**INSPECT FOR SHORT TO GROUND IN TRUNK LID OPENER SWITCH (EXTERIOR) (4SD)/LIFTGATE OPENER SWITCH (5HB) CIRCUIT** • Verify that the trunk lid opener switch (exterior) (4SD)/liftgate opener switch (5HB) and rear body control module (RBCM) connectors are disconnected.	Yes	Refer to the wiring diagram and verify whether or not there is a common connector between rear body control module (RBCM) terminal 4M and trunk lid opener switch (exterior) (4SD)/liftgate opener switch (5HB) terminal C. **If there is a common connector:** • Determine the malfunctioning part by inspecting the common connector and the terminal for corrosion, damage, or pin disconnection, and the common wiring

	• Inspect for continuity between trunk lid opener switch (exterior) (4SD)/liftgate opener switch (5HB) terminal C (wiring harness-side) and body ground. • Is there continuity?		harness for a short to ground. • Repair or replace the malfunctioning part. **If there is no common connector:** • Repair or replace the wiring harness which has a short to ground. Go to the next step.
		No	Go to the next step.
6	**VERIFY THAT REPAIRS HAVE BEEN COMPLETED** • Always reconnect all disconnected connectors. • Reconnect the negative battery cable. (See **NEGATIVE BATTERY CABLE DISCONNECTION/CONNECTION [SKYACTIV-G 2.0, SKYACTIV-G 2.5]**.) • Clear the DTC for the rear body control module (RBCM) using the M-MDS. (See **CLEARING DTC [REAR BODY CONTROL MODULE (RBCM)]**.) • Retrieve the rear body control module (RBCM) DTCs using the M-MDS. (See **DTC INSPECTION [REAR BODY CONTROL MODULE (RBCM)]**.) • Is the same DTC displayed?	Yes	Repeat the inspection from Step 1. • If the malfunction recurs, replace the rear body control module (RBCM). (See **REAR BODY CONTROL MODULE (RBCM) REMOVAL/INSTALLATION**.) Go to the next step.
		No	Go to the next step.
7	**VERIFY IF OTHER DTCs DISPLAYED** • Are any other DTCs displayed?	Yes	Repair or replace the malfunctioning part according to the applicable DTC troubleshooting. (See **DTC TABLE [REAR BODY CONTROL MODULE (RBCM)]**.)
		No	DTC troubleshooting completed.

2014 - Mazda3 - Body and Accessories

DTC B1172:11 [REAR BODY CONTROL MODULE (RBCM)]

Description	Front door lock-link switch (LH) unlock circuit malfunction
Detection condition	• Rear body control module (RBCM) detects a short to ground in the front door lock-link switch (LH) unlock circuit with the front door lock-link switch (LH) locked.
Fail-safe function	Not applicable
Possible cause	• Front door latch and lock actuator (LH) connector or terminal malfunction • Front door lock-link switch (LH) malfunction • Rear body control module (RBCM) connector or terminal malfunction • Short to ground in wiring harness between rear body control module (RBCM) terminal 3M and front door latch and lock actuator (LH) terminal B • Rear body control module (RBCM) malfunction

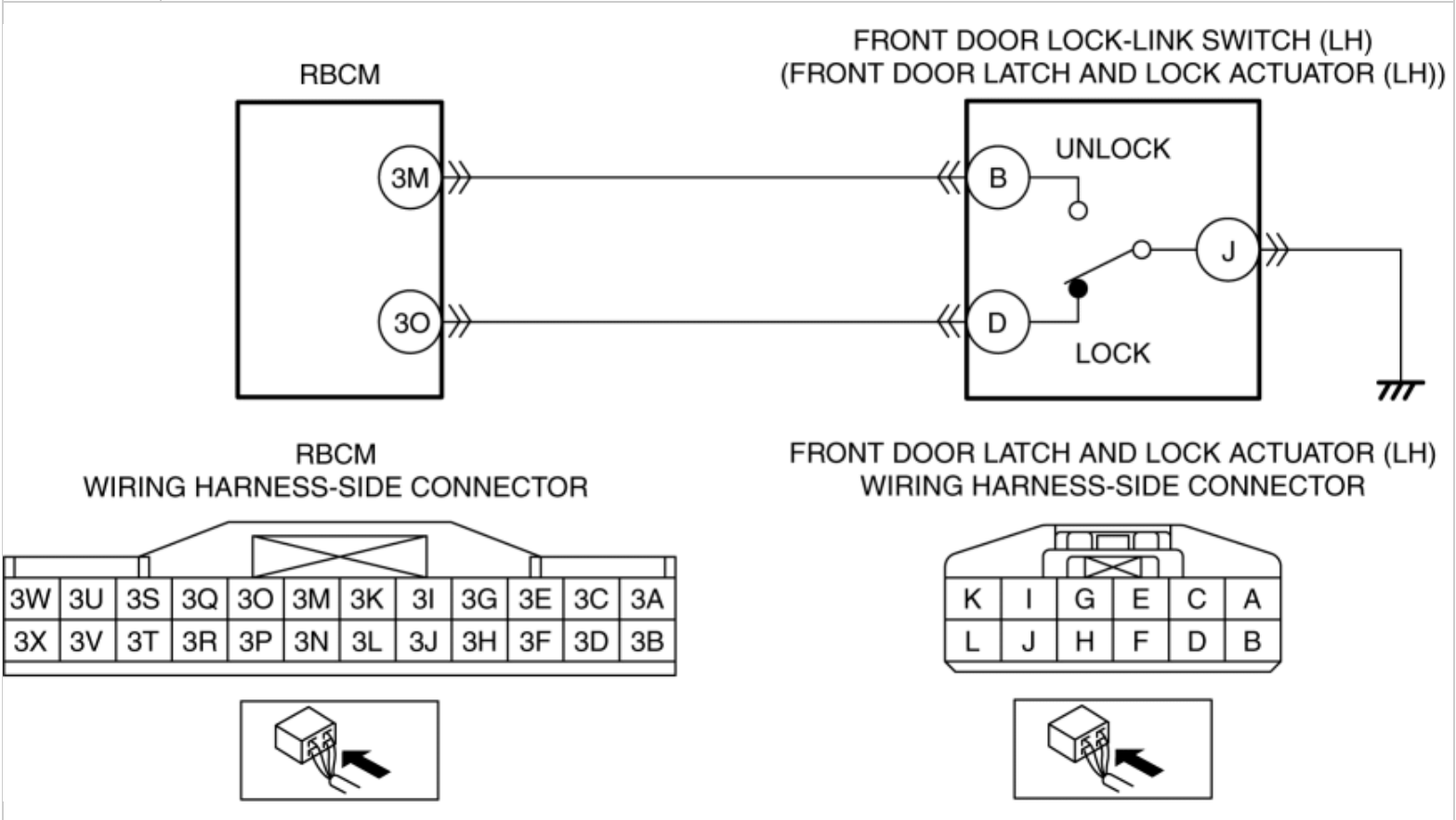

Diagnostic Procedure

Step	Inspection		Action
1	**VERIFY REAR BODY CONTROL MODULE (RBCM) DTCs AGAIN** • Clear the DTC for the rear body control module (RBCM) using the M-MDS. (See **CLEARING DTC [REAR BODY CONTROL MODULE (RBCM)]**.) • Retrieve the rear body control module (RBCM) DTCs using the M-MDS with the front door lock-link switch (LH) locked. (See **DTC INSPECTION [REAR BODY CONTROL MODULE (RBCM)]**.) • Is the same DTC displayed?	Yes	Go to the next step.
		No	Go to Step 8.
2	**VERIFY REAR BODY CONTROL MODULE (RBCM) DTCs AGAIN** • Clear the DTC for the rear body control module (RBCM) using the M-MDS. (See **CLEARING DTC [REAR BODY CONTROL MODULE (RBCM)]**.) • Retrieve the rear body control module (RBCM) DTCs using the M-MDS with the front door lock-link switch (LH) locked. (See **DTC INSPECTION [REAR BODY CONTROL MODULE (RBCM)]**.) • Is DTC B126A:11 or B126A:13 displayed?	Yes	Repair or replace the malfunctioning part according to the applicable DTC troubleshooting. (See **DTC TABLE [REAR BODY CONTROL MODULE (RBCM)]**.)
		No	Go to the next step.
3	**INSPECT FRONT DOOR LATCH AND LOCK ACTUATOR (LH) CONNECTOR CONDITION** • Switch the ignition off. • Disconnect the negative battery cable. (See **NEGATIVE BATTERY CABLE DISCONNECTION/CONNECTION [SKYACTIV-G 2.0, SKYACTIV-G 2.5]**.) • Disconnect the front door latch and lock actuator (LH) connector. • Inspect the connector engagement and connection condition and inspect the	Yes	Go to the next step.
		No	Repair or replace the connector, then go to Step 7.

	terminals for damage, deformation, corrosion, or disconnection. • Is the connector normal?		
4	**INSPECT FRONT DOOR LOCK-LINK SWITCH (LH)** • Inspect the front door lock-link switch (LH). (See **FRONT DOOR LOCK-LINK SWITCH INSPECTION**.) • Is the front door lock-link switch (LH) normal?	Yes	Go to the next step.
		No	Replace the front door latch and lock actuator (LH), then go to Step 7. (See **FRONT DOOR LATCH AND LOCK ACTUATOR REMOVAL/INSTALLATION**.)
5	**INSPECT REAR BODY CONTROL MODULE (RBCM) CONNECTOR CONDITION** • Disconnect the rear body control module (RBCM) connector. • Inspect the connector engagement and connection condition and inspect the terminals for damage, deformation, corrosion, or disconnection. • Is the connector normal?	Yes	Go to the next step.
		No	Repair or replace the connector, then go to Step 7.
6	**INSPECT FOR SHORT TO GROUND IN FRONT DOOR LOCK-LINK SWITCH (LH) UNLOCK CIRCUIT** • Verify that the rear body control module (RBCM) and front door latch and lock actuator (LH) connectors are disconnected. • Inspect for continuity between front door latch and lock actuator (LH) terminal B and body ground. • Is there continuity?	Yes	Refer to the wiring diagram and verify whether or not there is a common connector between rear body control module (RBCM) terminal 3M and front door latch and lock actuator (LH) terminal B. **If there is a common connector:** • Determine the malfunctioning part by inspecting the common connector and the terminal for corrosion, damage, or pin disconnection, and the common wiring harness for a short to ground. • Repair or replace the malfunctioning part. **If there is no common connector:** • Repair or replace the wiring harness which has a short to ground. Go to the next step.
		No	Go to the next step.
7	**VERIFY THAT REPAIRS HAVE BEEN COMPLETED** • Always reconnect all disconnected connectors. • Reconnect the negative battery cable.	Yes	Repeat the inspection from Step 1. • If the malfunction recurs, replace the rear body control module (RBCM). (See **REAR BODY CONTROL MODULE (RBCM) REMOVAL/INSTALLATION**.) Go to the next step.

	(See **NEGATIVE BATTERY CABLE DISCONNECTION/CONNECTION [SKYACTIV-G 2.0, SKYACTIV-G 2.5]**.) • Clear the DTC for the rear body control module (RBCM) using the M-MDS. (See **CLEARING DTC [REAR BODY CONTROL MODULE (RBCM)]**.) • Retrieve the rear body control module (RBCM) DTCs using the M-MDS with the front door lock-link switch (LH) locked. (See **DTC INSPECTION [REAR BODY CONTROL MODULE (RBCM)]**.) • Is the same DTC displayed?		
		No	Go to the next step.
8	**VERIFY IF OTHER DTCs DISPLAYED** • Are any other DTCs displayed?	Yes	Repair or replace the malfunctioning part according to the applicable DTC troubleshooting. (See **DTC TABLE [REAR BODY CONTROL MODULE (RBCM)]**.)
		No	DTC troubleshooting completed.

2014 - Mazda3 - Body and Accessories

DTC B1172:13 [REAR BODY CONTROL MODULE (RBCM)]

Description	Front door lock-link switch (LH) unlock circuit malfunction
Detection condition	• Rear body control module (RBCM) detects an open circuit in the front door lock-link switch (LH) unlock circuit with the front door lock-link switch (LH) unlocked.
Fail-safe function	Not applicable
Possible cause	• Front door latch and lock actuator (LH) connector or terminal malfunction • Open circuit in wiring harness between front door latch and lock actuator (LH) terminal J and body ground • Front door lock-link switch (LH) malfunction • Rear body control module (RBCM) connector or terminal malfunction • Open circuit in wiring harness between rear body control module (RBCM) terminal 3M and front door latch and lock actuator (LH) terminal B • Rear body control module (RBCM) malfunction

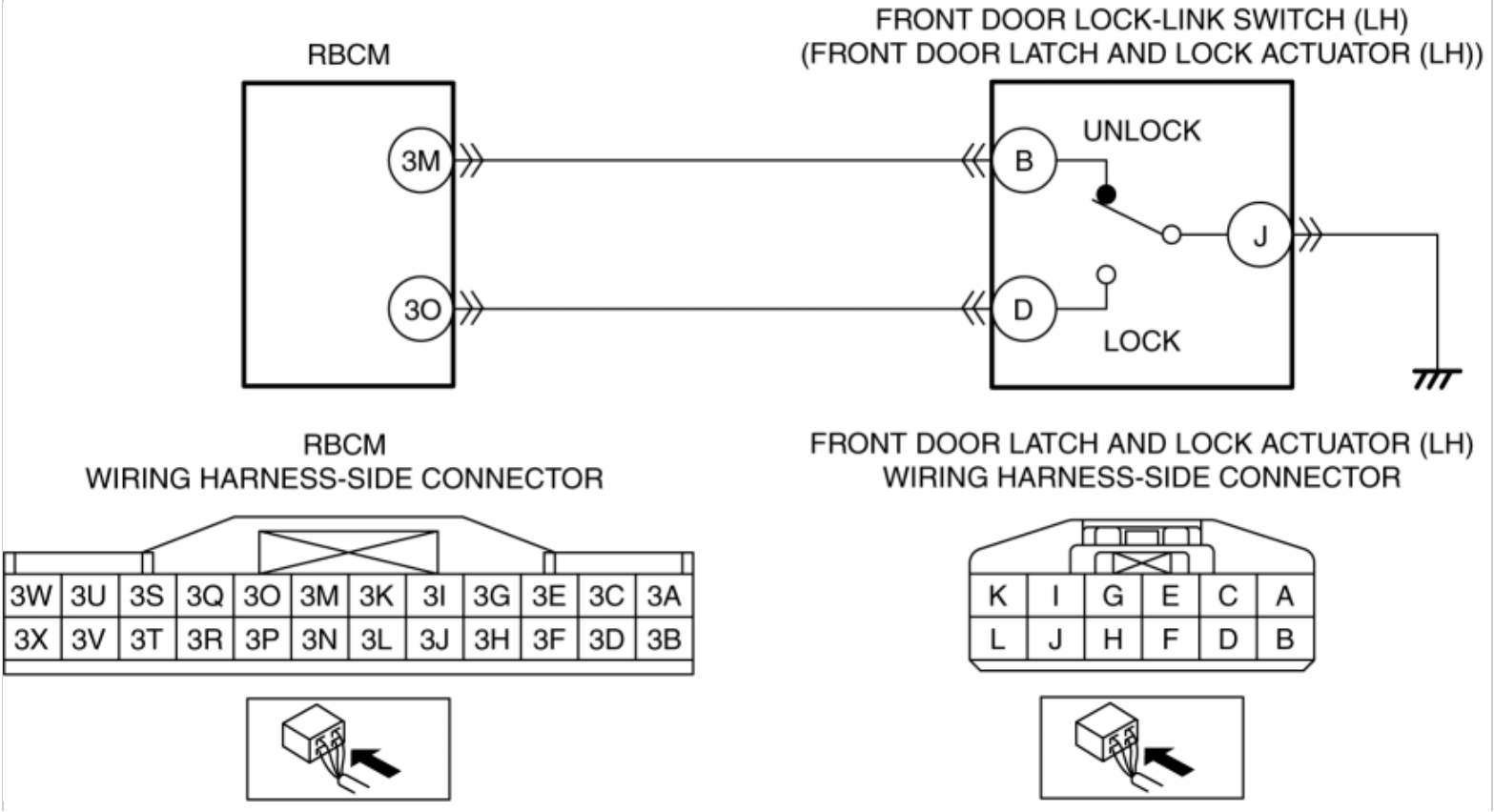

Diagnostic Procedure

Step	Inspection		Action
1	**VERIFY REAR BODY CONTROL MODULE (RBCM) DTCs AGAIN** • Clear the DTC for the rear body control module (RBCM) using the M-MDS. (See **CLEARING DTC [REAR BODY CONTROL MODULE (RBCM)]**.) • Retrieve the rear body control module (RBCM) DTCs using the M-MDS with the front door lock-link switch (LH) locked. (See **DTC INSPECTION [REAR BODY CONTROL MODULE (RBCM)]**.) • Is the same DTC displayed?	Yes	Go to the next step.
		No	Go to Step 9.
2	**VERIFY REAR BODY CONTROL MODULE (RBCM) DTCs AGAIN** • Clear the DTC for the rear body control module (RBCM) using the M-MDS. (See **CLEARING DTC [REAR BODY CONTROL MODULE (RBCM)]**.) • Retrieve the rear body control module (RBCM) DTCs using the M-MDS with the front door lock-link switch (LH) locked. (See **DTC INSPECTION [REAR BODY CONTROL MODULE (RBCM)]**.) • Is DTC B126A:11 or B126A:13 displayed?	Yes	Repair or replace the malfunctioning part according to the applicable DTC troubleshooting. (See **DTC TABLE [REAR BODY CONTROL MODULE (RBCM)]**.)
		No	Go to the next step.
3	**INSPECT FRONT DOOR LATCH AND LOCK ACTUATOR (LH) CONNECTOR CONDITION** • Switch the ignition off. • Disconnect the negative battery cable. (See **NEGATIVE BATTERY CABLE DISCONNECTION/CONNECTION [SKYACTIV-G 2.0, SKYACTIV-G 2.5]**.) • Disconnect the front door latch and lock actuator (LH) connector. • Inspect the connector engagement and connection condition and inspect the terminals for damage, deformation, corrosion, or	Yes	Go to the next step.
		No	Repair or replace the connector, then go to Step 8.

	disconnection. • Is the connector normal?		
4	**INSPECT FOR OPEN CIRCUIT IN FRONT DOOR LOCK-LINK SWITCH (LH) GROUND CIRCUIT** • Verify that the front door latch and lock actuator (LH) connector is disconnected. • Inspect for continuity between front door latch and lock actuator (LH) terminal J (wiring harness-side) and body ground. • Is there continuity?	Yes	Go to the next step.
		No	Refer to the wiring diagram and verify whether or not there is a common connector between front door latch and lock actuator (LH) terminal J and body ground. **If there is a common connector:** • Determine the malfunctioning part by inspecting the common connector and the terminal for corrosion, damage, or pin disconnection, and the common wiring harness for an open circuit. • Repair or replace the malfunctioning part. **If there is no common connector:** • Repair or replace the wiring harness which has an open circuit. Go to Step 8.
5	**INSPECT FRONT DOOR LOCK-LINK SWITCH (LH)** • Inspect the front door lock-link switch (LH). (See **FRONT DOOR LOCK-LINK SWITCH INSPECTION**.) • Is the front door lock-link switch (LH) normal?	Yes	Go to the next step.
		No	Replace the front door latch and lock actuator (LH), then go to Step 8. (See **FRONT DOOR LATCH AND LOCK ACTUATOR REMOVAL/INSTALLATION**.)
6	**INSPECT REAR BODY CONTROL MODULE (RBCM) CONNECTOR CONDITION** • Disconnect the rear body control module (RBCM) connector. • Inspect the connector engagement and connection condition and inspect the terminals for damage, deformation, corrosion, or disconnection. • Is the connector normal?	Yes	Go to the next step.
		No	Repair or replace the connector, then go to Step 8.
7	**INSPECT FOR OPEN CIRCUIT IN FRONT DOOR LOCK-LINK SWITCH (LH) UNLOCK CIRCUIT** • Verify that the rear body control module (RBCM) and front door latch and lock actuator (LH) connectors are disconnected. • Inspect for continuity between rear body control module (RBCM) terminal 3M and front door latch and lock actuator (LH) terminal B (wiring harness-side).	Yes	Go to the next step.
		No	Refer to the wiring diagram and verify whether or not there is a common connector between rear body control module (RBCM) terminal 3M and front door latch and lock actuator (LH) terminal B. **If there is a common connector:** • Determine the malfunctioning part by inspecting the common connector and the terminal for corrosion, damage, or pin

	• Is there continuity?		disconnection, and the common wiring harness for an open circuit. • Repair or replace the malfunctioning part. **If there is no common connector:** • Repair or replace the wiring harness which has an open circuit. Go to the next step.
8	**VERIFY THAT REPAIRS HAVE BEEN COMPLETED** • Always reconnect all disconnected connectors. • Reconnect the negative battery cable. (See **NEGATIVE BATTERY CABLE DISCONNECTION/CONNECTION [SKYACTIV-G 2.0, SKYACTIV-G 2.5]**.) • Clear the DTC for the rear body control module (RBCM) using the M-MDS. (See **CLEARING DTC [REAR BODY CONTROL MODULE (RBCM)]**.) • Retrieve the rear body control module (RBCM) DTCs using the M-MDS with the front door lock-link switch (LH) locked. (See **DTC INSPECTION [REAR BODY CONTROL MODULE (RBCM)]**.) • Is the same DTC displayed?	Yes	Repeat the inspection from Step 1. • If the malfunction recurs, replace the rear body control module (RBCM). (See **REAR BODY CONTROL MODULE (RBCM) REMOVAL/INSTALLATION**.) Go to the next step.
		No	Go to the next step.
9	**VERIFY IF OTHER DTCs DISPLAYED** • Are any other DTCs displayed?	Yes	Repair or replace the malfunctioning part according to the applicable DTC troubleshooting. (See **DTC TABLE [REAR BODY CONTROL MODULE (RBCM)]**.)
		No	DTC troubleshooting completed.

2014 - Mazda3 - Body and Accessories

DTC B1174:11 [REAR BODY CONTROL MODULE (RBCM)]

Without Theft-Deterrent System

Description	Front door lock-link switch (RH) unlock circuit malfunction
Detection condition	• Rear body control module (RBCM) detects a short to ground in the front door lock-link switch (RH) unlock circuit with the front door lock-link switch (RH) not unlocked.
Fail-safe function	Not applicable
Possible cause	• Front door latch and lock actuator (RH) connector or terminal malfunction • Front door lock-link switch (RH) malfunction • Rear body control module (RBCM) connector or terminal malfunction • Short to ground in wiring harness between rear body control module (RBCM) terminal 3J and front door latch and lock actuator (RH) terminal L • Rear body control module (RBCM) malfunction

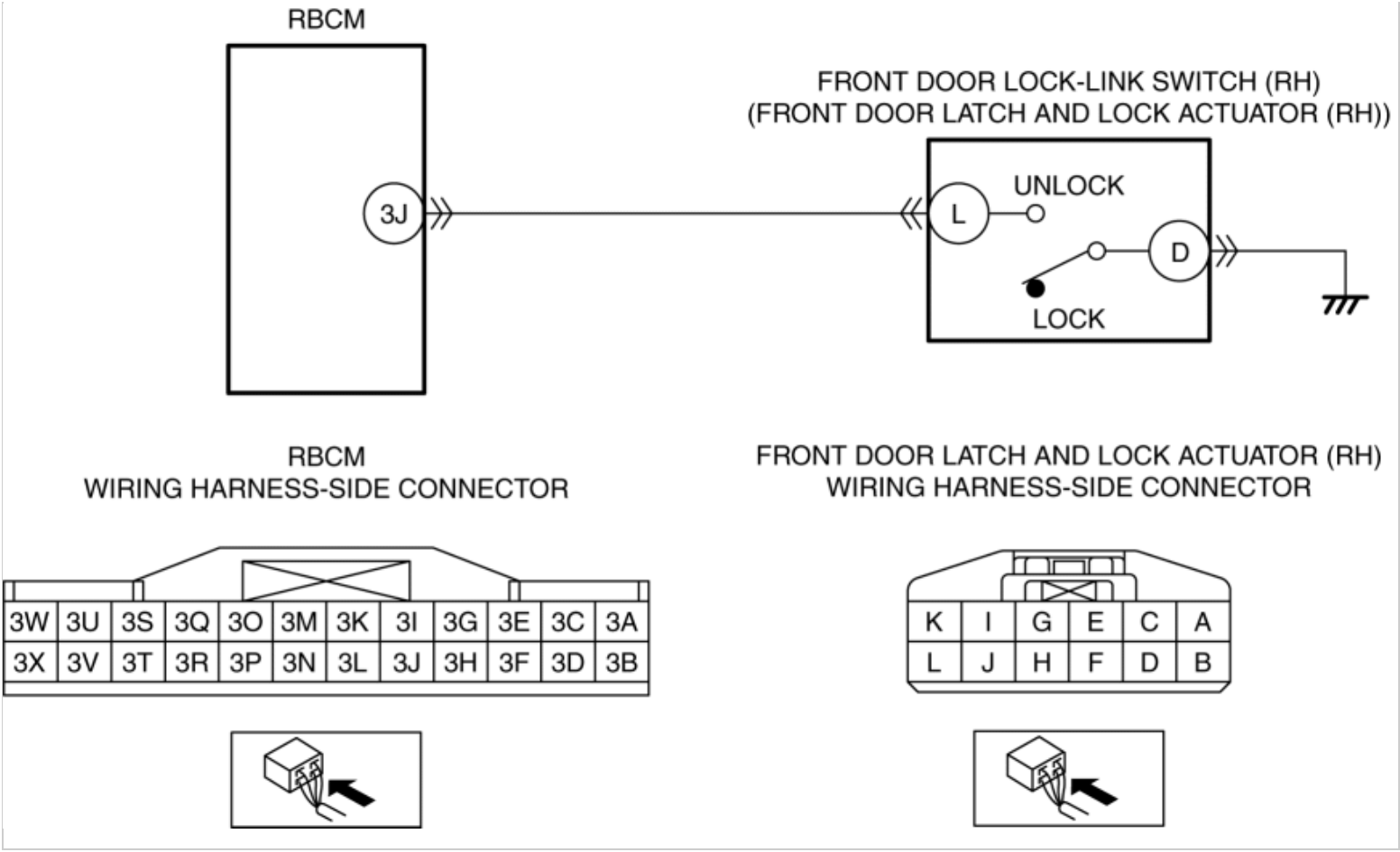

Diagnostic Procedure

Step	Inspection		Action
1	**VERIFY REAR BODY CONTROL MODULE (RBCM) DTCs AGAIN** • Clear the DTC for the rear body control module (RBCM) using the M-MDS. (See **CLEARING DTC [REAR BODY CONTROL MODULE (RBCM)]**.) • Retrieve the rear body control module (RBCM) DTCs using the M-MDS with the front door lock-link switch (RH) not unlocked. (See **DTC INSPECTION [REAR BODY CONTROL MODULE (RBCM)]**.) • Is the same DTC displayed?	Yes	Go to the next step.
		No	Go to Step 7.
2	**INSPECT FRONT DOOR LATCH AND LOCK ACTUATOR (RH) CONNECTOR CONDITION** • Switch the ignition off. • Disconnect the negative battery cable.	Yes	Go to the next step.
		No	Repair or replace the connector, then go to Step 6.

	(See **NEGATIVE BATTERY CABLE DISCONNECTION/CONNECTION [SKYACTIV-G 2.0, SKYACTIV-G 2.5]**.) • Disconnect the front door latch and lock actuator (RH) connector. • Inspect the connector engagement and connection condition and inspect the terminals for damage, deformation, corrosion, or disconnection. • Is the connector normal?		
3	**INSPECT FRONT DOOR LOCK-LINK SWITCH (RH)** • Inspect the front door lock-link switch (RH). (See **FRONT DOOR LOCK-LINK SWITCH INSPECTION**.) • Is the front door lock-link switch (RH) normal?	Yes	Go to the next step.
		No	Replace the front door latch and lock actuator (RH), then go to Step 6. (See **FRONT DOOR LATCH AND LOCK ACTUATOR REMOVAL/INSTALLATION**.)
4	**INSPECT REAR BODY CONTROL MODULE (RBCM) CONNECTOR CONDITION** • Disconnect the rear body control module (RBCM) connector. • Inspect the connector engagement and connection condition and inspect the terminals for damage, deformation, corrosion, or disconnection. • Is the connector normal?	Yes	Go to the next step.
		No	Repair or replace the connector, then go to Step 6.
5	**INSPECT FOR SHORT TO GROUND IN FRONT DOOR LOCK-LINK SWITCH (RH) UNLOCK CIRCUIT** • Verify that the rear body control module (RBCM) and front door latch and lock actuator (RH) connectors are disconnected. • Inspect for continuity between front door latch and lock actuator (RH) terminal L (wiring harness-side) and body ground. • Is there continuity?	Yes	Refer to the wiring diagram and verify whether or not there is a common connector between rear body control module (RBCM) terminal 3J and front door latch and lock actuator (RH) terminal L. **If there is a common connector:** • Determine the malfunctioning part by inspecting the common connector and the terminal for corrosion, damage, or pin disconnection, and the common wiring harness for a short to ground. • Repair or replace the malfunctioning part. **If there is no common connector:** • Repair or replace the wiring harness which has a short to ground. Go to the next step.

		No	Go to the next step.
6	**VERIFY THAT REPAIRS HAVE BEEN COMPLETED** • Always reconnect all disconnected connectors. • Reconnect the negative battery cable. (See **NEGATIVE BATTERY CABLE DISCONNECTION/CONNECTION [SKYACTIV-G 2.0, SKYACTIV-G 2.5]**.) • Clear the DTC for the rear body control module (RBCM) using the M-MDS. (See **CLEARING DTC [REAR BODY CONTROL MODULE (RBCM)]**.) • Retrieve the rear body control module (RBCM) DTCs using the M-MDS with the front door lock-link switch (RH) not unlocked. (See **DTC INSPECTION [REAR BODY CONTROL MODULE (RBCM)]**.) • Is the same DTC displayed?	Yes	Repeat the inspection from Step 1. • If the malfunction recurs, replace the rear body control module (RBCM). (See **REAR BODY CONTROL MODULE (RBCM) REMOVAL/INSTALLATION**.) Go to the next step.
		No	Go to the next step.
7	**VERIFY IF OTHER DTCs DISPLAYED** • Are any other DTCs displayed?	Yes	Repair or replace the malfunctioning part according to the applicable DTC troubleshooting. (See **DTC TABLE [REAR BODY CONTROL MODULE (RBCM)]**.)
		No	DTC troubleshooting completed.

With Theft-Deterrent System

Description	Door lock-link switch unlock circuit malfunction
Detection condition	• Rear body control module (RBCM) detects a short to ground in the door lock-link switch unlock circuit with the front door lock-link switch (RH)/rear door lock-link switch (LH)/(RH) not unlocked.
Fail-safe function	Not applicable
	• Front door latch and lock actuator (RH) connector or terminal malfunction • Front door lock-link switch (RH) malfunction • Rear door latch and lock actuator (LH) connector or terminal malfunction

Possible cause	• Rear door lock-link switch (LH) malfunction
	• Rear door latch and lock actuator (RH) connector or terminal malfunction
	• Rear door lock-link switch (RH) malfunction
	• Rear body control module (RBCM) connector or terminal malfunction
	• Short to ground in wiring harness between the following terminals:
	  ▪ Rear body control module (RBCM) terminal 3J—Front door latch and lock actuator (RH) terminal L
	  ▪ Rear body control module (RBCM) terminal 3J—Rear door latch and lock actuator (LH) terminal B
	  ▪ Rear body control module (RBCM) terminal 3J—Rear door latch and lock actuator (RH) terminal L
	• Rear body control module (RBCM) malfunction

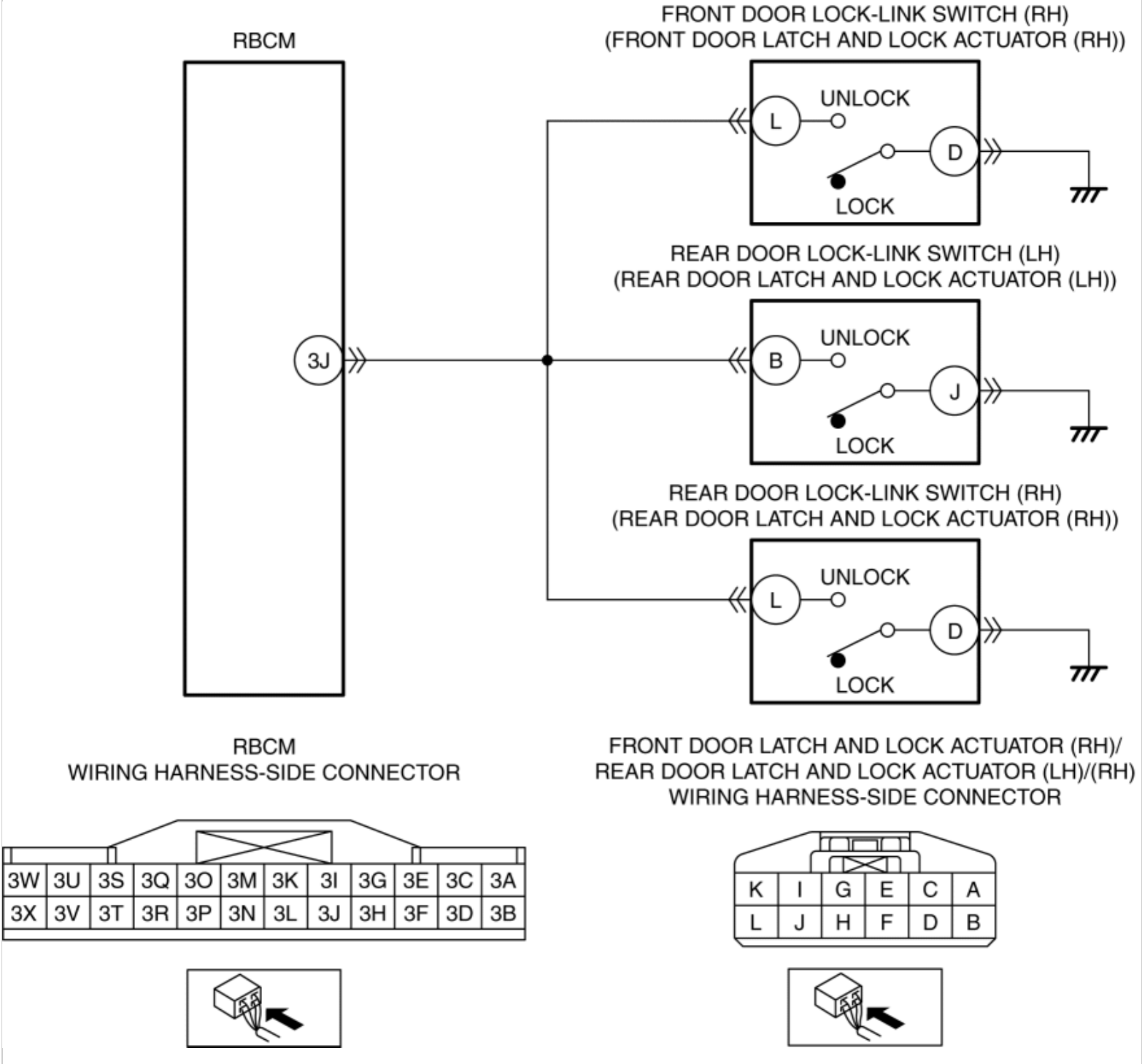

Diagnostic Procedure

Step	Inspection		Action
1	**VERIFY REAR BODY CONTROL MODULE (RBCM) DTCs AGAIN** • Clear the DTC for the rear body control module (RBCM) using the M-MDS. (See **CLEARING DTC [REAR BODY CONTROL MODULE (RBCM)]**.) • Retrieve the rear body control	Yes	Go to the next step.
		No	Go to Step 11.

	module (RBCM) DTCs using the M-MDS with the front door lock-link switch (RH), rear door lock-link switch (LH) and (RH) not unlocked. (See **DTC INSPECTION [REAR BODY CONTROL MODULE (RBCM)]**.) • Is the same DTC displayed?		
2	**INSPECT FRONT DOOR LATCH AND LOCK ACTUATOR (RH) CONNECTOR CONDITION** • Switch the ignition off. • Disconnect the negative battery cable. (See **NEGATIVE BATTERY CABLE DISCONNECTION/CONNECTION [SKYACTIV-G 2.0, SKYACTIV-G 2.5]**.) • Disconnect the front door latch and lock actuator (RH) connector. • Inspect the connector engagement and connection condition and inspect the terminals for damage, deformation, corrosion, or disconnection. • Is the connector normal?	Yes	Go to the next step.
		No	Repair or replace the connector, then go to Step 10.
3	**INSPECT FRONT DOOR LOCK-LINK SWITCH (RH)** • Inspect the front door lock-link switch (RH). (See **FRONT DOOR LOCK-LINK SWITCH INSPECTION**.) • Is the front door lock-link switch (RH) normal?	Yes	Go to the next step.
		No	Replace the front door latch and lock actuator (RH), then go to Step 10. (See **FRONT DOOR LATCH AND LOCK ACTUATOR REMOVAL/INSTALLATION**.)
4	**INSPECT REAR DOOR LATCH ACTUATOR (LH) CONNECTOR CONDITION** • Disconnect the rear door latch and lock actuator (LH) connector. • Inspect the connector engagement and connection condition and inspect the terminals for damage, deformation, corrosion, or disconnection. • Is the connector normal?	Yes	Go to the next step.
		No	Repair or replace the connector, then go to Step 10.
5	**INSPECT REAR DOOR LOCK-LINK SWITCH (LH)** • Inspect the rear door lock-link switch (LH). (See **REAR DOOR LOCK-LINK SWITCH INSPECTION**.) • Is the rear door lock-link switch (LH) normal?	Yes	Go to the next step.
		No	Replace the rear door latch and lock actuator (LH), then go to Step 10. (See **REAR DOOR LATCH AND LOCK ACTUATOR REMOVAL/INSTALLATION**.)

6	**INSPECT REAR DOOR LATCH ACTUATOR (RH) CONNECTOR CONDITION** • Disconnect the rear door latch and lock actuator (RH) connector. • Inspect the connector engagement and connection condition and inspect the terminals for damage, deformation, corrosion, or disconnection. • Is the connector normal?	Yes	Go to the next step.
		No	Repair or replace the connector, then go to Step 10.
7	**INSPECT REAR DOOR LOCK-LINK SWITCH (RH)** • Inspect the rear door lock-link switch (RH). (See **REAR DOOR LOCK-LINK SWITCH INSPECTION**.) • Is the rear door lock-link switch (RH) normal?	Yes	Go to the next step.
		No	Replace the rear door latch and lock actuator (RH), then go to Step 10. (See **REAR DOOR LATCH AND LOCK ACTUATOR REMOVAL/INSTALLATION**.)
8	**INSPECT REAR BODY CONTROL MODULE (RBCM) CONNECTOR CONDITION** • Disconnect the rear body control module (RBCM) connector. • Inspect the connector engagement and connection condition and inspect the terminals for damage, deformation, corrosion, or disconnection. • Is the connector normal?	Yes	Go to the next step.
		No	Repair or replace the connector, then go to Step 10.
9	**INSPECT FOR SHORT TO GROUND IN DOOR LOCK-LINK SWITCH UNLOCK CIRCUIT** • Verify that the rear body control module (RBCM), front door latch and lock actuator (RH), rear door latch and lock actuator (LH) and (RH) connectors are disconnected. • Inspect for continuity between front door latch and lock actuator (RH) terminal L (wiring harness-side) and body ground. • Is there continuity?	Yes	Refer to the wiring diagram and verify whether or not there is a common connector between the following terminals: • Rear body control module (RBCM) terminal 3J—Front door latch and lock actuator (RH) terminal L • Rear body control module (RBCM) terminal 3J—Rear door latch and lock actuator (LH) terminal B • Rear body control module (RBCM) terminal 3J—Rear door latch and lock actuator (RH) terminal L **If there is a common connector:** • Determine the malfunctioning part by inspecting the common connector and the terminal for corrosion, damage, or pin disconnection, and the common wiring harness for a short to ground. • Repair or replace the malfunctioning part. **If there is no common connector:** • Repair or replace the wiring harness

			which has a short to ground. Go to the next step.
		No	Go to the next step.
10	**VERIFY THAT REPAIRS HAVE BEEN COMPLETED** • Always reconnect all disconnected connectors. • Reconnect the negative battery cable. (See **NEGATIVE BATTERY CABLE DISCONNECTION/CONNECTION [SKYACTIV-G 2.0, SKYACTIV-G 2.5]**.) • Clear the DTC for the rear body control module (RBCM) using the M-MDS. (See **CLEARING DTC [REAR BODY CONTROL MODULE (RBCM)]**.) • Retrieve the rear body control module (RBCM) DTCs using the M-MDS with the front door lock-link switch (RH), rear door lock-link switch (LH) and (RH) not unlocked. (See **DTC INSPECTION [REAR BODY CONTROL MODULE (RBCM)]**.) • Is the same DTC displayed?	Yes	Repeat the inspection from Step 1. • If the malfunction recurs, replace the rear body control module (RBCM). (See **REAR BODY CONTROL MODULE (RBCM) REMOVAL/INSTALLATION**.) Go to the next step.
		No	Go to the next step.
11	**VERIFY IF OTHER DTCs DISPLAYED** • Are any other DTCs displayed?	Yes	Repair or replace the malfunctioning part according to the applicable DTC troubleshooting. (See **DTC TABLE [REAR BODY CONTROL MODULE (RBCM)]**.)
		No	DTC troubleshooting completed.

2014 - Mazda3 - Body and Accessories

DTC B1174:13 [REAR BODY CONTROL MODULE (RBCM)]

Without Theft-Deterrent System

Description	Front door lock-link switch (RH) unlock circuit malfunction
Detection condition	• Rear body control module (RBCM) detects an open circuit in the front door lock-link switch (RH) unlock circuit with the front door lock-link switch (RH) unlocked.
Fail-safe function	Not applicable
Possible cause	• Front door latch and lock actuator (RH) connector or terminal malfunction • Open circuit in wiring harness between front door latch and lock actuator (RH) terminal D and body ground. • Front door lock-link switch (RH) malfunction • Rear body control module (RBCM) connector or terminal malfunction • Open circuit in wiring harness between rear body control module (RBCM) terminal 3J and front door latch and lock actuator (RH) terminal L • Rear body control module (RBCM) malfunction

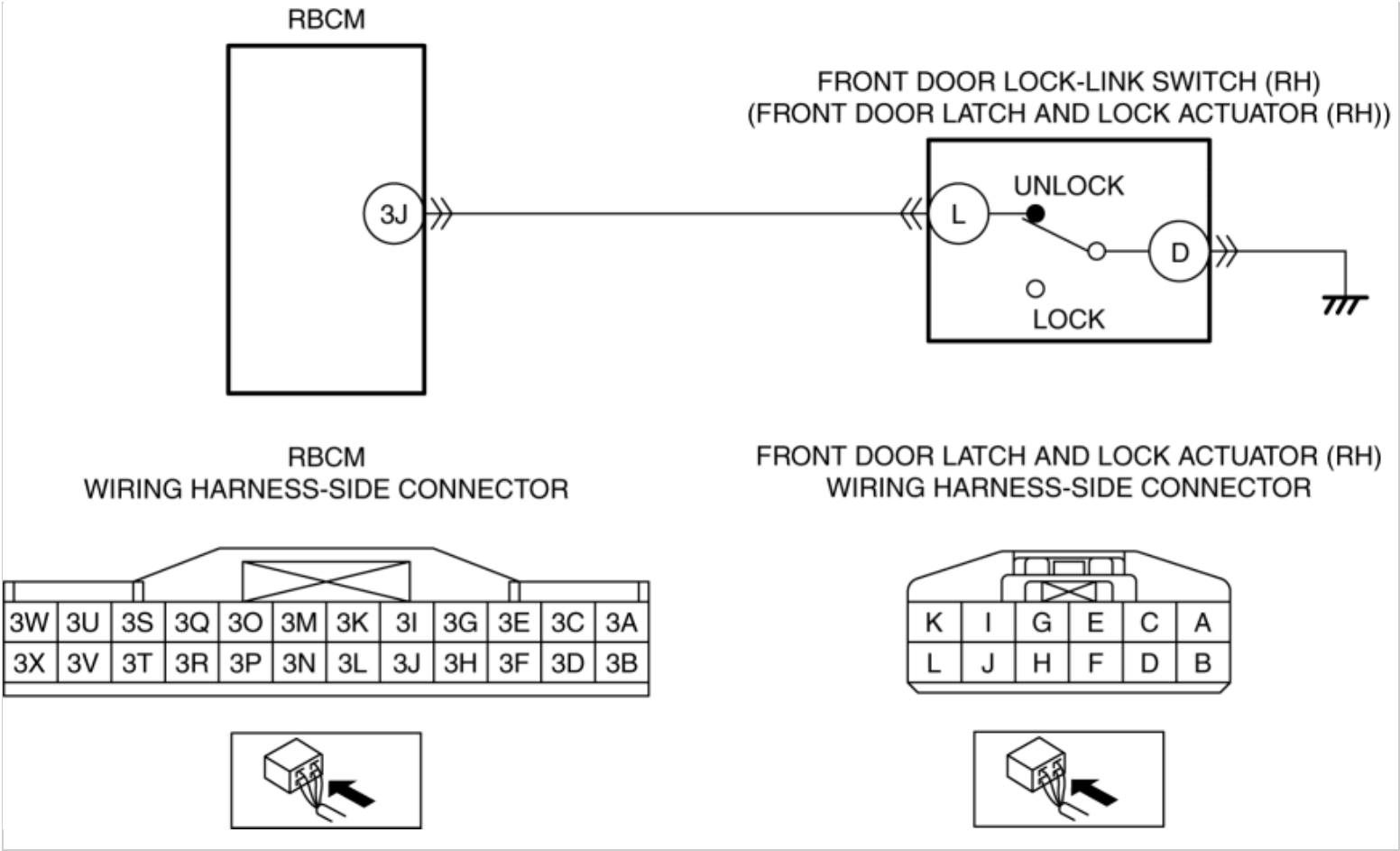

Diagnostic Procedure

Step	Inspection		Action
1	**VERIFY REAR BODY CONTROL MODULE (RBCM) DTCs AGAIN** • Clear the DTC for the rear body control module (RBCM) using the M-MDS. (See **CLEARING DTC [REAR BODY CONTROL MODULE (RBCM)]**.) • Retrieve the rear body control module (RBCM) DTCs using the M-MDS. (See **DTC INSPECTION [REAR BODY CONTROL MODULE (RBCM)]**.) • Is the same DTC displayed?	Yes	Go to the next step.
		No	Go to Step 8.
2	**INSPECT FRONT DOOR LATCH AND LOCK ACTUATOR (RH) CONNECTOR CONDITION** • Switch the ignition off. • Disconnect the negative battery cable. (See **NEGATIVE BATTERY CABLE DISCONNECTION/CONNECTION [SKYACTIV-G 2.0, SKYACTIV-G 2.5]**.) • Disconnect the front door latch and	Yes	Go to the next step.
		No	Repair or replace the connector, then go to Step 7.

	lock actuator (RH) connector. • Inspect the connector engagement and connection condition and inspect the terminals for damage, deformation, corrosion, or disconnection. • Is the connector normal?		
3	**INSPECT FOR OPEN CIRCUIT IN FRONT DOOR LOCK-LINK SWITCH (RH) GROUND CIRCUIT** • Verify that the front door latch and lock actuator (RH) connector is disconnected. • Inspect for continuity between front door latch and lock actuator (RH) terminal D (wiring harness-side) and body ground. • Is there continuity?	Yes	Go to the next step.
		No	Refer to the wiring diagram and verify whether or not there is a common connector between front door latch and lock actuator (RH) terminal D and body ground. **If there is a common connector:** • Determine the malfunctioning part by inspecting the common connector and the terminal for corrosion, damage, or pin disconnection, and the common wiring harness for an open circuit. • Repair or replace the malfunctioning part. **If there is no common connector:** • Repair or replace the wiring harness which has an open circuit. Go to Step 7.
4	**INSPECT FRONT DOOR LOCK-LINK SWITCH (RH)** • Inspect the front door lock-link switch (RH). (See **FRONT DOOR LOCK-LINK SWITCH INSPECTION**.) • Is the front door lock-link switch (RH) normal?	Yes	Go to the next step.
		No	Replace the front door latch and lock actuator (RH), then go to Step 7. (See **FRONT DOOR LATCH AND LOCK ACTUATOR REMOVAL/INSTALLATION**.)
5	**INSPECT REAR BODY CONTROL MODULE (RBCM) CONNECTOR CONDITION** • Disconnect the rear body control module (RBCM) connector. • Inspect the connector engagement and connection condition and inspect the terminals for damage, deformation, corrosion, or disconnection. • Is the connector normal?	Yes	Go to the next step.
		No	Repair or replace the connector, then go to Step 7.
6	**INSPECT FOR OPEN CIRCUIT IN FRONT DOOR LOCK-LINK SWITCH (RH) UNLOCK CIRCUIT** • Verify that the rear body control module (RBCM) and front door latch and lock actuator (RH) connectors are disconnected. • Inspect for continuity between rear body control module (RBCM) terminal	Yes	Go to the next step.
		No	Refer to the wiring diagram and verify whether or not there is a common connector between rear body control module (RBCM) terminal 3J and front door latch and lock actuator (RH) terminal L. **If there is a common connector:**

	3J (wiring harness-side) and front door latch and lock actuator (RH) terminal L (wiring harness-side). • Is there continuity?		• Determine the malfunctioning part by inspecting the common connector and the terminal for corrosion, damage, or pin disconnection, and the common wiring harness for an open circuit. • Repair or replace the malfunctioning part. **If there is no common connector:** • Repair or replace the wiring harness which has an open circuit. Go to the next step.
7	**VERIFY THAT REPAIRS HAVE BEEN COMPLETED** • Always reconnect all disconnected connectors. • Reconnect the negative battery cable. (See **NEGATIVE BATTERY CABLE DISCONNECTION/CONNECTION [SKYACTIV-G 2.0, SKYACTIV-G 2.5]**.) • Clear the DTC for the rear body control module (RBCM) using the M-MDS. (See **CLEARING DTC [REAR BODY CONTROL MODULE (RBCM)]**.) • Retrieve the rear body control module (RBCM) DTCs using the M-MDS. (See **DTC INSPECTION [REAR BODY CONTROL MODULE (RBCM)]**.) • Is the same DTC displayed?	Yes	Repeat the inspection from Step 1. • If the malfunction recurs, replace the rear body control module (RBCM). (See **REAR BODY CONTROL MODULE (RBCM) REMOVAL/INSTALLATION**.) Go to the next step.
		No	Go to the next step.
8	**VERIFY IF OTHER DTCs DISPLAYED** • Are any other DTCs displayed?	Yes	Repair or replace the malfunctioning part according to the applicable DTC troubleshooting. (See **DTC TABLE [REAR BODY CONTROL MODULE (RBCM)]**.)
		No	DTC troubleshooting completed.

With Theft-Deterrent System

Description	Door lock-link switch unlock circuit malfunction
Detection condition	• Rear body control module (RBCM) detects an open circuit in the door lock-link switch unlock circuit with the front door lock-link switch (RH)/rear door lock-link switch (LH)/(RH) unlocked.
Fail-safe function	Not applicable

Possible cause	• Front door latch and lock actuator (RH) connector or terminal malfunction
	• Open circuit in wiring harness between front door latch and lock actuator (RH) terminal D and body ground.
	• Front door lock-link switch (RH) malfunction
	• Rear door latch and lock actuator (LH) connector or terminal malfunction
	• Open circuit in wiring harness between rear door latch and lock actuator (LH) terminal J and body ground
	• Rear door lock-link switch (LH) malfunction
	• Rear door latch and lock actuator (RH) connector or terminal malfunction
	• Open circuit in wiring harness between rear door latch and lock actuator (RH) terminal D and body ground
	• Rear door lock-link switch (RH) malfunction
	• Rear body control module (RBCM) connector or terminal malfunction
	• Open circuit in wiring harness between the following terminals:
	  ▪ Rear body control module (RBCM) terminal 3J—Front door latch and lock actuator (RH) terminal L
	  ▪ Rear body control module (RBCM) terminal 3J—Rear door latch and lock actuator (LH) terminal B
	  ▪ Rear body control module (RBCM) terminal 3J—Rear door latch and lock actuator (RH) terminal L
	• Rear body control module (RBCM) malfunction

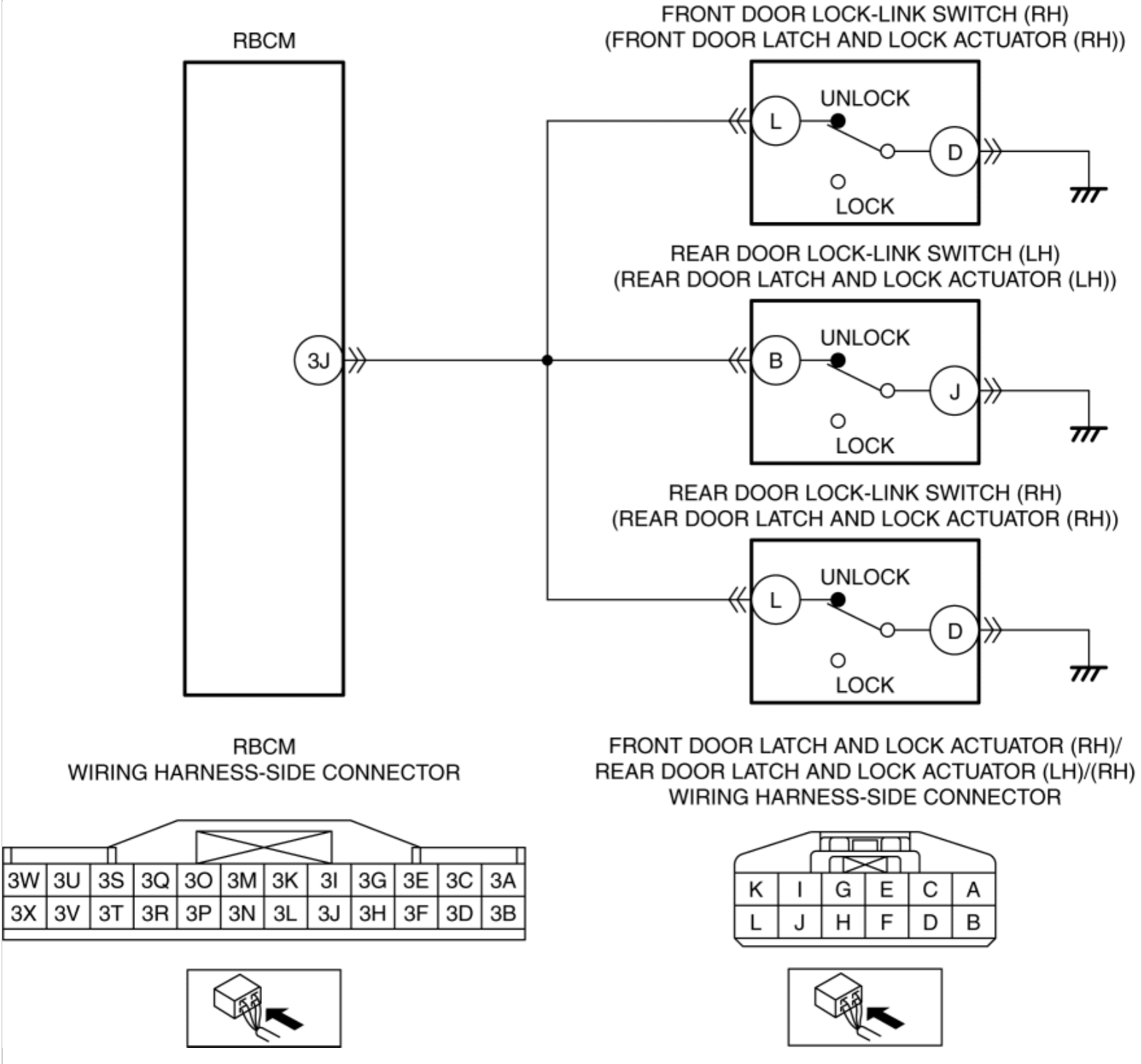

Diagnostic Procedure

Step	Inspection		Action
1	**VERIFY REAR BODY CONTROL MODULE (RBCM) DTCs AGAIN** • Clear the DTC for the rear body control module (RBCM) using the M-MDS. (See **CLEARING DTC [REAR BODY CONTROL MODULE (RBCM)]**.) • Retrieve the rear body control module	Yes	Go to the next step.
		No	Go to Step 14.

	(RBCM) DTCs using the M-MDS. (See **DTC INSPECTION [REAR BODY CONTROL MODULE (RBCM)]**.) • Is the same DTC displayed?		
2	**INSPECT FRONT DOOR LATCH AND LOCK ACTUATOR (RH) CONNECTOR CONDITION** • Switch the ignition off. • Disconnect the negative battery cable. (See **NEGATIVE BATTERY CABLE DISCONNECTION/CONNECTION [SKYACTIV-G 2.0, SKYACTIV-G 2.5]**.) • Disconnect the front door latch and lock actuator (RH) connector. • Inspect the connector engagement and connection condition and inspect the terminals for damage, deformation, corrosion, or disconnection. • Is the connector normal?	Yes	Go to the next step.
		No	Repair or replace the connector, then go to Step 13.
3	**INSPECT FOR OPEN CIRCUIT IN FRONT DOOR LOCK-LINK SWITCH (RH) GROUND CIRCUIT** • Verify that the front door latch and lock actuator (RH) connector is disconnected. • Inspect for continuity between front door latch and lock actuator (RH) terminal D (wiring harness-side) and body ground. • Is there continuity?	Yes	Go to the next step.
		No	Refer to the wiring diagram and verify whether or not there is a common connector between front door latch and lock actuator (RH) terminal D and body ground. **If there is a common connector:** • Determine the malfunctioning part by inspecting the common connector and the terminal for corrosion, damage, or pin disconnection, and the common wiring harness for an open circuit. • Repair or replace the malfunctioning part. **If there is no common connector:** • Repair or replace the wiring harness which has an open circuit. Go to Step 13.
4	**INSPECT FRONT DOOR LOCK-LINK SWITCH (RH)** • Inspect the front door lock-link switch (RH). (See **FRONT DOOR LOCK-LINK SWITCH INSPECTION**.) • Is the front door lock-link switch (RH) normal?	Yes	Go to the next step.
		No	Replace the front door latch and lock actuator (RH), then go to Step 13. (See **FRONT DOOR LATCH AND LOCK ACTUATOR REMOVAL/INSTALLATION**.)
5	**INSPECT REAR DOOR LATCH AND LOCK ACTUATOR (LH) CONNECTOR CONDITION**	Yes	Go to the next step.

	• Disconnect the rear door latch and lock actuator (LH) connector. • Inspect the connector engagement and connection condition and inspect the terminals for damage, deformation, corrosion, or disconnection. • Is the connector normal?	No	Repair or replace the connector, then go to Step 13.
6	**INSPECT FOR OPEN CIRCUIT IN REAR DOOR LOCK-LINK SWITCH (LH) GROUND CIRCUIT** • Verify that the rear door latch and lock actuator (LH) connector is disconnected. • Inspect for continuity between rear door latch and lock actuator (LH) terminal J (wiring harness-side) and body ground. • Is there continuity?	Yes	Go to the next step.
		No	Refer to the wiring diagram and verify whether or not there is a common connector between rear door latch and lock actuator (LH) terminal J and body ground. **If there is a common connector:** • Determine the malfunctioning part by inspecting the common connector and the terminal for corrosion, damage, or pin disconnection, and the common wiring harness for an open circuit. • Repair or replace the malfunctioning part. **If there is no common connector:** • Repair or replace the wiring harness which has an open circuit. Go to Step 13.
7	**INSPECT REAR DOOR LOCK-LINK SWITCH (LH)** • Inspect the rear door lock-link switch (LH). (See **REAR DOOR LOCK-LINK SWITCH INSPECTION**.) • Is the rear door lock-link switch (LH) normal?	Yes	Go to the next step.
		No	Replace the rear door latch and lock actuator (LH), then go to Step 13. (See **FRONT DOOR LATCH AND LOCK ACTUATOR REMOVAL/INSTALLATION**.)
8	**INSPECT REAR DOOR LATCH AND LOCK ACTUATOR (RH) CONNECTOR CONDITION** • Disconnect the rear door latch and lock actuator (RH) connector. • Inspect the connector engagement and connection condition and inspect the terminals for damage, deformation, corrosion, or disconnection. • Is the connector normal?	Yes	Go to the next step.
		No	Repair or replace the connector, then go to Step 13.
9	**INSPECT FOR OPEN CIRCUIT IN REAR DOOR LOCK-LINK SWITCH (RH) GROUND CIRCUIT** • Verify that the rear door latch and lock actuator (RH) connector is disconnected.	Yes	Go to the next step.
		No	Refer to the wiring diagram and verify whether or not there is a common connector between rear door latch and lock actuator (RH) terminal D and body ground.

	• Inspect for continuity between rear door latch and lock actuator (RH) terminal D (wiring harness-side) and body ground. • Is there continuity?		**If there is a common connector:** • Determine the malfunctioning part by inspecting the common connector and the terminal for corrosion, damage, or pin disconnection, and the common wiring harness for an open circuit. • Repair or replace the malfunctioning part. **If there is no common connector:** • Repair or replace the wiring harness which has an open circuit. Go to Step 13.
10	**INSPECT REAR DOOR LOCK-LINK SWITCH (RH)** • Inspect the rear door lock-link switch (RH). (See **REAR DOOR LOCK-LINK SWITCH INSPECTION**.) • Is the rear door lock-link switch (RH) normal?	Yes	Go to the next step.
		No	Replace the rear door latch and lock actuator (RH), then go to Step 13. (See **REAR DOOR LATCH AND LOCK ACTUATOR REMOVAL/INSTALLATION**.)
11	**INSPECT REAR BODY CONTROL MODULE (RBCM) CONNECTOR CONDITION** • Disconnect the rear body control module (RBCM) connector. • Inspect the connector engagement and connection condition and inspect the terminals for damage, deformation, corrosion, or disconnection. • Is the connector normal?	Yes	Go to the next step.
		No	Repair or replace the connector, then go to Step 13.
12	**INSPECT FOR OPEN CIRCUIT IN DOOR LOCK-LINK SWITCH UNLOCK CIRCUIT** • Verify that the rear body control module (RBCM), front door latch and lock actuator (RH), rear door latch and lock actuator (LH) and (RH) connectors are disconnected. • Inspect for continuity between the following terminals (wiring harness-side): ▪ Rear body control module (RBCM) terminal 3J—Front door latch and lock actuator (RH) terminal L ▪ Rear body control module (RBCM) terminal 3J—Rear door latch and lock	Yes	Go to the next step.
		No	Refer to the wiring diagram and verify whether or not there is a common connector between the following terminals: • Rear body control module (RBCM) terminal 3J—Front door latch and lock actuator (RH) terminal L • Rear body control module (RBCM) terminal 3J—Rear door latch and lock actuator (LH) terminal B • Rear body control module (RBCM) terminal 3J—Rear door latch and lock actuator (RH) terminal L **If there is a common connector:** • Determine the malfunctioning part by inspecting the common connector and the terminal for corrosion, damage, or

	actuator (LH) terminal B ▪ Rear body control module (RBCM) terminal 3J—Rear door latch and lock actuator (RH) terminal L • Is there continuity?		pin disconnection, and the common wiring harness for an open circuit. • Repair or replace the malfunctioning part. **If there is no common connector:** • Repair or replace the wiring harness which has an open circuit. Go to the next step.
13	**VERIFY THAT REPAIRS HAVE BEEN COMPLETED** • Always reconnect all disconnected connectors. • Reconnect the negative battery cable. (See **NEGATIVE BATTERY CABLE DISCONNECTION/CONNECTION [SKYACTIV-G 2.0, SKYACTIV-G 2.5]**.) • Clear the DTC for the rear body control module (RBCM) using the M-MDS. (See **CLEARING DTC [REAR BODY CONTROL MODULE (RBCM)]**.) • Retrieve the rear body control module (RBCM) DTCs using the M-MDS. (See **DTC INSPECTION [REAR BODY CONTROL MODULE (RBCM)]**.) • Is the same DTC displayed?	Yes	Repeat the inspection from Step 1. • If the malfunction recurs, replace the rear body control module (RBCM). (See **REAR BODY CONTROL MODULE (RBCM) REMOVAL/INSTALLATION**.) Go to the next step.
		No	Go to the next step.
14	**VERIFY IF OTHER DTCs DISPLAYED** • Are any other DTCs displayed?	Yes	Repair or replace the malfunctioning part according to the applicable DTC troubleshooting. (See **DTC TABLE [REAR BODY CONTROL MODULE (RBCM)]**.)
		No	DTC troubleshooting completed.

2014 - Mazda3 - Body and Accessories

DTC B1175:11 [REAR BODY CONTROL MODULE (RBCM)]

Description	Front door latch switch (LH) circuit malfunction
Detection condition	• Rear body control module (RBCM) detects a short to ground in the front door latch switch (LH) circuit with the front door (LH) closed (front door latch switch (LH) off).
Fail-safe function	Not applicable
Possible cause	• Front door latch and lock actuator (LH) connector or terminal malfunction • Front door latch switch (LH) malfunction • Rear body control module (RBCM) connector or terminal malfunction • Short to ground in wiring harness between rear body control module (RBCM) terminal 3W and front door latch and lock actuator (LH) terminal L • Rear body control module (RBCM) malfunction

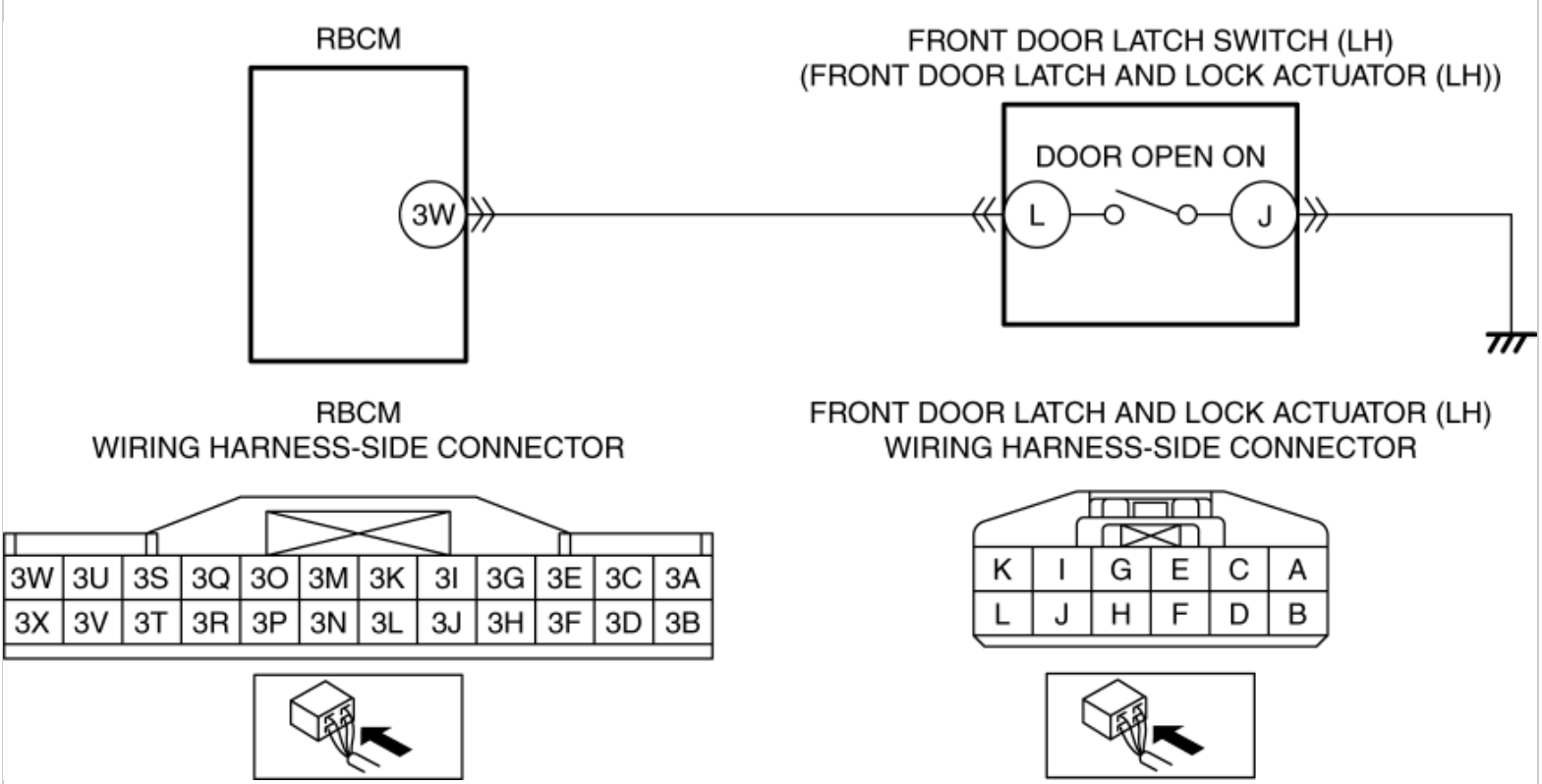

Diagnostic Procedure

Step	Inspection		Action
1	**VERIFY REAR BODY CONTROL MODULE (RBCM) DTCs AGAIN** • Clear the DTC for the rear body control module (RBCM) using the M-MDS. (See **CLEARING DTC [REAR BODY CONTROL MODULE (RBCM)]**.) • Retrieve the rear body control module (RBCM) DTCs using the M-MDS. (See **DTC INSPECTION [REAR BODY CONTROL MODULE (RBCM)]**.) • Is the same DTC displayed?	Yes	Go to the next step.
		No	Go to Step 7.
2	**INSPECT FRONT DOOR LATCH AND LOCK ACTUATOR (LH) CONNECTOR CONDITION** • Switch the ignition off. • Disconnect the negative battery cable. (See **NEGATIVE BATTERY CABLE DISCONNECTION/CONNECTION [SKYACTIV-G 2.0, SKYACTIV-G 2.5]**.) • Disconnect the front door latch and lock actuator (LH) connector. • Inspect the connector engagement and connection condition and inspect the terminals for damage, deformation, corrosion, or disconnection. • Is the connector normal?	Yes	Go to the next step.
		No	Repair or replace the connector, then go to Step 6.
3	**INSPECT FRONT DOOR LATCH SWITCH (LH)** • Inspect the front door latch switch (LH). (See **FRONT DOOR LATCH SWITCH INSPECTION**.) • Is the front door latch switch (LH) normal?	Yes	Go to the next step.
		No	Replace the front door latch and lock actuator (LH), then go to Step 6. (See **FRONT DOOR LATCH AND LOCK ACTUATOR REMOVAL/INSTALLATION**.)
4	**INSPECT REAR BODY CONTROL MODULE (RBCM) CONNECTOR CONDITION** • Disconnect the rear body control module (RBCM) connector. • Inspect the connector engagement and connection condition and inspect the	Yes	Go to the next step.
		No	Repair or replace the connector, then go to Step 6.

	terminals for damage, deformation, corrosion, or disconnection. • Is the connector normal?		
5	**INSPECT FOR SHORT TO GROUND IN FRONT DOOR LATCH SWITCH (LH) CIRCUIT** • Verify that the rear body control module (RBCM) and front door latch and lock actuator (LH) connectors are disconnected. • Inspect for continuity between front door latch and lock actuator (LH) terminal L (wiring harness-side) and body ground. • Is there continuity?	Yes	Refer to the wiring diagram and verify whether or not there is a common connector between rear body control module (RBCM) terminal 3W and front door latch and lock actuator (LH) terminal L. **If there is a common connector:** • Determine the malfunctioning part by inspecting the common connector and the terminal for corrosion, damage, or pin disconnection, and the common wiring harness for a short to ground. • Repair or replace the malfunctioning part. **If there is no common connector:** • Repair or replace the wiring harness which has a short to ground. Go to the next step.
		No	Go to the next step.
6	**VERIFY THAT REPAIRS HAVE BEEN COMPLETED** • Always reconnect all disconnected connectors. • Reconnect the negative battery cable. (See **NEGATIVE BATTERY CABLE DISCONNECTION/CONNECTION [SKYACTIV-G 2.0, SKYACTIV-G 2.5]**.) • Clear the DTC for the rear body control module (RBCM) using the M-MDS. (See **CLEARING DTC [REAR BODY CONTROL MODULE (RBCM)]**.) • Retrieve the rear body control module (RBCM) DTCs using the M-MDS. (See **DTC INSPECTION [REAR BODY CONTROL MODULE (RBCM)]**.) • Is the same DTC displayed?	Yes	Repeat the inspection from Step 1. • If the malfunction recurs, replace the rear body control module (RBCM). (See **REAR BODY CONTROL MODULE (RBCM) REMOVAL/INSTALLATION**.) Go to the next step.
		No	Go to the next step.
7	**VERIFY IF OTHER DTCs DISPLAYED** • Are any other DTCs displayed?	Yes	Repair or replace the malfunctioning part according to the applicable DTC troubleshooting. (See **DTC TABLE [REAR BODY CONTROL MODULE (RBCM)]**.)

		No	DTC troubleshooting completed.

2014 - Mazda3 - Body and Accessories

DTC B1176:11 [REAR BODY CONTROL MODULE (RBCM)]

Description	Front door latch switch (RH) circuit malfunction
Detection condition	• Rear body control module (RBCM) detects a short to ground in the front door latch switch (RH) circuit with the front door (RH) closed (front door latch switch (RH) off).
Fail-safe function	Not applicable
Possible cause	• Front door latch and lock actuator (RH) connector or terminal malfunction • Front door latch switch (RH) malfunction • Rear body control module (RBCM) connector or terminal malfunction • Short to ground in wiring harness between rear body control module (RBCM) terminal 3U and front door latch and lock actuator (RH) terminal B. • Rear body control module (RBCM) malfunction

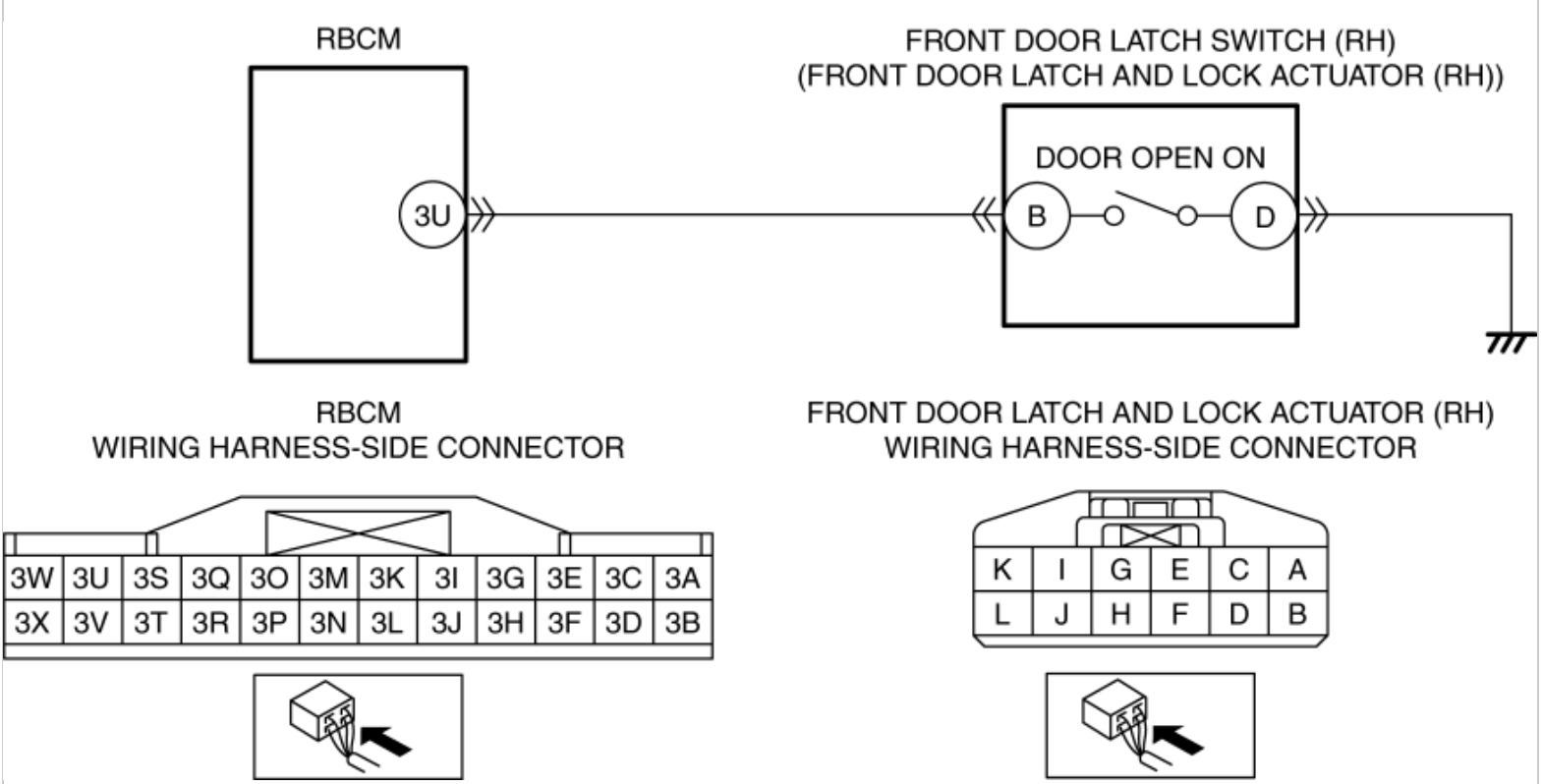

Diagnostic Procedure

Step	Inspection		Action
1	**VERIFY REAR BODY CONTROL MODULE (RBCM) DTCs AGAIN** • Clear the DTC for the rear body control module (RBCM) using the M-MDS. (See **CLEARING DTC [REAR BODY CONTROL MODULE (RBCM)]**.) • Retrieve the rear body control module (RBCM) DTCs using the M-MDS. (See **DTC INSPECTION [REAR BODY CONTROL MODULE (RBCM)]**.) • Is the same DTC displayed?	Yes	Go to the next step.
		No	Go to Step 7.
2	**INSPECT FRONT DOOR LATCH AND LOCK ACTUATOR (RH) CONNECTOR CONDITION** • Switch the ignition off. • Disconnect the negative battery cable. (See **NEGATIVE BATTERY CABLE DISCONNECTION/CONNECTION [SKYACTIV-G 2.0, SKYACTIV-G 2.5]**.) • Disconnect the front door latch and lock actuator (RH) connector. • Inspect the connector engagement and connection condition and inspect the terminals for damage, deformation, corrosion, or disconnection. • Is the connector normal?	Yes	Go to the next step.
		No	Repair or replace the connector, then go to Step 6.
3	**INSPECT FRONT DOOR LATCH SWITCH (RH)** • Inspect the front door latch switch (RH). (See **FRONT DOOR LATCH SWITCH INSPECTION**.) • Is the front door latch switch (RH) normal?	Yes	Go to the next step.
		No	Replace the front door latch and lock actuator (RH), then go to Step 6. (See **FRONT DOOR LATCH AND LOCK ACTUATOR REMOVAL/INSTALLATION**.)
4	**INSPECT REAR BODY CONTROL MODULE (RBCM) CONNECTOR CONDITION** • Disconnect the rear body control module (RBCM) connector. • Inspect the connector engagement and connection condition and inspect the	Yes	Go to the next step.
		No	Repair or replace the connector, then go to Step 6.

	terminals for damage, deformation, corrosion, or disconnection. • Is the connector normal?		
5	**INSPECT FOR SHORT TO GROUND IN FRONT DOOR LATCH SWITCH (RH) CIRCUIT** • Verify that the rear body control module (RBCM) and front door latch and lock actuator (RH) connectors are disconnected. • Inspect for continuity between front door latch and lock actuator (RH) terminal B (wiring harness-side) and body ground. • Is there continuity?	Yes	Refer to the wiring diagram and verify whether or not there is a common connector between rear body control module (RBCM) terminal 3U and front door latch and lock actuator (RH) terminal B. **If there is a common connector:** • Determine the malfunctioning part by inspecting the common connector and the terminal for corrosion, damage, or pin disconnection, and the common wiring harness for a short to ground. • Repair or replace the malfunctioning part. **If there is no common connector:** • Repair or replace the wiring harness which has a short to ground. Go to the next step.
		No	Go to the next step.
6	**VERIFY THAT REPAIRS HAVE BEEN COMPLETED** • Always reconnect all disconnected connectors. • Reconnect the negative battery cable. (See **NEGATIVE BATTERY CABLE DISCONNECTION/CONNECTION [SKYACTIV-G 2.0, SKYACTIV-G 2.5]**.) • Clear the DTC for the rear body control module (RBCM) using the M-MDS. (See **CLEARING DTC [REAR BODY CONTROL MODULE (RBCM)]**.) • Retrieve the rear body control module (RBCM) DTCs using the M-MDS. (See **DTC INSPECTION [REAR BODY CONTROL MODULE (RBCM)]**.) • Is the same DTC displayed?	Yes	Repeat the inspection from Step 1. • If the malfunction recurs, replace the rear body control module (RBCM). (See **REAR BODY CONTROL MODULE (RBCM) REMOVAL/INSTALLATION**.) Go to the next step.
		No	Go to the next step.
7	**VERIFY IF OTHER DTCs DISPLAYED** • Are any other DTCs displayed?	Yes	Repair or replace the malfunctioning part according to the applicable DTC troubleshooting. (See **DTC TABLE [REAR BODY CONTROL MODULE (RBCM)]**.)

		No	DTC troubleshooting completed.

2014 - Mazda3 - Body and Accessories

DTC B1178:11 [REAR BODY CONTROL MODULE (RBCM)]

4SD

Description	Trunk lid latch switch circuit malfunction
Detection condition	• Rear body control module (RBCM) detects short to ground in trunk lid latch switch circuit with the trunk closed (trunk lid latch switch off).
Fail-safe function	Not applicable
Possible cause	• Trunk lid latch and release actuator connector or terminal malfunction • Trunk lid latch switch malfunction • Rear body control module (RBCM) connector or terminal malfunction • Short to ground in wiring harness between rear body control module (RBCM) terminal 4K and trunk lid latch and release actuator terminal C • Rear body control module (RBCM) malfunction

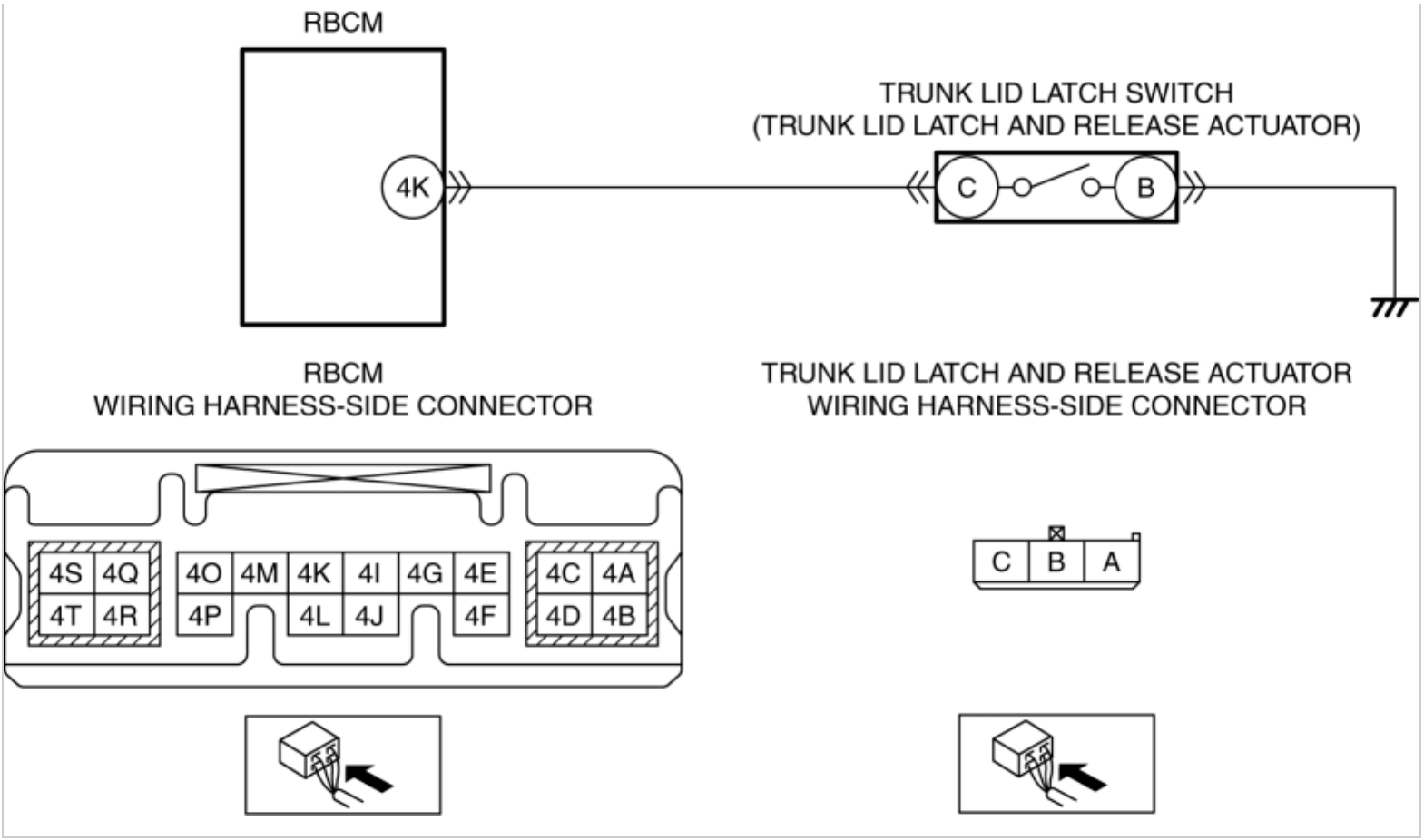

Diagnostic Procedure

Step	Inspection		Action
1	**VERIFY REAR BODY CONTROL MODULE (RBCM) DTCs AGAIN** • Clear the DTC for the rear body control module (RBCM) using the M-MDS. (See **CLEARING DTC [REAR BODY CONTROL MODULE (RBCM)]**.) • Retrieve the rear body control module (RBCM) DTCs using the M-MDS. (See **DTC INSPECTION [REAR BODY CONTROL MODULE (RBCM)]**.) • Is the same DTC displayed?	Yes	Go to the next step.
		No	Go to Step 7.
2	**INSPECT TRUNK LID LATCH AND RELEASE ACTUATOR CONNECTOR CONDITION** • Switch the ignition off. • Disconnect the negative battery cable. (See **NEGATIVE BATTERY CABLE**	Yes	Go to the next step.
		No	Repair or replace the connector, then go to Step 6.

	DISCONNECTION/CONNECTION [SKYACTIV-G 2.0, SKYACTIV-G 2.5].) • Disconnect the trunk lid latch and release actuator connector. • Inspect the connector engagement and connection condition and inspect the terminals for damage, deformation, corrosion, or disconnection. • Is the connector normal?		
3	**INSPECT TRUNK LID LATCH SWITCH** • Inspect the trunk lid latch switch. (See **TRUNK LID LATCH SWITCH INSPECTION**.) • Is the trunk lid latch switch normal?	Yes	Go to the next step.
		No	Replace the trunk lid latch and release actuator, then go to Step 6. (See **TRUNK LID LATCH AND RELEASE ACTUATOR REMOVAL/INSTALLATION**.)
4	**INSPECT REAR BODY CONTROL MODULE (RBCM) CONNECTOR CONDITION** • Disconnect the rear body control module (RBCM) connector. • Inspect the connector engagement and connection condition and inspect the terminals for damage, deformation, corrosion, or disconnection. • Is the connector normal?	Yes	Go to the next step.
		No	Repair or replace the connector, then go to Step 6.
5	**INSPECT FOR SHORT TO GROUND IN TRUNK LID LATCH SWITCH CIRCUIT** • Verify that the rear body control module (RBCM) and trunk lid latch and release actuator connectors are disconnected. • Inspect for continuity between trunk lid latch and release actuator terminal C (wiring harness) and body ground. • Is there continuity?	Yes	Refer to the wiring diagram and verify whether or not there is a common connector between rear body control module (RBCM) terminal 4K and trunk lid latch and release actuator terminal C. **If there is a common connector:** • Determine the malfunctioning part by inspecting the common connector and the terminal for corrosion, damage, or pin disconnection, and the common wiring harness for a short to ground. • Repair or replace the malfunctioning part. **If there is no common connector:** • Repair or replace the wiring harness which has a short to ground. Go to the next step.

		No	Go to the next step.
6	**VERIFY THAT REPAIRS HAVE BEEN COMPLETED** • Always reconnect all disconnected connectors. • Reconnect the negative battery cable. (See **NEGATIVE BATTERY CABLE DISCONNECTION/CONNECTION [SKYACTIV-G 2.0, SKYACTIV-G 2.5]**.) • Clear the DTC for the rear body control module (RBCM) using the M-MDS. (See **CLEARING DTC [REAR BODY CONTROL MODULE (RBCM)]**.) • Retrieve the rear body control module (RBCM) DTCs using the M-MDS. (See **DTC INSPECTION [REAR BODY CONTROL MODULE (RBCM)]**.) • Is the same DTC displayed?	Yes	Repeat the inspection from Step 1. • If the malfunction recurs, replace the rear body control module (RBCM). (See **REAR BODY CONTROL MODULE (RBCM) REMOVAL/INSTALLATION**.) Go to the next step.
		No	Go to the next step.
7	**VERIFY IF OTHER DTCs DISPLAYED** • Are any other DTCs displayed?	Yes	Repair or replace the malfunctioning part according to the applicable DTC troubleshooting. (See **DTC TABLE [REAR BODY CONTROL MODULE (RBCM)]**.)
		No	DTC troubleshooting completed.

5HB

Description	Liftgate latch switch circuit malfunction
Detection condition	• Rear body control module (RBCM) detects short to ground in liftgate latch switch circuit with the liftgate closed (liftgate latch switch off).
Fail-safe function	Not applicable
Possible cause	• Liftgate latch and lock actuator connector or terminal malfunction • Liftgate latch switch malfunction • Rear body control module (RBCM) connector or terminal malfunction • Short to ground in wiring harness between rear body control module (RBCM) terminal

	4K and liftgate latch and lock actuator terminal C • Rear body control module (RBCM) malfunction

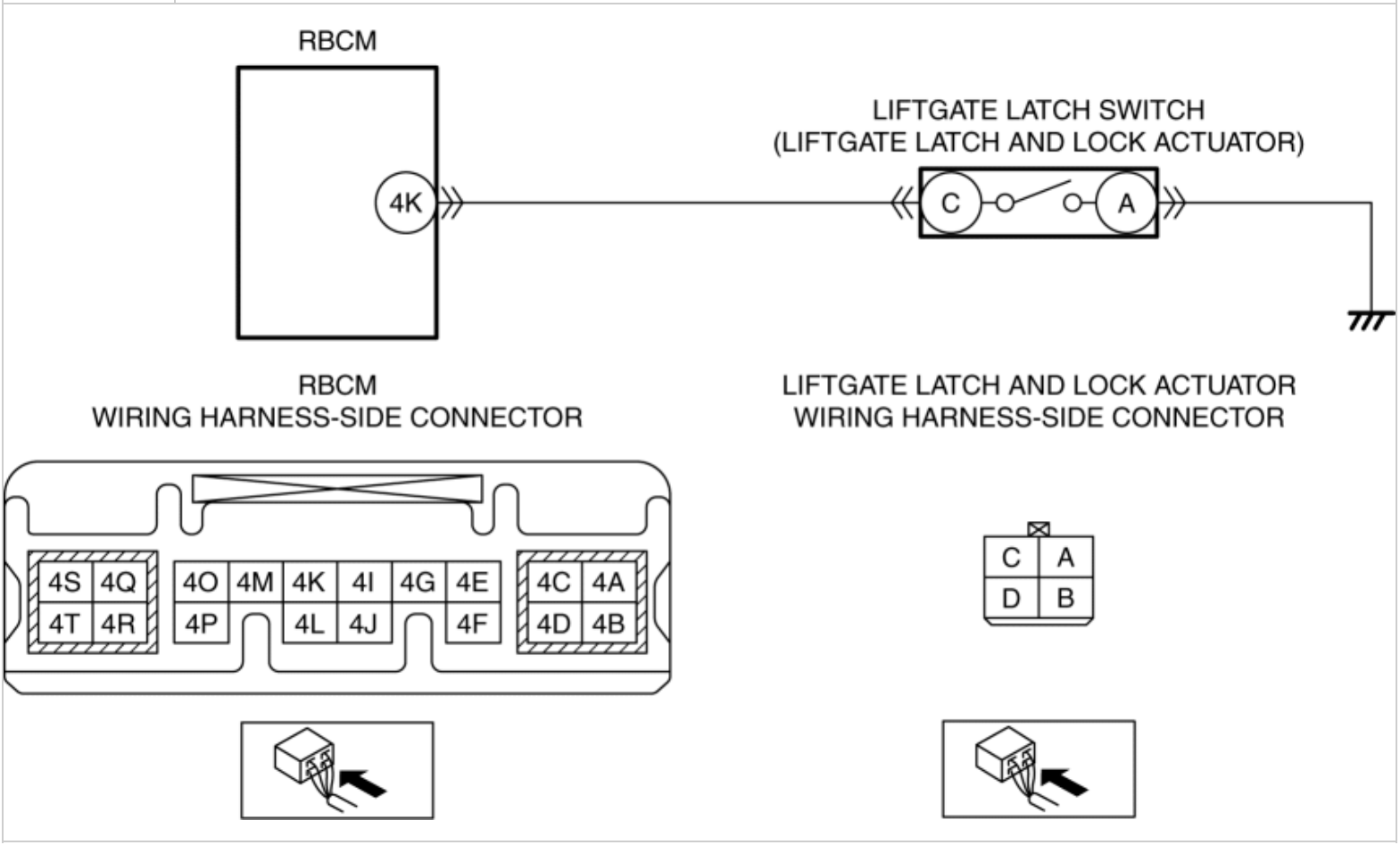

Diagnostic Procedure

Step	Inspection		Action
1	**VERIFY REAR BODY CONTROL MODULE (RBCM) DTCs AGAIN** • Clear the DTC for the rear body control module (RBCM) using the M-MDS. (See **CLEARING DTC [REAR BODY CONTROL MODULE (RBCM)]**.) • Retrieve the rear body control module (RBCM) DTCs using the M-MDS. (See **DTC INSPECTION [REAR BODY CONTROL MODULE (RBCM)]**.) • Is the same DTC displayed?	Yes	Go to the next step.
		No	Go to Step 7.
2	**INSPECT LIFTGATE LATCH AND LOCK ACTUATOR CONNECTOR CONDITION** • Switch the ignition off.	Yes	Go to the next step.
		No	Repair or replace the connector, then go to Step 6.

	• Disconnect the negative battery cable. (See **NEGATIVE BATTERY CABLE DISCONNECTION/CONNECTION [SKYACTIV-G 2.0, SKYACTIV-G 2.5]**.) • Disconnect the liftgate latch and lock actuator connector. • Inspect the connector engagement and connection condition and inspect the terminals for damage, deformation, corrosion, or disconnection. • Is the connector normal?		
3	**INSPECT LIFTGATE LATCH SWITCH** • Inspect the liftgate latch switch. (See **LIFTGATE LATCH SWITCH INSPECTION**.) • Is the liftgate latch switch normal?	Yes	Go to the next step.
		No	Replace the liftgate latch and lock actuator, then go to Step 6. (See **LIFTGATE LATCH AND LOCK ACTUATOR REMOVAL/INSTALLATION**.)
4	**INSPECT REAR BODY CONTROL MODULE (RBCM) CONNECTOR CONDITION** • Disconnect the rear body control module (RBCM) connector. • Inspect the connector engagement and connection condition and inspect the terminals for damage, deformation, corrosion, or disconnection. • Is the connector normal?	Yes	Go to the next step.
		No	Repair or replace the connector, then go to Step 6.
5	**INSPECT FOR SHORT TO GROUND IN LIFTGATE LATCH SWITCH CIRCUIT** • Verify that the rear body control module (RBCM) and liftgate latch and lock actuator connectors are disconnected. • Inspect for continuity between liftgate latch and lock actuator terminal C (wiring harness) and body ground. • Is there continuity?	Yes	Refer to the wiring diagram and verify whether or not there is a common connector between rear body control module (RBCM) terminal 4K and liftgate latch and lock actuator terminal C. **If there is a common connector:** • Determine the malfunctioning part by inspecting the common connector and the terminal for corrosion, damage, or pin disconnection, and the common wiring harness for a short to ground. • Repair or replace the malfunctioning part. **If there is no common connector:** • Repair or replace the wiring harness which has a short to ground.

			Go to the next step.
		No	Go to the next step.
6	**VERIFY THAT REPAIRS HAVE BEEN COMPLETED** • Always reconnect all disconnected connectors. • Reconnect the negative battery cable. (See **NEGATIVE BATTERY CABLE DISCONNECTION/CONNECTION [SKYACTIV-G 2.0, SKYACTIV-G 2.5]**.) • Clear the DTC for the rear body control module (RBCM) using the M-MDS. (See **CLEARING DTC [REAR BODY CONTROL MODULE (RBCM)]**.) • Retrieve the rear body control module (RBCM) DTCs using the M-MDS. (See **DTC INSPECTION [REAR BODY CONTROL MODULE (RBCM)]**.) • Is the same DTC displayed?	Yes	Repeat the inspection from Step 1. • If the malfunction recurs, replace the rear body control module (RBCM). (See **REAR BODY CONTROL MODULE (RBCM) REMOVAL/INSTALLATION**.) Go to the next step.
		No	Go to the next step.
7	**VERIFY IF OTHER DTCs DISPLAYED** • Are any other DTCs displayed?	Yes	Repair or replace the malfunctioning part according to the applicable DTC troubleshooting. (See **DTC TABLE [REAR BODY CONTROL MODULE (RBCM)]**.)
		No	DTC troubleshooting completed.

2014 - Mazda3 - Body and Accessories

DTC B11DA:16 [REAR BODY CONTROL MODULE (RBCM)]

Description	Front door key cylinder switch (LH) circuit malfunction
Detection condition	• Rear body control module (RBCM) detects the front door key cylinder switch (LH) circuit voltage of **4 V or less** with the front door key cylinder switch (LH) off.
Fail-safe function	Not applicable
Possible cause	• Front door latch and lock actuator (LH) connector or terminal malfunction • Front door key cylinder switch (LH) malfunction • Rear body control module (RBCM) connector or terminal malfunction • Short to ground in wiring harness between rear body control module (RBCM) terminal 3H and front door latch and lock actuator (LH) terminal H. • Rear body control module (RBCM) malfunction

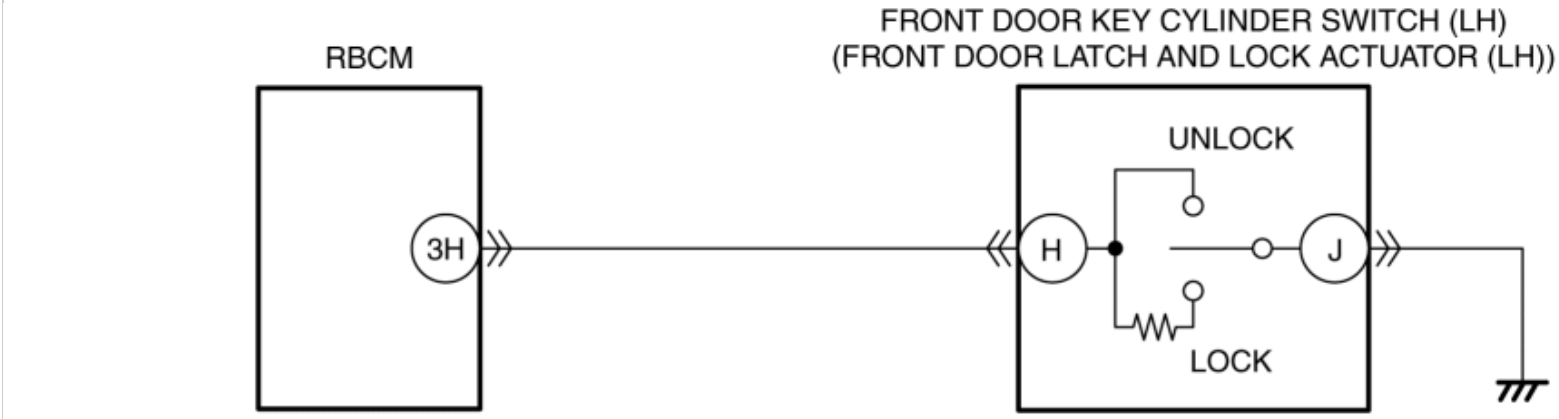

RBCM
WIRING HARNESS-SIDE CONNECTOR

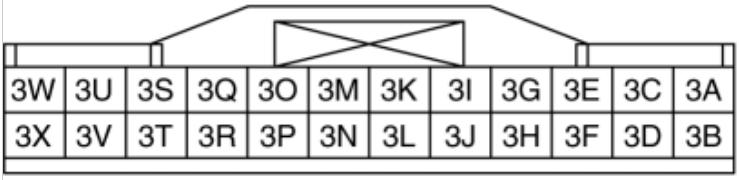

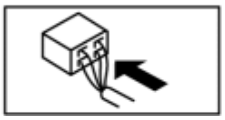

FRONT DOOR LATCH AND LOCK ACTUATOR (LH)
WIRING HARNESS-SIDE CONNECTOR

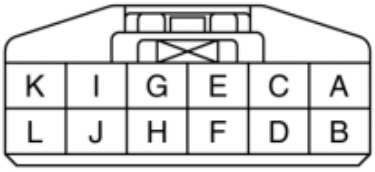

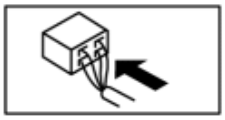

Diagnostic Procedure

Step	Inspection		Action
1	**VERIFY REAR BODY CONTROL MODULE (RBCM) DTCs AGAIN** • Clear the DTC for the rear body control module (RBCM) using the M-MDS. (See **CLEARING DTC [REAR BODY CONTROL MODULE (RBCM)]**.) • Retrieve the rear body control module (RBCM) DTCs using the M-MDS. (See **DTC INSPECTION [REAR BODY CONTROL MODULE (RBCM)]**.) • Is the same DTC displayed?	Yes	Go to the next step.
		No	Go to Step 7.
2	**INSPECT FRONT DOOR LATCH AND LOCK ACTUATOR (LH) CONNECTOR CONDITION** • Switch the ignition off. • Disconnect the negative battery cable. (See **NEGATIVE BATTERY CABLE DISCONNECTION/CONNECTION [SKYACTIV-G 2.0, SKYACTIV-G 2.5]**.) • Disconnect the front door latch and lock actuator (LH) connector. • Inspect the connector engagement and connection condition and inspect the terminals for damage, deformation, corrosion, or disconnection. • Is the connector normal?	Yes	Go to the next step.
		No	Repair or replace the connector, then go to Step 6.
3	**INSPECT FRONT DOOR KEY CYLINDER SWITCH (LH)** • Inspect the front door key cylinder switch (LH). (See **FRONT DOOR KEY CYLINDER SWITCH INSPECTION**.) • Is the front door key cylinder switch (LH) normal?	Yes	Go to the next step.
		No	Replace the front door latch and lock actuator (LH), then go to Step 6. (See **FRONT DOOR LATCH AND LOCK ACTUATOR REMOVAL/INSTALLATION**.)
4	**INSPECT REAR BODY CONTROL MODULE (RBCM) CONNECTOR CONDITION**	Yes	Go to the next step.

	• Disconnect the rear body control module (RBCM) connector. • Inspect the connector engagement and connection condition and inspect the terminals for damage, deformation, corrosion, or disconnection. • Is the connector normal?	No	Repair or replace the connector, then go to Step 6.
5	**INSPECT FOR SHORT TO GROUND IN FRONT DOOR KEY CYLINDER SWITCH (LH) CIRCUIT** • Verify that the rear body control module (RBCM) and front door latch and lock actuator (LH) connectors are disconnected. • Inspect for continuity between front door latch and lock actuator (LH) terminal H (wiring harness-side) and body ground. • Is there continuity?	Yes	Refer to the wiring diagram and verify whether or not there is a common connector between rear body control module (RBCM) terminal 3H and front door latch and lock actuator (LH) terminal H. **If there is a common connector:** • Determine the malfunctioning part by inspecting the common connector and the terminal for corrosion, damage, or pin disconnection, and the common wiring harness for a short to ground. • Repair or replace the malfunctioning part. **If there is no common connector:** • Repair or replace the wiring harness which has a short to ground. Go to the next step.
		No	Go to the next step.
6	**VERIFY THAT REPAIRS HAVE BEEN COMPLETED** • Always reconnect all disconnected connectors. • Reconnect the negative battery cable. (See **NEGATIVE BATTERY CABLE DISCONNECTION/CONNECTION [SKYACTIV-G 2.0, SKYACTIV-G 2.5]**.) • Clear the DTC for the rear body control module (RBCM) using the M-MDS. (See **CLEARING DTC [REAR BODY CONTROL MODULE (RBCM)]**.) • Retrieve the rear body control module (RBCM) DTCs using the M-MDS. (See **DTC INSPECTION [REAR BODY CONTROL MODULE (RBCM)]**.)	Yes	Repeat the inspection from Step 1. • If the malfunction recurs, replace the rear body control module (RBCM). (See **REAR BODY CONTROL MODULE (RBCM) REMOVAL/INSTALLATION**.) Go to the next step.
		No	Go to the next step.

	• Is the same DTC displayed?		
7	**VERIFY IF OTHER DTCs DISPLAYED** • Are any other DTCs displayed?	Yes	Repair or replace the malfunctioning part according to the applicable DTC troubleshooting. (See **DTC TABLE [REAR BODY CONTROL MODULE (RBCM)]**.)
		No	DTC troubleshooting completed.

2014 - Mazda3 - Body and Accessories

DTC B11E9:11 [REAR BODY CONTROL MODULE (RBCM)]

Description	Rear door latch switch (LH) circuit malfunction
Detection condition	• Rear body control module (RBCM) detects a short to ground in the rear door latch switch (LH) circuit with the rear door (LH) closed (rear door latch switch (LH) off).
Fail-safe function	Not applicable
Possible cause	• Rear door latch and lock actuator (LH) connector or terminal malfunction • Rear door latch switch (LH) malfunction • Rear body control module (RBCM) connector or terminal malfunction • Short to ground in wiring harness between rear body control module (RBCM) terminal 3S and rear door latch and lock actuator (LH) terminal L • Rear body control module (RBCM) malfunction

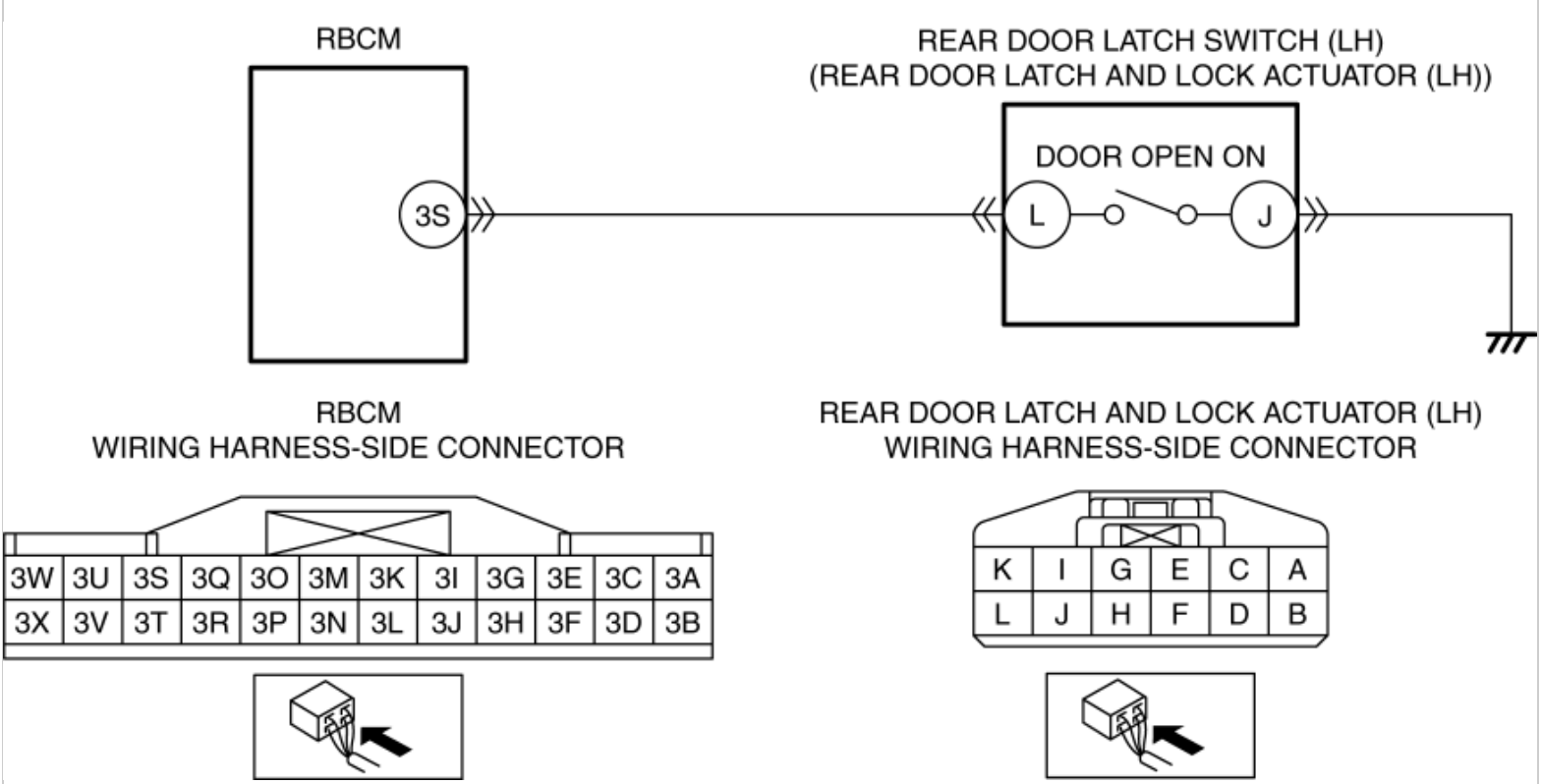

Diagnostic Procedure

Step	Inspection	Action	
1	**VERIFY REAR BODY CONTROL MODULE (RBCM) DTCs AGAIN** • Clear the DTC for the rear body control module (RBCM) using the M-MDS. (See **CLEARING DTC [REAR BODY CONTROL MODULE (RBCM)]**.) • Retrieve the rear body control module (RBCM) DTCs using the M-MDS. (See **DTC INSPECTION [REAR BODY CONTROL MODULE (RBCM)]**.) • Is the same DTC displayed?	Yes	Go to the next step.
		No	Go to Step 7.
2	**INSPECT REAR DOOR LATCH AND LOCK ACTUATOR (LH) CONNECTOR CONDITION** • Switch the ignition off. • Disconnect the negative battery cable. (See **NEGATIVE BATTERY CABLE DISCONNECTION/CONNECTION [SKYACTIV-G 2.0, SKYACTIV-G 2.5]**.) • Disconnect the rear door latch and lock actuator (LH) connector. • Inspect the connector engagement and connection condition and inspect the terminals for damage, deformation, corrosion, or disconnection. • Is the connector normal?	Yes	Go to the next step.
		No	Repair or replace the connector, then go to Step 6.
3	**INSPECT REAR DOOR LATCH SWITCH (LH)** • Inspect the rear door latch switch (LH). (See **REAR DOOR LATCH SWITCH INSPECTION**.) • Is the rear door latch switch (LH) normal?	Yes	Go to the next step.
		No	Replace the rear door latch and lock actuator (LH), then go to Step 6. (See **REAR DOOR LATCH AND LOCK ACTUATOR REMOVAL/INSTALLATION**.)
4	**INSPECT REAR BODY CONTROL MODULE (RBCM) CONNECTOR CONDITION** • Disconnect the rear body control module (RBCM) connector. • Inspect the connector engagement and connection condition and inspect the	Yes	Go to the next step.
		No	Repair or replace the connector, then go to Step 6.

	terminals for damage, deformation, corrosion, or disconnection. • Is the connector normal?		
5	**INSPECT FOR SHORT TO GROUND IN REAR DOOR LATCH SWITCH (LH) CIRCUIT** • Verify that the rear body control module (RBCM) and rear door latch and lock actuator (LH) connectors are disconnected. • Inspect for continuity between rear door latch and lock actuator (LH) terminal L (wiring harness-side) and body ground. • Is there continuity?	Yes	Refer to the wiring diagram and verify whether or not there is a common connector between rear body control module (RBCM) terminal 3S and rear door latch and lock actuator (LH) terminal L. **If there is a common connector:** • Determine the malfunctioning part by inspecting the common connector and the terminal for corrosion, damage, or pin disconnection, and the common wiring harness for a short to ground. • Repair or replace the malfunctioning part. **If there is no common connector:** • Repair or replace the wiring harness which has a short to ground. Go to the next step.
		No	Go to the next step.
6	**VERIFY THAT REPAIRS HAVE BEEN COMPLETED** • Always reconnect all disconnected connectors. • Reconnect the negative battery cable. (See **NEGATIVE BATTERY CABLE DISCONNECTION/CONNECTION [SKYACTIV-G 2.0, SKYACTIV-G 2.5]**.) • Clear the DTC for the rear body control module (RBCM) using the M-MDS. (See **CLEARING DTC [REAR BODY CONTROL MODULE (RBCM)]**.) • Retrieve the rear body control module (RBCM) DTCs using the M-MDS. (See **DTC INSPECTION [REAR BODY CONTROL MODULE (RBCM)]**.) • Is the same DTC displayed?	Yes	Repeat the inspection from Step 1. • If the malfunction recurs, replace the rear body control module (RBCM). (See **REAR BODY CONTROL MODULE (RBCM) REMOVAL/INSTALLATION**.) Go to the next step.
		No	Go to the next step.
7	**VERIFY IF OTHER DTCs DISPLAYED** • Are any other DTCs displayed?	Yes	Repair or replace the malfunctioning part according to the applicable DTC troubleshooting. (See **DTC TABLE [REAR BODY CONTROL MODULE (RBCM)]**.)

		No	DTC troubleshooting completed.

2014 - Mazda3 - Body and Accessories

DTC B11EA:11 [REAR BODY CONTROL MODULE (RBCM)]

Description	Rear door latch switch (RH) circuit malfunction
Detection condition	• Rear body control module (RBCM) detects a short to ground in the rear door latch switch (RH) circuit with the rear door (RH) closed (rear door latch switch (RH) off).
Fail-safe function	Not applicable
Possible cause	• Rear door latch and lock actuator (RH) connector or terminal malfunction • Rear door latch switch (RH) malfunction • Rear body control module (RBCM) connector or terminal malfunction • Short to ground in wiring harness between rear body control module (RBCM) terminal 3Q and rear door latch and lock actuator (RH) terminal B • Rear body control module (RBCM) malfunction

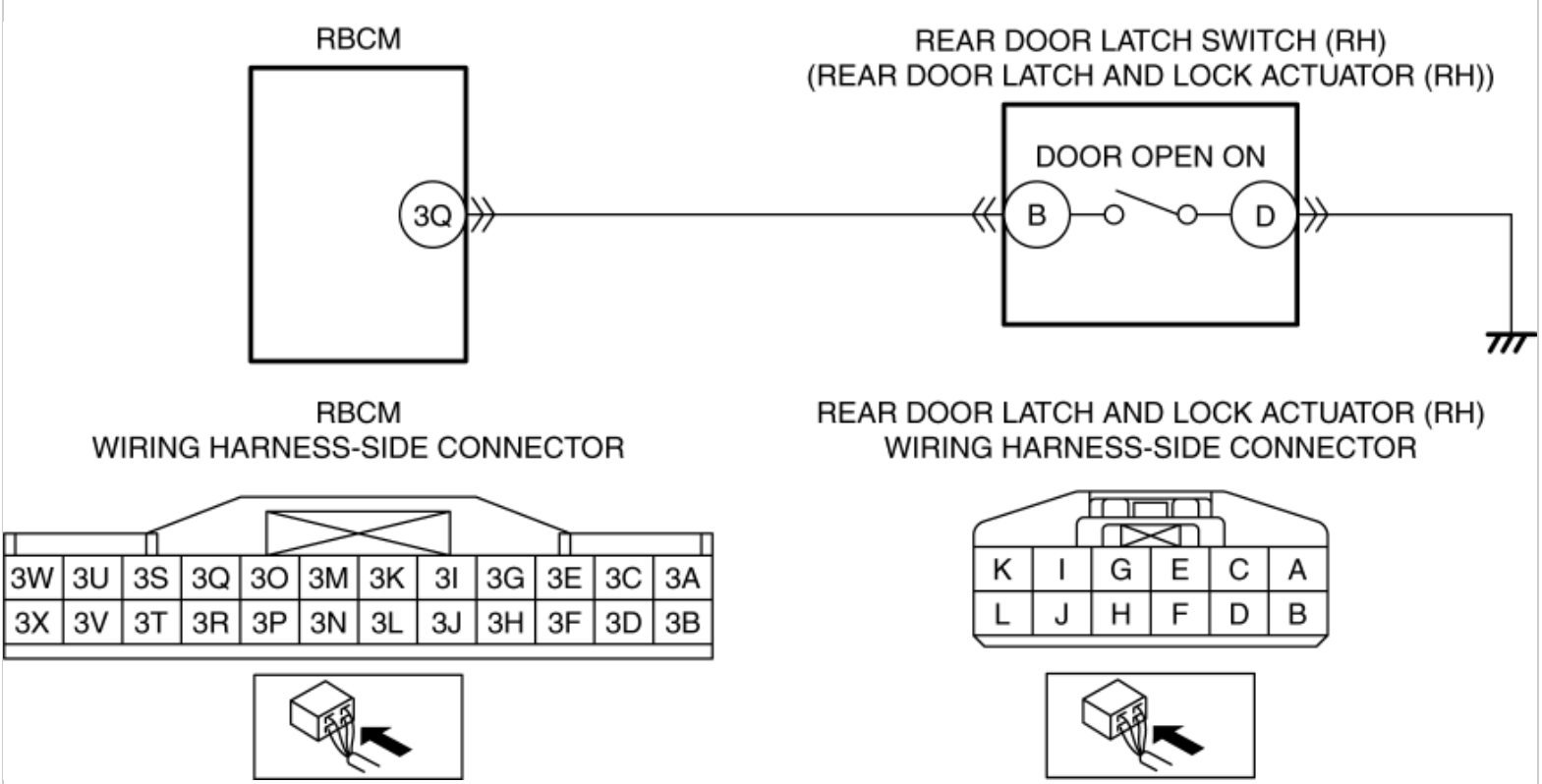

Diagnostic Procedure

Step	Inspection		Action
1	**VERIFY REAR BODY CONTROL MODULE (RBCM) DTCs AGAIN** • Clear the DTC for the rear body control module (RBCM) using the M-MDS. (See **CLEARING DTC [REAR BODY CONTROL MODULE (RBCM)]**.) • Retrieve the rear body control module (RBCM) DTCs using the M-MDS. (See **DTC INSPECTION [REAR BODY CONTROL MODULE (RBCM)]**.) • Is the same DTC displayed?	Yes	Go to the next step.
		No	Go to Step 7.
2	**INSPECT REAR DOOR LATCH AND LOCK ACTUATOR (RH) CONNECTOR CONDITION** • Switch the ignition off. • Disconnect the negative battery cable. (See **NEGATIVE BATTERY CABLE DISCONNECTION/CONNECTION [SKYACTIV-G 2.0, SKYACTIV-G 2.5]**.) • Disconnect the rear door latch and lock actuator (RH) connector. • Inspect the connector engagement and connection condition and inspect the terminals for damage, deformation, corrosion, or disconnection. • Is the connector normal?	Yes	Go to the next step.
		No	Repair or replace the connector, then go to Step 6.
3	**INSPECT REAR DOOR LATCH SWITCH (RH)** • Inspect the rear door latch switch (RH). (See **REAR DOOR LATCH SWITCH INSPECTION**.) • Is the rear door latch switch (RH) normal?	Yes	Go to the next step.
		No	Replace the rear door latch and lock actuator (RH), then go to Step 6. (See **REAR DOOR LATCH AND LOCK ACTUATOR REMOVAL/INSTALLATION**.)
4	**INSPECT REAR BODY CONTROL MODULE (RBCM) CONNECTOR CONDITION** • Disconnect the rear body control module (RBCM) connector. • Inspect the connector engagement and connection condition and inspect the	Yes	Go to the next step.
		No	Repair or replace the connector, then go to Step 6.

	terminals for damage, deformation, corrosion, or disconnection. • Is the connector normal?		
5	**INSPECT FOR SHORT TO GROUND IN REAR DOOR LATCH SWITCH (RH) CIRCUIT** • Verify that the rear body control module (RBCM) and rear door latch and lock actuator (RH) connectors are disconnected. • Inspect for continuity between rear door latch and lock actuator (RH) terminal B (wiring harness-side) and body ground. • Is there continuity?	Yes	Refer to the wiring diagram and verify whether or not there is a common connector between rear body control module (RBCM) terminal 3Q and rear door latch and lock actuator (RH) terminal B. **If there is a common connector:** • Determine the malfunctioning part by inspecting the common connector and the terminal for corrosion, damage, or pin disconnection, and the common wiring harness for a short to ground. • Repair or replace the malfunctioning part. **If there is no common connector:** • Repair or replace the wiring harness which has a short to ground. Go to the next step.
		No	Go to the next step.
6	**VERIFY THAT REPAIRS HAVE BEEN COMPLETED** • Always reconnect all disconnected connectors. • Reconnect the negative battery cable. (See **NEGATIVE BATTERY CABLE DISCONNECTION/CONNECTION [SKYACTIV-G 2.0, SKYACTIV-G 2.5]**.) • Clear the DTC for the rear body control module (RBCM) using the M-MDS. (See **CLEARING DTC [REAR BODY CONTROL MODULE (RBCM)]**.) • Retrieve the rear body control module (RBCM) DTCs using the M-MDS. (See **DTC INSPECTION [REAR BODY CONTROL MODULE (RBCM)]**.) • Is the same DTC displayed?	Yes	Repeat the inspection from Step 1. • If the malfunction recurs, replace the rear body control module (RBCM). (See **REAR BODY CONTROL MODULE (RBCM) REMOVAL/INSTALLATION**.) Go to the next step.
		No	Go to the next step.
7	**VERIFY IF OTHER DTCs DISPLAYED** • Are any other DTCs displayed?	Yes	Repair or replace the malfunctioning part according to the applicable DTC troubleshooting. (See **DTC TABLE [REAR BODY CONTROL MODULE (RBCM)]**.)

		No	DTC troubleshooting completed.

2014 - Mazda3 - Body and Accessories

DTC B1219:11 [REAR BODY CONTROL MODULE (RBCM)]

Description	Trunk lid opener switch (interior) circuit malfunction
Detection condition	• Rear body control module (RBCM) detects a short to ground in trunk lid opener switch (interior) circuit
Fail-safe function	Not applicable
Possible cause	• Trunk lid opener switch (interior) connector or terminal malfunction • Trunk lid opener switch (interior) malfunction • Rear body control module (RBCM) connector or terminal malfunction • Short to ground in wiring harness between rear body control module (RBCM) terminal 2D and trunk lid opener switch (interior) terminal A • Rear body control module (RBCM) malfunction

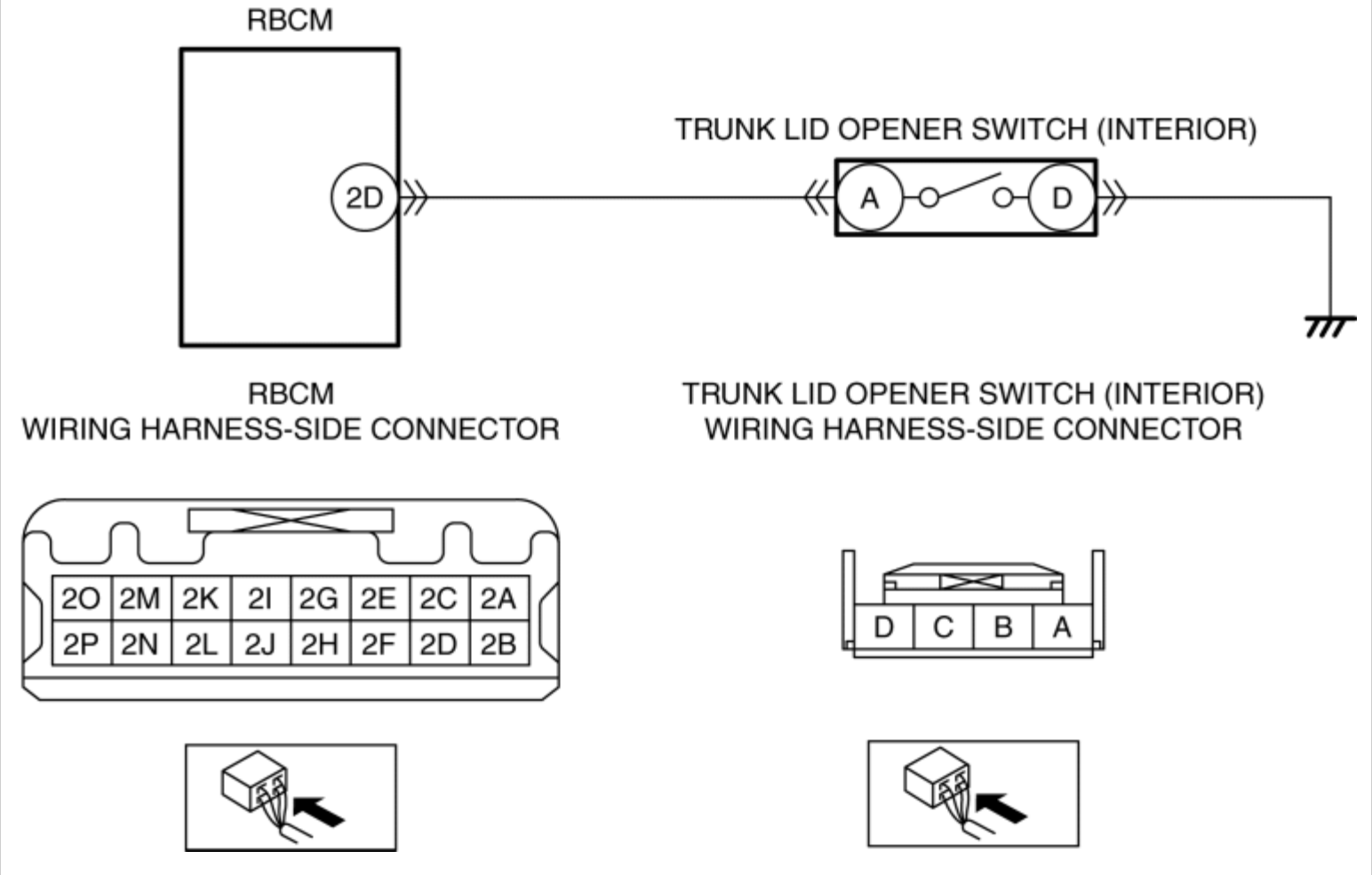

Diagnostic Procedure

Step	Inspection		Action
1	**VERIFY REAR BODY CONTROL MODULE (RBCM) DTCs AGAIN** • Clear the DTC for the rear body control module (RBCM) using the M-MDS. (See **CLEARING DTC [REAR BODY CONTROL MODULE (RBCM)]**.) • Retrieve the rear body control module (RBCM) DTCs using the M-MDS. (See **DTC INSPECTION [REAR BODY CONTROL MODULE (RBCM)]**.) • Is the same DTC displayed?	Yes	Go to the next step.
		No	Go to Step 7.
2	**INSPECT TRUNK LID OPENER SWITCH (INTERIOR) CONNECTOR CONDITION**	Yes	Go to the next step.

	• Switch the ignition off. • Disconnect the negative battery cable. (See **NEGATIVE BATTERY CABLE DISCONNECTION/CONNECTION [SKYACTIV-G 2.0, SKYACTIV-G 2.5]**.) • Disconnect the trunk lid opener switch (interior) connector. • Inspect the connector engagement and connection condition and inspect the terminals for damage, deformation, corrosion, or disconnection. • Is the connector normal?	No	Repair or replace the connector, then go to Step 6.
3	**INSPECT TRUNK LID OPENER SWITCH (INTERIOR)** • Inspect the trunk lid opener switch (interior). (See **TRUNK LID OPENER SWITCH INSPECTION**.) • Is the trunk lid opener switch (interior) normal?	Yes	Go to the next step.
		No	Replace the trunk lid opener switch (interior), then go to Step 6. (See **TRUNK LID OPENER SWITCH REMOVAL/INSTALLATION**.)
4	**INSPECT REAR BODY CONTROL MODULE (RBCM) CONNECTOR CONDITION** • Disconnect the rear body control module (RBCM) connector. • Inspect the connector engagement and connection condition and inspect the terminals for damage, deformation, corrosion, or disconnection. • Is the connector normal?	Yes	Go to the next step.
		No	Repair or replace the connector, then go to Step 6.
5	**INSPECT FOR SHORT TO GROUND IN TRUNK LID OPENER SWITCH (INTERIOR) CIRCUIT** • Verify that the trunk lid opener switch (interior) and rear body control module (RBCM) connectors are	Yes	Refer to the wiring diagram and verify whether or not there is a common connector between rear body control module (RBCM) terminal 2D and trunk lid opener switch (interior) terminal A. **If there is a common connector:**

	disconnected. • Inspect for continuity between trunk lid opener switch (interior) terminal A (wiring harness-side) and body ground. • Is there continuity?		• Determine the malfunctioning part by inspecting the common connector and the terminal for corrosion, damage, or pin disconnection, and the common wiring harness for a short to ground. • Repair or replace the malfunctioning part. **If there is no common connector:** • Repair or replace the wiring harness which has a short to ground. Go to the next step.
		No	Go to the next step.
6	**VERIFY THAT REPAIRS HAVE BEEN COMPLETED** • Always reconnect all disconnected connectors. • Reconnect the negative battery cable. (See **NEGATIVE BATTERY CABLE DISCONNECTION/CONNECTION [SKYACTIV-G 2.0, SKYACTIV-G 2.5]**.) • Clear the DTC for the rear body control module (RBCM) using the M-MDS. (See **CLEARING DTC [REAR BODY CONTROL MODULE (RBCM)]**.) • Retrieve the rear body control module (RBCM) DTCs using the M-MDS. (See **DTC INSPECTION [REAR BODY CONTROL MODULE (RBCM)]**.) • Is the same DTC displayed?	Yes	Repeat the inspection from Step 1. • If the malfunction recurs, replace the rear body control module (RBCM). (See **REAR BODY CONTROL MODULE (RBCM) REMOVAL/INSTALLATION**.) Go to the next step.
		No	Go to the next step.
7	**VERIFY IF OTHER DTCs DISPLAYED** • Are any other DTCs displayed?	Yes	Repair or replace the malfunctioning part according to the applicable DTC troubleshooting.

			(See **DTC TABLE [REAR BODY CONTROL MODULE (RBCM)]**.)
		No	DTC troubleshooting completed.

2014 - Mazda3 - Body and Accessories

DTC B126A:11 [REAR BODY CONTROL MODULE (RBCM)]

Description	Front door lock-link switch (LH) lock circuit malfunction
Detection condition	• Rear body control module (RBCM) detects a short to ground in the front door lock-link switch (LH) lock circuit with the front door lock-link switch (LH) unlocked.
Fail-safe function	Not applicable
Possible cause	• Front door latch and lock actuator (LH) connector or terminal malfunction • Front door lock-link switch (LH) malfunction • Start stop unit connector or terminal malfunction • Rear body control module (RBCM) connector or terminal malfunction • Short to ground in wiring harness between the following terminals: ▪ Start stop unit terminal 1P—Front door latch and lock actuator (LH) terminal D ▪ Rear body control module (RBCM) terminal 3O—Front door latch and lock actuator (LH) terminal D • Start stop unit malfunction • Rear body control module (RBCM) malfunction

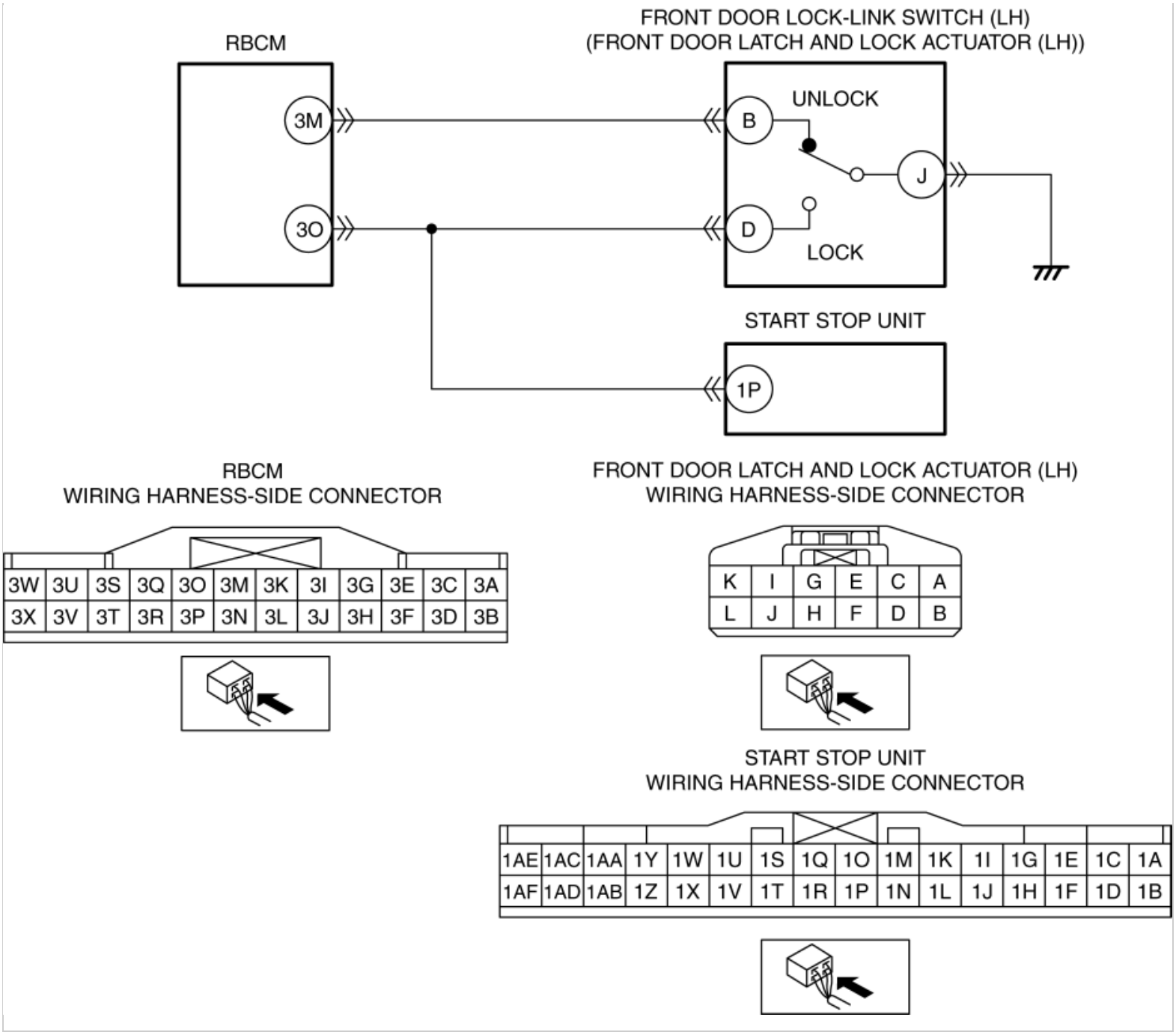

Diagnostic Procedure

Step	Inspection		Action
1	**VERIFY REAR BODY CONTROL MODULE (RBCM) DTCs AGAIN** • Clear the DTC for the rear body control module (RBCM) using the M-MDS. (See **CLEARING DTC [REAR BODY CONTROL MODULE (RBCM)]**.) • Retrieve the rear body control module (RBCM) DTCs using the M-MDS. (See **DTC INSPECTION [REAR BODY**	Yes	Go to the next step.
		No	Go to Step 9.

	CONTROL MODULE (RBCM)].) • Is the same DTC displayed?		
2	**INSPECT FRONT DOOR LATCH AND LOCK ACTUATOR (LH) CONNECTOR CONDITION** • Switch the ignition off. • Disconnect the negative battery cable. (See **NEGATIVE BATTERY CABLE DISCONNECTION/CONNECTION [SKYACTIV-G 2.0, SKYACTIV-G 2.5]**.) • Disconnect the front door latch and lock actuator (LH) connector. • Inspect the connector engagement and connection condition and inspect the terminals for damage, deformation, corrosion, or disconnection. • Is the connector normal?	Yes	Go to the next step.
		No	Repair or replace the connector, then go to Step 8.
3	**INSPECT FRONT DOOR LOCK-LINK SWITCH (LH)** • Inspect the front door lock-link switch (LH). (See **FRONT DOOR LOCK-LINK SWITCH INSPECTION**.) • Is the front door lock-link switch (LH) normal?	Yes	Go to the next step.
		No	Replace the front door latch and lock actuator (LH), then go to Step 8. (See **FRONT DOOR LATCH AND LOCK ACTUATOR REMOVAL/INSTALLATION**.)
4	**INSPECT START STOP UNIT CONNECTOR CONDITION** • Disconnect the start stop unit connector. • Inspect the connector engagement and connection condition and inspect the terminals for damage, deformation, corrosion, or disconnection. • Is the connector normal?	Yes	Go to the next step.
		No	Repair or replace the connector, then go to Step 8.
5	**INSPECT REAR BODY CONTROL MODULE (RBCM) CONNECTOR CONDITION** • Disconnect the rear body control module (RBCM) connector. • Inspect the connector engagement and connection condition and inspect the terminals for damage, deformation, corrosion, or disconnection. • Is the connector normal?	Yes	Go to the next step.
		No	Repair or replace the connector, then go to Step 8.
6	**INSPECT FOR SHORT TO GROUND IN FRONT DOOR LOCK-LINK SWITCH (LH) LOCK CIRCUIT** • Verify that the rear body control module (RBCM), start stop unit and front door latch and lock actuator	Yes	Refer to the wiring diagram and verify whether or not there is a common connector between the following terminals: • Start stop unit terminal 1P—Front door latch and lock actuator (LH) terminal D

	(LH) connectors are disconnected. • Inspect for continuity between front door latch and lock actuator (LH) terminal D (wiring harness-side) and body ground. • Is there continuity?		• Rear body control module (RBCM) terminal 3O—Front door latch and lock actuator (LH) terminal D **If there is a common connector:** • Determine the malfunctioning part by inspecting the common connector and the terminal for corrosion, damage, or pin disconnection, and the common wiring harness for a short to ground. • Repair or replace the malfunctioning part. **If there is no common connector:** • Repair or replace the wiring harness which has a short to ground. Go to Step 8.
		No	Go to the next step.
7	**INSPECT START STOP UNIT** • Inspect the start stop unit. (See **START STOP UNIT INSPECTION**.) • Is the start stop unit normal?	Yes	Go to the next step.
		No	Replace the start stop unit, then go to the next step. (See **START STOP UNIT REMOVAL/INSTALLATION**.)
8	**VERIFY THAT REPAIRS HAVE BEEN COMPLETED** • Always reconnect all disconnected connectors. • Reconnect the negative battery cable. (See **NEGATIVE BATTERY CABLE DISCONNECTION/CONNECTION [SKYACTIV-G 2.0, SKYACTIV-G 2.5]**.) • Clear the DTC for the rear body control module (RBCM) using the M-MDS. (See **CLEARING DTC [REAR BODY CONTROL MODULE (RBCM)]**.) • Retrieve the rear body control module (RBCM) DTCs using the M-MDS. (See **DTC INSPECTION [REAR BODY CONTROL MODULE (RBCM)]**.) • Is the same DTC displayed?	Yes	Repeat the inspection from Step 1. • If the malfunction recurs, replace the rear body control module (RBCM). (See **REAR BODY CONTROL MODULE (RBCM) REMOVAL/INSTALLATION**.) Go to the next step.
		No	Go to the next step.
9	**VERIFY IF OTHER DTCs DISPLAYED** • Are any other DTCs displayed?	Yes	Repair or replace the malfunctioning part according to the applicable DTC troubleshooting. (See **DTC TABLE [REAR BODY CONTROL MODULE (RBCM)]**.)
		No	DTC troubleshooting completed.

2014 - Mazda3 - Body and Accessories

DTC B126A:13 [REAR BODY CONTROL MODULE (RBCM)]

Description	Front door lock-link switch (LH) lock circuit malfunction
Detection condition	• Rear body control module (RBCM) detects an open circuit in the front door lock-link switch (LH) lock circuit with the front door lock-link switch (LH) locked.
Fail-safe function	Not applicable
Possible cause	• Front door latch and lock actuator (LH) connector or terminal malfunction • Open circuit in wiring harness between front door latch and lock actuator (LH) terminal J and body ground • Front door lock-link switch (LH) malfunction • Rear body control module (RBCM) connector or terminal malfunction • Open circuit in wiring harness between rear body control module (RBCM) terminal 3O and front door latch and lock actuator (LH) terminal D • Rear body control module (RBCM) malfunction

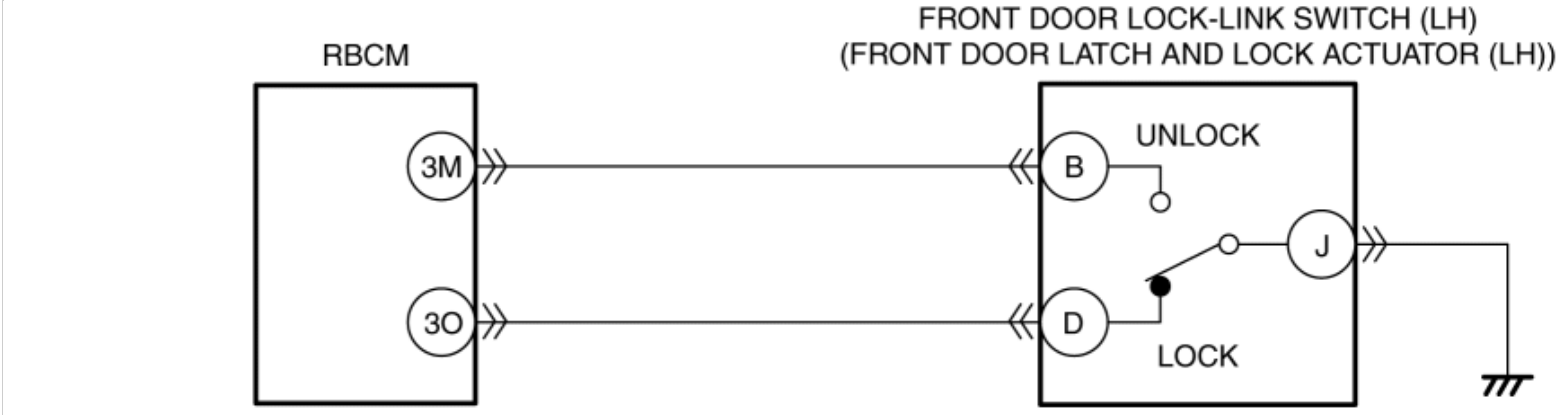

RBCM
WIRING HARNESS-SIDE CONNECTOR

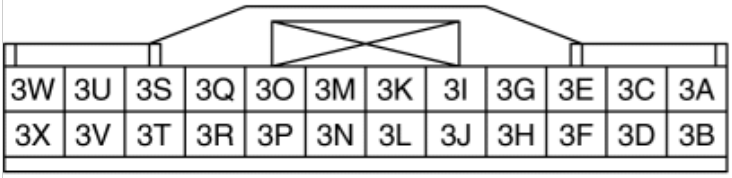

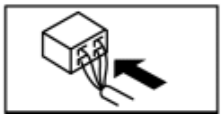

FRONT DOOR LATCH AND LOCK ACTUATOR (LH)
WIRING HARNESS-SIDE CONNECTOR

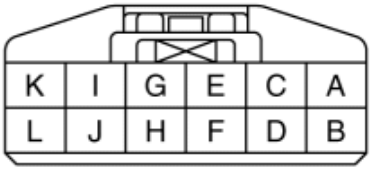

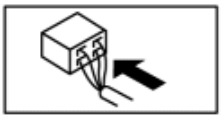

Diagnostic Procedure

Step	Inspection		Action
1	**VERIFY REAR BODY CONTROL MODULE (RBCM) DTCs AGAIN** • Clear the DTC for the rear body control module (RBCM) using the M-MDS. (See **CLEARING DTC [REAR BODY CONTROL MODULE (RBCM)]**.) • Retrieve the rear body control module (RBCM) DTCs using the M-MDS with the front door lock-link switch (LH) locked. (See **DTC INSPECTION [REAR BODY CONTROL MODULE (RBCM)]**.) • Is the same DTC displayed?	Yes	Go to the next step.
		No	Go to Step 8.
2	**INSPECT FRONT DOOR LATCH AND LOCK ACTUATOR (LH) CONNECTOR CONDITION** • Switch the ignition off. • Disconnect the negative battery cable. (See **NEGATIVE BATTERY CABLE DISCONNECTION/CONNECTION [SKYACTIV-G 2.0, SKYACTIV-G 2.5]**.) • Disconnect the front door latch and lock actuator (LH) connector. • Inspect the connector engagement and connection condition and inspect the terminals for damage, deformation, corrosion, or disconnection. • Is the connector normal?	Yes	Go to the next step.
		No	Repair or replace the connector, then go to Step 7.
3	**INSPECT FOR OPEN CIRCUIT IN FRONT DOOR LOCK-LINK SWITCH (LH) GROUND CIRCUIT** • Verify that the front door latch and lock actuator (LH) connector is disconnected. • Inspect for continuity between front door latch and lock actuator (LH) terminal J (wiring harness-side) and body ground. • Is there continuity?	Yes	Go to the next step.
		No	Refer to the wiring diagram and verify whether or not there is a common connector between front door latch and lock actuator (LH) terminal J and body ground. **If there is a common connector:** • Determine the malfunctioning part by inspecting the common connector and the terminal for corrosion, damage, or pin disconnection, and the common wiring harness for an open circuit. • Repair or replace the malfunctioning part. **If there is no common connector:**

			• Repair or replace the wiring harness which has an open circuit. Go to Step 7.
4	**INSPECT FRONT DOOR LOCK-LINK SWITCH (LH)** • Inspect the front door lock-link switch (LH). (See **FRONT DOOR LOCK-LINK SWITCH INSPECTION**.) • Is the front door lock-link switch (LH) normal?	Yes	Go to the next step.
		No	Replace the front door latch and lock actuator (LH), then go to Step 7. (See **FRONT DOOR LATCH AND LOCK ACTUATOR REMOVAL/INSTALLATION**.)
5	**INSPECT REAR BODY CONTROL MODULE (RBCM) CONNECTOR CONDITION** • Disconnect the rear body control module (RBCM) connector. • Inspect the connector engagement and connection condition and inspect the terminals for damage, deformation, corrosion, or disconnection. • Is the connector normal?	Yes	Go to the next step.
		No	Repair or replace the connector, then go to Step 7.
6	**INSPECT FOR OPEN CIRCUIT IN FRONT DOOR LOCK-LINK SWITCH (LH) LOCK CIRCUIT** • Verify that the rear body control module (RBCM) and front door latch and lock actuator (LH) connectors are disconnected. • Inspect for continuity between rear body control module (RBCM) terminal 3O (wiring harness-side) and front door latch and lock actuator (LH) terminal D (wiring harness-side). • Is there continuity?	Yes	Go to the next step.
		No	Refer to the wiring diagram and verify whether or not there is a common connector between rear body control module (RBCM) terminal 3O and front door latch and lock actuator (LH) terminal D. **If there is a common connector:** • Determine the malfunctioning part by inspecting the common connector and the terminal for corrosion, damage, or pin disconnection, and the common wiring harness for an open circuit. • Repair or replace the malfunctioning part. **If there is no common connector:** • Repair or replace the wiring harness which has an open circuit. Go to the next step.
7	**VERIFY THAT REPAIRS HAVE BEEN COMPLETED** • Always reconnect all disconnected connectors. • Reconnect the negative battery cable. (See **NEGATIVE BATTERY CABLE DISCONNECTION/CONNECTION [SKYACTIV-G 2.0, SKYACTIV-G 2.5]**.) • Clear the DTC for the rear body control module (RBCM) using the M-	Yes	Repeat the inspection from Step 1. • If the malfunction recurs, replace the rear body control module (RBCM). (See **REAR BODY CONTROL MODULE (RBCM) REMOVAL/INSTALLATION**.) Go to the next step.
		No	Go to the next step.

	MDS. (See **CLEARING DTC [REAR BODY CONTROL MODULE (RBCM)]**.) • Retrieve the rear body control module (RBCM) DTCs using the M-MDS with the front door lock-link switch (LH) locked. (See **DTC INSPECTION [REAR BODY CONTROL MODULE (RBCM)]**.) • Is the same DTC displayed?		
8	**VERIFY IF OTHER DTCs DISPLAYED** • Are any other DTCs displayed?	Yes	Repair or replace the malfunctioning part according to the applicable DTC troubleshooting. (See **DTC TABLE [REAR BODY CONTROL MODULE (RBCM)]**.)
		No	DTC troubleshooting completed.

2014 - Mazda3 - Body and Accessories

DTC C0023:14 [REAR BODY CONTROL MODULE (RBCM)]

Description	Brake light circuit malfunction
Detection condition	• Rear body control module (RBCM) detects any of the following conditions: ▪ Brake lights/high-mount brake light illuminated even though driver or system does not illuminate brake lights/high-mount brake lights. ▪ Brake lights/high-mount brake light not illuminated even though driver depresses brake pedal. ▪ Brake lights/high-mount brake light not illuminated even though system illuminates brake lights/high-mount brake light.
Fail-safe function	Not applicable
Possible cause	• Brake light bulb (LH) malfunction • Brake light bulb (RH) malfunction • High-mount brake light connector or terminal malfunction • Brake light (LH) connector or terminal malfunction • Brake light (RH) connector or terminal malfunction • Rear body control module (RBCM) connector or terminal malfunction • Short to ground in wiring harness between the following terminals: ▪ Rear body control module (RBCM) terminal 4D—Brake light (LH) terminal C ▪ Rear body control module (RBCM) terminal 4D—Brake light (RH) terminal C ▪ Rear body control module (RBCM) terminal 4D—High-mount brake light terminal B • Short to power supply in wiring harness between the following terminals: ▪ Rear body control module (RBCM) terminal 4D—Brake light (LH) terminal C ▪ Rear body control module (RBCM) terminal 4D—Brake light (RH) terminal C ▪ Rear body control module (RBCM) terminal 4D—High-mount brake light terminal B • Open circuit in wiring harness between the following terminals: ▪ Rear body control module (RBCM) terminal 4D—Brake light (LH) terminal C ▪ Rear body control module (RBCM) terminal 4D—Brake light (RH) terminal C ▪ Rear body control module (RBCM) terminal 4D—High-mount brake light terminal B

	• High-mount brake light malfunction • Brake light (LH) malfunction • Brake light (RH) malfunction • Rear body control module (RBCM) malfunction

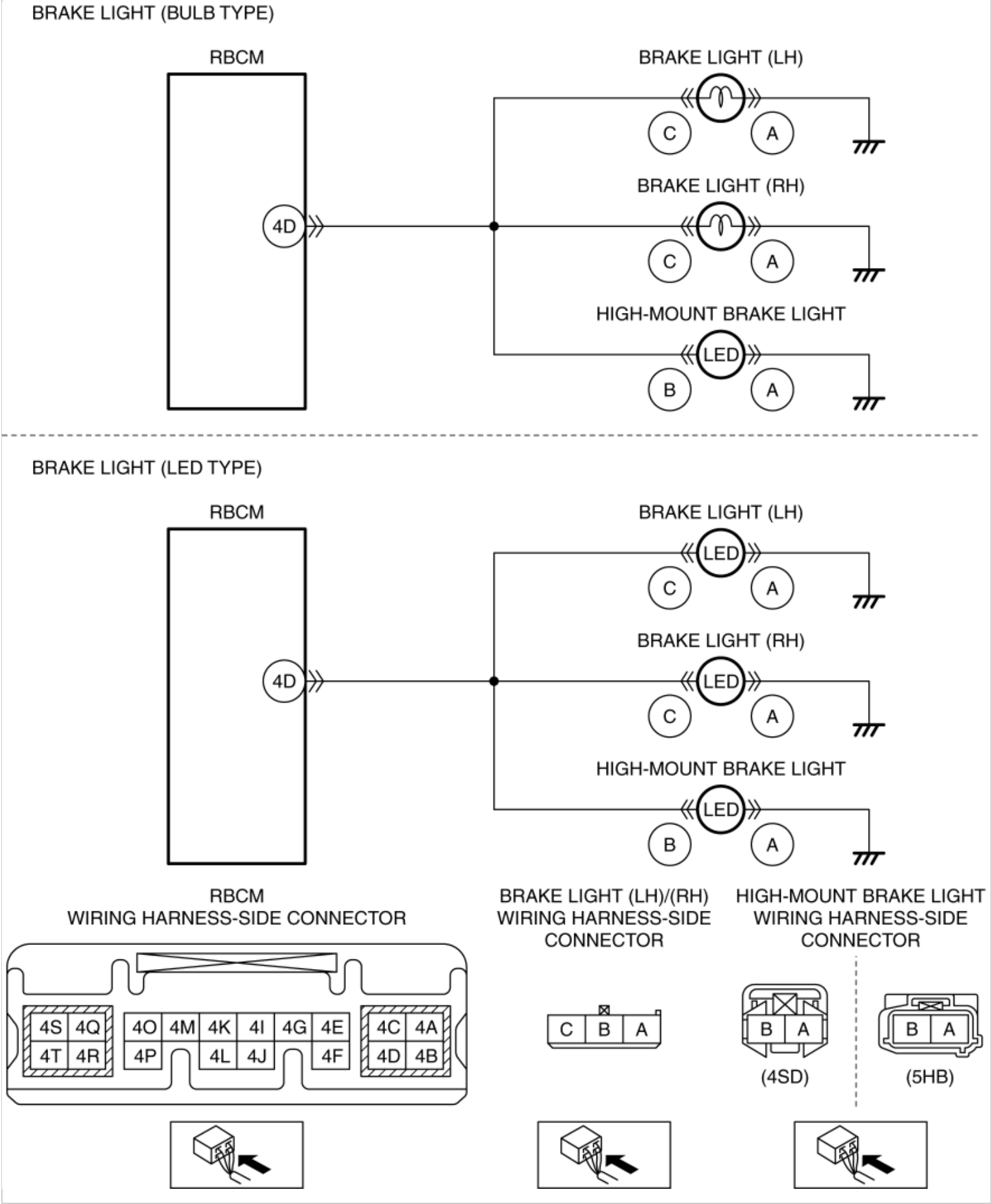
BRAKE LIGHT (BULB TYPE)
RBCM
4D
BRAKE LIGHT (LH)
C
A
BRAKE LIGHT (RH)
C
A
HIGH-MOUNT BRAKE LIGHT
LED
B
A
BRAKE LIGHT (LED TYPE)
RBCM
4D
BRAKE LIGHT (LH)
LED
C
A
BRAKE LIGHT (RH)
LED
C
A
HIGH-MOUNT BRAKE LIGHT
LED
B
A
RBCM
WIRING HARNESS-SIDE CONNECTOR
4S 4Q 4O 4M 4K 4I 4G 4E 4C 4A
4T 4R 4P 4L 4J 4F 4D 4B
BRAKE LIGHT (LH)/(RH)
WIRING HARNESS-SIDE
CONNECTOR
C B A
HIGH-MOUNT BRAKE LIGHT
WIRING HARNESS-SIDE
CONNECTOR
B A
(4SD)
B A
(5HB)

Diagnostic Procedure

Step	Inspection		Action
1	**VERIFY REAR BODY CONTROL MODULE (FBCM) DTCs AGAIN** • Clear the DTC for the rear body control module (RBCM) using the M-MDS. (See **CLEARING DTC [REAR BODY CONTROL MODULE (RBCM)]**.) • Depress the brake pedal. • Retrieve the rear body control module (RBCM) DTCs using the M-MDS. (See **DTC INSPECTION [REAR BODY CONTROL MODULE (RBCM)]**.) • Is the same DTC displayed?	Yes	Brake light (bulb type) • Go to the next step. Brake light (LED type) • Go to Step 4.
		No	Go to Step 17.
2	**INSPECT BRAKE LIGHT BULB (LH)** • Inspect the brake light bulb (LH). • Is the brake light bulb (LH) normal?	Yes	Go to the next step.
		No	Replace the brake light bulb (LH), then go to Step 17. (See **BRAKE LIGHT/REAR SIDE MARKER LIGHT/TAILLIGHT BULB REMOVAL/INSTALLATION**.)
3	**INSPECT BRAKE LIGHT BULB (RH)** • Inspect the brake light bulb (RH). • Is the brake light bulb (RH) normal?	Yes	Go to the next step.
		No	Replace the brake light bulb (RH), then go to Step 17. (See **BRAKE LIGHT/REAR SIDE MARKER LIGHT/TAILLIGHT BULB REMOVAL/INSTALLATION**.)
4	**INSPECT HIGH-MOUNT BRAKE LIGHT CONNECTOR CONDITION** • Switch the ignition off. • Disconnect the negative battery cable. (See **NEGATIVE BATTERY CABLE DISCONNECTION/CONNECTION [SKYACTIV-G 2.0, SKYACTIV-G 2.5]**.) • Disconnect the high-mount brake light connector. • Inspect the connector engagement and connection condition and inspect the terminals for damage, deformation, corrosion, or disconnection. • Is the connector normal?	Yes	Go to the next step.
		No	Repair or replace the connector, then go to Step 17.

5	**INSPECT BRAKE LIGHT (LH) CONNECTOR CONDITION** • Disconnect the brake light (LH) connector. • Inspect the connector engagement and connection condition and inspect the terminals for damage, deformation, corrosion, or disconnection. • Is the connector normal?	Yes	Go to the next step.
		No	Repair or replace the connector, then go to Step 17.
6	**INSPECT BRAKE LIGHT (RH) CONNECTOR CONDITION** • Disconnect the brake light (RH) connector. • Inspect the connector engagement and connection condition and inspect the terminals for damage, deformation, corrosion, or disconnection. • Is the connector normal?	Yes	Go to the next step.
		No	Repair or replace the connector, then go to Step 17.
7	**INSPECT REAR BODY CONTROL MODULE (RBCM) CONNECTOR CONDITION** • Disconnect the rear body control module (RBCM) connector. • Inspect the connector engagement and connection condition and inspect the terminals for damage, deformation, corrosion, or disconnection. • Is the connector normal?	Yes	Go to the next step.
		No	Repair or replace the connector, then go to Step 17.
8	**INSPECT FOR SHORT TO GROUND IN BRAKE LIGHT CIRCUIT** • Verify that the high-mount brake light, brake light (LH), brake light (RH) and rear body control module (RBCM) connectors are disconnected. • Inspect for continuity between rear body control module (RBCM) terminal 4D (wiring harness-side) and body ground. • Is there continuity?	Yes	Refer to the wiring diagram and verify whether or not there is a common connector between the following terminals: • Rear body control module (RBCM) terminal 4D —Brake light (LH) terminal C • Rear body control module (RBCM) terminal 4D —Brake light (RH) terminal C • Rear body control module (RBCM) terminal 4D —High-mount brake light terminal B **If there is a common connector:** • Determine the malfunctioning part by inspecting the common connector and the terminal for corrosion, damage, or pin disconnection, and the common wiring harness for a short to ground. • Repair or replace the malfunctioning part. **If there is no common connector:**

			• Repair or replace the wiring harness which has a short to ground. Go to Step 17.
		No	Go to the next step.
9	**INSPECT FOR SHORT TO POWER SUPPLY IN BRAKE LIGHT CIRCUIT** • Verify that the high-mount brake light, brake light (LH), brake light (RH) and rear body control module (RBCM) connectors are disconnected. • Reconnect the negative battery cable. (See **NEGATIVE BATTERY CABLE DISCONNECTION/CONNECTION [SKYACTIV-G 2.0, SKYACTIV-G 2.5]**.) • Switch the ignition ON (engine off or on). • Measure the voltage at the rear body control module (RBCM) terminal 4D (wiring harness-side). • Is the voltage **0 V**?	Yes	Go to the next step.
		No	Refer to the wiring diagram and verify whether or not there is a common connector between the following terminals: • Rear body control module (RBCM) terminal 4D —Brake light (LH) terminal C • Rear body control module (RBCM) terminal 4D —Brake light (RH) terminal C • Rear body control module (RBCM) terminal 4D —High-mount brake light terminal B **If there is a common connector:** • Determine the malfunctioning part by inspecting the common connector and the terminal for corrosion, damage, or pin disconnection, and the common wiring harness for a short to power supply. • Repair or replace the malfunctioning part. **If there is no common connector:** • Repair or replace the wiring harness which has a short to power supply. Go to Step 17.
10	**INSPECT FOR OPEN CIRCUIT IN BRAKE LIGHT CIRCUIT** • Verify that the high-mount brake light, brake light (LH), brake light (RH) and rear body control module (RBCM) connectors are disconnected. • Switch the ignition off. • Disconnect the negative battery cable. (See **NEGATIVE BATTERY CABLE DISCONNECTION/CONNECTION [SKYACTIV-G 2.0, SKYACTIV-G 2.5]**.) • Inspect for continuity between the following terminals (wiring harness-side): ▪ Rear body control module (RBCM) terminal 4D—Brake light (LH)	Yes	Go to the next step.
		No	Refer to the wiring diagram and verify whether or not there is a common connector between the following terminals: • Rear body control module (RBCM) terminal 4D —Brake light (LH) terminal C • Rear body control module (RBCM) terminal 4D —Brake light (RH) terminal C • Rear body control module (RBCM) terminal 4D —High-mount brake light terminal B **If there is a common connector:** • Determine the malfunctioning part by inspecting the common connector and the terminal for corrosion, damage, or pin disconnection, and the common wiring harness for an open circuit. • Repair or replace the malfunctioning part. **If there is no common connector:** • Repair or replace the wiring harness which has

	terminal C ▪ Rear body control module (RBCM) terminal 4D—Brake light (RH) terminal C ▪ Rear body control module (RBCM) terminal 4D—High-mount brake light terminal B • Is there continuity?		an open circuit. Go to Step 17.
11	**INSPECT FOR SHORT TO GROUND IN HIGH-MOUNT BRAKE LIGHT** • Verify that the high-mount brake light, brake light (LH), brake light (RH) and rear body control module (RBCM) connectors are disconnected. • Reconnect the high-mount brake light connector. • Inspect for continuity between rear body control module (RBCM) terminal 4D (wiring harness-side) and body ground. • Is there continuity?	Yes	Replace the high-mount brake light, then go to Step 17. (See **HIGH-MOUNT BRAKE LIGHT REMOVAL/INSTALLATION**.)
		No	Go to the next step.
12	**INSPECT FOR SHORT TO POWER SUPPLY IN HIGH-MOUNT BRAKE LIGHT** • Verify that the brake light (LH), brake light (RH) and rear body control module (RBCM) connectors are disconnected. • Reconnect the negative battery cable. (See **NEGATIVE BATTERY CABLE DISCONNECTION/CONNECTION [SKYACTIV-G 2.0, SKYACTIV-G 2.5]**.) • Switch the ignition ON (engine off or on). • Measure the voltage at the rear body control module (RBCM) terminal 4D (wiring harness-side). • Is the voltage **0 V**?	Yes	Brake light (bulb type) • Go to Step 17. Brake light (LED type) • Go to the next step.
		No	Replace the high-mount brake light, then go to Step 17. (See **HIGH-MOUNT BRAKE LIGHT REMOVAL/INSTALLATION**.)
13	**INSPECT FOR SHORT TO GROUND IN BRAKE LIGHT (LH)** • Verify that the brake light (LH),	Yes	Replace the rear combination light (LH), then go to Step 17. (See **REAR COMBINATION LIGHT REMOVAL/INSTALLATION**.)

	brake light (RH) and rear body control module (RBCM) connectors are disconnected. • Switch the ignition off. • Disconnect the negative battery cable. (See **NEGATIVE BATTERY CABLE DISCONNECTION/CONNECTION [SKYACTIV-G 2.0, SKYACTIV-G 2.5]**.) • Reconnect the brake light (LH) connector. • Inspect for continuity between rear body control module (RBCM) terminal 4D (wiring harness-side) and body ground. • Is there continuity?	No	Go to the next step.
14	**INSPECT FOR SHORT TO POWER SUPPLY IN BRAKE LIGHT (LH)** • Verify that the brake light (RH) and rear body control module (RBCM) connectors are disconnected. • Reconnect the negative battery cable. (See **NEGATIVE BATTERY CABLE DISCONNECTION/CONNECTION [SKYACTIV-G 2.0, SKYACTIV-G 2.5]**.) • Switch the ignition ON (engine off or on). • Measure the voltage at the rear body control module (RBCM) terminal 4D (wiring harness-side). • Is the voltage **0 V**?	Yes	Go to the next step.
		No	Replace the rear combination light (LH), then go to Step 17. (See **REAR COMBINATION LIGHT REMOVAL/INSTALLATION**.)
15	**INSPECT FOR SHORT TO GROUND IN BRAKE LIGHT (RH)** • Verify that the brake light (RH) and rear body control module (RBCM) connectors are disconnected. • Switch the ignition off. • Disconnect the negative battery cable. (See **NEGATIVE BATTERY CABLE DISCONNECTION/CONNECTION [SKYACTIV-G 2.0, SKYACTIV-G 2.5]**.) • Reconnect the brake light (RH)	Yes	Replace the rear combination light (RH), then go to Step 17. (See **REAR COMBINATION LIGHT REMOVAL/INSTALLATION**.)
		No	Go to the next step.

	connector. • Inspect for continuity between rear body control module (RBCM) terminal 4D (wiring harness-side) and body ground. • Is there continuity?		
16	**INSPECT FOR SHORT TO POWER SUPPLY IN BRAKE LIGHT (RH)** • Verify that the rear body control module (RBCM) connector is disconnected. • Reconnect the negative battery cable. (See **NEGATIVE BATTERY CABLE DISCONNECTION/CONNECTION [SKYACTIV-G 2.0, SKYACTIV-G 2.5]**.) • Switch the ignition ON (engine off or on). • Measure the voltage at the rear body control module (RBCM) terminal 4D (wiring harness-side). • Is the voltage **0 V**?	Yes	Go to the next step.
		No	Replace the rear combination light (RH), then go to the next step. (See **REAR COMBINATION LIGHT REMOVAL/INSTALLATION**.)
17	**VERIFY THAT REPAIRS HAVE BEEN COMPLETED** • Always reconnect all disconnected connectors. • Reconnect the negative battery cable. (See **NEGATIVE BATTERY CABLE DISCONNECTION/CONNECTION [SKYACTIV-G 2.0, SKYACTIV-G 2.5]**.) • Clear the DTC for the rear body control module (RBCM) using the M-MDS. (See **CLEARING DTC [REAR BODY CONTROL MODULE (RBCM)]**.) • Depress the brake pedal. • Retrieve the rear body control module (RBCM) DTCs using the M-MDS. (See **DTC INSPECTION [REAR BODY CONTROL MODULE (RBCM)]**.) • Is the same DTC displayed?	Yes	Repeat the inspection from Step 1. • If the malfunction recurs, replace the rear body control module (RBCM). (See **REAR BODY CONTROL MODULE (RBCM) REMOVAL/INSTALLATION**.) Go to the next step.
		No	Go to the next step.
18	**VERIFY IF OTHER DTCs DISPLAYED**	Yes	Repair or replace the malfunctioning part according to the

	• Are any other DTCs displayed?		applicable DTC troubleshooting. (See **DTC TABLE [REAR BODY CONTROL MODULE (RBCM)]**.)
		No	DTC troubleshooting completed.

2014 - Mazda3 - Body and Accessories

DTC U0010:88/U0155:00 [REAR BODY CONTROL MODULE (RBCM)]

Description	• U0010:88
	  ▪ Unit communication error (MS-CAN)
	• U0155:00
	  ▪ Communication error with instrument cluster

Detection condition	• U0010:88
	  ▪ Rear body control module (RBCM) detects a CAN communication line (MS-CAN) error with the ignition switched ON (engine off or on).
	• U0155:00
	  ▪ Rear body control module (RBCM) cannot receive the CAN signals from the instrument cluster for **5 s or more** with the ignition switched ON (engine off or on).

Fail-safe function	Not applicable
Possible cause	• Malfunction in the CAN bus communication line • Malfunction in the CAN line between instrument cluster and rear body control module (RBCM)
System wiring diagram	Not applicable

Diagnostic Procedure

- Perform the malfunction diagnosis according to the troubleshooting procedure for the multiplex communication system. (See **FOREWORD**.)

DTC U0010:88/U0155:00 [REAR BODY CONTROL MODULE (RBCM)]

2014 - Mazda3 - Body and Accessories

DTC U2100:00 [REAR BODY CONTROL MODULE (RBCM)]

Description	Rear body control module (RBCM) configuration error
Detection condition	• Rear body control module (RBCM) configuration error (no configuration) detected.
Fail-safe function	Not applicable
Possible cause	• Rear body control module (RBCM) configuration error • Rear body control module (RBCM) malfunction
System wiring diagram	Not applicable

Diagnostic Procedure

Step	Inspection		Action
1	**VERIFY REAR BODY CONTROL MODULE (RBCM) DTCs AGAIN** • Clear the DTC for the rear body control module (RBCM) using the M-MDS. (See **CLEARING DTC [REAR BODY CONTROL MODULE (RBCM)]**.) • Retrieve the rear body control module (RBCM) DTCs using the M-MDS. (See **DTC INSPECTION [REAR BODY CONTROL MODULE (RBCM)]**.) • Is the same DTC displayed?	Yes	Go to the next step.
		No	Go to Step 4.
2	**PERFORM REAR BODY CONTROL MODULE (RBCM) CONFIGURATION (USING AS-BUILT DATA)**	Yes	Using the M-MDS, perform the rear body control module (RBCM) configuration (using As-Built data)

	• Using the M-MDS, perform the rear body control module (RBCM) configuration (using As-Built data). (See **REAR BODY CONTROL MODULE (RBCM) CONFIGURATION (USING AS-BUILT DATA)**.) • Clear the DTC for the rear body control module (RBCM) using the M-MDS. (See **CLEARING DTC [REAR BODY CONTROL MODULE (RBCM)]**.) • Retrieve the rear body control module (RBCM) DTCs using the M-MDS. (See **DTC INSPECTION [REAR BODY CONTROL MODULE (RBCM)]**.) • Is the same DTC displayed?		again, then go to the next step. (See **REAR BODY CONTROL MODULE (RBCM) CONFIGURATION (USING AS-BUILT DATA)**.)
		No	Go to Step 4.
3	**VERIFY THAT REPAIRS HAVE BEEN COMPLETED** • Clear the DTC for the rear body control module (RBCM) using the M-MDS. (See **CLEARING DTC [REAR BODY CONTROL MODULE (RBCM)]**.) • Retrieve the rear body control module (RBCM) DTCs using the M-MDS. (See **DTC INSPECTION [REAR BODY CONTROL MODULE (RBCM)]**.) • Is the same DTC displayed?	Yes	Repeat the inspection from Step 1. • If the malfunction recurs, replace the rear body control module (RBCM). (See **REAR BODY CONTROL MODULE (RBCM) REMOVAL/INSTALLATION**.) Go to the next step.
		No	Go to the next step.
4	**VERIFY IF OTHER DTCs DISPLAYED** • Are any other DTCs displayed?	Yes	Repair or replace the malfunctioning part according to the applicable DTC troubleshooting. (See **DTC TABLE [REAR BODY CONTROL MODULE (RBCM)]**.)
		No	DTC troubleshooting completed.

DTC U2100:00 [REAR BODY CONTROL MODULE (RBCM)]

2014 - Mazda3 - Body and Accessories

DTC U3000:49 [REAR BODY CONTROL MODULE (RBCM)]

Description	Rear body control module (RBCM) internal malfunction
Detection condition	• Rear body control module (RBCM) detects the internal malfunction.
Fail-safe function	Not applicable
Possible cause	• Rear body control module (RBCM) malfunction
System wiring diagram	Not applicable

Diagnostic Procedure

Step	Inspection		Action
1	**PERFORM DTC INSPECTION AND VERIFY REAR BODY CONTROL MODULE (RBCM) MALFUNCTION** • Clear the DTC for the rear body control module (RBCM) using the M-MDS. (See **CLEARING DTC [REAR BODY CONTROL MODULE (RBCM)]**.) • Retrieve the rear body control module (RBCM) DTCs using the M-MDS. (See **DTC INSPECTION [REAR BODY CONTROL MODULE (RBCM)]**.) • Is the same DTC displayed?	Yes	Repeat the inspection from Step 1. • If the malfunction recurs, replace the rear body control module (RBCM). (See **REAR BODY CONTROL MODULE (RBCM) REMOVAL/INSTALLATION**.) Go to the next step.
		No	Go to the next step.
2	**VERIFY IF OTHER DTCs DISPLAYED** • Are any other DTCs displayed?	Yes	Repair or replace the malfunctioning part according to the applicable DTC troubleshooting. (See **DTC TABLE [REAR BODY CONTROL MODULE (RBCM)]**.)

		No	DTC troubleshooting completed.

2014 - Mazda3 - Body and Accessories

DTC U3003:16 [REAR BODY CONTROL MODULE (RBCM)]

Description	Rear body control module (RBCM) power supply voltage low input
Detection condition	• Rear body control module (RBCM) power supply circuit voltage of **5 V or more, less than 9 V** is detected for **10 s or more**.
Fail-safe function	Not applicable
Possible cause	• Battery malfunction • Generator malfunction • Rear body control module (RBCM) connector or terminal malfunction • Rear body control module (RBCM) power supply circuit malfunction • Rear body control module (RBCM) malfunction

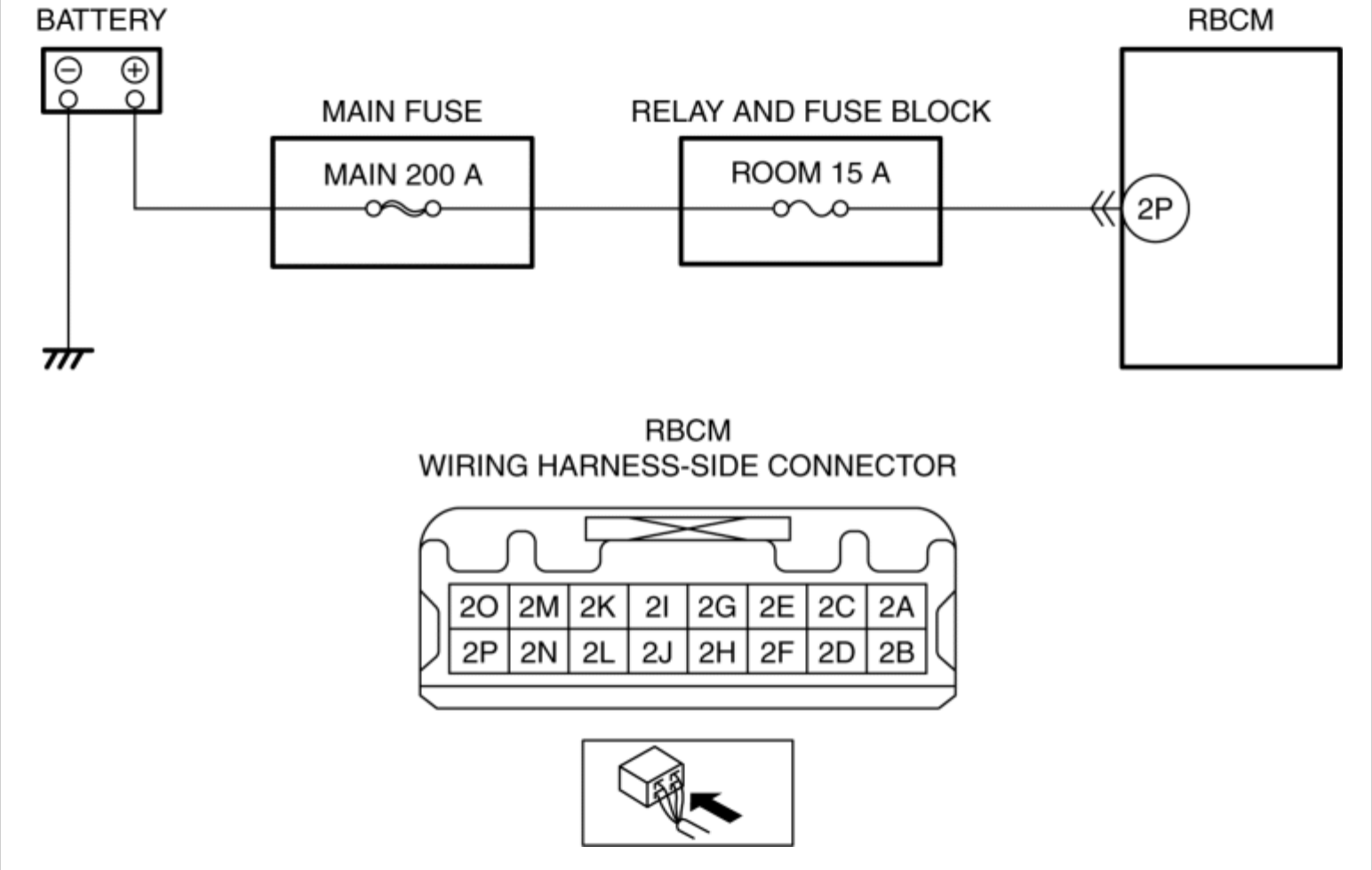

Diagnostic Procedure

Step	Inspection		Action
1	**VERIFY REAR BODY CONTROL MODULE (RBCM) DTCs AGAIN** • Clear the DTC for the rear body control module (RBCM) using the M-MDS. (See **CLEARING DTC [REAR BODY CONTROL MODULE (RBCM)]**.) • Switch the ignition ON (engine off or on) and wait for **10 s or more**. • Retrieve the rear body control module (RBCM) DTCs using the M-MDS. (See **DTC INSPECTION [REAR BODY CONTROL MODULE (RBCM)]**.) • Is the same DTC displayed?	Yes	Go to the next step.
		No	Go to Step 7.

2	**INSPECT BATTERY** • Inspect the battery. (See **BATTERY INSPECTION [SKYACTIV-G 2.0, SKYACTIV-G 2.5]**.) • Is the battery normal?	Yes	Go to the next step.
		No	Recharge or replace the battery, then go to Step 6. (See **BATTERY RECHARGING [SKYACTIV-G 2.0, SKYACTIV-G 2.5]**.) (See **BATTERY REMOVAL/INSTALLATION [SKYACTIV-G 2.0, SKYACTIV-G 2.5]**.)
3	**INSPECT GENERATOR** • Inspect the generator. (See **GENERATOR INSPECTION [SKYACTIV-G 2.0, SKYACTIV-G 2.5 (WITHOUT i-ELOOP)]**.) (See **GENERATOR INSPECTION [SKYACTIV-G 2.0, SKYACTIV-G 2.5 (WITH i-ELOOP)]**.) • Is the generator normal?	Yes	Go to the next step.
		No	Replace the generator, then go to Step 6. (See **GENERATOR REMOVAL/INSTALLATION [SKYACTIV-G 2.0, SKYACTIV-G 2.5 (WITHOUT i-ELOOP)]**.) (See **GENERATOR REMOVAL/INSTALLATION [SKYACTIV-G 2.0, SKYACTIV-G 2.5 (WITH i-ELOOP)]**.)
4	**INSPECT REAR BODY CONTROL MODULE (RBCM) CONNECTOR CONDITION** • Switch the ignition off. • Disconnect the negative battery cable. (See **NEGATIVE BATTERY CABLE DISCONNECTION/CONNECTION [SKYACTIV-G 2.0, SKYACTIV-G 2.5]**.) • Disconnect the rear body control module (RBCM) connector. • Inspect the connector engagement and connection condition and inspect the terminals for damage, deformation, corrosion, or disconnection. • Is the connector normal?	Yes	Go to the next step.
		No	Repair or replace the connector, then go to Step 6.
5	**VERIFY REAR BODY CONTROL MODULE (RBCM) POWER SUPPLY VOLTAGE** • Always reconnect all disconnected connectors. • Reconnect the negative battery cable.	Yes	Refer to the wiring diagram and verify whether or not there is a common connector between battery positive terminal and rear body control module (RBCM) terminal 2P. **If there is a common connector:**

	(See **NEGATIVE BATTERY CABLE DISCONNECTION/CONNECTION [SKYACTIV-G 2.0, SKYACTIV-G 2.5]**.) • Display the PID VPWR_B_R using the M-MDS. (See **PID/DATA MONITOR INSPECTION [REAR BODY CONTROL MODULE (RBCM)]**.) • Is the voltage **5 V or more, less than 9 V**?		• Determine the malfunctioning part by inspecting the common connector and the terminal for corrosion, damage, or pin disconnection, and the common wiring harness for a malfunction. • Repair or replace the malfunctioning part. **If there is no common connector:** • Repair or replace the wiring harness. Go to the next step.
		No	Go to the next step.
6	**VERIFY THAT REPAIRS HAVE BEEN COMPLETED** • Always reconnect all disconnected connectors. • Reconnect the negative battery cable. (See **NEGATIVE BATTERY CABLE DISCONNECTION/CONNECTION [SKYACTIV-G 2.0, SKYACTIV-G 2.5]**.) • Clear the DTC for the rear body control module (RBCM) using the M-MDS. (See **CLEARING DTC [REAR BODY CONTROL MODULE (RBCM)]**.) • Switch the ignition ON (engine off or on) and wait for **10 s or more**. • Retrieve the rear body control module (RBCM) DTCs using the M-MDS. (See **DTC INSPECTION [REAR BODY CONTROL MODULE (RBCM)]**.) • Is the same DTC displayed?	Yes	Repeat the inspection from Step 1. • If the malfunction recurs, replace the rear body control module (RBCM). (See **REAR BODY CONTROL MODULE (RBCM) REMOVAL/INSTALLATION**.) Go to the next step.
		No	Go to the next step.
7	**VERIFY IF OTHER DTCs DISPLAYED**	Yes	Repair or replace the malfunctioning part according

	• Are any other DTCs displayed?		to the applicable DTC troubleshooting. (See **DTC TABLE [REAR BODY CONTROL MODULE (RBCM)]**.)
		No	DTC troubleshooting completed.

2014 - Mazda3 - Body and Accessories

PID/DATA MONITOR INSPECTION [REAR BODY CONTROL MODULE (RBCM)]

1. Connect the M-MDS to the DLC-2.

2. After the vehicle is identified, select the following items from the initialization screen of the M-MDS.

    a. Select “DataLogger”.

    b. Select “Modules”.

    c. Select “R_BCM”.

3. Select the applicable PID from the PID table.

4. Verify the PID data according to the directions on the screen.

NOTE:

- The PID data screen function is used for monitoring the calculated value of input/output signals in the module. Therefore, if the monitored value of the output parts is not within the specification, it is necessary to inspect the monitored value of input parts corresponding to the applicable output part control. In addition, because the system does not display an output part malfunction as an abnormality in the monitored value, it is necessary to inspect the output parts individually.
- When detecting DTCs, PIDs related to a malfunctioning system may not display even if the module is normal. Therefore, if a PID is not displayed, it is necessary to verify the DTC, perform malfunction diagnosis of the DTC that was detected, and do repairs.

2014 - Mazda3 - Body and Accessories

PID/DATA MONITOR TABLE [REAR BODY CONTROL MODULE (RBCM)]

—: Not applicable

PID	Unit/Operation	Data contents	Data read/use method	Module control terminal
AT_DL_IG	Off/On	Auto door lock function (IG) • Off: Door lock actuator does not operate to unlock in conjunction with ignition off. • On: Door lock actuator operates to unlock in conjunction with ignition off.	If the personalization features setting for the auto door lock is set to auto door lock in conjunction with the ignition, displays if the auto door lock set in conjunction with the ignition being switched off is applicable. Operates when the ignition is switched from ON to OFF.	—
AT_DL_SHIFT	Off/On	Auto door lock function (shift) • Off: Door lock actuator does not operate to lock or unlock in conjunction with shifting. • On: Door lock actuator operate to lock or unlock in conjunction with shifting.	If the personalization features setting for the auto door lock is set to auto door lock in conjunction with the AT shifting, displays if the auto door lock set in conjunction with gear shifting is applicable. Operates when the gear is shifted.	—
		Auto door lock function (vehicle speed) • Off: Door lock actuator does not operate to	If the personalization features setting for the auto door lock is set in	

AT_DL_VSPD	Off/On	lock in conjunction with vehicle speed. • On: Door lock actuator operates to lock in conjunction with vehicle speed.	conjunction with the vehicle speed, displays if the auto door lock set in conjunction with the vehicle speed is applicable. Operates at a vehicle speed of **20 km/h {12 mph} or more**.	—
BG_HORN_RLY*1	Off/On	Theft-deterrent horn relay operation output • Off: Theft-deterrent horn relay is off. • On: Theft-deterrent horn relay is on.	—	2F (Theft-deterrent horn relay control)
BRAKE_SW*2	Off/On	Brake switch input signal • Off: Brake switch (No.1 signal) is off (brake pedal is not depressed). • On: Brake switch (No.1 signal) is on (brake pedal is depressed).	—	2J (Brake switch signal)
C_DL_SW_LK	Off/On	Door lock switch (lock side) input signal • Off: Door lock switch is not in lock. • On: Door lock switch is in lock.	—	3F (Door lock switch signal)
C_DL_SW_UNL	Off/On	Door lock switch (unlock side) input signal • Off: Door lock switch is not in unlock.	—	3F (Door lock switch signal)

		• On: Door lock switch is in unlock.		
CNT_S_COMM	—	The rear body control module (RBCM) counts the lock/unlock request signal (serial transmission) received from the start stop unit. **NOTE:** • If number of times **exceeds 15**, display returns to 0.	If the lock/unlock operation is performed by the remote transmitter or request switch, the start stop unit sends the lock/unlock request signal to the rear body control module (RBCM). If the lock/unlock request signal is received normally, the rear body control module (RBCM) increases the counter by one for the PID. When monitoring PID item CNT_S_COMM, switch the ignition off because the start stop unit does not output the lock/unlock signal when the ignition is switched ON.	3B (Serial communication)
DL_MT_A_LK	Off/On	All-door lock motor lock output • Off: All door lock actuators are not operated to lock. • On: All door lock actuators are operated to lock.	—	—
DL_MT_A_UNL	Off/On	All-door lock motor unlock output • Off: All door lock actuators are not operated to unlock.	—	—

		• On: All door lock actuators are operated to unlock.		
DL_MT_D_UNL	Off/On	Driver's door lock motor unlock output • Off: Front door lock actuator (LH) is not operated to unlock. • On: Front door lock actuator (LH) is operated to unlock.	—	—
DL_MT_S-LK	**NOTE:** • Displays in the M-MDS but it does not operate.			
DOOR_ALL	Close/OPEN	Open/closed condition of all doors • Close: All doors are closed. • OPEN: Any door is open.	—	—
DOOR_D	Close/OPEN	Door switch input on driver's door • Close: Front door (LH) is closed. • OPEN: Front door (LH) is open.	—	3W (Front door switch (driver's door) signal)
ELAT_MT_RLY	Off/On	Electric latch motor relay operation output • Off: Trunk lid latch (4SD)/liftgate latch (5HB) is not operated to unlock. • On: Trunk lid	—	4C (Trunk lid release/Liftgate lock actuator control)

		latch (4SD)/liftgate latch (5HB) is operated to unlock.		
ELAT_UNL	Off/On	Electric latch motor (unlock) operation output • Off: Trunk lid latch (4SD)/liftgate latch (5HB) is not operated to unlock. • On: Trunk lid latch (4SD)/liftgate latch (5HB) is operated to unlock.	—	—
FUEL_SEN_M	V	Displays input voltage of fuel gauge sender unit input from rear body control module (RBCM)	If the fuel tank level is low, the rear body control module (RBCM) input voltage increases because the fuel gauge sender unit resistance decreases.	3I (Fuel sensor signal)
FUEL_SEN_S	V	Displays fuel gauge sender unit (SUB) input voltage input from rear body control module (RBCM)	If there is no fuel gauge sender unit (SUB), a constant **5 V** is output.	—
		Displays power voltage supplied to fuel gauge sender unit from rear body control module (RBCM) **CAUTION:** • The battery voltage is supplied to the fuel gauge sender unit from the rear body control module (RBCM),	After switching the ignition off, supply of the battery voltage to the fuel gauge sender unit	

FUEL_SEN_SV	V	however display of the PID item is controlled by the microcomputer and therefore **5 V** is displayed. Accordingly, even if the actual terminal voltage differs from the PID item display, this does not indicate an abnormality.	from the rear body control module (RBCM) continues until the CAN communication is in the sleep mode.	2P (Power supply)
HOOD*1	Close/OPEN	Hood latch switch condition • Close: Hood is closed. • OPEN: Hood is open.	—	3L (Hood latch switch signal)
IG1_SW	Off/On	Displays power input condition of rear body control module (RBCM) • Off: IG1 power is not input to rear body control module (RBCM) • On: IG1 power is input to rear body control module (RBCM)	If there is a malfunction in the IG1 power supply input to the rear body control module (RBCM), the door lock and interior light controls, which the rear body control module (RBCM) controls, do not operate normally because PID item IG1_SW is used for determining ignition on/off for the rear body control module (RBCM).	2I (Ignition power supply)
KC_SW_D_LK	Off/On	Driver's key cylinder switch (lock side) operation condition • Off: Front door key cylinder switch is not in lock. • On: Front door	—	3H (Driver's door key cylinder switch signal)

		key cylinder switch is in lock.		
KC_SW_D_UNL	Off/On	Driver's key cylinder switch (unlock side) operation condition • Off: Front door key cylinder switch is not in unlock. • On: Front door key cylinder switch is in unlock.	—	3H (Driver's door key cylinder switch signal)
LL_P/R*1	Unlock/Other	Passenger/rear door lock link operation condition • Unlock: Front door lock-link switch (RH), rear door lock-link switch (LH), rear door lock-link switch (RH) are in unlock. • Other: Front door lock-link switch (RH), rear door lock-link switch (LH), rear door lock-link switch (RH) are in other than unlock.	—	3J (Lock input (lock-link switch (passenger, rear door)))
LL_SW_D_LK	Off/On	Driver's door lock link switch (lock side) operation condition • Off: Front door lock-link switch (LH) is in unlock. • On: Front door lock-link switch (LH) is in lock.	—	3O (Lock input (front door lock-link switch (driver's door)))
		Driver's door lock link switch (unlock side) operation		

LL_SW_D_UNL	Off/On	condition • Off: Front door lock-link switch (LH) is in lock. • On: Front door lock-link switch (LH) is in unlock.	—	3M (Unlock input (front door lock-link switch (driver's door)))
R_FOG_L_CS	**NOTE:** • Displays in the M-MDS but it does not operate.			
R_FOG_LMP	**NOTE:** • Displays in the M-MDS but it does not operate.			
R_LMP	Off/On	Back-up light operation output signal • Off: Back-up light is turned off. • On: Back-up light is turned on.	—	—
R_LMP_CS	Off/On/Unknown/Fault	Back-up light operation request signal from instrument cluster • Off: Back-up light off signal is received. • On: Back-up light on signal is received. • Unknown: Back-up light control signal not determined • Fault: Communication with instrument cluster is failed.	—	3E, 3G (CAN)
		Rear wiper motor operation output signal		

R_WIP_MT_LO*3	Off/On	Off: Rear wiper motor is not operated. • On: Rear wiper motor is operated.	—	4T (Rear wiper motor control (LO))
ROOM_LMP	Off/On	Interior light output signal • Off: Front map light is turned off. • On: Front map light is turned on.	—	1E (Door unlock control)
SEAT_B_2C*4	Unbuckled/Buckled	Rear seat belt switch condition (center seat) • Unbuckled: Second-row center seat belt is not fastened. • Buckled: Second-row center seat belt is fastened.	—	3V (Rear seat belt (center) switch)
SEAT_B_2L*4	Unbuckled/Buckled	Rear seat belt switch condition (left-side seat) • Unbuckled: Second-row left-side seat belt is not fastened. • Buckled: Second-row left-side seat belt is fastened.	—	3X (Rear seat belt (LH) switch)
SEAT_B_2R*4	Unbuckled/Buckled	Rear seat belt switch condition (right-side seat) • Unbuckled: Second-row right-side seat belt is not fastened.	—	3T (Rear seat belt (RH) switch signal)

		• Buckled: Second-row right-side seat belt is fastened.		
SEAT_B_3C	**NOTE:** • Displays in the M-MDS but it does not operate.			
SEAT_B_3L	**NOTE:** • Displays in the M-MDS but it does not operate.			
SEAT_B_3R	**NOTE:** • Displays in the M-MDS but it does not operate.			
STOP_LMP*2	Off/On	Brake light output control signal • Off: Brake light is turned off. • On: Brake light is turned on.	—	2H (Brake light control)
STOP_LMP_CS*2	Off/On	Brake light on monitor • Off: Brake light off signal is received. • On: Brake light on signal is received.	—	4D (Brake light control)
T_ROOM_LMP	Off/On	Trunk compartment light (4SD)/cargo compartment (5HB) output control condition • Off: Trunk compartment light (4SD)/cargo compartment light (5HB) is turned off. • On: Trunk compartment light (4SD)/cargo compartment light (5HB) is turned on.	—	4P (Trunk compartment light (4SD)/cargo compartment light (5HB) signal)

T_UNL_SW*5	Off/On	Trunk lid opener switch (exterior) (4SD)/liftgate opener switch (5HB) input status • Off: Trunk lid opener switch (exterior) (4SD)/liftgate opener switch (5HB) is not pressed. • On: Trunk lid opener switch (exterior) (4SD)/liftgate opener switch (5HB) is pressed.	—	4M (Trunk lid opener switch (exterior) (4SD)/liftgate opener switch (5HB) signal)
T_UNL_SW_IP*6	Off/On	Trunk lid opener switch (interior) condition • Off: Trunk lid opener switch (interior) is not pressed. • On: Trunk lid opener switch (interior) is pressed.	—	2D (Trunk lid opener switch signal (interior))
TRUNK	Close/OPEN	Trunk lid latch switch (4SD)/liftgate latch switch (5HB) input status • Close: Trunk (4SD)/liftgate (5HB) is closed. • OPEN: Trunk (4SD)/liftgate (5HB) is open.	—	4K (Trunk lid/liftgate latch switch signal)
VPWR_B_R	V	Displays voltage at rear body control module (RBCM) terminal 2P (power supply)	—	2P (Power supply)
VPWR_IG1	V	Displays voltage at rear body control module (RBCM) terminal 2I (ignition power supply)	—	2I (Ignition power supply)

*1 **With theft-deterrent system**

*2 **With smart city brake support (SCBS)**

*3 **With rear wiper and washer**

*4 **With rear seat belt reminder system**

*5 **With trunk lid opener switch (exterior) (4SD)/liftgate opener switch (5HB)**

*6 **With trunk lid opener switch (interior)**

2014 - Mazda3 - Body and Accessories

ACTIVE COMMAND MODES INSPECTION [REAR BODY CONTROL MODULE (RBCM)]

1. Connect the M-MDS to the DLC-2.

2. After the vehicle is identified, select the following items from the initialization screen of the M-MDS.

    a. Select “DataLogger”.

    b. Select “Modules”.

    c. Select “R_BCM”.

3. Select the simulation items from the PID table.

4. Perform the active command modes function, inspect the operations for each parts.

    - If the operation of output parts cannot be verified after the active command mode inspection is performed, this could indicate the possibility of an open or short circuit, sticking, or operation malfunction in the output parts.

2014 - Mazda3 - Body and Accessories

ACTIVE COMMAND MODES TABLE [REAR BODY CONTROL MODULE (RBCM)]

Simulation item	Unit/Operation	Data contents	Output part name
BG_HORN_RLY*1	Off/On	• Off: Stops theft-deterrent horn. • On: Sounds the theft-deterrent horn.	Rear body control module (RBCM)
DL_MT_A	Lock/Unlock	• Lock: Locks all of the doors. • Unlock: Unlocks all of the doors.	Door lock actuator
ELAT_MT_RLY	Off/On	• Off: Stops the trunk lid latch (4SD)/liftgate latch (5HB) release operation. • On: Releases the trunk lid latch (4SD)/liftgate latch (5HB).	**4SD** • Trunk lid latch and release actuator **5HB** • Liftgate latch and lock actuator
ELAT_UNL	Off/On	• Off: Stops the trunk lid latch (4SD)/liftgate latch (5HB) release operation. • On: Releases the trunk lid latch (4SD)/liftgate latch (5HB).	**4SD** • Trunk lid latch and release actuator **5HB** • Liftgate latch and lock actuator
R_FOG_LMP	**NOTE:**		

	• Displays in the M-MDS but it does not operate.		
R_LMP	Off/On	• Off: Turns off back-up light. • On: Illuminates back-up light.	Back-up light
R_WIP_MT_LO*2	Off/On	• Off: Stops rear wiper motor. • On: Operates rear wiper motor.	Rear wiper motor
STOP_LMP_CS*3	Off/On	• Off: Turns off brake light. • On: Illuminates brake light.	• Brake light • High-mount brake light

*1 **With theft-deterrent horn**

*2 **With rear wiper and washer**

*3 **With smart city brake support (SCBS)**

2014 - Mazda3 - Body and Accessories

ON-BOARD DIAGNOSTIC WIRING DIAGRAM [START STOP UNIT]

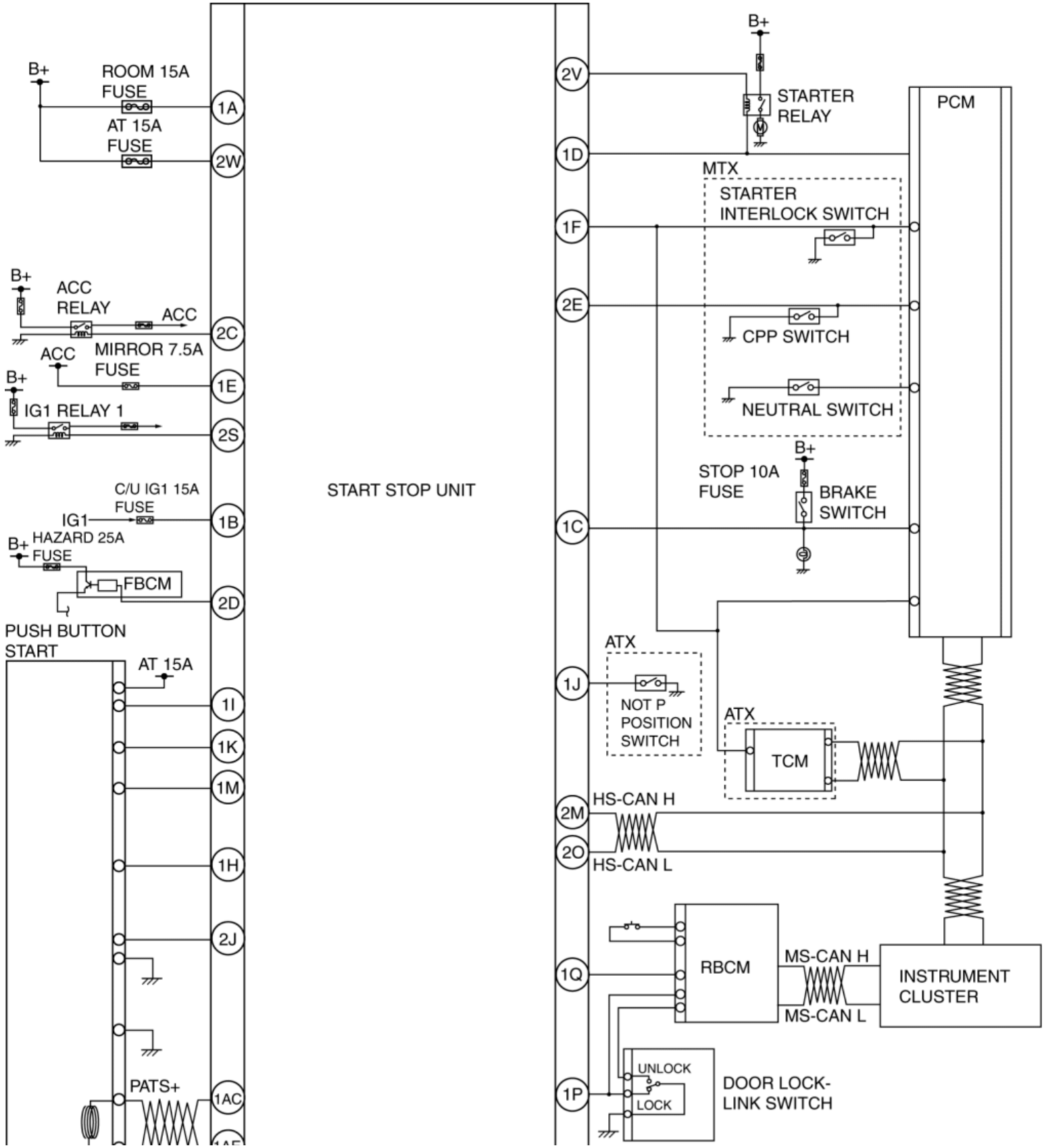

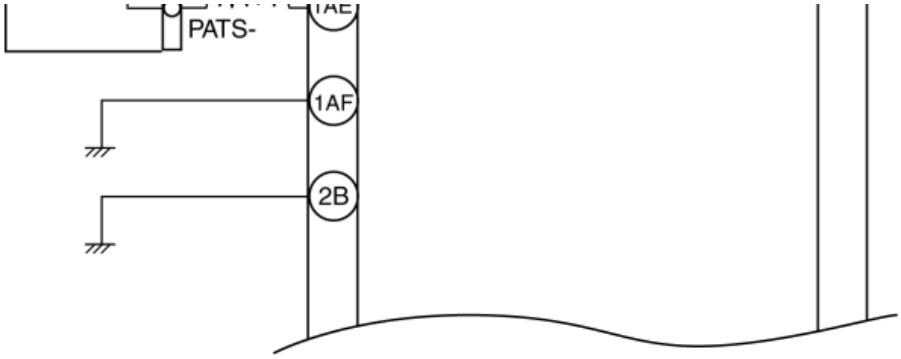
PATS-
1AE
1AF
2B

ON-BOARD DIAGNOSTIC WIRING DIAGRAM [START STOP UNIT]

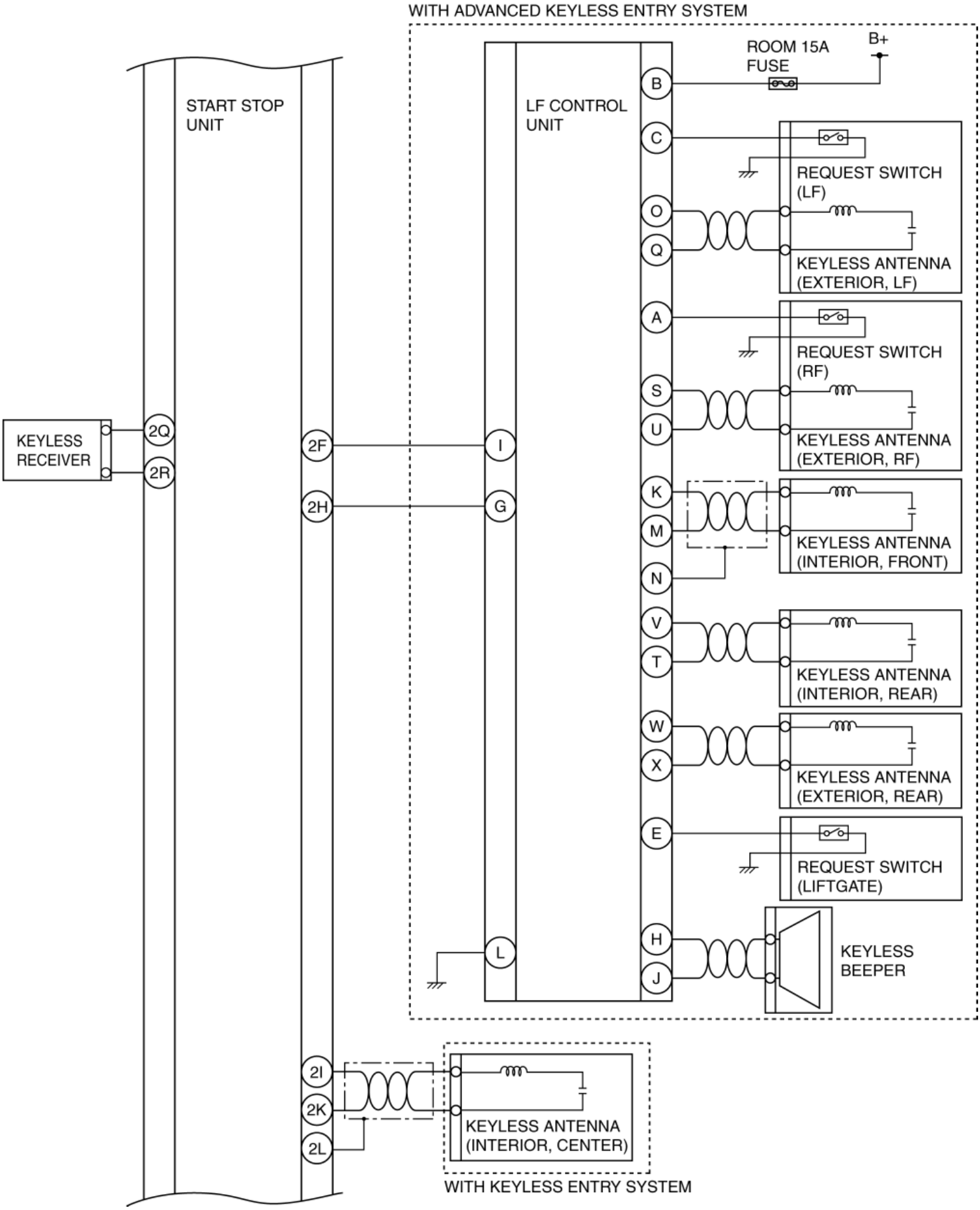

ON-BOARD DIAGNOSTIC WIRING DIAGRAM [START STOP UNIT]

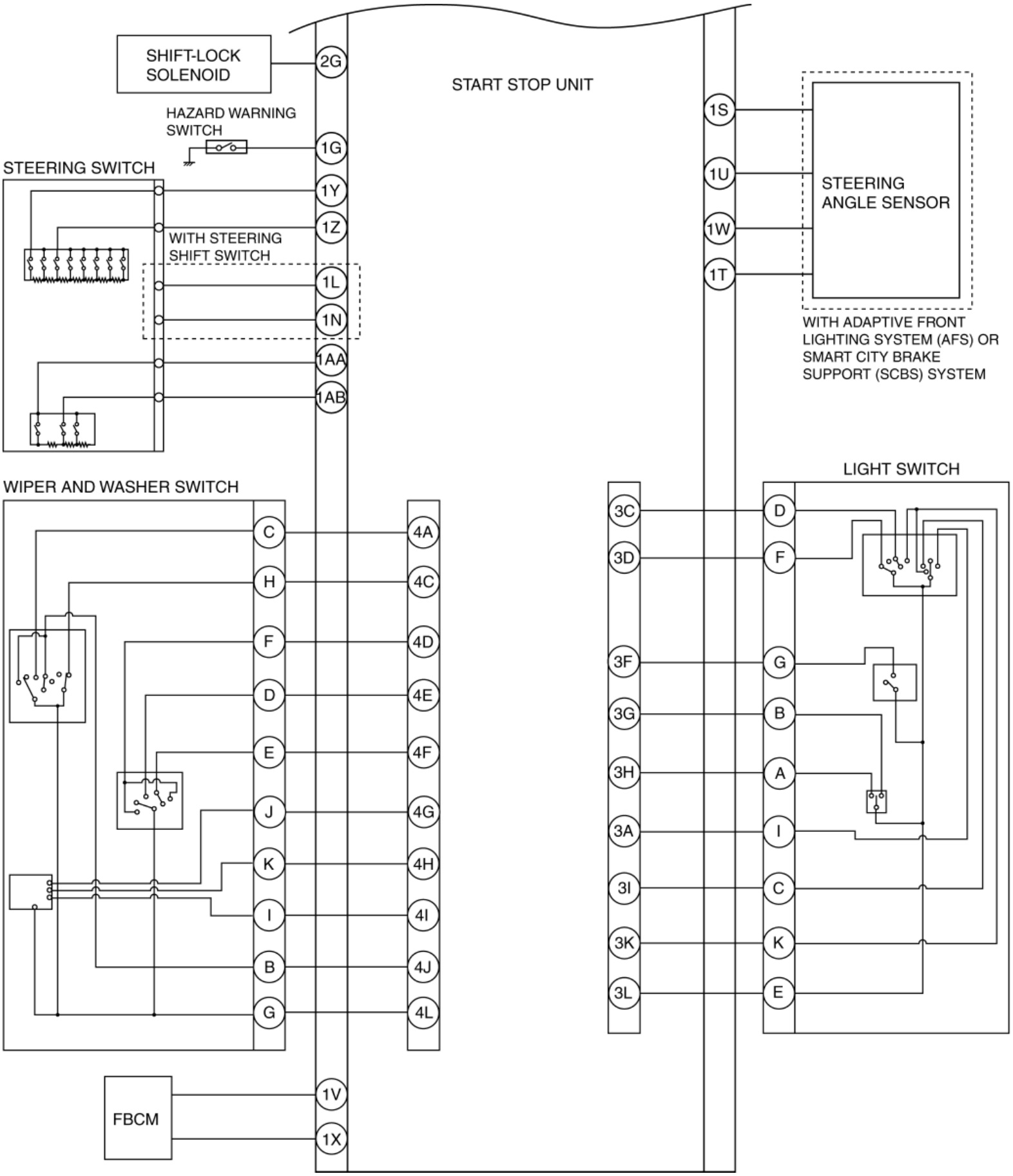

ON-BOARD DIAGNOSTIC WIRING DIAGRAM [START STOP UNIT]

2014 - Mazda3 - Body and Accessories

FOREWORD [START STOP UNIT]

- If there is any vehicle malfunction complaint lodged by a customer, perform malfunction diagnosis according to the troubleshooting procedure.

Troubleshooting Procedure

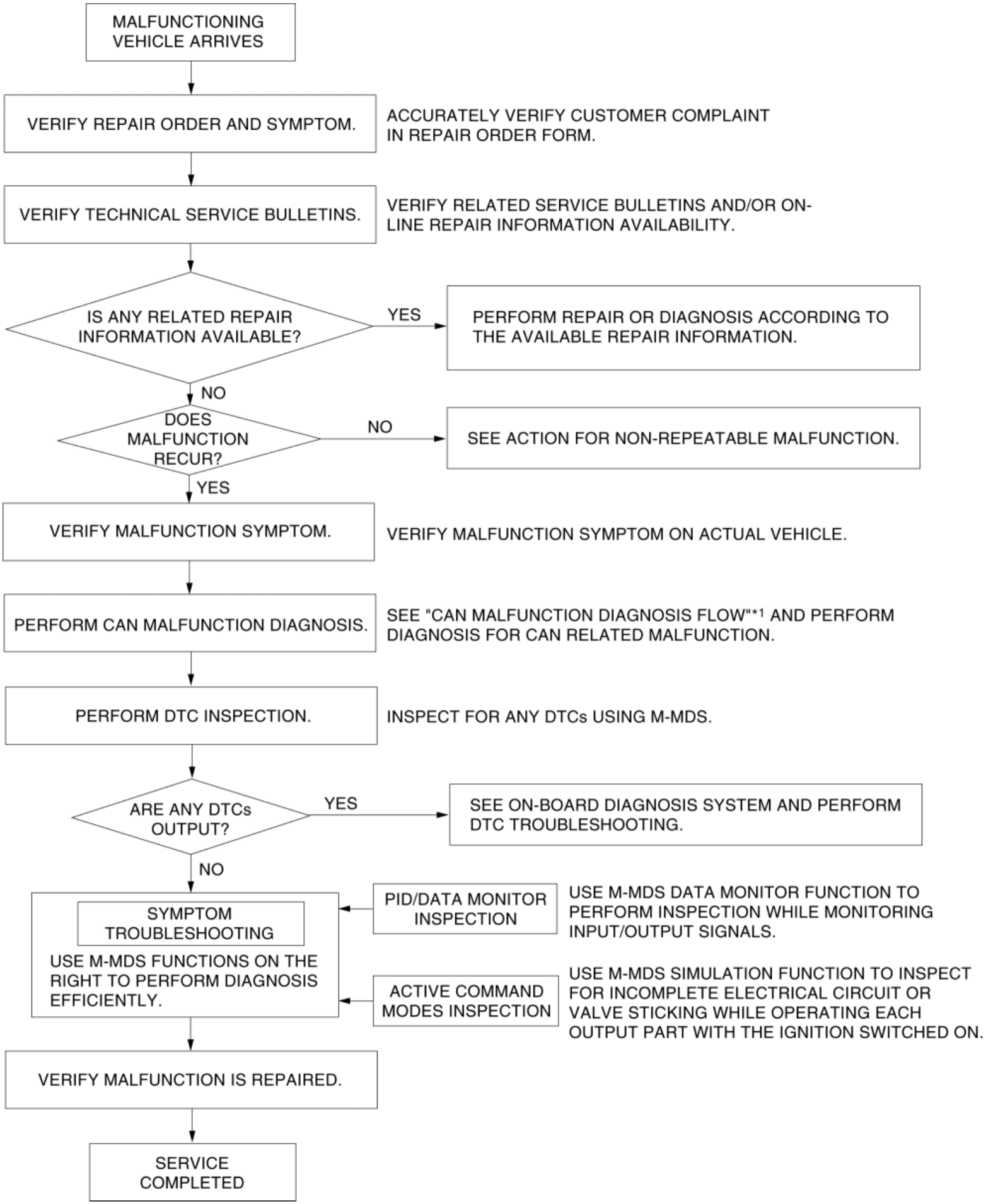
MALFUNCTIONING VEHICLE ARRIVES
VERIFY REPAIR ORDER AND SYMPTOM.
ACCURATELY VERIFY CUSTOMER COMPLAINT IN REPAIR ORDER FORM.
VERIFY TECHNICAL SERVICE BULLETINS.
VERIFY RELATED SERVICE BULLETINS AND/OR ON-LINE REPAIR INFORMATION AVAILABILITY.
IS ANY RELATED REPAIR INFORMATION AVAILABLE?
YES
PERFORM REPAIR OR DIAGNOSIS ACCORDING TO THE AVAILABLE REPAIR INFORMATION.
NO
DOES MALFUNCTION RECUR?
NO
SEE ACTION FOR NON-REPEATABLE MALFUNCTION.
YES
VERIFY MALFUNCTION SYMPTOM.
VERIFY MALFUNCTION SYMPTOM ON ACTUAL VEHICLE.
PERFORM CAN MALFUNCTION DIAGNOSIS.
SEE "CAN MALFUNCTION DIAGNOSIS FLOW"*1 AND PERFORM DIAGNOSIS FOR CAN RELATED MALFUNCTION.
PERFORM DTC INSPECTION.
INSPECT FOR ANY DTCs USING M-MDS.
ARE ANY DTCs OUTPUT?
YES
SEE ON-BOARD DIAGNOSIS SYSTEM AND PERFORM DTC TROUBLESHOOTING.
NO
SYMPTOM TROUBLESHOOTING
USE M-MDS FUNCTIONS ON THE RIGHT TO PERFORM DIAGNOSIS EFFICIENTLY.
PID/DATA MONITOR INSPECTION
USE M-MDS DATA MONITOR FUNCTION TO PERFORM INSPECTION WHILE MONITORING INPUT/OUTPUT SIGNALS.
ACTIVE COMMAND MODES INSPECTION
USE M-MDS SIMULATION FUNCTION TO INSPECT FOR INCOMPLETE ELECTRICAL CIRCUIT OR VALVE STICKING WHILE OPERATING EACH OUTPUT PART WITH THE IGNITION SWITCHED ON.
VERIFY MALFUNCTION IS REPAIRED.
SERVICE COMPLETED

*1

(See CONTROLLER AREA NETWORK (CAN) MALFUNCTION DIAGNOSIS FLOW.)

Action for non-repeatable malfunction

- If the malfunction does not recur, verify the malfunction cause by performing the following actions:
  - Based on the repair order form, attempt to drive the vehicle or perform tests to replicate the malfunction, record the data at that time, and detect the malfunction cause.
  - Shake the wiring harness or connector of the electrical component which is suspected to be the cause of the malfunction, and inspect for malfunction or occurrence of any DTCs.

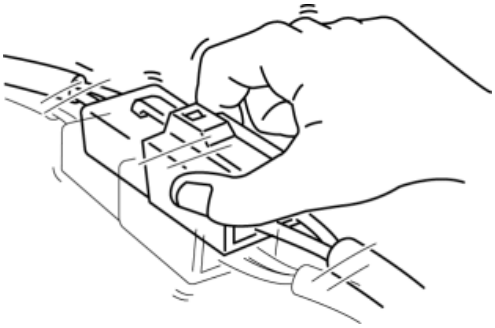

  - Inspect the female terminals on the connector of the electric component which is suspected to be the cause of the malfunction for poor connection.

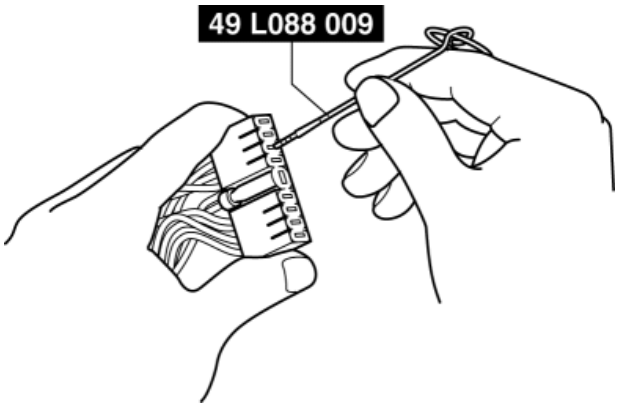

2014 - Mazda3 - Body and Accessories

DTC INSPECTION [START STOP UNIT]

CMDTC Self Test

1. Connect the M-MDS to the DLC-2.
2. After the vehicle is identified, select the following items from the initialization screen of the M-MDS.
   a. Select “Self Test”.
   b. Select “All CMDTCs”.
3. Verify the DTC according to the directions on the screen.
   - If any DTCs are displayed, perform troubleshooting according to the corresponding DTC inspection after recording the snapshot data.
4. After completion of repairs, clear all DTCs stored in the start stop unit. (See **CLEARING DTC [START STOP UNIT]**.)

ODDTC Self Test

1. Connect the M-MDS to the DLC-2.
2. After the vehicle is identified, select the following items from the initialization screen of the M-MDS.
   a. Select “Self Test”.
   b. Select “Modules”.
   c. Select “SSU”.
3. Verify the DTC according to the directions on the screen.
   - If any DTCs are displayed, perform troubleshooting according to the corresponding DTC inspection after recording the snapshot data.
4. After completion of repairs, clear all DTCs stored in the start stop unit. (See **CLEARING DTC [START STOP UNIT]**.)

Snapshot Data

NOTE:

- The start stop unit stores the following two types of snapshot data (vehicle information) when a DTC is detected and displays them in the M-MDS.
  - Vehicle information detected by start stop unit
  - Vehicle information detected by instrument cluster and received by start stop unit via CAN signal
- The data for all DTCs currently detected is stored.

—: Not applicable

Snapshot data item	Unit	Data contents	Data read/use method	Corresponding data monitor items

AAT	°C	°F	Ambient temperature	—	—
APP_STATUS	Accelerator Pedal Off/Under20%/Over20%/FAIL		Accelerator pedal position status	—	—
CFG_STATUS	Config Complete/Not Configured/Config Error		Instrument cluster configuration status	—	—
ECT_STATUS	Under 0 degrees C/0 - Under 80 degrees C/Over 80 degrees C/FAIL		Engine coolant temperature status	—	—
IC_VPWR	V		Instrument cluster power supply voltage	• The start stop unit constantly receives the power supply voltage value of the instrument cluster sent via CAN signal from the instrument cluster. • If a DTC is detected, the start stop unit records the power supply voltage of the instrument cluster when the DTC was detected, and it is displayed in the M-MDS.	VPWR*1
IG-ON_TIMER	hh:mm:ss*2		Elapsed time since ignition was switched ON (engine off or on) **NOTE:** • The instrument cluster records the elapsed time since the ignition was switched ON (engine off or on).	• The start stop unit constantly receives the elapsed time since the ignition was switched ON (engine off or on) sent via CAN signal from the instrument cluster. • If a DTC is detected, the start stop unit records the elapsed time since the ignition was switched ON (engine off or on) when the DTC was detected, and it is displayed in the M-MDS.	—

PWR_MODE_KEY	Key Out/Key Recently Out (Position 0)/Accessory (Position 1)/Post Ignition (Position 2)/Ignition On (Position 2)/Running (Position 2)/Running - Starting	• Key Out: Ignition switched off • Key Recently Out (Position 0): Elapsed time **within 3 s** since ignition was switched off • Accessory (Position 1): Ignition is switched to ACC • Post Ignition (Position 2): Elapsed time **within 3 s** since ignition was switched ON (engine off or on) • Ignition On (Position 2): Ignition switched ON (engine off) • Running (Position 2): Ignition switched ON (engine on) • Running - Starting: Cranking condition	• The start stop unit constantly receives the ignition switch status sent via CAN signal from the instrument cluster. • If a DTC is detected, the start stop unit records the ignition switch status when the DTC was detected, and it is displayed in the M-MDS.	—
			• The start stop unit constantly receives the engine speed	

RPM_STATUS	Engine Stop/Under1500rpm/Over1500rpm/FAIL		Engine speed status	sent via CAN signal from the instrument cluster. • If a DTC is detected, the start stop unit records the engine speed when the DTC was detected, and it is displayed in the M-MDS.	TACHOMTR*1
SHIFT_STATUS	P/N/D/R/FAIL		Selector lever position status	• The start stop unit constantly receives the selector lever position sent via CAN signal from the instrument cluster. • If a DTC is detected, the start stop unit records the selector lever position when the DTC was detected, and it is displayed in the M-MDS.	—
TOTAL_DIST	km	Miles	Accumulated total traveled distance from completion of vehicle until start stop unit detects DTC (Odometer value in instrument cluster)	The total traveled distance from which the start stop unit detects DTCs to the present can be calculated by performing the following procedure. • Verify the odometer value in the instrument cluster. • Verify the snapshot data item TOTAL_DIST. • Subtract 2 from 1.	—
TOTAL_TIME	*2		Accumulated total elapsed time since vehicle completion until start stop unit detects a DTC **NOTE:** • When the ROOM fuse is	The elapsed time from which the start stop unit detects DTCs to the present can be calculated by performing the following procedure. • Verify the instrument cluster PID	*1

	hh:mm:ss	removed, and the ignition is switched off, the time is not included in the elapsed time.	item TOTAL_TIME. • Verify the snapshot data item TOTAL_TIME. • Subtract 2 from 1.	TOTAL_TIME
TRNS_NUM_L	Initial/No.1/No.2/No.3/No.4/No.5/No.6	Registration number of the remote transmitter	If the start stop unit detects DTC B13D3:16 (Low remote transmitter battery voltage), inspect the remote transmitter in which the malfunction is occurring using the following procedure to display the registration number of the remote transmitter that was operated. • Verify the registration number of the remote transmitter in the snapshot data. • Display the start stop unit PID item RF_TRNS_NUM and inspect the battery voltage of the remote transmitter having the same registration number as the recorded remote transmitter registration number.	—
VPWR	V	Start stop unit power supply voltage	—	VPWR_B2
VPWR_B1	V	Start stop unit power supply voltage (ROOM fuse)	—	VPWR_B1
VSPD_STATUS	Stop/0-10km/h/Over10km/h/FAIL	Vehicle speed status	• The start stop unit constantly receives the vehicle speed sent via CAN signal from the instrument cluster. • If a DTC is	SPEEDOMTR*1

			detected, the start stop unit records the vehicle speed when the DTC was detected, and it is displayed in the M-MDS.	

*1

Instrument cluster PID (See PID/DATA MONITOR TABLE [INSTRUMENT CLUSTER].)

*2

The seconds may be indicated after the decimal point.

2014 - Mazda3 - Body and Accessories

CLEARING DTC [START STOP UNIT]

CMDTC Memory Clearing Procedure

1. Connect the M-MDS to the DLC-2.
2. After the vehicle is identified, select the following items from the initialization screen of the M-MDS.
    a. Select “Self Test”.
    b. Select “All CMDTCs”.
3. Verify the DTC according to the directions on the screen.
4. Press the clear button on the DTC screen to clear the DTC.
5. Switch the ignition off.
6. Switch the ignition ON (engine off or on) and wait for **5 s or more**.
7. Perform DTC inspection. (See **DTC INSPECTION [START STOP UNIT]**.)
8. Verify that no DTCs are displayed.

ODDTC Memory Clearing Procedure

1. Connect the M-MDS to the DLC-2.
2. After the vehicle is identified, select the following items from the initialization screen of the M-MDS.
    a. Select “Self Test”.
    b. Select “Modules”.
    c. Select “SSU”.
3. Verify the DTC according to the directions on the screen.
4. Press the clear button on the DTC screen to clear the DTC.
5. Switch the ignition off.
6. Switch the ignition ON (engine off or on) and wait for **5 s or more**.
7. Perform DTC inspection. (See **DTC INSPECTION [START STOP UNIT]**.)
8. Verify that no DTCs are displayed.

CLEARING DTC [START STOP UNIT]

2014 - Mazda3 - Body and Accessories

DTC TABLE [START STOP UNIT]

×: Applicable—: Not applicable

DTC No.	KEY warning light (red)	Push button start indicator light (amber)	Description	Fail-safe function	Drive cycle	Self test type*1	Memory function	Page
B108B:23	—	Flash	Push button start switch 1 circuit malfunction	×	—	C	×	(See **DTC B108B:23 [START STOP UNIT]**.)
B108B:24	—	Flash	Push button start switch 1 circuit malfunction	—	—	C	×	(See **DTC B108B:24 [START STOP UNIT]**.)
B108C:23	—	Flash	Push button start switch 2 circuit malfunction	×	—	C	×	(See **DTC B108C:23 [START STOP UNIT]**.)
B108C:24	—	Flash	Push button start switch 2 circuit malfunction	—	—	C	×	(See **DTC B108C:24 [START STOP UNIT]**.)
B10AC:13*2	—	—	Cruise control switch circuit malfunction	—	—	C	×	(See **DTC B10AC:13 [START STOP UNIT]**.)
B10AC:23*2	—	—	Cruise control switch circuit malfunction	—	—	C	×	(See **DTC B10AC:23 [START STOP UNIT]**.)
B10C6:1F*3	On	—	Keyless antenna (exterior, rear) circuit malfunction	×	—	C, D	×	(See **DTC B10C6:1F [ADVANCED KEYLESS ENTRY SYSTEM]**.)

B10C7:1F*3	On	—	Keyless antenna (interior, rear) circuit malfunction	×	—	C, D	×	(See **DTC B10C7:1F [ADVANCED KEYLESS ENTRY SYSTEM]**.)
B10C9:1F	On	—	Keyless antenna (interior, center) circuit malfunction (With keyless entry system)	—	—	C, D	×	(See **DTC B10C9:1F [START STOP UNIT]**.)
	On	—	Keyless antenna (interior, front) circuit malfunction (With advanced keyless entry system)	×	—	C, D	×	(See **DTC B10C9:1F [ADVANCED KEYLESS ENTRY SYSTEM]**.)
B10D1:23*3	On	—	Request switch (LF) circuit malfunction	—	—	C	×	(See **DTC B10D1:23 [ADVANCED KEYLESS ENTRY SYSTEM]**.)
B10D3:23*3	On	—	Request switch (RF) circuit malfunction	—	—	C	×	(See **DTC B10D3:23 [ADVANCED KEYLESS ENTRY SYSTEM]**.)
B10D9:87	—	Flash	Coil antenna (built into push button start) error	—	—	C	—	(See **SECURITY INDICATOR LIGHT: 11, DTC: B10D9:87/P1260:00 [IMMOBILIZER SYSTEM]**.)
B10DA:51	—	—	Communication error with PCM (data received failure)	—	—	C	—	(See **SECURITY INDICATOR LIGHT: 22, DTC: B10DA:51/P1260:00 [IMMOBILIZER SYSTEM]**.)
B10DA:62	—	—	Communication error with PCM (code mis-matched)	—	—	C	—	(See **SECURITY INDICATOR LIGHT: 23, DTC: B10DA:62/P1260:00 [IMMOBILIZER SYSTEM]**.)
B10E7:11	—	Flash	IG1 relay circuit malfunction	—	—	C	×	(See **DTC B10E7:11 [START STOP UNIT]**.)
B10E7:12	—	Flash	IG1 relay circuit	—	—	C	×	(See **DTC B10E7:12 [START STOP UNIT]**.)

			malfunction					
B10E7:16	—	Flash	IG1 relay circuit malfunction	—	—	C	×	(See **DTC B10E7:16 [START STOP UNIT]**.)
B10E7:17	—	Flash	IG1 relay circuit malfunction	—	—	C	×	(See **DTC B10E7:17 [START STOP UNIT]**.)
B112A:11	—	Flash	IG2 relay circuit malfunction	—	—	C	×	(See **DTC B112A:11 [START STOP UNIT]**.)
B112A:12	—	Flash	IG2 relay circuit malfunction	—	—	C	×	(See **DTC B112A:12 [START STOP UNIT]**.)
B11C4:23*3	On	—	Request switch (liftgate) circuit malfunction	—	—	C	×	(See **DTC B11C4:23 [ADVANCED KEYLESS ENTRY SYSTEM]**.)
B11FD:1F*3	On	—	Keyless antenna (exterior, LF) circuit malfunction	×	—	C, D	×	(See **DTC B11FD:1F [ADVANCED KEYLESS ENTRY SYSTEM]**.)
B1210:1F*3	On	—	Keyless antenna (exterior, RF) circuit malfunction	×	—	C, D	×	(See **DTC B1210:1F [ADVANCED KEYLESS ENTRY SYSTEM]**.)
B124C:56	—	—	Turn switch circuit malfunction	—	—	C	×	(See **DTC B124C:56 [START STOP UNIT]**.)
B13C3:04*3	On	—	LF control unit internal malfunction	×	—	C	×	(See **DTC B13C3:04 [ADVANCED KEYLESS ENTRY SYSTEM]**.)
B13C3:09*3	On	—	LF control unit malfunction	×	—	C	×	(See **DTC B13C3:09 [ADVANCED KEYLESS ENTRY SYSTEM]**.)
B13C3:16*3	On	—	LF control unit power supply voltage low input	×	—	C	×	(See **DTC B13C3:16 [ADVANCED KEYLESS ENTRY SYSTEM]**.)
			Communication					

B13C3:29*3	On	—	error between start stop unit and LF control unit	×	—	C	×	(See **DTC B13C3:29 [ADVANCED KEYLESS ENTRY SYSTEM]**.)
B13D3:05	—	—	Remote transmitter program error	—	—	C	—	(See **SECURITY INDICATOR LIGHT: 13, DTC: B13D3:05/P1260:00 [IMMOBILIZER SYSTEM]**.)
B13D3:16	—	—	Low remote transmitter battery voltage	—	—	C	×	(See **DTC B13D3:16 [START STOP UNIT]**.)
B13D3:4A	On	—	Remote transmitter assembly malfunction	—	—	C	×	(See **DTC B13D3:4A [START STOP UNIT]**.)
B13D3:51	—	Flash	Unregistered remote transmitter is detected	—	—	C	—	(See **SECURITY INDICATOR LIGHT: 15, DTC: B13D3:51/P1260:00 [IMMOBILIZER SYSTEM]**.)
B13D3:94	—	—	Communication error with remote transmitter	—	—	C	—	(See **SECURITY INDICATOR LIGHT: 13, DTC: B13D3:94/P1260:00 [IMMOBILIZER SYSTEM]**.)
B13D3:97	—	—	Remote transmitter registration work not completed	—	—	C	×	(See **DTC B13D3:97 [START STOP UNIT]**.)
B13D4:00	On	—	Insufficient remote transmitter programming number	—	—	C	—	(See **SECURITY INDICATOR LIGHT: 21, DTC: B13D4:00/P1260:00 [IMMOBILIZER SYSTEM]**.)
B1C53:13	—	—	Windshield wiper switch circuit malfunction	—	—	C	×	(See **DTC B1C53:13 [START STOP UNIT]**.)
C0040:23*5	—	Flash	Brake switch (No.1 signal) circuit malfunction	×	—	C	×	(See **DTC C0040:23 [START STOP UNIT]**.)
C0040:24*5	—	Flash	Brake switch (No.1 signal)	×	—	C	×	(See **DTC C0040:24 [START STOP UNIT]**.)

			circuit malfunction					
C0051:2F*4	—	—	Steering angle sensor signal error	—	—	C	×	(See **DTC C0051:2F [START STOP UNIT]**.)
C0051:95*4	—	—	Steering angle sensor assembly malfunction	—	—	C	×	(See **DTC C0051:95 [START STOP UNIT]**.)
C0052:14*4	—	—	Steering angle sensor A signal circuit malfunction	—	—	C	×	(See **DTC C0052:14 [START STOP UNIT]**.)
C0052:2F*4	—	—	Steering angle sensor A signal malfunction	—	—	C	×	(See **DTC C0052:2F [START STOP UNIT]**.)
C0053:14*4	—	—	Steering angle sensor B signal circuit malfunction	—	—	C	×	(See **DTC C0053:14 [START STOP UNIT]**.)
C0053:2F*4	—	—	Steering angle sensor B signal malfunction	—	—	C	×	(See **DTC C0053:2F [START STOP UNIT]**.)
C2003:13	—	—	Open circuit in steering switch	—	—	C	×	(See **DTC C2003:13 [START STOP UNIT]**.)
P0615:11	—	Flash	Starter relay circuit malfunction	—	—	C	×	(See **DTC P0615:11 [START STOP UNIT]**.)
P0615:12	—	Flash	Starter relay circuit malfunction	×	—	C	×	(See **DTC P0615:12 [START STOP UNIT]**.)
P0615:13	—	Flash	Starter relay circuit malfunction	—	—	C	×	(See **DTC P0615:13 [START STOP UNIT]**.)
P0615:16	—	Flash	Starter relay circuit malfunction	—	—	C	×	(See **DTC P0615:16 [START STOP UNIT]**.)
			Circuit malfunction on					

P0616:23	—	—	downstream side of starter relay	—	—	C	×	(See **DTC P0616:23 [START STOP UNIT]**.)
P0616:24	—	—	Circuit malfunction on downstream side of starter relay	—	—	C	×	(See **DTC P0616:24 [START STOP UNIT]**.)
P0616:29	—	—	Downstream side of starter relay signal malfunction	—	—	C	×	(See **DTC P0616:29 [START STOP UNIT]**.)
P081C:23 *5	—	Flash	NOT P position switch circuit malfunction	×	—	C	×	(See **DTC P081C:23 [START STOP UNIT]**.)
P081C:24 *5	—	Flash	NOT P position switch circuit malfunction	×	—	C	×	(See **DTC P081C:24 [START STOP UNIT]**.)
P081D:29 *6	—	Flash	Neutral switch error signal received	×	—	C	×	(See **DTC P081D:29 [START STOP UNIT]**.)
P081D:2F *6	—	Flash	Neutral switch signal mismatch	×	—	C	×	(See **DTC P081D:2F [START STOP UNIT]**.)
P0830:23 *6	—	Flash	CPP switch circuit malfunction	×	—	C	×	(See **DTC P0830:23 [START STOP UNIT]**.)
P0850:23 *5	—	Flash	Transaxle range sensor circuit malfunction	×	—	C	×	(See **DTC P0850:23 [START STOP UNIT]**.)
P0850:24 *5	—	Flash	Transaxle range sensor circuit malfunction	×	—	C	×	(See **DTC P0850:24 [START STOP UNIT]**.)
P0930:71 *5	—	—	Shift-lock solenoid circuit malfunction	×	—	C	×	(See **DTC P0930:71 [START STOP UNIT]**.)
P1708:24 *6	—	Flash	Starter interlock switch circuit	×	—	C	×	(See **DTC P1708:24 [START STOP UNIT]**.)

			malfunction					
P1708:29*6	—	Flash	Starter interlock switch circuit or CPP switch circuit malfunction	×	—	C	×	(See **DTC P1708:29 [START STOP UNIT]**.)
P1794:16	—	Flash	Start stop unit power supply voltage (terminal 2W) low input	—	—	C	×	(See **DTC P1794:16 [START STOP UNIT]**.)
U0001:88	On	Flash	Module communication error (HS-CAN)	×	—	C	×	(See **DTC U0001:88/U0100:00/U0101:00/U0121:00/U0121:87/U0131:00/U0140:00/U0146:00/U0151:00/U0155:00 [START STOP UNIT]**.)
U0028:87	On	—	Communication error with rear body control module (RBCM)	—	—	C	×	(See **DTC U0028:87 [START STOP UNIT]**.)
U0100:00	On	Flash	Communication error with PCM	×	—	C	×	(See **DTC U0001:88/U0100:00/U0101:00/U0121:00/U0121:87/U0131:00/U0140:00/U0146:00/U0151:00/U0155:00 [START STOP UNIT]**.)
U0100:87	—	—	Communication error with PCM (no response or data mis-match)	—	—	C	—	(See **SECURITY INDICATOR LIGHT: 16, DTC: U0100:87/P1260:00 [IMMOBILIZER SYSTEM]**.)
U0101:00*5	—	Flash	Communication error with TCM	×	—	C	×	
U0121:00	On	Flash	Communication error with DSC HU/CM	×	—	C	×	
U0121:87	On	Flash	Communication error with DSC HU/CM	×	—	C	×	
U0131:00	—	—	Communication error with EPS control module	×	—	C	×	
			Communication					(See **DTC**

U0140:00	—	—	error with front body control module (FBCM)	×	—	C	×	U0001:88/U0100:00/U0101:00/U0121:00/U0121:87/U0131:00/U0140:00/U0146:00/U0151:00/U0155:00 [START STOP UNIT].)
U0146:00	On	Flash	Communication error with instrument cluster	×	—	C	×	
U0151:00	On	Flash	Communication error with SAS control module	×	—	C	×	
U0155:00	On	Flash	Communication error with instrument cluster	×	—	C	×	
U0447:86	On	Flash	Error signal received from instrument cluster	×	—	C	×	(See DTC U0447:86 [START STOP UNIT].)
U201F:11	On	—	Keyless receiver circuit malfunction	—	—	C	×	(See DTC U201F:11 [START STOP UNIT].)
U201F:12	On	—	Keyless receiver circuit malfunction	—	—	C	×	(See DTC U201F:12 [START STOP UNIT].)
U2100:00	On	—	Start stop unit configuration not completed	×	—	C	×	(See DTC U2100:00 [START STOP UNIT].)
U2300:00	—	—	Configuration data not received from instrument cluster	×	—	C	×	(See DTC U2300:00 [START STOP UNIT].)
U3000:01 *4	—	—	Start stop unit internal malfunction	—	—	C	×	(See DTC U3000:01 [START STOP UNIT].)
U3000:49	On	Flash	Start stop unit internal malfunction	×	—	C	×	(See DTC U3000:49 [START STOP UNIT].)
	On	Flash	Start stop unit malfunction	—	—	C	×	(See DTC U3000:96 [START STOP UNIT].)

U3000:96	On	Flash	Start stop unit malfunction	—	—	C	×	(See **SECURITY INDICATOR LIGHT: 09, DTC: U3000:96/P1260:00 [IMMOBILIZER SYSTEM]**.)
U3003:16	On	—	Start stop unit power supply voltage (terminal 1A) low input	×	—	C	×	(See **DTC U3003:16 [START STOP UNIT]**.)
U3004:11	—	Flash	ACC relay circuit malfunction	—	—	C	×	(See **DTC U3004:11 [START STOP UNIT]**.)
U3004:12	—	Flash	ACC relay circuit malfunction	—	—	C	×	(See **DTC U3004:12 [START STOP UNIT]**.)
U3004:16	—	—	ACC relay circuit malfunction	—	—	C	×	(See **DTC U3004:16 [START STOP UNIT]**.)
U3004:17	—	—	ACC relay circuit malfunction	—	—	C	×	(See **DTC U3004:17 [START STOP UNIT]**.)

*1 **C: CMDTC self test, D: ODDTC self test**

*2 **With cruise control system**

*3 **With advanced keyless entry system**

*4 **With AFS, smart city brake support (SCBS), or blind spot monitoring (BSM) system**

*5 **ATX**

*6 **MTX**

2014 - Mazda3 - Body and Accessories

DTC B108B:23 [START STOP UNIT]

Description	Push button start switch 1 circuit malfunction
Detection condition	• Start stop unit detects that the push button start switch 1 is stuck on for **120 s or more**.
Fail-safe function	• Perform the control with the push button start switch 1 turned off.
Possible cause	• Push button start connector or terminal malfunction • Start stop unit connector or terminal malfunction • Short to ground in wiring harness between start stop unit terminal 1H and push button start terminal C • Push button start switch 1 malfunction • Start stop unit malfunction

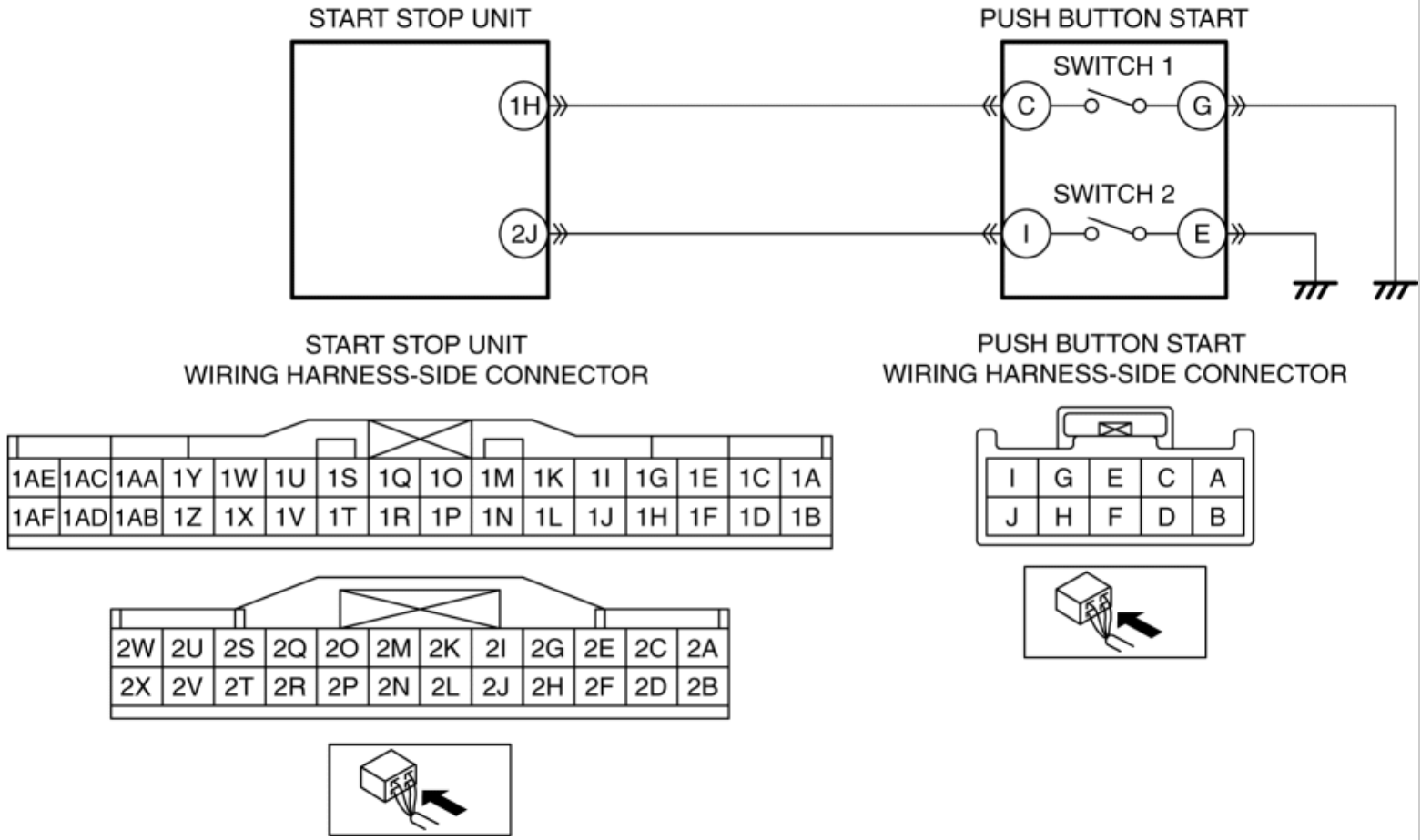

Diagnostic Procedure

Step	Inspection		Action
1	**INSPECT PUSH BUTTON START CONNECTOR CONDITION** • Switch the ignition off. • Disconnect the negative battery cable. (See **NEGATIVE BATTERY CABLE DISCONNECTION/CONNECTION [SKYACTIV-G 2.0, SKYACTIV-G 2.5]**.) • Disconnect the push button start connector. • Inspect the connector engagement and connection condition and inspect the terminals for damage, deformation, corrosion, or disconnection. • Is the connector normal?	Yes	Go to the next step.
		No	Repair or replace the connector, then go to Step 5.
2	**INSPECT START STOP UNIT CONNECTOR CONDITION** • Disconnect the start stop unit connector. • Inspect the connector engagement and connection condition and inspect the terminals for damage, deformation, corrosion, or disconnection. • Is the connector normal?	Yes	Go to the next step.
		No	Repair or replace the connector, then go to Step 5.
3	**INSPECT FOR SHORT TO GROUND IN PUSH BUTTON START SWITCH 1 CIRCUIT** • Verify that the push button start and start stop unit connectors are disconnected. • Inspect for continuity between push button start terminal C (wiring harness-side) and body ground. • Is there continuity?	Yes	Refer to the wiring diagram and verify whether or not there is a common connector between start stop unit terminal 1H and push button start terminal C. **If there is a common connector:** • Determine the malfunctioning part by inspecting the common connector and the terminal for corrosion, damage, or pin disconnection, and the common wiring harness for a short to ground. • Repair or replace the malfunctioning part. **If there is no common connector:** • Repair or replace the wiring harness which has a short to ground. Go to Step 5.
		No	Go to the next step.
4	**INSPECT PUSH BUTTON START SWITCH 1** • Inspect the push button start switch 1. (See **PUSH BUTTON START INSPECTION**.) • Is the push button start switch 1	Yes	Go to the next step.
		No	Replace the push button start, then go to the next step. (See **PUSH BUTTON START REMOVAL/INSTALLATION**.)

	normal?		
5	**VERIFY THAT REPAIRS HAVE BEEN COMPLETED** • Always reconnect all disconnected connectors. • Reconnect the negative battery cable. (See **NEGATIVE BATTERY CABLE DISCONNECTION/CONNECTION [SKYACTIV-G 2.0, SKYACTIV-G 2.5]**.) • Clear the DTC for the start stop unit using the M-MDS. (See **CLEARING DTC [START STOP UNIT]**.) • Switch the ignition ON (engine off or on) and wait for **120 s or more**. • Retrieve the start stop unit DTCs using the M-MDS. (See **DTC INSPECTION [START STOP UNIT]**.) • Is the same DTC displayed?	Yes	Repeat the inspection from Step 1. • If the malfunction recurs, replace the start stop unit. (See **START STOP UNIT REMOVAL/INSTALLATION**.) Go to the next step.
		No	Go to the next step.
6	**VERIFY IF OTHER DTCs DISPLAYED** • Are any other DTCs displayed?	Yes	Repair or replace the malfunctioning part according to the applicable DTC troubleshooting. (See **DTC TABLE [START STOP UNIT]**.)
		No	DTC troubleshooting completed.

2014 - Mazda3 - Body and Accessories

DTC B108B:24 [START STOP UNIT]

Description	Push button start switch 1 circuit malfunction
Detection condition	• Start stop unit detects that the push button start switch 1 is kept in an off condition **5 times or more** even though the push button start switch 2 is on.
Fail-safe function	Not applicable
Possible cause	• Push button start connector or terminal malfunction • Open circuit in wiring harness between push button start terminal G and body ground • Start stop unit connector or terminal malfunction • Open circuit in wiring harness between start stop unit terminal 1H and push button start terminal C • Push button start switch 1 malfunction • Start stop unit malfunction

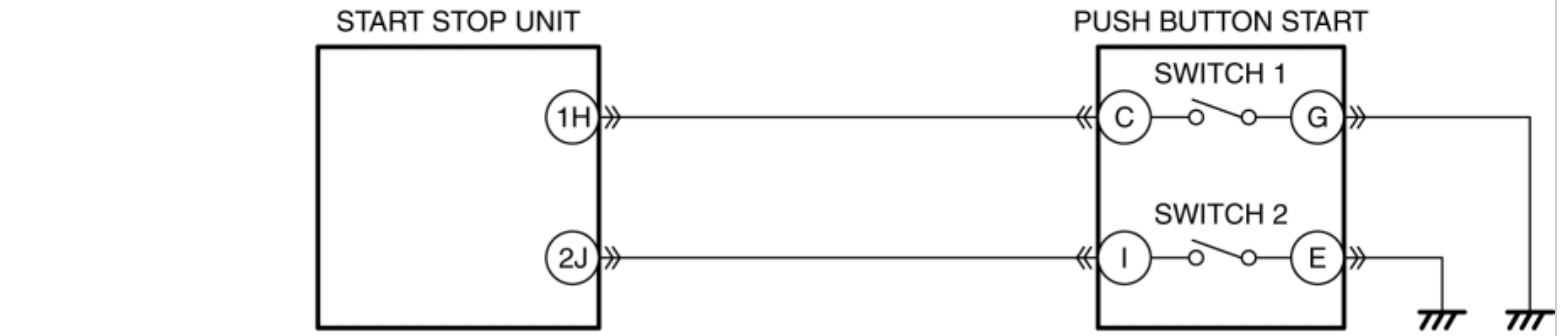

START STOP UNIT
WIRING HARNESS-SIDE CONNECTOR

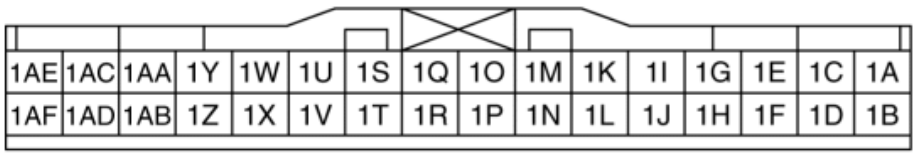

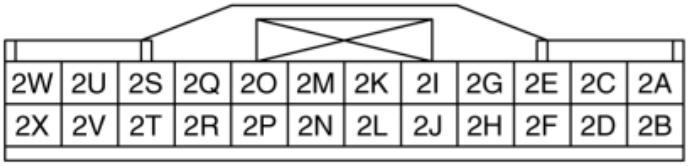

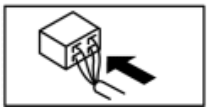

PUSH BUTTON START
WIRING HARNESS-SIDE CONNECTOR

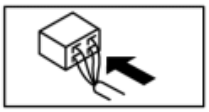

Diagnostic Procedure

Step	Inspection		Action
1	**INSPECT PUSH BUTTON START CONNECTOR CONDITION** • Switch the ignition off. • Disconnect the negative battery cable. (See **NEGATIVE BATTERY CABLE DISCONNECTION/CONNECTION [SKYACTIV-G 2.0, SKYACTIV-G 2.5]**.) • Disconnect the push button start connector. • Inspect the connector engagement and connection condition and inspect the terminals for damage, deformation, corrosion, or disconnection. • Is the connector normal?	Yes	Go to the next step.
		No	Repair or replace the connector, then go to Step 6.
2	**INSPECT FOR OPEN CIRCUIT IN PUSH BUTTON START SWITCH 1 GROUND CIRCUIT** • Verify that the push button start connector is disconnected. • Inspect for continuity between push button start terminal G (wiring harness-side) and body ground. • Is there continuity?	Yes	Go to the next step.
		No	Refer to the wiring diagram and verify whether or not there is a common connector between push button start terminal G and body ground. **If there is a common connector:** • Determine the malfunctioning part by inspecting the common connector and the terminal for corrosion, damage, or pin disconnection, and the common wiring harness for an open circuit. • Repair or replace the malfunctioning part. **If there is no common connector:** • Repair or replace the wiring harness which has an open circuit. Go to Step 6.
3	**INSPECT START STOP UNIT CONNECTOR CONDITION** • Disconnect the start stop unit connector. • Inspect the connector engagement and connection condition and inspect the terminals for damage, deformation, corrosion, or disconnection. • Is the connector normal?	Yes	Go to the next step.
		No	Repair or replace the connector, then go to Step 6.
4	**INSPECT FOR OPEN CIRCUIT IN PUSH BUTTON START SWITCH 1 CIRCUIT** • Verify that the push button start and start stop unit connectors are disconnected.	Yes	Go to the next step.
		No	Refer to the wiring diagram and verify whether or not there is a common connector between start stop unit terminal 1H and push

	• Inspect for continuity between start stop unit terminal 1H (wiring harness-side) and push button start terminal C (wiring harness-side). • Is there continuity?		button start terminal C. **If there is a common connector:** • Determine the malfunctioning part by inspecting the common connector and the terminal for corrosion, damage, or pin disconnection, and the common wiring harness for an open circuit. • Repair or replace the malfunctioning part. **If there is no common connector:** • Repair or replace the wiring harness which has an open circuit. Go to Step 6.
5	**INSPECT PUSH BUTTON START SWITCH 1** • Inspect the push button start switch 1. (See **PUSH BUTTON START INSPECTION**.) • Is the push button start switch 1 normal?	Yes	Go to the next step.
		No	Replace the push button start, then go to the next step. (See **PUSH BUTTON START REMOVAL/INSTALLATION**.)
6	**VERIFY THAT REPAIRS HAVE BEEN COMPLETED** • Always reconnect all disconnected connectors. • Reconnect the negative battery cable. (See **NEGATIVE BATTERY CABLE DISCONNECTION/CONNECTION [SKYACTIV-G 2.0, SKYACTIV-G 2.5]**.) • Clear the DTC for the start stop unit using the M-MDS. (See **CLEARING DTC [START STOP UNIT]**.) • Switch the ignition ON (engine off or on) and press the push button start **5 times or more**. • Retrieve the start stop unit DTCs using the M-MDS. (See **DTC INSPECTION [START STOP UNIT]**.) • Is the same DTC displayed?	Yes	Repeat the inspection from Step 1. • If the malfunction recurs, replace the start stop unit. (See **START STOP UNIT REMOVAL/INSTALLATION**.) Go to the next step.
		No	Go to the next step.
7	**VERIFY IF OTHER DTCs DISPLAYED** • Are any other DTCs displayed?	Yes	Repair or replace the malfunctioning part according to the applicable DTC troubleshooting. (See **DTC TABLE [START STOP UNIT]**.)
		No	DTC troubleshooting completed.

2014 - Mazda3 - Body and Accessories

DTC B108C:23 [START STOP UNIT]

Description	Push button start switch 2 circuit malfunction
Detection condition	• Start stop unit detects the push button start switch 2 is stuck on for **120 s or more**.
Fail-safe function	• Perform the control with the push button start switch 2 turned off.
Possible cause	• Push button start connector or terminal malfunction • Start stop unit connector or terminal malfunction • Short to ground in wiring harness between start stop unit terminal 2J and push button start terminal I • Push button start switch 2 malfunction • Start stop unit malfunction

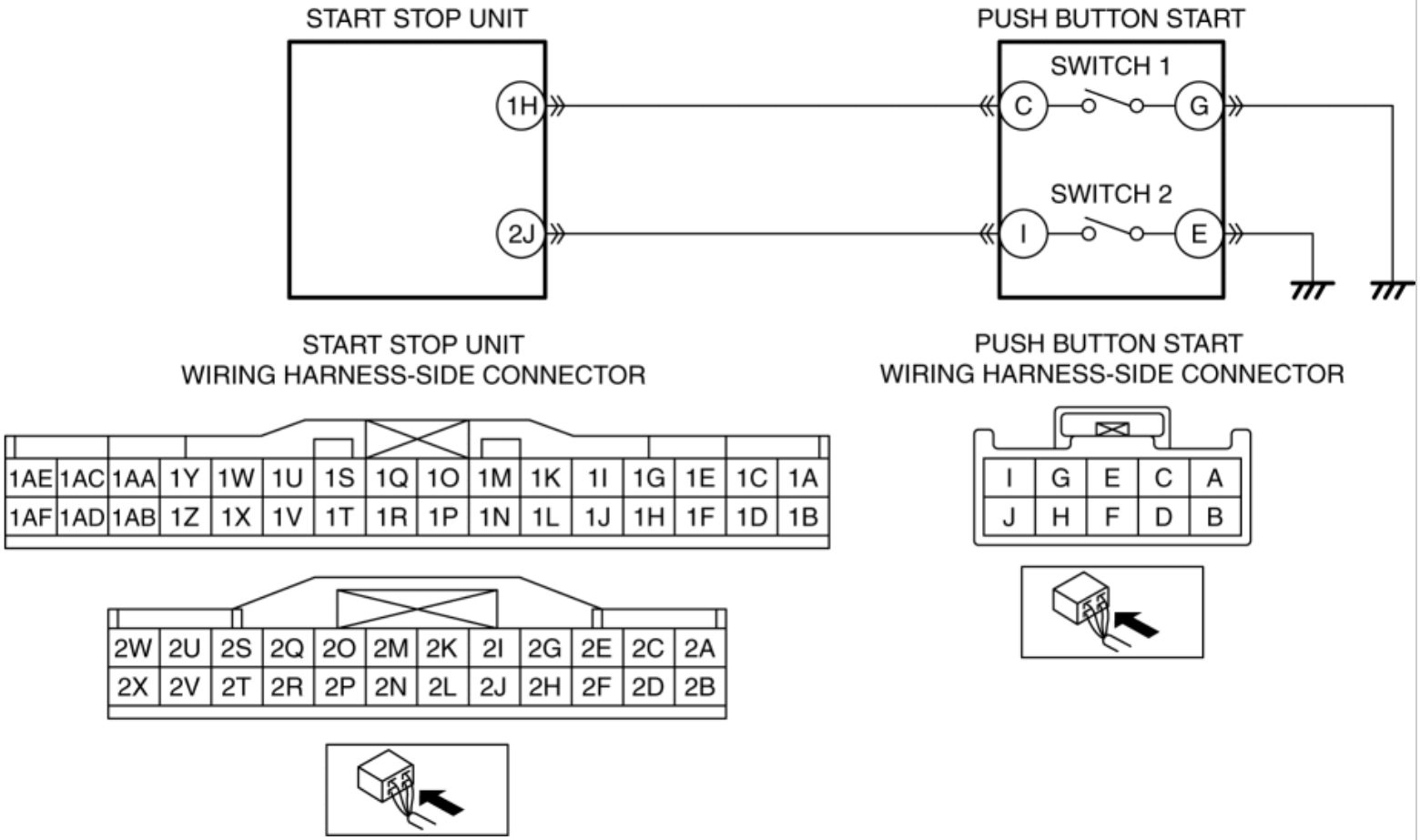

Diagnostic Procedure

Step	Inspection		Action
1	**INSPECT PUSH BUTTON START CONNECTOR CONDITION** • Switch the ignition off. • Disconnect the negative battery cable. (See **NEGATIVE BATTERY CABLE DISCONNECTION/CONNECTION [SKYACTIV-G 2.0, SKYACTIV-G 2.5]**.) • Disconnect the push button start connector. • Inspect the connector engagement and connection condition and inspect the terminals for damage, deformation, corrosion, or disconnection. • Is the connector normal?	Yes	Go to the next step.
		No	Repair or replace the connector, then go to Step 5.
2	**INSPECT START STOP UNIT CONNECTOR CONDITION** • Disconnect the start stop unit connector. • Inspect the connector engagement and connection condition and inspect the terminals for damage, deformation, corrosion, or disconnection. • Is the connector normal?	Yes	Go to the next step.
		No	Repair or replace the connector, then go to Step 5.
3	**INSPECT FOR SHORT TO GROUND IN PUSH BUTTON START SWITCH 2 CIRCUIT** • Verify that the push button start and start stop unit connectors are disconnected. • Inspect for continuity between push button start terminal I (wiring harness-side) and body ground. • Is there continuity?	Yes	Refer to the wiring diagram and verify whether or not there is a common connector between start stop unit terminal 2J and push button start terminal I. **If there is a common connector:** • Determine the malfunctioning part by inspecting the common connector and the terminal for corrosion, damage, or pin disconnection, and the common wiring harness for a short to ground. • Repair or replace the malfunctioning part. **If there is no common connector:** • Repair or replace the wiring harness which has a short to ground. Go to Step 5.
		No	Go to the next step.
4	**INSPECT PUSH BUTTON START SWITCH 2** • Inspect push button start switch 2. (See **PUSH BUTTON START INSPECTION**.) • Is push button start switch 2 normal?	Yes	Go to the next step.
		No	Replace the push button start, then go to the next step. (See **PUSH BUTTON START REMOVAL/INSTALLATION**.)

5	**VERIFY THAT REPAIRS HAVE BEEN COMPLETED** • Always reconnect all disconnected connectors. • Reconnect the negative battery cable. (See **NEGATIVE BATTERY CABLE DISCONNECTION/CONNECTION [SKYACTIV-G 2.0, SKYACTIV-G 2.5]**.) • Clear the DTC for the start stop unit using the M-MDS. (See **CLEARING DTC [START STOP UNIT]**.) • Switch the ignition ON (engine off or on) and wait for **120 s or more**. • Retrieve the start stop unit DTCs using the M-MDS. (See **DTC INSPECTION [START STOP UNIT]**.) • Is the same DTC displayed?	Yes	Repeat the inspection from Step 1. • If the malfunction recurs, replace the start stop unit. (See **START STOP UNIT REMOVAL/INSTALLATION**.) Go to the next step.
		No	Go to the next step.
6	**VERIFY IF OTHER DTCs DISPLAYED** • Are any other DTCs displayed?	Yes	Repair or replace the malfunctioning part according to the applicable DTC troubleshooting. (See **DTC TABLE [START STOP UNIT]**.)
		No	DTC troubleshooting completed.

2014 - Mazda3 - Body and Accessories

DTC B108C:24 [START STOP UNIT]

Description	Push button start switch 2 circuit malfunction
Detection condition	• Start stop unit detects that the push button start switch 2 is kept in an off condition **5 times or more** even though the push button start switch 1 is on.
Fail-safe function	Not applicable
Possible cause	• Push button start connector or terminal malfunction • Open circuit in wiring harness between push button start terminal E and body ground • Start stop unit connector or terminal malfunction • Open circuit in wiring harness between start stop unit terminal 2J and push button start terminal I • Push button start switch 2 malfunction • Start stop unit malfunction

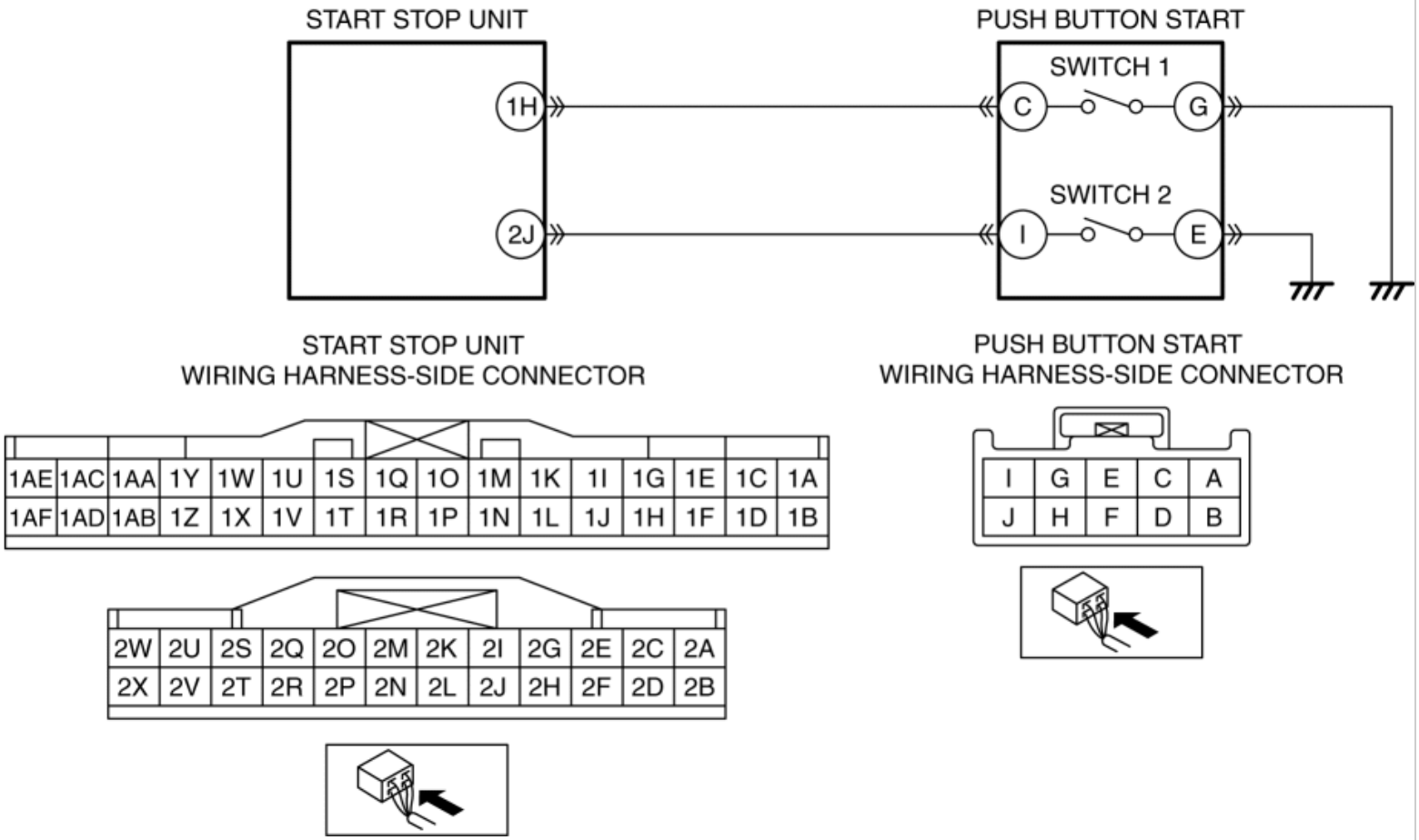

Diagnostic Procedure

Step	Inspection		Action
1	**INSPECT PUSH BUTTON START CONNECTOR CONDITION** • Switch the ignition off. • Disconnect the negative battery cable. (See **NEGATIVE BATTERY CABLE DISCONNECTION/CONNECTION [SKYACTIV-G 2.0, SKYACTIV-G 2.5]**.) • Disconnect the push button start connector. • Inspect the connector engagement and connection condition and inspect the terminals for damage, deformation, corrosion, or disconnection. • Is the connector normal?	Yes	Go to the next step.
		No	Repair or replace the connector, then go to Step 6.
2	**INSPECT FOR OPEN CIRCUIT IN PUSH BUTTON START SWITCH 2 GROUND CIRCUIT** • Verify that the push button start connector is disconnected. • Inspect for continuity between push button start terminal E (wiring harness-side) and body ground. • Is there continuity?	Yes	Go to the next step.
		No	Refer to the wiring diagram and verify whether or not there is a common connector between push button start terminal E and body ground. **If there is a common connector:** • Determine the malfunctioning part by inspecting the common connector and the terminal for corrosion, damage, or pin disconnection, and the common wiring harness for an open circuit. • Repair or replace the malfunctioning part. **If there is no common connector:** • Repair or replace the wiring harness which has an open circuit. Go to Step 6.
3	**INSPECT START STOP UNIT CONNECTOR CONDITION** • Disconnect the start stop unit connector. • Inspect the connector engagement and connection condition and inspect the terminals for damage, deformation, corrosion, or disconnection. • Is the connector normal?	Yes	Go to the next step.
		No	Repair or replace the connector, then go to Step 6.
4	**INSPECT FOR OPEN CIRCUIT IN PUSH BUTTON START SWITCH 2 CIRCUIT** • Verify that the push button start and start stop unit connectors are disconnected.	Yes	Go to the next step.
		No	Refer to the wiring diagram and verify whether or not there is a common connector between start stop unit terminal 2J and push

	• Inspect for continuity between start stop unit terminal 2J (wiring harness-side) and push button start terminal I (wiring harness-side). • Is there continuity?		button start terminal I. **If there is a common connector:** • Determine the malfunctioning part by inspecting the common connector and the terminal for corrosion, damage, or pin disconnection, and the common wiring harness for an open circuit. • Repair or replace the malfunctioning part. **If there is no common connector:** • Repair or replace the wiring harness which has an open circuit. Go to Step 6.
5	**INSPECT PUSH BUTTON START SWITCH 2** • Inspect the push button start switch 2. (See **PUSH BUTTON START INSPECTION**.) • Is the push button start switch 2 normal?	Yes	Go to the next step.
		No	Replace the push button start, then go to the next step. (See **PUSH BUTTON START REMOVAL/INSTALLATION**.)
6	**VERIFY THAT REPAIRS HAVE BEEN COMPLETED** • Always reconnect all disconnected connectors. • Reconnect the negative battery cable. (See **NEGATIVE BATTERY CABLE DISCONNECTION/CONNECTION [SKYACTIV-G 2.0, SKYACTIV-G 2.5]**.) • Clear the DTC for the start stop unit using the M-MDS. (See **CLEARING DTC [START STOP UNIT]**.) • Switch the ignition ON (engine off or on) and press the push button start **5 times or more**. • Retrieve the start stop unit DTCs using the M-MDS. (See **DTC INSPECTION [START STOP UNIT]**.) • Is the same DTC displayed?	Yes	Repeat the inspection from Step 1. • If the malfunction recurs, replace the start stop unit. (See **START STOP UNIT REMOVAL/INSTALLATION**.) Go to the next step.
		No	Go to the next step.
7	**VERIFY IF OTHER DTCs DISPLAYED** • Are any other DTCs displayed?	Yes	Repair or replace the malfunctioning part according to the applicable DTC troubleshooting. (See **DTC TABLE [START STOP UNIT]**.)
		No	DTC troubleshooting completed.

DTC B108C:24 [START STOP UNIT]

2014 - Mazda3 - Body and Accessories

DTC B10AC:13 [START STOP UNIT]

Description	Cruise control switch circuit malfunction
Detection condition	• Start stop unit detected an open circuit in the cruise control switch circuit for **5 s or more** with the ignition switched ON (engine off or on).
Fail-safe function	Not applicable
Possible cause	• Instrument cluster configuration error • Clock spring connector or terminal malfunction • Clock spring malfunction • Start stop unit connector or terminal malfunction • Open circuit in wiring harness between the following terminals: ▪ Start stop unit terminal 1Y—Clock spring (instrument panel harness-side) terminal 1J ▪ Start stop unit terminal 1Z—Clock spring (instrument panel harness-side) terminal 1N • Cruise control switch malfunction • Start stop unit malfunction

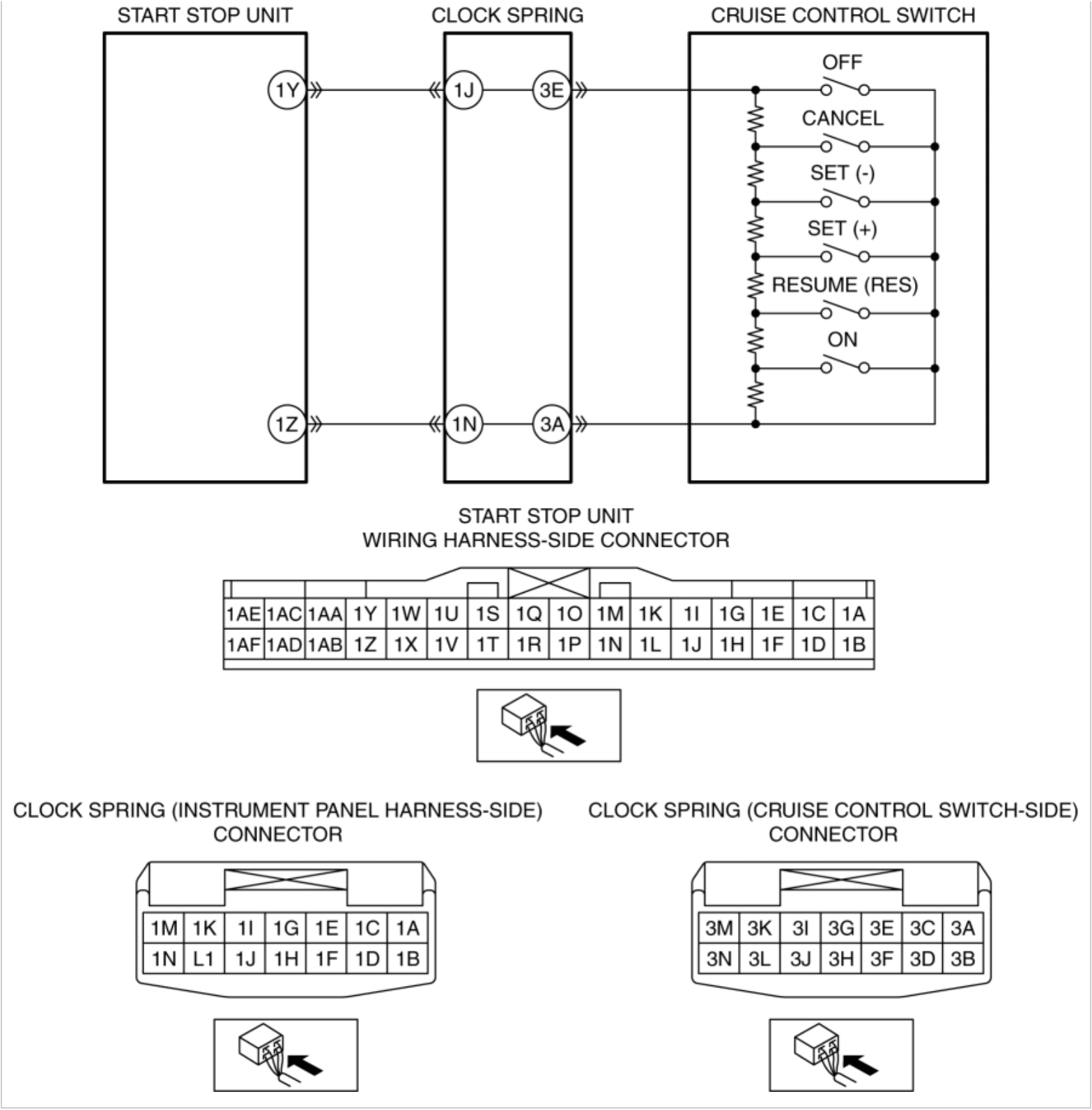

Diagnostic Procedure

Step	Inspection		Action
1	**PERFORM INSTRUMENT CLUSTER CONFIGURATION (USING AS-BUILT DATA)** • Using the M-MDS, perform the instrument cluster configuration (using As-Built data).	Yes	Using the M-MDS, perform the instrument cluster configuration (using As-Built data) again, then go to the next step. (See **INSTRUMENT CLUSTER CONFIGURATION (USING AS-BUILT DATA)**.)

	(See **INSTRUMENT CLUSTER CONFIGURATION (USING AS-BUILT DATA)**.) • Clear the DTC for the start stop unit using the M-MDS. (See **CLEARING DTC [START STOP UNIT]**.) • Switch the ignition ON (engine off or on) and wait for **5 s or more**. • Retrieve the start stop unit DTCs using the M-MDS. (See **DTC INSPECTION [START STOP UNIT]**.) • Is the same DTC displayed?	No	Go to Step 8.
2	**INSPECT CLOCK SPRING CONNECTOR CONDITION** • Switch the ignition off. • Disconnect the negative battery cable. (See **NEGATIVE BATTERY CABLE DISCONNECTION/CONNECTION [SKYACTIV-G 2.0, SKYACTIV-G 2.5]**.) • Disconnect the clock spring connector. • Inspect the connector engagement and connection condition and inspect the terminals for damage, deformation, corrosion, or disconnection. • Is the connector normal?	Yes	Go to the next step.
		No	Repair or replace the connector, then go to Step 7.
3	**INSPECT CLOCK SPRING** • Inspect the clock spring. (See **CLOCK SPRING INSPECTION [STANDARD DEPLOYMENT CONTROL SYSTEM]**.) (See **CLOCK SPRING INSPECTION [TWO-STEP DEPLOYMENT CONTROL SYSTEM]**.) • Is the clock spring normal?	Yes	Go to the next step.
		No	Replace the clock spring, then go to Step 7. (See **CLOCK SPRING REMOVAL/INSTALLATION [STANDARD DEPLOYMENT CONTROL SYSTEM]**.) (See **CLOCK SPRING REMOVAL/INSTALLATION [TWO-STEP DEPLOYMENT CONTROL SYSTEM]**.)
4	**INSPECT START STOP UNIT CONNECTOR CONDITION** • Disconnect the start stop unit connector. • Inspect the connector engagement and connection condition and inspect the terminals for damage, deformation, corrosion, or disconnection.	Yes	Go to the next step.
		No	Repair or replace the connector, then go to Step 7.

	• Is the connector normal?		
5	**INSPECT FOR OPEN CIRCUIT IN CRUISE CONTROL SWITCH CIRCUIT** • Verify that the start stop unit and clock spring connectors are disconnected. • Inspect for continuity between the following terminals (wiring harness-side): ▪ Start stop unit terminal 1Y—Clock spring (instrument panel harness-side) terminal 1J ▪ Start stop unit terminal 1Z—Clock spring (instrument panel harness-side) terminal 1N • Is there continuity?	Yes	Go to the next step.
		No	Refer to the wiring diagram and verify whether or not there is a common connector between the following terminals: • Start stop unit terminal 1Y—Clock spring (instrument panel harness-side) terminal 1J • Start stop unit terminal 1Z—Clock spring (instrument panel harness-side) terminal 1N **If there is a common connector:** • Determine the malfunctioning part by inspecting the common connector and the terminal for corrosion, damage, or pin disconnection, and the common wiring harness for an open circuit. • Repair or replace the malfunctioning part. **If there is no common connector:** • Repair or replace the wiring harness which has an open circuit. Go to Step 7.
6	**INSPECT CRUISE CONTROL SWITCH** • Inspect the cruise control switch. (See **CRUISE CONTROL SWITCH INSPECTION [SKYACTIV-G 2.0, SKYACTIV-G 2.5]**.) • Is the cruise control switch normal?	Yes	Go to the next step.
		No	Replace the cruise control switch, then go to the next step. (See **STEERING SWITCH REMOVAL/INSTALLATION**.)
7	**VERIFY THAT REPAIRS HAVE BEEN COMPLETED** • Always reconnect all disconnected connectors. • Reconnect the negative battery cable. (See **NEGATIVE BATTERY CABLE DISCONNECTION/CONNECTION [SKYACTIV-G 2.0, SKYACTIV-G 2.5]**.) • Clear the DTC for the start stop unit using the M-MDS. (See **CLEARING DTC [START STOP UNIT]**.) • Switch the ignition ON (engine off or on) and wait for **5 s or more**. • Retrieve the start stop unit DTCs using the M-MDS. (See **DTC INSPECTION [START STOP UNIT]**.)	Yes	Repeat the inspection from Step 1. • If the malfunction recurs, replace the start stop unit. (See **START STOP UNIT REMOVAL/INSTALLATION**.) Go to the next step.
		No	Go to the next step.

	• Is the same DTC displayed?		
8	**VERIFY IF OTHER DTCs DISPLAYED** • Are any other DTCs displayed?	Yes	Repair or replace the malfunctioning part according to the applicable DTC troubleshooting. (See **DTC TABLE [START STOP UNIT]**.)
		No	DTC troubleshooting completed.

2014 - Mazda3 - Body and Accessories

DTC B10AC:23 [START STOP UNIT]

Description	Cruise control switch circuit malfunction
Detection condition	• Start stop unit detects any cruise control switch stuck on for **2 min or more** with the ignition switched ON (engine off or on).
Fail-safe function	Not applicable
Possible cause	• Instrument cluster configuration error • Clock spring connector or terminal malfunction • Clock spring malfunction • Start stop unit connector or terminal malfunction • Short to power supply in wiring harness between start stop unit terminal 1Y and clock spring (instrument panel harness-side) terminal 1J • Cruise control switch malfunction • Start stop unit malfunction

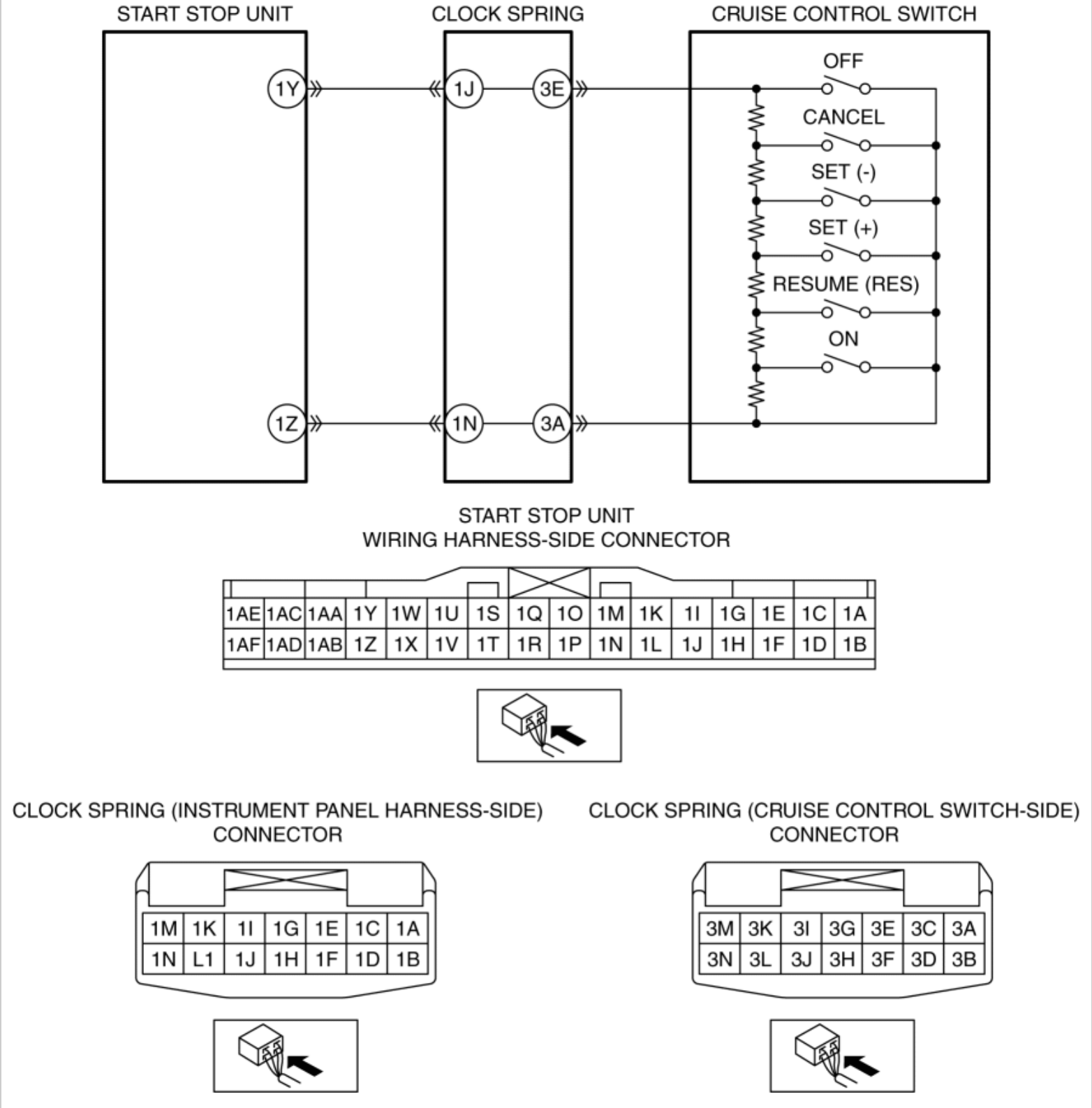

Diagnostic Procedure

Step	Inspection		Action
1	**PERFORM INSTRUMENT CLUSTER CONFIGURATION (USING AS-BUILT DATA)** • Using the M-MDS, perform the instrument cluster configuration (using As-Built data).	Yes	Using the M-MDS, perform the instrument cluster configuration (using As-Built data) again, then go to the next step. (See **INSTRUMENT CLUSTER CONFIGURATION (USING AS-BUILT DATA)**.)

	(See **INSTRUMENT CLUSTER CONFIGURATION (USING AS-BUILT DATA)**.) • Clear the DTC for the start stop unit using the M-MDS. (See **CLEARING DTC [START STOP UNIT]**.) • Switch the ignition ON (engine off or on) and wait for **2 min or more**. • Retrieve the start stop unit DTCs using the M-MDS. (See **DTC INSPECTION [START STOP UNIT]**.) • Is the same DTC displayed?	No	Go to Step 8.
2	**INSPECT CLOCK SPRING CONNECTOR CONDITION** • Switch the ignition off. • Disconnect the negative battery cable. (See **NEGATIVE BATTERY CABLE DISCONNECTION/CONNECTION [SKYACTIV-G 2.0, SKYACTIV-G 2.5]**.) • Disconnect the clock spring connector. • Inspect the connector engagement and connection condition and inspect the terminals for damage, deformation, corrosion, or disconnection. • Is the connector normal?	Yes	Go to the next step.
		No	Repair or replace the connector, then go to Step 7.
3	**INSPECT CLOCK SPRING** • Inspect the clock spring. (See **CLOCK SPRING INSPECTION [STANDARD DEPLOYMENT CONTROL SYSTEM]**.) (See **CLOCK SPRING INSPECTION [TWO-STEP DEPLOYMENT CONTROL SYSTEM]**.) • Is the clock spring normal?	Yes	Go to the next step.
		No	Replace the clock spring, then go to Step 7. (See **CLOCK SPRING REMOVAL/INSTALLATION [STANDARD DEPLOYMENT CONTROL SYSTEM]**.) (See **CLOCK SPRING REMOVAL/INSTALLATION [TWO-STEP DEPLOYMENT CONTROL SYSTEM]**.)
4	**INSPECT START STOP UNIT CONNECTOR CONDITION** • Disconnect the start stop unit connector. • Inspect the connector engagement and connection condition and inspect the	Yes	Go to the next step.
		No	Repair or replace the connector, then go to Step 7.

	terminals for damage, deformation, corrosion, or disconnection. • Is the connector normal?		
5	**INSPECT FOR SHORT TO POWER SUPPLY IN CRUISE CONTROL SWITCH CIRCUIT** • Verify that the start stop unit and clock spring connectors are disconnected. • Reconnect the negative battery cable. (See **NEGATIVE BATTERY CABLE DISCONNECTION/CONNECTION [SKYACTIV-G 2.0, SKYACTIV-G 2.5]**.) • Switch the ignition ON (engine off or on). • Measure the voltage at the clock spring (instrument panel harness-side) terminal 1J (wiring harness-side). • Is the voltage **0 V**?	Yes	Go to the next step.
		No	Refer to the wiring diagram and verify whether or not there is a common connector between start stop unit terminal 1Y and clock spring (instrument panel harness-side) terminal 1J. **If there is a common connector:** • Determine the malfunctioning part by inspecting the common connector and the terminal for corrosion, damage, or pin disconnection, and the common wiring harness for a short to power supply. • Repair or replace the malfunctioning part. **If there is no common connector:** • Repair or replace the wiring harness which has a short to power supply. Go to Step 7.
6	**INSPECT CRUISE CONTROL SWITCH** • Inspect the cruise control switch. (See **CRUISE CONTROL SWITCH INSPECTION [SKYACTIV-G 2.0, SKYACTIV-G 2.5]**.) • Is the cruise control switch normal?	Yes	Go to the next step.
		No	Replace the cruise control switch, then go to the next step. (See **STEERING SWITCH REMOVAL/INSTALLATION**.)
7	**VERIFY THAT REPAIRS HAVE BEEN COMPLETED** • Always reconnect all disconnected connectors. • Reconnect the negative battery cable. (See **NEGATIVE BATTERY CABLE DISCONNECTION/CONNECTION [SKYACTIV-G 2.0, SKYACTIV-G 2.5]**.) • Clear the DTC for the start stop unit using the M-MDS. (See **CLEARING DTC [START STOP UNIT]**.) • Switch the ignition ON (engine off or on) and wait for **2 min or more**. • Retrieve the start stop unit DTCs using the M-MDS. (See **DTC INSPECTION [START**	Yes	Repeat the inspection from Step 1. • If the malfunction recurs, replace the start stop unit. (See **START STOP UNIT REMOVAL/INSTALLATION**.) Go to the next step.
		No	Go to the next step.

	STOP UNIT].) • Is the same DTC displayed?		
8	**VERIFY IF OTHER DTCs DISPLAYED** • Are any other DTCs displayed?	Yes	Repair or replace the malfunctioning part according to the applicable DTC troubleshooting. (See **DTC TABLE [START STOP UNIT]**.)
		No	DTC troubleshooting completed.

2014 - Mazda3 - Body and Accessories

DTC B10C9:1F [START STOP UNIT]

Description	Keyless antenna (interior, center) circuit malfunction
Detection condition	• Start stop unit detects an open circuit or short to ground in the keyless antenna (interior, center) with the ignition switched off.
Fail-safe function	Not applicable

Possible cause	• Keyless antenna (interior, center) connector or terminal malfunction
	• Start stop unit connector or terminal malfunction
	• Short to ground in wiring harness between the following terminals:
	  ▪ Start stop unit terminal 2I—Keyless antenna (interior, center) terminal B
	  ▪ Start stop unit terminal 2K—Keyless antenna (interior, center) terminal A
	• Open circuit in wiring harness between the following terminals:
	  ▪ Start stop unit terminal 2I—Keyless antenna (interior, center) terminal B
	  ▪ Start stop unit terminal 2K—Keyless antenna (interior, center) terminal A
	• Keyless antenna (interior, center) malfunction
	• Start stop unit malfunction

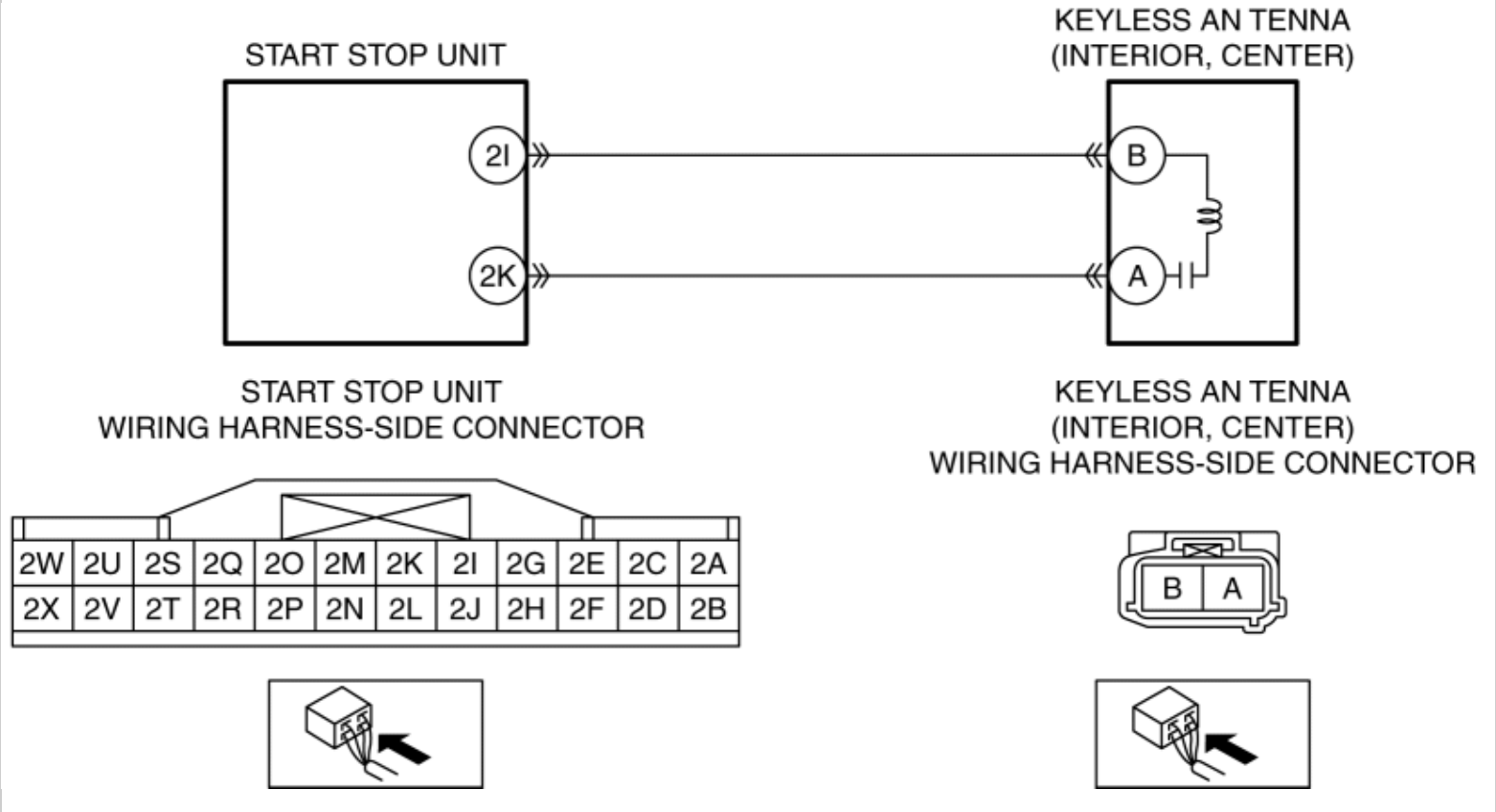

Diagnostic Procedure

Step	Inspection		Action
1	**INSPECT KEYLESS ANTENNA (INTERIOR, CENTER) CONNECTOR CONDITION** • Switch the ignition off. • Disconnect the negative battery cable. (See **NEGATIVE BATTERY CABLE DISCONNECTION/CONNECTION [SKYACTIV-G 2.0, SKYACTIV-G 2.5]**.) • Disconnect the keyless antenna (interior, center) connector. • Inspect the connector engagement and connection condition and inspect the terminals for damage, deformation, corrosion, or disconnection. • Is the connector normal?	Yes	Go to the next step.
		No	Repair or replace the connector, then go to Step 6.
2	**INSPECT START STOP UNIT CONNECTOR CONDITION**	Yes	Go to the next step.

	• Disconnect the start stop unit connector. • Inspect the connector engagement and connection condition and inspect the terminals for damage, deformation, corrosion, or disconnection. • Is the connector normal?	No	Repair or replace the connector, then go to Step 6.
3	**INSPECT FOR SHORT TO GROUND IN KEYLESS ANTENNA (INTERIOR, CENTER) CIRCUIT** • Verify that the start stop unit and keyless antenna (interior, center) connectors are disconnected. • Inspect for continuity between the following terminals (wiring harness-side) and body ground: ▪ Keyless antenna (interior, center) terminal B ▪ Keyless antenna (interior, center) terminal A • Is there continuity?	Yes	Refer to the wiring diagram and verify whether or not there is a common connector between the following terminals: • Start stop unit terminal 2I—Keyless antenna (interior, center) terminal B • Start stop unit terminal 2K—Keyless antenna (interior, center) terminal A **If there is a common connector:** • Determine the malfunctioning part by inspecting the common connector and the terminal for corrosion, damage, or pin disconnection, and the common wiring harness for a short to ground. • Repair or replace the malfunctioning part. **If there is no common connector:** • Repair or replace the wiring harness which has a short to ground. Go to Step 6.
		No	Go to the next step.
4	**INSPECT FOR OPEN CIRCUIT IN KEYLESS ANTENNA (INTERIOR, CENTER) CIRCUIT** • Verify that the start stop unit and keyless antenna (interior, center) connectors are disconnected. • Inspect for continuity between the following terminals (wiring harness-side): ▪ Start stop unit terminal 2I—Keyless antenna (interior, center) terminal B ▪ Start stop unit terminal	Yes	Go to the next step.
		No	Refer to the wiring diagram and verify whether or not there is a common connector between the following terminals: • Start stop unit terminal 2I—Keyless antenna (interior, center) terminal B • Start stop unit terminal 2K—Keyless antenna (interior, center) terminal A **If there is a common connector:** • Determine the malfunctioning part by inspecting the common connector and the terminal for corrosion, damage, or pin disconnection, and the common wiring harness for an open circuit.

	2K—Keyless antenna (interior, center) terminal A • Is there continuity?		Repair or replace the malfunctioning part. **If there is no common connector:** • Repair or replace the wiring harness which has an open circuit. Go to Step 6.
5	**PERFORM DTC INSPECTION AND VERIFY KEYLESS ANTENNA (INTERIOR, CENTER) MALFUNCTION** • Always reconnect all disconnected connectors. • Reconnect the negative battery cable. (See **NEGATIVE BATTERY CABLE DISCONNECTION/CONNECTION [SKYACTIV-G 2.0, SKYACTIV-G 2.5]**.) • Clear the DTC for the start stop unit using the M-MDS. (See **CLEARING DTC [START STOP UNIT]**.) • Perform the following work: ▪ Switch the ignition off. ▪ Open the front door (LH). ▪ Close all the doors and trunk (4SD)/liftgate (5HB). • Retrieve the start stop unit DTCs using the M-MDS. (See **DTC INSPECTION [START STOP UNIT]**.) • Is the same DTC displayed?	Yes	Replace the keyless antenna (interior, center), then go to the next step. (See **KEYLESS ANTENNA REMOVAL/INSTALLATION**.)
		No	Go to Step 7.
6	**VERIFY THAT REPAIRS HAVE BEEN COMPLETED** • Always reconnect all disconnected connectors. • Reconnect the negative battery cable. (See **NEGATIVE BATTERY CABLE**	Yes	Repeat the inspection from Step 1. • If the malfunction recurs, replace the start stop unit. (See **START STOP UNIT REMOVAL/INSTALLATION**.) Go to the next step.

	DISCONNECTION/CONNECTION [SKYACTIV-G 2.0, SKYACTIV-G 2.5].) • Clear the DTC for the start stop unit using the M-MDS. (See **CLEARING DTC [START STOP UNIT]**.) • Perform the following work: ▪ Switch the ignition off. ▪ Open the front door (LH). ▪ Close all the doors and trunk (4SD)/liftgate (5HB). • Retrieve the start stop unit DTCs using the M-MDS. (See **DTC INSPECTION [START STOP UNIT]**.) • Is the same DTC displayed?	No	Go to the next step.
7	**VERIFY IF OTHER DTCs DISPLAYED** • Are any other DTCs displayed?	Yes	Repair or replace the malfunctioning part according to the applicable DTC troubleshooting. (See **DTC TABLE [START STOP UNIT]**.)
		No	DTC troubleshooting completed.

2014 - Mazda3 - Body and Accessories

DTC B10E7:11 [START STOP UNIT]

Description	IG1 relay circuit malfunction
Detection condition	• Start stop unit detects the voltage from the IG1 relay output monitor as **less than 2.5 V** for **0.5 s or more** while the engine is not being cranked with the ignition switched ON (engine off or on).
Fail-safe function	Not applicable
Possible cause	• IG1 relay malfunction • Start stop unit connector or terminal malfunction • Short to ground in wiring harness between IG1 relay terminal A and start stop unit terminal 2S • Start stop unit malfunction

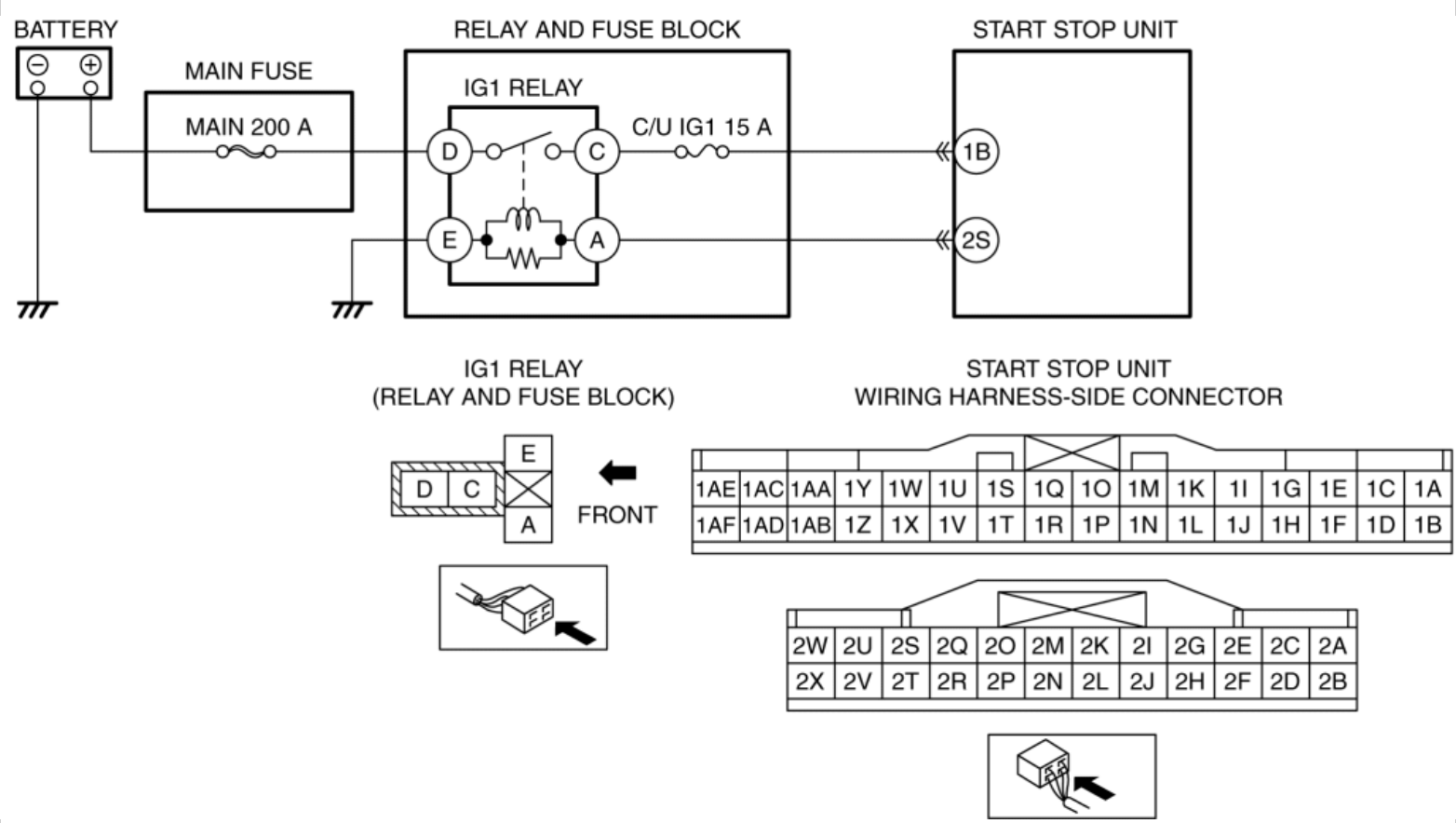

Diagnostic Procedure

Step	Inspection		Action
1	**INSPECT IG1 RELAY** • Switch the ignition off. • Disconnect the negative battery cable.	Yes	Go to the next step.
		No	Replace the IG1 relay, then go to Step 4.

	(See **NEGATIVE BATTERY CABLE DISCONNECTION/CONNECTION [SKYACTIV-G 2.0, SKYACTIV-G 2.5]**.) • Remove the IG1 relay. (See **RELAY LOCATION**.) • Inspect the IG1 relay. (See **RELAY INSPECTION**.) • Is the IG1 relay normal?		(See **RELAY LOCATION**.)
2	**INSPECT START STOP UNIT CONNECTOR CONDITION** • Disconnect the start stop unit connector. • Inspect the connector engagement and connection condition and inspect the terminals for damage, deformation, corrosion, or disconnection. • Is the connector normal?	Yes	Go to the next step.
		No	Repair or replace the connector, then go to Step 4.
3	**INSPECT FOR SHORT TO GROUND IN IG1 RELAY CIRCUIT** • Verify that the IG1 relay is removed. • Verify that the start stop unit connector is disconnected. • Inspect for continuity between IG1 relay terminal A (wiring harness-side) and body ground. • Is there continuity?	Yes	Refer to the wiring diagram and verify whether or not there is a common connector between IG1 relay terminal A and start stop unit terminal 2S. **If there is a common connector:** • Determine the malfunctioning part by inspecting the common connector and the terminal for corrosion, damage, or pin disconnection, and the common wiring harness for a short to ground. • Repair or replace the malfunctioning part. **If there is no common connector:** • Repair or replace the wiring harness which has a short to ground. Go to the next step.
		No	Go to the next step.
4	**VERIFY THAT REPAIRS HAVE BEEN COMPLETED** • Always reconnect all disconnected connectors. • Reconnect the negative battery cable. (See **NEGATIVE BATTERY CABLE DISCONNECTION/CONNECTION [SKYACTIV-G 2.0, SKYACTIV-G 2.5]**.) • Clear the DTC for the start stop unit using the M-MDS. (See **CLEARING DTC [START STOP UNIT]**.) • Switch the ignition ON (engine off or on) and wait for **1 s or more**. • Retrieve the start stop unit DTCs using the M-MDS. (See **DTC INSPECTION [START STOP UNIT]**.) • Is the same DTC displayed?	Yes	Repeat the inspection from Step 1. • If the malfunction recurs, replace the start stop unit. (See **START STOP UNIT REMOVAL/INSTALLATION**.) Go to the next step.
		No	Go to the next step.
5	**VERIFY IF OTHER DTCs DISPLAYED** • Are any other DTCs displayed?	Yes	Repair or replace the malfunctioning part according to the applicable DTC troubleshooting. (See **DTC TABLE [START STOP UNIT]**.)

		No	DTC troubleshooting completed.

2014 - Mazda3 - Body and Accessories

DTC B10E7:12 [START STOP UNIT]

Description	IG1 relay circuit malfunction
Detection condition	• Start stop unit detects the IG1 relay output monitor voltage of **2.5 V or more** for **0.5 s or more** with the ignition switched off or ACC.
Fail-safe function	Not applicable
Possible cause	• IG1 relay malfunction • Start stop unit connector or terminal malfunction • Short to power supply in wiring harness between IG1 relay terminal A and start stop unit terminal 2S • Start stop unit malfunction

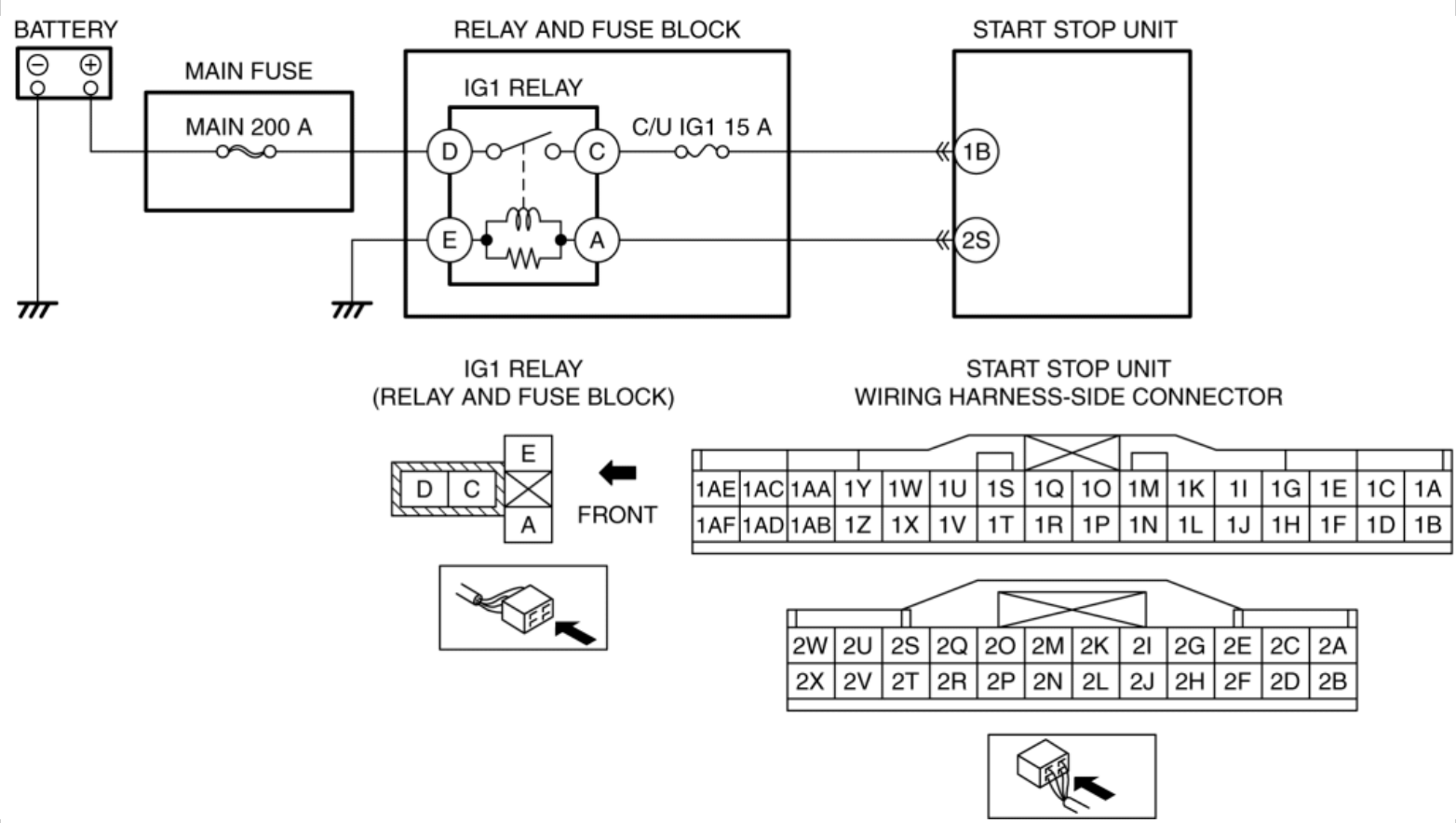

Diagnostic Procedure

Step	Inspection		Action
1	**INSPECT IG1 RELAY** • Switch the ignition off. • Disconnect the negative battery cable.	Yes	Go to the next step.
		No	Replace the IG1 relay, then go to Step 4.

	(See **NEGATIVE BATTERY CABLE DISCONNECTION/CONNECTION [SKYACTIV-G 2.0, SKYACTIV-G 2.5]**.) • Remove the IG1 relay. (See **RELAY LOCATION**.) • Inspect the IG1 relay. (See **RELAY INSPECTION**.) • Is the IG1 relay normal?		(See **RELAY LOCATION**.)
2	**INSPECT START STOP UNIT CONNECTOR CONDITION** • Disconnect the start stop unit connector. • Inspect the connector engagement and connection condition and inspect the terminals for damage, deformation, corrosion, or disconnection. • Is the connector normal?	Yes	Go to the next step.
		No	Repair or replace the connector, then go to Step 4.
3	**INSPECT FOR SHORT TO POWER SUPPLY IN IG1 RELAY CIRCUIT** • Always reconnect all disconnected connectors. • Reconnect the negative battery cable. (See **NEGATIVE BATTERY CABLE DISCONNECTION/CONNECTION [SKYACTIV-G 2.0, SKYACTIV-G 2.5]**.) • Measure the voltage at the start stop unit terminal 2S (wiring harness-side). • Is the voltage **2.5 V or more**?	Yes	Refer to the wiring diagram and verify whether or not there is a common connector between IG1 relay terminal A and start stop unit terminal 2S. **If there is a common connector:** • Determine the malfunctioning part by inspecting the common connector and the terminal for corrosion, damage, or pin disconnection, and the common wiring harness for a short to power supply. • Repair or replace the malfunctioning part. **If there is no common connector:** • Repair or replace the wiring harness which has a short to power supply. Go to the next step.
		No	Go to the next step.
4	**VERIFY THAT REPAIRS HAVE BEEN COMPLETED** • Always reconnect all disconnected connectors. • Reconnect the negative battery cable. (See **NEGATIVE BATTERY CABLE DISCONNECTION/CONNECTION [SKYACTIV-G 2.0, SKYACTIV-G 2.5]**.) • Clear the DTC for the start stop unit using the M-MDS. (See **CLEARING DTC [START STOP UNIT]**.) • Switch the ignition off and wait for **1 s or more**. • Retrieve the start stop unit DTCs using the M-MDS. (See **DTC INSPECTION [START STOP UNIT]**.) • Is the same DTC displayed?	Yes	Repeat the inspection from Step 1. • If the malfunction recurs, replace the start stop unit. (See **START STOP UNIT REMOVAL/INSTALLATION**.) Go to the next step.
		No	Go to the next step.
5	**VERIFY IF OTHER DTCs DISPLAYED** • Are any other DTCs displayed?	Yes	Repair or replace the malfunctioning part according to the applicable DTC troubleshooting. (See **DTC TABLE [START STOP UNIT]**.)

		No	DTC troubleshooting completed.

2014 - Mazda3 - Body and Accessories

DTC B10E7:16 [START STOP UNIT]

Description	IG1 relay circuit malfunction
Detection condition	• Start stop unit detects the IG1 monitor voltage of **less than 2.5 V** for **1 s or more** while the engine is not being cranked with the ignition switched ON (engine off or on).
Fail-safe function	Not applicable

Possible cause	• IG1 relay malfunction
	• IG1 relay circuit malfunction
	  ▪ Short to ground in wiring harness between MAIN 200 A fuse and IG1 relay terminal D
	  ▪ MAIN 200 A fuse malfunction
	  ▪ Open circuit in wiring harness between battery positive terminal and IG1 relay terminal D
	• Start stop unit connector or terminal malfunction
	• Wiring harness between IG1 relay terminal C and start stop unit terminal 1B malfunction
	  ▪ Short to ground in wiring harness between IG1 relay terminal C and start stop unit terminal 1B
	  ▪ C/U IG1 15 A fuse malfunction
	• Wiring harness between IG1 relay terminal C and start stop unit terminal 1B malfunction
	  ▪ C/U IG1 15 A fuse malfunction
	  ▪ Open circuit in wiring harness between IG1 relay terminal C and start stop unit terminal 1B
	• Start stop unit malfunction

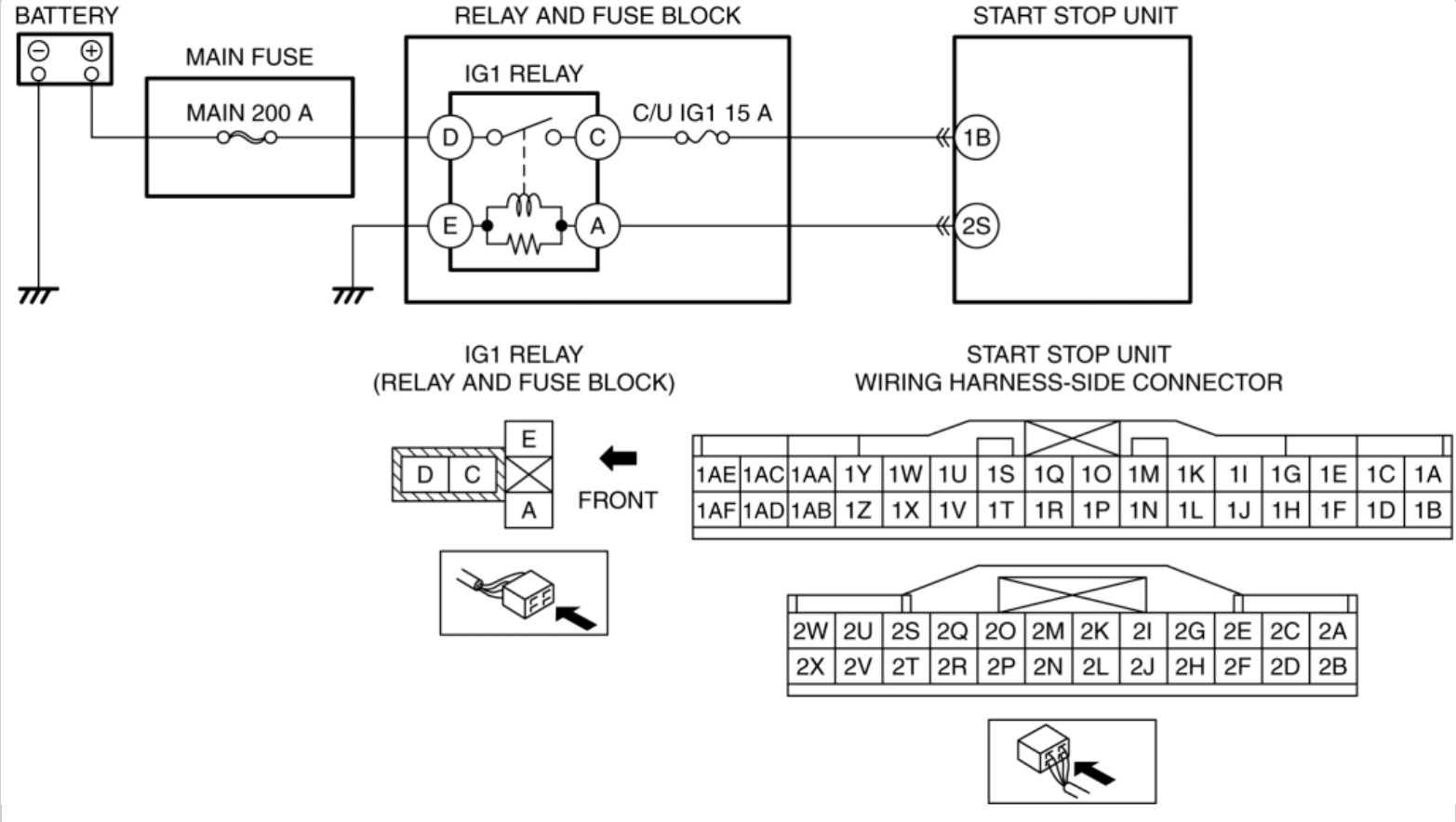

Diagnostic Procedure

Step	Inspection		Action
1	**INSPECT IG1 RELAY** • Switch the ignition off. • Disconnect the negative battery cable. (See **NEGATIVE BATTERY CABLE DISCONNECTION/CONNECTION [SKYACTIV-G 2.0, SKYACTIV-G 2.5]**.) • Remove the IG1 relay. (See **RELAY LOCATION**.) • Inspect the IG1 relay. (See **RELAY INSPECTION**.) • Is the IG1 relay normal?	Yes	Go to the next step.
		No	Replace the IG1 relay, then go to Step 6. (See **RELAY LOCATION**.)
2	**INSPECT FOR OPEN CIRCUIT OR SHORT TO GROUND IN IG1 RELAY CIRCUIT** • Verify that the IG1 relay is removed. • Reconnect the negative battery cable. (See **NEGATIVE BATTERY CABLE DISCONNECTION/CONNECTION [SKYACTIV-G 2.0, SKYACTIV-G 2.5]**.) • Measure the voltage at the IG1 relay terminal D (wiring harness-side). • Is the voltage **B+**?	Yes	Go to the next step.
		No	Inspect the MAIN 200 A fuse. • If the fuse is blown: ▪ Refer to the wiring diagram and verify whether or not there is a common connector between MAIN 200 A fuse and IG1 relay terminal D. **If there is a common connector:** • Determine the malfunctioning part by inspecting the

			common connector and the terminal for corrosion, damage, or pin disconnection, and the common wiring harness for a short to ground. • Repair or replace the malfunctioning part. **If there is no common connector:** • Repair or replace the wiring harness which has a short to ground. • Replace the fuse. • If the fuse is damaged: ▪ Replace the fuse. • If the fuse is normal: ▪ Refer to the wiring diagram and verify whether or not there is a common connector between battery positive terminal and IG1 relay terminal D. **If there is a common connector:** • Determine the malfunctioning part by inspecting the common connector and the terminal for corrosion, damage, or pin disconnection, and the common wiring harness for an open circuit. • Repair or replace the malfunctioning part. **If there is no common connector:** • Repair or replace the wiring harness which has an open circuit. Go to Step 6.
3	**INSPECT START STOP UNIT CONNECTOR CONDITION** • Disconnect the negative battery cable. (See **NEGATIVE BATTERY CABLE DISCONNECTION/CONNECTION [SKYACTIV-G 2.0, SKYACTIV-G 2.5]**.) • Disconnect the start stop unit connector. • Inspect the connector engagement and connection condition and inspect the terminals for damage, deformation, corrosion, or disconnection. • Is the connector normal?	Yes	Go to the next step.
		No	Repair or replace the connector, then go to Step 6.
4	**INSPECT FOR SHORT TO GROUND IN IG1 RELAY CIRCUIT** • Verify that the IG1 relay is removed.	Yes	Inspect the C/U IG1 15 A fuse. • If the fuse is blown:

	• Verify that the start stop unit connector is disconnected. • Inspect for continuity between the following terminals (wiring harness-side) and body ground: ▪ IG1 relay terminal C ▪ Start stop unit terminal 1B • Is there continuity?		Refer to the wiring diagram and verify whether or not there is a common connector between IG1 relay terminal C and start stop unit terminal 1B. **If there is a common connector:** • Determine the malfunctioning part by inspecting the common connector and the terminal for corrosion, damage, or pin disconnection, and the common wiring harness for a short to ground. • Repair or replace the malfunctioning part. **If there is no common connector:** • Repair or replace the wiring harness which has a short to ground. • Replace the fuse. • If the fuse is damaged: ▪ Replace the fuse. Go to Step 6.
		No	Go to the next step.
5	**INSPECT FOR OPEN CIRCUIT IN IG1 RELAY CIRCUIT** • Verify that the IG1 relay is removed. • Verify that the start stop unit connector is disconnected. • Inspect for continuity between IG1 relay terminal C (wiring harness-side) and start stop unit terminal 1B (wiring harness-side). • Is there continuity?	Yes	Go to the next step.
		No	Inspect the C/U IG1 15 A fuse. • If the fuse is damaged: ▪ Replace the fuse. • If the fuse is normal: ▪ Refer to the wiring diagram and verify whether or not there is a common connector between IG1 relay terminal C and start stop unit terminal 1B. **If there is a common connector:** • Determine the malfunctioning part by inspecting the common connector and the terminal for corrosion, damage, or pin disconnection, and the common wiring harness for an open circuit. • Repair or replace the malfunctioning part. **If there is no common connector:** • Repair or replace the wiring harness which has an open circuit. Go to the next step.
6	**VERIFY THAT REPAIRS HAVE BEEN COMPLETED**	Yes	Repeat the inspection from Step 1.

	• Always reconnect all disconnected connectors. • Reconnect the negative battery cable. (See **NEGATIVE BATTERY CABLE DISCONNECTION/CONNECTION [SKYACTIV-G 2.0, SKYACTIV-G 2.5]**.) • Clear the DTC for the start stop unit using the M-MDS. (See **CLEARING DTC [START STOP UNIT]**.) • Switch the ignition ON (engine off or on) and wait for **1 s or more**. • Retrieve the start stop unit DTCs using the M-MDS. (See **DTC INSPECTION [START STOP UNIT]**.) • Is the same DTC displayed?		• If the malfunction recurs, replace the start stop unit. (See **START STOP UNIT REMOVAL/INSTALLATION**.) Go to the next step.
		No	Go to the next step.
7	**VERIFY IF OTHER DTCs DISPLAYED** • Are any other DTCs displayed?	Yes	Repair or replace the malfunctioning part according to the applicable DTC troubleshooting. (See **DTC TABLE [START STOP UNIT]**.)
		No	DTC troubleshooting completed.

2014 - Mazda3 - Body and Accessories

DTC B10E7:17 [START STOP UNIT]

Description	IG1 relay circuit malfunction
Detection condition	• Start stop unit detects the IG1 monitor voltage of **2.5 V or more** for **1 s or more** with the ignition switched off or ACC.
Fail-safe function	Not applicable
Possible cause	• IG1 relay malfunction • Start stop unit connector or terminal malfunction • Short to power supply in wiring harness between IG1 relay terminal C and start stop unit terminal 1B • Start stop unit malfunction

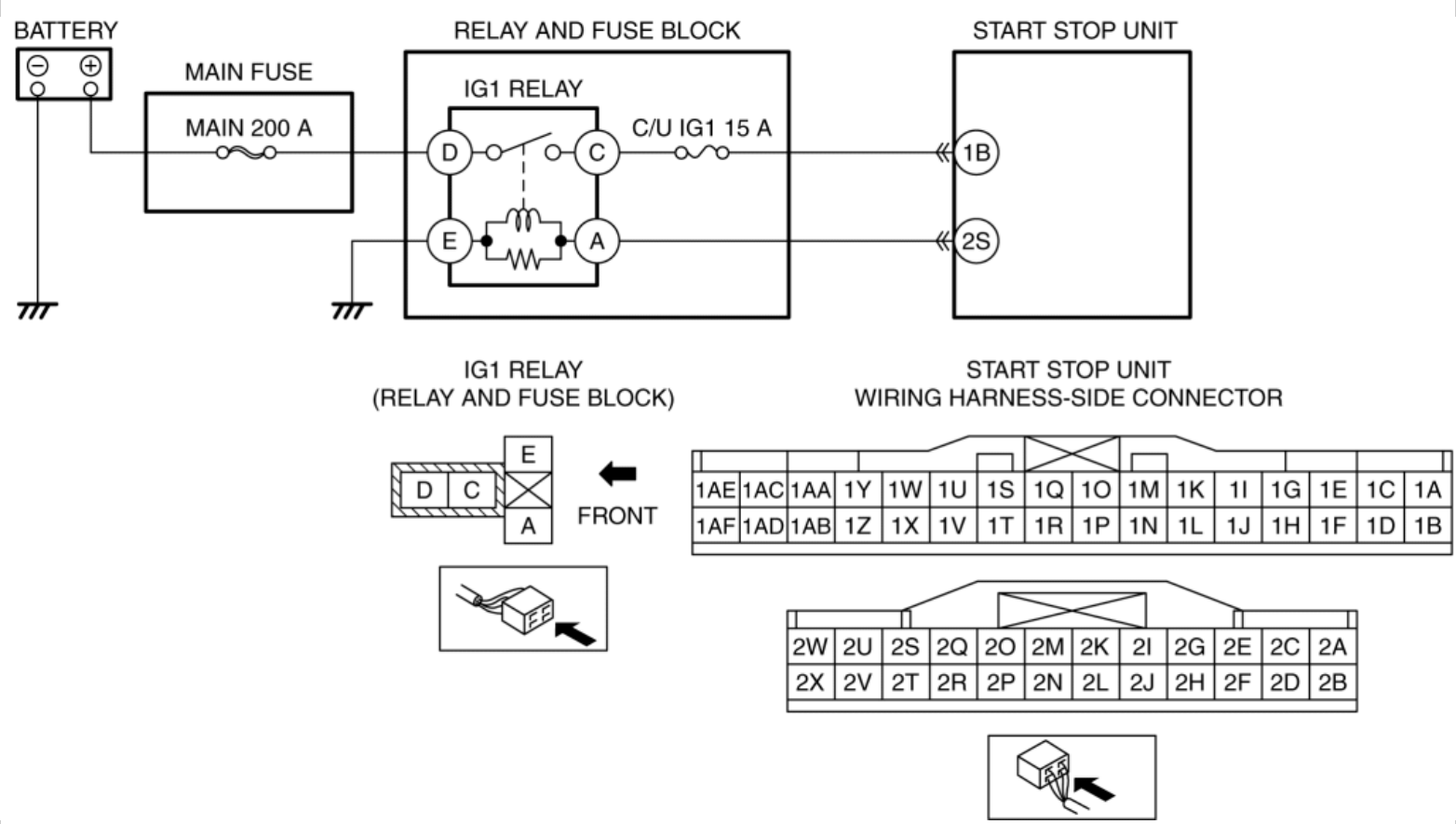

Diagnostic Procedure

Step	Inspection		Action
1	**INSPECT IG1 RELAY** • Switch the ignition off. • Disconnect the negative battery cable.	Yes	Go to the next step.
		No	Replace the IG1 relay, then go to Step 4.

	(See **NEGATIVE BATTERY CABLE DISCONNECTION/CONNECTION [SKYACTIV-G 2.0, SKYACTIV-G 2.5]**.) • Remove the IG1 relay. (See **RELAY LOCATION**.) • Inspect the IG1 relay. (See **RELAY INSPECTION**.) • Is the IG1 relay normal?		(See **RELAY LOCATION**.)
2	**INSPECT START STOP UNIT CONNECTOR CONDITION** • Disconnect the start stop unit connector. • Inspect the connector engagement and connection condition and inspect the terminals for damage, deformation, corrosion, or disconnection. • Is the connector normal?	Yes	Go to the next step.
		No	Repair or replace the connector, then go to Step 4.
3	**INSPECT FOR SHORT TO POWER SUPPLY IN IG1 RELAY CIRCUIT** • Always reconnect all disconnected connectors. • Reconnect the negative battery cable. (See **NEGATIVE BATTERY CABLE DISCONNECTION/CONNECTION [SKYACTIV-G 2.0, SKYACTIV-G 2.5]**.) • Measure the voltage at the start stop unit terminal 1B (wiring harness-side). • Is the voltage **2.5 V or more**?	Yes	Refer to the wiring diagram and verify whether or not there is a common connector between IG1 relay terminal C and start stop unit terminal 1B. **If there is a common connector:** • Determine the malfunctioning part by inspecting the common connector and the terminal for corrosion, damage, or pin disconnection, and the common wiring harness for a short to power supply. • Repair or replace the malfunctioning part. **If there is no common connector:** • Repair or replace the wiring harness which has a short to power supply. Go to the next step.
		No	Go to the next step.
4	**VERIFY THAT REPAIRS HAVE BEEN COMPLETED** • Always reconnect all disconnected connectors. • Reconnect the negative battery cable. (See **NEGATIVE BATTERY CABLE DISCONNECTION/CONNECTION [SKYACTIV-G 2.0, SKYACTIV-G 2.5]**.) • Clear the DTC for the start stop unit using the M-MDS. (See **CLEARING DTC [START STOP UNIT]**.) • Switch the ignition off and wait for **1 s or more**. • Retrieve the start stop unit DTCs using the M-MDS. (See **DTC INSPECTION [START STOP UNIT]**.) • Is the same DTC displayed?	Yes	Repeat the inspection from Step 1. • If the malfunction recurs, replace the start stop unit. (See **START STOP UNIT REMOVAL/INSTALLATION**.) Go to the next step.
		No	Go to the next step.
5	**VERIFY IF OTHER DTCs DISPLAYED** • Are any other DTCs displayed?	Yes	Repair or replace the malfunctioning part according to the applicable DTC troubleshooting. (See **DTC TABLE [START STOP UNIT]**.)

		No	DTC troubleshooting completed.

2014 - Mazda3 - Body and Accessories

DTC B112A:11 [START STOP UNIT]

Description	IG2 relay circuit malfunction
Detection condition	• Start stop unit detects the IG2 relay output monitor voltage of **2.5 V or less** for **0.5 s or more** with the ignition switched ON (engine off or on).
Fail-safe function	Not applicable
Possible cause	• Front body control module (FBCM) connector or terminal malfunction • Start stop unit connector or terminal malfunction • Short to ground in wiring harness between start stop unit terminal 2D and front body control module (FBCM) terminal 2U • Front body control module (FBCM) malfunction • Start stop unit malfunction

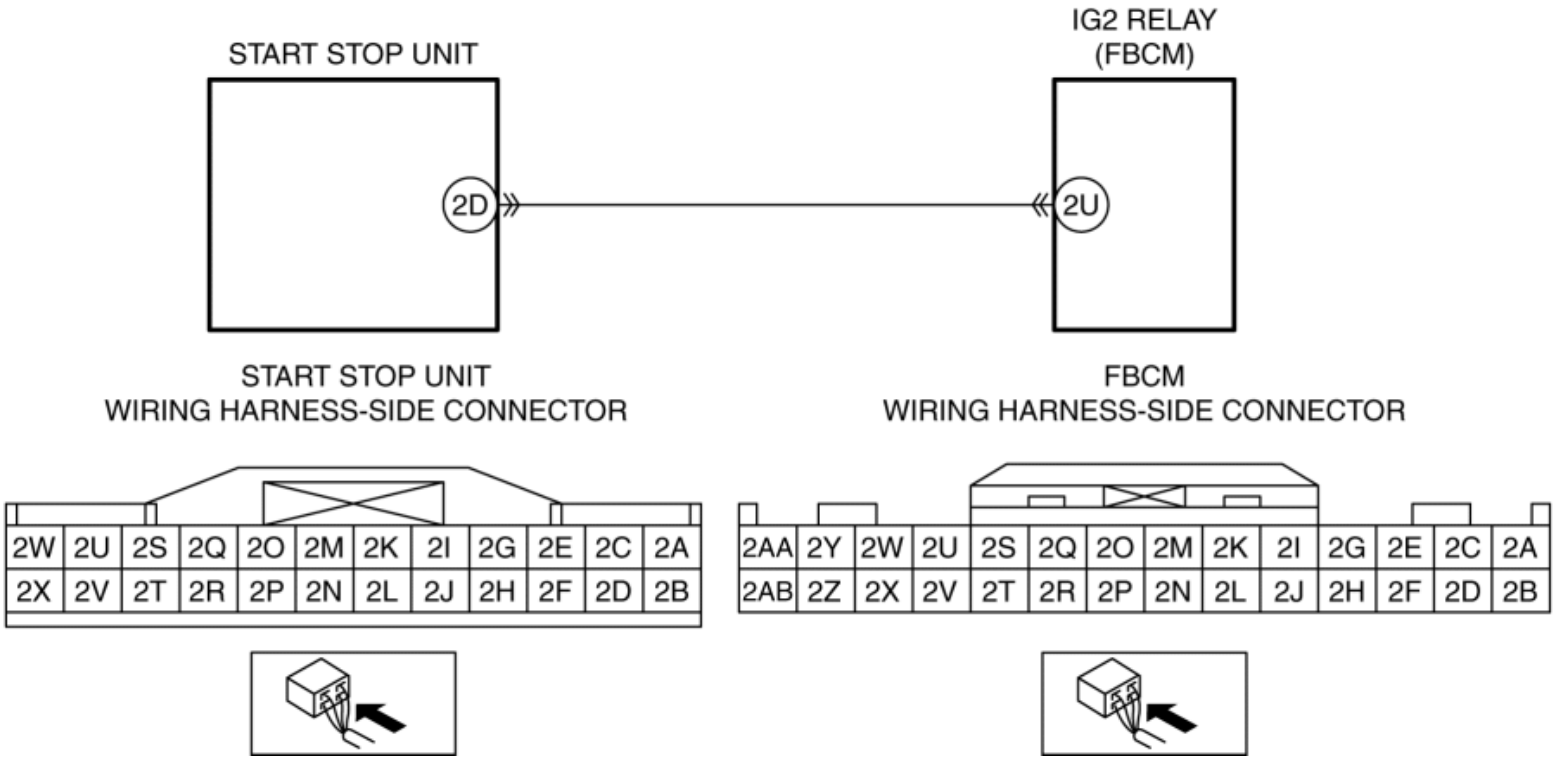

Diagnostic Procedure

Step	Inspection	Action

1	**INSPECT FRONT BODY CONTROL MODULE (FBCM) CONNECTOR CONDITION** • Switch the ignition off. • Disconnect the negative battery cable. (See **NEGATIVE BATTERY CABLE DISCONNECTION/CONNECTION [SKYACTIV-G 2.0, SKYACTIV-G 2.5]**.) • Disconnect the front body control module (FBCM) connector. • Inspect the connector engagement and connection condition and inspect the terminals for damage, deformation, corrosion, or disconnection. • Is the connector normal?	Yes	Go to the next step.
		No	Repair or replace the connector, then go to Step 5.
2	**INSPECT START STOP UNIT CONNECTOR CONDITION** • Disconnect the start stop unit connector. • Inspect the connector engagement and connection condition and inspect the terminals for damage, deformation, corrosion, or disconnection. • Is the connector normal?	Yes	Go to the next step.
		No	Repair or replace the connector, then go to Step 5.
3	**INSPECT FOR SHORT TO GROUND IN IG2 RELAY CIRCUIT** • Verify that the start stop unit and front body control module (FBCM) connectors are disconnected. • Inspect for continuity between front body control module (FBCM) terminal 2U (wiring harness-side) and body ground. • Is there continuity?	Yes	Refer to the wiring diagram and verify whether or not there is a common connector between start stop unit terminal 2D and front body control module (FBCM) terminal 2U. **If there is a common connector:** • Determine the malfunctioning part by inspecting the common connector and the terminal for corrosion, damage, or pin disconnection, and the common wiring harness for a short to ground. • Repair or replace the malfunctioning part. **If there is no common connector:** • Repair or replace the wiring harness which has a short to ground. Go to Step 5.
		No	Go to the next step.
4	**PERFORM DTC INSPECTION AND VERIFY IG2 RELAY MALFUNCTION** • Always reconnect all disconnected connectors. • Reconnect the negative battery cable.	Yes	Replace the front body control module (FBCM), then go to the next step. (See **FRONT BODY CONTROL MODULE (FBCM) REMOVAL/INSTALLATION**.)

	(See **NEGATIVE BATTERY CABLE DISCONNECTION/CONNECTION [SKYACTIV-G 2.0, SKYACTIV-G 2.5]**.) • Clear the DTC for the start stop unit using the M-MDS. (See **CLEARING DTC [START STOP UNIT]**.) • Switch the ignition ON (engine off or on) and wait for **1 s or more**. • Retrieve the start stop unit DTCs using the M-MDS. (See **DTC INSPECTION [START STOP UNIT]**.) • Is the same DTC displayed?	No	Go to Step 6.
5	**VERIFY THAT REPAIRS HAVE BEEN COMPLETED** • Always reconnect all disconnected connectors. • Reconnect the negative battery cable. (See **NEGATIVE BATTERY CABLE DISCONNECTION/CONNECTION [SKYACTIV-G 2.0, SKYACTIV-G 2.5]**.) • Clear the DTC for the start stop unit using the M-MDS. (See **CLEARING DTC [START STOP UNIT]**.) • Switch the ignition ON (engine off or on) and wait for **1 s or more**. • Retrieve the start stop unit DTCs using the M-MDS. (See **DTC INSPECTION [START STOP UNIT]**.) • Is the same DTC displayed?	Yes	Repeat the inspection from Step 1. • If the malfunction recurs, replace the start stop unit. (See **START STOP UNIT REMOVAL/INSTALLATION**.) Go to the next step.
		No	Go to the next step.
6	**VERIFY IF OTHER DTCs DISPLAYED** • Are any other DTCs displayed?	Yes	Repair or replace the malfunctioning part according to the applicable DTC troubleshooting. (See **DTC TABLE [START STOP UNIT]**.)
		No	DTC troubleshooting completed.

2014 - Mazda3 - Body and Accessories

DTC B112A:12 [START STOP UNIT]

Description	IG2 relay circuit malfunction
Detection condition	• Start stop unit detects the IG2 relay output monitor voltage of **2.5 V or more** for **0.5 s or more** with the ignition switched off or to ACC.
Fail-safe function	Not applicable
Possible cause	• Front body control module (FBCM) connector or terminal malfunction • Start stop unit connector or terminal malfunction • Short to power supply in wiring harness between start stop unit terminal 2D and front body control module (FBCM) terminal 2U • Front body control module (FBCM) malfunction • Start stop unit malfunction

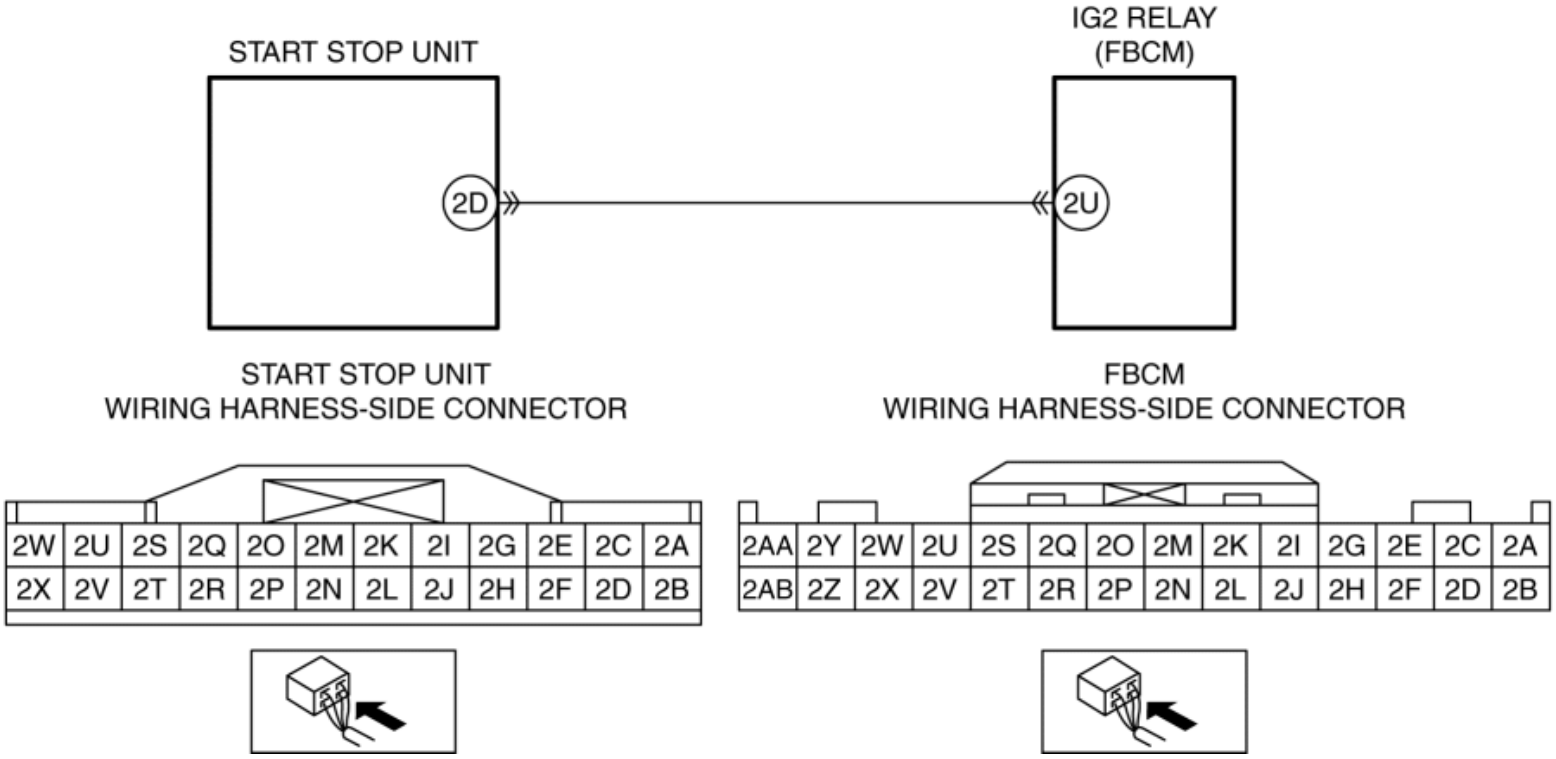

Diagnostic Procedure

Step	Inspection	Action

1	**INSPECT FRONT BODY CONTROL MODULE (FBCM) CONNECTOR CONDITION** • Switch the ignition off. • Disconnect the negative battery cable. (See **NEGATIVE BATTERY CABLE DISCONNECTION/CONNECTION [SKYACTIV-G 2.0, SKYACTIV-G 2.5]**.) • Disconnect the front body control module (FBCM) connector. • Inspect the connector engagement and connection condition and inspect the terminals for damage, deformation, corrosion, or disconnection. • Is the connector normal?	Yes	Go to the next step.
		No	Repair or replace the connector, then go to Step 5.
2	**INSPECT START STOP UNIT CONNECTOR CONDITION** • Disconnect the start stop unit connector. • Inspect the connector engagement and connection condition and inspect the terminals for damage, deformation, corrosion, or disconnection. • Is the connector normal?	Yes	Go to the next step.
		No	Repair or replace the connector, then go to Step 5.
3	**INSPECT FOR SHORT TO POWER SUPPLY IN IG2 RELAY CIRCUIT** • Always reconnect all disconnected connectors. • Reconnect the negative battery cable. (See **NEGATIVE BATTERY CABLE DISCONNECTION/CONNECTION [SKYACTIV-G 2.0, SKYACTIV-G 2.5]**.) • Measure the voltage at the front body control module (FBCM) terminal 2U (wiring harness-side). • Is the voltage **2.5 V or more**?	Yes	Refer to the wiring diagram and verify whether or not there is a common connector between start stop unit terminal 2D and front body control module (FBCM) terminal 2U. **If there is a common connector:** • Determine the malfunctioning part by inspecting the common connector and the terminal for corrosion, damage, or pin disconnection, and the common wiring harness for a short to power supply. • Repair or replace the malfunctioning part. **If there is no common connector:** • Repair or replace the wiring harness which has a short to power supply. Go to Step 5.
		No	Go to the next step.
4	**PERFORM DTC INSPECTION AND VERIFY IG2 RELAY MALFUNCTION** • Clear the DTC for the start stop unit using the M-MDS.	Yes	Replace the front body control module (FBCM), then go to the next step. (See **FRONT BODY CONTROL MODULE (FBCM) REMOVAL/INSTALLATION**.)

	(See **CLEARING DTC [START STOP UNIT]**.) • Switch the ignition off and wait for **1 s or more**. • Retrieve the start stop unit DTCs using the M-MDS. (See **DTC INSPECTION [START STOP UNIT]**.) • Is the same DTC displayed?		
		No	Go to Step 6.
5	**VERIFY THAT REPAIRS HAVE BEEN COMPLETED** • Always reconnect all disconnected connectors. • Reconnect the negative battery cable. (See **NEGATIVE BATTERY CABLE DISCONNECTION/CONNECTION [SKYACTIV-G 2.0, SKYACTIV-G 2.5]**.) • Clear the DTC for the start stop unit using the M-MDS. (See **CLEARING DTC [START STOP UNIT]**.) • Switch the ignition off and wait for **1 s or more**. • Retrieve the start stop unit DTCs using the M-MDS. (See **DTC INSPECTION [START STOP UNIT]**.) • Is the same DTC displayed?	Yes	Repeat the inspection from Step 1. • If the malfunction recurs, replace the start stop unit. (See **START STOP UNIT REMOVAL/INSTALLATION**.) Go to the next step.
		No	Go to the next step.
6	**VERIFY IF OTHER DTCs DISPLAYED** • Are any other DTCs displayed?	Yes	Repair or replace the malfunctioning part according to the applicable DTC troubleshooting. (See **DTC TABLE [START STOP UNIT]**.)
		No	DTC troubleshooting completed.

2014 - Mazda3 - Body and Accessories

DTC B124C:56 [START STOP UNIT]

Description	Turn switch circuit malfunction
Detection condition	• Start stop unit detects that the turn switch LH and RH are turned on simultaneously for **5 s or more**.
Fail-safe function	Not applicable
Possible cause	• Start stop unit configuration error • The installations of the light switch and the wiper and washer switch are reversed. • Turn switch malfunction • Start stop unit malfunction
System wiring diagram	Not applicable

Diagnostic Procedure

Step	Inspection		Action
1	**PERFORM START STOP UNIT CONFIGURATION (USING AS-BUILT DATA)** • Using the M-MDS, perform the start stop unit configuration (using As-Built data). (See **START STOP UNIT CONFIGURATION (USING AS-BUILT DATA)**.) • Clear the DTC for the start stop unit using the M-MDS. (See **CLEARING DTC [START STOP UNIT]**.) • Operate the turn switch to RH	Yes	Using the M-MDS, perform the start stop unit configuration (using As-Built data) again, then go to the next step. (See **START STOP UNIT CONFIGURATION (USING AS-BUILT DATA)**.)
		No	Go to Step 5.

	position and wait for **5 s or more**. • Operate the turn switch to LH position and wait for **5 s or more**. • Retrieve the start stop unit DTCs using the M-MDS. (See **DTC INSPECTION [START STOP UNIT]**.) • Is the same DTC displayed?		
2	**VERIFY IF INSTALLATIONS OF LIGHT SWITCH AND WIPER AND WASHER SWITCH ARE REVERSED** • Verify the installation condition of the light switch and the wiper and washer switch. • Are the light switch and the wiper and washer switch installed correctly?	Yes	Go to the next step.
		No	Install the light switch and the wiper and washer switch properly, then go to Step 4. (See **LIGHT SWITCH REMOVAL/INSTALLATION**.) (See **WIPER AND WASHER SWITCH REMOVAL/INSTALLATION**.)
3	**INSPECT TURN SWITCH** • Inspect the turn switch. (See **LIGHT SWITCH INSPECTION**.) • Is the turn switch normal?	Yes	Go to the next step.
		No	Replace the light switch, then go to the next step. (See **LIGHT SWITCH REMOVAL/INSTALLATION**.)
4	**VERIFY THAT REPAIRS HAVE BEEN COMPLETED** • Clear the DTC for the start stop unit using the M-MDS. (See **CLEARING DTC [START STOP UNIT]**.) • Operate the turn switch to RH position and wait for **5 s or more**. • Operate the turn switch to LH position and wait for **5 s or more**. • Perform the start stop unit DTC inspection using the M-MDS. (See **DTC INSPECTION [START STOP UNIT]**.) • Is the same DTC displayed?	Yes	Repeat the inspection from Step 1. • If the malfunction recurs, replace the start stop unit. (See **START STOP UNIT REMOVAL/INSTALLATION**.) Go to the next step.
		No	Go to the next step.

5	**VERIFY IF OTHER DTCs DISPLAYED** • Are any other DTCs displayed?	Yes	Repair or replace the malfunctioning part according to the applicable DTC troubleshooting. (See **DTC TABLE [START STOP UNIT]**.)
		No	DTC troubleshooting completed.

2014 - Mazda3 - Body and Accessories

DTC B13D3:16 [START STOP UNIT]

Description	Low remote transmitter battery voltage
Detection condition	• Start stop unit detects the low remote transmitter battery voltage in any of the programmed transmitters **3 times** continuously.
Vehicle status when DTCs are output	All lock/unlock operations using the advanced keyless entry system, push button start system, and remote transmitter are not possible.
Fail-safe function	Not applicable
Possible cause	• Dirt around remote transmitter battery, or foreign matter adhering • Remote transmitter battery is dead. • Specific remote transmitter is malfunctioning.
System wiring diagram	Not applicable

Diagnostic Procedure

1. Verify the TRANS_NUM_L of the snapshot data item and then the registration number of the remote transmitter in which low battery voltage was detected.

2. Using the M-MDS, display the PID item RF_TRANS_NUM for the start stop unit.

3. Press the unlock button of the remote transmitter to verify the registration numbers of all the programmed remote transmitters.

4. Perform the remote transmitter diagnostic procedure using the remote transmitter corresponding to the registration number of the remote transmitter detected using the snapshot data. (See **Remote Transmitter Diagnostic Procedure**.)

Remote Transmitter Diagnostic Procedure

Step	Inspection		Action
1	**INSPECT AREA AROUND REMOTE TRANSMITTER BATTERY** • Inspect the area around the remote transmitter battery. • Is the area around the remote transmitter battery dirty or is there foreign mattering adhering?	Yes	Remove dirt or foreign matter, then go to the next step.
		No	Go to the next step.
2	**VERIFY IF MALFUNCTION CAUSE IS DEAD REMOTE TRANSMITTER BATTERY** • Clear the DTC for the start stop unit using the M-MDS. (See **CLEARING DTC [START STOP UNIT]**.) • Retrieve the start stop unit DTCs using the M-MDS. (See **DTC INSPECTION [START STOP UNIT]**.) • Is the same DTC displayed?	Yes	Replace the remote transmitter battery, then go to the next step. (See **REMOTE TRANSMITTER DISASSEMBLY / ASSEMBLY**.)
		No	Go to Step 4
3	**VERIFY THAT REPAIRS HAVE BEEN COMPLETED** • Clear the DTC for the start stop unit using the M-MDS. (See **CLEARING DTC [START STOP UNIT]**.) • Retrieve the start stop unit DTCs using the M-MDS. (See **DTC INSPECTION [START STOP UNIT]**.) • Is the same DTC displayed?	Yes	Repeat the inspection from Step 1. • If the malfunction recurs, replace the remote transmitter. (See **IMMOBILIZER SYSTEM-RELATED PARTS PROGRAMMING**.) Go to the next step.
		No	Go to the next step.
4	**VERIFY IF OTHER DTCs DISPLAYED** • Are any other DTCs displayed?	Yes	Repair or replace the malfunctioning part according to the applicable DTC troubleshooting. (See **DTC TABLE [START STOP UNIT]**.)
		No	DTC troubleshooting completed.

2014 - Mazda3 - Body and Accessories

DTC B13D3:4A [START STOP UNIT]

Description	Remote transmitter assembly malfunction
Detection condition	• Start stop unit detects a remote transmitter different from the one equipped to the vehicle.
Fail-safe function	Not applicable
Possible cause	• Mistaken remote transmitter registration • Start stop unit configuration error • Remote transmitter malfunction • Start stop unit malfunction
System wiring diagram	Not applicable

Diagnostic Procedure

Step	Inspection		Action
1	**VERIFY THAT THE VEHICLE AND REMOTE TRANSMITTER COMBINATION IS CORRECT** • Verify that the vehicle and remote transmitter combination is correct. • Is the combination of the remote transmitters correct?	Yes	Go to the next step.
		No	Re-register using the correct remote transmitters, then go to the Step 4. (See **IMMOBILIZER SYSTEM-RELATED PARTS PROGRAMMING**.)
2	**PERFORM START STOP UNIT CONFIGURATION (USING AS-BUILT DATA)** • Using the M-MDS, perform the start stop unit configuration (using As-Built data).	Yes	Using the M-MDS, perform the start stop unit configuration (using As-Built data) again, then go to the next step. (See **START STOP UNIT CONFIGURATION (USING AS-BUILT DATA)**.)

	(See **START STOP UNIT CONFIGURATION (USING AS-BUILT DATA)**.) • Clear the DTC for the start stop unit using the M-MDS. (See **CLEARING DTC [START STOP UNIT]**.) • Retrieve the start stop unit DTCs using the M-MDS. (See **DTC INSPECTION [START STOP UNIT]**.) • Is the same DTC displayed?	No	Go to Step 5.
3	**VERIFY IF MALFUNCTION CAUSE IS SPECIFIC REMOTE TRANSMITTER** **NOTE:** • Perform the following procedure for all of the programmed remote transmitters. • Clear the DTC for the start stop unit using the M-MDS. (See **CLEARING DTC [START STOP UNIT]**.) • Retrieve the start stop unit DTCs using the M-MDS. (See **DTC INSPECTION [START STOP UNIT]**.) • Is there a remote transmitter which indicates the same DTC?	Yes	Replace the remote transmitter which indicates the DTC, then go to the next step. (See **IMMOBILIZER SYSTEM-RELATED PARTS PROGRAMMING**.)
		No	Go to the next step.
4	**VERIFY THAT REPAIRS HAVE BEEN COMPLETED** • Clear the DTC for the start stop unit using the M-MDS. (See **CLEARING DTC [START STOP UNIT]**.) • Retrieve the start stop unit DTCs using the M-MDS. (See **DTC INSPECTION [START STOP UNIT]**.) • Is the same DTC displayed?	Yes	Repeat the inspection from Step 1. • If the malfunction recurs, replace the start stop unit. (See **START STOP UNIT REMOVAL/INSTALLATION**.) Go to the next step.
		No	Go to the next step.

5	**VERIFY IF OTHER DTCs DISPLAYED** • Are any other DTCs displayed?	Yes	Repair or replace the malfunctioning part according to the applicable DTC troubleshooting. (See **DTC TABLE [START STOP UNIT]**.)
		No	DTC troubleshooting completed.

2014 - Mazda3 - Body and Accessories

DTC B13D3:97 [START STOP UNIT]

Description	Remote transmitter registration work not completed
Detection condition	• Start stop unit detects that the registration of a remote transmitter has not been completed.
Fail-safe function	Not applicable
Possible cause	• DTCs are stored in the immobilizer system. • Start stop unit configuration error • Remote transmitter registration not completed correctly. • Start stop unit malfunction
System wiring diagram	Not applicable

Diagnostic Procedure

Step	Inspection		Action
1	**VERIFY IMMOBILIZER SYSTEM DTCs** • Retrieve the immobilizer system DTCs using the M-MDS. (See **DTC INSPECTION [IMMOBILIZER SYSTEM]**.) • Are any DTCs displayed?	Yes	Repair or replace the malfunctioning part according to the applicable DTC troubleshooting. (See **DTC TABLE [IMMOBILIZER SYSTEM]**.)
		No	Go to the next step.
2	**PERFORM START STOP UNIT CONFIGURATION (USING AS-BUILT DATA)** • Using the M-MDS, perform the start stop unit configuration (using As-Built data).	Yes	Using the M-MDS, perform the start stop unit configuration (using As-Built data) again, then go to the next step. (See **START STOP UNIT CONFIGURATION (USING AS-BUILT DATA)**.)
		No	Go to Step 5.

	(See **START STOP UNIT CONFIGURATION (USING AS-BUILT DATA)**.) • Clear the DTC for the start stop unit using the M-MDS. (See **CLEARING DTC [START STOP UNIT]**.) • Retrieve the start stop unit DTCs using the M-MDS. (See **DTC INSPECTION [START STOP UNIT]**.) • Is the same DTC displayed?		
3	**REGISTER REMOTE TRANSMITTER** • Register the remote transmitter. (See **IMMOBILIZER SYSTEM-RELATED PARTS PROGRAMMING**.) • Clear the DTC for the start stop unit using the M-MDS. (See **CLEARING DTC [START STOP UNIT]**.) • Retrieve the start stop unit DTCs using the M-MDS. (See **DTC INSPECTION [START STOP UNIT]**.) • Is the same DTC displayed?	Yes	Go to the next step.
		No	Go to Step 5.
4	**VERIFY THAT REPAIRS HAVE BEEN COMPLETED** • Clear the DTC for the start stop unit using the M-MDS. (See **CLEARING DTC [START STOP UNIT]**.) • Retrieve the start stop unit DTCs using the M-MDS. (See **DTC INSPECTION [START STOP UNIT]**.) • Is the same DTC displayed?	Yes	Repeat the inspection from Step 1. • If the malfunction recurs, replace the start stop unit. (See **START STOP UNIT REMOVAL/INSTALLATION**.) Go to the next step.
		No	Go to the next step.
5	**VERIFY IF OTHER DTCs DISPLAYED** • Are any other DTCs displayed?	Yes	Repair or replace the malfunctioning part according to the applicable DTC troubleshooting.

			(See **DTC TABLE [START STOP UNIT]**.)
		No	DTC troubleshooting completed.

2014 - Mazda3 - Body and Accessories

DTC B1C53:13 [START STOP UNIT]

Description	Windshield wiper switch circuit malfunction
Detection condition	• Start stop unit detects an open circuit, short to ground, or short to power supply in the windshield wiper switch circuit for **5 s or more** with the ignition switched ON (engine off or on).
Fail-safe function	Not applicable
Possible cause	• Start stop unit configuration error • The installations of the light switch and the wiper and washer switch are reversed. • Windshield wiper switch malfunction • Start stop unit malfunction
System wiring diagram	Not applicable

Diagnostic Procedure

Step	Inspection		Action
1	**PERFORM START STOP UNIT CONFIGURATION (USING AS-BUILT DATA)** • Using the M-MDS, perform the start stop unit configuration (using As-Built data). (See **START STOP UNIT CONFIGURATION (USING AS-BUILT DATA)**.) • Clear the DTC for the start stop unit using the M-MDS. (See **CLEARING DTC [START STOP UNIT]**.)	Yes	Using the M-MDS, perform the start stop unit configuration (using As-Built data) again, then go to the next step. (See **START STOP UNIT CONFIGURATION (USING AS-BUILT DATA)**.)
		No	Go to Step 5.

	• Switch the INT volume switch to each step at **5 s** intervals. • Retrieve the start stop unit DTCs using the M-MDS. (See **DTC INSPECTION [START STOP UNIT]**.) • Is the same DTC displayed?		
2	**VERIFY IF INSTALLATIONS OF LIGHT SWITCH AND WIPER AND WASHER SWITCH ARE REVERSED** • Verify the installation condition of the light switch and the wiper and washer switch. • Are the light switch and the wiper and washer switch installed correctly?	Yes	Go to the next step.
		No	Install the light switch and the wiper and washer switch properly, then go to Step 4. (See **LIGHT SWITCH REMOVAL/INSTALLATION**.) (See **WIPER AND WASHER SWITCH REMOVAL/INSTALLATION**.)
3	**INSPECT WINDHIELD WIPER SWITCH** • Inspect the windshield wiper switch. (See **WIPER AND WASHER SWITCH INSPECTION**.) • Is the windshield wiper switch normal?	Yes	Go to the next step.
		No	Replace the windshield wiper switch, then go to the next step. (See **WIPER AND WASHER SWITCH REMOVAL/INSTALLATION**.)
4	**VERIFY THAT REPAIRS HAVE BEEN COMPLETED** • Clear the DTC for the start stop unit using the M-MDS. (See **CLEARING DTC [START STOP UNIT]**.) • Switch the INT volume switch to each step at **5 s** intervals. • Perform the start stop unit DTC inspection using the M-MDS. (See **DTC INSPECTION [START STOP UNIT]**.) • Is the same DTC displayed?	Yes	Repeat the inspection from Step 1. • If the malfunction recurs, replace the start stop unit. (See **START STOP UNIT REMOVAL/INSTALLATION**.) Go to the next step.
		No	Go to the next step.
5	**VERIFY IF OTHER DTCs DISPLAYED** • Are any other DTCs displayed?	Yes	Repair or replace the malfunctioning part according to the applicable DTC troubleshooting. (See **DTC TABLE [START STOP UNIT]**.)

		No	DTC troubleshooting completed.

2014 - Mazda3 - Body and Accessories

DTC C0040:23 [START STOP UNIT]

Description	Brake switch (No.1 signal) circuit malfunction
Detection condition	• Start stop unit detects that the brake switch No.1 signal is in the off condition for **3 s or more** continuously for a continuous **5 times** even though brake switch No.2 signal changes with the ignition switched ON (engine off or on).
Fail-safe function	• Determined by brake switch (No.2 signal) with the brake pedal depressed.

Possible cause	• Brake switch connector or terminal malfunction
	• Brake switch (No.1 signal) malfunction
	• Brake switch (No.1 signal) power supply circuit malfunction
	  ▪ Short to ground in wiring harness between MAIN 200 A fuse and brake switch terminal A
	  ▪ STOP 10 A fuse malfunction
	  ▪ MAIN 200 A fuse malfunction
	  ▪ Open circuit in wiring harness between battery positive terminal and brake switch terminal A
	• Start stop unit connector or terminal malfunction
	• Short to ground in wiring harness between brake switch terminal D and start stop unit terminal 1C
	• Open circuit in wiring harness between brake switch terminal D and start stop unit terminal 1C
	• Start stop unit malfunction

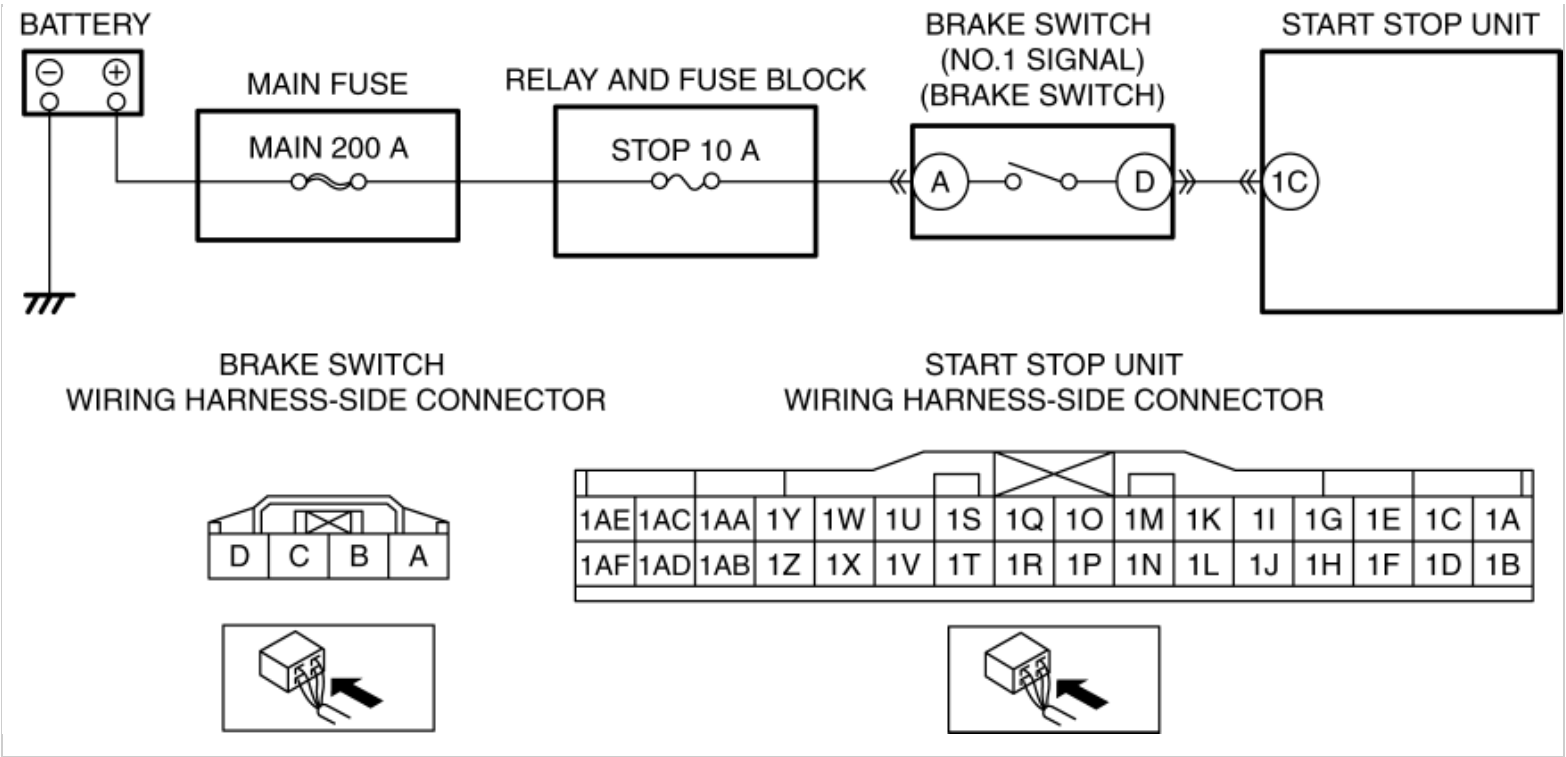

Diagnostic Procedure

Step	Inspection		Action
1	**INSPECT BRAKE SWITCH CONNECTOR CONDITION** • Switch the ignition off. • Disconnect the negative battery cable. (See **NEGATIVE BATTERY CABLE DISCONNECTION/CONNECTION [SKYACTIV-G 2.0, SKYACTIV-G 2.5]**.) • Disconnect the brake switch connector. • Inspect the connector engagement and connection condition and inspect the terminals for damage, deformation, corrosion, or disconnection. • Is the connector normal?	Yes	Go to the next step.
		No	Repair or replace the connector, then go to Step 7.
2	**INSPECT BRAKE SWITCH (NO.1 SIGNAL)** • Inspect the brake switch (No.1 signal). (See **BRAKE SWITCH INSPECTION**.) • Is the brake switch (No.1 signal) normal?	Yes	Go to the next step.
		No	Replace the brake switch, then go to Step 7. (See **BRAKE PEDAL REMOVAL/INSTALLATION**.)

3	**INSPECT FOR OPEN CIRCUIT OR SHORT TO GROUND IN BRAKE SWITCH (NO.1 SIGNAL) POWER SUPPLY CIRCUIT** • Verify that the brake switch connector is disconnected. • Reconnect the negative battery cable. (See **NEGATIVE BATTERY CABLE DISCONNECTION/CONNECTION [SKYACTIV-G 2.0, SKYACTIV-G 2.5]**.) • Measure the voltage at the brake switch terminal A (wiring harness-side). • Is the voltage **B+**?	Yes	Go to the next step.
		No	Inspect the STOP 10 A fuse and MAIN 200 A fuse. • If the fuse is blown: ▪ Refer to the wiring diagram and verify whether or not there is a common connector between MAIN 200 A fuse and brake switch terminal A. **If there is a common connector:** • Determine the malfunctioning part by inspecting the common connector and the terminal for corrosion, damage, or pin disconnection, and the common wiring harness for a short to ground. • Repair or replace the malfunctioning part. **If there is no common connector:** • Repair or replace the wiring harness which has a short to ground. • Replace the fuse. • If the fuse is damaged: ▪ Replace the fuse. • If the fuse is normal: ▪ Refer to the wiring diagram and verify whether or not there is a common connector between battery positive terminal and brake switch terminal A.

			If there is a common connector: • Determine the malfunctioning part by inspecting the common connector and the terminal for corrosion, damage, or pin disconnection, and the common wiring harness for an open circuit. • Repair or replace the malfunctioning part. **If there is no common connector:** • Repair or replace the wiring harness which has an open circuit. Go to Step 7.
4	**INSPECT START STOP UNIT CONNECTOR CONDITION** • Disconnect the negative battery cable. (See **NEGATIVE BATTERY CABLE DISCONNECTION/CONNECTION [SKYACTIV-G 2.0, SKYACTIV-G 2.5]**.) • Disconnect the start stop unit connector. • Inspect the connector engagement and connection condition and inspect the terminals for damage, deformation, corrosion, or disconnection. • Is the connector normal?	Yes	Go to the next step.
		No	Repair or replace the connector, then go to Step 7.
5	**INSPECT FOR SHORT TO GROUND IN BRAKE SWITCH (NO.1 SIGNAL) CIRCUIT** • Verify that the brake switch and start stop unit connectors are disconnected.	Yes	Refer to the wiring diagram and verify whether or not there is a common connector between brake switch terminal D and start stop unit terminal 1C. **If there is a common connector:**

	• Inspect for continuity between brake switch terminal D (wiring harness-side) and body ground. • Is there continuity?		• Determine the malfunctioning part by inspecting the common connector and the terminal for corrosion, damage, or pin disconnection, and the common wiring harness for a short to ground. • Repair or replace the malfunctioning part. **If there is no common connector:** • Repair or replace the wiring harness which has a short to ground. Go to Step 7.
		No	Go to the next step.
6	**INSPECT FOR OPEN CIRCUIT IN BRAKE SWITCH (NO.1 SIGNAL) CIRCUIT** • Verify that the brake switch and start stop unit connectors are disconnected. • Inspect for continuity between brake switch terminal D (wiring harness-side) and start stop unit terminal 1C (wiring harness-side). • Is there continuity?	Yes	Go to the next step.
		No	Refer to the wiring diagram and verify whether or not there is a common connector between brake switch terminal D and start stop unit terminal 1C. **If there is a common connector:** • Determine the malfunctioning part by inspecting the common connector and the terminal for corrosion, damage, or pin disconnection, and the common wiring harness for an open circuit. • Repair or replace the malfunctioning part. **If there is no common connector:** • Repair or replace the wiring harness which has an open circuit. Go to the next step.
7	**VERIFY THAT REPAIRS HAVE BEEN COMPLETED** • Always reconnect all disconnected connectors. • Reconnect the negative battery cable. (See **NEGATIVE BATTERY CABLE DISCONNECTION/CONNECTION [SKYACTIV-G 2.0, SKYACTIV-G 2.5]**.) • Clear the DTC for the start stop unit using the M-MDS. (See **CLEARING DTC [START STOP UNIT]**.) • Perform the work of depressing the brake pedal for **3 s or more** and then releasing it for **5 times or more** with the ignition	Yes	Repeat the inspection from Step 1. • If the malfunction recurs, replace the start stop unit. (See **START STOP UNIT REMOVAL/INSTALLATION**.) Go to the next step.
		No	Go to the next step.

	switched ON (engine off or on). • Retrieve the start stop unit DTCs using the M-MDS. (See **DTC INSPECTION [START STOP UNIT]**.) • Is the same DTC displayed?		
8	**VERIFY IF OTHER DTCs DISPLAYED** • Are any other DTCs displayed?	Yes	Repair or replace the malfunctioning part according to the applicable DTC troubleshooting. (See **DTC TABLE [START STOP UNIT]**.)
		No	DTC troubleshooting completed.

2014 - Mazda3 - Body and Accessories

DTC C0040:24 [START STOP UNIT]

Description	Brake switch (No.1 signal) circuit malfunction
Detection condition	• Start stop unit detects that the brake switch No.1 signal is in the on condition for **3 s or more** continuously for a continuous **5 times** even though brake switch No.2 signal changes with the ignition switched ON (engine off or on).
Fail-safe function	• Determined by brake switch (No.2 signal) with the brake pedal depressed.
Possible cause	• Brake switch connector or terminal malfunction • Brake switch (No.1 signal) malfunction • Start stop unit connector or terminal malfunction • Short to power supply in wiring harness between brake switch terminal D and start stop unit terminal 1C • Start stop unit malfunction

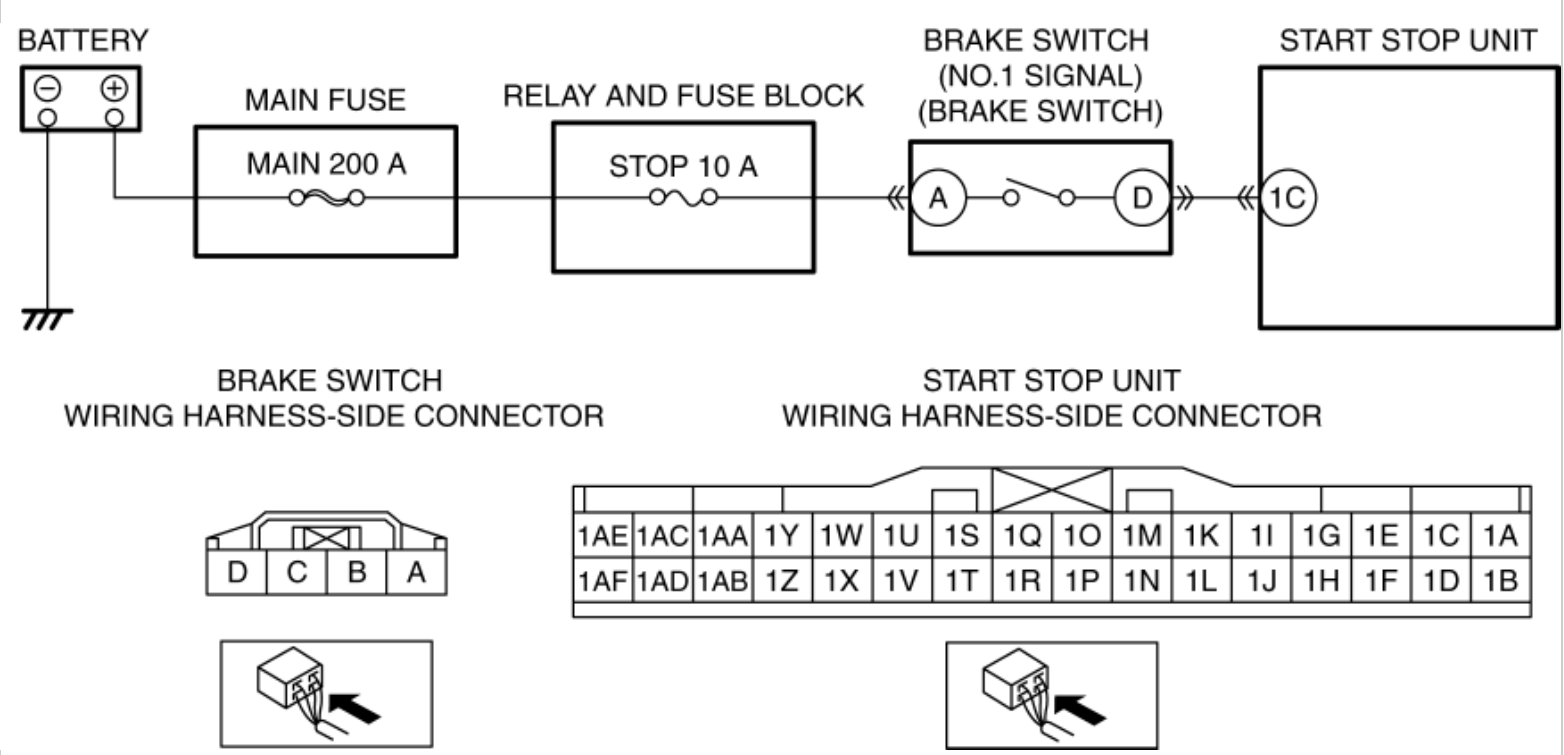

Diagnostic Procedure

Step	Inspection	Action

1	**INSPECT BRAKE SWITCH CONNECTOR CONDITION** • Switch the ignition off. • Disconnect the negative battery cable. (See **NEGATIVE BATTERY CABLE DISCONNECTION/CONNECTION [SKYACTIV-G 2.0, SKYACTIV-G 2.5]**.) • Disconnect the brake switch connector. • Inspect the connector engagement and connection condition and inspect the terminals for damage, deformation, corrosion, or disconnection. • Is the connector normal?	Yes	Go to the next step.
		No	Repair or replace the connector, then go to Step 5.
2	**INSPECT BRAKE SWITCH (NO.1 SIGNAL)** • Inspect the brake switch (No.1 signal). (See **BRAKE SWITCH INSPECTION**.) • Is the brake switch (No.1 signal) normal?	Yes	Go to the next step.
		No	Replace the brake switch, then go to Step 5. (See **BRAKE PEDAL REMOVAL/INSTALLATION**.)
3	**INSPECT START STOP UNIT CONNECTOR CONDITION** • Disconnect the start stop unit connector. • Inspect the connector engagement and connection condition and inspect the terminals for damage, deformation, corrosion, or disconnection. • Is the connector normal?	Yes	Go to the next step.
		No	Repair or replace the connector, then go to Step 5.
4	**INSPECT FOR SHORT TO POWER SUPPLY IN BRAKE SWITCH (NO.1 SIGNAL) CIRCUIT** • Verify that the brake switch and start stop unit connectors are disconnected. • Reconnect the negative battery cable. (See **NEGATIVE BATTERY CABLE DISCONNECTION/CONNECTION [SKYACTIV-G 2.0, SKYACTIV-G 2.5]**.) • Switch the ignition ON (engine off or on). • Measure the voltages at brake switch terminal D (wiring harness-	Yes	Go to the next step.
		No	Refer to the wiring diagram and verify whether or not there is a common connector between brake switch terminal D and start stop unit terminal 1C. **If there is a common connector:** • Determine the malfunctioning part by inspecting the common connector and the terminal for corrosion, damage, or pin disconnection, and the common wiring harness for a short to power supply. • Repair or replace the malfunctioning part. **If there is no common connector:**

	side). • Is the voltage **0 V**?		Repair or replace the wiring harness which has a short to power supply. Go to the next step.
5	**VERIFY THAT REPAIRS HAVE BEEN COMPLETED** • Always reconnect all disconnected connectors. • Reconnect the negative battery cable. (See **NEGATIVE BATTERY CABLE DISCONNECTION/CONNECTION [SKYACTIV-G 2.0, SKYACTIV-G 2.5]**.) • Clear the DTC for the start stop unit using the M-MDS. (See **CLEARING DTC [START STOP UNIT]**.) • Perform the work of depressing the brake pedal for **3 s or more** and then releasing it for **5 times or more** with the ignition switched ON (engine off or on). • Retrieve the start stop unit DTCs using the M-MDS. (See **DTC INSPECTION [START STOP UNIT]**.) • Is the same DTC displayed?	Yes	Repeat the inspection from Step 1. • If the malfunction recurs, replace the start stop unit. (See **START STOP UNIT REMOVAL/INSTALLATION**.) Go to the next step.
		No	Go to the next step.
6	**VERIFY IF OTHER DTCs DISPLAYED** • Are any other DTCs displayed?	Yes	Repair or replace the malfunctioning part according to the applicable DTC troubleshooting. (See **DTC TABLE [START STOP UNIT]**.)
		No	DTC troubleshooting completed.

2014 - Mazda3 - Body and Accessories

DTC C0051:95 [START STOP UNIT]

Description	Steering angle sensor assembly malfunction

Detection condition	• Start stop unit receives the following signals with the ignition switched ON (engine off or on).
	  ▪ Steering angle sensor assembly malfunction from EPS control module for **1 s or more**
	  ▪ Improper assembly of steering angle sensor at **360°**
	  ▪ Steering wheel angle of **720° or more** for **0.048 s or more**

Fail-safe function	Not applicable
Possible cause	• DTCs are stored in the EPS control module. • Improper assembly of steering angle sensor • Start stop unit malfunction
System wiring diagram	Not applicable

Diagnostic Procedure

Step	Inspection		Action
1	**VERIFY EPS CONTROL MODULE DTCs** • Retrieve the EPS control module DTCs using the M-MDS. (See **ELECTRIC POWER STEERING (EPS) ON-BOARD DIAGNOSIS**.) • Are any DTCs displayed?	Yes	Repair or replace the malfunctioning part according to the applicable DTC troubleshooting. (See **ELECTRIC POWER STEERING (EPS) ON-BOARD DIAGNOSIS**.)
		No	Go to the next step.
2	**VERIFY STEERING ANGLE SENSOR INSTALLATION CONDITION**	Yes	Go to the next step.

	• Verify the steering angle sensor installation condition. (See **CLOCK SPRING INSPECTION [STANDARD DEPLOYMENT CONTROL SYSTEM]**.) (See **CLOCK SPRING INSPECTION [TWO-STEP DEPLOYMENT CONTROL SYSTEM]**.) • Is the steering angle sensor installed correctly?	No	Install the steering angle sensor correctly, then go to the next step. (See **CLOCK SPRING REMOVAL/INSTALLATION [STANDARD DEPLOYMENT CONTROL SYSTEM]**.) (See **CLOCK SPRING REMOVAL/INSTALLATION [TWO-STEP DEPLOYMENT CONTROL SYSTEM]**.)
3	**VERIFY THAT REPAIRS HAVE BEEN COMPLETED** • Clear the DTC for the start stop unit using the M-MDS. (See **CLEARING DTC [START STOP UNIT]**.) • Switch the ignition ON (engine off or on) and wait for **1 s or more**. • Retrieve the start stop unit DTCs using the M-MDS. (See **DTC INSPECTION [START STOP UNIT]**.) • Is the same DTC displayed?	Yes	Repeat the inspection from Step 1. • If the malfunction recurs, replace the start stop unit. (See **START STOP UNIT REMOVAL/INSTALLATION**.) Go to the next step.
		No	Go to the next step.
4	**VERIFY IF OTHER DTCs DISPLAYED** • Are any other DTCs displayed?	Yes	Repair or replace the malfunctioning part according to the applicable DTC troubleshooting. (See **DTC TABLE [START STOP UNIT]**.)
		No	DTC troubleshooting completed.

2014 - Mazda3 - Body and Accessories

DTC C0051:2F [START STOP UNIT]

Description	Steering angle sensor signal error
Detection condition	• Start stop unit detects the steering angle sensor signal error for **5 s or more** with the ignition switched ON (engine off or on).
Fail-safe function	Not applicable
Possible cause	• Start stop unit malfunction
System wiring diagram	Not applicable

Diagnostic Procedure

Step	Inspection		Action
1	**PERFORM DTC INSPECTION AND VERIFY START STOP UNIT MALFUNCTION** • Clear the DTC for the start stop unit using the M-MDS. (See **CLEARING DTC [START STOP UNIT]**.) • Switch the ignition ON (engine off or on) and wait for **5 s or more**. • Retrieve the start stop unit DTCs using the M-MDS. (See **DTC INSPECTION [START STOP UNIT]**.) • Is the same DTC displayed?	Yes	Repeat the inspection from Step 1. • If the malfunction recurs, replace the start stop unit. (See **START STOP UNIT REMOVAL/INSTALLATION**.) Go to the next step.
		No	Go to the next step.
2	**VERIFY IF OTHER DTCs DISPLAYED** • Are any other DTCs displayed?	Yes	Repair or replace the malfunctioning part according to the applicable DTC troubleshooting.

			(See **DTC TABLE [START STOP UNIT]**.)
		No	DTC troubleshooting completed.

2014 - Mazda3 - Body and Accessories

DTC C0052:14 [START STOP UNIT]

Description	Steering angle sensor A signal circuit malfunction
Detection condition	• Start stop unit detects an open circuit or short to ground in the steering angle sensor A signal circuit.
Fail-safe function	Not applicable
Possible cause	• Steering angle sensor connector or terminal malfunction • Start stop unit connector or terminal malfunction • Short to ground in wiring harness between start stop unit terminal 1U and steering angle sensor terminal A • Open circuit in wiring harness between start stop unit terminal 1U and steering angle sensor terminal A • Steering angle sensor malfunction • Start stop unit malfunction

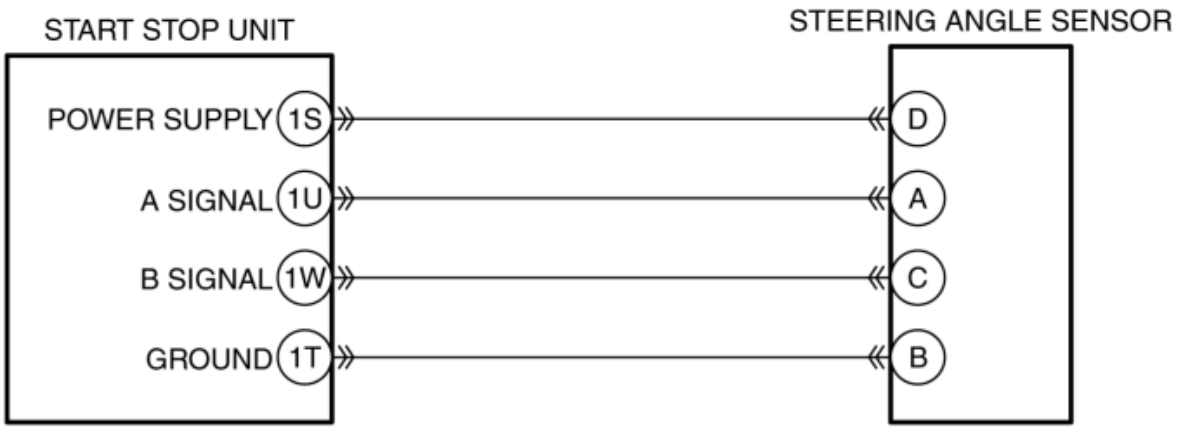

START STOP UNIT
WIRING HARNESS-SIDE CONNECTOR

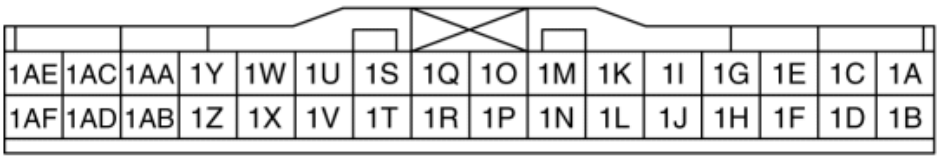

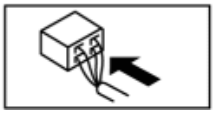

STEERING ANGLE SENSOR
WIRING HARNESS-SIDE CONNECTOR

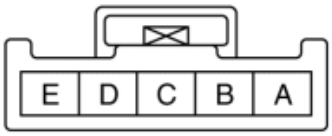

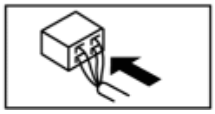

Diagnostic Procedure

Step	Inspection		Action
1	**INSPECT STEERING ANGLE SENSOR CONNECTOR CONDITION** • Switch the ignition off. • Disconnect the negative battery cable. (See **NEGATIVE BATTERY CABLE DISCONNECTION/CONNECTION [SKYACTIV-G 2.0, SKYACTIV-G 2.5]**.) • Disconnect the steering angle sensor connector. • Inspect the connector engagement and connection condition and inspect the terminals for damage, deformation, corrosion, or disconnection. • Is the connector normal?	Yes	Go to the next step.
		No	Repair or replace the connector, then go to Step 6.
2	**INSPECT START STOP UNIT CONNECTOR CONDITION** • Disconnect the start stop unit connector. • Inspect the connector engagement and connection condition and inspect the terminals for damage, deformation, corrosion, or disconnection. • Is the connector normal?	Yes	Go to the next step.
		No	Repair or replace the connector, then go to Step 6.
3	**INSPECT FOR SHORT TO GROUND IN STEERING ANGLE SENSOR A SIGNAL CIRCUIT** • Verify that the steering angle sensor and start stop unit connectors are disconnected. • Inspect for continuity between steering angle sensor terminal A (wiring harness-side) and body ground. • Is there continuity?	Yes	Refer to the wiring diagram and verify whether or not there is a common connector between start stop unit terminal 1U and steering angle sensor terminal A. **If there is a common connector:** • Determine the malfunctioning part by inspecting the common connector and the terminal for corrosion, damage, or pin disconnection, and the common wiring harness for a short to ground. • Repair or replace the malfunctioning part. **If there is no common connector:** • Repair or replace the wiring harness which has a short to ground. Go to Step 6.
		No	Go to the next step.
	INSPECT FOR OPEN CIRCUIT IN STEERING		

4	**ANGLE SENSOR A SIGNAL CIRCUIT** • Verify that the steering angle sensor and start stop unit connectors are disconnected. • Inspect for continuity between start stop unit terminal 1U (wiring harness-side) and steering angle sensor terminal A (wiring harness-side). • Is there continuity?	Yes	Go to the next step.
		No	Refer to the wiring diagram and verify whether or not there is a common connector between start stop unit terminal 1U and steering angle sensor terminal A. **If there is a common connector:** • Determine the malfunctioning part by inspecting the common connector and the terminal for corrosion, damage, or pin disconnection, and the common wiring harness for an open circuit. • Repair or replace the malfunctioning part. **If there is no common connector:** • Repair or replace the wiring harness which has an open circuit. Go to Step 6.
5	**INSPECT STEERING ANGLE SENSOR** • Inspect the steering angle sensor. (See **STEERING ANGLE SENSOR INSPECTION**.) • Is the steering angle sensor normal?	Yes	Go to the next step.
		No	Replace the steering angle sensor, then go to the next step. (See **CLOCK SPRING REMOVAL/INSTALLATION [STANDARD DEPLOYMENT CONTROL SYSTEM]**.) (See **CLOCK SPRING REMOVAL/INSTALLATION [TWO-STEP DEPLOYMENT CONTROL SYSTEM]**.)
6	**VERIFY THAT REPAIRS HAVE BEEN COMPLETED** • Always reconnect all disconnected connectors. • Reconnect the negative battery cable. (See **NEGATIVE BATTERY CABLE DISCONNECTION/CONNECTION [SKYACTIV-G 2.0, SKYACTIV-G 2.5]**.) • Clear the DTC for the start stop unit using the M-MDS. (See **CLEARING DTC [START STOP UNIT]**.) • Retrieve the start stop unit DTCs using the M-MDS. (See **DTC INSPECTION [START STOP UNIT]**.) • Is the same DTC displayed?	Yes	Repeat the inspection from Step 1. • If the malfunction recurs, replace the start stop unit. (See **START STOP UNIT REMOVAL/INSTALLATION**.) Go to the next step.
		No	Go to the next step.
7	**VERIFY IF OTHER DTCs DISPLAYED** • Are any other DTCs displayed?	Yes	Repair or replace the malfunctioning part according to the applicable DTC troubleshooting. (See **DTC TABLE [START STOP UNIT]**.)
		No	DTC troubleshooting completed.

2014 - Mazda3 - Body and Accessories

DTC C0052:2F [START STOP UNIT]

Description	Steering angle sensor A signal malfunction
Detection condition	• Start stop unit detected the sudden change in steering angle sensor A signal. • Start stop unit detected that the steering angle sensor A signal is stuck with the ignition switched ON (engine off or on).
Fail-safe function	Not applicable
Possible cause	• Steering angle sensor malfunction • Start stop unit malfunction
System wiring diagram	Not applicable

Diagnostic Procedure

Step	Inspection		Action
1	**INSPECT STEERING ANGLE SENSOR** • Inspect the steering angle sensor. (See **STEERING ANGLE SENSOR INSPECTION**.) • Is the steering angle sensor normal?	Yes	Go to the next step.
		No	Replace the steering angle sensor, then go to the next step. (See **CLOCK SPRING REMOVAL/INSTALLATION [STANDARD DEPLOYMENT CONTROL SYSTEM]**.) (See **CLOCK SPRING REMOVAL/INSTALLATION [TWO-STEP DEPLOYMENT CONTROL SYSTEM]**.)
2	**VERIFY THAT REPAIRS HAVE BEEN COMPLETED** • Clear the DTC for the start stop unit using the M-MDS. (See **CLEARING DTC [START**	Yes	Repeat the inspection from Step 1. • If the malfunction recurs, replace the start stop unit. (See **START STOP UNIT REMOVAL/INSTALLATION**.)

	STOP UNIT].) • Retrieve the start stop unit DTCs using the M-MDS. (See **DTC INSPECTION [START STOP UNIT]**.) • Is the same DTC displayed?		Go to the next step.
		No	Go to the next step.
3	**VERIFY IF OTHER DTCs DISPLAYED** • Are any other DTCs displayed?	Yes	Repair or replace the malfunctioning part according to the applicable DTC troubleshooting. (See **DTC TABLE [START STOP UNIT]**.)
		No	DTC troubleshooting completed.

2014 - Mazda3 - Body and Accessories

DTC C0053:14 [START STOP UNIT]

Description	Steering angle sensor B signal circuit malfunction
Detection condition	• Start stop unit detects an open circuit or short to ground in steering angle sensor B signal circuit.
Fail-safe function	Not applicable
Possible cause	• Steering angle sensor connector or terminal malfunction • Start stop unit connector or terminal malfunction • Short to ground in wiring harness between start stop unit terminal 1W and steering angle sensor terminal C • Open circuit in wiring harness between start stop unit terminal 1W and steering angle sensor terminal C • Steering angle sensor malfunction • Start stop unit malfunction

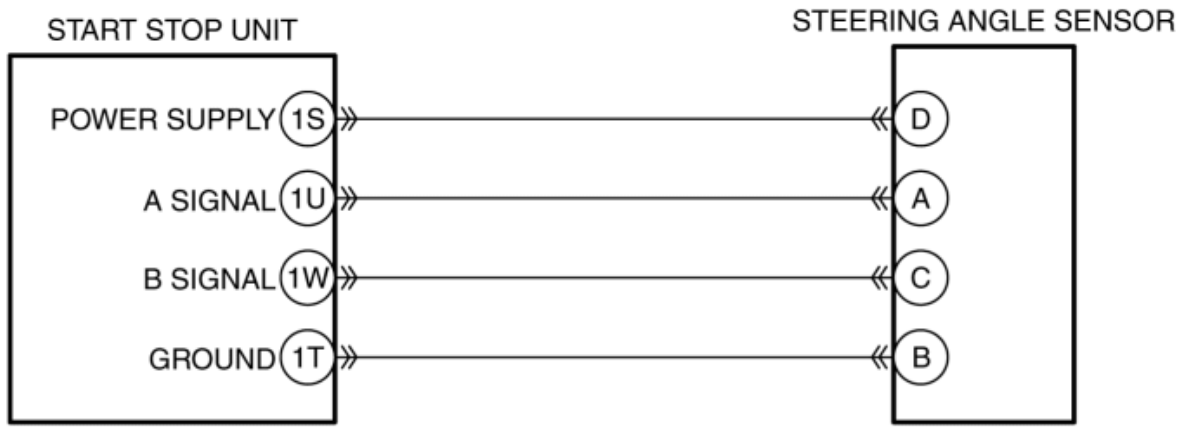

START STOP UNIT
WIRING HARNESS-SIDE CONNECTOR

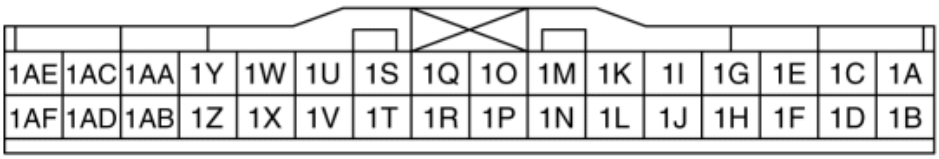

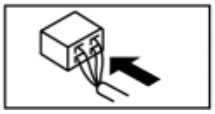

STEERING ANGLE SENSOR
WIRING HARNESS-SIDE CONNECTOR

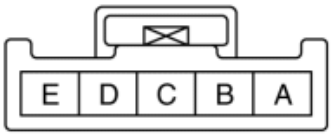

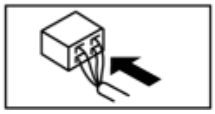

Diagnostic Procedure

Step	Inspection		Action
1	**INSPECT STEERING ANGLE SENSOR CONNECTOR CONDITION** • Switch the ignition off. • Disconnect the negative battery cable. (See **NEGATIVE BATTERY CABLE DISCONNECTION/CONNECTION [SKYACTIV-G 2.0, SKYACTIV-G 2.5]**.) • Disconnect the steering angle sensor connector. • Inspect the connector engagement and connection condition and inspect the terminals for damage, deformation, corrosion, or disconnection. • Is the connector normal?	Yes	Go to the next step.
		No	Repair or replace the connector, then go to Step 6.
2	**INSPECT START STOP UNIT CONNECTOR CONDITION** • Disconnect the start stop unit connector. • Inspect the connector engagement and connection condition and inspect the terminals for damage, deformation, corrosion, or disconnection. • Is the connector normal?	Yes	Go to the next step.
		No	Repair or replace the connector, then go to Step 6.
3	**INSPECT FOR SHORT TO GROUND IN STEERING ANGLE SENSOR B SIGNAL CIRCUIT** • Verify that the steering angle sensor and start stop unit connectors are disconnected. • Inspect for continuity between steering angle sensor terminal C (wiring harness-side) and body ground. • Is there continuity?	Yes	Refer to the wiring diagram and verify whether or not there is a common connector between start stop unit terminal 1W and steering angle sensor terminal C. **If there is a common connector:** • Determine the malfunctioning part by inspecting the common connector and the terminal for corrosion, damage, or pin disconnection, and the common wiring harness for a short to ground. • Repair or replace the malfunctioning part. **If there is no common connector:** • Repair or replace the wiring harness which has a short to ground. Go to Step 6.
		No	Go to the next step.
	INSPECT FOR OPEN CIRCUIT IN STEERING		

4	**ANGLE SENSOR B SIGNAL CIRCUIT** • Verify that the steering angle sensor and start stop unit connectors are disconnected. • Inspect for continuity between start stop unit terminal 1W (wiring harness-side) and steering angle sensor terminal C (wiring harness-side). • Is there continuity?	Yes	Go to the next step.
		No	Refer to the wiring diagram and verify whether or not there is a common connector between start stop unit terminal 1W and steering angle sensor terminal C. **If there is a common connector:** • Determine the malfunctioning part by inspecting the common connector and the terminal for corrosion, damage, or pin disconnection, and the common wiring harness for an open circuit. • Repair or replace the malfunctioning part. **If there is no common connector:** • Repair or replace the wiring harness which has an open circuit. Go to Step 6.
5	**INSPECT STEERING ANGLE SENSOR** • Inspect the steering angle sensor. (See **STEERING ANGLE SENSOR INSPECTION**.) • Is the steering angle sensor normal?	Yes	Go to the next step.
		No	Replace the steering angle sensor, then go to the next step. (See **CLOCK SPRING REMOVAL/INSTALLATION [STANDARD DEPLOYMENT CONTROL SYSTEM]**.) (See **CLOCK SPRING REMOVAL/INSTALLATION [TWO-STEP DEPLOYMENT CONTROL SYSTEM]**.)
6	**VERIFY THAT REPAIRS HAVE BEEN COMPLETED** • Always reconnect all disconnected connectors. • Reconnect the negative battery cable. (See **NEGATIVE BATTERY CABLE DISCONNECTION/CONNECTION [SKYACTIV-G 2.0, SKYACTIV-G 2.5]**.) • Clear the DTC for the start stop unit using the M-MDS. (See **CLEARING DTC [START STOP UNIT]**.) • Retrieve the start stop unit DTCs using the M-MDS. (See **DTC INSPECTION [START STOP UNIT]**.) • Is the same DTC displayed?	Yes	Repeat the inspection from Step 1. • If the malfunction recurs, replace the start stop unit. (See **START STOP UNIT REMOVAL/INSTALLATION**.) Go to the next step.
		No	Go to the next step.
7	**VERIFY IF OTHER DTCs DISPLAYED** • Are any other DTCs displayed?	Yes	Repair or replace the malfunctioning part according to the applicable DTC troubleshooting. (See **DTC TABLE [START STOP UNIT]**.)
		No	DTC troubleshooting completed.

2014 - Mazda3 - Body and Accessories

DTC C0053:2F [START STOP UNIT]

Description	Steering angle sensor B signal malfunction
Detection condition	• Start stop unit detects the sudden change in steering angle sensor B signal. • Start stop unit detects that the steering angle sensor B signal is stuck with the ignition switched ON (engine off or on).
Fail-safe function	Not applicable
Possible cause	• Steering angle sensor malfunction • Start stop unit malfunction
System wiring diagram	Not applicable

Diagnostic Procedure

Step	Inspection		Action
1	**INSPECT STEERING ANGLE SENSOR** • Inspect the steering angle sensor. (See **STEERING ANGLE SENSOR INSPECTION**.) • Is the steering angle sensor normal?	Yes	Go to the next step.
		No	Replace the steering angle sensor, then go to the next step. (See **CLOCK SPRING REMOVAL/INSTALLATION [STANDARD DEPLOYMENT CONTROL SYSTEM]**.) (See **CLOCK SPRING REMOVAL/INSTALLATION [TWO-STEP DEPLOYMENT CONTROL SYSTEM]**.)
2	**VERIFY THAT REPAIRS HAVE BEEN COMPLETED** • Clear the DTC for the start stop unit using the M-MDS. (See **CLEARING DTC [START**	Yes	Repeat the inspection from Step 1. • If the malfunction recurs, replace the start stop unit. (See **START STOP UNIT REMOVAL/INSTALLATION**.)

	STOP UNIT].) • Retrieve the start stop unit DTCs using the M-MDS. (See **DTC INSPECTION [START STOP UNIT]**.) • Is the same DTC displayed?		Go to the next step.
		No	Go to the next step.
3	**VERIFY IF OTHER DTCs DISPLAYED** • Are any other DTCs displayed?	Yes	Repair or replace the malfunctioning part according to the applicable DTC troubleshooting. (See **DTC TABLE [START STOP UNIT]**.)
		No	DTC troubleshooting completed.

2014 - Mazda3 - Body and Accessories

DTC C2003:13 [START STOP UNIT]

Description	Open circuit in steering switch
Detection condition	• Start stop unit detects an open circuit in the steering switch circuit for **5 s or more** with the ignition switched ON (engine off or on).
Fail-safe function	Not applicable

Possible cause	• Clock spring connector or terminal malfunction
	• Clock spring malfunction
	• Start stop unit connector or terminal malfunction
	• Open circuit in wiring harness between the following terminals:
	  ▪ Start stop unit terminal 1AA—Clock spring (instrument panel harness-side) terminal 1K
	  ▪ Start stop unit terminal 1AB—Clock spring (instrument panel harness-side) terminal 1C
	• Steering switch malfunction
	• Start stop unit malfunction

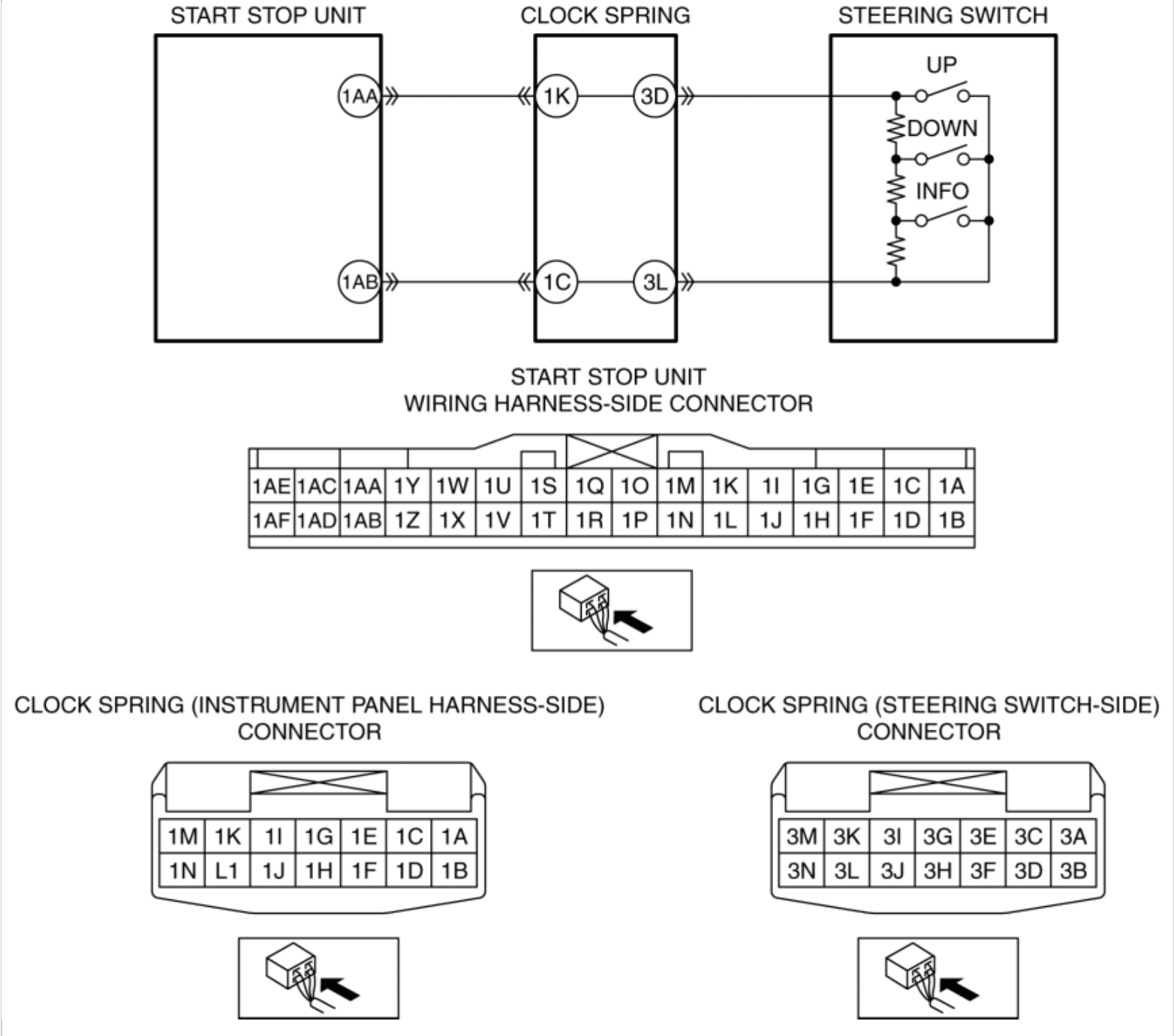

Diagnostic Procedure

Step	Inspection		Action
1	**INSPECT CLOCK SPRING CONNECTOR CONDITION** • Switch the ignition off. • Disconnect the negative battery cable. (See **NEGATIVE BATTERY CABLE DISCONNECTION/CONNECTION [SKYACTIV-G 2.0, SKYACTIV-G 2.5]**.)	Yes	Go to the next step.
		No	Repair or replace the connector, then go to Step 6.

	Disconnect the clock spring connector. • Inspect the connector engagement and connection condition and inspect the terminals for damage, deformation, corrosion, or disconnection. • Is the connector normal?		
2	**INSPECT CLOCK SPRING** • Inspect the clock spring. (See **CLOCK SPRING INSPECTION [STANDARD DEPLOYMENT CONTROL SYSTEM]**.) (See **CLOCK SPRING INSPECTION [TWO-STEP DEPLOYMENT CONTROL SYSTEM]**.) • Is the clock spring normal?	Yes	Go to the next step.
		No	Replace the clock spring, then go to Step 6. (See **CLOCK SPRING REMOVAL/INSTALLATION [STANDARD DEPLOYMENT CONTROL SYSTEM]**.) (See **CLOCK SPRING REMOVAL/INSTALLATION [TWO-STEP DEPLOYMENT CONTROL SYSTEM]**.)
3	**INSPECT START STOP UNIT CONNECTOR CONDITION** • Disconnect the start stop unit connector. • Inspect the connector engagement and connection condition and inspect the terminals for damage, deformation, corrosion, or disconnection. • Is the connector normal?	Yes	Go to the next step.
		No	Repair or replace the connector, then go to Step 6.
4	**INSPECT FOR OPEN CIRCUIT IN STEERING SWITCH CIRCUIT** • Verify that the clock spring and start stop unit connectors are disconnected. • Inspect for continuity between the following terminals (wiring harness-side): ▪ Start stop unit terminal 1AA—Clock spring (instrument panel harness-side) terminal 1K ▪ Start stop unit terminal 1AB—Clock spring (instrument panel harness-side) terminal 1C	Yes	Go to the next step.
		No	Refer to the wiring diagram and verify whether or not there is a common connector between the following terminals: • Start stop unit terminal 1AA—Clock spring (instrument panel harness-side) terminal 1K • Start stop unit terminal 1AB—Clock spring (instrument panel harness-side) terminal 1C **If there is a common connector:** • Determine the malfunctioning part by inspecting the common connector and the terminal for corrosion, damage, or pin disconnection, and the common wiring harness for an open circuit. • Repair or replace the malfunctioning part. **If there is no common connector:** • Repair or replace the wiring harness which has an open circuit.

	• Is there continuity?		Go to Step 6.
5	**INSPECT STEERING SWITCH** • Inspect the steering switch. (See **STEERING SWITCH INSPECTION**.) • Is the steering switch normal?	Yes	Go to the next step.
		No	Replace the steering switch, then go to the next step. (See **STEERING SWITCH REMOVAL/INSTALLATION**.)
6	**VERIFY THAT REPAIRS HAVE BEEN COMPLETED** • Always reconnect all disconnected connectors. • Reconnect the negative battery cable. (See **NEGATIVE BATTERY CABLE DISCONNECTION/CONNECTION [SKYACTIV-G 2.0, SKYACTIV-G 2.5]**.) • Clear the DTC for the start stop unit using the M-MDS. (See **CLEARING DTC [START STOP UNIT]**.) • Switch the ignition ON (engine off or on) and wait for **5 s or more**. • Retrieve the start stop unit DTCs using the M-MDS. (See **DTC INSPECTION [START STOP UNIT]**.) • Is the same DTC displayed?	Yes	Repeat the inspection from Step 1. • If the malfunction recurs, replace the start stop unit. (See **START STOP UNIT REMOVAL/INSTALLATION**.) Go to the next step.
		No	Go to the next step.
7	**VERIFY IF OTHER DTCs DISPLAYED** • Are any other DTCs displayed?	Yes	Repair or replace the malfunctioning part according to the applicable DTC troubleshooting. (See **DTC TABLE [START STOP UNIT]**.)
		No	DTC troubleshooting completed.

2014 - Mazda3 - Body and Accessories

DTC P0615:11 [START STOP UNIT]

Description	Starter relay circuit malfunction
Detection condition	• Start stop unit detects that the starter relay monitor circuit voltage of **less than 2.2 V** for **0.2 s or more** with the ignition switched off.
Fail-safe function	Not applicable

Possible cause	• DTCs are stored in the PCM.
	• Starter relay malfunction
	• Start stop unit connector or terminal malfunction
	• PCM connector malfunction
	• Short to ground in wiring harness between the following terminals:
	  ▪ Start stop unit terminal 1D—Starter relay terminal E
	  ▪ Start stop unit terminal 1D—PCM terminal 2AZ
	  ▪ Start stop unit terminal 2V—Starter relay terminal A
	• PCM malfunction
	• Start stop unit malfunction

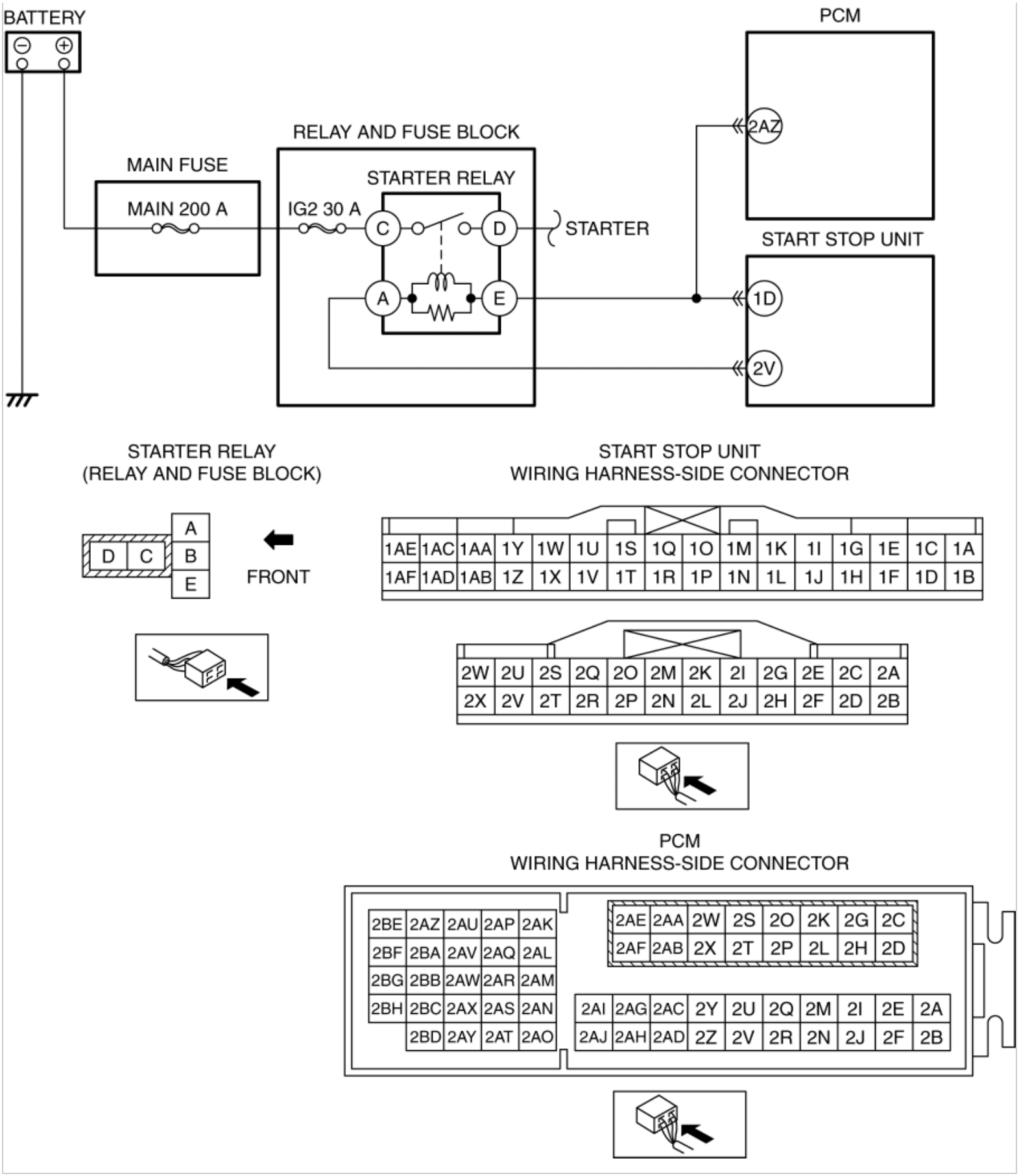

Diagnostic Procedure

Step	Inspection	Action

1	**VERIFY PCM DTCs** • Retrieve the PCM DTCs using the M-MDS. (See **ON-BOARD DIAGNOSTIC TEST [SKYACTIV-G 2.0, SKYACTIV-G 2.5]**.) • Are any DTCs displayed?	Yes	Repair or replace the malfunctioning part according to the applicable DTC troubleshooting. (See **DTC TABLE [SKYACTIV-G 2.0, SKYACTIV-G 2.5]**.)
		No	Go to the next step.
2	**INSPECT STARTER RELAY** • Switch the ignition off. • Disconnect the negative battery cable. (See **NEGATIVE BATTERY CABLE DISCONNECTION/CONNECTION [SKYACTIV-G 2.0, SKYACTIV-G 2.5]**.) • Remove the starter relay. (See **RELAY LOCATION**.) • Inspect the starter relay. (See **RELAY INSPECTION**.) • Is the starter relay normal?	Yes	Go to the next step.
		No	Replace the starter relay, then go to Step 7. (See **RELAY LOCATION**.)
3	**INSPECT START STOP UNIT CONNECTOR CONDITION** • Disconnect the start stop unit connector. • Inspect the connector engagement and connection condition and inspect the terminals for damage, deformation, corrosion, or disconnection. • Is the connector normal?	Yes	Go to the next step.
		No	Repair or replace the connector, then go to Step 7.
4	**INSPECT PCM CONNECTOR CONDITION** • Disconnect the PCM connector. • Inspect the connector engagement and connection condition and inspect the terminals for damage, deformation, corrosion, or disconnection. • Is the connector normal?	Yes	Go to the next step.
		No	Repair or replace the connector, then go to Step 7.
5	**INSPECT FOR SHORT TO GROUND IN STARTER RELAY CIRCUIT** • Verify that the starter relay is removed. • Verify that the start stop unit and PCM connectors are disconnected. • Inspect for continuity between the following terminals (wiring	Yes	Refer to the wiring diagram and verify whether or not there is a common connector between the following terminals: • Start stop unit terminal 1D—Starter relay terminal E • Start stop unit terminal 1D—PCM terminal 2AZ • Start stop unit terminal 2V—Starter relay terminal A

	harness-side) and body ground: ▪ Start stop unit terminal 1D ▪ Start stop unit terminal 2V • Is there continuity?		**If there is a common connector:** • Determine the malfunctioning part by inspecting the common connector and the terminal for corrosion, damage, or pin disconnection, and the common wiring harness for a short to ground. • Repair or replace the malfunctioning part. **If there is no common connector:** • Repair or replace the wiring harness which has a short to ground. Go to Step 7.
		No	Go to the next step.
6	**PERFORM DTC INSPECTION AND VERIFY PCM MALFUNCTION** • Always reconnect all disconnected connectors. • Reconnect the negative battery cable. (See **NEGATIVE BATTERY CABLE DISCONNECTION/CONNECTION [SKYACTIV-G 2.0, SKYACTIV-G 2.5]**.) • Clear the DTC for the start stop unit using the M-MDS. (See **CLEARING DTC [START STOP UNIT]**.) • Switch the ignition off and wait for **1 s or more**. • Retrieve the start stop unit DTCs using the M-MDS. (See **DTC INSPECTION [START STOP UNIT]**.) • Is the same DTC displayed?	Yes	Replace the PCM, then go to the next step. (See **PCM REMOVAL/INSTALLATION [SKYACTIV-G 2.0, SKYACTIV-G 2.5]**.)
		No	Go to Step 8.
7	**VERIFY THAT REPAIRS HAVE BEEN COMPLETED** • Always reconnect all disconnected connectors. • Reconnect the negative battery cable. (See **NEGATIVE BATTERY CABLE DISCONNECTION/CONNECTION [SKYACTIV-G 2.0, SKYACTIV-G 2.5]**.) • Clear the DTC for the start stop unit using the M-MDS. (See **CLEARING DTC [START STOP UNIT]**.)	Yes	Repeat the inspection from Step 1. • If the malfunction recurs, replace the start stop unit. (See **START STOP UNIT REMOVAL/INSTALLATION**.) Go to the next step.
		No	Go to the next step.

	• Switch the ignition off and wait for **1 s or more**. • Retrieve the start stop unit DTCs using the M-MDS. (See **DTC INSPECTION [START STOP UNIT]**.) • Is the same DTC displayed?		
8	**VERIFY IF OTHER DTCs DISPLAYED** • Are any other DTCs displayed?	Yes	Repair or replace the malfunctioning part according to the applicable DTC troubleshooting. (See **DTC TABLE [START STOP UNIT]**.)
		No	DTC troubleshooting completed.

2014 - Mazda3 - Body and Accessories

DTC P0615:12 [START STOP UNIT]

Description	Starter relay circuit malfunction
Detection condition	• Start stop unit detects that the starter relay circuit voltage of specification or more for **0.1 s or more** with the ignition switched off.
Fail-safe function	• Inhibits switching the ignition ON (engine off or on). • Inhibits the engine start.

Possible cause	• DTCs are stored in the PCM.
	• Starter relay malfunction
	• Start stop unit connector or terminal malfunction
	• PCM connector malfunction
	• Short to power supply in wiring harness between the following terminals:
	  ▪ Start stop unit terminal 1D—Starter relay terminal E
	  ▪ Start stop unit terminal 1D—PCM terminal 2AZ
	  ▪ Start stop unit terminal 2V—Starter relay terminal A
	• PCM malfunction
	• Start stop unit malfunction

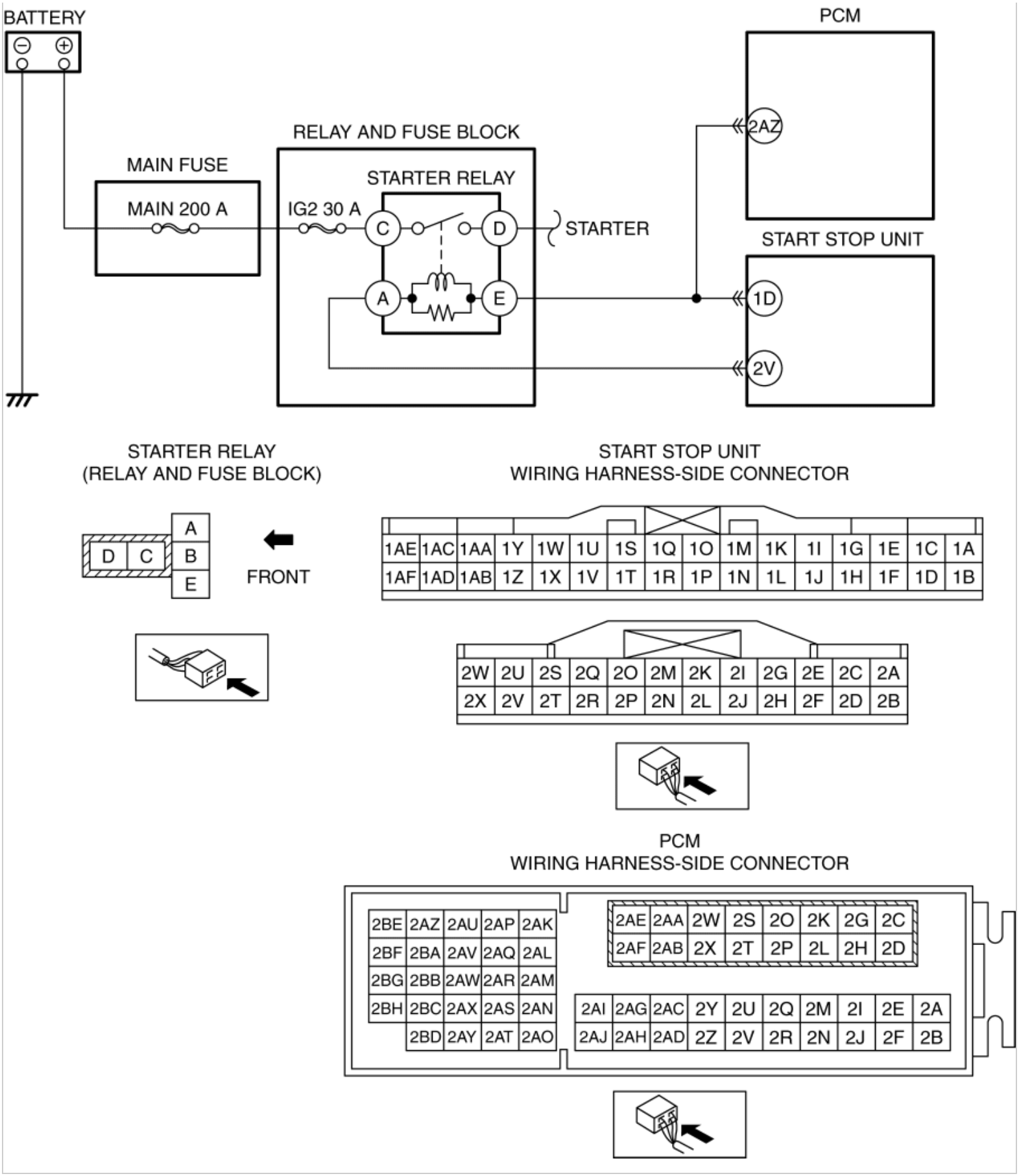

Diagnostic Procedure

Step	Inspection	Action

1	**VERIFY PCM DTCs** • Retrieve the PCM DTCs using the M-MDS. (See **ON-BOARD DIAGNOSTIC TEST [SKYACTIV-G 2.0, SKYACTIV-G 2.5]**.) • Are any DTCs displayed?	Yes	Repair or replace the malfunctioning part according to the applicable DTC troubleshooting. (See **DTC TABLE [SKYACTIV-G 2.0, SKYACTIV-G 2.5]**.)
		No	Go to the next step.
2	**INSPECT STARTER RELAY** • Switch the ignition off. • Disconnect the negative battery cable. (See **NEGATIVE BATTERY CABLE DISCONNECTION/CONNECTION [SKYACTIV-G 2.0, SKYACTIV-G 2.5]**.) • Remove the starter relay. (See **RELAY LOCATION**.) • Inspect the starter relay. (See **RELAY INSPECTION**.) • Is the starter relay normal?	Yes	Go to the next step.
		No	Replace the starter relay, then go to Step 7. (See **RELAY LOCATION**.)
3	**INSPECT START STOP UNIT CONNECTOR CONDITION** • Disconnect the start stop unit connector. • Inspect the connector engagement and connection condition and inspect the terminals for damage, deformation, corrosion, or disconnection. • Is the connector normal?	Yes	Go to the next step.
		No	Repair or replace the connector, then go to Step 7.
4	**INSPECT PCM CONNECTOR CONDITION** • Disconnect the PCM connector. • Inspect the connector engagement and connection condition and inspect the terminals for damage, deformation, corrosion, or disconnection. • Is the connector normal?	Yes	Go to the next step.
		No	Repair or replace the connector, then go to Step 7.
5	**INSPECT FOR SHORT TO POWER SUPPLY IN STARTER RELAY CIRCUIT** • Verify that the starter relay is removed. • Verify that the start stop unit and PCM connectors are disconnected.	Yes	Go to the next step.
		No	Refer to the wiring diagram and verify whether or not there is a common connector between the following terminals: • Start stop unit terminal 1D—Starter relay terminal E

	Reconnect the negative battery cable.
	
	(See **NEGATIVE BATTERY CABLE DISCONNECTION/CONNECTION [SKYACTIV-G 2.0, SKYACTIV-G 2.5]**.)
	
	• Measure the voltage at the following terminals (wiring harness-side):
	  ▪ Start stop unit terminal 1D
	  ▪ Start stop unit terminal 2V
	
	• Is the voltage **0 V**?
			• Start stop unit terminal 1D—PCM terminal 2AZ
			• Start stop unit terminal 2V—Starter relay terminal A
			
			If there is a common connector:
			
			• Determine the malfunctioning part by inspecting the common connector and the terminal for corrosion, damage, or pin disconnection, and the common wiring harness for a short to power supply.
			• Repair or replace the malfunctioning part.
			
			If there is no common connector:
			
			• Repair or replace the wiring harness which has a short to power supply.
			
			Go to Step 7.

6	**PERFORM DTC INSPECTION AND VERIFY PCM MALFUNCTION** • Always reconnect all disconnected connectors. • Reconnect the negative battery cable. (See **NEGATIVE BATTERY CABLE DISCONNECTION/CONNECTION [SKYACTIV-G 2.0, SKYACTIV-G 2.5]**.) • Clear the DTC for the start stop unit using the M-MDS. (See **CLEARING DTC [START STOP UNIT]**.) • Switch the ignition off and wait for **1 s or more**. • Retrieve the start stop unit DTCs using the M-MDS. (See **DTC INSPECTION [START STOP UNIT]**.) • Is the same DTC displayed?	Yes	Replace the PCM, then go to the next step. (See **PCM REMOVAL/INSTALLATION [SKYACTIV-G 2.0, SKYACTIV-G 2.5]**.)
		No	Go to Step 8.
7	**VERIFY THAT REPAIRS HAVE BEEN COMPLETED** • Always reconnect all disconnected connectors. • Reconnect the negative battery cable. (See **NEGATIVE BATTERY CABLE DISCONNECTION/CONNECTION [SKYACTIV-G 2.0, SKYACTIV-G 2.5]**.) • Clear the DTC for the start stop unit using the M-MDS. (See **CLEARING DTC [START STOP**	Yes	Repeat the inspection from Step 1. • If the malfunction recurs, replace the start stop unit. (See **START STOP UNIT REMOVAL/INSTALLATION**.) Go to the next step.
		No	Go to the next step.

	UNIT].) • Switch the ignition off and wait for **1 s or more**. • Retrieve the start stop unit DTCs using the M-MDS. (See **DTC INSPECTION [START STOP UNIT]**.) • Is the same DTC displayed?		
8	**VERIFY IF OTHER DTCs DISPLAYED** • Are any other DTCs displayed?	Yes	Repair or replace the malfunctioning part according to the applicable DTC troubleshooting. (See **DTC TABLE [START STOP UNIT]**.)
		No	DTC troubleshooting completed.

2014 - Mazda3 - Body and Accessories

DTC P0615:13 [START STOP UNIT]

Description	Starter relay circuit malfunction
Detection condition	• Start stop unit detects an open circuit in the starter relay circuit for **0.075 s or more** with the ignition switched off.
Fail-safe function	Not applicable
Possible cause	• Disconnect the start stop unit connector with the battery cables connected. • Starter relay malfunction • Start stop unit connector or terminal malfunction • Open circuit in wiring harness between the following terminals: ▪ Starter relay terminal E—Start stop unit terminal 1D ▪ Starter relay terminal A—Start stop unit terminal 2V • Start stop unit malfunction

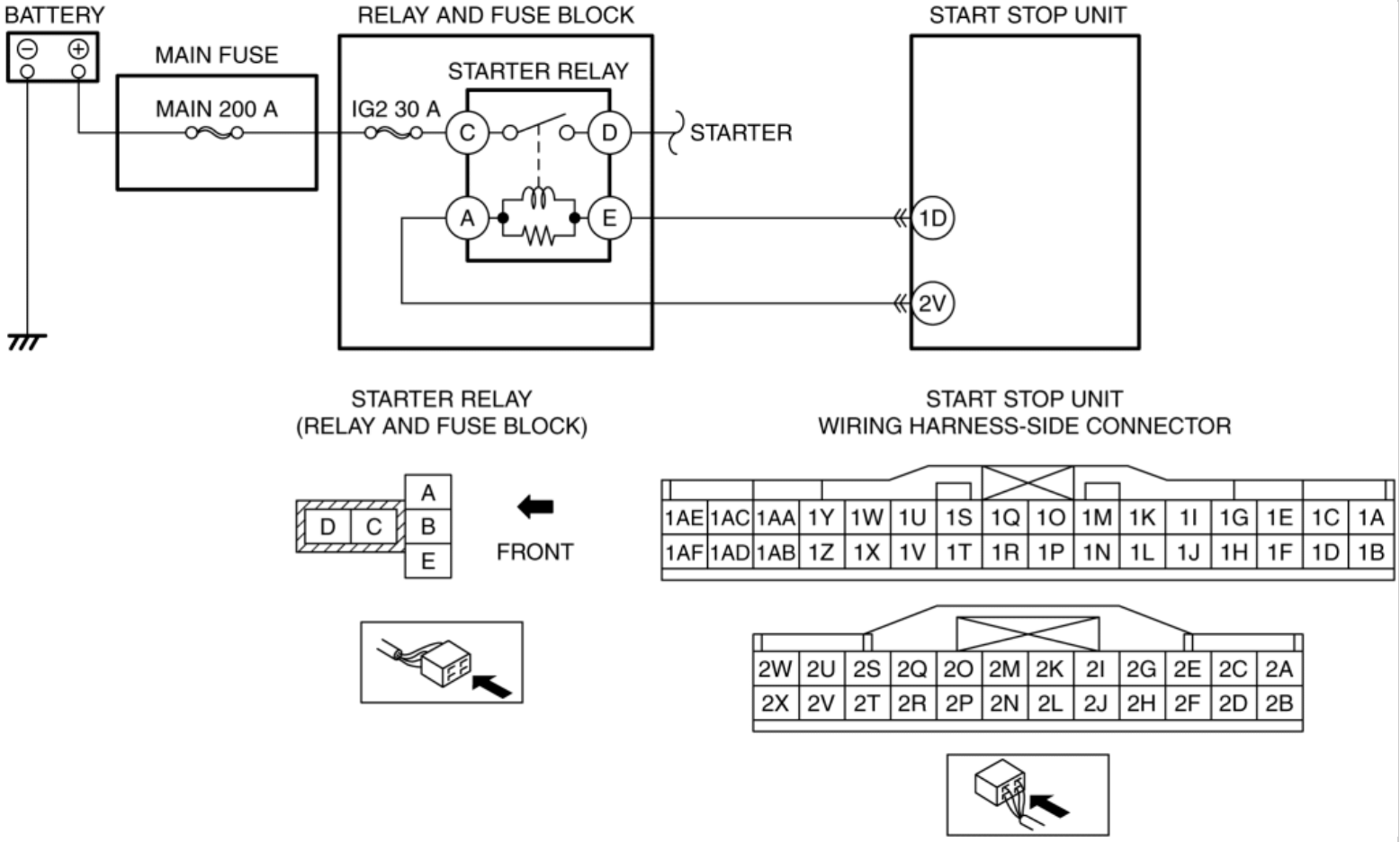

Diagnostic Procedure

Step	Inspection		Action
1	**INSPECT STARTER RELAY** • Switch the ignition off. • Disconnect the negative battery cable. (See **NEGATIVE BATTERY CABLE DISCONNECTION/CONNECTION [SKYACTIV-G 2.0, SKYACTIV-G 2.5]**.) • Remove the starter relay. (See **RELAY LOCATION**.) • Inspect the starter relay. (See **RELAY INSPECTION**.) • Is the starter relay normal?	Yes	Go to the next step.
		No	Replace the starter relay, then go to Step 4. (See **RELAY LOCATION**.)
2	**INSPECT START STOP UNIT CONNECTOR CONDITION** • Disconnect the start stop unit connector. • Inspect the connector engagement and connection condition and inspect the terminals for damage, deformation, corrosion, or disconnection. • Is the connector normal?	Yes	Go to the next step.
		No	Repair or replace the connector, then go to Step 4.
3	**INSPECT FOR OPEN CIRCUIT IN STARTER RELAY CIRCUIT** • Verify that the starter relay is removed. • Verify that the start stop unit connector is disconnected. • Inspect for continuity between the following terminals (wiring harness-side): ▪ Starter relay terminal E—Start stop unit terminal 1D ▪ Starter relay terminal A—Start stop unit terminal 2V • Is there continuity?	Yes	Go to the next step.
		No	Refer to the wiring diagram and verify whether or not there is a common connector between the following terminals: • Starter relay terminal E—Start stop unit terminal 1D • Starter relay terminal A—Start stop unit terminal 2V **If there is a common connector:** • Determine the malfunctioning part by inspecting the common connector and the terminal for corrosion, damage, or pin disconnection, and the common wiring harness for an open circuit. • Repair or replace the malfunctioning part. **If there is no common connector:** • Repair or replace the wiring harness which has an open circuit. Go to the next step.
4	**VERIFY THAT REPAIRS HAVE BEEN COMPLETED** • Always reconnect all disconnected connectors. • Reconnect the negative battery cable. (See **NEGATIVE BATTERY CABLE DISCONNECTION/CONNECTION [SKYACTIV-G 2.0, SKYACTIV-G 2.5]**.) • Clear the DTC for the start stop unit using the M-MDS. (See **CLEARING DTC [START STOP UNIT]**.) • Switch the ignition off and wait for **1 s or more**. • Retrieve the start stop unit DTCs using the M-MDS. (See **DTC INSPECTION [START STOP**	Yes	Repeat the inspection from Step 1. • If the malfunction recurs, replace the start stop unit. (See **START STOP UNIT REMOVAL/INSTALLATION**.) Go to the next step.
		No	Go to the next step.

	UNIT].) • Is the same DTC displayed?		
5	**VERIFY IF OTHER DTCs DISPLAYED** • Are any other DTCs displayed?	Yes	Repair or replace the malfunctioning part according to the applicable DTC troubleshooting. (See **DTC TABLE [START STOP UNIT]**.)
		No	DTC troubleshooting completed.

2014 - Mazda3 - Body and Accessories

DTC P0615:16 [START STOP UNIT]

Description	Starter relay circuit malfunction
Detection condition	• Start stop unit detects that the starter relay circuit voltage that is less than the specification for **0.05 s or more** during cranking.
Fail-safe function	Not applicable
Possible cause	• Starter relay malfunction • Start stop unit connector or terminal malfunction • Short to ground in wiring harness between starter relay terminal A and start stop unit terminal 2V • Start stop unit malfunction

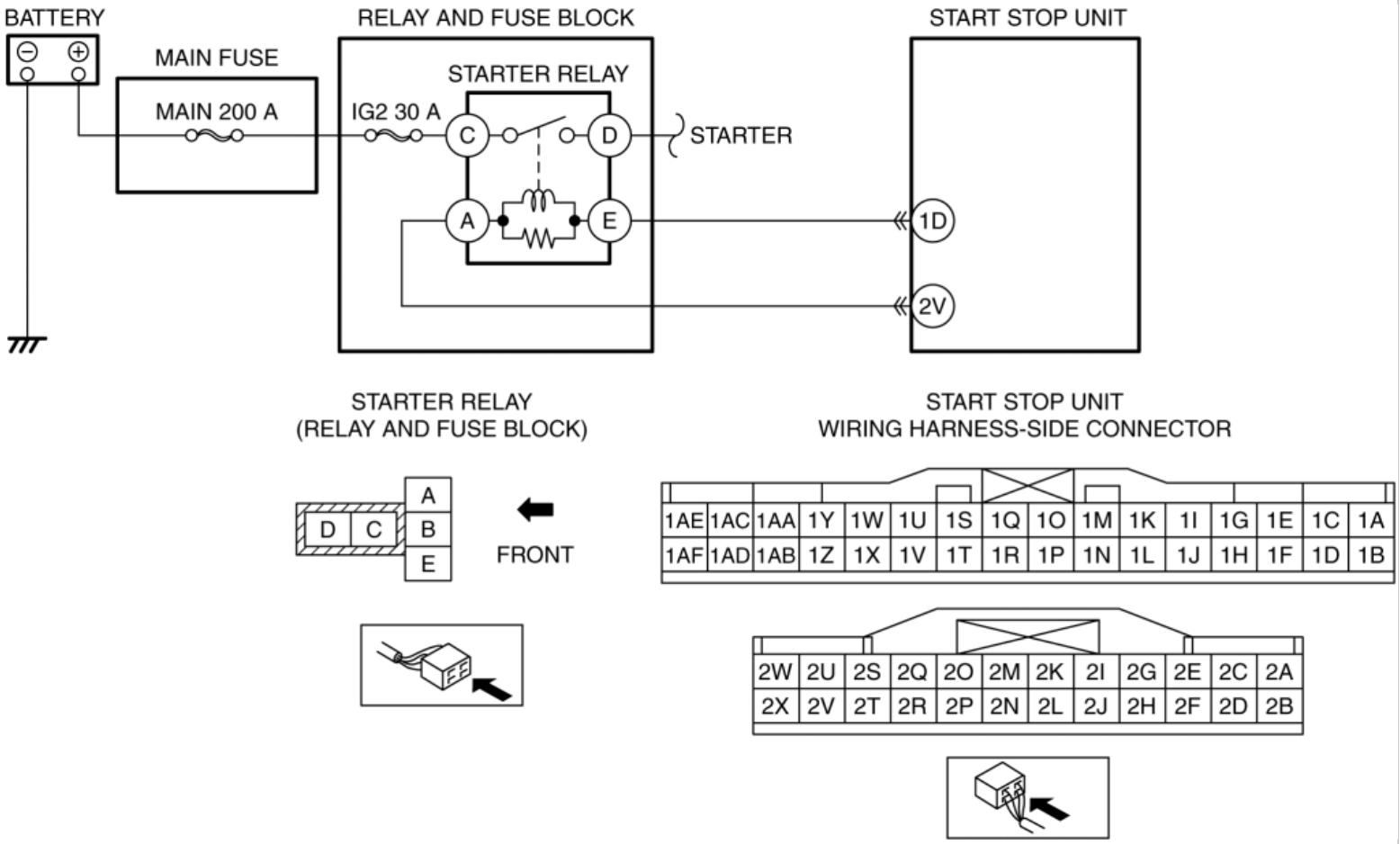

Diagnostic Procedure

Step	Inspection		Action
1	**INSPECT STARTER RELAY**	Yes	Go to the next step.

	Switch the ignition off. • Disconnect the negative battery cable. (See **NEGATIVE BATTERY CABLE DISCONNECTION/CONNECTION [SKYACTIV-G 2.0, SKYACTIV-G 2.5]**.) • Remove the starter relay. (See **RELAY LOCATION**.) • Inspect the starter relay. (See **RELAY INSPECTION**.) • Is the starter relay normal?		
		No	Replace the starter relay, then go to Step 4. (See **RELAY LOCATION**.)
2	**INSPECT START STOP UNIT CONNECTOR CONDITION** • Disconnect the start stop unit connector. • Inspect the connector engagement and connection condition and inspect the terminals for damage, deformation, corrosion, or disconnection. • Is the connector normal?	Yes	Go to the next step.
		No	Repair or replace the connector, then go to Step 4.
3	**INSPECT FOR SHORT TO GROUND IN STARTER RELAY CIRCUIT** • Verify that the starter relay is removed. • Verify that the start stop unit connector is disconnected. • Inspect for continuity between start stop unit terminal 2V (wiring harness-side) and body ground. • Is there continuity?	Yes	Refer to the wiring diagram and verify whether or not there is a common connector between starter relay terminal A and start stop unit terminal 2V. **If there is a common connector:** • Determine the malfunctioning part by inspecting the common connector and the terminal for corrosion, damage, or pin disconnection, and the common wiring harness for a short to ground. • Repair or replace the malfunctioning part. **If there is no common connector:** • Repair or replace the wiring harness which has a short to ground. Go to the next step.
		No	Go to the next step.
4	**VERIFY THAT REPAIRS HAVE BEEN COMPLETED** • Always reconnect all disconnected connectors. • Reconnect the negative battery cable. (See **NEGATIVE BATTERY CABLE DISCONNECTION/CONNECTION [SKYACTIV-G 2.0, SKYACTIV-G 2.5]**.) • Clear the DTC for the start stop unit using the M-MDS. (See **CLEARING DTC [START STOP UNIT]**.) • Wait until **1 s or more** have elapsed during cranking. • Retrieve the start stop unit DTCs using the M-MDS. (See **DTC INSPECTION [START STOP UNIT]**.) • Is the same DTC displayed?	Yes	Repeat the inspection from Step 1. • If the malfunction recurs, replace the start stop unit. (See **START STOP UNIT REMOVAL/INSTALLATION**.) Go to the next step.
		No	Go to the next step.
5	**VERIFY IF OTHER DTCs DISPLAYED** • Are any other DTCs displayed?	Yes	Repair or replace the malfunctioning part according to the applicable DTC troubleshooting.

			(See **DTC TABLE [START STOP UNIT]**.)
		No	DTC troubleshooting completed.

2014 - Mazda3 - Body and Accessories

DTC P0616:23 [START STOP UNIT]

Description	Circuit malfunction on downstream side of starter relay
Detection condition	• Start stop unit detects a short to ground in the starter relay downstream circuit continuously for **0.5 s or more** for a continuous **5 times**.
Fail-safe function	Not applicable
Possible cause	• DTCs are stored in the PCM. • Start stop unit connector or terminal malfunction • PCM connector or terminal malfunction • Short to ground in wiring harness between start stop unit terminal 1D and PCM terminal 2AZ • PCM malfunction • Start stop unit malfunction

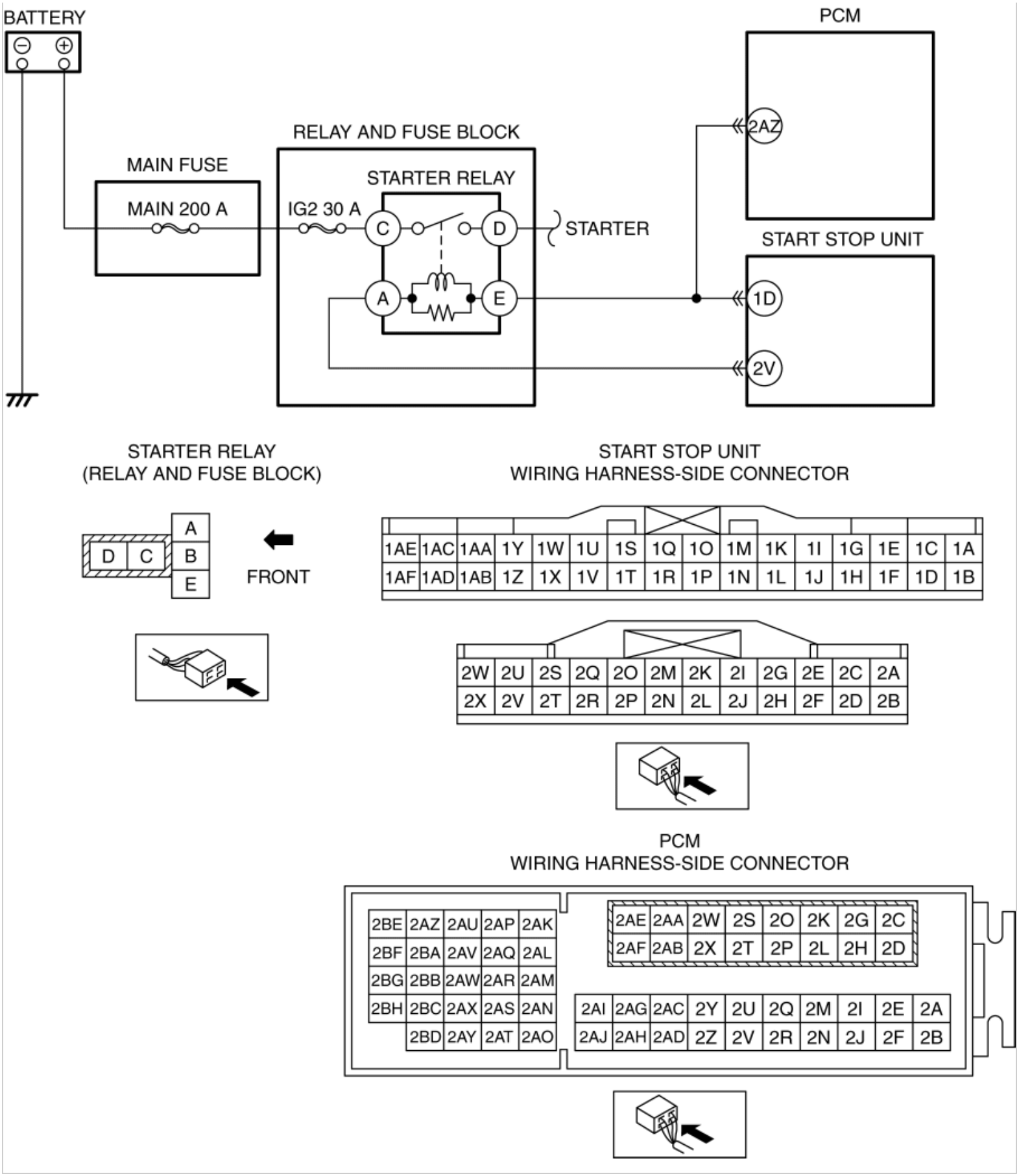

Diagnostic Procedure

Step	Inspection	Action

1	**VERIFY PCM DTCs** • Retrieve the PCM DTCs using the M-MDS. (See **ON-BOARD DIAGNOSTIC TEST [SKYACTIV-G 2.0, SKYACTIV-G 2.5]**.) • Are any DTCs displayed?	Yes	Repair or replace the malfunctioning part according to the applicable DTC troubleshooting. (See **DTC TABLE [SKYACTIV-G 2.0, SKYACTIV-G 2.5]**.)
		No	Go to the next step.
2	**INSPECT START STOP UNIT CONNECTOR CONDITION** • Switch the ignition off. • Disconnect the negative battery cable. (See **NEGATIVE BATTERY CABLE DISCONNECTION/CONNECTION [SKYACTIV-G 2.0, SKYACTIV-G 2.5]**.) • Disconnect the start stop unit connector. • Inspect the connector engagement and connection condition and inspect the terminals for damage, deformation, corrosion, or disconnection. • Is the connector normal?	Yes	Go to the next step.
		No	Repair or replace the connector, then go to Step 6.
3	**INSPECT PCM CONNECTOR CONDITION** • Disconnect the PCM connector. • Inspect the connector engagement and connection condition and inspect the terminals for damage, deformation, corrosion, or disconnection. • Is the connector normal?	Yes	Go to the next step.
		No	Repair or replace the connector, then go to Step 6.
4	**INSPECT FOR SHORT TO GROUND IN DOWNSTREAM SIDE OF STARTER RELAY CIRCUIT** • Verify that the start stop unit and PCM connectors are disconnected. • Inspect for continuity between start stop unit terminal 1D (wiring harness-side) and body ground. • Is there continuity?	Yes	Refer to the wiring diagram and verify whether or not there is a common connector between start stop unit terminal 1D and PCM terminal 2AZ. **If there is a common connector:** • Determine the malfunctioning part by inspecting the common connector and the terminal for corrosion, damage, or pin disconnection, and the common wiring harness for a short to ground. • Repair or replace the malfunctioning part. **If there is no common connector:** • Repair or replace the wiring harness which has a short to ground. Go to Step 6.

		No	Go to the next step.
5	**PERFORM DTC INSPECTION AND VERIFY PCM MALFUNCTION** • Always reconnect all disconnected connectors. • Reconnect the negative battery cable. (See **NEGATIVE BATTERY CABLE DISCONNECTION/CONNECTION [SKYACTIV-G 2.0, SKYACTIV-G 2.5]**.) • Clear the DTC for the start stop unit using the M-MDS. (See **CLEARING DTC [START STOP UNIT]**.) • With the programmed remote transmitter in the vehicle, switch the ignition ON (engine off). • Perform the following work **5 times or more**. ▪ Depress the clutch pedal and release it. (MTX) ▪ Operate the selector lever to other than P and N position from P or N position and hold for **1 s or more**. (ATX) • Retrieve the start stop unit DTCs using the M-MDS. (See **DTC INSPECTION [START STOP UNIT]**.) • Is the same DTC displayed?	Yes	Replace the PCM, then go to the next step. (See **PCM REMOVAL/INSTALLATION [SKYACTIV-G 2.0, SKYACTIV-G 2.5]**.)
		No	Go to Step 7.
6	**VERIFY THAT REPAIRS HAVE BEEN COMPLETED** • Always reconnect all disconnected connectors. • Reconnect the negative battery cable. (See **NEGATIVE BATTERY CABLE DISCONNECTION/CONNECTION [SKYACTIV-G 2.0, SKYACTIV-G 2.5]**.) • Clear the DTC for the start stop unit using the M-MDS. (See **CLEARING DTC [START STOP UNIT]**.) • With the programmed remote	Yes	Repeat the inspection from Step 1. • If the malfunction recurs, replace the start stop unit. (See **START STOP UNIT REMOVAL/INSTALLATION**.) Go to the next step.
		No	Go to the next step.

	transmitter in the vehicle, switch the ignition ON (engine off). • Perform the following work **5 times or more**. ▪ Depress the clutch pedal and release it. (MTX) ▪ Operate the selector lever to other than P and N position from P or N position and hold for **1 s or more**. (ATX) • Retrieve the start stop unit DTCs using the M-MDS. (See **DTC INSPECTION [START STOP UNIT]**.) • Is the same DTC displayed?		
7	**VERIFY IF OTHER DTCs DISPLAYED** • Are any other DTCs displayed?	Yes	Repair or replace the malfunctioning part according to the applicable DTC troubleshooting. (See **DTC TABLE [START STOP UNIT]**.)
		No	DTC troubleshooting completed.

2014 - Mazda3 - Body and Accessories

DTC P0616:24 [START STOP UNIT]

Description	Circuit malfunction on downstream side of starter relay
Detection condition	• Start stop unit detects an open circuit in the starter relay downstream circuit continuously for **0.5 s or more** for a continuous **5 times**.
Fail-safe function	Not applicable
Possible cause	• DTCs are stored in the PCM. • Start stop unit connector or terminal malfunction • PCM connector or terminal malfunction • Open circuit in wiring harness between start stop unit terminal 1D and PCM terminal 2AZ • PCM malfunction • Start stop unit malfunction

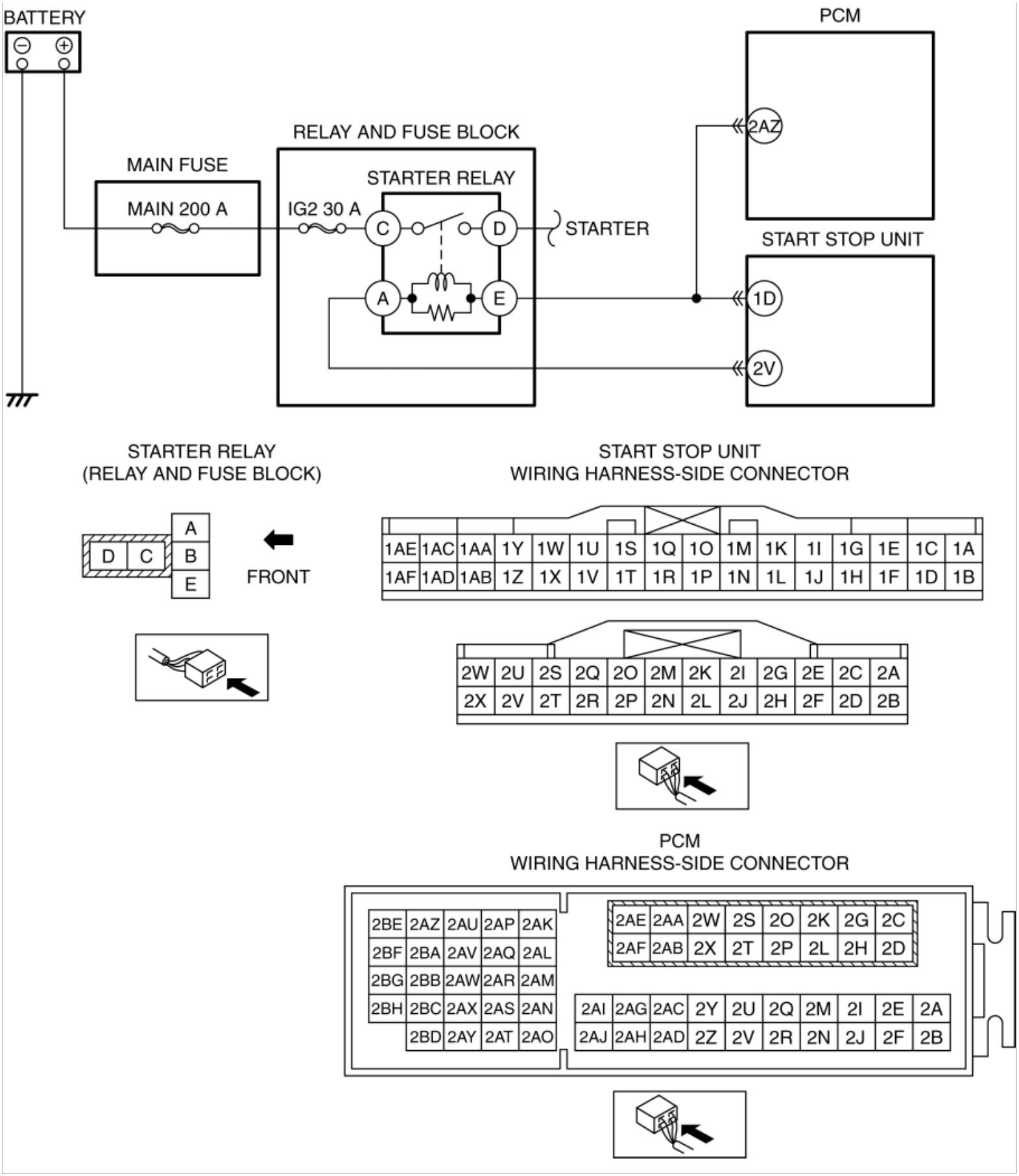

Diagnostic Procedure

Step	Inspection	Action

1	**VERIFY PCM DTCs** • Retrieve the PCM DTCs using the M-MDS. (See **ON-BOARD DIAGNOSTIC TEST [SKYACTIV-G 2.0, SKYACTIV-G 2.5]**.) • Are any DTCs displayed?	Yes	Repair or replace the malfunctioning part according to the applicable DTC troubleshooting. (See **DTC TABLE [SKYACTIV-G 2.0, SKYACTIV-G 2.5]**.)
		No	Go to the next step.
2	**INSPECT START STOP UNIT CONNECTOR CONDITION** • Switch the ignition off. • Disconnect the negative battery cable. (See **NEGATIVE BATTERY CABLE DISCONNECTION/CONNECTION [SKYACTIV-G 2.0, SKYACTIV-G 2.5]**.) • Disconnect the start stop unit connector. • Inspect the connector engagement and connection condition and inspect the terminals for damage, deformation, corrosion, or disconnection. • Is the connector normal?	Yes	Go to the next step.
		No	Repair or replace the connector, then go to Step 6.
3	**INSPECT PCM CONNECTOR CONDITION** • Disconnect the PCM connector. • Inspect the connector engagement and connection condition and inspect the terminals for damage, deformation, corrosion, or disconnection. • Is the connector normal?	Yes	Go to the next step.
		No	Repair or replace the connector, then go to Step 6.
4	**INSPECT FOR OPEN CIRCUIT IN DOWNSTREAM SIDE OF STARTER RELAY CIRCUIT** • Verify that the start stop unit and PCM connectors are disconnected. • Inspect for continuity between start stop unit terminal 1D (wiring harness-side) and PCM terminal 2AZ (wiring harness-side). • Is there continuity?	Yes	Go to the next step.
		No	Refer to the wiring diagram and verify whether or not there is a common connector between start stop unit terminal 1D and PCM terminal 2AZ. **If there is a common connector:** • Determine the malfunctioning part by inspecting the common connector and the terminal for corrosion, damage, or pin disconnection, and the common wiring harness for an open circuit. • Repair or replace the malfunctioning part. **If there is no common connector:** • Repair or replace the wiring harness which has an open circuit.

			Go to Step 6.
5	**PERFORM DTC INSPECTION AND VERIFY PCM MALFUNCTION** • Always reconnect all disconnected connectors. • Reconnect the negative battery cable. (See **NEGATIVE BATTERY CABLE DISCONNECTION/CONNECTION [SKYACTIV-G 2.0, SKYACTIV-G 2.5]**.) • Clear the DTC for the start stop unit using the M-MDS. (See **CLEARING DTC [START STOP UNIT]**.) • With the programmed remote transmitter in the vehicle, switch the ignition ON (engine off). • Perform the following work **5 times or more**. ▪ Depress the clutch pedal. (MTX) ▪ Operate the selector lever to P or N position from other than P and N position and hold for **1 s or more**. (ATX) • Retrieve the start stop unit DTCs using the M-MDS. (See **DTC INSPECTION [START STOP UNIT]**.) • Is the same DTC displayed?	Yes	Replace the PCM, then go to the next step. (See **PCM REMOVAL/INSTALLATION [SKYACTIV-G 2.0, SKYACTIV-G 2.5]**.)
		No	Go to Step 7.
6	**VERIFY THAT REPAIRS HAVE BEEN COMPLETED** • Always reconnect all disconnected connectors. • Reconnect the negative battery cable. (See **NEGATIVE BATTERY CABLE DISCONNECTION/CONNECTION [SKYACTIV-G 2.0, SKYACTIV-G 2.5]**.) • Clear the DTC for the start stop unit using the M-MDS. (See **CLEARING DTC [START STOP UNIT]**.) • With the programmed remote transmitter in the vehicle, switch	Yes	Repeat the inspection from Step 1. • If the malfunction recurs, replace the start stop unit. (See **START STOP UNIT REMOVAL/INSTALLATION**.) Go to the next step.
		No	Go to the next step.

	the ignition ON (engine off). • Perform the following work **5 times or more**. ▪ Depress the clutch pedal. (MTX) ▪ Operate the selector lever to P or N position from other than P and N position and hold for **1 s or more**. (ATX) • Retrieve the start stop unit DTCs using the M-MDS. (See **DTC INSPECTION [START STOP UNIT]**.) • Is the same DTC displayed?		
7	**VERIFY IF OTHER DTCs DISPLAYED** • Are any other DTCs displayed?	Yes	Repair or replace the malfunctioning part according to the applicable DTC troubleshooting. (See **DTC TABLE [START STOP UNIT]**.)
		No	DTC troubleshooting completed.

2014 - Mazda3 - Body and Accessories

DTC P0616:29 [START STOP UNIT]

Description	Downstream side of starter relay signal malfunction
Detection condition	• Start stop unit detects that the following signals are unmatched for **0.5 s or more** for a continuous **5 times**. ▪ Transaxle range sensor (ATX) or starter interlock switch (MTX) condition ▪ Starter relay downstream circuit condition ▪ PCM control result ▪ CAN signal condition output from PCM
Fail-safe function	Not applicable
Possible cause	• DTCs are stored in the PCM. • PCM malfunction • Start stop unit malfunction
System wiring diagram	Not applicable

Diagnostic Procedure

Step	Inspection		Action
1	**VERIFY PCM DTCs** • Retrieve the PCM DTCs using the M-MDS. (See **ON-BOARD DIAGNOSTIC TEST [SKYACTIV-G 2.0, SKYACTIV-G 2.5]**.) • Are any DTCs displayed?	Yes	Repair or replace the malfunctioning part according to the applicable DTC troubleshooting. (See **DTC TABLE [SKYACTIV-G 2.0, SKYACTIV-G 2.5]**.)
		No	Go to the next step.
2	**PERFORM DTC INSPECTION AND VERIFY PCM MALFUNCTION**	Yes	Replace the PCM, then go to the next

	• Clear the DTC for the start stop unit using the M-MDS. (See **CLEARING DTC [START STOP UNIT]**.) • With the programmed remote transmitter in the vehicle, switch the ignition ON (engine off). • Perform the following work **5 times or more**. ▪ Depress the clutch pedal and release it. (MTX) ▪ Operate the selector lever to other than P and N position from P or N position and hold for **1 s or more**. (ATX) • Retrieve the start stop unit DTCs using the M-MDS. (See **DTC INSPECTION [START STOP UNIT]**.) • Is the same DTC displayed?		step. (See **PCM REMOVAL/INSTALLATION [SKYACTIV-G 2.0, SKYACTIV-G 2.5]**.)
		No	Go to Step 4.
3	**VERIFY THAT REPAIRS HAVE BEEN COMPLETED** • Clear the DTC for the start stop unit using the M-MDS. (See **CLEARING DTC [START STOP UNIT]**.) • With the programmed remote transmitter in the vehicle, switch the ignition ON (engine off). • Perform the following work **5 times or more**. ▪ Depress the clutch pedal and release it. (MTX) ▪ Operate the selector lever to other than P and N position from P or N position and hold for **1 s or more**. (ATX) • Retrieve the start stop unit DTCs using	Yes	Repeat the inspection from Step 1. • If the malfunction recurs, replace the start stop unit. (See **START STOP UNIT REMOVAL/INSTALLATION**.) Go to the next step.
		No	Go to the next step.

	the M-MDS. (See **DTC INSPECTION [START STOP UNIT]**.) • Is the same DTC displayed?		
4	**VERIFY IF OTHER DTCs DISPLAYED** • Are any other DTCs displayed?	Yes	Repair or replace the malfunctioning part according to the applicable DTC troubleshooting. (See **DTC TABLE [START STOP UNIT]**.)
		No	DTC troubleshooting completed.

2014 - Mazda3 - Body and Accessories

DTC P081C:23 [START STOP UNIT]

Description	NOT P position switch circuit malfunction
Detection condition	• Start stop unit detects that the NOT P position switch is stuck on for **5 s or more** for a continuous **5 times** with the ignition switched ON (engine off or on).
Fail-safe function	• Perform the NOT P position switch control in a position other than P.
Possible cause	• Selector lever component connector or terminal malfunction • NOT P position switch malfunction • Start stop unit connector or terminal malfunction • Short to ground in wiring harness between start stop unit terminal 1J and selector lever component terminal B • Start stop unit malfunction

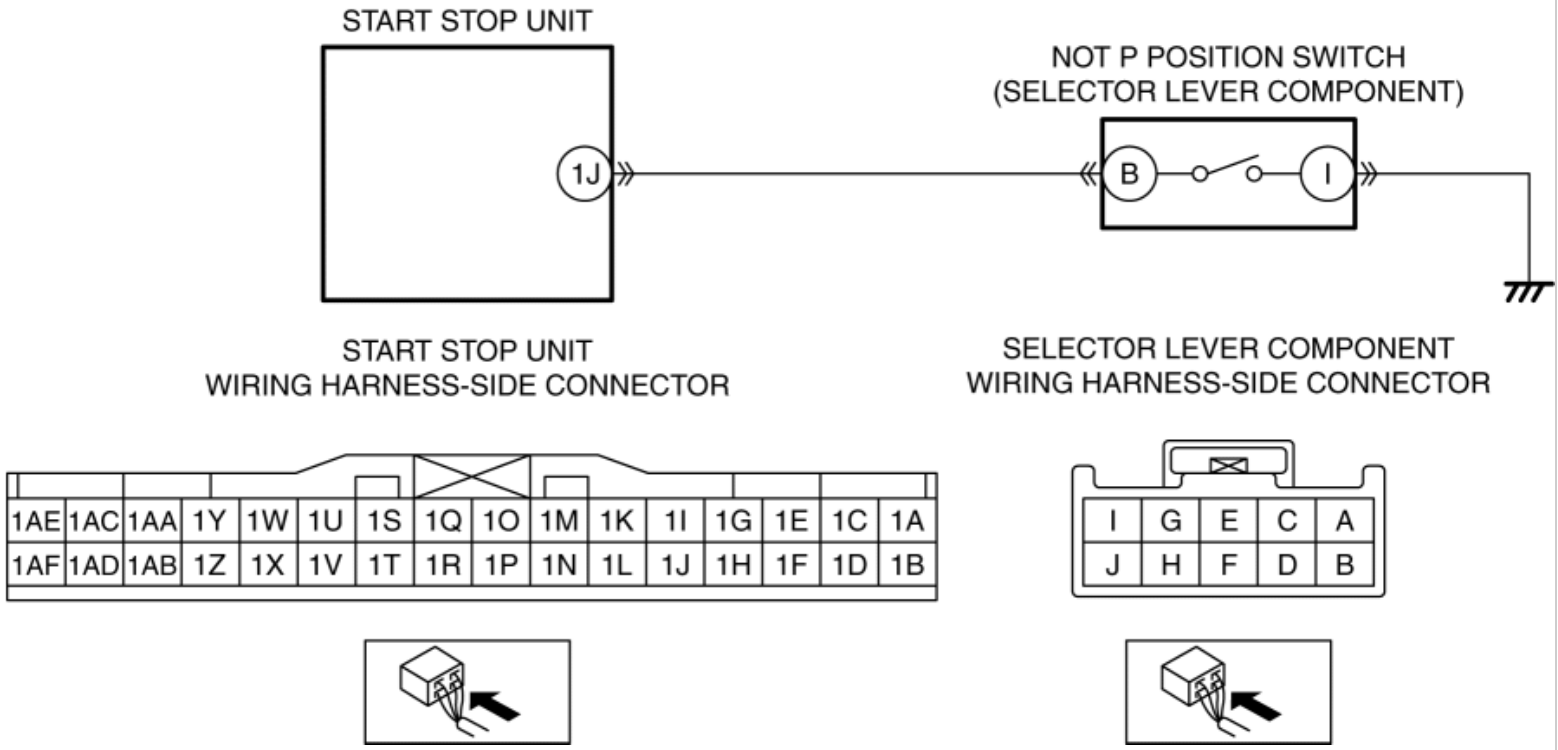

Diagnostic Procedure

Step	Inspection	Action
	INSPECT SELECTOR LEVER COMPONENT	

1	**CONNECTOR CONDITION** • Switch the ignition off. • Disconnect the negative battery cable. (See **NEGATIVE BATTERY CABLE DISCONNECTION/CONNECTION [SKYACTIV-G 2.0, SKYACTIV-G 2.5]**.) • Disconnect the selector lever component connector. • Inspect the connector engagement and connection condition and inspect the terminals for damage, deformation, corrosion, or disconnection. • Is the connector normal?	Yes	Go to the next step.
		No	Repair or replace the connector, then go to Step 5.
2	**INSPECT NOT P POSITION SWITCH** • Inspect the NOT P position switch. (See **NOT P POSITION SWITCH INSPECTION**.) • Is the NOT P position switch normal?	Yes	Go to the next step.
		No	Replace the selector lever component, then go to Step 5. (See **AUTOMATIC TRANSAXLE SHIFT MECHANISM REMOVAL/INSTALLATION**.)
3	**INSPECT START STOP UNIT CONNECTOR CONDITION** • Disconnect the start stop unit connector. • Inspect the connector engagement and connection condition and inspect the terminals for damage, deformation, corrosion, or disconnection. • Is the connector normal?	Yes	Go to the next step.
		No	Repair or replace the connector, then go to Step 5.
4	**INSPECT FOR SHORT TO GROUND IN NOT P POSITION SWITCH CIRCUIT** • Verify that the selector lever component and start stop unit connectors are disconnected. • Inspect for continuity between selector lever component terminal B (wiring harness-side) and body ground. • Is there continuity?	Yes	Refer to the wiring diagram and verify whether or not there is a common connector between start stop unit terminal 1J and selector lever component terminal B. **If there is a common connector:** • Determine the malfunctioning part by inspecting the common connector and the terminal for corrosion, damage, or pin disconnection, and the common wiring harness for a short to ground. • Repair or replace the malfunctioning part. **If there is no common connector:** • Repair or replace the wiring harness which has a short to ground. Go to the next step.

		No	Go to the next step.
5	**VERIFY THAT REPAIRS HAVE BEEN COMPLETED** • Always reconnect all disconnected connectors. • Reconnect the negative battery cable. (See **NEGATIVE BATTERY CABLE DISCONNECTION/CONNECTION [SKYACTIV-G 2.0, SKYACTIV-G 2.5]**.) • Clear the DTC for the start stop unit using the M-MDS. (See **CLEARING DTC [START STOP UNIT]**.) • Switch the ignition ON (engine off). • Perform the following work **5 times or more**. ▪ Operate the selector lever to other than P position and hold for **5 s or more**. ▪ Operate the selector lever to P position and hold for **5 s or more**. ▪ Operate the selector lever to other than P position. • Retrieve the start stop unit DTCs using the M-MDS. (See **DTC INSPECTION [START STOP UNIT]**.) • Is the same DTC displayed?	Yes	Repeat the inspection from Step 1. • If the malfunction recurs, replace the start stop unit. (See **START STOP UNIT REMOVAL/INSTALLATION**.) Go to the next step.
		No	Go to the next step.
6	**VERIFY IF OTHER DTCs DISPLAYED** • Are any other DTCs displayed?	Yes	Repair or replace the malfunctioning part according to the applicable DTC troubleshooting. (See **DTC TABLE [START STOP UNIT]**.)
		No	DTC troubleshooting completed.

2014 - Mazda3 - Body and Accessories

DTC P081C:24 [START STOP UNIT]

Description	NOT P position switch circuit malfunction
Detection condition	• Start stop unit detects that the NOT P position switch is stuck off for **5 s or more** for a continuous **5 times** with the ignition switched ON (engine off or on).
Fail-safe function	• Perform the NOT P position switch control in a position other than P.
Possible cause	• Selector lever component connector or terminal malfunction • Open circuit in wiring harness between selector lever component terminal I and body ground • NOT P position switch malfunction • Start stop unit connector or terminal malfunction • Open circuit in wiring harness between start stop unit terminal 1J and selector lever component terminal B • Start stop unit malfunction

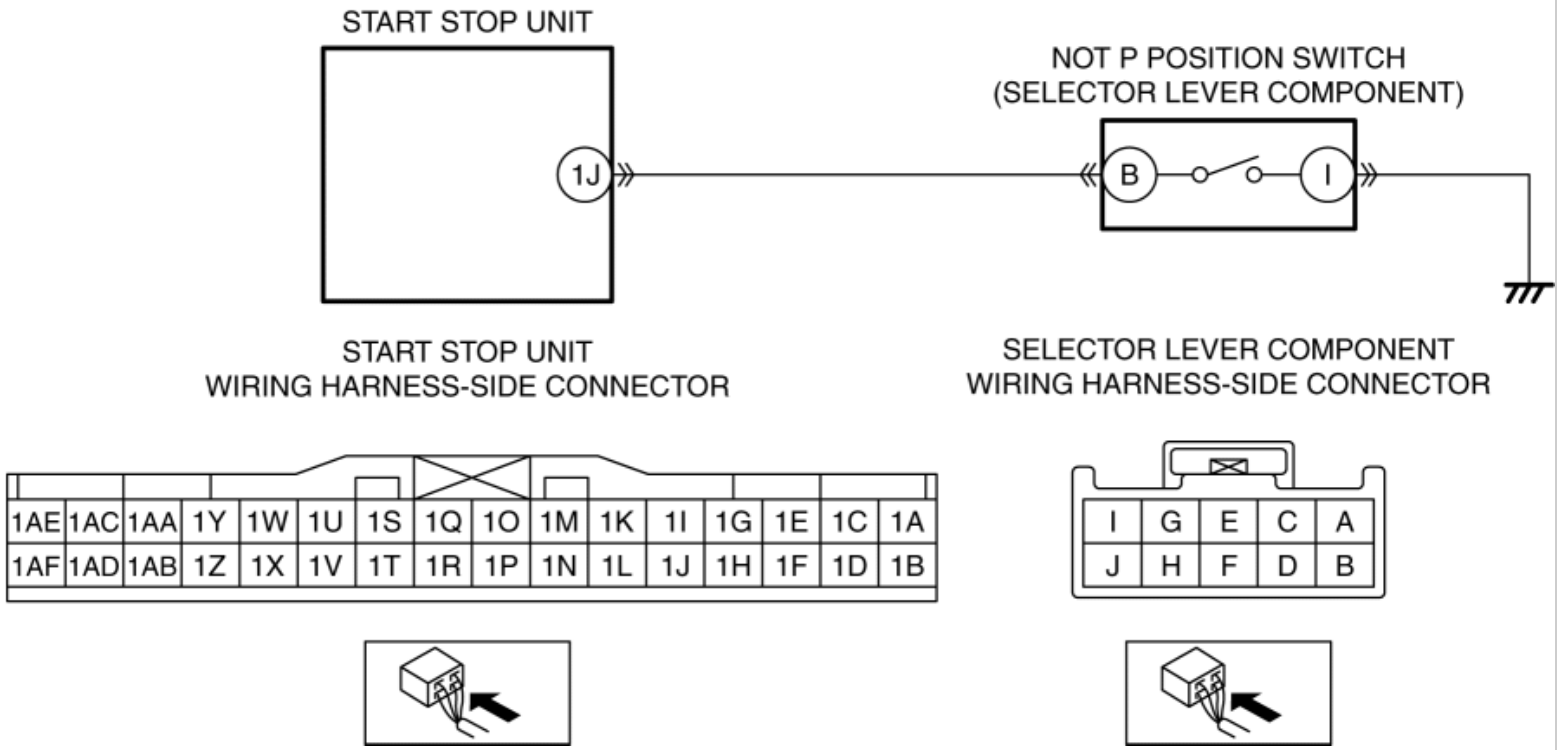

Diagnostic Procedure

Step	Inspection	Action

1	**INSPECT SELECTOR LEVER COMPONENT CONNECTOR CONDITION** • Switch the ignition off. • Disconnect the negative battery cable. (See **NEGATIVE BATTERY CABLE DISCONNECTION/CONNECTION [SKYACTIV-G 2.0, SKYACTIV-G 2.5]**.) • Disconnect the selector lever component connector. • Inspect the connector engagement and connection condition and inspect the terminals for damage, deformation, corrosion, or disconnection. • Is the connector normal?	Yes	Go to the next step.
		No	Repair or replace the connector, then go to Step 6.
2	**INSPECT FOR OPEN CIRCUIT IN NOT P POSITION SWITCH GROUND CIRCUIT** • Verify that the selector lever component connector is disconnected. • Inspect for continuity between selector lever component terminal I (wiring harness-side) and body ground. • Is there continuity?	Yes	Go to the next step.
		No	Refer to the wiring diagram and verify whether or not there is a common connector between selector lever component terminal I and body ground. **If there is a common connector:** • Determine the malfunctioning part by inspecting the common connector and the terminal for corrosion, damage, or pin disconnection, and the common wiring harness for an open circuit. • Repair or replace the malfunctioning part. **If there is no common connector:** • Repair or replace the wiring harness which has an open circuit. Go to Step 6.
3	**INSPECT NOT P POSITION SWITCH** • Inspect the NOT P position switch. (See **NOT P POSITION SWITCH INSPECTION**.) • Is the NOT P position switch normal?	Yes	Go to the next step.
		No	Replace the selector lever component, then go to Step 6. (See **AUTOMATIC TRANSAXLE SHIFT MECHANISM REMOVAL/INSTALLATION**.)
4	**INSPECT START STOP UNIT CONNECTOR CONDITION** • Disconnect the start stop unit connector. • Inspect the connector engagement and connection condition and inspect the terminals for damage, deformation, corrosion, or disconnection.	Yes	Go to the next step.
		No	Repair or replace the connector, then go to Step 6.

	• Is the connector normal?		
5	**INSPECT FOR OPEN CIRCUIT IN NOT P POSITION SWITCH CIRCUIT** • Verify that the selector lever component and start stop unit connectors are disconnected. • Inspect for continuity between start stop unit terminal 1J (wiring harness-side) and selector lever component terminal B (wiring harness-side). • Is there continuity?	Yes	Go to the next step.
		No	Refer to the wiring diagram and verify whether or not there is a common connector between start stop unit terminal 1J and selector lever component terminal B. **If there is a common connector:** • Determine the malfunctioning part by inspecting the common connector and the terminal for corrosion, damage, or pin disconnection, and the common wiring harness for an open circuit. • Repair or replace the malfunctioning part. **If there is no common connector:** • Repair or replace the wiring harness which has an open circuit. Go to the next step.
6	**VERIFY THAT REPAIRS HAVE BEEN COMPLETED** • Always reconnect all disconnected connectors. • Reconnect the negative battery cable. (See **NEGATIVE BATTERY CABLE DISCONNECTION/CONNECTION [SKYACTIV-G 2.0, SKYACTIV-G 2.5]**.) • Clear the DTC for the start stop unit using the M-MDS. (See **CLEARING DTC [START STOP UNIT]**.) • Switch the ignition ON (engine off). • Perform the following work **5 times or more**. ▪ Operate the selector lever to P position and hold for **5 s or more**. ▪ Operate the selector lever to other than P position and hold for **5 s or more**. ▪ Operate the selector lever to P position. • Retrieve the start stop unit DTCs using the M-MDS. (See **DTC INSPECTION [START STOP**	Yes	Repeat the inspection from Step 1. • If the malfunction recurs, replace the start stop unit. (See **START STOP UNIT REMOVAL/INSTALLATION**.) Go to the next step.
		No	Go to the next step.

	UNIT].) • Is the same DTC displayed?		
7	**VERIFY IF OTHER DTCs DISPLAYED** • Are any other DTCs displayed?	Yes	Repair or replace the malfunctioning part according to the applicable DTC troubleshooting. (See **DTC TABLE [START STOP UNIT]**.)
		No	DTC troubleshooting completed.

2014 - Mazda3 - Body and Accessories

DTC P081D:29 [START STOP UNIT]

Description	Neutral switch error signal received
Detection condition	• Start stop unit receives the neutral switch signal error signal from the PCM for **1 min or more** with the ignition switched ON (engine off or on).
Fail-safe function	• Perform the control with neutral switch signal turned off.
Possible cause	• DTCs are stored in the PCM. • Neutral switch malfunction • PCM malfunction • Start stop unit malfunction
System wiring diagram	Not applicable

Diagnostic Procedure

Step	Inspection		Action
1	**VERIFY PCM DTCs** • Retrieve the PCM DTCs using the M-MDS. (See **ON-BOARD DIAGNOSTIC TEST [SKYACTIV-G 2.0, SKYACTIV-G 2.5]**.) • Are any DTCs displayed?	Yes	Repair or replace the malfunctioning part according to the applicable DTC troubleshooting. (See **DTC TABLE [SKYACTIV-G 2.0, SKYACTIV-G 2.5]**.)
		No	Go to the next step.
2	**INSPECT NEUTRAL SWITCH** • Inspect the neutral switch. (See **NEUTRAL SWITCH INSPECTION [SKYACTIV-G 2.0, SKYACTIV-G 2.5]**.)	Yes	Go to the next step.
		No	Replace the neutral switch, then go to Step 4. (See **NEUTRAL SWITCH REMOVAL/INSTALLATION [C66M-R]**.)

	• Is the neutral switch normal?		
3	**PERFORM DTC INSPECTION AND VERIFY PCM MALFUNCTION** • Clear the DTC for the start stop unit using the M-MDS. (See **CLEARING DTC [START STOP UNIT]**.) • Switch the ignition ON (engine off or on) and wait for **1 min or more**. • Retrieve the start stop unit DTCs using the M-MDS. (See **DTC INSPECTION [START STOP UNIT]**.) • Is the same DTC displayed?	Yes	Replace the PCM, then go to the next step. (See **PCM REMOVAL/INSTALLATION [SKYACTIV-G 2.0, SKYACTIV-G 2.5]**.)
		No	Go to Step 5.
4	**VERIFY THAT REPAIRS HAVE BEEN COMPLETED** • Clear the DTC for the start stop unit using the M-MDS. (See **CLEARING DTC [START STOP UNIT]**.) • Switch the ignition ON (engine off or on) and wait for **1 min or more**. • Retrieve the start stop unit DTCs using the M-MDS. (See **DTC INSPECTION [START STOP UNIT]**.) • Is the same DTC displayed?	Yes	Repeat the inspection from Step 1. • If the malfunction recurs, replace the start stop unit. (See **START STOP UNIT REMOVAL/INSTALLATION**.) Go to the next step.
		No	Go to the next step.
5	**VERIFY IF OTHER DTCs DISPLAYED** • Are any other DTCs displayed?	Yes	Repair or replace the malfunctioning part according to the applicable DTC troubleshooting. (See **DTC TABLE [START STOP UNIT]**.)
		No	DTC troubleshooting completed.

2014 - Mazda3 - Body and Accessories

DTC P081D:2F [START STOP UNIT]

Description	Neutral switch signal mismatch
Detection condition	• Start stop unit detects that the vehicle speed changes from **0 km/h {0 mph}** to **10 km/h {6.2 mph}** for a continuous **5 times or more** even though the neutral signal from the PCM is being received with the ignition switched ON (engine off or on).
Fail-safe function	• Perform the control with neutral switch signal turned off.
Possible cause	• DTCs are stored in the PCM. • Neutral switch malfunction • PCM malfunction • Start stop unit malfunction
System wiring diagram	Not applicable

Diagnostic Procedure

Step	Inspection		Action
1	**VERIFY PCM DTCs** • Retrieve the PCM DTCs using the M-MDS. (See **ON-BOARD DIAGNOSTIC TEST [SKYACTIV-G 2.0, SKYACTIV-G 2.5]**.) • Are any DTCs displayed?	Yes	Repair or replace the malfunctioning part according to the applicable DTC troubleshooting. (See **DTC TABLE [SKYACTIV-G 2.0, SKYACTIV-G 2.5]**.)
		No	Go to the next step.
2	**INSPECT NEUTRAL SWITCH** • Inspect the neutral switch. (See **NEUTRAL SWITCH INSPECTION**	Yes	Go to the next step.
		No	Replace the neutral switch, then go to Step 4.

	[SKYACTIV-G 2.0, SKYACTIV-G 2.5].) • Is the neutral switch normal?		(See NEUTRAL SWITCH REMOVAL/INSTALLATION [C66M-R].)
3	**PERFORM DTC INSPECTION AND VERIFY PCM MALFUNCTION** • Clear the DTC for the start stop unit using the M-MDS. (See CLEARING DTC [START STOP UNIT].) • Perform the following work **5 times or more**. ▪ Drive the vehicle. ▪ Vehicle speed changes from **0 km/h {0 mph}** to **10 km/h {6.2 mph}**. • Retrieve the start stop unit DTCs using the M-MDS. (See DTC INSPECTION [START STOP UNIT].) • Is the same DTC displayed?	Yes	Replace the PCM, then go to the next step. (See PCM REMOVAL/INSTALLATION [SKYACTIV-G 2.0, SKYACTIV-G 2.5].)
		No	Go to Step 5.
4	**VERIFY THAT REPAIRS HAVE BEEN COMPLETED** • Clear the DTC for the start stop unit using the M-MDS. (See CLEARING DTC [START STOP UNIT].) • Perform the following work **5 times or more**. ▪ Drive the vehicle. ▪ Vehicle speed changes from **0 km/h {0 mph}** to **10 km/h {6.2 mph}**. • Retrieve the start stop unit DTCs using the M-MDS. (See DTC INSPECTION [START STOP UNIT].) • Is the same DTC displayed?	Yes	Repeat the inspection from Step 1. • If the malfunction recurs, replace the start stop unit. (See START STOP UNIT REMOVAL/INSTALLATION.) Go to the next step.
		No	Go to the next step.
5	**VERIFY IF OTHER DTCs DISPLAYED**	Yes	Repair or replace the malfunctioning part

	• Are any other DTCs displayed?		according to the applicable DTC troubleshooting. (See **DTC TABLE [START STOP UNIT]**.)
		No	DTC troubleshooting completed.

2014 - Mazda3 - Body and Accessories

DTC P0830:23 [START STOP UNIT]

Description	CPP switch circuit malfunction
Detection condition	• Start stop unit detects that the CPP switch is stuck on for **10 min or more**.
Fail-safe function	• Change to the back-up mode. • Perform the control with CPP switch turned off.

Possible cause	• DTCs are stored in the PCM.
	• CPP switch connector or terminal malfunction
	• CPP switch malfunction
	• Start stop unit connector or terminal malfunction
	• PCM connector or terminal malfunction
	• Short to ground in the wiring harness between the following terminals:
	  ▪ CPP switch terminal A—PCM terminal 2J
	  ▪ CPP switch terminal A—Start stop unit terminal 2E
	• Start stop unit malfunction

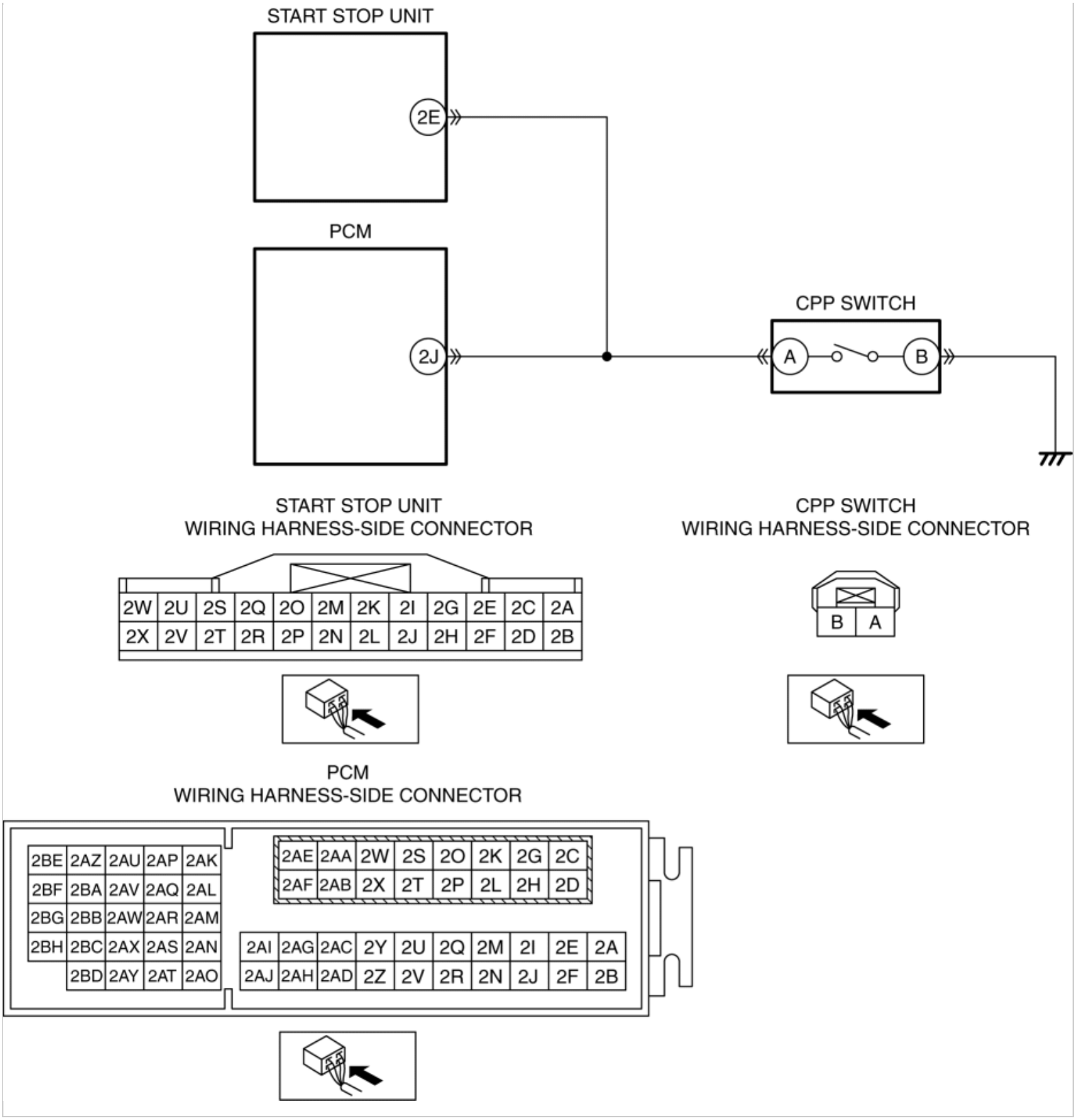

Diagnostic Procedure

Step	Inspection		Action
1	**VERIFY PCM DTCs** • Retrieve the PCM DTCs using the M-MDS. (See **ON-BOARD DIAGNOSTIC TEST**	Yes	Repair or replace the malfunctioning part according to the applicable DTC troubleshooting. (See **DTC TABLE [SKYACTIV-G 2.0, SKYACTIV-G 2.5]**.)

	[SKYACTIV-G 2.0, SKYACTIV-G 2.5].) • Are any DTCs displayed?	No	Go to the next step.
2	**INSPECT CPP SWITCH CONNECTOR CONDITION** • Switch the ignition off. • Disconnect the negative battery cable. (See **NEGATIVE BATTERY CABLE DISCONNECTION/CONNECTION [SKYACTIV-G 2.0, SKYACTIV-G 2.5]**.) • Disconnect the CPP switch connector. • Inspect the connector engagement and connection condition and inspect the terminals for damage, deformation, corrosion, or disconnection. • Is the connector normal?	Yes	Go to the next step.
		No	Repair or replace the connector, then go to Step 7.
3	**INSPECT CPP SWITCH** • Inspect the CPP switch. (See **CLUTCH PEDAL POSITION (CPP) SWITCH INSPECTION [SKYACTIV-G 2.0, SKYACTIV-G 2.5]**.) • Is the CPP switch normal?	Yes	Go to the next step.
		No	Replace the CPP switch, then go to the Step 7. (See **CLUTCH PEDAL POSITION SWITCH REMOVAL/INSTALLATION [C66M-R]**.)
4	**INSPECT START STOP UNIT CONNECTOR CONDITION** • Disconnect the start stop unit connector. • Inspect the connector engagement and connection condition and inspect the terminals for damage, deformation, corrosion, or disconnection. • Is the connector normal?	Yes	Go to the next step.
		No	Repair or replace the connector, then go to Step 7.
5	**INSPECT PCM CONNECTOR CONDITION** • Disconnect the PCM connector. • Inspect the connector engagement and connection condition and inspect the terminals for damage, deformation, corrosion, or disconnection. • Is the connector normal?	Yes	Go to the next step.
		No	Repair or replace the connector, then go to Step 7.
6	**INSPECT FOR SHORT TO GROUND IN CPP SWITCH CIRCUIT** • Verify that the CPP switch, start stop unit and PCM connectors are disconnected. • Inspect for continuity between CPP switch terminal A (wiring harness-side) and body ground.	Yes	Refer to the wiring diagram and verify whether or not there is a common connector between the following terminals: • CPP switch terminal A—PCM terminal 2J • CPP switch terminal A—Start stop unit terminal 2E **If there is a common connector:** • Determine the malfunctioning part by inspecting the common connector and the terminal for

	• Is there continuity?		corrosion, damage, or pin disconnection, and the common wiring harness for a short to ground. • Repair or replace the malfunctioning part. **If there is no common connector:** • Repair or replace the wiring harness which has a short to ground. Go to the next step.
		No	Go to the next step.
7	**VERIFY THAT REPAIRS HAVE BEEN COMPLETED** • Always reconnect all disconnected connectors. • Reconnect the negative battery cable. (See **NEGATIVE BATTERY CABLE DISCONNECTION/CONNECTION [SKYACTIV-G 2.0, SKYACTIV-G 2.5]**.) • Clear the DTC for the start stop unit using the M-MDS. (See **CLEARING DTC [START STOP UNIT]**.) • Switch the ignition ON (engine off or on) and wait for **10 min or more**. • Retrieve the start stop unit DTCs using the M-MDS. (See **DTC INSPECTION [START STOP UNIT]**.) • Is the same DTC displayed?	Yes	Repeat the inspection from Step 1. • If the malfunction recurs, replace the start stop unit. (See **START STOP UNIT REMOVAL/INSTALLATION**.) Go to the next step.
		No	Go to the next step.
8	**VERIFY IF OTHER DTCs DISPLAYED** • Are any other DTCs displayed?	Yes	Repair or replace the malfunctioning part according to the applicable DTC troubleshooting. (See **DTC TABLE [START STOP UNIT]**.)
		No	DTC troubleshooting completed.

2014 - Mazda3 - Body and Accessories

DTC P0850:23 [START STOP UNIT]

Description	Transaxle range sensor circuit malfunction
Detection condition	• Start stop unit detects that the transaxle range sensor signal is P or N position for **1 s or more** continuously for a continuous **5 times or more** even though the TCM CAN signal is other than P and N position with the ignition switched ON (engine off or on).
Fail-safe function	• Perform control of the internal signal for control of the transaxle range sensor as position other than P, N positions.
Possible cause	• DTCs are stored in the TCM. • Start stop unit connector or terminal malfunction • TCM connector or terminal malfunction • Short to power supply in wiring harness between start stop unit terminal 1F and TCM terminal J • Transaxle range sensor malfunction • Start stop unit malfunction

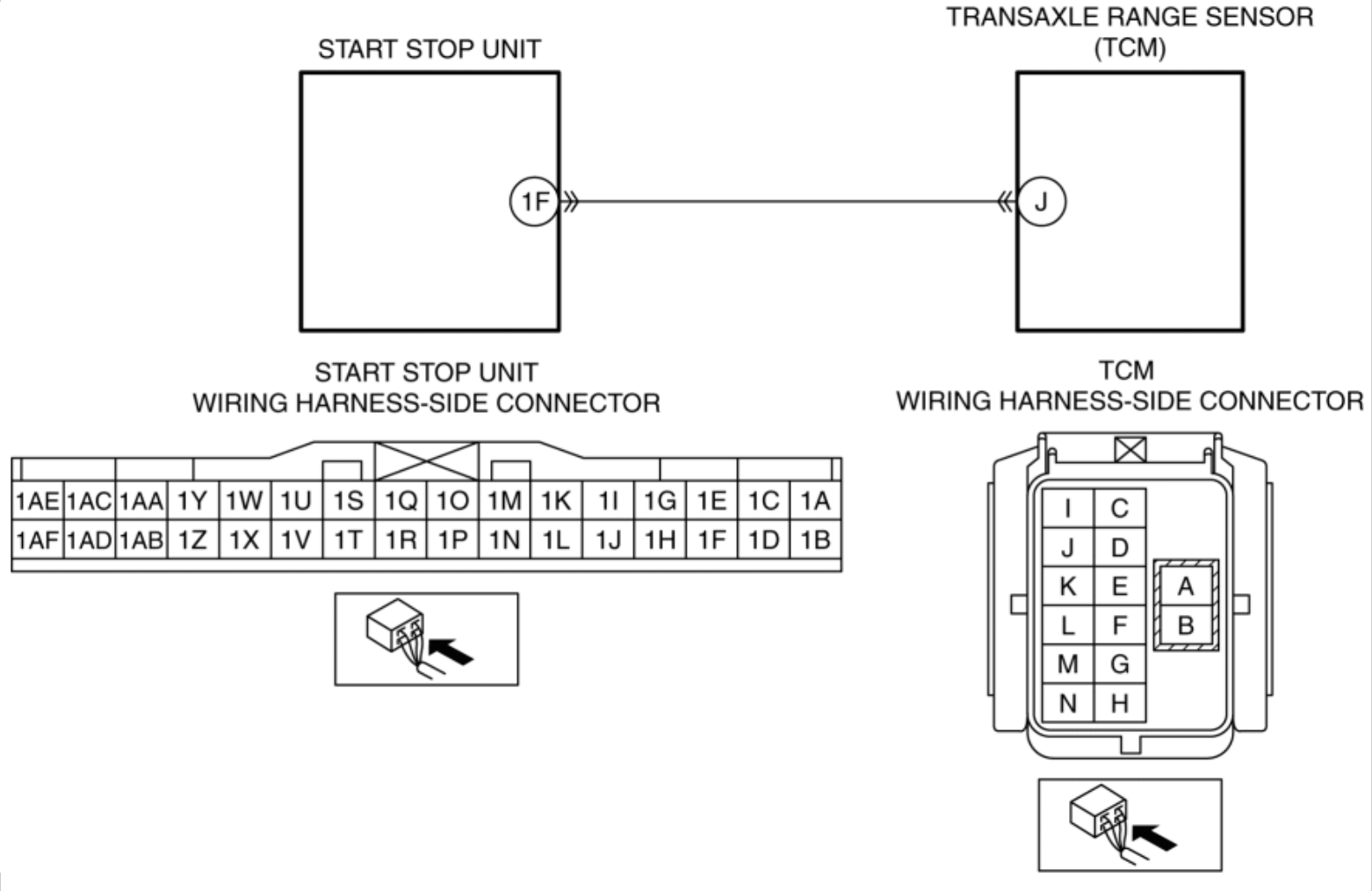

Diagnostic Procedure

Step	Inspection		Action
1	**VERIFY TCM DTCs** • Retrieve the TCM DTCs using the M-MDS. (See **ON-BOARD DIAGNOSTIC SYSTEM DTC INSPECTION [FW6A-EL]**.) • Are any DTCs displayed?	Yes	Repair or replace the malfunctioning part according to the applicable DTC troubleshooting. (See **ON-BOARD DIAGNOSTIC SYSTEM DTC TABLE [FW6A-EL]**.)
		No	Go to the next step.
2	**INSPECT START STOP UNIT CONNECTOR CONDITION** • Switch the ignition off. • Disconnect the negative battery cable. (See **NEGATIVE BATTERY CABLE DISCONNECTION/CONNECTION [SKYACTIV-G 2.0, SKYACTIV-G 2.5]**.) • Disconnect the start stop unit connector.	Yes	Go to the next step.
		No	Repair or replace the connector, then go to Step 6.

	• Inspect the connector engagement and connection condition and inspect the terminals for damage, deformation, corrosion, or disconnection. • Is the connector normal?		
3	**INSPECT TCM CONNECTOR CONDITION** • Disconnect the TCM connector. • Inspect the connector engagement and connection condition and inspect the terminals for damage, deformation, corrosion, or disconnection. • Is the connector normal?	Yes	Go to the next step.
		No	Repair or replace the connector, then go to Step 6.
4	**INSPECT FOR SHORT TO POWER SUPPLY IN TRANSAXLE RANGE SENSOR CIRCUIT** • Always reconnect all disconnected connectors. • Reconnect the negative battery cable. (See **NEGATIVE BATTERY CABLE DISCONNECTION/CONNECTION [SKYACTIV-G 2.0, SKYACTIV-G 2.5]**.) • Operate the selector lever to P or N position. • Measure the voltage at the start stop unit terminal 1F (wiring harness-side). • Is the voltage **1.0 V or less**?	Yes	Go to the next step.
		No	Refer to the wiring diagram and verify whether or not there is a common connector between start stop unit terminal 1F and TCM terminal J. **If there is a common connector:** • Determine the malfunctioning part by inspecting the common connector and the terminal for corrosion, damage, or pin disconnection, and the common wiring harness for a short to power supply. • Repair or replace the malfunctioning part. **If there is no common connector:** • Repair or replace the wiring harness which has a short to power supply. Go to Step 6.
5	**PERFORM DTC INSPECTION AND VERIFY TRANSAXLE RANGE SENSOR MALFUNCTION** • Clear the DTC for the start stop unit using the M-MDS. (See **CLEARING DTC [START STOP UNIT]**.) • Switch the ignition ON (engine off). • Perform the following work **5 times or more**. ▪ Operate the selector lever to P or N position and wait for **1 s or more**.	Yes	Replace the TCM, then go to the next step. (See **CONTROL VALVE BODY REMOVAL/INSTALLATION [FW6A-EL]**.)
		No	Go to Step 7.

	Operate the selector lever to other than P and N position and wait for **1 s or more**. ▪ Operate the selector lever to P or N position. • Retrieve the start stop unit DTCs using the M-MDS. (See **DTC INSPECTION [START STOP UNIT]**.) • Is the same DTC displayed?		
6	**VERIFY THAT REPAIRS HAVE BEEN COMPLETED** • Always reconnect all disconnected connectors. • Reconnect the negative battery cable. (See **NEGATIVE BATTERY CABLE DISCONNECTION/CONNECTION [SKYACTIV-G 2.0, SKYACTIV-G 2.5]**.) • Clear the DTC for the start stop unit using the M-MDS. (See **CLEARING DTC [START STOP UNIT]**.) • Switch the ignition ON (engine off). • Perform the following work **5 times or more**. ▪ Operate the selector lever to P or N position and wait for **1 s or more**. ▪ Operate the selector lever to other than P and N position and wait for **1 s or more**. ▪ Operate the selector lever to P or N position. • Retrieve the start stop unit DTCs using the M-MDS. **DTC INSPECTION [START**	Yes	Repeat the inspection from Step 1. • If the malfunction recurs, replace the start stop unit. (See **START STOP UNIT REMOVAL/INSTALLATION**.) Go to the next step.
		No	Go to the next step.

	(See **STOP UNIT]**.) • Is the same DTC displayed?		
7	**VERIFY IF OTHER DTCs DISPLAYED** • Are any other DTCs displayed?	Yes	Repair or replace the malfunctioning part according to the applicable DTC troubleshooting. (See **DTC TABLE [START STOP UNIT]**.)
		No	DTC troubleshooting completed.

2014 - Mazda3 - Body and Accessories

DTC P0850:24 [START STOP UNIT]

Description	Transaxle range sensor circuit malfunction
Detection condition	• Start stop unit detects that the transaxle range sensor signal is other than P and N position for **1 s or more** continuously for a continuous **5 times or more** even though the TCM CAN signal is in P or N position with the ignition switched ON (engine off or on).
Fail-safe function	• Perform control of the internal signal for control of the transaxle range sensor as position other than P, N positions.
Possible cause	• DTCs are stored in the TCM. • Start stop unit connector or terminal malfunction • TCM connector or terminal malfunction • Short to ground in wiring harness between start stop unit terminal 1F and TCM terminal J • Open circuit in wiring harness between start stop unit terminal 1F and TCM terminal J • Transaxle range sensor malfunction • Start stop unit malfunction

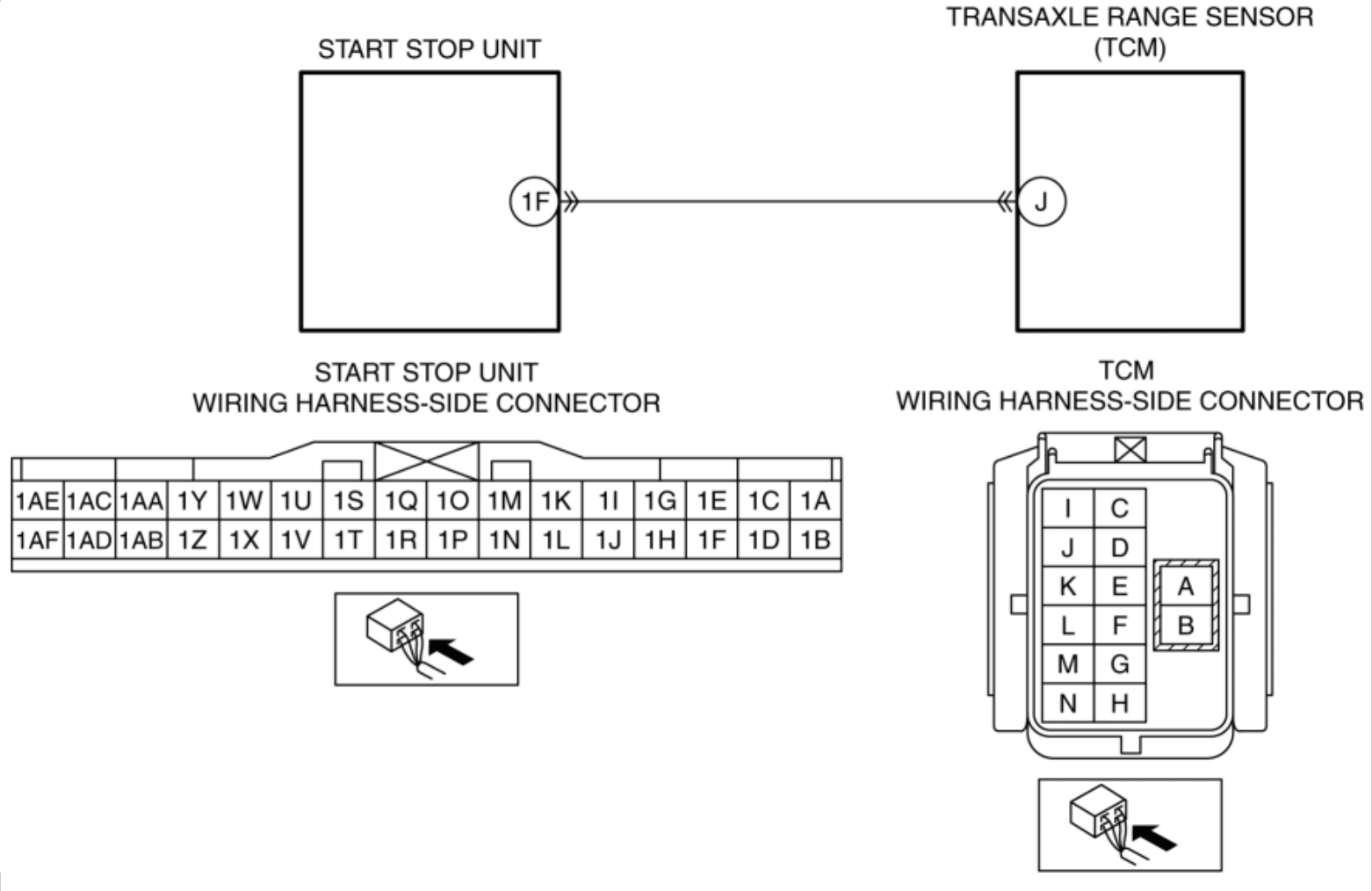

Diagnostic Procedure

Step	Inspection		Action
1	**VERIFY TCM DTCs** • Retrieve the TCM DTCs using the M-MDS. (See **ON-BOARD DIAGNOSTIC SYSTEM DTC INSPECTION [FW6A-EL]**.) • Are any DTCs displayed?	Yes	Repair or replace the malfunctioning part according to the applicable DTC troubleshooting. (See **ON-BOARD DIAGNOSTIC SYSTEM DTC TABLE [FW6A-EL]**.)
		No	Go to the next step.
2	**INSPECT START STOP UNIT CONNECTOR CONDITION** • Switch the ignition off. • Disconnect the negative battery cable. (See **NEGATIVE BATTERY CABLE DISCONNECTION/CONNECTION [SKYACTIV-G 2.0, SKYACTIV-G 2.5]**.) • Disconnect the start stop unit connector.	Yes	Go to the next step.
		No	Repair or replace the connector, then go to Step 7.

	• Inspect the connector engagement and connection condition and inspect the terminals for damage, deformation, corrosion, or disconnection. • Is the connector normal?		
3	**INSPECT TCM CONNECTOR CONDITION** • Disconnect the TCM connector. • Inspect the connector engagement and connection condition and inspect the terminals for damage, deformation, corrosion, or disconnection. • Is the connector normal?	Yes	Go to the next step.
		No	Repair or replace the connector, then go to Step 7.
4	**INSPECT FOR SHORT TO GROUND IN TRANSAXLE RANGE SENSOR CIRCUIT** • Verify that the start stop unit and TCM connectors are disconnected. • Inspect for continuity between start stop unit terminal 1F (wiring harness-side) and body ground. • Is there continuity?	Yes	Refer to the wiring diagram and verify whether or not there is a common connector between start stop unit terminal 1F and TCM terminal J. **If there is a common connector:** • Determine the malfunctioning part by inspecting the common connector and the terminal for corrosion, damage, or pin disconnection, and the common wiring harness for a short to ground. • Repair or replace the malfunctioning part. **If there is no common connector:** • Repair or replace the wiring harness which has a short to ground. Go to Step 7.
		No	Go to the next step.
5	**INSPECT FOR OPEN CIRCUIT IN TRANSAXLE RANGE SENSOR CIRCUIT** • Verify that the start stop unit and TCM connectors are disconnected. • Inspect for continuity between start stop unit terminal 1F (wiring harness-side) and TCM terminal J (wiring harness-side). • Is there continuity?	Yes	Go to the next step.
		No	Refer to the wiring diagram and verify whether or not there is a common connector between start stop unit terminal 1F and TCM terminal J. **If there is a common connector:** • Determine the malfunctioning part by inspecting the common connector and the terminal for corrosion, damage, or pin disconnection, and the common wiring harness for an open circuit. • Repair or replace the malfunctioning part. **If there is no common connector:** • Repair or replace the wiring harness which has an open circuit.

			Go to Step 7.
6	**PERFORM DTC INSPECTION AND VERIFY TRANSAXLE RANGE SENSOR MALFUNCTION** • Always reconnect all disconnected connectors. • Reconnect the negative battery cable. (See **NEGATIVE BATTERY CABLE DISCONNECTION/CONNECTION [SKYACTIV-G 2.0, SKYACTIV-G 2.5]**.) • Clear the DTC for the start stop unit using the M-MDS. (See **CLEARING DTC [START STOP UNIT]**.) • Switch the ignition ON (engine off). • Perform the following work **5 times or more**. ▪ Operate the selector lever to other than P and N position and wait for **1 s or more**. ▪ Operate the selector lever to P or N position and wait for **1 s or more**. ▪ Operate the selector lever to other than P and N position. • Retrieve the start stop unit DTCs using the M-MDS. (See **DTC INSPECTION [START STOP UNIT]**.) • Is the same DTC displayed?	Yes	Replace the TCM, then go to the next step. (See **CONTROL VALVE BODY REMOVAL/INSTALLATION [FW6A-EL]**.)
		No	Go to Step 8.
7	**VERIFY THAT REPAIRS HAVE BEEN COMPLETED** • Always reconnect all disconnected connectors. • Reconnect the negative battery cable. (See **NEGATIVE BATTERY CABLE DISCONNECTION/CONNECTION [SKYACTIV-G 2.0, SKYACTIV-G 2.5]**.) • Clear the DTC for the start stop	Yes	Repeat the inspection from Step 1. • If the malfunction recurs, replace the start stop unit. (See **START STOP UNIT REMOVAL/INSTALLATION**.) Go to the next step.
		No	Go to the next step.

	unit using the M-MDS.
	
	(See **CLEARING DTC [START STOP UNIT]**.)
	
	• Switch the ignition ON (engine off).
	
	• Perform the following work **5 times or more**.
	
	  ▪ Operate the selector lever to other than P and N position and wait for **1 s or more**.
	
	  ▪ Operate the selector lever to P or N position and wait for **1 s or more**.
	
	  ▪ Operate the selector lever to other than P and N position.
	
	• Retrieve the start stop unit DTCs using the M-MDS.
	
	(See **DTC INSPECTION [START STOP UNIT]**.)
	
	• Is the same DTC displayed?		

8	**VERIFY IF OTHER DTCs DISPLAYED** • Are any other DTCs displayed?	Yes	Repair or replace the malfunctioning part according to the applicable DTC troubleshooting. (See **DTC TABLE [START STOP UNIT]**.)
		No	DTC troubleshooting completed.

2014 - Mazda3 - Body and Accessories

DTC P0930:71 [START STOP UNIT]

Description	Shift-lock solenoid circuit malfunction
Detection condition	• Start stop unit detects the shift-lock solenoid is stuck on for **30 min or more** with the ignition switched ON (engine off or on).
Fail-safe function	• Inhibits the shift lock control.

Possible cause	• Selector lever component connector or terminal malfunction
	• Shift-lock solenoid power supply circuit malfunction
	  ▪ Short to ground in wiring harness between ENGINE.IG1 15 A fuse and selector lever component terminal A
	  ▪ ENGINE.IG1 15 A fuse malfunction
	  ▪ Open circuit in wiring harness between IG1 relay and selector lever component terminal A
	• Start stop unit connector or terminal malfunction
	• Short to ground in the wiring harness between selector lever component terminal H and start stop unit terminal 2G
	• Open circuit in the wiring harness between selector lever component terminal H and start stop unit terminal 2G
	• Shift-lock solenoid malfunction
	• Start stop unit malfunction

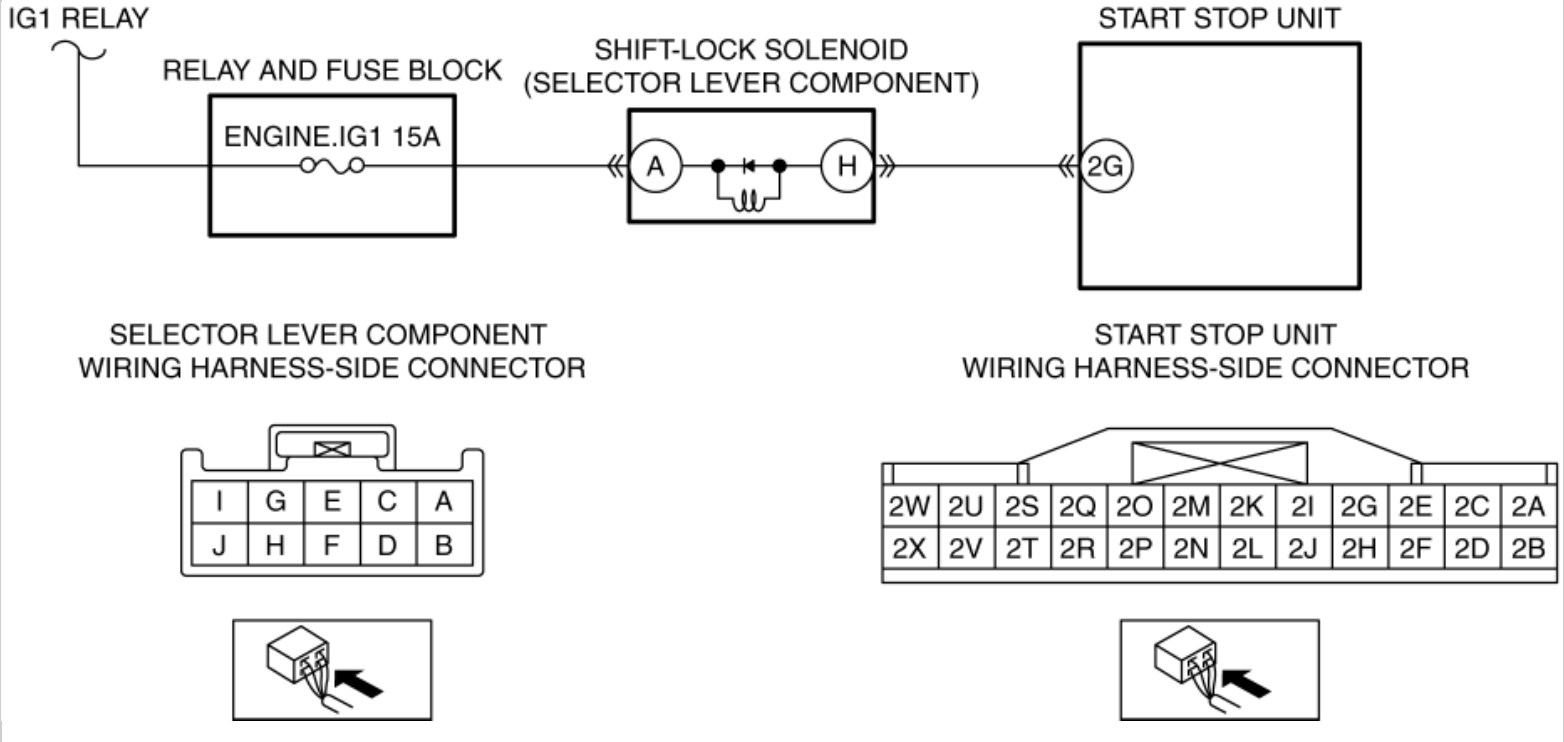

Diagnostic Procedure

Step	Inspection		Action
1	**INSPECT SELECTOR LEVER COMPONENT CONNECTOR CONDITION** • Switch the ignition off. • Disconnect the negative battery cable. (See **NEGATIVE BATTERY CABLE DISCONNECTION/CONNECTION [SKYACTIV-G 2.0, SKYACTIV-G 2.5]**.) • Disconnect the selector lever component connector. • Inspect the connector engagement and connection condition and inspect the terminals for damage, deformation, corrosion, or disconnection. • Is the connector normal?	Yes	Go to the next step.
		No	Repair or replace the connector, then go to Step 7.
2	**INSPECT FOR OPEN CIRCUIT OR SHORT TO GROUND IN SHIFT-LOCK SOLENOID POWER SUPPLY CIRCUIT** • Verify that the selector lever component connector is disconnected. • Reconnect the negative battery cable. (See **NEGATIVE BATTERY CABLE DISCONNECTION/CONNECTION**	Yes	Go to the next step.
		No	Inspect the ENGINE.IG1 15 A fuse. • If the fuse is blown: ▪ Refer to the wiring diagram and verify whether or not there is a common connector between ENGINE.IG1 15 A fuse and selector lever component terminal A.

	[SKYACTIV-G 2.0, SKYACTIV-G 2.5].) • Switch the ignition ON (engine off or on). • Measure the voltage at the selector lever component terminal A (wiring harness-side). • Is the voltage **B+**?		**If there is a common connector:** • Determine the malfunctioning part by inspecting the common connector and the terminal for corrosion, damage, or pin disconnection, and the common wiring harness for a short to ground. • Repair or replace the malfunctioning part. **If there is no common connector:** • Repair or replace the wiring harness which has a short to ground. • Replace the fuse. • If the fuse is damaged: ▪ Replace the fuse. • If the fuse is normal: ▪ Refer to the wiring diagram and verify whether or not there is a common connector between IG1 relay and selector lever component terminal A. **If there is a common connector:** • Determine the malfunctioning part by inspecting the common connector and the terminal for corrosion, damage, or pin disconnection, and the common wiring harness for an open circuit. • Repair or replace the malfunctioning part. **If there is no common connector:** • Repair or replace the wiring harness which has an open circuit. Go to Step 7.
3	**INSPECT START STOP UNIT CONNECTOR CONDITION**	Yes	Go to the next step.

	• Switch the ignition off. • Disconnect the negative battery cable. (See **NEGATIVE BATTERY CABLE DISCONNECTION/CONNECTION [SKYACTIV-G 2.0, SKYACTIV-G 2.5]**.) • Disconnect the start stop unit connector. • Inspect the connector engagement and connection condition and inspect the terminals for damage, deformation, corrosion, or disconnection. • Is the connector normal?	No	Repair or replace the connector, then go to Step 7.
4	**INSPECT FOR SHORT TO GROUND IN SHIFT-LOCK SOLENOID CIRCUIT** • Verify that the selector lever component and start stop unit connectors are disconnected. • Inspect for continuity between selector lever component terminal H (wiring harness-side) and body ground. • Is there continuity?	Yes	Refer to the wiring diagram and verify whether or not there is a common connector between selector lever component terminal H and start stop unit terminal 2G. **If there is a common connector:** • Determine the malfunctioning part by inspecting the common connector and the terminal for corrosion, damage, or pin disconnection, and the common wiring harness for a short to ground. • Repair or replace the malfunctioning part. **If there is no common connector:** • Repair or replace the wiring harness which has a short to ground. Go to Step 7.
		No	Go to the next step.
5	**INSPECT FOR OPEN CIRCUIT IN SHIFT-LOCK SOLENOID CIRCUIT** • Verify that the selector lever component and start stop unit connectors are disconnected. • Inspect for continuity between selector lever component terminal H (wiring harness-side) and start stop unit terminal 2G (wiring harness-side). • Is there continuity?	Yes	Go to the next step.
		No	Refer to the wiring diagram and verify whether or not there is a common connector between selector lever component terminal H and start stop unit terminal 2G. **If there is a common connector:** • Determine the malfunctioning part by inspecting the common connector and the terminal for corrosion, damage, or pin disconnection, and the common wiring harness for an open circuit. • Repair or replace the malfunctioning part. **If there is no common connector:** • Repair or replace the wiring harness which has an open circuit. Go to Step 7.
6	**INSPECT SHIFT-LOCK SOLENOID** • Inspect the shift-lock solenoid.	Yes	Go to the next step.

	(See **SHIFT-LOCK SYSTEM INSPECTION**.) • Is the shift-lock solenoid normal?	No	Replace the selector lever component, then go to the next step. (See **AUTOMATIC TRANSAXLE SHIFT MECHANISM REMOVAL/INSTALLATION**.)
7	**VERIFY THAT REPAIRS HAVE BEEN COMPLETED** • Always reconnect all disconnected connectors. • Reconnect the negative battery cable. (See **NEGATIVE BATTERY CABLE DISCONNECTION/CONNECTION [SKYACTIV-G 2.0, SKYACTIV-G 2.5]**.) • Clear the DTC for the start stop unit using the M-MDS. (See **CLEARING DTC [START STOP UNIT]**.) • Switch the ignition ON (engine off or on) and wait for **30 min or more**. • Retrieve the start stop unit DTCs using the M-MDS. (See **DTC INSPECTION [START STOP UNIT]**.) • Is the same DTC displayed?	Yes	Repeat the inspection from Step 1. • If the malfunction recurs, replace the start stop unit. (See **START STOP UNIT REMOVAL/INSTALLATION**.) Go to the next step.
		No	Go to the next step.
8	**VERIFY IF OTHER DTCs DISPLAYED** • Are any other DTCs displayed?	Yes	Repair or replace the malfunctioning part according to the applicable DTC troubleshooting. (See **DTC TABLE [START STOP UNIT]**.)
		No	DTC troubleshooting completed.

2014 - Mazda3 - Body and Accessories

DTC P1708:24 [START STOP UNIT]

Description	Starter interlock switch circuit malfunction
Detection condition	• Start stop unit detects an open circuit in the starter interlock switch circuit for **0.5 s or more** for a continuous **5 times** with the ignition switched ON (engine off or on).
Fail-safe function	• Change to the back-up mode.
Possible cause	• Starter interlock switch connector or terminal malfunction • Open circuit in wiring harness between starter interlock switch terminal B and body ground • Starter interlock switch malfunction • Start stop unit connector or terminal malfunction • Open circuit in wiring harness between start stop unit terminal 1F and starter interlock switch terminal A • Start stop unit malfunction

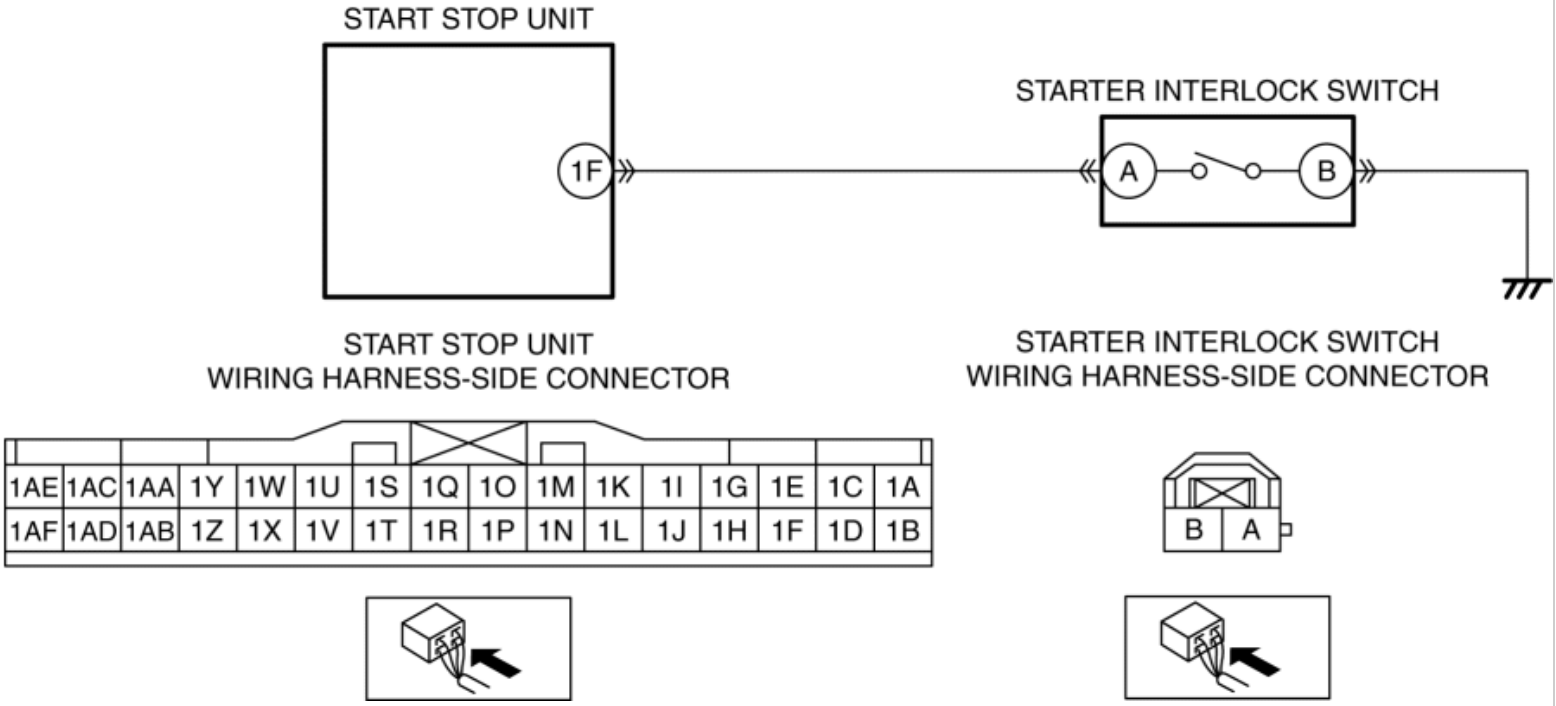

Diagnostic Procedure

Step	Inspection	Action
	INSPECT STARTER INTERLOCK SWITCH	

1	**CONNECTOR CONDITION** • Switch the ignition off. • Disconnect the negative battery cable. (See **NEGATIVE BATTERY CABLE DISCONNECTION/CONNECTION [SKYACTIV-G 2.0, SKYACTIV-G 2.5]**.) • Disconnect the starter interlock switch connector. • Inspect the connector engagement and connection condition and inspect the terminals for damage, deformation, corrosion, or disconnection. • Is the connector normal?	Yes	Go to the next step.
		No	Repair or replace the connector, then go to Step 6.
2	**INSPECT FOR OPEN CIRCUIT IN STARTER INTERLOCK SWITCH GROUND CIRCUIT** • Verify that the starter interlock switch connector is disconnected. • Inspect for continuity between starter interlock switch terminal B (wiring harness-side) and body ground. • Is there continuity?	Yes	Go to the next step.
		No	Refer to the wiring diagram and verify whether or not there is a common connector between starter interlock switch terminal B and body ground. **If there is a common connector:** • Determine the malfunctioning part by inspecting the common connector and the terminal for corrosion, damage, or pin disconnection, and the common wiring harness for an open circuit. • Repair or replace the malfunctioning part. **If there is no common connector:** • Repair or replace the wiring harness which has an open circuit. Go to Step 6.
3	**INSPECT STARTER INTERLOCK SWITCH** • Inspect the starter interlock switch. (See **STARTER INTERLOCK SWITCH INSPECTION [SKYACTIV-G 2.0, SKYACTIV-G 2.5]**.) • Is the starter interlock switch normal?	Yes	Go to the next step.
		No	Replace the starter interlock switch, then go to Step 6. (See **STARTER INTERLOCK SWITCH REMOVAL/INSTALLATION [C66M-R]**.)
4	**INSPECT START STOP UNIT CONNECTOR CONDITION** • Disconnect the start stop unit connector. • Inspect the connector engagement and connection condition and inspect the terminals for damage, deformation, corrosion, or disconnection.	Yes	Go to the next step.
		No	Repair or replace the connector, then go to Step 6.

	• Is the connector normal?		
5	**INSPECT FOR OPEN CIRCUIT IN STARTER INTERLOCK SWITCH CIRCUIT** • Verify that the starter interlock switch and start stop unit connectors are disconnected. • Inspect for continuity between start stop unit terminal 1F (wiring harness-side) and starter interlock switch terminal A (wiring harness-side). • Is there continuity?	Yes	Go to the next step.
		No	Refer to the wiring diagram and verify whether or not there is a common connector between start stop unit terminal 1F and starter interlock switch terminal A. **If there is a common connector:** • Determine the malfunctioning part by inspecting the common connector and the terminal for corrosion, damage, or pin disconnection, and the common wiring harness for an open circuit. • Repair or replace the malfunctioning part. **If there is no common connector:** • Repair or replace the wiring harness which has an open circuit. Go to the next step.
6	**VERIFY THAT REPAIRS HAVE BEEN COMPLETED** • Always reconnect all disconnected connectors. • Reconnect the negative battery cable. (See **NEGATIVE BATTERY CABLE DISCONNECTION/CONNECTION [SKYACTIV-G 2.0, SKYACTIV-G 2.5]**.) • Clear the DTC for the start stop unit using the M-MDS. (See **CLEARING DTC [START STOP UNIT]**.) • Switch the ignition ON (engine off or on). • Perform the following work **5 times or more**. ▪ Depress the clutch pedal for **1 s or more**. ▪ Release the clutch pedal for **1 s or more**. • Retrieve the start stop unit DTCs using the M-MDS. (See **DTC INSPECTION [START STOP UNIT]**.) • Is the same DTC displayed?	Yes	Repeat the inspection from Step 1. • If the malfunction recurs, replace the start stop unit. (See **START STOP UNIT REMOVAL/INSTALLATION**.) Go to the next step.
		No	Go to the next step.
7	**VERIFY IF OTHER DTCs DISPLAYED**	Yes	Repair or replace the malfunctioning part according to the

	• Are any other DTCs displayed?		applicable DTC troubleshooting. (See **DTC TABLE [START STOP UNIT]**.)
		No	DTC troubleshooting completed.

2014 - Mazda3 - Body and Accessories

DTC P1708:29 [START STOP UNIT]

Description	Starter interlock switch circuit or CPP switch circuit malfunction
Detection condition	• Start stop unit detects that the starter interlock switch circuit is stuck on for **0.2 s or more**, or the CPP switch circuit is stuck off for **0.25 s or more**.
Fail-safe function	• Change to the back-up mode. • Perform the control with starter interlock switch turned off. (Starter interlock switch circuit malfunction)
Possible cause	• Starter interlock switch connector or terminal malfunction • Starter interlock switch malfunction • Start stop unit connector or terminal malfunction • Short to ground in wiring harness between start stop unit terminal 1F and starter interlock switch terminal A • CPP switch connector or terminal malfunction • Open circuit in wiring harness between CPP switch terminal B and body ground • CPP switch malfunction • Open circuit in wiring harness between start stop unit terminal 2E and CPP switch terminal A • Start stop unit malfunction

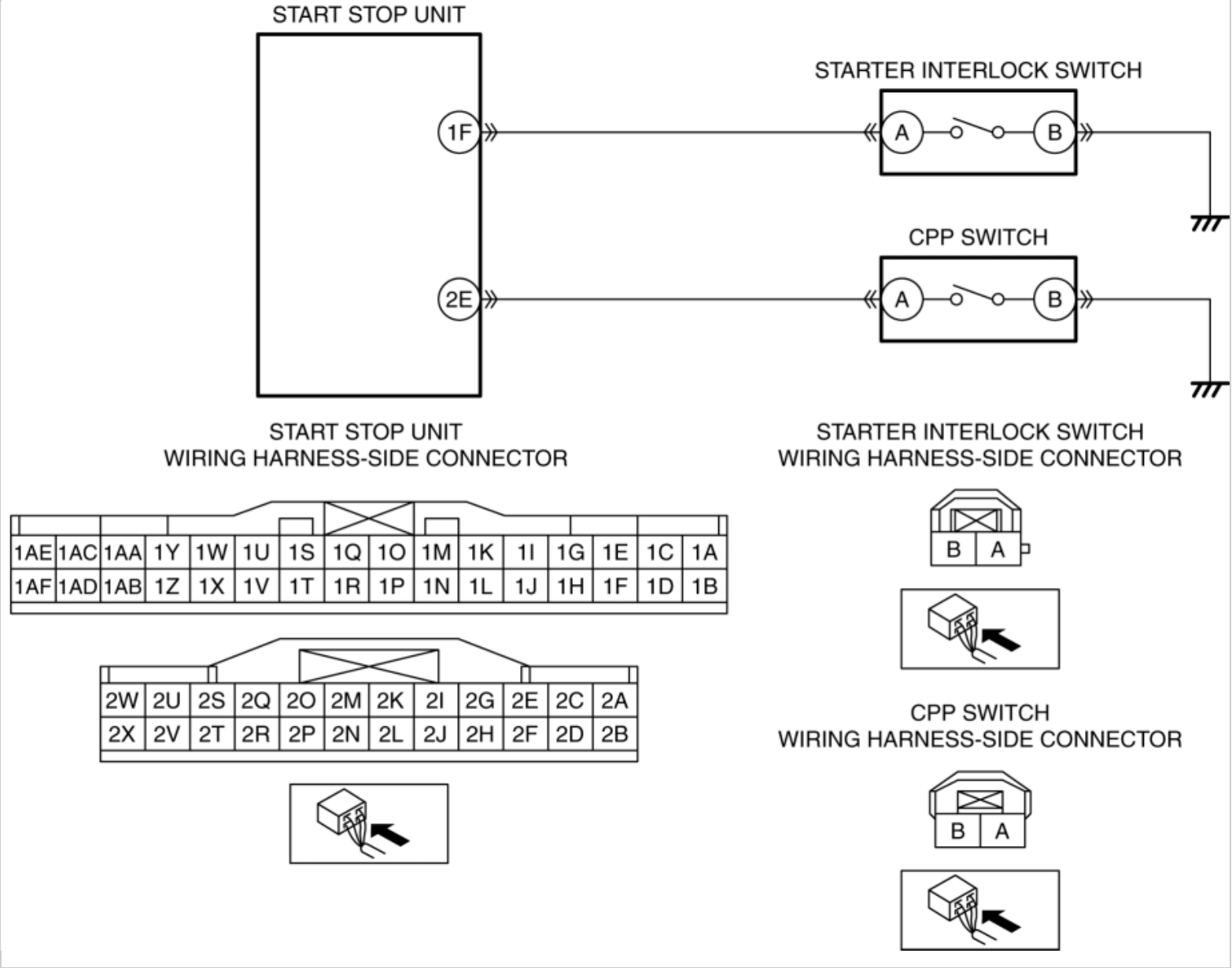

Diagnostic Procedure

Step	Inspection		Action
1	**PERFORM PID/DATA MONITOR INSPECTION AND DETERMINE MALFUNCTIONING LOCATION** • Display the following PIDs using the M-MDS. (See **PID/DATA MONITOR INSPECTION [START STOP UNIT]**.) ▪ CLUT_CUT_SW (Starter interlock switch) ▪ CLUTCH_SW (CPP switch) • Are all PID values normal? (See **PID/DATA MONITOR TABLE [START STOP UNIT]**.)	Yes	Go to Step 12.
		No	If the PID CLUT_CUT_SW value is not normal: • Go to the next step. If the PID CLUTCH_SW value is not normal: • Go to Step 6. If all PID values are not normal: • Go to Step 11.

2	**INSPECT STARTER INTERLOCK SWITCH CONNECTOR CONDITION** • Switch the ignition off. • Disconnect the negative battery cable. (See **NEGATIVE BATTERY CABLE DISCONNECTION/CONNECTION [SKYACTIV-G 2.0, SKYACTIV-G 2.5]**.) • Disconnect the starter interlock switch connector. • Inspect the connector engagement and connection condition and inspect the terminals for damage, deformation, corrosion, or disconnection. • Is the connector normal?	Yes	Go to the next step.
		No	Repair or replace the connector, then go to Step 12.
3	**INSPECT STARTER INTERLOCK SWITCH** • Inspect the starter interlock switch. (See **STARTER INTERLOCK SWITCH INSPECTION [SKYACTIV-G 2.0, SKYACTIV-G 2.5]**.) • Is the starter interlock switch normal?	Yes	Go to the next step.
		No	Replace the starter interlock switch, then go to Step 12. (See **STARTER INTERLOCK SWITCH REMOVAL/INSTALLATION [C66M-R]**.)
4	**INSPECT START STOP UNIT CONNECTOR CONDITION** • Disconnect the start stop unit connector. • Inspect the connector engagement and connection condition and inspect the terminals for damage, deformation, corrosion, or disconnection. • Is the connector normal?	Yes	Go to the next step.
		No	Repair or replace the connector, then go to Step 12.
5	**INSPECT FOR SHORT TO GROUND IN STARTER INTERLOCK SWITCH CIRCUIT** • Verify that the start stop unit and starter interlock switch connectors are disconnected. • Inspect for continuity between starter interlock switch terminal A (wiring harness-side) and body ground. • Is there continuity?	Yes	Refer to the wiring diagram and verify whether or not there is a common connector between start stop unit terminal 1F and starter interlock switch terminal A. **If there is a common connector:** • Determine the malfunctioning part by inspecting the common connector and the terminal for corrosion, damage, or pin disconnection, and the common wiring harness for a short to ground. • Repair or replace the malfunctioning part. **If there is no common connector:** • Repair or replace the wiring harness which has a short to ground. Go to Step 12.
		No	Go to Step 12.

6	**INSPECT CPP SWITCH CONNECTOR CONDITION** • Switch the ignition off. • Disconnect the negative battery cable. (See **NEGATIVE BATTERY CABLE DISCONNECTION/CONNECTION [SKYACTIV-G 2.0, SKYACTIV-G 2.5]**.) • Disconnect the CPP switch connector. • Inspect the connector engagement and connection condition and inspect the terminals for damage, deformation, corrosion, or disconnection. • Is the connector normal?	Yes	Go to the next step.
		No	Repair or replace the connector, then go to Step 12.
7	**INSPECT FOR OPEN CIRCUIT IN CPP SWITCH GROUND CIRCUIT** • Verify that the CPP switch connector is disconnected. • Inspect for continuity between CPP switch terminal B (wiring harness-side) and body ground. • Is there continuity?	Yes	Go to the next step.
		No	Refer to the wiring diagram and verify whether or not there is a common connector between CPP switch terminal B and body ground. **If there is a common connector:** • Determine the malfunctioning part by inspecting the common connector and the terminal for corrosion, damage, or pin disconnection, and the common wiring harness for an open circuit. • Repair or replace the malfunctioning part. **If there is no common connector:** • Repair or replace the wiring harness which has an open circuit. Go to Step 12.
8	**INSPECT CPP SWITCH** • Inspect the CPP switch. (See **CLUTCH PEDAL POSITION (CPP) SWITCH INSPECTION [SKYACTIV-G 2.0, SKYACTIV-G 2.5]**.) • Is the CPP switch normal?	Yes	Go to the next step.
		No	Replace the CPP switch, then go to the Step 12. (See **CLUTCH PEDAL POSITION SWITCH REMOVAL/INSTALLATION [C66M-R]**.)
9	**INSPECT START STOP UNIT CONNECTOR CONDITION** • Disconnect the start stop unit connector. • Inspect the connector engagement and connection condition and inspect the terminals for damage, deformation, corrosion, or disconnection. • Is the connector normal?	Yes	Go to the next step.
		No	Repair or replace the connector, then go to Step 12.
10	**INSPECT FOR OPEN CIRCUIT IN CPP SWITCH CIRCUIT**	Yes	Go to Step 12.

	• Verify that the CPP switch and start stop unit connectors are disconnected. • Inspect for continuity between start stop unit terminal 2E (wiring harness-side) and CPP switch terminal A (wiring harness-side). • Is there continuity?	No	Refer to the wiring diagram and verify whether or not there is a common connector between start stop unit terminal 2E and CPP switch terminal A. **If there is a common connector:** • Determine the malfunctioning part by inspecting the common connector and the terminal for corrosion, damage, or pin disconnection, and the common wiring harness for an open circuit. • Repair or replace the malfunctioning part. **If there is no common connector:** • Repair or replace the wiring harness which has an open circuit. Go to Step 12.
11	**INSPECT START STOP UNIT CONNECTOR CONDITION** • Switch the ignition off. • Disconnect the negative battery cable. (See **NEGATIVE BATTERY CABLE DISCONNECTION/CONNECTION [SKYACTIV-G 2.0, SKYACTIV-G 2.5]**.) • Disconnect the start stop unit connector. • Inspect the connector engagement and connection condition and inspect the terminals for damage, deformation, corrosion, or disconnection. • Is the connector normal?	Yes	Go to the next step.
		No	Repair or replace the connector, then go to the next step.
12	**VERIFY THAT REPAIRS HAVE BEEN COMPLETED** • Always reconnect all disconnected connectors. • Reconnect the negative battery cable. (See **NEGATIVE BATTERY CABLE DISCONNECTION/CONNECTION [SKYACTIV-G 2.0, SKYACTIV-G 2.5]**.) • Clear the DTC for the start stop unit using the M-MDS. (See **CLEARING DTC [START STOP UNIT]**.) • Switch the ignition ON (engine off or on). • Perform the work of depressing and releasing the clutch pedal **3 times**. • Retrieve the start stop unit DTCs using the M-MDS.	Yes	Repeat the inspection from Step 1. • If the malfunction recurs, replace the start stop unit. (See **START STOP UNIT REMOVAL/INSTALLATION**.) Go to the next step.
		No	Go to the next step.

	(See **DTC INSPECTION [START STOP UNIT]**.) • Is the same DTC displayed?		
13	**VERIFY IF OTHER DTCs DISPLAYED** • Are any other DTCs displayed?	Yes	Repair or replace the malfunctioning part according to the applicable DTC troubleshooting. (See **DTC TABLE [START STOP UNIT]**.)
		No	DTC troubleshooting completed.

2014 - Mazda3 - Body and Accessories

DTC P1794:16 [START STOP UNIT]

Description	Start stop unit power supply voltage (terminal 2W) low input
Detection condition	• Start stop unit power supply circuit voltage (terminal 2W) of **less than 6.5 V** is detected for **5 s or more**.
Fail-safe function	Not applicable

Possible cause	• DTCs are stored in the PCM.
	• Battery malfunction
	• Generator malfunction
	• Start stop unit connector or terminal malfunction
	• Start stop unit power supply circuit (terminal 2W) malfunction
	  ▪ Short to ground in wiring harness between MAIN 200 A fuse and start stop unit terminal 2W
	  ▪ AT 15 A fuse malfunction
	  ▪ MAIN 200 A fuse malfunction
	  ▪ Open circuit in wiring harness between battery positive terminal and start stop unit terminal 2W
	• Start stop unit malfunction

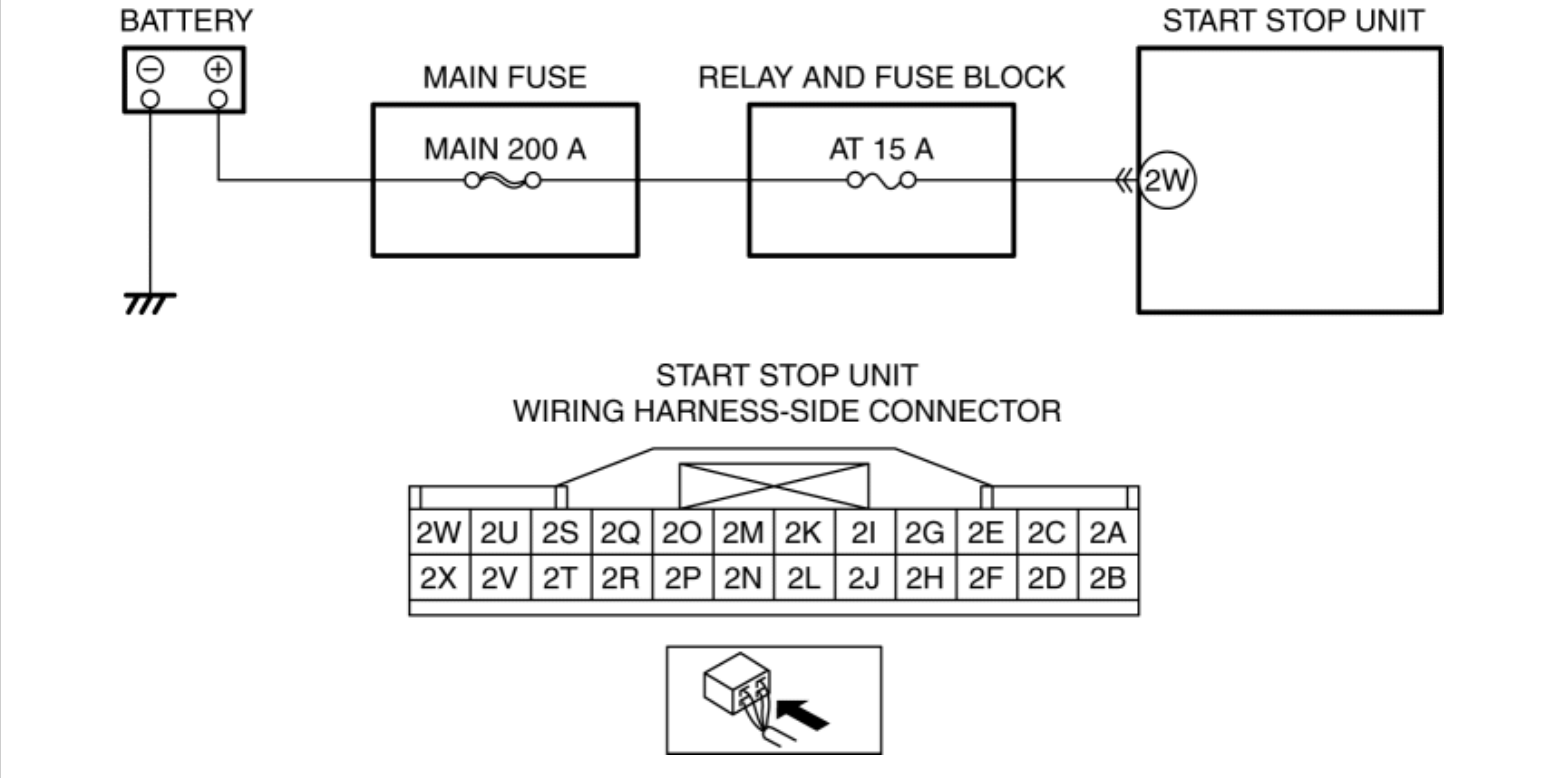

Diagnostic Procedure

Step	Inspection		Action
1	**VERIFY PCM DTCs** • Retrieve the PCM DTCs using the M-MDS. (See **ON-BOARD DIAGNOSTIC TEST [SKYACTIV-G 2.0, SKYACTIV-G 2.5]**.) • Are any DTCs displayed?	Yes	Repair or replace the malfunctioning part according to the applicable DTC troubleshooting. (See **DTC TABLE [SKYACTIV-G 2.0, SKYACTIV-G 2.5]**.)
		No	Go to the next step.
2	**INSPECT BATTERY** • Inspect the battery. (See **BATTERY INSPECTION [SKYACTIV-G 2.0, SKYACTIV-G 2.5]**.) • Is the battery normal?	Yes	Go to the next step.
		No	Recharge or replace the battery, then go to Step 6. (See **BATTERY RECHARGING [SKYACTIV-G 2.0, SKYACTIV-G 2.5]**.) (See **BATTERY REMOVAL/INSTALLATION [SKYACTIV-G 2.0, SKYACTIV-G 2.5]**.)
3	**INSPECT GENERATOR** • Inspect the generator. (See **GENERATOR INSPECTION [SKYACTIV-G 2.0, SKYACTIV-G 2.5 (WITHOUT i-ELOOP)]**.) (See **GENERATOR INSPECTION [SKYACTIV-G 2.0, SKYACTIV-G 2.5 (WITH i-ELOOP)]**.) • Is the generator normal?	Yes	Go to the next step.
		No	Replace the generator, then go to Step 6. (See **GENERATOR REMOVAL/INSTALLATION [SKYACTIV-G 2.0, SKYACTIV-G 2.5 (WITHOUT i-ELOOP)]**.) (See **GENERATOR REMOVAL/INSTALLATION [SKYACTIV-G 2.0, SKYACTIV-G 2.5 (WITH i-ELOOP)]**.)

4	**INSPECT START STOP UNIT CONNECTOR CONDITION** • Switch the ignition off. • Disconnect the negative battery cable. (See **NEGATIVE BATTERY CABLE DISCONNECTION/CONNECTION [SKYACTIV-G 2.0, SKYACTIV-G 2.5]**.) • Disconnect the start stop unit connector. • Inspect the connector engagement and connection condition and inspect the terminals for damage, deformation, corrosion, or disconnection. • Is the connector normal?	Yes	Go to the next step.
		No	Repair or replace the connector, then go to Step 6.
5	**VERIFY START STOP UNIT POWER SUPPLY VOLTAGE (TERMINAL 2W)** • Always reconnect all disconnected connectors. • Reconnect the negative battery cable. (See **NEGATIVE BATTERY CABLE DISCONNECTION/CONNECTION [SKYACTIV-G 2.0, SKYACTIV-G 2.5]**.) • Display PID VPWR_B2 using the M-MDS. (See **PID/DATA MONITOR INSPECTION [START STOP UNIT]**.) • Is the voltage **B+**?	Yes	Go to the next step.
		No	Inspect the AT 15 A fuse and MAIN 200 A fuse. • If the fuse is blown: ▪ Refer to the wiring diagram and verify whether or not there is a common connector between MAIN 200 A fuse and start stop unit terminal 2W. **If there is a common connector:** • Determine the malfunctioning part by inspecting the common connector and the terminal for corrosion, damage, or pin disconnection, and the common wiring harness for a short to ground. • Repair or replace the malfunctioning part.

If there is no common connector:

- Repair or replace the wiring harness which has a short to ground.
- Replace the fuse.

- If the fuse is damaged:
  - Replace the fuse.
- If the fuse is normal:
  - Refer to the wiring diagram and verify whether or not there is a common connector between battery positive terminal and start stop unit terminal 2W.

If there is a common connector:

- Determine the malfunctioning part by inspecting the common connector and the terminal for corrosion, damage, or pin disconnection, and the common wiring harness for an open circuit.
- Repair or replace the malfunctioning part.

If there is no common connector:

- Repair or replace the wiring harness which has an open circuit.

Go to the next step.

VERIFY THAT REPAIRS HAVE BEEN

6	**COMPLETED** • Always reconnect all disconnected connectors. • Reconnect the negative battery cable. (See **NEGATIVE BATTERY CABLE DISCONNECTION/CONNECTION [SKYACTIV-G 2.0, SKYACTIV-G 2.5]**.) • Clear the DTC for the start stop unit using the M-MDS. (See **CLEARING DTC [START STOP UNIT]**.) • Switch the ignition ON (engine off or on) and wait for **5 s or more**. • Retrieve the start stop unit DTCs using the M-MDS. (See **DTC INSPECTION [START STOP UNIT]**.) • Is the same DTC displayed?	Yes	Repeat the inspection from Step 1. • If the malfunction recurs, replace the start stop unit. (See **START STOP UNIT REMOVAL/INSTALLATION**.) Go to the next step.
		No	Go to the next step.
7	**VERIFY IF OTHER DTCs DISPLAYED** • Are any other DTCs displayed?	Yes	Repair or replace the malfunctioning part according to the applicable DTC troubleshooting. (See **DTC TABLE [START STOP UNIT]**.)
		No	DTC troubleshooting completed.

2014 - Mazda3 - Body and Accessories

DTC U0001:88/U0100:00/U0101:00/U0121:00/U0121:87/U0131:00/U0140:00/U0146:00/U0151:00/U0155:00 [START STOP UNIT]

Description	• U0001:88 ▪ Module communication error (HS-CAN) • U0100:00 ▪ Communication error with PCM • U0101:00 ▪ Communication error with TCM • U0121:00 ▪ Communication error with DSC HU/CM • U0121:87 ▪ Communication error with DSC HU/CM • U0131:00 ▪ Communication error with EPS control module • U0140:00 ▪ Communication error with front body control module (FBCM) • U0146:00 ▪ Communication error with instrument cluster • U0151:00 ▪ Communication error with SAS control module • U0155:00 ▪ Communication error with instrument cluster
	• U0001:88 ▪ Start stop unit detects the CAN bus communication line (HS-CAN) malfunction **10 times** continuously. • U0100:00 ▪ Start stop unit could not receive the CAN signal from the PCM for **1 s or more**. • U0101:00

Detection condition	Start stop unit could not receive the CAN signal from the TCM for **1 s or more**. • U0121:00 ▪ Start stop unit could not receive the CAN signal from the DSC HU/CM for **1 s or more**. • U0121:87 ▪ Start stop unit could not receive the CAN signal from the DSC HU/CM for **10 s or more**. • U0131:00 ▪ Start stop unit could not receive the CAN signal from the EPS control module for **1.2 s or more**. • U0140:00 ▪ Start stop unit could not receive the CAN signal from the front body control module (FBCM) for **5 s or more**. • U0146:00 ▪ Start stop unit cannot receive the CAN signal from the instrument cluster for **5 s or more** with the ignition switched ON (engine off or on). • U0151:00 ▪ Start stop unit could not receive the CAN signal from the SAS control module for **1 s or more**. • U0155:00 ▪ Start stop unit could not receive the CAN signal from the instrument cluster for **5 s or more**.
Fail-safe function	• U0001:88 ▪ Sets to default signal. • U0100:00 ▪ Sets to default signal. • U0101:00 ▪ Sets to default signal. • U0121:00 ▪ Sets to default signal. • U0121:87 ▪ Sets to default signal. • U0131:00 ▪ Sets to default signal. • U0140:00 ▪ Sets to default signal. • U0146:00

	▪ Sets to default signal. • U0151:00 ▪ Sets to default signal. • U0155:00 ▪ Sets to default signal.
Possible cause	• Malfunction in CAN bus communication line • Malfunction in CAN line between PCM and start stop unit • Malfunction in CAN line between TCM and start stop unit • Malfunction in CAN line between DSC HU/CM and start stop unit • Malfunction in CAN line between EPS control module and start stop unit • Malfunction in CAN line between front body control module (FBCM) and start stop unit • Malfunction in CAN line between instrument cluster and start stop unit • Malfunction in CAN line between SAS control module and start stop unit
System wiring diagram	Not applicable

Diagnostic Procedure

- Perform the malfunction diagnosis according to the troubleshooting procedure for the multiplex communication system. (See **FOREWORD**.)

2014 - Mazda3 - Body and Accessories

DTC U0028:87 [START STOP UNIT]

Description	Communication error with rear body control module (RBCM)
Detection condition	• Start stop unit detects the communication error with rear body control module (RBCM) **10 times continuously**.
Fail-safe function	Not applicable
Possible cause	• Rear body control module (RBCM) connector or terminal malfunction • Start stop unit connector or terminal malfunction • Short to ground in wiring harness between start stop unit terminal 1Q and rear body control module (RBCM) terminal 3B • Open circuit in wiring harness between start stop unit terminal 1Q and rear body control module (RBCM) terminal 3B • Rear body control module (RBCM) malfunction • Start stop unit malfunction

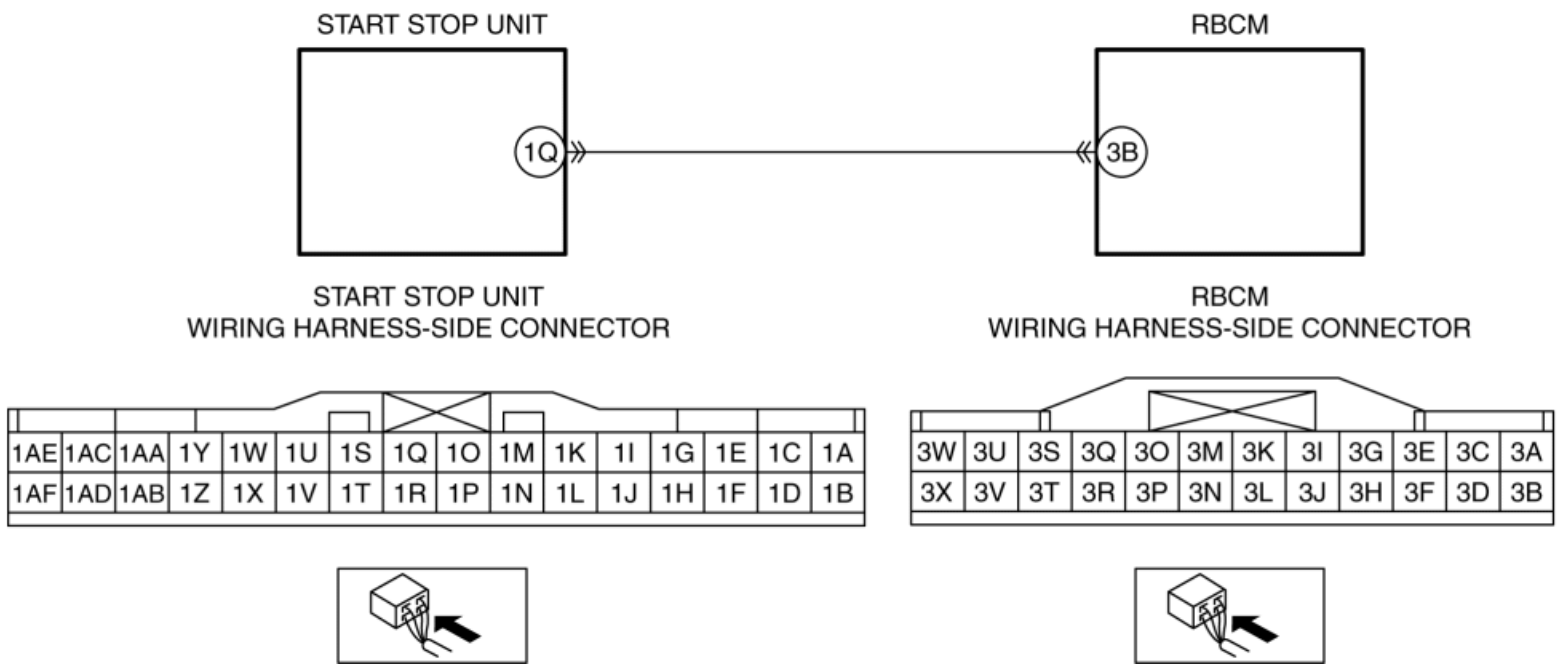

Diagnostic Procedure

Step	Inspection		Action
1	**INSPECT REAR BODY CONTROL MODULE (RBCM) CONNECTOR CONDITION** • Switch the ignition off.	Yes	Go to the next step.
		No	Repair or replace the connector, then go to Step 6.

	• Disconnect the negative battery cable. (See **NEGATIVE BATTERY CABLE DISCONNECTION/CONNECTION [SKYACTIV-G 2.0, SKYACTIV-G 2.5]**.) • Disconnect the rear body control module (RBCM) connector. • Inspect the connector engagement and connection condition and inspect the terminals for damage, deformation, corrosion, or disconnection. • Is the connector normal?		
2	**INSPECT START STOP UNIT CONNECTOR CONDITION** • Disconnect the start stop unit connector. • Inspect the connector engagement and connection condition and inspect the terminals for damage, deformation, corrosion, or disconnection. • Is the connector normal?	Yes	Go to the next step.
		No	Repair or replace the connector, then go to Step 6.
3	**INSPECT FOR SHORT TO GROUND IN WIRING HARNESS BETWEEN REAR BODY CONTROL MODULE AND START STOP UNIT** • Verify that the rear body control module (RBCM) and start stop unit connectors are disconnected. • Inspect for continuity between rear body control module (RBCM) terminal 3B (wiring harness-side) and body ground. • Is there continuity?	Yes	Refer to the wiring diagram and verify whether or not there is a common connector between start stop unit terminal 1Q and rear body control module (RBCM) terminal 3B. **If there is a common connector:** • Determine the malfunctioning part by inspecting the common connector and the terminal for corrosion, damage, or pin disconnection, and the common wiring harness for a short to ground. • Repair or replace the malfunctioning part. **If there is no common connector:** • Repair or replace the wiring harness which has a short to ground. Go to Step 6.
		No	Go to the next step.
4	**INSPECT FOR OPEN CIRCUIT IN WIRING HARNESS BETWEEN REAR BODY CONTROL MODULE AND START STOP UNIT** • Verify that the rear body control module (RBCM) and start stop unit connectors are disconnected. • Inspect for continuity between start stop unit terminal 1Q (wiring harness-side) and rear body control module (RBCM) terminal 3B (wiring harness-side). • Is there continuity?	Yes	Go to the next step.
		No	Refer to the wiring diagram and verify whether or not there is a common connector between start stop unit terminal 1Q and rear body control module (RBCM) terminal 3B. **If there is a common connector:** • Determine the malfunctioning part by inspecting the common connector and the terminal for corrosion, damage, or pin disconnection, and the common wiring harness for an open circuit. • Repair or replace the malfunctioning part. **If there is no common connector:** • Repair or replace the wiring harness which has an open circuit. Go to Step 6.
5	**PERFORM DTC INSPECTION AND VERIFY REAR BODY CONTROL MODULE (RBCM) MALFUNCTION**	Yes	Replace the rear body control module (RBCM), then go to the next

	• Always reconnect all disconnected connectors. • Reconnect the negative battery cable. (See **NEGATIVE BATTERY CABLE DISCONNECTION/CONNECTION [SKYACTIV-G 2.0, SKYACTIV-G 2.5]**.) • Clear the DTC for the start stop unit using the M-MDS. (See **CLEARING DTC [START STOP UNIT]**.) • Retrieve the start stop unit DTCs using the M-MDS. (See **DTC INSPECTION [START STOP UNIT]**.) • Is the same DTC displayed?		step. (See **REAR BODY CONTROL MODULE (RBCM) REMOVAL/INSTALLATION**.)
		No	Go to Step 7.
6	**VERIFY THAT REPAIRS HAVE BEEN COMPLETED** • Always reconnect all disconnected connectors. • Reconnect the negative battery cable. (See **NEGATIVE BATTERY CABLE DISCONNECTION/CONNECTION [SKYACTIV-G 2.0, SKYACTIV-G 2.5]**.) • Clear the DTC for the start stop unit using the M-MDS. (See **CLEARING DTC [START STOP UNIT]**.) • Retrieve the start stop unit DTCs using the M-MDS. (See **DTC INSPECTION [START STOP UNIT]**.) • Is the same DTC displayed?	Yes	Repeat the inspection from Step 1. • If the malfunction recurs, replace the start stop unit. (See **START STOP UNIT REMOVAL/INSTALLATION**.) Go to the next step.
		No	Go to the next step.
7	**VERIFY IF OTHER DTCs DISPLAYED** • Are any other DTCs displayed?	Yes	Repair or replace the malfunctioning part according to the applicable DTC troubleshooting. (See **DTC TABLE [START STOP UNIT]**.)
		No	DTC troubleshooting completed.

2014 - Mazda3 - Body and Accessories

DTC U0447:86 [START STOP UNIT]

Description	Error signal received from instrument cluster
Detection condition	• Start stop unit receives the error signals from the instrument cluster for **5 s or more** with the ignition switched ON (engine off or on).
Fail-safe function	• Sets to default signal.
Possible cause	• DTCs are stored in the instrument cluster. • Instrument cluster malfunction • Start stop unit malfunction
System wiring diagram	Not applicable

Diagnostic Procedure

Step	Inspection		Action
1	**VERIFY INSTRUMENT CLUSTER DTCs** • Retrieve the instrument cluster DTCs using the M-MDS. (See **DTC INSPECTION [INSTRUMENT CLUSTER]**.) • Are any DTCs displayed?	Yes	Repair or replace the malfunctioning part according to the applicable DTC troubleshooting. (See **DTC TABLE [INSTRUMENT CLUSTER]**.)
		No	Go to the next step.
2	**PERFORM DTC INSPECTION AND VERIFY INSTRUMENT CLUSTER MALFUNCTION** • Clear the DTC for the start stop unit using the M-MDS. (See **CLEARING DTC [START STOP UNIT]**.) • Switch the ignition ON (engine	Yes	Replace the instrument cluster, then go to the next step. (See **INSTRUMENT CLUSTER REMOVAL/INSTALLATION**.)
		No	Go to Step 4.

	off or on) and wait for **5 s or more**. • Retrieve the start stop unit DTCs using the M-MDS. (See **DTC INSPECTION [START STOP UNIT]**.) • Is the same DTC displayed?		
3	**VERIFY THAT REPAIRS HAVE BEEN COMPLETED** • Clear the DTC for the start stop unit using the M-MDS. (See **CLEARING DTC [START STOP UNIT]**.) • Switch the ignition ON (engine off or on) and wait for **5 s or more**. • Retrieve the start stop unit DTCs using the M-MDS. (See **DTC INSPECTION [START STOP UNIT]**.) • Is the same DTC displayed?	Yes	Repeat the inspection from Step 1. • If the malfunction recurs, replace the start stop unit. (See **START STOP UNIT REMOVAL/INSTALLATION**.) Go to the next step.
		No	Go to the next step.
4	**VERIFY IF OTHER DTCs DISPLAYED** • Are any other DTCs displayed?	Yes	Repair or replace the malfunctioning part according to the applicable DTC troubleshooting. (See **DTC TABLE [START STOP UNIT]**.)
		No	DTC troubleshooting completed.

2014 - Mazda3 - Body and Accessories

DTC U201F:11 [START STOP UNIT]

Description	Keyless receiver circuit malfunction
Detection condition	• Start stop unit detects that the keyless receiver circuit voltage of **less than 3.4 V** for **0.5 s or more**.
Fail-safe function	Not applicable
Possible cause	• Keyless receiver connector or terminal malfunction • Start stop unit connector or terminal malfunction • Short to ground in wiring harness between start stop unit terminal 2Q and keyless receiver terminal A • Keyless receiver malfunction • Start stop unit malfunction

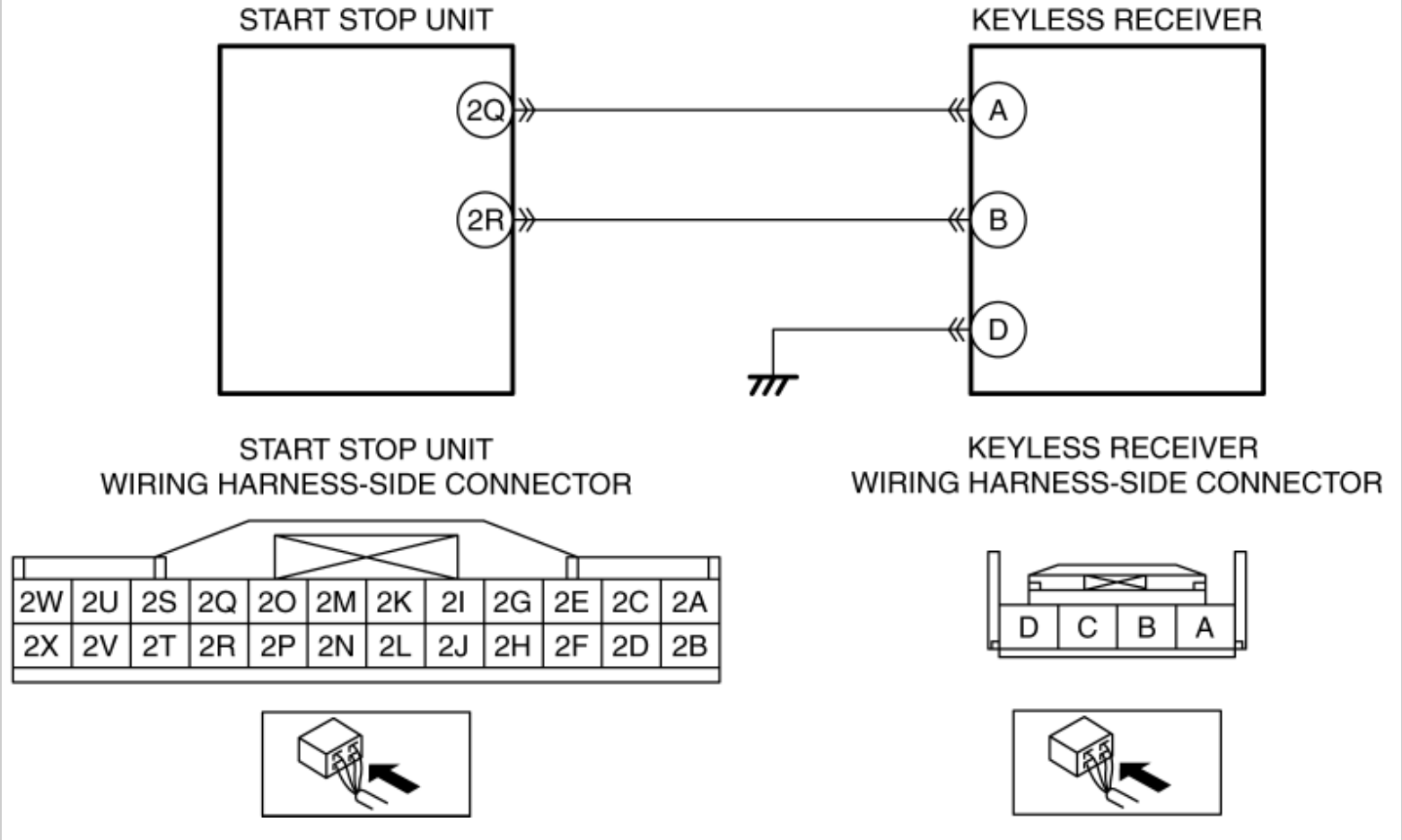

Diagnostic Procedure

Step	Inspection		Action
1	**INSPECT KEYLESS RECEIVER CONNECTOR CONDITION** • Switch the ignition off. • Disconnect the negative battery cable. (See **NEGATIVE BATTERY CABLE DISCONNECTION/CONNECTION [SKYACTIV-G 2.0, SKYACTIV-G 2.5]**.) • Disconnect the keyless receiver connector. • Inspect the connector engagement and connection condition and inspect the terminals for damage, deformation, corrosion, or disconnection. • Is the connector normal?	Yes	Go to the next step.
		No	Repair or replace the connector, then go to Step 5.

2	**INSPECT START STOP UNIT CONNECTOR CONDITION** • Disconnect the start stop unit connector. • Inspect the connector engagement and connection condition and inspect the terminals for damage, deformation, corrosion, or disconnection. • Is the connector normal?	Yes	Go to the next step.
		No	Repair or replace the connector, then go to Step 5.
3	**INSPECT FOR SHORT TO GROUND IN KEYLESS RECEIVER CIRCUIT** • Verify that the keyless receiver and start stop unit connectors are disconnected. • Inspect for continuity between keyless receiver terminal A (wiring harness-side) and body ground. • Is there continuity?	Yes	Refer to the wiring diagram and verify whether or not there is a common connector between start stop unit terminal 2Q and keyless receiver terminal A. **If there is a common connector:** • Determine the malfunctioning part by inspecting the common connector and the terminal for corrosion, damage, or pin disconnection, and the common wiring harness for a short to ground. • Repair or replace the malfunctioning part. **If there is no common connector:** • Repair or replace the wiring harness which has a short to ground. Go to Step 5.
		No	Go to the next step.
4	**INSPECT KEYLESS RECEIVER** • Inspect the keyless receiver. (See **KEYLESS RECEIVER INSPECTION**.) • Is the keyless receiver normal?	Yes	Go to the next step.
		No	Replace the keyless receiver, then go to the next step. (See **KEYLESS RECEIVER REMOVAL/INSTALLATION**.)
5	**VERIFY THAT REPAIRS HAVE BEEN COMPLETED** • Always reconnect all disconnected connectors. • Reconnect the negative battery cable. (See **NEGATIVE BATTERY CABLE**	Yes	Repeat the inspection from Step 1. • If the malfunction recurs, replace the start stop unit. (See **START STOP UNIT REMOVAL/INSTALLATION**.) Go to the next step.

	DISCONNECTION/CONNECTION [SKYACTIV-G 2.0, SKYACTIV-G 2.5].) • Clear the DTC for the start stop unit using the M-MDS. (See **CLEARING DTC [START STOP UNIT]**.) • Retrieve the start stop unit DTCs using the M-MDS. (See **DTC INSPECTION [START STOP UNIT]**.) • Is the same DTC displayed?	No	Go to the next step.
6	**VERIFY IF OTHER DTCs DISPLAYED** • Are any other DTCs displayed?	Yes	Repair or replace the malfunctioning part according to the applicable DTC troubleshooting. (See **DTC TABLE [START STOP UNIT]**.)
		No	DTC troubleshooting completed.

2014 - Mazda3 - Body and Accessories

DTC U201F:12 [START STOP UNIT]

Description	Keyless receiver circuit malfunction
Detection condition	• Start stop unit detects that the keyless receiver circuit voltage of **6.2 V or more** for **0.5 s or more**.
Fail-safe function	Not applicable
Possible cause	• Keyless receiver connector or terminal malfunction • Start stop unit connector or terminal malfunction • Short to power supply in wiring harness between start stop unit terminal 2Q and keyless receiver terminal A • Keyless receiver malfunction • Start stop unit malfunction

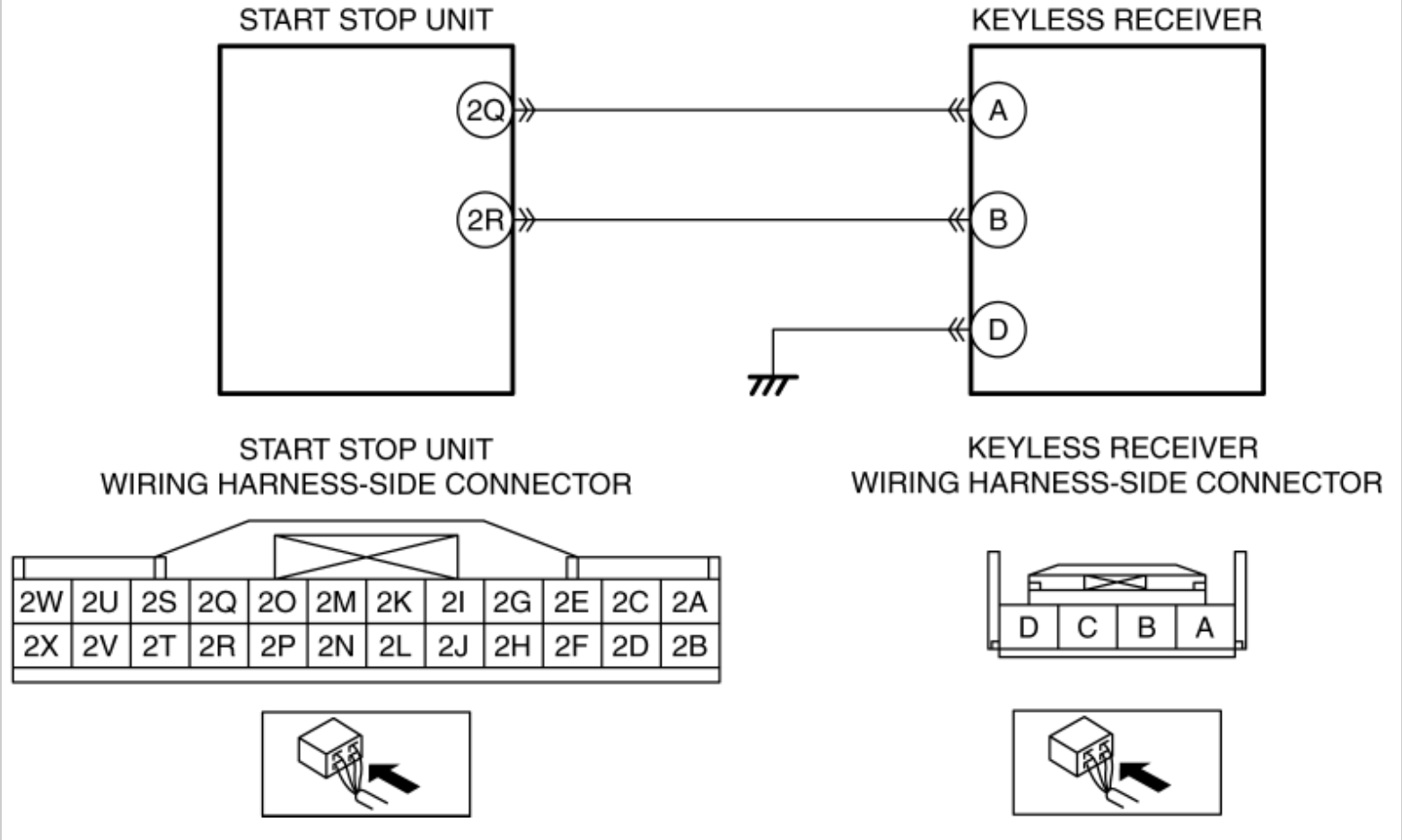

Diagnostic Procedure

Step	Inspection		Action
1	**INSPECT KEYLESS RECEIVER CONNECTOR CONDITION** • Switch the ignition off. • Disconnect the negative battery cable. (See **NEGATIVE BATTERY CABLE DISCONNECTION/CONNECTION [SKYACTIV-G 2.0, SKYACTIV-G 2.5]**.) • Disconnect the keyless receiver connector. • Inspect the connector engagement and connection condition and inspect the terminals for damage, deformation, corrosion, or disconnection. • Is the connector normal?	Yes	Go to the next step.
		No	Repair or replace the connector, then go to Step 5.

2	**INSPECT START STOP UNIT CONNECTOR CONDITION** • Disconnect the start stop unit connector. • Inspect the connector engagement and connection condition and inspect the terminals for damage, deformation, corrosion, or disconnection. • Is the connector normal?	Yes	Go to the next step.
		No	Repair or replace the connector, then go to Step 5.
3	**INSPECT FOR SHORT TO POWER SUPPLY IN KEYLESS RECEIVER CIRCUIT** • Reconnect the start stop unit connector. • Verify that the keyless receiver connector is disconnected. • Reconnect the negative battery cable. (See **NEGATIVE BATTERY CABLE DISCONNECTION/CONNECTION [SKYACTIV-G 2.0, SKYACTIV-G 2.5]**.) • Switch the ignition ON (engine off or on). • Measure the voltage at the following terminals (wiring harness-side): ▪ Keyless receiver terminal A ▪ Start stop unit terminal 2Q • Is the voltage **0 V**?	Yes	Go to the next step.
		No	Refer to the wiring diagram and verify whether or not there is a common connector between start stop unit terminal 2Q and keyless receiver terminal A. **If there is a common connector:** • Determine the malfunctioning part by inspecting the common connector and the terminal for corrosion, damage, or pin disconnection, and the common wiring harness for a short to power supply. • Repair or replace the malfunctioning part. **If there is no common connector:** • Repair or replace the wiring harness which has a short to power supply. Go to Step 5.
4	**INSPECT KEYLESS RECEIVER** • Inspect the keyless receiver. (See **KEYLESS RECEIVER INSPECTION**.) • Is the keyless receiver normal?	Yes	Go to the next step.
		No	Replace the keyless receiver, then go to the next step. (See **KEYLESS RECEIVER REMOVAL/INSTALLATION**.)
	VERIFY THAT REPAIRS HAVE BEEN		

5	**COMPLETED** • Always reconnect all disconnected connectors. • Reconnect the negative battery cable. (See **NEGATIVE BATTERY CABLE DISCONNECTION/CONNECTION [SKYACTIV-G 2.0, SKYACTIV-G 2.5]**.) • Clear the DTC for the start stop unit using the M-MDS. (See **CLEARING DTC [START STOP UNIT]**.) • Retrieve the start stop unit DTCs using the M-MDS. (See **DTC INSPECTION [START STOP UNIT]**.) • Is the same DTC displayed?	Yes	Repeat the inspection from Step 1. • If the malfunction recurs, replace the start stop unit. (See **START STOP UNIT REMOVAL/INSTALLATION**.) Go to the next step.
		No	Go to the next step.
6	**VERIFY IF OTHER DTCs DISPLAYED** • Are any other DTCs displayed?	Yes	Repair or replace the malfunctioning part according to the applicable DTC troubleshooting. (See **DTC TABLE [START STOP UNIT]**.)
		No	DTC troubleshooting completed.

2014 - Mazda3 - Body and Accessories

DTC U2100:00 [START STOP UNIT]

Description	Start stop unit configuration not completed
Detection condition	• Start stop unit configuration not completed.
Fail-safe function	• Although the engine cannot be started with the ignition switched off or to ACC, if the ignition is switched ON (engine off), the engine can be started. **NOTE:** • If the start stop unit configuration is not completed, the start stop unit setting will be for an ATX vehicle. • For MTX vehicles, if the start stop unit cannot receive the CAN signal, the engine cannot be started because the vehicle cannot be recognized as a MTX vehicle.
Possible cause	• Start stop unit configuration error • Start stop unit malfunction
System wiring diagram	Not applicable

Diagnostic Procedure

Step	Inspection		Action
1	**PERFORM START STOP UNIT CONFIGURATION (USING AS-BUILT DATA)** • Using the M-MDS, perform the start stop unit configuration (using As-Built data). (See **START STOP UNIT CONFIGURATION (USING AS-BUILT DATA)**.)	Yes	Using the M-MDS, perform the start stop unit configuration (using As-Built data) again, then go to the next step. (See **START STOP UNIT CONFIGURATION (USING AS-BUILT DATA)**.)
		No	Go to Step 3.

	• Clear the DTC for the start stop unit using the M-MDS. (See **CLEARING DTC [START STOP UNIT]**.) • Retrieve the start stop unit DTCs using the M-MDS. (See **DTC INSPECTION [START STOP UNIT]**.) • Is the same DTC displayed?		
2	**VERIFY THAT REPAIRS HAVE BEEN COMPLETED** • Clear the DTC for the start stop unit using the M-MDS. (See **CLEARING DTC [START STOP UNIT]**.) • Retrieve the start stop unit DTCs using the M-MDS. (See **DTC INSPECTION [START STOP UNIT]**.) • Is the same DTC displayed?	Yes	Repeat the inspection from Step 1. • If the malfunction recurs, replace the start stop unit. (See **START STOP UNIT REMOVAL/INSTALLATION**.) Go to the next step.
		No	Go to the next step.
3	**VERIFY IF OTHER DTCs DISPLAYED** • Are any other DTCs displayed?	Yes	Repair or replace the malfunctioning part according to the applicable DTC troubleshooting. (See **DTC TABLE [START STOP UNIT]**.)
		No	DTC troubleshooting completed.

2014 - Mazda3 - Body and Accessories

DTC U2300:00 [START STOP UNIT]

Description	Configuration data not received from instrument cluster
Detection condition	• Start stop unit cannot receive the configuration data from the instrument cluster for **1 s or more** with the ignition switched ON (engine off or on).
Fail-safe function	• Secures the correct data received right before the malfunction.
Possible cause	• DTCs are stored in the instrument cluster. • Instrument cluster malfunction • Start stop unit malfunction
System wiring diagram	Not applicable

Diagnostic Procedure

Step	Inspection		Action
1	**VERIFY INSTRUMENT CLUSTER DTCs** • Retrieve the instrument cluster DTCs using the M-MDS. (See **DTC INSPECTION [INSTRUMENT CLUSTER]**.) • Are any DTCs displayed?	Yes	Repair or replace the malfunctioning part according to the applicable DTC troubleshooting. (See **DTC TABLE [INSTRUMENT CLUSTER]**.)
		No	Go to the next step.
2	**PERFORM DTC INSPECTION AND VERIFY INSTRUMENT CLUSTER MALFUNCTION** • Clear the DTC for the start stop unit using the M-MDS. (See **CLEARING DTC [START STOP UNIT]**.) • Switch the ignition ON (engine	Yes	Replace the instrument cluster, then go to the next step. (See **INSTRUMENT CLUSTER REMOVAL/INSTALLATION**.)
		No	Go to Step 4.

	off or on) and wait for **1 s or more**. • Retrieve the start stop unit DTCs using the M-MDS. (See **DTC INSPECTION [START STOP UNIT]**.) • Is the same DTC displayed?		
3	**VERIFY THAT REPAIRS HAVE BEEN COMPLETED** • Clear the DTC for the start stop unit using the M-MDS. (See **CLEARING DTC [START STOP UNIT]**.) • Switch the ignition ON (engine off or on) and wait for **1 s or more**. • Retrieve the start stop unit DTCs using the M-MDS. (See **DTC INSPECTION [START STOP UNIT]**.) • Is the same DTC displayed?	Yes	Repeat the inspection from Step 1. • If the malfunction recurs, replace the start stop unit. (See **START STOP UNIT REMOVAL/INSTALLATION**.) Go to the next step.
		No	Go to the next step.
4	**VERIFY IF OTHER DTCs DISPLAYED** • Are any other DTCs displayed?	Yes	Repair or replace the malfunctioning part according to the applicable DTC troubleshooting. (See **DTC TABLE [START STOP UNIT]**.)
		No	DTC troubleshooting completed.

2014 - Mazda3 - Body and Accessories

DTC U3000:01 [START STOP UNIT]

Description	Start stop unit internal malfunction
Detection condition	• Start stop unit detects the internal malfunction.
Fail-safe function	Not applicable
Possible cause	• Start stop unit internal malfunction
System wiring diagram	Not applicable

Diagnostic Procedure

Step	Inspection		Action
1	**PERFORM DTC INSPECTION AND VERIFY START STOP UNIT MALFUNCTION** • Clear the DTC for the start stop unit using the M-MDS. (See **CLEARING DTC [START STOP UNIT]**.) • Retrieve the start stop unit DTCs using the M-MDS. (See **DTC INSPECTION [START STOP UNIT]**.) • Is the same DTC displayed?	Yes	Repeat the inspection from Step 1. • If the malfunction recurs, replace the start stop unit. (See **START STOP UNIT REMOVAL/INSTALLATION**.) Go to the next step.
		No	Go to the next step.
2	**VERIFY IF OTHER DTCs DISPLAYED** • Are any other DTCs displayed?	Yes	Repair or replace the malfunctioning part according to the applicable DTC troubleshooting. (See **DTC TABLE [START STOP UNIT]**.)
		No	DTC troubleshooting completed.

DTC U3000:01 [START STOP UNIT]

2014 - Mazda3 - Body and Accessories

DTC U3000:49 [START STOP UNIT]

WARNING:

- If this DTC is detected, the system will enter the fail-safe function to ensure safety. If a specified period of time has elapsed or the vehicle has been driven for a specified period of time or more while in fail-safe mode, the ignition will remain stuck in off and the engine cannot be started. Therefore, perform the malfunction diagnosis while the engine can be started. In addition, after having performed the malfunction diagnosis, verify that this DTC is not detected. If the DTC is not detected, the system returns to normal from the fail-safe function.

NOTE:

- If the vehicle is in the following condition while in fail-safe mode, “Keyless system malfunction” is displayed in the center display (With center display) and the KEY warning light (red) illuminates and the push button start indicator light (amber) flashes.
    - Switch the ignition to ACC or ON (engine off or on).
    - Depress the brake pedal (ATX)/clutch pedal (MTX).
- In addition to the normal engine starting operation while cranking the engine in fail-safe mode, it is necessary to press the push button start.

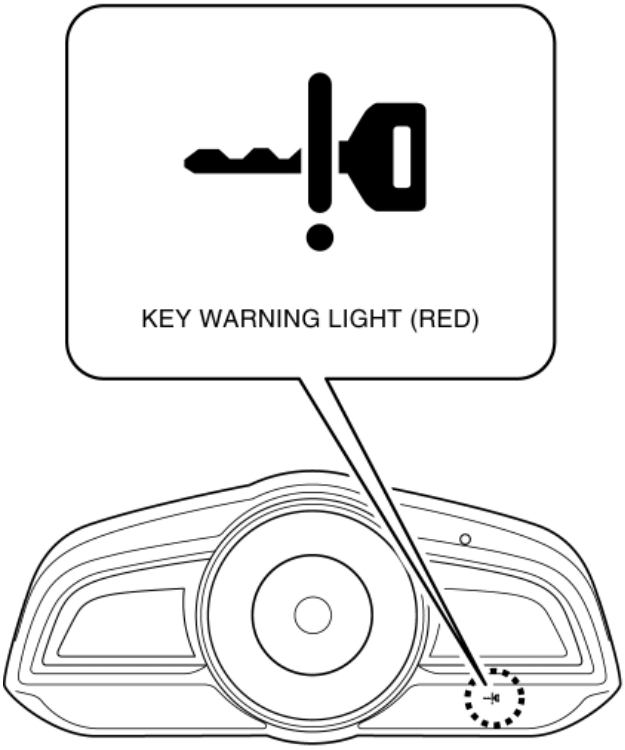

INSTRUMENT CLUSTER

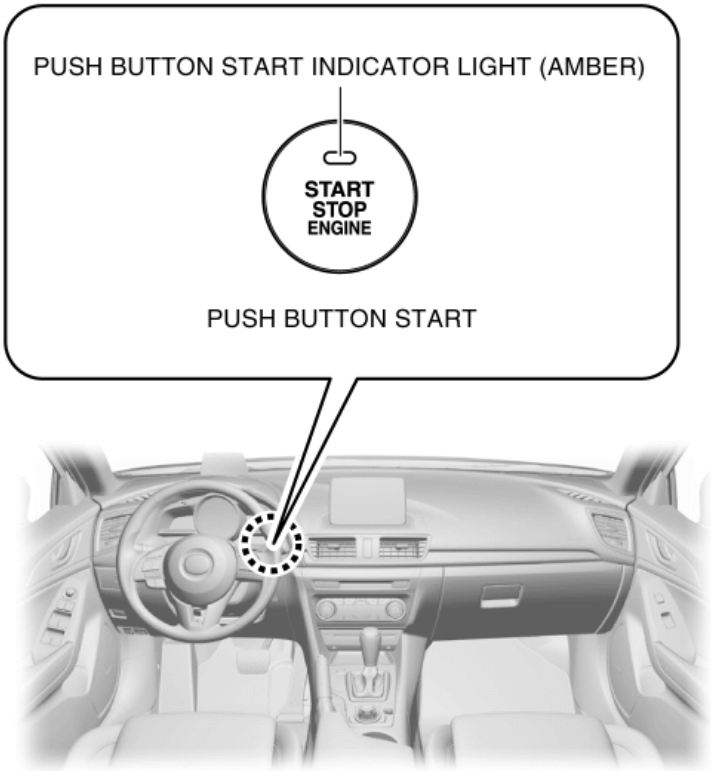

Description	Start stop unit internal malfunction
Detection condition	• Start stop unit detects the internal malfunction.
Fail-safe function	• The system will enter the fail-safe function to ensure safety. If a specified period of time has elapsed or the vehicle has been driven for a specified period of time or more while in fail-safe mode, the ignition will remain stuck in off and the engine cannot be started.
Possible cause	• Start stop unit internal malfunction

System wiring diagram	Not applicable

Diagnostic Procedure

Step	Inspection		Action
1	**PERFORM DTC INSPECTION AND VERIFY START STOP UNIT MALFUNCTION** • Clear the DTC for the start stop unit using the M-MDS. (See **CLEARING DTC [START STOP UNIT]**.) • Retrieve the start stop unit DTCs using the M-MDS. (See **DTC INSPECTION [START STOP UNIT]**.) • Is the same DTC displayed?	Yes	Repeat the inspection from Step 1. • If the malfunction recurs, replace the start stop unit. (See **START STOP UNIT REMOVAL/INSTALLATION**.) Go to the next step.
		No	Go to the next step.
2	**VERIFY IF OTHER DTCs DISPLAYED** • Are any other DTCs displayed?	Yes	Repair or replace the malfunctioning part according to the applicable DTC troubleshooting. (See **DTC TABLE [START STOP UNIT]**.)
		No	DTC troubleshooting completed.

2014 - Mazda3 - Body and Accessories

DTC U3000:96 [START STOP UNIT]

Description	Start stop unit malfunction
Detection condition	• Start stop unit malfunction detected.
Fail-safe function	Not applicable
Possible cause	• Start stop unit malfunction
System wiring diagram	Not applicable

Diagnostic Procedure

Step	Inspection		Action
1	**PERFORM DTC INSPECTION AND VERIFY START STOP UNIT MALFUNCTION** • Clear the DTC for the start stop unit using the M-MDS. (See **CLEARING DTC [START STOP UNIT]**.) • Retrieve the start stop unit DTCs using the M-MDS. (See **DTC INSPECTION [START STOP UNIT]**.) • Is the same DTC displayed?	Yes	Repeat the inspection from Step 1. • If the malfunction recurs, replace the start stop unit. (See **START STOP UNIT REMOVAL/INSTALLATION**.) Go to the next step.
		No	Go to the next step.
2	**VERIFY IF OTHER DTCs DISPLAYED** • Are any other DTCs displayed?	Yes	Repair or replace the malfunctioning part according to the applicable DTC troubleshooting. (See **DTC TABLE [START STOP UNIT]**.)
		No	DTC troubleshooting completed.

DTC U3000:96 [START STOP UNIT]

2014 - Mazda3 - Body and Accessories

DTC U3003:16 [START STOP UNIT]

Description	Start stop unit power supply voltage (terminal 1A) low input
Detection condition	• Start stop unit power supply circuit voltage (terminal 1A) of **5V or more, less than 8.5 V** is detected for **5 s or more**.
Fail-safe function	• Inhibits the door lock/unlock control using the advanced keyless entry system. (With advanced keyless entry system).

Possible cause	• DTCs are stored in the PCM.
	• Battery malfunction
	• Generator malfunction
	• Start stop unit connector or terminal malfunction
	• Start stop unit power supply circuit (terminal 1A) malfunction
	  ▪ Short to ground in the wiring harness between MAIN 200 A fuse and start stop unit terminal 1A
	  ▪ ROOM 15 A fuse malfunction
	  ▪ MAIN 200 A fuse malfunction
	  ▪ Open circuit in wiring harness between battery positive terminal and start stop unit terminal 1A
	• Start stop unit malfunction

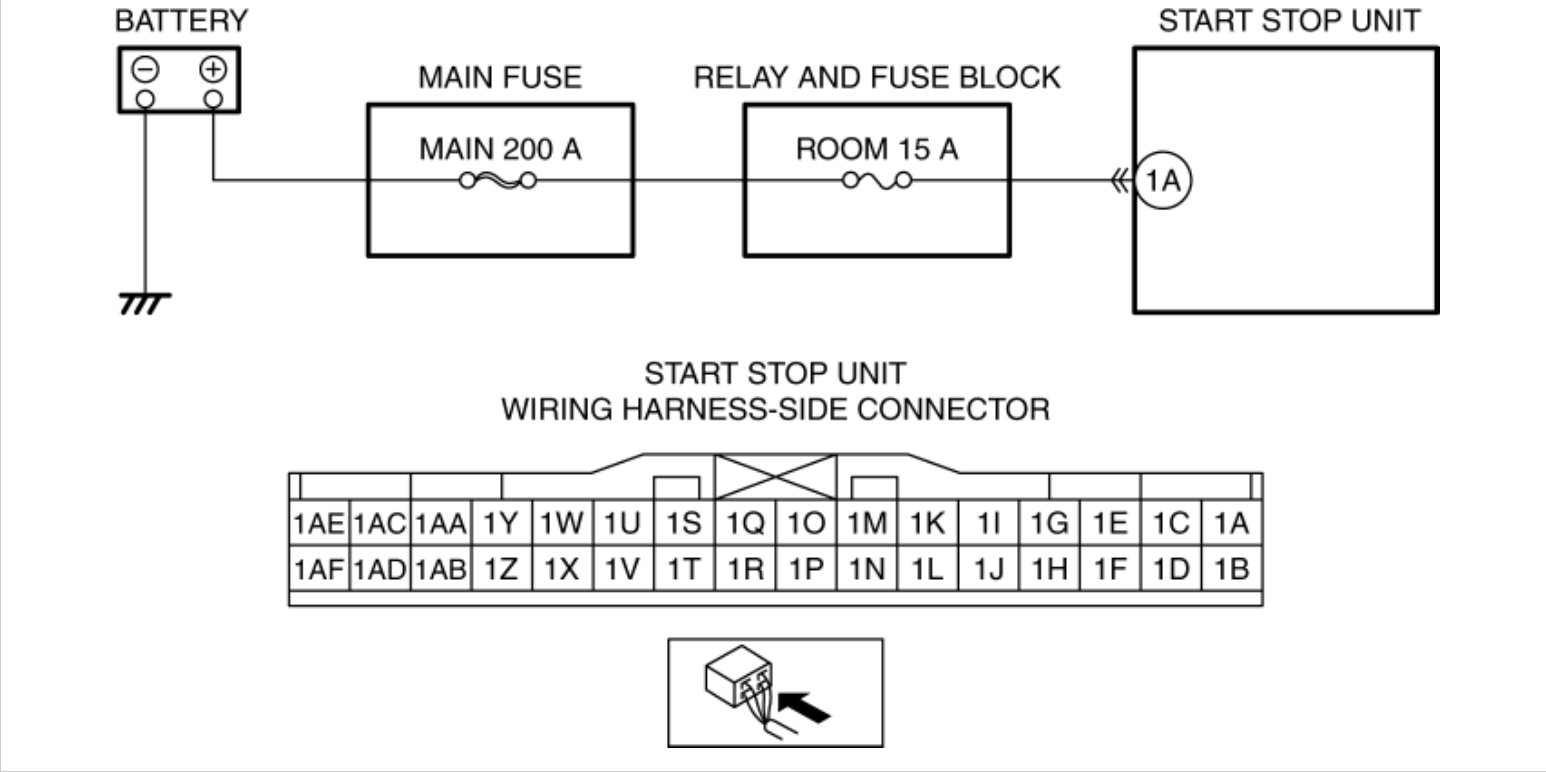

Diagnostic Procedure

Step	Inspection		Action
1	**VERIFY PCM DTCs** • Retrieve the PCM DTCs using the M-MDS. (See **ON-BOARD DIAGNOSTIC TEST [SKYACTIV-G 2.0, SKYACTIV-G 2.5]**.) • Are any DTCs displayed?	Yes	Repair or replace the malfunctioning part according to the applicable DTC troubleshooting. (See **DTC TABLE [SKYACTIV-G 2.0, SKYACTIV-G 2.5]**.)
		No	Go to the next step.
2	**INSPECT BATTERY** • Inspect the battery. (See **BATTERY INSPECTION [SKYACTIV-G 2.0, SKYACTIV-G 2.5]**.) • Is the battery normal?	Yes	Go to the next step.
		No	Recharge or replace the battery, then go to Step 6. (See **BATTERY RECHARGING [SKYACTIV-G 2.0, SKYACTIV-G 2.5]**.) (See **BATTERY REMOVAL/INSTALLATION [SKYACTIV-G 2.0, SKYACTIV-G 2.5]**.)
3	**INSPECT GENERATOR** • Inspect the generator. (See **GENERATOR INSPECTION [SKYACTIV-G 2.0, SKYACTIV-G 2.5 (WITHOUT i-ELOOP)]**.) (See **GENERATOR INSPECTION [SKYACTIV-G 2.0, SKYACTIV-G 2.5 (WITH i-ELOOP)]**.) • Is the generator normal?	Yes	Go to the next step.
		No	Replace the generator, then go to Step 6. (See **GENERATOR REMOVAL/INSTALLATION [SKYACTIV-G 2.0, SKYACTIV-G 2.5 (WITHOUT i-ELOOP)]**.) (See **GENERATOR REMOVAL/INSTALLATION [SKYACTIV-G 2.0, SKYACTIV-G 2.5 (WITH i-ELOOP)]**.)

4	**INSPECT START STOP UNIT CONNECTOR CONDITION** • Switch the ignition off. • Disconnect the negative battery cable. (See **NEGATIVE BATTERY CABLE DISCONNECTION/CONNECTION [SKYACTIV-G 2.0, SKYACTIV-G 2.5]**.) • Disconnect the start stop unit connector. • Inspect the connector engagement and connection condition and inspect the terminals for damage, deformation, corrosion, or disconnection. • Is the connector normal?	Yes	Go to the next step.
		No	Repair or replace the connector, then go to Step 6.
5	**VERIFY START STOP UNIT POWER SUPPLY VOLTAGE (TERMINAL 1A)** • Always reconnect all disconnected connectors. • Reconnect the negative battery cable. (See **NEGATIVE BATTERY CABLE DISCONNECTION/CONNECTION [SKYACTIV-G 2.0, SKYACTIV-G 2.5]**.) • Display PID VPWR_B1 using the M-MDS. (See **PID/DATA MONITOR INSPECTION [START STOP UNIT]**.) • Is the voltage **B+**?	Yes	Go to the next step.
		No	Inspect the ROOM 15 A fuse and MAIN 200 A fuse. • If the fuse is blown: ▪ Refer to the wiring diagram and verify whether or not there is a common connector between MAIN 200 A fuse and start stop unit terminal 1A. **If there is a common connector:** • Determine the malfunctioning part by inspecting the common connector and the terminal for corrosion, damage, or pin disconnection, and the common wiring harness for a short to ground. • Repair or replace the malfunctioning part.

If there is no common connector:

- Repair or replace the wiring harness which has a short to ground.
- Replace the fuse.

- If the fuse is damaged:
  - Replace the fuse.
- If the fuse is normal:
  - Refer to the wiring diagram and verify whether or not there is a common connector between battery positive terminal and start stop unit terminal 1A.

If there is a common connector:

- Determine the malfunctioning part by inspecting the common connector and the terminal for corrosion, damage, or pin disconnection, and the common wiring harness for an open circuit.
- Repair or replace the malfunctioning part.

If there is no common connector:

- Repair or replace the wiring harness which has an open circuit.

Go to the next step.

VERIFY THAT REPAIRS HAVE BEEN

6	**COMPLETED** • Always reconnect all disconnected connectors. • Reconnect the negative battery cable. (See **NEGATIVE BATTERY CABLE DISCONNECTION/CONNECTION [SKYACTIV-G 2.0, SKYACTIV-G 2.5]**.) • Clear the DTC for the start stop unit using the M-MDS. (See **CLEARING DTC [START STOP UNIT]**.) • Switch the ignition ON (engine off or on) and wait for **5 s or more**. • Retrieve the start stop unit DTCs using the M-MDS. (See **DTC INSPECTION [START STOP UNIT]**.) • Is the same DTC displayed?	Yes	Repeat the inspection from Step 1. • If the malfunction recurs, replace the start stop unit. (See **START STOP UNIT REMOVAL/INSTALLATION**.) Go to the next step.
		No	Go to the next step.
7	**VERIFY IF OTHER DTCs DISPLAYED** • Are any other DTCs displayed?	Yes	Repair or replace the malfunctioning part according to the applicable DTC troubleshooting. (See **DTC TABLE [START STOP UNIT]**.)
		No	DTC troubleshooting completed.

2014 - Mazda3 - Body and Accessories

DTC U3004:11 [START STOP UNIT]

Description	ACC relay circuit malfunction
Detection condition	• Start stop unit detects that the ACC relay output monitor voltage of **less than specification** for **0.05 s or more** with the ignition switched to ACC or ON (engine off or on).
Fail-safe function	Not applicable
Possible cause	• ACC relay malfunction • Start stop unit connector or terminal malfunction • Short to ground in wiring harness between ACC relay terminal A and start stop unit terminal 2C • Start stop unit malfunction

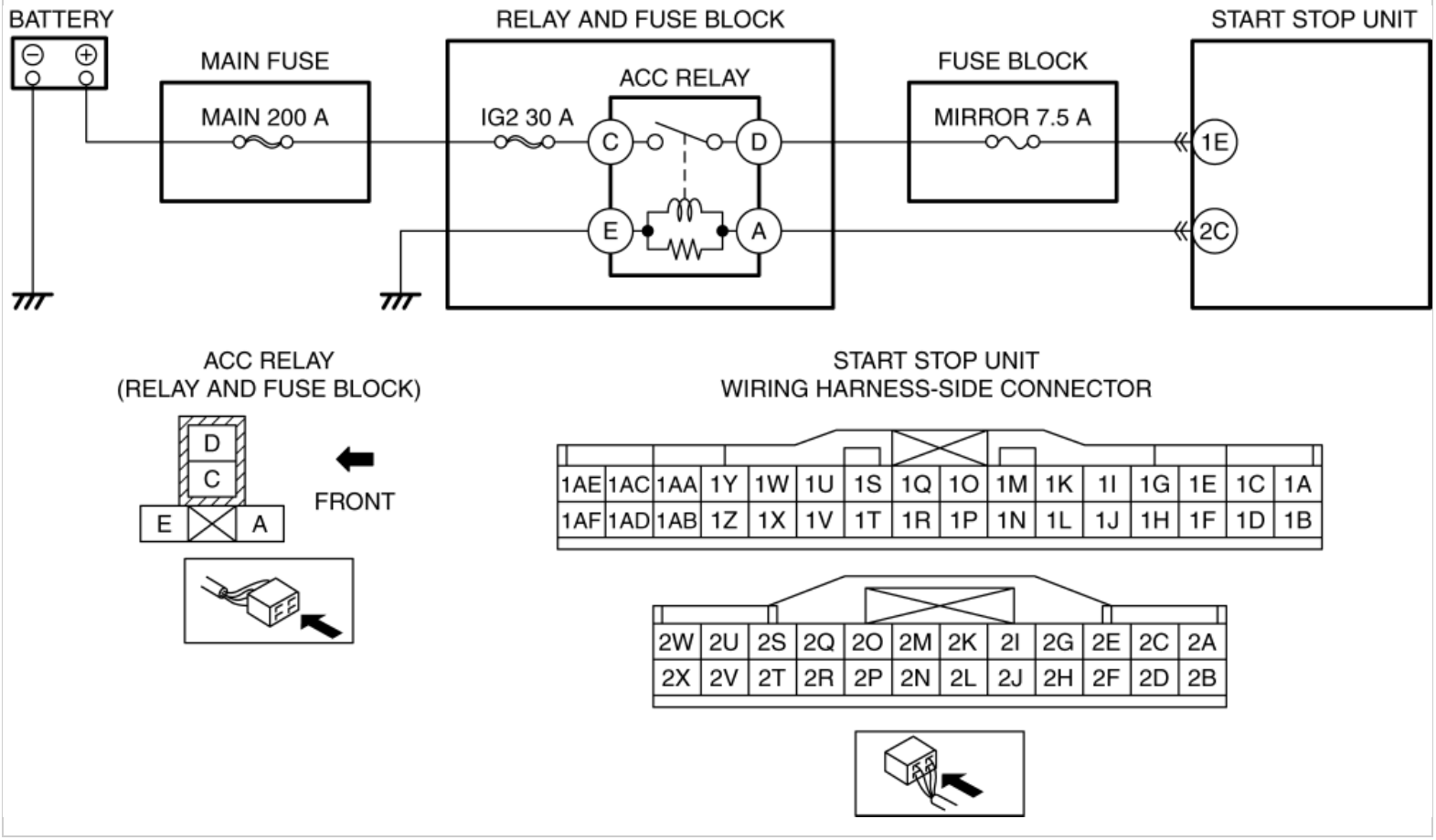

Diagnostic Procedure

Step	Inspection		Action
1	**INSPECT ACC RELAY** • Switch the ignition off.	Yes	Go to the next step.

	• Disconnect the negative battery cable. (See **NEGATIVE BATTERY CABLE DISCONNECTION/CONNECTION [SKYACTIV-G 2.0, SKYACTIV-G 2.5]**.) • Remove the ACC relay. (See **RELAY LOCATION**.) • Inspect the ACC relay. (See **RELAY INSPECTION**.) • Is the ACC relay normal?	No	Replace the ACC relay, then go to Step 4. (See **RELAY LOCATION**.)
2	**INSPECT START STOP UNIT CONNECTOR CONDITION** • Disconnect the start stop unit connector. • Inspect the connector engagement and connection condition and inspect the terminals for damage, deformation, corrosion, or disconnection. • Is the connector normal?	Yes	Go to the next step.
		No	Repair or replace the connector, then go to Step 4.
3	**INSPECT FOR SHORT TO GROUND IN ACC RELAY CIRCUIT** • Verify that the ACC relay is removed. • Verify that the start stop unit connector is disconnected. • Inspect for continuity between ACC relay terminal A (wiring harness-side) and body ground. • Is there continuity?	Yes	Refer to the wiring diagram and verify whether or not there is a common connector between ACC relay terminal A and start stop unit terminal 2C. **If there is a common connector:** • Determine the malfunctioning part by inspecting the common connector and the terminal for corrosion, damage, or pin disconnection, and the common wiring harness for a short to ground. • Repair or replace the malfunctioning part. **If there is no common connector:** • Repair or replace the wiring harness which has a short to ground. Go to the next step.
		No	Go to the next step.
4	**VERIFY THAT REPAIRS HAVE BEEN COMPLETED** • Always reconnect all disconnected connectors. • Reconnect the negative battery cable. (See **NEGATIVE BATTERY CABLE DISCONNECTION/CONNECTION [SKYACTIV-G 2.0, SKYACTIV-G 2.5]**.) • Clear the DTC for the start stop unit using the M-MDS. (See **CLEARING DTC [START STOP UNIT]**.) • Switch the ignition to ACC or ON (engine off or on) and wait for **1 s or more**. • Retrieve the start stop unit DTCs using the M-MDS. (See **DTC INSPECTION [START STOP UNIT]**.)	Yes	Repeat the inspection from Step 1. • If the malfunction recurs, replace the start stop unit. (See **START STOP UNIT REMOVAL/INSTALLATION**.) Go to the next step.
		No	Go to the next step.

	Is the same DTC displayed?		
5	**VERIFY IF OTHER DTCs DISPLAYED** • Are any other DTCs displayed?	Yes	Repair or replace the malfunctioning part according to the applicable DTC troubleshooting. (See **DTC TABLE [START STOP UNIT]**.)
		No	DTC troubleshooting completed.

2014 - Mazda3 - Body and Accessories

DTC U3004:12 [START STOP UNIT]

Description	ACC relay circuit malfunction
Detection condition	• Start stop unit detects that the ACC relay output monitor voltage of **2.5 V or more** for **0.5 s or more** with the ignition switched off.
Fail-safe function	Not applicable
Possible cause	• ACC relay malfunction • Start stop unit connector or terminal malfunction • Short to power supply in wiring harness between ACC relay terminal A and start stop unit terminal 2C • Start stop unit malfunction

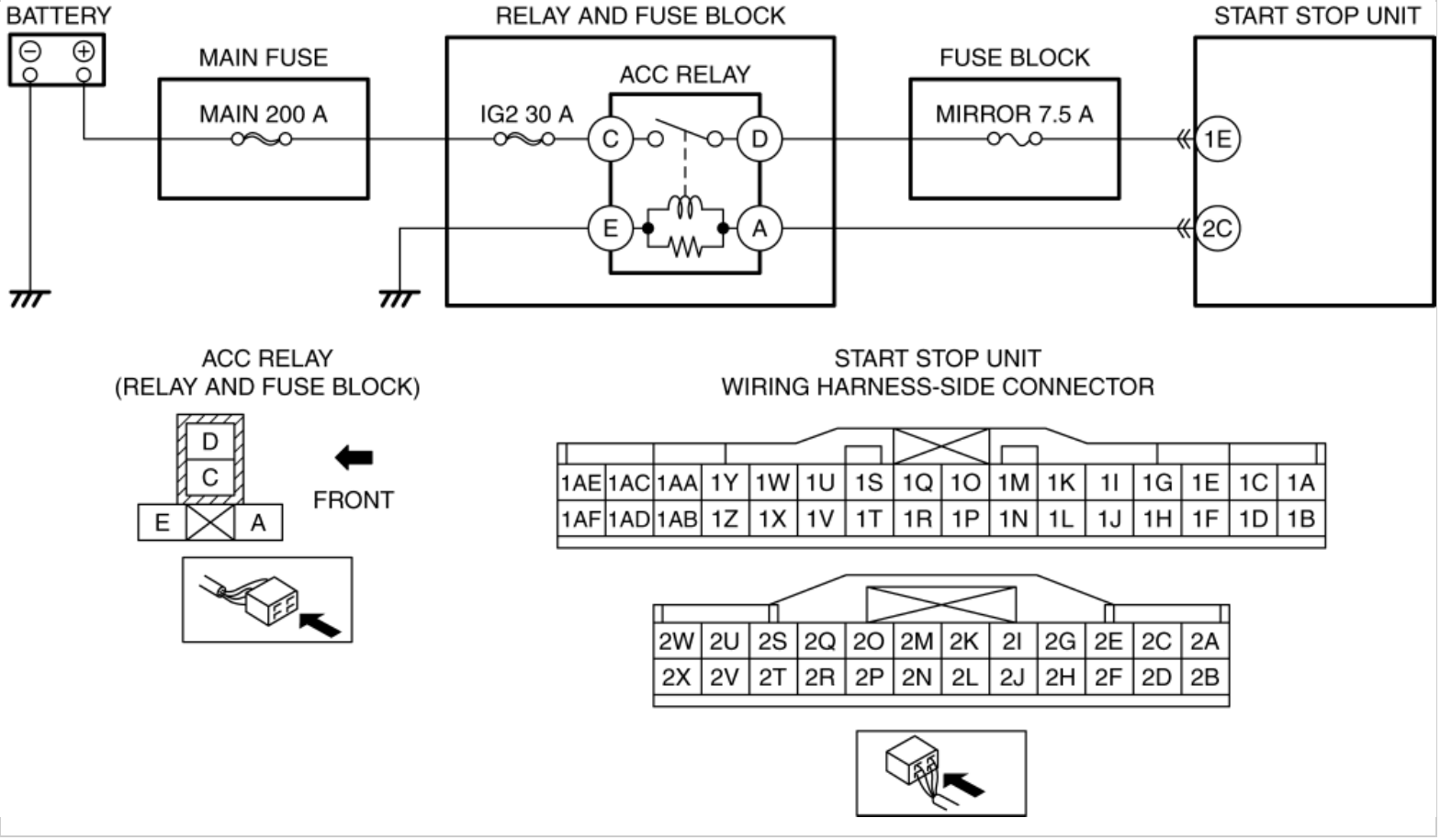

Diagnostic Procedure

Step	Inspection		Action
1	**INSPECT ACC RELAY** • Switch the ignition off.	Yes	Go to the next step.

	• Disconnect the negative battery cable. (See **NEGATIVE BATTERY CABLE DISCONNECTION/CONNECTION [SKYACTIV-G 2.0, SKYACTIV-G 2.5]**.) • Remove the ACC relay. (See **RELAY LOCATION**.) • Inspect the ACC relay. (See **RELAY INSPECTION**.) • Is the ACC relay normal?	No	Replace the ACC relay, then go to Step 4. (See **RELAY LOCATION**.)
2	**INSPECT START STOP UNIT CONNECTOR CONDITION** • Disconnect the start stop unit connector. • Inspect the connector engagement and connection condition and inspect the terminals for damage, deformation, corrosion, or disconnection. • Is the connector normal?	Yes	Go to the next step.
		No	Repair or replace the connector, then go to Step 4.
3	**INSPECT FOR SHORT TO POWER SUPPLY IN ACC RELAY CIRCUIT** • Always reconnect all disconnected connectors. • Reconnect the negative battery cable. (See **NEGATIVE BATTERY CABLE DISCONNECTION/CONNECTION [SKYACTIV-G 2.0, SKYACTIV-G 2.5]**.) • Measure the voltage at the start stop unit terminal 2C (wiring harness-side). • Is the voltage **2.5 V or more**?	Yes	Refer to the wiring diagram and verify whether or not there is a common connector between ACC relay terminal A and start stop unit terminal 2C. **If there is a common connector:** • Determine the malfunctioning part by inspecting the common connector and the terminal for corrosion, damage, or pin disconnection, and the common wiring harness for a short to power supply. • Repair or replace the malfunctioning part. **If there is no common connector:** • Repair or replace the wiring harness which has a short to power supply. Go to the next step.
		No	Go to the next step.
4	**VERIFY THAT REPAIRS HAVE BEEN COMPLETED** • Always reconnect all disconnected connectors. • Reconnect the negative battery cable. (See **NEGATIVE BATTERY CABLE DISCONNECTION/CONNECTION [SKYACTIV-G 2.0, SKYACTIV-G 2.5]**.) • Clear the DTC for the start stop unit using the M-MDS. (See **CLEARING DTC [START STOP UNIT]**.) • Switch the ignition off and wait for **1 s or more**. • Retrieve the start stop unit DTCs using the M-MDS. (See **DTC INSPECTION [START STOP UNIT]**.) • Is the same DTC displayed?	Yes	Repeat the inspection from Step 1. • If the malfunction recurs, replace the start stop unit. (See **START STOP UNIT REMOVAL/INSTALLATION**.) Go to the next step.
		No	Go to the next step.

5	**VERIFY IF OTHER DTCs DISPLAYED** • Are any other DTCs displayed?	Yes	Repair or replace the malfunctioning part according to the applicable DTC troubleshooting. (See **DTC TABLE [START STOP UNIT]**.)
		No	DTC troubleshooting completed.

2014 - Mazda3 - Body and Accessories

DTC U3004:16 [START STOP UNIT]

Description	ACC relay circuit malfunction
Detection condition	• Start stop unit detects that the ACC monitor voltage of **less than 2.5 V** for **1 s or more** with the ignition switched to ACC or ON (engine off or on).
Fail-safe function	Not applicable

Possible cause	• ACC relay malfunction
	• ACC relay circuit malfunction
	  ▪ Short to ground in wiring harness between MAIN 200 A fuse and ACC relay terminal C
	  ▪ IG2 30 A fuse malfunction
	  ▪ MAIN 200 A fuse malfunction
	  ▪ Open circuit in wiring harness between battery positive terminal and ACC relay terminal C
	• Start stop unit connector or terminal malfunction
	• Short to ground in wiring harness between ACC relay terminal D and start stop unit terminal 1E
	• MIRROR 7.5 A fuse malfunction
	• Open circuit in wiring harness between ACC relay terminal D and start stop unit terminal 1E
	• Start stop unit malfunction

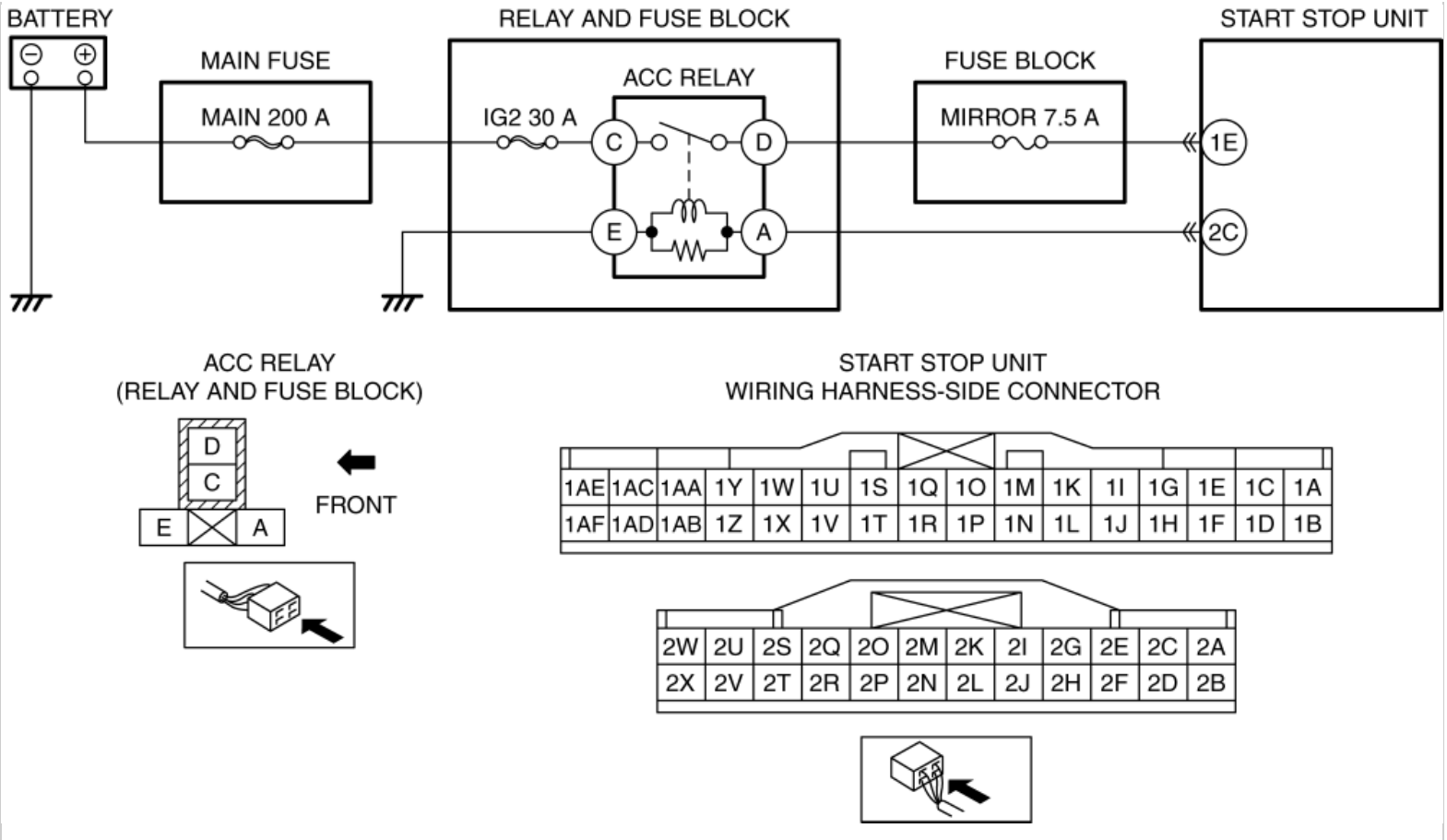

Diagnostic Procedure

Step	Inspection		Action
1	**INSPECT ACC RELAY** • Switch the ignition off. • Disconnect the negative battery cable. (See **NEGATIVE BATTERY CABLE DISCONNECTION/CONNECTION [SKYACTIV-G 2.0, SKYACTIV-G 2.5]**.) • Remove the ACC relay. (See **RELAY LOCATION**.) • Inspect the ACC relay. (See **RELAY INSPECTION**.) • Is the ACC relay normal?	Yes	Go to the next step.
		No	Replace the ACC relay, then go to Step 6. (See **RELAY LOCATION**.)
2	**INSPECT FOR OPEN CIRCUIT OR SHORT TO GROUND IN ACC RELAY CIRCUIT** • Verify that the ACC relay is removed. • Reconnect the negative battery cable. (See **NEGATIVE BATTERY CABLE DISCONNECTION/CONNECTION [SKYACTIV-G 2.0, SKYACTIV-G 2.5]**.) • Measure the voltage at the ACC relay terminal C (wiring harness-	Yes	Go to the next step.
		No	Inspect the IG2 30 A and MAIN 200 A fuse. • If the fuse is blown: ▪ Refer to the wiring diagram and verify whether or not there is a common connector between MAIN 200 A fuse and ACC relay terminal C. **If there is a common connector:**

	side). • Is the voltage **B+**?		• Determine the malfunctioning part by inspecting the common connector and the terminal for corrosion, damage, or pin disconnection, and the common wiring harness for a short to ground. • Repair or replace the malfunctioning part. **If there is no common connector:** • Repair or replace the wiring harness which has a short to ground. • Replace the fuse. • If the fuse is damaged: ▪ Replace the fuse. • If the fuse is normal: ▪ Refer to the wiring diagram and verify whether or not there is a common connector between battery positive terminal and ACC relay terminal C. **If there is a common connector:** • Determine the malfunctioning part by inspecting the common connector and the terminal for corrosion, damage, or pin disconnection, and the common wiring harness for an open circuit. • Repair or replace the malfunctioning part. **If there is no common connector:** • Repair or replace the wiring harness which has an open circuit. Go to Step 6.
3	**INSPECT START STOP UNIT CONNECTOR CONDITION** • Disconnect the negative battery cable. (See **NEGATIVE BATTERY CABLE DISCONNECTION/CONNECTION [SKYACTIV-G 2.0, SKYACTIV-G 2.5]**.) • Disconnect the start stop unit connector. • Inspect the connector engagement and connection condition and inspect the terminals for damage, deformation, corrosion, or disconnection. • Is the connector normal?	Yes	Go to the next step.
		No	Repair or replace the connector, then go to Step 6.
	INSPECT FOR SHORT TO GROUND IN ACC		

4	**RELAY CIRCUIT** • Verify that the ACC relay is removed. • Verify that the start stop unit connector is disconnected. • Inspect for continuity between the following terminals (wiring harness-side) and body ground: ▪ ACC relay terminal D ▪ Start stop unit terminal 1E • Is there continuity?	Yes	Inspect the MIRROR 7.5 A fuse. • Refer to the wiring diagram and verify whether or not there is a common connector between ACC relay terminal D and start stop unit terminal 1E. **If there is a common connector:** ▪ Determine the malfunctioning part by inspecting the common connector and the terminal for corrosion, damage, or pin disconnection, and the common wiring harness for a short to ground. ▪ Repair or replace the malfunctioning part. **If there is no common connector:** ▪ Repair or replace the wiring harness which has a short to ground. ▪ Replace the fuse. Go to Step 6.
		No	Go to the next step.
5	**INSPECT FOR OPEN CIRCUIT IN ACC RELAY CIRCUIT** • Verify that the ACC relay is removed. • Verify that the start stop unit connector is disconnected. • Inspect for continuity between ACC relay terminal D (wiring harness-side) and start stop unit terminal 1E (wiring harness-side). • Is there continuity?	Yes	Go to the next step.
		No	Inspect the MIRROR 7.5 A fuse. • If the fuse is damaged: ▪ Replace the fuse. • If the fuse is normal: ▪ Refer to the wiring diagram and verify whether or not there is a common connector between ACC relay terminal D and start stop unit terminal 1E. **If there is a common connector:** • Determine the malfunctioning part by inspecting the common connector and the terminal for corrosion, damage, or pin disconnection, and the common wiring harness for an open circuit. • Repair or replace the malfunctioning part. **If there is no common connector:** • Repair or replace the wiring harness which has an open circuit. Go to the next step.
6	**VERIFY THAT REPAIRS HAVE BEEN COMPLETED** • Always reconnect all disconnected connectors. • Reconnect the negative battery cable. (See **NEGATIVE BATTERY CABLE DISCONNECTION/CONNECTION**	Yes	Repeat the inspection from Step 1. • If the malfunction recurs, replace the start stop unit. (See **START STOP UNIT REMOVAL/INSTALLATION**.) Go to the next step.
		No	Go to the next step.

	[SKYACTIV-G 2.0, SKYACTIV-G 2.5].) • Clear the DTC for the start stop unit using the M-MDS. (See **CLEARING DTC [START STOP UNIT]**.) • Switch the ignition to ACC or ON (engine off or on) and wait for **1 s or more**. • Retrieve the start stop unit DTCs using the M-MDS. (See **DTC INSPECTION [START STOP UNIT]**.) • Is the same DTC displayed?		
7	**VERIFY IF OTHER DTCs DISPLAYED** • Are any other DTCs displayed?	Yes	Repair or replace the malfunctioning part according to the applicable DTC troubleshooting. (See **DTC TABLE [START STOP UNIT]**.)
		No	DTC troubleshooting completed.

2014 - Mazda3 - Body and Accessories

DTC U3004:17 [START STOP UNIT]

Description	ACC relay circuit malfunction
Detection condition	• Start stop unit detects that the ACC monitor voltage of **2.5 V or more** for **5 s or more** with the ignition switched off.
Fail-safe function	Not applicable
Possible cause	• ACC relay malfunction • Start stop unit connector or terminal malfunction • Short to power supply in wiring harness between ACC relay terminal D and start stop unit terminal 1E • Start stop unit malfunction

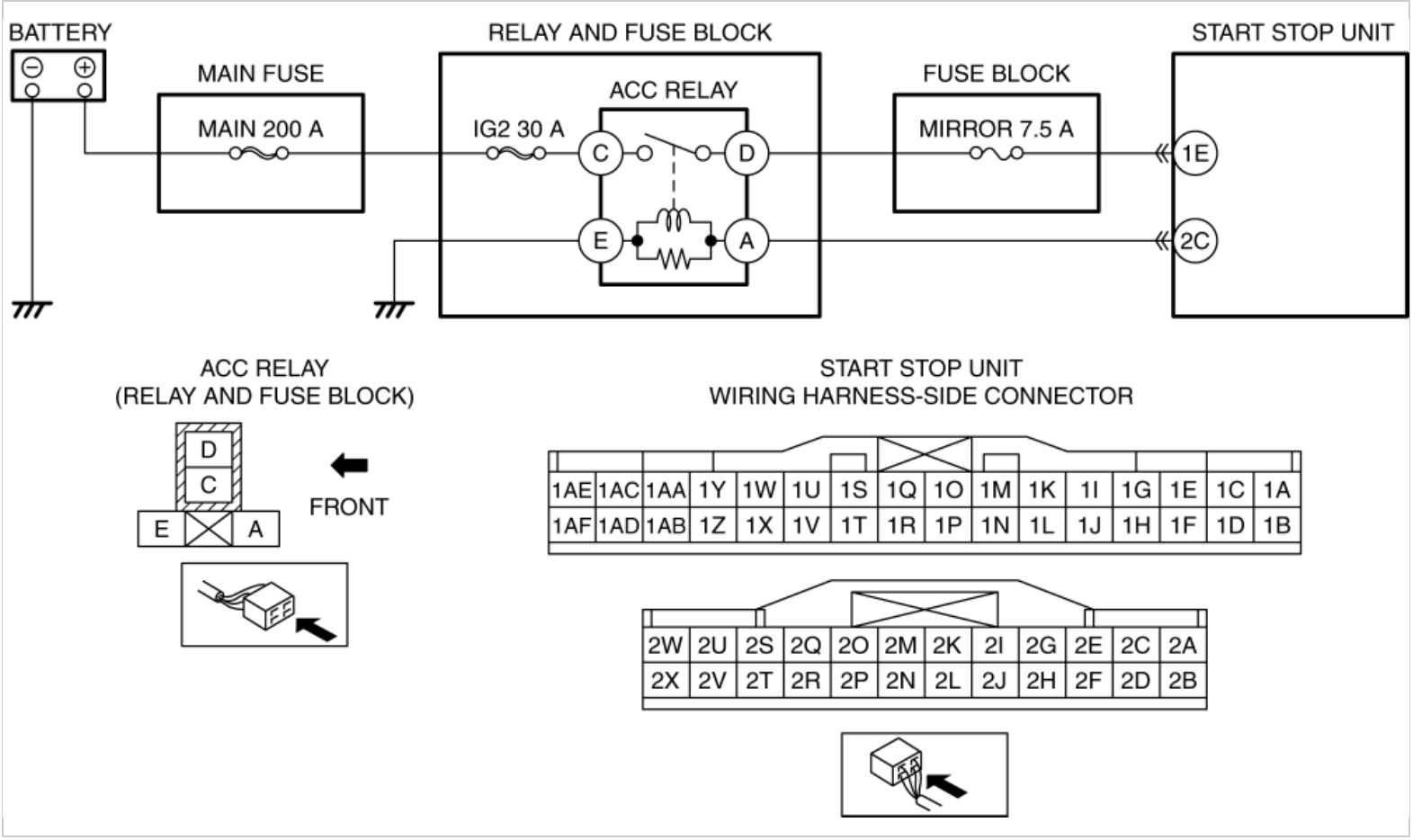

Diagnostic Procedure

Step	Inspection		Action
1	**INSPECT ACC RELAY** • Switch the ignition off.	Yes	Go to the next step.

	• Disconnect the negative battery cable. (See **NEGATIVE BATTERY CABLE DISCONNECTION/CONNECTION [SKYACTIV-G 2.0, SKYACTIV-G 2.5]**.) • Remove the ACC relay. (See **RELAY LOCATION**.) • Inspect the ACC relay. (See **RELAY INSPECTION**.) • Is the ACC relay normal?	No	Replace the ACC relay, then go to Step 4. (See **RELAY LOCATION**.)
2	**INSPECT START STOP UNIT CONNECTOR CONDITION** • Disconnect the start stop unit connector. • Inspect the connector engagement and connection condition and inspect the terminals for damage, deformation, corrosion, or disconnection. • Is the connector normal?	Yes	Go to the next step.
		No	Repair or replace the connector, then go to Step 4.
3	**INSPECT FOR SHORT TO POWER SUPPLY IN ACC RELAY CIRCUIT** • Always reconnect all disconnected connectors. • Reconnect the negative battery cable. (See **NEGATIVE BATTERY CABLE DISCONNECTION/CONNECTION [SKYACTIV-G 2.0, SKYACTIV-G 2.5]**.) • Measure the voltage at the start stop unit terminal 1E (wiring harness-side). • Is the voltage **2.5 V or more**?	Yes	Refer to the wiring diagram and verify whether or not there is a common connector between ACC relay terminal D and start stop unit terminal 1E. **If there is a common connector:** • Determine the malfunctioning part by inspecting the common connector and the terminal for corrosion, damage, or pin disconnection, and the common wiring harness for a short to power supply. • Repair or replace the malfunctioning part. **If there is no common connector:** • Repair or replace the wiring harness which has a short to power supply. Go to the next step.
		No	Go to the next step.
4	**VERIFY THAT REPAIRS HAVE BEEN COMPLETED** • Always reconnect all disconnected connectors. • Reconnect the negative battery cable. (See **NEGATIVE BATTERY CABLE DISCONNECTION/CONNECTION [SKYACTIV-G 2.0, SKYACTIV-G 2.5]**.) • Clear the DTC for the start stop unit using the M-MDS. (See **CLEARING DTC [START STOP UNIT]**.) • Switch the ignition off and wait for **5 s or more**. • Retrieve the start stop unit DTCs using the M-MDS. (See **DTC INSPECTION [START STOP UNIT]**.) • Is the same DTC displayed?	Yes	Repeat the inspection from Step 1. • If the malfunction recurs, replace the start stop unit. (See **START STOP UNIT REMOVAL/INSTALLATION**.) Go to the next step.
		No	Go to the next step.

5	**VERIFY IF OTHER DTCs DISPLAYED** • Are any other DTCs displayed?	Yes	Repair or replace the malfunctioning part according to the applicable DTC troubleshooting. (See **DTC TABLE [START STOP UNIT]**.)
		No	DTC troubleshooting completed.

2014 - Mazda3 - Body and Accessories

PID/DATA MONITOR INSPECTION [START STOP UNIT]

1. Connect the M-MDS to the DLC 2.

2. After the vehicle is identified, select the following items from the initialization screen of the M-MDS.

    a. Select “DataLogger”.

    b. Select “Modules”.

    c. Select “SSU”.

3. Select the applicable PID from the PID table.

4. Verify the PID data according to the directions on the screen.

NOTE:

- The PID data screen function is used for monitoring the calculated value of input/output signals in the module. Therefore, if the monitored value of the output parts is not within the specification, it is necessary to inspect the monitored value of input parts corresponding to the applicable output part control. In addition, because the system does not display an output part malfunction as an abnormality in the monitored value, it is necessary to inspect the output parts individually.
- When detecting DTCs, PIDs related to a malfunctioning system may not display even if the module is normal. Therefore, if a PID is not displayed, it is necessary to verify the DTC, perform malfunction diagnosis of the DTC that was detected, and do repairs.

2014 - Mazda3 - Body and Accessories

PID/DATA MONITOR TABLE [START STOP UNIT]

—: Not applicable

PID	Unit/Operation	Data contents	Data read/use method	Module control terminal
BRAKE_SW1*1	Off/On	Brake switch (No.1 signal) signal input status • Off: Brake switch (No.1 signal) is off. • On: Brake switch (No.1 signal) is on.	—	1C (Brake switch)
CLUT_CUT_SW*2	Off/On	Starter interlock switch input status • Off: Starter interlock switch is off. • On: Starter interlock switch is on.	—	1F (Starter interlock switch)
CLUTCH_SW*2	Off/On	Clutch switch input status • Off: CPP switch is off. • On: CPP switch is on.	—	2E (Clutch pedal position switch)
COMM_ST_TSP	Off/On	Displays operation condition of the immobilizer system key code read function • Off: Key code read function not performed • On: Code read function is performed and coil antenna reads key code from remote transmitter transponder.	Key code reading function of immobilizer system is performed and when a brake switch, clutch switch, or push button start signal is input, the coil antenna reads the key code from the transponder of the remote transmitter, and displays On while the key code is being sent to the start stop unit.	• 1AC (PATS+) • 1AE (PATS-)

CRU_CON_SW*3	Not_Pressed/On/Off/On/Off/Cancel/Resume/Fault/Set (+)/Set (-)/Distance (+)/Distance (-)	Cruise control switch operation condition • Not_Pressed: Each switch of cruise control switch is not pressed. • On: Cruise ON switch is pressed. • Off: Cruise OFF switch is pressed. • On/Off: — • Cancel: CANCEL switch is pressed. • Resume: RESUME (RES) switch is pressed. • Fault: Cruise control switch has a malfunction. • Set (+): SET (+) switch is pressed. • Set (-): SET (-) switch is pressed. • Distance (+): — • Distance (-): —	—	1Y (Cruise control switch signal)
ES_UL_SW	Not_Unlock/Unlock	**NOTE:** • Displays in the M-MDS but it does not operate.	—	—
ES_UL_SW_M	Not_Unlock/Unlock	**NOTE:** • Displays in the M-MDS but it does not operate.	—	—
ES_ULL_SW	Off/On	**NOTE:** • Displays in the M-MDS but it does not operate.	—	—
		NOTE:		

ES_ULL_SW_M	Off/On	• Displays in the M-MDS but it does not operate.	—	—
F_FOG_SW	Off/On	Front fog light switch operation condition • Off: Fog light switch is not in F.FOG position. • On: Fog light switch is in F.FOG position.	—	—
H/L_SW_HI	Off/On	Headlight switch (HI) operation condition • Off: Light switch is not in HI position. • On: Light switch is in HI position.	—	—
H/L_SW_LOW	Off/On	Displays dimmer switch position of the light switch that is being input to the start stop unit • Off: Dimmer switch of light switch is not in LO position • On: Dimmer switch of light switch is in LO position	Verify if the monitor value switches when the dimmer switch of the light switch is switched between LO and HI positions. If the dimmer switch operation and monitor values do not match, inspect the light switch.	—
H/L_SW_OFF	Off/On	Headlight light switch (OFF) operation condition • Off: Light switch is not in OFF position. • On: Light switch is in OFF position.	—	—
H/L_SW_PASS	Off/On	Headlight switch (PASS) operation condition • Off: Light switch is not in passing position. • On: Light switch is in passing position.	—	—
		Headlight switch (TNS) operation		

		condition • Off: Light switch is not in TNS position. • On: Light switch is in TNS position.	—	—
HAZARD_SW	Off/On	Displays condition of hazard warning switch input to start stop unit • Off: Hazard warning switch is off. • On: Hazard warning switch is on.	—	1G (Hazard warning switch signal)
IG_POSITION	OFF/ACC/ON/CRANK	Displays power status controlled by the start stop unit • OFF: Start stop unit controls ignition switch off • ACC: Start stop unit controls ignition switch ACC • ON: Start stop unit controls ignition switch ON (engine off) • CRANK: Start stop unit controls cranking at ignition switch ON	• When the push button start is operated, the start stop unit performs power source switching and displays the PID value of the power source position in which control was performed. • If the push button start operation and PID value do not match, and a power source status of another unit differs from the PID value, inspect the	—

			input power source of the other unit because the power source control of the start stop unit is normal.	
INFO_SW*4	Off/SW1_On/SW2_On/SW3_On/Unknown/Invalid	Steering switch operation condition • Off: Steering switch UP/DOWN/INFO switch is not pressed. • SW1_On: UP switch is pressed. • SW2_On: DOWN switch is pressed. • SW3_On: INFO switch is pressed. • Unknown: Steering switch UP/DOWN/INFO switch signal is not determined. • Invalid: Steering switch malfunction is received.	Displays INFO switch position of steering switch input to start stop unit. Steering switch signal is input to start stop unit via clock spring.	• 1AA (Steering switch signal) • 1AB (Steering switch ground)
INHIBIT_SW*1	Off/On	Transaxle range switch input status • Off: Selector lever is not in P and N positions. • On: Selector lever is in P or N position.	—	1F (Selector lever position switch)
LG/T_LK_SW*5	Off/On	Request switch (liftgate) operation condition • Off: Request switch (liftgate) is off. • On: Request switch (liftgate) is on.	The request switch (liftgate) input is an input signal to the start stop unit through the LF control unit.	2F (LF control unit communication)

LG/T_UNL_SW	Off/On	Trunk lid opener switch (exterior) (4SD)/liftgate opener switch (5HB) operation condition • Off: Trunk lid opener switch (exterior) (4SD)/liftgate opener switch (5HB) is off. • On: Trunk lid opener switch (exterior) (4SD)/liftgate opener switch (5HB) is on.	Trunk lid opener switch (exterior) (4SD)/liftgate opener switch (5HB) operation signal. The start stop unit and rear body control module (RBCM) transmit signals to perform trunk (4SD)/liftgate (5HB) unlatch operation.	1Q (Rear body control module (RBCM) communication)
LL_SW_D_LK	Off/On	Driver's door lock link switch (lock side) operation condition • Off: Front door lock-link switch (LH) is in unlock. • On: Front door lock-link switch (LH) is in lock.	Driver's door lock link switch lock signal is input to start stop unit. The same signal may also be sent to rear body control module (RBCM).	1P (Lock input)
NUM_TRNSMIT	—	Displays number of the remote transmitters programmed to the start stop unit	—	—
P_RANGE_SW*1	Off/On	P position switch condition • Off: NOT P position switch is off. • On: NOT P position switch is on.	—	1J (P position)
PAD_DOWN_SW*6	Off/On	Steering shift switch (DOWN) condition • Off: DOWN switch of steering shift switch is off. • On: DOWN switch of steering shift switch is on.	—	1N (Steering shift switch (down))
PAD_UP_SW*6	Off/On	Steering shift switch (UP) condition • Off: UP switch of steering shift switch is off. • On: UP switch of	—	1L (Steering shift switch (up))

		steering shift switch is on.		
R_FOG_SW	Off/On	**NOTE:** • Displays in the M-MDS but it does not operate.	—	—
RELAY_ACC	Off/On	ACC relay operation condition • Off: ACC relay drive is off. • On: ACC relay drive is on.	—	2C (ACC relay control)
RELAY_IG1	Off/On	IG1 relay operation condition • Off: IG1 relay drive is off. • On: IG1 relay drive is on.	—	2S (IG1 relay control)
RELAY_IG2	Off/On	IG2 relay operation condition • Off: IG2 relay drive is off. • On: IG2 relay drive is on.	—	2D (IG2 relay control)
RF_RECEP_ST	Initial/Transmitter/RF_Response	Displays radio reception status from the remote transmitter • Initial: Signal from remote transmitter is not received by start stop unit • Transmitter: Signal by button operation on remote transmitter is received by start stop unit • RF_Response: During remote transmitter authorization, response signal from remote transmitter is received by start	When verifying the PID value while operating the remote transmitter buttons, if “Transmitter” is displayed it can be determined that the transmission between the remote transmitter, keyless receiver, and start stop unit is normal.	2R (Keyless receiver communication)

		stop unit		
RF_TRNS_NUM	Initial/No.1/No.2/No.3/No.4/No.5/No.6	When pressing the unlock button of the remote transmitter, the registration number of the remote transmitter sending radio waves to the start stop unit is displayed. • Initial: Registration number of remote transmitter cannot be received • No.1: Registration number No.1 remote transmitter is received • No.2: Registration number No.2 remote transmitter is received • No.3: Registration number No.3 remote transmitter is received • No.4: Registration number No.4 remote transmitter is received • No.5: Registration number No.5 remote transmitter is received • No.6: Registration number No.6 remote transmitter is received	When DTC B13D3:16 (Low remote transmitter battery voltage) is detected, the registration number of the remote transmitter in which the battery voltage has decreased is displayed in the snapshot data item TRNS_NUM_L. Display the registration number of the remote transmitter using the PID, verify the remote transmitter with the low battery voltage, and inspect the battery condition of the target remote transmitter.	2R (Keyless receiver communication)
RQ_SW_LF*5	Off/On	Request switch (LF) operation condition • Off: Request switch (LF) is off. • On: Request switch (LF) is on.	The signal is input to the start stop unit through the LF control unit of the request switch (LF).	2F (LF control unit communication)
RQ_SW_RF*5	Off/On	Request switch (RF) operation condition • Off: Request switch (RF) is off.	The signal is input to the start stop unit through the LF control unit of the	2F (LF control unit communication)

		• On: Request switch (RF) is on.	request switch (RF).	
SECURITY_I	Off/On	Output condition of security indicator • Off: Security indicator light is turned off. • On: Security indicator light is illuminated.	Security indicator on request to instrument cluster	2M, 2O (CAN)
SFT_LK_SOL*1	Off (Lock)/On (Unlock)	Shift lock solenoid operation condition • Off (Lock): Shift-lock is operated. • On (Unlock): Shift-lock is released.	—	2G (Shift lock)
SPD_LIM_SW	Off/On/Unknown	**NOTE:** • Displays in the M-MDS but it does not operate.	—	—
SSB_1	Off/On	Push button start switch 1 input signal • Off: Push button start switch 1 is off. • On: Push button start switch 1 is on.	—	1H (Push button start 1)
SSB_2	Off/On	Push button start switch 2 input signal • Off: Push button start switch 2 is off. • On: Push button start switch 2 is on.	—	2J (Push button start 2)
SSB_AMBER	Off/On	Push button start indicator light (amber) illumination request • Off: Push button start indicator light (amber) is turned off. • On: Push button	—	1M (Push button illumination (amber))

		start indicator light (amber) is illuminated.		
SSB_GREEN	Off/On	Push button start indicator light (green) illumination request • Off: Push button start indicator light (green) is turned off. • On: Push button start indicator light (green) is illuminated.	—	1K (Push button illumination (green))
SSB_ILLMI	Off/On	Push button start illumination request • Off: START/STOP/ENGINE indicator light is turned off. • On: START/STOP/ENGINE indicator light is illuminated.	—	1I (Push button illumination)
START_RLY_1	V	Displays voltage at start stop unit terminal 2V	—	2V (Starter relay)
START_RLY_2	V	Displays voltage at start stop unit terminal 1D	—	1D (Starter monitor)
STR_A_ANG_A*7	° (deg)	Displays steering angle sensor A signal aiming angle	—	—
STR_A_ANG_B*7	° (deg)	Displays steering angle sensor B signal aiming angle	—	—
STR_AB_ANG*7	° (deg)	Displays steering angle signal (absolute angle) • Steering wheel in neutral position: Near **0 degrees** • Steering wheel turned to left: Changes from **0 degrees** to positive • Steering wheel	—	—

		turned to right: Changes from **0 degrees** to negative		
STR_ANG_S*7	Without/With	Vehicle with/without steering angle sensor • Without: Steering angle sensor is not equipped. • With: Steering angle sensor is equipped.	—	—
STR_ANG_S_A*7	V	Displays voltage at the steering angle sensor A signal	—	1U (Steering angle sensor (signal A/D1)) **NOTE:** • (See **STEERING ANGLE SENSOR INSPECTION**.)
STR_ANG_S_B*7	V	Displays voltage at the steering angle sensor B signal	—	1W (Steering angle sensor (signal A/D1)) **NOTE:** • (See **STEERING ANGLE SENSOR INSPECTION**.)
STR_ANG_S_V*7	V	Displays steering angle sensor power supply voltage **NOTE:** • “5 V” is displayed even if the voltage is **5 V or more**.	—	1S (Steering angle sensor power supply)
TURN_SW_L	Off/On	Turn switch (RH) input • Off: Turn switch is in position other than LH. • On: Turn switch is in LH position.	—	—
		Turn switch (LH) input		

TURN_SW_R	Off/On	• Off: Turn switch is in position other than RH. • On: Turn switch is in RH position.	—	—
VPWR_ACC	V	Displays ACC power supply voltage input to start stop unit	If there is a malfunction in the ACC power supply voltage input to the start stop unit, the keyless entry system and push button start system do not operate normally because PID item VPWR_ACC is used for ACC power on/off determination.	1E (ACC monitor)
VPWR_B1	V	Displays B+ power supply (ROOM fuse) voltage input to start stop unit	If there is a malfunction in the B+ power supply (ROOM fuse) voltage input to the start stop unit, the keyless entry system does not operate normally because PID item VPWR_B1 is used for determining whether or not there is a ROOM fuse inserted.	1A (Power supply)
VPWR_B2	V	Displays B+ power supply (AT fuse) voltage input to start stop unit	When the ROOM fuse is removed, the B+ power supply (AT fuse) is the start stop unit power supply. If there is a malfunction in the B+ power supply (AT fuse) voltage input to the start stop unit when the ROOM fuse is removed, the push button start system does not operate normally.	2W (Power supply)
VPWR_B3	V	**NOTE:** • Displays in the M-MDS but it does not operate.	—	—
			If there is a malfunction in the IG1 power supply voltage input to the start stop unit, the keyless entry	

VPWR_IG1	V	Displays IG1 power supply voltage input to start stop unit	system and the push button start system do not operate normally because PID item VPWR_IG1 is used for IG1 power on/off determination.	1B (Power supply)
WASHER_F	Off/On	Windshield washer switch signal input status • Off: Windshield washer switch is in OFF position. • On: Windshield washer switch is in ON position.	—	—
WASHER_R	Off/On	Rear washer switch signal input status • Off: Rear washer switch is not in ON position. • On: Rear washer switch is in ON position.	—	—
WIP_F_INT	Off/On	Windshield wiper switch (INT) signal input status • Off: Windshield wiper switch is not in INT and AUTO positions. • On: Windshield wiper switch is in INT or AUTO position.	—	—
WIP_F_LOW	Off/On	Windshield wiper switch (LO) signal input status • Off: Windshield wiper switch is not in LO position. • On: Windshield wiper switch is in LO position.	—	—
		Wiper INT encoder A signal input status		

WIP_INT_E_A	Low/High	• Low: Windshield wiper switch INT encoder A value is low. • High: Windshield wiper switch INT encoder A value is high.	—	—
WIP_INT_E_B	Low/High	Wiper INT encoder B signal input status • Low: Windshield wiper switch INT encoder B value is low. • High: Windshield wiper switch INT encoder B value is high.	—	—
WIP_INT_E_C	Low/High	Wiper INT encoder C signal input status • Low: Windshield wiper switch INT encoder C value is low. • High: Windshield wiper switch INT encoder C value is high.	—	—
WIP_R_INT	Off/On	Rear wiper switch (INT) signal input status • Off: Rear wiper switch is not in INT position. • On: Rear wiper switch is in INT position.	—	—
WIP_R_ON	Off/On	Rear wiper switch (ON) signal input status • Off: Rear wiper switch is not in ON position. • On: Rear wiper	—	—

		switch is in ON position.		

*1 **ATX**

*2 **MTX**

*3 **With cruise control system**

*4 **With steering switch**

*5 **With advanced keyless entry system**

*6 **With steering shift switch**

*7 **With AFS, smart city brake support (SCBS)**

2014 - Mazda3 - Body and Accessories

ON-BOARD DIAGNOSTIC WIRING DIAGRAM [ADVANCED KEYLESS ENTRY SYSTEM]

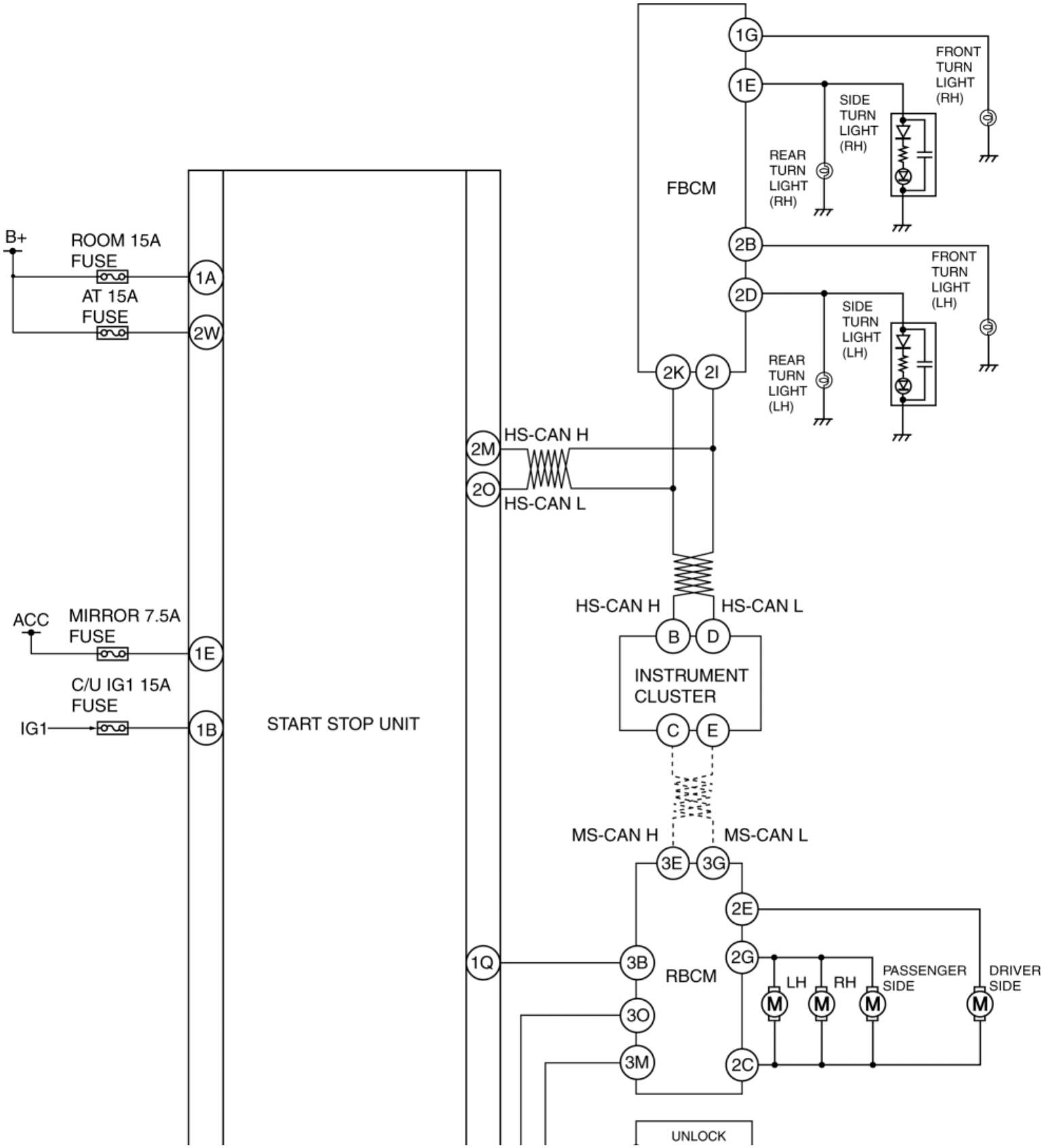

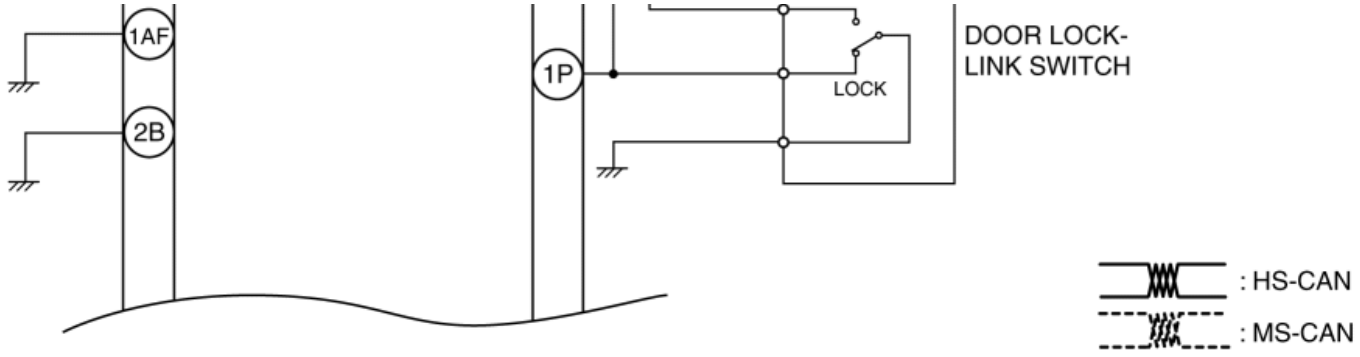
1AF
2B
1P
LOCK
DOOR LOCK-
LINK SWITCH
: HS-CAN
: MS-CAN

ON-BOARD DIAGNOSTIC WIRING DIAGRAM [ADVANCED KEYLESS ENTRY SYSTEM]

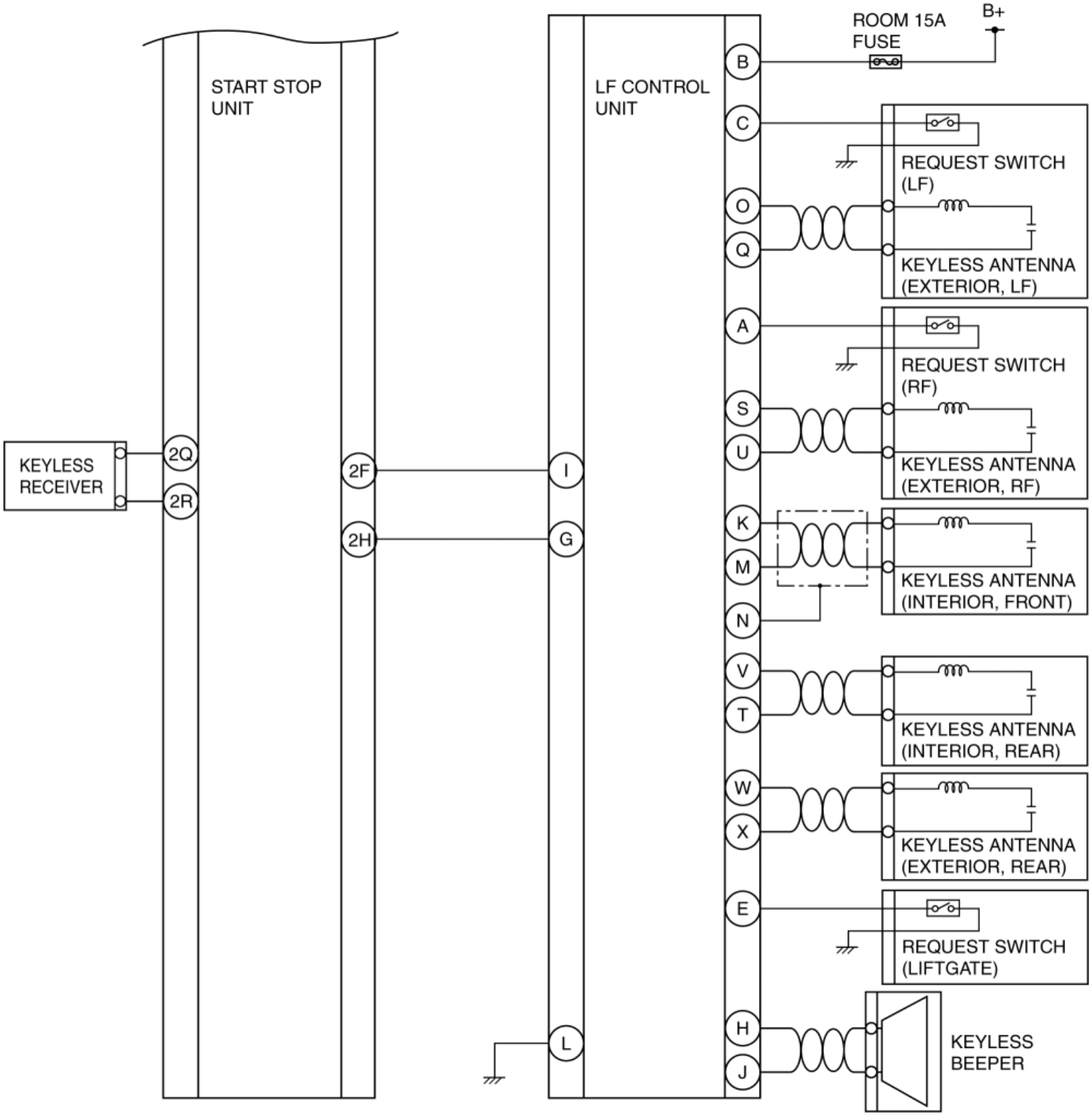

2014 - Mazda3 - Body and Accessories

FOREWORD [ADVANCED KEYLESS ENTRY SYSTEM]

- If there is any vehicle malfunction complaint lodged by a customer, perform malfunction diagnosis according to the troubleshooting procedure.

Troubleshooting Procedure

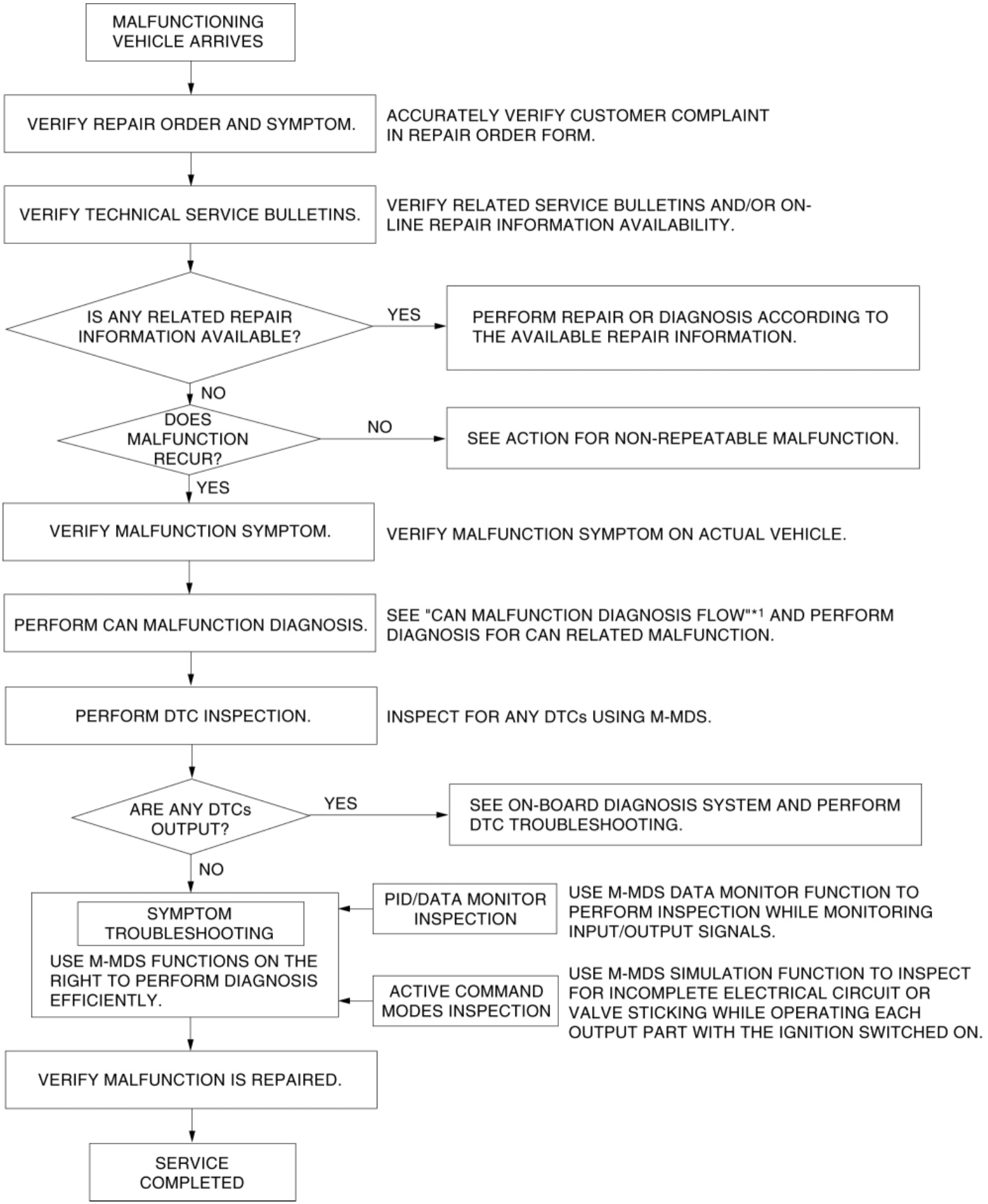
MALFUNCTIONING VEHICLE ARRIVES
VERIFY REPAIR ORDER AND SYMPTOM.
ACCURATELY VERIFY CUSTOMER COMPLAINT IN REPAIR ORDER FORM.
VERIFY TECHNICAL SERVICE BULLETINS.
VERIFY RELATED SERVICE BULLETINS AND/OR ON-LINE REPAIR INFORMATION AVAILABILITY.
IS ANY RELATED REPAIR INFORMATION AVAILABLE?
YES
PERFORM REPAIR OR DIAGNOSIS ACCORDING TO THE AVAILABLE REPAIR INFORMATION.
NO
DOES MALFUNCTION RECUR?
NO
SEE ACTION FOR NON-REPEATABLE MALFUNCTION.
YES
VERIFY MALFUNCTION SYMPTOM.
VERIFY MALFUNCTION SYMPTOM ON ACTUAL VEHICLE.
PERFORM CAN MALFUNCTION DIAGNOSIS.
SEE "CAN MALFUNCTION DIAGNOSIS FLOW"*1 AND PERFORM DIAGNOSIS FOR CAN RELATED MALFUNCTION.
PERFORM DTC INSPECTION.
INSPECT FOR ANY DTCs USING M-MDS.
ARE ANY DTCs OUTPUT?
YES
SEE ON-BOARD DIAGNOSIS SYSTEM AND PERFORM DTC TROUBLESHOOTING.
NO
SYMPTOM TROUBLESHOOTING
USE M-MDS FUNCTIONS ON THE RIGHT TO PERFORM DIAGNOSIS EFFICIENTLY.
PID/DATA MONITOR INSPECTION
USE M-MDS DATA MONITOR FUNCTION TO PERFORM INSPECTION WHILE MONITORING INPUT/OUTPUT SIGNALS.
ACTIVE COMMAND MODES INSPECTION
USE M-MDS SIMULATION FUNCTION TO INSPECT FOR INCOMPLETE ELECTRICAL CIRCUIT OR VALVE STICKING WHILE OPERATING EACH OUTPUT PART WITH THE IGNITION SWITCHED ON.
VERIFY MALFUNCTION IS REPAIRED.
SERVICE COMPLETED

*1

(See CONTROLLER AREA NETWORK (CAN) MALFUNCTION DIAGNOSIS FLOW.)

Action for non-repeatable malfunction

- If the malfunction does not recur, verify the malfunction cause by performing the following actions:
  - Based on the repair order form, attempt to drive the vehicle or perform tests to replicate the malfunction, record the data at that time, and detect the malfunction cause.
  - Shake the wiring harness or connector of the electrical component which is suspected to be the cause of the malfunction, and inspect for malfunction or occurrence of any DTCs.

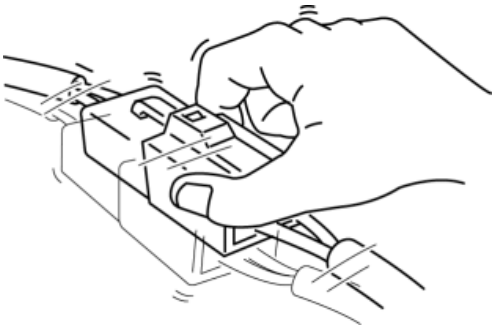

  - Inspect the female terminals on the connector of the electric component which is suspected to be the cause of the malfunction for poor connection.

2014 - Mazda3 - Body and Accessories

DTC INSPECTION [ADVANCED KEYLESS ENTRY SYSTEM]

CMDTC Self Test

1. Connect the M-MDS to the DLC-2.

2. After the vehicle is identified, select the following items from the initialization screen of the M-MDS.

   a. Select “Self Test”.

   b. Select “All CMDTCs”.

3. Verify the DTC according to the directions on the screen.

   - If any DTCs are displayed, perform troubleshooting according to the corresponding DTC inspection.

4. After completion of repairs, clear all DTCs stored in the start stop unit. (See **CLEARING DTC [ADVANCED KEYLESS ENTRY SYSTEM]**.)

ODDTC Self Test

1. Connect the M-MDS to the DLC-2.

2. After the vehicle is identified, select the following items from the initialization screen of the M-MDS.

   a. Select “Self Test”.

   b. Select “Modules”.

   c. Select “SSU”.

3. Verify the DTC according to the directions on the screen.

   - If any DTCs are displayed, perform troubleshooting according to the corresponding DTC inspection.

4. After completion of repairs, clear all DTCs stored in the start stop unit. (See **CLEARING DTC [ADVANCED KEYLESS ENTRY SYSTEM]**.)

2014 - Mazda3 - Body and Accessories

CLEARING DTC [ADVANCED KEYLESS ENTRY SYSTEM]

CMDTC Memory Clearing Procedure

1. Connect the M-MDS to the DLC-2.
2. After the vehicle is identified, select the following items from the initialization screen of the M-MDS.
    a. Select “Self Test”.
    b. Select “All CMDTCs”.
3. Verify the DTC according to the directions on the screen.
4. Press the clear button on the DTC screen to clear the DTC.
5. Switch the ignition off.
6. Switch the ignition ON (engine off or on) and wait for **5 s or more**.
7. Perform DTC inspection. (See **DTC INSPECTION [ADVANCED KEYLESS ENTRY SYSTEM]**.)
8. Verify that no DTCs are displayed.

ODDTC Memory Clearing Procedure

1. Connect the M-MDS to the DLC-2.
2. After the vehicle is identified, select the following items from the initialization screen of the M-MDS.
    a. Select “Self Test”.
    b. Select “Modules”.
    c. Select “SSU”.
3. Verify the DTC according to the directions on the screen.
4. Press the clear button on the DTC screen to clear the DTC.
5. Switch the ignition off.
6. Switch the ignition ON (engine off or on) and wait for **5 s or more**.
7. Perform DTC inspection. (See **DTC INSPECTION [ADVANCED KEYLESS ENTRY SYSTEM]**.)
8. Verify that no DTCs are displayed.

CLEARING DTC [ADVANCED KEYLESS ENTRY SYSTEM]

2014 - Mazda3 - Body and Accessories

DTC TABLE [ADVANCED KEYLESS ENTRY SYSTEM]

×: Applicable—: Not applicable

DTC No.	KEY warning light (red)	Description	Fail-safe function	Drive cycle	Self test type*1	Memory function	Page
B10C6:1F	On	Keyless antenna (exterior, rear) circuit malfunction	×	—	C, D	×	(See **DTC B10C6:1F [ADVANCED KEYLESS ENTRY SYSTEM]**.)
B10C7:1F	On	Keyless antenna (interior, rear) circuit malfunction	×	—	C, D	×	(See **DTC B10C7:1F [ADVANCED KEYLESS ENTRY SYSTEM]**.)
B10C9:1F	On	Keyless antenna (interior, front) circuit malfunction	×	—	C, D	×	(See **DTC B10C9:1F [ADVANCED KEYLESS ENTRY SYSTEM]**.)
B10D1:23	On	Request switch (LF) circuit malfunction	—	—	C	×	(See **DTC B10D1:23 [ADVANCED KEYLESS ENTRY SYSTEM]**.)
B10D3:23	On	Request switch (RF) circuit malfunction	—	—	C	×	(See **DTC B10D3:23 [ADVANCED KEYLESS ENTRY SYSTEM]**.)
B11C4:23*2	On	Request switch (liftgate) circuit malfunction	—	—	C	×	(See **DTC B11C4:23 [ADVANCED KEYLESS ENTRY SYSTEM]**.)
B11FD:1F	On	Keyless antenna (exterior, LF) circuit malfunction	×	—	C, D	×	(See **DTC B11FD:1F [ADVANCED KEYLESS ENTRY SYSTEM]**.)
B1210:1F	On	Keyless antenna (exterior, RF) circuit malfunction	×	—	C, D	×	(See **DTC B1210:1F [ADVANCED KEYLESS ENTRY SYSTEM]**.)
B13C3:04	On	LF control unit internal malfunction	×	—	C	×	(See **DTC B13C3:04 [ADVANCED KEYLESS ENTRY SYSTEM]**.)

B13C3:09	On	LF control unit malfunction	×	—	C	×	(See **DTC B13C3:09 [ADVANCED KEYLESS ENTRY SYSTEM]**.)
B13C3:16	On	LF control unit power supply voltage low input	×	—	C	×	(See **DTC B13C3:16 [ADVANCED KEYLESS ENTRY SYSTEM]**.)
B13C3:29	On	Communication error between start stop unit and LF control unit	×	—	C	×	(See **DTC B13C3:29 [ADVANCED KEYLESS ENTRY SYSTEM]**.)

*1

C: CMDTC self test, D: ODDTC self test

*2

5HB

2014 - Mazda3 - Body and Accessories

DTC B10C6:1F [ADVANCED KEYLESS ENTRY SYSTEM]

Description	Keyless antenna (exterior, rear) circuit malfunction
Detection condition	• Start stop unit detects an open circuit or short to ground in the keyless antenna (exterior, rear) circuit with the ignition switched off.
Fail-safe function	• Inhibits the door lock/unlock control using the advanced keyless entry system.
Possible cause	• Keyless antenna (exterior, rear) connector or terminal malfunction • LF control unit connector or terminal malfunction • Short to ground in wiring harness between the following terminals: ▪ LF control unit terminal W—Keyless antenna (exterior, rear) terminal B ▪ LF control unit terminal X—Keyless antenna (exterior, rear) terminal A • Open circuit in wiring harness between the following terminals: ▪ LF control unit terminal W—Keyless antenna (exterior, rear) terminal B ▪ LF control unit terminal X—Keyless antenna (exterior, rear) terminal A • Keyless antenna (exterior, rear) malfunction • LF control unit malfunction • Start stop unit malfunction

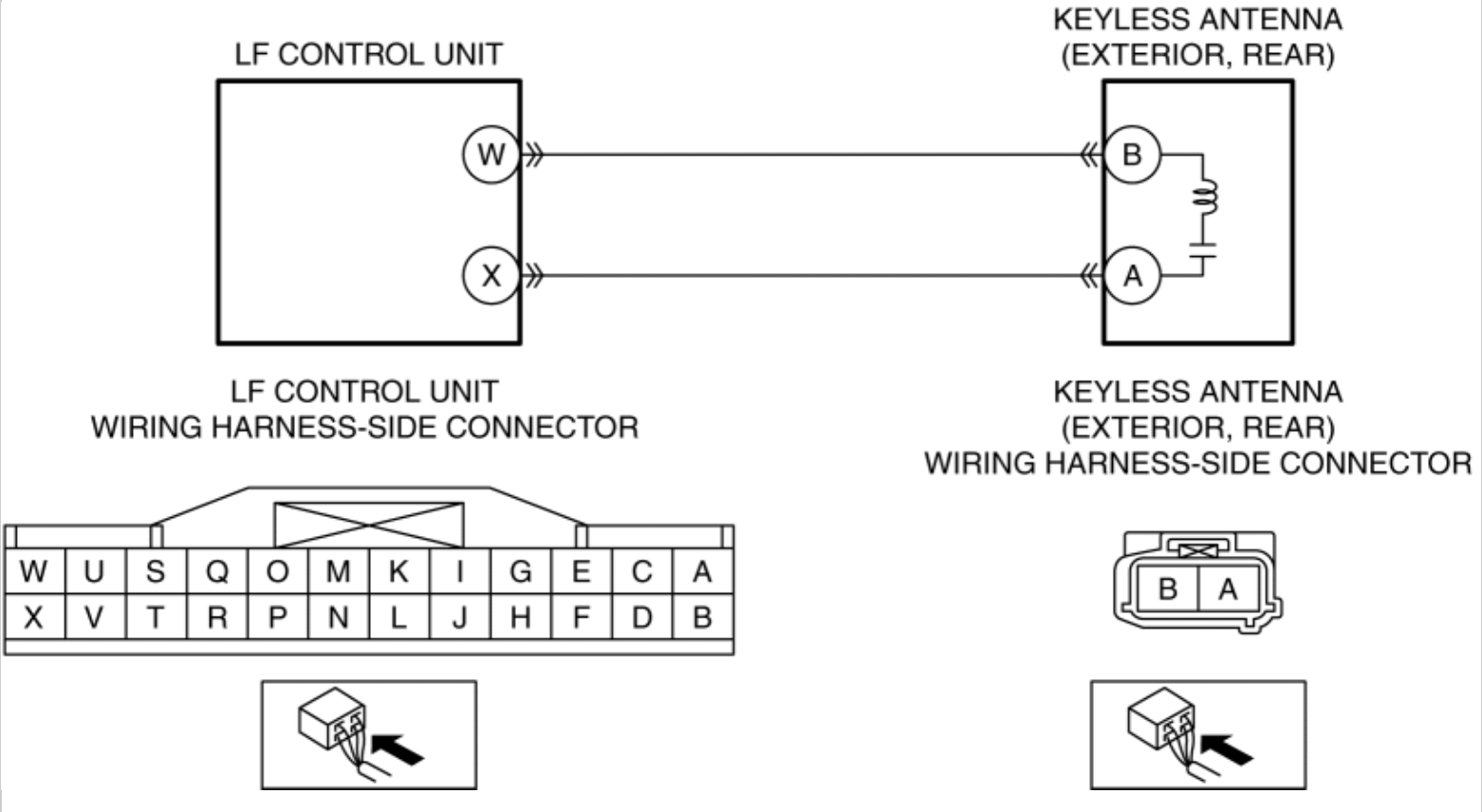

Diagnostic Procedure

Step	Inspection		Action
1	**INSPECT KEYLESS ANTENNA (EXTERIOR, REAR) CONNECTOR CONDITION** • Switch the ignition off. • Disconnect the negative battery cable. (See **NEGATIVE BATTERY CABLE DISCONNECTION/CONNECTION [SKYACTIV-G 2.0, SKYACTIV-G 2.5]**.) • Disconnect the keyless antenna (exterior, rear) connector. • Inspect the connector engagement and connection condition and inspect the terminals for damage, deformation, corrosion, or disconnection. • Is the connector normal?	Yes	Go to the next step.
		No	Repair or replace the connector, then go to Step 7.
2	**INSPECT LF CONTROL UNIT CONNECTOR CONDITION**	Yes	Go to the next step.

	• Disconnect the LF control unit connector. • Inspect the connector engagement and connection condition and inspect the terminals for damage, deformation, corrosion, or disconnection. • Is the connector normal?	No	Repair or replace the connector, then go to Step 7.
3	**INSPECT FOR SHORT TO GROUND IN KEYLESS ANTENNA (EXTERIOR, REAR) CIRCUIT** • Verify that the LF control unit and keyless antenna (exterior, rear) connectors are disconnected. • Inspect for continuity between the following terminals (wiring harness-side) and body ground: ▪ Keyless antenna (exterior, rear) terminal B ▪ Keyless antenna (exterior, rear) terminal A • Is there continuity?	Yes	Refer to the wiring diagram and verify whether or not there is a common connector between the following terminals: • LF control unit terminal W—Keyless antenna (exterior, rear) terminal B • LF control unit terminal X—Keyless antenna (exterior, rear) terminal A **If there is a common connector:** • Determine the malfunctioning part by inspecting the common connector and the terminal for corrosion, damage, or pin disconnection, and the common wiring harness for a short to ground. • Repair or replace the malfunctioning part. **If there is no common connector:** • Repair or replace the wiring harness which has a short to ground. Go to Step 7.
		No	Go to the next step.
4	**INSPECT FOR OPEN CIRCUIT IN KEYLESS ANTENNA (EXTERIOR, REAR) CIRCUIT** • Verify that the LF control unit and keyless antenna (exterior, rear) connectors are disconnected. • Inspect for continuity between the following terminals (wiring harness-side): ▪ LF control unit terminal W—Keyless antenna (exterior, rear) terminal B	Yes	Go to the next step.
		No	Refer to the wiring diagram and verify whether or not there is a common connector between the following terminals: • LF control unit terminal W—Keyless antenna (exterior, rear) terminal B • LF control unit terminal X—Keyless antenna (exterior, rear) terminal A **If there is a common connector:** • Determine the malfunctioning part by inspecting the common connector and the terminal for corrosion, damage, or pin disconnection, and the common

	▪ LF control unit terminal X—Keyless antenna (exterior, rear) terminal A • Is there continuity?		wiring harness for an open circuit. • Repair or replace the malfunctioning part. **If there is no common connector:** • Repair or replace the wiring harness which has an open circuit. Go to Step 7.
5	**PERFORM DTC INSPECTION AND VERIFY KEYLESS ANTENNA (EXTERIOR, REAR) MALFUNCTION** • Always reconnect all disconnected connectors. • Reconnect the negative battery cable. (See **NEGATIVE BATTERY CABLE DISCONNECTION/CONNECTION [SKYACTIV-G 2.0, SKYACTIV-G 2.5]**.) • Clear the DTC for the advanced keyless entry system using the M-MDS. (See **CLEARING DTC [ADVANCED KEYLESS ENTRY SYSTEM]**.) • Perform the following work: ▪ Switch the ignition off. ▪ Open the front door (LH). ▪ Close all the doors and trunk (4SD)/liftgate (5HB). • Retrieve the advanced keyless entry system DTCs using the M-MDS. (See **DTC INSPECTION [ADVANCED KEYLESS ENTRY SYSTEM]**.) • Is the same DTC displayed?	Yes	Replace the keyless antenna (exterior, rear), then go to the next step. (See **KEYLESS ANTENNA REMOVAL/INSTALLATION**.)
		No	Go to Step 8.
6	**PERFORM DTC INSPECTION AND VERIFY LF CONTROL UNIT MALFUNCTION**	Yes	Replace the LF control unit, then go to the next step.

	• Clear the DTC for the advanced keyless entry system using the M-MDS. (See **CLEARING DTC [ADVANCED KEYLESS ENTRY SYSTEM]**.) • Perform the following work: ▪ Switch the ignition off. ▪ Open the front door (LH). ▪ Close all the doors and trunk (4SD)/liftgate (5HB). • Retrieve the advanced keyless entry system DTCs using the M-MDS. (See **DTC INSPECTION [ADVANCED KEYLESS ENTRY SYSTEM]**.) • Is the same DTC displayed?		(See **LF CONTROL UNIT REMOVAL/INSTALLATION**.)
		No	Go to Step 8.
7	**VERIFY THAT REPAIRS HAVE BEEN COMPLETED** • Always reconnect all disconnected connectors. • Reconnect the negative battery cable. (See **NEGATIVE BATTERY CABLE DISCONNECTION/CONNECTION [SKYACTIV-G 2.0, SKYACTIV-G 2.5]**.) • Clear the DTC for the advanced keyless entry system using the M-MDS. (See **CLEARING DTC [ADVANCED KEYLESS ENTRY SYSTEM]**.) • Perform the following work: ▪ Switch the ignition off. ▪ Open the front door	Yes	Repeat the inspection from Step 1. • If the malfunction recurs, replace the start stop unit. (See **START STOP UNIT REMOVAL/INSTALLATION**.) Go to the next step.
		No	Go to the next step.

	(LH). ▪ Close all the doors and trunk (4SD)/liftgate (5HB). • Retrieve the advanced keyless entry system DTCs using the M-MDS. (See **DTC INSPECTION [ADVANCED KEYLESS ENTRY SYSTEM]**.) • Is the same DTC displayed?		
8	**VERIFY IF OTHER DTCs DISPLAYED** • Are any other DTCs displayed?	Yes	Repair or replace the malfunctioning part according to the applicable DTC troubleshooting. (See **DTC TABLE [ADVANCED KEYLESS ENTRY SYSTEM]**.)
		No	DTC troubleshooting completed.

2014 - Mazda3 - Body and Accessories

DTC B10C7:1F [ADVANCED KEYLESS ENTRY SYSTEM]

Description	Keyless antenna (interior, rear) circuit malfunction
Detection condition	• Start stop unit detects an open circuit or short to ground in the keyless antenna (interior, rear) circuit with the ignition switched off.
Fail-safe function	• Inhibits the door lock/unlock control using the advanced keyless entry system.
Possible cause	• Keyless antenna (interior, rear) connector or terminal malfunction • LF control unit connector or terminal malfunction • Short to ground in wiring harness between the following terminals: ▪ LF control unit terminal V—Keyless antenna (interior, rear) terminal B ▪ LF control unit terminal T—Keyless antenna (interior, rear) terminal A • Open circuit in wiring harness between the following terminals: ▪ LF control unit terminal V—Keyless antenna (interior, rear) terminal B ▪ LF control unit terminal T—Keyless antenna (interior, rear) terminal A • Keyless antenna (interior, rear) malfunction • LF control unit malfunction • Start stop unit malfunction

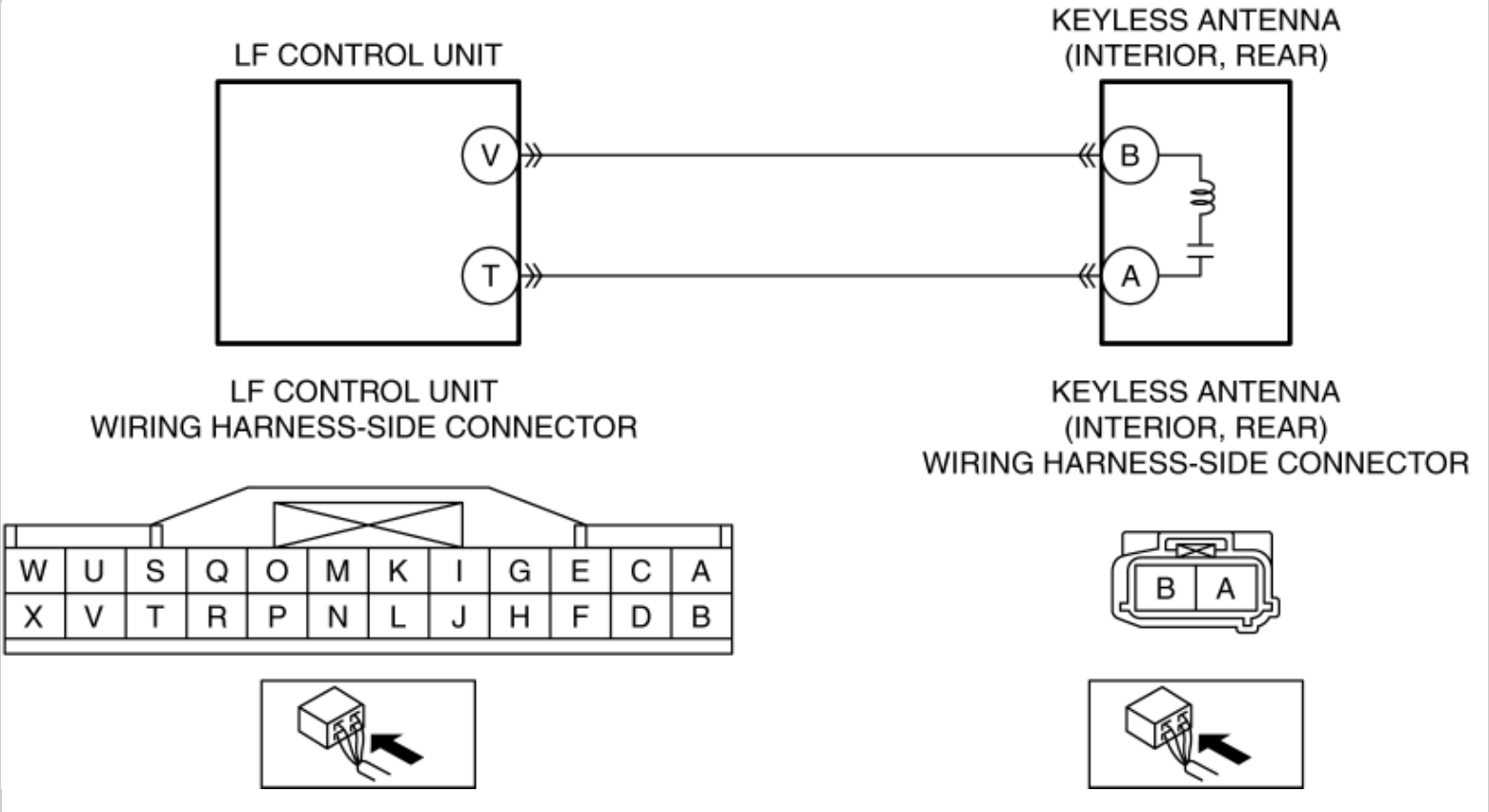

Diagnostic Procedure

Step	Inspection		Action
1	**INSPECT KEYLESS ANTENNA (INTERIOR, REAR) CONNECTOR CONDITION** • Switch the ignition off. • Disconnect the negative battery cable. (See **NEGATIVE BATTERY CABLE DISCONNECTION/CONNECTION [SKYACTIV-G 2.0, SKYACTIV-G 2.5]**.) • Disconnect the keyless antenna (interior, rear) connector. • Inspect the connector engagement and connection condition and inspect the terminals for damage, deformation, corrosion, or disconnection. • Is the connector normal?	Yes	Go to the next step.
		No	Repair or replace the connector, then go to Step 7.
2	**INSPECT LF CONTROL UNIT CONNECTOR CONDITION**	Yes	Go to the next step.

	• Disconnect the LF control unit connector. • Inspect the connector engagement and connection condition and inspect the terminals for damage, deformation, corrosion, or disconnection. • Is the connector normal?	No	Repair or replace the connector, then go to Step 7.
3	**INSPECT FOR SHORT TO GROUND IN KEYLESS ANTENNA (INTERIOR, REAR) CIRCUIT** • Verify that the LF control unit and keyless antenna (interior, rear) connectors are disconnected. • Inspect for continuity between the following terminals (wiring harness-side) and body ground: ▪ Keyless antenna (interior, rear) terminal B ▪ Keyless antenna (interior, rear) terminal A • Is there continuity?	Yes	Refer to the wiring diagram and verify whether or not there is a common connector between the following terminals: • LF control unit terminal V—Keyless antenna (interior, rear) terminal B • LF control unit terminal T—Keyless antenna (interior, rear) terminal A **If there is a common connector:** • Determine the malfunctioning part by inspecting the common connector and the terminal for corrosion, damage, or pin disconnection, and the common wiring harness for a short to ground. • Repair or replace the malfunctioning part. **If there is no common connector:** • Repair or replace the wiring harness which has a short to ground. Go to Step 7.
		No	Go to the next step.
4	**INSPECT FOR OPEN CIRCUIT IN KEYLESS ANTENNA (INTERIOR, REAR) CIRCUIT** • Verify that the LF control unit and keyless antenna (interior, rear) connectors are disconnected. • Inspect for continuity between the following terminals (wiring harness-side): ▪ LF control unit terminal V—Keyless antenna (interior, rear) terminal B	Yes	Go to the next step.
		No	Refer to the wiring diagram and verify whether or not there is a common connector between the following terminals: • LF control unit terminal V—Keyless antenna (interior, rear) terminal B • LF control unit terminal T—Keyless antenna (interior, rear) terminal A **If there is a common connector:** • Determine the malfunctioning part by inspecting the common connector and the terminal for corrosion, damage, or pin disconnection, and the common wiring harness for an open circuit.

	LF control unit terminal T—Keyless antenna (interior, rear) terminal A • Is there continuity?		• Repair or replace the malfunctioning part. **If there is no common connector:** • Repair or replace the wiring harness which has an open circuit. Go to Step 7.
5	**PERFORM DTC INSPECTION AND VERIFY KEYLESS ANTENNA (INTERIOR, REAR) MALFUNCTION** • Always reconnect all disconnected connectors. • Reconnect the negative battery cable. (See **NEGATIVE BATTERY CABLE DISCONNECTION/CONNECTION [SKYACTIV-G 2.0, SKYACTIV-G 2.5]**.) • Clear the DTC for the advanced keyless entry system using the M-MDS. (See **CLEARING DTC [ADVANCED KEYLESS ENTRY SYSTEM]**.) • Perform the following work: ▪ Switch the ignition off. ▪ Open the front door (LH). ▪ Close all the doors and trunk (4SD)/liftgate (5HB). • Retrieve the advanced keyless entry system DTCs using the M-MDS. (See **DTC INSPECTION [ADVANCED KEYLESS ENTRY SYSTEM]**.) • Is the same DTC displayed?	Yes	Replace the keyless antenna (interior, rear), then go to the next step. (See **KEYLESS ANTENNA REMOVAL/INSTALLATION**.)
		No	Go to Step 8.
6	**PERFORM DTC INSPECTION AND VERIFY LF CONTROL UNIT MALFUNCTION** • Clear the DTC for the	Yes	Replace the LF control unit, then go to the next step. (See **LF CONTROL UNIT REMOVAL/INSTALLATION**.)

	advanced keyless entry system using the M-MDS.
	
	(See **CLEARING DTC [ADVANCED KEYLESS ENTRY SYSTEM]**.)
	
	• Perform the following work:
	  ▪ Switch the ignition off.
	  ▪ Open the front door (LH).
	  ▪ Close all the doors and trunk (4SD)/liftgate (5HB).
	
	• Retrieve the advanced keyless entry system DTCs using the M-MDS.
	
	(See **DTC INSPECTION [ADVANCED KEYLESS ENTRY SYSTEM]**.)
	
	• Is the same DTC displayed?
		No	Go to Step 8.

7	**VERIFY THAT REPAIRS HAVE BEEN COMPLETED**
	
	• Always reconnect all disconnected connectors.
	
	• Reconnect the negative battery cable.
	
	(See **NEGATIVE BATTERY CABLE DISCONNECTION/CONNECTION [SKYACTIV-G 2.0, SKYACTIV-G 2.5]**.)
	
	• Clear the DTC for the advanced keyless entry system using the M-MDS.
	
	(See **CLEARING DTC [ADVANCED KEYLESS ENTRY SYSTEM]**.)
	
	• Perform the following work:
	  ▪ Switch the ignition off.
	  ▪ Open the front door (LH).
		Yes	Repeat the inspection from Step 1.
			
			• If the malfunction recurs, replace the start stop unit.
			
			(See **START STOP UNIT REMOVAL/INSTALLATION**.)
			
			Go to the next step.

		No	Go to the next step.

	▪ Close all the doors and trunk (4SD)/liftgate (5HB). • Retrieve the advanced keyless entry system DTCs using the M-MDS. (See **DTC INSPECTION [ADVANCED KEYLESS ENTRY SYSTEM]**.) • Is the same DTC displayed?		
8	**VERIFY IF OTHER DTCs DISPLAYED** • Are any other DTCs displayed?	Yes	Repair or replace the malfunctioning part according to the applicable DTC troubleshooting. (See **DTC TABLE [ADVANCED KEYLESS ENTRY SYSTEM]**.)
		No	DTC troubleshooting completed.

2014 - Mazda3 - Body and Accessories

DTC B10C9:1F [ADVANCED KEYLESS ENTRY SYSTEM]

Description	Keyless antenna (interior, front) circuit malfunction
Detection condition	• Start stop unit detects an open circuit or short to ground in the keyless antenna (interior, front) circuit with the ignition switched off.
Fail-safe function	• Inhibits the door lock/unlock control using the advanced keyless entry system.
Possible cause	• Keyless antenna (interior, front) connector or terminal malfunction • LF control unit connector or terminal malfunction • Short to ground in wiring harness between the following terminals: ▪ LF control unit terminal K—Keyless antenna (interior, front) terminal B ▪ LF control unit terminal M—Keyless antenna (interior, front) terminal A • Open circuit in wiring harness between the following terminals: ▪ LF control unit terminal K—Keyless antenna (interior, front) terminal B ▪ LF control unit terminal M—Keyless antenna (interior, front) terminal A • Keyless antenna (interior, front) malfunction • LF control unit malfunction • Start stop unit malfunction

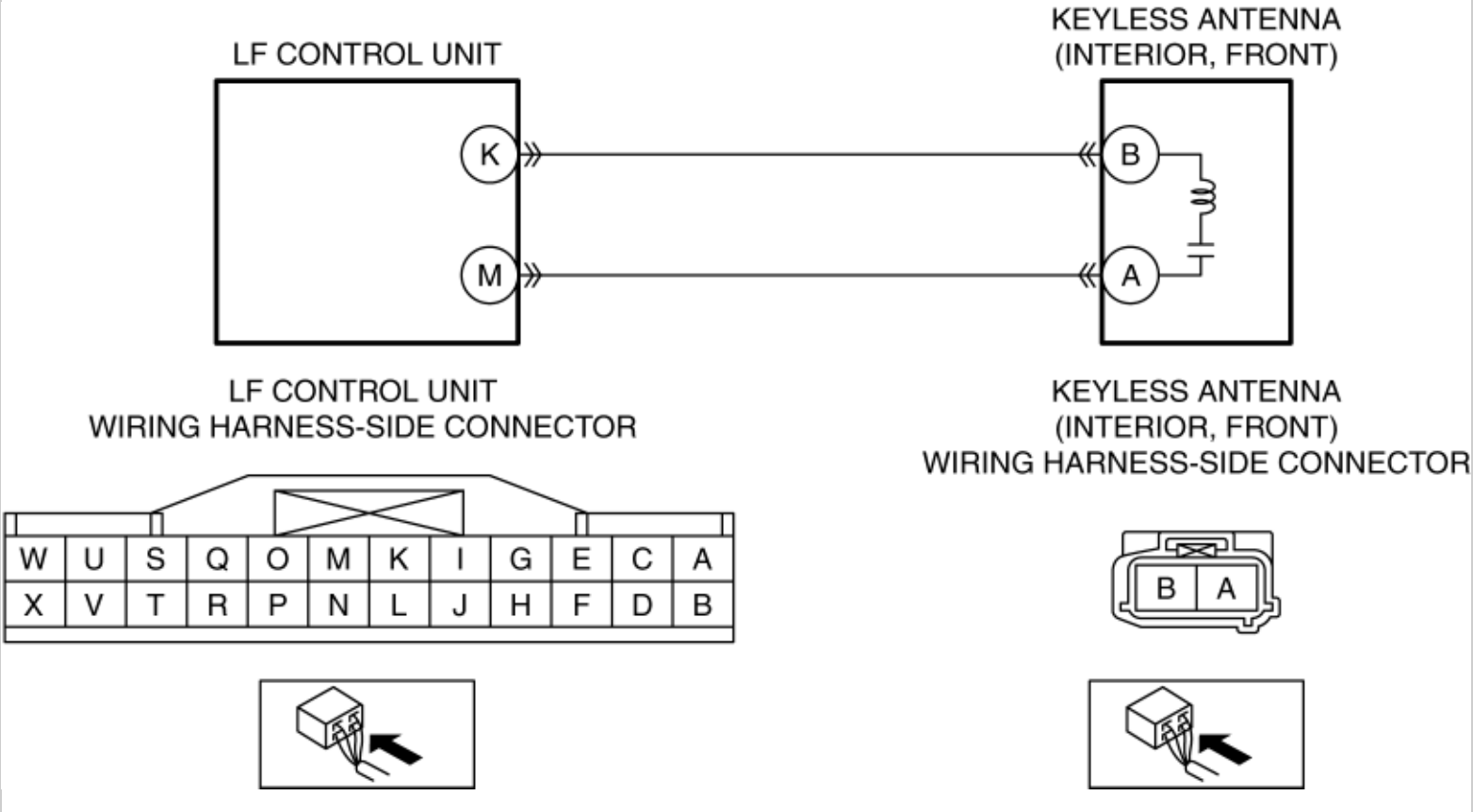

Diagnostic Procedure

Step	Inspection		Action
1	**INSPECT KEYLESS ANTENNA (INTERIOR, FRONT) CONNECTOR CONDITION** • Switch the ignition off. • Disconnect the negative battery cable. (See **NEGATIVE BATTERY CABLE DISCONNECTION/CONNECTION [SKYACTIV-G 2.0, SKYACTIV-G 2.5]**.) • Disconnect the keyless antenna (interior, front) connector. • Inspect the connector engagement and connection condition and inspect the terminals for damage, deformation, corrosion, or disconnection. • Is the connector normal?	Yes	Go to the next step.
		No	Repair or replace the connector, then go to Step 7.
2	**INSPECT LF CONTROL UNIT CONNECTOR CONDITION**	Yes	Go to the next step.

	• Disconnect the LF control unit connector. • Inspect the connector engagement and connection condition and inspect the terminals for damage, deformation, corrosion, or disconnection. • Is the connector normal?	No	Repair or replace the connector, then go to Step 7.
3	**INSPECT FOR SHORT TO GROUND IN KEYLESS ANTENNA (INTERIOR, FRONT) CIRCUIT** • Verify that the LF control unit and keyless antenna (interior, front) connectors are disconnected. • Inspect for continuity between the following terminals (wiring harness-side) and body ground: ▪ Keyless antenna (interior, front) terminal B ▪ Keyless antenna (interior, front) terminal A • Is there continuity?	Yes	Refer to the wiring diagram and verify whether or not there is a common connector between the following terminals: • LF control unit terminal K—Keyless antenna (interior, front) terminal B • LF control unit terminal M—Keyless antenna (interior, front) terminal A **If there is a common connector:** • Determine the malfunctioning part by inspecting the common connector and the terminal for corrosion, damage, or pin disconnection, and the common wiring harness for a short to ground. • Repair or replace the malfunctioning part. **If there is no common connector:** • Repair or replace the wiring harness which has a short to ground. Go to Step 7.
		No	Go to the next step.
4	**INSPECT FOR OPEN CIRCUIT IN KEYLESS ANTENNA (INTERIOR, FRONT) CIRCUIT** • Verify that the LF control unit and keyless antenna (interior, front) connectors are disconnected. • Inspect for continuity between the following terminals (wiring harness-side): ▪ LF control unit terminal K—Keyless antenna (interior, front) terminal B	Yes	Go to the next step.
		No	Refer to the wiring diagram and verify whether or not there is a common connector between the following terminals: • LF control unit terminal K—Keyless antenna (interior, front) terminal B • LF control unit terminal M—Keyless antenna (interior, front) terminal A **If there is a common connector:** • Determine the malfunctioning part by inspecting the common connector and the terminal for corrosion, damage, or

	▪ LF control unit terminal M—Keyless antenna (interior, front) terminal A • Is there continuity?		pin disconnection, and the common wiring harness for an open circuit. • Repair or replace the malfunctioning part. **If there is no common connector:** • Repair or replace the wiring harness which has an open circuit. Go to Step 7.
5	**PERFORM DTC INSPECTION AND VERIFY KEYLESS ANTENNA (INTERIOR, FRONT) MALFUNCTION** • Always reconnect all disconnected connectors. • Reconnect the negative battery cable. (See **NEGATIVE BATTERY CABLE DISCONNECTION/CONNECTION [SKYACTIV-G 2.0, SKYACTIV-G 2.5]**.) • Clear the DTC for the advanced keyless entry system using the M-MDS. (See **CLEARING DTC [ADVANCED KEYLESS ENTRY SYSTEM]**.) • Perform the following work: ▪ Switch the ignition off. ▪ Open the front door (LH). ▪ Close all the doors and trunk (4SD)/liftgate (5HB). • Retrieve the advanced keyless entry system DTCs using the M-MDS. (See **DTC INSPECTION [ADVANCED KEYLESS ENTRY SYSTEM]**.) • Is the same DTC displayed?	Yes	Replace the keyless antenna (interior, front), then go to the next step. (See **KEYLESS ANTENNA REMOVAL/INSTALLATION**.)
		No	Go to Step 8.
6	**PERFORM DTC INSPECTION AND VERIFY**	Yes	Replace the LF control unit, then go to the next step.

	LF CONTROL UNIT MALFUNCTION • Clear the DTC for the advanced keyless entry system using the M-MDS. (See **CLEARING DTC [ADVANCED KEYLESS ENTRY SYSTEM]**.) • Perform the following work: ▪ Switch the ignition off. ▪ Open the front door (LH). ▪ Close all the doors and trunk (4SD)/liftgate (5HB). • Retrieve the advanced keyless entry system DTCs using the M-MDS. (See **DTC INSPECTION [ADVANCED KEYLESS ENTRY SYSTEM]**.) • Is the same DTC displayed?		(See **LF CONTROL UNIT REMOVAL/INSTALLATION**.)
		No	Go to Step 8.
7	**VERIFY THAT REPAIRS HAVE BEEN COMPLETED** • Always reconnect all disconnected connectors. • Reconnect the negative battery cable. (See **NEGATIVE BATTERY CABLE DISCONNECTION/CONNECTION [SKYACTIV-G 2.0, SKYACTIV-G 2.5]**.) • Clear the DTC for the advanced keyless entry system using the M-MDS. (See **CLEARING DTC [ADVANCED KEYLESS ENTRY SYSTEM]**.) • Perform the following work: ▪ Switch the ignition off.	Yes	Repeat the inspection from Step 1. • If the malfunction recurs, replace the start stop unit. (See **START STOP UNIT REMOVAL/INSTALLATION**.) Go to the next step.
		No	Go to the next step.

	Open the front door (LH). ▪ Close all the doors and trunk (4SD)/liftgate (5HB). • Retrieve the advanced keyless entry system DTCs using the M-MDS. (See **DTC INSPECTION [ADVANCED KEYLESS ENTRY SYSTEM]**.) • Is the same DTC displayed?		
8	**VERIFY IF OTHER DTCs DISPLAYED** • Are any other DTCs displayed?	Yes	Repair or replace the malfunctioning part according to the applicable DTC troubleshooting. (See **DTC TABLE [ADVANCED KEYLESS ENTRY SYSTEM]**.)
		No	DTC troubleshooting completed.

2014 - Mazda3 - Body and Accessories

DTC B10D1:23 [ADVANCED KEYLESS ENTRY SYSTEM]

Description	Request switch (LF) circuit malfunction

Detection condition	• Start stop unit detected any of the following conditions at a vehicle speed of **5 km/h {3 mph} or more**.
	  ▪ The request switch (LF) is continuously ON for **2 min or more**.
	  ▪ The request switch (LF) was ON **7 times** before the vehicle speed decreased to **less than 5 km/h {3 mph}**.

Fail-safe function	Not applicable
Possible cause	• Front outer handle (LH) connector or terminal malfunction • LF control unit connector or terminal malfunction • Short to ground in wiring harness between LF control unit terminal C and front outer handle (LH) terminal D • Request switch (LF) malfunction • LF control unit malfunction • Start stop unit malfunction

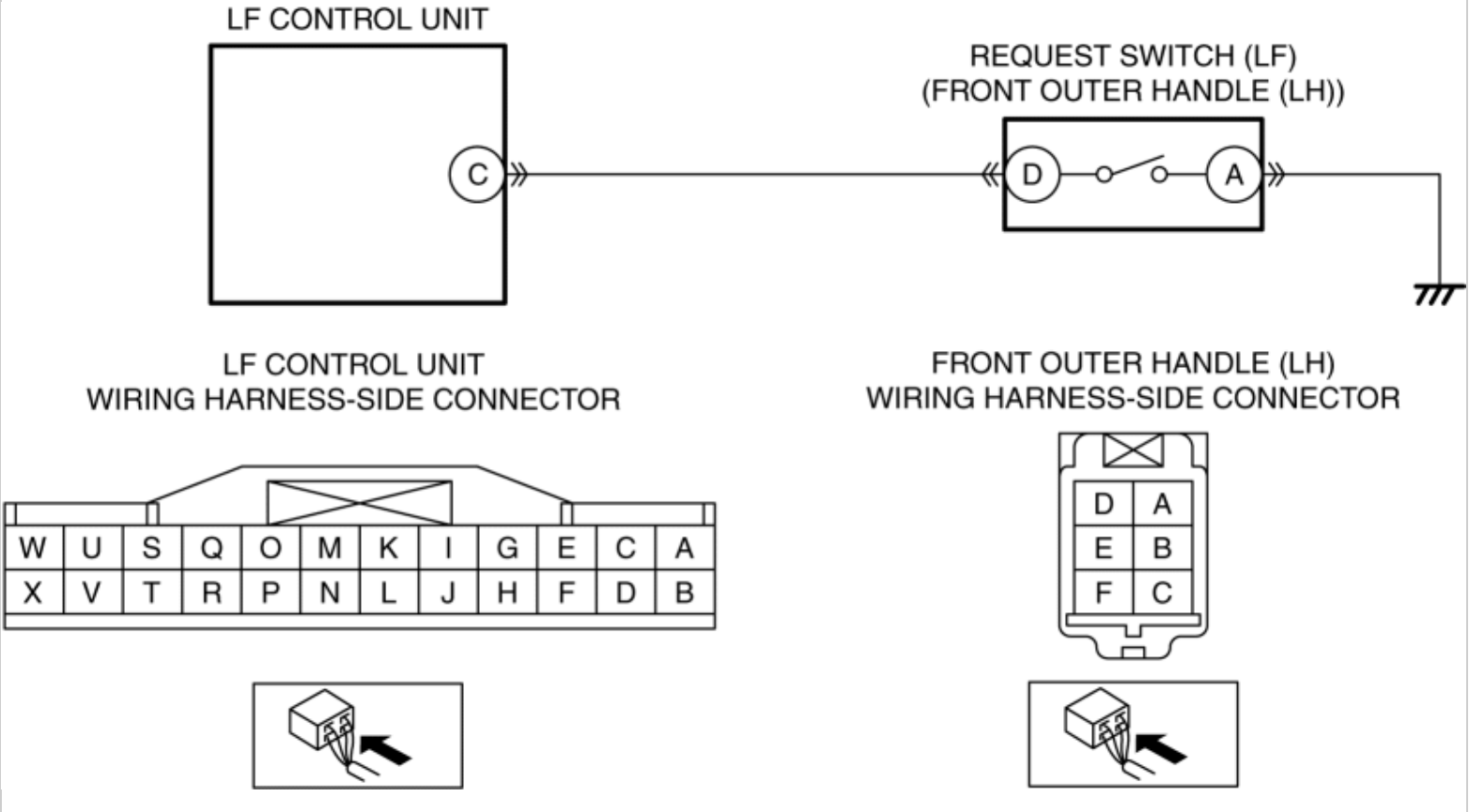

Diagnostic Procedure

Step	Inspection		Action
1	**INSPECT FRONT OUTER HANDLE (LH) CONNECTOR CONDITION** • Switch the ignition off. • Disconnect the negative battery cable. (See **NEGATIVE BATTERY CABLE DISCONNECTION/CONNECTION [SKYACTIV-G 2.0, SKYACTIV-G 2.5]**.) • Disconnect the front outer handle (LH) connector. • Inspect the connector engagement and connection condition and inspect the terminals for damage, deformation, corrosion, or disconnection. • Is the connector normal?	Yes	Go to the next step.
		No	Repair or replace the connector, then go to Step 6.
2	**INSPECT LF CONTROL UNIT CONNECTOR CONDITION** • Disconnect the LF control unit	Yes	Go to the next step.

	connector. • Inspect the connector engagement and connection condition and inspect the terminals for damage, deformation, corrosion, or disconnection. • Is the connector normal?	No	Repair or replace the connector, then go to Step 6.
3	**INSPECT FOR SHORT TO GROUND IN REQUEST SWITCH (LF) CIRCUIT** • Verify that the LF control unit and front outer handle (LH) connectors are disconnected. • Inspect for continuity between front outer handle (LH) terminal D (wiring harness-side) and body ground. • Is there continuity?	Yes	Refer to the wiring diagram and verify whether or not there is a common connector between LF control unit terminal C and front outer handle (LH) terminal D. **If there is a common connector:** • Determine the malfunctioning part by inspecting the common connector and the terminal for corrosion, damage, or pin disconnection, and the common wiring harness for a short to ground. • Repair or replace the malfunctioning part. **If there is no common connector:** • Repair or replace the wiring harness which has a short to ground. Go to Step 6.
		No	Go to the next step.
4	**INSPECT REQUEST SWITCH (LF)** • Inspect the request switch (LF). (See **REQUEST SWITCH INSPECTION**.) • Is the request switch (LF) normal?	Yes	Go to the next step.
		No	Replace the front outer handle (LH), then go to Step 6. (See **FRONT OUTER HANDLE REMOVAL/INSTALLATION**.)
5	**INSPECT LF CONTROL UNIT** • Inspect the LF control unit. (See **LF CONTROL UNIT INSPECTION**.) • Is the LF control unit normal?	Yes	Go to the next step.
		No	Replace the LF control unit, then go to the next step. (See **LF CONTROL UNIT REMOVAL/INSTALLATION**.)
6	**VERIFY THAT REPAIRS HAVE BEEN COMPLETED** • Always reconnect all disconnected connectors. • Reconnect the negative battery cable.	Yes	Repeat the inspection from Step 1. • If the malfunction recurs, replace the start stop unit. (See **START STOP UNIT REMOVAL/INSTALLATION**.) Go to the next step.

	(See **NEGATIVE BATTERY CABLE DISCONNECTION/CONNECTION [SKYACTIV-G 2.0, SKYACTIV-G 2.5]**.) • Clear the DTC for the advanced keyless entry system using the M-MDS. (See **CLEARING DTC [ADVANCED KEYLESS ENTRY SYSTEM]**.) • Drive the vehicle at **5 km/h {3 mph} or more** for **2 min or more**. • Retrieve the advanced keyless entry system DTCs using the M-MDS. (See **DTC INSPECTION [ADVANCED KEYLESS ENTRY SYSTEM]**.) • Is the same DTC displayed?		
		No	Go to the next step.
7	**VERIFY IF OTHER DTCs DISPLAYED** • Are any other DTCs displayed?	Yes	Repair or replace the malfunctioning part according to the applicable DTC troubleshooting. (See **DTC TABLE [ADVANCED KEYLESS ENTRY SYSTEM]**.)
		No	DTC troubleshooting completed.

2014 - Mazda3 - Body and Accessories

DTC B10D3:23 [ADVANCED KEYLESS ENTRY SYSTEM]

Description	Request switch (RF) circuit malfunction

Detection condition	• Start stop unit detected any of the following conditions at a vehicle speed of **5 km/h {3 mph} or more**.
	  ▪ The request switch (RF) is continuously ON for **2 min or more**.
	  ▪ The request switch (RF) was ON **7 times** before the vehicle speed decreased to **less than 5 km/h {3 mph}**.

Fail-safe function	Not applicable
Possible cause	• Front outer handle (RH) connector or terminal malfunction • LF control unit connector or terminal malfunction • Short to ground in wiring harness between LF control unit terminal A and front outer handle (RH) terminal D • Request switch (RF) malfunction • LF control unit malfunction • Start stop unit malfunction

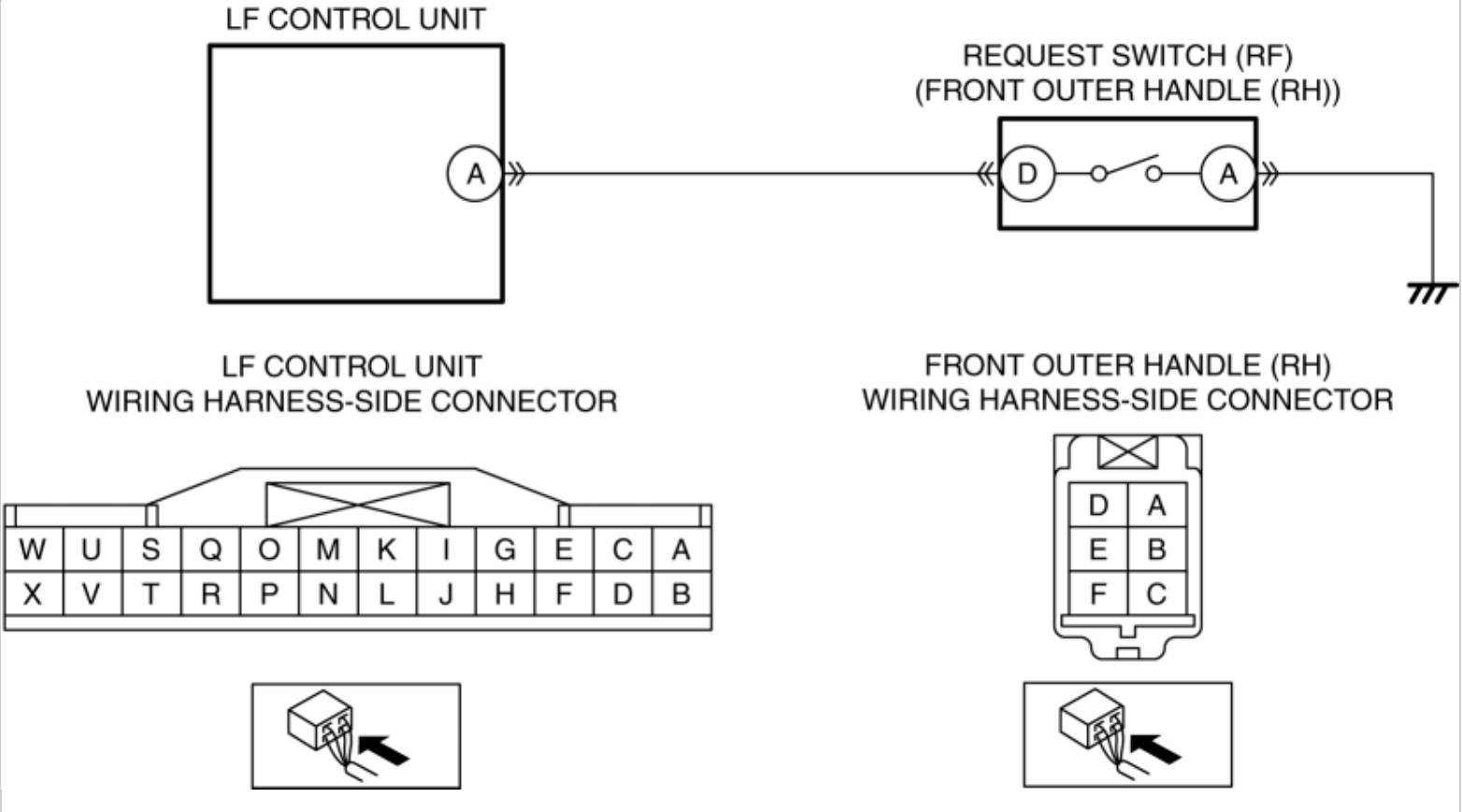

Diagnostic Procedure

Step	Inspection		Action
1	**INSPECT FRONT OUTER HANDLE (RH) CONNECTOR CONDITION** • Switch the ignition off. • Disconnect the negative battery cable. (See **NEGATIVE BATTERY CABLE DISCONNECTION/CONNECTION [SKYACTIV-G 2.0, SKYACTIV-G 2.5]**.) • Disconnect the front outer handle (RH) connector. • Inspect the connector engagement and connection condition and inspect the terminals for damage, deformation, corrosion, or disconnection. • Is the connector normal?	Yes	Go to the next step.
		No	Repair or replace the connector, then go to Step 6.
2	**INSPECT LF CONTROL UNIT CONNECTOR CONDITION**	Yes	Go to the next step.

	Disconnect the LF control unit connector. • Inspect the connector engagement and connection condition and inspect the terminals for damage, deformation, corrosion, or disconnection. • Is the connector normal?	No	Repair or replace the connector, then go to Step 6.
3	**INSPECT FOR SHORT TO GROUND IN REQUEST SWITCH (RF) CIRCUIT** • Verify that the LF control unit and front outer handle (RH) connectors are disconnected. • Inspect for continuity between front outer handle (RH) terminal D (wiring harness-side) and body ground. • Is there continuity?	Yes	Refer to the wiring diagram and verify whether or not there is a common connector between LF control unit terminal A and front outer handle (RH) terminal D. **If there is a common connector:** • Determine the malfunctioning part by inspecting the common connector and the terminal for corrosion, damage, or pin disconnection, and the common wiring harness for a short to ground. • Repair or replace the malfunctioning part. **If there is no common connector:** • Repair or replace the wiring harness which has a short to ground. Go to Step 6.
		No	Go to the next step.
4	**INSPECT REQUEST SWITCH (RF)** • Inspect the request switch (RF). (See **REQUEST SWITCH INSPECTION**.) • Is the request switch (RH) normal?	Yes	Go to the next step.
		No	Replace the front outer handle (RH), then go to Step 6. (See **FRONT OUTER HANDLE REMOVAL/INSTALLATION**.)
5	**INSPECT LF CONTROL UNIT** • Inspect the LF control unit. (See **LF CONTROL UNIT INSPECTION**.) • Is the LF control unit normal?	Yes	Go to the next step.
		No	Replace the LF control unit, then go to the next step. (See **LF CONTROL UNIT REMOVAL/INSTALLATION**.)
6	**VERIFY THAT REPAIRS HAVE BEEN COMPLETED** • Always reconnect all disconnected connectors. • Reconnect the negative battery cable.	Yes	Repeat the inspection from Step 1. • If the malfunction recurs, replace the start stop unit. (See **START STOP UNIT REMOVAL/INSTALLATION**.)

	(See **NEGATIVE BATTERY CABLE DISCONNECTION/CONNECTION [SKYACTIV-G 2.0, SKYACTIV-G 2.5]**.) • Clear the DTC for the advanced keyless entry system using the M-MDS. (See **CLEARING DTC [ADVANCED KEYLESS ENTRY SYSTEM]**.) • Drive the vehicle at **5 km/h {3 mph} or more** for **2 min or more**. • Retrieve the advanced keyless entry system DTCs using the M-MDS. (See **DTC INSPECTION [ADVANCED KEYLESS ENTRY SYSTEM]**.) • Is the same DTC displayed?		Go to the next step.
		No	Go to the next step.
7	**VERIFY IF OTHER DTCs DISPLAYED** • Are any other DTCs displayed?	Yes	Repair or replace the malfunctioning part according to the applicable DTC troubleshooting. (See **DTC TABLE [ADVANCED KEYLESS ENTRY SYSTEM]**.)
		No	DTC troubleshooting completed.

2014 - Mazda3 - Body and Accessories

DTC B11C4:23 [ADVANCED KEYLESS ENTRY SYSTEM]

Description	Request switch (liftgate) circuit malfunction

Detection condition	• Start stop unit detected any of the following conditions at a vehicle speed of **5 km/h {3 mph} or more**.
	  ▪ The request switch (liftgate) is continuously ON for **2 min or more**.
	  ▪ The request switch (liftgate) was ON **7 times** before the vehicle speed decreased to **less than 5 km/h {3 mph}**.

Fail-safe function	Not applicable
Possible cause	• Request switch (liftgate) connector or terminal malfunction • LF control unit connector or terminal malfunction • Short to ground in wiring harness between LF control unit terminal E and request switch (liftgate) terminal A • Request switch (liftgate) malfunction • LF control unit malfunction • Start stop unit malfunction

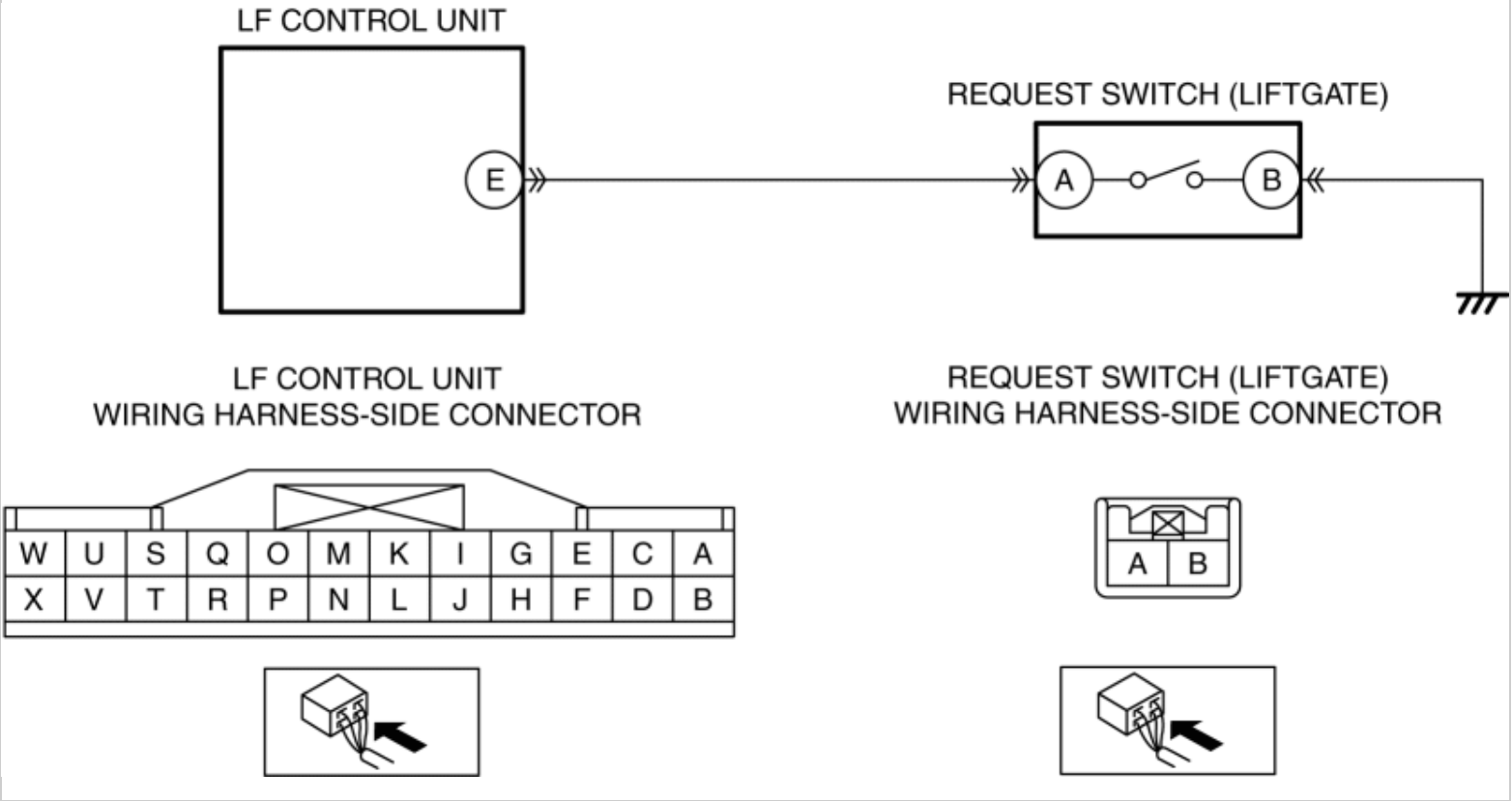

Diagnostic Procedure

Step	Inspection		Action
1	**INSPECT REQUEST SWITCH (LIFTGATE) CONNECTOR CONDITION** • Switch the ignition off. • Disconnect the negative battery cable. (See **NEGATIVE BATTERY CABLE DISCONNECTION/CONNECTION [SKYACTIV-G 2.0, SKYACTIV-G 2.5]**.) • Disconnect the request switch (liftgate) connector. • Inspect the connector engagement and connection condition and inspect the terminals for damage, deformation, corrosion, or disconnection. • Is the connector normal?	Yes	Go to the next step.
		No	Repair or replace the connector, then go to Step 6.
2	**INSPECT LF CONTROL UNIT CONNECTOR CONDITION** • Disconnect the LF control unit connector.	Yes	Go to the next step.
		No	Repair or replace the connector, then go to Step 6.

	• Inspect the connector engagement and connection condition and inspect the terminals for damage, deformation, corrosion, or disconnection. • Is the connector normal?		
3	**INSPECT FOR SHORT TO GROUND IN REQUEST SWITCH (LIFTGATE) CIRCUIT** • Verify that the LF control unit and request switch (liftgate) connectors are disconnected. • Inspect for continuity between request switch (liftgate) terminal A (wiring harness-side) and body ground. • Is there continuity?	Yes	Refer to the wiring diagram and verify whether or not there is a common connector between LF control unit terminal E and request switch (liftgate) terminal A. **If there is a common connector:** • Determine the malfunctioning part by inspecting the common connector and the terminal for corrosion, damage, or pin disconnection, and the common wiring harness for a short to ground. • Repair or replace the malfunctioning part. **If there is no common connector:** • Repair or replace the wiring harness which has a short to ground. Go to Step 6.
		No	Go to the next step.
4	**INSPECT REQUEST SWITCH (LIFTGATE)** • Inspect the request switch (liftgate). (See **REQUEST SWITCH INSPECTION**.) • Is the request switch (liftgate) normal?	Yes	Go to the next step.
		No	Replace the request switch (liftgate), then go to Step 6. (See **REQUEST SWITCH REMOVAL/INSTALLATION**.)
5	**INSPECT LF CONTROL UNIT** • Inspect the LF control unit. (See **LF CONTROL UNIT INSPECTION**.) • Is the LF control unit normal?	Yes	Go to the next step.
		No	Replace the LF control unit, then go to the next step. (See **LF CONTROL UNIT REMOVAL/INSTALLATION**.)
6	**VERIFY THAT REPAIRS HAVE BEEN COMPLETED** • Always reconnect all disconnected connectors. • Reconnect the negative battery cable. (See **NEGATIVE BATTERY CABLE**	Yes	Repeat the inspection from Step 1. • If the malfunction recurs, replace the start stop unit. (See **START STOP UNIT REMOVAL/INSTALLATION**.) Go to the next step.

	DISCONNECTION/CONNECTION [SKYACTIV-G 2.0, SKYACTIV-G 2.5].) • Clear the DTC for the advanced keyless entry system using the M-MDS. (See **CLEARING DTC [ADVANCED KEYLESS ENTRY SYSTEM]**.) • Drive the vehicle at **5 km/h {3 mph} or more** for **2 min or more**. • Retrieve the advanced keyless entry system DTCs using the M-MDS. (See **DTC INSPECTION [ADVANCED KEYLESS ENTRY SYSTEM]**.) • Is the same DTC displayed?	No	Go to the next step.
7	**VERIFY IF OTHER DTCs DISPLAYED** • Are any other DTCs displayed?	Yes	Repair or replace the malfunctioning part according to the applicable DTC troubleshooting. (See **DTC TABLE [ADVANCED KEYLESS ENTRY SYSTEM]**.)
		No	DTC troubleshooting completed.

2014 - Mazda3 - Body and Accessories

DTC B11FD:1F [ADVANCED KEYLESS ENTRY SYSTEM]

Description	Keyless antenna (exterior, LF) circuit malfunction
Detection condition	• Start stop unit detects an open circuit or short to ground in the keyless antenna (exterior, LF) circuit with the ignition switched off.
Fail-safe function	• Inhibits the door lock/unlock using the advanced keyless entry system.
Possible cause	• Front outer handle (LH) connector or terminal malfunction • LF control unit connector or terminal malfunction • Short to ground in wiring harness between the following terminals: ▪ LF control unit terminal O—Front outer handle (LH) terminal B ▪ LF control unit terminal Q—Front outer handle (LH) terminal E • Open circuit in wiring harness between the following terminals: ▪ LF control unit terminal O—Front outer handle (LH) terminal B ▪ LF control unit terminal Q—Front outer handle (LH) terminal E • Keyless antenna (exterior, LF) malfunction • LF control unit malfunction • Start stop unit malfunction

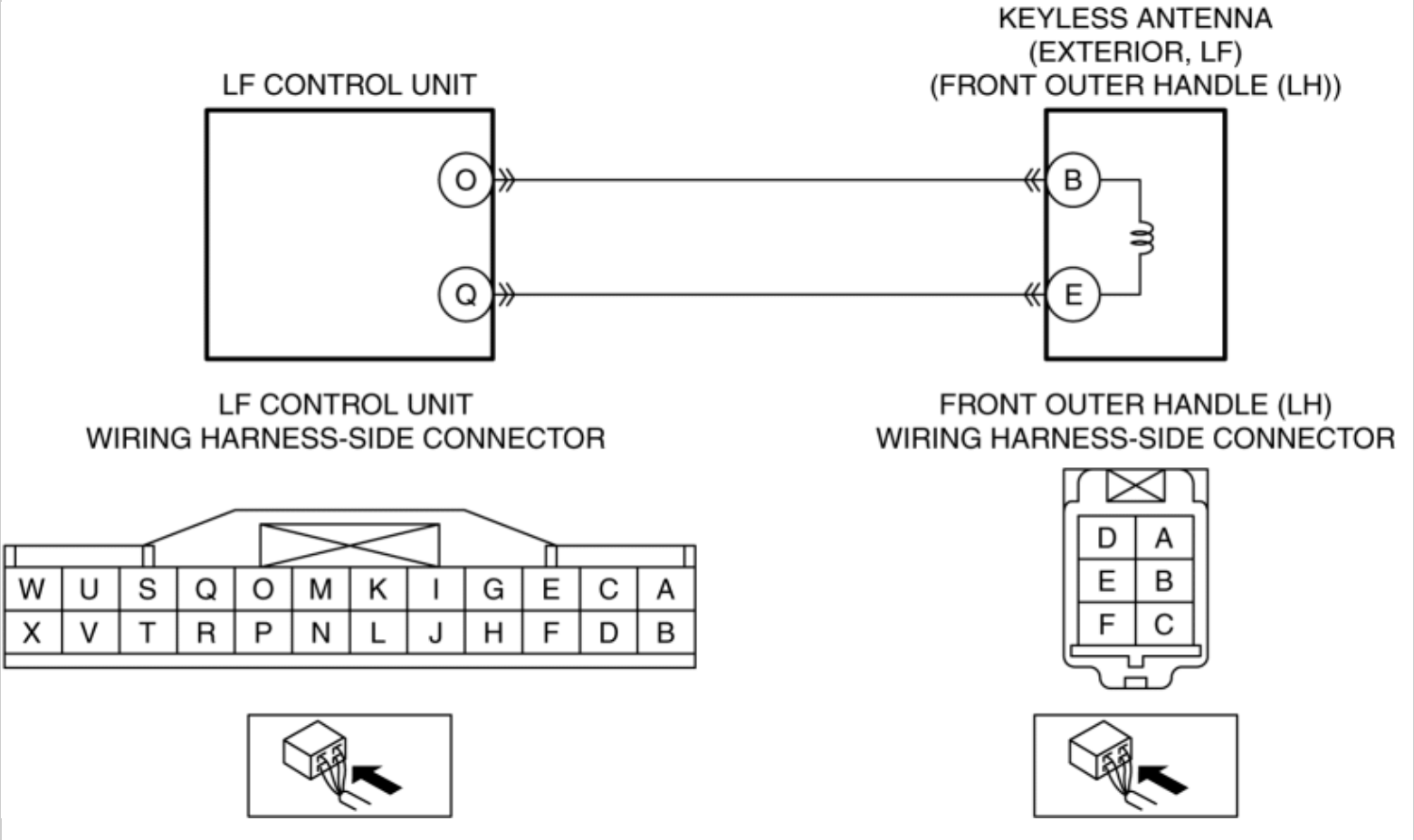

Diagnostic Procedure

Step	Inspection		Action
1	**INSPECT FRONT OUTER HANDLE (LH) CONNECTOR CONDITION** • Switch the ignition off. • Disconnect the negative battery cable. (See **NEGATIVE BATTERY CABLE DISCONNECTION/CONNECTION [SKYACTIV-G 2.0, SKYACTIV-G 2.5]**.) • Disconnect the front outer handle (LH) connector. • Inspect the connector engagement and connection condition and inspect the terminals for damage, deformation, corrosion, or disconnection. • Is the connector normal?	Yes	Go to the next step.
		No	Repair or replace the connector, then go to Step 7.
	INSPECT LF CONTROL UNIT CONNECTOR		

2	**CONDITION** • Disconnect the LF control unit connector. • Inspect the connector engagement and connection condition and inspect the terminals for damage, deformation, corrosion, or disconnection. • Is the connector normal?	Yes	Go to the next step.
		No	Repair or replace the connector, then go to Step 7.
3	**INSPECT FOR SHORT TO GROUND IN KEYLESS ANTENNA (EXTERIOR, LF) CIRCUIT** • Verify that the LF control unit and front outer handle (LH) connectors are disconnected. • Inspect for continuity between the following terminals (wiring harness-side) and body ground: ▪ Front outer handle (LH) terminal B ▪ Front outer handle (LH) terminal E • Is there continuity?	Yes	Refer to the wiring diagram and verify whether or not there is a common connector between the following terminals: • LF control unit terminal O—Front outer handle (LH) terminal B • LF control unit terminal Q—Front outer handle (LH) terminal E **If there is a common connector:** • Determine the malfunctioning part by inspecting the common connector and the terminal for corrosion, damage, or pin disconnection, and the common wiring harness for a short to ground. • Repair or replace the malfunctioning part. **If there is no common connector:** • Repair or replace the wiring harness which has a short to ground. Go to Step 7.
		No	Go to the next step.
4	**INSPECT FOR OPEN CIRCUIT IN KEYLESS ANTENNA (EXTERIOR, LF) CIRCUIT** • Verify that the LF control unit and front outer handle (LH) connectors are disconnected. • Inspect for continuity between the following terminals (wiring harness-side): ▪ LF control unit terminal O—Front outer handle (LH) terminal B	Yes	Go to the next step.
		No	Refer to the wiring diagram and verify whether or not there is a common connector between the following terminals: • LF control unit terminal O—Front outer handle (LH) terminal B • LF control unit terminal Q—Front outer handle (LH) terminal E **If there is a common connector:** • Determine the malfunctioning part by inspecting the common connector and the terminal for corrosion, damage, or

	▪ LF control unit terminal Q—Front outer handle (LH) terminal E • Is there continuity?		pin disconnection, and the common wiring harness for an open circuit. • Repair or replace the malfunctioning part. **If there is no common connector:** • Repair or replace the wiring harness which has an open circuit. Go to Step 7.
5	**PERFORM DTC INSPECTION AND VERIFY KEYLESS ANTENNA (EXTERIOR, LF) MALFUNCTION** • Always reconnect all disconnected connectors. • Reconnect the negative battery cable. (See **NEGATIVE BATTERY CABLE DISCONNECTION/CONNECTION [SKYACTIV-G 2.0, SKYACTIV-G 2.5]**.) • Clear the DTC for the advanced keyless entry system using the M-MDS. (See **CLEARING DTC [ADVANCED KEYLESS ENTRY SYSTEM]**.) • Perform the following work: ▪ Switch the ignition off. ▪ Open the front door (LH). ▪ Close all the doors and trunk (4SD)/liftgate (5HB). • Retrieve the advanced keyless entry system DTCs using the M-MDS. (See **DTC INSPECTION [ADVANCED KEYLESS ENTRY SYSTEM]**.) • Is the same DTC displayed?	Yes	Replace the front outer handle (LH), then go to the next step. (See **FRONT OUTER HANDLE REMOVAL/INSTALLATION**.)
		No	Go to Step 8.
6	**PERFORM DTC INSPECTION AND VERIFY LF CONTROL UNIT MALFUNCTION**	Yes	Replace the LF control unit, then go to the next step.

	• Clear the DTC for the advanced keyless entry system using the M-MDS.
	
	(See **CLEARING DTC [ADVANCED KEYLESS ENTRY SYSTEM]**.)
	
	• Perform the following work:
	  ▪ Switch the ignition off.
	  ▪ Open the front door (LH).
	  ▪ Close all the doors and trunk (4SD)/liftgate (5HB).
	
	• Retrieve the advanced keyless entry system DTCs using the M-MDS.
	
	(See **DTC INSPECTION [ADVANCED KEYLESS ENTRY SYSTEM]**.)
	
	• Is the same DTC displayed?
			(See **LF CONTROL UNIT REMOVAL/INSTALLATION**.)

		No	Go to Step 8.

7	**VERIFY THAT REPAIRS HAVE BEEN COMPLETED**
	
	• Always reconnect all disconnected connectors.
	
	• Reconnect the negative battery cable.
	
	(See **NEGATIVE BATTERY CABLE DISCONNECTION/CONNECTION [SKYACTIV-G 2.0, SKYACTIV-G 2.5]**.)
	
	• Clear the DTC for the advanced keyless entry system using the M-MDS.
	
	(See **CLEARING DTC [ADVANCED KEYLESS ENTRY SYSTEM]**.)
	
	• Perform the following work:
	  ▪ Switch the ignition off.
	  ▪ Open the front door
		Yes	Repeat the inspection from Step 1.
			
			• If the malfunction recurs, replace the start stop unit.
			
			(See **START STOP UNIT REMOVAL/INSTALLATION**.)
			
			Go to the next step.

		No	Go to the next step.

	(LH). ▪ Close all the doors and trunk (4SD)/liftgate (5HB). • Retrieve the advanced keyless entry system DTCs using the M-MDS. (See **DTC INSPECTION [ADVANCED KEYLESS ENTRY SYSTEM]**.) • Is the same DTC displayed?		
8	**VERIFY IF OTHER DTCs DISPLAYED** • Are any other DTCs displayed?	Yes	Repair or replace the malfunctioning part according to the applicable DTC troubleshooting. (See **DTC TABLE [ADVANCED KEYLESS ENTRY SYSTEM]**.)
		No	DTC troubleshooting completed.

2014 - Mazda3 - Body and Accessories

DTC B1210:1F [ADVANCED KEYLESS ENTRY SYSTEM]

Description	Keyless antenna (exterior, RF) circuit malfunction
Detection condition	• Start stop unit detects an open circuit or short to ground in the keyless antenna (exterior, RF) circuit with the ignition switched off.
Fail-safe function	• Inhibits the door lock/unlock control using the advanced keyless entry system.
Possible cause	• Front outer handle (RH) connector or terminal malfunction • LF control unit connector or terminal malfunction • Short to ground in wiring harness between the following terminals: ▪ LF control unit terminal S—Front outer handle (RH) terminal B ▪ LF control unit terminal U—Front outer handle (RH) terminal E • Open circuit in wiring harness between the following terminals: ▪ LF control unit terminal S—Front outer handle (RH) terminal B ▪ LF control unit terminal U—Front outer handle (RH) terminal E • Keyless antenna (exterior, RF) malfunction • LF control unit malfunction • Start stop unit malfunction

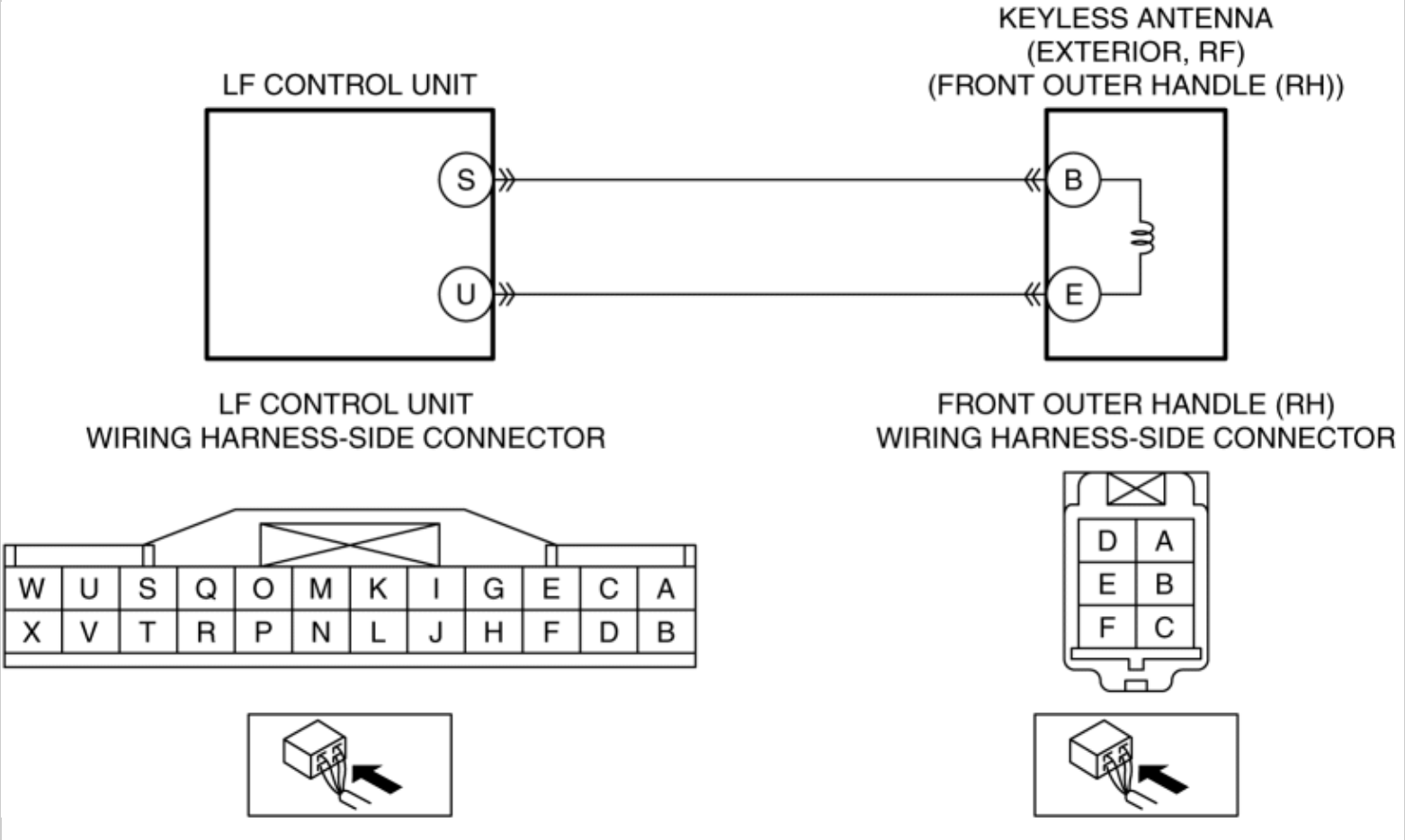

Diagnostic Procedure

Step	Inspection		Action
1	**INSPECT FRONT OUTER HANDLE (RH) CONNECTOR CONDITION** • Switch the ignition off. • Disconnect the negative battery cable. (See **NEGATIVE BATTERY CABLE DISCONNECTION/CONNECTION [SKYACTIV-G 2.0, SKYACTIV-G 2.5]**.) • Disconnect the front outer handle (RH) connector. • Inspect the connector engagement and connection condition and inspect the terminals for damage, deformation, corrosion, or disconnection. • Is the connector normal?	Yes	Go to the next step.
		No	Repair or replace the connector, then go to Step 7.
	INSPECT LF CONTROL UNIT CONNECTOR		

2	**CONDITION** • Disconnect the LF control unit connector. • Inspect the connector engagement and connection condition and inspect the terminals for damage, deformation, corrosion, or disconnection. • Is the connector normal?	Yes	Go to the next step.
		No	Repair or replace the connector, then go to Step 7.
3	**INSPECT FOR SHORT TO GROUND IN KEYLESS ANTENNA (EXTERIOR, RF) CIRCUIT** • Verify that the LF control unit and front outer handle (RH) connectors are disconnected. • Inspect for continuity between the following terminals (wiring harness-side) and body ground: ▪ Front outer handle (RH) terminal B ▪ Front outer handle (RH) terminal E • Is there continuity?	Yes	Refer to the wiring diagram and verify whether or not there is a common connector between the following terminals: • LF control unit terminal S—Front outer handle (RH) terminal B • LF control unit terminal U—Front outer handle (RH) terminal E **If there is a common connector:** • Determine the malfunctioning part by inspecting the common connector and the terminal for corrosion, damage, or pin disconnection, and the common wiring harness for a short to ground. • Repair or replace the malfunctioning part. **If there is no common connector:** • Repair or replace the wiring harness which has a short to ground. Go to Step 7.
		No	Go to the next step.
4	**INSPECT FOR OPEN CIRCUIT IN KEYLESS ANTENNA (EXTERIOR, RF) CIRCUIT** • Verify that the LF control unit and front outer handle (RH) connectors are disconnected. • Inspect for continuity between the following terminals (wiring harness-side): ▪ LF control unit terminal S—Front outer handle (RH) terminal B	Yes	Go to the next step.
		No	Refer to the wiring diagram and verify whether or not there is a common connector between the following terminals: • LF control unit terminal S—Front outer handle (RH) terminal B • LF control unit terminal U—Front outer handle (RH) terminal E **If there is a common connector:** • Determine the malfunctioning part by inspecting the common connector and

	▪ LF control unit terminal U—Front outer handle (RH) terminal E • Is there continuity?		the terminal for corrosion, damage, or pin disconnection, and the common wiring harness for an open circuit. • Repair or replace the malfunctioning part. **If there is no common connector:** • Repair or replace the wiring harness which has an open circuit. Go to Step 7.
5	**PERFORM DTC INSPECTION AND VERIFY KEYLESS ANTENNA (EXTERIOR, RF) MALFUNCTION** • Always reconnect all disconnected connectors. • Reconnect the negative battery cable. (See **NEGATIVE BATTERY CABLE DISCONNECTION/CONNECTION [SKYACTIV-G 2.0, SKYACTIV-G 2.5]**.) • Clear the DTC for the advanced keyless entry system using the M-MDS. (See **CLEARING DTC [ADVANCED KEYLESS ENTRY SYSTEM]**.) • Perform the following work: ▪ Switch the ignition off. ▪ Open the front door (LH). ▪ Close all the doors and trunk (4SD)/liftgate (5HB). • Retrieve the advanced keyless entry system DTCs using the M-MDS. (See **DTC INSPECTION [ADVANCED KEYLESS ENTRY SYSTEM]**.) • Is the same DTC displayed?	Yes	Replace the front outer handle (RH), then go to the next step. (See **FRONT OUTER HANDLE REMOVAL/INSTALLATION**.)
		No	Go to Step 8.
	PERFORM DTC INSPECTION AND VERIFY		

6	**LF CONTROL UNIT MALFUNCTION** • Clear the DTC for the advanced keyless entry system using the M-MDS. (See **CLEARING DTC [ADVANCED KEYLESS ENTRY SYSTEM]**.) • Perform the following work: ▪ Switch the ignition off. ▪ Open the front door (LH). ▪ Close all the doors and trunk (4SD)/liftgate (5HB). • Retrieve the advanced keyless entry system DTCs using the M-MDS. (See **DTC INSPECTION [ADVANCED KEYLESS ENTRY SYSTEM]**.) • Is the same DTC displayed?	Yes	Replace the LF control unit, then go to the next step. (See **LF CONTROL UNIT REMOVAL/INSTALLATION**.)
		No	Go to Step 8.
7	**VERIFY THAT REPAIRS HAVE BEEN COMPLETED** • Always reconnect all disconnected connectors. • Reconnect the negative battery cable. (See **NEGATIVE BATTERY CABLE DISCONNECTION/CONNECTION [SKYACTIV-G 2.0, SKYACTIV-G 2.5]**.) • Clear the DTC for the advanced keyless entry system using the M-MDS. (See **CLEARING DTC [ADVANCED KEYLESS ENTRY SYSTEM]**.) • Perform the following work: ▪ Switch the ignition off.	Yes	Repeat the inspection from Step 1. • If the malfunction recurs, replace the start stop unit. (See **START STOP UNIT REMOVAL/INSTALLATION**.) Go to the next step.
		No	Go to the next step.

	Open the front door (LH). ▪ Close all the doors and trunk (4SD)/liftgate (5HB). • Retrieve the advanced keyless entry system DTCs using the M-MDS. (See **DTC INSPECTION [ADVANCED KEYLESS ENTRY SYSTEM]**.) • Is the same DTC displayed?		
8	**VERIFY IF OTHER DTCs DISPLAYED** • Are any other DTCs displayed?	Yes	Repair or replace the malfunctioning part according to the applicable DTC troubleshooting. (See **DTC TABLE [ADVANCED KEYLESS ENTRY SYSTEM]**.)
		No	DTC troubleshooting completed.

2014 - Mazda3 - Body and Accessories

DTC B13C3:04 [ADVANCED KEYLESS ENTRY SYSTEM]

Description	LF control unit internal malfunction
Detection condition	• Start stop unit detects the LF control unit internal malfunction.
Fail-safe function	• Inhibits the door lock/unlock control using the advanced keyless entry system.
Possible cause	• LF control unit internal malfunction • Start stop unit malfunction
System wiring diagram	Not applicable

Diagnostic Procedure

Step	Inspection		Action
1	**INSPECT LF CONTROL UNIT** • Inspect the LF control unit. (See **LF CONTROL UNIT INSPECTION**.) • Is the LF control unit normal?	Yes	Go to the next step.
		No	Replace the LF control unit, then go to the next step. (See **LF CONTROL UNIT REMOVAL/INSTALLATION**.)
2	**VERIFY THAT REPAIRS HAVE BEEN COMPLETED** • Clear the DTC for the advanced keyless entry system using the M-MDS. (See **CLEARING DTC [ADVANCED KEYLESS ENTRY SYSTEM]**.) • Retrieve the advanced keyless entry system DTCs using the M-MDS.	Yes	Repeat the inspection from Step 1. • If the malfunction recurs, replace the start stop unit. (See **START STOP UNIT REMOVAL/INSTALLATION**.) Go to the next step.
		No	Go to the next step.

	(See **DTC INSPECTION [ADVANCED KEYLESS ENTRY SYSTEM]**.) • Is the same DTC displayed?		
3	**VERIFY IF OTHER DTCs DISPLAYED** • Are any other DTCs displayed?	Yes	Repair or replace the malfunctioning part according to the applicable DTC troubleshooting. (See **DTC TABLE [ADVANCED KEYLESS ENTRY SYSTEM]**.)
		No	DTC troubleshooting completed.

2014 - Mazda3 - Body and Accessories

DTC B13C3:09 [ADVANCED KEYLESS ENTRY SYSTEM]

Description	LF control unit malfunction
Detection condition	• Start stop unit detects that the LF state signal of the LF control unit is low for **5 s or more**. • With the communication between the start stop unit and LF control unit being performed normally, there is no response from the LF control unit even though there is the signal transmission request from the start stop unit to the LF control unit, and the LF state signal becomes low.
Fail-safe function	• Inhibits the door lock/unlock control using the advanced keyless entry system.
Possible cause	• LF control unit connector or terminal malfunction • Start stop unit connector or terminal malfunction • Short to ground in wiring harness between start stop unit terminal 2H and LF control unit terminal G • Open circuit in wiring harness between start stop unit terminal 2H and LF control unit terminal G • LF control unit malfunction • Start stop unit malfunction

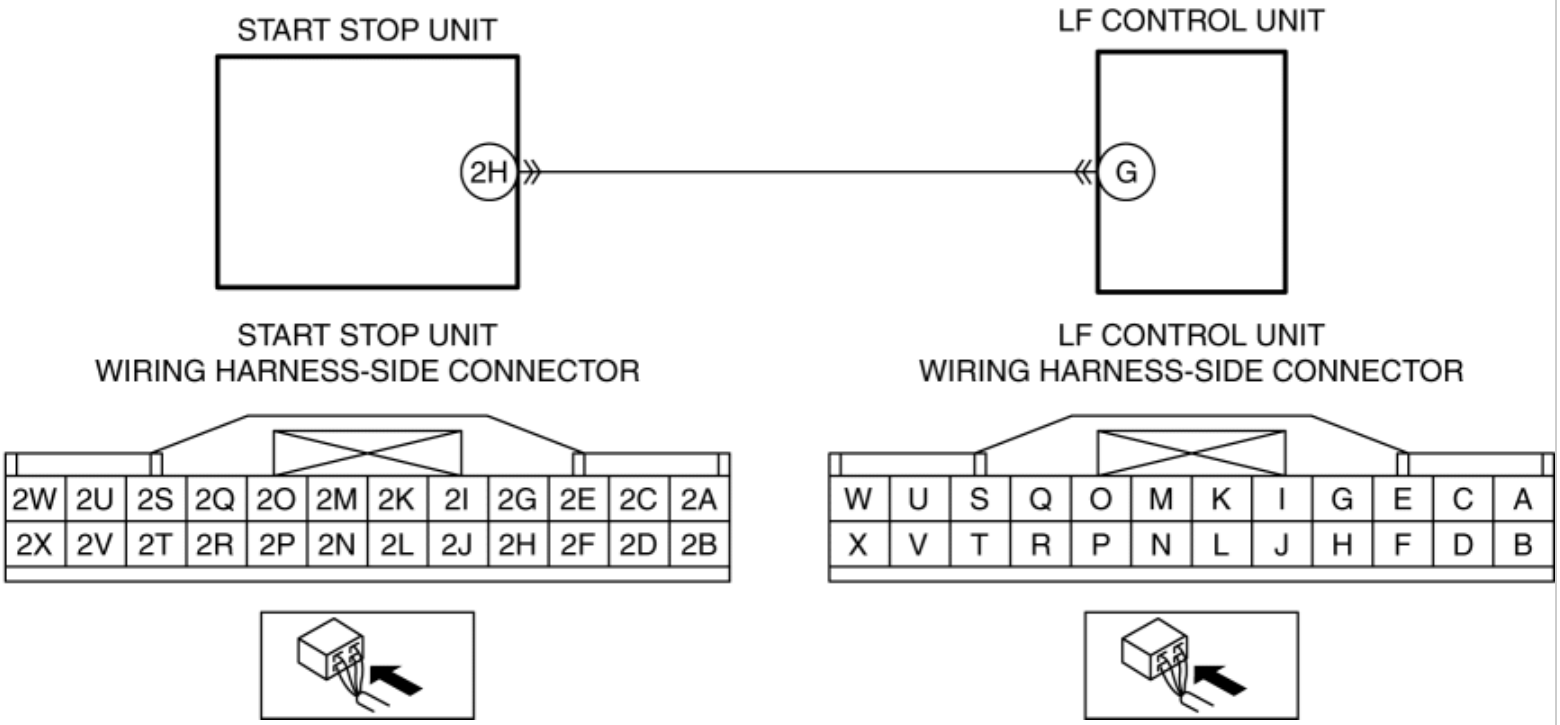

Diagnostic Procedure

Step	Inspection		Action
1	**INSPECT LF CONTROL UNIT CONNECTOR CONDITION** • Switch the ignition off. • Disconnect the negative battery cable. (See **NEGATIVE BATTERY CABLE DISCONNECTION/CONNECTION [SKYACTIV-G 2.0, SKYACTIV-G 2.5]**.) • Disconnect the LF control unit connector. • Inspect the connector engagement and connection condition and inspect the terminals for damage, deformation, corrosion, or disconnection. • Is the connector normal?	Yes	Go to the next step.
		No	Repair or replace the connector, then go to Step 6.
2	**INSPECT START STOP UNIT CONNECTOR CONDITION** • Disconnect the start stop unit connector. • Inspect the connector engagement and connection condition and inspect the terminals for damage, deformation, corrosion, or disconnection. • Is the connector normal?	Yes	Go to the next step.
		No	Repair or replace the connector, then go to Step 6.
3	**INSPECT FOR SHORT TO GROUND IN WIRING HARNESS BETWEEN START STOP UNIT AND LF CONTROL UNIT** • Verify that the start stop unit and LF control unit connectors are disconnected. • Inspect for continuity between LF control unit terminal G (wiring harness-side) and body ground. • Is there continuity?	Yes	Refer to the wiring diagram and verify whether or not there is a common connector between start stop unit terminal 2H and LF control unit terminal G. **If there is a common connector:** • Determine the malfunctioning part by inspecting the common connector and the terminal for corrosion, damage, or pin disconnection, and the common wiring harness for a short to ground. • Repair or replace the malfunctioning part. **If there is no common connector:** • Repair or replace the wiring harness which has a short to ground. Go to Step 6.

		No	Go to the next step.
4	**INSPECT FOR OPEN CIRCUIT IN WIRING HARNESS BETWEEN START STOP UNIT AND LF CONTROL UNIT** • Verify that the start stop unit and LF control unit connectors are disconnected. • Inspect for continuity between start stop unit terminal 2H (wiring harness-side) and LF control unit terminal G (wiring harness-side). • Is there continuity?	Yes	Go to the next step.
		No	Refer to the wiring diagram and verify whether or not there is a common connector between start stop unit terminal 2H and LF control unit terminal G. **If there is a common connector:** • Determine the malfunctioning part by inspecting the common connector and the terminal for corrosion, damage, or pin disconnection, and the common wiring harness for an open circuit. • Repair or replace the malfunctioning part. **If there is no common connector:** • Repair or replace the wiring harness which has an open circuit. Go to Step 6.
5	**INSPECT LF CONTROL UNIT** • Inspect the LF control unit. (See **LF CONTROL UNIT INSPECTION**.) • Is the LF control unit normal?	Yes	Go to the next step.
		No	Replace the LF control unit, then go to the next step. (See **LF CONTROL UNIT REMOVAL/INSTALLATION**.)
6	**VERIFY THAT REPAIRS HAVE BEEN COMPLETED** • Always reconnect all disconnected connectors. • Reconnect the negative battery cable. (See **NEGATIVE BATTERY CABLE DISCONNECTION/CONNECTION [SKYACTIV-G 2.0, SKYACTIV-G 2.5]**.) • Clear the DTC for the advanced keyless entry system using the M-MDS. (See **CLEARING DTC [ADVANCED KEYLESS ENTRY SYSTEM]**.) • Switch the ignition ON (engine off or on) and wait for **5 s or more**. • Retrieve the advanced keyless entry system DTCs using the M-MDS. (See **DTC INSPECTION [ADVANCED KEYLESS ENTRY**	Yes	Repeat the inspection from Step 1. • If the malfunction recurs, replace the start stop unit. (See **START STOP UNIT REMOVAL/INSTALLATION**.) Go to the next step.
		No	Go to the next step.

	SYSTEM].) • Is the same DTC displayed?		
7	**VERIFY IF OTHER DTCs DISPLAYED** • Are any other DTCs displayed?	Yes	Repair or replace the malfunctioning part according to the applicable DTC troubleshooting. (See **DTC TABLE [ADVANCED KEYLESS ENTRY SYSTEM]**.)
		No	DTC troubleshooting completed.

2014 - Mazda3 - Body and Accessories

DTC B13C3:16 [ADVANCED KEYLESS ENTRY SYSTEM]

Description	LF control unit power supply voltage low input
Detection condition	• Start stop unit power supply circuit voltage of **8.5 V or more or less than 16.5 V** and LF control unit power supply circuit voltage of **5 V or more or less than 8.5 V** are detected for **5 s or more**.
Fail-safe function	• Inhibits the door lock/unlock control using the advanced keyless entry system.
Possible cause	• LF control unit connector or terminal malfunction • Malfunction between battery positive terminal and LF control unit terminal B • LF control unit malfunction • Start stop unit malfunction

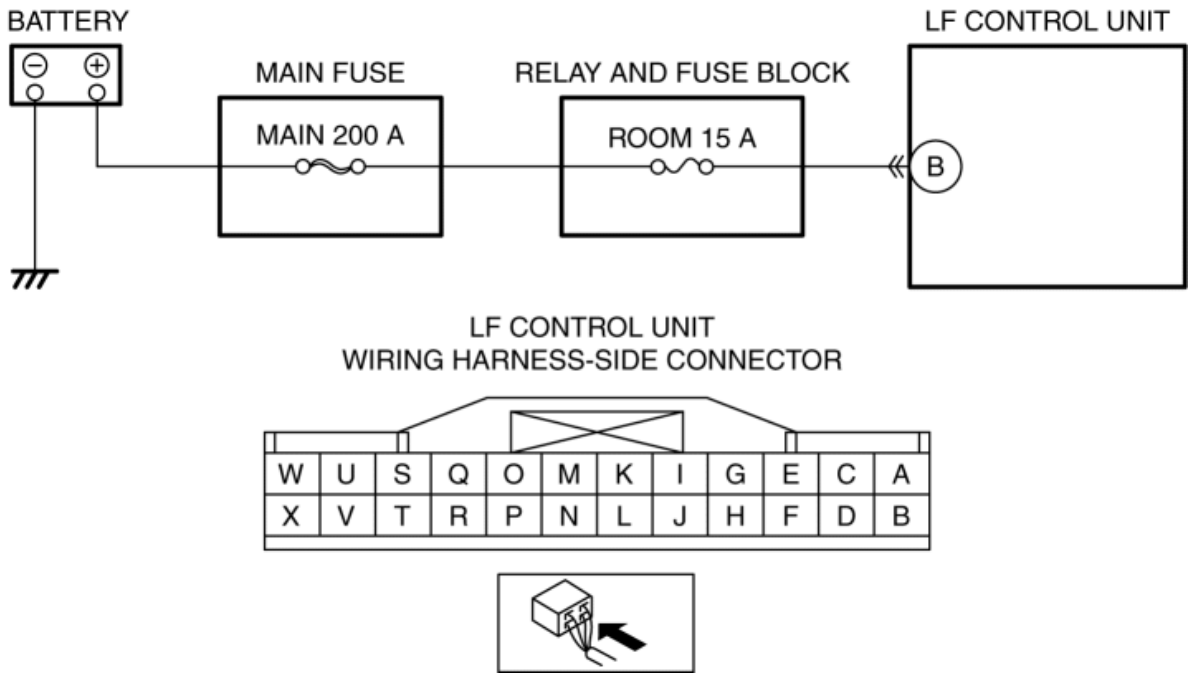

Diagnostic Procedure

Step	Inspection		Action
1	**INSPECT LF CONTROL UNIT CONNECTOR CONDITION** • Switch the ignition off. • Disconnect the negative battery cable. (See **NEGATIVE BATTERY**	Yes	Go to the next step.
		No	Repair or replace the connector, then go to Step 4.

	CABLE DISCONNECTION/CONNECTION [SKYACTIV-G 2.0, SKYACTIV-G 2.5].) • Disconnect the LF control unit connector. • Inspect the connector engagement and connection condition and inspect the terminals for damage, deformation, corrosion, or disconnection. • Is the connector normal?		
2	**VERIFY LF CONTROL UNIT POWER SUPPLY VOLTAGE** • Always reconnect all disconnected connectors. • Reconnect the negative battery cable. (See **NEGATIVE BATTERY CABLE DISCONNECTION/CONNECTION [SKYACTIV-G 2.0, SKYACTIV-G 2.5]**.) • Measure the voltage at the LF control unit terminal B (wiring harness-side). • Is the voltage **5 V or more or less than 8.5 V**?	Yes	Refer to the wiring diagram and verify whether or not there is a common connector between battery positive terminal and LF control unit terminal B. **If there is a common connector:** • Determine the malfunctioning part by inspecting the common connector and the terminal for corrosion, damage, or pin disconnection, and the common wiring harness for a malfunction. • Repair or replace the malfunctioning part. **If there is no common connector:** • Inspect the wiring harness between battery positive terminal and LF control unit terminal B. ▪ If there is any malfunction: • Repair or replace the wiring harness. ▪ If there is no malfunction: • Replace the LF control unit. (See **LF CONTROL UNIT REMOVAL/INSTALLATION**.) Go to Step 4.
		No	Go to the next step.
3	**INSPECT LF CONTROL UNIT** • Inspect the LF control unit. (See **LF CONTROL UNIT INSPECTION**.) • Is the LF control unit normal?	Yes	Go to the next step.
		No	Replace the LF control unit, then go to the next step. (See **LF CONTROL UNIT REMOVAL/INSTALLATION**.)
4	**VERIFY THAT REPAIRS HAVE BEEN COMPLETED** • Always reconnect all disconnected connectors. • Reconnect the negative battery cable. (See **NEGATIVE BATTERY CABLE DISCONNECTION/CONNECTION [SKYACTIV-G 2.0, SKYACTIV-G**	Yes	Repeat the inspection from Step 1. • If the malfunction recurs, replace the start stop unit. (See **START STOP UNIT REMOVAL/INSTALLATION**.) Go to the next step.
		No	Go to the next step.

	2.5].) • Clear the DTC for the advanced keyless entry system using the M-MDS. (See **CLEARING DTC [ADVANCED KEYLESS ENTRY SYSTEM]**.) • Switch the ignition ON (engine off) and wait for **5 s or more**. • Retrieve the advanced keyless entry system DTCs using the M-MDS. (See **DTC INSPECTION [ADVANCED KEYLESS ENTRY SYSTEM]**.) • Is the same DTC displayed?		
5	**VERIFY IF OTHER DTCs DISPLAYED** • Are any other DTCs displayed?	Yes	Repair or replace the malfunctioning part according to the applicable DTC troubleshooting. (See **DTC TABLE [ADVANCED KEYLESS ENTRY SYSTEM]**.)
		No	DTC troubleshooting completed.

2014 - Mazda3 - Body and Accessories

DTC B13C3:29 [ADVANCED KEYLESS ENTRY SYSTEM]

Description	Communication error between start stop unit and LF control unit
Detection condition	• Start stop unit detects the communication error with the LF control unit **10 times**.
Fail-safe function	• Inhibits the door lock/unlock control using the advanced keyless entry system.
Possible cause	• LF control unit connector or terminal malfunction • Start stop unit connector or terminal malfunction • Short to ground in wiring harness between start stop unit terminal 2F and LF control unit terminal I • Open circuit in wiring harness between start stop unit terminal 2F and LF control unit terminal I • LF control unit malfunction • Start stop unit malfunction

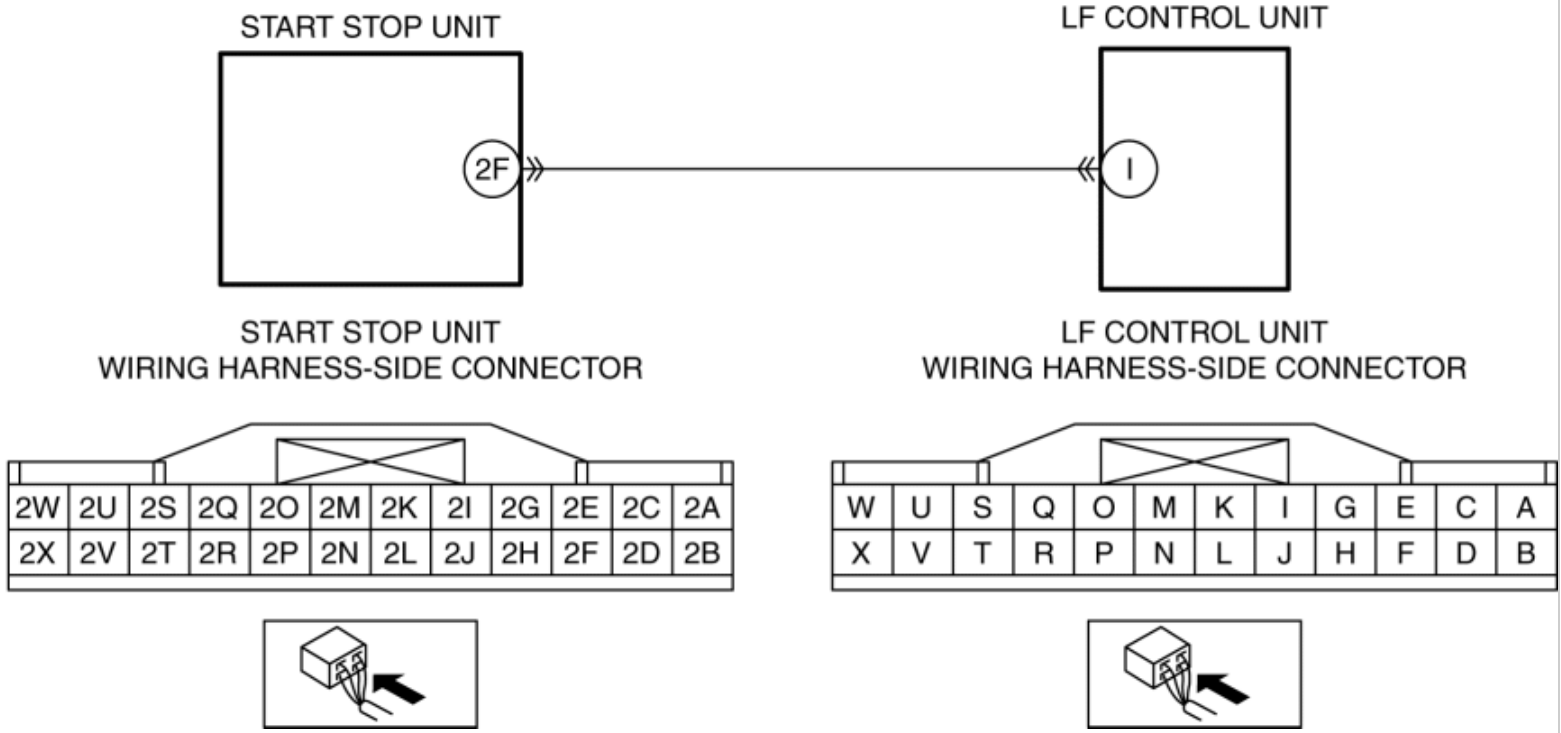

Diagnostic Procedure

Step	Inspection		Action
1	**INSPECT LF CONTROL UNIT CONNECTOR CONDITION** • Switch the ignition off. • Disconnect the negative battery cable. (See **NEGATIVE BATTERY CABLE DISCONNECTION/CONNECTION [SKYACTIV-G 2.0, SKYACTIV-G 2.5]**.) • Disconnect the LF control unit connector. • Inspect the connector engagement and connection condition and inspect the terminals for damage, deformation, corrosion, or disconnection. • Is the connector normal?	Yes	Go to the next step.
		No	Repair or replace the connector, then go to Step 6.
2	**INSPECT START STOP UNIT CONNECTOR CONDITION** • Disconnect the start stop unit connector. • Inspect the connector engagement and connection condition and inspect the terminals for damage, deformation, corrosion, or disconnection. • Is the connector normal?	Yes	Go to the next step.
		No	Repair or replace the connector, then go to Step 6.
3	**INSPECT FOR SHORT TO GROUND IN WIRING HARNESS BETWEEN START STOP UNIT AND LF CONTROL UNIT** • Verify that the start stop unit and LF control unit connectors are disconnected. • Inspect for continuity between LF control unit terminal I (wiring harness-side) and body ground. • Is there continuity?	Yes	Refer to the wiring diagram and verify whether or not there is a common connector between start stop unit terminal 2F and LF control unit terminal I. **If there is a common connector:** • Determine the malfunctioning part by inspecting the common connector and the terminal for corrosion, damage, or pin disconnection, and the common wiring harness for a short to ground. • Repair or replace the malfunctioning part. **If there is no common connector:** • Repair or replace the wiring harness which has a short to ground. Go to Step 6.
		No	Go to the next step.

4	**INSPECT FOR OPEN CIRCUIT IN WIRING HARNESS BETWEEN START STOP UNIT AND LF CONTROL UNIT** • Verify that the start stop unit and LF control unit connectors are disconnected. • Inspect for continuity between start stop unit terminal 2F (wiring harness-side) and LF control unit terminal I (wiring harness-side). • Is there continuity?	Yes	Go to the next step.
		No	Refer to the wiring diagram and verify whether or not there is a common connector between start stop unit terminal 2F and LF control unit terminal I. **If there is a common connector:** • Determine the malfunctioning part by inspecting the common connector and the terminal for corrosion, damage, or pin disconnection, and the common wiring harness for an open circuit. • Repair or replace the malfunctioning part. **If there is no common connector:** • Repair or replace the wiring harness which has an open circuit. Go to Step 6.
5	**INSPECT LF CONTROL UNIT** • Inspect the LF control unit. (See **LF CONTROL UNIT INSPECTION**.) • Is the LF control unit normal?	Yes	Go to the next step.
		No	Replace the LF control unit, then go to the next step. (See **LF CONTROL UNIT REMOVAL/INSTALLATION**.)
6	**VERIFY THAT REPAIRS HAVE BEEN COMPLETED** • Always reconnect all disconnected connectors. • Reconnect the negative battery cable. (See **NEGATIVE BATTERY CABLE DISCONNECTION/CONNECTION [SKYACTIV-G 2.0, SKYACTIV-G 2.5]**.) • Clear the DTC for the advanced keyless entry system using the M-MDS. (See **CLEARING DTC [ADVANCED KEYLESS ENTRY SYSTEM]**.) • Retrieve the advanced keyless entry system DTCs using the M-MDS. (See **DTC INSPECTION [ADVANCED KEYLESS ENTRY SYSTEM]**.) • Is the same DTC displayed?	Yes	Repeat the inspection from Step 1. • If the malfunction recurs, replace the start stop unit. (See **START STOP UNIT REMOVAL/INSTALLATION**.) Go to the next step.
		No	Go to the next step.
7	**VERIFY IF OTHER DTCs DISPLAYED** • Are any other DTCs displayed?	Yes	Repair or replace the malfunctioning part according to the applicable DTC troubleshooting.

			(See **DTC TABLE [ADVANCED KEYLESS ENTRY SYSTEM]**.)
		No	DTC troubleshooting completed.

2014 - Mazda3 - Body and Accessories

PID/DATA MONITOR INSPECTION [ADVANCED KEYLESS ENTRY SYSTEM]

1. Connect the M-MDS to the DLC 2.

2. After the vehicle is identified, select the following items from the initialization screen of the M-MDS.

    a. Select “DataLogger”.

    b. Select “Modules”.

    c. Select “SSU”.

3. Select the applicable PID from the PID table.

4. Verify the PID data according to the directions on the screen.

NOTE:

- The PID data screen function is used for monitoring the calculated value of input/output signals in the module. Therefore, if the monitored value of the output parts is not within the specification, it is necessary to inspect the monitored value of input parts corresponding to the applicable output part control. In addition, because the system does not display an output part malfunction as an abnormality in the monitored value, it is necessary to inspect the output parts individually.
- When detecting DTCs, PIDs related to a malfunctioning system may not display even if the module is normal. Therefore, if a PID is not displayed, it is necessary to verify the DTC, perform malfunction diagnosis of the DTC that was detected, and do repairs.

2014 - Mazda3 - Body and Accessories

PID/DATA MONITOR TABLE [ADVANCED KEYLESS ENTRY SYSTEM]

PID	Unit/Operation	Data contents	Data read/use method	Module control terminal
LG/T_LK_SW*1	Off/On	Request switch (liftgate) operation condition • Off: Request switch (liftgate) is off. • On: Request switch (liftgate) is on.	The request switch (liftgate) input is an input signal to the start stop unit through the LF control unit.	2F (LF control unit communication)
RQ_SW_LF	Off/On	Request switch (LF) operation condition • Off: Request switch (LF) is off. • On: Request switch (LF) is on.	The signal is input to the start stop unit through the LF control unit of the request switch (LF).	2F (LF control unit communication)
RQ_SW_RF	Off/On	Request switch (RF) operation condition • Off: Request switch (RF) is off. • On: Request	The signal is input to the start stop unit through the LF control unit of the request switch (RF).	2F (LF control unit communication)

		switch (RF) is on.		

*1

5HB

2014 - Mazda3 - Body and Accessories

ACTIVE COMMAND MODES INSPECTION [ADVANCED KEYLESS ENTRY SYSTEM]

1. Connect the M-MDS to the DLC-2.

2. After the vehicle is identified, select the following items from the initialization screen of the M-MDS.

    a. Select “DataLogger”.

    b. Select “Modules”.

    c. Select “SSU”.

3. Select the simulation items from the PID table.

4. Perform the active command modes function, inspect the operations for each parts.

    - If the operation of output parts cannot be verified after the active command mode inspection is performed, this could indicate the possibility of an open or short circuit, sticking, or operation malfunction in the output parts.

2014 - Mazda3 - Body and Accessories

ACTIVE COMMAND MODES TABLE [ADVANCED KEYLESS ENTRY SYSTEM]

Simulation item	Unit/Operation	Data contents	Data read/use method	Output part name
BZR_OUT	Off/On	• Off: Keyless beeper does not sound. • On: Keyless beeper sounds.	• When the simulation item BZR_OUT is turned on, a force override signal is sent to the LF control unit from the start stop unit, and the LF control unit drives (sounds) the keyless beeper. • With adoption of a separate excitation buzzer to the keyless beeper, buzzer does not sound normally even if the voltage is applied to the buzzer unit because there is no oscillation circuit. The integrity of the keyless beeper is determined using the simulation item BZR_OUT. • If the keyless buzzer does not sound even though the simulation function BZR_OUT is on, perform diagnosis using the following procedure. ▪ Press the remote transmitter lock/unlock button repeatedly and measure the terminal voltage of the keyless buzzer when the button is pressed. **Voltage is output** • Keyless buzzer malfunction may have occurred. **Voltage is not output** • Related wiring harness, or LF control unit malfunction may have	Keyless beeper

			occurred.	

2014 - Mazda3 - Body and Accessories

ON-BOARD DIAGNOSTIC WIRING DIAGRAM [FORWARD SENSING CAMERA (FSC)]

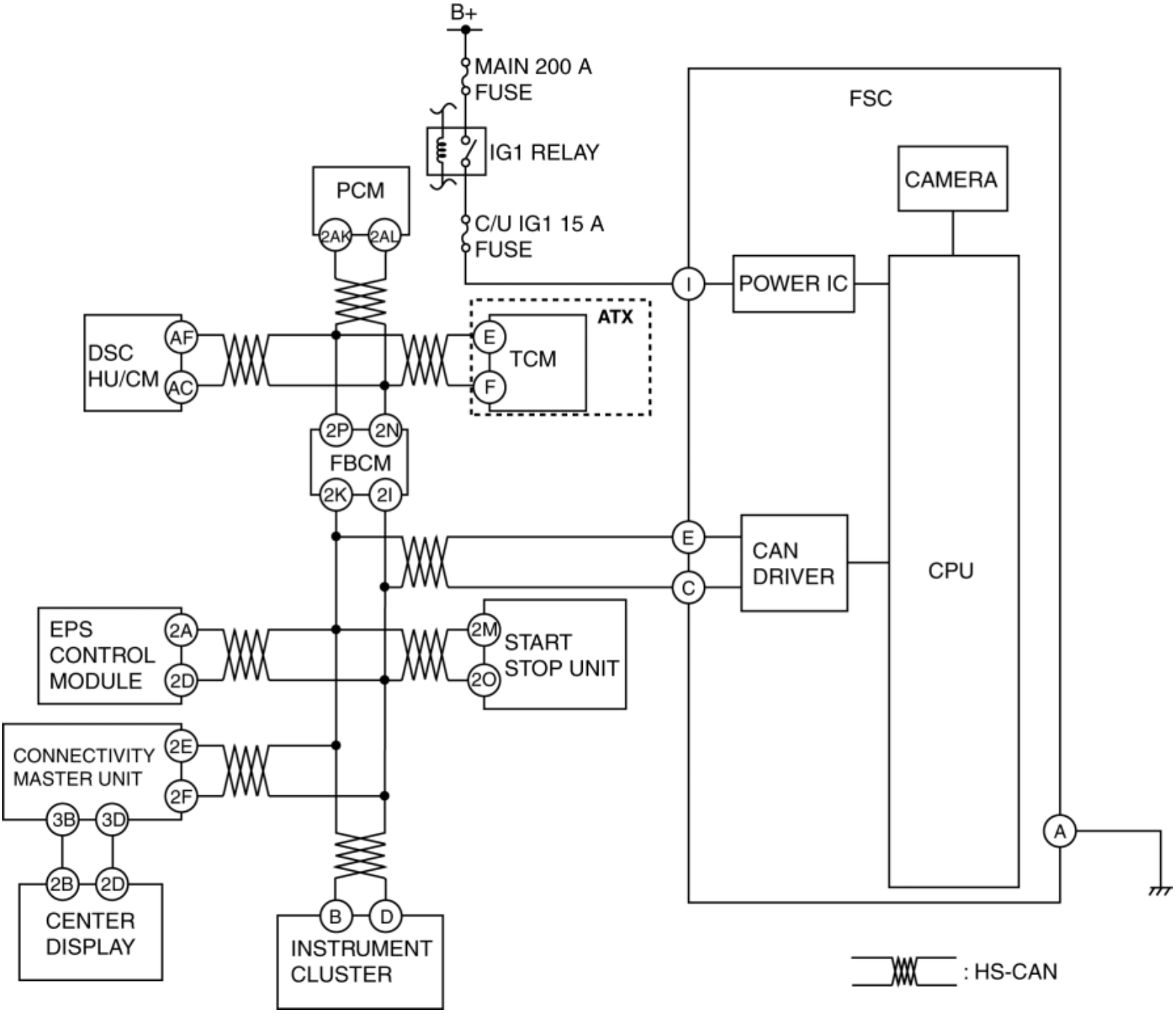

2014 - Mazda3 - Body and Accessories

FOREWORD [FORWARD SENSING CAMERA (FSC)]

- If there is any vehicle malfunction complaint lodged by a customer, perform malfunction diagnosis according to the troubleshooting procedure.

Troubleshooting Procedure

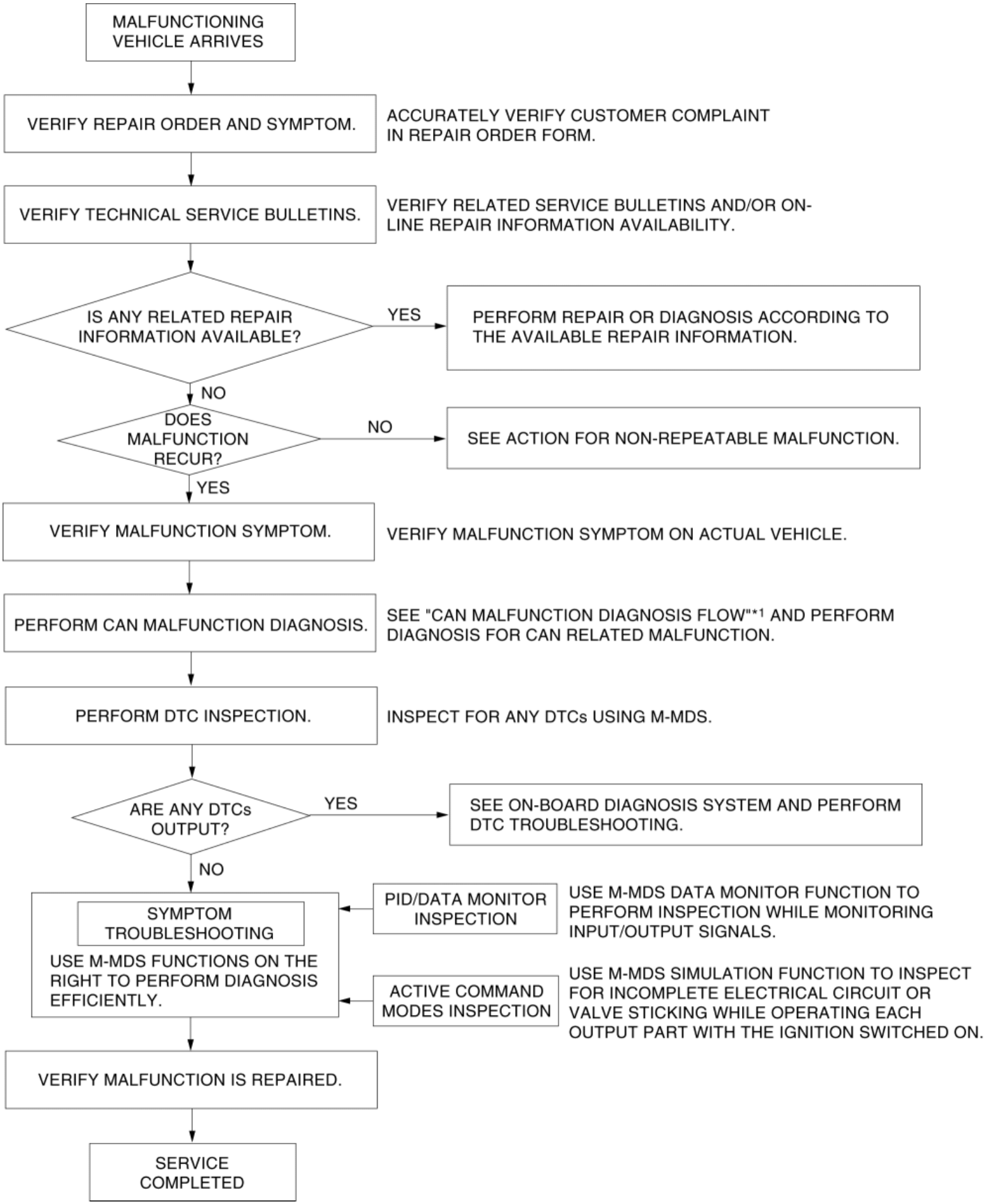
MALFUNCTIONING VEHICLE ARRIVES
VERIFY REPAIR ORDER AND SYMPTOM.
ACCURATELY VERIFY CUSTOMER COMPLAINT IN REPAIR ORDER FORM.
VERIFY TECHNICAL SERVICE BULLETINS.
VERIFY RELATED SERVICE BULLETINS AND/OR ON-LINE REPAIR INFORMATION AVAILABILITY.
IS ANY RELATED REPAIR INFORMATION AVAILABLE?
YES
PERFORM REPAIR OR DIAGNOSIS ACCORDING TO THE AVAILABLE REPAIR INFORMATION.
NO
DOES MALFUNCTION RECUR?
NO
SEE ACTION FOR NON-REPEATABLE MALFUNCTION.
YES
VERIFY MALFUNCTION SYMPTOM.
VERIFY MALFUNCTION SYMPTOM ON ACTUAL VEHICLE.
PERFORM CAN MALFUNCTION DIAGNOSIS.
SEE "CAN MALFUNCTION DIAGNOSIS FLOW"*1 AND PERFORM DIAGNOSIS FOR CAN RELATED MALFUNCTION.
PERFORM DTC INSPECTION.
INSPECT FOR ANY DTCs USING M-MDS.
ARE ANY DTCs OUTPUT?
YES
SEE ON-BOARD DIAGNOSIS SYSTEM AND PERFORM DTC TROUBLESHOOTING.
NO
SYMPTOM TROUBLESHOOTING
USE M-MDS FUNCTIONS ON THE RIGHT TO PERFORM DIAGNOSIS EFFICIENTLY.
PID/DATA MONITOR INSPECTION
USE M-MDS DATA MONITOR FUNCTION TO PERFORM INSPECTION WHILE MONITORING INPUT/OUTPUT SIGNALS.
ACTIVE COMMAND MODES INSPECTION
USE M-MDS SIMULATION FUNCTION TO INSPECT FOR INCOMPLETE ELECTRICAL CIRCUIT OR VALVE STICKING WHILE OPERATING EACH OUTPUT PART WITH THE IGNITION SWITCHED ON.
VERIFY MALFUNCTION IS REPAIRED.
SERVICE COMPLETED

*1

(See CONTROLLER AREA NETWORK (CAN) MALFUNCTION DIAGNOSIS FLOW.)

Action for Non-repeatable Malfunction

- If the malfunction does not recur, verify the malfunction cause by performing the following actions:
  - Based on the repair order form, attempt to drive the vehicle or perform tests to replicate the malfunction, record the data at that time, and detect the malfunction cause.
  - Shake the wiring harness or connector of the electrical component which is suspected to be the cause of the malfunction, and inspect for malfunction or occurrence of any DTCs.

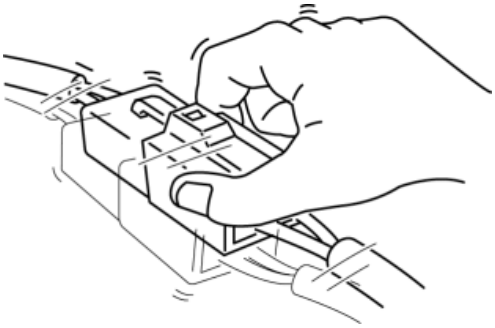

  - Inspect the female terminals on the connector of the electric component which is suspected to be the cause of the malfunction for poor connection.

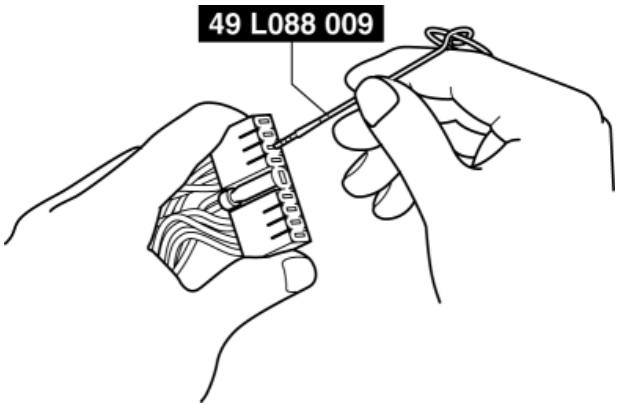

2014 - Mazda3 - Body and Accessories

DTC INSPECTION [FORWARD SENSING CAMERA (FSC)]

CMDTC Self Test

1. Connect the M-MDS to the DLC-2.
2. After the vehicle is identified, select the following items from the initialization screen of the M-MDS.
   a. Select “Self Test”.
   b. Select “All CMDTCs”.
3. Verify the DTC according to the directions on the screen.
   - If any DTCs are displayed, perform troubleshooting according to the corresponding DTC inspection after recording the snapshot data.
4. After completion of repairs, clear all DTCs stored in the forward sensing camera (FSC). (See **CLEARING DTC [FORWARD SENSING CAMERA (FSC)]**.)

ODDTC Self Test

1. Connect the M-MDS to the DLC-2.
2. After the vehicle is identified, select the following items from the initialization screen of the M-MDS.
   a. Select “Self Test”.
   b. Select “Modules”.
   c. Select “FSC”.
3. Verify the DTC according to the directions on the screen.
   - If any DTCs are displayed, perform troubleshooting according to the corresponding DTC inspection after recording the snapshot data.
4. After completion of repairs, clear all DTCs stored in the forward sensing camera (FSC). (See **CLEARING DTC [FORWARD SENSING CAMERA (FSC)]**.)

Snapshot Data

NOTE:

- The forward sensing camera (FSC) stores the following two types of snapshot data (vehicle information) when a DTC is detected and displays them in the M-MDS.
  - Vehicle information detected by forward sensing camera (FSC)
  - Vehicle information detected by instrument cluster and received by forward sensing camera (FSC) via CAN signal

- The data for all DTCs currently detected is stored.

—: Not applicable

Snapshot data item	Unit		Data contents	Data read/use method	Corresponding data monitor items
ECU_IN_TMP	°C	°F	ECU Internal Temperature	—	—
IG-ON_TIMER	hh:mm:ss*1		Elapsed time since ignition was switched ON (engine off or on) **NOTE:** • The instrument cluster records the elapsed time since the ignition was switched ON (engine off or on).	• The forward sensing camera (FSC) constantly receives the elapsed time since the ignition was switched ON (engine off or on) sent via CAN signal from the instrument cluster. • If a DTC is detected, the forward sensing camera (FSC) records the elapsed time since the ignition was switched ON (engine off or on) when the DTC was detected, and it is displayed in the M-MDS.	—

OPE_MODE	Normal/CALIBRATION/EMERGENCY		Operation Mode	—	—
VSPD	KPH	MPH	Vehicle speed	—	—

*1

The seconds may be indicated after the decimal point.

2014 - Mazda3 - Body and Accessories

CLEARING DTC [FORWARD SENSING CAMERA (FSC)]

CMDTC Memory Clearing Procedure

1. Connect the M-MDS to the DLC-2.
2. After the vehicle is identified, select the following items from the initialization screen of the M-MDS.
    a. Select “Self Test”.
    b. Select “All CMDTCs”.
3. Verify the DTC according to the directions on the screen.
4. Press the clear button on the DTC screen to clear the DTC.
5. Switch the ignition off.
6. Switch the ignition ON (engine off or on) and wait for **5 s or more**.
7. Perform DTC inspection. (See **DTC INSPECTION [FORWARD SENSING CAMERA (FSC)]**.)
8. Verify that no DTCs are displayed.

ODDTC Memory Clearing Procedure

1. Connect the M-MDS to the DLC-2.
2. After the vehicle is identified, select the following items from the initialization screen of the M-MDS.
    a. Select “Self Test”.
    b. Select “Modules”.
    c. Select “FSC”.
3. Verify the DTC according to the directions on the screen.
4. Press the clear button on the DTC screen to clear the DTC.
5. Switch the ignition off.
6. Switch the ignition ON (engine off or on) and wait for **5 s or more**.
7. Perform DTC inspection. (See **DTC INSPECTION [FORWARD SENSING CAMERA (FSC)]**.)
8. Verify that no DTCs are displayed.

CLEARING DTC [FORWARD SENSING CAMERA (FSC)]

2014 - Mazda3 - Body and Accessories

DTC TABLE [FORWARD SENSING CAMERA (FSC)]

×: Applicable—: Not applicable

DTC No.	HBC system warning light (amber)/LDWS warning light (amber)	Description	Fail-safe function	Drive cycle	Self test type*1	Memory function	Page
B115E:54	Flash	Forward sensing camera (FSC) aiming not completed	×	—	C, D	×	(See **DTC B115E:54 [FORWARD SENSING CAMERA (FSC)]**.)
B13A6:11	Flash	LDWS switch circuit malfunction	×	—	C, D	×	(See **DTC B13A6:11 [FORWARD SENSING CAMERA (FSC)]**.)
C1001:92	Illuminated	Poor functioning of forward sensing camera (FSC)	×	—	C, D	×	(See **DTC C1001:92 [FORWARD SENSING CAMERA (FSC)]**.)
C1001:97	Illuminated	Forward sensing camera (FSC) poor visibility	×	—	C, D	×	(See **DTC C1001:97 [FORWARD SENSING CAMERA (FSC)]**.)
U0001:88	Flash	Module communication error (HS-CAN)	×	—	C, D	×	(See **DTC U0001:88/U0100:00/U0121:00/U0131:00/U0140:00/U0155:00/U0214:00 [FORWARD SENSING CAMERA (FSC)]**.)
U0100:00	Flash	Communication error with PCM	×	—	C, D	×	
U0121:00	Flash	Communication error with DSC HU/CM	×	—	C, D	×	
U0131:00	Flash	Communication error with EPS control module	×	—	C, D	×	
U0140:00	Flash	Communication error with front body control module (FBCM)	×	—	C, D	×	
U0155:00	Flash	Communication error with instrument cluster	×	—	C, D	×	
		Communication					

U0214:00	Flash	error with start stop unit	×	—	C, D	×	
U0401:68	Flash	Error signal received from PCM	×	—	C, D	×	(See **DTC U0401:68 [FORWARD SENSING CAMERA (FSC)]**.)
U0415:68	Flash	Error signal received from DSC HU/CM	×	—	C, D	×	(See **DTC U0415:68 [FORWARD SENSING CAMERA (FSC)]**.)
U0420:68	Flash	Error signal received from EPS control module	×	—	C, D	×	(See **DTC U0420:68 [FORWARD SENSING CAMERA (FSC)]**.)
U0423:68	Flash	Error signal received from instrument cluster	×	—	C, D	×	(See **DTC U0423:68 [FORWARD SENSING CAMERA (FSC)]**.)
U0515:68	Flash	Error signal received from start stop unit	×	—	C, D	×	(See **DTC U0515:68 [FORWARD SENSING CAMERA (FSC)]**.)
U2005:86	Flash	Error signal received from PCM	×	—	C, D	×	(See **DTC U2005:86 [FORWARD SENSING CAMERA (FSC)]**.)
U2100:00	Illuminated	Forward sensing camera (FSC) configuration error	×	—	C, D	×	(See **DTC U2100:00 [FORWARD SENSING CAMERA (FSC)]**.)
U2101:00	Illuminated	Forward sensing camera (FSC) configuration error	×	—	C, D	×	(See **DTC U2101:00 [FORWARD SENSING CAMERA (FSC)]**.)
U3000:04	Flash	Forward sensing camera (FSC) internal malfunction	×	—	C, D	×	(See **DTC U3000:04/U3000:09/U3000:42/U3000:49 [FORWARD SENSING CAMERA (FSC)]**.)
U3000:09	Flash	Forward sensing camera (FSC) internal malfunction	×	—	C, D	×	
U3000:42	Flash	Forward sensing camera (FSC) internal malfunction	×	—	C, D	×	
U3000:49	Flash	Forward sensing camera (FSC) internal malfunction	×	—	C, D	×	

U3003:16	Flash	Forward sensing camera (FSC) low power supply voltage input	×	—	C, D	×	(See **DTC U3003:16 [FORWARD SENSING CAMERA (FSC)]**.)
U3003:17	Flash	Forward sensing camera (FSC) high power supply voltage input	×	—	C, D	×	(See **DTC U3003:17 [FORWARD SENSING CAMERA (FSC)]**.)

*1

C: CMDTC self test, D: ODDTC self test

2014 - Mazda3 - Body and Accessories

DTC B115E:54 [FORWARD SENSING CAMERA (FSC)]

Description	Forward sensing camera (FSC) aiming not completed
Detection condition	• Forward sensing camera (FSC) aiming not completed is detected.
Fail-safe function	• Inhibits the lane departure warning system (LDWS). • Inhibits the high beam control (HBC) system.
Possible cause	• Forward sensing camera (FSC) aiming not performed. • Forward sensing camera (FSC) malfunction
System wiring diagram	Not applicable

Diagnostic Procedure

Step	Inspection		Action
1	**PERFORM FORWARD SENSING CAMERA (FSC) AIMING** • Perform the forward sensing camera (FSC) aiming. (See **FORWARD SENSING CAMERA (FSC) AIMING**.) • Clear the DTC for the forward sensing camera (FSC) using the M-MDS. (See **CLEARING DTC [FORWARD SENSING CAMERA (FSC)]**.) • Retrieve the forward sensing camera (FSC) DTCs using the M-MDS. (See **DTC INSPECTION [FORWARD SENSING CAMERA**	Yes	Perform the forward sensing camera (FSC) aiming again, then go to the next step. (See **FORWARD SENSING CAMERA (FSC) AIMING**.)
		No	Go to Step 3.

	(FSC)].) • Is the same DTC displayed?		
2	**VERIFY THAT REPAIRS HAVE BEEN COMPLETED** • Clear the DTC for the forward sensing camera (FSC) using the M-MDS. (See **CLEARING DTC [FORWARD SENSING CAMERA (FSC)]**.) • Retrieve the forward sensing camera (FSC) DTCs using the M-MDS. (See **DTC INSPECTION [FORWARD SENSING CAMERA (FSC)]**.) • Is the same DTC displayed?	Yes	Repeat the inspection from Step 1. • If the malfunction recurs, replace the forward sensing camera (FSC). (See **FORWARD SENSING CAMERA (FSC) REMOVAL/INSTALLATION**.) Go to the next step.
		No	Go to the next step.
3	**VERIFY IF OTHER DTCs DISPLAYED** • Are any other DTCs displayed?	Yes	Repair or replace the malfunctioning part according to the applicable DTC troubleshooting. (See **DTC TABLE [FORWARD SENSING CAMERA (FSC)]**.)
		No	DTC troubleshooting completed.

2014 - Mazda3 - Body and Accessories

DTC B13A6:11 [FORWARD SENSING CAMERA (FSC)]

Description	LDWS switch circuit malfunction
Detection condition	• Forward sensing camera (FSC) detects that LDWS switch is held pressed for **10 s or more**.
Fail-safe function	• Inhibits the lane departure warning system (LDWS).
Possible cause	• DTCs are stored in the instrument cluster. • LDWS switch malfunction • Instrument cluster malfunction • Forward sensing camera (FSC) malfunction
System wiring diagram	Not applicable

Diagnostic Procedure

Step	Inspection		Action
1	**VERIFY INSTRUMENT CLUSTER DTCs** • Retrieve the instrument cluster DTCs using the M-MDS. (See **DTC INSPECTION [INSTRUMENT CLUSTER]**.) • Are any DTCs displayed?	Yes	Repair or replace the malfunctioning part according to the applicable DTC troubleshooting. (See **DTC TABLE [INSTRUMENT CLUSTER]**.)
		No	Go to the next step.
2	**INSPECT LDWS SWITCH** • Inspect the LDWS switch. (See **LDWS SWITCH INSPECTION**.) • Is the LDWS switch normal?	Yes	Go to the next step.
		No	Replace the cluster switch, then go to Step 4. (See **CLUSTER SWITCH REMOVAL/INSTALLATION**.)
3	**PERFORM DTC INSPECTION AND VERIFY INSTRUMENT CLUSTER MALFUNCTION**	Yes	Replace the instrument cluster, then go to the

	• Clear the DTC for the forward sensing camera (FSC) using the M-MDS. (See **CLEARING DTC [FORWARD SENSING CAMERA (FSC)]**.) • Switch the ignition ON (engine off or on) and wait for **11.5 s or more**. • Retrieve the forward sensing camera (FSC) DTCs using the M-MDS. (See **DTC INSPECTION [FORWARD SENSING CAMERA (FSC)]**.) • Is the same DTC displayed?		next step. (See **INSTRUMENT CLUSTER REMOVAL/INSTALLATION**.)
		No	Go to Step 5.
4	**VERIFY THAT REPAIRS HAVE BEEN COMPLETED** • Clear the DTC for the forward sensing camera (FSC) using the M-MDS. (See **CLEARING DTC [FORWARD SENSING CAMERA (FSC)]**.) • Switch the ignition ON (engine off or on) and wait for **11.5 s or more**. • Retrieve the forward sensing camera (FSC) DTCs using the M-MDS. (See **DTC INSPECTION [FORWARD SENSING CAMERA (FSC)]**.) • Is the same DTC displayed?	Yes	Repeat the inspection from Step 1. • If the malfunction recurs, replace the forward sensing camera (FSC). (See **FORWARD SENSING CAMERA (FSC) REMOVAL/INSTALLATION**.) Go to the next step.
		No	Go to the next step.
5	**VERIFY IF OTHER DTCs DISPLAYED** • Are any other DTCs displayed?	Yes	Repair or replace the malfunctioning part according to the applicable DTC troubleshooting. (See **DTC TABLE [FORWARD SENSING CAMERA (FSC)]**.)
		No	DTC troubleshooting completed.

2014 - Mazda3 - Body and Accessories

DTC C1001:92 [FORWARD SENSING CAMERA (FSC)]

Description	Poor functioning of forward sensing camera (FSC)
Detection condition	• With the LDWS switch on or the high beam control (HBC) system operating, a condition in which the area around the forward sensing camera (FSC) is excessively bright, and the system is inoperable for **10 min or more** is detected.
Fail-safe function	• Inhibits the lane departure warning system (LDWS). • Inhibits the high beam control (HBC) system.
Possible cause	• Windshield fogging • Forward sensing camera (FSC) lens fogging • Forward sensing camera (FSC) malfunction
System wiring diagram	Not applicable

Diagnostic Procedure

Step	Inspection		Action
1	**VERIFY WINDSHIELD FOGGING** • Verify if the windshield is fogged. • Is the windshield fogged?	Yes	Use the defroster to clear the fogging from the windshield, then go to Step 3.
		No	Go to the next step.
2	**VERIFY FOGGING ON FORWARD SENSING CAMERA (FSC) LENS AREA** • Verify if there is any fogging on the forward sensing camera (FSC) lens. • Is the forward sensing camera (FSC) lens fogged?	Yes	Use the defroster to clear the fogging on the forward sensing camera (FSC) lens, then go to the next step.
		No	Go to the next step.

3	**VERIFY THAT REPAIRS HAVE BEEN COMPLETED** • Clear the DTC for the forward sensing camera (FSC) using the M-MDS. (See **CLEARING DTC [FORWARD SENSING CAMERA (FSC)]**.) • Drive the vehicle at a vehicle speed of **20 km/h {12 mph} or more** for **3 min or more**. • Retrieve the forward sensing camera (FSC) DTCs using the M-MDS. (See **DTC INSPECTION [FORWARD SENSING CAMERA (FSC)]**.) • Is the same DTC displayed?	Yes	Repeat the inspection from Step 1. • If the malfunction recurs, replace the forward sensing camera (FSC). (See **FORWARD SENSING CAMERA (FSC) REMOVAL/INSTALLATION**.) Go to the next step.
		No	Go to the next step.
4	**VERIFY IF OTHER DTCs DISPLAYED** • Are any other DTCs displayed?	Yes	Repair or replace the malfunctioning part according to the applicable DTC troubleshooting. (See **DTC TABLE [FORWARD SENSING CAMERA (FSC)]**.)
		No	DTC troubleshooting completed.

2014 - Mazda3 - Body and Accessories

DTC C1001:97 [FORWARD SENSING CAMERA (FSC)]

Description	Forward sensing camera (FSC) poor visibility
Detection condition	• With the LDWS switch on or the high beam control (HBC) system operating, it is detected that the forward sensing camera (FSC) field of view is obstructed for **10 min or more**.
Fail-safe function	• Inhibits the lane departure warning system (LDWS). • Inhibits the high beam control (HBC) system.
Possible cause	• Windshield is dirty • Forward sensing camera (FSC) lens is dirty • Forward sensing camera (FSC) malfunction
System wiring diagram	Not applicable

Diagnostic Procedure

Step	Inspection		Action
1	**VERIFY WINDSHIELD DIRT** • Verify if the windshield is dirty. • Is the windshield dirty?	Yes	Clean the windshield, then go to Step 3.
		No	Go to the next step.
2	**VERIFY FORWARD SENSING CAMERA (FSC) LENS DIRT** • Verify if the forward sensing camera (FSC) lens is dirty. • Is the forward sensing camera (FSC) lens dirty?	Yes	Clean the forward sensing camera (FSC) lens, then go to the next step.
		No	Go to the next step.
3	**VERIFY THAT REPAIRS HAVE BEEN COMPLETED** • Clear the DTC for the forward sensing	Yes	Repeat the inspection from Step 1. • If the malfunction recurs,

	camera (FSC) using the M-MDS. (See **CLEARING DTC [FORWARD SENSING CAMERA (FSC)]**.) • Drive the vehicle at a vehicle speed of **20 km/h {12 mph} or more** for **3 min or more**. • Retrieve the forward sensing camera (FSC) DTCs using the M-MDS. (See **DTC INSPECTION [FORWARD SENSING CAMERA (FSC)]**.) • Is the same DTC displayed?		replace the forward sensing camera (FSC). (See **FORWARD SENSING CAMERA (FSC) REMOVAL/INSTALLATION**.) Go to the next step.
		No	Go to the next step.
4	**VERIFY IF OTHER DTCs DISPLAYED** • Are any other DTCs displayed?	Yes	Repair or replace the malfunctioning part according to the applicable DTC troubleshooting. (See **DTC TABLE [FORWARD SENSING CAMERA (FSC)]**.)
		No	DTC troubleshooting completed.

2014 - Mazda3 - Body and Accessories

DTC U0001:88/U0100:00/U0121:00/U0131:00/U0140:00/U0155:00/U0214:00 [FORWARD SENSING CAMERA (FSC)]

Description	• U0001:88
	  ▪ Module communication error (HS-CAN)
	• U0100:00
	  ▪ Communication error with PCM
	• U0121:00
	  ▪ Communication error with DSC HU/CM
	• U0131:00
	  ▪ Communication error with EPS control module
	• U0140:00
	  ▪ Communication error with front body control module (FBCM)
	• U0155:00
	  ▪ Communication error with instrument cluster
	• U0214:00
	  ▪ Communication error with start stop unit

	• U0001:88
	  ▪ Forward sensing camera (FSC) cannot receive the CAN bus communication signal (HS-CAN) for **1 s or more**.
	  ▪ Forward sensing camera (FSC) detects the CAN bus communication line (HS-CAN) malfunction **10 times** continuously.
	• U0100:00
	  ▪ Forward sensing camera (FSC) cannot receive the CAN signal from the PCM for **1 s or more**.
	• U0121:00
	  ▪ Forward sensing camera (FSC) cannot receive the CAN signal from the DSC HU/CM for **1 s or more**.

Detection condition	• U0131:00 ▪ Forward sensing camera (FSC) cannot receive the CAN signal from the EPS control module for **1 s or more**. • U0140:00 ▪ Forward sensing camera (FSC) cannot receive the CAN signal from the front body control module (FBCM) for **5 s or more**. • U0155:00 ▪ Forward sensing camera (FSC) cannot receive the CAN signal from the instrument cluster for **5 s or more**. • U0214:00 ▪ Forward sensing camera (FSC) cannot receive the CAN signal from the start stop unit for **1 s or more**.
Fail-safe function	• U0001:88 ▪ Inhibits the lane departure warning system (LDWS). ▪ Inhibits the high beam control (HBC) system. • U0100:00 ▪ Inhibits the lane departure warning system (LDWS). ▪ Inhibits the high beam control (HBC) system. • U0121:00 ▪ Inhibits the lane departure warning system (LDWS). ▪ Inhibits the high beam control (HBC) system. • U0131:00 ▪ Inhibits the lane departure warning system (LDWS). • U0140:00 ▪ Inhibits the lane departure warning system (LDWS). ▪ Inhibits the high beam control (HBC) system. • U0155:00 ▪ Inhibits the lane departure warning system (LDWS). ▪ Inhibits the high beam control (HBC) system. • U0214:00 ▪ Inhibits the lane departure warning system (LDWS). ▪ Inhibits the high beam control (HBC) system.

Possible cause	• Malfunction in CAN bus communication line • Malfunction in CAN line between PCM and forward sensing camera (FSC) • Malfunction in CAN line between DSC HU/CM and forward sensing camera (FSC) • Malfunction in CAN line between EPS control module and forward sensing camera (FSC) • Malfunction in CAN line between front body control module (FBCM) and forward sensing camera (FSC) • Malfunction in CAN line between instrument cluster and forward sensing camera (FSC) • Malfunction in CAN line between start stop unit and forward sensing camera (FSC)
System wiring diagram	Not applicable

Diagnostic Procedure

- Perform the malfunction diagnosis according to the troubleshooting procedure for the multiplex communication system. (See **FOREWORD**.)

2014 - Mazda3 - Body and Accessories

DTC U0401:68 [FORWARD SENSING CAMERA (FSC)]

Description	Error signal received from PCM
Detection condition	• Forward sensing camera (FSC) receives the error signal from the PCM for **5 s or more**.
Fail-safe function	• Inhibits the lane departure warning system (LDWS). • Inhibits the high beam control (HBC) system.
Possible cause	• DTCs are stored in the PCM. • PCM malfunction • Forward sensing camera (FSC) malfunction
System wiring diagram	Not applicable

Diagnostic Procedure

Step	Inspection		Action
1	**VERIFY PCM DTCs** • Retrieve the PCM DTCs using the M-MDS. (See **ON-BOARD DIAGNOSTIC TEST [SKYACTIV-G 2.0, SKYACTIV-G 2.5]**.) • Are any DTCs displayed?	Yes	Repair or replace the malfunctioning part according to the applicable DTC troubleshooting. (See **DTC TABLE [SKYACTIV-G 2.0, SKYACTIV-G 2.5]**.)
		No	Go to the next step.
2	**PERFORM DTC INSPECTION AND VERIFY PCM MALFUNCTION** • Clear the DTC for the forward sensing camera (FSC) using the M-MDS. (See **CLEARING DTC [FORWARD SENSING CAMERA (FSC)]**.)	Yes	Replace the PCM, then go to the next step. (See **PCM REMOVAL/INSTALLATION [SKYACTIV-G 2.0, SKYACTIV-G 2.5]**.)
		No	Go to Step 4.

	• Switch the ignition ON (engine off or on) and wait for **6.5 s or more**. • Retrieve the forward sensing camera (FSC) DTCs using the M-MDS. (See **DTC INSPECTION [FORWARD SENSING CAMERA (FSC)]**.) • Is the same DTC displayed?		
3	**VERIFY THAT REPAIRS HAVE BEEN COMPLETED** • Clear the DTC for the forward sensing camera (FSC) using the M-MDS. (See **CLEARING DTC [FORWARD SENSING CAMERA (FSC)]**.) • Switch the ignition ON (engine off or on) and wait for **6.5 s or more**. • Retrieve the forward sensing camera (FSC) DTCs using the M-MDS. (See **DTC INSPECTION [FORWARD SENSING CAMERA (FSC)]**.) • Is the same DTC displayed?	Yes	Repeat the inspection from Step 1. • If the malfunction recurs, replace the forward sensing camera (FSC). (See **FORWARD SENSING CAMERA (FSC) REMOVAL/INSTALLATION**.) Go to the next step.
		No	Go to the next step.
4	**VERIFY IF OTHER DTCs DISPLAYED** • Are any other DTCs displayed?	Yes	Repair or replace the malfunctioning part according to the applicable DTC troubleshooting. (See **DTC TABLE [FORWARD SENSING CAMERA (FSC)]**.)
		No	DTC troubleshooting completed.

2014 - Mazda3 - Body and Accessories

DTC U0415:68 [FORWARD SENSING CAMERA (FSC)]

Description	Error signal received from DSC HU/CM
Detection condition	• Forward sensing camera (FSC) receives the error signal from the DSC HU/CM for **5 s or more**.
Fail-safe function	• Inhibits the lane departure warning system (LDWS). • Inhibits the high beam control (HBC) system.
Possible cause	• DTCs are stored in the DSC HU/CM. • DSC HU/CM malfunction • Forward sensing camera (FSC) malfunction
System wiring diagram	Not applicable

Diagnostic Procedure

Step	Inspection		Action
1	**VERIFY DSC HU/CM DTCs** • Retrieve the DSC HU/CM DTCs using the M-MDS. (See **ON-BOARD DIAGNOSIS [DYNAMIC STABILITY CONTROL (DSC)]**.) • Are any DTCs displayed?	Yes	Repair or replace the malfunctioning part according to the applicable DTC troubleshooting. (See **ON-BOARD DIAGNOSIS [DYNAMIC STABILITY CONTROL (DSC)]**.)
		No	Go to the next step.
2	**PERFORM DTC INSPECTION AND VERIFY DSC HU/CM MALFUNCTION** • Clear the DTC for the forward sensing camera (FSC) using the M-MDS. (See **CLEARING DTC [FORWARD SENSING CAMERA (FSC)]**.)	Yes	Replace the DSC HU/CM, then go to the next step. (See **DSC HU/CM REMOVAL/INSTALLATION**.)
		No	Go to Step 4.

	• Switch the ignition ON (engine off or on) and wait for **6.5 s or more**. • Retrieve the forward sensing camera (FSC) DTCs using the M-MDS. (See **DTC INSPECTION [FORWARD SENSING CAMERA (FSC)]**.) • Is the same DTC displayed?		
3	**VERIFY THAT REPAIRS HAVE BEEN COMPLETED** • Clear the DTC for the forward sensing camera (FSC) using the M-MDS. (See **CLEARING DTC [FORWARD SENSING CAMERA (FSC)]**.) • Switch the ignition ON (engine off or on) and wait for **6.5 s or more**. • Retrieve the forward sensing camera (FSC) DTCs using the M-MDS. (See **DTC INSPECTION [FORWARD SENSING CAMERA (FSC)]**.) • Is the same DTC displayed?	Yes	Repeat the inspection from Step 1. • If the malfunction recurs, replace the forward sensing camera (FSC). (See **FORWARD SENSING CAMERA (FSC) REMOVAL/INSTALLATION**.) Go to the next step.
		No	Go to the next step.
4	**VERIFY IF OTHER DTCs DISPLAYED** • Are any other DTCs displayed?	Yes	Repair or replace the malfunctioning part according to the applicable DTC troubleshooting. (See **DTC TABLE [FORWARD SENSING CAMERA (FSC)]**.)
		No	DTC troubleshooting completed.

2014 - Mazda3 - Body and Accessories

DTC U0420:68 [FORWARD SENSING CAMERA (FSC)]

Description	Error signal received from EPS control module
Detection condition	• Forward sensing camera (FSC) receives the error signal from the EPS control module for **5 s or more**.
Fail-safe function	• Inhibits the lane departure warning system (LDWS).
Possible cause	• DTCs are stored in the EPS control module. • EPS control module malfunction • Forward sensing camera (FSC) malfunction
System wiring diagram	Not applicable

Diagnostic Procedure

Step	Inspection		Action
1	**VERIFY EPS CONTROL MODULE DTCs** • Retrieve the EPS control module DTCs using the M-MDS. (See **ELECTRIC POWER STEERING (EPS) ON-BOARD DIAGNOSIS**.) • Are any DTCs displayed?	Yes	Repair or replace the malfunctioning part according to the applicable DTC troubleshooting. (See **ELECTRIC POWER STEERING (EPS) ON-BOARD DIAGNOSIS**.)
		No	Go to the next step.
2	**PERFORM DTC INSPECTION AND VERIFY EPS CONTROL MODULE MALFUNCTION** • Clear the DTC for the forward sensing camera (FSC) using the M-MDS. (See **CLEARING DTC [FORWARD SENSING CAMERA (FSC)]**.) • Switch the ignition ON (engine	Yes	Replace the EPS control module, then go to the next step. (See **STEERING WHEEL AND COLUMN REMOVAL/INSTALLATION**.)
		No	Go to Step 4.

	off or on) and wait for **6.5 s or more**. • Retrieve the forward sensing camera (FSC) DTCs using the M-MDS. (See **DTC INSPECTION [FORWARD SENSING CAMERA (FSC)]**.) • Is the same DTC displayed?		
3	**VERIFY THAT REPAIRS HAVE BEEN COMPLETED** • Clear the DTC for the forward sensing camera (FSC) using the M-MDS. (See **CLEARING DTC [FORWARD SENSING CAMERA (FSC)]**.) • Switch the ignition ON (engine off or on) and wait for **6.5 s or more**. • Retrieve the forward sensing camera (FSC) DTCs using the M-MDS. (See **DTC INSPECTION [FORWARD SENSING CAMERA (FSC)]**.) • Is the same DTC displayed?	Yes	Repeat the inspection from Step 1. • If the malfunction recurs, replace the forward sensing camera (FSC). (See **FORWARD SENSING CAMERA (FSC) REMOVAL/INSTALLATION**.) Go to the next step.
		No	Go to the next step.
4	**VERIFY IF OTHER DTCs DISPLAYED** • Are any other DTCs displayed?	Yes	Repair or replace the malfunctioning part according to the applicable DTC troubleshooting. (See **DTC TABLE [FORWARD SENSING CAMERA (FSC)]**.)
		No	DTC troubleshooting completed.

2014 - Mazda3 - Body and Accessories

DTC U0423:68 [FORWARD SENSING CAMERA (FSC)]

Description	Error signal received from instrument cluster
Detection condition	• Forward sensing camera (FSC) receives the error signal from the instrument cluster for **5 s or more**.
Fail-safe function	• Inhibits the lane departure warning system (LDWS).
Possible cause	• DTCs are stored in the instrument cluster. • Instrument cluster malfunction • Forward sensing camera (FSC) malfunction
System wiring diagram	Not applicable

Diagnostic Procedure

Step	Inspection		Action
1	**VERIFY INSTRUMENT CLUSTER DTCs** • Retrieve the instrument cluster DTCs using the M-MDS. (See **DTC INSPECTION [INSTRUMENT CLUSTER]**.) • Are any DTCs displayed?	Yes	Repair or replace the malfunctioning part according to the applicable DTC troubleshooting. (See **DTC TABLE [INSTRUMENT CLUSTER]**.)
		No	Go to the next step.
2	**PERFORM DTC INSPECTION AND VERIFY INSTRUMENT CLUSTER MALFUNCTION** • Clear the DTC for the forward sensing camera (FSC) using the M-MDS. (See **CLEARING DTC [FORWARD SENSING CAMERA (FSC)]**.) • Switch the ignition ON (engine	Yes	Replace the instrument cluster, then go to the next step. (See **INSTRUMENT CLUSTER REMOVAL/INSTALLATION**.)
		No	Go to Step 4.

	off or on) and wait for **6.5 s or more**. • Retrieve the forward sensing camera (FSC) DTCs using the M-MDS. (See **DTC INSPECTION [FORWARD SENSING CAMERA (FSC)]**.) • Is the same DTC displayed?		
3	**VERIFY THAT REPAIRS HAVE BEEN COMPLETED** • Clear the DTC for the forward sensing camera (FSC) using the M-MDS. (See **CLEARING DTC [FORWARD SENSING CAMERA (FSC)]**.) • Switch the ignition ON (engine off or on) and wait for **6.5 s or more**. • Retrieve the forward sensing camera (FSC) DTCs using the M-MDS. (See **DTC INSPECTION [FORWARD SENSING CAMERA (FSC)]**.) • Is the same DTC displayed?	Yes	Repeat the inspection from Step 1. • If the malfunction recurs, replace the forward sensing camera (FSC). (See **FORWARD SENSING CAMERA (FSC) REMOVAL/INSTALLATION**.) Go to the next step.
		No	Go to the next step.
4	**VERIFY IF OTHER DTCs DISPLAYED** • Are any other DTCs displayed?	Yes	Repair or replace the malfunctioning part according to the applicable DTC troubleshooting. (See **DTC TABLE [FORWARD SENSING CAMERA (FSC)]**.)
		No	DTC troubleshooting completed.

2014 - Mazda3 - Body and Accessories

DTC U0515:68 [FORWARD SENSING CAMERA (FSC)]

Description	Error signal received from start stop unit
Detection condition	• Forward sensing camera (FSC) receives the error signal from the start stop unit for **5 s or more**.
Fail-safe function	• Inhibits the lane departure warning system (LDWS). • Inhibits the high beam control (HBC) system.
Possible cause	• DTCs are stored in the start stop unit. • Start stop unit malfunction • Forward sensing camera (FSC) malfunction
System wiring diagram	Not applicable

Diagnostic Procedure

Step	Inspection		Action
1	**VERIFY START STOP UNIT DTCs** • Retrieve the start stop unit DTCs using the M-MDS. (See **DTC INSPECTION [START STOP UNIT]**.) • Are any DTCs displayed?	Yes	Repair or replace the malfunctioning part according to the applicable DTC troubleshooting. (See **DTC TABLE [START STOP UNIT]**.)
		No	Go to the next step.
2	**PERFORM DTC INSPECTION AND VERIFY START STOP UNIT MALFUNCTION** • Clear the DTC for the forward sensing camera (FSC) using the M-MDS. (See **CLEARING DTC [FORWARD SENSING CAMERA (FSC)]**.)	Yes	Replace the start stop unit, then go to the next step. (See **START STOP UNIT REMOVAL/INSTALLATION**.)
		No	Go to Step 4.

	Switch the ignition ON (engine off or on) and wait for **6.5 s or more**. • Retrieve the forward sensing camera (FSC) DTCs using the M-MDS. (See **DTC INSPECTION [FORWARD SENSING CAMERA (FSC)]**.) • Is the same DTC displayed?		
3	**VERIFY THAT REPAIRS HAVE BEEN COMPLETED** • Clear the DTC for the forward sensing camera (FSC) using the M-MDS. (See **CLEARING DTC [FORWARD SENSING CAMERA (FSC)]**.) • Switch the ignition ON (engine off or on) and wait for **6.5 s or more**. • Retrieve the forward sensing camera (FSC) DTCs using the M-MDS. (See **DTC INSPECTION [FORWARD SENSING CAMERA (FSC)]**.) • Is the same DTC displayed?	Yes	Repeat the inspection from Step 1. • If the malfunction recurs, replace the forward sensing camera (FSC). (See **FORWARD SENSING CAMERA (FSC) REMOVAL/INSTALLATION**.) Go to the next step.
		No	Go to the next step.
4	**VERIFY IF OTHER DTCs DISPLAYED** • Are any other DTCs displayed?	Yes	Repair or replace the malfunctioning part according to the applicable DTC troubleshooting. (See **DTC TABLE [FORWARD SENSING CAMERA (FSC)]**.)
		No	DTC troubleshooting completed.

2014 - Mazda3 - Body and Accessories

DTC U2005:86 [FORWARD SENSING CAMERA (FSC)]

Description	Error signal received from PCM
Detection condition	• Forward sensing camera (FSC) receives the vehicle speed signal error from the PCM for **5 s or more**.
Fail-safe function	• Inhibits the lane departure warning system (LDWS). • Inhibits the high beam control (HBC) system.
Possible cause	• DTCs are stored in the PCM. • PCM malfunction • Forward sensing camera (FSC) malfunction
System wiring diagram	Not applicable

Diagnostic Procedure

Step	Inspection		Action
1	**VERIFY PCM DTCs** • Retrieve the PCM DTCs using the M-MDS. (See **ON-BOARD DIAGNOSTIC TEST [SKYACTIV-G 2.0, SKYACTIV-G 2.5]**.) • Are any DTCs displayed?	Yes	Repair or replace the malfunctioning part according to the applicable DTC troubleshooting. (See **DTC TABLE [SKYACTIV-G 2.0, SKYACTIV-G 2.5]**.)
		No	Go to the next step.
2	**PERFORM DTC INSPECTION AND VERIFY PCM MALFUNCTION** • Clear the DTC for the forward sensing camera (FSC) using the M-MDS. (See **CLEARING DTC [FORWARD SENSING CAMERA (FSC)]**.)	Yes	Replace the PCM, then go to the next step. (See **PCM REMOVAL/INSTALLATION [SKYACTIV-G 2.0, SKYACTIV-G 2.5]**.)
		No	Go to Step 4.

	• Switch the ignition ON (engine off or on) and wait for **6.5 s or more**. • Retrieve the forward sensing camera (FSC) DTCs using the M-MDS. (See **DTC INSPECTION [FORWARD SENSING CAMERA (FSC)]**.) • Is the same DTC displayed?		
3	**VERIFY THAT REPAIRS HAVE BEEN COMPLETED** • Clear the DTC for the forward sensing camera (FSC) using the M-MDS. (See **CLEARING DTC [FORWARD SENSING CAMERA (FSC)]**.) • Switch the ignition ON (engine off or on) and wait for **6.5 s or more**. • Retrieve the forward sensing camera (FSC) DTCs using the M-MDS. (See **DTC INSPECTION [FORWARD SENSING CAMERA (FSC)]**.) • Is the same DTC displayed?	Yes	Repeat the inspection from Step 1. • If the malfunction recurs, replace the forward sensing camera (FSC). (See **FORWARD SENSING CAMERA (FSC) REMOVAL/INSTALLATION**.) Go to the next step.
		No	Go to the next step.
4	**VERIFY IF OTHER DTCs DISPLAYED** • Are any other DTCs displayed?	Yes	Repair or replace the malfunctioning part according to the applicable DTC troubleshooting. (See **DTC TABLE [FORWARD SENSING CAMERA (FSC)]**.)
		No	DTC troubleshooting completed.

2014 - Mazda3 - Body and Accessories

DTC U2100:00 [FORWARD SENSING CAMERA (FSC)]

Description	Forward sensing camera (FSC) configuration error
Detection condition	• Forward sensing camera (FSC) configuration not completed is detected.
Fail-safe function	• Inhibits the lane departure warning system (LDWS). • Inhibits the high beam control (HBC) system.
Possible cause	• Forward sensing camera (FSC) configuration error • Forward sensing camera (FSC) malfunction
System wiring diagram	Not applicable

Diagnostic Procedure

Step	Inspection		Action
1	**PERFORM FORWARD SENSING CAMERA (FSC) CONFIGURATION (USING AS-BUILT DATA)** • Using the M-MDS, perform the forward sensing camera (FSC) configuration (using As-Built data). (See **FORWARD SENSING CAMERA (FSC) CONFIGURATION (USING AS-BUILT DATA)**.) • Clear the DTC for the forward sensing camera (FSC) using the M-MDS. (See **CLEARING DTC [FORWARD SENSING CAMERA (FSC)]**.)	Yes	Using the M-MDS, perform the forward sensing camera (FSC) configuration (using As-Built data) again, then go to the next step. (See **FORWARD SENSING CAMERA (FSC) CONFIGURATION (USING AS-BUILT DATA)**.)
		No	Go to Step 3.

	• Retrieve the forward sensing camera (FSC) DTCs using the M-MDS. (See **DTC INSPECTION [FORWARD SENSING CAMERA (FSC)]**.) • Is the same DTC displayed?		
2	**VERIFY THAT REPAIRS HAVE BEEN COMPLETED** • Clear the DTC for the forward sensing camera (FSC) using the M-MDS. (See **CLEARING DTC [FORWARD SENSING CAMERA (FSC)]**.) • Retrieve the forward sensing camera (FSC) DTCs using the M-MDS. (See **DTC INSPECTION [FORWARD SENSING CAMERA (FSC)]**.) • Is the same DTC displayed?	Yes	Repeat the inspection from Step 1. • If the malfunction recurs, replace the forward sensing camera (FSC). (See **FORWARD SENSING CAMERA (FSC) REMOVAL/INSTALLATION**.) Go to the next step.
		No	Go to the next step.
3	**VERIFY IF OTHER DTCs DISPLAYED** • Are any other DTCs displayed?	Yes	Repair or replace the malfunctioning part according to the applicable DTC troubleshooting. (See **DTC TABLE [FORWARD SENSING CAMERA (FSC)]**.)
		No	DTC troubleshooting completed.

2014 - Mazda3 - Body and Accessories

DTC U2101:00 [FORWARD SENSING CAMERA (FSC)]

Description	Forward sensing camera (FSC) configuration error
Detection condition	• Detects that forward sensing camera (FSC) has unsupported configuration data.
Fail-safe function	• Inhibits the lane departure warning system (LDWS). • Inhibits the high beam control (HBC) system.
Possible cause	• Forward sensing camera (FSC) configuration error • Forward sensing camera (FSC) malfunction
System wiring diagram	Not applicable

Diagnostic Procedure

Step	Inspection		Action
1	**PERFORM FORWARD SENSING CAMERA (FSC) CONFIGURATION (USING AS-BUILT DATA)** • Using the M-MDS, perform the forward sensing camera (FSC) configuration (using As-Built data). (See **FORWARD SENSING CAMERA (FSC) CONFIGURATION (USING AS-BUILT DATA)**.) • Clear the DTC for the forward sensing camera (FSC) using the M-MDS. (See **CLEARING DTC [FORWARD SENSING CAMERA (FSC)]**.)	Yes	Using the M-MDS, perform the forward sensing camera (FSC) configuration (using As-Built data) again, then go to the next step. (See **FORWARD SENSING CAMERA (FSC) CONFIGURATION (USING AS-BUILT DATA)**.)
		No	Go to Step 3.

	• Retrieve the forward sensing camera (FSC) DTCs using the M-MDS. (See **DTC INSPECTION [FORWARD SENSING CAMERA (FSC)]**.) • Is the same DTC displayed?		
2	**VERIFY THAT REPAIRS HAVE BEEN COMPLETED** • Clear the DTC for the forward sensing camera (FSC) using the M-MDS. (See **CLEARING DTC [FORWARD SENSING CAMERA (FSC)]**.) • Retrieve the forward sensing camera (FSC) DTCs using the M-MDS. (See **DTC INSPECTION [FORWARD SENSING CAMERA (FSC)]**.) • Is the same DTC displayed?	Yes	Repeat the inspection from Step 1. • If the malfunction recurs, replace the forward sensing camera (FSC). (See **FORWARD SENSING CAMERA (FSC) REMOVAL/INSTALLATION**.) Go to the next step.
		No	Go to the next step.
3	**VERIFY IF OTHER DTCs DISPLAYED** • Are any other DTCs displayed?	Yes	Repair or replace the malfunctioning part according to the applicable DTC troubleshooting. (See **DTC TABLE [FORWARD SENSING CAMERA (FSC)]**.)
		No	DTC troubleshooting completed.

2014 - Mazda3 - Body and Accessories

DTC U3000:04/U3000:09/U3000:42/U3000:49 [FORWARD SENSING CAMERA (FSC)]

Description	Forward sensing camera (FSC) internal malfunction

Detection condition	• U3000:04
	  ▪ Forward sensing camera (FSC) detects an error in the image-related circuit in the forward sensing camera (FSC) with the ignition switched ON (engine off or on).
	• U3000:09
	  ▪ Forward sensing camera (FSC) detects an internal temperature sensor malfunction in the forward sensing camera (FSC) with the ignition switched ON (engine off or on).
	• U3000:42
	  ▪ Forward sensing camera (FSC) detects a NVRAM error in the forward sensing camera (FSC) with the ignition switched ON (engine off or on).
	• U3000:49
	  ▪ Forward sensing camera (FSC) detects a malfunction in the forward sensing camera (FSC) with the ignition switched ON (engine off or on).

Fail-safe function	• U3000:04
	  ▪ Inhibits the lane departure warning system (LDWS).
	  ▪ Inhibits the high beam control (HBC) system.
	• U3000:09
	  ▪ Inhibits the lane departure warning system (LDWS).
	  ▪ Inhibits the high beam control (HBC) system.
	• U3000:42
	  ▪ Inhibits the lane departure warning system (LDWS).
	  ▪ Inhibits the high beam control (HBC) system.
	• U3000:49

	▪ Inhibits the lane departure warning system (LDWS). ▪ Inhibits the high beam control (HBC) system.
Possible cause	• Forward sensing camera (FSC) malfunction
System wiring diagram	Not applicable

Diagnostic Procedure

Step	Inspection		Action
1	**PERFORM DTC INSPECTION AND VERIFY FORWARD SENSING CAMERA (FSC) MALFUNCTION** • Clear the DTC for the forward sensing camera (FSC) using the M-MDS. (See **CLEARING DTC [FORWARD SENSING CAMERA (FSC)]**.) • Retrieve the forward sensing camera (FSC) DTCs using the M-MDS. (See **DTC INSPECTION [FORWARD SENSING CAMERA (FSC)]**.) • Is the same DTC displayed?	Yes	Repeat the inspection from Step 1. • If the malfunction recurs, replace the forward sensing camera (FSC). (See **FORWARD SENSING CAMERA (FSC) REMOVAL/INSTALLATION**.) Go to the next step.
		No	Go to the next step.
2	**VERIFY IF OTHER DTCs DISPLAYED** • Are any other DTCs displayed?	Yes	Repair or replace the malfunctioning part according to the applicable DTC troubleshooting. (See **DTC TABLE [FORWARD SENSING CAMERA (FSC)]**.)
		No	DTC troubleshooting completed.

2014 - Mazda3 - Body and Accessories

DTC U3003:16 [FORWARD SENSING CAMERA (FSC)]

Description	Forward sensing camera (FSC) low power supply voltage input
Detection condition	• Forward sensing camera (FSC) power supply circuit voltage of **8.0 ± 0.8 V or less** is detected for **5 s or more** with the ignition switched ON (engine off or on).
Fail-safe function	• Inhibits the lane departure warning system (LDWS). • Inhibits the high beam control (HBC) system.

Possible cause	• DTCs are stored in the PCM.
	• Battery malfunction
	• Generator malfunction
	• Forward sensing camera (FSC) connector or terminal malfunction
	• Forward sensing camera (FSC) power supply circuit malfunction
	  ▪ Short to ground in wiring harness between C/U IG1 15 A fuse and forward sensing camera (FSC) terminal I
	  ▪ C/U IG1 15 A fuse malfunction
	  ▪ Open circuit in wiring harness between IG1 relay and forward sensing camera (FSC) terminal I
	• Forward sensing camera (FSC) malfunction

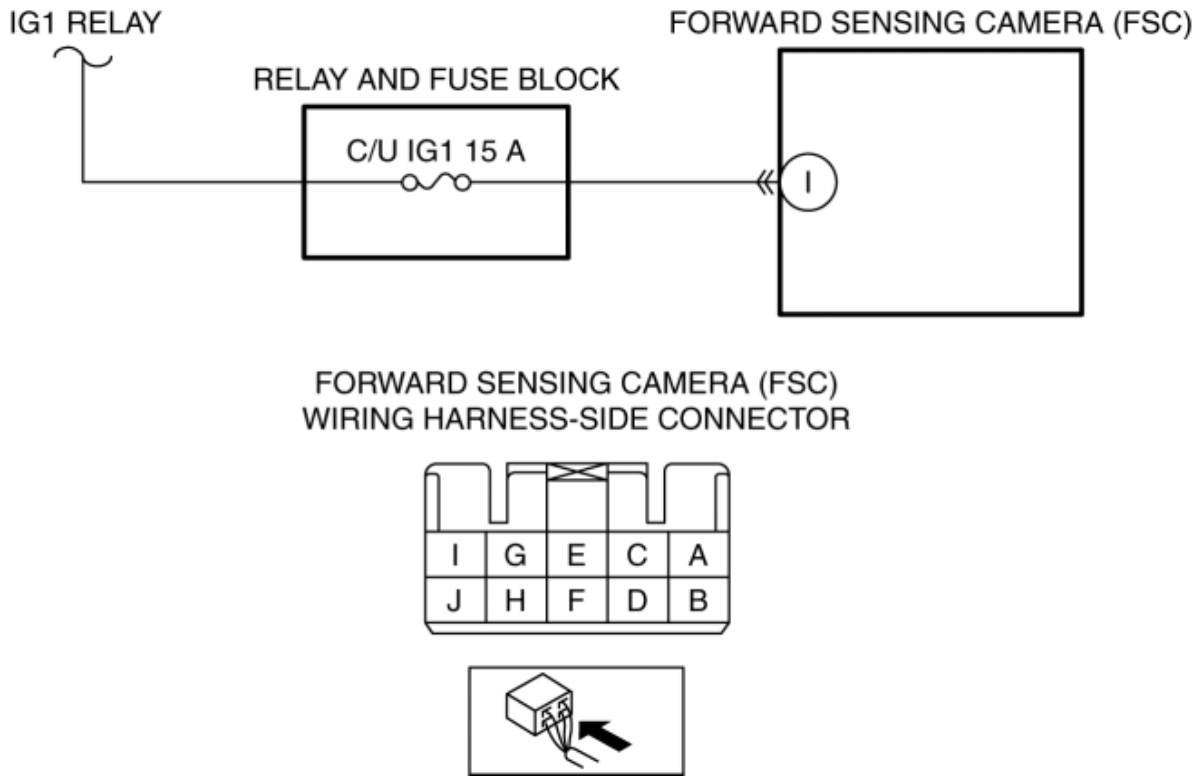

Diagnostic Procedure

Step	Inspection		Action
1	**VERIFY PCM DTCs** • Retrieve the PCM DTCs using the M-MDS. (See **ON-BOARD DIAGNOSTIC TEST [SKYACTIV-G 2.0, SKYACTIV-G 2.5]**.) • Are any DTCs displayed?	Yes	Repair or replace the malfunctioning part according to the applicable DTC troubleshooting. (See **DTC TABLE [SKYACTIV-G 2.0, SKYACTIV-G 2.5]**.)
		No	Go to the next step.
2	**INSPECT BATTERY** • Inspect the battery. (See **BATTERY INSPECTION [SKYACTIV-G 2.0, SKYACTIV-G 2.5]**.) • Is the battery normal?	Yes	Go to the next step.
		No	Recharge or replace the battery, then go to Step 6. (See **BATTERY RECHARGING [SKYACTIV-G 2.0, SKYACTIV-G 2.5]**.) (See **BATTERY REMOVAL/INSTALLATION [SKYACTIV-G 2.0, SKYACTIV-G 2.5]**.)
3	**INSPECT GENERATOR** • Inspect the generator. (See **GENERATOR INSPECTION [SKYACTIV-G 2.0, SKYACTIV-G 2.5 (WITHOUT i-ELOOP)]**.) (See **GENERATOR INSPECTION [SKYACTIV-G 2.0, SKYACTIV-G 2.5 (WITH i-ELOOP)]**.)	Yes	Go to the next step.
		No	Replace the generator, then go to Step 6. (See **GENERATOR REMOVAL/INSTALLATION [SKYACTIV-G 2.0, SKYACTIV-G 2.5 (WITHOUT i-ELOOP)]**.) (See **GENERATOR REMOVAL/INSTALLATION [SKYACTIV-G 2.0, SKYACTIV-G 2.5 (WITH i-ELOOP)]**.)

	Is the generator normal?		
4	**INSPECT FORWARD SENSING CAMERA (FSC) CONNECTOR CONDITION** • Switch the ignition off. • Disconnect the negative battery cable. (See **NEGATIVE BATTERY CABLE DISCONNECTION/CONNECTION [SKYACTIV-G 2.0, SKYACTIV-G 2.5]**.) • Disconnect the forward sensing camera (FSC) connector. • Inspect the connector engagement and connection condition and inspect the terminals for damage, deformation, corrosion, or disconnection. • Is the connector normal?	Yes	Go to the next step.
		No	Repair or replace the connector, then go to Step 6.
5	**VERIFY FORWARD SENSING CAMERA (FSC) POWER SUPPLY VOLTAGE** • Always reconnect all disconnected connectors. • Reconnect the negative battery cable. (See **NEGATIVE BATTERY CABLE DISCONNECTION/CONNECTION [SKYACTIV-G 2.0, SKYACTIV-G 2.5]**.) • Display the PID VPWR_IG1 using the M-MDS. (See **PID/DATA MONITOR INSPECTION [FORWARD SENSING CAMERA (FSC)]**.) • Is the voltage **B+**?	Yes	Go to the next step.
		No	Inspect the C/U IG1 15 A fuse. • If the fuse is blown: ▪ Refer to the wiring diagram and verify whether or not there is a common connector between C/U IG1 15 A fuse and forward sensing camera (FSC) terminal I. **If there is a common connector:** • Determine the malfunctioning part by inspecting the common connector and the terminal for corrosion, damage, or pin disconnection, and the common wiring harness for a short to ground. • Repair or

replace the malfunctioning part.

If there is no common connector:

- Repair or replace the wiring harness which has a short to ground.
- Replace the fuse.

- If the fuse is damaged:
  - Replace the fuse.
- If the fuse is normal:
  - Refer to the wiring diagram and verify whether or not there is a common connector between IG1 relay and forward sensing camera (FSC) terminal I.

If there is a common connector:

- Determine the malfunctioning part by inspecting the common connector and the terminal for corrosion, damage, or pin disconnection, and the common wiring harness for an open circuit.
- Repair or replace the malfunctioning part.

If there is no common connector:

- Repair or replace the wiring harness which has an open circuit.

			Go to the next step.
6	**VERIFY THAT REPAIRS HAVE BEEN COMPLETED** • Always reconnect all disconnected connectors. • Reconnect the negative battery cable. (See **NEGATIVE BATTERY CABLE DISCONNECTION/CONNECTION [SKYACTIV-G 2.0, SKYACTIV-G 2.5]**.) • Clear the DTC for the forward sensing camera (FSC) using the M-MDS. (See **CLEARING DTC [FORWARD SENSING CAMERA (FSC)]**.) • Switch the ignition ON (engine off or on) and wait for **6.5 s or more**. • Retrieve the forward sensing camera (FSC) DTCs using the M-MDS. (See **DTC INSPECTION [FORWARD SENSING CAMERA (FSC)]**.) • Is the same DTC displayed?	Yes	Repeat the inspection from Step 1. • If the malfunction recurs, replace the forward sensing camera (FSC). (See **FORWARD SENSING CAMERA (FSC) REMOVAL/INSTALLATION**.) Go to the next step.
		No	Go to the next step.
7	**VERIFY IF OTHER DTCs DISPLAYED** • Are any other DTCs displayed?	Yes	Repair or replace the malfunctioning part according to the applicable DTC troubleshooting. (See **DTC TABLE [FORWARD SENSING CAMERA (FSC)]**.)
		No	DTC troubleshooting completed.

2014 - Mazda3 - Body and Accessories

DTC U3003:17 [FORWARD SENSING CAMERA (FSC)]

Description	Forward sensing camera (FSC) high power supply voltage input
Detection condition	• Forward sensing camera (FSC) power supply circuit voltage of **16.0 ± 0.8 V or more** is detected for **5 s or more** with the ignition switched ON (engine off or on).
Fail-safe function	• Inhibits the lane departure warning system (LDWS). • Inhibits the high beam control (HBC) system.
Possible cause	• DTCs are stored in the PCM. • Battery malfunction • Generator malfunction • Forward sensing camera (FSC) malfunction
System wiring diagram	Not applicable

Diagnostic Procedure

Step	Inspection		Action
1	**VERIFY PCM DTCs** • Retrieve the PCM DTCs using the M-MDS. (See **ON-BOARD DIAGNOSTIC TEST [SKYACTIV-G 2.0, SKYACTIV-G 2.5]**.) • Are any DTCs displayed?	Yes	Repair or replace the malfunctioning part according to the applicable DTC troubleshooting. (See **DTC TABLE [SKYACTIV-G 2.0, SKYACTIV-G 2.5]**.)
		No	Go to the next step.
2	**INSPECT BATTERY** • Inspect the battery. (See **BATTERY INSPECTION**	Yes	Go to the next step.
		No	Replace the battery, then go to Step 4.

	[SKYACTIV-G 2.0, SKYACTIV-G 2.5].) • Is the battery normal?		(See **BATTERY REMOVAL/INSTALLATION [SKYACTIV-G 2.0, SKYACTIV-G 2.5]**.)
3	**INSPECT GENERATOR** • Inspect the generator. (See **GENERATOR INSPECTION [SKYACTIV-G 2.0, SKYACTIV-G 2.5 (WITHOUT i-ELOOP)]**.) (See **GENERATOR INSPECTION [SKYACTIV-G 2.0, SKYACTIV-G 2.5 (WITH i-ELOOP)]**.) • Is the generator normal?	Yes	Go to the next step.
		No	Replace the generator, then go to the next step. (See **GENERATOR REMOVAL/INSTALLATION [SKYACTIV-G 2.0, SKYACTIV-G 2.5 (WITHOUT i-ELOOP)]**.) (See **GENERATOR REMOVAL/INSTALLATION [SKYACTIV-G 2.0, SKYACTIV-G 2.5 (WITH i-ELOOP)]**.)
4	**VERIFY THAT REPAIRS HAVE BEEN COMPLETED** • Clear the DTC for the forward sensing camera (FSC) using the M-MDS. (See **CLEARING DTC [FORWARD SENSING CAMERA (FSC)]**.) • Switch the ignition ON (engine off or on) and wait for **6.5 s or more**. • Retrieve the forward sensing camera (FSC) DTCs using the M-MDS. (See **DTC INSPECTION [FORWARD SENSING CAMERA (FSC)]**.) • Is the same DTC displayed?	Yes	Repeat the inspection from Step 1. • If the malfunction recurs, replace the forward sensing camera (FSC). (See **FORWARD SENSING CAMERA (FSC) REMOVAL/INSTALLATION**.) Go to the next step.
		No	Go to the next step.
5	**VERIFY IF OTHER DTCs DISPLAYED** • Are any other DTCs displayed?	Yes	Repair or replace the malfunctioning part according to the applicable DTC troubleshooting. (See **DTC TABLE [FORWARD SENSING CAMERA (FSC)]**.)
		No	DTC troubleshooting completed.

2014 - Mazda3 - Body and Accessories

PID/DATA MONITOR INSPECTION [FORWARD SENSING CAMERA (FSC)]

1. Connect the M-MDS to the DLC-2.

2. After the vehicle is identified, select the following items from the initialization screen of the M-MDS.

    a. Select “DataLogger”.

    b. Select “Modules”.

    c. Select “FSC”.

3. Select the applicable PID from the PID table.

4. Verify the PID data according to the directions on the screen.

NOTE:

- The PID data screen function is used for monitoring the calculated value of input/output signals in the module. Therefore, if the monitored value of the output parts is not within the specification, it is necessary to inspect the monitored value of input parts corresponding to the applicable output part control. In addition, because the system does not display an output part malfunction as an abnormality in the monitored value, it is necessary to inspect the output parts individually.
- When detecting DTCs, PIDs related to a malfunctioning system may not display even if the module is normal. Therefore, if a PID is not displayed, it is necessary to verify the DTC, perform malfunction diagnosis of the DTC that was detected, and do repairs.

2014 - Mazda3 - Body and Accessories

PID/DATA MONITOR TABLE [FORWARD SENSING CAMERA (FSC)]

PID	Unit/Operation	Data contents	Module control terminal
A_ANG_PITCH	° (deg)	Displays forward sensing camera (FSC) aiming angle (pitch)	C, E (CAN)
A_ANG_ROLL	° (deg)	Displays forward sensing camera (FSC) aiming angle (roll)	C, E (CAN)
A_ANG_YAW	° (deg)	Displays forward sensing camera (FSC) aiming angle (yaw)	C, E (CAN)
BRAKE_SW	Off/On	• Off: Brake switch (No. 2 signal) is off. (Brake pedal is depressed.) • On: Brake switch (No. 2 signal) is on. (Brake pedal is not depressed.)	C, E (CAN)
DSP_LANE_ST	Off/Dash_Lane/Solid_Lane	• Off: Vehicle lanes not displayed in the active driving display (ADD) • Dash_Lane: Displays broken lines in the active driving display (ADD) • Solid_Lane: Displays actual lanes in the active driving display (ADD)	C, E (CAN)
		• Off: Warning not displayed in the center display • LDWS_Left: Warning related to lane departure on vehicle left	

		side is displayed in the center display. • LDWS_Right: Warning related to lane departure on vehicle right side is displayed in the center display. • LDWS_Fail: Warning related to malfunction in lane departure warning system (LDWS) is displayed in the center display. • HBC_Fail: Warning related to malfunction in high beam control (HBC) system is displayed in the center display. • Camera_BLK: Warning related to dirt of the forward sensing camera (FSC) is displayed in the center display. • FSC_Fail: Warning related to malfunction in forward sensing camera (FSC) is displayed in the center display. • Camera_DRDT: Warning related to fogging of the forward sensing camera (FSC) is displayed in the center display.	
DSP_WRN_ST	Off/LDWS_Left/LDWS_Right/LDWS_Fail/HBC_Fail/Camera_BLK/FSC_Fail/Camera_DRDT		C, E (CAN)
		• Hi_Request: HI beam switch signal received • Low_Request: LO beam	

HBC_H/L_CS	Hi_Request/Low_Request/Invalid	switch signal received • Invalid: Error in HI/LO beam switch request signal	C, E (CAN)
IL_ST_HBC	Off/Green_On/Green_Flash/Amber_On/Amber_Flash	• Off: HBC system indicator light (green) and HBC system warning indicator light (amber) turned off • Green_On: HBC system indicator light (green) is illuminated. • Green_Flash: HBC system indicator light (green) is flashing. • Amber_On: HBC system warning light (amber) is illuminated. • Amber_Flash: HBC system warning light (amber) is flashing.	C, E (CAN)
IL_ST_LDWS	Off/Green_On/Green_Flash/Amber_On/Amber_Flash	• Off: LDWS indicator light (green) and LDWS warning light (amber) turned off • Green_On: LDWS indicator light (green) illuminated • Green_Flash: LDWS indicator light (green) is flashing. • Amber_On: LDWS warning light (amber) is illuminated. • Amber_Flash: LDWS warning light (amber) is flashing.	C, E (CAN)
LDWS_BUZZER	Off/On	• Off: LDWS warning alarm does not sound. • On: LDWS	C, E (CAN)

		warning alarm sounds.	
LDWS_SW	Off/On	• Off: LDWS switch is off. • On: LDWS switch is on.	C, E (CAN)
RS_SOUND_CS	Off/Left/Right	• Off: Rumble strip sound is not heard. • Left: Left side rumble strip sound heard. • Right: Right side rumble strip sound heard.	C, E (CAN)
VPWR_IG1	V	Displays forward sensing camera (FSC) power supply voltage	I (Power supply)
VSPD	KPH, MPH	Displays vehicle speed	C, E (CAN)

2014 - Mazda3 - Body and Accessories

POWER WINDOW SYSTEM WIRING DIAGRAM [POWER WINDOW SYSTEM]

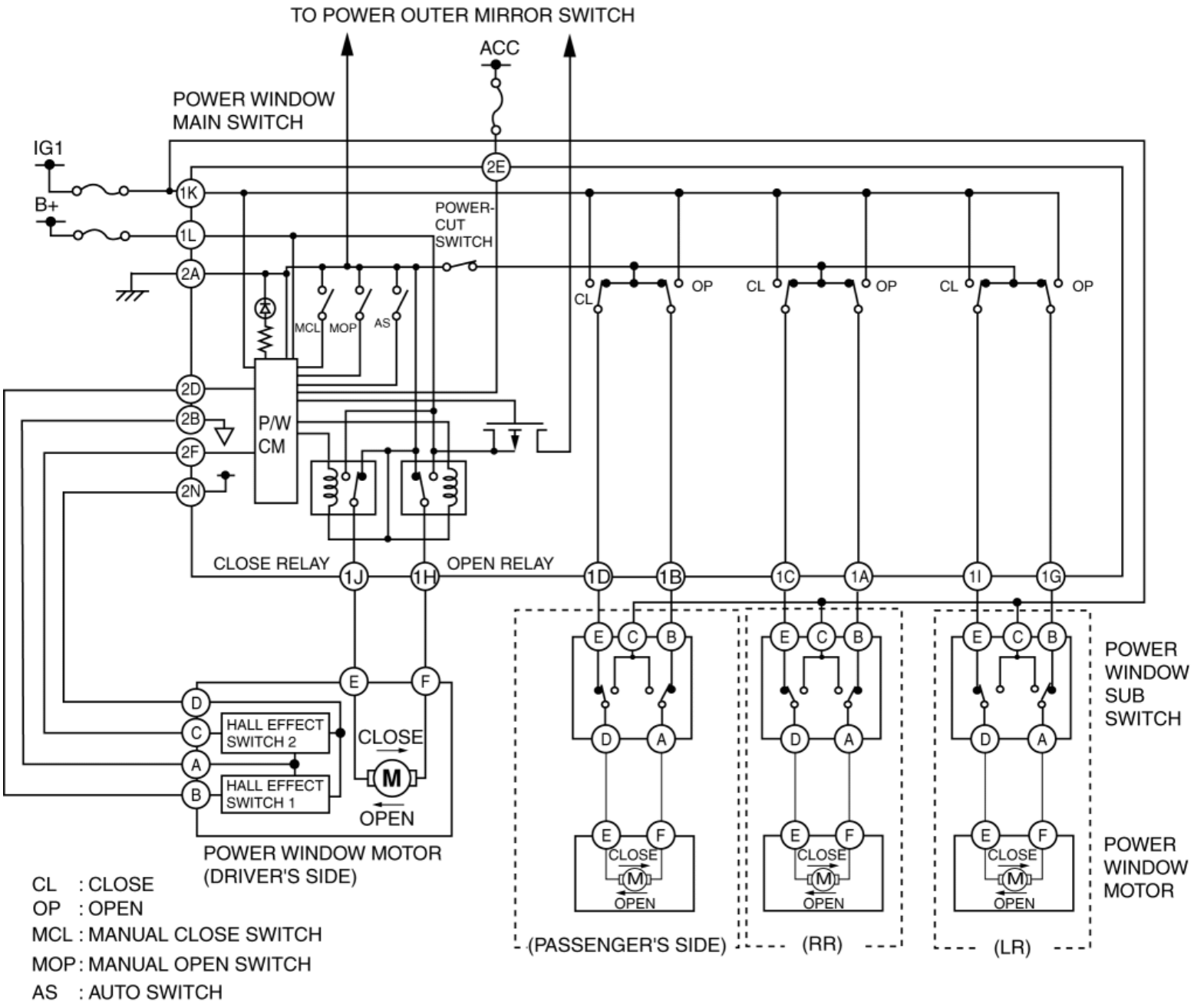

2014 - Mazda3 - Body and Accessories

FOREWORD [POWER WINDOW SYSTEM]

- Always perform basic power window system inspection before troubleshooting.

Troubleshooting Procedure

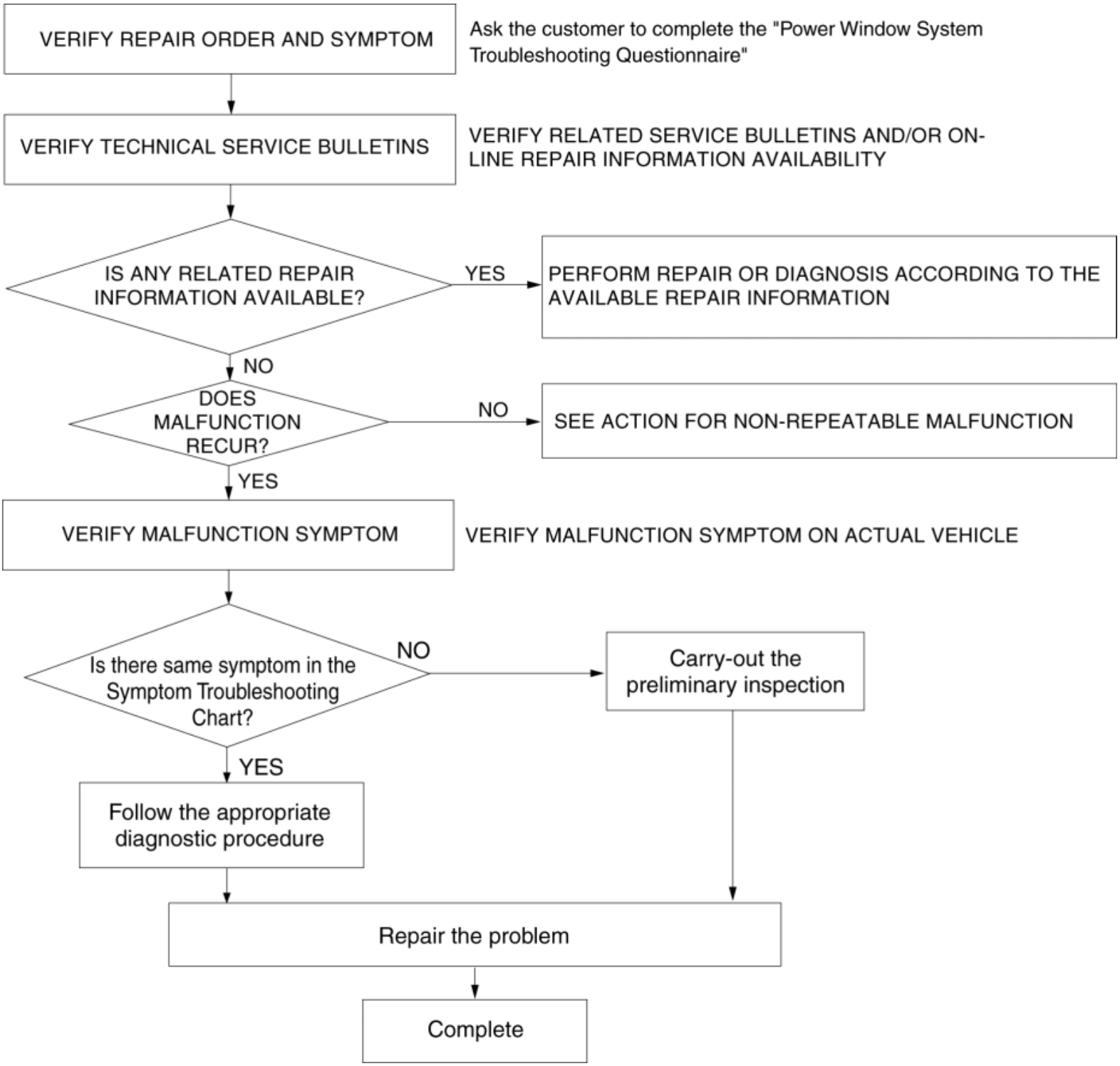

- Slightly shake the wiring harness and connectors while performing the inspection to discover whether poor contact points are the cause of any intermittent malfunctions.

CAUTION:

- If any of the following conditions continues indefinitely, the power window motor will heat up causing the protection circuit (integrated in power window motor) to operate. If this occurs, the operation of the power window motor protection circuit temporarily disables the power windows.
    - Continuous up and down operation of the power window.
    - Continuously pulling up the power window switch while the window glass is fully closed.
    - Continuously pressing the power window switch while the window glass fully opened.
- If the power window motor has a temporary malfunction and the power window main switch is operated, the power window system transfers to malfunction mode by the power window control module.
- While the power window system is in malfunction mode, the power windows cannot be operated using the auto open/close function.
- The power window system reverts to normal operation after performing the Power Window Initialization Procedure.

NOTE:

- If the following operations have been performed, initial setting is reset, and auto up/down operation is disabled. Therefore, performing the initial setting is necessary.
    - Negative battery cable disconnected
    - Power window main switch connector disconnected
    - Power window system power supply fuse removed

Action for non-repeatable malfunction

- If the malfunction does not recur, verify the malfunction cause by performing the following actions:
    - Based on the repair order form, attempt to drive the vehicle or perform tests to replicate the malfunction, record the data (such as power window main switch and power window motor circuit voltage) at that time, and detect the malfunction cause.
    - Shake the wiring harness or connector of the electrical component which is suspected to be the cause of the malfunction, and inspect for malfunction.

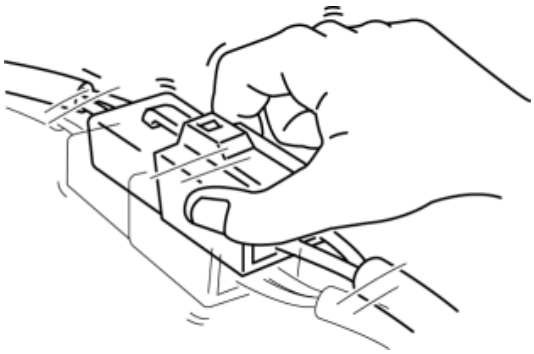

    - Inspect the female terminals on the connector of the electric component which is suspected to be the cause of the malfunction for poor connection.

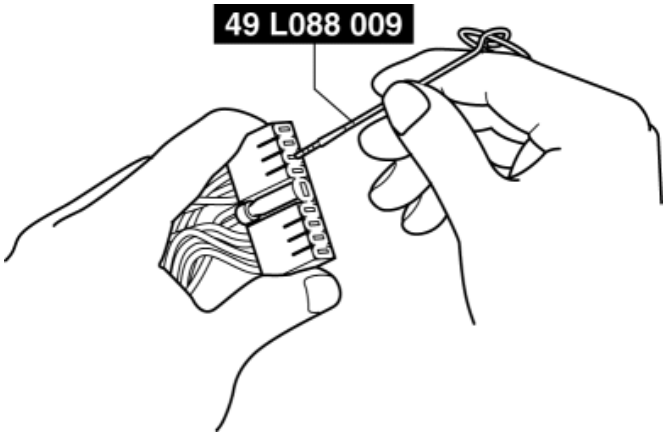

Power Window System Initialization Procedure

1. Switch the ignition ON (engine off or on).

2. Press the driver-side power window main switch and fully open the driver-side front door glass.

3. Pull up the driver-side power window main switch to the manual-up position to fully close the driver-side front door glass, and keep holding the switch up at the position for **approx. 2 s**.

2014 - Mazda3 - Body and Accessories

SYMPTOM TROUBLESHOOTING CHART [POWER WINDOW SYSTEM]

Troubleshooting item
DRIVER-SIDE DOOR GLASS CAN BE OPERATED MANUALLY BUT CANNOT BE OPERATED AUTOMATICALLY (See **DRIVER-SIDE DOOR GLASS CAN BE OPERATED MANUALLY BUT CANNOT BE OPERATED AUTOMATICALLY [POWER WINDOW SYSTEM]**.)
DRIVER-SIDE DOOR GLASS CANNOT BE OPERATED MANUALLY OR AUTOMATICALLY (See **DRIVER-SIDE DOOR GLASS CANNOT BE OPERATED MANUALLY OR AUTOMATICALLY [POWER WINDOW SYSTEM]**.)
DOOR GLASS OTHER THAN DRIVER'S DOOR CANNOT BE OPERATED (CANNOT BE OPERATED USING EACH SUBSWITCH BUT CAN BE OPERATED USING POWER WINDOW MAIN SWITCH) (See **DOOR GLASS OTHER THAN DRIVER'S DOOR CANNOT BE OPERATED (CANNOT BE OPERATED USING EACH SUBSWITCH BUT CAN BE OPERATED USING POWER WINDOW MAIN SWITCH) [POWER WINDOW SYSTEM]**.)
DOOR GLASS OTHER THAN DRIVER'S DOOR CANNOT BE OPERATED (CANNOT BE OPERATED USING POWER WINDOW MAIN SWITCH BUT CAN BE OPERATED USING EACH SUBSWITCH) (See **DOOR GLASS OTHER THAN DRIVER'S DOOR CANNOT BE OPERATED (CANNOT BE OPERATED USING POWER WINDOW MAIN SWITCH BUT CAN BE OPERATED USING EACH SUBSWITCH) [POWER WINDOW SYSTEM]**.)
DOOR GLASS OTHER THAN DRIVER'S DOOR CANNOT BE OPERATED (CANNOT BE OPERATED USING POWER WINDOW MAIN SWITCH OR EACH SUBSWITCH) (See **DOOR GLASS OTHER THAN DRIVER'S DOOR CANNOT BE OPERATED (CANNOT BE OPERATED USING POWER WINDOW MAIN SWITCH OR EACH SUBSWITCH) [POWER WINDOW SYSTEM]**.)
DRIVER-SIDE DOOR GLASS REVERSE OPENS DURING AUTO-CLOSE (MANUAL-CLOSE) OPERATION (MIS REVERSE OPEN) (See **DRIVER-SIDE DOOR GLASS REVERSE OPENS DURING AUTO-CLOSE (MANUAL-CLOSE) OPERATION (MIS REVERSE OPEN) [POWER WINDOW SYSTEM]**.)
ABNORMAL SOUND DURING DOOR GLASS OPENING/CLOSING (See **ABNORMAL SOUND DURING DOOR GLASS OPENING/CLOSING [POWER WINDOW SYSTEM]**.)

SYMPTOM TROUBLESHOOTING CHART [POWER WINDOW SYSTEM]

2014 - Mazda3 - Body and Accessories

POWER WINDOW SYSTEM TROUBLESHOOTING QUESTIONNAIRE [POWER WINDOW SYSTEM]

Date :

When did the malfunction first occur ?				
Weather conditions	☐ Fair weather ☐ Cloudy ☐ Rain ☐ Snow ☐ Other ( )		Outside temperature	Approx. F°
Driving conditions	☐ Driving ☐ Stopped (Engine is : ☐ Running ☐ Stopped)			
Duplicate symptom?	☐ YES ☐ NO	Frequency	☐ Always ☐ Sometimes (times/month)	
Road conditions	☐ City ☐ Outer city ☐ Freeway ☐ Other ( ) / ☐ Paved ☐ Dirt road			

*Follow the appropriate diagnostic procedures shown below or perform the basic troubleshooting flow.

☐ Driver-side door glass can be operated manually but cannot be operated automatically.

☐ Driver-side door glass cannot be operated manually or automatically.

☐ Door glass other than driver's door cannot be operated.
(Cannot be operated using each subswitch but can be operated using power window main switch)

☐ Door glass other than driver's door cannot be operated.
(Cannot be operated using power window main switch but can be operated using each subswitch)

☐ Door glass other than driver's door cannot be operated.
(Cannot be operated using power window main switch or each subswitch)

☐ Driver-side door glass reverse opens during auto-close (manual-close) operation (mis reverse open).

Please clarify the position where the driver side front door glass opens automatically. ☐ Completely closed position
☐ Approx. ( )mm lower than completely closed position ☐ Approx. ( )mm upper than the completely open position.

☐ Abnormal sound during door glass opening/closing.

☐ Other (Describe the symptom below if the symptom does not appear in the above list.)

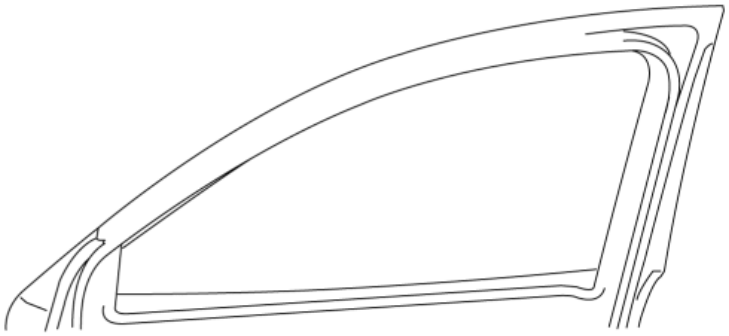

Please describe the conditions when the malfunction occurs.
(Example) : When the outer mirrors are operated

Please describe the conditions under which the system returns to normal operation after malfunctioning.
(Example) : The ignition switch is turned to the ON position after inserting the ignition key into the key cylinder

2014 - Mazda3 - Body and Accessories

BASIC POWER WINDOW SYSTEM INSPECTION [POWER WINDOW SYSTEM]

Manual Open/close Function Inspection

STEP	INSPECTION		ACTION
1	• Switch the ignition ON (engine off or on). • Operate the power window using the manual open/close function on the power window main switch. • Does the power window operate properly?	Yes	Go to the next step.
		No	• Inspect the power window main switch and the wiring harness. • Repair or replace malfunctioning parts.
2	• Set the power cut switch to the UNLOCK (contact point: Close) position. • Operate the power window using the power window subswitch. • Does the power window operate properly?	Yes	Go to the next step.
		No	• Inspect the power window subswitch and the wiring harness. • Repair or replace malfunctioning parts.
3	• Set the power cut switch to the LOCK (contact point: Open) position. • Operate all power windows other than the driver-side. • Does the power window operate properly?	Yes	• Inspect the power cut switch and the wiring harness. • Replace the power window main switch.
		No	• Manual open/close function is normal. • Perform the auto open/close function inspection.

Auto Open/close Function (Driver-side) Inspection

STEP	INSPECTION		ACTION
1	• Switch the ignition ON (engine off or on). • Operate the power window using the auto open /close function on the power window main switch. • Does the power window operate properly?	Yes	Go to the next step.
		No	**If the power window automatically opens during the closing operation:** • Go to **DRIVER-SIDE DOOR GLASS REVERSE OPENS DURING AUTO-CLOSE (MANUAL-CLOSE) OPERATION (MIS REVERSE OPEN) [POWER WINDOW SYSTEM]**. **Others:** • Go to **DRIVER-SIDE DOOR GLASS CAN BE OPERATED MANUALLY BUT CANNOT BE OPERATED AUTOMATICALLY [POWER WINDOW SYSTEM]**.
2	• Operate the power window main switch to the close position while the power window is opening. • Does the power window operation stop?	Yes	Go to the next step.
		No	Replace the power window main switch (power window control unit is malfunctioning.)
3	• Operate the power window main switch to the open position while the power window is closing. • Does the power window operation stop?	Yes	• Auto open/close function is normal. • Perform the IG-OFF timer function inspection.
		No	Replace the power window main switch (power window control unit is malfunctioning.)

IG-OFF Timer Function Inspection

STEP	INSPECTION		ACTION
1	• Close all doors.	Yes	Go to the next step.

	Switch the ignition from ON (engine off or on) to off. • Operate the power window main switch **within 40 s** after switching the ignition to off. • Does the power window operate?	No	• Inspect the door switches and related wiring harness. • If above parts are okay, replace the power window main switch, then go to the next step. • If above parts are incorrect repair or replace malfunction part (s), then go to the next step.
2	• Open any door. • Switch the ignition from ON (engine off or on) to off. • Operate the power window main switch **within 40 s** after switching the ignition to off. • Does the power window operate?	Yes	• Inspect the door switches and related wiring harness. • If above parts are okay, replace the power window main switch, then go to the next step. • If above parts are incorrect repair or replace malfunction part (s), then go to the next step.
		No	Go to the next step.
3	• Close all doors. • Switch the ignition from ON (engine off or on) to off. • Operate the power window main switch **within 60 s** after switching the ignition to off. • Does the power window operate?	Yes	Replace the power window main switch (power window control unit is malfunctioning.)
		No	• IG-OFF timer function operation is normal. • Perform the auto reverse pinch protection function inspection.

Auto Reverse Pinch Protection Function Inspection

STEP	INSPECTION		ACTION
1	• Switch the ignition ON (engine off or on). • Fully open the driver-side power window. • Set the hammer (thickness: **10 mm**	Yes	Auto reverse pinch protection function is normal.
		No	Go to the next step.

	{0.39 in} or more) as shown below. Then, close the power window. • Verify that the power window opens approx. **200 mm {2.87 in}** after contacting the hammer and the operation stops. • Does auto reverse pinch protection function operate properly?		
2	• Does power window open before contacting the hammer?	Yes	Go to **DRIVER-SIDE DOOR GLASS REVERSE OPENS DURING AUTO-CLOSE (MANUAL-CLOSE) OPERATION (MIS REVERSE OPEN) [POWER WINDOW SYSTEM]**.
		No	Initialize the power window main switch. **NOTE:** • Before initializing the power window main switch, cut off the power supply to the power window main switch for approx. **60 s**. Then, reconnect it again after **approx. 60 s**: ▪ Disconnect the negative battery cable. ▪ Disconnect the power window main switch connector. ▪ Remove the fuse for the power window system.

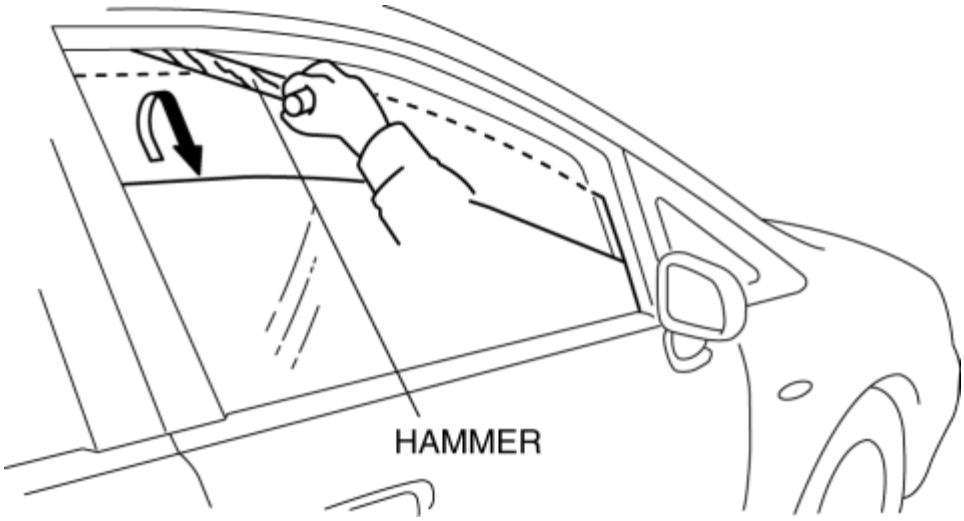

BASIC POWER WINDOW SYSTEM INSPECTION [POWER WINDOW SYSTEM]

2014 - Mazda3 - Body and Accessories

DRIVER-SIDE DOOR GLASS CAN BE OPERATED MANUALLY BUT CANNOT BE OPERATED AUTOMATICALLY [POWER WINDOW SYSTEM]

Description	**Driver-side door glass cannot be operated automatically but can be operated manually using power window main switch**
Possible Causes	• Power window main switch malfunction • Power window motor malfunction • Open circuit in wiring harness between the following terminals: ▪ Power window main switch terminal 2D and power window motor terminal B ▪ Power window main switch terminal 2B and power window motor terminal A ▪ Power window main switch terminal 2F and power window motor terminal C ▪ Power window main switch terminal 2N and power window motor terminal D • Short to ground in wiring harness between the following terminals: ▪ Power window main switch terminal 2D and power window motor terminal B ▪ Power window main switch terminal 2F and power window motor terminal C ▪ Power window main switch terminal 2N and power window motor terminal D • Short to power supply in wiring harness between the following terminals: ▪ Power window main switch terminal 2D and power window motor terminal B ▪ Power window main switch terminal 2F and power window motor terminal C • Connector poor contact or terminal damage

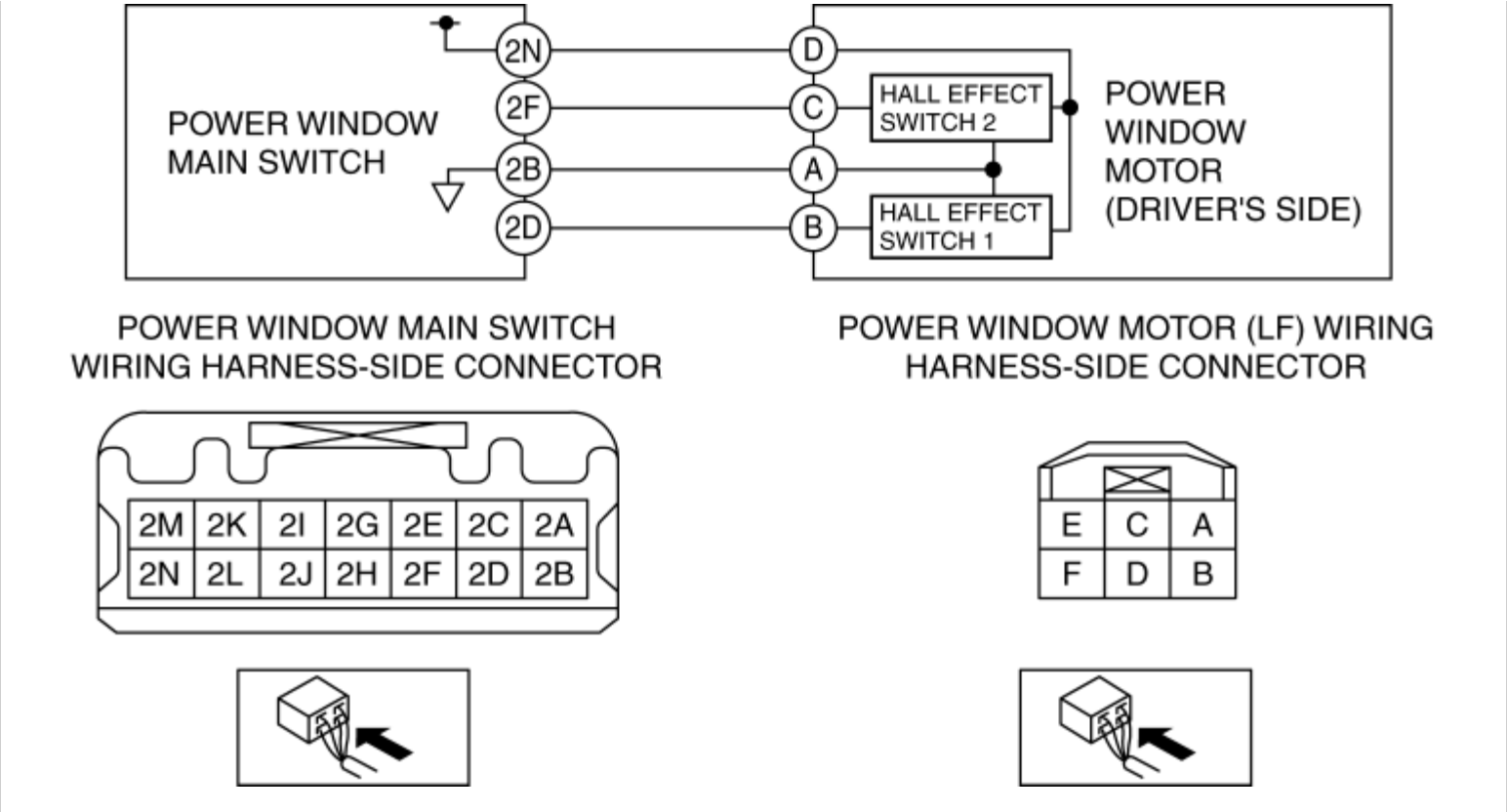

Diagnostic Procedure

Step	Inspection		Action
1	**VERIFY IF MALFUNCTION CAUSE IS OPERATION UNDER OPERATION PERMISSION CONDITION** • Perform the power window system initialization procedure. • Does the driver-side door glass operate automatically using the power window main switch?	Yes	System is normal. (Tell the customer about power window system initialization procedure.)
		No	Go to the next step.
2	**POWER WINDOW MAIN SWITCH CONNECTOR INSPECTION** • Switch the ignition off. • Disconnect the negative battery cable.	Yes	Go to the next step.
		No	Repair or replace the connector, then go to Step 10.

	(See **NEGATIVE BATTERY CABLE DISCONNECTION/CONNECTION [SKYACTIV-G 2.0, SKYACTIV-G 2.5]**.) • Disconnect the power window main switch connector. • Inspect the connector engagement and connection condition and inspect the terminals for damage, deformation, corrosion, or disconnection. • Is the connector normal?		
3	**POWER WINDOW MOTOR CONNECTOR INSPECTION** • Disconnect the power window motor connector. • Inspect the connector engagement and connection condition and inspect the terminals for damage, deformation, corrosion, or disconnection. • Is the connector normal?	Yes	Go to the next step.
		No	Repair or replace the connector, then go to Step 10.
4	**POWER WINDOW MOTOR TERMINAL D INSPECTION** • Reconnect all the disconnected connectors. • Connect the negative battery cable. (See **NEGATIVE BATTERY CABLE DISCONNECTION/CONNECTION [SKYACTIV-G 2.0, SKYACTIV-G 2.5]**.) • Measure the voltage at the power window motor terminal D (vehicle wiring harness side). • Is the voltage B+?	Yes	Go to Step 6.
		No	Go to the next step.
5	**POWER WINDOW MAIN SWITCH TERMINAL 2N**	Yes	Refer to the wiring diagram and verify if there is a common connector between power window main

	INSPECTION • Measure the voltage at power window main switch terminal 2N (vehicle wiring harness side). • Is the voltage B+?		switch terminal 2N and power window motor terminal D. **If there is a common connector:** • Inspect the common connector and terminals for corrosion, damage, or disconnection and the common wiring harnesses for an open or short circuit to determine the malfunctioning location. • Repair or replace the malfunctioning location. **If there is no common connector:** • Repair or replace the wiring harness which has an open or short circuit. Go to Step 10.
		No	Replace the power window main switch, then go to Step 10. (See **POWER WINDOW MAIN SWITCH REMOVAL/INSTALLATION**.)
6	**DETERMINE IF MALFUNCTION CAUSE IS POWER WINDOW MAIN SWITCH INTERNAL GROUND SYSTEM** • Disconnect the negative battery cable. (See **NEGATIVE BATTERY CABLE DISCONNECTION/CONNECTION [SKYACTIV-G 2.0, SKYACTIV-G 2.5]**.) • Inspect for continuity between power window motor terminal A (vehicle wiring harness side) and body ground. • Is there continuity?	Yes	Go to Step 8.
		No	Go to the next step.
7	**VERIFY IF MALFUNCTION CAUSE IS OPEN CIRCUIT IN WIRING HARNESS BETWEEN POWER WINDOW MAIN SWITCH**	Yes	Replace the power window main switch, then go to Step 10. (See **POWER WINDOW MAIN SWITCH REMOVAL/INSTALLATION**.)

	AND POWER WINDOW MOTOR • Disconnect the power window main switch connector and power window motor connector. • Inspect for continuity between the following terminals (vehicle wiring harness). ▪ Power window main switch terminal 2B and power window motor terminal A • Is there continuity?	No	Refer to the wiring diagram and verify if there is a common connector between power window main switch terminal 2B and power window motor terminal A. **If there is a common connector:** • Inspect the common connector and terminals for corrosion, damage, or disconnection and the common wiring harnesses for an open circuit to determine the malfunctioning location. • Repair or replace the malfunctioning location. **If there is no common connector:** • Repair or replace the wiring harness which has an open circuit. Go to Step 10.
8	**POWER WINDOW MAIN SWITCH TERMINALS 2F AND 2D INSPECTION** • Reconnect all the disconnected connectors. • Connect the negative battery cable. (See **NEGATIVE BATTERY CABLE DISCONNECTION/CONNECTION [SKYACTIV-G 2.0, SKYACTIV-G 2.5]**.) • Measure the pulse at power window main switch terminals 2F and 2D. (See **Inspection Using an Oscilloscope**.) • Is the pulse normal?	Yes	Replace the power window main switch, then go to Step 10. (See **POWER WINDOW MAIN SWITCH REMOVAL/INSTALLATION**.)
		No	Go to the next step.
9	**POWER WINDOW MOTOR TERMINALS B AND C INSPECTION** • Measure the pulse at power window motor terminals B and	Yes	Refer to the wiring diagram and verify if there is a common connector between the following terminals. • Power window main switch terminal 2D and power window

	C. (See **Inspection Using an Oscilloscope**.) • Is the pulse normal?		motor terminal B • Power window main switch terminal 2F and power window motor terminal C **If there is a common connector:** • Inspect the common connector and terminals for corrosion, damage, or disconnection and the common wiring harnesses for an open or short circuit to determine the malfunctioning location. • Repair or replace the malfunctioning location. **If there is no common connector:** • Repair or replace the wiring harness which has an open or short circuit. Go to the next step.
		No	Replace the power window motor, then go to the next step. (See **FRONT POWER WINDOW MOTOR REMOVAL/INSTALLATION**.)
10	**VERIFY IF MALFUNCTION CAUSE IS CORRECTED** • Does the power window system operate normally?	Yes	Troubleshooting completed. (Explain the problem to the customer.)
		No	Verify the malfunction symptom in the symptom troubleshooting chart and perform the other applicable malfunction diagnosis.

Inspection Using an Oscilloscope

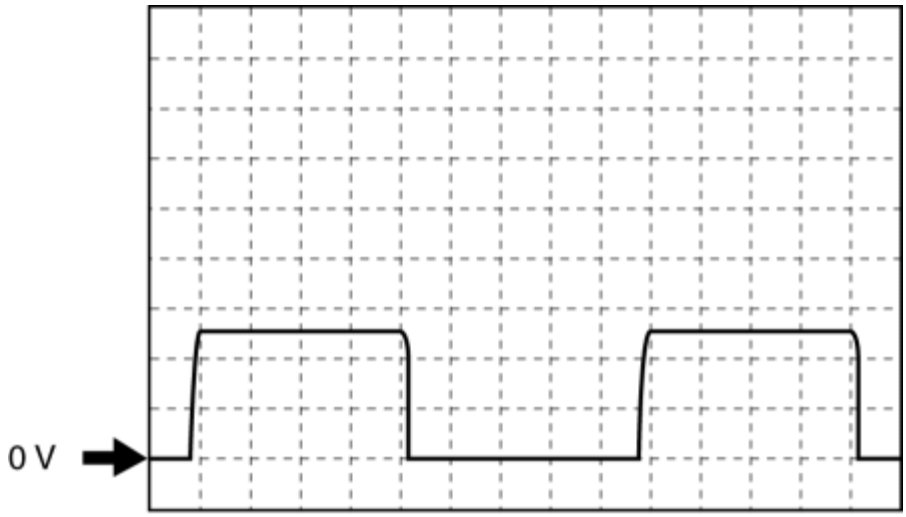

- Power window main switch: 2D, 2F (+) ↔ ground (-)
- Power window motor: B, C (+) ↔ ground (-)
- Oscilloscope setting: 2 V/DIV (Y), 1 ms/DIV (X), DC range

2014 - Mazda3 - Body and Accessories

DRIVER-SIDE DOOR GLASS CANNOT BE OPERATED MANUALLY OR AUTOMATICALLY [POWER WINDOW SYSTEM]

Description	**Driver-side door glass cannot be operated manually or automatically using power window main switch**

Possible Causes	• Power window main switch malfunction
	• Power window motor malfunction
	• Malfunction in power window main switch power supply circuit
	  ▪ Short to ground in wiring harness between P.WINDOW1 30A fuse and power window main switch terminal 1K
	  ▪ Short to ground in wiring harness between P.WINDOW2 25A fuse and power window main switch terminal 1L
	  ▪ P.WINDOW1 30A fuse malfunction
	  ▪ P.WINDOW2 25A fuse malfunction
	  ▪ Open circuit in wiring harness between P.WINDOW1 30A fuse and power window main switch terminal 1K
	  ▪ Open circuit in wiring harness between P.WINDOW2 25A fuse and power window main switch terminal 1L
	• Malfunction in wiring harness between power window main switch terminals and power window motor terminals
	  ▪ Open circuit in wiring harness between power window main switch terminal 1J and power window motor terminal E
	  ▪ Open circuit in wiring harness between power window main switch terminal 1H and power window motor terminal F
	  ▪ Short to ground in wiring harness between power window main switch terminal 1J and power window motor terminal E
	  ▪ Short to ground in wiring harness between power window main switch terminal 1H and power window motor terminal F
	• Open circuit in wiring harness between power window main switch terminal 2A and body ground
	• Connector poor contact or terminal damage

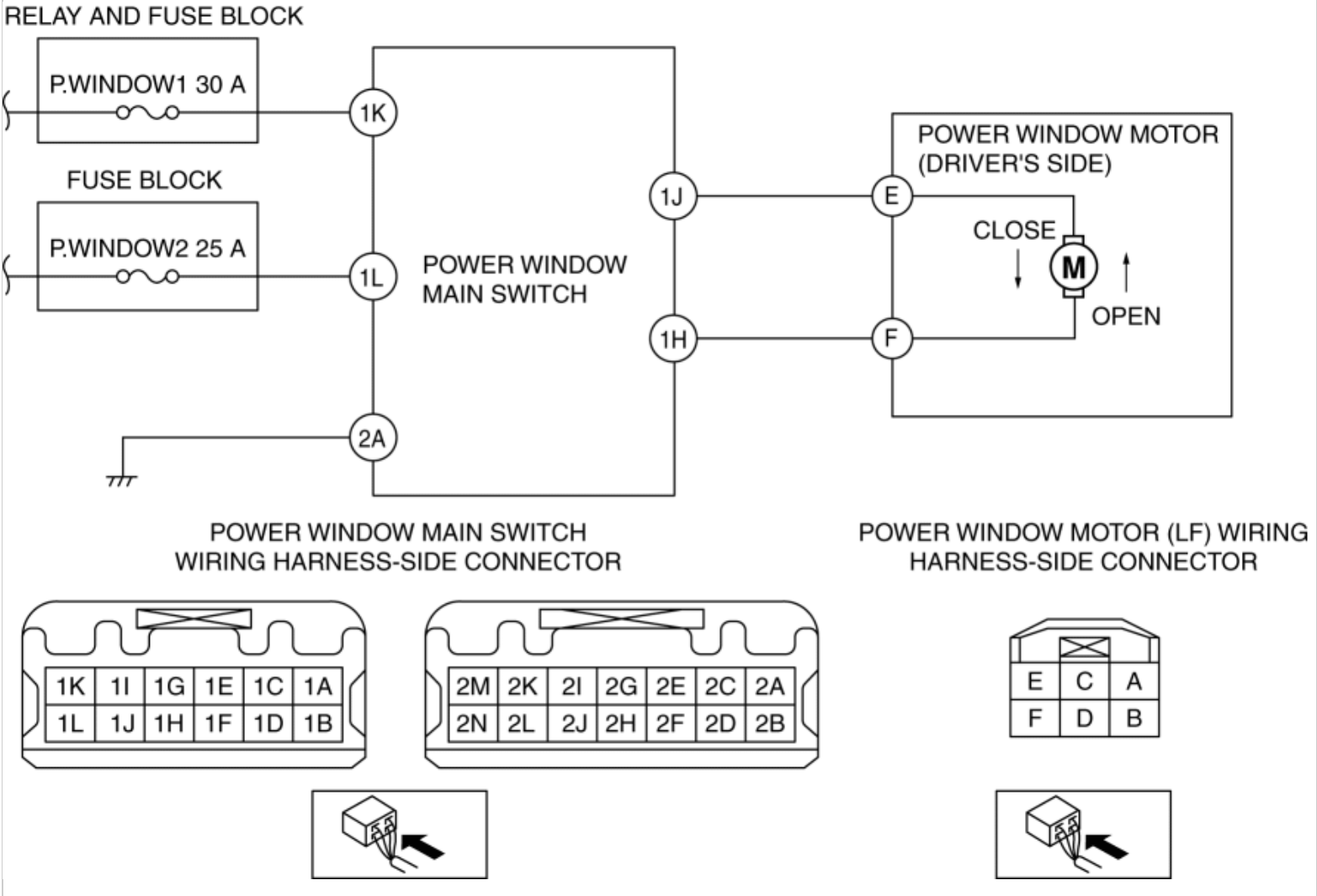

Diagnostic Procedure

Step	Inspection		Action
1	**POWER WINDOW MAIN SWITCH CONNECTOR INSPECTION** • Switch the ignition off. • Disconnect the negative battery cable. (See **NEGATIVE BATTERY CABLE DISCONNECTION/CONNECTION [SKYACTIV-G 2.0, SKYACTIV-G 2.5]**.) • Disconnect the power window main switch connector. • Inspect the connector engagement and connection condition and inspect the	Yes	Go to the next step.
		No	Repair or replace the connector, then go to Step 7.

	terminals for damage, deformation, corrosion, or disconnection. • Is the connector normal?		
2	**POWER WINDOW MOTOR CONNECTOR INSPECTION** • Disconnect the power window motor connector. • Inspect the connector engagement and connection condition and inspect the terminals for damage, deformation, corrosion, or disconnection. • Is the connector normal?	Yes	Go to the next step.
		No	Repair or replace the connector, then go to Step 7.
3	**VERIFY IF MALFUNCTION CAUSE IS POWER WINDOW MAIN SWITCH POWER SUPPLY CIRCUIT** • Reconnect all the disconnected connectors. • Connect the negative battery cable. (See **NEGATIVE BATTERY CABLE DISCONNECTION/CONNECTION [SKYACTIV-G 2.0, SKYACTIV-G 2.5]**.) • Measure the voltage at the following terminals (vehicle wiring harness side). ▪ Power window main switch terminal 1K ▪ Power window main switch terminal 1L • Is the voltage B+?	Yes	Go to the next step.
		No	Inspect the P.WINDOW1 30A fuse and P.WINDOW2 25A fuse. • If any fuse is damaged: ▪ Replace the fuse. • If the fuses are normal: **Refer to the wiring diagram and verify if there is a common connector between the following terminals.** ▪ P.WINDOW1 30A fuse and power window main switch terminal 1K ▪ P.WINDOW2 25A fuse and power window main switch terminal 1L **If there is a common connector:** • Inspect the common connector and terminals for corrosion, damage, or disconnection and the common wiring harnesses for an open circuit to determine the malfunctioning location. • Repair or

			replace the malfunctioning location. **If there is no common connector:** • Repair or replace the wiring harness which has an open circuit. Go to Step 7.
4	**VERIFY IF MALFUNCTION CAUSE IS OPEN CIRCUIT IN WIRING HARNESS BETWEEN POWER WINDOW MAIN SWITCH AND BODY GROUND** • Disconnect the negative battery cable. (See **NEGATIVE BATTERY CABLE DISCONNECTION/CONNECTION [SKYACTIV-G 2.0, SKYACTIV-G 2.5]**.) • Disconnect the power window main switch connector. • Inspect for continuity between power window main switch terminal 2A (vehicle wiring harness side) and body ground. • Is there continuity?	Yes	Go to the next step.
		No	Refer to the wiring diagram and verify if there is a common connector between power window main switch terminal 2A and body ground. **If there is a common connector:** • Inspect the common connector and terminals for corrosion, damage, or disconnection and the common wiring harnesses for short to ground to determine the malfunctioning location. • Repair or replace the malfunctioning location. **If there is no common connector:** • Repair or replace the wiring harness which is shorted to ground. Go to Step 7.
5	**POWER WINDOW MOTOR TERMINALS E AND F INSPECTION** • Reconnect all the disconnected connectors. • Connect the negative battery cable. (See **NEGATIVE BATTERY CABLE DISCONNECTION/CONNECTION [SKYACTIV-G 2.0, SKYACTIV-G 2.5]**.) • Measure the voltage at power window motor terminals E and F while operating the power window main switch. ▪ Terminal E during close operation ▪ Terminal F during open operation	Yes	Replace the power window motor, then go to Step 7. (See **FRONT POWER WINDOW MOTOR REMOVAL/INSTALLATION**.)
		No	Go to the next step.

	• Is the voltage B+?		
6	**POWER WINDOW MAIN SWITCH TERMINALS 1J AND 1H INSPECTION** • Measure the voltage at power window main switch terminals 1J and 1H. (See **POWER WINDOW MAIN SWITCH INSPECTION**.) • Is the power window main switch normal?	Yes	Refer to the wiring diagram and verify if there is a common connector between the following terminals. • Power window main switch terminal 1J and power window motor terminal E • Power window main switch terminal 1H and power window motor terminal F **If there is a common connector:** • Inspect the common connector and terminals for corrosion, damage, or disconnection and the common wiring harnesses for an open or short circuit to determine the malfunctioning location. • Repair or replace the malfunctioning location. **If there is no common connector:** • Repair or replace the wiring harness which has an open or short circuit. Go to the next step.
		No	Replace the power window main switch, then go to the next step. (See **POWER WINDOW MAIN SWITCH REMOVAL/INSTALLATION**.)
7	**VERIFY IF MALFUNCTION CAUSE IS CORRECTED** • Does the power window system operate normally?	Yes	Troubleshooting completed. (Explain the problem to the customer.)
		No	Verify the malfunction symptom in the symptom troubleshooting chart and perform the other applicable malfunction diagnosis.

2014 - Mazda3 - Body and Accessories

DOOR GLASS OTHER THAN DRIVER'S DOOR CANNOT BE OPERATED (CANNOT BE OPERATED USING EACH SUBSWITCH BUT CAN BE OPERATED USING POWER WINDOW MAIN SWITCH) [POWER WINDOW SYSTEM]

Description	**Door glass other than driver's door cannot be operated using subswitches but can be operated using power window main switch**

Possible Causes	• Power window subswitch malfunction
	• Malfunction in power window subswitch power supply circuit
	  ▪ Short to ground in wiring harness between P.WINDOW1 30A fuse and power window subswitch terminal C
	  ▪ Open circuit in wiring harness between P.WINDOW1 30A fuse and power window subswitch terminal C
	• Connector poor contact or terminal damage
	• Customer mis-operation or misunderstanding

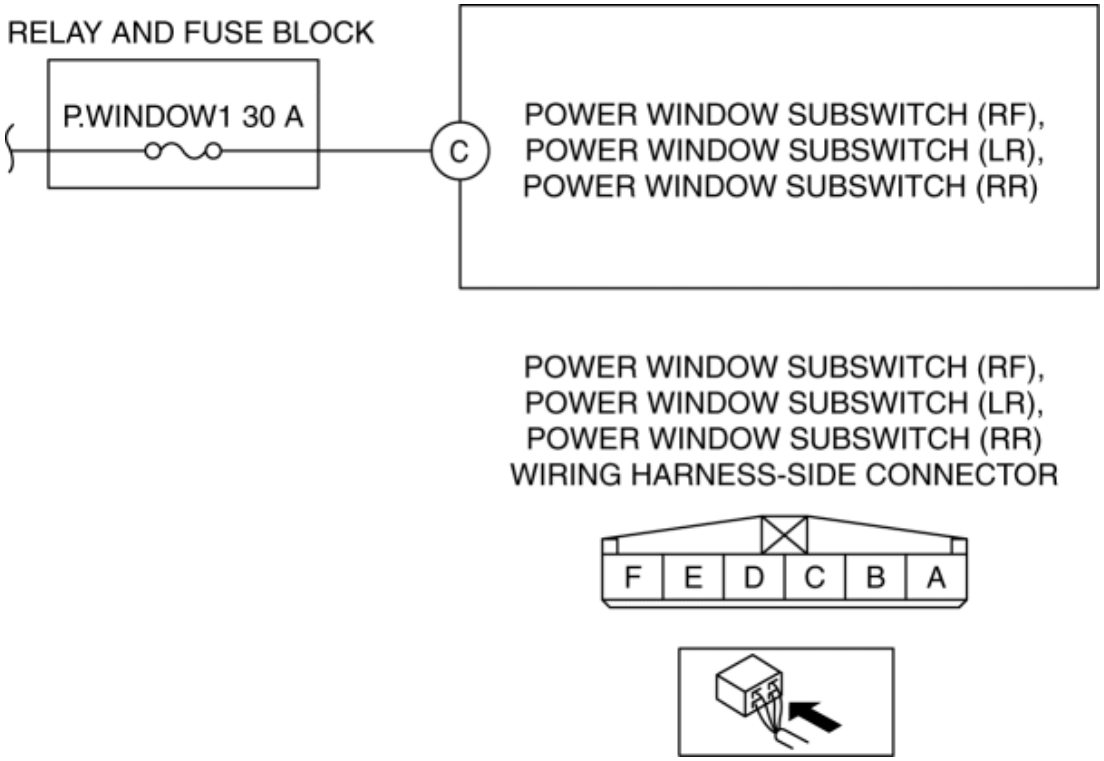

Diagnostic Procedure

Step	Inspection		Action
1	**VERIFY IF MALFUNCTION CAUSE IS OPERATION UNDER OPERATION PERMISSION CONDITION** • Turn the power-cut switch off (contact point: closed) and perform open/close operation. • Does the power window system operate normally?	Yes	System is normal. (Tell the customer about the power-cut switch.)
		No	Go to the next step.
2	**POWER WINDOW SUBSWITCH CONNECTOR INSPECTION** • Switch the ignition off. • Disconnect the negative battery cable. (See **NEGATIVE BATTERY CABLE DISCONNECTION/CONNECTION [SKYACTIV-G 2.0, SKYACTIV-G 2.5]**.) • Disconnect the power window subswitch connector. • Inspect the connector engagement and connection condition and inspect the terminals for damage, deformation, corrosion, or disconnection. • Is the connector normal?	Yes	Go to the next step.
		No	Repair or replace the connector, then go to Step 4.
3	**VERIFY IF MALFUNCTION CAUSE IS POWER WINDOW SUBSWITCH POWER SUPPLY CIRCUIT** • Connect the power window subswitch connector. • Connect the negative battery cable. (See **NEGATIVE BATTERY CABLE DISCONNECTION/CONNECTION [SKYACTIV-G 2.0, SKYACTIV-G 2.5]**.) • Measure the voltage at power window subswitch terminal C (vehicle wiring harness side). • Is the voltage B+?	Yes	Replace the power window subswitch, then go to the next step. (See **POWER WINDOW SUBSWITCH REMOVAL/INSTALLATION**.)
		No	Inspect the P.WINDOW1 30A fuse. • If the fuse is damaged: ▪ Replace the fuse. • If the fuse is normal: ▪ Refer to the wiring diagram and verify if there is a common connector between P.WINDOW1 30A fuse and power window subswitch terminal C. **If there is a common connector:**

			• Inspect the common connector and terminals for corrosion, damage, or disconnection and the common wiring harnesses for open or short circuit to determine the malfunctioning location. • Repair or replace the malfunctioning location. **If there is no common connector:** • Repair or replace the wiring harness which has an open or short circuit. Go to the next step.
4	**VERIFY IF MALFUNCTION CAUSE IS CORRECTED** • Does the power window system operate normally?	Yes	Troubleshooting completed. (Explain the problem to the customer.)
		No	Verify the malfunction symptom in the symptom troubleshooting chart and perform the other applicable malfunction diagnosis.

2014 - Mazda3 - Body and Accessories

DOOR GLASS OTHER THAN DRIVER'S DOOR CANNOT BE OPERATED (CANNOT BE OPERATED USING POWER WINDOW MAIN SWITCH BUT CAN BE OPERATED USING EACH SUBSWITCH) [POWER WINDOW SYSTEM]

Description	Door glass other than driver's door can be operated using subswitches but cannot be operated using power window main switch
Possible Causes	• Power window main switch malfunction • Short to ground in wiring harness between the following terminals: ▪ Power window main switch terminal 1D and power window subswitch (RF) terminal E ▪ Power window main switch terminal 1B and power window subswitch (RF) terminal B ▪ Power window main switch terminal 1I and power window subswitch (LR) terminal E ▪ Power window main switch terminal 1G and power window subswitch (LR) terminal B ▪ Power window main switch terminal 1C and power window subswitch (RR) terminal E ▪ Power window main switch terminal 1A and power window subswitch (RR) terminal B • Open circuit in wiring harness between the following terminals: ▪ Power window main switch terminal 1D and power window subswitch (RF) terminal E ▪ Power window main switch terminal 1B and power window subswitch (RF) terminal B ▪ Power window main switch terminal 1I and power window subswitch (LR) terminal E ▪ Power window main switch terminal 1G and power window subswitch (LR) terminal B ▪ Power window main switch terminal 1C and power window subswitch (RR) terminal E ▪ Power window main switch terminal 1A and power window subswitch (RR) terminal B

	• Connector poor contact or terminal damage

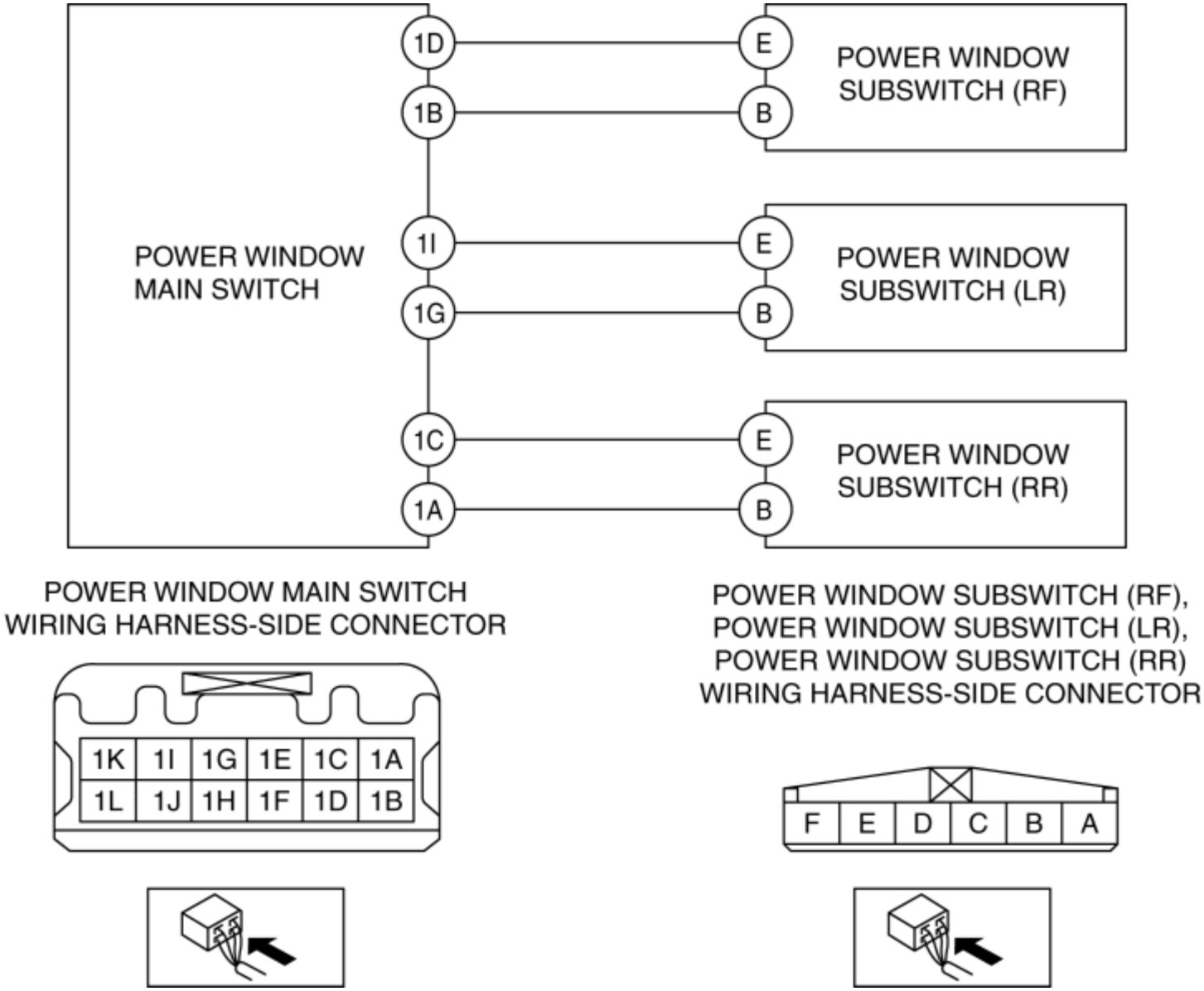

Diagnostic Procedure

Step	Inspection		Action
1	**POWER WINDOW MAIN SWITCH CONNECTOR INSPECTION** • Switch the ignition off. • Disconnect the negative battery cable.	Yes	Go to the next step.
		No	Repair or replace the connector, then go to Step 4.

	(See **NEGATIVE BATTERY CABLE DISCONNECTION/CONNECTION [SKYACTIV-G 2.0, SKYACTIV-G 2.5]**.) • Disconnect the power window main switch connector. • Inspect the connector engagement and connection condition and inspect the terminals for damage, deformation, corrosion, or disconnection. • Is the connector normal?		
2	**POWER WINDOW SUBSWITCH CONNECTOR INSPECTION** • Disconnect the power window subswitch connector. • Inspect the connector engagement and connection condition and inspect the terminals for damage, deformation, corrosion, or disconnection. • Is the connector normal?	Yes	Go to the next step.
		No	Repair or replace the connector, then go to Step 4.
3	**POWER WINDOW MAIN SWITCH INSPECTION** • Reconnect all the disconnected connectors. • Connect the negative battery cable. (See **NEGATIVE BATTERY CABLE DISCONNECTION/CONNECTION [SKYACTIV-G 2.0, SKYACTIV-G 2.5]**.) • Measure the voltage at the following power window main switch terminals (vehicle wiring harness). (See **POWER WINDOW MAIN SWITCH INSPECTION**.) ▪ Terminals 1B	Yes	Refer to the wiring diagram and verify if there is a common connector between the following terminals. • Power window main switch terminal 1D and power window subswitch (RF) terminal E • Power window main switch terminal 1B and power window subswitch (RF) terminal B • Power window main switch terminal 1I and power window subswitch (LR) terminal E • Power window main switch terminal 1G and power window subswitch (LR) terminal B • Power window main switch terminal 1C and power window subswitch (RR) terminal E • Power window main switch

	and 1D if door glass (RF) does not operate ▪ Terminals 1G and 1I if door glass (LR) does not operate ▪ Terminals 1A and 1C if door glass (RR) does not operate • Is the power window main switch normal?		terminal 1A and power window subswitch (RR) terminal B **If there is a common connector:** • Inspect the common connector and terminals for corrosion, damage, or disconnection and the common wiring harnesses for an open or short circuit to determine the malfunctioning location. • Repair or replace the malfunctioning location. **If there is no common connector:** • Repair or replace the wiring harness which has an open or short circuit. Go to the next step.
		No	Replace the power window main switch, then go to the next step. (See **POWER WINDOW MAIN SWITCH REMOVAL/INSTALLATION**.)
4	**VERIFY IF MALFUNCTION CAUSE IS CORRECTED** • Does the power window system operate normally?	Yes	Troubleshooting completed. (Explain the problem to the customer.)
		No	Verify the malfunction symptom in the symptom troubleshooting chart and perform the other applicable malfunction diagnosis.

2014 - Mazda3 - Body and Accessories

DOOR GLASS OTHER THAN DRIVER'S DOOR CANNOT BE OPERATED (CANNOT BE OPERATED USING POWER WINDOW MAIN SWITCH OR EACH SUBSWITCH) [POWER WINDOW SYSTEM]

Description	**Door glass other than driver's door cannot be operated using power window main switch or power window subswitch**

Possible Causes	• Power window subswitch malfunction
	• Power window motor malfunction
	• Short to ground in wiring harness between the following terminals:
	  ▪ Power window subswitch terminal A and power window motor terminal F
	  ▪ Power window subswitch terminal D and power window motor terminal E
	• Open circuit in wiring harness between the following terminals:
	  ▪ Power window subswitch terminal A and power window motor terminal F
	  ▪ Power window subswitch terminal D and power window motor terminal E
	• Connector poor contact or terminal damage

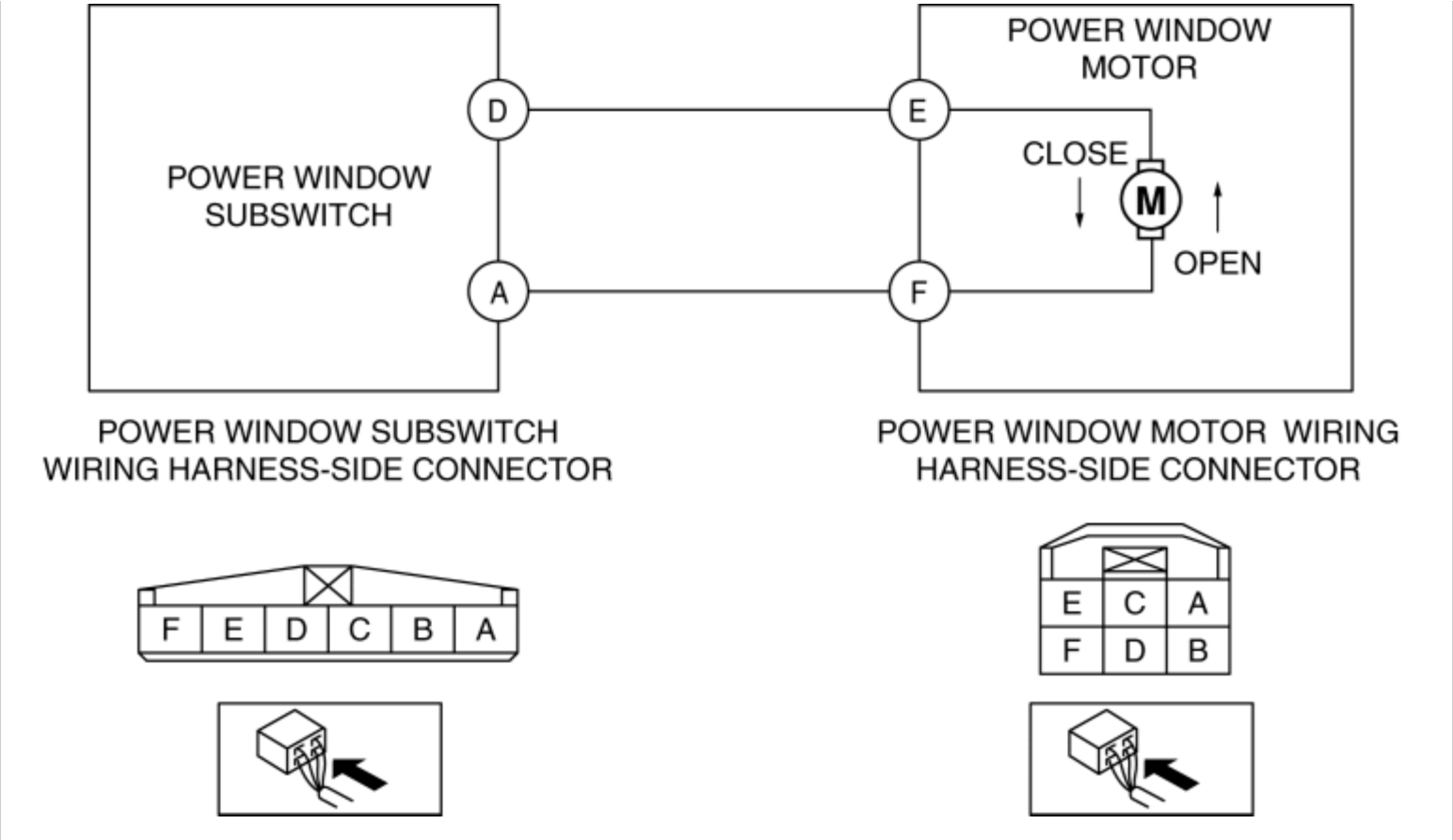

Diagnostic Procedure

Step	Inspection		Action
1	**POWER WINDOW MOTOR CONNECTOR INSPECTION** • Switch the ignition off. • Disconnect the negative battery cable. (See **NEGATIVE BATTERY CABLE DISCONNECTION/CONNECTION [SKYACTIV-G 2.0, SKYACTIV-G 2.5]**.) • Disconnect the power window motor connector. • Inspect the connector engagement and connection condition and inspect the terminals for damage,	Yes	Go to the next step.
		No	Repair or replace the connector, then go to Step 7.

	deformation, corrosion, or disconnection. • Is the connector normal?		
2	**POWER WINDOW SUBSWITCH CONNECTOR INSPECTION** • Disconnect the power window subswitch connector. • Inspect the connector engagement and connection condition and inspect the terminals for damage, deformation, corrosion, or disconnection. • Is the connector normal?	Yes	Go to the next step.
		No	Repair or replace the connector, then go to Step 5.
3	**POWER WINDOW MOTOR TERMINALS E AND F INSPECTION** • Reconnect the disconnected connectors. • Connect the negative battery cable. (See **NEGATIVE BATTERY CABLE DISCONNECTION/CONNECTION [SKYACTIV-G 2.0, SKYACTIV-G 2.5]**.) • Measure the voltage at power window motor terminals E and F while operating the power window subswitch. ▪ Terminal E during close operation ▪ Terminal F during open operation • Is the voltage B+?	Yes	Replace the power window motor, then go to Step 5. (See **FRONT POWER WINDOW MOTOR REMOVAL/INSTALLATION**.) (See **REAR POWER WINDOW MOTOR REMOVAL/INSTALLATION**.)
		No	Go to the next step.
4	**POWER WINDOW SUBSWITCH INSPECTION** • Inspect the power window subswitch.	Yes	Refer to the wiring diagram and verify if there is a common connector between the following terminals. • Power window subswitch terminal A and power window motor terminal F

	(See **POWER WINDOW SUBSWITCH INSPECTION**.) • Is the power window subswitch normal?		• Power window subswitch terminal D and power window motor terminal E **If there is a common connector:** • Inspect the common connector and terminals for corrosion, damage, or disconnection and the common wiring harnesses for an open or short circuit to determine the malfunctioning location. • Repair or replace the malfunctioning location. **If there is no common connector:** • Repair or replace the wiring harness which has an open or short circuit. Go to the next step.
		No	Replace the power window subswitch, then go to the next step. (See **POWER WINDOW SUBSWITCH REMOVAL/INSTALLATION**.)
5	**VERIFY IF MALFUNCTION CAUSE IS CORRECTED** • Does the power window system operate normally?	Yes	Troubleshooting completed. (Explain the problem to the customer.)
		No	Verify the malfunction symptom in the symptom troubleshooting chart and perform the other applicable malfunction diagnosis.

2014 - Mazda3 - Body and Accessories

DRIVER-SIDE DOOR GLASS REVERSE OPENS DURING AUTO-CLOSE (MANUAL-CLOSE) OPERATION (MIS REVERSE OPEN) [POWER WINDOW SYSTEM]

NOTE:

- Perform the following inspection for the power window system component parts of windows where the door glass reverses even though the glass does not encounter a foreign object while it is moving up in automatic mode.

Description	**Driver-side door glass reverse opens during auto-close**

Possible Causes	• Extreme change in the sliding resistance of the glass while the door glass is closing.
	  ▪ Improper installation of the acrylic door visor.
	  ▪ Power window motor malfunction.
	  ▪ Object caught between the glass run channel and the door glass.
	  ▪ Insufficient tightening of the door glass to the carrier plate.
	  ▪ Glass run channel malfunction.
	  ▪ Glass guide related malfunction.
	NOTE:
	• The auto-reverse pinch protection function is a mechanism that automatically reverses (opens) the door glass while it is closing when the power window main switch detects the signal from the power window motor indicating that an object is obstructing the door glass movement.
	• The auto-reverse pinch protection function may operate if the sliding resistance of the door glass increases causing the closing speed to decrease.
	• If the door glass closing speed has changed, concentrate the inspection on the following locations: (Slip occurrence)
	  ▪ If the door glass is slipping forward, inspect the front side of the glass guide or glass run channel.
	  ▪ If the door glass is slipping rearward, inspect the rear side of the glass guide or glass run channel.

Diagnostic procedure

STEP	INSPECTION		ACTION

1	• Inspect malfunction symptom.
	• Does the malfunction symptom occur only under the following special conditions?:
	  ▪ Driving over railroad tracks.
	  ▪ Driving on bumpy roads.
	  ▪ Opening/closing the door.
		Yes	The system is normal.
			(Explain to the customer that this does not indicate a malfunction because the system is designed to reverse the door glass while it is closing if it receives vibration when the vehicle is crossing railroad tracks, driving on a bumpy road, or when the door is opened/closed.)

		No	Go to the next step.

2	• Inspect acrylic door visor installation condition. • Is the acrylic door visor normal?	Yes	Go to the next step.
		No	Install the side visor properly, then go to the next step.
3	• Inspect door glass closing speed. • Affix tape to the rear edge of the door glass as shown in the figure for placing marks. (to facilitate seeing the door glass movement) • Start the engine and idle it (to ensure a stabilized operational voltage). • Does the door glass hesitate only once while its closing?	Yes	Mark the point where the door glass closing speed changed, then go to Step 5.
		No	Go to the next step.
4	• Reinspect door glass closing speed. • Does the door glass hesitate periodically while it is closing?	Yes	Replace the power window motor, then go to Step 8. (See **FRONT POWER WINDOW MOTOR REMOVAL/INSTALLATION**.) (See **REAR POWER WINDOW MOTOR REMOVAL/INSTALLATION**.)
		No	Go to Step 8.
5	• Inspect glass run channel and door glass sliding surface. • Visually inspect the sliding surface of the glass run channel and door glass. • Is there dirt, foreign matter, or roughness on the sliding surface of the glass run channel and door glass?	Yes	**Dirt on the sliding surface of the glass run channel and door glass:** • Clean the glass run channel and door glass. **Object is caught between glass run channel and door glass:** • Remove the object. **Roughness on the sliding surface (rubber surface):** • Replace the glass run channel. After performing one of the above actions, reinspect. If the malfunction is not corrected, go to Step 3.
		No	Go to the next step.
6	• Inspect tightening of door glass to carrier plate. • Is it normal?	Yes	Go to the next step.
		No	After tightening correctly, reinspect. If the malfunction is not corrected, go to Step 3.
7	• Inspect condition of glass run channel and door glass. • Is it normal?	Yes	Go to the next step.
		No	Assemble the glass run channel and door glass securely, and reinspect. If the malfunction is not corrected, go to Step 3.
8	• Inspect door glass closing speed. • Does the door glass hesitate at any location?	Yes	Repeat the inspection from Step 3.
		No	Troubleshooting completed.

DRIVER-SIDE DOOR GLASS REVERSE OPENS DURING AUTO-CLOSE (MANUAL-CLOSE) OPERATION (MIS REVERSE OPEN) [POWER WINDOW SYSTEM]

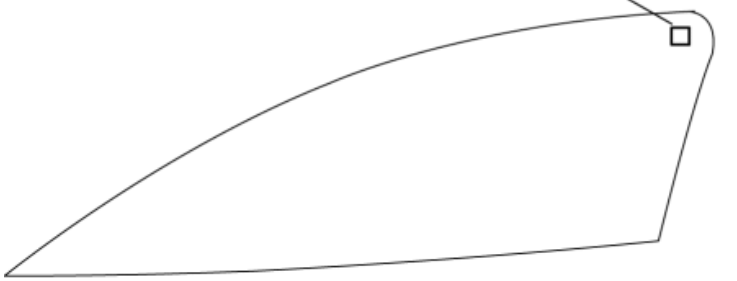

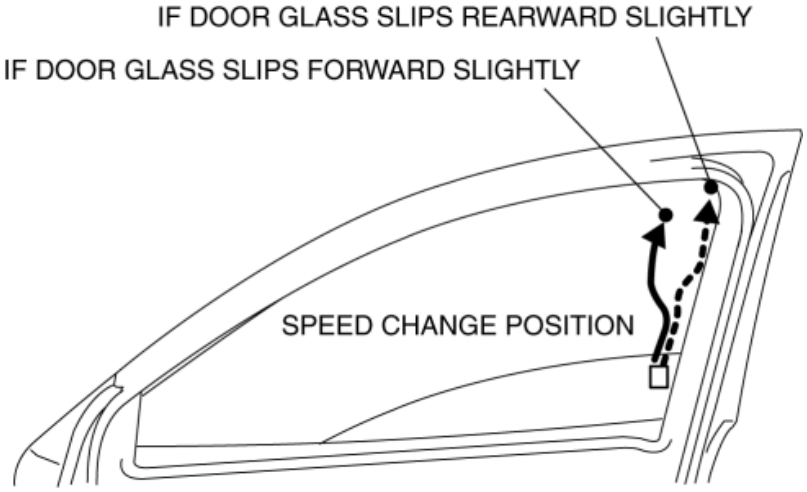

2014 - Mazda3 - Body and Accessories

ABNORMAL SOUND DURING DOOR GLASS OPENING/CLOSING [POWER WINDOW SYSTEM]

Description	**Abnormal sound during door glass opening/closing**

Possible Causes	• Installation screw is loose between the door glass and carrier plate.
	• Deformity in the power window regulator plastic part due to use.
	  ▪ Scratching, wear marks to the power window regulator resin part due to twisting of the cable.
	  ▪ Gear deformity in the power window motor.
	NOTE:
	• Identify the location of the noise using a stethoscope or similar device.

Diagnostic procedure

Noise type	Time of occurrence	Possible cause	Location of noise	Action
Clanking noise	Door glass begins to move	Insufficiently tightened installation screw between the door glass and carrier plate.	Between door glass lower edge and carrier plate.	Securely tighten the installation screw.
Groaning noise (Sound increases due to use)	While door glass is operating	Vibration caused by wear on the resin part from cable twisting due to use of the power window regulator. **NOTE:** • Noise does not occur if a roller is equipped to power window regulator resin part.	Power window regulator	Replace the power window regulator (See **FRONT POWER WINDOW REGULATOR REMOVAL/INSTALLATION**.) (See **REAR POWER WINDOW REGULATOR REMOVAL/INSTALLATION**.)
Whining noise Clicking noise		Gear inside power window motor is deformed due to use.	Gear in power window motor	Replace the power window motor (See **FRONT POWER WINDOW MOTOR REMOVAL/INSTALLATION**.)

(Periodic noise)				(See **REAR POWER WINDOW MOTOR REMOVAL/INSTALLATION**.)

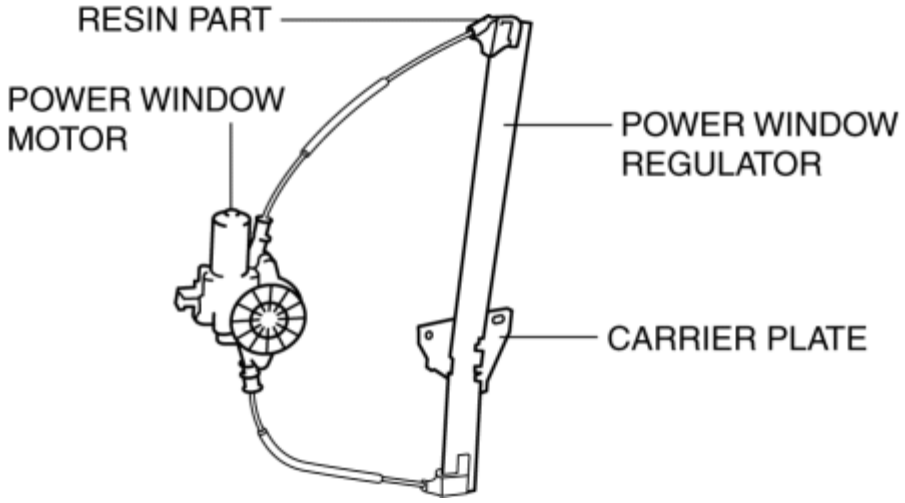

2014 - Mazda3 - Body and Accessories

FOREWORD [INSTRUMENT CLUSTER]

- If there is any vehicle malfunction complaint lodged by a customer, perform malfunction diagnosis according to the troubleshooting procedure.

Troubleshooting Procedure

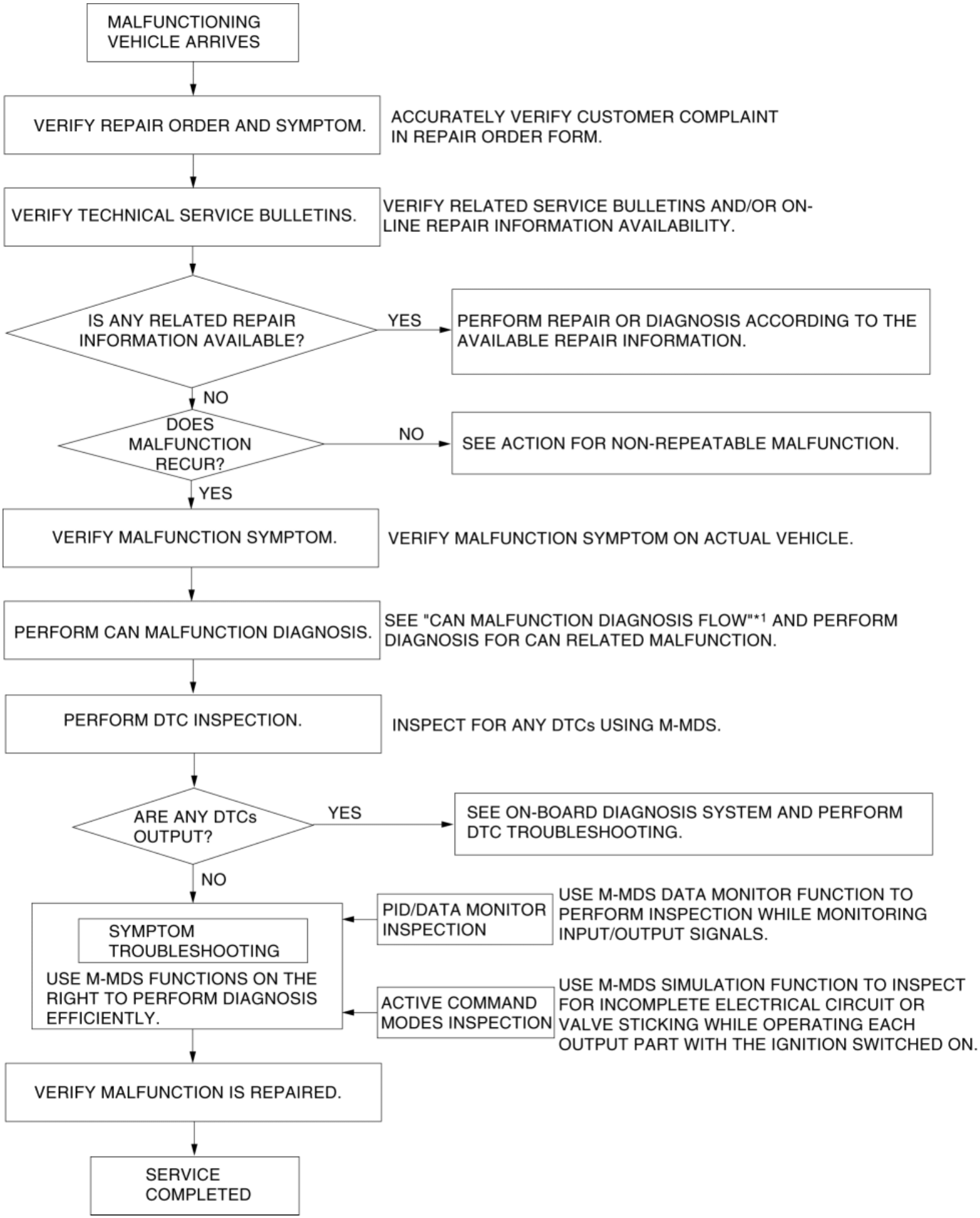
MALFUNCTIONING VEHICLE ARRIVES
VERIFY REPAIR ORDER AND SYMPTOM.
ACCURATELY VERIFY CUSTOMER COMPLAINT IN REPAIR ORDER FORM.
VERIFY TECHNICAL SERVICE BULLETINS.
VERIFY RELATED SERVICE BULLETINS AND/OR ON-LINE REPAIR INFORMATION AVAILABILITY.
IS ANY RELATED REPAIR INFORMATION AVAILABLE?
YES
PERFORM REPAIR OR DIAGNOSIS ACCORDING TO THE AVAILABLE REPAIR INFORMATION.
NO
DOES MALFUNCTION RECUR?
NO
SEE ACTION FOR NON-REPEATABLE MALFUNCTION.
YES
VERIFY MALFUNCTION SYMPTOM.
VERIFY MALFUNCTION SYMPTOM ON ACTUAL VEHICLE.
PERFORM CAN MALFUNCTION DIAGNOSIS.
SEE "CAN MALFUNCTION DIAGNOSIS FLOW"*1 AND PERFORM DIAGNOSIS FOR CAN RELATED MALFUNCTION.
PERFORM DTC INSPECTION.
INSPECT FOR ANY DTCs USING M-MDS.
ARE ANY DTCs OUTPUT?
YES
SEE ON-BOARD DIAGNOSIS SYSTEM AND PERFORM DTC TROUBLESHOOTING.
NO
SYMPTOM TROUBLESHOOTING
USE M-MDS FUNCTIONS ON THE RIGHT TO PERFORM DIAGNOSIS EFFICIENTLY.
PID/DATA MONITOR INSPECTION
USE M-MDS DATA MONITOR FUNCTION TO PERFORM INSPECTION WHILE MONITORING INPUT/OUTPUT SIGNALS.
ACTIVE COMMAND MODES INSPECTION
USE M-MDS SIMULATION FUNCTION TO INSPECT FOR INCOMPLETE ELECTRICAL CIRCUIT OR VALVE STICKING WHILE OPERATING EACH OUTPUT PART WITH THE IGNITION SWITCHED ON.
VERIFY MALFUNCTION IS REPAIRED.
SERVICE COMPLETED

*1

(See CONTROLLER AREA NETWORK (CAN) MALFUNCTION DIAGNOSIS FLOW.)

Action for non-repeatable malfunction

- If the malfunction does not recur, verify the malfunction cause by performing the following actions:
  - Verify that a DTC has been recorded in the memory. (See **DTC INSPECTION [INSTRUMENT CLUSTER]**.)
  - Based on the repair order form, attempt to drive the vehicle or perform tests to replicate the malfunction, record the data at that time, and detect the malfunction cause.
  - Refer to [Determining Open Circuit Location] based on the recorded DTC, shake the wiring harness or connector of the electrical component which is suspected to be the cause of the malfunction, and inspect for any changes in CAN system voltage or occurrence of any DTCs.

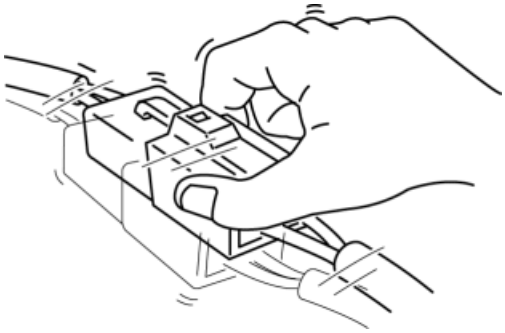

  - Inspect the female terminals on the connector of the electric component which is suspected to be the cause of the malfunction for poor connection.

2014 - Mazda3 - Body and Accessories

SYMPTOM TROUBLESHOOTING [INSTRUMENT CLUSTER]

Troubleshooting item
FUEL GAUGE READING IS NOT CORRECT (See **FUEL GAUGE READING IS NOT CORRECT [INSTRUMENT CLUSTER]**.)
LOW ENGINE COOLANT TEMPERATURE INDICATOR LIGHT/HIGH ENGINE COOLANT TEMPERATURE WARNING LIGHT ILLUMINATES OR FLASHES CONTINUOUSLY (See **LOW ENGINE COOLANT TEMPERATURE INDICATOR LIGHT/HIGH ENGINE COOLANT TEMPERATURE WARNING LIGHT ILLUMINATES OR FLASHES CONTINUOUSLY [INSTRUMENT CLUSTER]**.)
ACTIVE DRIVING DISPLAY DOES NOT DISPLAY (See **ACTIVE DRIVING DISPLAY DOES NOT DISPLAY [INSTRUMENT CLUSTER]**.)
ACTIVE DRIVING DISPLAY DOES NOT OPERATE (See **ACTIVE DRIVING DISPLAY DOES NOT OPERATE [INSTRUMENT CLUSTER]**.)
ACTIVE DRIVING DISPLAY DOES NOT DIM AUTOMATICALLY (See **ACTIVE DRIVING DISPLAY DOES NOT DIM AUTOMATICALLY [INSTRUMENT CLUSTER]**.)

2014 - Mazda3 - Body and Accessories

FUEL GAUGE READING IS NOT CORRECT [INSTRUMENT CLUSTER]

Possible cause

- Instrument cluster malfunction
- Rear body control module (RBCM) malfunction
- Fuel gauge sender unit malfunction
- Open or short circuit in wiring harness between fuel gauge sensor unit and rear body control module (RBCM)

Diagnostic Procedure

Step	Inspection	Action	
1	**PERFORM CAN MALFUNCTION DIAGNOSIS AND DTC INSPECTION** • Perform the CAN malfunction diagnosis according to the recommendation of **FOREWORD [INSTRUMENT CLUSTER]** malfunction diagnosis, and if there is no CAN malfunction, perform inspection for DTCs. (See **DTC INSPECTION [INSTRUMENT CLUSTER]**.) • Is the DTC displayed?	Yes	Go to the applicable DTC inspection. (See **DTC TABLE [INSTRUMENT CLUSTER]**.)
		No	Go to the next step.
2	**INSPECTION OF INSTRUMENT CLUSTER** • Perform inspection of the fuel gauge/LCD display referring to the instrument cluster inspection. (See **INSTRUMENT CLUSTER INSPECTION**.)	Yes	Go to the next step.
		No	Replace the instrument cluster. (See **INSTRUMENT CLUSTER REMOVAL/INSTALLATION**.)

	• Is the display normal?		
3	**DETERMINE IF MALFUNCTION CAUSE IS FUEL GAUGE SENDER** • Display the following rear body control module (RBCM) PIDs using the M-MDS. ▪ FUEL_SEN_M • Verify the voltage in the display monitor while shaking the vehicle. • Does the voltage change?	Yes	Go to the next step.
		No	Go to Step 5.
4	**DETERMINE IF MALFUNCTION CAUSE IS REAR BODY CONTROL MODULE (RBCM)** • Display the following instrument cluster PIDs using the M-MDS. ▪ FUEL_SEN_M • Verify the resistance in the display monitor while shaking the vehicle. • Does the resistance change?	Yes	Replace the instrument cluster. (See **INSTRUMENT CLUSTER REMOVAL/INSTALLATION**.)
		No	Replace the rear body control module (RBCM). (See **REAR BODY CONTROL MODULE (RBCM) REMOVAL/INSTALLATION**.)
5	**INSPECT FUEL GAUGE SENDER UNIT** • Switch the ignition off. • Inspect the fuel gauge sender unit. (See **FUEL GAUGE SENDER UNIT INSPECTION**.) • Is the fuel gauge sender unit normal?	Yes	Refer to the wiring diagram and verify whether or not there is a common connector between the fuel gauge sender unit and the rear body control module (RBCM). **If there is a common connector:** • Determine the malfunctioning part by inspecting the common connector and the terminal for corrosion, damage, or pin disconnection, and the mid-wiring harness for a short to power supply. • Repair or replace the wiring harness which has a malfunction. **If there is no common connector:** • Repair or replace the wiring harness which has a malfunction.

		No	Replace the fuel gauge sender unit. (See **FUEL GAUGE SENDER UNIT REMOVAL / INSTALLATION**.)

2014 - Mazda3 - Body and Accessories

LOW ENGINE COOLANT TEMPERATURE INDICATOR LIGHT/HIGH ENGINE COOLANT TEMPERATURE WARNING LIGHT ILLUMINATES OR FLASHES CONTINUOUSLY [INSTRUMENT CLUSTER]

Possible cause

- ECT sensor malfunction
- Instrument cluster malfunction

Diagnostic Procedure

Step	Inspection	Action	
1	**PERFORM CAN MALFUNCTION DIAGNOSIS AND DTC INSPECTION** • Perform the CAN malfunction diagnosis according to the recommendation of **FOREWORD [INSTRUMENT CLUSTER]** malfunction diagnosis, and if there is no CAN malfunction, perform inspection for DTCs. (See **DTC INSPECTION [INSTRUMENT CLUSTER]**.) • Is the DTC displayed?	Yes	Go to the applicable DTC inspection. (See **DTC TABLE [INSTRUMENT CLUSTER]**.)
		No	Go to the next step.
2	**VERIFY THE MALFUNCTION SYMPTOM** • Cool down the engine. • When the ignition is switched ON, does the engine coolant temperature warning light illuminate or flash?	Yes	Go to Step 4.
		No	Go to the next step.
3	**VERIFY ILLUMINATION OF LOW ENGINE COOLANT TEMPERATURE INDICATOR LIGHT** • Start the engine. • Monitor the PID ECT using the M-MDS.	Yes	Go to the next step.
		No	The system is operating normally.

	Verify that the low engine coolant temperature indicator light illuminates when the ECT monitor value is **55 °C {131 °F} or more**. • Does the low engine coolant temperature indicator light illuminate?		
4	**INSPECT ECT SENSOR** • Inspect the ECT sensor. (See **ENGINE COOLANT TEMPERATURE (ECT) SENSOR INSPECTION [SKYACTIV-G 2.0, SKYACTIV-G 2.5]**.) • Is the ECT sensor normal?	Yes	Replace the instrument cluster. (See **INSTRUMENT CLUSTER REMOVAL/INSTALLATION**.)
		No	Replace the ECT sensor. (See **ENGINE COOLANT TEMPERATURE (ECT) SENSOR REMOVAL/INSTALLATION [SKYACTIV-G 2.0, SKYACTIV-G 2.5]**.)

2014 - Mazda3 - Body and Accessories

ACTIVE DRIVING DISPLAY DOES NOT DISPLAY [INSTRUMENT CLUSTER]

NOTE:

- If there is any vehicle malfunction complaint lodged by a customer, perform FOREWORD [INSTRUMENT CLUSTER] malfunction diagnosis according to the troubleshooting procedure. (See **FOREWORD [INSTRUMENT CLUSTER]**.)

Possible Cause

- Active driving display malfunction
- Instrument cluster malfunction

Diagnostic Procedure

Step	Inspection	Action	
1	**VISUALLY INSPECT ACTIVE DRIVING DISPLAY** • Switch the ignition ON (engine on). • Visually inspect the active driving display for damage, dust, or dirt. • Is there damage, foreign matter penetration, or dirt on the active driving display?	Yes	Go to the next step.
		No	**If the active driving display is damaged:** • Replace the active driving display. (See **ACTIVE DRIVING DISPLAY REMOVAL/INSTALLATION**.) **If there is foreign matter penetration or dirt on the active driving display:** • Remove foreign matter or dirt on the active driving display.
2	**INSPECT ACTIVE DRIVING DISPLAY** • Inspect the active driving display.	Yes	Go to the next step.
		No	Replace the active driving display. (See **ACTIVE DRIVING DISPLAY REMOVAL/INSTALLATION**.)

	(See **ACTIVE DRIVING DISPLAY INSPECTION**.) • Is the active driving display normal?		
3	**VERIFY IF MALFUNCTION CAUSE IS CORRECTED** • Is the active driving display operating normally?	Yes	Troubleshooting completed (explain the contents of the servicing to the customer).
		No	Replace the instrument cluster. (See **INSTRUMENT CLUSTER REMOVAL/INSTALLATION**.)

2014 - Mazda3 - Body and Accessories

ACTIVE DRIVING DISPLAY DOES NOT OPERATE [INSTRUMENT CLUSTER]

NOTE:

- If there is any vehicle malfunction complaint lodged by a customer, perform FOREWORD [INSTRUMENT CLUSTER] malfunction diagnosis according to the troubleshooting procedure. (See **FOREWORD [INSTRUMENT CLUSTER]**.)

Possible Cause

- Active driving display not set
- Active driving display malfunction
- Instrument cluster malfunction

Diagnostic Procedure

Step	Inspection	Action	
1	**VERIFY ACTIVE DRIVING DISPLAY SETTING** • Verify the "Active Driving Display" setting for the active driving display using the center display. • Is the setting ON?	Yes	Go to the next step.
		No	Switch the setting to ON.
2	**VISUALLY INSPECT COMBINER** • Visually inspect around the combiner bearing for foreign matter penetration or dirt. • Is there foreign matter or dirt around the combiner bearing?	Yes	Go to the next step.
		No	Remove foreign matter or dirt around the combiner bearing.
3	**VISUALLY INSPECT ACTIVE DRIVING DISPLAY** • Visually inspect the active driving display	Yes	Go to the next step.
		No	Replace the active driving display.

	for damage. • Is the active driving display normal?		(See **ACTIVE DRIVING DISPLAY REMOVAL/INSTALLATION**.)
4	**DETERMINE IF MALFUNCTION CAUSE IS ACTIVE DRIVING DISPLAY** • Disconnect the negative battery cable and connect the negative battery cable after approx. 1 min. (See **NEGATIVE BATTERY CABLE DISCONNECTION/CONNECTION [SKYACTIV-G 2.0, SKYACTIV-G 2.5]**.) • Is the active driving display operating normally?	Yes	Troubleshooting completed (explain the contents of the servicing to the customer).
		No	Go to the next step.
5	**INSPECT ACTIVE DRIVING DISPLAY** • Inspect the active driving display. (See **ACTIVE DRIVING DISPLAY INSPECTION**.) • Is the active driving display operating normally?	Yes	Go to the next step.
		No	Replace the active driving display. (See **ACTIVE DRIVING DISPLAY REMOVAL/INSTALLATION**.)
6	**VERIFY IF MALFUNCTION CAUSE IS CORRECTED** • Is the active driving display operating normally?	Yes	Troubleshooting completed (explain the contents of the servicing to the customer).
		No	Replace the instrument cluster. (See **INSTRUMENT CLUSTER REMOVAL/INSTALLATION**.)

2014 - Mazda3 - Body and Accessories

ACTIVE DRIVING DISPLAY DOES NOT DIM AUTOMATICALLY [INSTRUMENT CLUSTER]

NOTE:

- If there is any vehicle malfunction complaint lodged by a customer, perform FOREWORD [INSTRUMENT CLUSTER] malfunction diagnosis according to the troubleshooting procedure. (See **FOREWORD [INSTRUMENT CLUSTER]**.)

Possible Cause

- Active driving display not set
- Active driving display malfunction

Diagnostic Procedure

Step	Inspection	Action	
1	**VERIFY ACTIVE DRIVING DISPLAY SETTING** • Verify the "Brightness Control" setting for the active driving display using the center display. • The "Brightness Control" is set automatically.	Yes	Go to the next step.
		No	Switch the setting to automatic.
2	**VISUALLY INSPECT ACTIVE DRIVING DISPLAY** • Switch the ignition ON (engine on). • Visually inspect the display device or the reflection part of the active driving display for dust or dirt. • Is there any dust or dirt on the active driving display?	Yes	Go to the next step.
		No	Remove any dust or dirt on the active driving display.

3	**VISUALLY INSPECT PHOTO SENSOR** • Switch the ignition off. • Visually inspect the photo sensor part for dust or dirt. • Is there any dust or dirt on the photo sensor part?	Yes	Go to the next step.
		No	Remove any dust or dirt on the photo sensor part.
4	**DETERMINE IF MALFUNCTION CAUSE IS PHOTO SENSOR** • Shine light on the photo sensor part of the active driving display and inspect. • Does the active driving display dim automatically?	Yes	Go to the next step.
		No	Replace the active driving display. (See **ACTIVE DRIVING DISPLAY REMOVAL / INSTALLATION**.)
5	**VERIFY IF MALFUNCTION CAUSE IS CORRECTED** • Is the active driving display operating normally?	Yes	Troubleshooting completed (explain the contents of the servicing to the customer).
		No	Verify the malfunction symptom in the symptom troubleshooting chart and perform the other applicable malfunction diagnosis.

2014 - Mazda3 - Body and Accessories

FOREWORD [BLIND SPOT MONITORING (BSM)]

- If there is any vehicle malfunction complaint lodged by a customer, perform malfunction diagnosis according to the troubleshooting procedure.

Troubleshooting Procedure

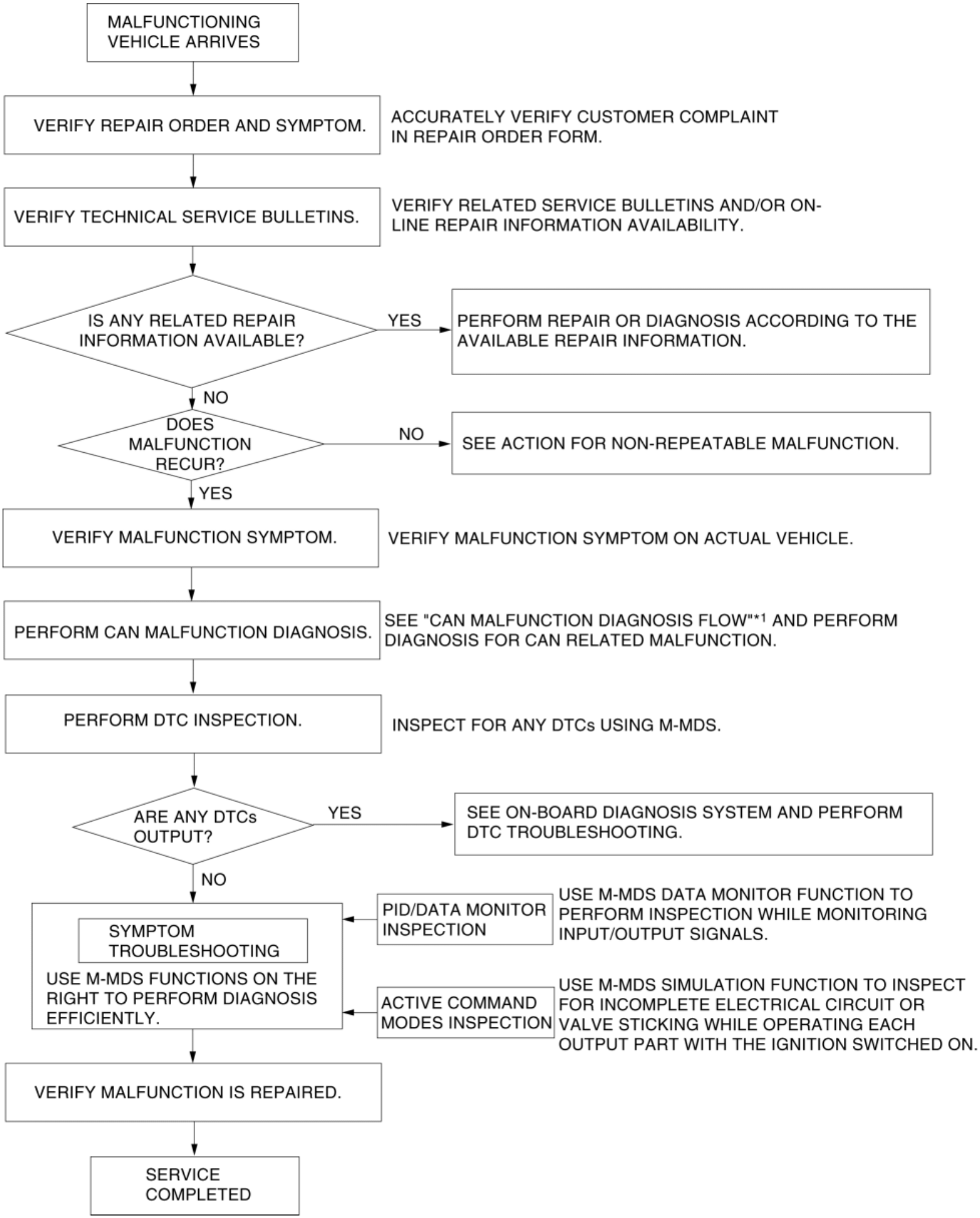
MALFUNCTIONING VEHICLE ARRIVES
VERIFY REPAIR ORDER AND SYMPTOM.
ACCURATELY VERIFY CUSTOMER COMPLAINT IN REPAIR ORDER FORM.
VERIFY TECHNICAL SERVICE BULLETINS.
VERIFY RELATED SERVICE BULLETINS AND/OR ON-LINE REPAIR INFORMATION AVAILABILITY.
IS ANY RELATED REPAIR INFORMATION AVAILABLE?
YES
PERFORM REPAIR OR DIAGNOSIS ACCORDING TO THE AVAILABLE REPAIR INFORMATION.
NO
DOES MALFUNCTION RECUR?
NO
SEE ACTION FOR NON-REPEATABLE MALFUNCTION.
YES
VERIFY MALFUNCTION SYMPTOM.
VERIFY MALFUNCTION SYMPTOM ON ACTUAL VEHICLE.
PERFORM CAN MALFUNCTION DIAGNOSIS.
SEE "CAN MALFUNCTION DIAGNOSIS FLOW"*1 AND PERFORM DIAGNOSIS FOR CAN RELATED MALFUNCTION.
PERFORM DTC INSPECTION.
INSPECT FOR ANY DTCs USING M-MDS.
ARE ANY DTCs OUTPUT?
YES
SEE ON-BOARD DIAGNOSIS SYSTEM AND PERFORM DTC TROUBLESHOOTING.
NO
SYMPTOM TROUBLESHOOTING
USE M-MDS FUNCTIONS ON THE RIGHT TO PERFORM DIAGNOSIS EFFICIENTLY.
PID/DATA MONITOR INSPECTION
USE M-MDS DATA MONITOR FUNCTION TO PERFORM INSPECTION WHILE MONITORING INPUT/OUTPUT SIGNALS.
ACTIVE COMMAND MODES INSPECTION
USE M-MDS SIMULATION FUNCTION TO INSPECT FOR INCOMPLETE ELECTRICAL CIRCUIT OR VALVE STICKING WHILE OPERATING EACH OUTPUT PART WITH THE IGNITION SWITCHED ON.
VERIFY MALFUNCTION IS REPAIRED.
SERVICE COMPLETED

*1

(See CONTROLLER AREA NETWORK (CAN) MALFUNCTION DIAGNOSIS FLOW.)

Action for non-repeatable malfunction

- If the malfunction does not recur, verify the malfunction cause by performing the following actions:
  - Based on the repair order form, attempt to drive the vehicle or perform tests to replicate the malfunction, record the data at that time, and detect the malfunction cause.
  - Shake the wiring harness or connector of the electrical component which is suspected to be the cause of the malfunction, and inspect for malfunction or occurrence of any DTCs.

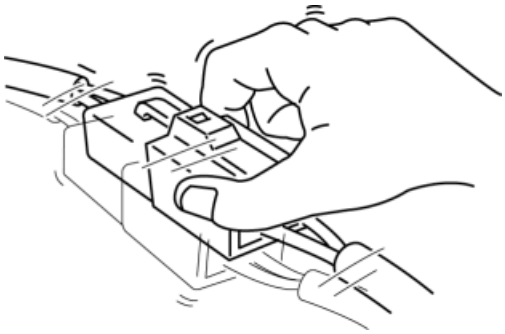

  - Inspect the female terminals on the connector of the electric component which is suspected to be the cause of the malfunction for poor connection.

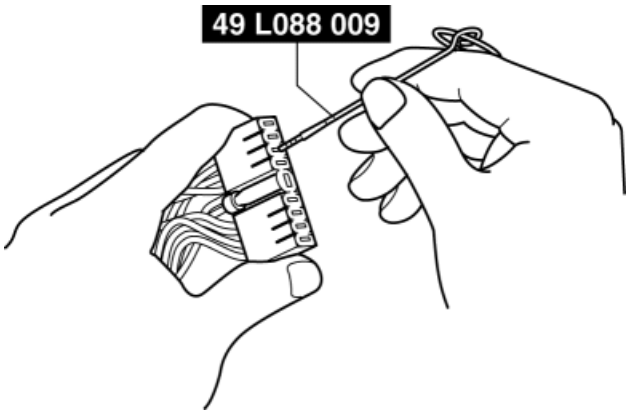

  - When the BSM OFF indicator light is flashing (BSM malfunction is detected by its on-board diagnostic function), perform the On-board Diagnostic Inspection. To inspect the DTC, follow the DTC Inspection steps. (See **DTC INSPECTION [BLIND SPOT MONITORING (BSM)]**.)
  - Before performing the steps in Symptom Troubleshooting, perform the On-board Diagnostic Inspection. To inspect the DTC, follow the DTC Inspection steps. (See **DTC INSPECTION [BLIND SPOT MONITORING (BSM)]**.)
  - The Blind Spot Monitoring (BSM) System is a warning device which monitors the vehicle's rear on both sides for approaching vehicles using radar emitted from the BSM control module the radar reflects off a vehicle that enters a warning zone and is then transmitted back to the BSM control module.

WARNING:

- The BSM is not a substitute for the driver in confirming safety. The driver is responsible for assuring the safety of lane changes and other maneuvers. Do not rely completely on the BSM and always confirm the safety around the vehicle visually before changing lanes.
- Dirt, ice or snow adhering to the areas near the BSM control module could obstruct the radar and prevent the system from adequately or completely detecting a target vehicle. Always pay attention to the direction in which the vehicle is traveling and the vehicle’s surroundings.
- Do not block the area around the BSM control module on the rear bumper with foreign matter (such as bumper stickers) so as not to affect the BSM’s functions.
- Always have the BSM control module inspected at an Authorized Mazda Dealer if any shock or impact has occurred in

the rear bumper area, even that from a minor accident. Otherwise, the BSM may not operate correctly.

- The BSM may not operate normally under the following conditions:
    - Dirt, ice or snow is adhering to the rear bumper surface.
    - The vehicle is driven in heavy rain or snowfall, or under conditions where water on the road is sprayed by the vehicle.
    - The vehicle accelerates from a standing-start with a target vehicle alongside.
    - A target vehicle moves laterally from a lane two lanes over to the adjacent lane.
    - The difference in vehicle speed between the vehicle and a target vehicle is higher with the target vehicle passing through the alert area in a very short period.
    - On a steep incline, or if there is a difference in height between lanes.
- Although the system may detect objects on the road side such as parked vehicles or guardrails and operate the warning light/beep, it does not indicate a malfunction.
- The BSM control module may not detect all types of vehicles. In particular, detection of the following types of vehicles may not occur:
    - A vehicle driving at a low speed
    - Small vehicles such as motorcycles
    - Vehicles with body shapes that may not reflect radar such as unloaded trailers
    - Vehicles with lower body height
- On a road with a narrower lane width, the system could detect vehicles on a lane next to the adjacent lane and cause the warning light/beep to operate. On a road with a wider lane width, the system may not detect vehicles on the adjacent lane and may not operate the warning light/beep.

2014 - Mazda3 - Body and Accessories

TROUBLESHOOTING INDEX [BLIND SPOT MONITORING (BSM)]

Troubleshooting item	Description
BSM OFF INDICATOR LIGHT DOES NOT ILLUMINATE WHEN THE IGNITION IS SWITCHED TO ON (See **BSM OFF INDICATOR LIGHT DOES NOT ILLUMINATE WHEN THE IGNITION IS SWITCHED TO ON [BLIND SPOT MONITORING (BSM)]**.)	• The BSM OFF indicator light does not illuminate when the ignition is switched to ON. • The BSM control module does not communicate with the M-MDS.
BSM OFF INDICATOR LIGHT DOES NOT ILLUMINATE WHILE BSM SYSTEM IS OFF (See **BSM OFF INDICATOR LIGHT DOES NOT ILLUMINATE WHILE BSM SYSTEM IS OFF [BLIND SPOT MONITORING (BSM)]**.)	• The BSM OFF indicator light does not illuminate after the BSM OFF switch turns off the system when the ignition is switched to ON.
BSM OFF INDICATOR LIGHT ILLUMINATES CONTINUOUSLY (See **BSM OFF INDICATOR LIGHT ILLUMINATES CONTINUOUSLY [BLIND SPOT MONITORING (BSM)]**.)	• The BSM OFF indicator light illuminates for 4 s or more without the BSM OFF switch turning off the system when the ignition is switched to ON.
BSM INDICATOR LIGHT ILLUMINATES WHILE NOT UNDER LIGHT-ILLUMINATION CONDITIONS (See **BSM INDICATOR LIGHT ILLUMINATES WHILE NOT UNDER LIGHT-ILLUMINATION CONDITIONS [BLIND SPOT MONITORING (BSM)]**.)	• The BSM indicator light illuminates, but the conditions to illuminate the BSM indicator light are not satisfied (vehicle speed **10 km/h {6.2 mph} or more**, turn signals off, and vehicle in warning zone).
BSM INDICATOR LIGHT DOES NOT ILLUMINATE WHILE UNDER BSM INDICATOR LIGHT-ILLUMINATION CONDITIONS (See **BSM INDICATOR LIGHT DOES NOT ILLUMINATE WHILE UNDER BSM INDICATOR LIGHT-ILLUMINATION CONDITIONS [BLIND SPOT MONITORING (BSM)]**.)	• The BSM indicator light does not illuminate despite satisfying the conditions to illuminate the BSM indicator light (vehicle speed **10 km/h {6.2 mph} or more**, turn signals off, and vehicle in warning zone).
BSM INDICATOR LIGHT FLASHES WHILE NOT	• The BSM indicator light flashes despite

UNDER BSM INDICATOR LIGHT-FLASHING CONDITIONS (NO LIGHT SWITCH OPERATION (TURN SIGNAL SWITCH)) (See **BSM INDICATOR LIGHT FLASHES WHILE NOT UNDER BSM INDICATOR LIGHT-FLASHING CONDITIONS (NO LIGHT SWITCH OPERATION (TURN SIGNAL SWITCH)) [BLIND SPOT MONITORING (BSM)]**.)	not satisfying the BSM indicator light flashing conditions (vehicle speed **10 km/h {6.2 mph} or more**, turn signal on, and vehicle in warning zone). • The BSM indicator light flashes, but the turn signals are off.
BSM INDICATOR LIGHT DOES NOT FLASH WHILE UNDER BSM INDICATOR LIGHT-FLASHING CONDITIONS (WITH LIGHT SWITCH OPERATION (TURN SIGNAL SWITCH)) (See **BSM INDICATOR LIGHT DOES NOT FLASH WHILE UNDER BSM INDICATOR LIGHT-FLASHING CONDITIONS (WITH LIGHT SWITCH OPERATION (TURN SIGNAL SWITCH)) [BLIND SPOT MONITORING (BSM)]**.)	• The BSM indicator light does not flash or illuminate continuously, but the conditions to flash the BSM indicator light are satisfied (vehicle speed **10 km/h {6.2 mph} or more**, turn signal on, and vehicle in warning zone). • The BSM indicator light does not flash or illuminate continuously, but turn signals are on.
THE BSM INDICATOR LIGHT DOES NOT FLASH OR ILLUMINATE CONTINUOUSLY, BUT A TURN SIGNAL IS ON (See **THE BSM INDICATOR LIGHT DOES NOT FLASH OR ILLUMINATE CONTINUOUSLY, BUT A TURN SIGNAL IS ON [BLIND SPOT MONITORING (BSM)]**.)	• The BSM warning alarm sounds but BSM indicator light does not flash. • The BSM warning alarm is triggered on the side opposite to the direction in which the turn signal is operated.
BSM WARNING ALARM DOES NOT SOUND WHILE BSM INDICATOR LIGHT FLASHES (See **BSM WARNING ALARM DOES NOT SOUND WHILE BSM INDICATOR LIGHT FLASHES [BLIND SPOT MONITORING (BSM)]**.)	• The BSM control module recognizes that a vehicle is in the warning zone on the side in which the turn signal is operated, but the BSM warning alarm does not sound despite the BSM indicator light flashing.

2014 - Mazda3 - Body and Accessories

BLIND SPOT MONITORING (BSM) WIRING DIAGRAM [BLIND SPOT MONITORING (BSM)]

BLIND SPOT MONITORING (BSM) WIRING DIAGRAM [BLIND SPOT MONITORING (BSM)]

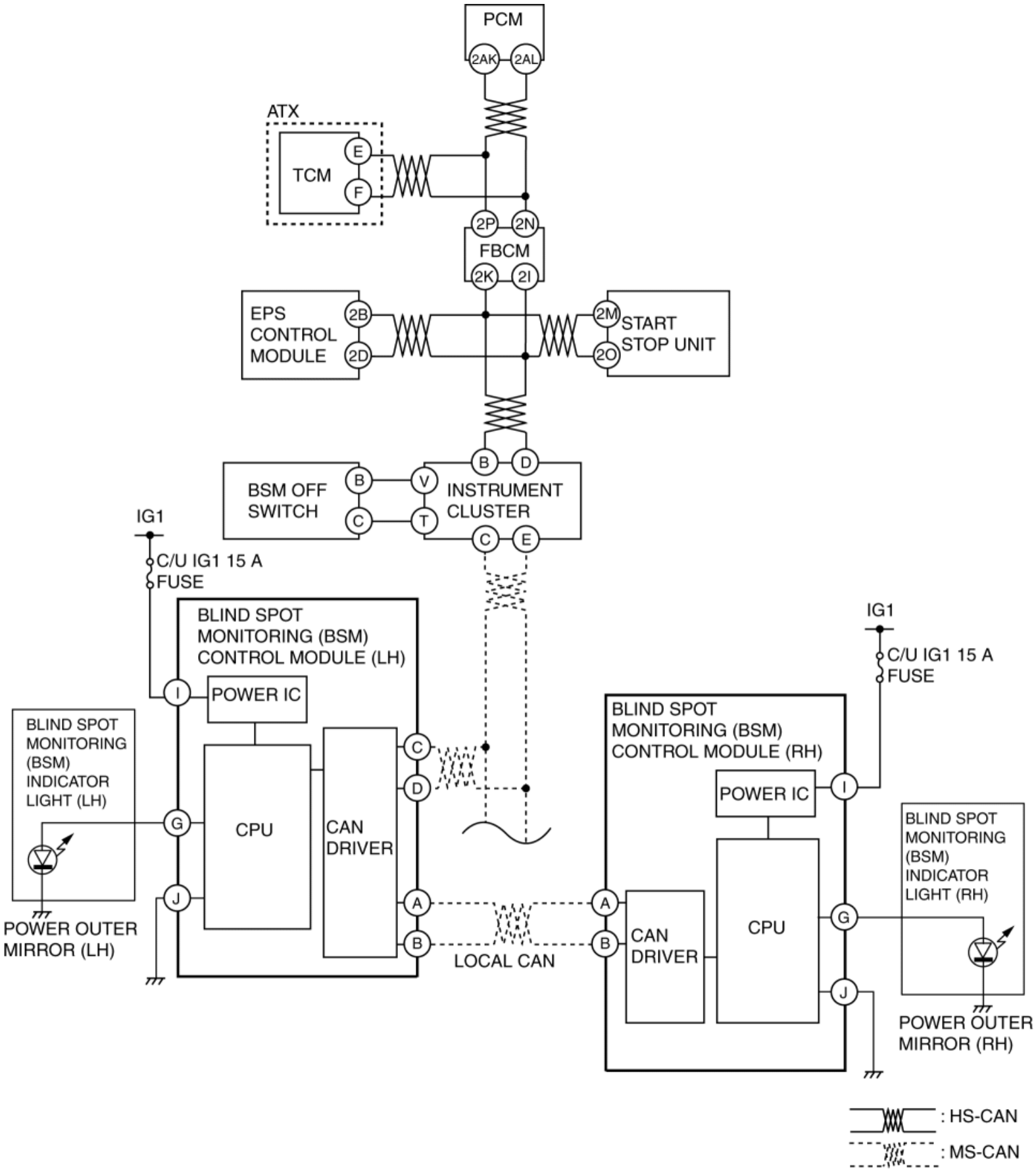

2014 - Mazda3 - Body and Accessories

BSM OFF INDICATOR LIGHT DOES NOT ILLUMINATE WHEN THE IGNITION IS SWITCHED TO ON [BLIND SPOT MONITORING (BSM)]

Description	**BSM OFF indicator light does not illuminate when the ignition is switched to ON**
	• BSM OFF indicator light does not illuminate when the ignition is switched to ON. • The BSM control module does not communicate with the M-MDS.

Possible Causes	• BSM control module (LH) does not initiate
	  ▪ Open or short circuit in BSM control module (LH) power supply circuit (open or short to power supply circuit in wiring harness between C/U IG1 15A fuse and BSM control module (LH) terminal I)
	  ▪ Open circuit in BSM control module (LH) ground circuit (open circuit in wiring harness between BSM control module (LH) and ground, poor contact at ground point)
	  ▪ BSM control module (LH) malfunction
	• Instrument cluster does not illuminate BSM OFF indicator light
	  ▪ Instrument cluster malfunction

Diagnostic Procedure

Step	Inspection	Result	Action
1	**INSPECT BSM CONTROL MODULE (LH) POWER SUPPLY VOLTAGE** • Switch the ignition ON (engine off or on). • Measure the voltage at BSM control module (LH) terminal I.	Yes	Go to the next step.

		No	Inspect the C/U IG1 15A fuse.
			• If the fuse is damaged:
			  ▪ Replace the fuse.
			• If the fuse is normal:
			  ▪ Refer to the wiring diagram and verify if there is a common connector between

	• Is the voltage B+?		C/U IG1 15A fuse and BSM control module (LH) terminal I. **If there is a common connector:** • Inspect the common connector and terminals for corrosion, damage, or disconnection and the common wiring harnesses for open or short circuit to determine the malfunctioning location. • Repair or replace the malfunctioning location. **If there is no common connector:** • Repair or replace the wiring harness which has an open or short circuit. Go to the next step.
2	**INSPECT BSM CONTROL MODULE (LH) GROUND CIRCUIT** • Switch the ignition off. • Verify that there is continuity between the BSM control module (LH) terminal J and ground. • Is there	Yes	Go to the next step.
		No	Inspect and repair the ground point. Repair or replace for an open circuit between the BSM control module (LH) and ground.

	continuity?		
3	**INSPECT IF MALFUNCTION IS IN INSTRUMENT CLUSTER OR BSM CONTROL MODULE (LH)** • Turn off the BSM OFF indicator light using the M-MDS instrument cluster active command modes WL+IL. (See **ACTIVE COMMAND MODES TABLE [INSTRUMENT CLUSTER]**.) • Does the BSM OFF indicator light turn on according to the active command modes?	Yes	Replace the BSM control module (LH). (See **BLIND SPOT MONITORING (BSM) CONTROL MODULE REMOVAL/INSTALLATION**.)
		No	Replace the instrument cluster. (See **INSTRUMENT CLUSTER REMOVAL/INSTALLATION**.)

2014 - Mazda3 - Body and Accessories

BSM OFF INDICATOR LIGHT DOES NOT ILLUMINATE WHILE BSM SYSTEM IS OFF [BLIND SPOT MONITORING (BSM)]

Description	**BSM OFF indicator light does not illuminate while BSM system is off**
	• BSM OFF indicator light does not illuminate even though BSM OFF switch turns off the system after the ignition is switched ON.
Possible Causes	• Malfunction in BSM OFF switch related parts ▪ BSM OFF switch malfunction (stuck at off) • Instrument cluster does not illuminate BSM OFF indicator light ▪ BSM control module (LH) malfunction ▪ Instrument cluster malfunction

Diagnostic Procedure

Step	Inspection	Result	Action
1	**INSPECT BSM OFF SWITCH** • Inspect the BSM OFF switch. (See **BLIND SPOT MONITORING (BSM) OFF SWITCH INSPECTION**.) • Is the BSM OFF switch normal?	Yes	Go to the next step.
		No	Replace the BSM OFF switch. (See **BLIND SPOT MONITORING (BSM) OFF SWITCH REMOVAL/INSTALLATION**.)
2	**INSPECT IF MALFUNCTION IS IN INSTRUMENT CLUSTER OR BSM CONTROL MODULE (LH)** • Turn on the BSM OFF indicator light using the M-MDS instrument cluster active command modes WL+IL. (See **ACTIVE COMMAND MODES INSPECTION [INSTRUMENT CLUSTER]**.) • Does the BSM OFF indicator light illuminate according to the active	Yes	Replace the BSM control module (LH). (See **BLIND SPOT MONITORING (BSM) CONTROL MODULE REMOVAL/INSTALLATION**.)
		No	Replace the instrument cluster. (See **INSTRUMENT CLUSTER REMOVAL/INSTALLATION**.)

	command modes?		

2014 - Mazda3 - Body and Accessories

BSM OFF INDICATOR LIGHT ILLUMINATES CONTINUOUSLY [BLIND SPOT MONITORING (BSM)]

Description	**BSM OFF indicator light illuminates continuously**
	• The BSM OFF indicator light illuminates for 4 s or more without the BSM OFF switch turning off after the ignition is switched ON.
Possible Causes	• Malfunction in BSM OFF switch related parts ▪ BSM OFF switch malfunction (stuck at on) • Instrument cluster does not turn off BSM indicator light ▪ BSM control module (LH) malfunction ▪ Instrument cluster malfunction

Diagnostic Procedure

Step	Inspection	Result	Action
1	**INSPECT BSM OFF SWITCH** • Inspect the BSM OFF switch. (See **BLIND SPOT MONITORING (BSM) OFF SWITCH INSPECTION**.) • Is the BSM OFF switch normal?	Yes	Go to the next step.
		No	Replace the BSM OFF switch. (See **BLIND SPOT MONITORING (BSM) OFF SWITCH REMOVAL/INSTALLATION**.)
2	**INSPECT IF MALFUNCTION IS IN INSTRUMENT CLUSTER OR BSM CONTROL MODULE (LH)** • Turn off the BSM OFF indicator light using the M-MDS instrument cluster active command modes WL+IL. (See **ACTIVE COMMAND MODES INSPECTION [INSTRUMENT CLUSTER]**.) • Does the BSM OFF indicator light turn off according to the active command modes?	Yes	Replace the BSM control module (LH). (See **BLIND SPOT MONITORING (BSM) CONTROL MODULE REMOVAL/INSTALLATION**.)
		No	Replace the instrument cluster. (See **INSTRUMENT CLUSTER REMOVAL/INSTALLATION**.)

BSM OFF INDICATOR LIGHT ILLUMINATES CONTINUOUSLY [BLIND SPOT MONITORING (BSM)]

2014 - Mazda3 - Body and Accessories

BSM INDICATOR LIGHT ILLUMINATES WHILE NOT UNDER LIGHT-ILLUMINATION CONDITIONS [BLIND SPOT MONITORING (BSM)]

Description	**BSM indicator light illuminates while not under light-illumination conditions**
	• The BSM indicator light illuminates, but the conditions to illuminate the BSM indicator light are not satisfied (vehicle speed **10 km/h {6.2 mph} or more**, turn signals off, and vehicle in warning zone).
Possible Causes	• The BSM control module recognizes a vehicle as being inside the warning zone when it is actually outside of it. ▪ Radar (BSM control module integrated) is emitted outside of warning zone (deviates from warning zone) • Damage, deformity or looseness to installation bracket or vehicle frame (including moderate impacts) • Malfunction in steering angle signal (instrument cluster or EPS control module malfunction) • Problem with rear bumper such as dirt on radar emitting/receiving area, application of stickers (including transparent types), repairs using putty application. ▪ After-market electrical parts interfere with BSM system • Malfunction in BSM indicator light related parts ▪ Short to power supply circuit in wiring harness between BSM control module and BSM indicator light

Diagnostic Procedure

Step	Inspection	Result	Action
1	**INSPECT IF MALFUNCTION IS IN INPUT SIGNAL OR BSM CONTROL MODULE** • Monitor the following PIDs on the	Yes	Go to Step 3.
		No	Go to the next step.

	suspected side of the BSM control module using the M-MDS. (See **PID/DATA MONITOR INSPECTION [BLIND SPOT MONITORING (BSM)]**.) ▪ SWA_POS • Are the monitoring values normal?		
2	**INSPECT STEERING ANGLE SIGNAL** • Monitor the PID STR_ANG for the EPS control module using the M-MDS. (See **ELECTRIC POWER STEERING (EPS) ON-BOARD DIAGNOSIS**.) • Is the monitoring value normal?	Yes	Replace the instrument cluster. (See **INSTRUMENT CLUSTER REMOVAL/INSTALLATION**.)
		No	Replace the EPS control module. (See **STEERING WHEEL AND COLUMN REMOVAL/INSTALLATION**.)
3	**INSPECT REAR BUMPER** • Inspect the rear bumper at the BSM installation area for the following: ▪ Installation condition ▪ Sticker adhesion ▪ Excessive dirt ▪ Repairs using putty • Is the rear bumper condition normal?	Yes	Go to the next step.
		No	Repair or replace malfunctioning parts, or replace the rear bumper. (See **REAR BUMPER REMOVAL/INSTALLATION**.)
4	**VERIFY THE CONDITION OF THE BSM CONTROL MODULE** • Remove the rear bumper. (See **REAR BUMPER REMOVAL/INSTALLATION**.) • Inspect the BSM control module for the following: ▪ Looseness ▪ Damage or deformity to the bracket ▪ Distortion at vehicle installation surface • Is the BSM control module installation condition normal?	Yes	Go to the next step.
		No	Repair or replace the malfunctioning part.
5	**VERIFY IF CAUSE OF TROUBLE IS IN**	Yes	Go to the next step.

	AFTER-MARKET ELECTRICAL PRODUCT OR ELSEWHERE • Remove the after-market electrical product. • Verify that the malfunction symptom recurs as stated by the customer. • Does the malfunction symptom recur?		
		No	The after-market electrical product is causing the malfunction.
6	**INSPECT BSM CONTROL MODULE (RADAR)** • Perform the BSM radar test. (See **BLIND SPOT MONITORING (BSM) RADAR TEST**.) • Is “TEST PASSED” displayed?	Yes	Temporary malfunction with the radar echo-back. If the same symptom recurs repeatedly, replace the BSM control module. (See **BLIND SPOT MONITORING (BSM) CONTROL MODULE REMOVAL/INSTALLATION**.)
		No	Repair or replace malfunctioning part according to inspection result. (See **BLIND SPOT MONITORING (BSM) RADAR TEST**.)

2014 - Mazda3 - Body and Accessories

BSM INDICATOR LIGHT DOES NOT ILLUMINATE WHILE UNDER BSM INDICATOR LIGHT-ILLUMINATION CONDITIONS [BLIND SPOT MONITORING (BSM)]

Description	**BSM indicator light does not illuminate while under BSM indicator light-illumination conditions**
	• The BSM indicator light does not illuminate despite satisfying the conditions to illuminate the BSM indicator light (vehicle speed **10 km/h {6.2 mph} or more**, turn signals off, and vehicle in warning zone).

Possible Causes	• The BSM control module mistakenly recognizes a vehicle as being outside of the warning zone when it actually inside of it.
	  ▪ Radar (BSM control module integrated) is not emitted inside of warning zone (unable to emit radar inside warning zone)
	  • Damage, deformity or looseness to installation bracket or vehicle frame (including moderate impacts)
	  • Malfunction in steering angle sensor (instrument cluster or EPS control module malfunction)
	  • Problem with rear bumper such as dirt on radar emitting/receiving area, application of stickers (including transparent types), repairs using putty application.
	  ▪ BSM control module does not receive echo-back correctly
	• BSM control module (radar) malfunction
	• Problem with rear bumper such as dirt on radar emitting/receiving area, application of stickers (including transparent types), repairs using putty application.
	NOTE:
	  • Rear bumper problem such defective installation of rear bumper, excessive dirt on the radar emitting/receiving area, sticker adhesion (including transparent types), repairs to rear bumper using putty
	  • Non-genuine bumper, paint, or installation of after-market parts negatively affecting radar echo-back ability

	After-market electrical parts interfere with BSM system • Malfunction in BSM indicator light related parts ▪ Open circuit in wiring harness between BSM indicator light and BSM control module ▪ Open circuit in wiring harness or poor ground between BSM control module and ground ▪ BSM indicator light malfunction

Diagnostic Procedure

Step	Inspection	Result	Action
1	**INSPECT IF MALFUNCTION IS IN INPUT SIGNAL OR BSM CONTROL MODULE** • Monitor the following PIDs on the suspected side of the BSM control module using the M-MDS. (See **PID/DATA MONITOR INSPECTION [BLIND SPOT MONITORING (BSM)]**.) ▪ SWA_POS • Are the monitoring values normal?	Yes	Go to Step 3.
		No	Go to the next step.
2	**INSPECT STEERING ANGLE SIGNAL** • Monitor the PID STR_ANG for the EPS control module using the M-MDS. (See **ELECTRIC POWER STEERING (EPS) ON-BOARD DIAGNOSIS**.) • Is the monitoring value normal?	Yes	Replace the instrument cluster. (See **INSTRUMENT CLUSTER REMOVAL/INSTALLATION**.)
		No	Replace the EPS control module. (See **STEERING WHEEL AND COLUMN REMOVAL/INSTALLATION**.)
3	**INSPECT REAR BUMPER** • Inspect the rear bumper at the BSM installation area for the following: ▪ Installation condition ▪ Sticker adhesion ▪ Excessive dirt ▪ Repairs using putty • Is the rear bumper condition normal?	Yes	Go to the next step.
		No	Repair or replace malfunctioning parts, or replace the rear bumper. (See **REAR BUMPER REMOVAL/INSTALLATION**.)

4	**VERIFY THE CONDITION OF THE BSM CONTROL MODULE** • Remove the rear bumper. (See **REAR BUMPER REMOVAL/INSTALLATION**.) • Inspect the BSM control module for the following: ▪ Looseness ▪ Damage or deformity to the bracket ▪ Distortion at vehicle installation surface • Is the BSM control module installation condition normal?	Yes	Go to the next step.
		No	Repair or replace the malfunctioning part.
5	**VERIFY IF CAUSE OF MALFUNCTION IS IN AFTER-MARKET ELECTRICAL PRODUCT OR ELSEWHERE** • Remove the after-market electrical product. • Verify that the malfunction symptom recurs as stated by the customer. • Does the malfunction symptom recur?	Yes	Go to the next step.
		No	The after-market electrical product is causing the malfunction.
6	**INSPECT BSM CONTROL MODULE (RADAR)** • Perform the BSM radar test. (See **BLIND SPOT MONITORING (BSM) RADAR TEST**.) • Is “TEST PASSED” displayed?	Yes	Temporary malfunction with the radar echo-back. If the same symptom recurs repeatedly, replace the BSM control module. (See **BLIND SPOT MONITORING (BSM) CONTROL MODULE REMOVAL/INSTALLATION**.)
		No	Repair or replace malfunctioning part according to inspection result. (See **BLIND SPOT MONITORING (BSM) RADAR TEST**.)

2014 - Mazda3 - Body and Accessories

BSM INDICATOR LIGHT FLASHES WHILE NOT UNDER BSM INDICATOR LIGHT-FLASHING CONDITIONS (NO LIGHT SWITCH OPERATION (TURN SIGNAL SWITCH)) [BLIND SPOT MONITORING (BSM)]

Description	**BSM indicator light flashes while not under BSM indicator light-flashing conditions (no combination switch operation (turn signal switch)** • The BSM indicator light flashes despite not satisfying the BSM indicator light flashing conditions (vehicle speed **10 km/h {6.2 mph} or more**, turn signal on, and vehicle in warning zone)). • The BSM indicator light flashes, but the turn signals are off.
Possible Causes	**NOTE:** • This malfunction symptom is basically the same as symptom “BSM indicator light while not under BSM indicator light-illumination conditions”. • BSM control module recognizes a vehicle as being inside the warning zone when it is actually outside of it. ▪ Radar (BSM control module integrated) is emitted outside of warning zone (deviates from warning zone) • Damage, deformity or looseness to installation bracket or vehicle frame (including moderate impacts). • Malfunction in steering angle signal (communication error between start stop unit and BSM control module, or EPS control module malfunction). • Problem with rear bumper such as dirt on radar emitting/receiving area, application of stickers (including transparent types), repairs using putty application. ▪ After-market electrical parts interfere with BSM system • BSM does not recognize vehicle speed correctly (BSM control module mistakenly recognizes vehicle speed as being **10 km/h {6.2 mph} or more** ▪ PCM communication error with BSM control module ▪ Malfunction in ABS wheel speed sensor related parts • BSM control module mistakenly recognizes that turn signals have been

	operated ▪ Short to ground circuit in wiring harness between combination switch (turn signal switch) and start stop unit ▪ Communication error between start stop unit and BSM control module ▪ BSM control module malfunction

Diagnostic Procedure

Step	Inspection	Result	Action
1	**VERIFY MALFUNCTION SYMPTOM** • BSM indicator light illuminates while under light-off conditions.	Yes	Go to the symptom troubleshooting procedure, “ BSM indicator light illuminates while not under BSM indicator light-off conditions”. (See **BSM INDICATOR LIGHT ILLUMINATES WHILE NOT UNDER LIGHT-ILLUMINATION CONDITIONS [BLIND SPOT MONITORING (BSM)]**.)
		No	Go to the next step.
2	**INSPECT IF MALFUNCTION IS IN START STOP UNIT INPUT SIGNAL OR BSM CONTROL MODULE** • Monitor the following PIDs on the suspected side of the start stop unit using the M-MDS. (See **PID/DATA MONITOR TABLE [START STOP UNIT]**.) ▪ TURN_SW_L ▪ TURN_SW_R • Are the monitoring values normal?	Yes	Replace the BSM control module. (See **BLIND SPOT MONITORING (BSM) CONTROL MODULE REMOVAL/INSTALLATION**.)
		No	Retrieve DTCs from the start stop unit, instrument cluster, and BSM control module using the M-MDS. (See **DTC INSPECTION [START STOP UNIT]**.) (See **DTC INSPECTION [INSTRUMENT CLUSTER]**.) (See **DTC INSPECTION [BLIND SPOT MONITORING (BSM)]**.)

2014 - Mazda3 - Body and Accessories

BSM INDICATOR LIGHT DOES NOT FLASH WHILE UNDER BSM INDICATOR LIGHT-FLASHING CONDITIONS (WITH LIGHT SWITCH OPERATION (TURN SIGNAL SWITCH)) [BLIND SPOT MONITORING (BSM)]

Description	**BSM indicator light does not flash while under BSM indicator light-flashing conditions (with combination switch operation (turn signal switch))**
	• The BSM indicator light does not flash or illuminate continuously, but the conditions to flash the BSM indicator light are satisfied (vehicle speed **10 km/h {6.2 mph} or more**, turn signal on, and vehicle in warning zone). • BSM indicator light does not flash or illuminate continuously, but turn signals are on.
	NOTE: • This malfunction symptom is basically the same as symptom “BSM indicator light does not illuminate while under BSM indicator light-illumination conditions”. • The BSM control module mistakenly recognizes a vehicle as being outside of the warning zone when it is actually inside of it. ▪ Radar (BSM control module integrated) is not emitted inside of warning zone (unable to emit radar inside warning zone) • Damage, deformity or looseness to installation bracket or vehicle frame (including moderate impacts). • Malfunction in steering angle signal (communication error between start stop unit and BSM control module, or EPS control module malfunction). • Problem with rear bumper such as dirt on radar emitting/receiving area, application of stickers (including transparent types), repairs using putty application. ▪ BSM control module does not receive echo-back correctly • BSM control module (radar) malfunction • Problem with rear bumper such as dirt on radar emitting/receiving area, application of stickers (including transparent types),

Possible Causes	repairs using putty application. **NOTE:** • Rear bumper problems such defective installation of rear bumper, excessive dirt on radar emitting/receiving area, sticker adhesion (including transparent types), repairs to rear bumper using putty • Non-genuine bumper or paint, or installation of after-market parts negatively affecting radar echo-back ability ▪ After-market electrical parts interfere with BSM system • BSM does not recognize vehicle speed correctly (BSM control module mistakenly recognizes vehicle speed as being **within 10 km/h {6.2 mph} or more** ▪ PCM communication error with BSM control module ▪ Malfunction in ABS wheel speed sensor related parts • Malfunction in BSM indicator light related parts ▪ Open circuit in wiring harness between BSM indicator light and BSM control module ▪ Open circuit in wiring harness or poor ground between BSM control module and ground ▪ BSM indicator light malfunction • Signal is not input for turn signal ▪ Combination switch (turn signal switch) malfunction ▪ Open circuit in wiring harness between combination switch (turn signal switch) and start stop unit ▪ Communication error between start stop unit and BSM control module ▪ BSM control module malfunction

Diagnostic Procedure

Step	Inspection	Result	Action
1	**VERIFY MALFUNCTION SYMPTOM**	Yes	Go to the next step.
		No	Go to the symptom troubleshooting procedure,

	BSM indicator light illuminates while under light-off conditions.		”BSM indicator light does not illuminate while under BSM indicator light-illumination conditions”. (See **BSM INDICATOR LIGHT DOES NOT ILLUMINATE WHILE UNDER BSM INDICATOR LIGHT-ILLUMINATION CONDITIONS [BLIND SPOT MONITORING (BSM)]**.)
2	**INSPECT IF MALFUNCTION IS IN START STOP UNIT INPUT SIGNAL OR BSM CONTROL MODULE** • Monitor the following PIDs on the suspected side of the start stop unit using the M-MDS. (See **PID/DATA MONITOR TABLE [START STOP UNIT]**.) ▪ TURN_SW_L ▪ TURN_SW_R • Are the monitoring values normal?	Yes	Replace the BSM control module. (See **BLIND SPOT MONITORING (BSM) CONTROL MODULE REMOVAL/INSTALLATION**.)
		No	Retrieve DTCs from the start stop unit, instrument cluster, and BSM control module using the M-MDS. (See **DTC INSPECTION [START STOP UNIT]**.) (See **DTC INSPECTION [INSTRUMENT CLUSTER]**.) (See **DTC INSPECTION [BLIND SPOT MONITORING (BSM)]**.)

2014 - Mazda3 - Body and Accessories

THE BSM INDICATOR LIGHT DOES NOT FLASH OR ILLUMINATE CONTINUOUSLY, BUT A TURN SIGNAL IS ON [BLIND SPOT MONITORING (BSM)]

Description	**The BSM indicator light does not flash or illuminate continuously, but a turn signal is ON**
	• The BSM warning alarm sounds but BSM indicator light does not flash • The BSM warning alarm is triggered on side opposite to the direction in which turn signal is operated

Possible Causes	• Instrument cluster receives incorrect BSM warning alarm request signal
	  ▪ Communication error between BSM control module and instrument cluster
	  ▪ Instrument cluster malfunction

Diagnostic Procedure

Step	Inspection	Result	Action
1	**INSPECT BSM WARNING ALARM** • Turn off the BSM using the M-MDS instrument cluster active command modes ALARM. (See **ACTIVE COMMAND MODES TABLE [INSTRUMENT CLUSTER]**.) • Does the BSM turn off according to the active command models?	Yes	Go to the next step.
		No	Replace the instrument cluster. (See **INSTRUMENT CLUSTER REMOVAL/INSTALLATION**.)
2	**VERIFY DTCs** • Retrieve DTCs from the BSM control module and instrument cluster using the M-MDS. (See **DTC INSPECTION [INSTRUMENT CLUSTER]**.) (See **DTC INSPECTION [BLIND SPOT**	Yes	Go to the applicable DTC inspection. (See **DTC TABLE [INSTRUMENT CLUSTER]**.) (See **DTC TABLE [BLIND SPOT MONITORING (BSM)]**.)
		No	Go to the next step.

	MONITORING (BSM)].) • Are any DTCs displayed?		
3	**VERIFY BSM INDICATOR LIGHT CONDITION** • Verify the BSM indicator light illumination condition while under the BSM indicator light-illumination conditions (vehicle speed **10 km/h {6.2 mph} or more**, turn signals off, and vehicle in warning zone). • Does the BSM indicator light illuminate normally?	Yes	Replace the BSM control module. (See **BLIND SPOT MONITORING (BSM) CONTROL MODULE REMOVAL/INSTALLATION**.)
		No	Go to the symptom troubleshooting procedure, ”BSM indicator light does not illuminate while under BSM indicator light-illumination conditions”. (See **BSM INDICATOR LIGHT DOES NOT ILLUMINATE WHILE UNDER BSM INDICATOR LIGHT-ILLUMINATION CONDITIONS [BLIND SPOT MONITORING (BSM)]**.)

2014 - Mazda3 - Body and Accessories

BSM WARNING ALARM DOES NOT SOUND WHILE BSM INDICATOR LIGHT FLASHES [BLIND SPOT MONITORING (BSM)]

Description	**BSM warning alarm does not sound while BSM indicator light flashes**
	• The BSM control module recognizes that vehicle is in warning zone on side in which turn signal is operated, but BSM warning alarm does not sound despite BSM indicator light flashing.
Possible Causes	• Instrument cluster receives incorrect BSM warning alarm request signal ▪ Instrument cluster malfunction ▪ BSM control module malfunction

Diagnostic Procedure

Step	Inspection	Result	Action
1	**INSPECT BSM WARNING ALARM** • Turn off the BSM using the M-MDS instrument cluster active command modes ALARM. (See **ACTIVE COMMAND MODES TABLE [INSTRUMENT CLUSTER]**.) • Does the BSM turn off according to the active command models?	Yes	Replace the applicable BSM control module. (See **BLIND SPOT MONITORING (BSM) CONTROL MODULE REMOVAL/INSTALLATION**.)
		No	Replace the instrument cluster. (See **INSTRUMENT CLUSTER REMOVAL/INSTALLATION**.)

2014 - Mazda3 - Body and Accessories

FOREWORD [SECURITY AND LOCKS]

- If there is any vehicle malfunction complaint lodged by a customer, perform malfunction diagnosis according to the troubleshooting procedure.

Troubleshooting Procedure

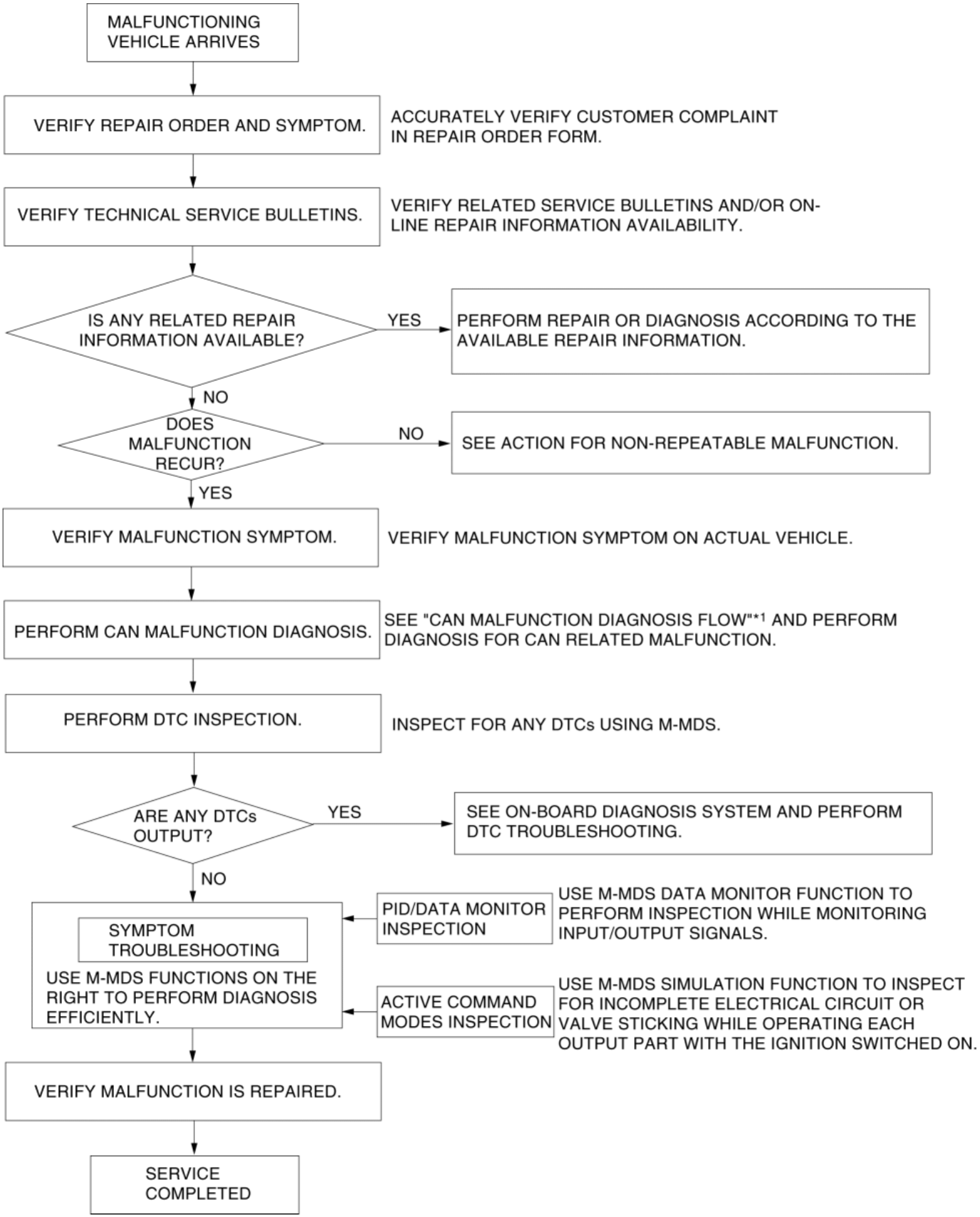
MALFUNCTIONING VEHICLE ARRIVES
VERIFY REPAIR ORDER AND SYMPTOM.
ACCURATELY VERIFY CUSTOMER COMPLAINT IN REPAIR ORDER FORM.
VERIFY TECHNICAL SERVICE BULLETINS.
VERIFY RELATED SERVICE BULLETINS AND/OR ON-LINE REPAIR INFORMATION AVAILABILITY.
IS ANY RELATED REPAIR INFORMATION AVAILABLE?
YES
PERFORM REPAIR OR DIAGNOSIS ACCORDING TO THE AVAILABLE REPAIR INFORMATION.
NO
DOES MALFUNCTION RECUR?
NO
SEE ACTION FOR NON-REPEATABLE MALFUNCTION.
YES
VERIFY MALFUNCTION SYMPTOM.
VERIFY MALFUNCTION SYMPTOM ON ACTUAL VEHICLE.
PERFORM CAN MALFUNCTION DIAGNOSIS.
SEE "CAN MALFUNCTION DIAGNOSIS FLOW"*1 AND PERFORM DIAGNOSIS FOR CAN RELATED MALFUNCTION.
PERFORM DTC INSPECTION.
INSPECT FOR ANY DTCs USING M-MDS.
ARE ANY DTCs OUTPUT?
YES
SEE ON-BOARD DIAGNOSIS SYSTEM AND PERFORM DTC TROUBLESHOOTING.
NO
SYMPTOM TROUBLESHOOTING
USE M-MDS FUNCTIONS ON THE RIGHT TO PERFORM DIAGNOSIS EFFICIENTLY.
PID/DATA MONITOR INSPECTION
USE M-MDS DATA MONITOR FUNCTION TO PERFORM INSPECTION WHILE MONITORING INPUT/OUTPUT SIGNALS.
ACTIVE COMMAND MODES INSPECTION
USE M-MDS SIMULATION FUNCTION TO INSPECT FOR INCOMPLETE ELECTRICAL CIRCUIT OR VALVE STICKING WHILE OPERATING EACH OUTPUT PART WITH THE IGNITION SWITCHED ON.
VERIFY MALFUNCTION IS REPAIRED.
SERVICE COMPLETED

*1

(See CONTROLLER AREA NETWORK (CAN) MALFUNCTION DIAGNOSIS FLOW.)

Action for non-repeatable malfunction

- If the malfunction does not recur, verify the malfunction cause by performing the following actions:
  - Based on the repair order form, attempt to drive the vehicle or perform tests to replicate the malfunction, record the data (such as rear body control module (RBCM) and start stop unit circuit voltage) at that time, and detect the malfunction cause.
  - Shake the wiring harness or connector of the electrical component which is suspected to be the cause of the malfunction, and inspect for malfunction or occurrence of any DTCs.

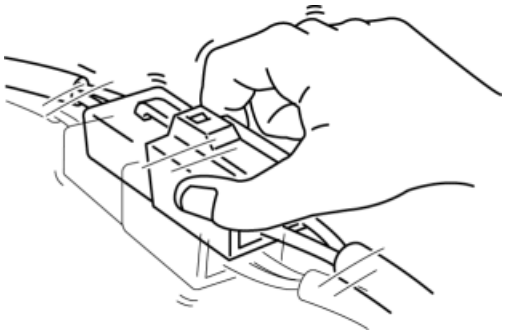

  - Inspect the female terminals on the connector of the electric component which is suspected to be the cause of the malfunction for poor connection.

2014 - Mazda3 - Body and Accessories

SYSTEM WIRING DIAGRAM [SECURITY AND LOCKS]

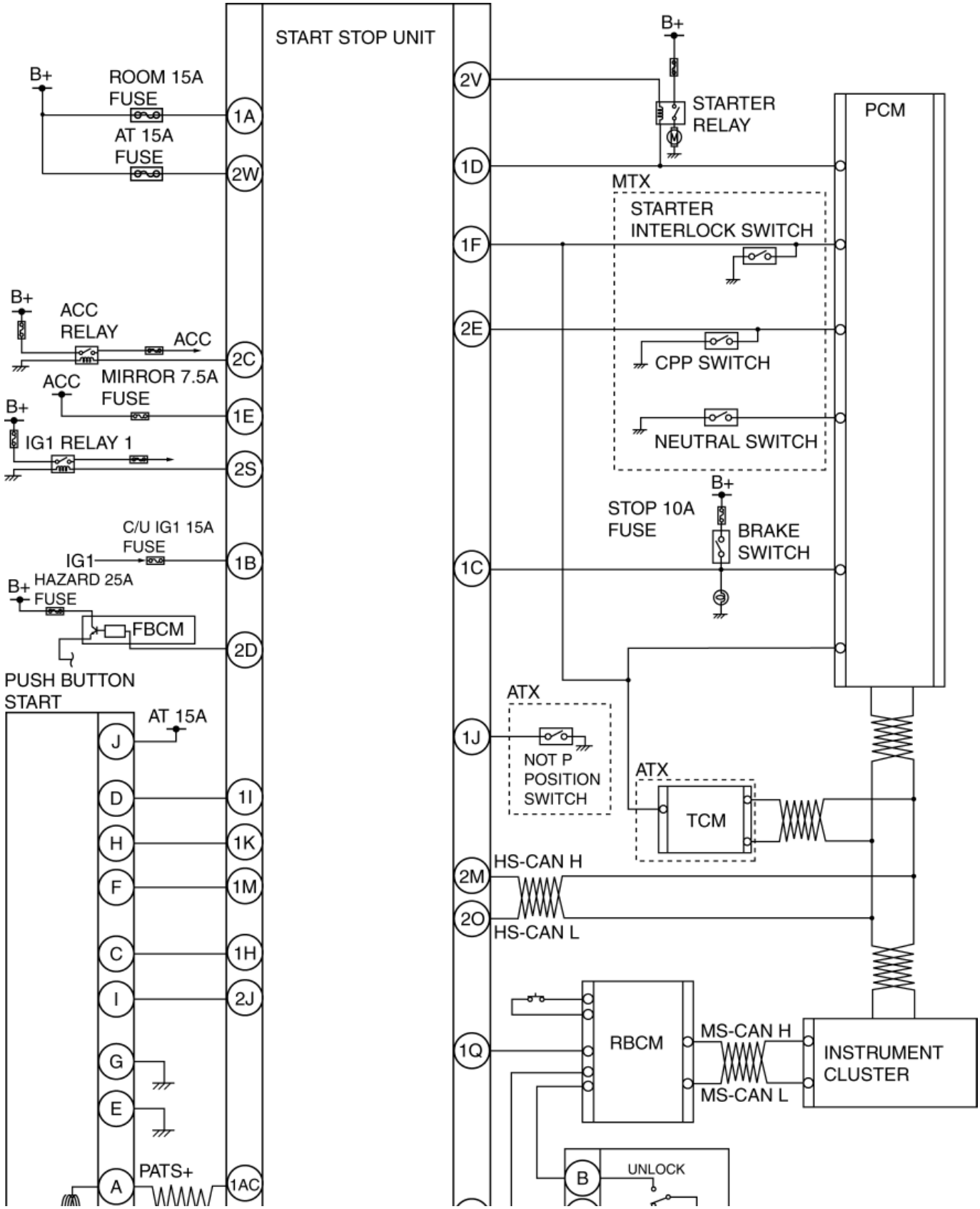

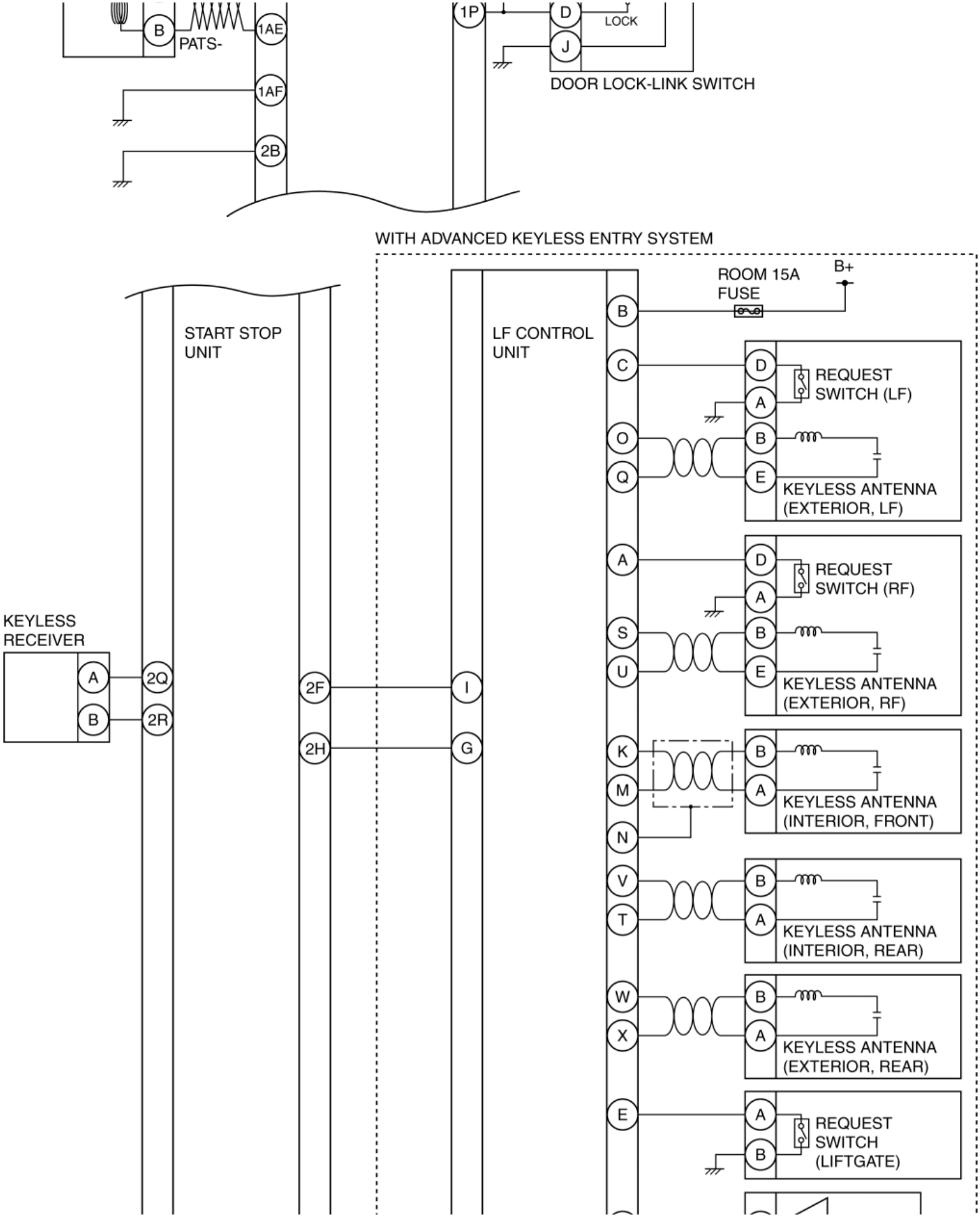
B
PATS-
1AE
1AF
2B
1P
D
LOCK
J
DOOR LOCK-LINK SWITCH
WITH ADVANCED KEYLESS ENTRY SYSTEM
START STOP UNIT
LF CONTROL UNIT
ROOM 15A FUSE
B+
KEYLESS RECEIVER
A
B
2Q
2R
2F
2H
I
G
C
O
Q
REQUEST SWITCH (LF)
KEYLESS ANTENNA (EXTERIOR, LF)
S
U
REQUEST SWITCH (RF)
KEYLESS ANTENNA (EXTERIOR, RF)
K
M
N
KEYLESS ANTENNA (INTERIOR, FRONT)
V
T
KEYLESS ANTENNA (INTERIOR, REAR)
W
X
KEYLESS ANTENNA (EXTERIOR, REAR)
E
REQUEST SWITCH (LIFTGATE)

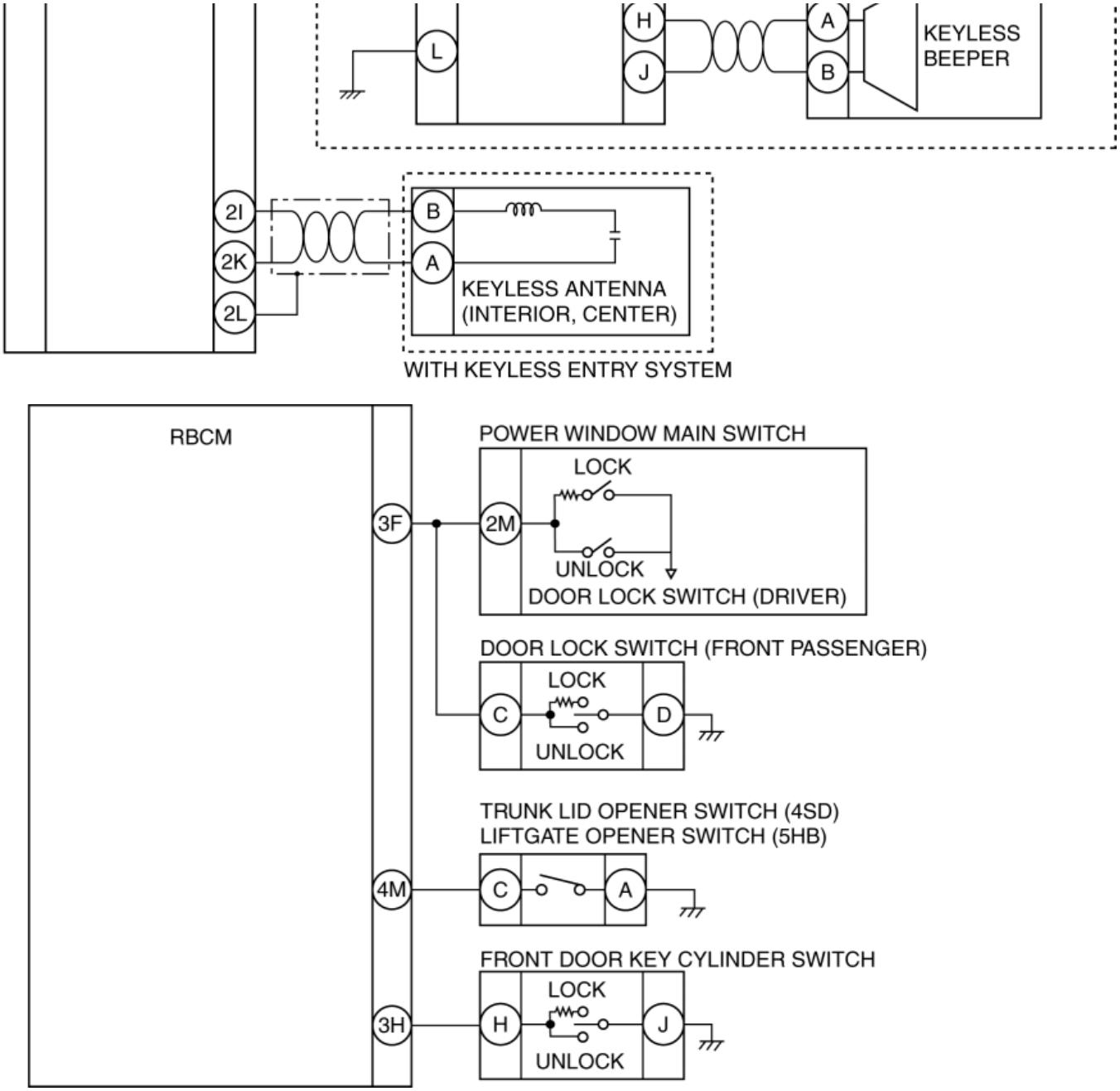
L
H
J
A
B
KEYLESS
BEEPER
2I
2K
2L
B
A
KEYLESS ANTENNA
(INTERIOR, CENTER)
WITH KEYLESS ENTRY SYSTEM
RBCM
3F
POWER WINDOW MAIN SWITCH
2M
LOCK
UNLOCK
DOOR LOCK SWITCH (DRIVER)
DOOR LOCK SWITCH (FRONT PASSENGER)
C
LOCK
UNLOCK
D
TRUNK LID OPENER SWITCH (4SD)
LIFTGATE OPENER SWITCH (5HB)
4M
C
A
FRONT DOOR KEY CYLINDER SWITCH
3H
H
LOCK
UNLOCK
J

2014 - Mazda3 - Body and Accessories

SYMPTOM TROUBLESHOOTING ITEM TABLE [SECURITY AND LOCKS]

- Verify the malfunctioning symptom and perform malfunction diagnosis according to the applicable item.

Malfunction symptom	Malfunction diagnosis
Door cannot be locked/unlocked using key cylinder	• **DOOR LOCK DOES NOT OPERATE [SECURITY AND LOCKS]**
Door cannot be locked/unlocked using lock knob	• **DOOR LOCK DOES NOT OPERATE [SECURITY AND LOCKS]**
Liftgate/trunk lid does not open even if liftgate/trunk lid opener switch is pressed	• **ADVANCED KEYLESS ENTRY SYSTEM DOES NOT OPERATE [SECURITY AND LOCKS]**
Door cannot be locked/unlocked using request switch	• **DOOR LOCK DOES NOT OPERATE [SECURITY AND LOCKS]** • **ADVANCED KEYLESS ENTRY SYSTEM DOES NOT OPERATE [SECURITY AND LOCKS]**
Door cannot be locked/unlocked using remote transmitter	• **DOOR LOCK DOES NOT OPERATE [SECURITY AND LOCKS]** • **LOCK/UNLOCK OPERATION NOT POSSIBLE USING REMOTE TRANSMITTER [SECURITY AND LOCKS]**
Door cannot be locked/unlocked using door lock switch	• **DOOR LOCK DOES NOT OPERATE [SECURITY AND LOCKS]**
Keyless beeper does not sound	• **ANSWER-BACK BUZZER DOES NOT SOUND [SECURITY AND LOCKS]**
Ignition cannot be switched to ACC or ON (engine off)	• **PUSH BUTTON START SYSTEM DOES NOT OPERATE [SECURITY AND LOCKS]**

2014 - Mazda3 - Body and Accessories

QUICK DIAGNOSIS CHART [SECURITY AND LOCKS]

X: Applicable

Open circuit in wiring harness between start stop unit terminal 2B and ground			X	X	X		X	X
Open circuit in wiring harness between start stop unit terminal 1AF and ground			X	X	X		X	X
Open circuit in wiring harness between start stop unit terminal 2J and push button start terminal I								X
Open circuit in wiring harness between start stop unit terminal 1H and push button start terminal C								X
Personalization feature not set							X	
Open circuit in wiring harness between keyless beeper terminal B and LF control unit terminal J							X	
Open circuit in wiring harness between keyless beeper terminal A and LF control unit terminal H							X	
Short to ground in wiring harness between keyless beeper terminal B and LF control unit terminal J							X	
Short to ground in wiring harness between keyless beeper terminal A and LF control unit terminal H							X	
Short to power supply in wiring harness between keyless beeper terminal B and LF control unit terminal J							X	
Short to power supply in wiring harness between keyless beeper terminal A and LF control unit terminal H							X	
Keyless beeper malfunction							X	
Effect of non-standard equipment (any control unit with built-in micro computer such as radio set, mobile telephone, and TV)					X			
Customer's mis-operation or misunderstanding					X			
Open circuit in wiring harness between keyless receiver terminal B and start stop unit terminal 2R				X	X			X
Open circuit in wiring harness between keyless receiver terminal A and start stop unit terminal 2Q				X	X			X
Remote transmitter malfunction				X	X			X
Keyless receiver malfunction				X	X			X
Open circuit in wiring harness between LF control unit terminal C and request switch (LF) terminal D				X				
Open circuit in wiring harness between LF control unit terminal A and request switch (RF) terminal D				X				
Open circuit in wiring harness between LF control unit terminal E and request switch (liftgate) terminal A				X				
Open circuit in wiring harness between rear body control module (RBCM) terminal 4M and liftgate/trunk lid opener switch terminal C			X					
Short to ground in wiring harness between start stop unit terminal 1P and door lock link switch (driver's side) terminal D		X		X				
Open circuit in wiring harness between start stop unit terminal		X		X				

Possible cause / Malfunction symptom	Door cannot be locked/unlocked using key cylinder	Door cannot be locked/unlocked using lock knob	Liftgate/trunk lid does not open even if liftgate/trunk lid opener switch is pressed	Door cannot be locked/unlocked using request switch	Door cannot be locked/unlocked using remote transmitter	Door cannot be locked/unlocked using door lock switch	Keyless beeper does not sound	Ignition cannot be switched to ACC or ON (engine off)
1P and door lock link switch (driver's side) terminal D		X		X				
Liftgate/trunk lid opener switch malfunction			X					
Open circuit in wiring harness between power window main switch terminal 2M and rear body control module (RBCM) terminal 3F						X		
Open circuit in wiring harness between door lock switch (passenger's side) terminal C and rear body control module (RBCM) terminal 3F						X		
Front door latch and lock actuator terminal H and rear body control module (RBCM) terminal 3H	X	X		X	X	X		
Front door key cylinder switch malfunction	X					X		
Door lock actuator malfunction	X	X		X	X	X		
Door latch switch malfunction	X	X		X	X	X		

2014 - Mazda3 - Body and Accessories

DOOR LOCK DOES NOT OPERATE [SECURITY AND LOCKS]

Description

- Door cannot be locked/unlocked using the front door key cylinder.
- All doors cannot be locked/unlocked using the door lock switch.

Possible cause

- Door latch switch malfunction
- Door lock actuator malfunction
- Front door key cylinder switch malfunction
- Open circuit in wiring harness between the following terminals:
    - Front door latch and lock actuator terminal H and rear body control module (RBCM) terminal 3H
    - Power window main switch terminal 2M and rear body control module (RBCM) terminal 3F
    - Door lock switch (passenger's side) terminal C and rear body control module (RBCM) terminal 3F

Diagnostic Procedure

Step	Inspection		Action
1	**INSPECT DOOR LATCH SWITCH STUCK OFF OR OPEN CIRCUIT** • Open each door and verify that the door ajar warning light in the instrument cluster illuminates. • Does the door ajar warning light illuminate?	Yes	Go to the next step.
		No	• Inspect the door latch switch on the door in which the ajar warning light did not illuminate and for an open circuit in the wiring harness between the rear body control module (RBCM) and ground.

			(See **FRONT DOOR LATCH SWITCH INSPECTION**.) (See **REAR DOOR LATCH SWITCH INSPECTION**.) • After inspection, go to Step 7.
2	**DETERMINE IF MALFUNCTION CAUSE IS DOOR LOCK ACTUATOR** • Perform the lock/unlock operation using lock knob for each door. • Is door locked/unlocked?	Yes	Go to the next step.
		No	• Inspect the door lock actuator for the door which could not lock/unlock. (See **FRONT DOOR LOCK ACTUATOR INSPECTION**.) (See **REAR DOOR LOCK ACTUATOR INSPECTION**.) • After inspection, go to Step 7.
3	**DETERMINE IF MALFUNCTION CAUSE IS DOOR KEY CYLINDER** • Insert the auxiliary key into the door key cylinder and perform the lock/unlock operation using the auxiliary key. • Is door locked/unlocked?	Yes	Go to the next step.
		No	• Inspect the front door key cylinder switch. (See **FRONT DOOR KEY CYLINDER SWITCH INSPECTION**.) • After inspection, go to Step 7.
4	**INSPECT IF MALFUNCTION CAUSE IS OPEN CIRCUIT IN WIRING HARNESS BETWEEN FRONT DOOR KEY CYLINDER SWITCH AND REAR BODY CONTROL MODULE (RBCM)** • Disconnect the negative battery cable. • Disconnect the front door latch and lock actuator connector. • Disconnect the rear body control module (RBCM) connector. • Inspect for continuity between the following terminals (vehicle wiring harness). ▪ Front door latch and lock actuator terminal H and	Yes	Go to the next step.
		No	• Repair or replace the wiring harness for an open circuit. • After repair procedure, go to Step 7.

	rear body control module (RBCM) terminal 3H • Is there continuity?		
5	**INSPECT IF MALFUNCTION CAUSE IS OPEN CIRCUIT IN WIRING HARNESS BETWEEN DOOR LOCK SWITCH AND REAR BODY CONTROL MODULE (RBCM)** • Disconnect the door lock switch connector. • Inspect for continuity between the following terminals (vehicle wiring harness). ▪ Power window main switch terminal 2M and rear body control module (RBCM) terminal 3F ▪ Door lock switch (passenger's side) terminal C and rear body control module (RBCM) terminal 3F • Is there continuity?	Yes	Go to the next step.
		No	• Repair or replace the wiring harness for an open circuit. • After repair procedure, go to Step 7.
6	**DETERMINE IF MALFUNCTION CAUSE IS DOOR LOCK SWITCH** • Perform the lock/unlock operation using the door lock switch. • Does the lock knob switch between lock and unlock?	Yes	Go to the next step.
		No	• Inspect the door lock switch. (See **DOOR LOCK SWITCH INSPECTION**.) • After inspection, go to the next step.
7	**VERIFY IF MALFUNCTION CAUSE WAS CORRECTED** • Has the malfunction symptom been eliminated?	Yes	Troubleshooting completed. (Explain the contents of the servicing to the customer.)
		No	Verify the malfunction symptom in the symptom troubleshooting chart and perform the applicable other malfunction diagnosis.

			(See **SYMPTOM TROUBLESHOOTING ITEM TABLE [SECURITY AND LOCKS]**.)

2014 - Mazda3 - Body and Accessories

ADVANCED KEYLESS ENTRY SYSTEM DOES NOT OPERATE [SECURITY AND LOCKS]

Description

- The door locking operation using the door request switch is not possible.
- The liftgate/trunk lid cannot be open using the liftgate/trunk lid opener switch.

Possible cause

- Liftgate/trunk lid opener switch malfunction
- Open circuit in wiring harness between the following terminals:
    - Rear body control module (RBCM) terminal 4M and liftgate/trunk lid opener switch terminal C
    - LF control unit terminal C and request switch (LF) terminal D
    - LF control unit terminal A and request switch (RF) terminal D
    - LF control unit terminal E and request switch (liftgate) terminal A (5HB)
    - Start stop unit terminal 1P and door lock link switch (driver's side) terminal D
    - Start stop unit terminal 1AF and ground
    - Start stop unit terminal 2B and ground
- Short to ground in wiring harness between start stop unit terminal 1P and door lock link switch (driver's side) terminal D
- Connector poor contact or terminal damage
- Customer's mis-operation or misunderstanding

Diagnostic Procedure

Step	Inspection		Action
1	**DETERMINE IF MALFUNCTION**	Yes	Troubleshooting completed. (Explain the

	CAUSE IS DOOR LOCK • Refer to “door lock does not operate” symptom troubleshooting and perform the inspection. (See **DOOR LOCK DOES NOT OPERATE [SECURITY AND LOCKS]**.) • Is the advanced keyless entry system operating normally?		contents of the servicing to the customer.)
		No	Go to the next step.
2	**VERIFY IF MALFUNCTION CAUSE IS OPERATION OTHER THAN OPERATION PERMISSION CONDITION** • Verify the advanced keyless operation by operating each request switch and the liftgate/trunk lid opener switch with all the following conditions met. ▪ All doors and liftgate/trunk lid closed ▪ Ignition switched off ▪ Remote transmitter is within reception area (80 cm radius from driver's door, front passenger's door, and liftgate/trunk lid) • Is the advanced keyless entry system operating normally?	Yes	System is normal. (Explain to customer about operation range of advanced keyless entry system)
		No	Go to the next step.
3	**VERIFY MALFUNCTION SYMPTOM** • Does the liftgate/trunk lid open using the liftgate/trunk lid opener switch operation?	Yes	Go to Step 6.
		No	Go to the next step.
4	**DETERMINE IF MALFUNCTION CAUSE IS LIFTGATE/TRUNK LID OPENER SWITCH** • Measure the voltage at rear body control module (RBCM) terminal	Yes	Go to Step 11.
		No	Go to the next step.

	4M. • Is the voltage normal? **Specification** ○ Liftgate/trunk lid opener switch pressed: **1.0 V or less** ○ Except above: **4.5 V**		
5	**INSPECT IF MALFUNCTION CAUSE IS OPEN CIRCUIT IN WIRING HARNESS BETWEEN REAR BODY CONTROL MODULE (RBCM) AND LIFTGATE/TRUNK LID OPENER SWITCH** • Disconnect the negative battery cable. (See **NEGATIVE BATTERY CABLE DISCONNECTION/CONNECTION [SKYACTIV-G 2.0, SKYACTIV-G 2.5]**.) • Disconnect the rear body control module (RBCM) and liftgate/trunk lid opener switch connector. • Inspect for continuity between the following terminals (vehicle wiring harness). ▪ Liftgate/trunk lid opener switch terminal C and rear body control module (RBCM) terminal 4M • Is there continuity?	Yes	• Inspect the liftgate/trunk lid opener switch. If there is any malfunction, replace it. (See **LIFTGATE OPENER SWITCH INSPECTION**.) (See **TRUNK LID OPENER SWITCH INSPECTION**.) • If the liftgate/trunk lid opener switch inspection is normal, inspect or repair the following: ▪ Liftgate latch and actuator (5HB) (See **LIFTGATE LATCH AND LOCK ACTUATOR INSPECTION**.) ▪ Trunk lid latch and release actuator (4SD) (See **TRUNK LID LATCH AND RELEASE ACTUATOR INSPECTION**.) • After repair procedure, go to Step 11.
		No	• Repair or replace the wiring harness for an open circuit. • After repair procedure, go to Step 11.

6	**VERIFY MALFUNCTION SYMPTOM** • Connect the negative battery cable. (See **NEGATIVE BATTERY CABLE DISCONNECTION/CONNECTION [SKYACTIV-G 2.0, SKYACTIV-G 2.5]**.) • Verify the lock/unlock operation for all doors and liftgate/trunk lid using the request switch operation. • Is door locked/unlocked?	Yes	Go to Step 11.
		No	Go to the next step.
7	**INSPECT IF MALFUNCTION CAUSE IS OPEN CIRCUIT IN WIRING HARNESS BETWEEN START STOP UNIT AND DOOR LOCK LINK SWITCH (DRIVER-SIDE)** • Disconnect the start stop unit and the front door latch and lock actuator (driver's side) connector. • Inspect for continuity between the following terminals (vehicle wiring harness). ▪ Start stop unit terminal 1P and front door lock link switch terminal D • Is there continuity?	Yes	Go to the next step.
		No	• Repair or replace the wiring harness for an open circuit. • After repair procedure, go to Step 11.
8	**INSPECT IF MALFUNCTION CAUSE IS SHORT TO GROUND IN WIRING HARNESS BETWEEN START STOP UNIT AND DOOR LOCK LINK SWITCH (DRIVER-SIDE)** • Verify that the start stop unit connector is disconnected. • Inspect for continuity between the following wiring harness terminals (vehicle wiring harness side) and body ground. ▪ Start stop unit	Yes	Go to the next step.
		No	• Repair or replace the wiring harness for an open circuit. • After repair procedure, go to Step 11.

	terminal 1P and ground • Is there continuity?		
9	**INSPECT IF MALFUNCTION CAUSE IS OPEN CIRCUIT IN WIRING HARNESS BETWEEN START STOP UNIT AND GROUND** • Verify that the start stop unit connector is disconnected. • Inspect for continuity between the following terminals (vehicle wiring harness). ▪ Start stop unit terminal 1AF and ground ▪ Start stop unit terminal 2B and ground • Is there continuity?	Yes	Go to the next step.
		No	• Repair or replace the wiring harness for an open circuit. • After repair, go to Step 11.
10	**INSPECT IF MALFUNCTION CAUSE IS OPEN CIRCUIT IN WIRING HARNESS BETWEEN REQUEST SWITCH AND LF CONTROL UNIT** • Disconnect the negative battery cable. (See **NEGATIVE BATTERY CABLE DISCONNECTION/CONNECTION [SKYACTIV-G 2.0, SKYACTIV-G 2.5]**.) • Disconnect the LF control unit and request switch connector. • Inspect for continuity between the following terminals (vehicle wiring harness). ▪ Request switch (LF) terminal D and LF control unit terminal C ▪ Request switch (RF) terminal D and LF control unit terminal A	Yes	Go to the next step.
		No	• Repair or replace the wiring harness for an open circuit. • After repair, go to the next step.

	▪ Request switch (liftgate) terminal A and LF control unit terminal E (5HB) • Is there continuity?		
11	**VERIFY IF MALFUNCTION CAUSE WAS CORRECTED** • Does the advanced keyless entry system operate normally?	Yes	Troubleshooting completed. (Explain the contents of the servicing to the customer.)
		No	If the malfunction has not been resolved, repeat the inspection from Step 1.

2014 - Mazda3 - Body and Accessories

LOCK/UNLOCK OPERATION NOT POSSIBLE USING REMOTE TRANSMITTER [SECURITY AND LOCKS]

Description

- The door lock/unlock operation using the remote transmitter button is not possible.

Possible cause

- Keyless receiver malfunction
- Remote transmitter malfunction
- Faulty remote transmitter battery
- Open circuit in wiring harness between the following terminals:
    - Keyless receiver terminal A and start stop unit terminal 2Q
    - Keyless receiver terminal B and start stop unit terminal 2R
    - Start stop unit terminal 1AF and ground
    - Start stop unit terminal 2B and ground
- Connector poor contact or terminal damage
- Customer's mis-operation or misunderstanding
- Effect of non-standard equipment (any control unit with built-in micro computer such as radio set, mobile telephone, and TV)

Diagnostic Procedure

Step	Inspection		Action
1	**DETERMINE IF MALFUNCTION CAUSE IS DOOR LOCK** • Refer to “door lock does not operate” malfunction diagnosis and perform the inspection.	Yes	Troubleshooting completed. (Explain the contents of the servicing to the customer.)
		No	Go to the next step.

	(See **DOOR LOCK DOES NOT OPERATE [SECURITY AND LOCKS]**.) • Is the lock/unlock operation performed using the remote transmitter?		
2	**VERIFY IF MALFUNCTION CAUSE IS EXTERNAL NOISE** • Ask the customer malfunction condition. • Does the malfunction occur at the specified place where external noise is received such as a TV tower, electric power station, or a broadcast station?	Yes	System is normal. (Explain the customer that external noise affected the operation.)
		No	Go to the next step.
3	**VERIFY IF MALFUNCTION CAUSE IS OPERATION OTHER THAN OPERATION PERMISSION CONDITION** • Did the customer operate the remote transmitter with all the following conditions met? ▪ All doors and liftgate are closed. ▪ Ignition switched off	Yes	Go to the next step.
		No	System is normal. (Explain the customer operation condition.)
4	**DETERMINE IF MALFUNCTION CAUSE IS NON-STANDARD EQUIPMENT** • Did the malfunction occur after installing the following non-standard equipment? ▪ Mobile telephone or radio set ▪ Part with built-in micro computer ▪ Remote engine starter ▪ TV	Yes	Go to the next step.
		No	Go to Step 6.
5	**DETERMINE IF MALFUNCTION CAUSE IS NON-STANDARD EQUIPMENT** • Disconnect the connector for non-standard equipment. • Perform the lock/unlock operation using the remote transmitter. • Does it operate normally?	Yes	System is normal. (Explain to the customer that noise from the non-standard equipment affected the operation.)
		No	Go to the next step.
6	**VERIFY REMOTE TRANSMITTER**	Yes	**Battery insertion**

	BATTERY CONDITION • Visually inspect the remote transmitter battery for the following: ▪ Method of battery insertion (polarity) ▪ Battery type (CR2025) ▪ Corrosion, soiling, deformation of battery terminals (plus/minus terminals). ▪ Contact malfunction between the battery terminal and battery when battery is inserted • Is there any malfunction?		**direction, battery type is incorrect:** • Properly install the battery or replace the battery with a specified one (CR2025), then go to the next step. **Battery terminal malfunction:** • Clean corrosion and soiling, or repair or replace the terminal, then go to the next step.
		No	Go to Step 8.
7	**VERIFY REMOTE TRANSMITTER OPERATION** • Perform the lock/unlock operation using the remote transmitter. • Is the lock/unlock operation performed normally?	Yes	Troubleshooting completed.
		No	Go to the next step.
8	**DETERMINE IF MALFUNCTION CAUSE IS REMOTE TRANSMITTER** **NOTE:** • For a monitor battery, use a new battery or one which operates normally on another vehicle. • Replace the battery in all the remote transmitters with a monitor-use battery. (See **REMOTE TRANSMITTER DISASSEMBLY/ASSEMBLY**.) • For each remote transmitter, verify that the remote transmitter operation indicator light (LED) illuminates when a button is operated. • Does operation indicator light (LED) for each remote transmitter operate?	Yes	Go to the next step.
		No	If the operation indicator light (LED) does not illuminate, replace the remote transmitter, then go to the Step 12.
9	**DETERMINE IF MALFUNCTION CAUSE IS BATTERY** **NOTE:** • Inspect for all remote transmitters. • Inspect while the batteries for all of the remote transmitters are replaced with	Yes	Replace the battery, then go to Step 12. (See **REMOTE TRANSMITTER DISASSEMBLY/ASSEMBLY**.)

	monitor-use batteries. • Perform the lock/unlock operation using all the remote transmitters. • Is the lock/unlock operation performed normally?	No	Go to the next step.
10	**INSPECT IF MALFUNCTION CAUSE IS OPEN CIRCUIT IN WIRING HARNESS BETWEEN START STOP UNIT AND GROUND** • Verify that the start stop unit connector is disconnected. • Inspect for continuity between the following terminals (vehicle wiring harness). ▪ Start stop unit terminal 1AF and ground ▪ Start stop unit terminal 2B and ground • Is there continuity?	Yes	Go to the next step.
		No	• Repair or replace the wiring harness for an open circuit. • After repair, go to Step 12.
11	**INSPECT IF MALFUNCTION CAUSE IS OPEN CIRCUIT IN WIRING HARNESS BETWEEN KEYLESS RECEIVER AND START STOP UNIT OR KEYLESS RECEIVER** • Disconnect the negative battery cable. (See **NEGATIVE BATTERY CABLE DISCONNECTION/CONNECTION [SKYACTIV-G 2.0, SKYACTIV-G 2.5]**.) • Disconnect the keyless receiver and start stop unit connector. • Inspect for continuity between the following terminals (vehicle wiring harness). ▪ Keyless receiver terminal A and start stop unit terminal 2Q ▪ Keyless receiver terminal B and start stop unit terminal 2R • Is there continuity?	Yes	• Inspect the keyless receiver. If there is any malfunction, replace it. (See **KEYLESS RECEIVER INSPECTION**.) • After repair, go to the next step.
		No	• Repair or replace the wiring harness for an open circuit. • After repair, go to the next step.
12	**VERIFY IF MALFUNCTION CAUSE WAS CORRECTED**	Yes	Troubleshooting completed. (Explain the contents of the servicing to the customer.)

	Perform the lock/unlock operation using all the remote transmitters. • Is the lock/unlock operation performed normally?		
		No	If the malfunction has not been resolved, repeat the inspection from Step 1.

2014 - Mazda3 - Body and Accessories

ANSWER-BACK BUZZER DOES NOT SOUND [SECURITY AND LOCKS]

Description

- The keyless beeper does not sound when door lock/unlock operation is performed using the remote transmitter button.

Possible cause

- Keyless beeper malfunction
- Short to power supply in wiring harness between the following terminals:
  - Keyless beeper terminal A and LF control unit terminal H
  - Keyless beeper terminal B and LF control unit terminal J
- Short to ground in wiring harness between the following terminals:
  - Keyless beeper terminal A and LF control unit terminal H
  - Keyless beeper terminal B and LF control unit terminal J
- Open circuit in wiring harness between the following terminals:
  - Keyless beeper terminal A and LF control unit terminal H
  - Keyless beeper terminal B and LF control unit terminal J
  - Start stop unit terminal 1AF and ground
  - Start stop unit terminal 2B and ground
- Personalization feature not set

Diagnostic Procedure

Step	Inspection		Action
1	**VERIFY PERSONALIZATION FEATURES SETTING** • Verify the volume of the keyless	Yes	Set the volume so that the keyless beeper sounds and verify the operation. **Operation is verified:**

	beeper for the personalization features. (See **SECURITY AND LOCKS PERSONALIZATION FEATURES SETTING PROCEDURE**.) • Has the volume of the keyless beeper been set to off?		• Troubleshooting completed. (Explain the servicing contents to the customer.) **Operation is not verified:** • Go to the next step.
		No	Go to the next step.
2	**INSPECT IF MALFUNCTION CAUSE IS SHORT TO GROUND IN WIRING HARNESS BETWEEN KEYLESS BEEPER AND LF CONTROL UNIT** • Disconnect the negative battery cable. (See **NEGATIVE BATTERY CABLE DISCONNECTION/CONNECTION [SKYACTIV-G 2.0, SKYACTIV-G 2.5]**.) • Disconnect the LF control unit connector. • Inspect for continuity between the following wiring harness terminals (vehicle wiring harness side) and body ground. ▪ LF control unit terminal H and ground ▪ LF control unit terminal J and ground • Is there continuity?	Yes	• Repair or replace the wiring harness which is shorted to ground. • After repair procedure, go to Step 6.
		No	Go to the next step.
3	**INSPECT IF MALFUNCTION CAUSE IS SHORT TO POWER SUPPLY IN WIRING HARNESS BETWEEN KEYLESS BEEPER AND LF CONTROL UNIT** • Verify that the LF control unit connector is disconnected. • Connect the negative battery cable. (See **NEGATIVE BATTERY CABLE DISCONNECTION/CONNECTION [SKYACTIV-G 2.0, SKYACTIV-G 2.5]**.) • Measure the voltage at the following terminals (vehicle wiring harness). ▪ LF control unit	Yes	• Repair or replace the wiring harness which is shorted to power supply. • After repair procedure, go to Step 6.
		No	Go to the next step.

	terminal H ▪ LF control unit terminal J • Is there any voltage?		
4	**INSPECT IF MALFUNCTION CAUSE IS OPEN CIRCUIT IN WIRING HARNESS BETWEEN START STOP UNIT AND GROUND** • Verify that the start stop unit connector is disconnected. • Inspect for continuity between the following terminals (vehicle wiring harness). ▪ Start stop unit terminal 1AF and ground ▪ Start stop unit terminal 2B and ground • Is there continuity?	Yes	Go to the next step.
		No	• Repair or replace the wiring harness for an open circuit. • After repair, go to Step 6.
5	**INSPECT IF MALFUNCTION CAUSE IS OPEN CIRCUIT IN WIRING HARNESS BETWEEN KEYLESS BEEPER AND LF CONTROL UNIT OR KEYLESS BEEPER** • Disconnect the negative battery cable. (See **NEGATIVE BATTERY CABLE DISCONNECTION/CONNECTION [SKYACTIV-G 2.0, SKYACTIV-G 2.5]**.) • Disconnect the keyless beeper connector. • Inspect for continuity between the following terminals (vehicle wiring harness). ▪ Keyless beeper terminal A and LF control unit terminal H ▪ Keyless beeper terminal B and LF control unit terminal J • Is there continuity?	Yes	• Replace the keyless beeper. (See **KEYLESS BEEPER REMOVAL/INSTALLATION**.) • After replacement, go to the next step.
		No	• Repair or replace the wiring harness for an open circuit. • After repair, go to the next step.

6	**VERIFY IF MALFUNCTION CAUSE WAS CORRECTED** • Does the keyless beeper sound?	Yes	Troubleshooting completed. (Explain the contents of the servicing to the customer.)
		No	If the malfunction has not been resolved, repeat the inspection from Step 1.

2014 - Mazda3 - Body and Accessories

PUSH BUTTON START SYSTEM DOES NOT OPERATE [SECURITY AND LOCKS]

Description

- When the push button start is pressed, the ignition cannot be switched to ACC or ON (engine off).

Possible cause

- Open circuit in wiring harness between the following terminals:
    - Start stop unit terminal 1H and push button start terminal C
    - Start stop unit terminal 2J and push button start terminal I
    - Start stop unit terminal 1AF and ground
    - Start stop unit terminal 2B and ground

Diagnostic Procedure

Step	Inspection		Action
1	**INSPECT IF MALFUNCTION CAUSE IS OPEN CIRCUIT IN WIRING HARNESS BETWEEN START STOP UNIT AND PUSH BUTTON START** • Disconnect the negative battery cable. (See **NEGATIVE BATTERY CABLE DISCONNECTION/CONNECTION [SKYACTIV-G 2.0, SKYACTIV-G 2.5]**.) • Disconnect the start stop unit and push button start connector. • Inspect for continuity between the following terminals (vehicle wiring harness). ▪ Start stop unit terminal 1H and push button start terminal C	Yes	Go to the next step.
		No	• Repair or replace the wiring harness for an open circuit. • After repair procedure, go to Step 3.

	▪ Start stop unit terminal 2J and push button start terminal I • Is there continuity?		
2	**INSPECT IF MALFUNCTION CAUSE IS OPEN CIRCUIT IN WIRING HARNESS BETWEEN START STOP UNIT AND GROUND** • Verify that the start stop unit connector is disconnected. • Inspect for continuity between the following terminals (vehicle wiring harness). ▪ Start stop unit terminal 1AF and ground ▪ Start stop unit terminal 2B and ground • Is there continuity?	Yes	Go to the next step.
		No	• Repair or replace the wiring harness for an open circuit. • After repair, go to the next step.
3	**VERIFY IF MALFUNCTION CAUSE WAS CORRECTED** • Does the push button start button operate correctly?	Yes	Troubleshooting completed. (Explain the contents of the servicing to the customer.)
		No	If the malfunction has not been resolved, repeat the inspection from Step 1.

2014 - Mazda3 - Body and Accessories

FOREWORD [ADAPTIVE FRONT LIGHTING SYSTEM (AFS)]

- If there is any vehicle malfunction complaint lodged by a customer, perform malfunction diagnosis according to the troubleshooting procedure.

Troubleshooting Procedure

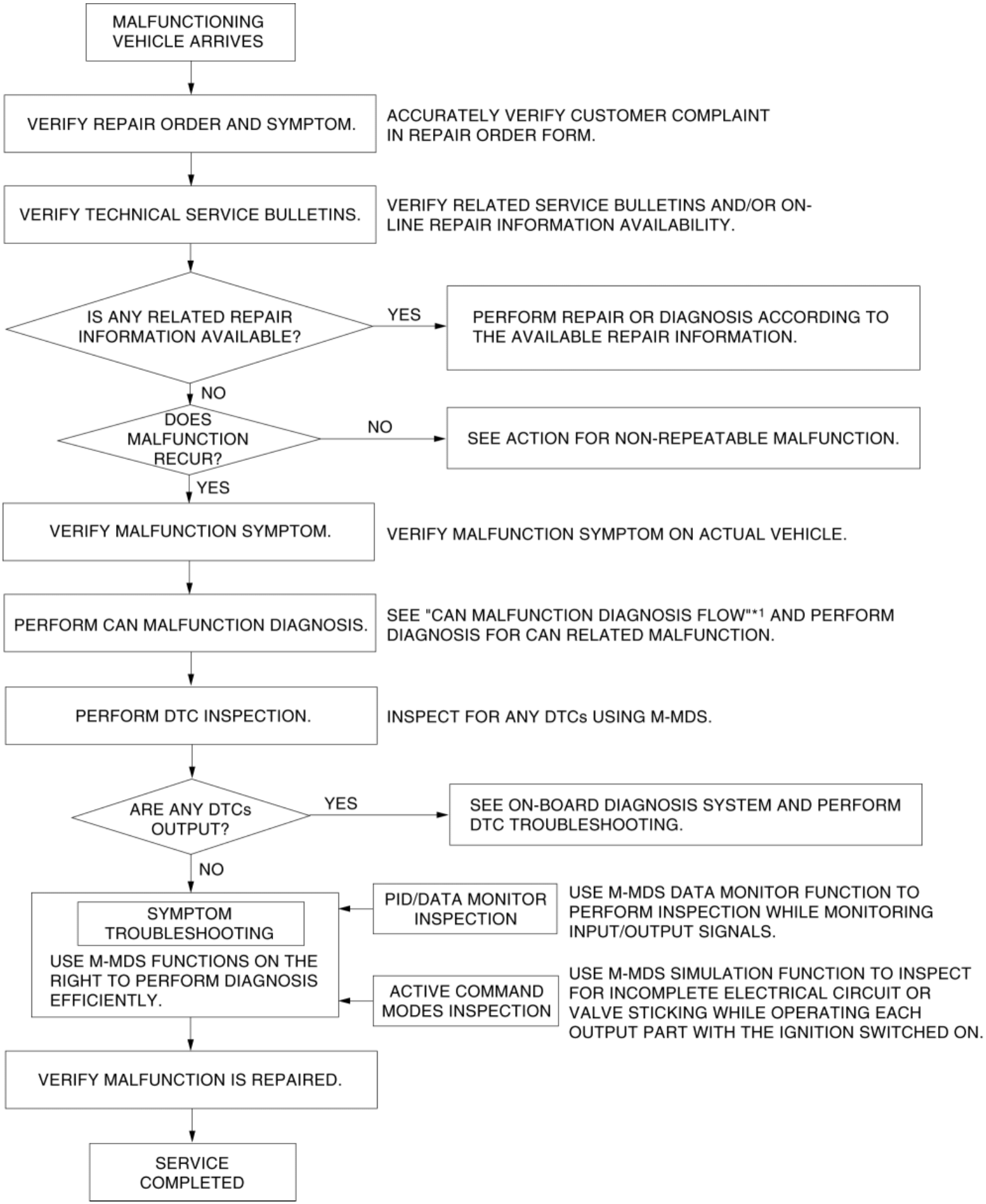
MALFUNCTIONING VEHICLE ARRIVES
VERIFY REPAIR ORDER AND SYMPTOM.
ACCURATELY VERIFY CUSTOMER COMPLAINT IN REPAIR ORDER FORM.
VERIFY TECHNICAL SERVICE BULLETINS.
VERIFY RELATED SERVICE BULLETINS AND/OR ON-LINE REPAIR INFORMATION AVAILABILITY.
IS ANY RELATED REPAIR INFORMATION AVAILABLE?
YES
PERFORM REPAIR OR DIAGNOSIS ACCORDING TO THE AVAILABLE REPAIR INFORMATION.
NO
DOES MALFUNCTION RECUR?
NO
SEE ACTION FOR NON-REPEATABLE MALFUNCTION.
YES
VERIFY MALFUNCTION SYMPTOM.
VERIFY MALFUNCTION SYMPTOM ON ACTUAL VEHICLE.
PERFORM CAN MALFUNCTION DIAGNOSIS.
SEE "CAN MALFUNCTION DIAGNOSIS FLOW"*1 AND PERFORM DIAGNOSIS FOR CAN RELATED MALFUNCTION.
PERFORM DTC INSPECTION.
INSPECT FOR ANY DTCs USING M-MDS.
ARE ANY DTCs OUTPUT?
YES
SEE ON-BOARD DIAGNOSIS SYSTEM AND PERFORM DTC TROUBLESHOOTING.
NO
SYMPTOM TROUBLESHOOTING
USE M-MDS FUNCTIONS ON THE RIGHT TO PERFORM DIAGNOSIS EFFICIENTLY.
PID/DATA MONITOR INSPECTION
USE M-MDS DATA MONITOR FUNCTION TO PERFORM INSPECTION WHILE MONITORING INPUT/OUTPUT SIGNALS.
ACTIVE COMMAND MODES INSPECTION
USE M-MDS SIMULATION FUNCTION TO INSPECT FOR INCOMPLETE ELECTRICAL CIRCUIT OR VALVE STICKING WHILE OPERATING EACH OUTPUT PART WITH THE IGNITION SWITCHED ON.
VERIFY MALFUNCTION IS REPAIRED.
SERVICE COMPLETED

*1

(See CONTROLLER AREA NETWORK (CAN) MALFUNCTION DIAGNOSIS FLOW.)

Action for non-repeatable malfunction

- If the malfunction does not recur, verify the malfunction cause by performing the following actions:
  - Based on the repair order form, attempt to drive the vehicle or perform tests to replicate the malfunction, record the data at that time, and detect the malfunction cause.
  - Shake the wiring harness or connector of the electrical component which is suspected to be the cause of the malfunction, and inspect for malfunction or occurrence of any DTCs.

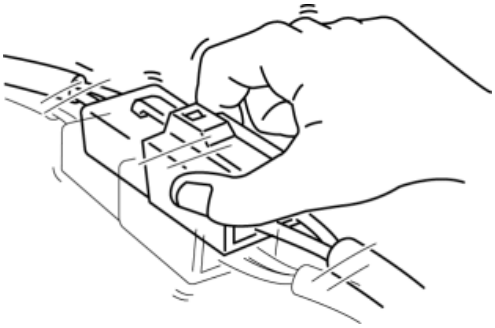

  - Inspect the female terminals on the connector of the electric component which is suspected to be the cause of the malfunction for poor connection.

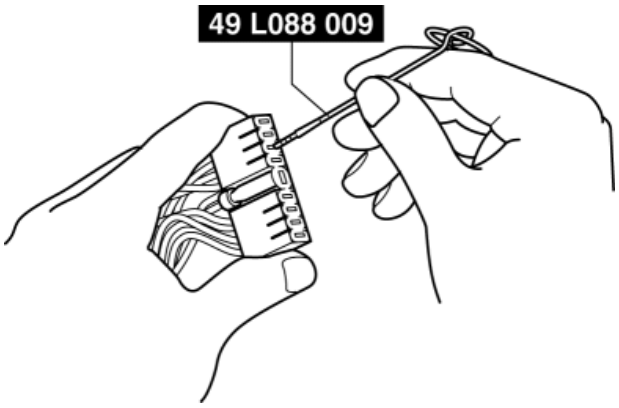

2014 - Mazda3 - Body and Accessories

SYSTEM WIRING DIAGRAM [ADAPTIVE FRONT LIGHTING SYSTEM (AFS)]

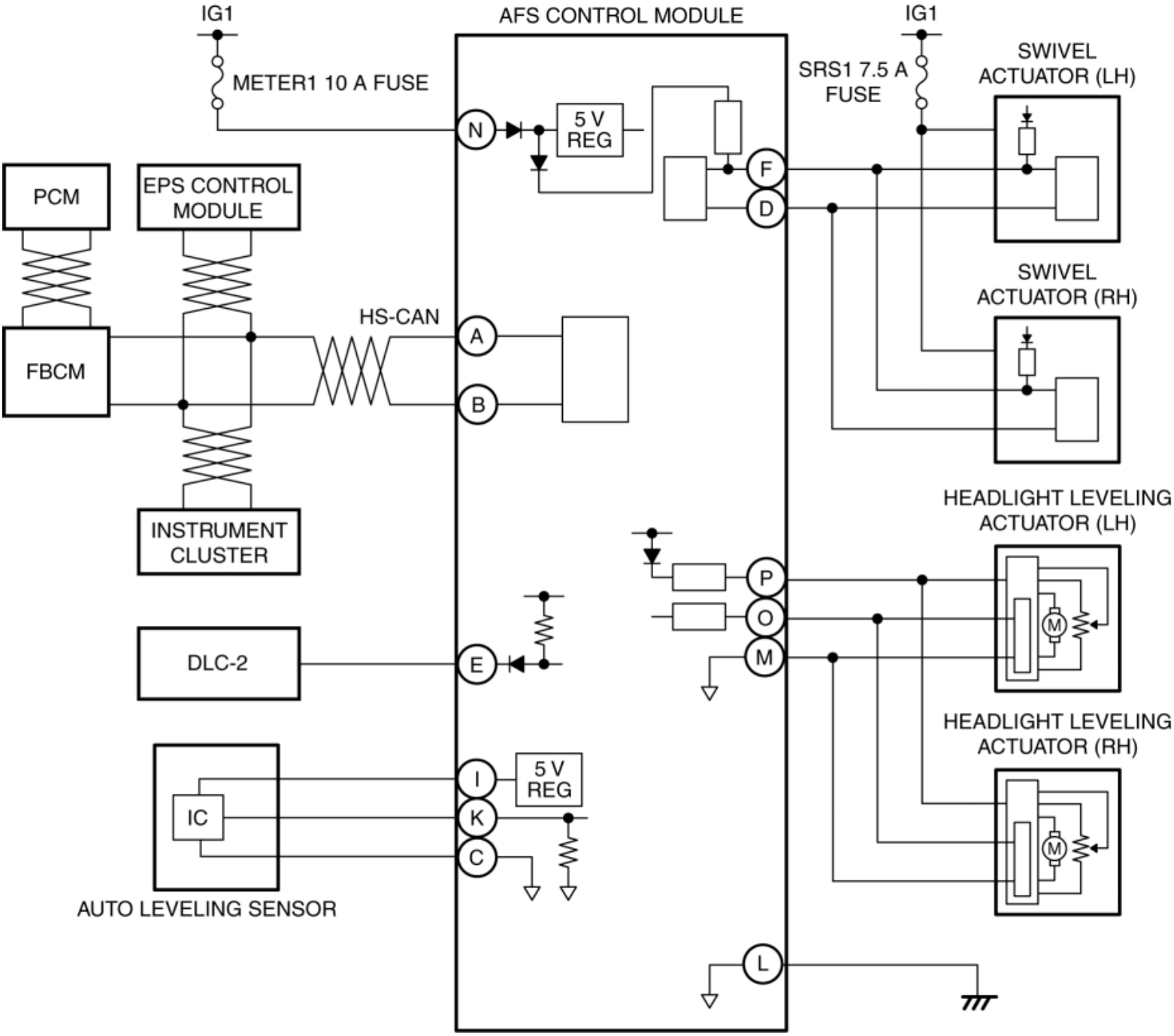

2014 - Mazda3 - Body and Accessories

SYMPTOM TROUBLESHOOTING [ADAPTIVE FRONT LIGHTING SYSTEM (AFS)]

Troubleshooting item	Description
AFS OFF INDICATOR LIGHT ILLUMINATES CONTINUOUSLY (See **AFS OFF INDICATOR LIGHT ILLUMINATES CONTINUOUSLY [ADAPTIVE FRONT LIGHTING SYSTEM (AFS)]**.)	• Inspect the AFS OFF indicator light with the ignition switched ON (engine off or on) and the AFS OFF indicator light illumination off (AFS operating).
ADAPTIVE FRONT LIGHTING SYSTEM (AFS) OPERATES EVEN THOUGH THE AFS OFF SWITCH IS TURNED ON (See **ADAPTIVE FRONT LIGHTING SYSTEM (AFS) OPERATES EVEN THOUGH THE AFS OFF SWITCH IS TURNED ON [ADAPTIVE FRONT LIGHTING SYSTEM (AFS)]**.)	• AFS operates with the AFS OFF switch on (system stopped condition).
THE HEADLIGHT AUTO LEVELING SYSTEM DOES NOT OPERATE IN RESPONSE TO VEHICLE POSTURE (See **THE HEADLIGHT AUTO LEVELING SYSTEM DOES NOT OPERATE IN RESPONSE TO VEHICLE POSTURE [ADAPTIVE FRONT LIGHTING SYSTEM (AFS)]**.)	• The headlight auto leveling system does operate in response to the number of occupants, cargo load in trunk, and the fuel level. • One side of the headlight leveling actuator does not operate.

2014 - Mazda3 - Body and Accessories

AFS OFF INDICATOR LIGHT ILLUMINATES CONTINUOUSLY [ADAPTIVE FRONT LIGHTING SYSTEM (AFS)]

NOTE:

- If there is any vehicle malfunction complaint lodged by a customer, perform **FOREWORD [ADAPTIVE FRONT LIGHTING SYSTEM (AFS)]** malfunction diagnosis according to the troubleshooting procedure.

Description

- Inspect the AFS OFF indicator light with the ignition switched ON (engine off or on) and the AFS OFF indicator light illumination off (AFS operating).

Possible malfunction

- AFS OFF switch malfunction (stuck on)
- AFS control module malfunction
- Instrument cluster malfunction

Diagnostic Procedure

Step	Inspection		Action
1	**DETERMINE IF MALFUNCTION LOCATION IS AFS OFF SWITCH** • Display the following AFS control module AFS_ST PIDs using the M-MDS. (See **PID/DATA MONITOR INSPECTION [ADAPTIVE FRONT LIGHTING SYSTEM (AFS)]**.) • Inspect the PID display when the AFS OFF switch is turned on/off. • Does the PID display switch normally in conjunction with the AFS OFF switch being turned on/off?	Yes	Go to Step 3.
		No	Go to the next step.

2	**PERFORM AFS OFF SWITCH INSPECTION** • Disconnect the negative battery cable. (See **NEGATIVE BATTERY CABLE DISCONNECTION/CONNECTION [SKYACTIV-G 2.0, SKYACTIV-G 2.5]**.) • Remove the AFS OFF switch. (See **ADAPTIVE FRONT LIGHTING SYSTEM (AFS) OFF SWITCH REMOVAL/INSTALLATION**.) • Inspect the AFS OFF switch. (See **ADAPTIVE FRONT LIGHTING SYSTEM (AFS) OFF SWITCH INSPECTION**.) • Is the AFS OFF switch normal?	Yes	Replace the AFS control module. (See **ADAPTIVE FRONT LIGHTING SYSTEM (AFS) CONTROL MODULE REMOVAL/INSTALLATION**.)
		No	Replace the AFS OFF switch. (See **ADAPTIVE FRONT LIGHTING SYSTEM (AFS) OFF SWITCH REMOVAL/INSTALLATION**.)
3	**VERIFY AFS OFF INDICATOR LIGHT ILLUMINATION** • Display the following instrument cluster WL+IL simulation items using the M-MDS. (See **ACTIVE COMMAND MODES INSPECTION [INSTRUMENT CLUSTER]**.) • Does the AFS OFF indicator light illumination turn off when the warning light, indicator light illumination is operated to off?	Yes	The system is operating normally.
		No	Replace the instrument cluster. (See **INSTRUMENT CLUSTER REMOVAL/INSTALLATION**.)

2014 - Mazda3 - Body and Accessories

ADAPTIVE FRONT LIGHTING SYSTEM (AFS) OPERATES EVEN THOUGH THE AFS OFF SWITCH IS TURNED ON [ADAPTIVE FRONT LIGHTING SYSTEM (AFS)]

NOTE:

- If there is any vehicle malfunction complaint lodged by a customer, perform **FOREWORD [ADAPTIVE FRONT LIGHTING SYSTEM (AFS)]** malfunction diagnosis according to the troubleshooting procedure.

Description

- AFS operates with the AFS OFF switch on (system stopped condition).

Possible malfunction

- AFS OFF switch malfunction (stuck off)
- AFS control module malfunction

Diagnostic Procedure

Step	Inspection		Action
1	**VERIFY AFS OFF INDICATOR LIGHT ILLUMINATION** • Display the following instrument cluster WL+IL simulation items using the M-MDS. (See **ACTIVE COMMAND MODES INSPECTION [INSTRUMENT CLUSTER]**.) • Does the AFS OFF indicator light illumination turn off when the warning light, indicator light illumination is operated to off?	Yes	Go to the next step.
		No	Perform inspection referring to the AFS OFF INDICATOR LIGHT ILLUMINATES CONTINUOUSLY item. (See **AFS OFF INDICATOR LIGHT ILLUMINATES CONTINUOUSLY [ADAPTIVE FRONT LIGHTING SYSTEM (AFS)]**.)
2	**DETERMINE IF MALFUNCTION LOCATION IS AFS OFF SWITCH** • Display the following AFS control module AFS_ST PIDs using the M-MDS.	Yes	Replace the AFS control module. (See **ADAPTIVE FRONT LIGHTING SYSTEM (AFS) CONTROL MODULE**

	(See **PID/DATA MONITOR INSPECTION [ADAPTIVE FRONT LIGHTING SYSTEM (AFS)]**.) • Inspect the PID display when the AFS OFF switch is turned on/off. • Does the PID display switch normally in conjunction with the AFS OFF switch being turned on/off?		**REMOVAL/INSTALLATION**.)
		No	Go to the next step.
3	**PERFORM AFS OFF SWITCH INSPECTION** • Disconnect the negative battery cable. (See **NEGATIVE BATTERY CABLE DISCONNECTION/CONNECTION [SKYACTIV-G 2.0, SKYACTIV-G 2.5]**.) • Remove the AFS OFF switch. (See **ADAPTIVE FRONT LIGHTING SYSTEM (AFS) OFF SWITCH REMOVAL/INSTALLATION**.) • Inspect the AFS OFF switch. (See **ADAPTIVE FRONT LIGHTING SYSTEM (AFS) OFF SWITCH INSPECTION**.) • Is the AFS OFF switch normal?	Yes	The system is operating normally.
		No	Replace the AFS OFF switch. (See **ADAPTIVE FRONT LIGHTING SYSTEM (AFS) OFF SWITCH REMOVAL/INSTALLATION**.)

2014 - Mazda3 - Body and Accessories

THE HEADLIGHT AUTO LEVELING SYSTEM DOES NOT OPERATE IN RESPONSE TO VEHICLE POSTURE [ADAPTIVE FRONT LIGHTING SYSTEM (AFS)]

NOTE:

- If there is any vehicle malfunction complaint lodged by a customer, perform **FOREWORD [ADAPTIVE FRONT LIGHTING SYSTEM (AFS)]** malfunction diagnosis according to the troubleshooting procedure.

Description

- The headlight auto leveling system does operate in response to the number of occupants, cargo load in trunk, and the fuel level.
- One side of the headlight leveling actuator does not operate.

Possible malfunction

- Open circuit in wiring harness between AFS control module terminal O and headlight leveling actuator (LH)/(RH) terminal F
- Short to ground in wiring harness between AFS control module terminal O and headlight leveling actuator (LH)/(RH) terminal F
- Headlight leveling actuator malfunction
- AFS control module malfunction
- Open circuit in wiring harness between the following terminals:
    - AFS control module terminal P—Headlight leveling actuator (LH)/(RH) terminal I
    - AFS control module terminal M—Headlight leveling actuator (LH)/(RH) terminal L
- Short to ground in wiring harness between the following terminals:
    - AFS control module terminal P—Headlight leveling actuator (LH)/(RH) terminal I
    - AFS control module terminal M—Headlight leveling actuator (LH)/(RH) terminal L
- Poor installation of the auto leveling sensor
- Auto leveling sensor malfunction

Diagnostic Procedure

Step	Inspection		Action
1	**DETERMINE IF MALFUNCTIONING LOCATION IS AUTO LEVELING SENSOR** • Verify the malfunction symptom. • Do both sides of the headlight auto leveling system not operate?	Yes	Go to Step 6.
		No	Go to the next step.
2	**LEVELING OPERATION SIGNAL INSPECTION** • Using the M-MDS, perform the headlight leveling actuator operation check mode. (See **HEADLIGHT LEVELING ACTUATOR OPERATION CHECK MODE [ADAPTIVE FRONT LIGHTING SYSTEM (AFS)]**) • Does the headlight leveling actuator operate normally?	Yes	Go to Step 8.
		No	Go to the next step.
3	**INSPECT LEVELING OPERATION SIGNAL CIRCUIT FOR OPEN CIRCUIT** • Inspect the wiring harness for continuity between the AFS control module and headlight leveling actuator on the side in which the auto leveling system does not operate. ▪ AFS control module terminal O —Headlight leveling actuator (LH)/(RH) terminal F • Is there continuity?	Yes	Go to the next step.
		No	Refer to the wiring diagram and verify if there is a common connector between AFS control module terminal O and headlight leveling actuator (LH)/(RH) terminal F. **If there is a common connector:** • Inspect the common connector and terminals for corrosion, damage, or disconnection and the common wiring harnesses for an open circuit to determine the malfunctioning location. • Repair or replace the malfunctioning location. **If there is no common connector:** • Repair or replace the wiring harness which has an open circuit.

4	**INSPECT LEVELING OPERATION SIGNAL CIRCUIT FOR SHORT TO GROUND** • Inspect for continuity between the ground and the wiring harness between the AFS control module and headlight leveling actuator on the side in which the auto leveling system does not operate. ▪ AFS control module terminal O —Body ground • Is there continuity?	Yes	Refer to the wiring diagram and verify if there is a common connector between AFS control module terminal O and headlight leveling actuator (LH)/(RH) terminal F. **If there is a common connector:** • Inspect the common connector and terminals for corrosion, damage, or disconnection and the common wiring harnesses for short to ground to determine the malfunctioning location. • Repair or replace the malfunctioning location. **If there is no common connector:** • Repair or replace the wiring harness which is shorted to ground.
		No	Go to the next step.
5	**HEADLIGHT LEVELING INSPECTION** • Replace the front combination light in which the auto leveling system does not operate. (See **FRONT COMBINATION LIGHT REMOVAL/INSTALLATION**) • Does the auto leveling system operate correctly?	Yes	Troubleshooting completed.
		No	Replace the AFS control module. (See **ADAPTIVE FRONT LIGHTING SYSTEM (AFS) CONTROL MODULE REMOVAL/INSTALLATION**)
6	**INSPECT WIRING HARNESS BETWEEN HEADLIGHT LEVELING ACTUATOR AND AFS CONTROL MODULE FOR OPEN CIRCUIT** • Inspect for continuity in the wiring harness between the following terminals: ▪ AFS control module terminal P —Headlight leveling actuator (LH)/(RH) terminal I ▪ AFS control module terminal O —Headlight	Yes	Go to the next step.
		No	Refer to the wiring diagram and verify if there is a common connector between the following terminals. • AFS control module terminal P—Headlight leveling actuator (LH)/(RH) terminal I • AFS control module terminal O—Headlight leveling actuator (LH)/(RH) terminal F • AFS control module terminal M—Headlight leveling actuator (LH)/(RH) terminal L

	leveling actuator (LH)/(RH) terminal F ▪ AFS control module terminal M—Headlight leveling actuator (LH)/(RH) terminal L • Is there continuity?		**If there is a common connector:** • Inspect the common connector and terminals for corrosion, damage, or disconnection and the common wiring harnesses for an open circuit to determine the malfunctioning location. • Repair or replace the malfunctioning location. **If there is no common connector:** • Repair or replace the wiring harness which has an open circuit.
7	**INSPECT WIRING HARNESS BETWEEN HEADLIGHT LEVELING ACTUATOR AND AFS CONTROL MODULE FOR SHORT TO GROUND** • Inspect for continuity between body ground and the following terminals. ▪ AFS control module terminal P ▪ AFS control module terminal O ▪ AFS control module terminal M • Is there continuity?	Yes	Refer to the wiring diagram and verify if there is a common connector between the following terminals. • AFS control module terminal P—Headlight leveling actuator (LH)/(RH) terminal I • AFS control module terminal O—Headlight leveling actuator (LH)/(RH) terminal F • AFS control module terminal M—Headlight leveling actuator (LH)/(RH) terminal L **If there is a common connector:** • Inspect the common connector and terminals for corrosion, damage, or disconnection and the common wiring harnesses for short to ground to determine the malfunctioning location. • Repair or replace the malfunctioning location. **If there is no common connector:** • Repair or replace the wiring harness which is shorted to ground.

		No	Go to the next step.
8	**VERIFY AUTO LEVELING SENSOR INSTALLATION** • Verify the auto leveling sensor installation condition. • Is a bracket bent, is there damage, or is a link disconnected?	Yes	Repair or replace the malfunctioning location.
		No	Go to the next step.
9	**AUTO LEVELING SENSOR INSPECTION** • Inspect the auto leveling sensor. (See **AUTO LEVELING SENSOR INSPECTION**) • Is the auto leveling sensor normal?	Yes	Replace the AFS control module. (See **ADAPTIVE FRONT LIGHTING SYSTEM (AFS) CONTROL MODULE REMOVAL/INSTALLATION**)
		No	Replace the auto leveling sensor. (See **AUTO LEVELING SENSOR REMOVAL/INSTALLATION**)

2014 - Mazda3 - Body and Accessories

FOREWORD [THEFT-DETERRENT SYSTEM]

- If there is any vehicle malfunction complaint lodged by a customer, perform malfunction diagnosis according to the troubleshooting procedure.

Troubleshooting Procedure

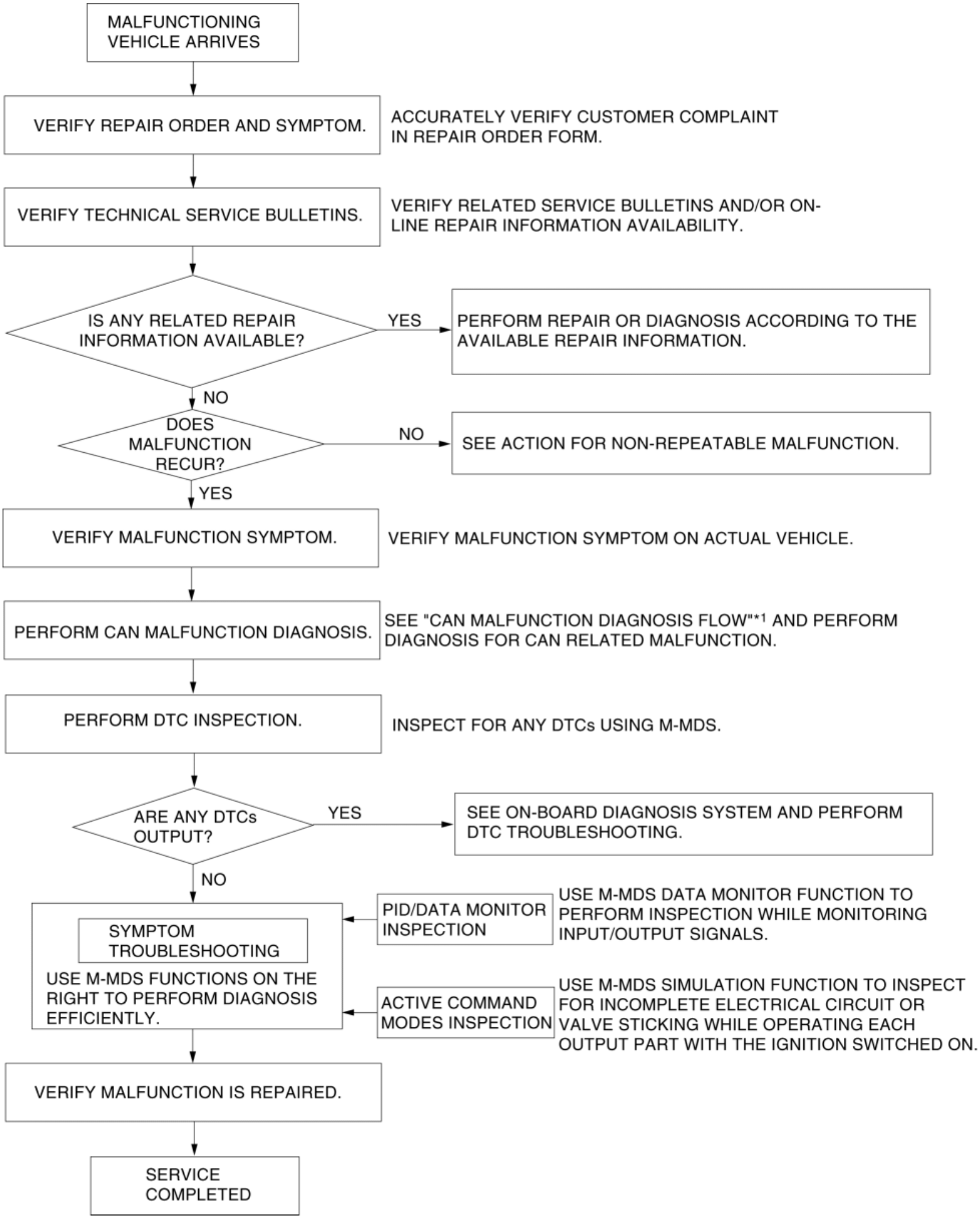
MALFUNCTIONING VEHICLE ARRIVES
VERIFY REPAIR ORDER AND SYMPTOM.
ACCURATELY VERIFY CUSTOMER COMPLAINT IN REPAIR ORDER FORM.
VERIFY TECHNICAL SERVICE BULLETINS.
VERIFY RELATED SERVICE BULLETINS AND/OR ON-LINE REPAIR INFORMATION AVAILABILITY.
IS ANY RELATED REPAIR INFORMATION AVAILABLE?
YES
PERFORM REPAIR OR DIAGNOSIS ACCORDING TO THE AVAILABLE REPAIR INFORMATION.
NO
DOES MALFUNCTION RECUR?
NO
SEE ACTION FOR NON-REPEATABLE MALFUNCTION.
YES
VERIFY MALFUNCTION SYMPTOM.
VERIFY MALFUNCTION SYMPTOM ON ACTUAL VEHICLE.
PERFORM CAN MALFUNCTION DIAGNOSIS.
SEE "CAN MALFUNCTION DIAGNOSIS FLOW"*1 AND PERFORM DIAGNOSIS FOR CAN RELATED MALFUNCTION.
PERFORM DTC INSPECTION.
INSPECT FOR ANY DTCs USING M-MDS.
ARE ANY DTCs OUTPUT?
YES
SEE ON-BOARD DIAGNOSIS SYSTEM AND PERFORM DTC TROUBLESHOOTING.
NO
SYMPTOM TROUBLESHOOTING
USE M-MDS FUNCTIONS ON THE RIGHT TO PERFORM DIAGNOSIS EFFICIENTLY.
PID/DATA MONITOR INSPECTION
USE M-MDS DATA MONITOR FUNCTION TO PERFORM INSPECTION WHILE MONITORING INPUT/OUTPUT SIGNALS.
ACTIVE COMMAND MODES INSPECTION
USE M-MDS SIMULATION FUNCTION TO INSPECT FOR INCOMPLETE ELECTRICAL CIRCUIT OR VALVE STICKING WHILE OPERATING EACH OUTPUT PART WITH THE IGNITION SWITCHED ON.
VERIFY MALFUNCTION IS REPAIRED.
SERVICE COMPLETED

*1

(See CONTROLLER AREA NETWORK (CAN) MALFUNCTION DIAGNOSIS FLOW.)

Action for non-repeatable malfunction

- If the malfunction does not recur, verify the malfunction cause by performing the following actions:
  - Based on the repair order form, attempt to drive the vehicle or perform tests to replicate the malfunction, record the data (such as rear body control module (RBCM) circuit voltage) at that time, and detect the malfunction cause.
  - Shake the wiring harness or connector of the electrical component which is suspected to be the cause of the malfunction, and inspect for malfunction or occurrence of any DTCs.

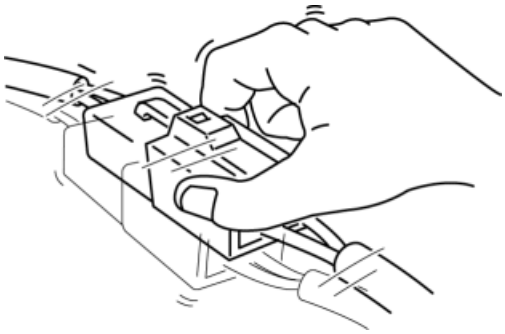

  - Inspect the female terminals on the connector of the electric component which is suspected to be the cause of the malfunction for poor connection.

2014 - Mazda3 - Body and Accessories

THEFT-DETERRENT SYSTEM [THEFT-DETERRENT SYSTEM]

Description

- Theft-deterrent horn sounded.

Possible cause

- Wiring harness malfunction
- Malfunction in switch which triggers system
- Rear body control module (RBCM) malfunction
- Customer's mis-operation or misunderstanding

Diagnostic Procedure

Step	Inspection		Action
1	**VERIFY DTCs** • Perform the DTC inspection for the rear body control module (RBCM) using the M-MDS. (See **DTC TABLE [REAR BODY CONTROL MODULE (RBCM)]**.) • Are any DTCs displayed?	Yes	Go to the applicable DTC inspection. (See **DTC TABLE [REAR BODY CONTROL MODULE (RBCM)]**.)
		No	Go to the next step.
2	**VERIFY OPERATION RECORD** • Has the operation record been stored? (See **THEFT-DETERRENT SYSTEM OPERATION RECORD**.)	Yes	Go to the next step.
		No	Diagnosis completed (theft-deterrent system does not operate).
3	**VERIFY CONDITION DURING THEFT-DETERRENT SYSTEM OPERATION**	Yes	Go to the next step.
		No	Inspect the rear body control

	Is the condition during theft-deterrent operation “Alarm” or “Arming”?		module (RBCM). If there is any malfunction, replace it. (See **REAR BODY CONTROL MODULE (RBCM) INSPECTION**.)
4	**DETERMINE IF MALFUNCTION CAUSE IS SYSTEM** • Verify what triggered the theft-deterrent system according to the trigger record, and inspect the switch which triggered the system and the related wiring harness. • Is the switch or related wiring harness normal?	Yes	System is normal (explain to the customer that the cause is customer's mis-operation).
		No	Replace the malfunctioning part.

2014 - Mazda3 - Body and Accessories

FOREWORD [ENTERTAINMENT SYSTEM [WITH CENTER DISPLAY]]

Troubleshooting Procedure

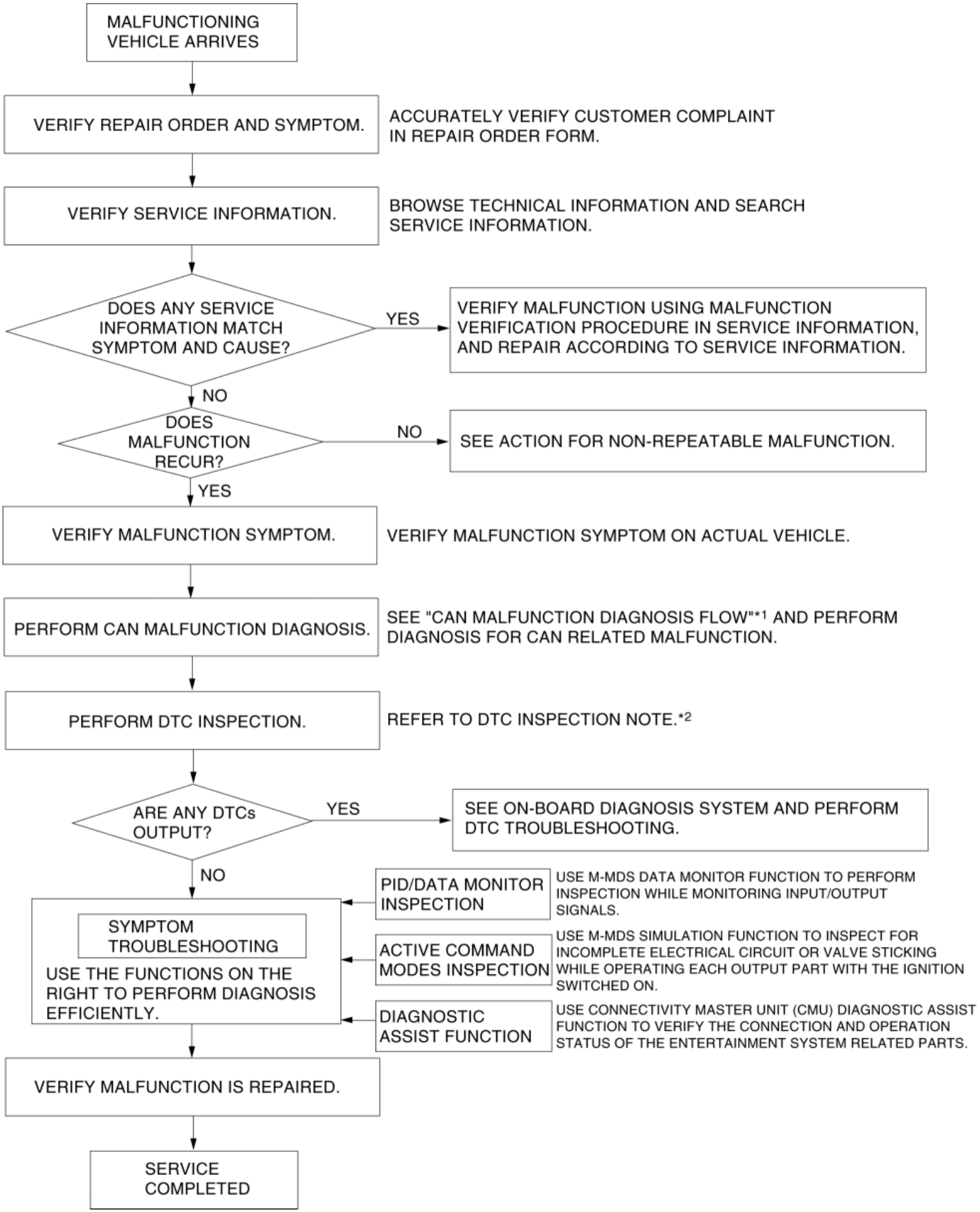
MALFUNCTIONING VEHICLE ARRIVES
VERIFY REPAIR ORDER AND SYMPTOM.
ACCURATELY VERIFY CUSTOMER COMPLAINT IN REPAIR ORDER FORM.
VERIFY SERVICE INFORMATION.
BROWSE TECHNICAL INFORMATION AND SEARCH SERVICE INFORMATION.
DOES ANY SERVICE INFORMATION MATCH SYMPTOM AND CAUSE?
YES
VERIFY MALFUNCTION USING MALFUNCTION VERIFICATION PROCEDURE IN SERVICE INFORMATION, AND REPAIR ACCORDING TO SERVICE INFORMATION.
NO
DOES MALFUNCTION RECUR?
NO
SEE ACTION FOR NON-REPEATABLE MALFUNCTION.
YES
VERIFY MALFUNCTION SYMPTOM.
VERIFY MALFUNCTION SYMPTOM ON ACTUAL VEHICLE.
PERFORM CAN MALFUNCTION DIAGNOSIS.
SEE "CAN MALFUNCTION DIAGNOSIS FLOW"*1 AND PERFORM DIAGNOSIS FOR CAN RELATED MALFUNCTION.
PERFORM DTC INSPECTION.
REFER TO DTC INSPECTION NOTE.*2
ARE ANY DTCs OUTPUT?
YES
SEE ON-BOARD DIAGNOSIS SYSTEM AND PERFORM DTC TROUBLESHOOTING.
NO
SYMPTOM TROUBLESHOOTING
USE THE FUNCTIONS ON THE RIGHT TO PERFORM DIAGNOSIS EFFICIENTLY.
PID/DATA MONITOR INSPECTION
USE M-MDS DATA MONITOR FUNCTION TO PERFORM INSPECTION WHILE MONITORING INPUT/OUTPUT SIGNALS.
ACTIVE COMMAND MODES INSPECTION
USE M-MDS SIMULATION FUNCTION TO INSPECT FOR INCOMPLETE ELECTRICAL CIRCUIT OR VALVE STICKING WHILE OPERATING EACH OUTPUT PART WITH THE IGNITION SWITCHED ON.
DIAGNOSTIC ASSIST FUNCTION
USE CONNECTIVITY MASTER UNIT (CMU) DIAGNOSTIC ASSIST FUNCTION TO VERIFY THE CONNECTION AND OPERATION STATUS OF THE ENTERTAINMENT SYSTEM RELATED PARTS.
VERIFY MALFUNCTION IS REPAIRED.
SERVICE COMPLETED

*1
(See CONTROLLER AREA NETWORK (CAN) MALFUNCTION DIAGNOSIS FLOW.)
*2
(See DTC Inspection Note.)

Action for non-repeatable malfunction

- If the malfunction does not recur, verify the malfunction cause by performing the following actions:
  - Verify that a DTC has been recorded in the memory. (See **DTC INSPECTION [CONNECTIVITY MASTER UNIT]**.) (See **DIAGNOSTIC ASSIST FUNCTION [CONNECTIVITY MASTER UNIT]**.)
  - Based on the repair order form, attempt to drive the vehicle or perform tests to replicate the malfunction, record the data at that time, and detect the malfunction cause.

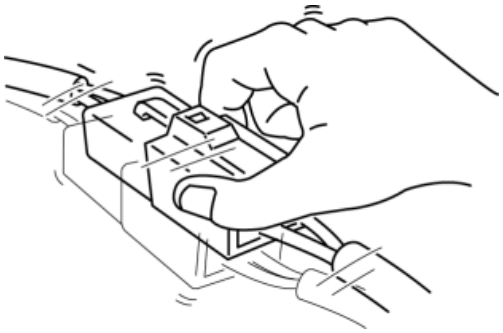

  - Shake the wiring harness or connector of the electrical component which is suspected to be the cause of the malfunction, and inspect for malfunction or occurrence of any DTCs.
  - Refer to [Determining Open Circuit Location] based on the recorded DTC, shake the wiring harness or connector of the electrical component which is suspected to be the cause of the malfunction, and inspect for any changes in CAN system voltage or occurrence of any DTCs.

DTC Inspection Note

- DTCs for the entertainment system [with center display] can be verified using the M-MDS or the on-board diagnostic test mode in which the on-board diagnostic function can be launched by operating the commander switch or the center display. (See **DTC INSPECTION [CONNECTIVITY MASTER UNIT]**.) (See **DIAGNOSTIC ASSIST FUNCTION [CONNECTIVITY MASTER UNIT]**.)

2014 - Mazda3 - Body and Accessories

SYMPTOM TROUBLESHOOTING [ENTERTAINMENT SYSTEM [WITH CENTER DISPLAY]]

Troubleshooting item	Description
IMAGE NOT OUTPUT IN ALL MODES (See **IMAGE NOT OUTPUT IN ALL MODES [ENTERTAINMENT SYSTEM [WITH CENTER DISPLAY]]**.)	• Image is not output in center display even if any mode is selected
NAVIGATION IMAGE NOT OUTPUT (See **NAVIGATION IMAGE NOT OUTPUT [ENTERTAINMENT SYSTEM [WITH CENTER DISPLAY]]**.)	• Rear mount camera image is output, however, navigation image only is not output
REAR MOUNT CAMERA IMAGE NOT OUTPUT (See **REAR MOUNT CAMERA IMAGE NOT OUTPUT [ENTERTAINMENT SYSTEM [WITH CENTER DISPLAY]]**.)	• Navigation image is output, however, rear mount camera image is not output
NO SOUND OUTPUT IN ALL MODES (See **NO SOUND OUTPUT IN ALL MODES [ENTERTAINMENT SYSTEM [WITH CENTER DISPLAY]]**.)	• Sound is not output from speakers even if any mode is selected
NO SOUND OUTPUT IN MULTIPLE MODES (See **NO SOUND OUTPUT IN MULTIPLE MODES [ENTERTAINMENT SYSTEM [WITH CENTER DISPLAY]]**.)	• Radio, CD, AUX audio is output, but no Bluetooth® audio, Internet radio, USB audio, and guidance voice
NO Bluetooth® AUDIO AND INTERNET RADIO SOUND (See **NO Bluetooth® AUDIO AND INTERNET RADIO SOUND [ENTERTAINMENT SYSTEM [WITH CENTER DISPLAY]]**.)	• Radio, CD, AUX/USB audio, guidance audio is output, but no Bluetooth® audio, Internet radio audio
NO USB AUDIO SOUND OUTPUT	• Radio, CD, AUX audio, Bluetooth® audio, Internet radio, and guidance audio is

(See **NO USB AUDIO SOUND OUTPUT [ENTERTAINMENT SYSTEM [WITH CENTER DISPLAY]]**.)	output, but not USB audio
NO NAVIGATION GUIDANCE VOICE OUTPUT (See **NO NAVIGATION GUIDANCE VOICE OUTPUT [ENTERTAINMENT SYSTEM [WITH CENTER DISPLAY]]**.)	• Radio, CD, AUX/USB audio, Bluetooth® audio, and Internet radio audio is output, but no navigation guidance audio
NO VOICE RECOGNITION GUIDANCE VOICE OUTPUT (See **NO VOICE RECOGNITION GUIDANCE VOICE OUTPUT [ENTERTAINMENT SYSTEM [WITH CENTER DISPLAY]]**.)	• Radio, CD, AUX/USB audio, Bluetooth® audio, and Internet radio audio is output, but not voice recognition guidance voice
NO CD SOUND OUTPUT (See **NO CD SOUND OUTPUT [ENTERTAINMENT SYSTEM [WITH CENTER DISPLAY]]**.)	• Radio, AUX audio, Bluetooth® audio, Internet radio, USB audio and guidance voice is output, but not CD sound
NO AUX AUDIO SOUND OUTPUT (See **NO AUX AUDIO SOUND OUTPUT [ENTERTAINMENT SYSTEM [WITH CENTER DISPLAY]]**.)	• Radio, CD audio, Bluetooth® audio, Internet radio, and guidance audio is output, but not AUX audio
VOICE OPERATION NOT POSSIBLE (See **VOICE OPERATION NOT POSSIBLE [ENTERTAINMENT SYSTEM [WITH CENTER DISPLAY]]**.)	• Voice operation of audio function, communication function, and navigation function is not possible
Bluetooth® PAIRING NOT POSSIBLE (See **Bluetooth® PAIRING NOT POSSIBLE [ENTERTAINMENT SYSTEM [WITH CENTER DISPLAY]]**.)	• Bluetooth® enabled device cannot be paired to connectivity master unit (CMU)
AUTOMATIC Bluetooth® CONNECTION NOT POSSIBLE (See **AUTOMATIC Bluetooth® CONNECTION NOT POSSIBLE [ENTERTAINMENT SYSTEM [WITH CENTER DISPLAY]]**.)	• Bluetooth® pairing setting is possible, however, automatic Bluetooth® connection is not possible
REAL TIME TRAFFIC FUNCTION INFORMATION NOT DISPLAYED (See **REAL TIME TRAFFIC FUNCTION INFORMATION NOT DISPLAYED [ENTERTAINMENT SYSTEM [WITH CENTER DISPLAY]]**.)	• Information such as gas prices, weather, and nearest restaurant is not output in navigation mode

2014 - Mazda3 - Body and Accessories

SYSTEM WIRING DIAGRAM [ENTERTAINMENT SYSTEM [WITH CENTER DISPLAY]]

Without Bose®

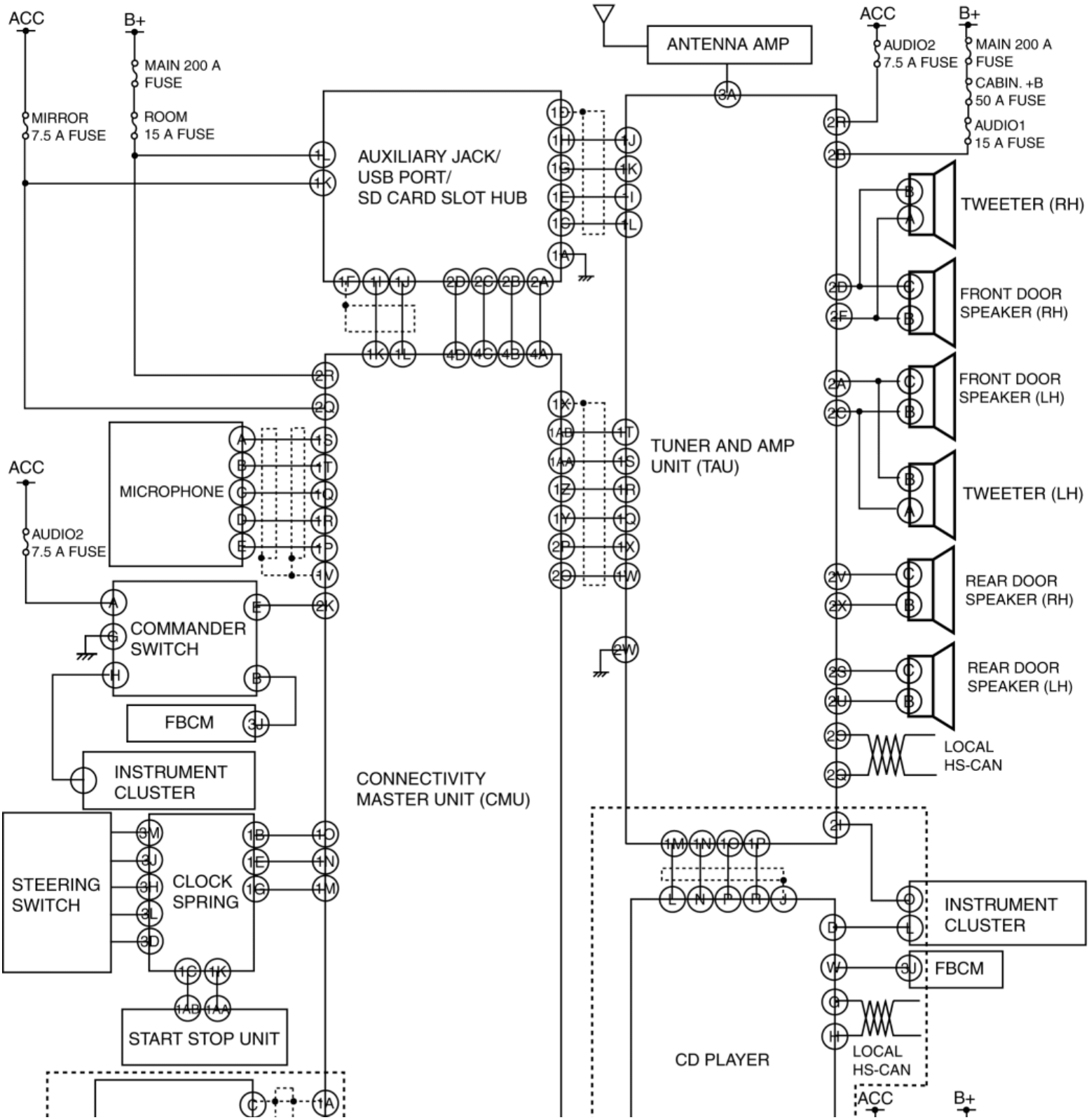

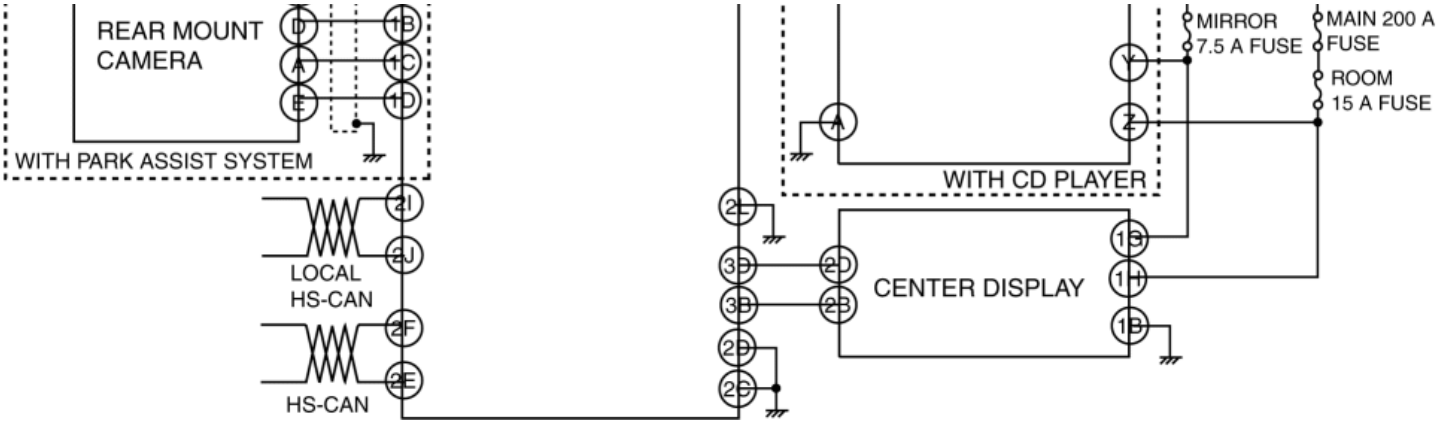
REAR MOUNT CAMERA
WITH PARK ASSIST SYSTEM
LOCAL HS-CAN
HS-CAN
MIRROR 7.5 A FUSE
MAIN 200 A FUSE
ROOM 15 A FUSE
WITH CD PLAYER
CENTER DISPLAY

With Bose®

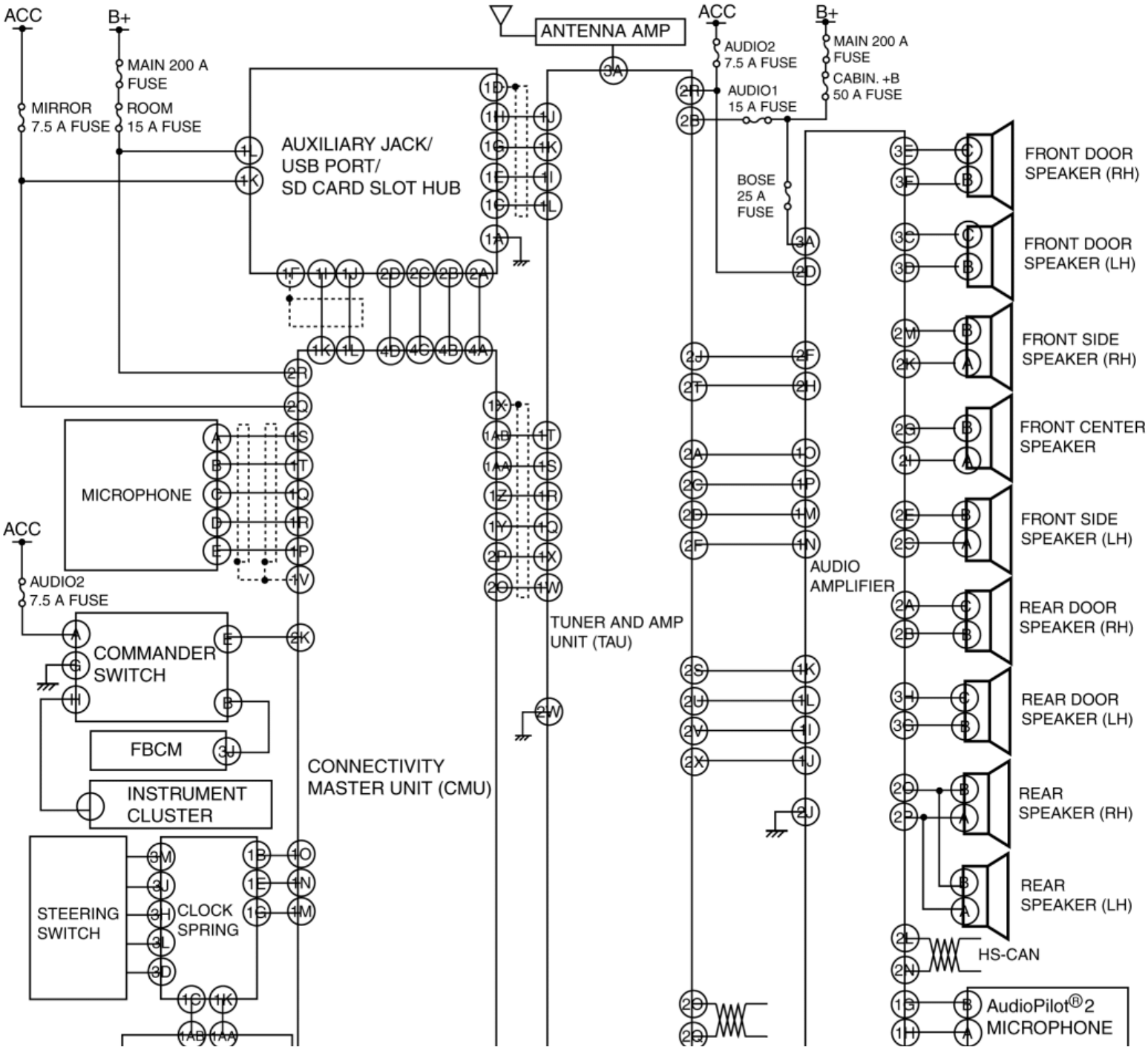
ACC
B+
MAIN 200 A FUSE
MIRROR 7.5 A FUSE
ROOM 15 A FUSE
AUXILIARY JACK/ USB PORT/ SD CARD SLOT HUB
ANTENNA AMP
AUDIO2 7.5 A FUSE
AUDIO1 15 A FUSE
CABIN. +B 50 A FUSE
BOSE 25 A FUSE
MICROPHONE
COMMANDER SWITCH
FBCM
INSTRUMENT CLUSTER
STEERING SWITCH
CLOCK SPRING
CONNECTIVITY MASTER UNIT (CMU)
TUNER AND AMP UNIT (TAU)
AUDIO AMPLIFIER
FRONT DOOR SPEAKER (RH)
FRONT DOOR SPEAKER (LH)
FRONT SIDE SPEAKER (RH)
FRONT CENTER SPEAKER
FRONT SIDE SPEAKER (LH)
REAR DOOR SPEAKER (RH)
REAR DOOR SPEAKER (LH)
REAR SPEAKER (RH)
REAR SPEAKER (LH)
HS-CAN
AudioPilot®2 MICROPHONE

SYSTEM WIRING DIAGRAM [ENTERTAINMENT SYSTEM [WITH CENTER DISPLAY]]

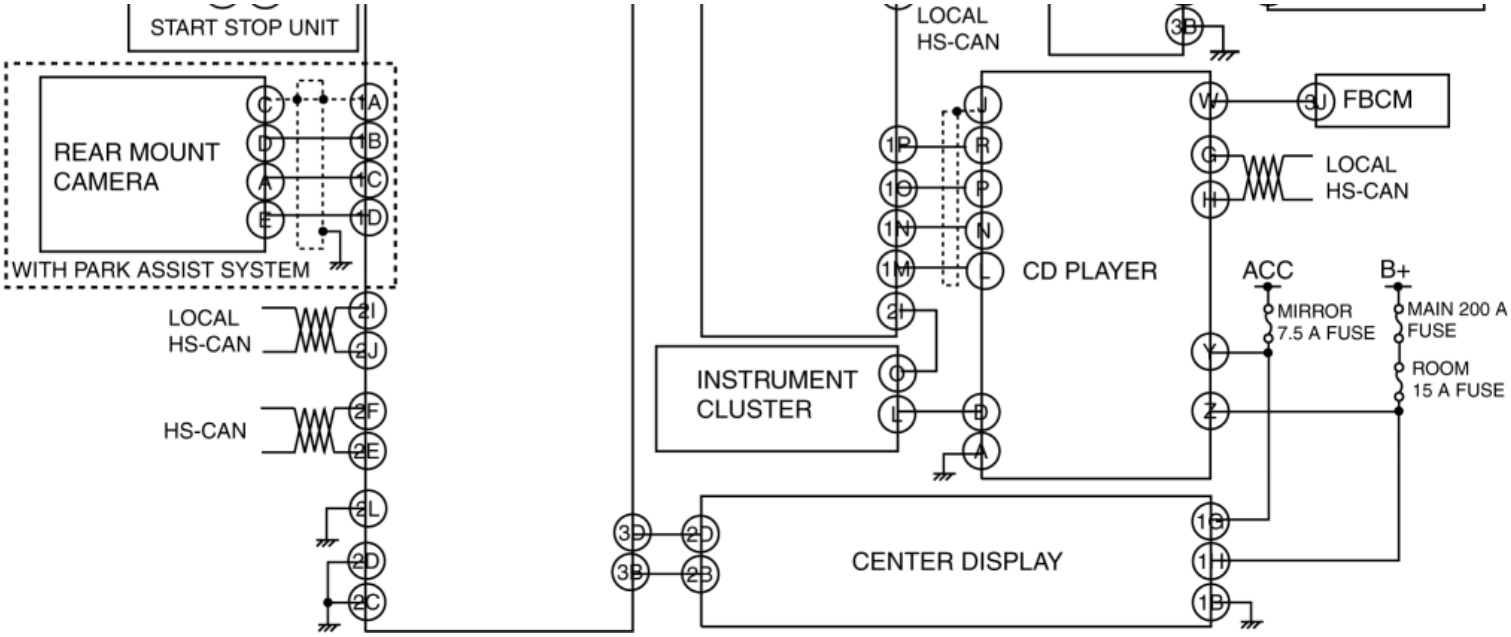

2014 - Mazda3 - Body and Accessories

IMAGE NOT OUTPUT IN ALL MODES [ENTERTAINMENT SYSTEM [WITH CENTER DISPLAY]]

Description	**IMAGE NOT OUTPUT IN ALL MODES**
	Image is not output in center display even if any mode is selected
Possible Causes	• Center display setting is off • Connector poor contact or terminal damage • Open circuit in wiring harness between center display terminal 1B and body ground • Center display malfunction • Connectivity master unit (CMU) malfunction

Diagnostic Procedure

Step	Inspection		Action
1	**INSPECT CENTER DISPLAY CONNECTOR** • Disconnect the negative battery cable. (See **NEGATIVE BATTERY CABLE DISCONNECTION/CONNECTION [SKYACTIV-G 2.0, SKYACTIV-G 2.5]**.) • Disconnect the center display connector. • Inspect the connector engagement and connection condition and inspect the terminals for damage, deformation, corrosion, or disconnection. • Is the connector normal?	Yes	Go to the next step.
		No	Repair or replace the connector, then go to Step 6.

2	**INSPECT CMU CONNECTOR** • Disconnect the CMU connector. • Inspect the connector engagement and connection condition and inspect the terminals for damage, deformation, corrosion, or disconnection. • Is the connector normal?	Yes	Go to the next step.
		No	Repair or replace the connector, then go to Step 6.
3	**VERIFY IF MALFUNCTION CAUSE IS OPEN CIRCUIT IN WIRING HARNESS BETWEEN CENTER DISPLAY AND BODY GROUND** • Verify that the center display connector is disconnected. • Inspect the wiring harness for continuity between center display terminal 1B and body ground (vehicle wiring harness side). • Is there continuity?	Yes	Go to the next step.
		No	• Refer to the wiring diagram and verify if there is a common connector between center display terminal 1B and body ground. **If there is a common connector:** ▪ Inspect the common connector and terminals for corrosion, damage, or disconnection and the common wiring harnesses for an open circuit to determine the malfunctioning location. ▪ Repair or replace the malfunctioning location. **If there is no common connector:** ▪ Repair or replace the wiring harness which has an open circuit. • Go to Step 6.
4	**VERIFY IF MALFUNCTION CAUSE IS CENTER DISPLAY**	Yes	Go to the next step.

	• Replace the center display. (See **CENTER DISPLAY REMOVAL/INSTALLATION**.) • Connect all the connectors. • Reconnect the negative battery cable. (See **NEGATIVE BATTERY CABLE DISCONNECTION/CONNECTION [SKYACTIV-G 2.0, SKYACTIV-G 2.5]**.) • Switch the ignition to ACC or ON (engine off or on). • Is image output in the center display?	No	Replace the CMU, then go to the next step. (See **CONNECTIVITY MASTER UNIT (CMU) REMOVAL/INSTALLATION**.)
5	**VERIFY IF MALFUNCTION CAUSE IS CORRECTED** • Switch the ignition to ACC or ON (engine off or on). • Select each mode by operating the center display or the commander switch. • Is image in each mode output?	Yes	Troubleshooting completed (explain the contents of the servicing to the customer).
		No	Verify the malfunction symptom in the symptom troubleshooting chart and perform the other applicable malfunction diagnosis. (See **SYMPTOM TROUBLESHOOTING [ENTERTAINMENT SYSTEM [WITH CENTER DISPLAY]]**.)

2014 - Mazda3 - Body and Accessories

NAVIGATION IMAGE NOT OUTPUT [ENTERTAINMENT SYSTEM [WITH CENTER DISPLAY]]

Description	**NAVIGATION IMAGE NOT OUTPUT**
	Rear mount camera image is output, however, navigation image only is not output

Possible Causes	• SD card malfunction
	• Connector poor contact or terminal damage
	• Open circuit in wiring harness between the following terminals:
	  ▪ Connectivity master unit (CMU) terminal 4A and auxiliary jack/USB port/SD card slot hub terminal 2A
	• Short to ground in wiring harness between the following terminals:
	  ▪ CMU terminal 4B and auxiliary jack/USB port/SD card slot hub terminal 2B
	  ▪ CMU terminal 4D and auxiliary jack/USB port/SD card slot hub terminal 2D
	• Short to power supply in wiring harness between the following terminals:
	  ▪ CMU terminal 4A and auxiliary jack/USB port/SD card slot hub terminal 2A
	  ▪ CMU terminal 4B and auxiliary jack/USB port/SD card slot hub terminal 2B
	  ▪ CMU terminal 4D and auxiliary jack/USB port/SD card slot hub terminal 2D
	• Auxiliary jack/USB port/SD card slot hub malfunction
	• Global positioning system (GPS) antenna malfunction
	• CMU malfunction

Diagnostic Procedure

Step	Inspection		Action
1	**VISUALLY INSPECT SD CARD** • Switch the ignition OFF. • Visually inspect the SD card for looseness or damage.	Yes	System is normal. (explain to the customer that there is a malfunction in SD card)
		No	Go to the next step.

	Is the SD card normal?		
2	**INSPECT AUXILIARY JACK/USB PORT/SD CARD SLOT HUB CONNECTOR** • Disconnect the auxiliary jack/USB port/SD card slot hub connector. • Inspect the connector engagement and connection condition and inspect the terminals for damage, deformation, corrosion, or disconnection. • Is the connector normal?	Yes	Go to the next step.
		No	Repair or replace the connector, then go to Step 9.
3	**INSPECT CMU CONNECTOR** • Disconnect the CMU connector. • Inspect the connector engagement and connection condition and inspect the terminals for damage, deformation, corrosion, or disconnection. • Is the connector normal?	Yes	Go to the next step.
		No	Repair or replace the connector, then go to Step 9.
4	**VERIFY IF MALFUNCTION CAUSE IS OPEN CIRCUIT IN WIRING HARNESS BETWEEN CMU AND AUXILIARY JACK/USB PORT/SD CARD SLOT HUB** • Verify that the CMU and the auxiliary jack/USB port/SD card slot hub connector are disconnected. • Inspect the wiring harness for continuity between the following terminals (vehicle wiring harness side). ▪ CMU terminal 4A and auxiliary jack/USB port/SD card slot hub terminal 2A • Is there continuity?	Yes	Go to the next step.
		No	• Refer to the wiring diagram and verify if there is a common connector between the following terminals. ▪ CMU terminal 4A and auxiliary jack/USB port/SD card slot hub terminal 2A **If there is a common connector:** • Inspect the common connector and terminals for corrosion, damage, or disconnection and the common wiring harnesses for an open circuit to determine the malfunctioning

			location. • Repair or replace the malfunctioning location. **If there is no common connector:** • Repair or replace the wiring harness which has an open circuit. • Go to Step 9.
5	**VERIFY IF MALFUNCTION CAUSE IS SHORT CIRCUIT TO GROUND IN WIRING HARNESS BETWEEN CMU AND AUXILIARY JACK/USB PORT/SD CARD SLOT HUB** • Verify that the CMU and the auxiliary jack/USB port/SD card slot hub connector are disconnected. • Inspect for continuity between the following wiring harness terminals (vehicle wiring harness side) and body ground. ▪ Auxiliary jack/USB port/SD card slot hub terminal 2B ▪ Auxiliary jack/USB port/SD card slot hub terminal 2D • Is there continuity?	Yes	• Refer to the wiring diagram and verify if there is a common connector between the following terminals. ▪ CMU terminal 4B and auxiliary jack/USB port/SD card slot hub terminal 2B ▪ CMU terminal 4D and auxiliary jack/USB port/SD card slot hub terminal 2D **If there is a common connector:** • Inspect the common connector and terminals for corrosion, damage, or disconnection and the common wiring harnesses for short to ground to determine the malfunctioning location. • Repair or replace the malfunctioning location. **If there is no common connector:** • Repair or replace the wiring harness which is

			shorted to ground. • Go to Step 9.
		No	Go to the next step.
6	**VERIFY IF MALFUNCTION CAUSE IS SHORT CIRCUIT TO POWER SUPPLY IN WIRING HARNESS BETWEEN CMU AND AUXILIARY JACK/USB PORT/SD CARD SLOT HUB** • Verify that the CMU and the auxiliary jack/USB port/SD card slot hub connector are disconnected. • Reconnect the negative battery cable. (See **NEGATIVE BATTERY CABLE DISCONNECTION/CONNECTION [SKYACTIV-G 2.0, SKYACTIV-G 2.5]**.) • Switch the ignition to ACC or ON (engine off or on). • Measure the voltage at the following terminals (vehicle wiring harness side). ▪ Auxiliary jack/USB port/SD card slot hub terminal 2A ▪ Auxiliary jack/USB port/SD card slot hub terminal 2B ▪ Auxiliary jack/USB port/SD card slot hub terminal 2D • Is the voltage **B+**?	Yes	• Refer to the wiring diagram and verify if there is a common connector between the following terminals. ▪ CMU terminal 4A and auxiliary jack/USB port/SD card slot hub terminal 2A ▪ CMU terminal 4B and auxiliary jack/USB port/SD card slot hub terminal 2B ▪ CMU terminal 4D and auxiliary jack/USB port/SD card slot hub terminal 2D **If there is a common connector:** • Inspect the common connector and terminals for corrosion, damage, or disconnection and the common wiring harnesses for an open circuit to determine the malfunctioning location. • Repair or replace the malfunctioning location. **If there is no common connector:** • Repair or replace the wiring harness which is shorted to the power supply. • Go to Step 9.
		No	Go to the next step.

7	**VERIFY IF MALFUNCTION CAUSE IS AUXILIARY JACK/USB PORT/SD CARD SLOT HUB** • Replace the auxiliary jack/USB port/SD card slot hub. (See **AUXILIARY JACK/USB PORT/SD CARD SLOT HUB REMOVAL/INSTALLATION**.) • Connect all the connectors. • Reconnect the negative battery cable. (See **NEGATIVE BATTERY CABLE DISCONNECTION/CONNECTION [SKYACTIV-G 2.0, SKYACTIV-G 2.5]**.) • Insert the SD card when the malfunction occurred. • Switch the ignition to ACC or ON (engine off or on). • Select navigation by operating the center display or the commander switch. • Is a navigation image output?	Yes	Go to Step 9.
		No	Go to the next step.
8	**VERIFY IF MALFUNCTION CAUSE IS GPS ANTENNA** • Disconnect the negative battery cable. (See **NEGATIVE BATTERY CABLE DISCONNECTION/CONNECTION [SKYACTIV-G 2.0, SKYACTIV-G 2.5]**.) • Replace the GPS antenna. (See **GLOBAL POSITIONING SYSTEM (GPS) ANTENNA REMOVAL/INSTALLATION**.) • Connect all the connectors. • Reconnect the negative battery cable. (See **NEGATIVE BATTERY CABLE DISCONNECTION/CONNECTION [SKYACTIV-G 2.0, SKYACTIV-G 2.5]**.)	Yes	Go to the next step.
		No	Replace the CMU, then go to the next step. (See **CONNECTIVITY MASTER UNIT (CMU) REMOVAL/INSTALLATION**.)

	Insert the SD card when the malfunction occurred. • Switch the ignition to ACC or ON (engine off or on). • Select navigation by operating the center display or the commander switch. • Is a navigation image output?		
9	**VERIFY IF MALFUNCTION CAUSE IS CORRECTED** • Disconnect the negative battery cable. (See **NEGATIVE BATTERY CABLE DISCONNECTION/CONNECTION [SKYACTIV-G 2.0, SKYACTIV-G 2.5]**.) • Connect all the connectors. • Reconnect the negative battery cable. (See **NEGATIVE BATTERY CABLE DISCONNECTION/CONNECTION [SKYACTIV-G 2.0, SKYACTIV-G 2.5]**.) • Insert the SD card when the malfunction occurred. • Switch the ignition to ACC or ON (engine off or on). • Select navigation by operating the center display or the commander switch. • Is a navigation image output?	Yes	Troubleshooting completed (explain the contents of the servicing to the customer).
		No	Verify the malfunction symptom in the symptom troubleshooting chart and perform the other applicable malfunction diagnosis. (See **SYMPTOM TROUBLESHOOTING [ENTERTAINMENT SYSTEM [WITH CENTER DISPLAY]]**.)

2014 - Mazda3 - Body and Accessories

REAR MOUNT CAMERA IMAGE NOT OUTPUT [ENTERTAINMENT SYSTEM [WITH CENTER DISPLAY]]

Description	**REAR MOUNT CAMERA IMAGE NOT OUTPUT**
	Navigation image is output, however, rear mount camera image is not output

Possible Causes	• Connector poor contact or terminal damage
	• Rear mount camera malfunction
	• Open circuit in wiring harness between the following terminals:
	  ▪ Connectivity master unit (CMU) terminal 1B and rear mount camera terminal D
	  ▪ CMU terminal 1C and rear mount camera terminal A
	  ▪ CMU terminal 1D and rear mount camera terminal E
	• Short to power supply in wiring harness between the following terminals:
	  ▪ CMU terminal 1B and rear mount camera terminal D
	  ▪ CMU terminal 1C and rear mount camera terminal A
	  ▪ CMU terminal 1D and rear mount camera terminal E
	• CMU malfunction

Diagnostic Procedure

Step	Inspection		Action
1	**INSPECT REAR MOUNT CAMERA CONDITION** • Is the rear mount camera lens soiled by dust or dirt?	Yes	Clean the rear mount camera lens, then go to Step 8.
		No	Go to the next step.
2	**VERIFY IF MALFUNCTION CAUSE IS REAR MOUNT CAMERA** • Are there any scratches or damage on the rear mount camera lens?	Yes	Replace the rear mount camera lens, then go to Step 8. (See **REAR MOUNT CAMERA REMOVAL/INSTALLATION**.)
		No	Go to the next step.
3	**INSPECT REAR MOUNT CAMERA CONNECTOR**	Yes	Go to the next step.
		No	Repair or replace the connector, then go to Step 8.

	Disconnect the negative battery cable. (See **NEGATIVE BATTERY CABLE DISCONNECTION/CONNECTION [SKYACTIV-G 2.0, SKYACTIV-G 2.5]**.) • Disconnect the rear mount camera connector. • Inspect the connector engagement and connection condition and inspect the terminals for damage, deformation, corrosion, or disconnection. • Is the connector normal?		
4	**INSPECT CMU CONNECTOR** • Disconnect the CMU connector. • Inspect the connector engagement and connection condition and inspect the terminals for damage, deformation, corrosion, or disconnection. • Is the connector normal?	Yes	Go to the next step.
		No	Repair or replace the connector, then go to Step 8.
5	**VERIFY IF MALFUNCTION CAUSE IS OPEN CIRCUIT IN WIRING HARNESS BETWEEN CMU AND REAR MOUNT CAMERA** • Verify that the rear mount camera and CMU connectors are disconnected. • Inspect the wiring harness for continuity between the following terminals (vehicle wiring harness side). ▪ CMU terminal 1B and rear mount camera terminal D ▪ CMU terminal 1C and rear mount camera terminal A ▪ CMU terminal 1D and rear	Yes	Go to the next step.
		No	• Refer to the wiring diagram and verify if there is a common connector between the following terminals. ▪ CMU terminal 1B and rear mount camera terminal D ▪ CMU terminal 1C and rear mount camera terminal A ▪ CMU terminal 1D and rear mount camera terminal E **If there is a common connector:** • Inspect the common connector and terminals for corrosion, damage, or disconnection and the common wiring

	mount camera terminal E • Is there continuity?		harnesses for an open circuit to determine the malfunctioning location. • Repair or replace the malfunctioning location. **If there is no common connector:** • Repair or replace the wiring harness which has an open circuit. • Go to Step 8.
6	**VERIFY IF MALFUNCTION CAUSE IS SHORT CIRCUIT TO POWER SUPPLY IN WIRING HARNESS BETWEEN CMU AND REAR MOUNT CAMERA** • Verify that the rear mount camera and CMU connectors are disconnected. • Reconnect the negative battery cable. (See **NEGATIVE BATTERY CABLE DISCONNECTION/CONNECTION [SKYACTIV-G 2.0, SKYACTIV-G 2.5]**.) • Switch the ignition to ACC or ON (engine off or on). • Measure the voltage at the following terminals (vehicle wiring harness side). ▪ Rear mount camera terminal D ▪ Rear mount camera terminal A ▪ Rear mount camera terminal E • Is the voltage **B+**?	Yes	• Refer to the wiring diagram and verify if there is a common connector between the following terminals. ▪ CMU terminal 1B and rear mount camera terminal D ▪ CMU terminal 1C and rear mount camera terminal A ▪ CMU terminal 1D and rear mount camera terminal E **If there is a common connector:** • Inspect the common connector and terminals for corrosion, damage, or disconnection and the common wiring harnesses for an open circuit to determine the malfunctioning location. • Repair or replace the malfunctioning location. **If there is**

			no common connector: • Repair or replace the wiring harness which is shorted to the power supply. • Go to Step 8.
		No	Go to the next step.
7	**DETERMINE IF MALFUNCTION CAUSE IS REAR MOUNT CAMERA** • Disconnect the negative battery cable. (See **NEGATIVE BATTERY CABLE DISCONNECTION/CONNECTION [SKYACTIV-G 2.0, SKYACTIV-G 2.5]**.) • Replace the rear mount camera. (See **REAR MOUNT CAMERA REMOVAL/INSTALLATION**.) • Connect all the connectors. • Reconnect the negative battery cable. (See **NEGATIVE BATTERY CABLE DISCONNECTION/CONNECTION [SKYACTIV-G 2.0, SKYACTIV-G 2.5]**.) • Apply the parking brake. • Switch the ignition to ACC or ON (engine off or on). • Shift to the R position. • Is rear mount camera image output normally?	Yes	Go to the next step.
		No	Replace the CMU, then go to the next step. (See **CONNECTIVITY MASTER UNIT (CMU) REMOVAL/INSTALLATION**.)
8	**VERIFY IF MALFUNCTION CAUSE IS CORRECTED** • Reconnect the negative battery cable. (See **NEGATIVE BATTERY CABLE DISCONNECTION/CONNECTION [SKYACTIV-G 2.0, SKYACTIV-G 2.5]**	Yes	Troubleshooting completed (explain the contents of the servicing to the customer).
		No	Verify the malfunction symptom in the symptom troubleshooting chart and perform the other applicable malfunction diagnosis. (See **SYMPTOM TROUBLESHOOTING [ENTERTAINMENT SYSTEM [WITH CENTER DISPLAY]]**.)

	.) • Apply the parking brake. • Switch the ignition to ACC or ON (engine off or on). • Shift to the R position. • Is rear mount camera image output normally?		

2014 - Mazda3 - Body and Accessories

NO SOUND OUTPUT IN ALL MODES [ENTERTAINMENT SYSTEM [WITH CENTER DISPLAY]]

With Bose ®

Description	NO SOUND OUTPUT IN ALL MODES
	Sound is not output from speakers even if any mode is selected

Possible	• Connector poor contact or terminal damage
	• Tuner and amp unit (TAU) ACC power supply circuit malfunction
	  ▪ Short circuit to ground in wiring harness between TAU terminal 2R and AUDIO2 7.5 A fuse
	  ▪ AUDIO2 7.5A fuse malfunction
	  ▪ Open circuit in wiring harness between TAU terminal 2R and AUDIO2 7.5 A fuse
	• Open circuit in wiring harness between the following terminals:
	  ▪ TAU terminal 2W and body ground
	  ▪ Audio amplifier terminal 2J and body ground
	  ▪ Audio amplifier terminal 3B and body ground
	• TAU malfunction
	• Connectivity master unit (CMU) malfunction
	• Speaker malfunction
	  ▪ Speaker malfunction
	  • Front door speaker (LH) malfunction
	  • Front door speaker (RH) malfunction
	  • Rear door speaker (LH) malfunction
	  • Rear door speaker (RH) malfunction
	  • Front side speaker (LH) malfunction
	  • Front side speaker (RH) malfunction
	  • Front center speaker malfunction
	  • Rear speaker (LH) malfunction
	  • Rear speaker (RH) malfunction
	  ▪ Open circuit, or short to ground in wiring harness between the following terminals:
	  • Audio amplifier terminal 3C and front door speaker (LH) terminal C

Causes	• Audio amplifier terminal 3D and front door speaker (LH) terminal B • Audio amplifier terminal 3E and front door speaker (RH) terminal C • Audio amplifier terminal 3F and front door speaker (RH) terminal B • Audio amplifier terminal 3G and rear door speaker (LH) terminal B • Audio amplifier terminal 3H and rear door speaker (LH) terminal C • Audio amplifier terminal 2A and rear door speaker (RH) terminal C • Audio amplifier terminal 2B and rear door speaker (RH) terminal B • Audio amplifier terminal 2C and front side speaker (LH) terminal A • Audio amplifier terminal 2E and front side speaker (LH) terminal B • Audio amplifier terminal 2K and front side speaker (RH) terminal A • Audio amplifier terminal 2M and front side speaker (RH) terminal B • Audio amplifier terminal 2G and front center speaker terminal B • Audio amplifier terminal 2I and front center speaker terminal A • Audio amplifier terminal 2O and rear speaker (LH) terminal B • Audio amplifier terminal 2P and rear speaker (LH) terminal A • Audio amplifier terminal 2O and rear speaker (RH) terminal B • Audio amplifier terminal 2P and rear speaker (RH) terminal A

Diagnostic Procedure

Step	Inspection		Action
1	**VERIFY MALFUNCTION SYMPTOM** • Switch the ignition to ACC or ON (engine off or on). • Launch the on-board diagnostic assist function. (See **DIAGNOSTIC ASSIST FUNCTION [CONNECTIVITY**	Yes	• System is normal. • Due to the possibility that sound is not output in some modes, verify the malfunction in the symptom troubleshooting chart and perform the other applicable malfunction diagnosis. (See **NO SOUND OUTPUT IN MULTIPLE MODES [ENTERTAINMENT SYSTEM [WITH CENTER DISPLAY]]**.)

	MASTER UNIT].) • Select assist code “94”. • Press the [ENTER] and verify that the sound is output from each speaker. • Is sound output from each speaker in the order?	No	**No sound is produced from all speakers** • Go to the next step. **No sound is produced from some speakers** • Go to Step 10.
2	**INSPECT TAU CONNECTOR** • Disconnect the negative battery cable. (See **NEGATIVE BATTERY CABLE DISCONNECTION/CONNECTION [SKYACTIV-G 2.0, SKYACTIV-G 2.5]**.) • Disconnect the TAU connector. • Inspect the connector engagement and connection condition and inspect the terminals for damage, deformation, corrosion, or disconnection. • Is the connector normal?	Yes	Go to the next step.
		No	Repair or replace the connector, then go to Step 13.
3	**INSPECT AUDIO AMPLIFIER CONNECTOR** • Disconnect the audio amplifier connector. • Inspect the connector engagement and connection condition and inspect the terminals for damage, deformation, corrosion, or disconnection. • Is the connector normal?	Yes	Go to the next step.
		No	Repair or replace the connector, then go to Step 13.
4	**INSPECT CMU CONNECTOR** • Disconnect the CMU connector. • Inspect the connector engagement and connection condition and inspect the terminals for damage, deformation, corrosion, or disconnection. • Is the connector normal?	Yes	Go to the next step.
		No	Repair or replace the connector, then go to Step 13.
5	**INSPECT TAU ACC POWER SUPPLY VOLTAGE**	Yes	Go to the next step.

	• Verify that the TAU connector is disconnected. • Reconnect the negative battery cable. (See **NEGATIVE BATTERY CABLE DISCONNECTION/CONNECTION [SKYACTIV-G 2.0, SKYACTIV-G 2.5]**.) • Switch the ignition to ACC or ON (engine off or on). • Measure the voltage at TAU terminal 2R (vehicle wiring harness side). • Is the voltage **B+**?	No	Inspect the AUDIO2 7.5A fuse. • If the fuse is blown: ▪ Refer to the wiring diagram and verify if there is a common connector between AUDIO2 7.5A fuse and the TAU terminal 2R. **If there is a common connector:** • Inspect the common connector and terminals for corrosion, damage, or disconnection and the common wiring harnesses for short to ground to determine the malfunctioning location. • Repair or replace the malfunctioning location. **If there is no common connector:** • Repair or replace the wiring harness which is shorted to ground. • Replace the fuse. • If the fuse is damaged: ▪ Replace the fuse. • If the fuse is normal: ▪ Refer to the wiring diagram and verify if there is a common connector between ACC relay and the TAU terminal 2R. **If there is a common connector:** • Inspect the common

			connector and terminals for corrosion, damage, or disconnection and the common wiring harnesses for an open circuit to determine the malfunctioning location. • Repair or replace the malfunctioning location. **If there is no common connector:** • Repair or replace the wiring harness which has an open circuit. Go to Step 13.
6	**VERIFY IF MALFUNCTION CAUSE IS OPEN CIRCUIT IN WIRING HARNESS BETWEEN TAU AND BODY GROUND** • Verify that the TAU connector is disconnected. • Inspect the wiring harness for continuity between the following terminals (vehicle wiring harness side). ▪ TAU terminal 2W and body ground • Is there continuity?	Yes	Go to the next step.
		No	• Refer to the wiring diagram and verify if there is a common connector between the following terminals. ▪ TAU terminal 2W and body ground **If there is a common connector:** • Inspect the common connector and terminals for corrosion, damage, or disconnection and the common wiring harnesses for an open circuit to determine the malfunctioning location. • Repair or replace the

			malfunctioning location. **If there is no common connector:** • Repair or replace the wiring harness which has an open circuit. • Go to Step 13.
7	**VERIFY IF MALFUNCTION CAUSE IS OPEN CIRCUIT IN WIRING HARNESS BETWEEN AUDIO AMPLIFIER AND BODY GROUND** • Verify that the audio amplifier connectors are disconnected. • Inspect the wiring harness for continuity between the following terminals (vehicle wiring harness side). ▪ Audio amplifier terminal 2J and body ground ▪ Audio amplifier terminal 3B and body ground • Is there continuity?	Yes	Go to the next step.
		No	• Refer to the wiring diagram and verify if there is a common connector between the following terminals. ▪ Audio amplifier terminal 2J and body ground ▪ Audio amplifier terminal 3B and body ground **If there is a common connector:** • Inspect the common connector and terminals for corrosion, damage, or disconnection and the common wiring harnesses for an open circuit to determine the malfunctioning location. • Repair or replace the malfunctioning location. **If there is no common connector:** • Repair or replace the wiring harness which has an open circuit. • Go to Step 13.

8	**DETERMINE IF MALFUNCTION CAUSE IS AUDIO AMPLIFIER** • Disconnect the negative battery cable. (See **NEGATIVE BATTERY CABLE DISCONNECTION/CONNECTION [SKYACTIV-G 2.0, SKYACTIV-G 2.5]**.) • Replace the audio amplifier. (See **AUDIO AMPLIFIER REMOVAL/INSTALLATION**.) • Connect all the connectors. • Reconnect the negative battery cable. (See **NEGATIVE BATTERY CABLE DISCONNECTION/CONNECTION [SKYACTIV-G 2.0, SKYACTIV-G 2.5]**.) • Switch the ignition to ACC or ON (engine off or on). • Launch the on-board diagnostic assist function. (See **DIAGNOSTIC ASSIST FUNCTION [CONNECTIVITY MASTER UNIT]**.) • Select assist code “94”. • Press the [ENTER] and verify that the sound is output from each speaker. • Is sound output from each speaker in the order?	Yes	Go to Step 13.
		No	Go to the next step.
9	**DETERMINE IF MALFUNCTION CAUSE IS TAU** • Disconnect the negative battery cable. (See **NEGATIVE BATTERY CABLE DISCONNECTION/CONNECTION [SKYACTIV-G 2.0, SKYACTIV-G 2.5]**.) • Replace the TAU. (See **TUNER AND AMP UNIT (TAU) REMOVAL/INSTALLATION**.)	Yes	Go to Step 13.
		No	Replace the CMU, then go to Step 13. (See **CONNECTIVITY MASTER UNIT (CMU) REMOVAL/INSTALLATION**.)

	Connect all the connectors. • Reconnect the negative battery cable. (See **NEGATIVE BATTERY CABLE DISCONNECTION/CONNECTION [SKYACTIV-G 2.0, SKYACTIV-G 2.5]**.) • Switch the ignition to ACC or ON (engine off or on). • Launch the on-board diagnostic assist function. (See **DIAGNOSTIC ASSIST FUNCTION [CONNECTIVITY MASTER UNIT]**.) • Select assist code “94”. • Press the [ENTER] and verify that the sound is output from each speaker. • Is sound output from each speaker in the order?		
10	**INSPECT SPEAKERS** • Disconnect the negative battery cable. (See **NEGATIVE BATTERY CABLE DISCONNECTION/CONNECTION [SKYACTIV-G 2.0, SKYACTIV-G 2.5]**.) • Inspect the malfunctioning speaker. (See **FRONT DOOR SPEAKER INSPECTION**.) (See **REAR DOOR SPEAKER INSPECTION**.) (See **FRONT SIDE SPEAKER INSPECTION**.) (See **FRONT CENTER SPEAKER INSPECTION**.) (See **REAR SPEAKER INSPECTION**.) • Is the speaker resistance normal?	Yes	Go to the next step.
		No	Replace the malfunctioning speaker, then go to Step 13. (See **FRONT DOOR SPEAKER REMOVAL/INSTALLATION**.) (See **REAR DOOR SPEAKER REMOVAL/INSTALLATION**.) (See **FRONT SIDE SPEAKER REMOVAL/INSTALLATION**.) (See **FRONT CENTER SPEAKER REMOVAL/INSTALLATION**.) (See **REAR SPEAKER REMOVAL/INSTALLATION**.)
11	**INSPECT SPEAKER CIRCUIT FOR OPEN CIRCUIT** • Disconnect the connector of the malfunctioning speaker	Yes	Go to the next step.
		No	• Refer to the wiring diagram and verify if there is a common connector between the following

and the audio amplifier connector.

- Verify the continuity of the wiring harness between the following terminals (vehicle wiring harness side) of the speakers which are malfunctioning.
  - Audio amplifier terminal 3C and front door speaker (LH) terminal C
  - Audio amplifier terminal 3D and front door speaker (LH) terminal B
  - Audio amplifier terminal 3E and front door speaker (RH) terminal C
  - Audio amplifier terminal 3F and front door speaker (RH) terminal B
  - Audio amplifier terminal 3G and rear door speaker (LH) terminal B
  - Audio amplifier terminal 3H and rear door speaker (LH) terminal C
  - Audio amplifier terminal 2A and rear door speaker (RH) terminal C
  - Audio amplifier terminal 2B

terminals.

- Audio amplifier terminal 3C and front door speaker (LH) terminal C
- Audio amplifier terminal 3D and front door speaker (LH) terminal B
- Audio amplifier terminal 3E and front door speaker (RH) terminal C
- Audio amplifier terminal 3F and front door speaker (RH) terminal B
- Audio amplifier terminal 3G and rear door speaker (LH) terminal B
- Audio amplifier terminal 3H and rear door speaker (LH) terminal C
- Audio amplifier terminal 2A and rear door speaker (RH) terminal C
- Audio amplifier terminal 2B and rear door speaker (RH) terminal B
- Audio amplifier terminal 2C and front side speaker (LH) terminal A
- Audio amplifier terminal 2E and front side speaker (LH) terminal B
- Audio amplifier terminal 2K and front side speaker (RH) terminal A
- Audio amplifier terminal 2M and front side speaker (RH) terminal B
- Audio amplifier terminal 2G and front center speaker terminal B
- Audio amplifier terminal 2I and front center speaker terminal A
- Audio amplifier terminal 2O and rear speaker (LH) terminal B
- Audio amplifier terminal 2P and rear speaker (LH) terminal A
- Audio amplifier terminal 2O and rear speaker (RH) terminal B
- Audio amplifier terminal 2P and rear speaker (RH) terminal A

and rear door speaker (RH) terminal B

- Audio amplifier terminal 2C and front side speaker (LH) terminal A
- Audio amplifier terminal 2E and front side speaker (LH) terminal B
- Audio amplifier terminal 2K and front side speaker (RH) terminal A
- Audio amplifier terminal 2M and front side speaker (RH) terminal B
- Audio amplifier terminal 2G and front center speaker terminal B
- Audio amplifier terminal 2I and front center speaker terminal A
- Audio amplifier terminal 2O and rear speaker (LH) terminal B
- Audio amplifier terminal 2P and rear speaker (LH) terminal A
- Audio amplifier terminal 2O

If there is a common connector:

- Inspect the common connector and terminals for corrosion, damage, or disconnection and the common wiring harnesses for an open circuit to determine the malfunctioning location.
- Repair or replace the malfunctioning location.

Repair or replace the malfunctioning location.

- Repair or replace the wiring harness which has an open circuit.

- Go to Step 13.

	and rear speaker (RH) terminal B ▪ Audio amplifier terminal 2P and rear speaker (RH) terminal A • Is there continuity?		
12	**INSPECT SPEAKER CIRCUIT FOR SHORT TO GROUND** • Verify that the connector of the malfunctioning speaker and the audio amplifier connector are disconnected. • Inspect for continuity between the following terminals (vehicle wiring harness side) of the speakers which are malfunctioning and body ground. ▪ Front door speaker (LH) terminal C ▪ Front door speaker (LH) terminal B ▪ Front door speaker (RH) terminal C ▪ Front door speaker (RH) terminal B ▪ Rear door speaker (LH) terminal B ▪ Rear door speaker (LH) terminal C ▪ Rear door speaker (RH) terminal C ▪ Rear door speaker (RH) terminal B ▪ Front side speaker (LH) terminal A ▪ Front side speaker (LH)	Yes	• Refer to the wiring diagram and verify if there is a common connector between the following terminals. ▪ Front door speaker (LH) terminal C ▪ Front door speaker (LH) terminal B ▪ Front door speaker (RH) terminal C ▪ Front door speaker (RH) terminal B ▪ Rear door speaker (LH) terminal B ▪ Rear door speaker (LH) terminal C ▪ Rear door speaker (RH) terminal C ▪ Rear door speaker (RH) terminal B ▪ Front side speaker (LH) terminal A ▪ Front side speaker (LH) terminal B ▪ Front side speaker (RH) terminal A ▪ Front side speaker (RH) terminal B ▪ Front center speaker terminal B ▪ Front center speaker terminal A ▪ Rear speaker (LH) terminal B ▪ Rear speaker (LH) terminal A ▪ Rear speaker (RH) terminal B ▪ Rear speaker (RH) terminal A **If there is a common connector:**

	terminal B ▪ Front side speaker (RH) terminal A ▪ Front side speaker (RH) terminal B ▪ Front center speaker terminal B ▪ Front center speaker terminal A ▪ Rear speaker (LH) terminal B ▪ Rear speaker (LH) terminal A ▪ Rear speaker (RH) terminal B ▪ Rear speaker (RH) terminal A • Is there continuity?		Inspect the common connector and terminals for corrosion, damage, or disconnection and the common wiring harnesses for short to ground to determine the malfunctioning location. ▪ Repair or replace the malfunctioning location. **Repair or replace the malfunctioning location.** ▪ Repair or replace the wiring harness which is shorted to ground. • Go to the next step.
		No	Go to the next step.
13	**VERIFY IF MALFUNCTION CAUSE IS CORRECTED** • Disconnect the negative battery cable. (See **NEGATIVE BATTERY CABLE DISCONNECTION/CONNECTION [SKYACTIV-G 2.0, SKYACTIV-G 2.5]**.) • Connect all the connectors. • Reconnect the negative battery cable. (See **NEGATIVE BATTERY CABLE DISCONNECTION/CONNECTION [SKYACTIV-G 2.0, SKYACTIV-G 2.5]**.) • Switch the ignition to ACC or ON (engine off or on). • Launch the on-board diagnostic assist function. (See **DIAGNOSTIC ASSIST FUNCTION [CONNECTIVITY**	Yes	Troubleshooting completed (explain the contents of the servicing to the customer).
		No	Verify the malfunction symptom in the symptom troubleshooting chart and perform the other applicable malfunction diagnosis. (See **SYMPTOM TROUBLESHOOTING [ENTERTAINMENT SYSTEM [WITH CENTER DISPLAY]]**.)

	MASTER UNIT].) • Select assist code “94”. • Press the [ENTER] and verify that the sound is output from each speaker. • Is sound output from each speaker in the order?		

Without Bose®

Description	NO SOUND OUTPUT IN ALL MODES
	Sound is not output from speakers even if any mode is selected

Possible Causes	• Connector poor contact or terminal damage
	• Tuner and amp unit (TAU) ACC power supply circuit malfunction
	  ▪ Short circuit to ground in wiring harness between TAU terminal 2R and AUDIO2 7.5 A fuse
	  ▪ AUDIO2 7.5A fuse malfunction
	  ▪ Open circuit in wiring harness between TAU terminal 2R and AUDIO2 7.5 A fuse
	• Open circuit in wiring harness between the following terminals:
	  ▪ TAU terminal 2W and body ground
	• TAU malfunction
	• Connectivity master unit (CMU) malfunction
	• Open circuit in wiring harness between the following terminals:
	  ▪ TAU terminal 2A and front door speaker (LH) terminal C
	  ▪ TAU terminal 2C and front door speaker (LH) terminal B
	  ▪ TAU terminal 2A and tweeter (LH) terminal B
	  ▪ TAU terminal 2C and tweeter (LH) terminal A
	  ▪ TAU terminal 2D and front door speaker (RH) terminal C
	  ▪ TAU terminal 2F and front door speaker (RH) terminal B
	  ▪ TAU terminal 2D and tweeter (RH) terminal B
	  ▪ TAU terminal 2F and tweeter (RH) terminal A
	  ▪ TAU terminal 2S and rear door speaker (LH) terminal C
	  ▪ TAU terminal 2U and rear door speaker (LH) terminal B
	  ▪ TAU terminal 2V and rear door speaker (RH) terminal C
	  ▪ TAU terminal 2X and rear door speaker (RH) terminal B

Diagnostic Procedure

Step	Inspection		Action
1	**VERIFY MALFUNCTION SYMPTOM** • Switch the ignition to ACC or ON (engine off or on). • Launch the on-board diagnostic assist function. (See **DIAGNOSTIC ASSIST FUNCTION [CONNECTIVITY MASTER UNIT]**.) • Select assist code “94”. • Press the [ENTER] and verify that the sound is output from each speaker. • Is sound output from each speaker in the order?	Yes	• System is normal. • Due to the possibility that sound is not output in some modes, verify the malfunction in the symptom troubleshooting chart and perform the other applicable malfunction diagnosis. (See **NO SOUND OUTPUT IN MULTIPLE MODES [ENTERTAINMENT SYSTEM [WITH CENTER DISPLAY]]**.)
		No	• No sound is produced from all speakers ▪ Go to the next step. • No sound is produced from some speakers ▪ Go to Step 7.
2	**INSPECT TAU CONNECTOR** • Disconnect the negative battery cable. (See **NEGATIVE BATTERY CABLE DISCONNECTION/CONNECTION [SKYACTIV-G 2.0, SKYACTIV-G 2.5]**.) • Disconnect the TAU connector. • Inspect the connector engagement and connection condition and inspect the terminals for damage, deformation, corrosion, or disconnection. • Is the connector normal?	Yes	Go to the next step.
		No	Repair or replace the connector, then go to Step 9.
3	**INSPECT CMU CONNECTOR** • Disconnect the CMU connector. • Inspect the connector engagement and connection condition and inspect the terminals for damage, deformation, corrosion, or disconnection. • Is the connector normal?	Yes	Go to the next step.
		No	Repair or replace the connector, then go to Step 9.
4	**INSPECT TAU ACC POWER SUPPLY VOLTAGE** • Verify that the TAU connector	Yes	Go to the next step.
		No	Inspect the AUDIO2 7.5A fuse.

is disconnected.

- Reconnect the negative battery cable.

  (See **NEGATIVE BATTERY CABLE DISCONNECTION/CONNECTION [SKYACTIV-G 2.0, SKYACTIV-G 2.5]**.)

- Switch the ignition to ACC or ON (engine off or on).
- Measure the voltage at TAU terminal 2R (vehicle wiring harness side).
- Is the voltage **B+**?

- If the fuse is blown:
  - Refer to the wiring diagram and verify if there is a common connector between AUDIO2 7.5A fuse and the TAU terminal 2R.

    If there is a common connector:

    - Inspect the common connector and terminals for corrosion, damage, or disconnection and the common wiring harnesses for short to ground to determine the malfunctioning location.
    - Repair or replace the malfunctioning location.

    If there is no common connector:

    - Repair or replace the wiring harness which is shorted to ground.
    - Replace the fuse.

- If the fuse is damaged:
  - Replace the fuse.
- If the fuse is normal:
  - Refer to the wiring diagram and verify if there is a common connector between ACC relay and the TAU terminal 2R.

    If there is a common connector:

    - Inspect the common connector and terminals for corrosion, damage, or

			disconnection and the common wiring harnesses for an open circuit to determine the malfunctioning location. • Repair or replace the malfunctioning location. **If there is no common connector:** • Repair or replace the wiring harness which has an open circuit. Go to Step 9.
5	**INSPECT WIRING HARNESS BETWEEN TAU AND BODY GROUND FOR OPEN CIRCUIT** • Verify that the TAU connector is disconnected. • Inspect for continuity between the following terminals (vehicle wiring harness side) and body ground. ▪ TAU terminal 2W • Is there continuity?	Yes	Go to the next step.
		No	• Refer to the wiring diagram and verify if there is a common connector between the following terminals and body ground. ▪ TAU terminal 2W **If there is a common connector:** • Inspect the common connector and terminals for corrosion, damage, or disconnection and the common wiring harnesses for an open circuit to determine the malfunctioning location. • Repair or replace the malfunctioning location. **Repair or replace the malfunctioning location.** • Repair or replace the

			wiring harness which has an open circuit. • Go to Step 9.
6	**DETERMINE IF MALFUNCTION CAUSE IS TAU** • Disconnect the negative battery cable. (See **NEGATIVE BATTERY CABLE DISCONNECTION/CONNECTION [SKYACTIV-G 2.0, SKYACTIV-G 2.5]**.) • Replace the TAU. (See **TUNER AND AMP UNIT (TAU) REMOVAL/INSTALLATION**.) • Connect all the connectors. • Reconnect the negative battery cable. (See **NEGATIVE BATTERY CABLE DISCONNECTION/CONNECTION [SKYACTIV-G 2.0, SKYACTIV-G 2.5]**.) • Switch the ignition to ACC or ON (engine off or on). • Launch the on-board diagnostic assist function. (See **DIAGNOSTIC ASSIST FUNCTION [CONNECTIVITY MASTER UNIT]**.) • Select assist code “94”. • Press the [ENTER] and verify that the sound is output from each speaker. • Is sound output from each speaker in the order?	Yes	Go to Step 9.
		No	Replace the CMU, then go to Step 9. (See **CONNECTIVITY MASTER UNIT (CMU) REMOVAL/INSTALLATION**.)
7	**INSPECT SPEAKERS** • Disconnect the negative battery cable. (See **NEGATIVE BATTERY CABLE DISCONNECTION/CONNECTION [SKYACTIV-G 2.0, SKYACTIV-G 2.5]**.) • Inspect the malfunctioning	Yes	Go to the next step.
		No	Replace the malfunctioning speaker, then go to Step 9. (See **FRONT DOOR SPEAKER REMOVAL/INSTALLATION**.) (See **REAR DOOR SPEAKER REMOVAL/INSTALLATION**.) (See **TWEETER REMOVAL/INSTALLATION**.)

	speaker. (See **FRONT DOOR SPEAKER INSPECTION**.) (See **REAR DOOR SPEAKER INSPECTION**.) (See **TWEETER INSPECTION**.) • Is the speaker resistance normal?		
8	**INSPECT SPEAKER CIRCUIT FOR OPEN CIRCUIT** • Disconnect the connector of the malfunctioning speaker and the TAU connector. • Verify the continuity of the wiring harness between the following terminals (vehicle wiring harness side) of the speakers which are malfunctioning. ▪ TAU terminal 2A and front door speaker (LH) terminal C ▪ TAU terminal 2C and front door speaker (LH) terminal B ▪ TAU terminal 2A and tweeter (LH) terminal B ▪ TAU terminal 2C and tweeter (LH) terminal A ▪ TAU terminal 2D and front door speaker (RH) terminal C ▪ TAU terminal 2F and front door speaker (RH) terminal B ▪ TAU terminal 2D and tweeter (RH) terminal B	Yes	Go to the next step.
		No	• Refer to the wiring diagram and verify if there is a common connector between the following terminals. ▪ TAU terminal 2A and front door speaker (LH) terminal C ▪ TAU terminal 2C and front door speaker (LH) terminal B ▪ TAU terminal 2A and tweeter (LH) terminal B ▪ TAU terminal 2C and tweeter (LH) terminal A ▪ TAU terminal 2D and front door speaker (RH) terminal C ▪ TAU terminal 2F and front door speaker (RH) terminal B ▪ TAU terminal 2D and tweeter (RH) terminal B ▪ TAU terminal 2F and tweeter (RH) terminal A ▪ TAU terminal 2S and rear door speaker (LH) terminal C ▪ TAU terminal 2U and rear door speaker (LH) terminal B ▪ TAU terminal 2V and rear door speaker (RH) terminal C ▪ TAU terminal 2X and rear door speaker (RH) terminal B **If there is a common connector:** ▪ Inspect the common connector and terminals for corrosion, damage, or disconnection and the common wiring harnesses for an open circuit to determine the malfunctioning location. ▪ Repair or replace the malfunctioning location.

	▪ TAU terminal 2F and tweeter (RH) terminal A ▪ TAU terminal 2S and rear door speaker (LH) terminal C ▪ TAU terminal 2U and rear door speaker (LH) terminal B ▪ TAU terminal 2V and rear door speaker (RH) terminal C ▪ TAU terminal 2X and rear door speaker (RH) terminal B • Is there continuity?		**Repair or replace the malfunctioning location.** ▪ Repair or replace the wiring harness which has an open circuit. • Go to the next step.
9	**VERIFY IF MALFUNCTION CAUSE IS CORRECTED** • Disconnect the negative battery cable. (See **NEGATIVE BATTERY CABLE DISCONNECTION/CONNECTION [SKYACTIV-G 2.0, SKYACTIV-G 2.5]**.) • Connect all the connectors. • Reconnect the negative battery cable. (See **NEGATIVE BATTERY CABLE DISCONNECTION/CONNECTION [SKYACTIV-G 2.0, SKYACTIV-G 2.5]**.) • Switch the ignition to ACC or ON (engine off or on). • Launch the on-board diagnostic assist function. (See **DIAGNOSTIC ASSIST FUNCTION [CONNECTIVITY MASTER UNIT]**.) • Select assist code “94”. • Press the [ENTER] and verify	Yes	Troubleshooting completed (explain the contents of the servicing to the customer).
		No	Verify the malfunction symptom in the symptom troubleshooting chart and perform the other applicable malfunction diagnosis. (See **SYMPTOM TROUBLESHOOTING [ENTERTAINMENT SYSTEM [WITH CENTER DISPLAY]]**.)

	that the sound is output from each speaker. • Is sound output from each speaker in the order?		

2014 - Mazda3 - Body and Accessories

NO SOUND OUTPUT IN MULTIPLE MODES [ENTERTAINMENT SYSTEM [WITH CENTER DISPLAY]]

Description	**NO SOUND OUTPUT IN MULTIPLE MODES**
	Radio, CD, AUX audio is output, but no Bluetooth® audio, Internet radio, USB audio, and guidance voice

Possible Causes	• Connector poor contact or terminal damage
	• Open circuit in wiring harness between the following terminals:
	  ▪ Connectivity master unit (CMU) terminal 1Y and tuner and amp unit (TAU) terminal 1Q
	  ▪ CMU terminal 1Z and TAU terminal 1R
	  ▪ CMU terminal 1AA and TAU terminal 1S
	  ▪ CMU terminal 1AB and TAU terminal 1T
	• Short to ground in wiring harness between the following terminals:
	  ▪ CMU terminal 1Y and TAU terminal 1Q
	  ▪ CMU terminal 1Z and TAU terminal 1R
	  ▪ CMU terminal 1AA and TAU terminal 1S
	  ▪ CMU terminal 1AB and TAU terminal 1T
	• Short to power supply in wiring harness between the following terminals:
	  ▪ CMU terminal 1Y and TAU terminal 1Q
	  ▪ CMU terminal 1Z and TAU terminal 1R
	  ▪ CMU terminal 1AA and TAU terminal 1S
	  ▪ CMU terminal 1AB and TAU terminal 1T
	• TAU malfunction
	• CMU malfunction

Diagnostic Procedure

Step	Inspection		Action
1	**INSPECT TAU CONNECTOR** • Disconnect the negative battery cable.	Yes	Go to the next step.
		No	Repair or replace the connector, then go to Step 7.

	(See **NEGATIVE BATTERY CABLE DISCONNECTION/CONNECTION [SKYACTIV-G 2.0, SKYACTIV-G 2.5]**.) • Disconnect the TAU connector. • Inspect the connector engagement and connection condition and inspect the terminals for damage, deformation, corrosion, or disconnection. • Is the connector normal?		
2	**INSPECT CMU CONNECTOR** • Disconnect the CMU connector. • Inspect the connector engagement and connection condition and inspect the terminals for damage, deformation, corrosion, or disconnection. • Is the connector normal?	Yes	Go to the next step.
		No	Repair or replace the connector, then go to Step 7.
3	**VERIFY IF MALFUNCTION CAUSE IS OPEN CIRCUIT IN WIRING HARNESS BETWEEN CMU AND TAU** • Verify that the CMU and TAU connectors are disconnected. • Inspect the wiring harness for continuity between the following terminals (vehicle wiring harness side). ▪ CMU terminal 1Y and TAU terminal 1Q ▪ CMU terminal 1Z and TAU terminal 1R ▪ CMU terminal 1AA and TAU terminal 1S ▪ CMU terminal 1AB and TAU terminal 1T • Is there continuity?	Yes	Go to the next step.
		No	• Refer to the wiring diagram and verify if there is a common connector between the following terminals. ▪ CMU terminal 1Y and TAU terminal 1Q ▪ CMU terminal 1Z and TAU terminal 1R ▪ CMU terminal 1AA and TAU terminal 1S ▪ CMU terminal 1AB and TAU terminal 1T **If there is a common connector:** • Inspect the common connector and terminals for corrosion, damage, or disconnection and the common wiring

			harnesses for an open circuit to determine the malfunctioning location. • Repair or replace the malfunctioning location. **If there is no common connector:** • Repair or replace the wiring harness which has an open circuit. • Go to Step 7.
4	**VERIFY IF MALFUNCTION CAUSE IS SHORT TO GROUND IN WIRING HARNESS BETWEEN CMU AND TAU** • Verify that the CMU and TAU connectors are disconnected. • Inspect for continuity between the following wiring harness terminals (vehicle wiring harness side) and body ground. ▪ TAU terminal 1Q ▪ TAU terminal 1R ▪ TAU terminal 1S ▪ TAU terminal 1T • Is there continuity?	Yes	• Refer to the wiring diagram and verify if there is a common connector between the following terminals. ▪ CMU terminal 1Y and TAU terminal 1Q ▪ CMU terminal 1Z and TAU terminal 1R ▪ CMU terminal 1AA and TAU terminal 1S ▪ CMU terminal 1AB and TAU terminal 1T **If there is a common connector:** • Inspect the common connector and terminals for corrosion, damage, or disconnection and the common wiring harnesses for short to ground to determine the malfunctioning location. • Repair or replace the malfunctioning location.

			If there is no common connector: • Repair or replace the wiring harness which is shorted to ground. • Go to Step 7.
		No	Go to the next step.
5	**VERIFY IF MALFUNCTION CAUSE IS SHORT TO POWER SUPPLY IN WIRING HARNESS BETWEEN CMU AND TAU** • Verify that the CMU and TAU connectors are disconnected. • Reconnect the negative battery cable. (See **NEGATIVE BATTERY CABLE DISCONNECTION/CONNECTION [SKYACTIV-G 2.0, SKYACTIV-G 2.5]**.) • Switch the ignition to ACC or ON (engine off or on). • Measure the voltage at the following terminals (vehicle wiring harness side). ▪ TAU terminal 1Q ▪ TAU terminal 1R ▪ TAU terminal 1S ▪ TAU terminal 1T • Is the voltage **B+**?	Yes	• Refer to the wiring diagram and verify if there is a common connector between the following terminals. ▪ CMU terminal 1Y and TAU terminal 1Q ▪ CMU terminal 1Z and TAU terminal 1R ▪ CMU terminal 1AA and TAU terminal 1S ▪ CMU terminal 1AB and TAU terminal 1T **If there is a common connector:** • Inspect the common connector and terminals for corrosion, damage, or disconnection and the common wiring harnesses for an open circuit to determine the malfunctioning location. • Repair or replace the malfunctioning location. **If there is no common connector:** • Repair or replace the wiring harness

			which is shorted to the power supply. • Go to Step 7.
		No	Go to the next step.
6	**DETERMINE IF MALFUNCTION CAUSE IS TAU** • Disconnect the negative battery cable. (See **NEGATIVE BATTERY CABLE DISCONNECTION/CONNECTION [SKYACTIV-G 2.0, SKYACTIV-G 2.5]**.) • Replace the TAU. (See **TUNER AND AMP UNIT (TAU) REMOVAL/INSTALLATION**.) • Connect all the connectors. • Reconnect the negative battery cable. (See **NEGATIVE BATTERY CABLE DISCONNECTION/CONNECTION [SKYACTIV-G 2.0, SKYACTIV-G 2.5]**.) • Switch the ignition to ACC or ON (engine off or on). • Select the mode when the malfunction occurred by operating the center display or the commander switch. • Is audio output normally?	Yes	Go to the next step.
		No	Replace the CMU, then go to the next step. (See **CONNECTIVITY MASTER UNIT (CMU) REMOVAL/INSTALLATION**.)
7	**VERIFY IF MALFUNCTION CAUSE IS CORRECTED** • Disconnect the negative battery cable. (See **NEGATIVE BATTERY CABLE DISCONNECTION/CONNECTION [SKYACTIV-G 2.0, SKYACTIV-G 2.5]**.) • Connect all the connectors. • Reconnect the negative battery cable.	Yes	Troubleshooting completed. (Explain the contents of the servicing to the customer.)
		No	Verify the malfunction symptom in the symptom troubleshooting chart and perform the other applicable malfunction diagnosis. (See **SYMPTOM TROUBLESHOOTING [ENTERTAINMENT SYSTEM [WITH CENTER DISPLAY]]**.)

	(See **NEGATIVE BATTERY CABLE DISCONNECTION/CONNECTION [SKYACTIV-G 2.0, SKYACTIV-G 2.5]**.) • Switch the ignition to ACC or ON (engine off or on). • Select the mode when the malfunction occurred by operating the center display or the commander switch. • Is audio output normally?		

2014 - Mazda3 - Body and Accessories

NO Bluetooth® AUDIO AND INTERNET RADIO SOUND [ENTERTAINMENT SYSTEM [WITH CENTER DISPLAY]]

Description	**NO Bluetooth® AUDIO AND INTERNET RADIO SOUND**
	Radio, CD, AUX/USB audio, guidance audio is output, but no Bluetooth® audio, Internet radio audio
Possible Causes	• Connector poor contact or terminal damage • Mobile device such as Smartphone, or Bluetooth® enabled device malfunction • Connectivity master unit (CMU) malfunction

Diagnostic Procedure

Step	Inspection		Action
1	**VERIFY MALFUNCTION SYMPTOM** • Switch the ignition to ACC or ON (engine off or on). • After obtaining the customer's consent, use another mobile device such as a Smartphone or Bluetooth® enabled device and select Bluetooth® audio or Internet radio. • Is Bluetooth® audio or Internet radio audio output?	Yes	Explain to the customer that there is a malfunction in the mobile device such as a Smartphone or a Bluetooth® enabled device.
		No	Go to the next step.
2	**INSPECT CMU CONNECTOR** • Disconnect the negative battery cable. (See **NEGATIVE BATTERY CABLE DISCONNECTION/CONNECTION [SKYACTIV-G 2.0, SKYACTIV-G 2.5]**.) • Disconnect the CMU connector. • Inspect the connector engagement and	Yes	Replace the CMU, then go to the next step. (See **CONNECTIVITY MASTER UNIT (CMU) REMOVAL/INSTALLATION**.)
		No	Repair or replace the connector, then go to the next step.

	connection condition and inspect the terminals for damage, deformation, corrosion, or disconnection. • Is the connector normal?		
3	**VERIFY IF MALFUNCTION CAUSE IS CORRECTED** • Connect the CMU connector. • Reconnect the negative battery cable. (See **NEGATIVE BATTERY CABLE DISCONNECTION/CONNECTION [SKYACTIV-G 2.0, SKYACTIV-G 2.5]**.) • Switch the ignition to ACC or ON (engine off or on). • Using the mobile device such as a Smartphone or the Bluetooth® enabled device when the malfunction occurred, select Bluetooth® audio or Internet radio. • Is Bluetooth® audio or Internet radio audio output?	Yes	Troubleshooting completed. (Explain the contents of the servicing to the customer.)
		No	Verify the malfunction symptom in the symptom troubleshooting chart and perform the other applicable malfunction diagnosis. (See **SYMPTOM TROUBLESHOOTING [ENTERTAINMENT SYSTEM [WITH CENTER DISPLAY]]**.)

2014 - Mazda3 - Body and Accessories

NO USB AUDIO SOUND OUTPUT [ENTERTAINMENT SYSTEM [WITH CENTER DISPLAY]]

Description	**NO USB AUDIO SOUND OUTPUT**
	Radio, CD, AUX audio, Bluetooth® audio, Internet radio, and guidance audio is output, but not USB audio

Possible Causes	• USB media malfunction
	• Connector poor contact or terminal damage
	• Open circuit in wiring harness between the following terminals:
	  ▪ Connectivity master unit (CMU) terminal 4A and auxiliary jack/USB port/SD card slot hub terminal 2A
	• Short to ground in wiring harness between the following terminals:
	  ▪ CMU terminal 4B and auxiliary jack/USB port/SD card slot hub terminal 2B
	  ▪ CMU terminal 4D and auxiliary jack/USB port/SD card slot hub terminal 2D
	• Short to power supply in wiring harness between the following terminals:
	  ▪ CMU terminal 4A and auxiliary jack/USB port/SD card slot hub terminal 2A
	  ▪ CMU terminal 4B and auxiliary jack/USB port/SD card slot hub terminal 2B
	  ▪ CMU terminal 4D and auxiliary jack/USB port/SD card slot hub terminal 2D
	• Auxiliary jack/USB port/SD card slot hub malfunction
	• CMU malfunction

Diagnostic Procedure

Step	Inspection		Action
1	**DETERMINE IF MALFUNCTION CAUSE IS USB MEDIA** • Switch the ignition off. • After obtaining the customer's consent, replace with a USB media that was not used	Yes	System is normal. (Explain to the customer that the USB media or internal data has a malfunction)
		No	Go to the next step.

	when the malfunction occurred. • Switch the ignition to ACC or ON (engine off or on). • Select the USB audio mode by operating the commander switch or the center display. • Is sound from the USB audio output?		
2	**INSPECT AUXILIARY JACK/USB PORT/SD CARD SLOT HUB CONNECTOR** • Disconnect the negative battery cable. (See **NEGATIVE BATTERY CABLE DISCONNECTION/CONNECTION [SKYACTIV-G 2.0, SKYACTIV-G 2.5]**.) • Disconnect the auxiliary jack/USB port/SD card slot hub connector. • Inspect the connector engagement and connection condition and inspect the terminals for damage, deformation, corrosion, or disconnection. • Is the connector normal?	Yes	Go to the next step.
		No	Repair or replace the connector, then go to Step 8.
3	**INSPECT CMU CONNECTOR** • Disconnect the CMU connector. • Inspect the connector engagement and connection condition and inspect the terminals for damage, deformation, corrosion, or disconnection. • Is the connector normal?	Yes	Go to the next step.
		No	Repair or replace the connector, then go to Step 8.
4	**VERIFY IF MALFUNCTION CAUSE IS OPEN CIRCUIT IN WIRING HARNESS BETWEEN CMU AND AUXILIARY JACK/USB PORT/SD CARD SLOT HUB** • Verify that the CMU and the auxiliary jack/USB port/SD card slot hub connector are disconnected.	Yes	Go to the next step.
		No	• Refer to the wiring diagram and verify if there is a common connector between the following terminals. ▪ CMU terminal 4A and auxiliary jack/USB port/SD card slot hub terminal 2A

	• Inspect the wiring harness for continuity between the following terminals (vehicle wiring harness side). ▪ CMU terminal 4A and auxiliary jack/USB port/SD card slot hub terminal 2A • Is there continuity?		**If there is a common connector:** • Inspect the common connector and terminals for corrosion, damage, or disconnection and the common wiring harnesses for an open circuit to determine the malfunctioning location. • Repair or replace the malfunctioning location. **If there is no common connector:** • Repair or replace the wiring harness which has an open circuit. • Go to Step 8.

5	**VERIFY IF MALFUNCTION CAUSE IS SHORT CIRCUIT TO GROUND IN WIRING HARNESS BETWEEN CMU AND AUXILIARY JACK/USB PORT/SD CARD SLOT HUB**
	• Verify that the CMU and the auxiliary jack/USB port/SD card slot hub connector are disconnected.
	• Inspect for continuity between the following wiring harness terminals (vehicle wiring harness side) and body ground.
	  ▪ Auxiliary jack/USB port/SD card slot hub terminal 2B
	  ▪ Auxiliary
		Yes	• Refer to the wiring diagram and verify if there is a common connector between the following terminals.
			  ▪ CMU terminal 4B and auxiliary jack/USB port/SD card slot hub terminal 2B
			  ▪ CMU terminal 4D and auxiliary jack/USB port/SD card slot hub terminal 2D
			If there is a common connector:
			• Inspect the common connector and terminals for corrosion, damage, or disconnection and the common wiring

	jack/USB port/SD card slot hub terminal 2D • Is there continuity?		harnesses for short to ground to determine the malfunctioning location. • Repair or replace the malfunctioning location. **If there is no common connector:** • Repair or replace the wiring harness which is shorted to ground. • Go to Step 8.
		No	Go to the next step.
6	**VERIFY IF MALFUNCTION CAUSE IS SHORT CIRCUIT TO POWER SUPPLY IN WIRING HARNESS BETWEEN CMU AND AUXILIARY JACK/USB PORT/SD CARD SLOT HUB** • Verify that the CMU and the auxiliary jack/USB port/SD card slot hub connector are disconnected. • Reconnect the negative battery cable. (See **NEGATIVE BATTERY CABLE DISCONNECTION/CONNECTION [SKYACTIV-G 2.0, SKYACTIV-G 2.5]**.) • Switch the ignition to ACC or ON (engine off or on). • Measure the voltage at the following terminals (vehicle wiring harness side). ▪ Auxiliary jack/USB port/SD card slot hub terminal 2A ▪ Auxiliary jack/USB	Yes	• Refer to the wiring diagram and verify if there is a common connector between the following terminals. ▪ CMU terminal 4A and auxiliary jack/USB port/SD card slot hub terminal 2A ▪ CMU terminal 4B and auxiliary jack/USB port/SD card slot hub terminal 2B ▪ CMU terminal 4D and auxiliary jack/USB port/SD card slot hub terminal 2D **If there is a common connector:** • Inspect the common connector and terminals for corrosion, damage, or disconnection and the common wiring harnesses for an open circuit to determine the malfunctioning location.

	port/SD card slot hub terminal 2B ▪ Auxiliary jack/USB port/SD card slot hub terminal 2D • Is the voltage **B+**?		• Repair or replace the malfunctioning location. **If there is no common connector:** • Repair or replace the wiring harness which is shorted to the power supply. • Go to Step 8.
		No	Go to the next step.
7	**VERIFY IF MALFUNCTION CAUSE IS AUXILIARY JACK/USB PORT/SD CARD SLOT HUB** • Disconnect the negative battery cable. (See **NEGATIVE BATTERY CABLE DISCONNECTION/CONNECTION [SKYACTIV-G 2.0, SKYACTIV-G 2.5]**.) • Replace the auxiliary jack/USB port/SD card slot hub. (See **AUXILIARY JACK/USB PORT/SD CARD SLOT HUB REMOVAL/INSTALLATION**.) • Connect all the connectors. • Reconnect the negative battery cable. (See **NEGATIVE BATTERY CABLE DISCONNECTION/CONNECTION [SKYACTIV-G 2.0, SKYACTIV-G 2.5]**.) • Insert the USB disc when the malfunction occurred. • Switch the ignition to ACC or ON (engine off or on). • Select the USB audio mode by operating the commander switch or the center display. • Is sound from the USB audio output?	Yes	Go to the next step.
		No	Replace the CMU, then go to the next step. (See **CONNECTIVITY MASTER UNIT (CMU) REMOVAL/INSTALLATION**.)

8	**VERIFY IF MALFUNCTION CAUSE IS CORRECTED** • Disconnect the negative battery cable. (See **NEGATIVE BATTERY CABLE DISCONNECTION/CONNECTION [SKYACTIV-G 2.0, SKYACTIV-G 2.5]**.) • Connect all the connectors. • Reconnect the negative battery cable. (See **NEGATIVE BATTERY CABLE DISCONNECTION/CONNECTION [SKYACTIV-G 2.0, SKYACTIV-G 2.5]**.) • Insert the USB disc when the malfunction occurred. • Switch the ignition to ACC or ON (engine off or on). • Select the USB audio mode by operating the commander switch or the center display. • Is sound from the USB audio output?	Yes	Troubleshooting completed. (Explain the contents of the servicing to the customer.)
		No	Verify the malfunction symptom in the symptom troubleshooting chart and perform the other applicable malfunction diagnosis. (See **SYMPTOM TROUBLESHOOTING [ENTERTAINMENT SYSTEM [WITH CENTER DISPLAY]]**.)

2014 - Mazda3 - Body and Accessories

NO NAVIGATION GUIDANCE VOICE OUTPUT [ENTERTAINMENT SYSTEM [WITH CENTER DISPLAY]]

Description	**NO NAVIGATION GUIDANCE VOICE OUTPUT**
	Radio, CD, AUX/USB audio, Bluetooth® audio, and Internet radio audio is output, but no navigation guidance audio
Possible Causes	• SD card malfunction • Connector poor contact or terminal damage • Auxiliary jack/USB port/SD card slot hub malfunction • Global positioning system (GPS) antenna malfunction • CMU malfunction

Diagnostic Procedure

Step	Inspection		Action
1	**VERIFY VOLUME SETTING** • Switch the ignition to ACC or ON (engine off or on). • Select the navigation mode by operating the commander switch or the center display. • Operate the navigation guidance audio by operating the commander switch or the steering switch. • Is navigation guidance audio output according to the operation?	Yes	System is normal.
		No	Go to the next step.
2	**VISUALLY INSPECT SD CARD** • Switch the ignition OFF. • Visually inspect the SD card for looseness or damage.	Yes	Go to the next step.
		No	System is normal. (explain to the customer that there is a malfunction in SD card.)

	• Is the SD card normal?		
3	**INSPECT GPS ANTENNA CONNECTOR** • Disconnect the negative battery cable. (See **NEGATIVE BATTERY CABLE DISCONNECTION/CONNECTION [SKYACTIV-G 2.0, SKYACTIV-G 2.5]**.) • Disconnect the GPS antenna connector. • Inspect the connector engagement and connection condition and inspect the terminals for damage, deformation, corrosion, or disconnection. • Is the connector normal?	Yes	Replace the auxiliary jack/USB port/SD card slot hub, then go to the next step. (See **AUXILIARY JACK/USB PORT/SD CARD SLOT HUB REMOVAL/INSTALLATION**.)
		No	Repair or replace the connector, then go to Step 5.
4	**VERIFY IF MALFUNCTION CAUSE IS GPS ANTENNA** • Replace the GPS antenna. (See **GLOBAL POSITIONING SYSTEM (GPS) ANTENNA REMOVAL/INSTALLATION**.) • Connect all the connectors. • Reconnect the negative battery cable. (See **NEGATIVE BATTERY CABLE DISCONNECTION/CONNECTION [SKYACTIV-G 2.0, SKYACTIV-G 2.5]**.) • Insert the SD card when the malfunction occurred. • Switch the ignition to ACC or ON (engine off or on). • Select navigation by operating the center display or the commander switch. • Set to an optional destination and operate the navigation function. • Is navigation guidance audio output according to the operation?	Yes	Go to the next step.
		No	Replace the CMU, then go to the next step. (See **CONNECTIVITY MASTER UNIT (CMU) REMOVAL/INSTALLATION**.)
5	**VERIFY IF MALFUNCTION CAUSE IS CORRECTED** • Disconnect the negative battery cable. (See **NEGATIVE BATTERY CABLE**	Yes	Troubleshooting completed. (Explain the contents of the servicing to the customer.)
		No	Verify the malfunction symptom in the symptom troubleshooting chart and

	DISCONNECTION/CONNECTION [SKYACTIV-G 2.0, SKYACTIV-G 2.5].) • Connect all the connectors. • Reconnect the negative battery cable. (See **NEGATIVE BATTERY CABLE DISCONNECTION/CONNECTION [SKYACTIV-G 2.0, SKYACTIV-G 2.5]**.) • Insert the SD card when the malfunction occurred. • Switch the ignition to ACC or ON (engine off or on). • Select navigation by operating the center display or the commander switch. • Set to an optional destination and operate the navigation function. • Is navigation guidance audio output according to the operation?		perform the other applicable malfunction diagnosis. (See **SYMPTOM TROUBLESHOOTING [ENTERTAINMENT SYSTEM [WITH CENTER DISPLAY]]**.)

2014 - Mazda3 - Body and Accessories

NO VOICE RECOGNITION GUIDANCE VOICE OUTPUT [ENTERTAINMENT SYSTEM [WITH CENTER DISPLAY]]

Description	**NO VOICE RECOGNITION GUIDANCE VOICE OUTPUT**
	Radio, CD, AUX/USB audio, Bluetooth® audio, and Internet radio audio is output, but not voice recognition guidance voice
Possible Causes	Connectivity master unit (CMU) malfunction

Diagnostic Procedure

Step	Inspection		Action
1	**VERIFY MALFUNCTION SYMPTOM** • Switch the ignition to ACC or ON (engine off or on). • Press the TALK button on the steering switch. • Is voice recognition guidance voice output?	Yes	System is normal.
		No	Replace the CMU, then go to the next step. (See **CONNECTIVITY MASTER UNIT (CMU) REMOVAL/INSTALLATION**.)
2	**VERIFY IF MALFUNCTION CAUSE IS CORRECTED** • Press the TALK button on the steering switch. • Is voice recognition	Yes	Troubleshooting completed (explain the contents of the servicing to the customer).
		No	Verify the malfunction symptom in the symptom troubleshooting chart and perform the other applicable malfunction diagnosis. (See **SYMPTOM TROUBLESHOOTING [ENTERTAINMENT SYSTEM [WITH CENTER DISPLAY]]**.)

	guidance voice output?		

2014 - Mazda3 - Body and Accessories

NO CD SOUND OUTPUT [ENTERTAINMENT SYSTEM [WITH CENTER DISPLAY]]

Description	**NO CD SOUND OUTPUT**
	Radio, AUX audio, Bluetooth® audio, Internet radio, USB audio and guidance voice is output, but not CD sound
Possible Causes	• CD disc malfunction • Connector poor contact or terminal damage • Open circuit in wiring harness between the following terminals: ▪ Tuner and amp unit (TAU) terminal 1M and CD player terminal L ▪ TAU terminal 1N and CD player terminal N ▪ TAU terminal 1O and CD player terminal P ▪ TAU terminal 1P and CD player terminal R • Short to ground in wiring harness between the following terminals: ▪ TAU terminal 1M and CD player terminal L ▪ TAU terminal 1N and CD player terminal N ▪ TAU terminal 1O and CD player terminal P ▪ TAU terminal 1P and CD player terminal R • Short to power supply in wiring harness between the following terminals: ▪ TAU terminal 1M and CD player terminal L ▪ TAU terminal 1N and CD player terminal N ▪ TAU terminal 1O and CD player terminal P ▪ TAU terminal 1P and CD player terminal R • Center display malfunction • TAU malfunction • Connectivity master unit (CMU) malfunction

Diagnostic Procedure

Step	Inspection		Action
1	**VERIFY CD DISC CONDITION**	Yes	• Remove dirt on the CD disc or replace with a CD disc that is not scratched or damaged.

	• Verify the CD disc condition when the malfunction occurred. • Is there any dirt or scratches on the CD disc?		• Go to Step 10.
		No	Go to the next step.
2	**DETERMINE IF MALFUNCTION CAUSE IS CD DISC** • After obtaining the customer's consent, replace with a CD that was not used when the malfunction occurred. • Is CD sound produced?	Yes	Go to the next step.
		No	Go to Step 4.
3	**VERIFY IF DATA TYPE OTHER THAN CDDA/MP3/WMA/AAC IS MIXED IN CD DISC** • Verify the CD disc data content when the malfunction occurred. • Is there data other than CDDA/MP3/WMA/AAC data mixed in?	Yes	• Replace with a CD disc containing only CDDA/MP3/WMA/AAC data and verify the malfunction symptom. **If the malfunction symptom is eliminated** ▪ System is normal (explain to the customer that the cause was a CD disc containing data other than CDDA/MP3/WMA/AAC). **If the malfunction symptom is not eliminated** ▪ Replace the CD player, then go to Step 10. (See **CD PLAYER REMOVAL**.) (See **CD PLAYER INSTALLATION**.)
		No	Go to the next step.
4	**INSPECT CD PLAYER CONNECTOR** • Disconnect the negative battery cable. (See **NEGATIVE BATTERY CABLE DISCONNECTION/CONNECTION [SKYACTIV-G 2.0, SKYACTIV-G 2.5]**.) • Disconnect the CD player connector. • Inspect the connector engagement and connection condition and inspect the terminals for damage,	Yes	Go to the next step.
		No	Repair or replace the connector, then go to Step 10.

	deformation, corrosion, or disconnection. • Is the connector normal?		
5	**INSPECT CONNECTIVITY MASTER UNIT CONNECTOR** • Disconnect the connectivity master unit connector. • Inspect the connector engagement and connection condition and inspect the terminals for damage, deformation, corrosion, or disconnection. • Is the connector normal?	Yes	Go to the next step.
		No	Repair or replace the connector, then go to Step 10.
6	**VERIFY IF MALFUNCTION CAUSE IS OPEN CIRCUIT IN WIRING HARNESS BETWEEN TAU AND CD PLAYER** • Verify that the CD player and the TAU connector are disconnected. • Inspect the wiring harness for continuity between the following terminals (vehicle wiring harness side). ▪ TAU terminal 1M and CD player terminal L ▪ TAU terminal 1N and CD player terminal N ▪ TAU terminal 1O and CD player terminal P ▪ TAU terminal 1P and CD player terminal R • Is there continuity?	Yes	Go to the next step.
		No	• Refer to the wiring diagram and verify if there is a common connector between the following terminals. ▪ TAU terminal 1M and CD player terminal L ▪ TAU terminal 1N and CD player terminal N ▪ TAU terminal 1O and CD player terminal P ▪ TAU terminal 1P and CD player terminal R **If there is a common connector:** • Inspect the common connector and terminals for corrosion, damage, or disconnection and the common wiring harnesses for an open circuit to determine the malfunctioning location. • Repair or replace the malfunctioning location.

			If there is no common connector: • Repair or replace the wiring harness which has an open circuit. • Go to Step 10.
7	**VERIFY IF MALFUNCTION CAUSE IS SHORT CIRCUIT TO GROUND IN WIRING HARNESS BETWEEN TAU AND CD PLAYER** • Verify that the CD player and the TAU connector are disconnected. • Inspect for continuity between the following wiring harness terminals (vehicle wiring harness side) and body ground. ▪ CD player terminal L ▪ CD player terminal N ▪ CD player terminal P ▪ CD player terminal R • Is there continuity?	Yes	• Refer to the wiring diagram and verify if there is a common connector between the following terminals. ▪ TAU terminal 1M and CD player terminal L ▪ TAU terminal 1N and CD player terminal N ▪ TAU terminal 1O and CD player terminal P ▪ TAU terminal 1P and CD player terminal R **If there is a common connector:** • Inspect the common connector and terminals for corrosion, damage, or disconnection and the common wiring harnesses for short to ground to determine the malfunctioning location. • Repair or replace the malfunctioning location. **If there is no common connector:** • Repair or replace the wiring harness which is shorted to ground.

			• Go to Step 10.
		No	Go to the next step.
8	**VERIFY IF MALFUNCTION CAUSE IS SHORT CIRCUIT TO POWER SUPPLY IN WIRING HARNESS BETWEEN TAU AND CD UNIT** • Verify that the CD player and the TAU connector are disconnected. • Reconnect the negative battery cable. (See **NEGATIVE BATTERY CABLE DISCONNECTION/CONNECTION [SKYACTIV-G 2.0, SKYACTIV-G 2.5]**.) • Switch the ignition to ACC or ON (engine off or on). • Measure the voltage at the following terminals (vehicle wiring harness side). ▪ CD player terminal L ▪ CD player terminal N ▪ CD player terminal P ▪ CD player terminal R • Is the voltage **B+**?	Yes	• Refer to the wiring diagram and verify if there is a common connector between the following terminals. ▪ TAU terminal 1M and CD player terminal L ▪ TAU terminal 1N and CD player terminal N ▪ TAU terminal 1O and CD player terminal P ▪ TAU terminal 1P and CD player terminal R **If there is a common connector:** • Inspect the common connector and terminals for corrosion, damage, or disconnection and the common wiring harnesses for an open circuit to determine the malfunctioning location. • Repair or replace the malfunctioning location. **If there is no common connector:** • Repair or replace the wiring harness which is shorted to the power supply. • Go to Step 10.
		No	Go to the next step.
9	**DETERMINE IF MALFUNCTION CAUSE IS**	Yes	Go to the next step.

	CD PLAYER • Disconnect the negative battery cable. (See **NEGATIVE BATTERY CABLE DISCONNECTION/CONNECTION [SKYACTIV-G 2.0, SKYACTIV-G 2.5]**.) • Replace the CD player. (See **CD PLAYER REMOVAL**.) (See **CD PLAYER INSTALLATION**.) • Connect all the connectors. • Reconnect the negative battery cable. (See **NEGATIVE BATTERY CABLE DISCONNECTION/CONNECTION [SKYACTIV-G 2.0, SKYACTIV-G 2.5]**.) • Switch the ignition to ACC or ON (engine off or on). • Insert the CD disc when the malfunction occurred. • Is CD sound produced?	No	Replace the CMU, then go to the next step. (See **CONNECTIVITY MASTER UNIT (CMU) REMOVAL/INSTALLATION**.)
10	**VERIFY IF MALFUNCTION CAUSE IS CORRECTED** • Switch the ignition to ACC or ON (engine off or on). • Insert the CD disc when the malfunction occurred. • Is CD sound produced?	Yes	Troubleshooting completed (explain the contents of the servicing to the customer).
		No	Verify the malfunction symptom in the symptom troubleshooting chart and perform the other applicable malfunction diagnosis. (See **SYMPTOM TROUBLESHOOTING [ENTERTAINMENT SYSTEM [WITH CENTER DISPLAY]]**.)

2014 - Mazda3 - Body and Accessories

NO AUX AUDIO SOUND OUTPUT [ENTERTAINMENT SYSTEM [WITH CENTER DISPLAY]]

Description	**NO AUX AUDIO SOUND OUTPUT** Radio, CD audio, Bluetooth® audio, Internet radio, and guidance audio is output, but not AUX audio

Possible Causes	• External device malfunction
	• Connector poor contact or terminal damage
	• Open circuit in wiring harness between the following terminals:
	  ▪ Tuner and amp unit (TAU) terminal 1L and auxiliary jack/USB port/SD card slot hub terminal 1C
	  ▪ TAU terminal 1I and auxiliary jack/USB port/SD card slot hub terminal 1E
	  ▪ TAU terminal 1K and auxiliary jack/USB port/SD card slot hub terminal 1G
	  ▪ TAU terminal 1J and auxiliary jack/USB port/SD card slot hub terminal 1H
	• Short to ground in wiring harness between the following terminals:
	  ▪ TAU terminal 1L and auxiliary jack/USB port/SD card slot hub terminal 1C
	  ▪ TAU terminal 1I and auxiliary jack/USB port/SD card slot hub terminal 1E
	  ▪ TAU terminal 1K and auxiliary jack/USB port/SD card slot hub terminal 1G
	  ▪ TAU terminal 1J and auxiliary jack/USB port/SD card slot hub terminal 1H
	• Short to power supply in wiring harness between the following terminals:
	  ▪ TAU terminal 1L and auxiliary jack/USB port/SD card slot hub terminal 1C
	  ▪ TAU terminal 1I and auxiliary jack/USB port/SD card slot hub terminal 1E
	  ▪ TAU terminal 1K and auxiliary jack/USB port/SD card slot hub terminal 1G
	  ▪ TAU terminal 1J and auxiliary jack/USB port/SD card slot hub terminal 1H
	• Auxiliary jack/USB port/SD card slot hub malfunction
	• TAU malfunction

	• Connectivity master unit (CMU) malfunction

Diagnostic Procedure

Step	Inspection		Action
1	**DETERMINE IF MALFUNCTION CAUSE IS EXTERNAL DEVICE** • Switch the ignition OFF. • After obtaining the customer's consent, replace with an external media that was not used when the malfunction occurred. • Switch the ignition to ACC or ON (engine off or on). • Select the AUX audio mode by operating the commander switch or the center display. • Is sound from the AUX audio output?	Yes	System is normal. (Explain to the customer that the external device or internal data has a malfunction)
		No	Go to the next step.
2	**INSPECT AUXILIARY JACK/USB PORT/SD CARD SLOT HUB CONNECTOR** • Disconnect the negative battery cable. (See **NEGATIVE BATTERY CABLE DISCONNECTION/CONNECTION [SKYACTIV-G 2.0, SKYACTIV-G 2.5]**.) • Disconnect the auxiliary jack/USB port/SD card slot hub connector. • Inspect the connector engagement and connection condition and inspect the terminals for damage, deformation, corrosion, or disconnection. • Is the connector normal?	Yes	Go to the next step.
		No	Repair or replace the connector, then go to Step 10.
3	**INSPECT TAU CONNECTOR** • Disconnect the TAU connector. • Inspect the connector engagement and connection condition and inspect the	Yes	Go to the next step.
		No	Repair or replace the connector, then go to Step 10.

	terminals for damage, deformation, corrosion, or disconnection. • Is the connector normal?		
4	**INSPECT CMU CONNECTOR** • Disconnect the CMU connector. • Inspect the connector engagement and connection condition and inspect the terminals for damage, deformation, corrosion, or disconnection. • Is the connector normal?	Yes	Go to the next step.
		No	Repair or replace the connector, then go to Step 10.
5	**VERIFY IF MALFUNCTION CAUSE IS OPEN CIRCUIT IN WIRING HARNESS BETWEEN TAU AND AUXILIARY JACK/USB PORT/SD CARD SLOT HUB** • Verify that the TAU and the auxiliary jack/USB port/SD card slot hub connector are disconnected. • Inspect the wiring harness for continuity between the following terminals (vehicle wiring harness side). ▪ TAU terminal 1L and auxiliary jack/USB port/SD card slot hub terminal 1C ▪ TAU terminal 1I and auxiliary jack/USB port/SD card slot hub terminal 1E ▪ TAU terminal 1K and auxiliary jack/USB port/SD card slot hub terminal 1G ▪ TAU terminal 1J and auxiliary	Yes	Go to the next step.
		No	• Refer to the wiring diagram and verify if there is a common connector between the following terminals. ▪ TAU terminal 1L and auxiliary jack/USB port/SD card slot hub terminal 1C ▪ TAU terminal 1I and auxiliary jack/USB port/SD card slot hub terminal 1E ▪ TAU terminal 1K and auxiliary jack/USB port/SD card slot hub terminal 1G ▪ TAU terminal 1J and auxiliary jack/USB port/SD card slot hub terminal 1H **If there is a common connector:** • Inspect the common connector and terminals for corrosion, damage, or disconnection and the common wiring harnesses for an open circuit to determine the malfunctioning location. • Repair or

	jack/USB port/SD card slot hub terminal 1H • Is there continuity?		replace the malfunctioning location. **If there is no common connector:** • Repair or replace the wiring harness which has an open circuit. • Go to Step 10.
6	**VERIFY IF MALFUNCTION CAUSE IS SHORT CIRCUIT TO GROUND IN WIRING HARNESS BETWEEN TAU AND AUXILIARY JACK/USB PORT/SD CARD SLOT HUB** • Verify that the TAU and the auxiliary jack/USB port/SD card slot hub connector are disconnected. • Inspect for continuity between the following wiring harness terminals (vehicle wiring harness side) and body ground. ▪ Auxiliary jack/USB port/SD card slot hub terminal 1C ▪ Auxiliary jack/USB port/SD card slot hub terminal 1E ▪ Auxiliary jack/USB port/SD card slot hub terminal 1G ▪ Auxiliary jack/USB port/SD card slot hub terminal 1H • Is there continuity?	Yes	• Refer to the wiring diagram and verify if there is a common connector between the following terminals. ▪ TAU terminal 1L and auxiliary jack/USB port/SD card slot hub terminal 1C ▪ TAU terminal 1I and auxiliary jack/USB port/SD card slot hub terminal 1E ▪ TAU terminal 1K and auxiliary jack/USB port/SD card slot hub terminal 1G ▪ TAU terminal 1J and auxiliary jack/USB port/SD card slot hub terminal 1H **If there is a common connector:** • Inspect the common connector and terminals for corrosion, damage, or disconnection and the common wiring harnesses for short to ground to determine the malfunctioning location. • Repair or replace the malfunctioning location. **If there is no common**

			connector: • Repair or replace the wiring harness which is shorted to ground. • Go to Step 10.
		No	Go to the next step.
7	**VERIFY IF MALFUNCTION CAUSE IS SHORT CIRCUIT TO POWER SUPPLY IN WIRING HARNESS BETWEEN TAU AND AUXILIARY JACK/USB PORT/SD CARD SLOT HUB** • Verify that the TAU and the auxiliary jack/USB port/SD card slot hub connector are disconnected. • Reconnect the negative battery cable. (See **NEGATIVE BATTERY CABLE DISCONNECTION/CONNECTION [SKYACTIV-G 2.0, SKYACTIV-G 2.5]**.) • Switch the ignition to ACC or ON (engine off or on). • Measure the voltage at the following terminals (vehicle wiring harness side). ▪ Auxiliary jack/USB port/SD card slot hub terminal 1C ▪ Auxiliary jack/USB port/SD card slot hub terminal 1E ▪ Auxiliary jack/USB port/SD card slot hub terminal 1G ▪ Auxiliary jack/USB port/SD card slot hub	Yes	• Refer to the wiring diagram and verify if there is a common connector between the following terminals. ▪ TAU terminal 1L and auxiliary jack/USB port/SD card slot hub terminal 1C ▪ TAU terminal 1I and auxiliary jack/USB port/SD card slot hub terminal 1E ▪ TAU terminal 1K and auxiliary jack/USB port/SD card slot hub terminal 1G ▪ TAU terminal 1J and auxiliary jack/USB port/SD card slot hub terminal 1H **If there is a common connector:** • Inspect the common connector and terminals for corrosion, damage, or disconnection and the common wiring harnesses for an open circuit to determine the malfunctioning location. • Repair or replace the malfunctioning location. **If there is no common connector:** • Repair or

	terminal 1H • Is the voltage **B+**?		replace the wiring harness which is shorted to the power supply. • Go to Step 10.
		No	Go to the next step.
8	**VERIFY IF MALFUNCTION CAUSE IS AUXILIARY JACK/USB PORT/SD CARD SLOT HUB** • Disconnect the negative battery cable. (See **NEGATIVE BATTERY CABLE DISCONNECTION/CONNECTION [SKYACTIV-G 2.0, SKYACTIV-G 2.5]**.) • Replace the auxiliary jack/USB port/SD card slot hub. (See **AUXILIARY JACK/USB PORT/SD CARD SLOT HUB REMOVAL/INSTALLATION**.) • Connect all the connectors. • Reconnect the negative battery cable. (See **NEGATIVE BATTERY CABLE DISCONNECTION/CONNECTION [SKYACTIV-G 2.0, SKYACTIV-G 2.5]**.) • Connect the external device when the malfunction occurred. • Switch the ignition to ACC or ON (engine off or on). • Select the AUX audio mode by operating the commander switch or the center display. • Is sound from the AUX audio output?	Yes	Go to Step 10.
		No	Go to the next step.
9	**VERIFY IF MALFUNCTION CAUSE IS TAU** • Disconnect the negative battery cable. (See **NEGATIVE BATTERY**	Yes	Go to the next step.
		No	Replace the CMU, then go to the next step. (See **CONNECTIVITY MASTER UNIT (CMU) REMOVAL/INSTALLATION**.)

	CABLE DISCONNECTION/CONNECTION [SKYACTIV-G 2.0, SKYACTIV-G 2.5].) • Replace the TAU. (See **TUNER AND AMP UNIT (TAU) REMOVAL/INSTALLATION**.) • Connect all the connectors. • Reconnect the negative battery cable. (See **NEGATIVE BATTERY CABLE DISCONNECTION/CONNECTION [SKYACTIV-G 2.0, SKYACTIV-G 2.5]**.) • Connect the external device when the malfunction occurred. • Switch the ignition to ACC or ON (engine off or on). • Select the AUX audio mode by operating the commander switch or the center display. • Is sound from the AUX audio output?		
10	**VERIFY IF MALFUNCTION CAUSE IS CORRECTED** • Disconnect the negative battery cable. (See **NEGATIVE BATTERY CABLE DISCONNECTION/CONNECTION [SKYACTIV-G 2.0, SKYACTIV-G 2.5]**.) • Connect all the connectors. • Reconnect the negative battery cable. (See **NEGATIVE BATTERY CABLE DISCONNECTION/CONNECTION [SKYACTIV-G 2.0, SKYACTIV-G 2.5]**.) • Connect the external device when the malfunction occurred. • Switch the ignition to ACC or ON (engine off or on).	Yes	Troubleshooting completed. (Explain the contents of the servicing to the customer.)
		No	Verify the malfunction symptom in the symptom troubleshooting chart and perform the other applicable malfunction diagnosis. (See **SYMPTOM TROUBLESHOOTING [ENTERTAINMENT SYSTEM [WITH CENTER DISPLAY]]**.)

	Select the AUX audio mode by operating the commander switch or the center display. • Is sound from the AUX audio output?		

2014 - Mazda3 - Body and Accessories

VOICE OPERATION NOT POSSIBLE [ENTERTAINMENT SYSTEM [WITH CENTER DISPLAY]]

Description	**VOICE OPERATION NOT POSSIBLE**
	
	Voice operation of audio function, communication function, and navigation function is not possible
	
	NOTE:
	• The following applicable voice operations are not possible.
	  ▪ Voice operation of audio function
	  • Except for USB audio mode, voice operation for specifying, artist name, and album name is not possible
	  • If the USB device audio file does not contain song information (artist name, album name), the song information cannot be specified.
	  ▪ Hands-free telephone (HF/TEL) voice operation
	  • If the connectivity master unit (CMU) cannot read the telephone book, voice operation is not possible.
	  • If “Mr./Mrs.” is added to a person's name when speaking, normal voice operation is not possible (non-match to name registered in telephone book)
	  • If there are several names with similar pronunciation to the name registered in the telephone book, normal voice operation is not possible (John Smith/ Juan Smith)
	  • If the person's name that is spoken is short, normal voice operation is not possible (Ma/Pa)

	• Malfunction due to conditions of use
	  ▪ Abnormally slow speech
	  ▪ Loud speech
	  ▪ Difference between language set in the CMU and language used in voice operation
	• Malfunction due to effects of surrounding environment
	  ▪ Air from A/C is blown against the microphone
	  ▪ Loud road noise, A/C operation sound, external noise
	• Speaker malfunction
	• Audio amplifier unit malfunction (with Bose®)
	• Tuner and amp unit (TAU) malfunction
	• Connector poor contact or terminal damage

Possible Causes	• Microphone malfunction
	  ▪ Open circuit in wiring harness between the following terminals
	  • CMU terminal 1P and microphone terminal E
	  • CMU terminal 1R and microphone terminal D
	  • CMU terminal 1S and microphone terminal A
	  • CMU terminal 1T and microphone terminal B
	  ▪ Short to ground in wiring harness between the following terminals
	  • CMU terminal 1P and microphone terminal E
	  ▪ Short to power supply in wiring harness between the following terminals
	  • CMU terminal 1P and microphone terminal E
	  • CMU terminal 1R and microphone terminal D
	  ▪ Microphone internal malfunction
	• CMU internal malfunction

Diagnostic Procedure

Step	Inspection		Action

1	**VERIFY IF MALFUNCTION DUE TO LANGUAGE SETTING OF CMU**
	• Switch the ignition to ACC or ON (engine off or on).
	• Select the following by operating the commander switch or the center display.
	  ▪ Settings
	  ▪ System
	  ▪ Language
	• Does the language set to the CMU match the language used in voice operations?
		Yes	Go to the next step.

		No	Select the language used for voice operations, then go to Step 12.
2	**VERIFY IF MALFUNCTION DUE TO CUSTOMER USE METHOD** • Switch the ignition to ACC or ON (engine off or on). • Press the TALK button on the steering switch. • After the voice guidance instructs the user to speak after the beep, say, “Current position” into the microphone in a normal or slightly loud voice.	Yes	System is normal. (Explain the contents of the servicing to the customer)
		No	Go to the next step.

	• Is the current position displayed in the center display? **Determination criteria** ▪ The current position can be determined to have been displayed if the current position is displayed one time out of 10 voice command trials.		
3	**VERIFY IF MALFUNCTION DUE TO EFFECTS OF SURROUNDING ENVIRONMENT** • Verify if air from the A/C is being blown against the microphone. • Move the vehicle to a location with little external noise. • Press the TALK button on the steering switch. • After the voice guidance instructs the user to speak after the beep, say, “Current position” into the microphone in a normal or slightly loud voice. • Is the current position displayed in the center display? **Determination criteria** ▪ The current position can be determined to have been displayed if the current position is displayed one time out of 10 voice command trials.	Yes	System is normal. (Explain the contents of the servicing to the customer)
		No	Go to the next step.
4	**DETERMINE IF MALFUNCTION IS SPEAKER, AUDIO AMPLIFIER RELATED** • Switch the ignition to ACC or ON (engine off or on). • Launch the on-board diagnostic	Yes	Go to the next step.
		No	Perform malfunction diagnosis according to NO SOUND OUTPUT IN ALL MODES. (See **NO SOUND OUTPUT IN ALL MODES [ENTERTAINMENT SYSTEM [WITH CENTER DISPLAY]]**.)

	assist function. (See **DIAGNOSTIC ASSIST FUNCTION [CONNECTIVITY MASTER UNIT]**.) • Select assist code “94”. • Press the [ENTER] and verify that the sound is output from each speaker. • Is sound output from each speaker?		
5	**DETERMINE IF MALFUNCTION IS TAU** • Switch the ignition to ACC or ON (engine off or on). • Operate the command switch or center display and verify if sound is output from the following modes. ▪ Bluetooth® audio ▪ Internet radio ▪ USB audio • Is sound output?	Yes	TAU is normal. Go to the next step.
		No	Perform malfunction diagnosis according to NO SOUND OUTPUT IN MULTIPLE MODES. (See **NO SOUND OUTPUT IN MULTIPLE MODES [ENTERTAINMENT SYSTEM [WITH CENTER DISPLAY]]**.)
6	**DETERMINE IF MALFUNCTION IS MICROPHONE RELATED** • Switch the ignition to ACC or ON (engine off or on). • Launch the on-board diagnostic assist function. (See **DIAGNOSTIC ASSIST FUNCTION [CONNECTIVITY MASTER UNIT]**.) • Select assist code “61”. • Press ENTER. • Say, “Current position” into the microphone in a normal or slightly loud voice. • When speaking, verify if the “Microphone” item is displayed. • Is the “Microphone” item displayed?	Yes	The microphone is normal. Go to Step 11.
		No	Go to the next step.
7	**MICROPHONE CONNECTOR INSPECTION** • Disconnect the negative battery	Yes	Go to the next step.
		No	Repair or replace the connector, then go to Step 12.

	cable. (See **NEGATIVE BATTERY CABLE DISCONNECTION/CONNECTION [SKYACTIV-G 2.0, SKYACTIV-G 2.5]**.) • Disconnect the microphone connector. • Inspect the connector engagement and connection condition and inspect the terminals for damage, deformation, corrosion, or disconnection. • Is the connector normal?		
8	**VERIFY IF MALFUNCTION CAUSE IS OPEN CIRCUIT IN WIRING HARNESS BETWEEN CMU AND MICROPHONE** • Disconnect the CMU connector. • Verify that the microphone connector is disconnected. • Inspect the wiring harness for continuity between the following terminals (vehicle wiring harness side). ▪ CMU terminal 1P and microphone terminal E ▪ CMU terminal 1R and microphone terminal D ▪ CMU terminal 1S and microphone terminal A ▪ CMU terminal 1T and microphone terminal B • Is there continuity?	Yes	Go to the next step.
		No	• Refer to the wiring diagram and verify if there is a common connector between the following terminals. ▪ CMU terminal 1P and microphone terminal E ▪ CMU terminal 1R and microphone terminal D ▪ CMU terminal 1S and microphone terminal A ▪ CMU terminal 1T and microphone terminal B **If there is a common connector:** • Inspect the common connector and terminals for corrosion, damage, or disconnection and the common wiring harnesses for an open circuit to determine the malfunctioning location. • Repair or replace the malfunctioning location. **If there is no common connector:**

			• Repair or replace the wiring harness which has an open circuit. • Go to Step 12.
9	**VERIFY IF MALFUNCTION CAUSE IS SHORT CIRCUIT TO GROUND IN WIRING HARNESS BETWEEN CMU AND MICROPHONE** • Verify that the CMU and microphone connectors are disconnected. • Inspect for continuity between the following wiring harness terminals (vehicle wiring harness side) and body ground. ▪ Microphone terminal E • Is there continuity?	Yes	• Refer to the wiring diagram and verify if there is a common connector between the following terminals. ▪ CMU terminal 1P and microphone terminal E **If there is a common connector:** • Inspect the common connector and terminals for corrosion, damage, or disconnection and the common wiring harnesses for short to ground to determine the malfunctioning location. • Repair or replace the malfunctioning location. **If there is no common connector:** • Repair or replace the wiring harness which is shorted to ground. • Go to Step 12.
		No	Go to the next step.
10	**VERIFY IF MALFUNCTION CAUSE IS SHORT CIRCUIT TO POWER SUPPLY IN WIRING HARNESS BETWEEN CMU AND MICROPHONE** • Verify that the CMU and microphone connectors are	Yes	• Refer to the wiring diagram and verify if there is a common connector between the following terminals. ▪ CMU terminal 1P and microphone terminal E ▪ CMU terminal 1R and

	disconnected. • Reconnect the negative battery cable. (See **NEGATIVE BATTERY CABLE DISCONNECTION/CONNECTION [SKYACTIV-G 2.0, SKYACTIV-G 2.5]**.) • Switch the ignition to ACC or ON (engine off or on). • Measure the voltage at the following terminals (vehicle wiring harness side). ▪ Microphone terminal E ▪ Microphone terminal D • Is the voltage **B+**?		microphone terminal D **If there is a common connector:** • Inspect the common connector and terminals for corrosion, damage, or disconnection and the common wiring harnesses for an open circuit to determine the malfunctioning location. • Repair or replace the malfunctioning location. **If there is no common connector:** • Repair or replace the wiring harness which is shorted to the power supply. • Go to Step 12.
		No	Replace the microphone, then go to Step 12. (See **MICROPHONE REMOVAL/INSTALLATION**.)
11	**INSPECT CMU CONNECTOR** • Disconnect the negative battery cable. (See **NEGATIVE BATTERY CABLE DISCONNECTION/CONNECTION [SKYACTIV-G 2.0, SKYACTIV-G 2.5]**.) • Disconnect the CMU connector. • Inspect the connector engagement and connection condition and inspect the terminals for damage, deformation, corrosion, or disconnection. • Is the connector normal?	Yes	Replace the CMU, then go to the next step. (See **CONNECTIVITY MASTER UNIT (CMU) REMOVAL/INSTALLATION**.)
		No	Repair or replace the connector, then go to the next step.

12	**VERIFY IF MALFUNCTION CAUSE IS CORRECTED** • Disconnect the negative battery cable. (See **NEGATIVE BATTERY CABLE DISCONNECTION/CONNECTION [SKYACTIV-G 2.0, SKYACTIV-G 2.5]**.) • Connect all the connectors. • Reconnect the negative battery cable. (See **NEGATIVE BATTERY CABLE DISCONNECTION/CONNECTION [SKYACTIV-G 2.0, SKYACTIV-G 2.5]**.) • Switch the ignition to ACC or ON (engine off or on). • Move the vehicle to a location with little external noise. • Press the TALK button on the steering switch. • After the voice guidance instructs the user to speak after the beep, say, “Current position” into the microphone in a normal or slightly loud voice. • Is the current position displayed in the center display? **Determination criteria** ▪ The current position can be determined to have been displayed if the current position is displayed one time out of 10 voice command trials.	Yes	Troubleshooting completed. (Explain the contents of the servicing to the customer.)
		No	Verify the malfunction symptom in the symptom troubleshooting chart and perform the other applicable malfunction diagnosis. (See **SYMPTOM TROUBLESHOOTING [ENTERTAINMENT SYSTEM [WITH CENTER DISPLAY]]**.)

2014 - Mazda3 - Body and Accessories

Bluetooth® PAIRING NOT POSSIBLE [ENTERTAINMENT SYSTEM [WITH CENTER DISPLAY]]

Description	**Bluetooth® PAIRING NOT POSSIBLE** Bluetooth® enabled device cannot be paired to connectivity master unit (CMU) **NOTE:** • The Bluetooth® pairing procedure differs depending on the version of the Bluetooth®-enabled device. Ask the customer in advance what the Bluetooth®-enabled device's version was when the Bluetooth® pairing was performed. • If the Bluetooth®-enabled device has an access limitation, the pairing setting cannot be performed. Ask the customer in advance if the Bluetooth®-enabled device has an access limitation. • A maximum of seven Bluetooth®-enabled devices can be programmed to one vehicle.

Possible Causes	• Customer's Bluetooth®-enabled device malfunction
	  ▪ Incompatible Bluetooth®-enabled device is used
	  ▪ Bluetooth® setting is off
	  ▪ Radio wave transmission setting including Bluetooth® radio wave is off
	  ▪ If the Bluetooth® pairing has been previously performed, it will be necessary to clear the vehicle data stored in the Bluetooth®-enabled device and re-program.
	  ▪ Bluetooth®-enabled device internal malfunction
	• Connector poor contact or terminal damage
	• Connectivity master unit (CMU) malfunction

Diagnostic Procedure

Step	Inspection		Action
1	**VERIFY MALFUNCTION SYMPTOM**	Yes	Go to the next step.

	• Select the following by using the center display or the commander switch. ▪ Settings ▪ Devices ▪ Bluetooth • Verify if the customer's Bluetooth®-enabled device is registered/selected. • Is the customer's Bluetooth®-enabled device registered/selected to the CMU?		
		No	Register/select the customer's Bluetooth®-enabled device. (See **Bluetooth® PAIRING PROCEDURE**.) • Verify the malfunction symptom again, and if the malfunction is not eliminated, go to the next step.
2	**VERIFY IF MALFUNCTION CAUSE IS Bluetooth®-ENABLED DEVICE SPECIFICATION** • Verify if the customer's Bluetooth®-enabled device is compatible according to the "Available Bluetooth®-enabled Devices". (See **Available Bluetooth®-Enabled Devices**.) • Is the customer's Bluetooth device compatible?	Yes	Go to the next step.
		No	Explain to the customer that the malfunction cause is an incompatible Bluetooth®-enabled device.
3	**VERIFY IF MALFUNCTION CAUSE IS Bluetooth®-ENABLED DEVICE SETTING** • After obtaining the customer's consent, verify that the Bluetooth®-enabled device setting is turned on. • Is the Bluetooth®-enabled device setting turned on?	Yes	Go to the next step.
		No	Turn it on and perform the Bluetooth® pairing. (See **Bluetooth® PAIRING PROCEDURE**.) • Verify the malfunction symptom again, and if the malfunction is not eliminated, go to the next step.
4	**VERIFY IF MALFUNCTION CAUSE IS RADIO WAVE TRANSMISSION SETTING FOR Bluetooth®-ENABLED DEVICE** • After obtaining the customer's consent, verify that the radio wave transmission setting for the Bluetooth®-enabled device is turned on.	Yes	Go to the next step.
		No	Turn it on and perform the Bluetooth® pairing. (See **Bluetooth® PAIRING PROCEDURE**.) • Verify the malfunction symptom again, and if the

	• Is the radio wave transmission setting for the Bluetooth®-enabled device turned on?		malfunction is not eliminated, go to the next step.
5	**VERIFY IF MALFUNCTION CAUSE IS Bluetooth®-ENABLED DEVICE RESETTING** • After obtaining the customer's consent, verify that the Bluetooth®-enabled device stores the customer's vehicle data. • Does the Bluetooth®-enabled device store the customer's vehicle data?	Yes	After obtaining the customer's consent, delete the vehicle data on the Bluetooth®-enabled device and re-perform the Bluetooth® pairing. (See **Bluetooth® PAIRING PROCEDURE**.) • Verify the malfunction symptom again, and if the malfunction is not eliminated, go to the next step.
		No	Perform the Bluetooth® pairing. (See **Bluetooth® PAIRING PROCEDURE**.) • Verify the malfunction symptom again, and if the malfunction is not eliminated, go to the next step.
6	**DETERMINE IF MALFUNCTION CAUSE IS Bluetooth®-ENABLED DEVICE** • After obtaining the customer's consent, perform the Bluetooth® pairing using other Bluetooth®-enabled device. (See **Bluetooth® PAIRING PROCEDURE**.) • Is the Bluetooth® pairing completed normally?	Yes	Explain to the customer that the malfunction cause is the Bluetooth®-enabled device.
		No	Go to the next step.
7	**INSPECT CMU CONNECTOR** • Disconnect the negative battery cable. (See **NEGATIVE BATTERY CABLE DISCONNECTION/CONNECTION [SKYACTIV-G 2.0, SKYACTIV-G 2.5]**.) • Disconnect the CMU connector. • Inspect the connector engagement and connection condition and inspect	Yes	Replace the CMU, then go to the next step. (See **CONNECTIVITY MASTER UNIT (CMU) REMOVAL/INSTALLATION**.)
		No	Repair or replace the connector, then go to the next step.

	the terminals for damage, deformation, corrosion, or disconnection. • Is the connector normal?		
8	**VERIFY IF MALFUNCTION CAUSE IS CORRECTED** • Reconnect the negative battery cable. (See **NEGATIVE BATTERY CABLE DISCONNECTION/CONNECTION [SKYACTIV-G 2.0, SKYACTIV-G 2.5]**.) • Switch the ignition to ACC or ON (engine off or on). • After obtaining the customer's consent, perform the Bluetooth® pairing using the malfunctioning Bluetooth®-enabled device. (See **Bluetooth® PAIRING PROCEDURE**.) • Is the Bluetooth® pairing completed normally?	Yes	Troubleshooting completed. (Explain the contents of the servicing to the customer.)
		No	Verify the malfunction symptom in the symptom troubleshooting chart and perform the other applicable malfunction diagnosis. (See **SYMPTOM TROUBLESHOOTING [ENTERTAINMENT SYSTEM [WITH CENTER DISPLAY]]**.)

Available Bluetooth®-Enabled Devices

Item		Content
Profile	A2DP 1.0/1.2 (Advanced audio distribution profile)	A2DP is a profile for transmitting high quality audio data by means of a Bluetooth® device and wireless transmission technology.
	AVRCP 1.0/1.3/1.4 (Audio/video remote control profile)	AVRCP is a profile which provides a standard interface which controls television and audio devices. The function differs depending on the version.
Maximum number of programmable devices		7
Number of programmed devices which can be used simultaneously		1

Bluetooth® PAIRING NOT POSSIBLE [ENTERTAINMENT SYSTEM [WITH CENTER DISPLAY]]

2014 - Mazda3 - Body and Accessories

AUTOMATIC Bluetooth® CONNECTION NOT POSSIBLE [ENTERTAINMENT SYSTEM [WITH CENTER DISPLAY]]

Description	**AUTOMATIC Bluetooth® CONNECTION NOT POSSIBLE** Bluetooth® pairing setting is possible, however, automatic Bluetooth® connection is not possible **NOTE:** • The Bluetooth® pairing procedure differs depending on the version of the Bluetooth®-enabled device. Ask the customer in advance what the Bluetooth®-enabled device's version was when the Bluetooth® pairing was performed. • If the Bluetooth®-enabled device has an access limitation, the automatic Bluetooth® connection cannot be performed. Ask the customer in advance if the Bluetooth®-enabled device has an access limitation. • A maximum of seven Bluetooth®-enabled devices can be programmed to one vehicle.

Possible Causes	• Customer's Bluetooth®-enabled device malfunction
	  ▪ Bluetooth® setting is off
	  ▪ Radio wave transmission setting including Bluetooth® radio wave is off
	  ▪ Bluetooth®-enabled device information has been changed (such as OS update), therefore, Bluetooth®-enabled device information programmed to vehicle is incompatible
	  ▪ Bluetooth®-enabled device internal malfunction
	• Connector poor contact or terminal damage
	• Connectivity master unit (CMU) malfunction

Diagnostic Procedure

Step	Inspection		Action
1	**VERIFY MALFUNCTION SYMPTOM**	Yes	Go to the next step.

	• Select the following by operating the center display or the commander switch. ▪ Settings ▪ Devices ▪ Bluetooth • Verify if the customer's Bluetooth®-enabled device is registered/selected. • Is the customer's Bluetooth®-enabled device registered/selected to the CMU?	No	Register/select the customer's Bluetooth®-enabled device. (See **Bluetooth® PAIRING PROCEDURE**.) • Verify the malfunction symptom again, and if the malfunction is not eliminated, go to the next step.
2	**VERIFY IF MALFUNCTION CAUSE IS Bluetooth®-ENABLED DEVICE SETTING** • After obtaining the customer's consent, verify that the Bluetooth®-enabled device setting is turned on. • Is the Bluetooth®-enabled device setting turned on?	Yes	Go to the next step.
		No	Turn it on and perform the Bluetooth® pairing. (See **Bluetooth® PAIRING PROCEDURE**.) • Verify the malfunction symptom again, and if the malfunction is not eliminated, go to the next step.
3	**VERIFY IF MALFUNCTION CAUSE IS RADIO WAVE TRANSMISSION SETTING FOR Bluetooth®-ENABLED DEVICE** • After obtaining the customer's consent, verify that the radio wave transmission setting for the Bluetooth®-enabled device is turned on. • Is the radio wave transmission setting for the Bluetooth®-enabled device turned on?	Yes	Go to the next step.
		No	Turn it on and perform the Bluetooth® pairing. (See **Bluetooth® PAIRING PROCEDURE**.) • Verify the malfunction symptom again, and if the malfunction is not eliminated, go to the next step.
4	**VERIFY IF MALFUNCTION CAUSE IS OS UPDATE FOR Bluetooth®-ENABLED DEVICE** • After obtaining the customer's consent, re-perform the Bluetooth® pairing. (See **Bluetooth® PAIRING PROCEDURE**.) • Switch the ignition OFF. • Bring the malfunctioning Bluetooth®-enabled device into the vehicle.	Yes	Troubleshooting completed (explain the contents of the servicing to the customer).
		No	Go to the next step.

	• Switch the ignition to ACC or ON (engine off or on). • Is the Bluetooth® connection automatically?		
5	**DETERMINE IF MALFUNCTION CAUSE IS Bluetooth®-ENABLED DEVICE** • Switch the ignition to ACC or ON (engine off or on). • After obtaining the customer's consent, perform the Bluetooth® pairing using other Bluetooth®-enabled device. (See **Bluetooth® PAIRING PROCEDURE**.) • Switch the ignition OFF. • Bring the Bluetooth®-enabled device into the vehicle. • Switch the ignition to ACC or ON (engine off or on). • Is the Bluetooth® connected automatically?	Yes	Explain to the customer that the malfunction cause is the Bluetooth®-enabled device.
		No	Go to the next step.
6	**INSPECT CMU CONNECTOR** • Disconnect the negative battery cable. (See **NEGATIVE BATTERY CABLE DISCONNECTION/CONNECTION [SKYACTIV-G 2.0, SKYACTIV-G 2.5]**.) • Disconnect the CMU connector. • Inspect the connector engagement and connection condition and inspect the terminals for damage, deformation, corrosion, or disconnection. • Is the connector normal?	Yes	Replace the CMU, then go to the next step. (See **CONNECTIVITY MASTER UNIT (CMU) REMOVAL/INSTALLATION**.)
		No	Repair or replace the connector, then go to the next step.
7	**VERIFY IF MALFUNCTION CAUSE IS CORRECTED** • Switch the ignition to ACC or ON (engine off or on). • After obtaining the customer's consent, perform the Bluetooth® pairing using the malfunctioning Bluetooth®-enabled device.	Yes	Troubleshooting completed (explain the contents of the servicing to the customer).
		No	Verify the malfunction symptom in the symptom troubleshooting chart and perform the other applicable malfunction diagnosis. (See **SYMPTOM TROUBLESHOOTING [ENTERTAINMENT SYSTEM [WITH CENTER**

	(See **Bluetooth® PAIRING PROCEDURE**.) • Switch the ignition off. • Bring the Bluetooth®-enabled device into the vehicle. • Switch the ignition to ACC or ON (engine off or on). • Is the Bluetooth® connected automatically?		**DISPLAY]]**.)

2014 - Mazda3 - Body and Accessories

REAL TIME TRAFFIC FUNCTION INFORMATION NOT DISPLAYED [ENTERTAINMENT SYSTEM [WITH CENTER DISPLAY]]

Description	**REAL TIME TRAFFIC FUNCTION INFORMATION NOT DISPLAYED** Information such as gas prices, weather, and nearest restaurant is not output in navigation mode

Possible Causes	• SD card malfunction
	• Malfunction due to effects of surrounding environment
	  ▪ Mobile device such as Smartphone is placed where radio waves cannot be received
	• Mobile device such as customer's Smartphone malfunction
	  ▪ Wi-Fi™ connection setting is off
	  ▪ Mobile device internal malfunction such as Smartphone
	• Connector poor contact or terminal damage
	• Connectivity master unit (CMU) malfunction
	  ▪ Wi-Fi™ connection setting is off
	  ▪ CMU internal malfunction
	• Auxiliary jack/USB port/SD card slot hub malfunction
	  ▪ Open circuit in wiring harness between the following terminals:
	  • CMU terminal 4A and auxiliary jack/USB port/SD card slot hub terminal 2A
	  ▪ Short to ground in wiring harness between the following terminals:
	  • CMU terminal 4A and auxiliary jack/USB port/SD card slot hub terminal 2A
	  • CMU terminal 4B and auxiliary jack/USB port/SD card slot hub terminal 2B
	  • CMU terminal 4D and auxiliary jack/USB port/SD card slot hub terminal 2D
	  ▪ Short to power supply in wiring harness between the following terminals:
	  • CMU terminal 4A and auxiliary jack/USB port/SD card slot hub terminal 2A
	  • CMU terminal 4B and auxiliary jack/USB port/SD card slot hub terminal 2B

	CMU terminal 4D and auxiliary jack/USB port/SD card slot hub terminal 2D ▪ Auxiliary jack/USB port/SD card slot hub malfunction

Diagnostic Procedure

Step	Inspection		Action
1	**VISUALLY INSPECT SD CARD** • Visually inspect the SD card for looseness or damage. • Is the SD card normal?	Yes	System is normal. (explain to the customer that there is a malfunction in SD card)
		No	Go to the next step.
2	**VERIFY IF MALFUNCTION CAUSE IS MOBILE DEVICE SETTING SUCH AS SMARTPHONE** • After obtaining the customer's consent, verify that the Wi-Fi™ connection setting for the mobile device such as a Smartphone is turned on. • Is the Wi-Fi™ connection setting turned on?	Yes	Go to the next step.
		No	Turn on the Wi-Fi™ connection setting for the mobile device, then go to Step 12.
3	**VERIFY IF MALFUNCTION CAUSE IS CMU SETTING** • Verify that the CMU Wi-Fi™ connection setting is turned on. • Is the CMU Wi-Fi™ connection setting turned on?	Yes	Go to the next step.
		No	Turn on the CMU Wi-Fi™ connection setting, then go to Step 12.
4	**VERIFY IF MALFUNCTION CAUSE IS OBSTRUCTION SUCH AS BUILDING** • Set the mobile device such as a Smartphone and the CMU Wi-Fi™ connection setting to on when the malfunction occurred. • Select the navigation mode by operating the center display or the commander switch. • Move the vehicle to an area where the mobile device such as a Smartphone can receive radio waves.	Yes	System is normal (explain to the customer that Wi-Fi™ communication could not be received normally due to driving in an area with tunnels or obstructions).
		No	Go to the next step.

	• Is information such as gas prices, weather, and the nearest restaurant displayed?		
5	**DETERMINE IF MALFUNCTION CAUSE IS MOBILE DEVICE SUCH AS SMARTPHONE** • After obtaining the customer's consent, set the CMU Wi-Fi™ connection setting using a mobile device such as a Smartphone not used when the malfunction occurred. • Select the navigation mode by operating the center display or the commander switch. • Move the vehicle to an area where the mobile device such as a Smartphone can receive radio waves. • Is information such as gas prices, weather, and the nearest restaurant displayed?	Yes	System is normal (explain to customer that the cause is mobile device malfunction such as Smartphone).
		No	Go to the next step.
6	**INSPECT AUXILIARY JACK/USB PORT/SD CARD SLOT HUB CONNECTOR** • Disconnect the negative battery cable. (See **NEGATIVE BATTERY CABLE DISCONNECTION/CONNECTION [SKYACTIV-G 2.0, SKYACTIV-G 2.5]**.) • Disconnect the auxiliary jack/USB port/SD card slot hub connector. • Inspect the connector engagement and connection condition and inspect the terminals for damage, deformation, corrosion, or disconnection. • Is the connector normal?	Yes	Go to the next step.
		No	Repair or replace the connector, then go to Step 12.
7	**INSPECT CMU CONNECTOR** • Disconnect the negative battery cable. (See **NEGATIVE BATTERY CABLE DISCONNECTION/CONNECTION**	Yes	Go to the next step.
		No	Repair or replace the connector, then go to Step 12.

	[SKYACTIV-G 2.0, SKYACTIV-G 2.5].) • Disconnect the CMU connector. • Inspect the connector engagement and connection condition and inspect the terminals for damage, deformation, corrosion, or disconnection. • Is the connector normal?		
8	**VERIFY IF MALFUNCTION CAUSE IS OPEN CIRCUIT IN WIRING HARNESS BETWEEN CMU AND AUXILIARY JACK/USB PORT/SD CARD SLOT HUB** • Verify that the auxiliary jack/USB port/SD card slot hub and the CMU connector are disconnected. • Inspect the wiring harness for continuity between the following terminals (vehicle wiring harness side). ▪ CMU terminal 4A and auxiliary jack/USB port/SD card slot hub terminal 2A • Is there continuity?	Yes	Go to the next step.
		No	• Refer to the wiring diagram and verify if there is a common connector between the following terminals. ▪ CMU terminal 4A and auxiliary jack/USB port/SD card slot hub terminal 2A **If there is a common connector:** • Inspect the common connector and terminals for corrosion, damage, or disconnection and the common wiring harnesses for an open circuit to determine the malfunctioning location. • Repair or replace the malfunctioning location. **If there is no common connector:** • Repair or replace the wiring harness which has an open circuit. • Go to Step 12.

9	**VERIFY IF MALFUNCTION CAUSE IS SHORT CIRCUIT TO GROUND IN WIRING HARNESS BETWEEN CMU AND AUXILIARY JACK/USB PORT/SD CARD SLOT HUB** • Verify that the auxiliary jack/USB port/SD card slot hub and the CMU connector are disconnected. • Inspect for continuity between the following wiring harness terminals (vehicle wiring harness side) and body ground. ▪ Auxiliary jack/USB port/SD card slot hub terminal 2A ▪ Auxiliary jack/USB port/SD card slot hub terminal 2B ▪ Auxiliary jack/USB port/SD card slot hub terminal 2D • Is there continuity?	Yes	Refer to the wiring diagram and verify if there is a common connector between the following terminals. ▪ CMU terminal 4A and auxiliary jack/USB port/SD card slot hub terminal 2A ▪ CMU terminal 4B and auxiliary jack/USB port/SD card slot hub terminal 2B ▪ CMU terminal 4D and auxiliary jack/USB port/SD card slot hub terminal 2D **If there is a common connector:** • Inspect the common connector and terminals for corrosion, damage, or disconnection and the common wiring harnesses for short to ground to determine the malfunctioning location. • Repair or replace the malfunctioning location. **If there is no common connector:** • Repair or replace the wiring harness which is shorted to ground. • Go to Step 12.
		No	Go to the next step.
10	**VERIFY IF MALFUNCTION CAUSE IS SHORT CIRCUIT TO POWER SUPPLY IN WIRING HARNESS BETWEEN CMU AND AUXILIARY JACK/USB PORT/SD CARD SLOT HUB**	Yes	• Refer to the wiring diagram and verify if there is a common connector between the following terminals. ▪ CMU terminal 4A and auxiliary jack/USB port/SD card slot hub terminal 2A

	• Verify that the auxiliary jack/USB port/SD card slot hub and the CMU connector are disconnected. • Reconnect the negative battery cable. (See **NEGATIVE BATTERY CABLE DISCONNECTION/CONNECTION [SKYACTIV-G 2.0, SKYACTIV-G 2.5]**.) • Switch the ignition to ACC or ON (engine off or on). • Measure the voltage at the following terminals (vehicle wiring harness side). ▪ Auxiliary jack/USB port/SD card slot hub terminal 2A ▪ Auxiliary jack/USB port/SD card slot hub terminal 2B ▪ Auxiliary jack/USB port/SD card slot hub terminal 2D • Is the voltage **B+**?		▪ CMU terminal 4B and auxiliary jack/USB port/SD card slot hub terminal 2B ▪ CMU terminal 4D and auxiliary jack/USB port/SD card slot hub terminal 2D **If there is a common connector:** • Inspect the common connector and terminals for corrosion, damage, or disconnection and the common wiring harnesses for an open circuit to determine the malfunctioning location. • Repair or replace the malfunctioning location. **If there is no common connector:** • Repair or replace the wiring harness which is shorted to the power supply. • Go to Step 12.
		No	Go to the next step.
11	**DETERMINE IF MALFUNCTION CAUSE IS AUXILIARY JACK/USB PORT/SD CARD SLOT HUB** • Disconnect the negative battery cable. (See **NEGATIVE BATTERY CABLE DISCONNECTION/CONNECTION [SKYACTIV-G 2.0, SKYACTIV-G 2.5]**.)	Yes	Go to the next step.
		No	Replace the CMU, then go to the next step. (See **CONNECTIVITY MASTER UNIT (CMU) REMOVAL/INSTALLATION**.)

	Replace the auxiliary jack/USB port/SD card slot hub. (See **AUXILIARY JACK/USB PORT/SD CARD SLOT HUB REMOVAL/INSTALLATION**.) • Connect all the connectors. • Reconnect the negative battery cable. (See **NEGATIVE BATTERY CABLE DISCONNECTION/CONNECTION [SKYACTIV-G 2.0, SKYACTIV-G 2.5]**.) • Switch the ignition to ACC or ON (engine off or on). • Set the mobile device such as a Smartphone and the CMU Wi-Fi™ connection setting to on when the malfunction occurred. • Select the navigation mode by operating the center display or the commander switch. • Move the vehicle to an area where the mobile device such as a Smartphone can receive radio waves. • Is information such as gas price, wether, nearest restaurant displayed?		
12	**VERIFY IF MALFUNCTION CAUSE IS CORRECTED** • Switch the ignition to ACC or ON (engine off or on). • Set the mobile device such as a Smartphone and the CMU Wi-Fi™ connection setting to on when the malfunction occurred. • Select the navigation mode by operating the center display or the commander switch. • Move the vehicle to an area where the mobile device such as a Smartphone can receive radio waves. • Is information such as gas	Yes	Troubleshooting completed (explain the contents of the servicing to the customer).
		No	Verify the malfunction symptom in the symptom troubleshooting chart and perform the other applicable malfunction diagnosis. (See **SYMPTOM TROUBLESHOOTING [ENTERTAINMENT SYSTEM [WITH CENTER DISPLAY]]**.)

	price, wether, nearest restaurant displayed?		

2014 - Mazda3 - Body and Accessories

FOREWORD [ENTERTAINMENT SYSTEM [WITHOUT CENTER DISPLAY]]

Troubleshooting Procedure

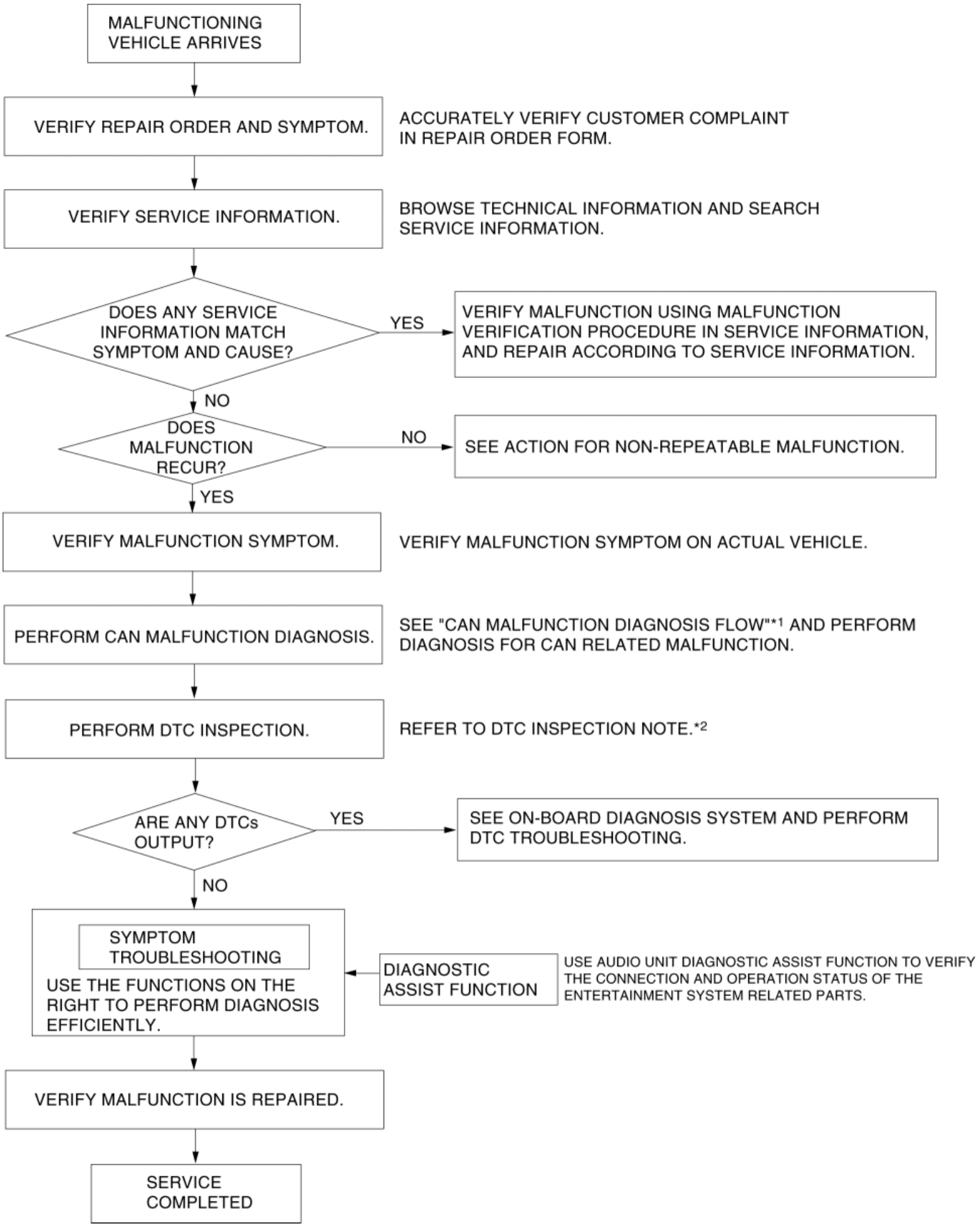
MALFUNCTIONING VEHICLE ARRIVES
VERIFY REPAIR ORDER AND SYMPTOM.
ACCURATELY VERIFY CUSTOMER COMPLAINT IN REPAIR ORDER FORM.
VERIFY SERVICE INFORMATION.
BROWSE TECHNICAL INFORMATION AND SEARCH SERVICE INFORMATION.
DOES ANY SERVICE INFORMATION MATCH SYMPTOM AND CAUSE?
YES
VERIFY MALFUNCTION USING MALFUNCTION VERIFICATION PROCEDURE IN SERVICE INFORMATION, AND REPAIR ACCORDING TO SERVICE INFORMATION.
NO
DOES MALFUNCTION RECUR?
NO
SEE ACTION FOR NON-REPEATABLE MALFUNCTION.
YES
VERIFY MALFUNCTION SYMPTOM.
VERIFY MALFUNCTION SYMPTOM ON ACTUAL VEHICLE.
PERFORM CAN MALFUNCTION DIAGNOSIS.
SEE "CAN MALFUNCTION DIAGNOSIS FLOW"*1 AND PERFORM DIAGNOSIS FOR CAN RELATED MALFUNCTION.
PERFORM DTC INSPECTION.
REFER TO DTC INSPECTION NOTE.*2
ARE ANY DTCs OUTPUT?
YES
SEE ON-BOARD DIAGNOSIS SYSTEM AND PERFORM DTC TROUBLESHOOTING.
NO
SYMPTOM TROUBLESHOOTING
USE THE FUNCTIONS ON THE RIGHT TO PERFORM DIAGNOSIS EFFICIENTLY.
DIAGNOSTIC ASSIST FUNCTION
USE AUDIO UNIT DIAGNOSTIC ASSIST FUNCTION TO VERIFY THE CONNECTION AND OPERATION STATUS OF THE ENTERTAINMENT SYSTEM RELATED PARTS.
VERIFY MALFUNCTION IS REPAIRED.
SERVICE COMPLETED

*1
(See CONTROLLER AREA NETWORK (CAN) MALFUNCTION DIAGNOSIS FLOW.)
*2
(See DTC Inspection Note.)

Action for non-repeatable malfunction

- If the malfunction does not recur, verify the malfunction cause by performing the following actions:
  - Verify that a DTC has been recorded in the memory. (See **DTC INSPECTION [AUDIO]**.)
  - Based on the repair order form, attempt to drive the vehicle or perform tests to replicate the malfunction, record the data at that time, and detect the malfunction cause.
  - Shake the wiring harness or connector of the electrical component which is suspected to be the cause of the malfunction, and inspect for malfunction or occurrence of any DTCs.

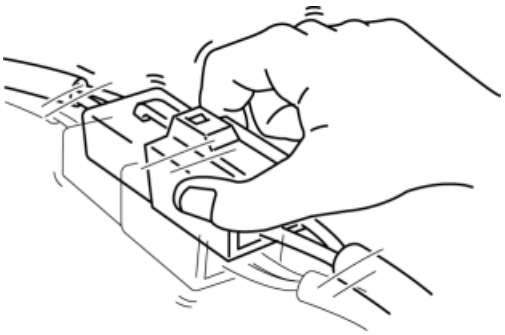

  - Refer to [Determining Open Circuit Location] based on the recorded DTC, shake the wiring harness or connector of the electrical component which is suspected to be the cause of the malfunction, and inspect for any malfunctions or occurrence of any DTCs.

DTC Inspection Note

- The entertainment system [without center display] DTCs can be verified using the on-board diagnostic test mode to activate the on-board diagnostic function by operating the audio unit. (See **DTC INSPECTION [AUDIO]**.)

2014 - Mazda3 - Body and Accessories

SYMPTOM TROUBLESHOOTING [ENTERTAINMENT SYSTEM [WITHOUT CENTER DISPLAY]]

Troubleshooting item	Description
NO SOUND OUTPUT IN ALL MODES (See **NO SOUND OUTPUT IN ALL MODES [ENTERTAINMENT SYSTEM [WITHOUT CENTER DISPLAY]]**.)	• Sound is not output from speakers even if any mode is selected
NO USB AUDIO SOUND OUTPUT (See **NO USB AUDIO SOUND OUTPUT [ENTERTAINMENT SYSTEM [WITHOUT CENTER DISPLAY]]**.)	• Radio, CD, AUX audio, Bluetooth® audio is output, but no USB sound
NO CD SOUND OUTPUT (See **NO CD SOUND OUTPUT [ENTERTAINMENT SYSTEM [WITHOUT CENTER DISPLAY]]**.)	• Radio, AUX audio, Bluetooth® audio, and USB audio is output, but no CD sound
NO AUX AUDIO SOUND OUTPUT (See **NO AUX AUDIO SOUND OUTPUT [ENTERTAINMENT SYSTEM [WITHOUT CENTER DISPLAY]]**.)	• Radio, CD, USB audio, Bluetooth® audio is produced, but no AUX audio
AUDIO UNIT DISPLAY NOT DISPLAYED (See **AUDIO UNIT DISPLAY NOT DISPLAYED [ENTERTAINMENT SYSTEM [WITHOUT CENTER DISPLAY]]**.)	• Does not display even with the audio unit power turned on

2014 - Mazda3 - Body and Accessories

SYSTEM WIRING DIAGRAM [ENTERTAINMENT SYSTEM [WITHOUT CENTER DISPLAY]]

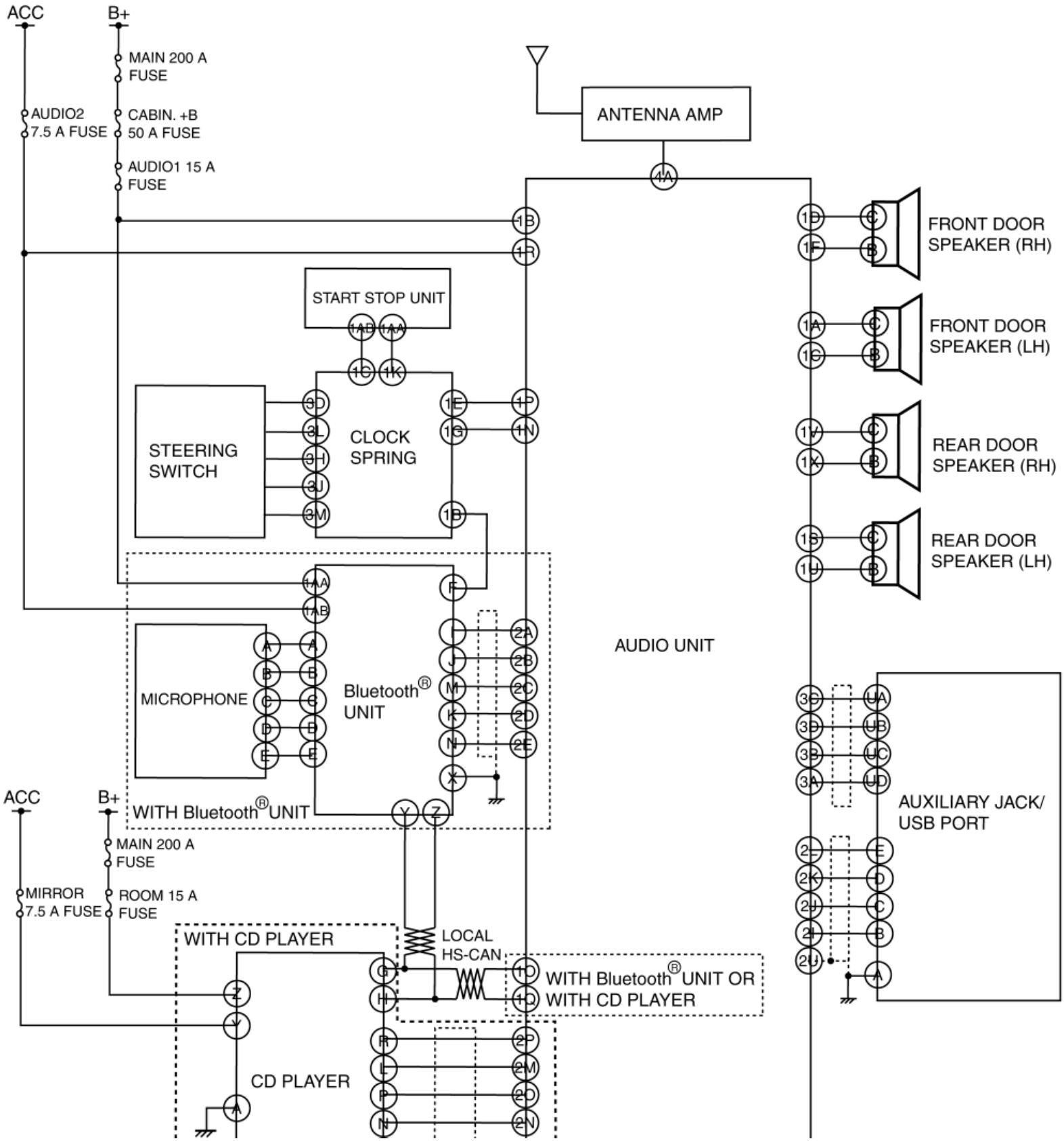

SYSTEM WIRING DIAGRAM [ENTERTAINMENT SYSTEM [WITHOUT CENTER DISPLAY]]

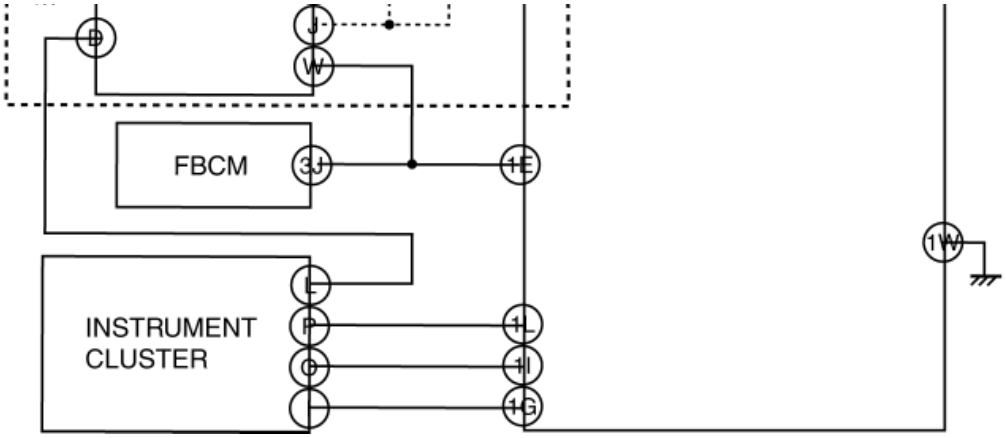

2014 - Mazda3 - Body and Accessories

NO SOUND OUTPUT IN ALL MODES [ENTERTAINMENT SYSTEM [WITHOUT CENTER DISPLAY]]

Description	**NO SOUND OUTPUT IN ALL MODES** Sound is not output from speakers even if any mode is selected

Possible Causes	• Connector poor contact or terminal damage
	• Speaker malfunction
	  ▪ Malfunction in each speaker
	  ▪ Open circuit in wiring harness between the following terminals:
	  • Audio unit terminal 1A and front speaker (LH) terminal C
	  • Audio unit terminal 1C and front speaker (LH) terminal B
	  • Audio unit terminal 1D and front speaker (RH) terminal C
	  • Audio unit terminal 1F and front speaker (RH) terminal B
	  • Audio unit terminal 1S and rear speaker (LH) terminal C
	  • Audio unit terminal 1U and rear speaker (LH) terminal B
	  • Audio unit terminal 1V and rear speaker (RH) terminal C
	  • Audio unit terminal 1X and rear speaker (RH) terminal B
	  ▪ Short to ground in wiring harness between the following terminals:
	  • Audio unit terminal 1A and front speaker (LH) terminal C
	  • Audio unit terminal 1C and front speaker (LH) terminal B

	Audio unit terminal 1D and front speaker (RH) terminal C • Audio unit terminal 1F and front speaker (RH) terminal B • Audio unit terminal 1S and rear speaker (LH) terminal C • Audio unit terminal 1U and rear speaker (LH) terminal B • Audio unit terminal 1V and rear speaker (RH) terminal C • Audio unit terminal 1X and rear speaker (RH) terminal B • Audio unit malfunction

Diagnostic Procedure

Step	Inspection		Action
1	**VERIFY MALFUNCTION SYMPTOM** • The ignition is switched to ACC or ON (engine off or on). • Launch the “Speaker Inspection” of the on-board diagnostic assist function. (See **DIAGNOSTIC ASSIST FUNCTION [AUDIO]**.) • Is sound output from each speaker?	Yes	• System is normal. • Due to the possibility that sound is not output in some modes, verify the malfunction in the symptom troubleshooting chart and perform the other applicable malfunction diagnosis. (See **SYMPTOM TROUBLESHOOTING [ENTERTAINMENT SYSTEM [WITHOUT CENTER DISPLAY]]**.)
		No	**No sound is produced from all speakers** • Go to the next step. **No sound is produced from some speakers** • Go to Step 3.
2	**INSPECT AUDIO UNIT CONNECTOR** • Switch the ignition OFF. • Disconnect the negative battery cable. (See **NEGATIVE BATTERY CABLE**	Yes	Replace the audio unit, then go to Step 7. (See **AUDIO UNIT REMOVAL/INSTALLATION**.)
		No	Repair or replace the connector, then go to Step 7.

	DISCONNECTION/CONNECTION [SKYACTIV-G 2.0, SKYACTIV-G 2.5].) • Disconnect the audio unit connector. • Inspect the connector engagement and connection condition and inspect the terminals for damage, deformation, corrosion, or disconnection. • Is the connector normal?		
3	**INSPECT SPEAKER CONNECTIONS** • Switch the ignition OFF. • Disconnect the negative battery cable. (See **NEGATIVE BATTERY CABLE DISCONNECTION/CONNECTION [SKYACTIV-G 2.0, SKYACTIV-G 2.5]**.) • Disconnect the connector of the speaker which is malfunctioning. • Inspect the connector engagement and connection condition and inspect the terminals for damage, deformation, corrosion, or disconnection. • Is the connector normal?	Yes	Go to the next step.
		No	Repair or replace the connector, then go to Step 7.
4	**SPEAKER INSPECTION** • Inspect the malfunctioning speaker. (See **FRONT DOOR SPEAKER INSPECTION**.) (See **REAR DOOR SPEAKER INSPECTION**.) • Is the speaker resistance normal?	Yes	Go to the next step.
		No	Replace the malfunctioning speaker, then go to Step 7. (See **FRONT DOOR SPEAKER REMOVAL/INSTALLATION**.) (See **REAR DOOR SPEAKER REMOVAL/INSTALLATION**.)
5	**INSPECT SPEAKER**	Yes	Go to the next step.

CIRCUIT FOR OPEN CIRCUIT

- Disconnect the connector the audio unit connector.
- Verify the continuity of the wiring harness between the following terminals (vehicle wiring harness side) of the speakers which are malfunctioning.
  - Audio unit terminal 1A and front speaker (LH) terminal C
  - Audio unit terminal 1C and front speaker (LH) terminal B
  - Audio unit terminal 1D and front speaker (RH) terminal C
  - Audio unit terminal 1F and front speaker (RH) terminal B
  - Audio unit terminal 1S and rear speaker (LH) terminal C
  - Audio unit terminal 1U and rear speaker (LH) terminal B
  - Audio unit terminal 1V and rear speaker (RH) terminal C
  - Audio unit terminal 1X and rear speaker (RH)

No

- Refer to the wiring diagram and verify if there is a common connector between the following terminals.
  - Audio unit terminal 1A and front speaker (LH) terminal C
  - Audio unit terminal 1C and front speaker (LH) terminal B
  - Audio unit terminal 1D and front speaker (RH) terminal C
  - Audio unit terminal 1F and front speaker (RH) terminal B
  - Audio unit terminal 1S and rear speaker (LH) terminal C
  - Audio unit terminal 1U and rear speaker (LH) terminal B
  - Audio unit terminal 1V and rear speaker (RH) terminal C
  - Audio unit terminal 1X and rear speaker (RH) terminal B

  If there is a common connector:

  - Inspect the common connector and terminals for corrosion, damage, or disconnection and the common wiring harnesses

	terminal B • Is there continuity?		for an open circuit to determine the malfunctioning location. ▪ Repair or replace the malfunctioning location. **If there is no common connector:** ▪ Repair or replace the wiring harness which has an open circuit. • Go to Step 7.
6	**INSPECT SPEAKER CIRCUIT FOR SHORT TO GROUND** • Verify that the connector of the malfunctioning speaker and the audio unit connector are disconnected. • Inspect for continuity between the following terminals (vehicle wiring harness side) of the speakers which are malfunctioning and body ground. ▪ Front speaker (LH) terminal C ▪ Front speaker (LH) terminal B ▪ Front speaker (RH) terminal C ▪ Front speaker (RH) terminal B ▪ Rear speaker (LH) terminal C ▪ Rear speaker (LH) terminal	Yes	• Refer to the wiring diagram and verify if there is a common connector between the following terminals. ▪ Audio unit terminal 1A and front speaker (LH) terminal C ▪ Audio unit terminal 1C and front speaker (LH) terminal B ▪ Audio unit terminal 1D and front speaker (RH) terminal C ▪ Audio unit terminal 1F and front speaker (RH) terminal B ▪ Audio unit terminal 1S and rear speaker (LH) terminal C ▪ Audio unit terminal 1U and rear speaker (LH) terminal B ▪ Audio unit terminal 1V and rear speaker (RH)

	B ▪ Rear speaker (RH) terminal C ▪ Rear speaker (RH) terminal B • Is there continuity?		terminal C ▪ Audio unit terminal 1X and rear speaker (RH) terminal B **If there is a common connector:** ▪ Inspect the common connector and terminals for corrosion, damage, or disconnection and the common wiring harnesses for short to ground to determine the malfunctioning location. ▪ Repair or replace the malfunctioning location. **If there is no common connector:** ▪ Repair or replace the wiring harness which is shorted to ground. • Go to the next step.
		No	Replace the audio unit, then go to the next step. (See **AUDIO UNIT REMOVAL/INSTALLATION**.)
7	**VERIFY IF MALFUNCTION CAUSE IS CORRECTED** • Switch the ignition to ACC or ON (engine off or on). • Launch the “Speaker Inspection” of the on-board diagnostic assist function. (See **DIAGNOSTIC ASSIST FUNCTION [AUDIO]**.)	Yes	Troubleshooting completed. (explain the contents of the servicing to the customer)
		No	Verify the malfunction symptom in the symptom troubleshooting chart and perform the other applicable malfunction diagnosis. (See **SYMPTOM TROUBLESHOOTING [ENTERTAINMENT SYSTEM [WITHOUT CENTER DISPLAY]]**.)

	• Is sound output from each speaker?		

2014 - Mazda3 - Body and Accessories

NO USB AUDIO SOUND OUTPUT [ENTERTAINMENT SYSTEM [WITHOUT CENTER DISPLAY]]

Description	**NO USB AUDIO SOUND OUTPUT**
	Radio, CD, AUX audio, Bluetooth® audio is output, but no USB sound
Possible Causes	• USB media malfunction • Connector poor contact or terminal damage • Auxiliary jack/USB port malfunction • Open circuit in wiring harness between the following terminals: ▪ Audio unit terminal 3C and auxiliary jack/USB port terminal UA ▪ Audio unit terminal 3D and auxiliary jack/USB port terminal UB ▪ Audio unit terminal 3B and auxiliary jack/USB port terminal UC ▪ Audio unit terminal 3A and auxiliary jack/USB port terminal UD • Short to ground in wiring harness between the following terminals: ▪ Audio unit terminal 3C and auxiliary jack/USB port terminal UA ▪ Audio unit terminal 3D and auxiliary jack/USB port terminal UB ▪ Audio unit terminal 3B and auxiliary jack/USB port terminal UC ▪ Audio unit terminal 3A and auxiliary jack/USB port terminal UD • Short to power supply in wiring harness between the following terminals: ▪ Audio unit terminal 3C and auxiliary jack/USB port terminal UA ▪ Audio unit terminal 3D and auxiliary jack/USB port terminal UB ▪ Audio unit terminal 3B and auxiliary jack/USB port terminal UC ▪ Audio unit terminal 3A and auxiliary jack/USB port terminal UD • Audio unit malfunction

Diagnostic Procedure

Step	Inspection		Action
1	**DETERMINE IF MALFUNCTION CAUSE IS USB MEDIA** • Switch the ignition OFF.	Yes	System is normal. (Explain to the customer that the USB media or internal data has a malfunction)
		No	Go to the next step.

	• After obtaining the customer's consent, replace with a USB media that was not used when the malfunction occurred. • Switch the ignition to ACC or ON (engine off or on). • Operate the audio unit and select the USB media. • Is sound from the USB audio output?		
2	**AUXILIARY JACK/USB PORT CONNECTOR INSPECTION** • Disconnect the negative battery cable. (See **NEGATIVE BATTERY CABLE DISCONNECTION/CONNECTION [SKYACTIV-G 2.0, SKYACTIV-G 2.5]**.) • Disconnect the connector of the auxiliary jack/USB port. • Inspect the connector engagement and connection condition and inspect the terminals for damage, deformation, corrosion, or disconnection. • Is the connector normal?	Yes	Go to the next step.
		No	Repair or replace the connector, then go to Step 8.
3	**INSPECT AUDIO UNIT CONNECTOR** • Disconnect the audio unit connector. • Inspect the connector engagement and connection condition and inspect the terminals for damage, deformation, corrosion, or disconnection. • Is the connector normal?	Yes	Go to the next step.
		No	Repair or replace the connector, then go to Step 8.
4	**AUXILIARY JACK/USB PORT INSPECTION** • Inspect the auxiliary jack/USB port. (See **AUXILIARY JACK/USB PORT INSPECTION**.)	Yes	Go to the next step.
		No	Replace the auxiliary jack/USB port, then go to Step 8. (See **AUXILIARY JACK/USB PORT REMOVAL/INSTALLATION**.)

	• Is the auxiliary jack/USB port normal?		
5	**VERIFY IF MALFUNCTION CAUSE IS OPEN CIRCUIT IN WIRING HARNESS BETWEEN AUDIO UNIT AND AUXILIARY JACK/USB PORT** • Verify that the connectivity audio unit and the auxiliary jack/USB port connectors are disconnected. • Inspect the wiring harness for continuity between the following terminals (vehicle wiring harness side). ▪ Audio unit terminal 3C and auxiliary jack/USB port terminal UA ▪ Audio unit terminal 3D and auxiliary jack/USB port terminal UB ▪ Audio unit terminal 3B and auxiliary jack/USB port terminal UC ▪ Audio unit terminal 3A and auxiliary jack/USB port terminal UD • Is there continuity?	Yes	Go to the next step.
		No	• Refer to the wiring diagram and verify if there is a common connector between the following terminals. ▪ Audio unit terminal 3C and auxiliary jack/USB port terminal UA ▪ Audio unit terminal 3D and auxiliary jack/USB port terminal UB ▪ Audio unit terminal 3B and auxiliary jack/USB port terminal UC ▪ Audio unit terminal 3A and auxiliary jack/USB port terminal UD **If there is a common connector:** • Inspect the common connector and terminals for corrosion, damage, or disconnection and the common wiring harnesses for an open circuit to determine the malfunctioning location. • Repair or replace the malfunctioning location. **If there is no common connector:** • Repair or replace the wiring harness which has an open circuit. • Go to Step 8.

6	**VERIFY IF MALFUNCTION CAUSE IS SHORT CIRCUIT TO GROUND IN WIRING HARNESS BETWEEN AUDIO UNIT AND AUXILIARY JACK/USB PORT** • Verify that the connectivity audio unit and the auxiliary jack/USB port connectors are disconnected. • Inspect for continuity between the following wiring harness terminals (vehicle wiring harness side) and body ground. ▪ Auxiliary jack/USB port terminal UA ▪ Auxiliary jack/USB port terminal UB ▪ Auxiliary jack/USB port terminal UC ▪ Auxiliary jack/USB port terminal UD • Is there continuity?	Yes	Refer to the wiring diagram and verify if there is a common connector between the following terminals. ▪ Audio unit terminal 3C and auxiliary jack/USB port terminal UA ▪ Audio unit terminal 3D and auxiliary jack/USB port terminal UB ▪ Audio unit terminal 3B and auxiliary jack/USB port terminal UC ▪ Audio unit terminal 3A and auxiliary jack/USB port terminal UD **If there is a common connector:** • Inspect the common connector and terminals for corrosion, damage, or disconnection and the common wiring harnesses for short to ground to determine the malfunctioning location. • Repair or replace the malfunctioning location. **If there is no common connector:** • Repair or replace the wiring harness which is shorted to ground. • Go to Step 8.
		No	Go to the next step.
7	**VERIFY IF MALFUNCTION CAUSE IS SHORT CIRCUIT TO POWER SUPPLY IN**	Yes	• Refer to the wiring diagram and verify if there is a common connector between the following terminals.

	WIRING HARNESS BETWEEN AUDIO UNIT AND AUXILIARY JACK/USB PORT • Verify that the connectivity audio unit and the auxiliary jack/USB port connectors are disconnected. • Reconnect the negative battery cable. (See **NEGATIVE BATTERY CABLE DISCONNECTION/CONNECTION [SKYACTIV-G 2.0, SKYACTIV-G 2.5]**.) • Switch the ignition to ACC or ON (engine off or on). • Measure the voltage at the following terminals (vehicle wiring harness side). ▪ Auxiliary jack/USB port terminal E ▪ Auxiliary jack/USB port terminal C ▪ Auxiliary jack/USB port terminal B ▪ Auxiliary jack/USB port terminal D • Is the voltage **B+**?		▪ Audio unit terminal 3C and auxiliary jack/USB port terminal UA ▪ Audio unit terminal 3D and auxiliary jack/USB port terminal UB ▪ Audio unit terminal 3B and auxiliary jack/USB port terminal UC ▪ Audio unit terminal 3A and auxiliary jack/USB port terminal UD **If there is a common connector:** • Inspect the common connector and terminals for corrosion, damage, or disconnection and the common wiring harnesses for an open circuit to determine the malfunctioning location. • Repair or replace the malfunctioning location. **If there is no common connector:** • Repair or replace the wiring harness which is shorted to the power supply. • Go to the next step.
		No	Replace the audio unit, then go to the next step. (See **AUDIO UNIT REMOVAL/INSTALLATION**.)
8	**VERIFY IF MALFUNCTION CAUSE IS CORRECTED** • Disconnect the negative	Yes	Troubleshooting completed. (explain the contents of the servicing to the customer)
		No	Verify the malfunction symptom in the symptom troubleshooting

	battery cable. (See **NEGATIVE BATTERY CABLE DISCONNECTION/CONNECTION [SKYACTIV-G 2.0, SKYACTIV-G 2.5]**.) • Connect all the connectors. • Reconnect the negative battery cable. (See **NEGATIVE BATTERY CABLE DISCONNECTION/CONNECTION [SKYACTIV-G 2.0, SKYACTIV-G 2.5]**.) • Insert the USB disc when the malfunction occurred. • Switch the ignition to ACC or ON (engine off or on). • Operate the audio unit and select the USB media. • Is sound from the USB audio output?		chart and perform the other applicable malfunction diagnosis. (See **SYMPTOM TROUBLESHOOTING [ENTERTAINMENT SYSTEM [WITHOUT CENTER DISPLAY]]**.)

2014 - Mazda3 - Body and Accessories

NO CD SOUND OUTPUT [ENTERTAINMENT SYSTEM [WITHOUT CENTER DISPLAY]]

Description	**NO CD SOUND OUTPUT**
	Radio, AUX audio, Bluetooth® audio, and USB audio is output, but no CD sound

Possible Causes	• CD disc malfunction
	• Connector poor contact or terminal damage
	• Open circuit in wiring harness between the following terminals:
	  ▪ Audio unit terminal 2M and CD player terminal L
	  ▪ Audio unit terminal 2N and CD player terminal N
	  ▪ Audio unit terminal 2O and CD player terminal P
	  ▪ Audio unit terminal 2P and CD player terminal R
	  ▪ Audio unit terminal 1O and CD player terminal G
	  ▪ Audio unit terminal 1Q and CD player terminal H
	• Short to ground in wiring harness between the following terminals:
	  ▪ Audio unit terminal 2M and CD player terminal L
	  ▪ Audio unit terminal 2N and CD player terminal N
	  ▪ Audio unit terminal 2O and CD player terminal P
	  ▪ Audio unit terminal 2P and CD player terminal R
	  ▪ Audio unit terminal 1O and CD player terminal G
	  ▪ Audio unit terminal 1Q and CD player terminal H
	• Short to power supply in wiring harness between the following terminals:
	  ▪ Audio unit terminal 2M and CD player terminal L
	  ▪ Audio unit terminal 2N and CD player terminal N
	  ▪ Audio unit terminal 2O and CD player terminal P
	  ▪ Audio unit terminal 2P and CD player terminal R
	  ▪ Audio unit terminal 1O and CD player terminal G
	  ▪ Audio unit terminal 1Q and CD player terminal H
	• CD player malfunction
	• Audio unit malfunction

Diagnostic Procedure

Step	Inspection		Action
1	**VERIFY CD DISC CONDITION** • Verify the CD disc condition when the malfunction occurred. • Is there any dirt or scratches on the CD disc?	Yes	• Remove dirt on the CD disc or replace with a CD disc that is not scratched or damaged. • Go to Step 10.
		No	Go to the next step.
2	**DETERMINE IF MALFUNCTION CAUSE IS CD DISC** • After obtaining the customer's consent, replace with a CD that was not used when the malfunction occurred. • Is CD sound produced?	Yes	Go to the next step.
		No	Go to Step 4.
3	**VERIFY IF DATA TYPE OTHER THAN CDDA/MP3/WMA/AAC IS MIXED IN CD DISC** • Verify the CD disc data content when the malfunction occurred. • Is there data other than CDDA/MP3/WMA/AAC data mixed in?	Yes	• Replace with a CD disc containing only CDDA/MP3/WMA/AAC data and verify the malfunction symptom. **If the malfunction symptom is eliminated** ▪ System is normal (explain to the customer that the cause was a CD disc containing data other than CDDA/MP3/WMA/AAC). **If the malfunction symptom is not eliminated** ▪ Replace the CD player, then go to Step 10. (See **CD PLAYER REMOVAL**.) (See **CD PLAYER INSTALLATION**.)
		No	Go to the next step.
4	**INSPECT CD PLAYER CONNECTOR** • Disconnect the negative battery cable. (See **NEGATIVE BATTERY CABLE DISCONNECTION/CONNECTION [SKYACTIV-G 2.0, SKYACTIV-G 2.5]**.)	Yes	Go to the next step.
		No	Repair or replace the connector, then go to Step 10.

	• Disconnect the CD player connector. • Inspect the connector engagement and connection condition and inspect the terminals for damage, deformation, corrosion, or disconnection. • Is the connector normal?		
5	**INSPECT AUDIO UNIT CONNECTOR** • Disconnect the audio unit connector. • Inspect the connector engagement and connection condition and inspect the terminals for damage, deformation, corrosion, or disconnection. • Is the connector normal?	Yes	Go to the next step.
		No	Repair or replace the connector, then go to Step 10.
6	**VERIFY IF MALFUNCTION CAUSE IS OPEN CIRCUIT IN WIRING HARNESS BETWEEN AUDIO UNIT AND CD PLAYER** • Verify that the CD player and the audio unit connectors are disconnected. • Inspect the wiring harness for continuity between the following terminals (vehicle wiring harness side). ▪ Audio unit terminal 2M and CD player terminal L ▪ Audio unit terminal 2N and CD player terminal N ▪ Audio unit terminal 2O and CD player terminal P ▪ Audio unit terminal 2P and CD player	Yes	Go to the next step.
		No	• Refer to the wiring diagram and verify if there is a common connector between the following terminals. ▪ Audio unit terminal 2M and CD player terminal L ▪ Audio unit terminal 2N and CD player terminal N ▪ Audio unit terminal 2O and CD player terminal P ▪ Audio unit terminal 2P and CD player terminal R ▪ Audio unit terminal 1O and CD player terminal G ▪ Audio unit terminal 1Q and CD player terminal H **If there is a common connector:** • Inspect the common connector and terminals for corrosion, damage, or disconnection and the

	terminal R ▪ Audio unit terminal 1O and CD player terminal G ▪ Audio unit terminal 1Q and CD player terminal H • Is there continuity?		common wiring harnesses for an open circuit to determine the malfunctioning location. • Repair or replace the malfunctioning location. **If there is no common connector:** • Repair or replace the wiring harness which has an open circuit. • Go to Step 10.
7	**VERIFY IF MALFUNCTION CAUSE IS SHORT CIRCUIT TO GROUND IN WIRING HARNESS BETWEEN AUDIO UNIT AND CD PLAYER** • Verify that the CD player and the audio unit connectors are disconnected. • Inspect for continuity between the following wiring harness terminals (vehicle wiring harness side) and body ground. ▪ CD player terminal L ▪ CD player terminal N ▪ CD player terminal P ▪ CD player terminal R ▪ CD player terminal G ▪ CD player terminal H • Is there continuity?	Yes	• Refer to the wiring diagram and verify if there is a common connector between the following terminals. ▪ Audio unit terminal 2M and CD player terminal L ▪ Audio unit terminal 2N and CD player terminal N ▪ Audio unit terminal 2O and CD player terminal P ▪ Audio unit terminal 2P and CD player terminal R ▪ Audio unit terminal 1O and CD player terminal G ▪ Audio unit terminal 1Q and CD player terminal H **If there is a common connector:** • Inspect the common connector and terminals for corrosion, damage, or disconnection and the common wiring harnesses for short to ground to

			determine the malfunctioning location. • Repair or replace the malfunctioning location. **If there is no common connector:** • Repair or replace the wiring harness which is shorted to ground. • Go to Step 10.
		No	Go to the next step.
8	**VERIFY IF MALFUNCTION CAUSE IS SHORT CIRCUIT TO POWER SUPPLY IN WIRING HARNESS BETWEEN AUDIO UNIT AND CD UNIT** • Verify that the CD player and the audio unit connectors are disconnected. • Reconnect the negative battery cable. (See **NEGATIVE BATTERY CABLE DISCONNECTION/CONNECTION [SKYACTIV-G 2.0, SKYACTIV-G 2.5]**.) • Switch the ignition to ACC or ON (engine off or on). • Measure the voltage at the following terminals (vehicle wiring harness side). ▪ CD player terminal L ▪ CD player terminal N ▪ CD player terminal P ▪ CD player terminal R ▪ CD player terminal G	Yes	• Refer to the wiring diagram and verify if there is a common connector between the following terminals. ▪ Audio unit terminal 2M and CD player terminal L ▪ Audio unit terminal 2N and CD player terminal N ▪ Audio unit terminal 2O and CD player terminal P ▪ Audio unit terminal 2P and CD player terminal R ▪ Audio unit terminal 1O and CD player terminal G ▪ Audio unit terminal 1Q and CD player terminal H **If there is a common connector:** • Inspect the common connector and terminals for corrosion, damage, or disconnection and the common wiring harnesses for an open circuit to determine the

	▪ CD player terminal H • Is the voltage **B+**?		malfunctioning location. • Repair or replace the malfunctioning location. **If there is no common connector:** • Repair or replace the wiring harness which is shorted to the power supply. • Go to Step 10.
		No	Go to the next step.
9	**DETERMINE IF MALFUNCTION CAUSE IS CD PLAYER** • Disconnect the negative battery cable. (See **NEGATIVE BATTERY CABLE DISCONNECTION/CONNECTION [SKYACTIV-G 2.0, SKYACTIV-G 2.5]**.) • Replace the CD player. (See **CD PLAYER REMOVAL**.) (See **CD PLAYER INSTALLATION**.) • Connect all the connectors. • Reconnect the negative battery cable. (See **NEGATIVE BATTERY CABLE DISCONNECTION/CONNECTION [SKYACTIV-G 2.0, SKYACTIV-G 2.5]**.) • Switch the ignition to ACC or ON (engine off or on). • Insert the CD disc when the malfunction occurred. • Is CD sound produced?	Yes	Go to the next step.
		No	Replace the audio unit, then go to the next step. (See **AUDIO UNIT REMOVAL/INSTALLATION**.)
10	**VERIFY IF MALFUNCTION CAUSE IS CORRECTED**	Yes	Troubleshooting completed. (explain the contents of the servicing to the customer)

	• Switch the ignition to ACC or ON (engine off or on). • Insert the CD disc when the malfunction occurred. • Is CD sound produced?	No	Verify the malfunction symptom in the symptom troubleshooting chart and perform the other applicable malfunction diagnosis. (See **SYMPTOM TROUBLESHOOTING [ENTERTAINMENT SYSTEM [WITHOUT CENTER DISPLAY]]**.)

2014 - Mazda3 - Body and Accessories

NO AUX AUDIO SOUND OUTPUT [ENTERTAINMENT SYSTEM [WITHOUT CENTER DISPLAY]]

Description	**NO AUX AUDIO SOUND OUTPUT**
	Radio, CD, USB audio, Bluetooth® audio is produced, but no AUX audio
Possible Causes	• External device malfunction • Connector poor contact or terminal damage • Auxiliary jack/USB port malfunction • Open circuit in wiring harness between the following terminals: ▪ Audio unit terminal 2L and auxiliary jack/USB port terminal E ▪ Audio unit terminal 2K and auxiliary jack/USB port terminal D ▪ Audio unit terminal 2J and auxiliary jack/USB port terminal C ▪ Audio unit terminal 2I and auxiliary jack/USB port terminal B • Short to ground in wiring harness between the following terminals: ▪ Audio unit terminal 2L and auxiliary jack/USB port terminal E ▪ Audio unit terminal 2K and auxiliary jack/USB port terminal D ▪ Audio unit terminal 2J and auxiliary jack/USB port terminal C ▪ Audio unit terminal 2I and auxiliary jack/USB port terminal B • Short to power supply in wiring harness between the following terminals: ▪ Audio unit terminal 2L and auxiliary jack/USB port terminal E ▪ Audio unit terminal 2K and auxiliary jack/USB port terminal D ▪ Audio unit terminal 2J and auxiliary jack/USB port terminal C ▪ Audio unit terminal 2I and auxiliary jack/USB port terminal B • Audio unit malfunction

Diagnostic Procedure

Step	Inspection		Action
1	**DETERMINE IF MALFUNCTION CAUSE IS EXTERNAL DEVICE** • Switch the ignition OFF.	Yes	System is normal. (Explain to the customer that the external device or internal data has a malfunction)
		No	Go to the next step.

	• After obtaining the customer's consent, replace with an external media that was not used when the malfunction occurred. • Switch the ignition to ACC or ON (engine off or on). • Operate the audio unit and select the AUX audio. • Is sound from the AUX audio output?		
2	**AUXILIARY JACK/USB PORT CONNECTOR INSPECTION** • Disconnect the negative battery cable. (See **NEGATIVE BATTERY CABLE DISCONNECTION/CONNECTION [SKYACTIV-G 2.0, SKYACTIV-G 2.5]**.) • Disconnect the connector of the auxiliary jack/USB port. • Inspect the connector engagement and connection condition and inspect the terminals for damage, deformation, corrosion, or disconnection. • Is the connector normal?	Yes	Go to the next step.
		No	Repair or replace the connector, then go to Step 8.
3	**INSPECT AUDIO UNIT CONNECTOR** • Disconnect the audio unit connector. • Inspect the connector engagement and connection condition and inspect the terminals for damage, deformation, corrosion, or disconnection. • Is the connector normal?	Yes	Go to the next step.
		No	Repair or replace the connector, then go to Step 8.
4	**AUXILIARY JACK/USB PORT INSPECTION** • Inspect the auxiliary jack/USB port. (See **AUXILIARY JACK/USB PORT INSPECTION**.)	Yes	Go to the next step.
		No	Replace the auxiliary jack/USB port, then go to Step 8. (See **AUXILIARY JACK/USB PORT REMOVAL/INSTALLATION**.)

	• Is the auxiliary jack/USB port normal?		
5	**VERIFY IF MALFUNCTION CAUSE IS OPEN CIRCUIT IN WIRING HARNESS BETWEEN AUDIO UNIT AND AUXILIARY JACK/USB PORT** • Verify that the connectivity audio unit and the auxiliary jack/USB port connectors are disconnected. • Inspect the wiring harness for continuity between the following terminals (vehicle wiring harness side). ▪ Audio unit terminal 2L and auxiliary jack/USB port terminal E ▪ Audio unit terminal 2K and auxiliary jack/USB port terminal D ▪ Audio unit terminal 2J and auxiliary jack/USB port terminal C ▪ Audio unit terminal 2I and auxiliary jack/USB port terminal B • Is there continuity?	Yes	Go to the next step.
		No	• Refer to the wiring diagram and verify if there is a common connector between the following terminals. ▪ Audio unit terminal 2L and auxiliary jack/USB port terminal E ▪ Audio unit terminal 2K and auxiliary jack/USB port terminal D ▪ Audio unit terminal 2J and auxiliary jack/USB port terminal C ▪ Audio unit terminal 2I and auxiliary jack/USB port terminal B **If there is a common connector:** • Inspect the common connector and terminals for corrosion, damage, or disconnection and the common wiring harnesses for an open circuit to determine the malfunctioning location. • Repair or replace the malfunctioning location. **If there is no common connector:** • Repair or replace the wiring harness which has an open circuit. • Go to Step 8.

6	**VERIFY IF MALFUNCTION CAUSE IS SHORT CIRCUIT TO GROUND IN WIRING HARNESS BETWEEN AUDIO UNIT AND AUXILIARY JACK/USB PORT** • Verify that the connectivity audio unit and the auxiliary jack/USB port connectors are disconnected. • Inspect for continuity between the following wiring harness terminals (vehicle wiring harness side) and body ground. ▪ Auxiliary jack/USB port terminal E ▪ Auxiliary jack/USB port terminal D ▪ Auxiliary jack/USB port terminal C ▪ Auxiliary jack/USB port terminal B • Is there continuity?	Yes	Refer to the wiring diagram and verify if there is a common connector between the following terminals. ▪ Audio unit terminal 2L and auxiliary jack/USB port terminal E ▪ Audio unit terminal 2K and auxiliary jack/USB port terminal D ▪ Audio unit terminal 2J and auxiliary jack/USB port terminal C ▪ Audio unit terminal 2I and auxiliary jack/USB port terminal B **If there is a common connector:** • Inspect the common connector and terminals for corrosion, damage, or disconnection and the common wiring harnesses for short to ground to determine the malfunctioning location. • Repair or replace the malfunctioning location. **If there is no common connector:** • Repair or replace the wiring harness which is shorted to ground. • Go to Step 8.
		No	Go to the next step.
7	**VERIFY IF MALFUNCTION CAUSE IS SHORT CIRCUIT TO POWER SUPPLY IN**	Yes	• Refer to the wiring diagram and verify if there is a common connector between the following terminals.

	WIRING HARNESS BETWEEN AUDIO UNIT AND AUXILIARY JACK/USB PORT • Verify that the connectivity audio unit and the auxiliary jack/USB port connectors are disconnected. • Reconnect the negative battery cable. (See **NEGATIVE BATTERY CABLE DISCONNECTION/CONNECTION [SKYACTIV-G 2.0, SKYACTIV-G 2.5]**.) • Switch the ignition to ACC or ON (engine off or on). • Measure the voltage at the following terminals (vehicle wiring harness side). ▪ Auxiliary jack/USB port terminal E ▪ Auxiliary jack/USB port terminal D ▪ Auxiliary jack/USB port terminal C ▪ Auxiliary jack/USB port terminal B • Is the voltage **B+**?		▪ Audio unit terminal 2L and auxiliary jack/USB port terminal E ▪ Audio unit terminal 2K and auxiliary jack/USB port terminal D ▪ Audio unit terminal 2J and auxiliary jack/USB port terminal C ▪ Audio unit terminal 2I and auxiliary jack/USB port terminal B **If there is a common connector:** • Inspect the common connector and terminals for corrosion, damage, or disconnection and the common wiring harnesses for an open circuit to determine the malfunctioning location. • Repair or replace the malfunctioning location. **If there is no common connector:** • Repair or replace the wiring harness which is shorted to the power supply. • Go to the next step.
		No	Replace the audio unit, then go to the next step. (See **AUDIO UNIT REMOVAL/INSTALLATION**.)
8	**VERIFY IF MALFUNCTION CAUSE IS CORRECTED** • Disconnect the negative	Yes	Troubleshooting completed. (explain the contents of the servicing to the customer)
		No	Verify the malfunction symptom in the symptom troubleshooting

	battery cable. (See **NEGATIVE BATTERY CABLE DISCONNECTION/CONNECTION [SKYACTIV-G 2.0, SKYACTIV-G 2.5]**.) • Connect all the connectors. • Reconnect the negative battery cable. (See **NEGATIVE BATTERY CABLE DISCONNECTION/CONNECTION [SKYACTIV-G 2.0, SKYACTIV-G 2.5]**.) • Insert the external device when the malfunction occurred. • Switch the ignition to ACC or ON (engine off or on). • Operate the audio unit and select the AUX audio. • Is sound from the AUX audio output?		chart and perform the other applicable malfunction diagnosis. (See **SYMPTOM TROUBLESHOOTING [ENTERTAINMENT SYSTEM [WITHOUT CENTER DISPLAY]]**.)

2014 - Mazda3 - Body and Accessories

AUDIO UNIT DISPLAY NOT DISPLAYED [ENTERTAINMENT SYSTEM [WITHOUT CENTER DISPLAY]]

Description	**AUDIO UNIT DISPLAY NOT DISPLAYED**
	Does not display even with the audio unit power turned on
Possible Causes	• Connector poor contact or terminal damage • Open circuit in wiring harness between audio unit terminal 1W and body ground • Audio unit malfunction

Diagnostic Procedure

Step	Inspection		Action
1	**INSPECT AUDIO UNIT CONNECTOR** • Switch the ignition OFF. • Disconnect the negative battery cable. (See **NEGATIVE BATTERY CABLE DISCONNECTION/CONNECTION [SKYACTIV-G 2.0, SKYACTIV-G 2.5]**.) • Disconnect the audio unit connector. • Inspect the connector engagement and connection condition and inspect the terminals for damage, deformation, corrosion, or disconnection. • Is the connector normal?	Yes	Go to the next step.
		No	Repair or replace the connector, then go to Step 3.

2	**VERIFY IF MALFUNCTION CAUSE IS OPEN CIRCUIT IN WIRING HARNESS BETWEEN AUDIO UNIT AND BODY GROUND** • Verify that the audio unit connectors are disconnected. • Inspect the wiring harness for continuity between audio unit terminal 1W and body ground (vehicle wiring harness side). • Is there continuity?	Yes	Replace the audio unit, then go to the next step. (See **AUDIO UNIT REMOVAL/INSTALLATION**.)
		No	• Refer to the wiring diagram and verify if there is a common connector between audio unit terminal 1W and body ground. **If there is a common connector:** ▪ Inspect the common connector and terminals for corrosion, damage, or disconnection and the common wiring harnesses for an open circuit to determine the malfunctioning location. ▪ Repair or replace the malfunctioning location. **If there is no common connector:** ▪ Repair or replace the wiring harness which has an open circuit. • Go to the next step.
3	**VERIFY IF MALFUNCTION CAUSE IS CORRECTED** • Connect the audio unit connector. • Reconnect the negative battery cable. (See **NEGATIVE BATTERY CABLE DISCONNECTION/CONNECTION [SKYACTIV-G 2.0, SKYACTIV-G 2.5]**.) • Switch the ignition to ACC or	Yes	Troubleshooting completed. (Explain the contents of the servicing to the customer.)
		No	Verify the malfunction symptom in the symptom troubleshooting chart and perform the other applicable malfunction diagnosis. (See **SYMPTOM TROUBLESHOOTING [ENTERTAINMENT SYSTEM [WITHOUT CENTER DISPLAY]]**.)

	ON (engine off or on). • Press the POWER/VOLUME button to turn on the audio unit power. • Does the display of the audio unit display images?		

2014 - Mazda3 - Body and Accessories

FOREWORD [SEAT WARMER SYSTEM]

WARNING:

- Handling a side air bag improperly can accidentally operate (deploy) the air bag, which may seriously injure you. Read the service warnings/cautions in the Workshop Manual before handling the front seat (side air bag integrated). (See **AIR BAG SYSTEM SERVICE WARNINGS [TWO-STEP DEPLOYMENT CONTROL SYSTEM]**.) (See **AIR BAG SYSTEM SERVICE CAUTIONS [TWO-STEP DEPLOYMENT CONTROL SYSTEM]**.) (See **AIR BAG SYSTEM SERVICE WARNINGS [STANDARD DEPLOYMENT CONTROL SYSTEM]**.) (See **AIR BAG SYSTEM SERVICE CAUTIONS [STANDARD DEPLOYMENT CONTROL SYSTEM]**.)
- If the sliding mechanisms on both sides are not locked after assembling the front seat, the front seat will operate accidentally while the vehicle is driven, which could result in serious injury. After assembling the front seat, shake it up and down and verify that the sliding mechanism on the both sides are locked.

CAUTION:

- If the slide lever is operated after the front seat is removed, the left/right slide positions will deviate and the adjuster unit could be damaged after the front seat is installed. After removing a front seat, do not operate the slide lever.
- Verify that there are no malfunctions in the forward/back slide of the seat and in the adjuster unit after installing a front seat.
- When performing the procedure with a front seat removed from the vehicle, perform the procedure on a clean cloth so as not to damage or dirty the seat.
- When the passenger's seat is removed, perform the seat weight sensor inspection using the M-MDS after installing the passenger's seat. (See **SEAT WEIGHT SENSOR INSPECTION [TWO-STEP DEPLOYMENT CONTROL SYSTEM]**.)
- When the passenger's seat is replaced with a new one, perform the seat weight sensor calibration using the M-MDS. (See **SEAT WEIGHT SENSOR CALIBRATION [TWO-STEP DEPLOYMENT CONTROL SYSTEM]**.)

Troubleshooting Procedure

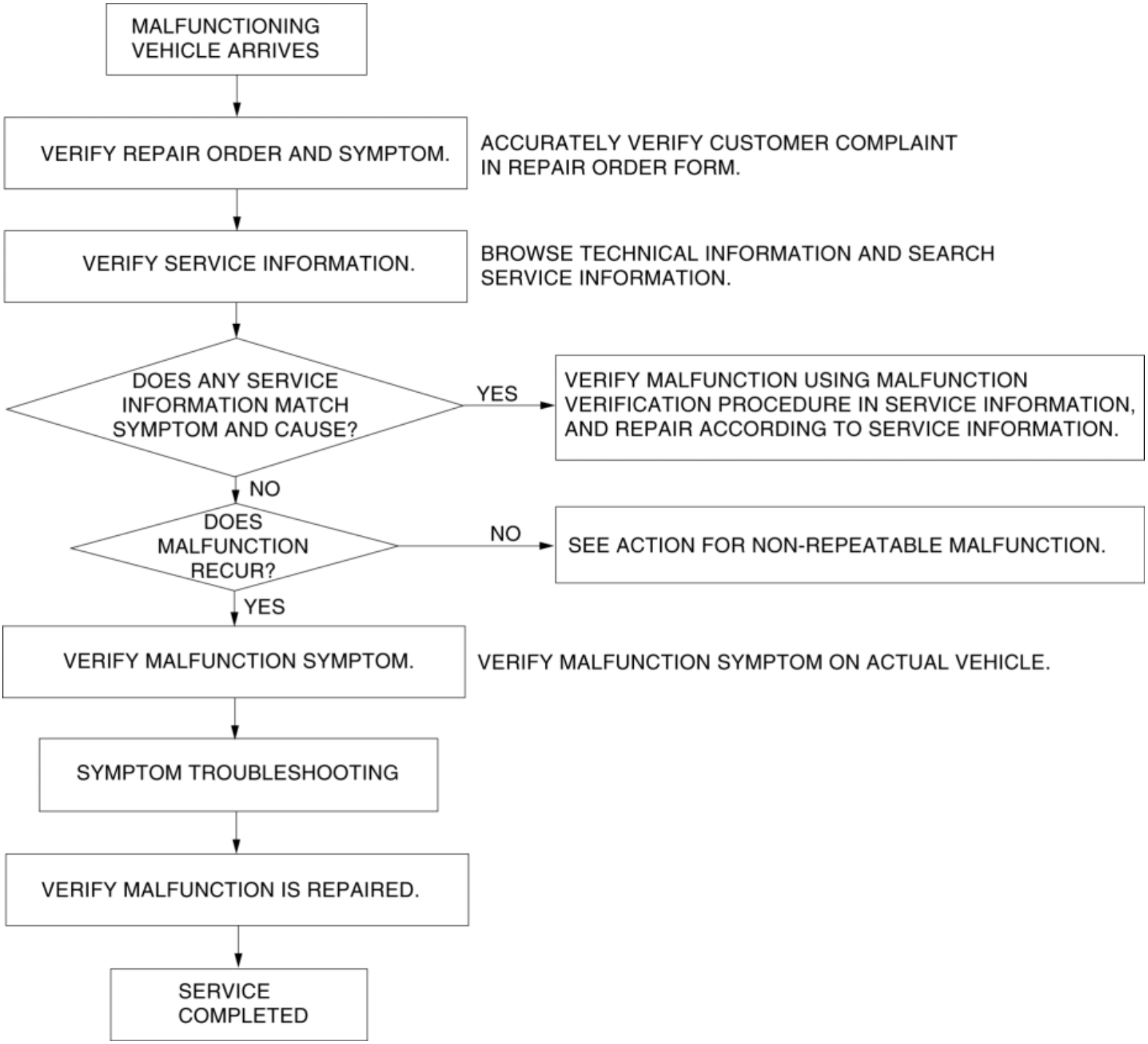

Action for non-repeatable malfunction

- If the malfunction does not recur, verify the malfunction cause by performing the following actions:
  - Based on the repair order form, attempt to drive the vehicle or perform tests to replicate the malfunction, record the data at that time, and detect the malfunction cause.

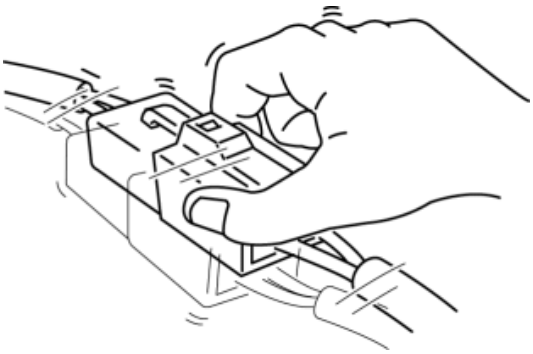

- Inspect the female terminals on the connector of the electric component which is suspected to be the cause of the malfunction for poor connection.

2014 - Mazda3 - Body and Accessories

SYMPTOM TROUBLESHOOTING [SEAT WARMER SYSTEM]

Troubleshooting item	Description
Seat warmer function is inoperative (See **SEAT WARMER FUNCTION IS INOPERATIVE [SEAT WARMER SYSTEM]**.)	• Seat warmer does not warm seat even though seat warmer switch is on
Seat warmer operates constantly (See **SEAT WARMER OPERATES CONSTANTLY [SEAT WARMER SYSTEM]**.)	• Seat warmer warms seat even though seat warmer switch is off
Temperature of seat warmer cannot be adjusted (See **TEMPERATURE OF SEAT WARMER CANNOT BE ADJUSTED [SEAT WARMER SYSTEM]**.)	• Seat warmer does not adjust temperature even though seat warmer Lo/Mid/Hi switch is switched between low and high • Seat warmer temperature continues to rise

2014 - Mazda3 - Body and Accessories

SYSTEM WIRING DIAGRAM [SEAT WARMER SYSTEM]

SYSTEM WIRING DIAGRAM [SEAT WARMER SYSTEM]

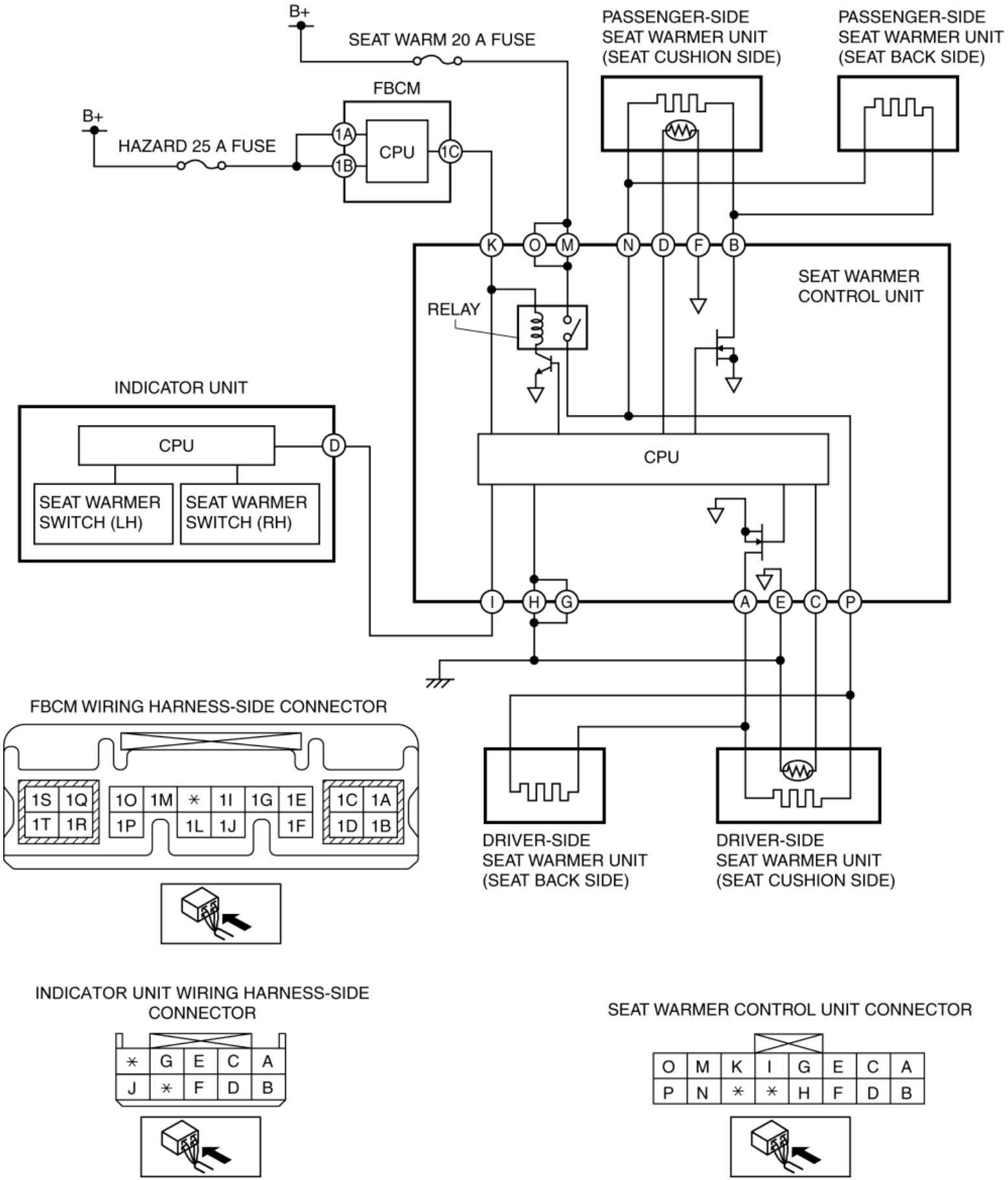

SYSTEM WIRING DIAGRAM [SEAT WARMER SYSTEM]

2014 - Mazda3 - Body and Accessories

SEAT WARMER FUNCTION IS INOPERATIVE [SEAT WARMER SYSTEM]

Description	Seat warmer does not warm seat even though seat warmer switch is on
Possible Causes	**The power supply is not supplied to filament of seat warmer** • Open circuit in seat warmer control unit power supply circuit: ▪ Seat warmer control unit terminal O and battery positive terminal ▪ Seat warmer control unit terminal M and battery positive terminal • SEAT WARM 20 A fuse malfunction (Blown fuse): • Poor connect the connector: ▪ Driver-side seat warmer unit connector and seat warmer control unit connector ▪ Passenger-side seat warmer unit connector and seat warmer control unit connector • Open circuit in wiring harness between the following terminal: ▪ Driver-side seat warmer unit terminal P and driver-side seat warmer unit terminal A ▪ Passenger-side seat warmer unit terminal N and passenger-side seat warmer unit terminal B **Seat warmer control unit not operation** • Open circuit or short to ground in wiring harness between the following terminal: ▪ FBCM terminal 1C and seat warmer control unit terminal K ▪ Seat warmer control unit terminal H and body ground ▪ Seat warmer control unit terminal G and body ground **Seat warmer control unit cannot control filament on** • Seat warmer control unit malfunction **Seat warmer filament does not generate heat** • Driver-side seat warmer unit (seat cushion side) malfunction • Driver-side seat warmer unit (seat back side) malfunction • Passenger-side seat warmer unit (seat cushion side) malfunction • Passenger-side seat warmer unit (seat back side) malfunction **Seat warmer control unit cannot receive operation signal** • Indicator unit malfunction

	• Seat warmer control unit malfunction • Open circuit or short to ground in wiring harness between the following terminal: ▪ Seat warmer control unit terminal I and indicator unit terminal D

Diagnostic Procedure

STEP	INSPECTION		ACTION
1	**DETERMINE IF THE MALFUNCTION CAUSE IS THE SEAT WARMER SWITCH** • Select either Low, Mid, or High on the seat warmer switch. • Does the seat warmer switch LED illuminate?	Yes	Go to the next step.
		No	Inspect the indicator unit. (See **INDICATOR UNIT INSPECTION**.)
2	**DETERMINE MALFUNCTIONING SYSTEM** • Are the seat warmers on both sides not operating?	Yes	Go to Step 8.
		No	Go to the next step.
3	**INSPECT SEAT WARMER CONTROL UNIT CONNECTOR** • Disconnect the negative battery cable. (See **NEGATIVE BATTERY CABLE DISCONNECTION/CONNECTION [SKYACTIV-G 2.0, SKYACTIV-G 2.5]**.) • Disconnect the seat warmer control unit connector. • Inspect the connector engagement and connection condition and inspect the terminals for damage, deformation, corrosion, or disconnection. • Is the connector normal?	Yes	Go to the next step.
		No	Repair or replace the connector, then go to Step 11.
4	**SEAT WARMER CONTROL UNIT POWER SUPPLY CIRCUIT INSPECTION** • Verify that the seat warmer control unit connector are disconnected. • Connect the negative battery cable. (See **NEGATIVE BATTERY**	Yes	Go to the next step.
		No	Inspect the SEAT WARM 20 A fuse. **If the fuse is blown:** • Refer to the wiring diagram and verify if there is a common connector between the following terminals.

CABLE DISCONNECTION/CONNECTION [SKYACTIV-G 2.0, SKYACTIV-G 2.5].)

- Switch the ignition ON (engine off or ON).
- Measure the voltage at the following terminal (wiring harness-side):
  - Seat warmer control unit terminal O
  - Seat warmer control unit terminal M
- Is the voltage **B+**?
  - SEAT WARM 20 A fuse and seat warmer control unit terminal O
  - SEAT WARM 20 A fuse and seat warmer control unit terminal M

If there is a common connector:

- Determine the malfunctioning part by inspecting the common connector and the terminal for corrosion, damage, or pin disconnection, and the common wiring harness for a short to ground.
- Repair or replace the malfunctioning part.

If there is no common connector:

- Repair or replace the wiring harness which has a short to ground.
- Replace the fuse.

If the fuse is damaged:

- Replace the fuse.

If the fuse is normal:

- Refer to the wiring diagram and verify if there is a common connector between the following terminals.
  - SEAT WARM 20 A fuse and seat warmer control unit terminal O
  - SEAT WARM 20 A fuse and seat warmer control unit terminal M

			If there is a common connector: • Determine the malfunctioning part by inspecting the common connector and the terminal for corrosion, damage, or pin disconnection, and the common wiring harness for an open circuit. • Repair or replace the malfunctioning part. **If there is no common connector:** • Repair or replace the wiring harness which has an open circuit. Go to Step 11.
5	**SEAT WARMER CONTROL UNIT POWER SUPPLY CIRCUIT INSPECTION** • Verify that the seat warmer control unit connector are disconnected. • Measure the voltage at the following terminal (wiring harness-side): ▪ Seat warmer control unit terminal K • Is the voltage **B+**?	Yes	Go to the next step.
		No	Inspect the Front body control module (FBCM) terminal 1C. (See **FRONT BODY CONTROL MODULE (FBCM) INSPECTION**.)
6	**VERIFY IF MALFUNCTION CAUSE IS OPEN CIRCUIT IN WIRING HARNESS BETWEEN SEAT WARMER CONTROL UNIT AND BODY GROUND** • Verify that the seat warmer control unit connector are disconnected. • Inspect for continuity between the following	Yes	Go to the next step.
		No	• Refer to the wiring diagram and verify if there is a common connector between the following terminals. ▪ Seat warmer control unit terminal on the side that is not operating H and body ground

	terminals (wiring harness-side): ▪ Seat warmer control unit terminal on the side that is not operating H and body ground ▪ Seat warmer control unit terminal on the side that is not operating G and body ground • Is there continuity?		▪ Seat warmer control unit terminal on the side that is not operating G and body ground **If there is a common connector:** • Inspect the common connector and terminals for corrosion, damage, or disconnection and the common wiring harnesses for an open circuit to determine the malfunctioning location. • Repair or replace the malfunctioning location. **If there is no common connector:** • Repair or replace the wiring harness which has an open circuit. • Go to Step 11.
7	**VERIFY IF MALFUNCTION CAUSE IS OPEN CIRCUIT IN WIRING HARNESS BETWEEN SEAT WARMER CONTROL UNIT AND INDICATOR UNIT** • Verify that the seat warmer control unit connector are disconnected. • Disconnect the indicator unit connector. • Inspect for continuity between the following terminals (wiring harness-side): ▪ Seat warmer control unit terminal I and indicator unit terminal D	Yes	Go to Step 10.
		No	• Refer to the wiring diagram and verify if there is a common connector between the following terminals. ▪ Seat warmer control unit terminal I and indicator unit terminal D **If there is a common connector:** • Inspect the common connector and terminals for corrosion, damage, or disconnection and the

	• Is there continuity?		common wiring harnesses for an open circuit to determine the malfunctioning location. • Repair or replace the malfunctioning location. **If there is no common connector:** • Repair or replace the wiring harness which has an open circuit. • Go to Step 11.
8	**INSPECT SEAT WARMER CONTROL UNIT AND SEAT WARMER UNIT CONNECTOR** • Disconnect the negative battery cable. (See **NEGATIVE BATTERY CABLE DISCONNECTION/CONNECTION [SKYACTIV-G 2.0, SKYACTIV-G 2.5]**.) • Disconnect the seat warmer control unit and seat warmer unit connector on the side not operating. • Inspect the connector engagement and connection condition and inspect the terminals for damage, deformation, corrosion, or disconnection. • Is the connector normal?	Yes	Go to the next step.
		No	Repair or replace the connector, then go to Step 11.
9	**SEAT WARMER UNIT INSPECTION** • Inspect the seat warmer unit. (See **SEAT WARMER UNIT INSPECTION**.) • Is the seat warmer unit normal?	Yes	Go to the next step.
		No	Replace the front seat which is malfunctioning, then go to Step 11. (See **FRONT SEAT REMOVAL/INSTALLATION**.)
10	**DETERMINE IF THE MALFUNCTION CAUSE IS SEAT WARMER CONTROL UNIT** • Replace the indicator unit.	Yes	Go to the next step.
		No	Replace the passenger's front seat, then go to the next step.

	(See **INDICATOR UNIT REMOVAL / INSTALLATION**.) • Does the seat warmer system operate?		(See **FRONT SEAT REMOVAL / INSTALLATION**.)
11	**VERIFY IF MALFUNCTION CAUSE IS CORRECTED** • Does the seat warmer system operate?	Yes	Troubleshooting completed. (Explain the problem to the customer.)
		No	Verify the malfunction symptom in the symptom troubleshooting chart and perform the other applicable malfunction diagnosis.

2014 - Mazda3 - Body and Accessories

SEAT WARMER OPERATES CONSTANTLY [SEAT WARMER SYSTEM]

Description	Seat warmer warms seat even though seat warmer switch is off
Possible Causes	**Seat warmer switch is always on** • Seat warmer switch malfunction **Seat warmer control unit falsely detects seat warmer switch as on** • Short circuit in wiring harness between the following terminal: ▪ Seat warmer control unit terminal I and indicator unit terminal D • Seat warmer control unit malfunction

Diagnostic Procedure

STEP	INSPECTION		ACTION
1	**DETERMINE IF THE MALFUNCTION CAUSE IS THE SEAT WARMER SWITCH** • Disconnect the negative battery cable. (See **NEGATIVE BATTERY CABLE DISCONNECTION/CONNECTION [SKYACTIV-G 2.0, SKYACTIV-G 2.5]**.) • Disconnect the indicator unit connector. • Connect the negative battery cable. (See **NEGATIVE BATTERY CABLE DISCONNECTION/CONNECTION**	Yes	Go to the next step.
		No	Replace the indicator unit, then go to Step 3. (See **INDICATOR UNIT REMOVAL/INSTALLATION**.)

	[SKYACTIV-G 2.0, SKYACTIV-G 2.5].) • Switch the ignition ON (engine off or on). • Is the seat warmer system operating?		
2	**DETERMINE IF THE MALFUNCTION CAUSE IS THE SEAT WARMER COTROL UNIT** • Disconnect the negative battery cable. (See **NEGATIVE BATTERY CABLE DISCONNECTION/CONNECTION [SKYACTIV-G 2.0, SKYACTIV-G 2.5]**.) • Disconnect the seat warmer control unit connector. • Connect the negative battery cable. (See **NEGATIVE BATTERY CABLE DISCONNECTION/CONNECTION [SKYACTIV-G 2.0, SKYACTIV-G 2.5]**.) • Measure the voltage at the following terminal (wiring harness-side): ▪ Seat warmer control unit terminal I • Is the voltage **1.0 or more**?	Yes	• Refer to the wiring diagram and verify if there is a common connector between seat warmer control unit terminal I and indicator unit terminal D. **If there is a common connector:** ▪ Inspect the common connector and terminals for corrosion, damage, or disconnection and the common wiring harnesses for an open or short circuit to determine the malfunctioning location. ▪ Repair or replace the malfunctioning location. **If there is no common connector:** ▪ Repair or replace the wiring harness which has an open or short circuit. • Go to the next step.
		No	Replace the passenger's front seat, then go to the next step. (See **FRONT SEAT REMOVAL/INSTALLATION**.)
3	**VERIFY IF MALFUNCTION CAUSE IS CORRECTED**	Yes	Troubleshooting completed. (Explain the problem to

	• Does the seat warmer system operate?		the customer.)
		No	Verify the malfunction symptom in the symptom troubleshooting chart and perform the other applicable malfunction diagnosis.

2014 - Mazda3 - Body and Accessories

TEMPERATURE OF SEAT WARMER CANNOT BE ADJUSTED [SEAT WARMER SYSTEM]

Description	• Seat warmer does not adjust temperature even though seat warmer Lo/Mid/Hi switch is switched between low and high • Seat warmer temperature continues to rise
Possible Causes	**Seat warmer control unit cannot control seat warmer unit** • Seat warmer switch malfunction • Thermostat (Built-in seat warmer unit) malfunction • Seat warmer control unit malfunction

Diagnostic Procedure

STEP	INSPECTION		ACTION
1	**DETERMINE IF THE MALFUNCTION CAUSE IS THE SEAT WARMER SWITCH** • Select either Low, Mid, or High on the seat warmer switch. • Does the seat warmer switch LED illuminate?	Yes	Go to the next step.
		No	Inspect the indicator unit. (See **INDICATOR UNIT INSPECTION**.)
2	**SEAT WARMER UNIT INSPECTION** • Inspect the seat warmer unit. (See **SEAT WARMER UNIT INSPECTION**.) • Is the seat warmer unit normal?	Yes	Replace the front seat which is malfunctioning, then go to the next step. (See **FRONT SEAT REMOVAL/INSTALLATION**.)
		No	Replace the passenger's front seat, then go to the next step. (See **FRONT SEAT REMOVAL/INSTALLATION**.)
	VERIFY IF MALFUNCTION CAUSE		

3	**IS CORRECTED** • Does the seat warmer system operate?	Yes	Troubleshooting completed. (Explain the problem to the customer.)
		No	Verify the malfunction symptom in the symptom troubleshooting chart and perform the other applicable malfunction diagnosis.

2014 - Mazda3 - Body and Accessories

BODY PANELS LOCATION INDEX

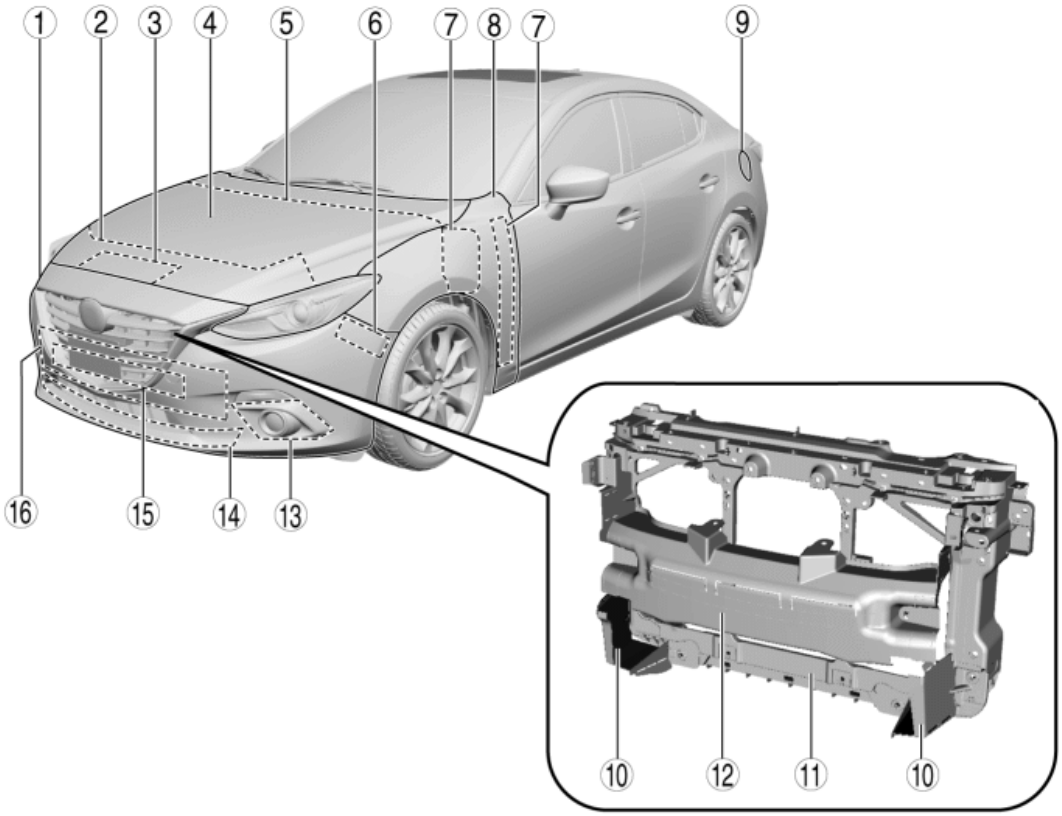

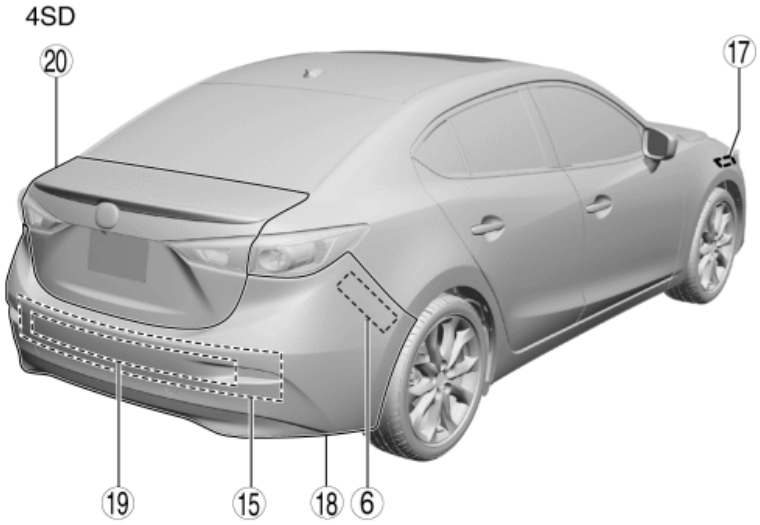

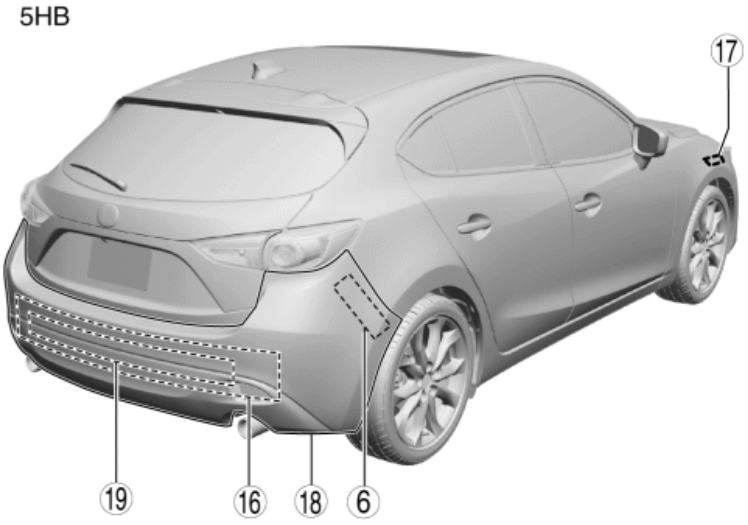

1	Front bumper (See **FRONT BUMPER REMOVAL/INSTALLATION**.) (See **FRONT BUMPER DISASSEMBLY/ASSEMBLY**.)

2	Shroud upper member (See **SHROUD UPPER MEMBER REMOVAL/INSTALLATION**.)
3	Set plate (See **SET PLATE REMOVAL/INSTALLATION**.)
4	Hood (See **HOOD REMOVAL/INSTALLATION**.) (See **HOOD DISASSEMBLY/ASSEMBLY**.) (See **HOOD ADJUSTMENT**.)
5	Cowl panel (See **COWL PANEL REMOVAL/INSTALLATION**.)
6	Bumper slider (See **BUMPER SLIDER REMOVAL/INSTALLATION**.)
7	Front fender insulator (See **FRONT FENDER INSULATOR No.1 REMOVAL/INSTALLATION**.) (See **FRONT FENDER INSULATOR No.2 REMOVAL**.) (See **FRONT FENDER INSULATOR No.2 INSTALLATION**.)
8	Front fender panel (See **FRONT FENDER PANEL REMOVAL/INSTALLATION**.)
9	Fuel-filler lid (See **FUEL-FILLER LID REMOVAL/INSTALLATION**.) (See **FUEL-FILLER LID ADJUSTMENT**.)
10	Seal plate (See **SEAL PLATE REMOVAL/INSTALLATION**.)
11	Shroud panel (See **SHROUD PANEL REMOVAL/INSTALLATION**.)
12	Intake air guide (See **INTAKE AIR GUIDE REMOVAL/INSTALLATION**.)
13	Front fog light bezel (See **FRONT FOG LIGHT BEZEL REMOVAL/INSTALLATION**.)
14	Bumper stiffener lower (See **BUMPER STIFFENER LOWER REMOVAL/INSTALLATION**.)
15	Front energy-absorbing foam (See **ENERGY-ABSORBING FOAM REMOVAL/INSTALLATION**.)
16	Bumper reinforcement (See **FRONT BUMPER REINFORCEMENT REMOVAL/INSTALLATION**.)

	(See **REAR BUMPER REINFORCEMENT REMOVAL/INSTALLATION**.)
17	Front fender stay (See **FRONT FENDER STAY REMOVAL/INSTALLATION**.)
18	Rear bumper (See **REAR BUMPER REMOVAL/INSTALLATION**.) (See **REAR BUMPER DISASSEMBLY/ASSEMBLY**.)
19	Rear energy-absorbing foam (See **ENERGY-ABSORBING FOAM REMOVAL/INSTALLATION**.)
20	Trunk lid (See **TRUNK LID REMOVAL/INSTALLATION**.) (See **TRUNK LID ADJUSTMENT**.) (See **BALANCE SPRING REMOVAL/INSTALLATION**.)

2014 - Mazda3 - Body and Accessories

TRUNK LID REMOVAL/INSTALLATION

WARNING:

- Always perform the following procedure with at least one other person to prevent the trunk lid from falling. Otherwise, it may fall and cause injury.

1. Disconnect the negative battery cable. (See **NEGATIVE BATTERY CABLE DISCONNECTION/CONNECTION [SKYACTIV-G 2.0, SKYACTIV-G 2.5]**.)
2. Set the trunk side trim aside. (See **TRUNK SIDE TRIM REMOVAL/INSTALLATION**.)
3. Disconnect the rear wiring harness connector and remove the rear wiring harness clips securing the vehicle body.

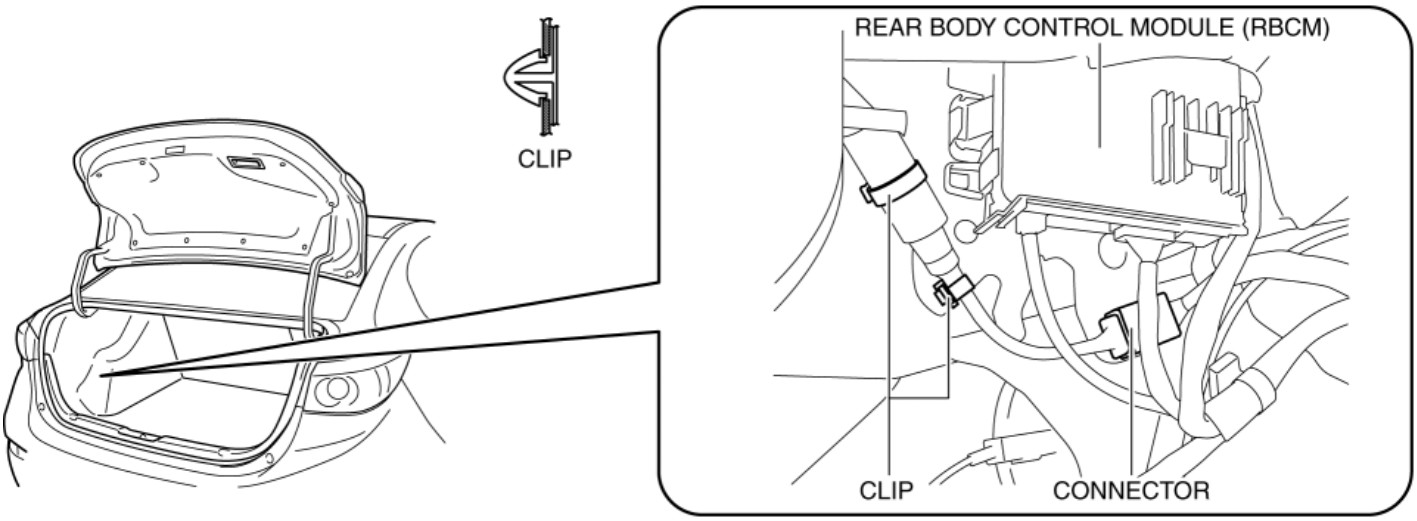

4. Remove the rear wiring harness clips securing the trunk lid hinge.

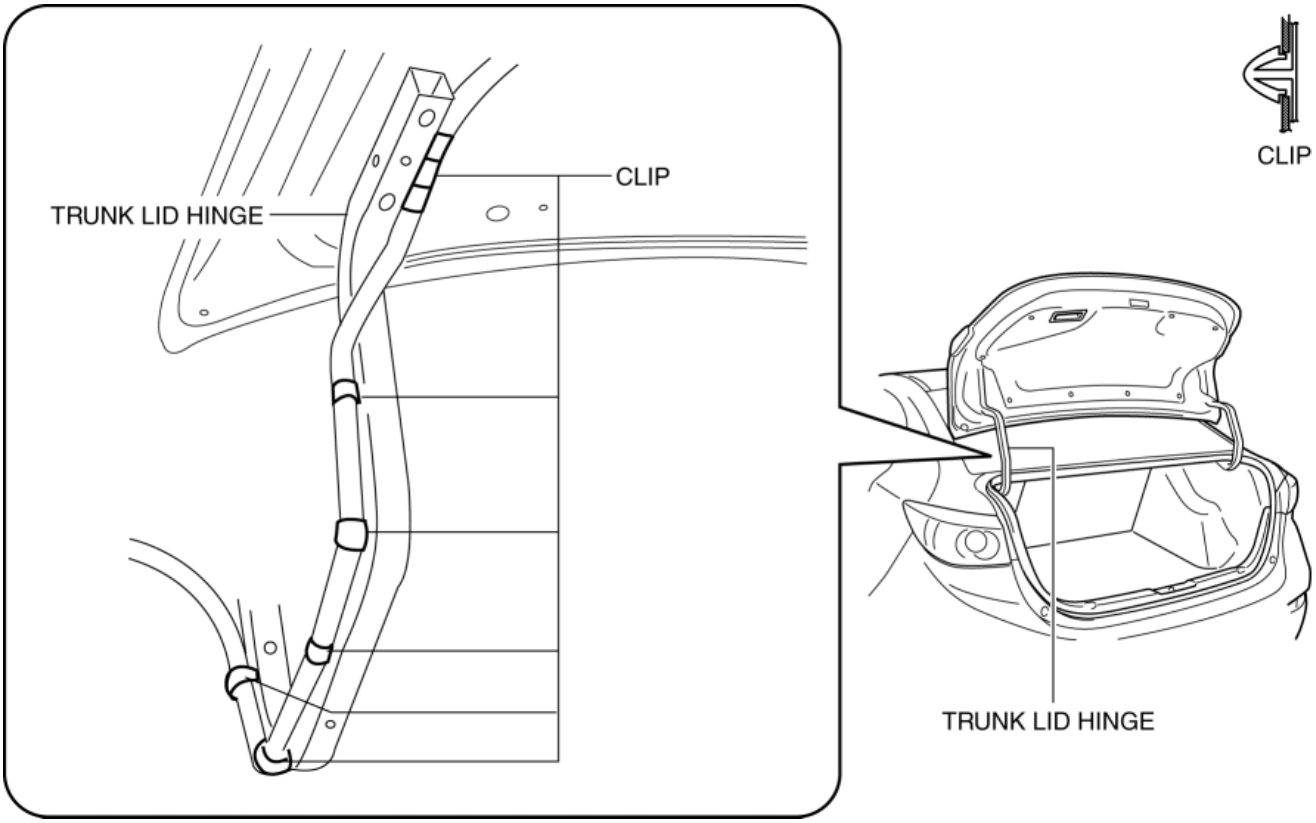

5. Remove the bolts, then remove the trunk lid.

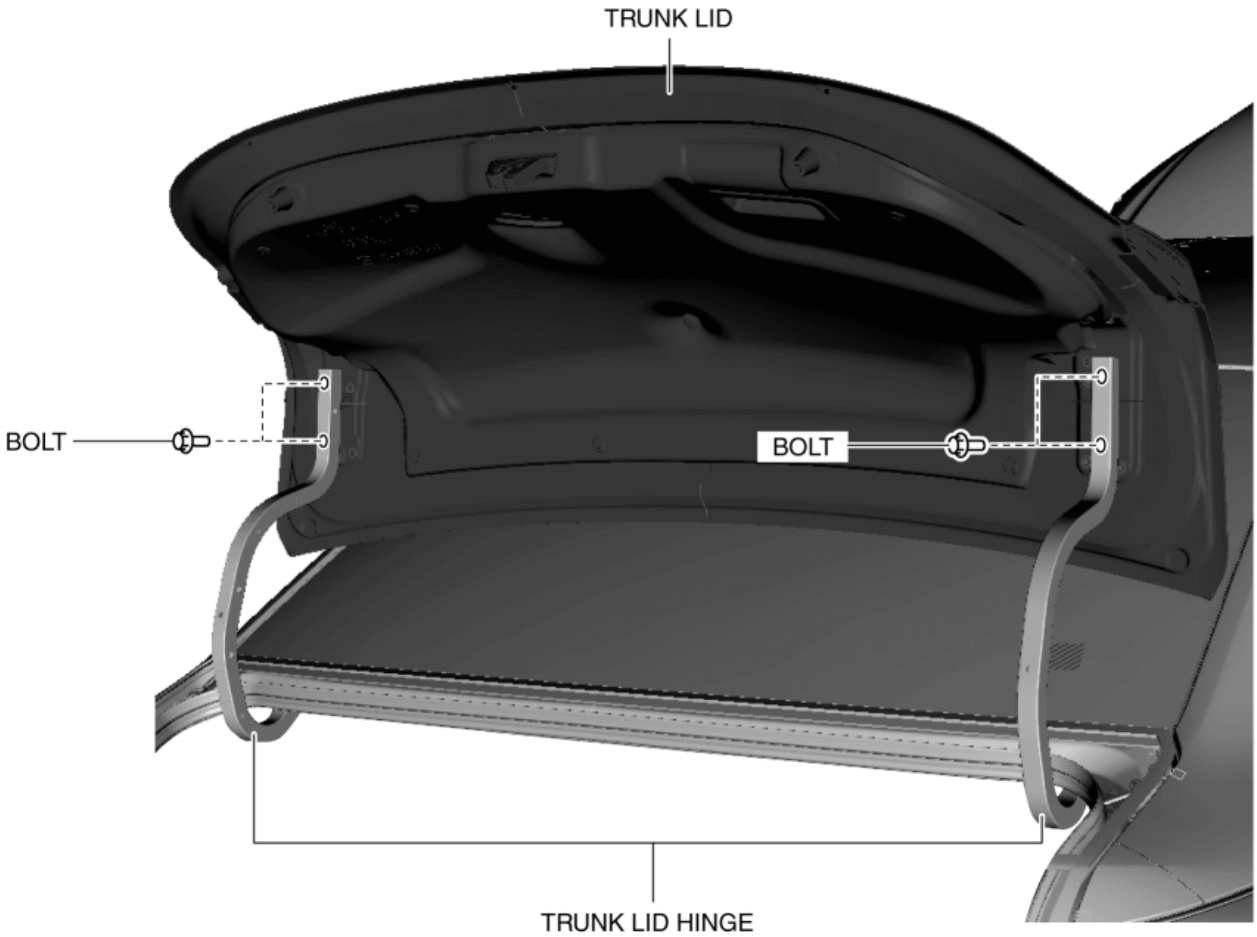

BOLT: **8—10 N·m {82—101 kgf·cm, 71—88 in·lbf}**

6. Remove the following parts:

a. Rear seat cushion (See **REAR SEAT CUSHION REMOVAL/INSTALLATION**.)

b. Rear scuff plate (See **REAR SCUFF PLATE REMOVAL/INSTALLATION**.)

c. Tire house trim (See **TIRE HOUSE TRIM REMOVAL/INSTALLATION**.)

d. C-pillar trim (See **C-PILLAR TRIM REMOVAL/INSTALLATION**.)

e. High-mount brake light (See **HIGH-MOUNT BRAKE LIGHT REMOVAL/INSTALLATION**)

f. Rear package trim (See **REAR PACKAGE TRIM REMOVAL/INSTALLATION**.)

g. Balance spring (See **BALANCE SPRING REMOVAL/INSTALLATION**.)

7. Affix protective tape to the positions shown in the figure and remove the nuts.

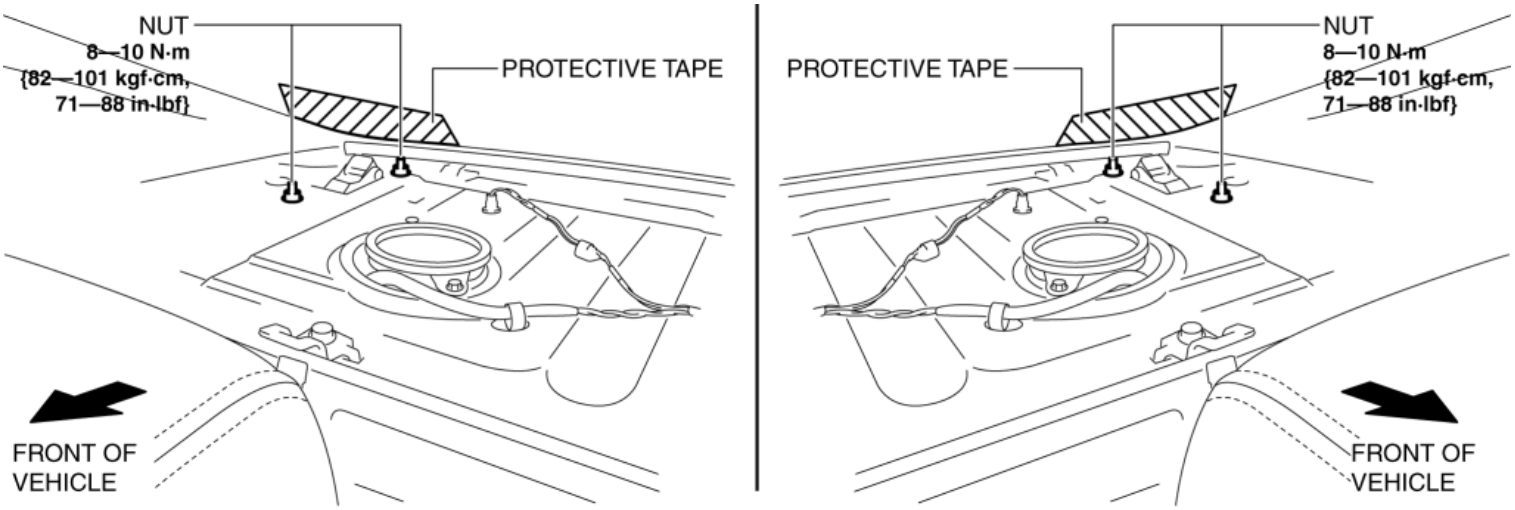

8. Remove the trunk lid hinge.

9. Install in the reverse order of removal.

10. Adjust the trunk lid. (See **TRUNK LID ADJUSTMENT**.)

2014 - Mazda3 - Body and Accessories

BALANCE SPRING REMOVAL/INSTALLATION

WARNING:

- If the balance spring is removed without supporting the trunk lid, the trunk lid may fall off and cause injury. When removing the balance spring, always use two persons to perform the work.

1. Using a crescent wrench, remove the balance spring in the direction of the arrow shown in the figure from the trunk lid hinge.

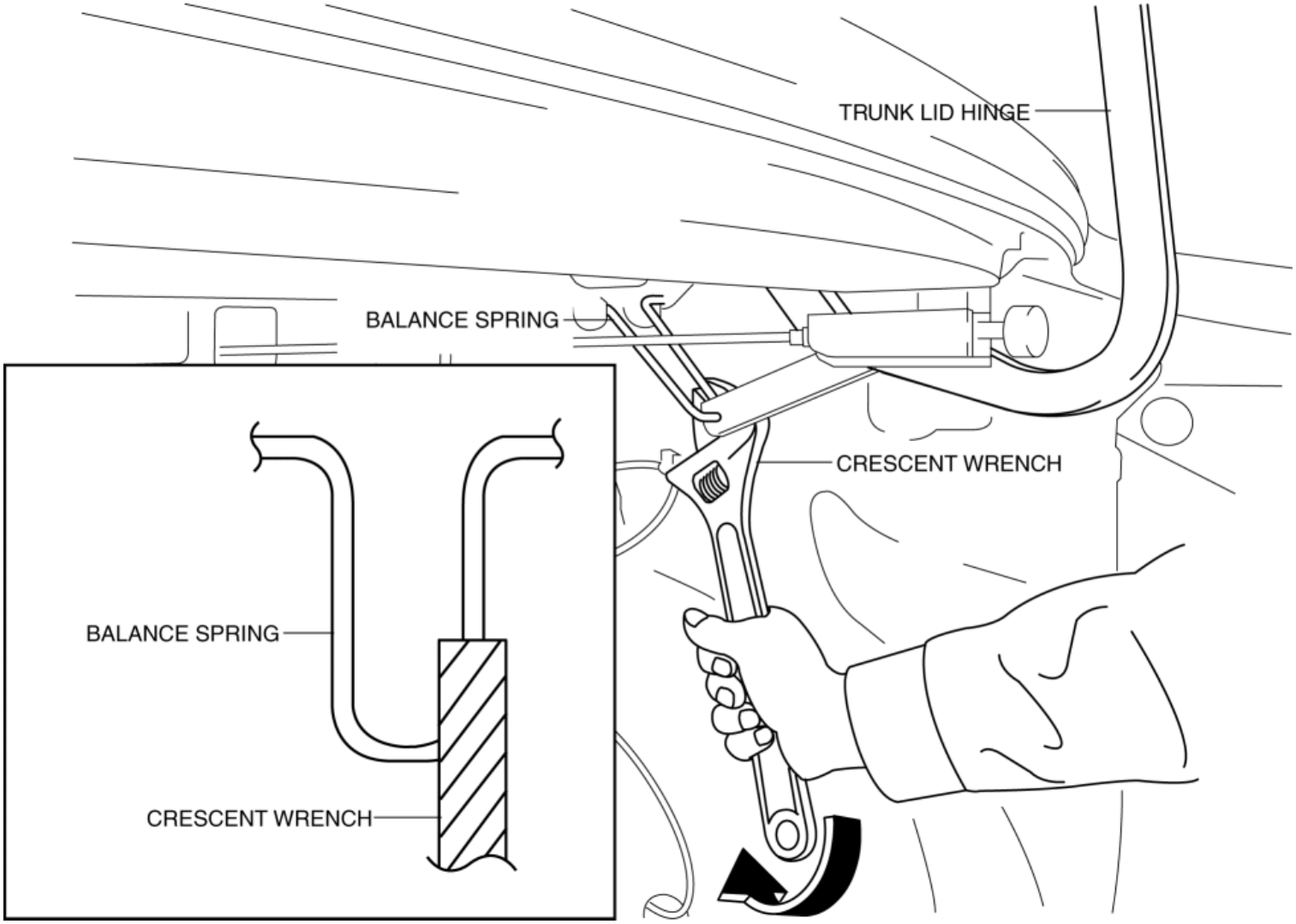

2. Remove the LH side balance spring shown in the figure from the hooks.

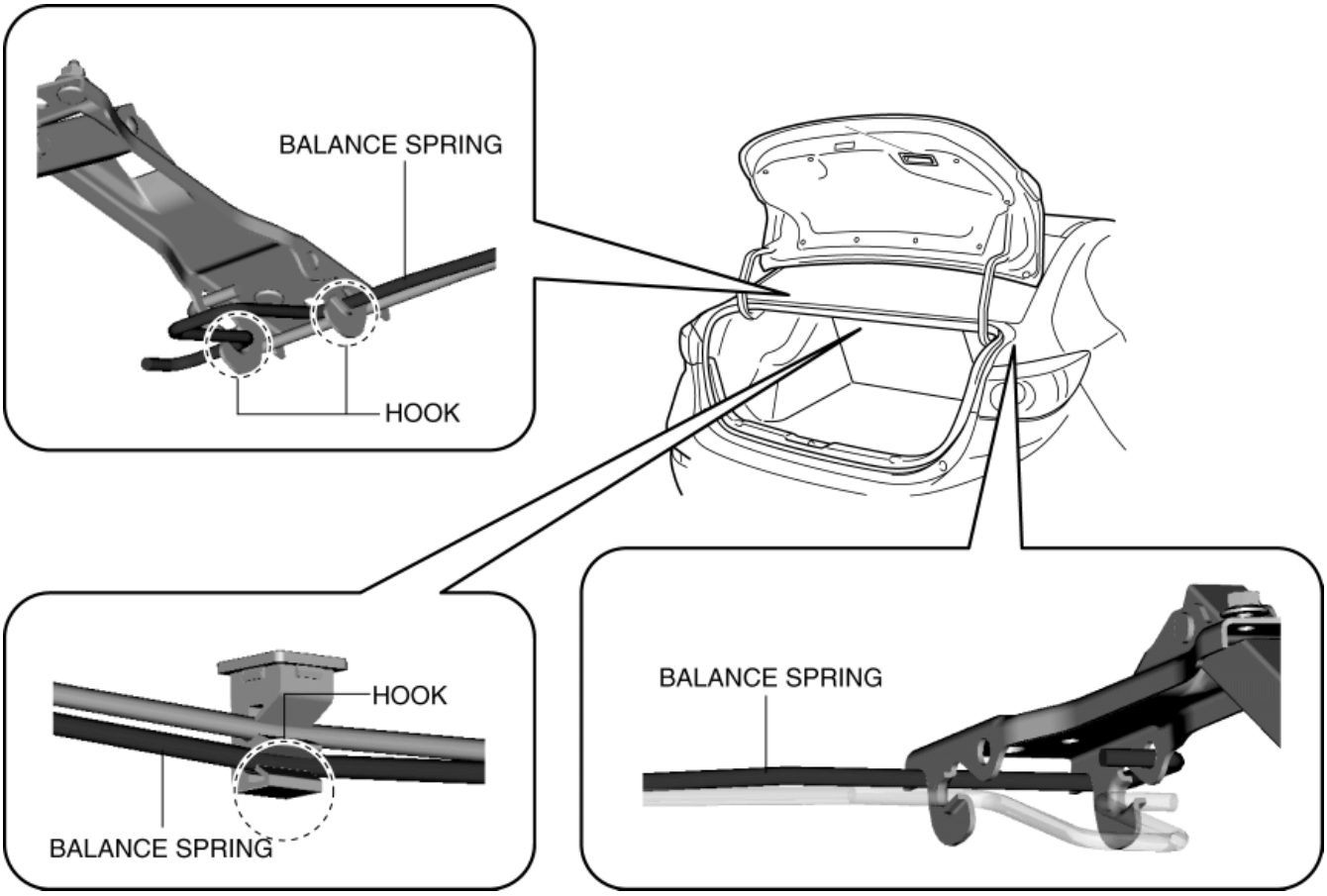

3. Remove the RH side balance spring shown in the figure from the hooks.

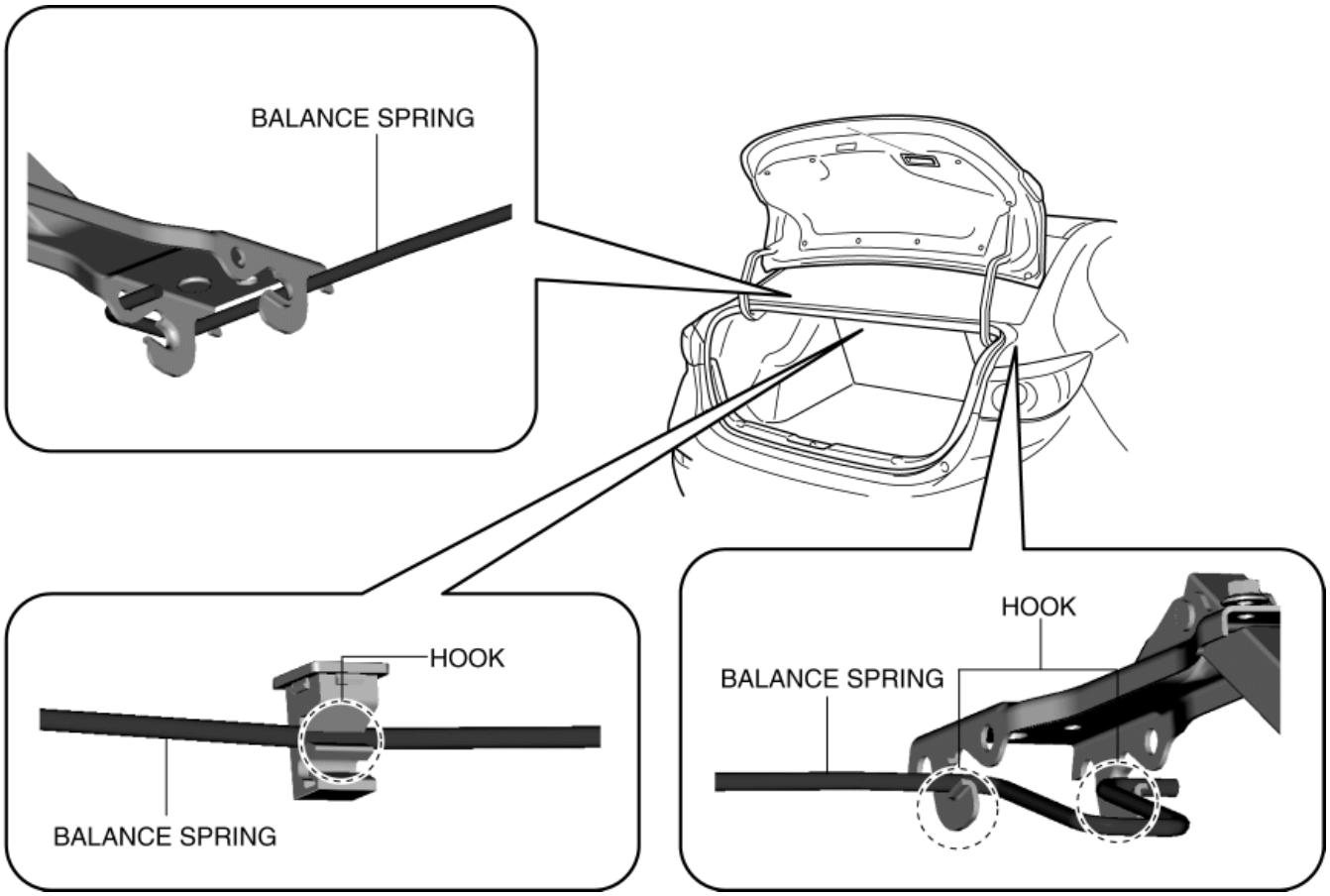

4. Install in the reverse order of removal.

2014 - Mazda3 - Body and Accessories

TRUNK LID ADJUSTMENT

Gap Adjustment

1. Measure the gap difference between the trunk lid and the body.

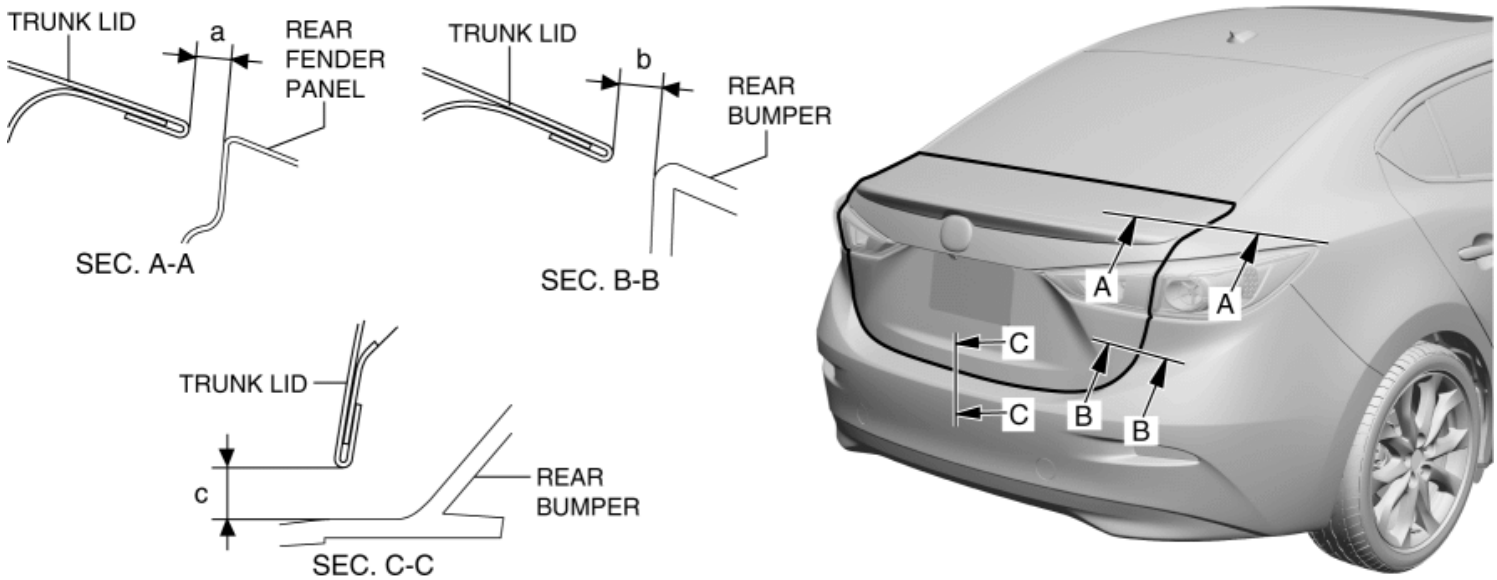

Standard Clearance

- a: 2.3—4.3 mm {0.10—0.16 in}
- b: 2.0—6.0 mm {0.08—0.23 in}
- c: 4.1—8.1 mm {0.17—0.31 in}
- If the measured value exceeds the standard clearance, adjust the trunk lid using the following procedure:

2. Loosen the bolts, and reposition the trunk lid. (See **TRUNK LID REMOVAL/INSTALLATION**)

3. Tighten the bolts. (See **TRUNK LID REMOVAL/INSTALLATION**)

4. Spray or pour water on the trunk lid and surrounding area using a hose or high pressure water pressure car wash and verify that there is no water leakage.

Height Difference Adjustment

1. Measure the height difference between the trunk lid and the body.

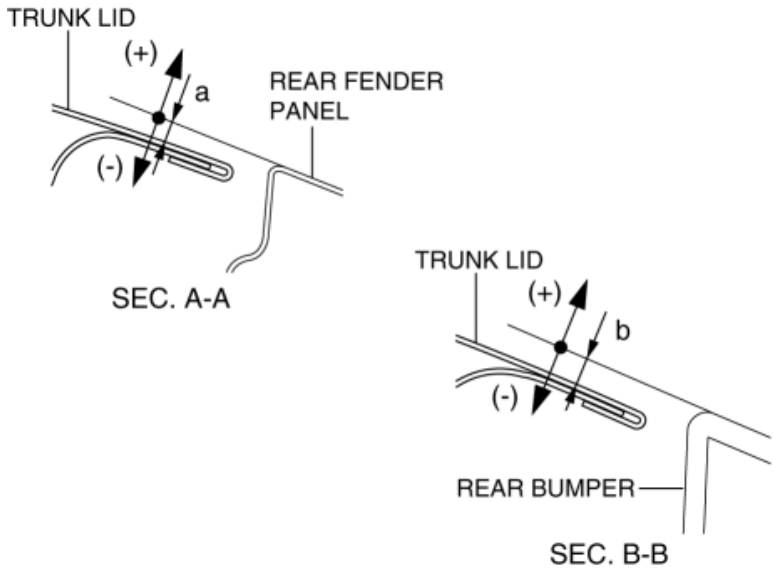

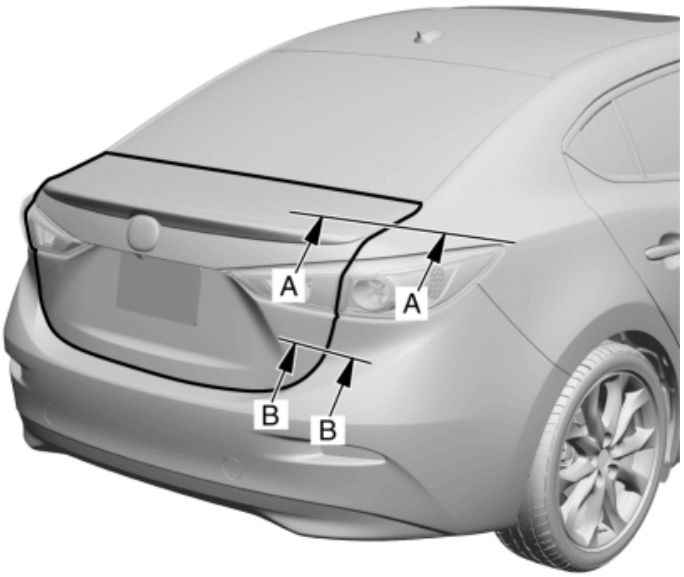

Standard Clearance

- a: –1.3—0.7 mm {–0.05—0.02 in}
- b: –3.0—1.0 mm {–0.11—0.03 in}
- If the height difference is out of the standard clearance or the trunk lid does not open/close smoothly, loosen the trunk lid lock striker installation bolts and adjust the trunk lid.

2. Loosen the bolts, and reposition the trunk lid lock striker. (See **TRUNK LID LOCK STRIKER REMOVAL/INSTALLATION**)

3. Tighten the bolts. (See **TRUNK LID LOCK STRIKER REMOVAL/INSTALLATION**)

4. Spray or pour water on the trunk lid and surrounding area using a hose or high pressure water pressure car wash and verify that there is no water leakage.

2014 - Mazda3 - Body and Accessories

FUEL-FILLER LID REMOVAL/INSTALLATION

1. Remove the bolts shown in the figure.

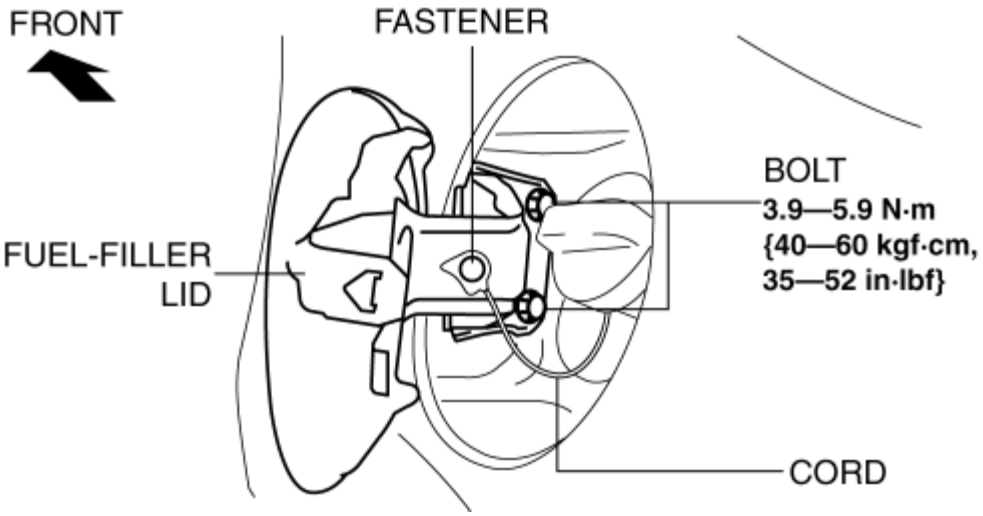

2. Remove the fastener.
3. Remove the fuel-filler lid.
4. Install in the reverse order of removal.
5. Adjust the fuel-filler lid. (See **FUEL-FILLER LID ADJUSTMENT**.)

2014 - Mazda3 - Body and Accessories

HOOD REMOVAL/INSTALLATION

WARNING:

- Always perform the procedure with at least another person to prevent the hood from falling. Otherwise, the hood may fall and cause injury.

1. Disconnect the negative battery cable. (See **NEGATIVE BATTERY CABLE DISCONNECTION/CONNECTION [SKYACTIV-G 2.0, SKYACTIV-G 2.5]**.)

2. Remove the bolts shown in the figure and remove the hood.

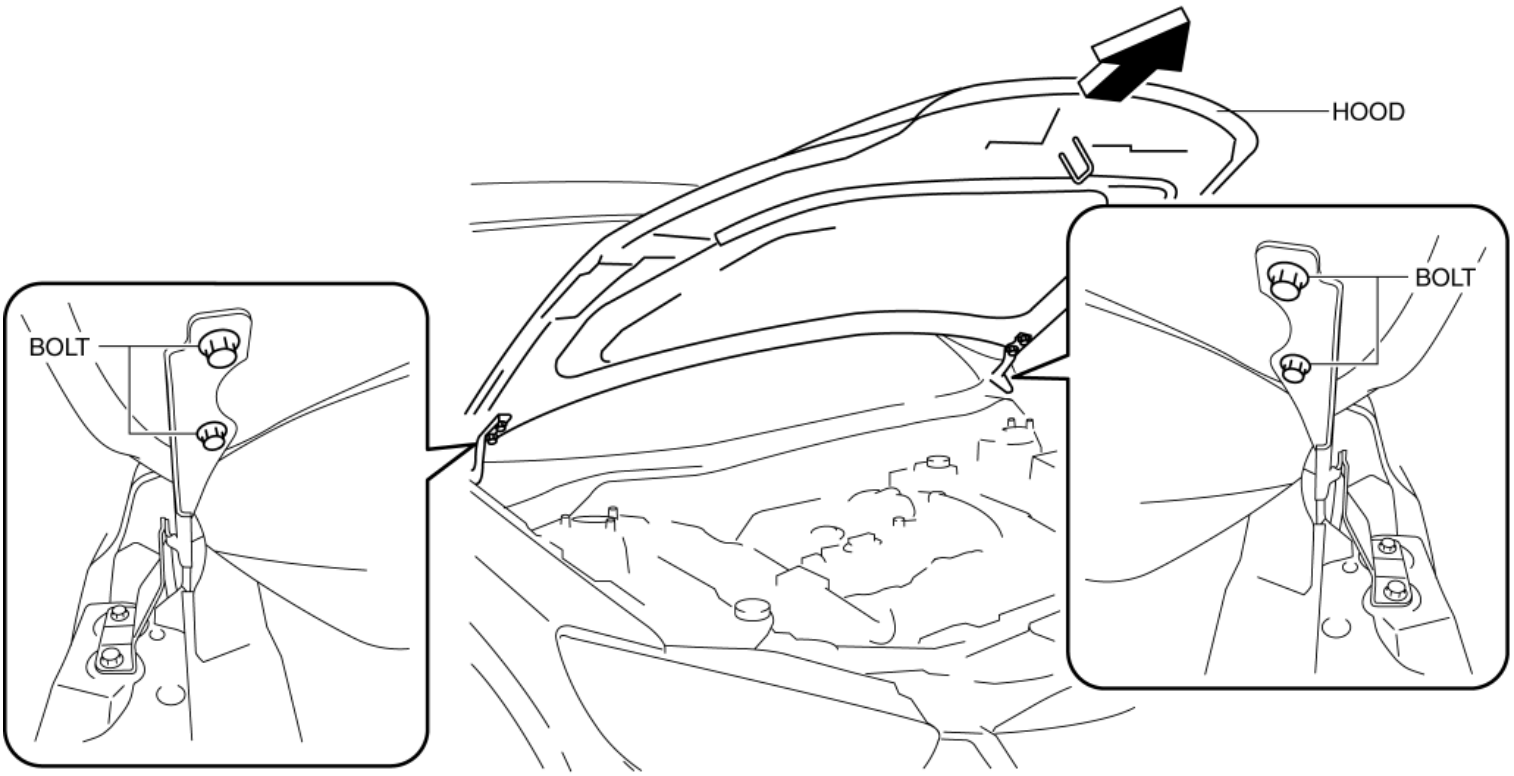

BOLT: **20—26 N·m {2.1—2.6 kgf·m, 15—19 ft·lbf}**

3. Remove the following parts:

   a. Set plate (See **SET PLATE REMOVAL/INSTALLATION**.)

   b. Front bumper (See **FRONT BUMPER REMOVAL/INSTALLATION**.)

   c. Front combination light (See **FRONT COMBINATION LIGHT REMOVAL/INSTALLATION**.)

   d. Front fender panel (See **FRONT FENDER PANEL REMOVAL/INSTALLATION**.)

4. Remove the bolts shown in the figure and remove the hood hinge.

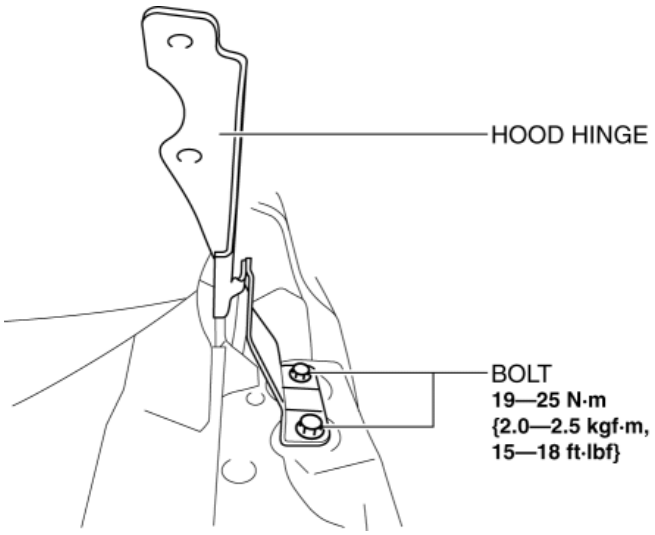

5. Install in the reverse order of removal.

6. Perform the hood adjustment. (See **HOOD ADJUSTMENT**.)

7. Adjust the headlight aiming. (See **HEADLIGHT AIMING**.)

8. If a front fog light is removed from the front bumper, perform the front fog light aiming. (with front fog lights) (See **FRONT FOG LIGHT AIMING**.)

2014 - Mazda3 - Body and Accessories

FUEL-FILLER LID ADJUSTMENT

1. Verify that the gap and height difference between the fuel-filler lid and body.

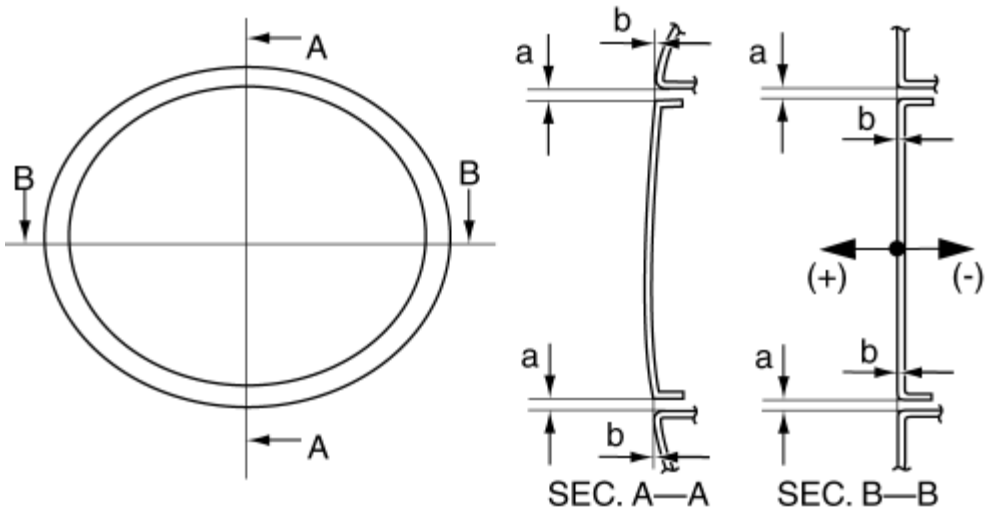

Standard clearance

- a: 1.7—3.7 mm {0.07—0.14 in}
- b: –1.5—0.5 mm {–0.05—0.01 in}
- If the measured value exceeds the standard clearance, adjust the fuel-filler lid using the following procedure:

2. Loosen the bolts and adjust the fuel-filler lid.
3. Tighten the bolts. (See **FUEL-FILLER LID REMOVAL/INSTALLATION**.)

2014 - Mazda3 - Body and Accessories

HOOD DISASSEMBLY/ASSEMBLY

1. Disassemble in the order indicated in the table.

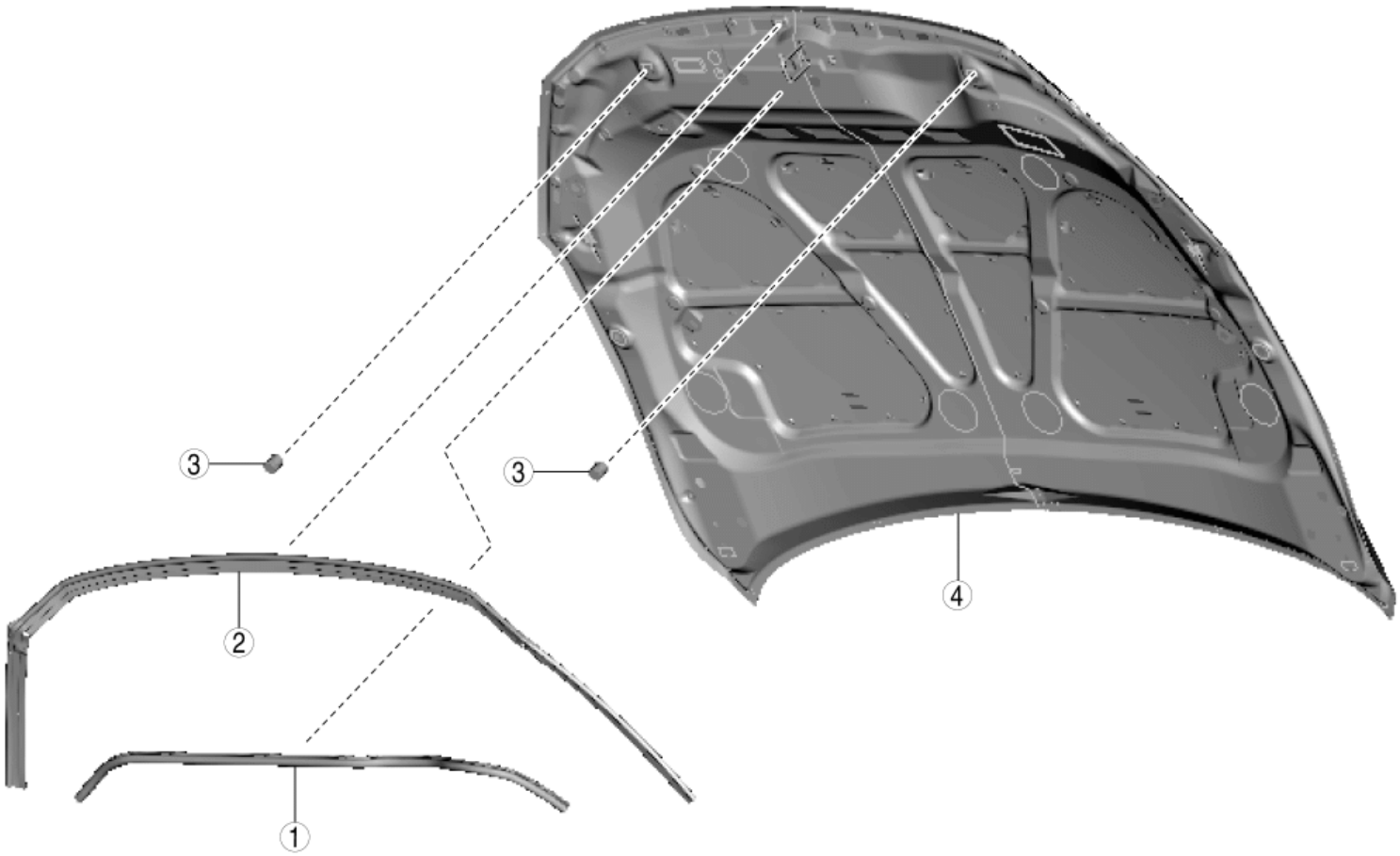

1	Shroud seal weatherstrip
2	Parting seal weatherstrip
3	Stopper rubber
4	Hood component

2. Assemble in the reverse order of disassembly.

2014 - Mazda3 - Body and Accessories

HOOD ADJUSTMENT

Gap Adjustment

1. Verify that the gap between the hood and the body is within the specification.

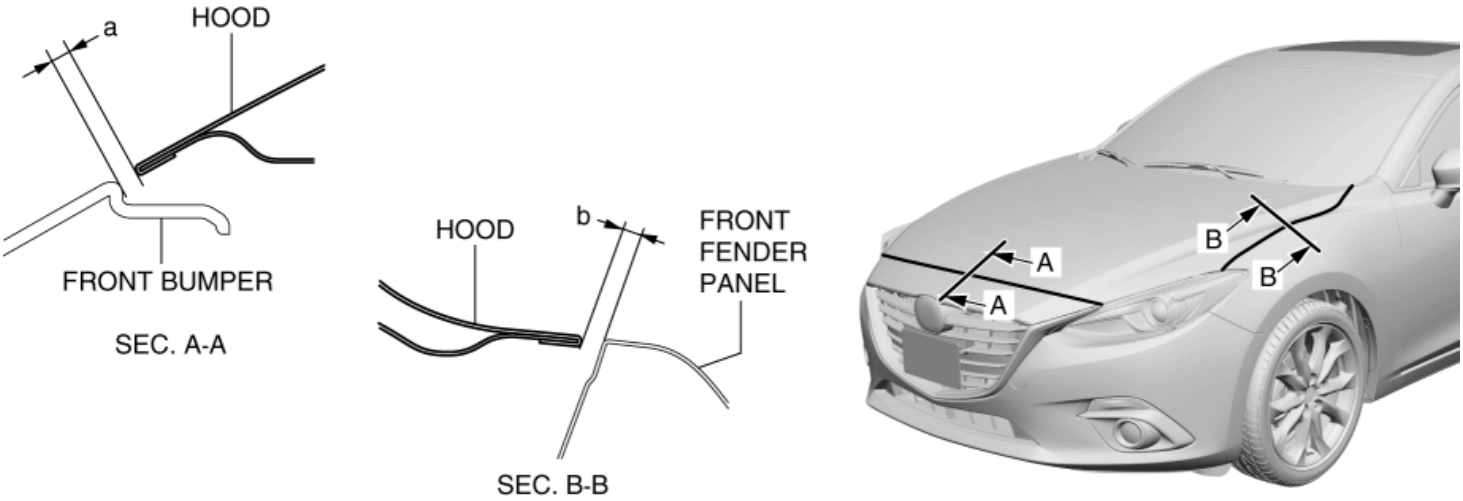

Standard clearance

- a: 1.7—5.3 mm {0.07—0.20 in}
- b: 2.5—4.5 mm {0.10—0.17 in}
- If the measured value exceeds the standard clearance, adjust the hood using the following procedure.

2. Loosen the bolts and adjust the hood.

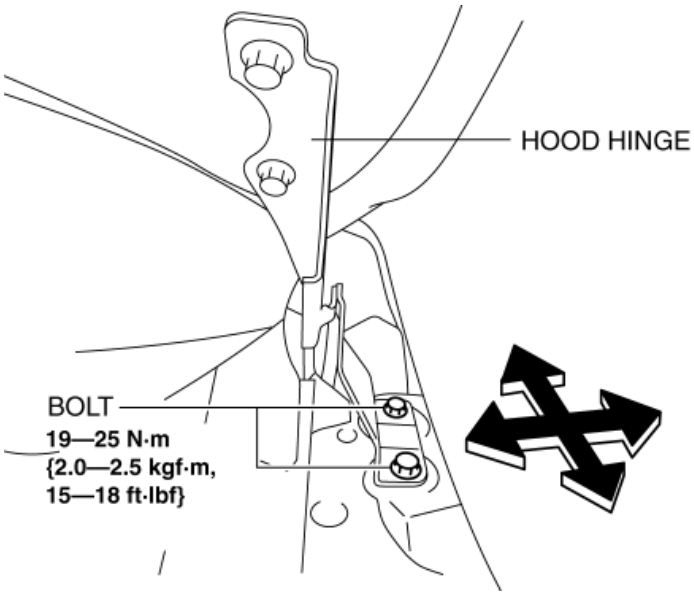

3. Tighten the bolts. (See **HOOD REMOVAL/INSTALLATION**.)

Height Difference Adjustment

1. Verify that the height difference between the hood and the body is within the specification.

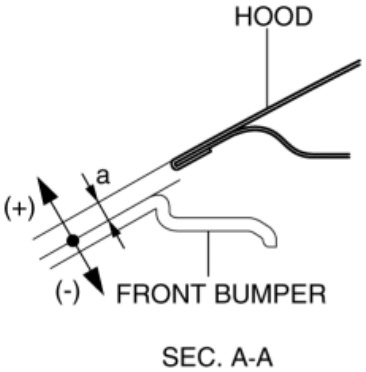

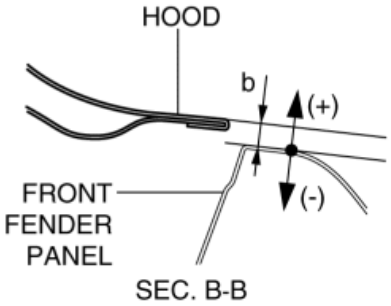

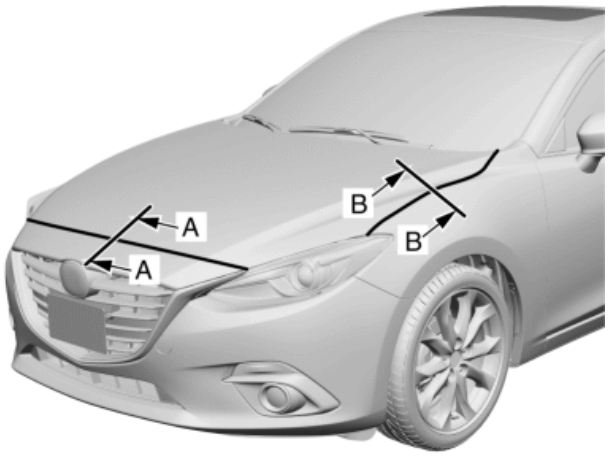

Standard clearance

- a: –2.0—2.0 mm {–0.078—0.078 in}
- b: –1.4—0.6 mm {–0.05—0.02 in}
- If the measured value exceeds the standard clearance, adjust the hood using the following procedure.

2. Turn the stopper rubber to adjust the height of the hood.

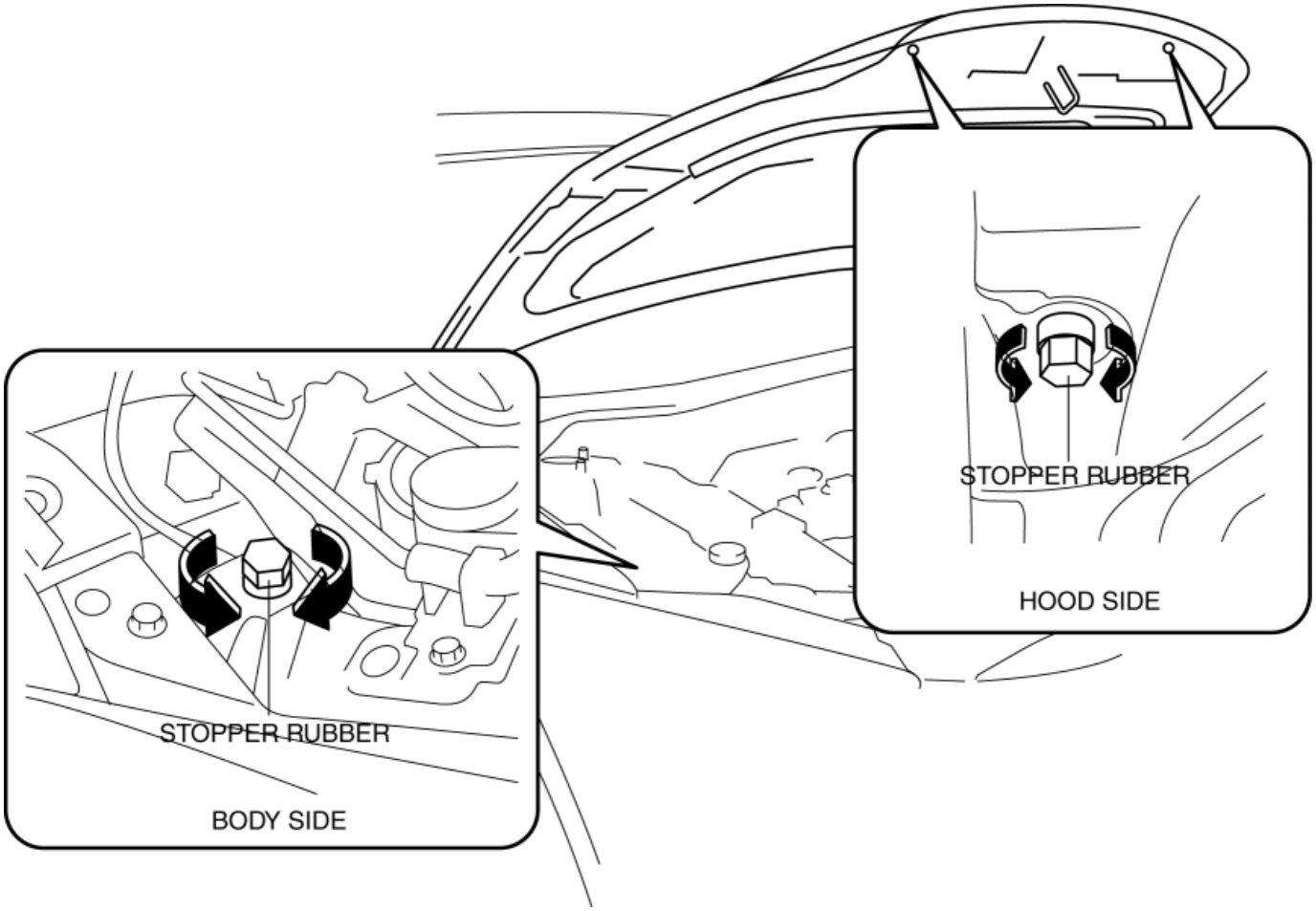

2014 - Mazda3 - Body and Accessories

FRONT BUMPER REMOVAL/INSTALLATION

CAUTION:

- Affix the protective tape to the position (vehicle body side) shown in the figure to prevent scratches and damage.

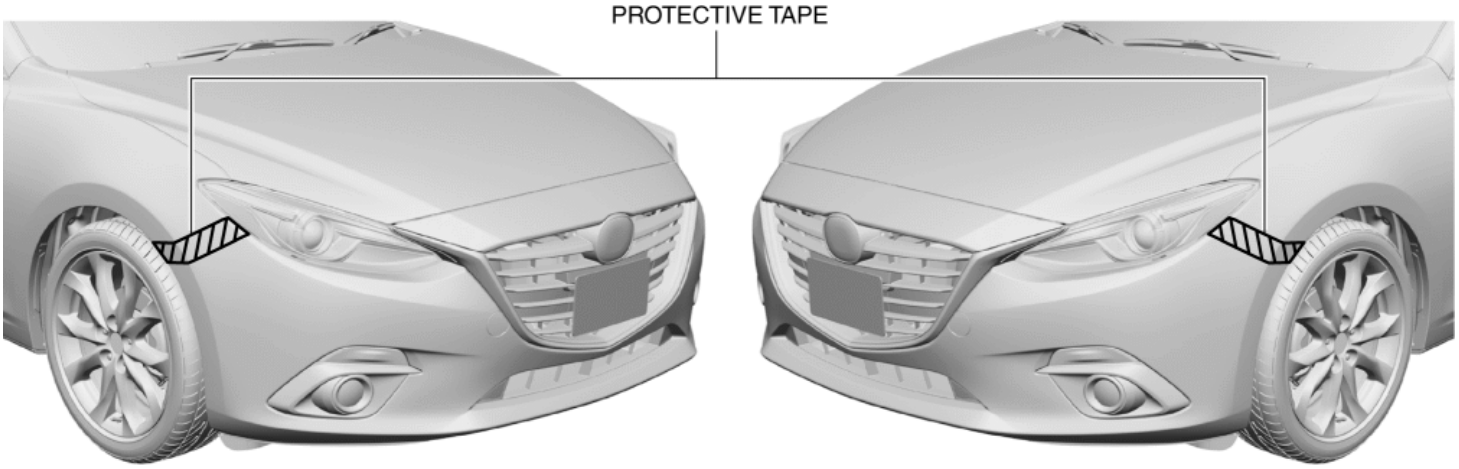

1. Disconnect the negative battery cable. (See **NEGATIVE BATTERY CABLE DISCONNECTION/CONNECTION [SKYACTIV-G 2.0, SKYACTIV-G 2.5]**.)
2. Remove the screws shown in the figure.

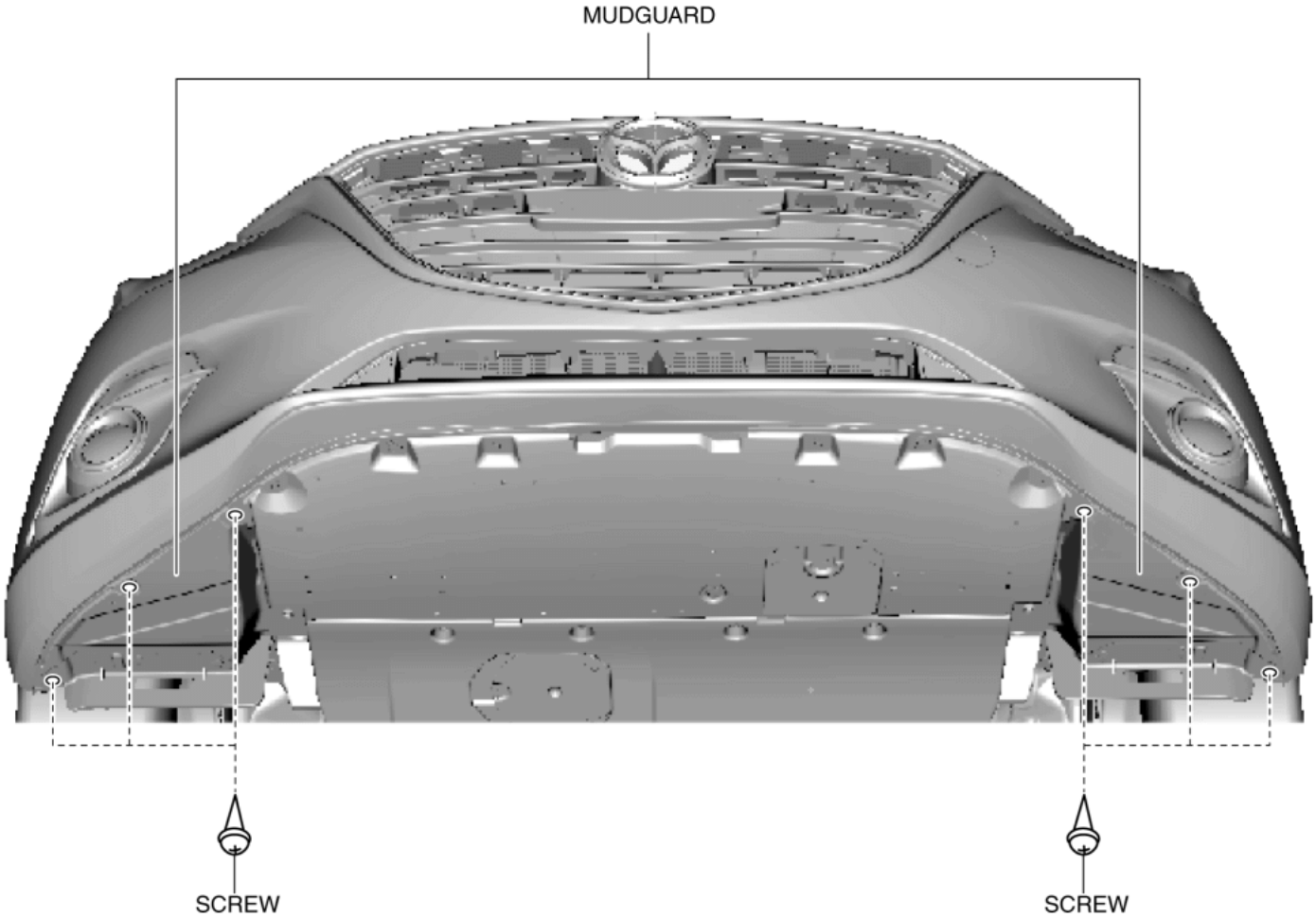

3. Remove the fasteners shown in the figure and slightly bend back the front mudguard.

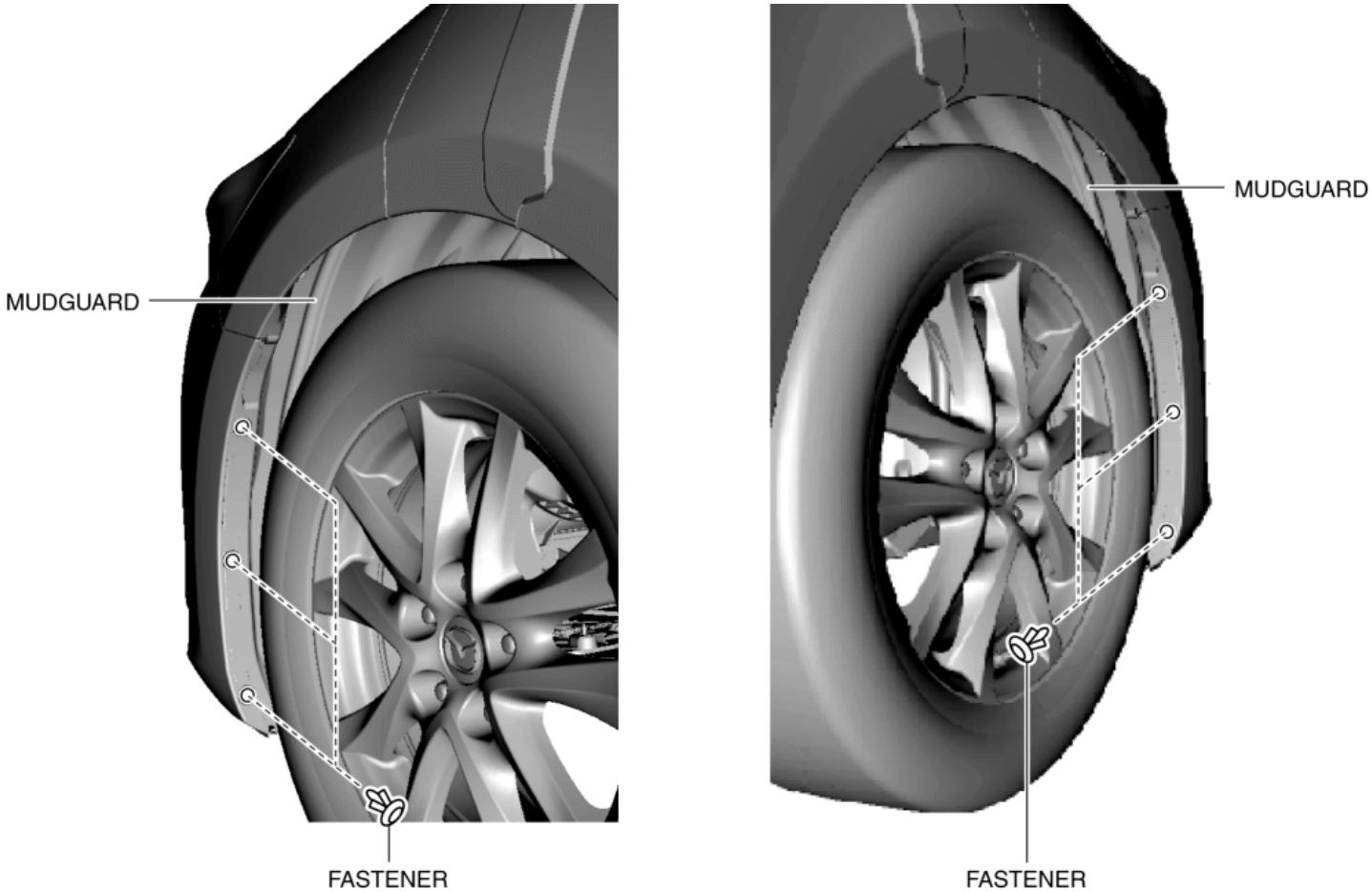

4. Remove the screw which can be verified at the position where the front mudguard was bent back.

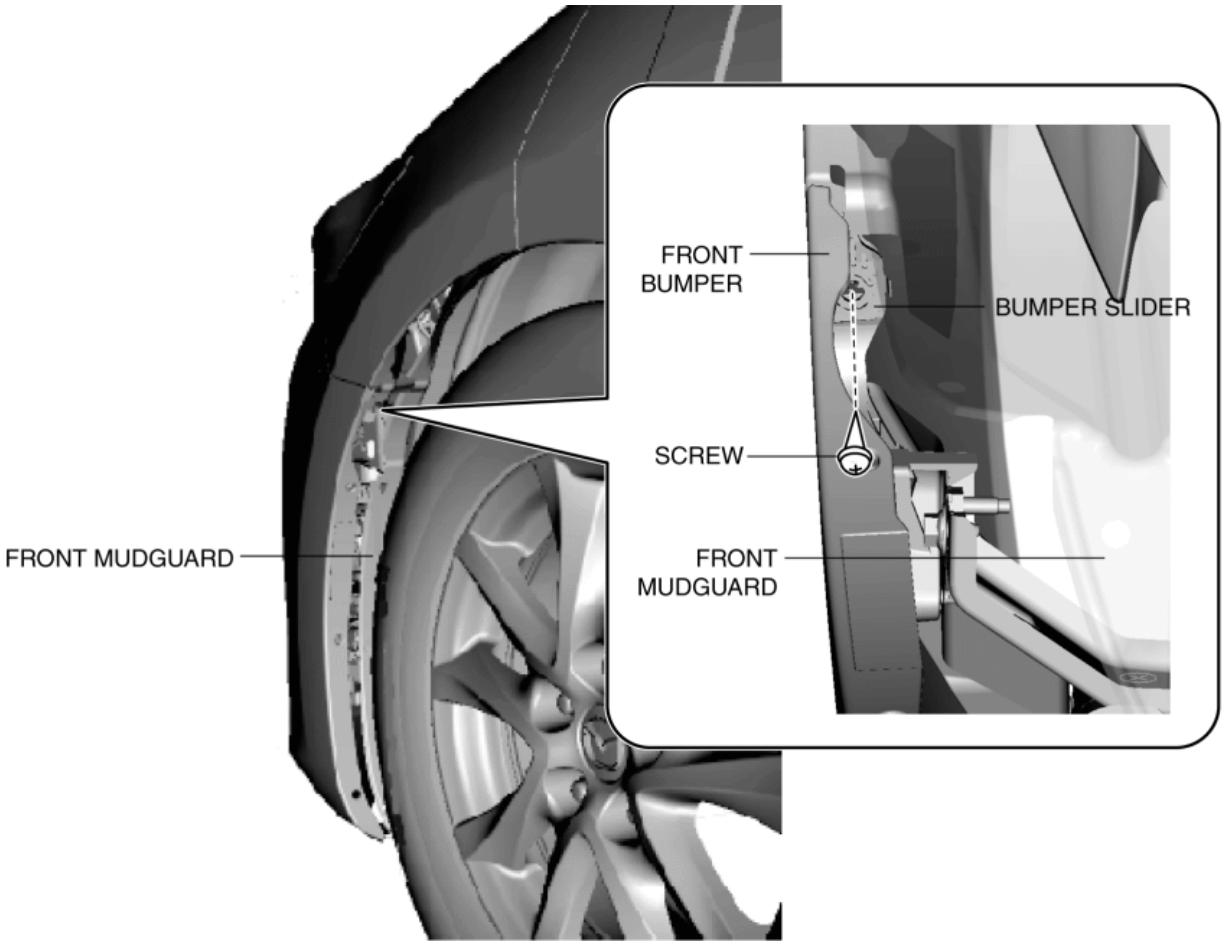

5. Remove the screws and fasteners shown in the figure.

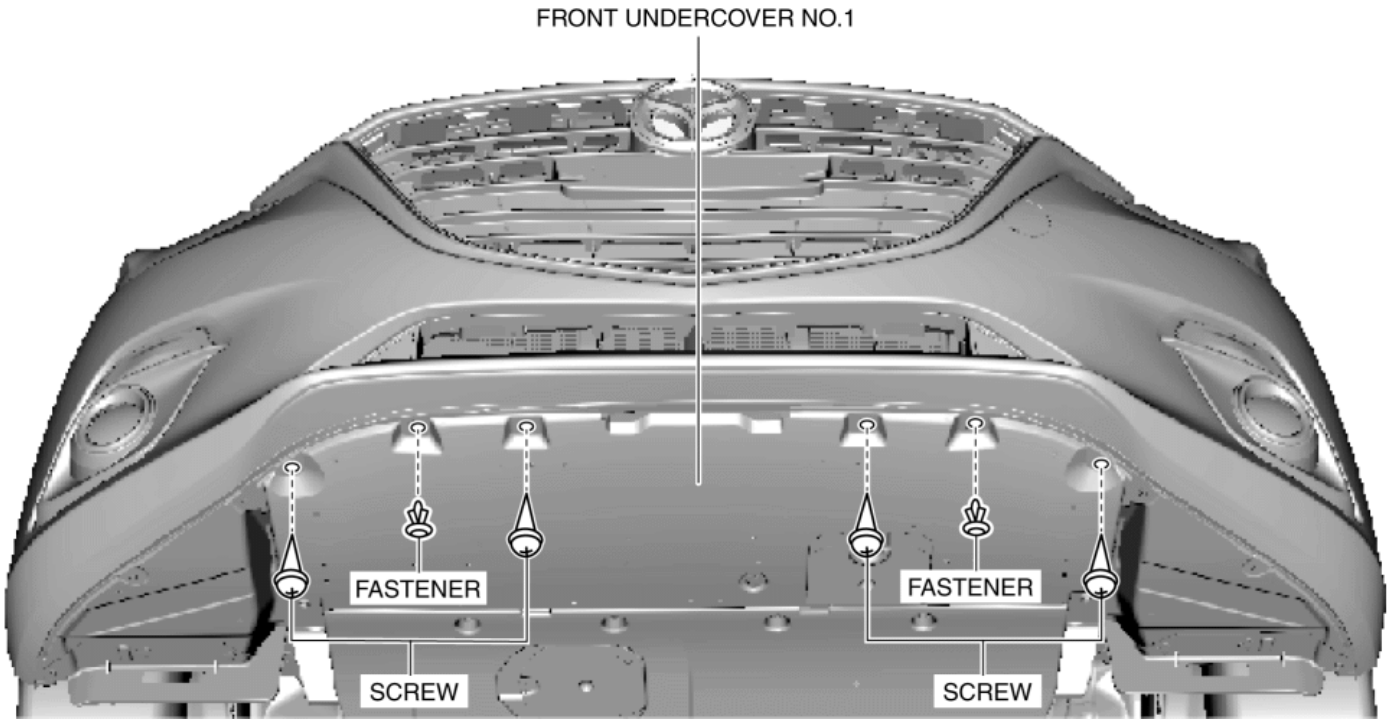

6. Remove the fasteners which can be verified at the position where front under cover No.1 was pulled back.

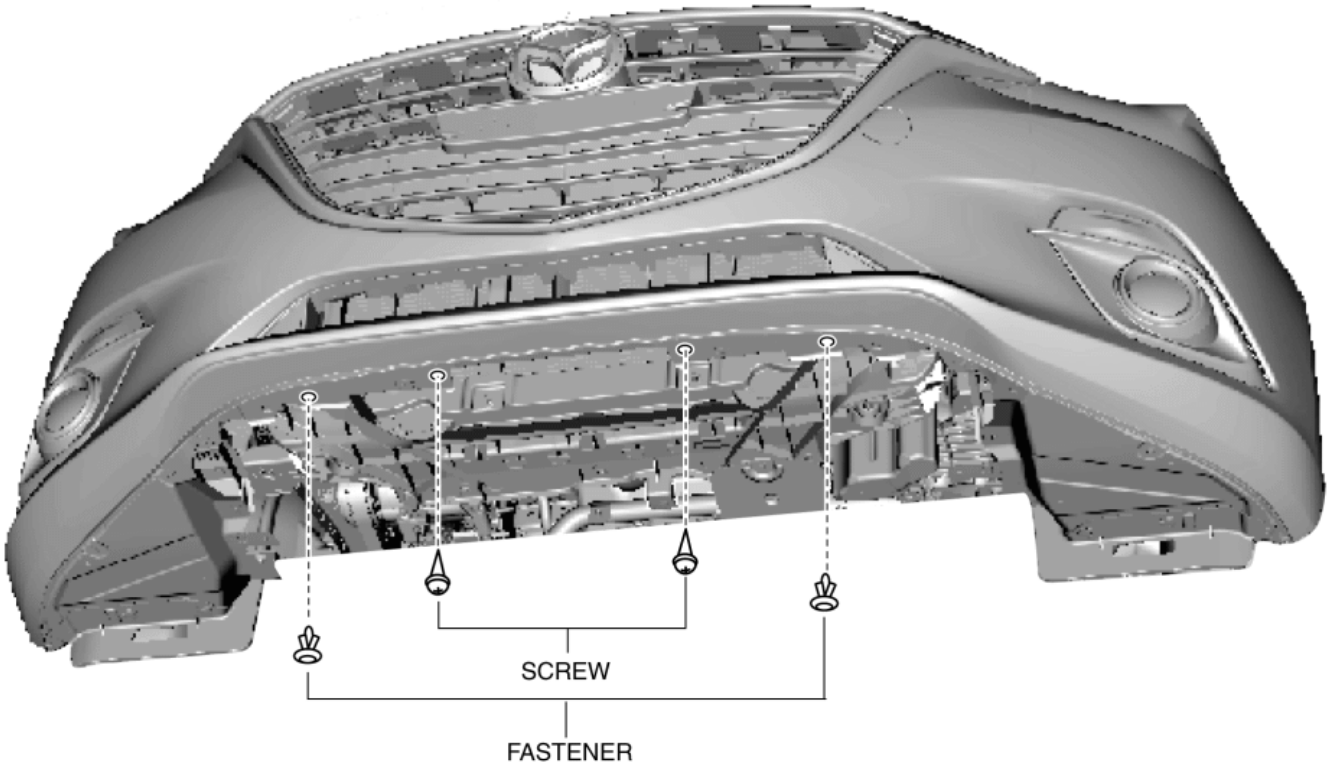

7. Remove the fresh-air duct installation bolts. (See **INTAKE-AIR SYSTEM REMOVAL/INSTALLATION [SKYACTIV-G 2.0, SKYACTIV-G 2.5]**.)

8. Remove the fastener which can be verified at the position where the fresh-air-duct was pulled back.

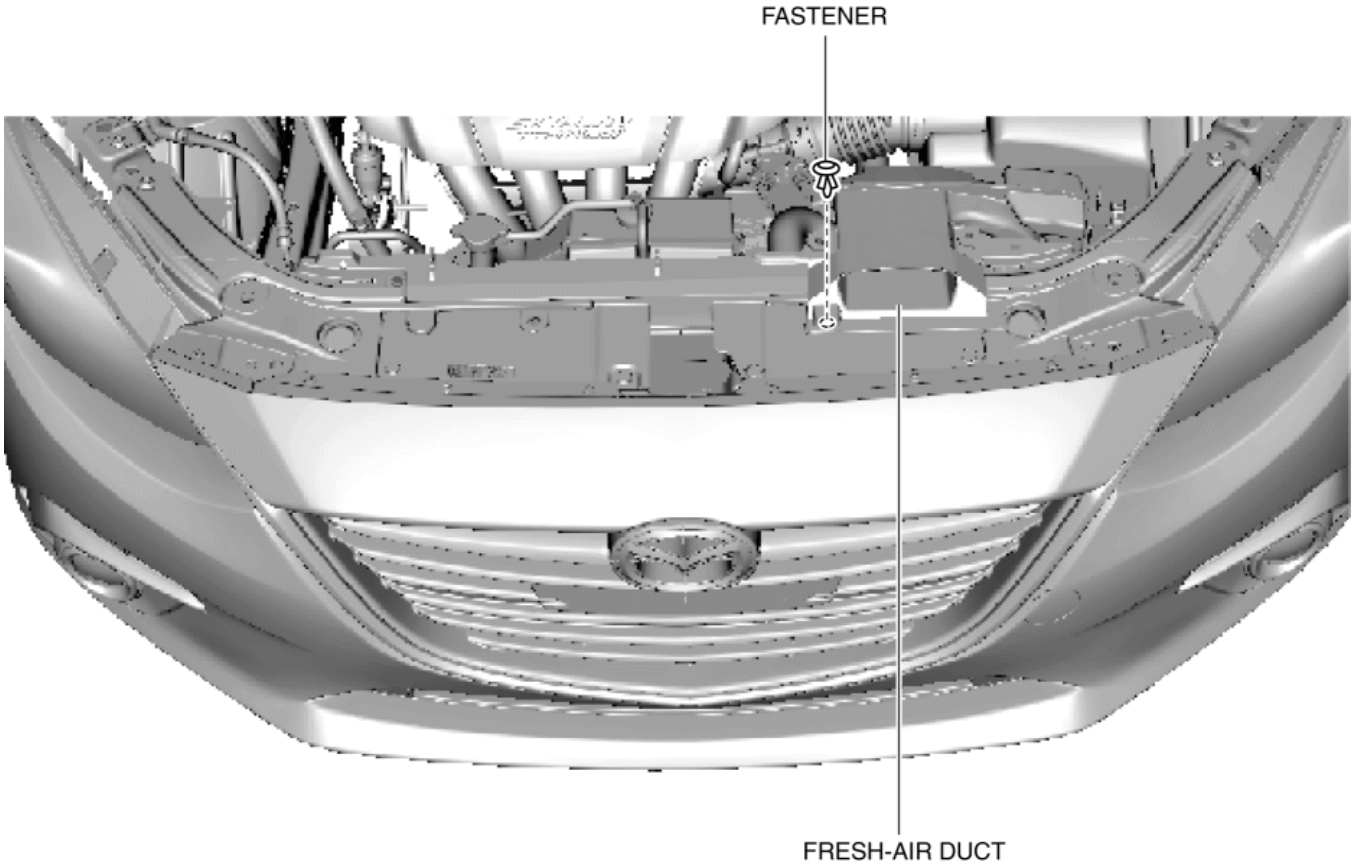

9. Remove the screws and fasteners shown in the figure.

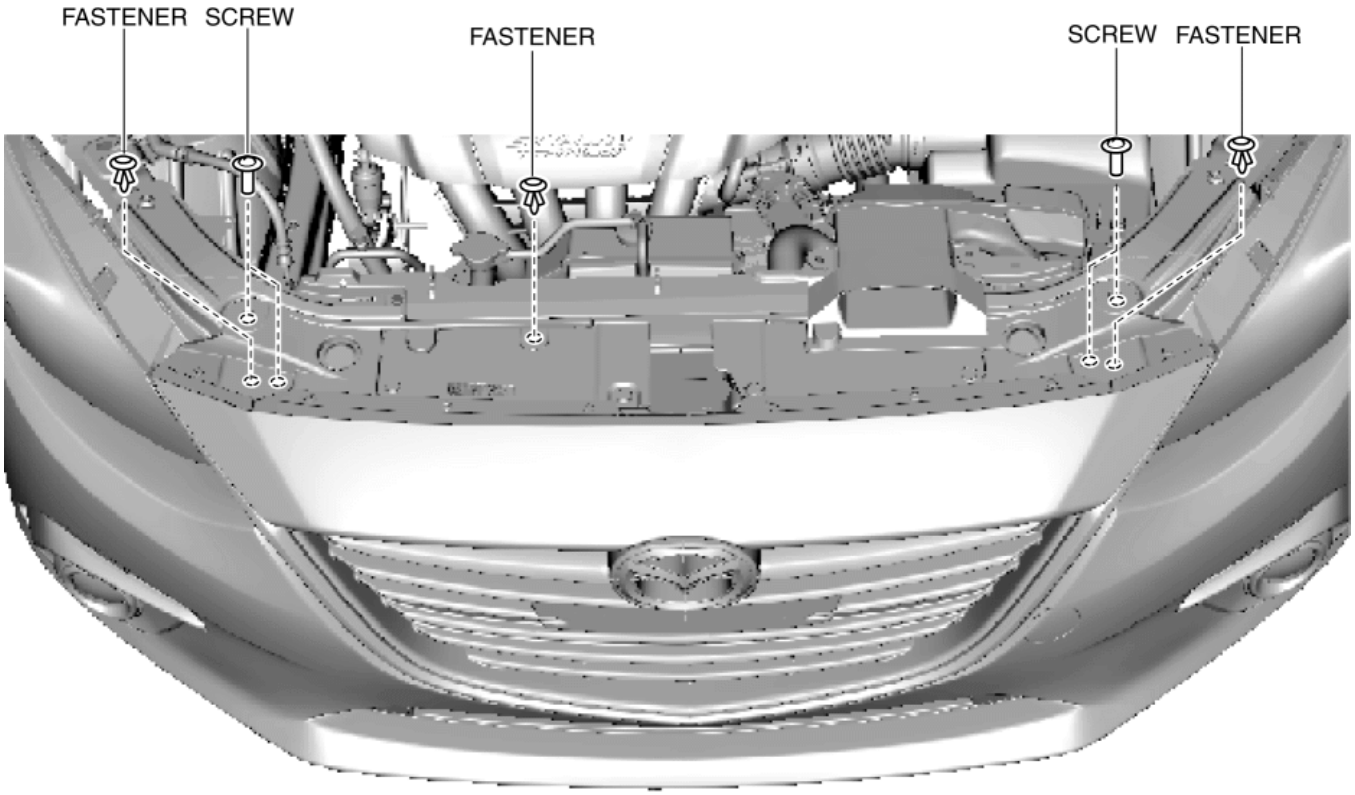

10. Remove the set plate. (See **SET PLATE REMOVAL/INSTALLATION**.)

11. Grasp the front bumper end, move it in the direction of the arrow shown in the figure, and remove the front bumper from the grommet.

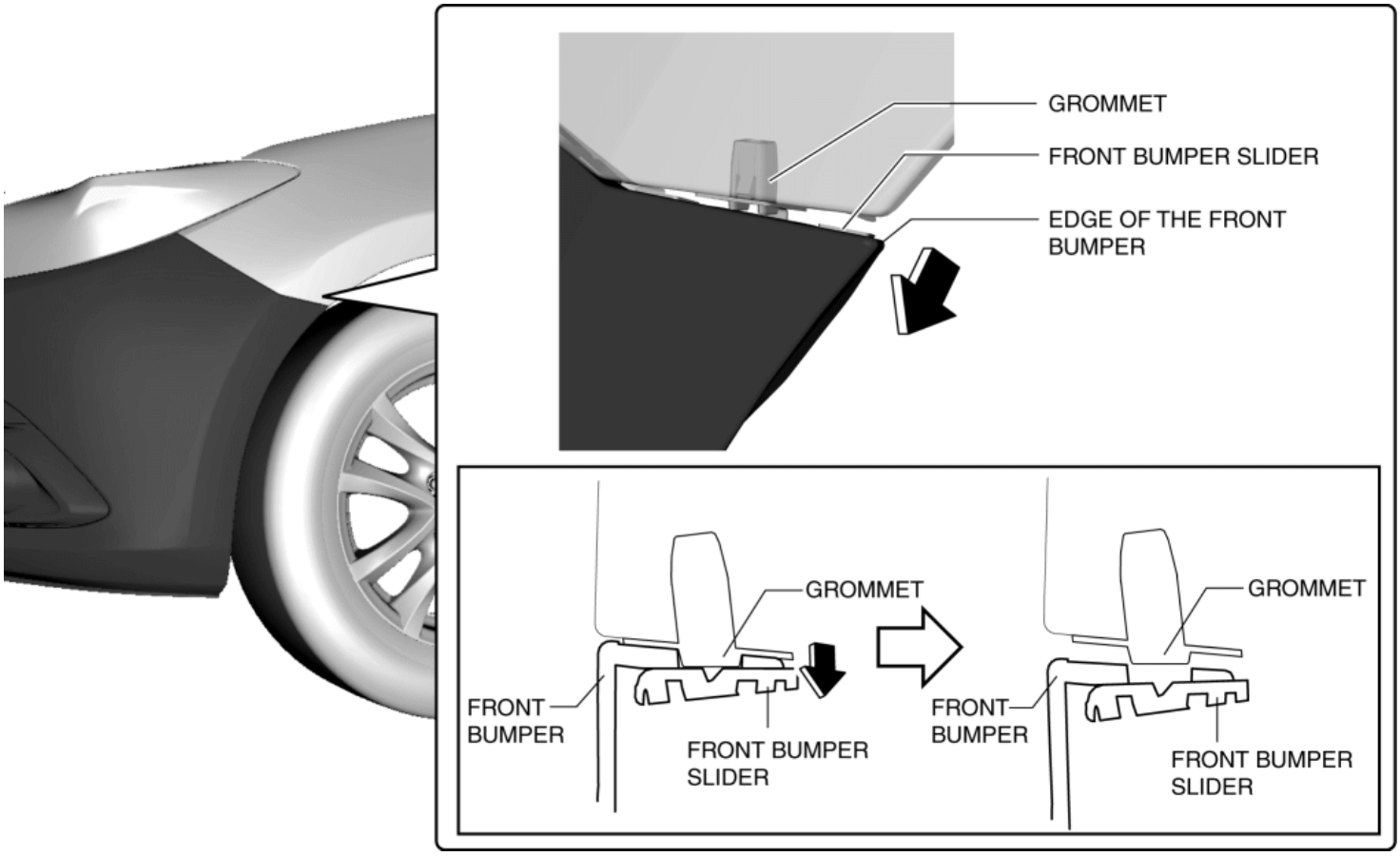

CAUTION:

- The front bumper and front bumper slider are engaged firmly. If they are disengaged forcibly the bumper could fall and be damaged. Perform the servicing carefully when disengaging the front bumper from the front bumper slider.
- When disengaging the front bumper from the front bumper slider, the front bumper could fall and be damaged. Support the front bumper so that it does not fall.

12. Pull the rear end of the front bumper in the direction of the arrow shown in the figure and detach the front bumper from the front bumper slider while removing the tabs.

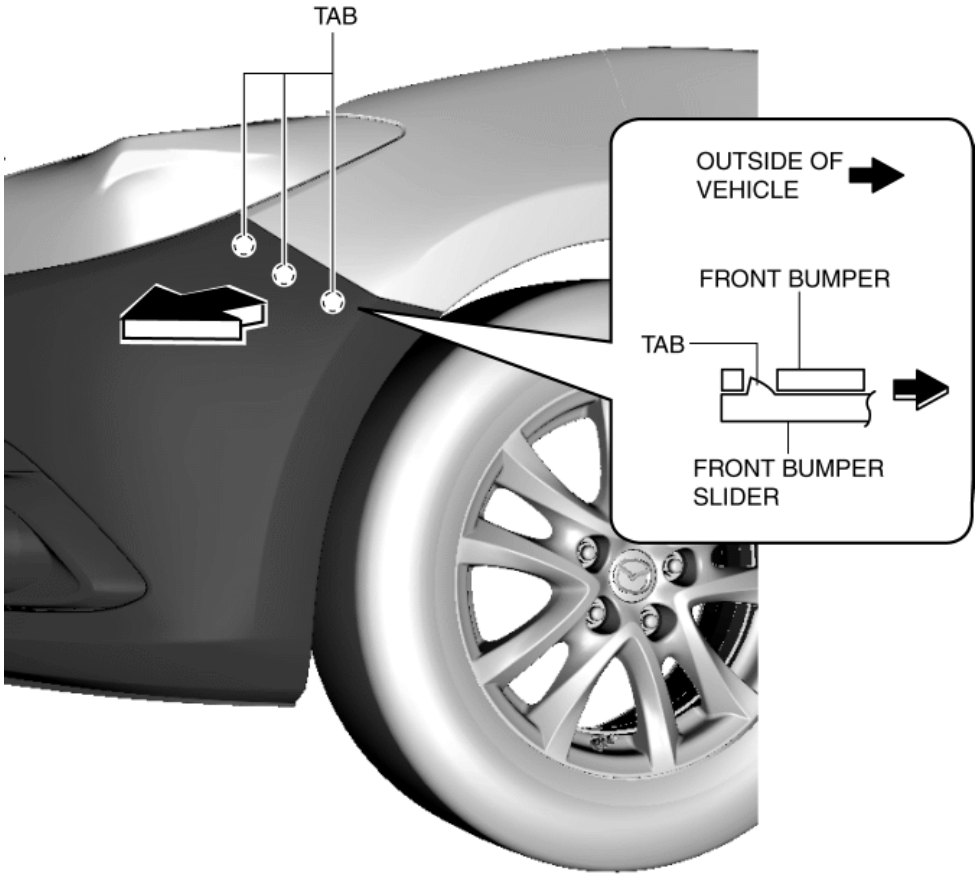

13. Hold locations A and B shown in the figure by hand, pull the front bumper in the direction of the arrows shown in the figure, and remove the front bumper from the guides.

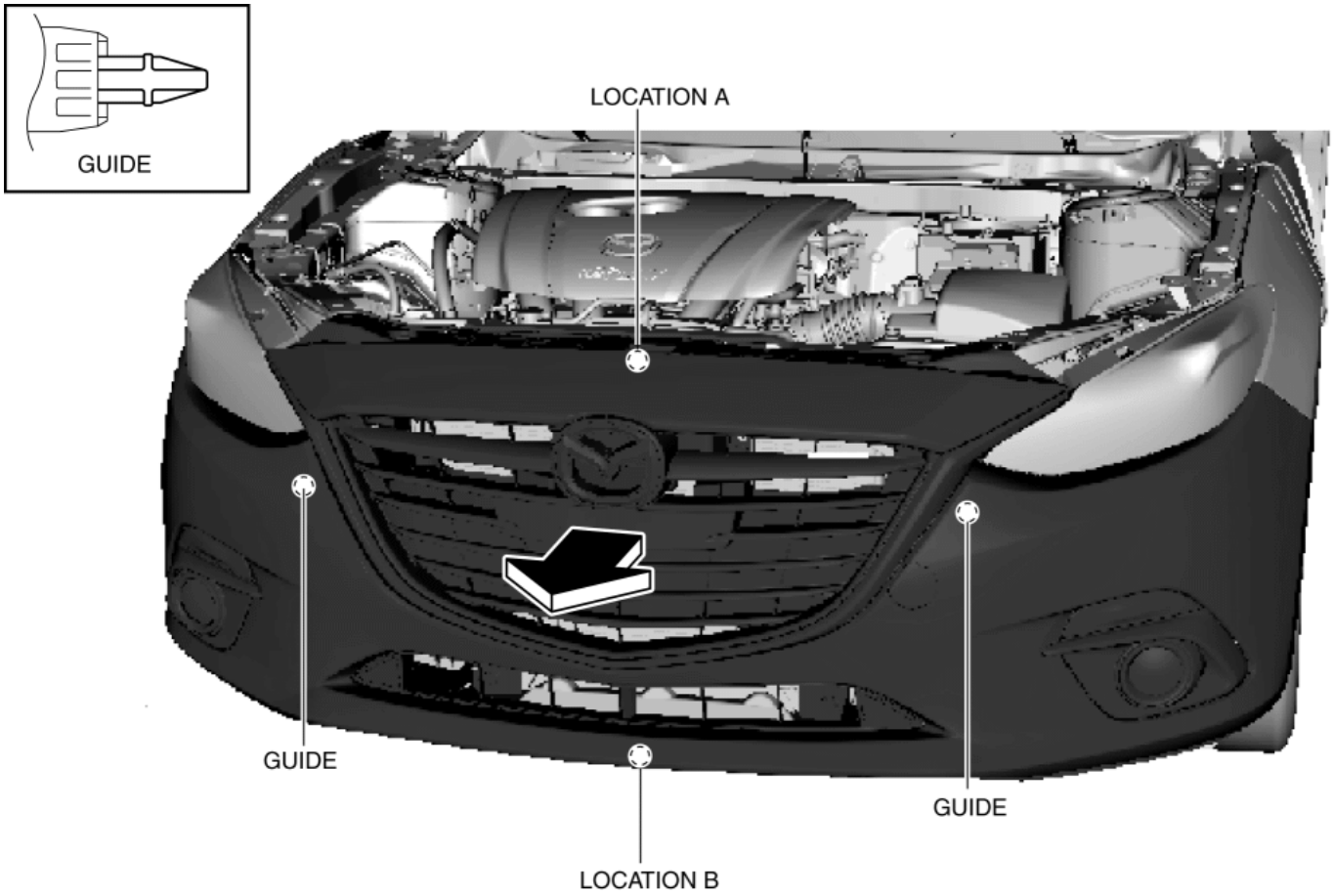

14. Disconnect the connectors and wiring harness clips shown in the figure.

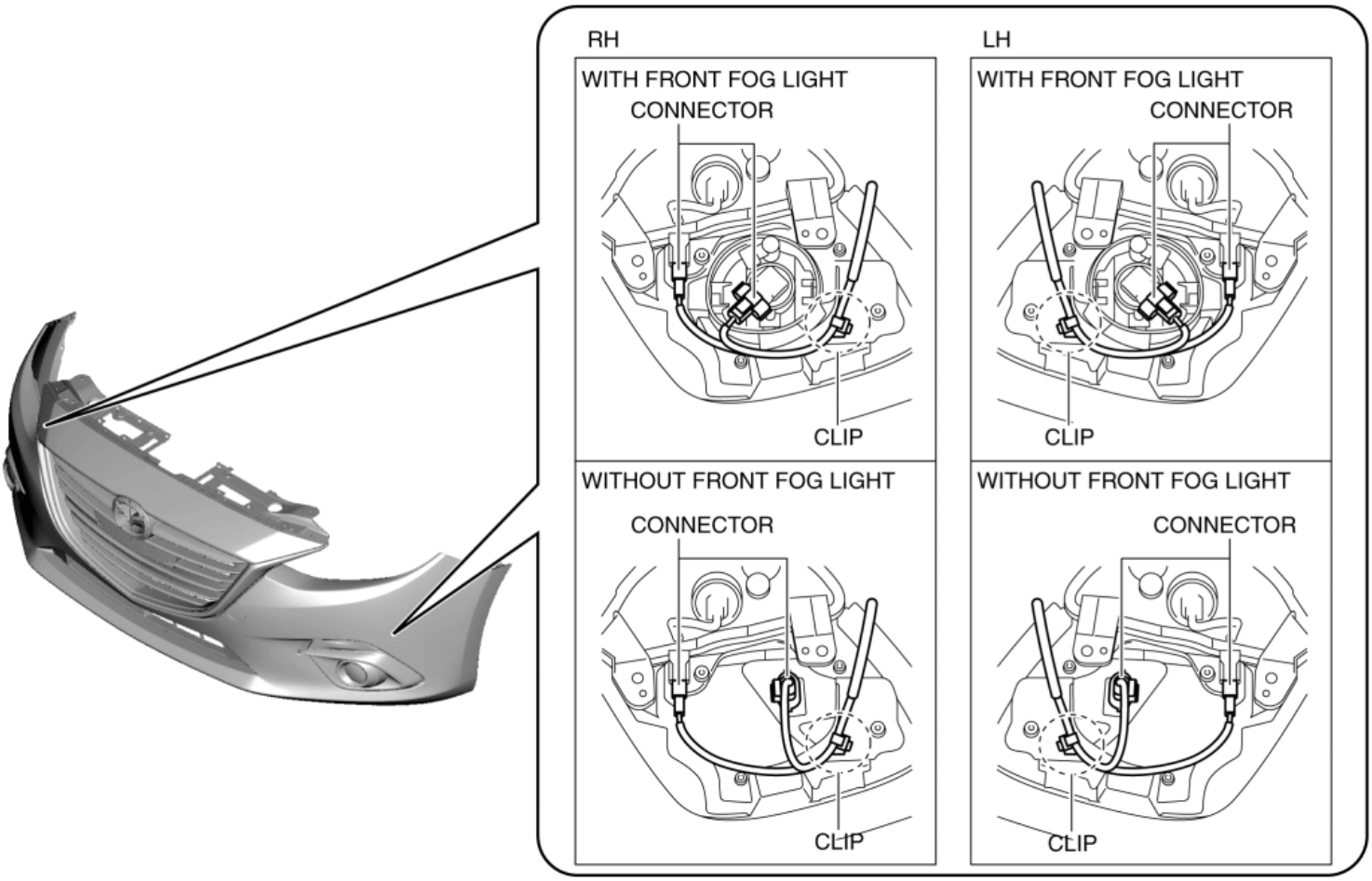

15. Install in the reverse order of removal.

16. If a front fog light is removed from the front bumper, perform the front fog light aiming. (with front fog lights) (See **FRONT FOG LIGHT AIMING**.)

2014 - Mazda3 - Body and Accessories

FRONT FOG LIGHT BEZEL REMOVAL/INSTALLATION

Front Fog Light Bezel No.1

Front fog light bezel No.1 removal

1. Slightly bend back the front mudguard. (See **MUDGUARD REMOVAL/INSTALLATION**.)
2. To prevent scratches or damage, apply protective tape to the position shown in the figure

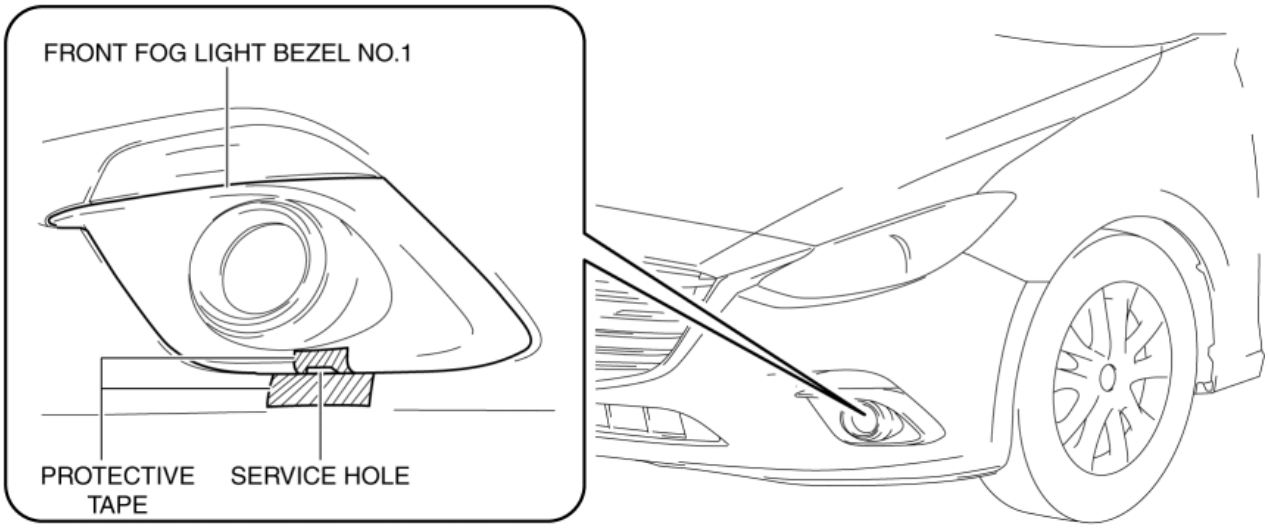

3. Insert the remover tool into the front fog light bezel No.1 service hole at the position shown in the figure.
4. Insert a hand through the position where the front mudguard was bent back, and while pressing area A of front fog light bezel No.1 in the direction of arrow (1) shown in the figure, move the remover tool in the direction of arrow (2) and detach the front fog light bezel No.1 tabs from the front bumper.

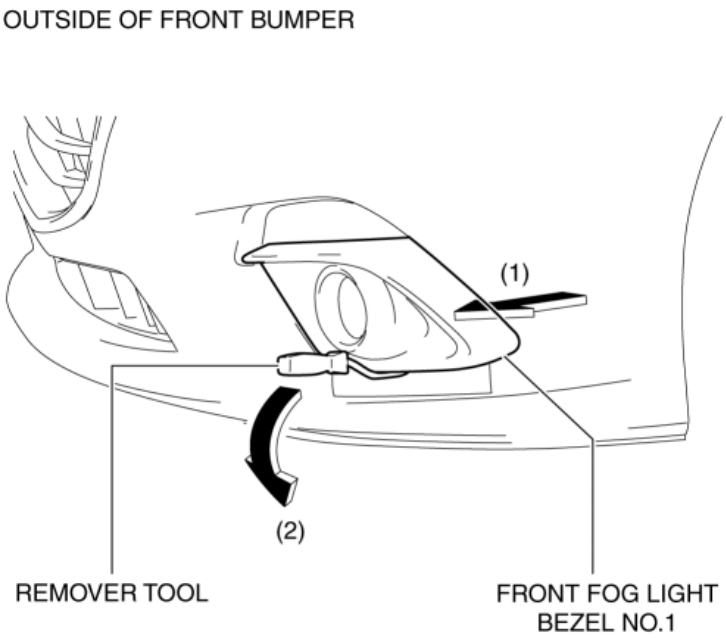

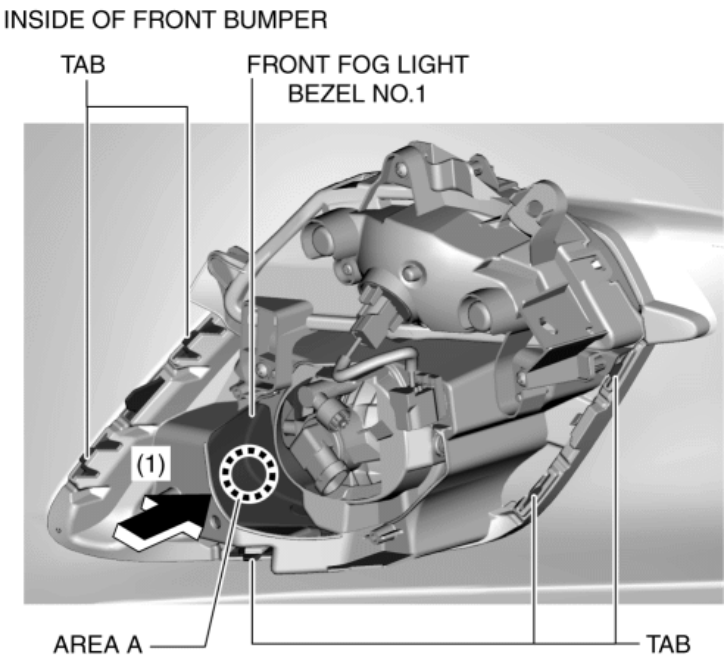

5. Remove front fog light bezel No.1.

CAUTION:

- For vehicles with front fog light bezel No.2, if front fog light bezel No.2 is pulled strongly, the tab could be damaged. Hold and remove front fog light bezel No.1 from the front bumper.

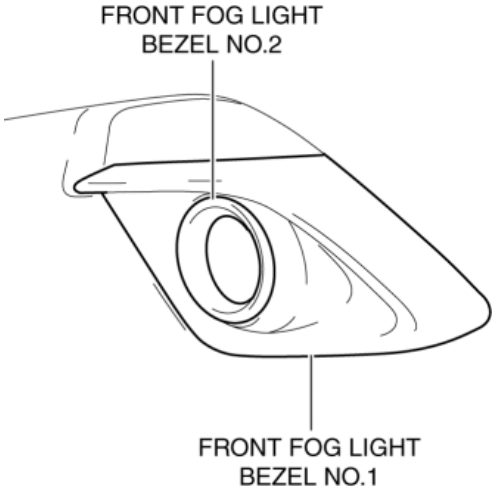

Front fog light bezel No.1 installation

1. Press in area B of front fog light bezel No.1 and detach the front fog light bezel No.1 tabs from the front bumper.

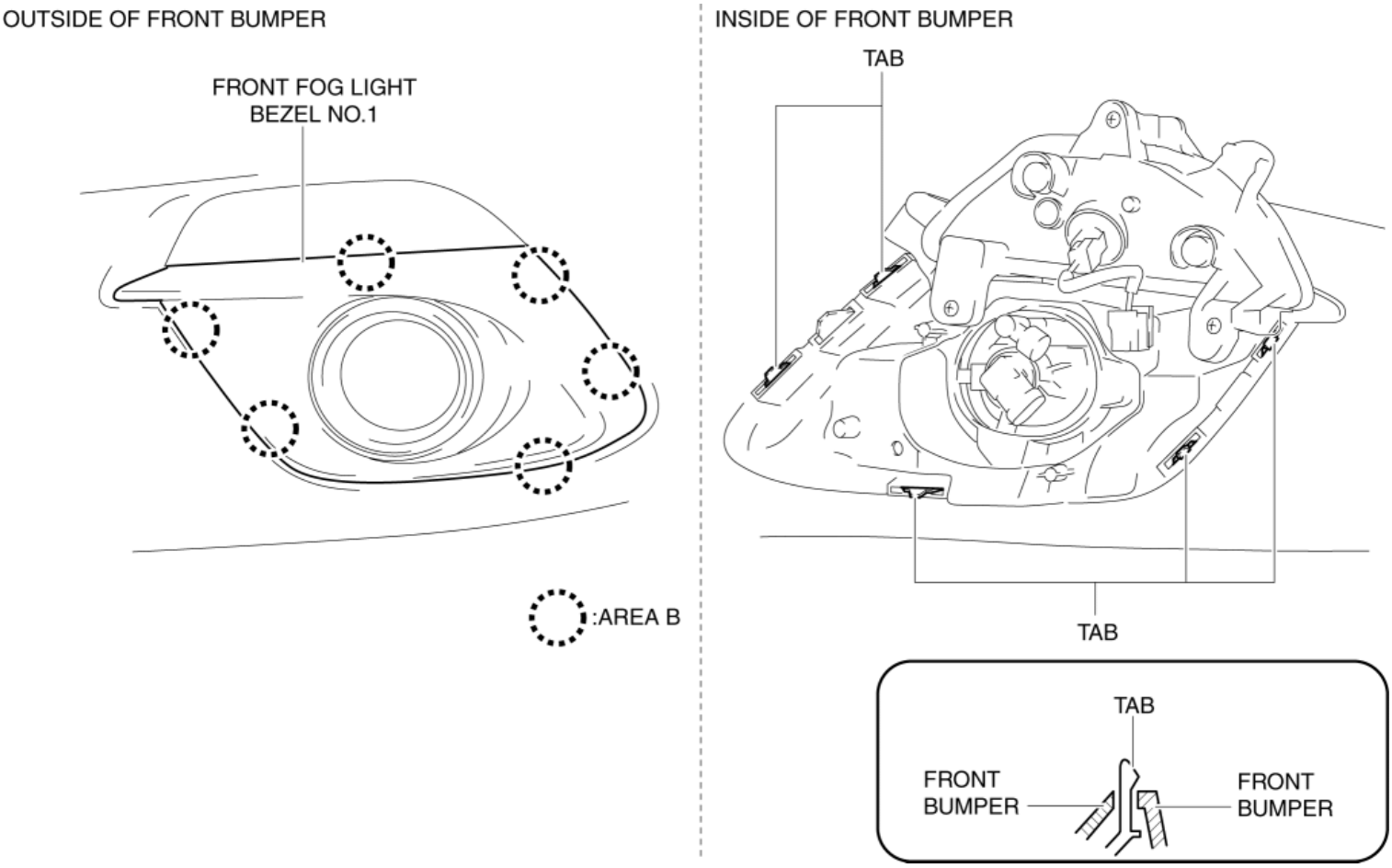

Front Fog Light Bezel No.2 (with front fog light bezel No.2)

1. Remove front fog light bezel No.1. (See **Front fog light bezel No.1 removal**.)(See **Front fog light bezel No.1 installation**.)
2. While pressing the front fog light bezel No.2 tabs in the direction of arrow (1) shown in the figure, press it out in the direction of

arrow (2) and detach the front fog light bezel No.2 tabs from front fog light bezel No.1

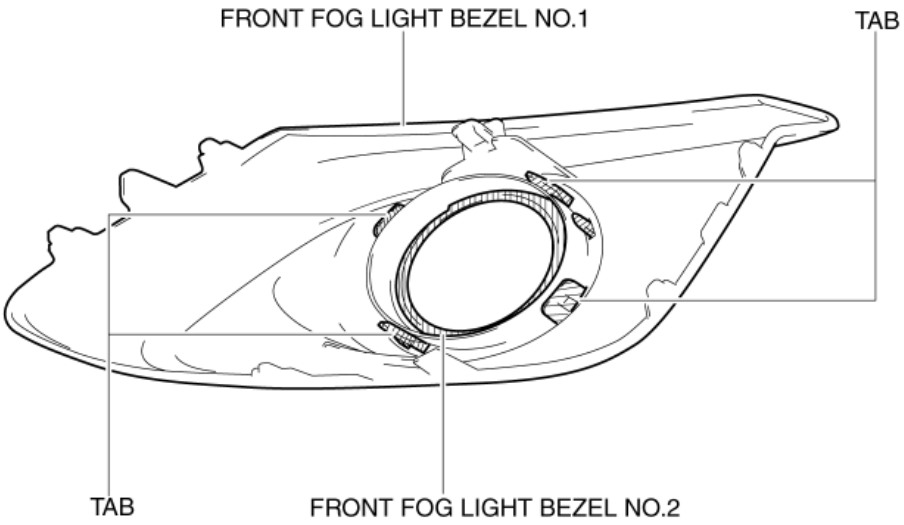

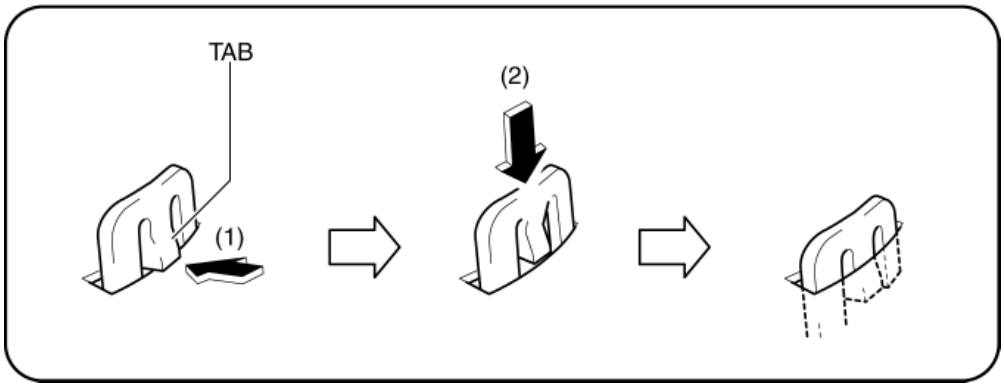

3. Detach all the front fog light bezel No.2 tabs from front fog light bezel No.1 and remove front fog light bezel No.2.

4. Install in the reverse order of removal.

2014 - Mazda3 - Body and Accessories

FRONT BUMPER REINFORCEMENT REMOVAL/INSTALLATION

1. Disconnect the negative battery cable. (See **NEGATIVE BATTERY CABLE DISCONNECTION/CONNECTION [SKYACTIV-G 2.0, SKYACTIV-G 2.5]**.)

2. Remove the following parts:

   a. Set plate (See **SET PLATE REMOVAL/INSTALLATION**.)

   b. Front bumper (See **FRONT BUMPER REMOVAL/INSTALLATION**.)

   c. Front combination light (See **FRONT COMBINATION LIGHT REMOVAL/INSTALLATION**.)

   d. Intake air guide (See **INTAKE AIR GUIDE REMOVAL/INSTALLATION**.)

   e. Front energy-absorbing foam (See **ENERGY-ABSORBING FOAM REMOVAL/INSTALLATION**.)

   f. Front under cover No.1 (See **FRONT UNDER COVER No.1 REMOVAL/INSTALLATION**.)

   g. Bumper stiffener lower (See **BUMPER STIFFENER LOWER REMOVAL/INSTALLATION**.)

CAUTION:

- The front bumper reinforcement supports the shroud panel. After removing the front bumper reinforcement, an excessive load applied to the shroud panel could result in damage. When removing the front bumper reinforcement, always use a floor jack to support the shroud panel.

3. Support the shroud panel using a floor jack.

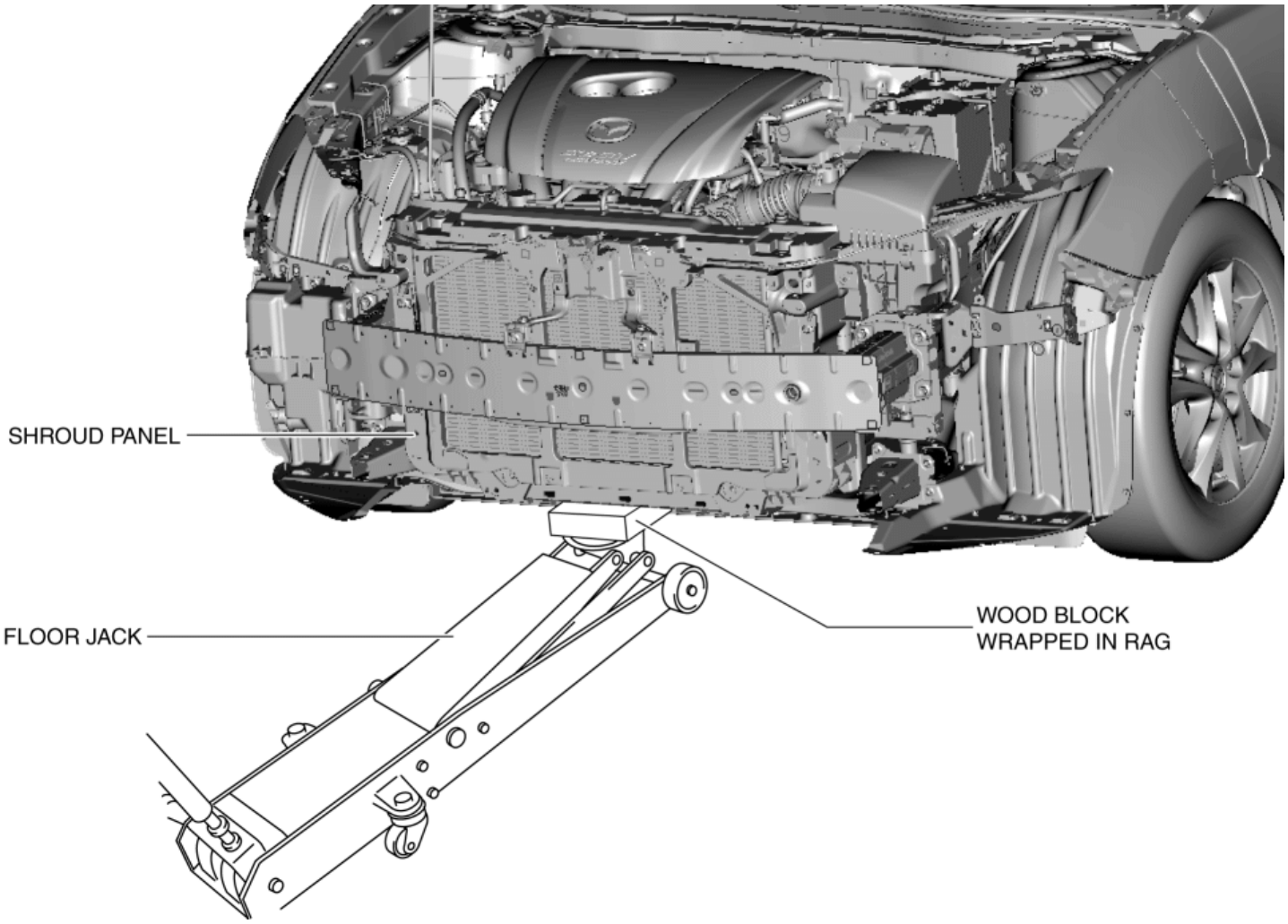

4. Remove the bolts shown in the figure.

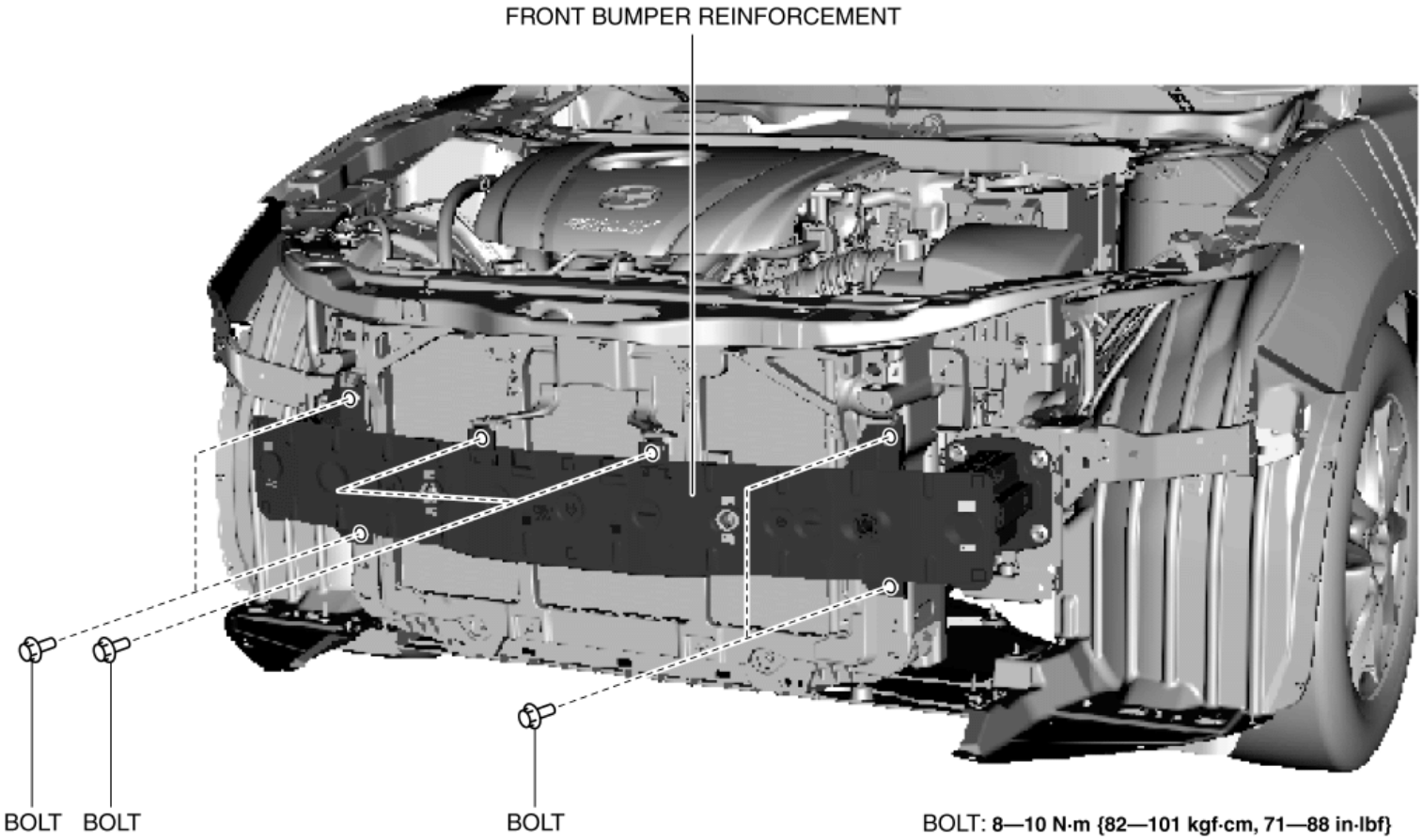

CAUTION:

- Removing the front bumper reinforcement without supporting it could cause the front bumper reinforcement to fall and cause serious injury. Always perform the procedure with at least another person to prevent the front bumper reinforcement from falling.

5. Remove the bolts shown in the figure and remove the front bumper reinforcement.

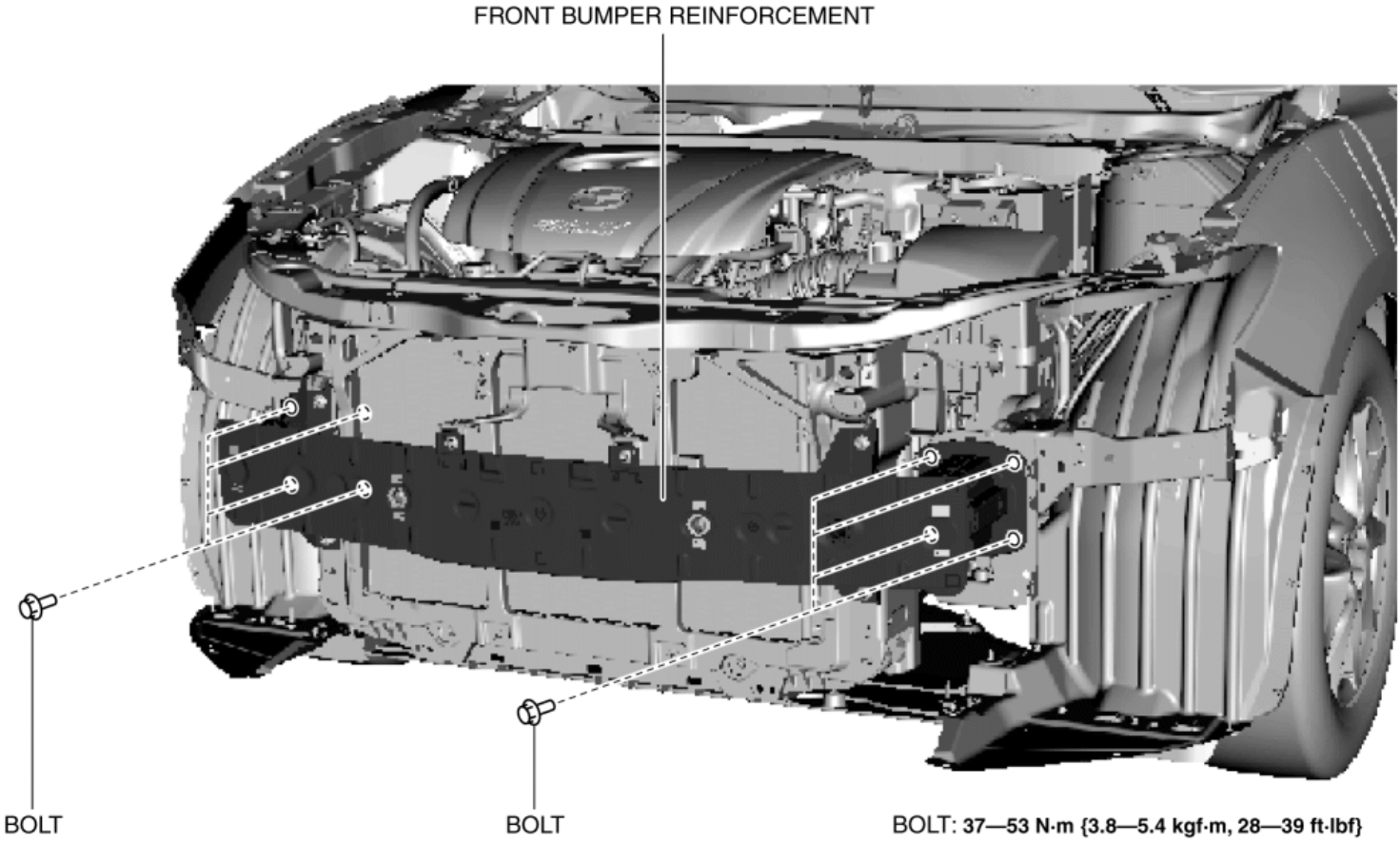

6. Install in the reverse order of removal.

7. Adjust the headlight aiming. (See **HEADLIGHT AIMING**.)

8. If a front fog light is removed from the front bumper, perform the front fog light aiming. (with front fog lights) (See **FRONT FOG LIGHT AIMING**.)

2014 - Mazda3 - Body and Accessories

ENERGY-ABSORBING FOAM REMOVAL/INSTALLATION

Front Energy-absorbing Foam

1. Disconnect the negative battery cable. (See **NEGATIVE BATTERY CABLE DISCONNECTION/CONNECTION [SKYACTIV-G 2.0, SKYACTIV-G 2.5]**.)

2. Remove the set plate. (See **SET PLATE REMOVAL/INSTALLATION**.)

3. Remove the front bumper. (See **FRONT BUMPER REMOVAL/INSTALLATION**.)

4. Insert a remover tool in the position shown in the figure, press out the areas where the pins are located on the fasteners in the direction of the arrow, and remove them.

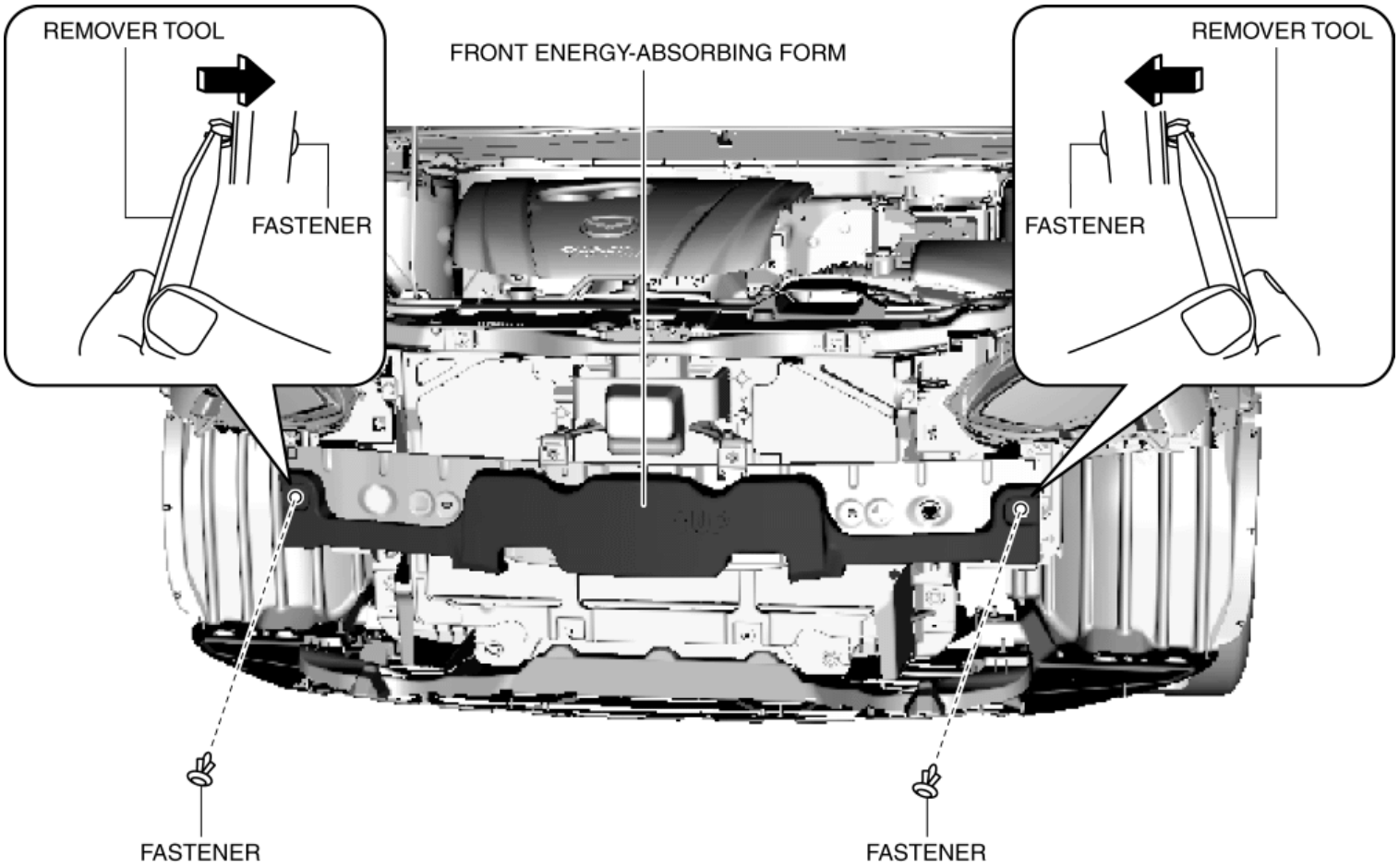

CAUTION:

- When removing the energy-absorbing foam, hold the area around the guide and pull the energy-absorbing foam straight out from the front bumper reinforcement. Otherwise, the guide may be damaged.

5. Pull the front energy-absorbing foam in the direction of the arrow shown in the figure while detaching guides

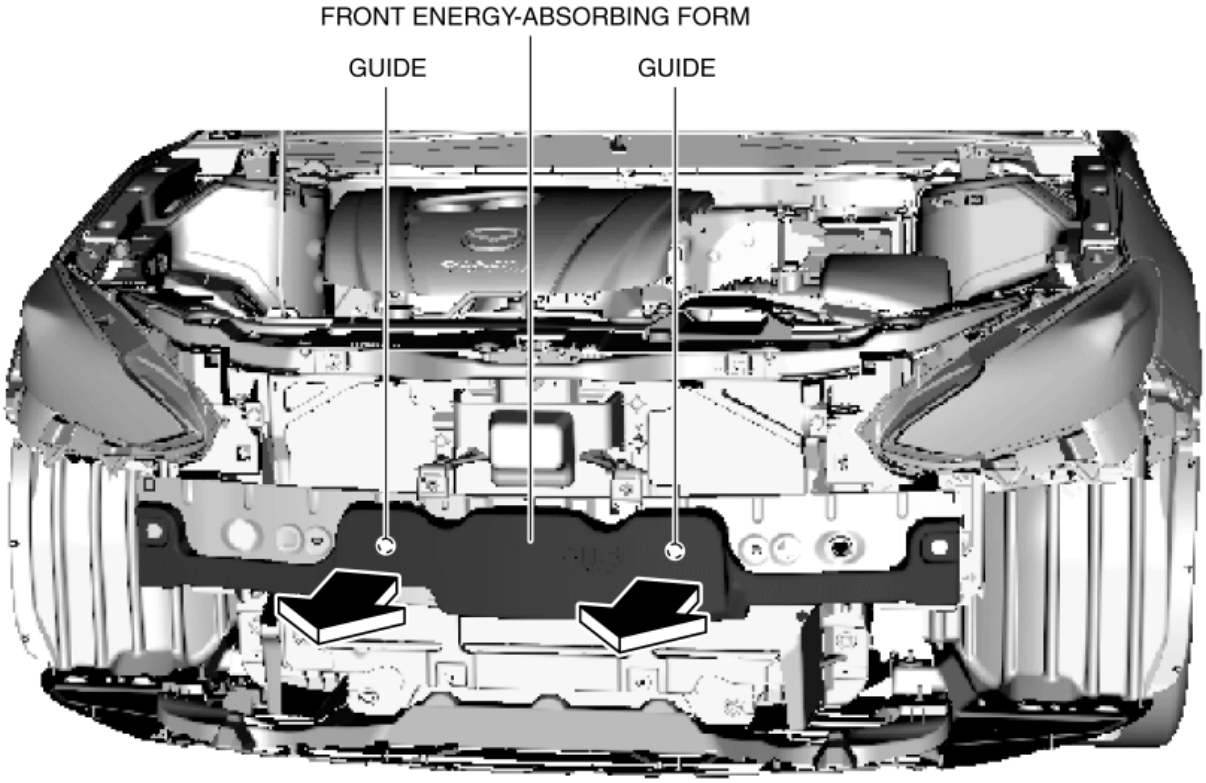

6. Install in the reverse order of removal.

7. If a front fog light is removed from the front bumper, perform the front fog light aiming. (with front fog lights) (See **FRONT FOG LIGHT AIMING**.)

Rear Energy-absorbing Foam

1. Disconnect the negative battery cable. (See **NEGATIVE BATTERY CABLE DISCONNECTION/CONNECTION [SKYACTIV-G 2.0, SKYACTIV-G 2.5]**.)

2. Remove the following parts:

   a. Rear combination light (See **REAR COMBINATION LIGHT REMOVAL/INSTALLATION**)

   b. Rear splash shield (See **SPLASH SHIELD REMOVAL/INSTALLATION**.)

   c. Rear bumper (See **REAR BUMPER REMOVAL/INSTALLATION**.)

3. Insert a precision flathead screwdriver into the position shown in the figure, pull out the center pins of the fasteners, and remove the fasteners.

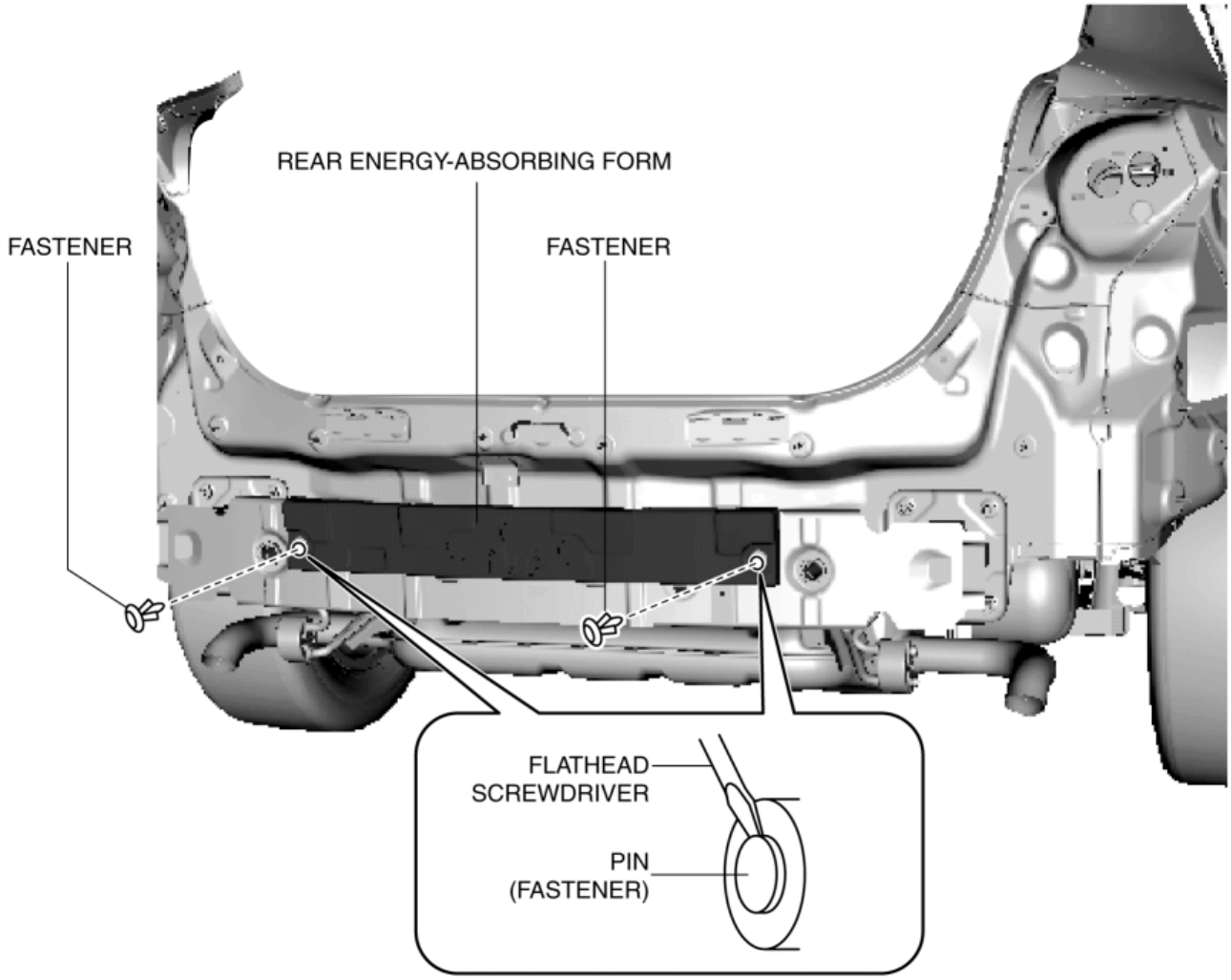

CAUTION:

- When removing the energy-absorbing foam, hold the area around the guide and pull the energy-absorbing foam straight out from the rear bumper reinforcement. Otherwise, the guide may be damaged.

4. Pull the energy-absorbing foam in the direction of the arrow shown in the figure while detaching guides.

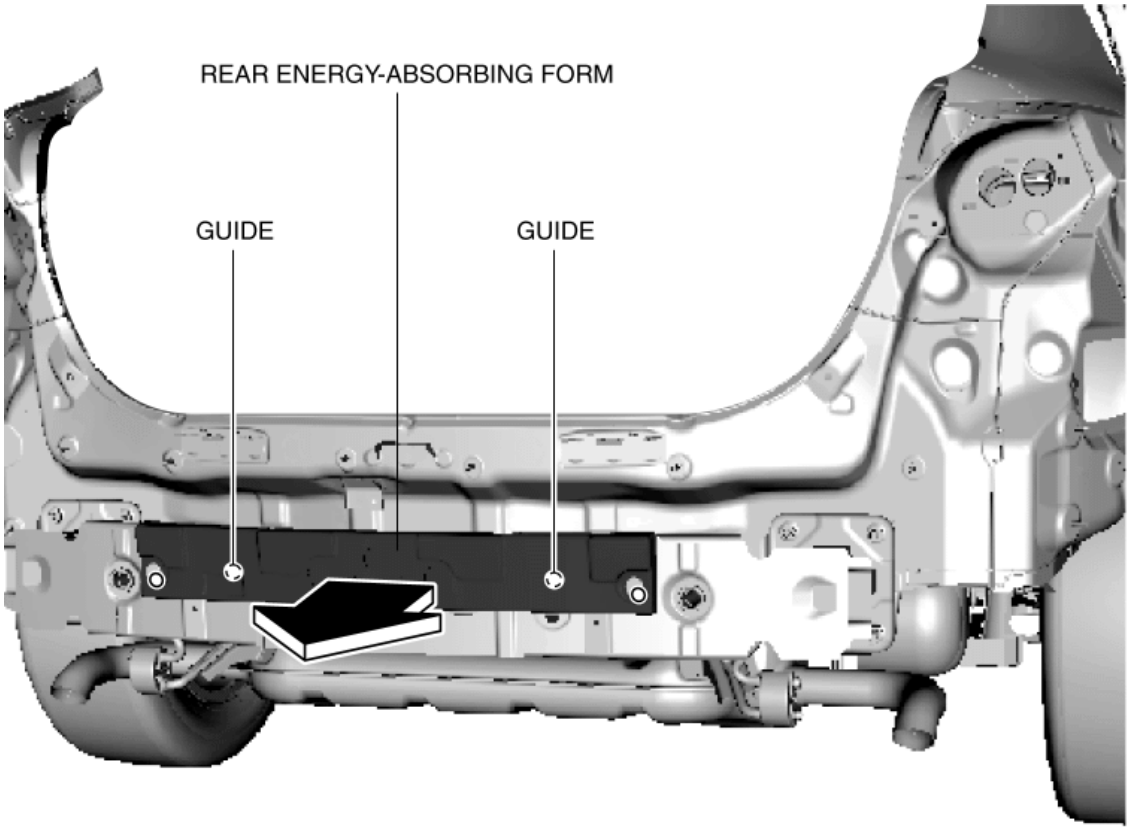

5. Install in the reverse order of removal.

2014 - Mazda3 - Body and Accessories

BUMPER STIFFENER LOWER REMOVAL/INSTALLATION

1. Disconnect the negative battery cable. (See **NEGATIVE BATTERY CABLE DISCONNECTION/CONNECTION [SKYACTIV-G 2.0, SKYACTIV-G 2.5]**.)
2. Remove the following parts:
   a. Set plate (See **SET PLATE REMOVAL/INSTALLATION**.)
   b. Front bumper (See **FRONT BUMPER REMOVAL/INSTALLATION**.)
3. Remove the screws shown in the figure.

Without i-ELOOP

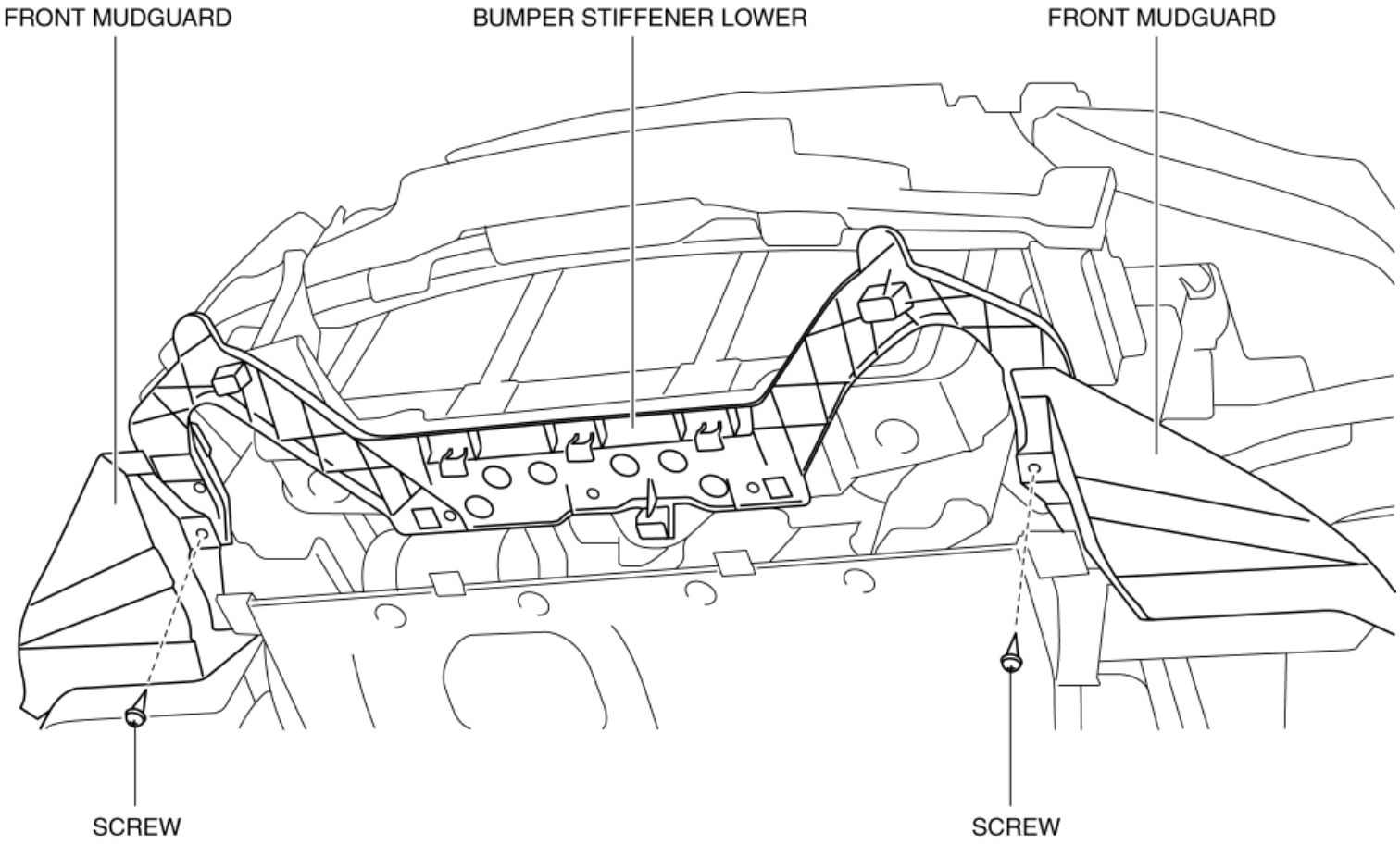

With i-ELOOP

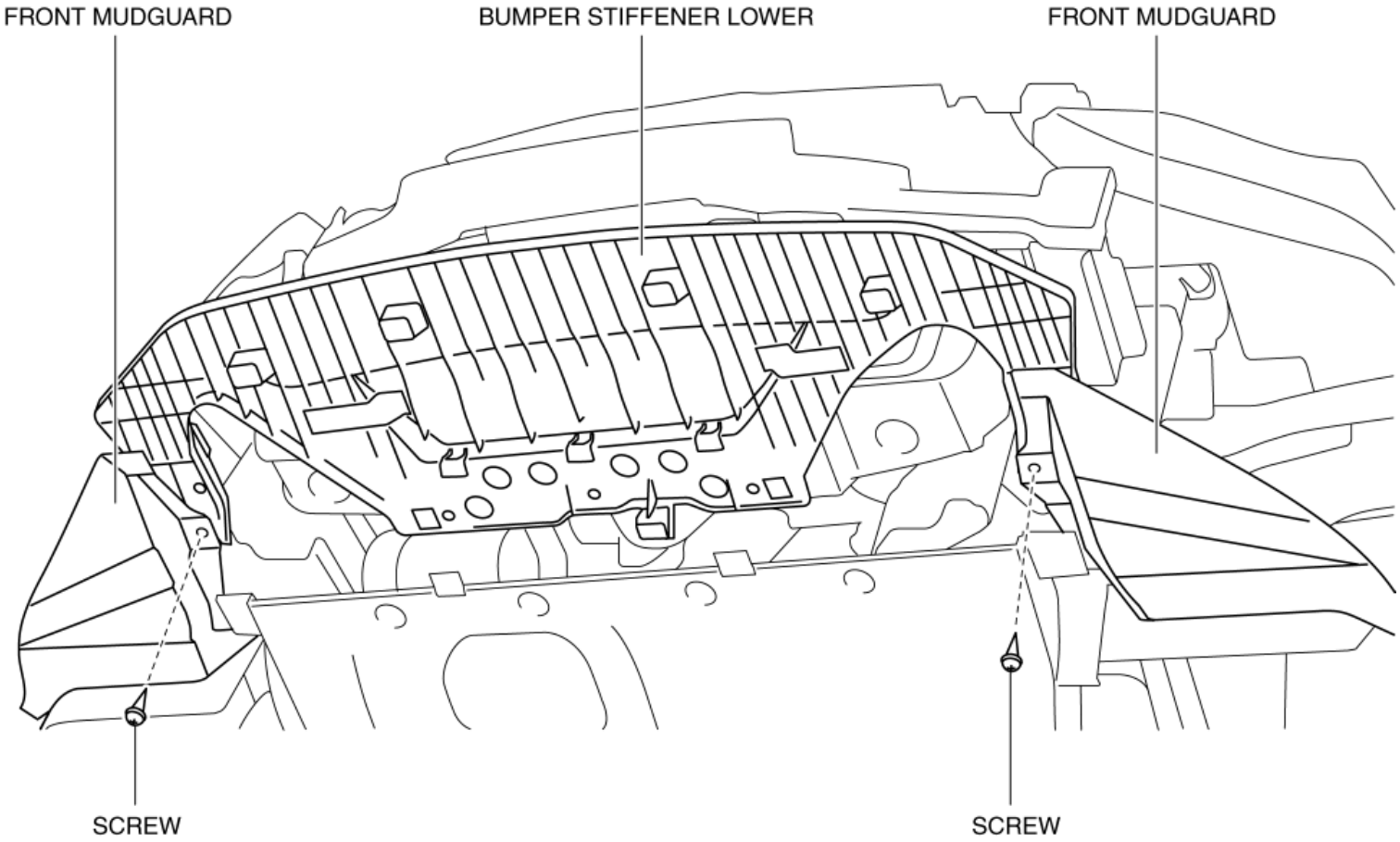

4. Remove the bolts shown in the figure.

Without i-ELOOP

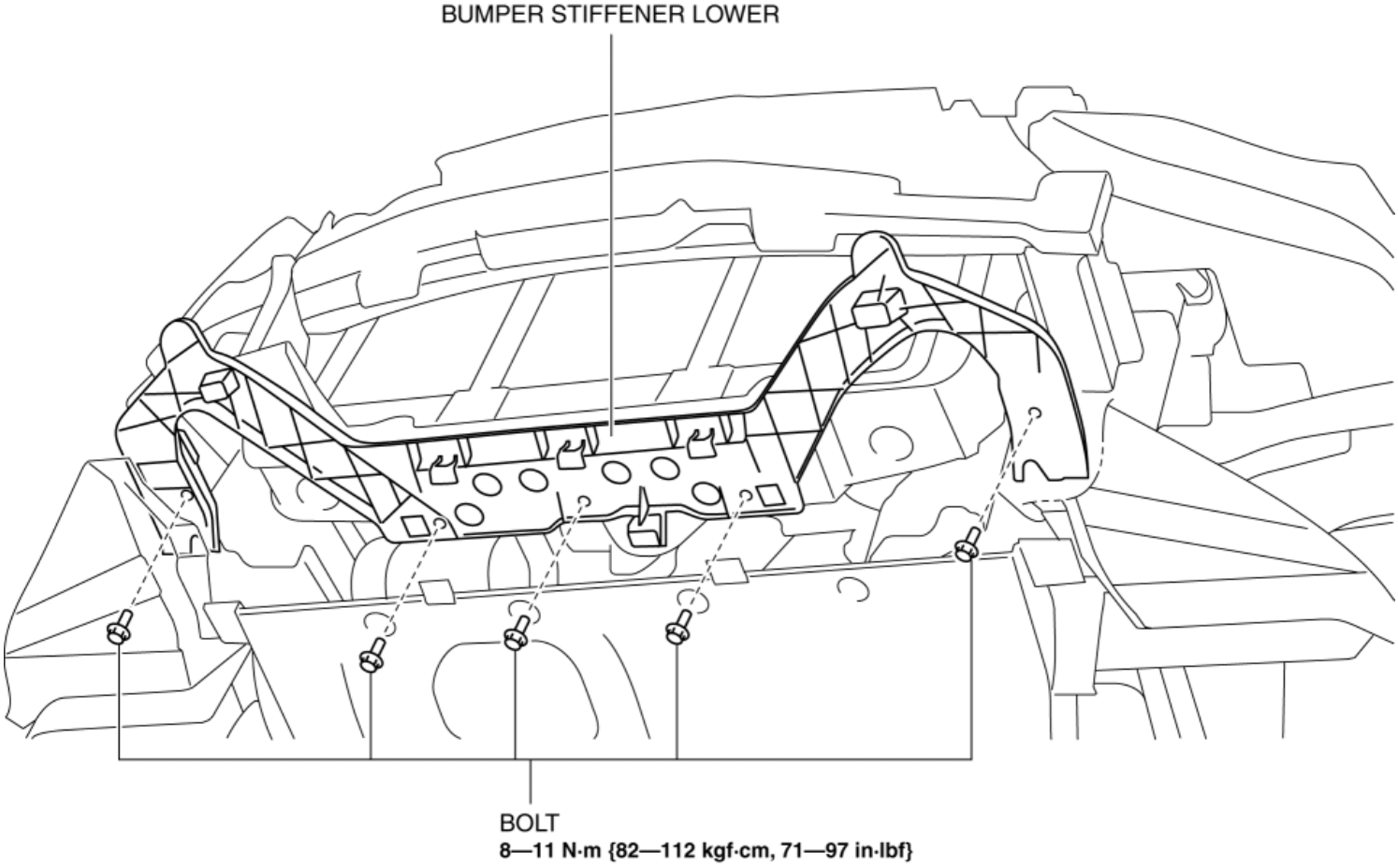

With i-ELOOP

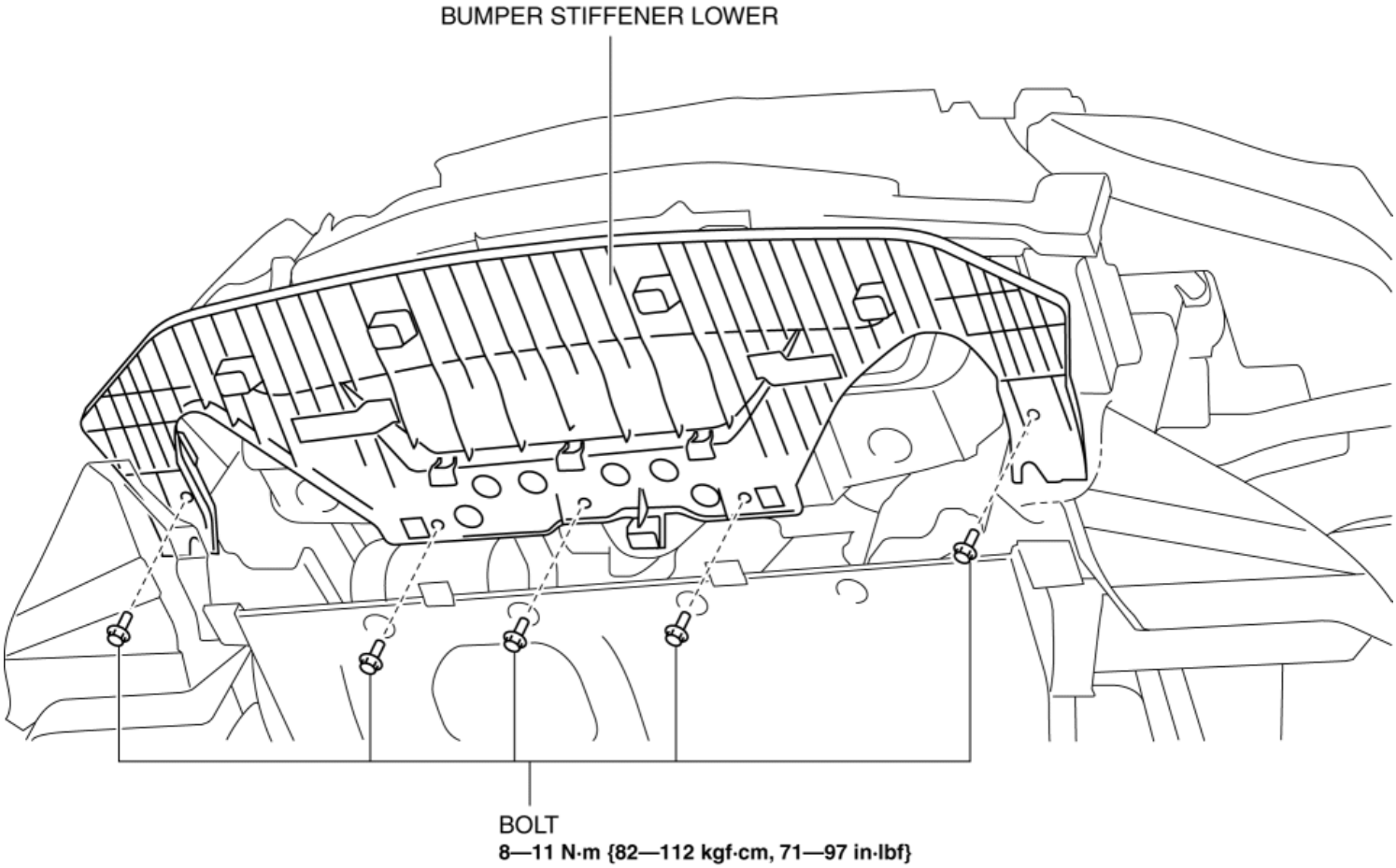

5. Remove the tabs shown in the figure.

Without i-ELOOP

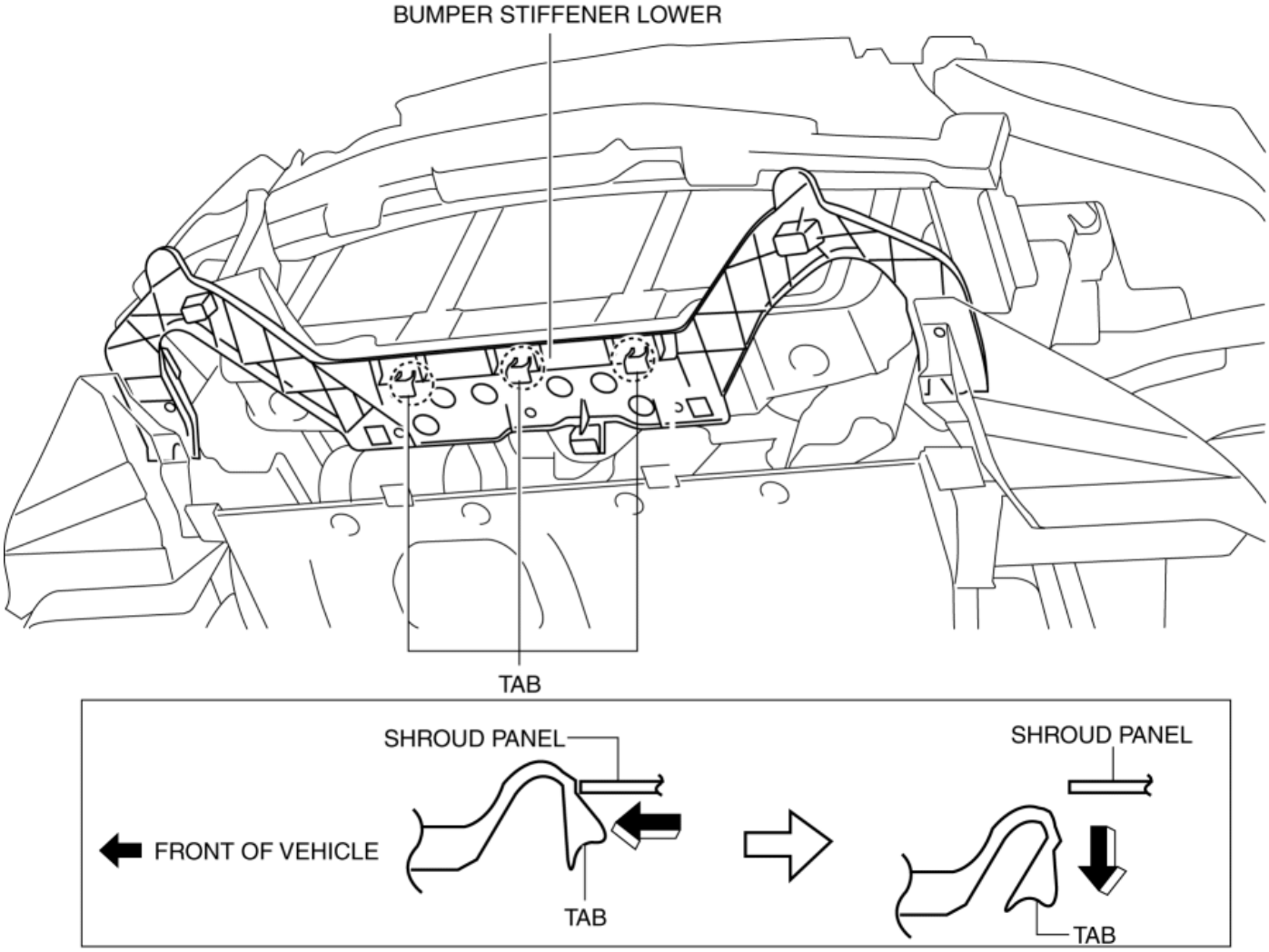
BUMPER STIFFENER LOWER
TAB
SHROUD PANEL
FRONT OF VEHICLE
TAB
SHROUD PANEL
TAB

With i-ELOOP

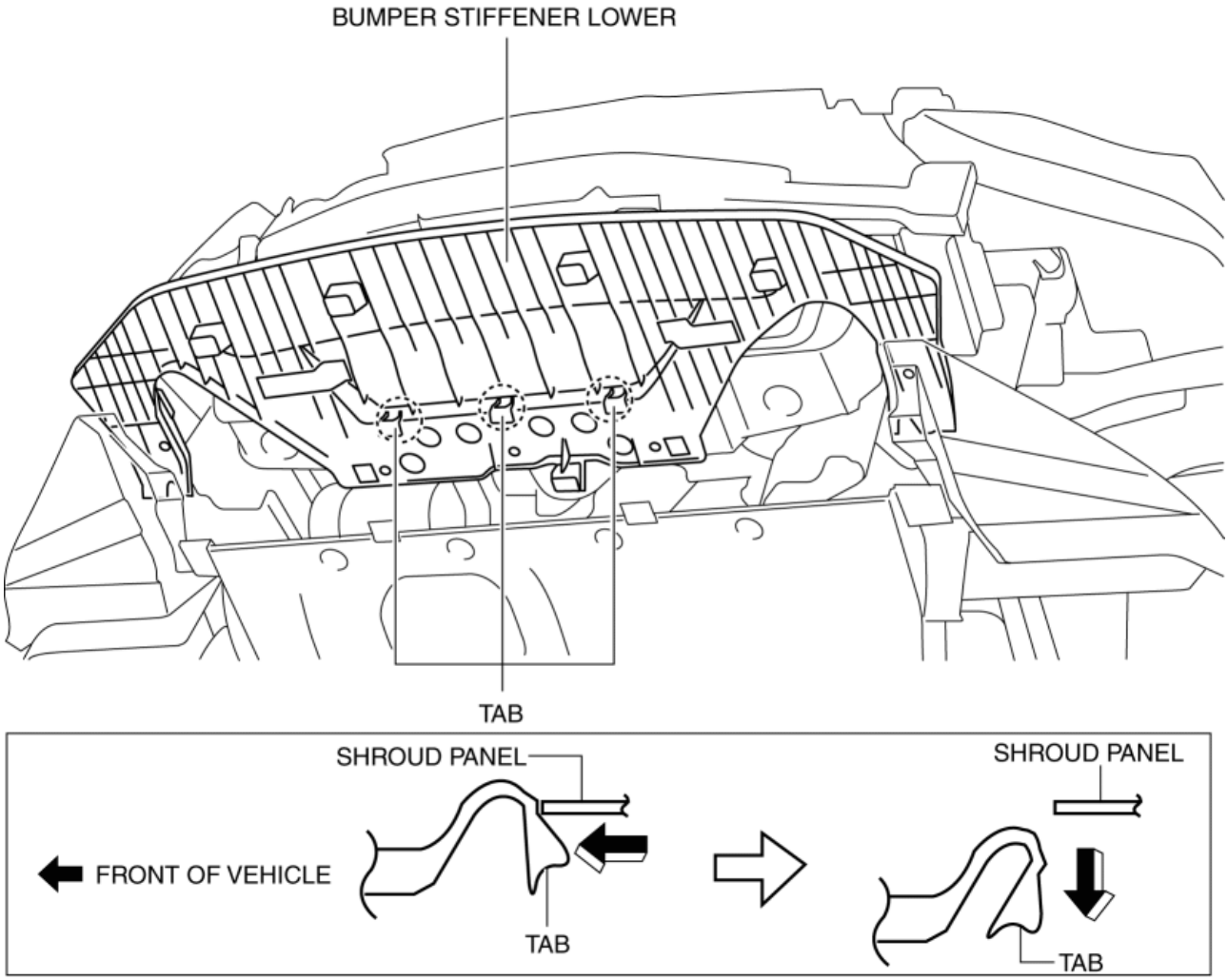

6. Move the bumper stiffener lower in the direction shown in the figure and remove it toward the vehicle front while detaching the hooks.

Without i-ELOOP

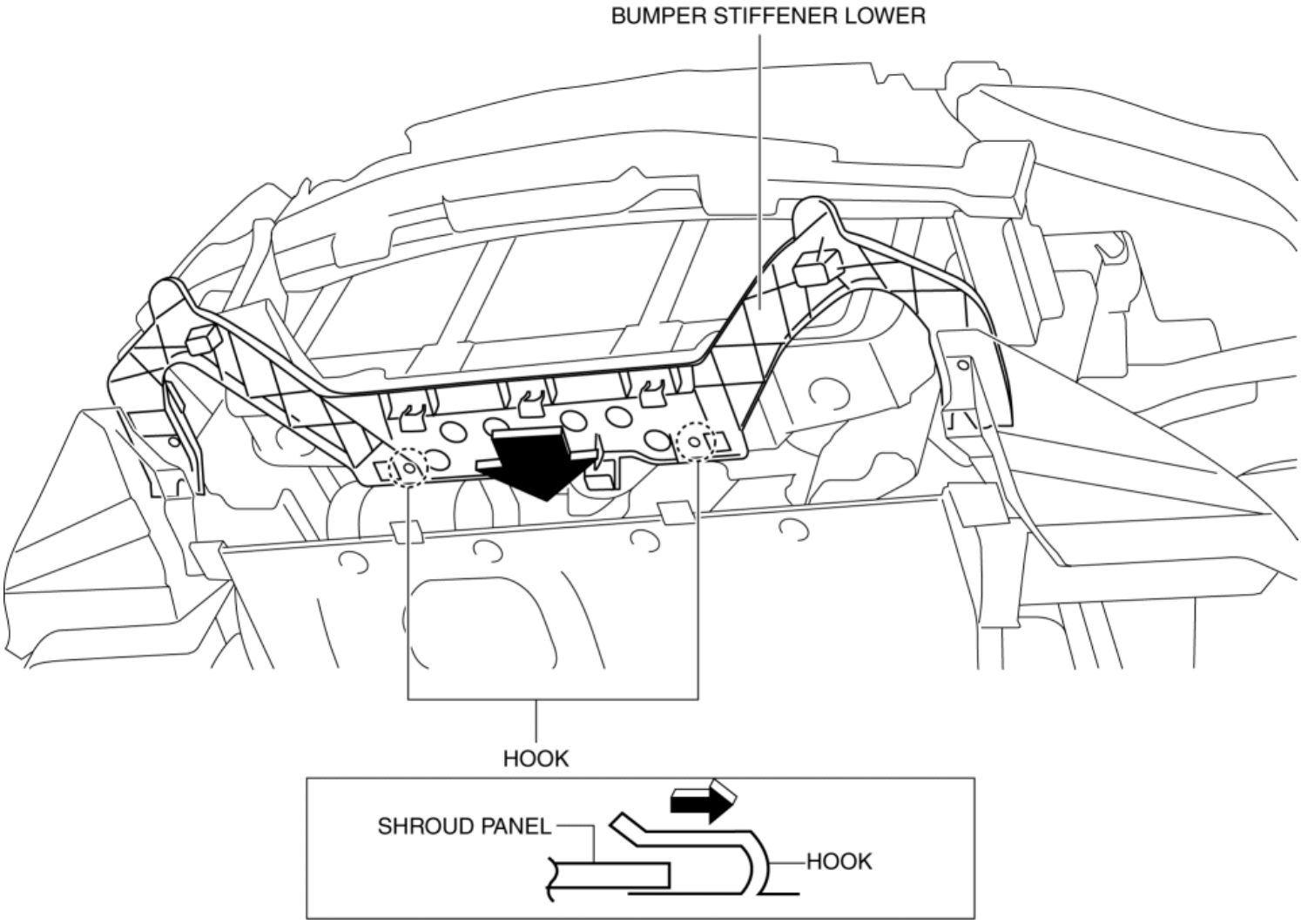

With i-ELOOP

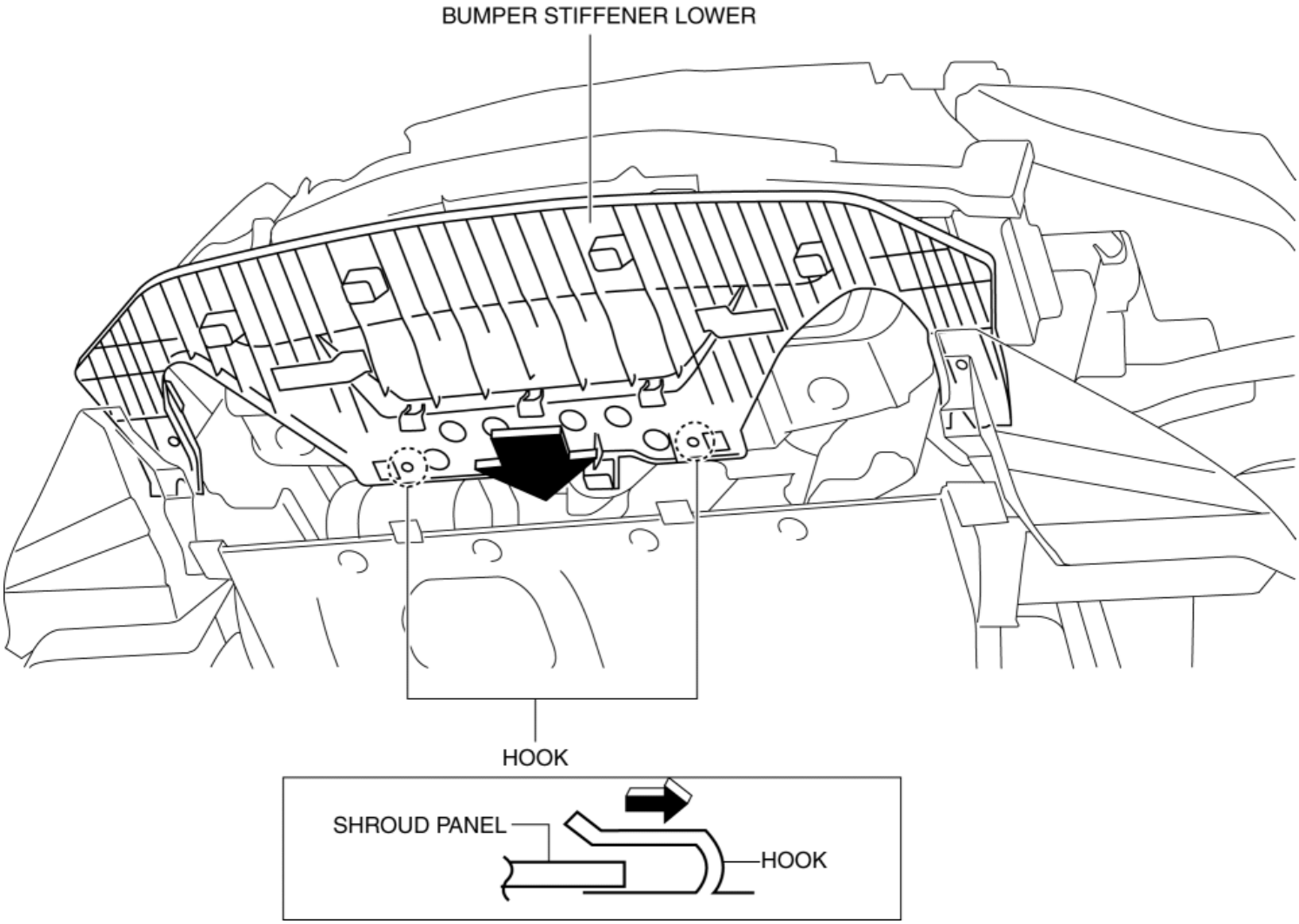

7. Install in the reverse order of removal.

8. If a front fog light is removed from the front bumper, perform the front fog light aiming. (with front fog lights) (See **FRONT FOG LIGHT AIMING**.)

2014 - Mazda3 - Body and Accessories

SEAL PLATE REMOVAL/INSTALLATION

1. Disconnect the negative battery cable. (See **NEGATIVE BATTERY CABLE DISCONNECTION/CONNECTION [SKYACTIV-G 2.0, SKYACTIV-G 2.5]**.)
2. Remove the set plate. (See **SET PLATE REMOVAL/INSTALLATION**.)
3. Remove the front bumper. (See **FRONT BUMPER REMOVAL/INSTALLATION**.)
4. Remove the fasteners shown in the figure.

5. Remove the seal plate toward the vehicle front while lifting up the tab using a remover tool.

6. Install in the reverse order of removal.

7. If a front fog light is removed from the front bumper, perform the front fog light aiming. (with front fog lights) (See **FRONT FOG LIGHT AIMING**.)

2014 - Mazda3 - Body and Accessories

FRONT BUMPER DISASSEMBLY/ASSEMBLY

1. Remove the front fog light bezel No.1 and front fog lights. (with front fog lights) (See **FRONT FOG LIGHT BEZEL REMOVAL/INSTALLATION**.)

2. Disassemble in the order indicated in the table.

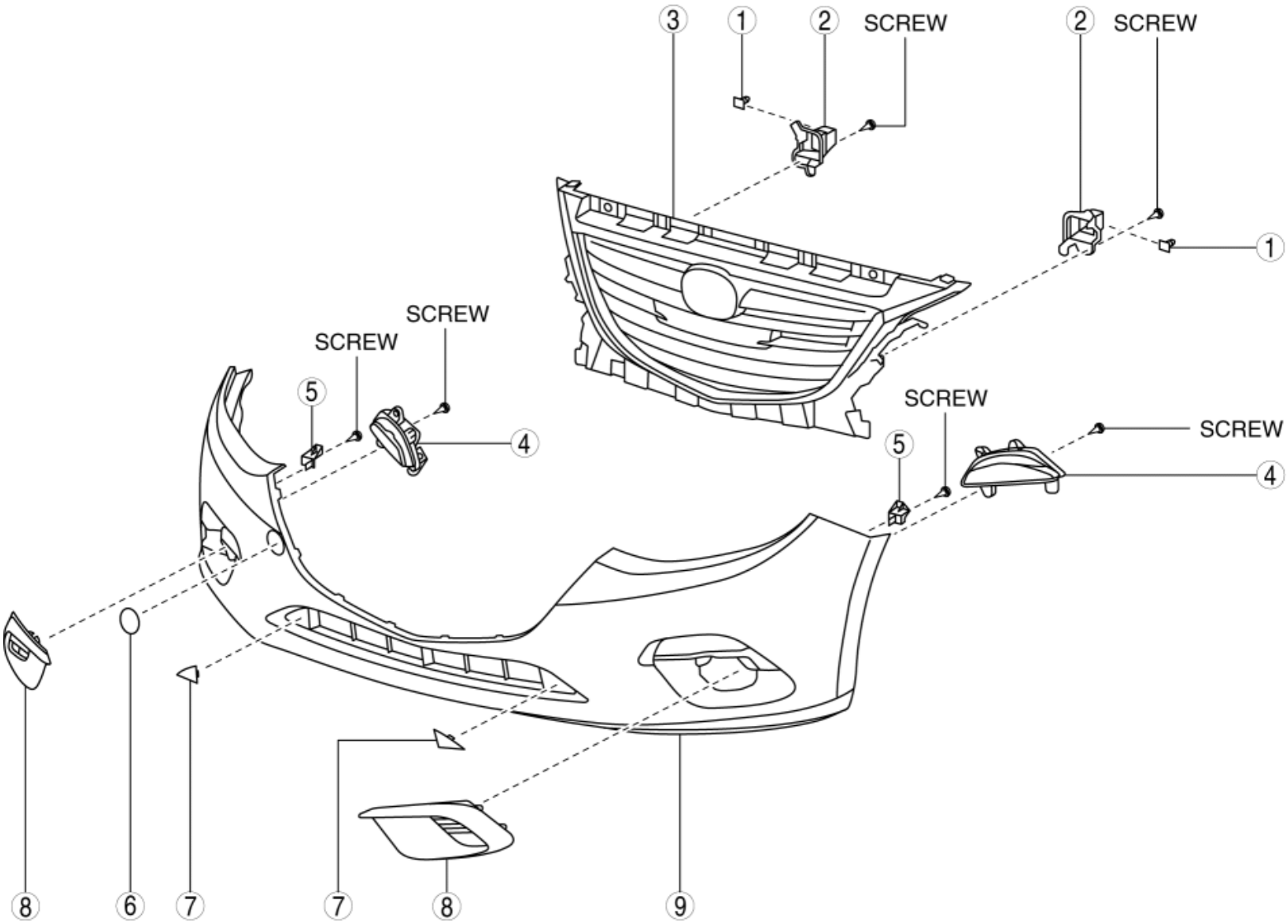

1	Locator pin
2	Locator pin bracket
3	Radiator grille (See **RADIATOR GRILLE REMOVAL/INSTALLATION**.)
4	Front turn lamp
5	Bracket

6	Towing hook cover
7	Front bumper cover
8	Hole cover (without front fog lights)
9	Front bumper face

3. Assemble in the reverse order of disassembly.

2014 - Mazda3 - Body and Accessories

BUMPER SLIDER REMOVAL/INSTALLATION

Front Bumper Slider

1. Disconnect the negative battery cable. (See **NEGATIVE BATTERY CABLE DISCONNECTION/CONNECTION [SKYACTIV-G 2.0, SKYACTIV-G 2.5]**.)
2. Remove the set plate. (See **SET PLATE REMOVAL/INSTALLATION**.)
3. Remove the front bumper. (See **FRONT BUMPER REMOVAL/INSTALLATION**.)
4. Remove the bolts shown in the figure.

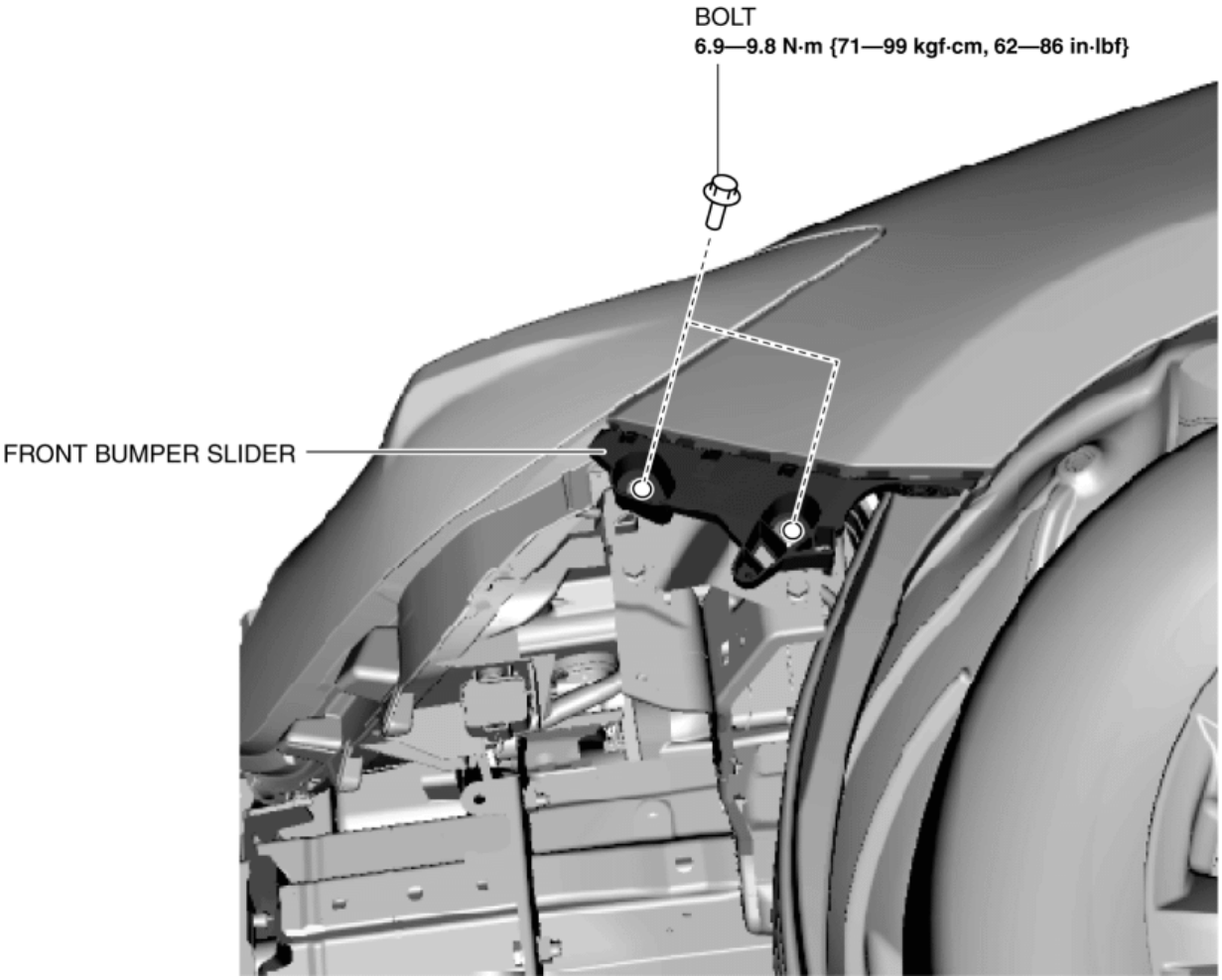

5. Remove the tabs shown in the figure and detach the front fender panel from the front bumper slider.

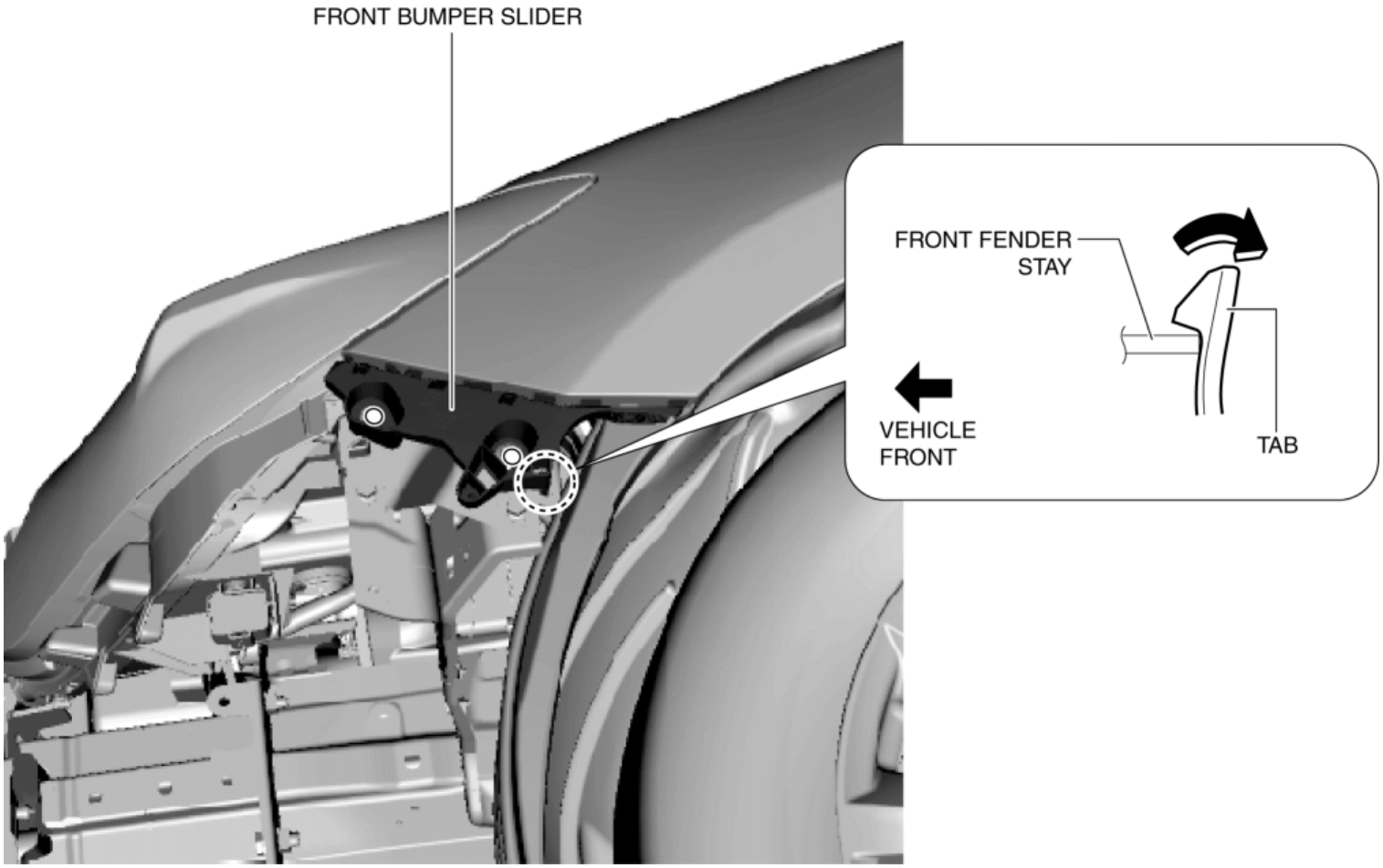

6. Pull the front bumper slider in the direction of the arrow shown in the figure while detaching the pin.

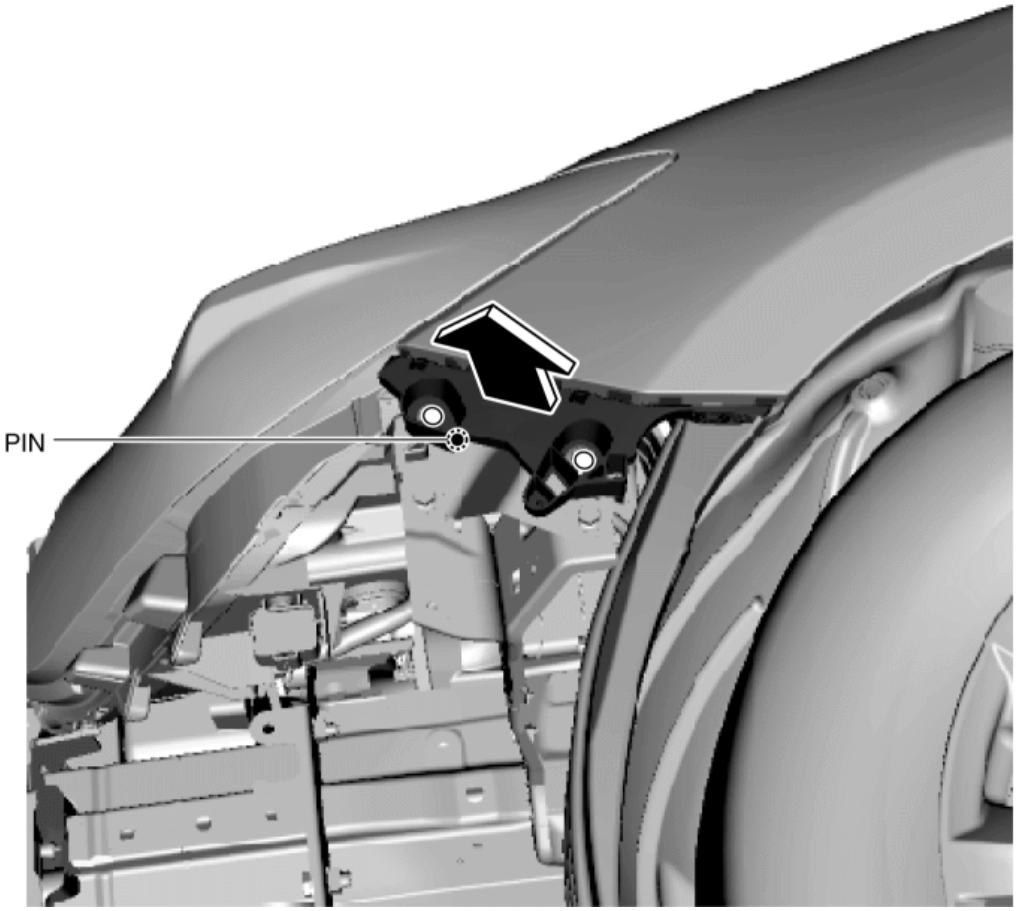

7. Install in the reverse order of removal.

8. If a front fog light is removed from the front bumper, perform the front fog light aiming. (with front fog lights) (See **FRONT FOG LIGHT AIMING**.)

Rear Bumper Slider

1. Disconnect the negative battery cable. (See **NEGATIVE BATTERY CABLE DISCONNECTION/CONNECTION [SKYACTIV-G 2.0, SKYACTIV-G 2.5]**.)

2. Remove the following parts:

   a. Rear combination light (See **REAR COMBINATION LIGHT REMOVAL/INSTALLATION**.)

   b. Rear splash shield (See **SPLASH SHIELD REMOVAL/INSTALLATION**.)

   c. Rear bumper (See **REAR BUMPER REMOVAL/INSTALLATION**.)

   d. Trunk side trim (See **TRUNK SIDE TRIM REMOVAL/INSTALLATION**.)

3. Remove the screws and nut shown in the figure.

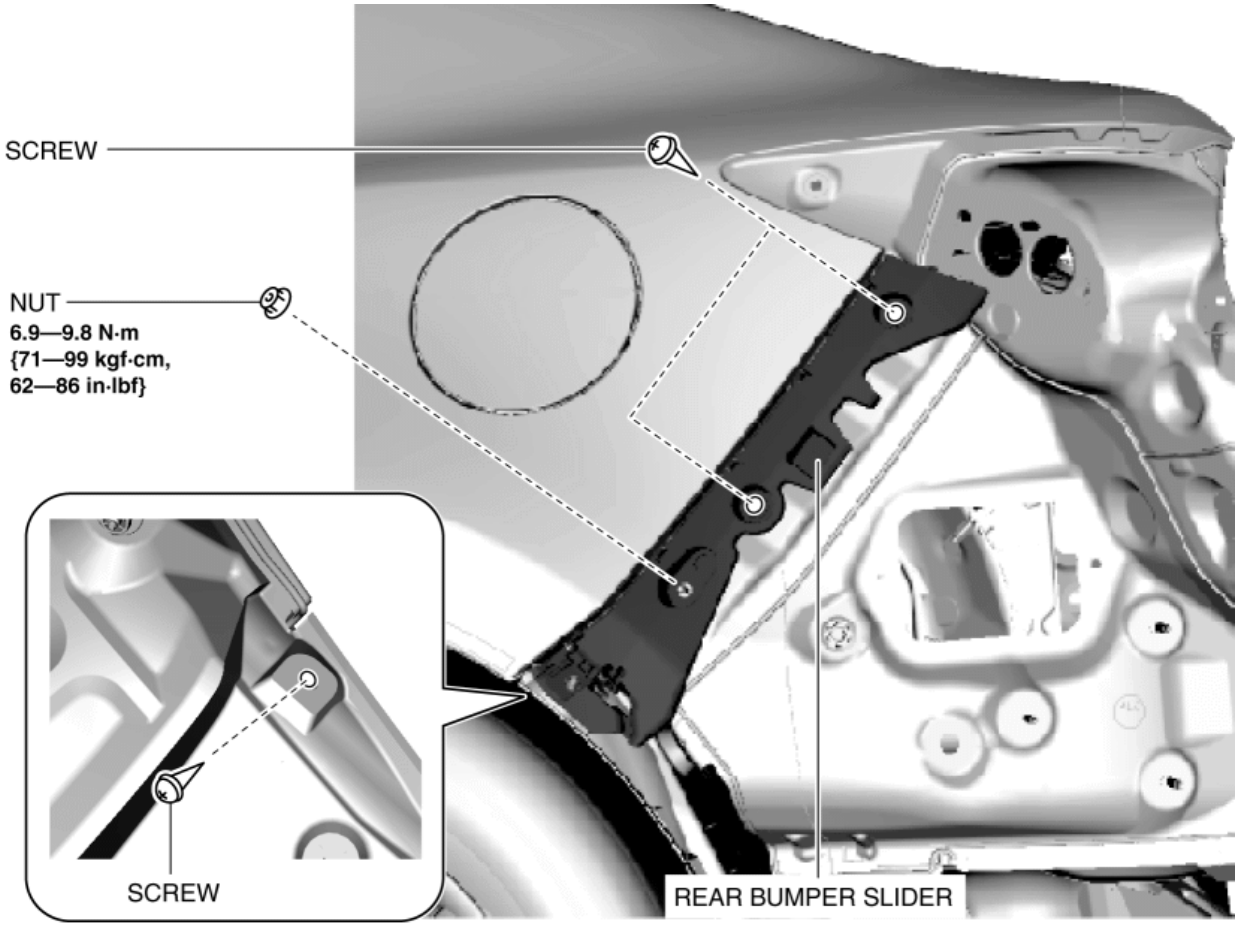
SCREW
NUT
6.9—9.8 N·m
{71—99 kgf·cm,
62—86 in·lbf}
SCREW
REAR BUMPER SLIDER

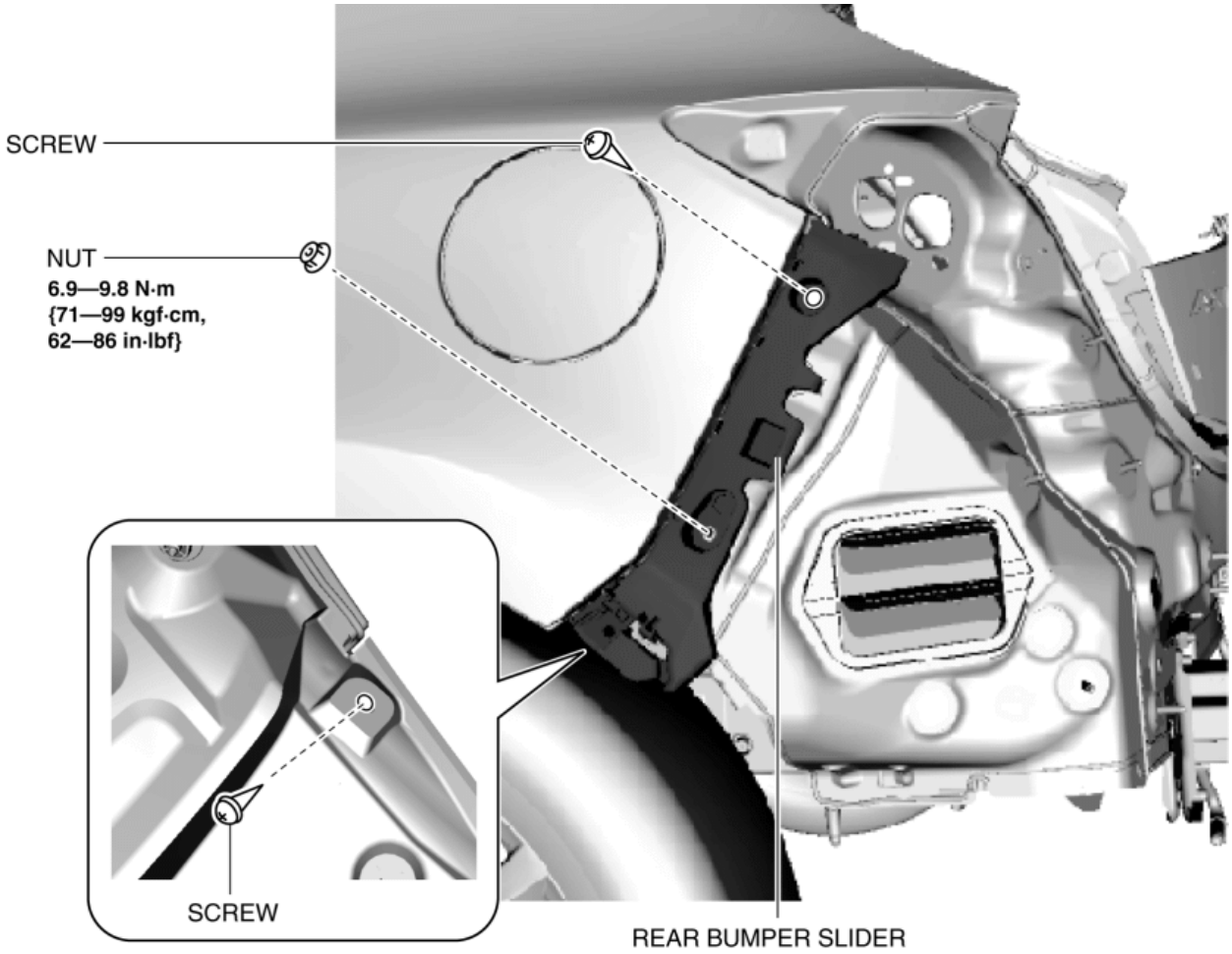

4. Press the hook tabs shown in the figure and remove the rear bumper slider from the rear fender panel.

CAUTION:

- When removing, move the rear bumper slider straight out from the rear fender panel so as not to damage the rear bumper slider pin.

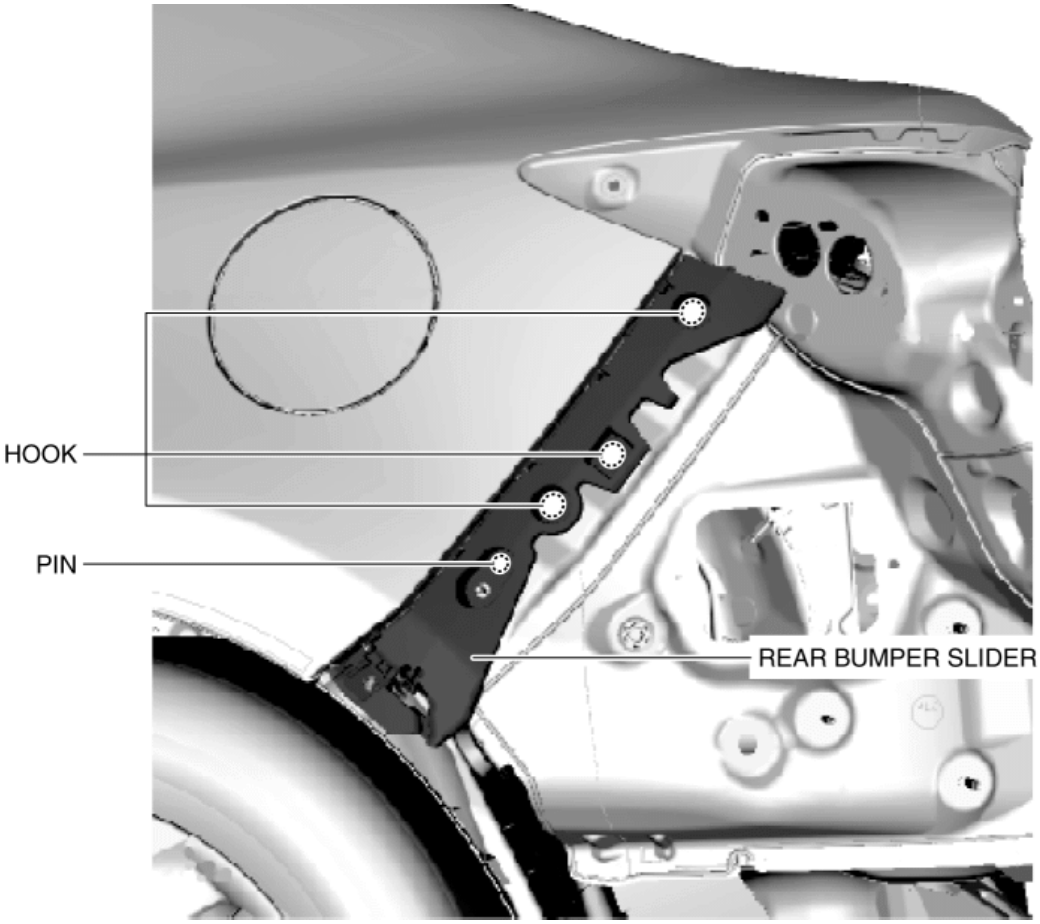
HOOK
PIN
REAR BUMPER SLIDER

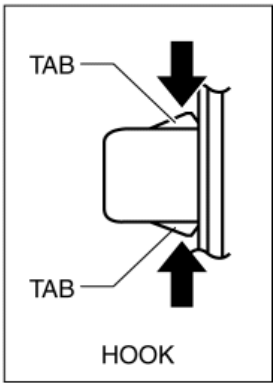
TAB
TAB
HOOK

5HB

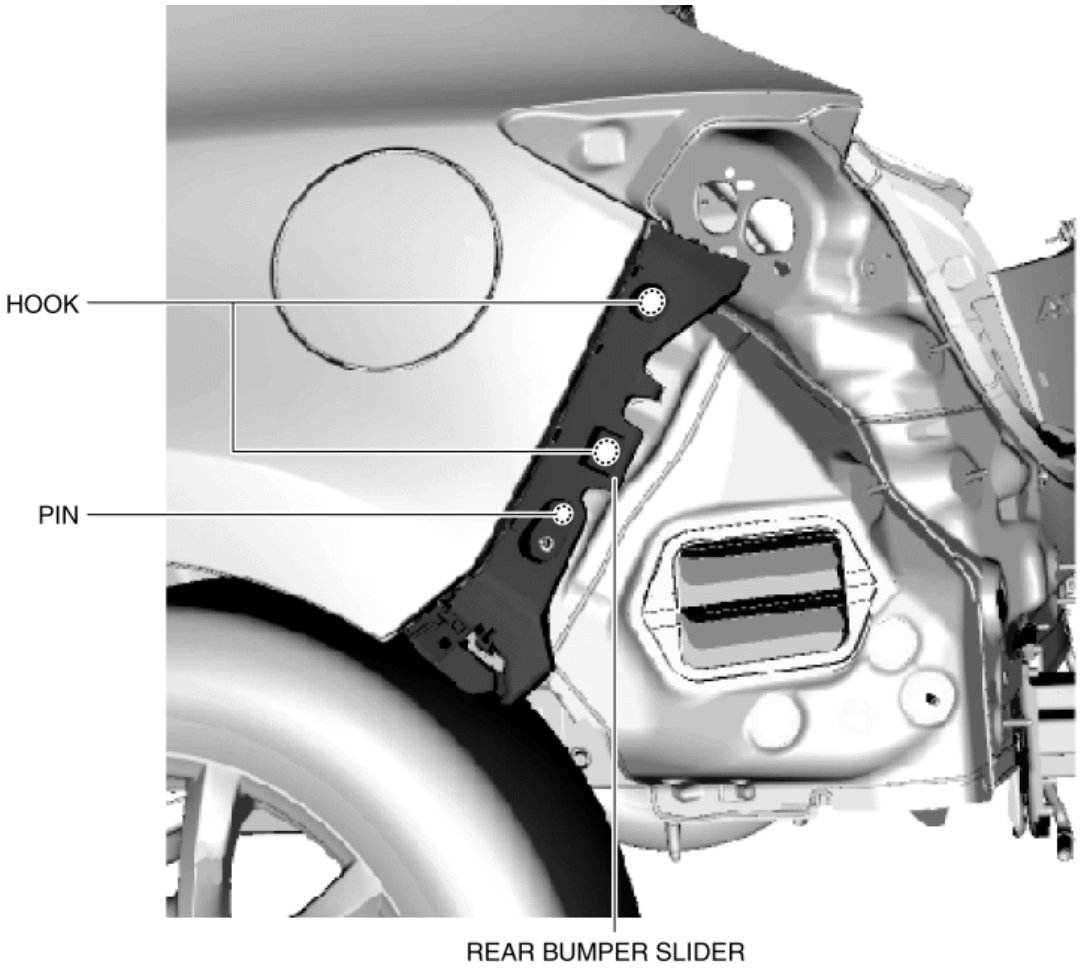
HOOK
PIN
REAR BUMPER SLIDER

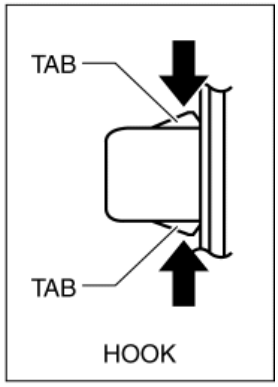
TAB
TAB
HOOK

5. Install in the reverse order of removal.

2014 - Mazda3 - Body and Accessories

SET PLATE REMOVAL/INSTALLATION

1. Remove fasteners shown in the figure.

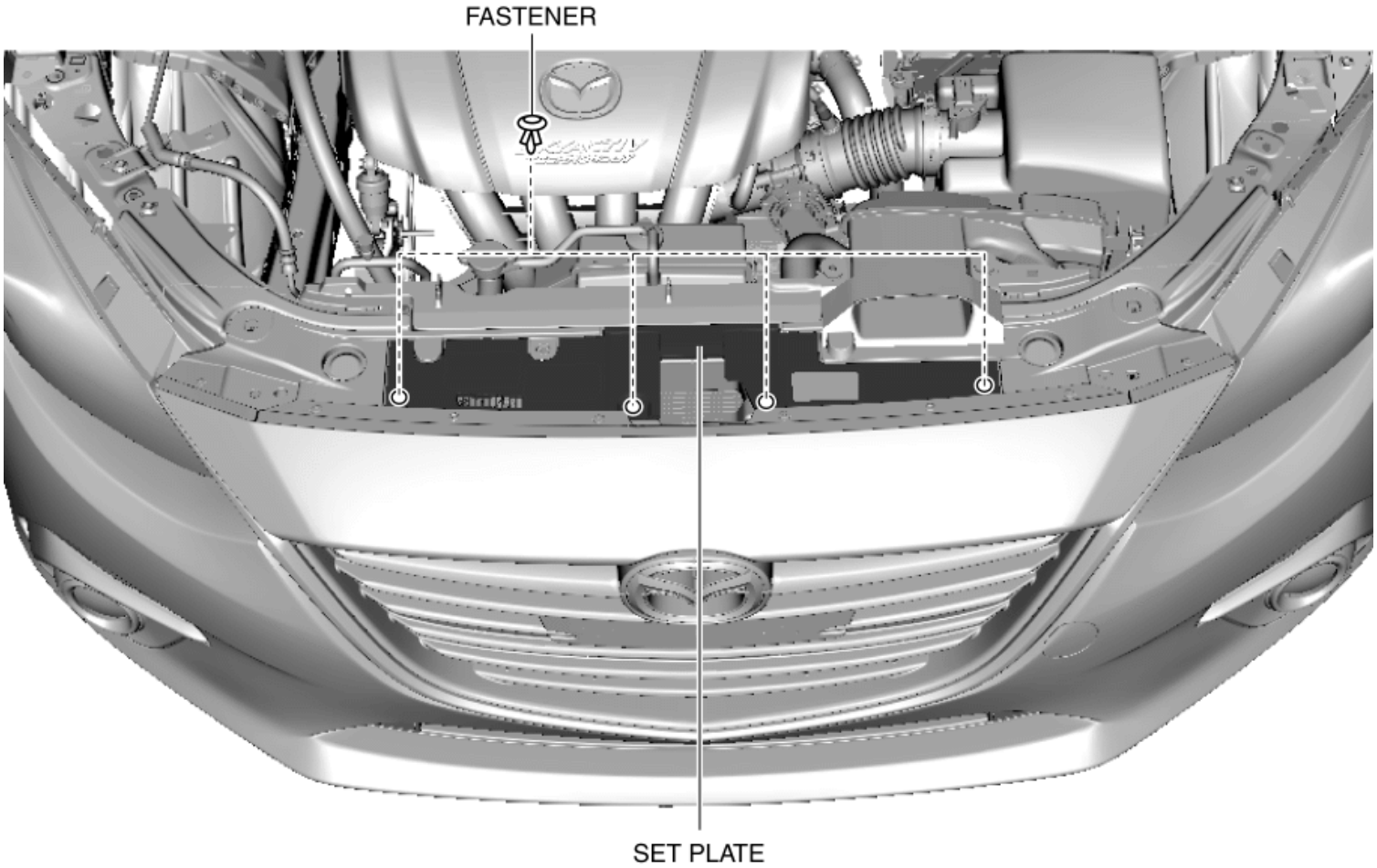

2. Pull the set plate in the direction of the arrow and remove it while detaching hooks.

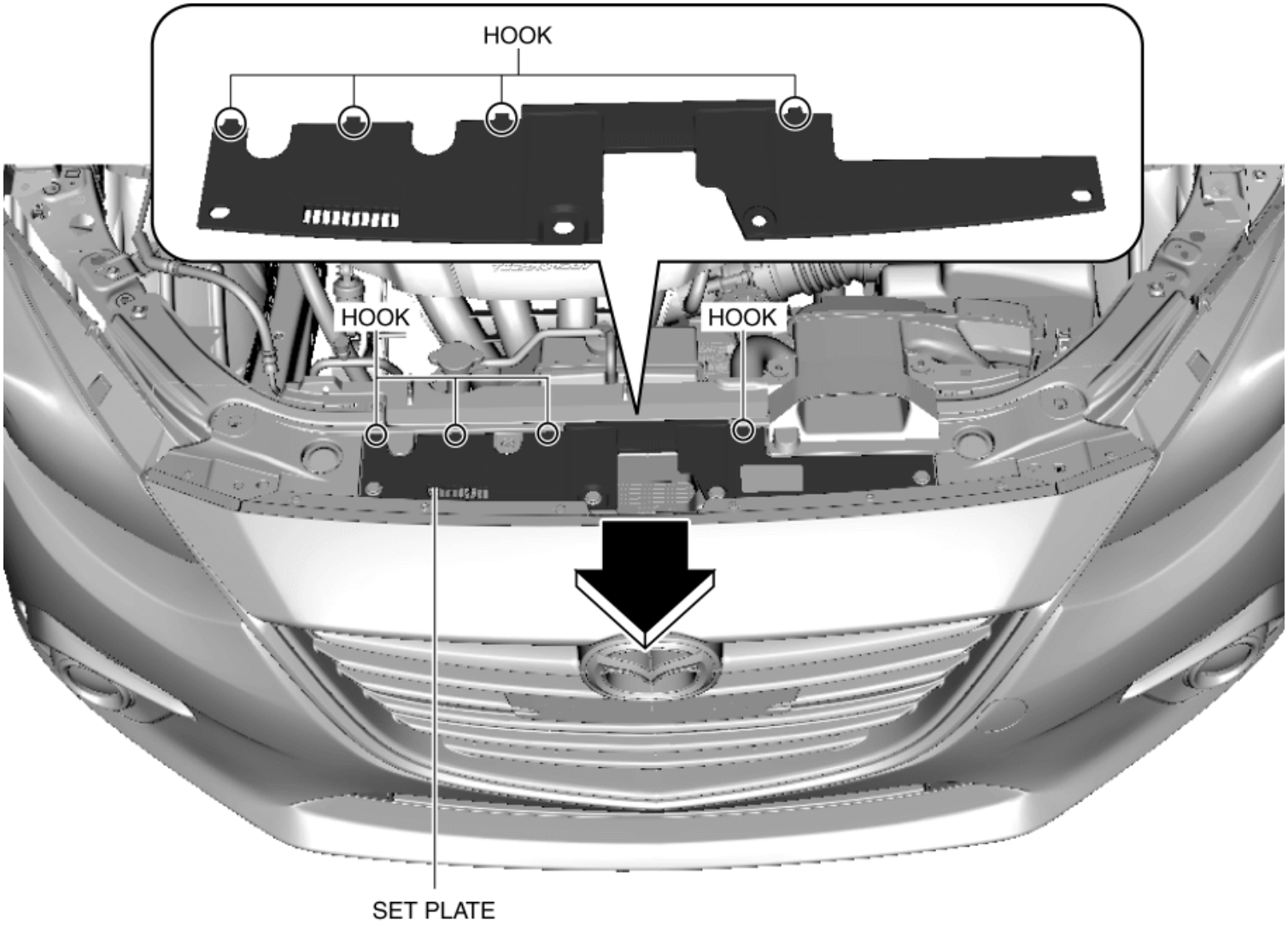

3. Install in the reverse order of removal.

2014 - Mazda3 - Body and Accessories

INTAKE AIR GUIDE REMOVAL/INSTALLATION

1. Disconnect the negative battery cable. (See **NEGATIVE BATTERY CABLE DISCONNECTION/CONNECTION [SKYACTIV-G 2.0, SKYACTIV-G 2.5]**.)
2. Remove the set plate. (See **SET PLATE REMOVAL/INSTALLATION**.)
3. Remove the front bumper. (See **FRONT BUMPER REMOVAL/INSTALLATION**.)
4. Remove the fasteners shown in the figure.

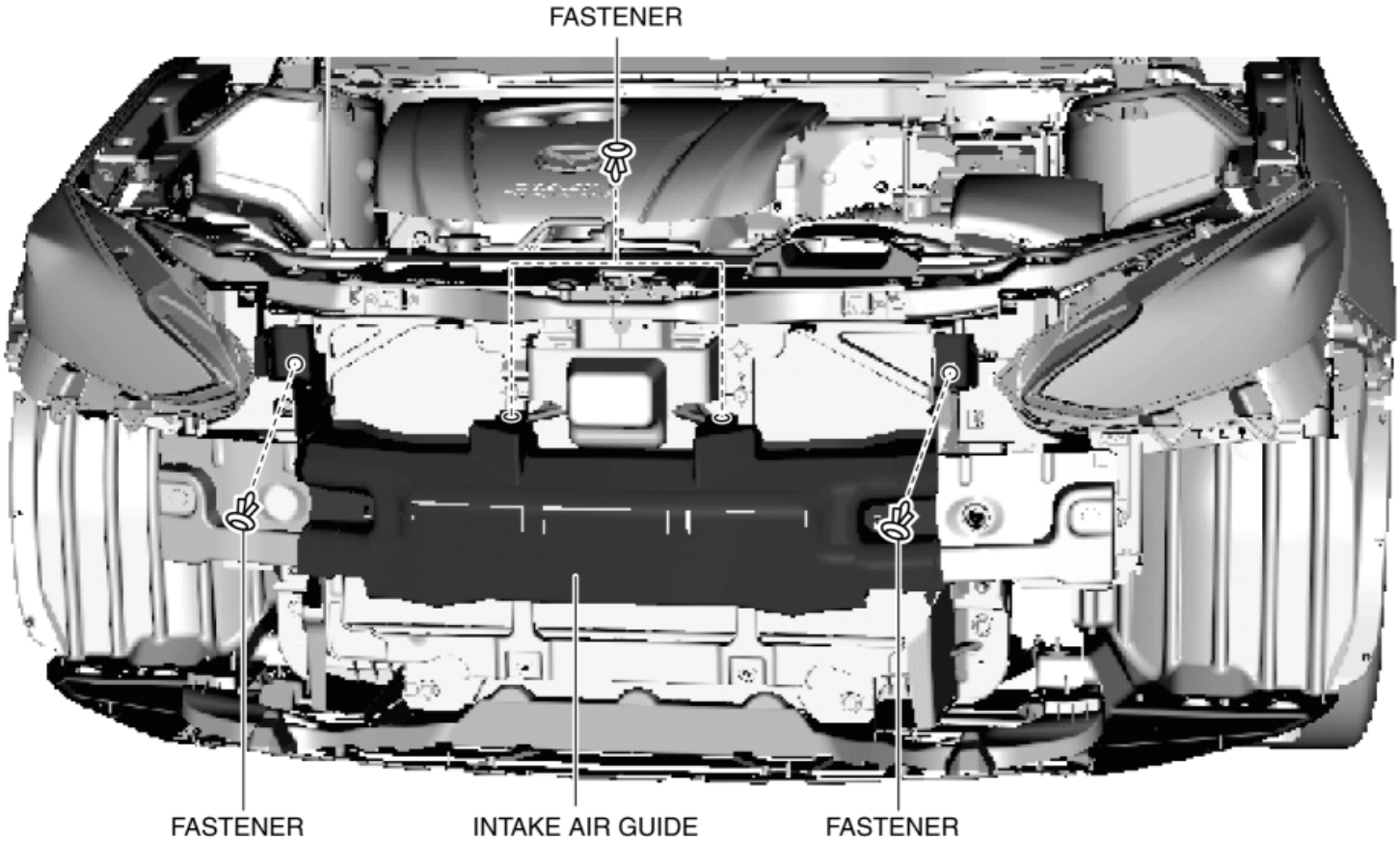

5. Remove the intake air guide in the direction of the arrow shown in the figure while detaching the tabs.

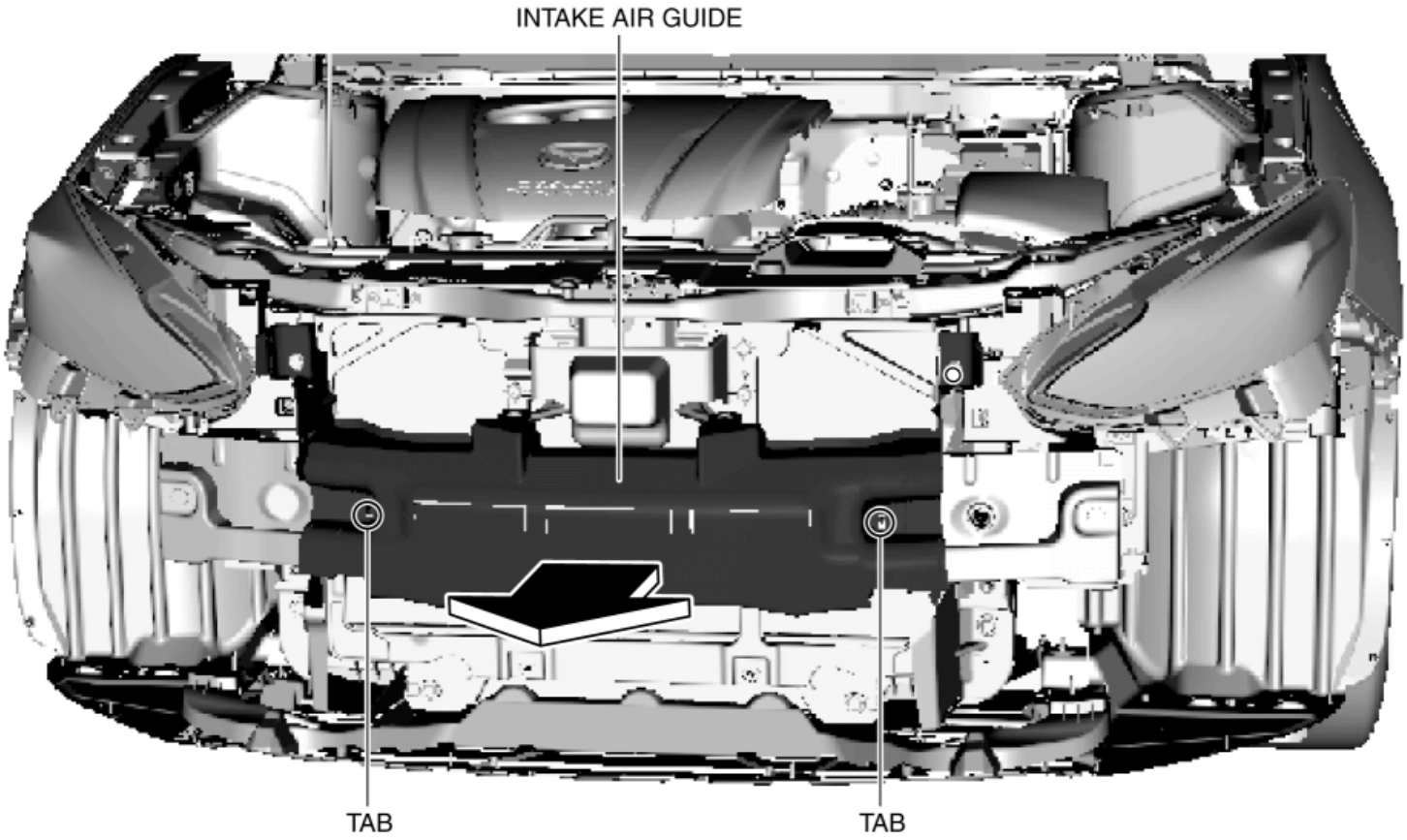

6. Install in the reverse order of removal.

7. If a front fog light is removed from the front bumper, perform the front fog light aiming. (with front fog lights) (See **FRONT FOG LIGHT AIMING**.)

2014 - Mazda3 - Body and Accessories

REAR BUMPER REMOVAL/INSTALLATION

CAUTION:

- Affix the protective tape to the position (vehicle body side) shown in the figure to prevent scratches and damage.

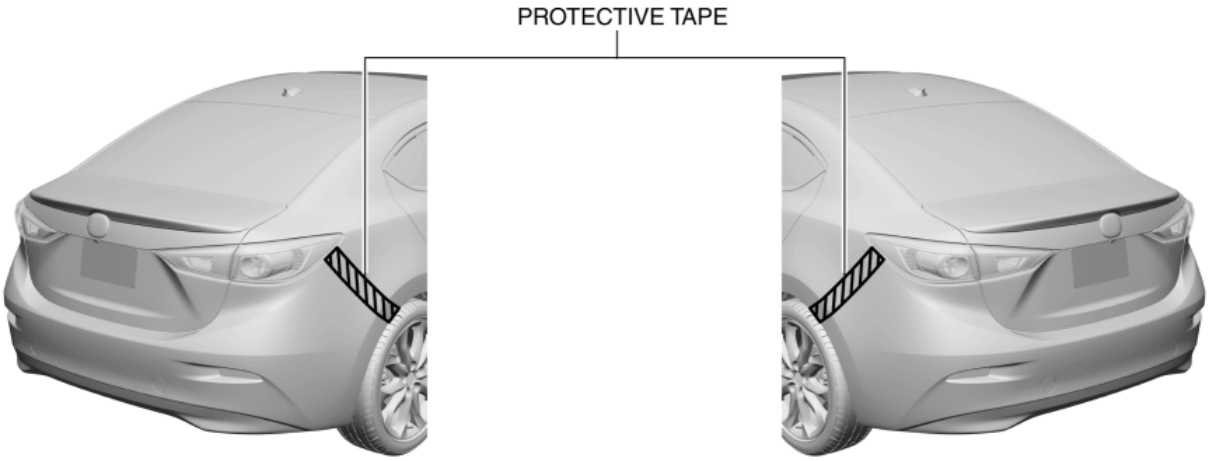

1. Disconnect the negative battery cable. (See **NEGATIVE BATTERY CABLE DISCONNECTION/CONNECTION [SKYACTIV-G 2.0, SKYACTIV-G 2.5]**.)
2. Remove the rear combination light. (See **REAR COMBINATION LIGHT REMOVAL/INSTALLATION**.)
3. Remove the rear splash shield. (See **SPLASH SHIELD REMOVAL/INSTALLATION**.)
4. Remove the screw shown in the figure.

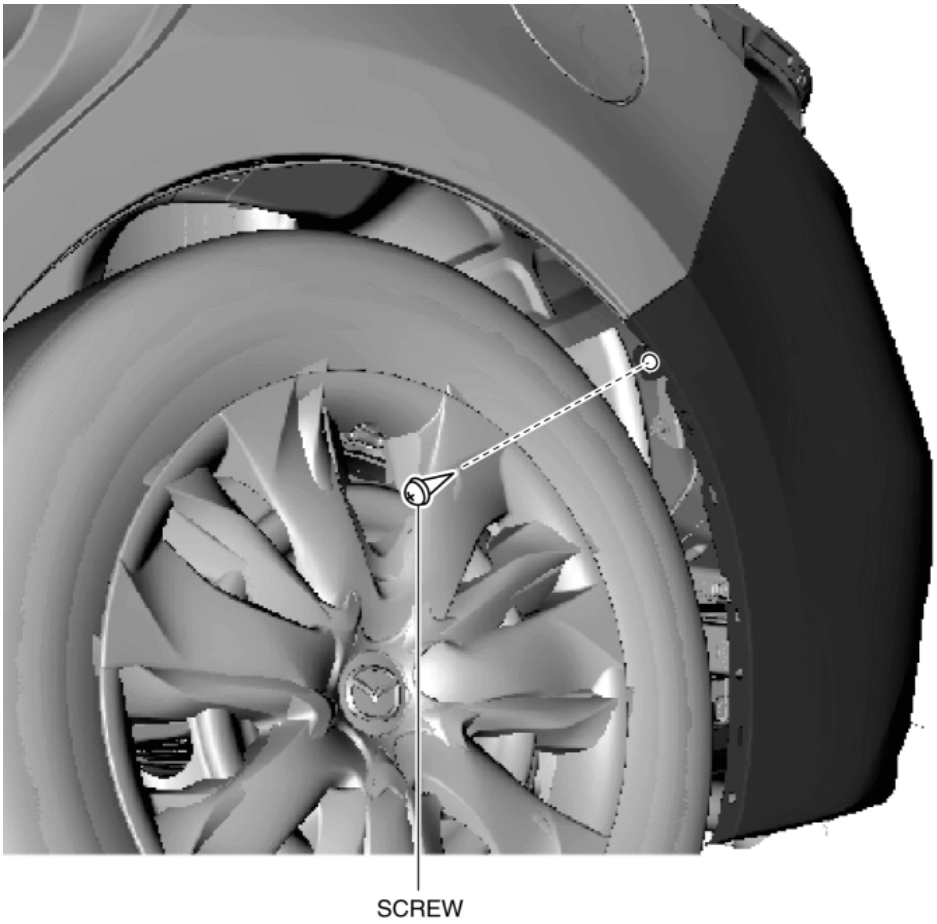

5. Remove the screws and fasteners shown in the figure.

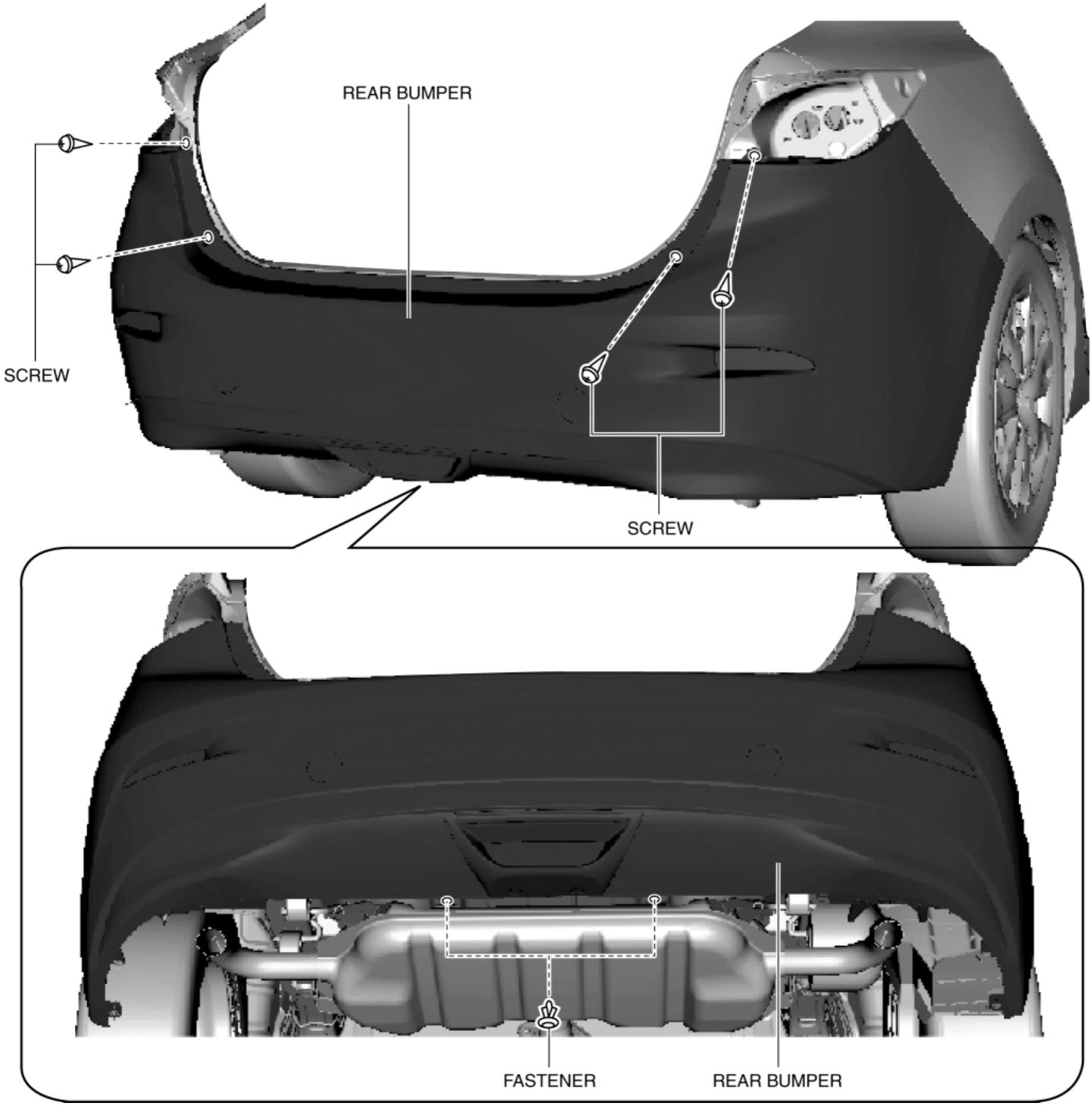

5HB

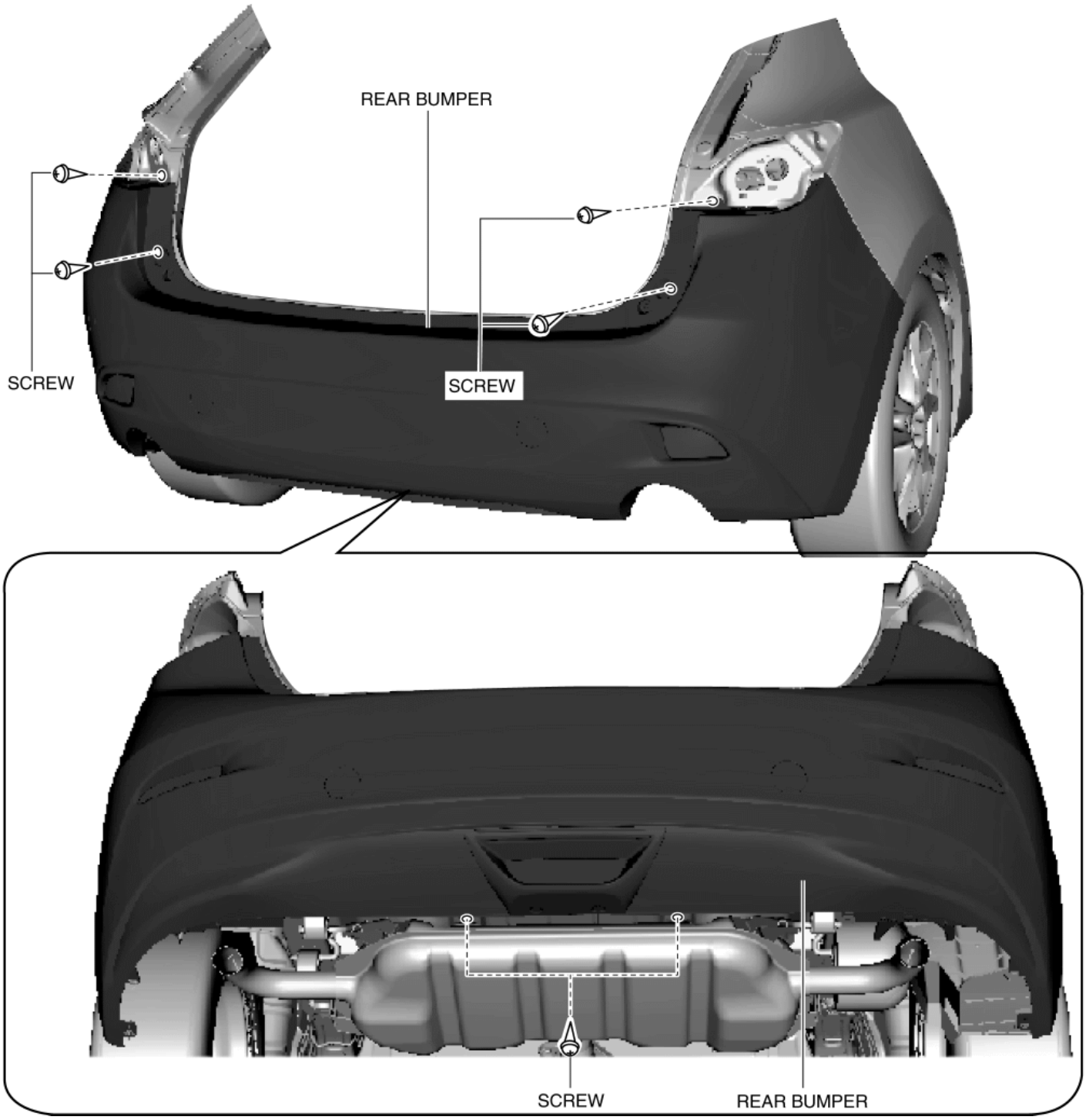

CAUTION:

- The rear bumper and rear bumper slider are engaged firmly. If they are disengaged forcibly the bumper could fall and be damaged. Perform the servicing carefully when disengaging the rear bumper from the rear bumper slider.
- When disengaging the rear bumper from the rear bumper slider, the rear bumper could fall and be damaged. Support the rear bumper so that it does not fall.

6. Detach the rear bumper from the rear bumper slider while holding the rear end of the rear bumper, moving it in the direction of the arrow shown in the figure, and detaching the tabs.

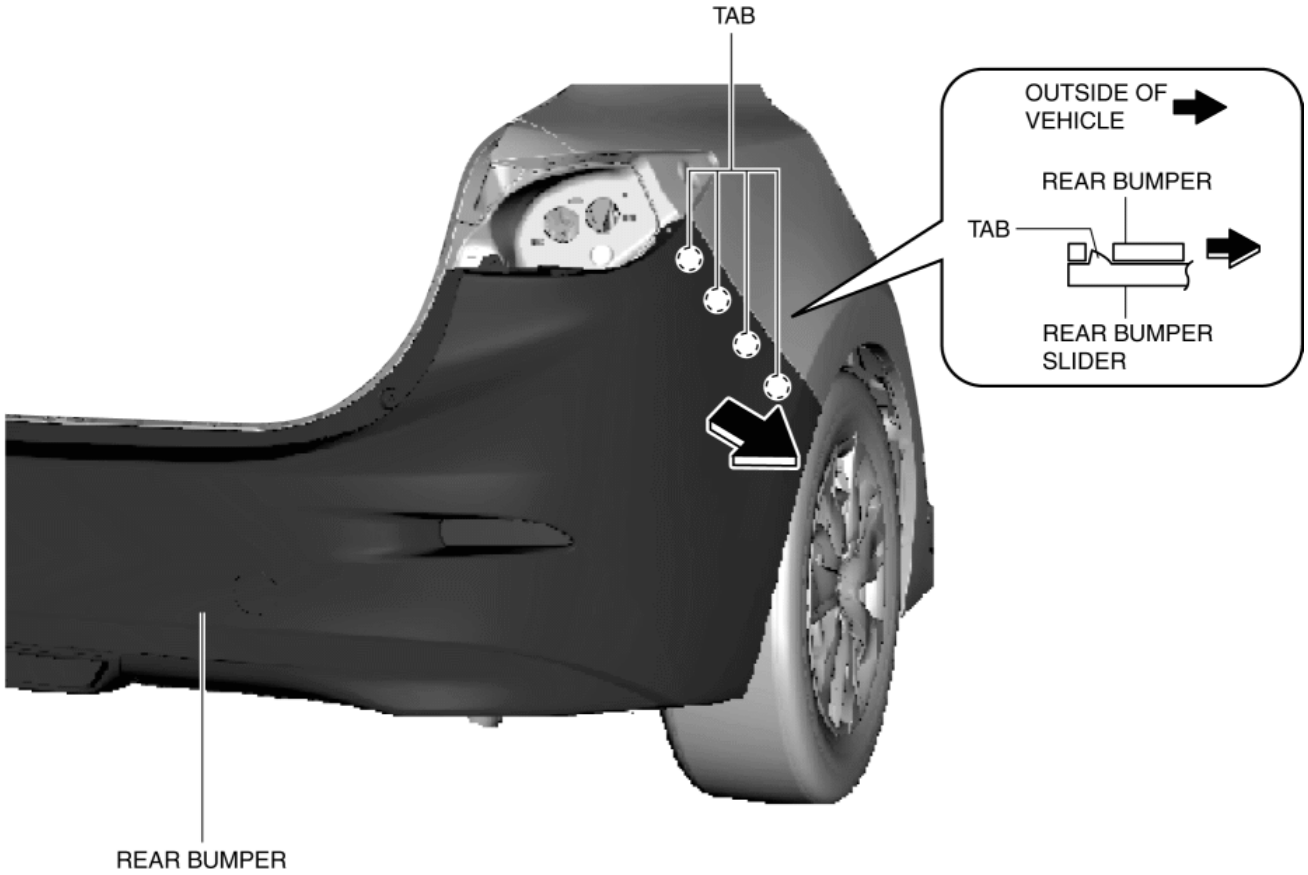

5HB

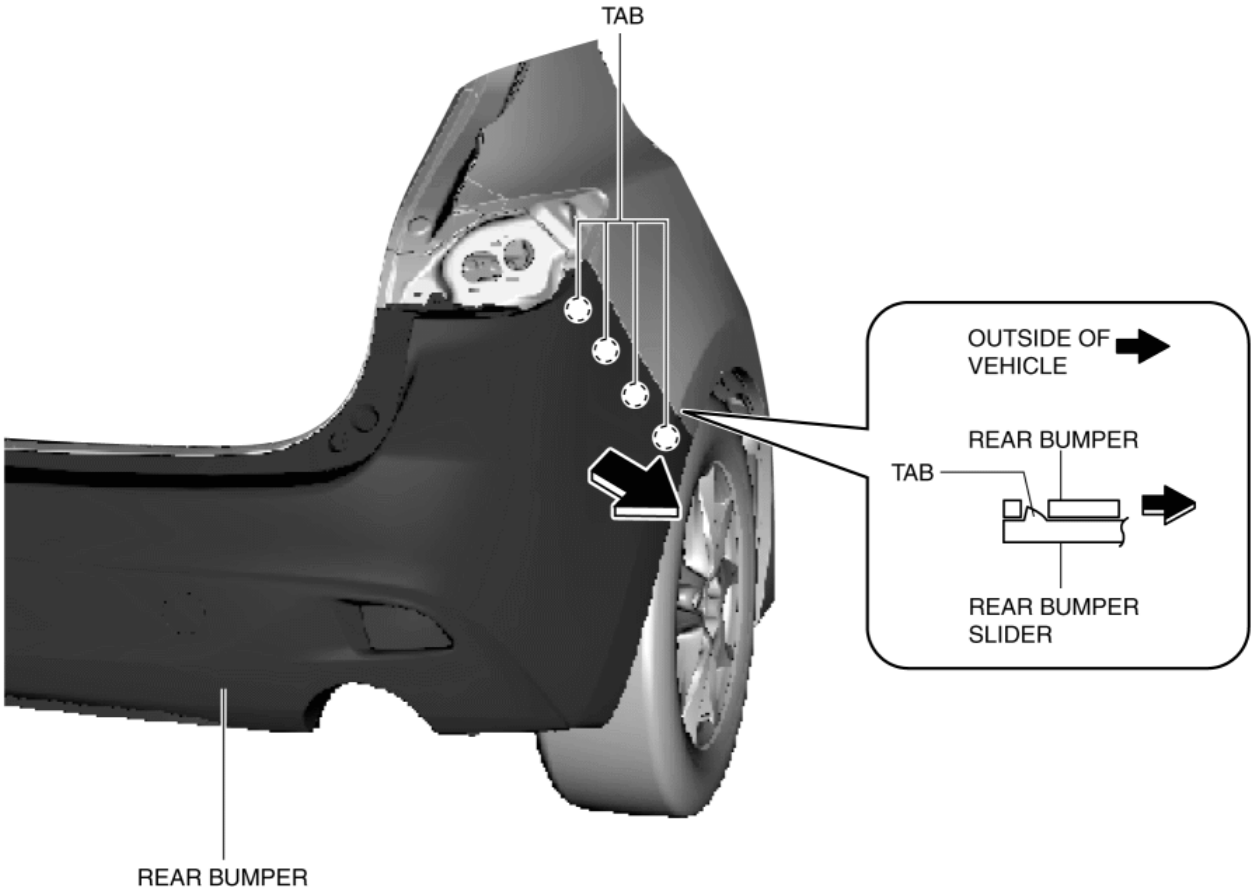

7. Hold the upper end of the rear bumper, move it in the direction of the arrow shown in the figure, and remove the rear bumper.

4SD

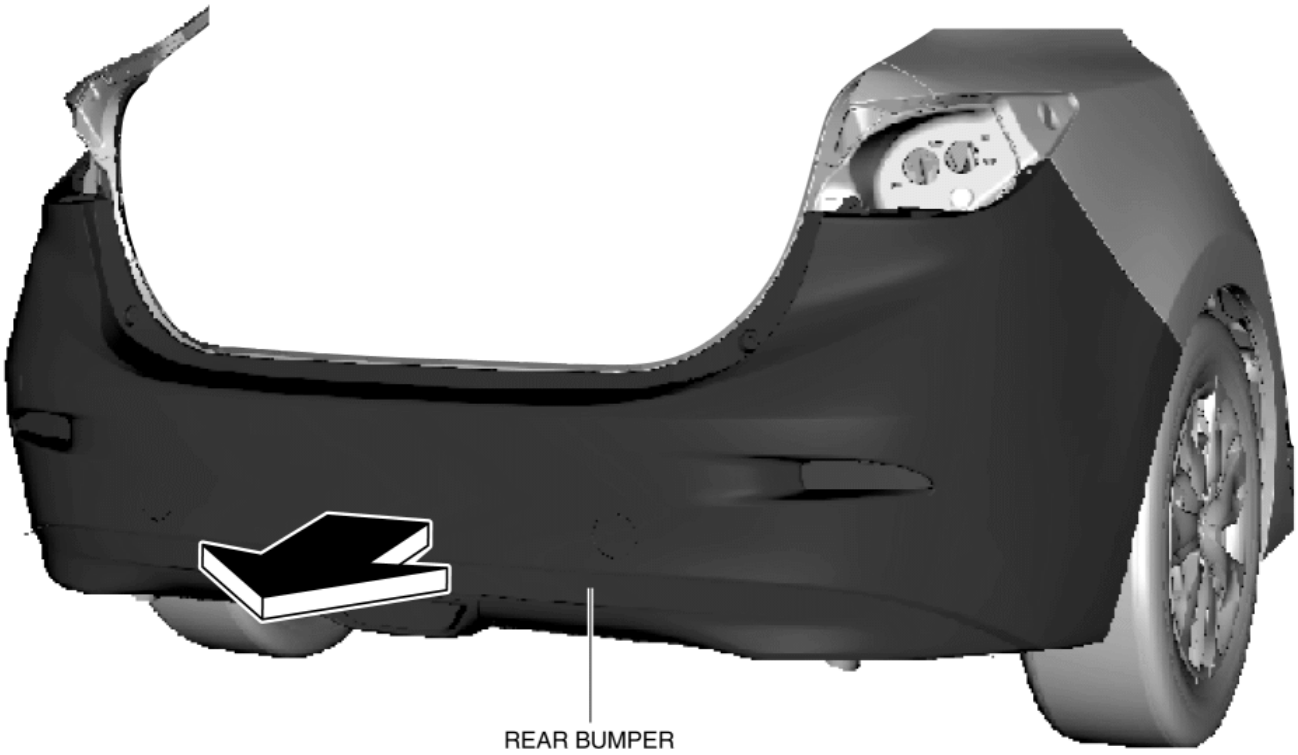

5HB

8. Install in the reverse order of removal.

2014 - Mazda3 - Body and Accessories

REAR BUMPER DISASSEMBLY/ASSEMBLY

1. Disassemble in the order indicated in the table.

4SD

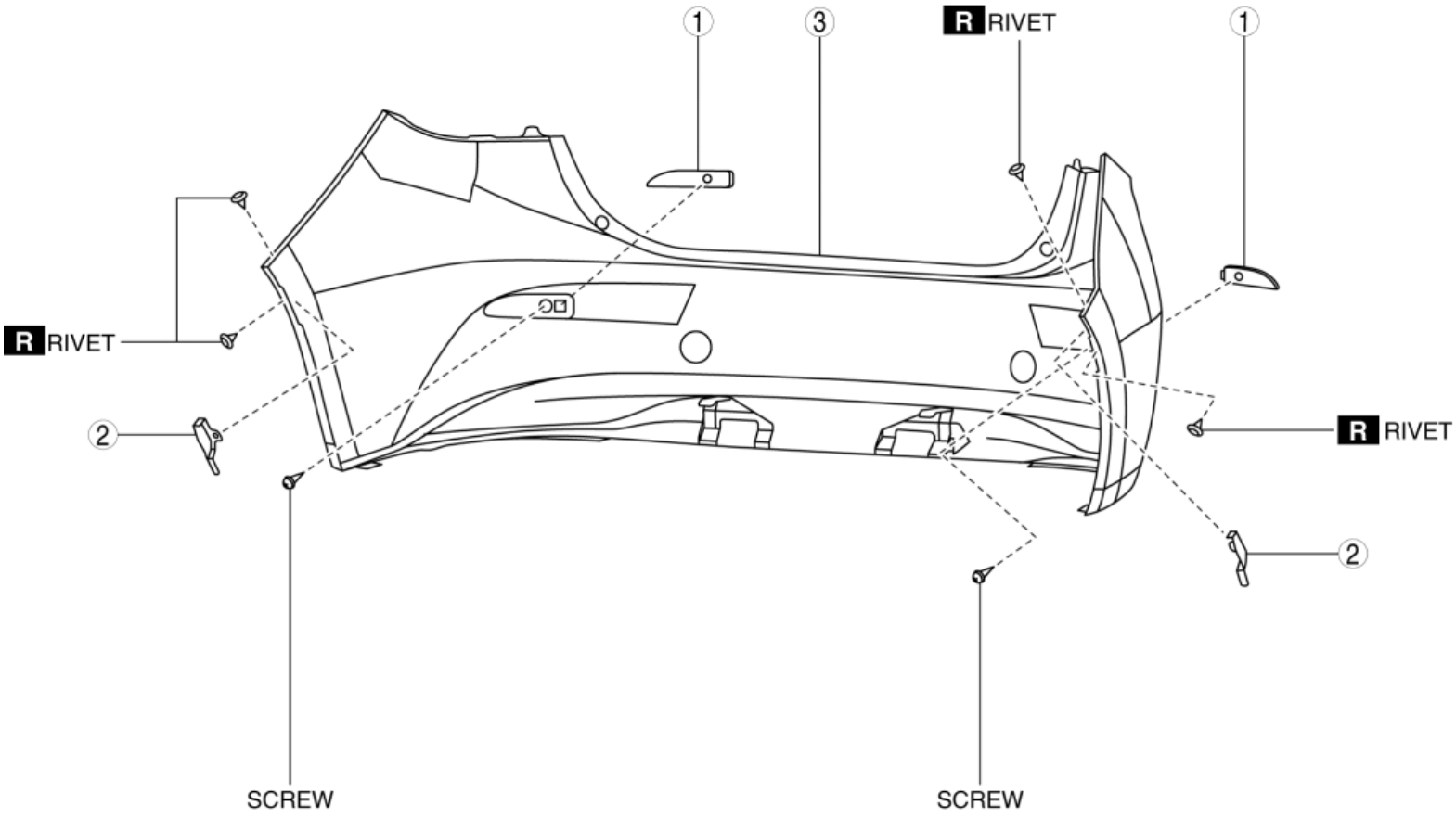

1	Rear reflector
2	Bracket
3	Rear bumper face

5HB

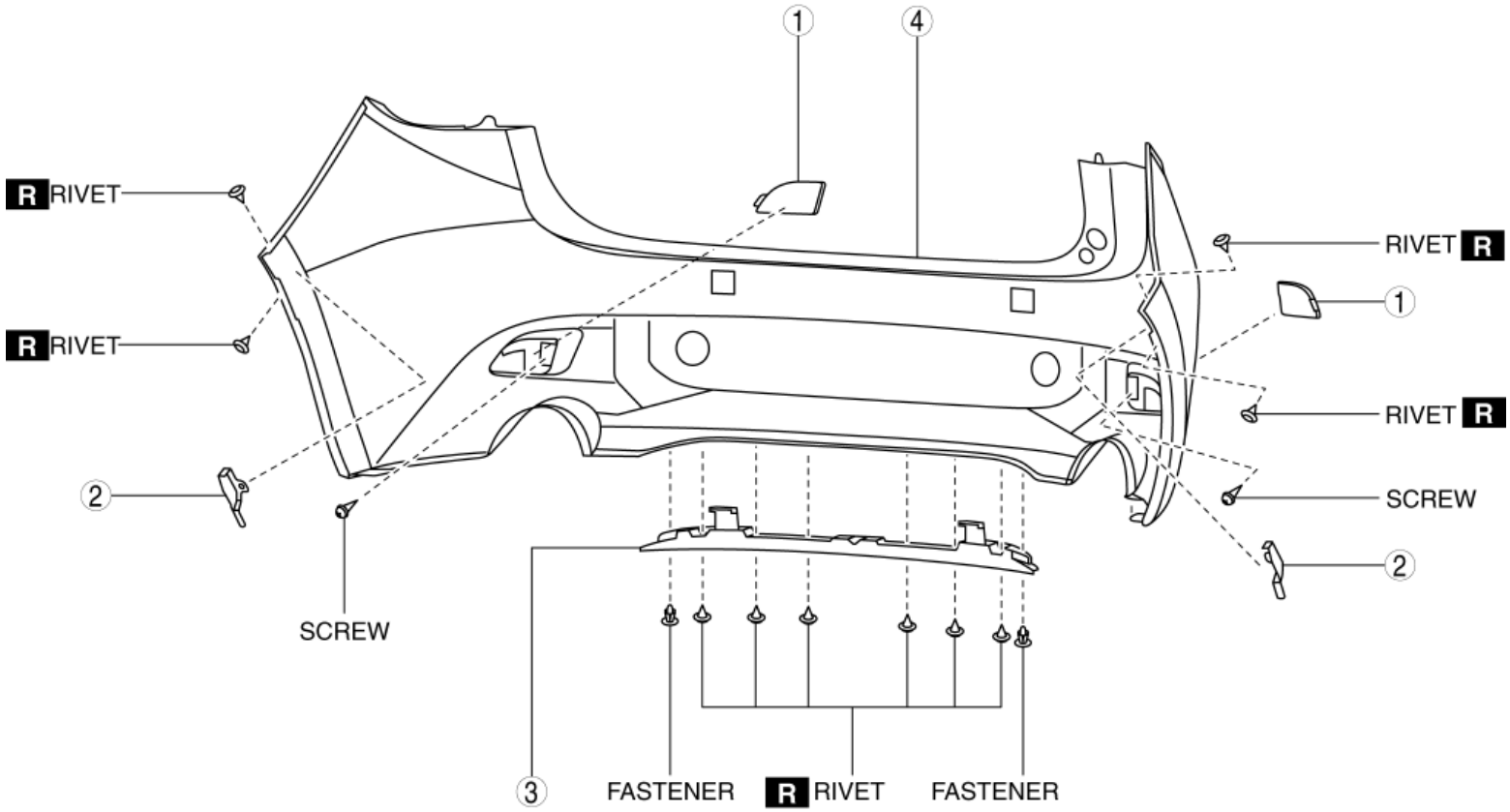

1	Rear reflector
2	Bracket
3	Rear bumper guard
4	Rear bumper face

2. Assemble in the reverse order of disassembly.

2014 - Mazda3 - Body and Accessories

REAR BUMPER REINFORCEMENT REMOVAL/INSTALLATION

1. Disconnect the negative battery cable. (See **NEGATIVE BATTERY CABLE DISCONNECTION/CONNECTION [SKYACTIV-G 2.0, SKYACTIV-G 2.5]**.)
2. Remove the following parts:
   a. Rear combination light (See **REAR COMBINATION LIGHT REMOVAL/INSTALLATION**.)
   b. Rear splash shield (See **SPLASH SHIELD REMOVAL/INSTALLATION**.)
   c. Rear bumper (See **REAR BUMPER REMOVAL/INSTALLATION**.)
   d. Rear energy-absorbing foam (See **ENERGY-ABSORBING FOAM REMOVAL/INSTALLATION**.)
3. Remove the hanger rubbers shown in the figure.

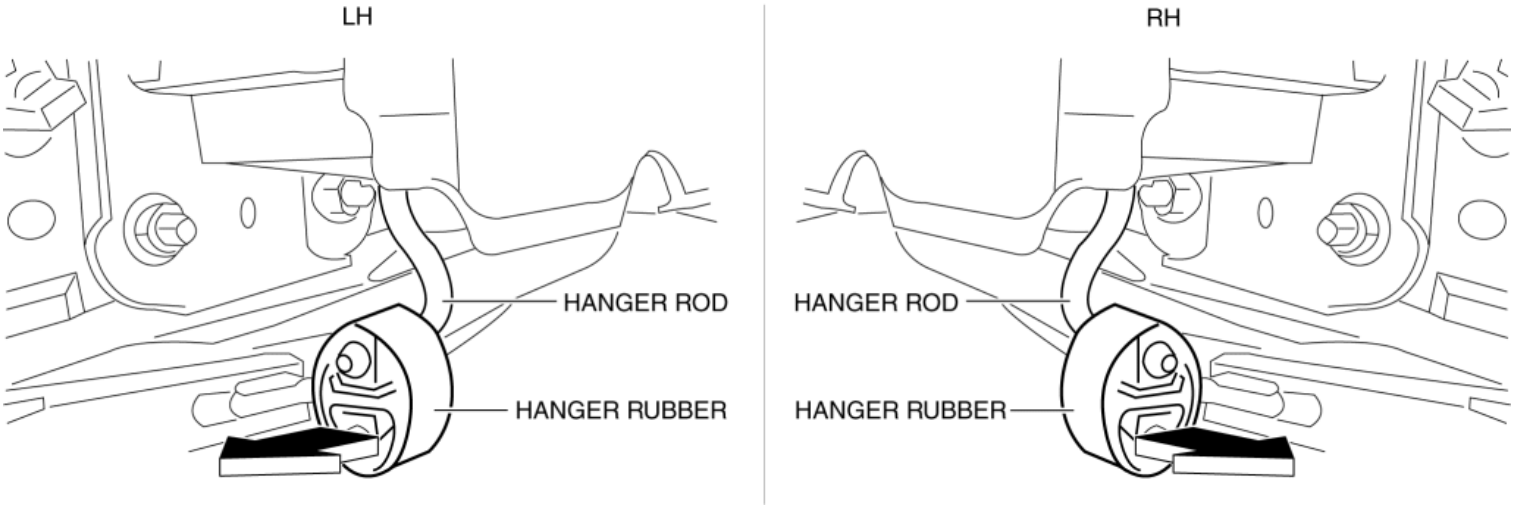

CAUTION:

- Removing the rear bumper reinforcement without supporting it could cause the rear bumper reinforcement to fall and cause serious injury. Always perform the procedure with at least another person to prevent the rear bumper reinforcement from falling.

4. Remove the nuts shown in the figure.

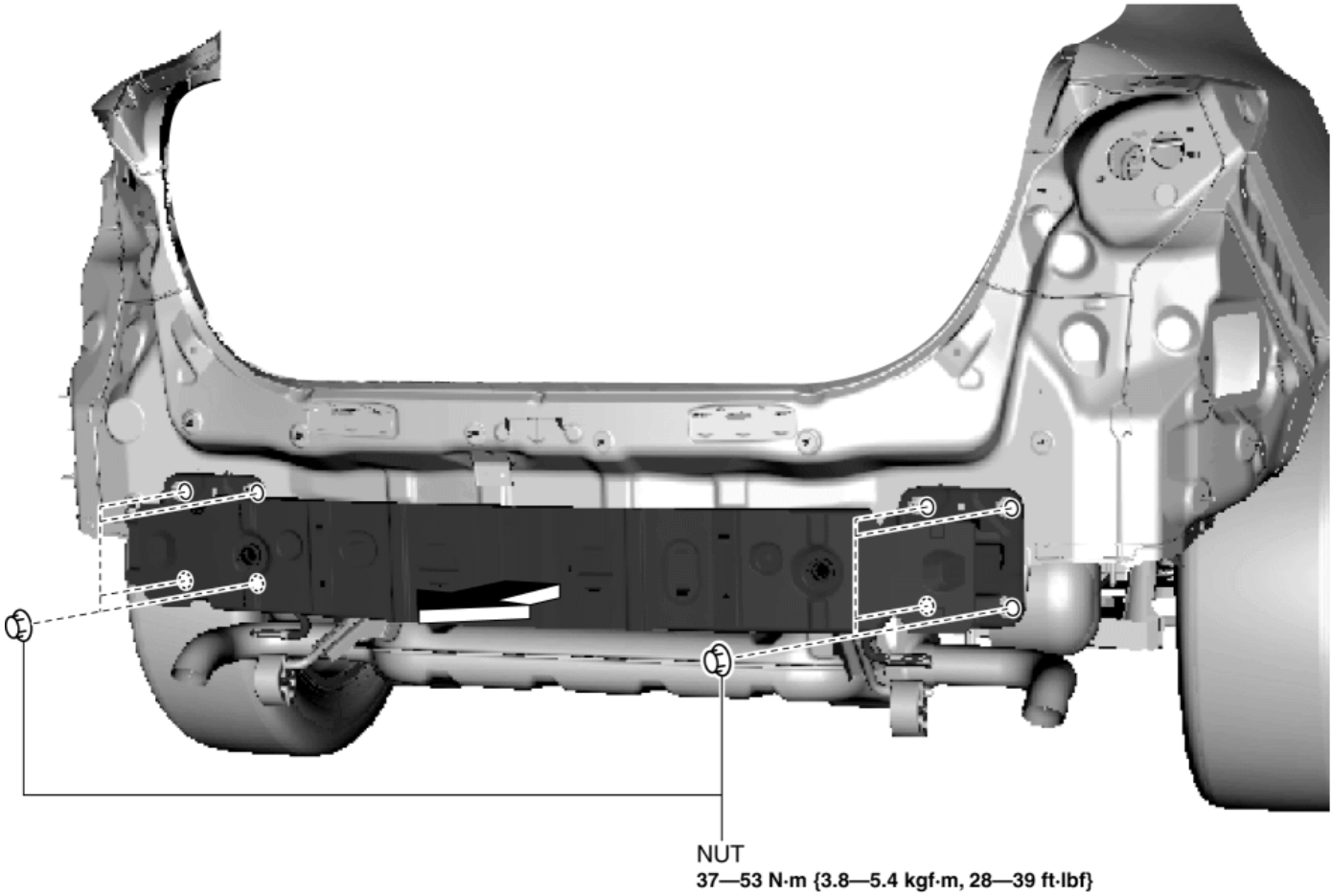

5. Remove the rear bumper reinforcement in the direction of the arrow shown in the figure.

6. Install in the reverse order of removal.

2014 - Mazda3 - Body and Accessories

FRONT FENDER PANEL REMOVAL/INSTALLATION

CAUTION:

- Overlap and adhere the protective tape to the position shown in the figure to prevent damage to the front fender panel and front door.

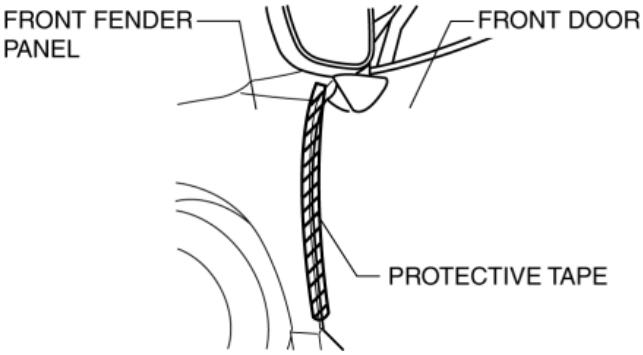

1. Disconnect the negative battery cable. (See **NEGATIVE BATTERY CABLE DISCONNECTION/CONNECTION [SKYACTIV-G 2.0, SKYACTIV-G 2.5]**.)

2. Remove the following parts:

   a. Set plate (See **SET PLATE REMOVAL/INSTALLATION**.)

   b. Front bumper (See **FRONT BUMPER REMOVAL/INSTALLATION**.)

   c. Front combination light (See **FRONT COMBINATION LIGHT REMOVAL/INSTALLATION**.)

   d. Front bumper slider (See **BUMPER SLIDER REMOVAL/INSTALLATION**.)

   e. Front fender molding (See **FRONT FENDER MOLDING REMOVAL/INSTALLATION**.)

3. Remove the fasteners.

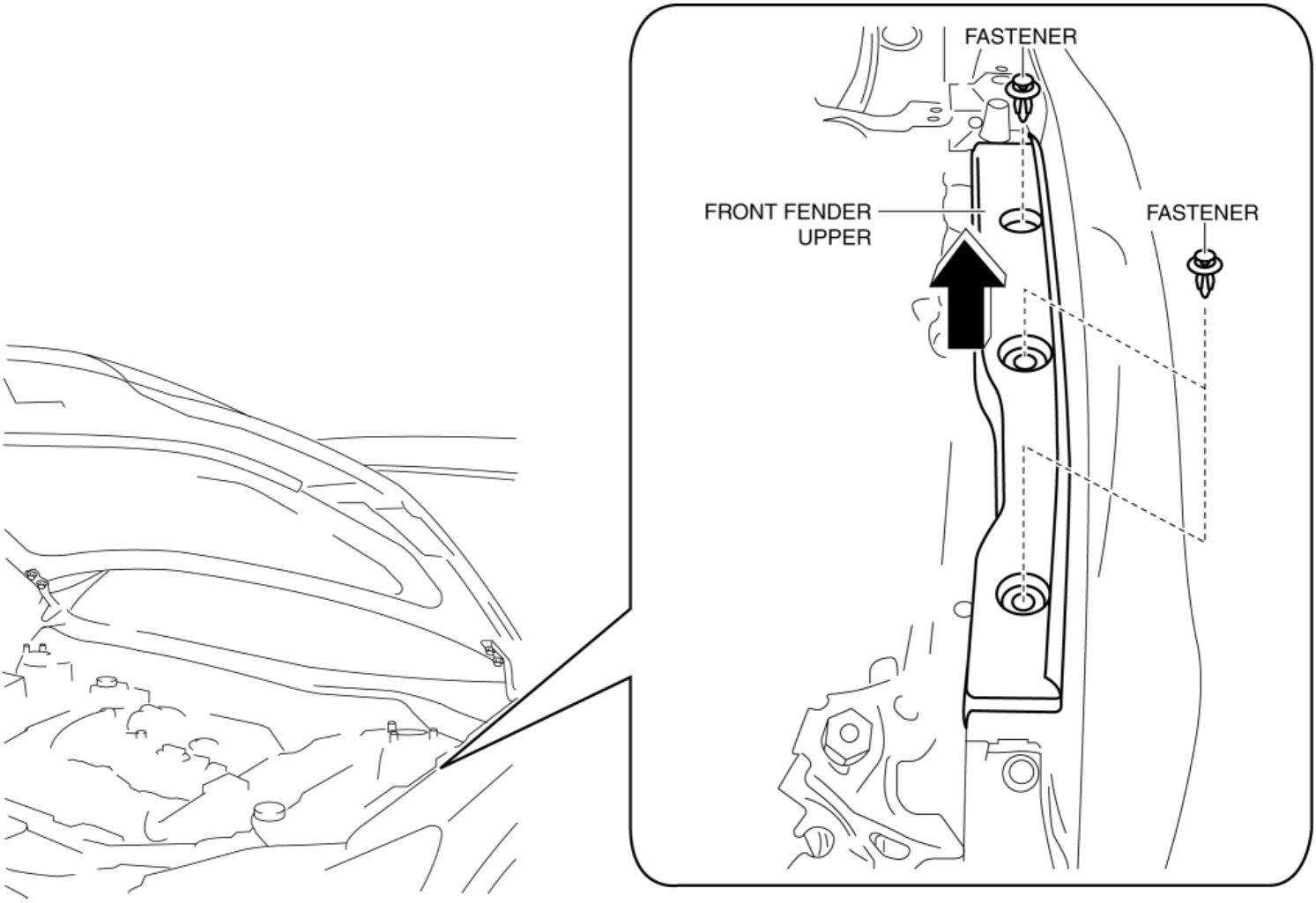

4. Remove the front fender upper in the direction of the arrow shown in the figure.

5. Remove the fasteners.

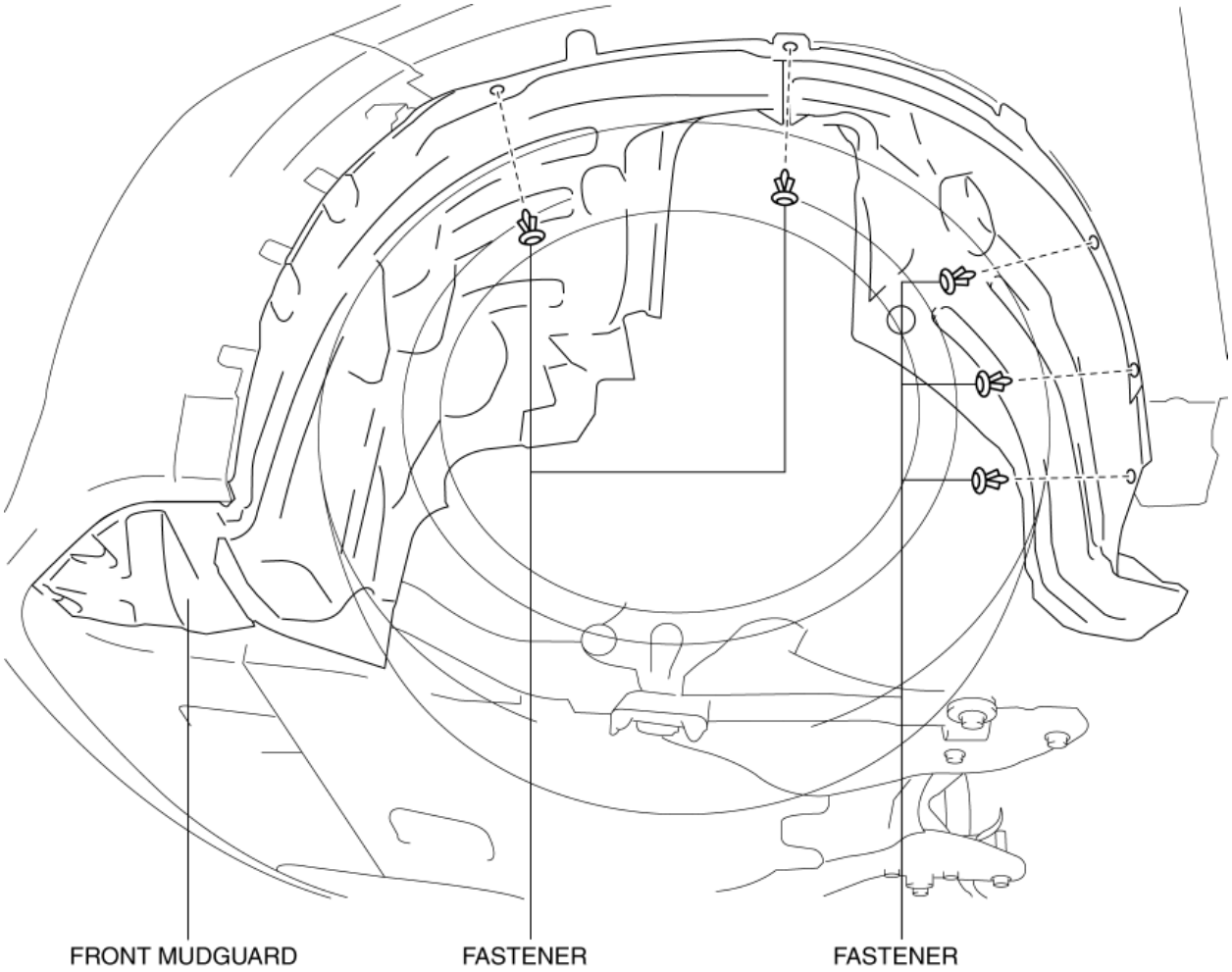

6. Partially peel back the front mudguard.

7. Remove the bolts shown in the figure.

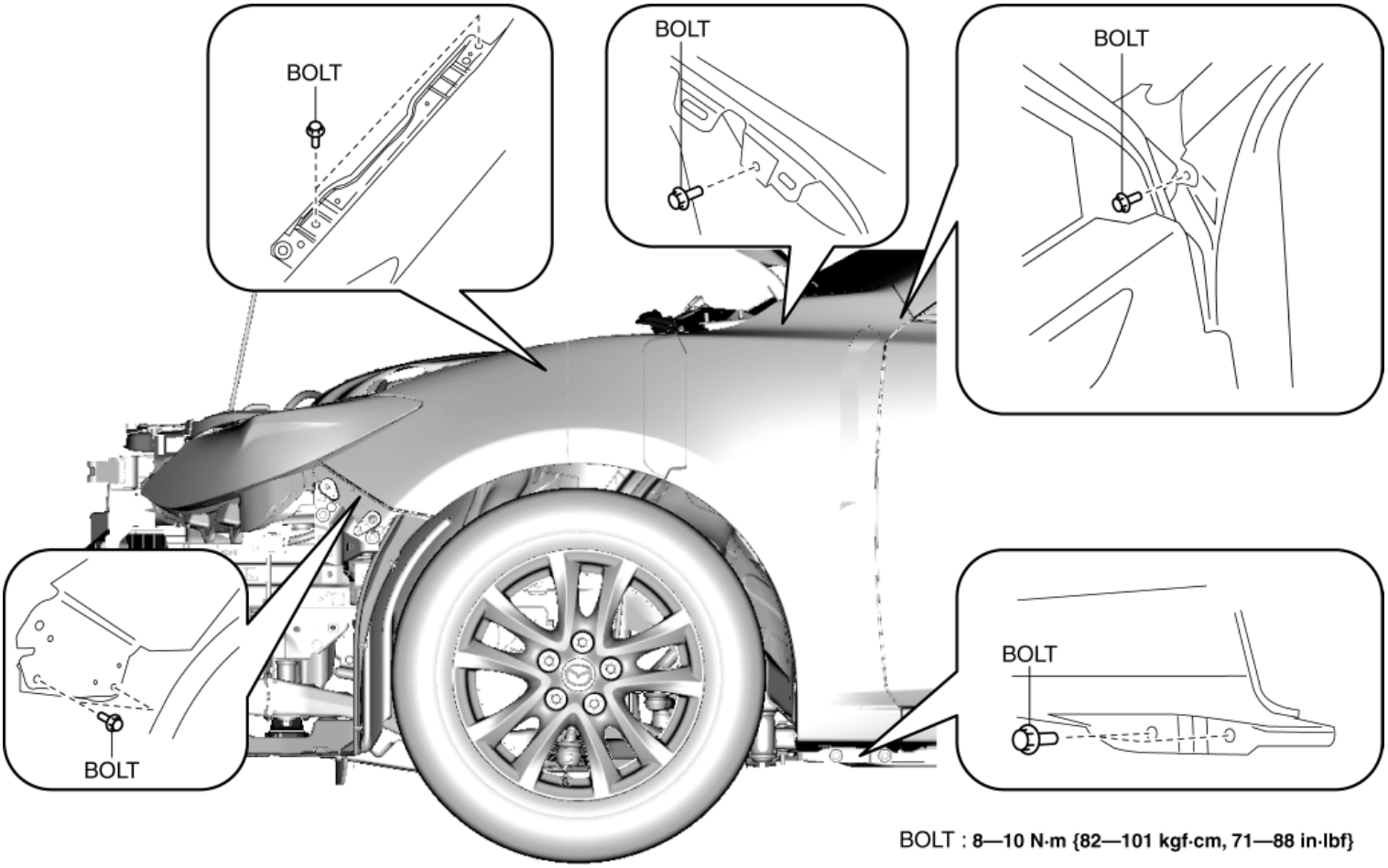

8. Remove the front fender panel.

9. Install in the reverse order of removal.

10. Adjust the headlight aiming. (See **HEADLIGHT AIMING**.)

11. If a front fog light is removed from the front bumper, perform the front fog light aiming. (with front fog lights) (See **FRONT FOG LIGHT AIMING**.)

2014 - Mazda3 - Body and Accessories

FRONT FENDER STAY REMOVAL/INSTALLATION

1. Disconnect the negative battery cable. (See **NEGATIVE BATTERY CABLE DISCONNECTION/CONNECTION [SKYACTIV-G 2.0, SKYACTIV-G 2.5]**.)
2. Remove the following parts:
   a. Set plate (See **SET PLATE REMOVAL/INSTALLATION**.)
   b. Front bumper (See **FRONT BUMPER REMOVAL/INSTALLATION**.)
   c. Front combination light (See **FRONT COMBINATION LIGHT REMOVAL/INSTALLATION**.)
   d. Washer tank (See **WASHER TANK REMOVAL/INSTALLATION**.)
3. Remove the bolt shown in the figure and then remove body ground.

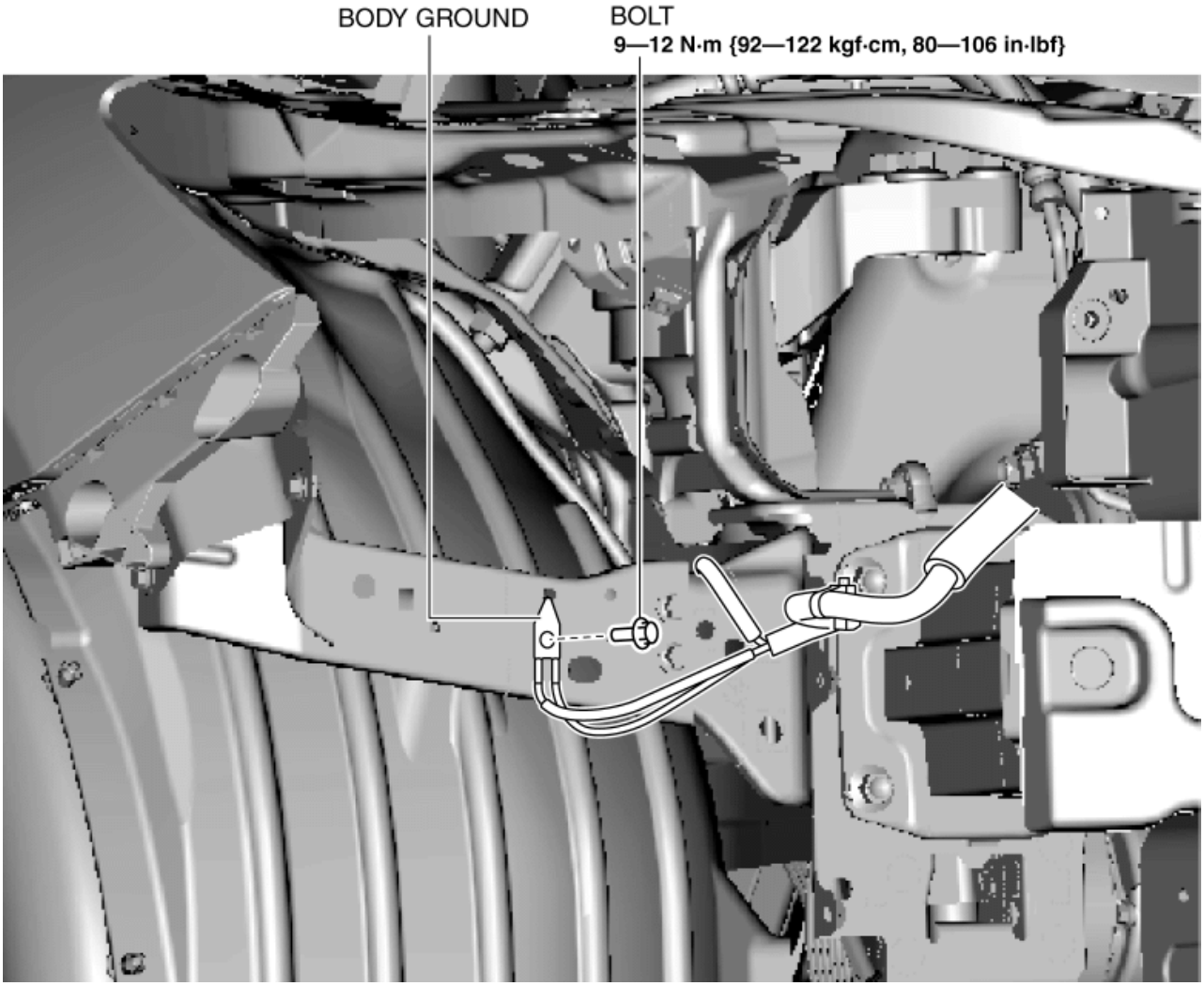

4. Remove the bolts shown in the figure.

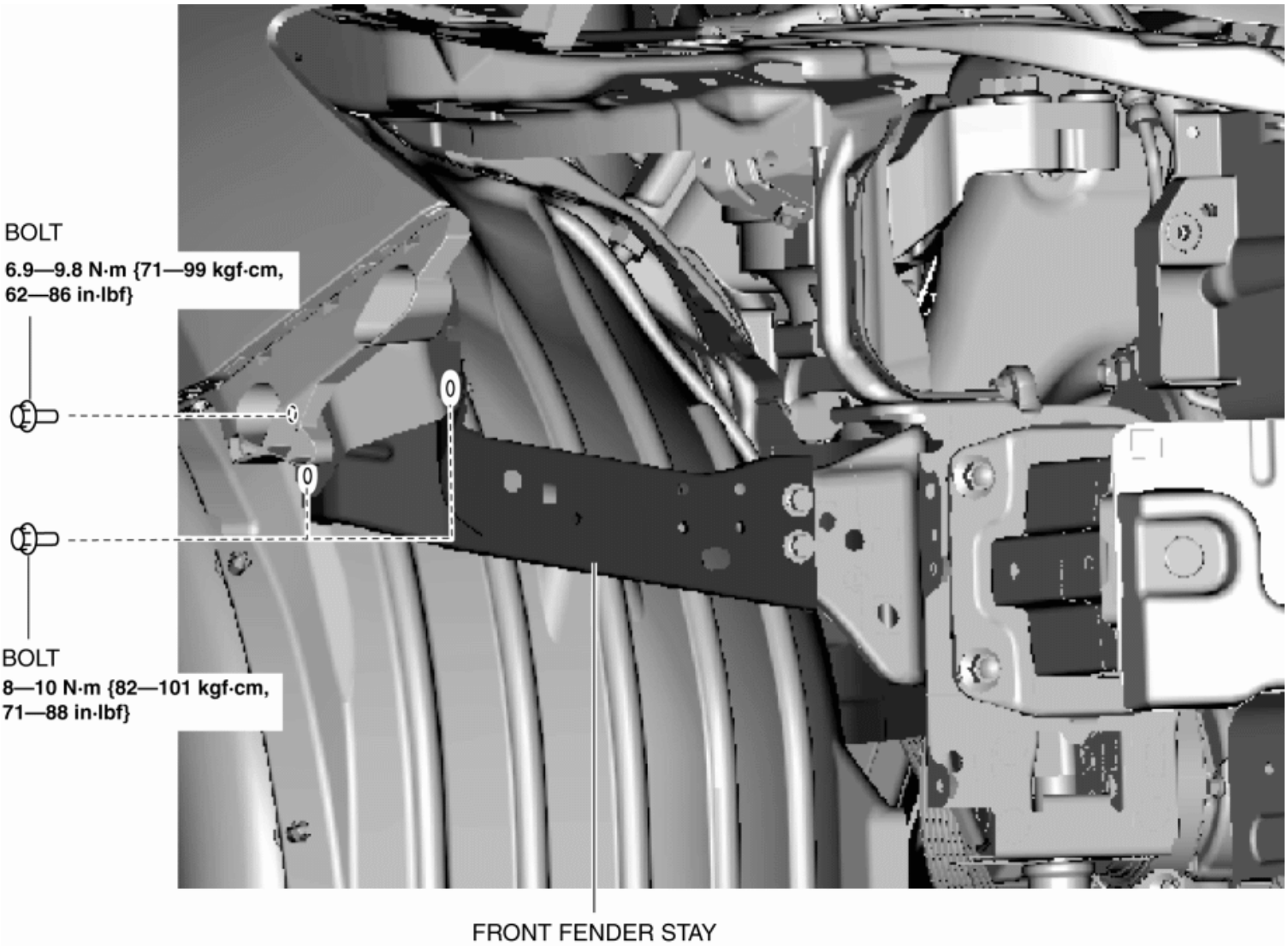

5. Remove the bolts shown in the figure and then remove the front fender stay.

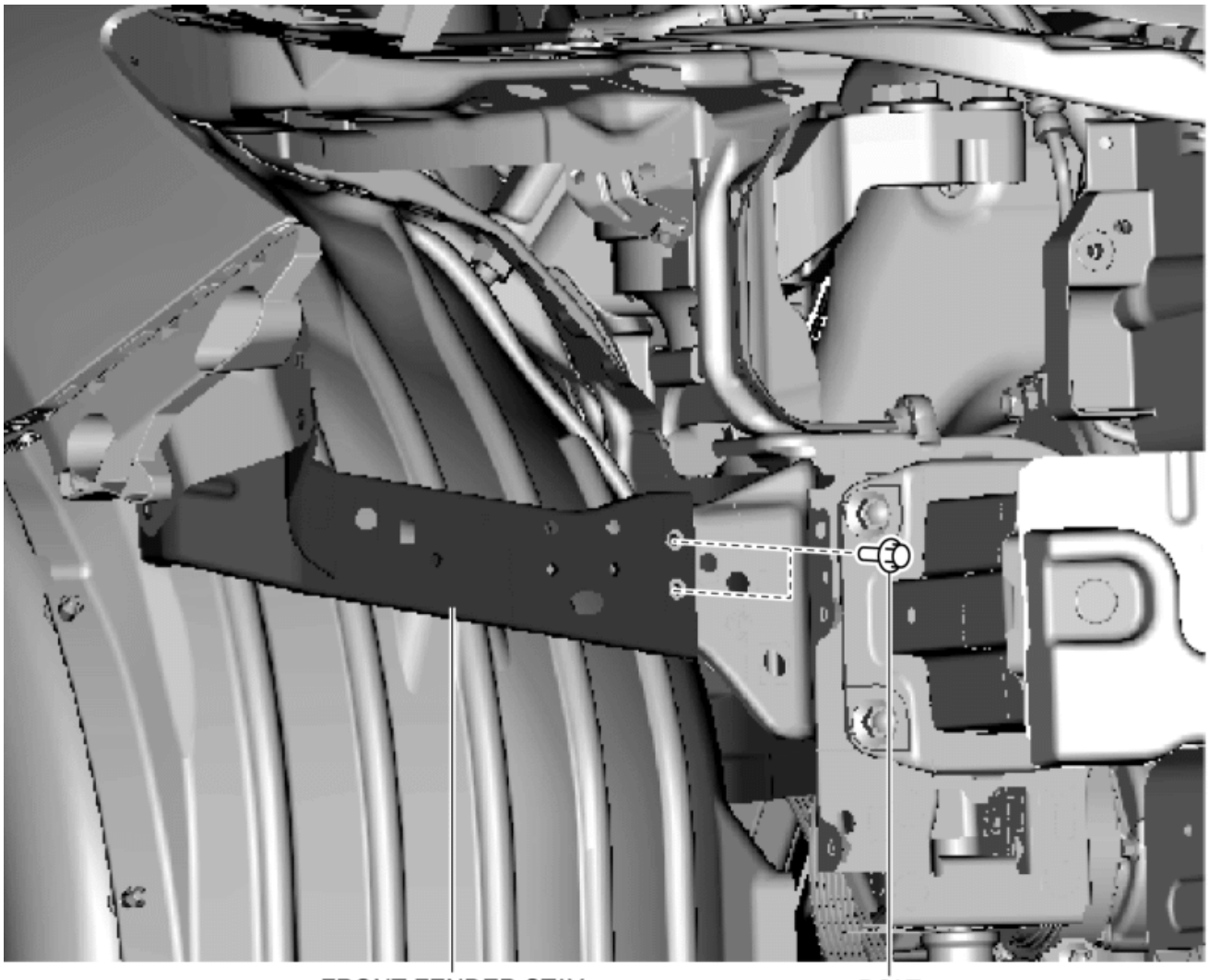

8—10 N·m {82—101 kgf·cm,71—88 in·lbf}

6. Install in the reverse order of removal. (See **Front Fender Stay Newly Replace Note**.)

7. Adjust the headlight aiming. (See **HEADLIGHT AIMING**.)

8. If a front fog light is removed from the front bumper, perform the front fog light aiming. (with front fog lights) (See **FRONT FOG LIGHT AIMING**.)

Front Fender Stay Newly Replace Note

CAUTION:

- If the bolt contact area is painted when the front fender stay is newly replaced, it could cause a malfunction in the PCM. Before painting a newly replaced part, protect the bolt contact areas with masking tape.

1. Before painting a newly replaced part, affix masking tape to the shaded areas shown in the figure.

NOTE:

- After installing the bolt, apply touch-up paint to the exposed base material area of the front fender stay.

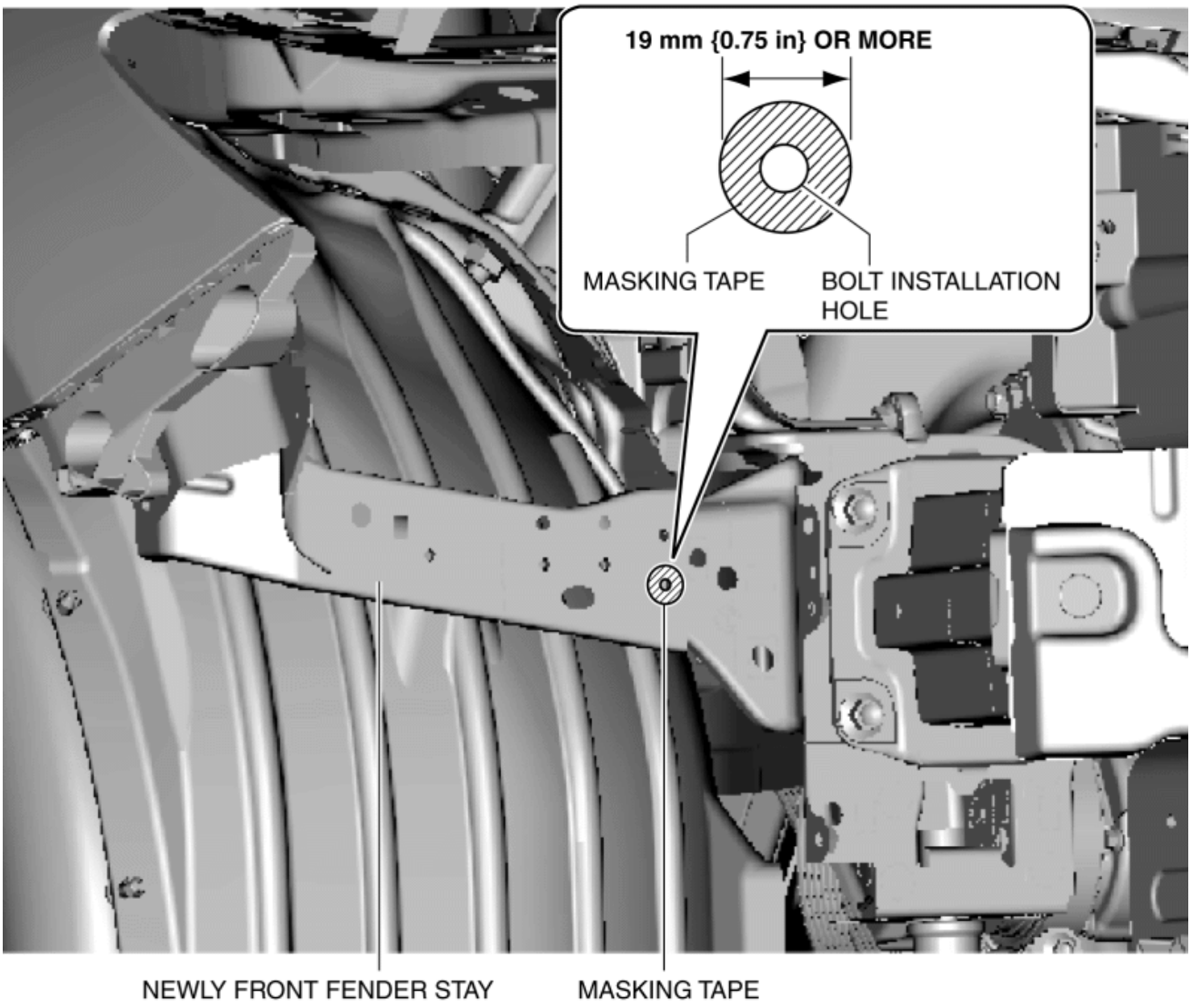
19 mm {0.75 in} OR MORE
MASKING TAPE
BOLT INSTALLATION HOLE
NEWLY FRONT FENDER STAY
MASKING TAPE

2014 - Mazda3 - Body and Accessories

FRONT FENDER INSULATOR No.1 REMOVAL/INSTALLATION

1. Remove the front mudguard.(See **MUDGUARD REMOVAL/INSTALLATION**.)
2. Remove the front fender insulator No.1 boss area from the hole of the cowl side reinforcement.

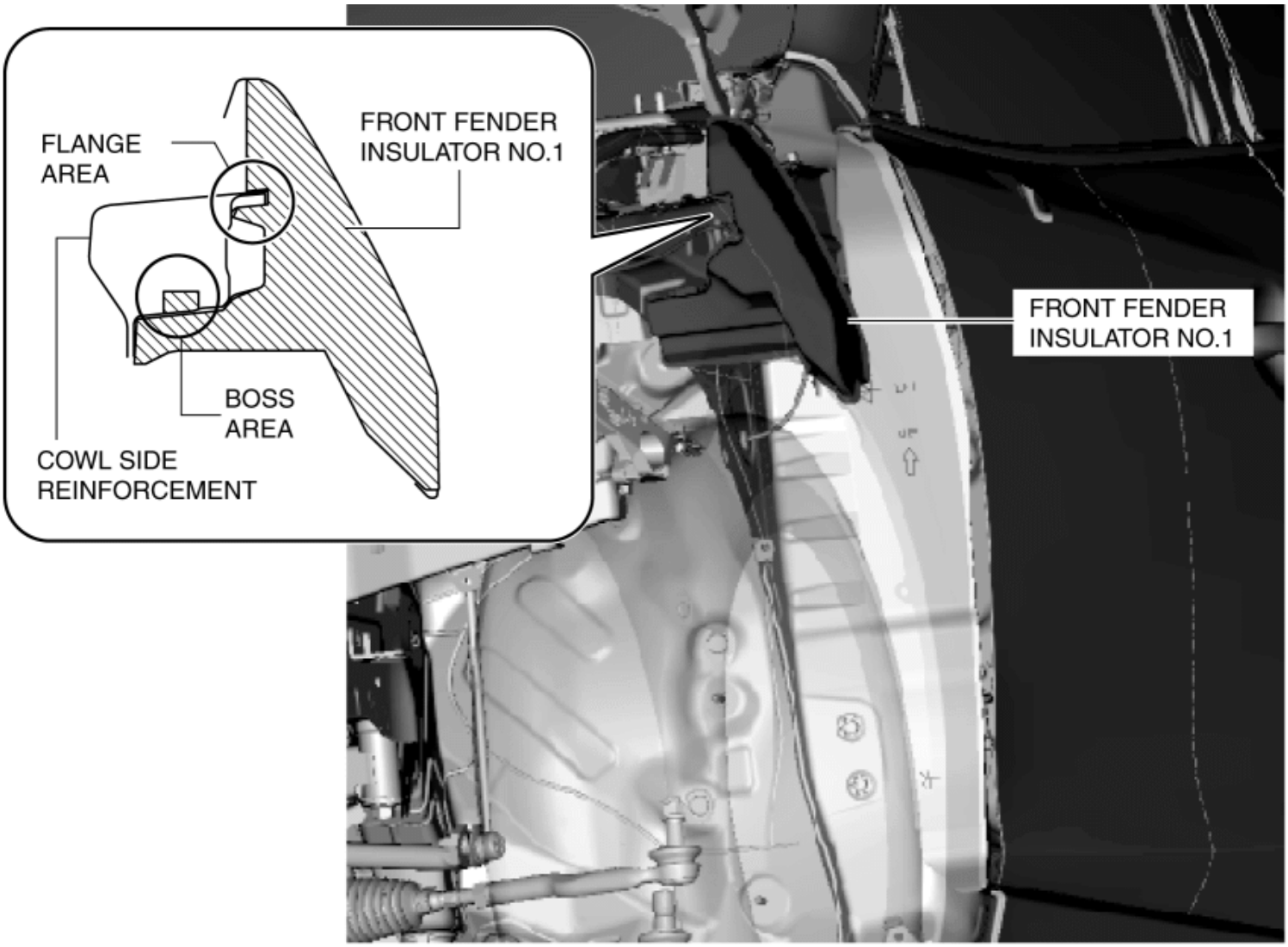

3. Pull out front fender insulator No.1 from the cowl side reinforcement flange area.
4. Remove front fender insulator No.1.
5. Install in the reverse order of removal.

2014 - Mazda3 - Body and Accessories

FRONT FENDER INSULATOR No.2 REMOVAL

CAUTION:

- Using a utility knife with bare hands can cause injury. Always wear gloves when using a utility knife.

1. Remove the front mudguard.(See **MUDGUARD REMOVAL/INSTALLATION**.)

2. Cut off the double-sided adhesive tape in the position shown in the figure using a utility knife and remove front fender insulator No.2 from the body.

FRONT FENDER INSULATOR No.2 REMOVAL

2014 - Mazda3 - Body and Accessories

FRONT FENDER INSULATOR No.2 INSTALLATION

CAUTION:

- Using a utility knife with bare hands can cause injury. Always wear gloves when using a utility knife.

1. If front fender insulator No.2 is to be reused, perform the following procedure.
   a. Remove the remaining double-sided adhesive tape on the body side.
   b. Remove the double-sided adhesive tape remaining on front fender insulator No.2.
   c. Clean and degrease the double-sided adhesive tape application area.
   d. Apply double-sided adhesive tape to the position shown in the figure.

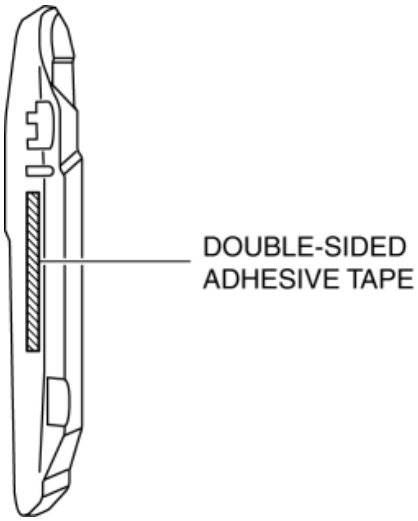

2. If front fender insulator No.2 is to be newly replaced, perform the following procedure.
   a. Remove the remaining double-sided adhesive tape on the body side.
   b. Clean and degrease the double-sided adhesive tape application area on the body side.
3. Peel off the paper backing of the double-sided adhesive tape from front fender insulator No.2.
4. Press front fender insulator No.2 into the grooves in the body in the order of the upper, lower, and middle parts without allowing the double-sided adhesive tape to contact the body.
5. Align the front fender insulator No.2 marking with the installation position on the body shown in the figure.

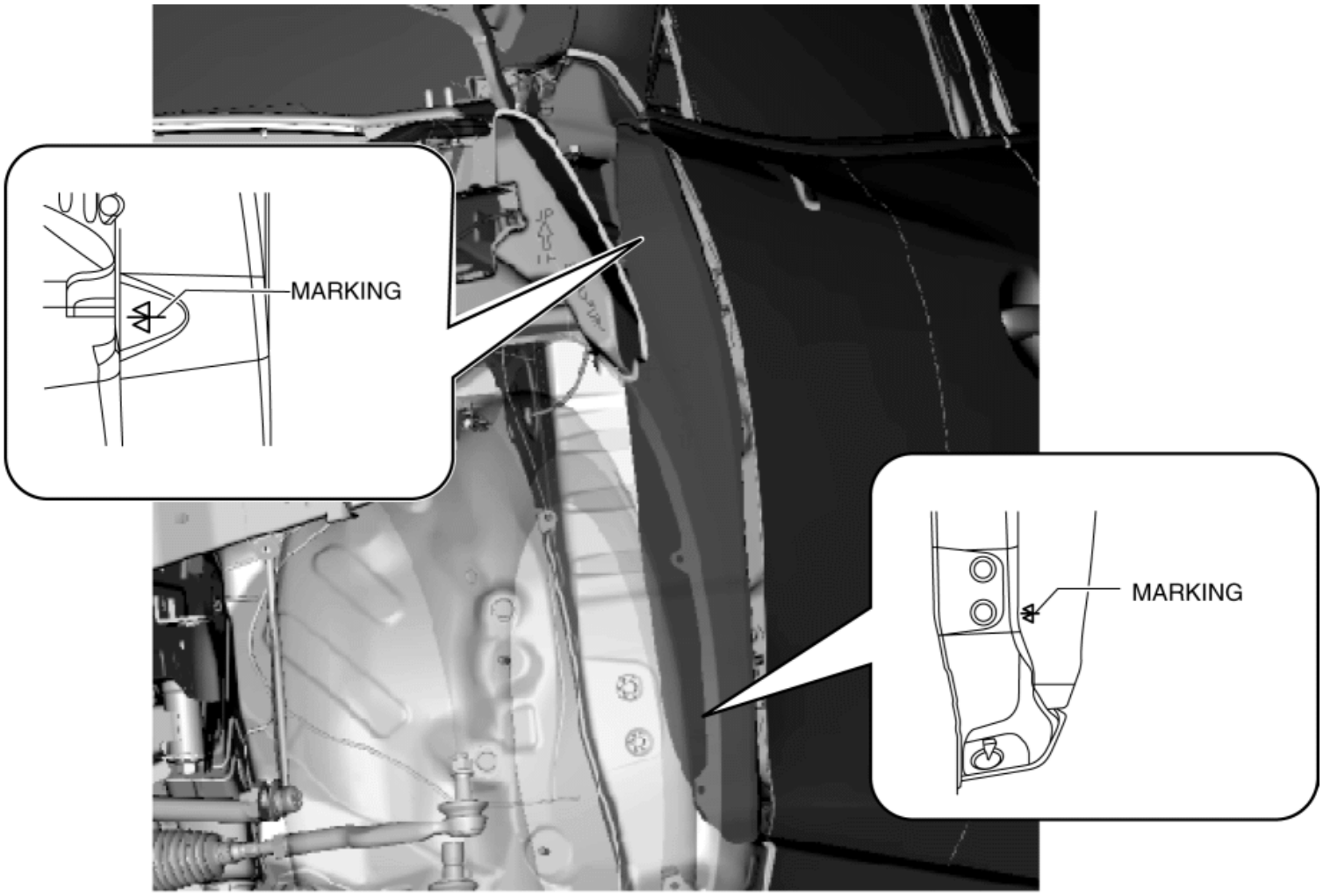

6. Press front fender insulator No.2 to adhere the double-sided adhesive tape to the body, and install front fender insulator No.2.

7. Install the front mudguard.(See MUDGUARD REMOVAL/INSTALLATION.)

2014 - Mazda3 - Body and Accessories

SHROUD PANEL REMOVAL/INSTALLATION

1. Disconnect the negative battery cable. (See **NEGATIVE BATTERY CABLE DISCONNECTION/CONNECTION [SKYACTIV-G 2.0, SKYACTIV-G 2.5]**.)

2. Remove the following parts:

   a. Set plate (See **SET PLATE REMOVAL/INSTALLATION**.)

   b. Front bumper (See **FRONT BUMPER REMOVAL/INSTALLATION**.)

   c. Front combination light (See **FRONT COMBINATION LIGHT REMOVAL/INSTALLATION**.)

   d. Active air shutter (with i-ELOOP) (See **ACTIVE AIR SHUTTER REMOVAL/INSTALLATION**.)

   e. Shroud upper member (See **SHROUD UPPER MEMBER REMOVAL/INSTALLATION**.)

   f. Hood lock (See **HOOD LATCH REMOVAL/INSTALLATION**.)

   g. Intake air guide (See **INTAKE AIR GUIDE REMOVAL/INSTALLATION**.)

   h. Seal plate (See **SEAL PLATE REMOVAL/INSTALLATION**.)

   i. Front under cover No.1 (See **FRONT UNDER COVER No.1 REMOVAL/INSTALLATION**.)

   j. Bumper stiffener lower (See **BUMPER STIFFENER LOWER REMOVAL/INSTALLATION**.)

CAUTION:

- The front bumper reinforcement supports the shroud panel. After removing the front bumper reinforcement, an excessive load applied to the shroud panel could result in damage. When removing the front bumper reinforcement, always use a floor jack to support the shroud panel.

3. Support the shroud panel using a floor jack.

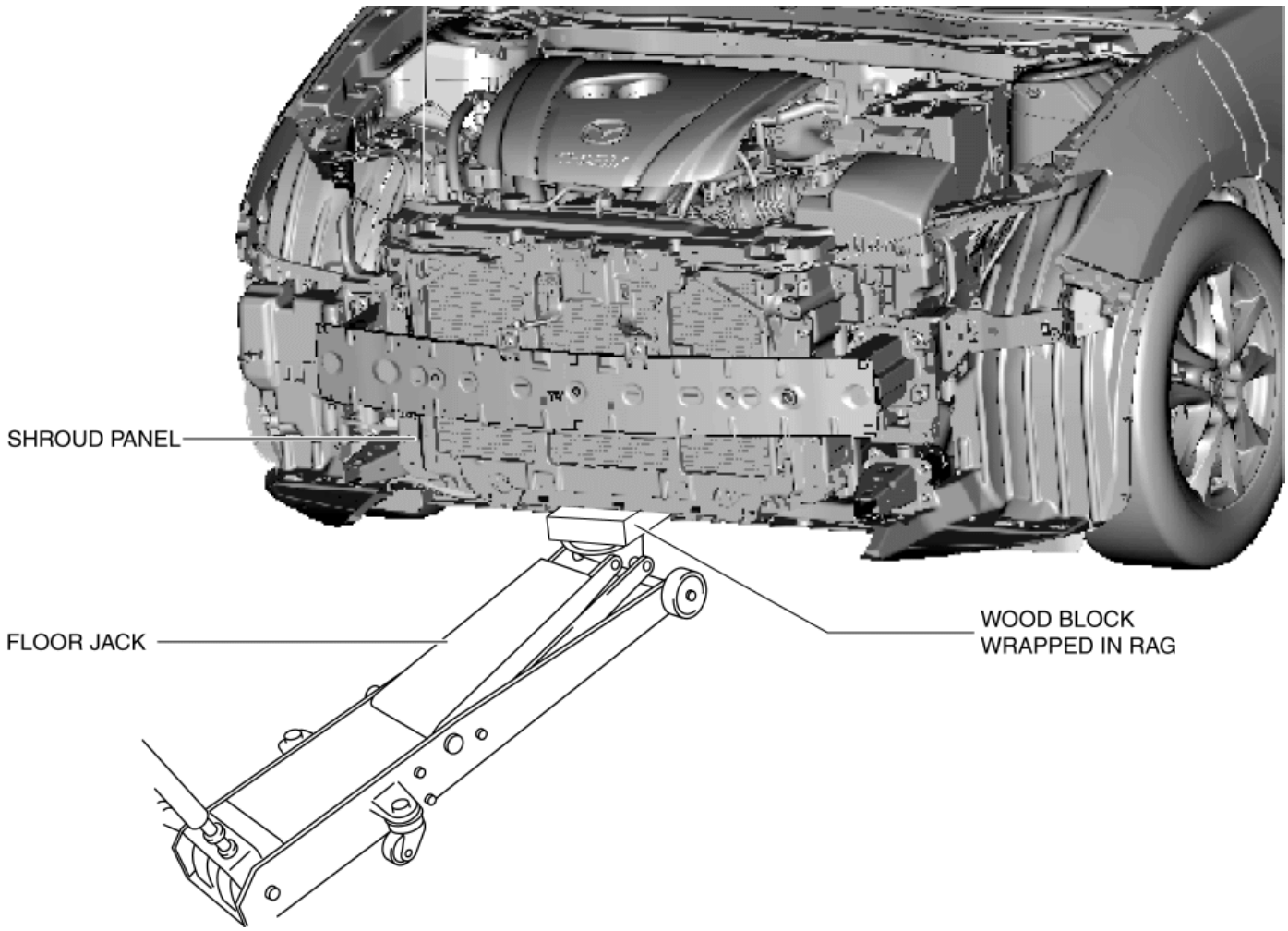

4. Remove the following parts:

   a. Front bumper reinforcement (See **FRONT BUMPER REINFORCEMENT REMOVAL/INSTALLATION**.)

   b. Ambient temperature sensor (See **AMBIENT TEMPERATURE SENSOR REMOVAL/INSTALLATION [FULL-AUTO AIR CONDITIONER]**.) (See **AMBIENT TEMPERATURE SENSOR INSPECTION [MANUAL AIR CONDITIONER]**.)

   c. Crash zone sensor (See **CRASH ZONE SENSOR REMOVAL/INSTALLATION [STANDARD DEPLOYMENT CONTROL SYSTEM]**.)

5. Remove the wiring harness clips secured to the shroud panel.

WARNING:

- Secure the hood stay using packing tape so that it does not detach. Otherwise, the hood may fall and cause injury.

6. Relocate the hood stay to the position shown in the figure.

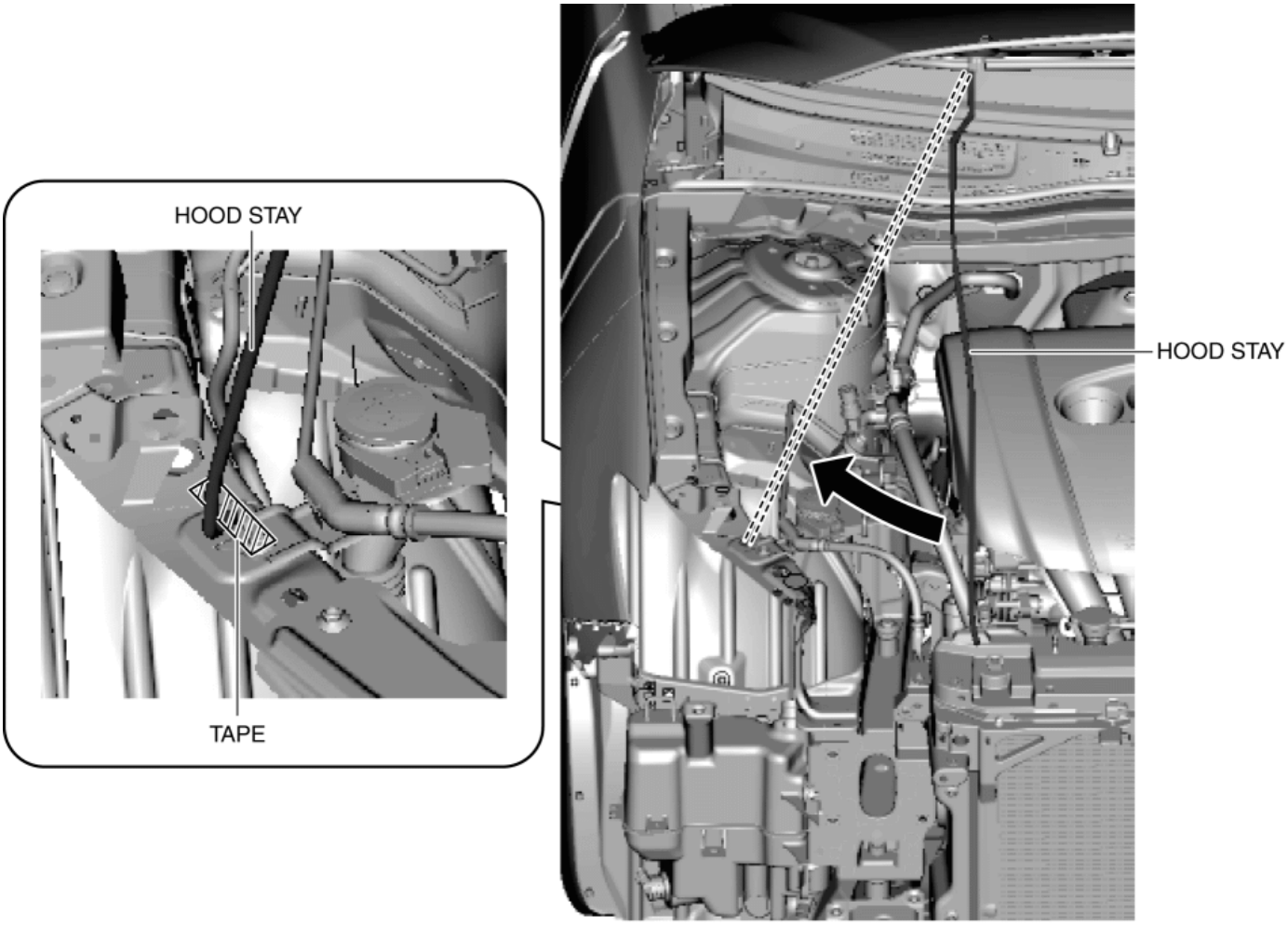

CAUTION:

- Remove the radiator from the shroud panel using two people. Otherwise, the radiator may fall and cause injury.

7. Remove the floor jack which has supported the shroud panel.

8. Press down the tabs shown in the figure in the direction of the arrow, pull out the upper mount rubber bracket toward the vehicle rear, and remove it.

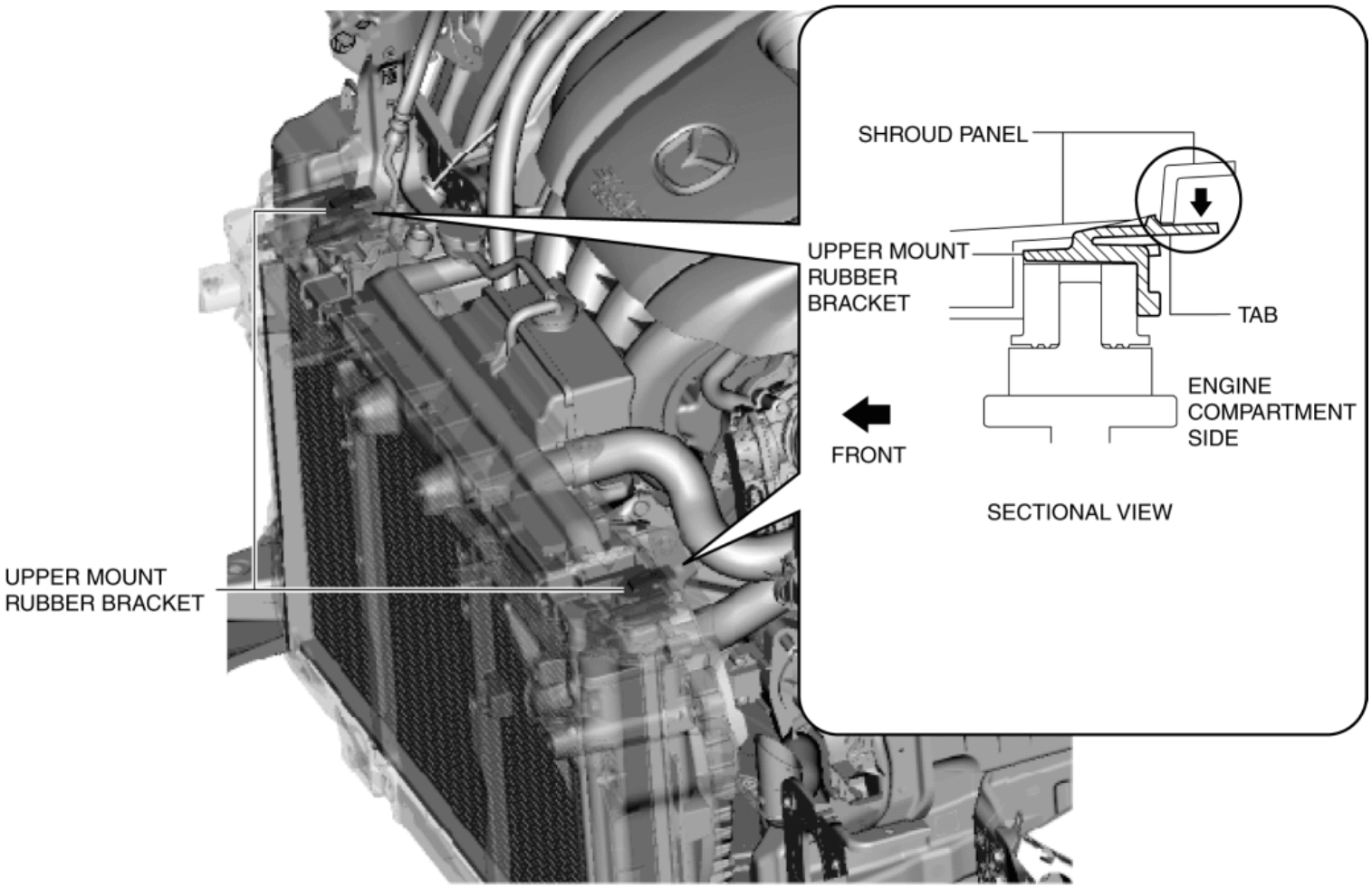

9. Hold the upper part of the radiator by hand and tilt the shroud panel toward the vehicle front.

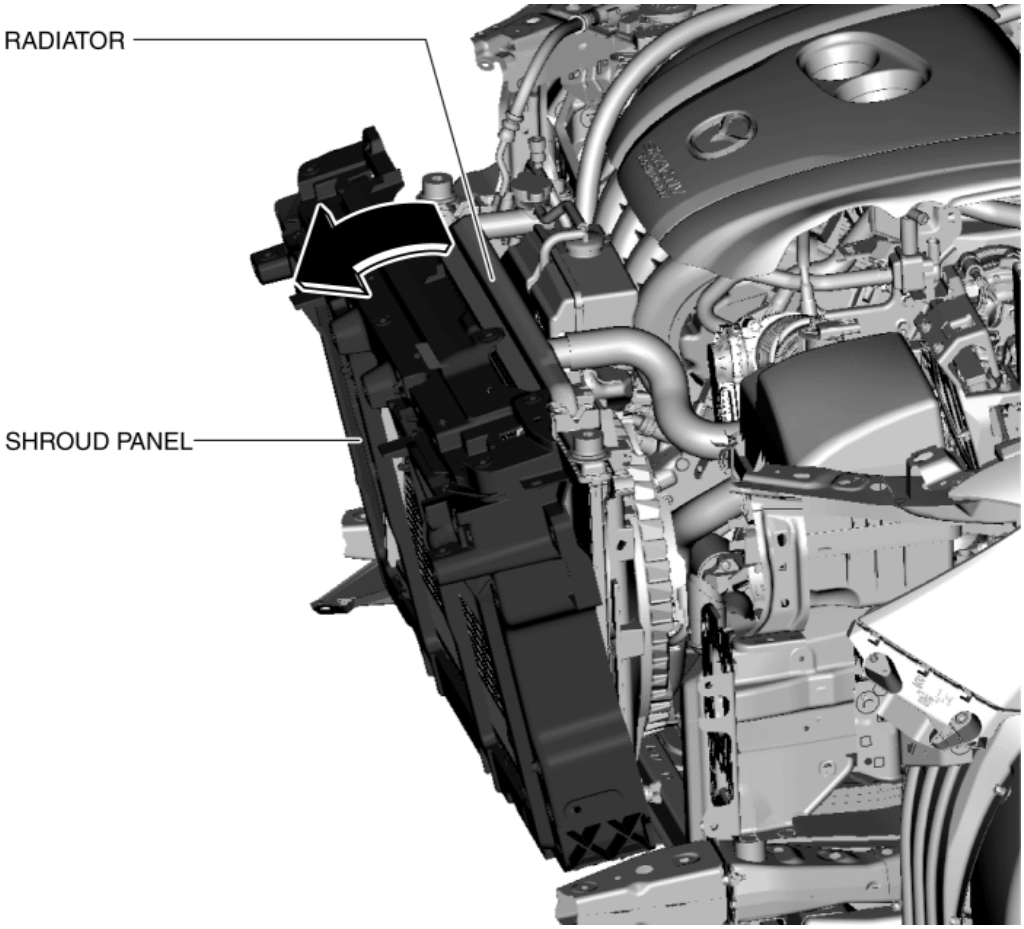

10. Move the shroud panel to the lower side with the radiator held by hand, detach it from the radiator mount guide, and remove the shroud panel toward the vehicle front.

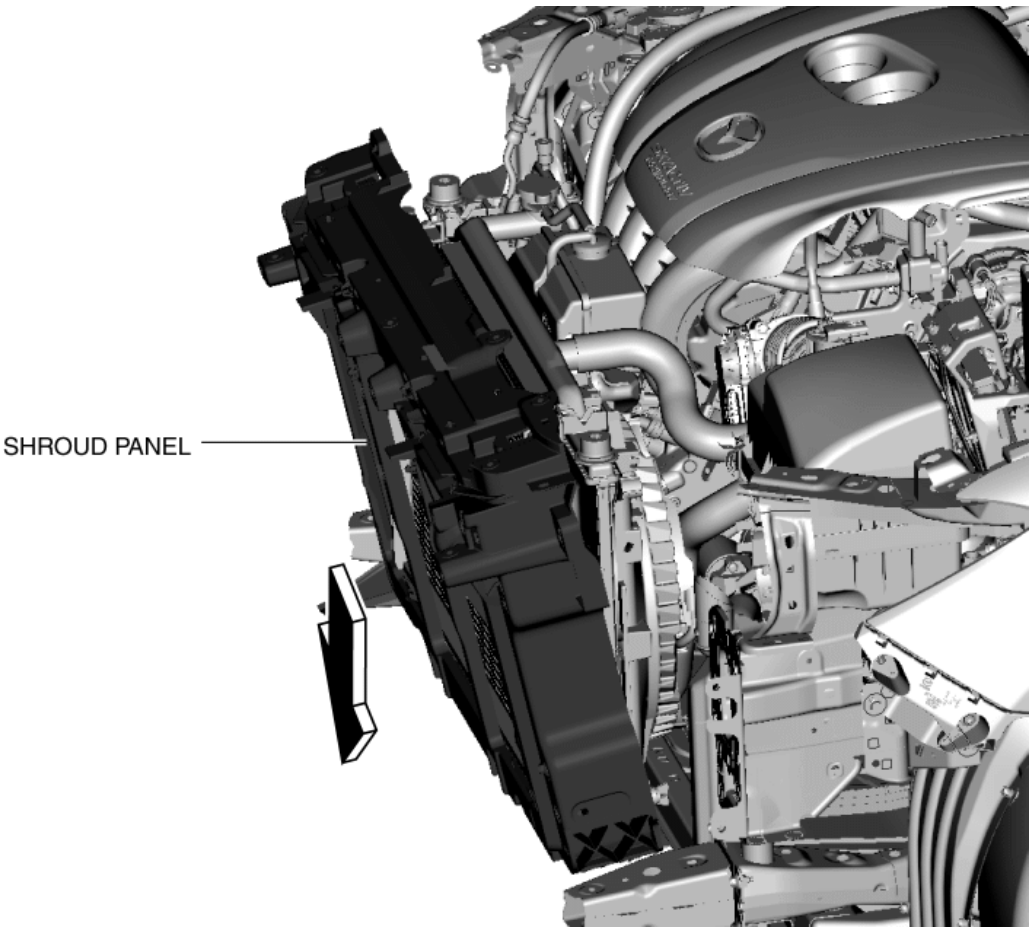

11. Support the radiator using a floor jack at the position shown in the figure.

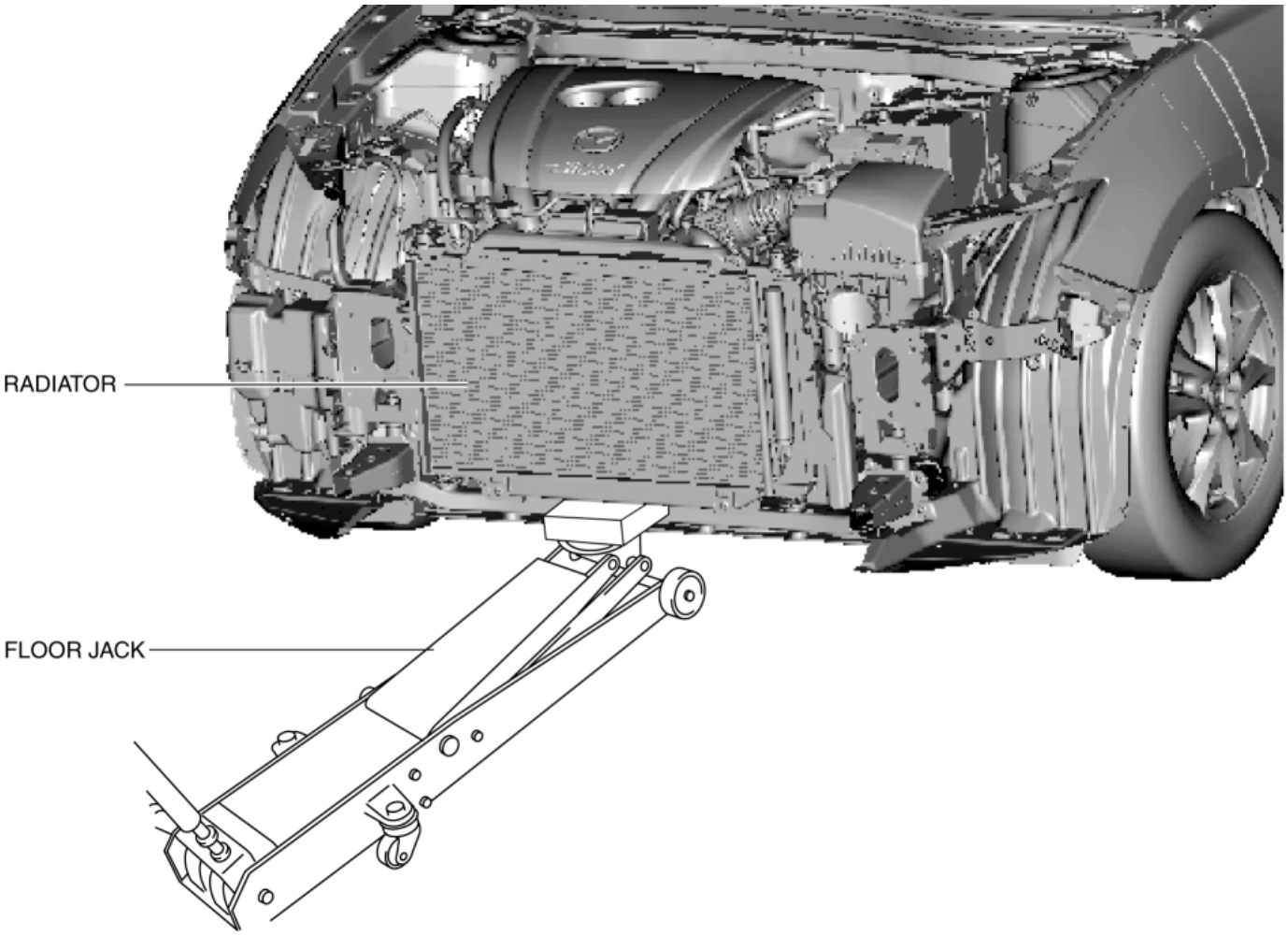

12. Install in the reverse order of removal.

13. Adjust the headlight aiming. (See **HEADLIGHT AIMING**.)

14. If a front fog light is removed from the front bumper, perform the front fog light aiming. (with front fog lights) (See **FRONT FOG LIGHT AIMING**.)

2014 - Mazda3 - Body and Accessories

SHROUD UPPER MEMBER REMOVAL/INSTALLATION

1. Disconnect the negative battery cable. (See **NEGATIVE BATTERY CABLE DISCONNECTION/CONNECTION [SKYACTIV-G 2.0, SKYACTIV-G 2.5]**.)
2. Remove the following parts:
   a. Set plate (See **SET PLATE REMOVAL/INSTALLATION**.)
   b. Front bumper (See **FRONT BUMPER REMOVAL/INSTALLATION**.)
   c. Front combination light (See **FRONT COMBINATION LIGHT REMOVAL/INSTALLATION**.)
   d. Horn (See **HORN REMOVAL/INSTALLATION**.)
3. Remove the wiring harness clip shown in the figure. (with DSC)

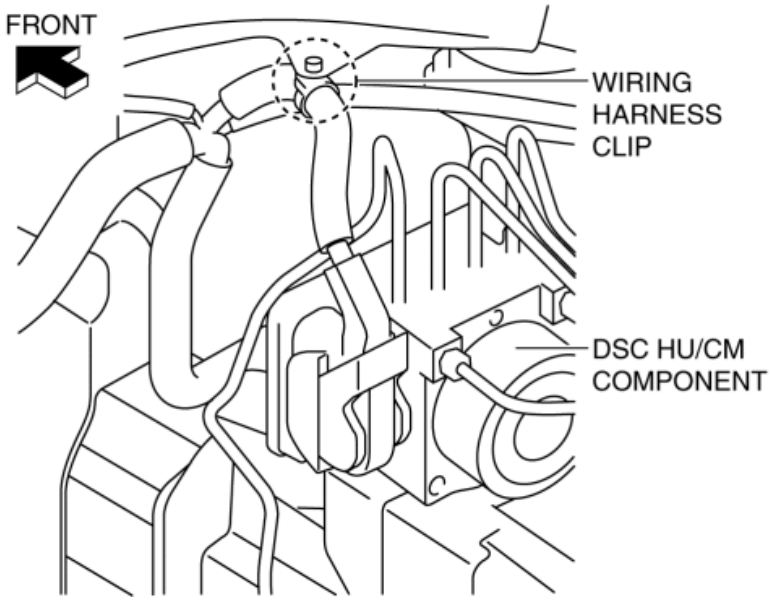

4. Remove the bolt shown in the figure and set the body ground aside.

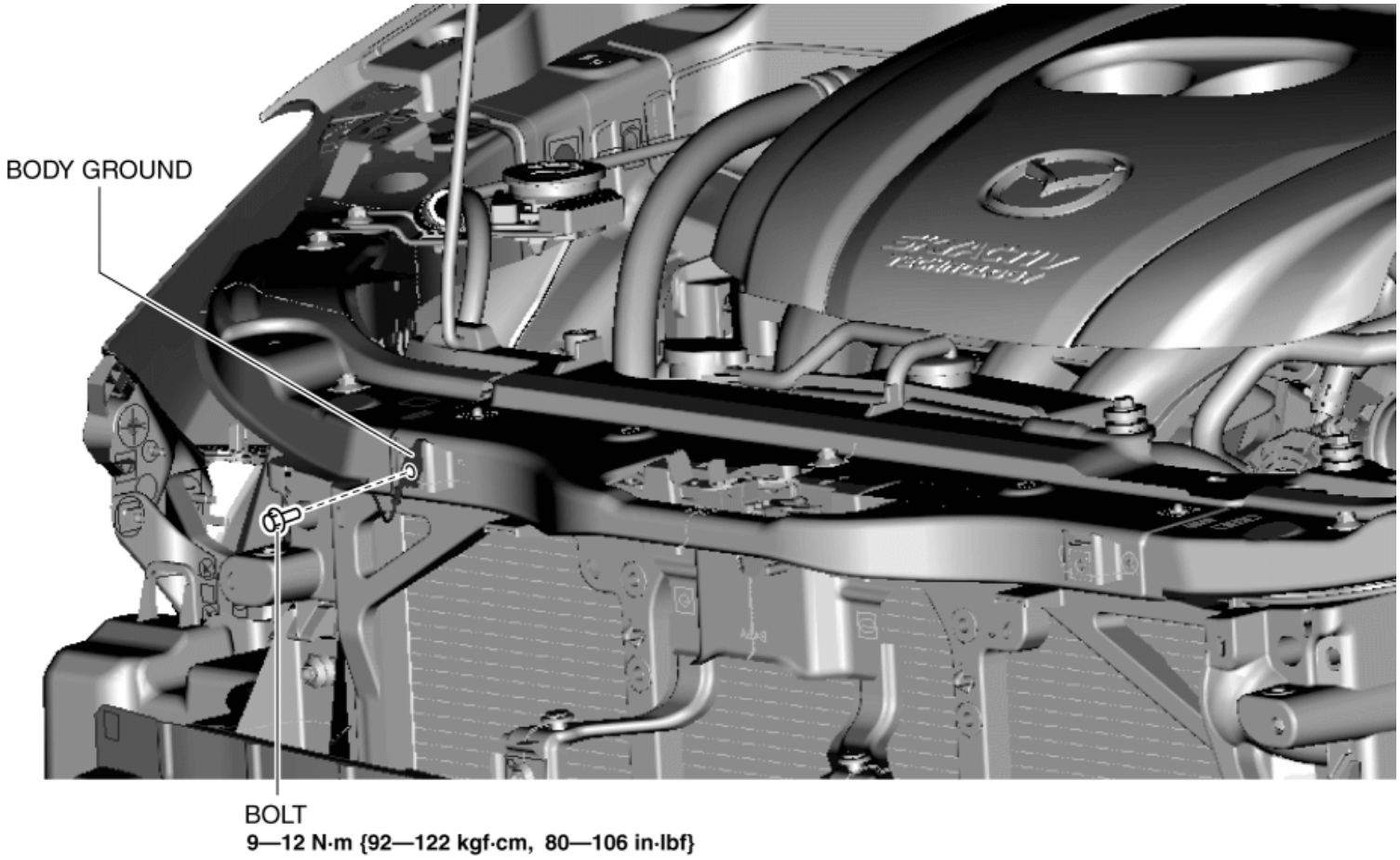

5. Remove the bolts shown in the figure and remove the shroud upper member in the direction of the arrow.

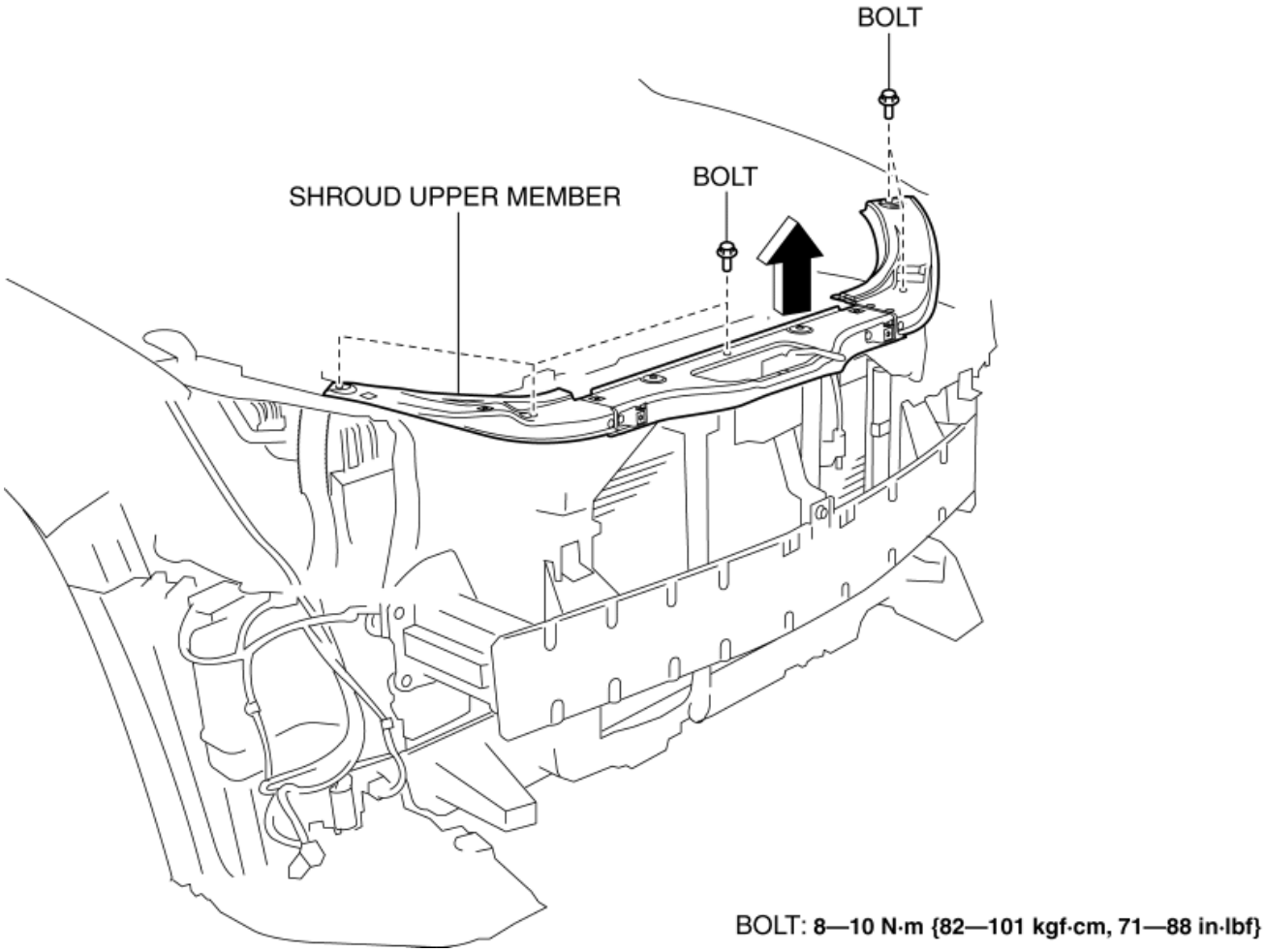

6. Install in the reverse order of removal.

7. Adjust the headlight aiming. (See **HEADLIGHT AIMING**.)

8. If a front fog light is removed from the front bumper, perform the front fog light aiming. (with front fog lights) (See **FRONT FOG LIGHT AIMING**.)

2014 - Mazda3 - Body and Accessories

COWL PANEL REMOVAL/INSTALLATION

1. Disconnect the negative battery cable. (See **NEGATIVE BATTERY CABLE DISCONNECTION/CONNECTION [SKYACTIV-G 2.0, SKYACTIV-G 2.5]**.)
2. Remove the following parts:
   a. Windshield wiper arm and blade (See **WINDSHIELD WIPER ARM AND BLADE REMOVAL/INSTALLATION**.)
   b. Cowl grille (See **COWL GRILLE REMOVAL/INSTALLATION**.)
   c. Windshield wiper motor (See **WINDSHIELD WIPER MOTOR AND LINK REMOVAL/INSTALLATION**.)
   d. Keyless beeper (with advanced keyless entry system) (See **KEYLESS BEEPER REMOVAL/INSTALLATION**.)
3. Remove the wiring harness clips secured to the cowl panel.
4. Remove the bolts shown in the figure.

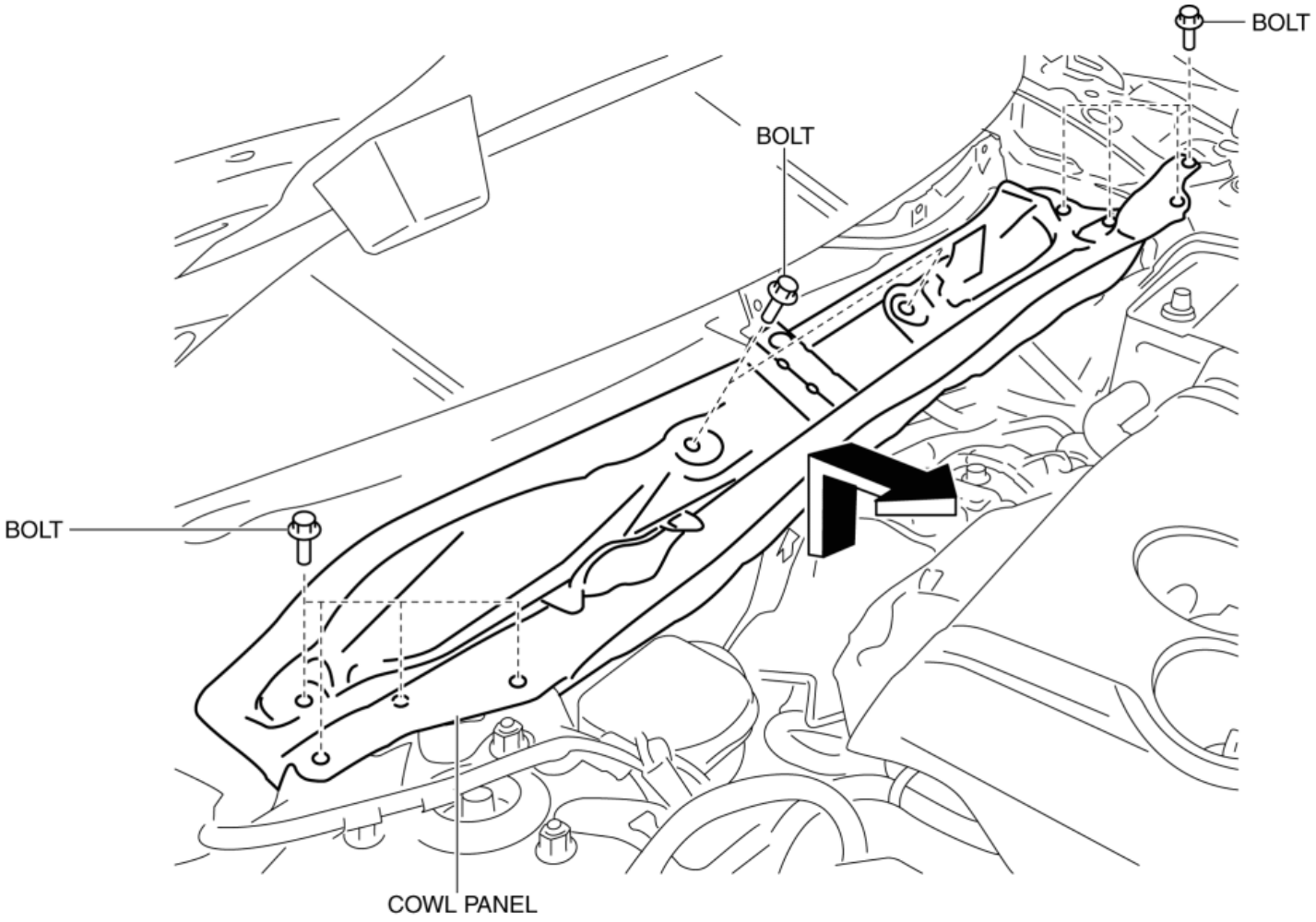

BOLT : **22—30 N·m {2.3—3.0 kgf·m, 17—22 ft·lbf}**

5. Remove the cowl panel in the direction of the arrow shown in the figure.
6. Install in the reverse order of removal.

2014 - Mazda3 - Body and Accessories

DOOR AND LIFTGATE LOCATION INDEX

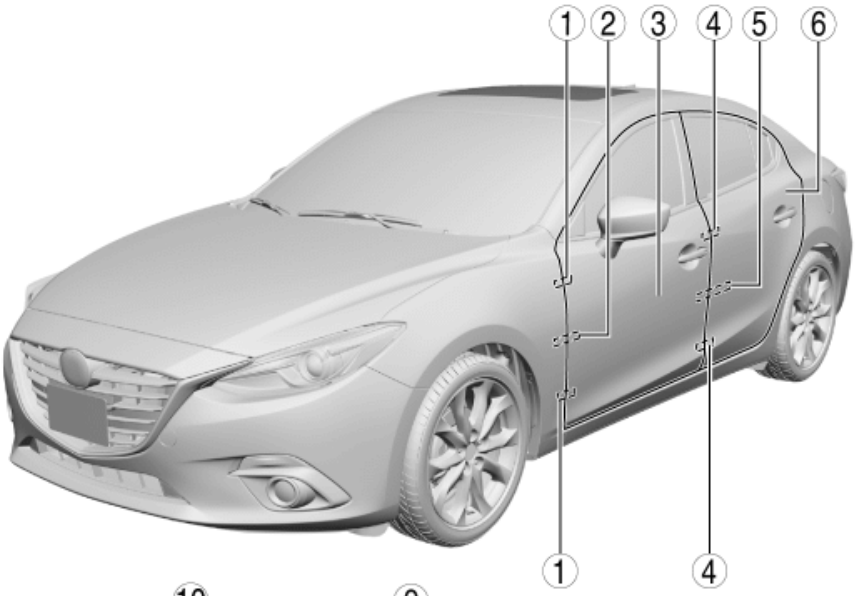

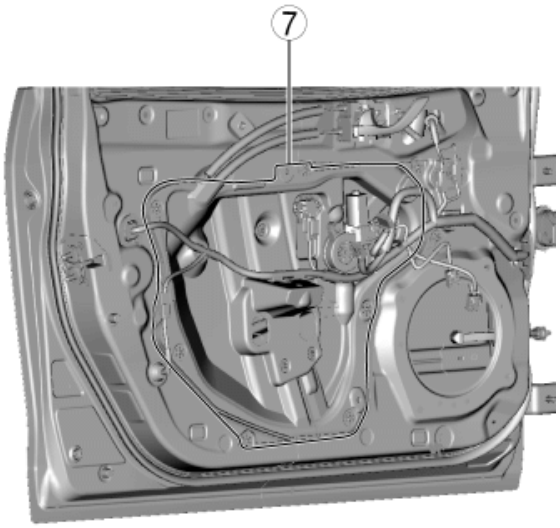

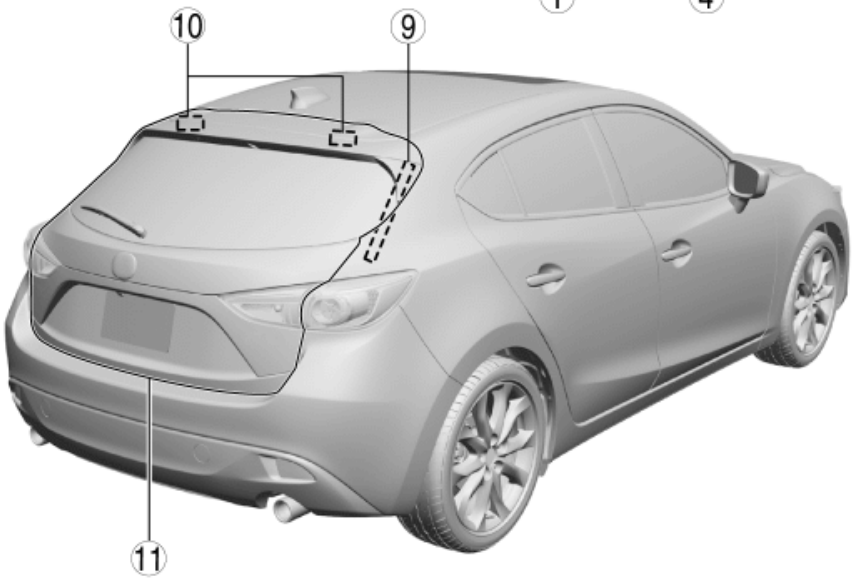

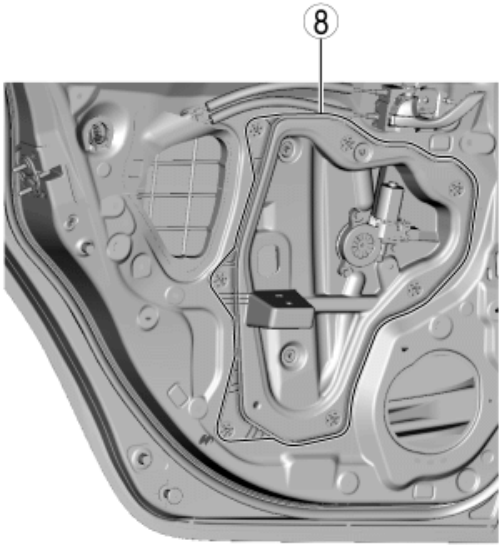

1	Front door hinge (See **FRONT DOOR HINGE REMOVAL / INSTALLATION**.)
2	Front door checker (See **FRONT DOOR CHECKER REMOVAL / INSTALLATION**.)
3	Front door (See **FRONT DOOR REMOVAL / INSTALLATION**.) (See **DOOR ADJUSTMENT**.)

4	Rear door hinge (See **REAR DOOR HINGE REMOVAL/INSTALLATION**.)
5	Rear door checker (See **REAR DOOR CHECKER REMOVAL/INSTALLATION**.)
6	Rear door (See **REAR DOOR REMOVAL/INSTALLATION**.) (See **DOOR ADJUSTMENT**.)
7	Front door module panel (See **FRONT DOOR MODULE PANEL REMOVAL/INSTALLATION**.)
8	Rear door module panel (See **REAR DOOR MODULE PANEL REMOVAL/INSTALLATION**.)
9	Stay damper (See **STAY DAMPER DISPOSAL**.)
10	Liftgate hinge (See **LIFTGATE HINGE REMOVAL/INSTALLATION**.)
11	Liftgate (See **LIFTGATE REMOVAL/INSTALLATION**.) (See **LIFTGATE ADJUSTMENT**.)

2014 - Mazda3 - Body and Accessories

FRONT DOOR REMOVAL/INSTALLATION

WARNING:

- Removing the front door without supporting it could cause the front door to fall and cause serious injury. Always perform the procedure with at least one other person to prevent the front door from falling.

CAUTION:

- When the front door checker securing bolts are removed, the front door may open until it contacts the front fender panel causing the front door and the front fender panel to be damaged. Before removing the front door, overlap and adhere the protective tape to the position shown in the figure and be careful not to damage the front door and the front fender panel.

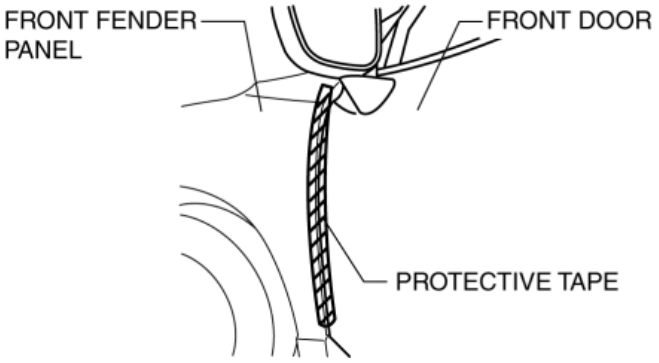

1. Disconnect the negative battery cable. (See **NEGATIVE BATTERY CABLE DISCONNECTION/CONNECTION [SKYACTIV-G 2.0, SKYACTIV-G 2.5]**.)

2. Remove the bolt A shown in the figure.

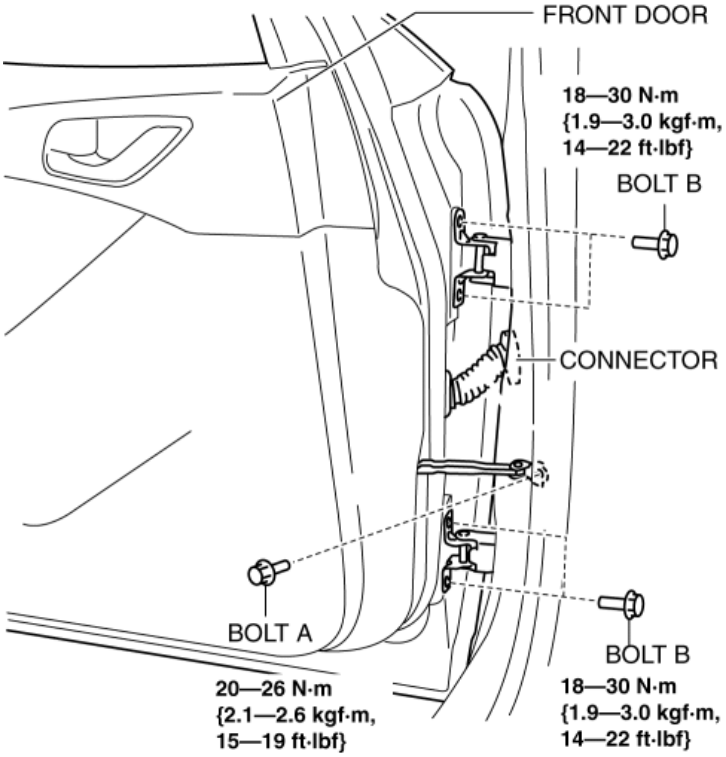

3. Remove the connector.

4. Remove the bolts B.

5. Remove the front door.

6. Install in the reverse order of removal.

7. Adjust the front door. (See **DOOR ADJUSTMENT**.)

Connector Removal Note

1. Partially peel back the rubber boot in the direction of arrow shown in the figure and remove it from the connector.

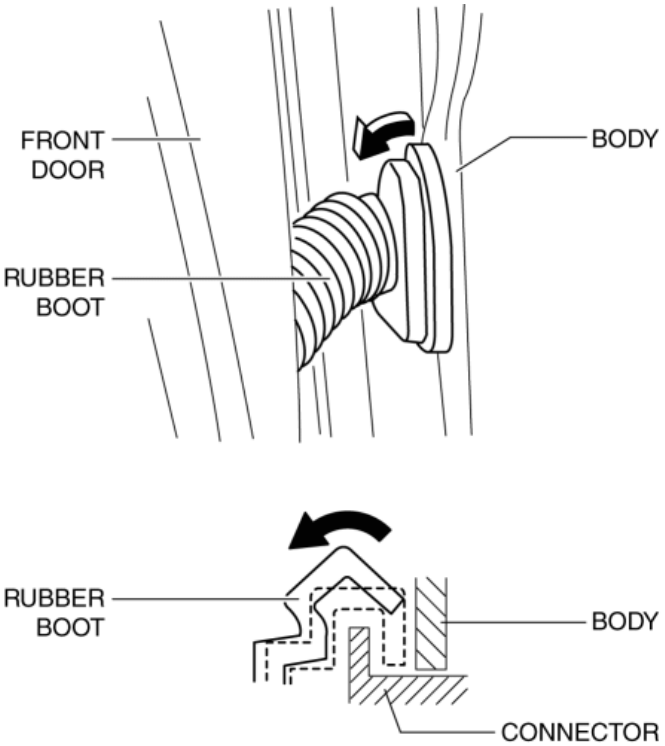

2. Using a remover tool, press tabs in the directions of arrows (1) and (2) shown in the figure and remove the upper part of the connector from the body in the direction of arrow (3).

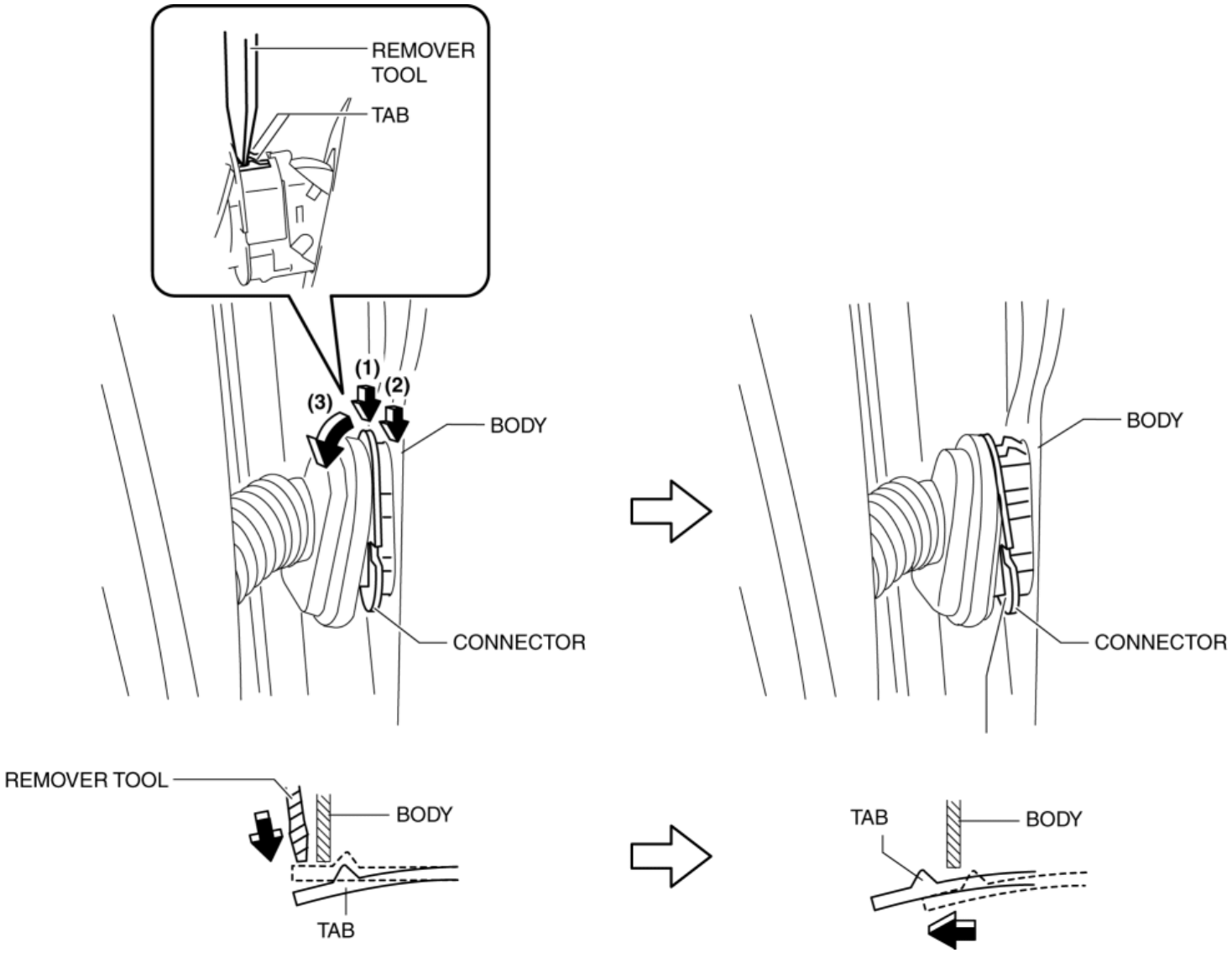

3. Using a remover tool, press tabs in the directions of arrows (1) and (2) shown in the figure and remove the connector from the body in the direction of arrow (3).

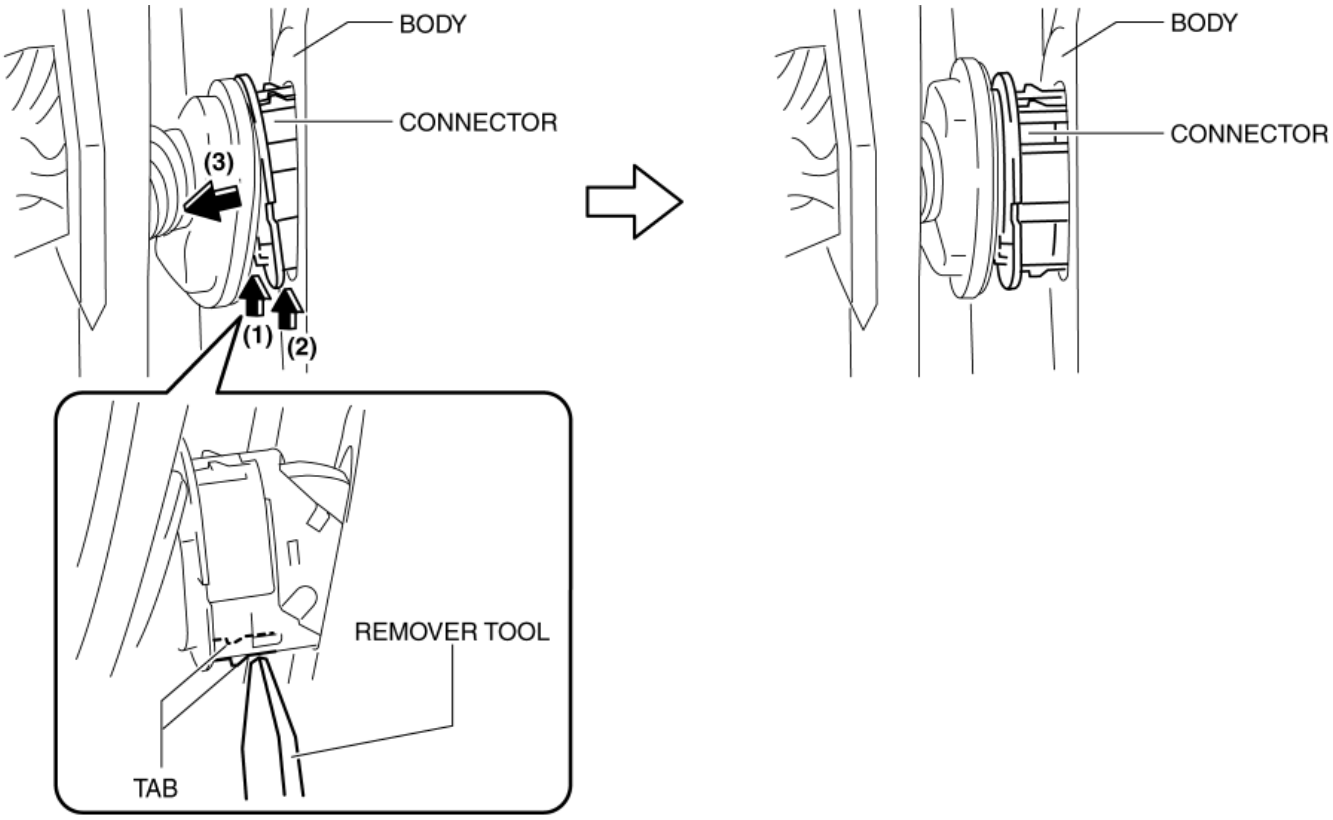

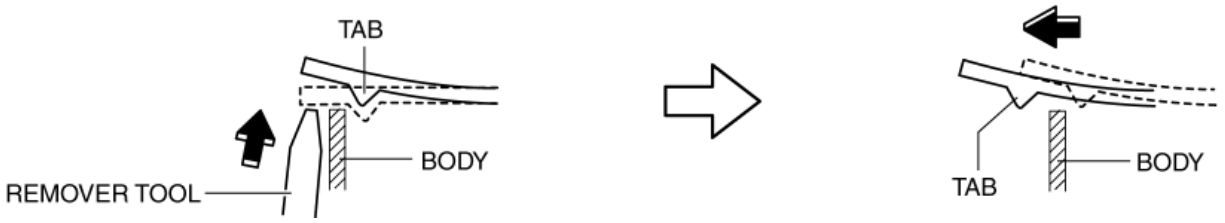

4. Release the lever lock by pressing the connector tab shown in the figure and tilt the lever in the direction of the arrow.

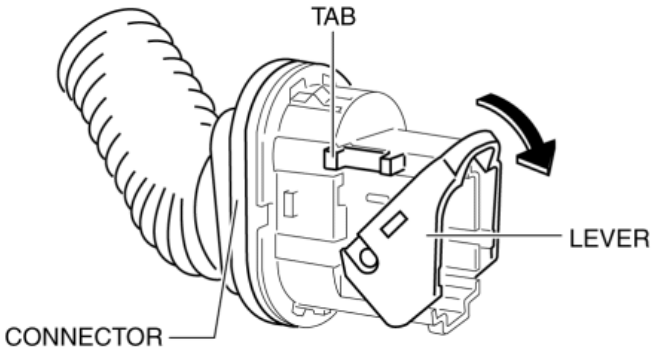

5. Disconnect the connector.

2014 - Mazda3 - Body and Accessories

FRONT DOOR MODULE PANEL REMOVAL/INSTALLATION

1. Perform the front door glass preparation. (See **FRONT DOOR GLASS REMOVAL/INSTALLATION**.)
2. Disconnect the negative battery cable. (See **NEGATIVE BATTERY CABLE DISCONNECTION/CONNECTION [SKYACTIV-G 2.0, SKYACTIV-G 2.5]**.)
3. Remove the following parts:
   a. Front door trim (See **FRONT DOOR TRIM REMOVAL/INSTALLATION**.)
   b. Front door speaker (See **FRONT DOOR SPEAKER REMOVAL/INSTALLATION**.)
   c. Front power window motor. (See **FRONT POWER WINDOW MOTOR REMOVAL/INSTALLATION**.)
   d. Front door glass (See **FRONT DOOR GLASS REMOVAL/INSTALLATION**.)

NOTE:

- After removing the front door trim, secure the inner handle using screws so that the procedure is performed smoothly.

4. Disconnect the connectors shown in the figure.

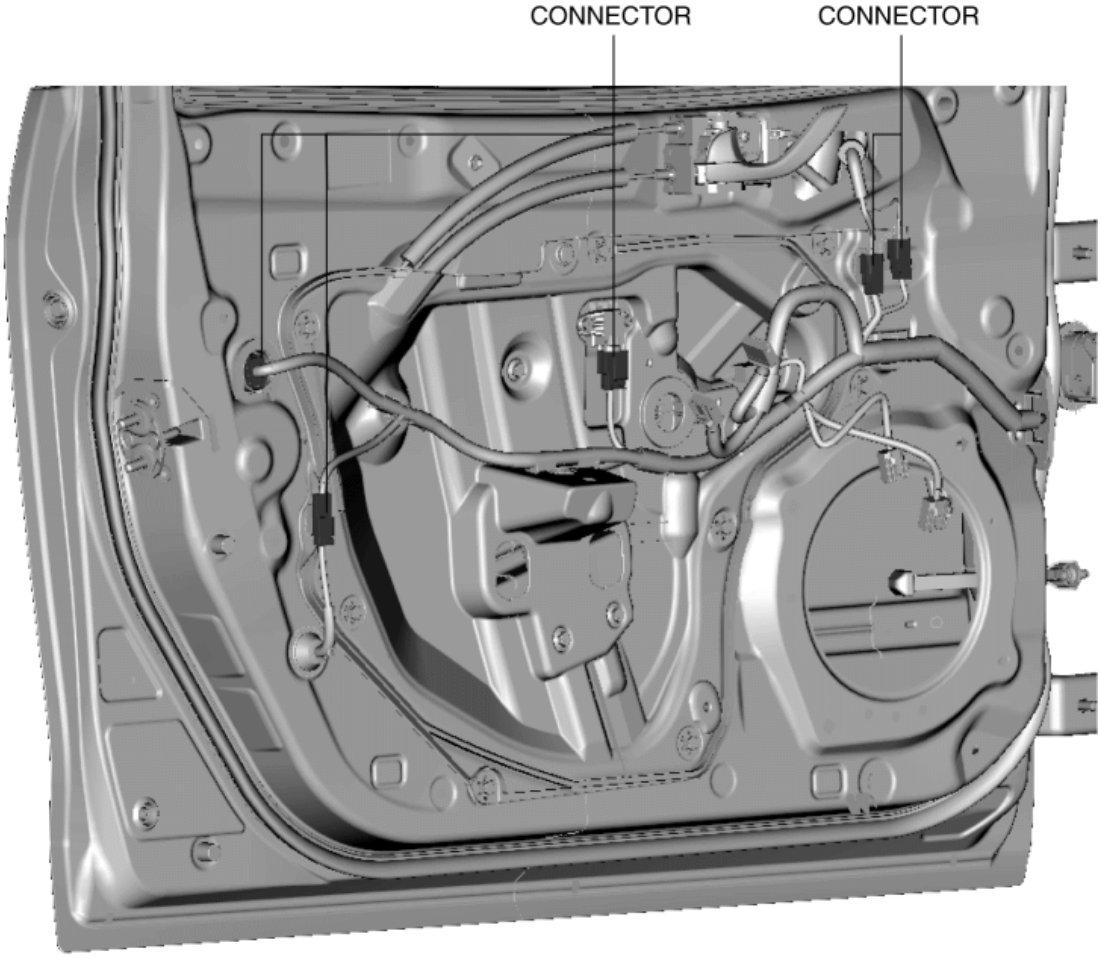

5. Remove the bolt and screws shown in the figure.

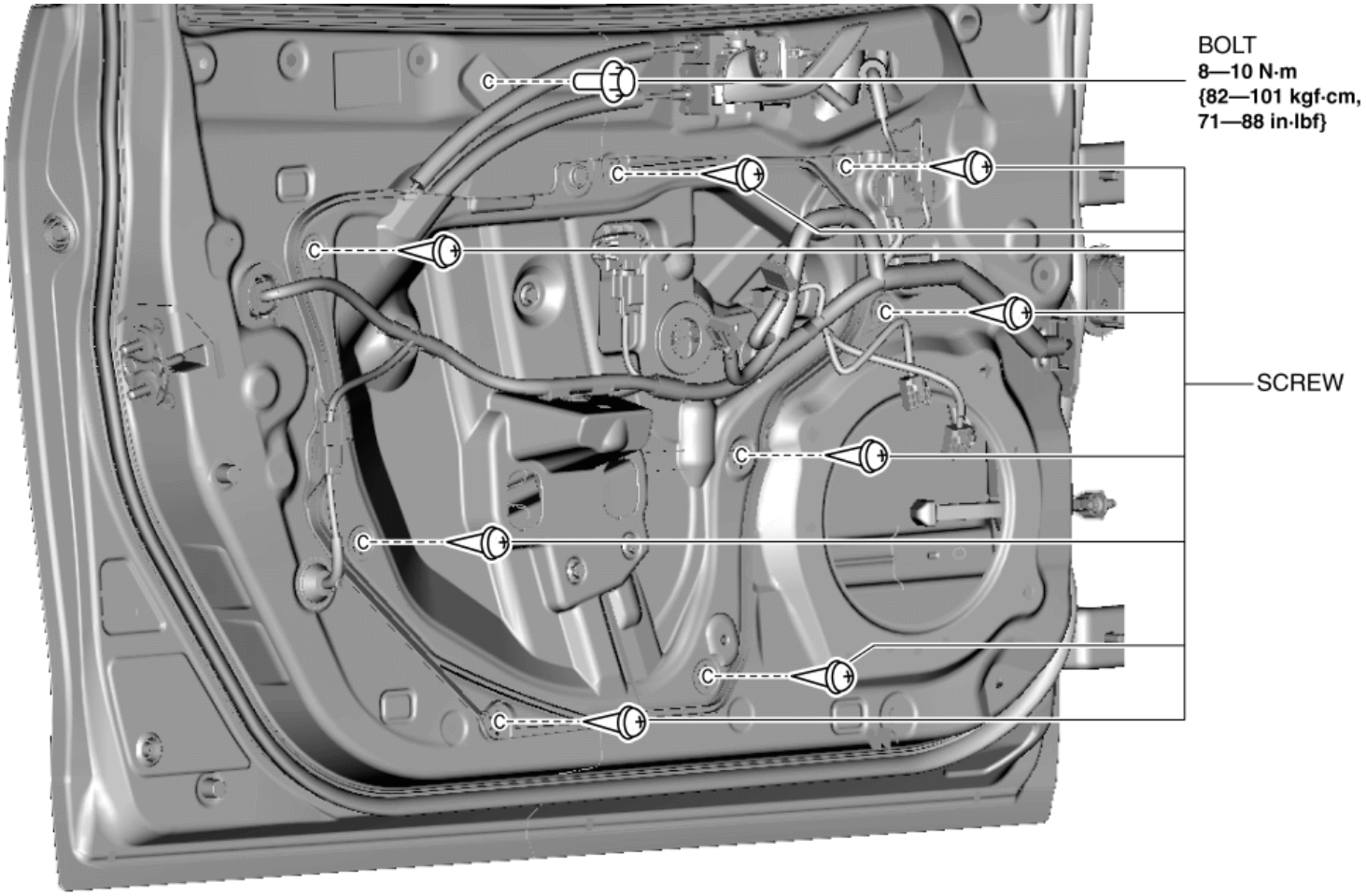

6. Remove the fastener shown in the figure.

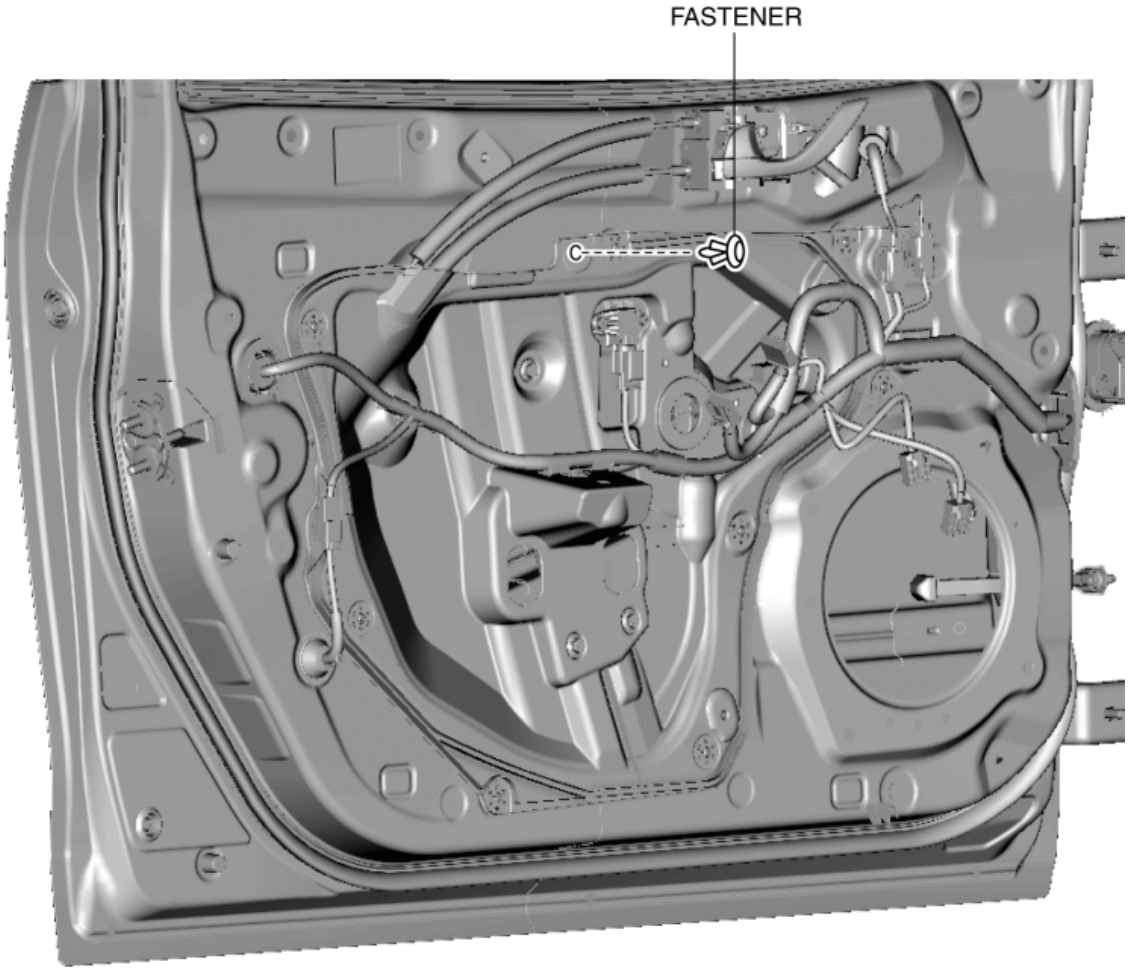

CAUTION:

- If the protector does not come out easily from the front door inner panel, pulling the front door module panel forcibly may cause the front door module panel to deform. If the protector does not come out easily, remove the front door module panel while gradually removing the protector.
- When removing, move the front door module panel straight out from the front door so as not to damage the front door module panel pin.

7. Pull the front door module panel in the direction of arrow shown in the figure and remove the protector and pin from the front door inner panel.

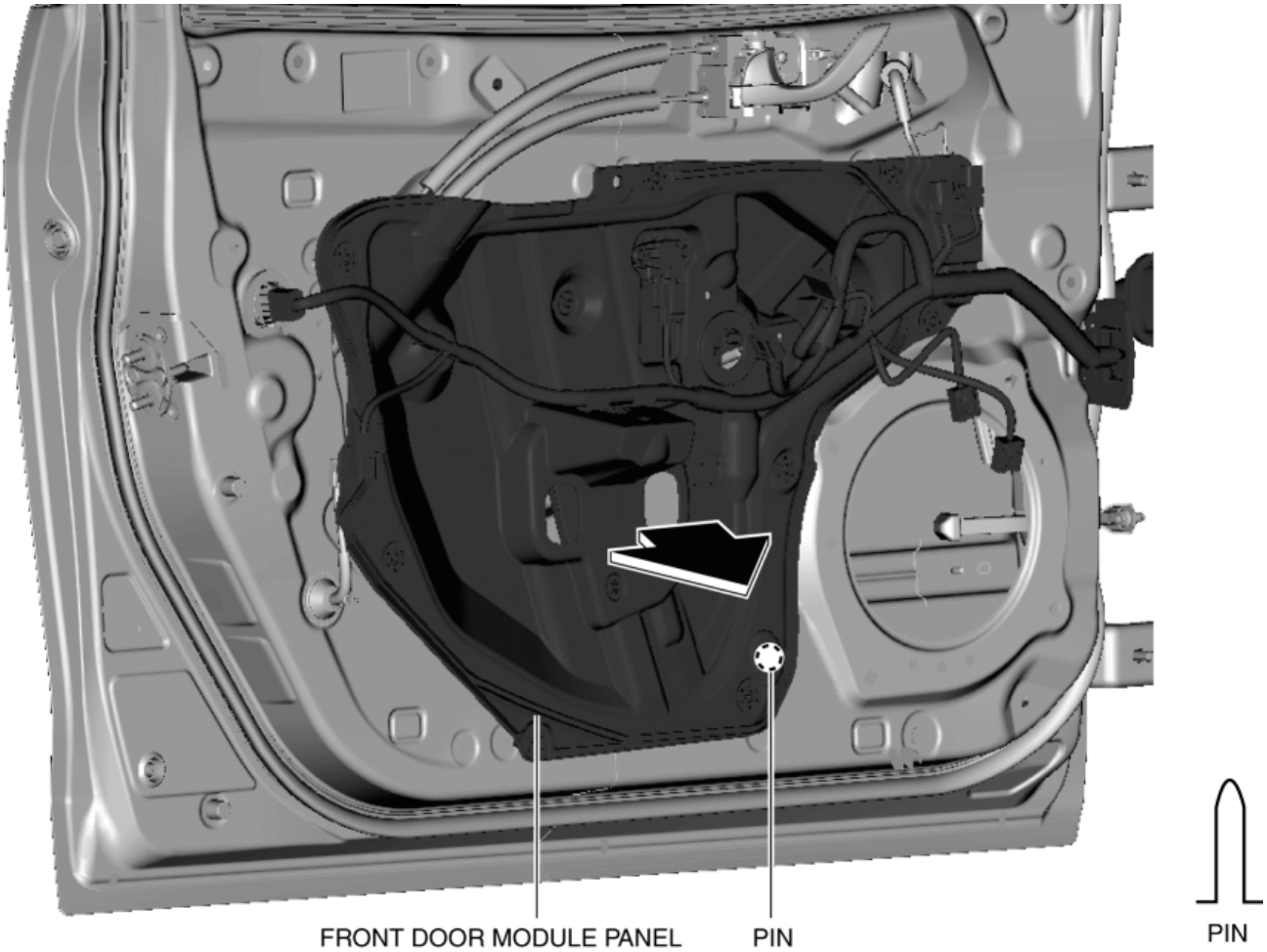

8. Remove the clips shown in the figure and set the front door wiring harness aside.

NOTE:

- The clip removal is easier if the work is performed from the backside of the front door module panel.

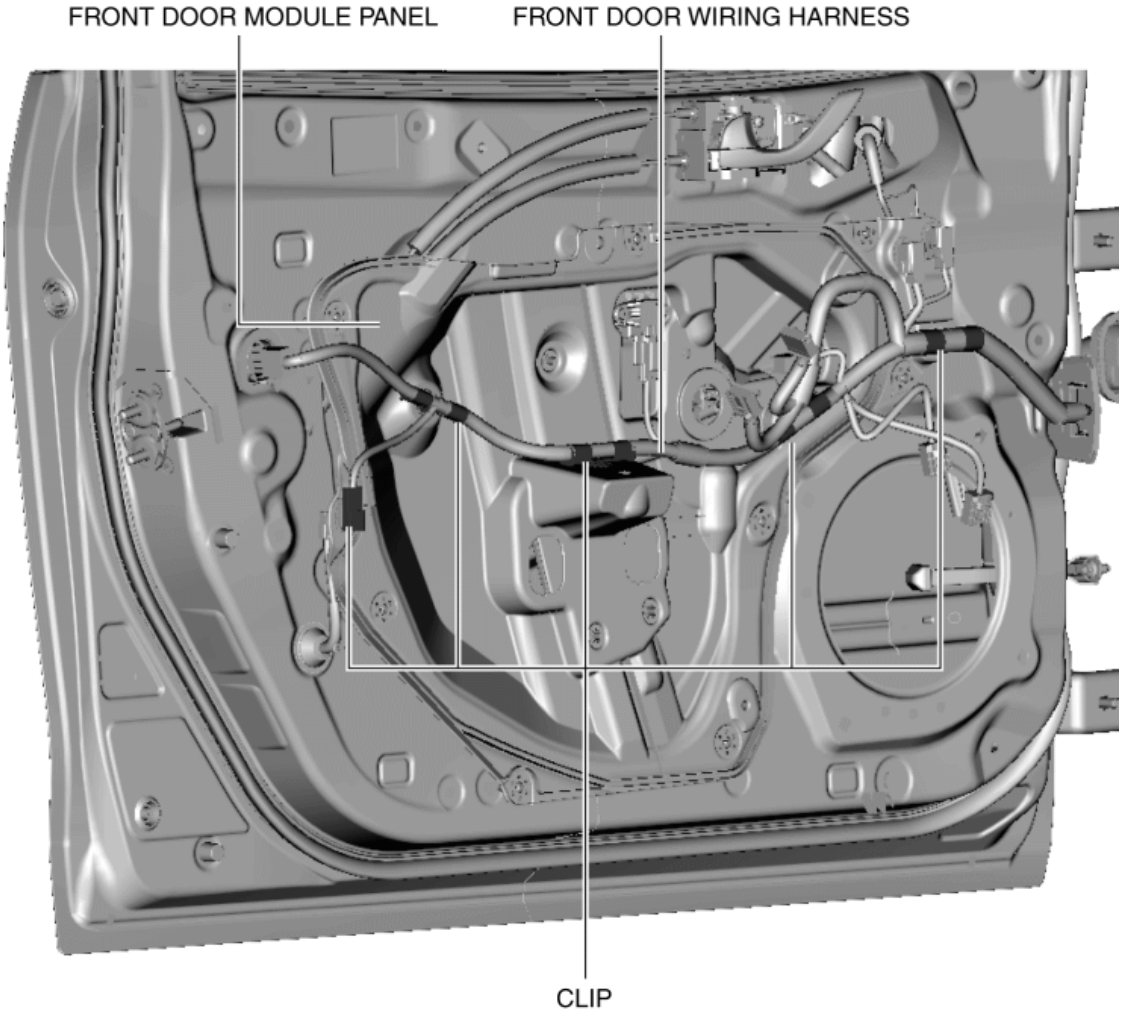

CAUTION:

- If the front power window regulator contacts the front door inner panel during the front door module panel removal, the coating film on the front door inner panel may get scratched, and the front door module panel and front power window regulator could be damaged. Remove the front door module panel while verifying that the front power window regulator and the front door inner panel do not contact each other.

9. Move the front door module panel in the direction of arrow shown in the figure so that the upper part of the front power window regulator does not contact the front door inner panel, and remove the front door module panel and the front power window regulator as a single unit.

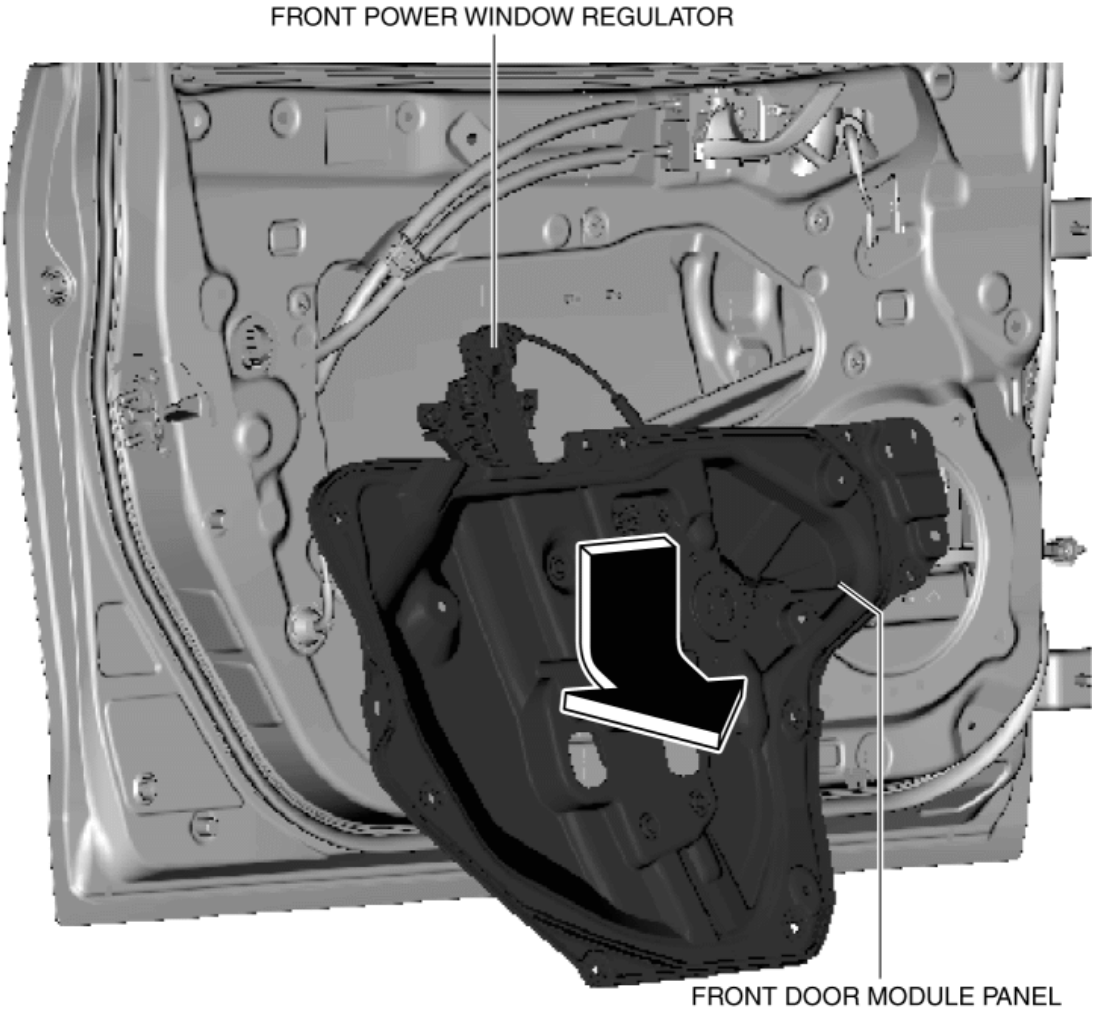

10. Remove the pressure sensor. (If equipped) (See **PRESSURE SENSOR REMOVAL/INSTALLATION [TWO-STEP DEPLOYMENT CONTROL SYSTEM]**.)

11. Remove the front power window regulator. (See **FRONT POWER WINDOW REGULATOR REMOVAL/INSTALLATION**.)

12. Install in the reverse order of removal.

2014 - Mazda3 - Body and Accessories

FRONT DOOR CHECKER REMOVAL/INSTALLATION

CAUTION:

- When the front door checker securing bolts are removed, the front door may open until it contacts the front fender panel causing the front door and the front fender panel to be damaged. Before removing the front door, overlap and adhere the protective tape to the position shown in the figure and be careful not to damage the front door and the front fender panel.

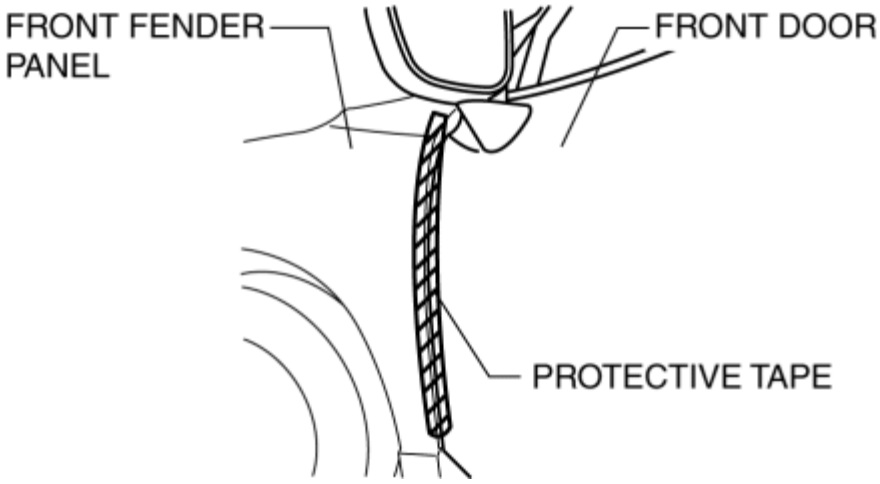

1. Fully close the front door glass.

2. Disconnect the negative battery cable. (See **NEGATIVE BATTERY CABLE DISCONNECTION/CONNECTION [SKYACTIV-G 2.0, SKYACTIV-G 2.5]**.)

3. Remove the following parts:

   a. Front door trim (See **FRONT DOOR TRIM REMOVAL/INSTALLATION**.)

   b. Front door speaker (See **FRONT DOOR SPEAKER REMOVAL/INSTALLATION**.)

4. Remove the bolt shown in the figure.

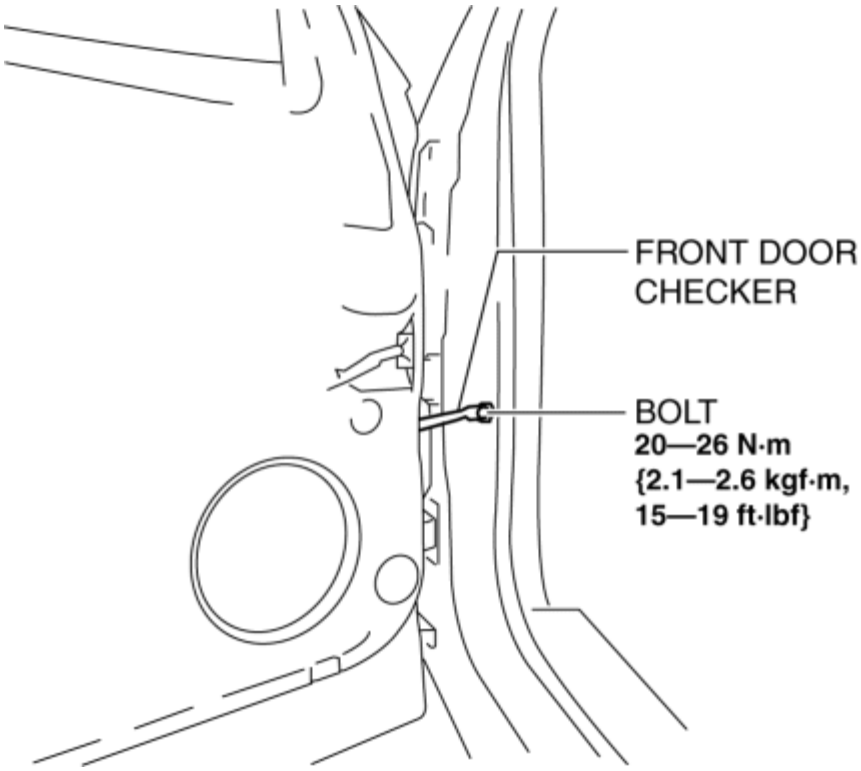

5. Remove the bolts shown in the figure.

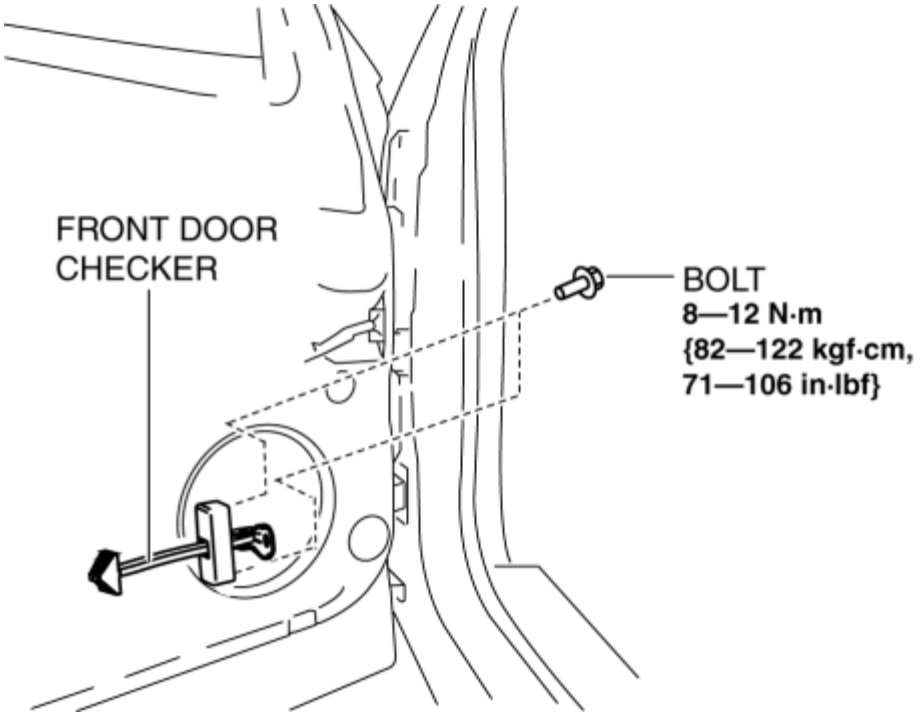

6. Pull out the front door checker from the front speaker installation hole.

7. Install in the reverse order of removal.

2014 - Mazda3 - Body and Accessories

FRONT DOOR HINGE REMOVAL/INSTALLATION

1. Disconnect the negative battery cable. (See **NEGATIVE BATTERY CABLE DISCONNECTION/CONNECTION [SKYACTIV-G 2.0, SKYACTIV-G 2.5]**.)

2. Remove the following parts:

   a. Set plate (See **SET PLATE REMOVAL/INSTALLATION**.)

   b. Front bumper (See **FRONT BUMPER REMOVAL/INSTALLATION**.)

   c. Front combination light (See **FRONT COMBINATION LIGHT REMOVAL/INSTALLATION**.)

   d. Front fender panel (See **FRONT FENDER PANEL REMOVAL/INSTALLATION**.)

   e. Front door (See **FRONT DOOR REMOVAL/INSTALLATION**.)

3. Remove the bolts shown in the figure.

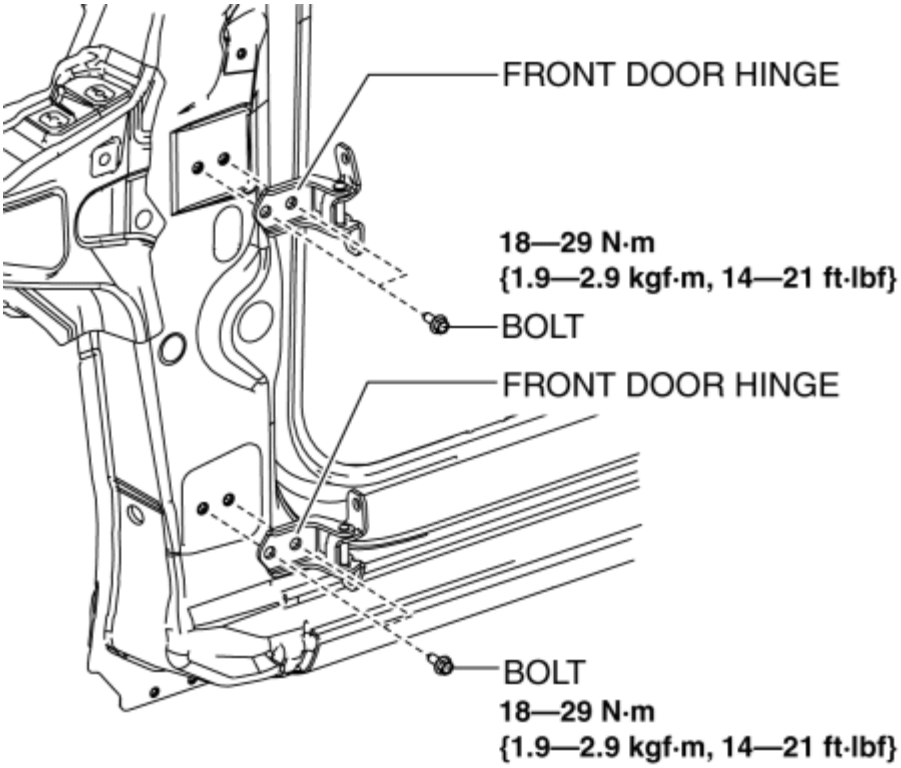

4. Remove the front door hinge.

5. Adjust the headlight aiming. (See **HEADLIGHT AIMING**.)

6. Adjust the front fog light aiming. (with front fog lights) (See **FRONT FOG LIGHT AIMING**.)

7. Adjust the front door. (See **DOOR ADJUSTMENT**.)

FRONT DOOR HINGE REMOVAL/INSTALLATION

2014 - Mazda3 - Body and Accessories

REAR DOOR REMOVAL/INSTALLATION

WARNING:

- Removing the rear door without supporting it could cause the rear door to fall and cause serious injury. Always perform the procedure with at least one other person to prevent the rear door from falling.

1. Disconnect the negative battery cable. (See **NEGATIVE BATTERY CABLE DISCONNECTION/CONNECTION [SKYACTIV-G 2.0, SKYACTIV-G 2.5]**.)

2. Remove the bolt A shown in the figure.

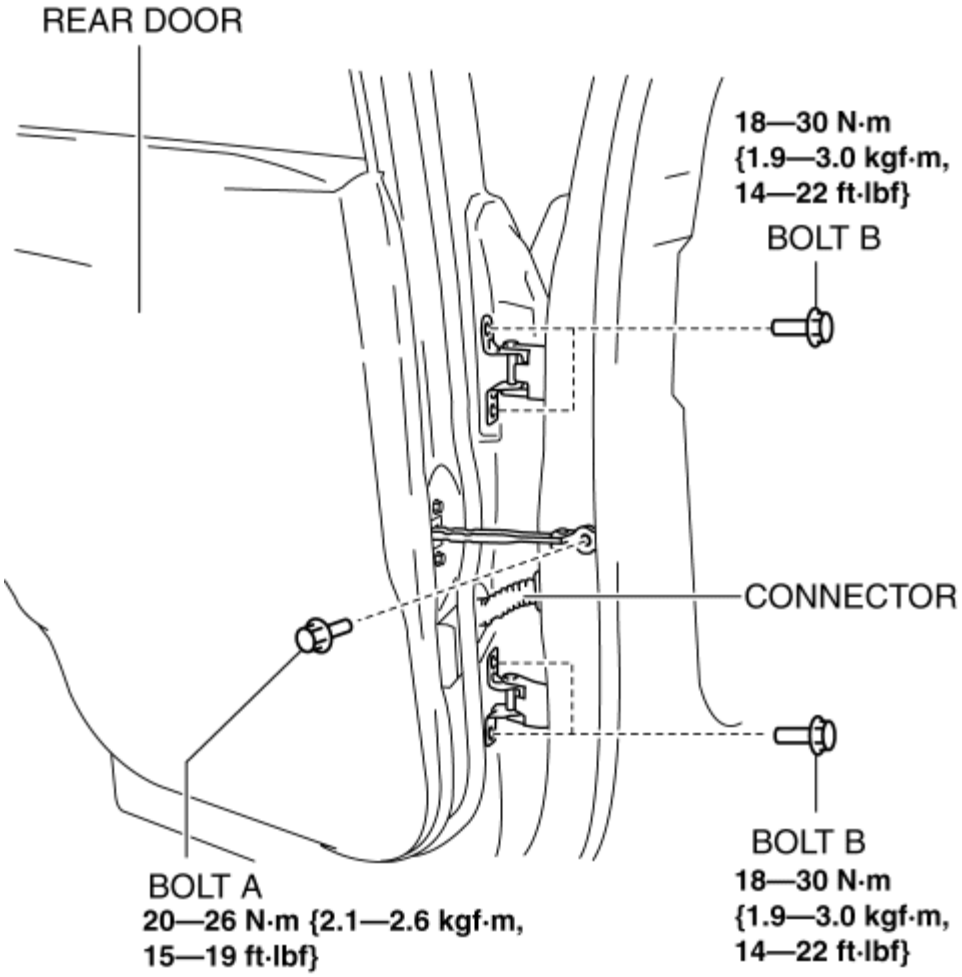

3. Remove connector. (See **Connector Removal Note**.)

4. Remove the bolt B.

5. Remove the rear door.

6. Install in the reverse order of removal.

7. Adjust the rear door. (See **DOOR ADJUSTMENT**.)

Connector Removal Note

1. While pressing tab in the direction of arrow (1), disconnect the connector in the direction of arrow (2).

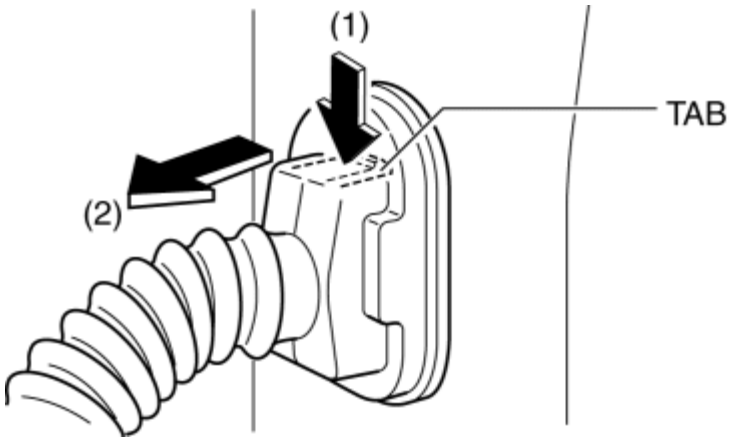

2014 - Mazda3 - Body and Accessories

REAR DOOR MODULE PANEL REMOVAL/INSTALLATION

1. Fully lower the rear door glass.

2. Disconnect the negative battery cable. (See **NEGATIVE BATTERY CABLE DISCONNECTION/CONNECTION [SKYACTIV-G 2.0, SKYACTIV-G 2.5]**.)

3. Remove the following parts:

   a. Rear door trim (See **REAR DOOR TRIM REMOVAL/INSTALLATION**.)

   b. Rear door speaker (See **REAR DOOR SPEAKER REMOVAL/INSTALLATION**.)

   c. Rear door quarter glass (See **REAR DOOR QUARTER GLASS REMOVAL/INSTALLATION**.)

   d. Rear power window motor (See **REAR POWER WINDOW MOTOR REMOVAL/INSTALLATION**.)

   e. Rear door glass (See **REAR DOOR GLASS REMOVAL/INSTALLATION**.)

   NOTE:

   - After removing the rear door trim, secure the inner handle using screws so that the procedure is performed smoothly.

4. Remove the connector and clips shown in the figure and set the rear door wiring harness aside.

NOTE:

- The clip removal is easier if your hand is inserted into the service hole and the rear door speaker installation hole.

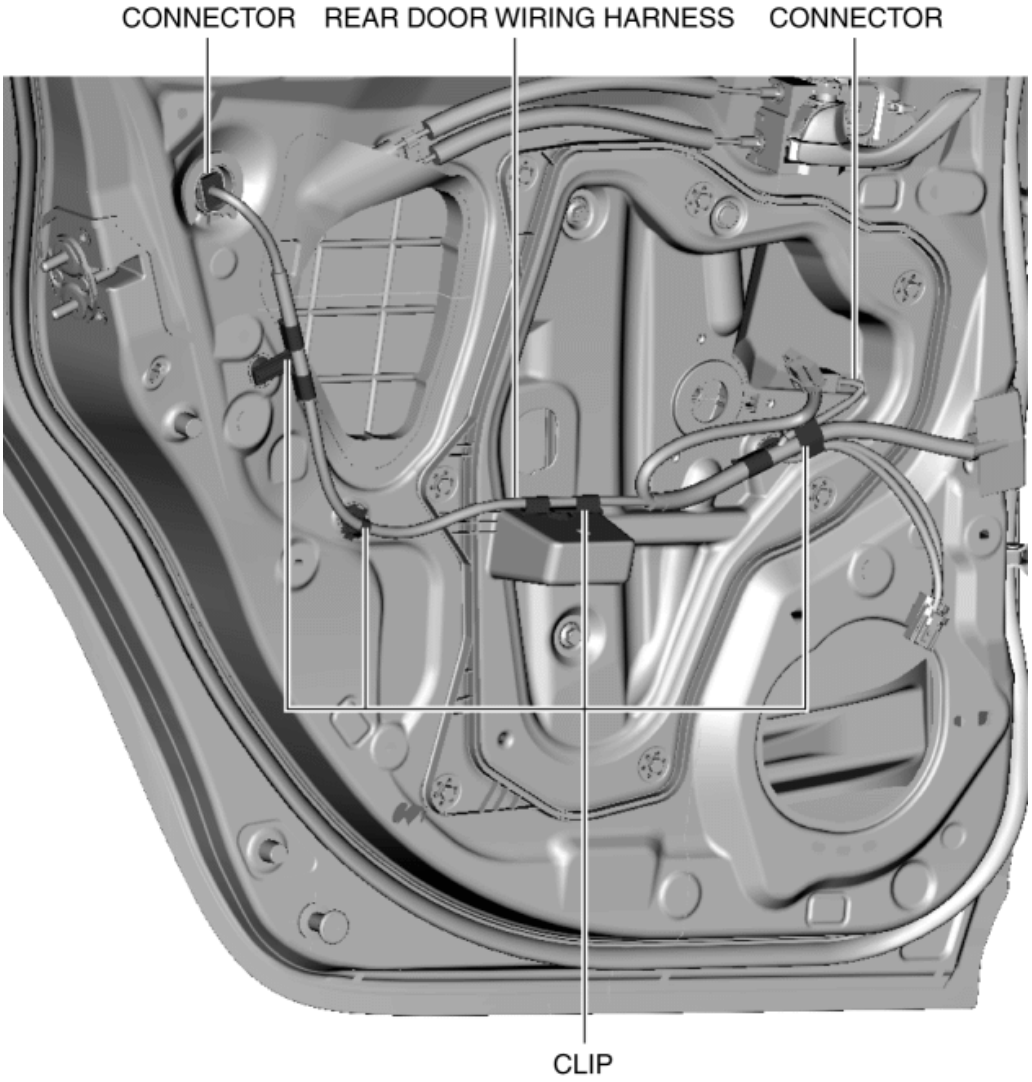

5. Remove the screws shown in the figure.

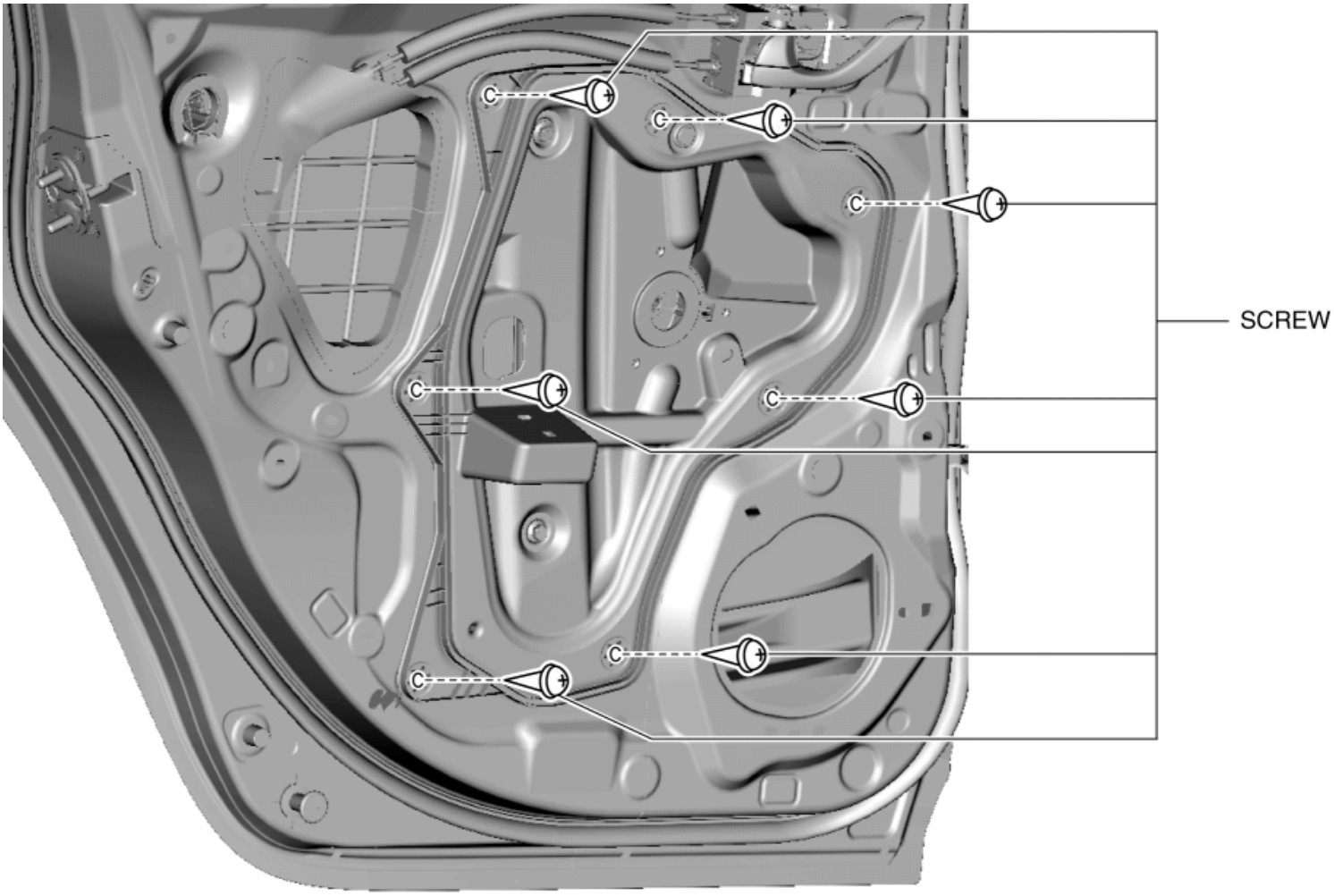

6. Remove the fastener shown in the figure.

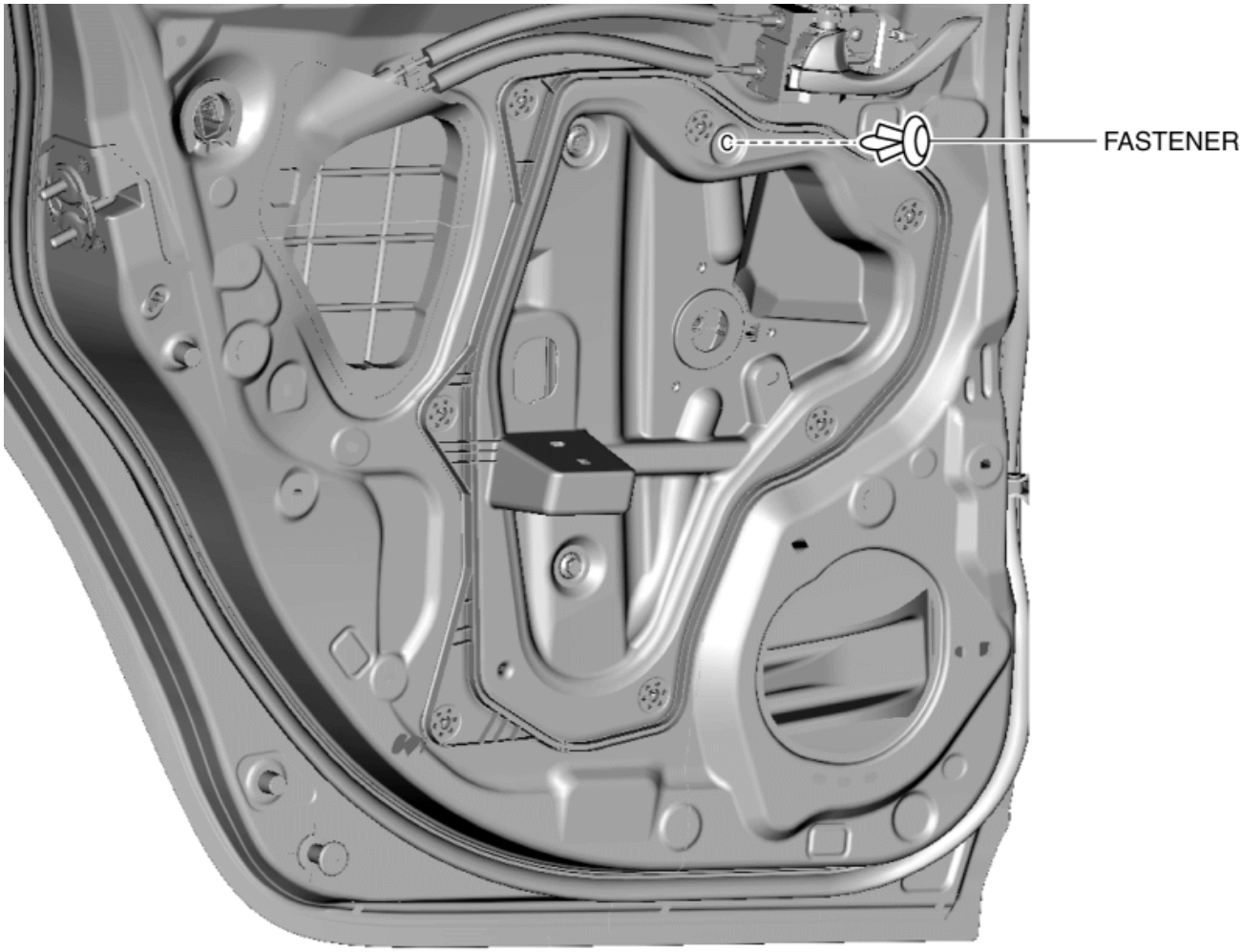

CAUTION:

- If the protector does not come out easily from the rear door inner panel, pulling the rear door module panel forcibly may cause the rear door module panel to deform. If the protector does not come out easily, remove the rear door module panel while gradually removing the protector.
- When removing, move the rear door module panel straight out from the rear door so as not to damage the rear door module panel pin.

7. Pull the rear door module panel in the direction of arrow shown in the figure and remove the pin from the rear door inner panel.

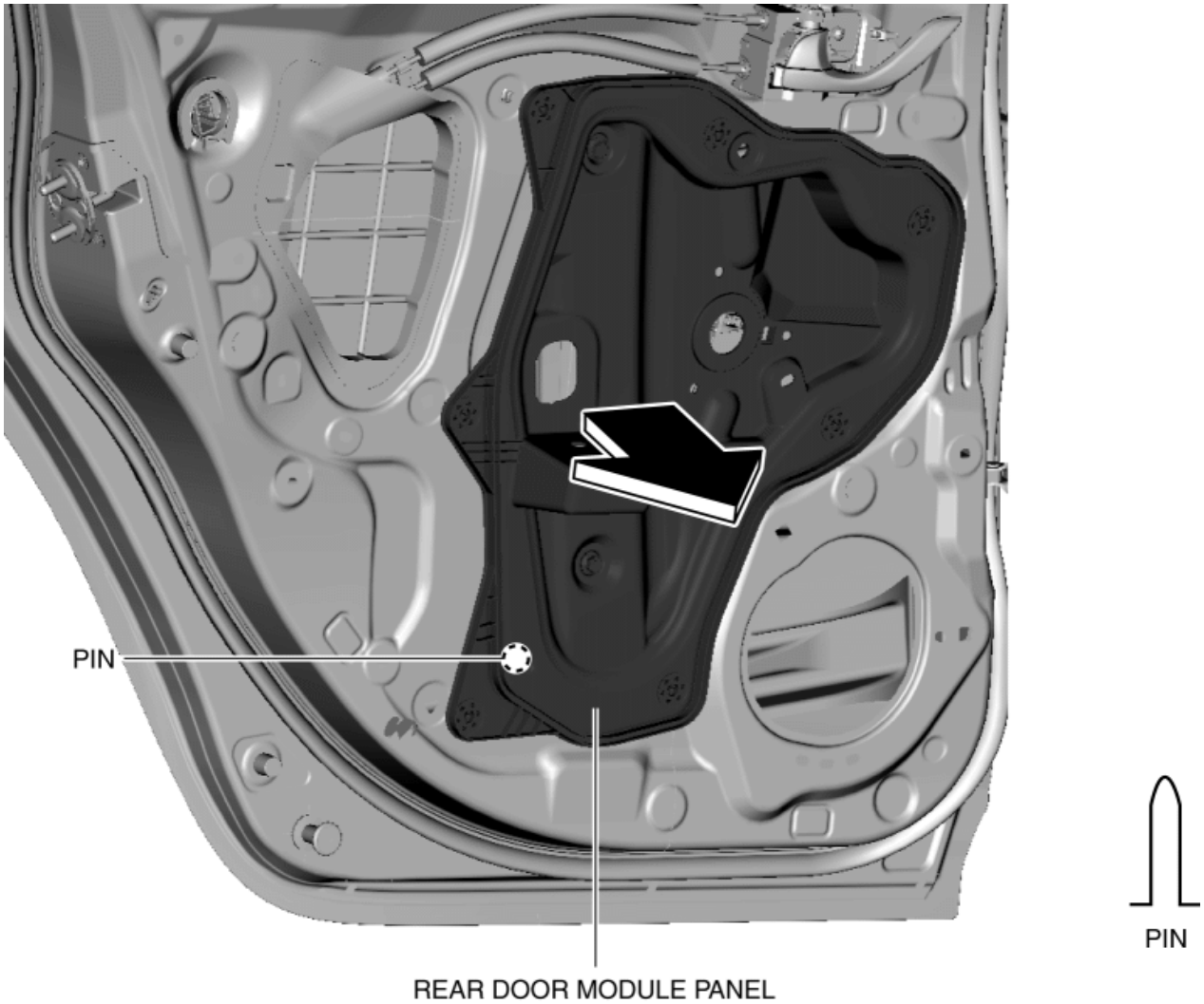

CAUTION:

- If the rear power window regulator contacts the rear door inner panel during the rear door module panel removal, the coating film on the rear door inner panel may get scratched, and the rear door module panel and rear power window regulator could be damaged. Remove the rear door module panel while verifying that the rear power window regulator and the rear door inner panel do not contact each other.

8. Move the rear door module panel in the direction of arrow shown in the figure so that the upper part of the rear power window regulator does not contact the rear door inner panel, and remove the rear door module panel and the rear power window regulator as a single unit.

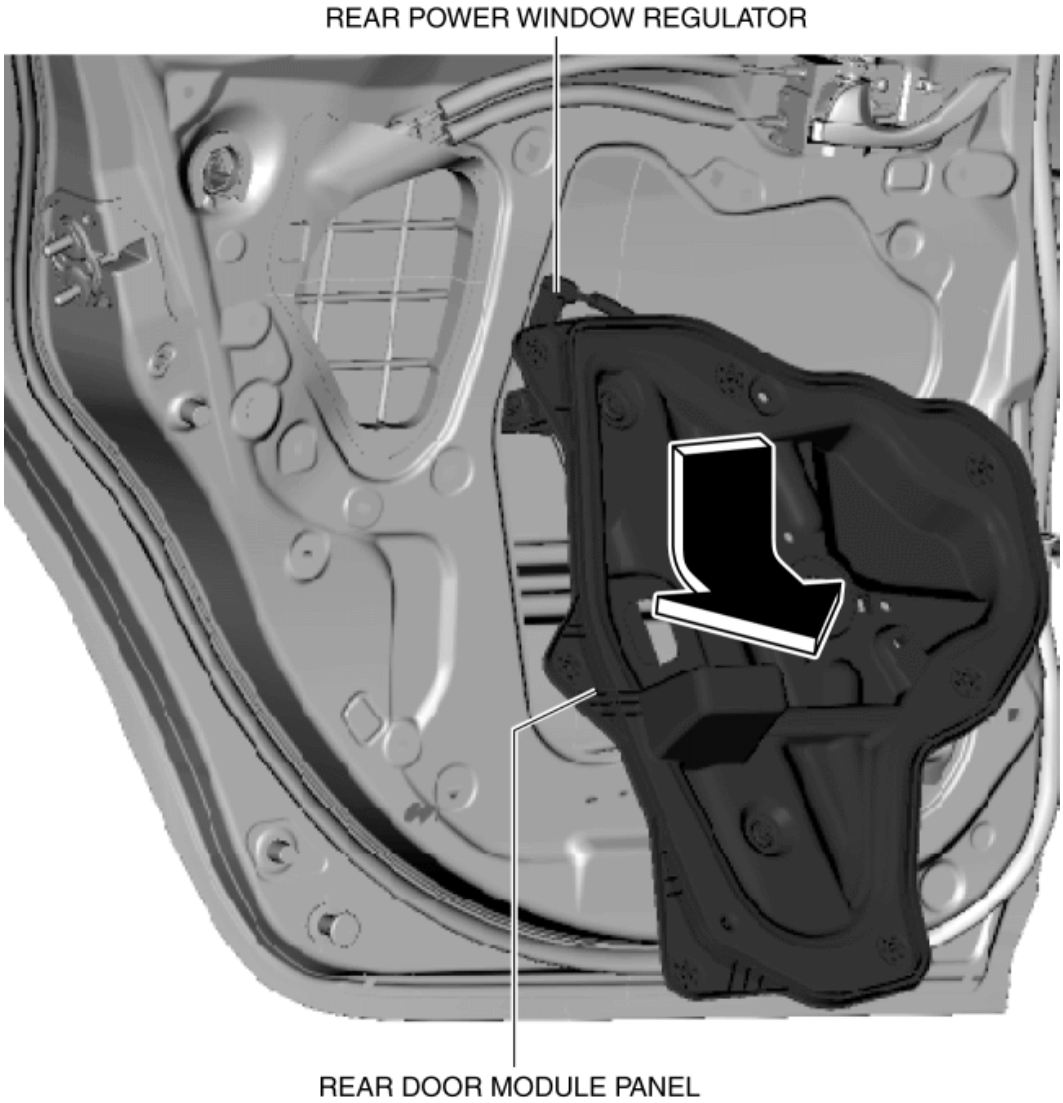

9. Remove the rear power window regulator. (See **REAR POWER WINDOW REGULATOR REMOVAL/INSTALLATION**.)

10. Install in the reverse order of removal.

2014 - Mazda3 - Body and Accessories

REAR DOOR CHECKER REMOVAL/INSTALLATION

1. Fully close the rear door glass.

2. Disconnect the negative battery cable. (See **NEGATIVE BATTERY CABLE DISCONNECTION/CONNECTION [SKYACTIV-G 2.0, SKYACTIV-G 2.5]**.)

3. Remove the following parts:

   a. Rear door trim (See **REAR DOOR TRIM REMOVAL/INSTALLATION**.)

   b. Rear door speaker (See **REAR DOOR SPEAKER REMOVAL/INSTALLATION**.)

4. Remove the bolt shown in the figure.

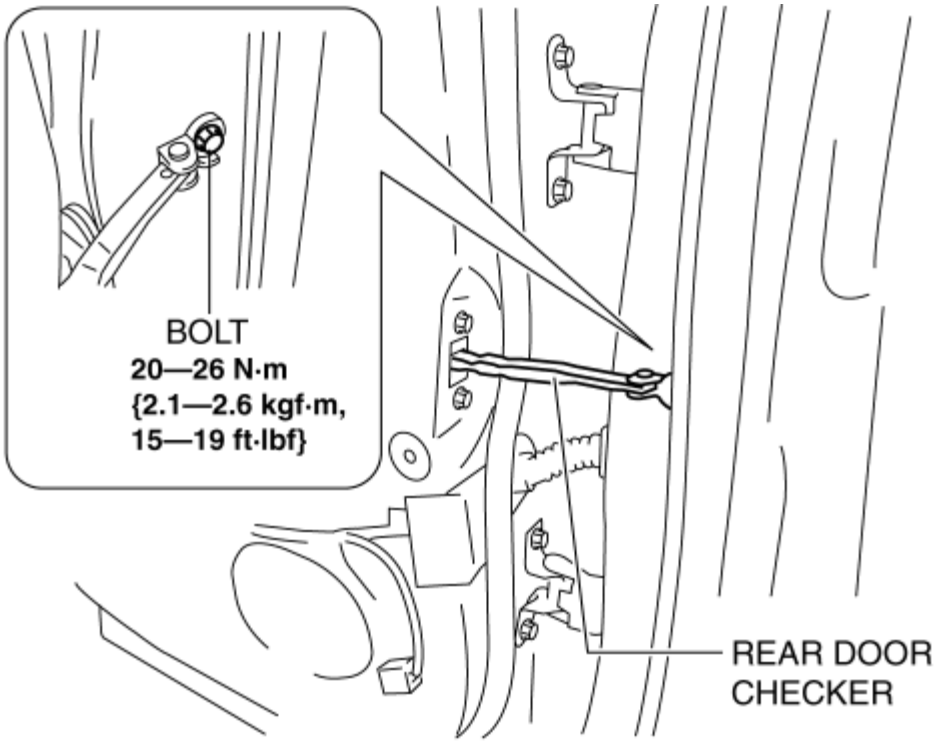

5. Remove the bolts shown in the figure.

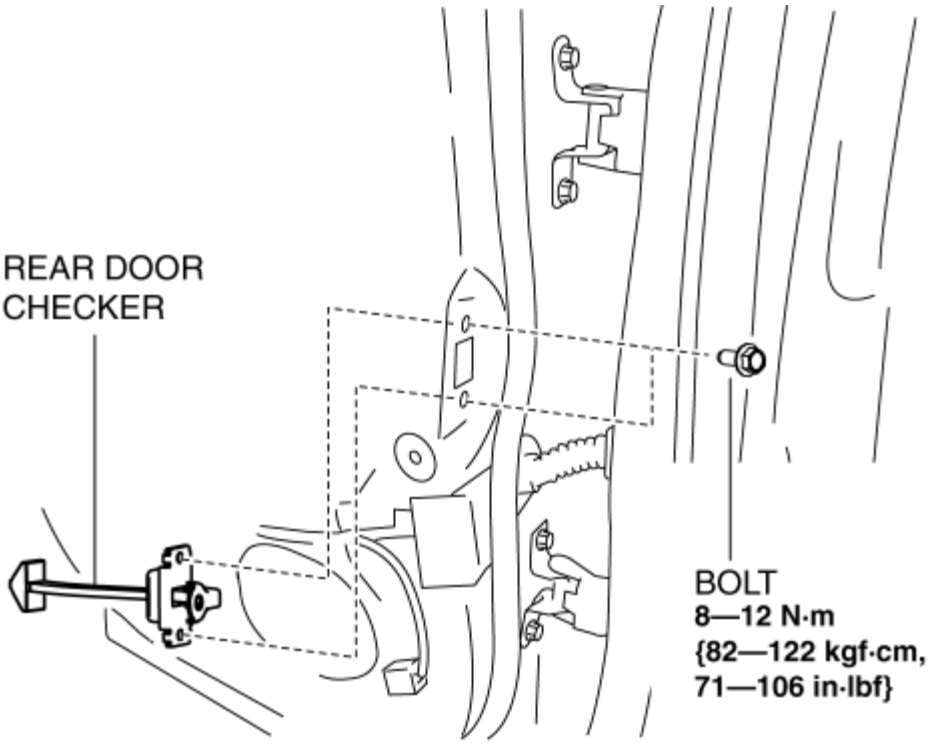

6. Pull out the rear door checker from the rear speaker installation hole.

7. Install in the reverse order of removal.

2014 - Mazda3 - Body and Accessories

REAR DOOR HINGE REMOVAL/INSTALLATION

1. Disconnect the negative battery cable. (See **NEGATIVE BATTERY CABLE DISCONNECTION/CONNECTION [SKYACTIV-G 2.0, SKYACTIV-G 2.5]**.)

2. Remove the following parts:

   a. Rear door (See **REAR DOOR REMOVAL/INSTALLATION**.)

   b. Front scuff plate (See **FRONT SCUFF PLATE REMOVAL/INSTALLATION**.)

   c. Rear scuff plate (See **REAR SCUFF PLATE REMOVAL/INSTALLATION**.)

   d. B-pillar lower trim (See **B-PILLAR LOWER TRIM REMOVAL/INSTALLATION**.)

3. Remove the bolts shown in the figure.

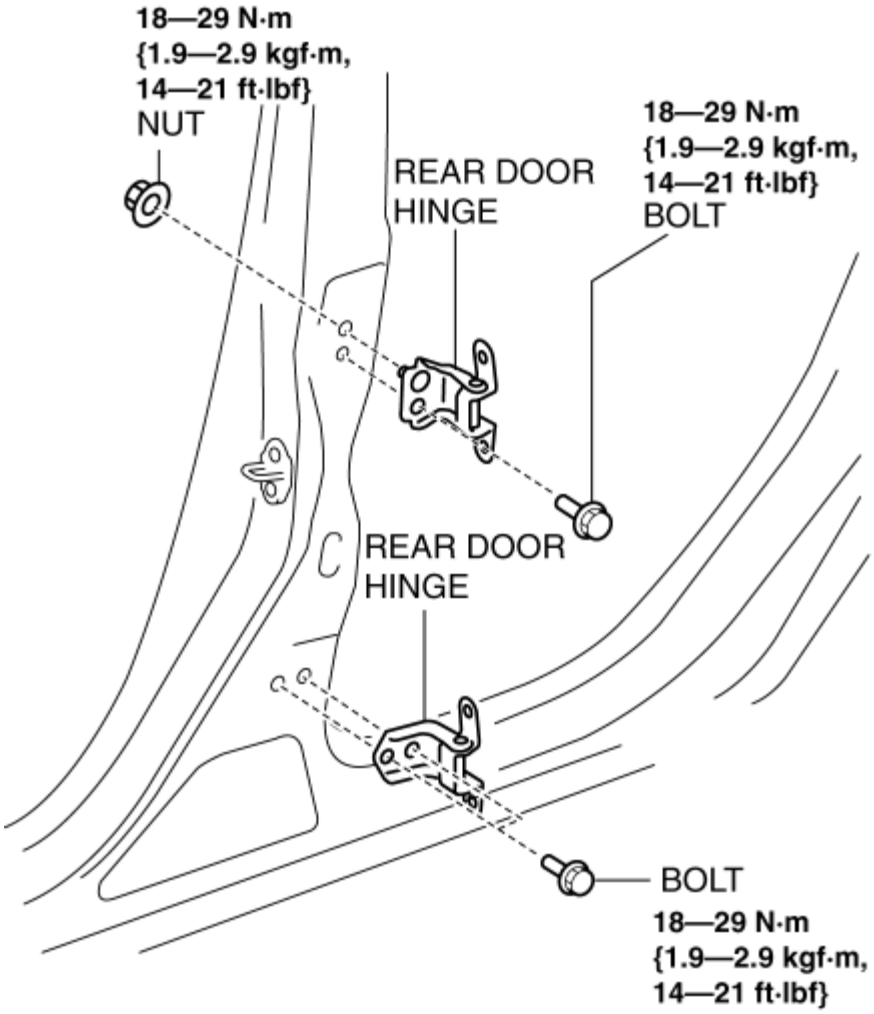

4. Remove the nut.

5. Remove the rear door hinge.

6. Install in the reverse order of removal.
7. Adjust the rear door. (See **DOOR ADJUSTMENT**.)

2014 - Mazda3 - Body and Accessories

LIFTGATE REMOVAL/INSTALLATION

WARNING:

- Removing the stay damper, liftgate hinge securing bolt, or liftgate without supporting the liftgate may cause the liftgate to fall off and injure you. When removing the stay damper, liftgate hinge, or liftgate, always use two persons to perform the work.

1. Disconnect the negative battery cable. (See **NEGATIVE BATTERY CABLE DISCONNECTION/CONNECTION [SKYACTIV-G 2.0, SKYACTIV-G 2.5]**.)

2. Remove the liftgate upper trim. (See **LIFTGATE UPPER TRIM REMOVAL/INSTALLATION**.)

3. Disconnect the connectors and rear washer hose shown in the figure.

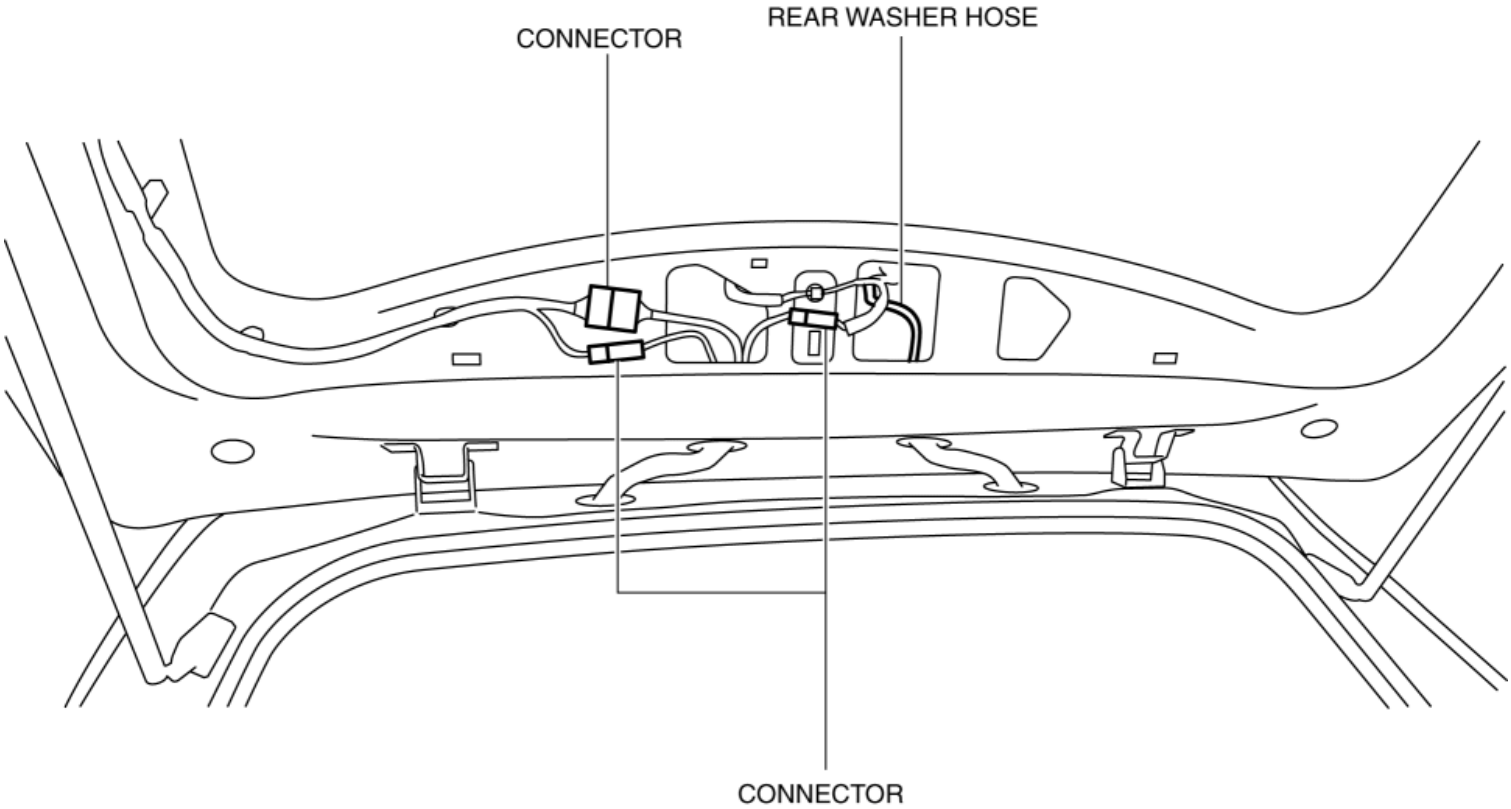

4. Remove the wiring harness clip shown in the figure.

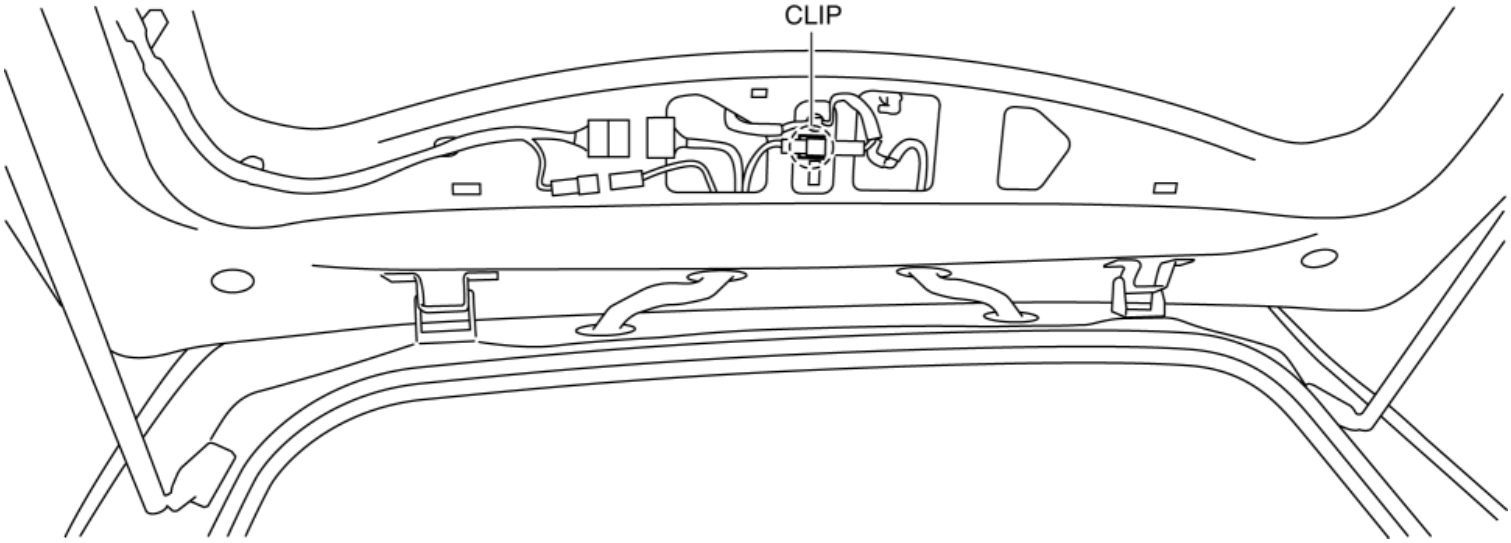

5. Partially peel the liftgate grommet in the direction of arrow shown in the figure, and remove the liftgate grommet from the liftgate grommet inner.

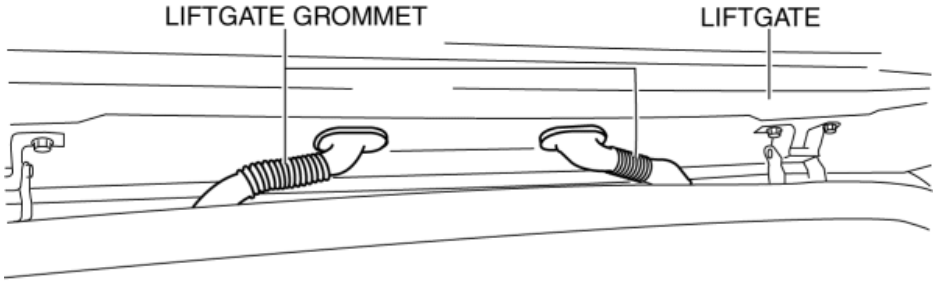

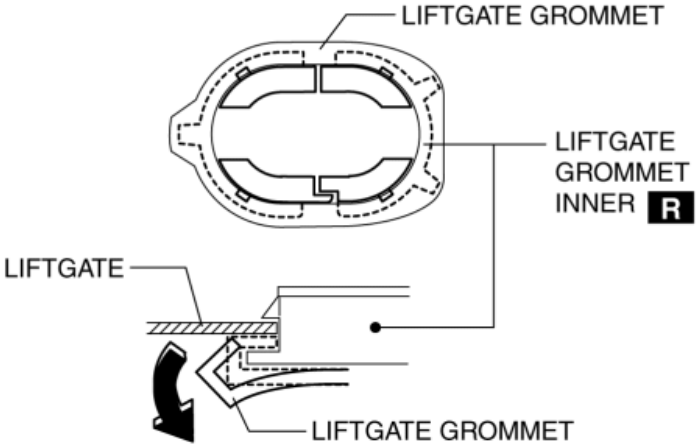

6. Using a remover tool, press the liftgate grommet inner tabs in the directions of arrows (1) and (2) shown in the figure and remove the liftgate grommet inner from the liftgate in the direction of arrow (3).

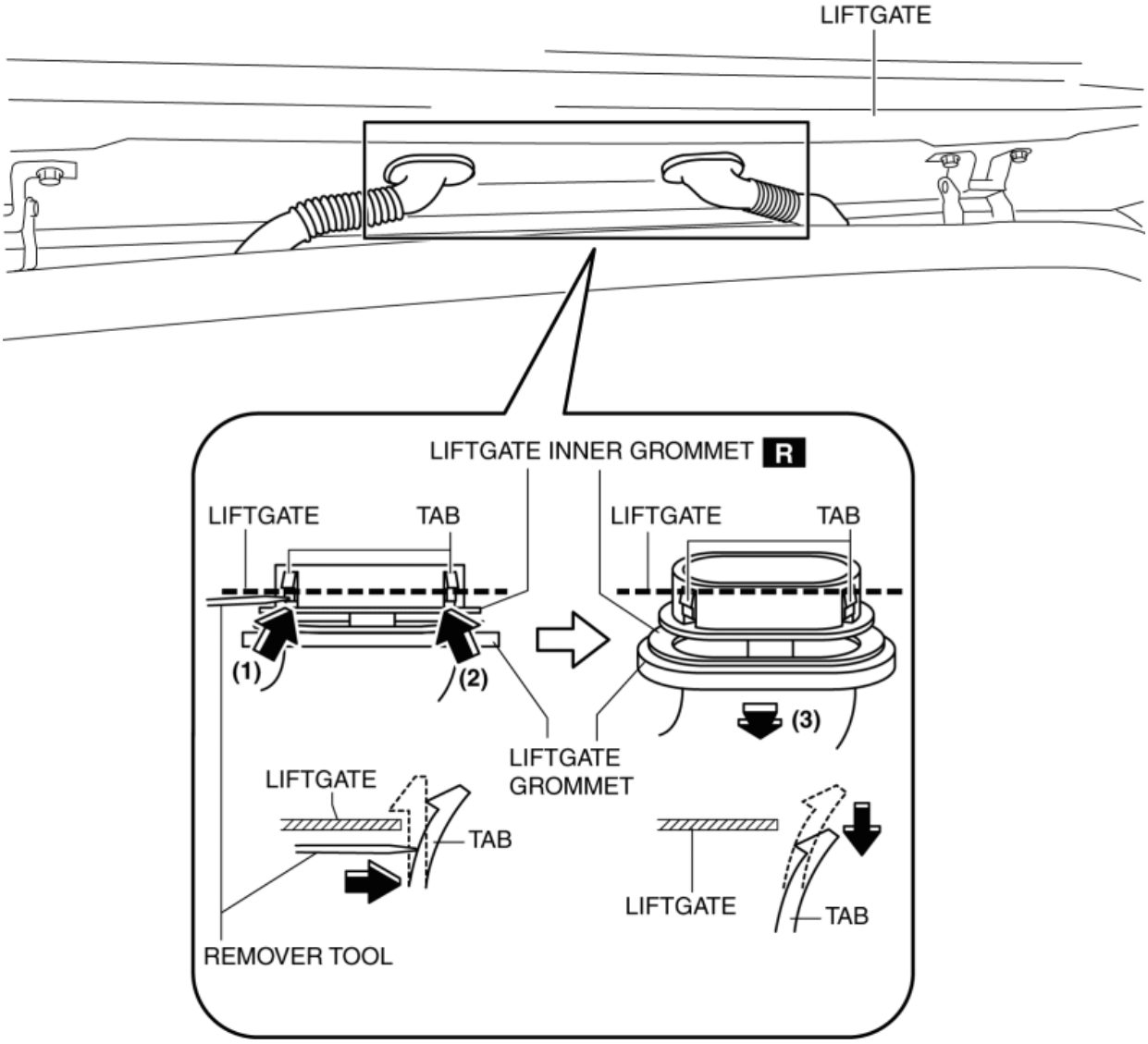

7. Remove the rear washer hose and wiring harness from the liftgate and set them aside.

8. Using a remover tool, remove the stay damper securing band in the direction of arrow shown in the figure.

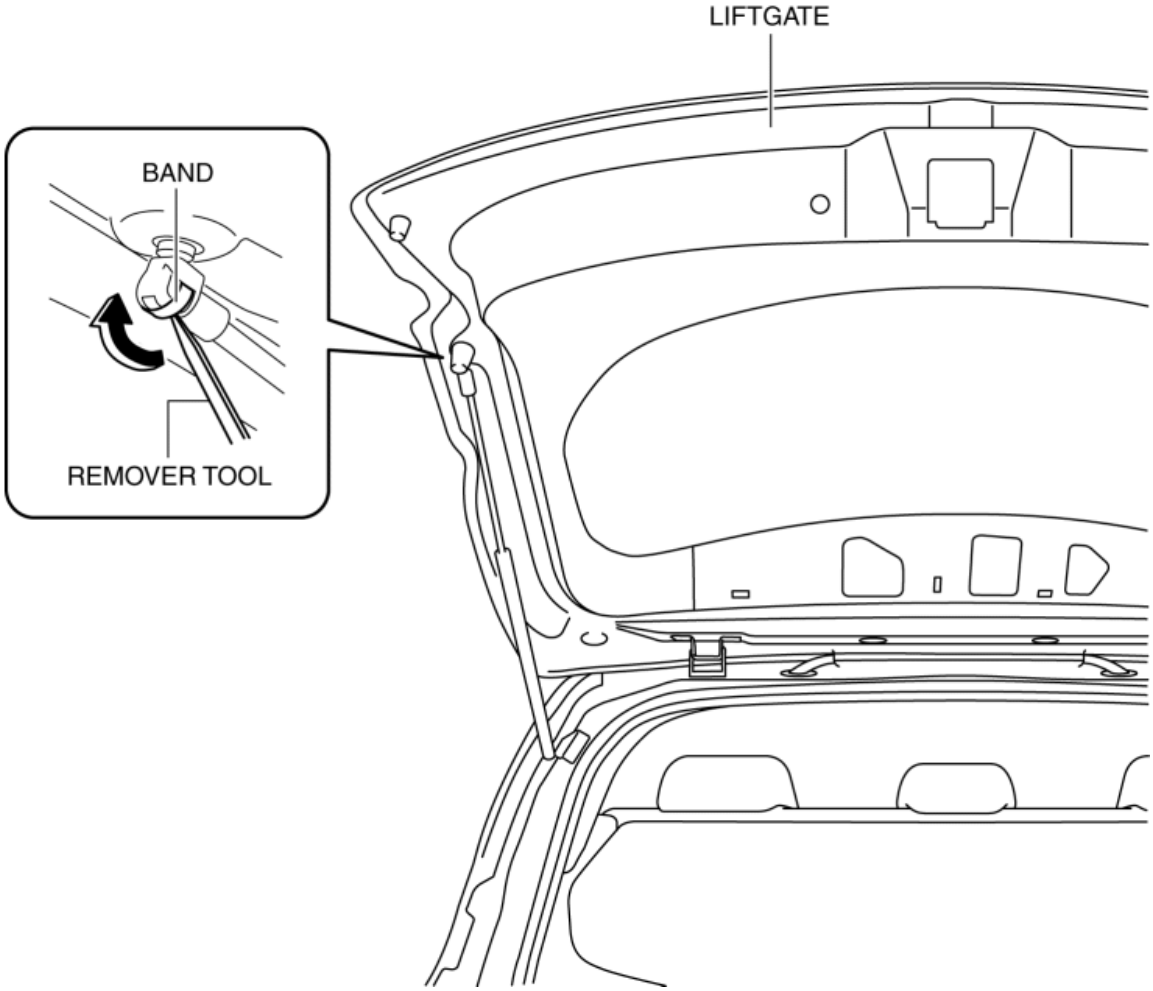

9. Remove the bolts shown in the figure and remove the stay damper.

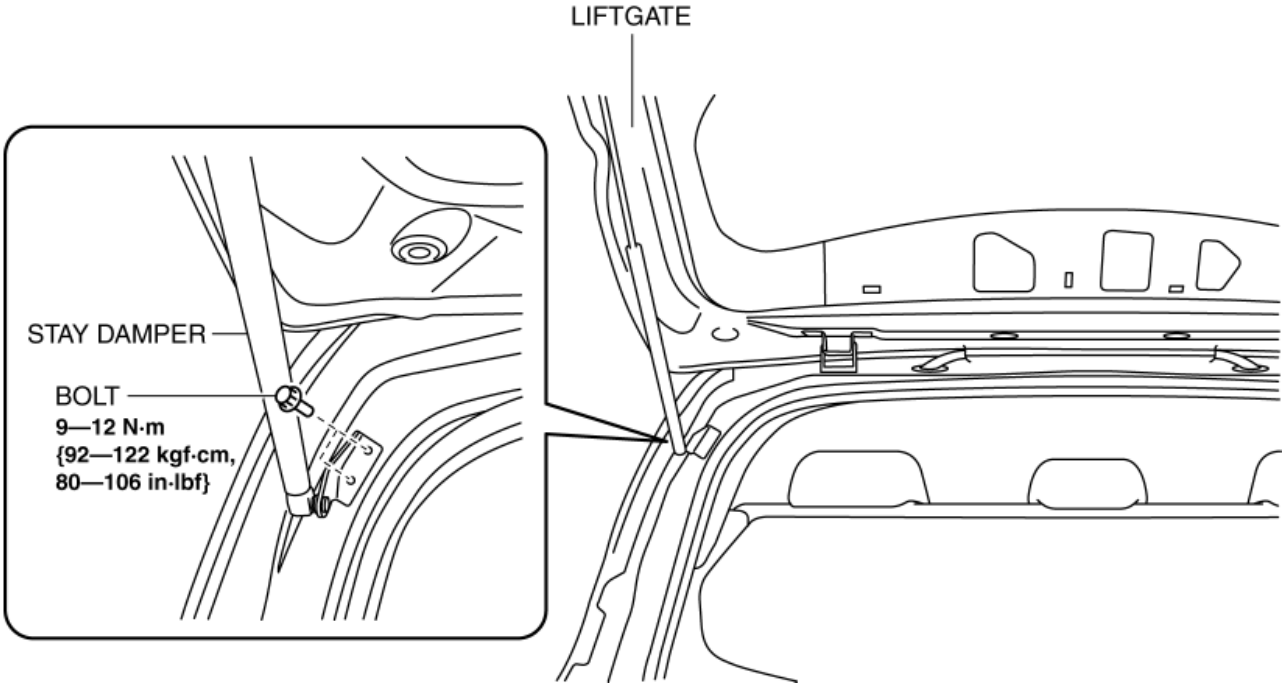

10. Remove the bolts shown in the figure and remove the liftgate.

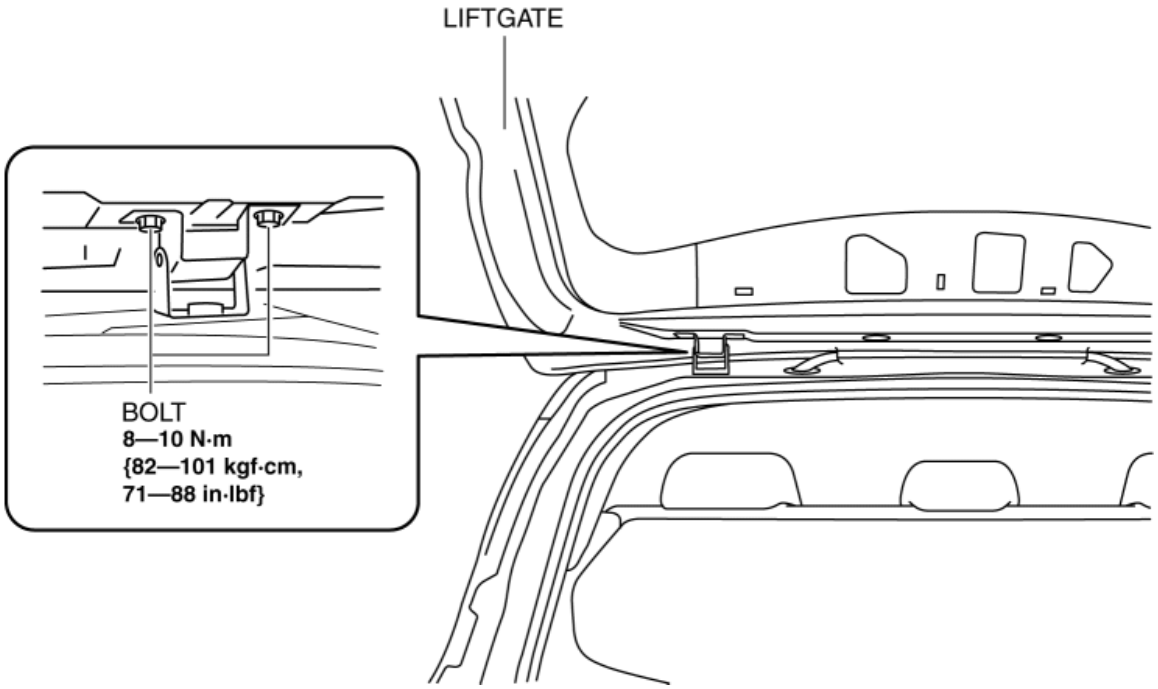

11. Remove the stud balls.

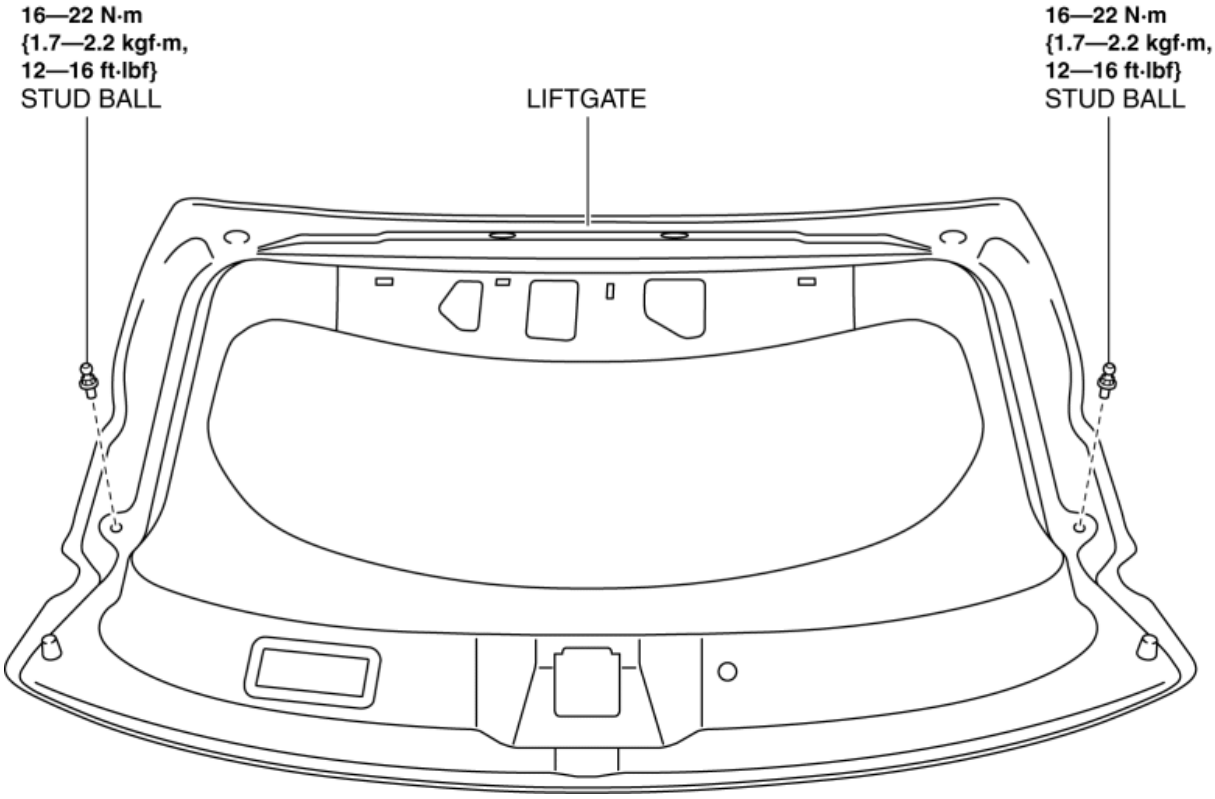

12. Install in the reverse order of removal. (See **Liftgate Grommet Installation Note**.)

13. Adjust the liftgate. (See **LIFTGATE ADJUSTMENT**.)

Liftgate Grommet Installation Note

1. Engage a new liftgate grommet inner.

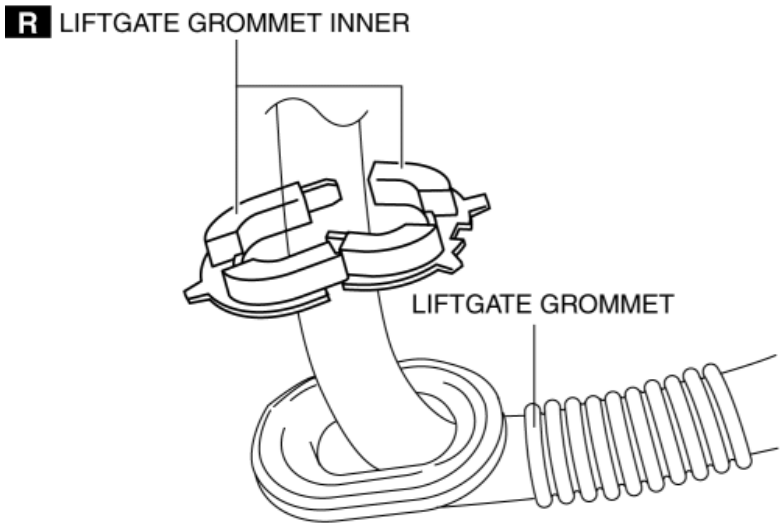

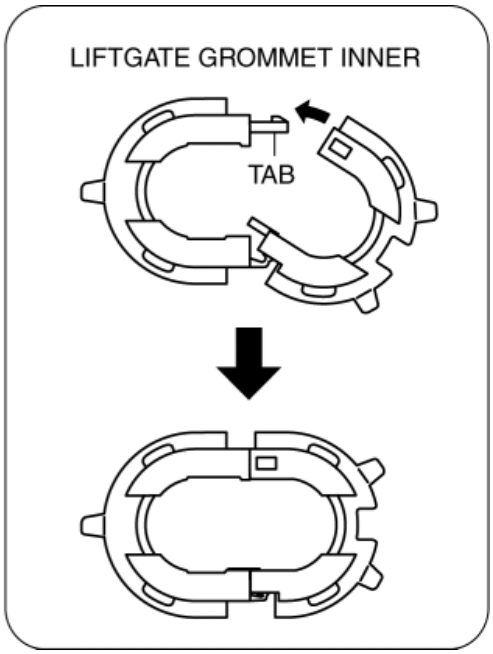

CAUTION:

- Install the liftgate grommet inner so that there is no gap between the liftgate grommet and the liftgate grommet inner. Otherwise, it may cause water leakage.

2. Install the liftgate grommet inner to the liftgate grommet.

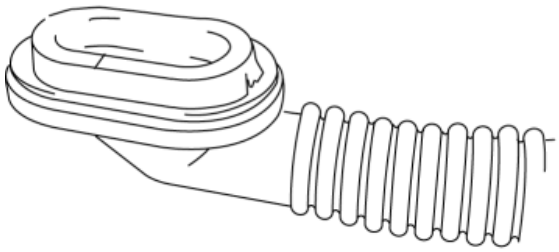

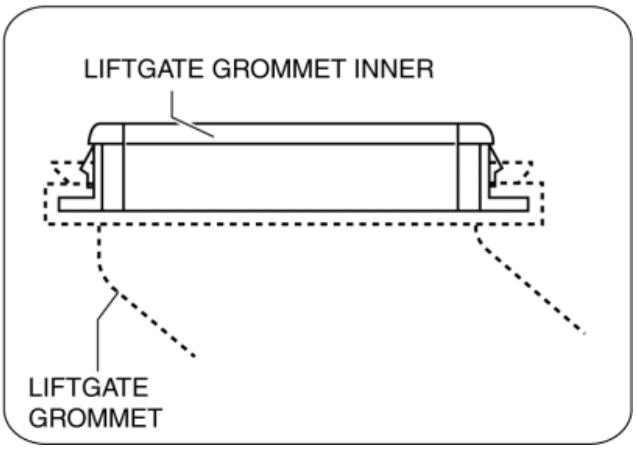

CAUTION:

- After installing the liftgate, shake the liftgate grommet inner to verify that the tabs are securely engaged. If there is gap between the liftgate grommet and the liftgate, it may cause water leakage.

3. Press the liftgate grommet inner into the liftgate side as shown in the figure and engage the tabs of the liftgate grommet inner with the liftgate side.

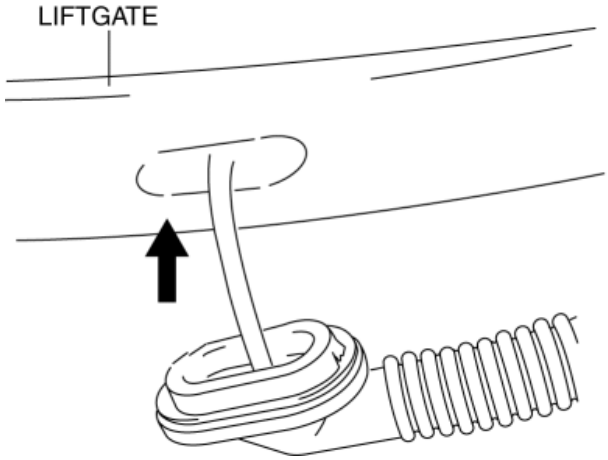
LIFTGATE

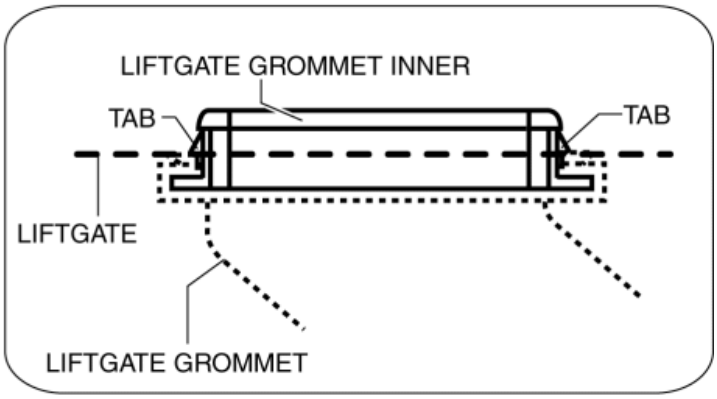
LIFTGATE GROMMET INNER
TAB
TAB
LIFTGATE
LIFTGATE GROMMET

2014 - Mazda3 - Body and Accessories

LIFTGATE HINGE REMOVAL/INSTALLATION

1. Disconnect the negative battery cable. (See **NEGATIVE BATTERY CABLE DISCONNECTION/CONNECTION [SKYACTIV-G 2.0, SKYACTIV-G 2.5]**.)

2. Remove the following parts:

   a. Trunk covering (See **TRUNK COVERING REMOVAL/INSTALLATION**.)

   b. Trunk board (See **TRUNK BOARD REMOVAL/INSTALLATION**.)

   c. Trunk end trim (See **TRUNK END TRIM REMOVAL/INSTALLATION**.)

   d. Rear scuff plate (See **REAR SCUFF PLATE REMOVAL/INSTALLATION**.)

   e. Rear seat cushion (See **REAR SEAT CUSHION REMOVAL/INSTALLATION**.)

   f. Tire house trim (See **TIRE HOUSE TRIM REMOVAL/INSTALLATION**.)

   g. Trunk side upper trim (See **TRUNK SIDE UPPER TRIM REMOVAL/INSTALLATION**.)

   h. Trunk side trim (LH) (See **TRUNK SIDE TRIM REMOVAL/INSTALLATION**.)

   i. Rear package tray (See **REAR PACKAGE TRAY REMOVAL/INSTALLATION**.)

   j. Assist handle (Rear side) (See **ASSIST HANDLE REMOVAL/INSTALLATION**.)

   k. C-pillar trim (See **C-PILLAR TRIM REMOVAL/INSTALLATION**.)

   l. Liftgate (See **LIFTGATE REMOVAL/INSTALLATION**.)

3. Remove the fasteners shown in the figure.

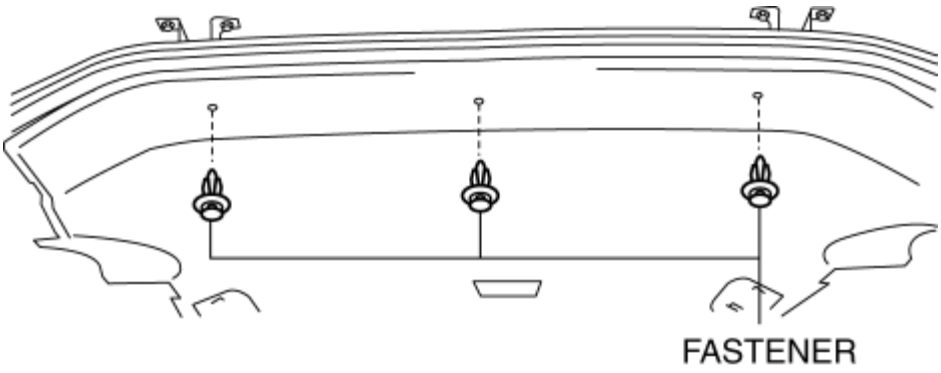

CAUTION:

- Peeling back the headliner without supporting it may cause the headliner to bend excessively and create a fold seam. Peel back the headliner while supporting it.

4. While partially peeling back the rear part of the headliner, remove the nuts shown in the figure.

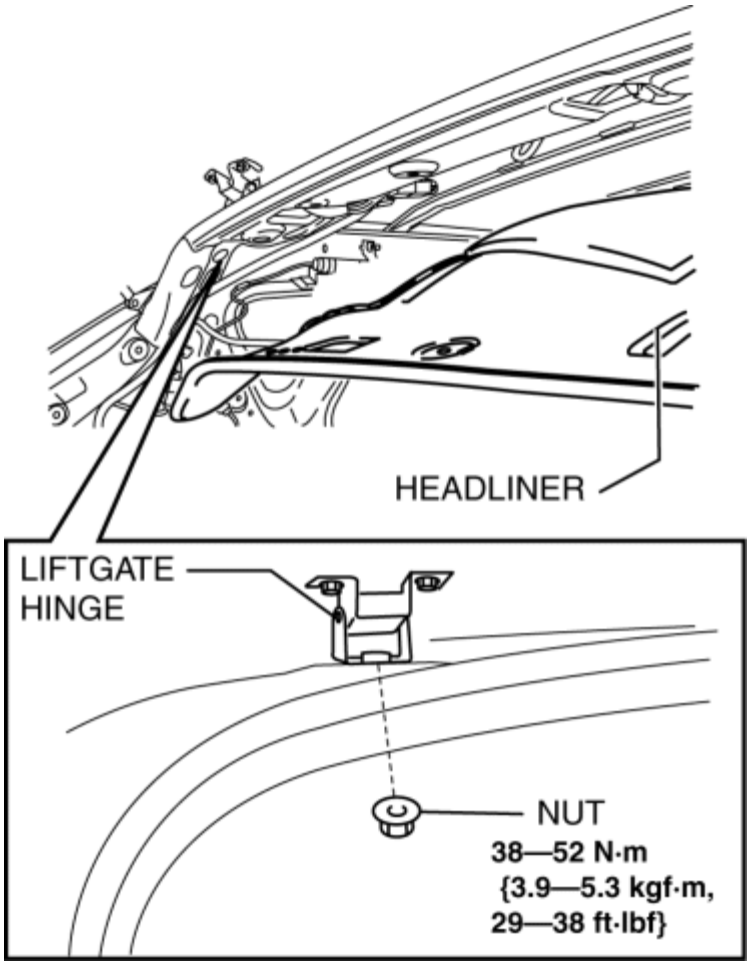

5. Remove the liftgate hinges.

6. Install in the reverse order of removal.

7. Adjust the liftgate. (See **LIFTGATE ADJUSTMENT**.)

2014 - Mazda3 - Body and Accessories

STAY DAMPER DISPOSAL

NOTE:

- The stay damper contains colorless, odorless, nontoxic gas.

1. Wear protective eye wear.

CAUTION:

- When cutting the stay damper, wear protective eye wear to prevent the gas or oil from getting into your eyes. Otherwise, the force of the gas and oil spraying out could lead to injury.

2. Position the stay damper horizontally.

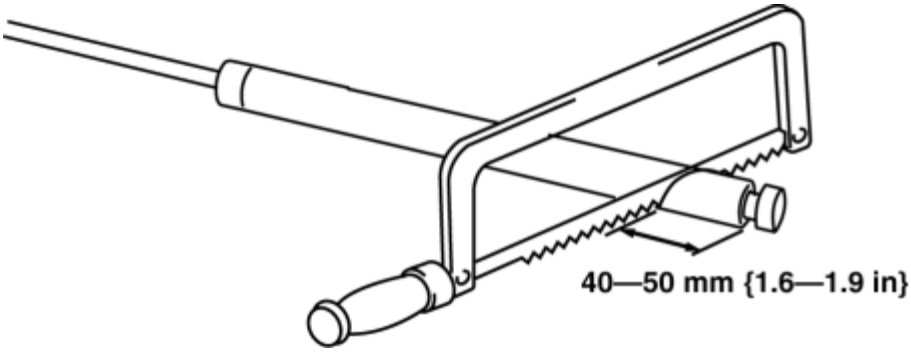

3. Drain gas and oil by cutting the position indicated in the figure to a **2—3 mm {0.08—0.11 in}** depth using a metal saw.

4. Verify that the gas and oil is drained completely by pulling and pushing the piston rod several times with the cut position facing downward.

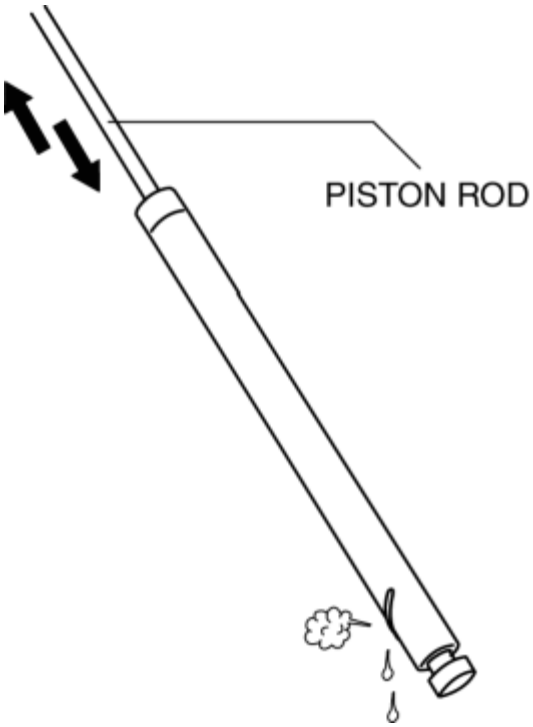

5. Cut off the bottom of the stay damper.

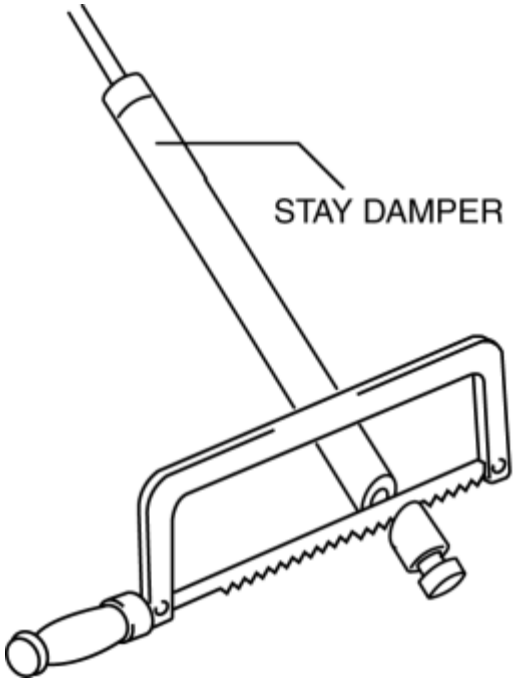

6. Dispose of the stay damper.

2014 - Mazda3 - Body and Accessories

DOOR ADJUSTMENT

1. Measure the gap and height difference between the door and the body.
    - If the measured value exceeds the standard clearance, adjust the door using the following procedure:
2. Loosen the door hinge installation bolts and adjust the door.

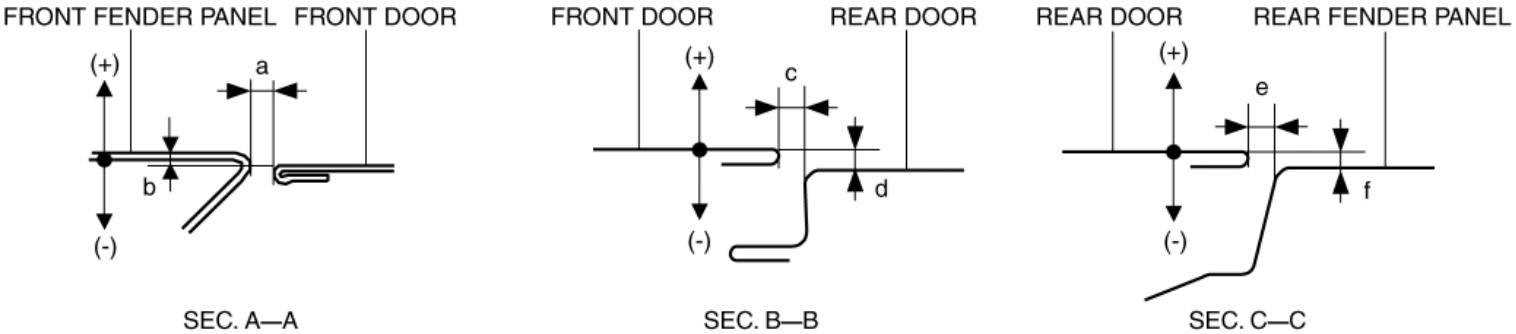

Standard clearance

- a: 2.5—4.3 mm {0.10—0.16 in}
- b: –1.0—1.0 mm {–0.039—0.039 in}
- c: 2.5—4.3 mm {0.10—0.16 in}
- d: –1.0—1.0 mm {–0.039—0.039 in}
- e: 2.5—4.3 mm {0.10—0.16 in}
- f: –1.0—1.0 mm {–0.039—0.039 in}

3. Tighten the door hinge installation bolts. (See **FRONT DOOR REMOVAL/INSTALLATION**.) (See **REAR DOOR REMOVAL/INSTALLATION**.)

4. If the door does not open/close smoothly, adjust it by loosening the door lock striker installation screw. (See **DOOR LOCK STRIKER REMOVAL/INSTALLATION**.)

5. Spray or pour water on the door and surrounding area using a hose or high pressure water pressure car wash and verify that there is no water leakage.

2014 - Mazda3 - Body and Accessories

LIFTGATE ADJUSTMENT

1. Measure the gap and height difference between the liftgate and the body.
    - If the measured value exceeds the standard clearance, adjust the liftgate using the following procedure:
2. Loosen the liftgate hinge installation bolts and adjust the liftgate.

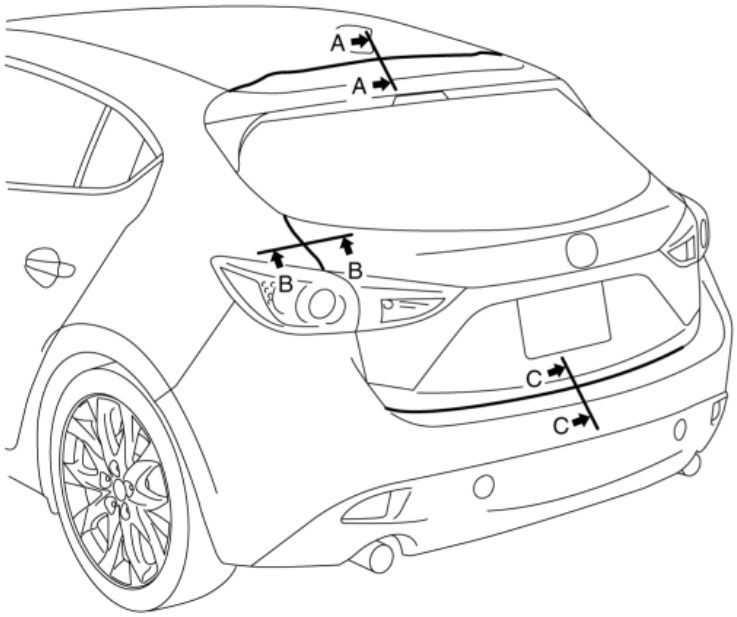

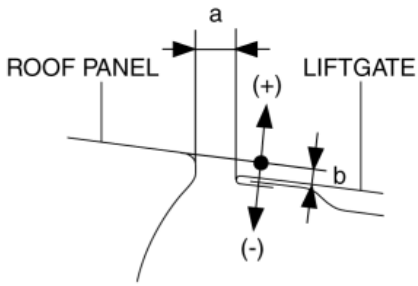

SEC. A—A

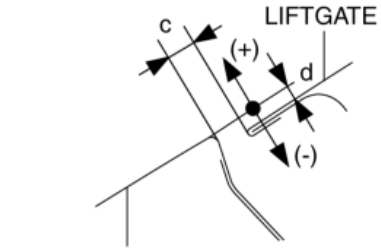

SEC. B—B

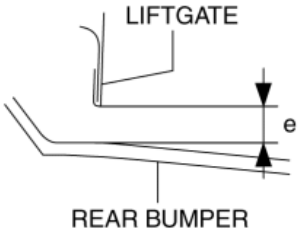

SEC. C—C

Standard clearance

- a: 5.1—7.1 mm {0.21—0.27 in}
- b: –2.0—0.0 mm {–0.078—0.000 in}
- c: 2.6—5.0 mm {0.11—0.19 in}
- d: –1.9—0.5 mm {–0.07—0.01 in}
- e: 4.3—8.3 mm {0.17—0.32 in}

3. Tighten the liftgate hinge installation bolts. (See **LIFTGATE REMOVAL/INSTALLATION**.)

4. If the liftgate does not open/close smoothly, adjust it by loosening the liftgate lock striker installation screw. (See **LIFTGATE LOCK STRIKER REMOVAL/INSTALLATION**.)

5. Spray or pour water on the door and surrounding area using a hose or high pressure water pressure car wash and verify that there is no water leakage.

2014 - Mazda3 - Body and Accessories

GLASS/WINDOWS/MIRRORS LOCATION INDEX

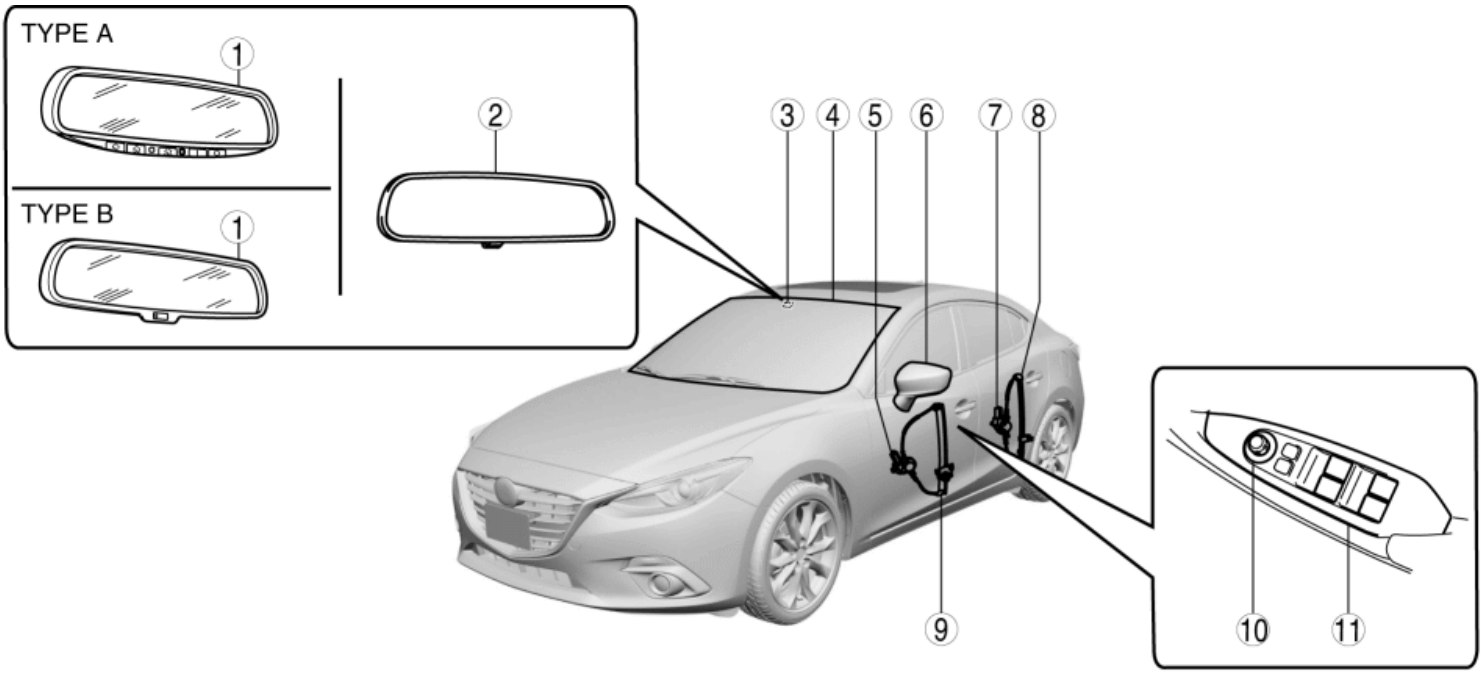

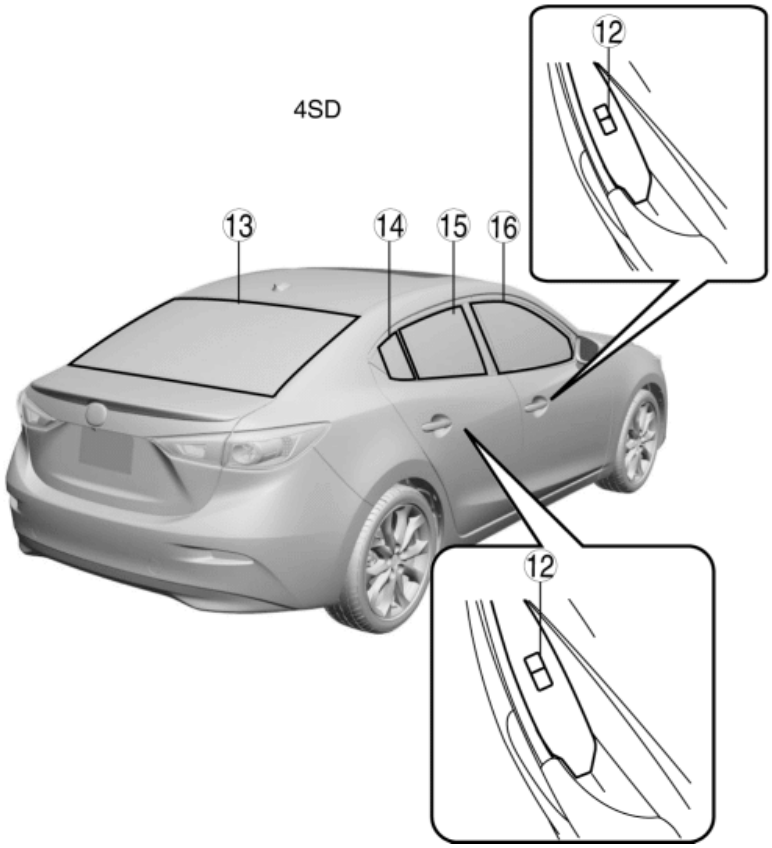

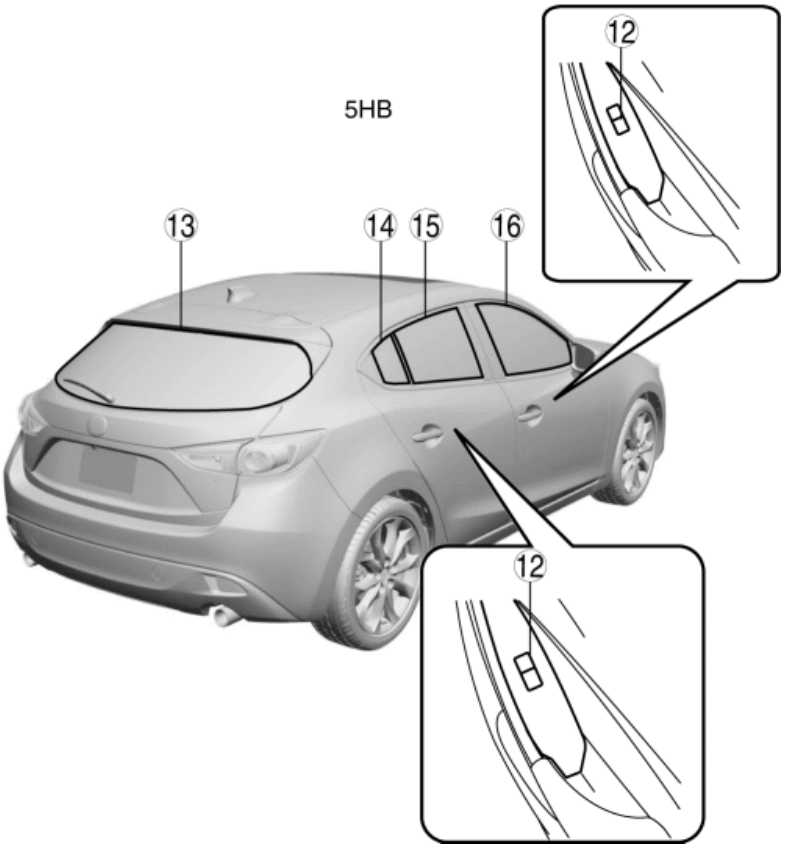

1	Auto-dimming mirror (See **AUTO-DIMMING MIRROR REMOVAL/INSTALLATION**.) (See **AUTO-DIMMING MIRROR INSPECTION**.)
2	Rearview mirror (See **REARVIEW MIRROR REMOVAL/INSTALLATION**.)
3	Mirror base (See **MIRROR BASE REMOVAL**.) (See **MIRROR BASE INSTALLATION**.)
4	Windshield (See **WINDSHIELD REMOVAL**.) (See **WINDSHIELD INSTALLATION**.)
5	Front power window motor (See **FRONT POWER WINDOW MOTOR REMOVAL/INSTALLATION**.) (See **FRONT POWER WINDOW MOTOR INSPECTION**.)
6	Power outer mirror (See **POWER OUTER MIRROR REMOVAL/INSTALLATION**.) (See **POWER OUTER MIRROR INSPECTION**.) (See **OUTER MIRROR GLASS REMOVAL**.) (See **OUTER MIRROR GLASS INSTALLATION**.) (See **OUTER MIRROR GLASS INSPECTION**.) (See **OUTER MIRROR GARNISH REMOVAL/INSTALLATION**.)
7	Rear power window motor (See **REAR POWER WINDOW MOTOR REMOVAL/INSTALLATION**.) (See **REAR POWER WINDOW MOTOR INSPECTION**.)
8	Rear power window regulator (See **REAR POWER WINDOW REGULATOR REMOVAL/INSTALLATION**.)
9	Front power window regulator (See **FRONT POWER WINDOW REGULATOR REMOVAL/INSTALLATION**.)
10	Power outer mirror switch (See **POWER OUTER MIRROR SWITCH REMOVAL/INSTALLATION**.) (See **POWER OUTER MIRROR SWITCH INSPECTION**.)
11	Power window main switch (See **POWER WINDOW MAIN SWITCH REMOVAL/INSTALLATION**.) (See **POWER WINDOW MAIN SWITCH INSPECTION**.) (See **POWER WINDOW SYSTEM INITIALIZATION PROCEDURE**.)

12	Power window subswitch (See **POWER WINDOW SUBSWITCH REMOVAL/INSTALLATION**.) (See **POWER WINDOW SUBSWITCH INSPECTION**.)
13	Rear window glass (See **REAR WINDOW GLASS REMOVAL**.) (See **REAR WINDOW GLASS INSTALLATION**.) (See **REAR WINDOW DEFROSTER SYSTEM INSPECTION**.) (See **REAR WINDOW DEFROSTER INSPECTION**.) (See **REAR WINDOW DEFROSTER/GLASS ANTENNA REPAIR**.)
14	Rear door quarter glass (See **REAR DOOR QUARTER GLASS REMOVAL/INSTALLATION**.)
15	Rear door glass (See **REAR DOOR GLASS REMOVAL/INSTALLATION**.)
16	Front door glass (See **FRONT DOOR GLASS REMOVAL/INSTALLATION**.)

2014 - Mazda3 - Body and Accessories

FRONT DOOR GLASS REMOVAL/INSTALLATION

1. Perform the front door glass preparation. (See **Front Door Glass Preparation**.)

NOTE:

- Before removing the front door glass, the removal procedure for the front door glass installation bolt can be facilitated by adjusting the top of the front door glass to the position **approx. 70 mm {2.8 in}** away from the upper part of the front beltline molding.

2. Disconnect the negative battery cable. (See **NEGATIVE BATTERY CABLE DISCONNECTION/CONNECTION [SKYACTIV-G 2.0, SKYACTIV-G 2.5]**.)

3. Remove the following parts:

   a. Front door trim (See **FRONT DOOR TRIM REMOVAL/INSTALLATION**.)

   b. Front door speaker (See **FRONT DOOR SPEAKER REMOVAL/INSTALLATION**.)

4. Press the center of the service hole cover in the direction of arrow (1) shown in the figure.

5. Remove the service hole cover by holding its rib and partially peeling it back in the direction of arrow (2) shown in the figure.

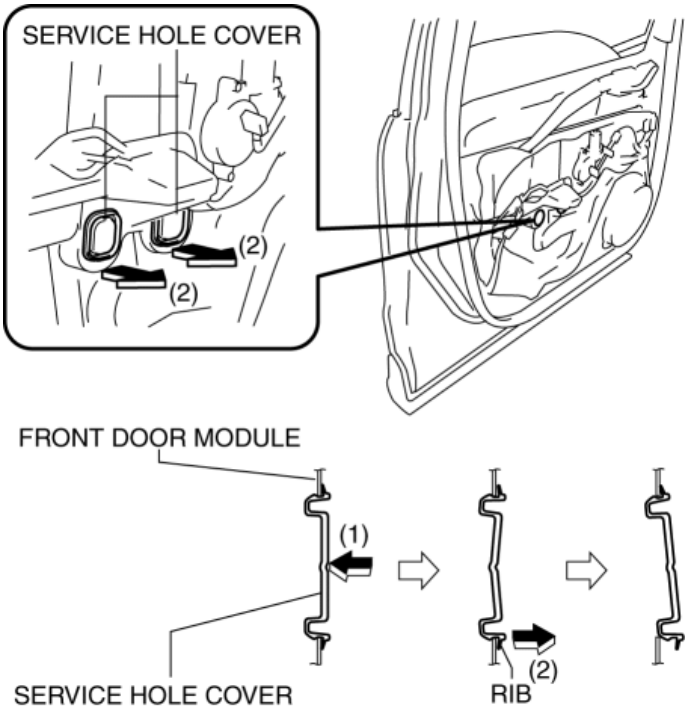

6. Apply protective tape to the edge part of the front door speaker installation hole to prevent injury.

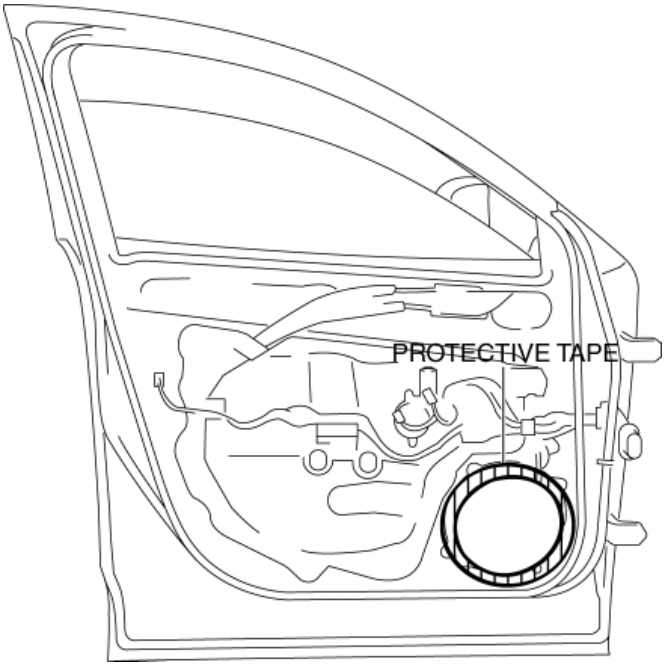

7. Remove bolts.

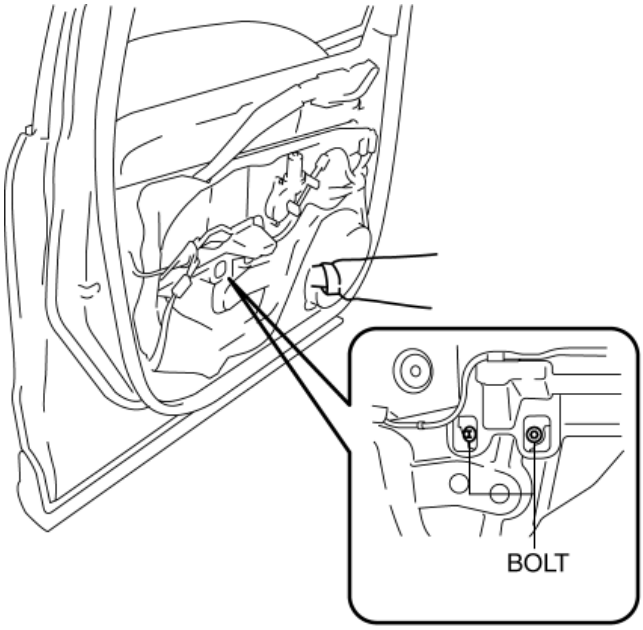

BOLT : **8—10 N·m {82—101 kgf·cm, 71—88 in·lbf}**

CAUTION:

- If the bolts are removed without supporting the front door glass, the front door glass may fall off and be damaged. Remove the bolts while inserting your hand into the front door speaker installation hole to support the front door glass.

8. Lift up the front door glass, tilt it in the direction of arrow (3) shown in the figure, then remove it in the direction of arrow (4).

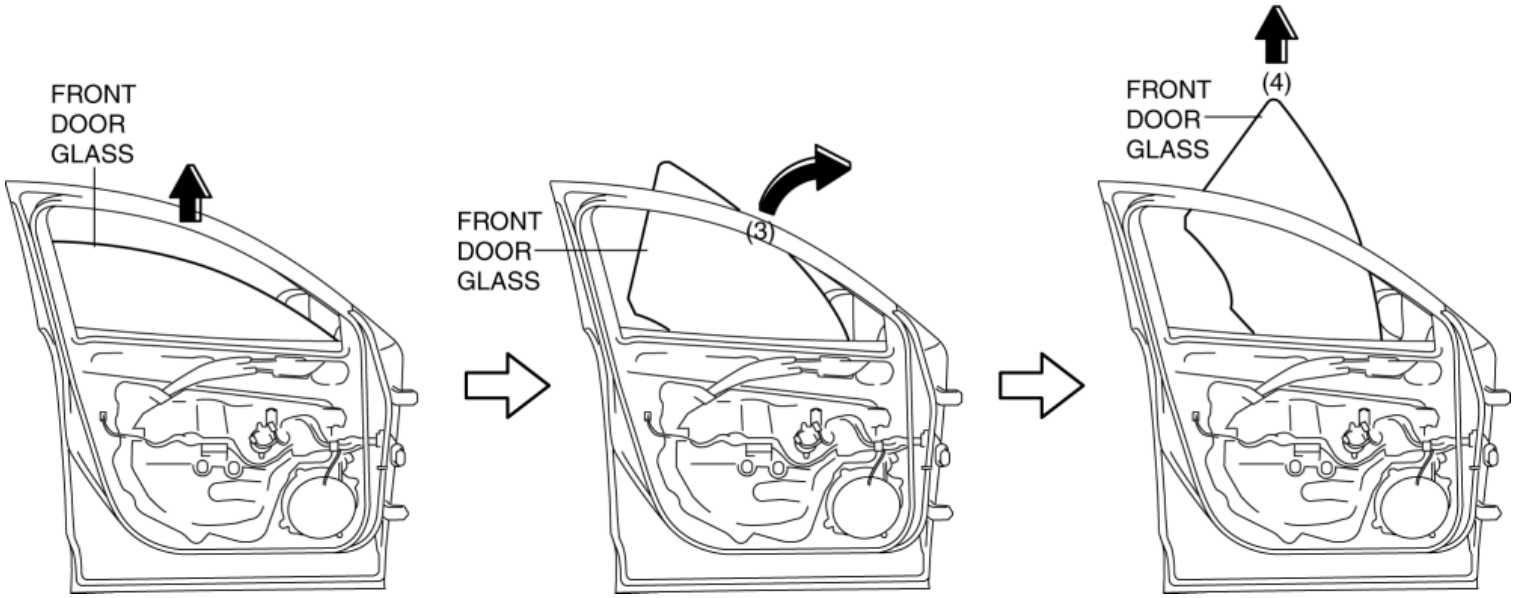

9. Install in the reverse order of removal.

Front Door Glass Preparation

- Perform the adjusting the top of the front door glass to the position **approx. 70 mm {2.8 in}** away from the front beltline molding.

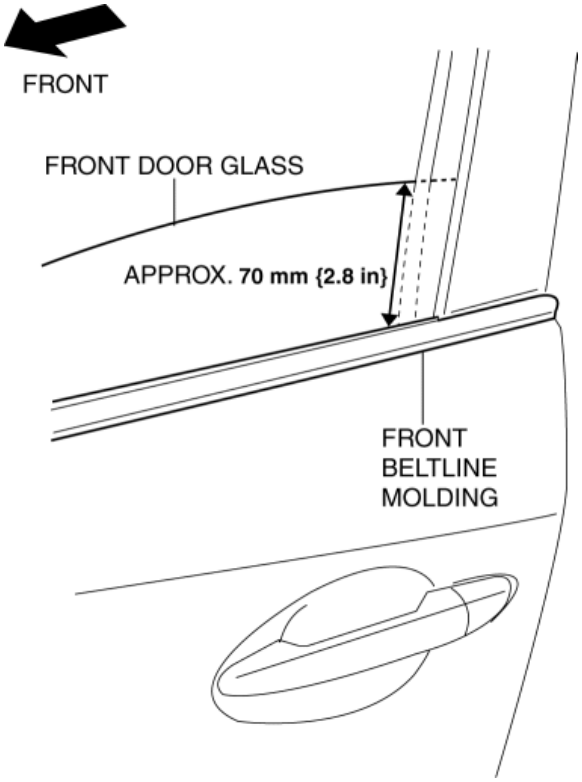

2014 - Mazda3 - Body and Accessories

REAR DOOR GLASS REMOVAL/INSTALLATION

1. Fully lower the rear door glass.
2. Disconnect the negative battery cable. (See **NEGATIVE BATTERY CABLE DISCONNECTION/CONNECTION [SKYACTIV-G 2.0, SKYACTIV-G 2.5]**.)
3. Remove the following parts:
   a. Rear door trim (See **REAR DOOR TRIM REMOVAL/INSTALLATION**.)
   b. Rear door speaker (See **REAR DOOR SPEAKER REMOVAL/INSTALLATION**.)
   c. Rear power window motor (See **REAR POWER WINDOW MOTOR REMOVAL/INSTALLATION**.)
   d. Rear door quarter glass (See **REAR DOOR QUARTER GLASS REMOVAL/INSTALLATION**.)
4. Press the center of the service hole cover in the direction of arrow (1) shown in the figure.

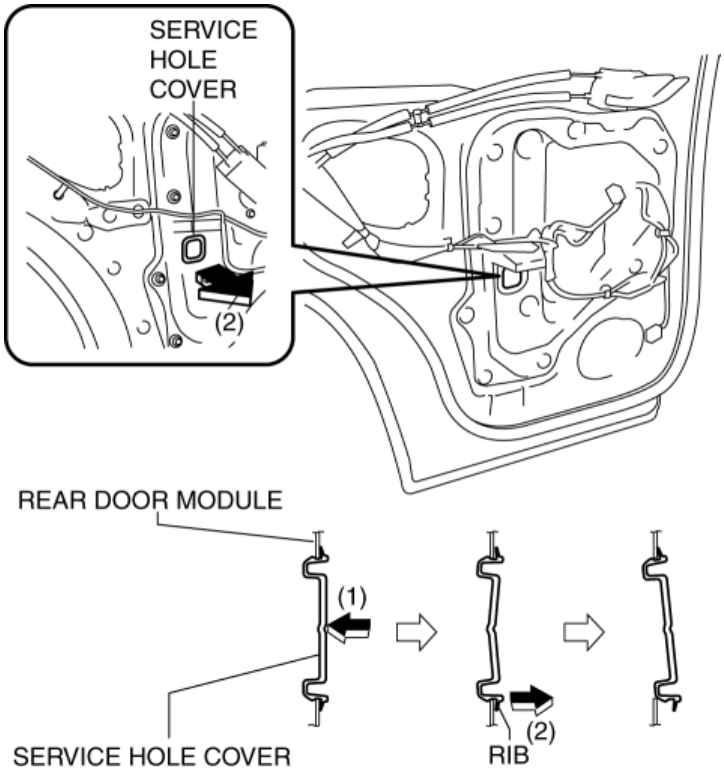

5. Remove the service hole cover by holding its rib and partially peeling it back in the direction of arrow (2) shown in the figure.
6. Apply protective tape to the edge part of the rear door speaker installation hole to prevent injury.

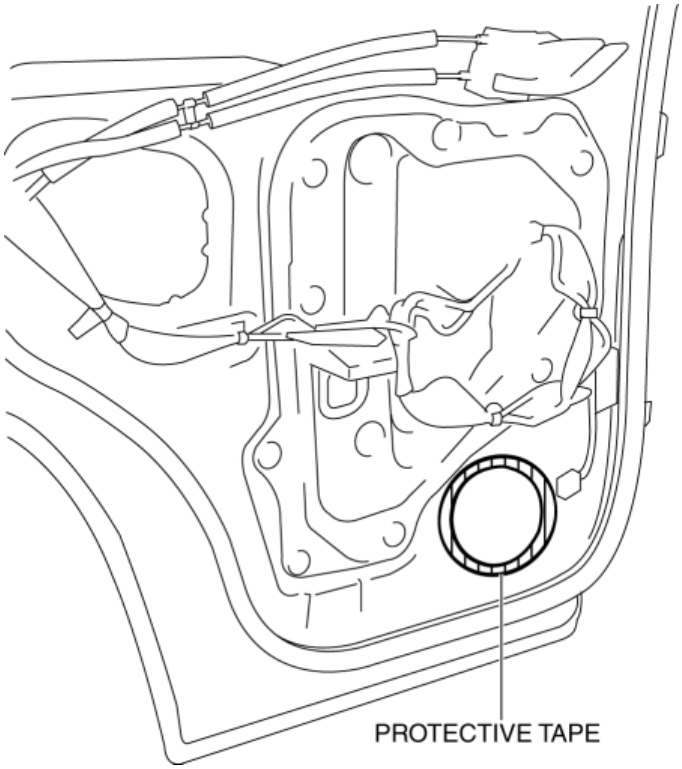

7. Remove the bolt.

CAUTION:

- If the bolts are removed without supporting the rear door glass, the rear door glass may fall off and be damaged. Remove the bolts while inserting your hand into the rear door speaker installation hole to support the rear door glass.

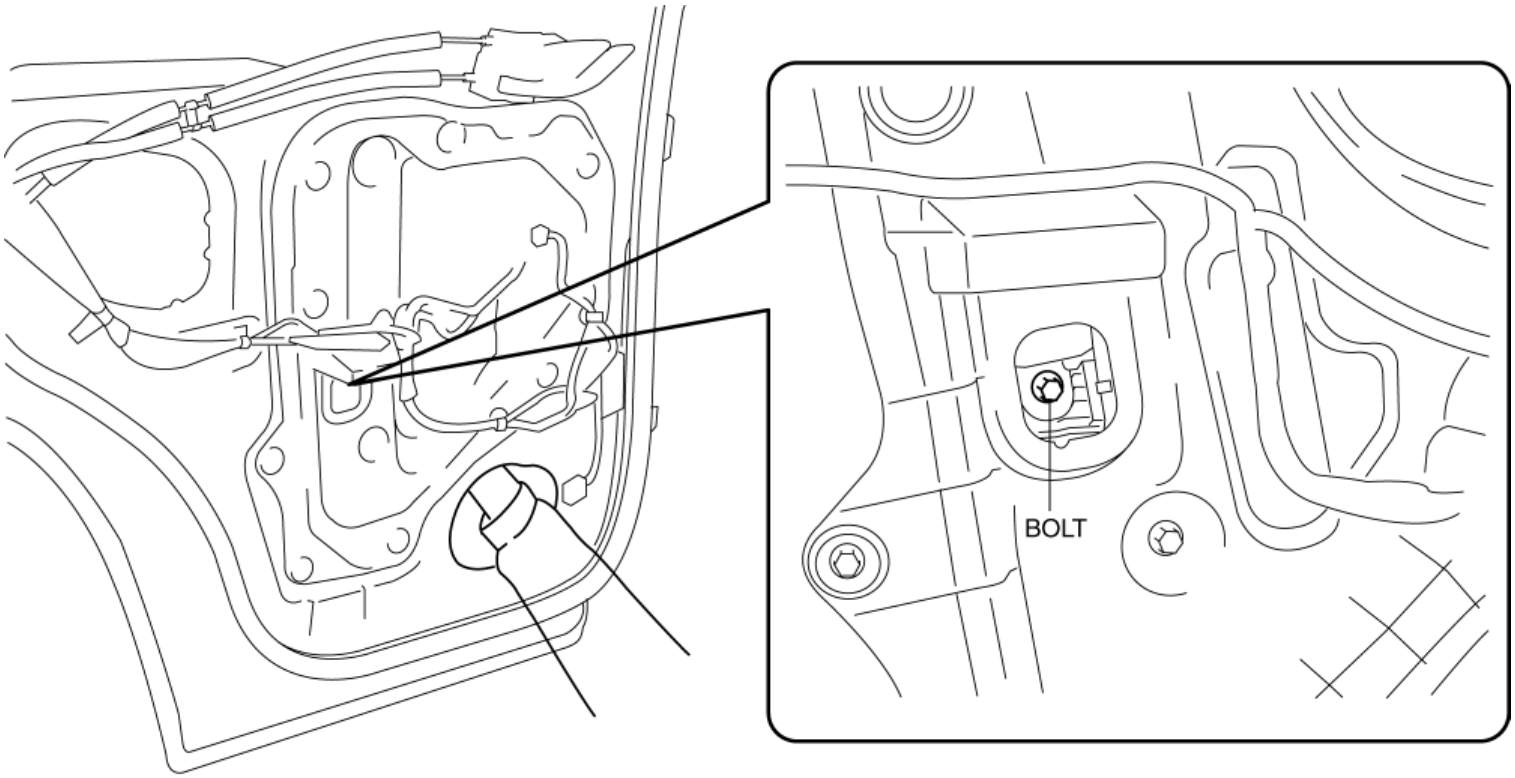

BOLT : **4.5—6.5 N·m {46—66 kgf·cm, 40—57 in·lbf}**

8. Lift the rear door glass up and remove while tilting it.

9. Lift up the rear door glass, tilt it in the direction of arrow (3) shown in the figure.

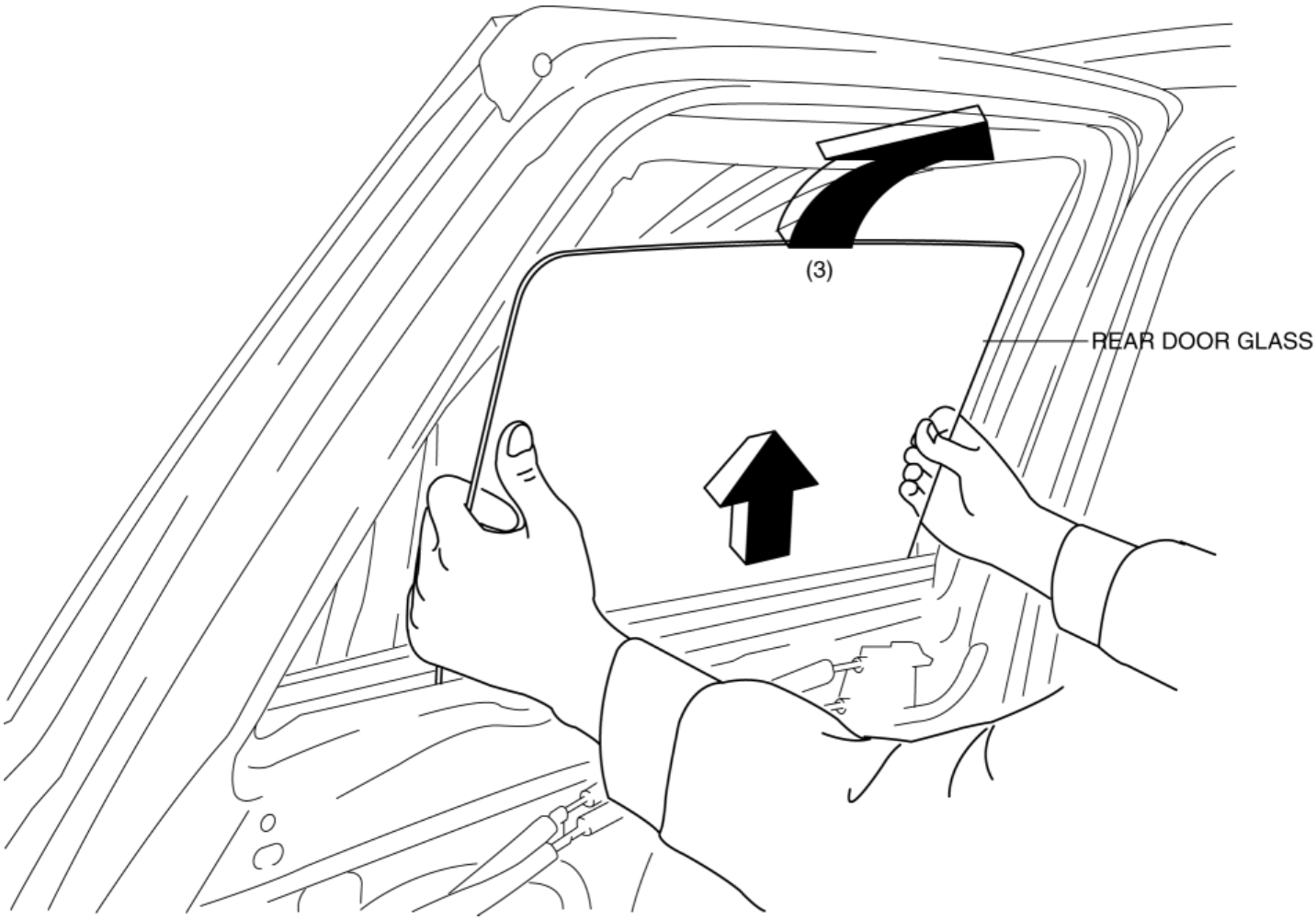

10. Install in the reverse order of removal.

2014 - Mazda3 - Body and Accessories

REAR DOOR QUARTER GLASS REMOVAL/INSTALLATION

1. Fully lower the rear door glass.
2. Disconnect the negative battery cable. (See **NEGATIVE BATTERY CABLE DISCONNECTION/CONNECTION [SKYACTIV-G 2.0, SKYACTIV-G 2.5]**.)
3. Remove the rear door trim. (See **REAR DOOR TRIM REMOVAL/INSTALLATION**.)
4. Remove the service hole cover arrow (1) shown in the figure.

CAUTION:

- When removing service hole cover, remove it while gradually stripping the butyl rubber. Otherwise service hole cover may be deformed.

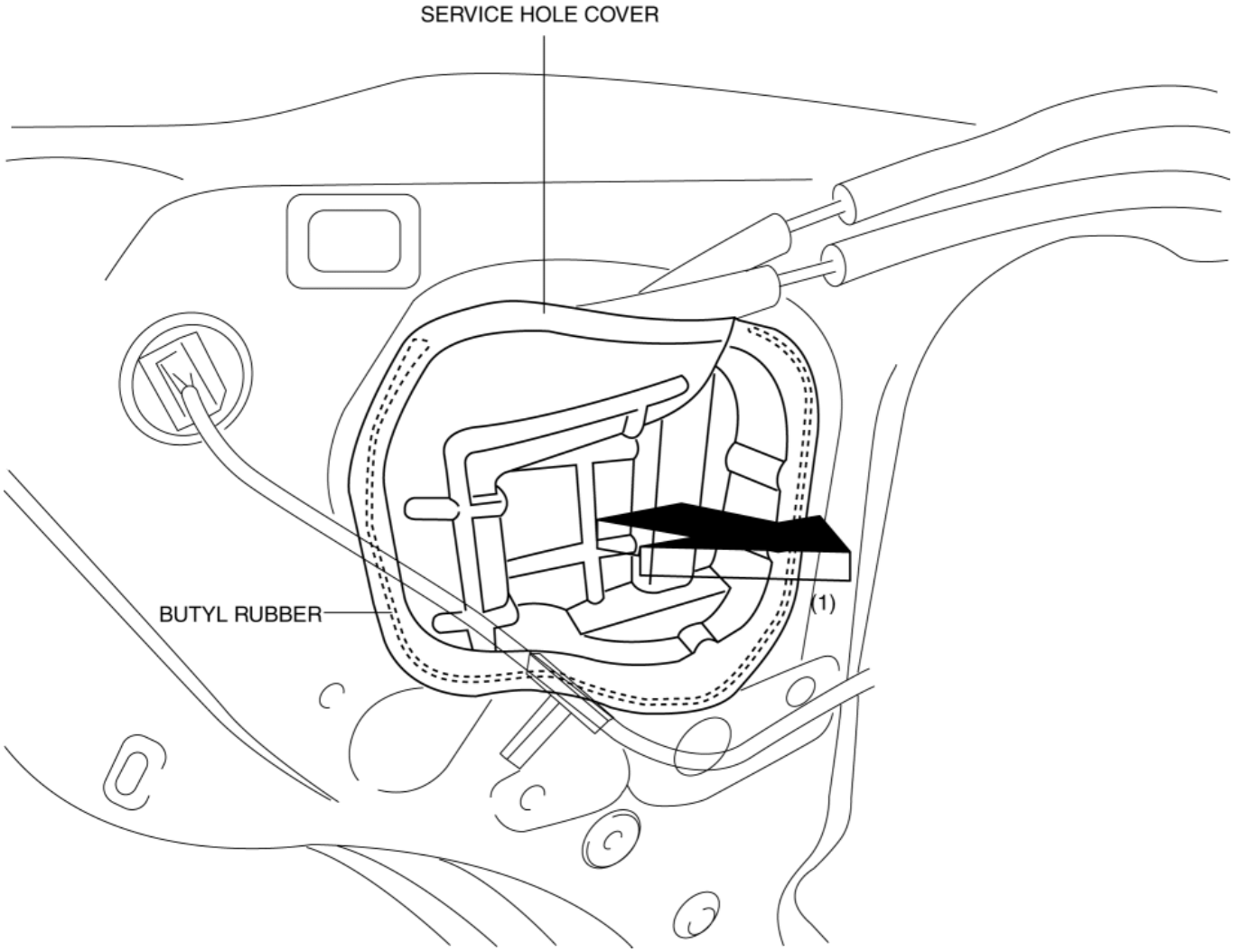

5. Partially peel back rear door weather strip.

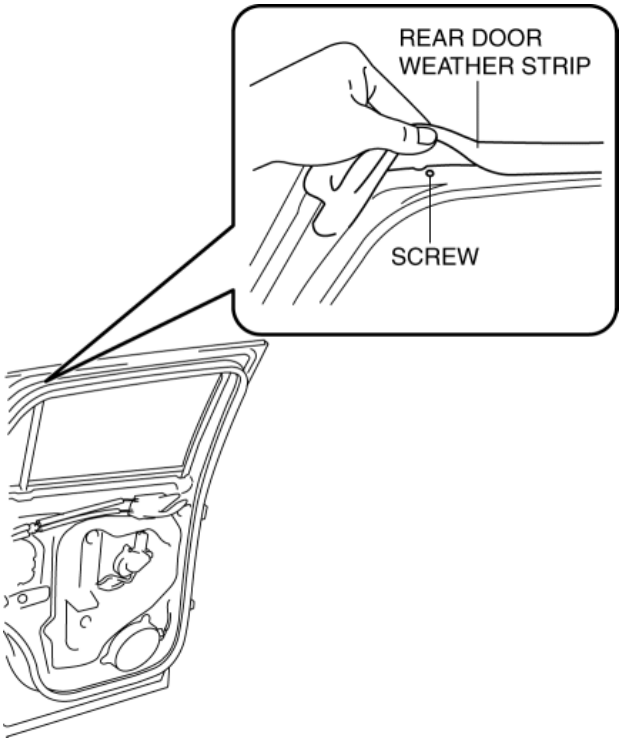

6. Remove screw.
7. Remove bolts.

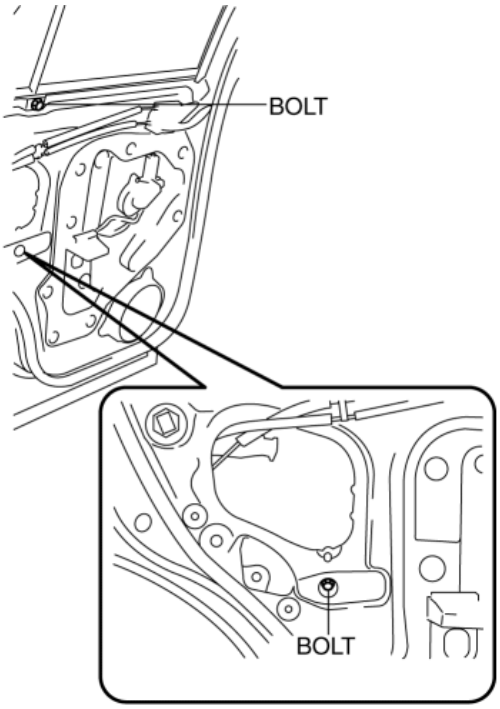

BOLT : **8—10 N·m {82—101 kgf·cm, 71—88 in·lbf}**

8. Partially peel back the rear door glass run channel. (See **Rear Door Glass Run Channel Installation Note**.)

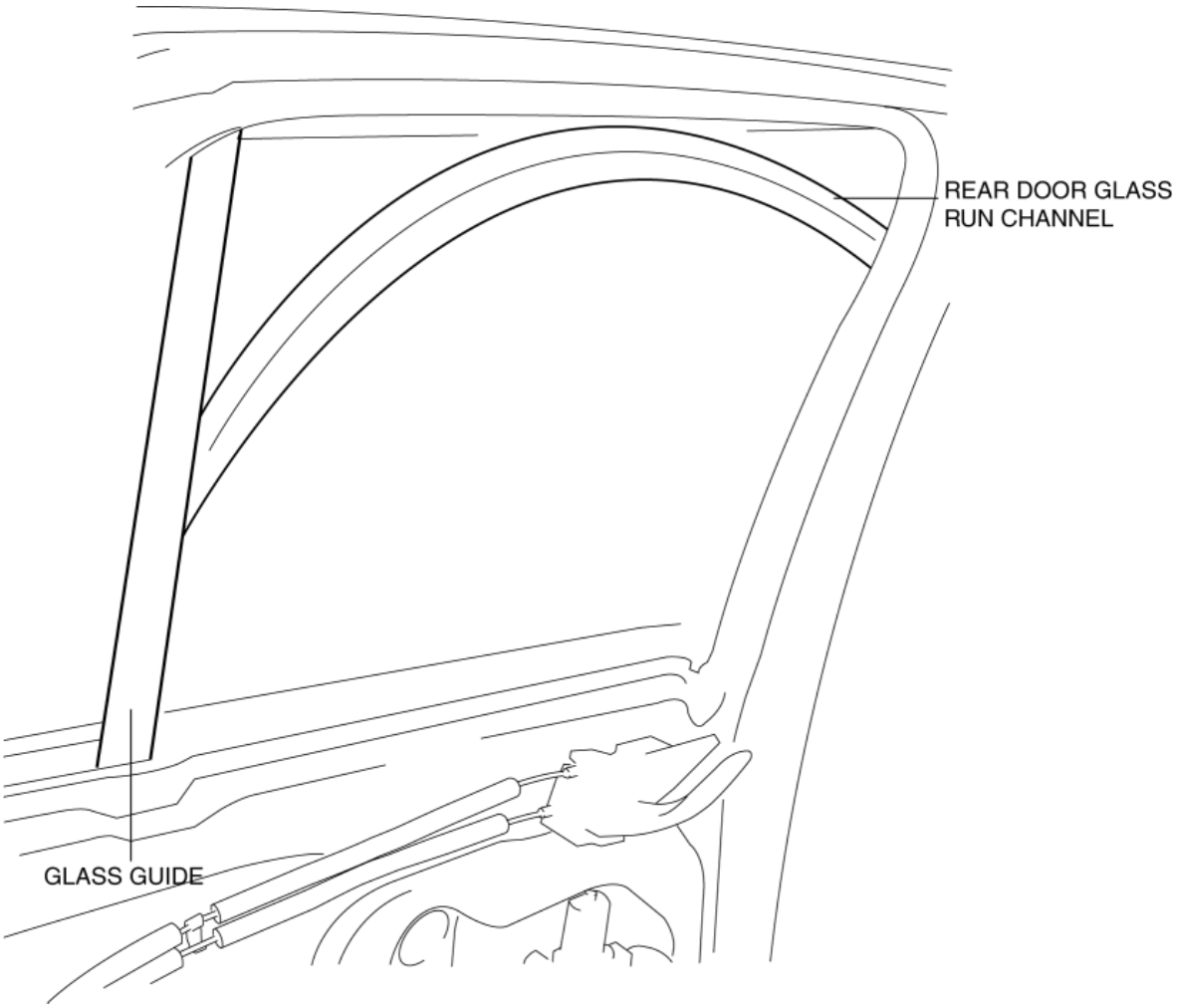

9. Pull the glass guide in the direction of the arrow (2) shown in the figure, then remove the glass guide direction of the arrow (3) shown in the figure. (See **Glass Guide Installation Note**.)

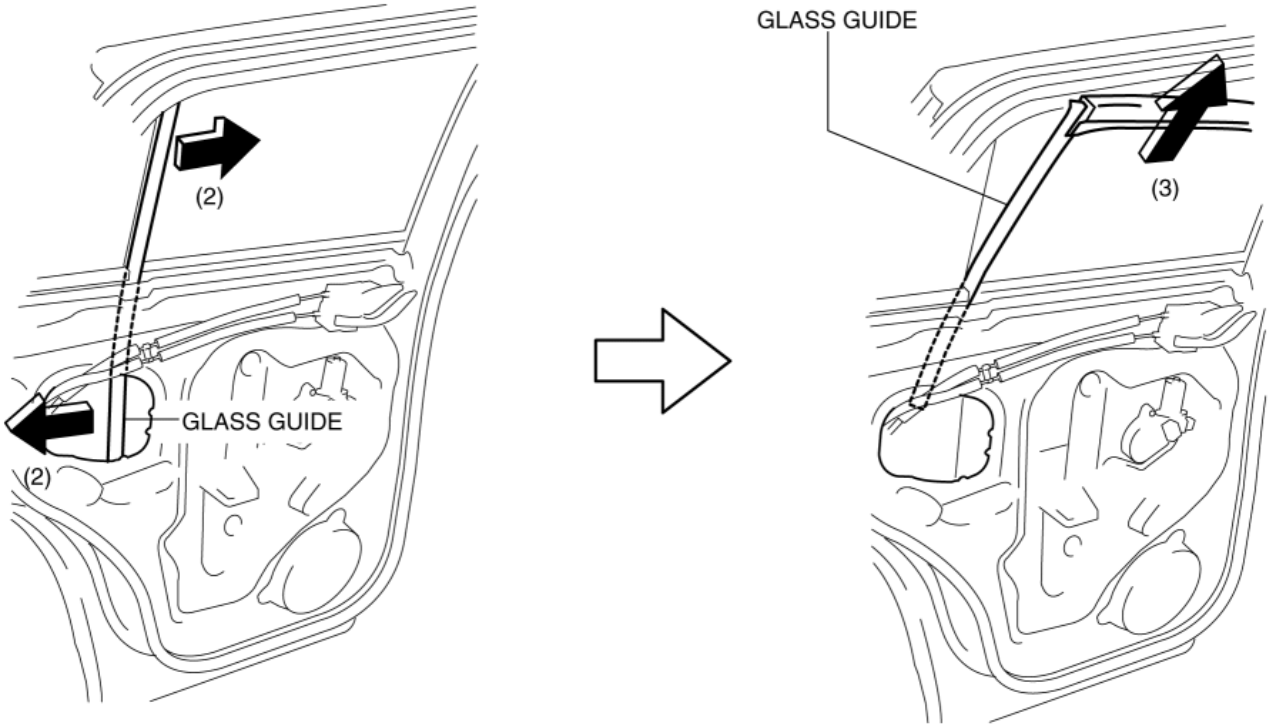

10. Pull the rear door glass run channel in the direction of the arrow (4) then remove the rear door glass run channel. (See **Rear Door Glass Run Channel Installation Note**.)

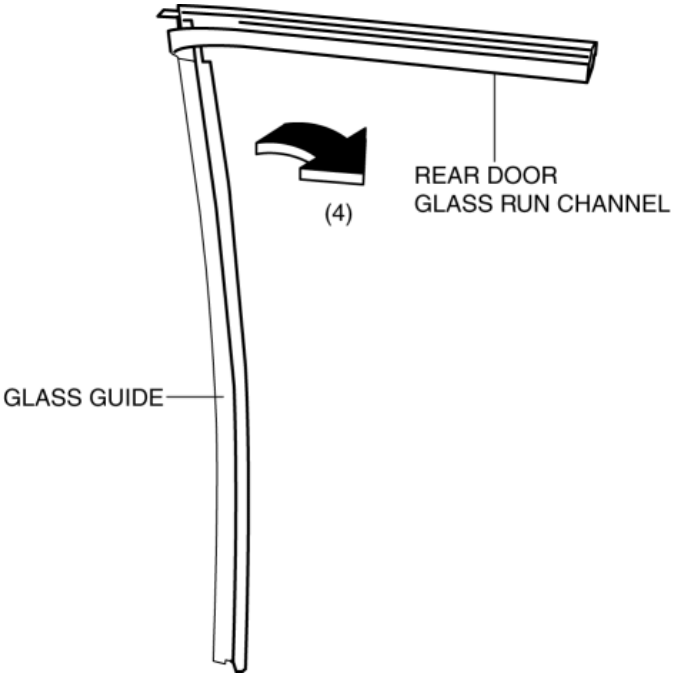

11. Slide the rear door quarter glass and rear door quarter glass guide as a single unit in the direction of the arrow (5) shown in the figure.

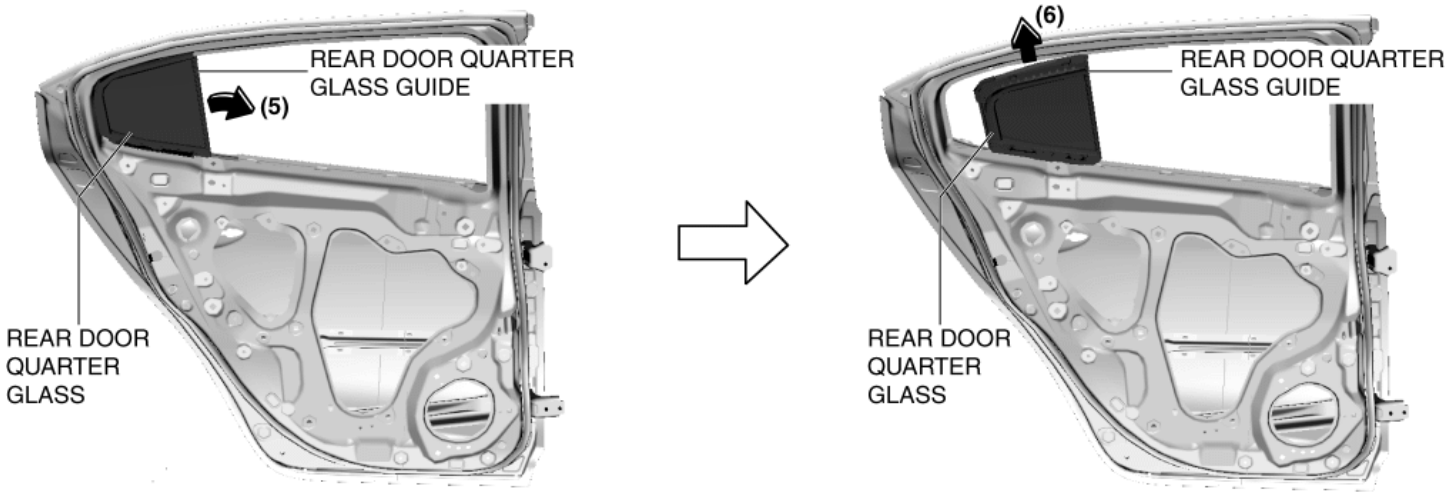

12. Remove the rear door quarter glass and rear door quarter glass guide as a single unit in the direction of the arrow (6) shown in the figure.

13. Pull the rear door quarter glass guide in the direction of the arrow (7) and remove the rear door quarter glass.

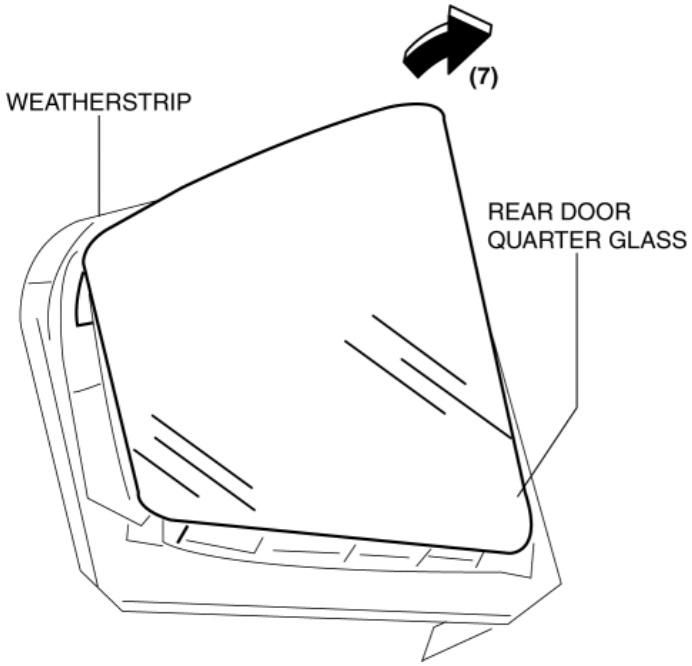

14. Install in the reverse order of removal.

Rear Door Glass Run Channel Installation Note

- Install the rear door glass run channel so that the glass guide is aligned with the top of the rear door glass run channel.

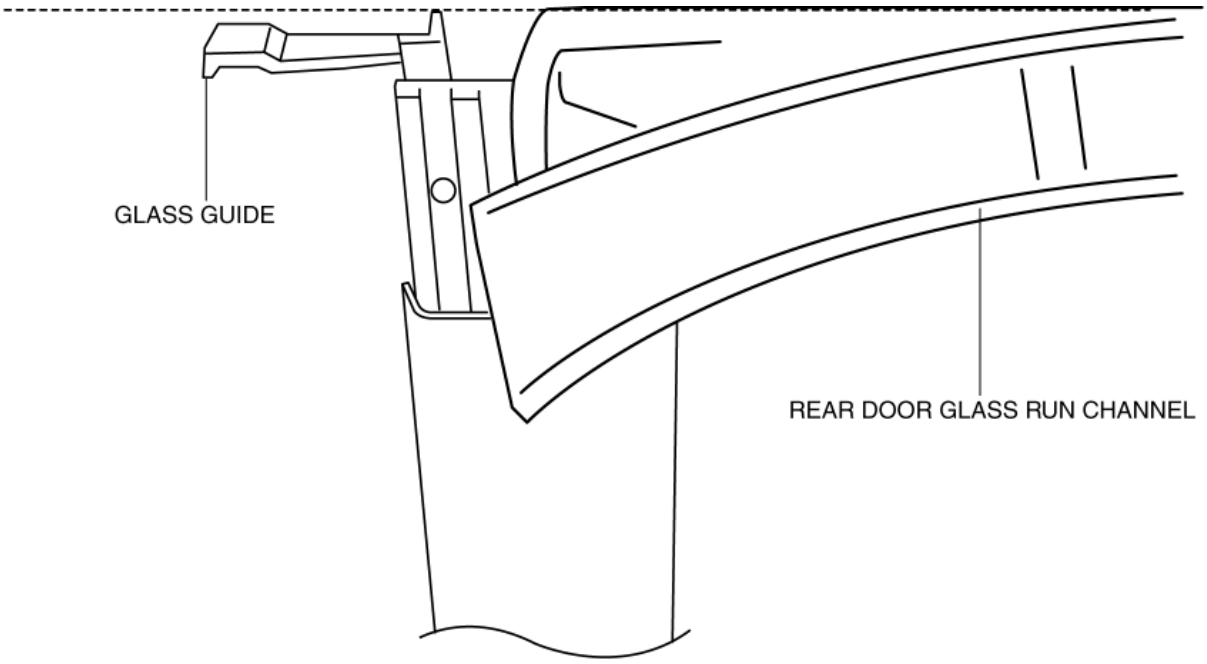

- Install the rear door glass run channel to the rear door panel by pressing the rear door glass run channel along the entire perimeter in the directions of the arrows.

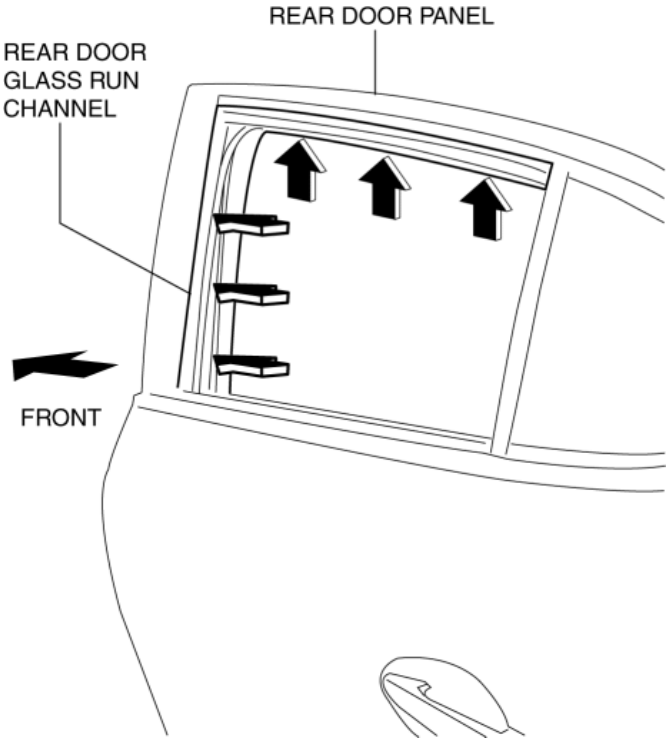

Glass Guide Installation Note

1. Set the glass guide in the direction shown in the figure, and insert the bolt installation hole in the direction of arrow (1) until it reaches area A.

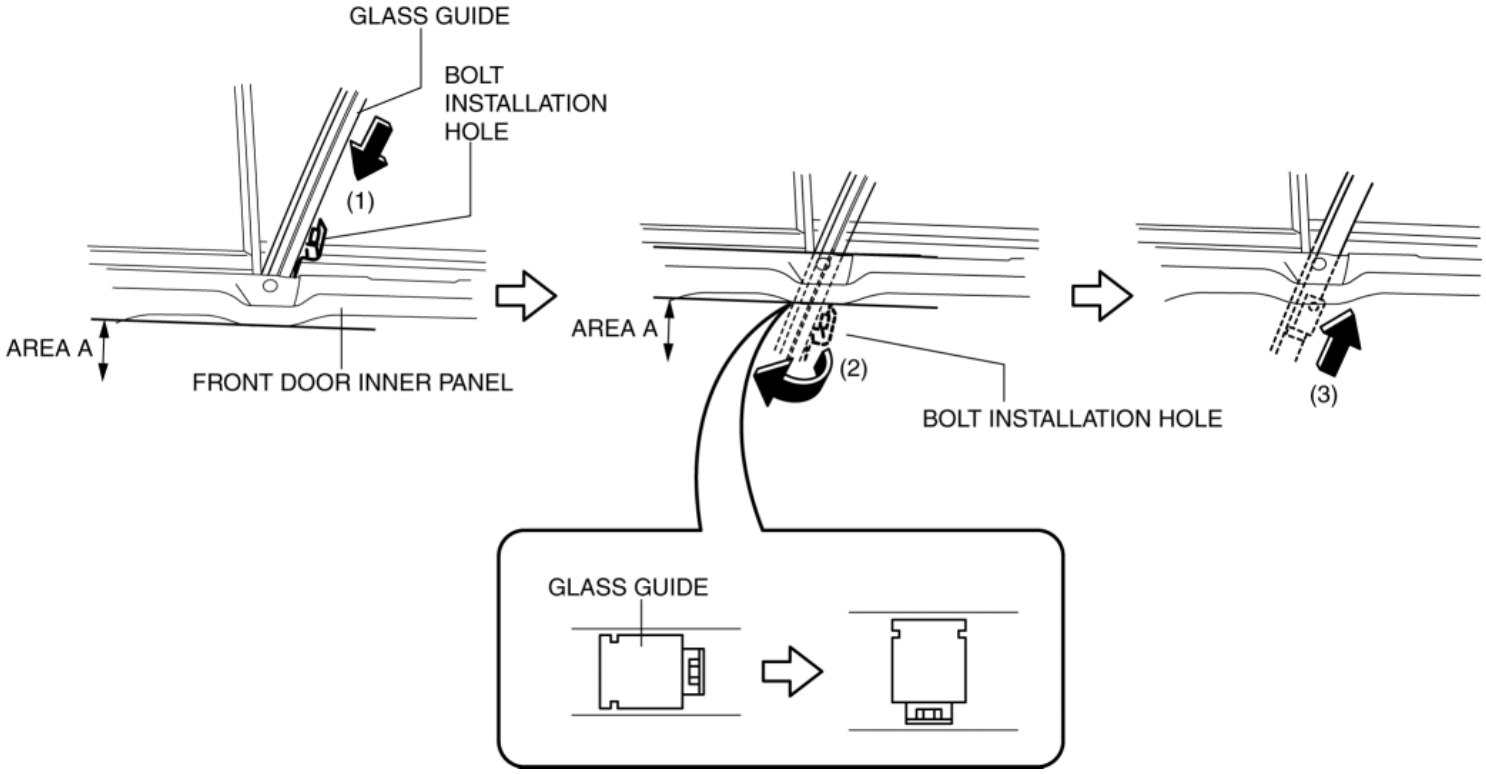

2. When the bolt installation hole of the glass guide reaches area A, rotate the glass guide in the direction of arrow (2) shown in the figure.

3. Move the glass guide in the direction of arrow (3) shown in the figure to adjust the position of the front door inner panel and the bolt installation holes of the glass guide.

4. Move the glass guide in the direction of arrow (4) shown in the figure and while aligning it to the screw installation hole in the rear door inner panel, set it to the rear door quarter glass and the rear door glass.

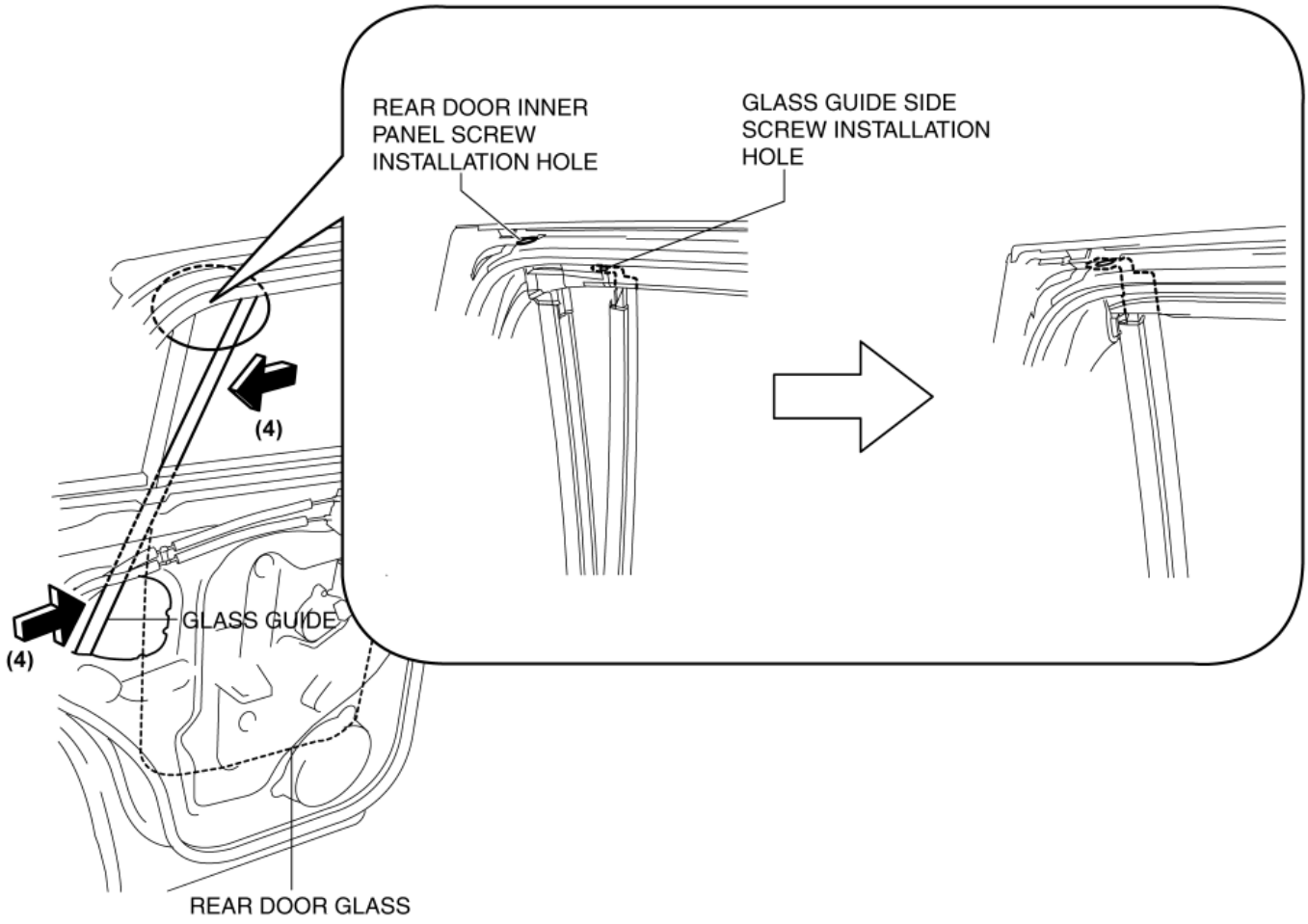

2014 - Mazda3 - Body and Accessories

WINDSHIELD REMOVAL

Reusing Windshield

1. Disconnect the negative battery cable. (See **NEGATIVE BATTERY CABLE DISCONNECTION/CONNECTION [SKYACTIV-G 2.0, SKYACTIV-G 2.5]**.)
2. Remove the following parts:
   a. Windshield wiper arm and blade (See **WINDSHIELD WIPER ARM AND BLADE REMOVAL/INSTALLATION**.)
   b. Cowl grille (See **COWL GRILLE REMOVAL/INSTALLATION**.)
   c. Front fender molding (See **FRONT FENDER MOLDING REMOVAL/INSTALLATION**.)
   d. A-pillar trim (See **A-PILLAR TRIM REMOVAL/INSTALLATION**.)
   e. Sunvisor (See **SUNVISOR REMOVAL/INSTALLATION**.)
   f. Front map light (dual light type) (See **FRONT MAP LIGHT REMOVAL/INSTALLATION**.)
   g. Assist handle (See **ASSIST HANDLE REMOVAL/INSTALLATION**.)
   h. Cover (See **FORWARD SENSING CAMERA (FSC) REMOVAL/INSTALLATION**.)
3. Disconnect the rain sensor connector. (with auto light/wiper system) (See **RAIN SENSOR REMOVAL/INSTALLATION**.)
4. Disconnect the forward sensing camera (FSC) connector (with high beam control (HBC) system) (See **FORWARD SENSING CAMERA (FSC) REMOVAL/INSTALLATION**.)
5. Disconnect the auto-dimming mirror connector (with auto-dimming mirror) (See **AUTO-DIMMING MIRROR REMOVAL/INSTALLATION**.)
6. Disconnect the laser sensor connector (with smart city brake support (SCBS)) (See **LASER SENSOR REMOVAL/INSTALLATION**.)
7. Set the headliner out of the way.
8. Apply protective tape along the edge of the body.

NOTE:

- Overlap and adhere the protective tape to the corners to prevent damage.

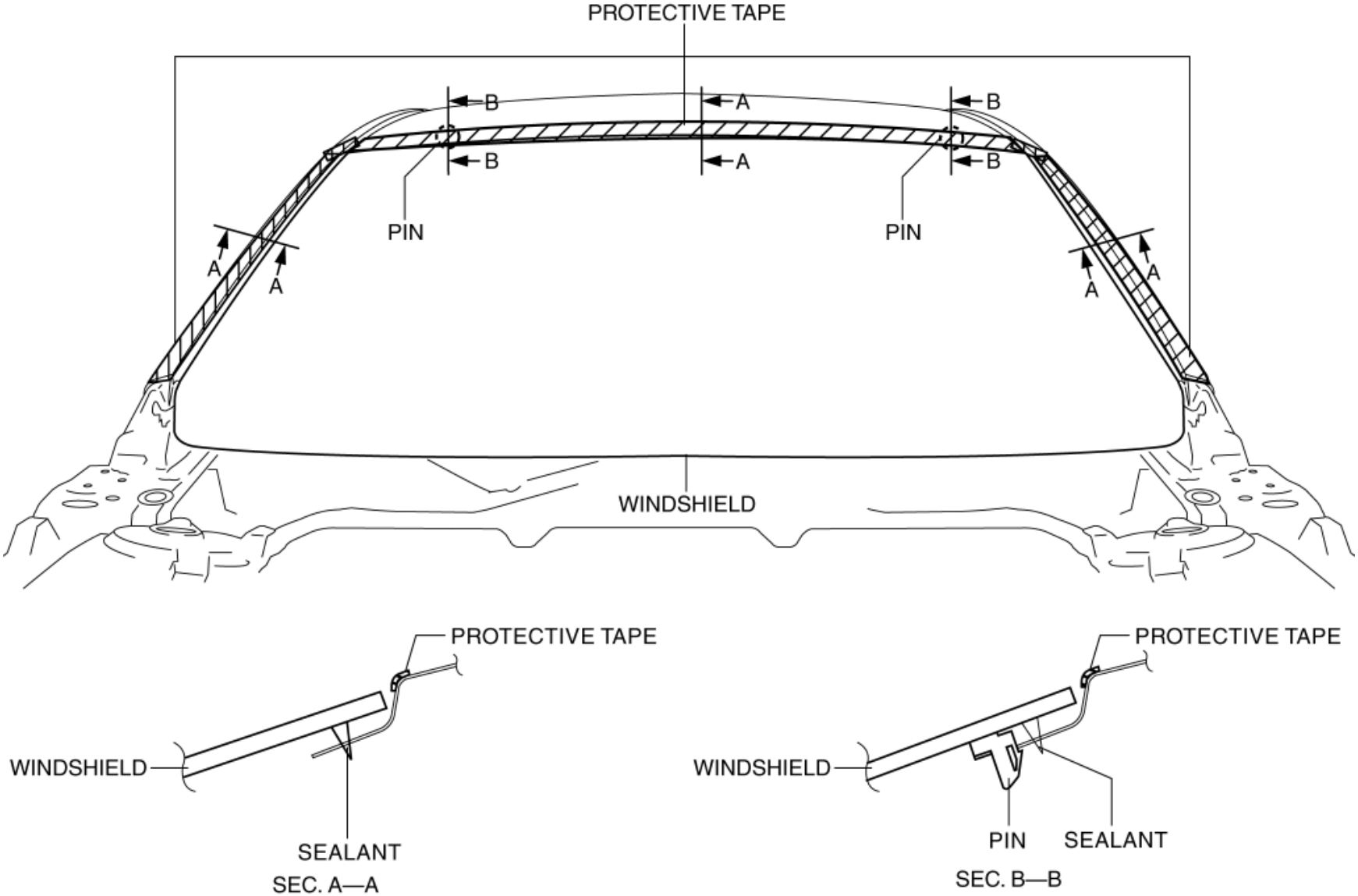

9. Remove the windshield molding by pulling it outward.

NOTE:

- If the windshield molding is difficult to remove, warm the windshield molding using a hot air blower.

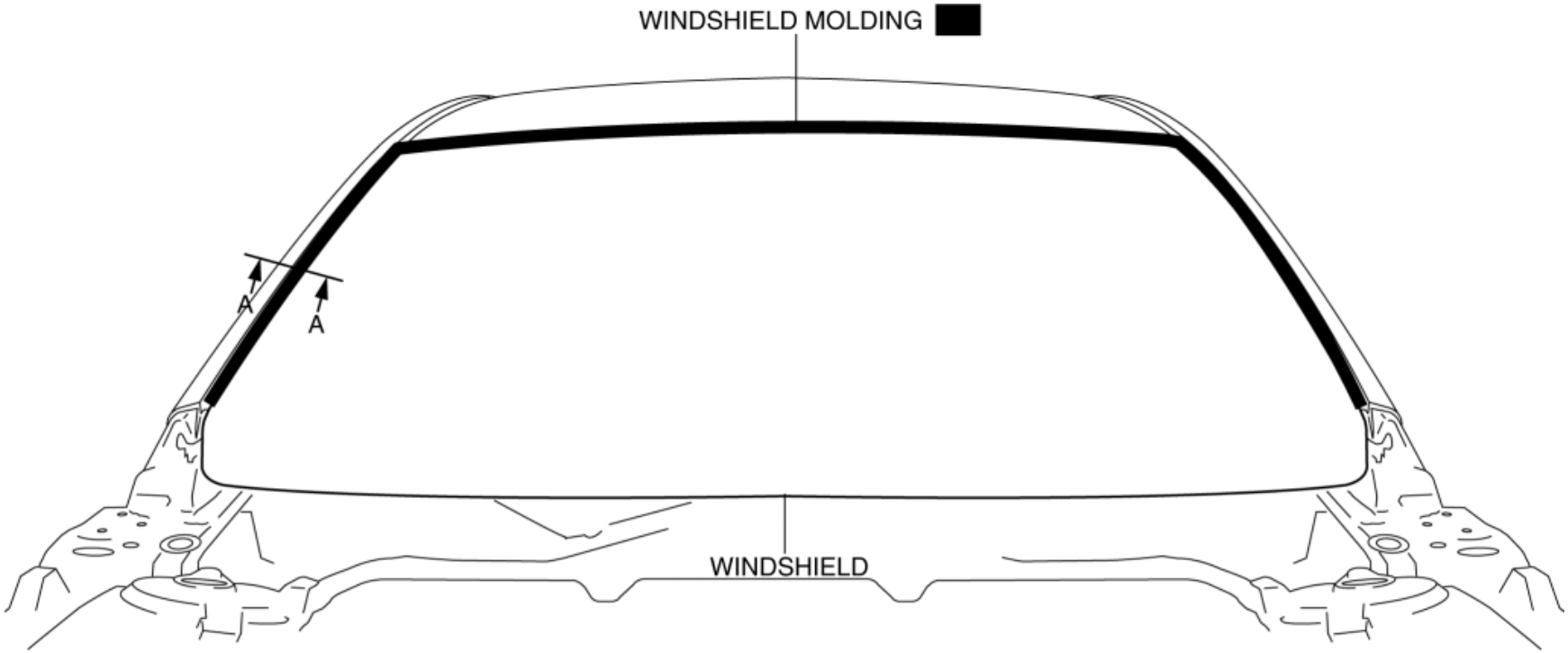

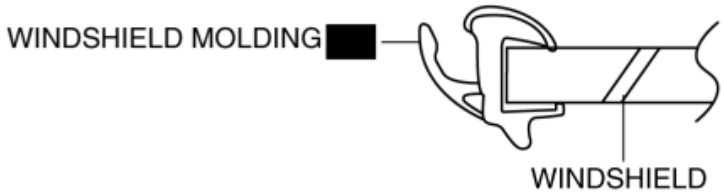

SEC. A—A

10. Cut the tip of the piano wire diagonally.

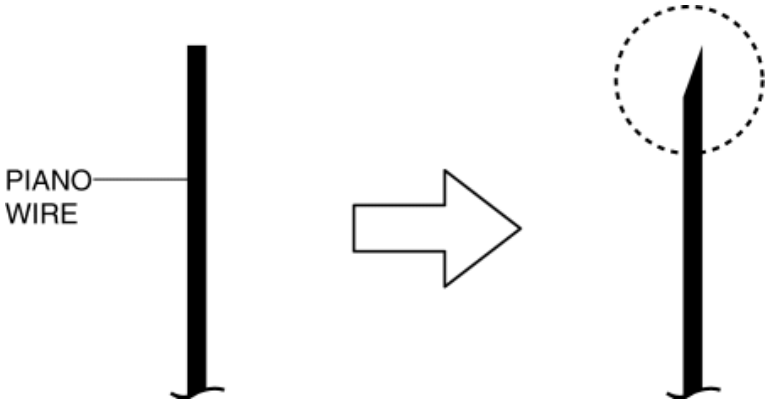

11. Pass the piano wire through from the cabin side.

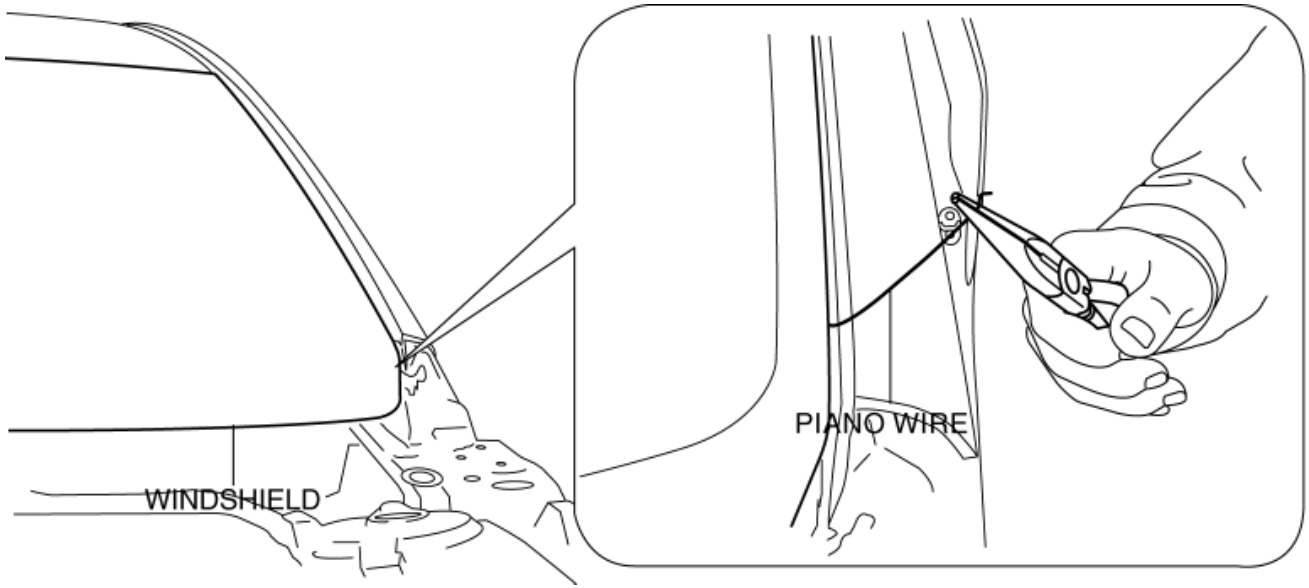

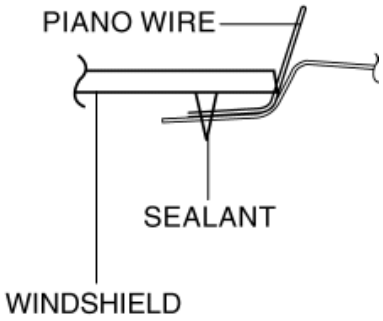

12. Wind each end of piano wire around a bar.

NOTE:

- Use a long sawing action to spread the work over the whole length of piano wire to prevent it from breaking due to localized heating.

13. Secure the piano wire on the cabin side, and pull the wire on the other side (vehicle exterior) in the direction of the arrow shown in the figure to cut the windshield sealant.

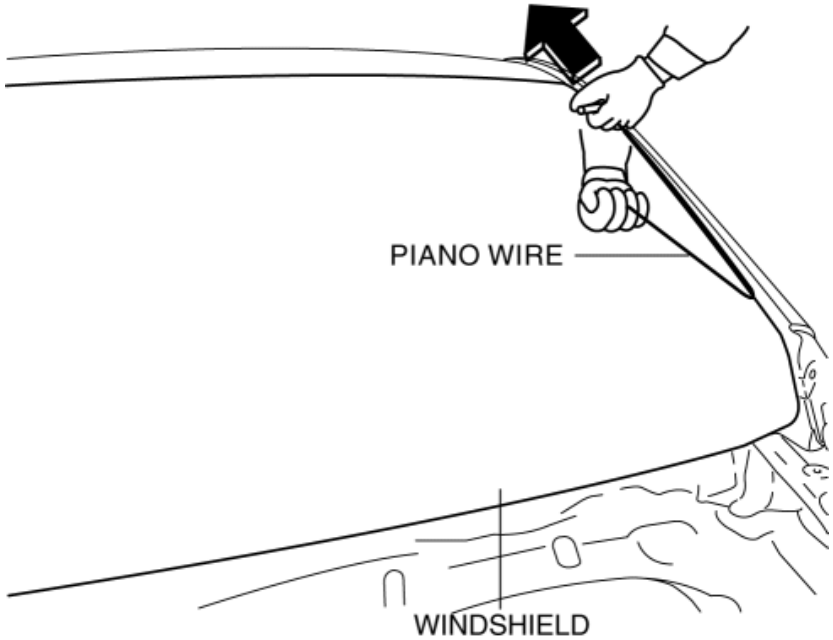

14. When reaching the pin, pull the piano wire out to go around the pin, then pass the piano wire through from the cabin side again.

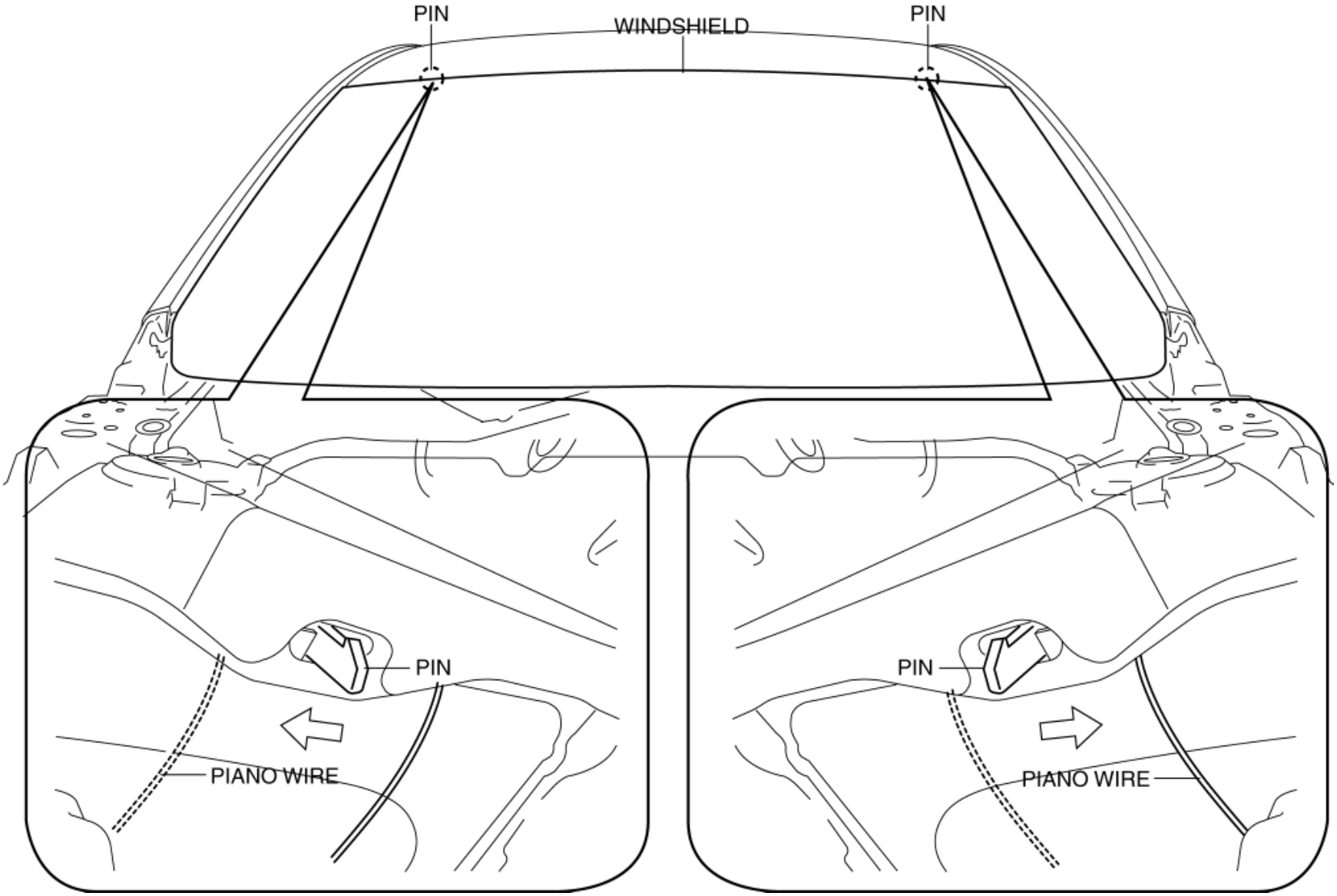

15. Secure one end of piano wire, and while pulling the other end, cut the sealant around the windshield.
16. Pinch the pin from the inside of the vehicle and detach it.
17. Remove the windshield.
18. If the pin is damaged, remove the pin.

NOTE:

- Before removing the pin from the windshield glass, place an alignment mark on the windshield.

Not Reusing Windshield

1. Disconnect the negative battery cable. (See **NEGATIVE BATTERY CABLE DISCONNECTION/CONNECTION [SKYACTIV-G 2.0, SKYACTIV-G 2.5]**.)
2. Remove the following parts:
   a. Windshield wiper arm and blade (See **WINDSHIELD WIPER ARM AND BLADE REMOVAL/INSTALLATION**.)
   b. Cowl grille (See **COWL GRILLE REMOVAL/INSTALLATION**.)
   c. Front fender molding (See **FRONT FENDER MOLDING REMOVAL/INSTALLATION**.)
   d. Forward sensing camera (FSC) short-cord (with high beam control (HBC) system) (See **FORWARD SENSING CAMERA (FSC) SHORT-CORD REMOVAL/INSTALLATION**.)
   e. Forward sensing camera (FSC) (with high beam control (HBC) system) (See **FORWARD SENSING CAMERA (FSC) REMOVAL/INSTALLATION**.)
   f. Forward sensing camera (FSC) clip (with high beam control (HBC) system) (See **FORWARD SENSING CAMERA (FSC) CLIP REMOVAL/INSTALLATION**.)
   g. Rain sensor (with auto light/wiper system) (See **RAIN SENSOR REMOVAL/INSTALLATION**.)
   h. Laser sensor (with smart city brake support (SCBS)) (See **LASER SENSOR REMOVAL/INSTALLATION**.)
   i. Auto-dimming mirror (with auto-dimming mirror) (See **AUTO-DIMMING MIRROR REMOVAL/INSTALLATION**.)
   j. Rearview mirror (without auto-dimming mirror) (See **REARVIEW MIRROR REMOVAL/INSTALLATION**.)
   k. A-pillar trim (See **A-PILLAR TRIM REMOVAL/INSTALLATION**.)
   l. Sunvisor (See **SUNVISOR REMOVAL/INSTALLATION**.)
   m. Front map light (dual light type) (See **FRONT MAP LIGHT REMOVAL/INSTALLATION**.)
   n. Assist handle (See **ASSIST HANDLE REMOVAL/INSTALLATION**.)
   o. Cover (See **FORWARD SENSING CAMERA (FSC) REMOVAL/INSTALLATION**.)
3. Set the headliner out of the way.
4. Apply protective tape along the edge of the body.

NOTE:

- Overlap and adhere the protective tape to the corners to prevent damage.

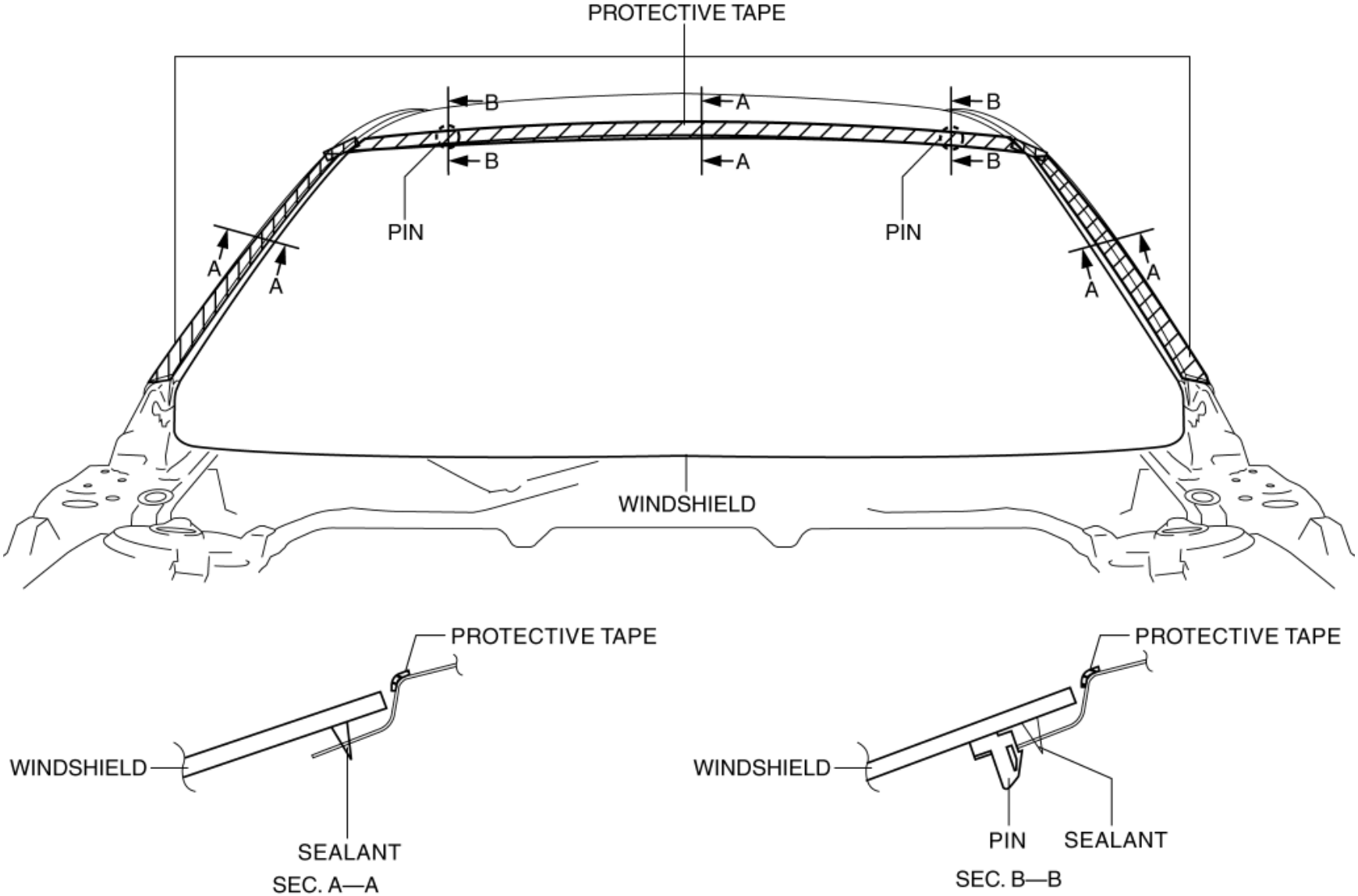

5. Remove the windshield molding by pulling it outward.

NOTE:

- If the windshield molding is difficult to remove, warm the windshield molding using a hot air blower.

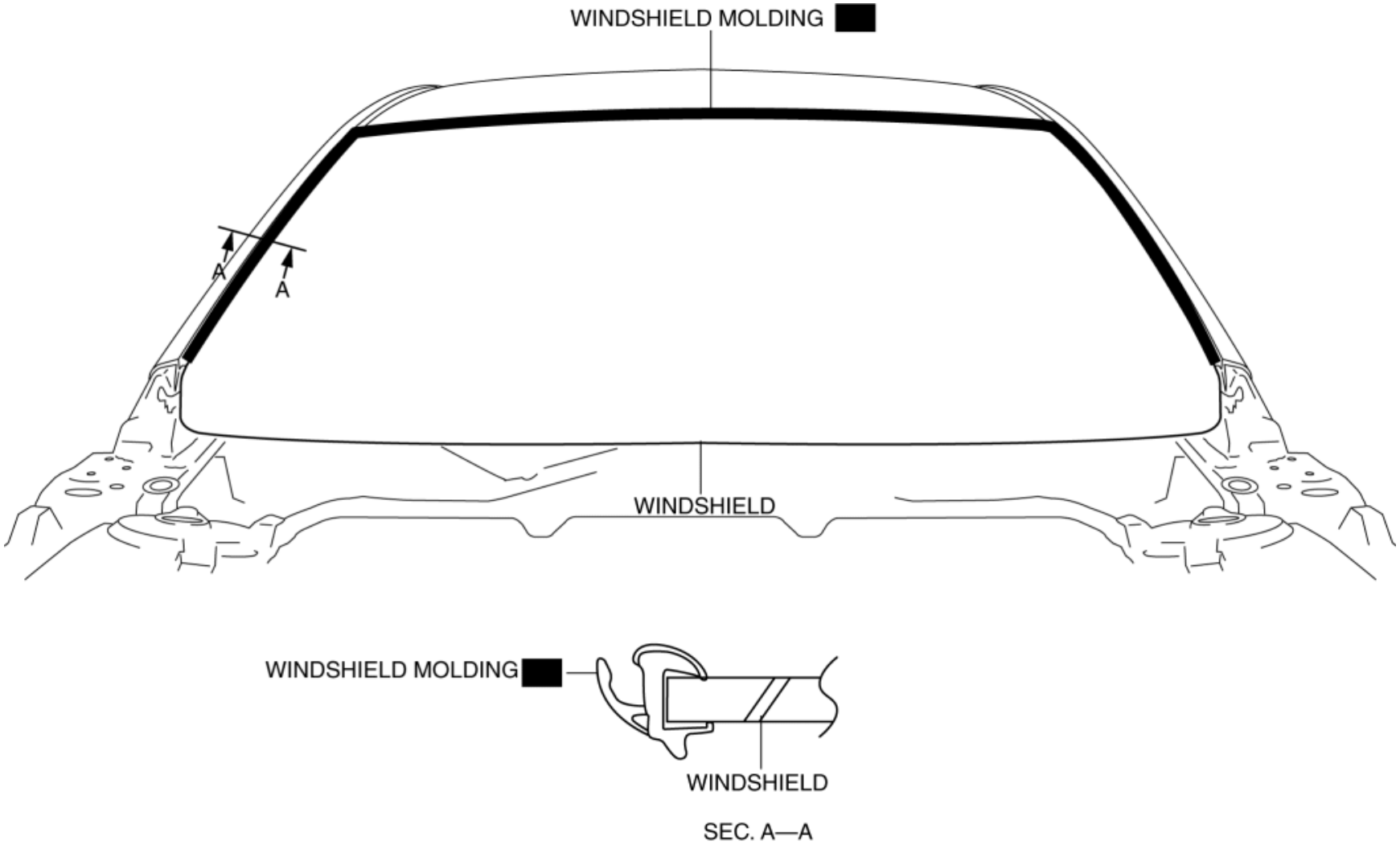

6. Cut out the sealant all around the glass using a sealant remover.

NOTE:

- If it is difficult to cut sealant, use piano wire and follow the procedure under “Reusing Windshield”.

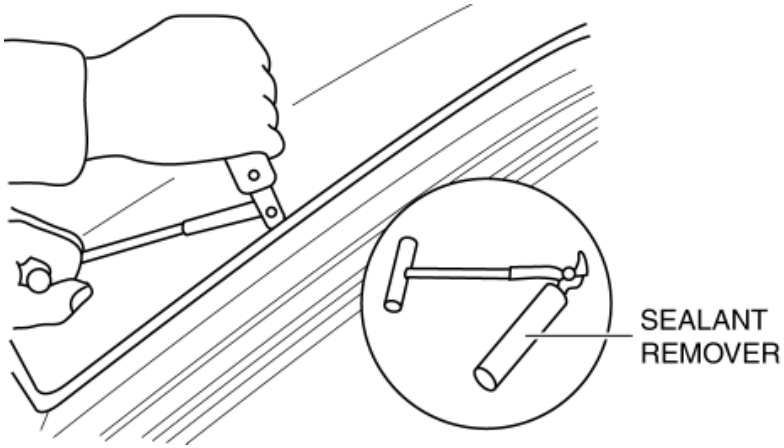

7. Remove the windshield.

2014 - Mazda3 - Body and Accessories

WINDSHIELD INSTALLATION

WARNING:

- Using a utility knife with bare hands can cause injury. Always wear gloves when using a utility knife.

CAUTION:

- If a door is opened or closed when all the window glass is closed, the resulting change in air pressure could cause the sealant to crack preventing the proper installation of the windshield. Keep the door glass opened until the windshield installation is completed.

Reusing Windshield

1. Remove the sealant along the perimeter of the glass using a utility knife.
2. Clean and degrease an **approx. 50 mm {2.0 in}** wide strip along the perimeter of the windshield.
3. Inspect the glass for cracks. If it is cracked, chamfer it using sandpaper.
4. Align the alignment marks made before removal and install the pin to the windshield referring to the figure.

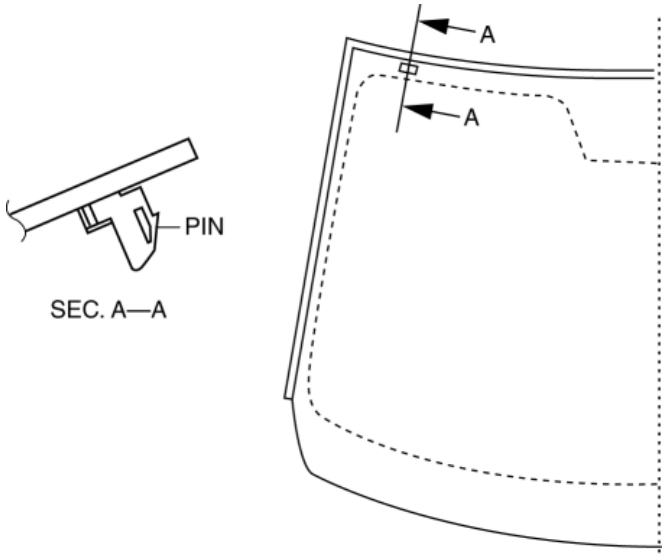

5. Install the windshield molding.

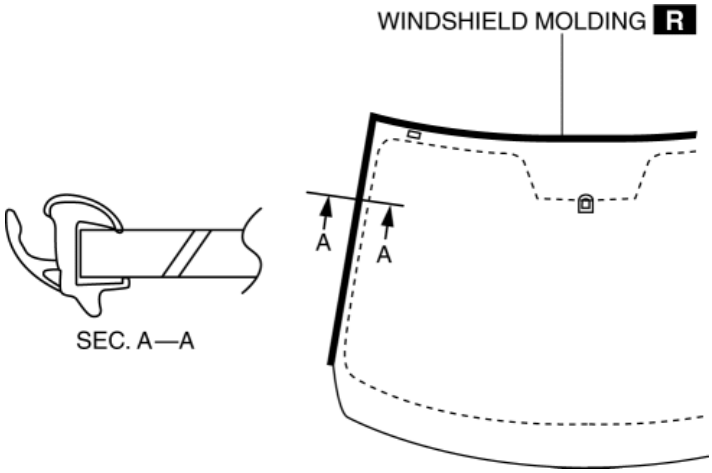

6. Apply primer to the area of the glass shown in the figure.
   - Follow the primer product instructions for the drying time.

CAUTION:

- To prevent weakening of the primer adhesion, keep the bonding surface free of dirt, moisture, and grease. Do not touch the surface with your hand.

NOTE:

- Apply primer to the hollowed marks in the ceramic coating.

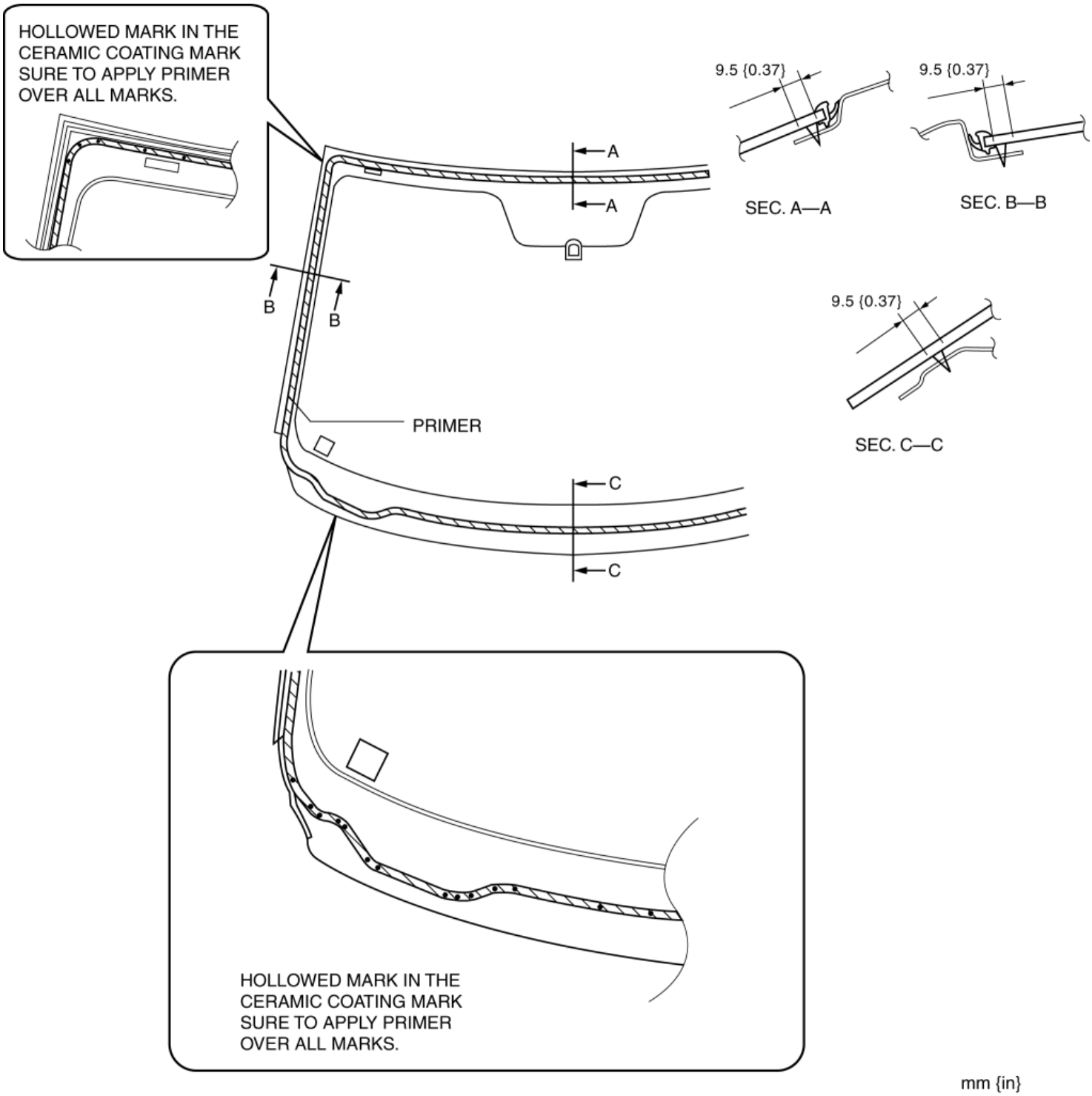

7. Cut away the old sealant using a utility knife so that **1—2 mm {0.04—0.07 in}** thickness of sealant remains along the perimeter of the frame.

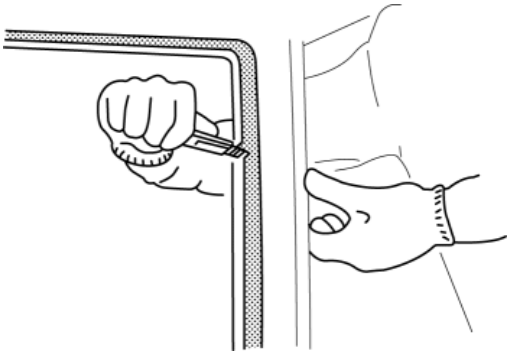

8. Clean and degrease along the perimeter of the bonding area on the body.

9. Apply primer to the area of the body shown in the figure.

- Follow the primer product instructions for the drying time.

CAUTION:

- Using the dowel for applying primer, apply primer to the area shown in the figure.

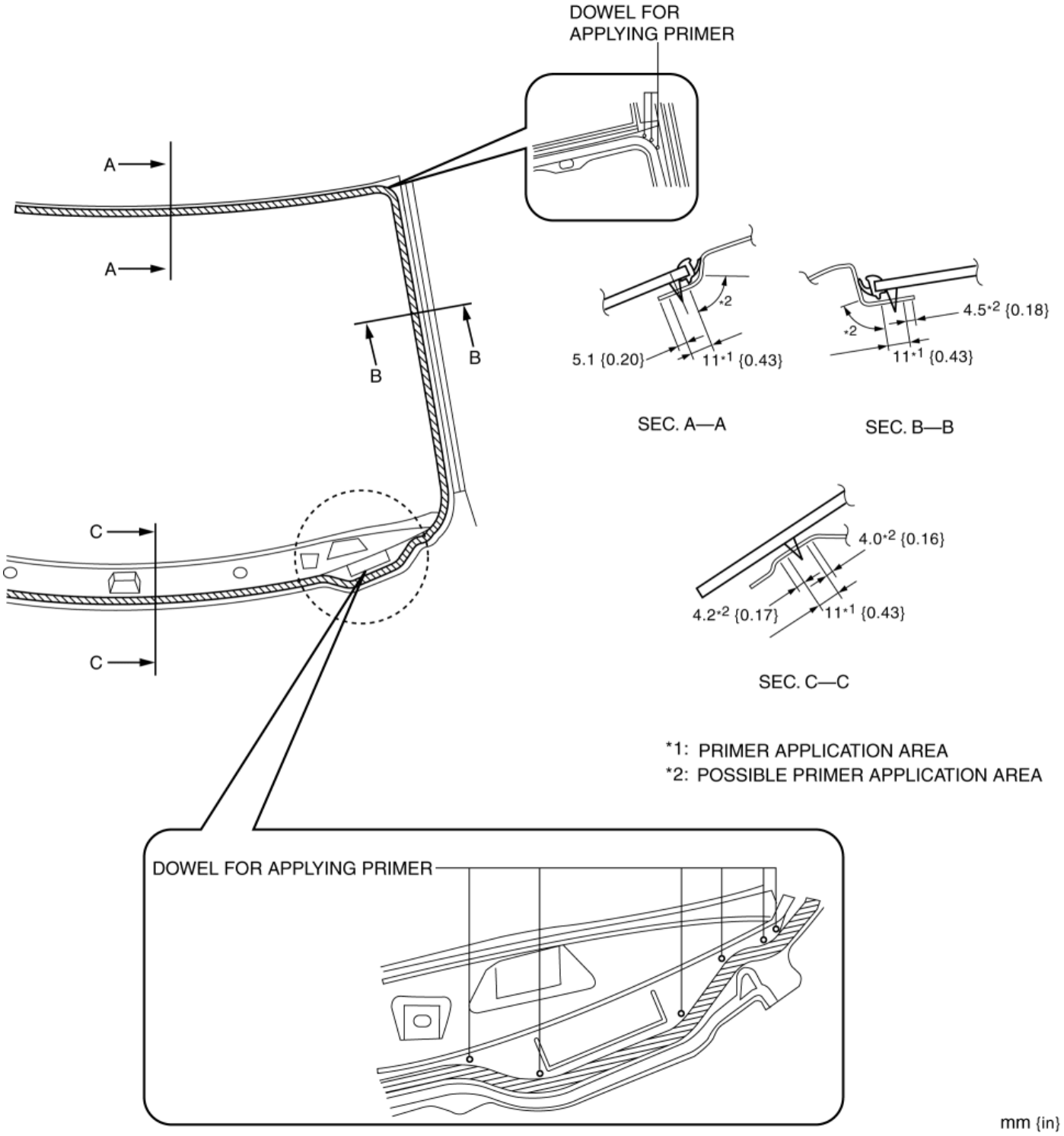

10. Apply sealant to the area of the glass surface as shown in the figure.

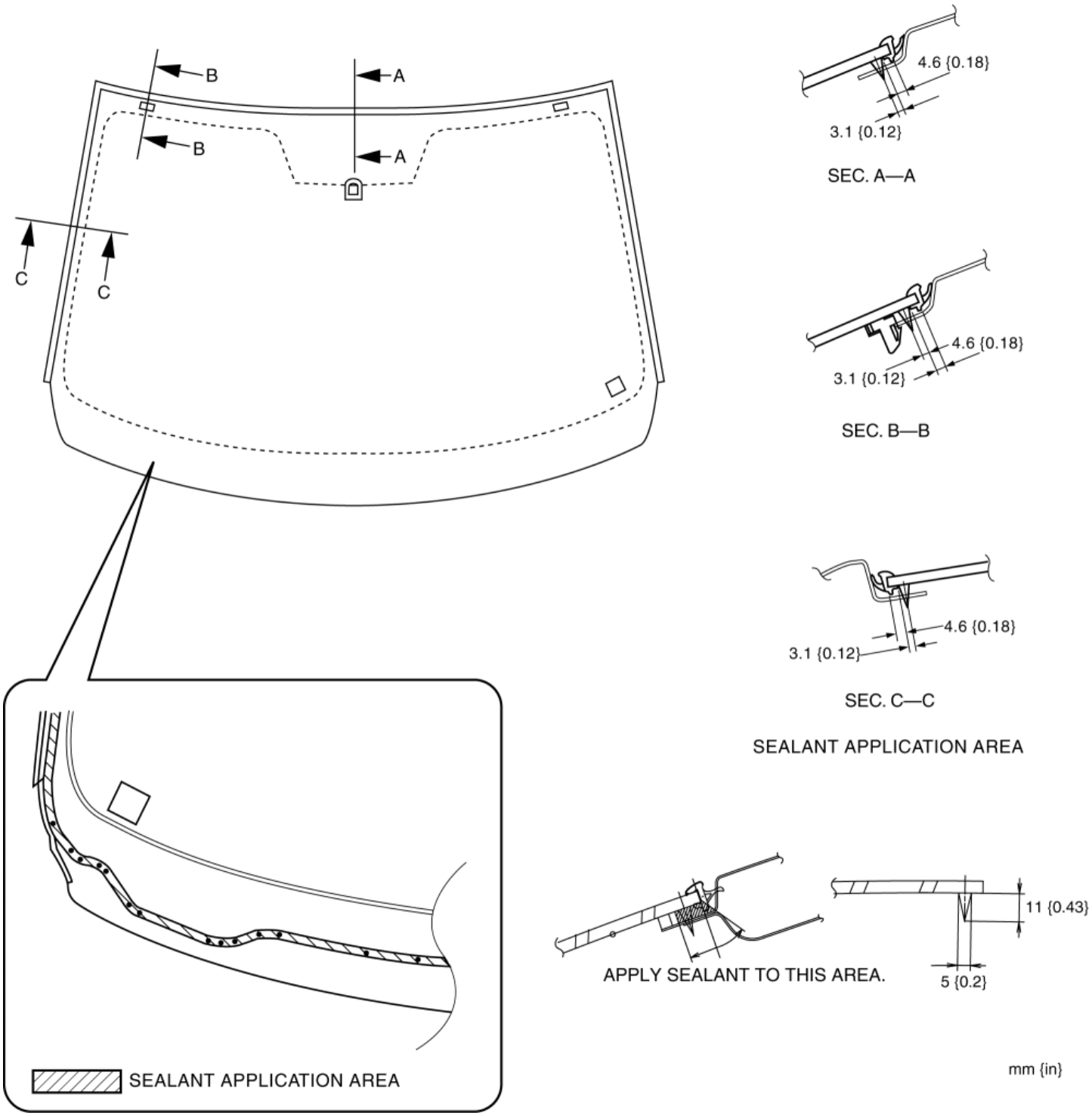

11. Insert the positioning pins to the body and install the windshield.

12. Verify that the clearance between the A-pillar and the roof is within the range shown in the figure, and press along the perimeter of the glass.

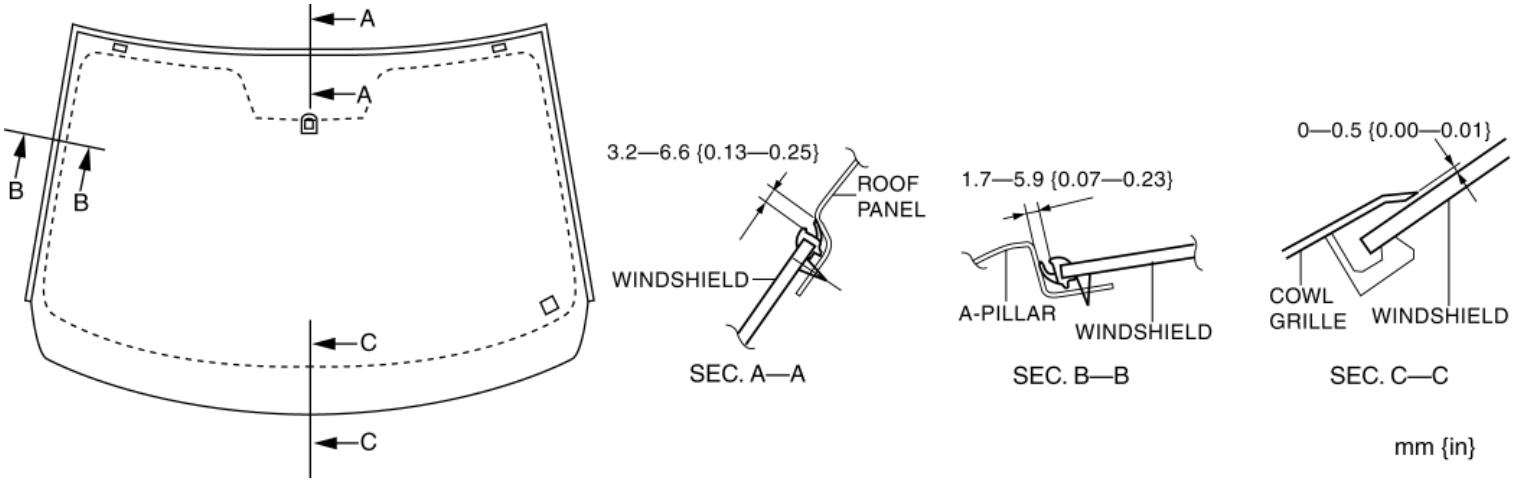

13. Connect the laser sensor connector (with smart city brake support (SCBS)) (See **LASER SENSOR REMOVAL/INSTALLATION**.)

14. Connect the auto-dimming mirror connector (with auto-dimming mirror) (See **AUTO-DIMMING MIRROR REMOVAL/INSTALLATION**.)

15. Connect the forward sensing camera (FSC) connector (with high beam control (HBC) system) (See **FORWARD SENSING CAMERA (FSC) REMOVAL/INSTALLATION**.)

16. Connect the rain sensor connector. (with auto light/wiper system) (See **RAIN SENSOR REMOVAL/INSTALLATION**.)

17. Install the following parts:

    a. Cover (See **FORWARD SENSING CAMERA (FSC) REMOVAL/INSTALLATION**.)

    b. Assist handle (See **ASSIST HANDLE REMOVAL/INSTALLATION**.)

    c. Front map light (dual light type) (See **FRONT MAP LIGHT REMOVAL/INSTALLATION**.)

    d. Sunvisor (See **SUNVISOR REMOVAL/INSTALLATION**.)

    e. A-pillar trim (See **A-PILLAR TRIM REMOVAL/INSTALLATION**.)

    f. Front fender molding (See **FRONT FENDER MOLDING REMOVAL/INSTALLATION**.)

    g. Cowl grille (See **COWL GRILLE REMOVAL/INSTALLATION**.)

    h. Windshield wiper arm and blade (See **WINDSHIELD WIPER ARM AND BLADE REMOVAL/INSTALLATION**.)

18. Connect the negative battery cable. (See **NEGATIVE BATTERY CABLE DISCONNECTION/CONNECTION [SKYACTIV-G 2.0, SKYACTIV-G 2.5]**.)

19. Allow the sealant to harden completely. Reference for sealant hardening time: 24 h

NOTE:

- Follow the product instructions for the sealant hardening time.

20. Adjust the forward sensing camera (FSC) aiming. (See **FORWARD SENSING CAMERA (FSC) AIMING**.)

21. If the rain sensor is replaced, perform the sensitivity setting procedure for the auto lights. (See **RAIN SENSOR REMOVAL/INSTALLATION**.)

Not Reusing Windshield

1. Clean and degrease an **approx. 50 mm {2.0 in}** wide strip along the perimeter of the windshield.

2. Inspect the glass for cracks. If it is cracked, chamfer it using sandpaper.

3. Install the windshield molding.

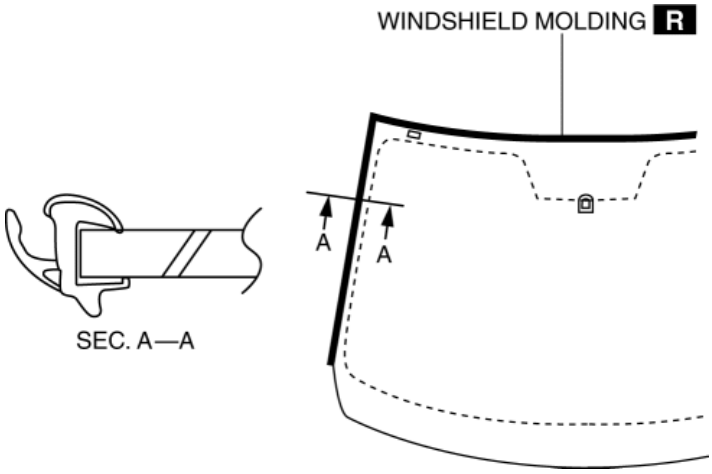

4. Apply primer to the area of the glass shown in the figure.

- Follow the primer product instructions for the drying time.

CAUTION:

- To prevent weakening of the primer adhesion, keep the bonding surface free of dirt, moisture, and grease. Do not touch the surface with your hand.

NOTE:

- Apply primer to the hollowed marks in the ceramic coating.

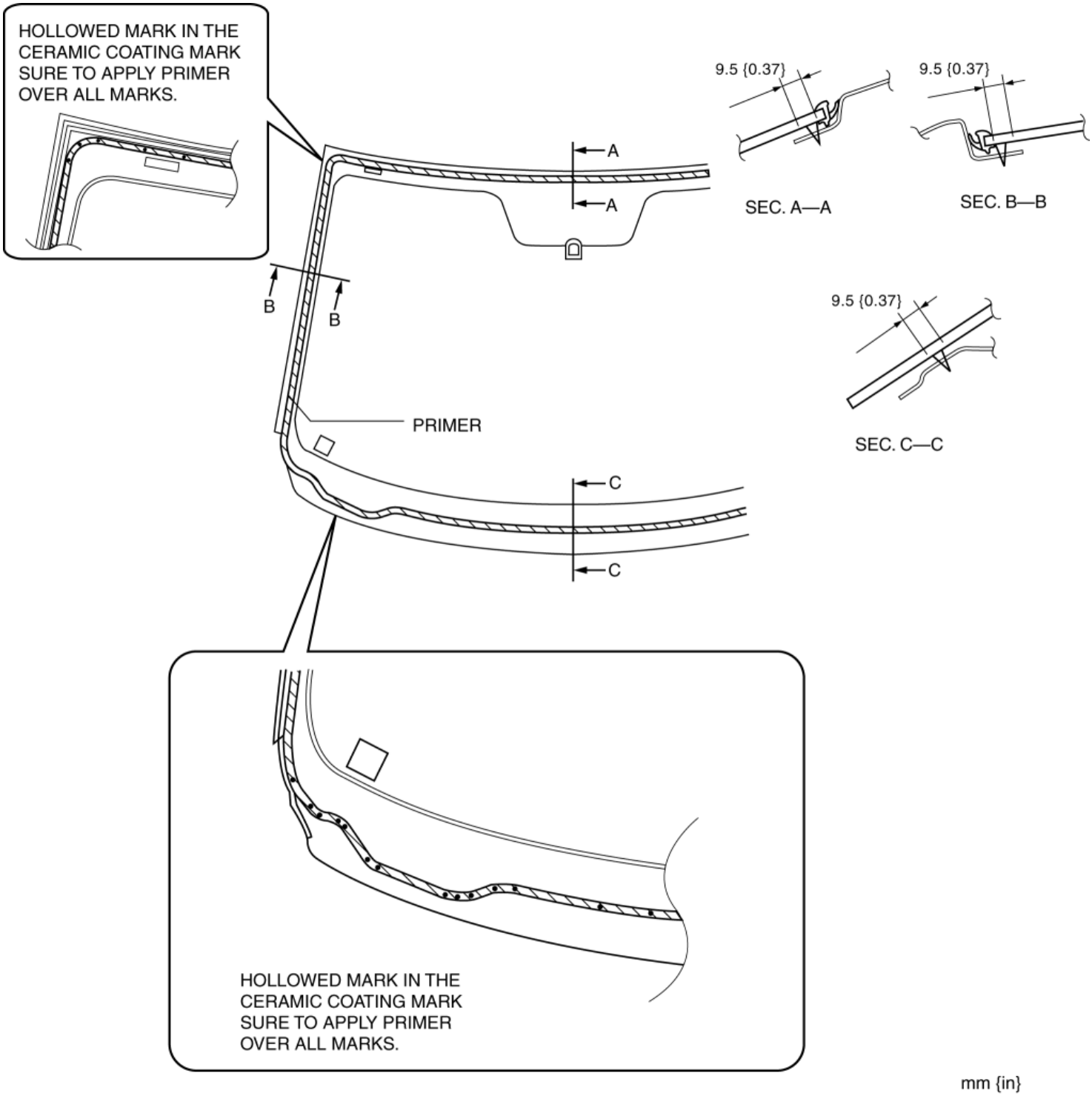

5. Cut away the old sealant using a utility knife so that **1—2 mm {0.04—0.07 in}** thickness of sealant remains along the perimeter of the frame.

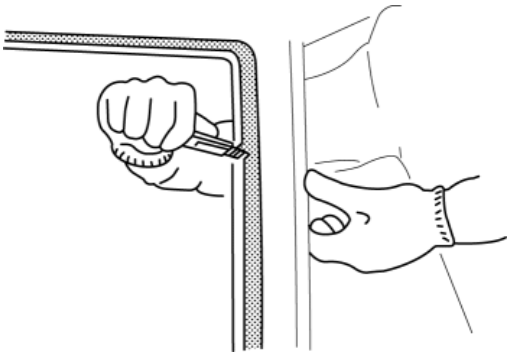

6. Clean and degrease along the perimeter of the bonding area on the body.
7. Apply primer to the area of the body shown in the figure.
    - Follow the primer product instructions for the drying time.

CAUTION:

- Using the dowel for applying primer, apply primer to the area shown in the figure.

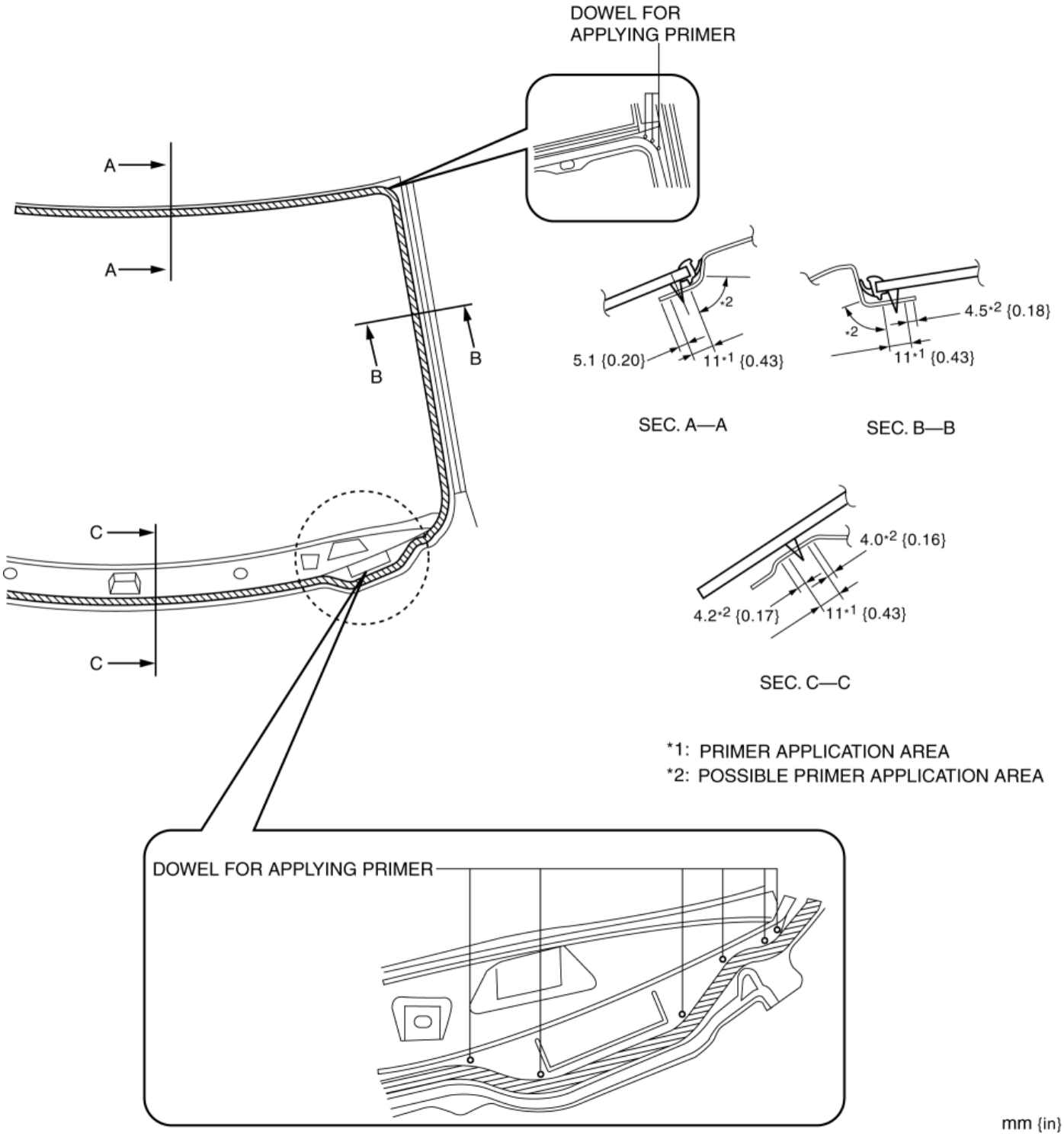

8. Apply sealant to the area of the glass surface as shown in the figure.

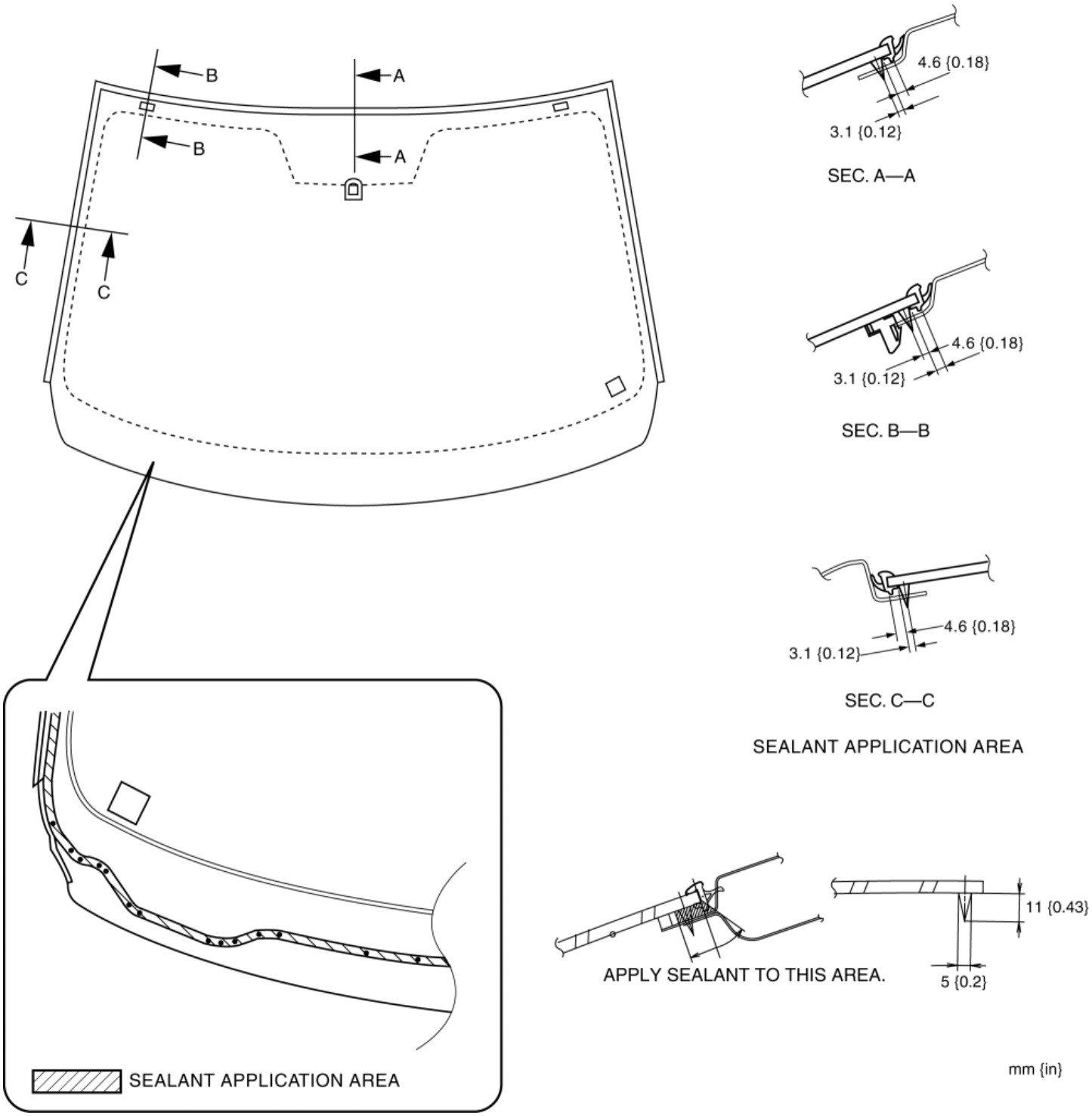

9. Insert the positioning pins to the body and install the windshield.

10. Verify that the clearance between the A-pillar and the roof is within the range shown in the figure, and press along the perimeter of the glass.

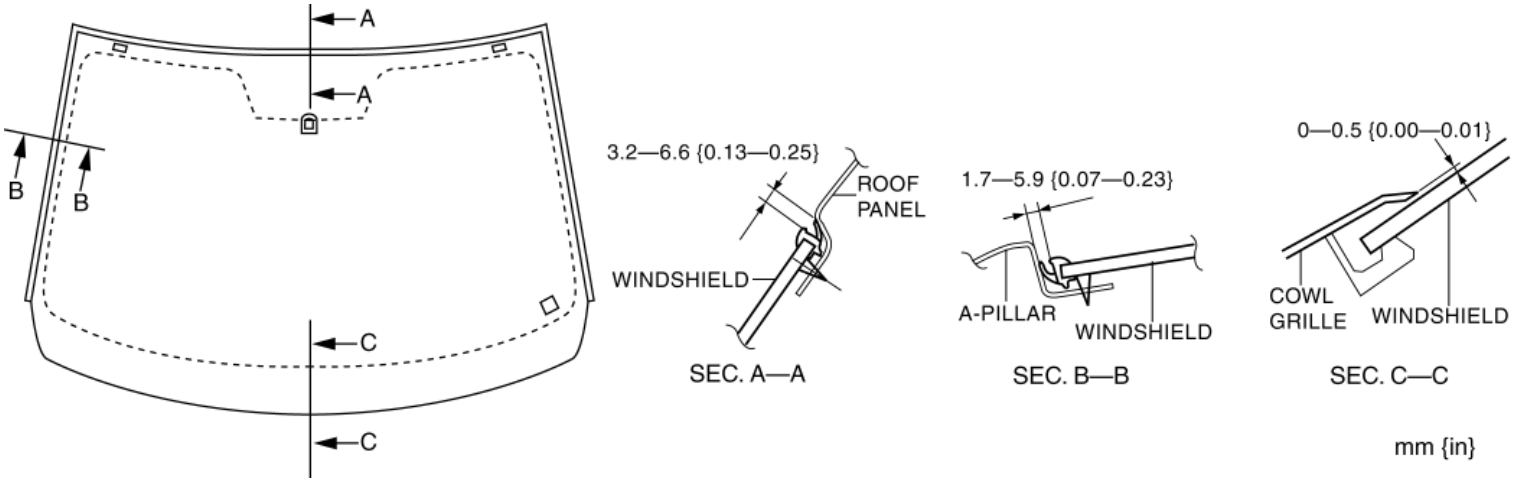

11. Install the following parts:

    a. Rearview mirror (without auto-dimming mirror) (See **REARVIEW MIRROR REMOVAL/INSTALLATION**.)

    b. Auto-dimming mirror (with auto-dimming mirror) (See **AUTO-DIMMING MIRROR REMOVAL/INSTALLATION**.)

    c. Laser sensor (with smart city brake support (SCBS)) (See **LASER SENSOR REMOVAL/INSTALLATION**.)

    d. Rain sensor (with auto light/wiper system) (See **RAIN SENSOR REMOVAL/INSTALLATION**.)

    e. Forward sensing camera (FSC) clip (with high beam control (HBC) system) (See **FORWARD SENSING CAMERA (FSC) CLIP REMOVAL/INSTALLATION**.)

    f. Forward sensing camera (FSC) (with high beam control (HBC) system) (See **FORWARD SENSING CAMERA (FSC) REMOVAL/INSTALLATION**.)

    g. Forward sensing camera (FSC) short-cord (with high beam control (HBC) system) (See **FORWARD SENSING CAMERA (FSC) SHORT-CORD REMOVAL/INSTALLATION**.)

    h. Cover (See **FORWARD SENSING CAMERA (FSC) REMOVAL/INSTALLATION**.)

    i. Assist handle (See **ASSIST HANDLE REMOVAL/INSTALLATION**.)

    j. Front map light (dual light type) (See **FRONT MAP LIGHT REMOVAL/INSTALLATION**.)

    k. Sunvisor (See **SUNVISOR REMOVAL/INSTALLATION**.)

    l. A-pillar trim (See **A-PILLAR TRIM REMOVAL/INSTALLATION**.)

    m. Front fender molding (See **FRONT FENDER MOLDING REMOVAL/INSTALLATION**.)

    n. Cowl grille (See **COWL GRILLE REMOVAL/INSTALLATION**.)

    o. Windshield wiper arm and blade (See **WINDSHIELD WIPER ARM AND BLADE REMOVAL/INSTALLATION**.)

12. Connect the negative battery cable. (See **NEGATIVE BATTERY CABLE DISCONNECTION/CONNECTION [SKYACTIV-G 2.0, SKYACTIV-G 2.5]**.)

13. Allow the sealant to harden completely. Reference for sealant hardening time: 24 h

NOTE:

- Follow the product instructions for the sealant hardening time.

14. Adjust the forward sensing camera (FSC) aiming. (See **FORWARD SENSING CAMERA (FSC) AIMING**.)

15. If the rain sensor is replaced, perform the sensitivity setting procedure for the auto lights. (See **RAIN SENSOR REMOVAL/INSTALLATION**.)

2014 - Mazda3 - Body and Accessories

REAR WINDOW GLASS REMOVAL

4SD

1. Disconnect the negative battery cable. (See **NEGATIVE BATTERY CABLE DISCONNECTION/CONNECTION [SKYACTIV-G 2.0, SKYACTIV-G 2.5]**.)

2. Remove the following parts:

   a. Rear seat cushion (See **REAR SEAT CUSHION REMOVAL/INSTALLATION**.)

   b. Tire house trim (See **TIRE HOUSE TRIM REMOVAL/INSTALLATION**.)

   c. C-pillar trim (See **C-PILLAR TRIM REMOVAL/INSTALLATION**.)

   d. High-mount brake light (See **HIGH-MOUNT BRAKE LIGHT REMOVAL/INSTALLATION**.)

   e. Rear package trim (See **REAR PACKAGE TRIM REMOVAL/INSTALLATION**.)

3. Disconnect the filament connectors in the direction of the arrow in the order of (1), (2) shown in the figure.

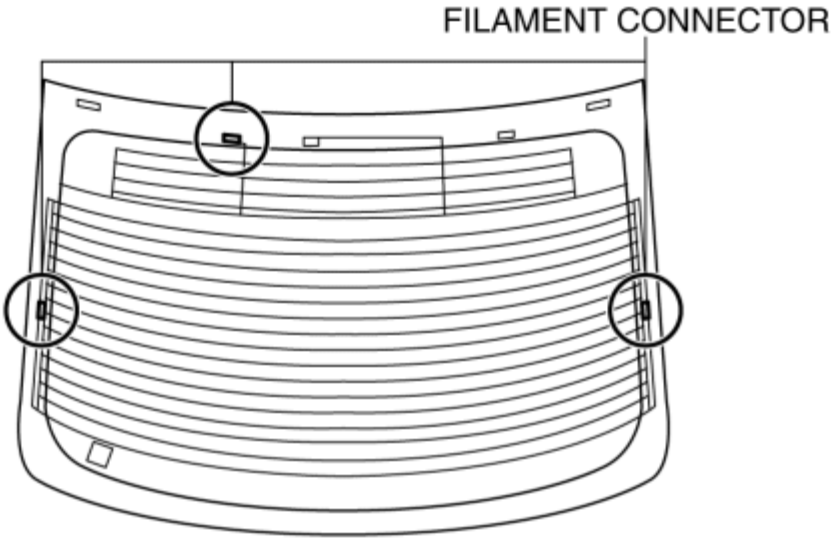

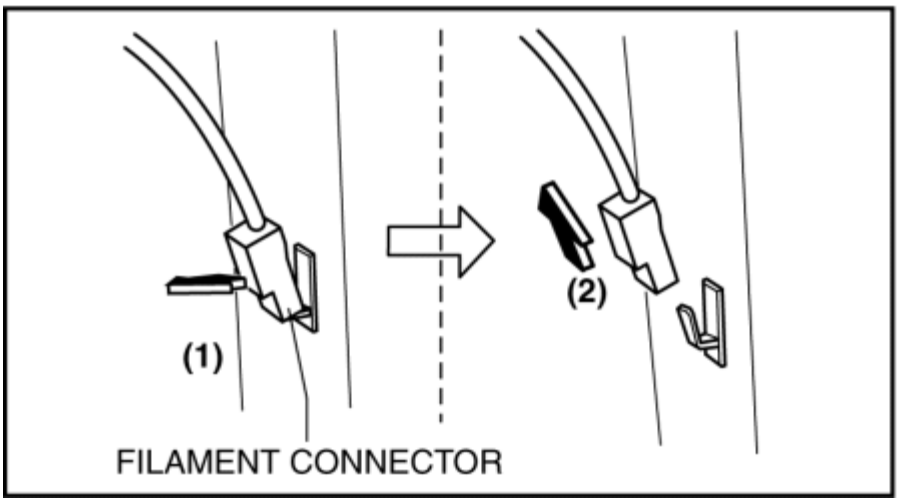

4. Apply protective tape along the edge of the body.

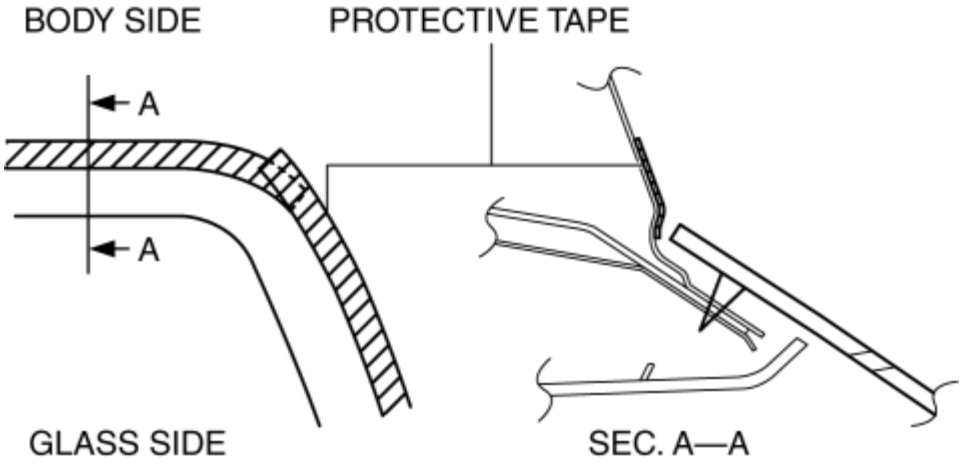

NOTE:

- Overlap and adhere the protective tape to the corners to prevent damage.

5. Avoiding the pin on the inside of the vehicle, insert piano wire which has been cut to sufficient length.

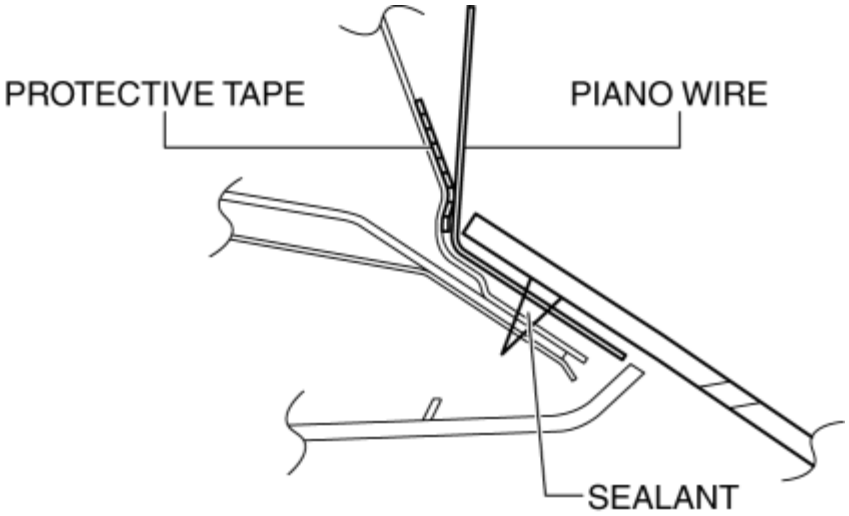

WARNING:

1. Using piano wire with bare hands can cause injury. Always wear gloves when using piano wire.

NOTE:

- Before removing the rear window glass from the body, mark the position of the glass by affixing tape to the glass and body panel.

6. Wind each end of piano wire around a bar.

NOTE:

- Use a long sawing action to spread the work over the whole length of piano wire to prevent it from breaking due to localized heating.

7. Secure one end of piano wire, and while pulling the other end, cut the sealant around the rear window glass.

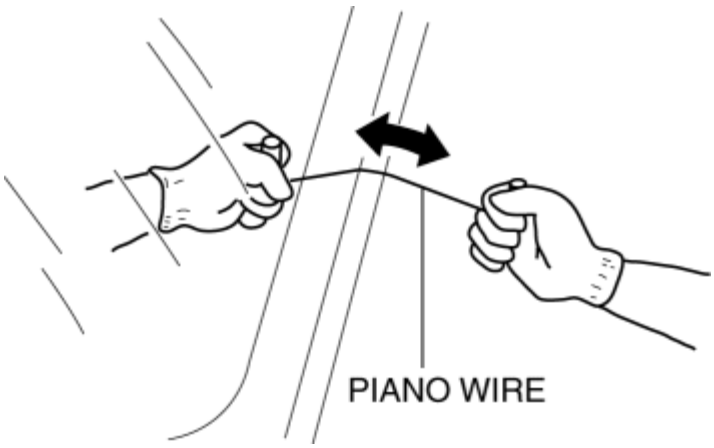

8. Pinch pins from the inside of the vehicle and detach it.

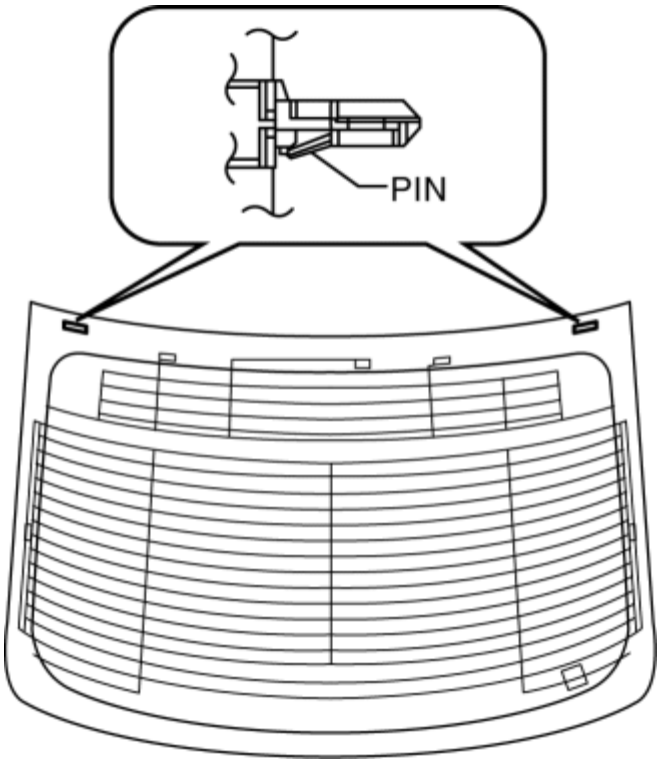

9. Remove the rear window glass.

5HB

1. Disconnect the negative battery cable. (See **NEGATIVE BATTERY CABLE DISCONNECTION/CONNECTION [SKYACTIV-G 2.0, SKYACTIV-G 2.5]**.)

2. Remove the following parts:

   a. Liftgate upper trim (See **LIFTGATE UPPER TRIM REMOVAL/INSTALLATION**.)

   b. Liftgate side trim (See **LIFTGATE SIDE TRIM REMOVAL/INSTALLATION**.)

   c. Liftgate recess (See **LIFTGATE RECESS REMOVAL/INSTALLATION**.)

   d. Liftgate lower trim (See **LIFTGATE LOWER TRIM REMOVAL/INSTALLATION**.)

   e. Rear spoiler (See **REAR SPOILER REMOVAL**.)

   f. Rear wiper arm and blade (See **REAR WIPER ARM AND BLADE REMOVAL/INSTALLATION**.)

   g. Rear wiper motor (See **REAR WIPER MOTOR REMOVAL/INSTALLATION**.)

   h. Outer bushing (See **REAR WIPER MOTOR REMOVAL/INSTALLATION**.)

3. Disconnect the antenna feeder No.3 connector. (with RDS (radio data system))

4. Disconnect the filament connectors in the direction of the arrow in the order of (1), (2) shown in the figure.

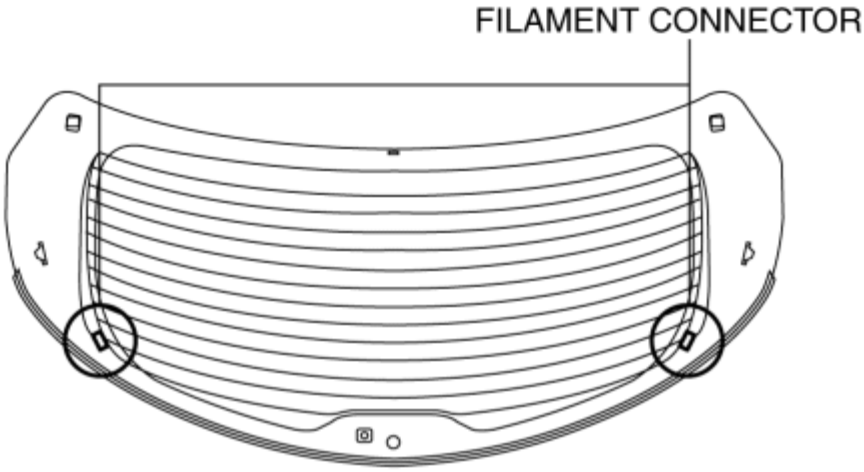

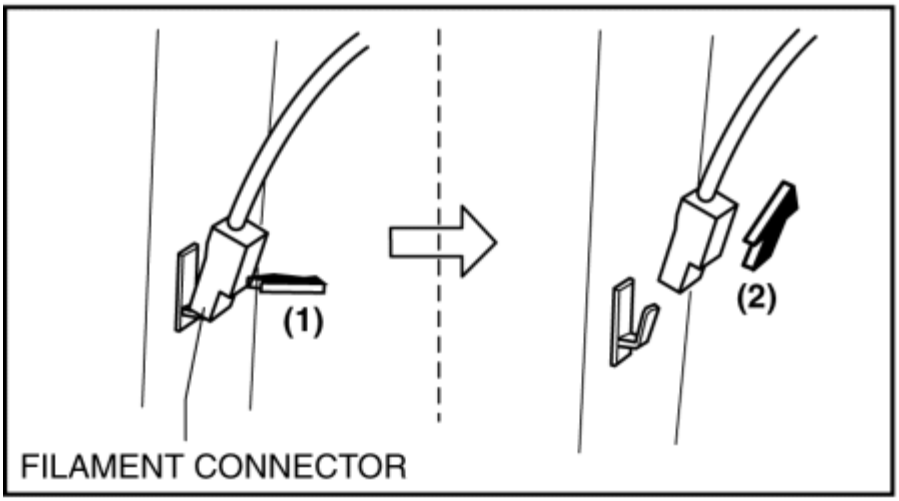

5. Apply protective tape along the edge of the body.

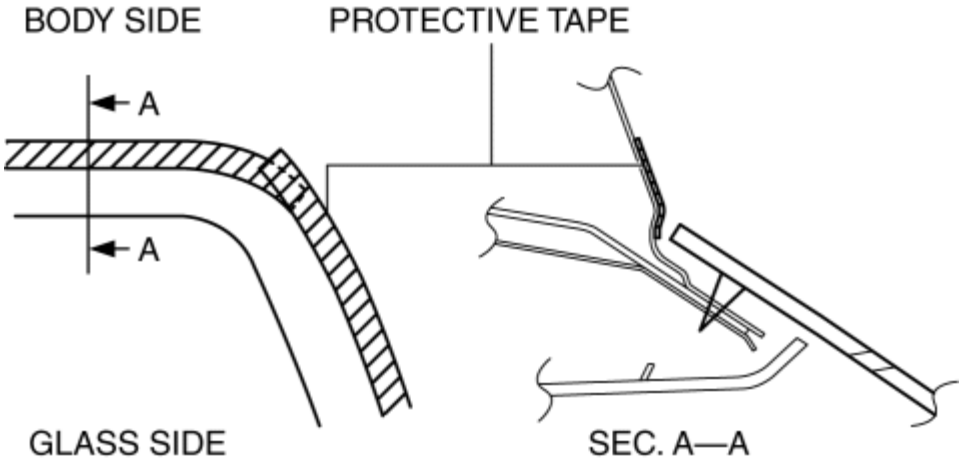

NOTE:

- Overlap and adhere the protective tape to the corners to prevent damage.

6. Avoiding the pin on the inside of the vehicle, insert piano wire which has been cut to sufficient length.

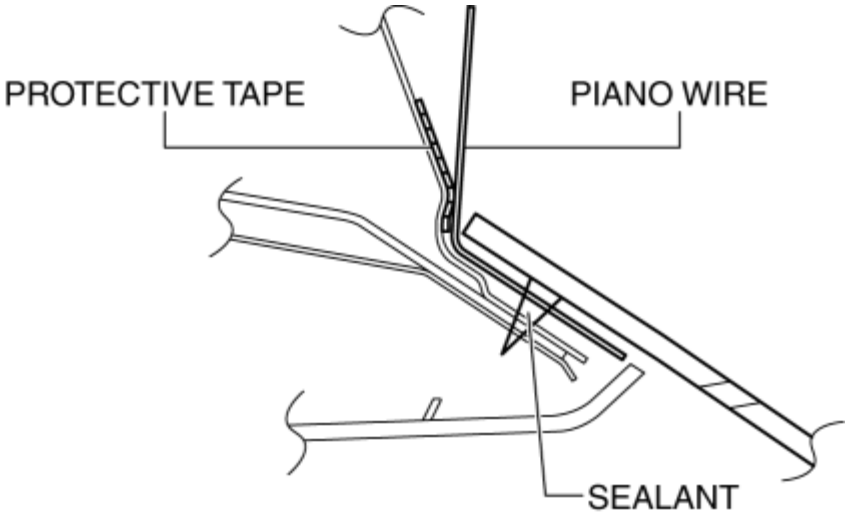

WARNING:

1. Using piano wire with bare hands can cause injury. Always wear gloves when using piano wire.

NOTE:

- Before removing the rear window glass from the body, mark the position of the glass by affixing tape to the glass and body panel.

7. Wind each end of piano wire around a bar.

NOTE:

- Use a long sawing action to spread the work over the whole length of piano wire to prevent it from breaking due to localized heating.

8. Secure one end of piano wire, and while pulling the other end, cut the sealant around the rear window glass.

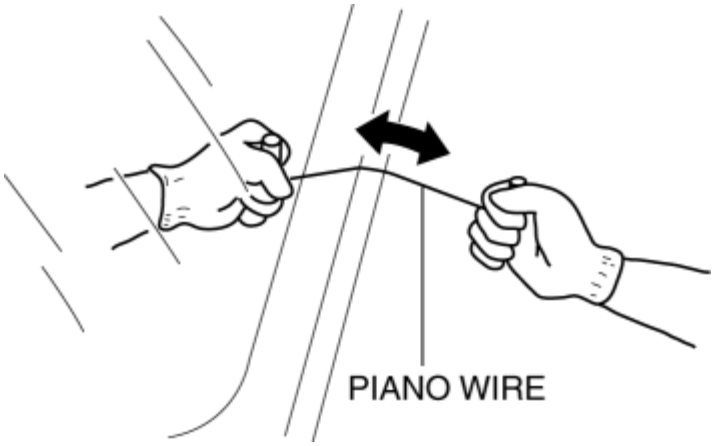

9. Pinch pins from the inside of the vehicle and detach it.

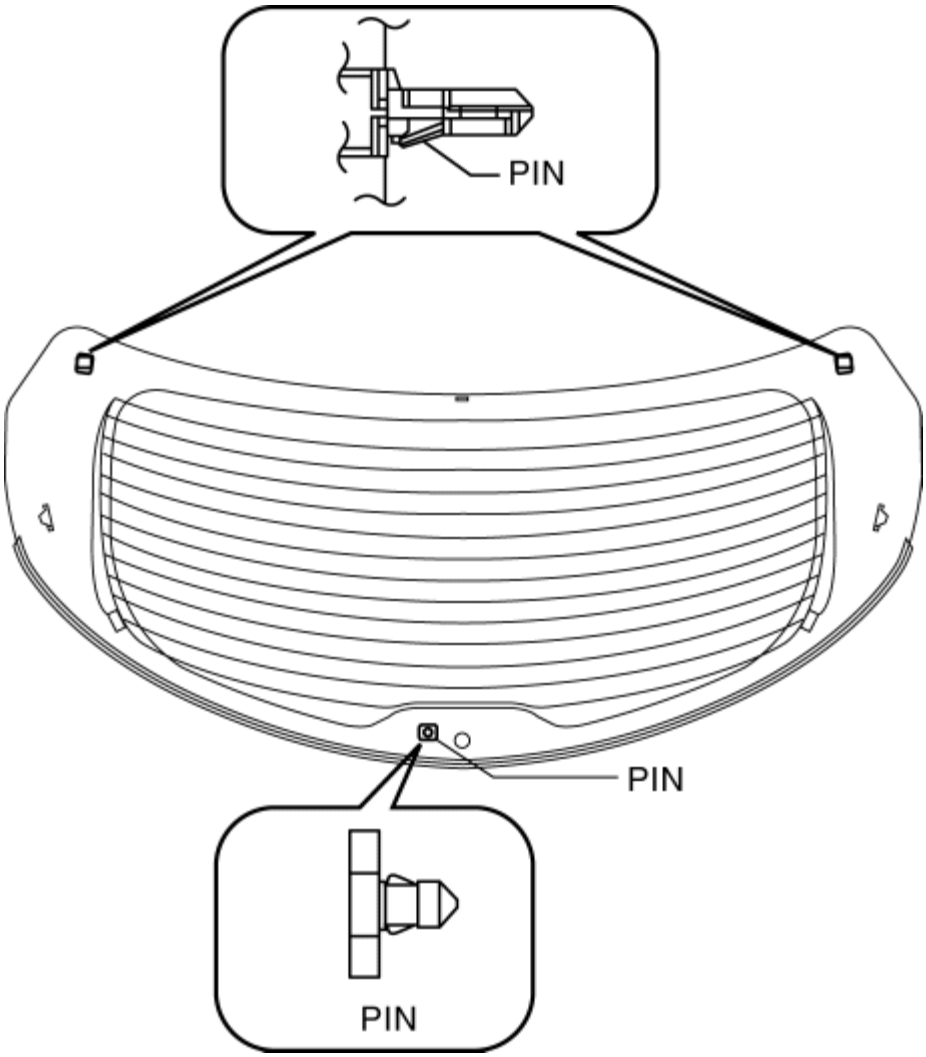

10. Remove the rear window glass.

2014 - Mazda3 - Body and Accessories

REAR WINDOW GLASS INSTALLATION

WARNING:

- Using a utility knife with bare hands can cause injury. Always wear gloves when using a utility knife.

CAUTION:

- Proper installation of the glass may be difficult if sealant is cracked or the glass is pushed out by air pressure when a door is opened/closed with all the window glass closed. Keep the door glass open until the rear window glass installation is completed.

4SD

1. Remove sealant along the perimeter of the glass using a utility knife or scraper. (When reusing the glass)
2. Clean and degrease an **approx. 50 mm {2.0 in}** wide strip along the perimeter of the glass.
3. Inspect the glass for cracks. If it is cracked, chamfer it using sandpaper.
4. Install spacer and pins to the glass as shown in the figure.

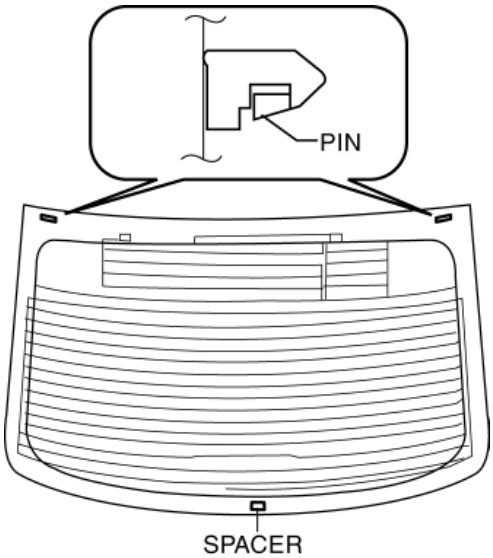

NOTE:

- When reusing the glass, align it with the alignment mark placed before the glass was removed.

5. Apply primer to the area of the glass shown in the figure.

- Follow the primer product instructions for the drying time.

CAUTION:

- To prevent weakening of the primer adhesion, keep the bonding surface free of dirt, moisture, and grease. Do not touch the surface with your hand.

NOTE:

- Apply primer to the hollowed marks in the ceramic coating.

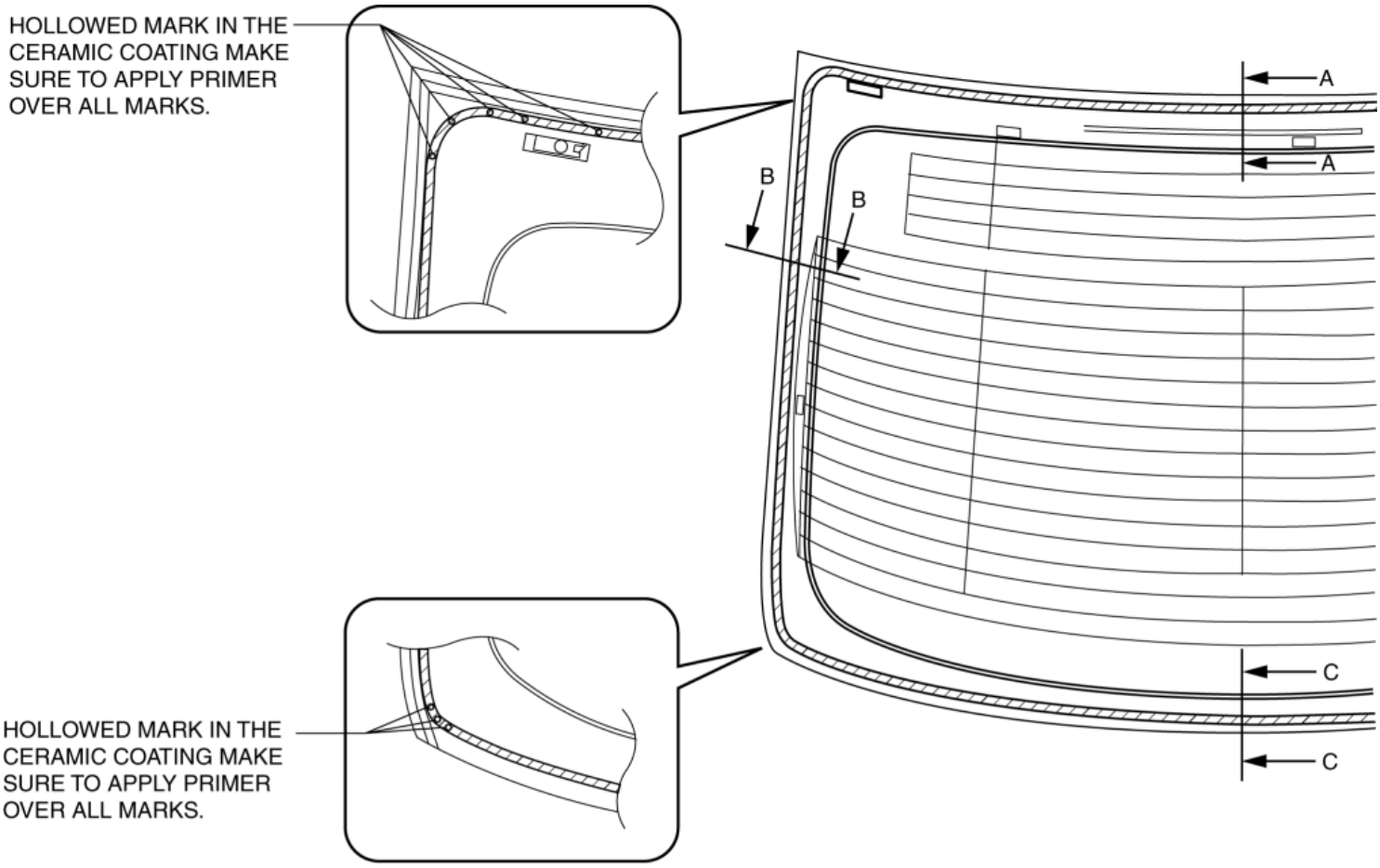

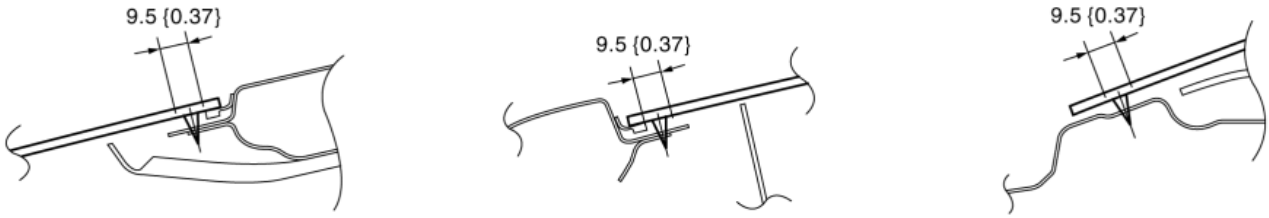

mm {in}

6. Cut away the old sealant using a utility knife or scraper so that **1—2 mm {0.04—0.07 in}** thickness of sealant remains along the perimeter of the frame.

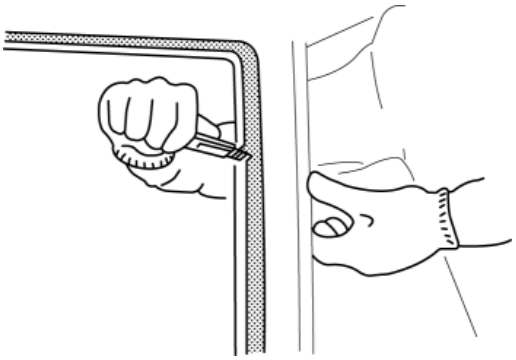

7. Clean and degrease along the perimeter of the bonding area on the body.

8. Apply primer to the area of the body shown in the figure.

- Follow the primer product instructions for the drying time.

CAUTION:

- To prevent weakening of the primer adhesion, keep the bonding surface free of dirt, moisture, and grease. Do not touch the surface with your hand.

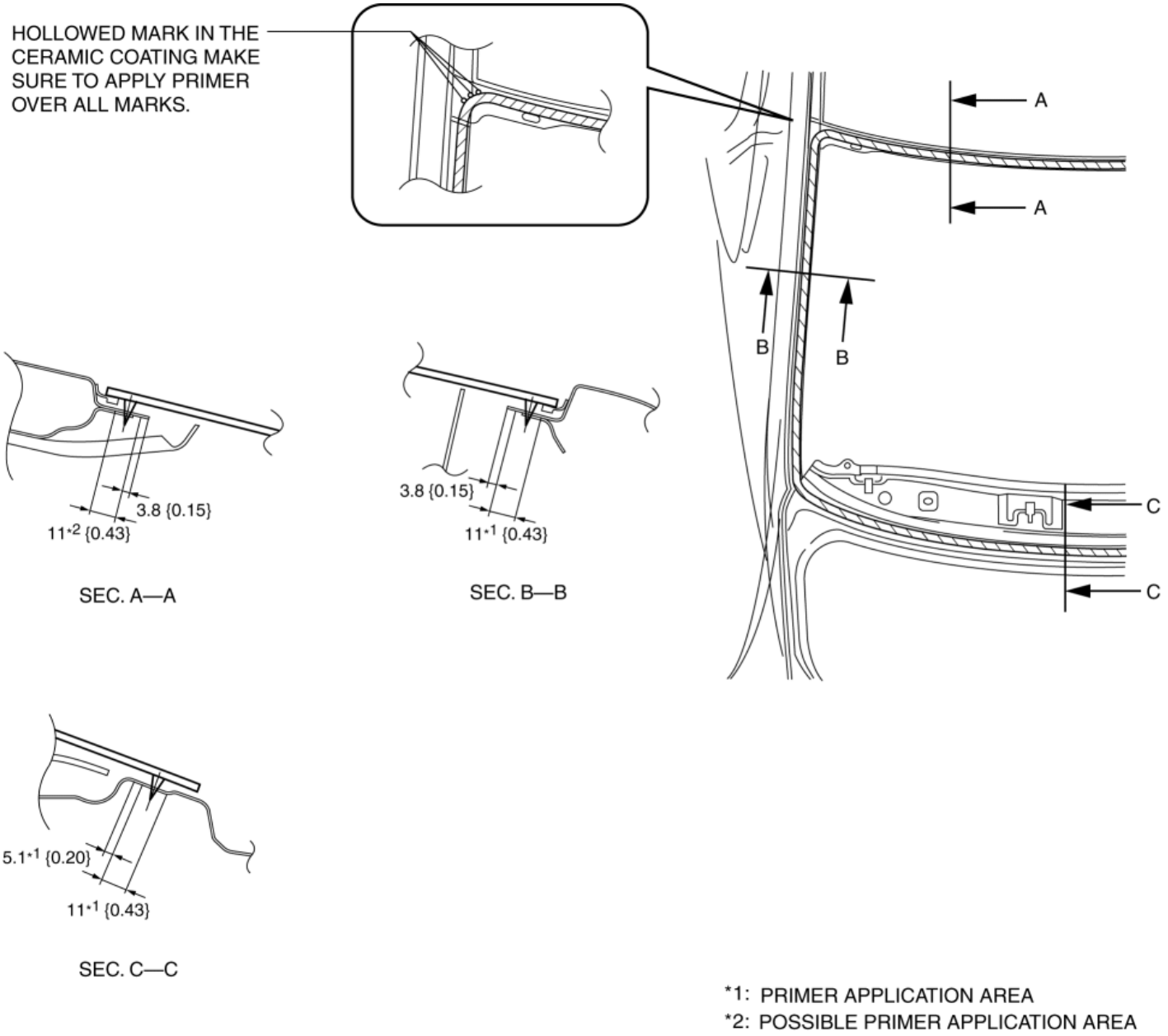

9. Apply sealant to the area of the glass surface as shown in the figure.

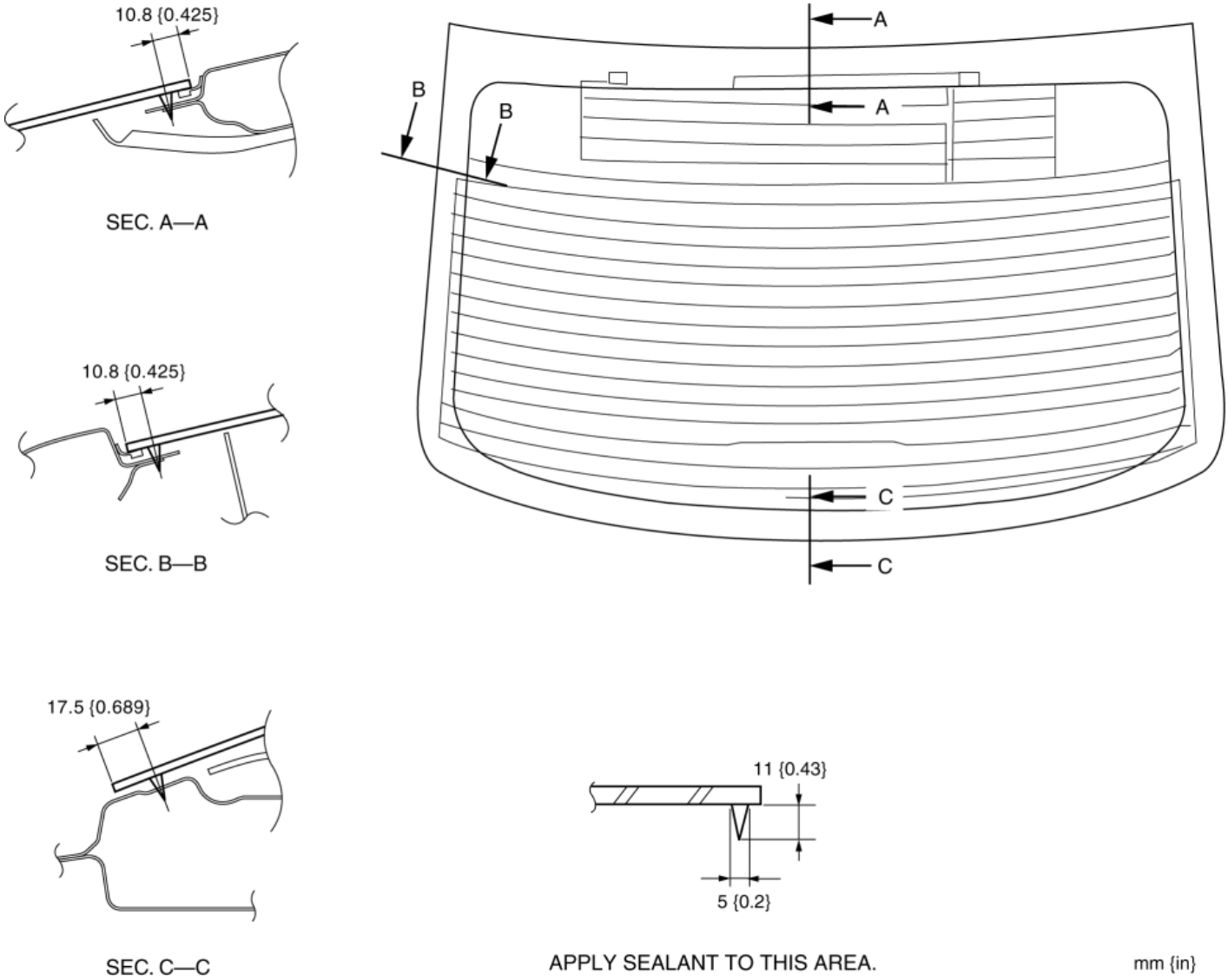

10. Install the rear window glass.

11. Verify that the gap at the upper and lower parts of the glass is within the specification shown in the figure, then press along the perimeter of the glass.

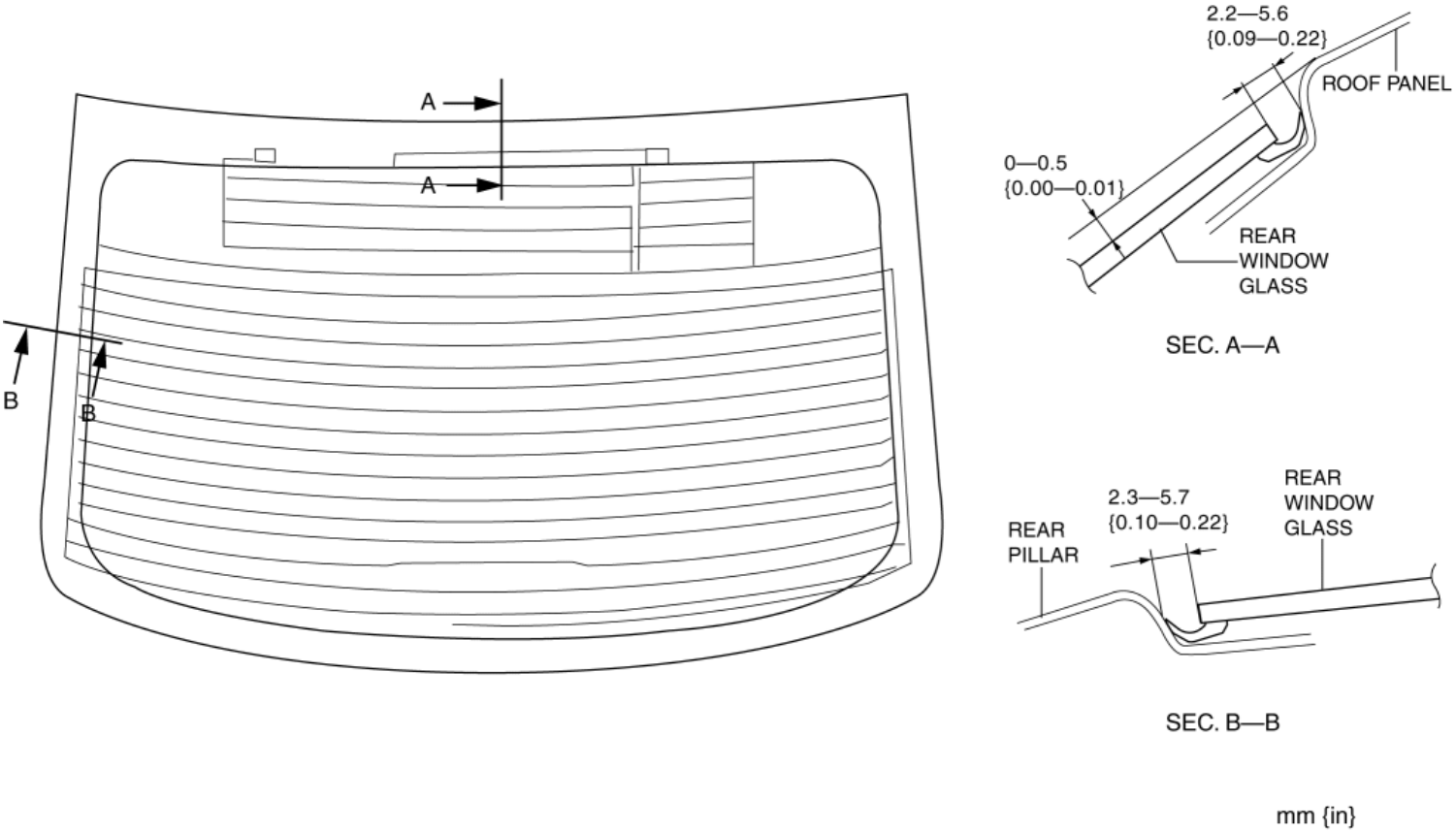

12. Connect the filament connectors in the direction of the arrow in the order of (1), (2) shown in the figure.

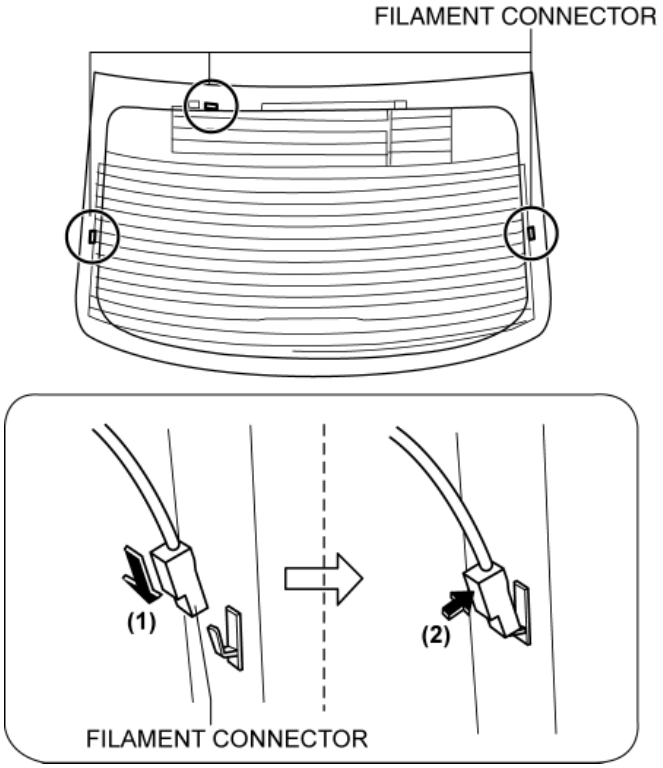

13. Install the following parts:

a. Rear package trim (See **REAR PACKAGE TRIM REMOVAL/INSTALLATION**.)

b. High-mount brake light (See **HIGH-MOUNT BRAKE LIGHT REMOVAL/INSTALLATION**.)

c. C-pillar trim (See **C-PILLAR TRIM REMOVAL/INSTALLATION**.)

d. Tire house trim (See **TIRE HOUSE TRIM REMOVAL/INSTALLATION**.)

e. Rear seat cushion (See **REAR SEAT CUSHION REMOVAL/INSTALLATION**.)

14. Connect the negative battery cable. (See **NEGATIVE BATTERY CABLE DISCONNECTION/CONNECTION [SKYACTIV-G 2.0, SKYACTIV-G 2.5]**.)

15. Allow the sealant to harden completely. Reference for sealant hardening time: 24 h

NOTE:

- Follow the product instructions for the sealant hardening time.

5HB

1. Remove sealant along the perimeter of the glass using a utility knife or scraper. (When reusing the glass)

2. Clean and degrease an **approx. 50 mm {2.0 in}** wide strip along the perimeter of the glass.

3. Inspect the glass for cracks. If it is cracked, chamfer it using sandpaper.

4. Install spacers, pins and fastener to the glass as shown in the figure.

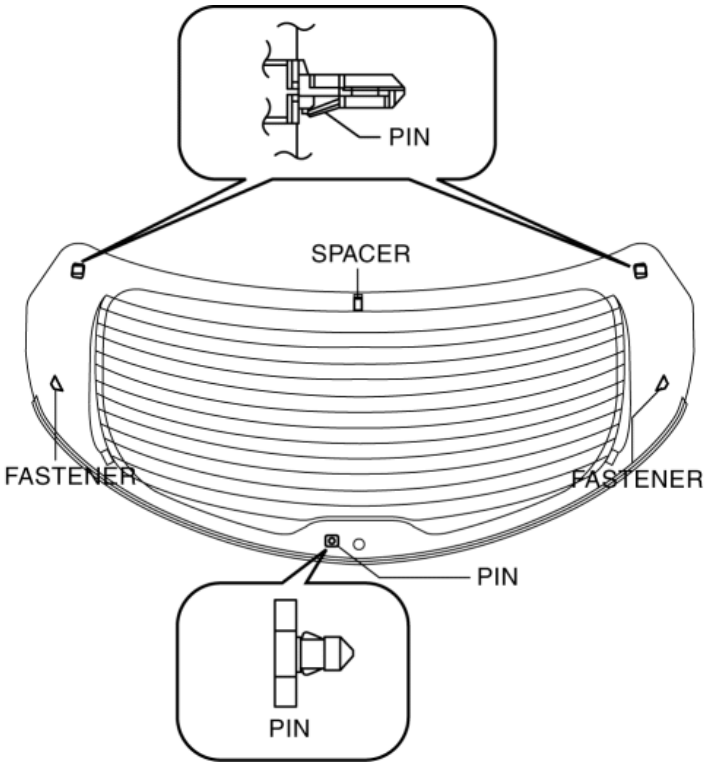

NOTE:

- When reusing the glass, align it with the alignment mark placed before the glass was removed.

5. Apply primer to the area of the glass shown in the figure.

- Follow the primer product instructions for the drying time.

CAUTION:

- To prevent weakening of the primer adhesion, keep the bonding surface free of dirt, moisture, and grease. Do not touch the surface with your hand.

NOTE:

- Apply primer to the hollowed marks in the ceramic coating.

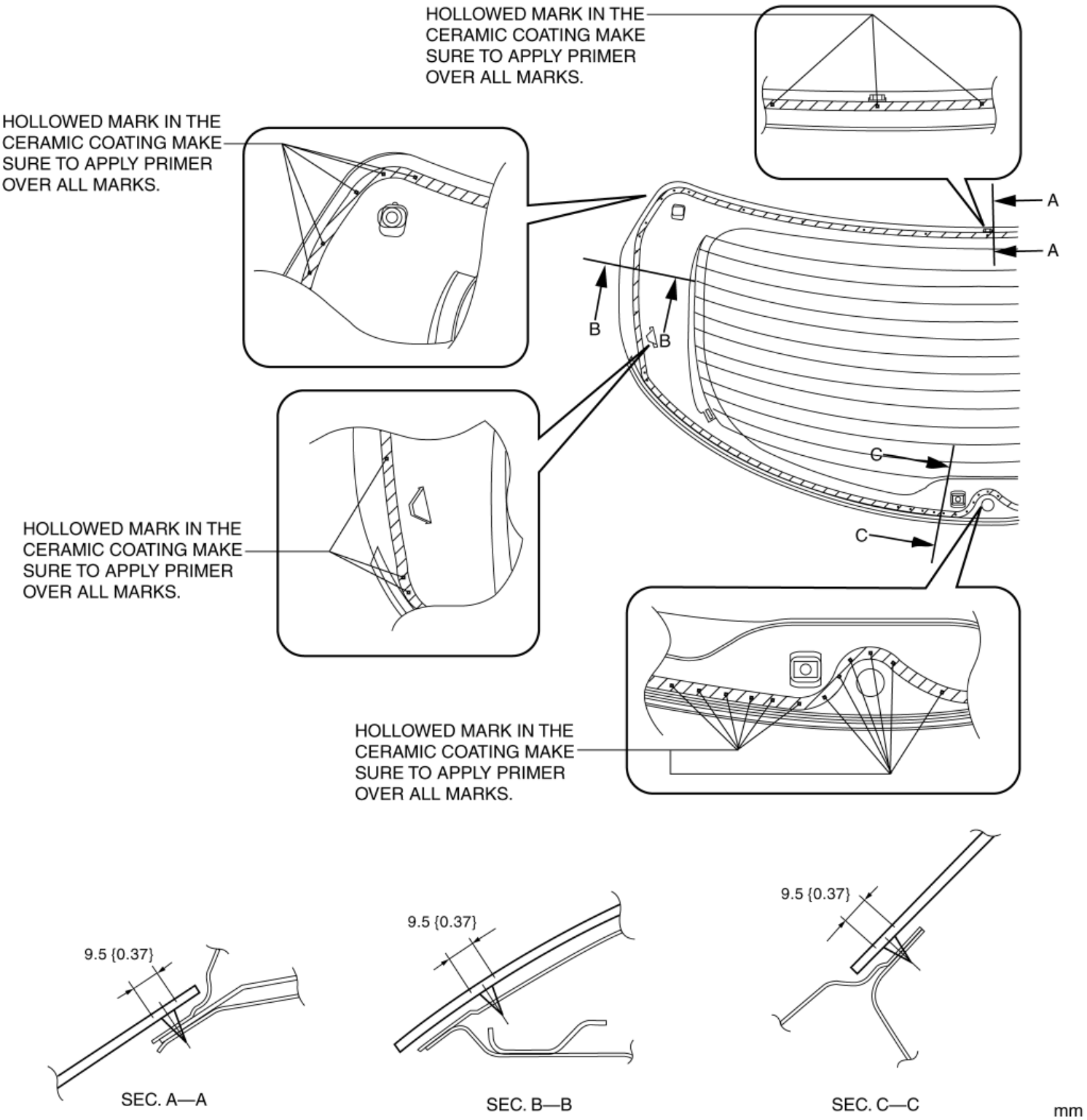

6. Cut away the old sealant using a utility knife or scraper so that **1—2 mm {0.04—0.07 in}** thickness of sealant remains along the perimeter of the frame.

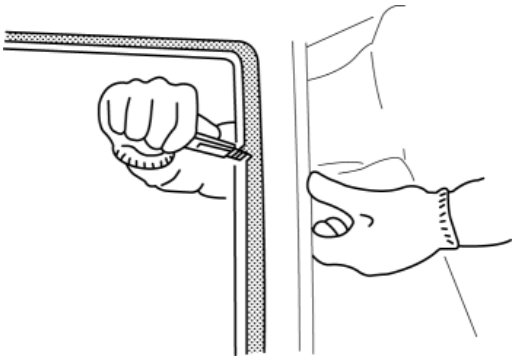

7. Clean and degrease along the perimeter of the bonding area on the body.

8. Apply primer to the area of the body shown in the figure.

    - Follow the primer product instructions for the drying time.

CAUTION:

- To prevent weakening of the primer adhesion, keep the bonding surface free of dirt, moisture, and grease. Do not touch the surface with your hand.

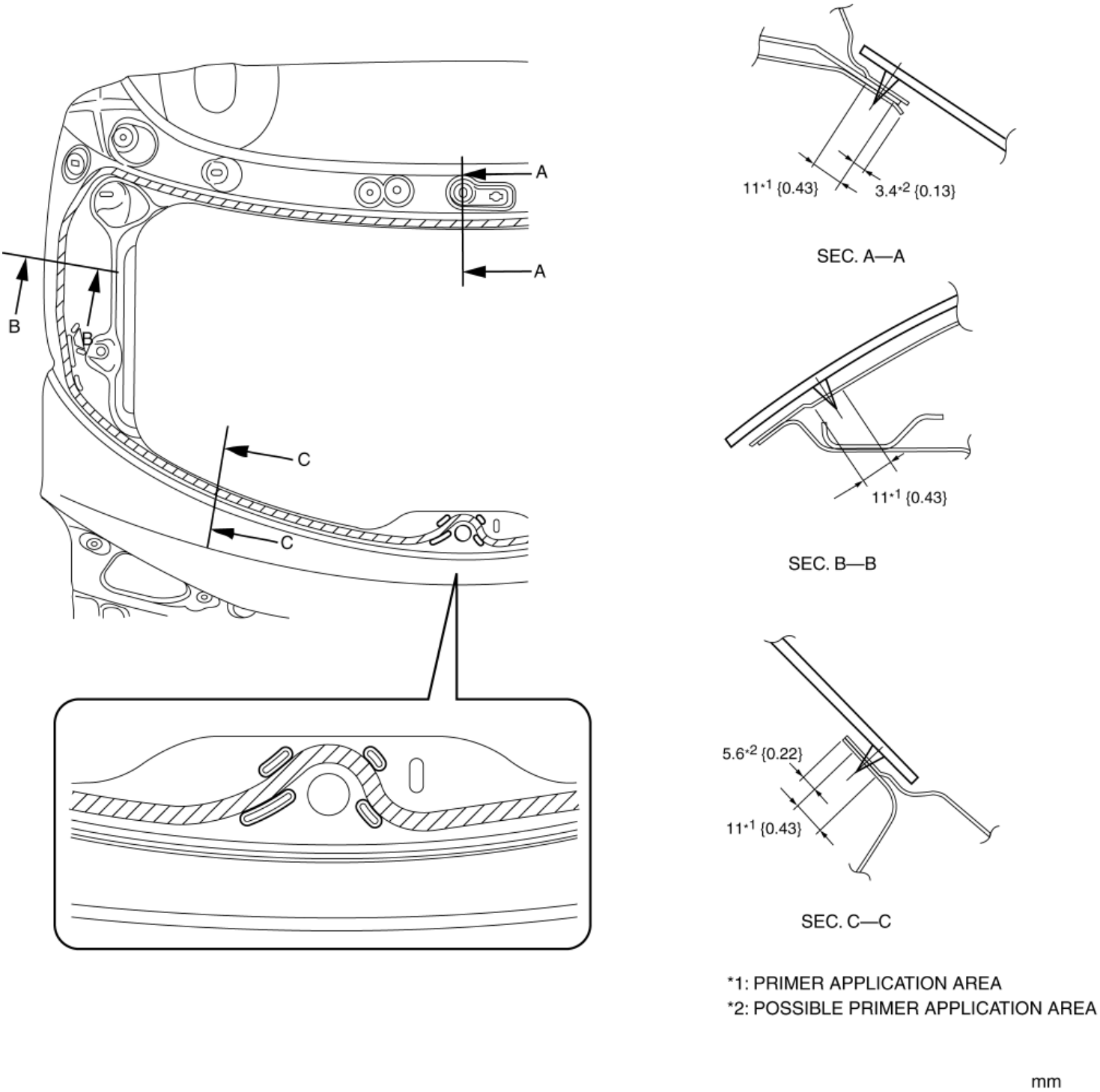

9. Apply sealant to the area of the glass surface as shown in the figure.

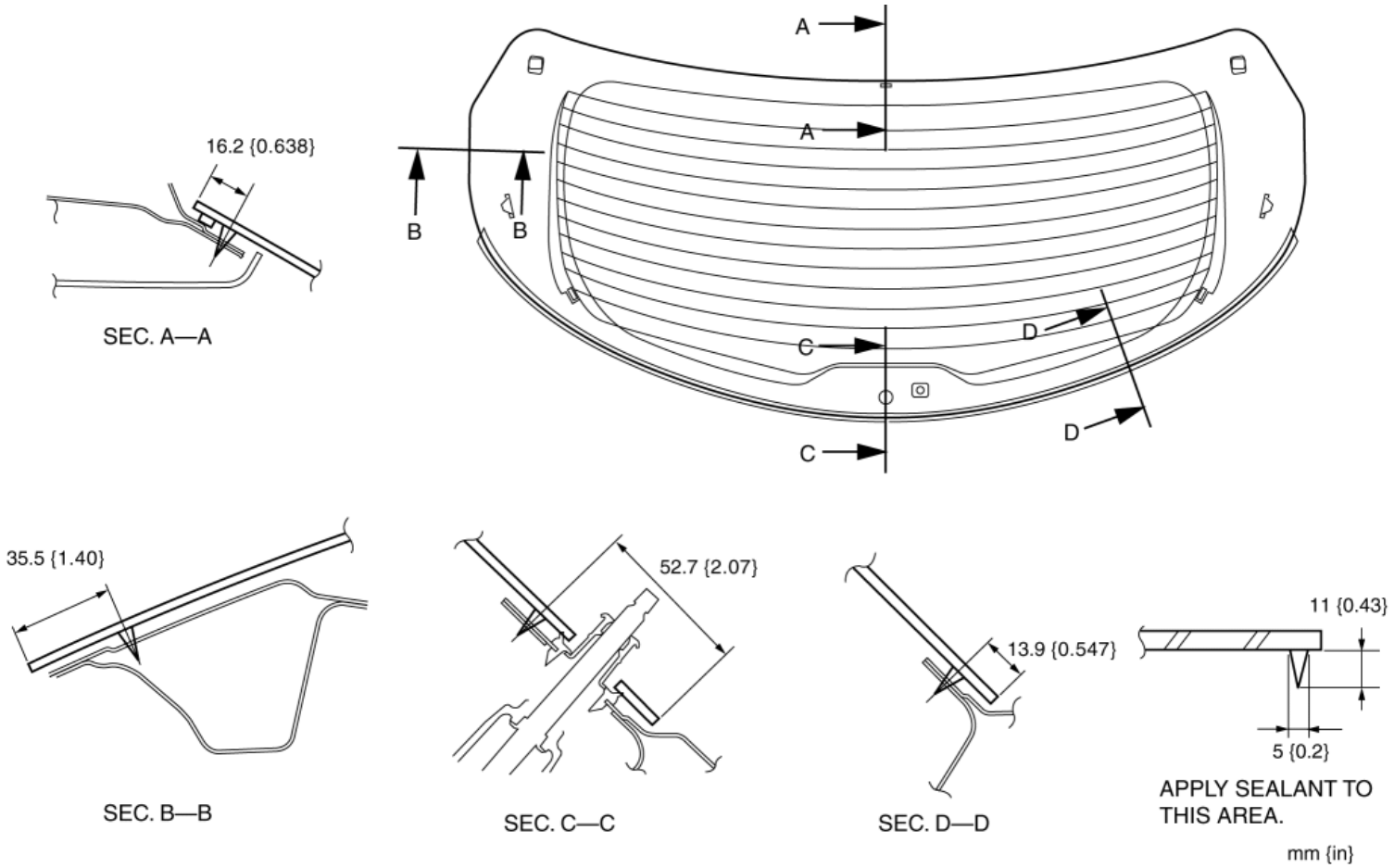

10. Install the rear window glass.

11. Verify that the gap at the upper and lower parts of the glass is within the specification shown in the figure, then press along the perimeter of the glass.

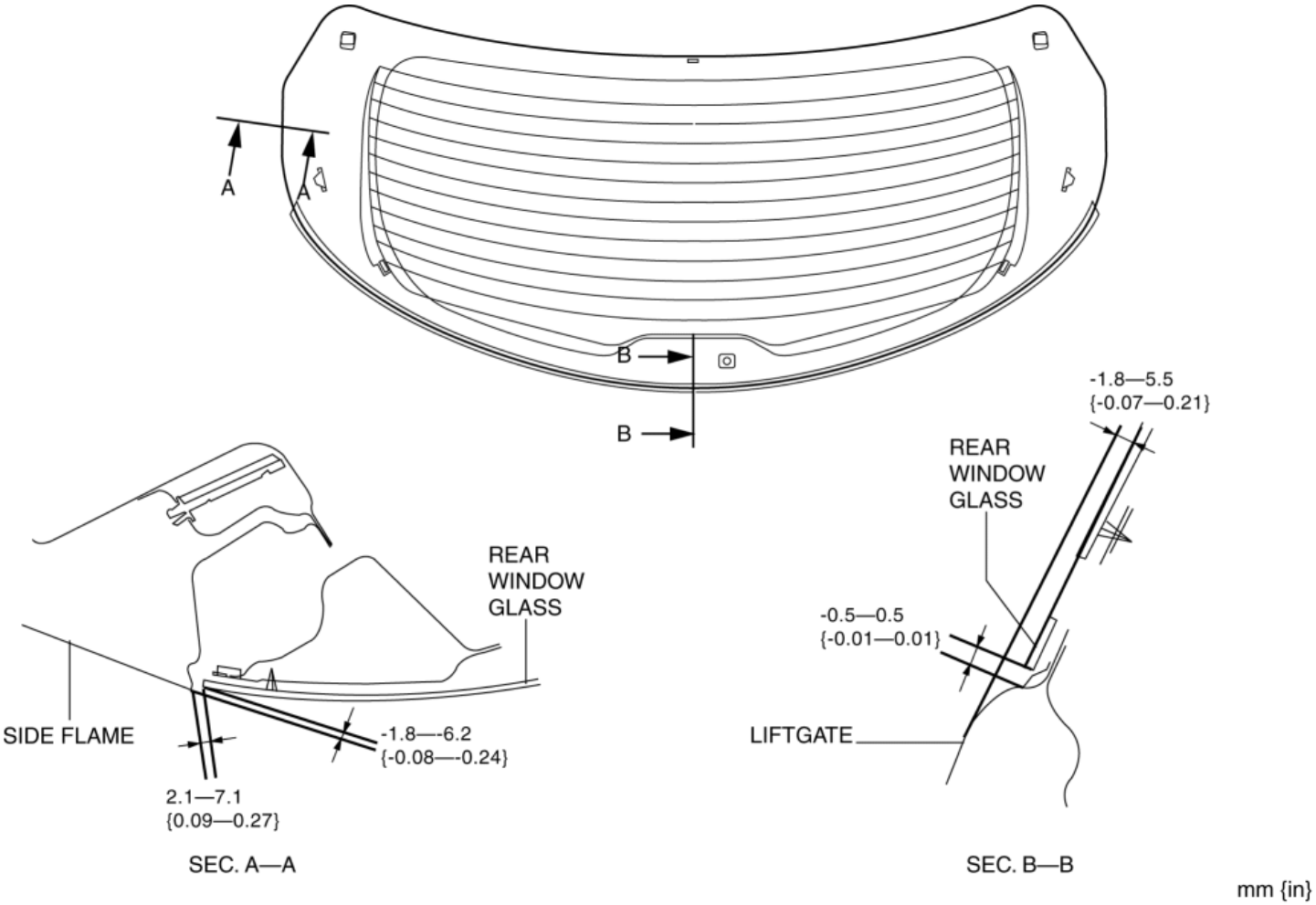

12. Connect the filament connectors in the direction of the arrow in the order of (1), (2) shown in the figure.

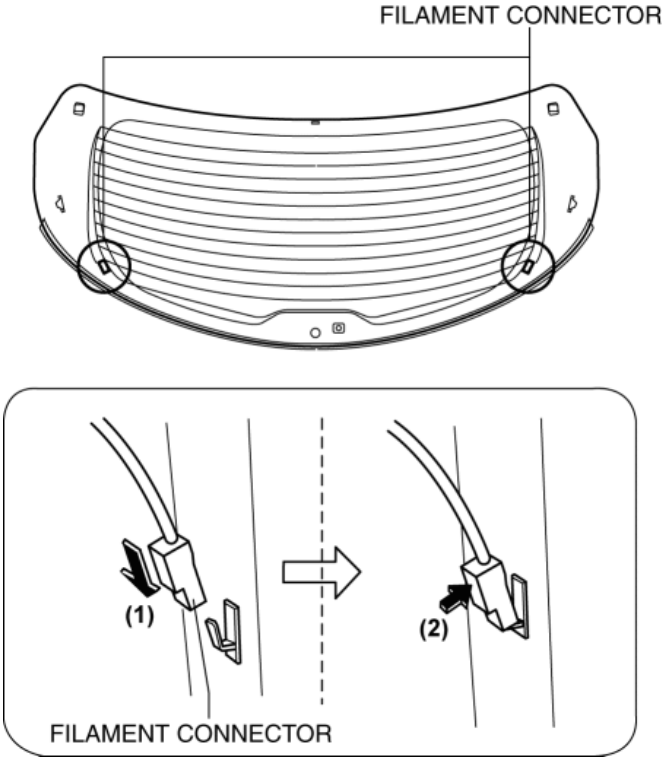

13. Connect the antenna feeder No.3 connector.

14. Install the following parts:

    a. Outer bushing (See **REAR WIPER MOTOR REMOVAL/INSTALLATION**.)

b. Rear wiper motor (See **REAR WIPER MOTOR REMOVAL/INSTALLATION**.)

c. Rear wiper arm and blade (See **REAR WIPER ARM AND BLADE REMOVAL/INSTALLATION**.)

d. Rear spoiler (See **REAR SPOILER INSTALLATION**.)

e. Liftgate lower trim (See **LIFTGATE LOWER TRIM REMOVAL/INSTALLATION**.)

f. Liftgate recess (See **LIFTGATE RECESS REMOVAL/INSTALLATION**.)

g. Liftgate side trim (See **LIFTGATE SIDE TRIM REMOVAL/INSTALLATION**.)

h. Liftgate upper trim (See **LIFTGATE UPPER TRIM REMOVAL/INSTALLATION**.)

15. Connect the negative battery cable. (See **NEGATIVE BATTERY CABLE DISCONNECTION/CONNECTION [SKYACTIV-G 2.0, SKYACTIV-G 2.5]**.)

16. Allow the sealant to harden completely. Reference for sealant hardening time: 24 h

NOTE:

- Follow the product instructions for the sealant hardening time.

2014 - Mazda3 - Body and Accessories

FRONT POWER WINDOW REGULATOR REMOVAL/INSTALLATION

1. Perform the front door glass preparation. (See **FRONT DOOR GLASS REMOVAL/INSTALLATION**.)
2. Disconnect the negative battery cable. (See **NEGATIVE BATTERY CABLE DISCONNECTION/CONNECTION [SKYACTIV-G 2.0, SKYACTIV-G 2.5]**.)
3. Remove the following parts:
   a. Front door trim (See **FRONT DOOR TRIM REMOVAL/INSTALLATION**.)
   b. Front door speaker (See **FRONT DOOR SPEAKER REMOVAL/INSTALLATION**.)
   c. Front door glass (See **FRONT DOOR GLASS REMOVAL/INSTALLATION**.)
   d. Front power window motor (See **FRONT POWER WINDOW MOTOR REMOVAL/INSTALLATION**.)
4. Remove the bolt.

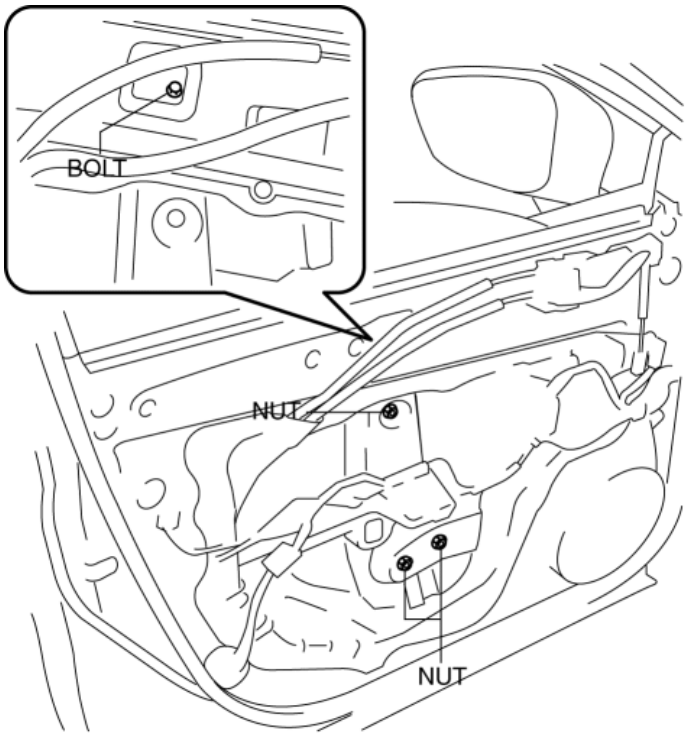

BOLT, NUT : **8—10 N·m {82—101 kgf·cm, 71—88 in·lbf}**

5. Remove nuts.
6. Insert your hand through the front door speaker installation hole and support the drum housing.

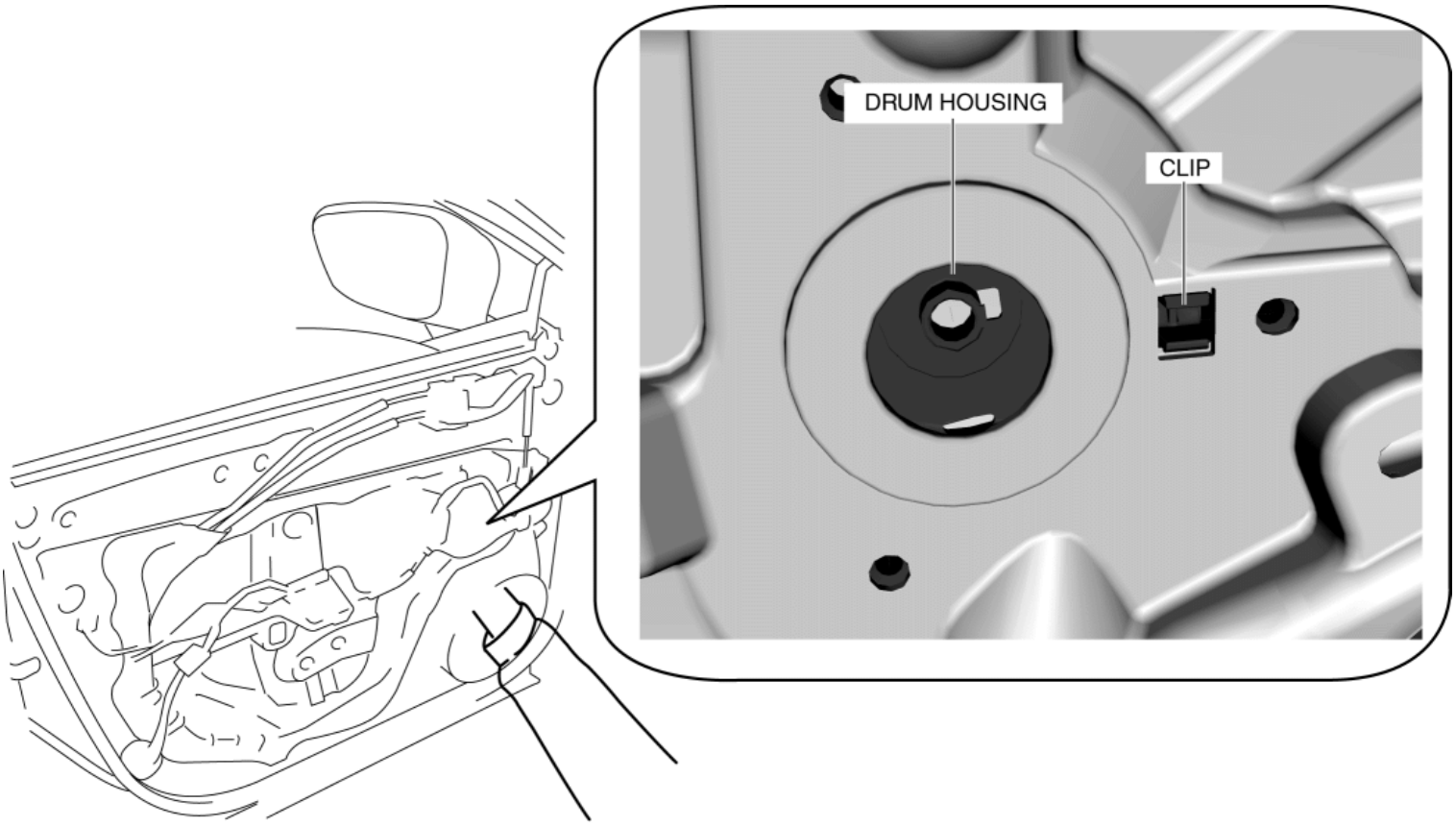

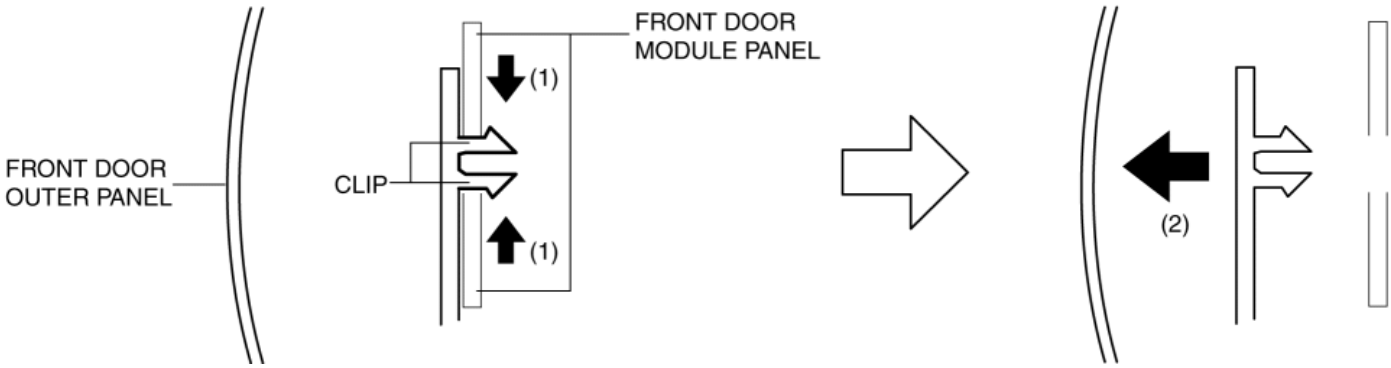

7. Move the clip tabs in the direction of arrow (1) shown in the figure to detach the tabs, and move the clip in the direction of arrow (2) to remove.

8. Remove the front power window regulator through the speaker installation hole.

CAUTION:

- When removing the front power window regulator, the front power window regulator may contact the front door speaker installation hole, and the coating film of the front door inner panel and the front power window regulator could be damaged. Remove the front power window regulator while verifying that the front power window regulator and the front door speaker installation hole do not contact each other.

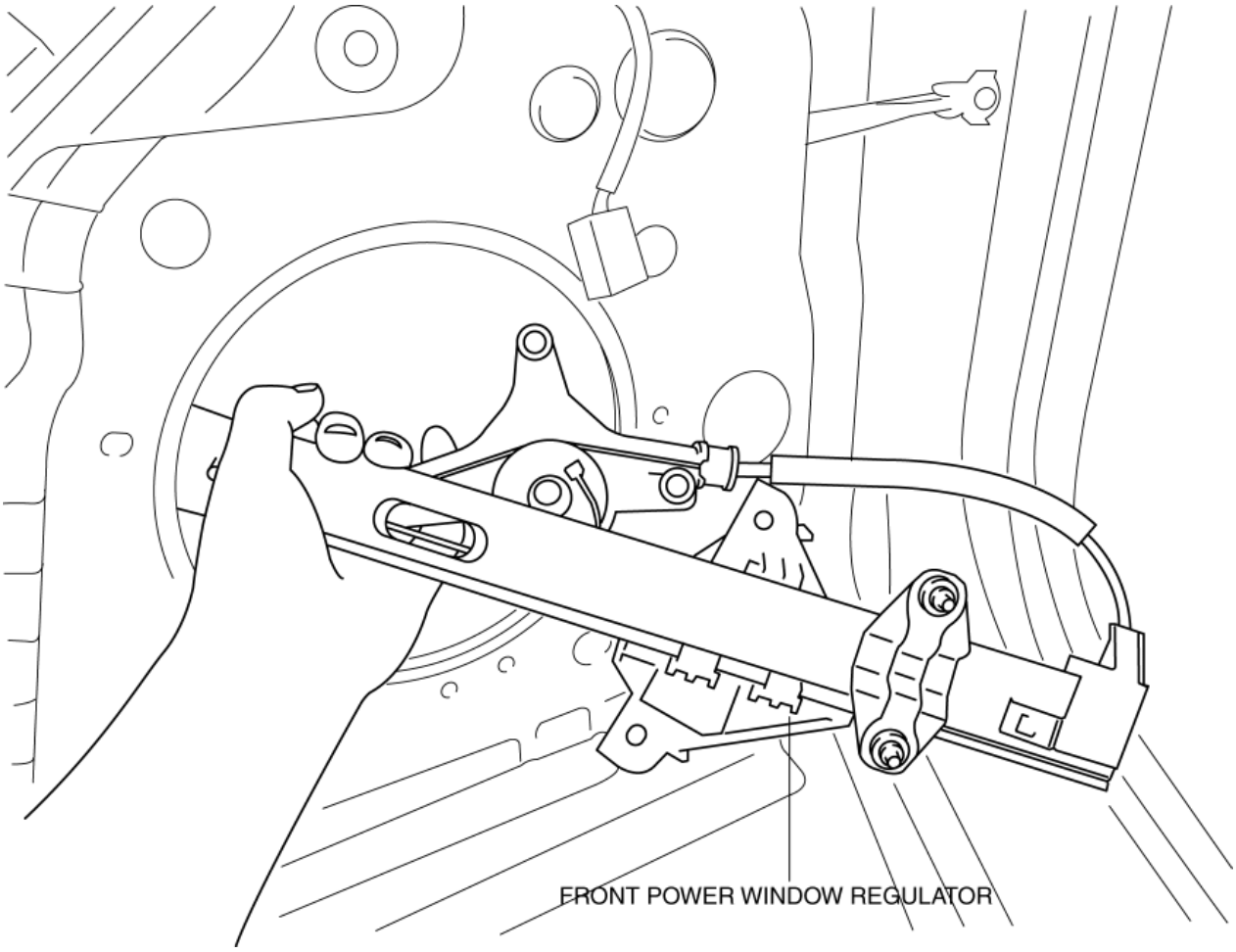

9. Install in the reverse order of removal.

2014 - Mazda3 - Body and Accessories

REAR POWER WINDOW REGULATOR REMOVAL/INSTALLATION

1. Fully lower the rear door glass.

2. Disconnect the negative battery cable. (See **NEGATIVE BATTERY CABLE DISCONNECTION/CONNECTION [SKYACTIV-G 2.0, SKYACTIV-G 2.5]**.)

3. Remove the following parts:

   a. Rear door trim (See **REAR DOOR TRIM REMOVAL/INSTALLATION**.)

   b. Rear door quarter glass (See **REAR DOOR QUARTER GLASS REMOVAL/INSTALLATION**.)

   c. Rear door speaker (See **REAR DOOR SPEAKER REMOVAL/INSTALLATION**.)

   d. Rear power window motor (See **REAR POWER WINDOW MOTOR REMOVAL/INSTALLATION**.)

   e. Rear door glass (See **REAR DOOR GLASS REMOVAL/INSTALLATION**.)

4. Remove bolts.

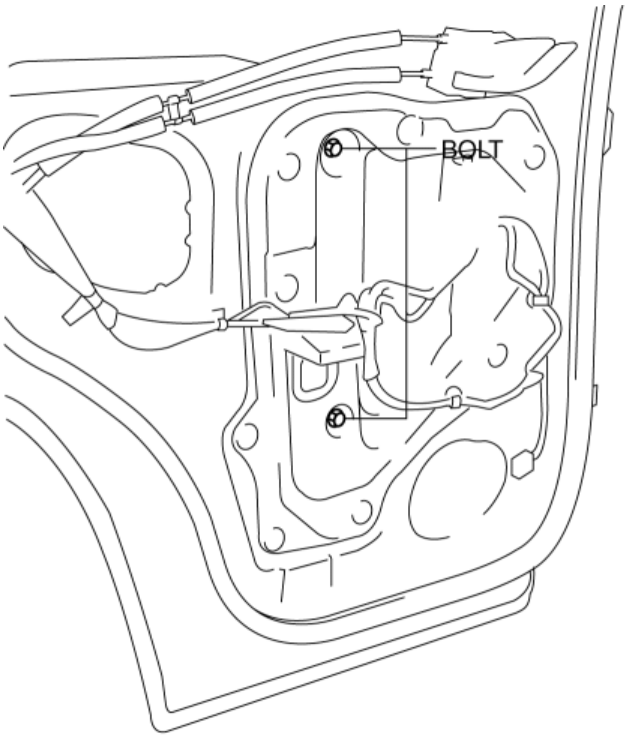

BOLT : **8—10 N·m {82—101 kgf·cm, 71—88 in·lbf}**

5. Insert your hand through the rear door speaker installation hole and support the drum housing.

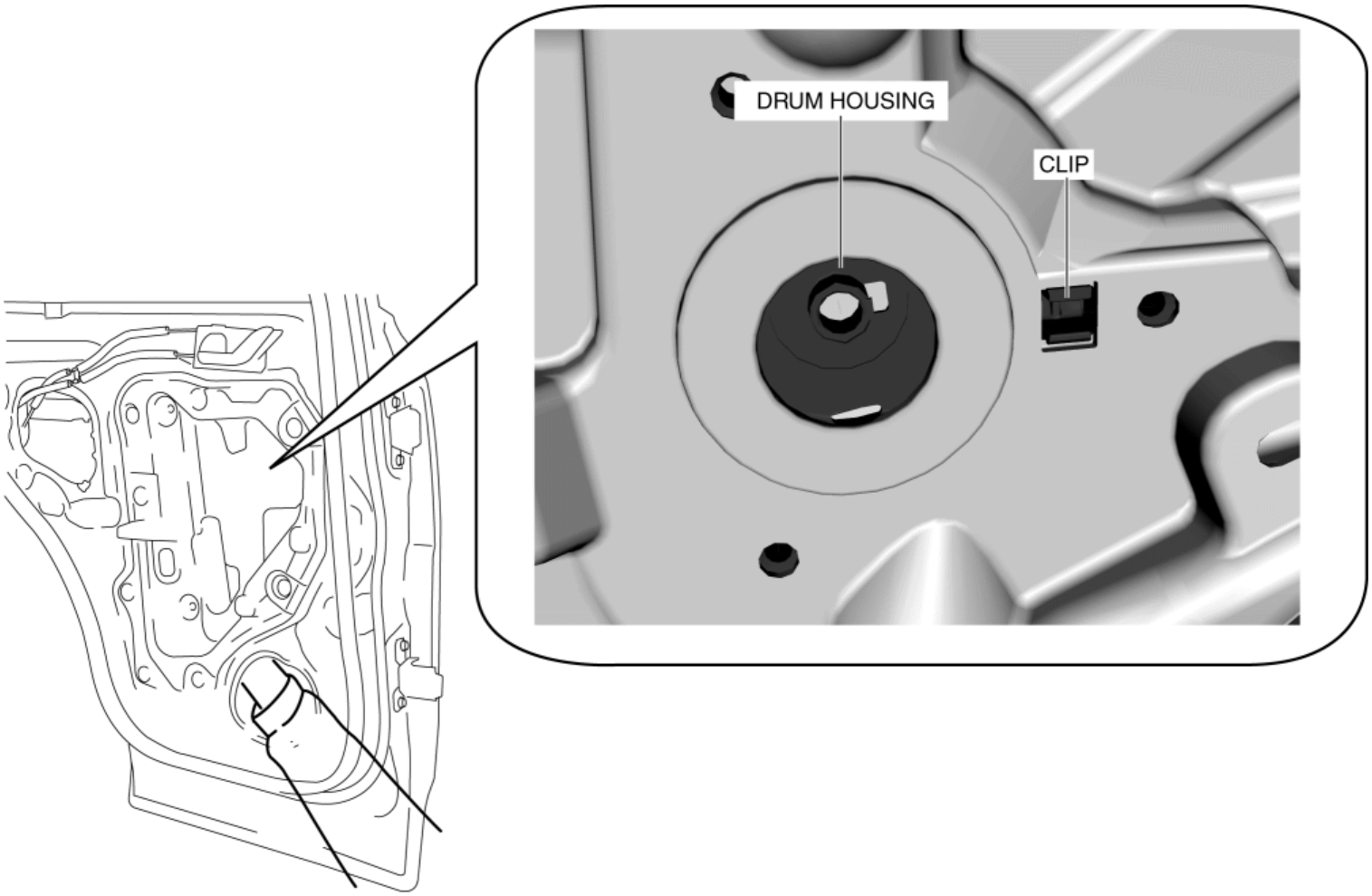

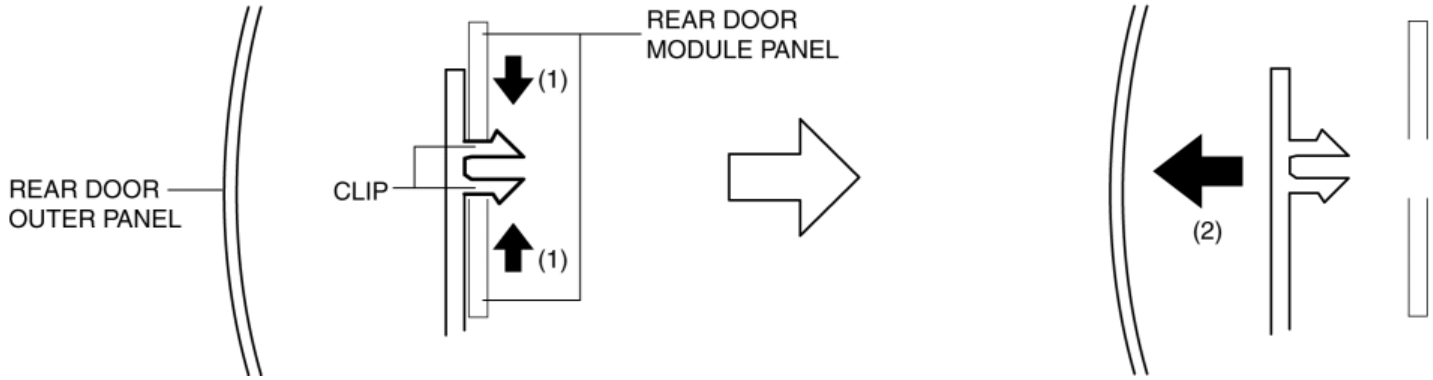

6. Move the clip tabs in the direction of arrow (1) shown in the figure to detach the tabs, and move the clip in the direction of arrow (2) to remove.

7. Remove the rear power window regulator through the speaker installation hole.

CAUTION:

- When removing the rear power window regulator, the rear power window regulator may contact the rear door speaker installation hole, and the coating film of the rear door inner panel and the rear power window regulator could be damaged. Remove the rear power window regulator while verifying that the rear power window regulator and the rear door speaker installation hole do not contact each other.

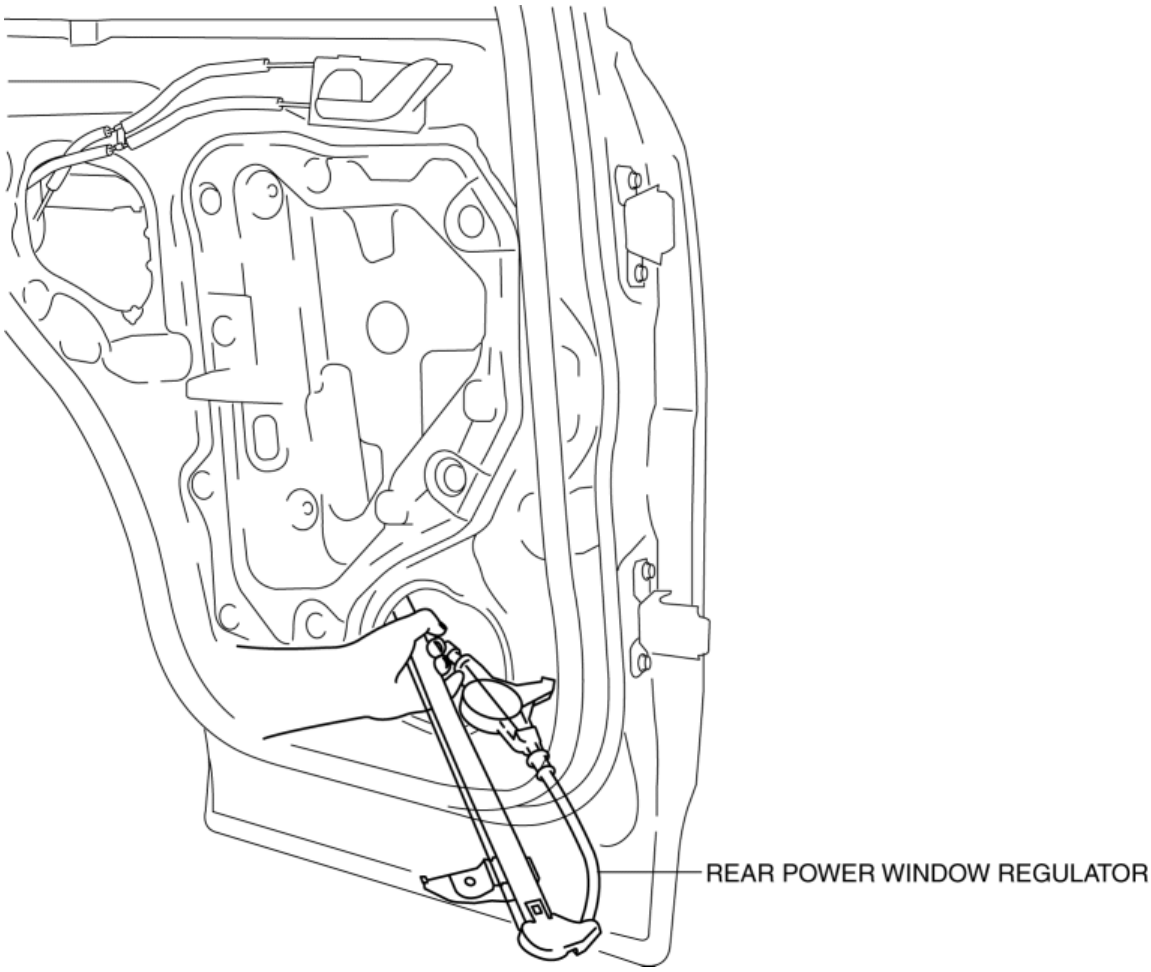

8. Install in the reverse order of removal.

2014 - Mazda3 - Body and Accessories

FRONT POWER WINDOW MOTOR REMOVAL/INSTALLATION

1. Fully lower the front door glass.

CAUTION:

- If the front power window motor is removed with the front door glass fully closed, the front door glass may fall off and be damaged.
- If the front door glass cannot be fully opened by operating the power window main switch or the power window subswitch, remove the front power window motor while inserting your hand through the front door speaker installation hole to support the front door glass.

2. Disconnect the negative battery cable. (See **NEGATIVE BATTERY CABLE DISCONNECTION/CONNECTION [SKYACTIV-G 2.0, SKYACTIV-G 2.5]**.)
3. Remove the front door trim. (See **FRONT DOOR TRIM REMOVAL/INSTALLATION**.)
4. Remove the front door speaker. (See **FRONT DOOR SPEAKER REMOVAL/INSTALLATION**.)
5. Disconnect the front power window motor connector.

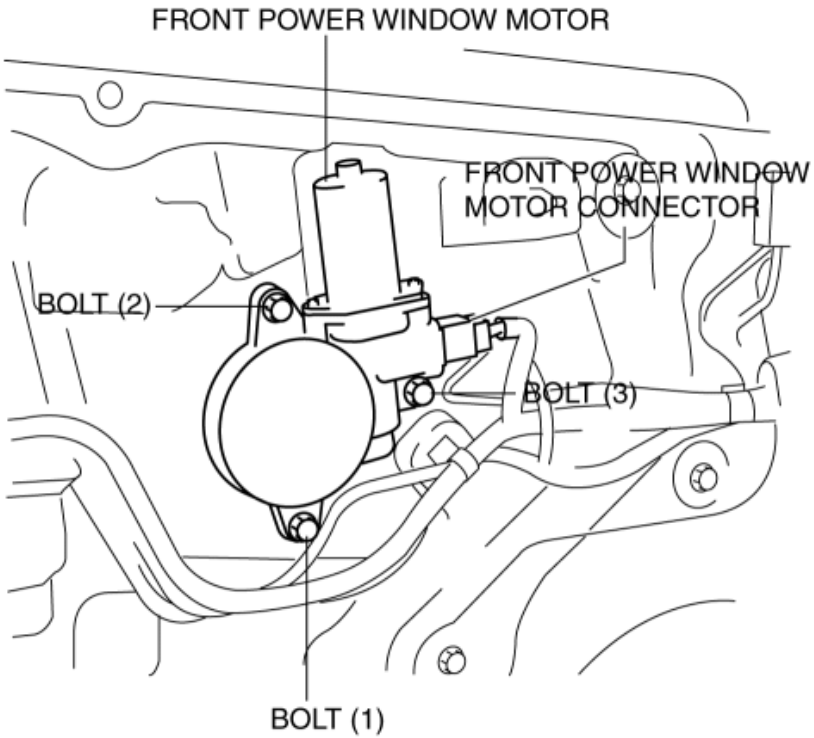

BOLT (1), (2), (3) : **5.2—7.2 N·m {54—73 kgf·cm, 47—63 in·lbf}**

6. Remove the bolt (1).
7. Remove the bolt (2).
8. Remove the bolt (3).
9. Remove the front power window motor.
10. Install in the reverse order of removal. (See **Front Power Window Motor Installation Note**.)

Front Power Window Motor Installation Note

CAUTION:

- If the front power window motor is installed without securing the front power window regulator drum housing, the drum housing may detach from the front door module panel and the front power window motor may not install correctly. When installing the front power window motor, insert your hand through the front door speaker installation hole and secure the drum housing so that the clip shown in the figure does not detach.

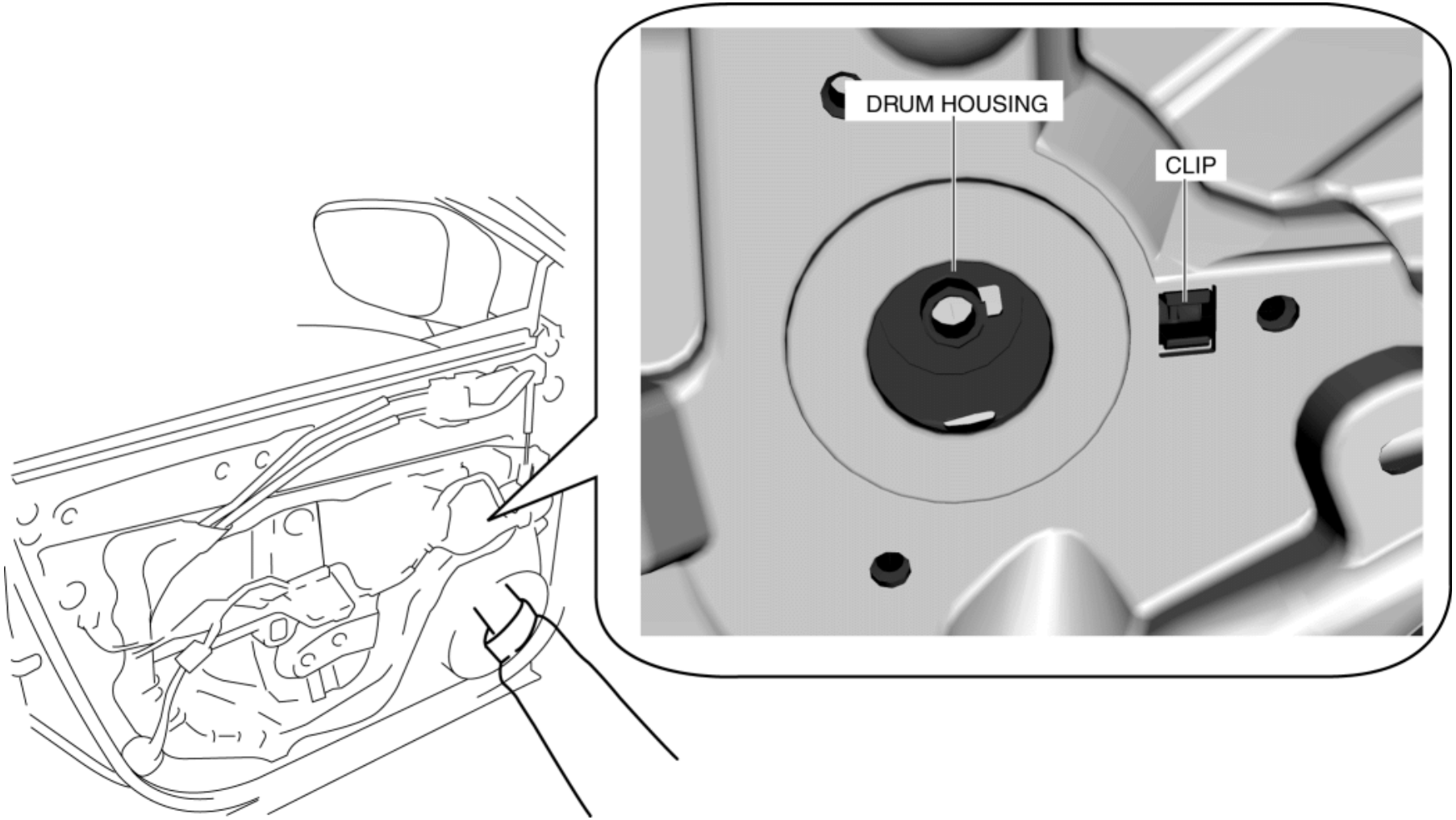
DRUM HOUSING
CLIP

2014 - Mazda3 - Body and Accessories

FRONT POWER WINDOW MOTOR INSPECTION

Driver-side

1. Disconnect the negative battery cable. (See **NEGATIVE BATTERY CABLE DISCONNECTION/CONNECTION [SKYACTIV-G 2.0, SKYACTIV-G 2.5]**.)

2. Remove the front door trim. (Driver- side) (See **FRONT DOOR TRIM REMOVAL/INSTALLATION**.)

3. Disconnect the front power window motor connector.

4. Apply battery positive voltage and connect the ground to front power window motor terminals E and F, and then inspect the front power window motor operation.

B+ Terminal	Ground Terminal	Operation
E	F	Close
F	E	Open

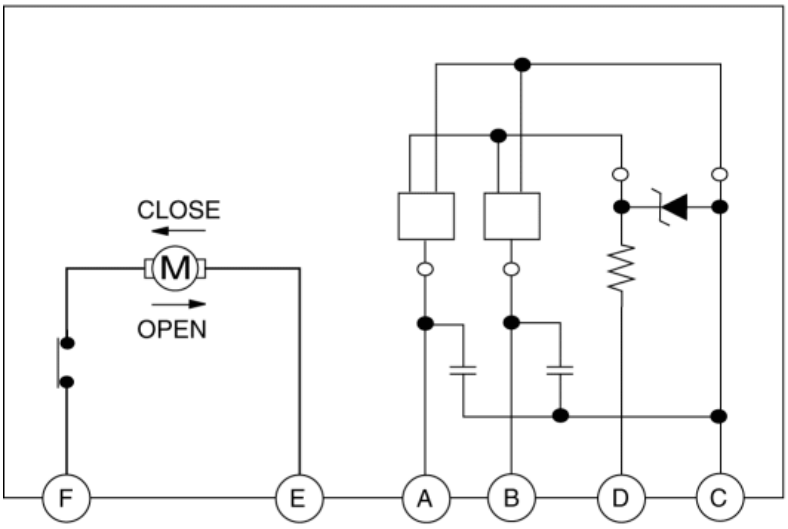

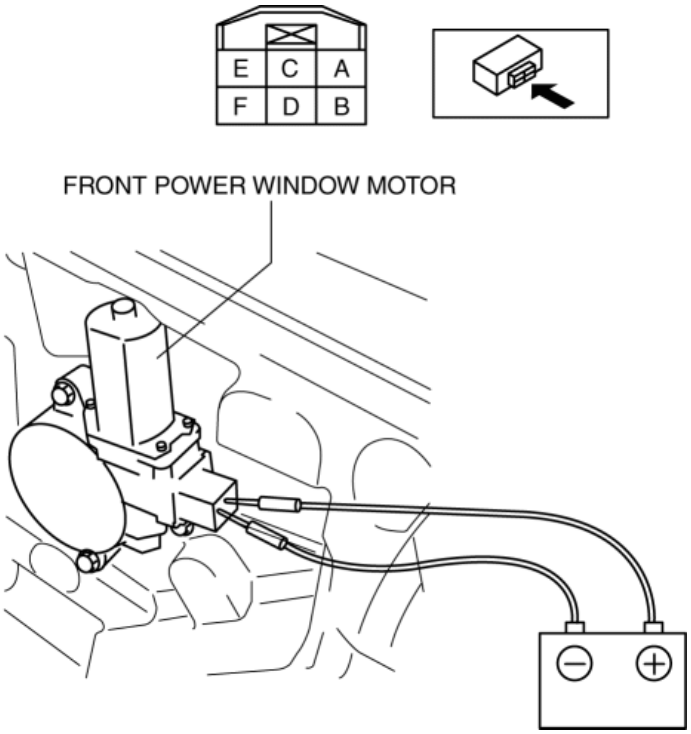

- If the front power window motor does not operate as indicated in the table, replace it. (See **FRONT POWER WINDOW MOTOR REMOVAL/INSTALLATION**.)

5. Connect the battery positive voltage to front power window motor terminal D and connect terminal C to ground.

6. Operate the front power window motor and verify the wave patterns for terminals A and B.

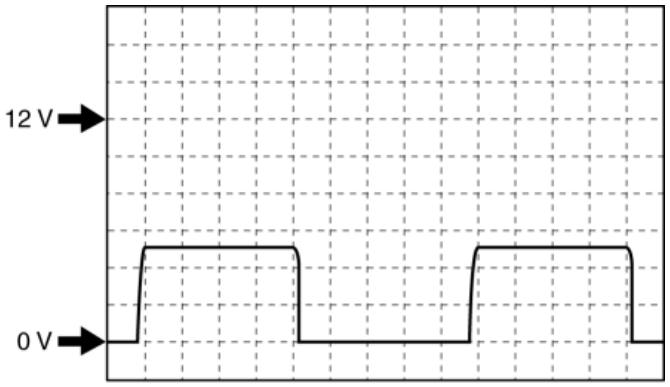

- Terminal:

  A, B(+) ↔ ground (-)
- Oscilloscope setting: 2 V/DIV (Y), 1 ms/DIV (X), DC range
- If the malfunction, replace the front power window motor. (See **FRONT POWER WINDOW MOTOR REMOVAL/INSTALLATION**.)

Passenger-side

1. Disconnect the negative battery cable. (See **NEGATIVE BATTERY CABLE DISCONNECTION/CONNECTION [SKYACTIV-G 2.0, SKYACTIV-G 2.5]**.)

2. Remove the front door trim. (Passenger- side) (See **FRONT DOOR TRIM REMOVAL/INSTALLATION**.)

3. Disconnect the front power window motor connector.

4. Apply battery positive voltage and connect the ground to front power window motor terminals E and F, and then inspect the front power window motor operation.

B+ Terminal	Ground Terminal	Operation
E	F	Close
F	E	Open

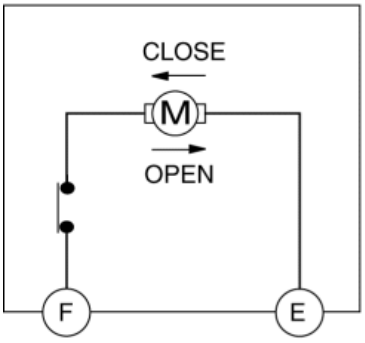

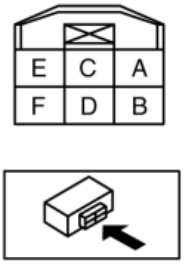

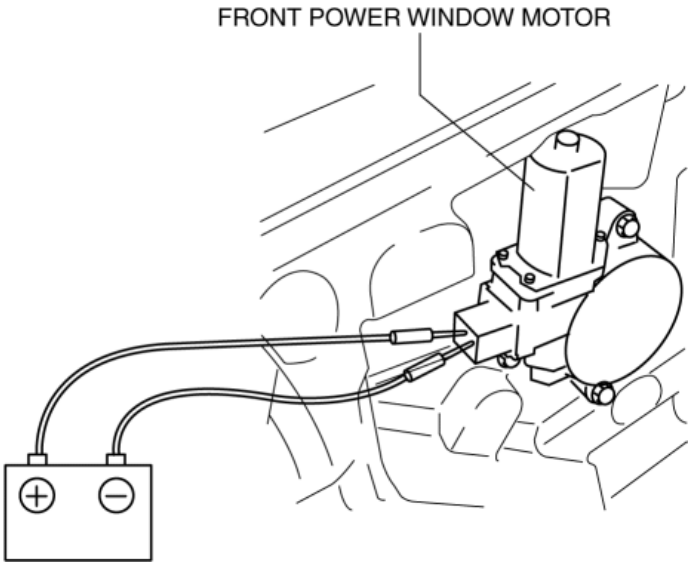

- If the front power window motor does not operate as indicated in the table, replace it. (See **FRONT POWER WINDOW MOTOR REMOVAL/INSTALLATION**.)

FRONT POWER WINDOW MOTOR INSPECTION

2014 - Mazda3 - Body and Accessories

REAR POWER WINDOW MOTOR REMOVAL/INSTALLATION

1. Fully lower the front door glass.

CAUTION:

- If the rear power window motor is removed with the rear door glass fully closed, the rear door glass may fall off and be damaged.
- If the rear door glass cannot be fully opened by operating the power window subswitch, remove the rear power window motor while inserting your hand through the rear door speaker installation hole to support the rear door glass.

2. Disconnect the negative battery cable. (See **NEGATIVE BATTERY CABLE DISCONNECTION/CONNECTION [SKYACTIV-G 2.0, SKYACTIV-G 2.5]**.)

3. Remove the rear door trim. (See **REAR DOOR TRIM REMOVAL/INSTALLATION**.)

4. Remove the rear door speaker. (See **REAR DOOR SPEAKER REMOVAL/INSTALLATION**.)

5. Disconnect the rear power window motor connector.

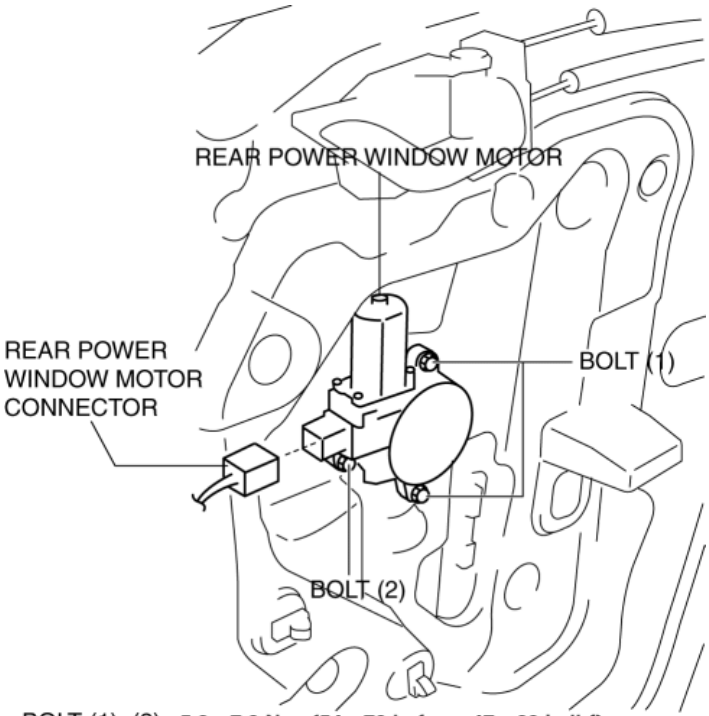

BOLT (1), (2) : **5.2—7.2 N·m {54—73 kgf·cm, 47—63 in·lbf}**

6. Remove the bolt (1).

7. Remove the bolt (2).

8. Remove the rear power window motor.

9. Install in the reverse order of removal. (See **Rear Power Window Motor Installation Note**.)

Rear Power Window Motor Installation Note

CAUTION:

- If the rear power window motor is installed without securing the rear power window regulator drum housing, the drum housing may detach from the rear door module panel and the rear power window motor may not install correctly. When installing the rear power window motor, insert your hand through the rear door speaker installation hole and secure the drum housing so that the clip shown in the figure does not detach.

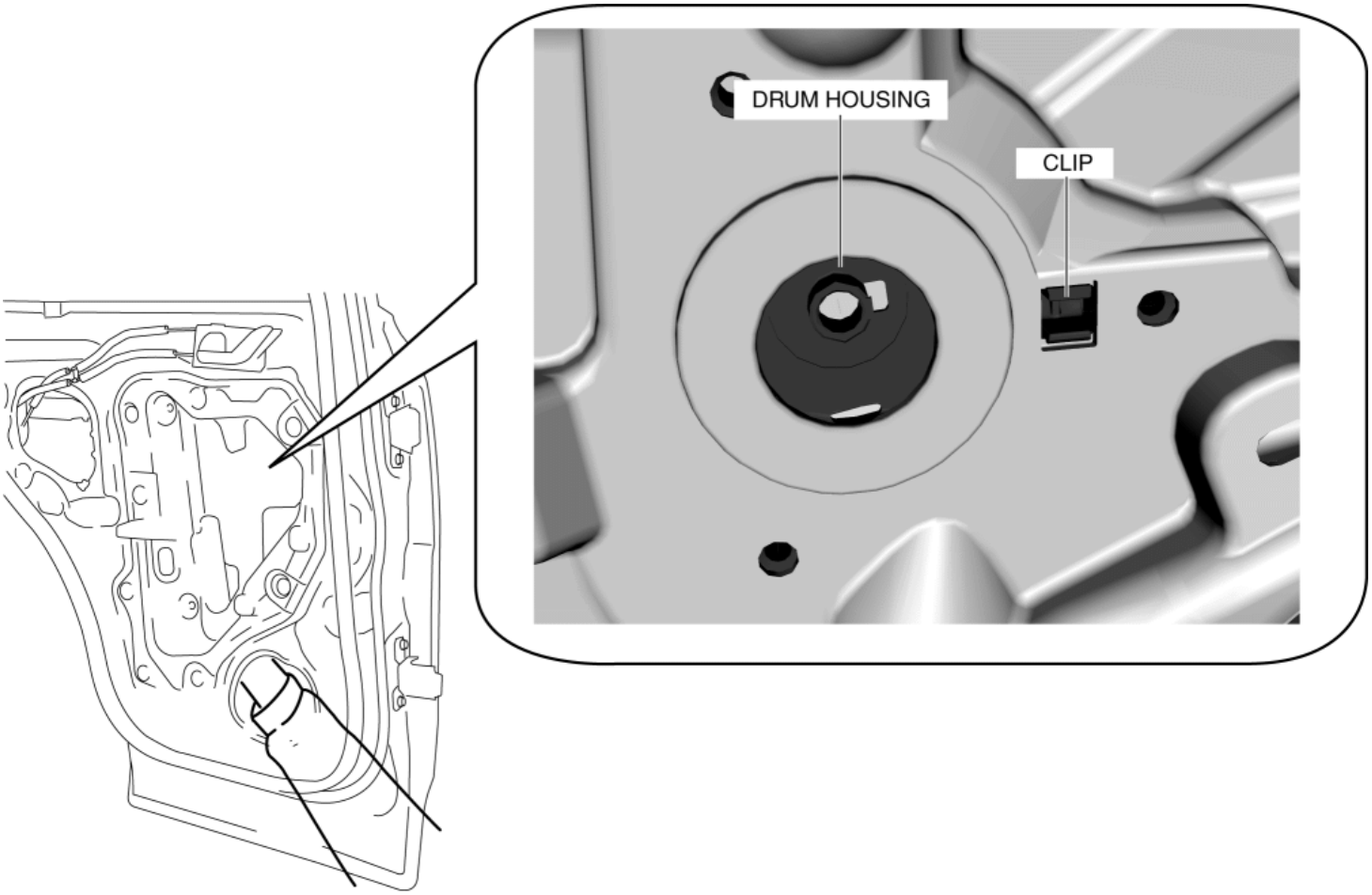
DRUM HOUSING
CLIP

2014 - Mazda3 - Body and Accessories

REAR POWER WINDOW MOTOR INSPECTION

1. Disconnect the negative battery cable. (See **NEGATIVE BATTERY CABLE DISCONNECTION/CONNECTION [SKYACTIV-G 2.0, SKYACTIV-G 2.5]**.)

2. Remove the rear door trim. (See **REAR DOOR TRIM REMOVAL/INSTALLATION**.)

3. Disconnect the front power window motor connector.

4. Apply battery positive voltage and connect the ground to front power window motor terminals E and F, and then inspect the front power window motor operation.

B+ Terminal	Ground Terminal	Operation
E	F	Close
F	E	Open

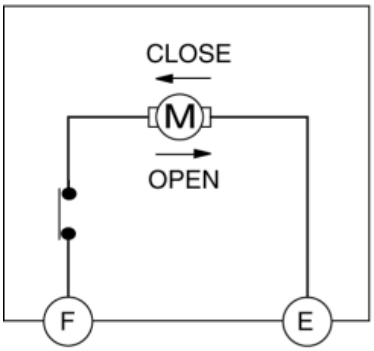

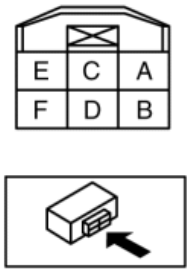

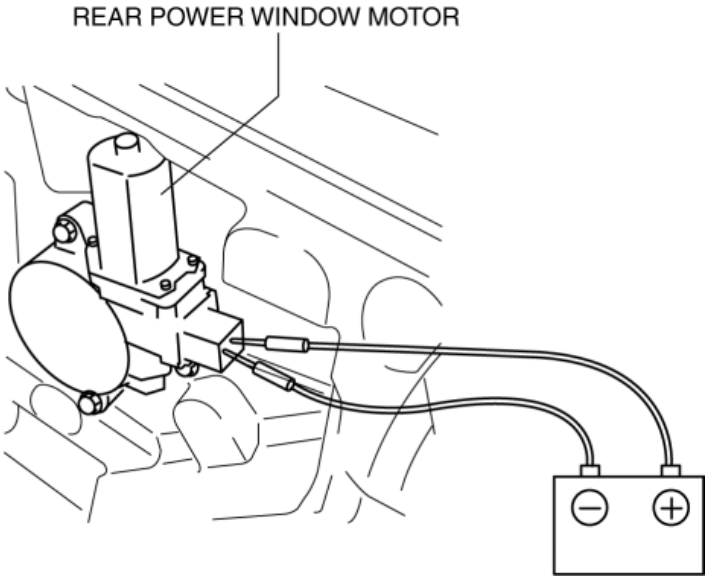

- If the rear power window motor does not operate as indicated in the table, replace it. (See **REAR POWER WINDOW MOTOR REMOVAL/INSTALLATION**.)

2014 - Mazda3 - Body and Accessories

POWER WINDOW MAIN SWITCH REMOVAL/INSTALLATION

1. Disconnect the negative battery cable. (See **NEGATIVE BATTERY CABLE DISCONNECTION/CONNECTION [SKYACTIV-G 2.0, SKYACTIV-G 2.5]**.)

2. Remove the cover.

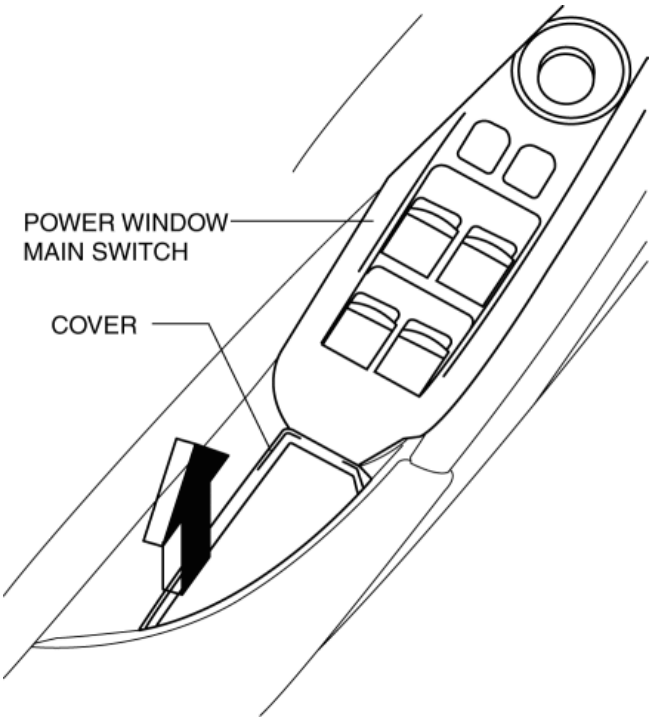

3. Insert a remover tool shown in the figure and remove the tab A in the direction of arrow (1).

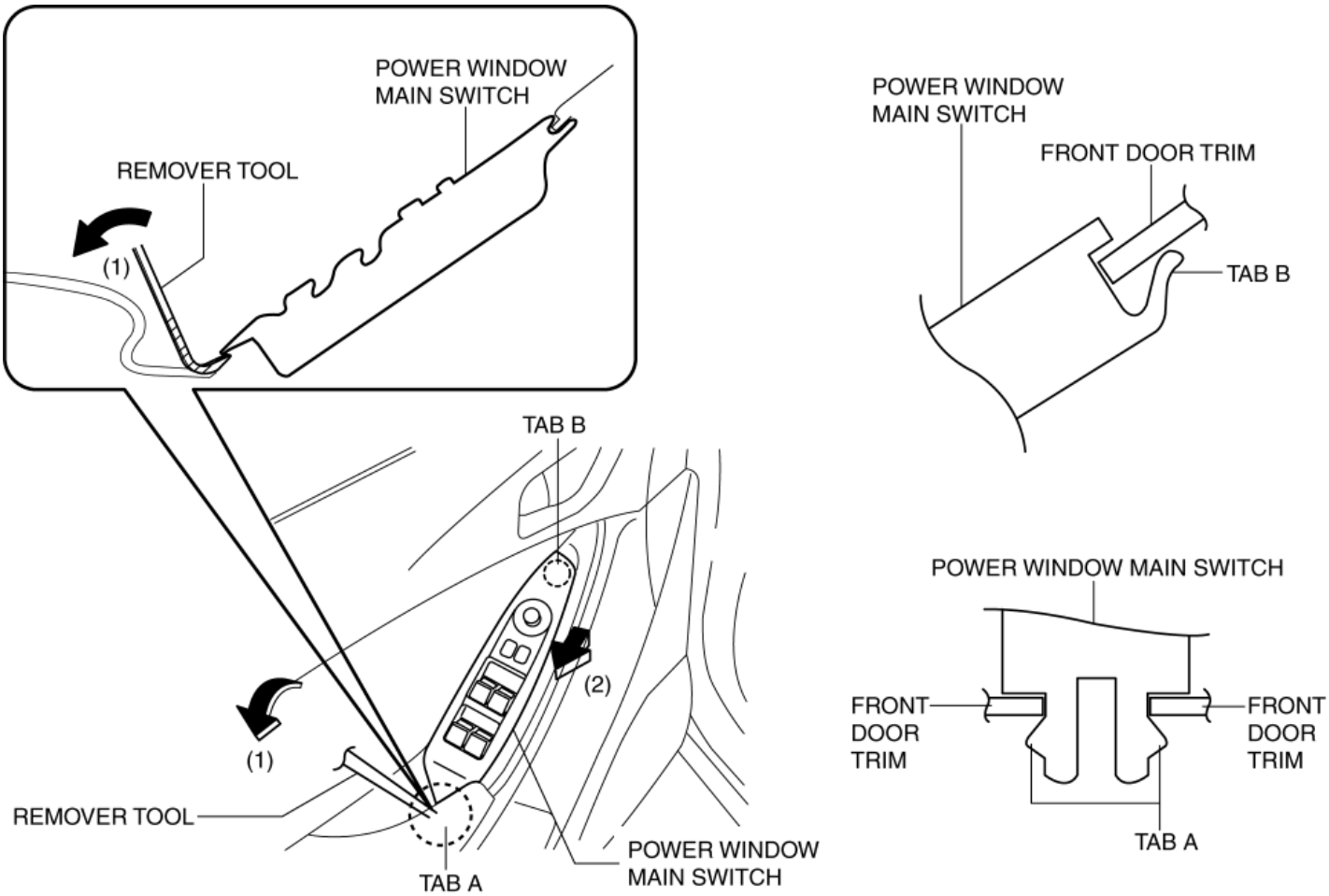

4. Slide the power window main switch in the direction of the arrow (2) shown in the figure and remove the tab B.

5. Disconnect the power window main switch connector.

6. Pull the edge of power window main switch cover in the direction of the arrow in the order of (4), (5) while detaching tab C.

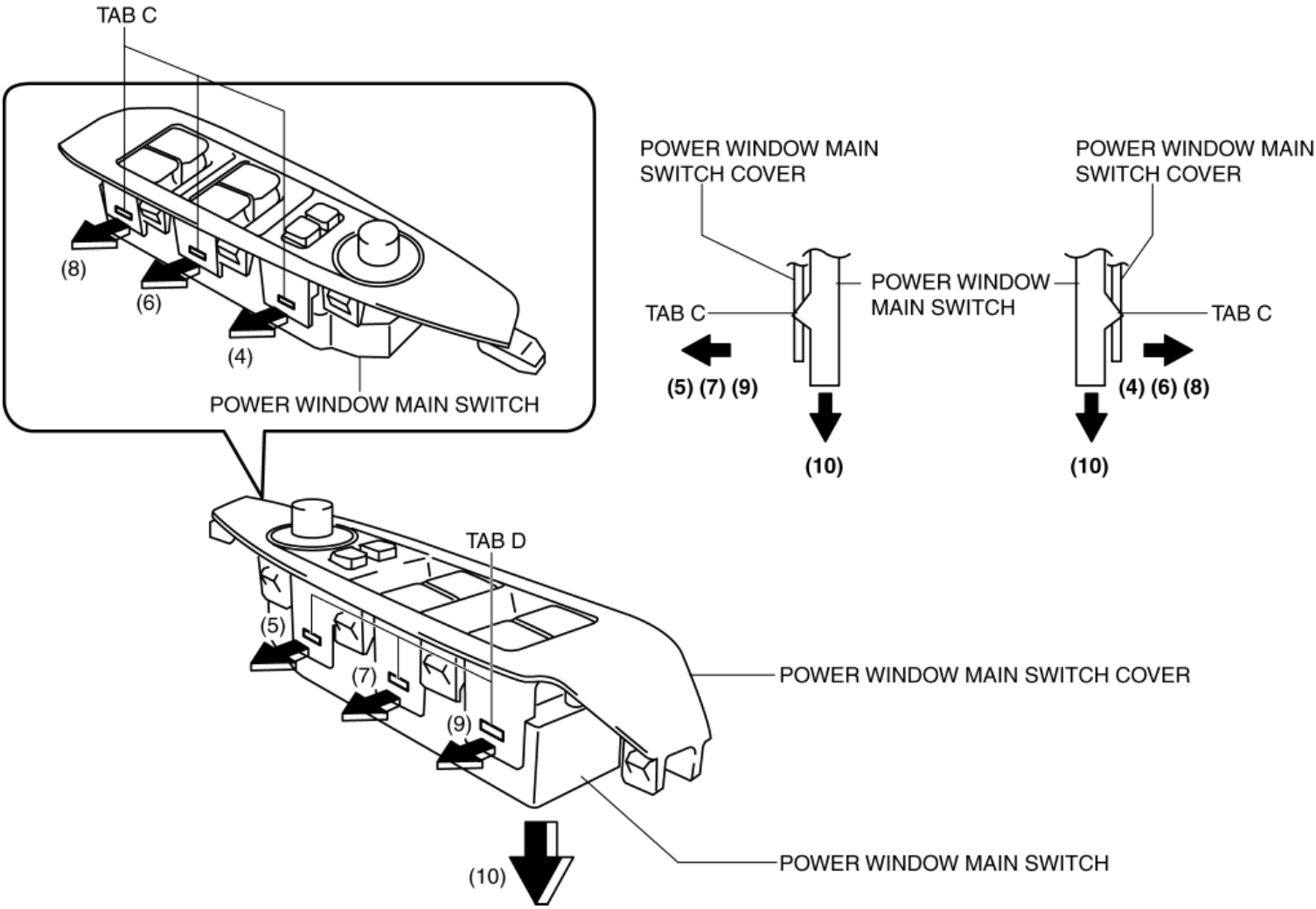

7. Pull the edge of power window main switch cover in the direction of the arrow in the order of (6), (7) while detaching tab C.

8. Pull the edge of power window main switch cover in the direction of the arrow in the order of (8), (9) while detaching tab C.

9. Remove the power window main switch in the direction of the arrow (10) shown in the figure.

10. Install in the reverse order of removal.

2014 - Mazda3 - Body and Accessories

POWER WINDOW MAIN SWITCH INSPECTION

1. Disconnect the negative battery cable. (See **NEGATIVE BATTERY CABLE DISCONNECTION/CONNECTION [SKYACTIV-G 2.0, SKYACTIV-G 2.5]**.)

2. Remove the power window main switch (See **POWER WINDOW MAIN SWITCH REMOVAL/INSTALLATION**.)

3. Connect the power window main switch connector.

4. Connect the negative battery cable. (See **NEGATIVE BATTERY CABLE DISCONNECTION/CONNECTION [SKYACTIV-G 2.0, SKYACTIV-G 2.5]**.)

5. Measure the voltage at each terminal.

- If the voltage is not as specified in the terminal voltage table, inspect the parts under Inspection item (s) and related wiring harnesses.
  - If the system does not work normally even though the inspection items or related wiring harnesses do not have any malfunction, replace the power window main switch. (See **POWER WINDOW MAIN SWITCH REMOVAL/INSTALLATION**.)

Terminal Voltage Table (Reference)

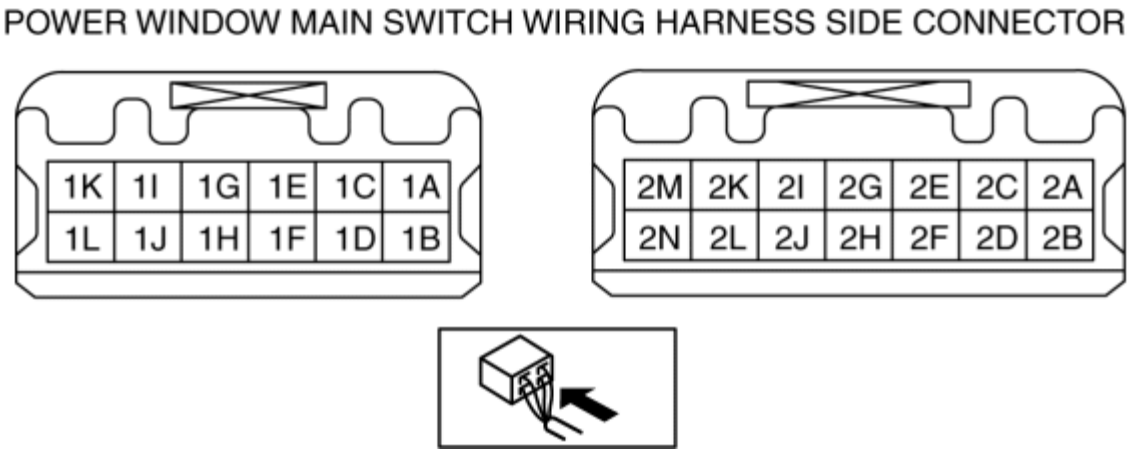

Terminal	Signal name	Connected to	Measurement condition	Voltage (V)	Inspection item (s)
1A	Rear right side window	Power window motor (rear	Door glass (rear right side) opening	B+	• Power window motor (rear

	open signal	right side)	Other	1.0 or less	right side)
1B	Passenger's side window open signal	Power window motor (passenger's side)	Door glass (passenger's side) opening	B+	• Power window motor (passenger's side)
			Other	1.0 or less	
1C	Rear right side window close signal	Power window motor (rear right side)	Door glass (rear right side) closing	B+	• Power window motor (rear right side)
			Other	1.0 or less	
1D	Passenger's side window close signal	Power window motor (passenger's side)	Door glass (passenger's side) closing	B+	• Power window motor (passenger's side)
			Other	1.0 or less	
1E	-	-	-	-	-
1F	Door open/close signal	Rear body control module (RBCM)	Any door is open	1.0 or less	• Rear body control module (RBCM)
			All door is close	approx. 6.0	
1G	Rear left side window open signal	Power window motor (rear left side)	Door glass (rear left side) opening	B+	• Power window motor (rear left side)
			Other	1.0 or less	
1H	Driver's side window open signal	Power window motor (driver's side)	Door glass (driver's side) opening	B+	• Power window motor (driver's side)
			While door glass (driver's side) is opening for approx. 40 s after ignition is switched OFF from ON	B+	
			Other	1.0 or less	
1I	Rear left side window close signal	Power window motor (rear left side)	Door glass (rear left side) closing	B+	• Power window motor (rear left side)
			Other	1.0 or less	
			Door glass (driver's side)	B+	

1J	Driver’s side window close signal	Power window motor (driver’s side)	closing		• Power window motor (driver’s side)
			While door glass (driver's side) is closing for approx. 40 s after ignition is switched OFF from ON	B+	
			Other	1.0 or less	
1K	IG1	P.WINDW1 30 A fuse	Switch the ignition ON (engine on or off)	B+	• P.WINDW1 30 A fuse
1L	Power supply	P.WINDW2 25 A fuse	Under any condition	B+	• P.WINDW2 25 A fuse
2A	GND	Body ground	Under any condition	1.0 or less	• Body ground
2B	Sensor ground	Power window motor (driver’s side)	Under any condition	1.0 or less	• Power window motor (driver’s side)
2C	Power outer mirror control signal	Power outer mirror	Inspect the power outer mirror switch. (See **POWER OUTER MIRROR SWITCH INSPECTION**.)		
2D	Pulse 1	Power window motor (driver’s side)	Door glass (driver’s side) operating	Wave pattern (See **Inspection Using an Oscilloscope (Reference)**.)	• Power window motor (driver’s side)
2E	ACC	MIRROR 7.5 A fuse	Switch the ignition to ACC	1.0 or less	• MIRROR 7.5 A fuse
			Other	B+	
2F	Pulse 2	Power window motor (driver’s side)	Door glass (driver’s side) operating	Wave pattern (See **Inspection Using an Oscilloscope (Reference)**.)	• Power window motor (driver’s side)
	Power outer		Inspect the power outer mirror switch.		

2G	mirror control signal	Power outer mirror	(See **POWER OUTER MIRROR SWITCH INSPECTION**.)		
2H	Power outer mirror control signal	Power outer mirror	Inspect the power outer mirror switch. (See **POWER OUTER MIRROR SWITCH INSPECTION**.)		
2I	Power outer mirror control signal	Power outer mirror	Inspect the power outer mirror switch. (See **POWER OUTER MIRROR SWITCH INSPECTION**.)		
2J	Power outer mirror control signal	Power outer mirror	Inspect the power outer mirror switch. (See **POWER OUTER MIRROR SWITCH INSPECTION**.)		
2K	Power outer mirror control signal	Power outer mirror	Inspect the power outer mirror switch. (See **POWER OUTER MIRROR SWITCH INSPECTION**.)		
2L	-	-	-	-	-
2M	Door lock signal	Rear body control module (RBCM)	Door lock switch ON	1.0 or less	• Rear body control module (RBCM)
			Other	approx. 5.0	
2N	Sensor power supply	Power window motor (driver's side)	Switch the ignition ON (engine on or off)	B+	• Power window motor (driver's side)
			Switch the ignition to ACC or OFF	1.0 or less	

Inspection Using an Oscilloscope (Reference)

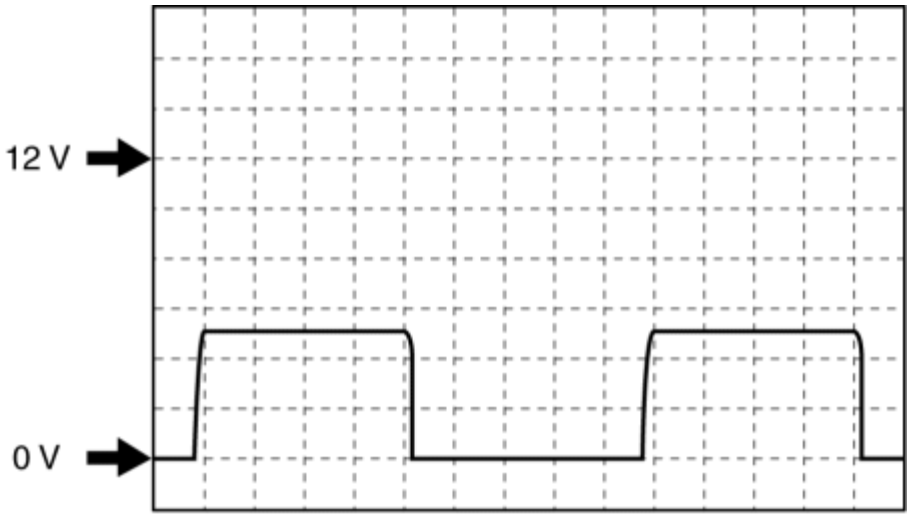

- Terminal:

  2D, 2F(+) ↔ ground (-)
- Oscilloscope setting: 2 V/DIV (Y), 1 ms/DIV (X), DC range

2014 - Mazda3 - Body and Accessories

POWER WINDOW SUBSWITCH REMOVAL/INSTALLATION

1. Disconnect the negative battery cable. (See **NEGATIVE BATTERY CABLE DISCONNECTION/CONNECTION [SKYACTIV-G 2.0, SKYACTIV-G 2.5]**.)

2. Remove the cover in the direction of arrow (1).

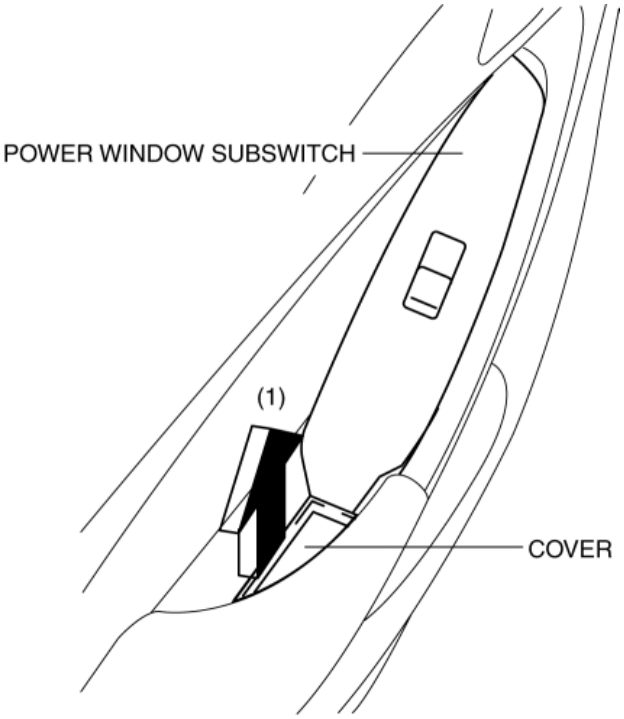

3. Insert a remover tool shown in the figure and remove the tab A in the direction of arrow (2).

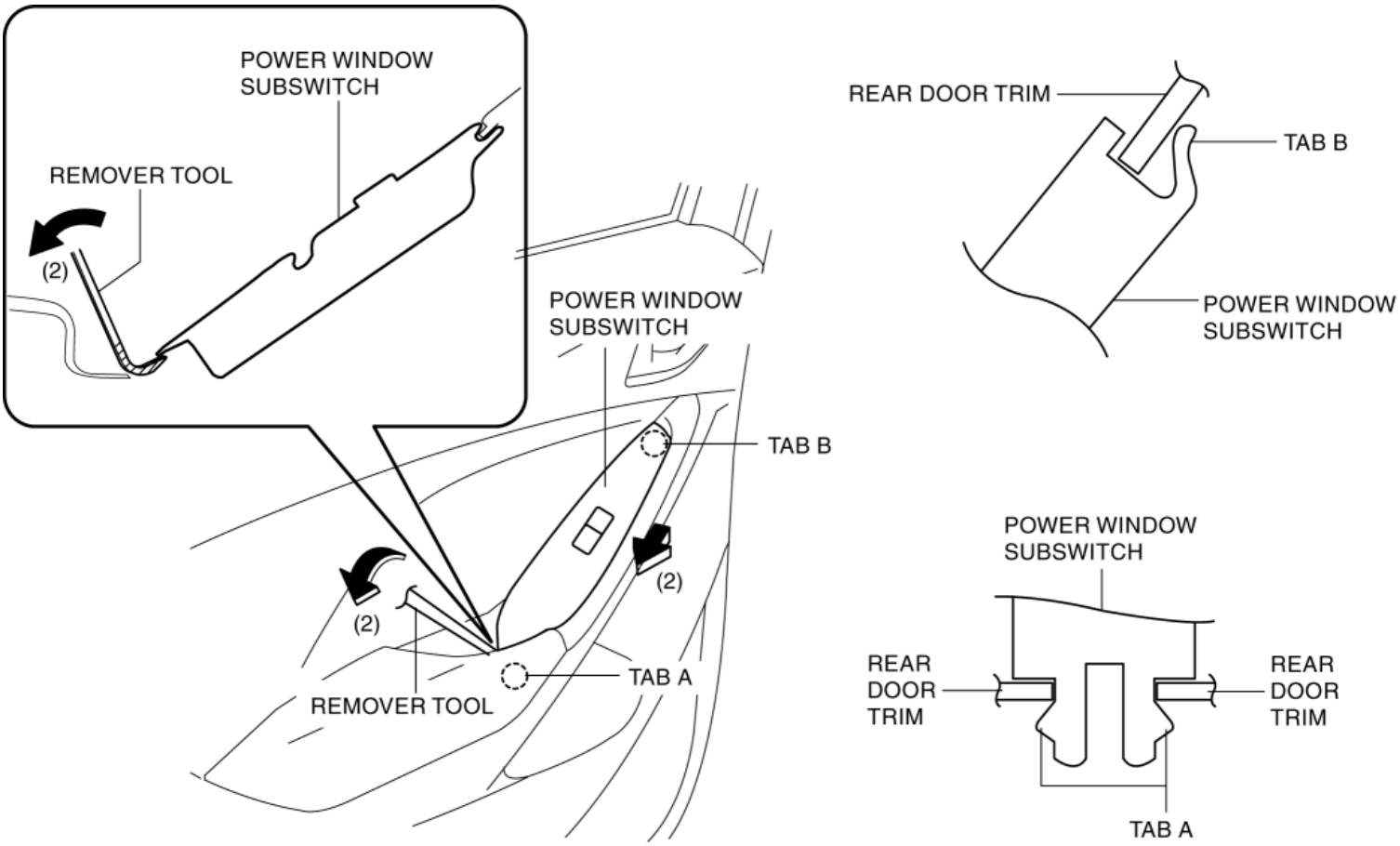

4. Slide the power window subswitch in the direction of the arrow (2) shown in the figure and remove the tab B.

5. Disconnect the power window subswitch connector.

6. Pull the edge of power window subswitch cover in the direction of the arrow in the order of (3), (4) while detaching tab C.

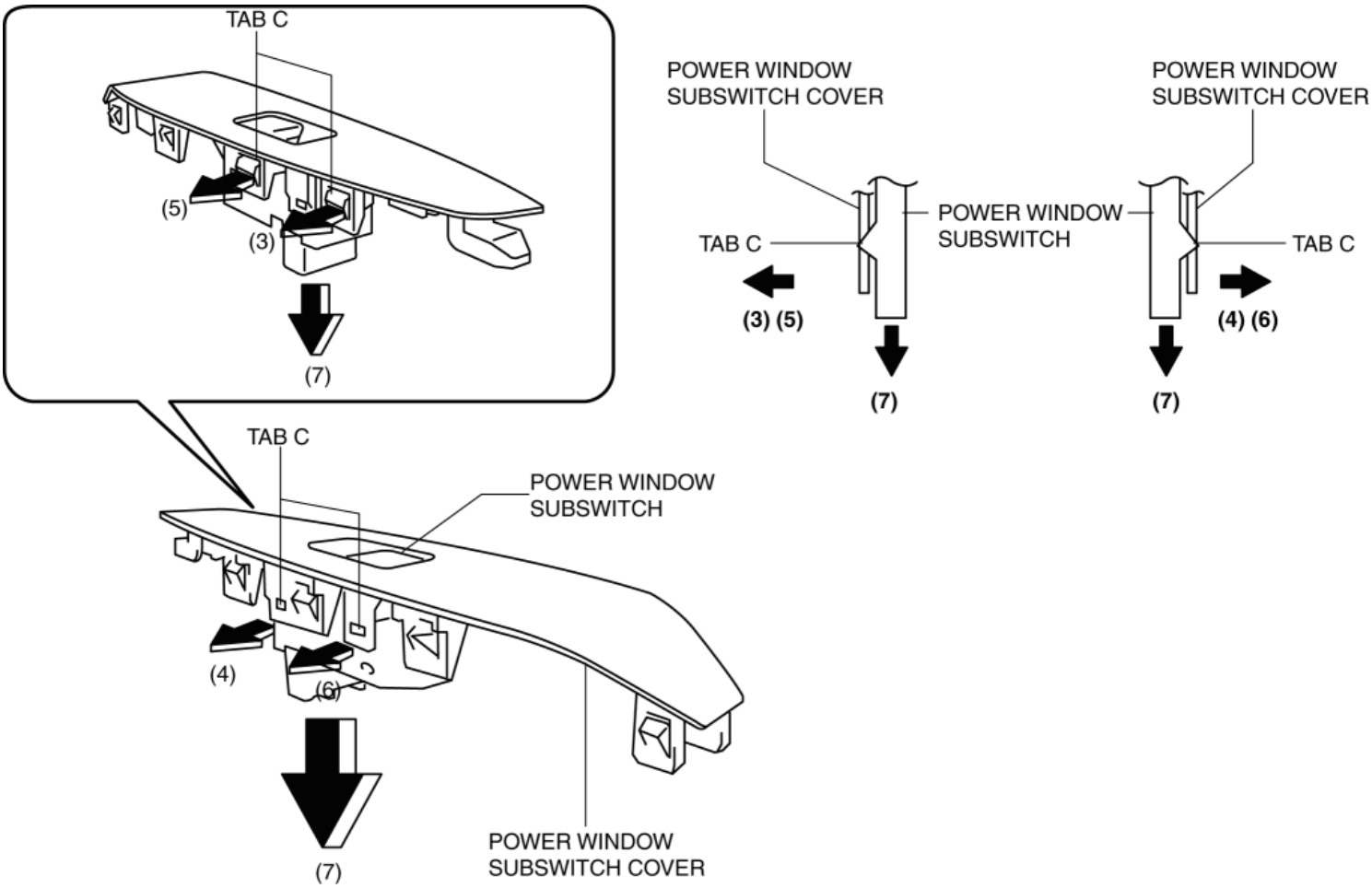

7. Pull the edge of power window subswitch cover in the direction of the arrow in the order of (5), (6) while detaching tab C.

8. Remove the power window subswitch in the direction of arrow (7) shown in the figure.

9. Install in the reverse order of removal.

2014 - Mazda3 - Body and Accessories

POWER WINDOW SUBSWITCH INSPECTION

1. Disconnect the negative battery cable. (See **NEGATIVE BATTERY CABLE DISCONNECTION/CONNECTION [SKYACTIV-G 2.0, SKYACTIV-G 2.5]**.)

2. Remove the power window subswitch. (See **POWER WINDOW SUBSWITCH REMOVAL/INSTALLATION**.)

3. Verify that the continuity is as indicated in the table using a tester.

○—○ : Continuity

Switch position	Terminal				
	A	B	C	D	E
CLOSE	○—○		○—○		
OFF	○—○			○—○	
OPEN	○—	——	—○	○—○	

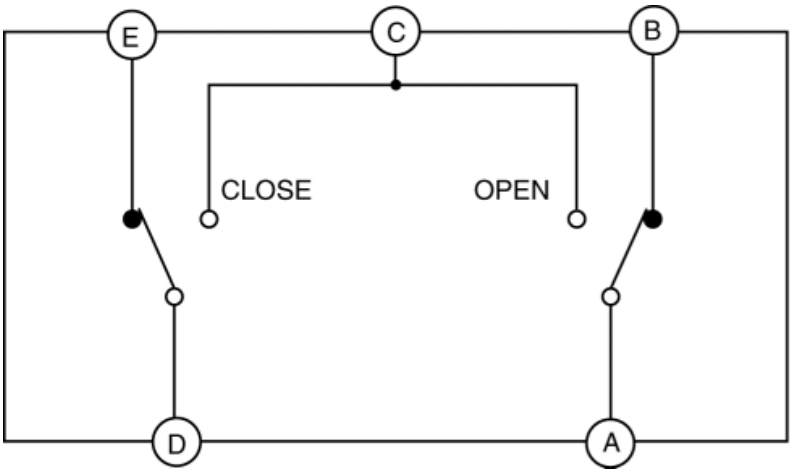

POWER WINDOW SUBSWITCH CONNECTOR

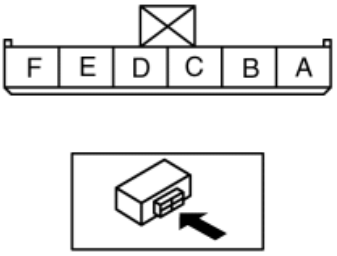

- If not as indicated in the table, replace the power window subswitch. (See **POWER WINDOW SUBSWITCH REMOVAL/INSTALLATION**.)

2014 - Mazda3 - Body and Accessories

POWER OUTER MIRROR REMOVAL/INSTALLATION

1. Disconnect the negative battery cable. (See **NEGATIVE BATTERY CABLE DISCONNECTION/CONNECTION [SKYACTIV-G 2.0, SKYACTIV-G 2.5]**.)
2. Remove the front door trim. (See **FRONT DOOR TRIM REMOVAL/INSTALLATION**.)
3. Remove the front door speaker. (See **FRONT DOOR SPEAKER REMOVAL/INSTALLATION**.)
4. Disconnect the connector.

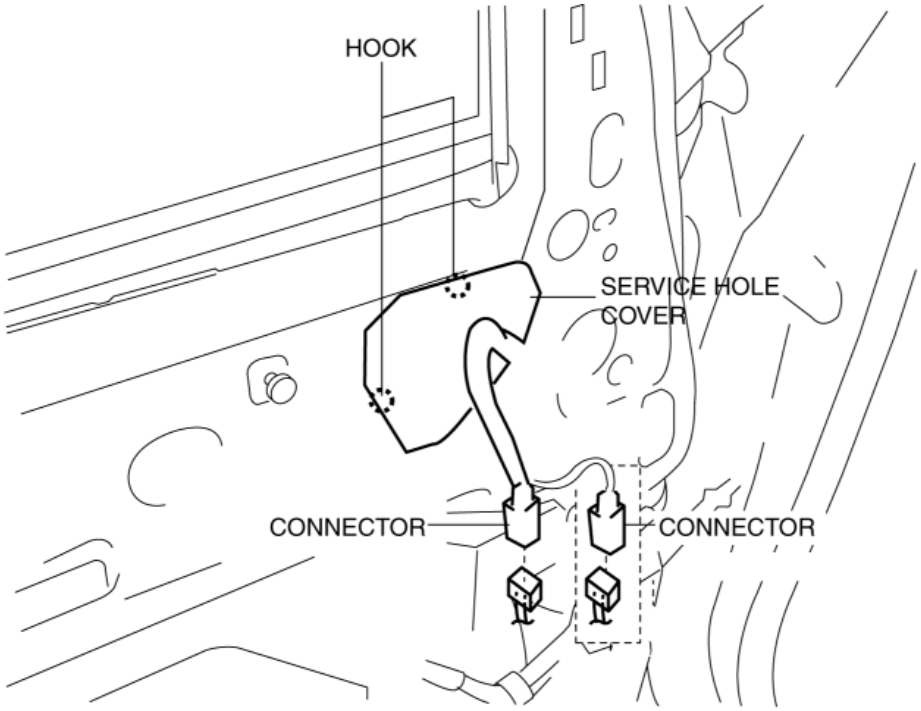

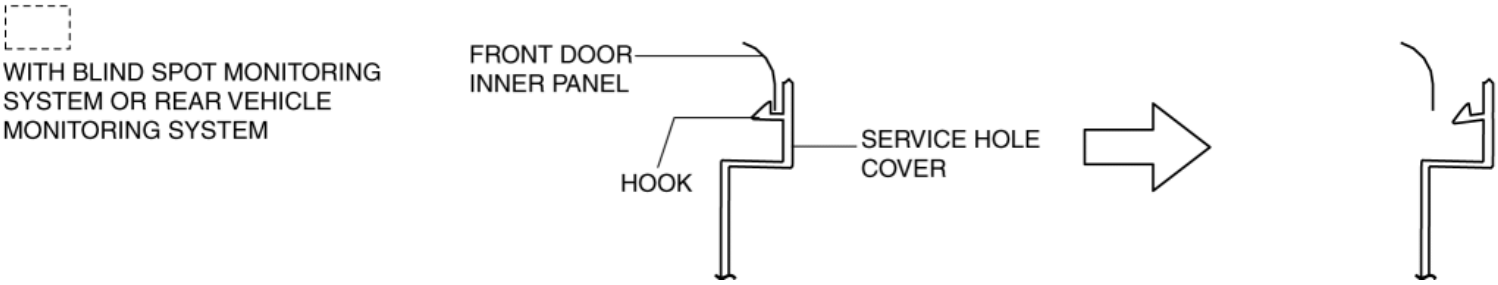

5. Insert your hand through the front door speaker installation hole and remove hooks.
6. Remove the service hole cover.
7. Remove bolts.

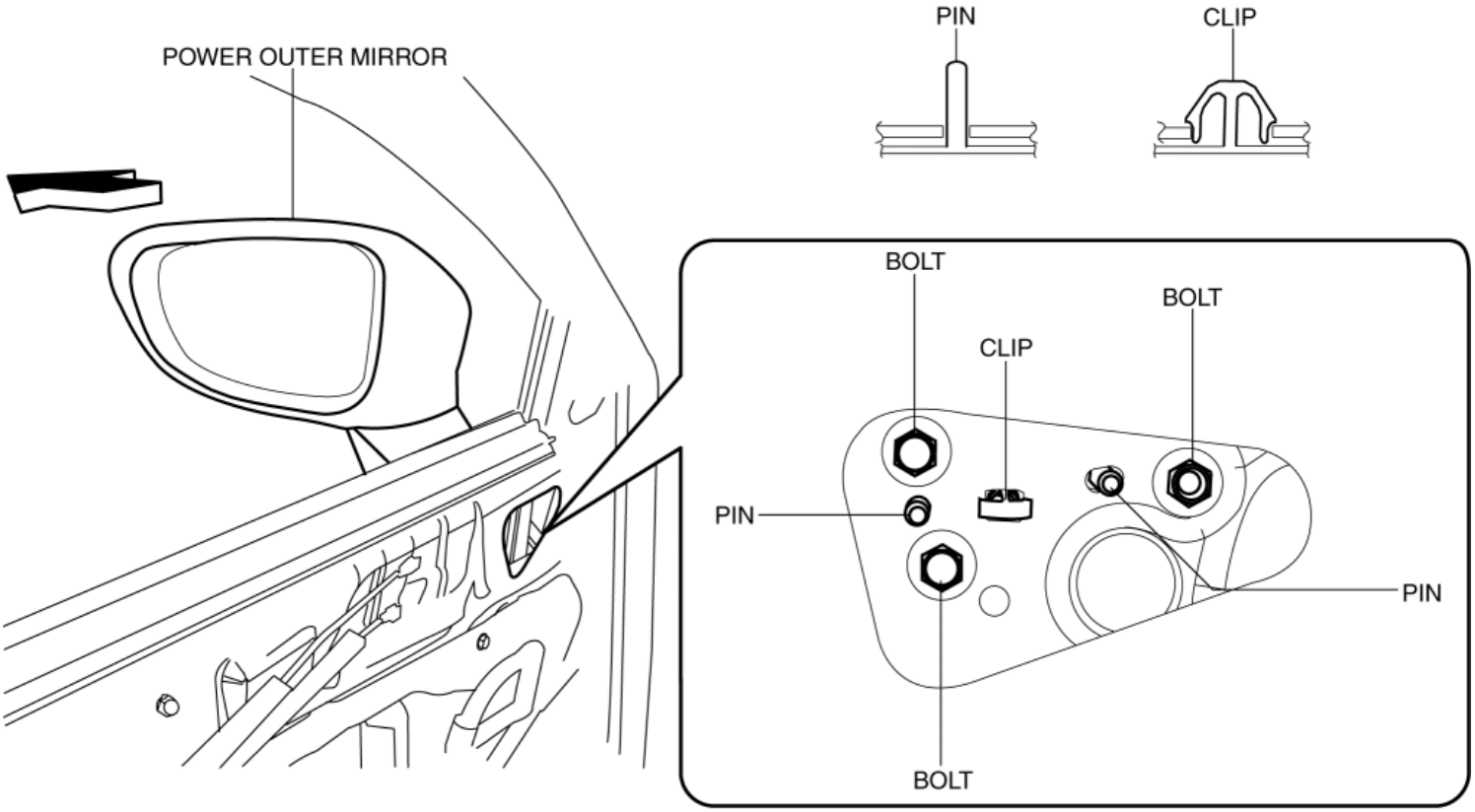

BOLT : **8—10 N·m {82—101 kgf·cm, 71—88 in·lbf}**

8. Pull the power outer mirror in the direction of the arrow while remove clips, pins.

CAUTION:

- If clip of the power outer mirror is detached, the power outer mirror may fall off and be damaged. When detaching clip of the power outer mirror, hold the power outer mirror by hand during the servicing.

9. Remove the power outer mirror.

10. Install in the reverse order of removal. (See **Power Outer Mirror Installation Note**.)

Power Outer Mirror Installation Note

1. If a wiring harness is mistakenly routed when installing a power outer mirror, it will interfere with the front door glass when opening/closing the front door glass, and could result in an open circuit. When routing the wiring harness, route it behind the glass guide.

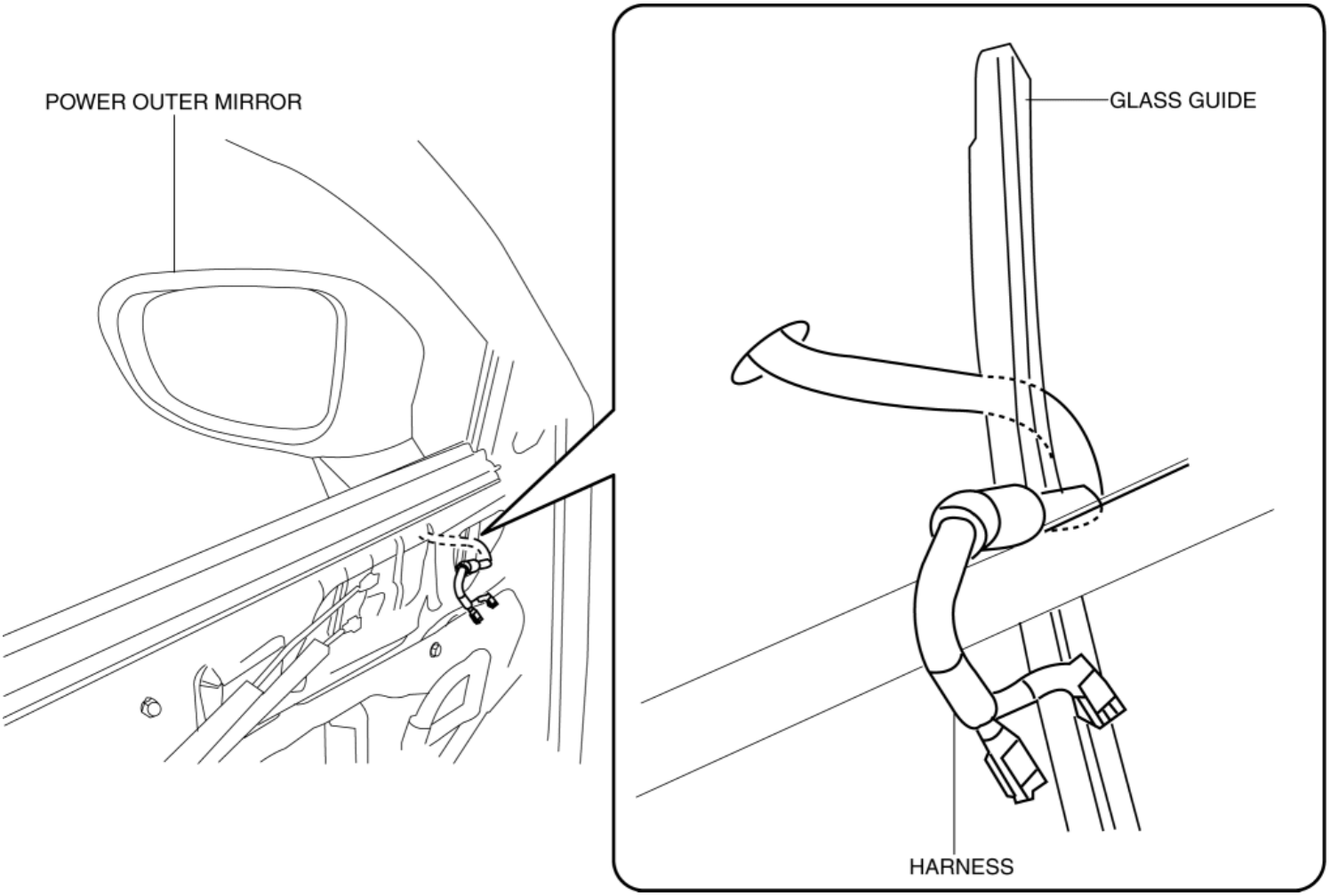
POWER OUTER MIRROR
GLASS GUIDE
HARNESS

2014 - Mazda3 - Body and Accessories

POWER OUTER MIRROR INSPECTION

Mirror Glass Adjustment

1. Disconnect the negative battery cable. (See **NEGATIVE BATTERY CABLE DISCONNECTION/CONNECTION [SKYACTIV-G 2.0, SKYACTIV-G 2.5]**.)

2. Remove the following parts:

   a. Front door trim (See **FRONT DOOR TRIM REMOVAL/INSTALLATION**.)

   b. Front door speaker (See **FRONT DOOR SPEAKER REMOVAL/INSTALLATION**.)

   c. Power outer mirror (See **POWER OUTER MIRROR REMOVAL/INSTALLATION**.)

3. Apply battery positive voltage and connect the ground to the power outer mirror terminals and inspect the power outer mirror operation.

Operation	B+ terminal	Ground terminal
Up	C	F
Down	F	C
Left	I	F
Right	F	I

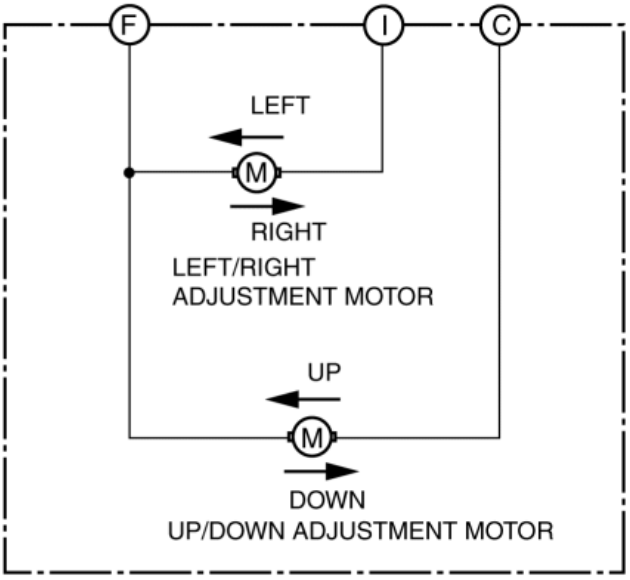

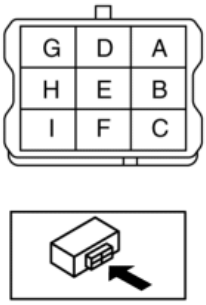

- If the power outer mirror does not operate as indicated in the table, replace the power outer mirror. (See **POWER OUTER MIRROR REMOVAL/INSTALLATION**.)

Heated Outer Mirror Inspection

1. Disconnect the negative battery cable. (See **NEGATIVE BATTERY CABLE DISCONNECTION/CONNECTION [SKYACTIV-G 2.0, SKYACTIV-G 2.5]**.)

2. Remove the following parts:

   a. Front door trim (See **FRONT DOOR TRIM REMOVAL/INSTALLATION**.)

   b. Outer mirror glass (See **OUTER MIRROR GLASS REMOVAL**.) (See **OUTER MIRROR GLASS INSTALLATION**.)

3. Verify that the continuity between heated outer mirror connector terminals is as indicated in the table.

Continuity

Test condition	Terminal			
	A	G	J	K
Under any condition	○			○
		○	○	

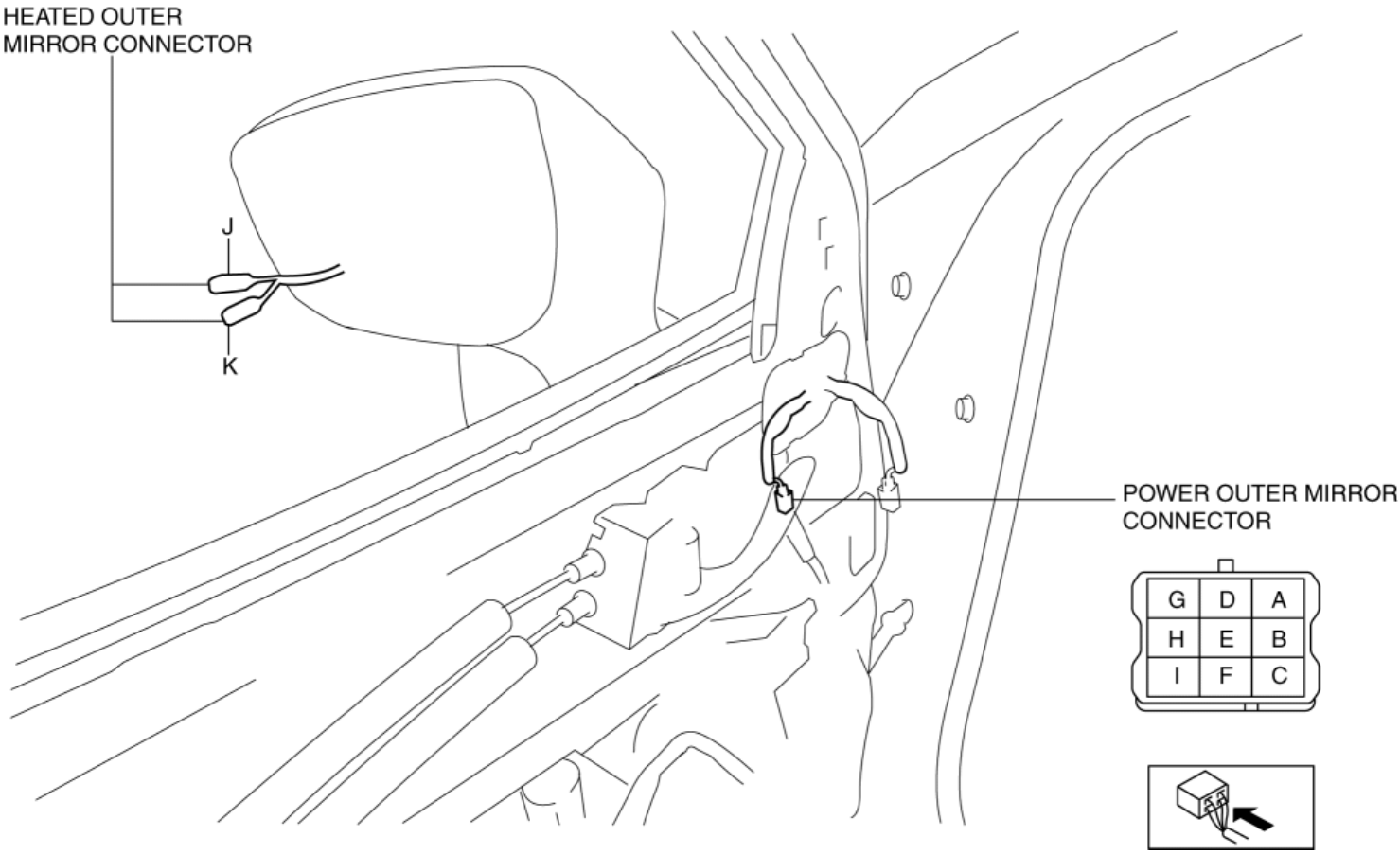

- If not as indicated in the table, replace the power outer mirror. (See **POWER OUTER MIRROR REMOVAL/INSTALLATION**.)

BSM Indicator Light Inspection

1. Disconnect the negative battery cable. (See **NEGATIVE BATTERY CABLE DISCONNECTION/CONNECTION [SKYACTIV-G 2.0, SKYACTIV-G 2.5]**.)

2. Remove the following parts:

   a. Front door trim (See **FRONT DOOR TRIM REMOVAL/INSTALLATION**.)

   b. Outer mirror glass (See **OUTER MIRROR GLASS REMOVAL**.) (See **OUTER MIRROR GLASS INSTALLATION**.)

3. Verify that the continuity between BSM indicator light connector terminals is as indicated in the table.

Continuity

Test condition	Terminal			
	G	H	J	K
Under any condition	○	———	○	
		○	———	○

- If not as indicated in the table, replace the power outer mirror. (See **POWER OUTER MIRROR REMOVAL/INSTALLATION**.)

2014 - Mazda3 - Body and Accessories

OUTER MIRROR GLASS REMOVAL

NOTE:

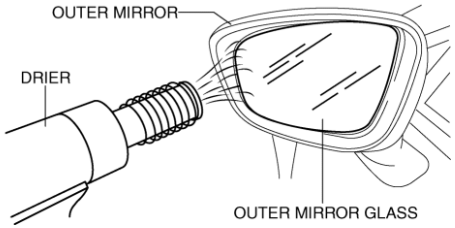

- Removal of the outer mirror glass can be facilitated by warming the back of the glass to approx. **50°C {90°F} to 60° {108°F}** degrees using a drier.
- Be careful not to overheat the outer mirror, as temperatures higher than **60°C {108°F}** degrees could deform it.

1. Disconnect the negative battery cable. (See **NEGATIVE BATTERY CABLE DISCONNECTION/CONNECTION [SKYACTIV-G 2.0, SKYACTIV-G 2.5]**.)
2. To facilitate removal of the outer mirror glass, orient the outer mirror in the direction of arrow (1) shown in the figure.

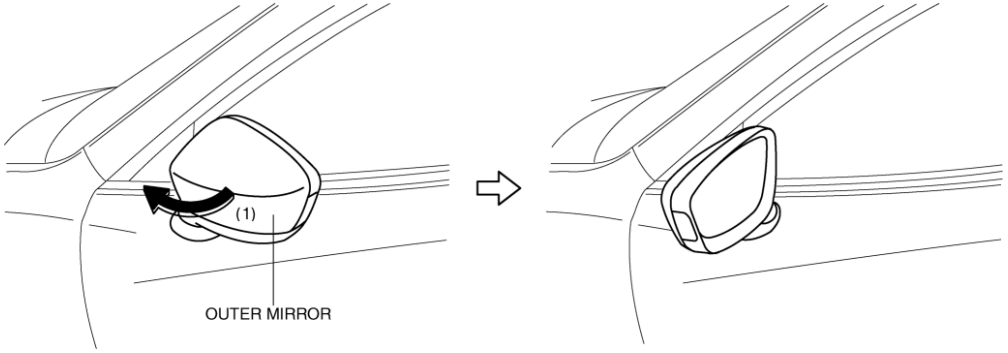

3. Move the outer mirror glass in the direction of arrow (2) shown in the figure to secure a space for inserting your fingers.

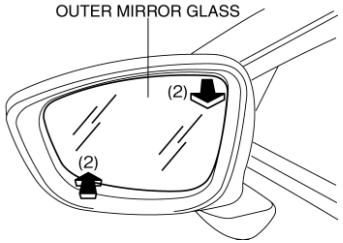

4. Insert your fingers into the location shown in the figure, move the outer mirror glass in the direction of arrow (3), and using the projection as the fulcrum point, disengage pin A.

CAUTION:

- When moving the outer mirror glass, if only the mirror glass is moved, the mirror glass could separate from the outer mirror glass holder. Move the outer mirror glass holder together with the mirror glass when moving the outer mirror glass.

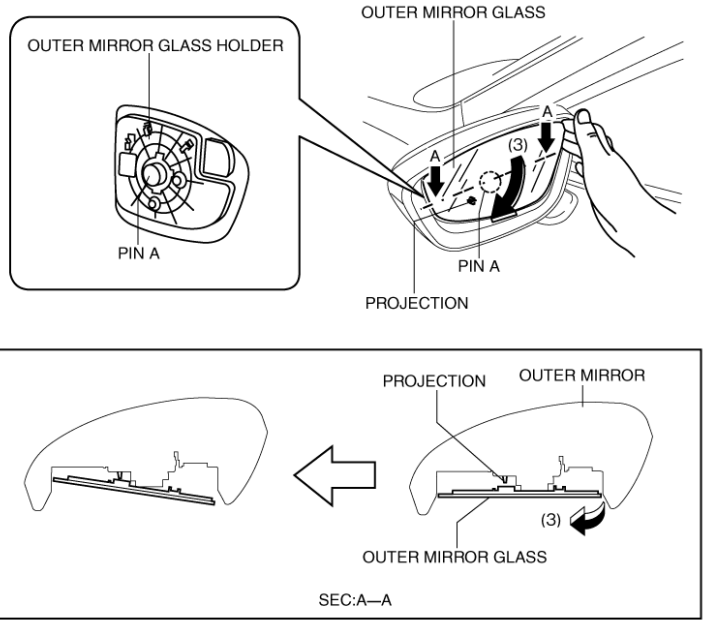

5. Insert your fingers behind the glass in the same manner as Step 4 and disengage the remaining pins B and C.

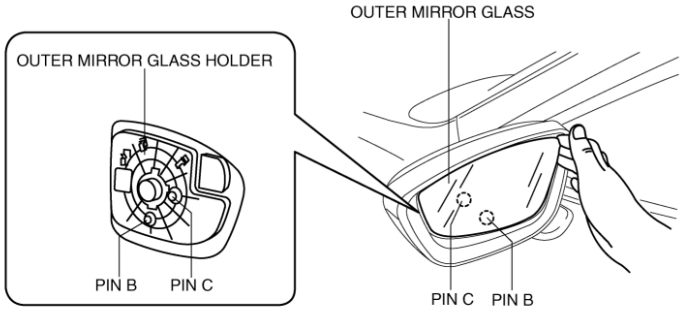

6. Remove the wiring harness for hooks.

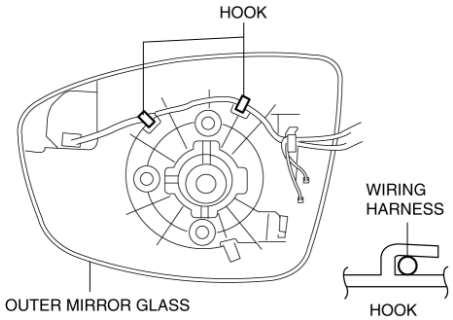

7. Disconnect the mirror heater connectors. (with heated outer mirror)

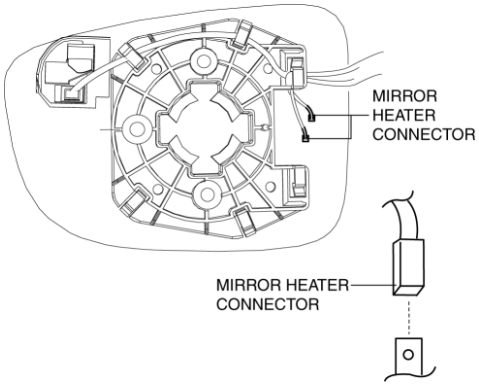

8. Insert a tape-wrapped flathead screwdriver to the position shown in the figure, remove the BSM indicator light connector (with blind spot monitoring system).

CAUTION:

- The connector can be easily deformed, therefore do not apply excessive force.

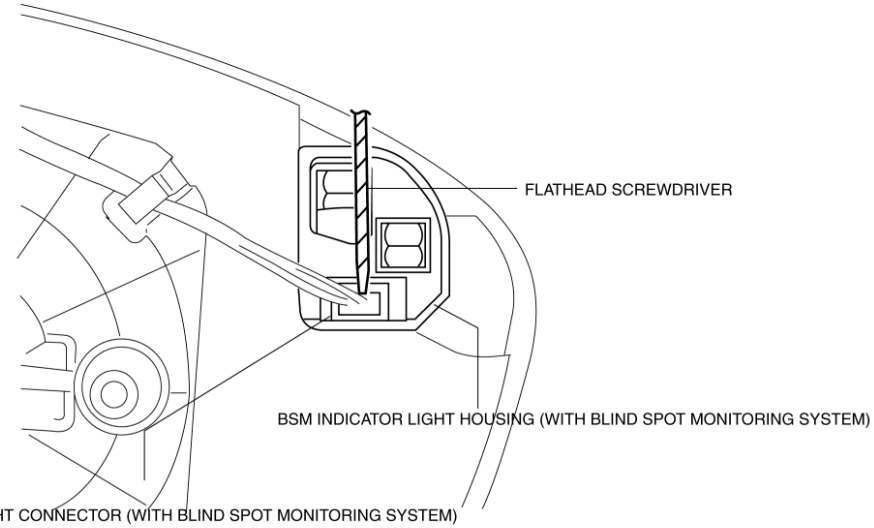

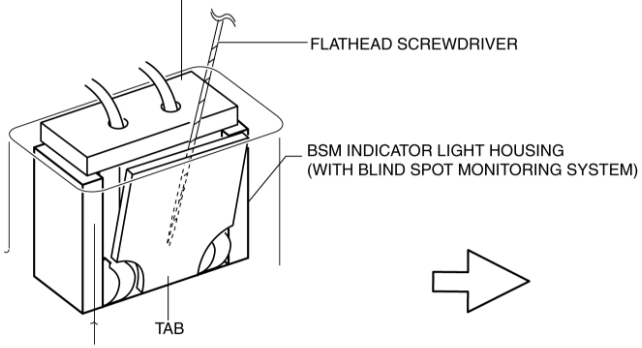

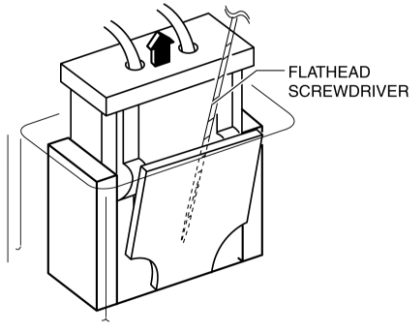

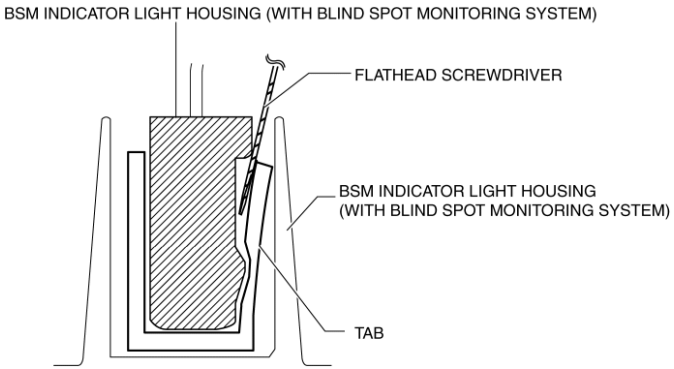

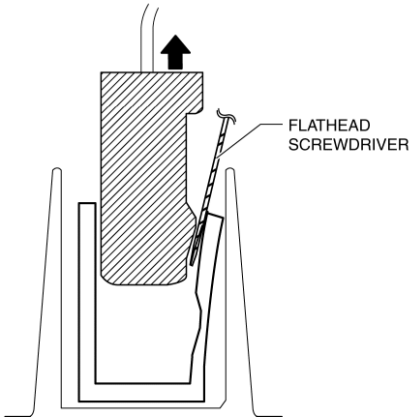

9. Remove the mirror glass holder and the outer mirror glass as a single unit.

2014 - Mazda3 - Body and Accessories

OUTER MIRROR GLASS INSTALLATION

NOTE:

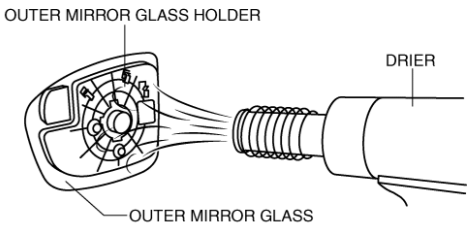

- Installation of the outer mirror glass can be facilitated by heating the outer mirror glass holder to approx. **50°C {90°F} to 60°C {108°F}** degrees using a drier.
- Be careful not to overheat the outer mirror, as temperatures higher than **60°C {108°F}** degrees could deform it.

1. To facilitate installation of the outer mirror glass, orient the outer mirror in the direction of arrow (1) shown in the figure.

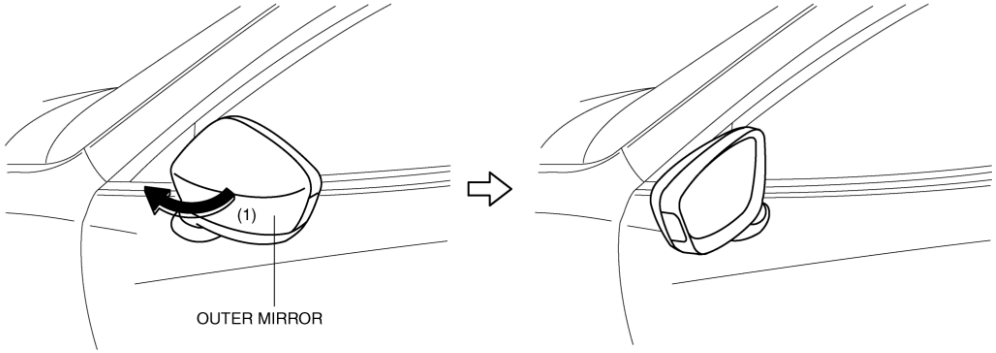

2. Connect the mirror heater connectors. (with heated outer mirror)

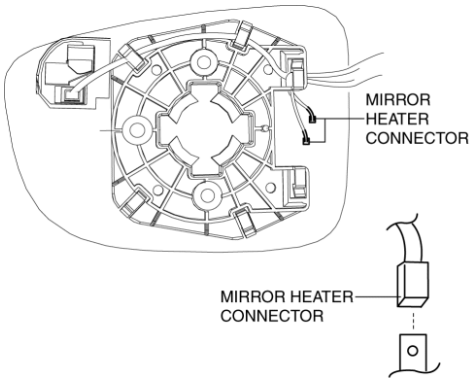

3. Connect the BSM indicator light connector (with blind spot monitoring system).

CAUTION:

- Lightly pull the BSM indicator light connector and verify that the BSM indicator light housing cannot be pulled off. If the connection is poor, insert a tape-wrapped flathead screwdriver into position A shown in the figure and engage the connector. (with blind spot monitoring system)

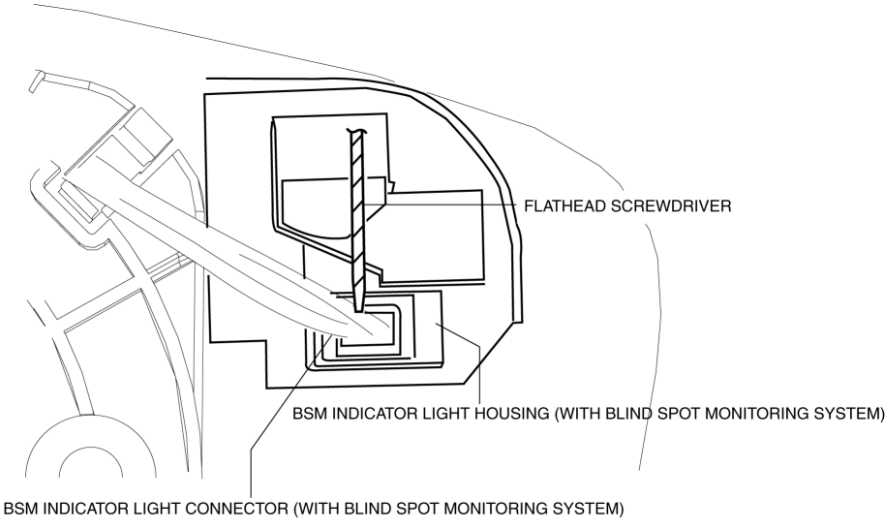

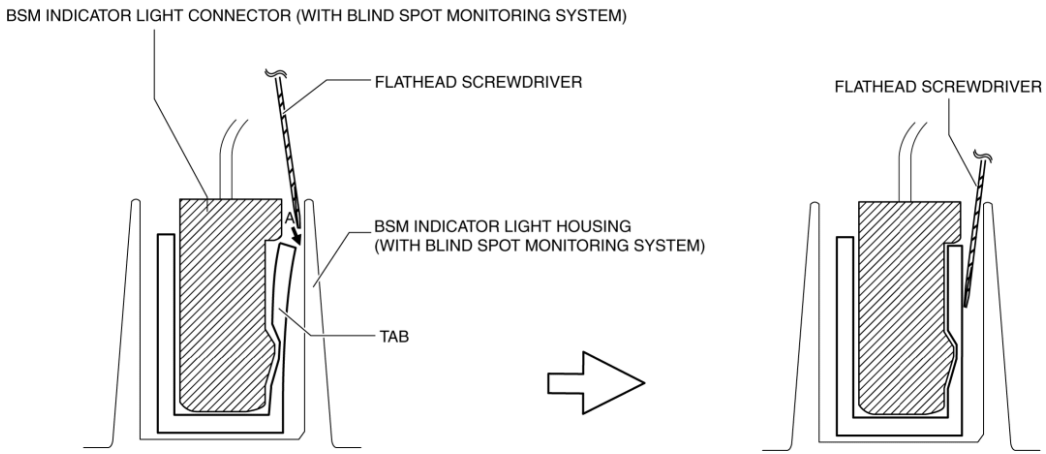

4. Press in outer mirror pins B and C in the direction of arrows (2) shown in the figure.

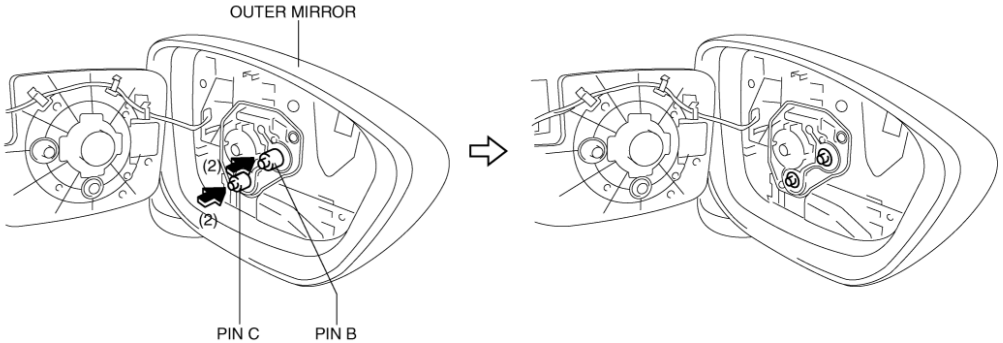

5. Align the outer mirror glass with the outer mirror in the direction of arrow (3) shown in the figure and while pressing in the direction of arrow (4), install pin A.

CAUTION:

- If the outer mirror moves when installing the outer mirror glass, the stay could be damaged. When installing the outer mirror glass, use both hands to press together the outer mirror glass and outer mirror.

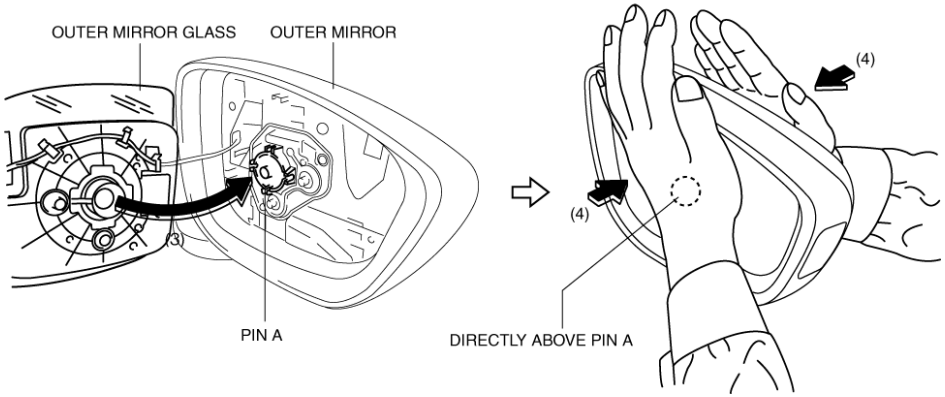

6. Install pins B and C in the same way as in Step 5.

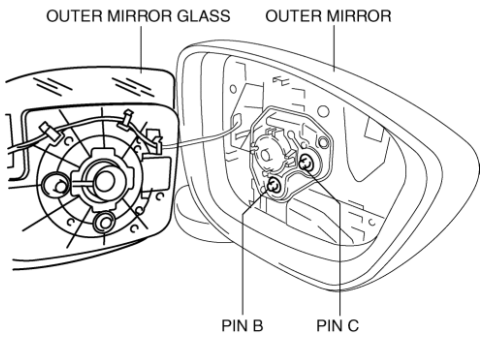

7. Connect the negative battery cable. (See **NEGATIVE BATTERY CABLE DISCONNECTION/CONNECTION [SKYACTIV-G 2.0, SKYACTIV-G 2.5]**.)

2014 - Mazda3 - Body and Accessories

OUTER MIRROR GLASS INSPECTION

Heated Outer Mirror Inspection

1. Disconnect the negative battery cable. (See **NEGATIVE BATTERY CABLE DISCONNECTION/CONNECTION [SKYACTIV-G 2.0, SKYACTIV-G 2.5]**.)
2. Remove the outer mirror glass. (See **OUTER MIRROR GLASS REMOVAL**.)(See **OUTER MIRROR GLASS INSTALLATION**.)
3. Inspect the resistance between outer mirror glass terminals.

Outer mirror glass resistance (standard)

- 9.0—13.5 ohms

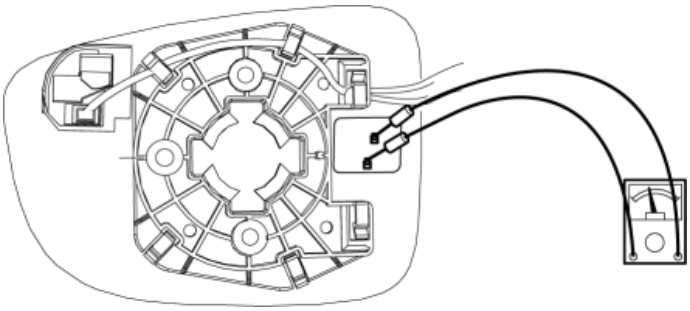

- If not within the specification, replace the outer mirror glass. (See **OUTER MIRROR GLASS REMOVAL**.)(See **OUTER MIRROR GLASS INSTALLATION**.)

BSM Indicator Light

1. Disconnect the negative battery cable. (See **NEGATIVE BATTERY CABLE DISCONNECTION/CONNECTION [SKYACTIV-G 2.0, SKYACTIV-G 2.5]**.)
2. Remove the outer mirror glass. (See **OUTER MIRROR GLASS REMOVAL**.) (See **OUTER MIRROR GLASS INSTALLATION**.)
3. Connect the battery voltage as shown in the figure.

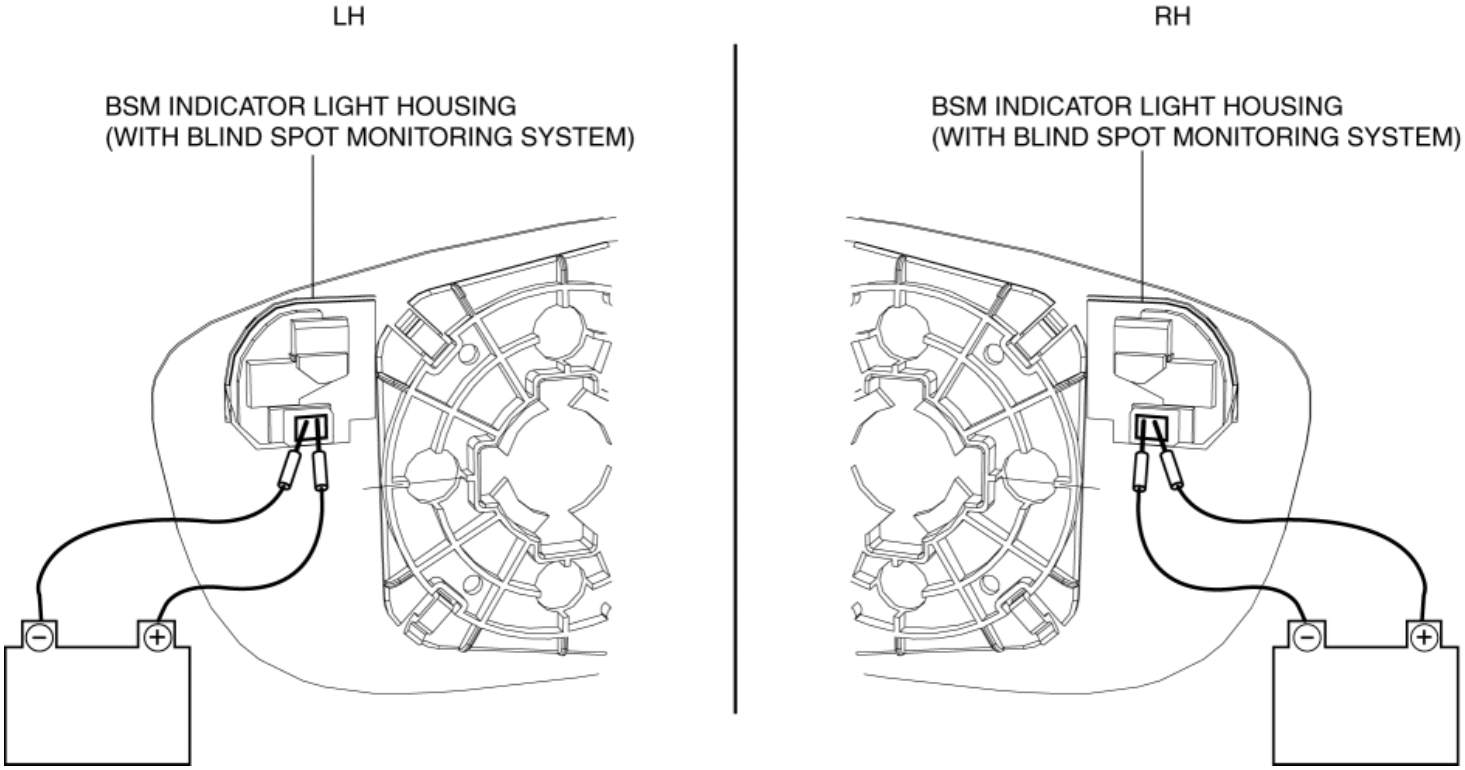

- If the BSM indicator light does not illuminate, replace the outer mirror glass. (See **OUTER MIRROR GLASS REMOVAL**.) (See **OUTER MIRROR GLASS INSTALLATION**.)

2014 - Mazda3 - Body and Accessories

OUTER MIRROR GARNISH REMOVAL/INSTALLATION

Removal

1. Disconnect the negative battery cable. (See **NEGATIVE BATTERY CABLE DISCONNECTION/CONNECTION [SKYACTIV-G 2.0, SKYACTIV-G 2.5]**.)

2. Remove the outer mirror glass. (See **OUTER MIRROR GLASS REMOVAL**.) (See **OUTER MIRROR GLASS INSTALLATION**.)

3. Insert a tape-wrapped flathead screwdriver into the upper outer mirror garnish and remove tab A in the direction of arrow (1).

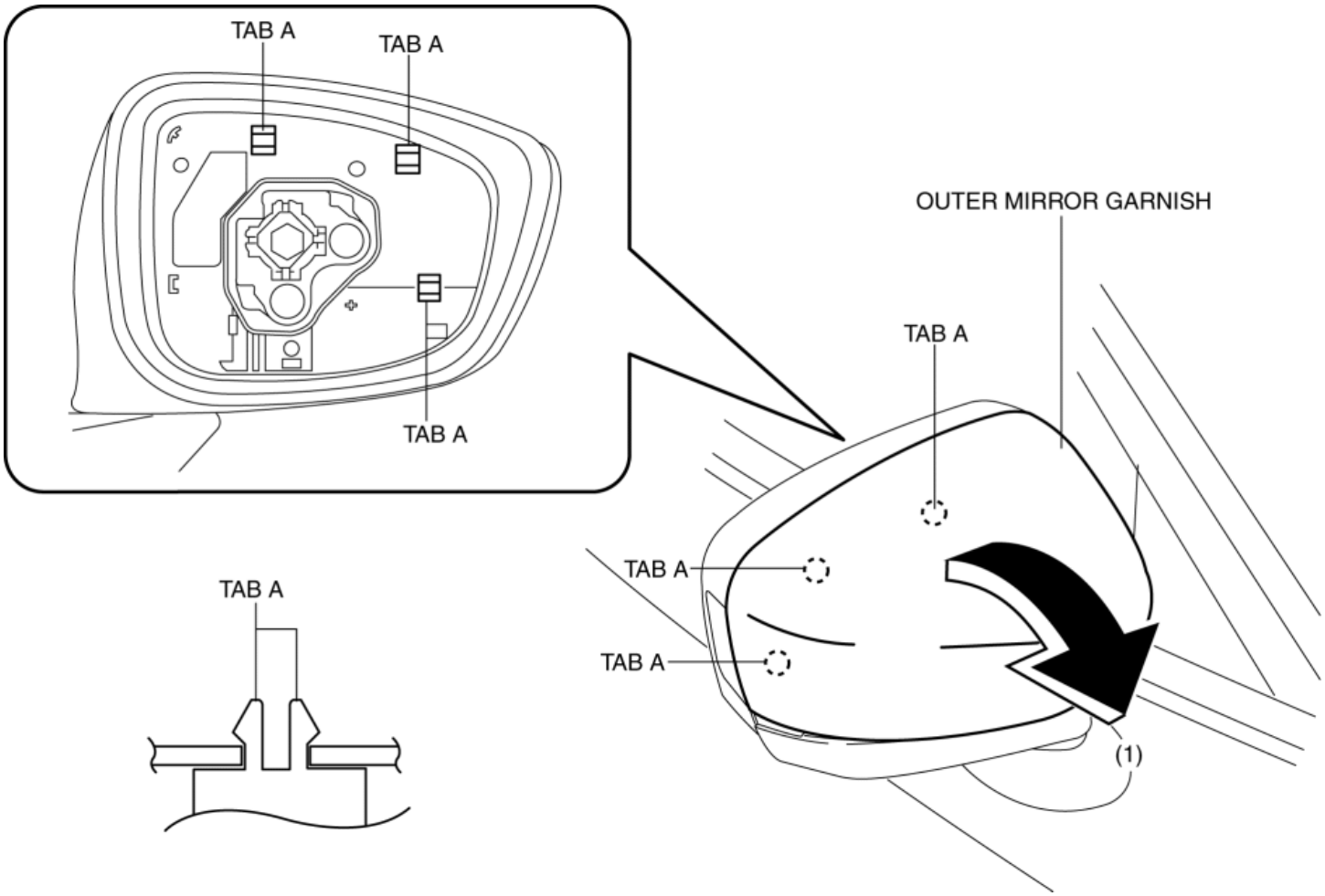

4. Insert a tape-wrapped flathead screwdriver into the upper outer mirror garnish and remove tab B in the direction of arrow (2).

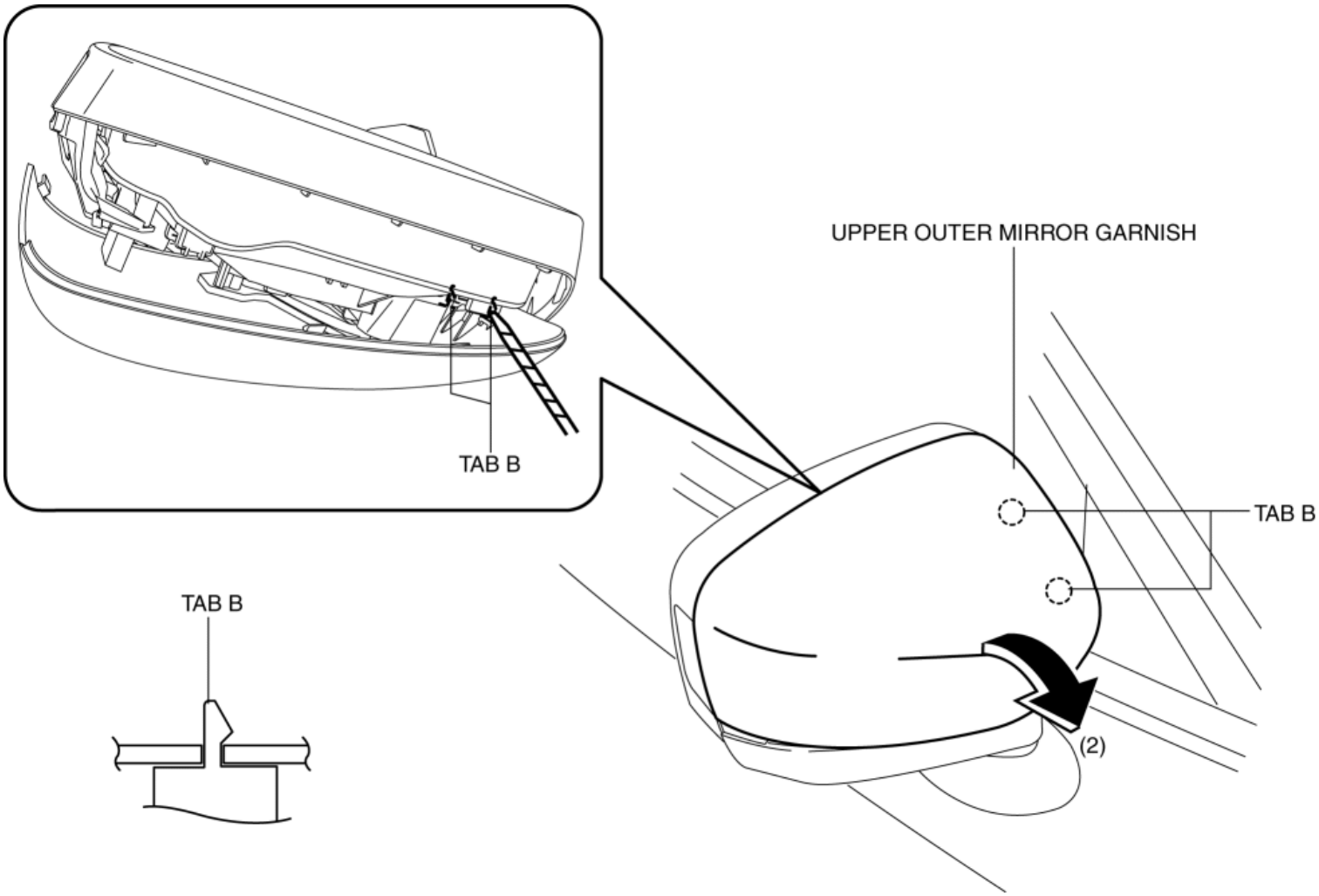

Installation

1. Press the upper outer mirror garnish in the direction of the arrow shown in the figure and install tabs A and B.

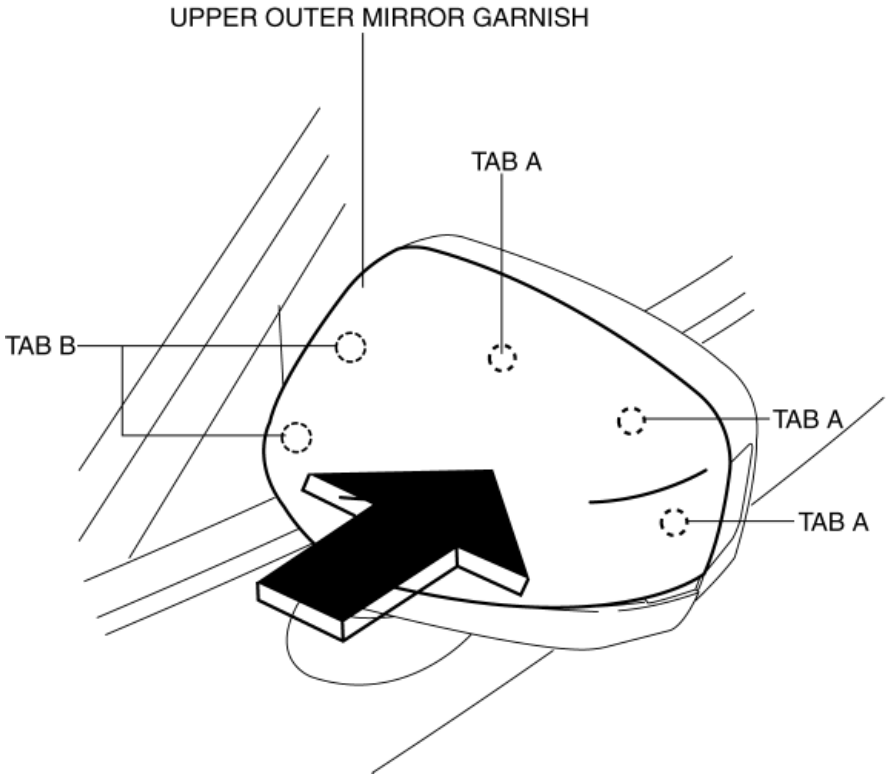

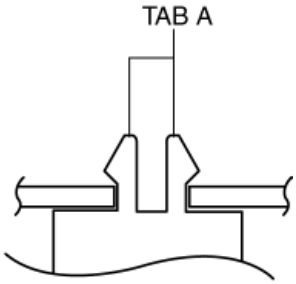

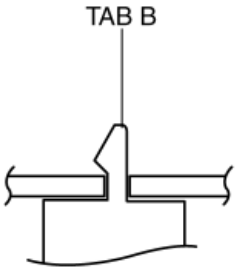

2. Install the outer mirror glass. (See **OUTER MIRROR GLASS REMOVAL**.) (See **OUTER MIRROR GLASS INSTALLATION**.)

3. Connect the negative battery cable. (See **NEGATIVE BATTERY CABLE DISCONNECTION/CONNECTION [SKYACTIV-G 2.0, SKYACTIV-G 2.5]**.)

2014 - Mazda3 - Body and Accessories

POWER OUTER MIRROR SWITCH REMOVAL/INSTALLATION

NOTE:

- The power outer mirror switch is integrated with the power window main switch.

1. Disconnect the negative battery cable. (See **NEGATIVE BATTERY CABLE DISCONNECTION/CONNECTION [SKYACTIV-G 2.0, SKYACTIV-G 2.5]**.)

2. Remove the power window main switch. (See **POWER WINDOW MAIN SWITCH REMOVAL/INSTALLATION**.)

3. Install in the reverse order of removal.

2014 - Mazda3 - Body and Accessories

POWER OUTER MIRROR SWITCH INSPECTION

1. Disconnect the negative battery cable. (See **NEGATIVE BATTERY CABLE DISCONNECTION/CONNECTION [SKYACTIV-G 2.0, SKYACTIV-G 2.5]**.)
2. Remove the power outer mirror switch. (See **POWER OUTER MIRROR SWITCH REMOVAL/INSTALLATION**.)
3. Verify that the continuity between the power outer mirror switch terminals is as indicated in the table.

○—○ : Continuity

Operation		2C	2E	2G	2H	2I	2J	2K
LH	UP	○	○	○				○
	DOWN	○	○			○		○
	LEFT	○	○				○	○
	RIGHT	○	○				○	○
RH	UP		○		○			○
	DOWN		○		○	○		○
	LEFT		○			○		○
	RIGHT		○		○	○		○

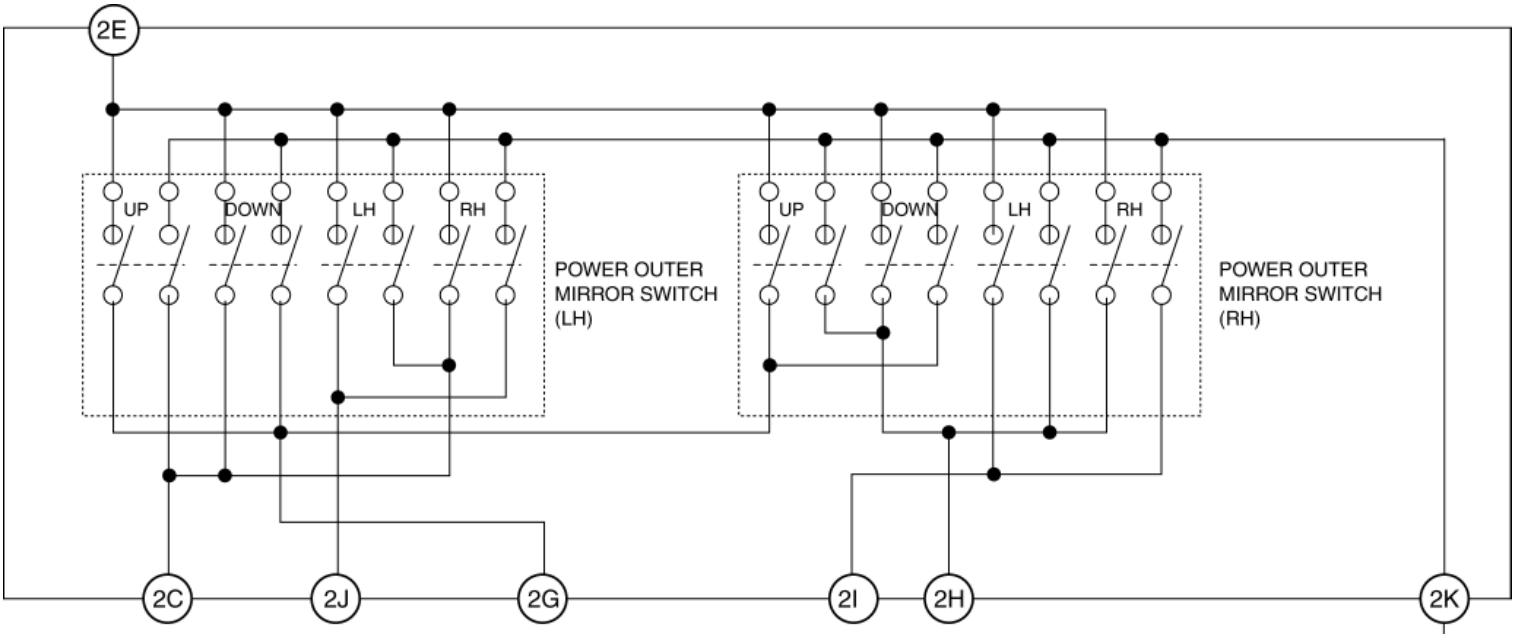

POWER OUTER MIRROR SWITCH WIRING HARNESS SIDE CONNECTOR

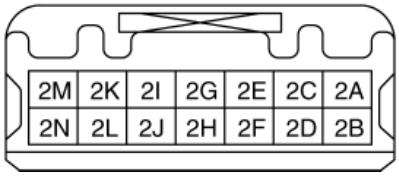

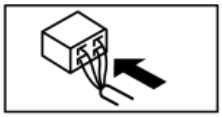

- If not as indicated in the table, replace the power outer mirror switch. (See **POWER OUTER MIRROR SWITCH REMOVAL/INSTALLATION**.)

2014 - Mazda3 - Body and Accessories

REAR WINDOW DEFROSTER SYSTEM INSPECTION

With Full-auto Air Conditioner System

System wiring diagram

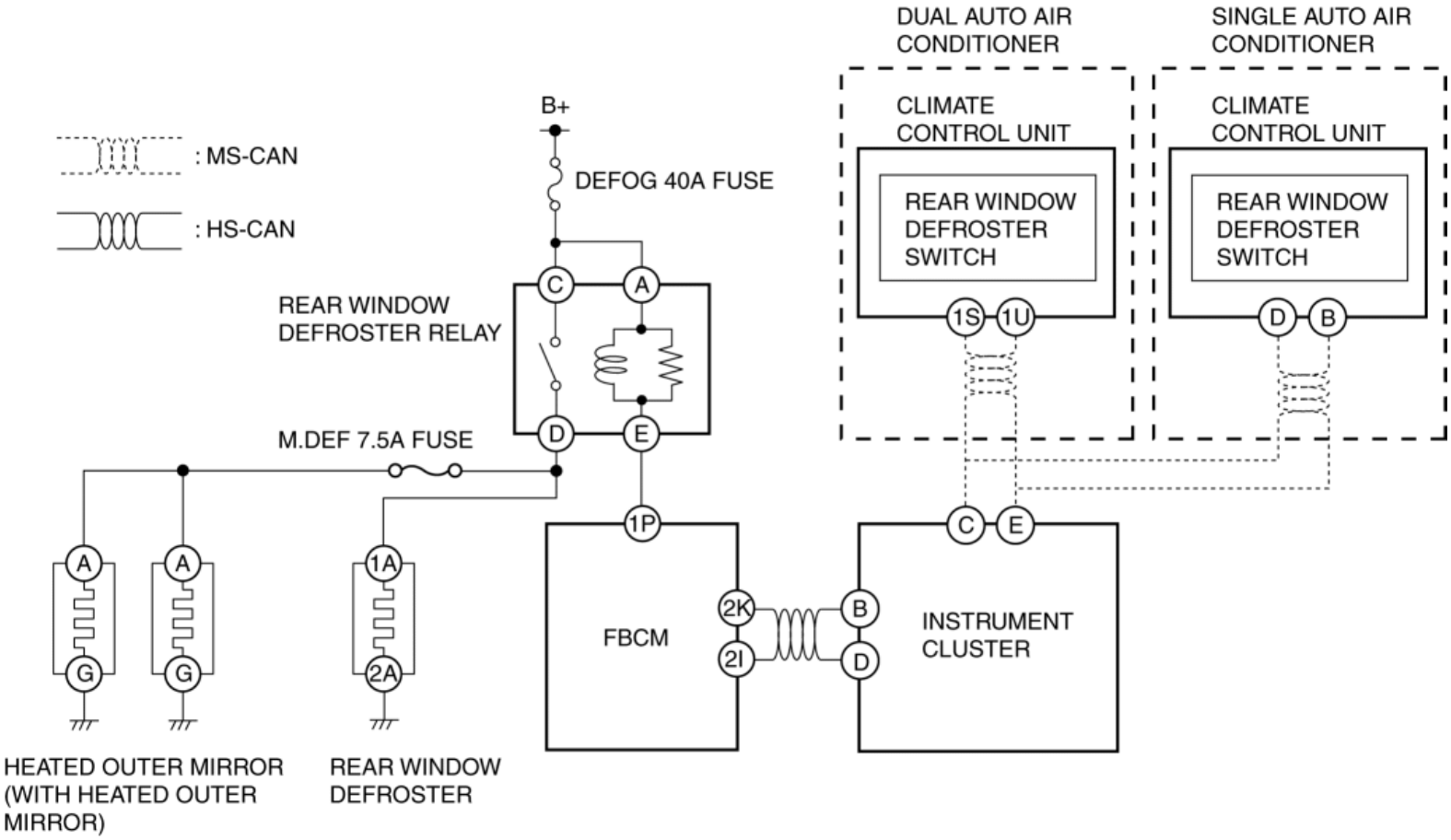

Inspection

1. Switch the ignition ON.
2. Verify that the rear window defroster switch LED illuminates using the rear window defroster switch.
3. Verify that the heated outer mirrors and rear window defroster warm up.
   - If the heated outer mirrors and the rear window defroster do not warm up, perform diagnosis for a possible CAN malfunction according to the CAN malfunction diagnosis flow. (See **FOREWORD**.)
     - If a CAN malfunction has occurred, repair the malfunctioning location according to the diagnostic procedure of the CAN malfunction diagnosis flow. (See **CONTROLLER AREA NETWORK (CAN) MALFUNCTION DIAGNOSIS FLOW**.)
     - If a CAN malfunction has not occurred, perform inspection of the each related part.

Rear window defroster switch inspection

- Use the heater, ventilation and air conditioning PID/data monitor inspection R/DEF_SW to inspect the rear window defroster switch. (See **PID/DATA MONITOR**

DISPLAY [FULL-AUTO AIR CONDITIONER].) (See PID/DATA MONITOR TABLE [FULL-AUTO AIR CONDITIONER].)

Inspection of rear window defroster control signal transmission condition for climate control unit

- Use the heater, ventilation and air conditioning PID/data monitor inspection R/DEF_CS to inspect the rear window defroster control signal transmission condition. (See PID/DATA MONITOR DISPLAY [FULL-AUTO AIR CONDITIONER].) (See PID/DATA MONITOR TABLE [FULL-AUTO AIR CONDITIONER].)

Inspection of rear window defroster control signal reception condition for front body control module (FBCM)

- Use the front body control module (FBCM) PID/data monitor inspection DEFOG_R_CS to inspect the rear window defroster control signal reception condition. (See PID/DATA MONITOR INSPECTION [FRONT BODY CONTROL MODULE (FBCM)].) (See PID/DATA MONITOR TABLE [FRONT BODY CONTROL MODULE (FBCM)].)

Rear window defroster relay ON/OFF control inspection

- Measure the terminal voltage at the front body control module (FBCM) terminal 1P. (See FRONT BODY CONTROL MODULE (FBCM) INSPECTION.)

Rear window defroster relay inspection

- Inspect the rear window defroster relay. (See RELAY INSPECTION.)

Rear window defroster inspection

- Inspect the rear window defroster. (See REAR WINDOW DEFROSTER INSPECTION.)

Heated outer mirror inspection

- Inspect the heated outer mirrors. (See OUTER MIRROR GLASS INSPECTION.)

With Manual Air Conditioner System

System wiring diagram

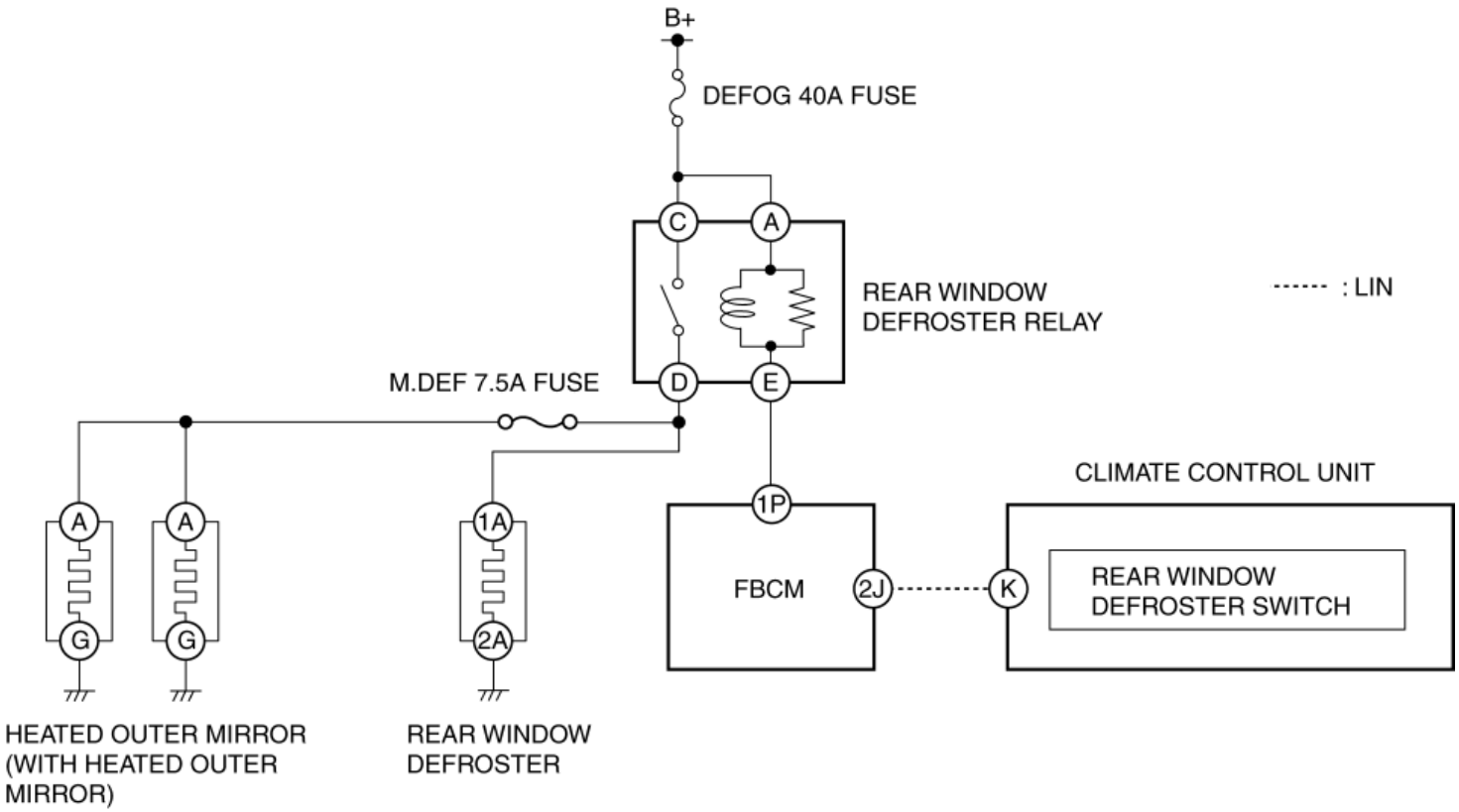

Inspection

1. Switch the ignition ON.
2. Verify that the rear window defroster switch LED illuminates using the rear window defroster switch.
3. Verify that the heated outer mirrors and rear window defroster warm up.
   - If the heated outer mirror and rear defroster do not warm up, perform an inspection of each related part.

     Inspection of rear window defroster control signal reception condition for front body control module (FBCM)

     - Use the front body control module (FBCM) PID/data monitor inspection DEFOG_R_CS to inspect the rear window defroster control signal reception condition. (See **PID/DATA MONITOR INSPECTION [FRONT BODY CONTROL MODULE (FBCM)]**.) (See **PID/DATA MONITOR TABLE [FRONT BODY CONTROL MODULE (FBCM)]**.)

     Rear window defroster relay ON/OFF control inspection

     - Measure the terminal voltage at the front body control module (FBCM) terminal 1P. (See **FRONT BODY CONTROL MODULE (FBCM) INSPECTION**.)

     Rear window defroster relay inspection

     - Inspect the rear window defroster relay. (See **RELAY INSPECTION**.)

     Rear window defroster inspection

     - Inspect the rear window defroster. (See **REAR WINDOW DEFROSTER INSPECTION**.)

     Heated outer mirror inspection

     - Inspect the heated outer mirrors. (See **OUTER MIRROR GLASS INSPECTION**.)

2014 - Mazda3 - Body and Accessories

REAR WINDOW DEFROSTER INSPECTION

1. Switch the ignition ON (engine off).

2. Turn the rear window defroster switch on.

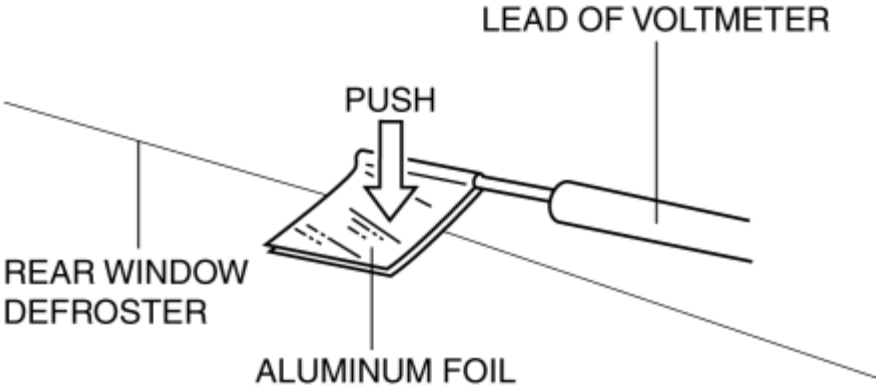

CAUTION:

- Directly touching the rear window defroster with the lead of the tester could damage it. Wrap aluminum foil around the end of the lead and inspect the rear window defroster by touching it with the aluminum foil.

3. Connect the positive lead of the tester to the positive side of each rear window defroster and the negative lead to ground.

4. Gradually slide the positive lead from the positive side to the negative side and verify that the voltage decreases accordingly.

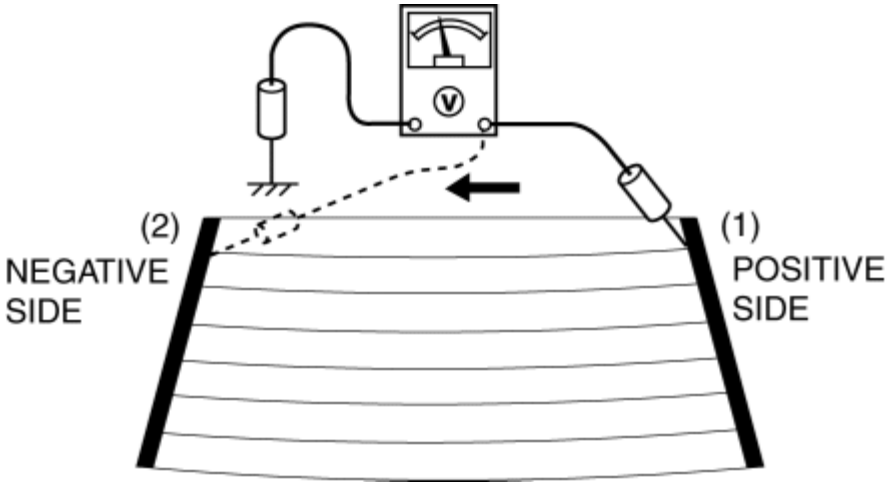

- If the voltage changes rapidly, the rear window defroster has a malfunction. Repair the rear window defroster. (See **REAR WINDOW DEFROSTER/GLASS ANTENNA REPAIR**.)

Measured part	Voltage (Reference)
(1) to (2)	Approx. 11 V to 0 V

2014 - Mazda3 - Body and Accessories

REAR WINDOW DEFROSTER/GLASS ANTENNA REPAIR

1. Clean the rear window defroster/glass antenna using isopropyl alcohol.
2. Attach tape to both sides of the rear window defroster/glass antenna.

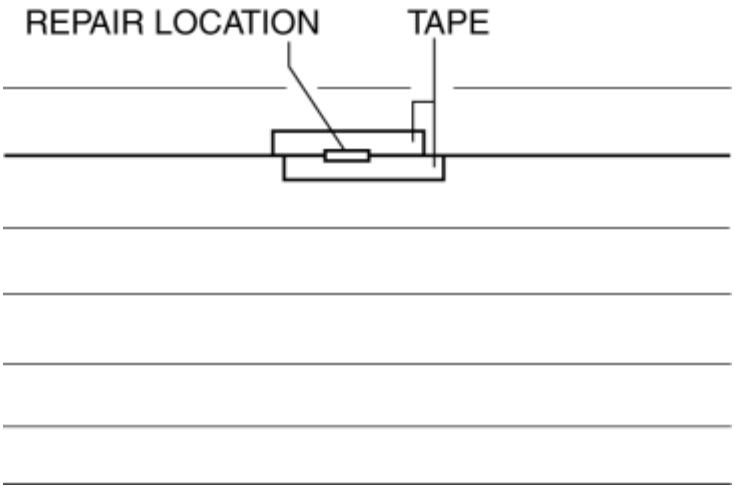

3. Using a small brush or marking pen, apply silver paint.
4. After **2—3 min,** carefully remove the tape without damaging the applied area.

CAUTION:

- Do not operate the rear window defroster until the paint is completely dry. It may cause other malfunctions if it is used before the paint is dry.

5. Dry the repaired part according to the following procedure.
   - When the room temperature is **25 °C {77 °F},** leave it as it is for **24 h.**
   - When a hot air blower is used, dry with the **150 °C {302 °F}** air for **30 min.**

2014 - Mazda3 - Body and Accessories

AUTO-DIMMING MIRROR REMOVAL/INSTALLATION

With Forward Sensing Camera (FSC) Or Smart City Brake Support (SCBS)

1. Disconnect the negative battery cable. (See **NEGATIVE BATTERY CABLE DISCONNECTION/CONNECTION [SKYACTIV-G 2.0, SKYACTIV-G 2.5]**.)
2. Remove the cover. (See **FORWARD SENSING CAMERA (FSC) REMOVAL/INSTALLATION**.)
3. Disconnect the auto-dimming mirror connector.

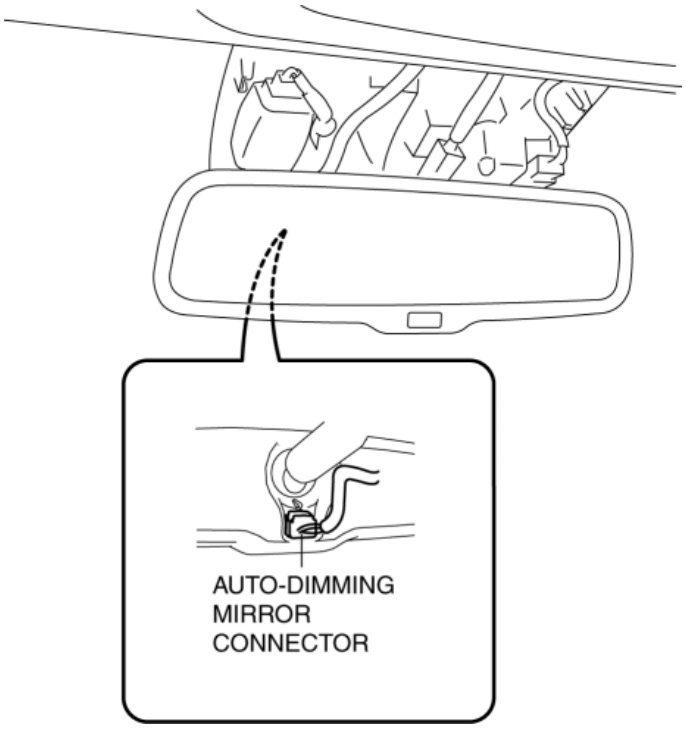

4. Remove screw A.

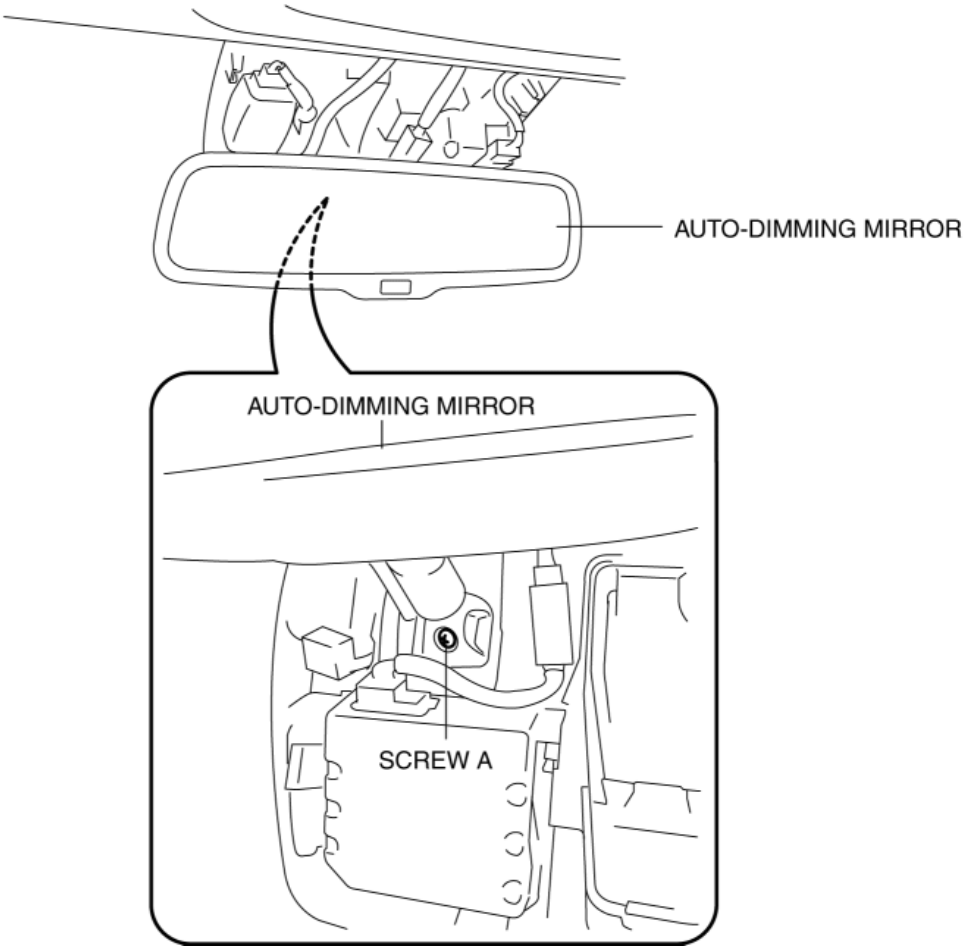

5. Remove the auto-dimming mirror in the direction of the arrow shown in the figure.

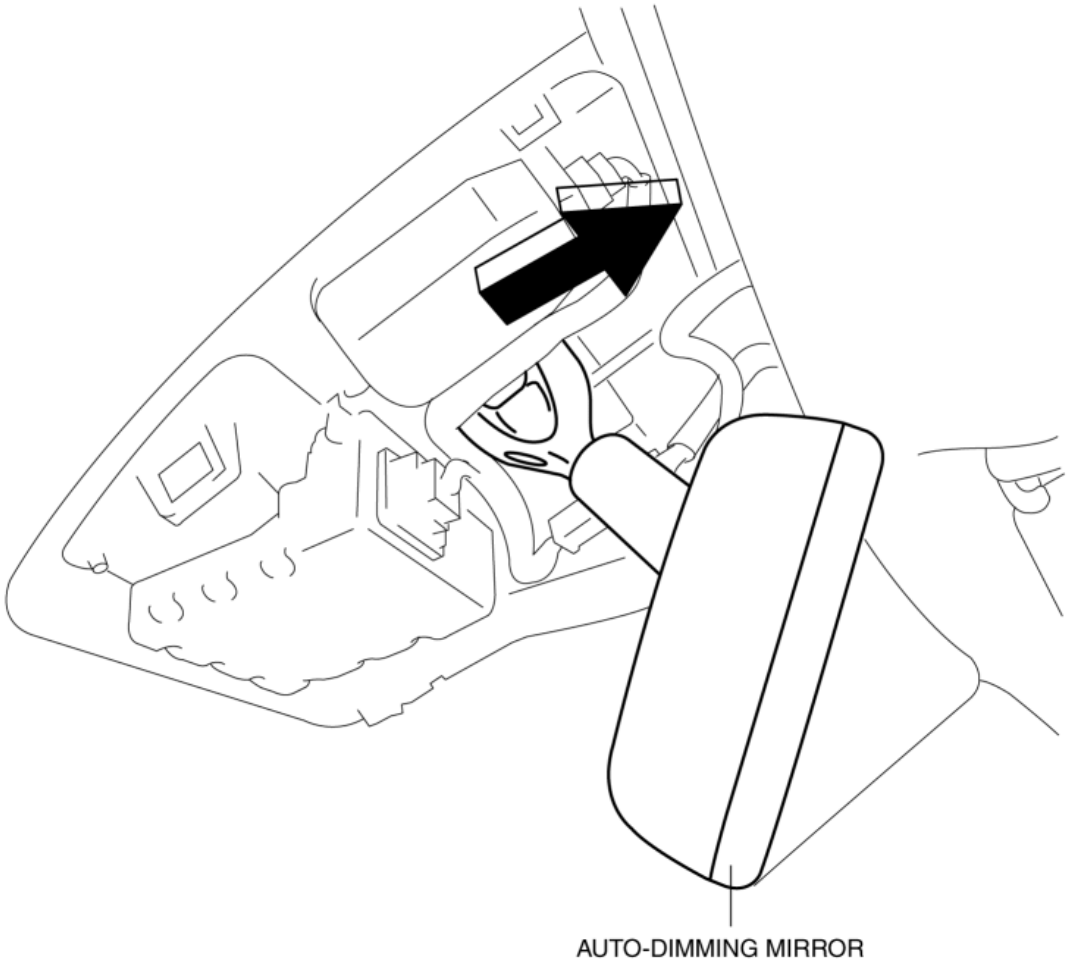

6. Install in the reverse order of removal.

Without Forward Sensing Camera (FSC) Or Smart City Brake Support (SCBS)

1. Disconnect the negative battery cable. (See **NEGATIVE BATTERY CABLE DISCONNECTION/CONNECTION [SKYACTIV-G 2.0, SKYACTIV-G 2.5]**.)

2. Remove the screw B.

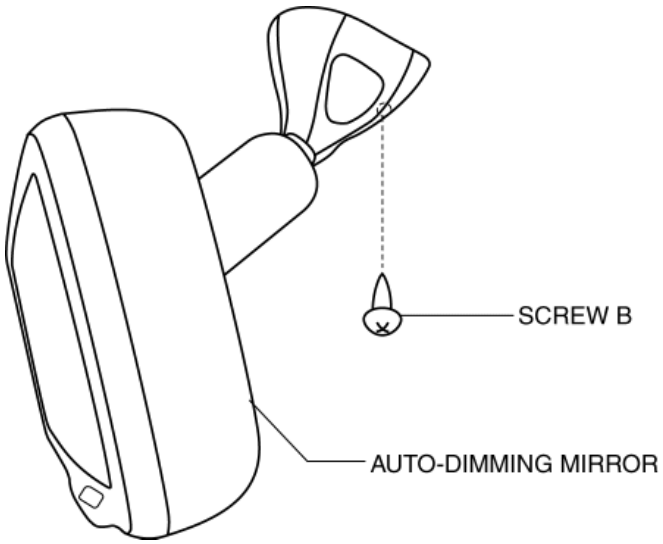

3. Remove the auto-dimming mirror in the direction of the arrow (1) shown in the figure.

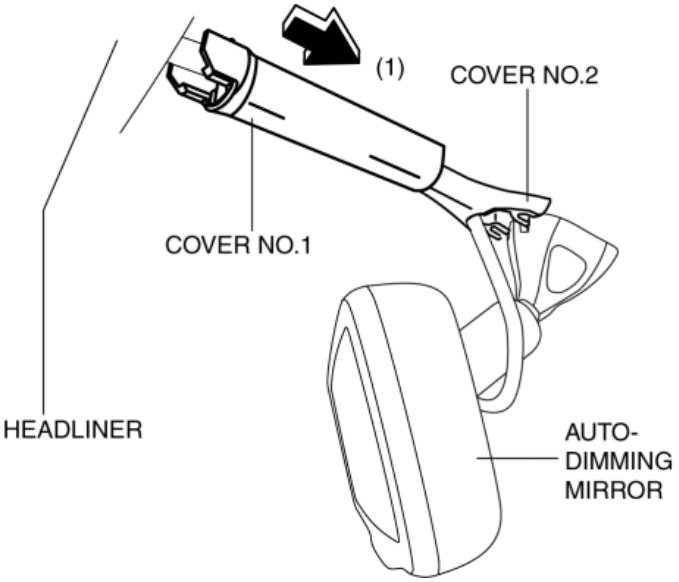

4. Detach tabs while pressing cover No.2 in the direction of the arrow (2) shown in the figure, then remove cover No.2 in the direction of the arrow (3).

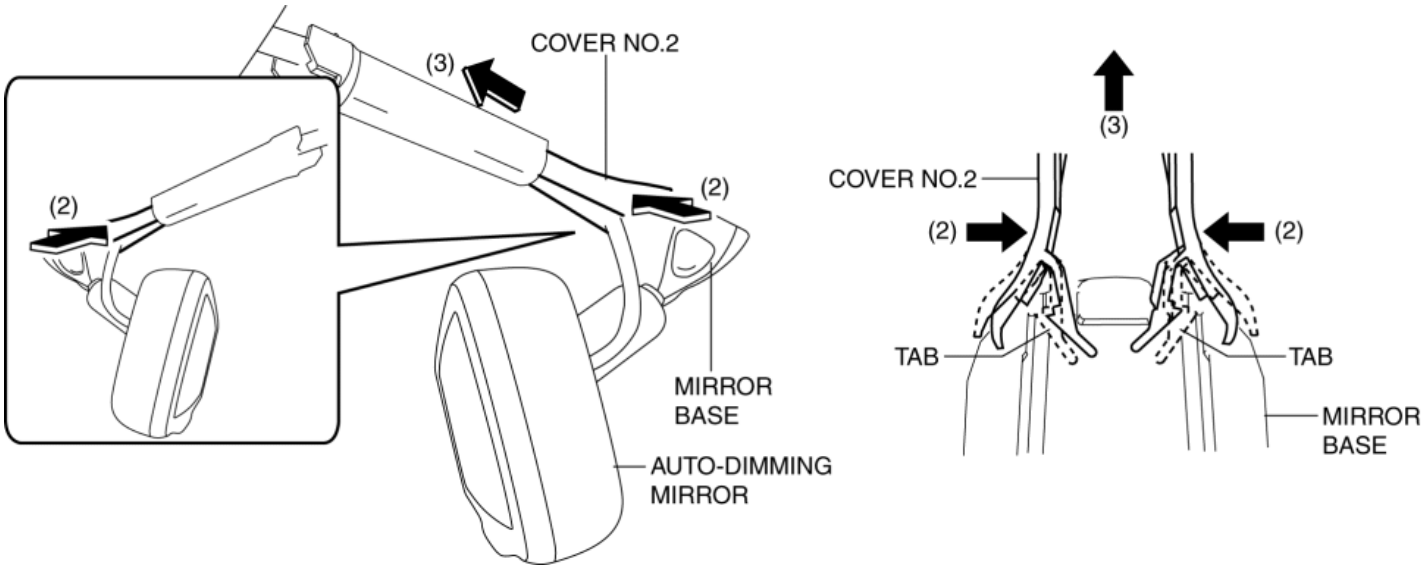

5. Disconnect the auto-dimming mirror connector.

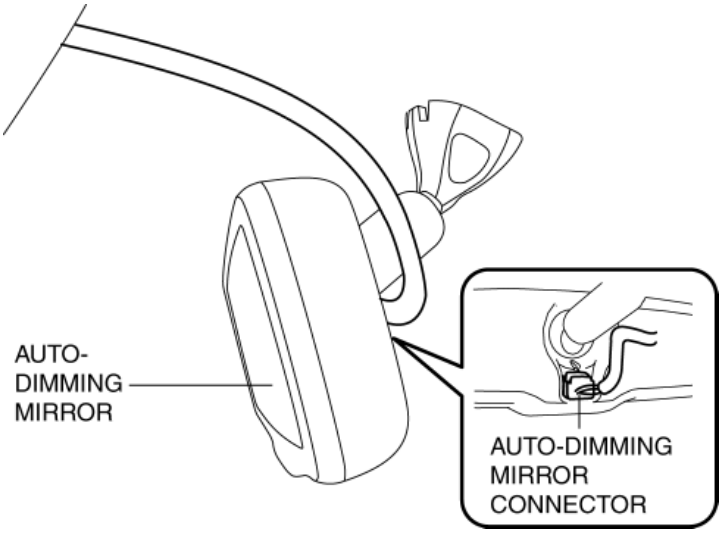

6. Remove the auto-dimming mirror in the direction of arrow (4) from the mirror base.

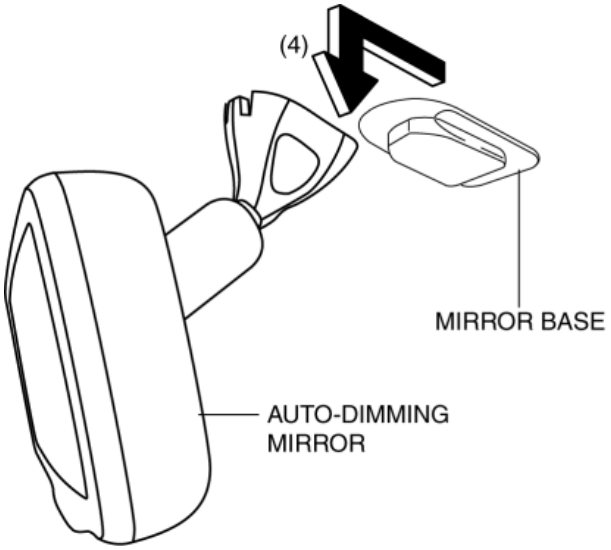

7. Install in the reverse order of removal.

2014 - Mazda3 - Body and Accessories

AUTO-DIMMING MIRROR INSPECTION

Type A

Operational Inspection

1. Switch the ignition ON (engine off or on).
2. Move the vehicle to a place with a showroom level of brightness.
3. Verify that the indicator light is illuminated.

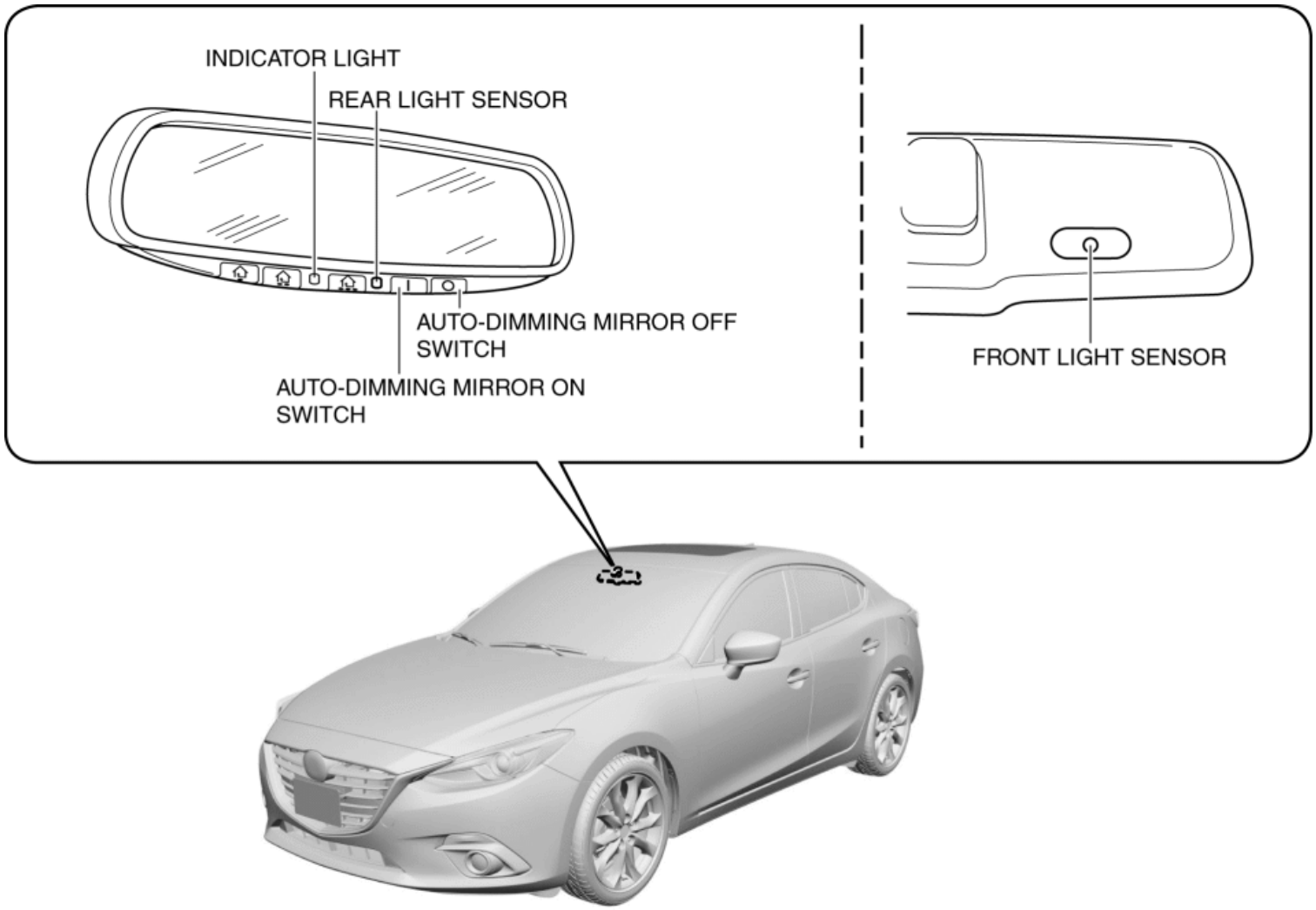

4. Verify that the indicator light switches when the auto-dimming mirror on switch and auto-dimming mirror off switch is pressed.
5. While the indicator light is illuminated, verify that the mirror surface brightens.
6. Cover the front light sensor with a hand and verify that the mirror surface darkens when light is shone on the rear light sensor.
7. Remove your hand covering the front light sensor and verify that the mirror surface brightens.

- If the auto-dimming mirror does not operate, inspect the terminal voltage. (See **Operational Inspection**.)

Terminal Voltage Table (Reference)

1. Measure the voltage at each terminal.
   - If the voltage is not as specified in the Terminal Voltage Table (Reference), inspect the parts under "Inspection item (s)" and related wiring harnesses.
     - If the system does not work properly even though the inspection items or related wiring harnesses do not have any malfunction, replace the auto-dimming mirror. (See **AUTO-DIMMING MIRROR REMOVAL/INSTALLATION**.)

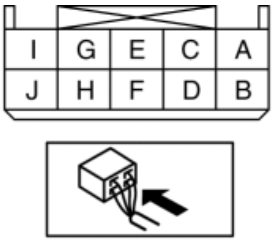

AUTO-DIMMING MIRROR
WIRING HARNESS-SIDE CONNECTOR

Terminal	Signal name	Connected to	Measured condition	Voltage (V)	Inspection item(s)
A	—	—	—	—	—
B	IG1	C/U IG1 15A fuse	Switch the ignition ON (engine on or off)	B+	• C/U IG1 15A fuse
			Switch the ignition off	1.0 or less	
C	—	—	—	—	—
D	R position signal	Rear body control module (RBCM)	R position	B+	• Rear body control module (RBCM)
			Other than R position	1.0 or less	
E	—	—	—	—	—
F	GND	Body ground	Under any condition	1.0 or less	• Body ground
G	—	—	—	—	—
H	—	—	—	—	—
I	—	—	—	—	—
J	Power supply	ROOM 15 A fuse	Under any condition	B+	• ROOM 15 A fuse

Type B

Operational Inspection

1. Switch the ignition ON (engine off or on).
2. Move the vehicle to a place with a showroom level of brightness.
3. Verify that the indicator light is illuminated.

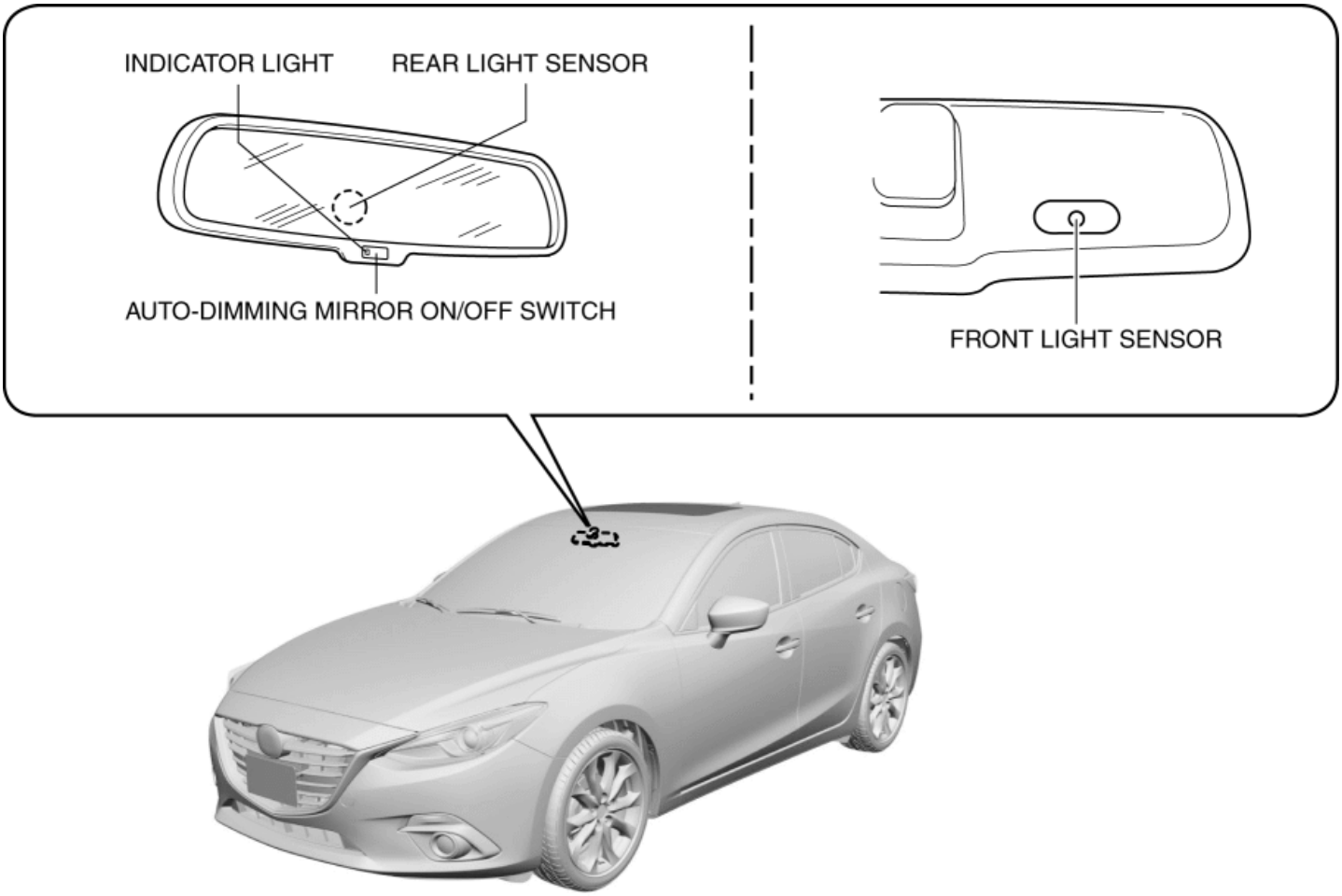

4. Verify that the indicator light switches when the auto-dimming mirror on switch/off switch is pressed.
5. While the indicator light is illuminated, verify that the mirror surface brightens.
6. Cover the front light sensor with a hand and verify that the mirror surface darkens when light is shone on the rear light sensor.
7. Remove your hand covering the front light sensor and verify that the mirror surface brightens.
    - If the auto-dimming mirror does not operate, inspect the terminal voltage. (See **Operational Inspection**.)

Terminal Voltage Table (Reference)

1. Measure the voltage at each terminal.
    - If the voltage is not as specified in the Terminal Voltage Table (Reference), inspect the parts under “Inspection item (s)” and related wiring harnesses.
        - If the system does not work properly even though the inspection items or related wiring harnesses do not have any malfunction, replace the auto-dimming mirror. (See **AUTO-DIMMING MIRROR REMOVAL/INSTALLATION**.)

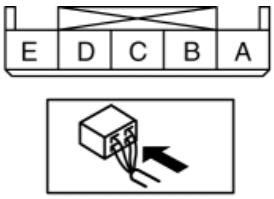

AUTO-DIMMING MIRROR
WIRING HARNESS-SIDE CONNECTOR

Terminal	Signal name	Connected to	Measured condition	Voltage (V)	Inspection item(s)
A	—	—	—	—	—
B	—	—	—	—	—
C	R position signal	Rear body control module (RBCM)	R position	B+	• Rear body control module (RBCM)
			Other than R position	1.0 or less	
D	GND	Body ground	Under any condition	1.0 or less	• Body ground
E	IG1	C/U IG1 15A fuse	Switch the ignition ON (engine on or off)	B+	• C/U IG1 15A fuse

2014 - Mazda3 - Body and Accessories

REARVIEW MIRROR REMOVAL/INSTALLATION

1. Remove the screw.

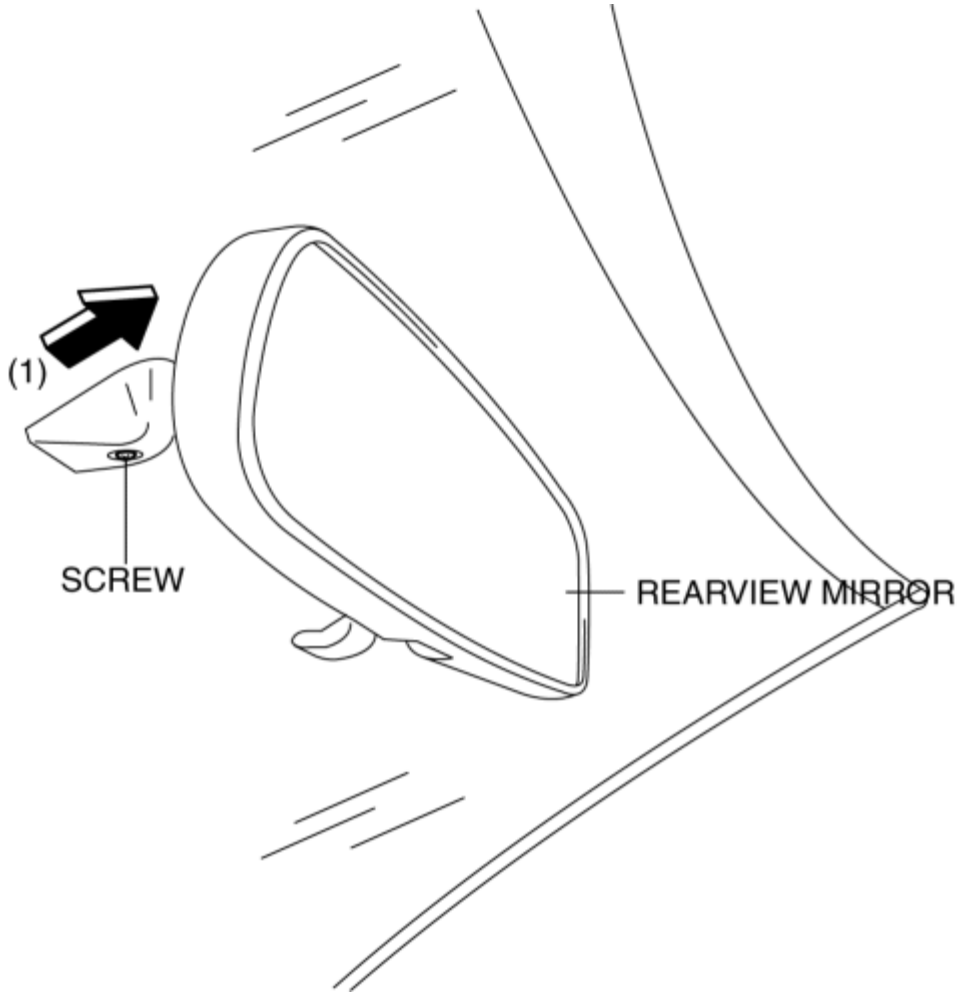

2. Pull the rearview mirror in the direction of the arrow (1) shown in the figure
3. Install in the reverse order of removal.

2014 - Mazda3 - Body and Accessories

MIRROR BASE REMOVAL

1. Disconnect the negative battery cable. (See **NEGATIVE BATTERY CABLE DISCONNECTION/CONNECTION [SKYACTIV-G 2.0, SKYACTIV-G 2.5]**.)

2. Remove the following parts:

   a. Rearview mirror (without auto-dimming mirror) (See **REARVIEW MIRROR REMOVAL/INSTALLATION**.)

   b. Cover (with forward sensing camera) (See **FORWARD SENSING CAMERA (FSC) REMOVAL/INSTALLATION**.)

   c. Auto-dimming mirror (with auto-dimming mirror) (See **AUTO-DIMMING MIRROR REMOVAL/INSTALLATION**.)

3. Wind each end of a wire around a bar.

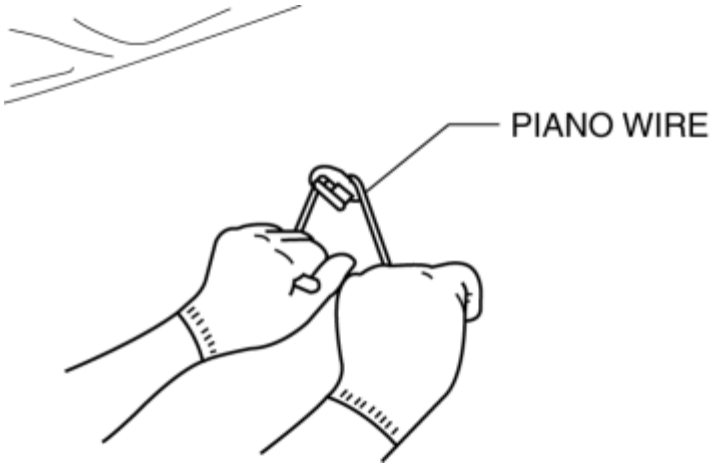

WARNING:

- Using the piano wire with bare hands can cause injury. Always wear gloves when using the piano wire.

NOTE:

- Use a long sawing action to spread the work over the whole length of the piano wire to prevent it from breaking.

4. Fix one end of the piano wire, and while pulling the other end, cut the sealant to remove the base.

2014 - Mazda3 - Body and Accessories

MIRROR BASE INSTALLATION

1. Cut away all of the original sealant using a razor.

WARNING:

- Using a razor with bare hands can cause injury. Always wear gloves when using a razor.

2. Clean and degrease the ceramic coating on the glass and the base.

CAUTION:

- Keep the area free of dirt and grease, and do not touch the surface. Otherwise, the primer may not properly bond to the surface of the glass.

3. Apply primer to the bonding area of the glass and the base.

4. Use only glass primer on the glass, and body primer on the base. Allow the primer to dry for **approx. 30 min.**

5. Apply **3.0 mm {0.12 in}** layer of sealant to the base.

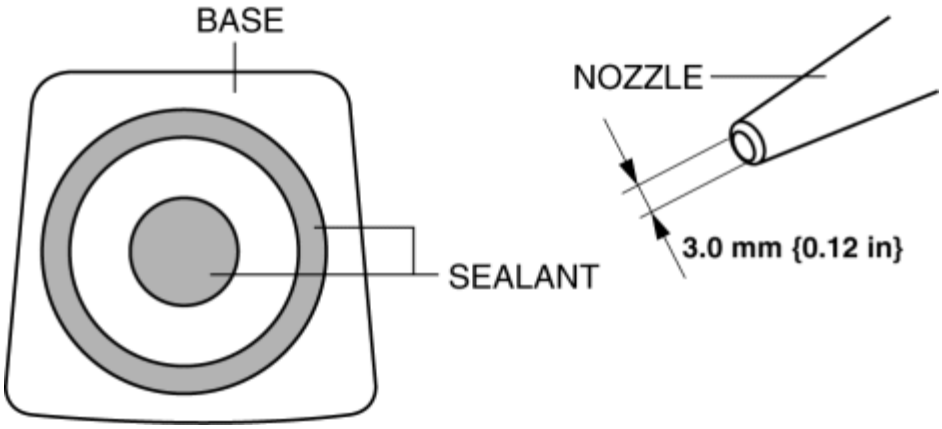

6. Center the base in the ceramic coating and press it onto the glass.

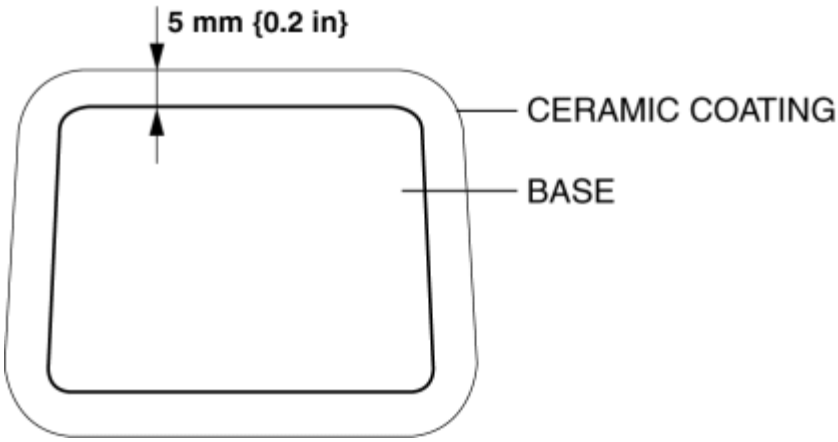

7. Use isopropyl alcohol to remove any excess repair sealant. **Hardening time of sealant**

Temperature	Surface hardening time	Time required until car can be put into service
5 °C {41 °F}	Approx. 1.5 h	Approx. 12 h
20 °C {68 °F}	Approx. 1 h	Approx. 4 h
35 °C {95 °F}	Approx. 10 min	Approx. 2 h

8. Install the rearview mirror. (without auto-dimming mirror) (See **REARVIEW MIRROR REMOVAL/INSTALLATION**.)

9. Install the auto-dimming mirror. (with auto-dimming mirror) (See **AUTO-DIMMING MIRROR REMOVAL/INSTALLATION**.)

10. Install the cover (with forward sensing camera) (See **FORWARD SENSING CAMERA (FSC) REMOVAL/INSTALLATION**.)

11. Connect the negative battery cable. (See **NEGATIVE BATTERY CABLE DISCONNECTION/CONNECTION [SKYACTIV-G 2.0, SKYACTIV-G 2.5]**.)

2014 - Mazda3 - Body and Accessories

POWER WINDOW SYSTEM INITIALIZATION PROCEDURE

NOTE:

- If the following operations have been performed, the initial setting is reset, and auto up/down operation are disabled. Therefore, performing the initial setting is necessary.
    - Negative battery cable is disconnected.
    - Power window main switch connector is disconnected.
    - Power window system power supply fuse is removed.

1. Switch the ignition ON (engine on or off).

2. Press the driver's seat switch to fully open the door glass.

3. Pull up the driver's seat switch to the manual-up position to fully close the door glass and keep holding the switch up at the position for **approx. 2 s**.

2014 - Mazda3 - Body and Accessories

SEATS LOCATION INDEX

Front Seat

FRONT SEAT

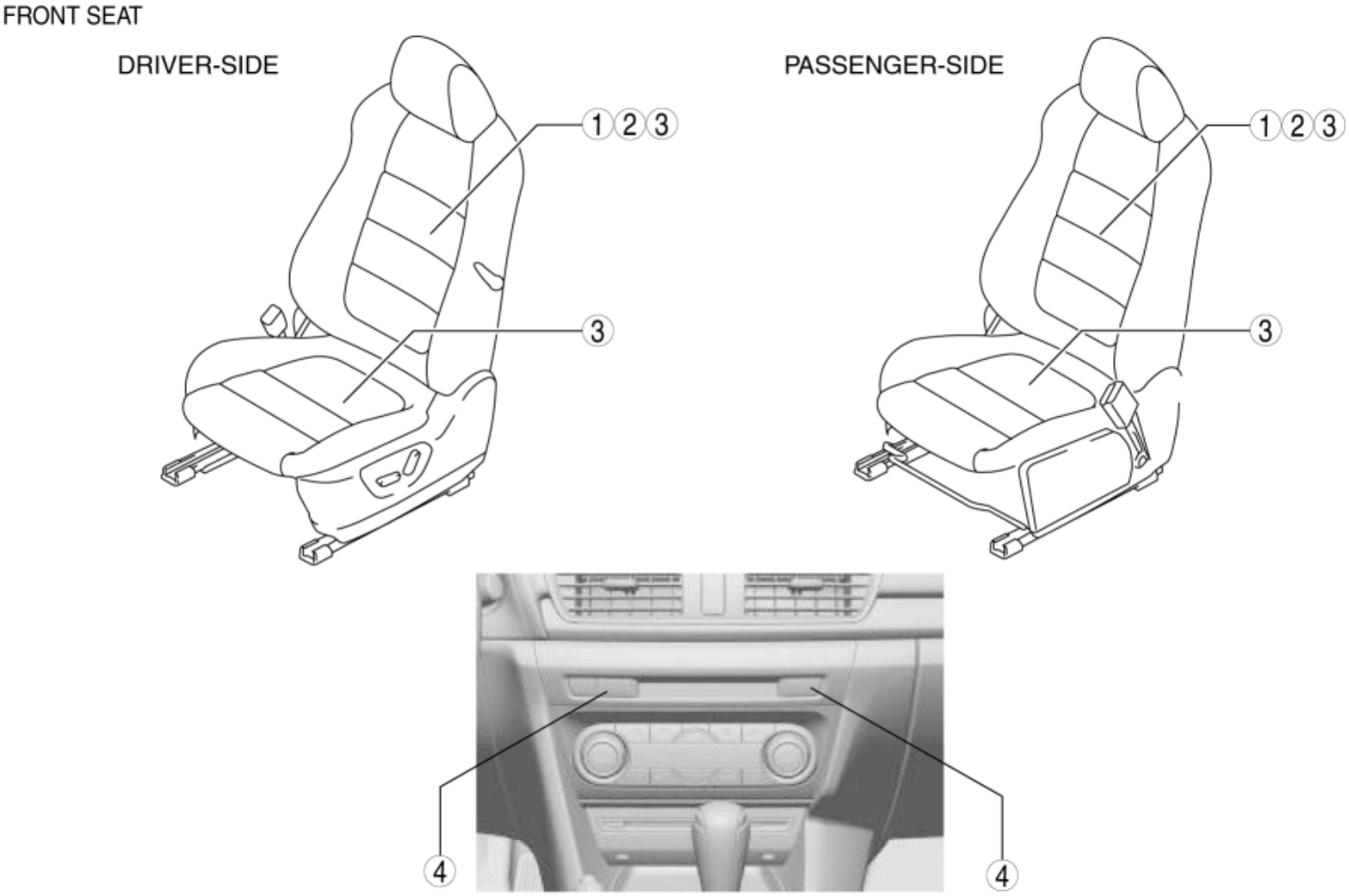

1	Front seat (See **FRONT SEAT REMOVAL / INSTALLATION**.)
2	Front seat back (See **FRONT SEAT BACK TRIM REMOVAL / INSTALLATION**.)
3	Seat warmer unit (See **SEAT WARMER UNIT INSPECTION**.)

4	Seat warmer switch (See **SEAT WARMER SWITCH REMOVAL/INSTALLATION**.)

Rear Seat

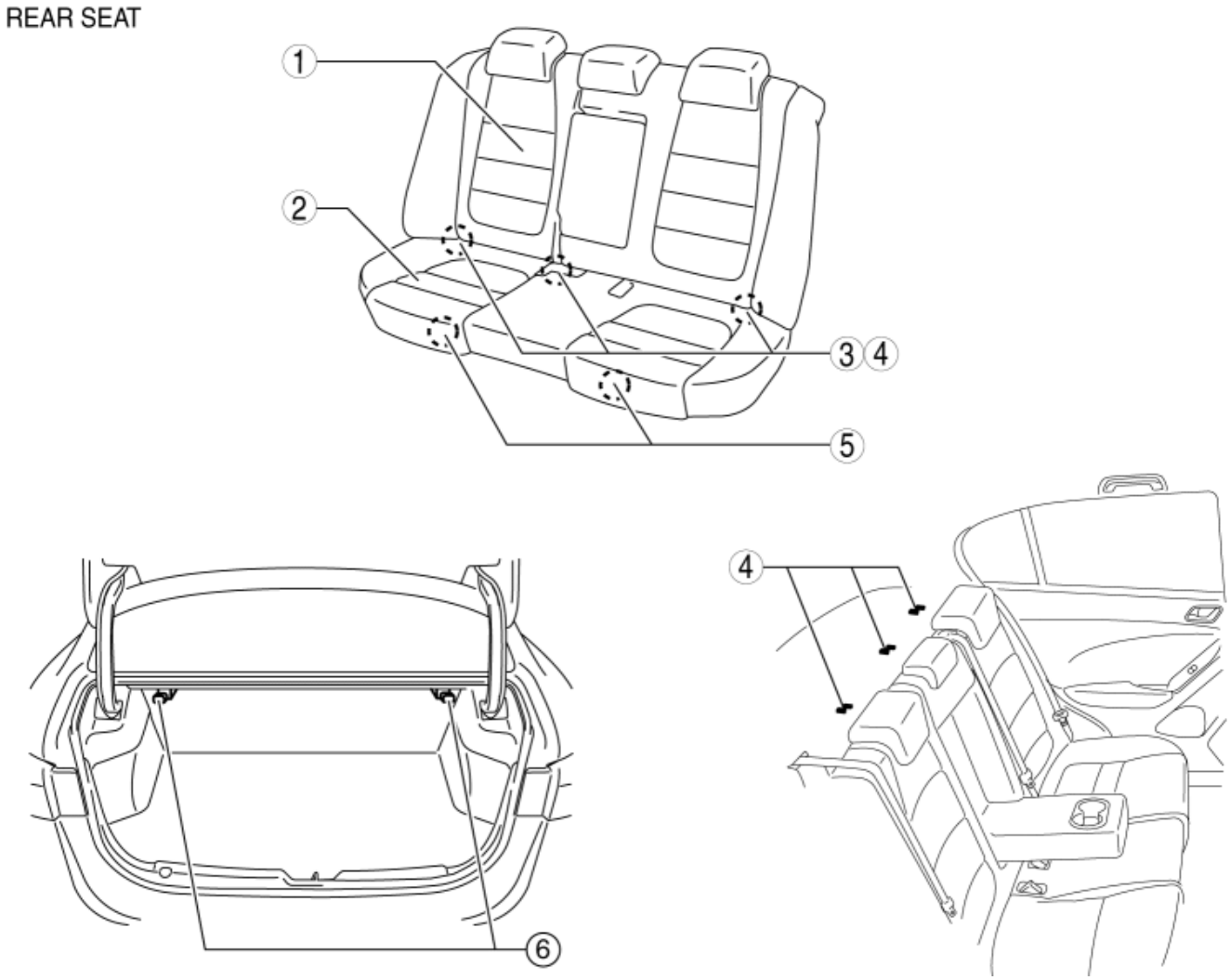

1	Rear seat back (See **REAR SEAT BACK REMOVAL/INSTALLATION**.)
2	Rear seat cushion (See **REAR SEAT CUSHION REMOVAL/INSTALLATION**.)
3	Rear seat hinge (See **REAR SEAT HINGE REMOVAL/INSTALLATION**.)
4	Child-restraint seat anchor (See **CHILD-RESTRAINT SEAT ANCHOR REMOVAL/INSTALLATION**.)

5	Rear seat cushion lock (See **REAR SEAT CUSHION LOCK REMOVAL/INSTALLATION**.)
6	Remote handle lever (See **REMOTE HANDLE LEVER REMOVAL/INSTALLATION**.)

2014 - Mazda3 - Body and Accessories

FRONT SEAT REMOVAL/INSTALLATION

WARNING:

- Handling a side air bag improperly can accidentally operate (deploy) the air bag, which may seriously injure you. Read the service warnings/cautions in the Workshop Manual before handling the front seat (side air bag integrated). (See **AIR BAG SYSTEM SERVICE WARNINGS [TWO-STEP DEPLOYMENT CONTROL SYSTEM]**.) (See **AIR BAG SYSTEM SERVICE CAUTIONS [TWO-STEP DEPLOYMENT CONTROL SYSTEM]**.) (See **AIR BAG SYSTEM SERVICE WARNINGS [STANDARD DEPLOYMENT CONTROL SYSTEM]**.) (See **AIR BAG SYSTEM SERVICE CAUTIONS [STANDARD DEPLOYMENT CONTROL SYSTEM]**.)
- If the sliding mechanisms on both sides are not locked after assembling the front seat, the front seat will operate accidentally while the vehicle is driven, which could result in serious injury. After assembling the front seat, shake it up and down and verify that the sliding mechanism on the both sides are locked.

CAUTION:

- If the slide lever is operated after the front seat is removed, the left/right slide positions will deviate and the adjuster unit could be damaged after the front seat is installed. After removing a front seat, do not operate the slide lever.
- Verify that there are no malfunctions in the forward/back slide of the seat and in the adjuster unit after installing a front seat.
- When performing the procedure with a front seat removed from the vehicle, perform the procedure on a clean cloth so as not to damage or dirty the seat.
- When the passenger's seat is removed, perform the seat weight sensor inspection using the M-MDS after installing the passenger's seat. (See **SEAT WEIGHT SENSOR INSPECTION [TWO-STEP DEPLOYMENT CONTROL SYSTEM]**.)
- When the passenger's seat is replaced with a new one, perform the seat weight sensor calibration using the M-MDS. (See **SEAT WEIGHT SENSOR CALIBRATION [TWO-STEP DEPLOYMENT CONTROL SYSTEM]**.)

NOTE:

- When removing the front seat from the vehicle or putting it back in, it can be performed smoothly by removing the head restraint.

1. Remove the head restraint.
2. Remove the bolts in the order of (1), (2), (3), (4) shown in the figure.

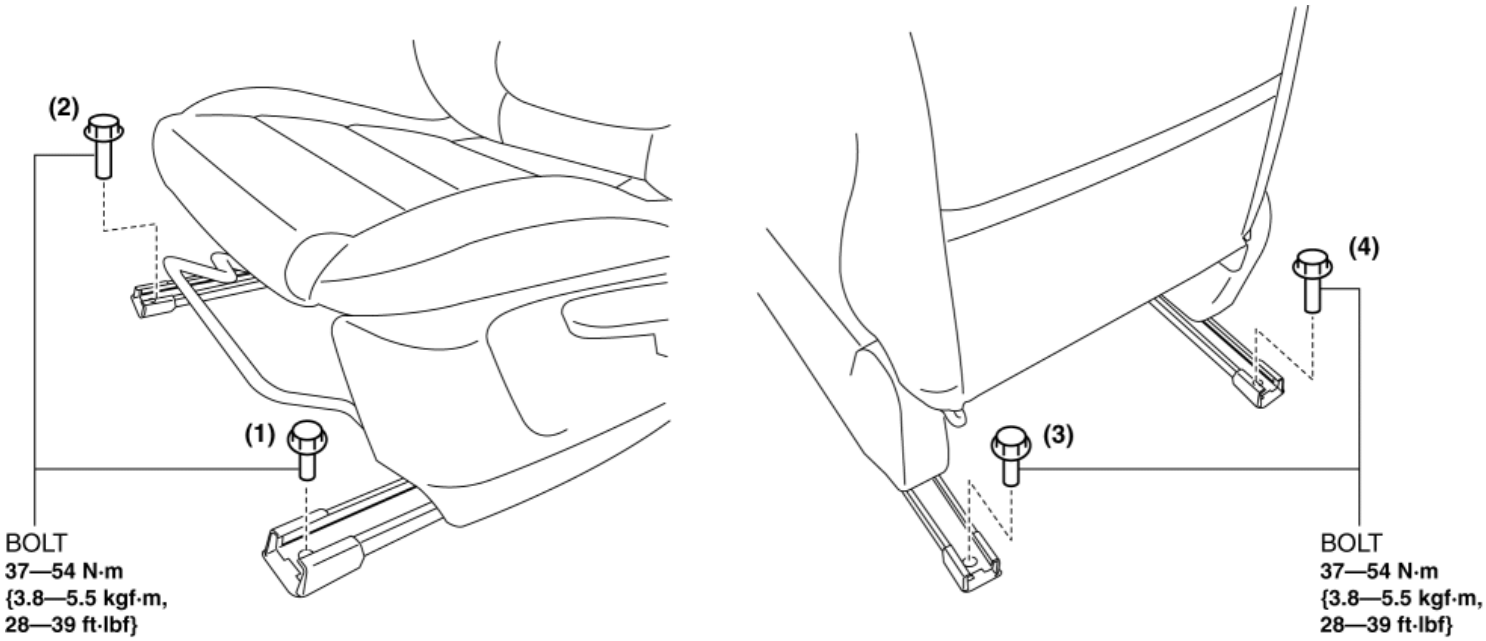

3. Switch the ignition off.
4. Disconnect the negative battery cable and wait for **1 min. or more**. (See **NEGATIVE BATTERY CABLE DISCONNECTION/CONNECTION [SKYACTIV-G 2.0, SKYACTIV-G 2.5]**.)
5. Press part A in the direction of the arrow (1) shown in the figure and disengage tabs, move the lever in the direction of the arrow

(2) and disconnect the connector A in the direction of the arrow (3).

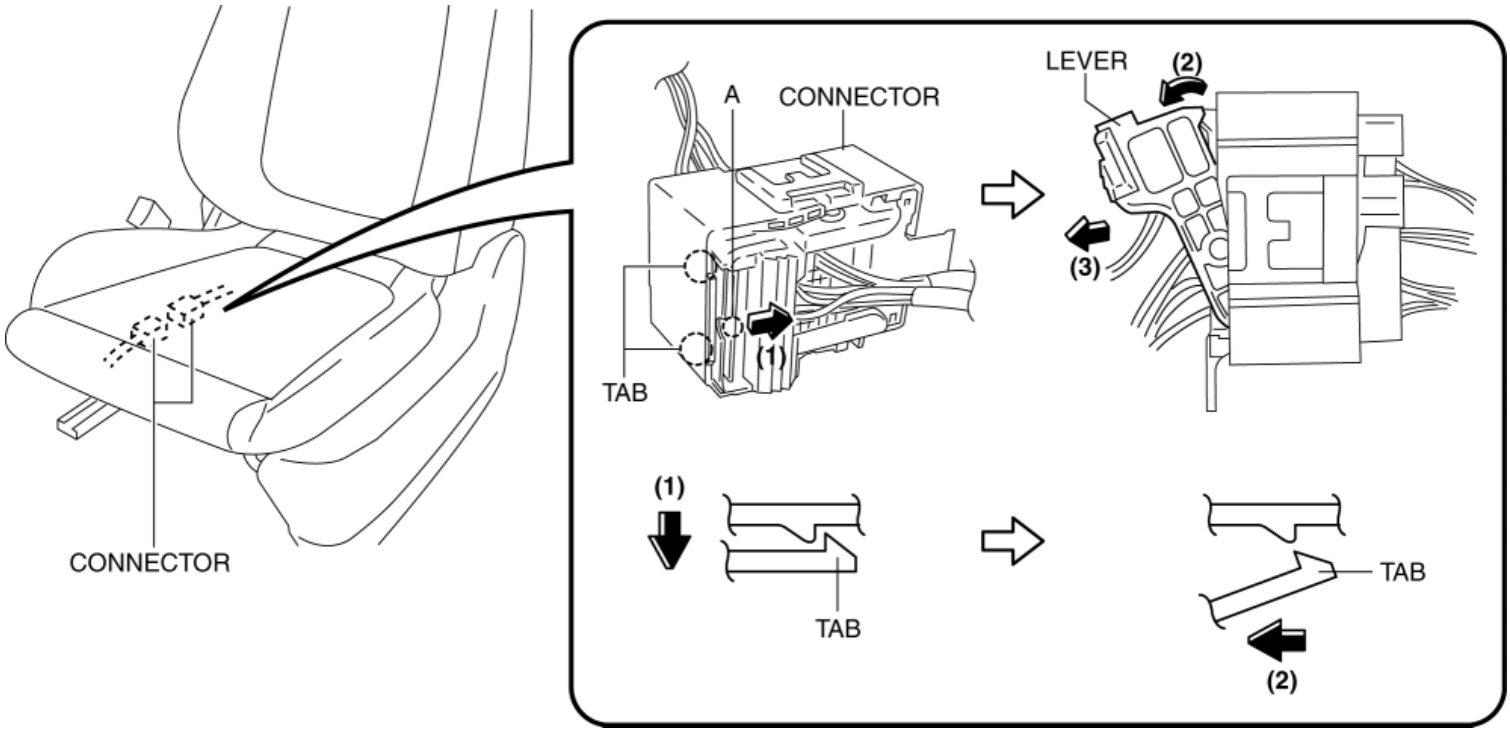

6. Remove the front seat.

7. Install in the reverse order of removal.

2014 - Mazda3 - Body and Accessories

FRONT SEAT BACK TRIM REMOVAL/INSTALLATION

WARNING:

- Handling a side air bag improperly can accidentally operate (deploy) the air bag, which may seriously injure you. Read the service warnings/cautions in the Workshop Manual before handling the front seat (side air bag integrated). (See **AIR BAG SYSTEM SERVICE WARNINGS [TWO-STEP DEPLOYMENT CONTROL SYSTEM]**.) (See **AIR BAG SYSTEM SERVICE CAUTIONS [TWO-STEP DEPLOYMENT CONTROL SYSTEM]**.) (See **AIR BAG SYSTEM SERVICE WARNINGS [STANDARD DEPLOYMENT CONTROL SYSTEM]**.) (See **AIR BAG SYSTEM SERVICE CAUTIONS [STANDARD DEPLOYMENT CONTROL SYSTEM]**.)
- If the sliding mechanisms on both sides are not locked after assembling the front seat, the front seat will operate accidentally while the vehicle is driven, which could result in serious injury. After assembling the front seat, shake it up and down and verify that the sliding mechanism on the both sides are locked.

CAUTION:

- If the slide lever is operated after the front seat is removed, the left/right slide positions will deviate and the adjuster unit could be damaged after the front seat is installed. After removing a front seat, do not operate the slide lever.
- Verify that there are no malfunctions in the forward/back slide of the seat and in the adjuster unit after installing a front seat.
- When performing the procedure with a front seat removed from the vehicle, perform the procedure on a clean cloth so as not to damage or dirty the seat.
- When the passenger's seat is removed, perform the seat weight sensor inspection using the M-MDS after installing the passenger's seat. (See **SEAT WEIGHT SENSOR INSPECTION [TWO-STEP DEPLOYMENT CONTROL SYSTEM]**.)
- When the passenger's seat is replaced with a new one, perform the seat weight sensor calibration using the M-MDS. (See **SEAT WEIGHT SENSOR CALIBRATION [TWO-STEP DEPLOYMENT CONTROL SYSTEM]**.)

Driver-side

1. Switch the ignition off.
2. Disconnect the negative battery cable and wait for **1 min. or more**. (See **NEGATIVE BATTERY CABLE DISCONNECTION/CONNECTION [SKYACTIV-G 2.0, SKYACTIV-G 2.5]**.)
3. Remove the head restraint.
4. Remove the front seat. (See **FRONT SEAT REMOVAL/INSTALLATION**.)
5. Remove fasteners and set the front seat cushion trim aside. (with power seat system)

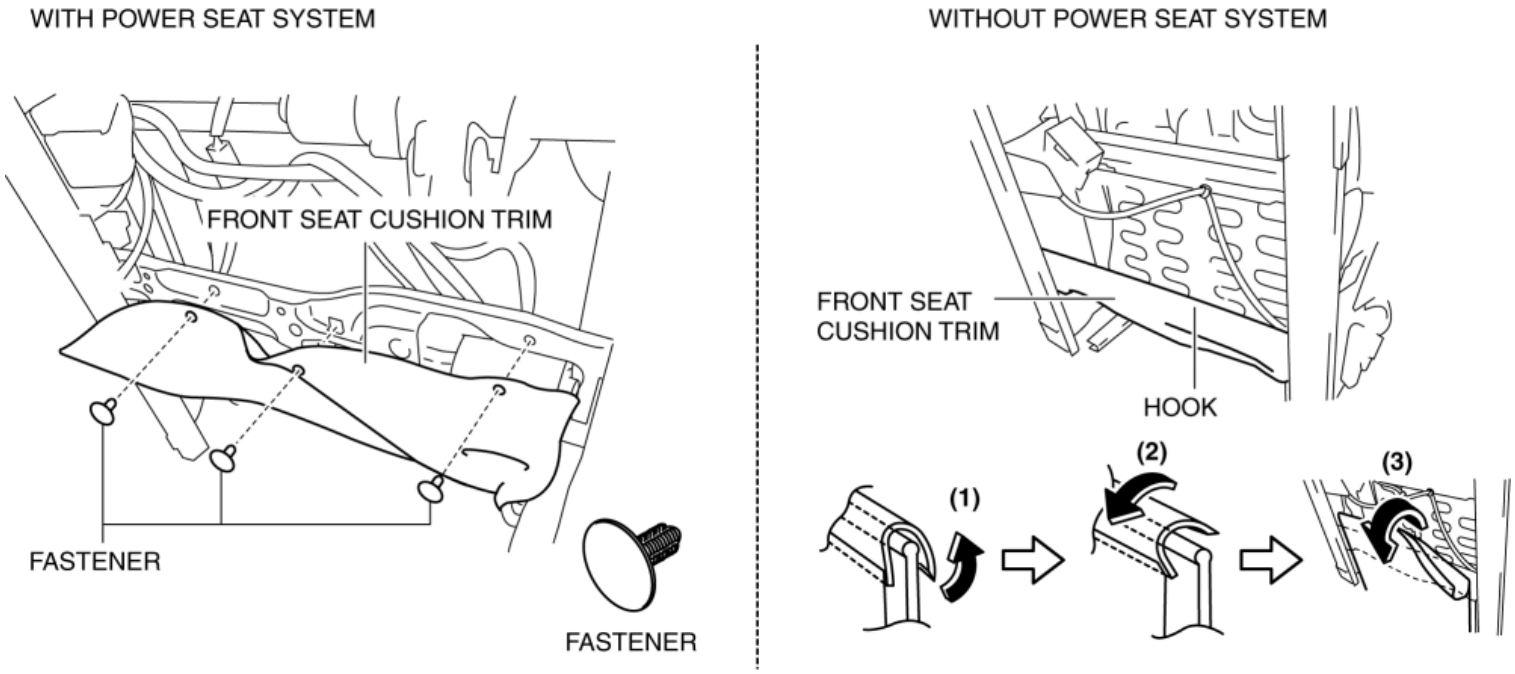

6. Slide hook in the order of arrows (1), (2), (3) shown in the figure and set the front seat cushion trim aside. (without power seat system)

7. Disconnect the side air bag module connector.

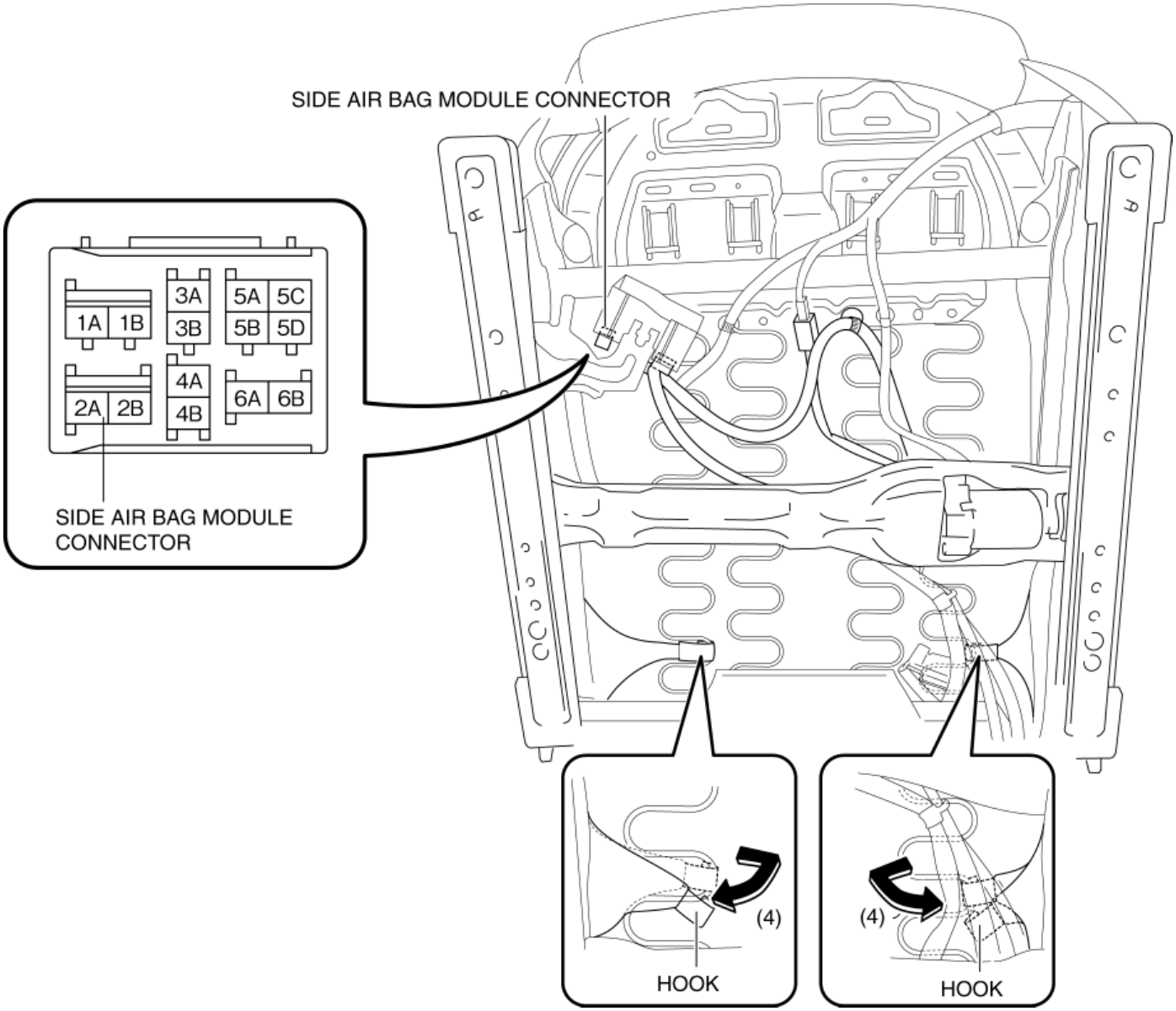

8. Set hooks aside in the direction of the arrow (4) shown in the figure.

9. Remove clip in the direction of the arrow (5) shown in the figure and remove the lumbar support lever in the direction of the arrow (6). (with manual lumbar support)

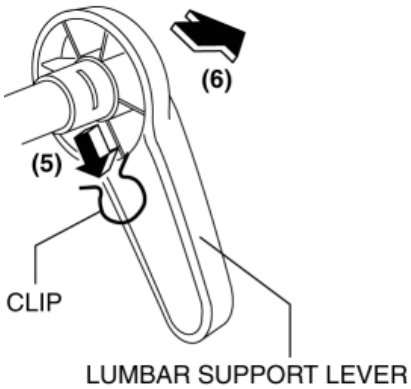

10. Slide hook A in the order of arrows (7), (8), (9) shown in the figure and disconnect them from hook B.

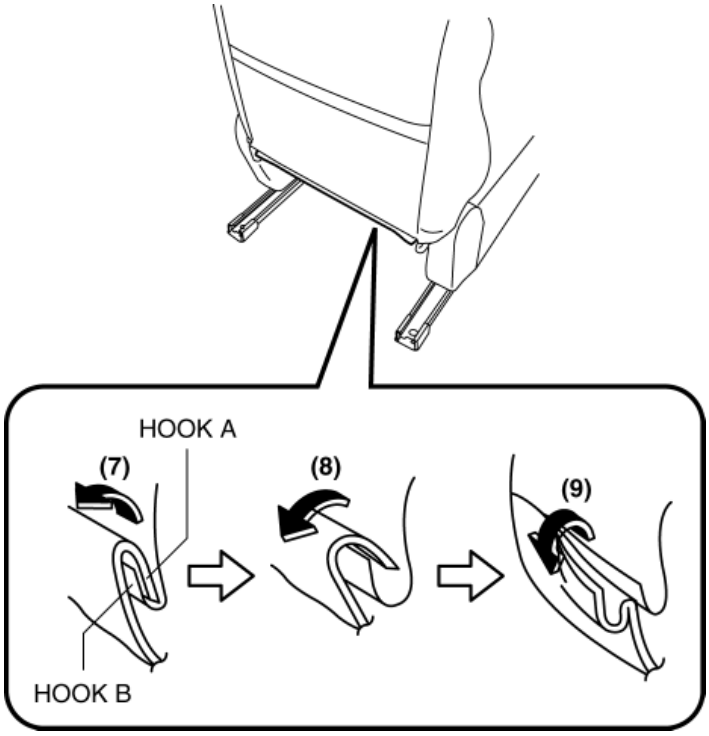

11. Open fasteners.

Leather type

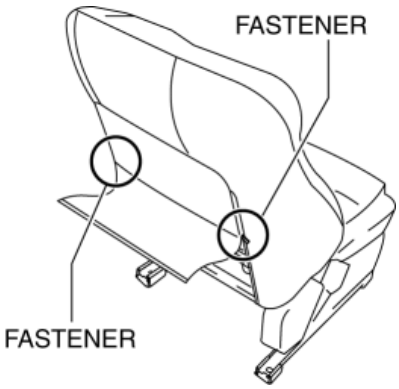

Cloth type

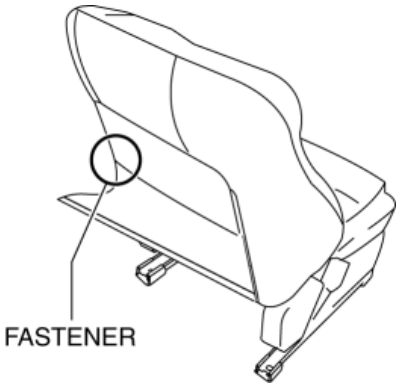

12. Partially peel back the front seat back trim and remove the hook from the seat back frame.

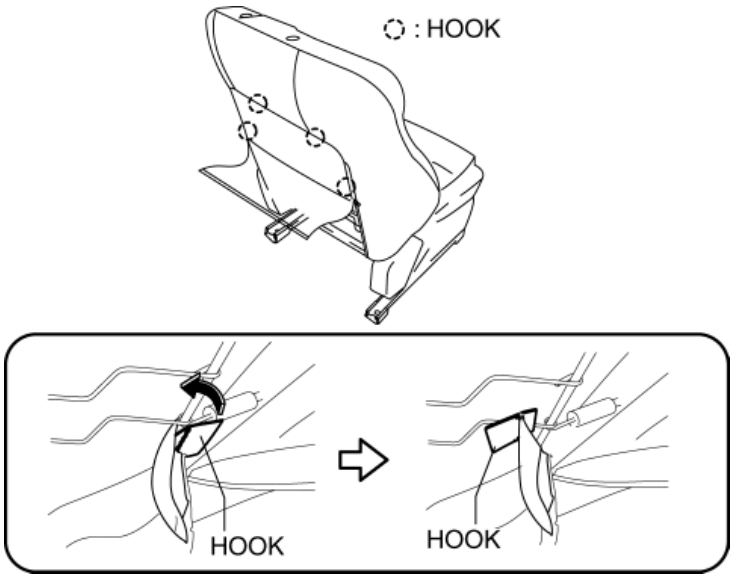

13. Partially peel back the front seat back trim, and while pressing the tabs in the direction of arrows (10) shown in the figure, remove the pole guides in the direction of arrow (11).

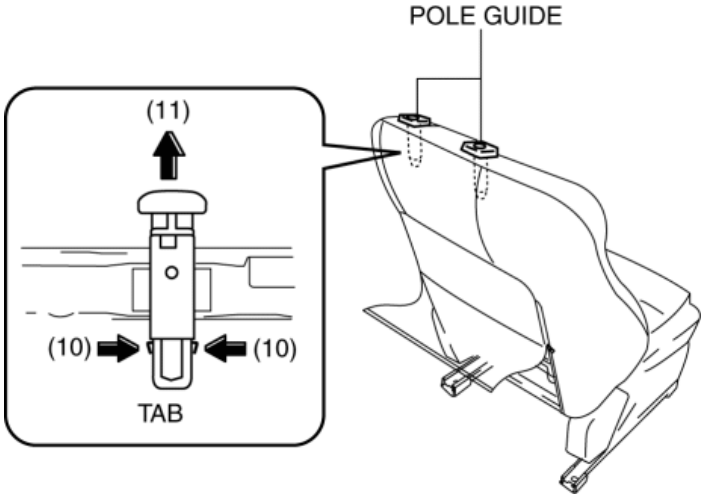

14. Remove the nut and washer.

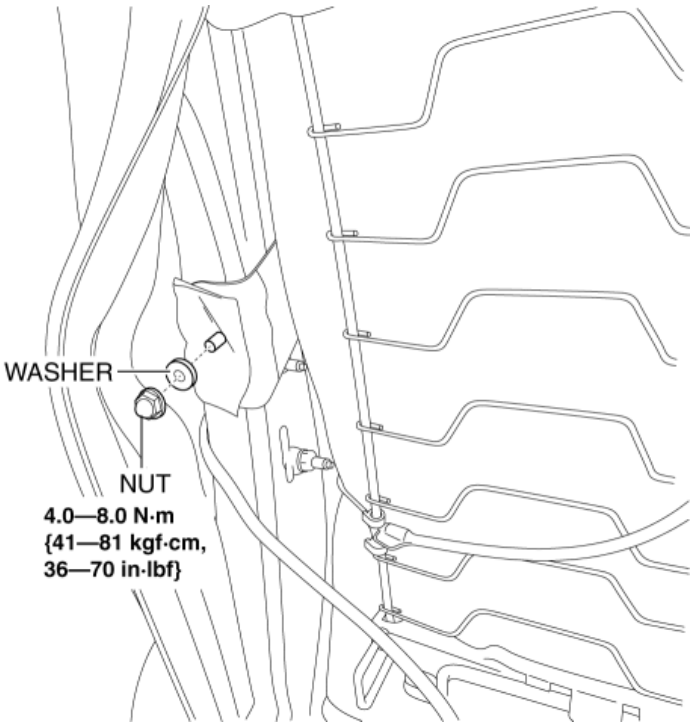

15. Pull the side air bag module securing belt in the direction of arrows (12) and (13) and remove it from the front seat back frame stud bolt.

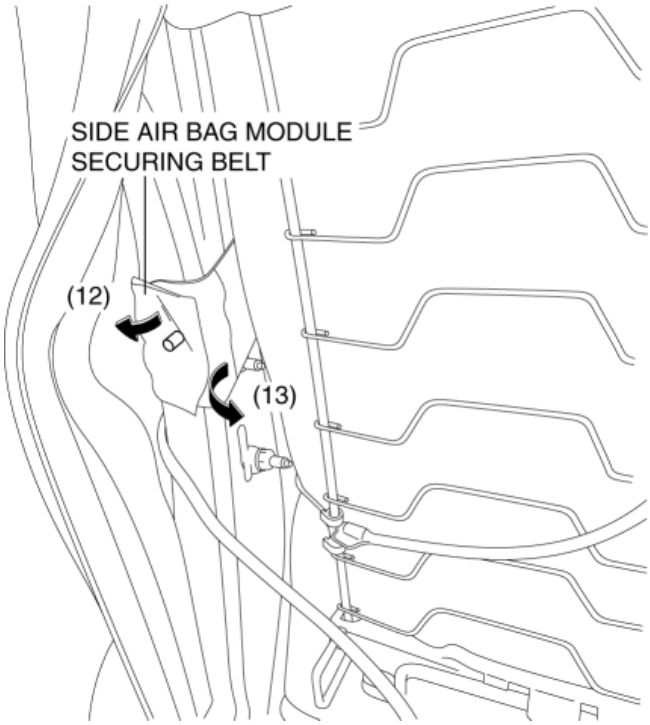

16. Pull out the front seat back pad and front seat back trim towards the front of the front seat.

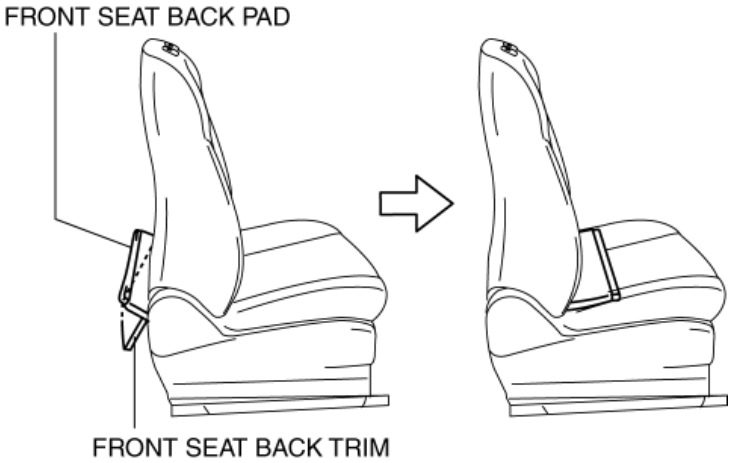

17. Lift up the front seat back trim and front seat back pad in the direction of the arrow (14) as a single unit and remove it from the front seat back frame.

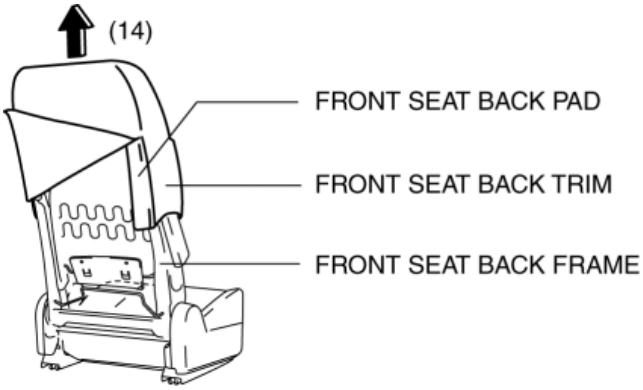

18. Install in the reverse order of removal.

Passenger-side

1. Switch the ignition off.

2. Disconnect the negative battery cable and wait for **1 min. or more**. (See **NEGATIVE BATTERY CABLE DISCONNECTION/CONNECTION [SKYACTIV-G 2.0, SKYACTIV-G 2.5]**.)

3. Remove the head restraint.

4. Remove the front seat. (See **FRONT SEAT REMOVAL/INSTALLATION**.)

5. Slide hook in the order of arrows (1), (2), (3) shown in the figure and set the front seat cushion trim aside.

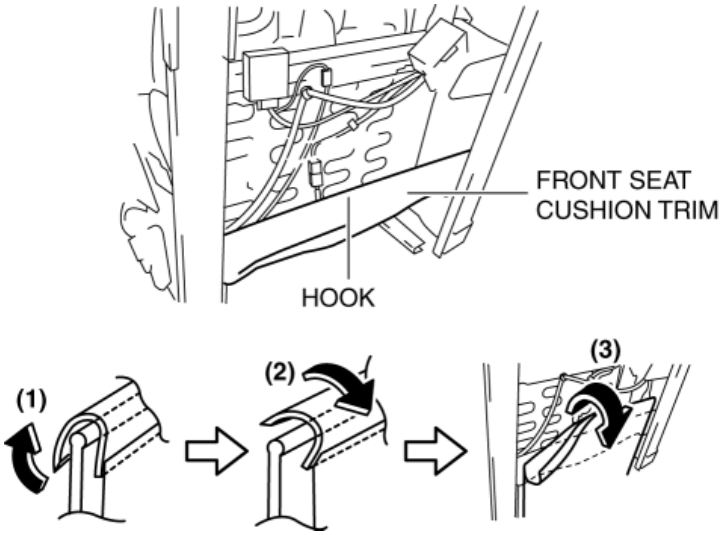

6. Disconnect the side air bag module connector.

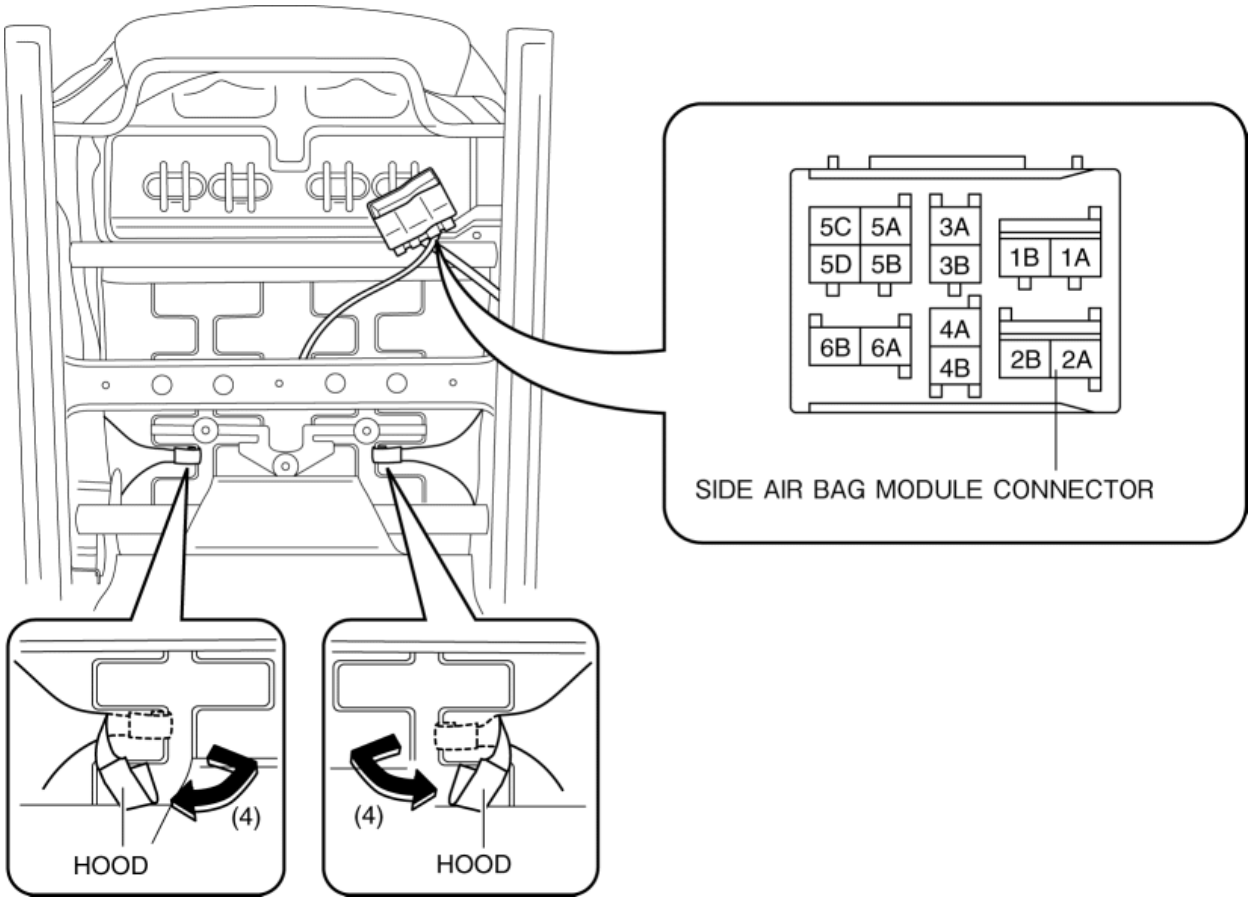

7. Set hook aside in the direction of the arrow (4) shown in the figure.

8. Slide hook A in the order of arrows (5), (6), (7) shown in the figure and disconnect them from hook B.

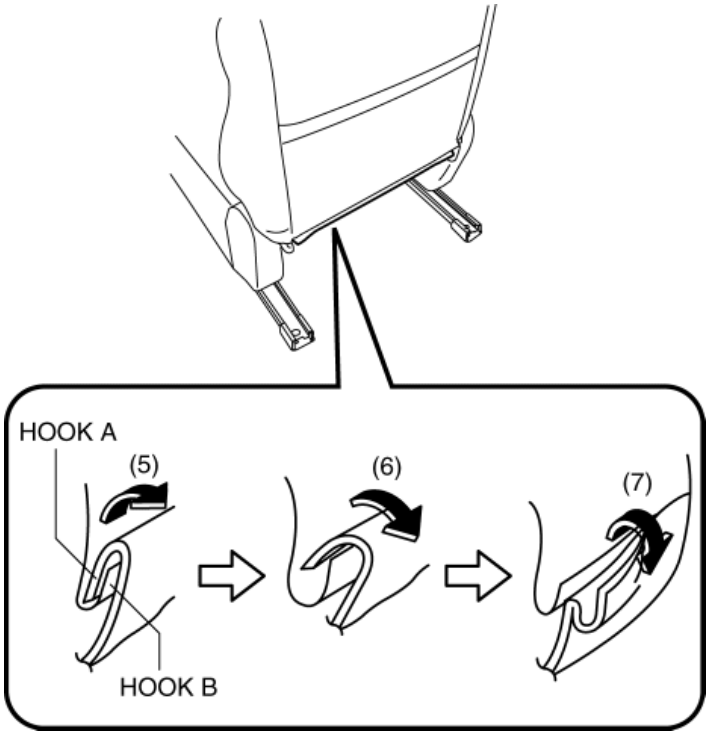

9. Open fasteners.

Leather type

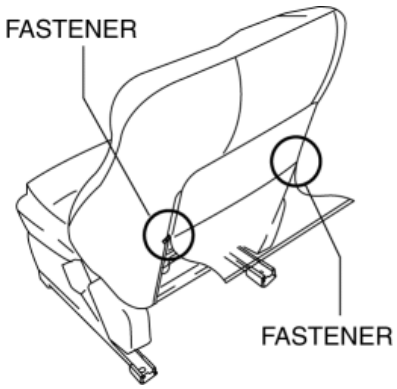

Cloth type

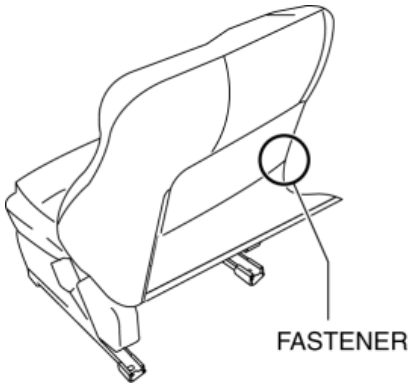

10. Partially peel back the front seat back trim and remove the hook from the seat back frame.

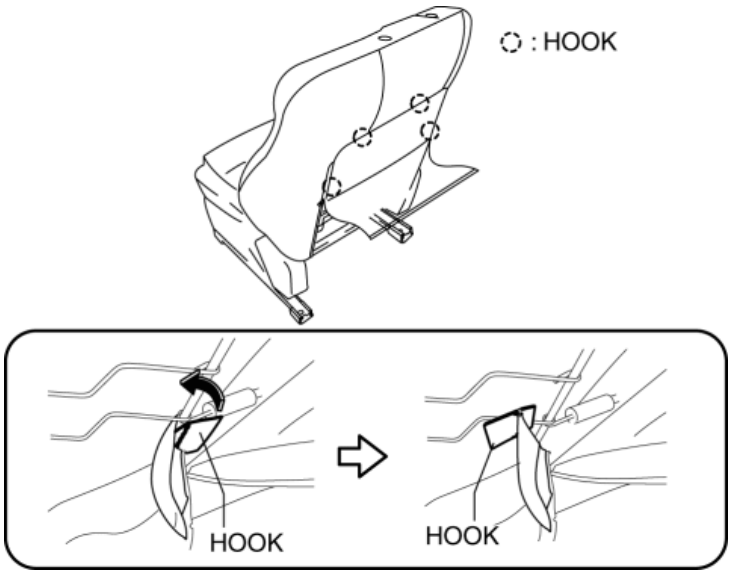

11. Partially peal back the front seat back trim, and while pressing the tabs in the direction of arrows (8), remove the pole guides in the direction of arrow (9).

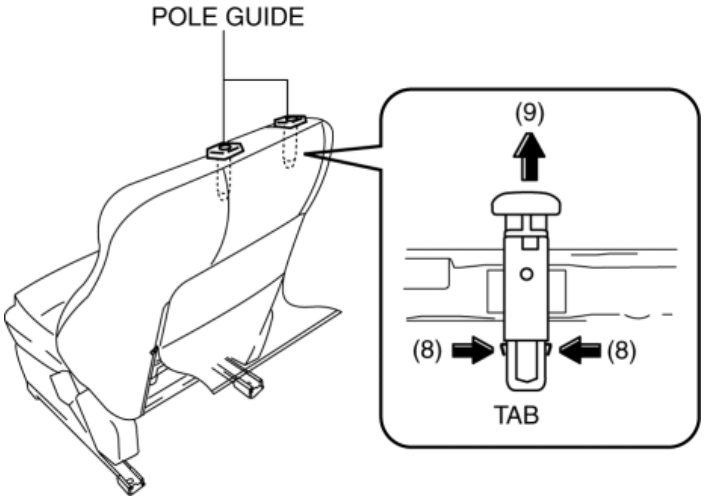

12. Remove the nut and washer.

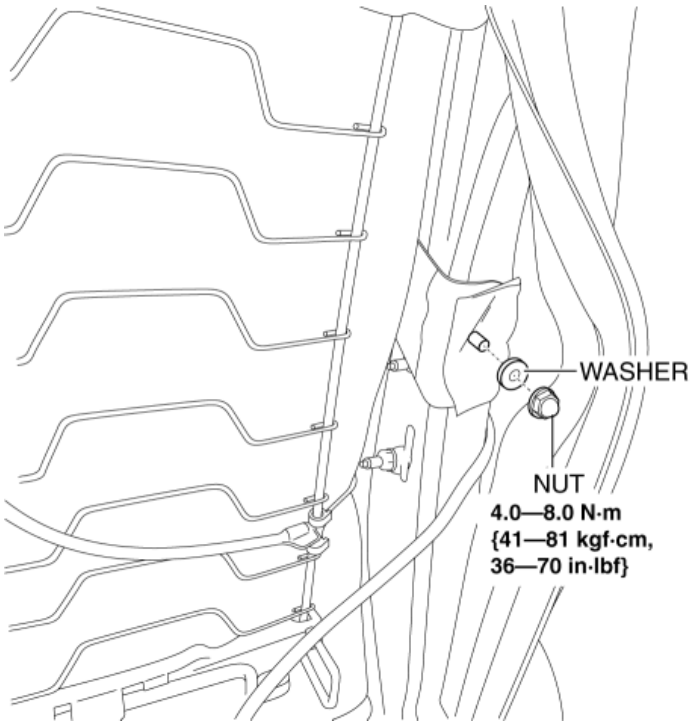

13. Pull the side air bag module securing belt in the direction of arrows (10) and (11) shown in the figure and remove it from the front seat back frame stud bolt.

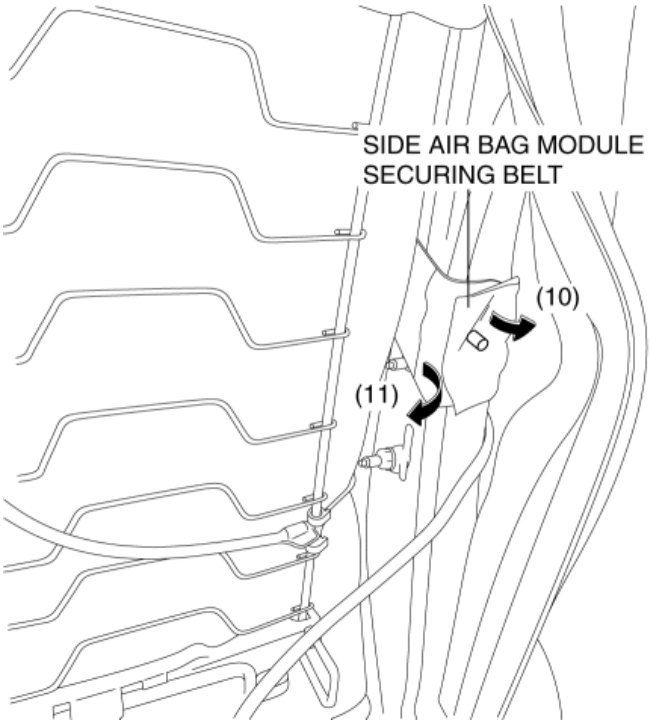

14. Pull out the front seat back pad and front seat back trim towards the front of the front seat.

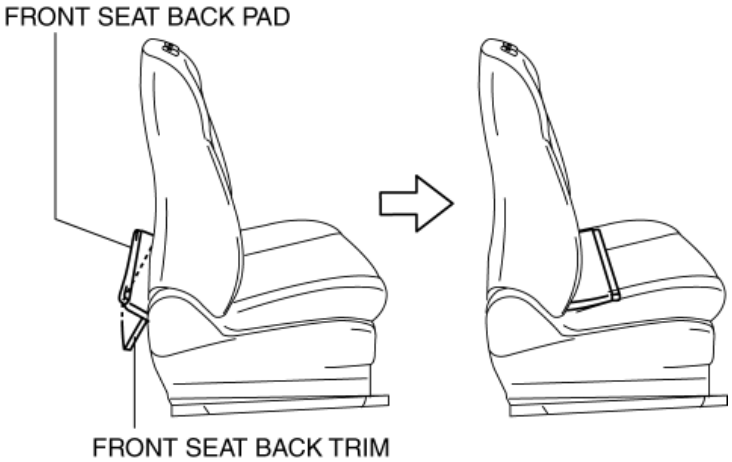

15. Lift up the front seat back trim and front seat back pad in the direction of the arrow (12) as a single unit and remove it from the front seat back frame.

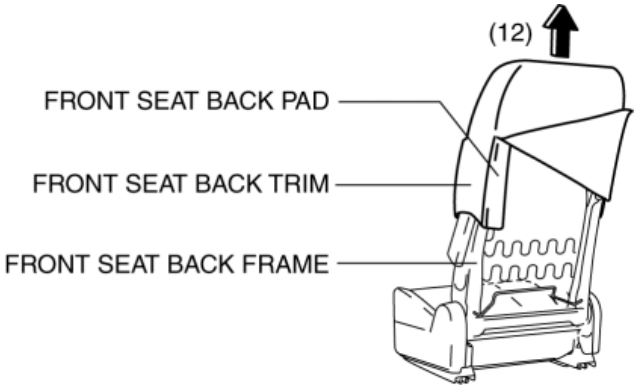

16. Install in the reverse order of removal.

FRONT SEAT BACK TRIM REMOVAL/INSTALLATION

2014 - Mazda3 - Body and Accessories

REAR SEAT BACK REMOVAL/INSTALLATION

CAUTION:

- When performing the procedure with a rear seat back removed from the vehicle, perform the procedure on a clean cloth so as not to damage or dirty the seat.

NOTE:

- When removing the rear seat back from the vehicle or putting it back in, it can be performed easier by removing the head restraint.

6:4 Split Type

1. Remove the rear seat cushion. (See **REAR SEAT CUSHION REMOVAL/INSTALLATION**.)
2. Remove the rear center seat belt anchor. (See **REAR CENTER SEAT BELT REMOVAL/INSTALLATION**.)
3. Fold the rear seat back.
4. Partially peal back the rear seat back trim and remove the bolts.

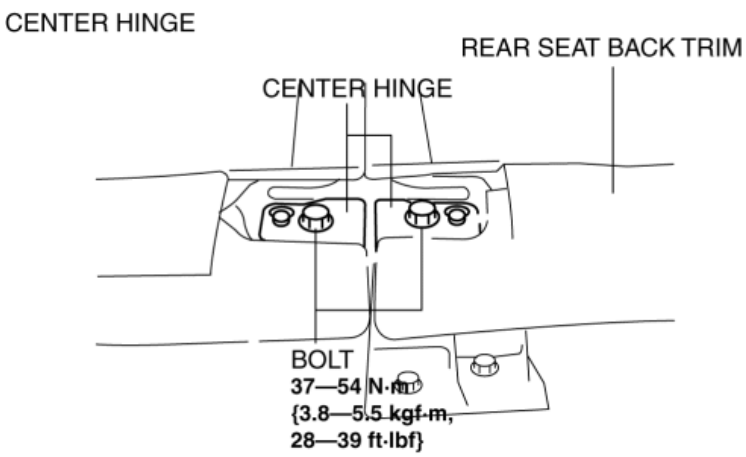

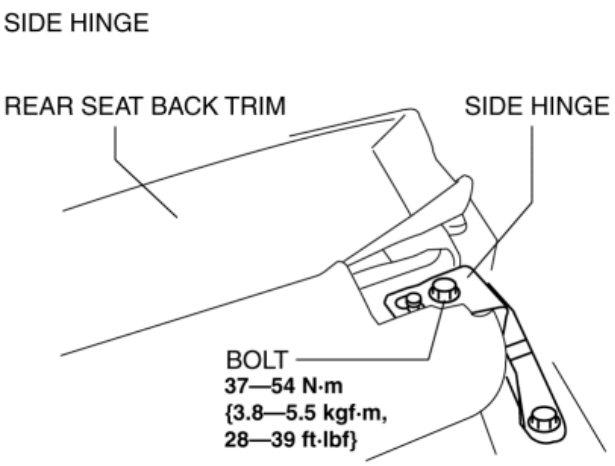

5. After moving the rear seat in the direction of the arrow (1) shown in the figure, remove the pins while moving the side hinge/center hinge in the direction of the arrow (2).

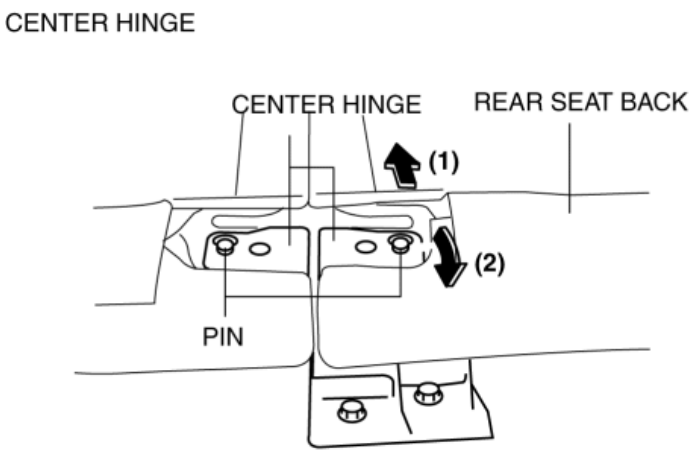

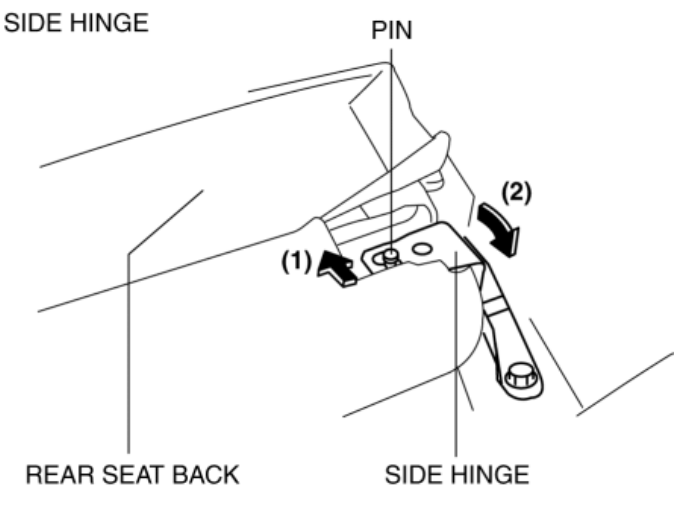

6. Remove the rear seat back.

7. Install in the reverse order of removal.

Single Type

1. Fold the rear seat back.

2. Partially peal back the rear seat back trim and remove the bolts.

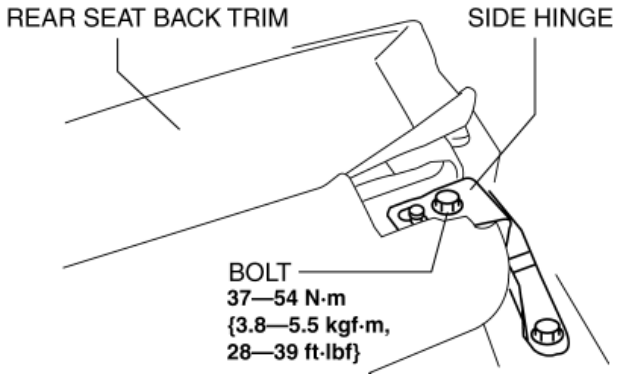

3. After moving the rear seat in the direction of the arrow (1) shown in the figure, remove the pins while moving the side hinge/center hinge in the direction of the arrow (2).

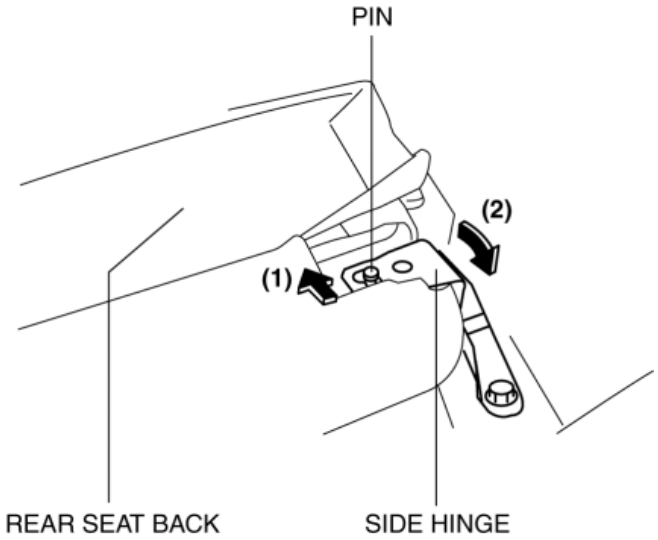

4. Remove the rear seat back.

5. Install in the reverse order of removal.

2014 - Mazda3 - Body and Accessories

REAR SEAT BACK FRAME REMOVAL/INSTALLATION

CAUTION:

- When performing the procedure with a rear seat removed from the vehicle, perform the procedure on a clean cloth so as not to damage or dirty the seat.

6:4 Split Type

1. Remove the headrest.
2. Remove the rear seat cushion. (See **REAR SEAT CUSHION REMOVAL/INSTALLATION**.)
3. Remove the rear center seat belt anchor. (See **REAR CENTER SEAT BELT REMOVAL/INSTALLATION**.)
4. Remove the rear seat back. (See **REAR SEAT BACK REMOVAL/INSTALLATION**.)
5. Remove screw.

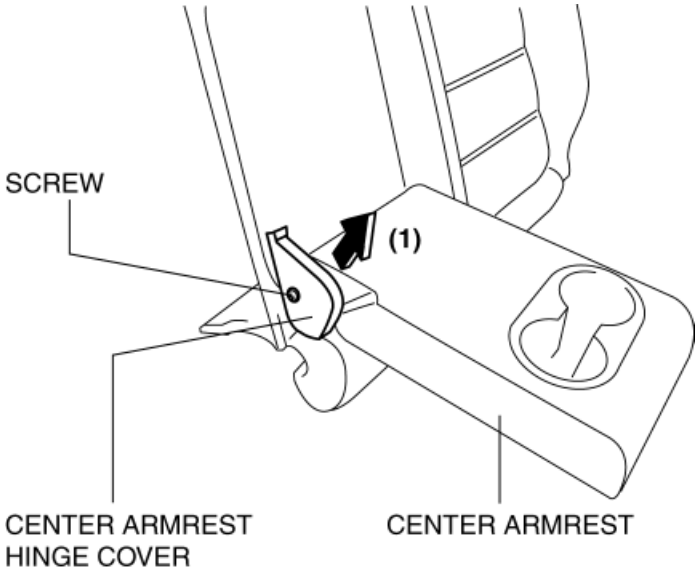

6. Remove the center armrest hinge cover in the direction of the arrow (1) shown in the figure. (with center armrest)
7. Remove bolt. (with center armrest)

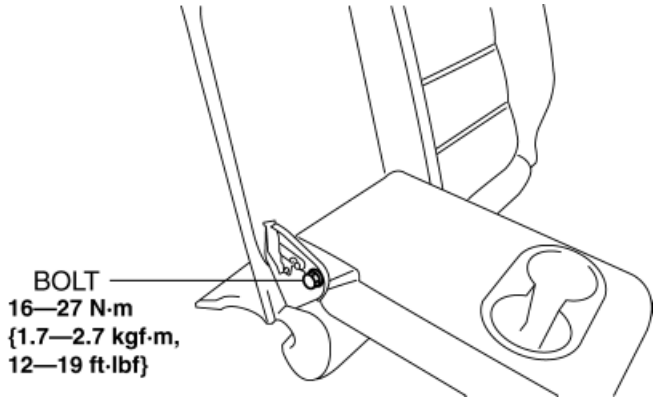

8. Remove the clip in the direction of the arrow (2) shown in the figure. (with center armrest)

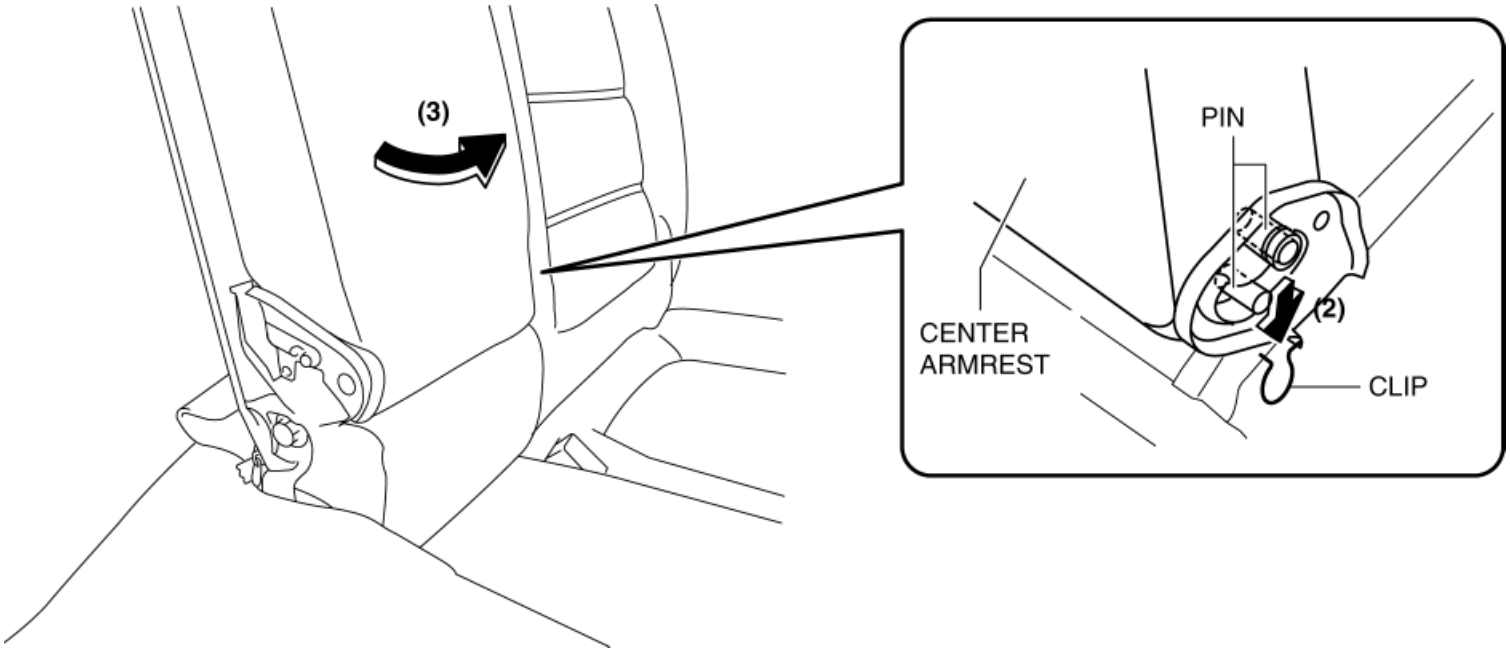

9. Remove the center armrest in the direction of the arrow (3) shown in the figure while setting pins aside. (with center armrest)

10. Open fasteners.

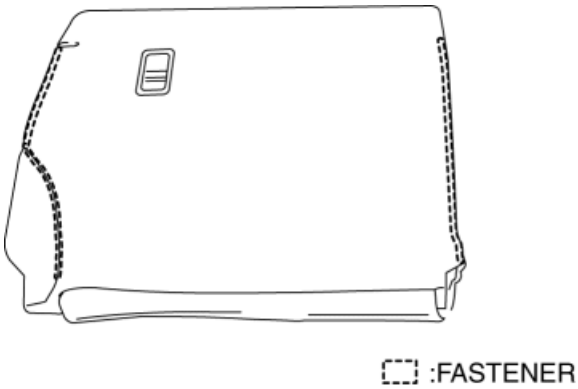

11. Slide hooks in the order of the arrows (4) and (5) shown in the figure, and set the rear seat back frames aside.

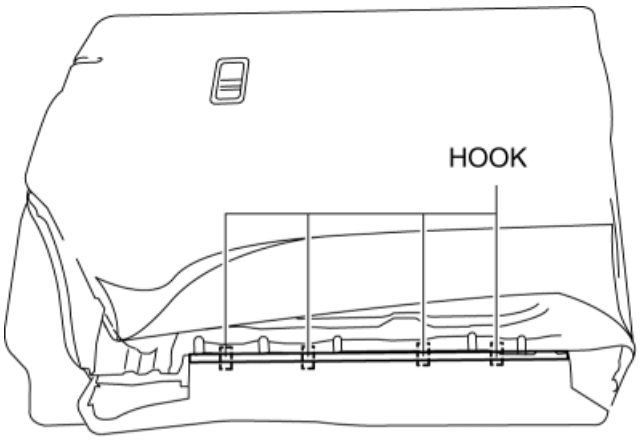

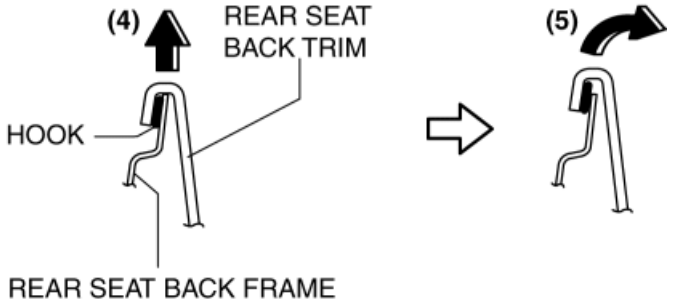

12. Release tabs in the direction of the arrow (6) shown in the figure and remove the top tether anchor cover in the direction of the arrow (7).

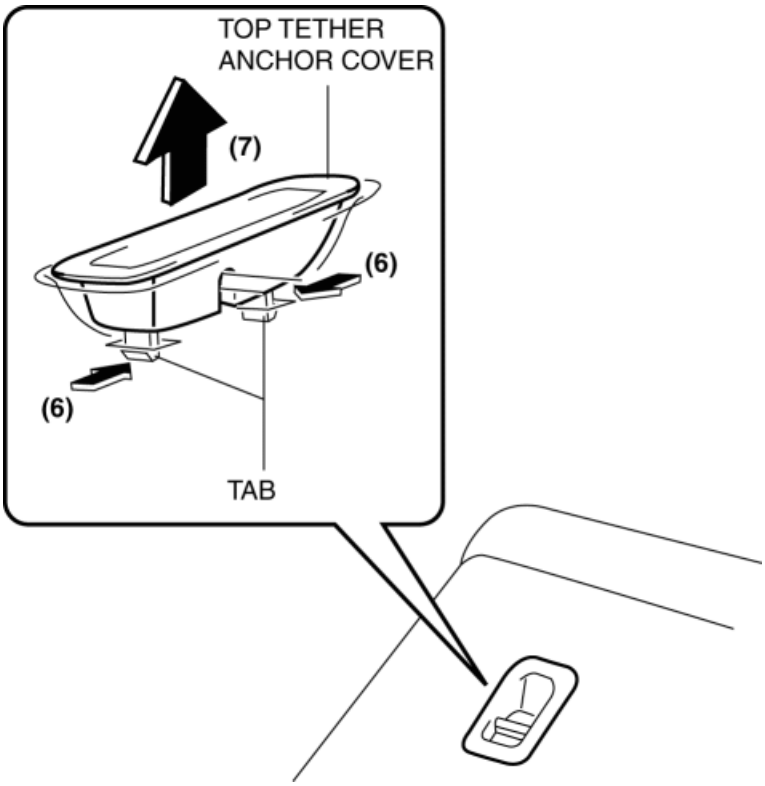

13. Release tabs in the direction of the arrow (8) shown in the figure and remove the seat belt cover in the direction of the arrow (9).

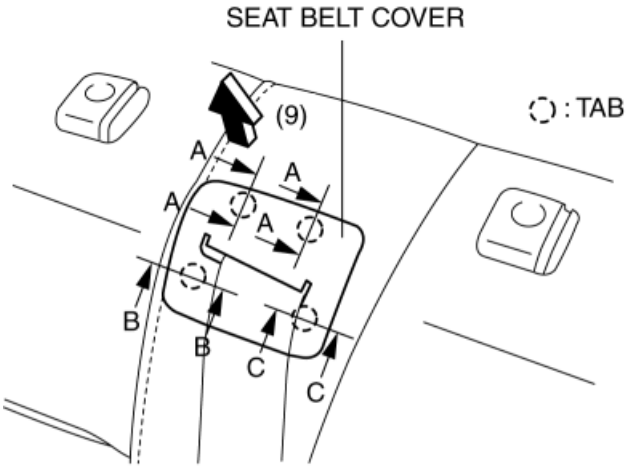

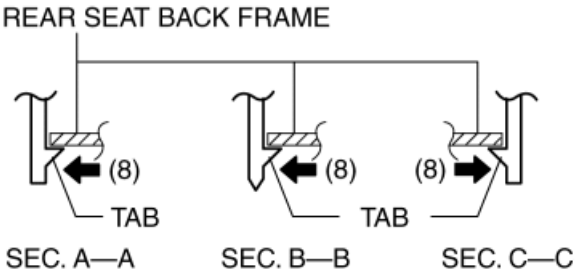

14. Remove screw.

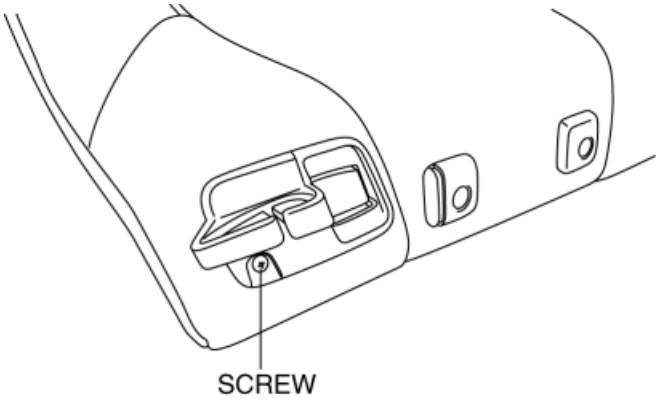

15. Partially peel back the rear seat back pad, release tabs in the direction of the arrow (10) shown in the figure and pull out the pins in the direction of the arrow (11).

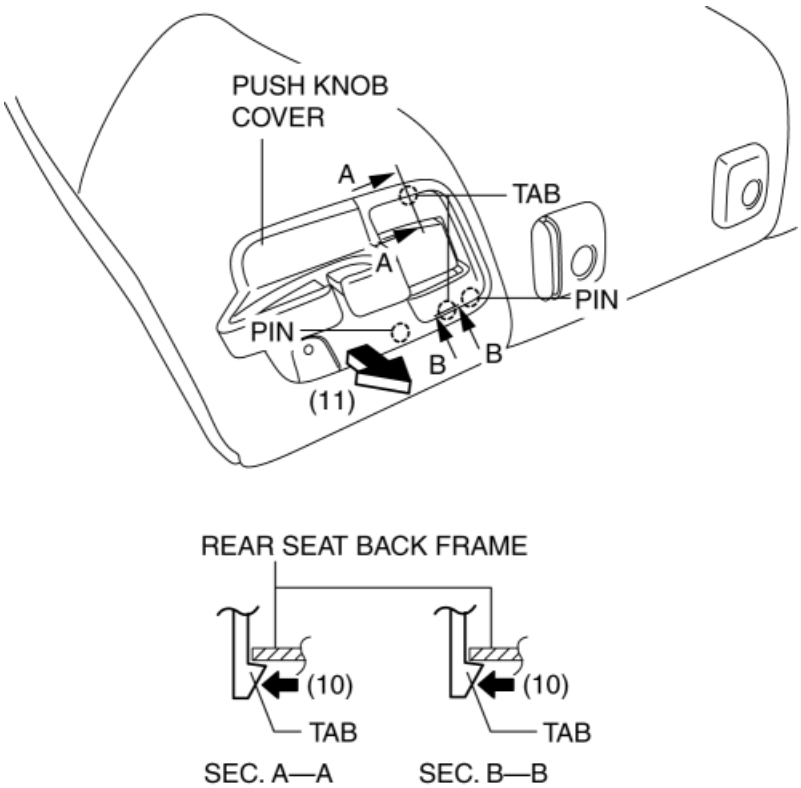

16. Remove the push knob cover.

17. Partially peel the rear seat back trim, and remove fasteners.

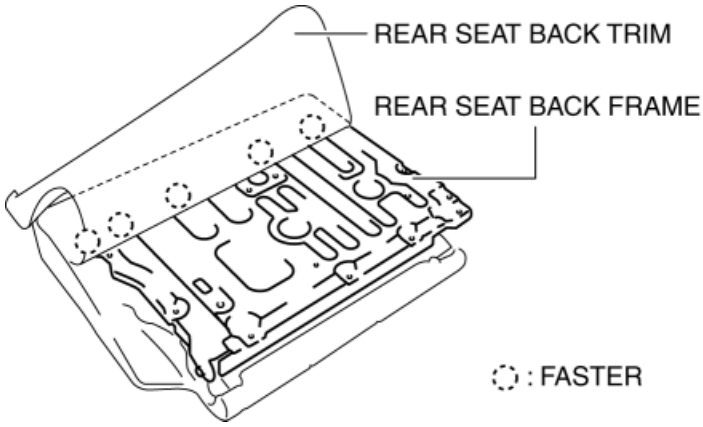

18. Partially peel back the rear seat back pad, release tabs in the direction of the arrow (12) shown in the figure and pull out the pole guide in the direction of the arrow (13).

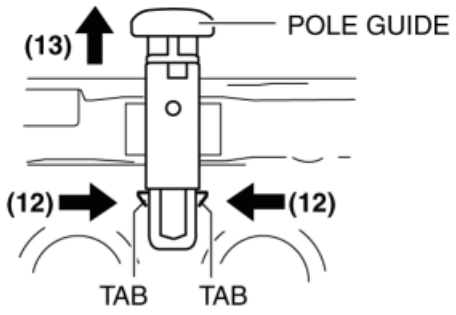

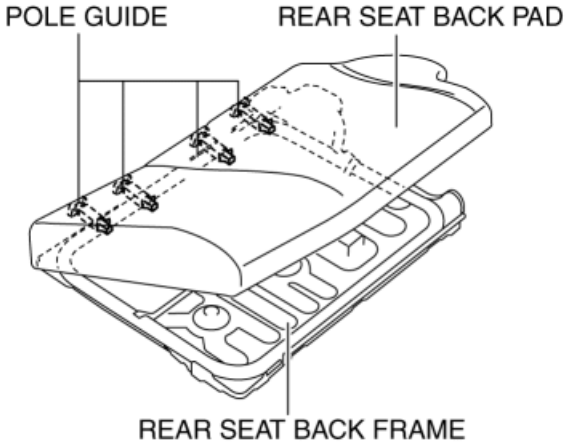

19. Pull the rear seat back frame in the direction of the arrow (14) shown in the figure, and remove it from the rear set back pad.

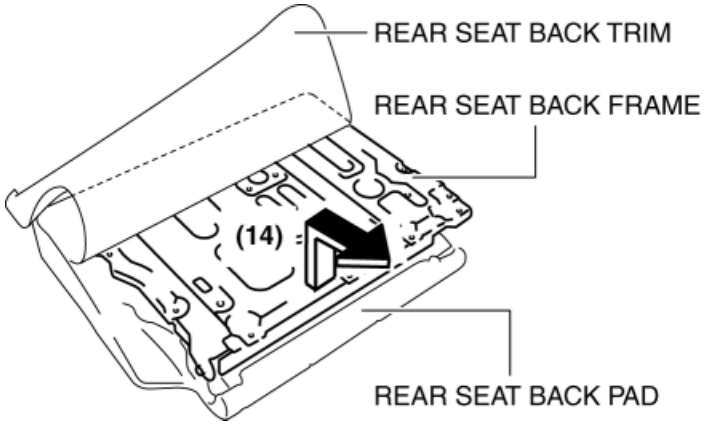

20. Install in the reverse order of removal.

2014 - Mazda3 - Body and Accessories

REAR SEAT CUSHION REMOVAL/INSTALLATION

CAUTION:

- When performing the procedure with a rear seat cushion removed from the vehicle, perform the procedure on a clean cloth so as not to damage or dirty the seat.

NOTE:

- When removing the rear seat cushion, perform the procedure in the posture shown in the figure.

1. Move the lever in the direction of arrow (1) shown in the figure, and lift up the rear seat cushion in the direction of arrow (2) shown in the figure while releasing the lock.

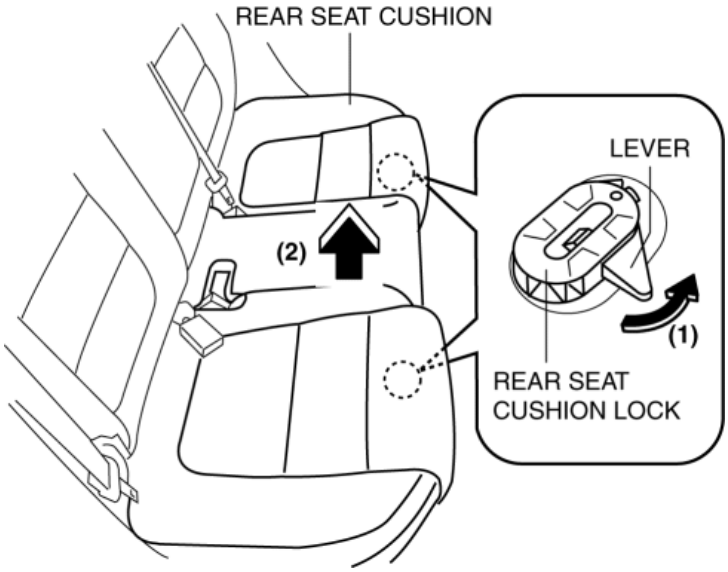

2. Fold the rear seat back (RH). (6:4 Split Type)

3. Fold the rear seat back. (Single Type)

4. Move the hook in the direction of arrow (4) shown in the figure, and set it aside from the center hinge while moving the rear seat cushion in the direction of arrow (3) shown in the figure.

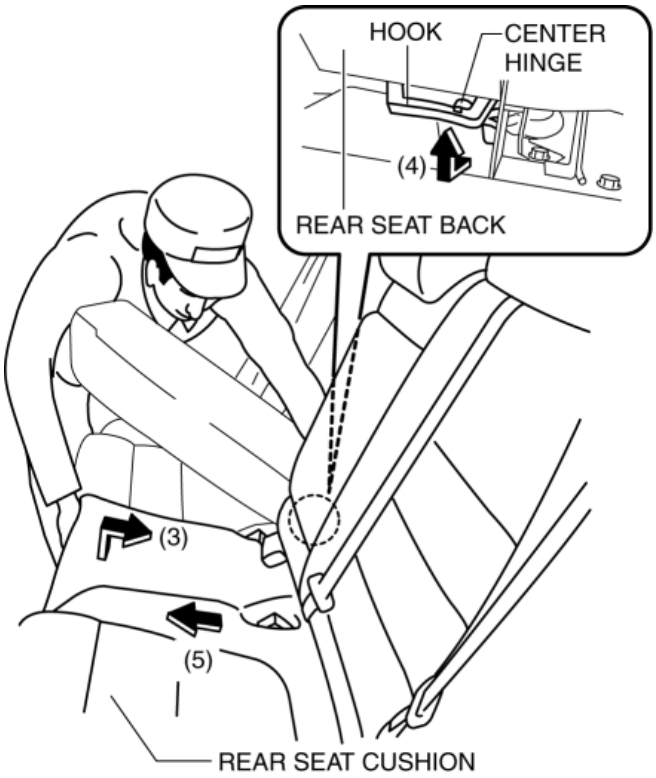

5. Remove the rear seat cushion in the direction of arrow (5) shown in the figure.
6. Install in the reverse order of removal. (See **Rear Seat Cushion Installation Note**.)

Rear Seat Cushion Installation Note

- After installing the rear seat cushion, place the rear buckle as shown in the figure.

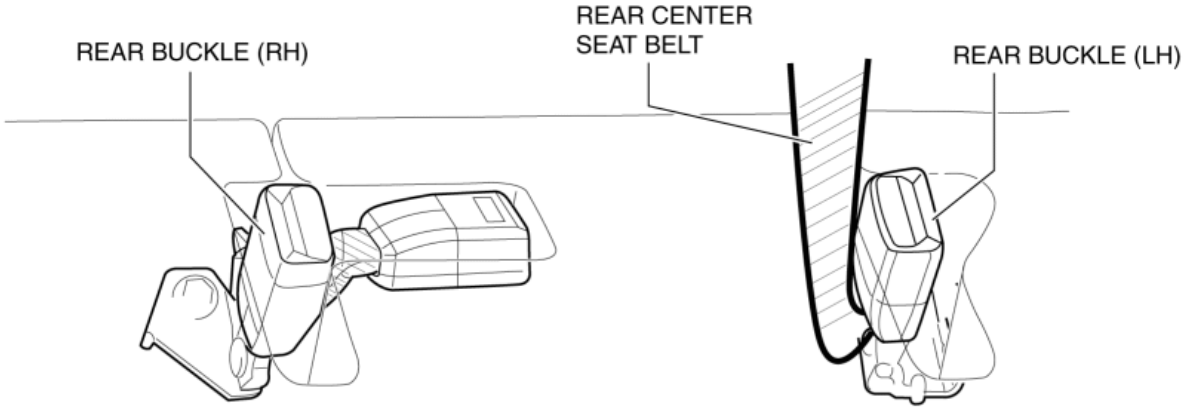
REAR BUCKLE (RH)
REAR CENTER
SEAT BELT
REAR BUCKLE (LH)

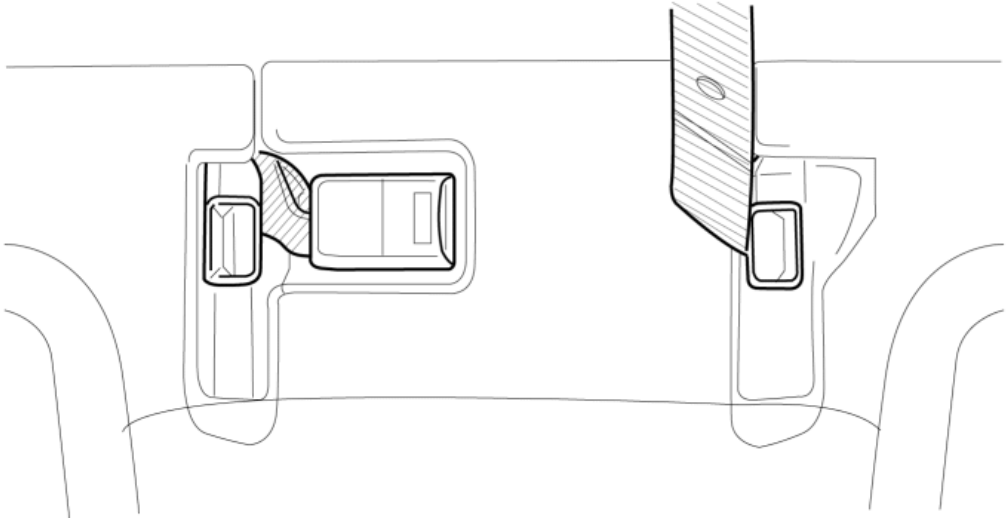

2014 - Mazda3 - Body and Accessories

POWER SEAT SYSTEM INSPECTION

WARNING:

- Handling a side air bag improperly can accidentally operate (deploy) the air bag, which may seriously injure you. Read the service warnings/cautions in the Workshop Manual before handling the front seat (side air bag integrated). (See **AIR BAG SYSTEM SERVICE WARNINGS [TWO-STEP DEPLOYMENT CONTROL SYSTEM]**.) (See **AIR BAG SYSTEM SERVICE CAUTIONS [TWO-STEP DEPLOYMENT CONTROL SYSTEM]**.) (See **AIR BAG SYSTEM SERVICE WARNINGS [STANDARD DEPLOYMENT CONTROL SYSTEM]**.) (See **AIR BAG SYSTEM SERVICE CAUTIONS [STANDARD DEPLOYMENT CONTROL SYSTEM]**.)

Terminal layout

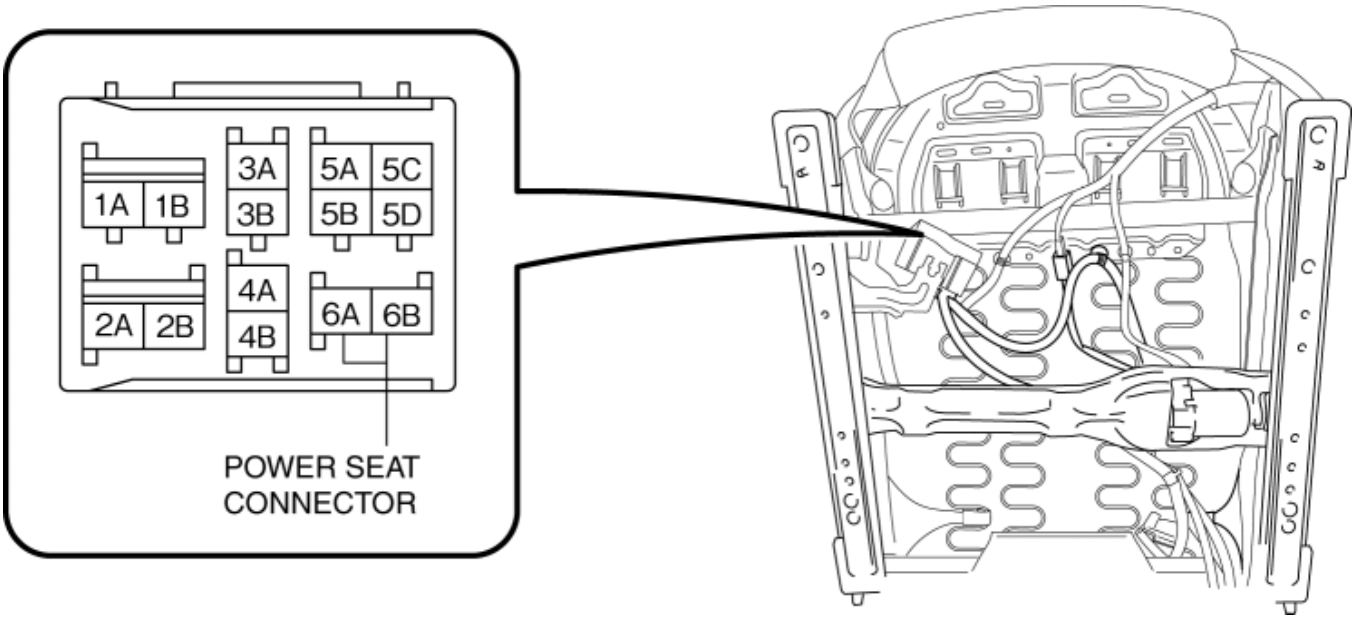

Diagnostic Procedure

Step	Inspection		Action
1	**INSPECT POWER SEAT CONNECTOR** • Disconnect the power seat connector. • Inspect the connector engagement and connection condition and inspect the terminals for damage, deformation, corrosion, or disconnection. • Is the connector normal?	Yes	Go to the next step.
		No	• Repair or replace the connector. • After repair or replacement, go to Step 4.
2	**POWER SEAT POWER SUPPLY CIRCUIT INSPECTION** • Verify that the power seat	Yes	Go to the next step.
		No	Inspect the P.SEAT D 30 A fuse.

connector is disconnected.

- Connect the negative battery cable.

  (See **NEGATIVE BATTERY CABLE DISCONNECTION/CONNECTION [SKYACTIV-G 2.0, SKYACTIV-G 2.5]**.)

- Switch the ignition ON (engine off).
- Measure the voltage at power seat terminal 6A (vehicle wiring harness side).
- Is the voltage **B+**?

- If the fuse is blown:
  - Refer to the wiring diagram and verify whether or not there is a common connector between P.SEAT D 30 A fuse and power seat connector terminal 6A.

    If there is a common connector:

    - Determine the malfunctioning part by inspecting the common connector and the terminal for corrosion, damage, or pin disconnection, and the common wiring harness for a short to ground.
    - Repair or replace the malfunctioning part.

    If there is no common connector:

    - Repair or replace the wiring harness which has a short to ground.
    - Replace the fuse.

- If the fuse is damaged:
  - Replace the fuse.
- If the fuse is normal:
  - Refer to the wiring diagram and verify whether or not there is a common connector between P.SEAT D 30 A and power seat connector terminal 6A.

    If there is a common

			connector: • Determine the malfunctioning part by inspecting the common connector and the terminal for corrosion, damage, or pin disconnection, and the common wiring harness for an open circuit. • Repair or replace the malfunctioning part. **If there is no common connector:** • Repair or replace the wiring harness which has an open circuit. Go to Step 4.
3	**INSPECT POWER SEAT GROUND CIRCUIT FOR OPEN CIRCUIT** • Verify that the power seat connector is disconnected. • Inspect for continuity between power seat terminal 6B (vehicle wiring harness side) and body ground. • Is there continuity?	Yes	Replace the front seat. (See **FRONT SEAT REMOVAL/INSTALLATION**.)
		No	• Repair or replace the wiring harness which has an open circuit. • After repair or replacement, go to Step 4.
4	**VERIFY THAT REPAIRS HAVE BEEN COMPLETED** • Reconnect all the disconnected connectors. • Connect the negative battery cable. (See **NEGATIVE BATTERY CABLE DISCONNECTION/CONNECTION [SKYACTIV-G 2.0, SKYACTIV-G 2.5]**.) • Switch the ignition ON (engine off).	Yes	The power seat system inspection is completed.
		No	Repeat the inspection from Step 1.

	• Operate the power switch. • Does the power seat operate normally.		

2014 - Mazda3 - Body and Accessories

SEAT WARMER SWITCH REMOVAL/INSTALLATION

NOTE:

- The seat warmer switches are integrated into the indicator unit.
- For the seat warmer switch removal/installation, refer to the indicator unit removal/installation. (See **INDICATOR UNIT REMOVAL/INSTALLATION**.)

2014 - Mazda3 - Body and Accessories

SEAT WARMER UNIT INSPECTION

WARNING:

- Handling a side air bag improperly can accidentally operate (deploy) the air bag, which may seriously injure you. Read the service warnings/cautions in the Workshop Manual before handling the front seat (side air bag integrated). (See **AIR BAG SYSTEM SERVICE WARNINGS [TWO-STEP DEPLOYMENT CONTROL SYSTEM]**.) (See **AIR BAG SYSTEM SERVICE CAUTIONS [TWO-STEP DEPLOYMENT CONTROL SYSTEM]**.) (See **AIR BAG SYSTEM SERVICE WARNINGS [STANDARD DEPLOYMENT CONTROL SYSTEM]**.) (See **AIR BAG SYSTEM SERVICE CAUTIONS [STANDARD DEPLOYMENT CONTROL SYSTEM]**.)
- If the sliding mechanisms on both sides are not locked after assembling the front seat, the front seat will operate accidentally while the vehicle is driven, which could result in serious injury. After assembling the front seat, shake it up and down and verify that the sliding mechanism on the both sides are locked.

CAUTION:

- If the slide lever is operated after the front seat is removed, the left/right slide positions will deviate and the adjuster unit could be damaged after the front seat is installed. After removing a front seat, do not operate the slide lever.
- Verify that there are no malfunctions in the forward/back slide of the seat and in the adjuster unit after installing a front seat.
- When performing the procedure with a front seat removed from the vehicle, perform the procedure on a clean cloth so as not to damage or dirty the seat.
- When the passenger's seat is removed, perform the seat weight sensor inspection using the M-MDS after installing the passenger's seat. (See **SEAT WEIGHT SENSOR INSPECTION [TWO-STEP DEPLOYMENT CONTROL SYSTEM]**.)
- When the passenger's seat is replaced with a new one, perform the seat weight sensor calibration using the M-MDS. (See **SEAT WEIGHT SENSOR CALIBRATION [TWO-STEP DEPLOYMENT CONTROL SYSTEM]**.)

Driver-Side

Seat cushion side

1. Switch the ignition off.

2. Disconnect the negative battery cable and wait **1 min. or more**. (See **NEGATIVE BATTERY CABLE DISCONNECTION/CONNECTION [SKYACTIV-G 2.0, SKYACTIV-G 2.5]**.)

3. Remove the front seat. (See **FRONT SEAT REMOVAL/INSTALLATION**.)

4. Inspect for continuity between the seat warmer unit connector terminal 5C and 5D.

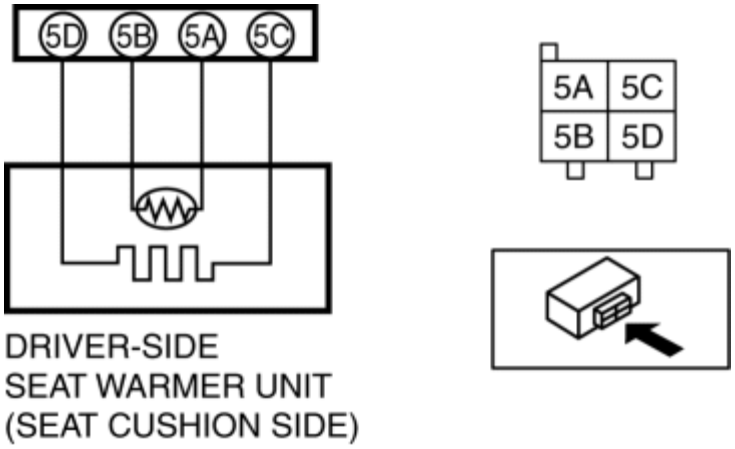

:Continuity

Status	Terminal	
	5C	**5D**
Under any condition	○	○

- If not as specified, replace the front seat. (See **FRONT SEAT REMOVAL/INSTALLATION**.)

5. Measure the temperature around the thermistor.

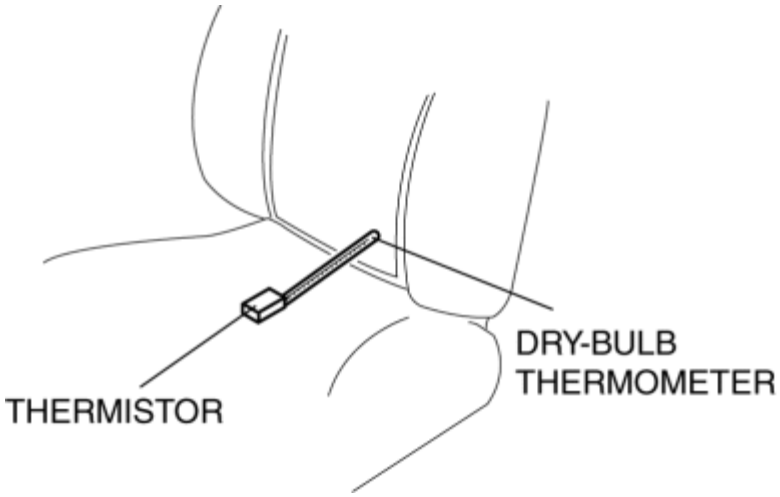

NOTE:

- To produce a normal temperature around the thermistor, leave the seat warmer turned off for **30 minutes or more**.

6. Measure the resistance between the seat warmer unit connector terminals 5A and 5B, records with the surrounding temperature of the thermistor measured beforehand.

7. Connect the negative battery cable. (See **NEGATIVE BATTERY CABLE DISCONNECTION/CONNECTION [SKYACTIV-G 2.0, SKYACTIV-G 2.5]**.)

8. Connect the seat warmer unit connector.

9. Switch the seat warmer switch to the Lo position and warm the seat.

10. Measure the resistance between the seat warmer unit connector terminals 5A and 5B, and

record it.

11. Switch the seat warmer switch to the High position and warm the seat.

12. Measure the resistance between the seat warmer unit connector terminals 5A and 5B, it is confirmed that there is a change from the resistance recorded beforehand.

- If the change in resistance cannot be verified, replace the front seat. (See **FRONT SEAT REMOVAL/INSTALLATION**.)

Seat back side

1. Switch the ignition off.

2. Disconnect the negative battery cable and wait **1 min. or more**. (See **NEGATIVE BATTERY CABLE DISCONNECTION/CONNECTION [SKYACTIV-G 2.0, SKYACTIV-G 2.5]**.)

3. Remove the front seat. (See **FRONT SEAT REMOVAL/INSTALLATION**.)

4. Inspect for continuity between the seat warmer unit connector (short code) terminals A and B.

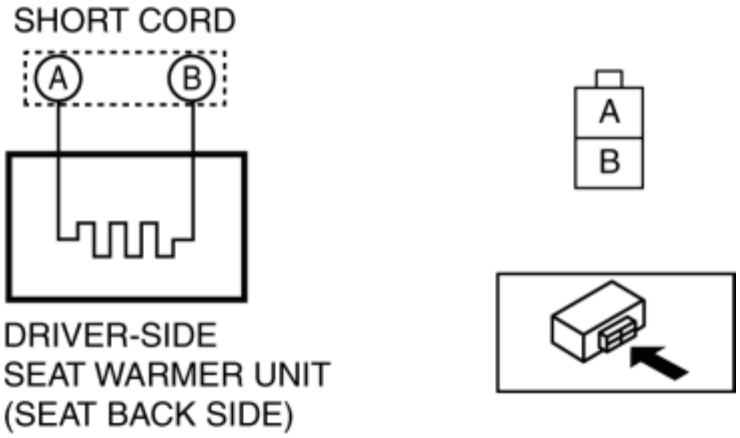

- If not as specified, replace the front seat. (See **FRONT SEAT REMOVAL/INSTALLATION**.)

○—○ :Continuity

Status	Terminal	
	A	**B**
Under any condition	○	○

Passenger-Side (leather type)

Seat cushion side

1. Switch the ignition off.

2. Disconnect the negative battery cable and wait **1 min. or more**. (See **NEGATIVE BATTERY**

CABLE DISCONNECTION/CONNECTION [SKYACTIV-G 2.0, SKYACTIV-G 2.5].)

3. Remove the front seat. (See **FRONT SEAT REMOVAL/INSTALLATION**.)

4. Inspect for continuity between the seat warmer unit connector (short code) terminals A and G.

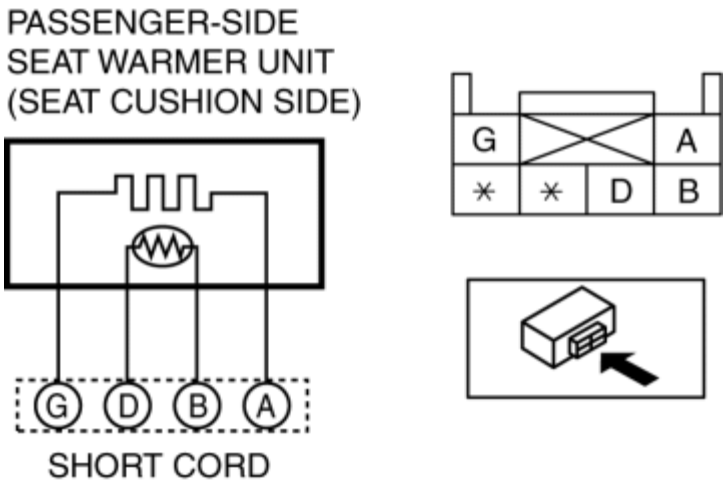

○—○:Continuity

Status	Terminal	
	A	G
Under any condition	○	○

- If not as specified, replace the front seat. (See **FRONT SEAT REMOVAL/INSTALLATION**.)

5. Measure the temperature around the thermistor.

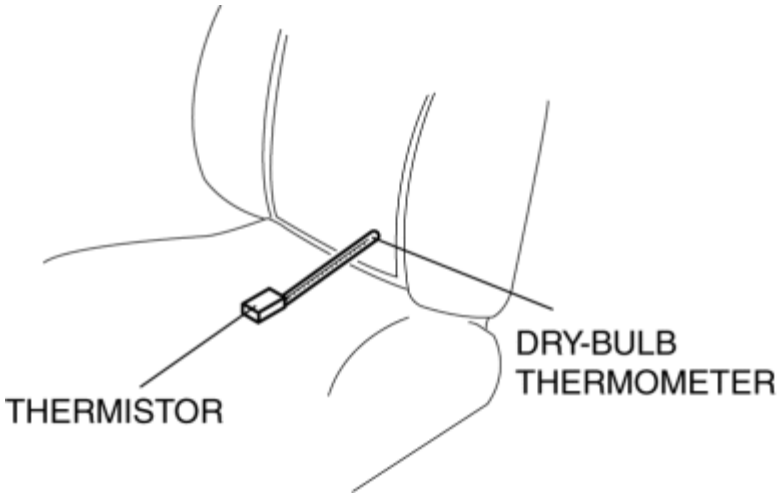

NOTE:

- To produce a normal temperature around the thermistor, leave the seat warmer turned off for **30 minutes or more**.

6. Measure the resistance between the seat warmer unit connector terminals B and D, records with the surrounding temperature of the thermistor measured beforehand.

7. Connect the negative battery cable. (See **NEGATIVE BATTERY CABLE**

DISCONNECTION/CONNECTION [SKYACTIV-G 2.0, SKYACTIV-G 2.5].)

8. Connect the seat warmer unit connector.

9. Switch the seat warmer switch to the Lo position and warm the seat.

10. Measure the resistance between the seat warmer unit connector terminals B and D, and record it.

11. Switch the seat warmer switch to the High position and warm the seat.

12. Measure the resistance between the seat warmer unit connector terminals B and D, it is confirmed that there is a change from the resistance recorded beforehand.

- If the change in resistance cannot be verified, replace the front seat. (See **FRONT SEAT REMOVAL/INSTALLATION**.)

Seat back side

1. Switch the ignition off.

2. Disconnect the negative battery cable and wait **1 min. or more**. (See **NEGATIVE BATTERY CABLE DISCONNECTION/CONNECTION [SKYACTIV-G 2.0, SKYACTIV-G 2.5]**.)

3. Remove the front seat. (See **FRONT SEAT REMOVAL/INSTALLATION**.)

4. Inspect for continuity between the seat warmer unit connector (short code) terminals A and B.

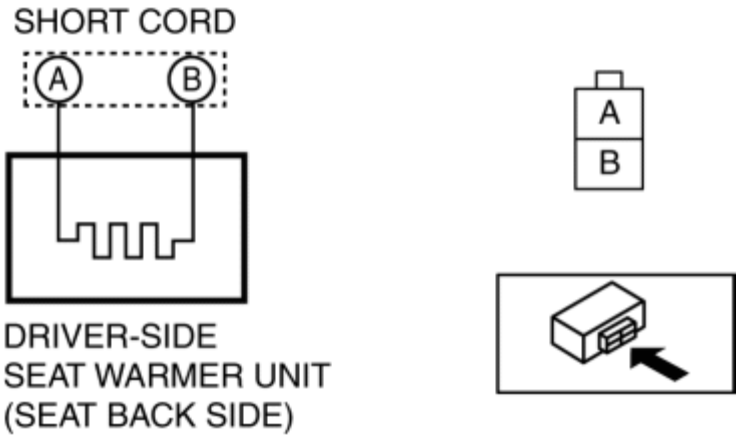

- If not as specified, replace the front seat. (See **FRONT SEAT REMOVAL/INSTALLATION**.)

○—○ :Continuity

Status	Terminal	
	A	**B**
Under any condition	○	○

Passenger-Side (cloth type)

Seat cushion side

1. Switch the ignition off.

2. Disconnect the negative battery cable and wait **1 min. or more**. (See **NEGATIVE BATTERY CABLE DISCONNECTION/CONNECTION [SKYACTIV-G 2.0, SKYACTIV-G 2.5]**.)

3. Remove the front seat. (See **FRONT SEAT REMOVAL/INSTALLATION**.)

4. Inspect for continuity between the seat warmer unit connector (short code) terminals A and F.

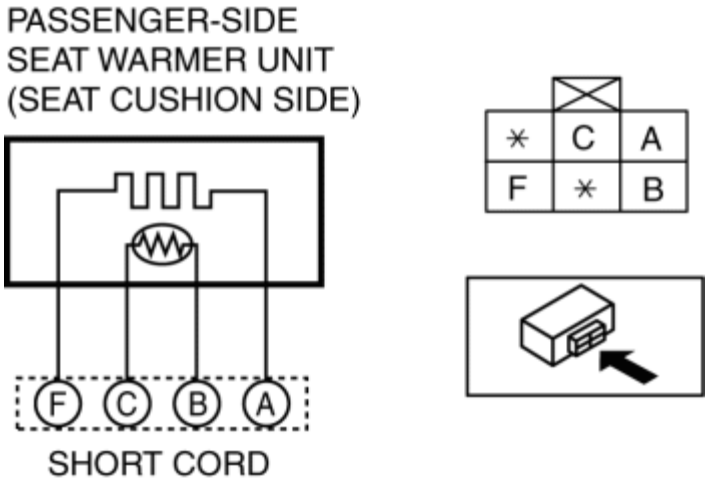

○—○ :Continuity

Status	Terminal	
	A	F
Under any condition	○	○

- If not as specified, replace the front seat. (See **FRONT SEAT REMOVAL/INSTALLATION**.)

5. Measure the temperature around the thermistor.

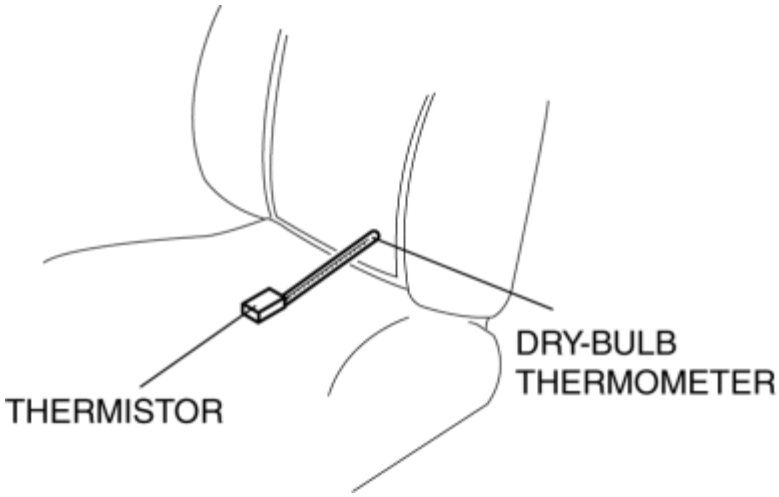

NOTE:

- To produce a normal temperature around the thermistor, leave the seat

warmer turned off for **30 minutes or more**.

6. Measure the resistance between the seat warmer unit connector terminals B and C, records with the surrounding temperature of the thermistor measured beforehand.

7. Connect the negative battery cable. (See **NEGATIVE BATTERY CABLE DISCONNECTION/CONNECTION [SKYACTIV-G 2.0, SKYACTIV-G 2.5]**.)

8. Connect the seat warmer unit connector.

9. Switch the seat warmer switch to the Lo position and warm the seat.

10. Measure the resistance between the seat warmer unit connector terminals B and C, and record it.

11. Switch the seat warmer switch to the High position and warm the seat.

12. Measure the resistance between the seat warmer unit connector terminals B and C, it is confirmed that there is a change from the resistance recorded beforehand.

- If the change in resistance cannot be verified, replace the front seat. (See **FRONT SEAT REMOVAL/INSTALLATION**.)

Seat back side

1. Switch the ignition off.

2. Disconnect the negative battery cable and wait **1 min. or more**. (See **NEGATIVE BATTERY CABLE DISCONNECTION/CONNECTION [SKYACTIV-G 2.0, SKYACTIV-G 2.5]**.)

3. Remove the front seat. (See **FRONT SEAT REMOVAL/INSTALLATION**.)

4. Inspect for continuity between the seat warmer unit connector (short code) terminals A and B.

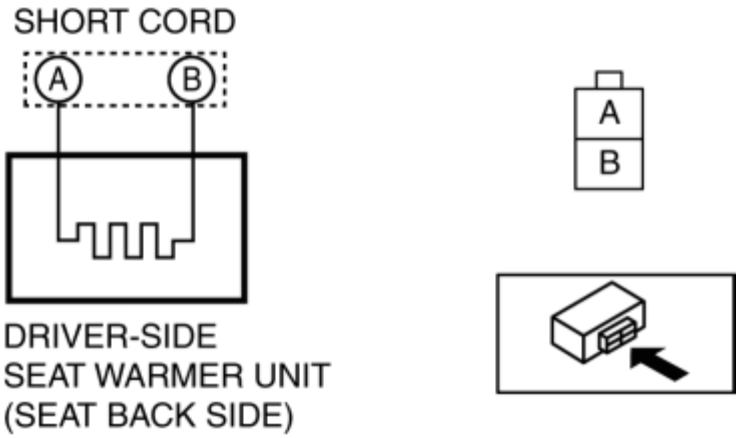

- If not as specified, replace the front seat. (See **FRONT SEAT REMOVAL/INSTALLATION**.)

○—○ :Continuity

Status	Terminal	
	A	**B**
Under any condition	○	○

SEAT WARMER UNIT INSPECTION

2014 - Mazda3 - Body and Accessories

REAR SEAT HINGE REMOVAL/INSTALLATION

Side Hinge

1. Remove the following parts:
    a. Rear seat cushion (See **REAR SEAT CUSHION REMOVAL/INSTALLATION**.)
    b. Rear seat back (See **REAR SEAT BACK REMOVAL/INSTALLATION**.)
    c. Rear scuff plate (See **REAR SCUFF PLATE REMOVAL/INSTALLATION**.)
    d. Tire house trim (See **TRUNK END TRIM REMOVAL/INSTALLATION**.)
2. Remove bolt A.

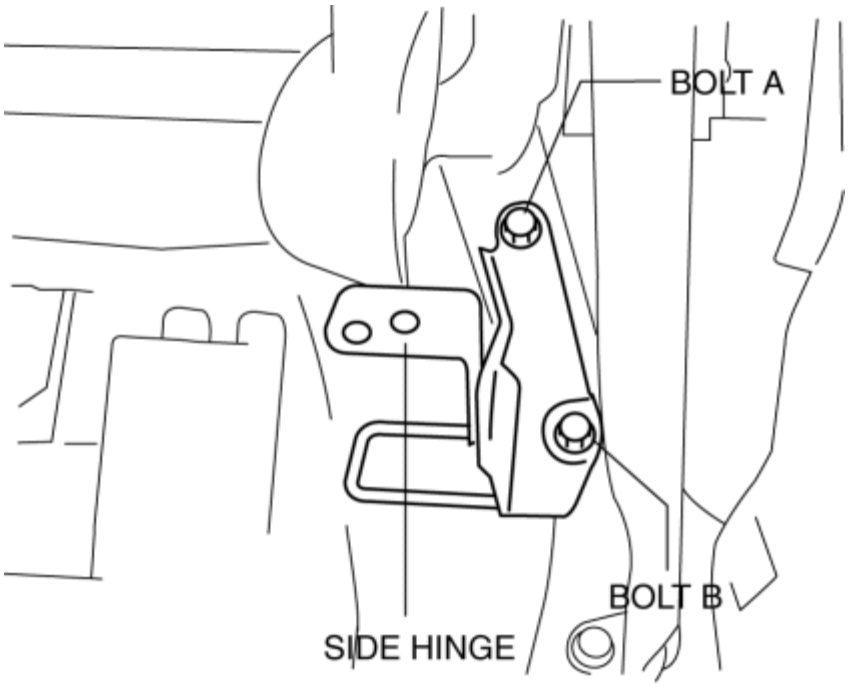

BOLT : **37—54 N·m {3.8—5.5 kgf·m, 28—39 ft·lbf}**

3. Remove bolt B.
4. Remove the side hinge.
5. Install in the reverse order of removal.

Center Hinge

1. Remove the following parts:
   a. Rear seat cushion (See **REAR SEAT CUSHION REMOVAL/INSTALLATION**.)
   b. Rear seat back (See **REAR SEAT BACK REMOVAL/INSTALLATION**.)
2. Remove bolt A.

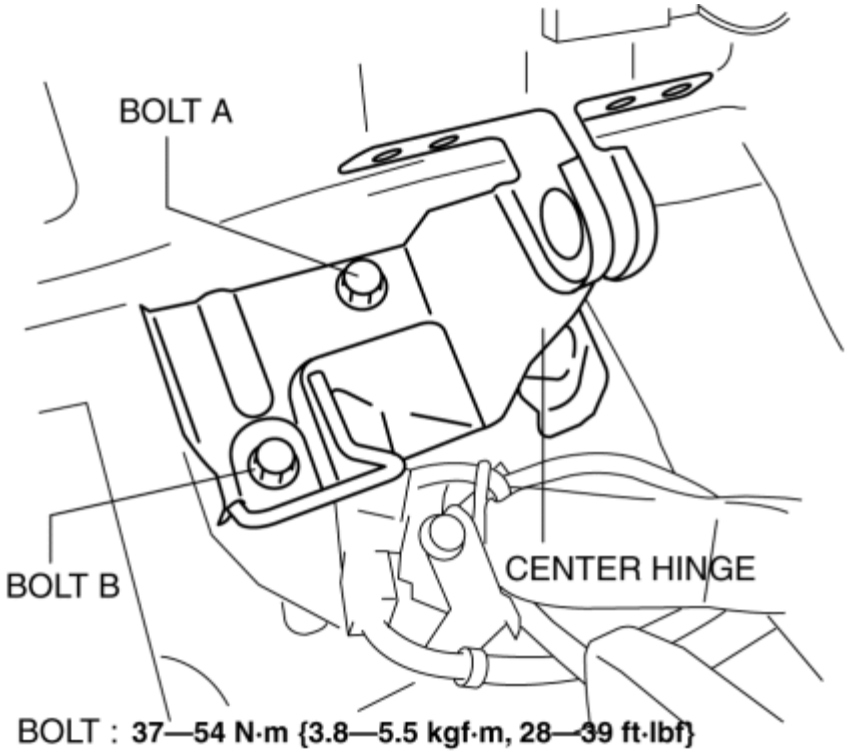

3. Remove bolt B.
4. Remove the center hinge.
5. Install in the reverse order of removal.

2014 - Mazda3 - Body and Accessories

CHILD-RESTRAINT SEAT ANCHOR REMOVAL/INSTALLATION

Top Tether Anchor

4SD

NOTE:

- When removing the top tether anchor from the vehicle or putting it back in, it can be performed easier by removing the head restraint

1. Open the cover.

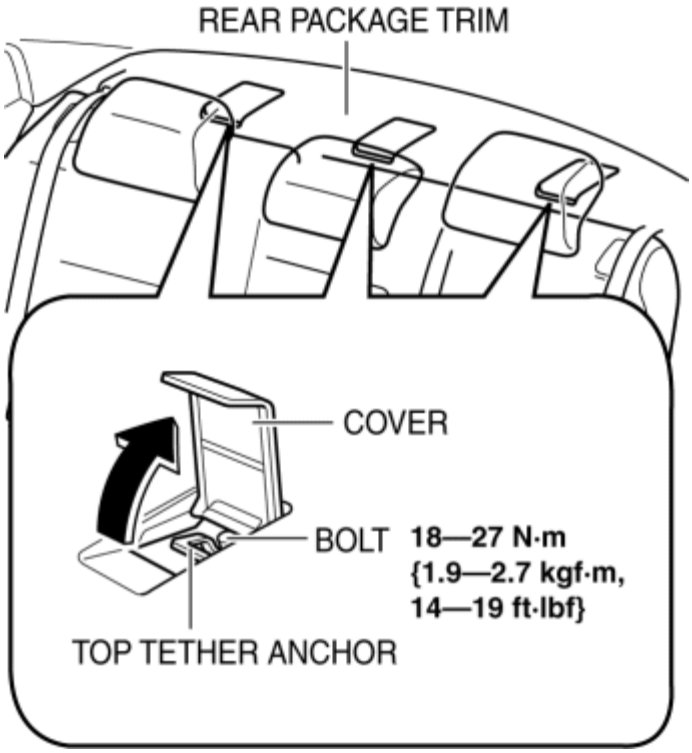

2. Remove the bolts.
3. Remove the top tether anchors.
4. Install in the reverse order of removal.

5HB

NOTE:

- The top tether anchors are integrated into the rear seat back frame.
- For the top tether anchor removal/installation, refer to the rear seat back frame removal/installation. (See **REAR SEAT BACK FRAME REMOVAL/INSTALLATION**.)

ISOFIX Anchor

4SD

NOTE:

- The ISOFIX anchor shown in figure A is integrated with the rear seat hinge (center).

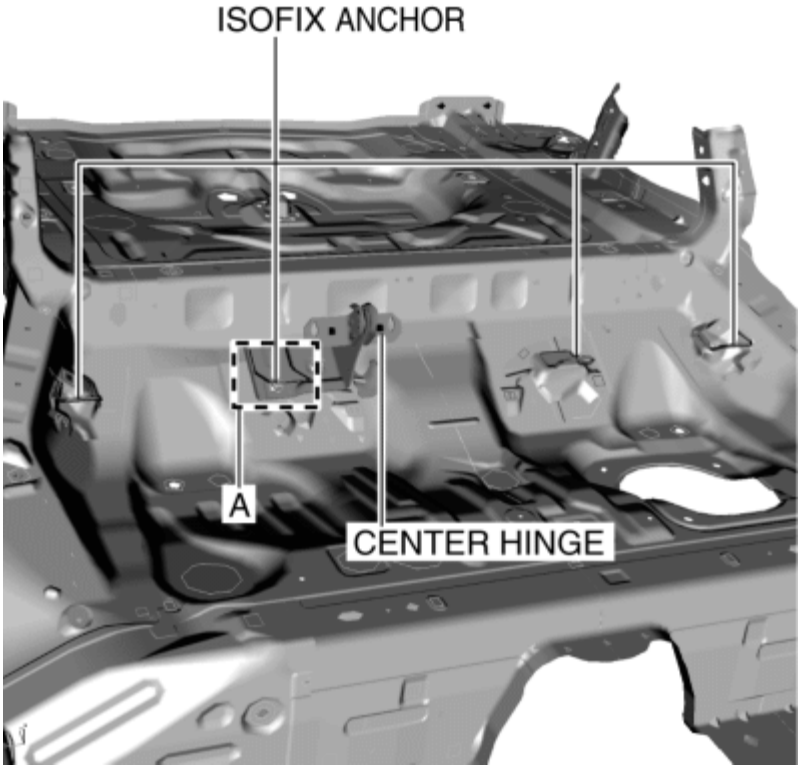

- ISOFIX anchors other than shown in figure A are integrated with the body.
- For the ISOFIX anchor removal/installation, refer to the rear seat hinge removal/installation. (See **REAR SEAT HINGE REMOVAL/INSTALLATION**.)

5HB

NOTE:

- The ISOFIX anchor shown in figure A is integrated with the rear seat hinge (center).

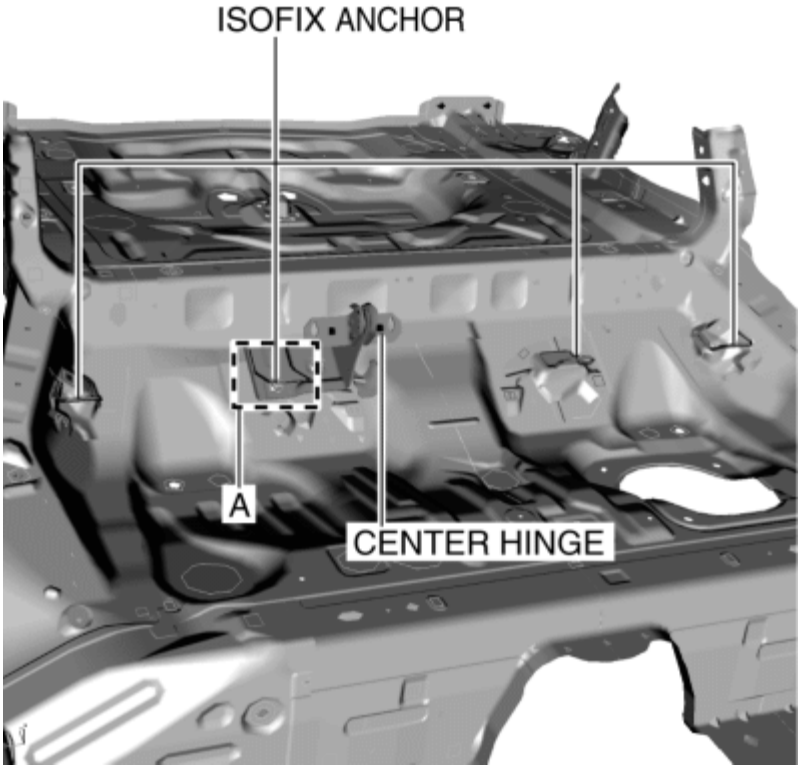

- ISOFIX anchors other than shown in figure A are integrated with the body.
- For the ISOFIX anchor removal/installation, refer to the rear seat hinge removal/installation. (See **REAR SEAT HINGE REMOVAL/INSTALLATION**.)

2014 - Mazda3 - Body and Accessories

REAR SEAT CUSHION LOCK REMOVAL/INSTALLATION

1. Remove the rear seat cushion. (See **REAR SEAT CUSHION REMOVAL/INSTALLATION**.)

2. Move the remover tool in the direction of the arrow (1) shown in the figure and disengage the tab.

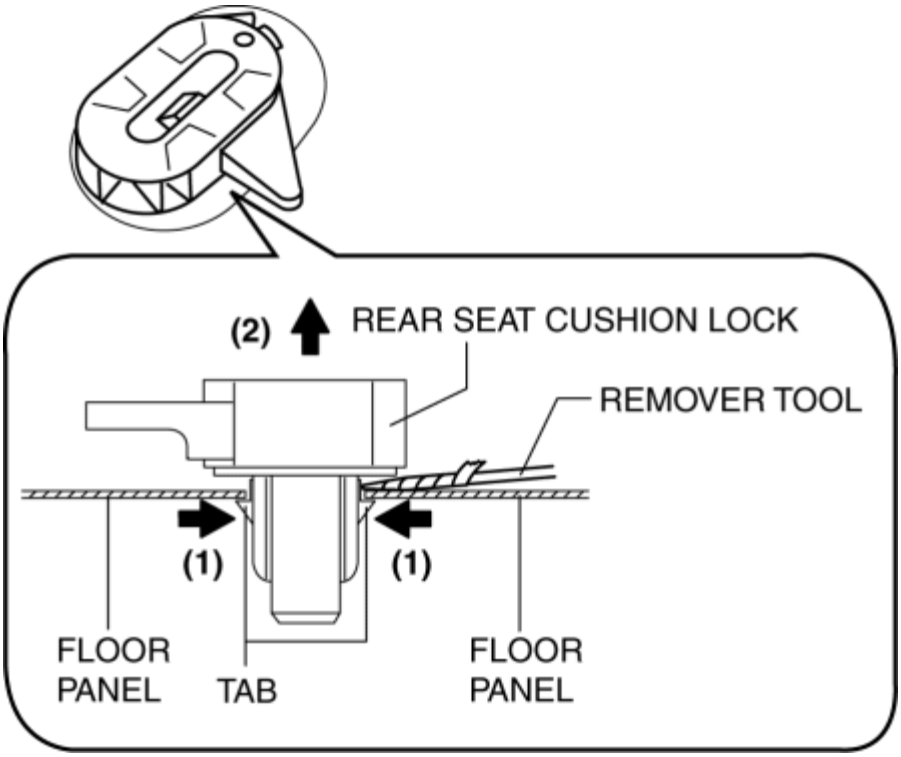

3. Remove the rear seat cushion lock in the direction of the arrow (2) shown in the figure.

4. Install in the reverse order of removal.

2014 - Mazda3 - Body and Accessories

REMOTE HANDLE LEVER REMOVAL/INSTALLATION

6:4 Split Type

1. Open the trunk lid.
2. Fold the rear seat back.
3. Move the remover tool in the direction of the arrow (1) shown in the figure and disengage tab.

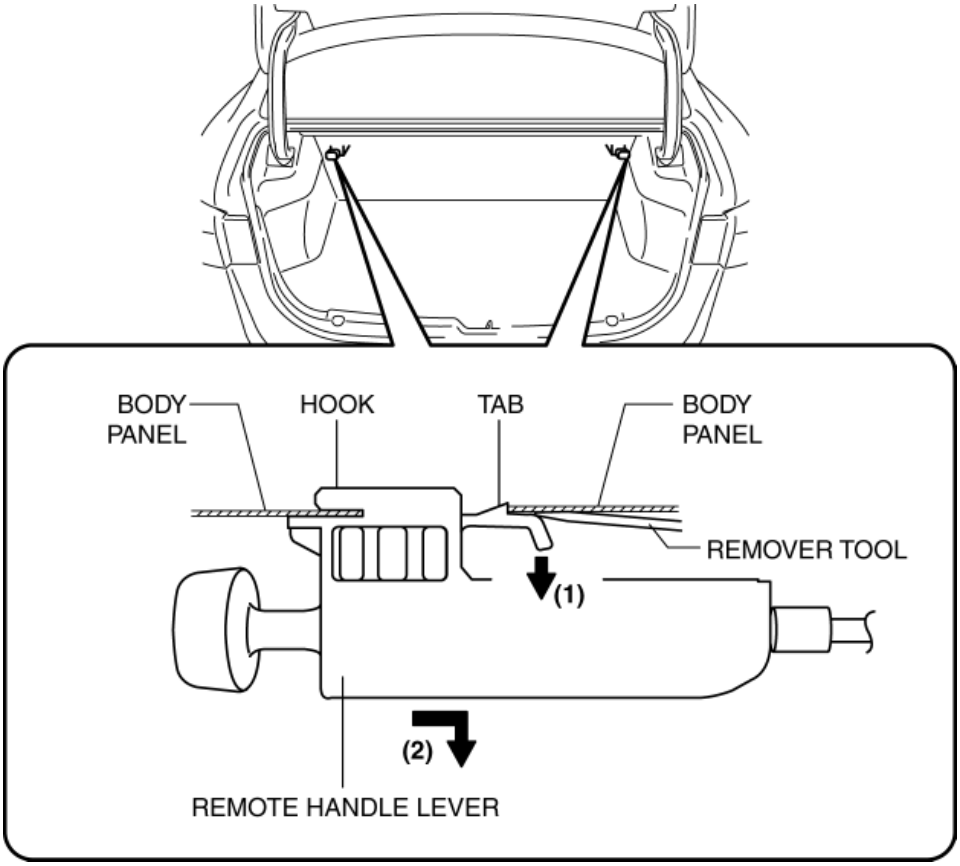

4. Remove the remote handle lever while pulling the hook in the direction of the arrow (2) shown in the figure.
5. Disconnect the negative battery cable. (See **NEGATIVE BATTERY CABLE DISCONNECTION/CONNECTION [SKYACTIV-G 2.0, SKYACTIV-G 2.5]**.)
6. Remove the following parts:
   a. Rear scuff plate (See **REAR SEAT CUSHION REMOVAL/INSTALLATION**.)
   b. Rear seat back (See **REAR SEAT BACK REMOVAL/INSTALLATION**.)
   c. Tire house trim (See **TIRE HOUSE TRIM REMOVAL/INSTALLATION**.)
   d. C-pillar trim (See **C-PILLAR TRIM REMOVAL/INSTALLATION**.)
   e. High-mount brake light (See **HIGH-MOUNT BRAKE LIGHT REMOVAL/INSTALLATION**.)
   f. Rear package trim (See **REAR PACKAGE TRIM REMOVAL/INSTALLATION**.)
7. Remove the nuts.

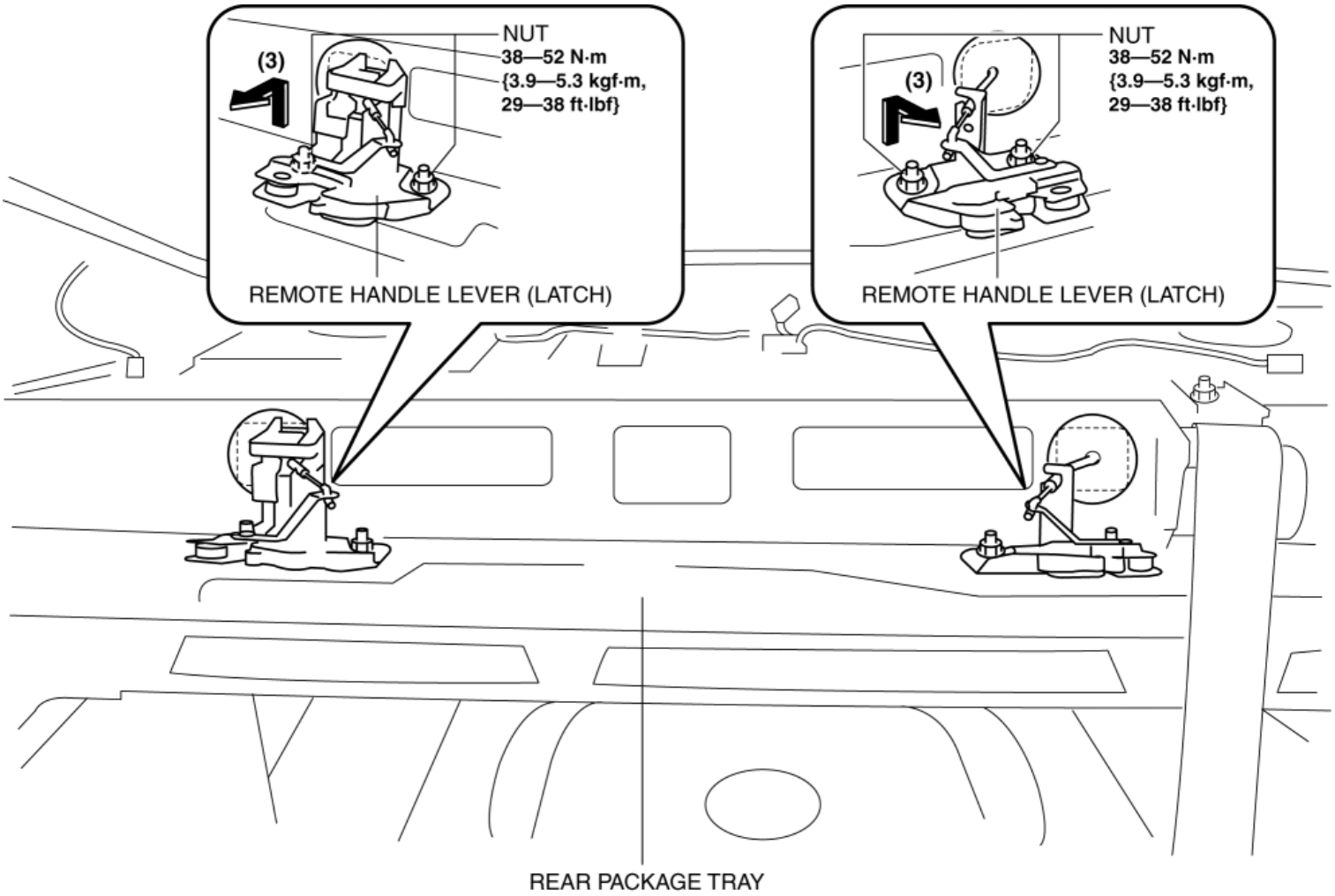

8. Remove the remote handle lever in the direction of the arrow (3) shown in the figure.
9. Install in the reverse order of removal.

Single Type

1. Open the trunk lid.
2. Fold the rear seat back.
3. Move the remover tool in the direction of the arrow (1) shown in the figure and disengage tab.

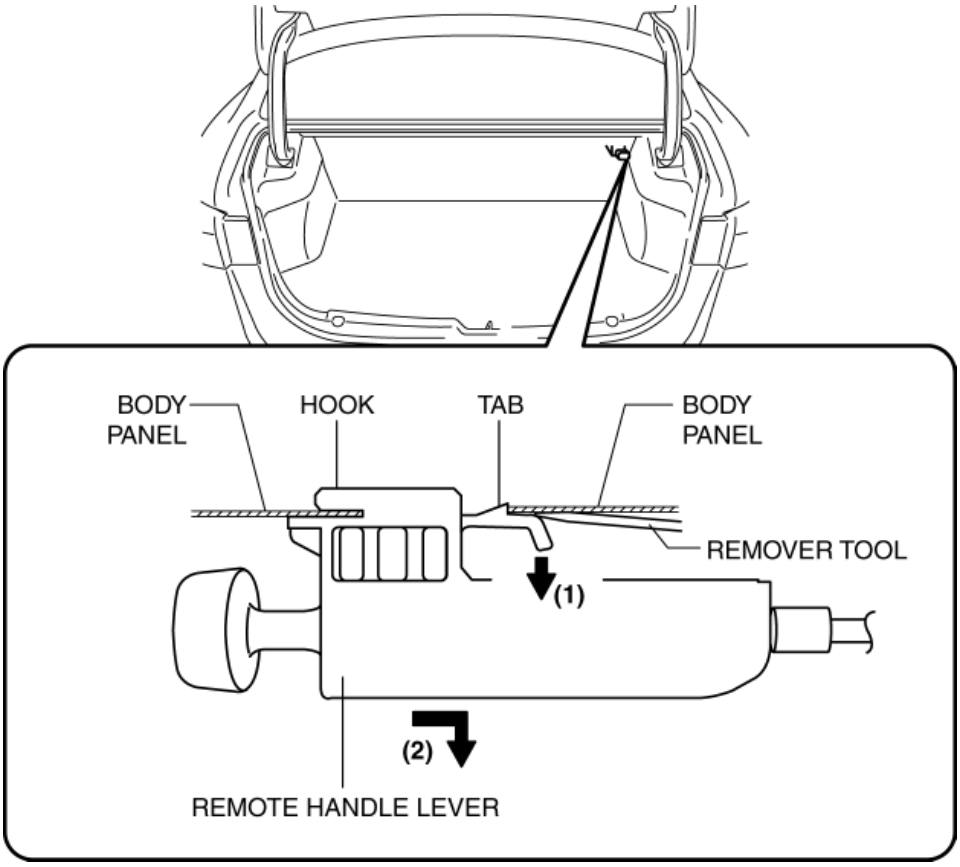

4. Remove the remote handle lever while pulling the hook in the direction of the arrow (2) shown in the figure.

5. Disconnect the negative battery cable. (See **NEGATIVE BATTERY CABLE DISCONNECTION/CONNECTION [SKYACTIV-G 2.0, SKYACTIV-G 2.5]**.)

6. Remove the following parts:

   a. Rear scuff plate (See **REAR SEAT CUSHION REMOVAL/INSTALLATION**.)

   b. Rear seat back (See **REAR SEAT BACK REMOVAL/INSTALLATION**.)

   c. Tire house trim (See **TIRE HOUSE TRIM REMOVAL/INSTALLATION**.)

   d. C-pillar trim (See **C-PILLAR TRIM REMOVAL/INSTALLATION**.)

   e. High-mount brake light (See **HIGH-MOUNT BRAKE LIGHT REMOVAL/INSTALLATION**.)

   f. Rear package trim (See **REAR PACKAGE TRIM REMOVAL/INSTALLATION**.)

7. Remove the nuts.

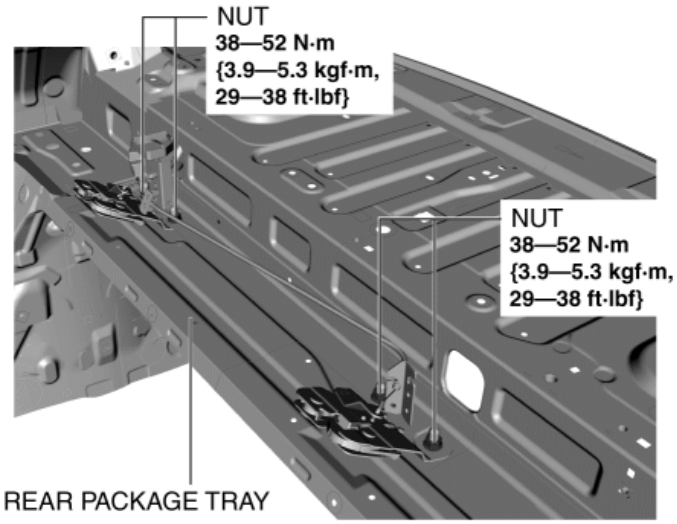

8. Remove the plate from the stud bolts. (See **Plate installation note**.)

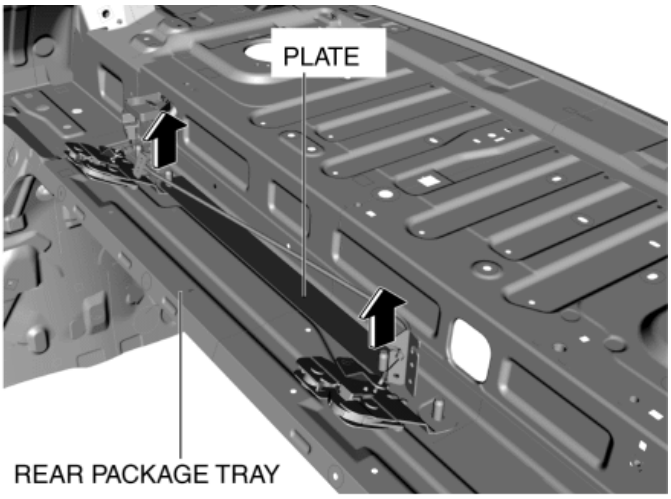

9. Remove the remote handle levers in the direction of arrow (3) shown in the figure, and pull them in the direction of arrow (4) to pull out the cable from the rear package tray.

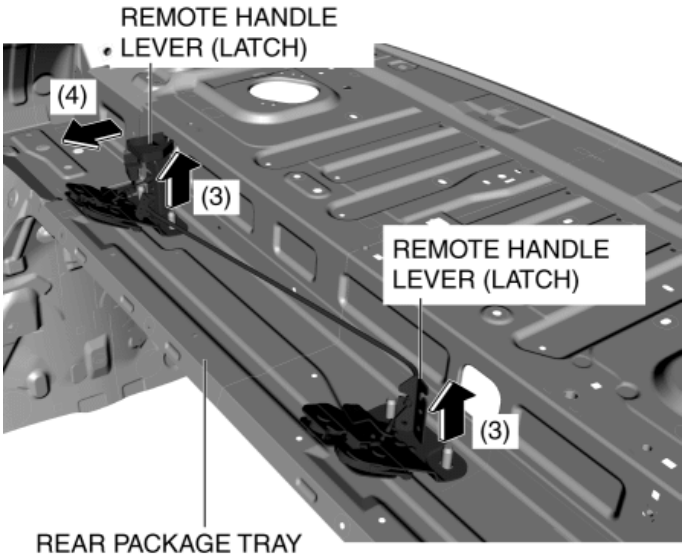

10. Install in the reverse order of removal.

Plate installation note

1. Install the plate with the arrow mark facing the vehicle front.

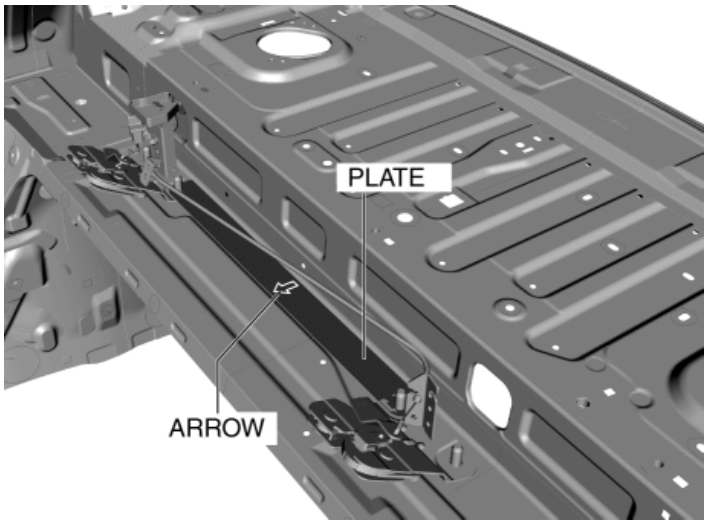

2014 - Mazda3 - Body and Accessories

SECURITY AND LOCKS LOCATION INDEX

Locks and Openers

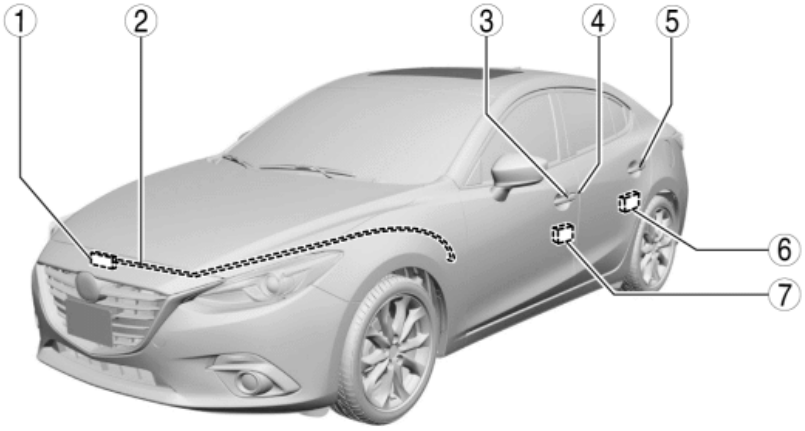

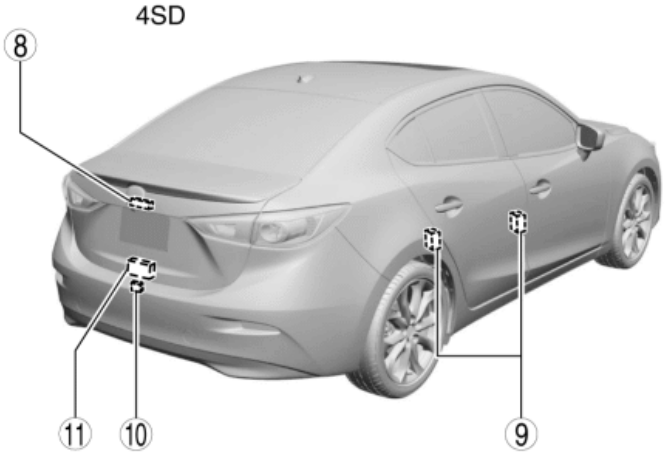

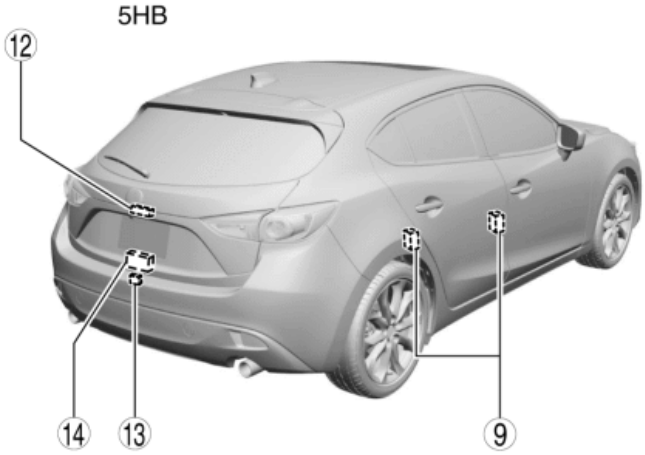

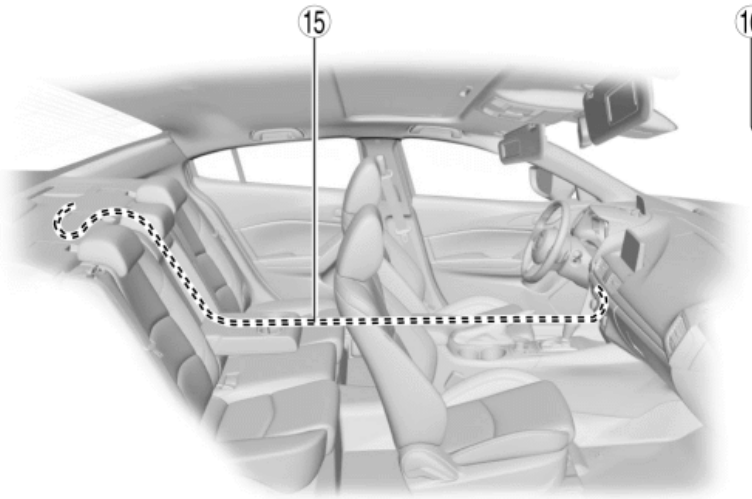

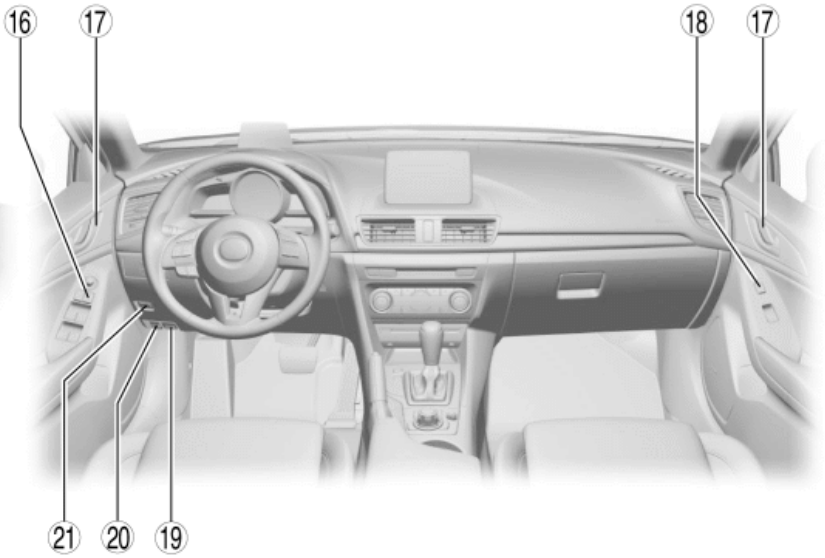

1	Hood latch (See **HOOD LATCH REMOVAL/INSTALLATION**.)
2	Hood release cable (See **HOOD RELEASE LEVER AND RELEASE CABLE REMOVAL/INSTALLATION**.)
3	Front outer handle (See **FRONT OUTER HANDLE REMOVAL/INSTALLATION**.)
4	Front door key cylinder (See **FRONT DOOR KEY CYLINDER REMOVAL/INSTALLATION**.) (See **FRONT DOOR KEY CYLINDER SWITCH INSPECTION**.)
5	Rear outer handle (See **REAR OUTER HANDLE REMOVAL/INSTALLATION**.)
6	Rear door latch and lock actuator (See **REAR DOOR LATCH AND LOCK ACTUATOR REMOVAL/INSTALLATION**.) (See **REAR DOOR LATCH AND LOCK ACTUATOR INSPECTION**.) (See **REAR DOOR LOCK ACTUATOR INSPECTION**.) (See **REAR DOOR LATCH SWITCH INSPECTION**.) (See **REAR DOOR LOCK-LINK SWITCH INSPECTION**.)
7	Front door latch and lock actuator (See **FRONT DOOR LATCH AND LOCK ACTUATOR REMOVAL/INSTALLATION**.) (See **FRONT DOOR LATCH AND LOCK ACTUATOR INSPECTION**.) (See **FRONT DOOR LOCK ACTUATOR INSPECTION**.) (See **FRONT DOOR LATCH SWITCH INSPECTION**.) (See **FRONT DOOR LOCK-LINK SWITCH INSPECTION**.)
8	Trunk lid opener switch (exterior) (See **TRUNK LID OPENER SWITCH REMOVAL/INSTALLATION**.) (See **TRUNK LID OPENER SWITCH INSPECTION**.)
9	Door lock striker (See **DOOR LOCK STRIKER REMOVAL/INSTALLATION**.)
10	Trunk lid striker (See **TRUNK LID LOCK STRIKER REMOVAL/INSTALLATION**.)
11	Trunk lid latch and release actuator (See **TRUNK LID LATCH AND RELEASE ACTUATOR REMOVAL/INSTALLATION**.) (See **TRUNK LID LATCH AND RELEASE ACTUATOR INSPECTION**.) (See **TRUNK LID RELEASE ACTUATOR INSPECTION**.) (See **TRUNK LID LATCH SWITCH INSPECTION**.)

12	Liftgate opener switch (See **LIFTGATE OPENER SWITCH REMOVAL/INSTALLATION**.) (See **LIFTGATE OPENER SWITCH INSPECTION**.)
13	Liftgate lock striker (See **LIFTGATE LOCK STRIKER REMOVAL/INSTALLATION**.)
14	Liftgate latch and lock actuator (See **LIFTGATE LATCH AND LOCK ACTUATOR REMOVAL/INSTALLATION**.) (See **LIFTGATE LATCH AND LOCK ACTUATOR INSPECTION**.) (See **LIFTGATE LOCK ACTUATOR INSPECTION**.) (See **LIFTGATE LATCH SWITCH INSPECTION**.)
15	Fuel-filler lid opener cable (See **FUEL-FILLER LID OPENER CABLE REMOVAL/INSTALLATION**.)
16	Door lock switch (driver's side) (See **DOOR LOCK SWITCH REMOVAL/INSTALLATION**.) (See **DOOR LOCK SWITCH INSPECTION**.)
17	Inner handle (See **INNER HANDLE REMOVAL/INSTALLATION**.)
18	Door lock switch (passenger's side) (See **DOOR LOCK SWITCH REMOVAL/INSTALLATION**.) (See **DOOR LOCK SWITCH INSPECTION**.)
19	Hood release lever (See **HOOD RELEASE LEVER AND RELEASE CABLE REMOVAL/INSTALLATION**.)
20	Fuel-filler lid opener lever (See **FUEL-FILLER LID OPENER AND LEVER REMOVAL/INSTALLATION**.)
21	Trunk lid opener switch (interior) (See **TRUNK LID OPENER SWITCH REMOVAL/INSTALLATION**.) (See **TRUNK LID OPENER SWITCH INSPECTION**.)

Advanced Keyless Entry System / Push Button Start System / Immobilizer System

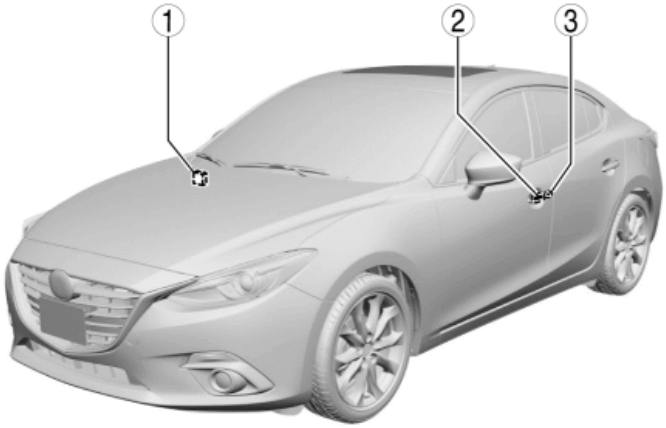

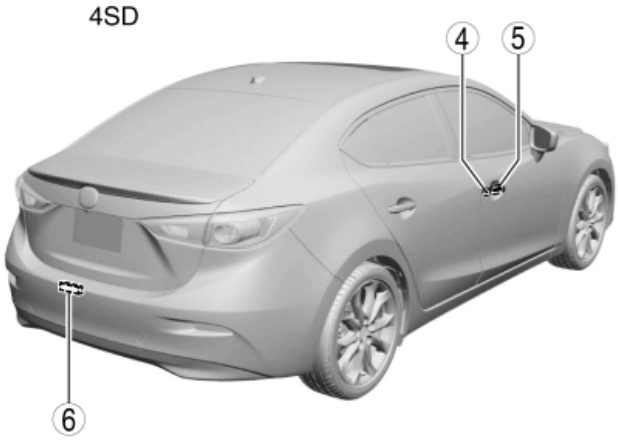

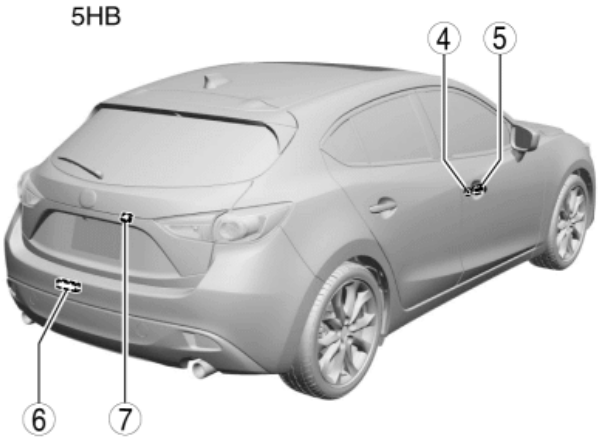

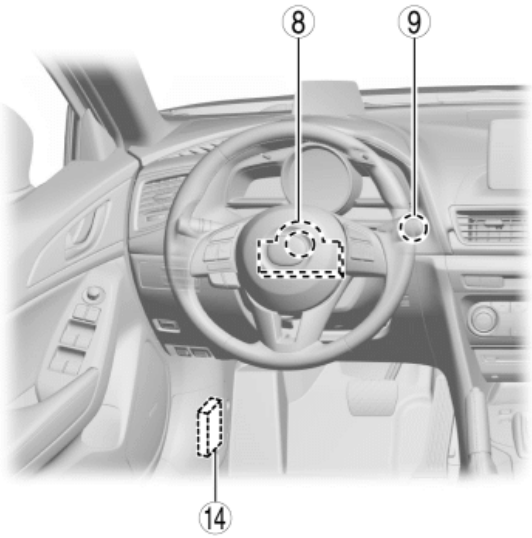

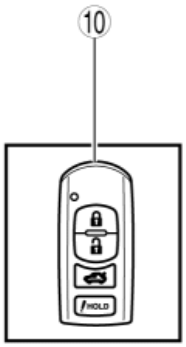

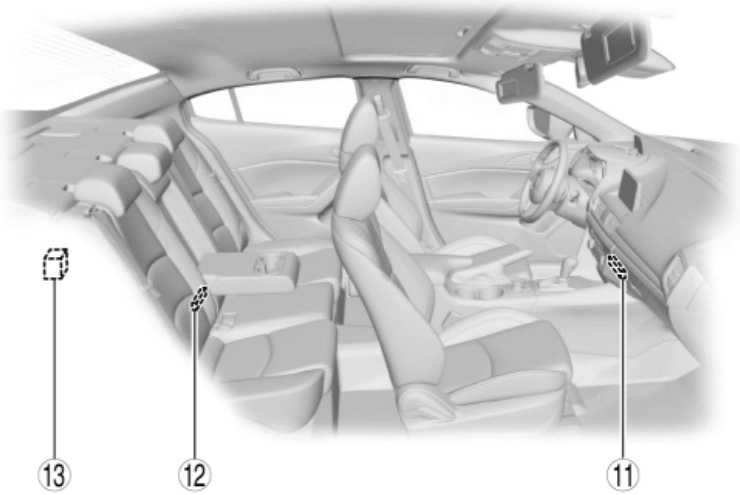

1	Keyless beeper (See **KEYLESS BEEPER REMOVAL/INSTALLATION**.) (See **KEYLESS BEEPER INSPECTION**.)
2	Keyless antenna (exterior, LF) (See **KEYLESS ANTENNA REMOVAL/INSTALLATION**.)
3	Request switch (LF) (See **REQUEST SWITCH REMOVAL/INSTALLATION**.)

	(See **REQUEST SWITCH INSPECTION**.)
4	Request switch (RF) (See **REQUEST SWITCH REMOVAL/INSTALLATION**.) (See **REQUEST SWITCH INSPECTION**.)
5	Keyless antenna (exterior, RF) (See **KEYLESS ANTENNA REMOVAL/INSTALLATION**.)
6	Keyless antenna (exterior, rear) (See **KEYLESS ANTENNA REMOVAL/INSTALLATION**.)
7	Request switch (liftgate) (See **REQUEST SWITCH REMOVAL/INSTALLATION**.) (See **REQUEST SWITCH INSPECTION**.)
8	Start stop unit (See **START STOP UNIT REMOVAL/INSTALLATION**.) (See **START STOP UNIT INSPECTION**.) (See **START STOP UNIT CONFIGURATION (USING READ/WRITE FUNCTION)**.) (See **START STOP UNIT CONFIGURATION (USING AS-BUILT DATA)**.) (See **SECURITY AND LOCKS PERSONALIZATION FEATURES SETTING PROCEDURE**.)
9	Push button start (See **PUSH BUTTON START REMOVAL/INSTALLATION**.) (See **PUSH BUTTON START INSPECTION**.)
10	Remote transmitter (See **REMOTE TRANSMITTER DISASSEMBLY/ASSEMBLY**.) (See **REMOTE TRANSMITTER ID CODE REGISTRATION**.) (See **CLEARING REMOTE TRANSMITTER**.) (See **REMOTE TRANSMITTER BATTERY VOLTAGE INSPECTION**.)
11	Keyless antenna (interior, front) (See **KEYLESS ANTENNA REMOVAL/INSTALLATION**.)
12	Keyless antenna (interior, rear) (See **KEYLESS ANTENNA REMOVAL/INSTALLATION**.)
13	Keyless receiver (See **KEYLESS RECEIVER REMOVAL/INSTALLATION**.) (See **KEYLESS RECEIVER INSPECTION**.)
14	LF control unit (See **LF CONTROL UNIT REMOVAL/INSTALLATION**.) (See **LF CONTROL UNIT INSPECTION**.)

Keyless entry system / Push Button Start System / Immobilizer system

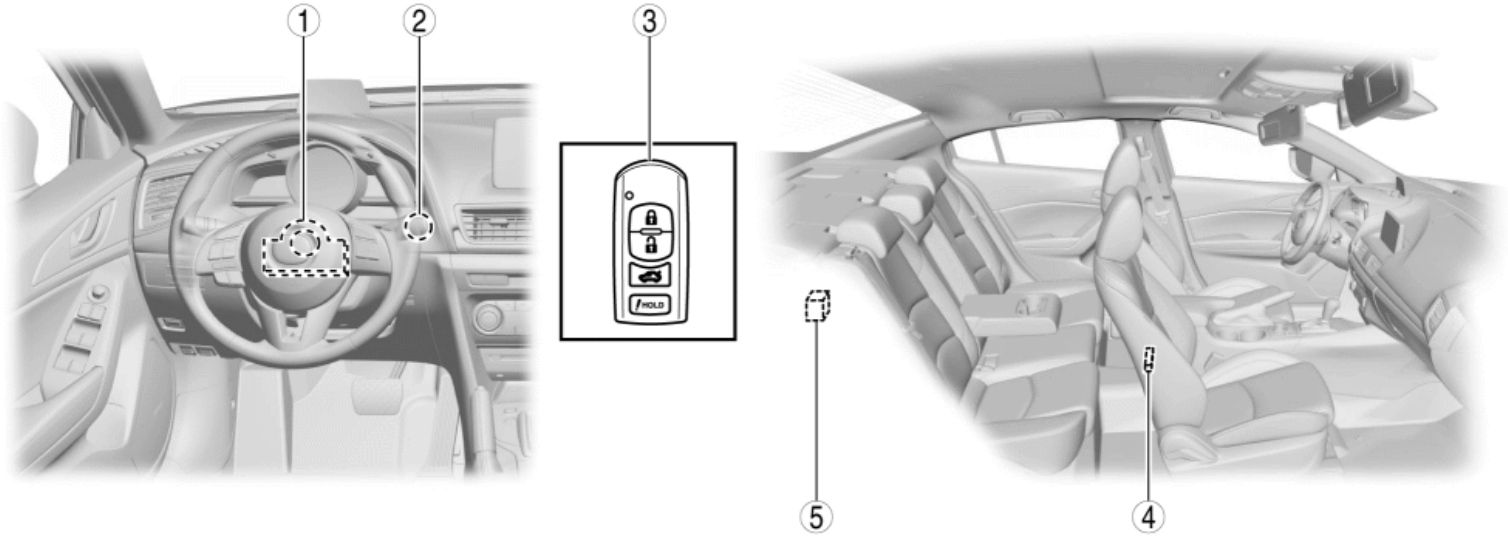

1	Start stop unit (See **START STOP UNIT REMOVAL/INSTALLATION**.) (See **START STOP UNIT INSPECTION**.) (See **START STOP UNIT CONFIGURATION (USING READ/WRITE FUNCTION)**.) (See **START STOP UNIT CONFIGURATION (USING AS-BUILT DATA)**.) (See **SECURITY AND LOCKS PERSONALIZATION FEATURES SETTING PROCEDURE**.)
2	Push button start (See **PUSH BUTTON START REMOVAL/INSTALLATION**.) (See **PUSH BUTTON START INSPECTION**.)
3	Remote transmitter (See **REMOTE TRANSMITTER DISASSEMBLY/ASSEMBLY**.) (See **REMOTE TRANSMITTER ID CODE REGISTRATION**.) (See **CLEARING REMOTE TRANSMITTER**.) (See **REMOTE TRANSMITTER BATTERY VOLTAGE INSPECTION**.)
4	Keyless antenna (center) (See **KEYLESS ANTENNA REMOVAL/INSTALLATION**.)
5	Keyless receiver (See **KEYLESS RECEIVER REMOVAL/INSTALLATION**.) (See **KEYLESS RECEIVER INSPECTION**.)

Theft-deterrent System

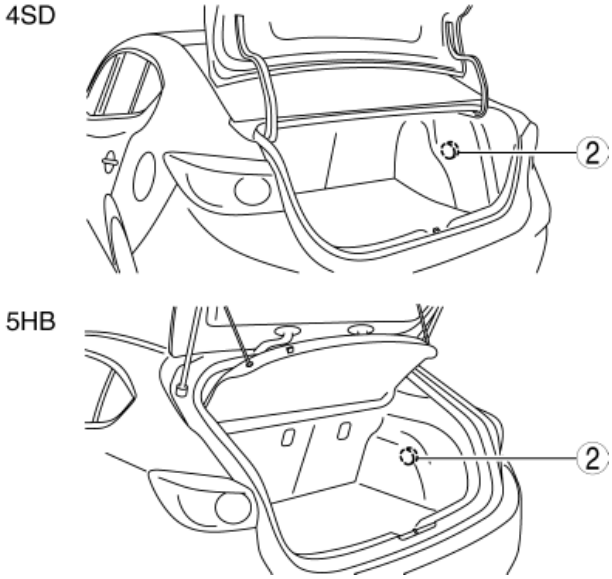

1	Hood latch switch (See **HOOD LATCH SWITCH INSPECTION**.)
2	Theft-deterrent horn (See **THEFT-DETERRENT HORN REMOVAL/INSTALLATION**.) (See **THEFT-DETERRENT HORN INSPECTION**.)

2014 - Mazda3 - Body and Accessories

FRONT OUTER HANDLE REMOVAL/INSTALLATION

1. Perform the front door glass preparation. (See **FRONT DOOR GLASS REMOVAL/INSTALLATION**.)

2. Disconnect the negative battery cable. (See **NEGATIVE BATTERY CABLE DISCONNECTION/CONNECTION [SKYACTIV-G 2.0, SKYACTIV-G 2.5]**.)

3. Remove the following parts:

   a. Front door trim (See **FRONT DOOR TRIM REMOVAL/INSTALLATION**.)

   b. Front door glass (See **FRONT DOOR GLASS REMOVAL/INSTALLATION**.)

   c. Front door module panel (See **FRONT DOOR MODULE PANEL REMOVAL/INSTALLATION**.)

   d. Front door key cylinder (See **FRONT DOOR KEY CYLINDER REMOVAL/INSTALLATION**.)

4. Disconnect the keyless antenna connector (With advanced keyless entry system).

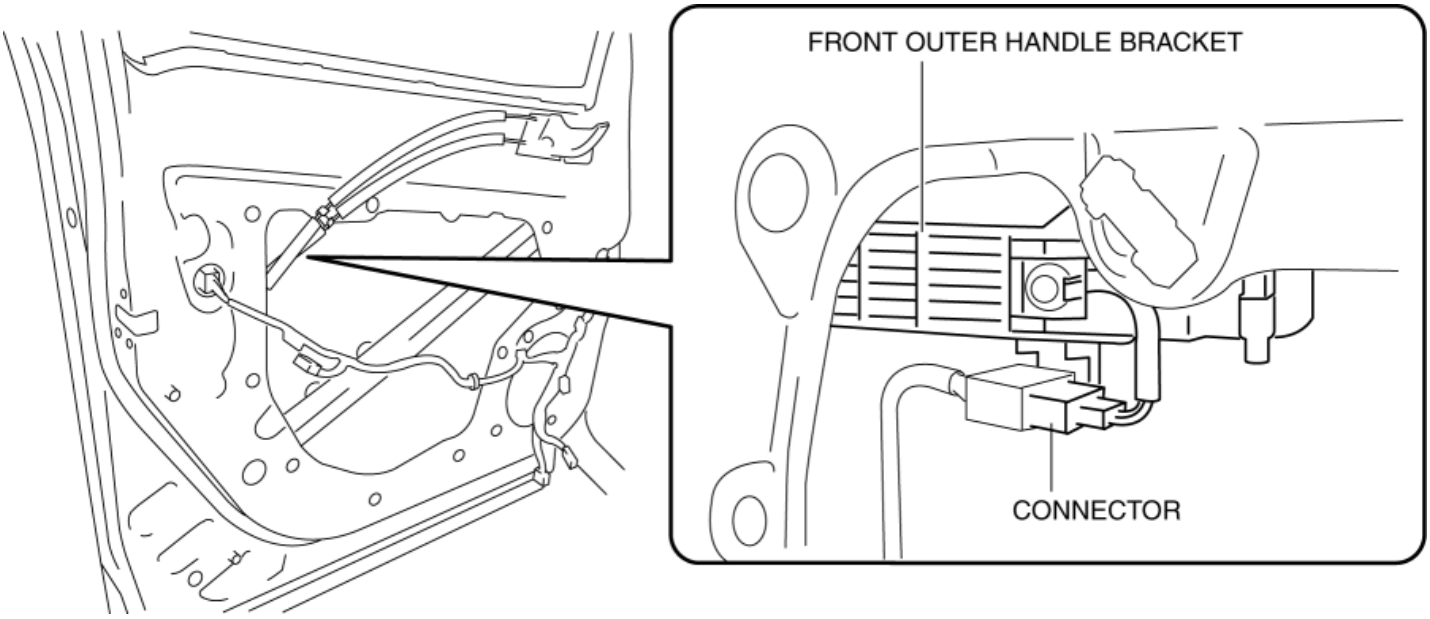

5. While pulling the front outer handle bracket pin in the direction of arrow (1) shown in the figure, pull the front outer handle in the direction of arrow (2) to detach the front outer handle bracket pin and the front outer handle.

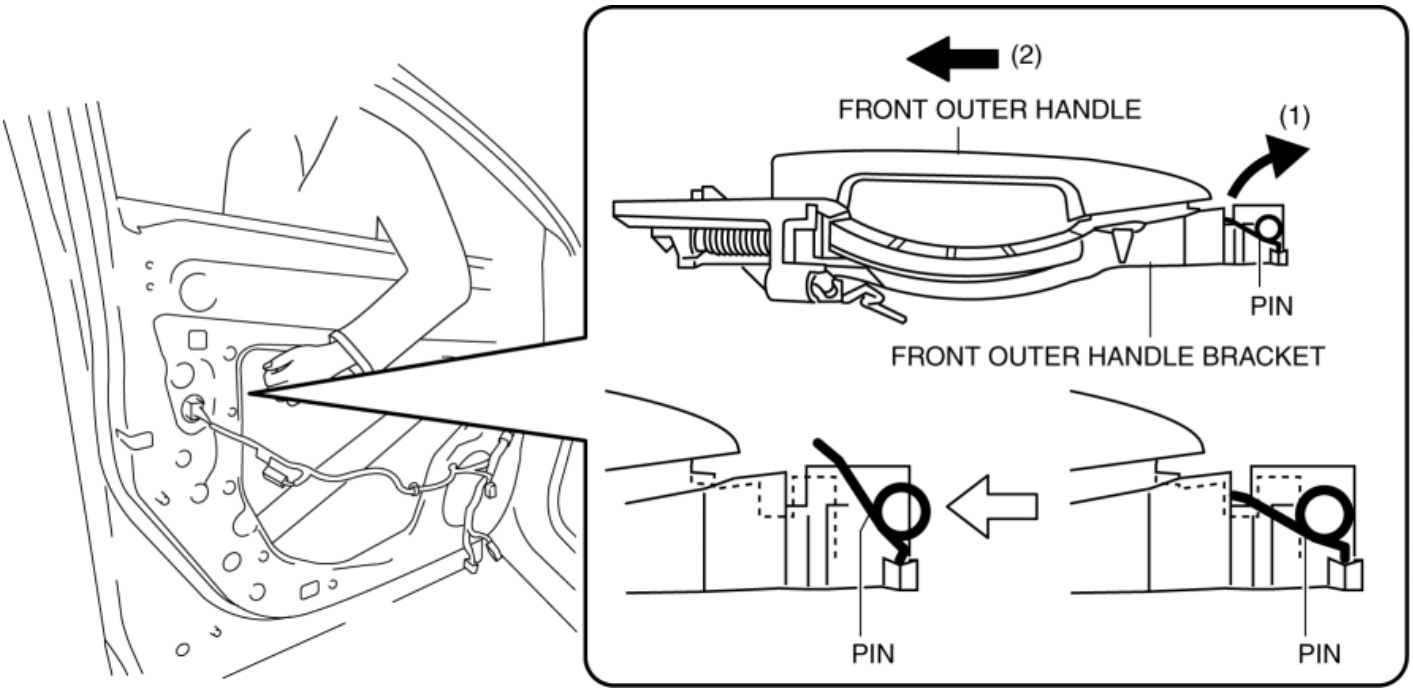

6. Remove the front outer handle in the direction of the arrow shown in the figure.

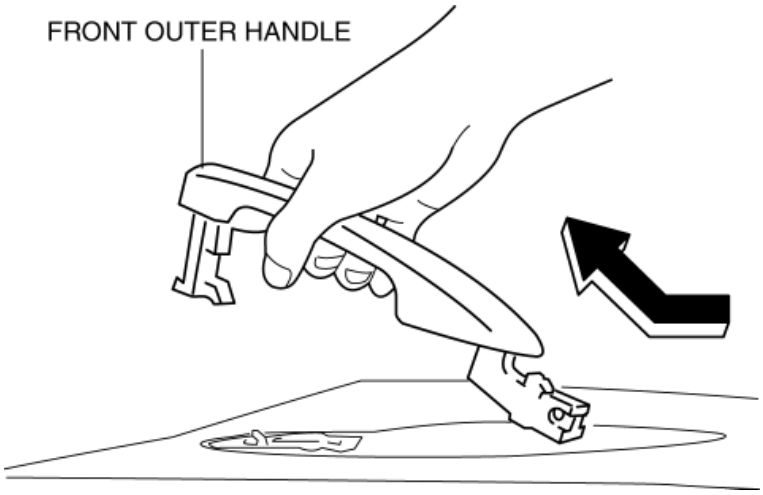

7. While pressing the tabs of the clip in the direction of arrow (1) shown in the figure, press it in the direction of arrow (2) to detach the connector tabs from the front outer handle bracket (With advanced keyless entry system).

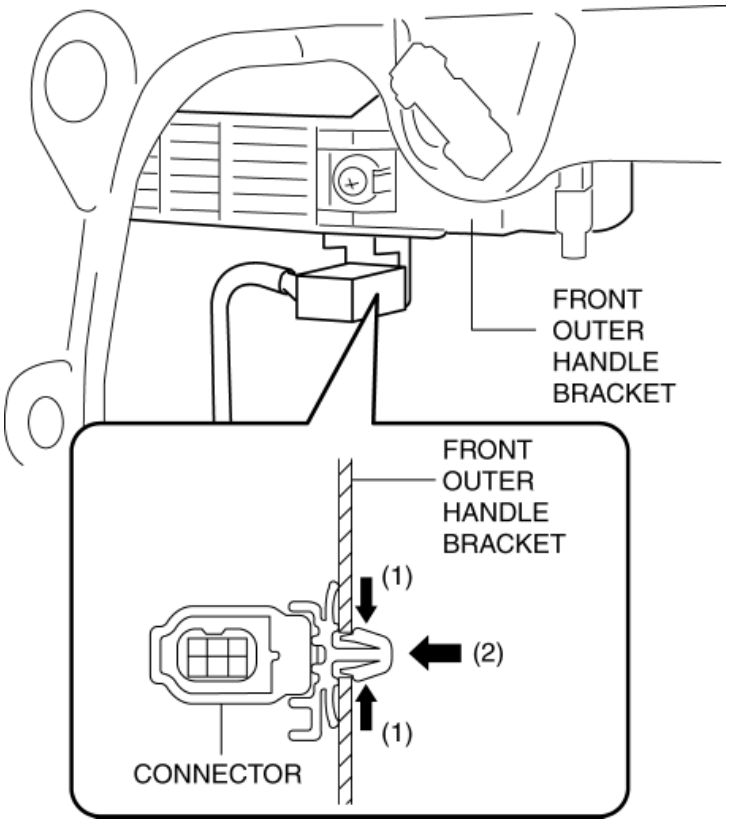

8. Loosen the screw securing the front outer handle bracket.

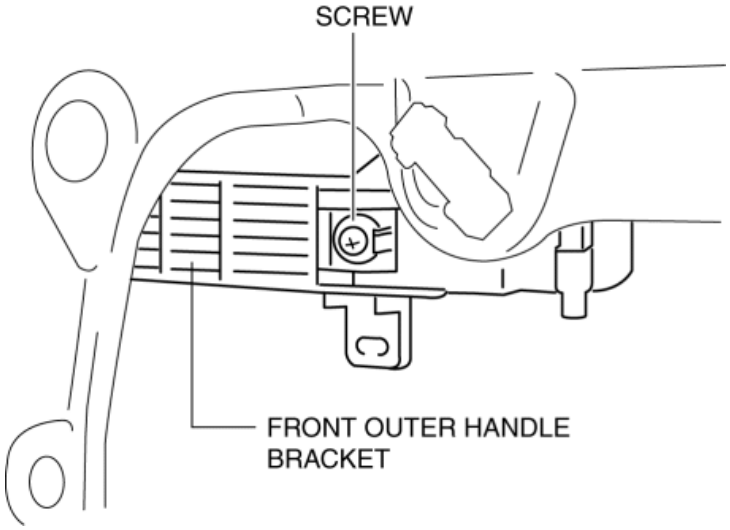

NOTE:

- The screw cannot be removed because the front outer handle bracket has a stopper which prevents the screw from falling.

9. Pull the front outer handle bracket in the direction of arrow (1) shown in the figure and detach the front outer handle bracket hooks from the body.

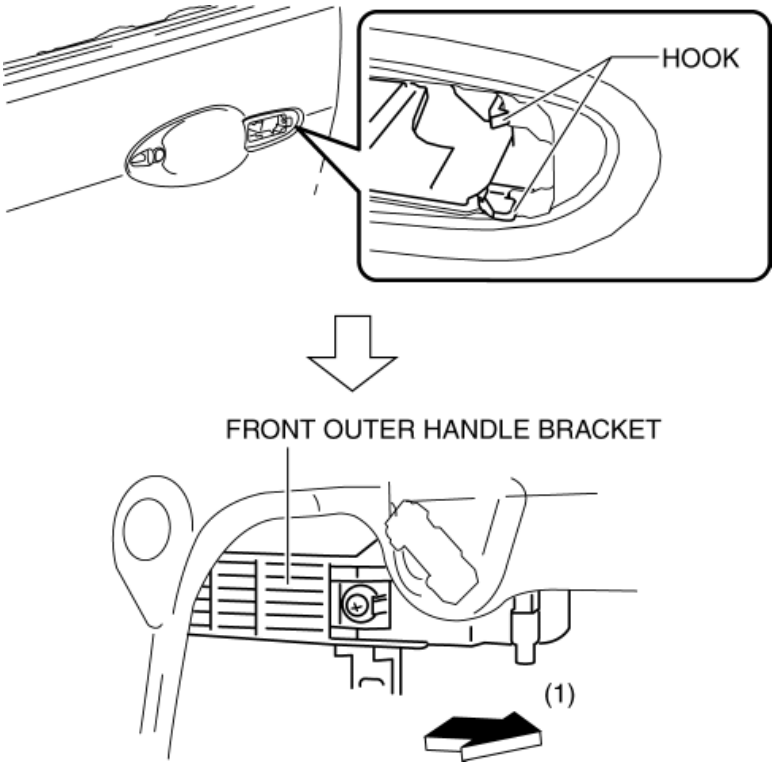

10. Lift the front outer handle bracket in the direction of arrow (2) shown in the figure to pull the rod out of the rod holder. (See **Front Outer Handle Bracket Installation Note**.)

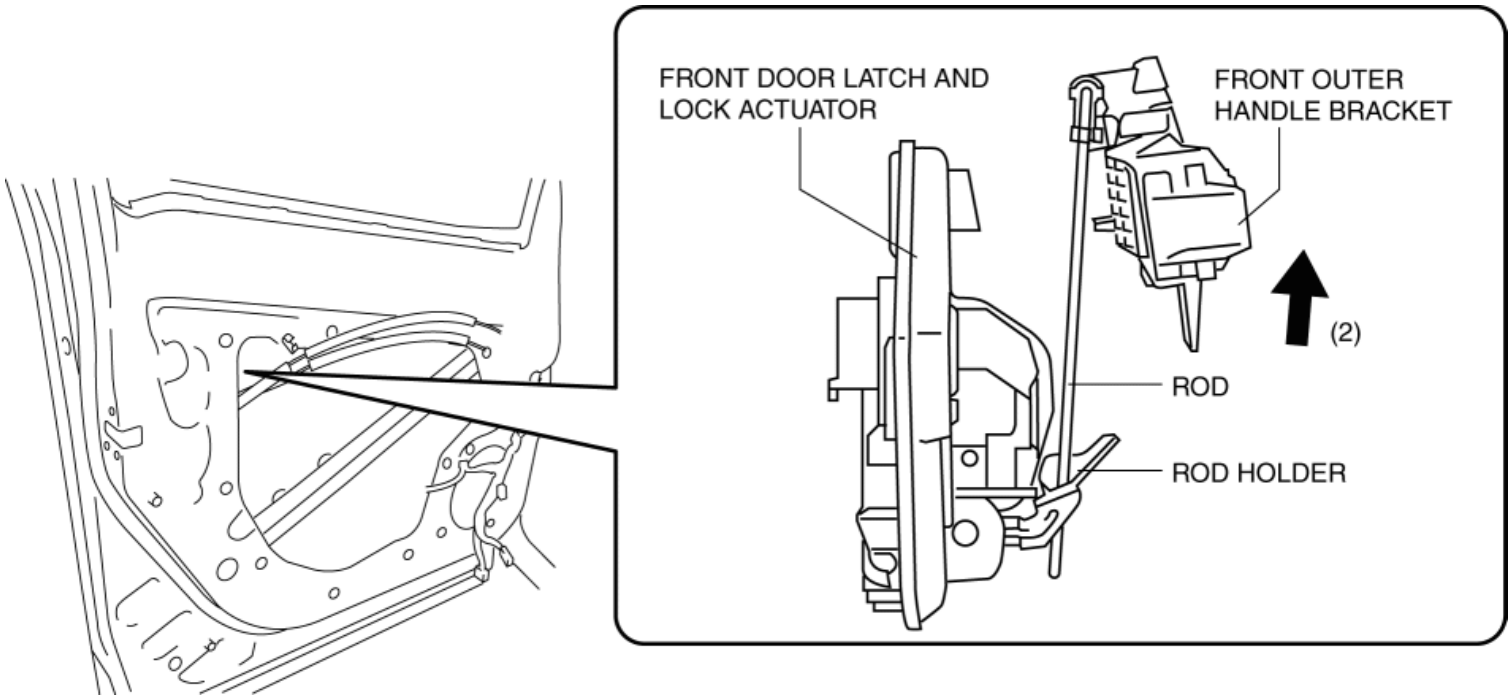

11. Remove the front outer handle bracket.

12. Remove the handle seat from the body.

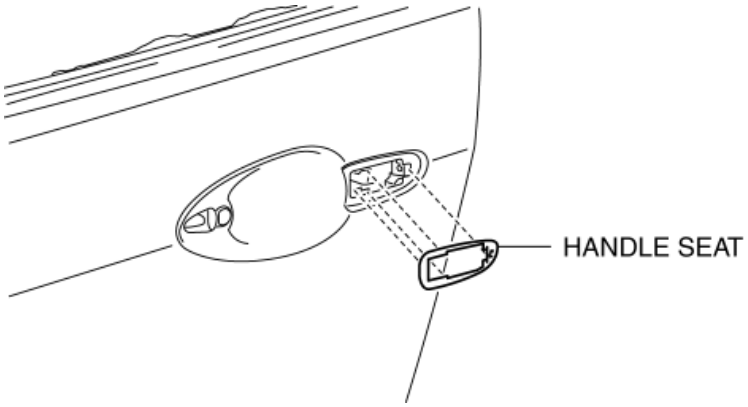

13. Install in the reverse order of removal.

Front Outer Handle Bracket Installation Note

- To assure that the rod is inserted into the rod holder hole, verify that the there is no excessive play.

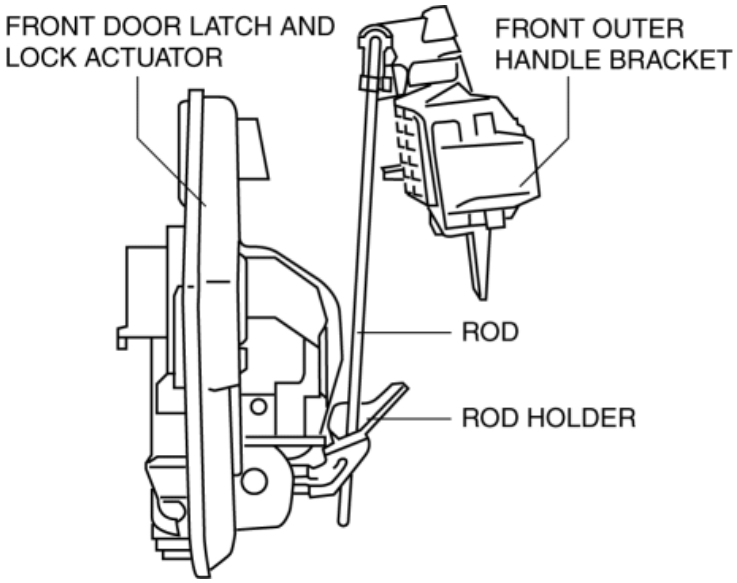

2014 - Mazda3 - Body and Accessories

REAR OUTER HANDLE REMOVAL/INSTALLATION

1. Disconnect the negative battery cable. (See **NEGATIVE BATTERY CABLE DISCONNECTION/CONNECTION [SKYACTIV-G 2.0, SKYACTIV-G 2.5]**.)

2. Remove the rear door trim. (See **REAR DOOR TRIM REMOVAL/INSTALLATION**.)

3. Remove service hole cover No. 1 in the direction of the arrow shown in the figure.

CAUTION:

- When removing service hole cover No.1, remove it while gradually stripping the butyl rubber. Otherwise service hole cover No.1 may be deformed.

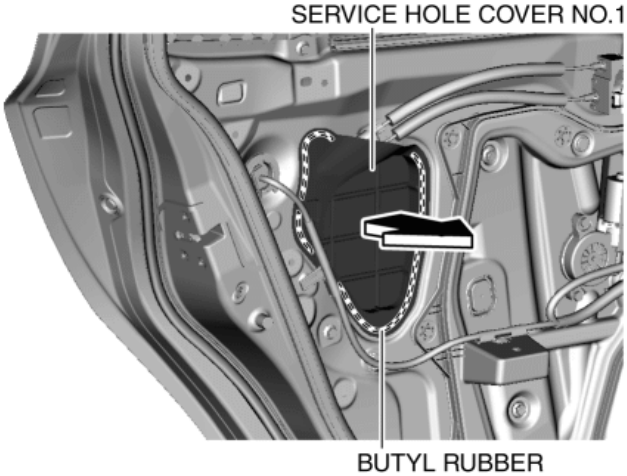

4. Remove the service hole cover.

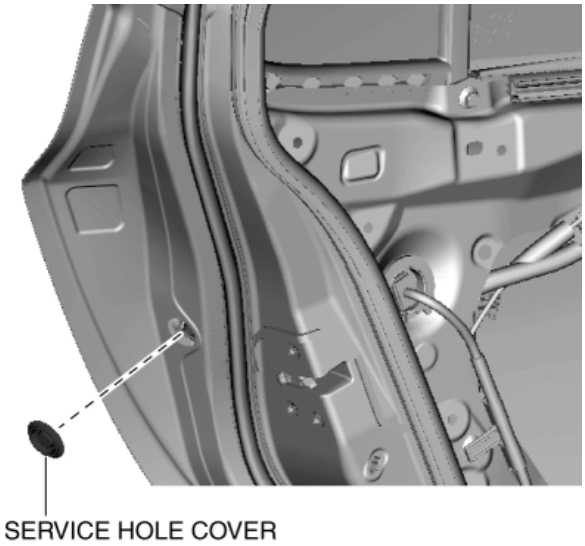

5. Loosen the screw from the rear outer handle bracket.

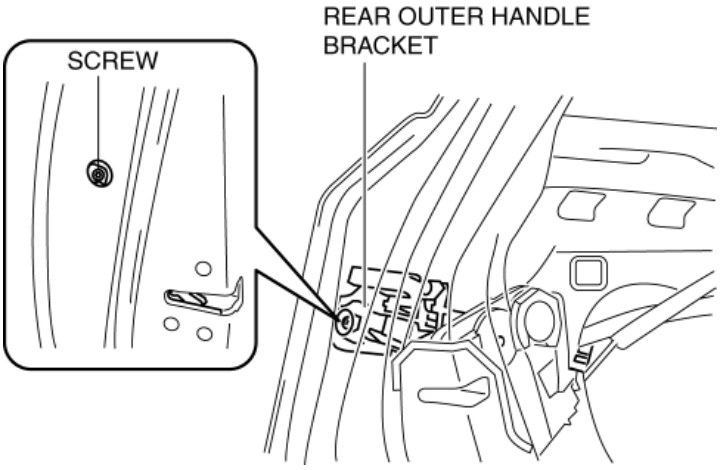

NOTE:

- The screw cannot be removed because the rear outer handle bracket has a stopper which prevents the screw from falling.

6. While pressing the rear outer handle bracket tab in the direction of arrow (1) shown in the figure, pull the outer handle garnish in the direction of arrow (2) to detach the rear outer handle bracket from the outer handle garnish.

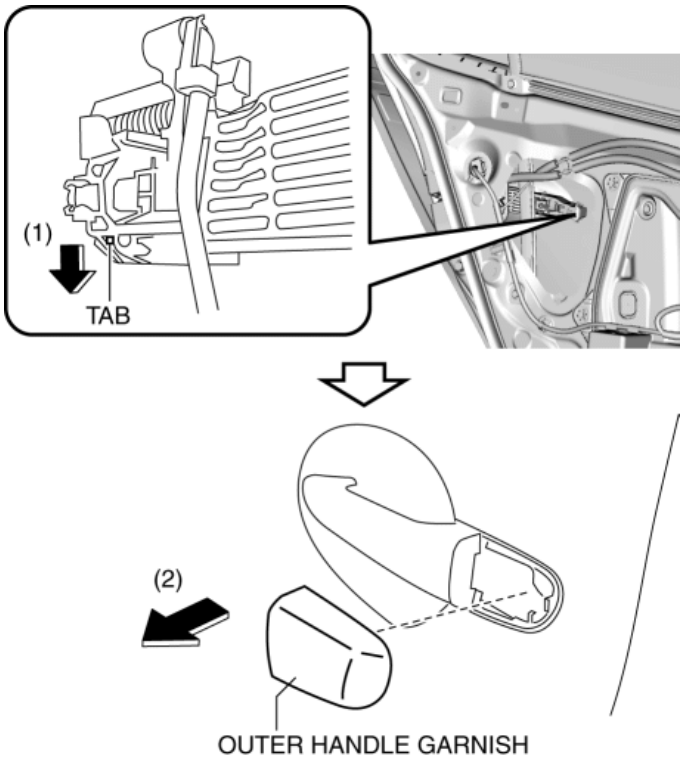

7. Remove the outer handle garnish from the rear outer handle bracket.

8. While pulling the rear outer handle bracket pin in the direction of arrow (3) shown in the figure, pull the rear outer handle in the direction of arrow (4) to detach the rear outer handle bracket pin from the rear outer handle.

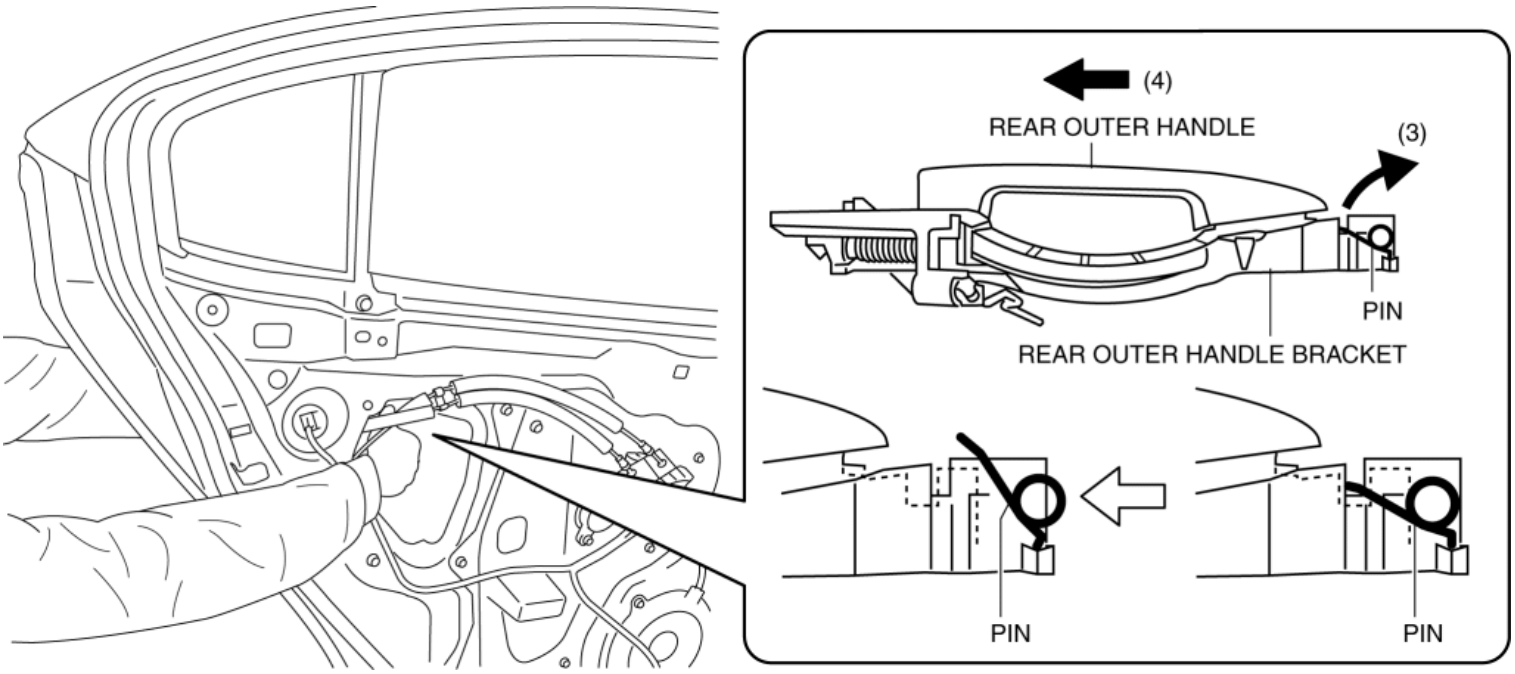

9. Remove the rear outer handle in the direction of the arrow shown in the figure.

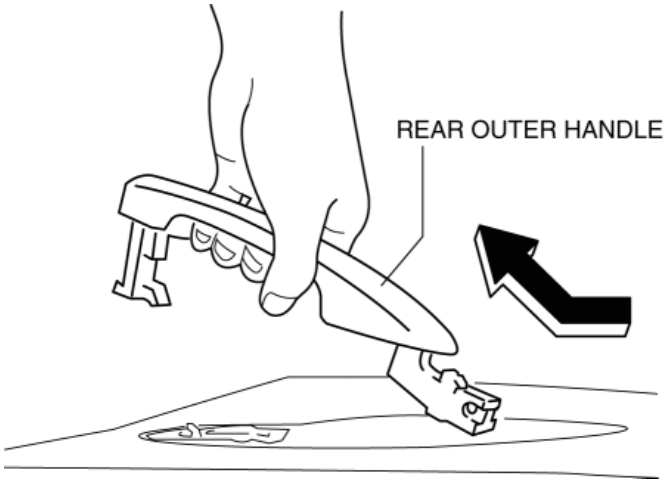

10. Loosen the screw from the rear outer handle bracket.

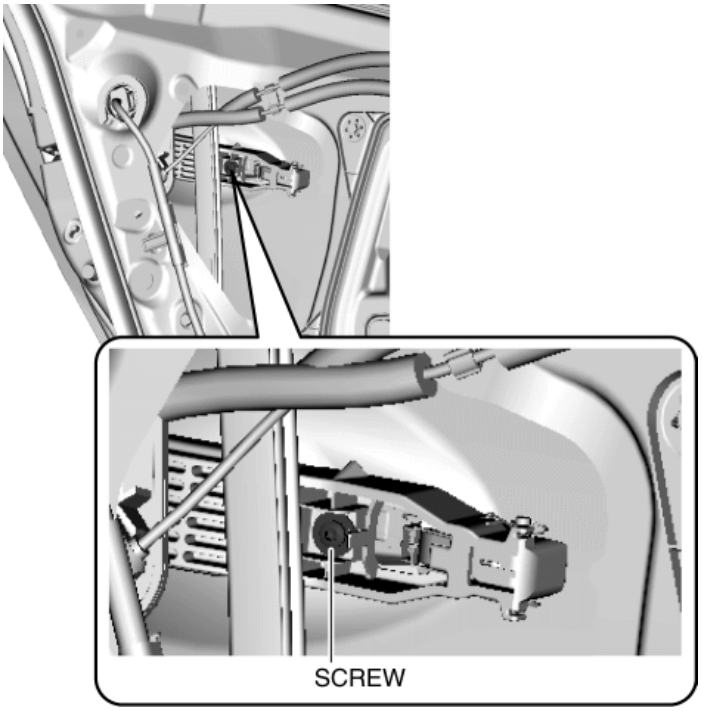

NOTE:

- The screw cannot be removed because the rear outer handle bracket has a stopper which prevents the screw from falling.

11. Pull the rear outer handle bracket in the direction of arrow (5) shown in the figure and detach the rear outer handle bracket hooks from the body.

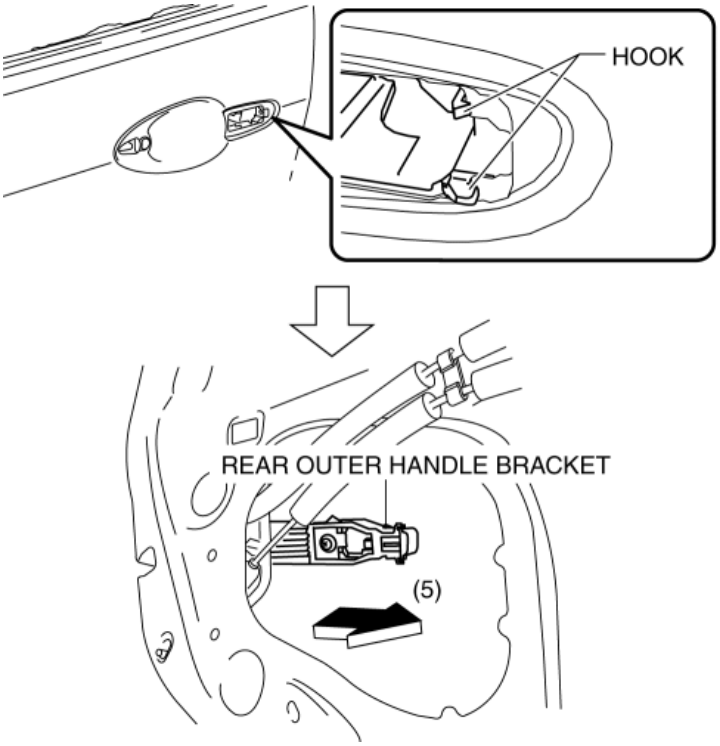

12. Lift the rear outer handle bracket in the direction of arrow (6) shown in the figure to pull the rod out of the rod holder. (See **Rear Outer Handle Bracket Installation Note**.)

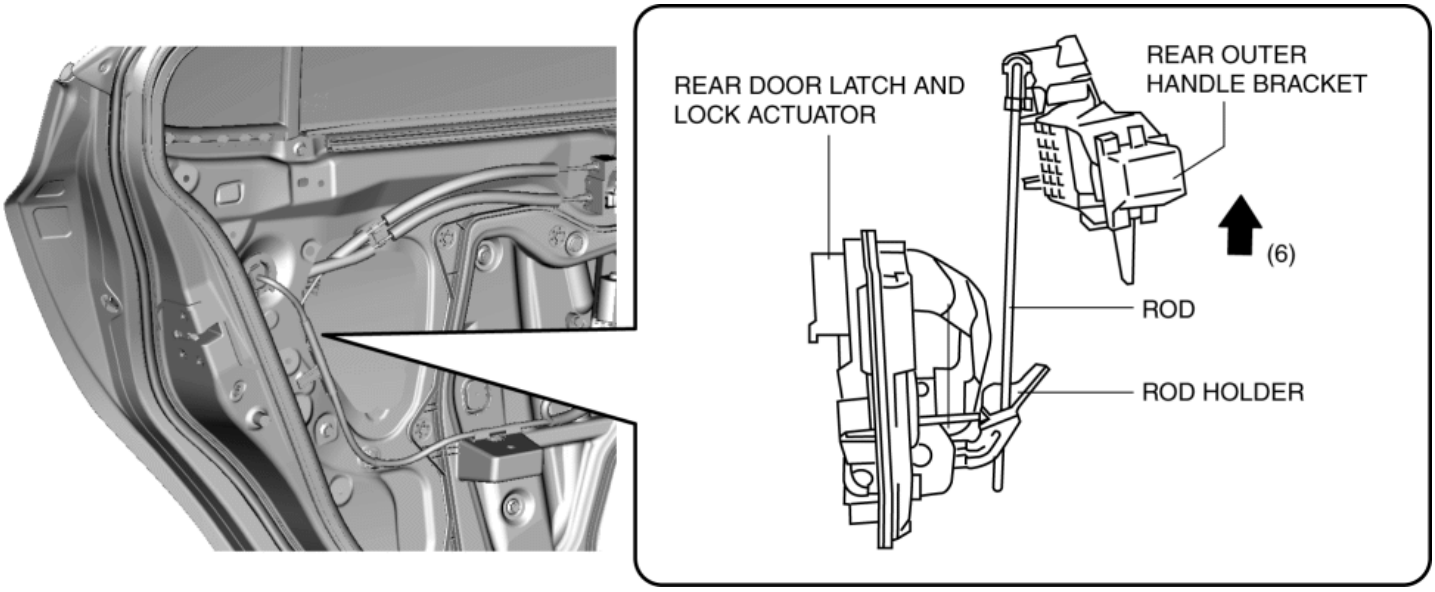

13. Remove the rear outer handle bracket.
14. Remove the handle seat from the body.

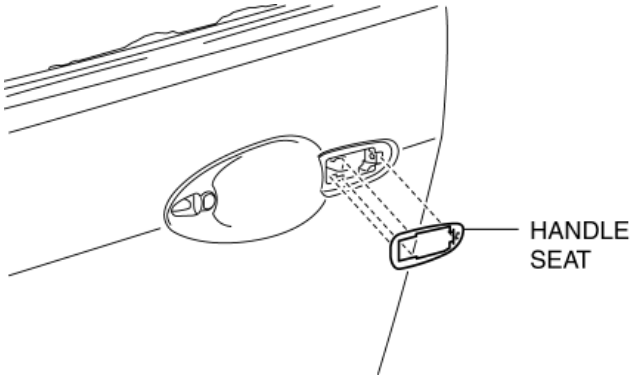

15. Install in the reverse order of removal.

Rear Outer Handle Bracket Installation Note

- To assure that the rod is inserted into the rod holder hole, verify that the there is no excessive play.

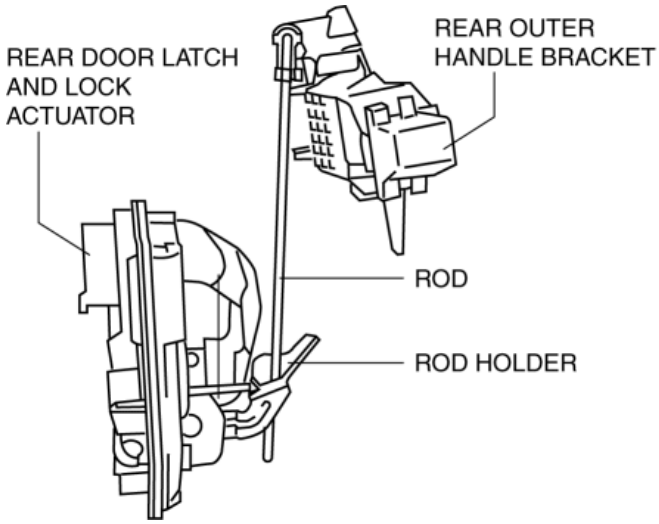

2014 - Mazda3 - Body and Accessories

INNER HANDLE REMOVAL/INSTALLATION

Front Inner Handle

1. Disconnect the negative battery cable. (See **NEGATIVE BATTERY CABLE DISCONNECTION/CONNECTION [SKYACTIV-G 2.0, SKYACTIV-G 2.5]**.)
2. Remove the front door trim. (See **FRONT DOOR TRIM REMOVAL/INSTALLATION**.)
3. Disconnect the door lock knob cable and the inner handle cable from the front inner handle.

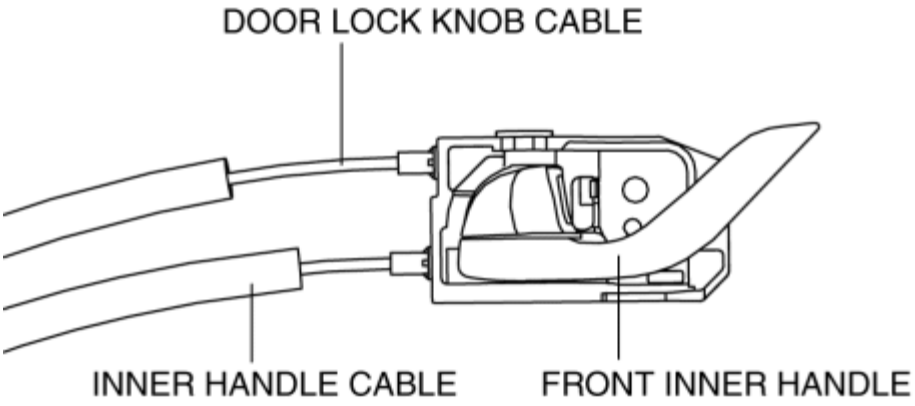

4. Install in the reverse order of removal.

Rear Inner Handle

1. Disconnect the negative battery cable. (See **NEGATIVE BATTERY CABLE DISCONNECTION/CONNECTION [SKYACTIV-G 2.0, SKYACTIV-G 2.5]**.)
2. Remove the rear door trim. (See **REAR DOOR TRIM REMOVAL/INSTALLATION**.)
3. Disconnect the door lock knob cable and the inner handle cable from the rear inner handle.

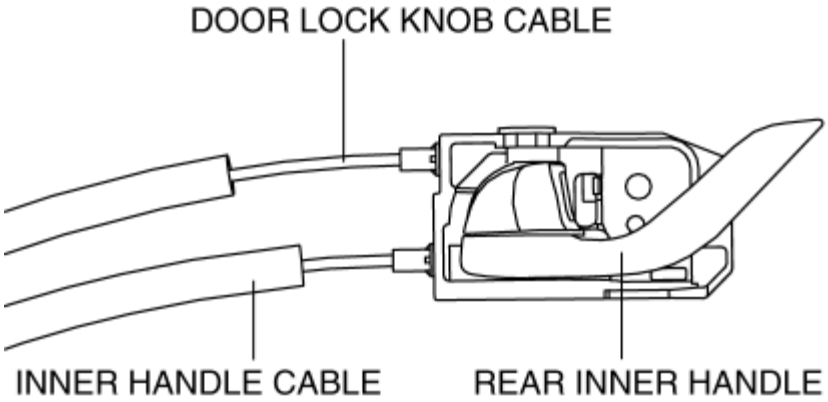

4. Install in the reverse order of removal.

2014 - Mazda3 - Body and Accessories

DOOR LOCK SWITCH REMOVAL/INSTALLATION

Driver's Side

NOTE:

- The driver's side door lock switch cannot be removed as a single unit because it is built into the power window main switch. If the driver's side door lock switch is replaced, replace the power window main switch. (See **POWER WINDOW MAIN SWITCH REMOVAL/INSTALLATION**.)

Passenger's Side

1. Disconnect the negative battery cable. (See **NEGATIVE BATTERY CABLE DISCONNECTION/CONNECTION [SKYACTIV-G 2.0, SKYACTIV-G 2.5]**.)

2. Remove the power window subswitch cover. (See **POWER WINDOW SUBSWITCH REMOVAL/INSTALLATION**.)

3. While pulling the power window subswitch cover in the direction of arrow (1) shown in the figure, pull the door lock switch in the direction of arrow (2) shown in the figure, and detach the door lock switch tabs from the power window subswitch cover.

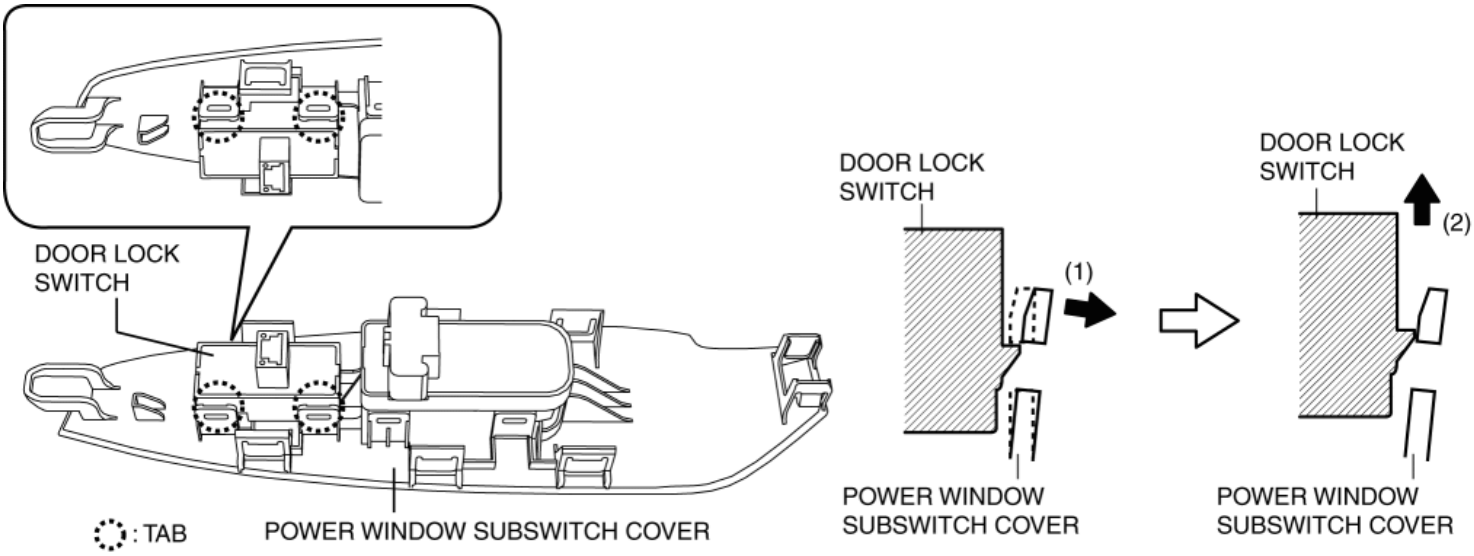

4. Detach all of the door lock switch tabs from the power window switch cover and remove the door lock switch.

5. Install in the reverse order of removal.

2014 - Mazda3 - Body and Accessories

DOOR LOCK SWITCH INSPECTION

Driver's Side

1. Disconnect the negative battery cable. (See **NEGATIVE BATTERY CABLE DISCONNECTION/CONNECTION [SKYACTIV-G 2.0, SKYACTIV-G 2.5]**.)
2. Remove the door lock switch. (See **POWER WINDOW MAIN SWITCH REMOVAL/INSTALLATION**.)
3. Verify that the continuity is as indicated in the table.

○—○ : Continuity ○-/\/\/-○ : Resistance

Position	Terminal	
	2A	2M
Lock	○—R—○	
Unlock	○———	———○

R: **950—1,050 ohms**

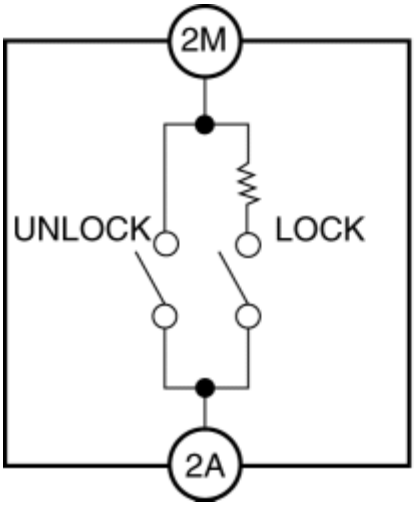

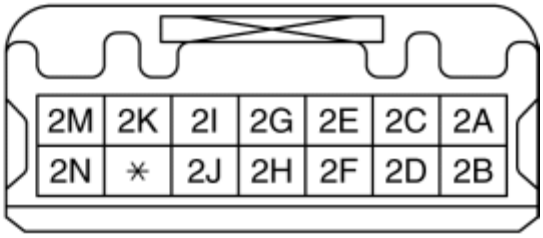

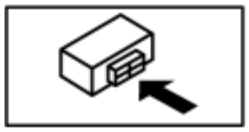

- If the continuity is not as indicated in the table, replace the door lock switch.

Passenger's Side

1. Disconnect the negative battery cable. (See **NEGATIVE BATTERY CABLE DISCONNECTION/CONNECTION [SKYACTIV-G 2.0, SKYACTIV-G 2.5]**.)

2. Remove the power window subswitch cover. (See **POWER WINDOW SUBSWITCH REMOVAL/INSTALLATION**.)

3. Remove the door lock switch. (See **DOOR LOCK SWITCH REMOVAL/INSTALLATION**.)

4. Verify that the continuity is as indicated in the table.

: Continuity : Resistance

Position	Terminal	
	C	D
Lock	R	
Unlock		

R: **950—1,050 ohms**

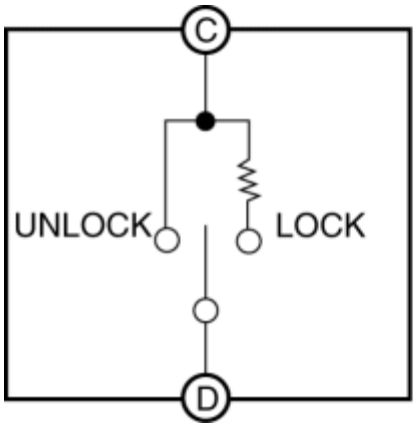

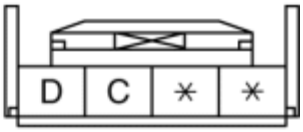

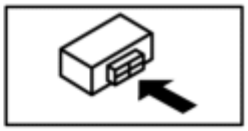

- If not as indicated in the table, replace the door lock switch.

2014 - Mazda3 - Body and Accessories

HOOD LATCH REMOVAL/INSTALLATION

1. Open the hood.

2. Disconnect the negative battery cable. (See **NEGATIVE BATTERY CABLE DISCONNECTION/CONNECTION [SKYACTIV-G 2.0, SKYACTIV-G 2.5]**.)

3. Remove the following parts:

   a. Set plate (See **SET PLATE REMOVAL/INSTALLATION**.)

   b. Front bumper (See **FRONT BUMPER REMOVAL/INSTALLATION**.)

   c. Front combination light (See **FRONT COMBINATION LIGHT REMOVAL/INSTALLATION**.)

   d. Shroud upper member (See **SHROUD UPPER MEMBER REMOVAL/INSTALLATION**.)

   e. Crash zone sensor cover (See **CRASH ZONE SENSOR REMOVAL/INSTALLATION [STANDARD DEPLOYMENT CONTROL SYSTEM]**.)

4. Insert a tape-wrapped flathead screwdriver into the position shown in the figure.

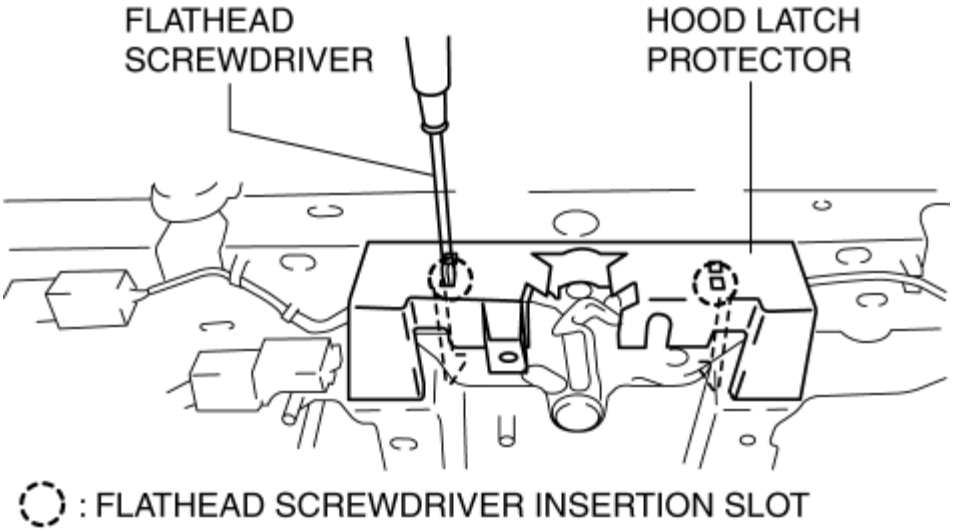

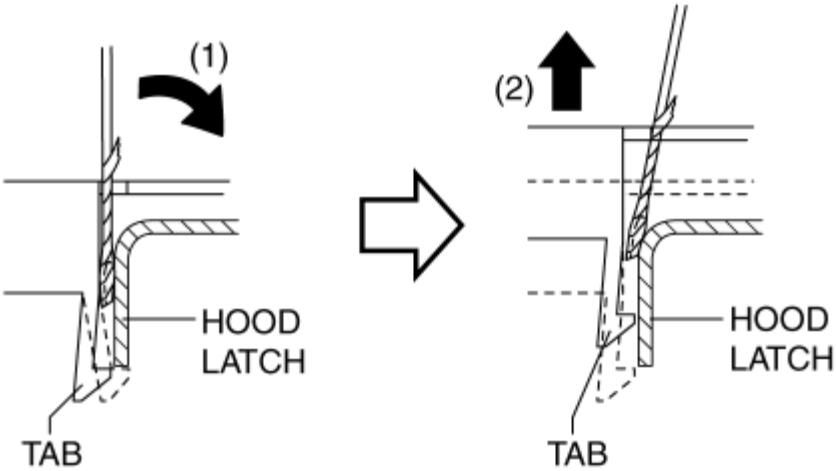

5. Move the tape-wrapped flathead screwdriver in the direction of arrow (1) shown in the figure to press the hood latch protector tab, and lift the tab up in the direction of arrow (2) and detach its tab from the hood latch.

6. Detach all the hood latch protector tabs from the hood latch and remove the hood latch protector.

7. While pressing the tabs of the clip in the direction of arrow (3) shown in the figure, press it in the direction of arrow (4) to detach the connector tabs from the body.

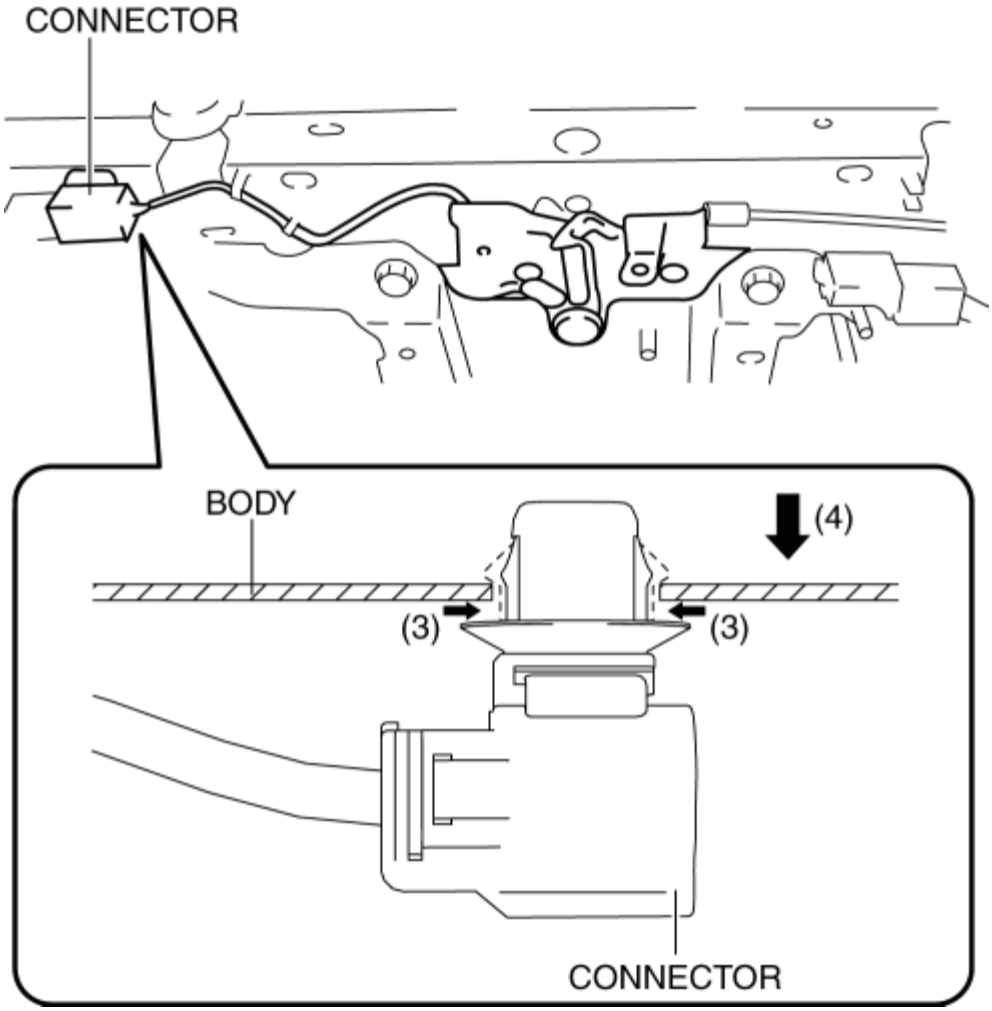

8. Remove the connector antenna from the body.

9. Disconnect the connector.

10. Disconnect the hood release cable.

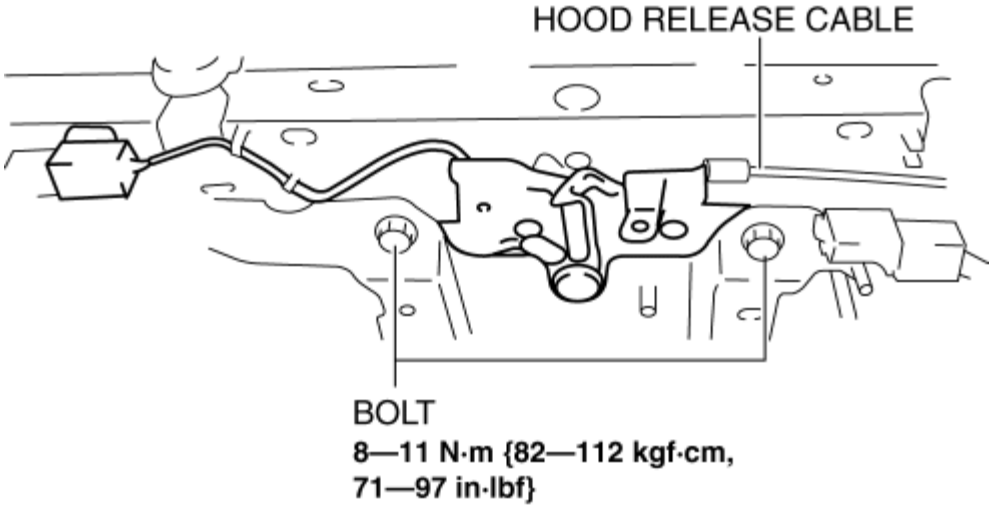

11. Remove the bolts.

12. Remove the hood latch.

13. Install in the reverse order of removal.

14. Adjust the hood. (See **HOOD ADJUSTMENT**.)

2014 - Mazda3 - Body and Accessories

HOOD RELEASE LEVER AND RELEASE CABLE REMOVAL/INSTALLATION

Hood Release Lever

1. While pulling the hood release lever, insert a tape-wrapped flathead screwdriver into the position shown in the figure.

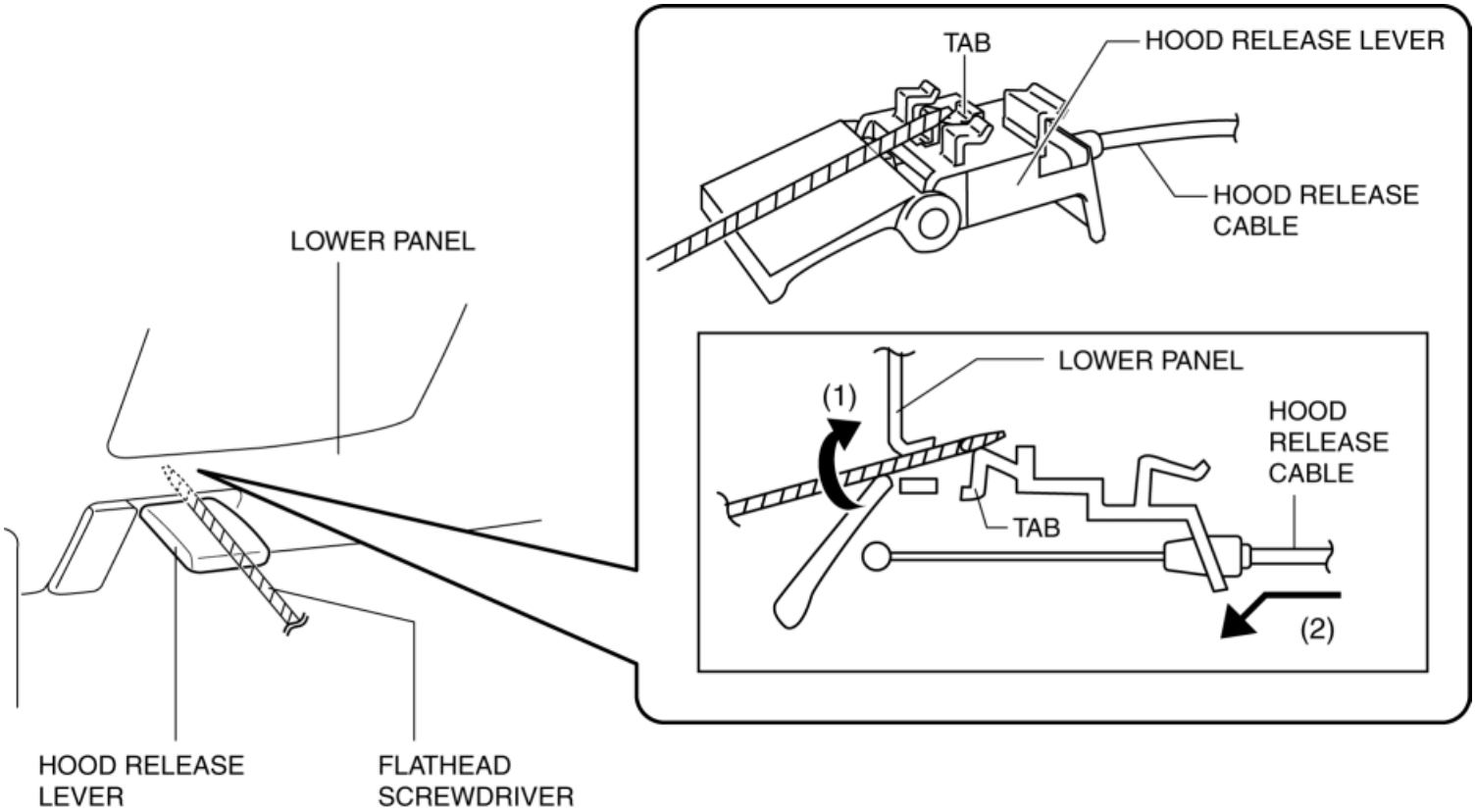

2. Move the tape-wrapped flathead screwdriver in the direction of arrow (1) shown in the figure to press the tab, and pull the hood release cable in the direction of arrow (2) to detach the hood release lever from the lower panel.

CAUTION:

- Remove the hood release lever while being careful not to damage the hood release cable with the flathead screwdriver.

3. Pull the hood release lever to remove it from the lower panel.

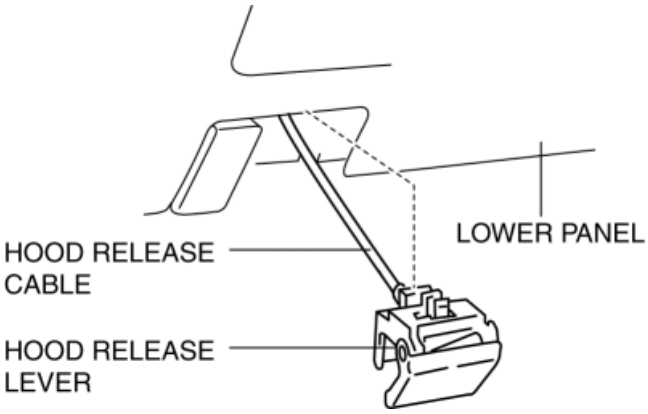

4. Disconnect the hood release cable from the hood release lever.

5. Install in the reverse order of removal.

Hood Release Cable

1. Disconnect the negative battery cable. (See **NEGATIVE BATTERY CABLE DISCONNECTION/CONNECTION [SKYACTIV-G 2.0, SKYACTIV-G 2.5]**.)

2. Remove the following parts:

   a. Set plate (See **SET PLATE REMOVAL/INSTALLATION**.)

   b. Front bumper (See **FRONT BUMPER REMOVAL/INSTALLATION**.)

   c. Front combination light (See **FRONT COMBINATION LIGHT REMOVAL/INSTALLATION**.)

   d. Shroud upper member (See **SHROUD UPPER MEMBER REMOVAL/INSTALLATION**.)

   e. Front mudguard (Driver's side) (See **MUDGUARD REMOVAL/INSTALLATION**.)

   f. Front fender insulator No.1 (See **FRONT FENDER INSULATOR No.1 REMOVAL/INSTALLATION**.)

   g. Hood release lever (See **Hood Release Lever**.)

3. Remove the hood latch protector. (See **HOOD LATCH REMOVAL/INSTALLATION**.)

4. Disconnect the hood release cable from the hood latch.

5. Remove the hood release cable from clip.

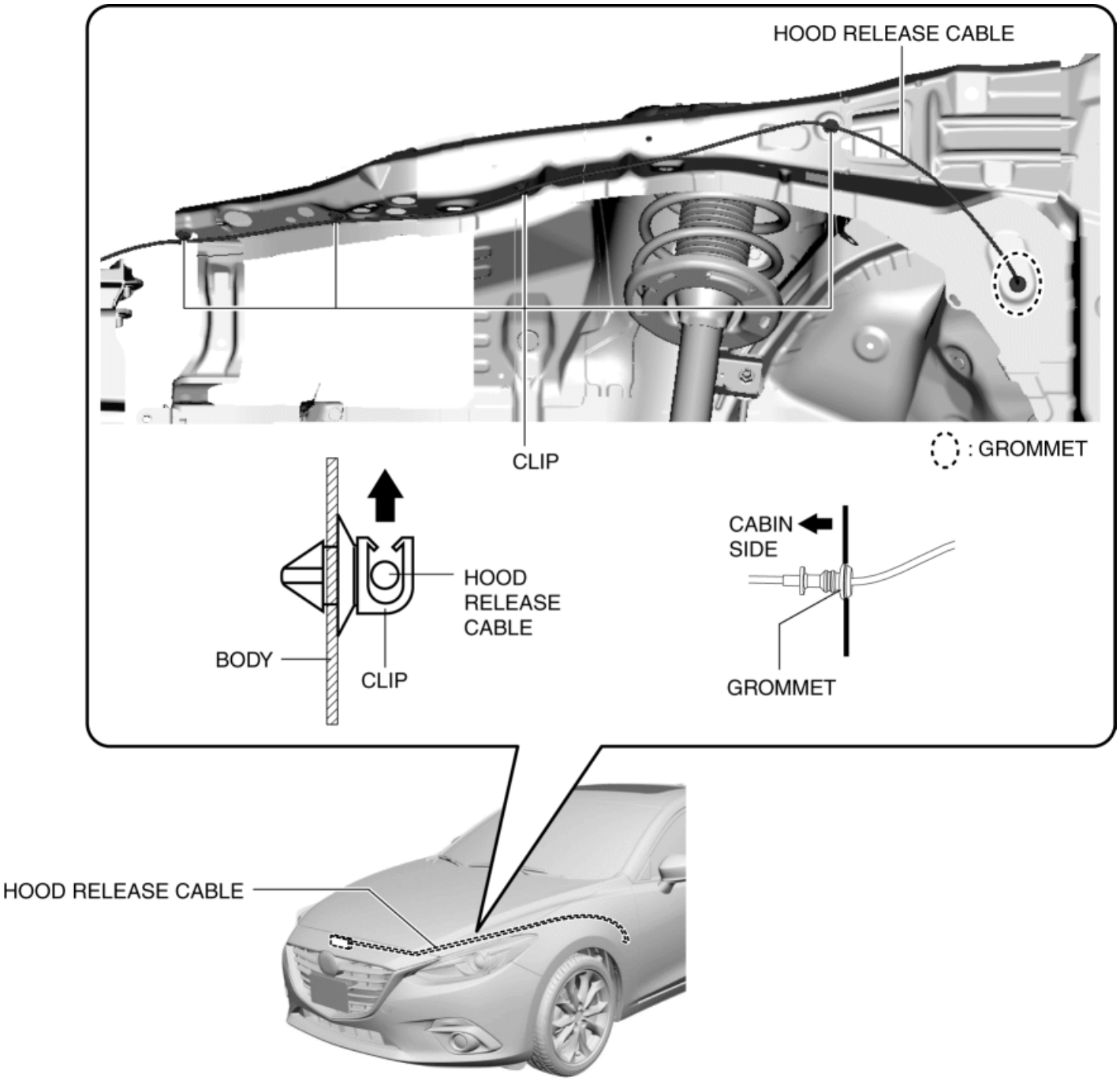

6. Press the grommet into the cabin side.
7. Remove the hood release cable from the cabin side.
8. Install in the reverse order of removal.

2014 - Mazda3 - Body and Accessories

HOOD LATCH SWITCH INSPECTION

1. Disconnect the negative battery cable. (See **NEGATIVE BATTERY CABLE DISCONNECTION/CONNECTION [SKYACTIV-G 2.0, SKYACTIV-G 2.5]**.)

2. Remove the following parts:

   a. Set plate (See **SET PLATE REMOVAL/INSTALLATION**.)

   b. Front bumper (See **FRONT BUMPER REMOVAL/INSTALLATION**.)

   c. Front combination light (See **FRONT COMBINATION LIGHT REMOVAL/INSTALLATION**.)

   d. Shroud upper member (See **SHROUD UPPER MEMBER REMOVAL/INSTALLATION**.)

   e. Crash zone sensor cover (See **CRASH ZONE SENSOR REMOVAL/INSTALLATION [STANDARD DEPLOYMENT CONTROL SYSTEM]**.)

3. Disconnect the hood latch switch connector. (See **HOOD LATCH REMOVAL/INSTALLATION**.)

4. Verify that the continuity is as indicated in the table.

NOTE:

- Inspect the continuity when the hood is open and closed.

○—○ :Continuity

Hood latch switch (hood condition)	Terminal	
	A	B
Latch (close)	○	○
Unlatch (open)		

- If the operation as indicated in the table cannot be verified, replace the hood latch.

2014 - Mazda3 - Body and Accessories

FUEL-FILLER LID OPENER AND LEVER REMOVAL/INSTALLATION

Fuel-filler Lid Opener

4SD

1. Pull back the trunk side trim (LH) to a position which allows for the removal of the fuel-filler lid opener. (See **TRUNK SIDE TRIM REMOVAL/INSTALLATION**.)

2. Open the fuel-filler lid.

3. Remove the nut.

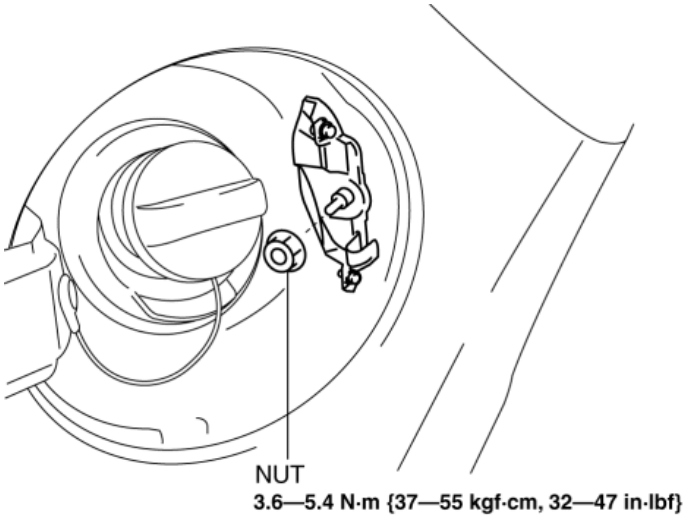

4. While pressing the tabs of the stopper bracket in the direction of arrow (1) shown in the figure, press it in the direction of arrow (2) to detach it from the body.

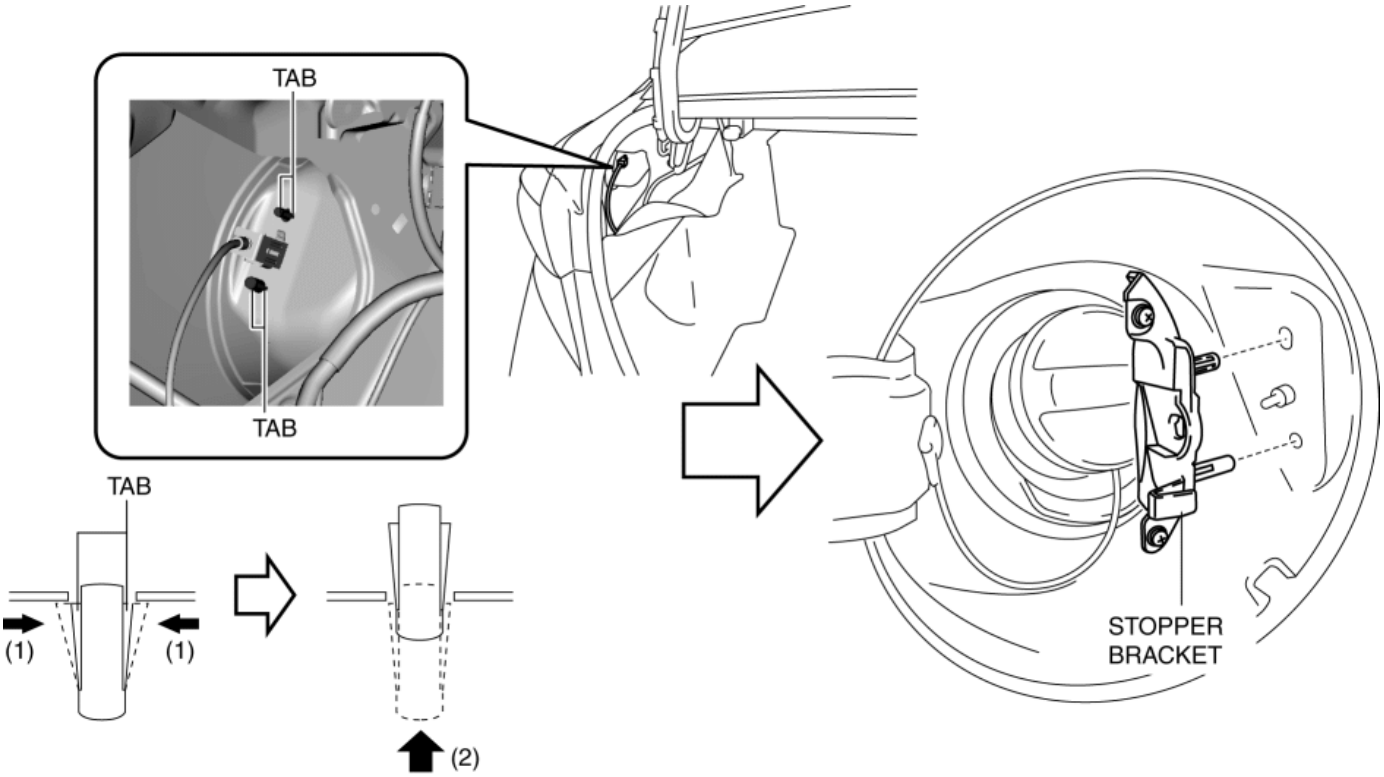

5. Detach all the stopper bracket tabs from the body and remove the stopper bracket.

6. Remove the fuel-filler lid opener in the direction of the arrow.

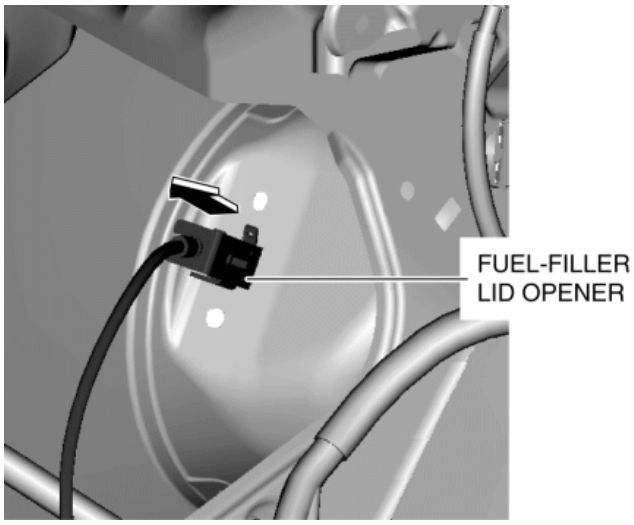

7. Disconnect the fuel-filler lid opener cable from the fuel-filler lid opener.

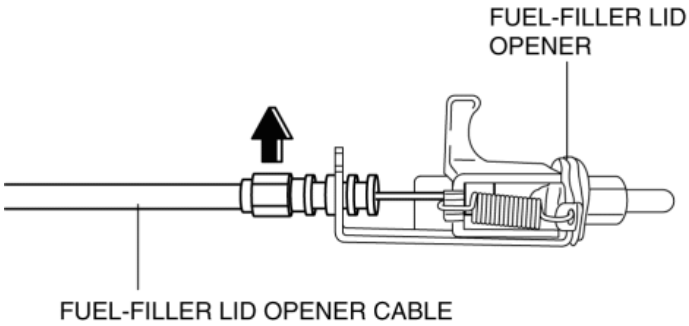

8. Install in the reverse order of removal.

1. Remove the following parts:

   a. Trunk covering (See **TRUNK COVERING REMOVAL/INSTALLATION**.)

   b. Trunk board (See **TRUNK BOARD REMOVAL/INSTALLATION**.)

   c. Trunk end trim (See **TRUNK END TRIM REMOVAL/INSTALLATION**.)

   d. Tire house trim (LH) (See **TIRE HOUSE TRIM REMOVAL/INSTALLATION**.)

   e. Rear package tray (See **REAR PACKAGE TRAY REMOVAL/INSTALLATION**.)

   f. Trunk side upper trim (LH) (See **TRUNK SIDE UPPER TRIM REMOVAL/INSTALLATION**.)

2. Pull back the trunk side trim (LH) to a position which allows for the removal of the fuel-filler lid opener. (See **TRUNK SIDE TRIM REMOVAL/INSTALLATION**.)

3. Open the fuel-filler lid.

4. Remove the nut.

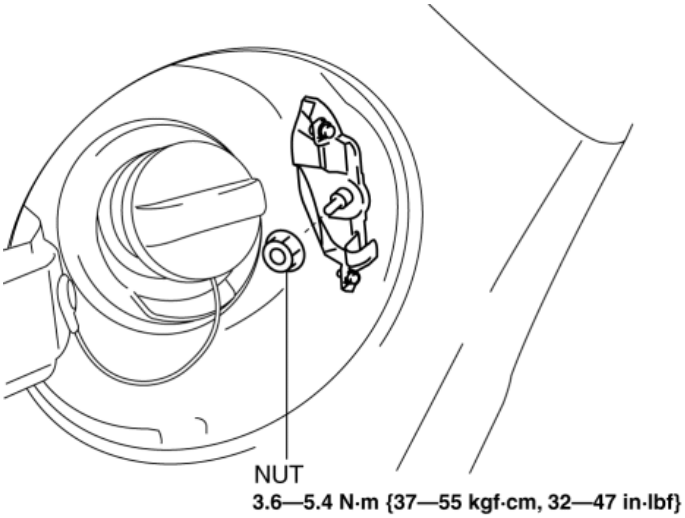

5. While pressing the tabs of the stopper bracket in the direction of arrow (1) shown in the figure, press it in the direction of arrow (2) to detach it from the body.

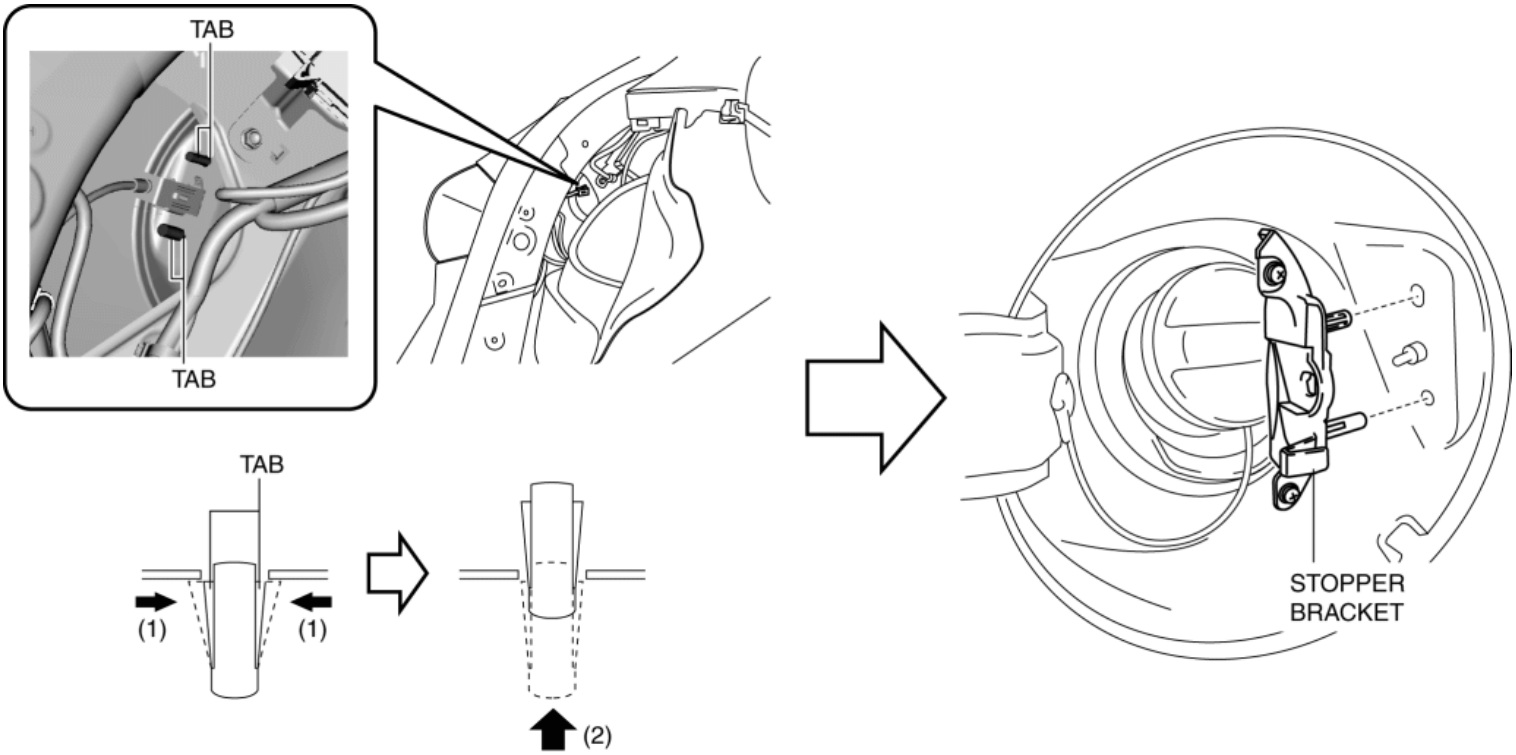

6. Detach all the stopper bracket tabs from the body and remove the stopper bracket.

7. Remove the fuel-filler lid opener in the direction of the arrow.

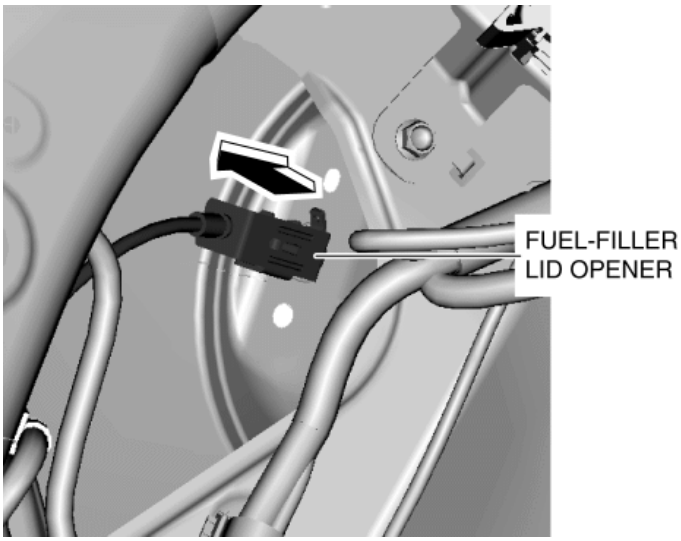

8. Disconnect the fuel-filler lid opener cable from the fuel-filler lid opener.

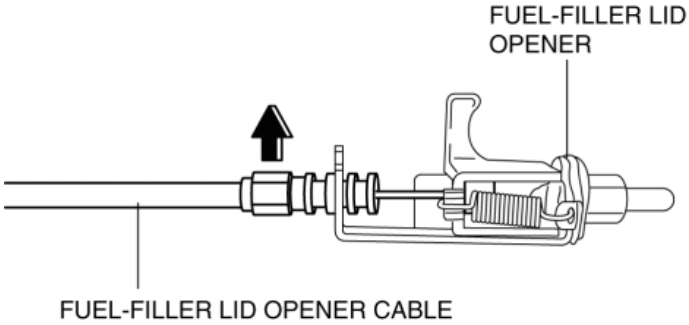

9. Install in the reverse order of removal.

Fuel-filler Lid Opener Lever

1. While pulling the fuel-filler lid opener lever, insert a tape-wrapped flathead screwdriver into the position shown in the figure.

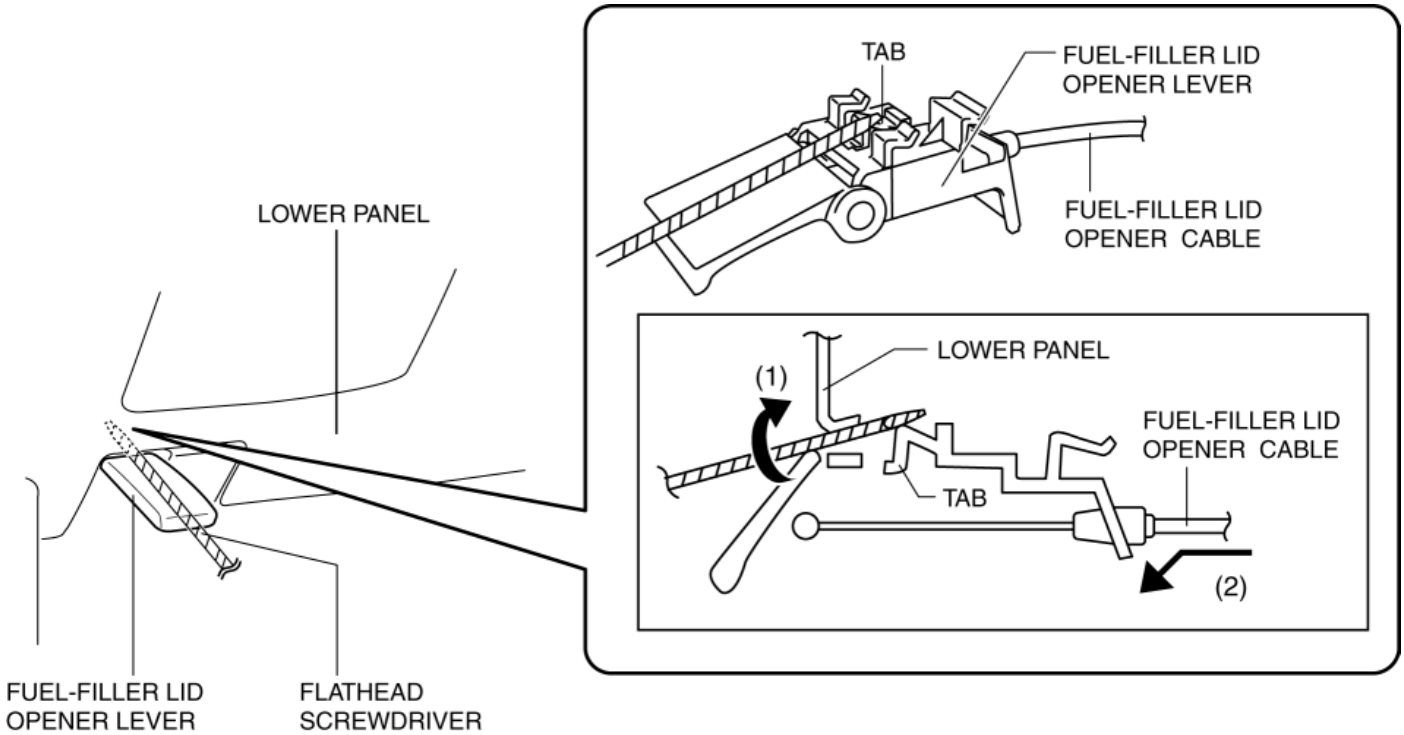

2. Move the tape-wrapped flathead screwdriver in the direction of arrow (1) shown in the figure to press the tab, and pull the fuel-filler lid opener cable in the direction of arrow (2) to detach the fuel-filler lid opener lever from the lower panel.

CAUTION:

- Remove the fuel-filler lid opener lever while being careful not to damage the fuel-filler lid opener cable with the flathead screwdriver.

3. Pull the fuel-filler lid opener lever to remove it from the lower panel.

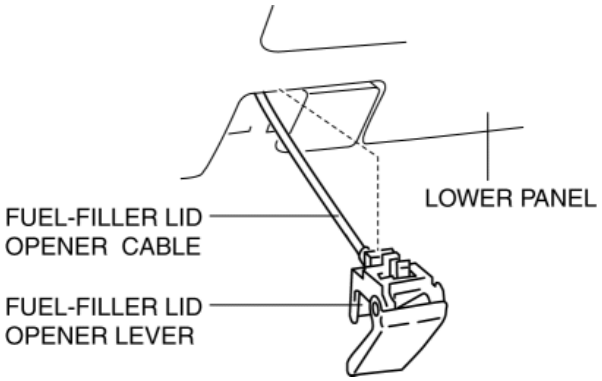

4. Disconnect the fuel-filler lid opener cable from the fuel-filler lid opener lever.
5. Install in the reverse order of removal.

2014 - Mazda3 - Body and Accessories

FUEL-FILLER LID OPENER CABLE REMOVAL/INSTALLATION

4SD

1. Disconnect the negative battery cable. (See **NEGATIVE BATTERY CABLE DISCONNECTION/CONNECTION [SKYACTIV-G 2.0, SKYACTIV-G 2.5]**.)
2. Remove the following parts:
   a. Front scuff plate (LH) (See **FRONT SCUFF PLATE REMOVAL/INSTALLATION**.)
   b. Front side trim (LH) (See **FRONT SIDE TRIM REMOVAL/INSTALLATION**.)
   c. Rear scuff plate (LH) (See **REAR SCUFF PLATE REMOVAL/INSTALLATION**.)
   d. B-pillar lower trim (LH) (See **B-PILLAR LOWER TRIM REMOVAL/INSTALLATION**.)
   e. Lap pre-tensioner seat belt (See **FRONT SEAT BELT REMOVAL/INSTALLATION**.) (With lap pre-tensioner seat belt.)
   f. Rear seat cushion (See **REAR SEAT CUSHION REMOVAL/INSTALLATION**.)
   g. Tire house trim (LH) (See **TIRE HOUSE TRIM REMOVAL/INSTALLATION**.)
   h. Trunk covering (See **TRUNK COVERING REMOVAL/INSTALLATION**.)
   i. Trunk board (See **TRUNK BOARD REMOVAL/INSTALLATION**.)
   j. Trunk end trim (See **TRUNK END TRIM REMOVAL/INSTALLATION**.)
   k. Trunk side trim (LH) (See **TRUNK SIDE TRIM REMOVAL/INSTALLATION**.)
   l. Fuel-filler lid opener (See **FUEL-FILLER LID OPENER AND LEVER REMOVAL/INSTALLATION**.)
   m. Fuel-filler lid opener lever (See **FUEL-FILLER LID OPENER AND LEVER REMOVAL/INSTALLATION**.)
3. Remove the fuel-filler lid opener cable from clips A and B.

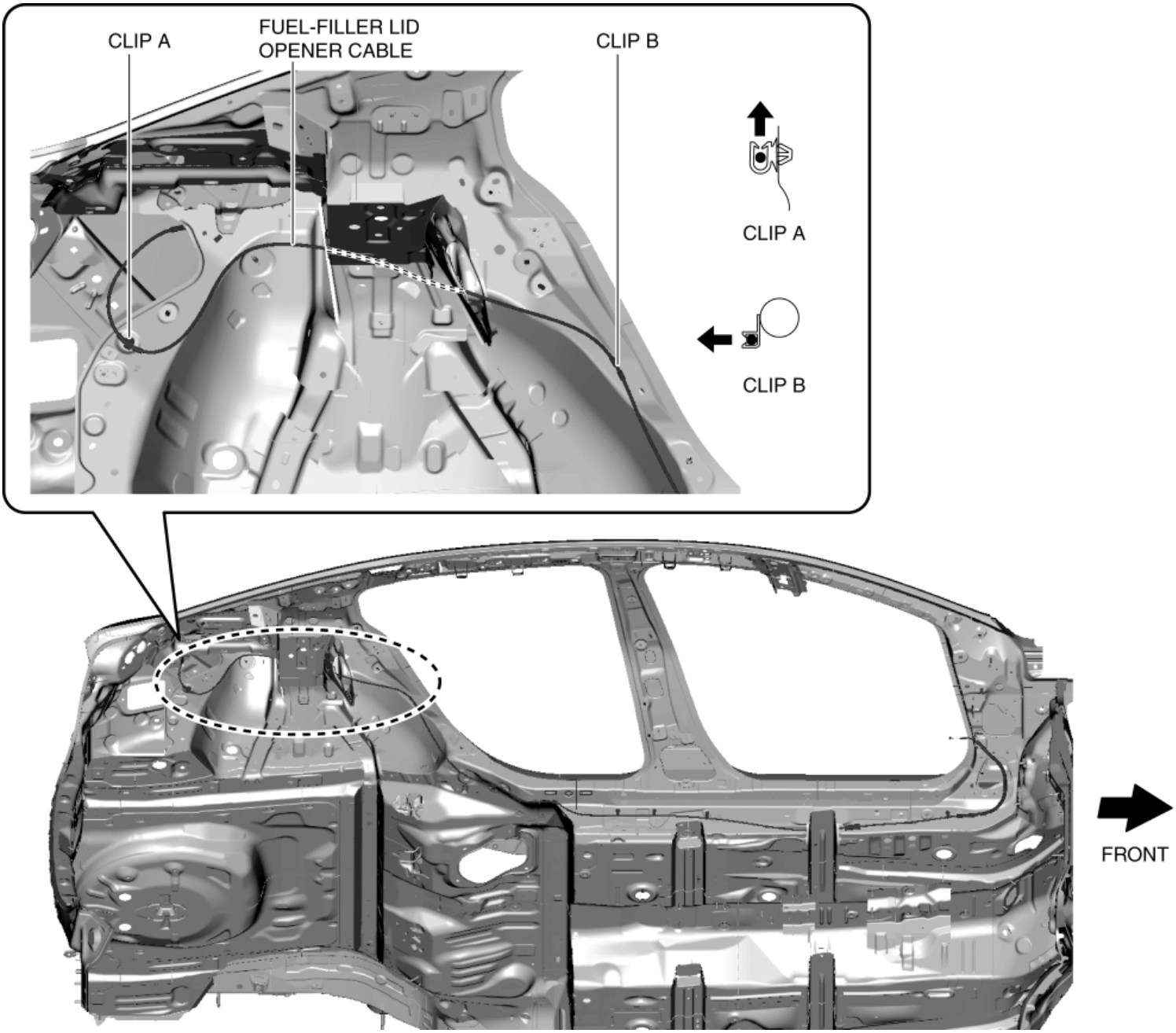

4. Remove the fuel-filler lid opener cable from clips C and D.

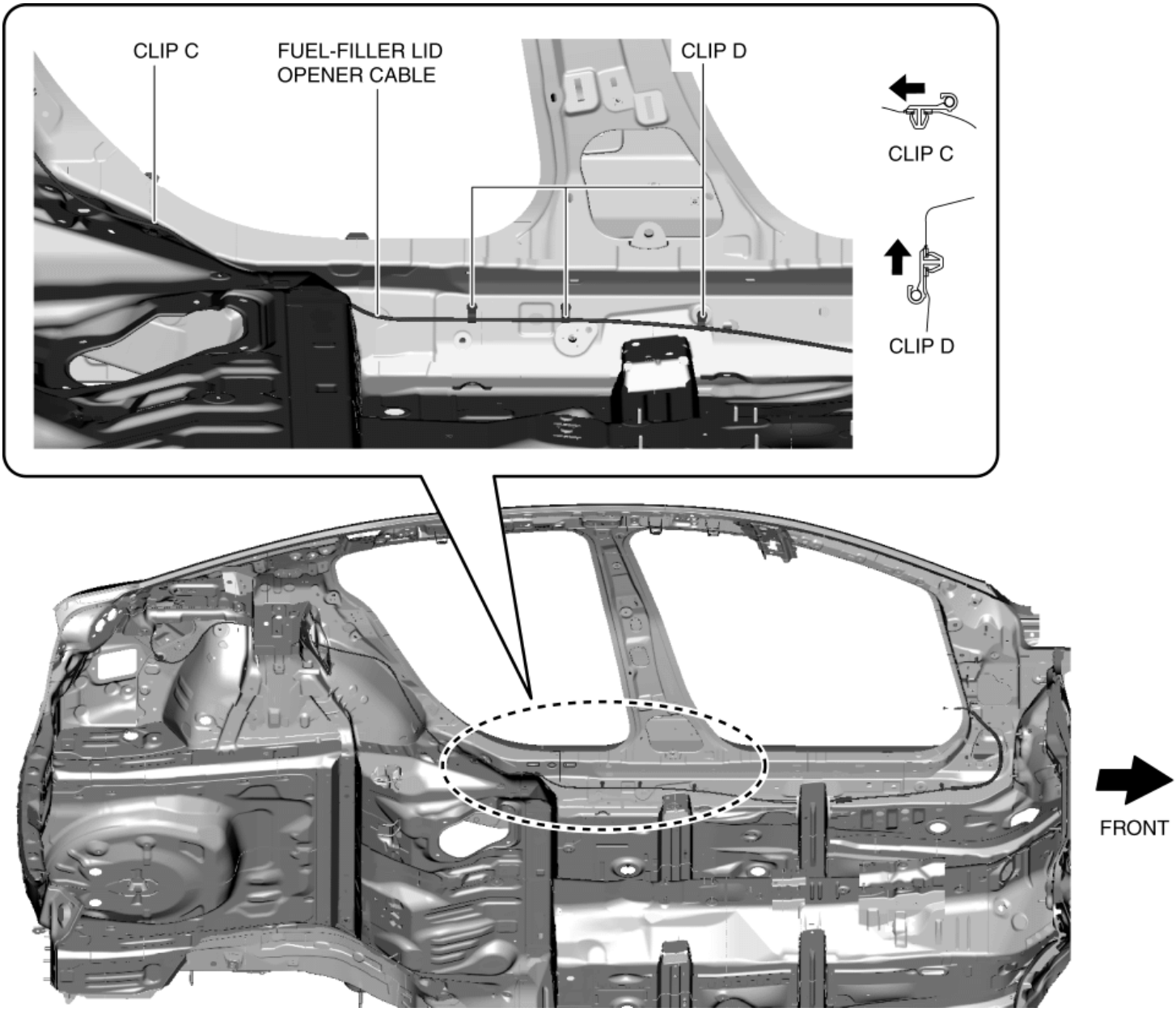

5. Remove the fuel-filler lid opener cable from clip E.

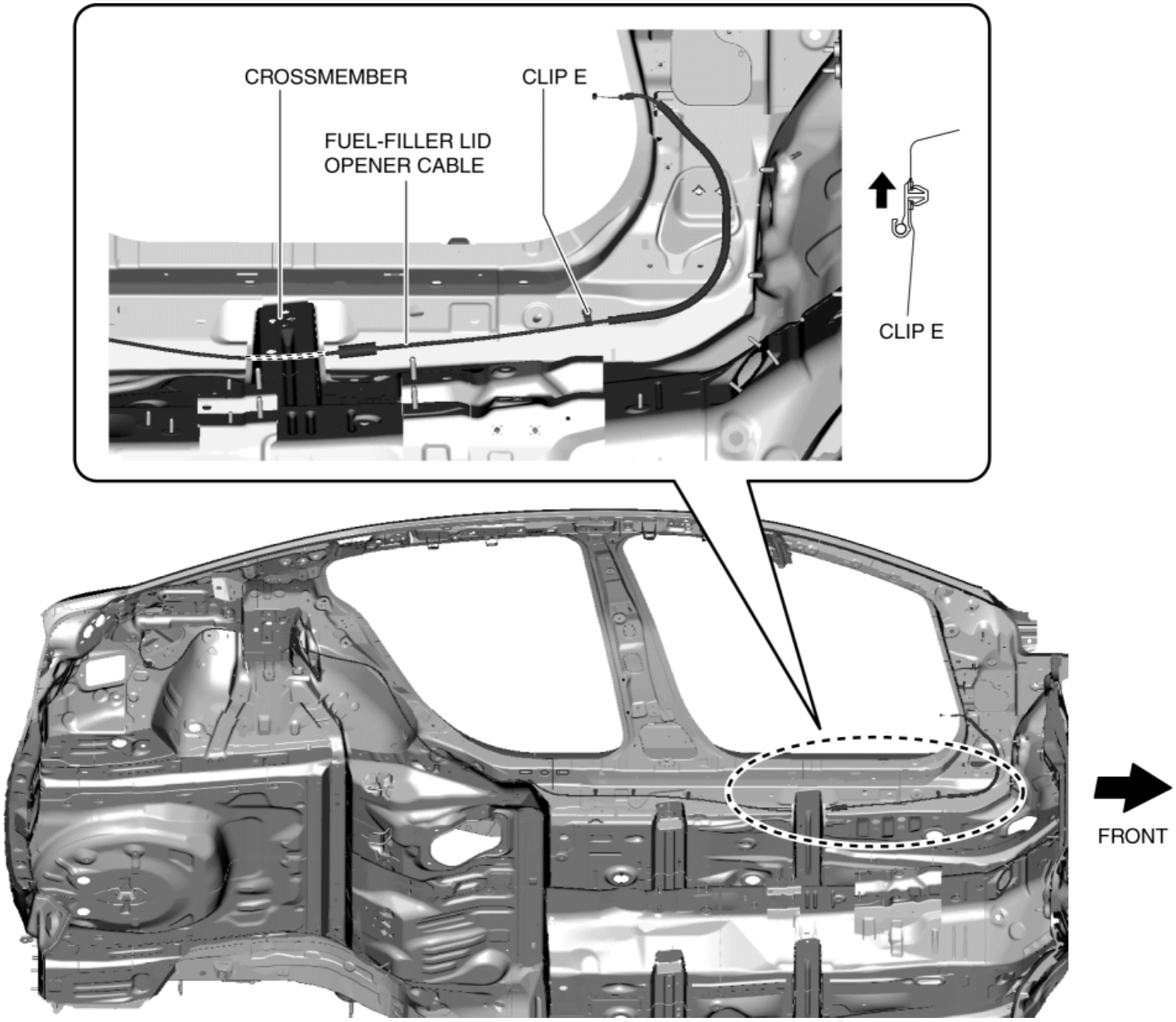

6. Pull the fuel-filler lid opener cable from the crossmember.

7. Install in the reverse order of removal.

5HB

1. Disconnect the negative battery cable. (See **NEGATIVE BATTERY CABLE DISCONNECTION/CONNECTION [SKYACTIV-G 2.0, SKYACTIV-G 2.5]**.)

2. Remove the following parts:

   a. Front scuff plate (LH) (See **FRONT SCUFF PLATE REMOVAL/INSTALLATION**.)

   b. Front side trim (LH) (See **FRONT SIDE TRIM REMOVAL/INSTALLATION**.)

   c. Rear scuff plate (LH) (See **REAR SCUFF PLATE REMOVAL/INSTALLATION**.)

   d. B-pillar lower trim (LH) (See **B-PILLAR LOWER TRIM REMOVAL/INSTALLATION**.)

   e. Lap pre-tensioner seat belt (See **FRONT SEAT BELT REMOVAL/INSTALLATION**.) (With lap pre-tensioner seat belt.)

   f. Rear seat cushion (See **REAR SEAT CUSHION REMOVAL/INSTALLATION**.)

   g. Tire house trim (LH) (See **TIRE HOUSE TRIM REMOVAL/INSTALLATION**.)

   h. Trunk covering (See **TRUNK COVERING REMOVAL/INSTALLATION**.)

i. Trunk board (See **TRUNK BOARD REMOVAL/INSTALLATION**.)

j. Trunk end trim (See **TRUNK END TRIM REMOVAL/INSTALLATION**.)

k. Rear package tray (See **REAR PACKAGE TRAY REMOVAL/INSTALLATION**.)

l. Trunk side upper trim (LH) (See **TRUNK SIDE UPPER TRIM REMOVAL/INSTALLATION**.)

m. Trunk side trim (LH) (See **TRUNK SIDE TRIM REMOVAL/INSTALLATION**.)

n. Fuel-filler lid opener (See **FUEL-FILLER LID OPENER AND LEVER REMOVAL/INSTALLATION**.)

o. Fuel-filler lid opener lever (See **FUEL-FILLER LID OPENER AND LEVER REMOVAL/INSTALLATION**.)

3. Remove the fuel-filler lid opener cable from clips A, B, and C.

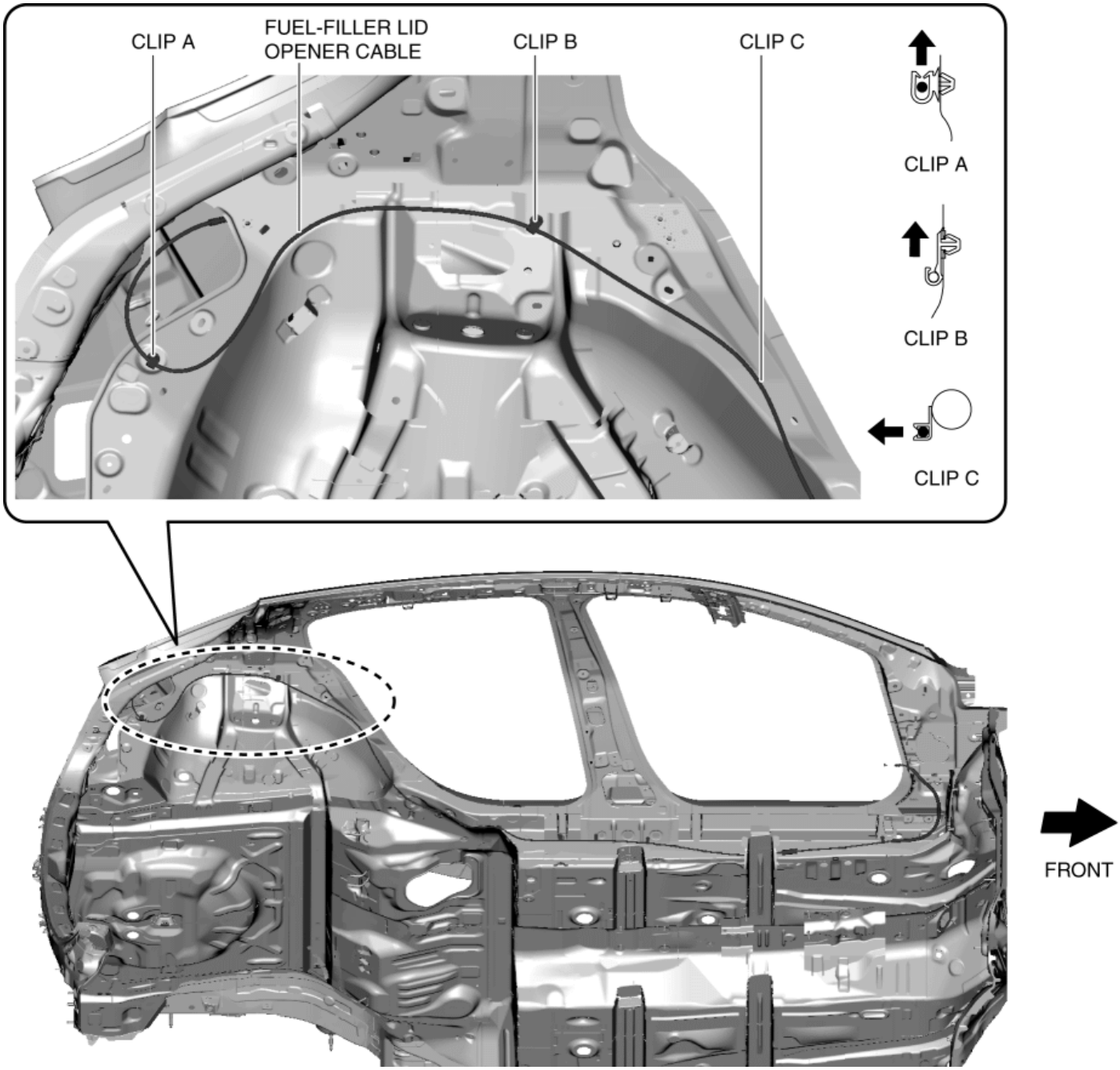

4. Remove the fuel-filler lid opener cable from clips D and E.

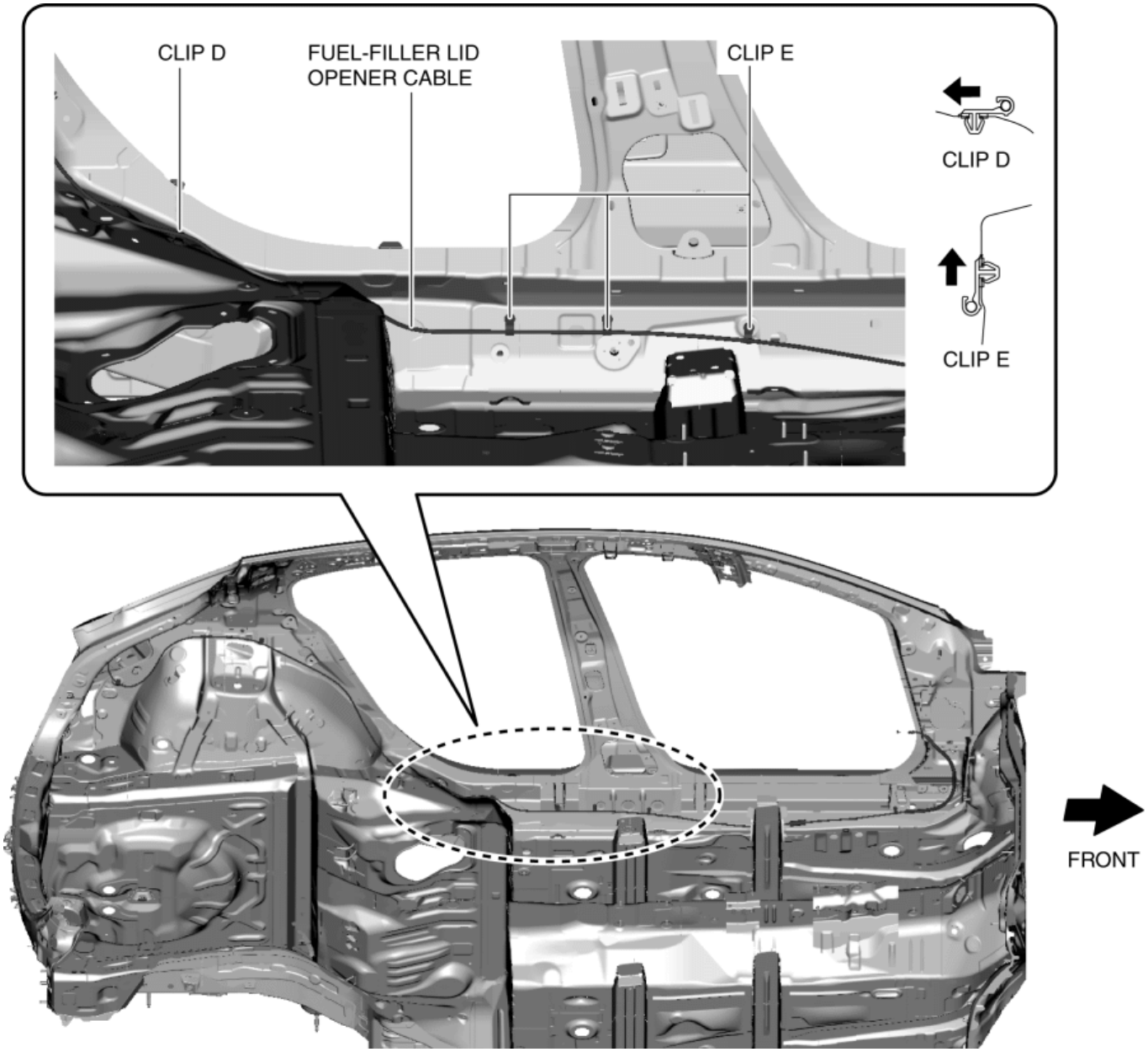

5. Remove the fuel-filler lid opener cable from clip F.

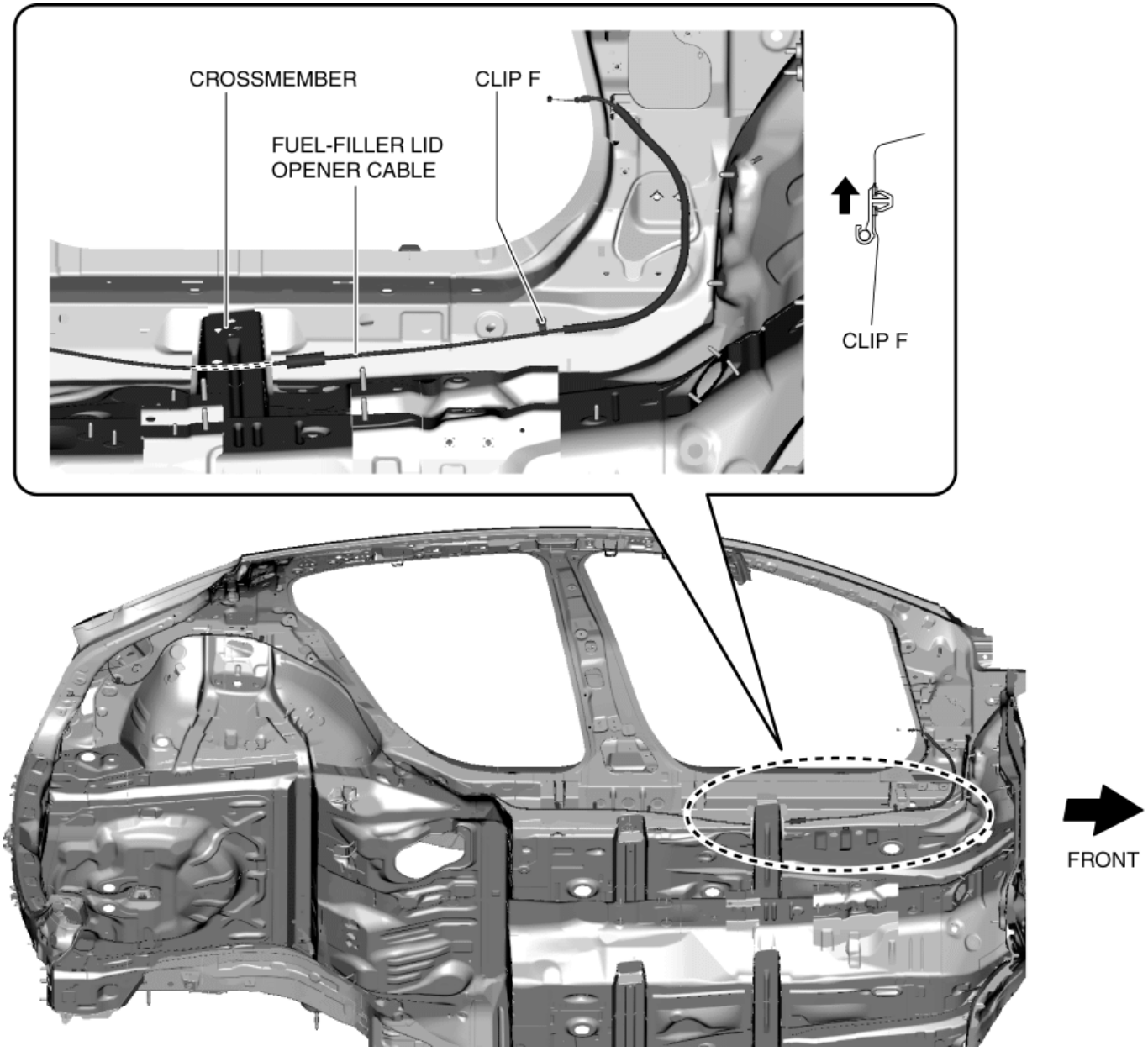

6. Pull the fuel-filler lid opener cable from the crossmember.

7. Install in the reverse order of removal.

2014 - Mazda3 - Body and Accessories

FRONT DOOR KEY CYLINDER REMOVAL/INSTALLATION

1. Remove the service hole cover.

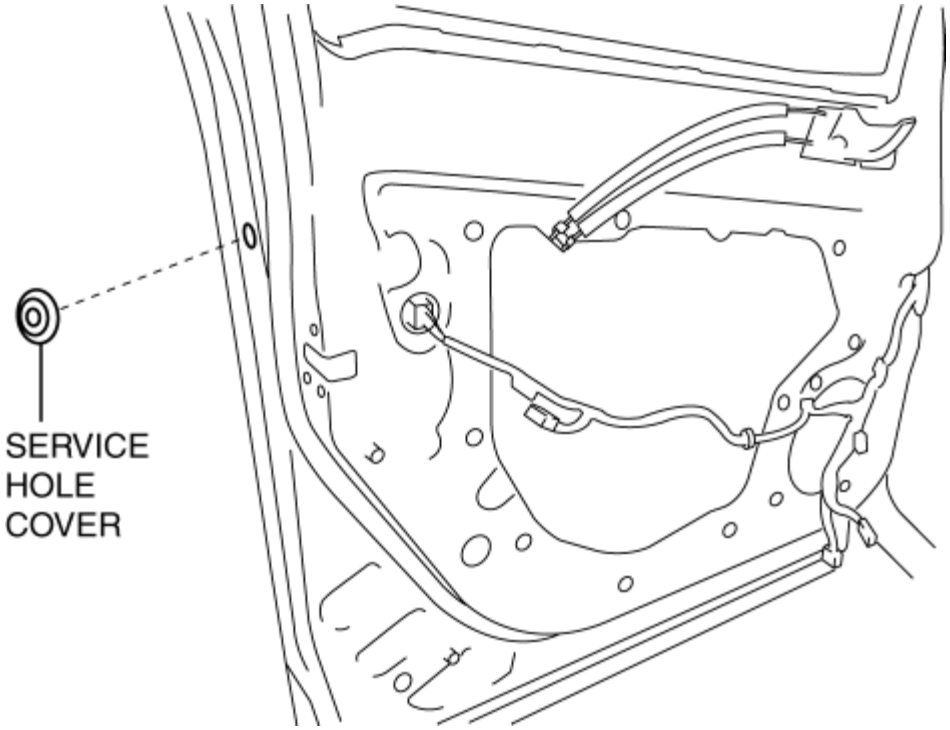

2. Loosen the screw from the front door key cylinder.

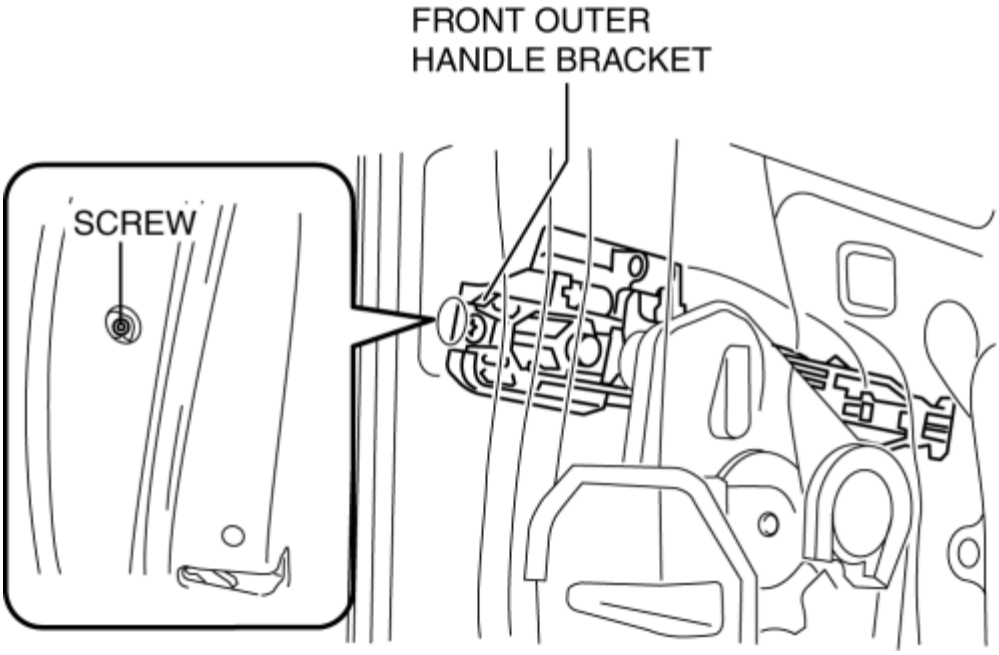

NOTE:

- The screw cannot be removed because the front outer handle bracket has a stopper which prevents the screw from falling.

3. While pressing the outer handle bracket tab in the direction of arrow (1) shown in the figure, pull the front door key cylinder in the direction of arrow (2) to detach the outer handle bracket and the front door key cylinder.

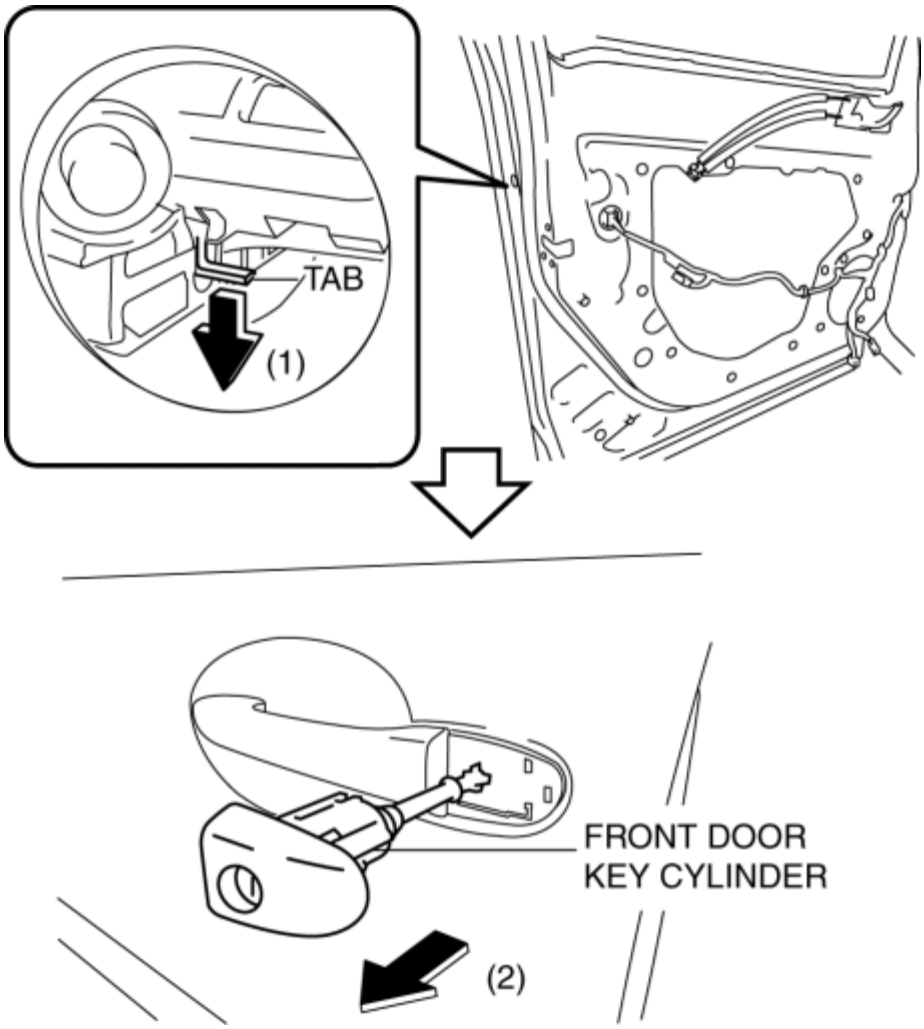

4. Remove the front door key cylinder from the outer handle bracket.

5. Insert a tape-wrapped flathead screwdriver into the position shown in the figure.

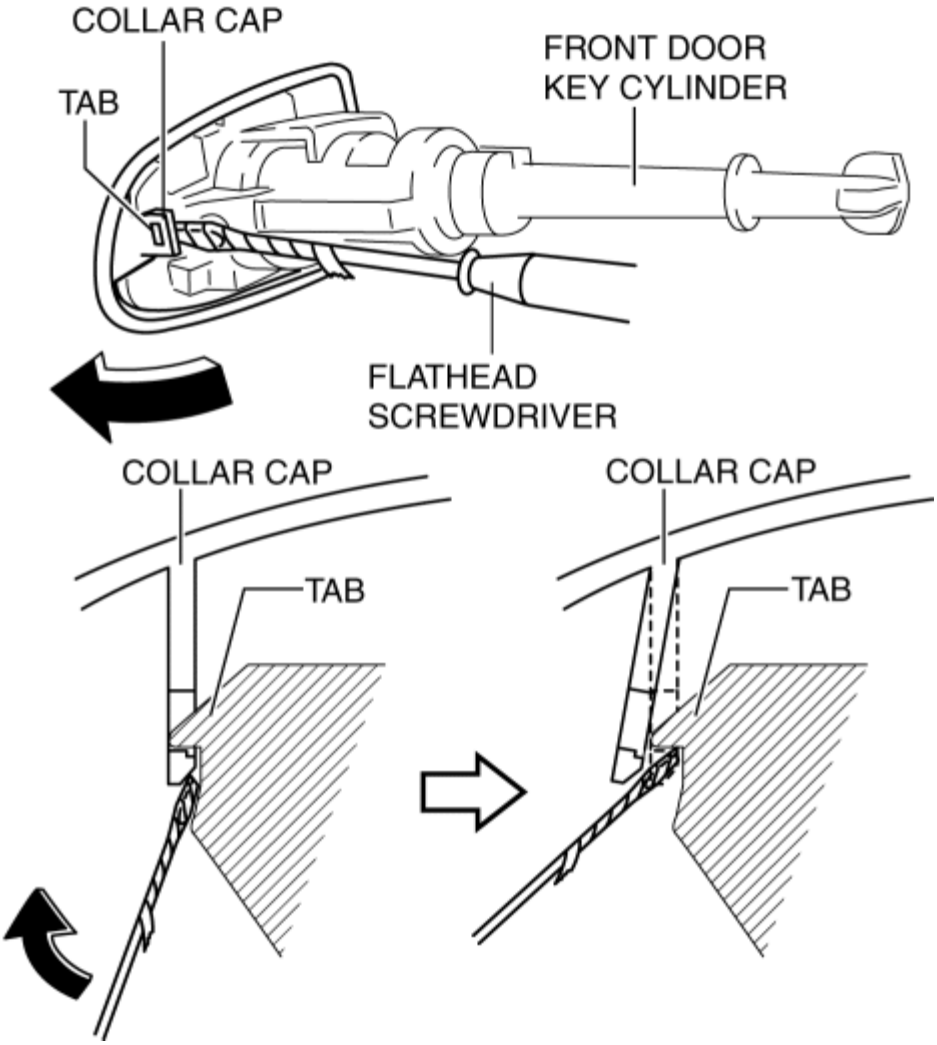

6. Move the tape-wrapped flathead screwdriver in the direction of the arrow shown in the figure to lift up the collar cap, and detach the collar cap from the front door key cylinder tab.

7. Remove the collar cap from the front door key cylinder.

8. Install in the reverse order of removal.

2014 - Mazda3 - Body and Accessories

FRONT DOOR KEY CYLINDER SWITCH INSPECTION

1. Perform the front door glass preparation. (See **FRONT DOOR GLASS REMOVAL/INSTALLATION**.)

2. Disconnect the negative battery cable. (See **NEGATIVE BATTERY CABLE DISCONNECTION/CONNECTION [SKYACTIV-G 2.0, SKYACTIV-G 2.5]**.)

3. Remove the following parts:

   a. Front door trim (See **FRONT DOOR TRIM REMOVAL/INSTALLATION**.)

   b. Front inner handle (See **INNER HANDLE REMOVAL/INSTALLATION**.)

   c. Front door glass (See **FRONT DOOR GLASS REMOVAL/INSTALLATION**.)

   d. Front door module panel (See **FRONT DOOR MODULE PANEL REMOVAL/INSTALLATION**.)

   e. Front door key cylinder (See **FRONT DOOR KEY CYLINDER REMOVAL/INSTALLATION**.)

   f. Front door latch and lock actuator (See **FRONT DOOR LATCH AND LOCK ACTUATOR REMOVAL/INSTALLATION**.)

Front Door Key Cylinder Switch Lock-Side Inspection

1. Press in the latch lever of the front door latch and lock actuator using a flathead screwdriver, and set it to the latched condition.

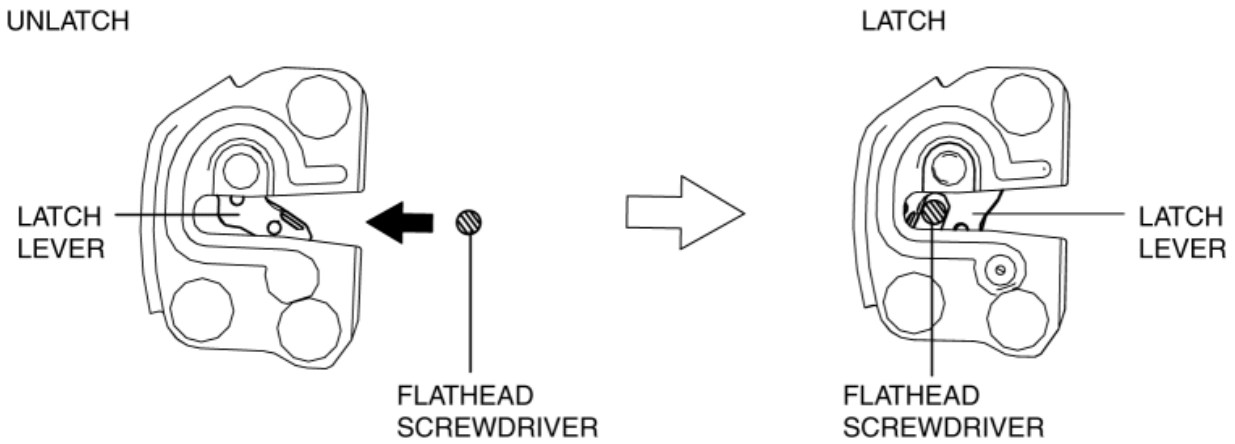

2. Rotate the front door key cylinder in the direction of the arrow until it stops to set the front door key cylinder switch to the locked condition.

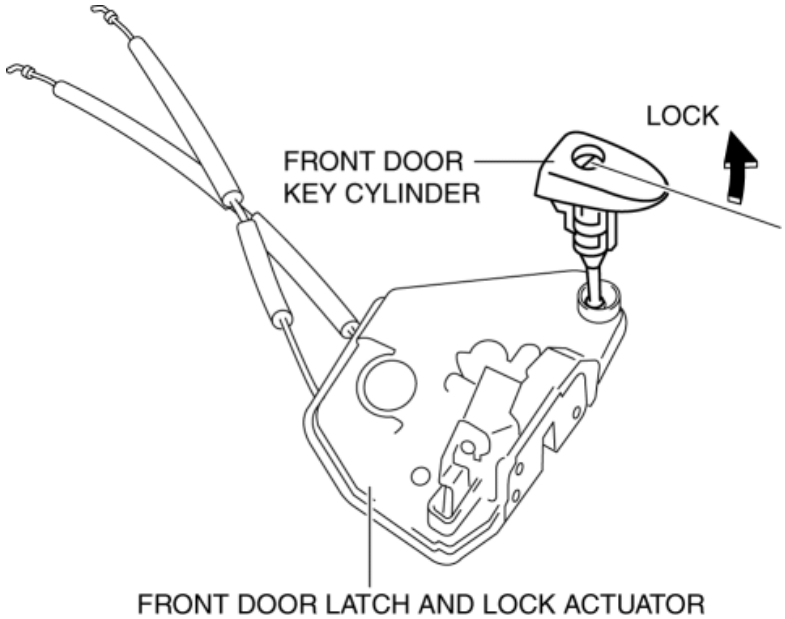

3. To verify that the switch is in the locked position, press down the rod holder in the direction of the arrow and verify that the latch lever does not move.

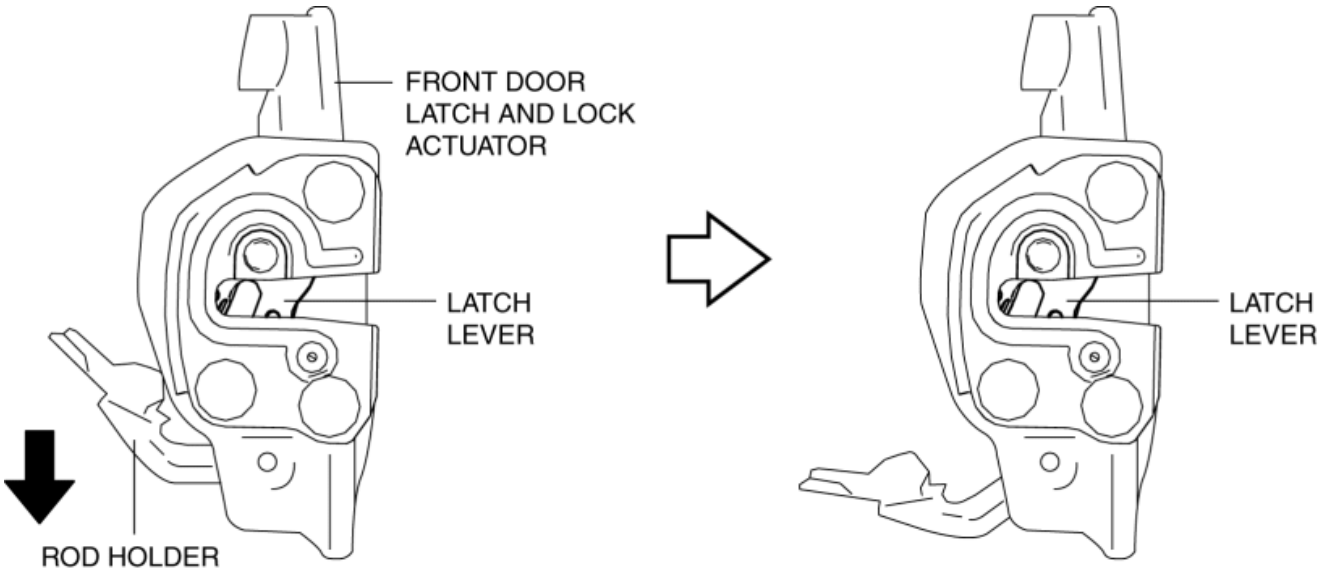

NOTE:

- If the latch lever moves, the front door key cylinder switch is not in the locked position. Repeat the procedure from Step 1.

4. Inspect the resistance between front door latch and lock actuator terminals J and H.

Front door latch and lock actuator resistance

- 1 kilohm

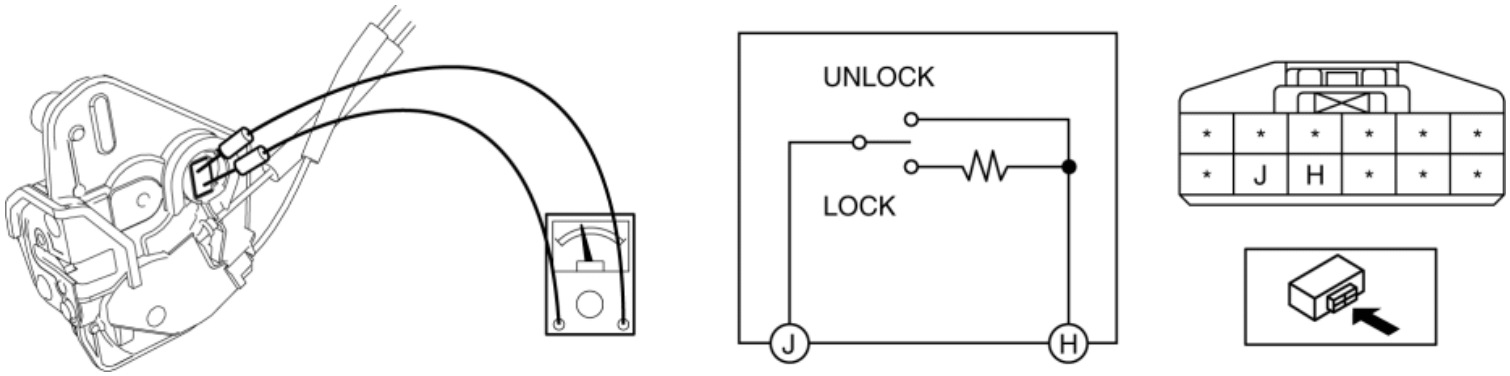

- If not as indicated in the table, replace the front door latch and lock actuator.

Front Door Key Cylinder Switch Unlock-Side Inspection

1. Press in the latch lever of the front door latch and lock actuator using a flathead screwdriver, and set it to the latched condition.

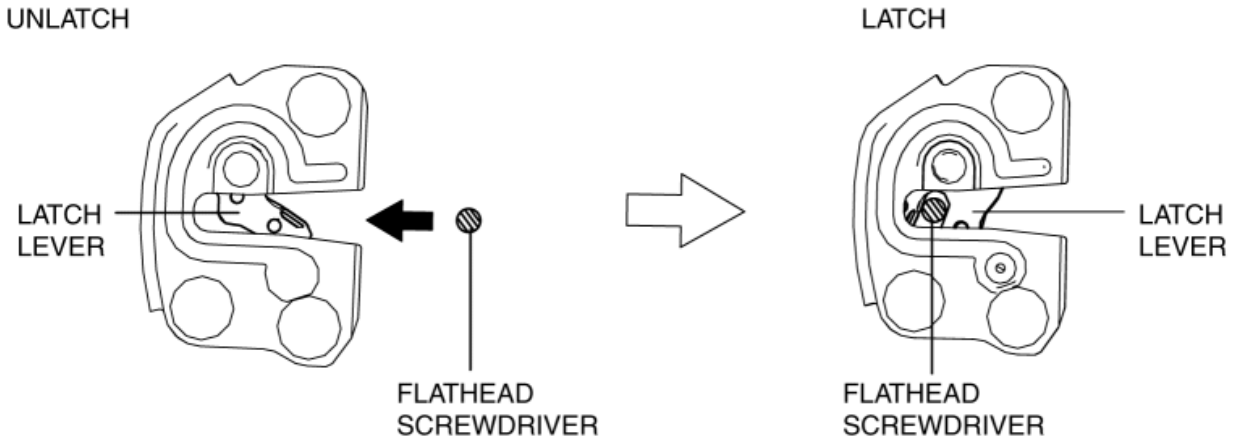

2. Rotate the front door key cylinder in the direction of the arrow until it stops to set the front door key cylinder switch to the unlocked condition.

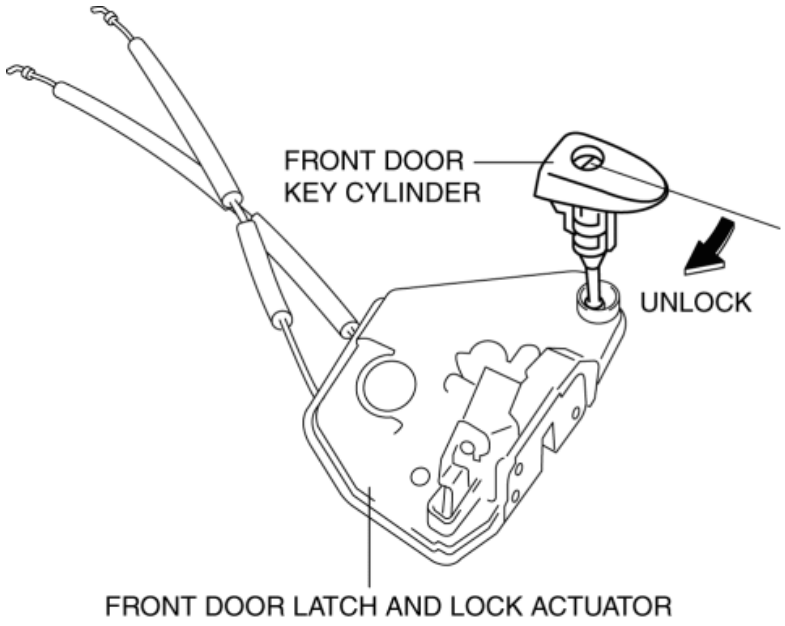

3. To verify that the switch is in the unlocked position, press down the rod holder in the direction of the arrow and verify that the latch lever moves.

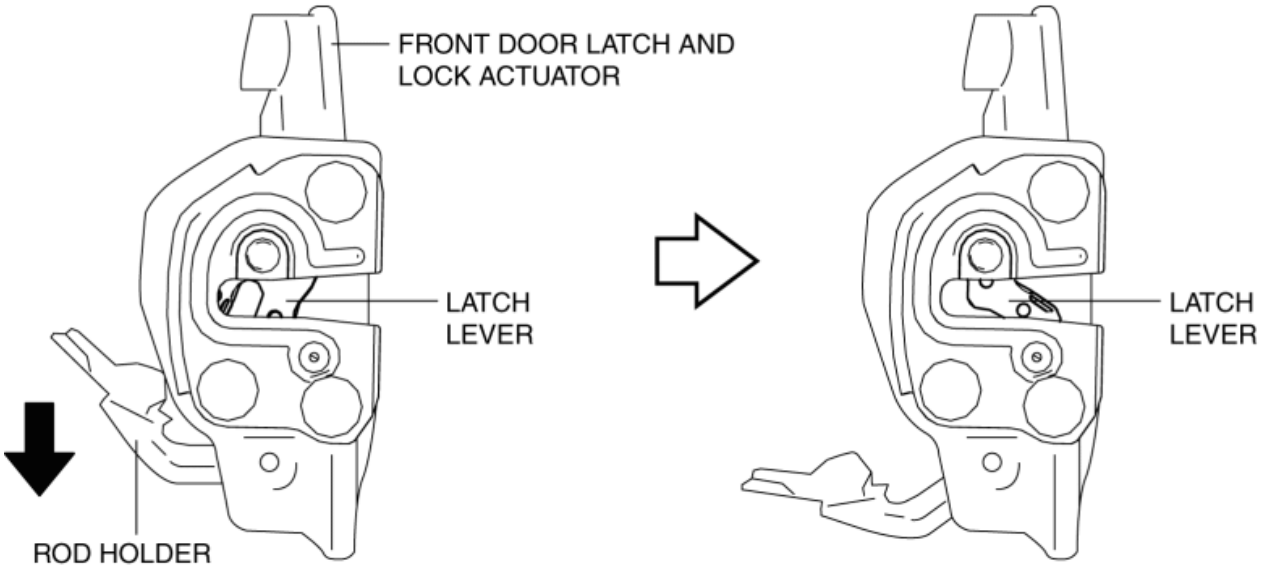

NOTE:

- If the latch lever does not move, the front door key cylinder switch is not in the unlocked position. Repeat the procedure from Step 2.

4. Verify that the continuity of the front door latch and lock actuator is as indicated in the table.

○—○ : Continuity

Front door latch and lock actuator	Terminal	
	J	H
Unlock	○	○

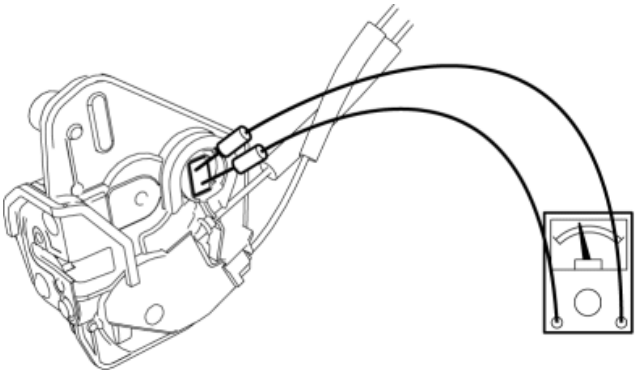

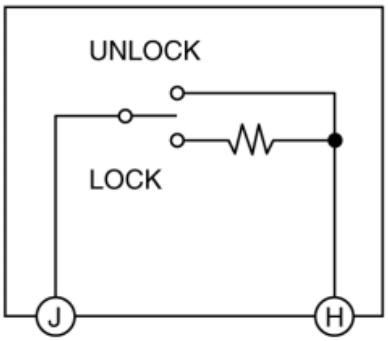

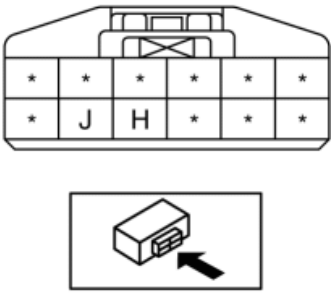

- If not as indicated in the table, replace the front door latch and lock actuator.

2014 - Mazda3 - Body and Accessories

FRONT DOOR LATCH AND LOCK ACTUATOR REMOVAL/INSTALLATION

1. Perform the front door glass preparation. (See **FRONT DOOR GLASS REMOVAL/INSTALLATION**.)

2. Disconnect the negative battery cable. (See **NEGATIVE BATTERY CABLE DISCONNECTION/CONNECTION [SKYACTIV-G 2.0, SKYACTIV-G 2.5]**.)

3. Remove the following parts:

   a. Front door trim (See **FRONT DOOR TRIM REMOVAL/INSTALLATION**.)

   b. Front inner handle (See **INNER HANDLE REMOVAL/INSTALLATION**.)

   c. Front door glass (See **FRONT DOOR GLASS REMOVAL/INSTALLATION**.)

   d. Front door module panel (See **FRONT DOOR MODULE PANEL REMOVAL/INSTALLATION**.)

   e. Front door key cylinder (See **FRONT DOOR KEY CYLINDER REMOVAL/INSTALLATION**.)

4. Disconnect the keyless antenna connector (With advanced keyless entry system).

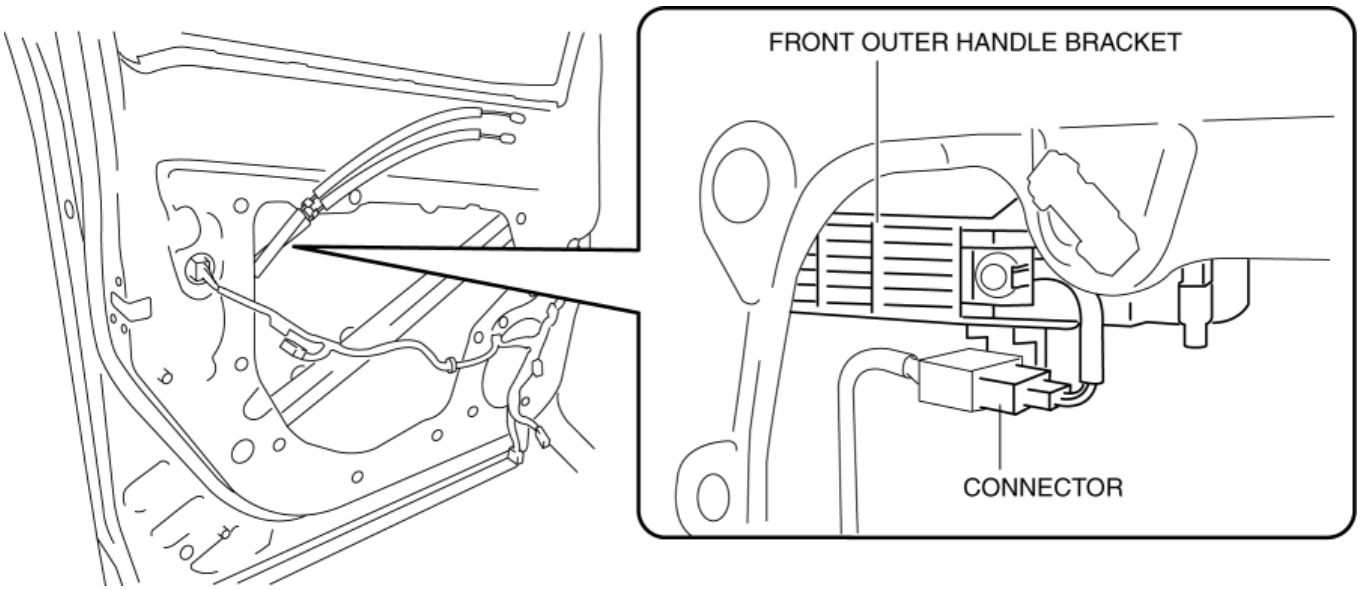

5. While pressing the tabs of the clip in the direction of arrow (1) shown in the figure, press it in the direction of arrow (2) to detach the connector tabs from the front outer handle bracket (With advanced keyless entry system).

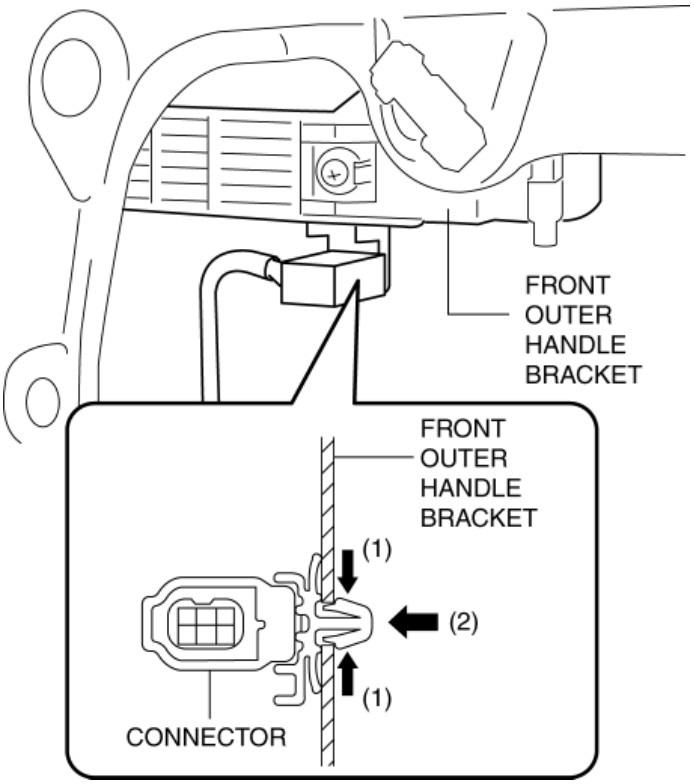

6. Remove the door lock knob cable and inner handle cable from the clip.

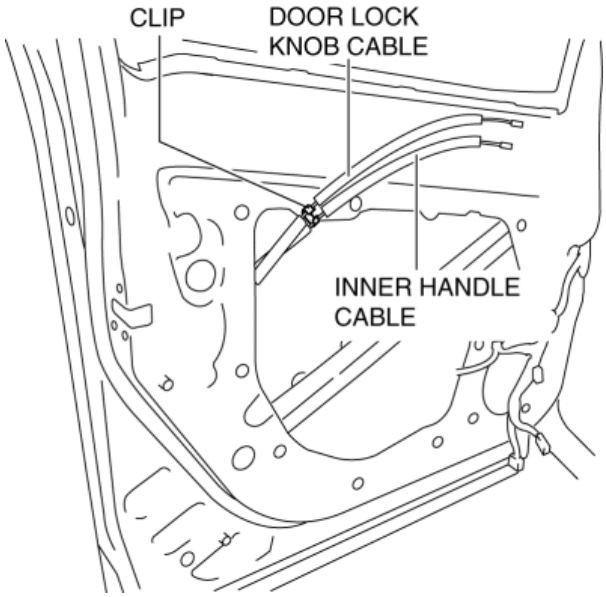

7. Remove the screws.

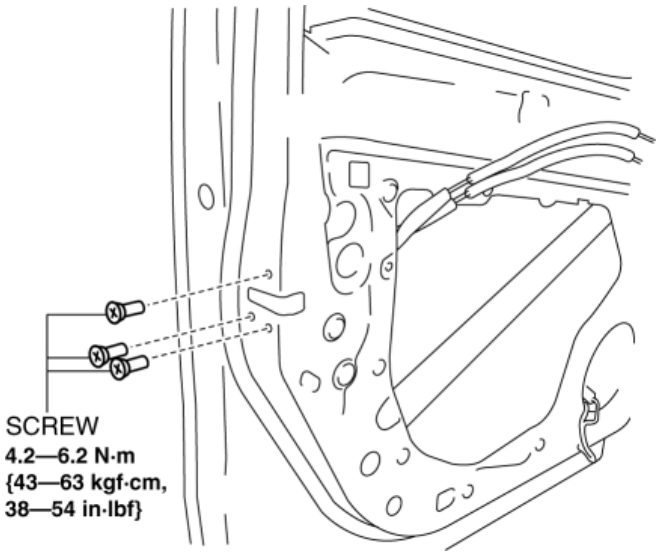

8. Tilt the front door latch and lock actuator in the direction of arrow (1) shown in the figure and lift it in the direction of arrow (2) to detach the hook of the front door latch and lock actuator.

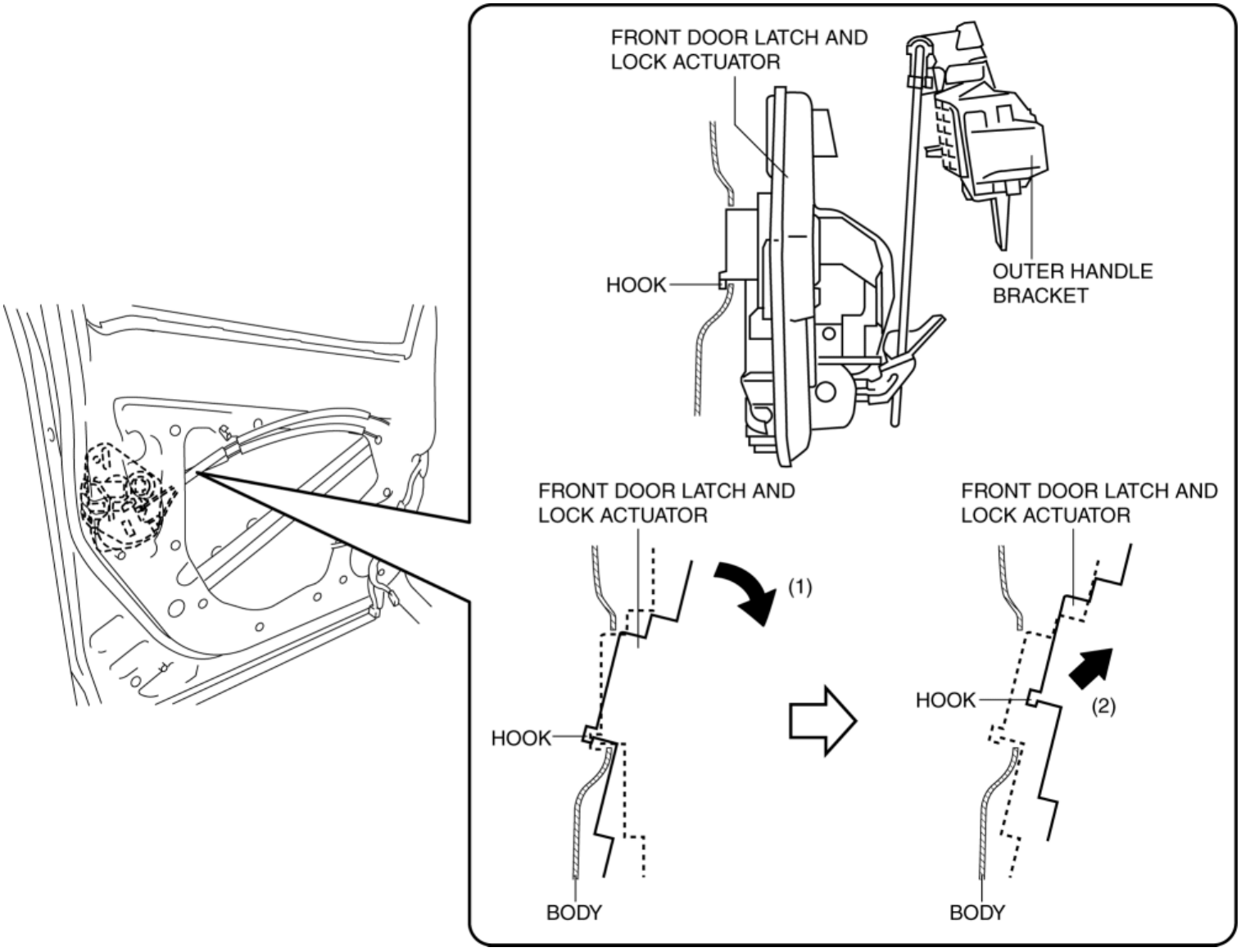

9. Move the front door latch and lock actuator down in the direction of arrow (3) shown in the figure to remove the rod from the rod holder.

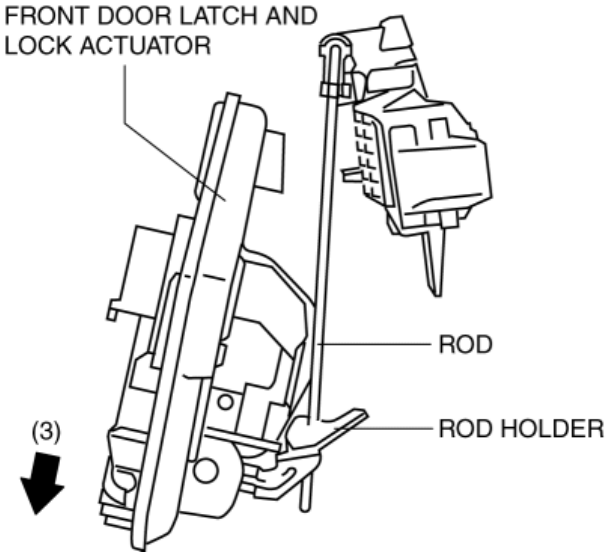

10. Remove the front door latch and lock actuator.

11. Install in the reverse order of removal.

2014 - Mazda3 - Body and Accessories

FRONT DOOR LATCH AND LOCK ACTUATOR INSPECTION

- The following actuator and switches are integrated with the front door latch and lock actuator.
- From the actuator/switch name and operation in the following table, select the actuator or switch to be inspected, and perform the inspection following the inspection procedure described in the reference.

Actuator/Switch name	Operation	Reference
Front door lock actuator	Electrically switches the lock/unlock of the front doors.	**FRONT DOOR LOCK ACTUATOR INSPECTION**
Front door lock-link switch	Turns on/off in conjunction with the lock/unlock so that the lock/unlock condition is detected.	**FRONT DOOR LOCK-LINK SWITCH INSPECTION**
Front door latch switch	Turns on/off in conjunction with the latch lever operation so that the front door open/closed condition is detected.	**FRONT DOOR LATCH SWITCH INSPECTION**
Front door key cylinder switch	Turns on/off in conjunction with the lock/unlock of the front door key cylinder so that the key cylinder operation condition is detected.	**FRONT DOOR KEY CYLINDER SWITCH INSPECTION**

2014 - Mazda3 - Body and Accessories

FRONT DOOR LOCK ACTUATOR INSPECTION

LH

1. Perform the front door glass removal preparation. (See **FRONT DOOR GLASS REMOVAL/INSTALLATION**.)

2. Disconnect the negative battery cable. (See **NEGATIVE BATTERY CABLE DISCONNECTION/CONNECTION [SKYACTIV-G 2.0, SKYACTIV-G 2.5]**.)

3. Remove the following parts:

   a. Front door trim (See **FRONT DOOR TRIM REMOVAL/INSTALLATION**.)

   b. Front inner handle (See **INNER HANDLE REMOVAL/INSTALLATION**.)

   c. Front door glass (See **FRONT DOOR GLASS REMOVAL/INSTALLATION**.)

   d. Front door module panel (See **FRONT DOOR MODULE PANEL REMOVAL/INSTALLATION**.)

   e. Front door key cylinder (See **FRONT DOOR KEY CYLINDER REMOVAL/INSTALLATION**.)

   f. Front door latch and lock actuator (See **FRONT DOOR LATCH AND LOCK ACTUATOR REMOVAL/INSTALLATION**.)

4. Apply battery positive voltage and connect the ground to the front door lock actuator terminals as indicated in the table below and verify the operation condition.

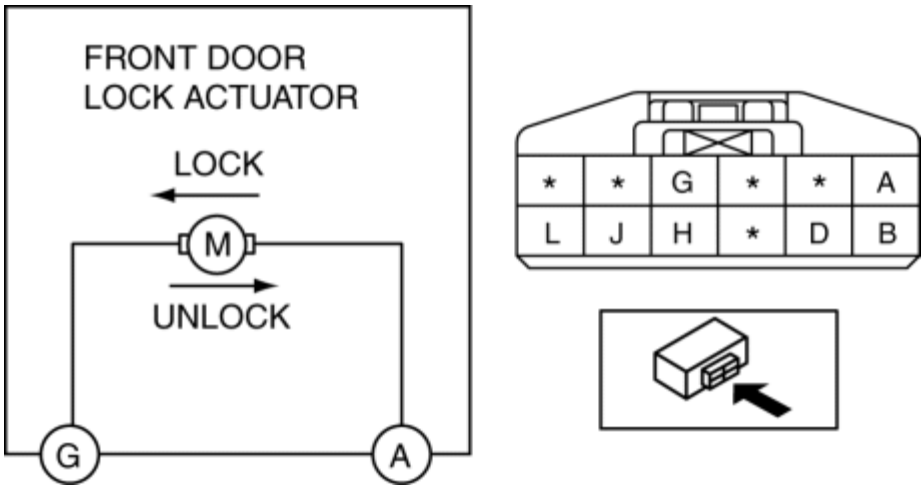

B+ Terminal	Ground Terminal	Operation

A	G	Lock
G	A	Unlock

- If not as indicated in the table, replace the front door latch and lock actuator.

RH

1. Perform the front door glass removal preparation. (See **FRONT DOOR GLASS REMOVAL/INSTALLATION**.)

2. Disconnect the negative battery cable. (See **NEGATIVE BATTERY CABLE DISCONNECTION/CONNECTION [SKYACTIV-G 2.0, SKYACTIV-G 2.5]**.)

3. Remove the following parts:

   a. Front door trim (See **FRONT DOOR TRIM REMOVAL/INSTALLATION**.)

   b. Front inner handle (See **INNER HANDLE REMOVAL/INSTALLATION**.)

   c. Front door glass (See **FRONT DOOR GLASS REMOVAL/INSTALLATION**.)

   d. Front door module panel (See **FRONT DOOR MODULE PANEL REMOVAL/INSTALLATION**.)

   e. Front door latch and lock actuator (See **FRONT DOOR LATCH AND LOCK ACTUATOR REMOVAL/INSTALLATION**.)

4. Apply battery positive voltage and connect the ground to the front door lock actuator terminals as indicated in the table below and verify the operation condition.

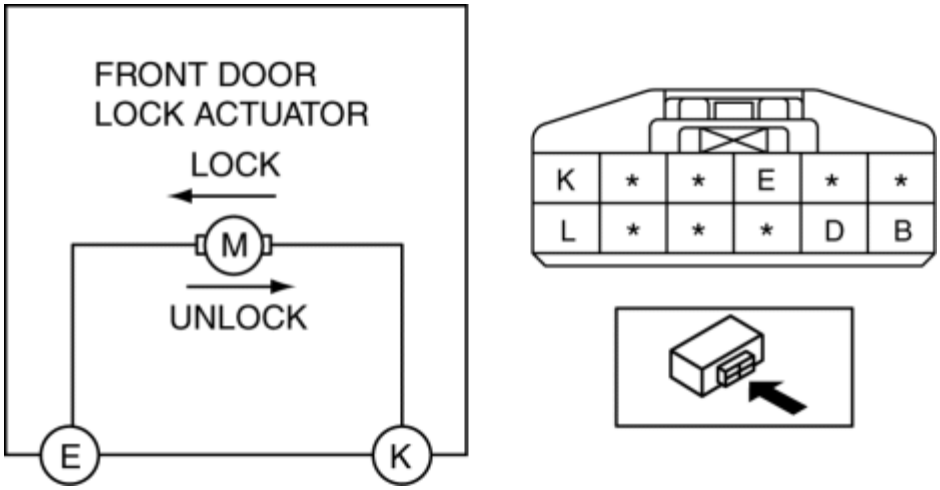

B+ Terminal	Ground Terminal	Operation
K	E	Lock

E	K	Unlock

- If not as indicated in the table, replace the front door latch and lock actuator.

2014 - Mazda3 - Body and Accessories

FRONT DOOR LATCH SWITCH INSPECTION

LH

1. Perform the front door glass preparation. (See **FRONT DOOR GLASS REMOVAL/INSTALLATION**.)
2. Disconnect the negative battery cable. (See **NEGATIVE BATTERY CABLE DISCONNECTION/CONNECTION [SKYACTIV-G 2.0, SKYACTIV-G 2.5]**.)
3. Remove the following parts:
   a. Front door trim (See **FRONT DOOR TRIM REMOVAL/INSTALLATION**.)
   b. Front inner handle (See **INNER HANDLE REMOVAL/INSTALLATION**.)
   c. Front door glass (See **FRONT DOOR GLASS REMOVAL/INSTALLATION**.)
   d. Front door module panel (See **FRONT DOOR MODULE PANEL REMOVAL/INSTALLATION**.)
   e. Front door key cylinder (See **FRONT DOOR KEY CYLINDER REMOVAL/INSTALLATION**.)
   f. Front door latch and lock actuator (See **FRONT DOOR LATCH AND LOCK ACTUATOR REMOVAL/INSTALLATION**.)
4. Verify that the continuity is as indicated in the table.

○—○ : Continuity

Door latch switch	Terminal	
	L	J
Latch		
Unlatch	○	○

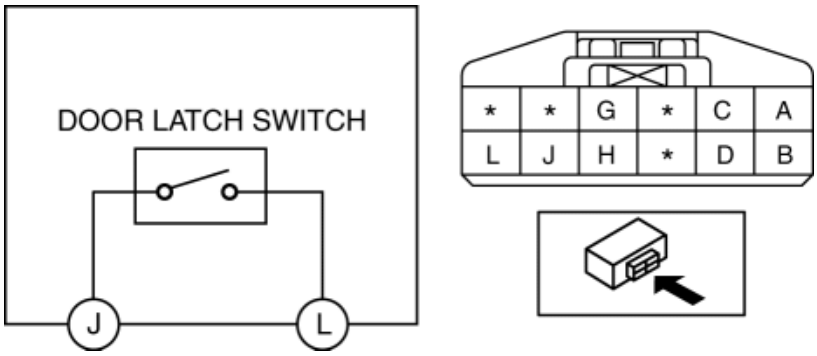

- If not as indicated in the table, replace the front door latch and lock actuator.

NOTE:

- When inspecting the latch side of the front door latch switch, press in the latch lever using a flathead screwdriver and set it to the latched position.

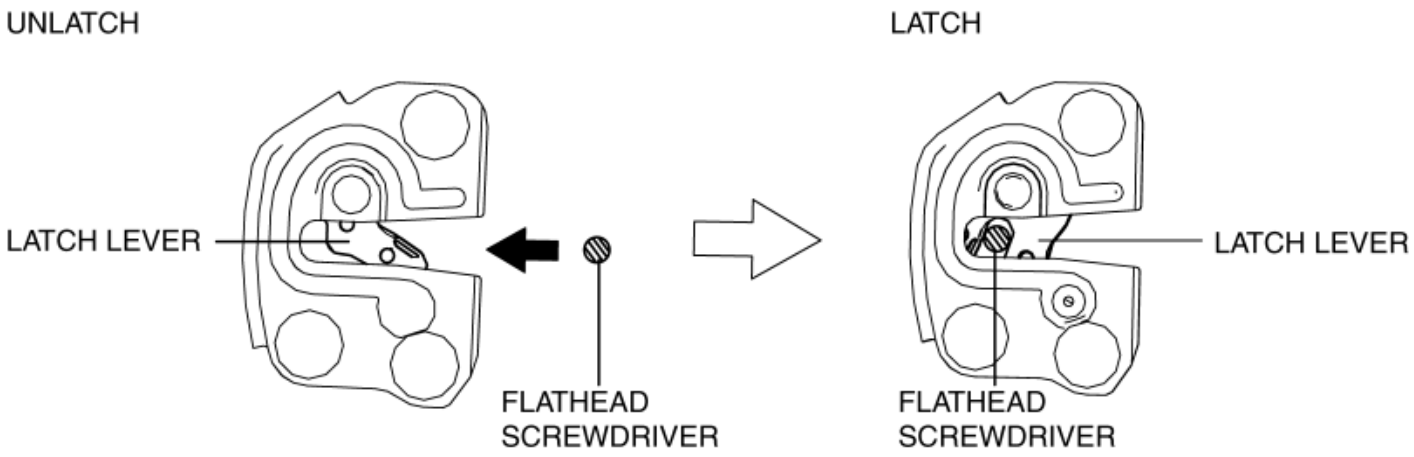

RH

1. Perform the front door glass preparation. (See **FRONT DOOR GLASS REMOVAL/INSTALLATION**.)

2. Disconnect the negative battery cable. (See **NEGATIVE BATTERY CABLE DISCONNECTION/CONNECTION [SKYACTIV-G 2.0, SKYACTIV-G 2.5]**.)

3. Remove the following parts:

   a. Front door trim (See **FRONT DOOR TRIM REMOVAL/INSTALLATION**.)

   b. Front inner handle (See **INNER HANDLE REMOVAL/INSTALLATION**.)

   c. Front door glass (See **FRONT DOOR GLASS REMOVAL/INSTALLATION**.)

   d. Front door module panel (See **FRONT DOOR MODULE PANEL REMOVAL/INSTALLATION**.)

   e. Front door latch and lock actuator (See **FRONT DOOR LATCH AND LOCK ACTUATOR REMOVAL/INSTALLATION**.)

4. Verify that the continuity is as indicated in the table.

○—○ : Continuity

Door latch switch	Terminal	
	B	D
Latch		
Unlatch	○	○

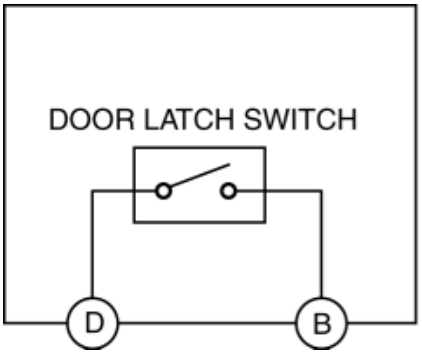

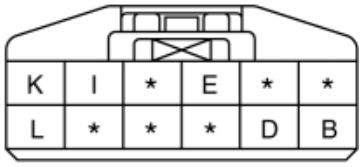

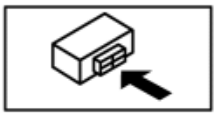

- If not as indicated in the table, replace the front door latch and lock actuator.

NOTE:

- When inspecting the latch side of the front door latch switch, press in the latch lever using a flathead screwdriver and set it to the latched position.

FRONT DOOR LATCH SWITCH INSPECTION

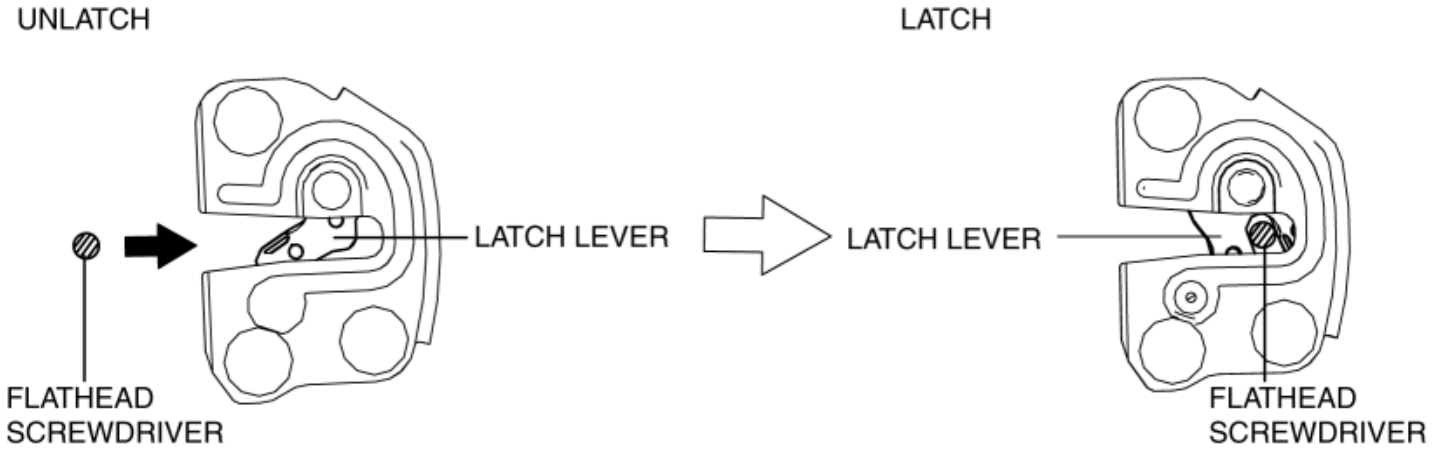

2014 - Mazda3 - Body and Accessories

FRONT DOOR LOCK-LINK SWITCH INSPECTION

LH

1. Perform the front door glass preparation. (See **FRONT DOOR GLASS REMOVAL/INSTALLATION**.)

2. Disconnect the negative battery cable. (See **NEGATIVE BATTERY CABLE DISCONNECTION/CONNECTION [SKYACTIV-G 2.0, SKYACTIV-G 2.5]**.)

3. Remove the following parts:

   a. Front door trim (See **FRONT DOOR TRIM REMOVAL/INSTALLATION**.)

   b. Front inner handle (See **INNER HANDLE REMOVAL/INSTALLATION**.)

   c. Front door glass (See **FRONT DOOR GLASS REMOVAL/INSTALLATION**.)

   d. Front door module panel (See **FRONT DOOR MODULE PANEL REMOVAL/INSTALLATION**.)

   e. Front door key cylinder (See **FRONT DOOR KEY CYLINDER REMOVAL/INSTALLATION**.)

   f. Front door latch and lock actuator (See **FRONT DOOR LATCH AND LOCK ACTUATOR REMOVAL/INSTALLATION**.)

4. When the door lock knob cable is pulled or pressed in, verify that the continuity is as indicated in the table.

○—○ : Continuity

Lock knob position	Terminal		
	D	J	B
Lock	○—○		
Unlock		○—○	

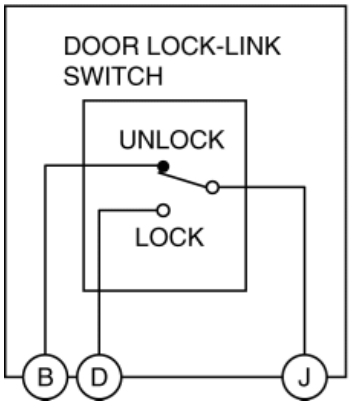

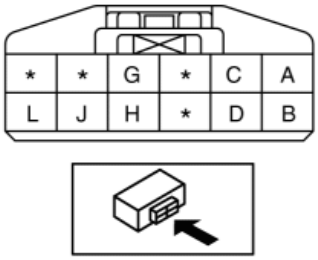

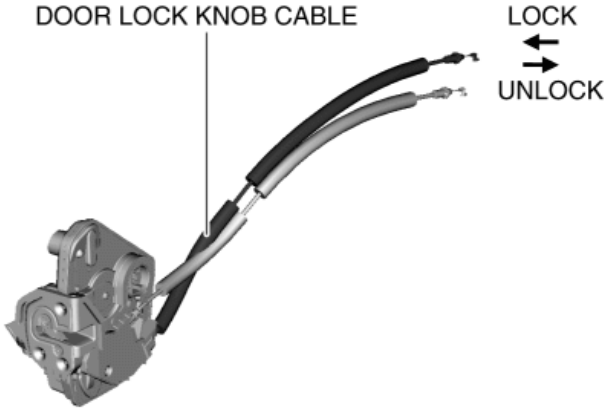

- If not as indicated in the table, replace the front door latch and lock actuator.

RH

1. Perform the front door glass preparation. (See **FRONT DOOR GLASS REMOVAL/INSTALLATION**.)

2. Disconnect the negative battery cable. (See **NEGATIVE BATTERY CABLE DISCONNECTION/CONNECTION [SKYACTIV-G 2.0, SKYACTIV-G 2.5]**.)

3. Remove the following parts:

   a. Front door trim (See **FRONT DOOR TRIM REMOVAL/INSTALLATION**.)

   b. Front inner handle (See **INNER HANDLE REMOVAL/INSTALLATION**.)

c. Front door glass (See **FRONT DOOR GLASS REMOVAL / INSTALLATION**.)

d. Front door module panel (See **FRONT DOOR MODULE PANEL REMOVAL / INSTALLATION**.)

e. Front door latch and lock actuator (See **FRONT DOOR LATCH AND LOCK ACTUATOR REMOVAL / INSTALLATION**.)

4. When the door lock knob cable is pulled or pressed in, verify that the continuity is as indicated in the table.

○—○ : Continuity

Lock knob position	Terminal		
	J	D	L
Lock	○—○		
Unlock		○—○	

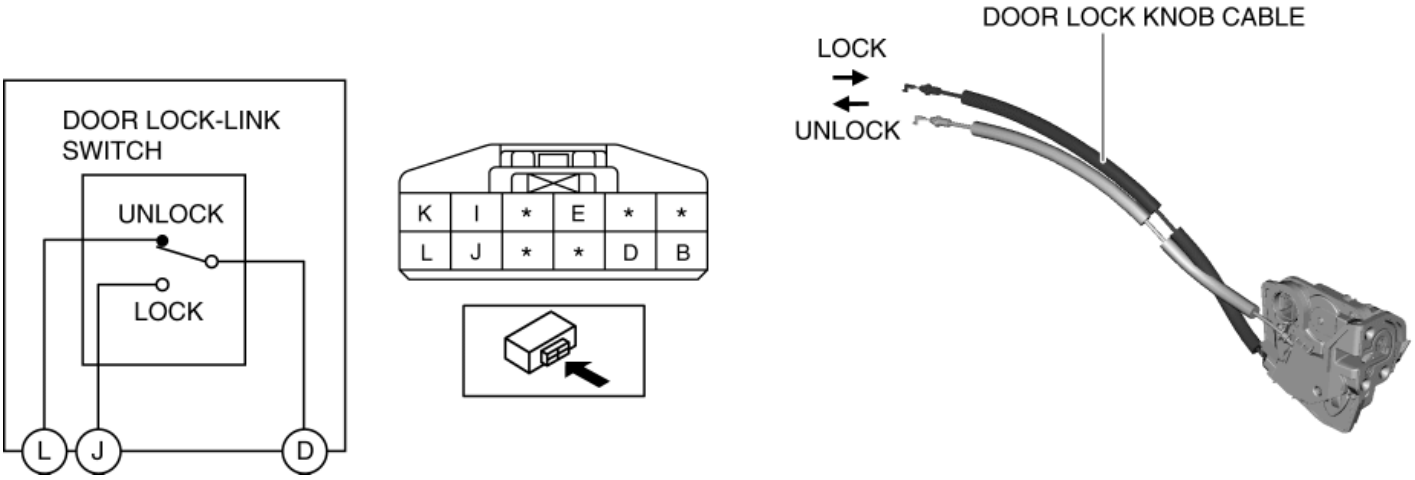

- If not as indicated in the table, replace the front door latch and lock actuator.

2014 - Mazda3 - Body and Accessories

DOOR LOCK STRIKER REMOVAL/INSTALLATION

1. Remove the screws, and then remove the door lock striker.

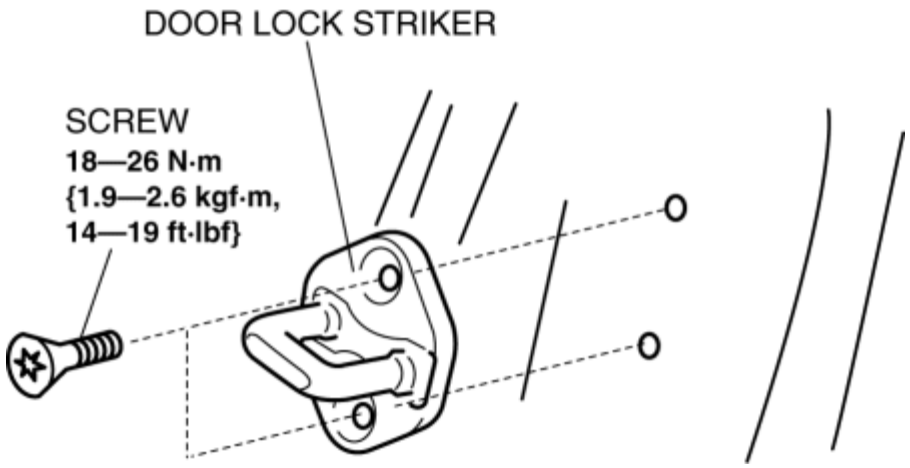

2. Install in the reverse order of removal.
3. Adjust the door. (See **DOOR ADJUSTMENT**.)

2014 - Mazda3 - Body and Accessories

REAR DOOR LATCH AND LOCK ACTUATOR REMOVAL/INSTALLATION

1. Fully lower the rear door glass.
2. Disconnect the negative battery cable. (See **NEGATIVE BATTERY CABLE DISCONNECTION/CONNECTION [SKYACTIV-G 2.0, SKYACTIV-G 2.5]**.)
3. Remove the following parts:
   a. Rear door trim (See **REAR DOOR TRIM REMOVAL/INSTALLATION**.)
   b. Rear inner handle (See **INNER HANDLE REMOVAL/INSTALLATION**.)
   c. Rear door speaker (See **REAR DOOR SPEAKER REMOVAL/INSTALLATION**.)
   d. Rear power window motor (See **REAR POWER WINDOW MOTOR REMOVAL/INSTALLATION**.)
   e. Rear door quarter glass (See **REAR DOOR QUARTER GLASS REMOVAL/INSTALLATION**.)
   f. Rear door glass (See **REAR DOOR GLASS REMOVAL/INSTALLATION**.)
4. Disconnect the connector.

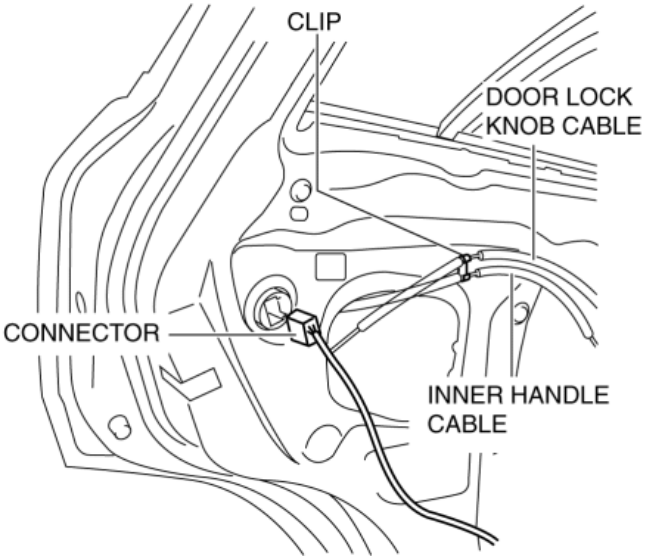

5. Remove the door lock knob cable and the inner handle cable from the clip.
6. Remove the screws.

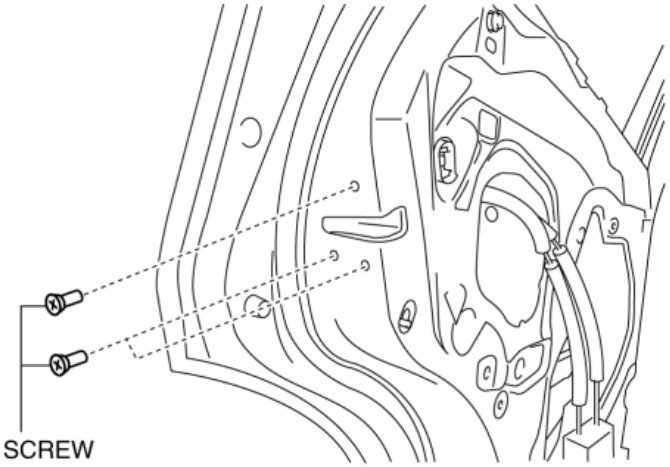

4.2—6.2 N·m {43—63 kgf·cm, 38—54 in·lbf}

7. Tilt the rear door latch and lock actuator in the direction of arrow (1) shown in the figure and lift it in the direction of arrow (2) to detach the hook of the rear door latch and lock actuator.

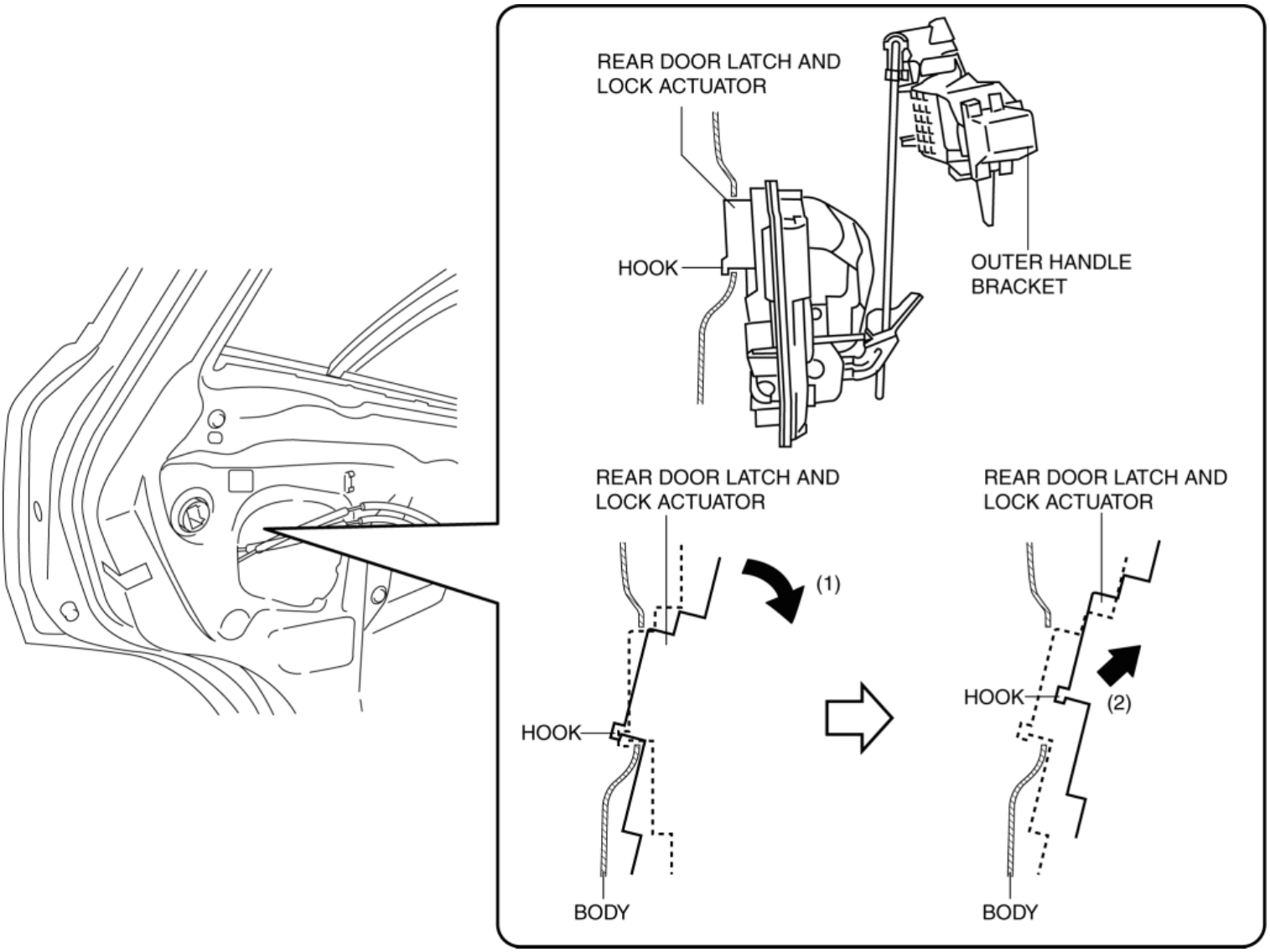

8. Move the rear door latch and lock actuator down in the direction of arrow (3) shown in the figure to remove the rod from the rod holder.

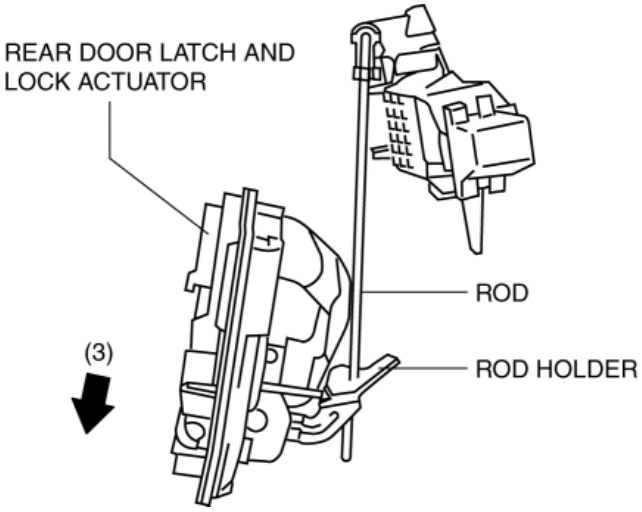

9. Remove the rear door latch and lock actuator.

10. Install in the reverse order of removal.

2014 - Mazda3 - Body and Accessories

REAR DOOR LATCH AND LOCK ACTUATOR INSPECTION

- The following actuator and switch are integrated with the rear door latch and lock actuator.
- From the actuator/switch name and operation in the following table, select the actuator or switch to be inspected, and perform the inspection following the inspection procedure described in the reference.

Actuator/Switch name	Operation	Reference
Rear door lock actuator	Electrically switches the lock/unlock of the rear doors.	**REAR DOOR LOCK ACTUATOR INSPECTION**
Rear door lock-link switch	Turns on/off in conjunction with the lock/unlock so that the lock/unlock condition is detected.	**REAR DOOR LOCK-LINK SWITCH INSPECTION**
Rear door latch switch	Turns on/off in conjunction with the latch lever operation so that the rear door open/closed condition is detected.	**REAR DOOR LATCH SWITCH INSPECTION**

2014 - Mazda3 - Body and Accessories

REAR DOOR LOCK ACTUATOR INSPECTION

LH

1. Fully lower the rear door glass.

2. Disconnect the negative battery cable. (See **NEGATIVE BATTERY CABLE DISCONNECTION/CONNECTION [SKYACTIV-G 2.0, SKYACTIV-G 2.5]**.)

3. Remove the following parts:

   a. Rear door trim (See **REAR DOOR TRIM REMOVAL/INSTALLATION**.)

   b. Rear inner handle (See **INNER HANDLE REMOVAL/INSTALLATION**.)

   c. Rear door speaker (See **REAR DOOR SPEAKER REMOVAL/INSTALLATION**.)

   d. Rear power window motor (See **REAR POWER WINDOW MOTOR REMOVAL/INSTALLATION**.)

   e. Rear door quarter glass (See **REAR DOOR QUARTER GLASS REMOVAL/INSTALLATION**.)

   f. Rear door glass (See **REAR DOOR GLASS REMOVAL/INSTALLATION**.)

   g. Rear door latch and lock actuator (See **REAR DOOR LATCH AND LOCK ACTUATOR REMOVAL/INSTALLATION**.)

4. Apply battery positive voltage and connect the ground to the rear door lock actuator terminals as indicated in the table below and verify the operation condition.

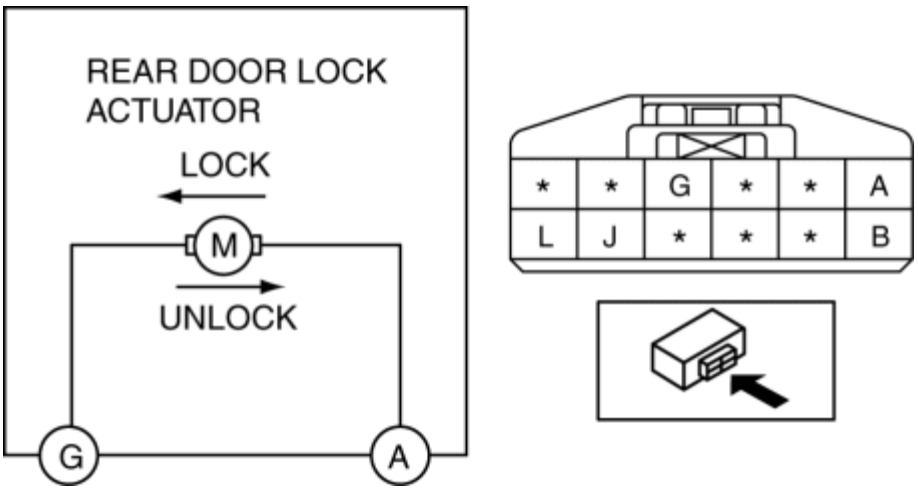

B+ Terminal	Ground Terminal	Operation

A	G	Lock
G	A	Unlock

- If not as indicated in the table, replace the rear door latch and lock actuator.

RH

1. Fully lower the rear door glass.

2. Disconnect the negative battery cable. (See **NEGATIVE BATTERY CABLE DISCONNECTION/CONNECTION [SKYACTIV-G 2.0, SKYACTIV-G 2.5]**.)

3. Remove the following parts:

   a. Rear door trim (See **REAR DOOR TRIM REMOVAL/INSTALLATION**.)

   b. Rear inner handle (See **INNER HANDLE REMOVAL/INSTALLATION**.)

   c. Rear door speaker (See **REAR DOOR SPEAKER REMOVAL/INSTALLATION**.)

   d. Rear power window motor (See **REAR POWER WINDOW MOTOR REMOVAL/INSTALLATION**.)

   e. Rear door quarter glass (See **REAR DOOR QUARTER GLASS REMOVAL/INSTALLATION**.)

   f. Rear door glass (See **REAR DOOR GLASS REMOVAL/INSTALLATION**.)

   g. Rear door latch and lock actuator (See **REAR DOOR LATCH AND LOCK ACTUATOR REMOVAL/INSTALLATION**.)

4. Apply battery positive voltage and connect the ground to the rear door lock actuator terminals as indicated in the table below and verify the operation condition.

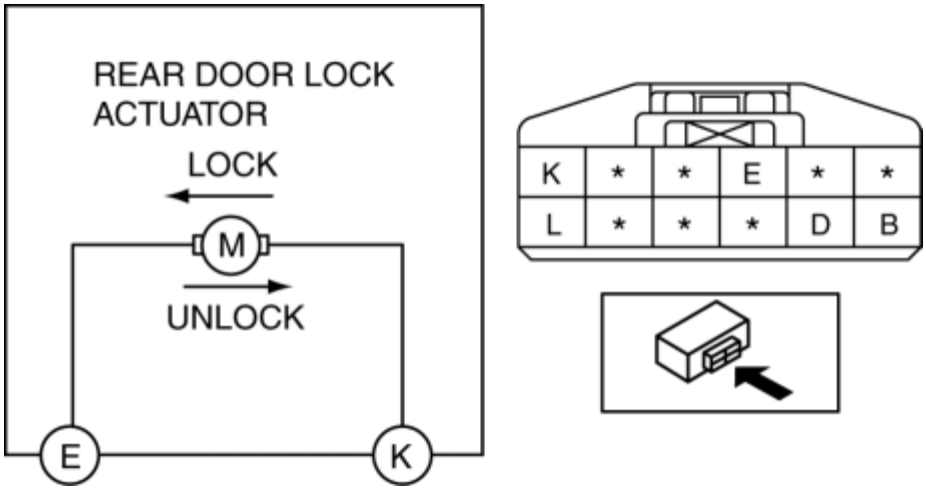

B+ Terminal	Ground Terminal	Operation

K	E	Lock
E	K	Unlock

- If not as indicated in the table, replace the rear door latch and lock actuator.

2014 - Mazda3 - Body and Accessories

REAR DOOR LATCH SWITCH INSPECTION

LH

1. Fully lower the rear door glass.
2. Disconnect the negative battery cable. (See **NEGATIVE BATTERY CABLE DISCONNECTION/CONNECTION [SKYACTIV-G 2.0, SKYACTIV-G 2.5]**.)
3. Remove the following parts:
   a. Rear door trim (See **REAR DOOR TRIM REMOVAL/INSTALLATION**.)
   b. Rear inner handle (See **INNER HANDLE REMOVAL/INSTALLATION**.)
   c. Rear door speaker (See **REAR DOOR SPEAKER REMOVAL/INSTALLATION**.)
   d. Rear power window motor (See **REAR POWER WINDOW MOTOR REMOVAL/INSTALLATION**.)
   e. Rear door quarter glass (See **REAR DOOR QUARTER GLASS REMOVAL/INSTALLATION**.)
   f. Rear door glass (See **REAR DOOR GLASS REMOVAL/INSTALLATION**.)
   g. Rear door latch and lock actuator (See **REAR DOOR LATCH AND LOCK ACTUATOR REMOVAL/INSTALLATION**.)
4. Verify that the continuity is as indicated in the table.

○—○ : Continuity

Door latch switch	Terminal	
	L	J
Latch		
Unlatch	○	○

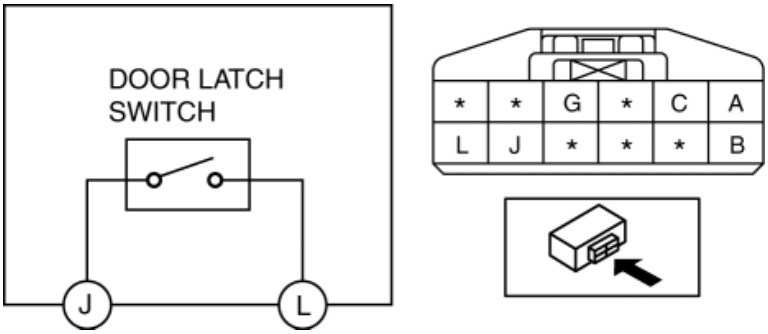

- If not as indicated in the table, replace the rear door latch and lock actuator.

NOTE:

- When inspecting the latch side of the rear door latch switch, press in the latch lever using a flathead screwdriver and set it to the latched position.

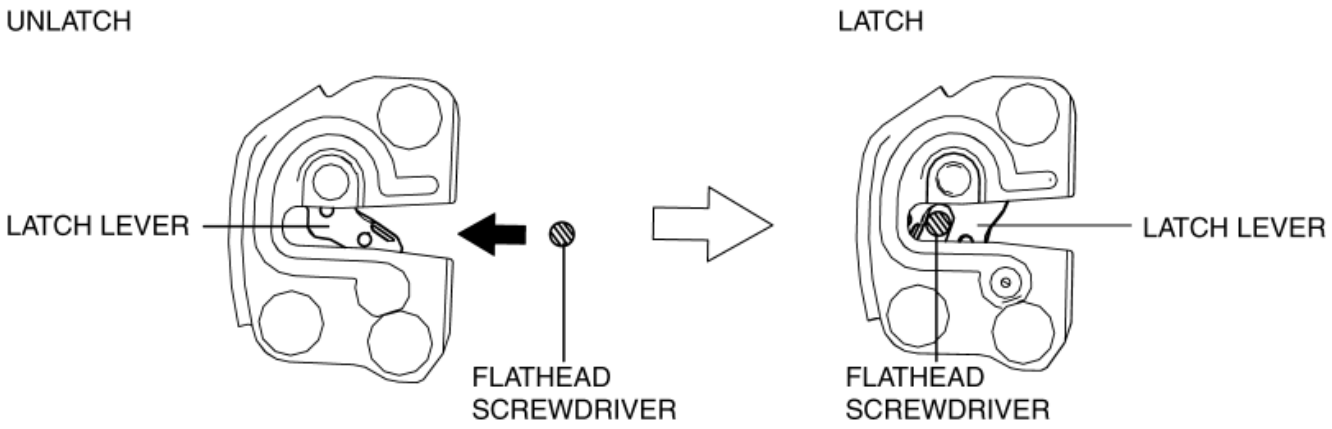

RH

1. Fully lower the rear door glass.

2. Disconnect the negative battery cable. (See **NEGATIVE BATTERY CABLE DISCONNECTION/CONNECTION [SKYACTIV-G 2.0, SKYACTIV-G 2.5]**.)

3. Remove the following parts:

   a. Rear door trim (See **REAR DOOR TRIM REMOVAL/INSTALLATION**.)

   b. Rear inner handle (See **INNER HANDLE REMOVAL/INSTALLATION**.)

   c. Rear door speaker (See **REAR DOOR SPEAKER REMOVAL/INSTALLATION**.)

   d. Rear power window motor (See **REAR POWER WINDOW MOTOR REMOVAL/INSTALLATION**.)

   e. Rear door quarter glass (See **REAR DOOR QUARTER GLASS REMOVAL/INSTALLATION**.)

   f. Rear door glass (See **REAR DOOR GLASS REMOVAL/INSTALLATION**.)

   g. Rear door latch and lock actuator (See **REAR DOOR LATCH AND LOCK ACTUATOR REMOVAL/INSTALLATION**.)

4. Verify that the continuity is as indicated in the table.

○—○: Continuity

Door latch switch	Terminal	
	B	D
Latch		
Unlatch	○	○

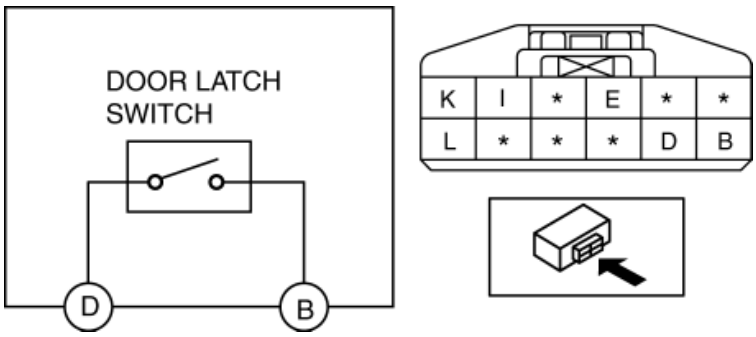

- If not as indicated in the table, replace the rear door latch and lock actuator.

NOTE:

- When inspecting the latch side of the rear door latch switch, press in the latch lever using a flathead screwdriver and set it to the latched position.

REAR DOOR LATCH SWITCH INSPECTION

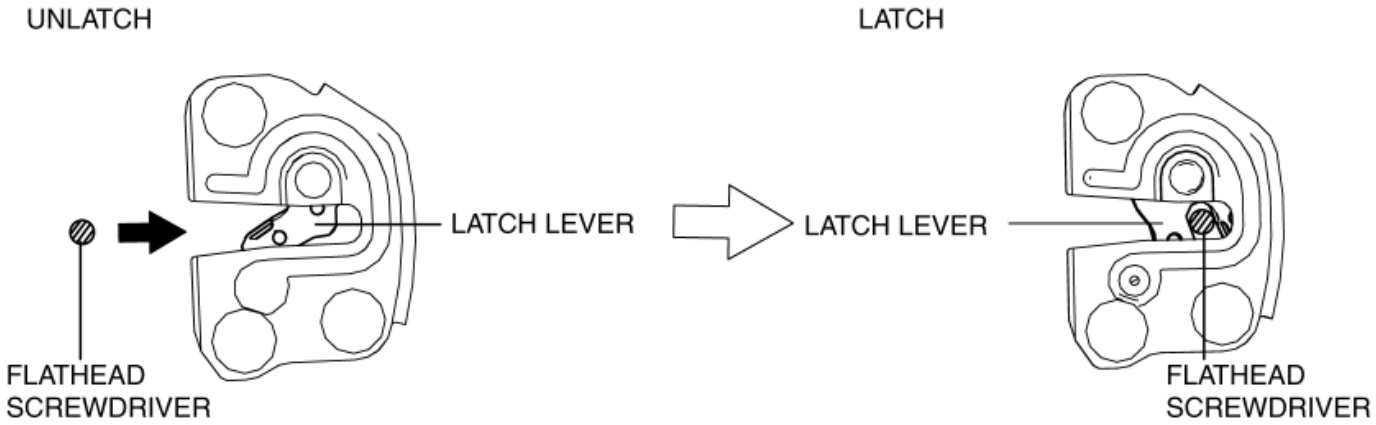

2014 - Mazda3 - Body and Accessories

REAR DOOR LOCK-LINK SWITCH INSPECTION

LH

1. Fully lower the rear door glass.
2. Disconnect the negative battery cable. (See **NEGATIVE BATTERY CABLE DISCONNECTION/CONNECTION [SKYACTIV-G 2.0, SKYACTIV-G 2.5]**.)
3. Remove the following parts:
   a. Rear door trim (See **REAR DOOR TRIM REMOVAL/INSTALLATION**.)
   b. Rear inner handle (See **INNER HANDLE REMOVAL/INSTALLATION**.)
   c. Rear door speaker (See **REAR DOOR SPEAKER REMOVAL/INSTALLATION**.)
   d. Rear power window motor (See **REAR POWER WINDOW MOTOR REMOVAL/INSTALLATION**.)
   e. Rear door quarter glass (See **REAR DOOR QUARTER GLASS REMOVAL/INSTALLATION**.)
   f. Rear door glass (See **REAR DOOR GLASS REMOVAL/INSTALLATION**.)
   g. Rear door latch and lock actuator (See **REAR DOOR LATCH AND LOCK ACTUATOR REMOVAL/INSTALLATION**.)
4. If the door lock condition is to be inspected, pull the door lock knob cable, or press it in.
5. Verify that the continuity is as indicated in the table.

○—○ : Continuity

Lock knob position	Terminal		
	D	J	B
Lock	○	○	
Unlock		○	○

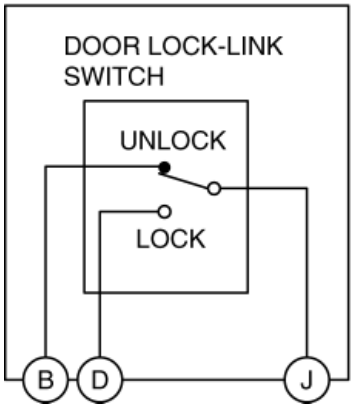

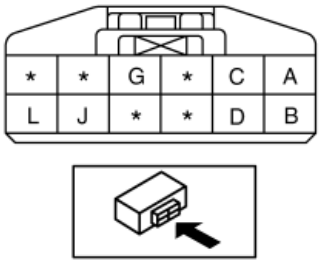

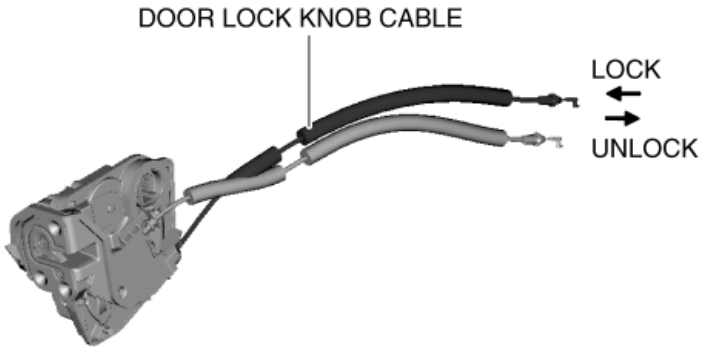

- If not as indicated in the table, replace the rear door latch and lock actuator.

RH

1. Fully lower the rear door glass.
2. Disconnect the negative battery cable. (See **NEGATIVE BATTERY CABLE DISCONNECTION/CONNECTION [SKYACTIV-G 2.0, SKYACTIV-G 2.5]**.)
3. Remove the following parts:

a. Rear door trim (See **REAR DOOR TRIM REMOVAL/INSTALLATION**.)

b. Rear inner handle (See **INNER HANDLE REMOVAL/INSTALLATION**.)

c. Rear door speaker (See **REAR DOOR SPEAKER REMOVAL/INSTALLATION**.)

d. Rear power window motor (See **REAR POWER WINDOW MOTOR REMOVAL/INSTALLATION**.)

e. Rear door quarter glass (See **REAR DOOR QUARTER GLASS REMOVAL/INSTALLATION**.)

f. Rear door glass (See **REAR DOOR GLASS REMOVAL/INSTALLATION**.)

g. Rear door latch and lock actuator (See **REAR DOOR LATCH AND LOCK ACTUATOR REMOVAL/INSTALLATION**.)

4. If the door lock condition is to be inspected, pull the door lock knob cable, or press it in.

5. Verify that the continuity is as indicated in the table.

○—○ : Continuity

Lock knob position	Terminal		
	J	D	L
Lock	○	○	
Unlock		○	○

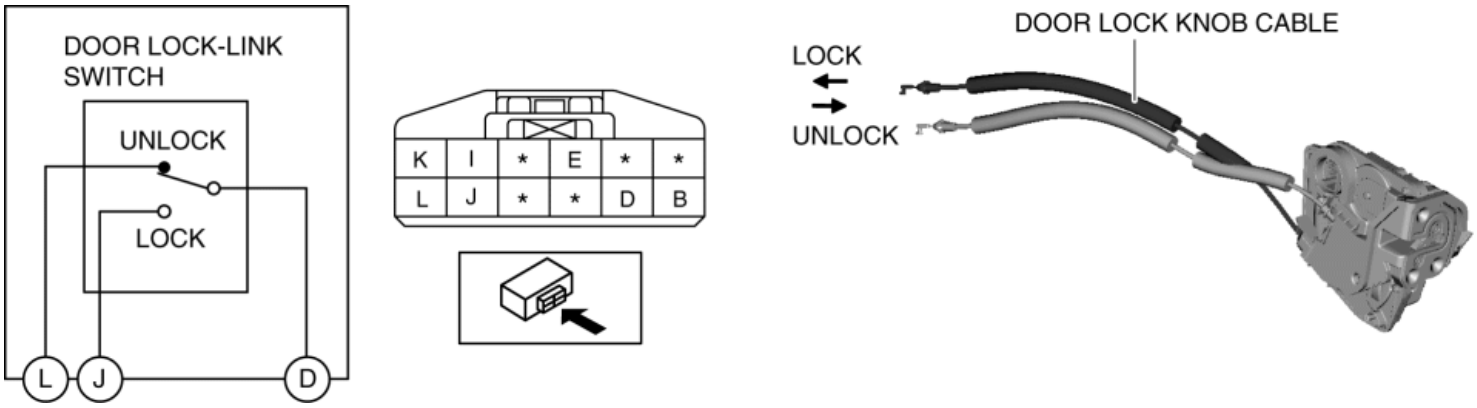

- If not as indicated in the table, replace the rear door latch and lock actuator.

2014 - Mazda3 - Body and Accessories

DOOR LOCK SYSTEM OPERATION RECORD

1. Connect the M-MDS to the DLC-2.
2. After vehicle identification, select the following from the M-MDS initial screen.
    - “Operational Record”
3. Then, select the following from the screen menu.
    - “Door Lock System”
4. Display the door lock system operation history according to the screen instructions.

2014 - Mazda3 - Body and Accessories

TRUNK LID LATCH AND RELEASE ACTUATOR REMOVAL/INSTALLATION

1. Disconnect the negative battery cable. (See **NEGATIVE BATTERY CABLE DISCONNECTION/CONNECTION [SKYACTIV-G 2.0, SKYACTIV-G 2.5]**.)
2. Remove the trunk lid recess. (See **TRUNK LID RECESS REMOVAL/INSTALLATION**.)
3. Remove the trunk lid trim. (See **TRUNK LID TRIM REMOVAL/INSTALLATION**.)
4. Disconnect the connector.

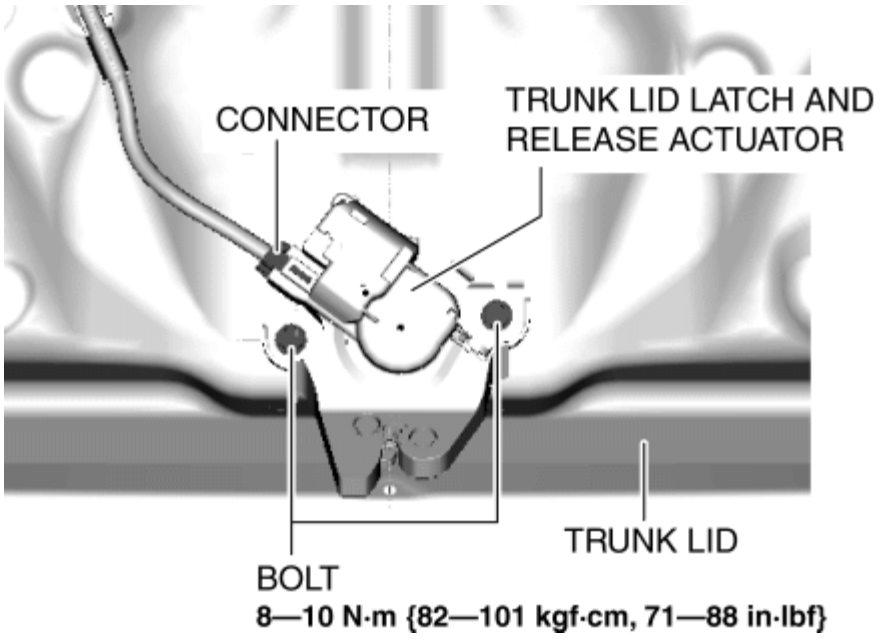

5. Remove the bolts.
6. Remove the trunk lid latch and release actuator from the trunk lid.
7. Install in the reverse order of removal.

2014 - Mazda3 - Body and Accessories

TRUNK LID LATCH AND RELEASE ACTUATOR INSPECTION

- The following actuator and switch are integrated with the trunk lid latch and release actuator.
- From the actuator/switch name and operation in the following table, select the actuator or switch to be inspected, and perform the inspection following the inspection procedure described in the reference.

Actuator/Switch name	Operation	Reference
Trunk lid release actuator	Electrically unlatches the trunk lid based on the signal from the rear body control module (RBCM).	**TRUNK LID RELEASE ACTUATOR INSPECTION**
Trunk lid latch switch	Turns on/off in conjunction with the latch lever rotation so that the trunk lid open/closed condition is detected.	**TRUNK LID LATCH SWITCH INSPECTION**

2014 - Mazda3 - Body and Accessories

TRUNK LID RELEASE ACTUATOR INSPECTION

1. Disconnect the negative battery cable. (See **NEGATIVE BATTERY CABLE DISCONNECTION/CONNECTION [SKYACTIV-G 2.0, SKYACTIV-G 2.5]**.)

2. Remove the trunk lid recess. (See **TRUNK LID RECESS REMOVAL/INSTALLATION**.)

3. Remove the trunk lid trim. (See **TRUNK LID TRIM REMOVAL/INSTALLATION**.)

4. Remove the trunk lid latch and release actuator. (See **TRUNK LID LATCH AND RELEASE ACTUATOR REMOVAL/INSTALLATION**.)

5. Press in the latch lever of the trunk lid latch and release actuator using a flathead screwdriver, and set it to the latched condition.

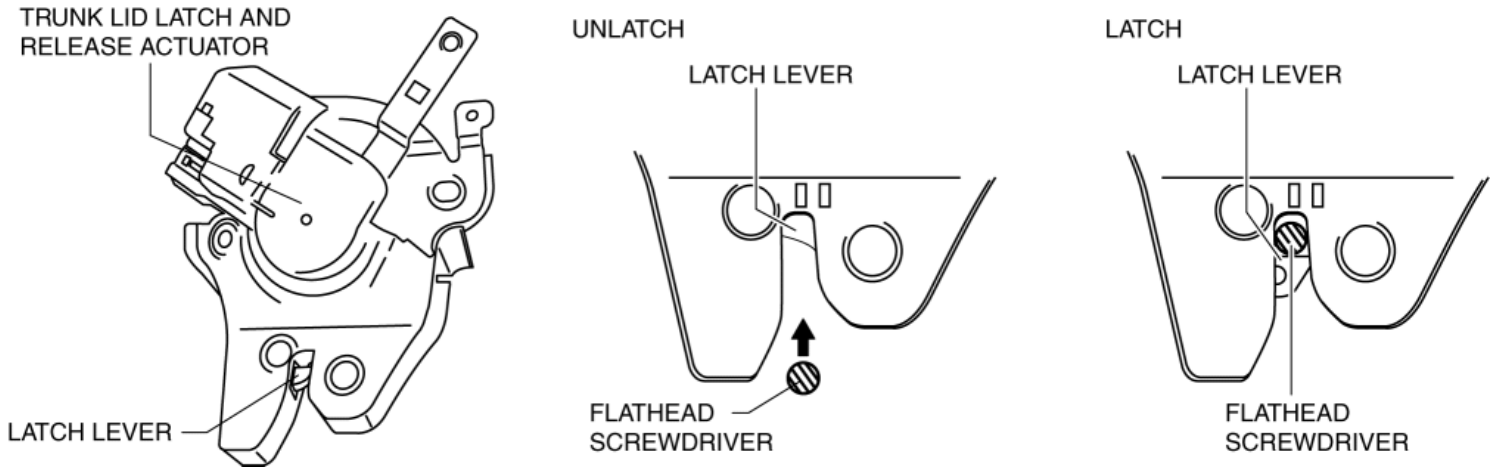

6. Connect terminal A to the positive battery voltage, connect terminal B to the ground, and verify that the latch lever is released and the condition changes to the unlatch condition.

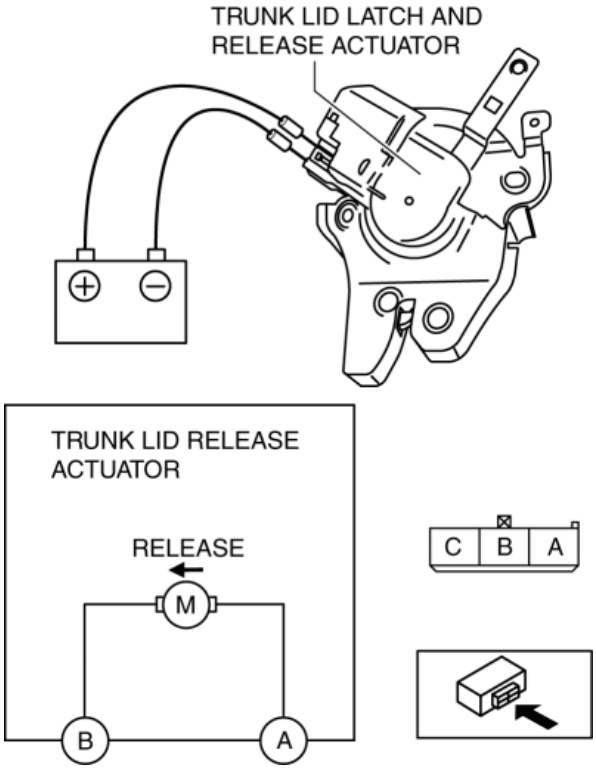

- If the operation cannot be verified, replace the trunk lid latch and release actuator.

TRUNK LID RELEASE ACTUATOR INSPECTION

2014 - Mazda3 - Body and Accessories

TRUNK LID LATCH SWITCH INSPECTION

1. Disconnect the negative battery cable. (See **NEGATIVE BATTERY CABLE DISCONNECTION/CONNECTION [SKYACTIV-G 2.0, SKYACTIV-G 2.5]**.)

2. Remove the trunk lid recess. (See **TRUNK LID RECESS REMOVAL/INSTALLATION**.)

3. Remove the trunk lid trim. (See **TRUNK LID TRIM REMOVAL/INSTALLATION**.)

4. Remove the trunk lid latch and release actuator. (See **TRUNK LID LATCH AND RELEASE ACTUATOR REMOVAL/INSTALLATION**.)

5. Verify that the continuity is as indicated in the table.

○—○ : Continuity

Trunk lid latch	Terminal	
	B	C
Latch (trunk lid close)		
Unlatch (trunk lid open)	○	○

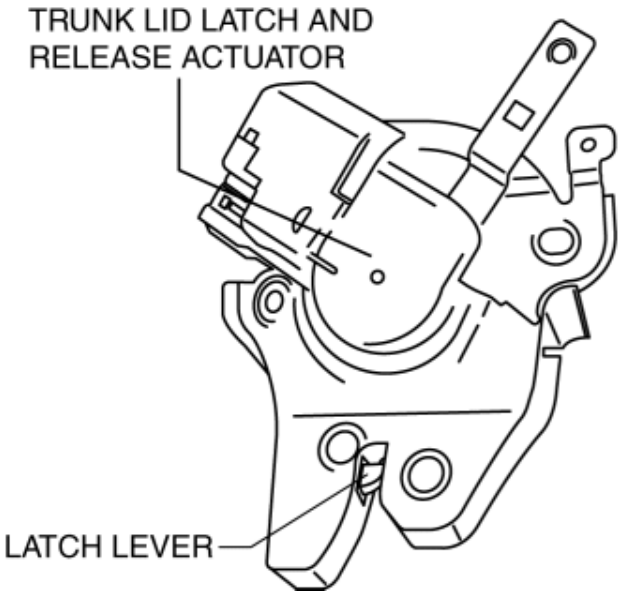

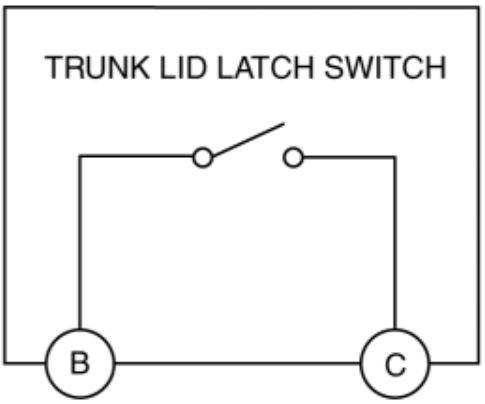

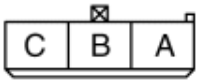

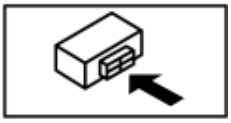

- If not as indicated in the table, replace the trunk lid latch and release actuator.

NOTE:

- When inspecting the latch condition of the trunk lid latch switch, press in the latch lever using a flathead screwdriver and set it to the latched position.

TRUNK LID LATCH SWITCH INSPECTION

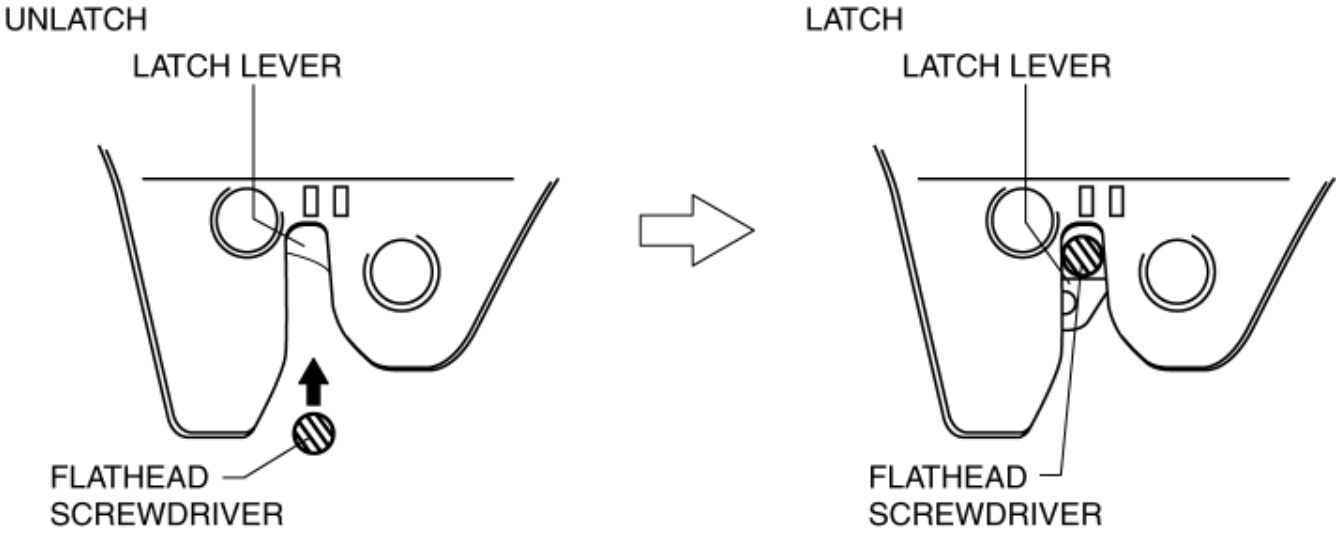

2014 - Mazda3 - Body and Accessories

TRUNK LID LOCK STRIKER REMOVAL/INSTALLATION

1. Remove the lock bezel in the direction of the arrow (1) shown in the figure while detaching tabs.

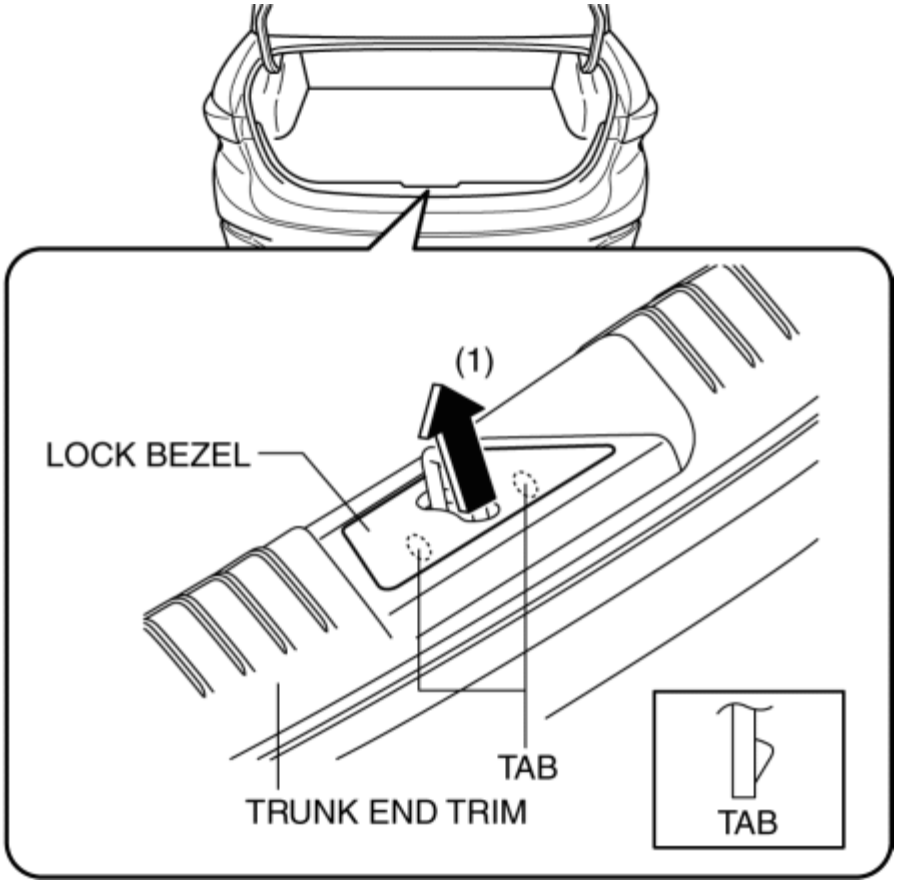

2. Remove the bolts, then remove the trunk lid lock striker.

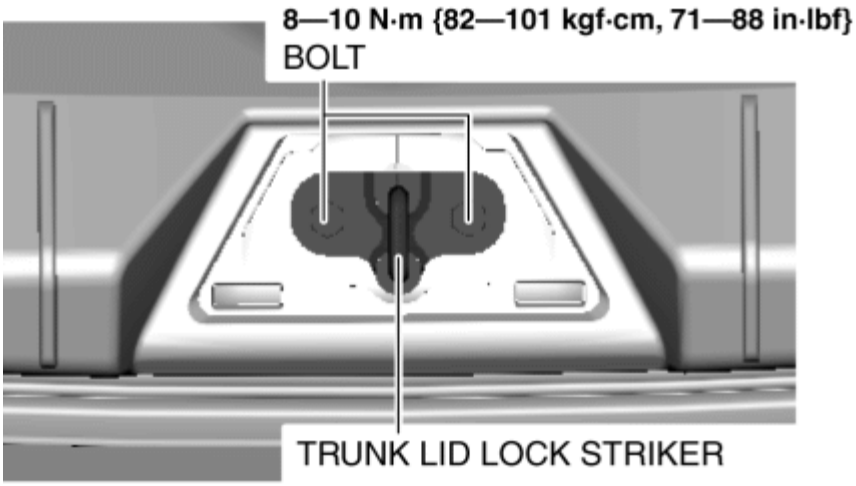

3. Install in the reverse order of removal.

4. Adjust the trunk lid. (See **TRUNK LID ADJUSTMENT**.)

2014 - Mazda3 - Body and Accessories

TRUNK LID OPENER SWITCH REMOVAL/INSTALLATION

Vehicle Interior

1. Disconnect the negative battery cable. (See **NEGATIVE BATTERY CABLE DISCONNECTION/CONNECTION [SKYACTIV-G 2.0, SKYACTIV-G 2.5]**.)

2. While pressing the trunk lid opener switch tab in the direction of arrow (1) shown in the figure, press it in the direction of arrow (2) to detach the trunk lid opener switch tab from the driver-side lower panel.

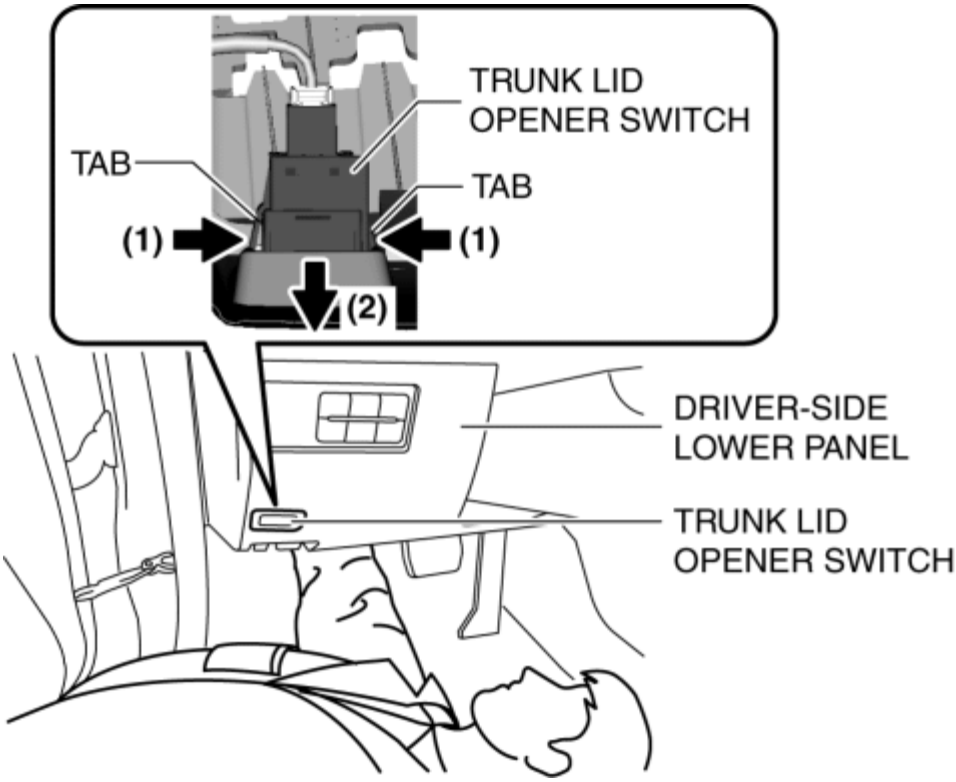

3. Remove the trunk lid opener switch from the driver-side lower panel.

4. Disconnect the connector from the trunk lid opener switch.

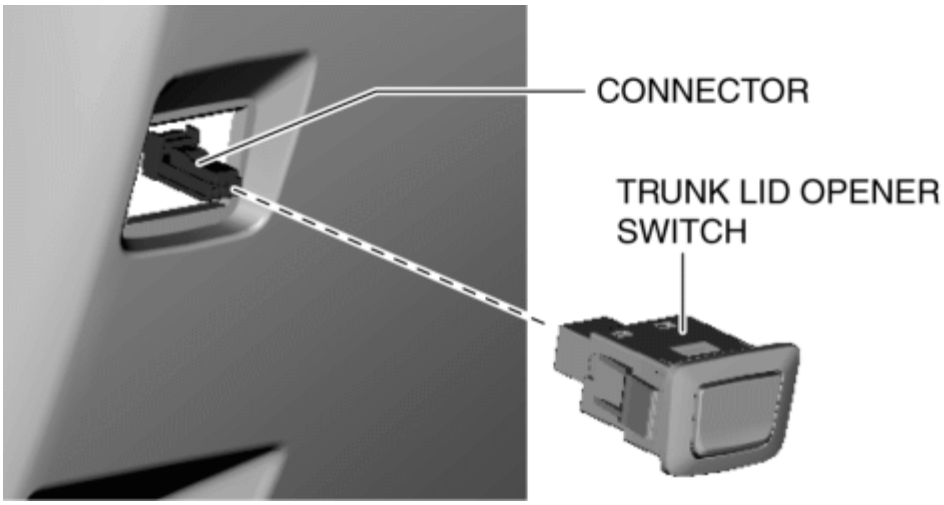

5. Install in the reverse order of removal.

Vehicle Exterior

1. Disconnect the negative battery cable. (See **NEGATIVE BATTERY CABLE DISCONNECTION/CONNECTION [SKYACTIV-G 2.0, SKYACTIV-G 2.5]**.)
2. Remove the trunk lid recess. (See **TRUNK LID RECESS REMOVAL/INSTALLATION**.)
3. Remove the trunk lid trim. (See **TRUNK LID TRIM REMOVAL/INSTALLATION**.)
4. Disconnect the connector.

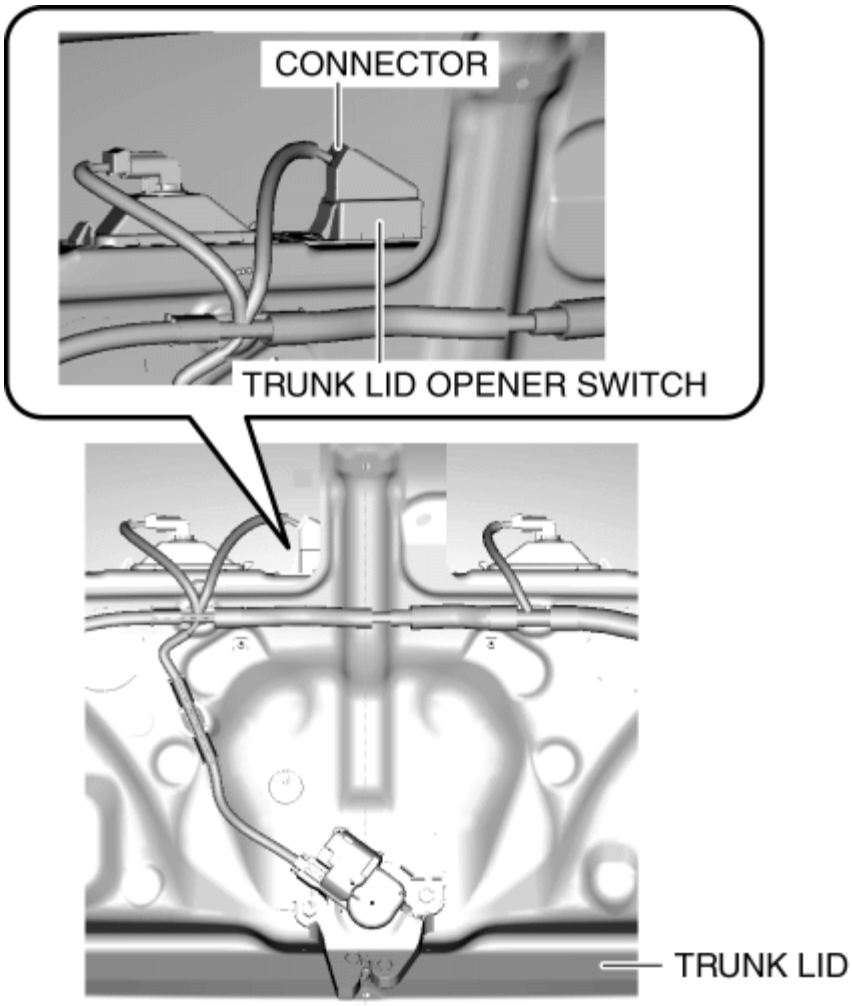

5. While pressing the trunk lid opener switch tab in the direction of arrow (1) shown in the figure, press it in the direction of arrow (2) to detach the trunk lid opener switch tab from the trunk lid.

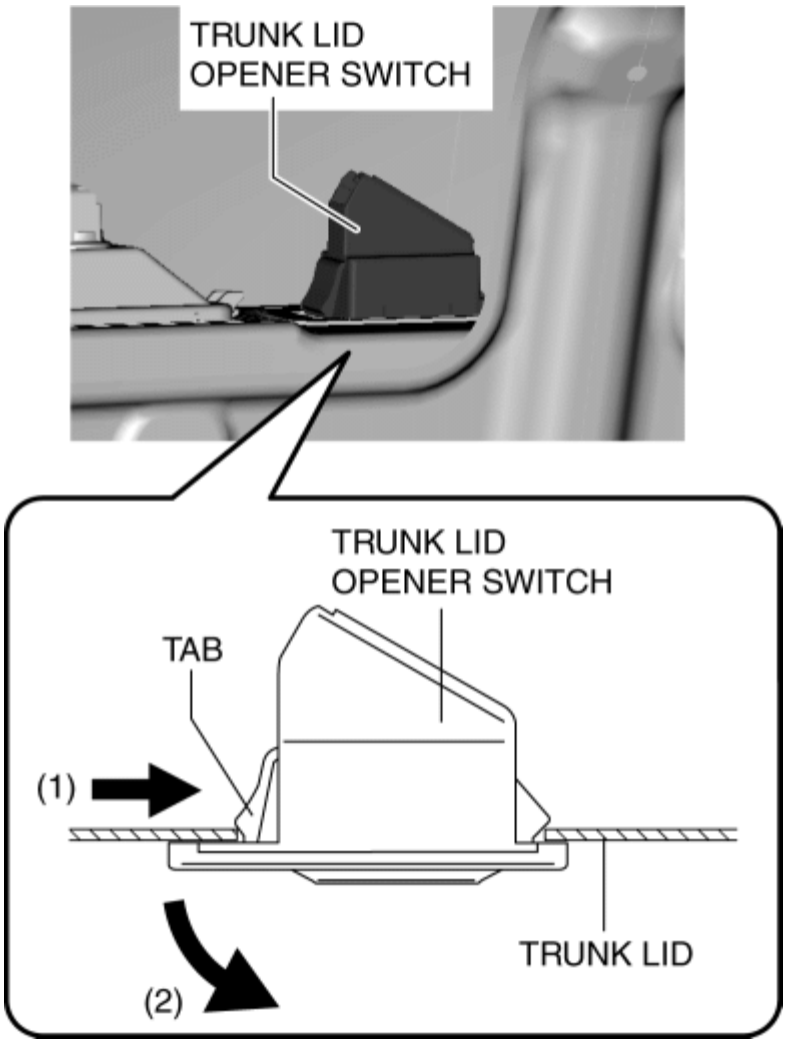

6. Remove the trunk lid opener switch from the trunk lid.

7. Install in the reverse order of removal.

2014 - Mazda3 - Body and Accessories

TRUNK LID OPENER SWITCH INSPECTION

Vehicle Interior

1. Disconnect the negative battery cable. (See **NEGATIVE BATTERY CABLE DISCONNECTION/CONNECTION [SKYACTIV-G 2.0, SKYACTIV-G 2.5]**.)

2. Remove the trunk lid opener switch (See **TRUNK LID OPENER SWITCH REMOVAL/INSTALLATION**.)

3. Verify the continuity of trunk lid opener switch terminals A and D.

○—○ : Continuity

Switch position	Terminal	
	A	D
On (push)	○	○
Off (release)		

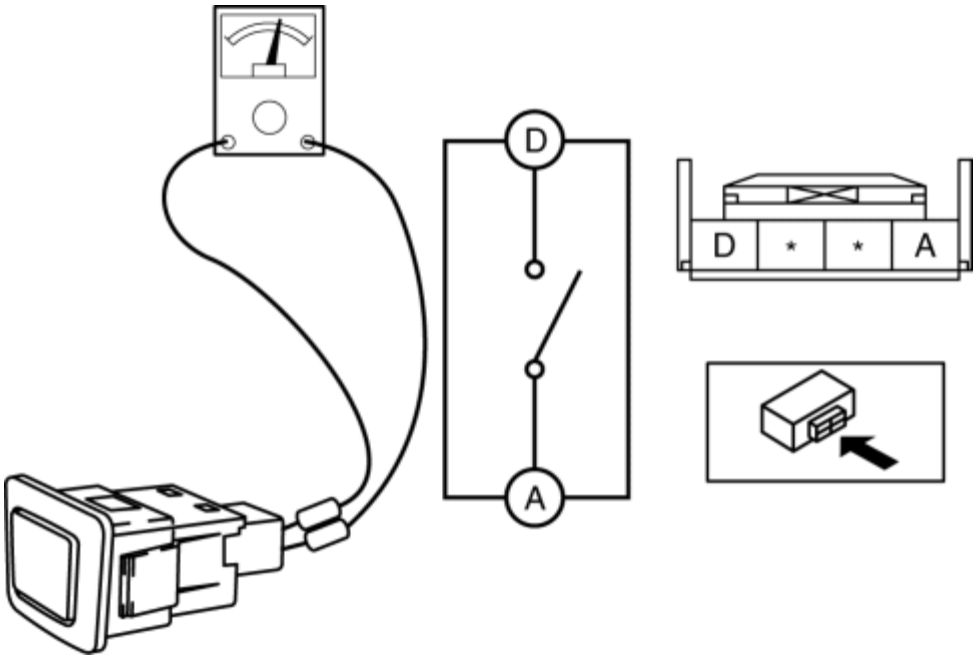

- If not as indicated in the table, replace the trunk lid opener switch.

Vehicle Exterior

1. Disconnect the negative battery cable. (See **NEGATIVE BATTERY CABLE DISCONNECTION/CONNECTION [SKYACTIV-G 2.0, SKYACTIV-G 2.5]**.)

2. Remove the following parts:

   a. Trunk lid recess (See **TRUNK LID RECESS REMOVAL/INSTALLATION**.)

   b. Trunk lid trim (See **TRUNK LID TRIM REMOVAL/INSTALLATION**.)

   c. Trunk lid opener switch (See **TRUNK LID OPENER SWITCH REMOVAL/INSTALLATION**.)

3. Verify the continuity of trunk lid opener switch terminals A and C.

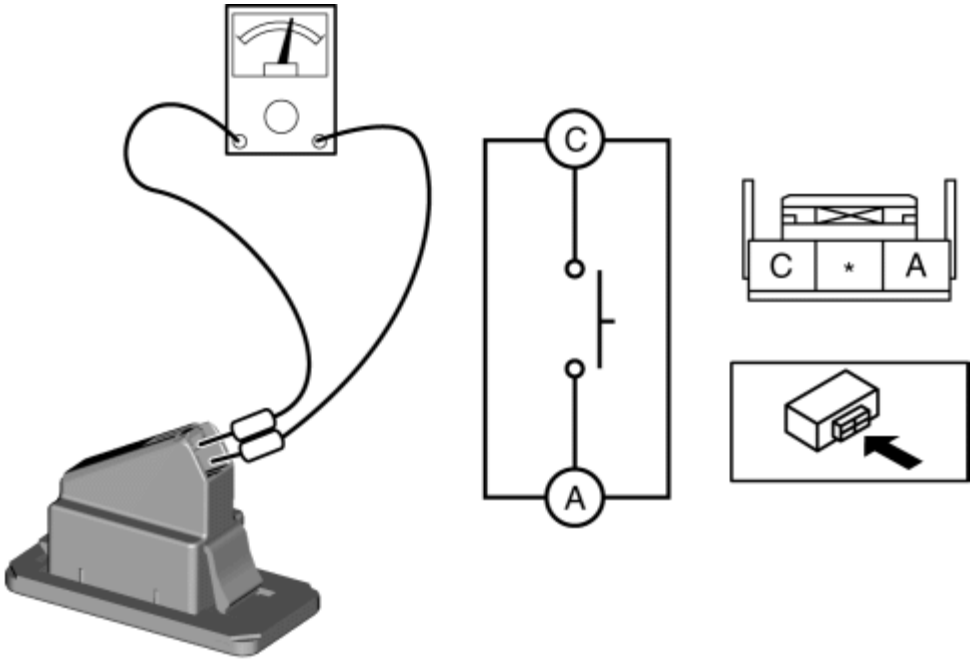

- If not as indicated in the table, replace the trunk lid opener switch.

○—○ : Continuity

Switch position	Terminal	
	A	C
On (push)	○	○
Off (release)		

2014 - Mazda3 - Body and Accessories

LIFTGATE LATCH AND LOCK ACTUATOR REMOVAL/INSTALLATION

1. Disconnect the negative battery cable. (See **NEGATIVE BATTERY CABLE DISCONNECTION/CONNECTION [SKYACTIV-G 2.0, SKYACTIV-G 2.5]**.)
2. Remove the following parts:
   a. Rear package tray (See **REAR PACKAGE TRAY REMOVAL/INSTALLATION**.)
   b. Liftgate upper trim (See **LIFTGATE UPPER TRIM REMOVAL/INSTALLATION**.)
   c. Liftgate side trim (See **LIFTGATE SIDE TRIM REMOVAL/INSTALLATION**.)
   d. Liftgate recess (See **LIFTGATE RECESS REMOVAL/INSTALLATION**.)
   e. Liftgate lower trim (See **LIFTGATE LOWER TRIM REMOVAL/INSTALLATION**.)
3. Disconnect the connector.

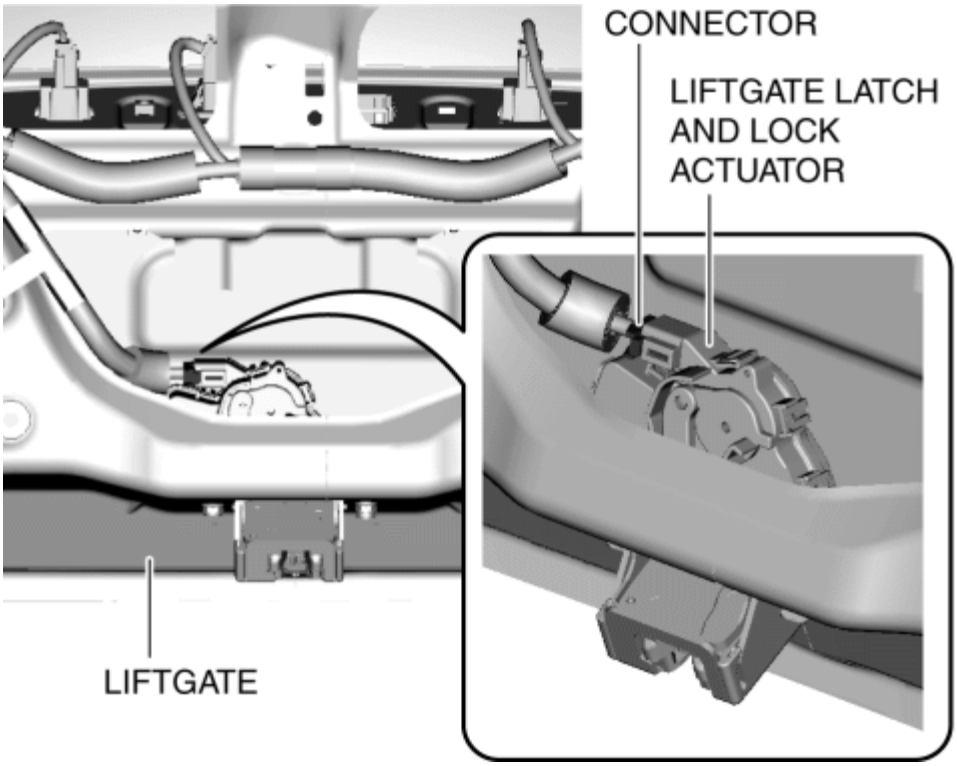

4. Remove the bolts.

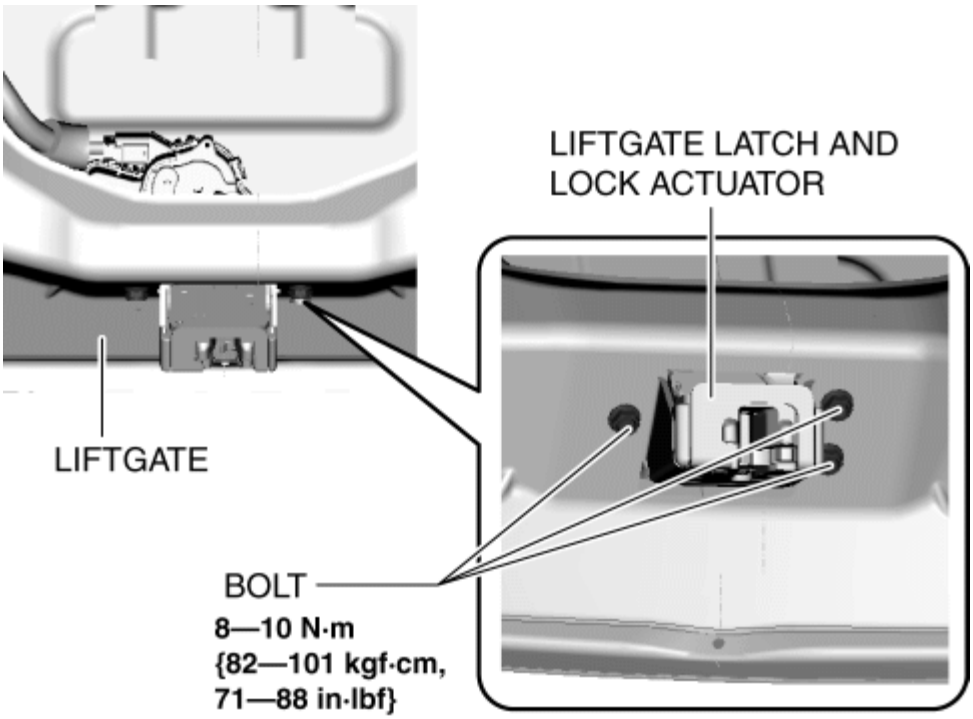

5. Remove the liftgate latch and lock actuator from the liftgate.

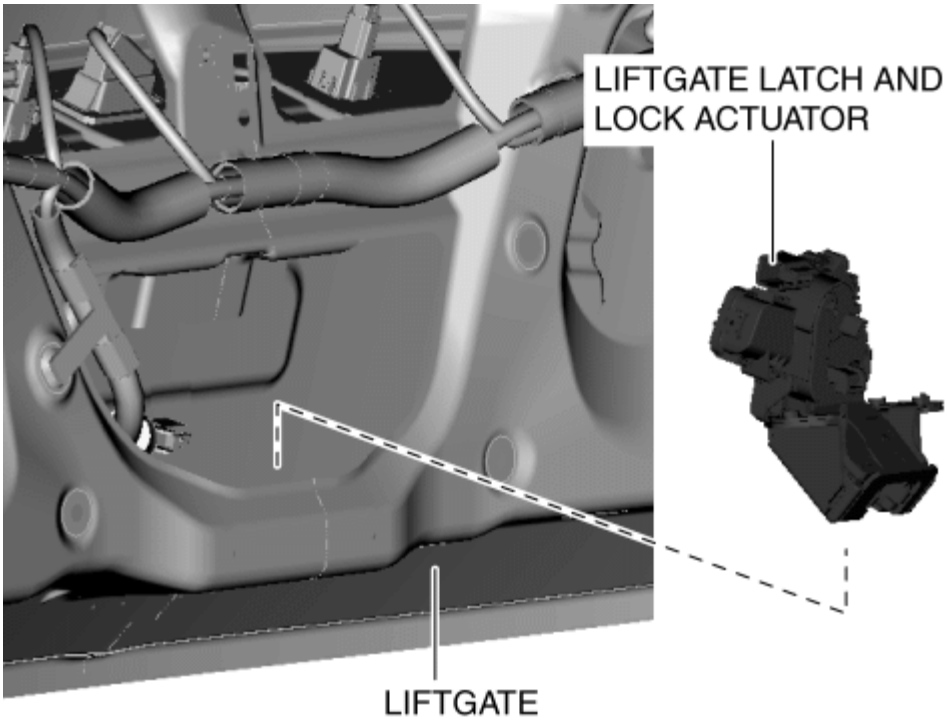

6. Install in the reverse order of removal.

2014 - Mazda3 - Body and Accessories

LIFTGATE LATCH AND LOCK ACTUATOR INSPECTION

- The following actuator and switch are integrated with the liftgate latch and lock actuator.
- From the actuator/switch name and operation in the following table, select the actuator or switch to be inspected, and perform the inspection following the inspection procedure described in the reference.

Actuator/Switch name	Operation	Reference
Liftgate lock actuator	Electrically unlatches the liftgate based on the signal from the rear body control module (RBCM).	**LIFTGATE LOCK ACTUATOR INSPECTION**
Liftgate latch switch	Turns on/off in conjunction with the latch lever rotation so that the liftgate open/closed condition is detected.	**LIFTGATE LATCH SWITCH INSPECTION**

2014 - Mazda3 - Body and Accessories

LIFTGATE LOCK ACTUATOR INSPECTION

1. Disconnect the negative battery cable. (See **NEGATIVE BATTERY CABLE DISCONNECTION/CONNECTION [SKYACTIV-G 2.0, SKYACTIV-G 2.5]**.)

2. Remove the following parts:

   a. Rear package tray (See **REAR PACKAGE TRAY REMOVAL/INSTALLATION**.)

   b. Liftgate upper trim (See **LIFTGATE UPPER TRIM REMOVAL/INSTALLATION**.)

   c. Liftgate side trim (See **LIFTGATE SIDE TRIM REMOVAL/INSTALLATION**.)

   d. Liftgate recess (See **LIFTGATE RECESS REMOVAL/INSTALLATION**.)

   e. Liftgate lower trim (See **LIFTGATE LOWER TRIM REMOVAL/INSTALLATION**.)

   f. Liftgate latch and lock actuator (See **LIFTGATE LATCH AND LOCK ACTUATOR REMOVAL/INSTALLATION**.)

3. Press in the latch lever of the liftgate latch and lock actuator using a flathead screwdriver, and set it to the latched condition.

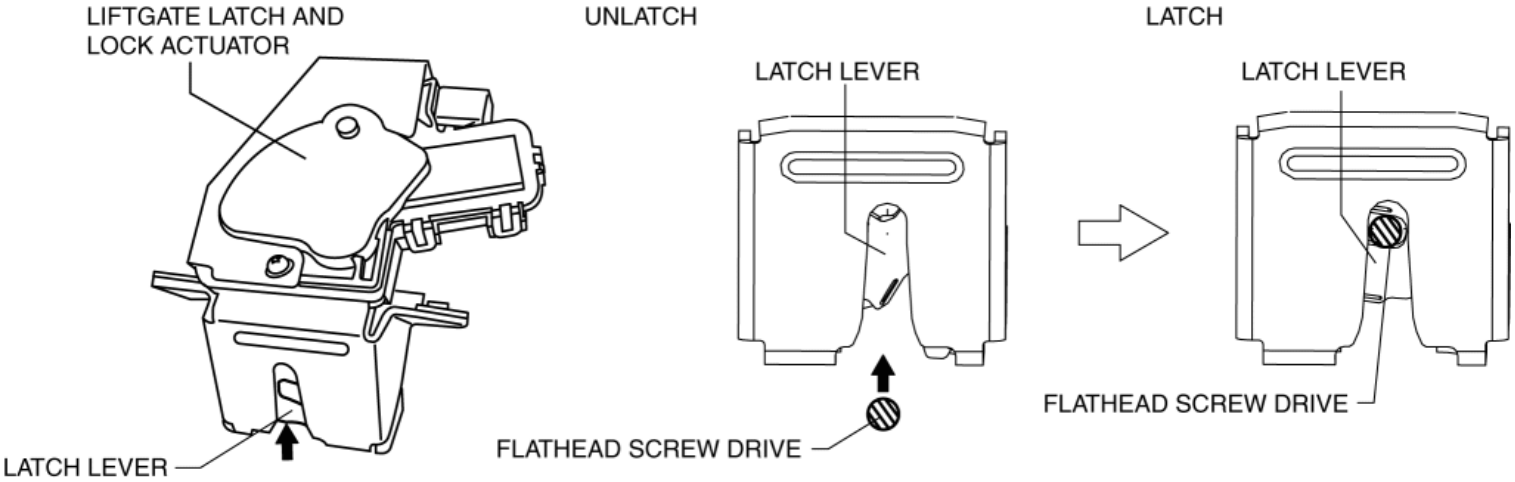

4. Connect terminal D to the positive battery voltage, connect terminal B to the ground, and verify that the latch lever is released and the condition changes to the unlatch condition.

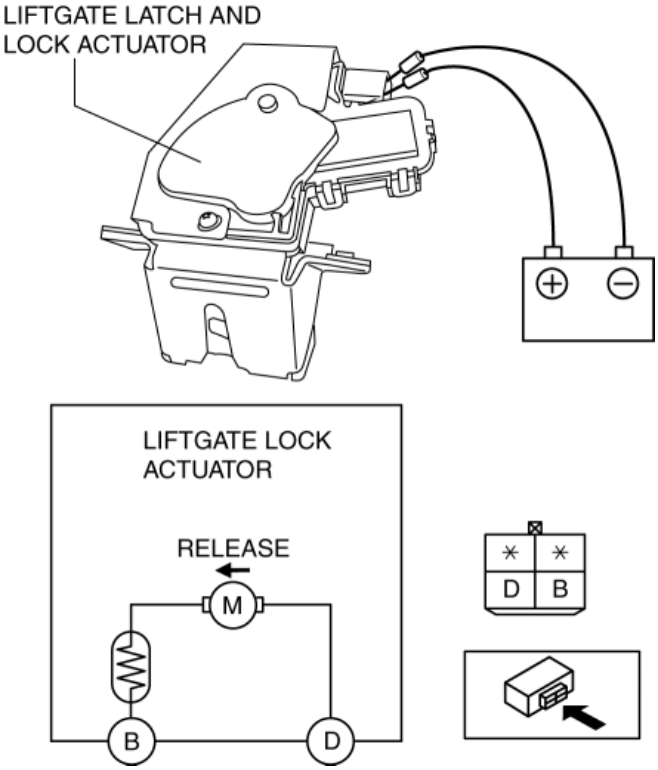

- If the operation cannot be verified, replace the liftgate latch and lock actuator.

2014 - Mazda3 - Body and Accessories

LIFTGATE LATCH SWITCH INSPECTION

1. Disconnect the negative battery cable. (See **NEGATIVE BATTERY CABLE DISCONNECTION/CONNECTION [SKYACTIV-G 2.0, SKYACTIV-G 2.5]**.)

2. Remove the following parts:

   a. Rear package tray (See **REAR PACKAGE TRAY REMOVAL/INSTALLATION**.)

   b. Liftgate upper trim (See **LIFTGATE UPPER TRIM REMOVAL/INSTALLATION**.)

   c. Liftgate side trim (See **LIFTGATE SIDE TRIM REMOVAL/INSTALLATION**.)

   d. Liftgate recess (See **LIFTGATE RECESS REMOVAL/INSTALLATION**.)

   e. Liftgate lower trim (See **LIFTGATE LOWER TRIM REMOVAL/INSTALLATION**.)

   f. Liftgate latch and lock actuator (See **LIFTGATE LATCH AND LOCK ACTUATOR REMOVAL/INSTALLATION**.)

3. Verify that the continuity is as indicated in the table.

○—○ : Continuity

Liftgate latch switch	Terminal	
	A	C
Latch (liftgate close)		
Unlatch (liftgate open)	○	○

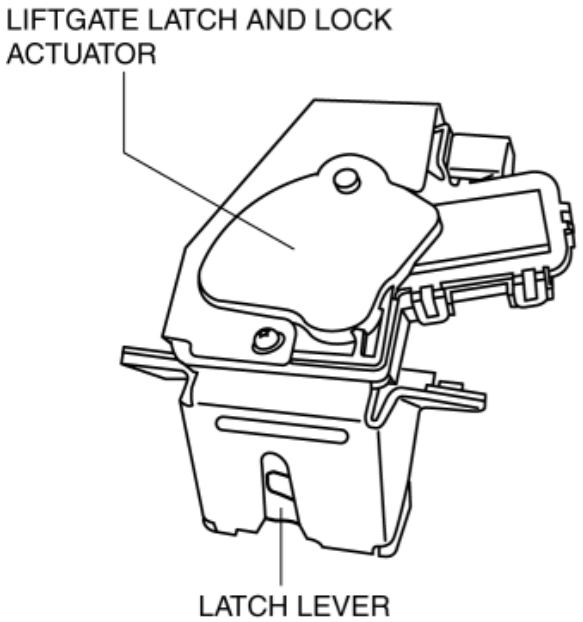

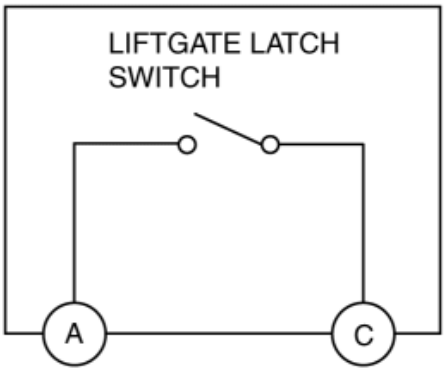

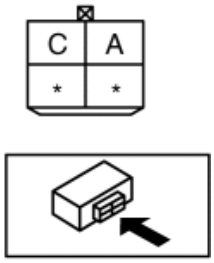

- If not as indicated in the table, replace the liftgate latch and lock actuator.

NOTE:

- When inspecting the latch condition of the liftgate latch switch, press in the latch lever using a flathead screwdriver and set it to the latched position.

LIFTGATE LATCH SWITCH INSPECTION

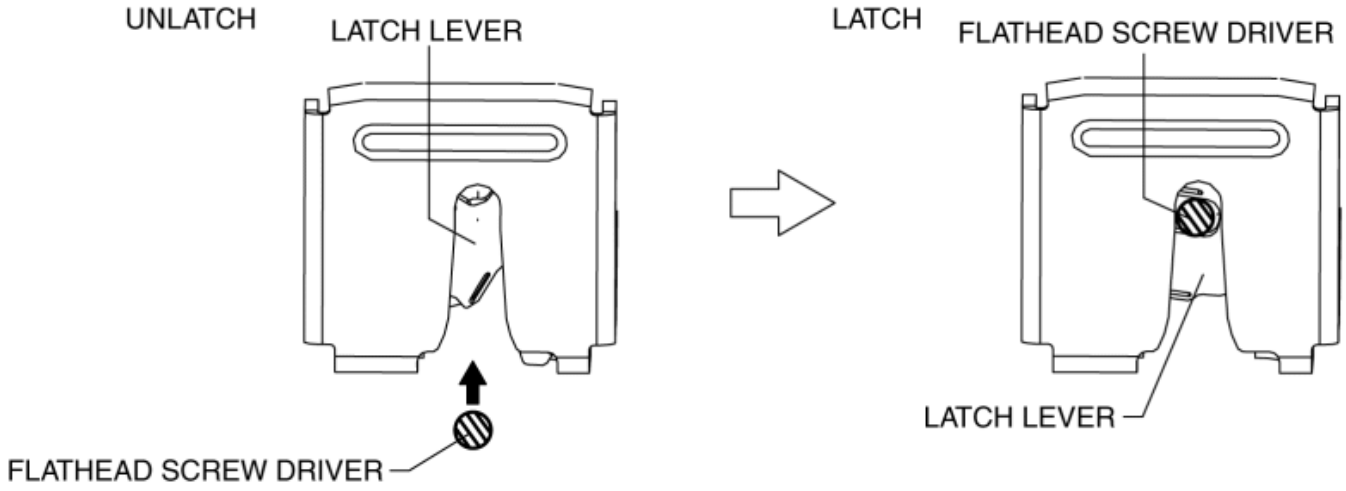

2014 - Mazda3 - Body and Accessories

LIFTGATE LOCK STRIKER REMOVAL/INSTALLATION

1. Remove the lock bezel on the trunk end trim. (See **TRUNK END TRIM REMOVAL/INSTALLATION**.)

2. Remove the bolts, then remove the liftgate lock striker.

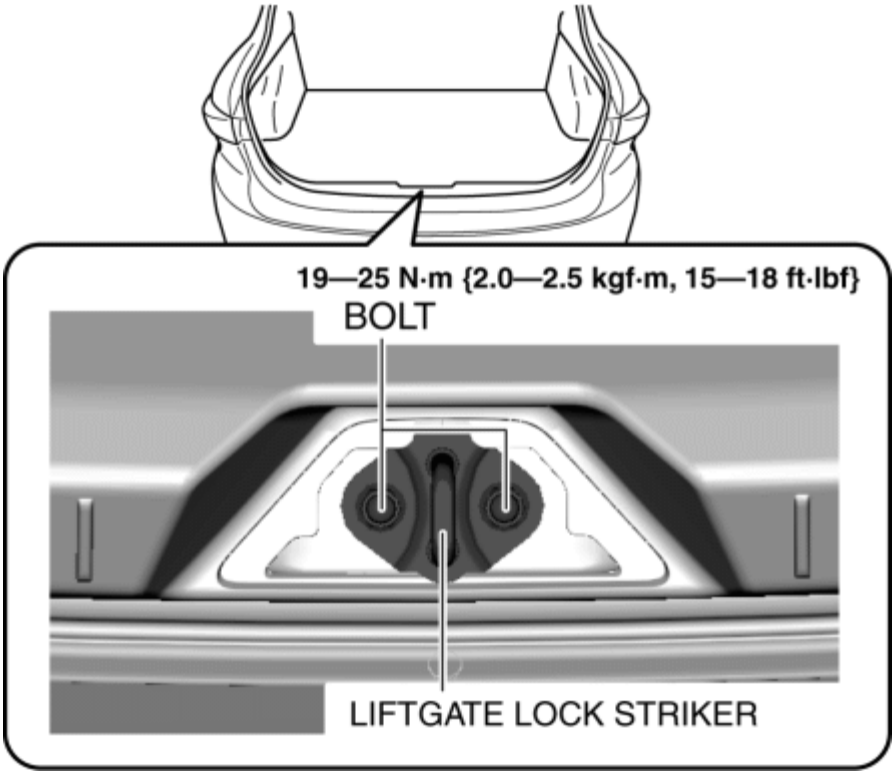

3. Install in the reverse order of removal.

4. Adjust the liftgate. (See **LIFTGATE ADJUSTMENT**.)

2014 - Mazda3 - Body and Accessories

LIFTGATE OPENER SWITCH REMOVAL/INSTALLATION

1. Disconnect the negative battery cable. (See **NEGATIVE BATTERY CABLE DISCONNECTION/CONNECTION [SKYACTIV-G 2.0, SKYACTIV-G 2.5]**.)

2. Remove the following parts:

   a. Rear package tray (See **REAR PACKAGE TRAY REMOVAL/INSTALLATION**.)

   b. Liftgate upper trim (See **LIFTGATE UPPER TRIM REMOVAL/INSTALLATION**.)

   c. Liftgate side trim (See **LIFTGATE SIDE TRIM REMOVAL/INSTALLATION**.)

   d. Liftgate recess (See **LIFTGATE RECESS REMOVAL/INSTALLATION**.)

   e. Liftgate lower trim (See **LIFTGATE LOWER TRIM REMOVAL/INSTALLATION**.)

   f. Liftgate garnish (See **LIFTGATE GARNISH REMOVAL/INSTALLATION**.)

3. While pulling the protector tabs in the direction of arrow (1) shown in the figure, pull the protector in the direction of arrow (2) shown in the figure, and detach the protector tabs from the liftgate opener switch.

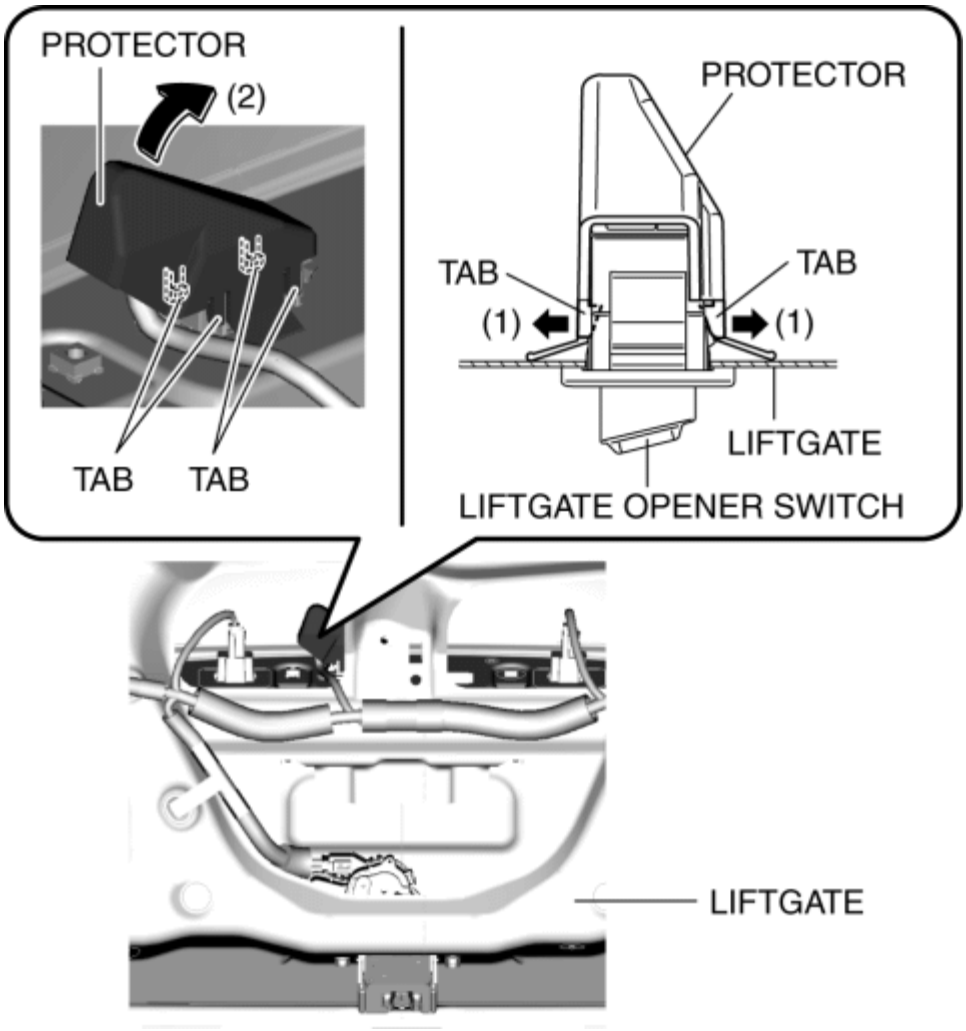

4. Remove the protector from the liftgate opener switch.

5. Disconnect the connector.

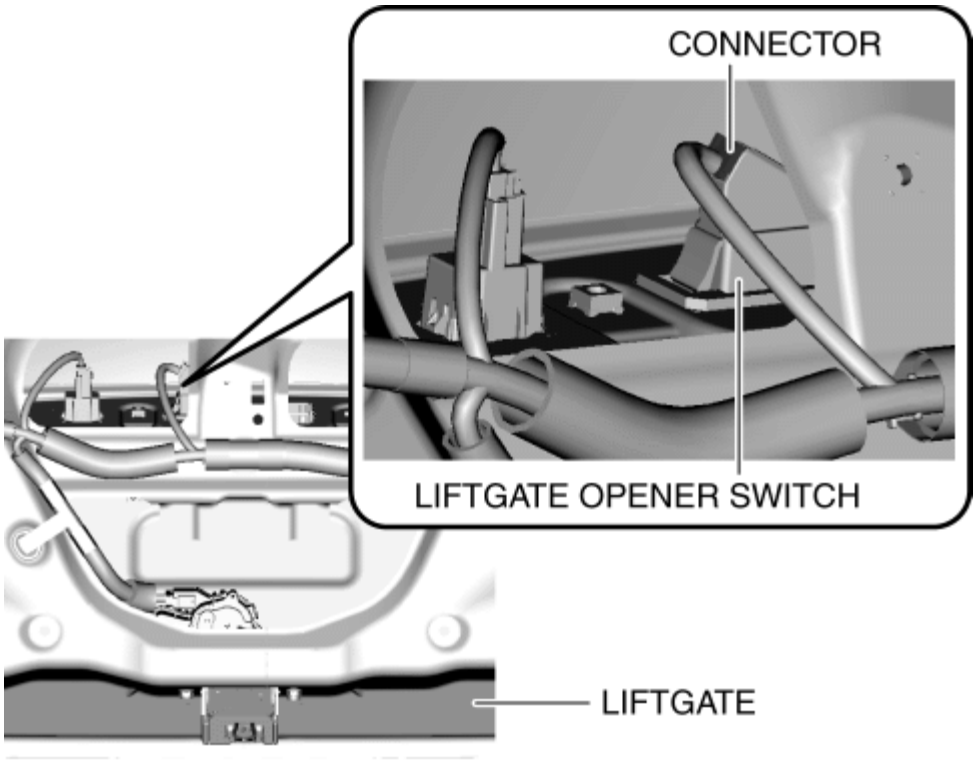

6. While pressing the liftgate opener switch tab in the direction of arrow (1) shown in the figure, press it in the direction of arrow (2) to detach the liftgate opener switch tab from the liftgate.

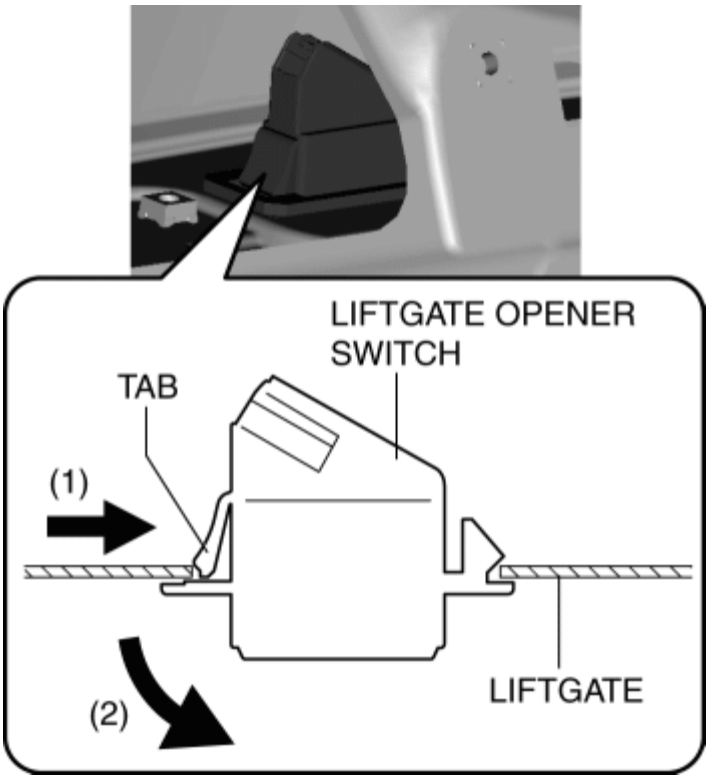

7. Remove the liftgate opener switch from the liftgate.

8. Install in the reverse order of removal.

2014 - Mazda3 - Body and Accessories

LIFTGATE OPENER SWITCH INSPECTION

1. Disconnect the negative battery cable. (See **NEGATIVE BATTERY CABLE DISCONNECTION/CONNECTION [SKYACTIV-G 2.0, SKYACTIV-G 2.5]**.)

2. Remove the following parts:

   a. Rear package tray (See **REAR PACKAGE TRAY REMOVAL/INSTALLATION**.)

   b. Liftgate upper trim (See **LIFTGATE UPPER TRIM REMOVAL/INSTALLATION**.)

   c. Liftgate side trim (See **LIFTGATE SIDE TRIM REMOVAL/INSTALLATION**.)

   d. Liftgate recess (See **LIFTGATE RECESS REMOVAL/INSTALLATION**.)

   e. Liftgate lower trim (See **LIFTGATE LOWER TRIM REMOVAL/INSTALLATION**.)

   f. Liftgate garnish (See **LIFTGATE GARNISH REMOVAL/INSTALLATION**.)

   g. Liftgate opener switch (See **LIFTGATE OPENER SWITCH REMOVAL/INSTALLATION**.)

3. Verify the continuity of liftgate opener switch terminals A and C.

○—○ : Continuity

Switch position	Terminal	
	A	C
On (push)	○	○
Off (release)		

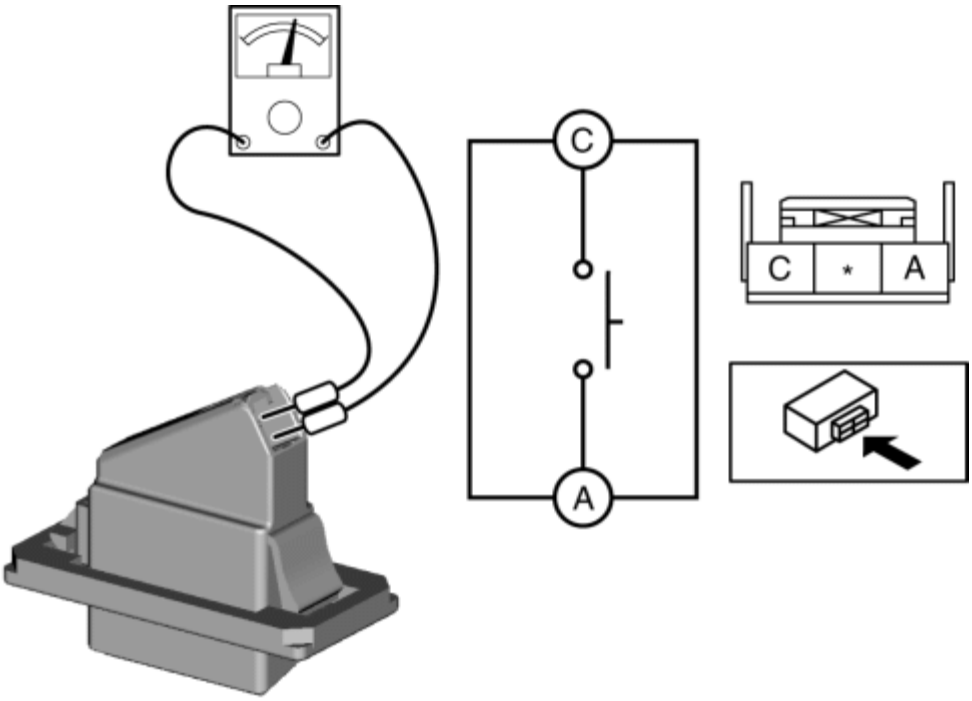

- If not as indicated in the table, replace the liftgate opener switch.

2014 - Mazda3 - Body and Accessories

START STOP UNIT REMOVAL/INSTALLATION

CAUTION:

- Never remove bolts and screws other than the bolt in Steps 8 and 9. Otherwise, it will cause internal damage and the steering lock cannot be unlocked, resulting in the inability to perform the start-stop unit removal/installation.
- If configuration is not performed when the start stop unit is replaced with a new one, the vehicle specification information is not stored in the start stop unit and the system will not operate normally.
- When performing configuration, it is necessary to read the vehicle specification information from the start stop unit before replacing it. Connect the M-MDS to the vehicle and perform vehicle identification before removing the start stop unit. The vehicle specification information is temporarily stored in the M-MDS.

NOTE:

- The start stop unit prior to replacement stores the vehicle specification information.
- A new start stop unit does not store any vehicle specification information.
- If the vehicle specification information from the start stop unit prior to replacement cannot be read, perform the configuration using As-Built data.

1. When replacing the start stop unit, perform the configuration. (See **START STOP UNIT CONFIGURATION (USING READ/WRITE FUNCTION)**.)

2. Switch the ignition off.

NOTE:

- If the ignition is switched off from ON (engine off or on) with the driver's door open, the steering lock operation can be temporarily released.

3. Disconnect the negative battery cable. (See **NEGATIVE BATTERY CABLE DISCONNECTION/CONNECTION [SKYACTIV-G 2.0, SKYACTIV-G 2.5]**.)

4. Remove the following parts:

   a. Driver-side air bag module (See **DRIVER-SIDE AIR BAG MODULE REMOVAL [TWO-STEP DEPLOYMENT CONTROL SYSTEM]**.) (See **DRIVER-SIDE AIR BAG MODULE INSTALLATION [TWO-STEP DEPLOYMENT CONTROL SYSTEM]**.) (See **DRIVER-SIDE AIR BAG MODULE REMOVAL [STANDARD DEPLOYMENT CONTROL SYSTEM]**.) (See **DRIVER-SIDE AIR BAG MODULE INSTALLATION [STANDARD DEPLOYMENT CONTROL SYSTEM]**.)

   b. Steering wheel (See **STEERING WHEEL AND COLUMN REMOVAL/INSTALLATION**.)

   c. Clock spring (See **CLOCK SPRING REMOVAL/INSTALLATION [TWO-STEP DEPLOYMENT CONTROL SYSTEM]** .) (See **CLOCK SPRING REMOVAL/INSTALLATION [STANDARD DEPLOYMENT CONTROL SYSTEM]** .)

d. Column cover (See **COLUMN COVER REMOVAL/INSTALLATION**.)

e. Wiper and washer switch (See **WIPER AND WASHER SWITCH REMOVAL/INSTALLATION**.)

f. Light switch (See **LIGHT SWITCH REMOVAL/INSTALLATION**.)

5. Disconnect the connector.

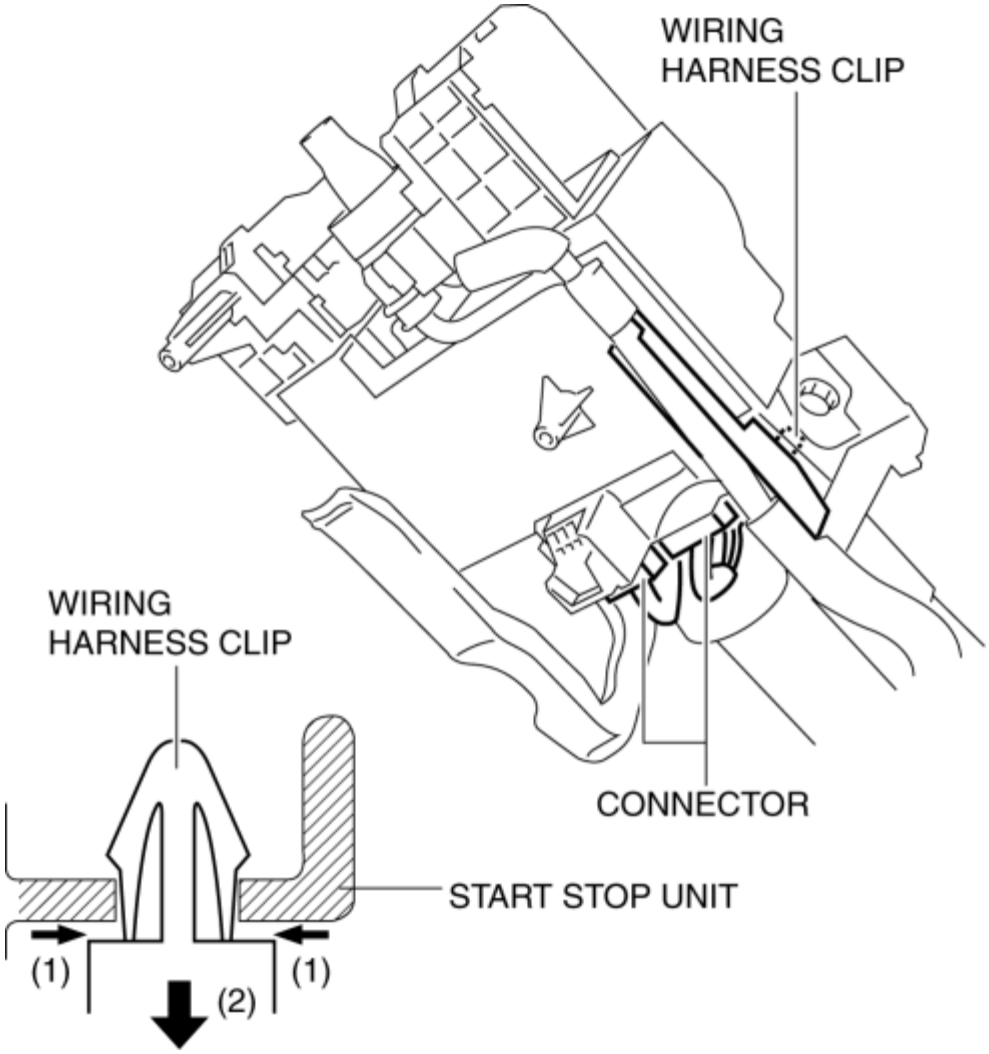

6. While pressing the tabs of the clip in the direction of arrow (1) shown in the figure, press it in the direction of arrow (2) to detach the connector tabs from the start stop unit.

7. Remove the wiring harness clip from the start stop unit.

8. Make a groove on the bolt head by punching it with a chisel using a hammer, and remove the bolts by rotating them counterclockwise.

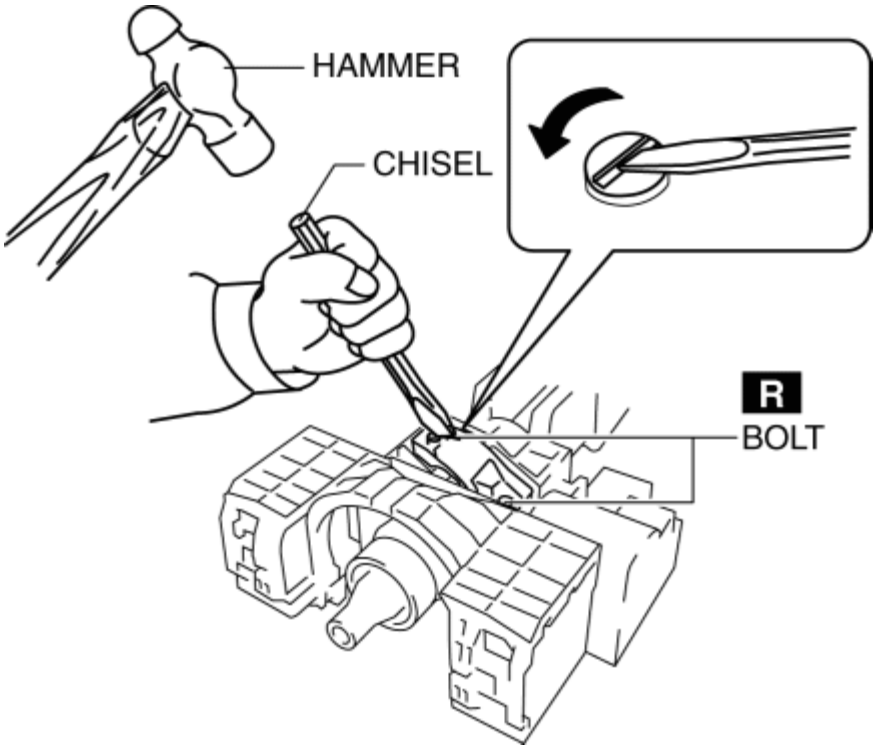

9. Remove the bolts.

10. Remove the start stop unit from the steering shaft by pulling it in the direction of the arrow shown in the figure.

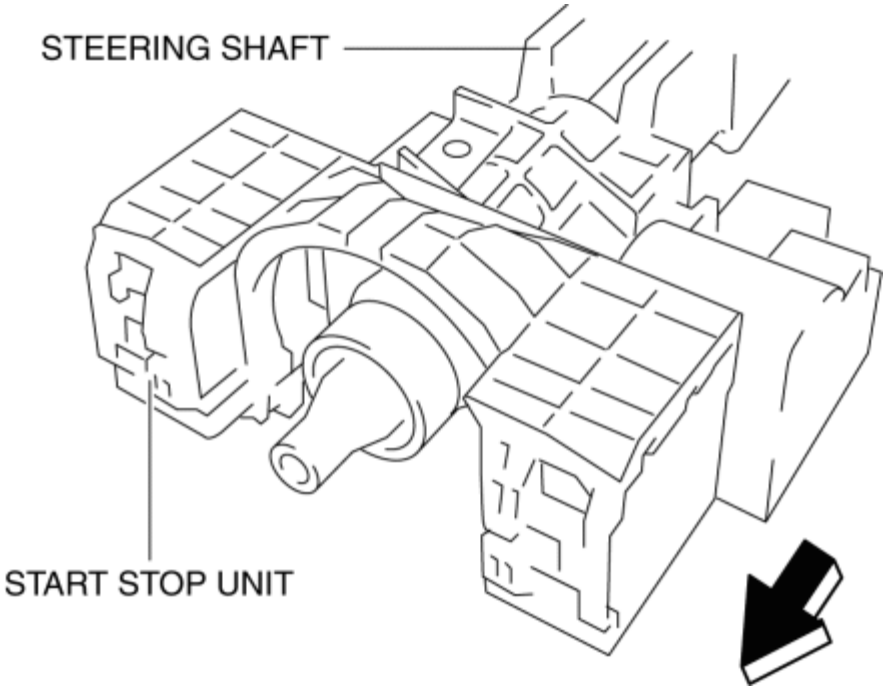

11. Install in the reverse order of removal. (See **Start Stop Unit Installation Note**.)

12. Perform the following when replacing the start stop unit.

- Start stop unit configuration. (See **START STOP UNIT CONFIGURATION (USING AS-BUILT DATA)**.)

  NOTE:

  - If configuration cannot be performed by reading/writing of the

vehicle specification information, perform the configuration using As-Built information after replacing the start stop unit.

- Immobilizer system-related parts programming. (See **IMMOBILIZER SYSTEM-RELATED PARTS PROGRAMMING**.)

Start Stop Unit Installation Note

1. Temporarily install the start stop unit to the steering shaft using new start stop unit installation bolts.

2. Tighten the start stop unit installation bolts until the heads break off.

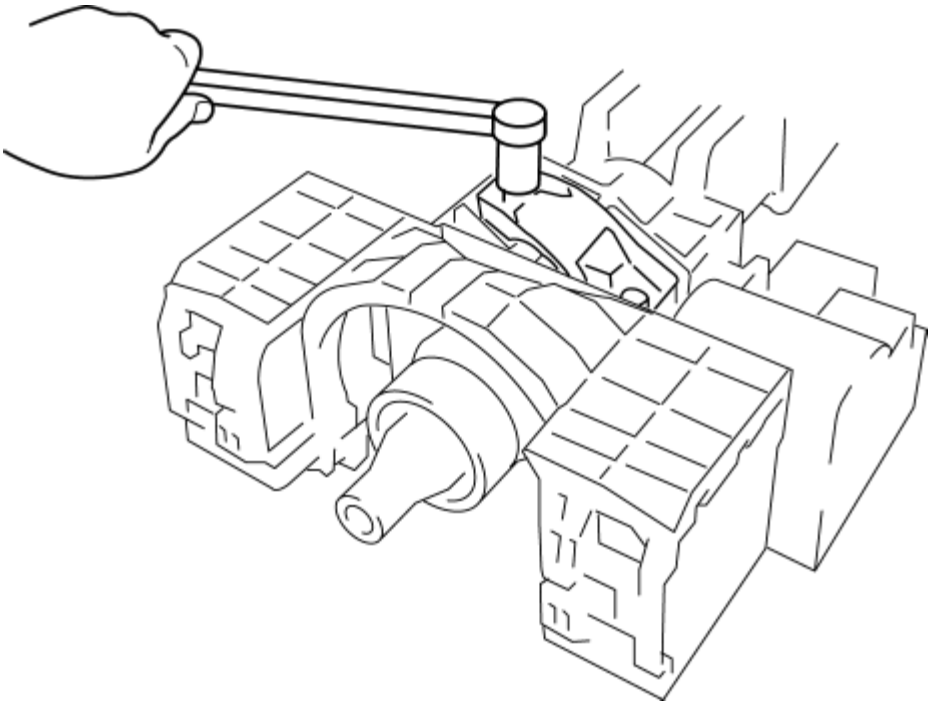

2014 - Mazda3 - Body and Accessories

START STOP UNIT INSPECTION

NOTE:

- Because the start stop unit terminals 3A—3L and 4A—4L are inside the start stop unit and not exposed, the terminal voltage cannot be measured.
- Terminals with terminal voltage that cannot be measured are not indicated in the terminal voltage table (reference).

1. Remove the following parts:

   a. Column cover (See **COLUMN COVER REMOVAL/INSTALLATION**.)

2. Verify that the voltages of each of the terminals are as indicated in the terminal voltage table (reference).
   - If the voltage is not as specified in the terminal voltage table (reference), inspect the parts under Inspection item(s) and related wiring harnesses.
     - If the system does not work normally even though the inspection items or related wiring harnesses do not have any malfunction, replace the start stop unit.

Terminal Voltage Table (Reference)

START STOP UNIT
WIRING HARNESS SIDE CONNECTOR

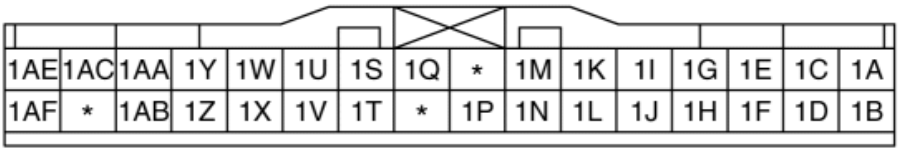

START STOP UNIT
WIRING HARNESS SIDE CONNECTOR

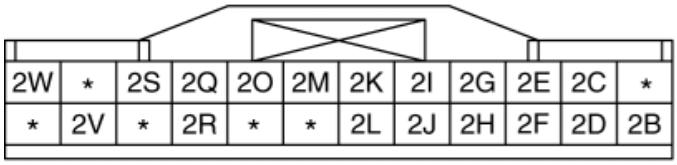

START STOP UNIT
INTERNAL CONNECTOR

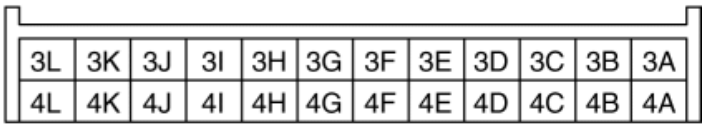

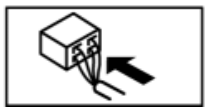

Terminal	Signal name	Connected to	Measurement conditions	Voltage (V)	Inspection item(s)
1A	Power supply	ROOM 15 A fuse	Under any condition	B+	• ROOM 15 A fuse • Battery

1B	Power supply	C/U IG1 15 A fuse	Ignition switched ON (engine off)		B+	• C/U IG1 15 A fuse • Battery
			Ignition switched off or at ACC		1.0 or less	
1C	Brake switch	Brake switch	Brake pedal depressed		B+	Brake switch
			Brake pedal not depressed		1.0 or less	
1D	Starter monitor (MTX)	Starter relay	Ignition switched ON (engine off)	Clutch pedal not depressed	B+	• Starter relay • Battery
				Clutch pedal depressed	1.0 or less	
	Starter monitor (ATX)	Starter relay	Ignition switched ON (engine off)	Other than selector lever is in P or N position	B+	• Starter relay • Battery
				Selector lever is in P or N position	1.0 or less	
1E	ACC monitor	MIRROR 7.5 A fuse	Switch the ignition to ACC or ON (engine off)		B+	• MIRROR 7.5 A fuse • Battery
			Ignition switched off		1.0 or less	
1F	Starter interlock switch (MTX)	Starter interlock switch	Clutch pedal not depressed		B+	Starter interlock switch
			Clutch pedal depressed		1.0 or less	
	Selector lever position switch (ATX)	TCM	Other than selector lever is in P or N position		B+	TCM
			Selector lever is in P or N position		1.0 or less	
1G	Hazard warning switch signal	Hazard warning switch	Hazard warning switch not pressed (OFF)		B+	Hazard warning switch
			Hazard warning switch pressed (ON)		1.0 or less	
1H	Push button start 1	Push button start	Push button start pressed		1.0 or less	Push button start
			Push button start not pressed		B+	
1I	Push button illumination	Push button start	Integrity determination using terminal voltage inspection is not possible.			Push button start
1J*1	P position	Not P position switch	Selector lever is in P position		B+	Not P position switch
			Except above		1.0 or less	
1K	Push button illumination (green)	Push button start	Engine starting conditions are met		1.0 or less	Push button start
			Except above		B+	

1L*5	Steering shift switch (up)	Steering shift switch	Steering shift switch (up) pressed		1.0 or less	Steering shift switch
			Steering shift switch (up) not pressed		B+	
1M	Push button illumination (amber)	Push button start	Ignition switched to ACC or ON (engine off)		1.0 or less	Push button start
			Except above		B+	
1N*5	Steering shift switch (down)	Steering shift switch	Steering shift switch (down) pressed		1.0 or less	Steering shift switch
			Steering shift switch (down) not pressed		B+	
1P	Lock input	Door lock-link switch (driver's door)	Driver's door locked		1.0 or less	Door lock-link switch (driver's door)
			Driver's door unlocked		Approx. 5	
1Q	Rear body control module (RBCM) communication	Rear body control module (RBCM)	Because this terminal is for communication, integrity determination using terminal voltage inspection is not possible.			
1S*6	Steering angle sensor power supply	Steering angle sensor	The specified time has elapsed since key placed outside vehicle and all doors locked		1.0 or less	Steering angle sensor
			Except above		Approx. 5	
1T*6	Steering angle sensor ground	Steering angle sensor	Under any condition		1.0 or less	Steering angle sensor
1U*6	Steering angle sensor (signal A/D1)	Steering angle sensor	Steering wheel is turned to left and right		4.00—4.75 0.25—0.75	Steering angle sensor
1V	Windshield wiper switch signal (LO)	Front body control module (FBCM)	Ignition switch ON (engine off or on)	Other than windshield wiper switch at LO and HI	B+	Front body control module (FBCM)
				Windshield wiper switch at LO	1.0 or less	
1W*6	Steering angle sensor (signal A/D1)	Steering angle sensor	Steering wheel is turned to left and right		4.00—4.75 0.25—0.75	Steering angle sensor
1X	Headlight switch signal (LO)	Front body control module (FBCM)	Light switch at position other than HEAD and passing		B+	Front body control module (FBCM)
			Light switch at HEAD position		1.0 or less	
1Y	Cruise control switch signal	Cruise control switch	RESUME switch is pressed		Approx. 1.5	Cruise control switch
			CANCEL switch is pressed		1.0 or less	
			ON switch is pressed		Approx. 1.9	
			OFF switch is pressed			

			SET (+) switch is pressed		1.0 or less	
			SET (-) switch is pressed			
			Except above		Approx. 3.6	
1Z	Cruise control switch ground	Cruise control switch	Under any condition		1.0 or less	Cruise control switch
1AA	Steering switch signal	Steering switch	Up switch is pressed		1.0 or less	Steering switch
			Down switch is pressed		Approx. 1.2	
			INFO button is pressed		Approx. 2.2	
			Except above		Approx. 3.3	
1AB	Steering switch ground	Steering switch	Under any condition		1.0 or less	Steering switch
1AC	PATS+	Coil antenna (push button start)	Because this terminal is for communication, integrity determination using terminal voltage inspection is not possible.			
1AE	PATS-	Coil antenna (push button start)	Because this terminal is for communication, integrity determination using terminal voltage inspection is not possible.			
1AF	GROUND	Body ground	Under any condition		1.0 or less	Body ground
2B	GROUND	Body ground	Under any condition		1.0 or less	Body ground
2C	ACC relay control	ACC relay	Switch the ignition to ACC or ON (engine off or on)		B+	ACC relay
			Ignition switched off		1.0 or less	
2D	IG2 relay control	Front body control module (FBCM)	Ignition switched ON (engine off)		B+	Front body control module (FBCM)
			Ignition switched off or at ACC		1.0 or less	
2E*2	Clutch pedal position switch	Clutch pedal position switch	Clutch pedal not depressed		B+	Clutch pedal position switch
			Clutch pedal depressed		1.0 or less	
2F*3	LF control unit communication	LF control unit	Because this terminal is for communication, integrity determination using terminal voltage inspection is not possible.			
2G*1	Shift lock	Shift lock solenoid	Ignition switch ON (engine off or on)	Selector lever at position except P	B+	Shift lock solenoid
				Selector lever at P position and brake pedal depressed	1.0 or less	
3	LF control unit		Because this terminal is for communication, integrity determination using			

2H*	communication	LF control unit	terminal voltage inspection is not possible.		
2I*4	Keyless antenna (inside vehicle, center)	Keyless antenna (interior, center)	Because this terminal is for communication, integrity determination using terminal voltage inspection is not possible.		
2J	Push button start 2	Push button start	Push button start pressed	1.0 or less	Push button start
			Push button start not pressed	B+	
2K*4	Keyless antenna (inside vehicle, center)	Keyless antenna (interior, center)	Because this terminal is for communication, integrity determination using terminal voltage inspection is not possible.		
2L*4	GROUND	Shield ground	Under any condition	1.0 or less	Body ground
2M	HS-CAN+	-	Because this terminal is for communication, integrity determination using terminal voltage inspection is not possible.		
2O	HS-CAN-	-	Because this terminal is for communication, integrity determination using terminal voltage inspection is not possible.		
2Q	Keyless receiver power supply	Keyless receiver	Under any condition	Approx. 5	Keyless receiver
2R	Keyless receiver communication	Keyless receiver	Because this terminal is for communication, integrity determination using terminal voltage inspection is not possible.		
2S	IG1 relay control	IG1 relay	Ignition switched ON (engine off)	B+	IG1 relay
			Ignition switched off or at ACC	1.0 or less	
2V	Starter relay	Starter relay	When cranking	B+	Starter relay
			Except above	1.0 or less	
2W	Power supply	AT 15 A fuse	Under any condition	B+	• AT 15 A fuse • Battery

*1 **ATX**

*2 **MTX**

*3 **With advanced keyless system**

*4 **Without advanced keyless system**

*5 **With steering shift switch**

*6 **With adaptive front lighting system (AFS) or smart city brake support (SCBS) system**

2014 - Mazda3 - Body and Accessories

START STOP UNIT CONFIGURATION (USING READ/WRITE FUNCTION)

NOTE:

- When performing configuration, it is necessary to read the vehicle specification information from the start stop unit before replacing it. Connect the M-MDS to the vehicle and perform vehicle identification before removing the start stop unit. The vehicle specification information is temporarily stored in the M-MDS.

1. Connect the M-MDS to the DLC-2.

2. After the vehicle is identified, select the following items from the initialization screen of the M-MDS.

    - Select “Module Programming”.

3. Then, select items from the screen menu in the following order.

    - Select “Programmable Module Installation”.
    - Select “SSU”.

4. Perform the configuration according to the directions on the screen.

CAUTION:

- When the configuration is performed, CAN communication between the start stop unit and control module connected to the CAN line is cut temporarily, and a communication error DTCs may be detected. After performing the configuration, verify the DTCs for the control module connected to the CAN line and clear them if any are detected.

5. Verify the DTCs for all of the control modules connected to the CAN line.

    - If any DTC is stored, clear it.
    - If the DTC is cleared, finish the procedure because the configuration has been completed normally.
    - If the DTC remains, perform troubleshooting according to the DTC.

2014 - Mazda3 - Body and Accessories

START STOP UNIT CONFIGURATION (USING AS-BUILT DATA)

NOTE:

- If the configuration is performed using As-Built data, the set value of the personalization function is reset to the initial value (condition when shipped from factory). Verify the set value with the customer and perform the personalization function setting after performing the configuration using As-Built data.
- If the ignition cannot be switched ON (engine off), switch it ON (engine off) using the forced ignition ON function of the M-MDS. (See **FORCED IGNITION ON**.)

1. Connect the M-MDS to the DLC-2.

2. After the vehicle is identified, select the following items from the initialization screen of the M-MDS.

    - Select “Module Programming”.

3. Then, select items from the screen menu in the following order.

    - Select “As-Built”.
    - Select “SSU”.

4. Perform the configuration according to the directions on the screen.

CAUTION:

- When the configuration is performed, CAN communication between the start stop unit and control module connected to the CAN line is cut temporarily, and communication error DTCs may be detected. After performing the configuration, verify the DTCs for the control module connected to the CAN line and clear them if any are detected.

5. Verify the DTCs for all of the control modules connected to the CAN line.

    - If any DTC is stored, clear it.
    - If the DTC is cleared, finish the procedure because the configuration has been completed normally.
    - If the DTC remains, perform troubleshooting according to the DTC.

2014 - Mazda3 - Body and Accessories

LF CONTROL UNIT REMOVAL/INSTALLATION

1. Disconnect the negative battery cable. (See **NEGATIVE BATTERY CABLE DISCONNECTION/CONNECTION [SKYACTIV-G 2.0, SKYACTIV-G 2.5]**.)

2. Remove the service hole cover on the front side trim.

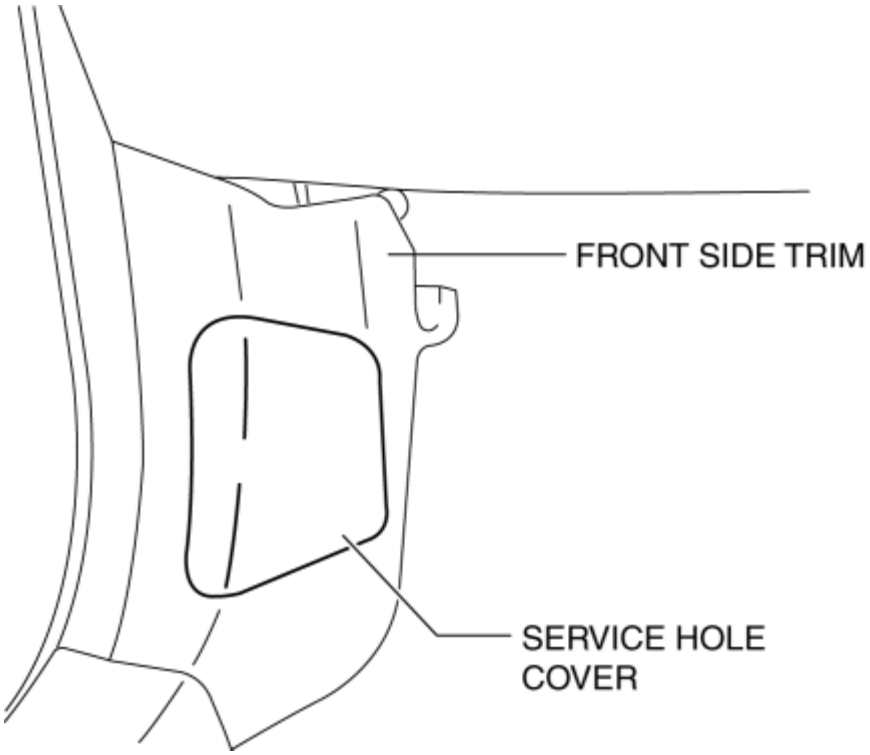

3. Disconnect the connector.

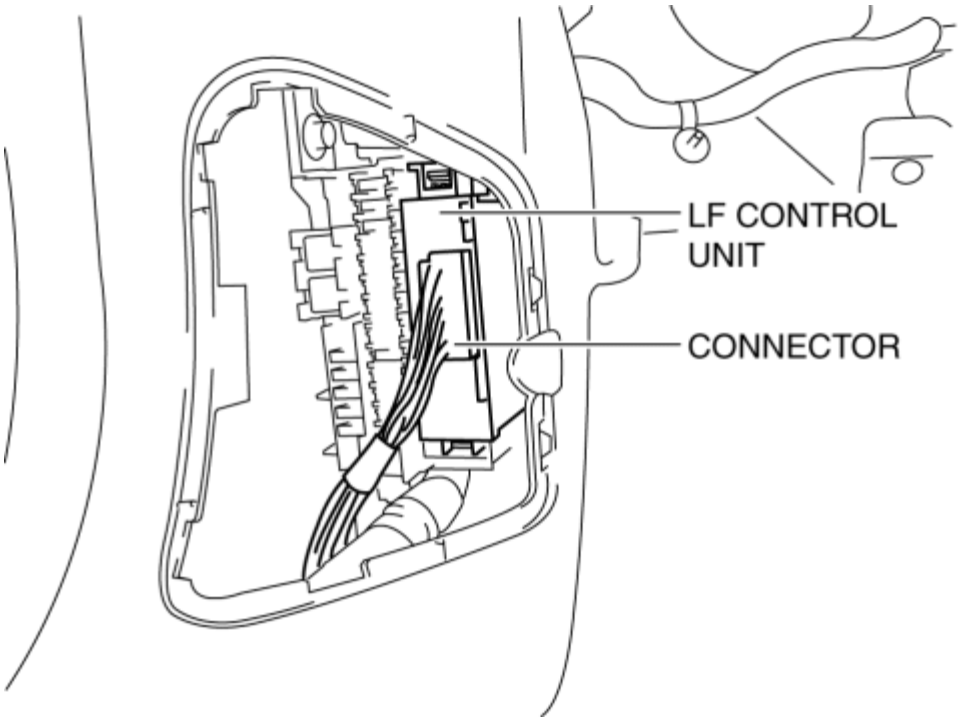

4. Pull the LF control unit in the direction of the arrow (2) shown in the figure and remove it while pressing the tab in the direction of the arrow (1).

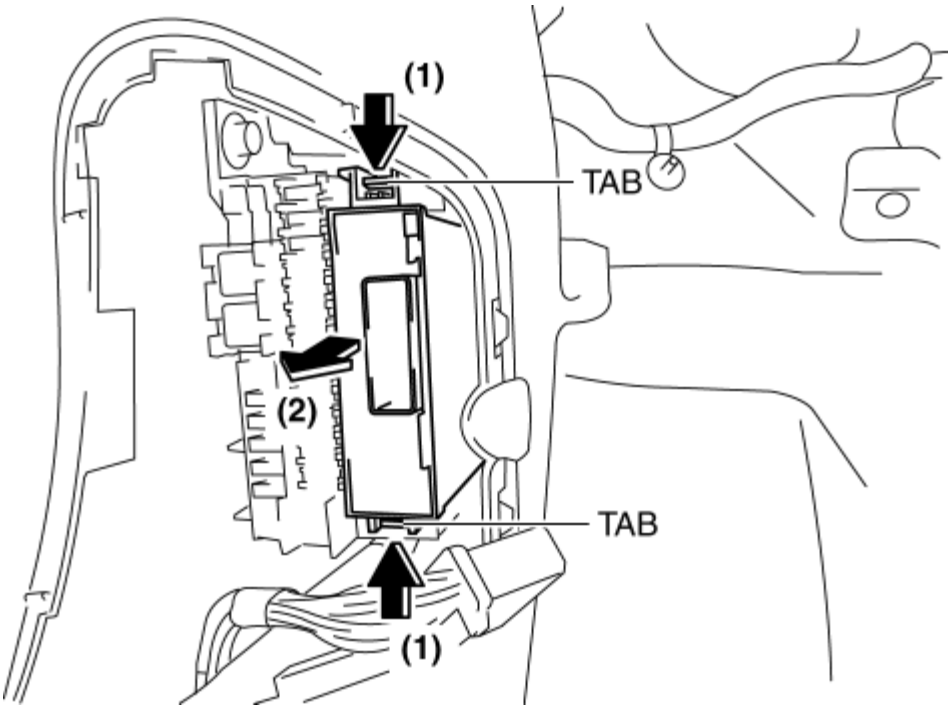

5. Install in the reverse order of removal.

2014 - Mazda3 - Body and Accessories

LF CONTROL UNIT INSPECTION

1. Remove the service hole cover on the front side trim. (See **LF CONTROL UNIT REMOVAL/INSTALLATION**.)

2. Verify that the voltages of each of the terminals are as indicated in the terminal voltage table (reference).

- If the voltage is not as specified in the terminal voltage table (reference), inspect the parts under Inspection item(s).
  - If the system does not work normally even though the inspection items are normal, replace the LF control unit.

Terminal Voltage Table (Reference)

LF CONTROL UNIT WIRING HARNESS SIDE CONNECTOR

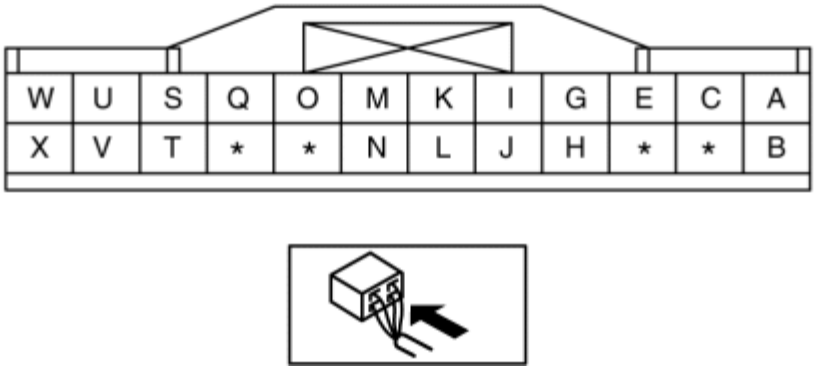

Terminal	Signal name	Connected to	Measurement conditions	Voltage (V)	Inspection item (s)
A	Request switch signal (Passenger's side)	Request switch (RF)	When passenger's side request switch is pressed	1.0 or less	• Front outer handle (passenger's side) • Related wiring harness
			When passenger's side request switch is not pressed	5.0	
			Under any condition		• ROOM 15 A fuse

B	Power supply	ROOM 15 A fuse		B+	• Battery • Related wiring harness
C	Request switch signal (Driver's side)	Request switch (LF)	When driver's side request switch is pressed	1.0 or less	• Front outer handle (driver's side) • Related wiring harness
			When driver's side request switch is not pressed	5.0	
E	Request switch signal (liftgate)	Request switch (Liftgate)	When liftgate request switch is pressed	1.0 or less	• Request switch (Liftgate) • Related wiring harness
			When liftgate request switch is not pressed	5.0	
G	Start stop unit signal	Start stop unit	Because this terminal is for communication, integrity determination using terminal voltage inspection is not possible.		
H	Keyless beeper power supply	Keyless beeper	When lock button on remote transmitter is pressed	Wave pattern (See **Pattern 1**.)	• Related wiring harness • Keyless beeper
			Except above	1.0 or less	
I	Start stop unit signal	Start stop unit	Because this terminal is for communication, integrity determination using terminal voltage inspection is not possible.		
J	GROUND	Keyless beeper	Under any condition	1.0 or less	• Related wiring harness • Keyless beeper
K	Keyless antenna (interior, front)	Keyless antenna (interior, front)	Because this terminal is for communication, integrity determination using terminal voltage inspection is not possible.		
L	GROUND	Body ground	Under any condition	1.0 or less	Body ground
M	Keyless antenna	Keyless antenna (interior,	Because this terminal is for communication, integrity determination using terminal voltage inspection is not possible.		

	(interior, front)	front)			
N	GROUND	Shield ground	Under any condition	1.0 or less	Body ground
O	Keyless antenna (exterior, LF)	Keyless antenna (exterior, LF)	Because this terminal is for communication, integrity determination using terminal voltage inspection is not possible.		
Q	Keyless antenna (exterior, LF)	Keyless antenna (exterior, LF)	Because this terminal is for communication, integrity determination using terminal voltage inspection is not possible.		
S	Keyless antenna (exterior, RF)	Keyless antenna (exterior, RF)	Because this terminal is for communication, integrity determination using terminal voltage inspection is not possible.		
T	Keyless antenna (interior, rear)	Keyless antenna (interior, rear)	Because this terminal is for communication, integrity determination using terminal voltage inspection is not possible.		
U	Keyless antenna (exterior, RF)	Keyless antenna (exterior, RF)	Because this terminal is for communication, integrity determination using terminal voltage inspection is not possible.		
V	Keyless antenna (interior, rear)	Keyless antenna (interior, rear)	Because this terminal is for communication, integrity determination using terminal voltage inspection is not possible.		
W	Keyless antenna (exterior, rear)	Keyless antenna (exterior, rear)	Because this terminal is for communication, integrity determination using terminal voltage inspection is not possible.		
X	Keyless antenna (exterior, rear)	Keyless antenna (exterior, rear)	Because this terminal is for communication, integrity determination using terminal voltage inspection is not possible.		

Inspection Using an Oscilloscope (Reference)

Pattern 1

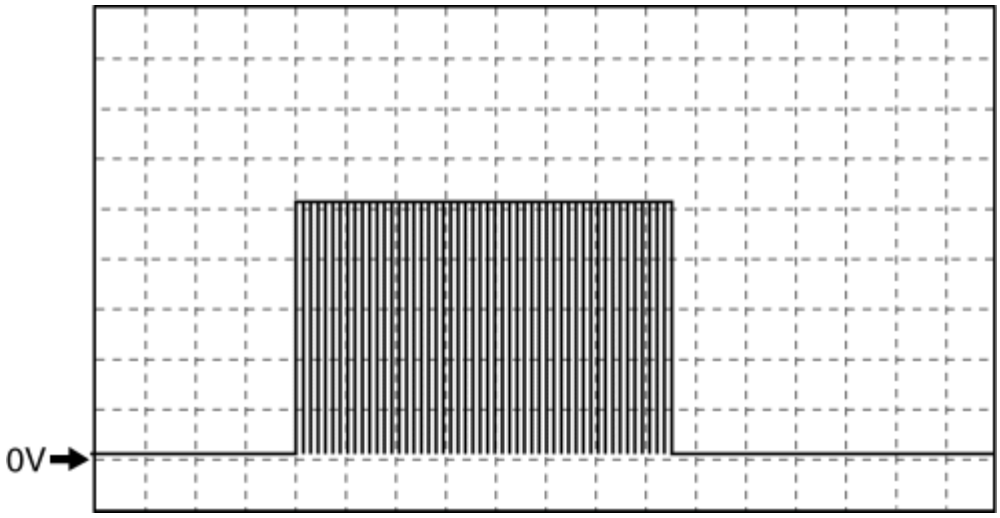

- LF control unit: H (+) ↔ body ground (-)
- Oscilloscope setting: 2 V/DIV (Y), 100 ms/DIV (X), DC range

2014 - Mazda3 - Body and Accessories

SECURITY AND LOCKS PERSONALIZATION FEATURES SETTING PROCEDURE

Advanced Keyless Entry System

Using M-MDS

1. Connect the M-MDS to DLC-2.
2. After the vehicle is identified, select the following items from the initial screen of the M-MDS.
    - Select the “Module Programming”.
    - Select “Programmable Parameters”.
3. Select menu in the SSU.
4. Select an item name, and then select option.

M-MDS display	Function	Initial setting	Setting contents	Control unit
Advanced keyless function.*1	The advanced keyless entry system and push button start system functions can be disabled.	Enabled.	Enabled. / Disabled.	Start stop unit
Walk Away Lock.	The out-of-area (reception area) type auto lock function can be set.	OFF	Not Adopted. / OFF / ON	Start stop unit
Auto Re-lock Time.	The operation start time of the auto re-lock function can be changed.	60 seconds	Not Adopted. / 30 seconds / 60 seconds / 90 seconds	Start stop unit
Lock Beep Volume.	The keyless beeper volume can be adjusted.	Medium	Not Adopted. / Off / Low / Medium / High	Start stop unit

*1

Because the push button start system function has been disabled, to start the engine press the upper part of the remote transmitter against the center of the push button start.

Using center display

- (See **CENTER DISPLAY PERSONALIZATION FEATURES SETTING PROCEDURE**.)

Keyless Entry System

Using M-MDS

1. Connect the M-MDS to DLC-2.
2. After the vehicle is identified, select the following items from the initial screen of the M-MDS.
    - Select the “Module Programming”.
    - Select “Programmable Parameters”.
3. Select menu in the SSU.
4. Select an item name, and then select option.

M-MDS display	Function	Initial setting	Setting contents	Control unit
Advanced keyless function.*1	The keyless entry system and push button start system functions can be disabled.	Enabled.	Enabled. / Disabled.	Start stop unit
Auto Re-lock Time.	The operation start time of the auto re-lock function can be changed.	60 seconds	Not Adopted. / 30 seconds / 60 seconds / 90 seconds	Start stop unit

*1 **Because the push button start system function has been disabled, to start the engine press the upper part of the remote transmitter against the center of the push button start.**

Using center display

- (See **CENTER DISPLAY PERSONALIZATION FEATURES SETTING PROCEDURE**.)

Power Door Lock System

Using M-MDS

1. Connect the M-MDS to DLC-2.
2. After the vehicle is identified, select the following items from the initial screen of the M-MDS.
    - Select the “Module Programming”.
    - Select “Programmable Parameters”.
3. Select menu in the SSU.
4. Select an item name, and then select option.

M-MDS display	Function	Initial setting	Setting contents	Control unit
Unlock Mode (Without Touch Sensor)	2-step unlocking system can be set.	Once: Driver's, Twice: All Doors.	Not Adopted. / Touch Once: All Doors. / Once: Driver's, Twice: All Doors.	Start stop unit

- For the auto door lock function, refer to the personalization features for the RBCM. (See **CONTROL SYSTEM PERSONALIZATION FEATURES SETTING PROCEDURE**.)

Using center display

- (See **CENTER DISPLAY PERSONALIZATION FEATURES SETTING PROCEDURE**.)

2014 - Mazda3 - Body and Accessories

REQUEST SWITCH REMOVAL/INSTALLATION

Driver's Door/Passenger's Door

NOTE:

- The request switch cannot be removed as a single unit because it is built into the front outer handle. If the request switch is replaced, replace the front outer handle. (See **FRONT OUTER HANDLE REMOVAL/INSTALLATION**.)

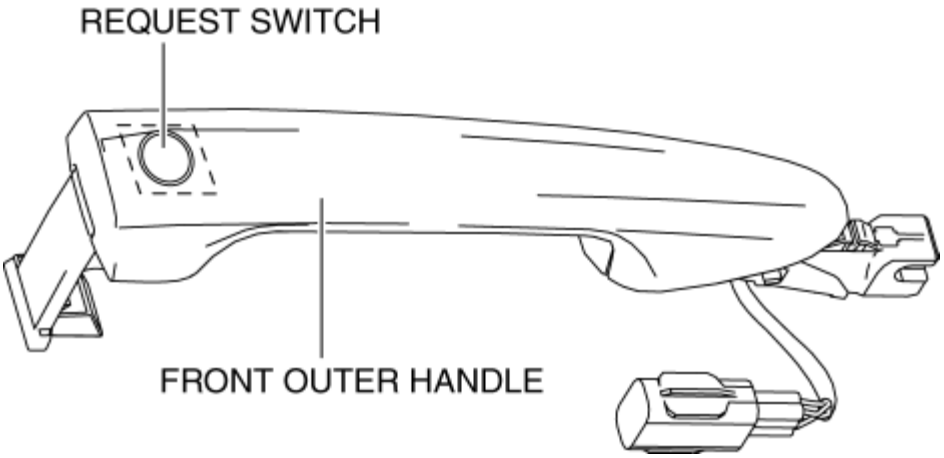

Liftgate

1. Disconnect the negative battery cable. (See **NEGATIVE BATTERY CABLE DISCONNECTION/CONNECTION [SKYACTIV-G 2.0, SKYACTIV-G 2.5]**.)

2. Remove the following parts:

   a. Rear package tray (See **REAR PACKAGE TRAY REMOVAL/INSTALLATION**.)

   b. Liftgate upper trim (See **LIFTGATE UPPER TRIM REMOVAL/INSTALLATION**.)

   c. Liftgate side trim (See **LIFTGATE SIDE TRIM REMOVAL/INSTALLATION**.)

   d. Liftgate recess (See **LIFTGATE RECESS REMOVAL/INSTALLATION**.)

   e. Liftgate lower trim (See **LIFTGATE LOWER TRIM REMOVAL/INSTALLATION**.)

   f. Liftgate garnish (See **LIFTGATE GARNISH REMOVAL/INSTALLATION**.)

3. Push out the request switch in the direction of the arrow (2) shown in the figure while pressing the request switch tab in the direction of the arrow (1) shown in the figure, detach the request switch tab and liftgate garnish, and then remove the request switch from the liftgate garnish.

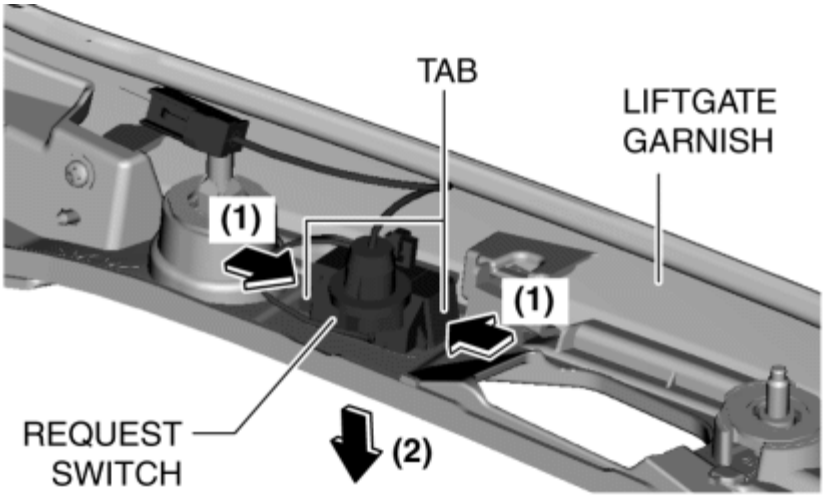

4. Install in the reverse order of removal.

2014 - Mazda3 - Body and Accessories

REQUEST SWITCH INSPECTION

Driver's Door/Passenger's Door

1. Perform the front door glass preparation. (See **FRONT DOOR GLASS REMOVAL/INSTALLATION**.)
2. Disconnect the negative battery cable. (See **NEGATIVE BATTERY CABLE DISCONNECTION/CONNECTION [SKYACTIV-G 2.0, SKYACTIV-G 2.5]**.)
3. Remove the following parts:
   a. Front door trim (See **FRONT DOOR TRIM REMOVAL/INSTALLATION**.)
   b. Front door glass (See **FRONT DOOR GLASS REMOVAL/INSTALLATION**.)
   c. Front door module panel (See **FRONT DOOR MODULE PANEL REMOVAL/INSTALLATION**.)
   d. Front door key cylinder (driver's side) (See **FRONT DOOR KEY CYLINDER REMOVAL/INSTALLATION**.)
   e. Front outer handle (See **FRONT OUTER HANDLE REMOVAL/INSTALLATION**.)
4. Verify that the continuity is as indicated in the table.

○—○ : Continuity

Request switch (request switch condition)	Terminal	
	A	D
On (pressed)	○	○
Off (not pressed)		

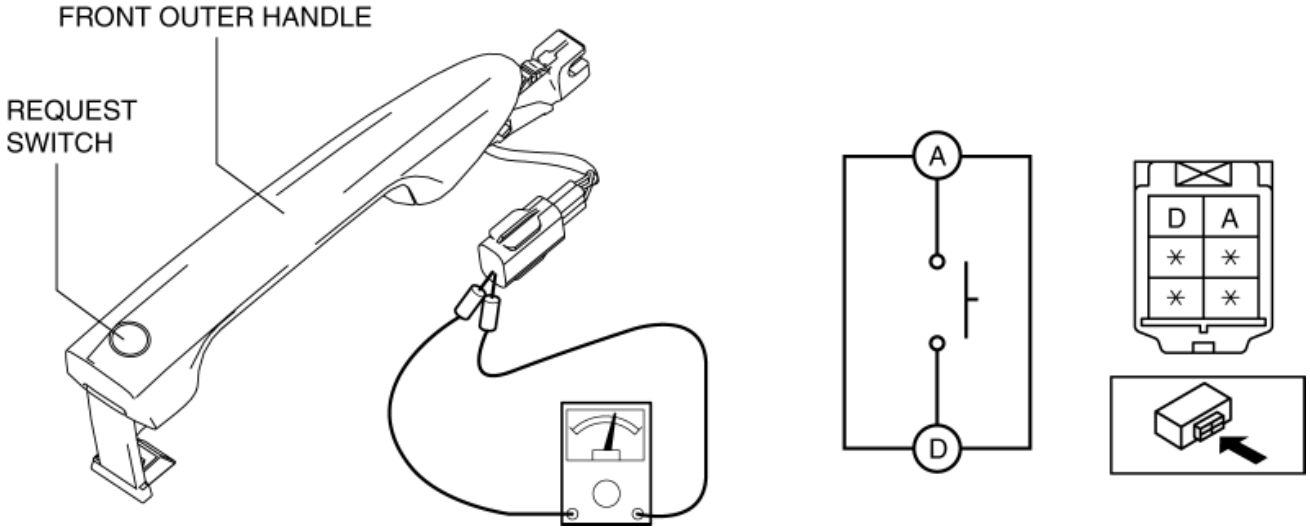

- If not as indicated in the table, replace the front outer handle.

Liftgate

1. Disconnect the negative battery cable. (See **NEGATIVE BATTERY CABLE DISCONNECTION/CONNECTION [SKYACTIV-G 2.0, SKYACTIV-G 2.5]**.)

2. Remove the following parts:

   a. Rear package tray (See **REAR PACKAGE TRAY REMOVAL / INSTALLATION**.)

   b. Liftgate upper trim (See **LIFTGATE UPPER TRIM REMOVAL / INSTALLATION**.)

   c. Liftgate side trim (See **LIFTGATE SIDE TRIM REMOVAL / INSTALLATION**.)

   d. Liftgate recess (See **LIFTGATE RECESS REMOVAL / INSTALLATION**.)

   e. Liftgate lower trim (See **LIFTGATE LOWER TRIM REMOVAL / INSTALLATION**.)

   f. Liftgate garnish (See **LIFTGATE GARNISH REMOVAL / INSTALLATION**.)

   g. Request switch (liftgate) (See **REQUEST SWITCH REMOVAL / INSTALLATION**.)

3. Verify that the continuity is as indicated in the table.

○—○ : Continuity

Request switch (request switch condition)	**Terminal**	
	A	**B**
On (pressed)	○	○
Off (not pressed)		

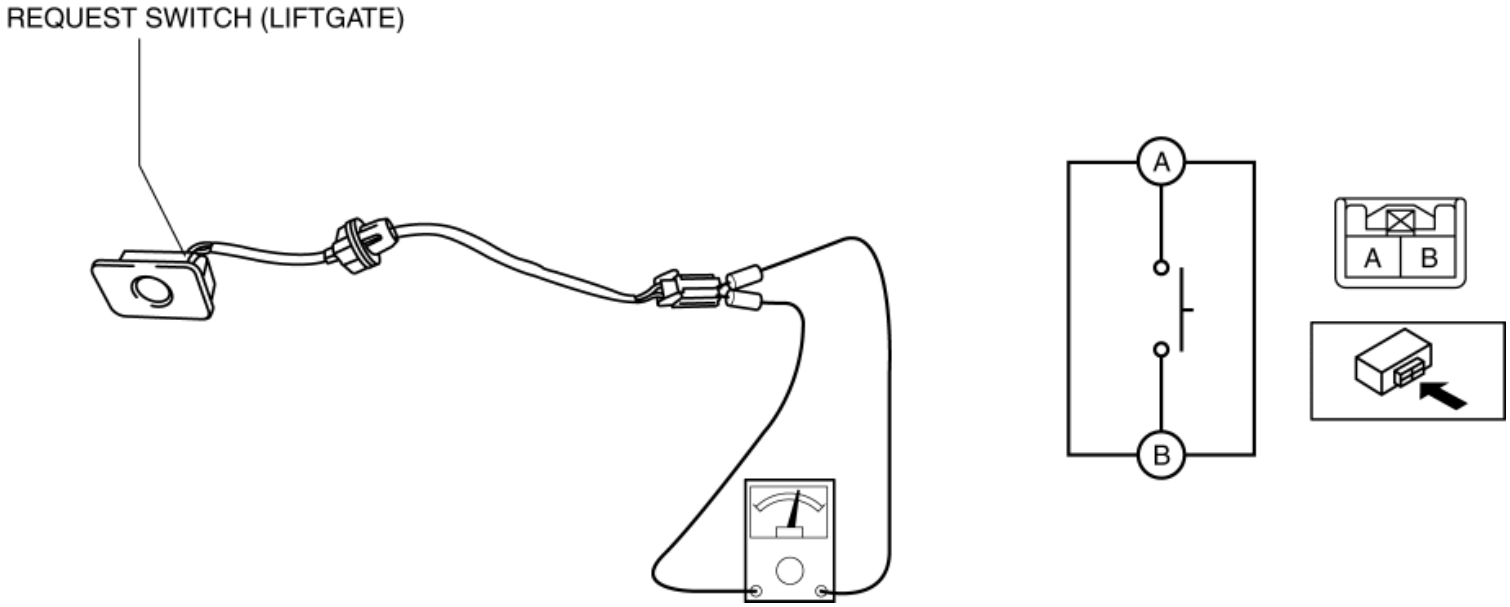

- If not as indicated in the table, replace the request switch.

2014 - Mazda3 - Body and Accessories

KEYLESS ANTENNA REMOVAL/INSTALLATION

With Advanced Keyless Entry System

Vehicle interior, front

1. Disconnect the negative battery cable. (See **NEGATIVE BATTERY CABLE DISCONNECTION/CONNECTION [SKYACTIV-G 2.0, SKYACTIV-G 2.5]**.)
2. Remove the following parts:
   a. Upper panel (See **UPPER PANEL REMOVAL**.) (See **UPPER PANEL INSTALLATION**.)
   b. Rear console (See **REAR CONSOLE REMOVAL/INSTALLATION**.)
   c. Shift lever knob (MTX) (See **MANUAL TRANSAXLE SHIFT MECHANISM REMOVAL/INSTALLATION [C66M-R]**.)
   d. Selector lever knob (ATX) (See **AUTOMATIC TRANSAXLE SHIFT MECHANISM REMOVAL/INSTALLATION**.)
   e. Shift panel (See **SHIFT PANEL REMOVAL/INSTALLATION**.)
   f. Front console box (See **FRONT CONSOLE BOX REMOVAL/INSTALLATION**.)
   g. CD player (with CD player) (See **CD PLAYER REMOVAL**.) (See **CD PLAYER INSTALLATION**.)
   h. Side wall (See **SIDE WALL REMOVAL/INSTALLATION**.)
   i. Decoration panel (See **DECORATION PANEL REMOVAL/INSTALLATION**.)
   j. Front console (See **FRONT CONSOLE REMOVAL/INSTALLATION**.)
3. While pressing the keyless antenna bracket tab in the direction of arrow (1) shown in the figure, press it in the direction of arrow (2) to detach the keyless antenna bracket tab from the instrument panel.

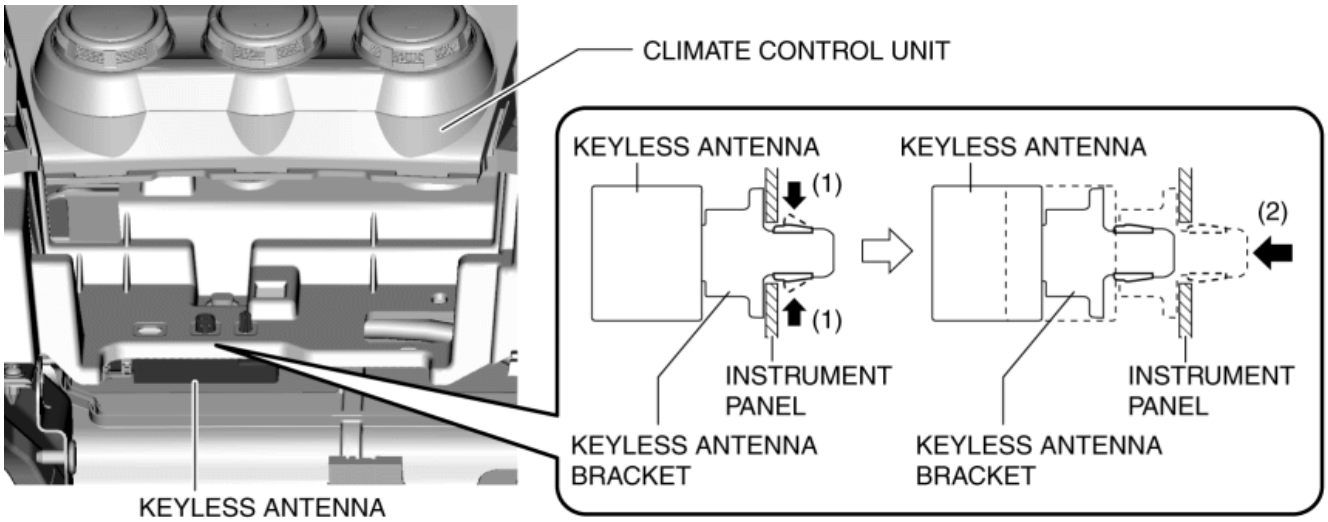

4. Remove the keyless antenna from the instrument panel.
5. Disconnect the connector from the keyless antenna.

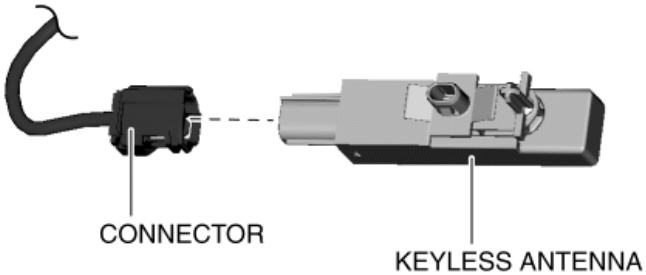

6. Insert a tape-wrapped flathead screwdriver into the position shown in the figure.

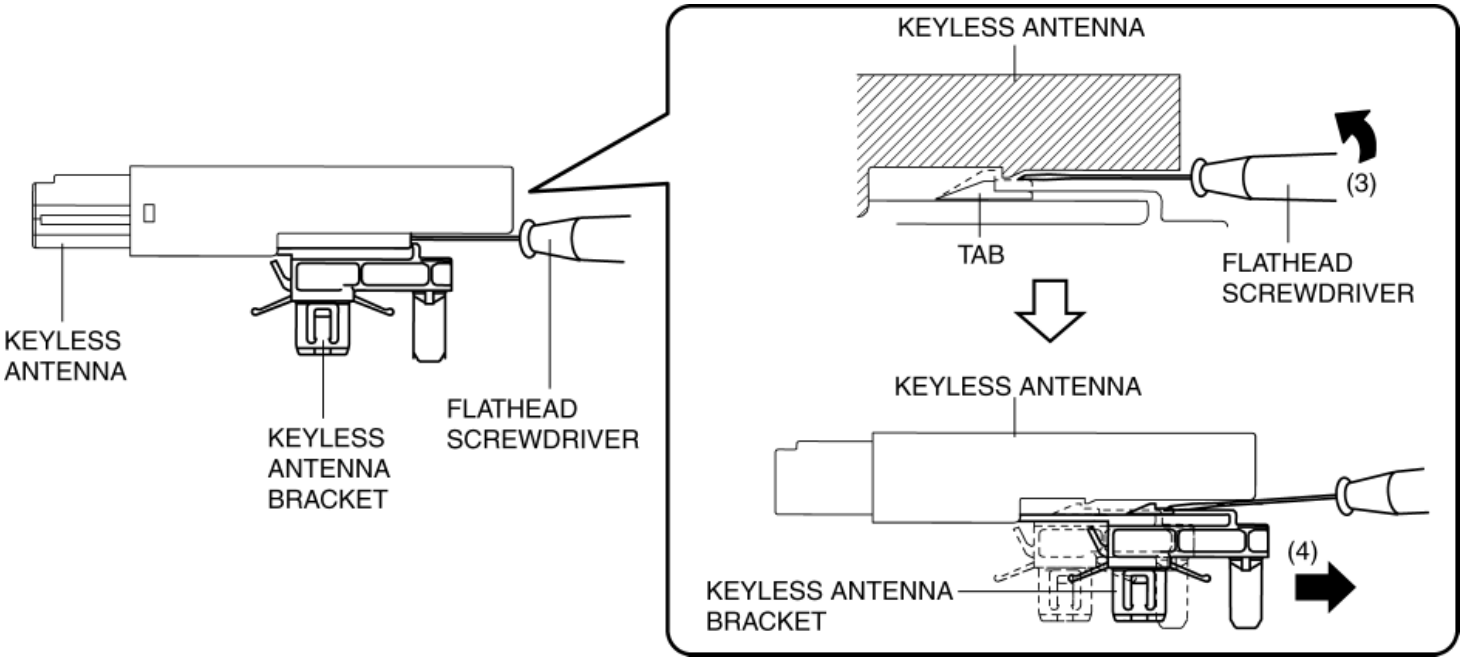

7. Move the tape-wrapped flathead screwdriver in the direction of arrow (3) shown in the figure to press the keyless antenna bracket tab, and pull it in the direction of arrow (4) to detach the keyless antenna bracket from the keyless antenna.

8. Remove the keyless antenna bracket from the keyless antenna.

9. Install in the reverse order of removal.

Vehicle interior, rear

1. Disconnect the negative battery cable. (See **NEGATIVE BATTERY CABLE DISCONNECTION/CONNECTION [SKYACTIV-G 2.0, SKYACTIV-G 2.5]**.)

2. Remove the trunk covering. (See **TRUNK COVERING REMOVAL/INSTALLATION**.)

3. Remove the trunk board. (See **TRUNK BOARD REMOVAL/INSTALLATION**.)

4. Disconnect the connector from the keyless antenna.

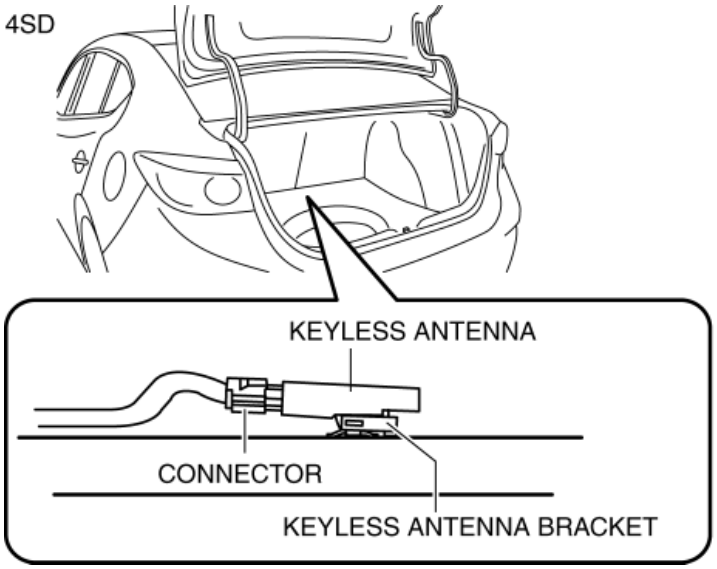

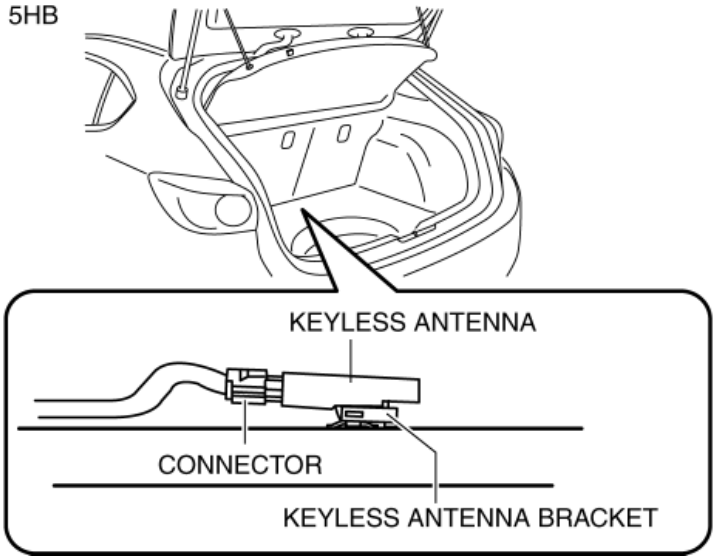

CAUTION:

- Disconnect the connector while holding the keyless antenna, otherwise the keyless antenna bracket could be damaged.

5. While pressing the keyless antenna bracket tab in the direction of arrow (1) shown in the figure, press it in the direction of arrow (2) to detach the keyless antenna bracket tab from the body.

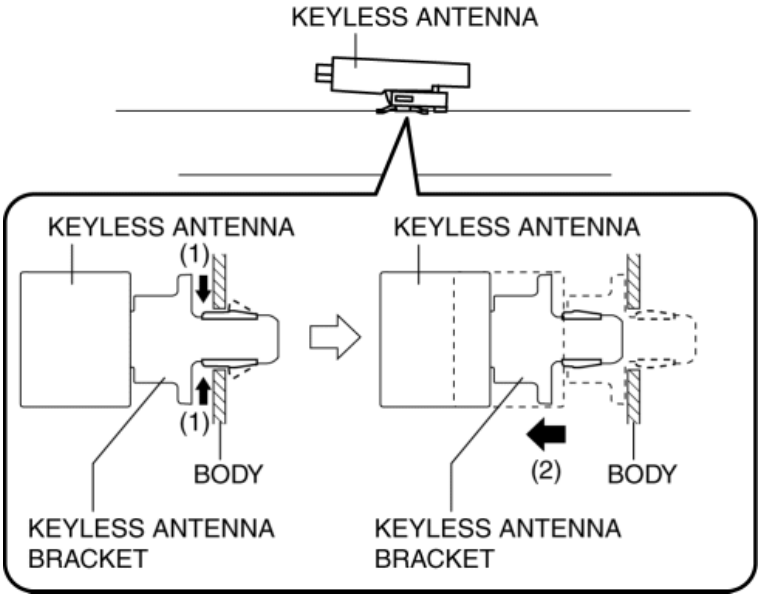

6. Remove the keyless antenna from the body.

7. Insert a tape-wrapped flathead screwdriver into the position shown in the figure.

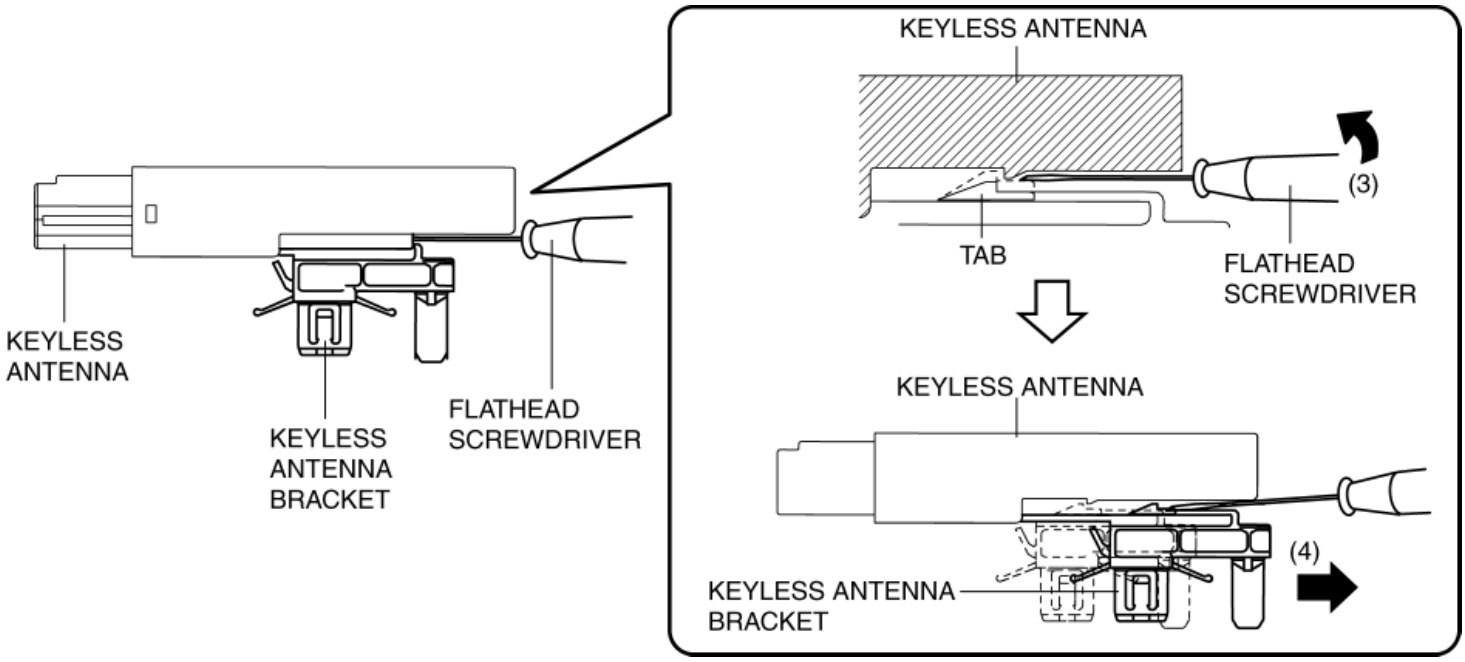

8. Move the tape-wrapped flathead screwdriver in the direction of arrow (3) shown in the figure to press the keyless antenna bracket tab, and pull it in the direction of arrow (4) to detach the keyless antenna bracket from the keyless antenna.

9. Remove the keyless antenna bracket from the keyless antenna.

10. Install in the reverse order of removal.

Vehicle exterior, rear

1. Disconnect the negative battery cable. (See **NEGATIVE BATTERY CABLE DISCONNECTION/CONNECTION [SKYACTIV-G 2.0, SKYACTIV-G 2.5]**.)

2. Disconnect the connector from the keyless antenna.

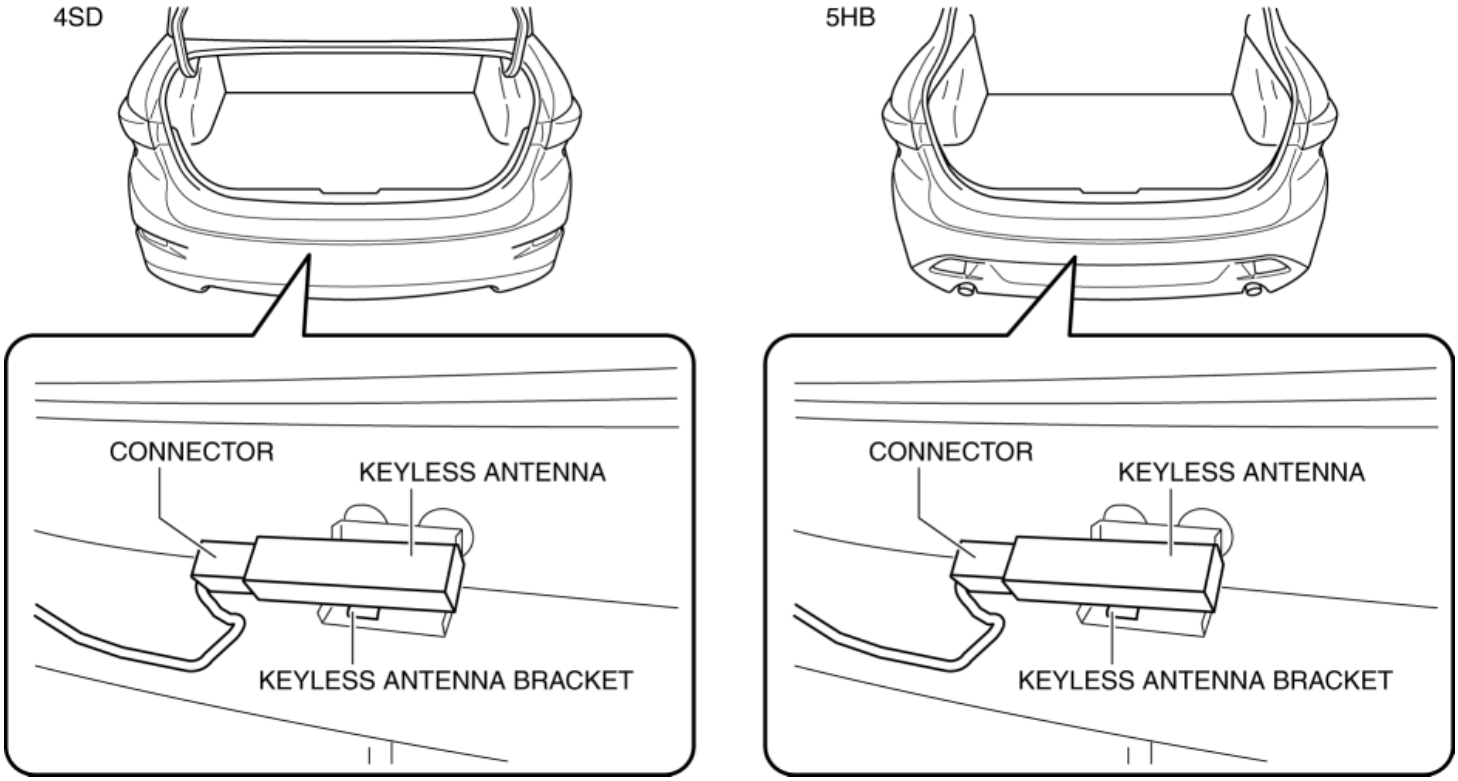

CAUTION:

- Disconnect the connector while holding the keyless antenna, otherwise the keyless antenna bracket could be

damaged.

3. While pressing the keyless antenna bracket tab in the direction of arrow (1) shown in the figure, press it in the direction of arrow (2) to detach the keyless antenna bracket tab from the bracket.

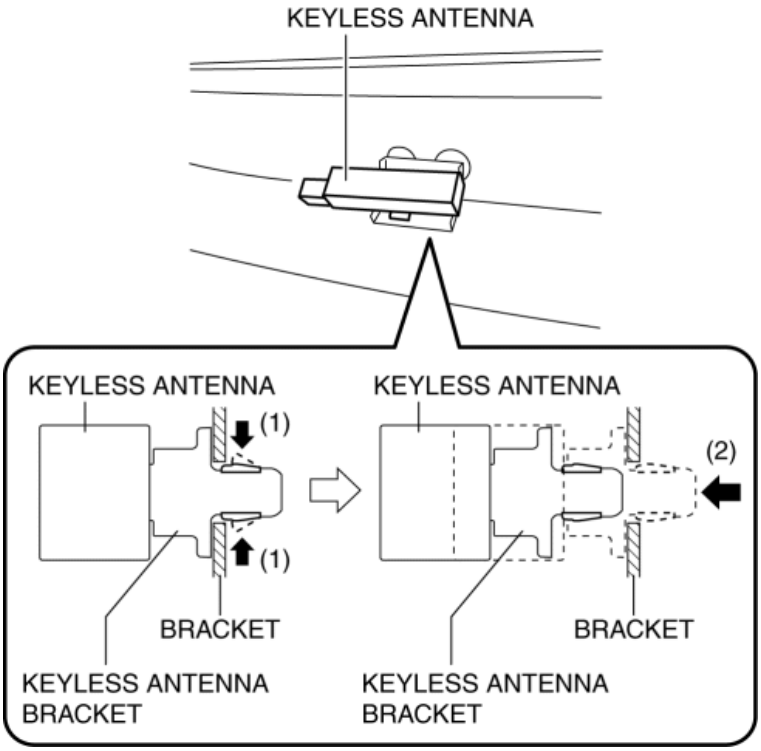

4. Remove the keyless antenna from the bracket.

5. Insert a tape-wrapped flathead screwdriver into the position shown in the figure.

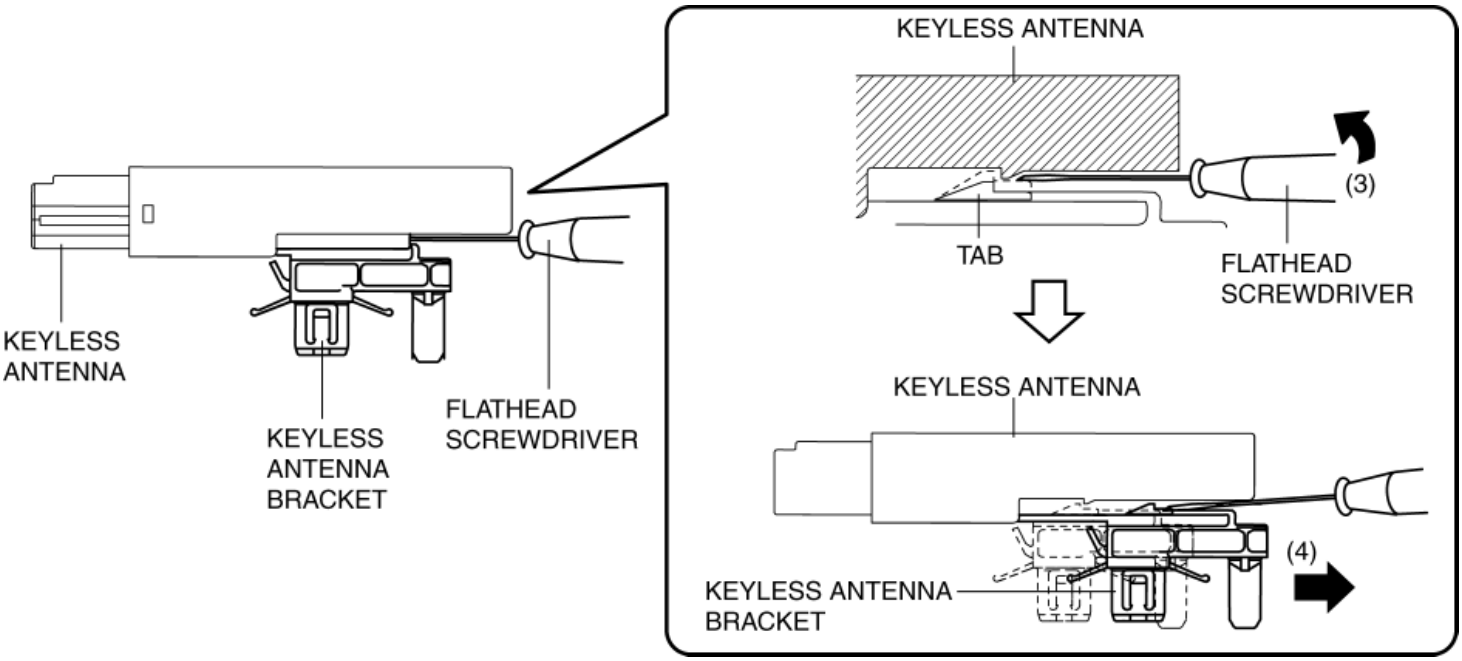

6. Move the tape-wrapped flathead screwdriver in the direction of arrow (3) shown in the figure to press the keyless antenna bracket tab, and pull it in the direction of arrow (4) to detach the keyless antenna bracket from the keyless antenna.

7. Remove the keyless antenna bracket from the keyless antenna.

8. Install in the reverse order of removal.

Vehicle exterior, driver's side / passenger's side

NOTE:

- The keyless antenna (vehicle exterior, driver's side/passenger's side) cannot be removed as a single unit because it is built into the front outer handle. To replace the keyless antenna (vehicle exterior, driver's side/passenger's side), replace the front outer handle. (See **FRONT OUTER HANDLE REMOVAL/INSTALLATION**.)

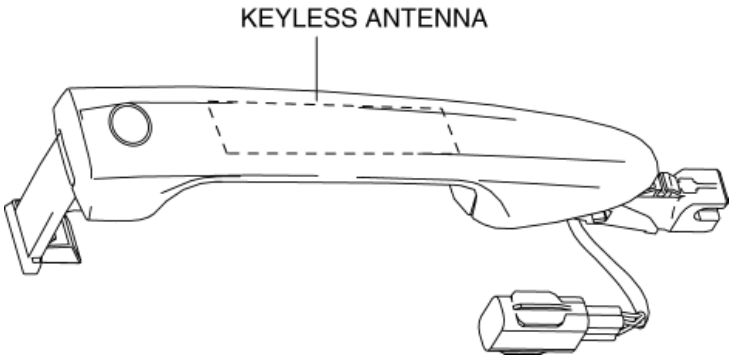

With Keyless Entry System

Vehicle interior, center

1. Disconnect the negative battery cable. (See **NEGATIVE BATTERY CABLE DISCONNECTION/CONNECTION [SKYACTIV-G 2.0, SKYACTIV-G 2.5]**.)

2. Remove the following parts:

   a. Upper panel (See **UPPER PANEL REMOVAL**.) (See **UPPER PANEL INSTALLATION**.)

   b. Rear console (See **REAR CONSOLE REMOVAL/INSTALLATION**.)

3. Disconnect the connector from the keyless antenna.

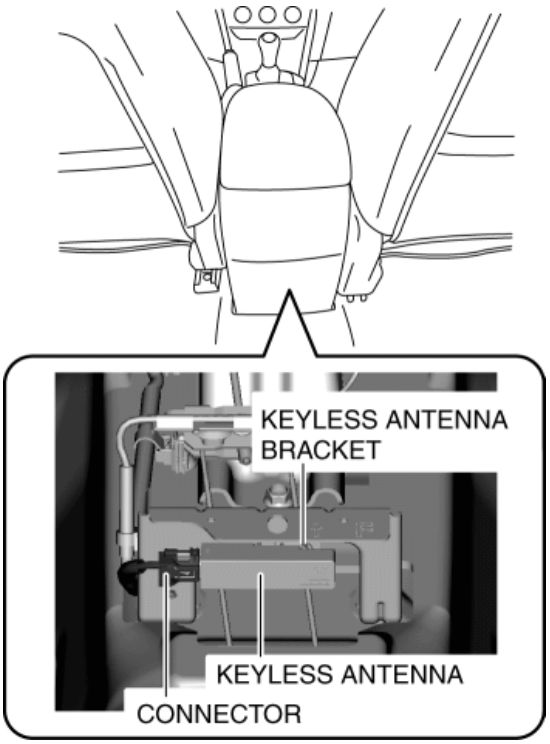

CAUTION:

- Disconnect the connector while holding the keyless antenna, otherwise the keyless antenna bracket could be damaged.

4. While pressing the keyless antenna bracket tab in the direction of arrow (1) shown in the figure, press it in the direction of arrow (2) to detach the keyless antenna bracket tab from the bracket.

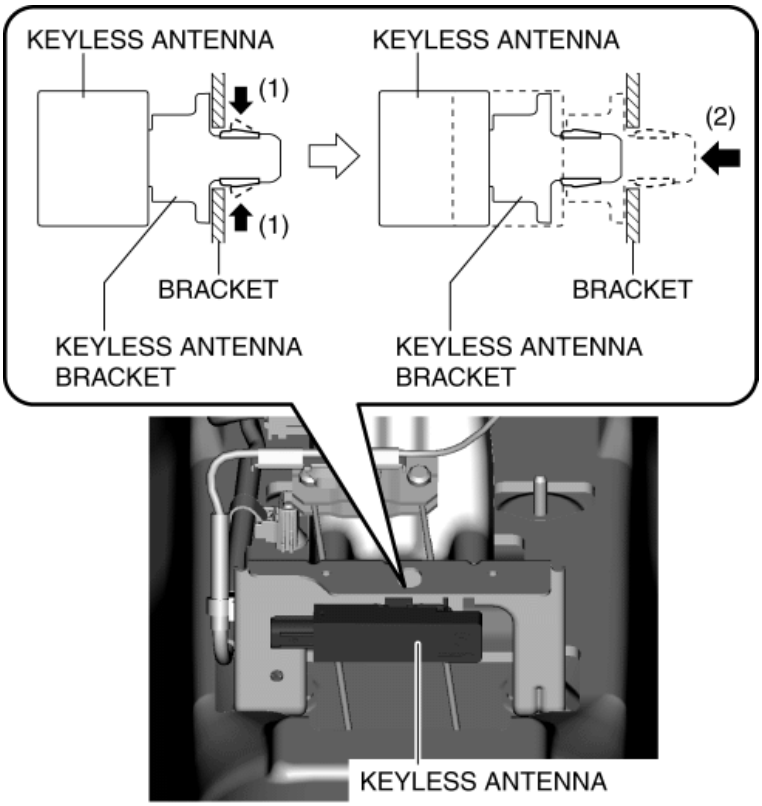

5. Remove the keyless antenna from the bracket.

6. Insert a tape-wrapped flathead screwdriver into the position shown in the figure.

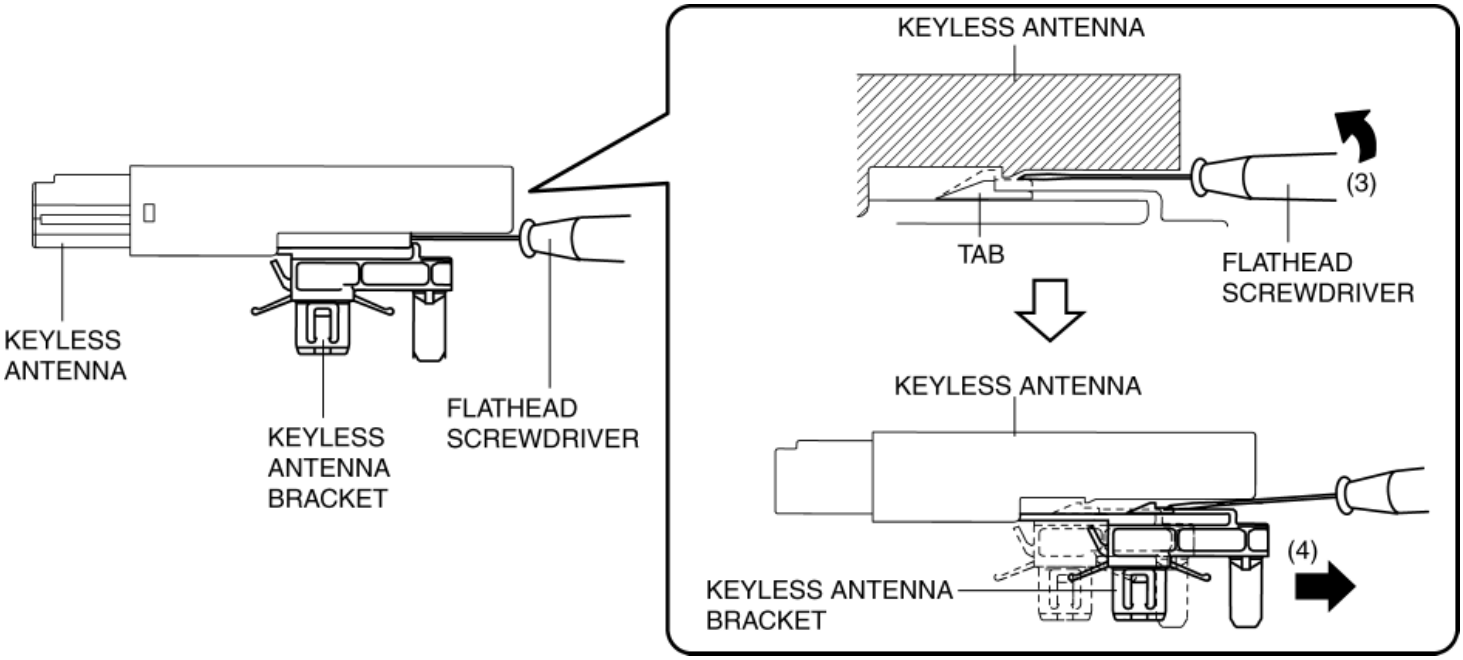

7. Move the tape-wrapped flathead screwdriver in the direction of arrow (3) shown in the figure to press the keyless antenna bracket tab, and pull it in the direction of arrow (4) to detach the keyless antenna bracket from the keyless antenna.

8. Remove the keyless antenna bracket from the keyless antenna.

9. Install in the reverse order of removal.

2014 - Mazda3 - Body and Accessories

KEYLESS BEEPER REMOVAL/INSTALLATION

1. Disconnect the negative battery cable. (See **NEGATIVE BATTERY CABLE DISCONNECTION/CONNECTION [SKYACTIV-G 2.0, SKYACTIV-G 2.5]**.)

2. Remove the cowl grille. (See **COWL GRILLE REMOVAL/INSTALLATION**.)

3. Disconnect the connector.

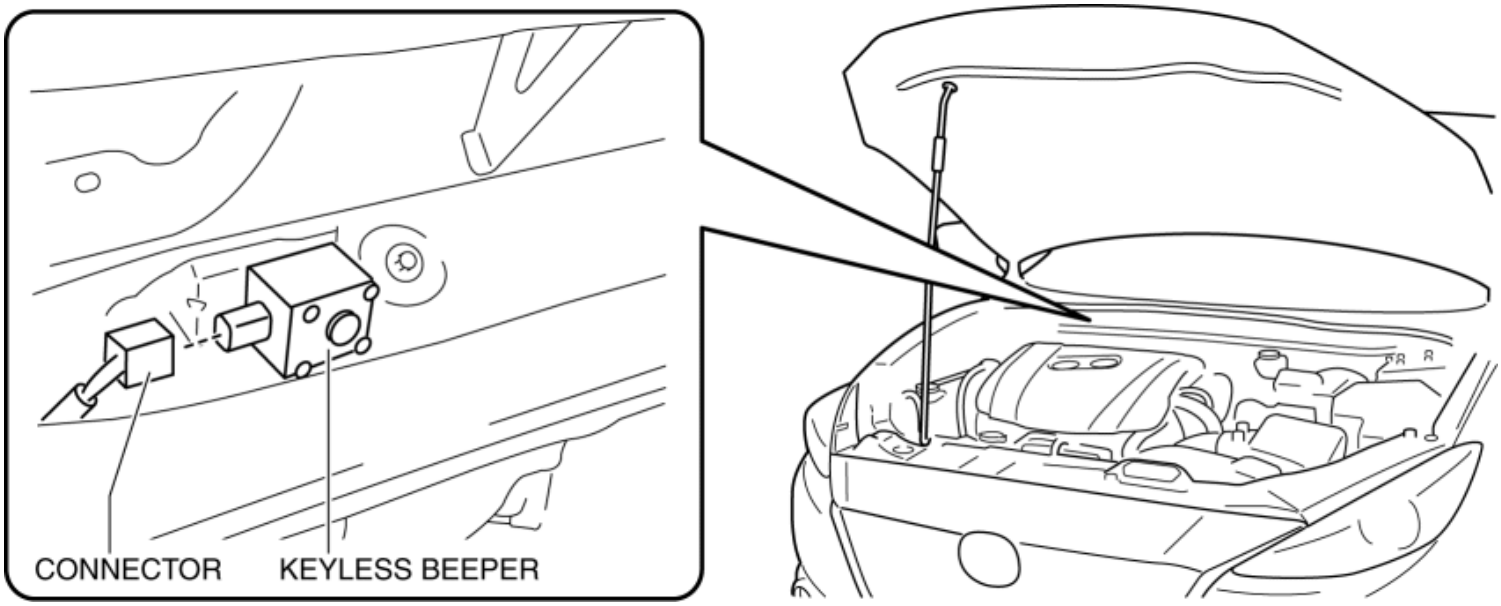

4. Pull the keyless beeper in the direction of the arrow (2) shown in the figure while pressing the keyless beeper tabs in the direction of the arrow (1) shown in the figure, detach the keyless beeper tabs and bracket, and then remove the keyless beeper from the bracket.

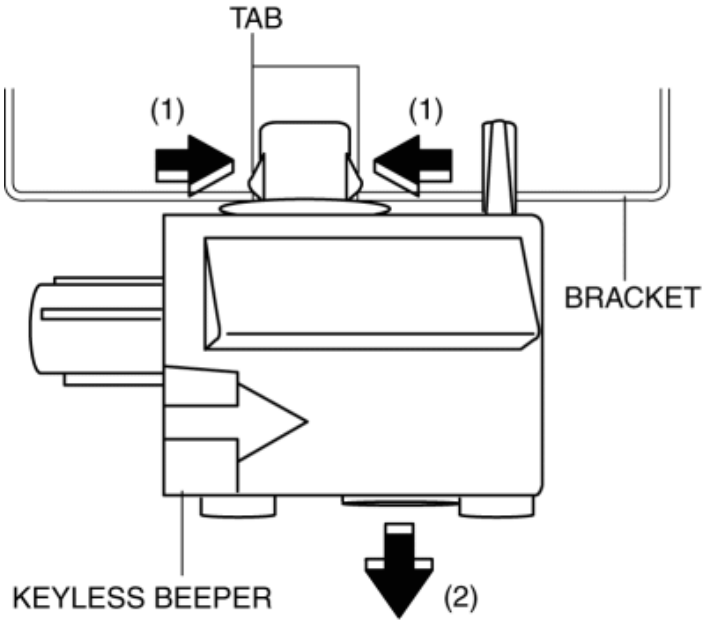

5. Install in the reverse order of removal.

2014 - Mazda3 - Body and Accessories

KEYLESS BEEPER INSPECTION

- Because no oscillation circuit is integrated in the keyless beeper, a beep sound is not heard by applying rated voltage to the keyless beeper itself. To inspect the keyless beeper, refer to symptom troubleshooting. (See **ANSWER-BACK BUZZER DOES NOT SOUND [SECURITY AND LOCKS]**.)

2014 - Mazda3 - Body and Accessories

KEYLESS RECEIVER REMOVAL/INSTALLATION

4SD

1. Disconnect the negative battery cable. (See **NEGATIVE BATTERY CABLE DISCONNECTION/CONNECTION [SKYACTIV-G 2.0, SKYACTIV-G 2.5]**.)
2. Remove the following parts:
   a. Rear seat cushion (See **REAR SEAT CUSHION REMOVAL/INSTALLATION**.)
   b. Rear scuff plate (RH) (See **REAR SCUFF PLATE REMOVAL/INSTALLATION**.)
   c. Tire house trim (RH) (See **TIRE HOUSE TRIM REMOVAL/INSTALLATION**.)
   d. C-pillar trim (RH) (See **C-PILLAR TRIM REMOVAL/INSTALLATION**.)
3. Disconnect the connector.

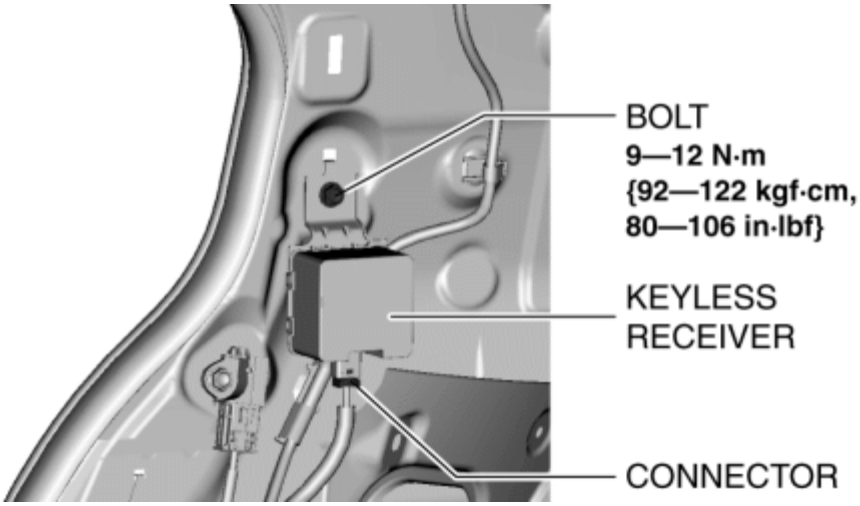

4. Remove the bolt.
5. Remove the keyless receiver.
6. Install in the reverse order of removal.

5HB

1. Disconnect the negative battery cable. (See **NEGATIVE BATTERY CABLE DISCONNECTION/CONNECTION [SKYACTIV-G 2.0, SKYACTIV-G 2.5]**.)
2. Remove the following parts:

a. Trunk covering (See **TRUNK COVERING REMOVAL/INSTALLATION**.)

b. Trunk board (See **TRUNK BOARD REMOVAL/INSTALLATION**.)

c. Trunk end trim (See **TRUNK END TRIM REMOVAL/INSTALLATION**.)

d. Rear seat cushion (See **REAR SEAT CUSHION REMOVAL/INSTALLATION**.)

e. Rear scuff plate (RH) (See **REAR SCUFF PLATE REMOVAL/INSTALLATION**.)

f. Tire house trim (RH) (See **TIRE HOUSE TRIM REMOVAL/INSTALLATION**.)

g. Rear package tray (See **REAR PACKAGE TRAY REMOVAL/INSTALLATION**.)

h. Trunk side upper trim (RH) (See **TRUNK SIDE UPPER TRIM REMOVAL/INSTALLATION**.)

i. C-pillar trim (RH) (See **C-PILLAR TRIM REMOVAL/INSTALLATION**.)

3. Disconnect the connector.

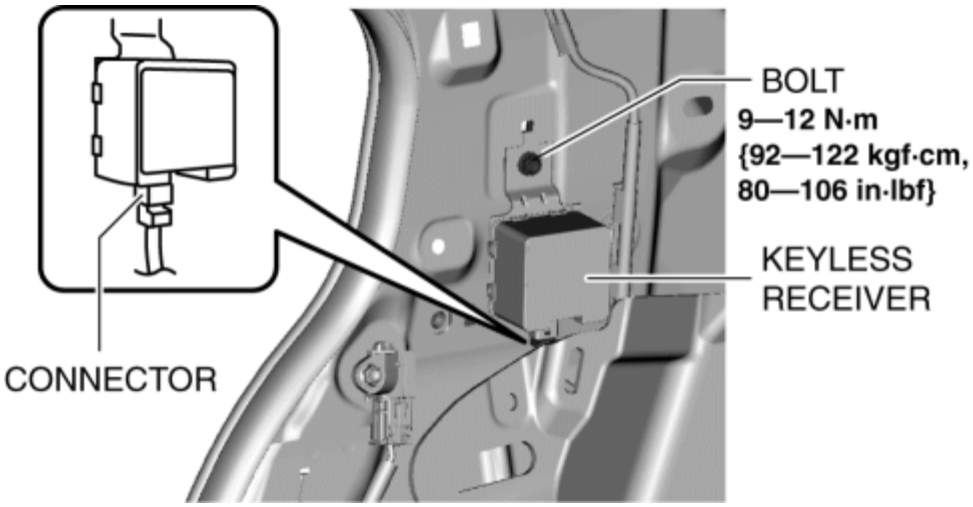

4. Remove the bolt.

5. Remove the keyless receiver.

6. Install in the reverse order of removal.

2014 - Mazda3 - Body and Accessories

KEYLESS RECEIVER INSPECTION

4SD

1. Remove the following parts:
   a. Rear scuff plate (RH) (See **REAR SCUFF PLATE REMOVAL/INSTALLATION**.)
   b. Rear seat cushion (See **REAR SEAT CUSHION REMOVAL/INSTALLATION**.)
   c. Tire house trim (RH) (See **TIRE HOUSE TRIM REMOVAL/INSTALLATION**.)
   d. C-pillar trim (RH) (See **C-PILLAR TRIM REMOVAL/INSTALLATION**.)
2. Remove the keyless receiver with the connector still connected. (See **KEYLESS RECEIVER REMOVAL/INSTALLATION**.)
3. Verify that the voltages of each of the terminals are as indicated in the terminal voltage table (reference).
   - If the voltage is not as specified in the terminal voltage table (reference), inspect the parts under Inspection item(s) and related wiring harnesses.
     - If the system does not operate normally even though the parts under Inspection Item(s) and related wiring harnesses do not have any malfunction, replace the keyless receiver.

Terminal Voltage Table (Reference)

Terminal	Signal name	Connected to	Measurement conditions	Voltage (V)	Inspection item(s)
A	Power supply	Start stop unit	Under any condition	Approx. 5	Start stop unit

B	DATA	Start stop unit	Because this terminal is for communication, determination using terminal voltage inspection is not possible.		Start stop unit
D	GND	Body ground	Under any condition	1.0 or less	Ground

5HB

1. Remove the following parts:

   a. Trunk covering (See **TRUNK COVERING REMOVAL/INSTALLATION**.)

   b. Trunk board (See **TRUNK BOARD REMOVAL/INSTALLATION**.)

   c. Trunk end trim (See **TRUNK END TRIM REMOVAL/INSTALLATION**.)

   d. Rear seat cushion (See **REAR SEAT CUSHION REMOVAL/INSTALLATION**.)

   e. Rear scuff plate (RH) (See **REAR SCUFF PLATE REMOVAL/INSTALLATION**.)

   f. Tire house trim (RH) (See **TIRE HOUSE TRIM REMOVAL/INSTALLATION**.)

   g. Rear package tray (See **REAR PACKAGE TRAY REMOVAL/INSTALLATION**.)

   h. Trunk side upper trim (RH) (See **TRUNK SIDE UPPER TRIM REMOVAL/INSTALLATION**.)

   i. C-pillar trim (RH) (See **C-PILLAR TRIM REMOVAL/INSTALLATION**.)

2. Remove the keyless receiver with the connector still connected. (See **KEYLESS RECEIVER REMOVAL/INSTALLATION**.)

3. Verify that the voltages of each of the terminals are as indicated in the terminal voltage table (reference).

   - If the voltage is not as specified in the terminal voltage table (reference), inspect the parts under Inspection item(s) and related wiring harnesses.

     - If the system does not operate normally even though the parts under Inspection Item(s) and related wiring harnesses do not have any malfunction, replace the keyless receiver.

Terminal Voltage Table (Reference)

Terminal	Signal name	Connected to	Measurement conditions	Voltage (V)	Inspection item(s)
A	Power supply	Start stop unit	Under any condition	Approx. 5	Start stop unit
B	DATA	Start stop unit	Because this terminal is for communication, determination using terminal voltage inspection is not possible.		Start stop unit
D	GND	Body ground	Under any condition	1.0 or less	Ground

2014 - Mazda3 - Body and Accessories

PUSH BUTTON START REMOVAL/INSTALLATION

1. Disconnect the negative battery cable. (See **NEGATIVE BATTERY CABLE DISCONNECTION/CONNECTION [SKYACTIV-G 2.0, SKYACTIV-G 2.5]**.)

2. Remove the upper column cover. (See **COLUMN COVER REMOVAL/INSTALLATION**.)

3. Remove the meter hood. (See **METER HOOD REMOVAL/INSTALLATION**.)

4. While pressing the push button start tabs in the direction of the arrows (1) shown in the figure, and push out the push button start in the direction of the arrow (2) shown in the figure to detach the push button start tabs from the meter hood.

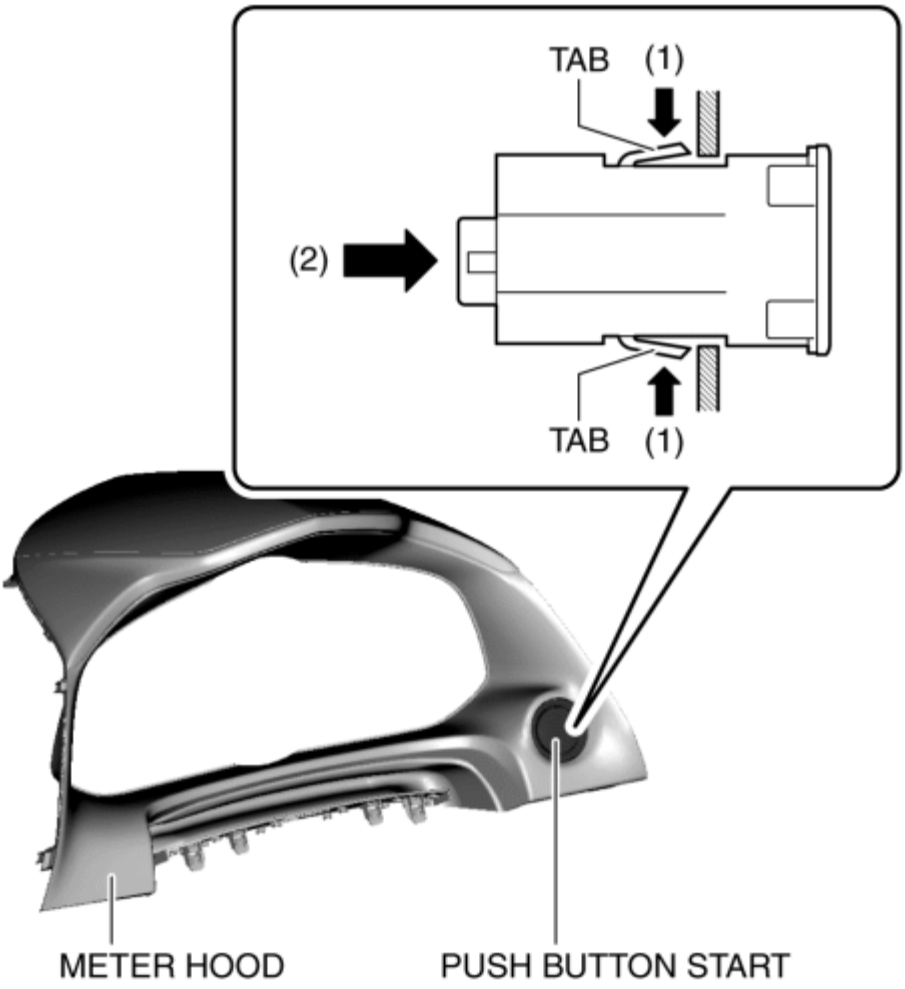

5. Remove the push button start.

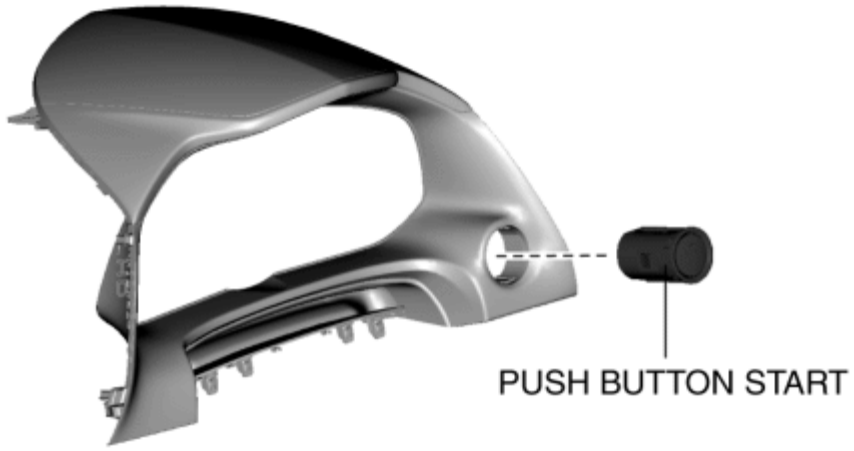

6. Install in the reverse order of removal.

2014 - Mazda3 - Body and Accessories

PUSH BUTTON START INSPECTION

Resistance Inspection

1. Disconnect the negative battery cable. (See **NEGATIVE BATTERY CABLE DISCONNECTION/CONNECTION [SKYACTIV-G 2.0, SKYACTIV-G 2.5]**.)

2. Remove the upper column cover. (See **COLUMN COVER REMOVAL/INSTALLATION**.)

3. Remove the meter hood. (See **METER HOOD REMOVAL/INSTALLATION**.)

4. Remove the push button start. (See **PUSH BUTTON START REMOVAL/INSTALLATION**.)

5. Verify that the continuity between the push button start terminals is as indicated in the table.

○—○ : Continuity

Test condition	Terminal			
	C	E	G	I
Button pressed	○		○	
		○		○
Button released				

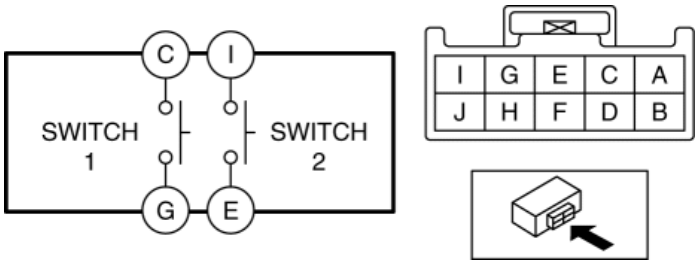

- If not as indicated in the table, replace the push button start. (See **PUSH BUTTON START REMOVAL/INSTALLATION**.)

LED Illumination Inspection

1. Disconnect the negative battery cable. (See **NEGATIVE BATTERY CABLE DISCONNECTION/CONNECTION [SKYACTIV-G 2.0, SKYACTIV-G 2.5]**.)

2. Remove the upper column cover. (See **COLUMN COVER REMOVAL/INSTALLATION**.)

3. Remove the meter hood. (See **METER HOOD REMOVAL/INSTALLATION**.)

4. Remove the push button start. (See **PUSH BUTTON START REMOVAL/INSTALLATION**.)

5. Apply battery positive voltage and connect the ground to the push button start terminals and verify that the LED illuminates as indicated in the table.

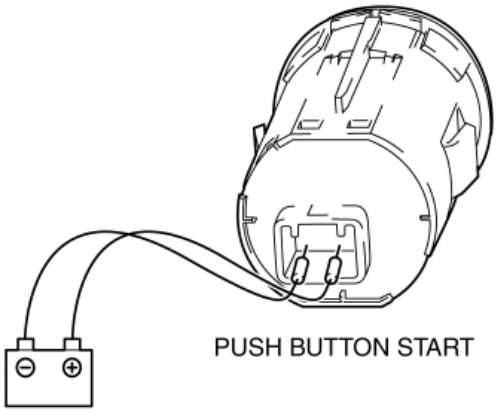

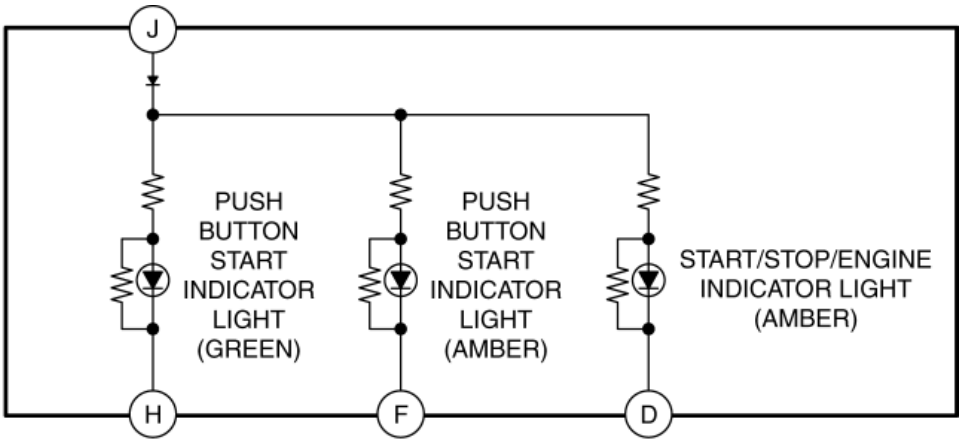

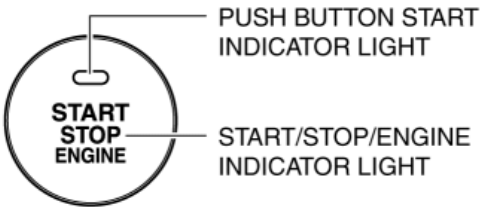

B+ terminal	Ground terminal	Illumination positions (Color)
J	D	START/STOP/ENGINE indicator light (Amber)
	F	Push button start indicator light (Amber)
	H	Push button start indicator light (Green)

- If the LED does not illuminate as indicated in the table, replace the push button start. (See **PUSH BUTTON START REMOVAL/INSTALLATION**.)

2014 - Mazda3 - Body and Accessories

REMOTE TRANSMITTER DISASSEMBLY/ASSEMBLY

Disassembly

1. Press the knob on the remote transmitter and pull the auxiliary key out.

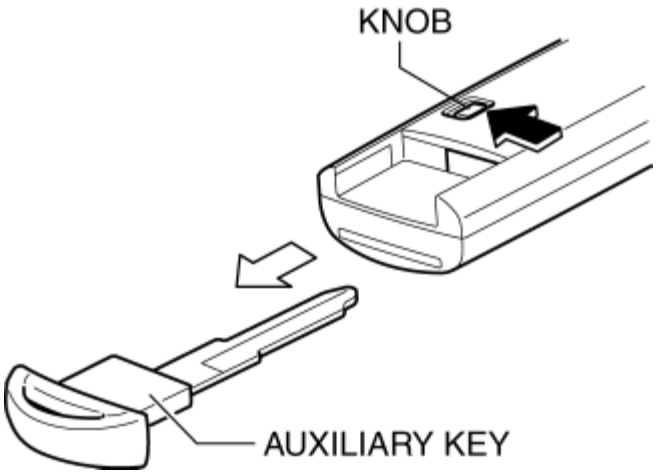

2. Insert a tape-wrapped flathead screwdriver into the notch on the remote transmitter and turn it in the direction of the arrow shown in the figure to detach tabs A from the remote transmitter.

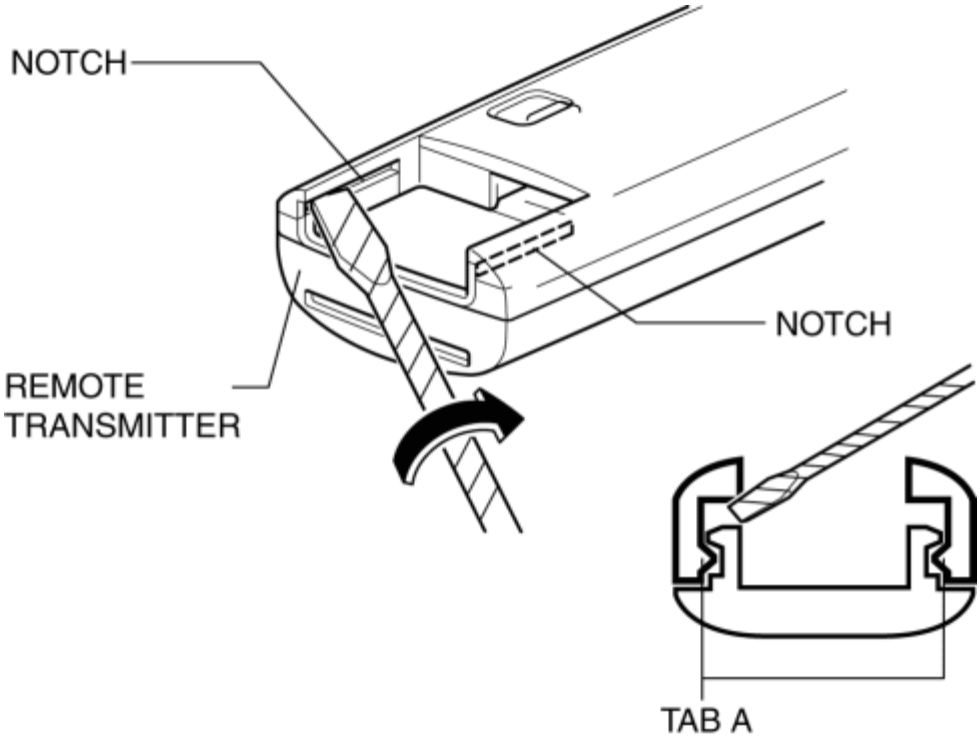

3. Insert a tape-wrapped flathead screwdriver between the remote transmitter and the cover

and slide it in the direction of arrow (1) shown in the figure.

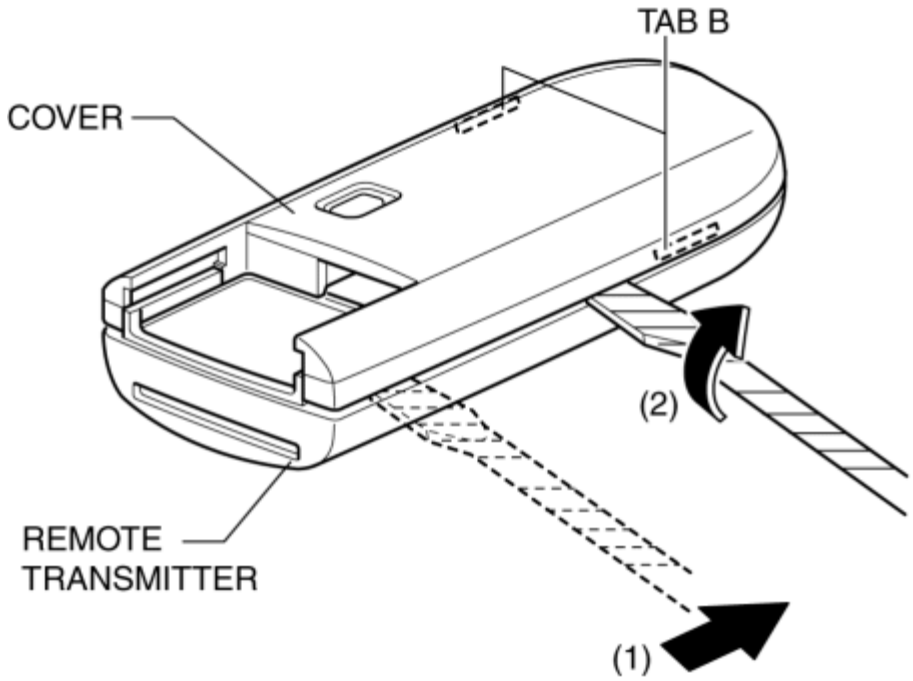

4. Turn the screwdriver in the direction of arrow (2) shown in the figure to detach tabs B of the cover from the remote transmitter.

5. Remove the cover.

6. Remove the cap and the battery from the remote transmitter.

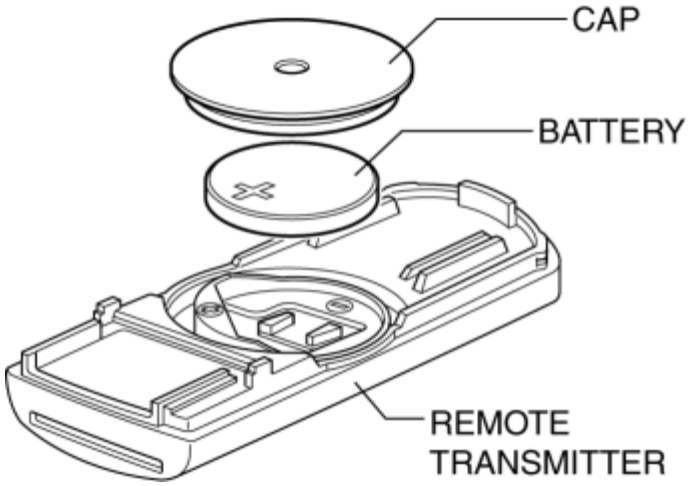

Assembly

1. Verify that the O-ring is installed to the remote transmitter.

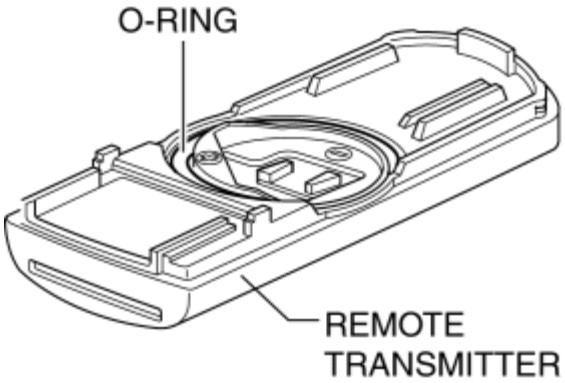

NOTE:

- If the O-ring is removed, install it before installing the battery.

2. Install a new battery (CR2025) in the direction of the arrow shown in the figure with the negative pole facing down.

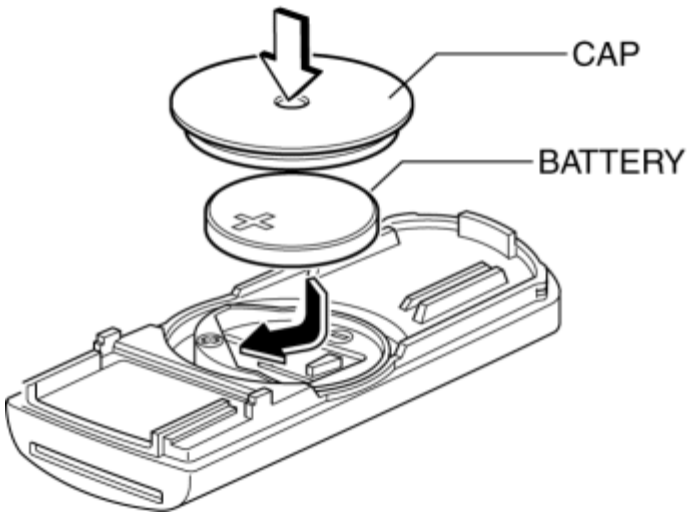

3. Install the cap.

4. Align the cover to the transmitter from its end and press it in the direction of the arrow shown in the figure to engage the tabs of the cover with the remote transmitter.

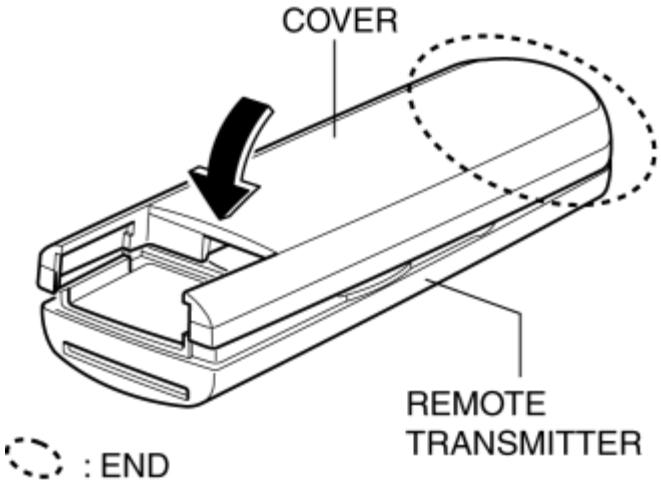

5. Insert the auxiliary key.

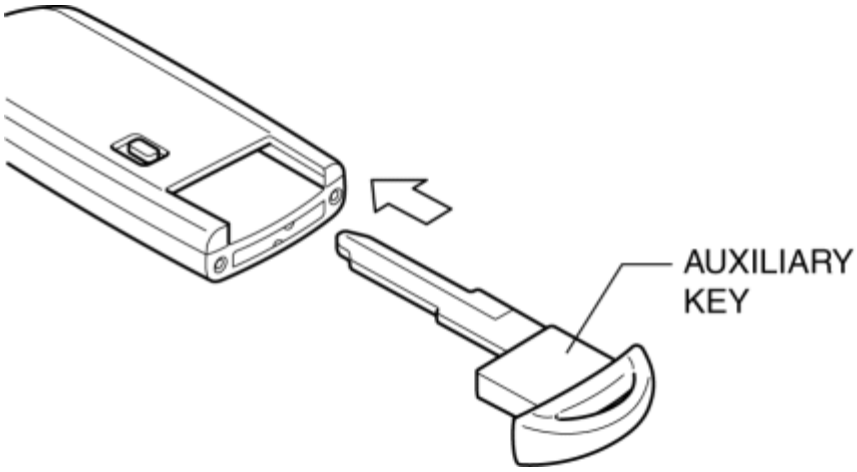
AUXILIARY
KEY

2014 - Mazda3 - Body and Accessories

REMOTE TRANSMITTER ID CODE REGISTRATION

- When the remote transmitter is replaced or an additional remote transmitter is programmed, the remote transmitter has to be programmed to the immobilizer system-related parts. When replacing or adding a remote transmitter, refer to immobilizer system-related parts programming and perform the remote transmitter programming. (See **IMMOBILIZER SYSTEM-RELATED PARTS PROGRAMMING**.)

2014 - Mazda3 - Body and Accessories

CLEARING REMOTE TRANSMITTER

- The remote transmitter clearing procedure clears remote transmitters from the immobilizer system-related parts, and after the clearing procedure is implemented, all transmitters that were programmed can no longer be used.
- For the remote transmitter clearing procedure, refer to clearing of remote transmitters in programming of immobilizer system- related parts. (See **IMMOBILIZER SYSTEM-RELATED PARTS PROGRAMMING**.)

2014 - Mazda3 - Body and Accessories

REMOTE TRANSMITTER BATTERY VOLTAGE INSPECTION

NOTE:

- Because the remote transmitter battery power cannot be determined using the battery itself, determine by the remote transmitter battery low warning operation conditions.

Operation procedure for remote transmitter battery low warning

1. Place the remote transmitter inside the vehicle and close all of the doors.
2. Switch the ignition ON (engine off) and wait **approx. 30 s**.
3. With the brake pedal not depressed, switch the ignition off.
4. Verify that the KEY indicator light (green) in the instrument panel is not flashing.

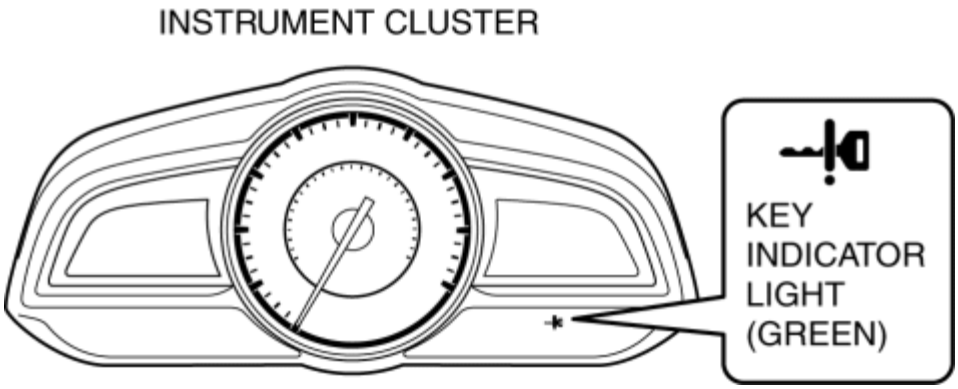

- KEY indicator light (green) flashes for **approx. 30 s**:

  Replace the remote transmitter battery because the remote transmitter battery power is depleted. (See **REMOTE TRANSMITTER DISASSEMBLY/ASSEMBLY**.)

2014 - Mazda3 - Body and Accessories

IMMOBILIZER SYSTEM-RELATED PARTS PROGRAMMING

Foreword

- When replacing immobilizer system-related parts or programming an additional remote transmitter, or clearing a remote transmitter, program the immobilizer system-related parts so that the system operates normally. For immobilizer system-related parts programming, select the programming procedures according to the service. (See **Selection of Procedure for Immobilizer System-Related Parts Programming**.)

CAUTION:

- The engine cannot be started if any step or procedure for each service operation is skipped. Perform all procedures in the order of the steps.
- If any metallic or magnetic object is near the remote transmitter, communication between the remote transmitter and the vehicle may be obstructed, resulting in a failure to program the immobilizer system-related parts. Remove any metallic or magnetic objects, such as key holders, from the remote transmitter when programming immobilizer system-related parts.
- If any of the following devices are inside the vehicle, programming of immobilizer system-related parts may fail. Do not bring any of the following devices or similar products inside the vehicle when programming immobilizer system-related parts.
    - M-MDS
    - Personal computer
    - Devices that can send/receive radio waves
- If the engine is started during immobilizer system-related parts programming, the programming mode cancels. Therefore, do not start the engine unless indicated in the procedure. Repeat the procedure from the beginning if the engine is started during the immobilizer system-related parts programming.
- If a remote transmitter is near the vehicle during immobilizer system-related parts programming, it may be programmed mistakenly. Keep the remote transmitter 1 m away from the vehicle unless indicated in the procedure.
- The SSU in the procedure indicates the start stop unit. In addition, the advanced key indicates the remote transmitter.

NOTE:

- Two or more remote transmitters must be programmed for the engine to start.
- A maximum of six remote transmitters can be programmed to one vehicle.
- The number of programmed key ID numbers can be verified using the M-MDS.

- Do not select any screen menu other than the ones indicated in the procedure during M-MDS operation.
- When programming the immobilizer system-related parts, the incode must be searched.

Selection of Procedure for Immobilizer System-Related Parts Programming

1. Verify that the ROOM fuse, AT fuse, and SRS2/ESCL fuse are installed.
2. Select the applicable programming procedure from the service content of the immobilizer system-related parts.

Immobilizer System-Related Parts Service and Programming Procedure Table

No.	Service		Programming procedure
1	Additional remote transmitter programming	Have remote transmitter that can start engine	(See **No.1 Additional Remote Transmitter Programming Procedure (Using the M-MDS)**.)
2	Programming due to PCM replacement		(See **No.2 Programming Procedure After PCM Replacement**.)
3	Start stop unit replacement and programming due to simultaneous replacement of start stop unit/PCM		(See **No.3 Start stop unit replacement and programming procedure due to simultaneous replacement of start stop unit/PCM**.)
4	Remote transmitter replacement or clearing		(See **No.4 Remote transmitter replacement or remote transmitter clearing**.)

M-MDS Connecting Procedure

NOTE:

- Do not place the M-MDS in the vehicle while programming the immobilizer system.

1. Fully lower the door glass.
2. Connect the M-MDS to the DLC-2.
3. Place the M-MDS outside the vehicle.

CAUTION:

- Cover the vehicle body with a rag so as not to damage the vehicle body with the cable.

Procedure for communication between coil antenna and remote transmitter

- While the push button start indicator light (green) is flashing, press the top part of the remote transmitter against the center of the push button start.

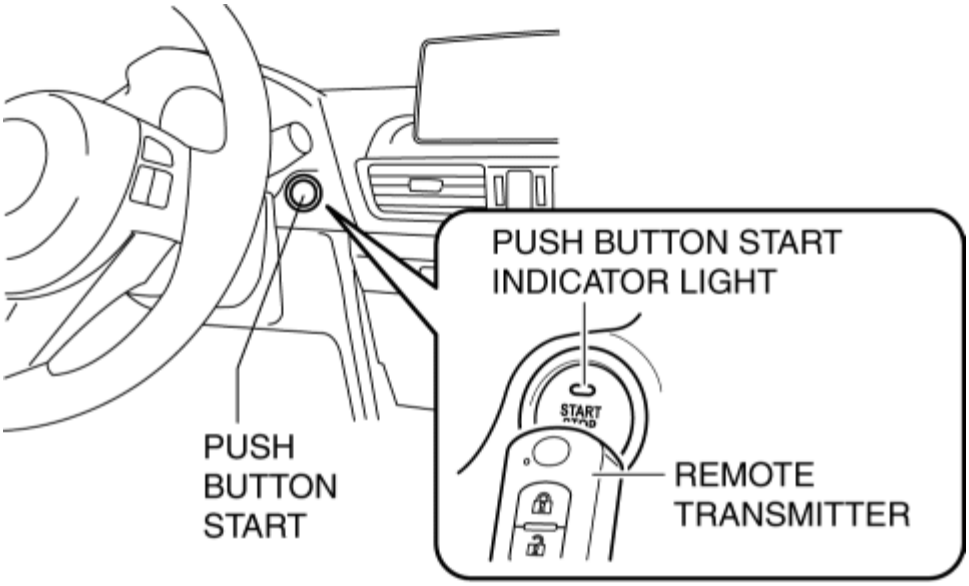

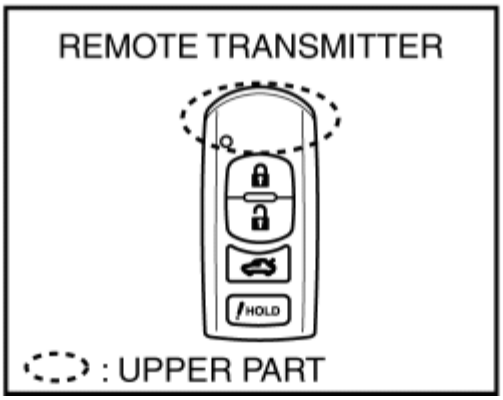

NOTE:

- The coil antenna is integrated with the push button start.

No.1 Additional Remote Transmitter Programming Procedure (Using the M-MDS)

CAUTION:

- The engine cannot be started if any step or procedure is skipped. Perform all procedures in the order of the steps.

Vehicle condition

- There is a remote transmitter that can start the engine.

NOTE:

- If a remote transmitter cannot be programmed, verify the number of programmed remote transmitter using the M-MDS.
- Perform the DTC inspection for the start stop unit using the M-MDS.

Procedure

VALID REMOTE TRANSMITTER	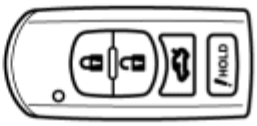 REMOTE TRANSMITTER 1
REMOTE TRANSMITTER TO BE PROGRAMMED	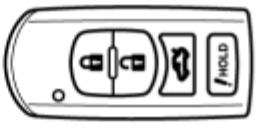 REMOTE TRANSMITTER 2

Step	Procedure	Action after procedure	
1	**VERIFY THAT REMOTE TRANSMITTER WHICH CAN START ENGINE IS REMOTE TRANSMITTER 1** • Switch the ignition ON (engine off) using remote transmitter 1. • Verify that the security light illuminates for approx. 3 s, and then turns off. • Switch the ignition off.	Go to the next step.	
2	**PERFORM ADDITIONAL PROGRAMMING OF REMOTE TRANSMITTER 2** • Connect the M-MDS to the DLC-2. (See **M-MDS Connecting Procedure**.) • Switch the ignition ON (engine off) using remote transmitter 1. • After vehicle identification, select the following from the M-MDS initial screen. ◦ “Body” ◦ “Security” ◦ “PATS (immobilizer) function” • Then, select the following from the screen menu. • Additional advanced key programming	Yes	Change the remote transmitter and repeat Step 2.

	• Input the start stop unit incode and cancel the security access according to the directions on the M-MDS screen. **NOTE:** • "Security access permitted" is displayed on the M-MDS screen. • Depress the clutch (MTX) or the brakes (ATX) according to the instructions on the M-MDS, and press remote transmitter 2 against the push button start while the push button start indicator light (green) is flashing. (See **Procedure for communication between coil antenna and remote transmitter**.) • Verify that the remote transmitter 2 programming is completed on the M-MDS screen, and release the clutch (MTX) or brake (ATX) pedal. • Are there other remote transmitters to be programmed?	No	Switch the ignition off, then go to the next step.
3	**PERFORM IMMOBILIZER SYSTEM FUNCTION VERIFICATION** **NOTE:** • Each remote transmitter is brought inside the vehicle one at a time to start the engine. • Depress the clutch (MTX)/brake (ATX) pedal. • After pressing remote transmitter 2 against the push button start, press the push button start to start the engine. (See **Procedure for communication between coil antenna and remote transmitter**.) • Are there other remote transmitters to be programmed?	Yes	Change the key and repeat Step 3.
		No	Go to the next step.
4	**VERIFY THAT REMOTE TRANSMITTER IS PROGRAMMED** Place only the programmed remote transmitter on the passenger seat and verify that the engine can be started with the programmed key.	Go to the next step.	
5	**M-MDS COMPLETION** • Wait for 5 s or more after the M-MDS is completed and switch the ignition off.	Procedure is completed.	

No.2 Programming Procedure After PCM Replacement

CAUTION:

- The engine cannot be started if any step or procedure is skipped. Perform all procedures in the order of the steps.

  Vehicle condition

- There is a remote transmitter that can start the engine.

Procedure

VALID REMOTE TRANSMITTER	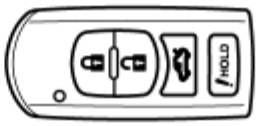 REMOTE TRANSMITTER

Step	Procedure	Action after procedure
1	**REPLACE PCM** Refer to PCM REMOVAL/INSTALLATION to perform PCM replacement. (See **PCM REMOVAL/INSTALLATION [SKYACTIV-G 2.0, SKYACTIV-G 2.5]**.)	Go to the next step.
2	**PERFORM PARAMETER RESET** • Connect the M-MDS to the DLC-2. (See **M-MDS Connecting Procedure**.) • Switch the ignition ON (engine off). **NOTE:** • Although the security indicator light illuminates for approx. 3 s and then turns off or flashes, continue to perform the procedure as indicated. • After vehicle identification, select the following from the M-MDS initial screen. ○ “Body” ○ “Security” ○ “PATS (immobilizer) function” • Then, select the following from the screen menu. • “Parameter reset” • Input the start stop unit and PCM incode and cancel the security access according to the directions on the M-MDS screen. **NOTE:** • “Security access permitted” is displayed on the M-MDS screen. • Perform the operation according to the directions on	Go to the next step.

	the M-MDS screen. **NOTE:** • "Parameter reset completed" is displayed on the M-MDS screen. • Select "No" according to the directions on the M-MDS. **CAUTION:** • Because the procedure switches to the procedure for key ID number clearing, if "Yes" is selected on the M-MDS screen, select "No".		
3	**M-MDS COMPLETION** • Wait for 5 s or more after the M-MDS is completed and switch the ignition off.	Go to the next step.	
4	**PERFORM IMMOBILIZER SYSTEM FUNCTION VERIFICATION** • Bring each remote transmitter into the vehicle one at a time and switch the ignition ON (engine off). • Verify that the security indicator light illuminates, and switch the ignition off. • Are there other remote transmitters to be programmed?	Yes	Change the key and repeat Step 4.
		No	Go to the next step.
5	**VERIFY PARAMETER RESET IS COMPLETED** **NOTE:** • Each remote transmitter is brought inside the vehicle one at a time to start the engine. • Place only the programmed remote transmitter on the passenger seat and verify that the engine starts. • Does engine start?	Yes	Procedure is completed.
		No	Perform the related DTC inspection to repair the malfunctioning part.

No.3 Start stop unit replacement and programming procedure due to simultaneous replacement of start stop unit/PCM

CAUTION:

- The engine cannot be started if any step or procedure is skipped. Perform all procedures in the order of the steps.
- Because it is necessary to program two or more remote transmitters to the immobilizer system-related parts to start the engine, perform the remote transmitter programming after clearing the remote transmitter.

NOTE:

Before beginning the procedure, verify that the customer has provided all of the remote transmitters for the vehicle.

- The engine cannot be started unless two or more remote transmitters are programmed after the replacement.

Vehicle condition

- Have two or more remote transmitters to be programmed after the replacement.

Procedure

REMOTE TRANSMITTER TO BE PROGRAMMED	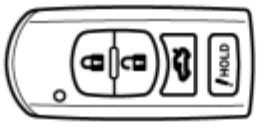 REMOTE TRANSMITTER 1	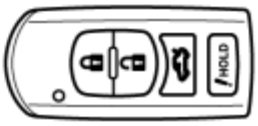 REMOTE TRANSMITTER 2

Step	Procedure	Action after procedure
1	**REPLACE START STOP UNIT AND REPLACE START STOP UNIT/PCM SIMULTANEOUSLY** Refer to START STOP UNIT REMOVAL/INSTALLATION to perform start stop unit replacement. (See **START STOP UNIT REMOVAL/INSTALLATION**.) Refer to PCM REMOVAL/INSTALLATION to perform PCM replacement. (See **PCM REMOVAL/INSTALLATION [SKYACTIV-G 2.0, SKYACTIV-G 2.5]**.)	Go to the next step.
2	**PERFORM PARAMETER RESET** • Connect the M-MDS to the DLC-2. (See **M-MDS Connecting Procedure**.) • Remove the remote transmitter from the vehicle (keep them 1 m or more from the vehicle) and switch the ignition ON (engine off) according to the directions on the M-MDS screen. • Select the following from the M-MDS initial screen. ○ “Body” ○ “Forced ignition ON”	

	• Press the push button start and switch the ignition ON (engine off) according to the instructions on the M-MDS.
	• Select the following from the M-MDS initial screen.
	  ◦ “Body”
	  ◦ “Security”
	  ◦ “PATS (immobilizer) function”
	• Then, select the following from the screen menu.
	  • “Parameter reset”
	• Input the start stop unit and PCM incode and cancel the security access according to the directions on the M-MDS screen.
	NOTE:
	  • “Security access permitted” is displayed on the M-MDS screen.
	• Perform the operation according to the directions on the M-MDS screen.
	NOTE:
	  • “Parameter reset completed” is displayed on the M-MDS screen.
	• Select “Yes” according to the directions on the M-MDS.
	CAUTION:
	  • Because the procedure will not switch to the procedure for key ID number clearing, if “No” is selected on the M-MDS screen, select “Yes”.
		Go to the next step.

3	**PERFORM KEY ID NUMBER CLEARING** • Perform the key ID number clearing and switch the ignition off according to the directions on the M-MDS screen.	Go to the next step.
4	**PERFORM REMOTE TRANSMITTER 1 PROGRAMMING** • Switch the ignition ON (engine off). **NOTE:** • Although the security indicator light illuminates for approx. 10 s and then turns off or flashes, continue to perform the procedure as indicated. • While the push button start indicator light (green) is flashing, press the top part of the remote transmitter 1 against the center of the push button start. (See **Procedure for communication between coil antenna and remote transmitter**.)	Switch the ignition off, then go to the next step.

	• Verify that remote transmitter 1 programming is completed on the M-MDS screen. **NOTE:** • When the programming is completed, the security indicator light turns off and DTC 21 is displayed after approx. 1 min. • If the programming fails, the security indicator light flashes and DTC 13 is displayed after approx. 1 min.		
5	**PERFORM REMOTE TRANSMITTER 2 PROGRAMMING** • Switch the ignition ON (engine off). • While the push button start indicator light (green) is flashing, press the top part of the remote transmitter 2 against the center of the push button start. (See **Procedure for communication between coil antenna and remote transmitter**.) • Verify that the remote transmitter 2 programming is completed on the M-MDS screen. **NOTE:** • If the programming fails, the security indicator light flashes and DTC 13 is displayed after approx. 1 min. • Are there other remote transmitters to be programmed?	Yes	If other remote transmitters are programmed, repeat Step 5.
		No	Go to the next step.
6	**M-MDS COMPLETION** • Wait for 5 s or more after the M-MDS is completed and switch the ignition off.	Go to the next step.	
7	**PERFORM IMMOBILIZER SYSTEM FUNCTION VERIFICATION (REMOTE TRANSMITTER 1)** **NOTE:** • Each remote transmitter is brought inside the vehicle one at a time to start the engine. • Depress the clutch (MTX)/brake (ATX) pedal. • While the push button start indicator light (green) is flashing, press the top part of the remote transmitter 1 against the center of the push button start. (See **Procedure for communication between coil antenna and remote transmitter**.) • After the push button start indicator light (green) goes from flashing to illumination, press the push button start to start the engine.	Switch the ignition off, then go to the next step.	
8	**PERFORM IMMOBILIZER SYSTEM FUNCTION VERIFICATION (REMOTE TRANSMITTER 2)** **NOTE:**	Yes	If there are other remote transmitters to be programmed,

	• Each remote transmitter is brought inside the vehicle one at a time to start the engine. • Depress the clutch (MTX)/brake (ATX) pedal. • While the push button start indicator light (green) is flashing, press the top part of the remote transmitter 2 against the center of the push button start. (See **Procedure for communication between coil antenna and remote transmitter**.) • After the push button start indicator light (green) goes from flashing to illumination, press the push button start to start the engine.		repeat Step 7.
		No	Go to the next step.
9	**VERIFY THAT REMOTE TRANSMITTER IS PROGRAMMED** **NOTE:** • Each remote transmitter is brought inside the vehicle one at a time to start the engine. • Place only the programmed remote transmitter on the passenger seat and verify that the engine starts. • Does engine start?	Yes	Procedure is completed.
		No	Perform the related DTC inspection to repair the malfunctioning part.

No.4 Remote transmitter replacement or remote transmitter clearing

CAUTION:

- The engine cannot be started if any step or procedure is skipped. Perform all procedures in the order of the steps.
- Because it is necessary to program two or more remote transmitters to the immobilizer system-related parts to start the engine, perform the remote transmitter programming after clearing the remote transmitter.

Vehicle condition

- Have two remote transmitters to be programmed.

Procedure

VALID REMOTE TRANSMITTER	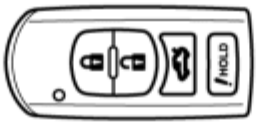 REMOTE TRANSMITTER 1	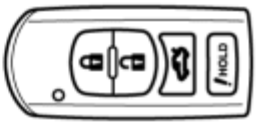 REMOTE TRANSMITTER 2

Step	Procedure	Action after procedure
1	**PERFORM KEY ID NUMBER CLEARING** • Connect the M-MDS to the DLC-2. (See **M-MDS Connecting Procedure**.) • Switch the ignition ON (engine off). • After vehicle identification, select the following from the M-MDS initial screen. ◦ “Body” ◦ “Security” ◦ “PATS (immobilizer) function” • Then, select the following from the screen menu. • “Advanced key clearing” • Input the start stop unit incode and cancel the security access according to the directions on the M-MDS screen. **NOTE:** • “Security access permitted” is displayed on the M-MDS screen. • Perform the remote transmitter clearing according to the directions on the M-MDS. **NOTE:** • “Advanced key clearing completed” is displayed on the M-MDS screen.	Switch the ignition off, then go to the next step.
2	**PERFORM REMOTE TRANSMITTER 1 PROGRAMMING** • Switch the ignition ON (engine off). **NOTE:** • Although the security indicator light	

	illuminates for approx. 10 s and then turns off or flashes, continue to perform the procedure as indicated. • While the push button start indicator light (green) is flashing, press the top part of the remote transmitter 1 against the center of the push button start. (See **Procedure for communication between coil antenna and remote transmitter**.) • Verify that the remote transmitter 1 programming is completed on the M-MDS screen. **NOTE:** • When the programming is completed, the security indicator light turns off and DTC 21 is displayed after approx. 1 min. • If the programming fails, the security indicator light flashes and DTC 13 is displayed after approx. 1 min.	Switch the ignition off, then go to the next step.	
3	**PERFORM REMOTE TRANSMITTER 2 PROGRAMMING** • Switch the ignition ON (engine off). **NOTE:** • Although the security indicator light illuminates for approx. 10 s and then turns off or flashes, continue to perform the procedure as indicated. • While the push button start indicator light (green) is flashing, press the top part of the remote transmitter 2 against the center of the push button start. (See **Procedure for communication between coil antenna and remote transmitter**.) • Verify that the remote transmitter 2 programming is completed on the M-MDS screen. **NOTE:** • If the programming fails, the security indicator light flashes and DTC 13 is displayed after approx. 1 min. • Are there other remote transmitters to be programmed?	Yes	Change the key and repeat Step 3.
		No	Go to the next step.
4	**M-MDS COMPLETION** • Wait for 5 s or more after the M-MDS is completed and switch the ignition off.	Go to the next step.	
5	**PERFORM IMMOBILIZER SYSTEM FUNCTION VERIFICATION (REMOTE TRANSMITTER 1)** **NOTE:** • Each remote transmitter is brought inside the vehicle one at a time to start the engine.		

	• Depress the clutch (MTX)/brake (ATX) pedal. • While the push button start indicator light (green) is flashing, press the top part of the remote transmitter 1 against the center of the push button start. (See **Procedure for communication between coil antenna and remote transmitter**.) • After the push button start indicator light (green) goes from flashing to illumination, press the push button start to start the engine.	Switch the ignition off, then go to the next step.	
6	**PERFORM IMMOBILIZER SYSTEM FUNCTION VERIFICATION (REMOTE TRANSMITTER 2)** **NOTE:** • Each remote transmitter is brought inside the vehicle one at a time to start the engine. • Depress the clutch (MTX)/brake (ATX) pedal. • While the push button start indicator light (green) is flashing, press the top part of the remote transmitter 2 against the center of the push button start. (See **Procedure for communication between coil antenna and remote transmitter**.) • After the push button start indicator light (green) goes from flashing to illumination, press the push button start to start the engine.	Yes	If there are other remote transmitters to be programmed, repeat Step 5.
		No	Go to the next step.
7	**VERIFY THAT REMOTE TRANSMITTER IS PROGRAMMED** **NOTE:** • Each remote transmitter is brought inside the vehicle one at a time to start the engine. • Place only the programmed remote transmitter on the passenger seat and verify that the engine starts. • Does engine start?	Yes	Procedure is completed.
		No	Perform the related DTC inspection to repair the malfunctioning part.

2014 - Mazda3 - Body and Accessories

THEFT-DETERRENT HORN REMOVAL/INSTALLATION

4SD

1. Disconnect the negative battery cable. (See **NEGATIVE BATTERY CABLE DISCONNECTION/CONNECTION [SKYACTIV-G 2.0, SKYACTIV-G 2.5]**.)

2. Pull back the trunk side trim (RH) to a position which allows for the removal of the theft-deterrent horn. (See **TRUNK SIDE TRIM REMOVAL/INSTALLATION**.)

3. Disconnect the connector.

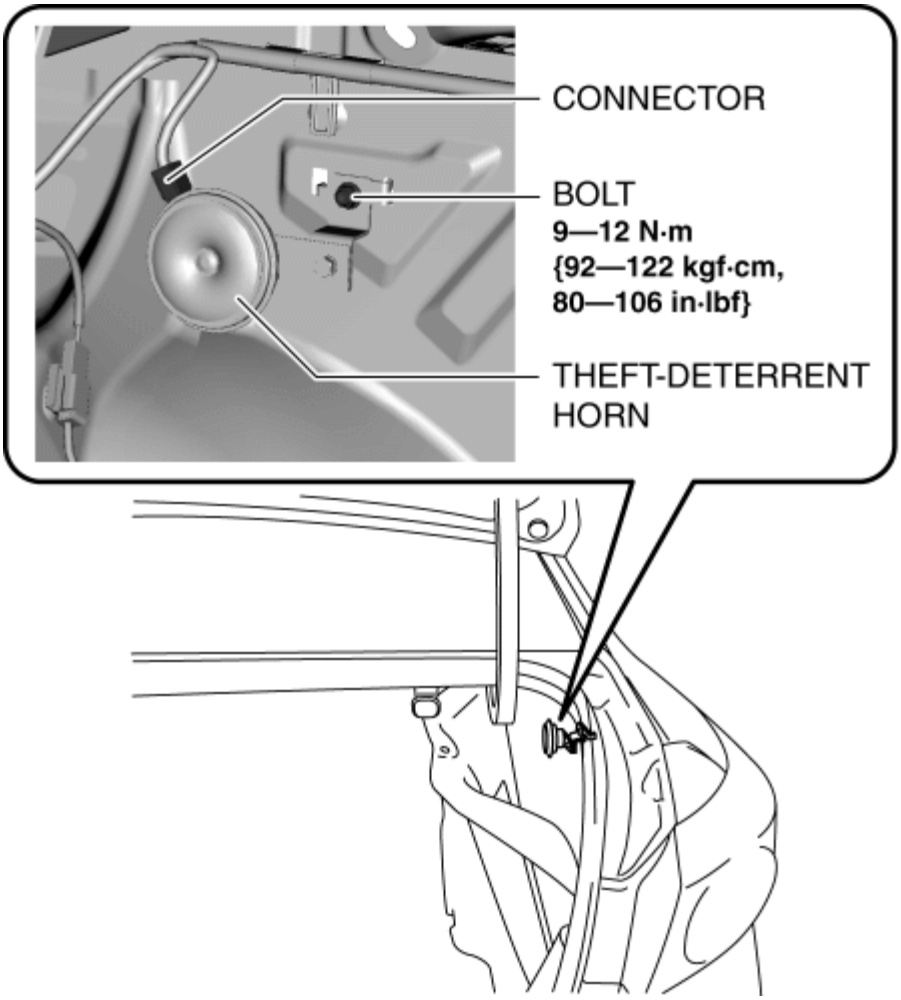

4. Remove the bolt.

5. Remove the theft-deterrent horn.

6. Install in the reverse order of removal.

5HB

1. Disconnect the negative battery cable. (See **NEGATIVE BATTERY CABLE DISCONNECTION/CONNECTION [SKYACTIV-G 2.0, SKYACTIV-G 2.5]**.)

2. Remove the service hole cover.

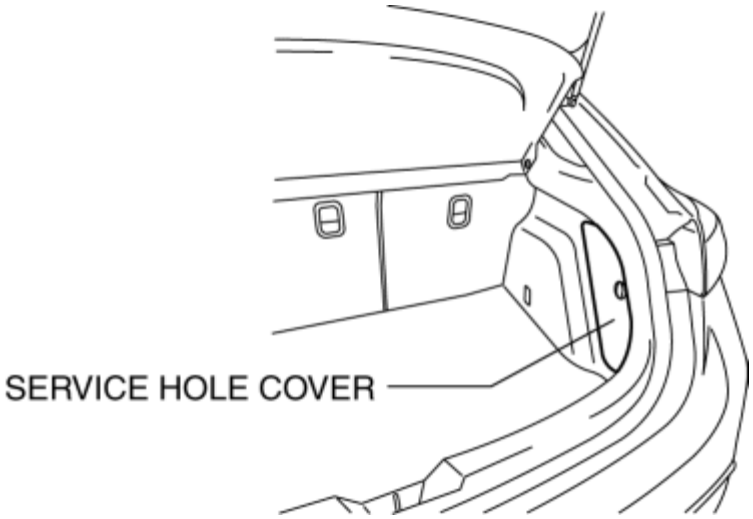

3. Remove the jack.

4. Disconnect the connector.

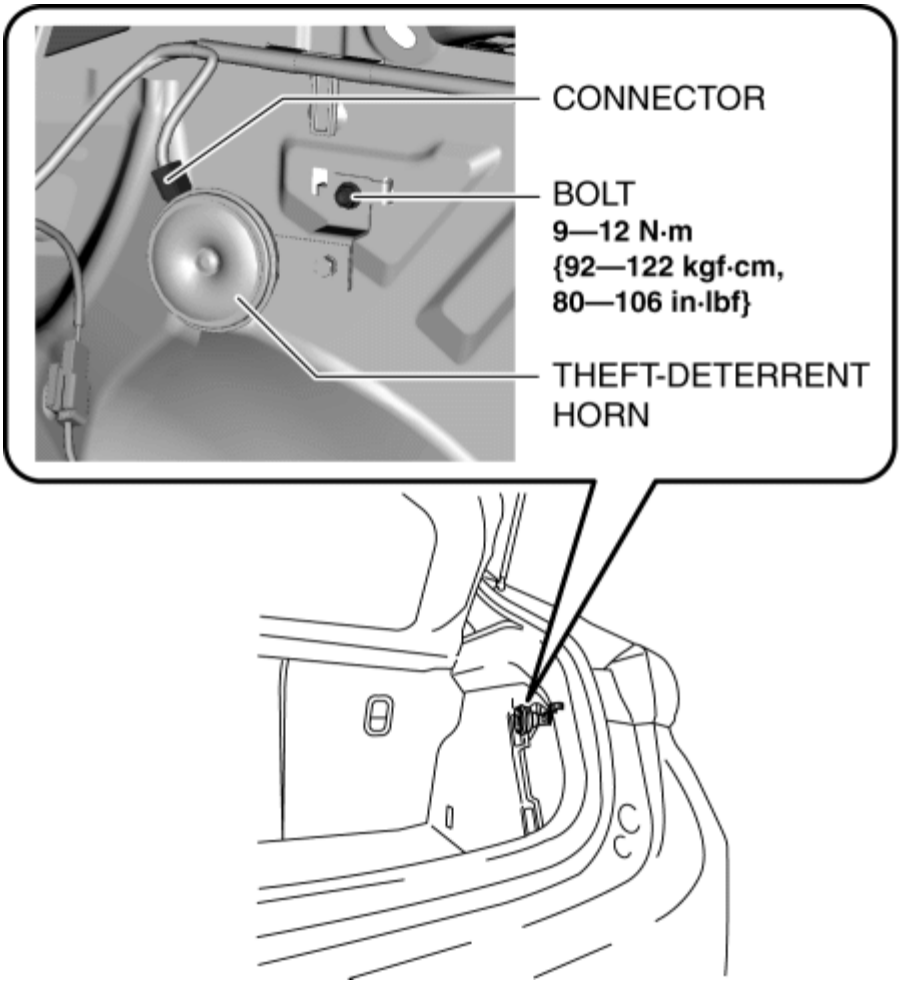

5. Remove the bolt.

6. Remove the theft-deterrent horn.

7. Install in the reverse order of removal.

2014 - Mazda3 - Body and Accessories

THEFT-DETERRENT HORN INSPECTION

4SD

1. Disconnect the negative battery cable. (See **NEGATIVE BATTERY CABLE DISCONNECTION/CONNECTION [SKYACTIV-G 2.0, SKYACTIV-G 2.5]**.)

2. Pull back the trunk side trim (RH) to a position which allows for the removal of the theft-deterrent horn. (See **TRUNK SIDE TRIM REMOVAL/INSTALLATION**.)

3. Remove the theft-deterrent horn. (See **THEFT-DETERRENT HORN REMOVAL/INSTALLATION**.)

4. Apply battery positive voltage to horn terminal A, and connect the horn retaining bolt to ground as shown in the figure, and then verify that the horn sounds.

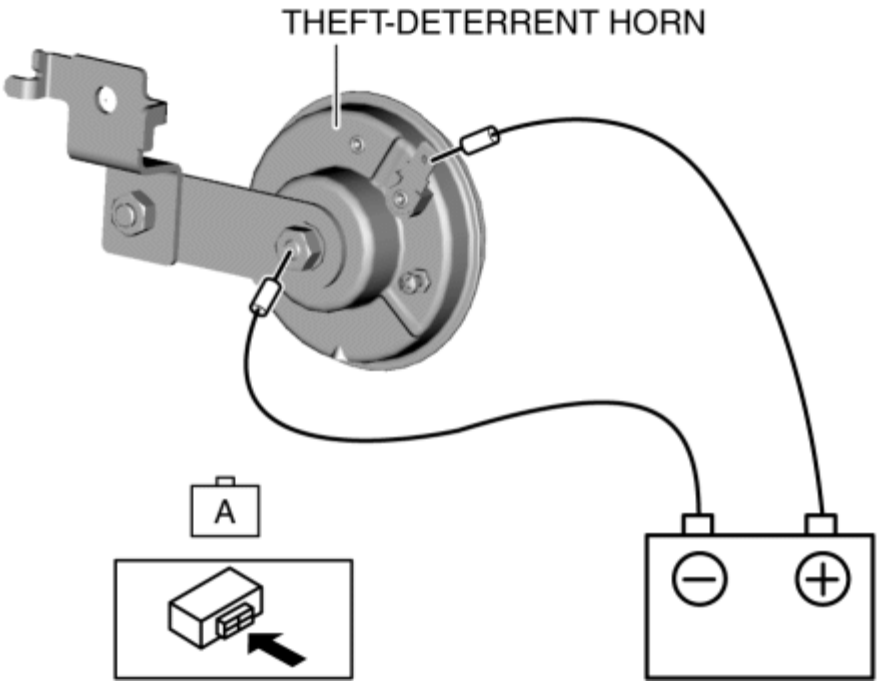

- If the horn does not sound, replace the horn.

5HB

1. Disconnect the negative battery cable. (See **NEGATIVE BATTERY CABLE DISCONNECTION/CONNECTION [SKYACTIV-G 2.0, SKYACTIV-G 2.5]**.)

2. Remove the theft-deterrent horn. (See **THEFT-DETERRENT HORN REMOVAL/INSTALLATION**.)

3. Apply battery positive voltage to horn terminal A, and connect the horn retaining bolt to ground as shown in the figure, and then verify that the horn sounds.

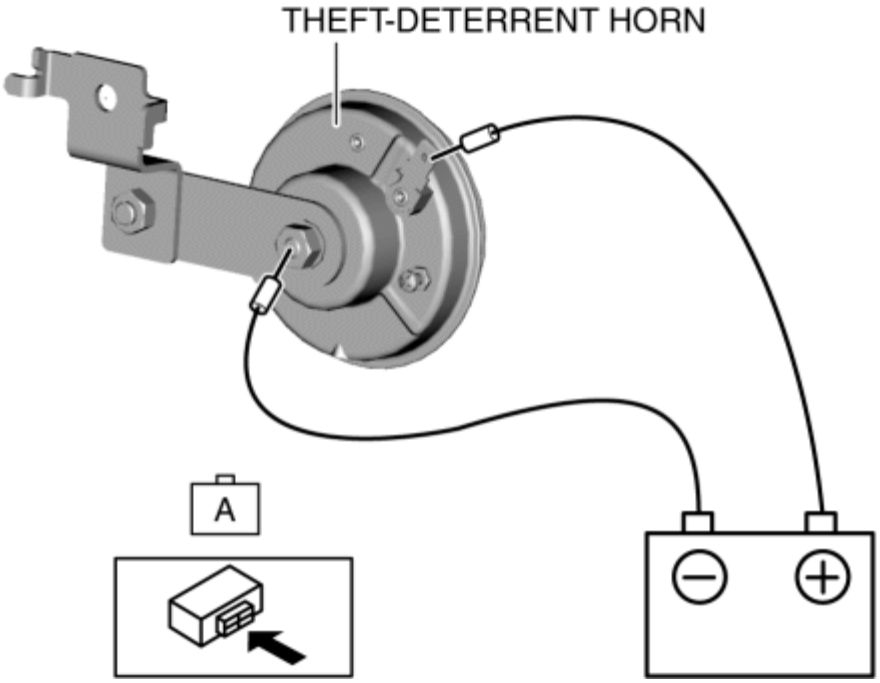

- If the horn does not sound, replace the horn.

2014 - Mazda3 - Body and Accessories

THEFT-DETERRENT SYSTEM OPERATION RECORD

1. Connect the M-MDS to the DLC-2.
2. After vehicle identification, select the following from the M-MDS initial screen.
    - “Operational Record”
3. Then, select the following from the screen menu.
    - “Burglar Alarm System”
4. Display the theft-deterrent system operation history according to the screen instructions.

2014 - Mazda3 - Body and Accessories

SUNROOF LOCATION INDEX

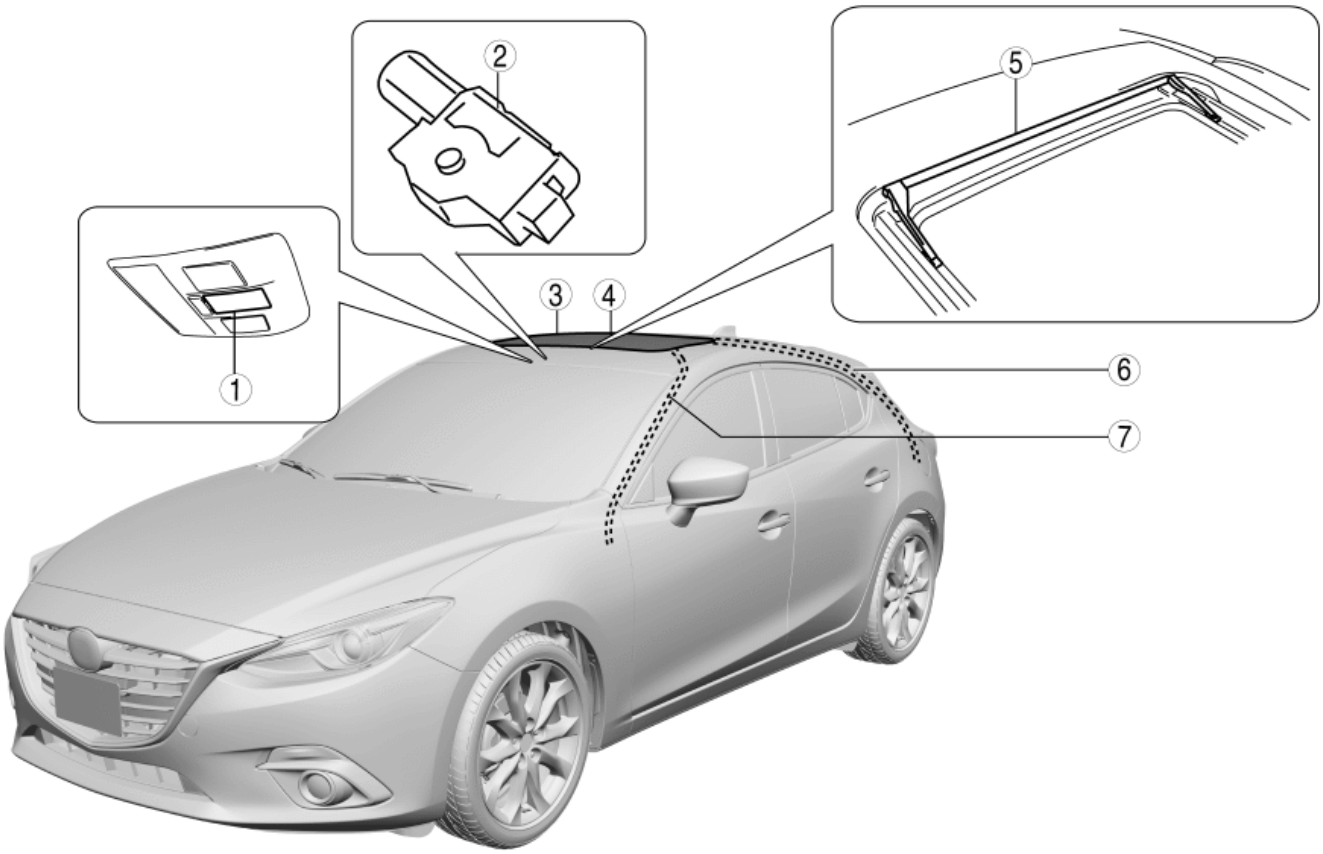

1	Sunroof switch (See **SUNROOF SWITCH REMOVAL/INSTALLATION**.) (See **SUNROOF SWITCH INSPECTION**.) (See **SUNROOF SYSTEM INITIALIZATION PROCEDURE**.)
2	Sunroof motor (See **SUNROOF MOTOR REMOVAL/INSTALLATION**.) (See **SUNROOF MOTOR INSPECTION**.)
3	Glass panel (See **GLASS PANEL REMOVAL/INSTALLATION**.) (See **GLASS PANEL ADJUSTMENT**.)
4	Sunroof unit

	(See **SUNROOF UNIT REMOVAL/INSTALLATION**.) (See **SUNROOF UNIT DISASSEMBLY/ASSEMBLY**.)
5	Deflector (See **DEFLECTOR REMOVAL/INSTALLATION**.)
6	Rear drain hose (See **REAR DRAIN HOSE REMOVAL/INSTALLATION**.)
7	Front drain hose (See **FRONT DRAIN HOSE REMOVAL/INSTALLATION**.)

2014 - Mazda3 - Body and Accessories

DEFLECTOR REMOVAL/INSTALLATION

1. Fully open the glass panel.

2. Rotate a tape-wrapped flathead screwdriver in the direction of the arrow (1) shown in the figure and remove the spring in the direction of the arrow (2) shown in the figure from hooks.

CAUTION:

- If the spring is removed forcefully, hooks located at the spring installation area may be damaged. Carefully remove the spring so as not to damage hooks.

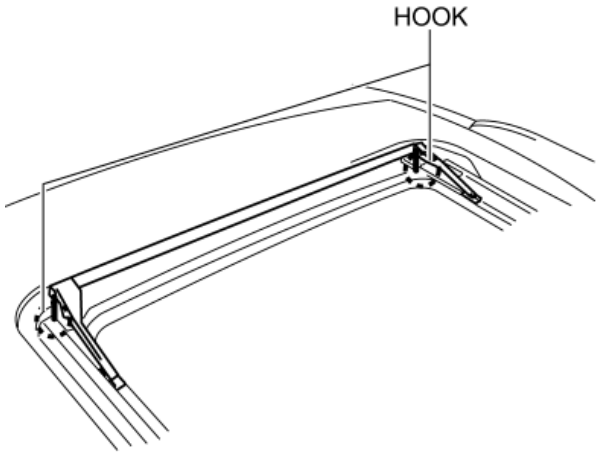

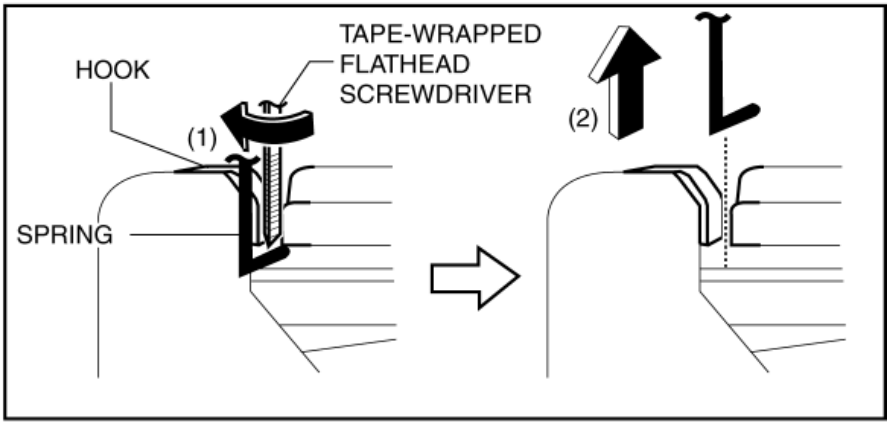

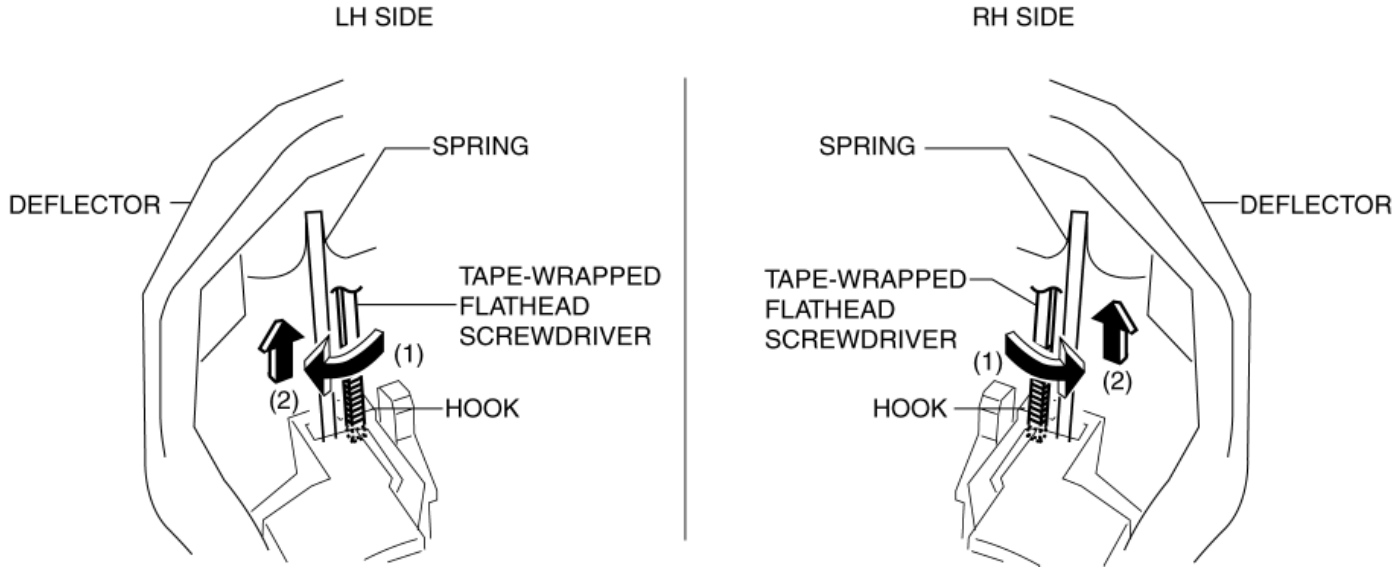

3. Remove the deflector while lifting it up in the direction of arrow (3) shown in the figure and moving it in the direction of arrow (4).

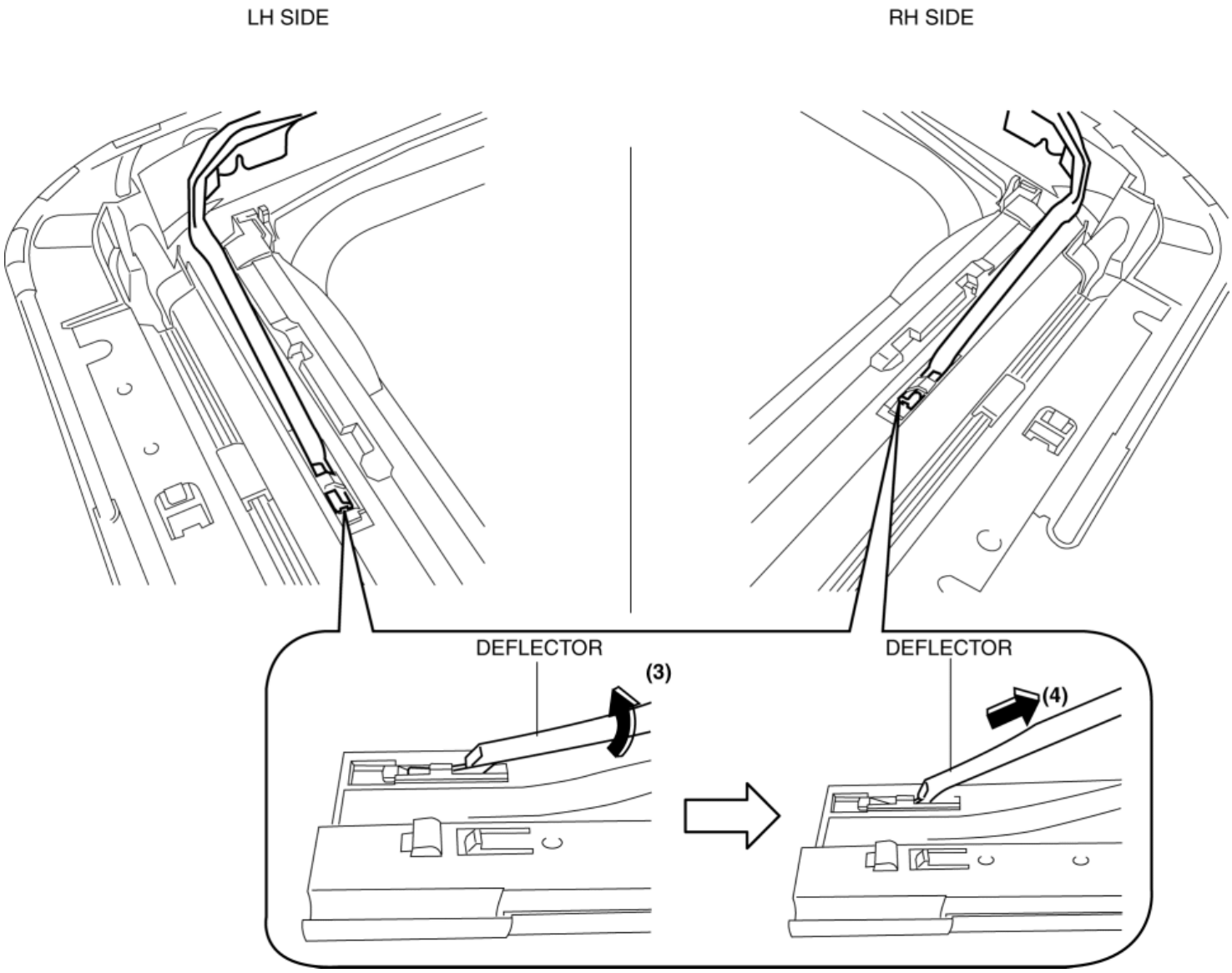

4. Install in the reverse order of removal.

2014 - Mazda3 - Body and Accessories

GLASS PANEL REMOVAL/INSTALLATION

1. Fully open the sunshade.
2. Fully close the glass panel.
3. Remove screws.

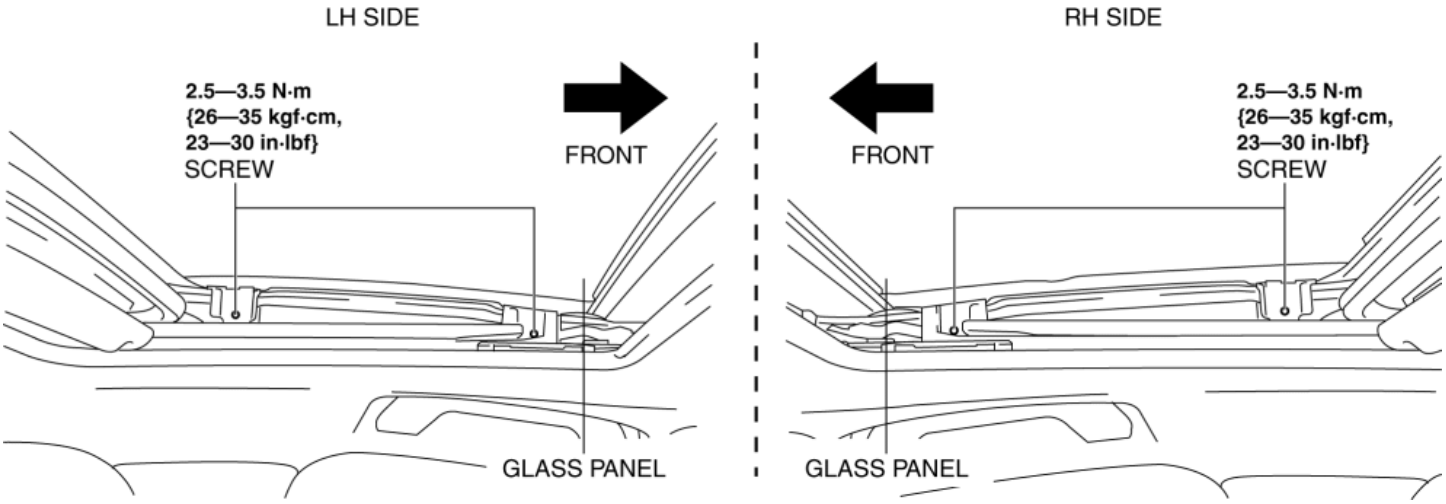

4. Remove the glass panel in the direction of the arrow (1) from sunroof unit.

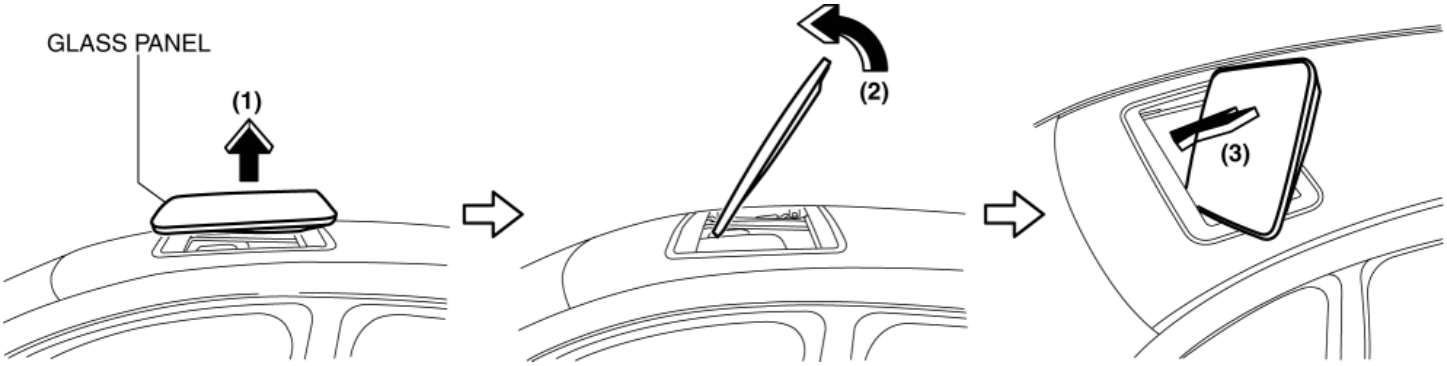

5. Move the glass panel in the order of arrows (2) and (3) shown in the figure and remove it from the cabin.
6. Peel the weatherstrip off the glass panel. (See **Weatherstrip Installation Note**.)
7. Install in the reverse order of removal.

Weatherstrip Installation Note

1. Install the weatherstrip to the glass panel with the joint part of the weatherstrip assembled to the vehicle rear side.

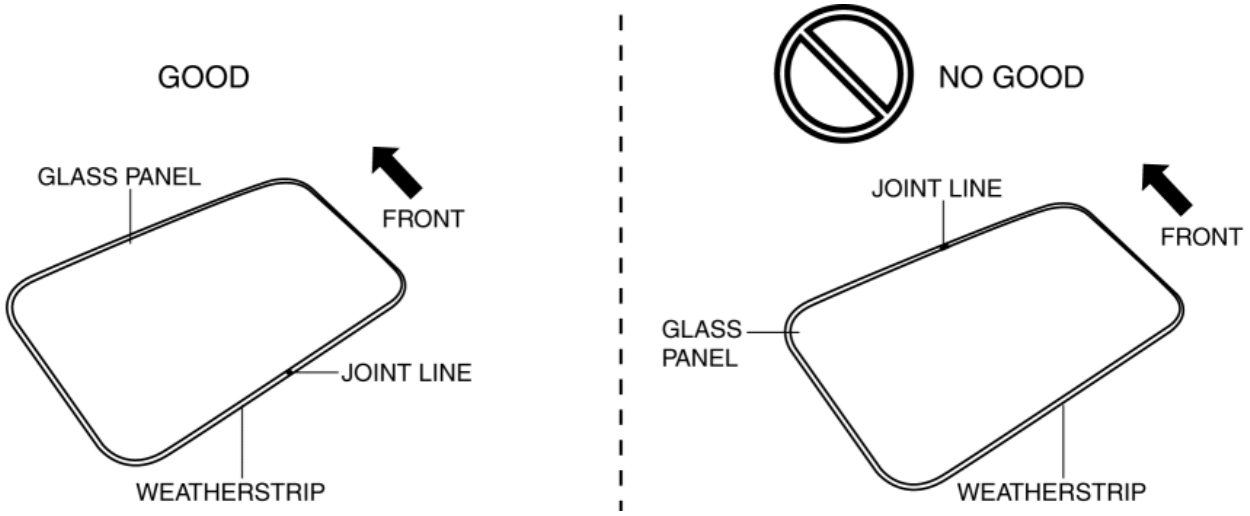
GOOD
GLASS PANEL
FRONT
JOINT LINE
WEATHERSTRIP
NO GOOD
JOINT LINE
FRONT
GLASS
PANEL
WEATHERSTRIP

2014 - Mazda3 - Body and Accessories

GLASS PANEL ADJUSTMENT

1. Fully close the glass panel.
2. Measure the gap and height between the glass panel and body.
3. Loosen the installation screws and adjust the glass panel.

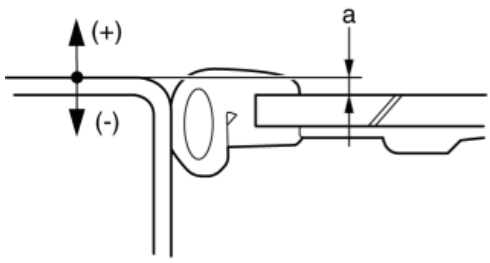

SEC. A—A

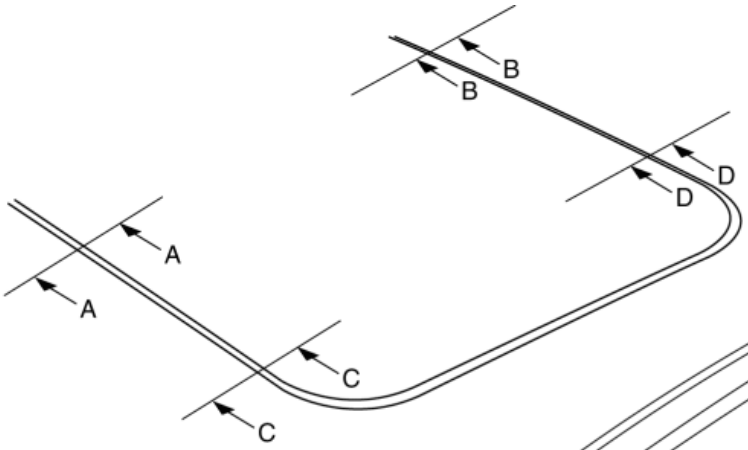

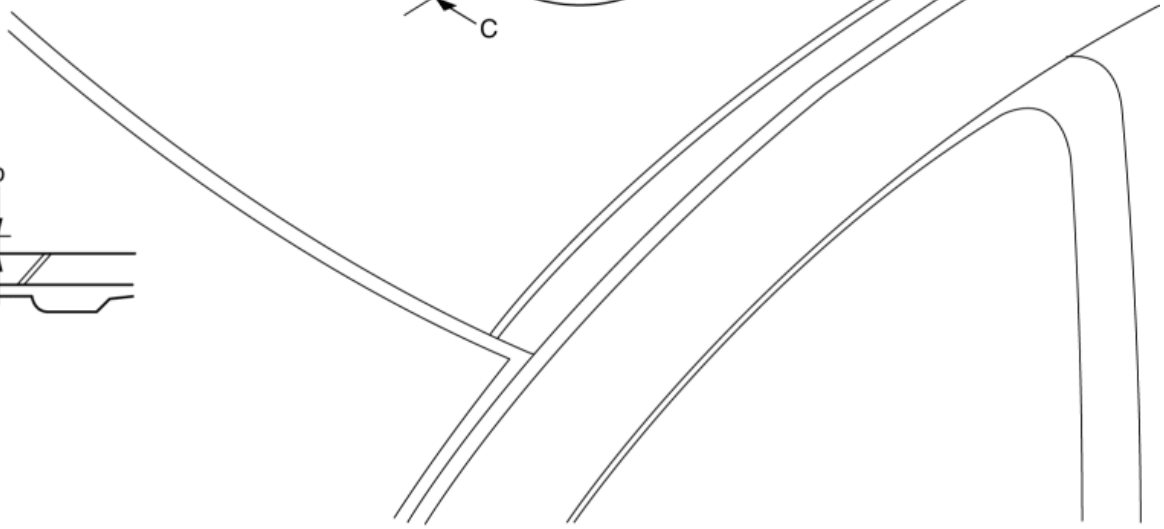

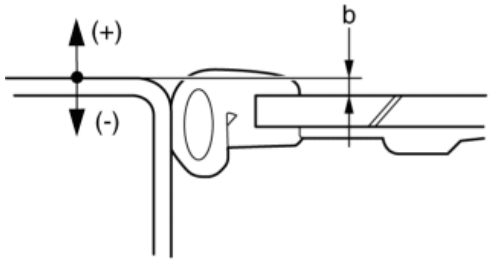

SEC. B—B

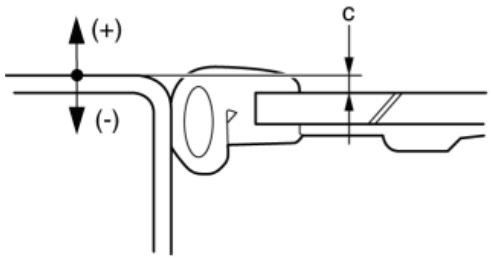

SEC. C—C

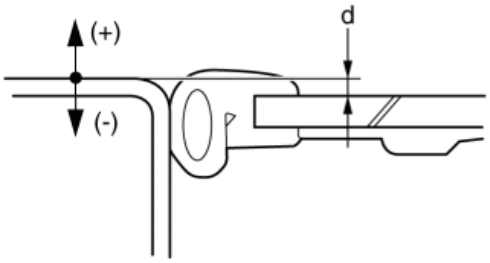

SEC. D—D

Standard clearance

- a: –2.6—0 mm {–0.10—0.00 in}
- b: –2.4—0.2 mm {–0.094—0.007 in}
- c: –2.2—0.4 mm {–0.08—0.01 in}
- d: –2.4—0.2 mm {–0.094—0.007 in}

4. Tighten the installation screws. (See **GLASS PANEL REMOVAL / INSTALLATION**.)

5. When inserting the plastic card between the weatherstrip and the body, and moving the plastic card in the direction of the arrows shown in the figure, verify that the plastic card has resistance.

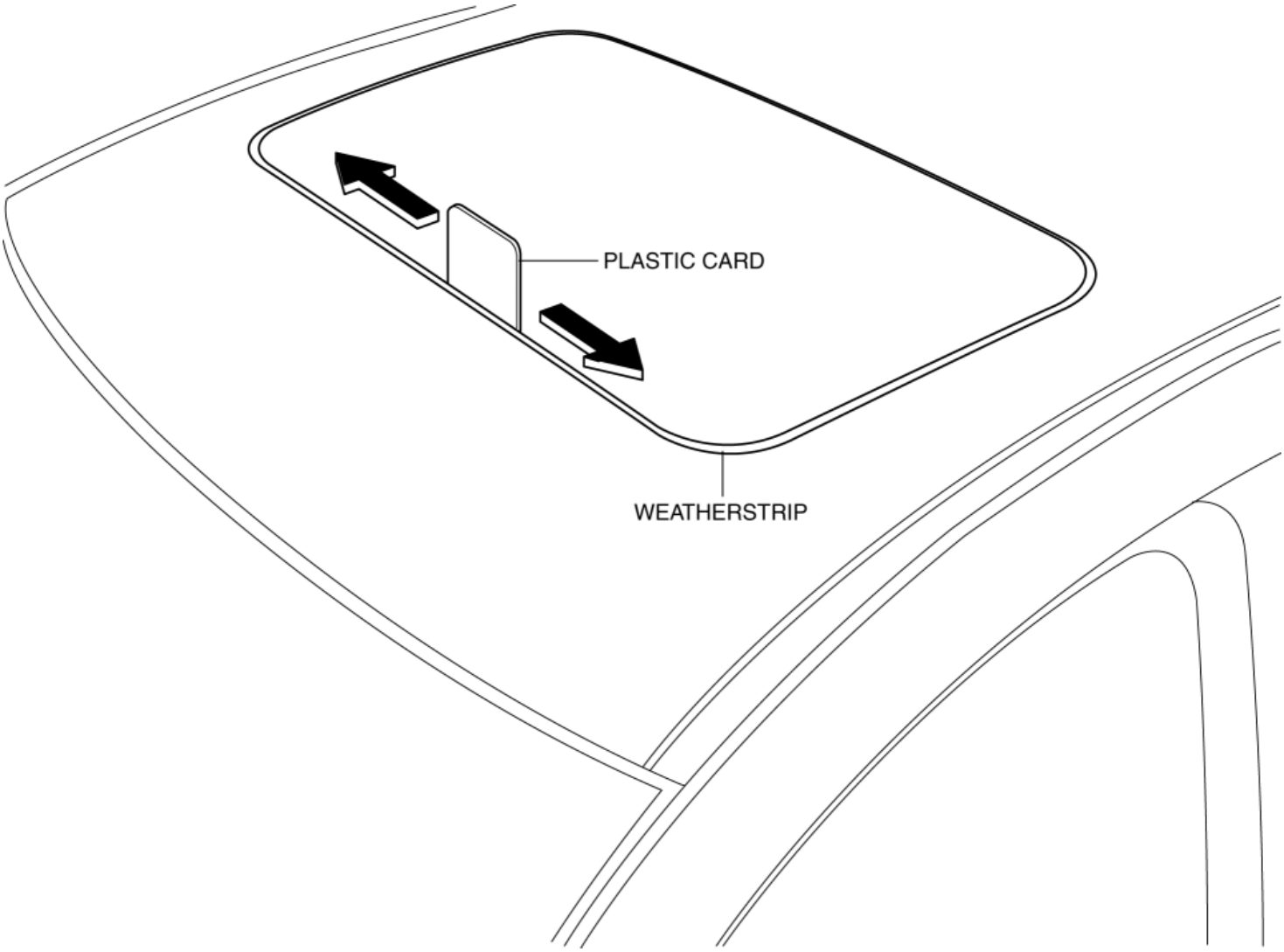

- If the sunroof is not shut tightly, readjust by performing Steps 3 and 4.

2014 - Mazda3 - Body and Accessories

SUNROOF UNIT REMOVAL/INSTALLATION

4SD

1. Set the wheel blocks for both the front and rear wheels.
2. Disconnect the negative battery cable. (See **NEGATIVE BATTERY CABLE DISCONNECTION/CONNECTION [SKYACTIV-G 2.0, SKYACTIV-G 2.5]**.)
3. Shift the selector lever from the P position to the D position (ATX).
4. Remove the sunroof seaming welt. (with sunroof system)
5. Remove the following parts:
    a. A-pillar trim (See **A-PILLAR TRIM REMOVAL/INSTALLATION**.)
    b. Sunvisor (See **SUNVISOR REMOVAL/INSTALLATION**.)
    c. Front map light (dual light type) (See **FRONT MAP LIGHT REMOVAL/INSTALLATION**.)
    d. Assist handle (See **ASSIST HANDLE REMOVAL/INSTALLATION**.)
    e. Front scuff plate (See **FRONT SCUFF PLATE REMOVAL/INSTALLATION**.)
    f. Rear scuff plate (See **REAR SCUFF PLATE REMOVAL/INSTALLATION**.)
    g. B-pillar lower trim (See **B-PILLAR LOWER TRIM REMOVAL/INSTALLATION**.)
    h. Adjust anchor cover (See **FRONT SEAT BELT REMOVAL/INSTALLATION**.)
    i. Upper anchor installation bolt on the seat belt (See **FRONT SEAT BELT REMOVAL/INSTALLATION**.)
    j. B-pillar upper trim (See **B-PILLAR UPPER TRIM REMOVAL/INSTALLATION**.)
6. Set the tire house trim aside. (See **TIRE HOUSE TRIM REMOVAL/INSTALLATION**.)
7. Remove the following parts:
    a. C-pillar trim (See **C-PILLAR TRIM REMOVAL/INSTALLATION**.)
    b. Upper panel (See **UPPER PANEL REMOVAL**.) (See **UPPER PANEL INSTALLATION**.)
    c. Rear console (See **REAR CONSOLE REMOVAL/INSTALLATION**.)
    d. Shift lever knob (MTX) (See **MANUAL TRANSAXLE SHIFT MECHANISM REMOVAL/INSTALLATION [C66M-R]**.)
    e. Selector lever knob (ATX) (See **AUTOMATIC TRANSAXLE SHIFT MECHANISM REMOVAL/INSTALLATION**.)
    f. Shift panel (See **SHIFT PANEL REMOVAL/INSTALLATION**.)
    g. Front console box (See **FRONT CONSOLE BOX REMOVAL/INSTALLATION**.)
    h. CD player (with CD player) (See **CD PLAYER REMOVAL**.) (See **CD PLAYER INSTALLATION**.)
    i. Glove compartment (See **GLOVE COMPARTMENT REMOVAL/INSTALLATION**.)
    j. Decoration panel (See **DECORATION PANEL REMOVAL/INSTALLATION**.)
    k. Side wall (See **SIDE WALL REMOVAL/INSTALLATION**.)
    l. Front console (See **FRONT CONSOLE REMOVAL/INSTALLATION**.)
    m. Headliner (See **HEADLINER REMOVAL/INSTALLATION**.)
8. Disconnect the front drain hose and rear drain hose from the sunroof frame in the direction of the arrow shown in the figure.

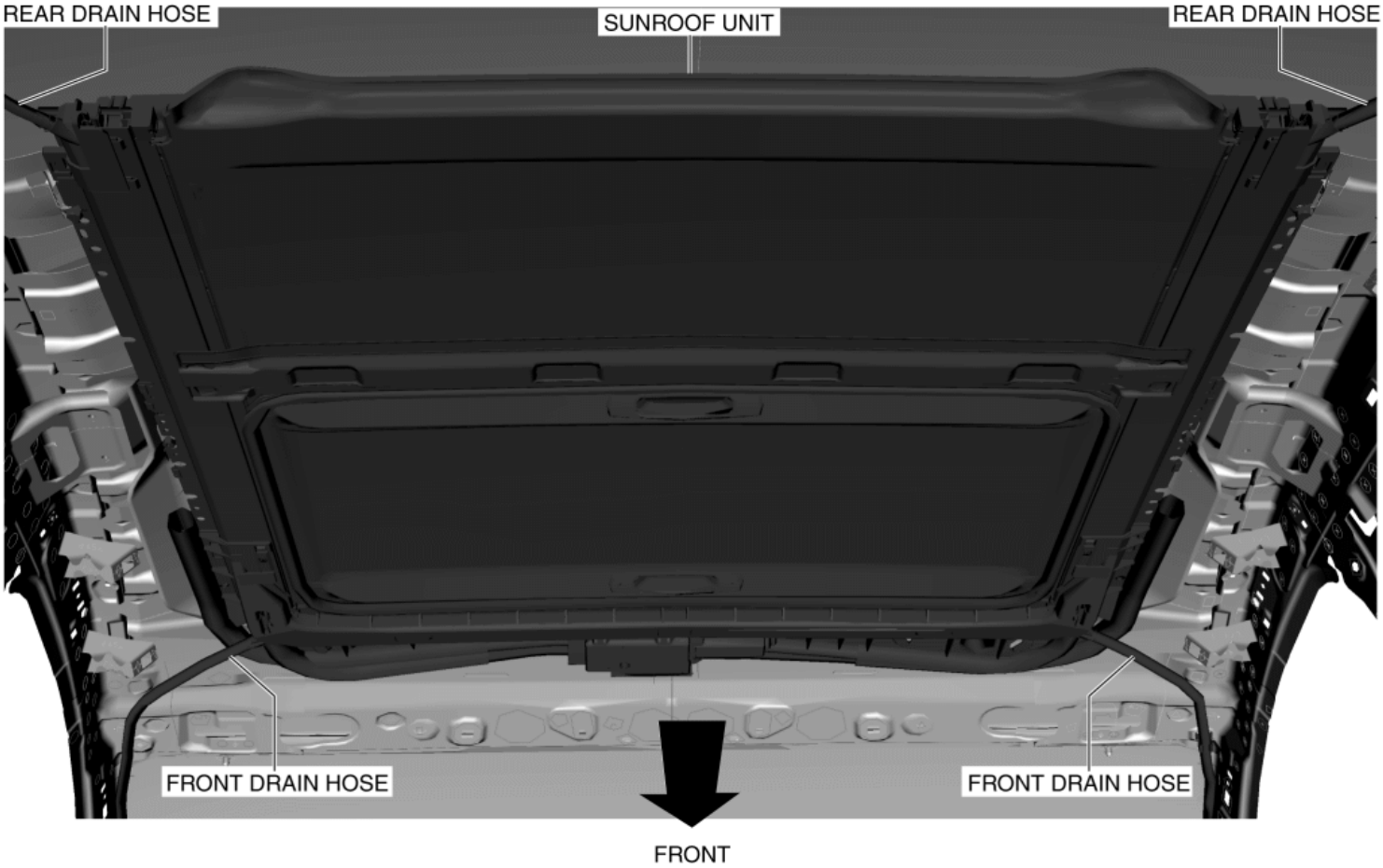

9. Remove nuts (1) shown in the figure.

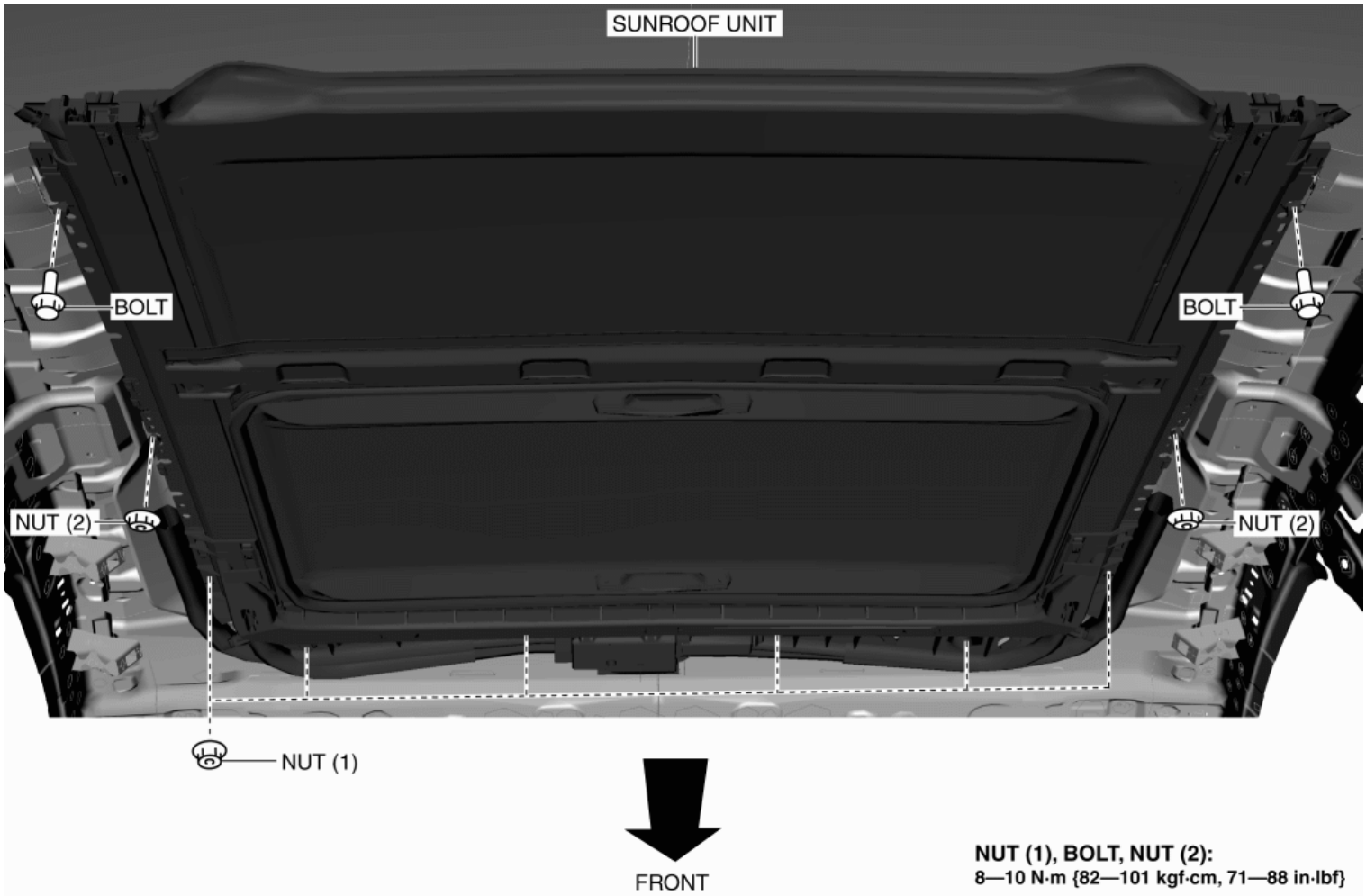

10. Remove bolts shown in the figure.

11. Remove nuts (2) shown in the figure.

CAUTION:

- Support the sunroof unit before removing nut (2) and always perform the procedure with at least one other person to prevent the sunroof unit from falling. Otherwise, it may fall and cause injury.

12. Remove the sunroof unit.

13. Take the sunroof unit off from the front driver-side door or front passenger-side door opening.

14. Install in the reverse order of removal.

5HB

1. Set the wheel blocks for both the front and rear wheels.

2. Disconnect the negative battery cable. (See **NEGATIVE BATTERY CABLE DISCONNECTION/CONNECTION [SKYACTIV-G 2.0, SKYACTIV-G 2.5]**.)

3. Shift the selector lever from the P position to the D position (ATX).

4. Remove the sunroof seaming welt. (with sunroof system)

5. Remove the following parts:

   a. A-pillar trim (See **A-PILLAR TRIM REMOVAL/INSTALLATION**.)

   b. Sunvisor (See **SUNVISOR REMOVAL/INSTALLATION**.)

   c. Front map light (dual light type) (See **FRONT MAP LIGHT REMOVAL/INSTALLATION**.)

   d. Assist handle (See **ASSIST HANDLE REMOVAL/INSTALLATION**.)

   e. Front scuff plate (See **FRONT SCUFF PLATE REMOVAL/INSTALLATION**.)

   f. Rear scuff plate (See **REAR SCUFF PLATE REMOVAL/INSTALLATION**.)

g. B-pillar lower trim (See **B-PILLAR LOWER TRIM REMOVAL/INSTALLATION**.)

h. Adjust anchor cover (See **FRONT SEAT BELT REMOVAL/INSTALLATION**.)

i. Upper anchor installation bolt on the seat belt (See **FRONT SEAT BELT REMOVAL/INSTALLATION**.)

j. B-pillar upper trim (See **B-PILLAR UPPER TRIM REMOVAL/INSTALLATION**.)

6. Set the tire house trim aside. (See **TIRE HOUSE TRIM REMOVAL/INSTALLATION**.)

7. Remove the following parts:

a. Rear package tray (See **REAR PACKAGE TRAY REMOVAL/INSTALLATION**.)

b. Trunk covering (See **TRUNK COVERING REMOVAL/INSTALLATION**.)

c. Trunk board (See **TRUNK BOARD REMOVAL/INSTALLATION**.)

d. Trunk end trim (See **TRUNK END TRIM REMOVAL/INSTALLATION**.)

e. Trunk side upper trim (See **TRUNK SIDE UPPER TRIM REMOVAL/INSTALLATION**.)

f. Trunk side trim (LH only) (See **TRUNK SIDE TRIM REMOVAL/INSTALLATION**.)

g. C-pillar trim (See **C-PILLAR TRIM REMOVAL/INSTALLATION**.)

h. Upper panel (See **UPPER PANEL REMOVAL**.) (See **UPPER PANEL INSTALLATION**.)

i. Rear console (See **REAR CONSOLE REMOVAL/INSTALLATION**.)

j. Shift lever knob (MTX) (See **MANUAL TRANSAXLE SHIFT MECHANISM REMOVAL/INSTALLATION [C66M-R]**.)

k. Selector lever knob (ATX) (See **AUTOMATIC TRANSAXLE SHIFT MECHANISM REMOVAL/INSTALLATION**.)

l. Shift panel (See **SHIFT PANEL REMOVAL/INSTALLATION**.)

m. Front console box (See **FRONT CONSOLE BOX REMOVAL/INSTALLATION**.)

n. CD player (with CD player) (See **CD PLAYER REMOVAL**.) (See **CD PLAYER INSTALLATION**.)

o. Glove compartment (See **GLOVE COMPARTMENT REMOVAL/INSTALLATION**.)

p. Decoration panel (See **DECORATION PANEL REMOVAL/INSTALLATION**.)

q. Side wall (See **SIDE WALL REMOVAL/INSTALLATION**.)

r. Front console (See **FRONT CONSOLE REMOVAL/INSTALLATION**.)

s. Headliner (See **HEADLINER REMOVAL/INSTALLATION**.)

8. Disconnect the front drain hose and rear drain hose from the sunroof frame in the direction of the arrow shown in the figure.

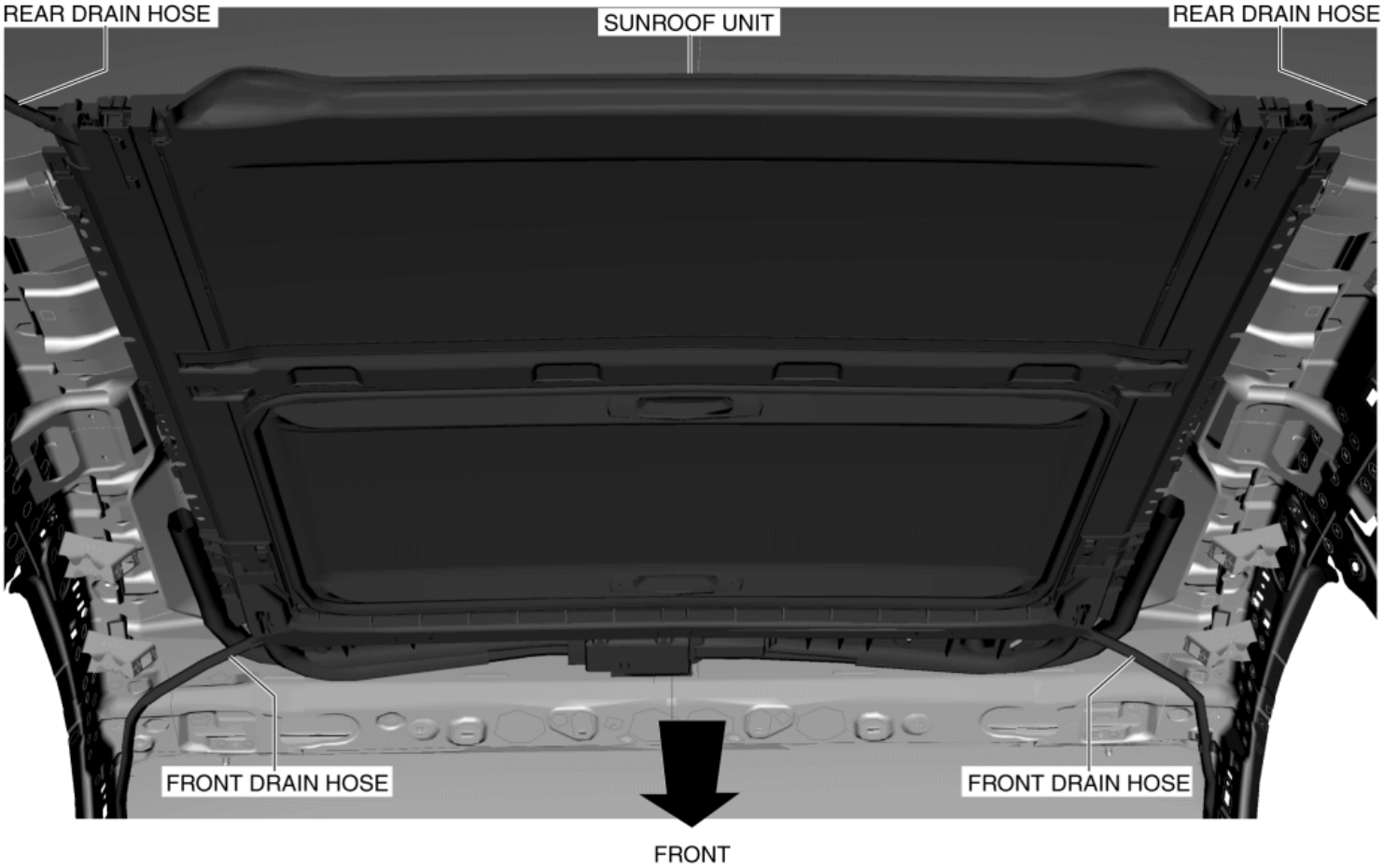

9. Remove nuts (1) shown in the figure.

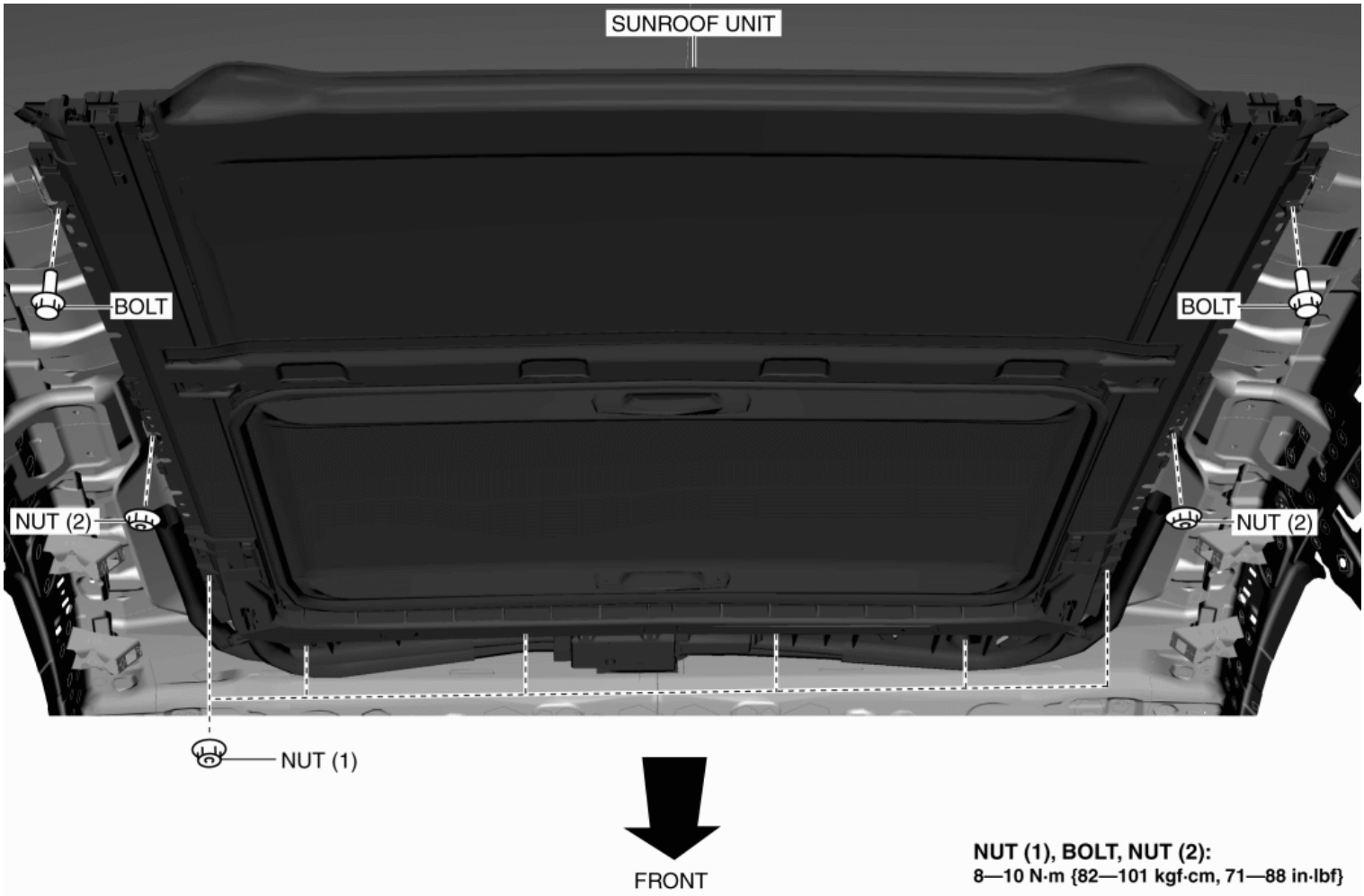

10. Remove bolts shown in the figure.

11. Remove nuts (2) shown in the figure.

CAUTION:

- Support the sunroof unit before removing nut (2) and always perform the procedure with at least one other person to prevent the sunroof unit from falling. Otherwise, it may fall and cause injury.

12. Remove the sunroof unit.

13. Take the sunroof unit off from the front driver-side door or front passenger-side door opening.

14. Install in the reverse order of removal.

2014 - Mazda3 - Body and Accessories

SUNROOF UNIT DISASSEMBLY/ASSEMBLY

1. Disassemble in the order indicated in the table.

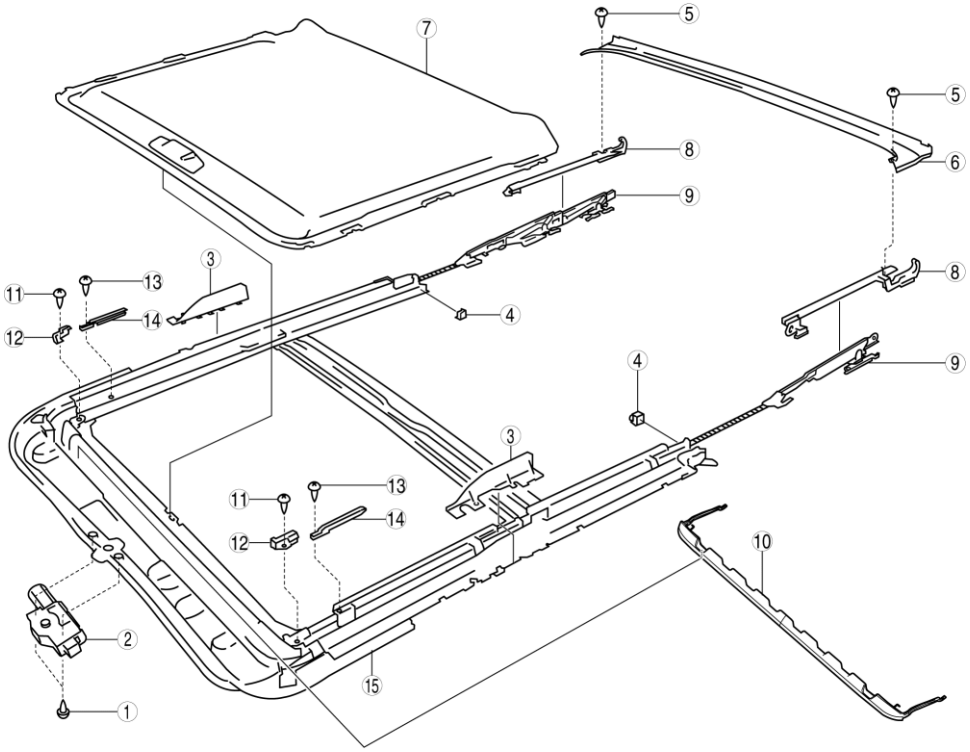

1	Screw
2	Sunroof motor
3	Screen
4	Rear stopper
5	Screw
6	Drip rail
7	Sunshade (See **Sunshade Disassembly Note**.)
8	Front guide (See **Front Guide Disassembly Note**.)
9	Decoration link (See **Decoration Link Assembly Note**.)
10	Deflector
11	Screw

12	Front stopper
13	Screw
14	Set plate
15	Sunroof frame

2. Assemble in the reverse order of disassembly.

Sunshade Disassembly Note

1. To prevent scratches or damage, affix protective tape to the position shown in the figure of the sunshade.

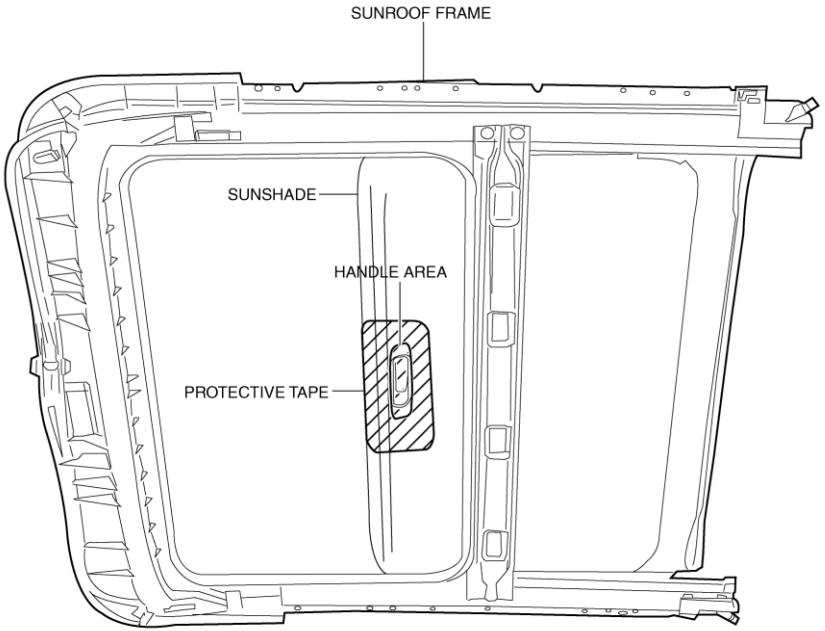

2. Pull the sunshade in the direction of the arrow in the order of (1), (2) and remove it.

CAUTION:

- The sunshade may contact the sunroof frame and the handle area may be damaged. Remove the sunshade by sliding it in the direction of arrow (2) shown in the figure while lifting it in the direction of arrow (1).

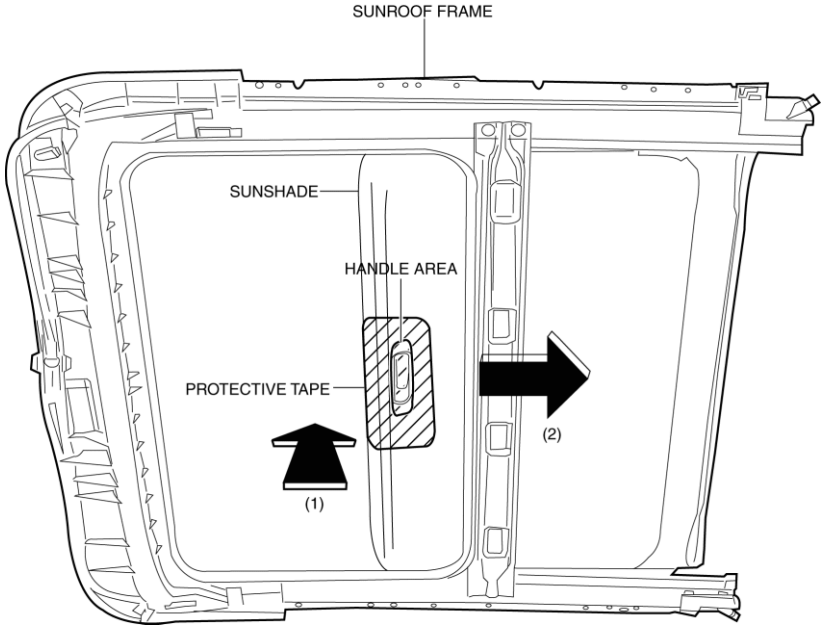

Front Guide Disassembly Note

1. Perform mark the position shown in the figure for correct positioning.

CAUTION:

- If the front guide is assembled to a wrong position, the glass panel may stop at the wrong position and may be damaged. Before removing the front guide, mark the position shown in the figure for correct positioning.

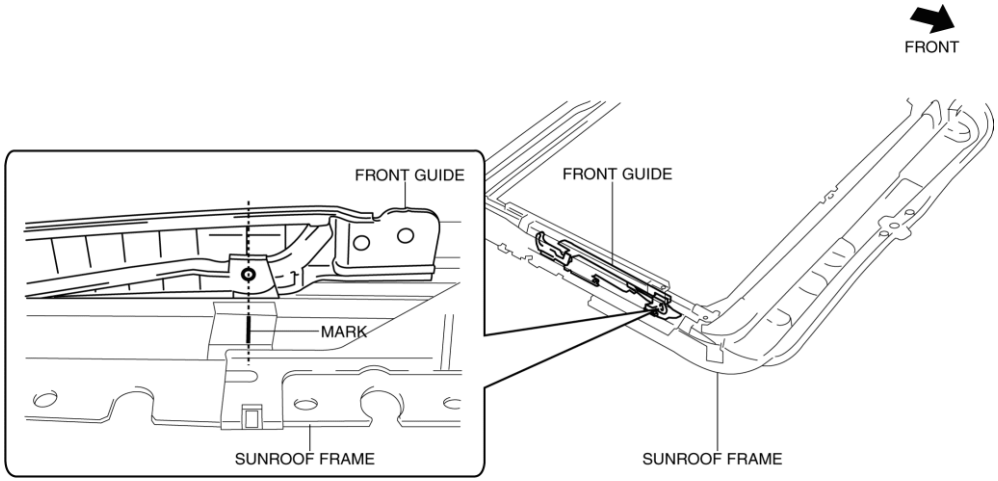

Decoration Link Assembly Note

1. To prevent the wire shown in the figure from coming off the rail, install while aligning the wire in the rail.

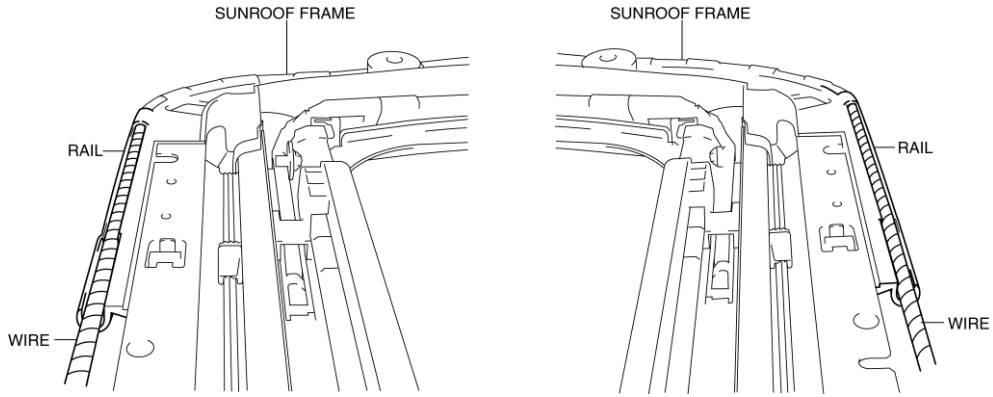
SUNROOF FRAME
RAIL
WIRE
SUNROOF FRAME
RAIL
WIRE

2014 - Mazda3 - Body and Accessories

FRONT DRAIN HOSE REMOVAL/INSTALLATION

4SD

Driver-side

1. Set the wheel blocks for both the front and rear wheels.
2. Disconnect the negative battery cable. (See **NEGATIVE BATTERY CABLE DISCONNECTION/CONNECTION [SKYACTIV-G 2.0, SKYACTIV-G 2.5]**.)
3. Shift the selector lever from the P position to the D position (ATX).
4. Remove the sunroof seaming welt. (with sunroof system)
5. Remove the following parts:
   a. A-pillar trim (See **A-PILLAR TRIM REMOVAL/INSTALLATION**.)
   b. Sunvisor (See **SUNVISOR REMOVAL/INSTALLATION**.)
   c. Front map light (dual light type) (See **FRONT MAP LIGHT REMOVAL/INSTALLATION**.)
   d. Assist handle (See **ASSIST HANDLE REMOVAL/INSTALLATION**.)
   e. Front scuff plate (See **FRONT SCUFF PLATE REMOVAL/INSTALLATION**.)
   f. Rear scuff plate (See **REAR SCUFF PLATE REMOVAL/INSTALLATION**.)
   g. B-pillar lower trim (See **B-PILLAR LOWER TRIM REMOVAL/INSTALLATION**.)
   h. Adjust anchor cover (See **FRONT SEAT BELT REMOVAL/INSTALLATION**.)
   i. Upper anchor installation bolt on the seat belt (See **FRONT SEAT BELT REMOVAL/INSTALLATION**.)
   j. B-pillar upper trim (See **B-PILLAR UPPER TRIM REMOVAL/INSTALLATION**.)
6. Set the tire house trim aside. (See **TIRE HOUSE TRIM REMOVAL/INSTALLATION**.)
7. Remove the following parts:
   a. C-pillar trim (See **C-PILLAR TRIM REMOVAL/INSTALLATION**.)
   b. Upper panel (See **UPPER PANEL REMOVAL**.) (See **UPPER PANEL INSTALLATION**.)
   c. Rear console (See **REAR CONSOLE REMOVAL/INSTALLATION**.)
   d. Shift lever knob (MTX) (See **MANUAL TRANSAXLE SHIFT MECHANISM REMOVAL/INSTALLATION [C66M-R]**.)
   e. Selector lever knob (ATX) (See **AUTOMATIC TRANSAXLE SHIFT MECHANISM REMOVAL/INSTALLATION**.)
   f. Shift panel (See **SHIFT PANEL REMOVAL/INSTALLATION**.)
   g. Front console box (See **FRONT CONSOLE BOX REMOVAL/INSTALLATION**.)
   h. CD player (with CD player) (See **CD PLAYER REMOVAL**.) (See **CD PLAYER INSTALLATION**.)
   i. Glove compartment (See **GLOVE COMPARTMENT REMOVAL/INSTALLATION**.)
   j. Decoration panel (See **DECORATION PANEL REMOVAL/INSTALLATION**.)
   k. Side wall (See **SIDE WALL REMOVAL/INSTALLATION**.)
   l. Front console (See **FRONT CONSOLE REMOVAL/INSTALLATION**.)
   m. Headliner (See **HEADLINER REMOVAL/INSTALLATION**.)
8. Remove bolts.

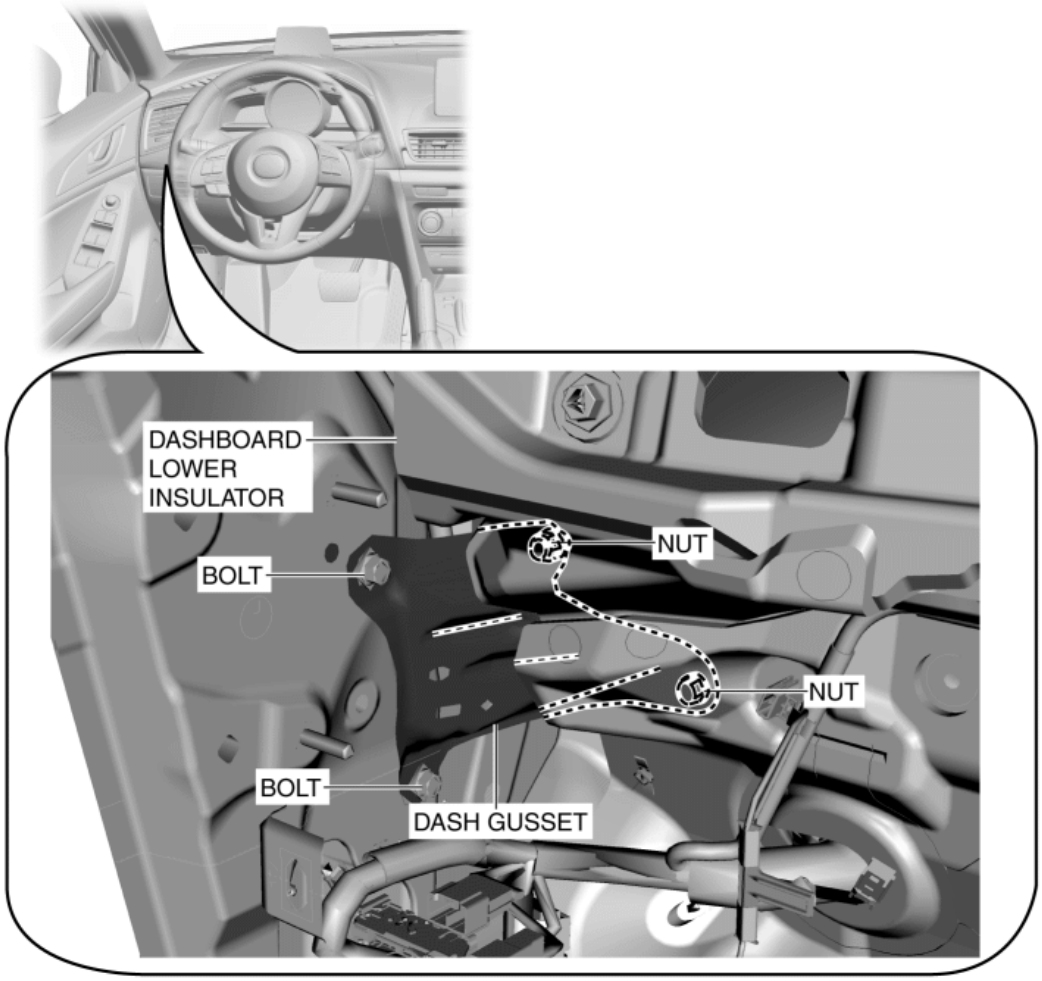

BOLT, NUT: 19—25 N·m {2.0—2.5 kgf·m, 15—18 ft·lbf}

9. Set the dashboard lower insulator aside.

10. Remove nuts.

11. Remove the dash gusset.

12. Disconnect the front drain hose from the sunroof frame.

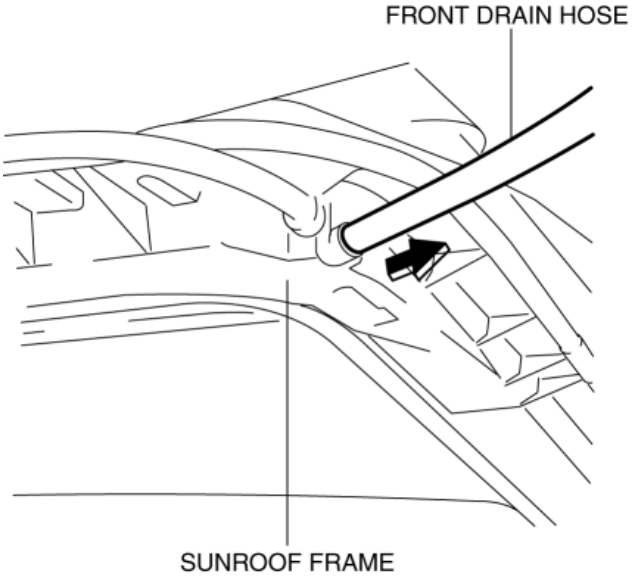

13. Pull the front drain hose in the direction of the arrow in the order of (1), (2) and remove it while detaching hook A.

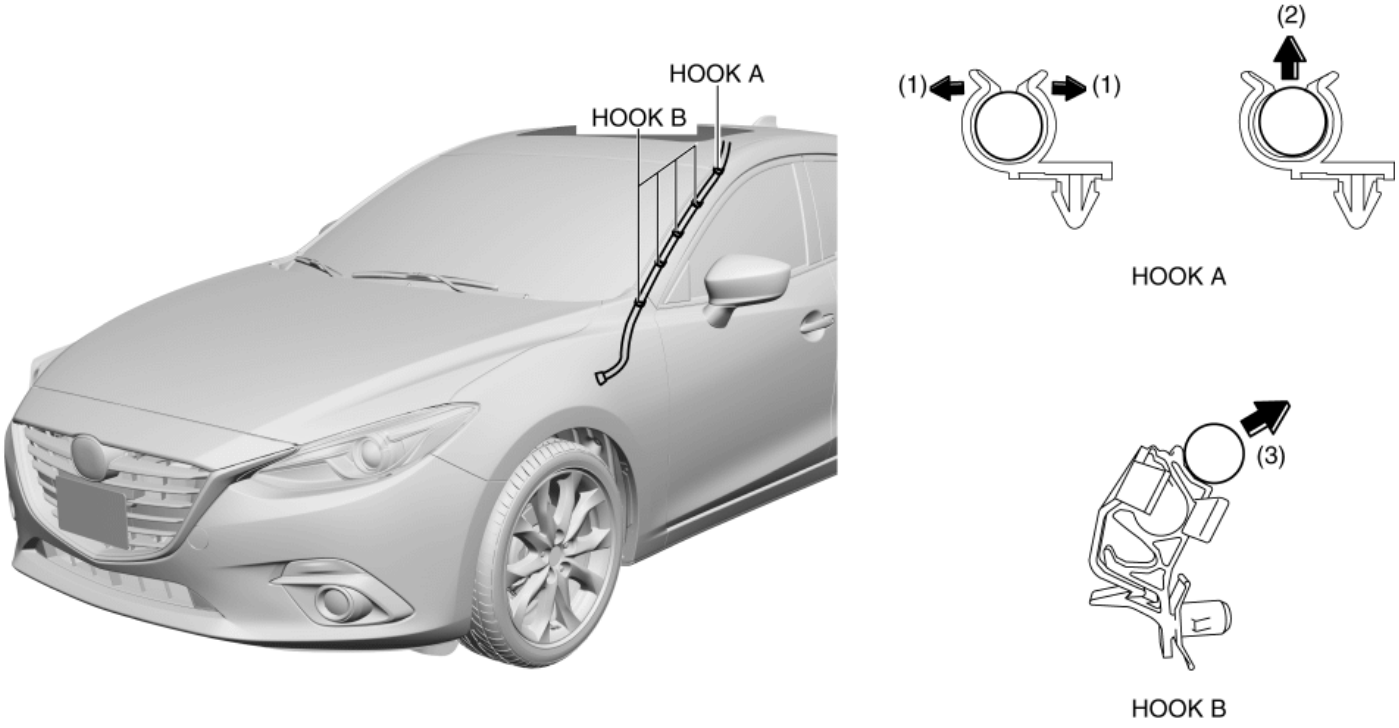

14. Remove the front drain hose in the direction of the arrow (3) from hooks B.
15. Remove the front drain hose in the direction of the arrow (4) from grommet.

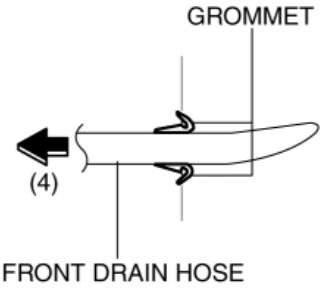

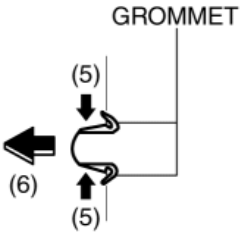

16. Remove the grommet in the direction of the arrow (5), (6) shown in the figure.

17. Pull the front drain hose out from the A-pillar side.

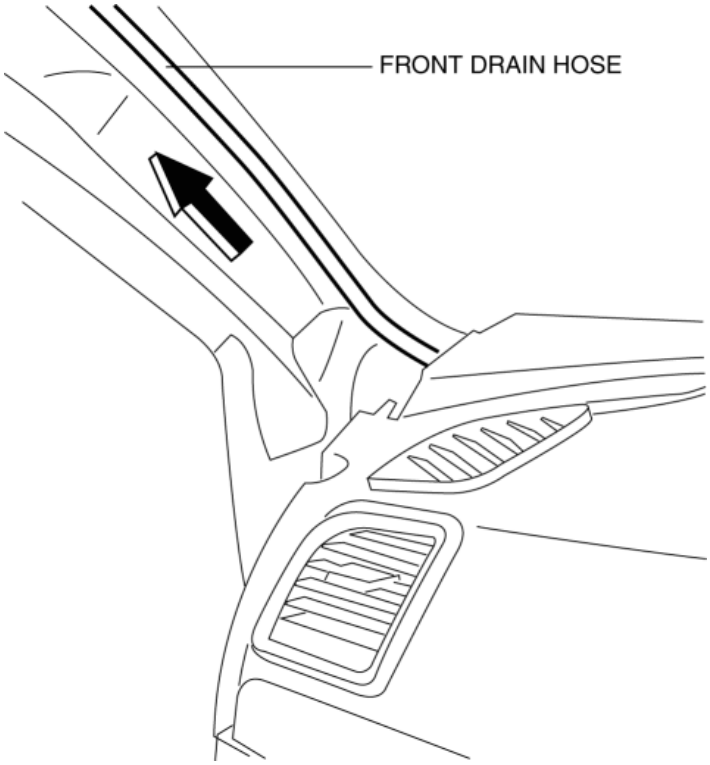

18. Install in the reverse order of removal.

Passenger-side

1. Set the wheel blocks for both the front and rear wheels.

2. Disconnect the negative battery cable. (See **NEGATIVE BATTERY CABLE DISCONNECTION/CONNECTION [SKYACTIV-G 2.0, SKYACTIV-G 2.5]**.)

3. Shift the selector lever from the P position to the D position (ATX).

4. Remove the sunroof seaming welt. (with sunroof system)

5. Remove the following parts:

   a. A-pillar trim (See **A-PILLAR TRIM REMOVAL/INSTALLATION**.)

   b. Sunvisor (See **SUNVISOR REMOVAL/INSTALLATION**.)

   c. Front map light (dual light type) (See **FRONT MAP LIGHT REMOVAL/INSTALLATION**.)

   d. Assist handle (See **ASSIST HANDLE REMOVAL/INSTALLATION**.)

   e. Front scuff plate (See **FRONT SCUFF PLATE REMOVAL/INSTALLATION**.)

   f. Rear scuff plate (See **REAR SCUFF PLATE REMOVAL/INSTALLATION**.)

   g. B-pillar lower trim (See **B-PILLAR LOWER TRIM REMOVAL/INSTALLATION**.)

   h. Adjust anchor cover (See **FRONT SEAT BELT REMOVAL/INSTALLATION**.)

   i. Upper anchor installation bolt on the seat belt (See **FRONT SEAT BELT REMOVAL/INSTALLATION**.)

   j. B-pillar upper trim (See **B-PILLAR UPPER TRIM REMOVAL/INSTALLATION**.)

6. Set the tire house trim aside. (See **TIRE HOUSE TRIM REMOVAL/INSTALLATION**.)

7. Remove the following parts:

   a. C-pillar trim (See **C-PILLAR TRIM REMOVAL/INSTALLATION**.)

   b. Upper panel (See **UPPER PANEL REMOVAL**.) (See **UPPER PANEL INSTALLATION**.)

   c. Rear console (See **REAR CONSOLE REMOVAL/INSTALLATION**.)

   d. Shift lever knob (MTX) (See **MANUAL TRANSAXLE SHIFT MECHANISM REMOVAL/INSTALLATION [C66M-R]**.)

e. Selector lever knob (ATX) (See **AUTOMATIC TRANSAXLE SHIFT MECHANISM REMOVAL/INSTALLATION**.)

f. Shift panel (See **SHIFT PANEL REMOVAL/INSTALLATION**.)

g. Front console box (See **FRONT CONSOLE BOX REMOVAL/INSTALLATION**.)

h. CD player (with CD player) (See **CD PLAYER REMOVAL**.) (See **CD PLAYER INSTALLATION**.)

i. Glove compartment (See **GLOVE COMPARTMENT REMOVAL/INSTALLATION**.)

j. Decoration panel (See **DECORATION PANEL REMOVAL/INSTALLATION**.)

k. Side wall (See **SIDE WALL REMOVAL/INSTALLATION**.)

l. Front console (See **FRONT CONSOLE REMOVAL/INSTALLATION**.)

m. Headliner (See **HEADLINER REMOVAL/INSTALLATION**.)

8. Disconnect the front drain hose from the sunroof frame.

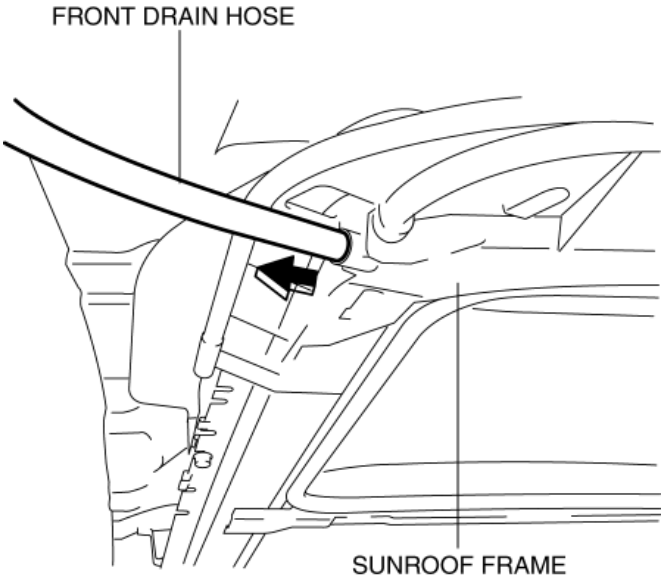

9. Pull the front drain hose in the direction of the arrow in the order of (1), (2) and remove it while detaching hook A.

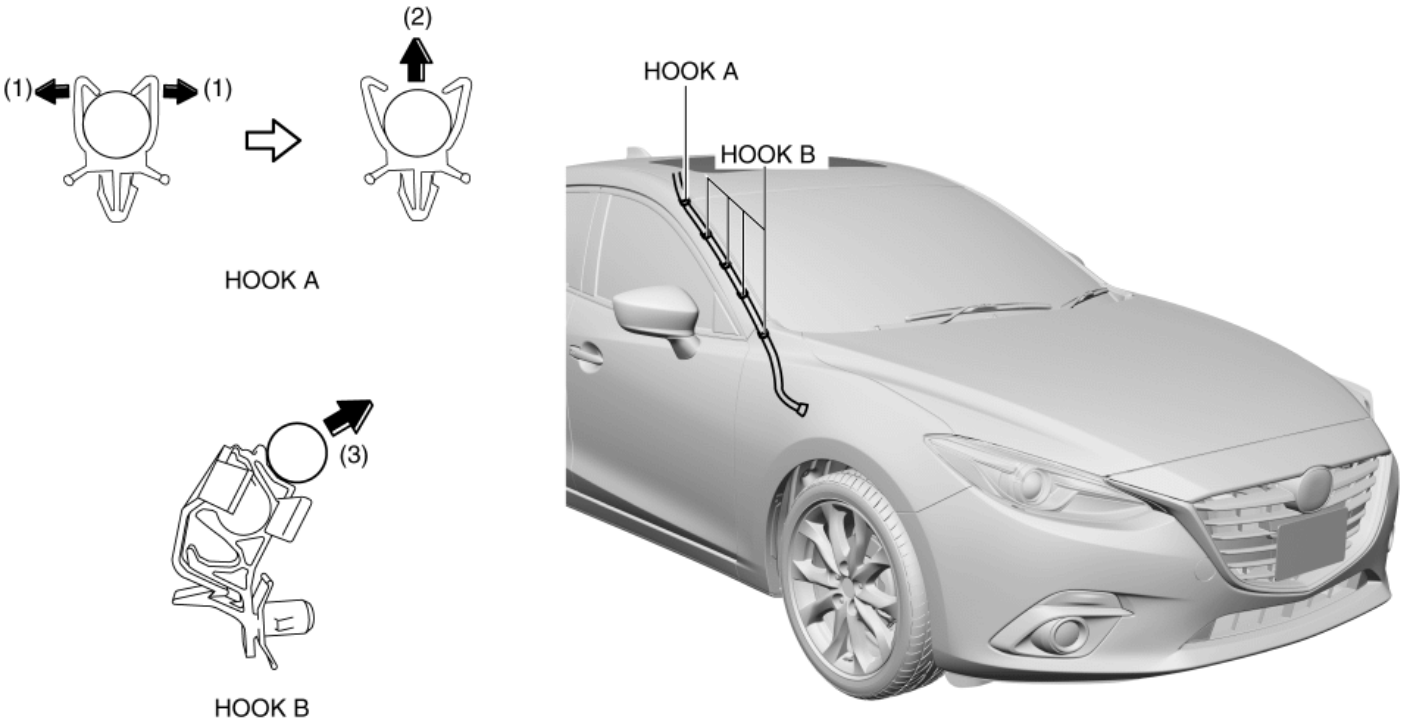

10. Remove the front drain hose in the direction of the arrow (3) from hooks B.
11. Remove the front drain hose in the direction of the arrow (4) from grommet.

12. Remove the grommet in the direction of the arrow (5), (6) shown in the figure.
13. Pull the front drain hose out from the A-pillar side.

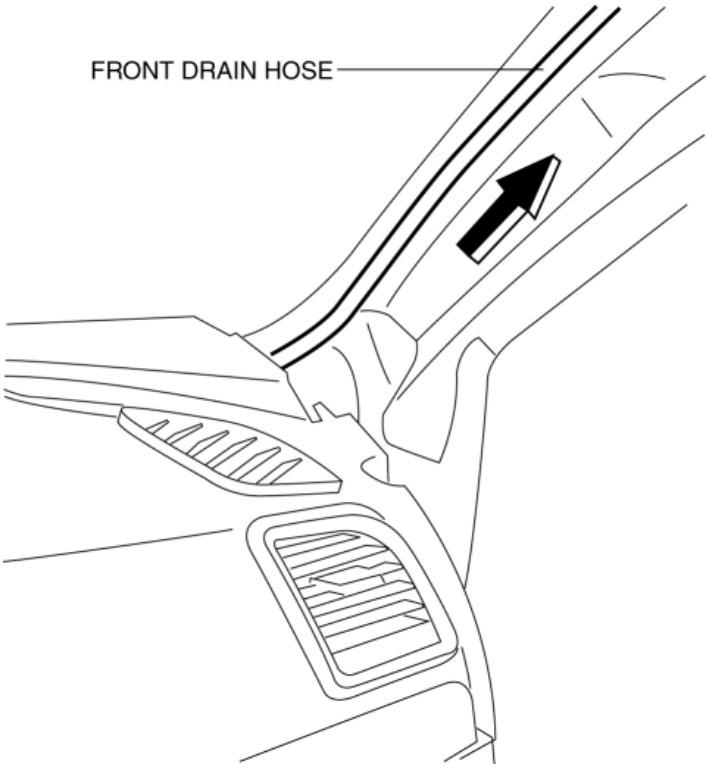

14. Install in the reverse order of removal.

5HB

Driver-side

1. Set the wheel blocks for both the front and rear wheels.
2. Disconnect the negative battery cable. (See **NEGATIVE BATTERY CABLE DISCONNECTION/CONNECTION [SKYACTIV-G 2.0, SKYACTIV-G 2.5]**.)
3. Shift the selector lever from the P position to the D position (ATX).
4. Remove the sunroof seaming welt. (with sunroof system)
5. Remove the following parts:
    a. A-pillar trim (See **A-PILLAR TRIM REMOVAL/INSTALLATION**.)
    b. Sunvisor (See **SUNVISOR REMOVAL/INSTALLATION**.)
    c. Front map light (dual light type) (See **FRONT MAP LIGHT REMOVAL/INSTALLATION**.)
    d. Assist handle (See **ASSIST HANDLE REMOVAL/INSTALLATION**.)
    e. Front scuff plate (See **FRONT SCUFF PLATE REMOVAL/INSTALLATION**.)
    f. Rear scuff plate (See **REAR SCUFF PLATE REMOVAL/INSTALLATION**.)
    g. B-pillar lower trim (See **B-PILLAR LOWER TRIM REMOVAL/INSTALLATION**.)
    h. Adjust anchor cover (See **FRONT SEAT BELT REMOVAL/INSTALLATION**.)
    i. Upper anchor installation bolt on the seat belt (See **FRONT SEAT BELT REMOVAL/INSTALLATION**.)
    j. B-pillar upper trim (See **B-PILLAR UPPER TRIM REMOVAL/INSTALLATION**.)
6. Set the tire house trim aside. (See **TIRE HOUSE TRIM REMOVAL/INSTALLATION**.)
7. Remove the following parts:
    a. Rear package tray (See **REAR PACKAGE TRAY REMOVAL/INSTALLATION**.)
    b. Trunk covering (See **TRUNK COVERING REMOVAL/INSTALLATION**.)
    c. Trunk board (See **TRUNK BOARD REMOVAL/INSTALLATION**.)

d. Trunk end trim (See **TRUNK END TRIM REMOVAL/INSTALLATION**.)

e. Trunk side upper trim (See **TRUNK SIDE UPPER TRIM REMOVAL/INSTALLATION**.)

f. Trunk side trim (LH only) (See **TRUNK SIDE TRIM REMOVAL/INSTALLATION**.)

g. C-pillar trim (See **C-PILLAR TRIM REMOVAL/INSTALLATION**.)

h. Upper panel (See **UPPER PANEL REMOVAL**.) (See **UPPER PANEL INSTALLATION**.)

i. Rear console (See **REAR CONSOLE REMOVAL/INSTALLATION**.)

j. Shift lever knob (MTX) (See **MANUAL TRANSAXLE SHIFT MECHANISM REMOVAL/INSTALLATION [C66M-R]**.)

k. Selector lever knob (ATX) (See **AUTOMATIC TRANSAXLE SHIFT MECHANISM REMOVAL/INSTALLATION**.)

l. Shift panel (See **SHIFT PANEL REMOVAL/INSTALLATION**.)

m. Front console box (See **FRONT CONSOLE BOX REMOVAL/INSTALLATION**.)

n. CD player (with CD player) (See **CD PLAYER REMOVAL**.) (See **CD PLAYER INSTALLATION**.)

o. Glove compartment (See **GLOVE COMPARTMENT REMOVAL/INSTALLATION**.)

p. Decoration panel (See **DECORATION PANEL REMOVAL/INSTALLATION**.)

q. Side wall (See **SIDE WALL REMOVAL/INSTALLATION**.)

r. Front console (See **FRONT CONSOLE REMOVAL/INSTALLATION**.)

s. Headliner (See **HEADLINER REMOVAL/INSTALLATION**.)

8. Remove bolts.

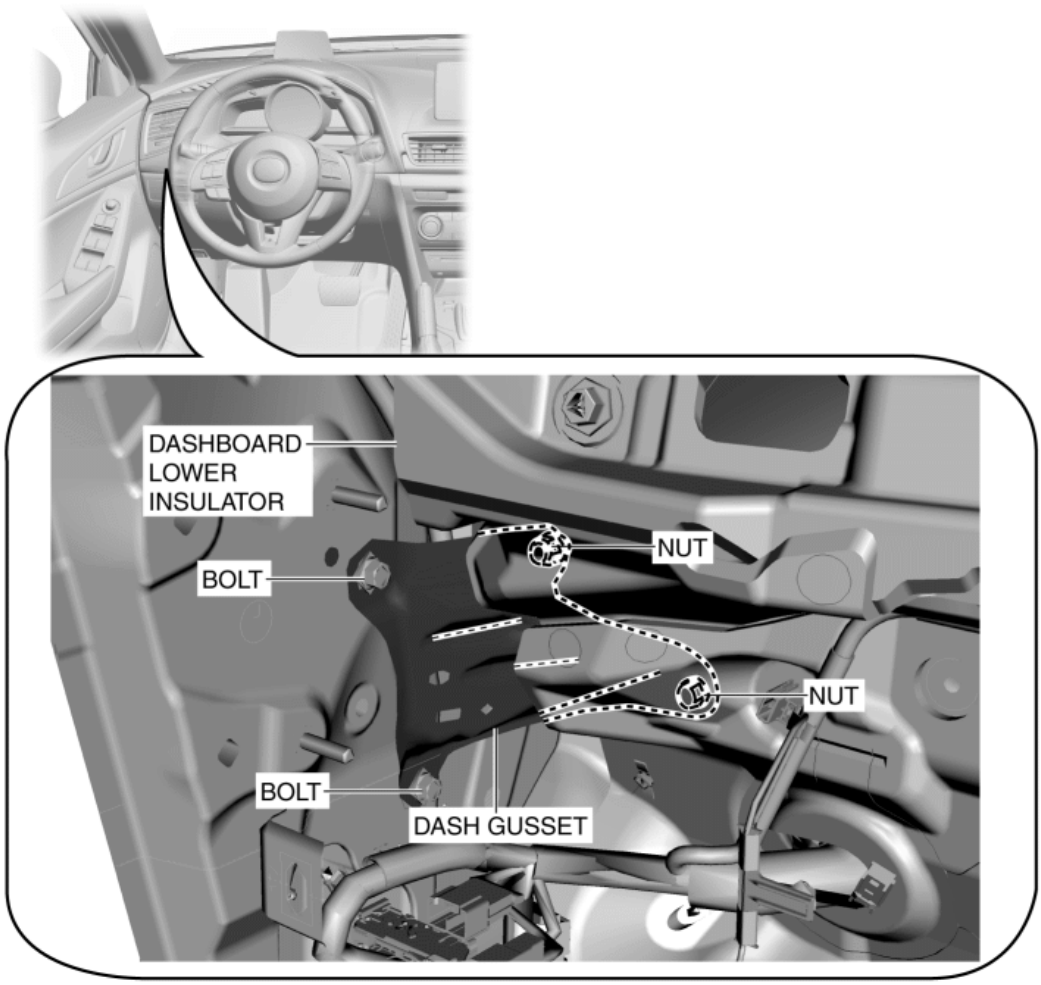

BOLT, NUT: 19—25 N·m {2.0—2.5 kgf·m, 15—18 ft·lbf}

9. Set the dashboard lower insulator aside.

10. Remove nuts.

11. Remove the dash gusset.

12. Disconnect the front drain hose from the sunroof frame.

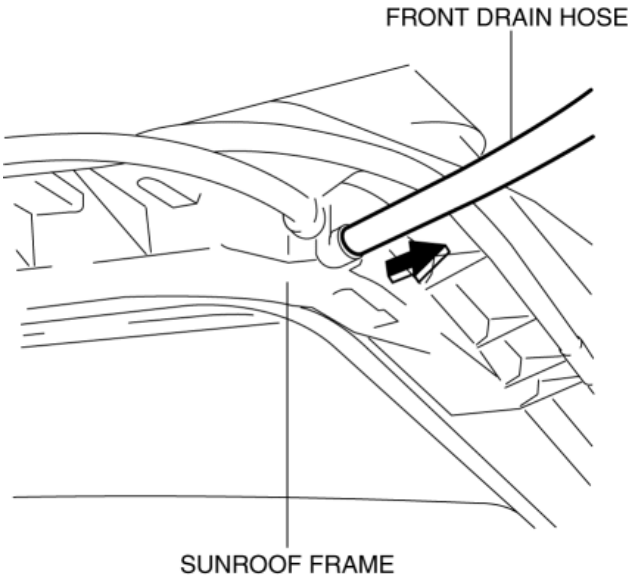

13. Pull the front drain hose in the direction of the arrow in the order of (1), (2) and remove it while detaching hook A.

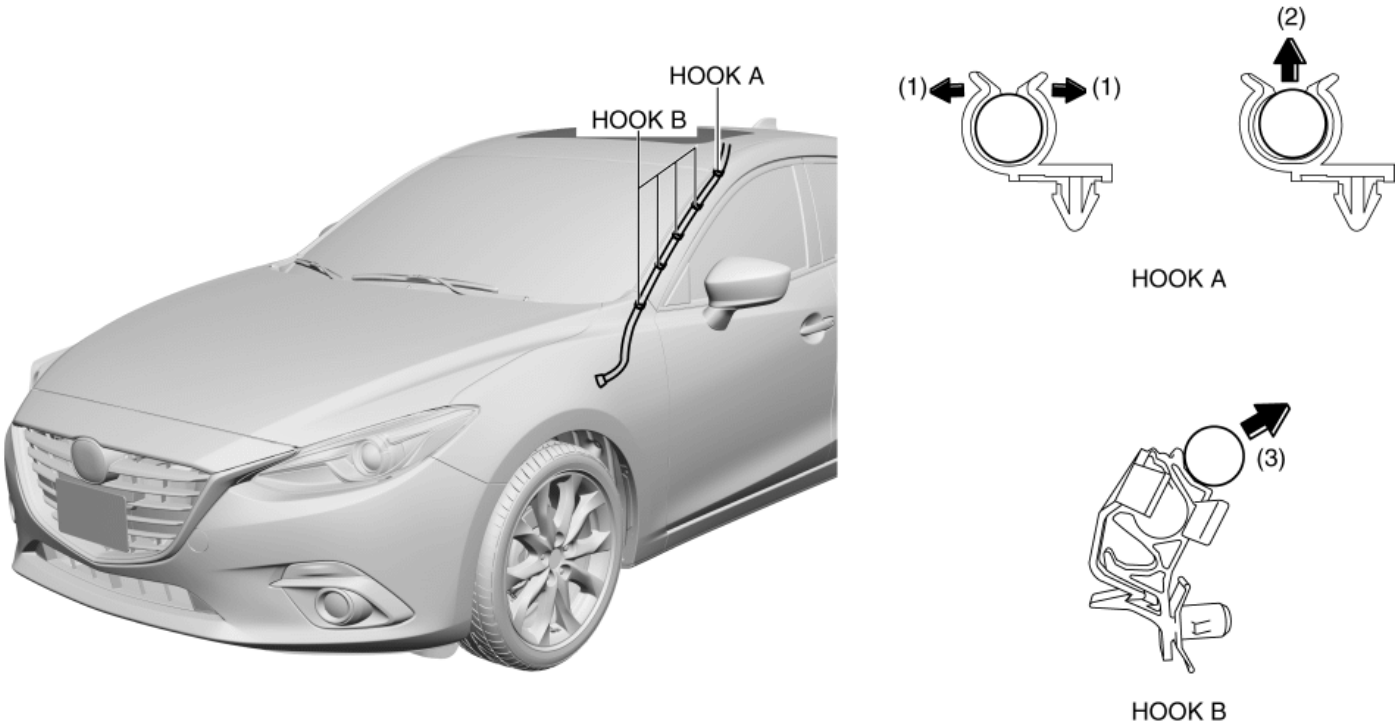

14. Remove the front drain hose in the direction of the arrow (3) from hooks B.

15. Remove the front drain hose in the direction of the arrow (4) from grommet.

16. Remove the grommet in the direction of the arrow (5), (6) shown in the figure.

17. Pull the front drain hose out from the A-pillar side.

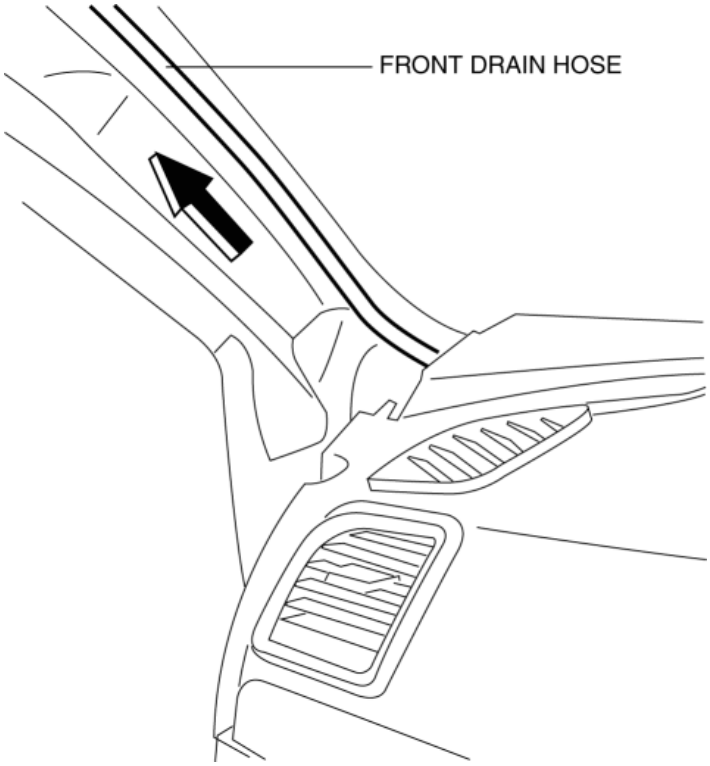

18. Install in the reverse order of removal.

Passenger-side

1. Set the wheel blocks for both the front and rear wheels.
2. Disconnect the negative battery cable. (See **NEGATIVE BATTERY CABLE DISCONNECTION/CONNECTION [SKYACTIV-G 2.0, SKYACTIV-G 2.5]**.)
3. Shift the selector lever from the P position to the D position (ATX).
4. Remove the sunroof seaming welt. (with sunroof system)
5. Remove the following parts:
   a. A-pillar trim (See **A-PILLAR TRIM REMOVAL/INSTALLATION**.)
   b. Sunvisor (See **SUNVISOR REMOVAL/INSTALLATION**.)
   c. Front map light (dual light type) (See **FRONT MAP LIGHT REMOVAL/INSTALLATION**.)
   d. Assist handle (See **ASSIST HANDLE REMOVAL/INSTALLATION**.)
   e. Front scuff plate (See **FRONT SCUFF PLATE REMOVAL/INSTALLATION**.)
   f. Rear scuff plate (See **REAR SCUFF PLATE REMOVAL/INSTALLATION**.)
   g. B-pillar lower trim (See **B-PILLAR LOWER TRIM REMOVAL/INSTALLATION**.)
   h. Adjust anchor cover (See **FRONT SEAT BELT REMOVAL/INSTALLATION**.)
   i. Upper anchor installation bolt on the seat belt (See **FRONT SEAT BELT REMOVAL/INSTALLATION**.)
   j. B-pillar upper trim (See **B-PILLAR UPPER TRIM REMOVAL/INSTALLATION**.)
6. Set the tire house trim aside. (See **TIRE HOUSE TRIM REMOVAL/INSTALLATION**.)
7. Remove the following parts:
   a. Rear package tray (See **REAR PACKAGE TRAY REMOVAL/INSTALLATION**.)
   b. Trunk covering (See **TRUNK COVERING REMOVAL/INSTALLATION**.)
   c. Trunk board (See **TRUNK BOARD REMOVAL/INSTALLATION**.)
   d. Trunk end trim (See **TRUNK END TRIM REMOVAL/INSTALLATION**.)
   e. Trunk side upper trim (See **TRUNK SIDE UPPER TRIM REMOVAL/INSTALLATION**.)
   f. Trunk side trim (LH only) (See **TRUNK SIDE TRIM REMOVAL/INSTALLATION**.)
   g. C-pillar trim (See **C-PILLAR TRIM REMOVAL/INSTALLATION**.)
   h. Upper panel (See **UPPER PANEL REMOVAL**.) (See **UPPER PANEL INSTALLATION**.)
   i. Rear console (See **REAR CONSOLE REMOVAL/INSTALLATION**.)
   j. Shift lever knob (MTX) (See **MANUAL TRANSAXLE SHIFT MECHANISM REMOVAL/INSTALLATION [C66M-R]**.)
   k. Selector lever knob (ATX) (See **AUTOMATIC TRANSAXLE SHIFT MECHANISM REMOVAL/INSTALLATION**.)
   l. Shift panel (See **SHIFT PANEL REMOVAL/INSTALLATION**.)
   m. Front console box (See **FRONT CONSOLE BOX REMOVAL/INSTALLATION**.)
   n. CD player (with CD player) (See **CD PLAYER REMOVAL**.) (See **CD PLAYER INSTALLATION**.)
   o. Glove compartment (See **GLOVE COMPARTMENT REMOVAL/INSTALLATION**.)
   p. Decoration panel (See **DECORATION PANEL REMOVAL/INSTALLATION**.)
   q. Side wall (See **SIDE WALL REMOVAL/INSTALLATION**.)
   r. Front console (See **FRONT CONSOLE REMOVAL/INSTALLATION**.)
   s. Headliner (See **HEADLINER REMOVAL/INSTALLATION**.)
8. Disconnect the front drain hose from the sunroof frame.

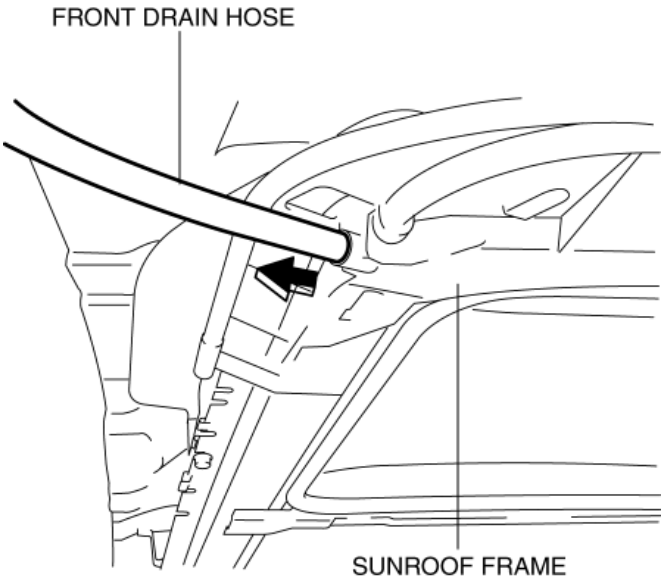

9. Pull the front drain hose in the direction of the arrow in the order of (1), (2) and remove it while detaching hook A.

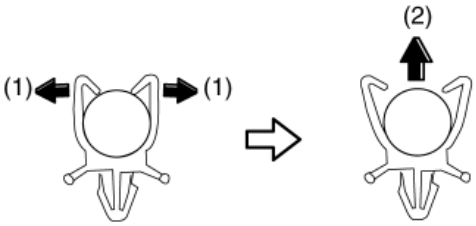

HOOK A

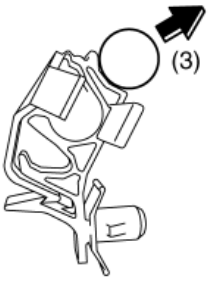

HOOK B

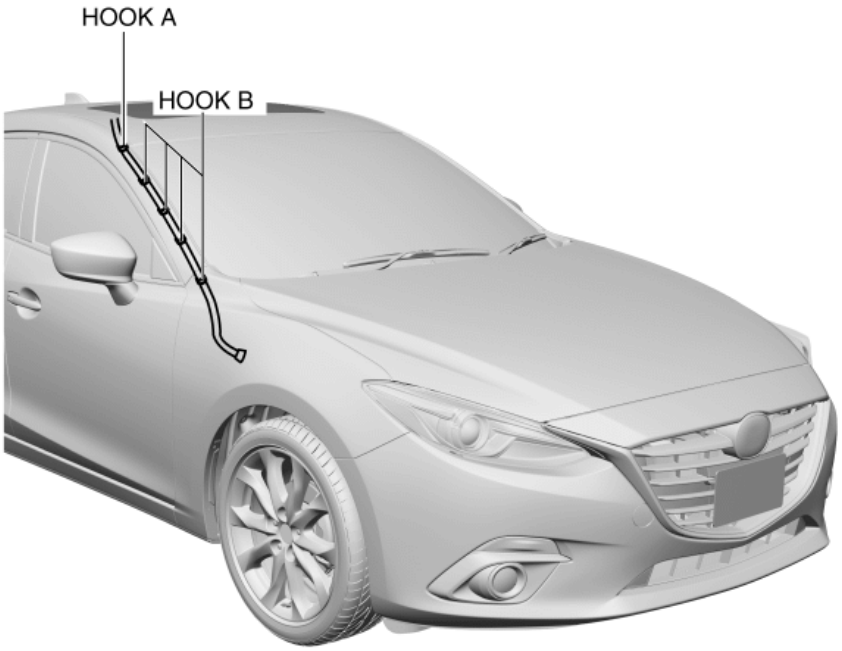

10. Remove the front drain hose in the direction of the arrow (3) from hooks B.

11. Remove the front drain hose in the direction of the arrow (4) from grommet.

12. Remove the grommet in the direction of the arrow (5), (6) shown in the figure.

13. Pull the front drain hose out from the A-pillar side.

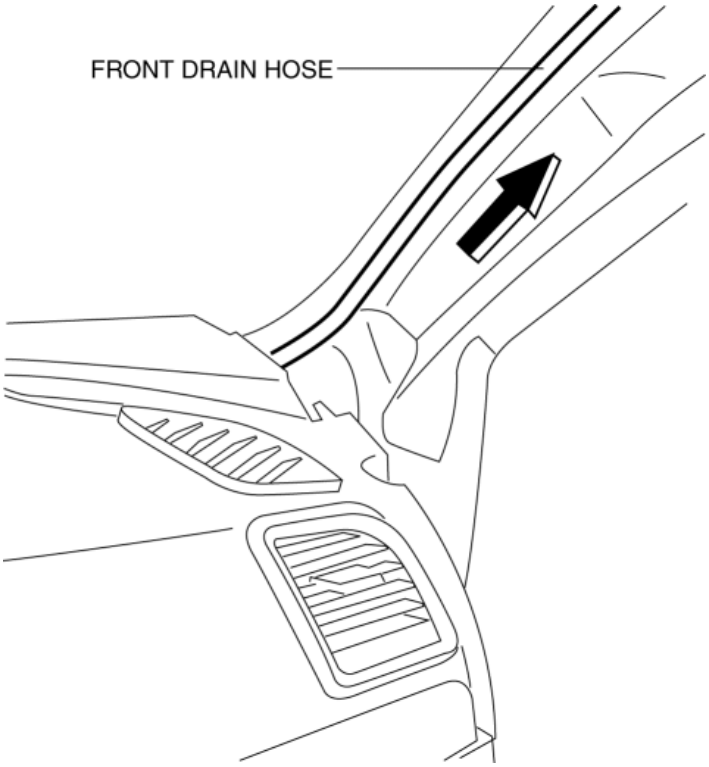

14. Install in the reverse order of removal.

FRONT DRAIN HOSE REMOVAL/INSTALLATION

2014 - Mazda3 - Body and Accessories

REAR DRAIN HOSE REMOVAL/INSTALLATION

4SD

1. Set the wheel blocks for both the front and rear wheels.
2. Disconnect the negative battery cable. (See **NEGATIVE BATTERY CABLE DISCONNECTION/CONNECTION [SKYACTIV-G 2.0, SKYACTIV-G 2.5]**.)
3. Shift the selector lever from the P position to the D position (ATX).
4. Remove the sunroof seaming welt. (with sunroof system)
5. Remove the following parts:
    a. A-pillar trim (See **A-PILLAR TRIM REMOVAL/INSTALLATION**.)
    b. Sunvisor (See **SUNVISOR REMOVAL/INSTALLATION**.)
    c. Front map light (dual light type) (See **FRONT MAP LIGHT REMOVAL/INSTALLATION**.)
    d. Assist handle (See **ASSIST HANDLE REMOVAL/INSTALLATION**.)
    e. Front scuff plate (See **FRONT SCUFF PLATE REMOVAL/INSTALLATION**.)
    f. Rear scuff plate (See **REAR SCUFF PLATE REMOVAL/INSTALLATION**.)
    g. B-pillar lower trim (See **B-PILLAR LOWER TRIM REMOVAL/INSTALLATION**.)
    h. Adjust anchor cover (See **FRONT SEAT BELT REMOVAL/INSTALLATION**.)
    i. Upper anchor installation bolt on the seat belt (See **FRONT SEAT BELT REMOVAL/INSTALLATION**.)
    j. B-pillar upper trim (See **B-PILLAR UPPER TRIM REMOVAL/INSTALLATION**.)
6. Set the tire house trim aside. (See **TIRE HOUSE TRIM REMOVAL/INSTALLATION**.)
7. Remove the following parts:
    a. C-pillar trim (See **C-PILLAR TRIM REMOVAL/INSTALLATION**.)
    b. Upper panel (See **UPPER PANEL REMOVAL**.) (See **UPPER PANEL INSTALLATION**.)
    c. Rear console (See **REAR CONSOLE REMOVAL/INSTALLATION**.)
    d. Shift lever knob (MTX) (See **MANUAL TRANSAXLE SHIFT MECHANISM REMOVAL/INSTALLATION [C66M-R]**.)
    e. Selector lever knob (ATX) (See **AUTOMATIC TRANSAXLE SHIFT MECHANISM REMOVAL/INSTALLATION**.)
    f. Shift panel (See **SHIFT PANEL REMOVAL/INSTALLATION**.)
    g. Front console box (See **FRONT CONSOLE BOX REMOVAL/INSTALLATION**.)
    h. CD player (with CD player) (See **CD PLAYER REMOVAL**.) (See **CD PLAYER INSTALLATION**.)
    i. Glove compartment (See **GLOVE COMPARTMENT REMOVAL/INSTALLATION**.)
    j. Decoration panel (See **DECORATION PANEL REMOVAL/INSTALLATION**.)
    k. Side wall (See **SIDE WALL REMOVAL/INSTALLATION**.)
    l. Front console (See **FRONT CONSOLE REMOVAL/INSTALLATION**.)
    m. Headliner (See **HEADLINER REMOVAL/INSTALLATION**.)
8. Set the trunk side trim aside.
9. Disconnect the rear drain hose from the sunroof frame.

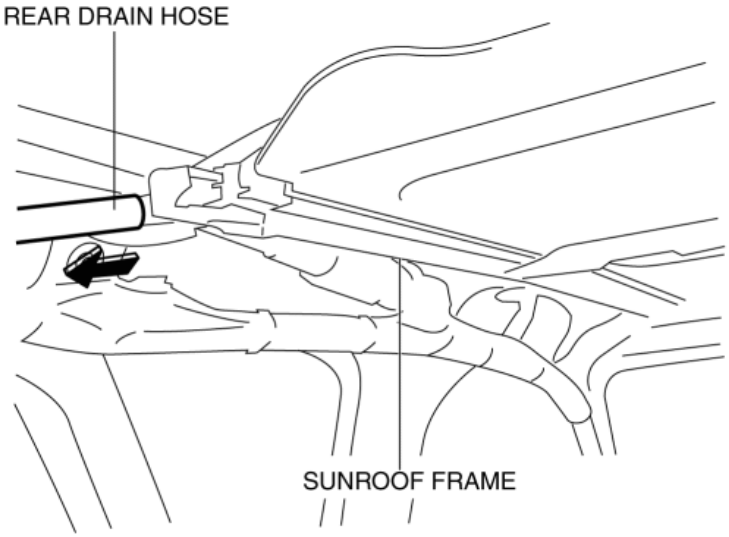

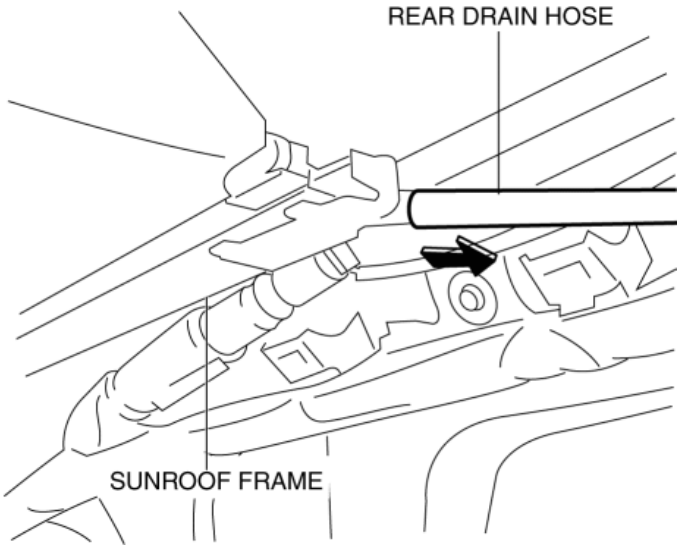

10. Pull the rear drain hose in the direction of the arrow in the order of (1), (2) shown in the figure from hooks.

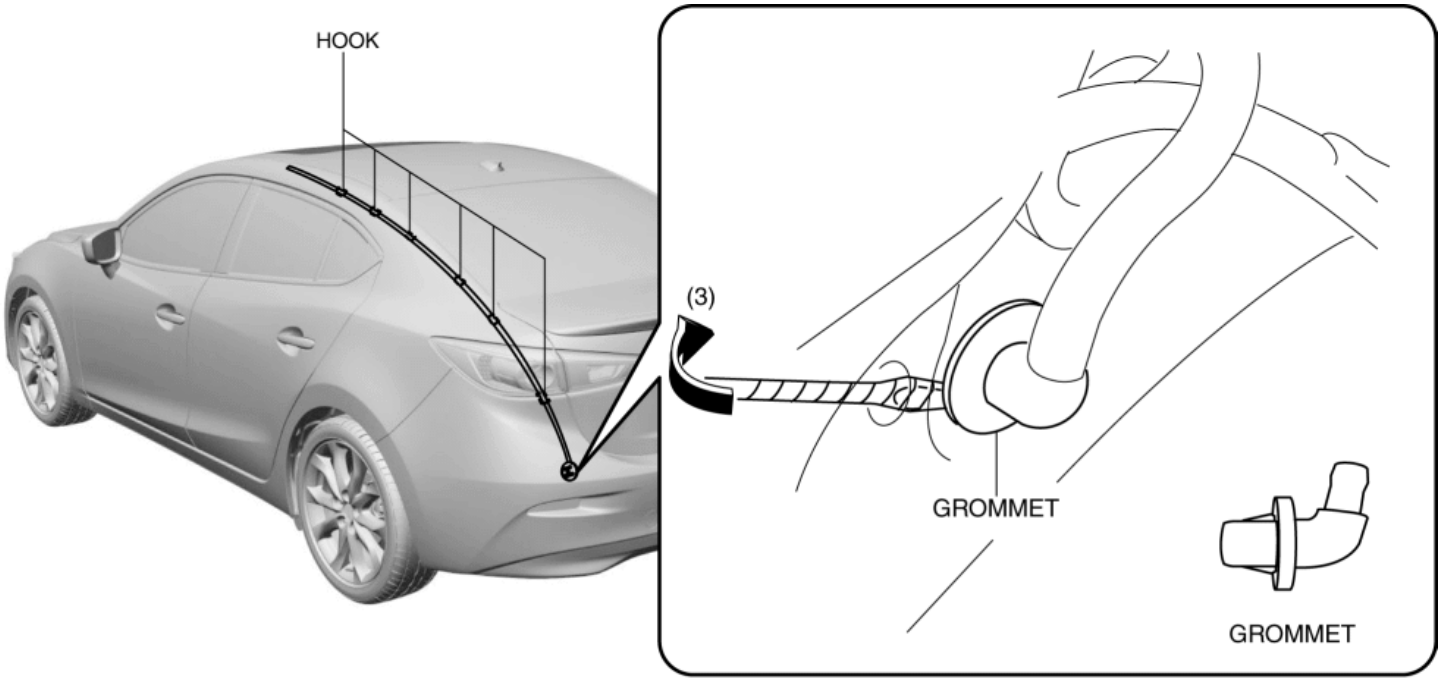

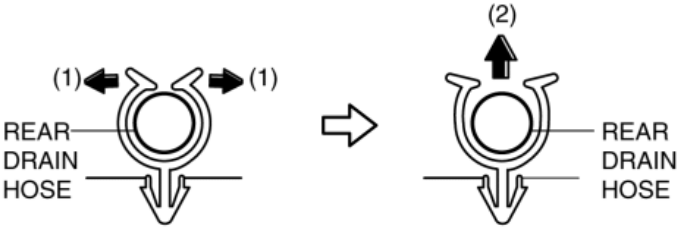

HOOK

11. Insert a tape-wrapped flathead screwdriver into the position shown in the figure, then remove the grommet in the direction of the arrow (3).

12. Remove the rear drain hose.

13. Install in the reverse order of removal.

5HB

1. Set the wheel blocks for both the front and rear wheels.

2. Disconnect the negative battery cable. (See **NEGATIVE BATTERY CABLE DISCONNECTION/CONNECTION [SKYACTIV-G 2.0, SKYACTIV-G 2.5]**.)

3. Shift the selector lever from the P position to the D position (ATX).
4. Remove the sunroof seaming welt. (with sunroof system)
5. Remove the following parts:
    a. A-pillar trim (See **A-PILLAR TRIM REMOVAL/INSTALLATION**.)
    b. Sunvisor (See **SUNVISOR REMOVAL/INSTALLATION**.)
    c. Front map light (dual light type) (See **FRONT MAP LIGHT REMOVAL/INSTALLATION**.)
    d. Assist handle (See **ASSIST HANDLE REMOVAL/INSTALLATION**.)
    e. Front scuff plate (See **FRONT SCUFF PLATE REMOVAL/INSTALLATION**.)
    f. Rear scuff plate (See **REAR SCUFF PLATE REMOVAL/INSTALLATION**.)
    g. B-pillar lower trim (See **B-PILLAR LOWER TRIM REMOVAL/INSTALLATION**.)
    h. Adjust anchor cover (See **FRONT SEAT BELT REMOVAL/INSTALLATION**.)
    i. Upper anchor installation bolt on the seat belt (See **FRONT SEAT BELT REMOVAL/INSTALLATION**.)
    j. B-pillar upper trim (See **B-PILLAR UPPER TRIM REMOVAL/INSTALLATION**.)
6. Set the tire house trim aside. (See **TIRE HOUSE TRIM REMOVAL/INSTALLATION**.)
7. Remove the following parts:
    a. Rear package tray (See **REAR PACKAGE TRAY REMOVAL/INSTALLATION**.)
    b. Trunk covering (See **TRUNK COVERING REMOVAL/INSTALLATION**.)
    c. Trunk board (See **TRUNK BOARD REMOVAL/INSTALLATION**.)
    d. Trunk end trim (See **TRUNK END TRIM REMOVAL/INSTALLATION**.)
    e. Trunk side upper trim (See **TRUNK SIDE UPPER TRIM REMOVAL/INSTALLATION**.)
    f. Trunk side trim (LH only) (See **TRUNK SIDE TRIM REMOVAL/INSTALLATION**.)
    g. C-pillar trim (See **C-PILLAR TRIM REMOVAL/INSTALLATION**.)
    h. Upper panel (See **UPPER PANEL REMOVAL**.) (See **UPPER PANEL INSTALLATION**.)
    i. Rear console (See **REAR CONSOLE REMOVAL/INSTALLATION**.)
    j. Shift lever knob (MTX) (See **MANUAL TRANSAXLE SHIFT MECHANISM REMOVAL/INSTALLATION [C66M-R]**.)
    k. Selector lever knob (ATX) (See **AUTOMATIC TRANSAXLE SHIFT MECHANISM REMOVAL/INSTALLATION**.)
    l. Shift panel (See **SHIFT PANEL REMOVAL/INSTALLATION**.)
    m. Front console box (See **FRONT CONSOLE BOX REMOVAL/INSTALLATION**.)
    n. CD player (with CD player) (See **CD PLAYER REMOVAL**.) (See **CD PLAYER INSTALLATION**.)
    o. Glove compartment (See **GLOVE COMPARTMENT REMOVAL/INSTALLATION**.)
    p. Decoration panel (See **DECORATION PANEL REMOVAL/INSTALLATION**.)
    q. Side wall (See **SIDE WALL REMOVAL/INSTALLATION**.)
    r. Front console (See **FRONT CONSOLE REMOVAL/INSTALLATION**.)
    s. Headliner (See **HEADLINER REMOVAL/INSTALLATION**.)
8. Set the trunk side trim aside. (RH only)
9. Disconnect the rear drain hose from the sunroof frame.

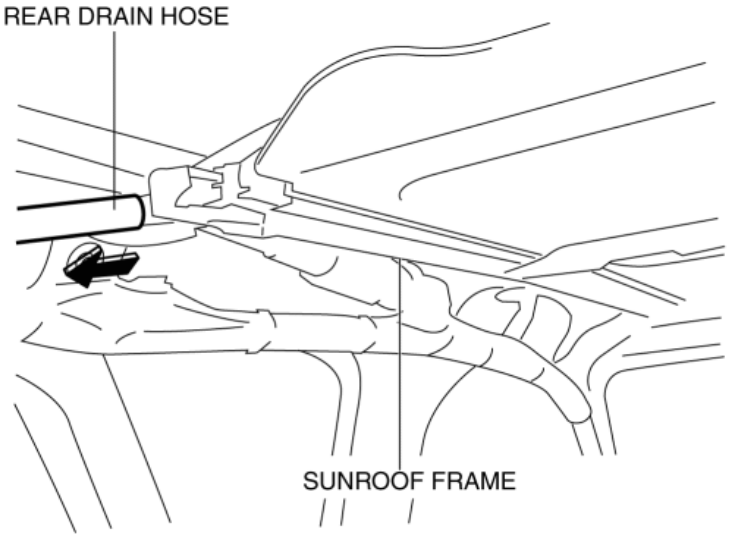

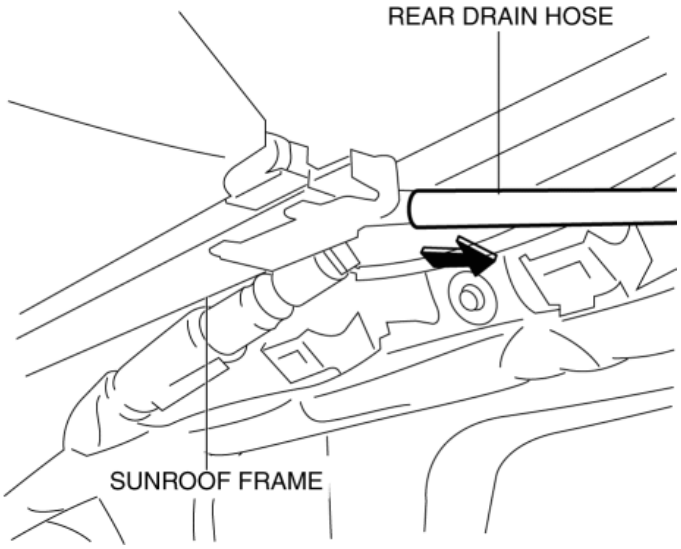

10. Pull the rear drain hose in the direction of the arrow in the order of (1), (2) shown in the figure from hooks A.

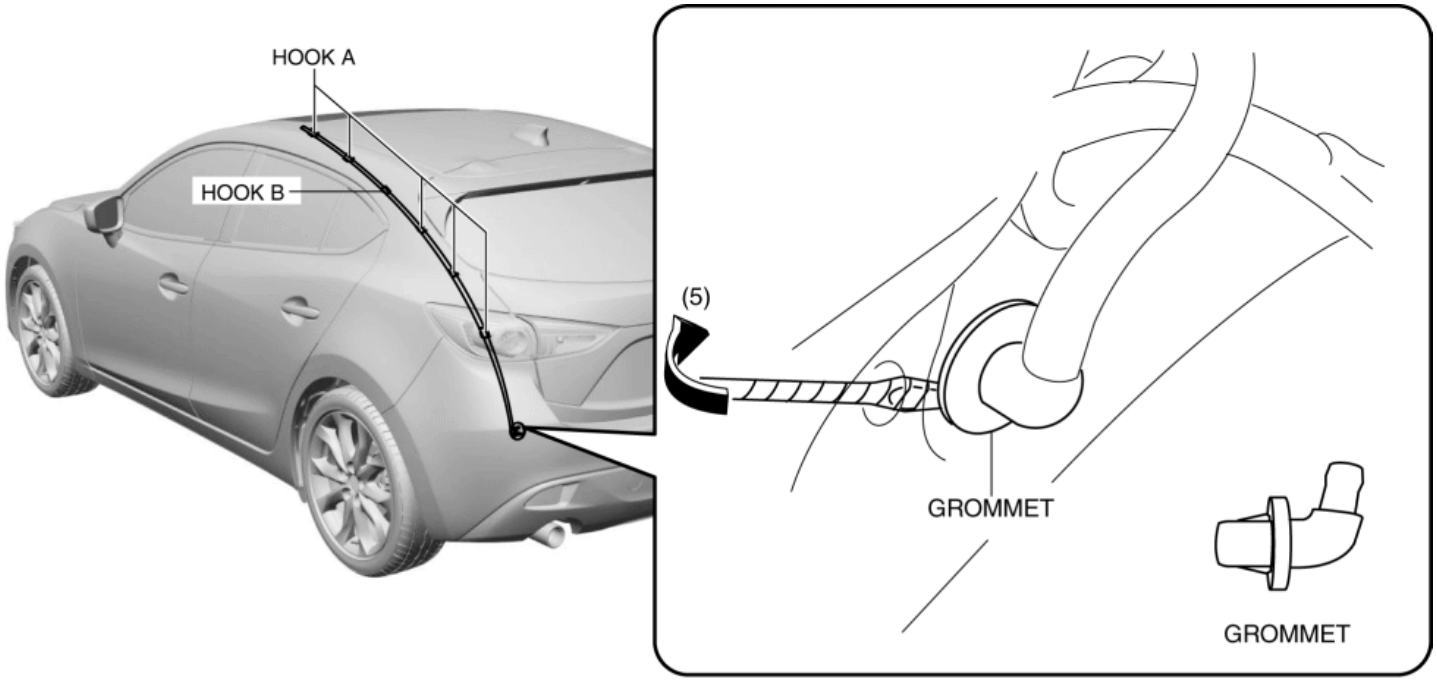

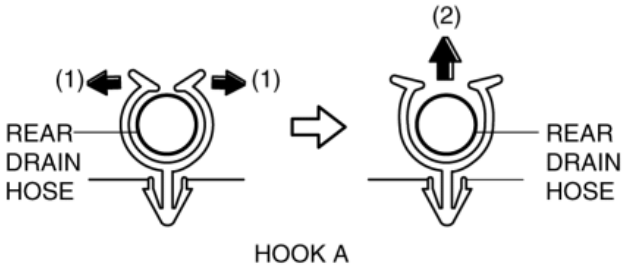

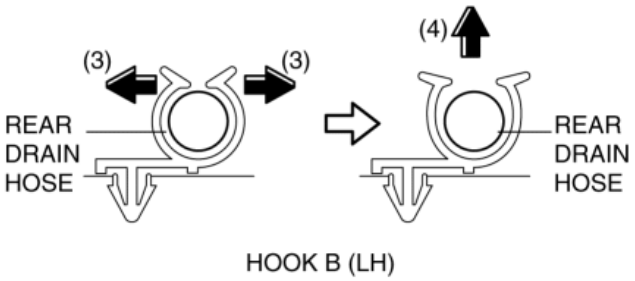

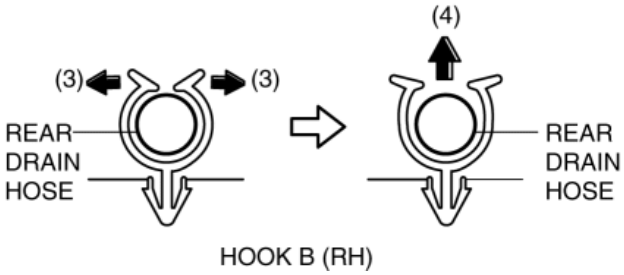

11. Pull the rear drain hose in the direction of the arrow in the order of (3), (4) shown in the figure from hook B.

12. Insert a tape-wrapped flathead screwdriver into the position shown in the figure, then remove the grommet in the direction of the

arrow (5).

13. Remove the rear drain hose.

14. Install in the reverse order of removal.

2014 - Mazda3 - Body and Accessories

SUNROOF MOTOR REMOVAL/INSTALLATION

1. Disconnect the negative battery cable. (See **NEGATIVE BATTERY CABLE DISCONNECTION/CONNECTION [SKYACTIV-G 2.0, SKYACTIV-G 2.5]**.)
2. Remove the front map light. (with sunglasses holder) (See **FRONT MAP LIGHT REMOVAL/INSTALLATION**.)
3. Disconnect the connector.

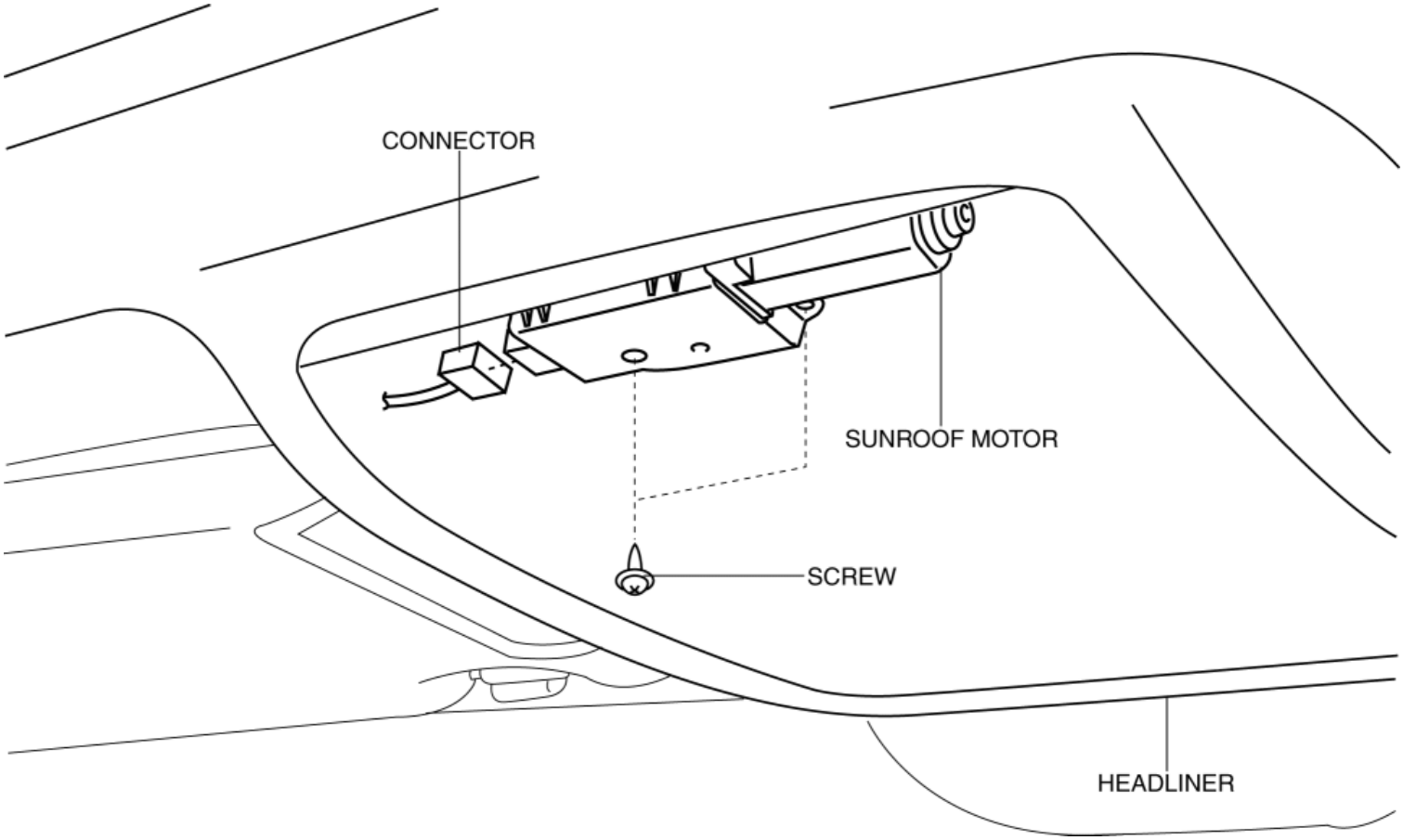

4. Remove screws.
5. Remove the sunroof motor.
6. Install in the reverse order of removal.

2014 - Mazda3 - Body and Accessories

SUNROOF MOTOR INSPECTION

1. Disconnect the negative battery cable. (See **NEGATIVE BATTERY CABLE DISCONNECTION/CONNECTION [SKYACTIV-G 2.0, SKYACTIV-G 2.5]**.)

2. Remove the front map light. (with sunglasses holder) (See **FRONT MAP LIGHT REMOVAL/INSTALLATION**.)

3. Connect the negative battery cable. (See **NEGATIVE BATTERY CABLE DISCONNECTION/CONNECTION [SKYACTIV-G 2.0, SKYACTIV-G 2.5]**.)

4. Measure the voltage at each terminal.

- If the voltage is not as specified in the terminal voltage table, inspect the parts under Inspection item (s) and related wiring harnesses.
  - If the system does not work normally even though the inspection items or related wiring harnesses do not have any malfunction, replace the sunroof motor. (See **SUNROOF MOTOR REMOVAL/INSTALLATION**.)

Terminal Voltage Table (Reference)

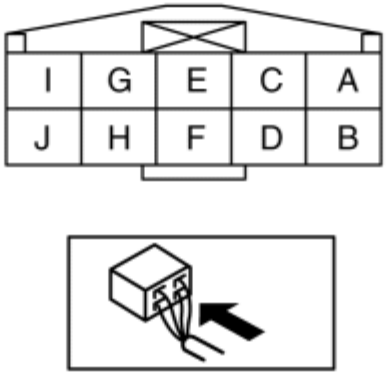

Terminal	Signal	Connected to	Test condition	Voltage (V)	Inspection item
A	Slide open	Sunroof switch	Sunroof is opening	B+	• Sunroof switch
			Other	1.0 or	

				less	
B	Slide close/tilt down	Sunroof switch	Sunroof is closing / tilting down	B+	• Sunroof switch
			Other	1.0 or less	
C	Tilt up	Sunroof switch	Sunroof is tilting up	B+	• Sunroof switch
			Other	1.0 or less	
E	IG1	C/U IG1 15A fuse	Switch the ignition ON (engine on or off)	B+	• C/U IG1 15A fuse
			Other	1.0 or less	
G	GND	GND	Under any condition	1.0 or less	• Body ground
J	Power supply	SUNROOF 10A fuse	Under any condition	B+	• SUNROOF 10A fuse

2014 - Mazda3 - Body and Accessories

SUNROOF SWITCH REMOVAL/INSTALLATION

NOTE:

- The sunroof switch is together with the front map light.

1. Disconnect the negative battery cable. (See **NEGATIVE BATTERY CABLE DISCONNECTION/CONNECTION [SKYACTIV-G 2.0, SKYACTIV-G 2.5]**.)

2. Remove the front map light. (with sunglasses holder) (See **FRONT MAP LIGHT REMOVAL/INSTALLATION**.)

3. Install in the reverse order of removal.

2014 - Mazda3 - Body and Accessories

SUNROOF SWITCH INSPECTION

1. Disconnect the negative battery cable. (See **NEGATIVE BATTERY CABLE DISCONNECTION/CONNECTION [SKYACTIV-G 2.0, SKYACTIV-G 2.5]**.)

2. Remove the front map light. (with sunglasses holder) (See **FRONT MAP LIGHT REMOVAL/INSTALLATION**.)

3. Verify that the continuity between the sunroof switch terminals is as indicated in the table.

○—○:continuity

Switch position	Terminal			
	A	B	C	D
SLIDE OPEN	○			○
SLIDE CLOSE / TILT DOWN		○		○
TILT UP			○	○

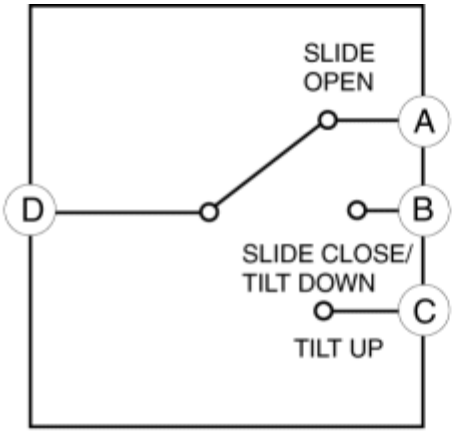

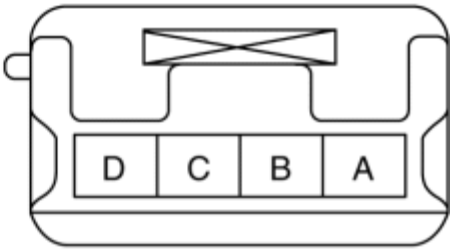

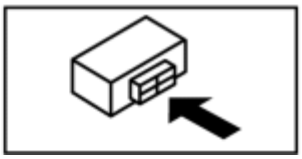

- If not as indicated in the table, replace the sunroof switch. (See **SUNROOF SWITCH REMOVAL/INSTALLATION**.)

2014 - Mazda3 - Body and Accessories

SUNROOF SYSTEM INITIALIZATION PROCEDURE

- If the following operations have been performed, the initial setting is reset, and operations except for tilt up are disabled. Therefore, performing initial setting is necessary.
    - Negative battery cable is disconnected. (See **NEGATIVE BATTERY CABLE DISCONNECTION/CONNECTION [SKYACTIV-G 2.0, SKYACTIV-G 2.5]**.)
    - Sunroof switch connector is disconnected.
    - Sunroof system power supply fuse is removed.

1. Switch the ignition ON (engine off or on).
2. Press the tilt up switch continuously until the glass panel stops at the tilt up position.

2014 - Mazda3 - Body and Accessories

EXTERIOR TRIM LOCATION INDEX

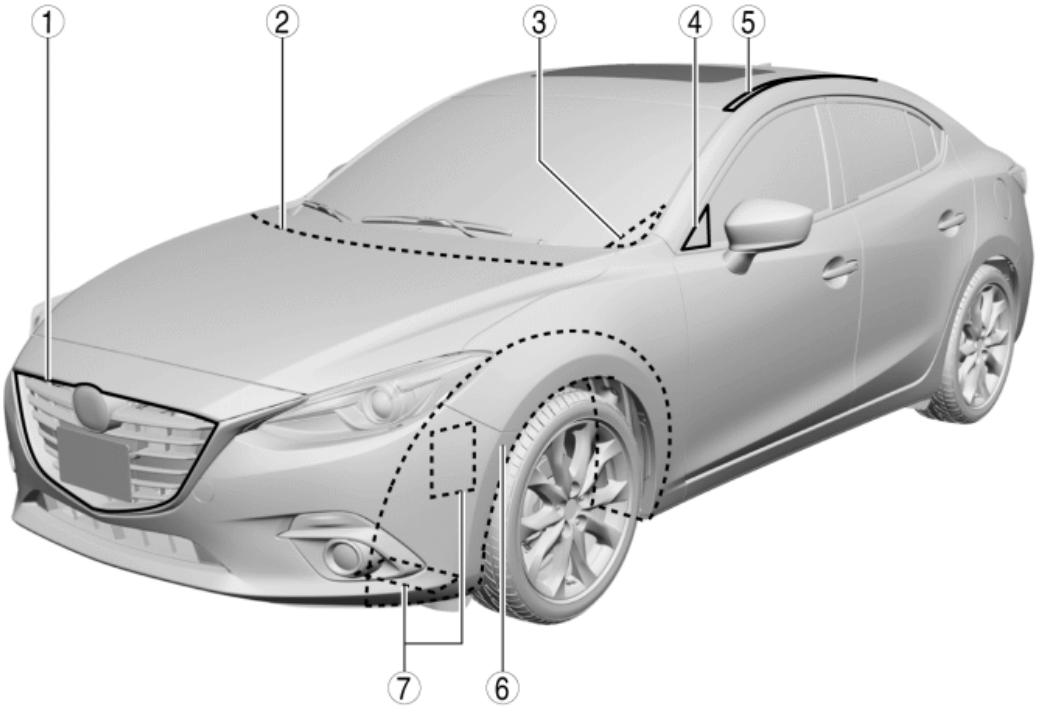

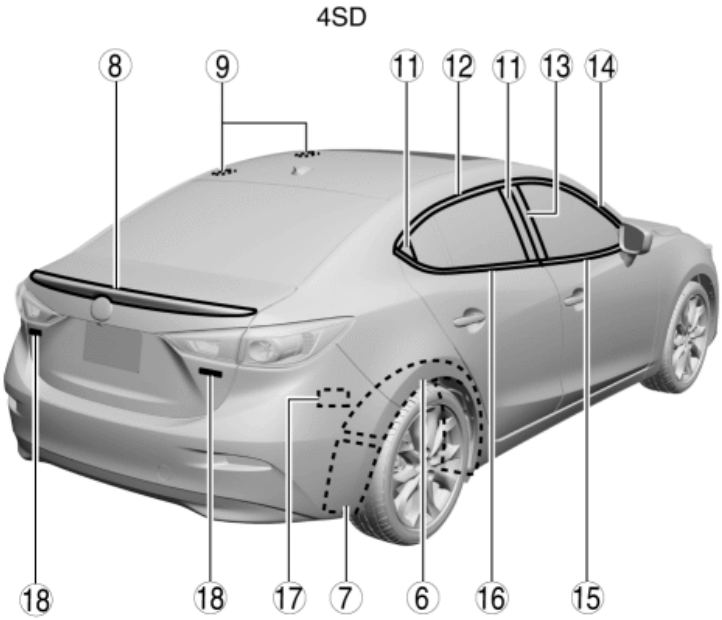

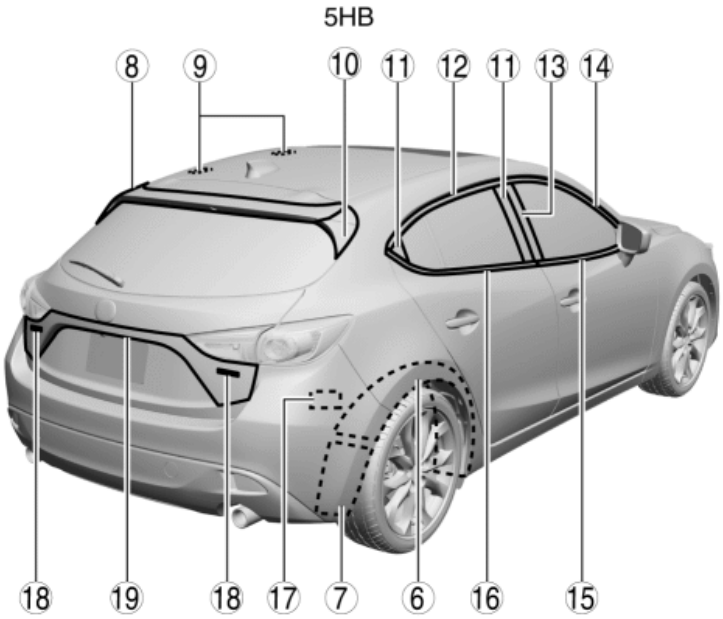

1	Radiator grille (See **RADIATOR GRILLE REMOVAL/INSTALLATION**.) (See **RADIATOR GRILLE DISASSEMBLY/ASSEMBLY**.)
2	Cowl grille (See **COWL GRILLE REMOVAL/INSTALLATION**.)

3	Front fender molding (See **FRONT FENDER MOLDING REMOVAL/INSTALLATION**.)
4	Sail garnish (See **SAIL GARNISH REMOVAL/INSTALLATION**.)
5	Roof molding (See **ROOF MOLDING REMOVAL**.) (See **ROOF MOLDING INSTALLATION**.)
6	Mudguard (See **MUDGUARD REMOVAL/INSTALLATION**.)
7	Splash shield (See **SPLASH SHIELD REMOVAL/INSTALLATION**.)
8	Rear spoiler (See **REAR SPOILER REMOVAL**.) (See **REAR SPOILER INSTALLATION**.)
9	Roof carrier bracket (See **ROOF CARRIER BRACKET REMOVAL/INSTALLATION**.)
10	Side spoiler (See **SIDE SPOILER REMOVAL/INSTALLATION**.)
11	Rear door garnish (See **REAR DOOR GARNISH REMOVAL/INSTALLATION**.)
12	Rear sash molding (See **REAR SASH MOLDING REMOVAL**.) (See **REAR SASH MOLDING INSTALLATION**.)
13	Front door garnish (See **FRONT DOOR GARNISH REMOVAL/INSTALLATION**.)
14	Front sash molding (See **FRONT SASH MOLDING REMOVAL**.) (See **FRONT SASH MOLDING INSTALLATION**.)
15	Front beltline molding (See **FRONT BELTLINE MOLDING REMOVAL/INSTALLATION**.)
16	Rear beltline molding (See **REAR BELTLINE MOLDING REMOVAL/INSTALLATION**.)
17	Extractor chamber (See **EXTRACTOR CHAMBER REMOVAL/INSTALLATION**.)

18	Ornament (See **ORNAMENT INSTALLATION**.)
19	Liftgate garnish (See **LIFTGATE GARNISH REMOVAL/INSTALLATION**.)

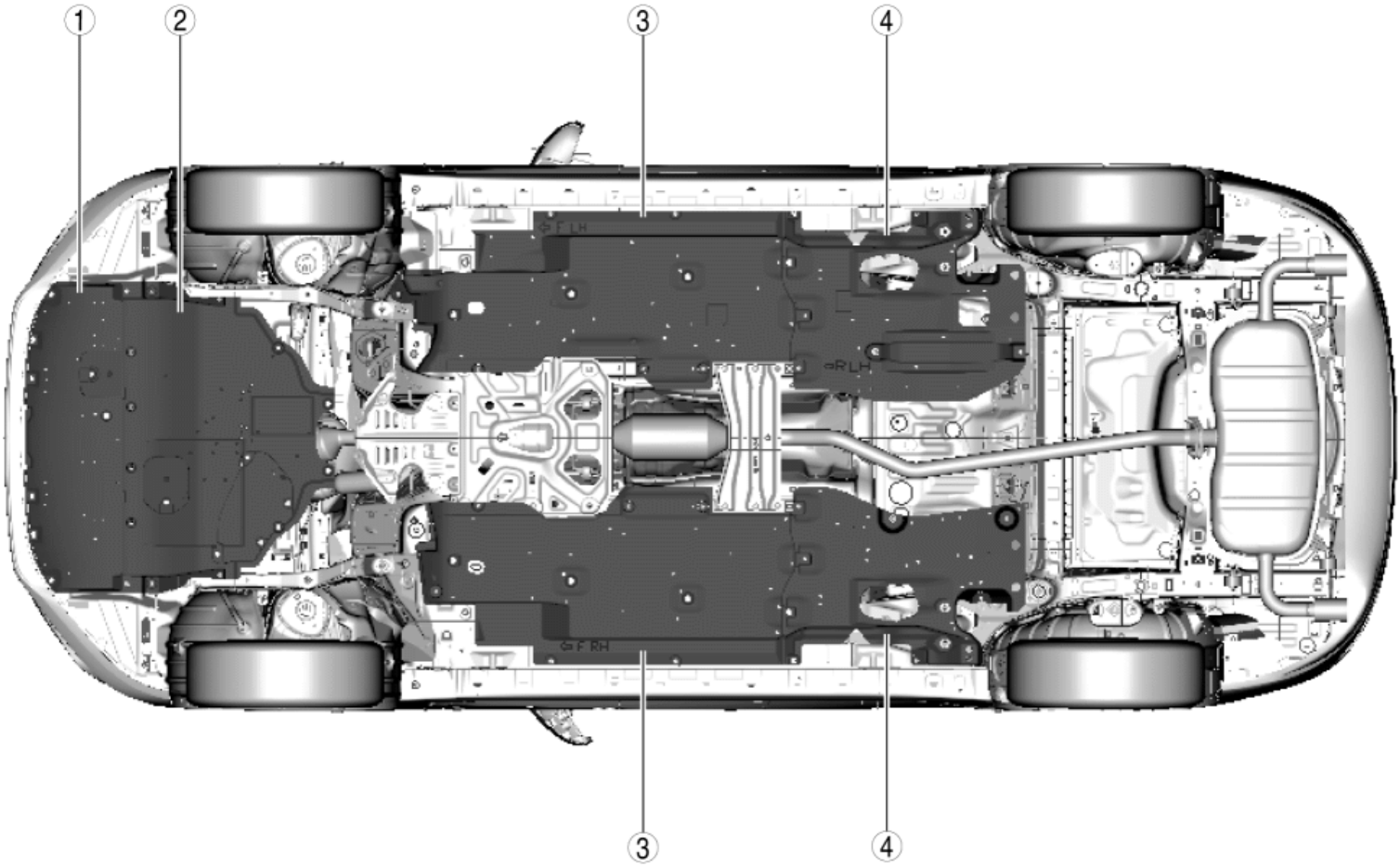

1	Front under cover No.1 (See **FRONT UNDER COVER No.1 REMOVAL/INSTALLATION**.)
2	Front under cover No.2 (See **FRONT UNDER COVER No.2 REMOVAL/INSTALLATION**.)
3	Floor under cover No.2 (See **FLOOR UNDER COVER REMOVAL/INSTALLATION**.)
4	Floor under cover No.1 (See **FLOOR UNDER COVER REMOVAL/INSTALLATION**.)

2014 - Mazda3 - Body and Accessories

COWL GRILLE REMOVAL/INSTALLATION

1. Disconnect the negative battery cable. (See **NEGATIVE BATTERY CABLE DISCONNECTION/CONNECTION [SKYACTIV-G 2.0, SKYACTIV-G 2.5]**.)
2. Remove the windshield wiper arm and blade. (See **WINDSHIELD WIPER ARM AND BLADE REMOVAL/INSTALLATION**.)
3. Disconnect the joint pipe A of the windshield washer hose. (See **WINDSHIELD WASHER HOSE REMOVAL/INSTALLATION**.)
4. Remove the clips and fasteners shown in the figure.

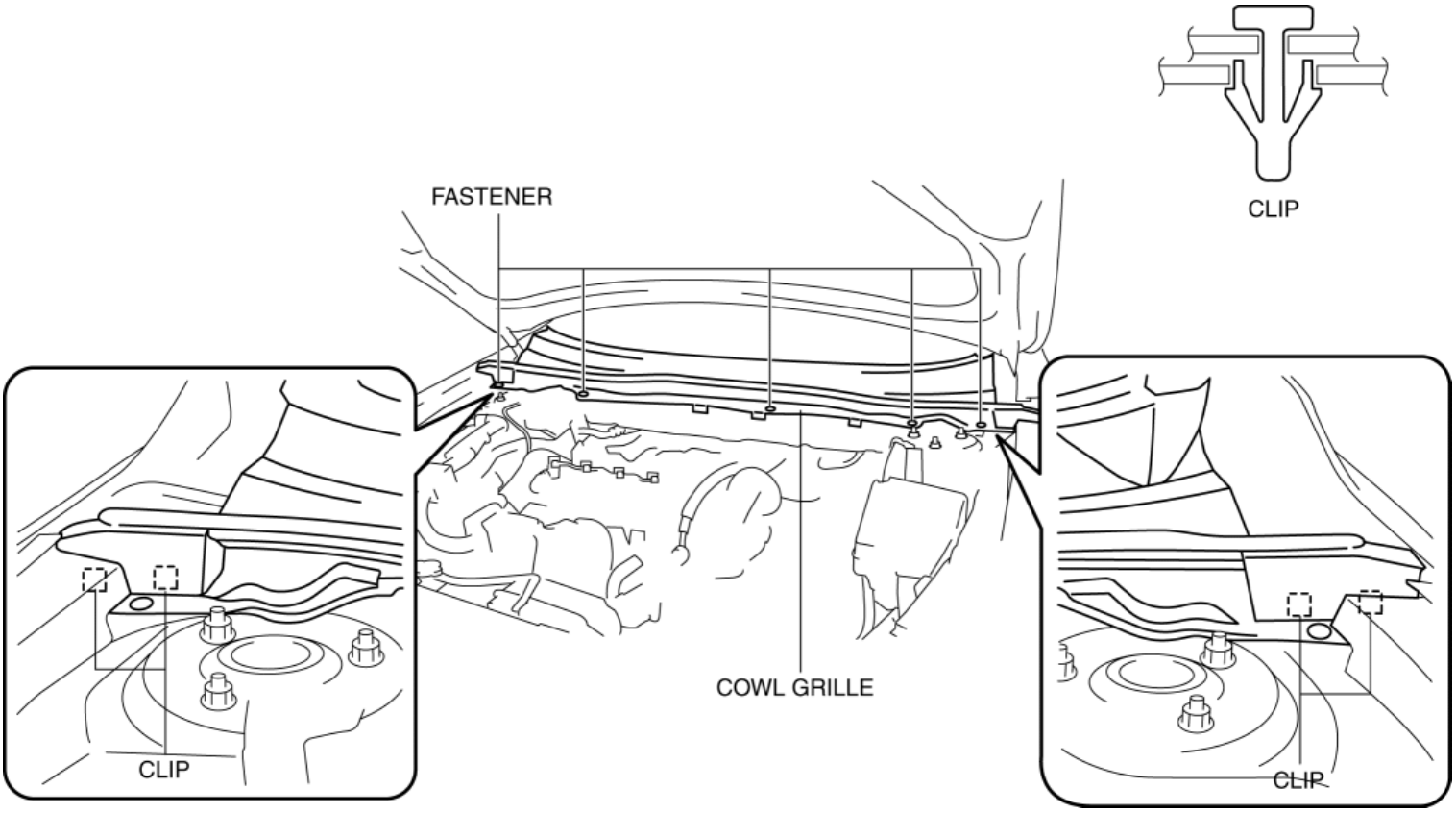

5. Pull the cowl grille in the direction of the arrow in the order of (1), (2), (3), (4), (5) and remove it while detaching the tabs.

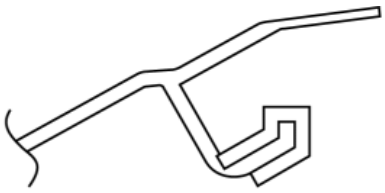

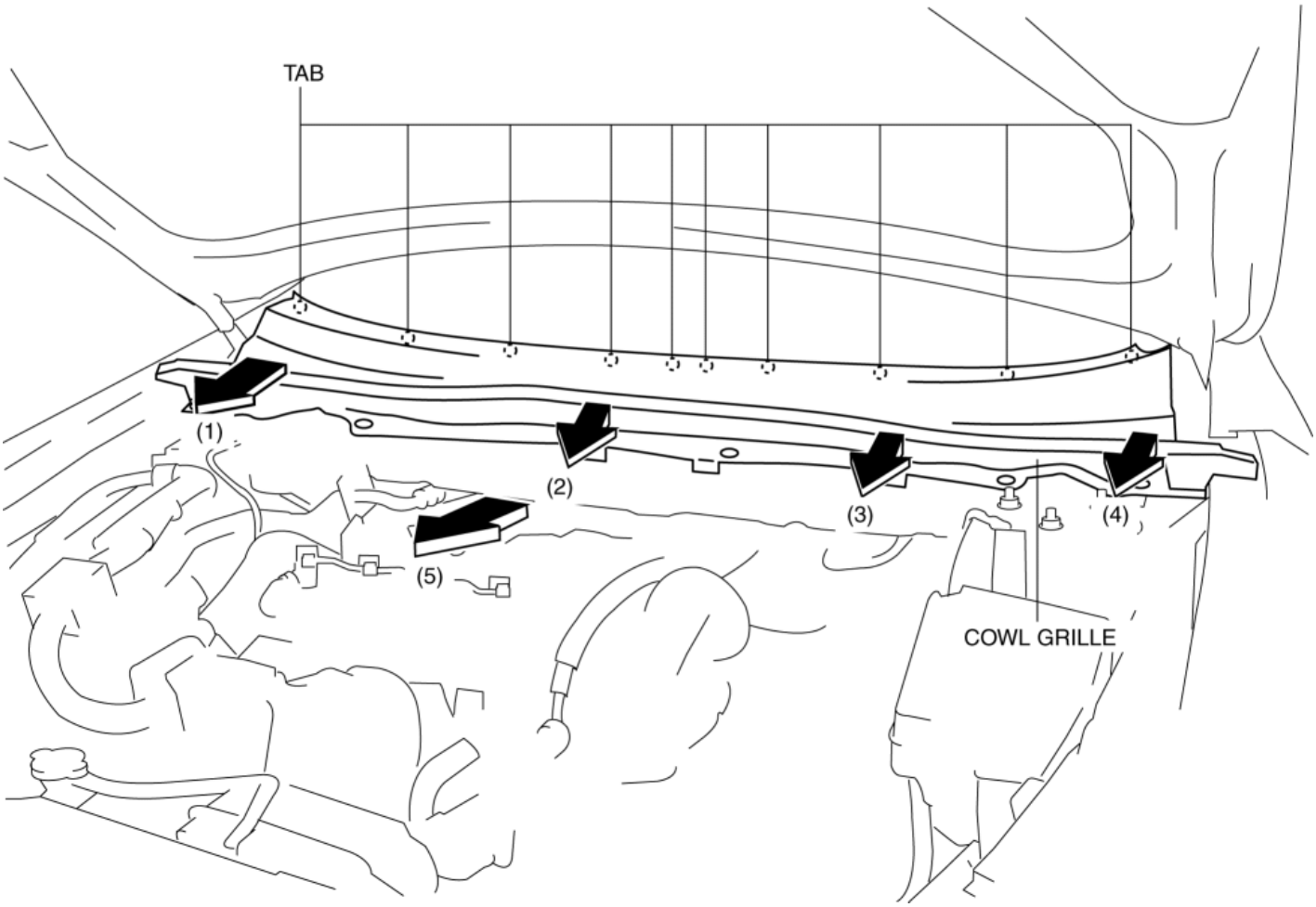

6. Install in the reverse order of removal.

2014 - Mazda3 - Body and Accessories

RADIATOR GRILLE REMOVAL/INSTALLATION

1. Disconnect the negative battery cable. (See **NEGATIVE BATTERY CABLE DISCONNECTION/CONNECTION [SKYACTIV-G 2.0, SKYACTIV-G 2.5]**.)
2. Remove the set plate. (See **SET PLATE REMOVAL/INSTALLATION**.)
3. Remove the front bumper. (See **FRONT BUMPER REMOVAL/INSTALLATION**.)
4. Remove the locator pin brackets. (See **FRONT BUMPER DISASSEMBLY/ASSEMBLY**.)
5. Remove the fasteners shown in the figure.

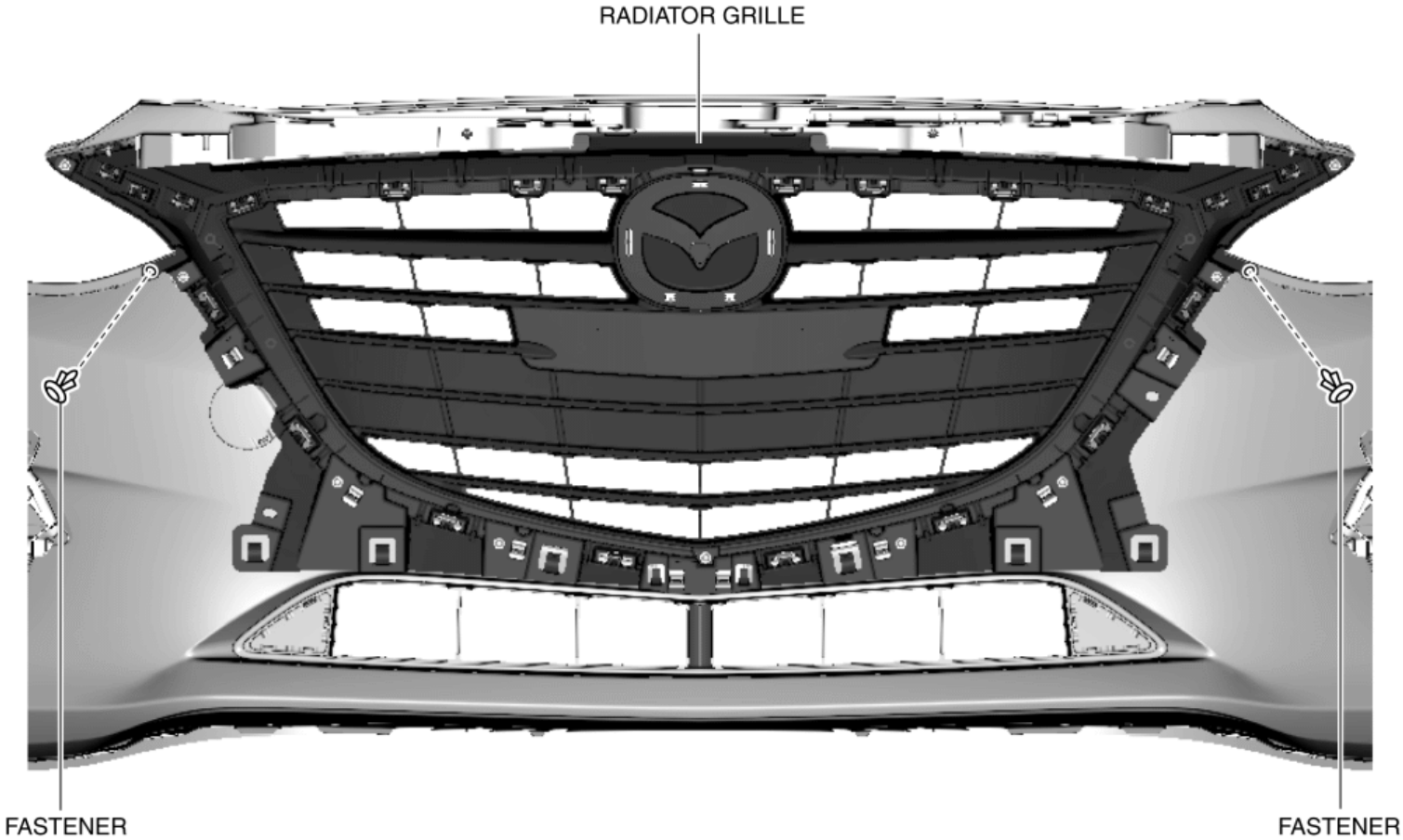

6. Detach the hooks of the front bumper fascia and remove the radiator grille.

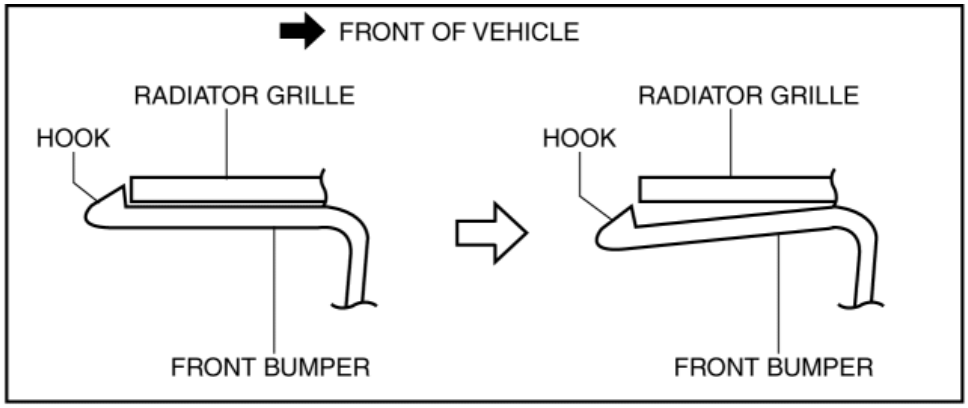

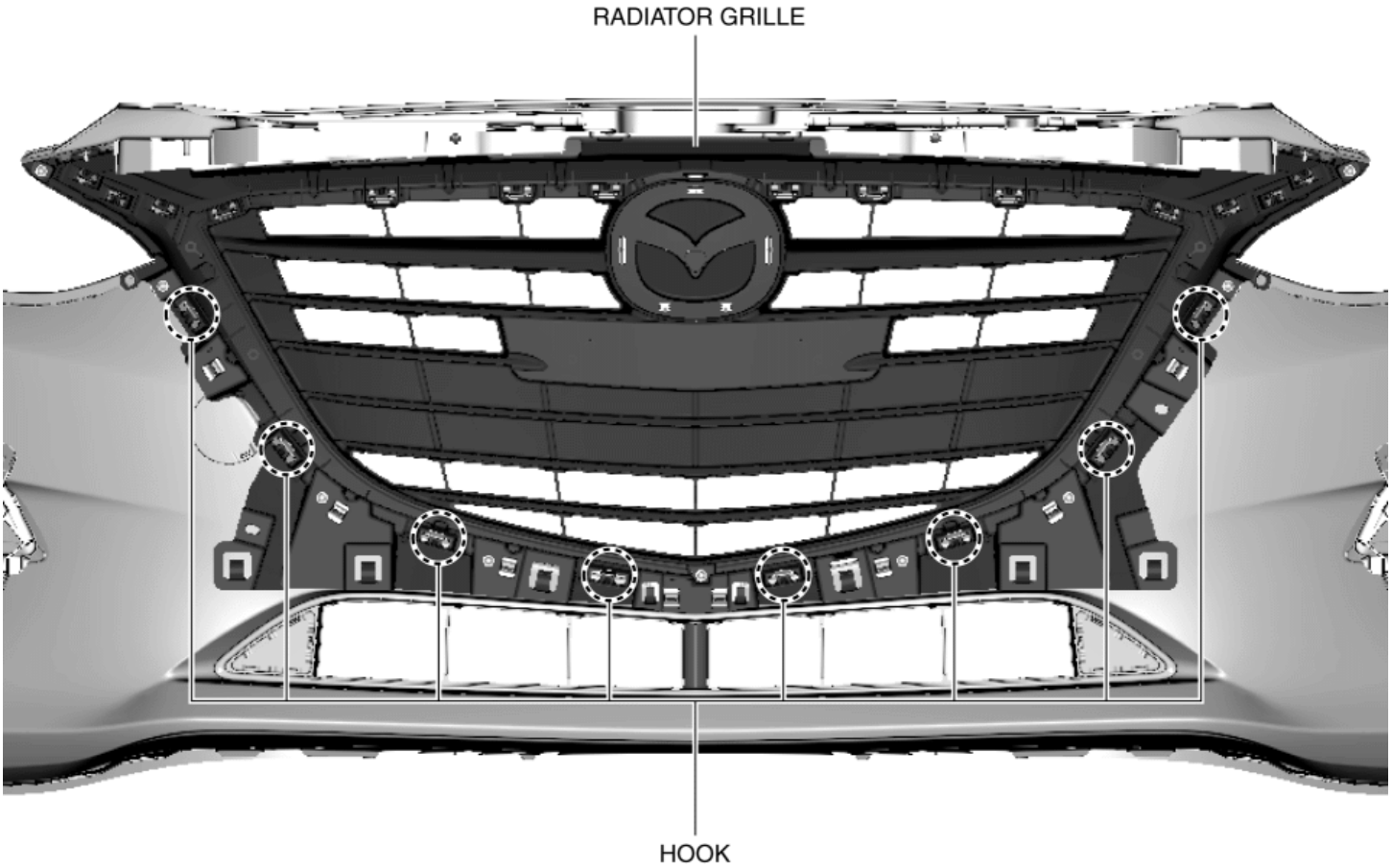

7. Install in the reverse order of removal.

8. Adjust the front fog light aiming. (with front fog lights) (See **FRONT FOG LIGHT AIMING**.)

2014 - Mazda3 - Body and Accessories

RADIATOR GRILLE DISASSEMBLY/ASSEMBLY

1. Disassemble in the order indicated in the table.

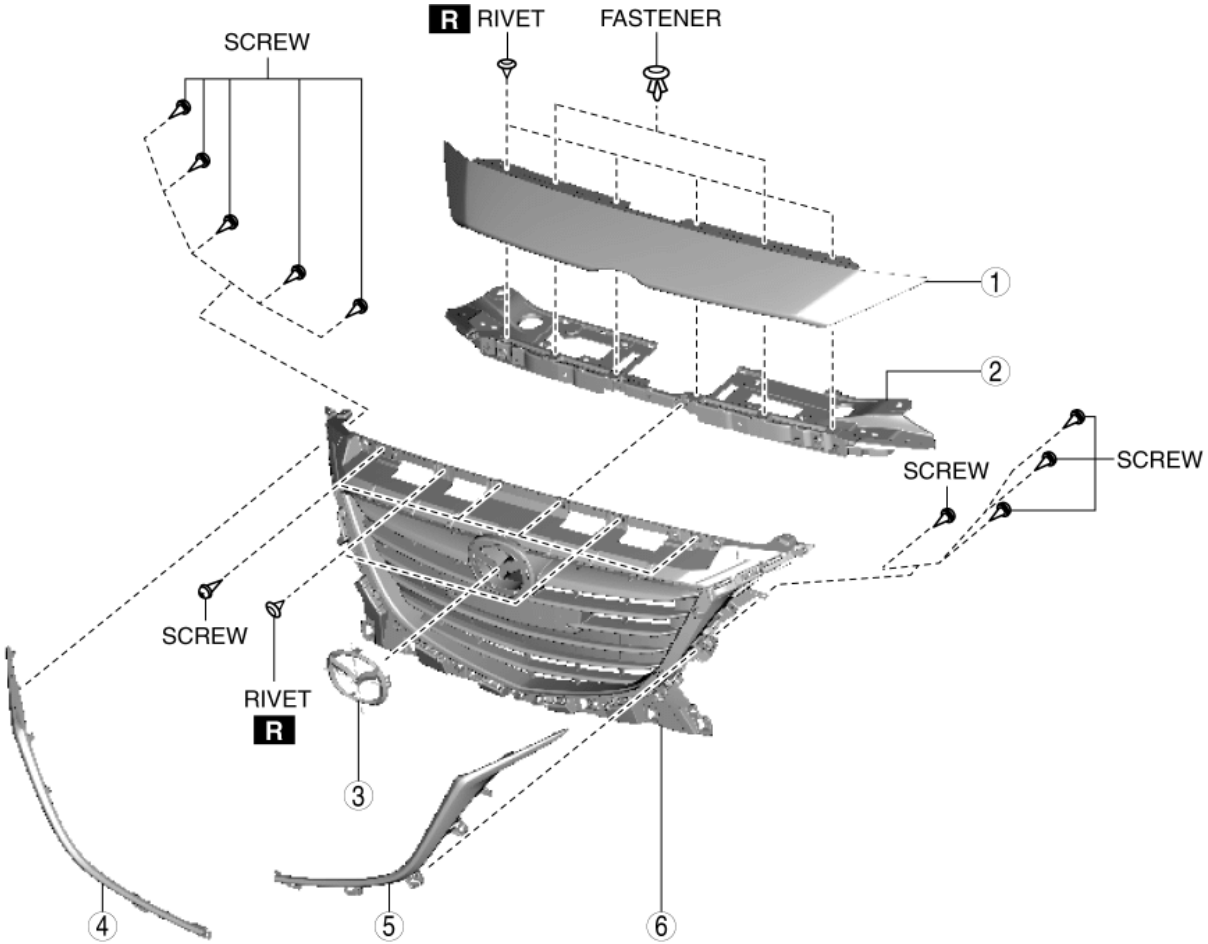

1	Front bumper upper face
2	Grille bracket
3	Ornament

4	Grille lower molding (RH)
5	Grille lower molding (LH)
6	Radiator grille reinforcement

2. Assemble in the reverse order of disassembly.

Rivet Removal Note

CAUTION:

- Use the following drill diameter. If an inappropriate drill diameter is used, the front bumper upper face and the radiator grille reinforcement may be damaged.
  - Drill diameter: **4.5 mm**

1. Secure the rivet pin from the radiator grille reinforcement side using needle-nose pliers.

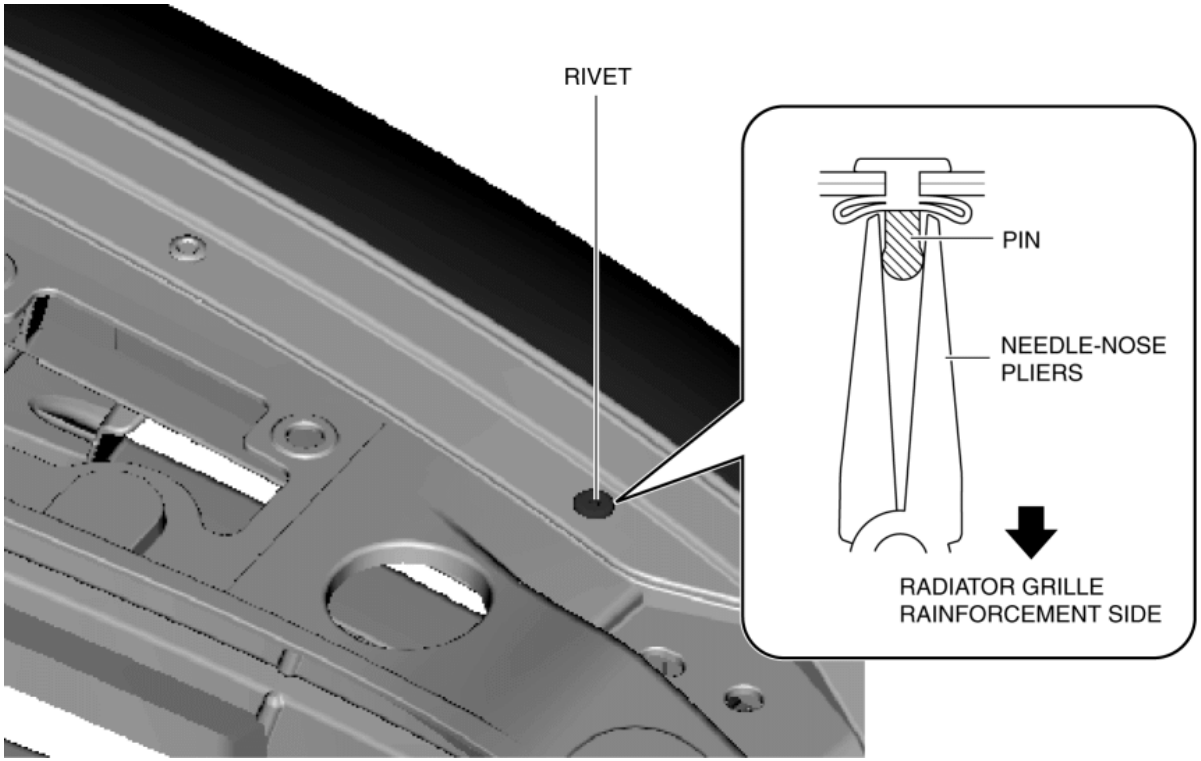

2. Remove the rivet flange using a drill and remove the rivet.

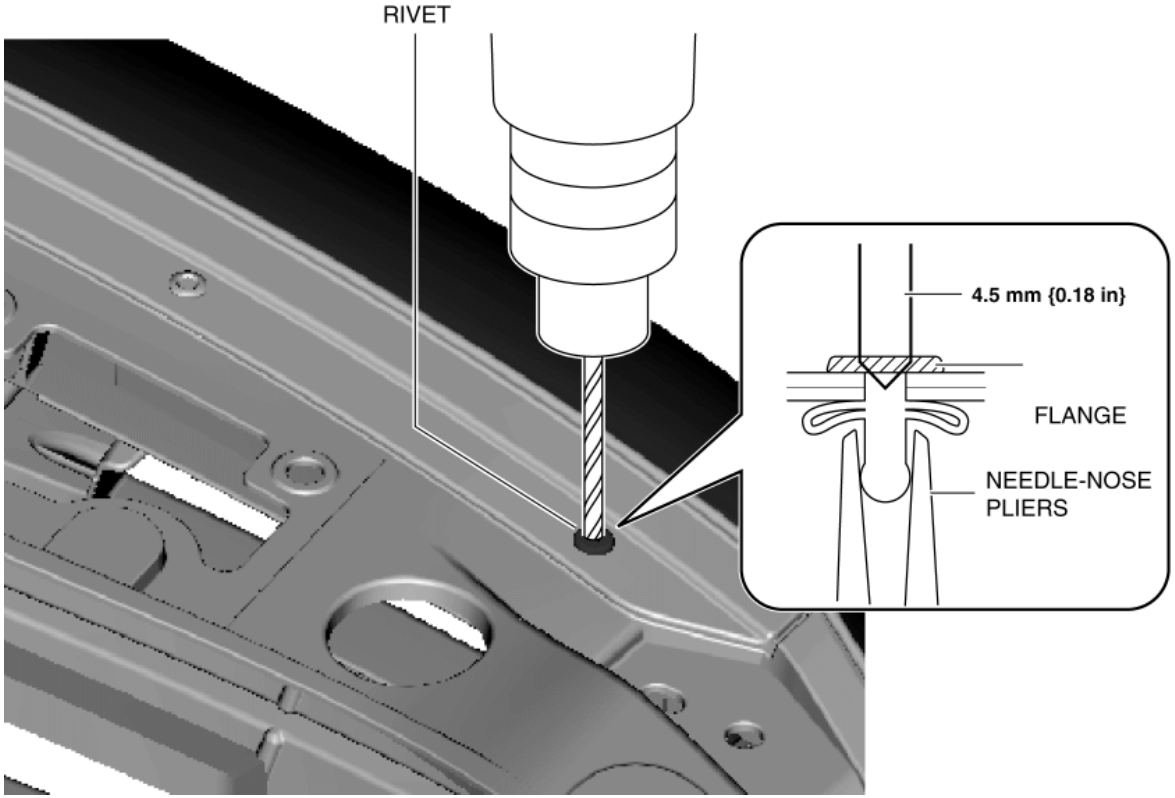

3. Remove any rivet shavings from the front bumper upper face and the radiator grille reinforcement.

2014 - Mazda3 - Body and Accessories

SAIL GARNISH REMOVAL/INSTALLATION

1. Fully open the front door glass.

2. Insert a remover tool, move it in the direction of the arrow shown in the figure, and remove the clip.

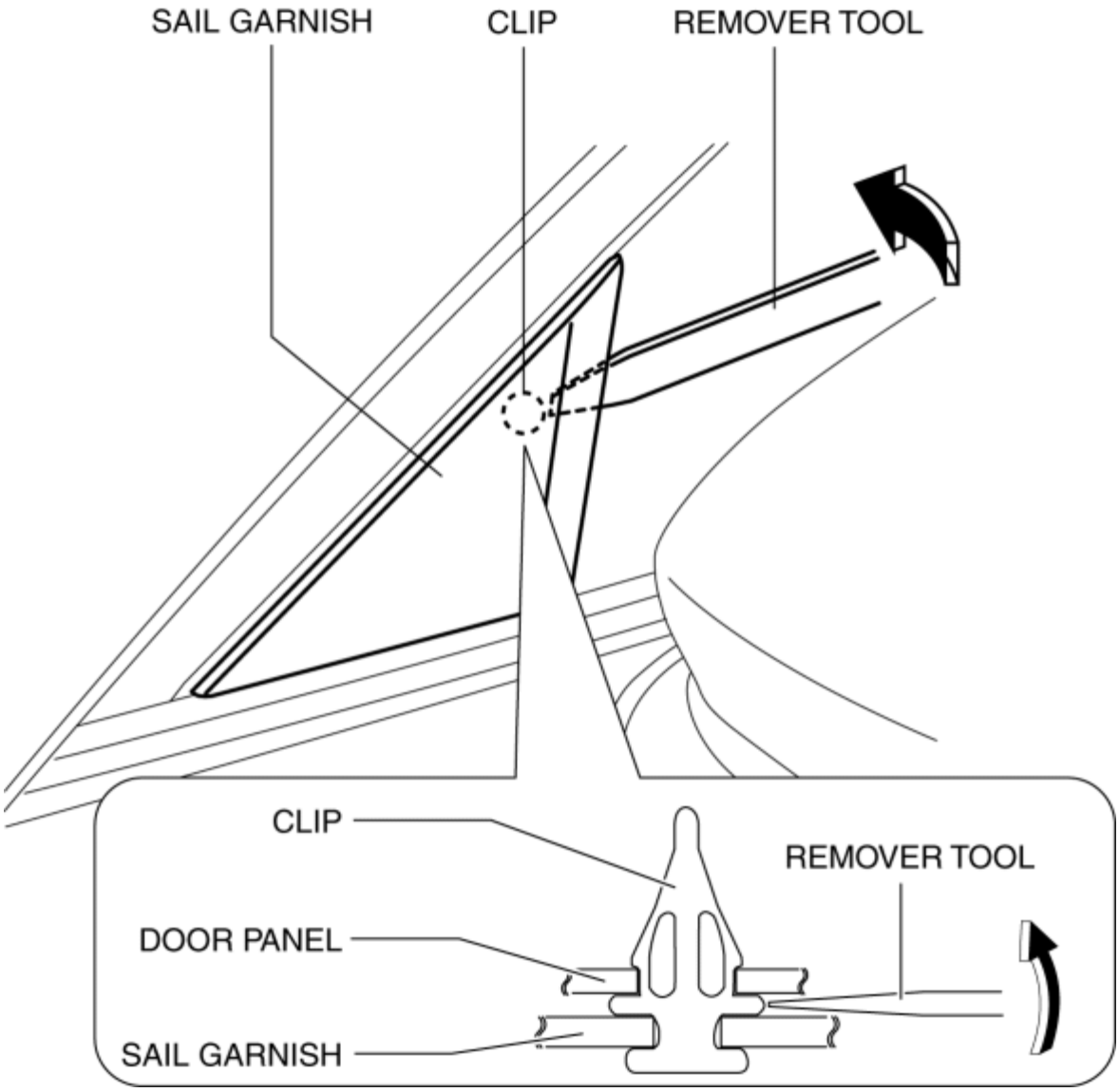

3. Insert a remover tool, move it in the direction of the arrow shown in the figure, remove the clips, and remove the sail garnish.

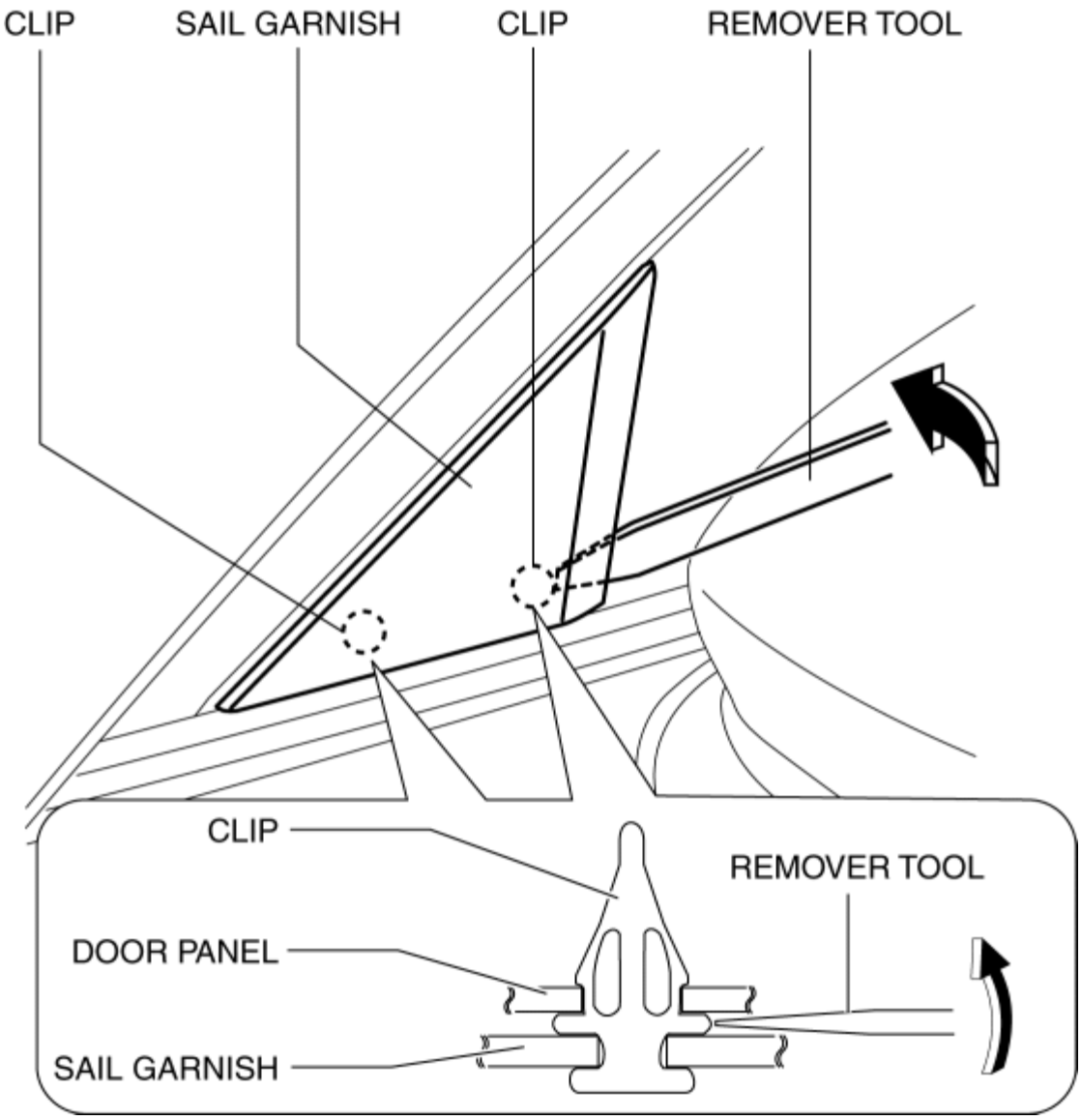

4. Install in the reverse order of removal.

2014 - Mazda3 - Body and Accessories

EXTRACTOR CHAMBER REMOVAL/INSTALLATION

1. Disconnect the negative battery cable. (See **NEGATIVE BATTERY CABLE DISCONNECTION/CONNECTION [SKYACTIV-G 2.0, SKYACTIV-G 2.5]**.)
2. Remove the following parts:
   a. Rear splash shield (See **SPLASH SHIELD REMOVAL/INSTALLATION**.)
   b. Rear combination light (See **REAR COMBINATION LIGHT REMOVAL/INSTALLATION**.)
   c. Rear bumper (See **REAR BUMPER REMOVAL/INSTALLATION**.)
3. Insert a remover tool in the position shown in the figure.

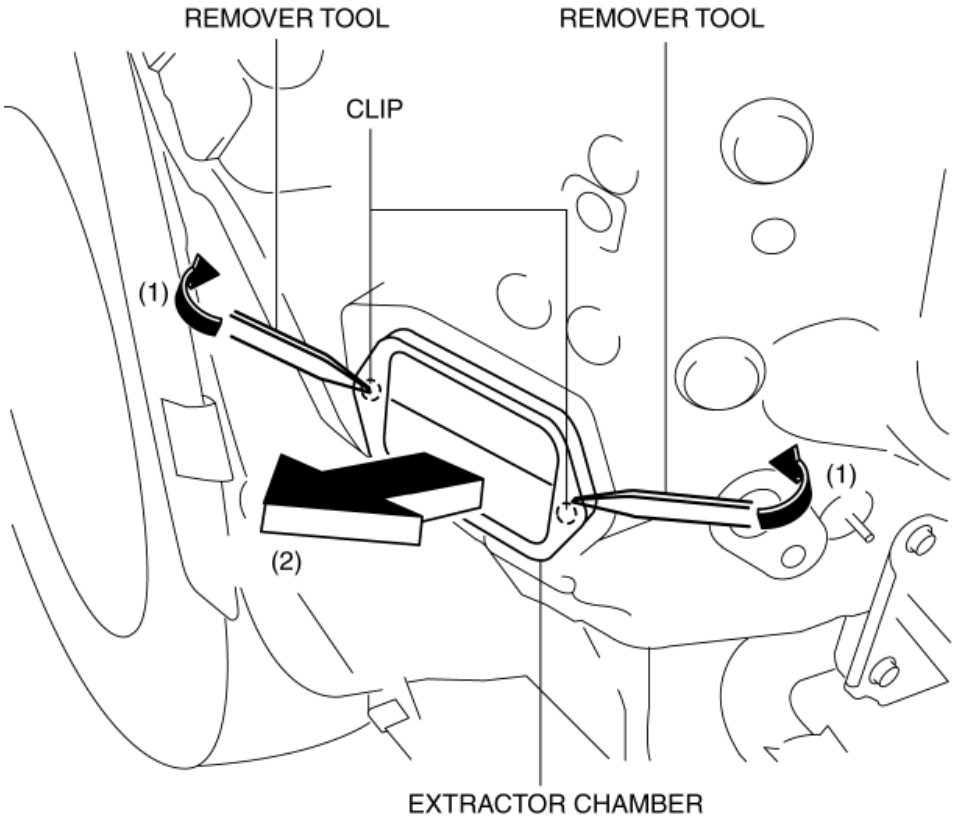

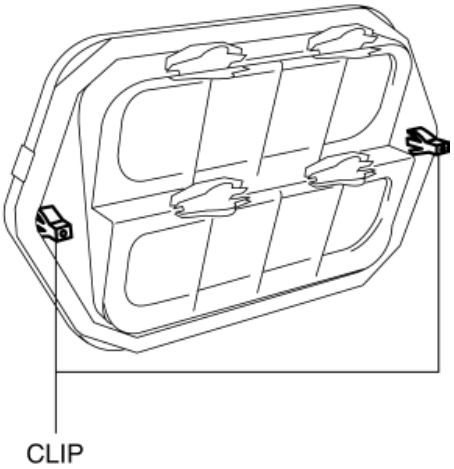

4. Move the remover tool in the direction of arrow (1) shown in the figure and detach the extractor chamber from the body.
5. Remove the extractor chamber in the direction of arrow (2) shown in the figure.
6. Install in the reverse order of removal.

2014 - Mazda3 - Body and Accessories

FRONT BELTLINE MOLDING REMOVAL/INSTALLATION

CAUTION:

- Before servicing, affix protective tape on the front door outer panel when detaching the front beltline molding clips from the front door outer panel. Otherwise, the front door outer panel could interfere with the remover tool and be damaged.

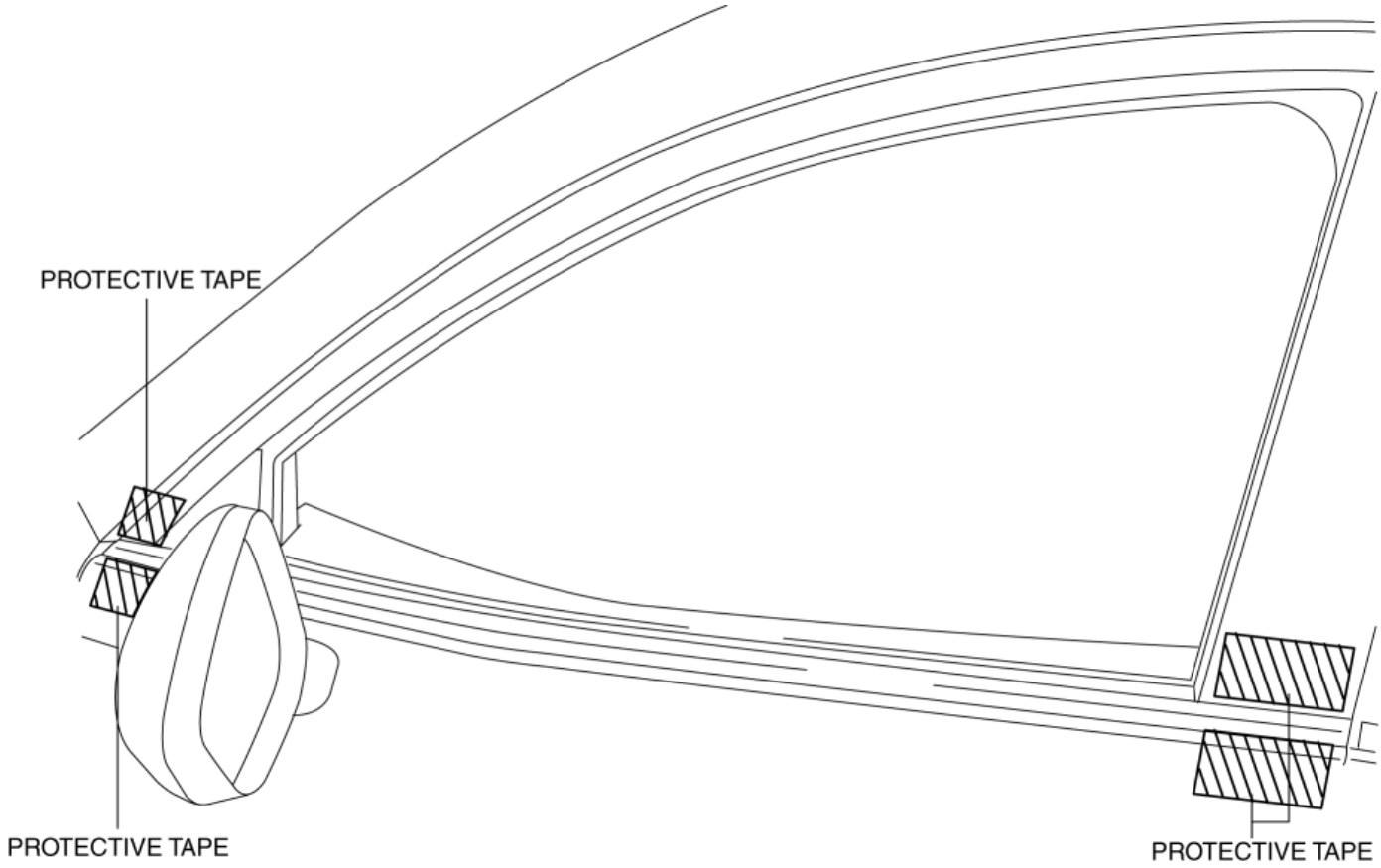

1. Fully open the front door glass.

2. Insert a remover tool into the position shown in the figure, move it in the direction of arrows (1), and detach the front beltline molding clip from the door panel.

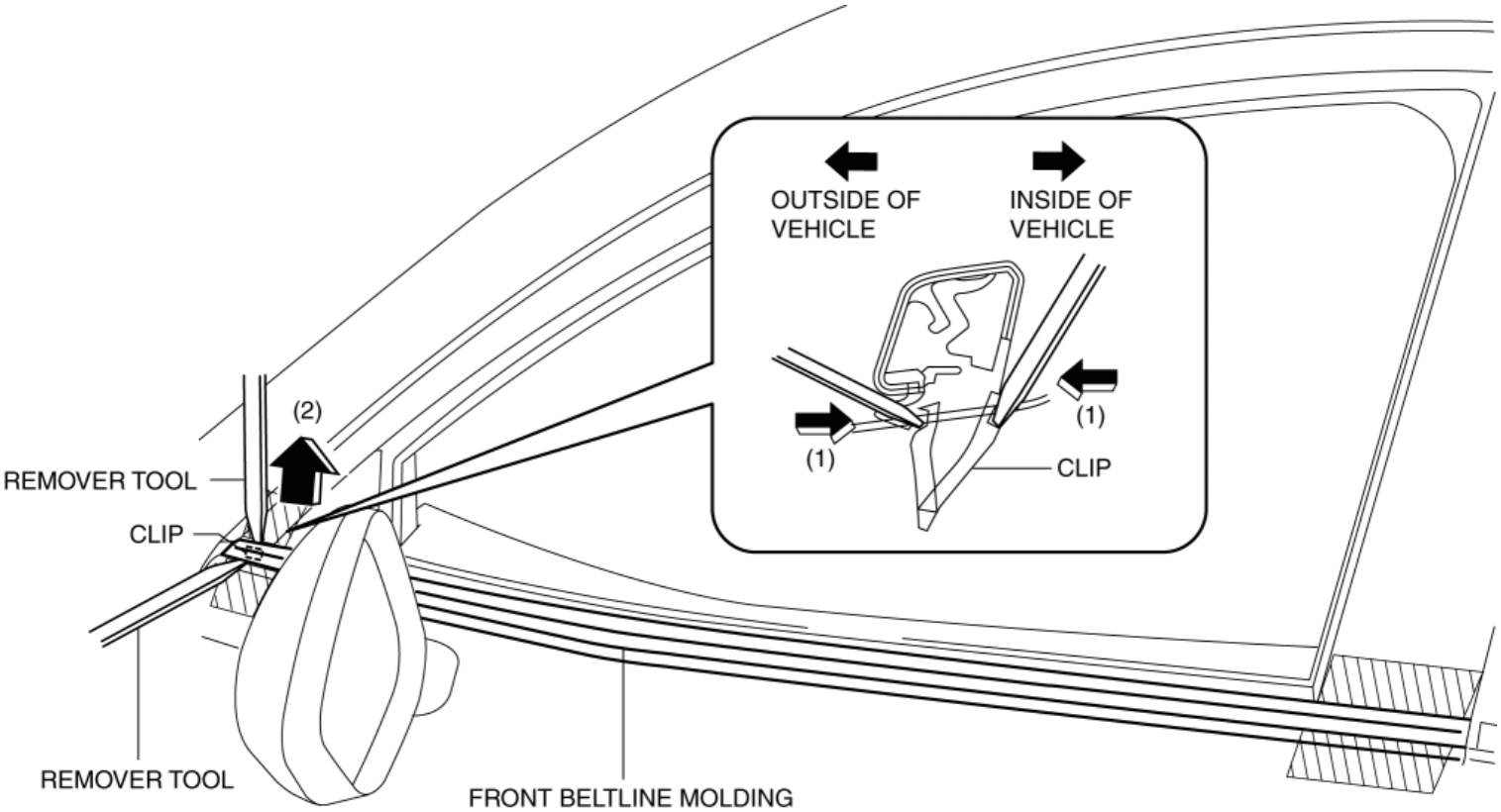

3. Pull the front beltline molding up in the direction of arrow (2).

4. Insert a remover tool into the position shown in the figure, move it in the direction of arrows (1), and detach the front beltline molding clip from the door panel.

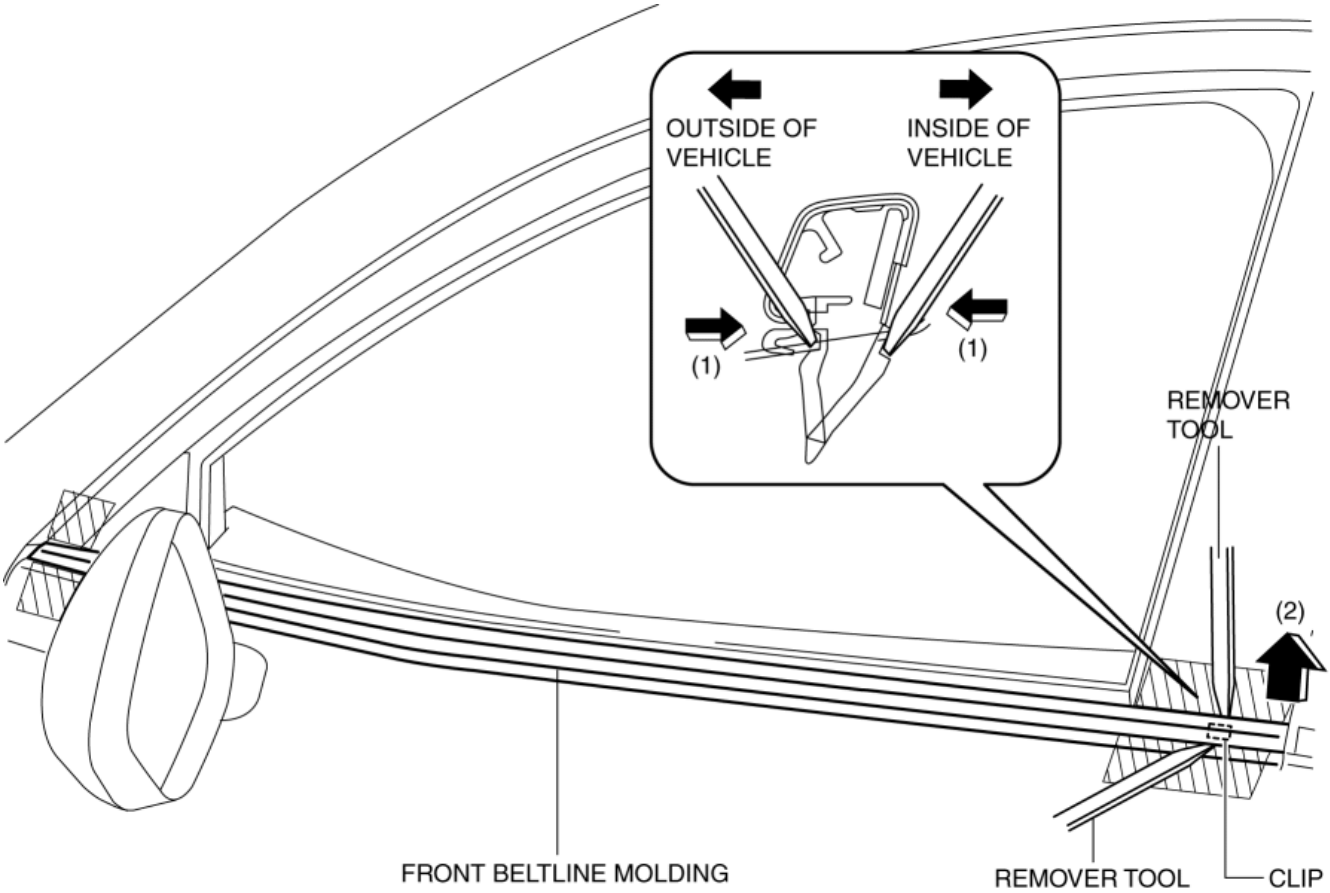

5. Pull the front beltline molding up in the direction of arrow (2).

6. Rotate the front beltline molding in the direction of the arrow shown in the figure and remove it while detaching the front beltline

molding tabs from the door panel.

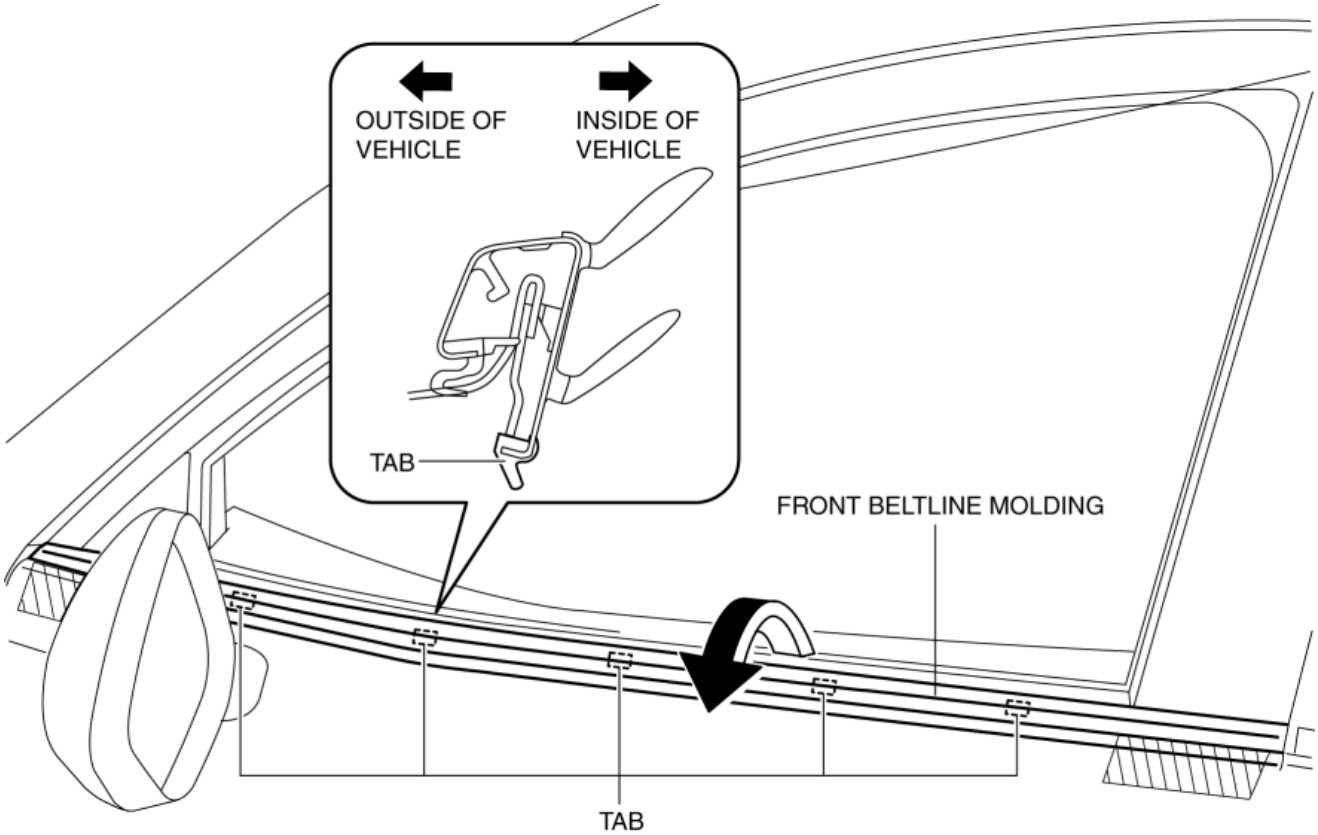

7. Install in the reverse order of removal.

2014 - Mazda3 - Body and Accessories

REAR BELTLINE MOLDING REMOVAL/INSTALLATION

Black molding type

CAUTION:

- Before servicing, affix protective tape on the rear door outer panel when detaching the rear beltline molding clips from the rear door outer panel. Otherwise, the rear door outer panel could interfere with the remover tool and be damaged.

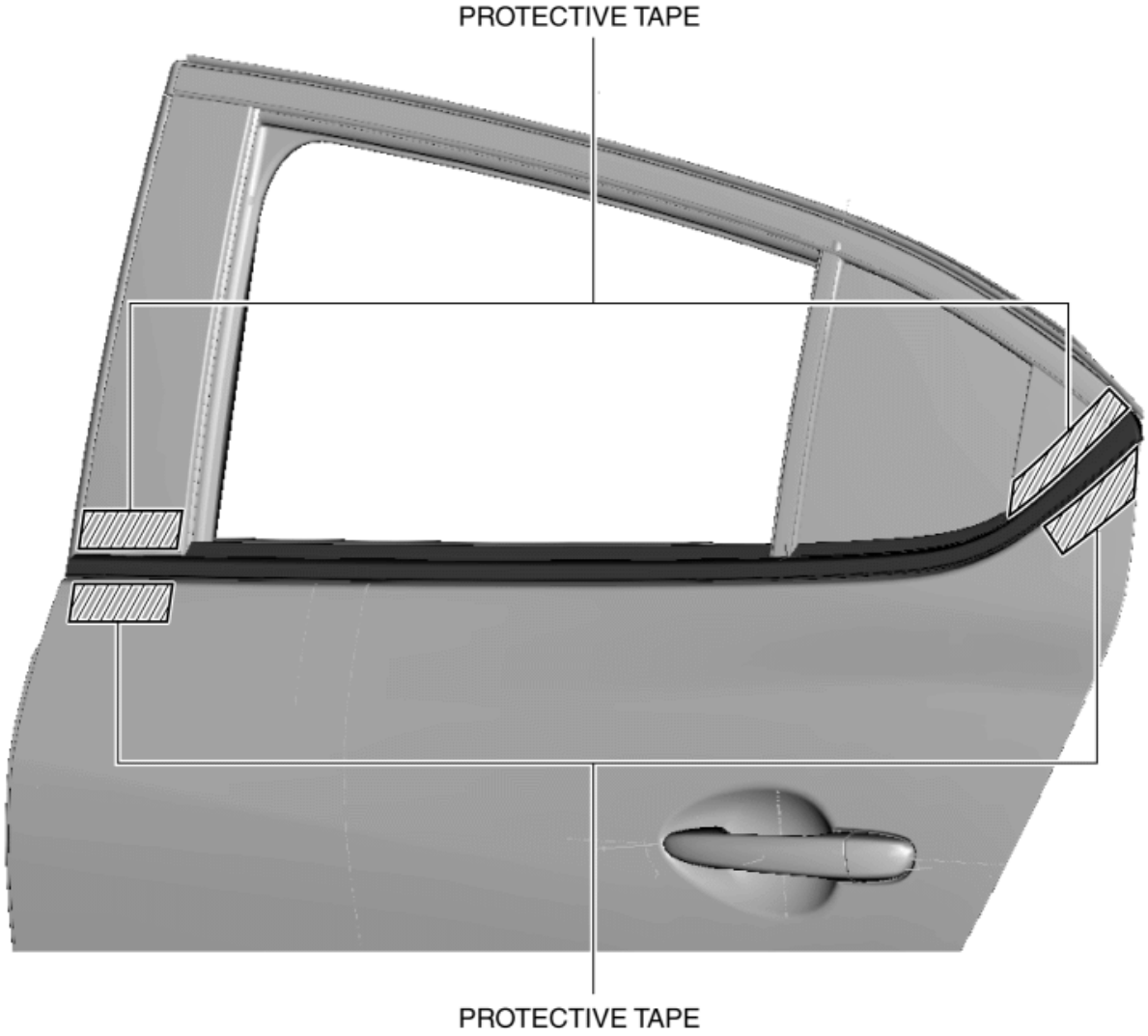

1. Fully open the rear door glass.

2. Insert a remover tool into the position shown in the figure, move it in the direction of arrows (1), detach the rear beltline molding clip from the door panel.

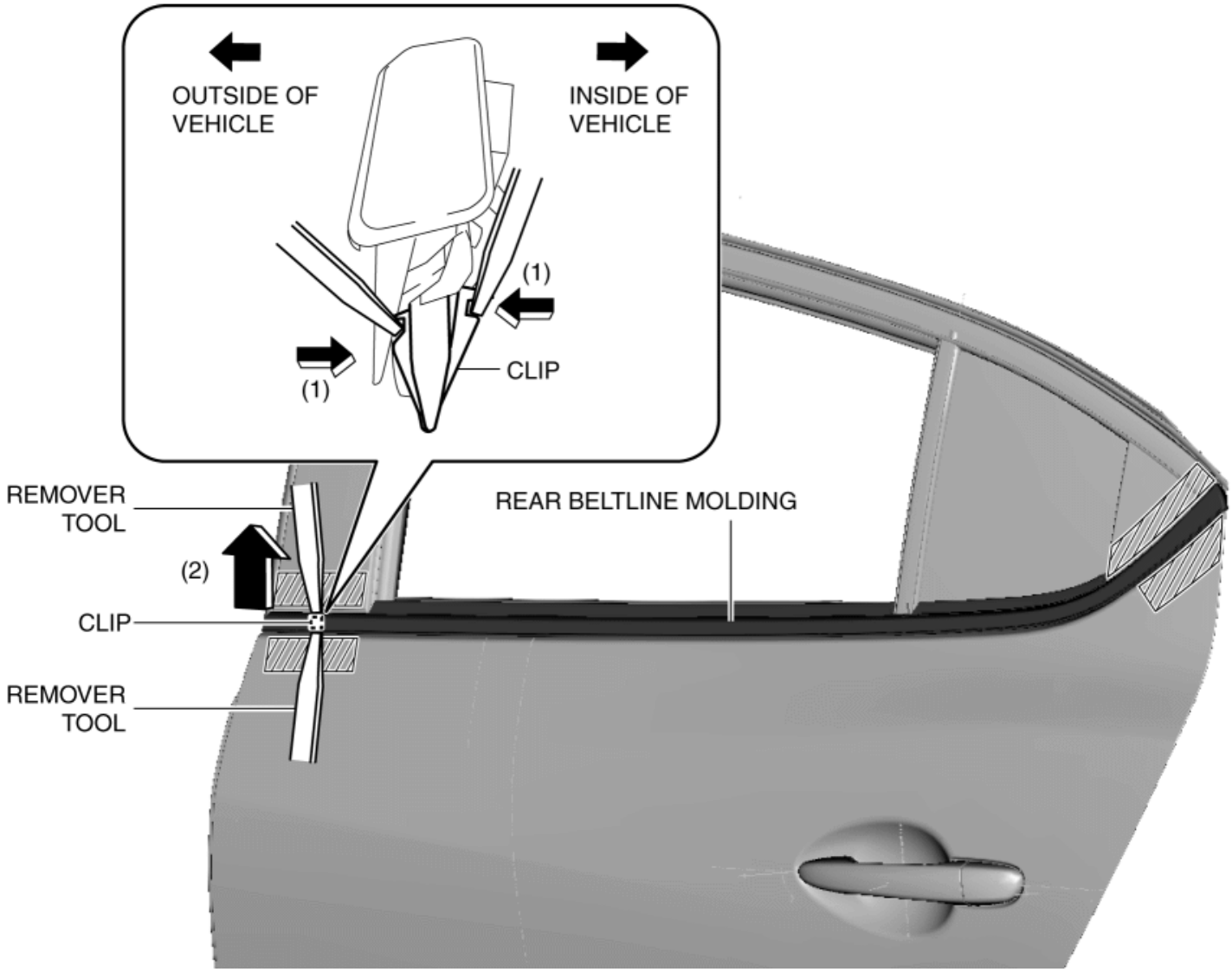

3. Pull the rear beltline molding up in the direction of arrow (2).

4. Insert a remover tool into the position shown in the figure, move it in the direction of arrows (1), and detach the rear beltline molding clip from the door panel.

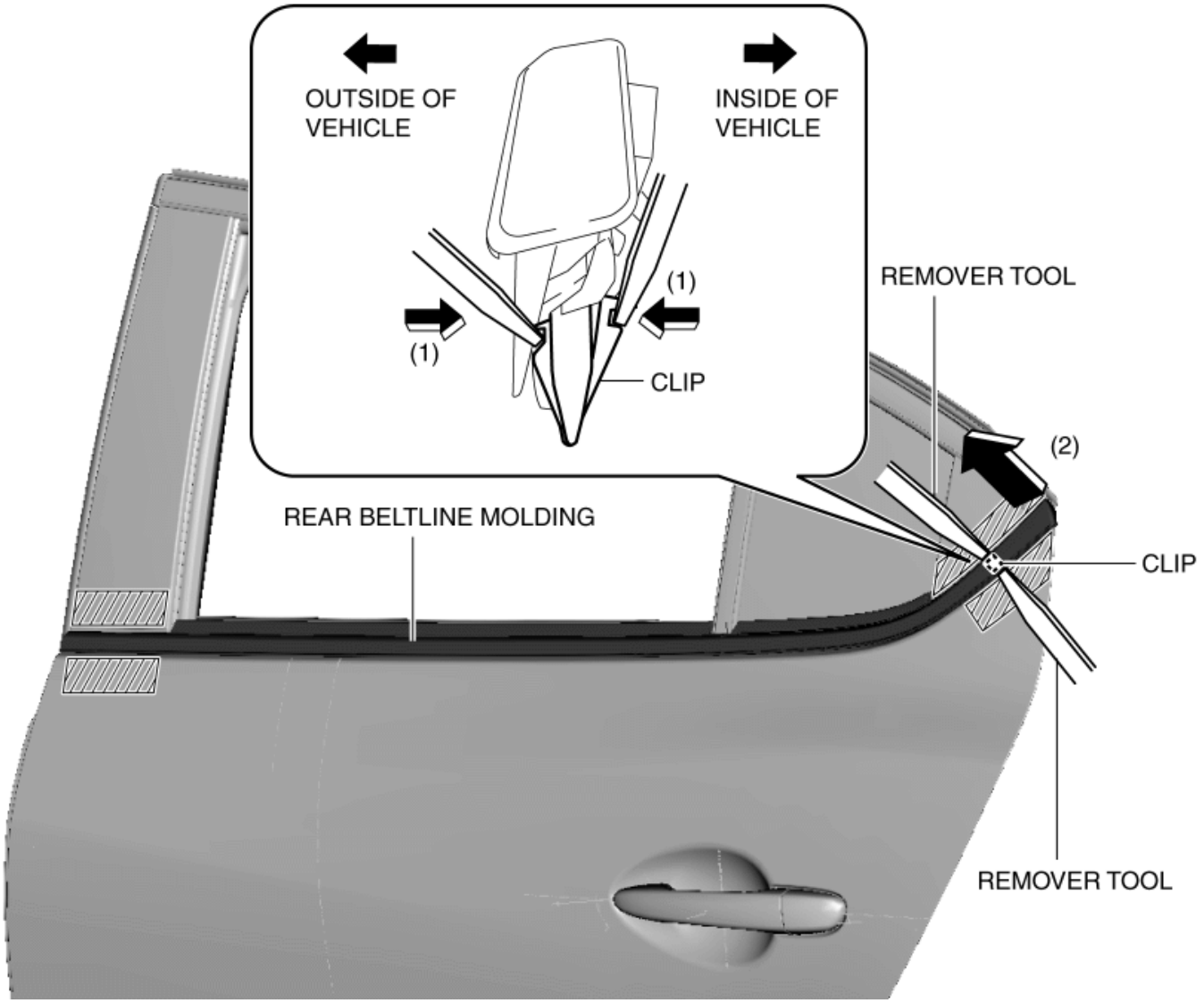

5. Pull the rear beltline molding up in the direction of arrow (2).

6. Rotate the rear beltline molding in the direction of the arrow shown in the figure remove it while detaching the rear beltline molding tabs from the door panel.

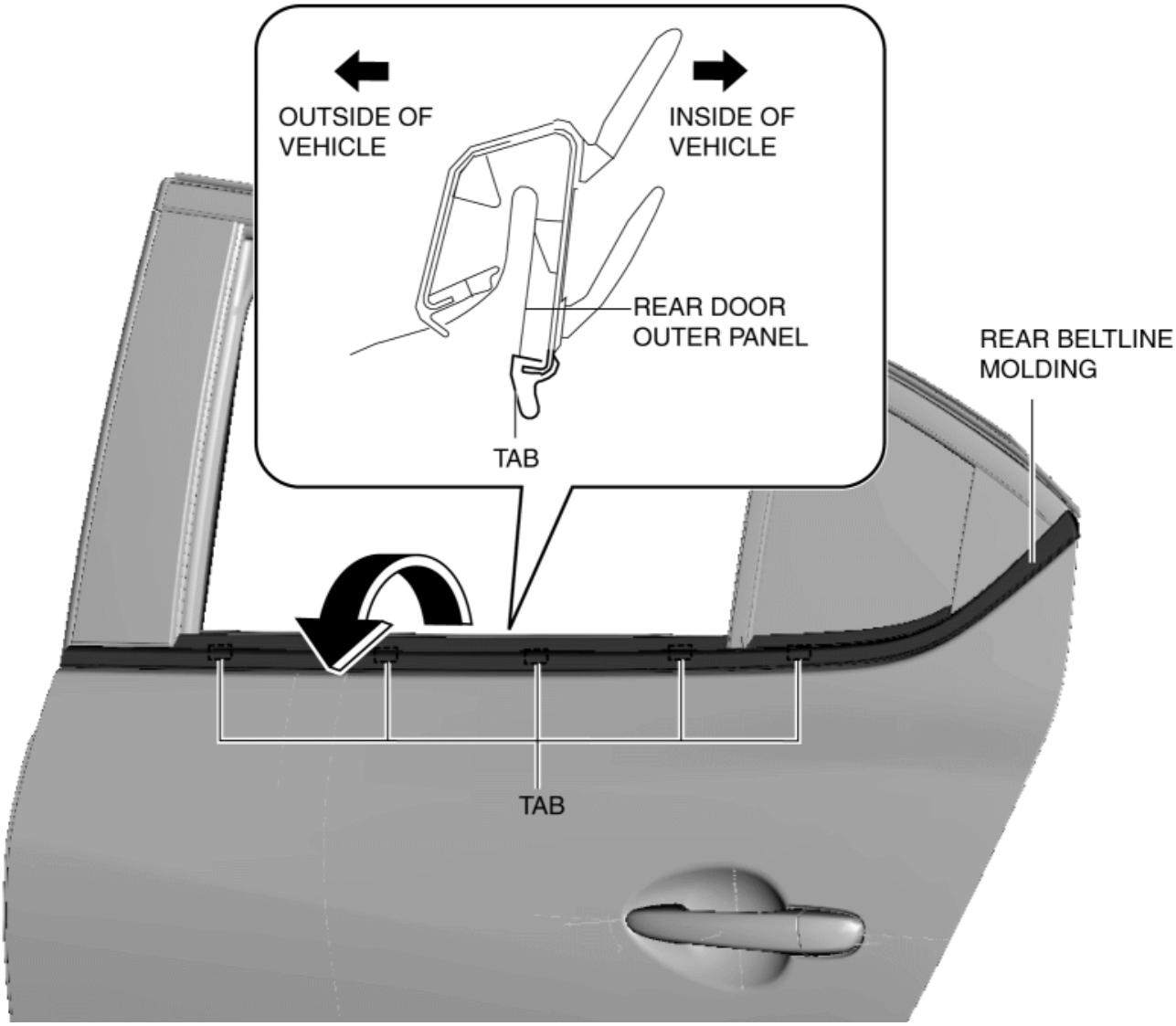

7. Install in the reverse order of removal.

Bright molding type

CAUTION:

- Before servicing, affix protective tape on the rear door outer panel when detaching the rear beltline molding clips from the rear door outer panel. Otherwise, the rear door outer panel could interfere with the remover tool and be damaged.

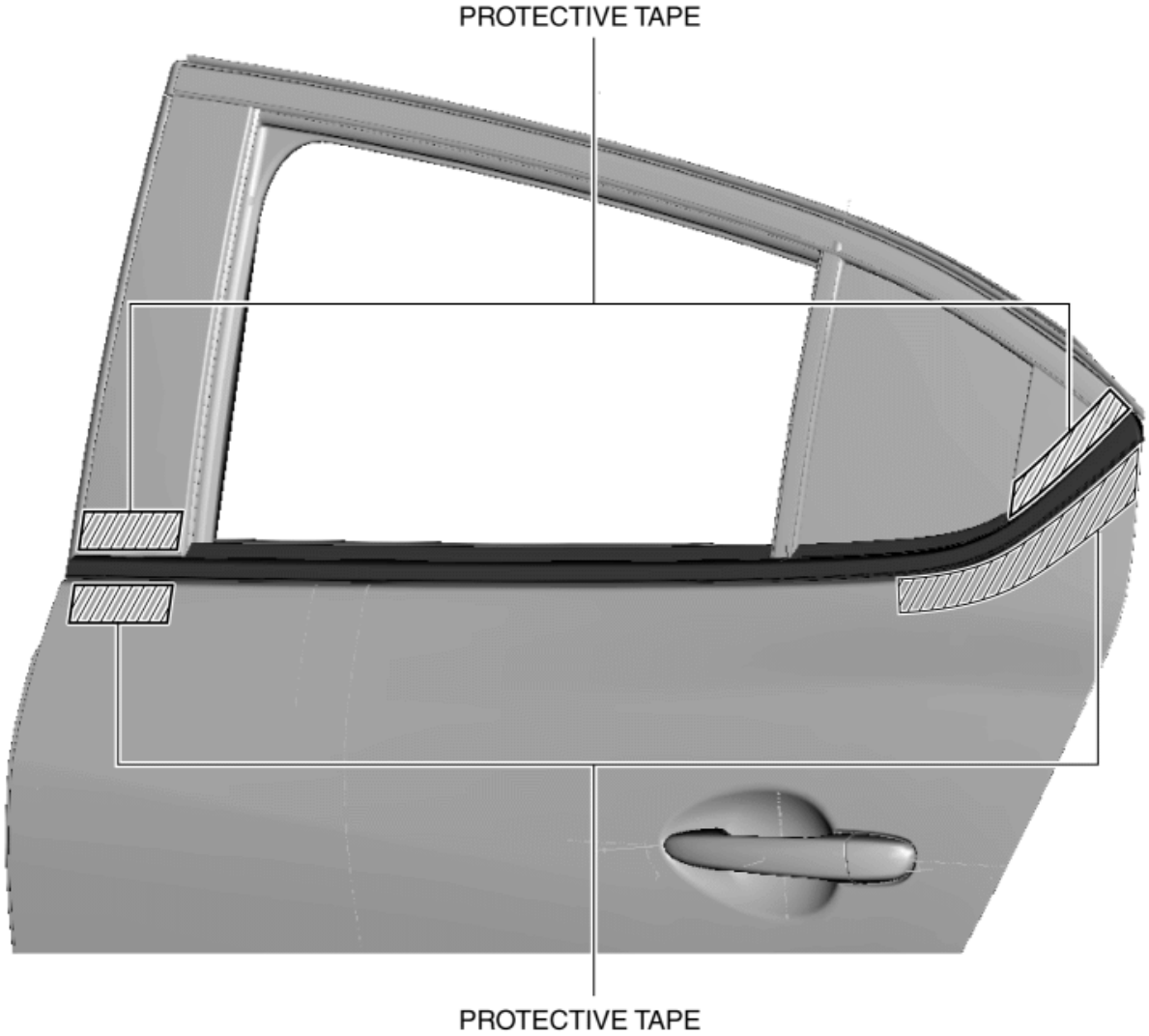

1. Fully open the rear door glass.

2. Insert a remover tool into the position shown in the figure, move it in the direction of arrows (1), detach the rear beltline molding clip from the door panel.

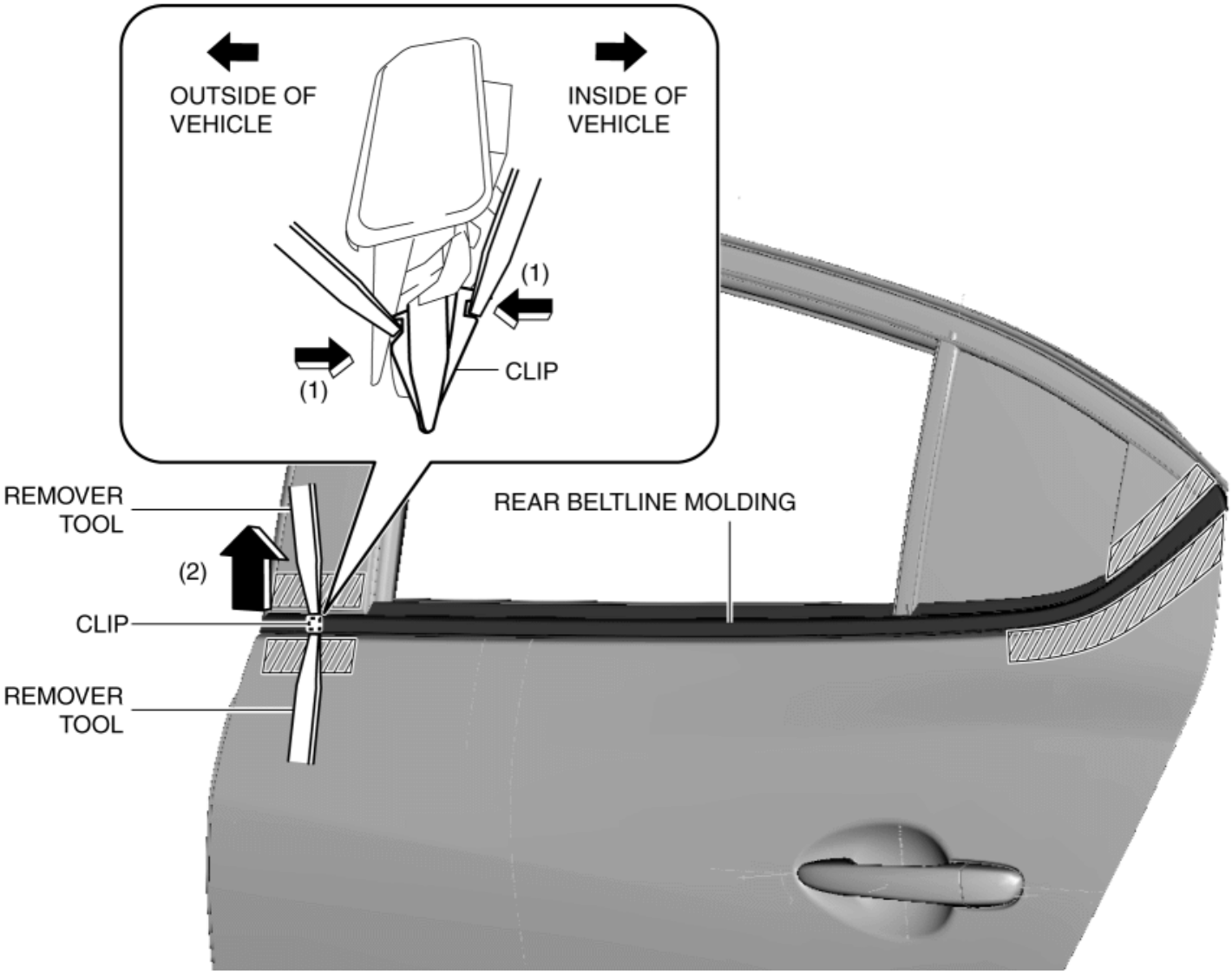

3. Pull the rear beltline molding up in the direction of arrow (2).

4. Insert a remover tool into the position shown in the figure, move it in the direction of arrows (1), and detach the rear beltline molding clip from the door panel.

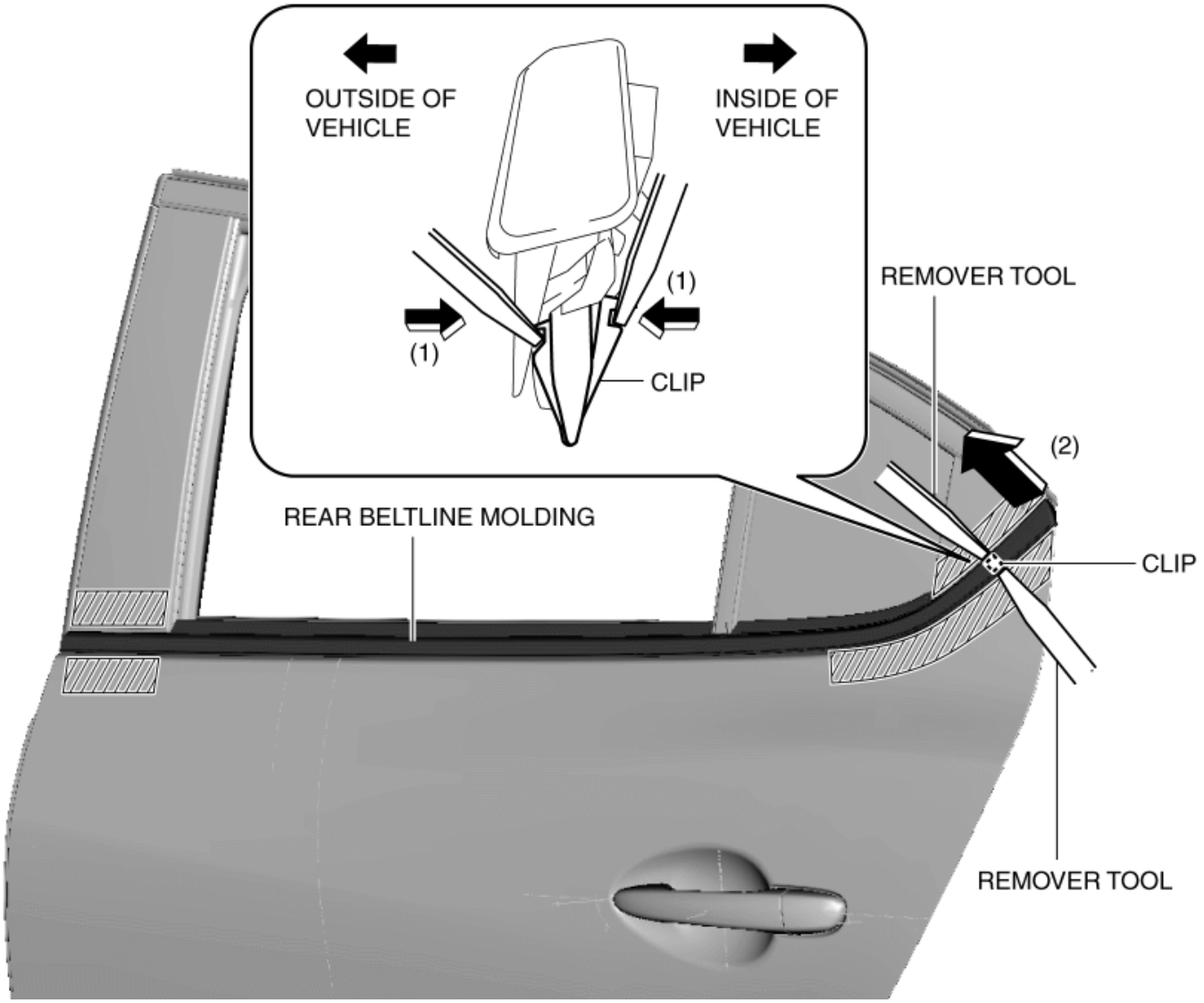

5. Pull the rear beltline molding up in the direction of arrow (2).

6. Insert a remover tool into the position shown in the figure, move it in the direction of arrows (1), and move the rear beltline molding in the direction of arrows (2), and detach the rear beltline molding clip from the door panel.

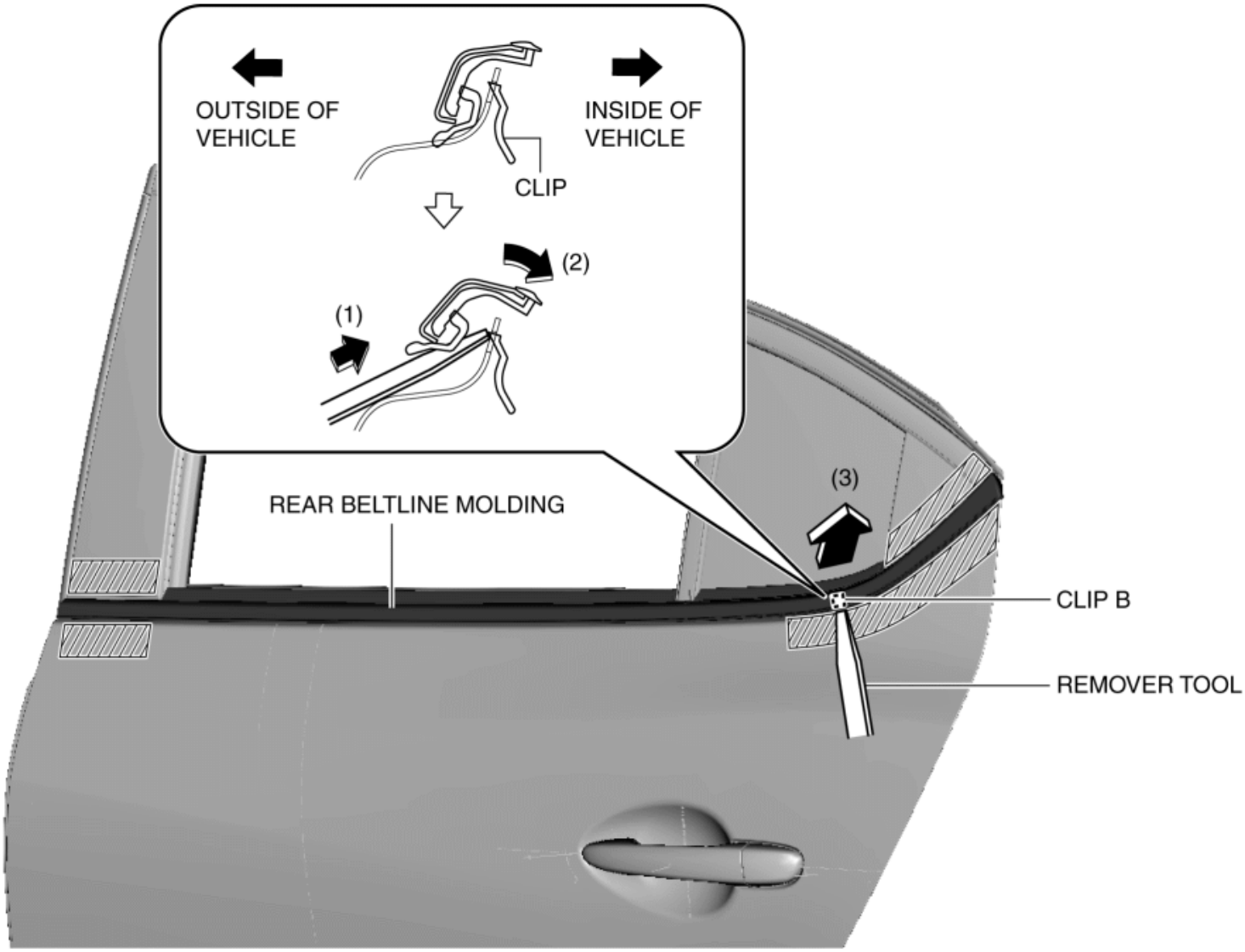

7. Pull the rear beltline molding up in the direction of arrow (3).

8. Rotate the rear beltline molding in the direction of the arrow shown in the figure remove it while detaching the rear beltline molding tabs from the door panel.

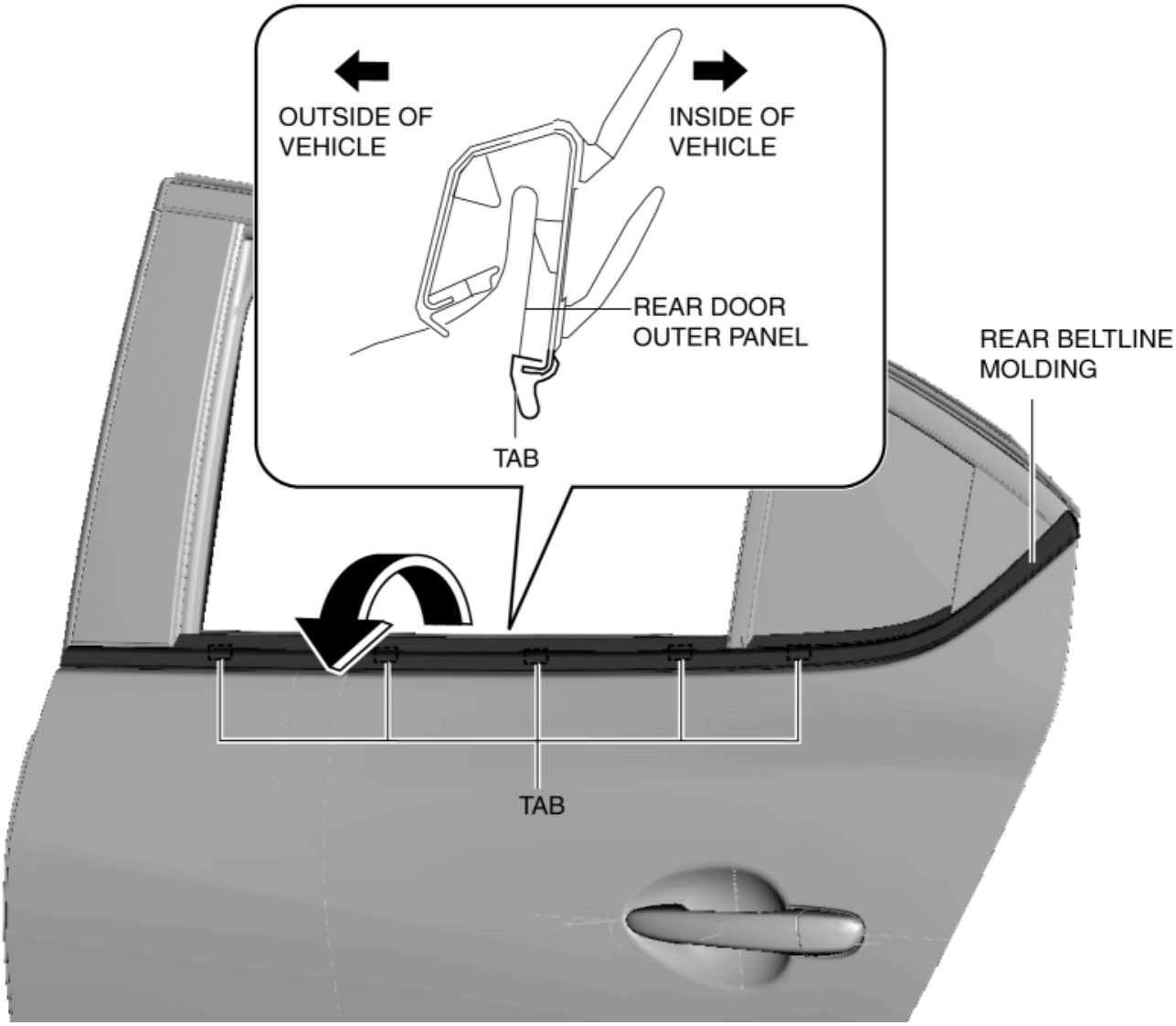

9. Install in the reverse order of removal.

2014 - Mazda3 - Body and Accessories

ROOF MOLDING REMOVAL

1. Insert a remover tool into the position shown in the figure.

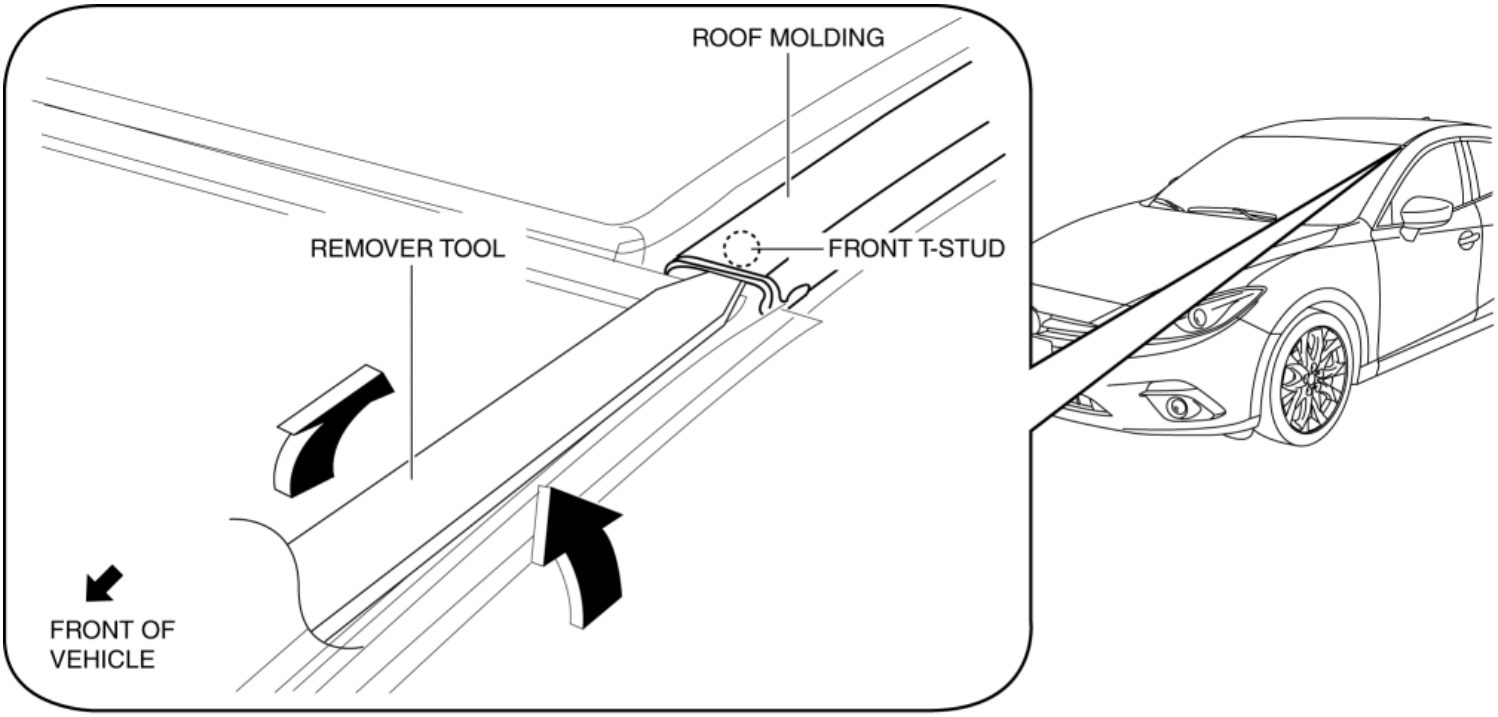

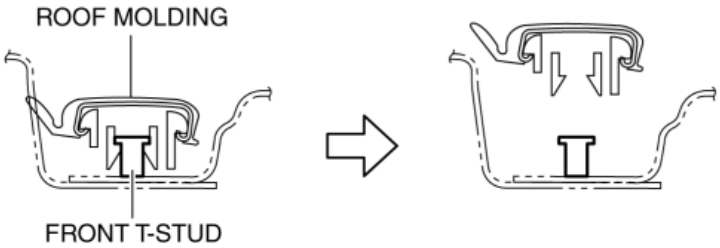

2. Move the remover tool in the direction of the arrows shown in the figure and detach the front T-stud from the roof molding.

3. Rotate the roof molding in the direction of arrows shown in the figure and remove it starting from the clips at the front of the vehicle.

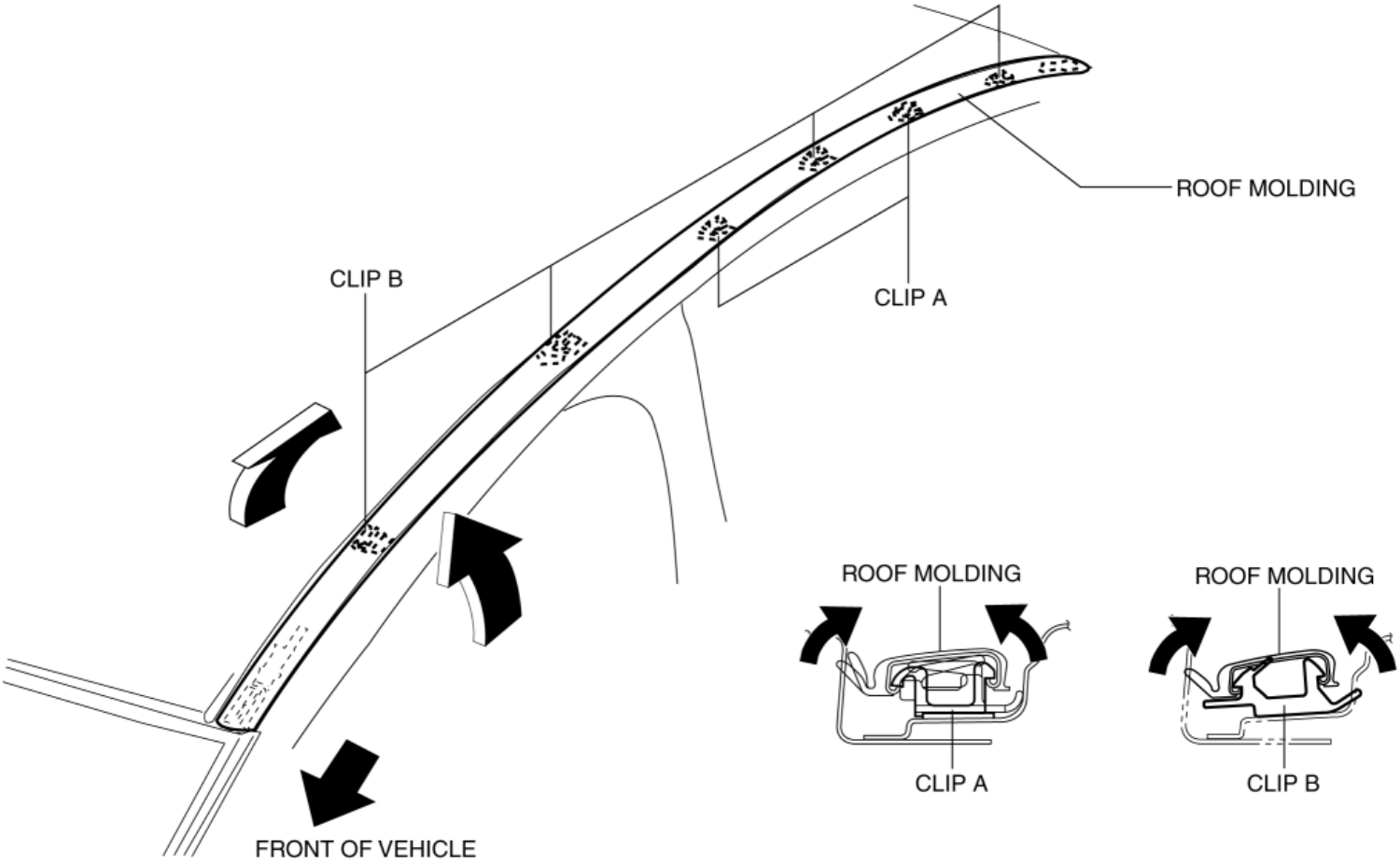

4. Insert a remover tool in the position shown in the figure.

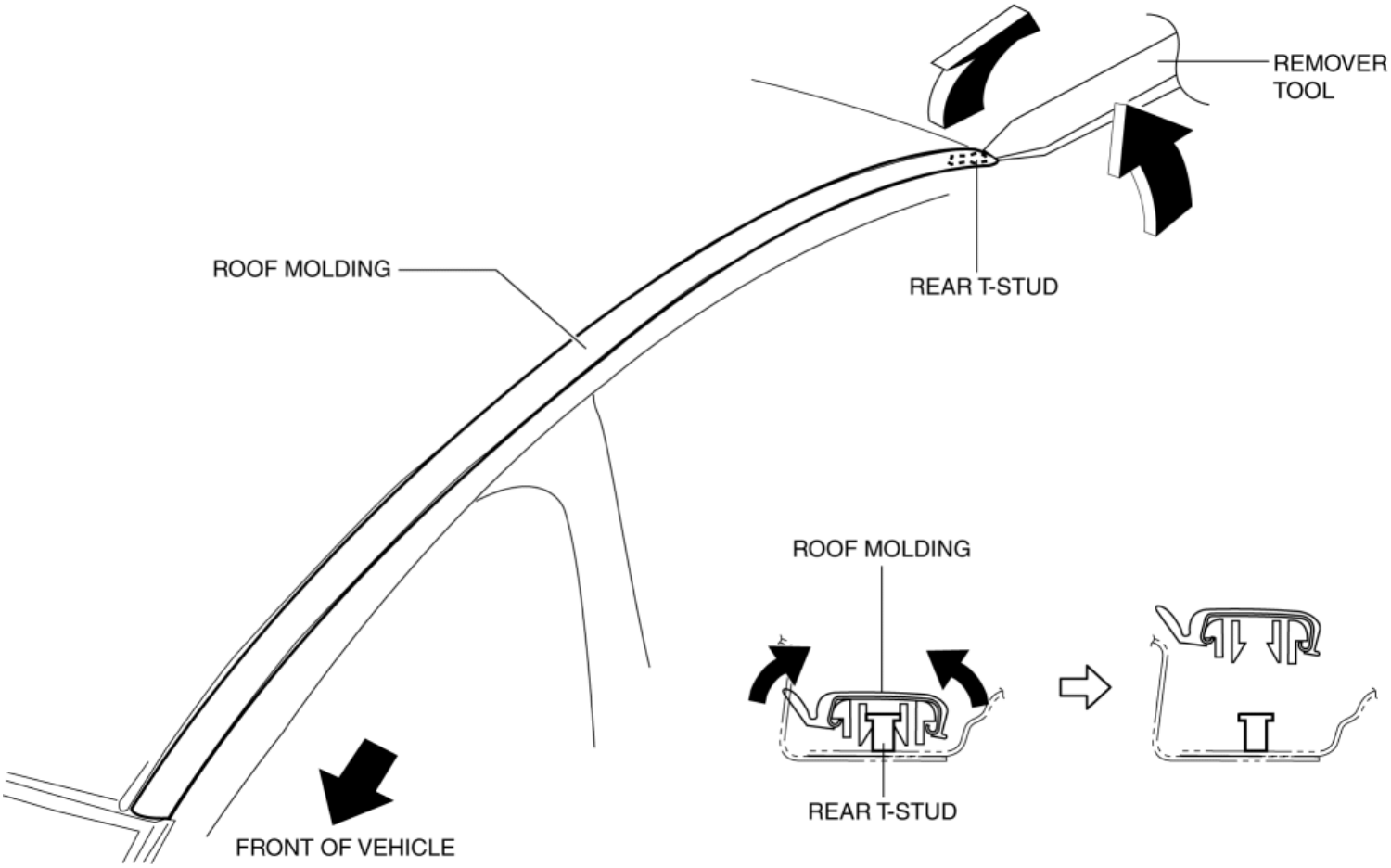

5. Move the remover tool in the direction of the arrows shown in the figure, detach the rear T-stud from the roof molding, and remove the roof molding.

2014 - Mazda3 - Body and Accessories

ROOF MOLDING INSTALLATION

1. Press the roof molding in the direction of arrow (1) shown in the figure and install it to the front T-stud.

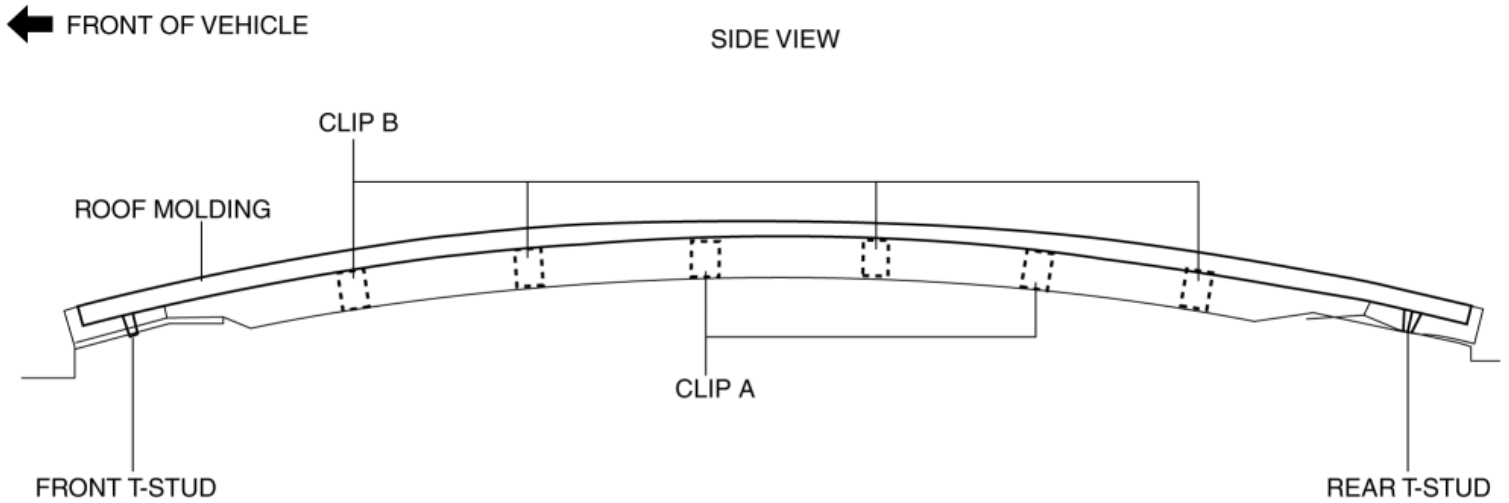

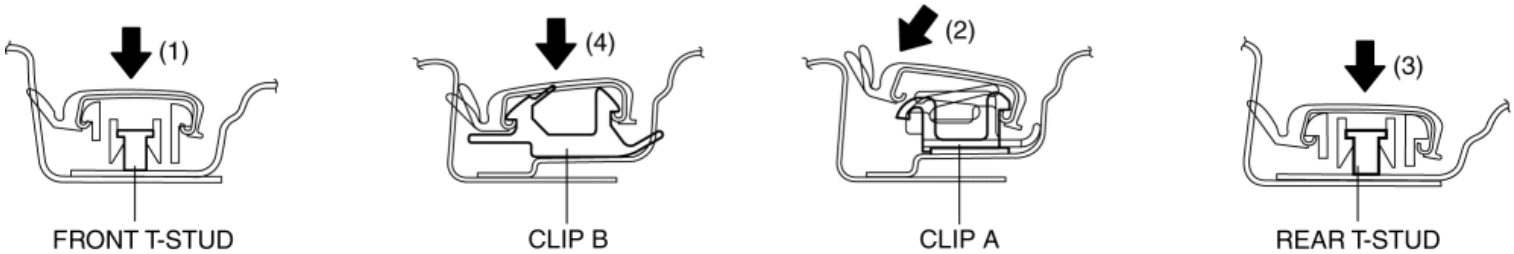

2. Hook the roof molding to clips A and install it while pressing it in the direction of arrow (2) shown in the figure.
3. Press the roof molding in the direction of arrow (3) shown in the figure and install it to the rear T-stud.
4. Press the roof molding in the direction of arrow (4) shown in the figure and install it to the clips B.

2014 - Mazda3 - Body and Accessories

MUDGUARD REMOVAL/INSTALLATION

Front Mudguard

1. Slightly bend back the front under cover No.1. (See **FRONT UNDER COVER No.1 REMOVAL/INSTALLATION**.)
2. Remove the front splash shield No.2. (See **SPLASH SHIELD REMOVAL/INSTALLATION**.)
3. Remove the screws and fasteners shown in the figure.

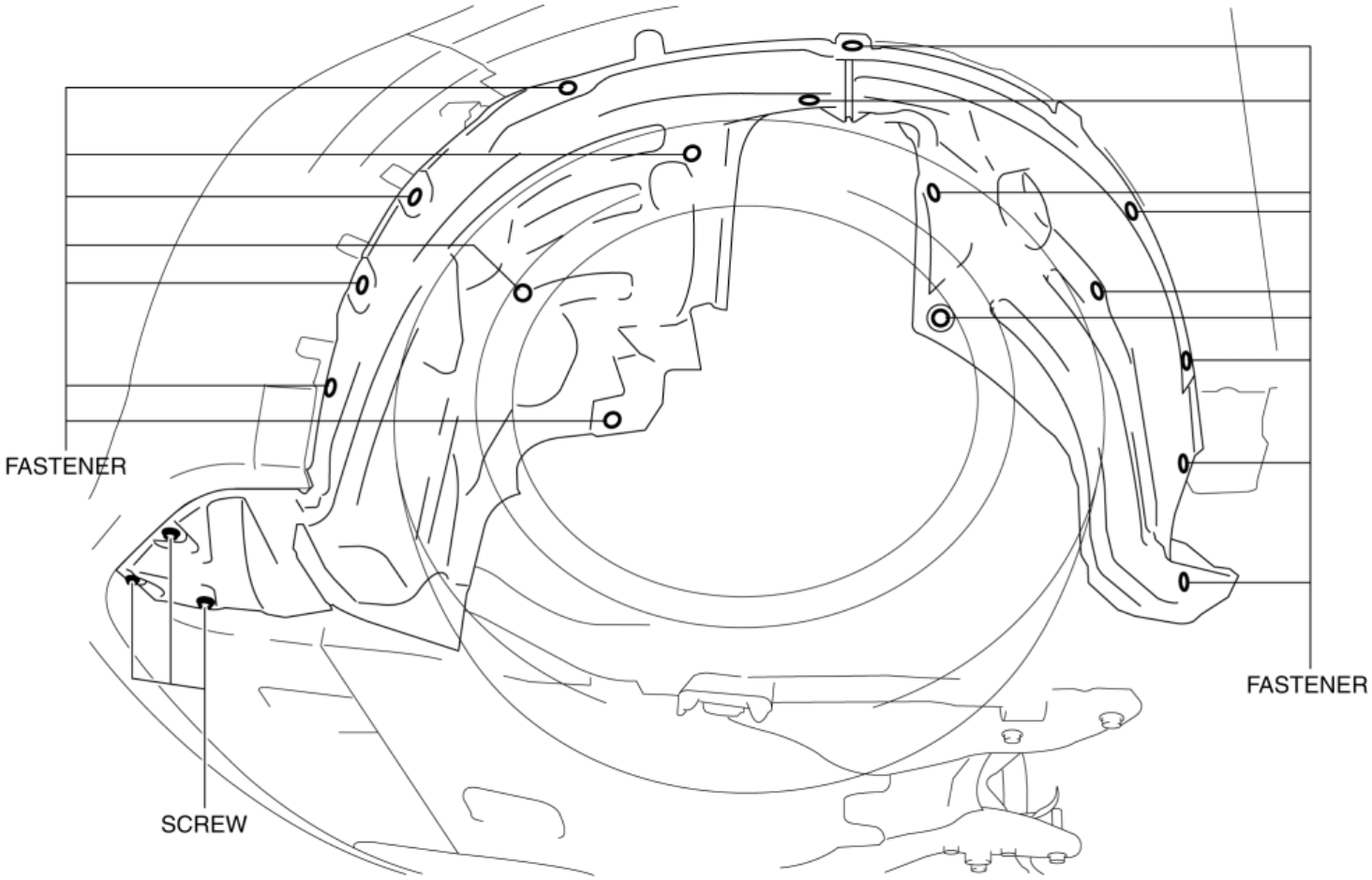

4. Pull the front mudguard in the direction of the arrow shown in the figure.

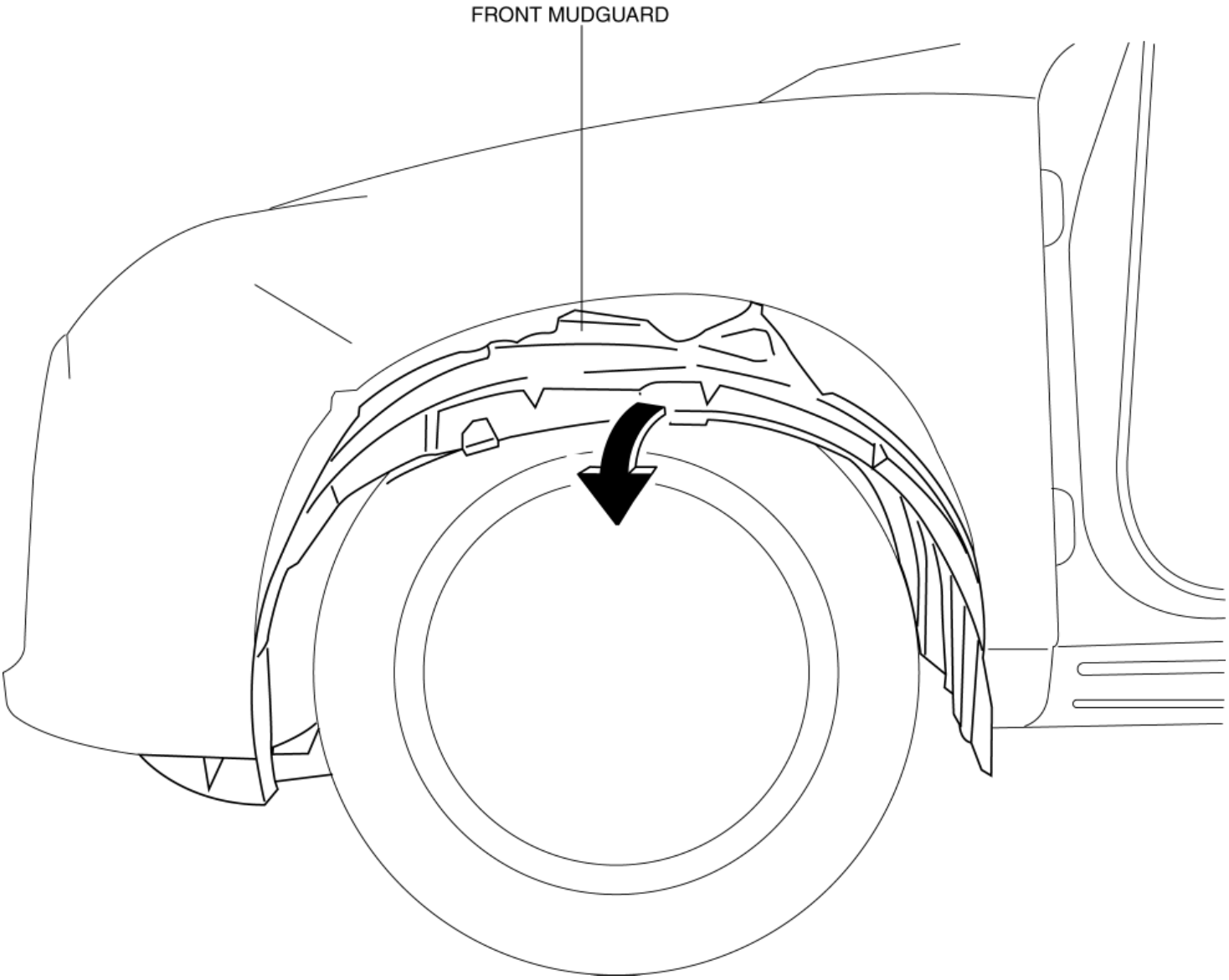

5. Install in the reverse order of removal.

Rear Mudguard

1. Remove the cap nuts and fastener shown in the figure.

LH

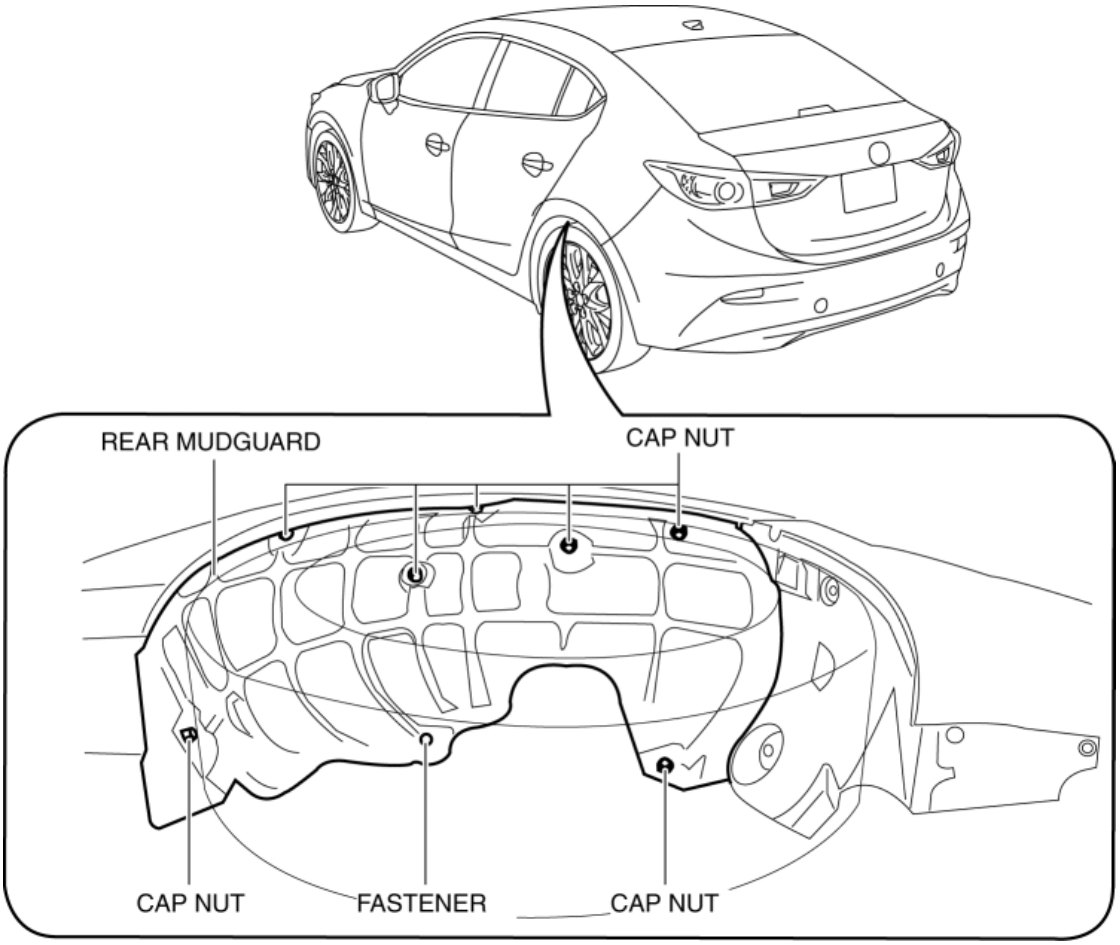
REAR MUDGUARD
CAP NUT
CAP NUT
FASTENER
CAP NUT

RH

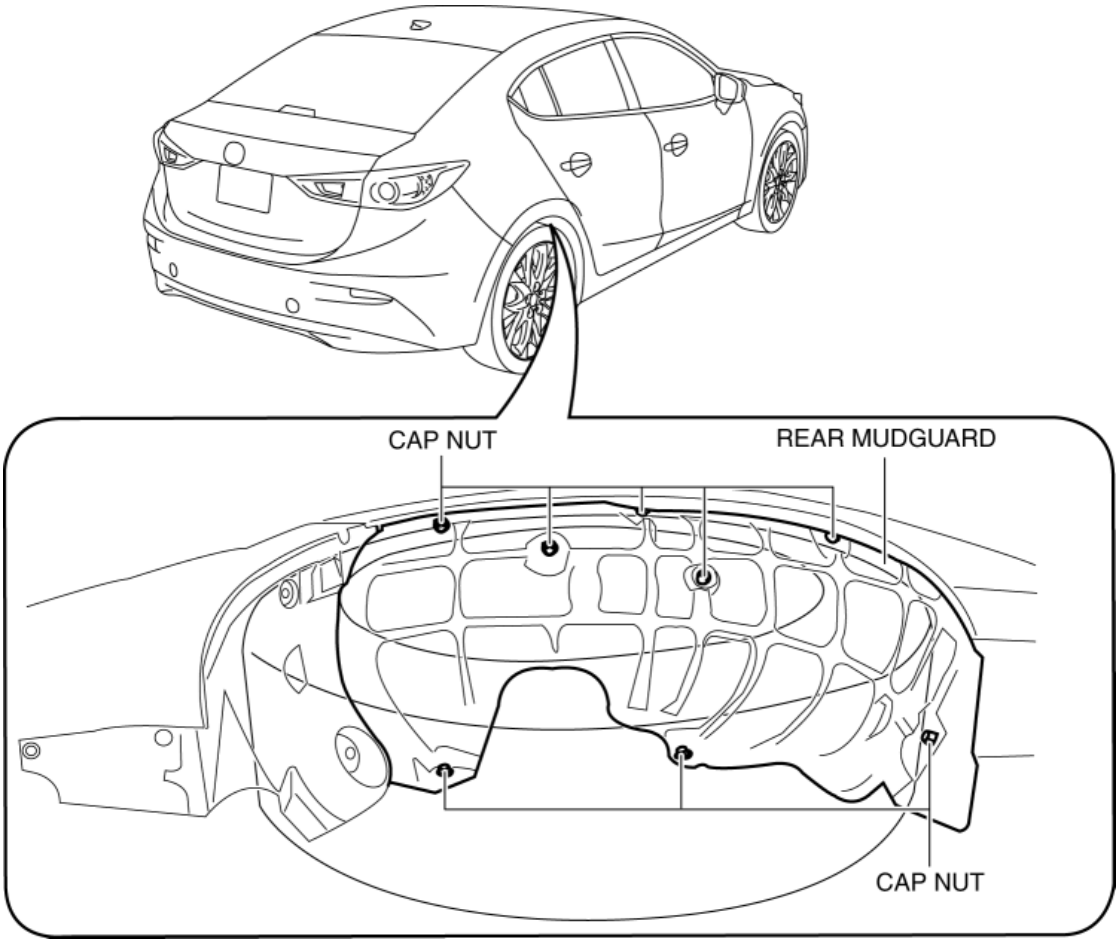
CAP NUT
REAR MUDGUARD
CAP NUT

2. Pull the rear mudguard in the direction of the arrow shown in the figure.

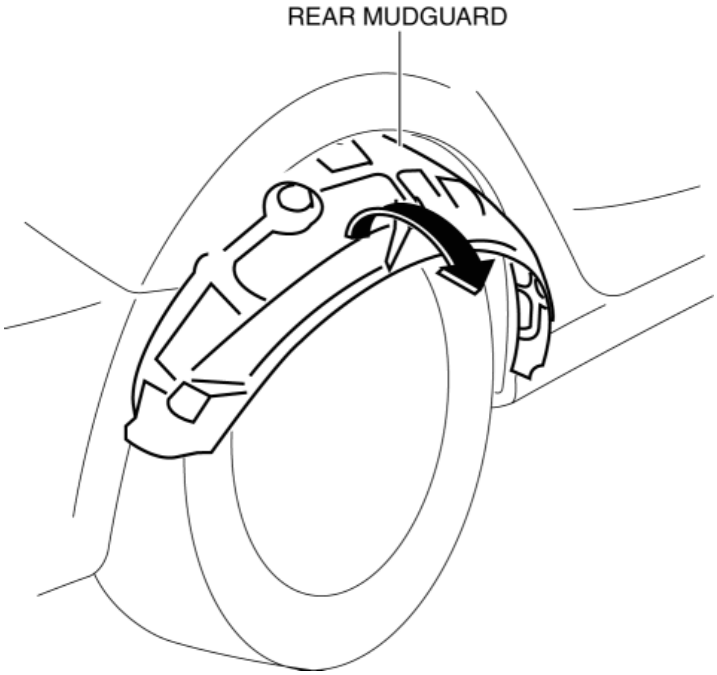

3. Install in the reverse order of removal.

2014 - Mazda3 - Body and Accessories

ROOF CARRIER BRACKET REMOVAL/INSTALLATION

1. Disconnect the negative battery cable. (See **NEGATIVE BATTERY CABLE DISCONNECTION/CONNECTION [SKYACTIV-G 2.0, SKYACTIV-G 2.5]**.)

2. Remove the following parts:

4SD

- A-pillar trim (See **A-PILLAR TRIM REMOVAL/INSTALLATION**.)
- Sunvisor (See **SUNVISOR REMOVAL/INSTALLATION**.)
- Front map light (See **FRONT MAP LIGHT REMOVAL/INSTALLATION**.)
- Assist handle (See **ASSIST HANDLE REMOVAL/INSTALLATION**.)
- Front scuff plate (See **FRONT SCUFF PLATE REMOVAL/INSTALLATION**.)
- Rear scuff plate (See **REAR SCUFF PLATE REMOVAL/INSTALLATION**.)
- B-pillar lower trim (See **B-PILLAR LOWER TRIM REMOVAL/INSTALLATION**.)
- Adjust anchor cover (See **FRONT SEAT BELT REMOVAL/INSTALLATION**.)
- Upper anchor installation bolt on the seat belt (See **FRONT SEAT BELT REMOVAL/INSTALLATION**.)
- B-pillar upper trim (See **B-PILLAR UPPER TRIM REMOVAL/INSTALLATION**.)
- Set the tire house trim aside. (See **TIRE HOUSE TRIM REMOVAL/INSTALLATION**.)
- C-pillar trim (See **C-PILLAR TRIM REMOVAL/INSTALLATION**.)
- Upper panel (See **UPPER PANEL REMOVAL**.)
- Rear console (See **REAR CONSOLE REMOVAL/INSTALLATION**.)
- Shift lever knob (MTX) (See **MANUAL TRANSAXLE SHIFT MECHANISM REMOVAL/INSTALLATION [C66M-R]**.)
- Selector lever knob (ATX) (See **AUTOMATIC TRANSAXLE SHIFT MECHANISM REMOVAL/INSTALLATION**.)
- Shift panel (See **SHIFT PANEL REMOVAL/INSTALLATION**.)
- Front console box (See **FRONT CONSOLE BOX REMOVAL/INSTALLATION**.)
- CD player (with CD player) (See **CD PLAYER REMOVAL**.)
- Glove compartment (See **GLOVE COMPARTMENT REMOVAL/INSTALLATION**.)
- Decoration panel (See **DECORATION PANEL REMOVAL/INSTALLATION**.)
- Side wall (See **SIDE WALL REMOVAL/INSTALLATION**.)
- Front console (See **FRONT CONSOLE REMOVAL/INSTALLATION**.)
- Set the selector lever component aside. (ATX) (See **AUTOMATIC TRANSAXLE SHIFT MECHANISM REMOVAL/INSTALLATION**.)
- Set the shift lever component aside. (MTX) (See **MANUAL TRANSAXLE SHIFT MECHANISM REMOVAL/INSTALLATION [C66M-R]**.)
- Headliner (See **HEADLINER REMOVAL/INSTALLATION**.)
- Curtain air bag module (See **CURTAIN AIR BAG MODULE REMOVAL/INSTALLATION [TWO-STEP DEPLOYMENT CONTROL SYSTEM]**.) (See **CURTAIN AIR BAG MODULE REMOVAL/INSTALLATION [STANDARD DEPLOYMENT CONTROL SYSTEM]**.)

5HB

- A-pillar trim (See **A-PILLAR TRIM REMOVAL/INSTALLATION**.)
- Sunvisor (See **SUNVISOR REMOVAL/INSTALLATION**.)
- Front map light (See **FRONT MAP LIGHT REMOVAL/INSTALLATION**.)
- Assist handle (See **ASSIST HANDLE REMOVAL/INSTALLATION**.)

FRONT SCUFF PLATE REMOVAL/INSTALLATION

Front scuff plate (See .)

- Rear scuff plate (See **REAR SCUFF PLATE REMOVAL/INSTALLATION**.)
- B-pillar lower trim (See **B-PILLAR LOWER TRIM REMOVAL/INSTALLATION**.)
- Adjust anchor cover (See **FRONT SEAT BELT REMOVAL/INSTALLATION**.)
- Upper anchor installation bolt on the seat belt (See **FRONT SEAT BELT REMOVAL/INSTALLATION**.)
- B-pillar upper trim (See **B-PILLAR UPPER TRIM REMOVAL/INSTALLATION**.)
- Set the tire house trim aside. (See **TIRE HOUSE TRIM REMOVAL/INSTALLATION**.)
- Rear package tray (See **REAR PACKAGE TRAY REMOVAL/INSTALLATION**.)
- Trunk covering (See **TRUNK COVERING REMOVAL/INSTALLATION**.)
- Trunk board (See **TRUNK BOARD REMOVAL/INSTALLATION**.)
- Trunk end trim (See **TRUNK END TRIM REMOVAL/INSTALLATION**.)
- Trunk side upper trim (See **TRUNK SIDE UPPER TRIM REMOVAL/INSTALLATION**.)
- Trunk side trim (LH) (See **TRUNK SIDE TRIM REMOVAL/INSTALLATION**.)
- C-pillar trim (See **C-PILLAR TRIM REMOVAL/INSTALLATION**.)
- Upper panel (See **UPPER PANEL REMOVAL**.)
- Rear console (See **REAR CONSOLE REMOVAL/INSTALLATION**.)
- Shift lever knob (MTX) (See **MANUAL TRANSAXLE SHIFT MECHANISM REMOVAL/INSTALLATION [C66M-R]**.)
- Selector lever knob (ATX) (See **AUTOMATIC TRANSAXLE SHIFT MECHANISM REMOVAL/INSTALLATION**.)
- Shift panel (See **SHIFT PANEL REMOVAL/INSTALLATION**.)
- Front console box (See **FRONT CONSOLE BOX REMOVAL/INSTALLATION**.)
- CD player (with CD player) (See **CD PLAYER REMOVAL**.)
- Glove compartment (See **GLOVE COMPARTMENT REMOVAL/INSTALLATION**.)
- Decoration panel (See **DECORATION PANEL REMOVAL/INSTALLATION**.)
- Side wall (See **SIDE WALL REMOVAL/INSTALLATION**.)
- Front console (See **FRONT CONSOLE REMOVAL/INSTALLATION**.)
- Set the selector lever component aside. (ATX) (See **AUTOMATIC TRANSAXLE SHIFT MECHANISM REMOVAL/INSTALLATION**.)
- Set the shift lever component aside. (MTX) (See **MANUAL TRANSAXLE SHIFT MECHANISM REMOVAL/INSTALLATION [C66M-R]**.)
- Headliner (See **HEADLINER REMOVAL/INSTALLATION**.)
- Curtain air bag module (See **CURTAIN AIR BAG MODULE REMOVAL/INSTALLATION [TWO-STEP DEPLOYMENT CONTROL SYSTEM]**.) (See **CURTAIN AIR BAG MODULE REMOVAL/INSTALLATION [STANDARD DEPLOYMENT CONTROL SYSTEM]**.)

3. Remove the nuts shown in the figure.

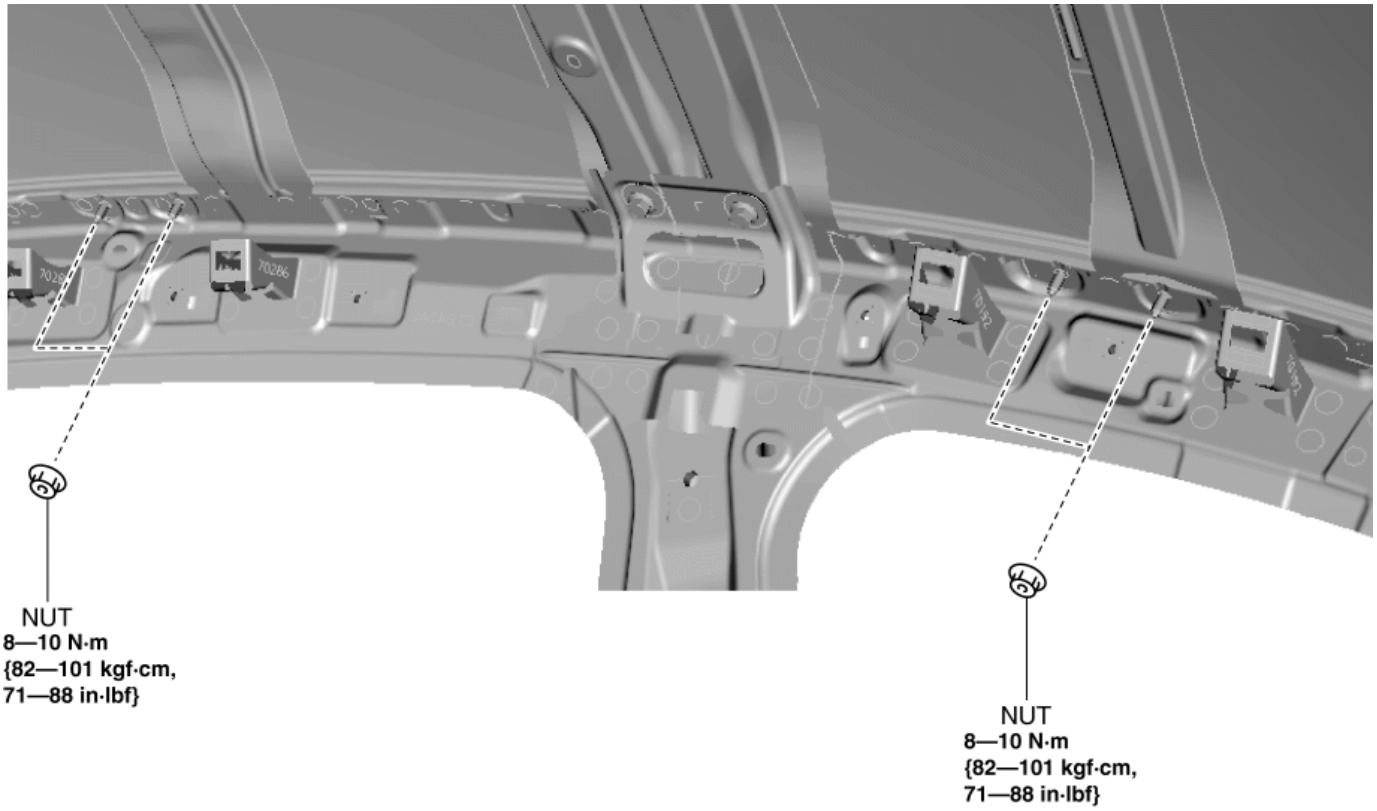

4. Remove the roof carrier brackets.
5. Install in the reverse order of removal.

NOTE:

- Install the roof carrier brackets so that the arrow on it faces inward.

ROOF CARRIER BRACKET REMOVAL/INSTALLATION

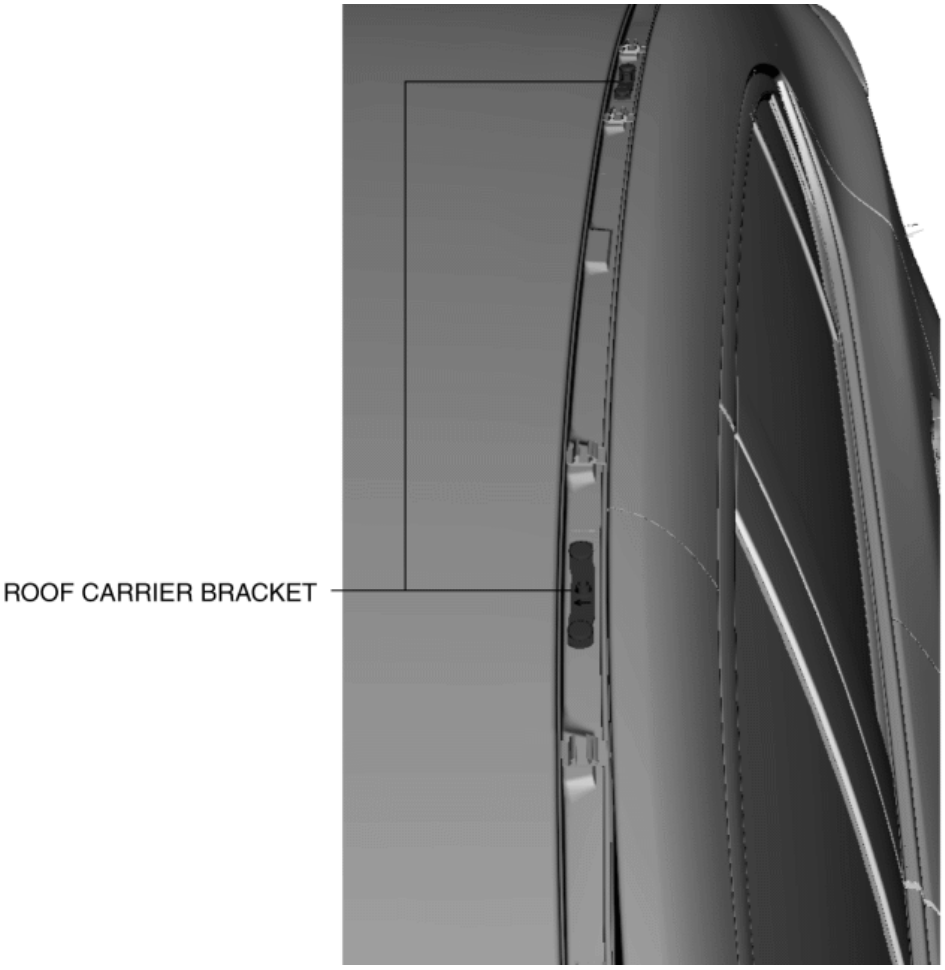

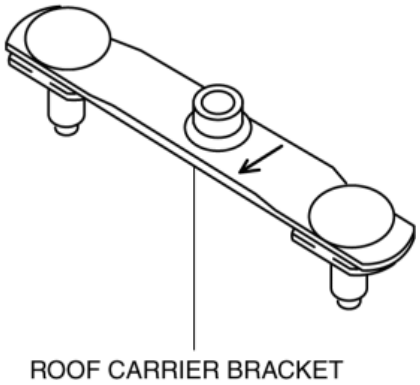

2014 - Mazda3 - Body and Accessories

REAR SPOILER REMOVAL

4SD

WARNING:

- Using a utility knife with bare hands can cause injury. Always wear gloves when using a utility knife.

1. Remove the trunk lid recess. (See **TRUNK LID RECESS REMOVAL/INSTALLATION**.)
2. Remove the trunk lid trim. (See **TRUNK LID TRIM REMOVAL/INSTALLATION**.)
3. Remove the bolts shown in the figure.

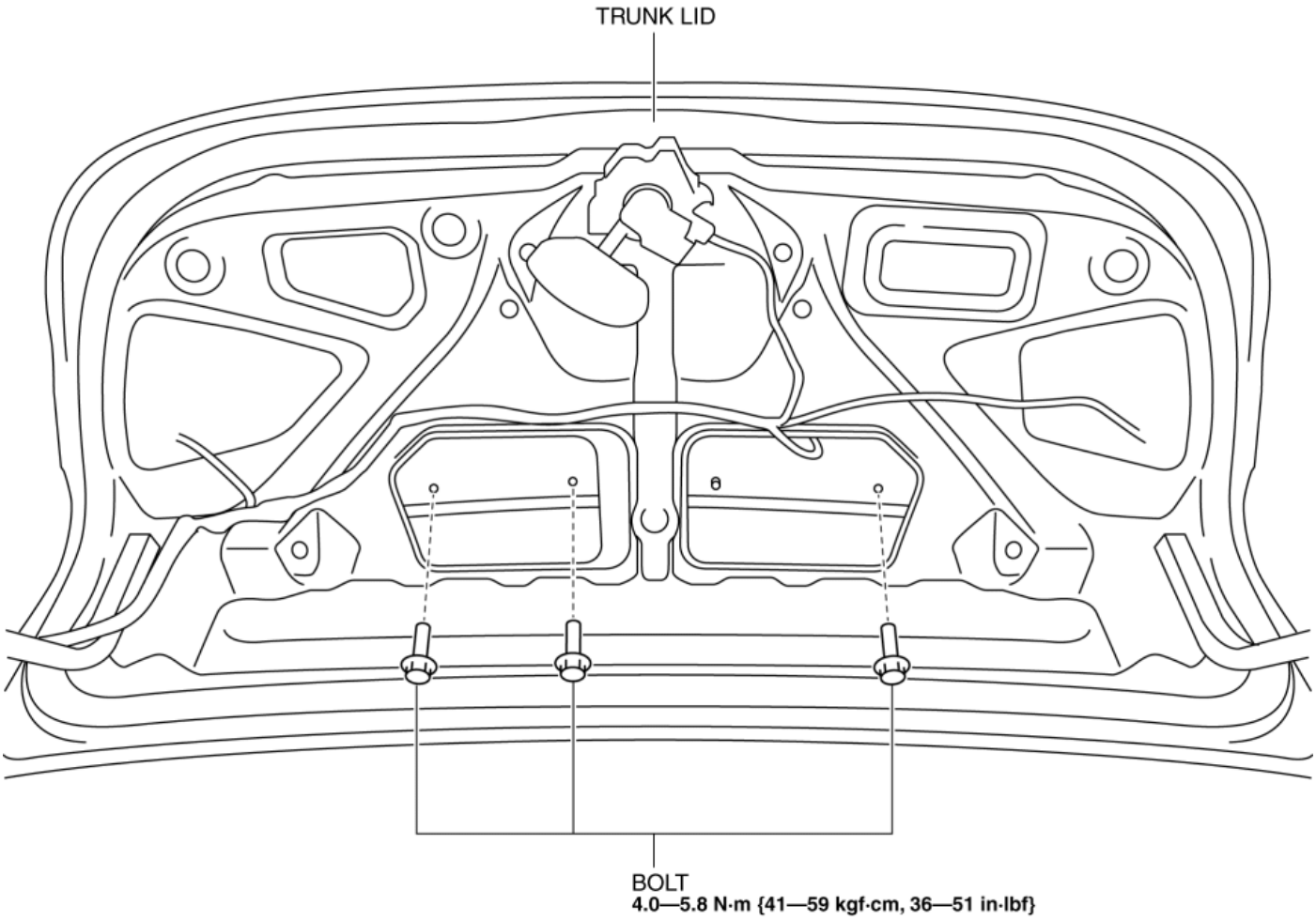

CAUTION:

- Be careful not to damage the vehicle's paint during tape removal.

4. Using a utility knife, carefully remove the double-sided adhesive tape in the locations shown below.

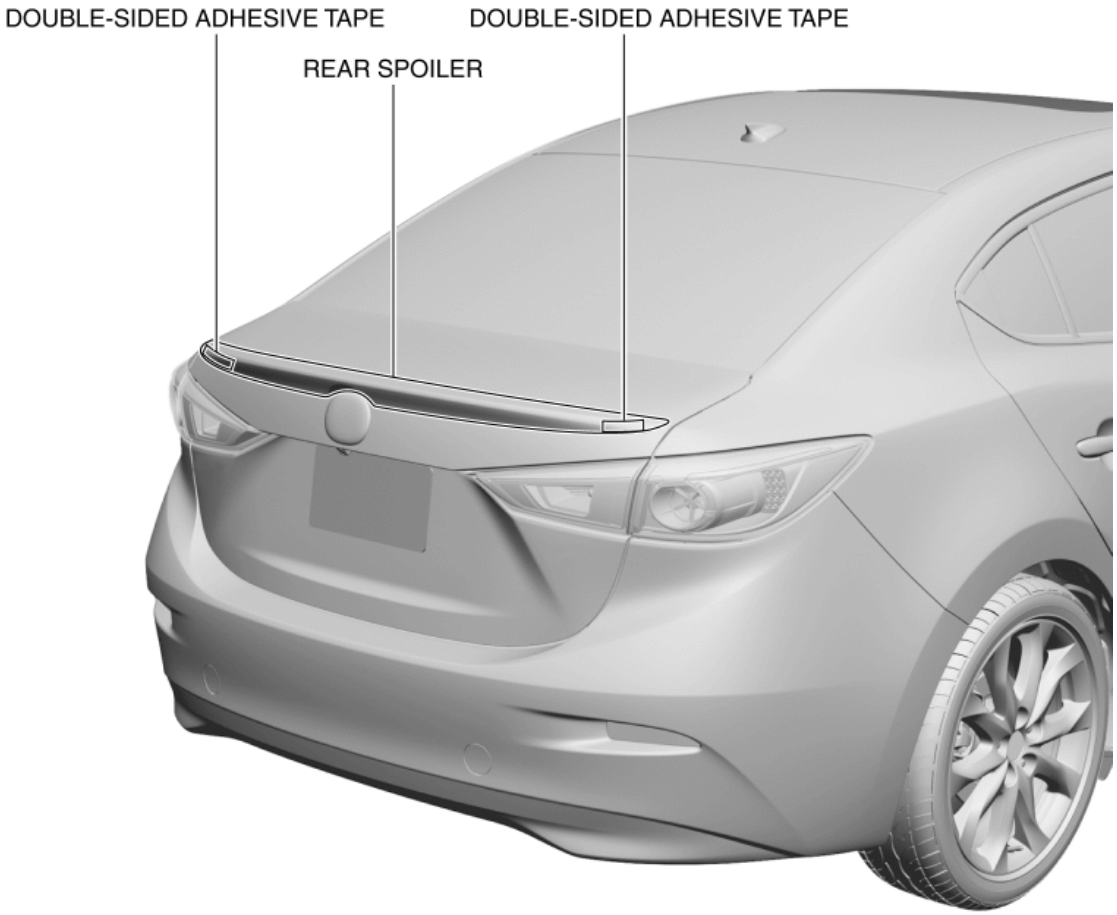

5. While holding the rear spoiler by hand, press the tabs of the clips in the direction of the arrows shown in the figure, and disengage the clips from the trunk lid in the order of (1), (2), and (3).

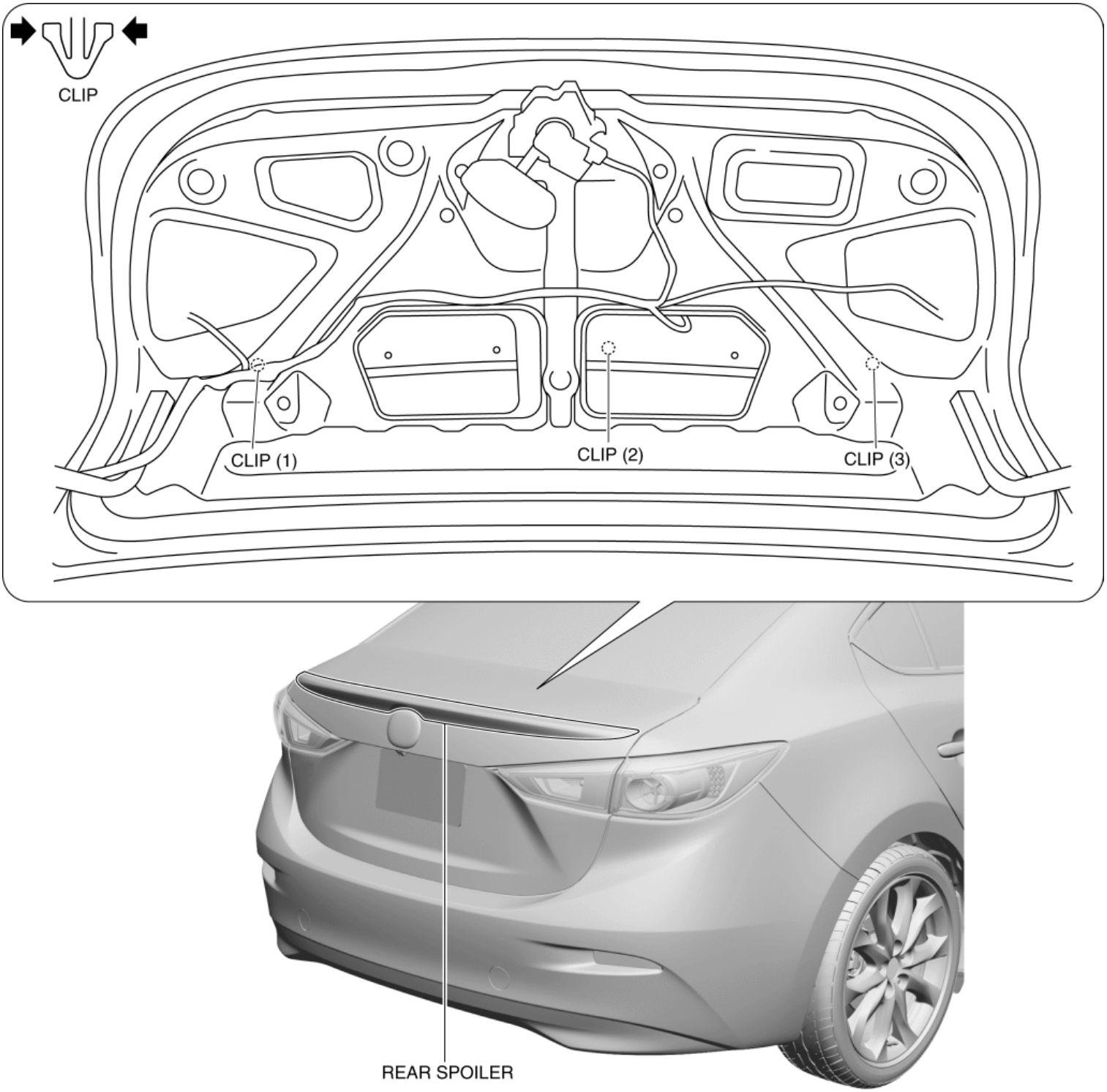

6. Remove the rear spoiler from the trunk lid.

5HB

1. Disconnect the negative battery cable. (See **NEGATIVE BATTERY CABLE DISCONNECTION/CONNECTION [SKYACTIV-G 2.0, SKYACTIV-G 2.5]**.)

2. Remove the liftgate upper trim. (See **LIFTGATE UPPER TRIM REMOVAL/INSTALLATION**.)

3. Disconnect the high-mount brake light connector and remove the wiring harness from the hook.

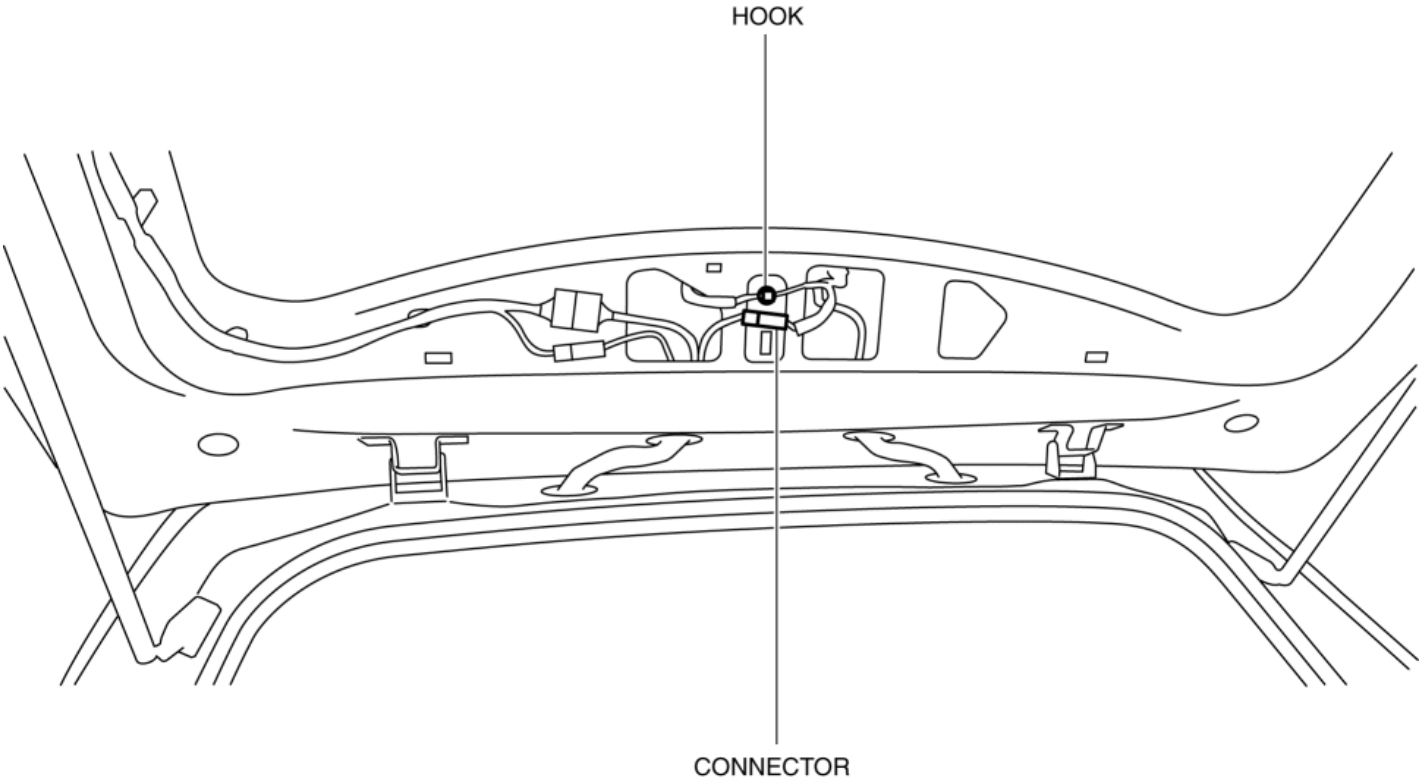

4. Remove the caps and nuts shown in the figure.

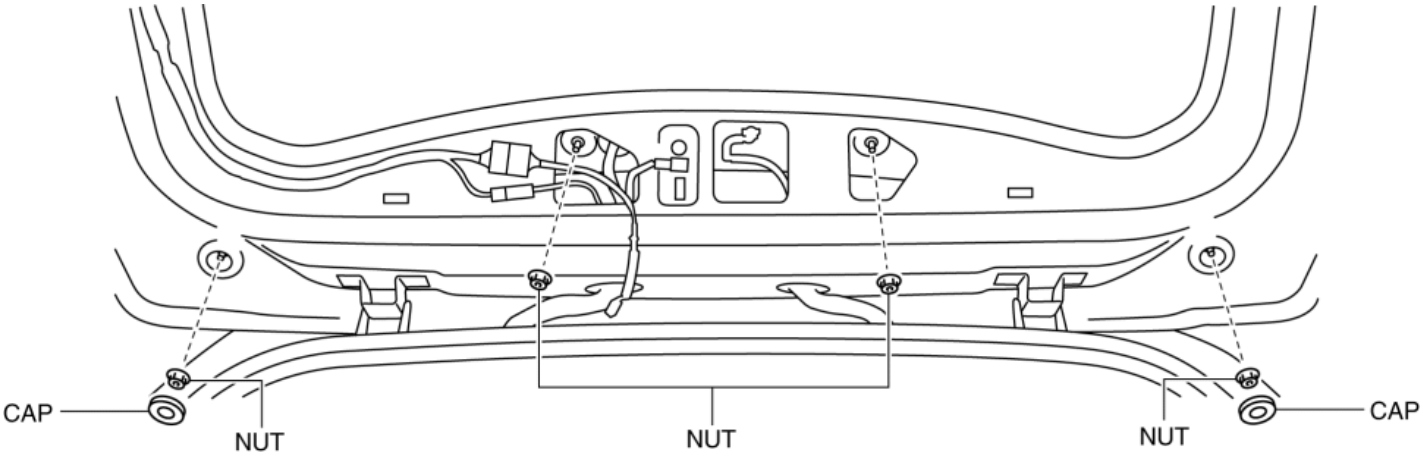

NUT: **4.0—5.8 N·m {41—59 kgf·cm, 36—51 in·lbf}**

5. Insert a remover tool in the position shown in the figure.

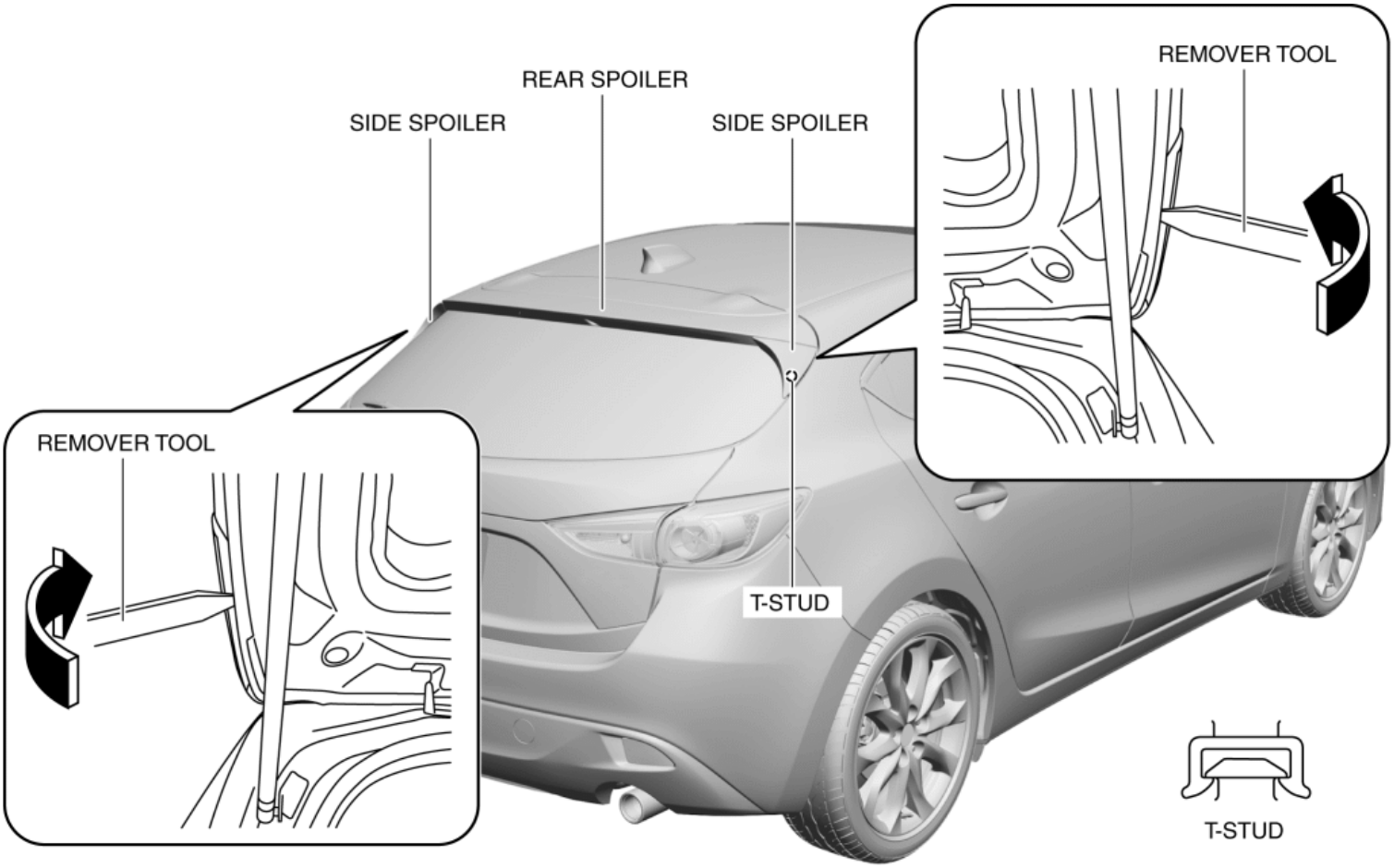

6. Move the remover tool in the direction of the arrow shown in the figure and disengage the side spoilers from the liftgate T-studs.

7. Insert a remover tool in the position shown in the figure.

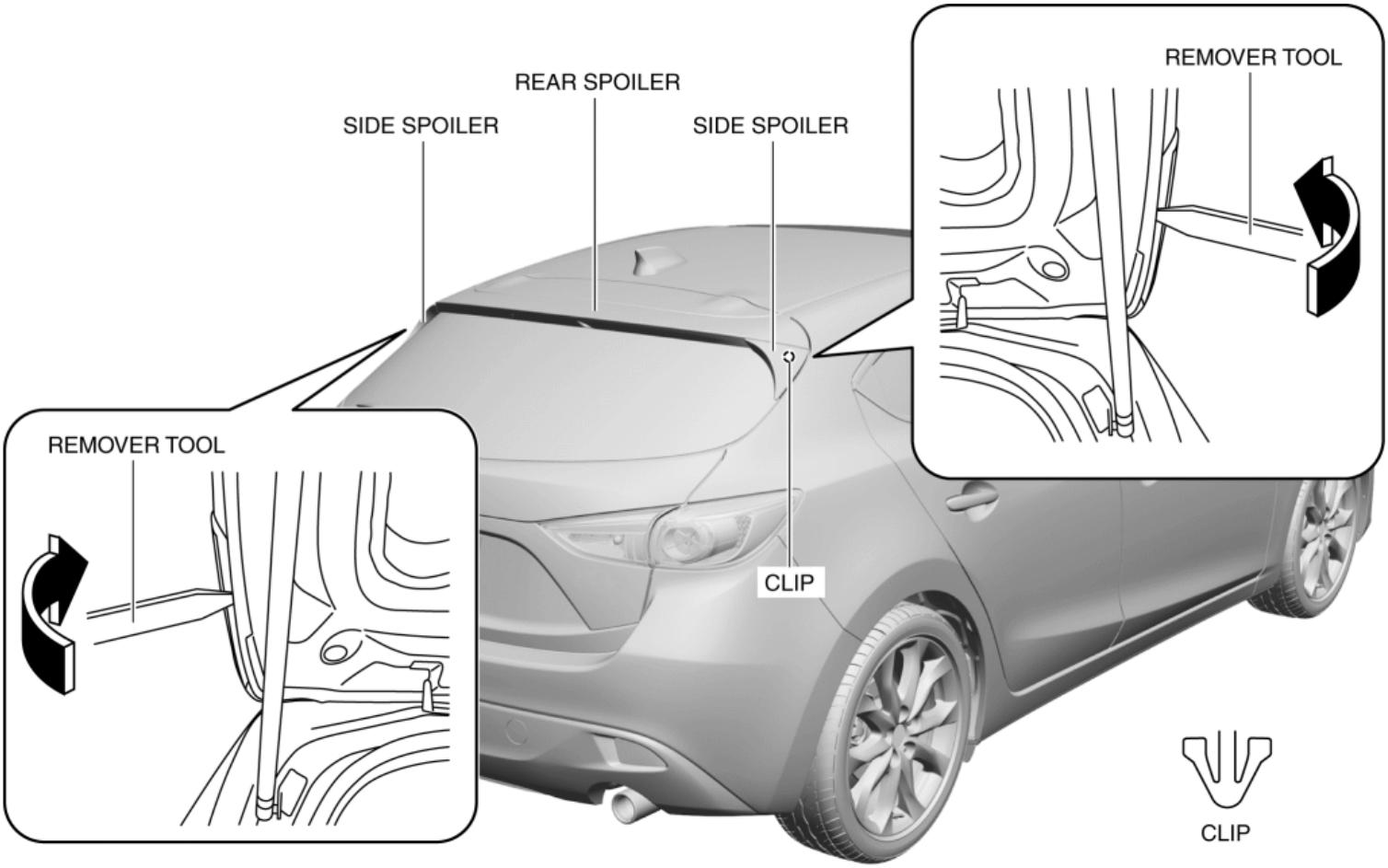

8. Move the remover tool in the direction of the arrow shown in the figure and disengage the side spoiler clip from the liftgate.

9. Pull the rear spoiler in the direction of the arrows and remove it while detaching the pins.

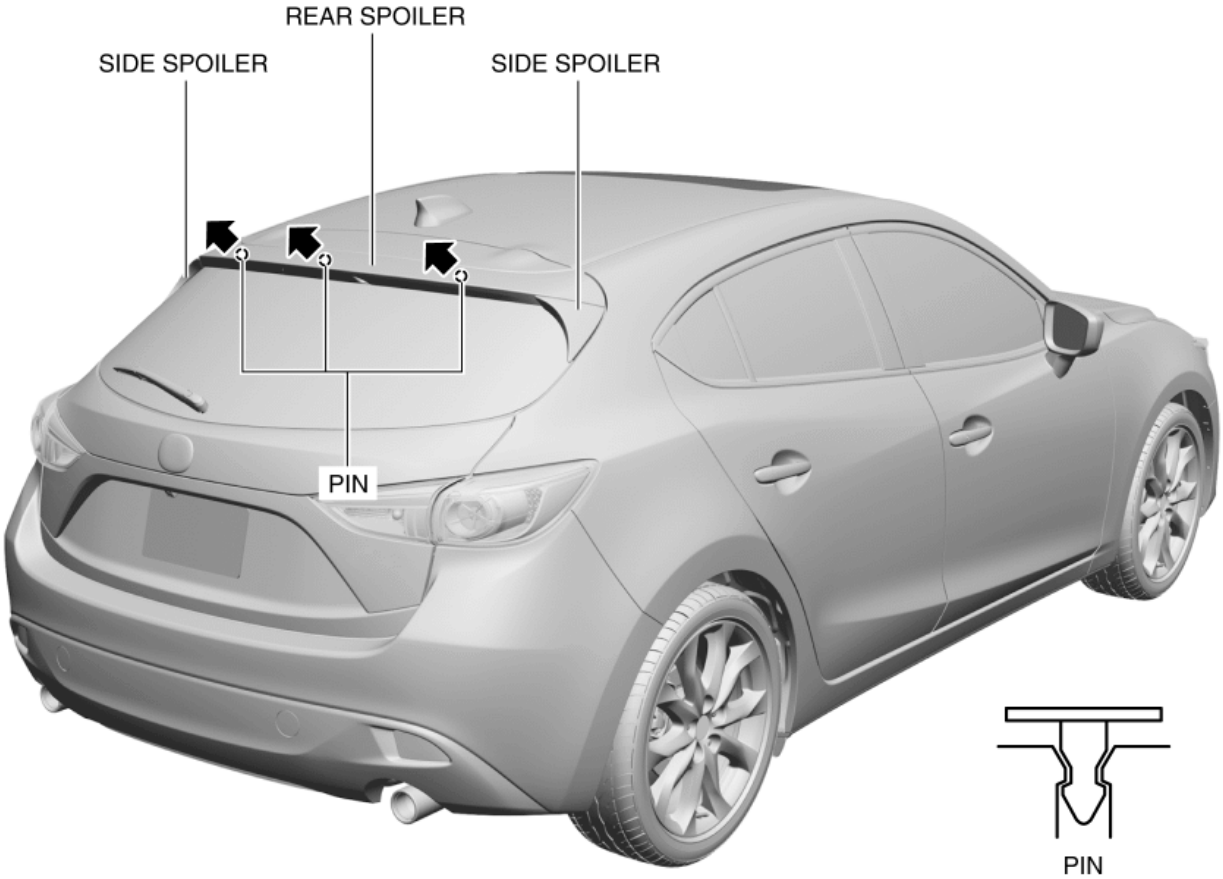

10. While holding the rear spoiler by hand, press the tabs of the grommet from the underside of the liftgate shown in the figure, and disengage the grommet tabs from the liftgate.

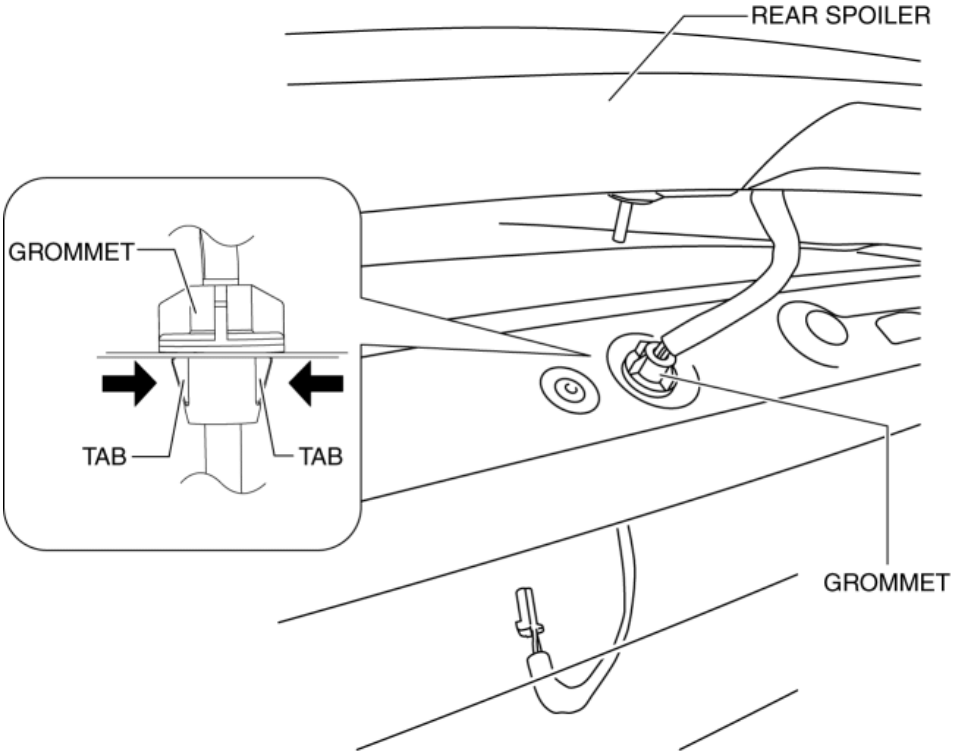

11. Remove the rear spoiler while pulling out the wiring harness.

12. Insert a remover tool into the position shown in the figure, move it in the direction of the arrow shown in the figure, and remove the side spoiler from the rear spoiler.

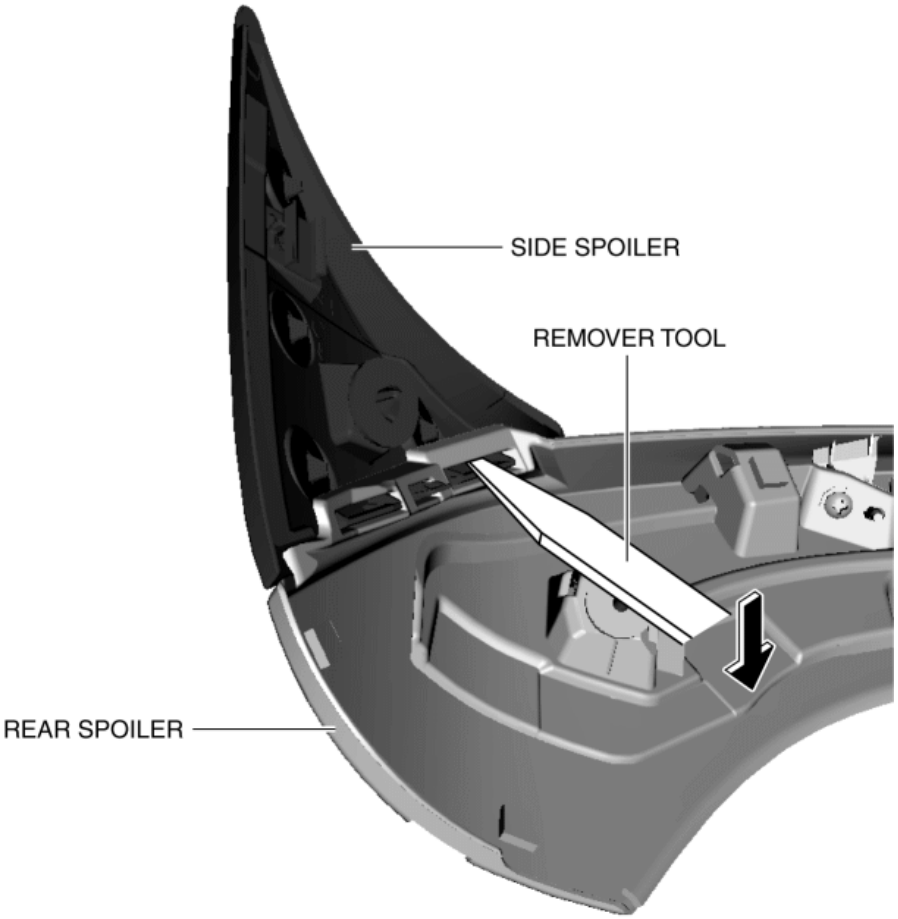

REAR SPOILER REMOVAL

2014 - Mazda3 - Body and Accessories

REAR SPOILER INSTALLATION

4SD

1. When a rear spoiler is to be reused, perform the following procedure:
   a. Remove the packing and double-sided adhesive tape remaining on the rear spoiler after removal.
   b. Remove any grease and dirt from the packing and double-sided adhesive tape affixing area.
   c. Affix a new packing and new double-sided adhesive tape to the position shown in the figure.

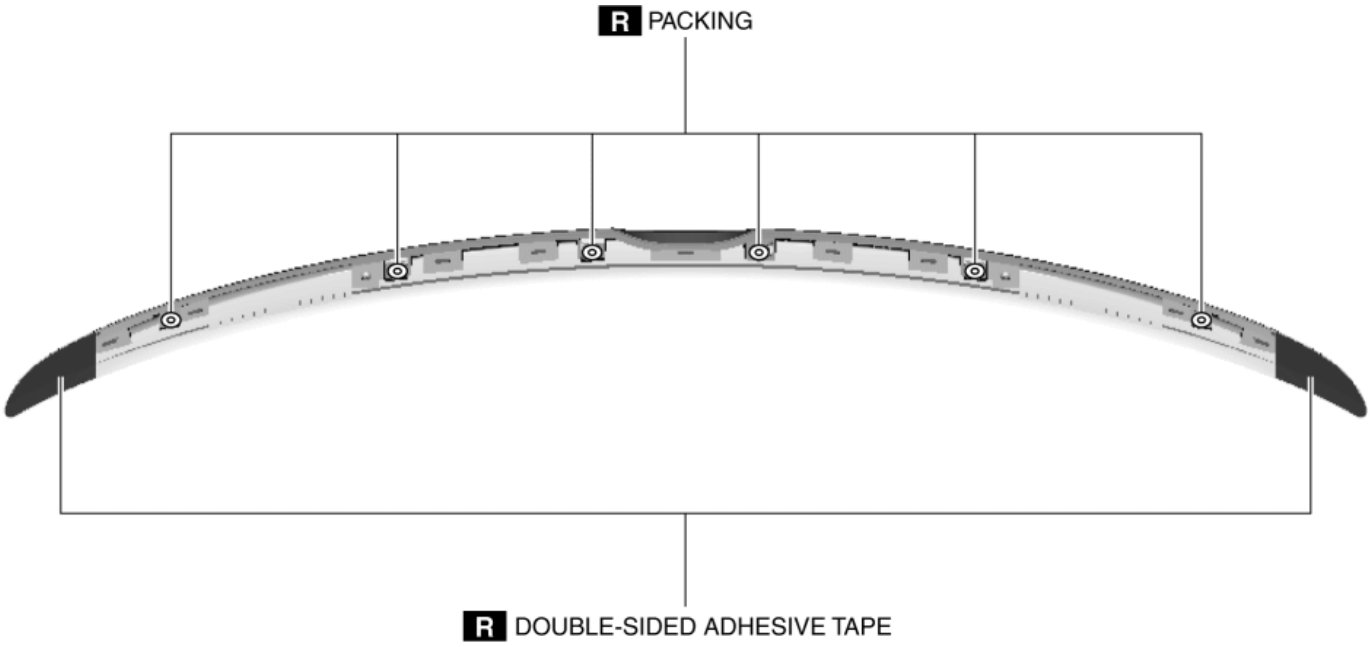

   d. If the protector is damaged, replace the part that is damaged with a new protector.

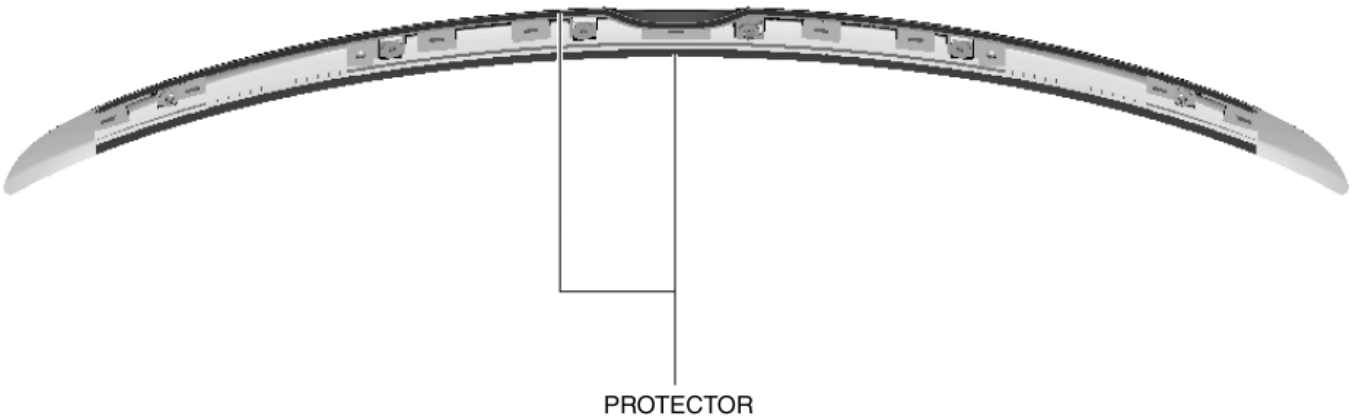

2. Peel off the paper backing from the double-sided adhesive tape and install the rear spoiler clips in the order of arrows (1), (2), and (3) shown in the figure.

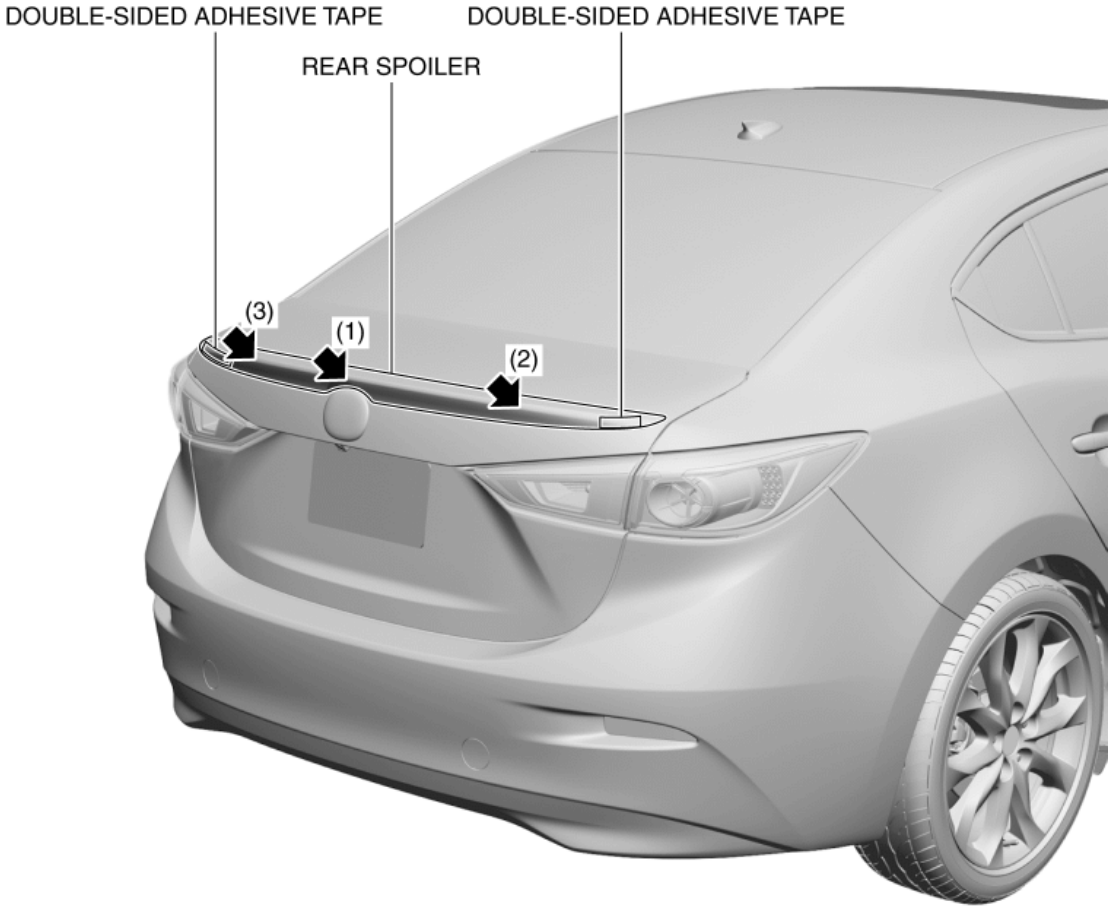

3. Install the bolts shown in the figure.

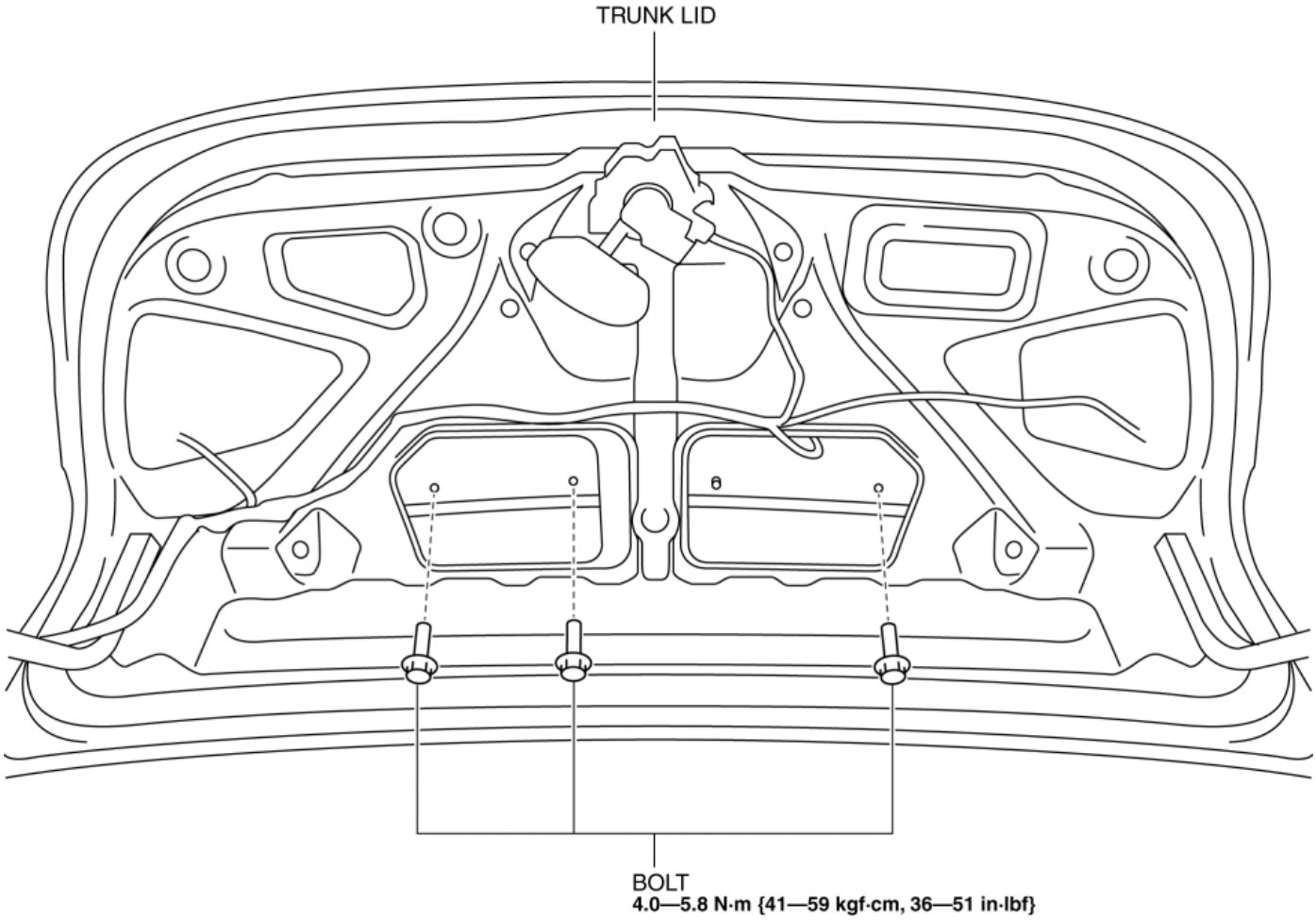

4. Install the trunk lid trim. (See **TRUNK LID TRIM REMOVAL/INSTALLATION**.)
5. Install the trunk lid recess. (See **TRUNK LID RECESS REMOVAL/INSTALLATION**.)

5HB

1. Install the side spoiler to the rear spoiler.

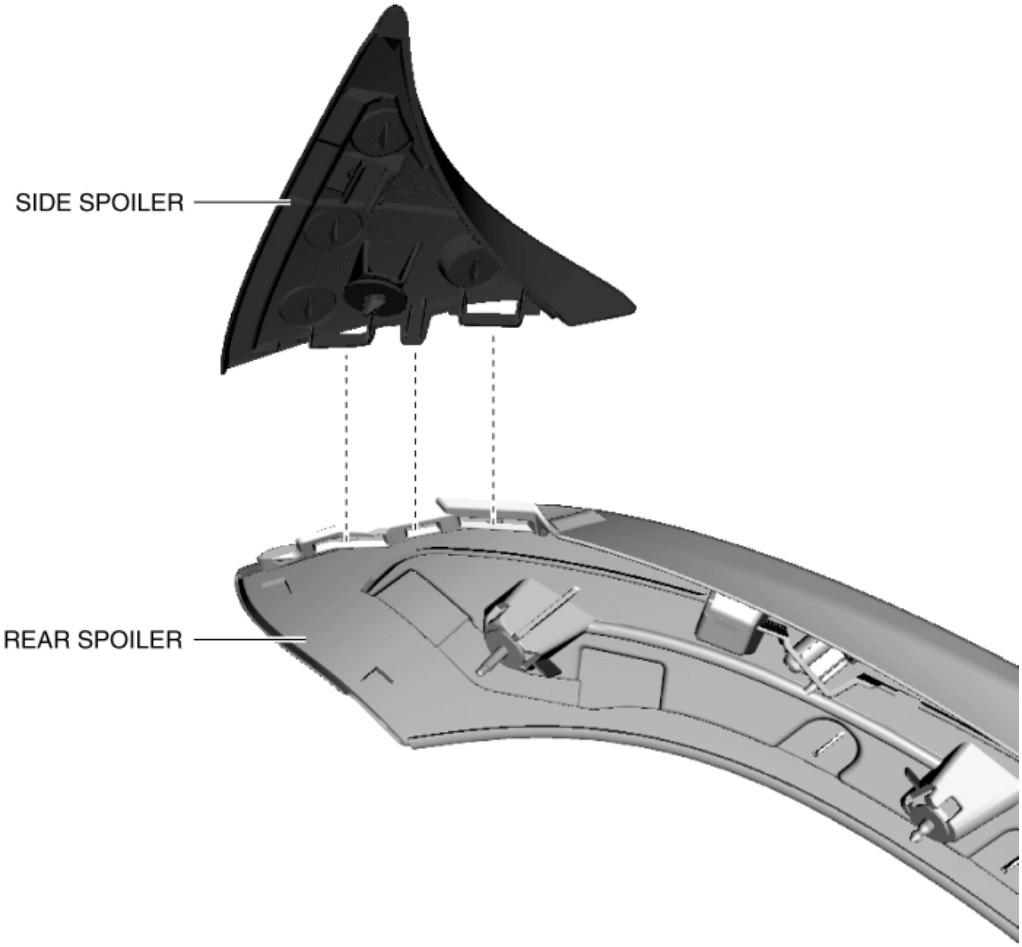

2. When a rear spoiler is to be reused, perform the following procedure:
   a. Remove the packing remaining on the rear spoiler after removal.
   b. Remove any grease and dirt from the packing affixing area.
   c. Affix a new packing to the position shown in the figure.

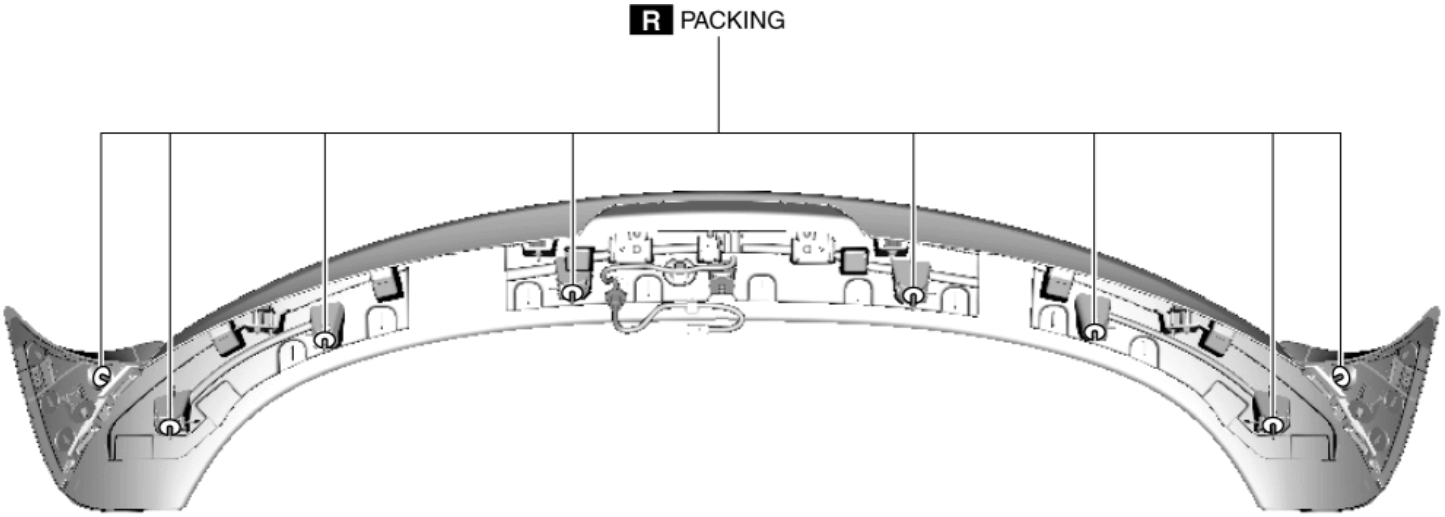

d. If the protector is damaged, replace the part that is damaged with a new protector.

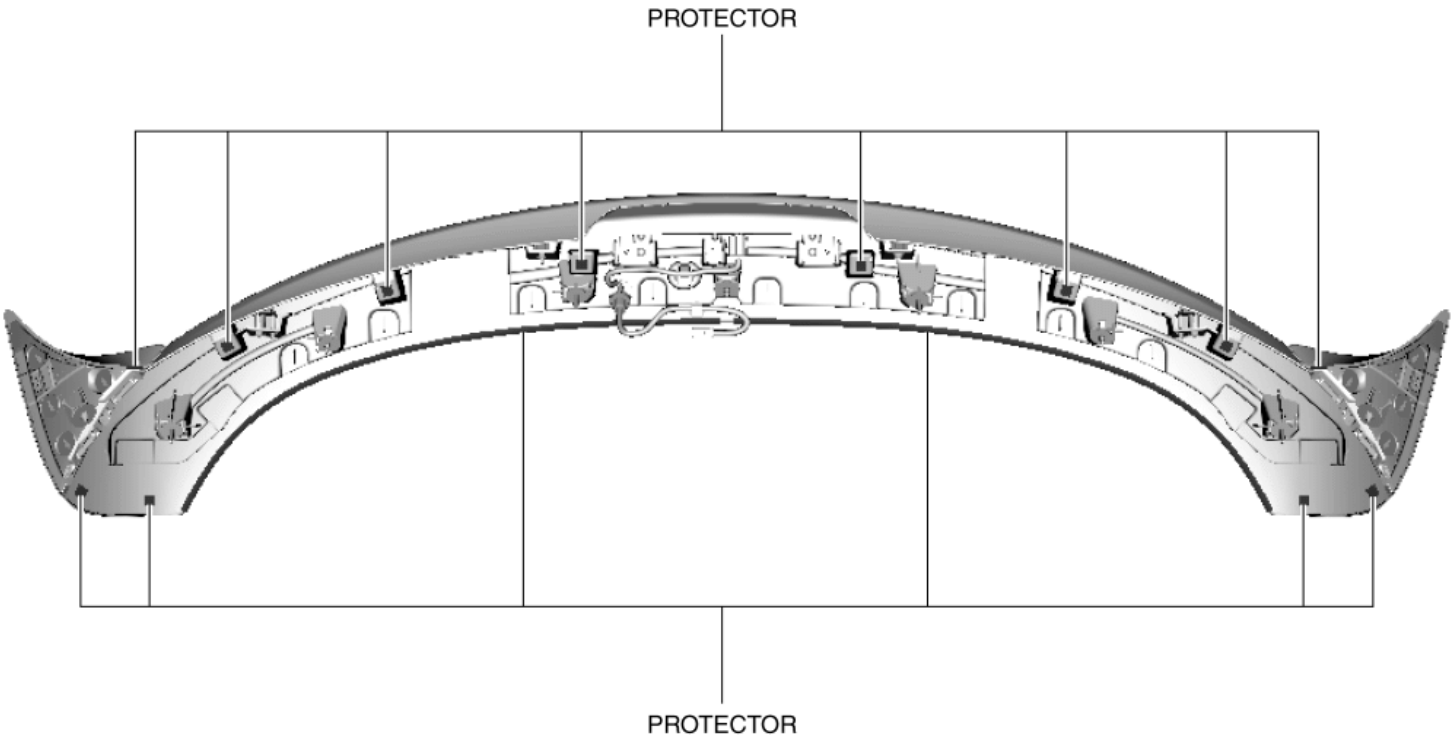

3. Install the grommet of the high-mount brake light wiring harness.

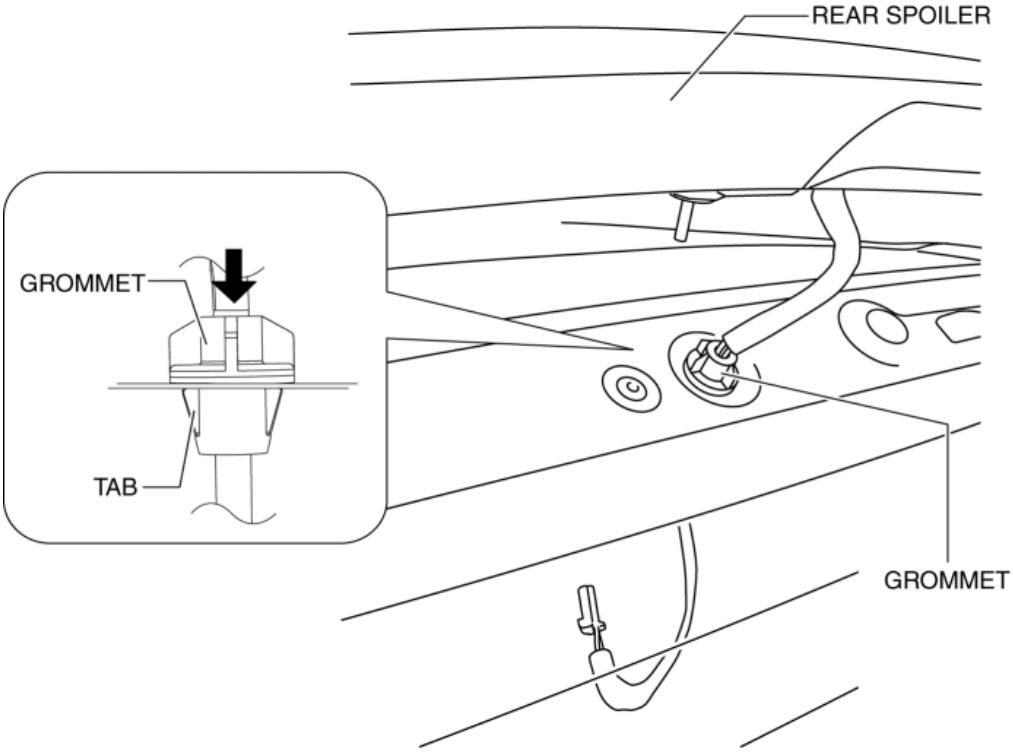

4. Push the rear spoiler and side spoiler in the direction of the arrows in the order of (1), (2), (3), (4), (5) and install the rear spoiler and side spoiler.

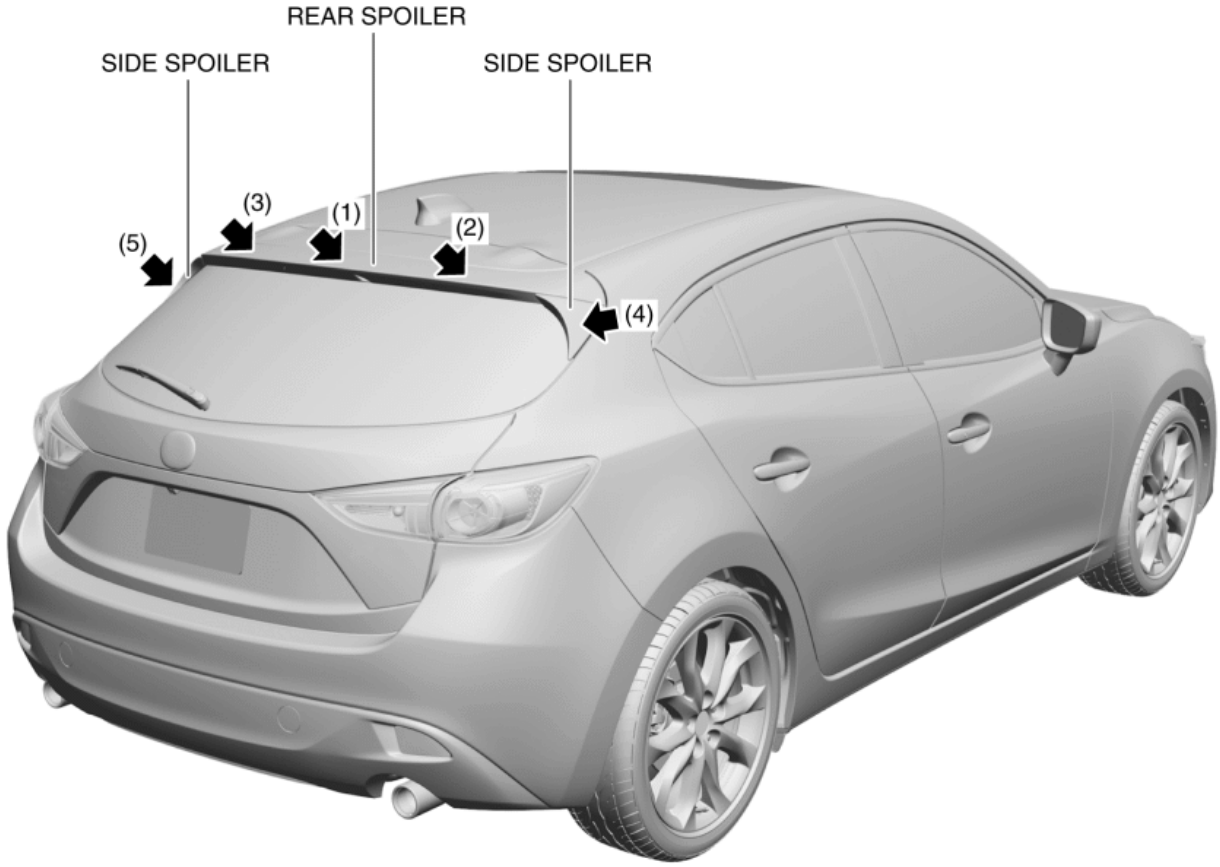

5. Install the nuts shown in the figure, and install the rear spoiler.

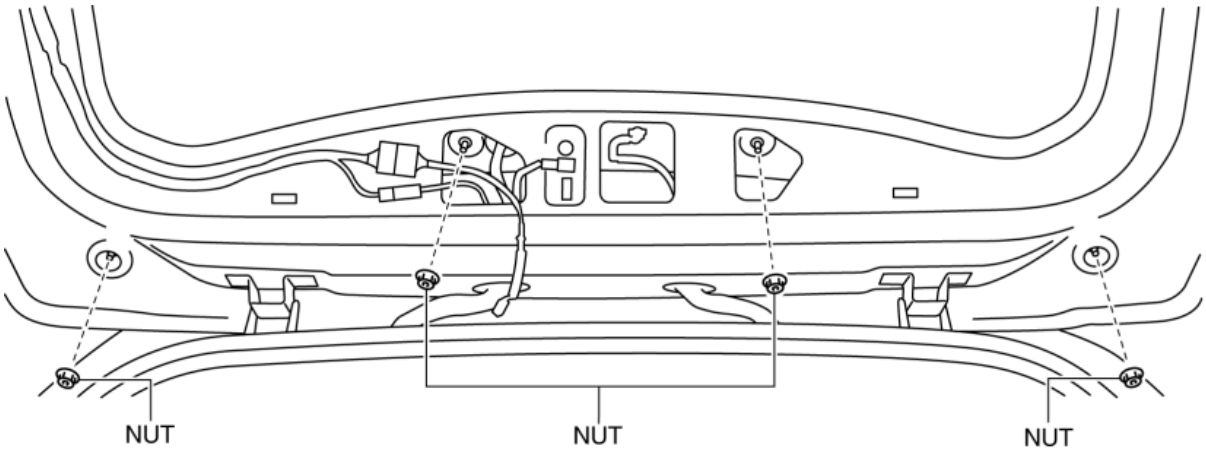

NUT: **4.0—5.8 N·m {41—59 kgf·cm, 36—51 in·lbf}**

6. Install the caps shown in the figure.

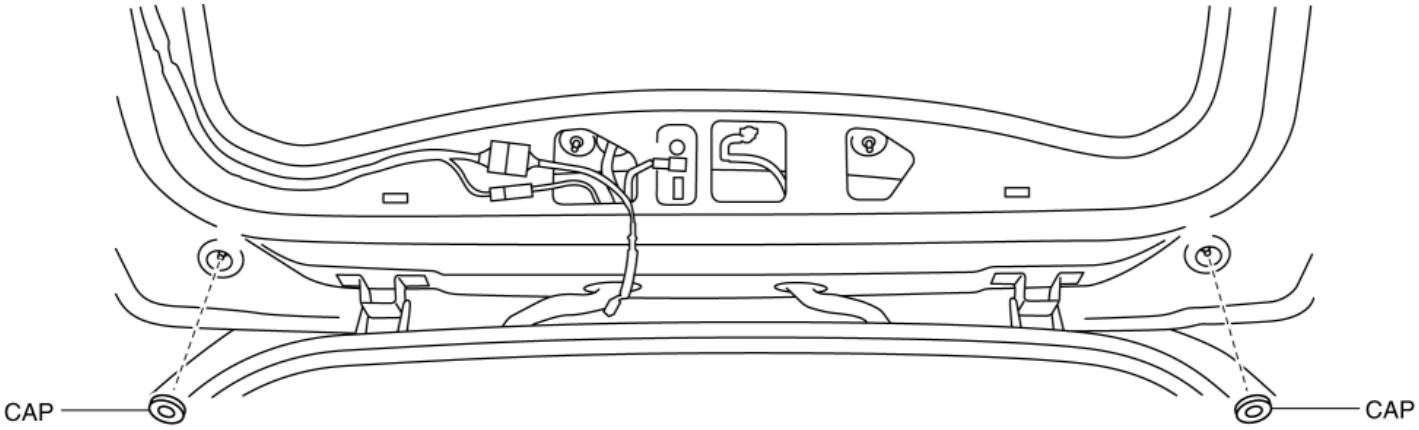

7. Connect the high-mount brake light connector and install the wiring harness to the hook.

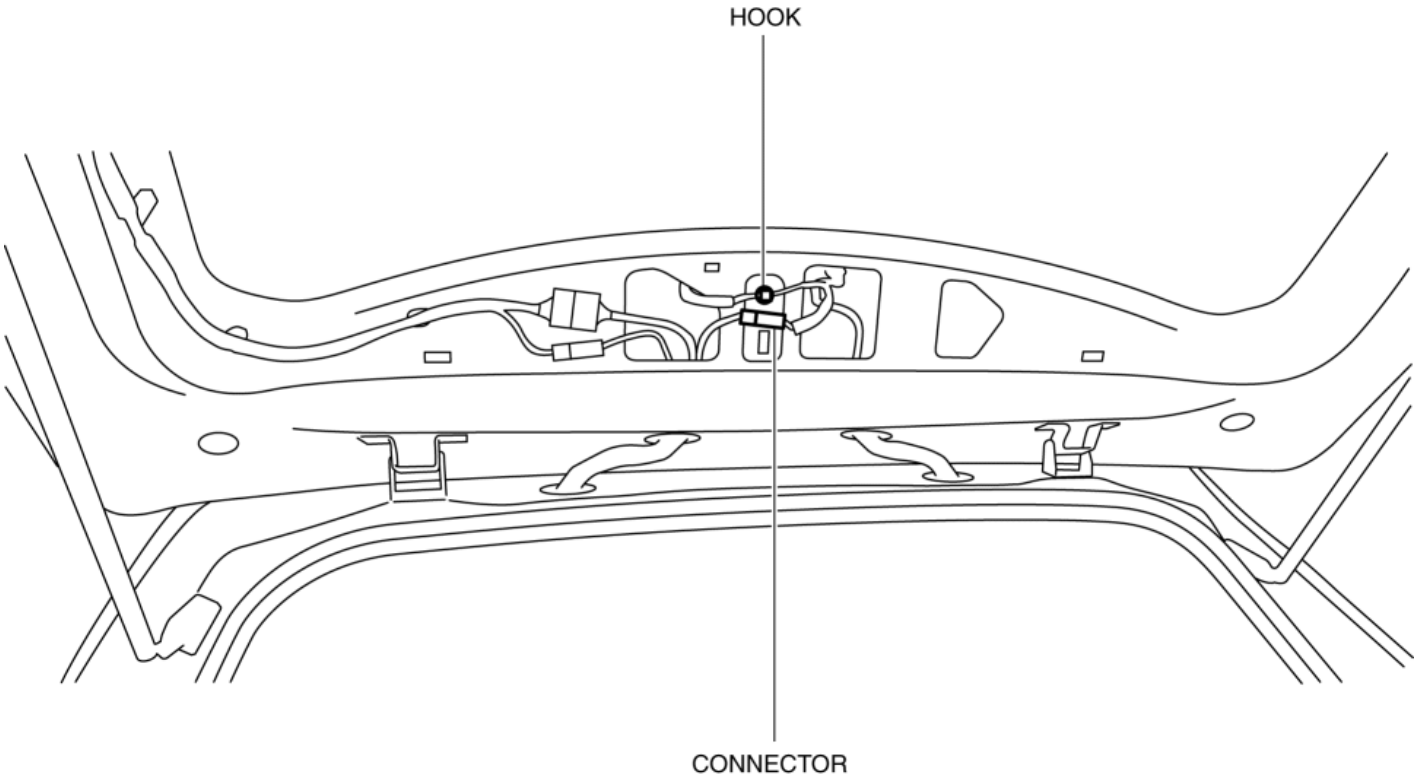

8. Install the liftgate upper trim. (See **LIFTGATE UPPER TRIM REMOVAL/INSTALLATION**.)

9. Connect the negative battery cable. (See **NEGATIVE BATTERY CABLE DISCONNECTION/CONNECTION [SKYACTIV-G 2.0, SKYACTIV-G 2.5]**.)

2014 - Mazda3 - Body and Accessories

SIDE SPOILER REMOVAL/INSTALLATION

1. Disconnect the negative battery cable. (See **NEGATIVE BATTERY CABLE DISCONNECTION/CONNECTION [SKYACTIV-G 2.0, SKYACTIV-G 2.5]**.)

2. Remove the liftgate upper trim. (See **LIFTGATE UPPER TRIM REMOVAL/INSTALLATION**.)

3. Remove the rear spoiler. (See **REAR SPOILER REMOVAL**.)

4. Insert a remover tool into the position shown in the figure, move it in the direction of the arrow shown in the figure, and remove the side spoiler from the rear spoiler.

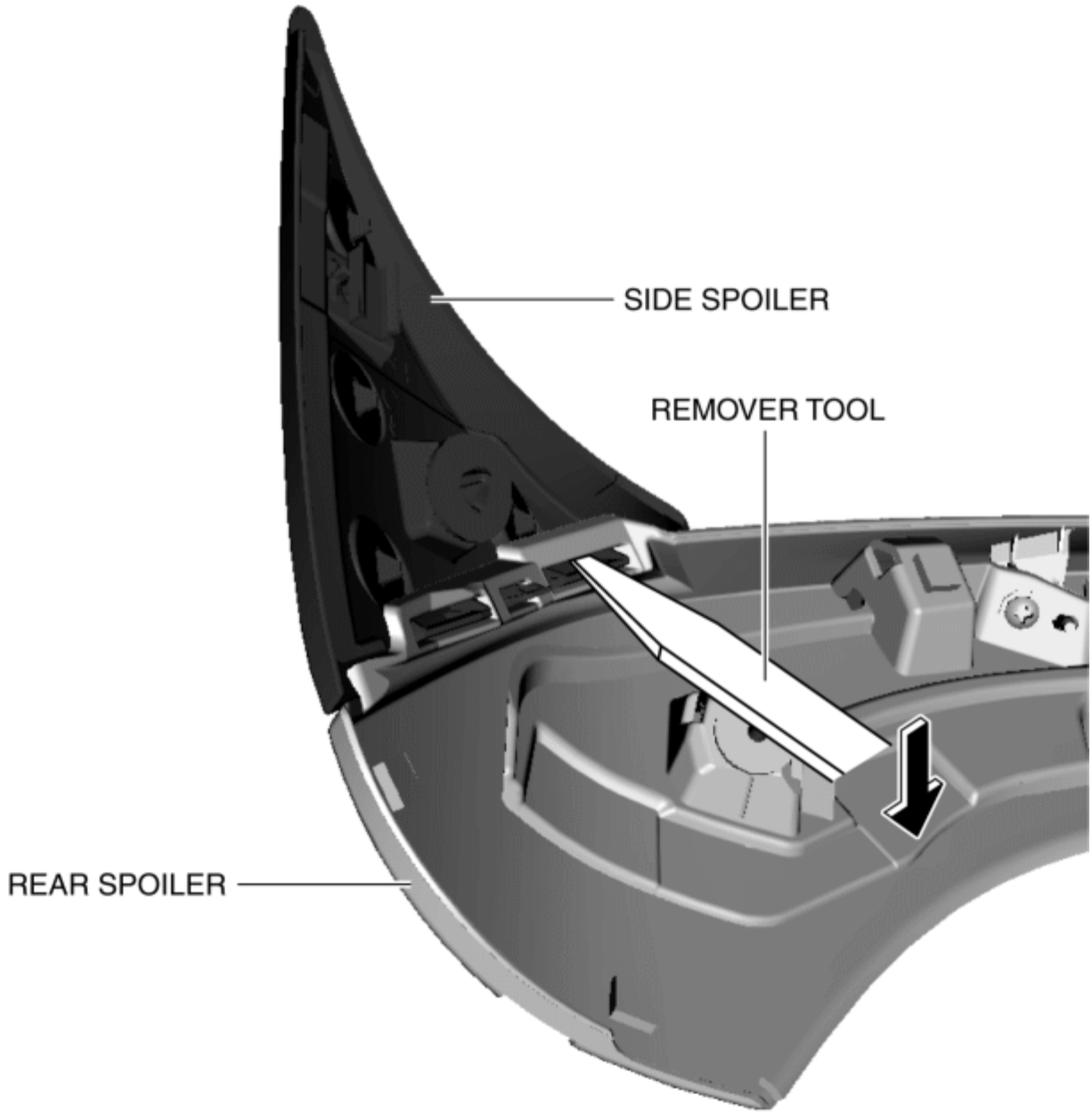

5. Install in the reverse order of removal.

2014 - Mazda3 - Body and Accessories

REAR DOOR GARNISH REMOVAL/INSTALLATION

WARNING:

- Using a utility knife with bare hands can cause injury. Always wear gloves when using a utility knife.

Front

1. Remove the rear beltline molding. (See **REAR BELTLINE MOLDING REMOVAL/INSTALLATION**.)
2. Using a remover tool, remove the clips in the direction of arrow (1), (2) shown in the figure.

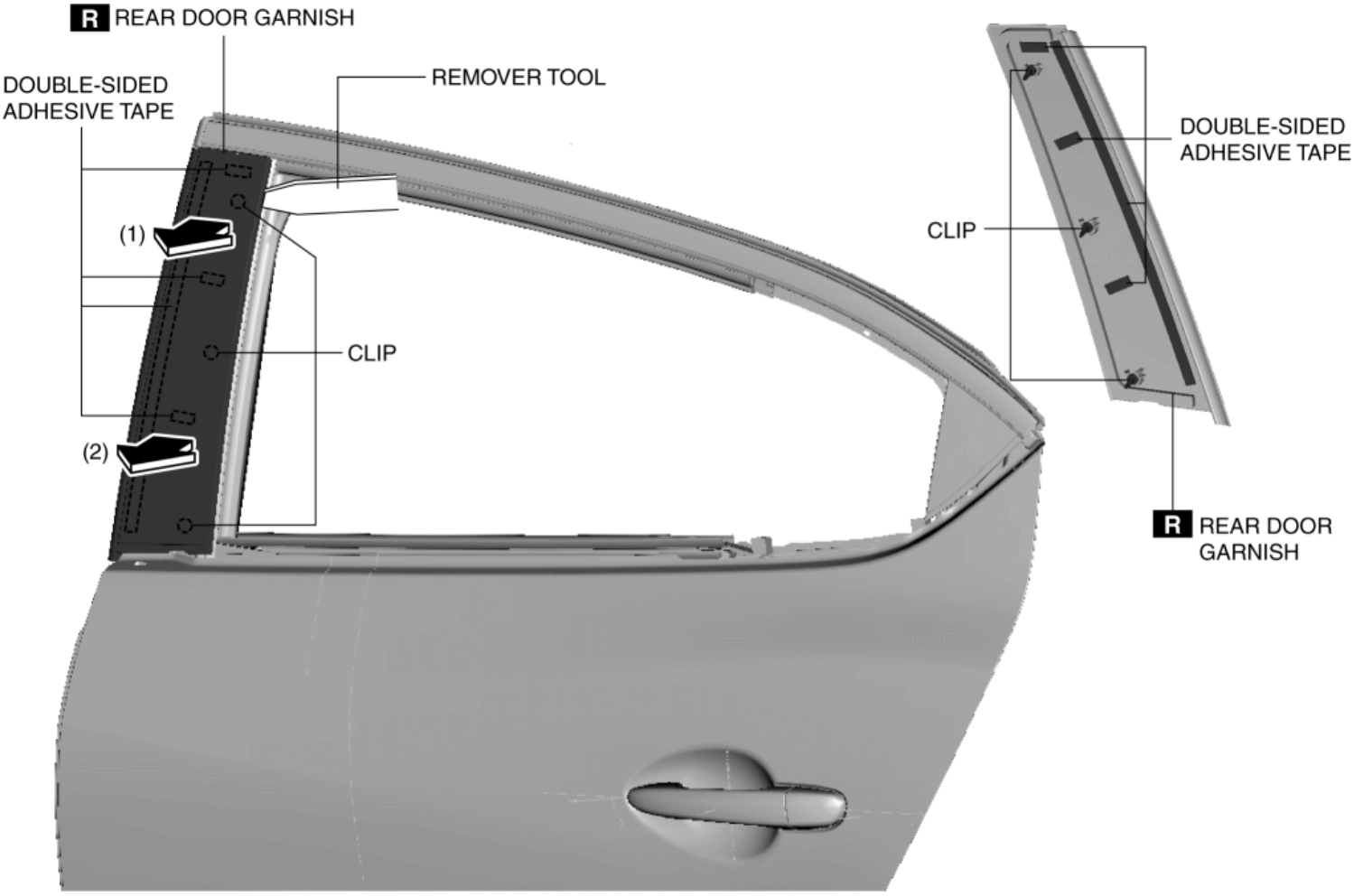

3. Remove the double-sided adhesive tape in the position shown in the figure using a utility knife, remove the rear door garnish from the rear door sash.
4. Install in the reverse order of removal. (See **Rear Door Garnish Installation Note**.)

Rear

1. Remove the rear beltline molding. (See **REAR BELTLINE MOLDING REMOVAL/INSTALLATION**.)
2. Using a remover tool, remove the clips in the direction of arrow (1), (2) shown in the figure.

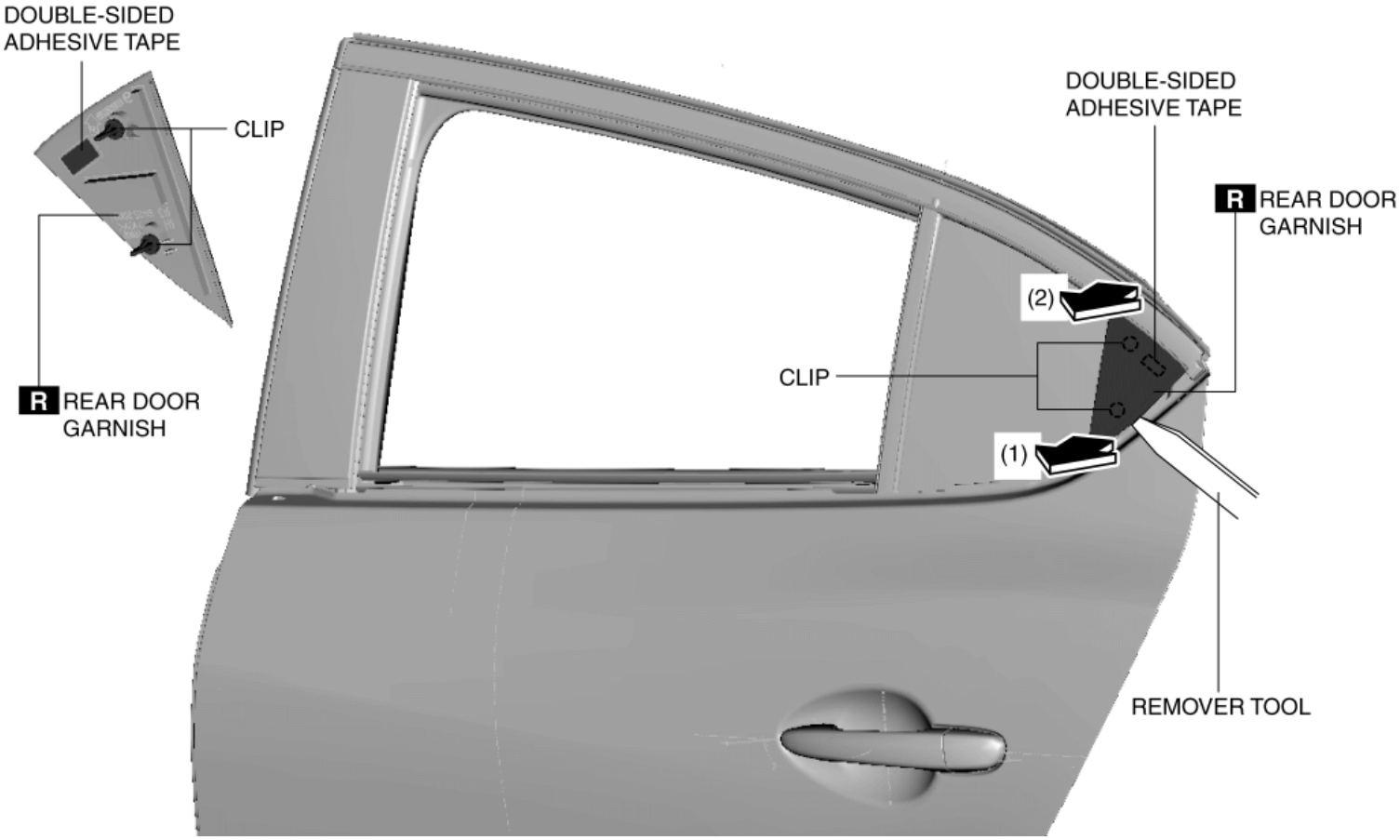

3. Remove the double-sided adhesive tape in the position shown in the figure using a utility knife, remove the rear door garnish from the rear door sash.

4. Install in the reverse order of removal. (See **Rear Door Garnish Installation Note**.)

Rear Door Garnish Installation Note

1. When installing a new rear door garnish, perform the following procedure:

   a. Remove the double-sided adhesive tape on the rear door sash.

   b. Remove any grease or dirt from the affixing surface of the rear door sash.

2014 - Mazda3 - Body and Accessories

FRONT FENDER MOLDING REMOVAL/INSTALLATION

1. Pull the front fender molding in the direction of the arrow shown in the figure and remove the hook from the front fender panel.

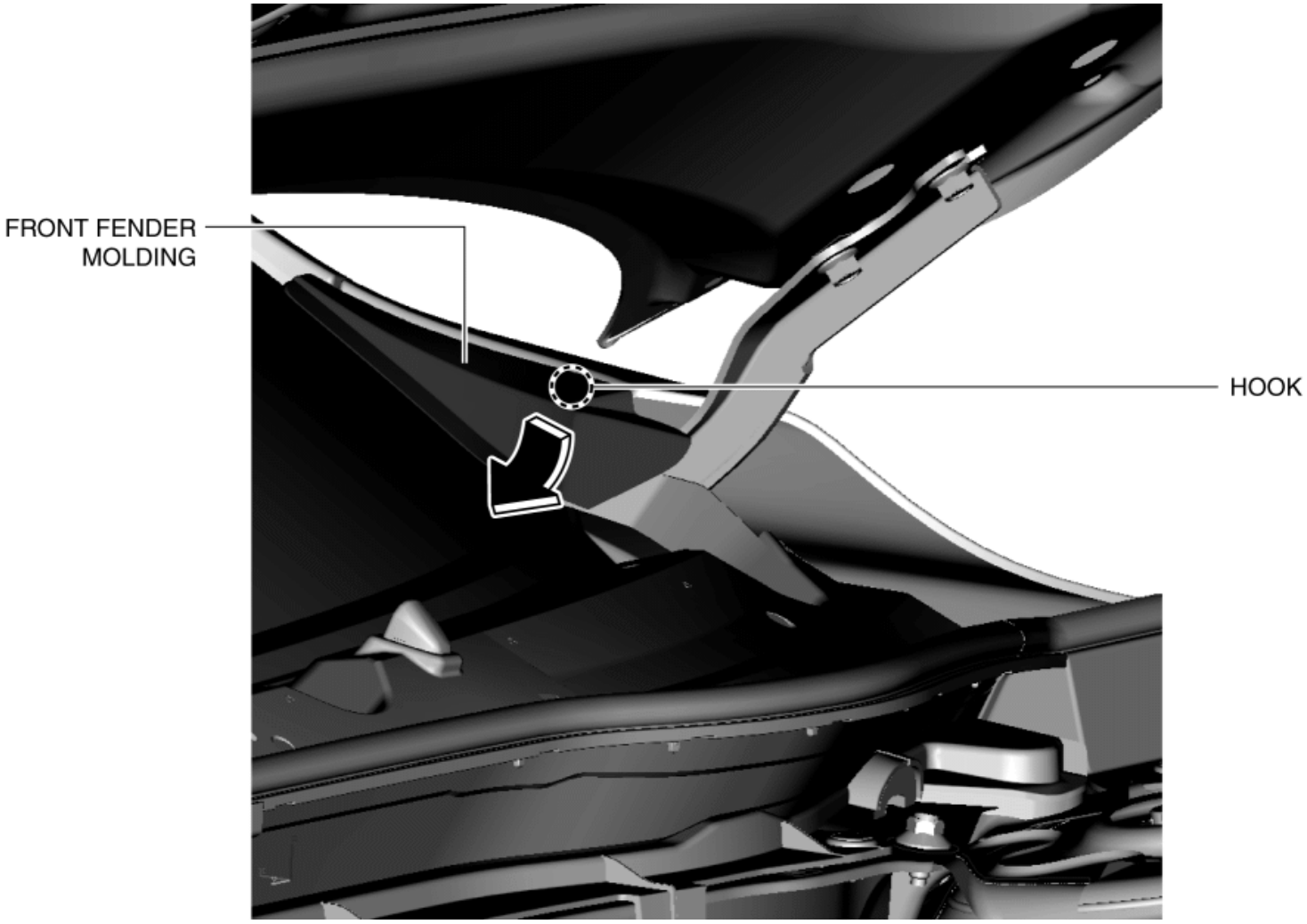

2. Move the front fender molding in the direction of the arrow shown in the figure and remove the hook from the front fender panel.

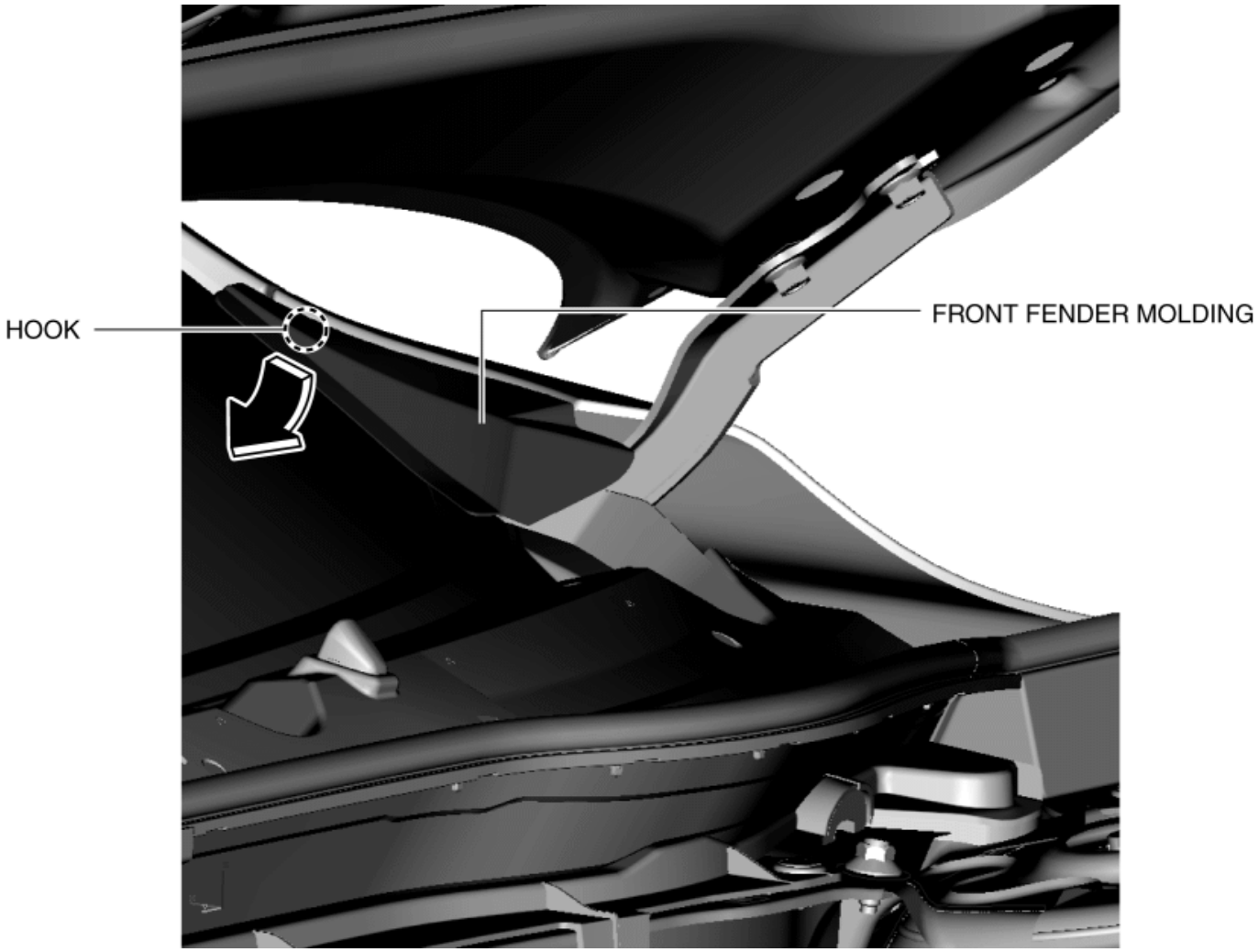

3. Remove the front fender molding while pulling it in the direction of the arrow shown in the figure.

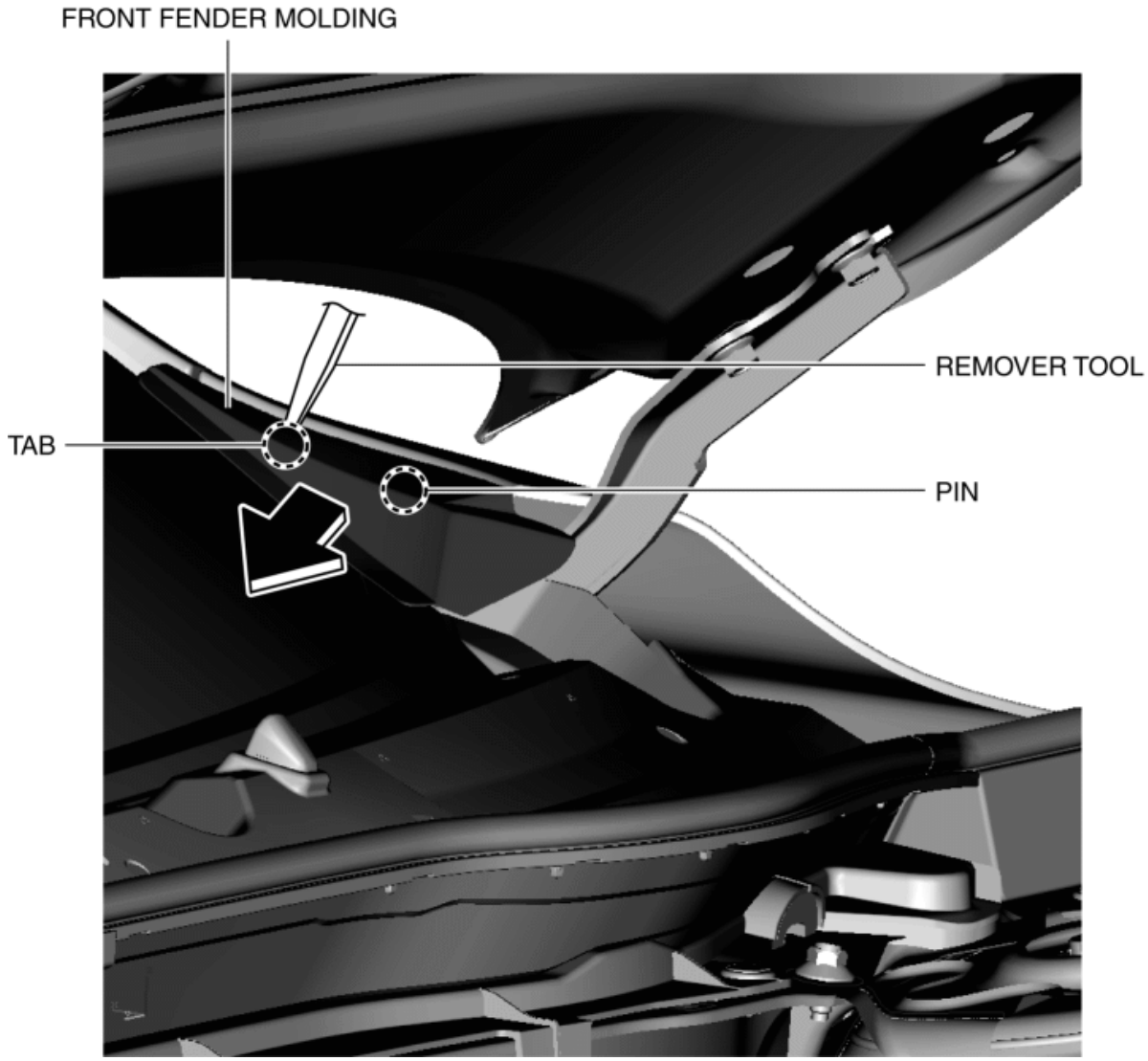

4. Install in the reverse order of removal.

2014 - Mazda3 - Body and Accessories

FRONT DOOR GARNISH REMOVAL/INSTALLATION

WARNING:

- Using a utility knife with bare hands can cause injury. Always wear gloves when using a utility knife.

1. Remove the front beltline molding. (See **FRONT BELTLINE MOLDING REMOVAL/INSTALLATION**.)
2. Using a remover tool, remove the clips in the direction of the arrow (1), (2) shown in the figure.

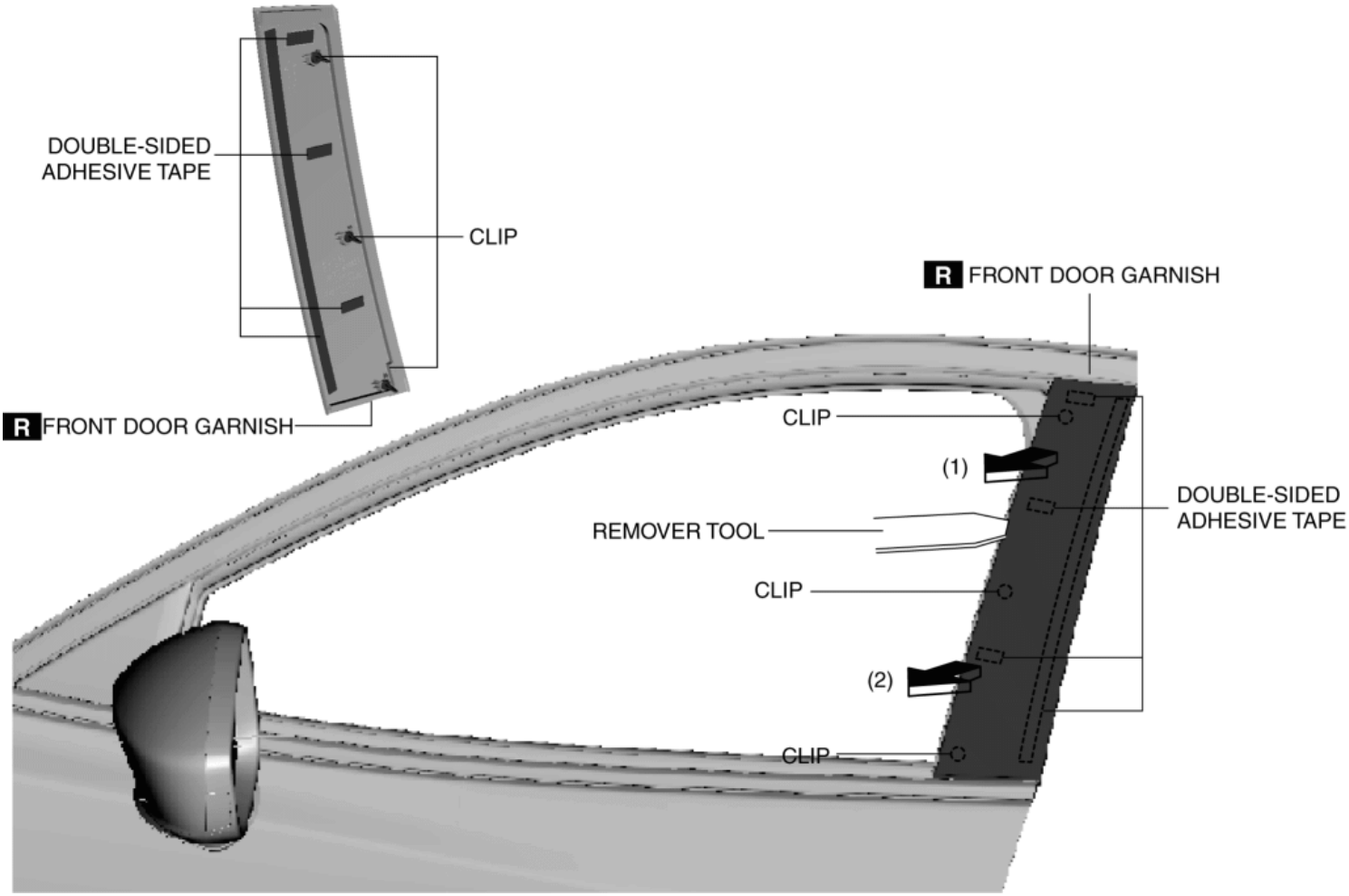

3. Remove the double-sided adhesive tape in the position shown in the figure using a utility knife, remove the front door garnish from the body.
4. Install in the reverse order of removal. (See **Front Door Garnish Installation Note**.)

Front Door Garnish Installation Note

1. When installing a new front door garnish, perform the following procedure:
   a. Remove the double-sided adhesive tape on the front door sash.
   b. Remove any grease or dirt from the affixing surface of the front door sash.

2014 - Mazda3 - Body and Accessories

FRONT UNDER COVER No.1 REMOVAL/INSTALLATION

1. Remove the bolts, screws and fasteners shown in the figure.

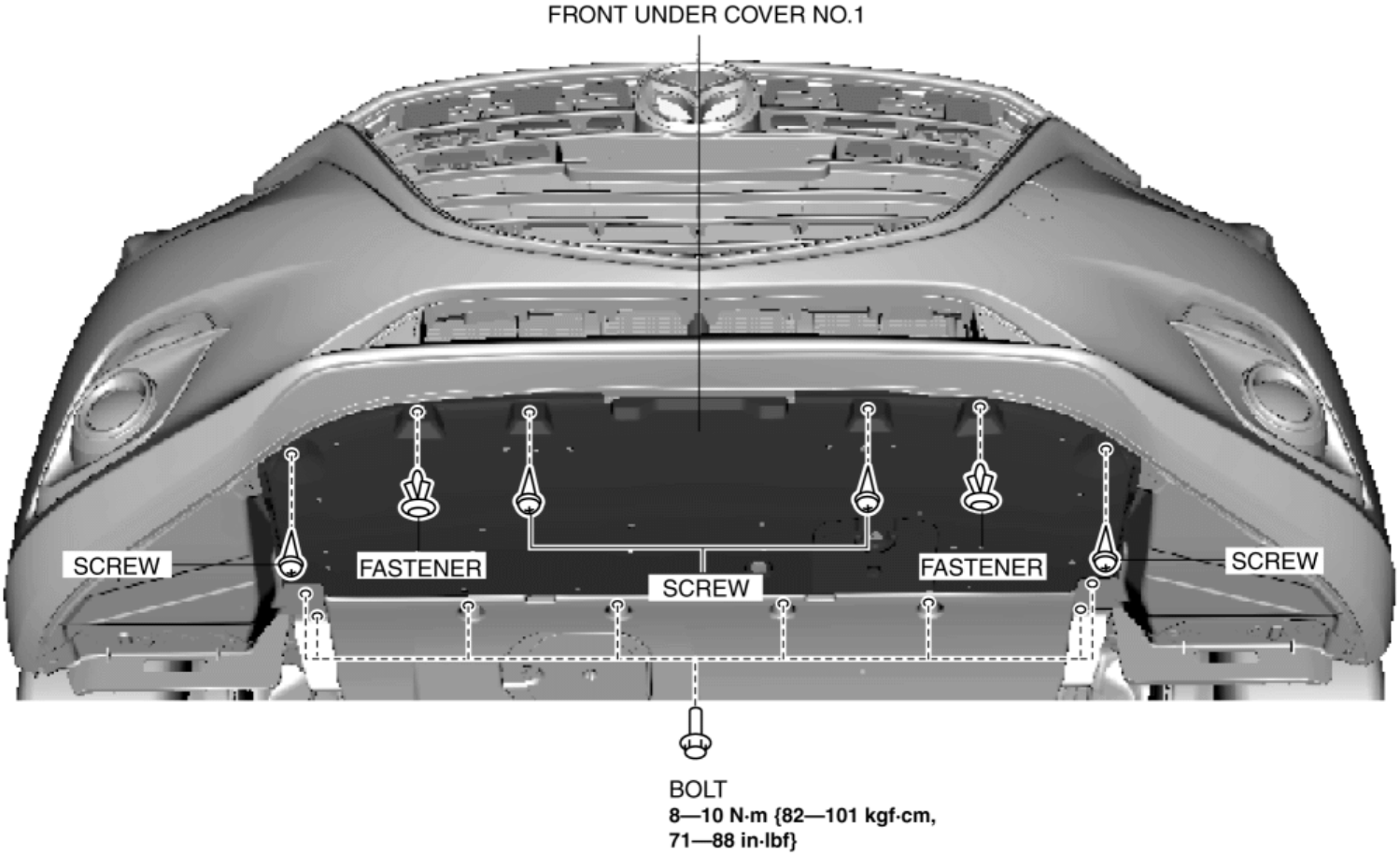

2. Remove the front under cover No.1 in the direction of the arrow shown in the figure while detaching the guide.

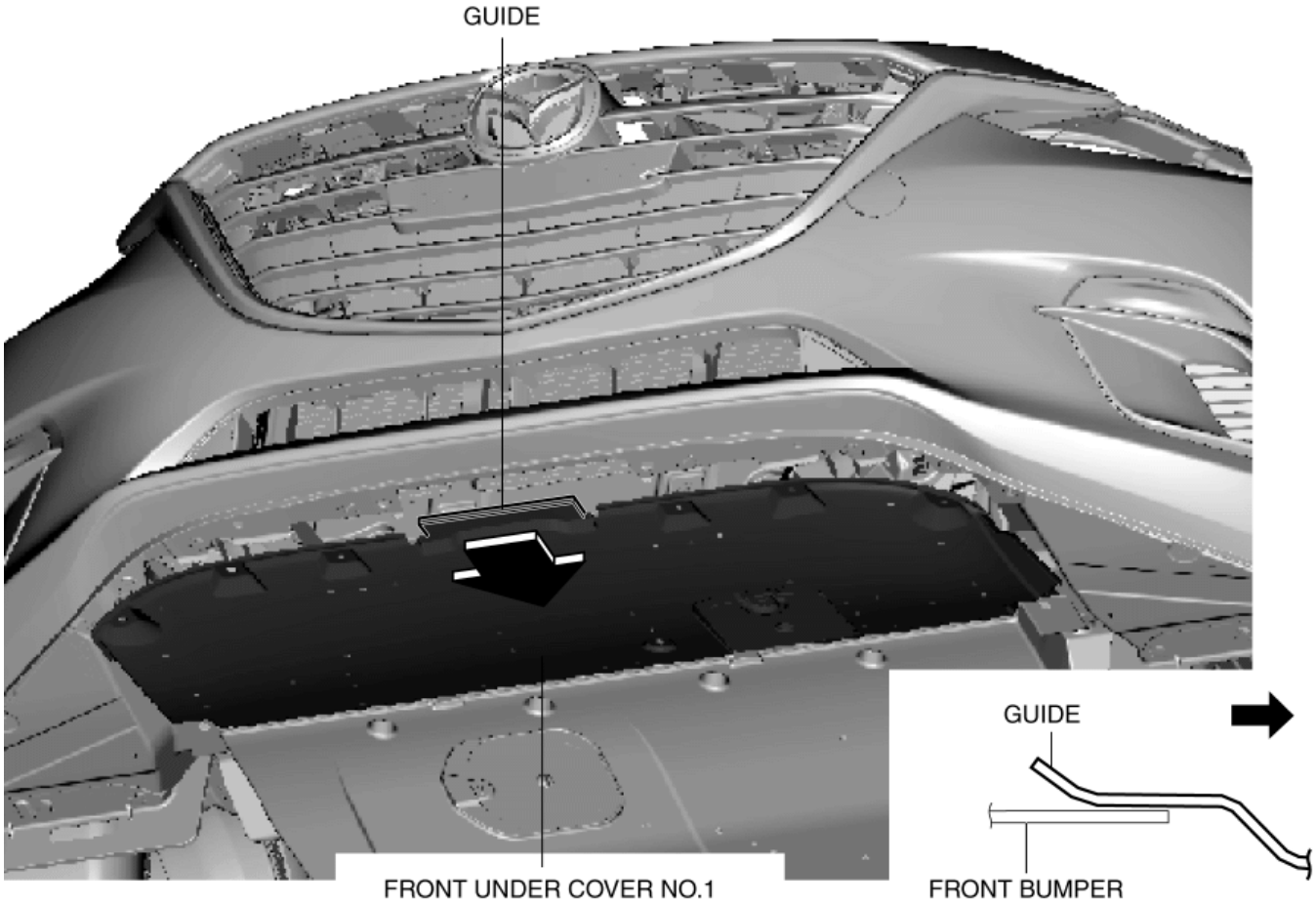

3. Install in the reverse order of removal.

2014 - Mazda3 - Body and Accessories

FRONT UNDER COVER No.2 REMOVAL/INSTALLATION

1. Lift up the vehicle.
2. Remove the bolts and fasteners shown in the figure.

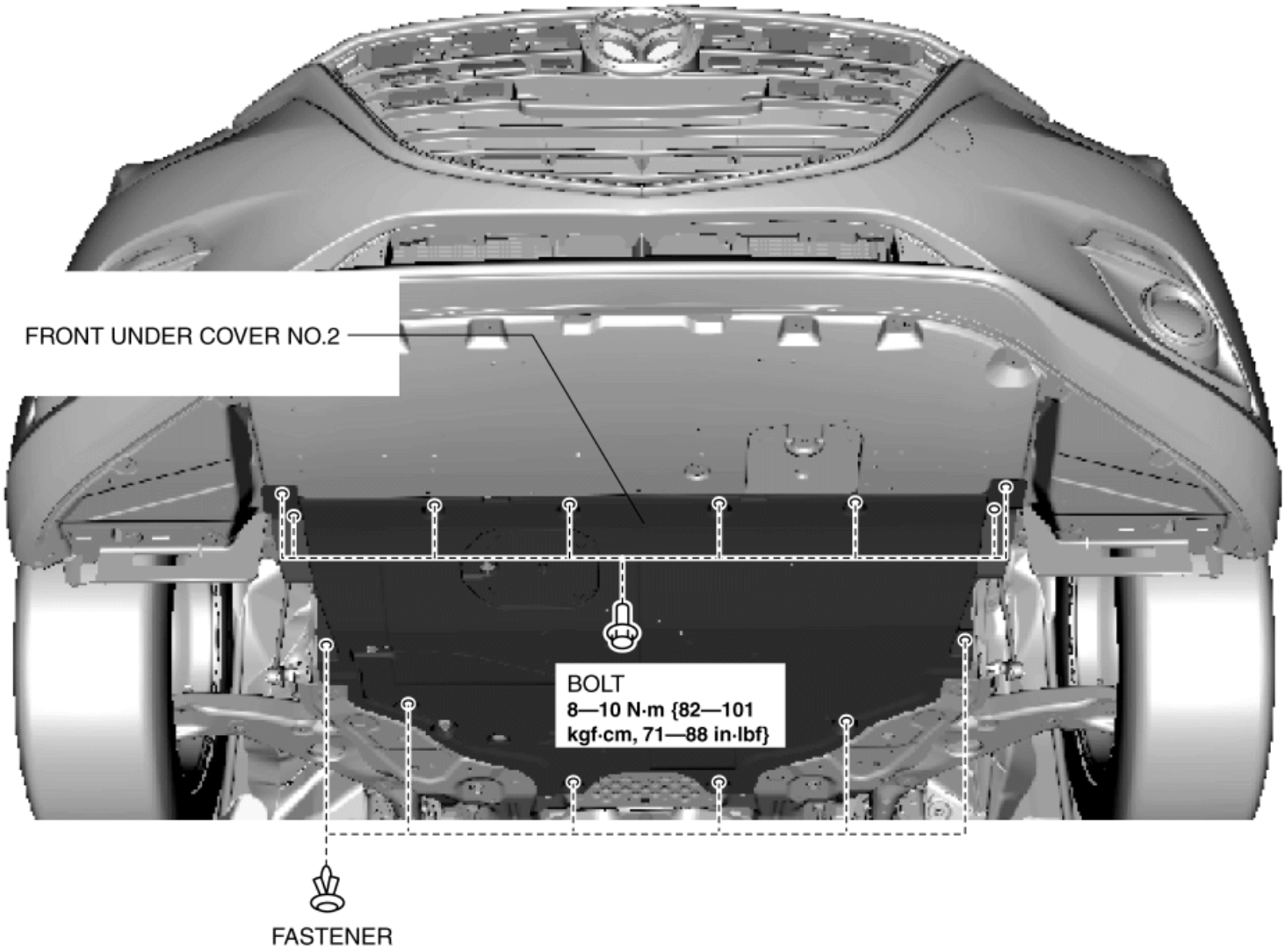

3. Remove the front under cover No.2.
4. Install in the reverse order of removal.

2014 - Mazda3 - Body and Accessories

FLOOR UNDER COVER REMOVAL/INSTALLATION

Floor Under Cover No.1

1. Lift up the vehicle.
2. Remove the bolts shown in the figure.

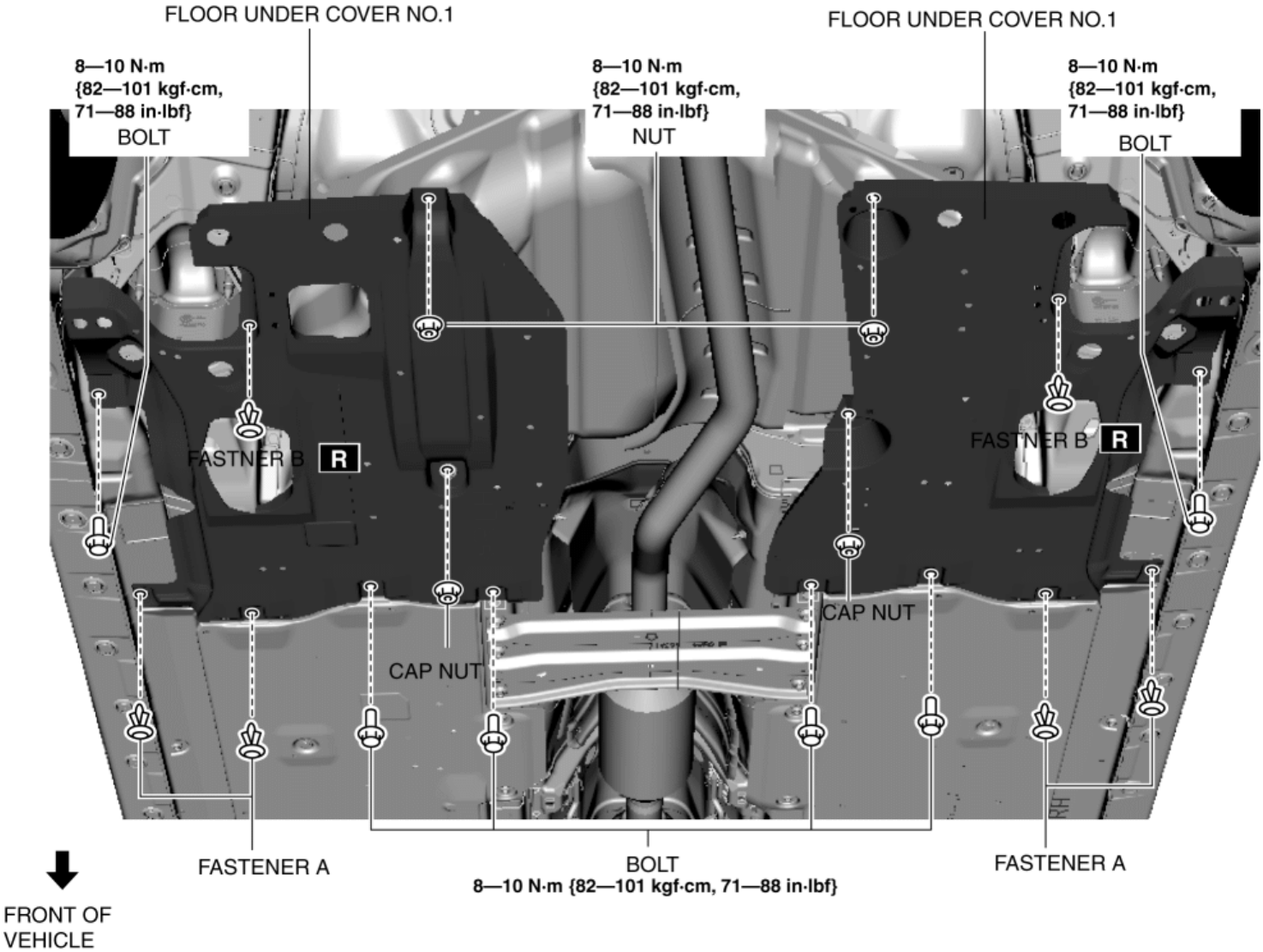

3. Remove the nuts
4. Remove the fasteners A.
5. Remove the cap nuts.
6. Remove the floor under cover No.1.
7. Remove the Fasteners B.
8. Install in the reverse order of removal.

Floor Under Cover No.2

1. Lift up the vehicle.
2. Remove the fasteners and bolts shown in the figure.

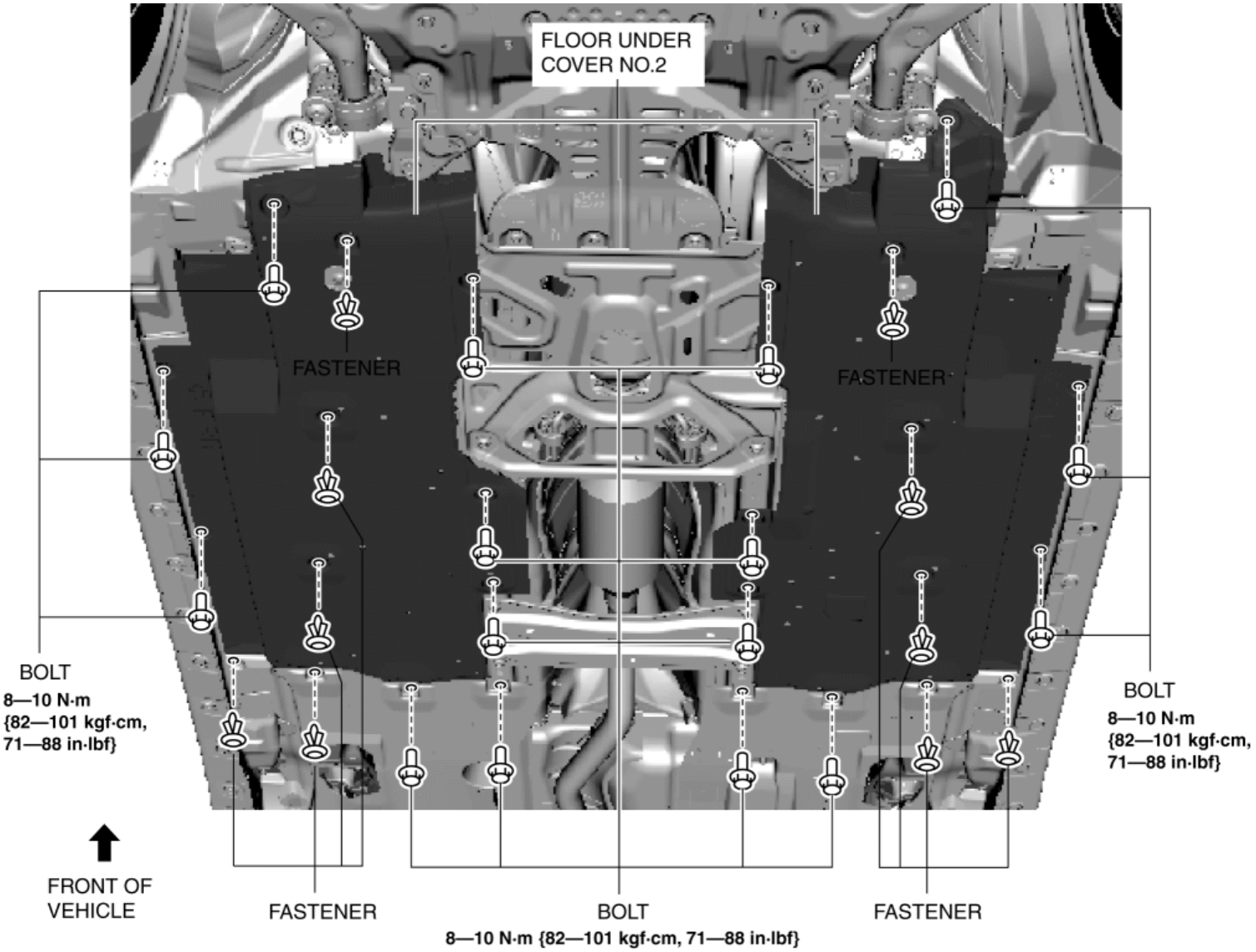

3. Remove the floor under cover No.2.
4. Install in the reverse order of removal.

2014 - Mazda3 - Body and Accessories

SPLASH SHIELD REMOVAL/INSTALLATION

Front

Front splash shield No.1

1. Remove the fastener shown in the figure and slightly bend back the front mudguard.

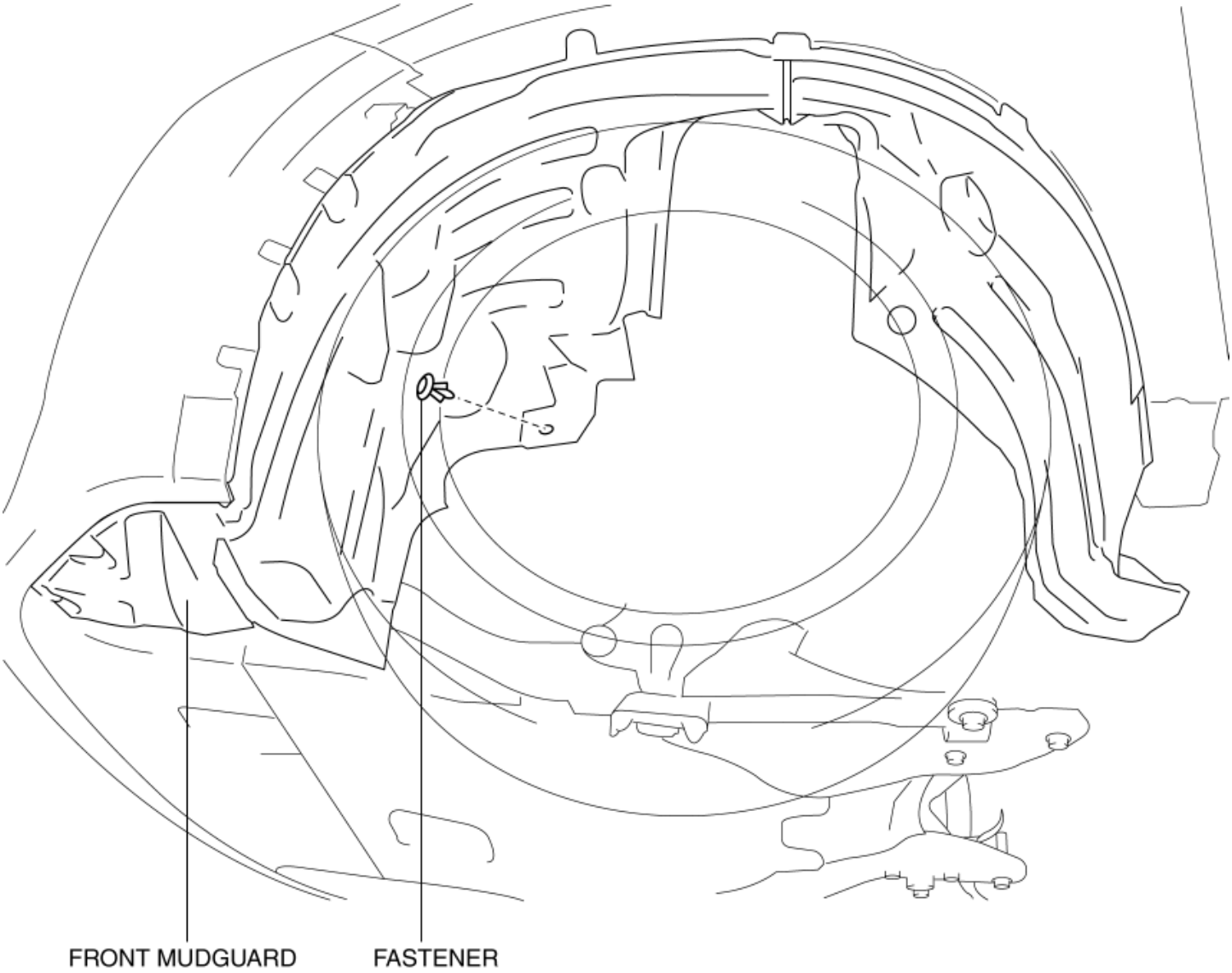

2. Remove the fasteners shown in the figure.

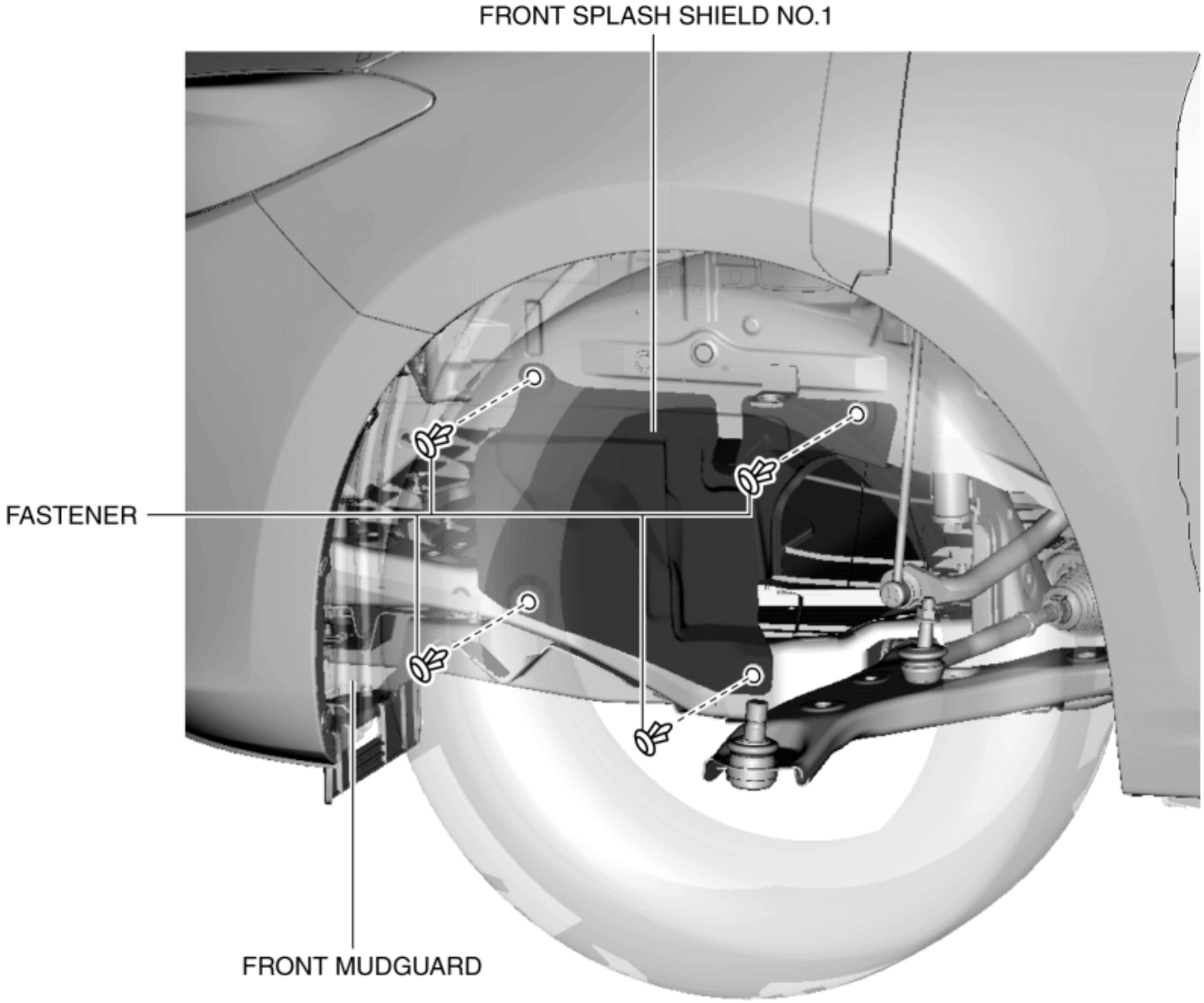

3. Remove the front splash shield No.1.
4. Install in the reverse order of removal.

Front splash shield No.2

1. Remove the fasteners and screw shown in the figure.

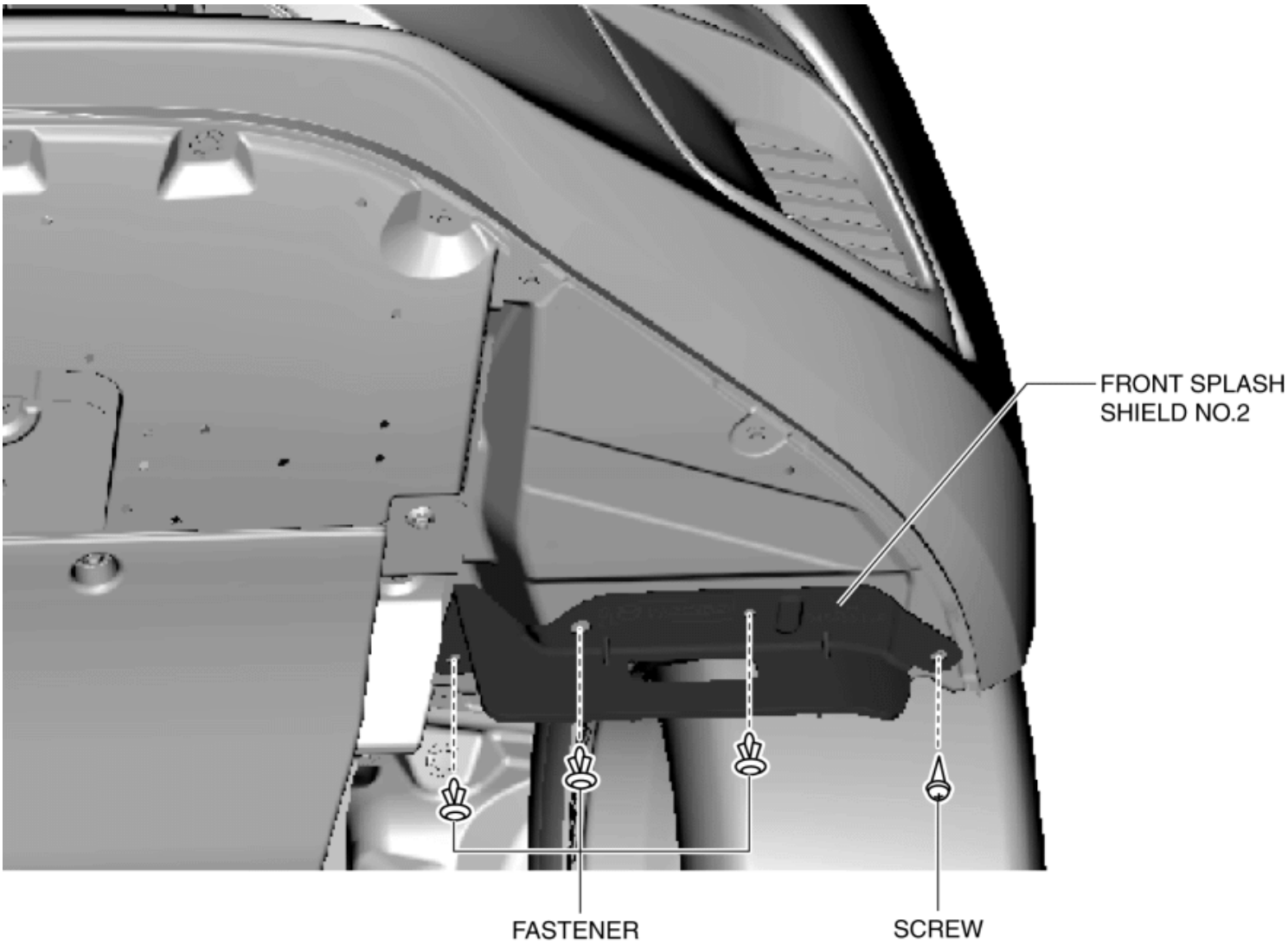

2. Remove the front splash shield No.2 in the direction of the arrow shown in the figure while detaching the hooks.

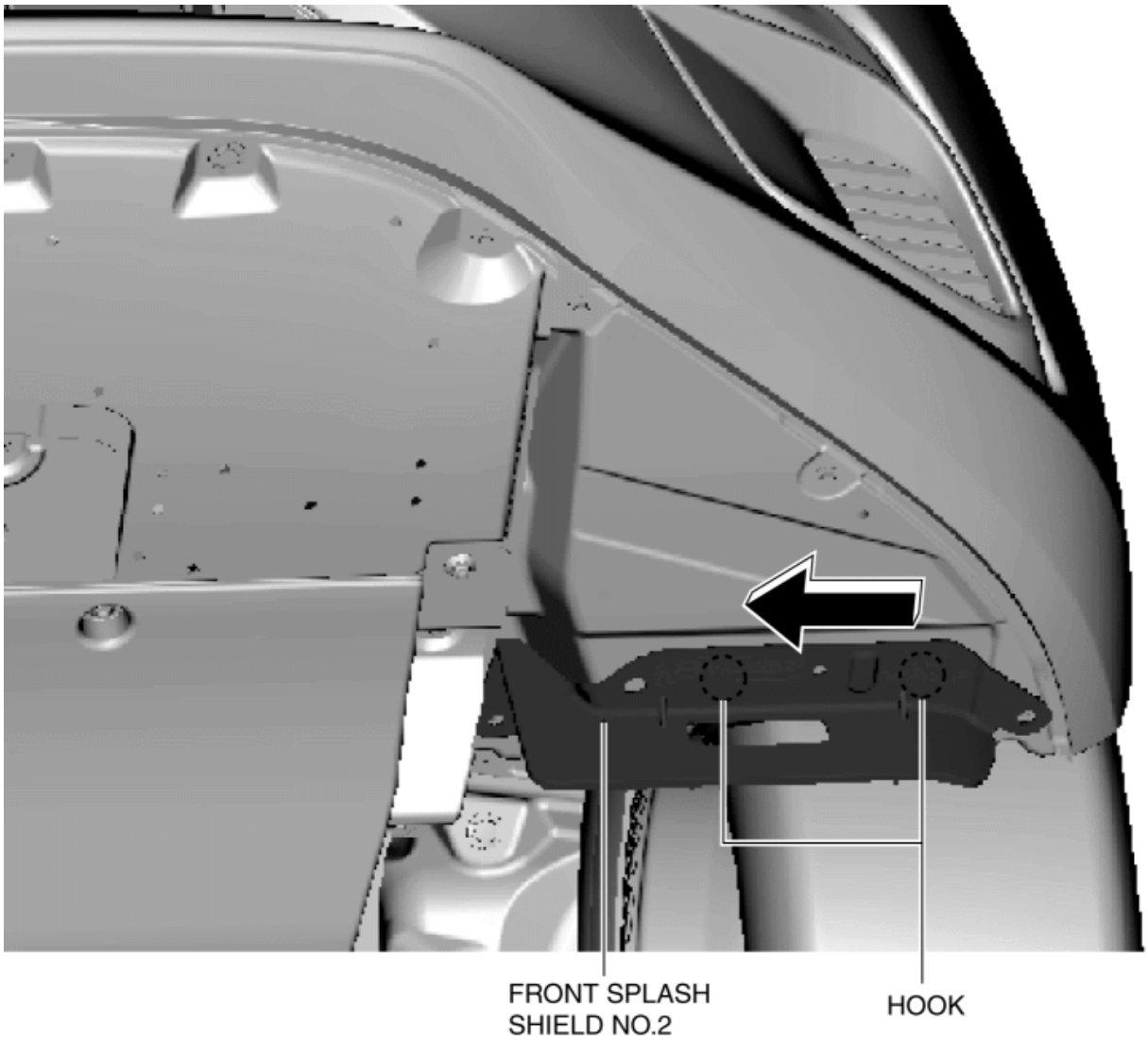

3. Install in the reverse order of removal.

Rear splash shield

1. Remove the screws, fasteners and cap nut shown the figure.

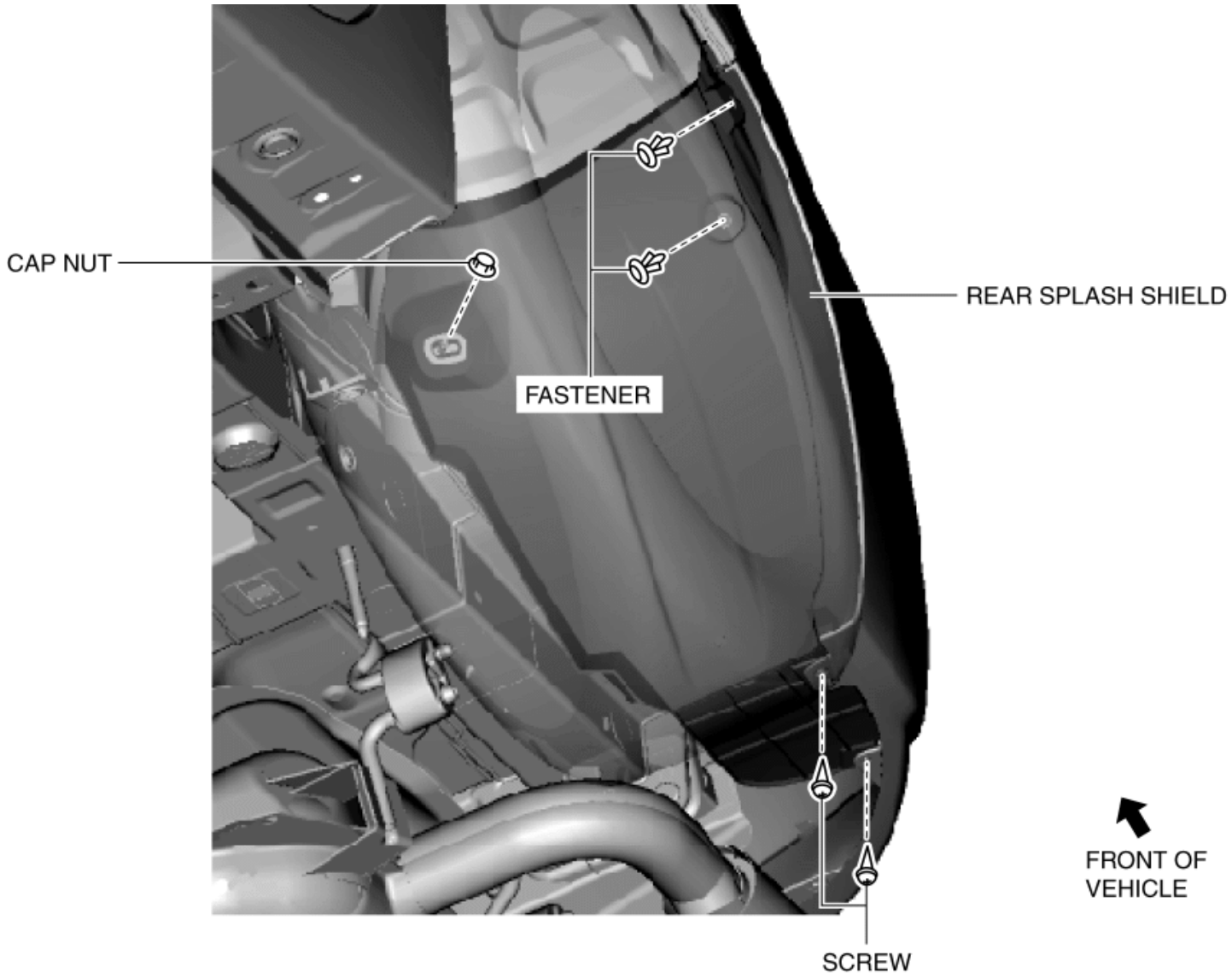

2. Remove the rear splash shield.

3. Install in the reverse order of removal.

2014 - Mazda3 - Body and Accessories

LIFTGATE GARNISH REMOVAL/INSTALLATION

Without advanced keyless entry system

1. Disconnect the negative battery cable. (See **NEGATIVE BATTERY CABLE DISCONNECTION/CONNECTION [SKYACTIV-G 2.0, SKYACTIV-G 2.5]**.)
2. Remove the following parts:
   a. Liftgate upper trim (See **LIFTGATE UPPER TRIM REMOVAL/INSTALLATION**.)
   b. Liftgate side trim (See **LIFTGATE SIDE TRIM REMOVAL/INSTALLATION**.)
   c. Liftgate recess (See **LIFTGATE RECESS REMOVAL/INSTALLATION**.)
   d. Liftgate lower trim (See **LIFTGATE LOWER TRIM REMOVAL/INSTALLATION**.)
3. Attach a piece of wire between the liftgate striker and liftgate latch to hold the liftgate in the half-opened position as shown below.

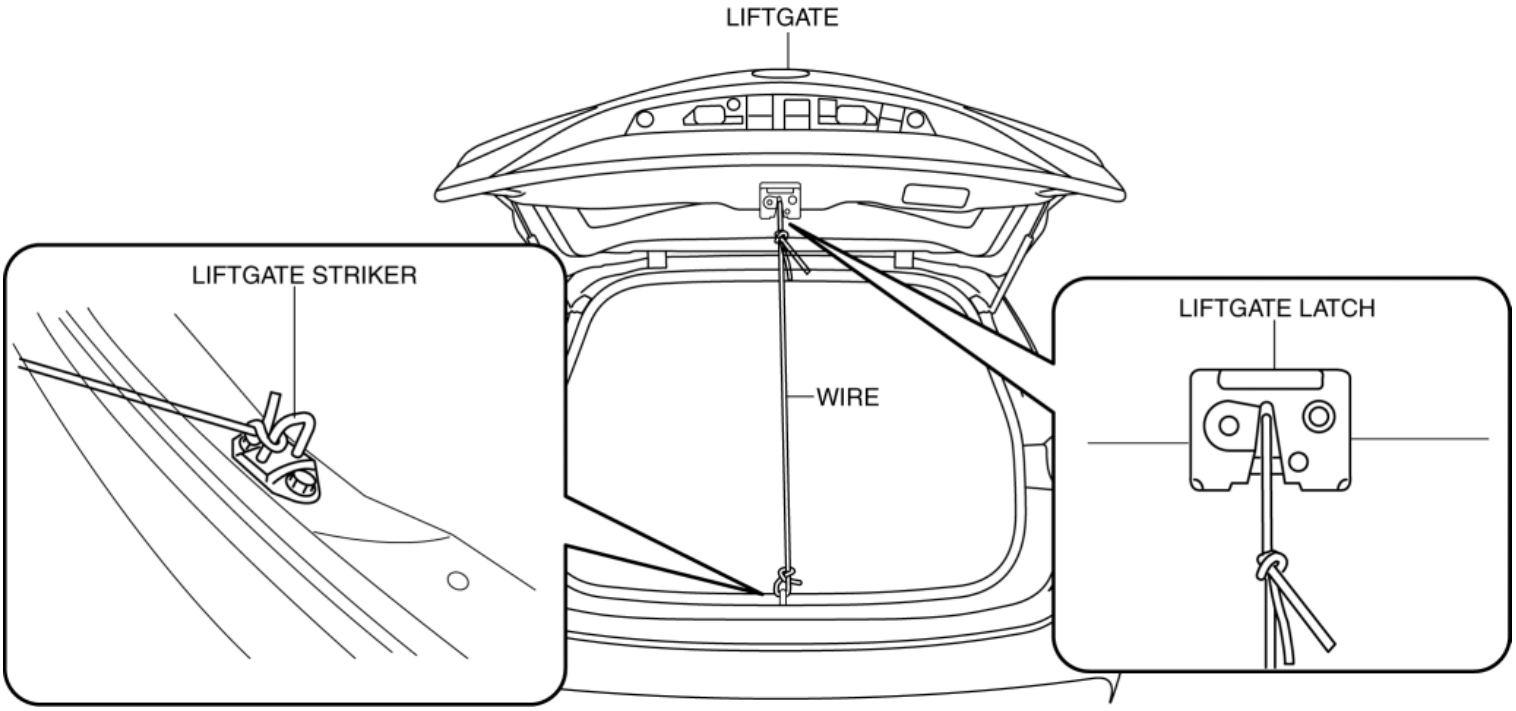

4. Remove the cap using a remover tool.

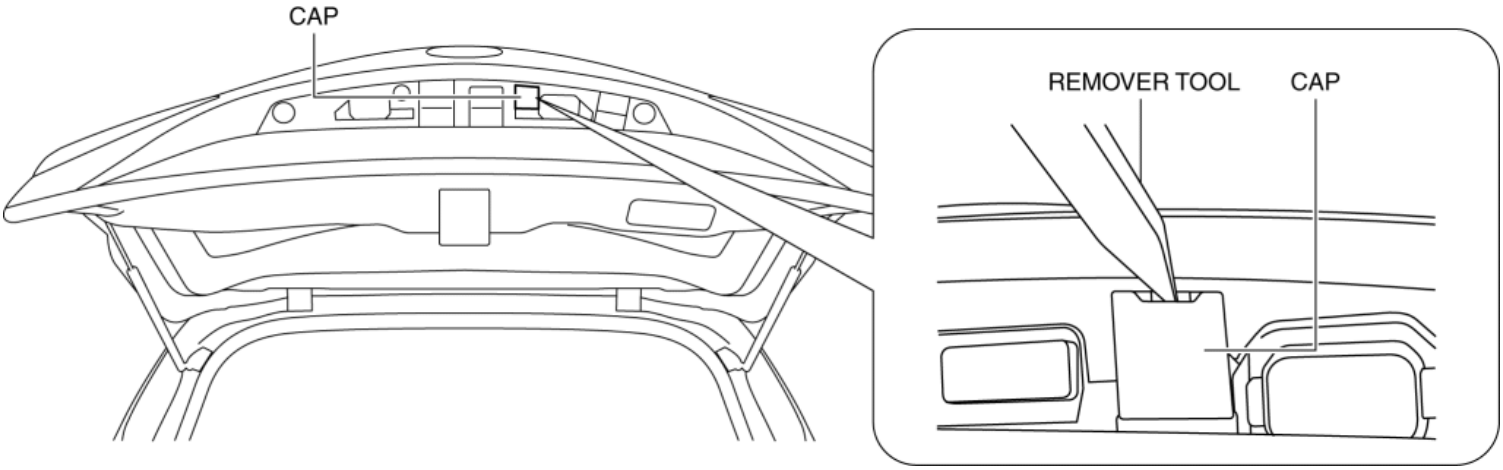

5. Remove the liftgate garnish bolt.

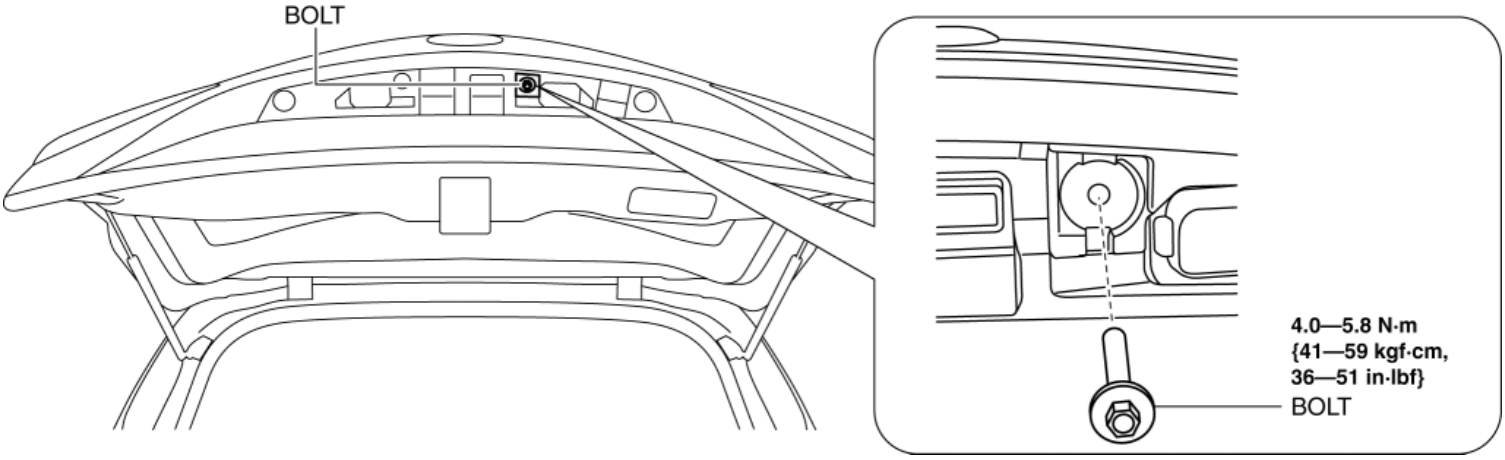

6. Remove the positioning pin from the liftgate garnish.

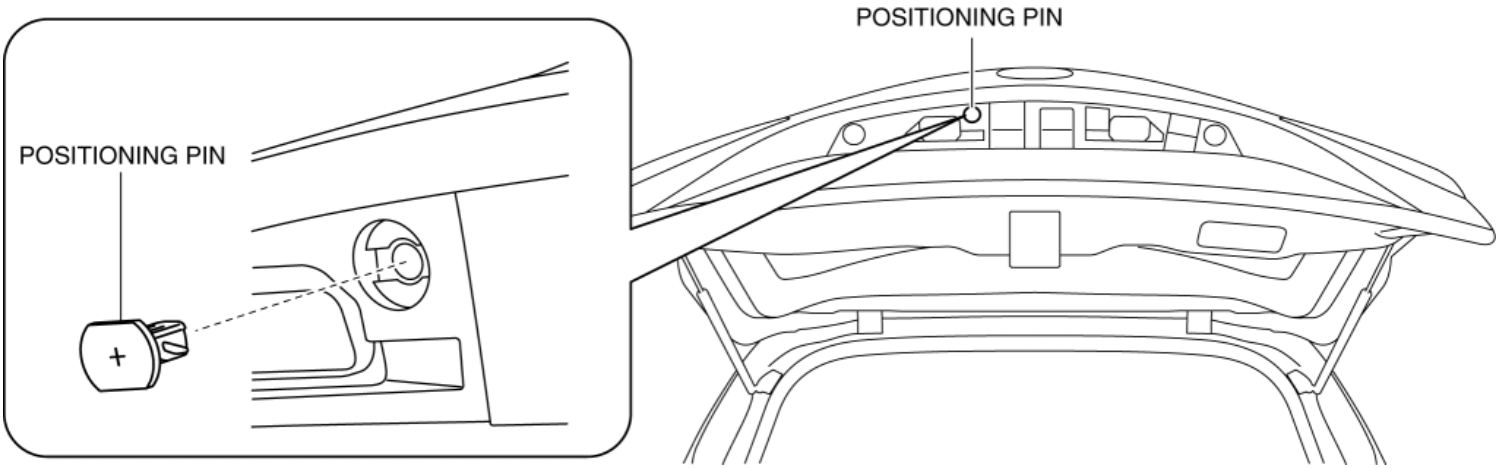

7. Remove the fasteners from the liftgate garnish in the order of the pins, guides shown in the figure.

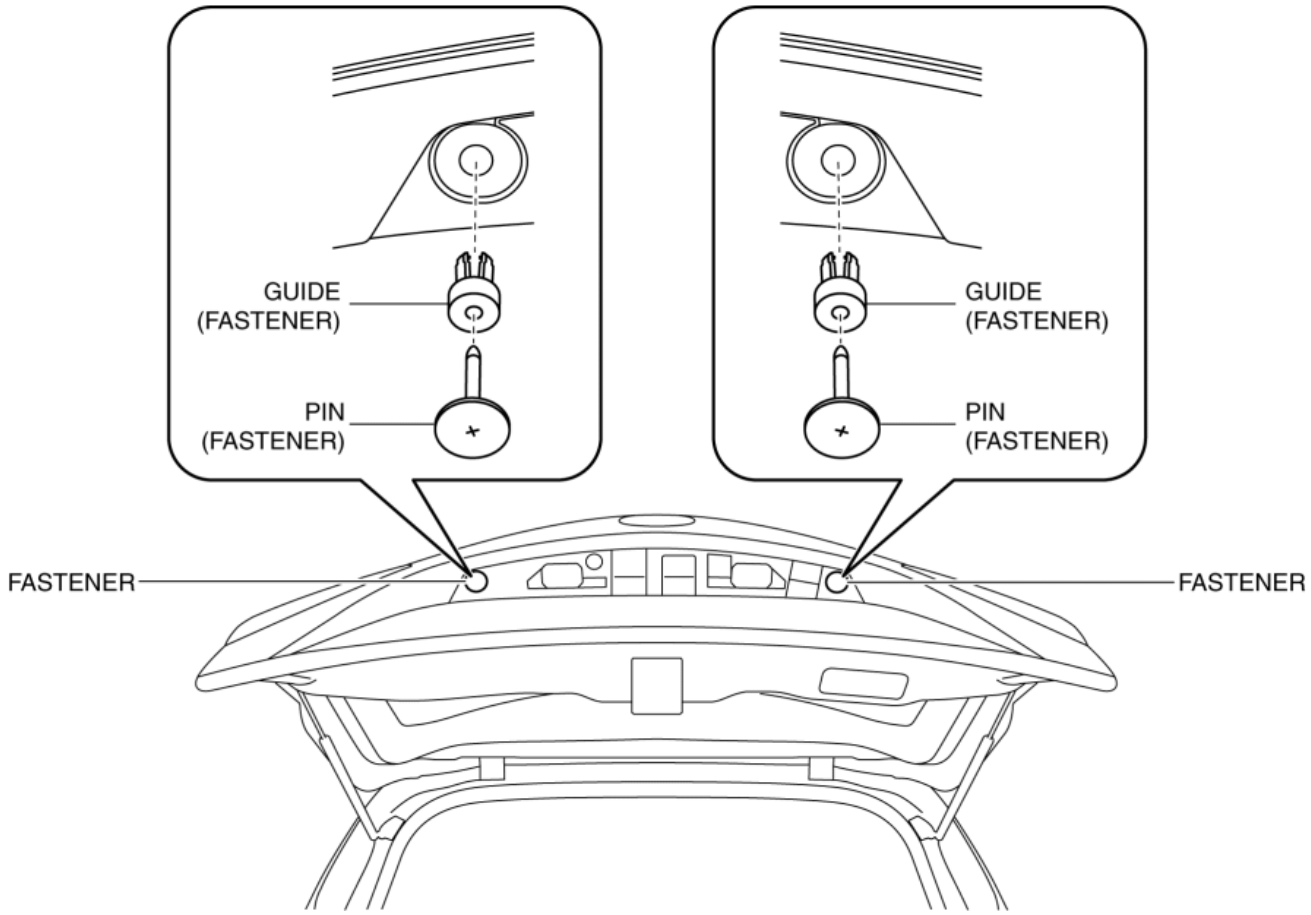

8. Remove the liftgate garnish installation nuts in the order of (1), (2), (3), and (4) shown in the figure.

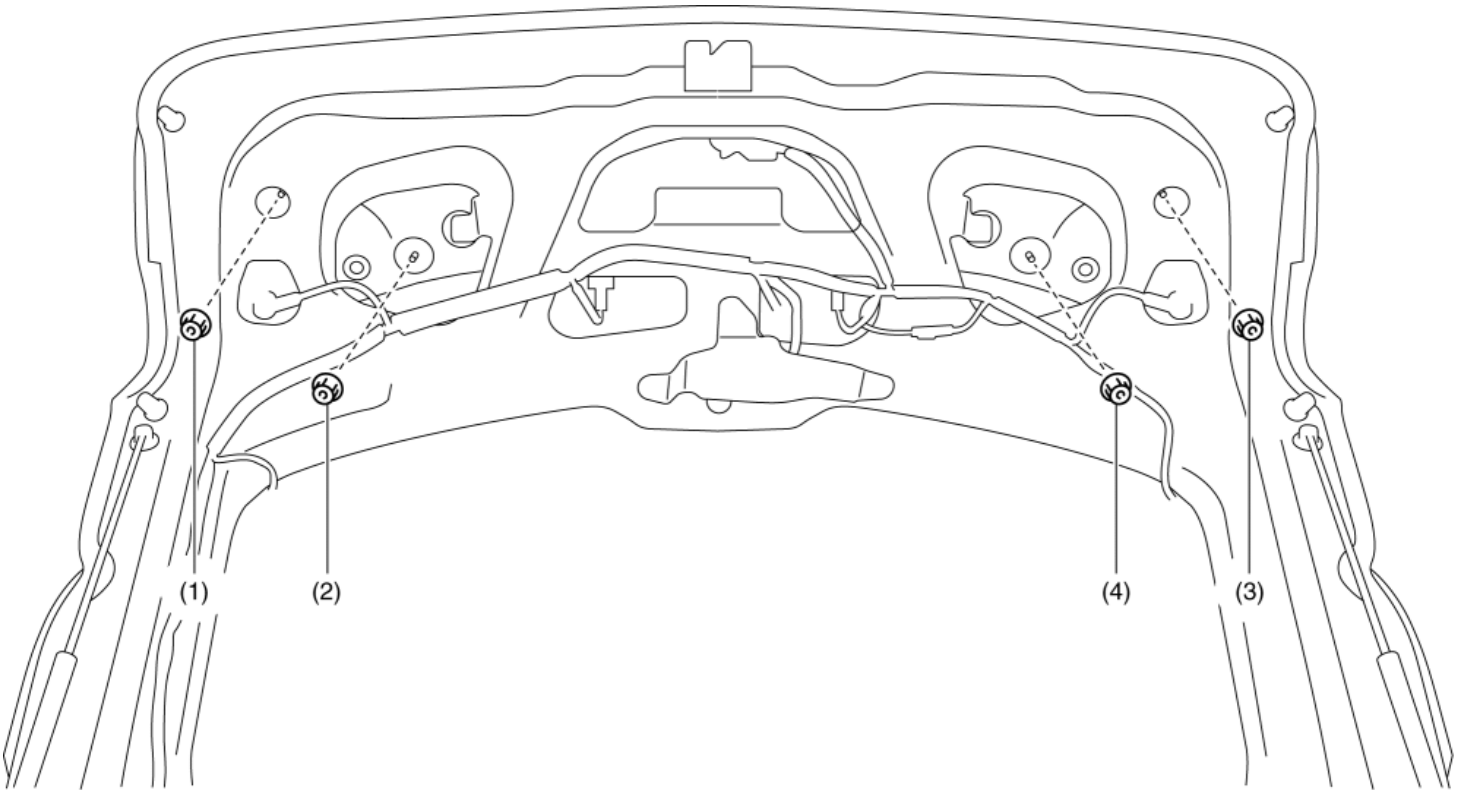

NUT: **6.9—9.8 N·m {71—99 kgf·cm, 62—86 in·lbf}**

9. Insert a remover tool in the position shown in the figure.

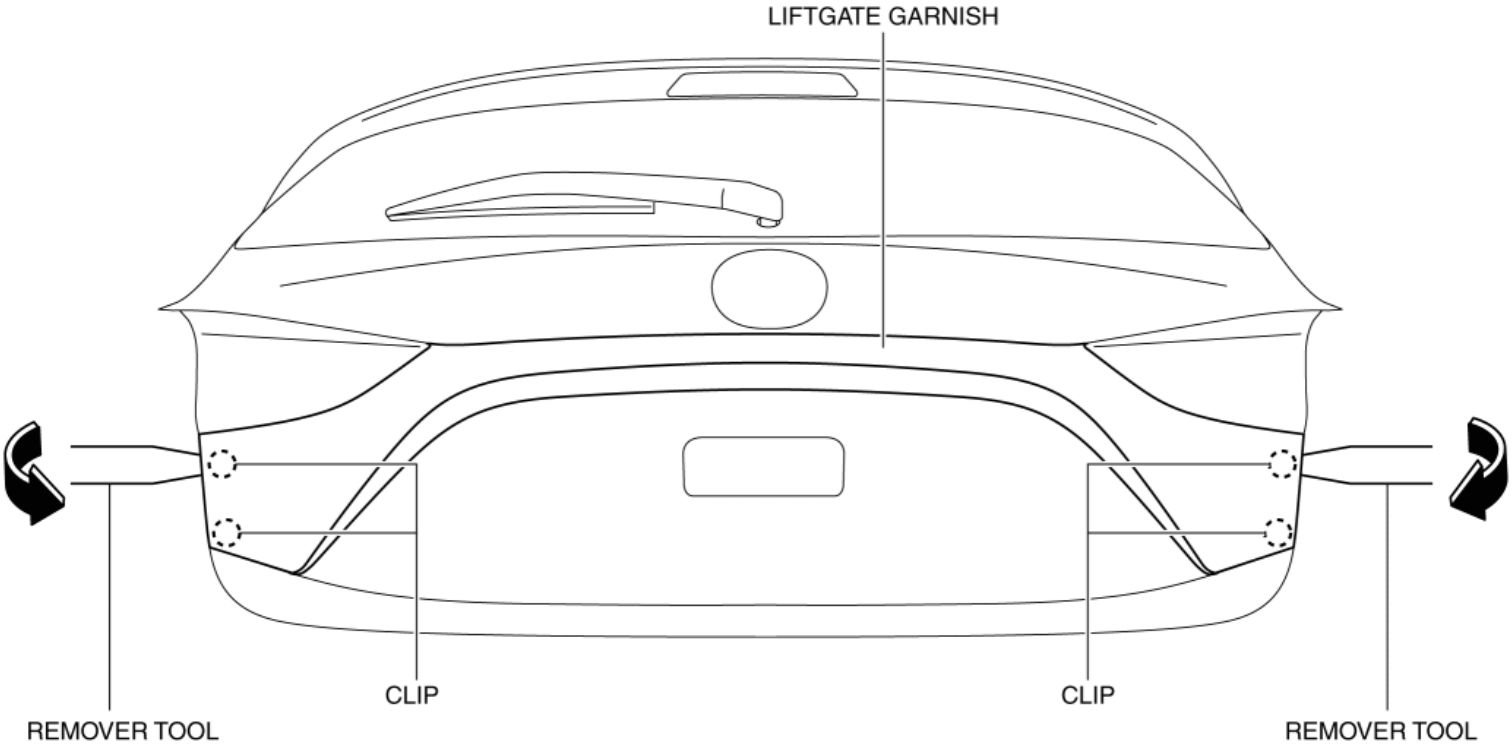

10. Move the remover tool in the direction shown in the figure and disengage the liftgate garnish clips from the liftgate side T-studs.

11. Insert a remover tool in the position shown in the figure.

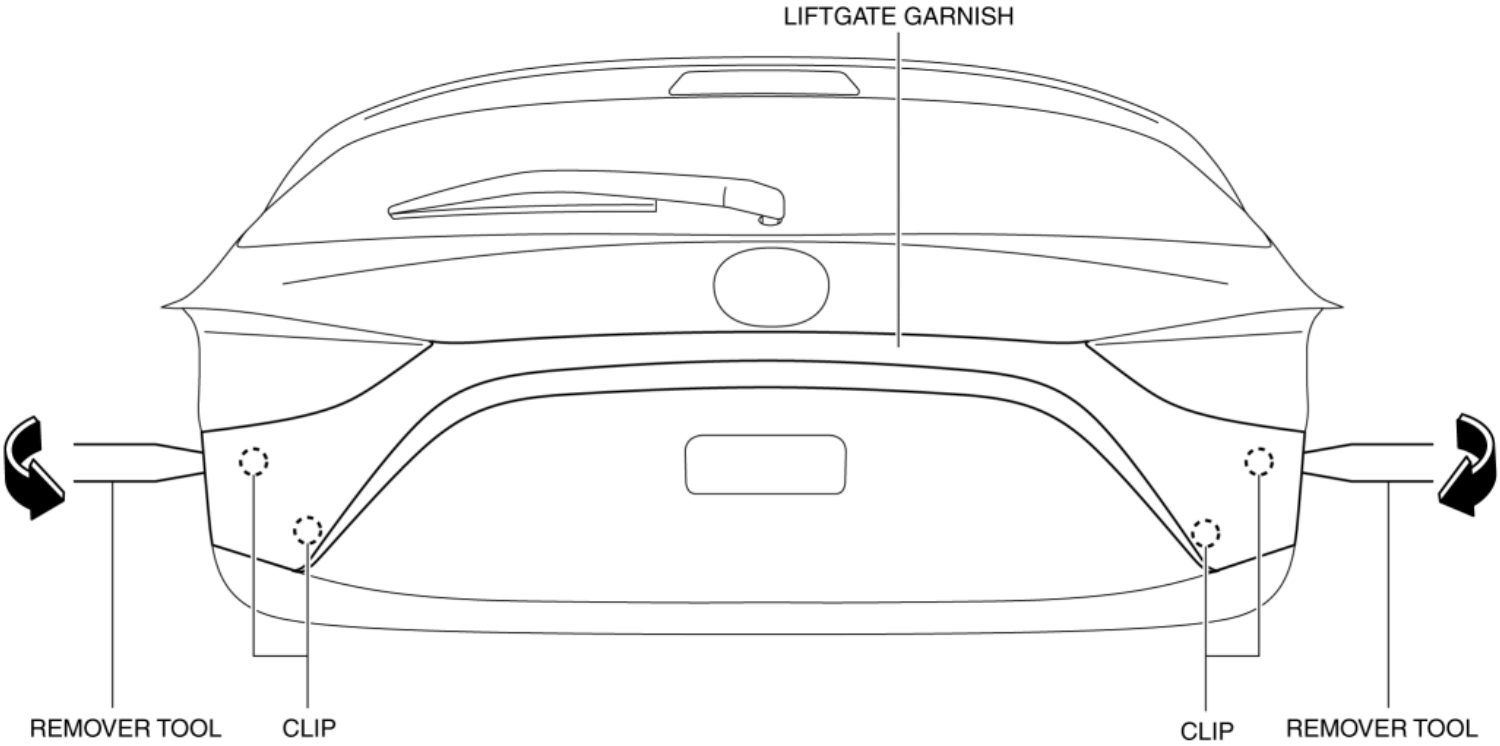

12. Move the remover tool in the direction of the arrow shown in the figure and remove the clips from the liftgate, and then remove the liftgate garnish.

13. Install in the reverse order removal.

With advanced keyless entry system

1. Disconnect the negative battery cable. (See **NEGATIVE BATTERY CABLE DISCONNECTION/CONNECTION [SKYACTIV-G 2.0, SKYACTIV-G 2.5]**.)

2. Remove the following parts:

a. Liftgate upper trim (See **LIFTGATE UPPER TRIM REMOVAL/INSTALLATION**.)

b. Liftgate side trim (See **LIFTGATE SIDE TRIM REMOVAL/INSTALLATION**.)

c. Liftgate recess (See **LIFTGATE RECESS REMOVAL/INSTALLATION**.)

d. Liftgate lower trim (See **LIFTGATE LOWER TRIM REMOVAL/INSTALLATION**.)

3. Attach a piece of wire between the liftgate striker and liftgate latch to hold the liftgate in the half-opened position as shown below.

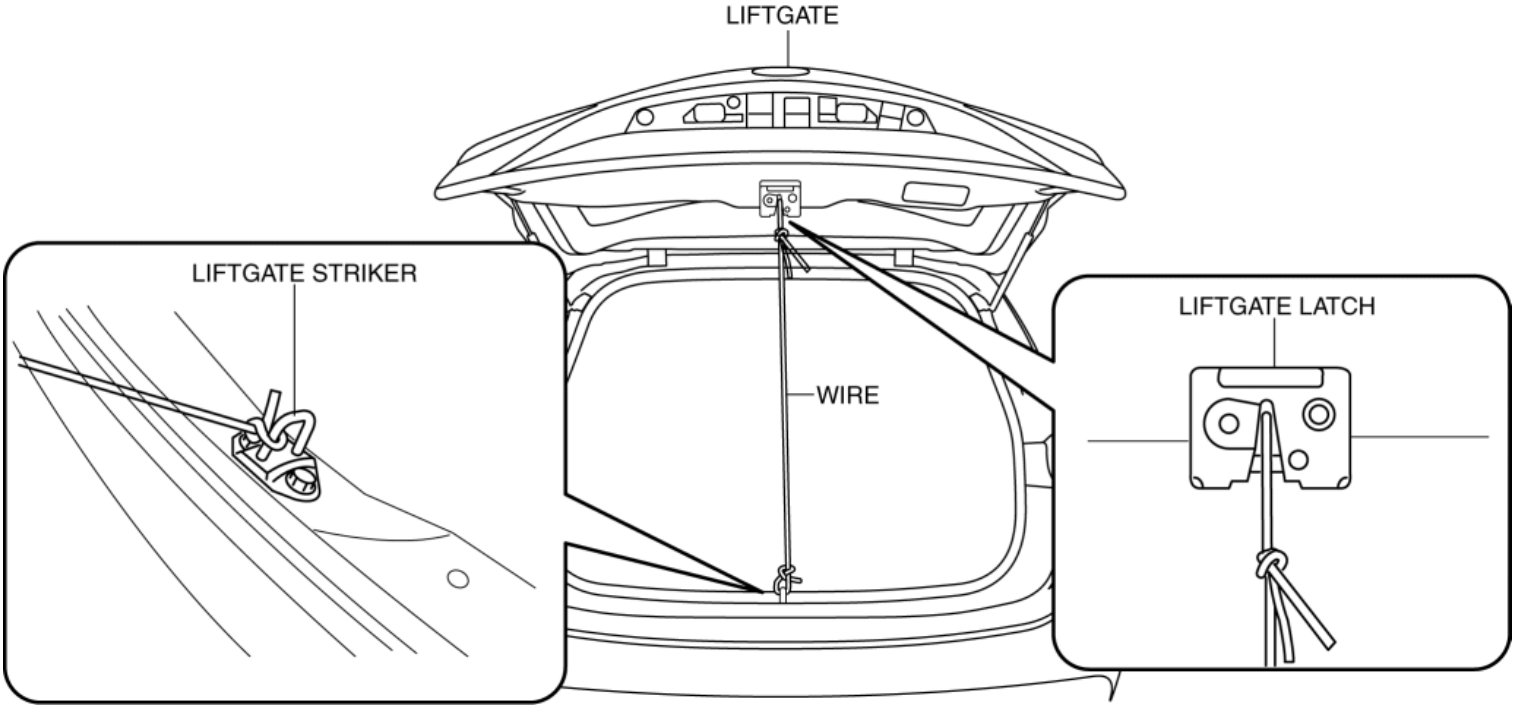

4. Remove the cap using a remover tool.

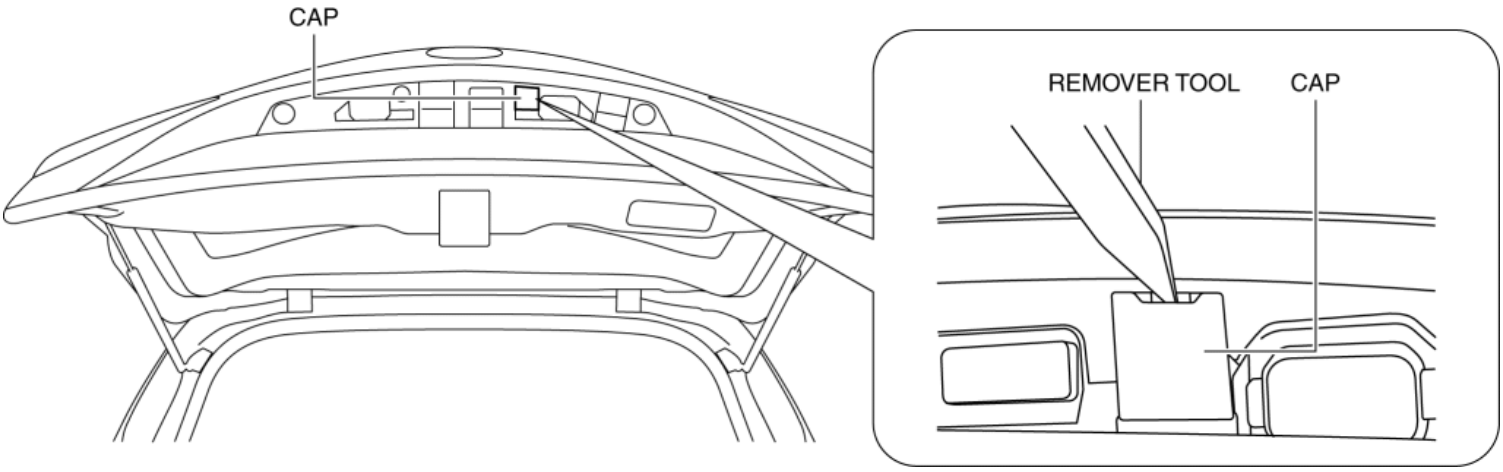

5. Remove the bolt from the liftgate garnish.

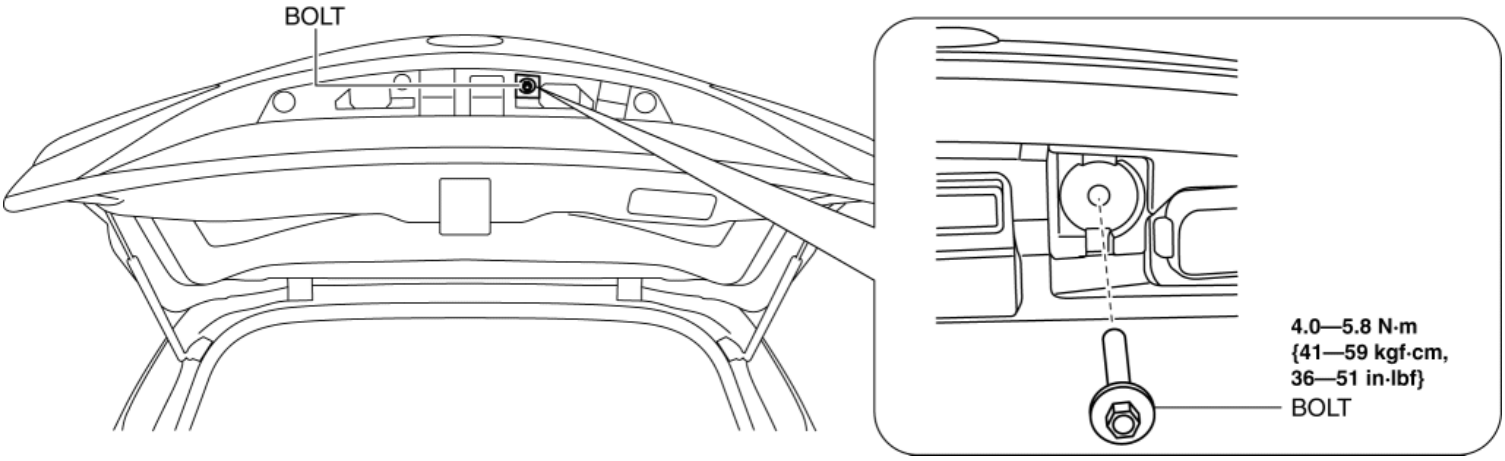

6. Remove the positioning pin from the liftgate garnish.

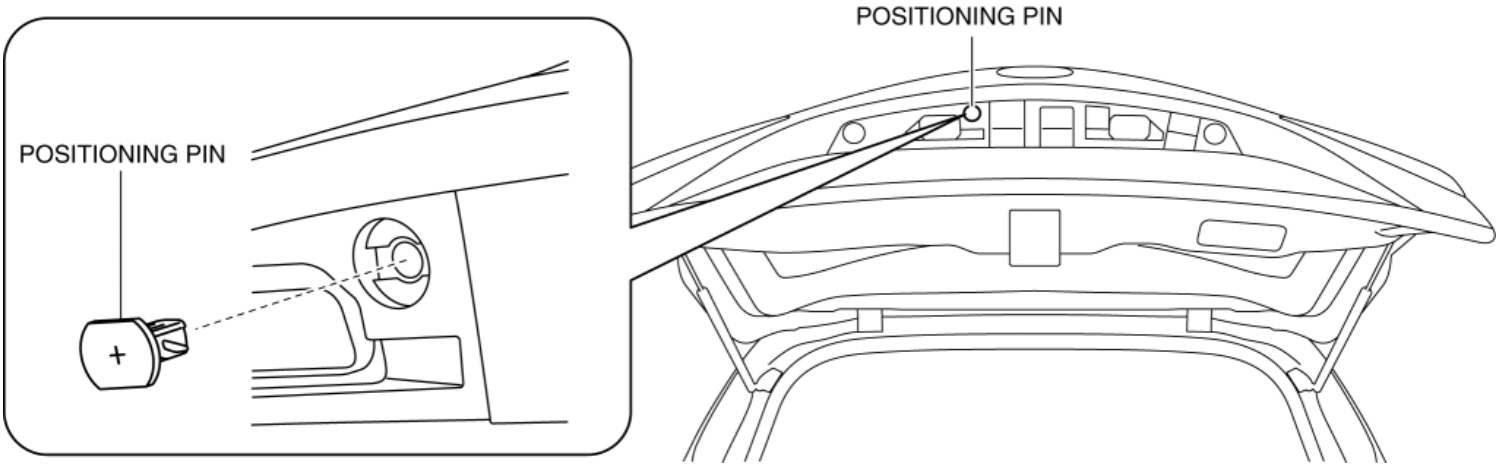

7. Remove the fasteners from the liftgate garnish in the order of the pins, guides shown in the figure.

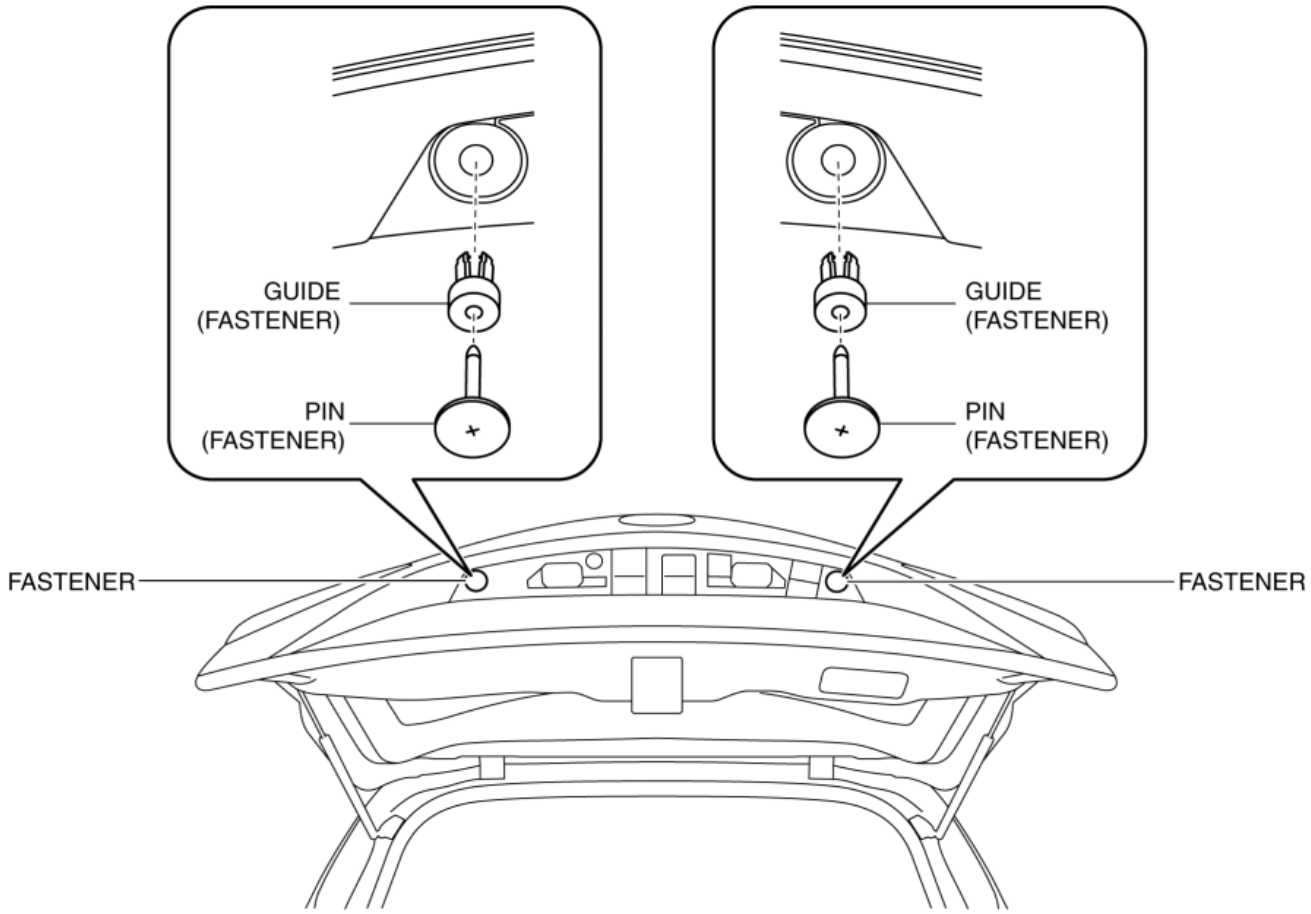

8. Remove the liftgate garnish installation nuts in the order of (1), (2), (3) and (4) shown in the figure.

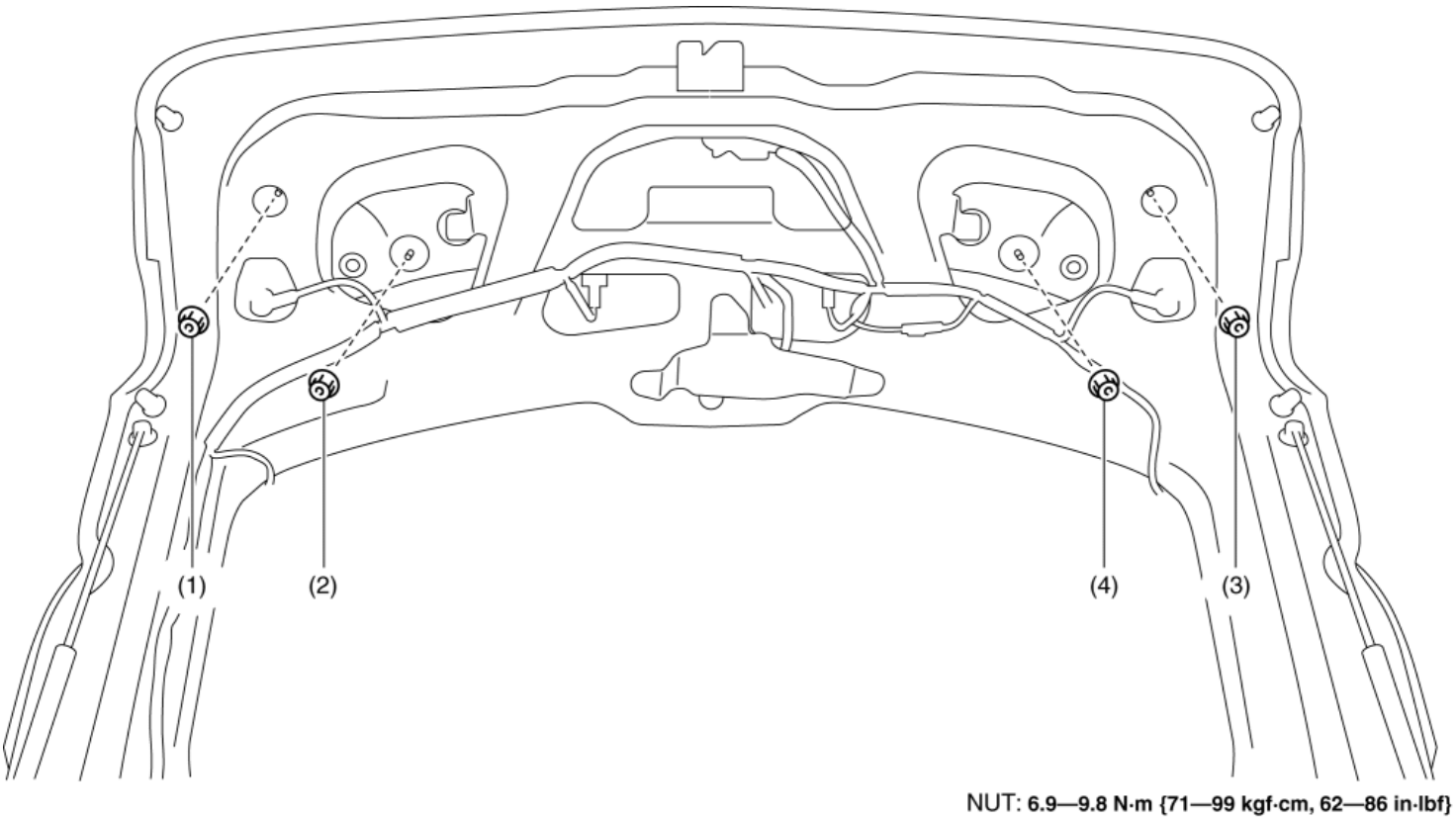

9. Insert a remover tool in the position shown in the figure.

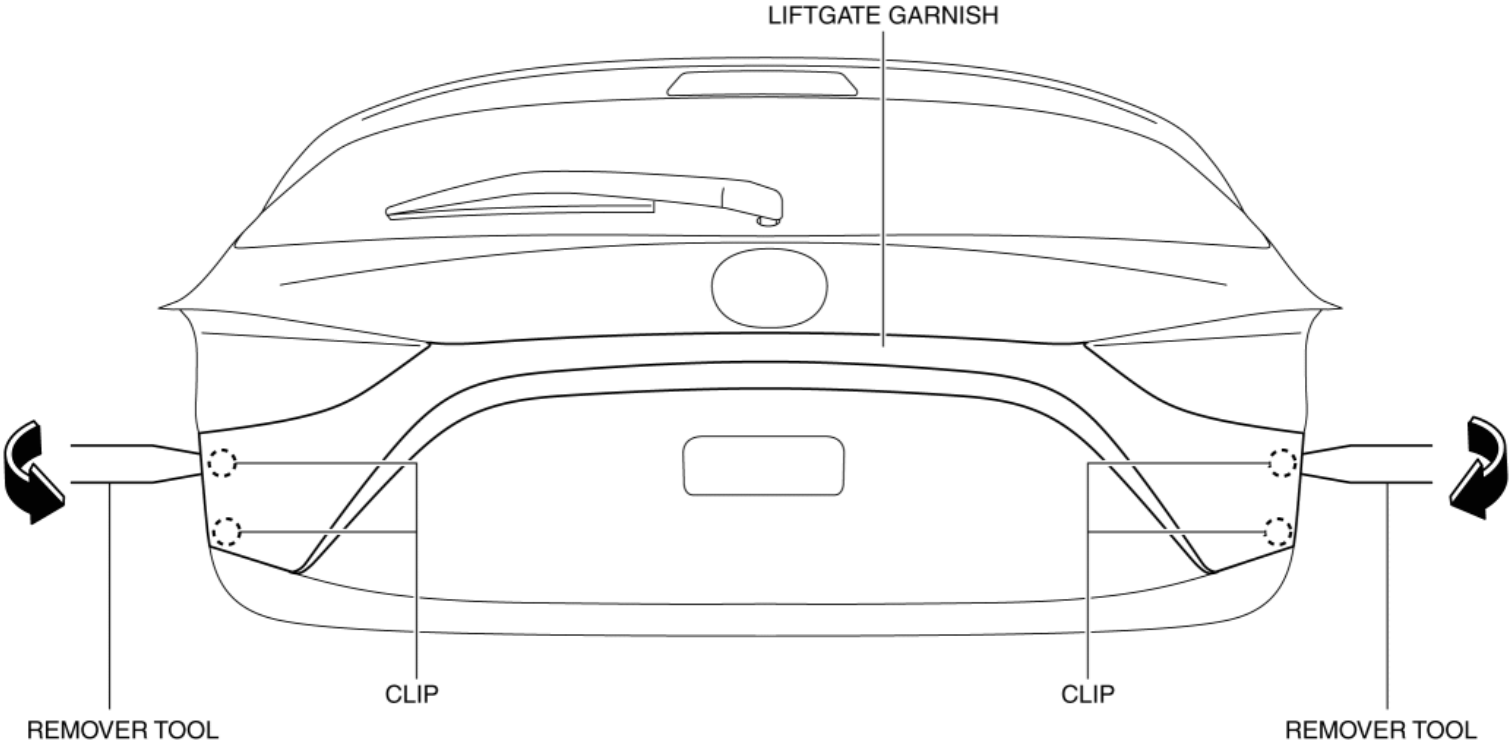

10. Move the remover tool in the direction of the arrow shown in the figure and disengage the liftgate garnish clips from the T-studs on the liftgate side.

11. Disconnect the request switch connector.

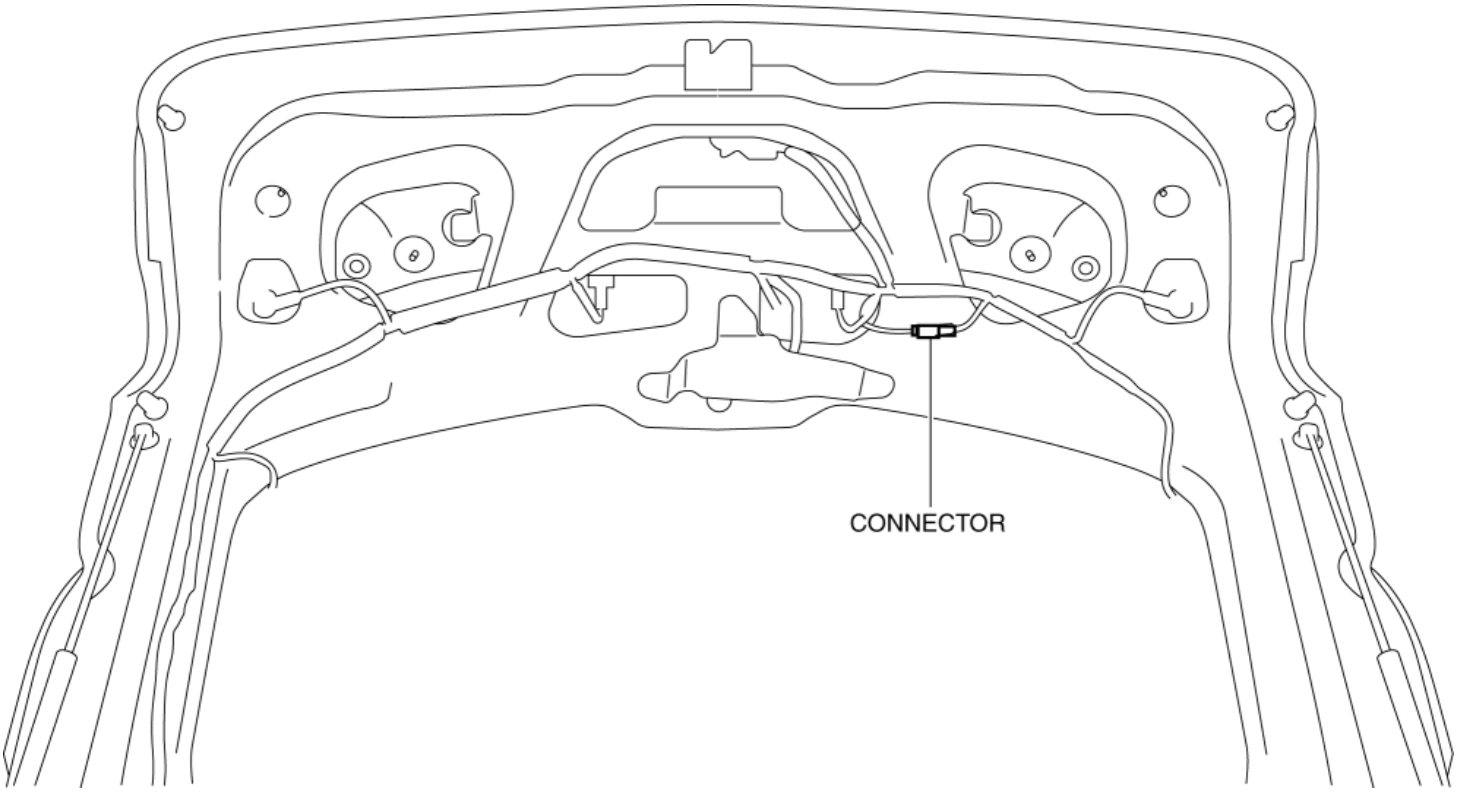

12. Insert a remover tool in the position shown in the figure.

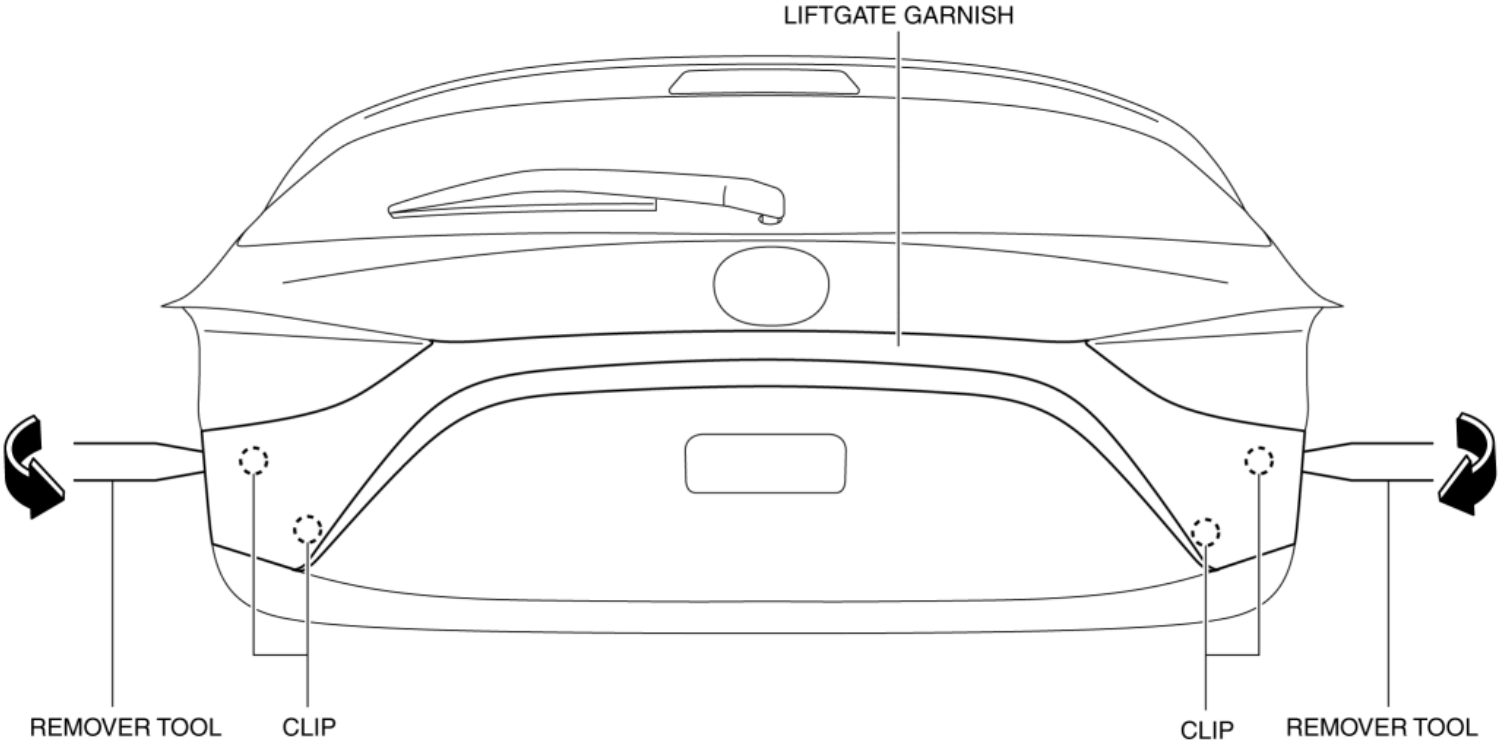

13. Move the remover tool in the direction of the arrow shown in the figure, remove the clips from the liftgate, and then lift up the liftgate garnish.

14. Press the tabs in the direction of the arrows shown in the figure and remove the request switch grommet.

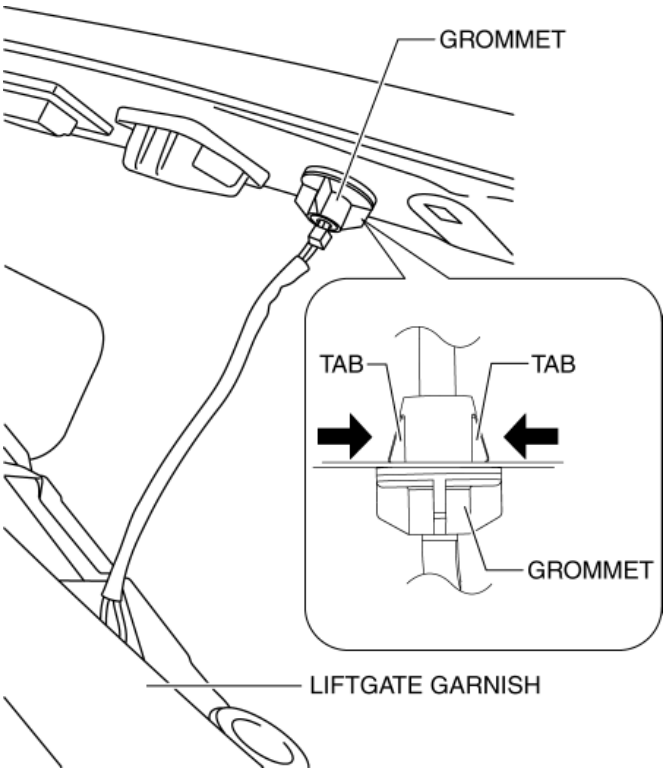

15. Remove the liftgate garnish.

16. Install in the reverse order removal.

2014 - Mazda3 - Body and Accessories

FRONT SASH MOLDING REMOVAL

WARNING:

- Using a utility knife with bare hands can cause injury. Always wear gloves when using a utility knife.

1. Remove the following parts:
   a. Sail garnish (See **SAIL GARNISH REMOVAL/INSTALLATION**.)
   b. Front beltline molding (See **FRONT BELTLINE MOLDING REMOVAL/INSTALLATION**.)
   c. Front door garnish (See **FRONT DOOR GARNISH REMOVAL/INSTALLATION**.)

CAUTION:

- When removing the double-sided adhesive tape, be careful not to damage the clip.

2. Using a utility knife, carefully remove the double-sided adhesive tape in the locations shown in the figure.

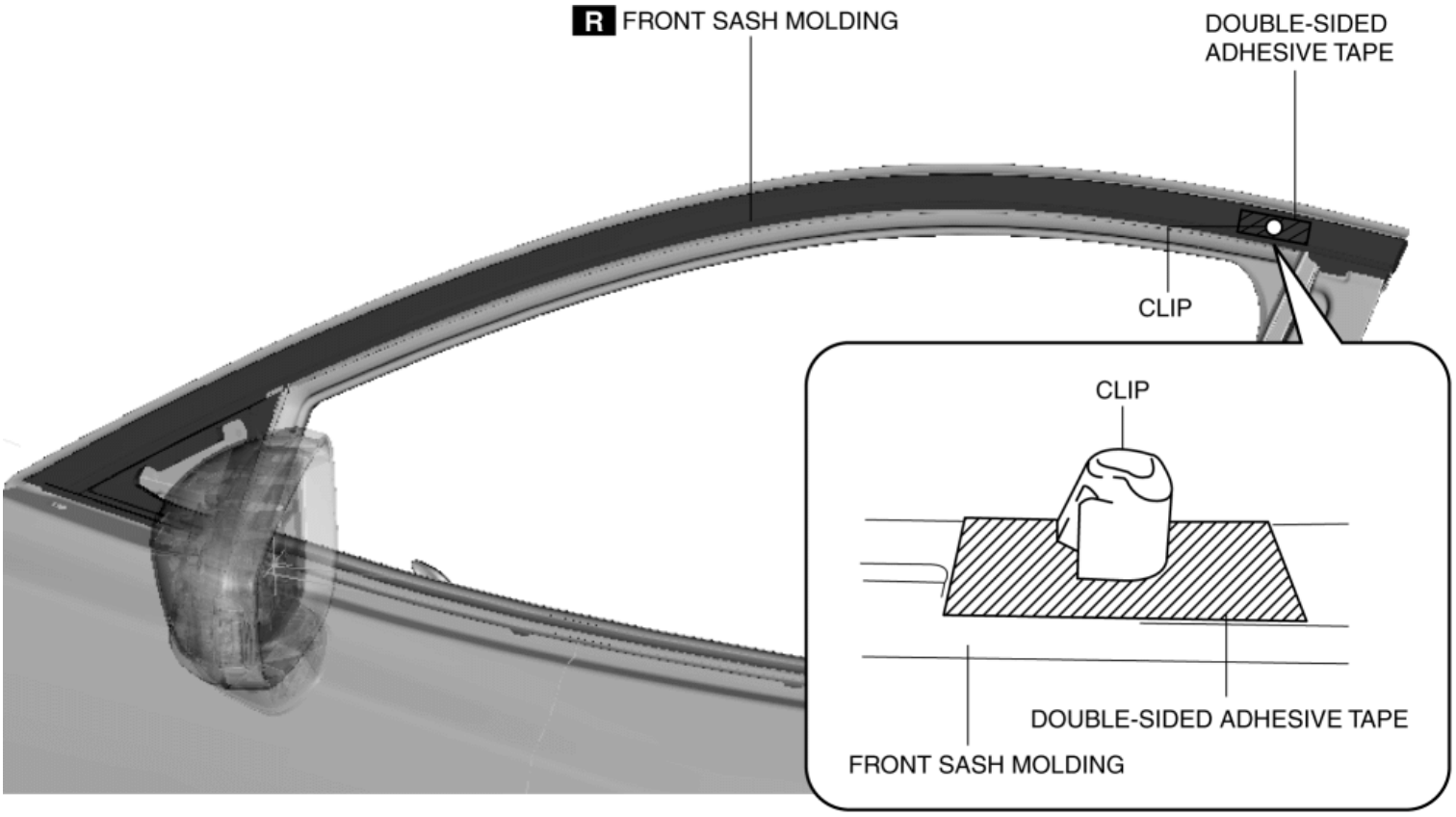

3. Insert a remover tool into the position shown in the figure, move it in the direction of the arrow, and remove the protector.

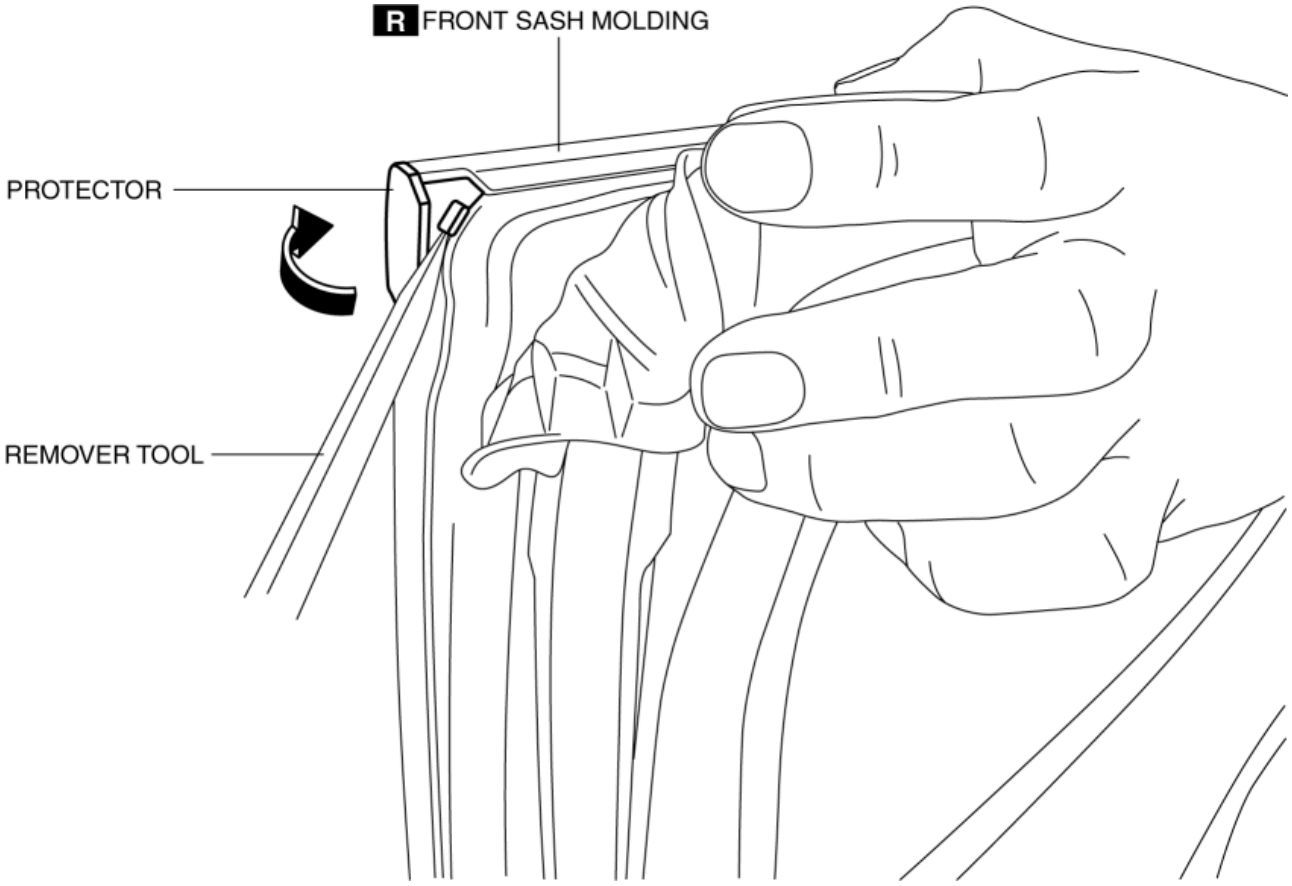

4. Insert a remover tool into the position shown in the figure, move it in the direction of the arrow, and remove the clip.

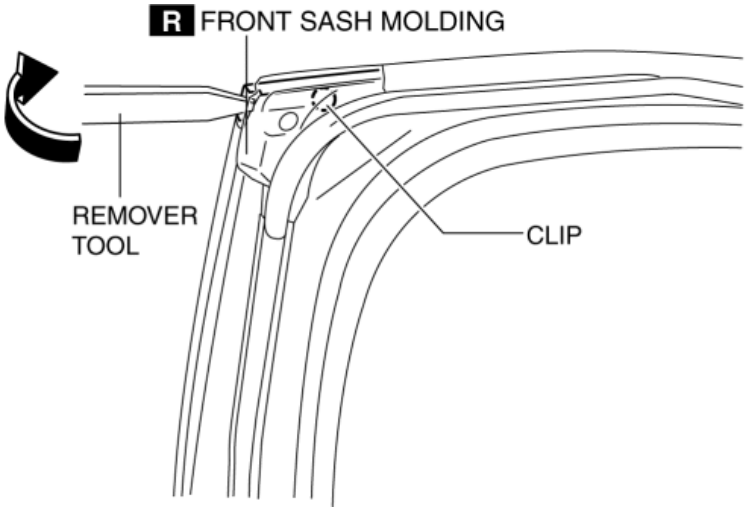

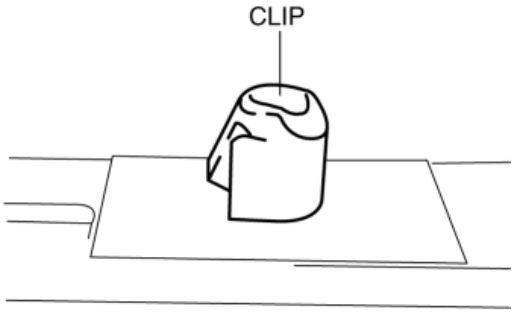

5. Pull the front sash molding in the direction of the arrows in the order of (1), (2), and (3) shown in the figure and remove it.

FRONT SASH MOLDING REMOVAL

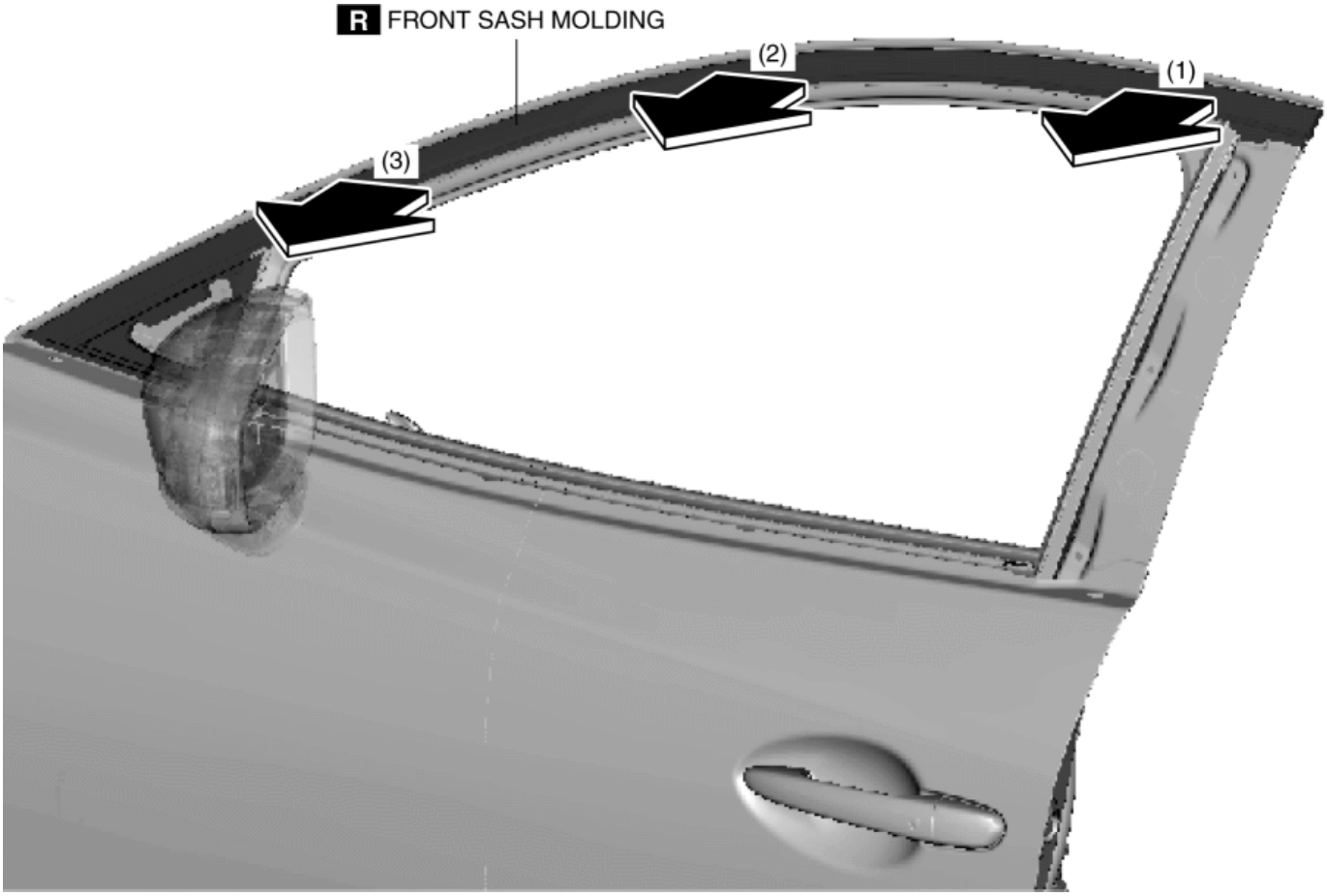

2014 - Mazda3 - Body and Accessories

FRONT SASH MOLDING INSTALLATION

WARNING:

- Using a utility knife with bare hands can cause injury. Always wear gloves when using a utility knife.

NOTE:

- Double-sided adhesive tape has already been attached to the new front sash molding.

1. Carefully remove the adhesive remaining on the body using a razor blade.
2. Remove any grease or dirt from the adhesion surface of the body.
3. Peel off the backing of the double-sided adhesive tape.
4. Hook the tab to the body in the position where the clip aligns with the sash hole.

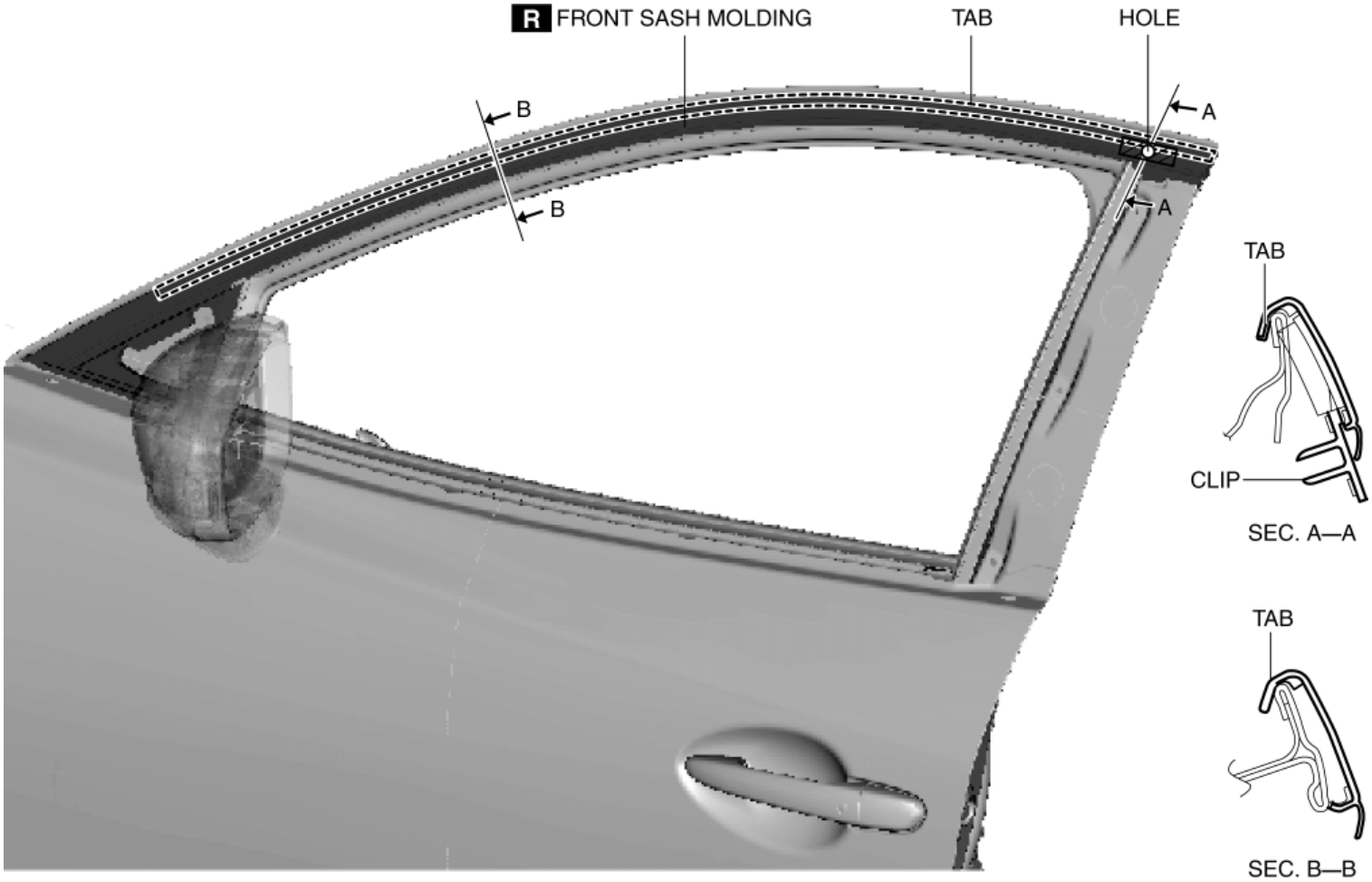

CAUTION:

- Do not press the front sash molding in any place other than the rubber areas.

5. Press the front sash molding in the direction of the arrow and install the clip to the body.

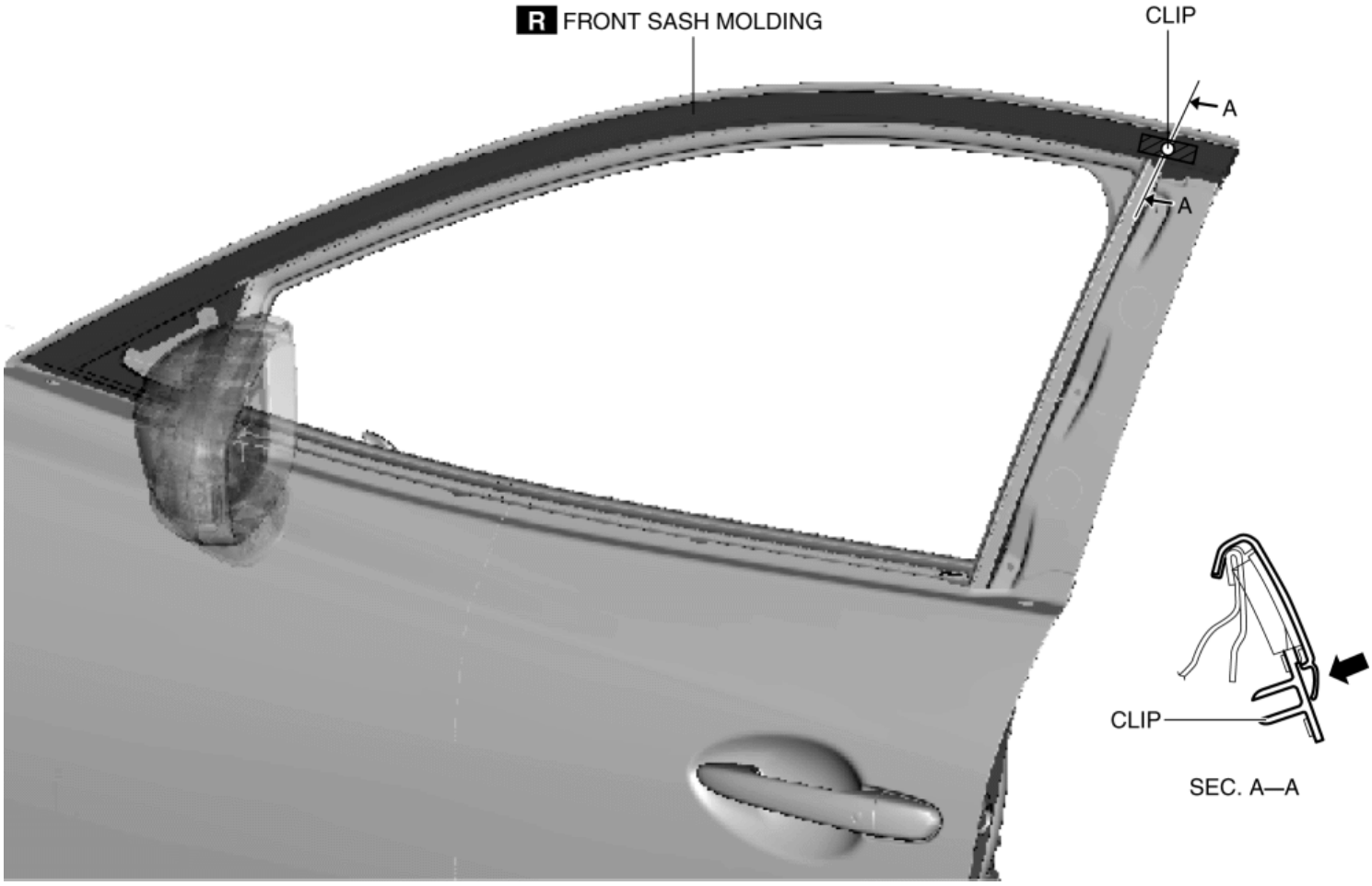

6. Press the front sash molding from the vehicle rear in the direction of the arrow and install the tab.

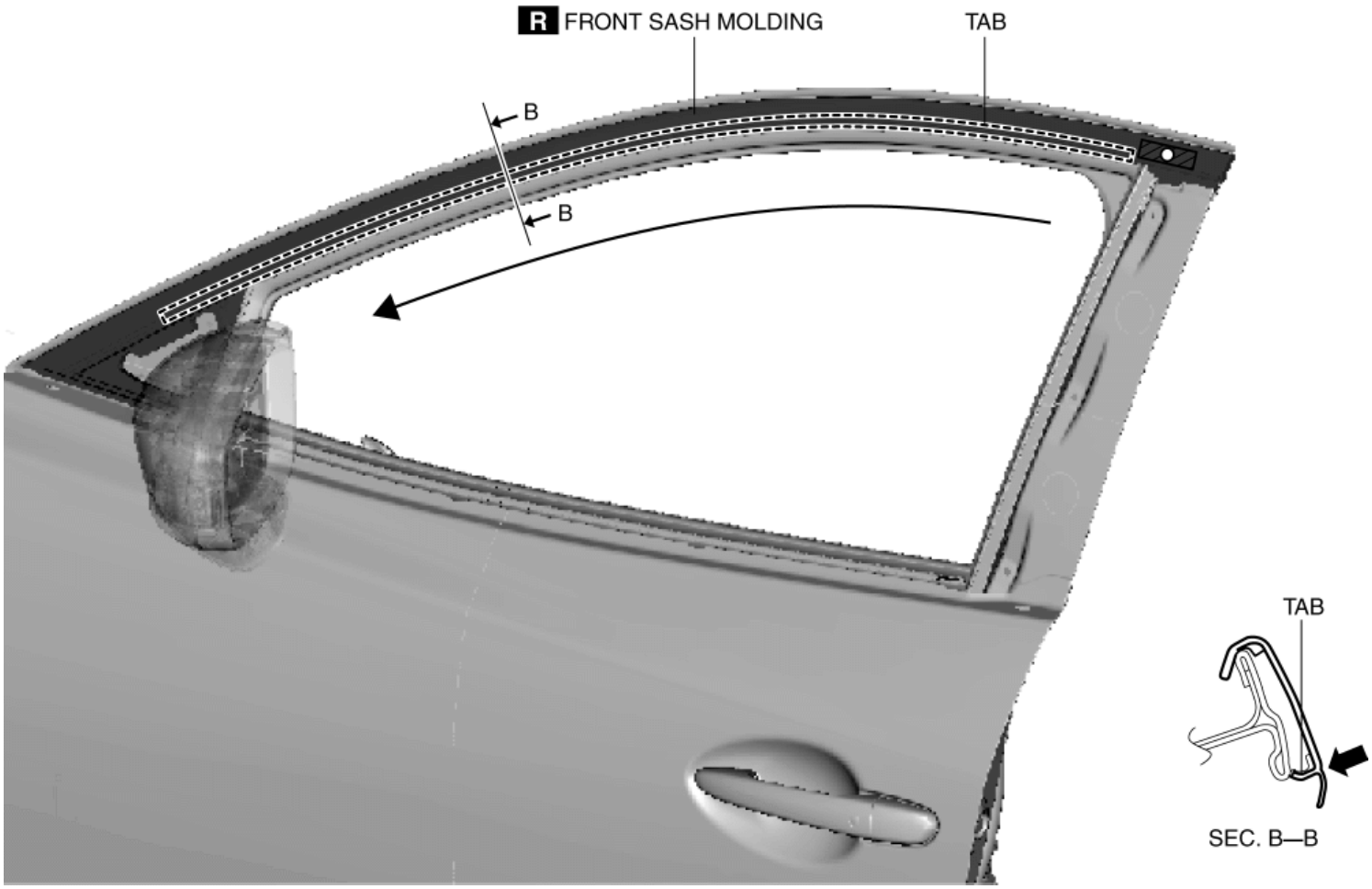

NOTE:

- After installing the front sash molding, verify that the tabs are connected properly to the body.

2014 - Mazda3 - Body and Accessories

REAR SASH MOLDING REMOVAL

WARNING:

- Using a utility knife with bare hands can cause injury. Always wear gloves when using a utility knife.

1. Remove the following parts:
   a. Rear beltline molding (See **REAR BELTLINE MOLDING REMOVAL/INSTALLATION**.)
   b. Rear door garnish (See **REAR DOOR GARNISH REMOVAL/INSTALLATION**.)

CAUTION:

- When removing the double-sided adhesive tape, be careful not to damage the clip.

2. Using a utility knife, carefully remove the double-sided adhesive tape in the locations shown in the figure.

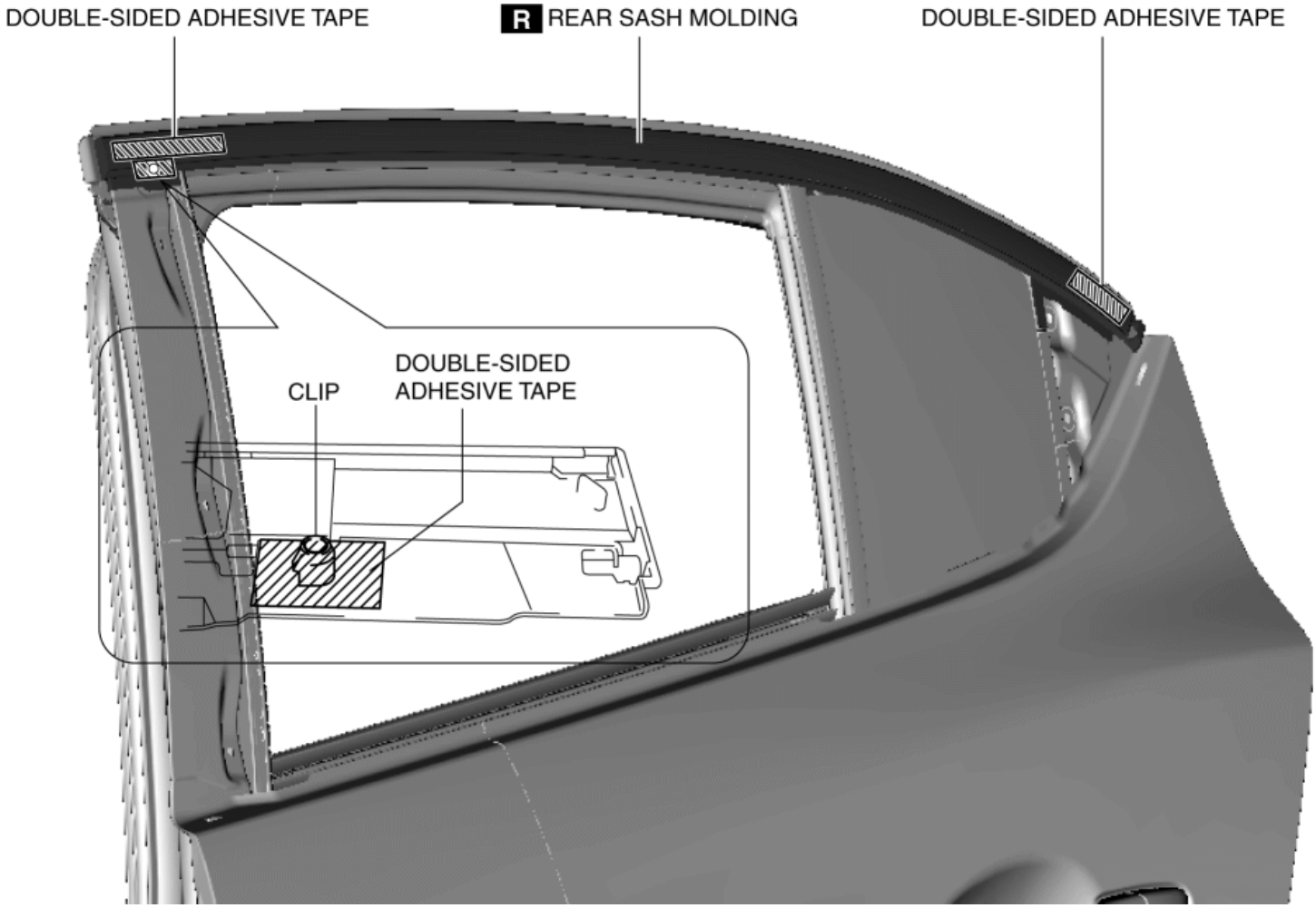

3. Insert a remover tool into the position shown in the figure, move it in the direction of the arrow, and remove the protector.

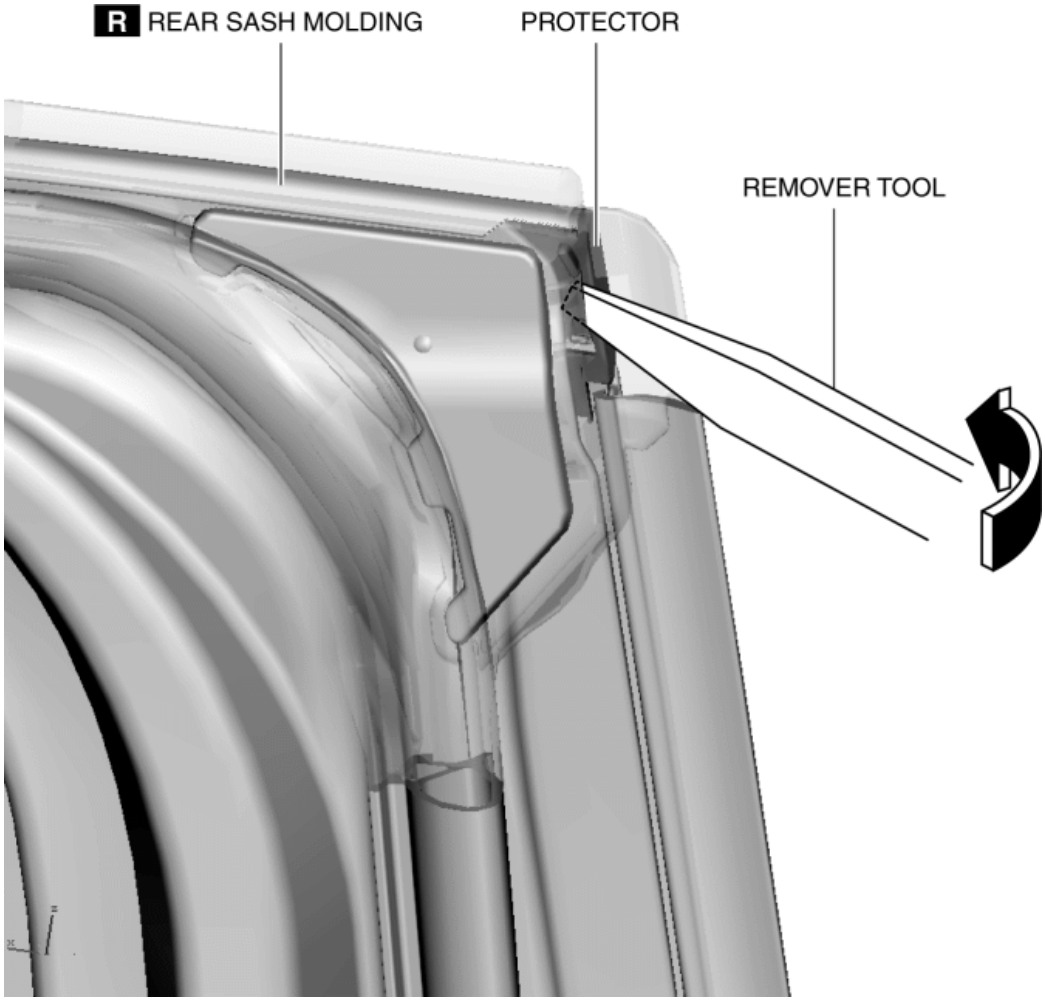

4. Insert a remover tool into the position shown in the figure, move it in the direction of the arrow, and remove the clip.

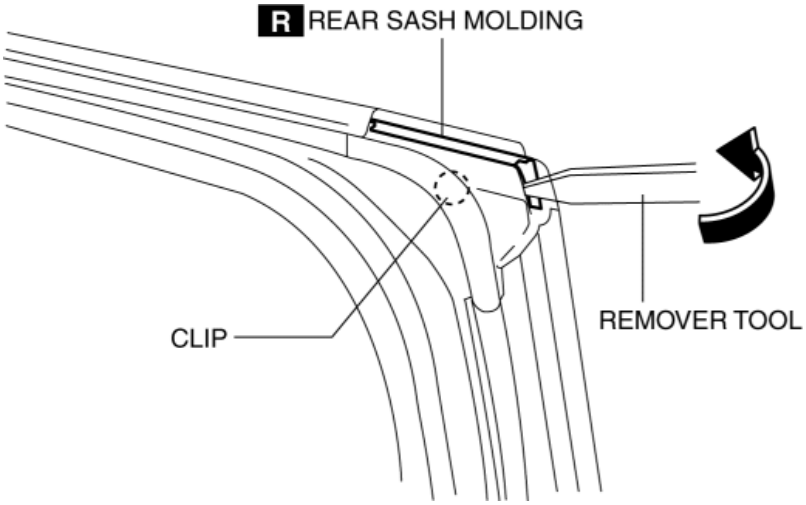

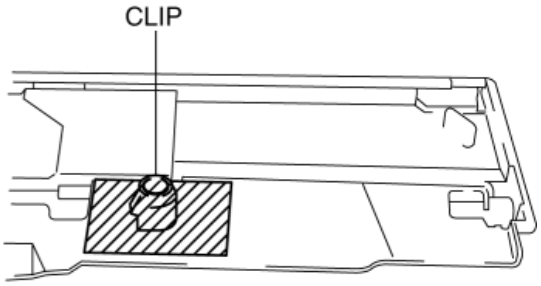

5. Pull the rear sash molding in the direction of the arrows in the order of (1) and (2) shown in the figure, and remove the rear sash molding from the rear door panel.

REAR SASH MOLDING REMOVAL

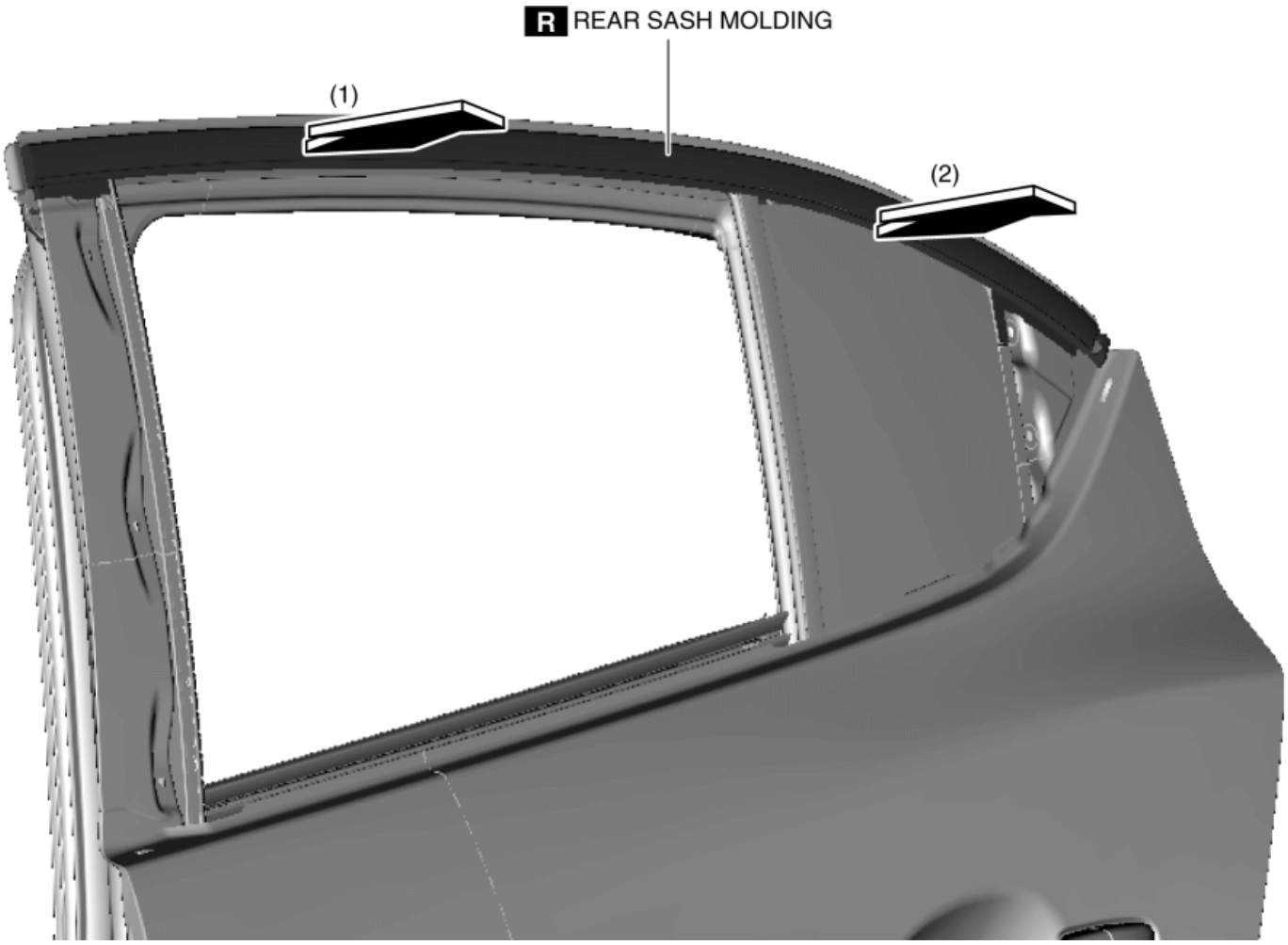

2014 - Mazda3 - Body and Accessories

REAR SASH MOLDING INSTALLATION

WARNING:

- Using a utility knife with bare hands can cause injury. Always wear gloves when using a utility knife.

NOTE:

- Double-sided adhesive tape has already been attached to the new rear sash molding.

1. Carefully remove the adhesive remaining on the body using a razor blade.
2. Remove any grease or dirt from the adhesion surface of the body.
3. Peel off the backing of the double-sided adhesive tape.
4. Hook the tab to the body in the position where the clip aligns with the sash hole.

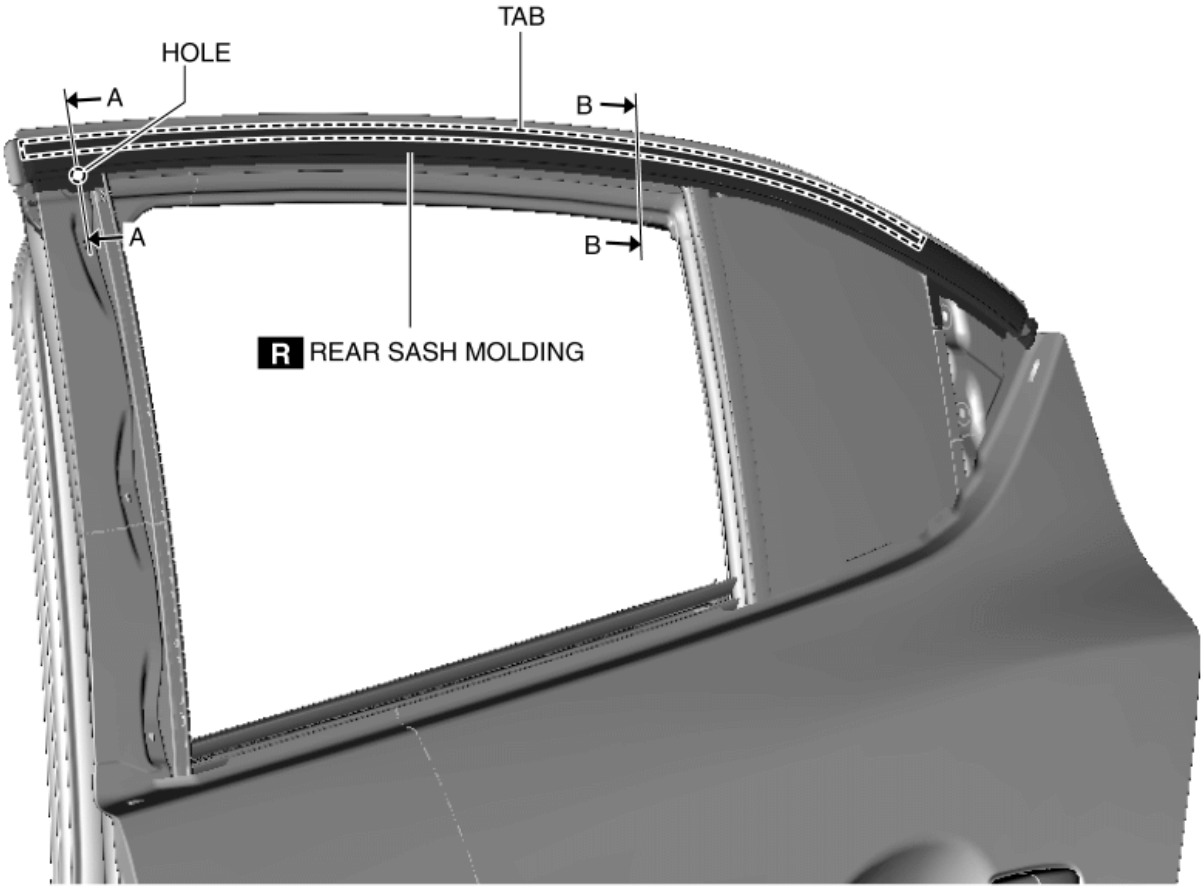

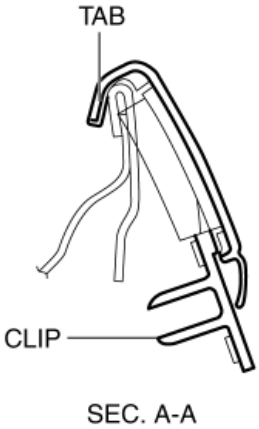

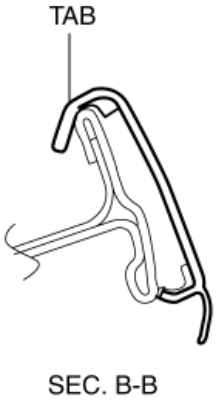

CAUTION:

- Do not press the rear sash molding in any place other than the rubber areas.

5. Press the rear sash molding in the direction of the arrow and install the clip to the body.

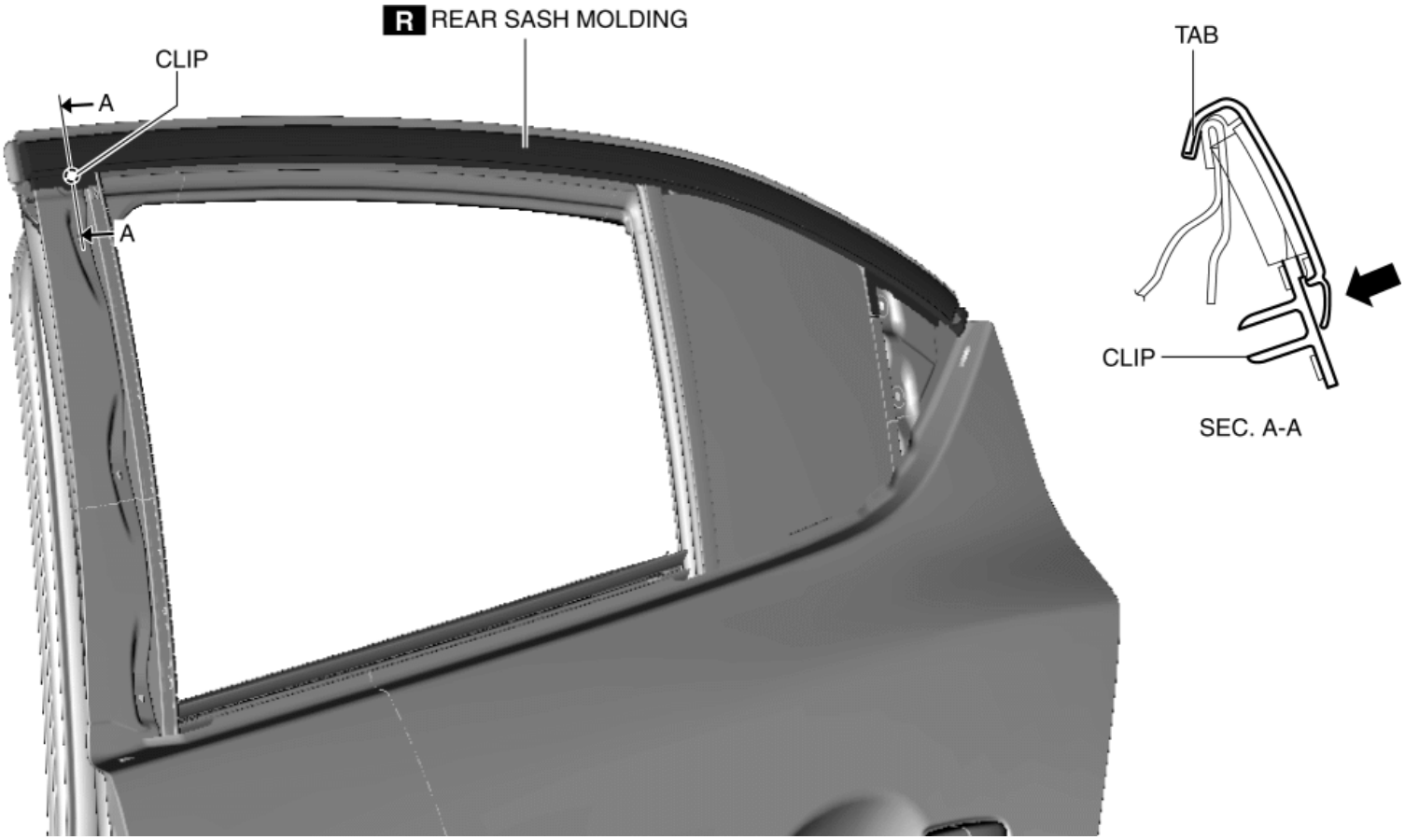

6. Press the rear sash molding from the vehicle front in the direction of the arrow and install the tab.

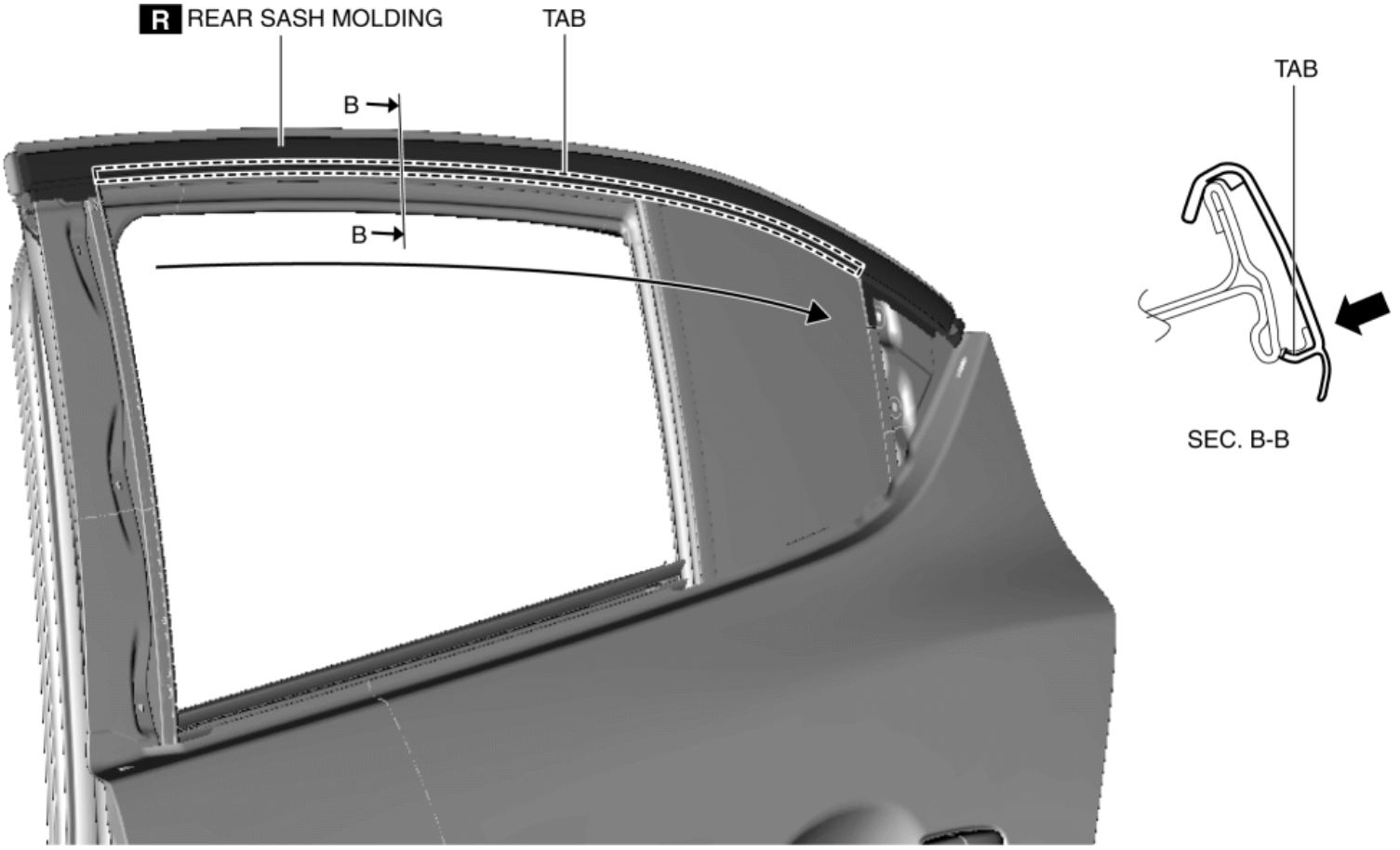

NOTE:

After installing the rear sash molding, verify that the tabs are connected properly to the body.

2014 - Mazda3 - Body and Accessories

ORNAMENT INSTALLATION

CAUTION:

- If the installation work for the ornament is performed without cleaning and degreasing the ornament installation surface, the ornament could fall off after installation. Before installing the ornament, clean and degrease the ornament and the ornament installation area.

1. Degrease the adhesion area of the ornament.
2. Warm the ornament installation area to between 15 °C {59 °F} and 40 °C {104 °F} using a hot air drier.

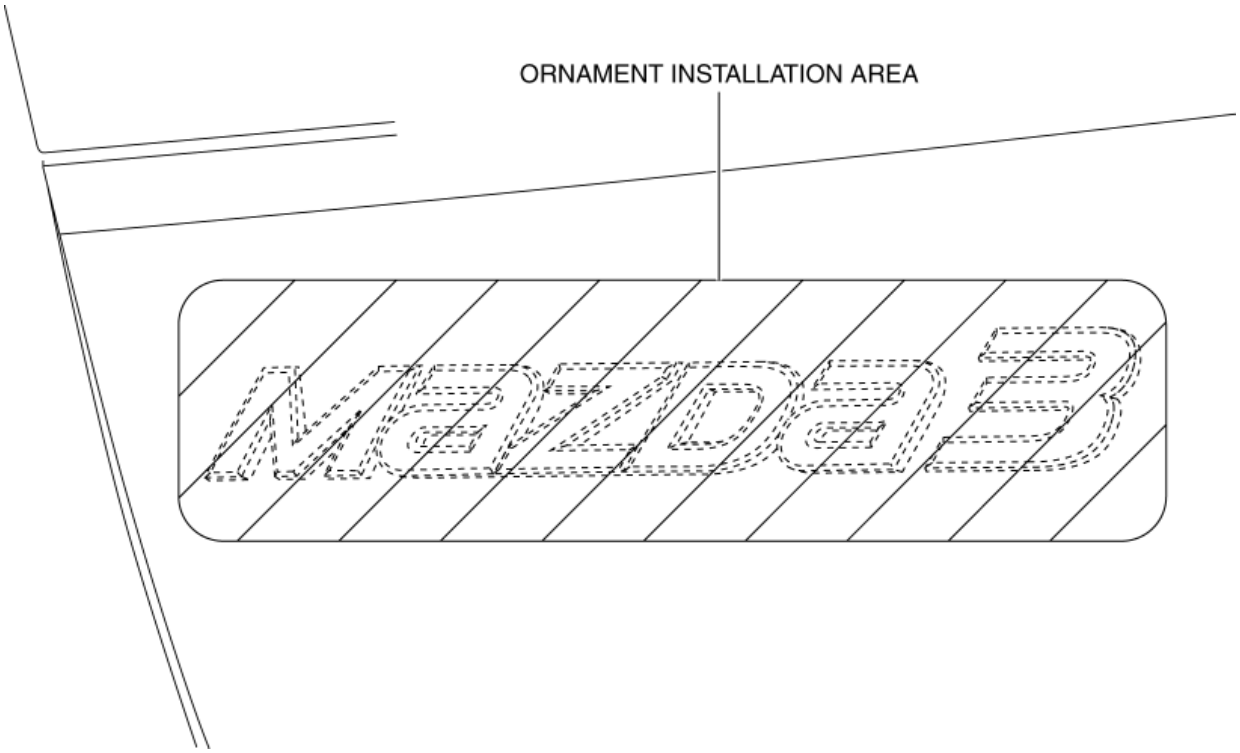

3. Install the ornament to the position shown in the figure.

4SD

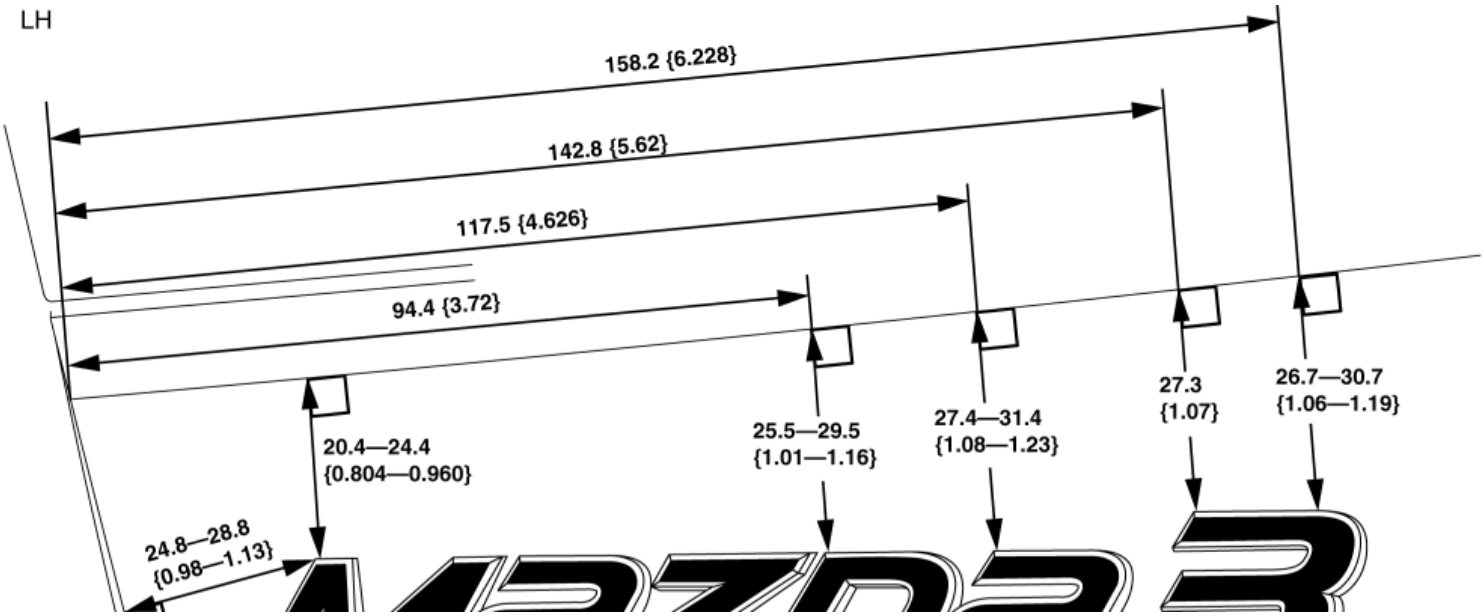

11.4—15.4
{0.449—0.606}
1.9—5.9
{0.08—0.23}
mm {in}

RH

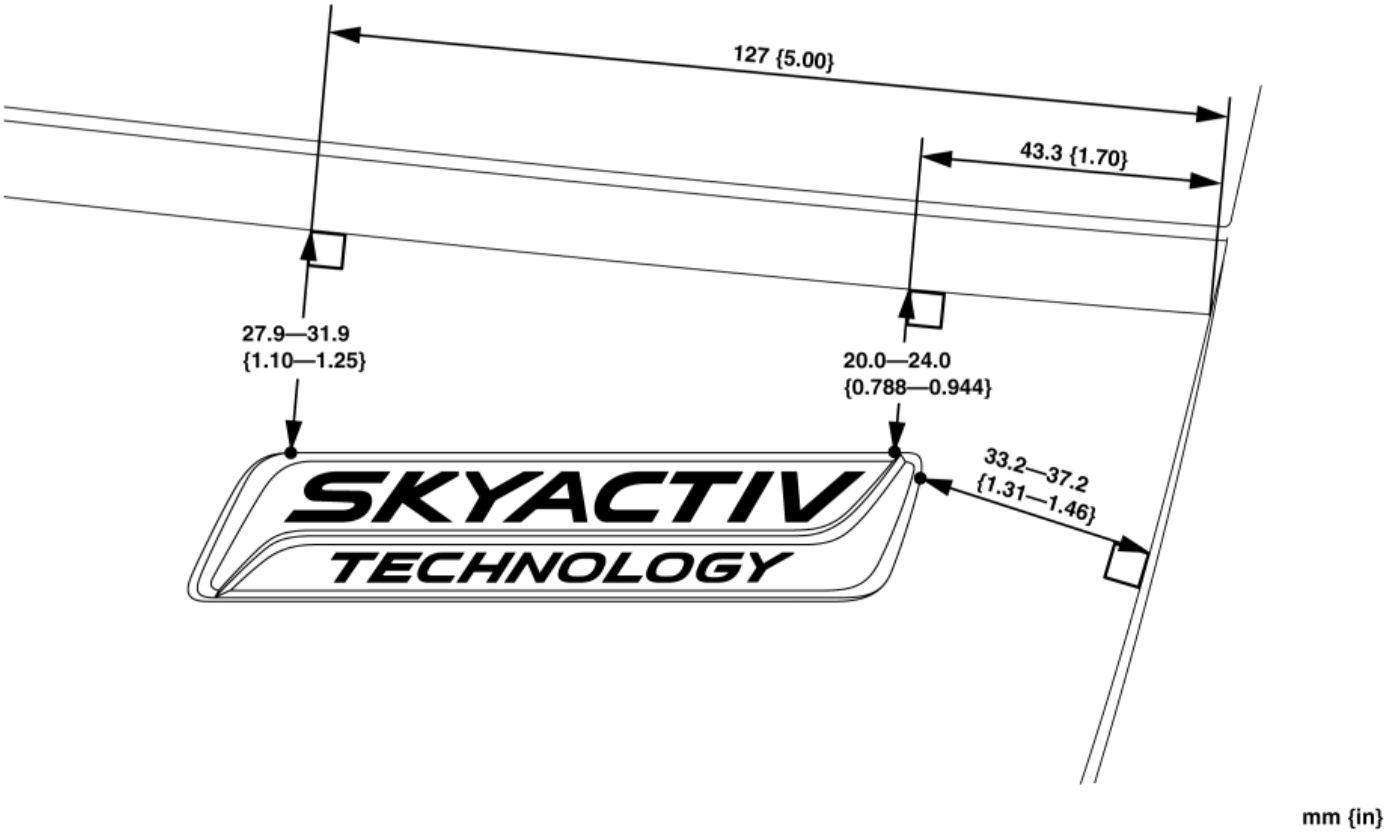
127 {5.00}
43.3 {1.70}
27.9—31.9
{1.10—1.25}
20.0—24.0
{0.788—0.944}
33.2—37.2
{1.31—1.46}
SKYACTIV
TECHNOLOGY
mm {in}

5HB

LH

46.2—50.2
{1.82—1.97}
Mazda3

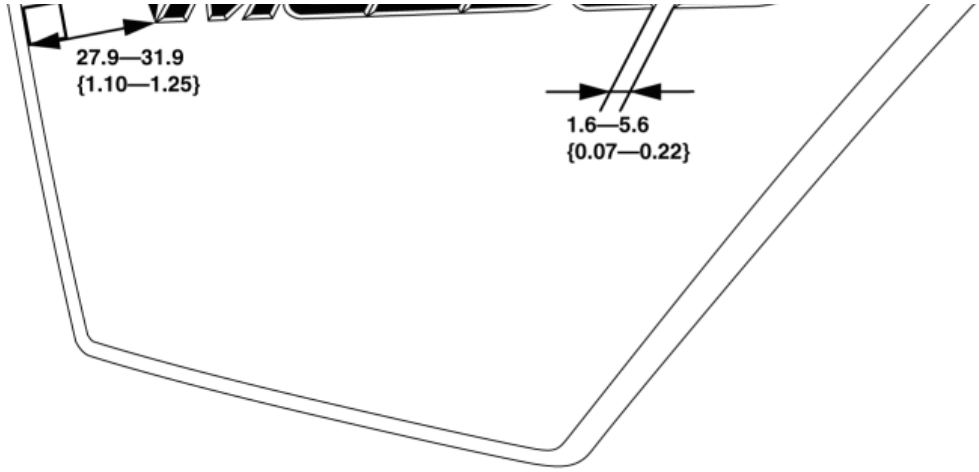

mm {in}

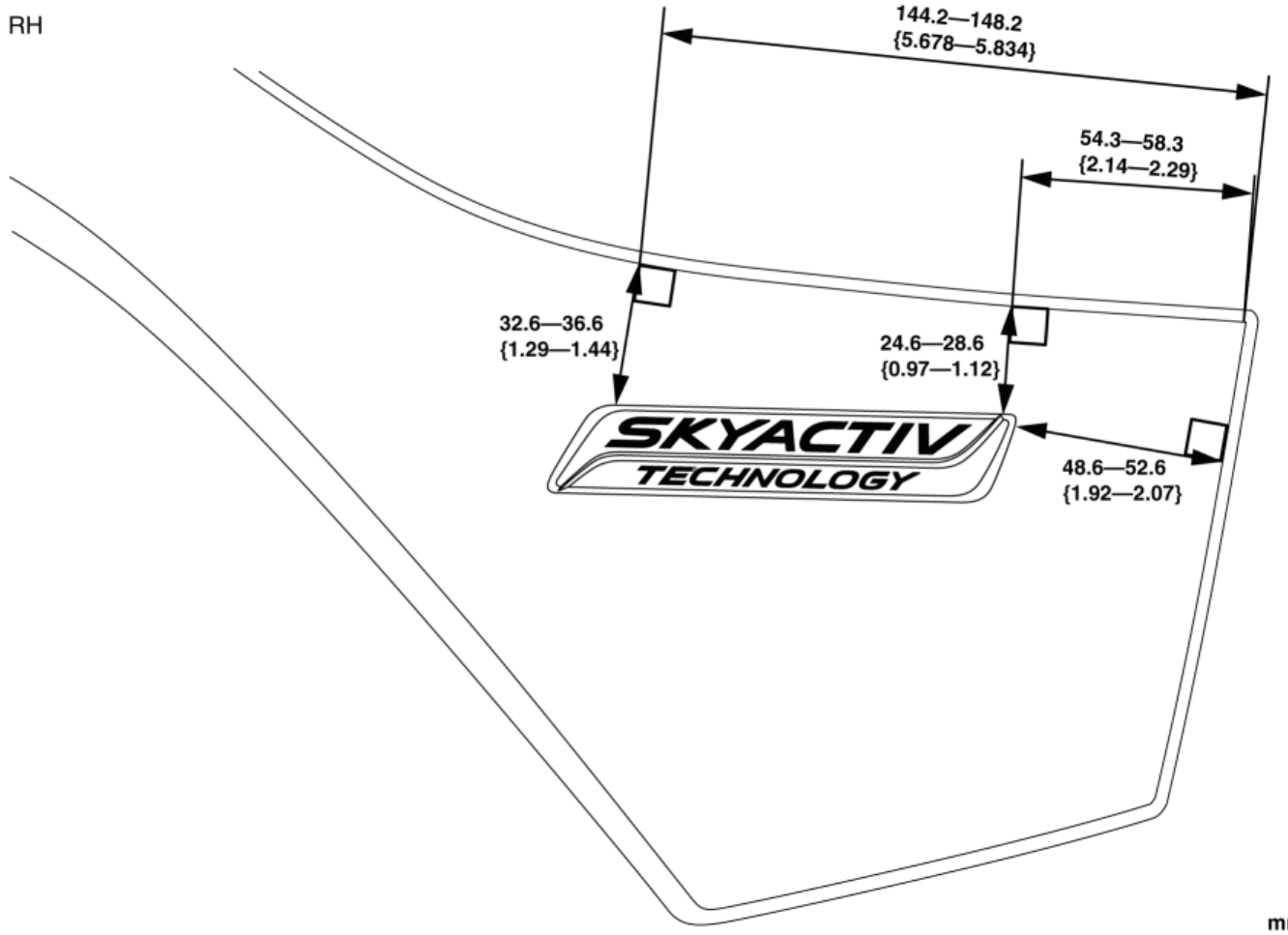

mm {in}

4. Press the ornament to adhere the double-sided adhesive tape to the ornament installation area.

2014 - Mazda3 - Body and Accessories

INTERIOR TRIM LOCATION INDEX

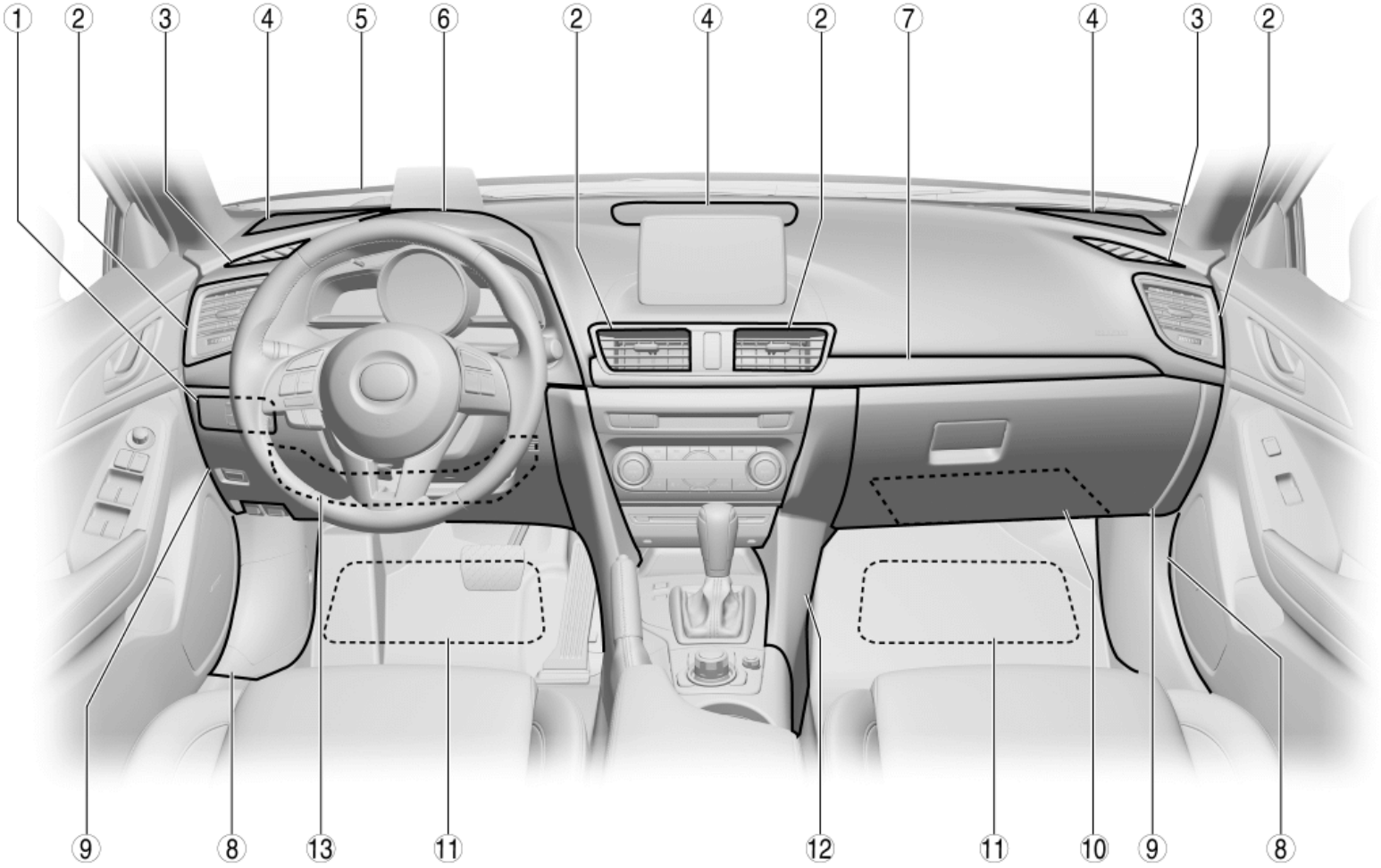

1	Cluster switch (See **CLUSTER SWITCH REMOVAL/INSTALLATION**.)
2	Ventilator grille (See **VENTILATOR GRILLE REMOVAL/INSTALLATION**.)
3	Demister grille (See **DEMISTER GRILLE REMOVAL/INSTALLATION**.)
4	Speaker grille (See **SPEAKER GRILLE REMOVAL/INSTALLATION**.)
5	Dashboard (See **DASHBOARD REMOVAL**.) (See **DASHBOARD INSTALLATION**.) (See **DASHBOARD DISASSEMBLY/ASSEMBLY**.)

6	Meter hood (See **METER HOOD REMOVAL/INSTALLATION**.)
7	Decoration panel (See **DECORATION PANEL REMOVAL/INSTALLATION**.)
8	Front side trim (See **FRONT SIDE TRIM REMOVAL/INSTALLATION**.)
9	Lower panel (See **LOWER PANEL REMOVAL/INSTALLATION**.)
10	Dashboard under cover (See **DASHBOARD UNDER COVER REMOVAL/INSTALLATION**.)
11	Floor insulator (See **FLOOR INSULATOR REMOVAL/INSTALLATION**.)
12	Front console (See **FRONT CONSOLE REMOVAL/INSTALLATION**.)
13	Knee bolster (See **KNEE BOLSTER REMOVAL/INSTALLATION**.)

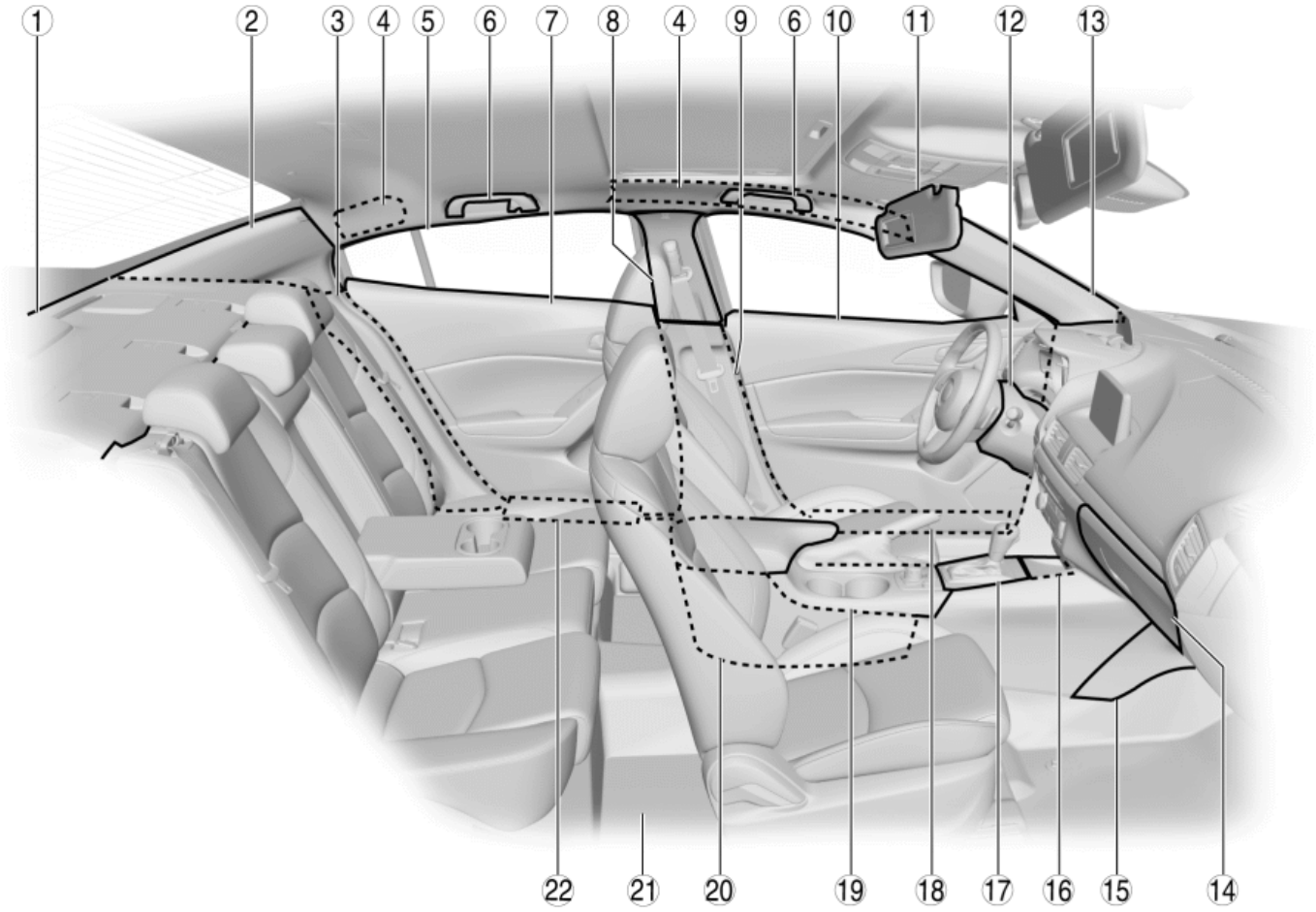

1	Rear package trim (See **REAR PACKAGE TRIM REMOVAL / INSTALLATION**.)
2	C-pillar trim (See **C-PILLAR TRIM REMOVAL / INSTALLATION**.)
3	Tire house trim (See **TIRE HOUSE TRIM REMOVAL / INSTALLATION**.)
4	Shock absorbing pad (See **SHOCK ABSORBING PAD REMOVAL / INSTALLATION**.)
5	Headliner (See **HEADLINER REMOVAL / INSTALLATION**.)
6	Assist handle (See **ASSIST HANDLE REMOVAL / INSTALLATION**.)
7	Rear door trim (See **REAR DOOR TRIM REMOVAL / INSTALLATION**.) (See **REAR DOOR TRIM DISASSEMBLY / ASSEMBLY**.)

8	B-pillar upper trim (See **B-PILLAR UPPER TRIM REMOVAL/INSTALLATION**.)
9	B-pillar lower trim (See **B-PILLAR LOWER TRIM REMOVAL/INSTALLATION**.)
10	Front door trim (See **FRONT DOOR TRIM REMOVAL/INSTALLATION**.) (See **FRONT DOOR TRIM DISASSEMBLY/ASSEMBLY**.)
11	Sunvisor (See **SUNVISOR REMOVAL/INSTALLATION**.)
12	Column cover (See **COLUMN COVER REMOVAL/INSTALLATION**.)
13	A-pillar trim (See **A-PILLAR TRIM REMOVAL/INSTALLATION**.)
14	Glove compartment (See **GLOVE COMPARTMENT REMOVAL/INSTALLATION**.)
15	Side wall (See **SIDE WALL REMOVAL/INSTALLATION**.)
16	Front console box (See **FRONT CONSOLE BOX REMOVAL/INSTALLATION**.)
17	Shift panel (See **SHIFT PANEL REMOVAL/INSTALLATION**.)
18	Front scuff plate (See **FRONT SCUFF PLATE REMOVAL/INSTALLATION**.)
19	Upper panel (See **UPPER PANEL REMOVAL**.) (See **UPPER PANEL INSTALLATION**.)
20	Rear console (See **REAR CONSOLE REMOVAL/INSTALLATION**.) (See **REAR CONSOLE DISASSEMBLY/ASSEMBLY**.)
21	Floor covering (See **FLOOR COVERING REMOVAL/INSTALLATION**.)
22	Rear scuff plate (See **REAR SCUFF PLATE REMOVAL/INSTALLATION**.)

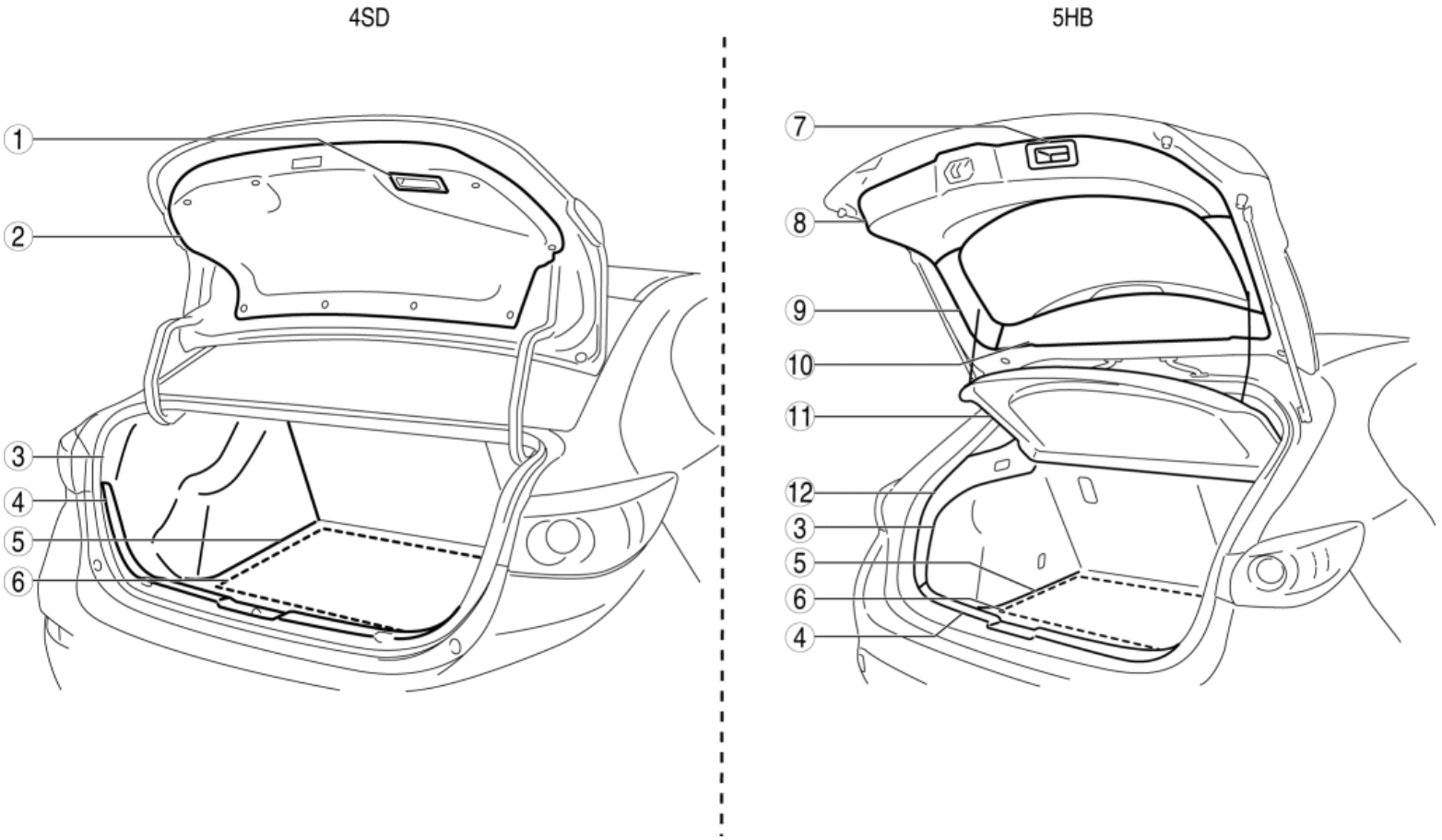

1	Trunk lid recess (See **TRUNK LID RECESS REMOVAL/INSTALLATION**.)
2	Trunk lid trim (See **TRUNK LID TRIM REMOVAL/INSTALLATION**.)
3	Trunk side trim (See **TRUNK SIDE TRIM REMOVAL/INSTALLATION**.)
4	Trunk end trim (See **TRUNK END TRIM REMOVAL/INSTALLATION**.)
5	Trunk covering (See **TRUNK COVERING REMOVAL/INSTALLATION**.)
6	Trunk board (See **TRUNK BOARD REMOVAL/INSTALLATION**.)
7	Liftgate recess (See **LIFTGATE RECESS REMOVAL/INSTALLATION**.)
8	Liftgate lower trim (See **LIFTGATE LOWER TRIM REMOVAL/INSTALLATION**.)
9	Liftgate side trim

	(See **LIFTGATE SIDE TRIM REMOVAL/INSTALLATION**.)
10	Liftgate upper trim (See **LIFTGATE UPPER TRIM REMOVAL/INSTALLATION**.)
11	Rear package tray (See **REAR PACKAGE TRAY REMOVAL/INSTALLATION**.)
12	Trunk side upper trim (See **TRUNK SIDE UPPER TRIM REMOVAL/INSTALLATION**.)

2014 - Mazda3 - Body and Accessories

DASHBOARD REMOVAL

1. Set the wheel blocks for both the front and rear wheels.

2. Disconnect the negative battery cable. (See **NEGATIVE BATTERY CABLE DISCONNECTION/CONNECTION [SKYACTIV-G 2.0, SKYACTIV-G 2.5]**.)

3. Shift the selector lever from the P position to the D position (ATX).

4. Remove the following parts:

   a. Windshield wiper arm and blade (See **WINDSHIELD WIPER ARM AND BLADE REMOVAL/INSTALLATION**.)

   b. Cowl grille (See **COWL GRILLE REMOVAL/INSTALLATION**.)

   c. Front scuff plate (See **FRONT SCUFF PLATE REMOVAL/INSTALLATION**.)

   d. Front side trim (See **FRONT SIDE TRIM REMOVAL/INSTALLATION**.)

   e. A-pillar trim (See **A-PILLAR TRIM REMOVAL/INSTALLATION**.)

   f. Driver-side air bag module (See **DRIVER-SIDE AIR BAG MODULE REMOVAL [STANDARD DEPLOYMENT CONTROL SYSTEM]**.) (See **DRIVER-SIDE AIR BAG MODULE INSTALLATION [STANDARD DEPLOYMENT CONTROL SYSTEM]**.) (See **DRIVER-SIDE AIR BAG MODULE REMOVAL [TWO-STEP DEPLOYMENT CONTROL SYSTEM]**.) (See **DRIVER-SIDE AIR BAG MODULE INSTALLATION [TWO-STEP DEPLOYMENT CONTROL SYSTEM]**.)

   g. Steering wheel (See **STEERING WHEEL AND COLUMN REMOVAL/INSTALLATION**.)

   h. Upper column cover (See **COLUMN COVER REMOVAL/INSTALLATION**.)

   i. Meter hood (See **METER HOOD REMOVAL/INSTALLATION**.)

   j. Lower column cover (See **COLUMN COVER REMOVAL/INSTALLATION**.)

   k. Instrument cluster (See **INSTRUMENT CLUSTER REMOVAL/INSTALLATION**.)

   l. Upper panel (See **UPPER PANEL REMOVAL**.) (See **UPPER PANEL INSTALLATION**.)

   m. Rear console (See **REAR CONSOLE REMOVAL/INSTALLATION**.)

   n. Shift lever knob (MTX) (See **MANUAL TRANSAXLE SHIFT MECHANISM REMOVAL/INSTALLATION [C66M-R]**.)

   o. Selector lever knob (ATX) (See **AUTOMATIC TRANSAXLE SHIFT MECHANISM REMOVAL/INSTALLATION**.)

   p. Shift panel (See **SHIFT PANEL REMOVAL/INSTALLATION**.)

   q. Front console box (See **FRONT CONSOLE BOX REMOVAL/INSTALLATION**.)

   r. CD player (with CD player) (See **CD PLAYER REMOVAL**.) (See **CD PLAYER INSTALLATION**.)

   s. Side wall (See **SIDE WALL REMOVAL/INSTALLATION**.)

   t. Glove compartment (See **GLOVE COMPARTMENT REMOVAL/INSTALLATION**.)

   u. Dashboard under cover (See **DASHBOARD UNDER COVER REMOVAL/INSTALLATION**.)

   v. Decoration panel (See **DECORATION PANEL REMOVAL/INSTALLATION**.)

   w. Passenger-side lower panel (See **LOWER PANEL REMOVAL/INSTALLATION**.)

   x. Front console (See **FRONT CONSOLE REMOVAL/INSTALLATION**.)

   y. Climate control unit (See **CLIMATE CONTROL UNIT REMOVAL/INSTALLATION [FULL-AUTO AIR CONDITIONER]**.) (See **CLIMATE CONTROL UNIT REMOVAL/INSTALLATION [MANUAL AIR CONDITIONER]**.)

   z. Center display (with center display) (See **CENTER DISPLAY REMOVAL/INSTALLATION**.)

   aa. Audio unit (without center display) (See **AUDIO UNIT REMOVAL/INSTALLATION**.)

   ab. Hood release lever (See **HOOD RELEASE LEVER AND RELEASE CABLE REMOVAL/INSTALLATION**.)

   ac. Fuel-filler lid opener lever (See **FUEL-FILLER LID OPENER AND LEVER REMOVAL/INSTALLATION**.)

   ad. Driver-side lower panel (See **LOWER PANEL REMOVAL/INSTALLATION**.)

   ae. Knee bolster (See **KNEE BOLSTER REMOVAL/INSTALLATION**.)

   af. Joint cover (See **STEERING WHEEL AND COLUMN REMOVAL/INSTALLATION**.)

ag. Steering shaft (See **STEERING WHEEL AND COLUMN REMOVAL/INSTALLATION**.)

ah. Shift lever component (MTX) (See **MANUAL TRANSAXLE SHIFT MECHANISM REMOVAL/INSTALLATION [C66M-R]**.)

ai. Selector lever component (ATX) (See **AUTOMATIC TRANSAXLE SHIFT MECHANISM REMOVAL/INSTALLATION**.)

5. Remove nuts.

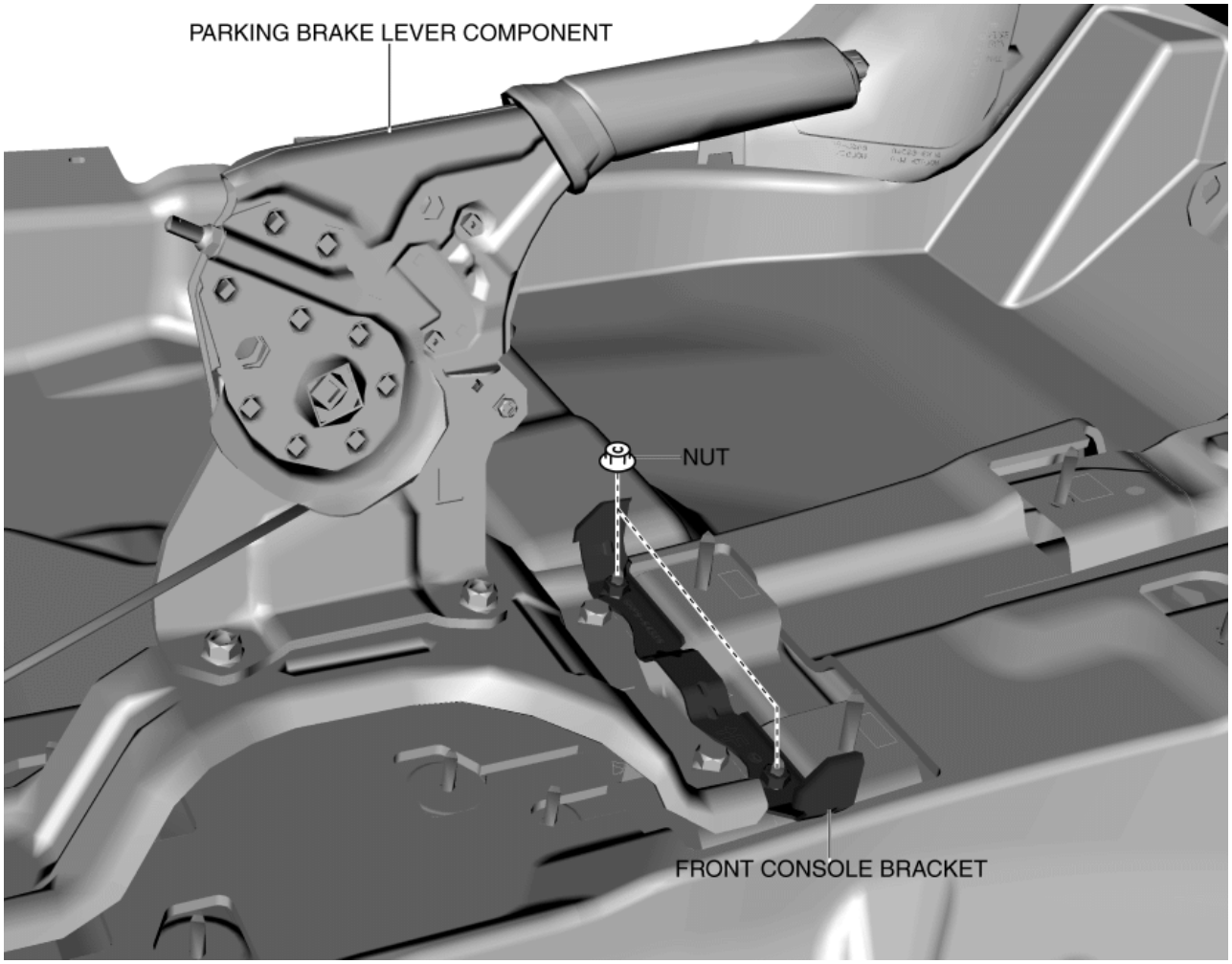

6. Remove the front console bracket.

7. Remove bolts.

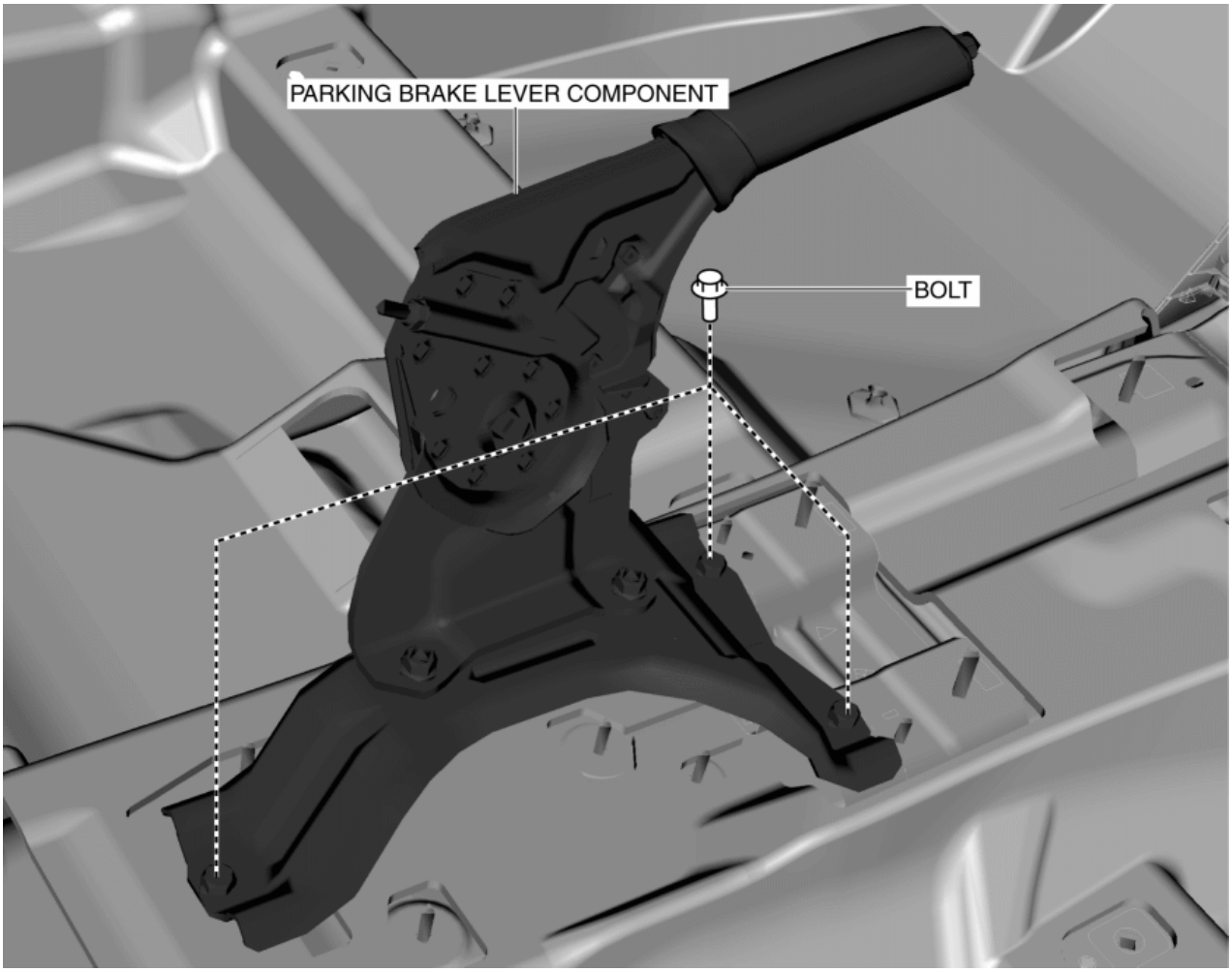

8. Remove the parking brake lever component.

9. Disconnect the dashboard harness connectors and remove the wiring harness clip.

10. Remove the bolts and nuts shown in the figure.

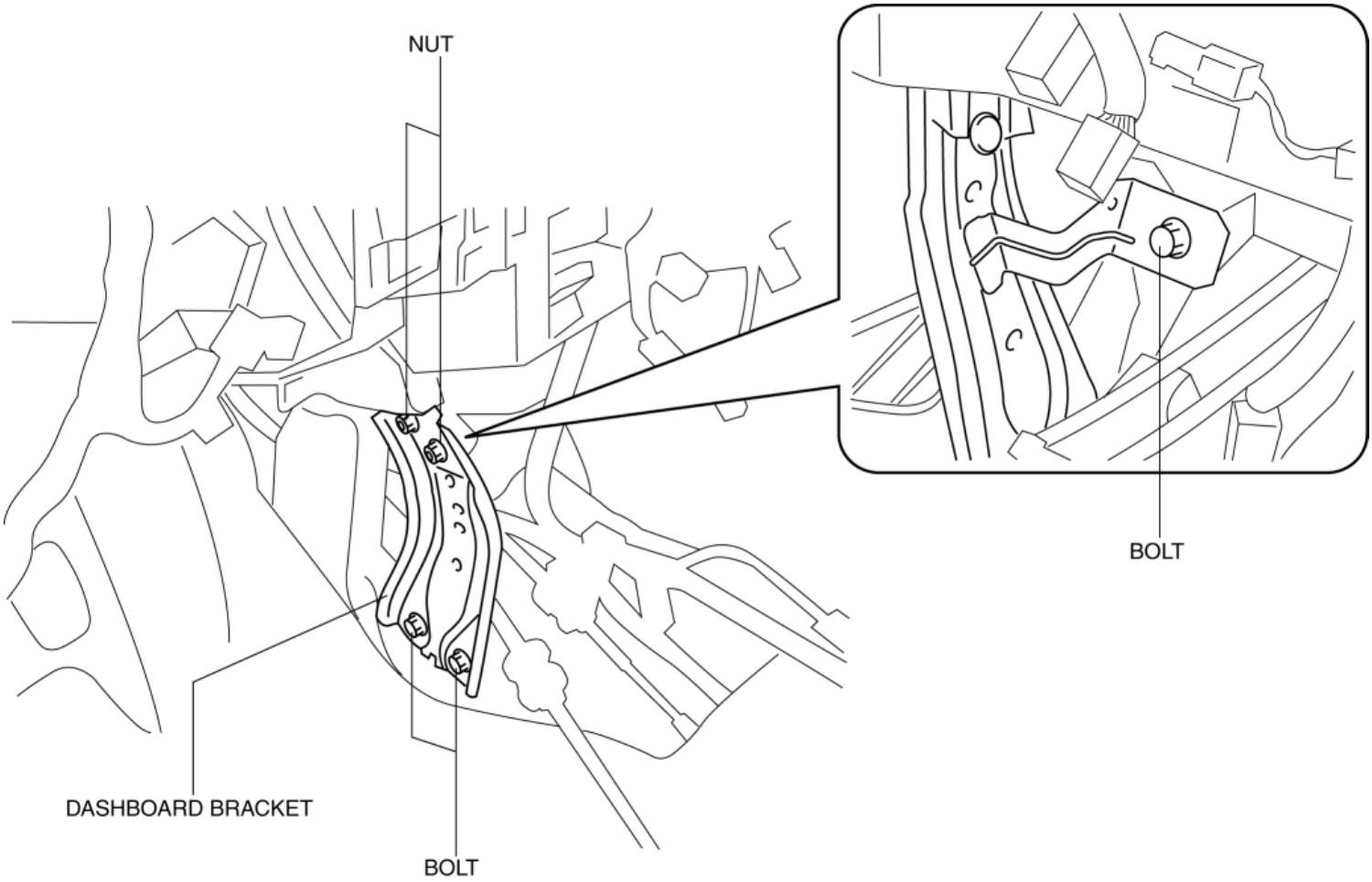

11. Remove the dashboard bracket.

12. To prevent scratches or damage, affix protective tape to the position shown in the figure of the windshield.

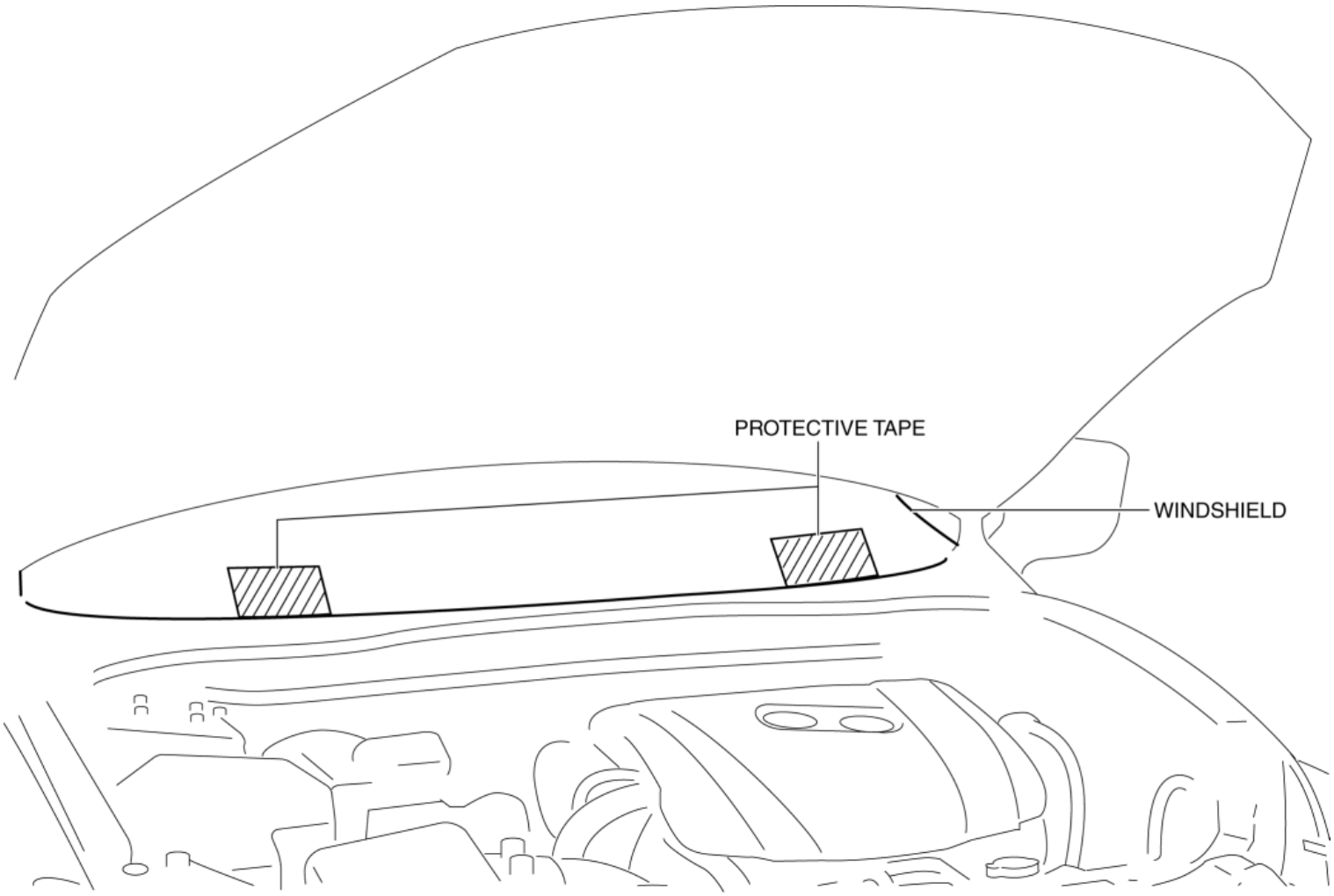

13. Remove bolts.

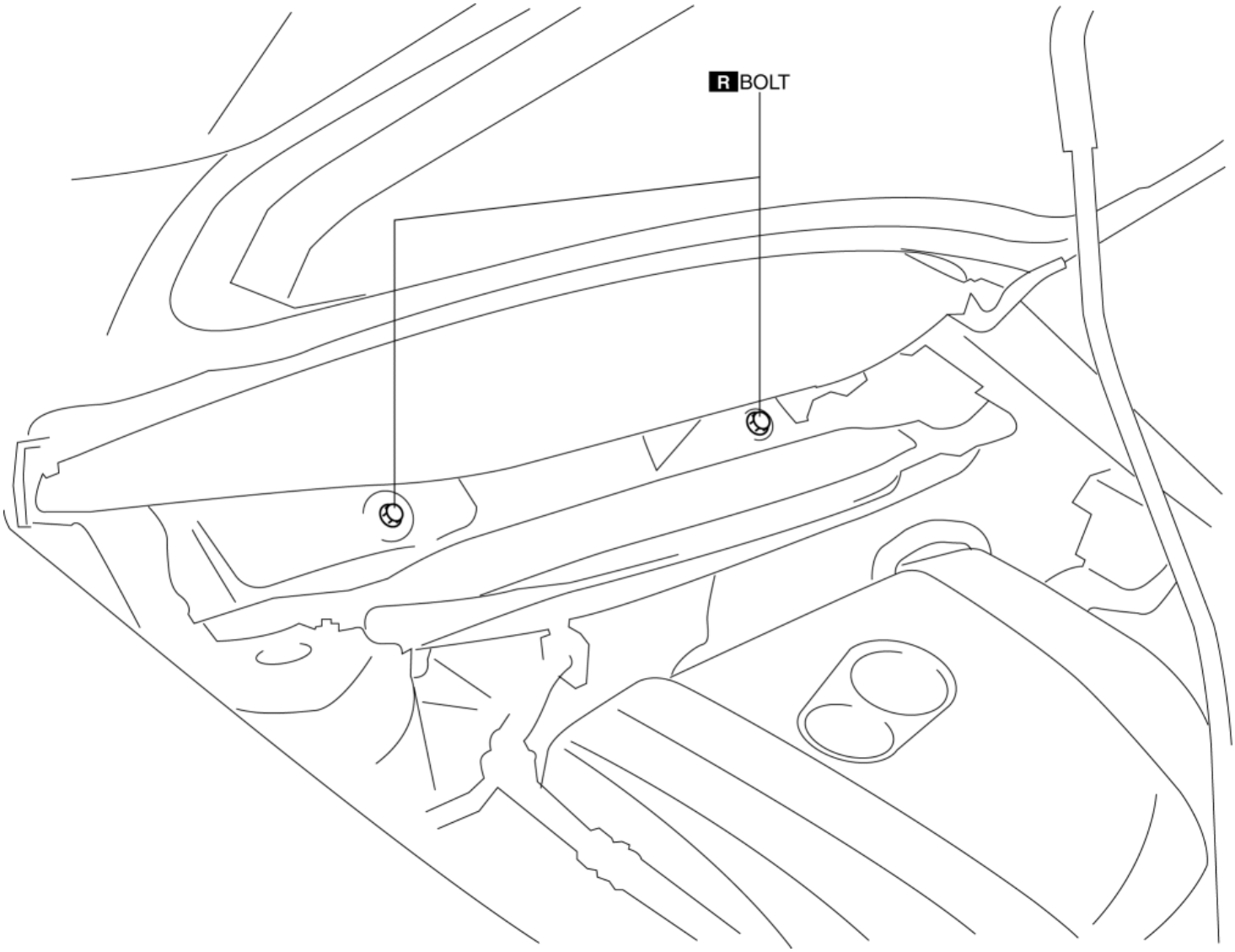

14. Remove the caps, then remove bolts.

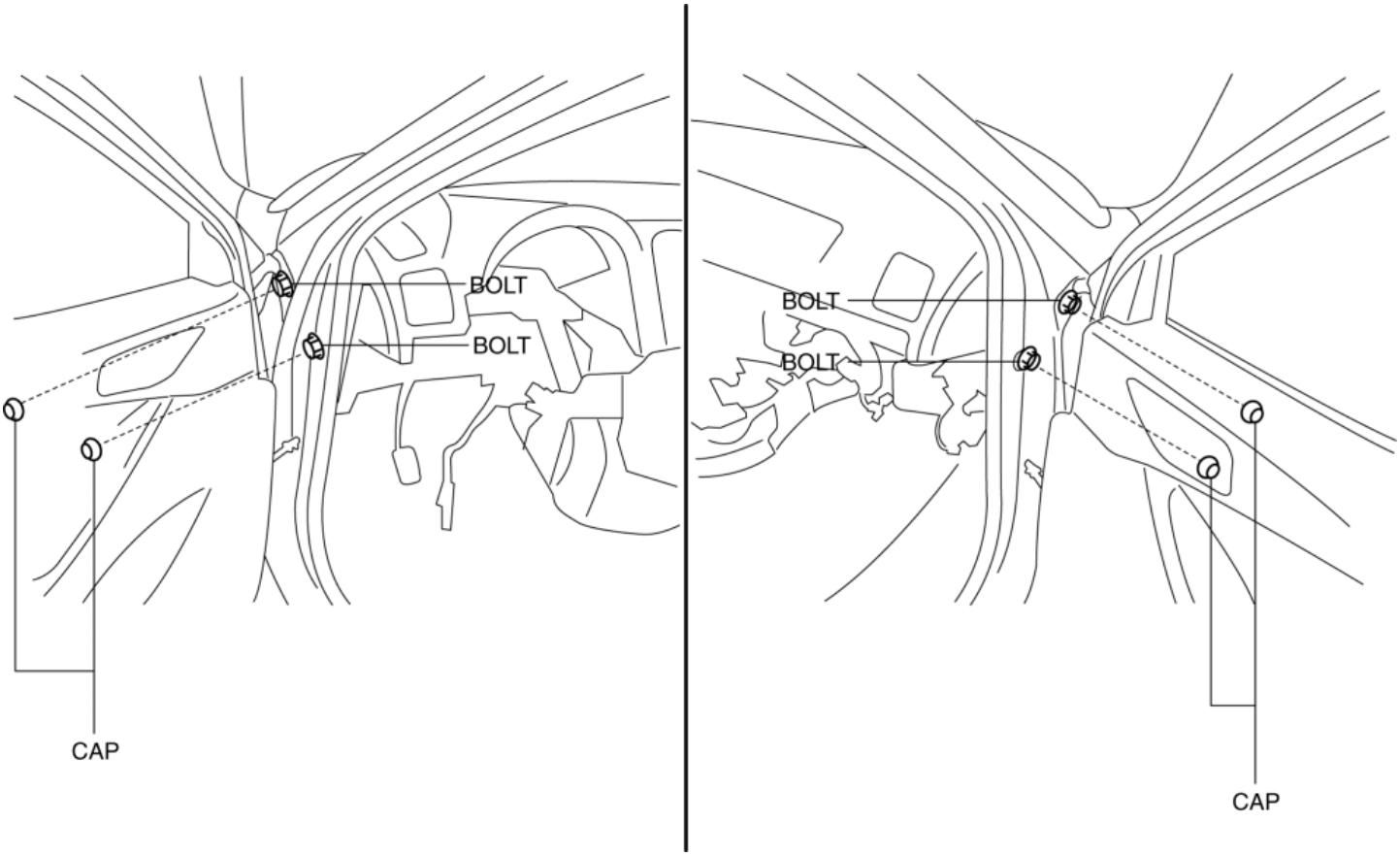

15. Move the dashboard in the direction of the arrow in the order of (1), (2) shown in the figure, then remove the guide pin.

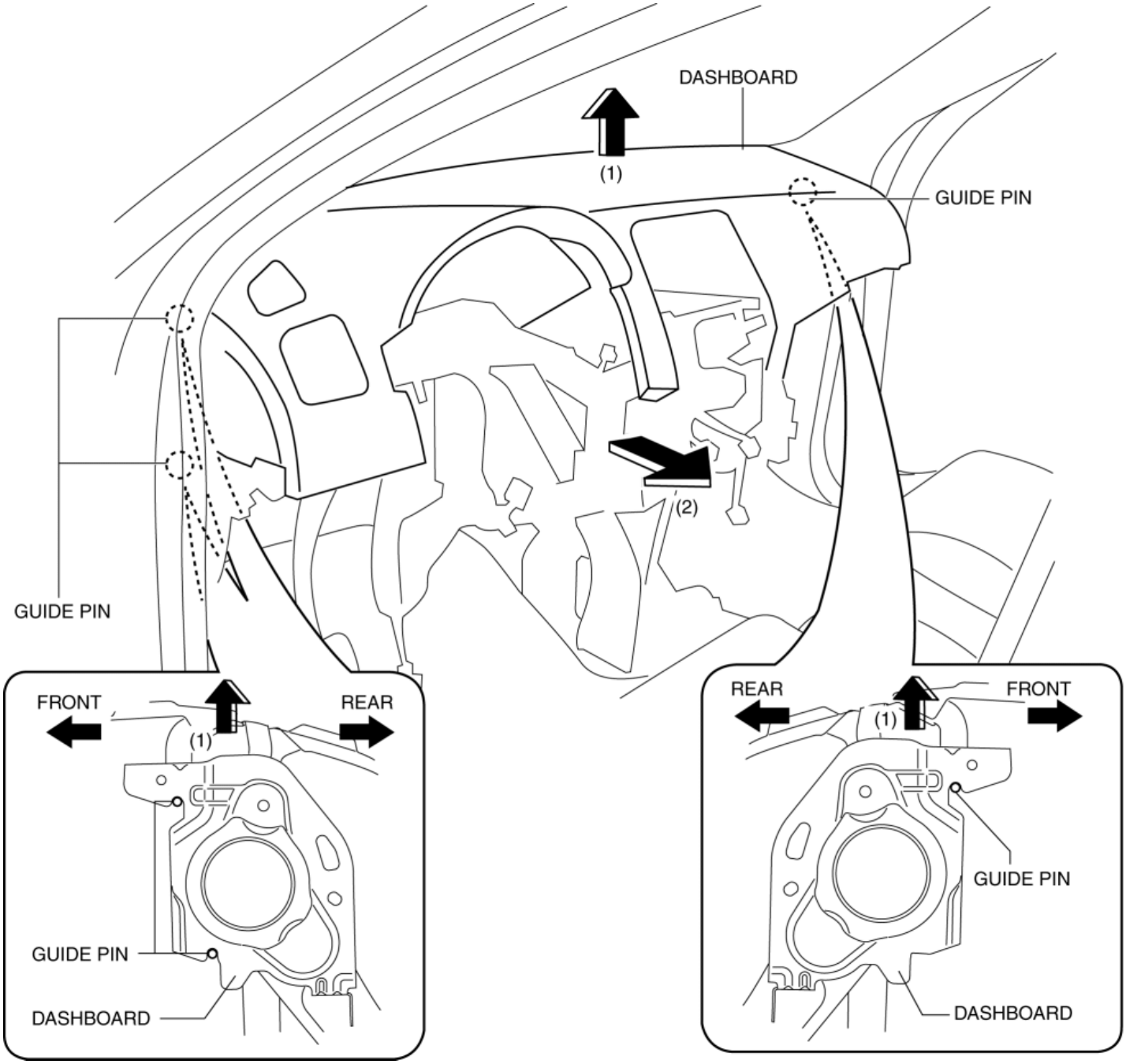

16. Turn the dashboard 90° in the direction of the arrow (3) shown in the figure.

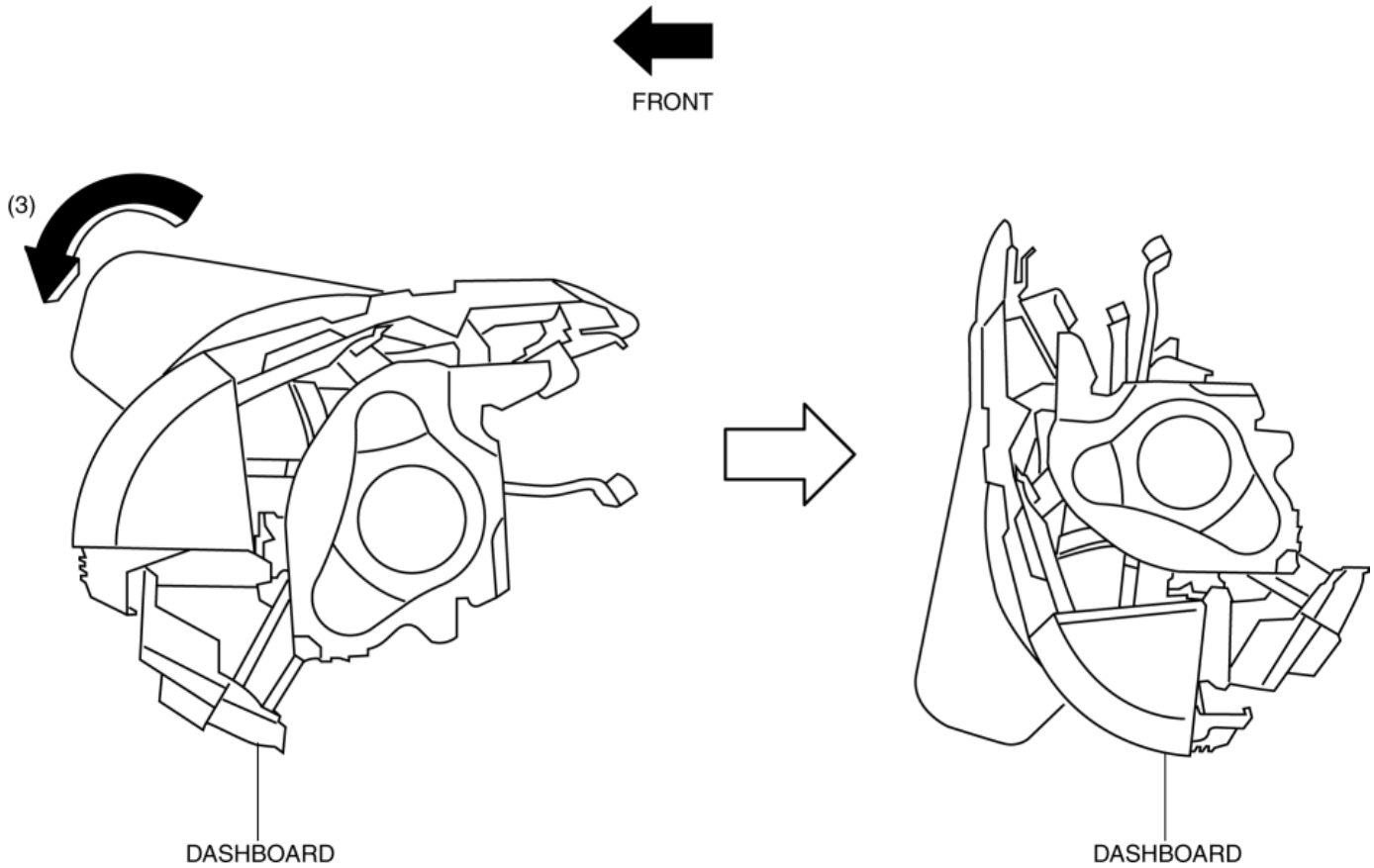

17. Take the dashboard off from the front driver-side door or front passenger-side door opening.

2014 - Mazda3 - Body and Accessories

DASHBOARD INSTALLATION

1. Rotate the plate nuts by hand in the direction of the arrow shown in the figure until they are seated.

CAUTION:

- After removing the dashboard, the plate nuts of the member junctions will have lifted. If the dashboard is removed with the plate nuts lifted, the plate nuts may contact the vehicle body, causing a dent or damage to the coating film, and the dashboard installation will be difficult. Before inserting the dashboard into the cabin, adjust the plate nuts of the member junctions.
- If the plate nuts are tightened completely when installing bolts, the plate nuts may not move resulting in damage to the member junction tab and the vehicle body. After seating the plate nuts, verify that they can be rotated by hand.

NOTE:

- If the plate nuts cannot be rotated by hand, loosen the plate nuts using a hexagonal wrench.

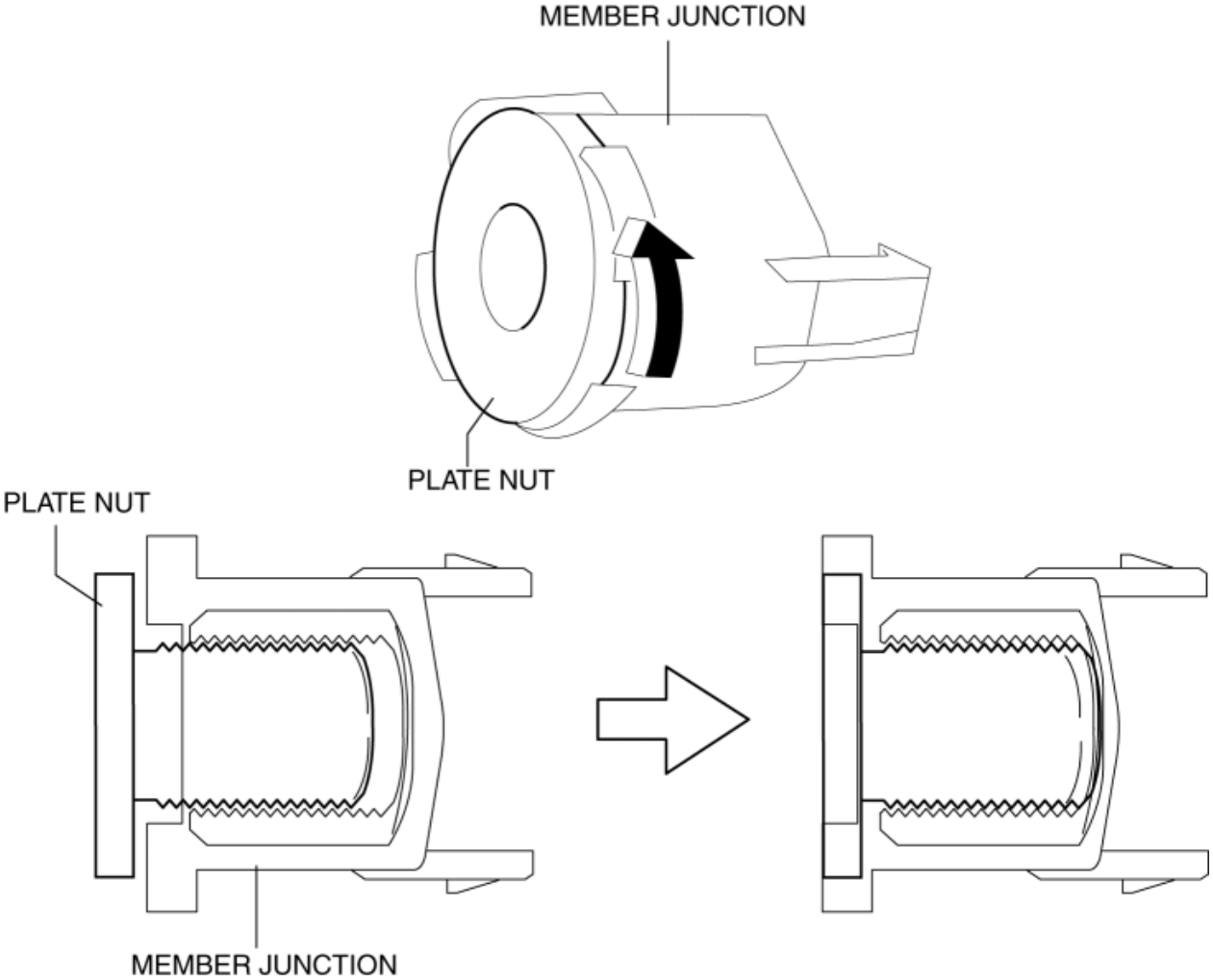

2. Insert the dashboard from the front driver-side door or front passenger-side door opening.

CAUTION:

- If the member junction tabs become disengaged from the dashboard when inserting the dashboard into the cabin, the member junction could be damaged. Before inserting the dashboard. into the cabin, verify that the member junction tabs are engaged with the dashboard.

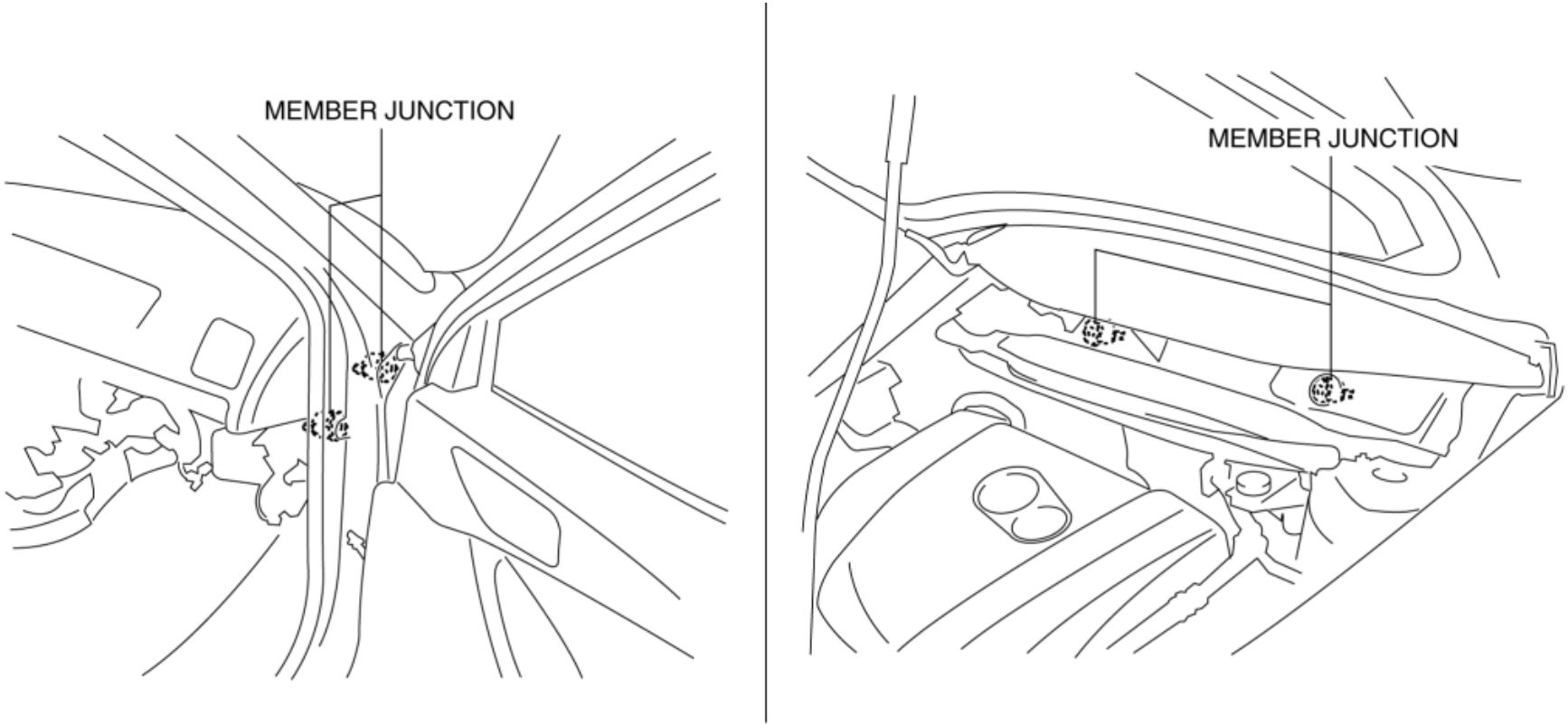

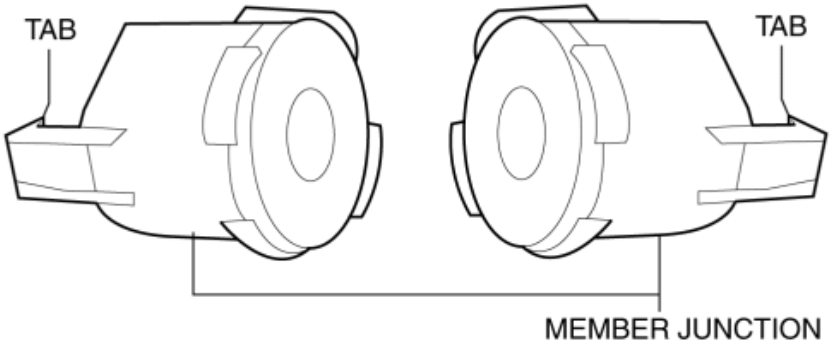

3. Move the dashboard in the direction of the arrow shown in the figure, align it with the guide pins on the vehicle body sides, and set it.

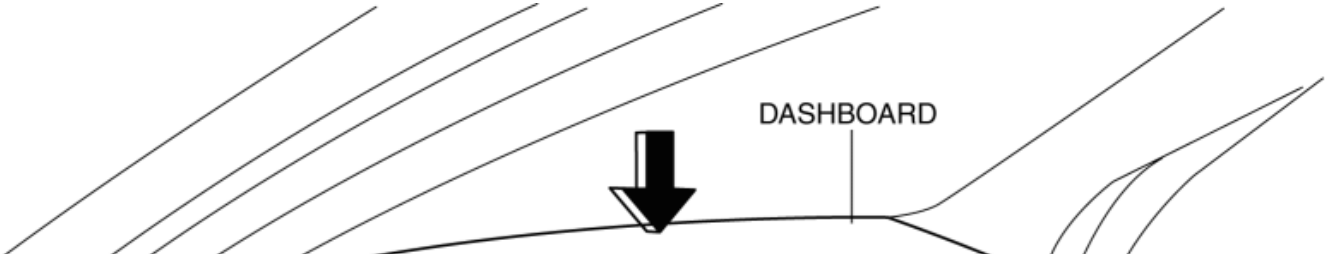

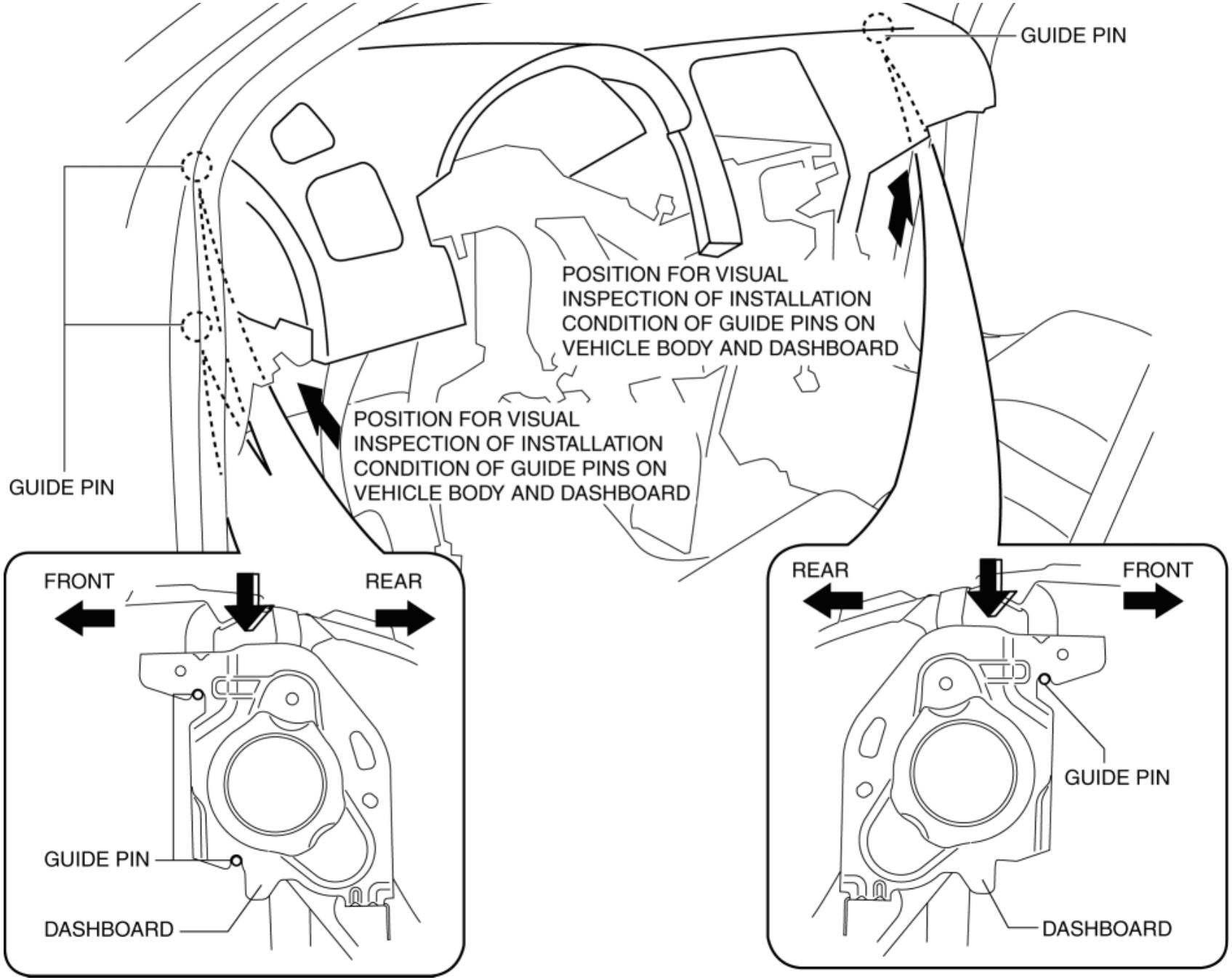

4. Insert bolts on the passenger-side.

NOTE:

- Tighten bolts to the specified toque after the member junction position of bolts is positioned.

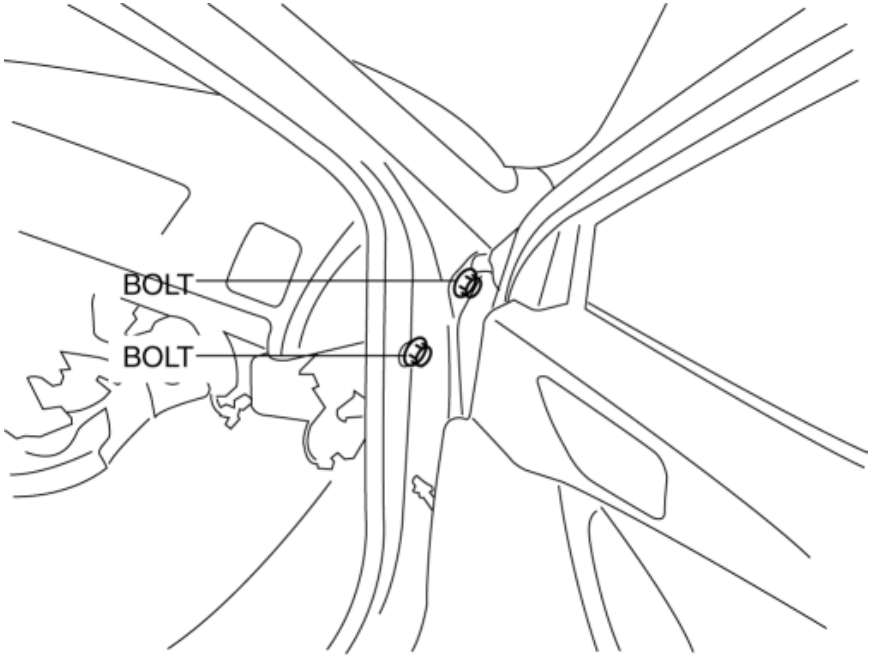

5. Tighten bolts on the driver-side until they are seated.

NOTE:

- Do not use a tool to tighten bolts, and instead hand tighten them until they feel sufficiently tight.

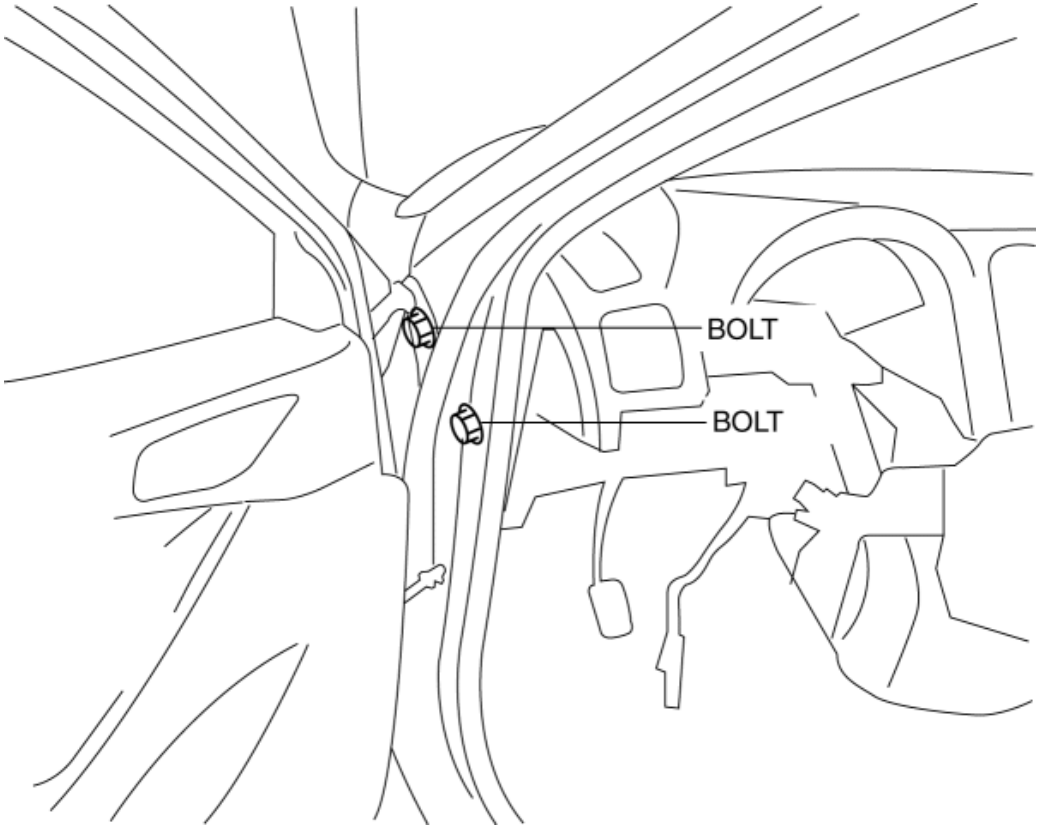

6. Tighten bolts on the passenger-side until they are seated.

NOTE:

- After bolts are seated, rotate the plate nuts of the member junctions and visually inspect them from the lower side of the dashboard on the passenger-side to verify that they emerge in the direction of the body panels.

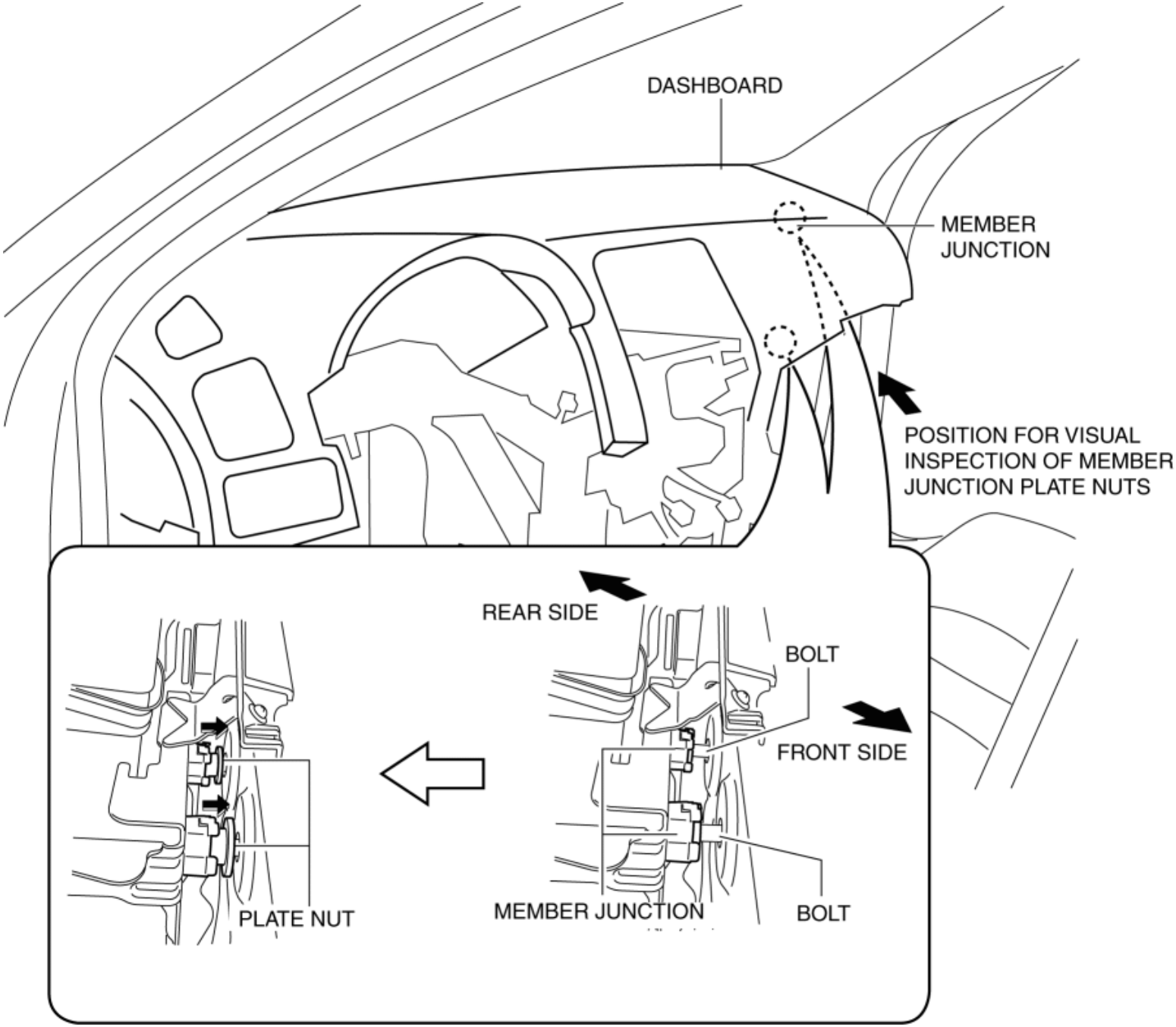

7. Verify that the member junction hole of bolt and the through-hole of bolt on the vehicle side are aligned.

NOTE:

- If the member junction hole of bolt is not aligned with the through-hole of bolt on the vehicle side, remove bolts on the driver-side and the front passenger-side, then resume the procedure from Step 5.

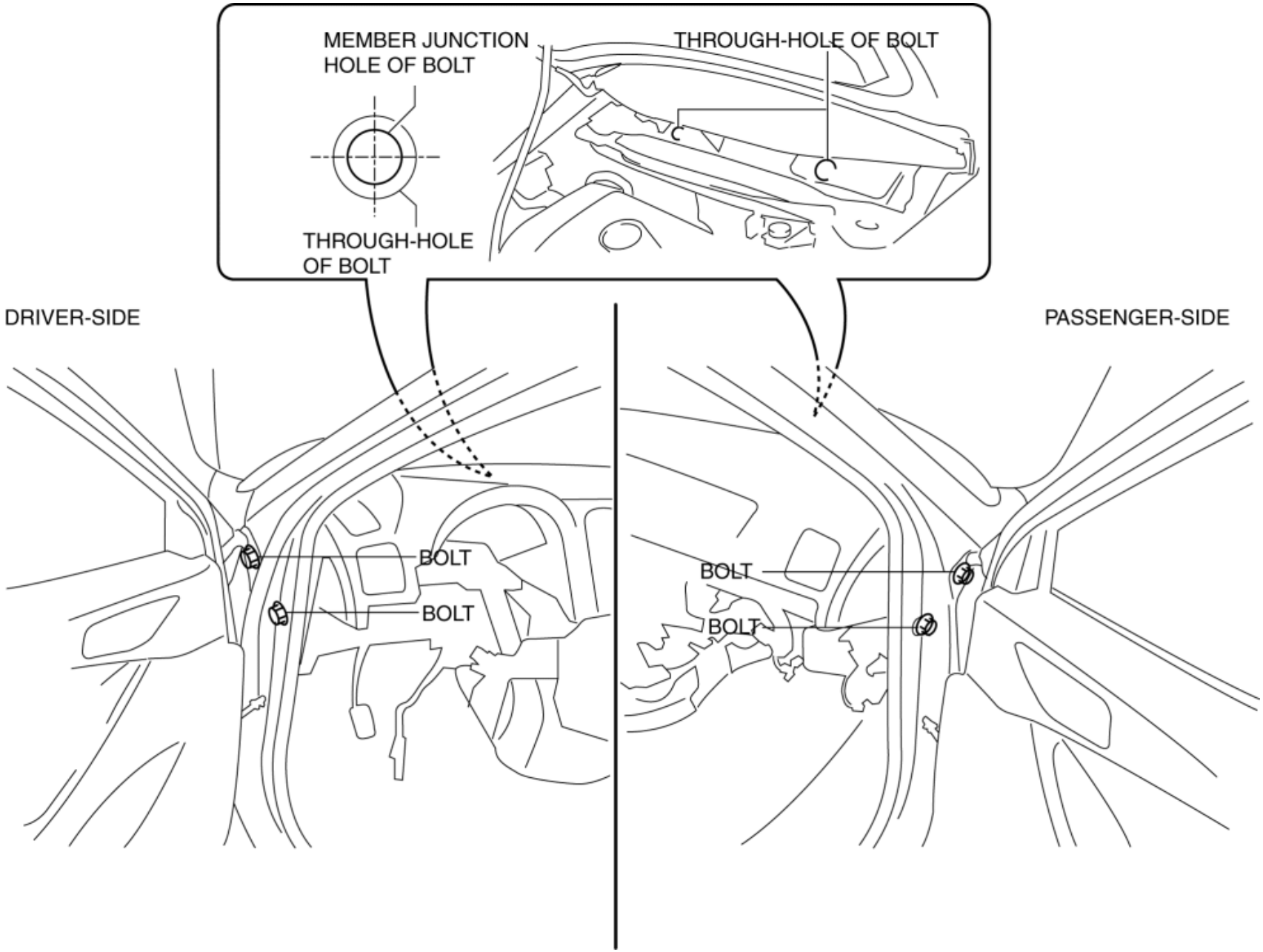

8. Seated bolts.

CAUTION:

- If bolts are reused, the plate nuts of the member junctions may not move causing damage to the member junction tabs and the vehicle body. Always replace bolts with new ones.

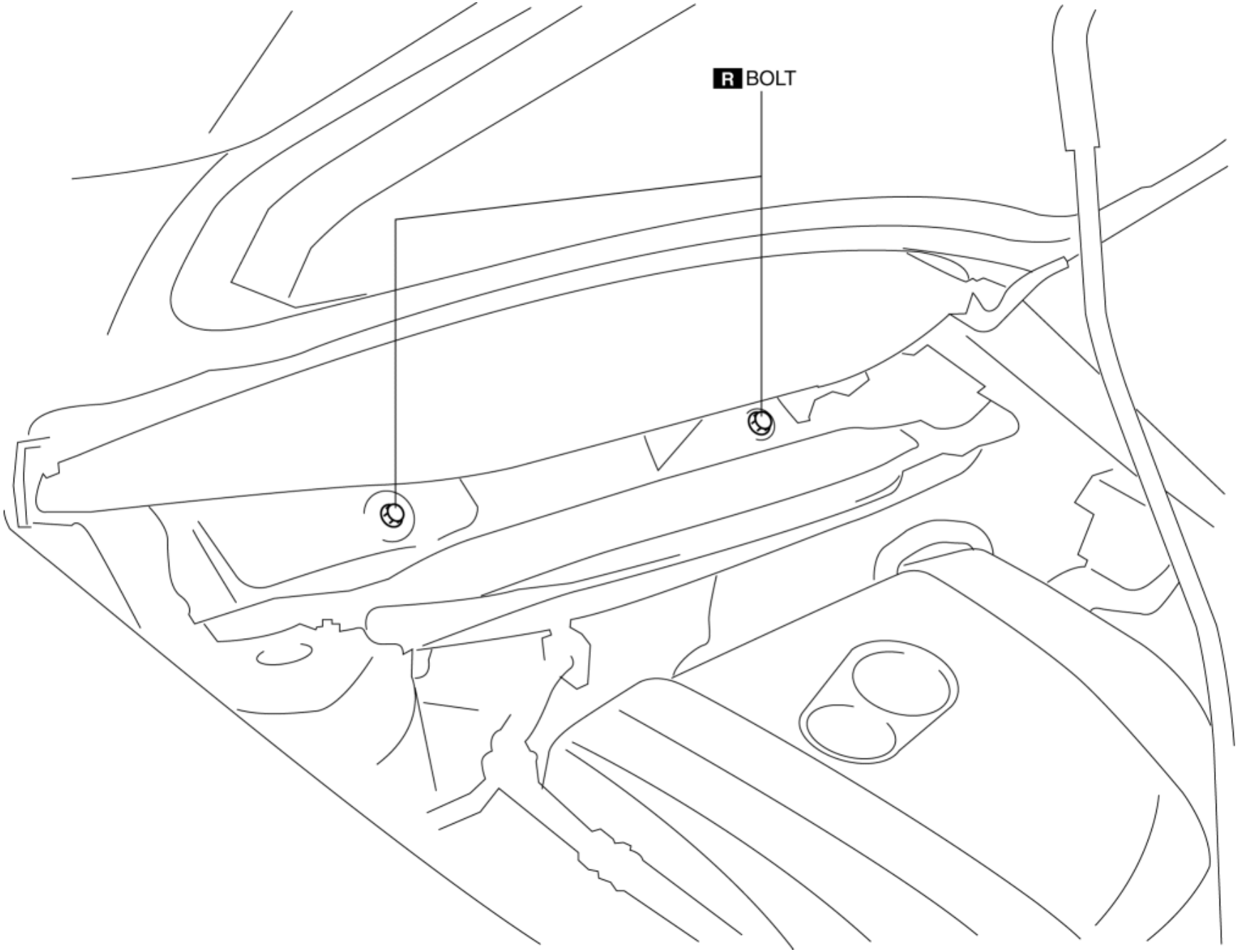

9. Completely tighten bolts on the driver-side and passenger-side to the specified torque.

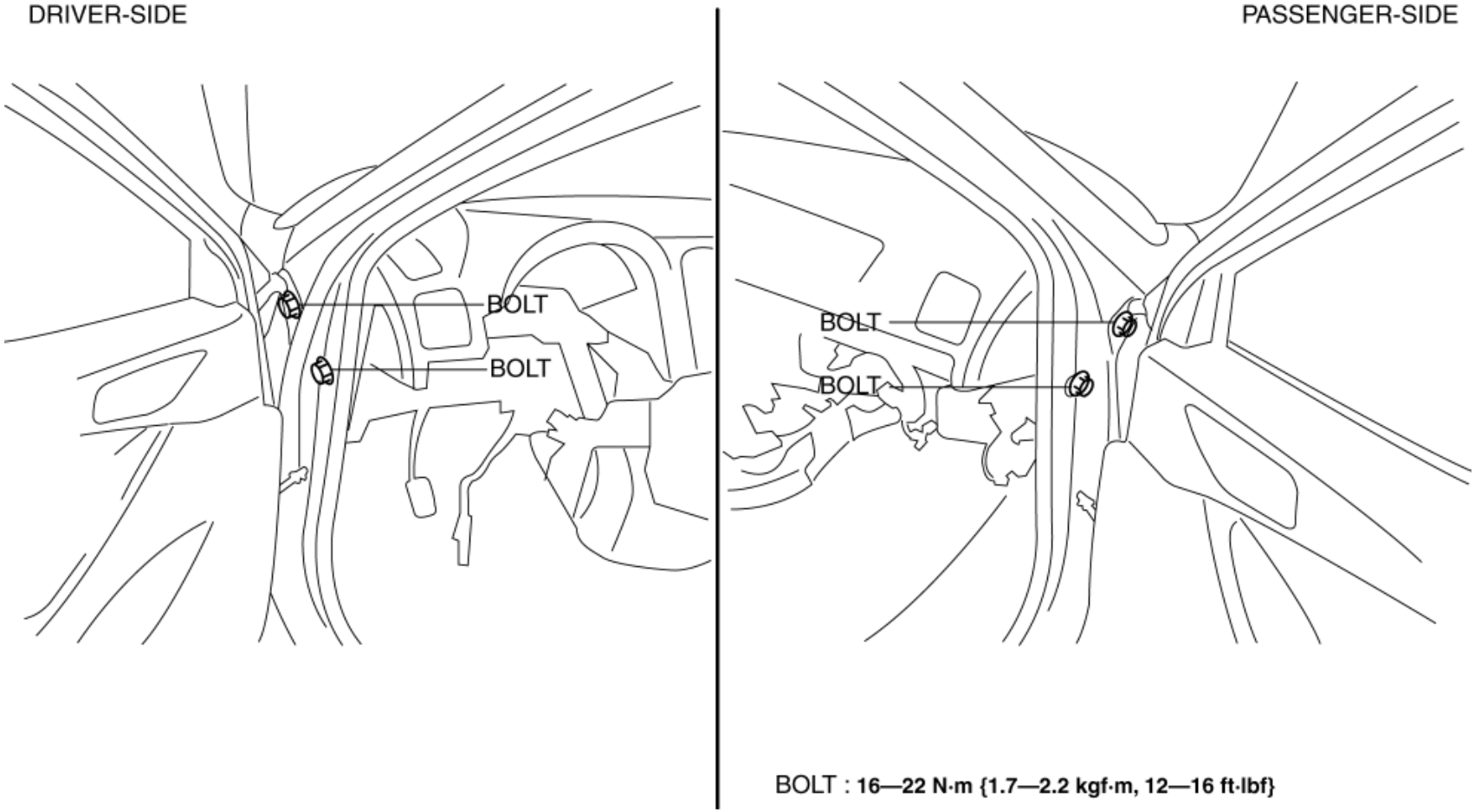

10. Completely tighten bolts to the specified torque.

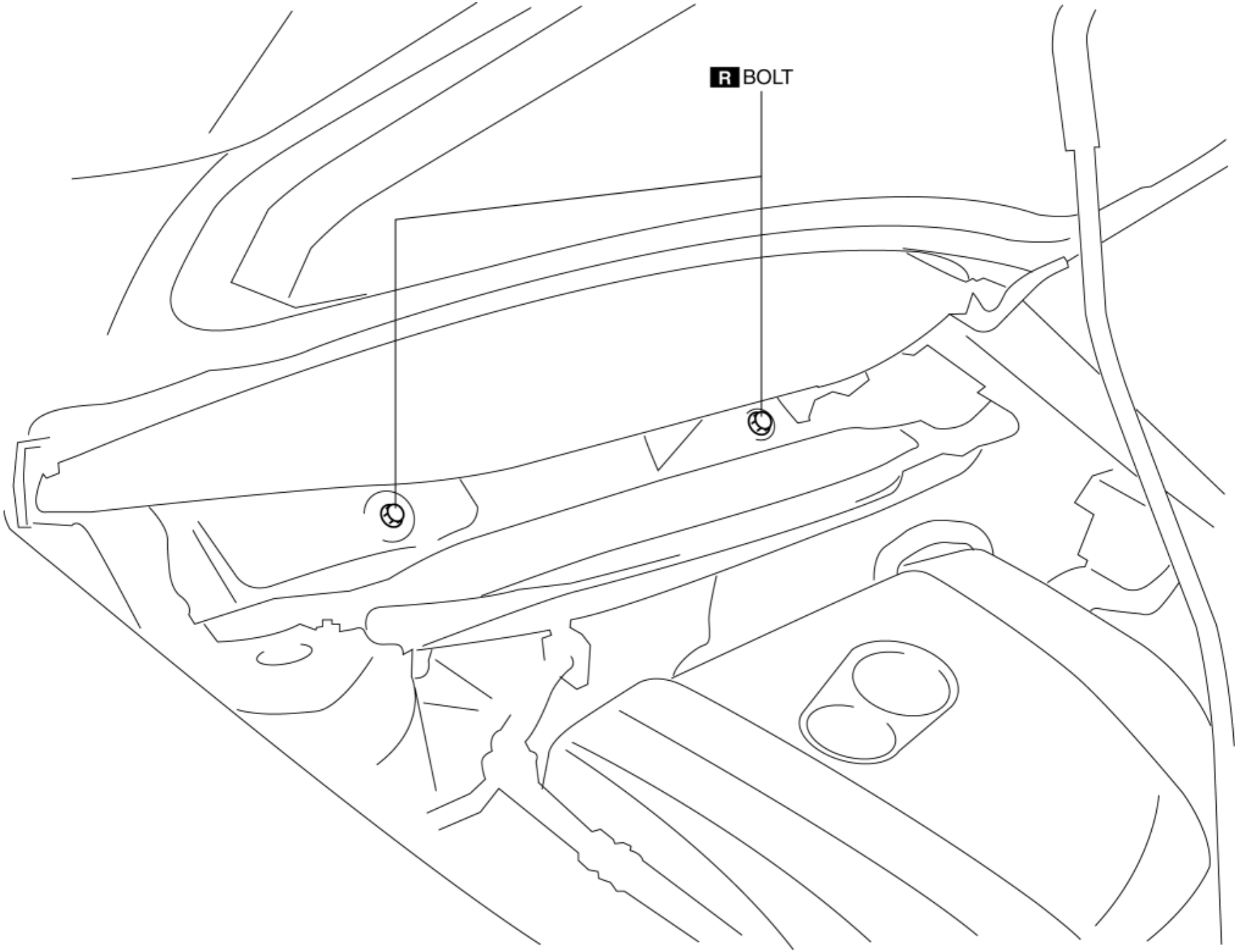

BOLT : **8—12 N·m {82—122 kgf·cm, 71—106 in·lbf}**

11. Install the caps.

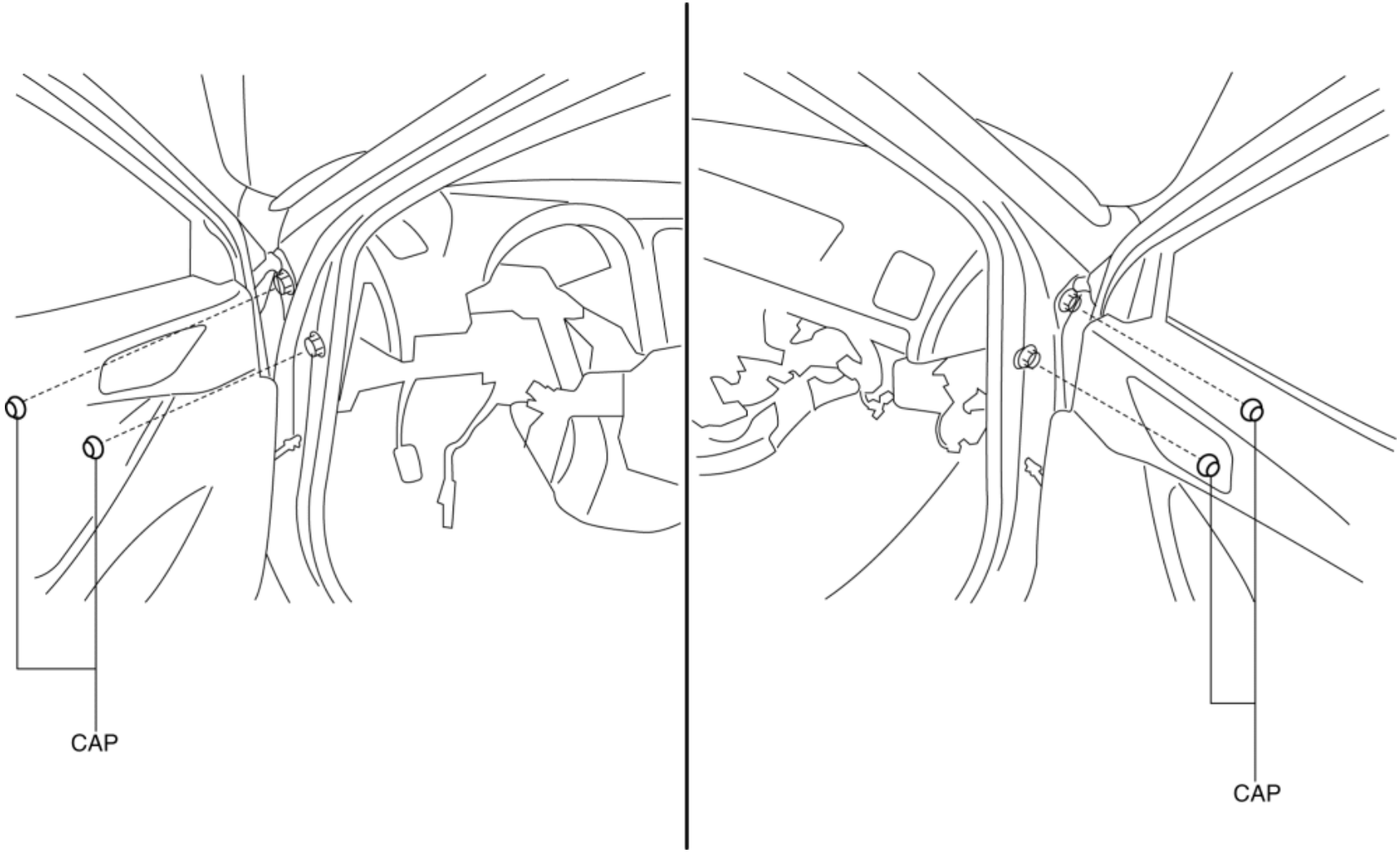

12. Install the dashboard bracket.
13. Install nuts.
14. Install bolts.

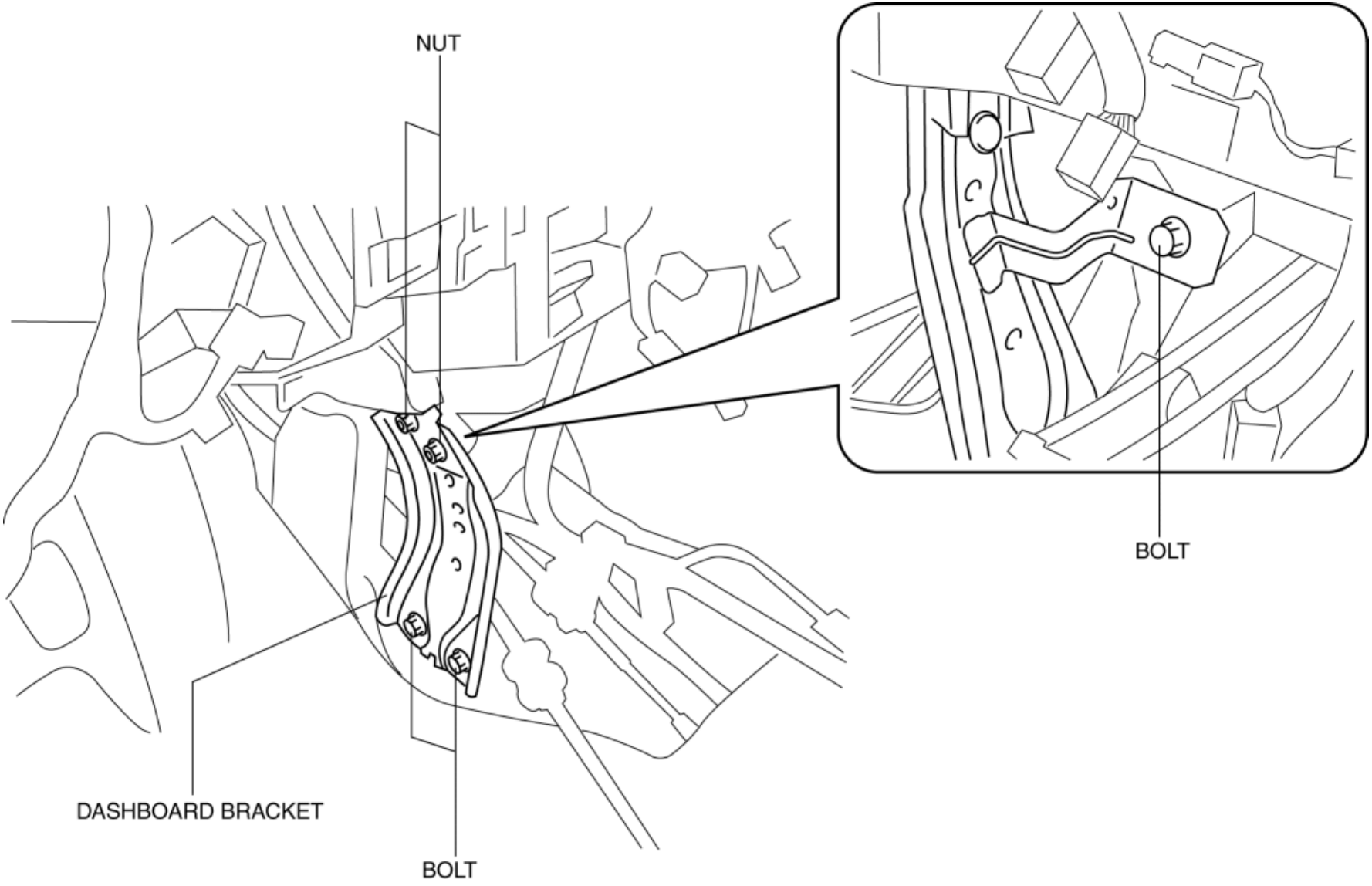

BOLT, NUT : **18—26 N·m {1.9—2.6 kgf·m, 14—19 ft·lbf}**

15. Install nuts.
16. Install the rear console bracket.
17. Connect the dashboard harness connectors and install the wiring harness clip.
18. Install the parking brake lever component.

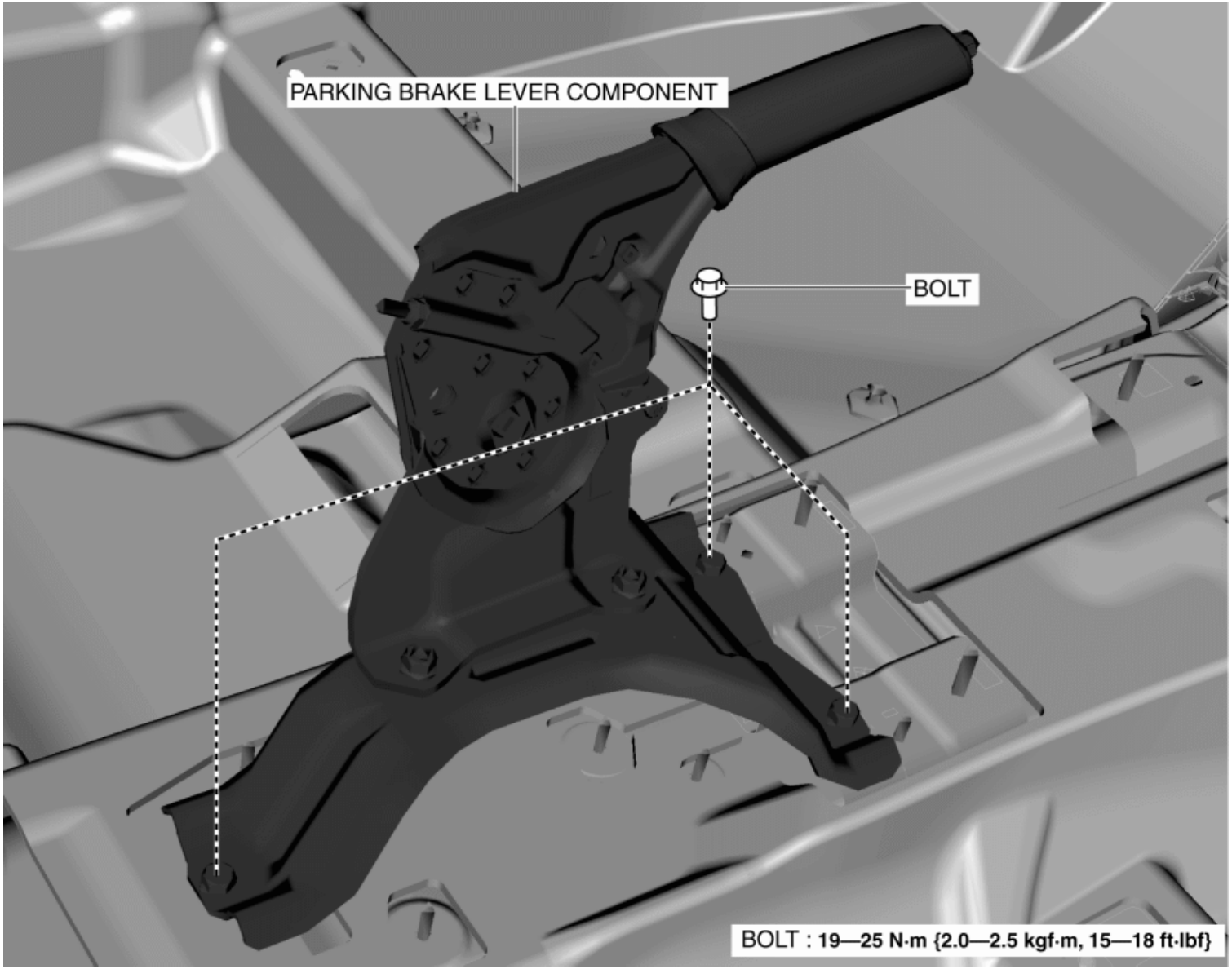

19. Install the front console bracket.

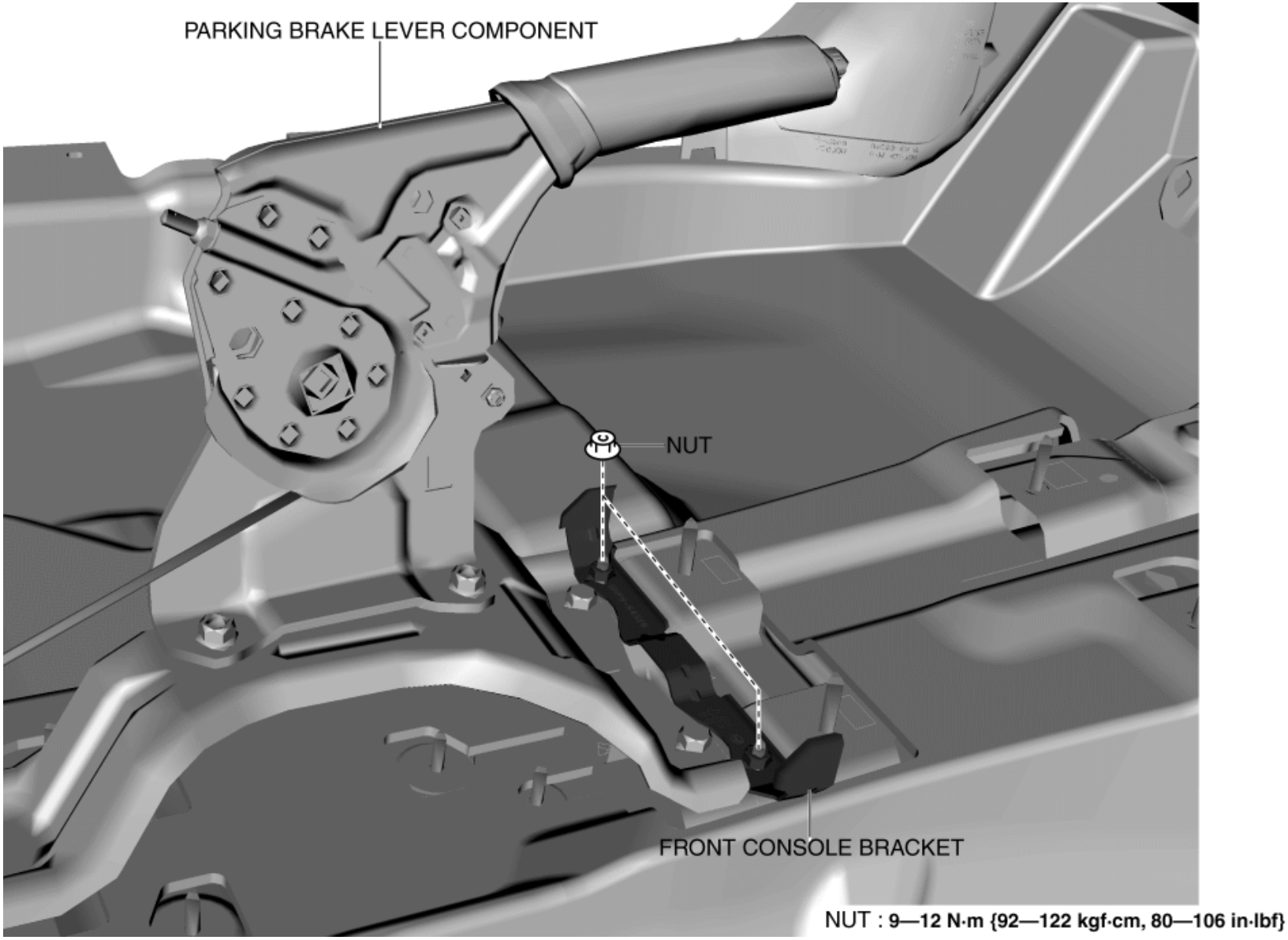

20. Install nuts.
21. Install the following parts:
    a. Selector lever component (ATX) (See **AUTOMATIC TRANSAXLE SHIFT MECHANISM REMOVAL/INSTALLATION**.)
    b. Shift lever component (MTX) (See **MANUAL TRANSAXLE SHIFT MECHANISM REMOVAL/INSTALLATION [C66M-R]**.)
    c. Steering shaft (See **STEERING WHEEL AND COLUMN REMOVAL/INSTALLATION**.)
    d. Joint cover (See **STEERING WHEEL AND COLUMN REMOVAL/INSTALLATION**.)

e. Knee bolster (See **KNEE BOLSTER REMOVAL/INSTALLATION**.)

f. Driver-side lower panel (See **LOWER PANEL REMOVAL/INSTALLATION**.)

g. Fuel-filler lid opener lever (See **FUEL-FILLER LID OPENER AND LEVER REMOVAL/INSTALLATION**.)

h. Hood release lever (See **HOOD RELEASE LEVER AND RELEASE CABLE REMOVAL/INSTALLATION**.)

i. Audio unit (without center display) (See **AUDIO UNIT REMOVAL/INSTALLATION**.)

j. Center display (with center display) (See **CENTER DISPLAY REMOVAL/INSTALLATION**.)

k. Climate control unit (See **CLIMATE CONTROL UNIT REMOVAL/INSTALLATION [FULL-AUTO AIR CONDITIONER]**.) (See **CLIMATE CONTROL UNIT REMOVAL/INSTALLATION [MANUAL AIR CONDITIONER]**.)

l. Front console (See **FRONT CONSOLE REMOVAL/INSTALLATION**.)

m. Passenger-side lower panel (See **LOWER PANEL REMOVAL/INSTALLATION**.)

n. Decoration panel (See **DECORATION PANEL REMOVAL/INSTALLATION**.)

o. Dashboard under cover (See **DASHBOARD UNDER COVER REMOVAL/INSTALLATION**.)

p. Glove compartment (See **GLOVE COMPARTMENT REMOVAL/INSTALLATION**.)

q. Side wall (See **SIDE WALL REMOVAL/INSTALLATION**.)

r. CD player (with CD player) (See **CD PLAYER REMOVAL**.) (See **CD PLAYER INSTALLATION**.)

s. Front console box (See **FRONT CONSOLE BOX REMOVAL/INSTALLATION**.)

t. Shift panel (See **SHIFT PANEL REMOVAL/INSTALLATION**.)

u. Selector lever knob (ATX) (See **AUTOMATIC TRANSAXLE SHIFT MECHANISM REMOVAL/INSTALLATION**.)

v. Shift lever knob (MTX) (See **MANUAL TRANSAXLE SHIFT MECHANISM REMOVAL/INSTALLATION [C66M-R]**.)

w. Rear console (See **REAR CONSOLE REMOVAL/INSTALLATION**.)

x. Upper panel (See **UPPER PANEL REMOVAL**.) (See **UPPER PANEL INSTALLATION**.)

y. Instrument cluster (See **INSTRUMENT CLUSTER REMOVAL/INSTALLATION**.)

z. Lower column cover (See **COLUMN COVER REMOVAL/INSTALLATION**.)

aa. Meter hood (See **METER HOOD REMOVAL/INSTALLATION**.)

ab. Upper column cover (See **COLUMN COVER REMOVAL/INSTALLATION**.)

ac. Steering wheel (See **STEERING WHEEL AND COLUMN REMOVAL/INSTALLATION**.)

ad. Driver-side air bag module (See **DRIVER-SIDE AIR BAG MODULE REMOVAL [STANDARD DEPLOYMENT CONTROL SYSTEM]**.) (See **DRIVER-SIDE AIR BAG MODULE INSTALLATION [STANDARD DEPLOYMENT CONTROL SYSTEM]**.) (See **DRIVER-SIDE AIR BAG MODULE REMOVAL [TWO-STEP DEPLOYMENT CONTROL SYSTEM]**.) (See **DRIVER-SIDE AIR BAG MODULE INSTALLATION [TWO-STEP DEPLOYMENT CONTROL SYSTEM]**.)

ae. A-pillar trim (See **A-PILLAR TRIM REMOVAL/INSTALLATION**.)

af. Front side trim (See **FRONT SIDE TRIM REMOVAL/INSTALLATION**.)

ag. Front scuff plate (See **FRONT SCUFF PLATE REMOVAL/INSTALLATION**.)

ah. Cowl grille (See **COWL GRILLE REMOVAL/INSTALLATION**.)

ai. Windshield wiper arm and blade (See **WINDSHIELD WIPER ARM AND BLADE REMOVAL/INSTALLATION**.)

22. Shift the selector lever from the D position to the P position (ATX).
23. Connect the negative battery cable. (See **NEGATIVE BATTERY CABLE DISCONNECTION/CONNECTION [SKYACTIV-G 2.0, SKYACTIV-G 2.5]**.)
24. Remove the wheel blocks on the front and rear wheels.

2014 - Mazda3 - Body and Accessories

SPEAKER GRILLE REMOVAL/INSTALLATION

CAUTION:

- If work using protective tape is performed in an area where the temperature can increase drastically or the protective tape is left adhered for a long period of time, tape adhesive could remain area where the protective tape was applied when the it is peeled off. When applying protective tape, avoid areas where the temperature of the tape can increase drastically and peel off the protective tape soon after the work is completed.

Center Speaker Grille

1. To prevent scratches or damage, affix protective tape to the position shown in the figure of the dashboard.

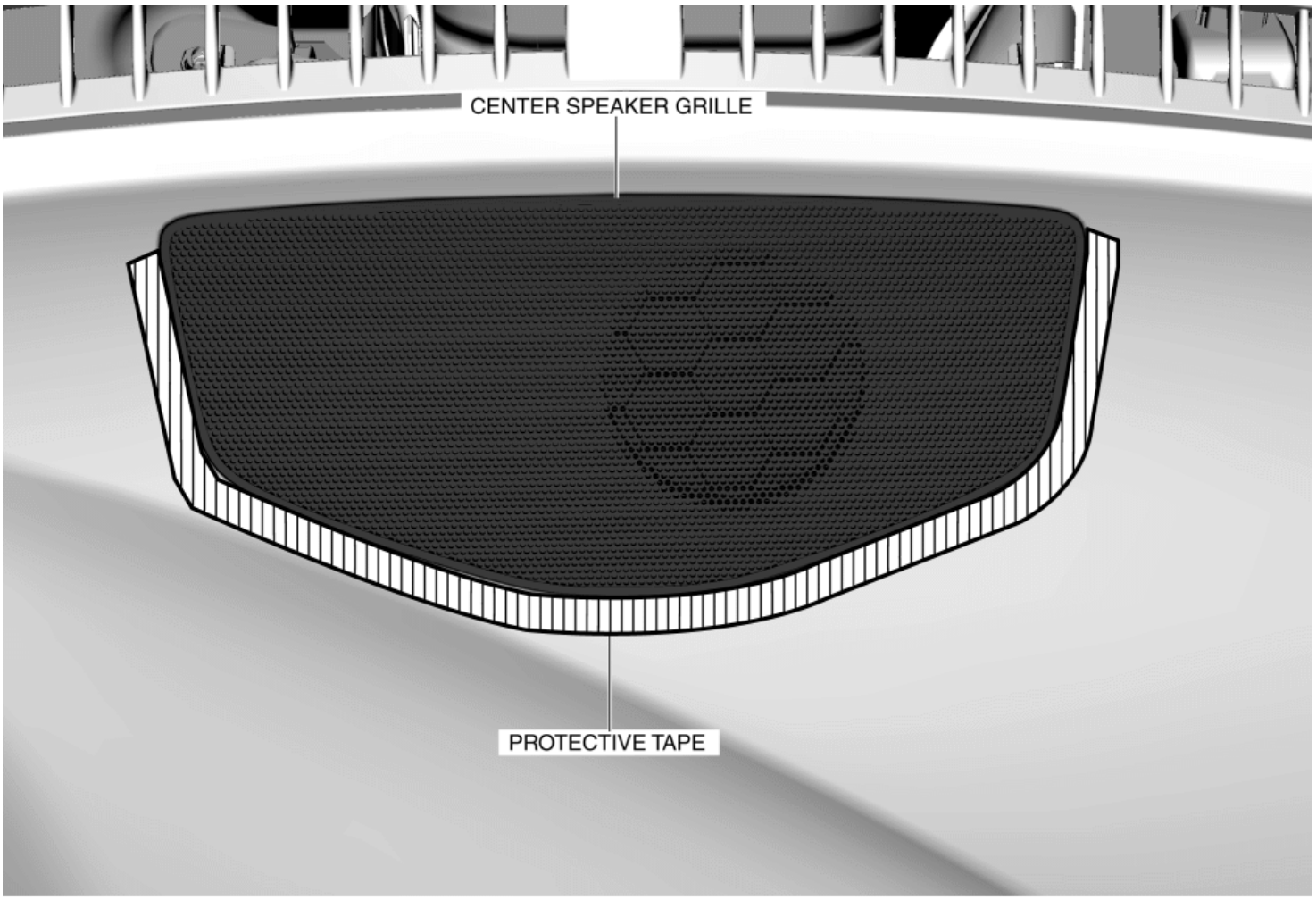

2. To detach clip (1) from the dashboard, insert the remover tool into the clearance between the center speaker grille and dashboard.

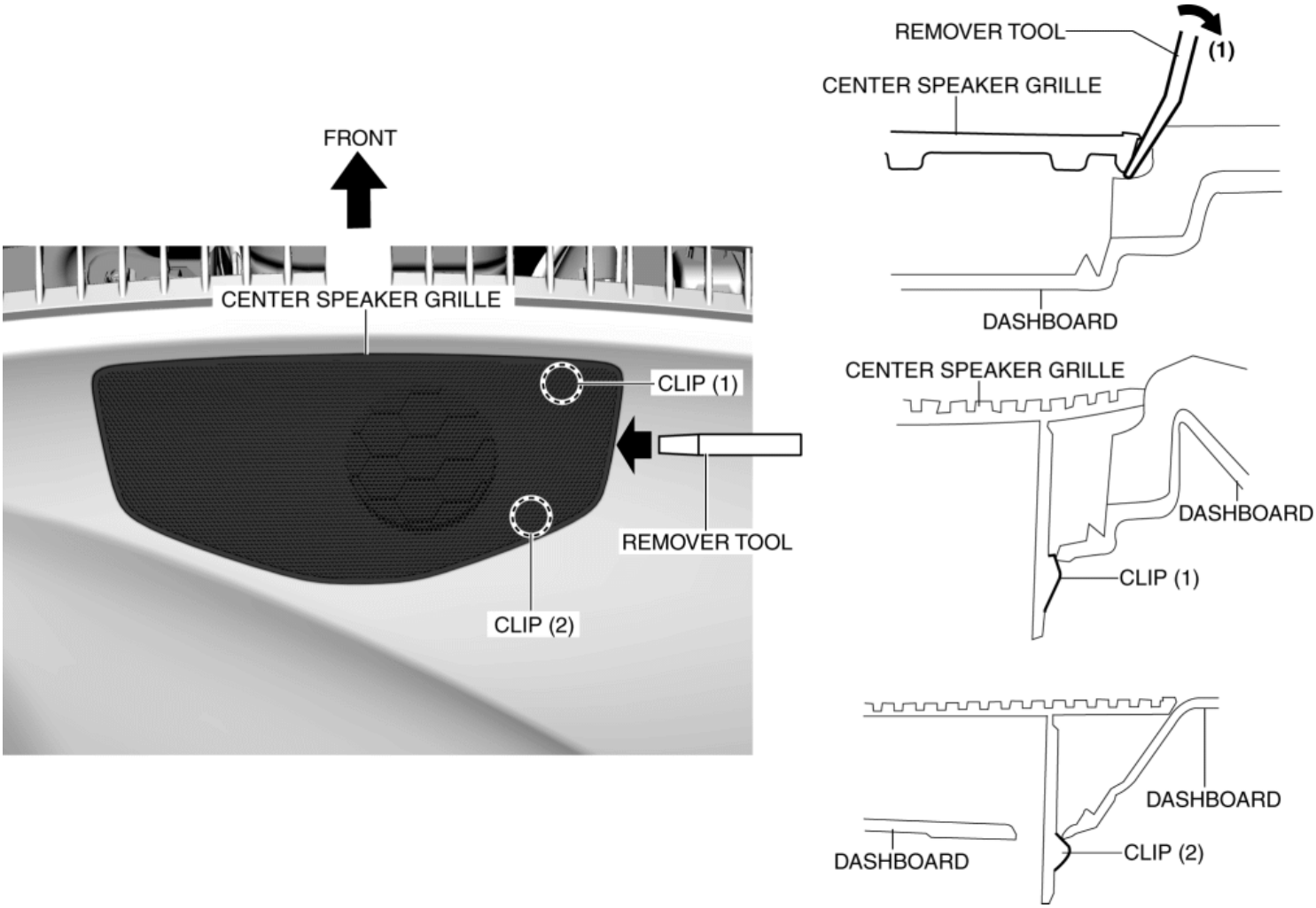

3. Move the remover tool in the direction of arrow (1) shown in the figure and detach clip (1), clip (2) from the dashboard.

4. Slide the remover tool to the position shown in the figure.

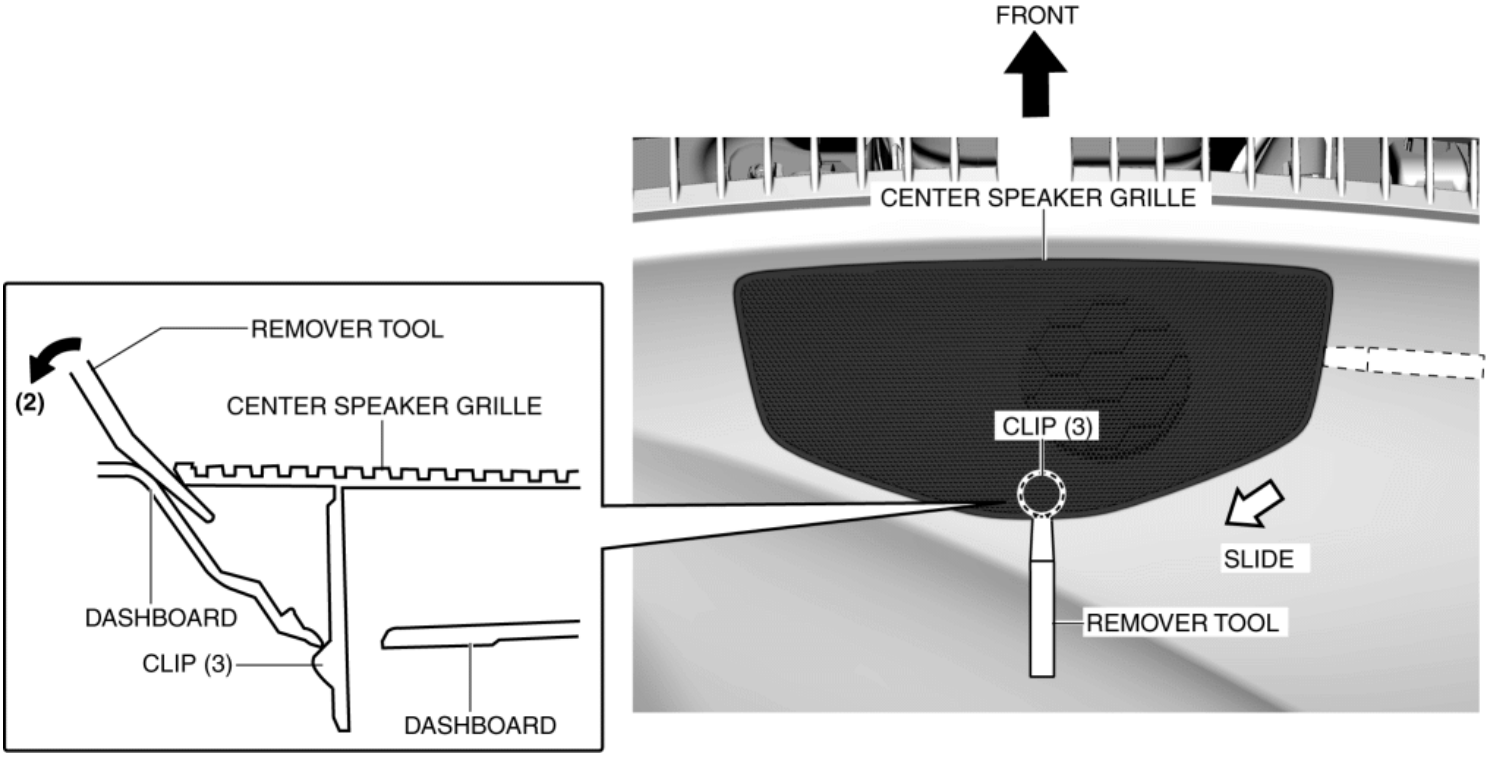

5. Move the remover tool in the direction of arrow (2) shown in the figure to detach clip (3) from the dashboard.

6. Slide the remover tool to the position shown in the figure.

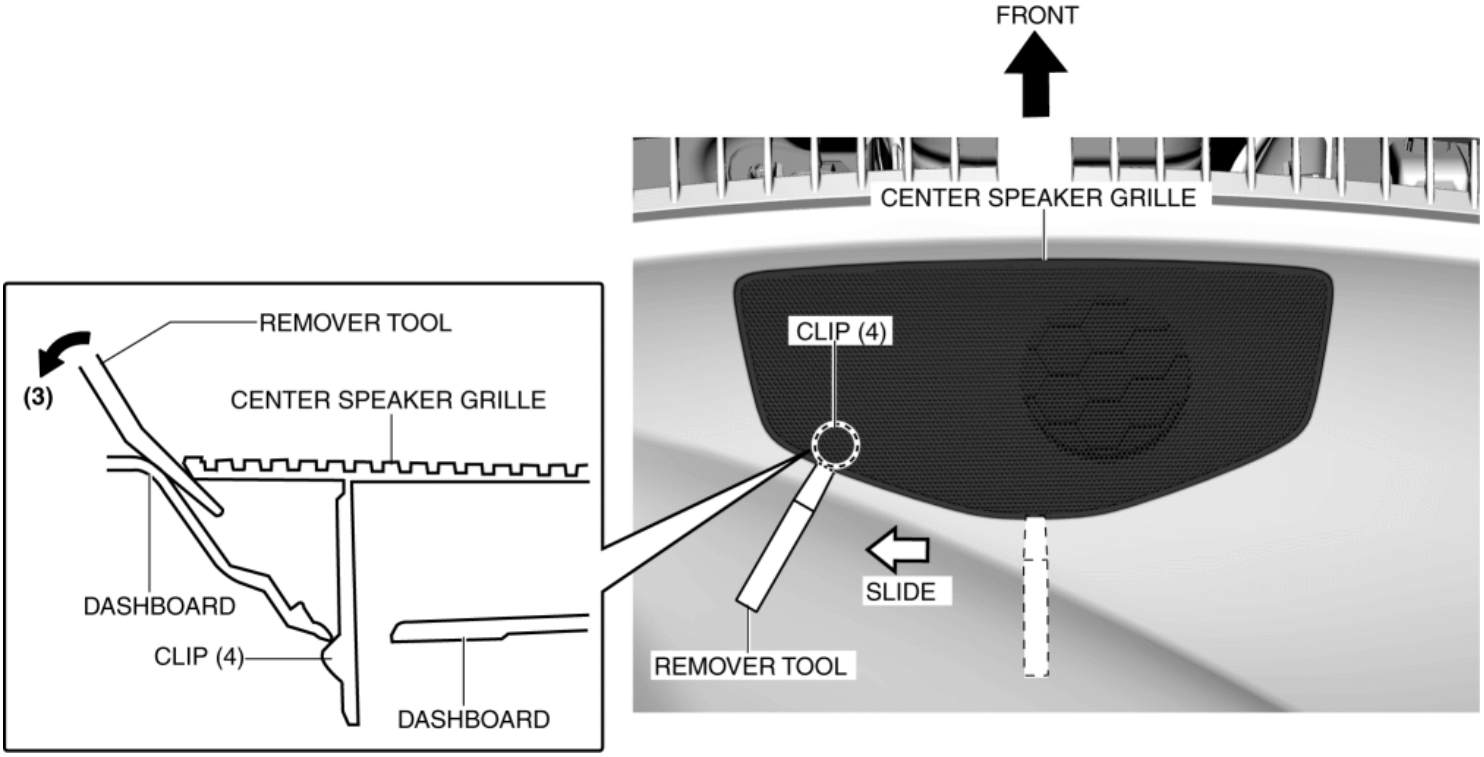

7. Move the remover tool in the direction of arrow (3) shown in the figure to detach clip (4) from the dashboard.

8. Hold the shaded area of the center speaker grille, move the center speaker grille in the direction of the arrow (4), and remove the center speaker grille while detaching clips (5).

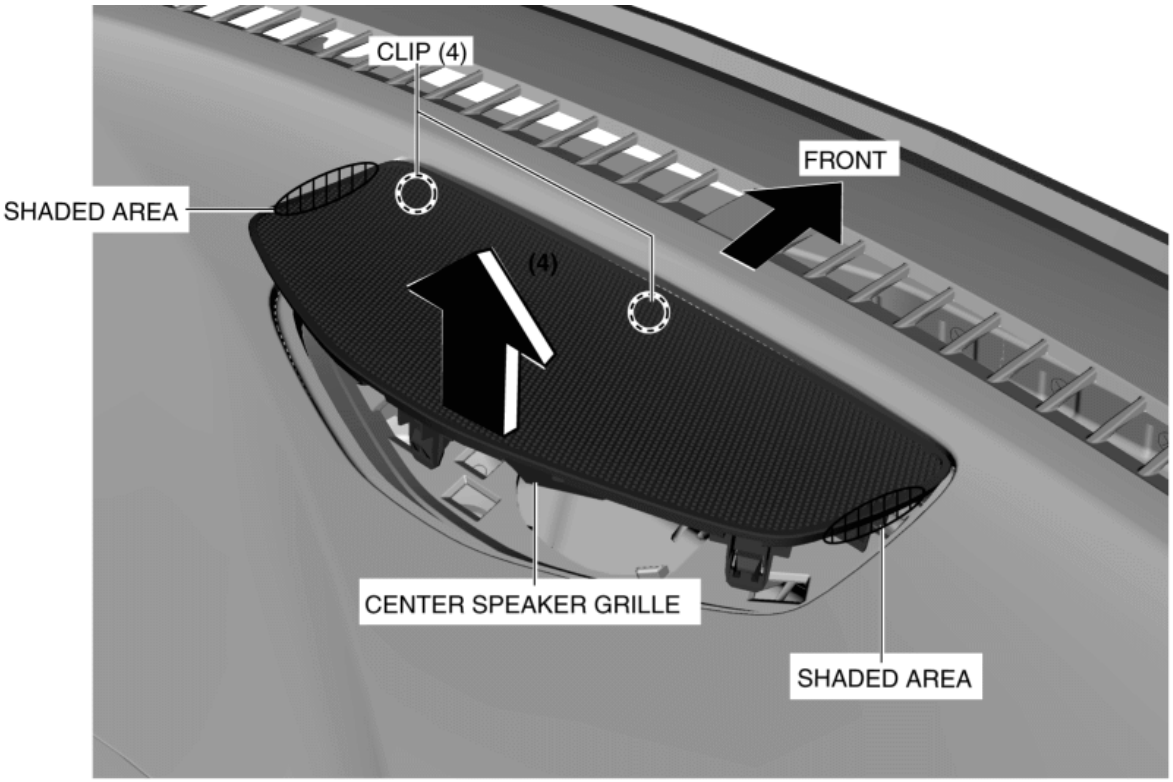

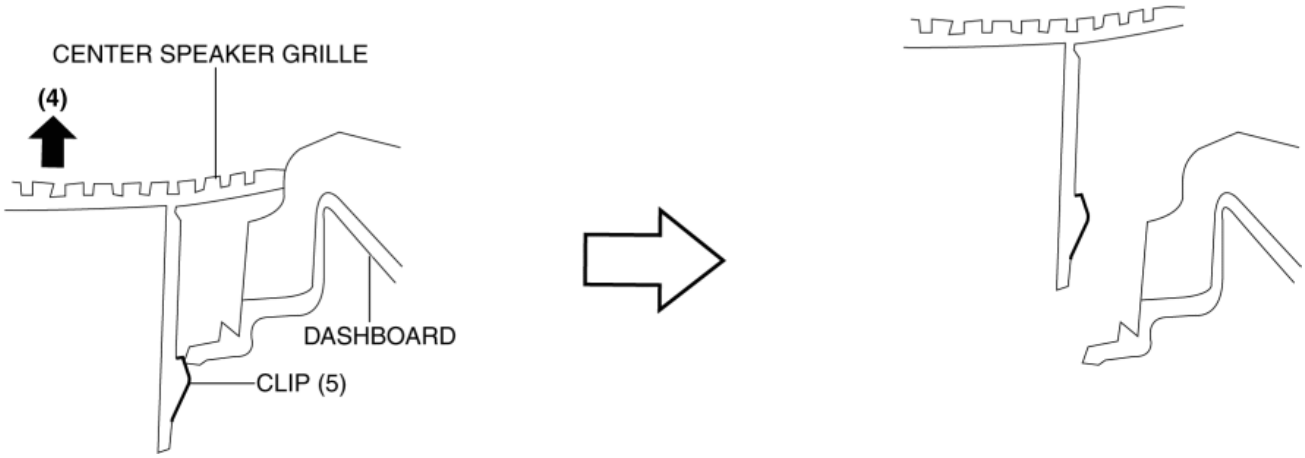

9. Install in the reverse order of removal.

Side Speaker Grille

1. To prevent scratches or damage, affix protective tape to the position shown in the figure of the dashboard.

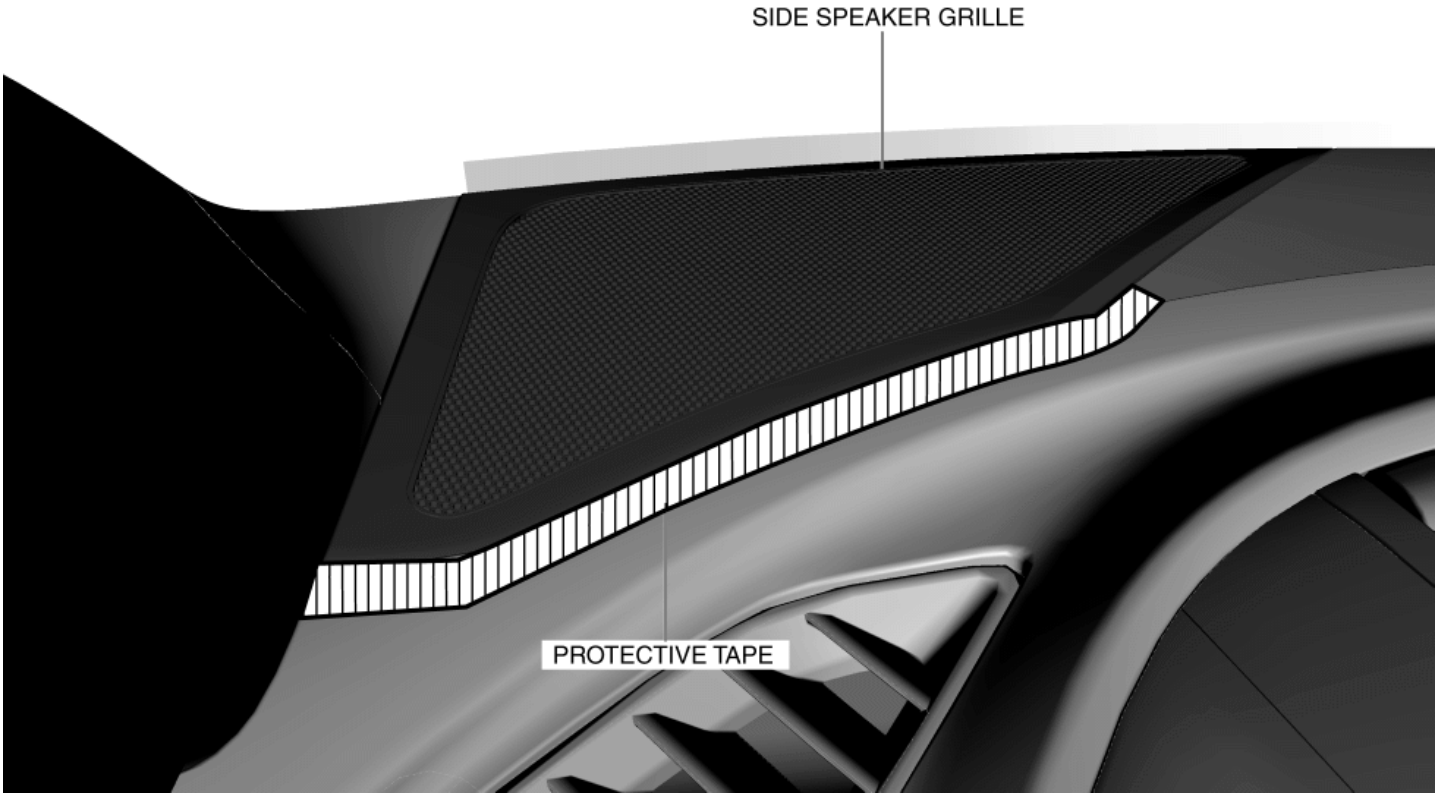

2. To detach clip (1) from the dashboard, insert the remover tool into the clearance between the side speaker grille and dashboard.

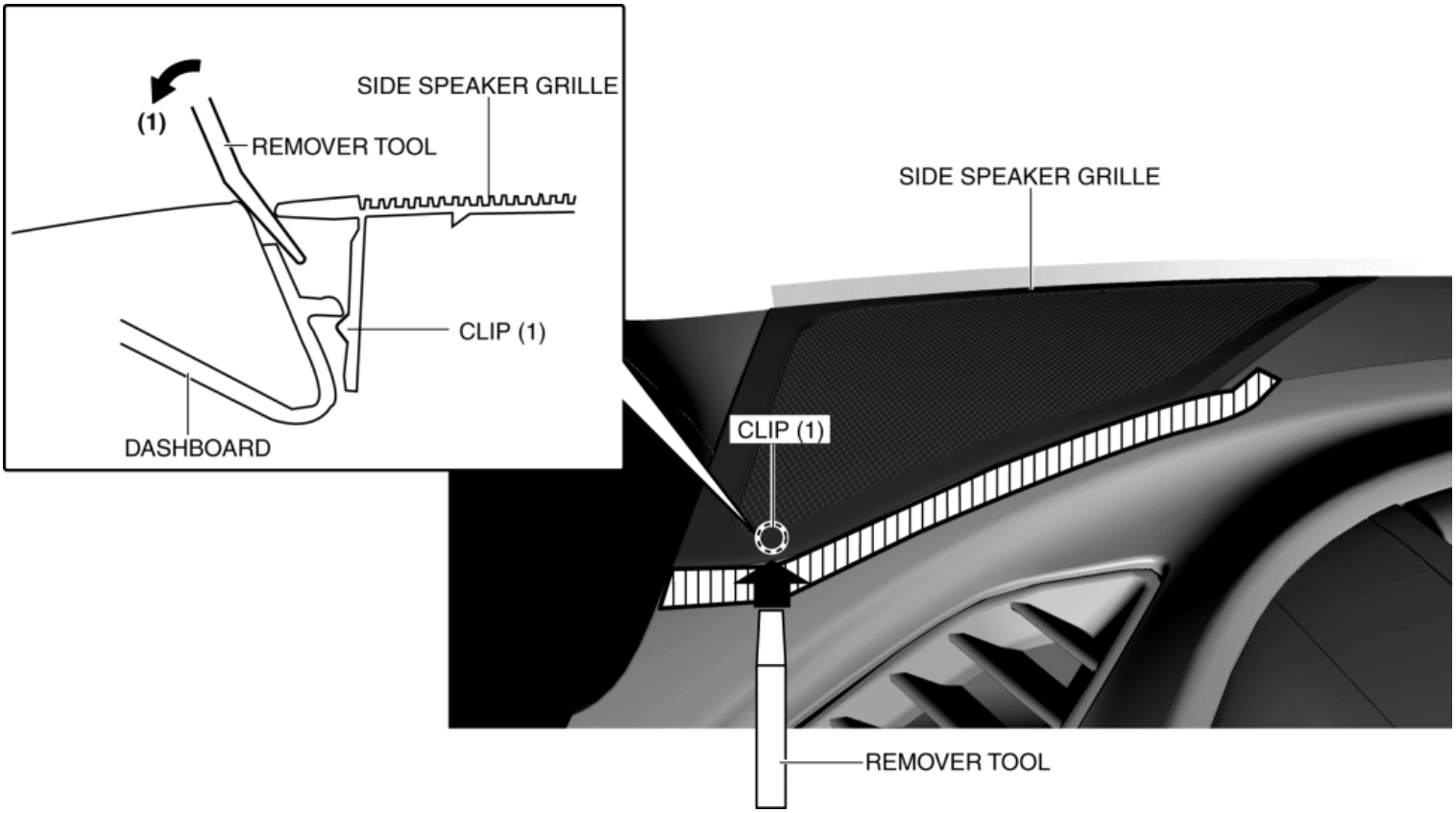

3. Move the remover tool in the direction of arrow (1) shown in the figure and detach clip (1) from the dashboard.

4. Slide the remover tool to the position shown in the figure.

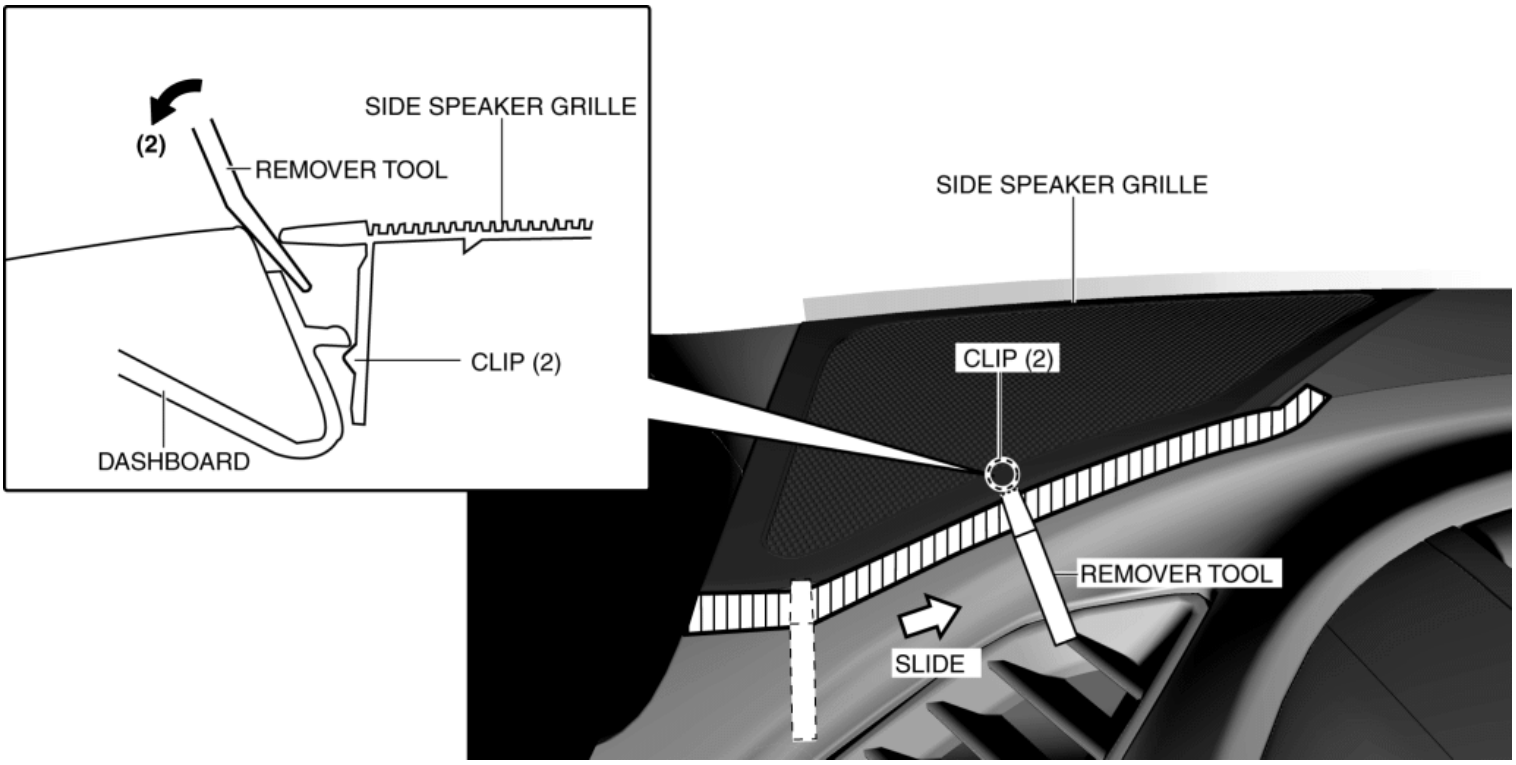

5. Move the remover tool in the direction of arrow (2) shown in the figure and detach clip (2) from the dashboard.

6. Slide the remover tool to the position shown in the figure.

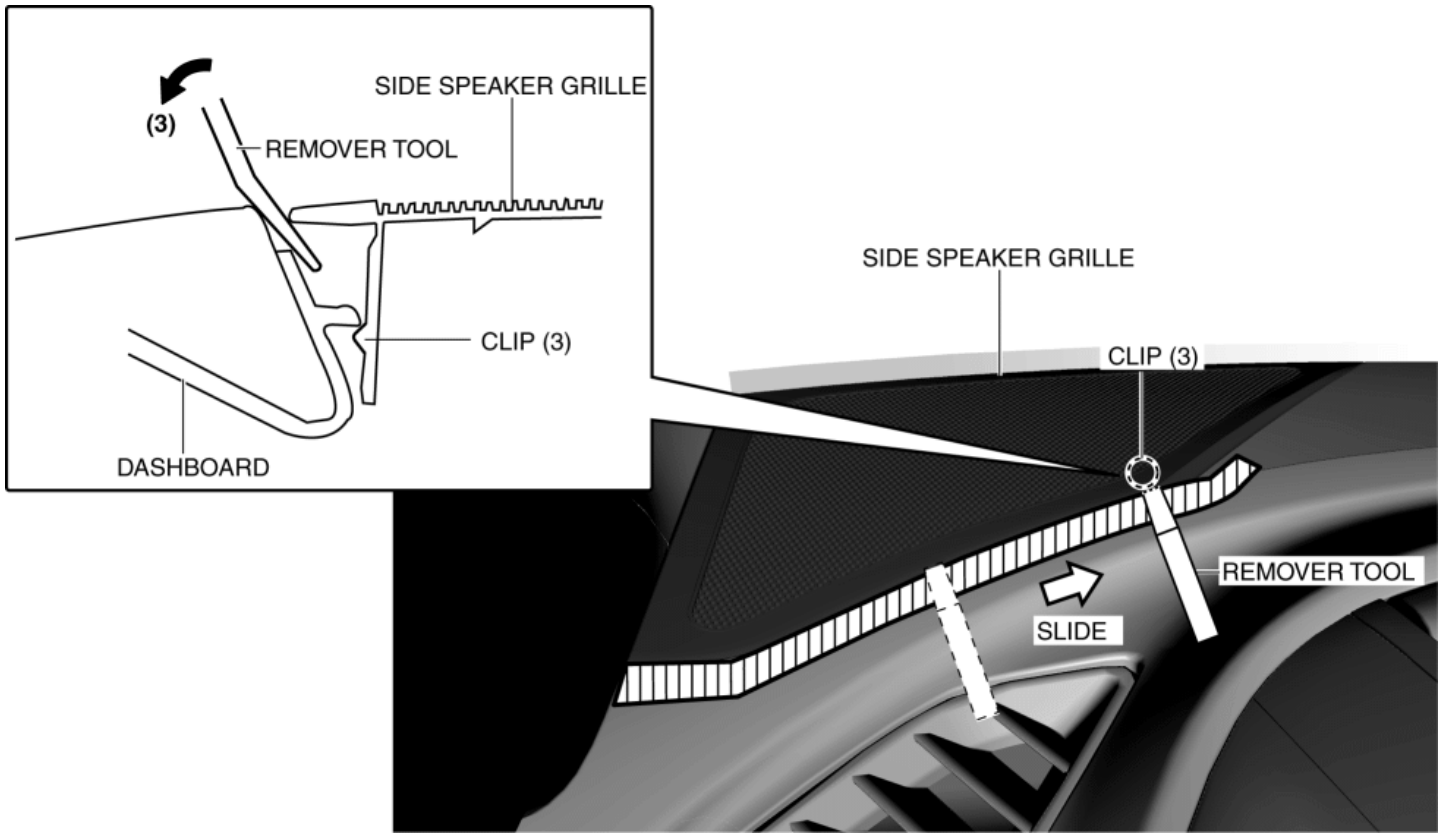

7. Move the remover tool in the direction of arrow (3) shown in the figure and detach clip (3) from the dashboard.

8. Slide the remover tool to the position shown in the figure.

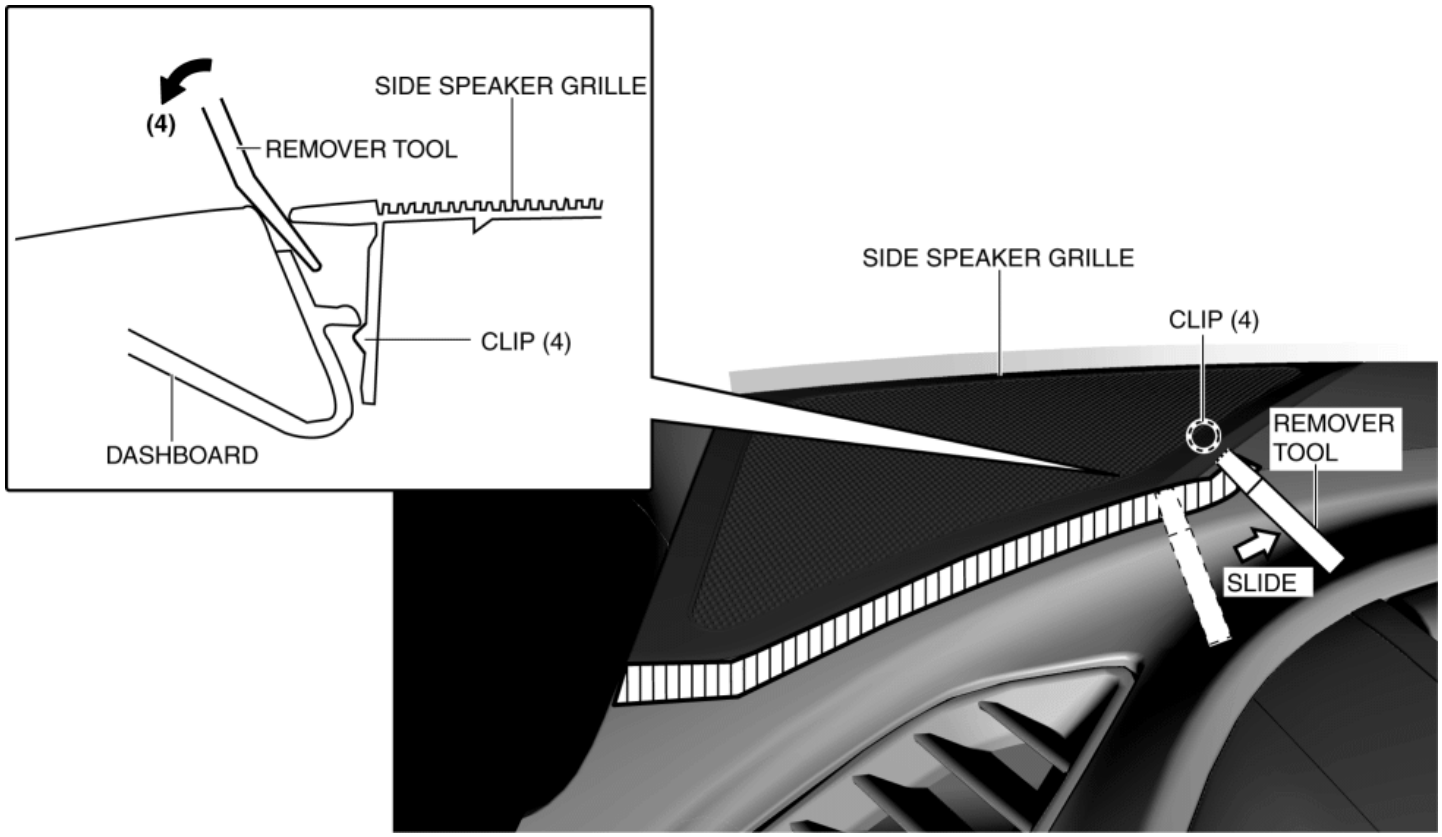

9. Move the remover tool in the direction of arrow (4) shown in the figure and detach clip (4) from the dashboard.

10. Hold the shaded area of the side speaker grille, move the side speaker grille in the direction of the arrow (5), and remove the side speaker grille while detaching guides.

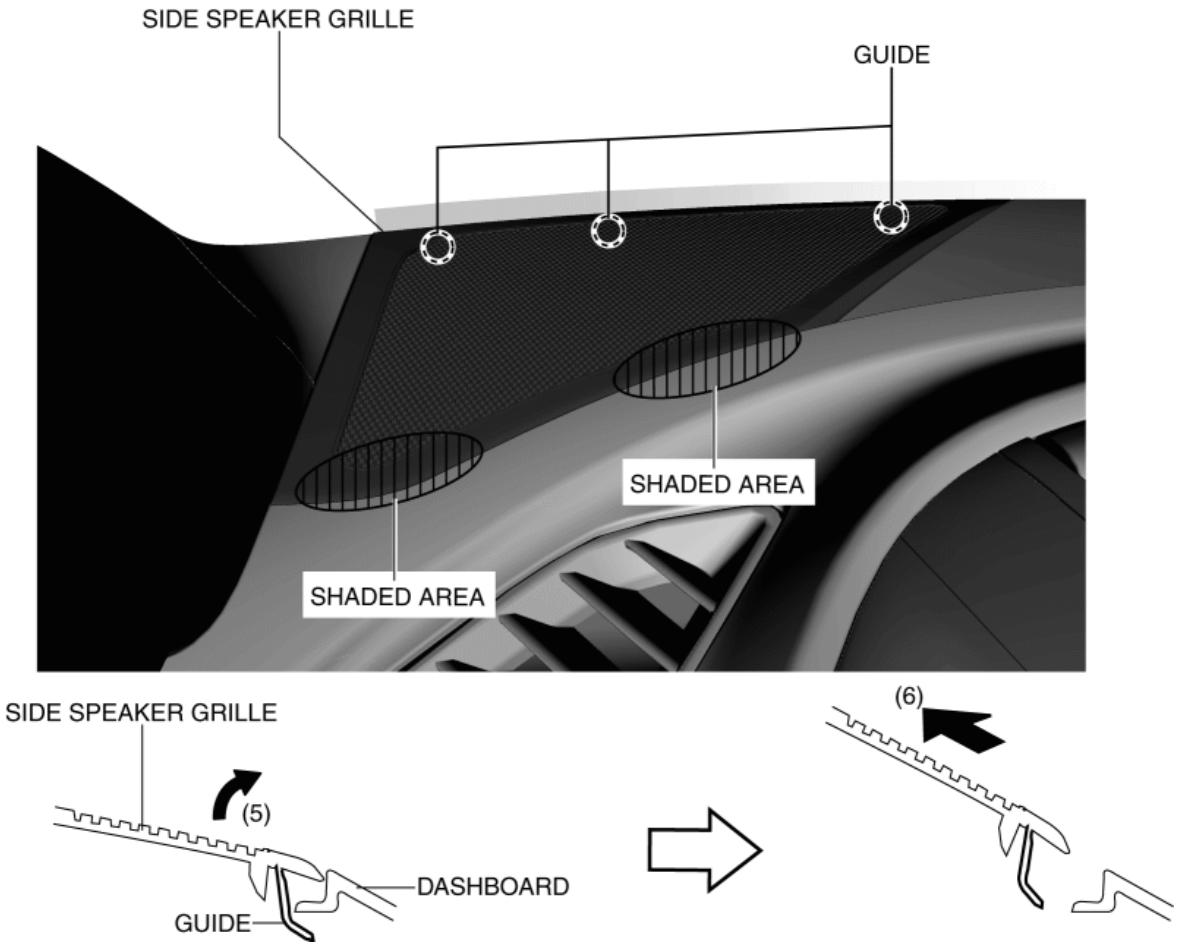

11. Remove the side speaker grille in the direction of arrow (6) from the dashboard.

12. Install in the reverse order of removal.

2014 - Mazda3 - Body and Accessories

DEMISTER GRILLE REMOVAL/INSTALLATION

CAUTION:

- If work using protective tape is performed in an area where the temperature can increase drastically or the protective tape is left adhered for a long period of time, tape adhesive could remain area where the protective tape was applied when the it is peeled off. When applying protective tape, avoid areas where the temperature of the tape can increase drastically and peel off the protective tape soon after the work is completed.

1. To prevent scratches or damage, affix protective tape to the position shown in the figure of the dashboard.

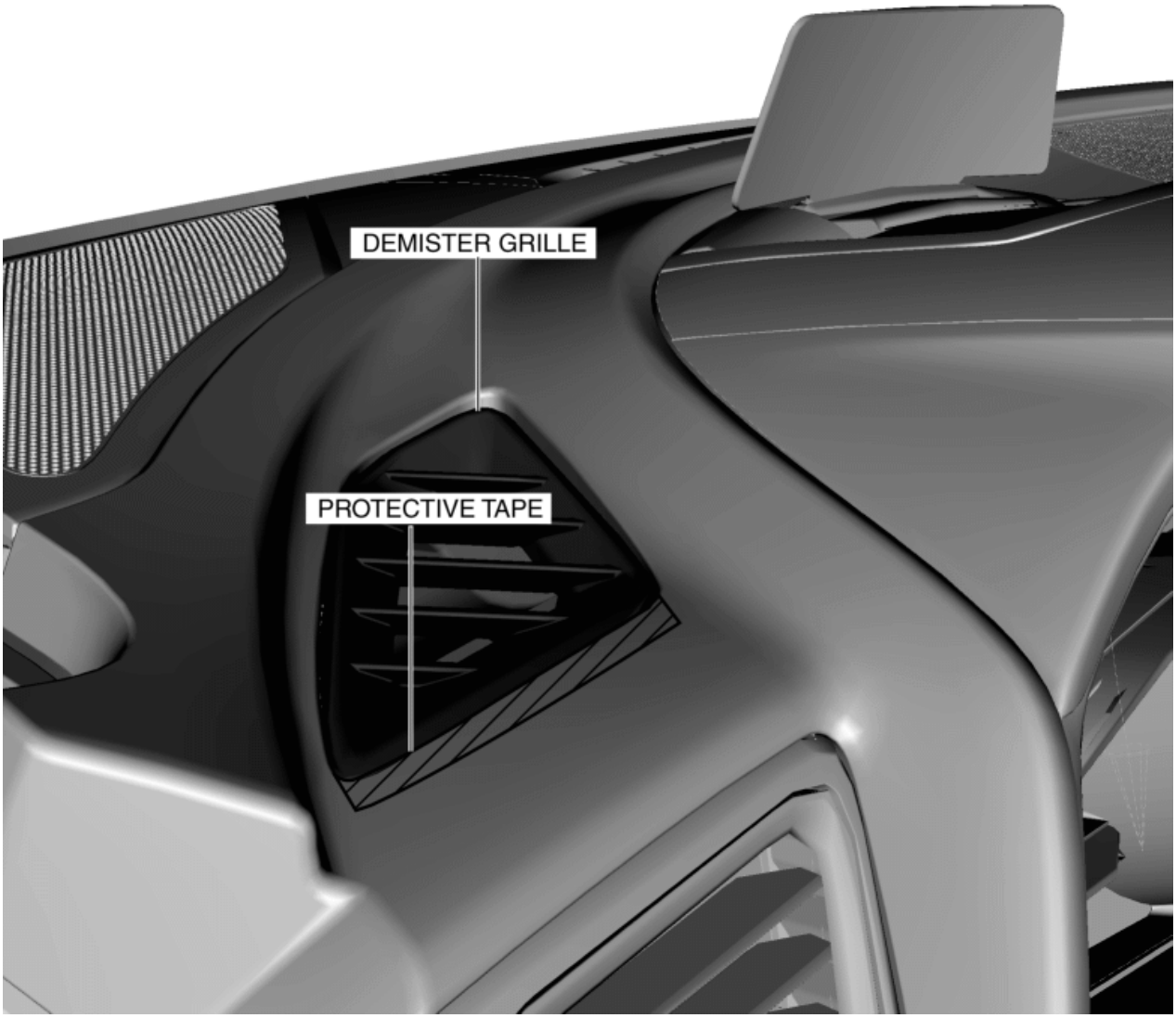

2. To detach the clip from the dashboard, insert the remover tool into the clearance between the demister grille and dashboard.

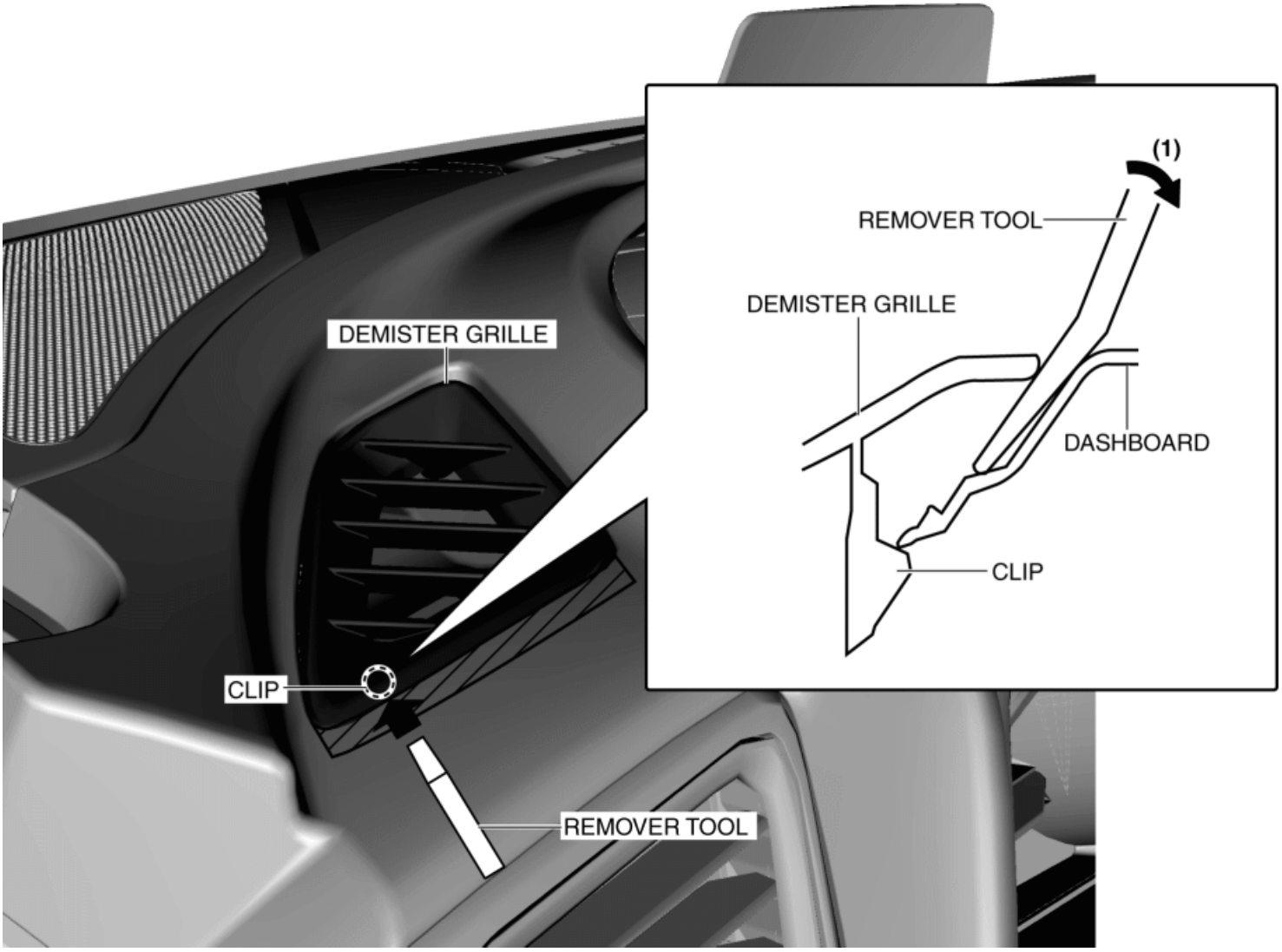

3. Move the remover tool in the direction of arrow (1) shown in the figure and detach the clip from the dashboard.

4. Slide the remover tool in the direction of the arrow shown in the figure.

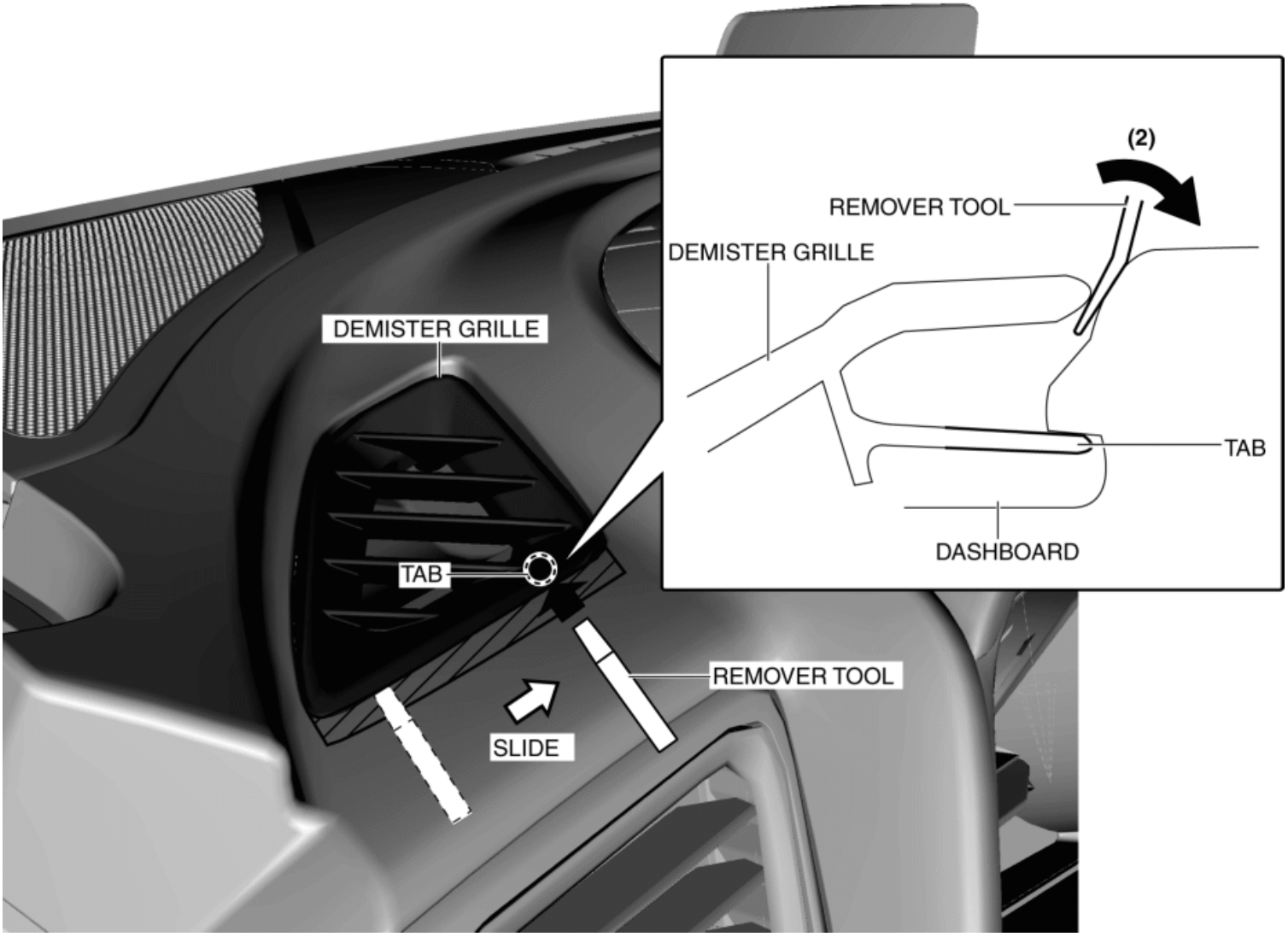

5. Move the remover tool in the direction of arrow (2) shown in the figure and detach the tab from the dashboard.

6. Hold the demister grille in the shaded areas, move the demister grille in the direction of arrow (3), and detach the tabs from the dashboard.

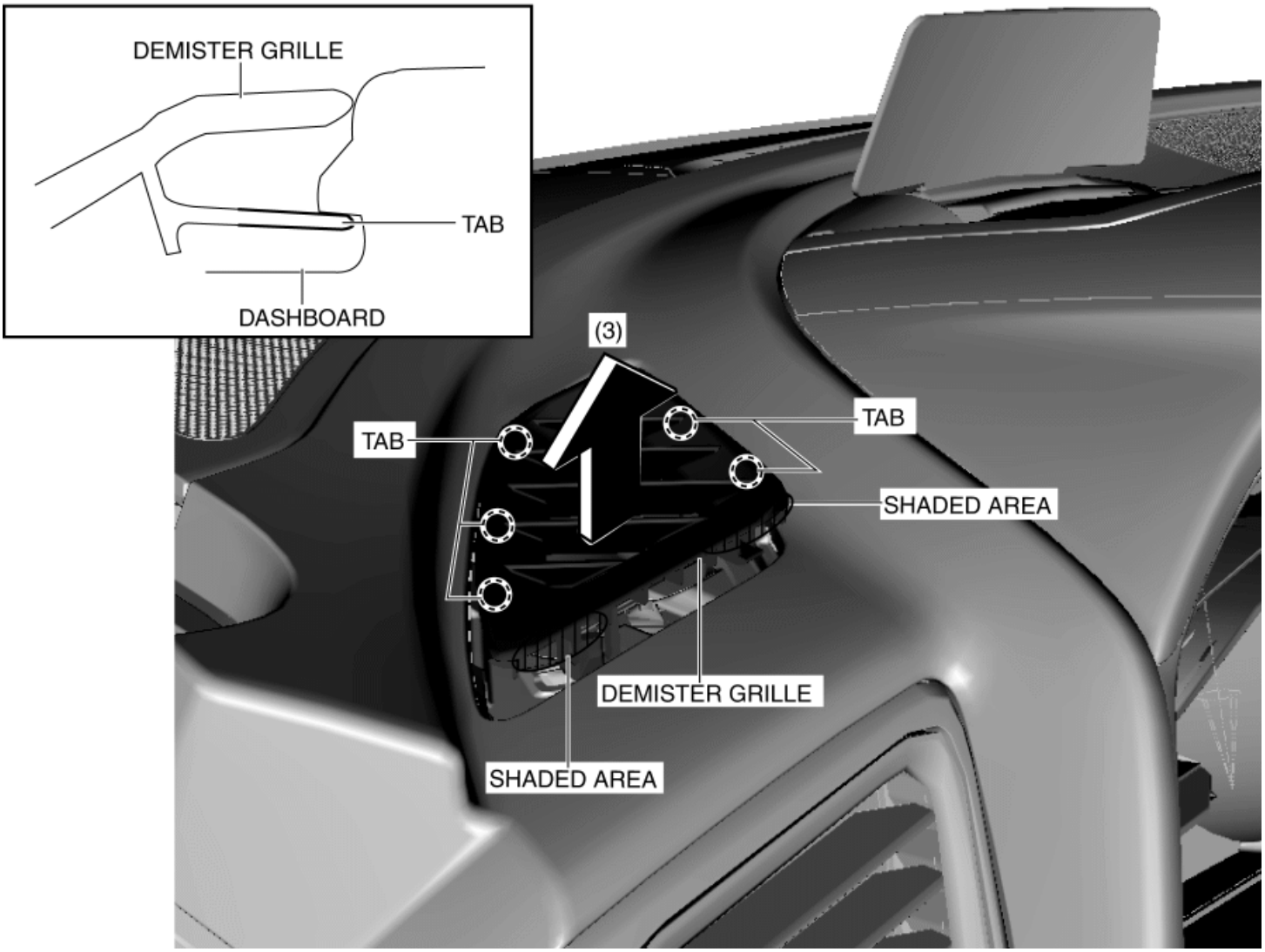

7. Install in the reverse order of removal.

2014 - Mazda3 - Body and Accessories

FRONT CONSOLE REMOVAL/INSTALLATION

CAUTION:

- If work using protective tape is performed in an area where the temperature can increase drastically or the protective tape is left adhered for a long period of time, tape adhesive could remain area where the protective tape was applied when the it is peeled off. When applying protective tape, avoid areas where the temperature of the tape can increase drastically and peel off the protective tape soon after the work is completed.

1. Affix protective tape to the position shown in the figure.

2. Set the wheel blocks for both the front and rear wheels.
3. Disconnect the negative battery cable. (See **NEGATIVE BATTERY CABLE DISCONNECTION/CONNECTION [SKYACTIV-G 2.0, SKYACTIV-G 2.5]**.)
4. Shift the selector lever from the P position to the D position (ATX).
5. Remove the following parts:
   a. Upper panel (See **UPPER PANEL REMOVAL**.) (See **UPPER PANEL INSTALLATION**.)
   b. Rear console (See **REAR CONSOLE REMOVAL/INSTALLATION**.)
   c. Shift lever knob (MTX) (See **MANUAL TRANSAXLE SHIFT MECHANISM REMOVAL/INSTALLATION [C66M-R]**.)
   d. Selector lever knob (ATX) (See **AUTOMATIC TRANSAXLE SHIFT MECHANISM REMOVAL/INSTALLATION**.)
   e. Shift panel (See **SHIFT PANEL REMOVAL/INSTALLATION**.)
   f. Front console box (See **FRONT CONSOLE BOX REMOVAL/INSTALLATION**.)
   g. CD player (with CD player) (See **CD PLAYER REMOVAL**.) (See **CD PLAYER INSTALLATION**.)
   h. Side wall (See **SIDE WALL REMOVAL/INSTALLATION**.)
   i. Glove compartment (See **GLOVE COMPARTMENT REMOVAL/INSTALLATION**.)
   j. Decoration panel (See **DECORATION PANEL REMOVAL/INSTALLATION**.)
6. Remove fasteners.

7. Pull the front console in the direction of the arrow in the order of (1), (2), (3), (4) and remove it while detaching clips A, clips B.

CLIP A

CLIP B

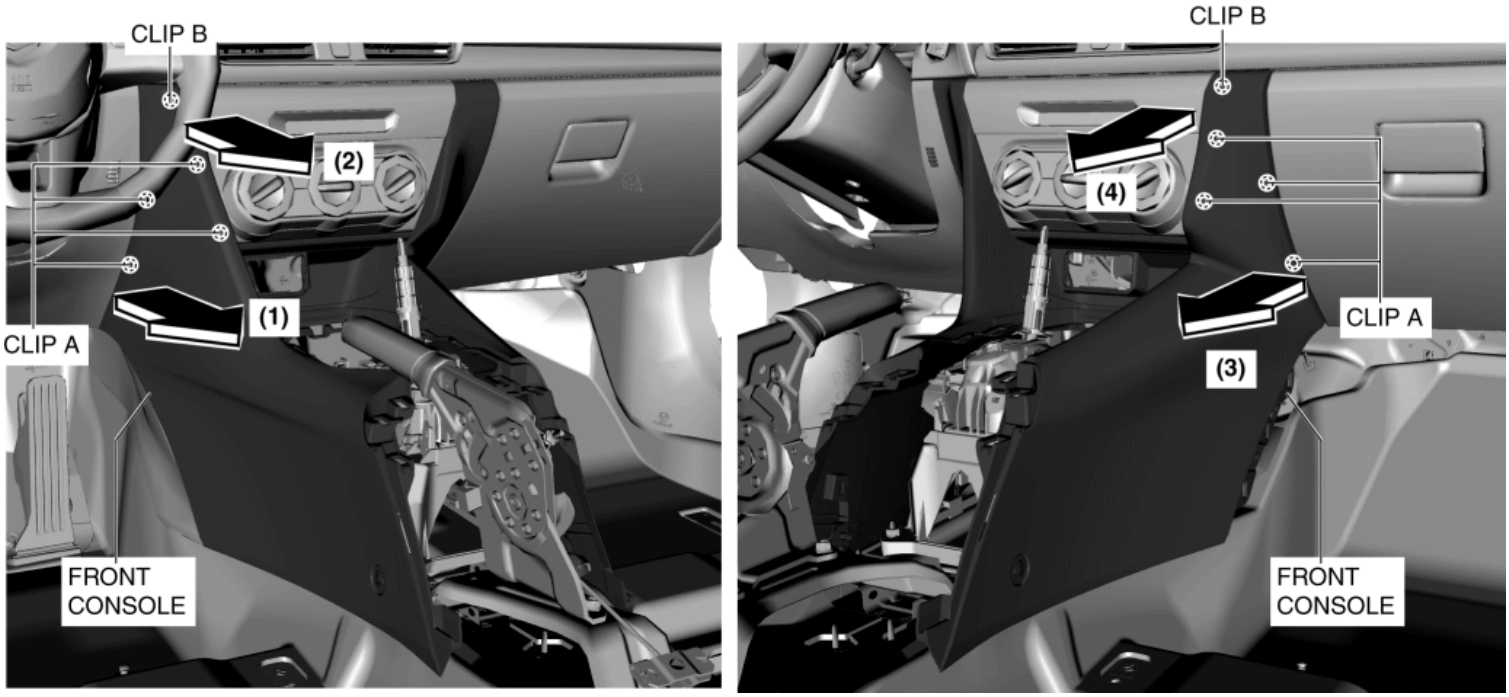

8. Operate the parking lever, move the front console in the direction of arrow (5), and remove the front console while setting the parking brake lever aside.

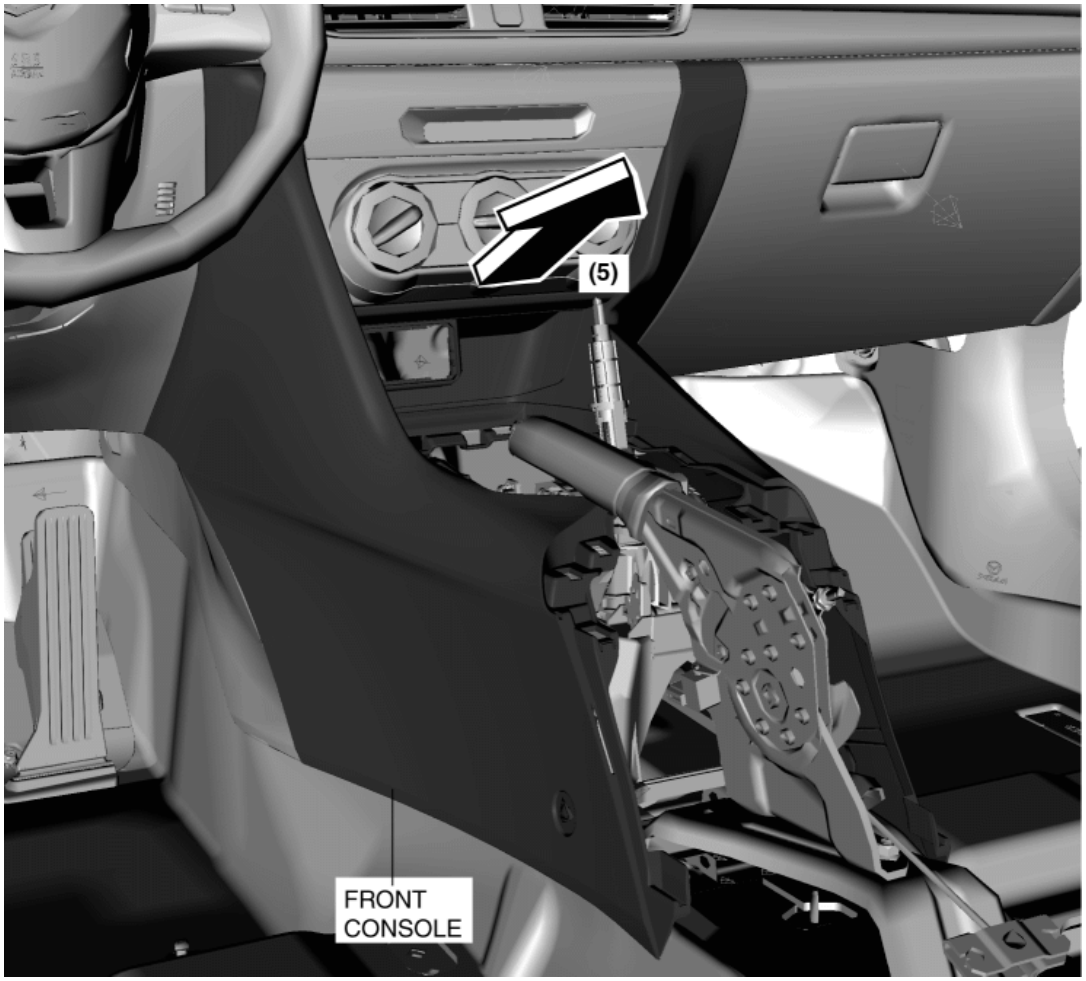

9. Disconnect the auxiliary jack/USB port connector. (without center display and without CD player)

10. Disconnect the front accessory socket connector. (without center display and without CD player)

11. Install in the reverse order of removal.

2014 - Mazda3 - Body and Accessories

CLUSTER SWITCH REMOVAL/INSTALLATION

1. Disconnect the negative battery cable. (See **NEGATIVE BATTERY CABLE DISCONNECTION/CONNECTION [SKYACTIV-G 2.0, SKYACTIV-G 2.5]**.)

2. Remove the front scuff plate (See **FRONT SCUFF PLATE REMOVAL/INSTALLATION**.)

3. Remove the front side trim (See **FRONT SIDE TRIM REMOVAL/INSTALLATION**.)

4. Remove bolt.

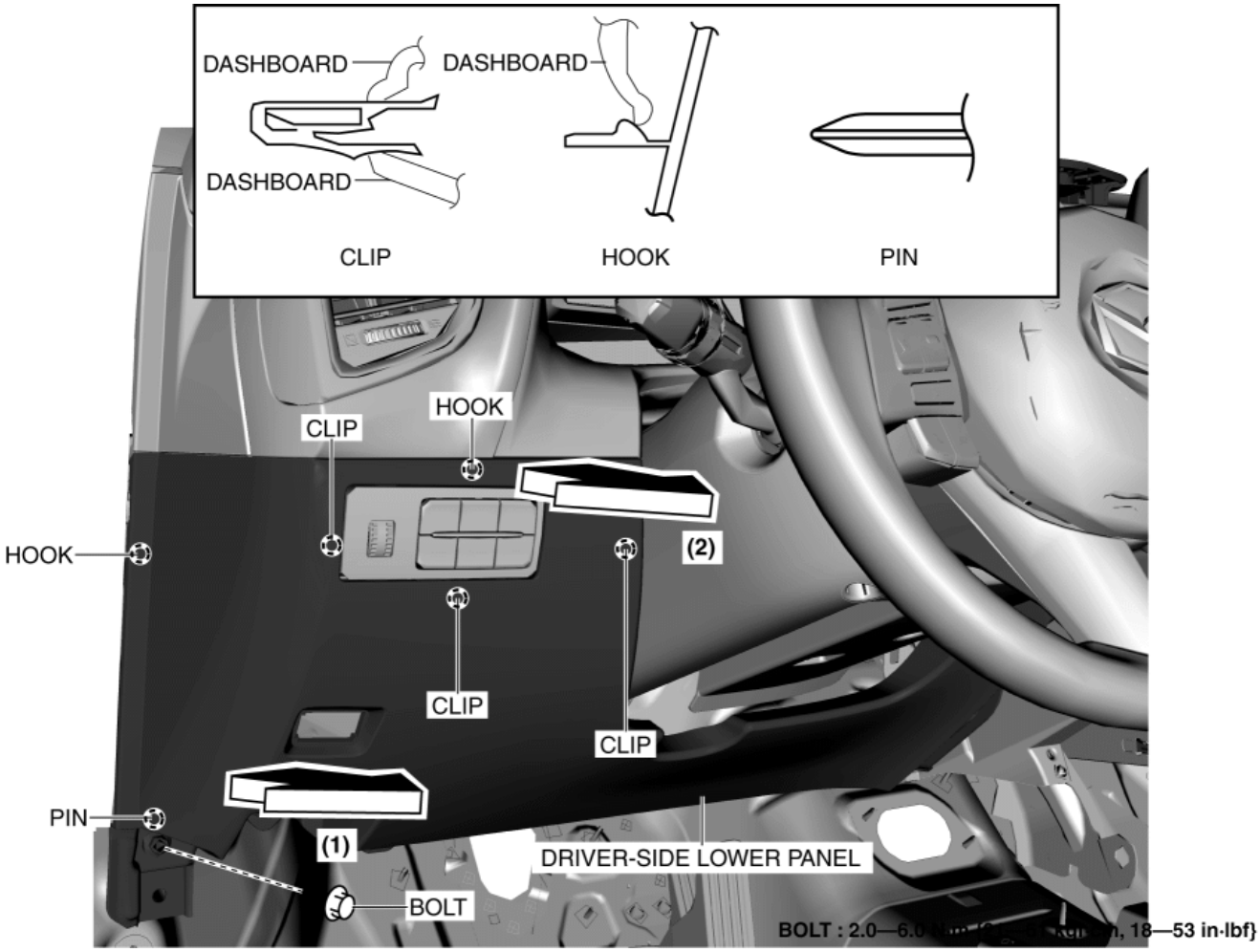

5. Pull the driver-side lower panel in the direction of the arrow in the order of (1), (2) while detaching clips, hooks and pin.

6. Set the driver-side lower panel aside.

7. Insert the remover tools into the positions shown in the figure, move the remover tools in the direction of arrow (3), move the cluster switch in the direction of arrow (4) while pressing hooks (1), and then disconnect cluster switch hooks (1) from the instrument panel.

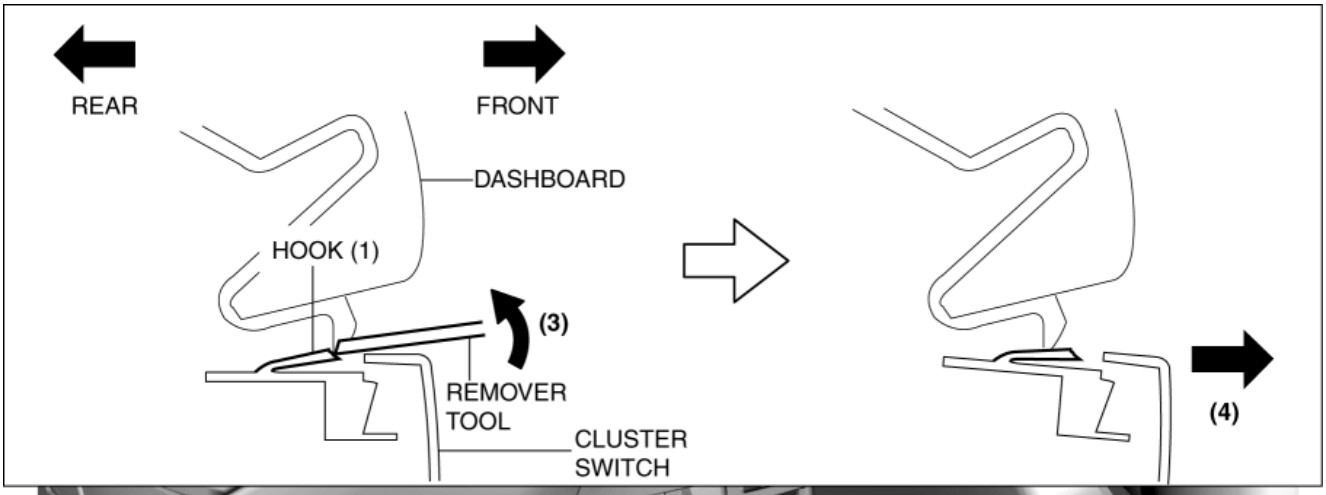

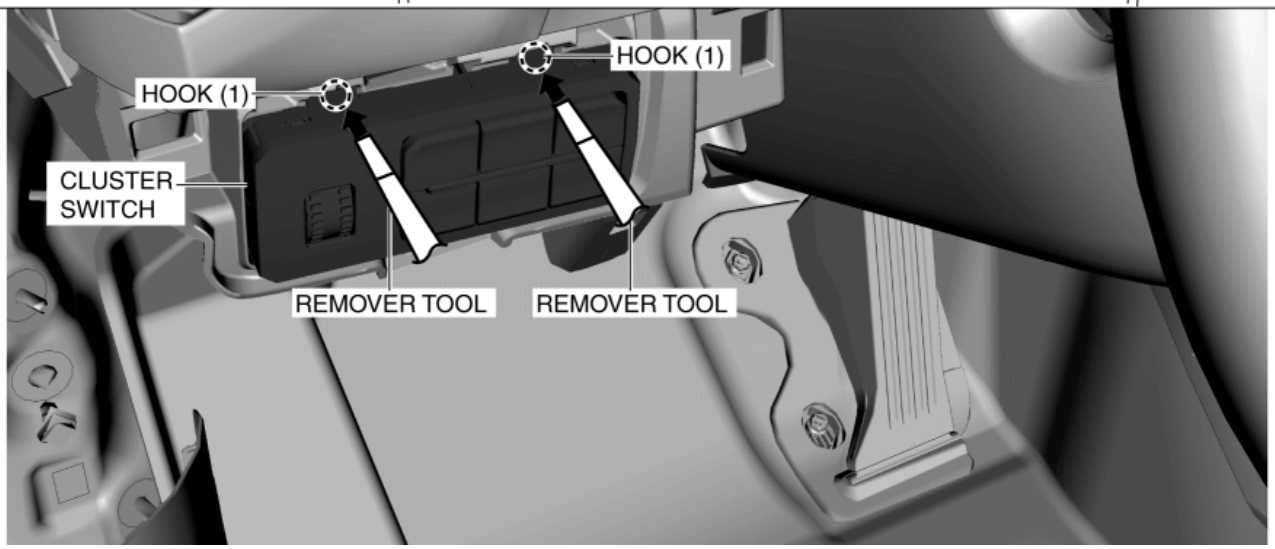

8. Insert the remover tools into the positions shown in the figure, move the remover tools in the direction of arrow (5), move the cluster switch in the direction of arrow (6) while pressing hooks (2), and then disconnect cluster switch hooks (2) from the instrument panel.

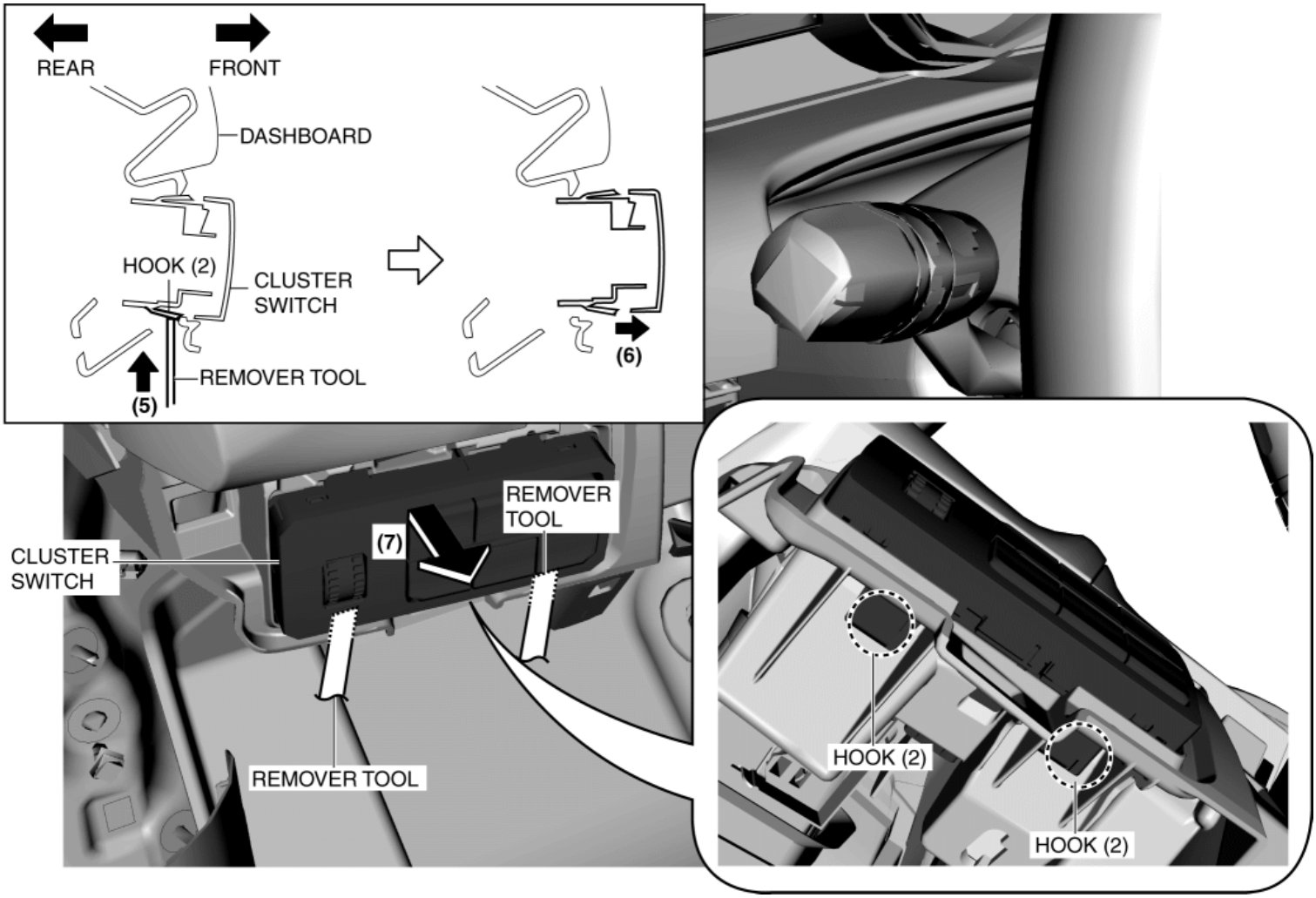

9. Remove the cluster switch in the direction of the arrow (7) shown in the figure.

CAUTION:

- If the driver's side lower panel is left uninstalled it could be damaged. If the cluster switch is not to be installed for the time being during the cluster switch inspection, temporarily install the driver's side lower panel in the direction of the arrows shown in the figure.

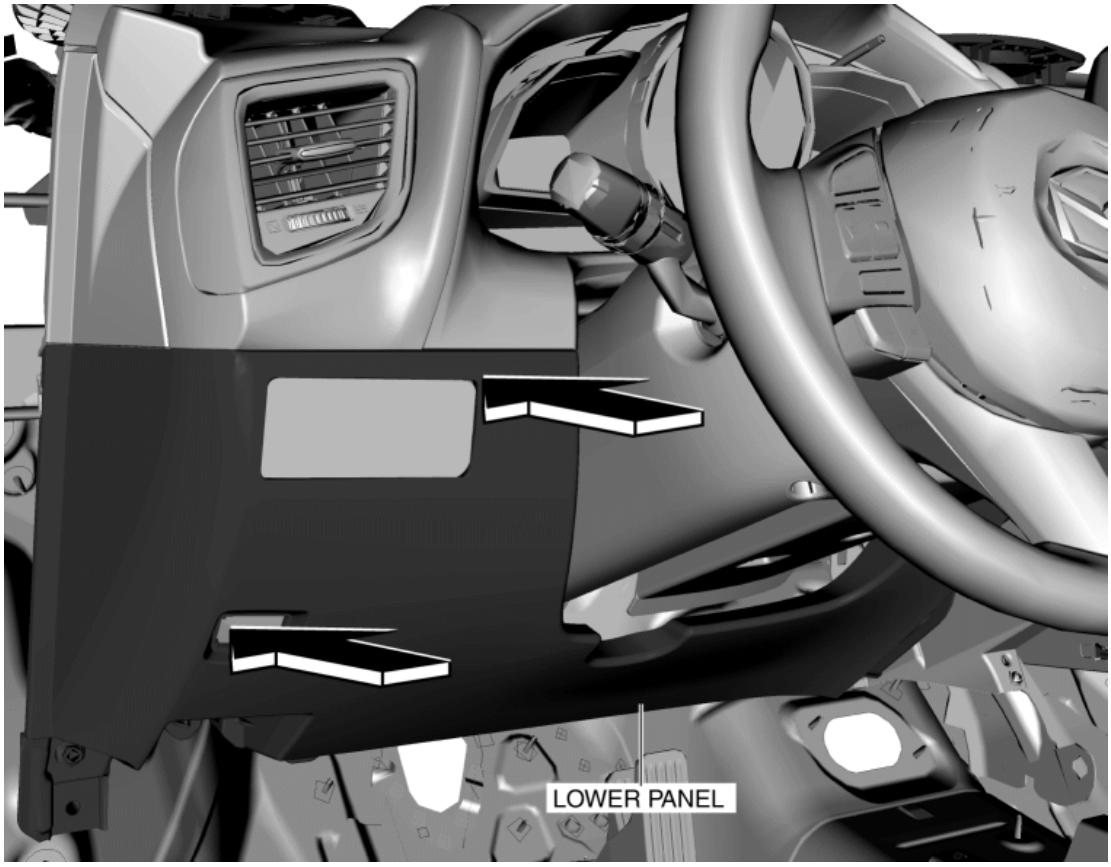

10. Install in the reverse order of removal.

2014 - Mazda3 - Body and Accessories

TRUNK COVERING REMOVAL/INSTALLATION

4SD

1. Remove the trunk covering in the direction of arrow shown in the figure.

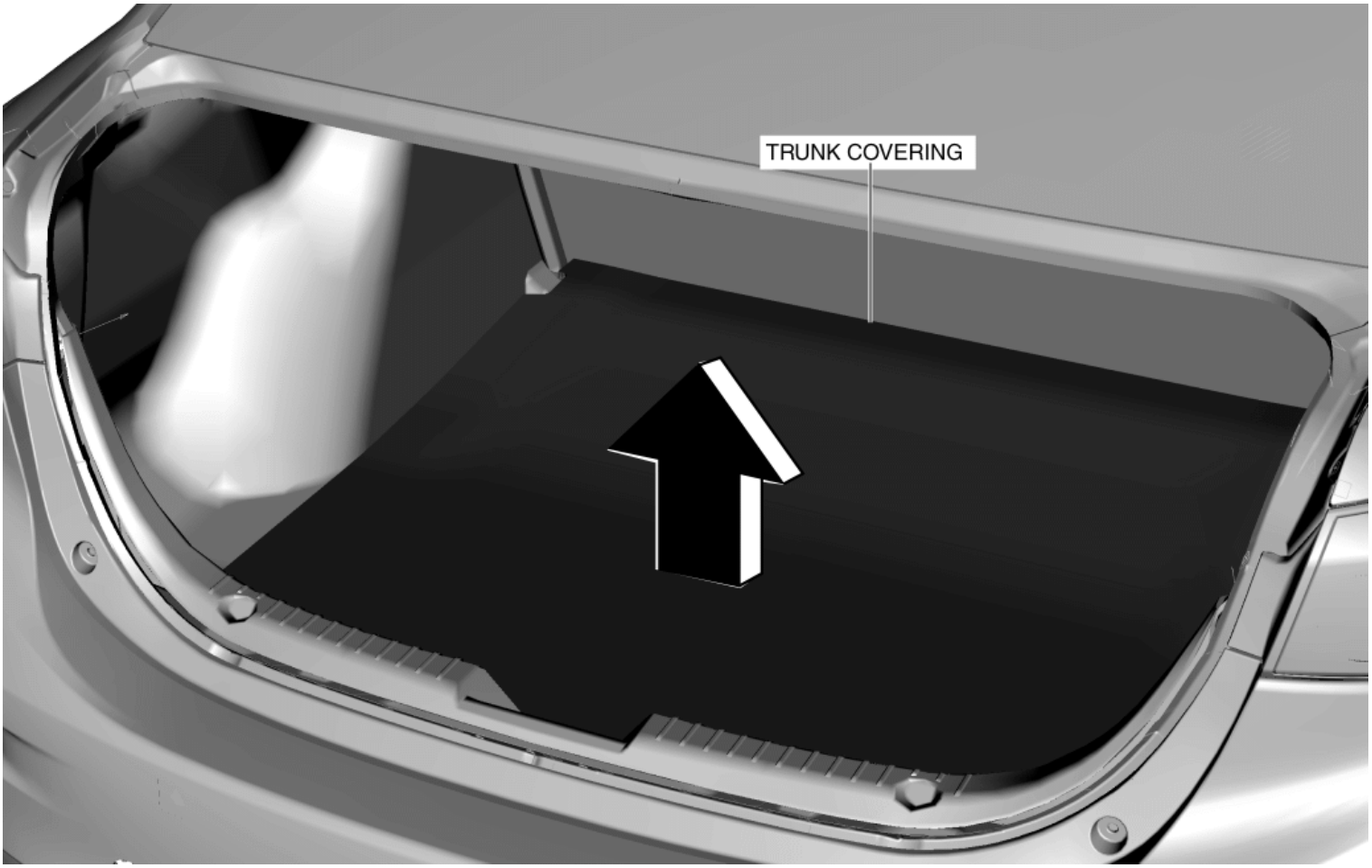

2. Install in the reverse order of removal.

5HB

1. Remove the trunk covering in the direction of arrow shown in the figure.

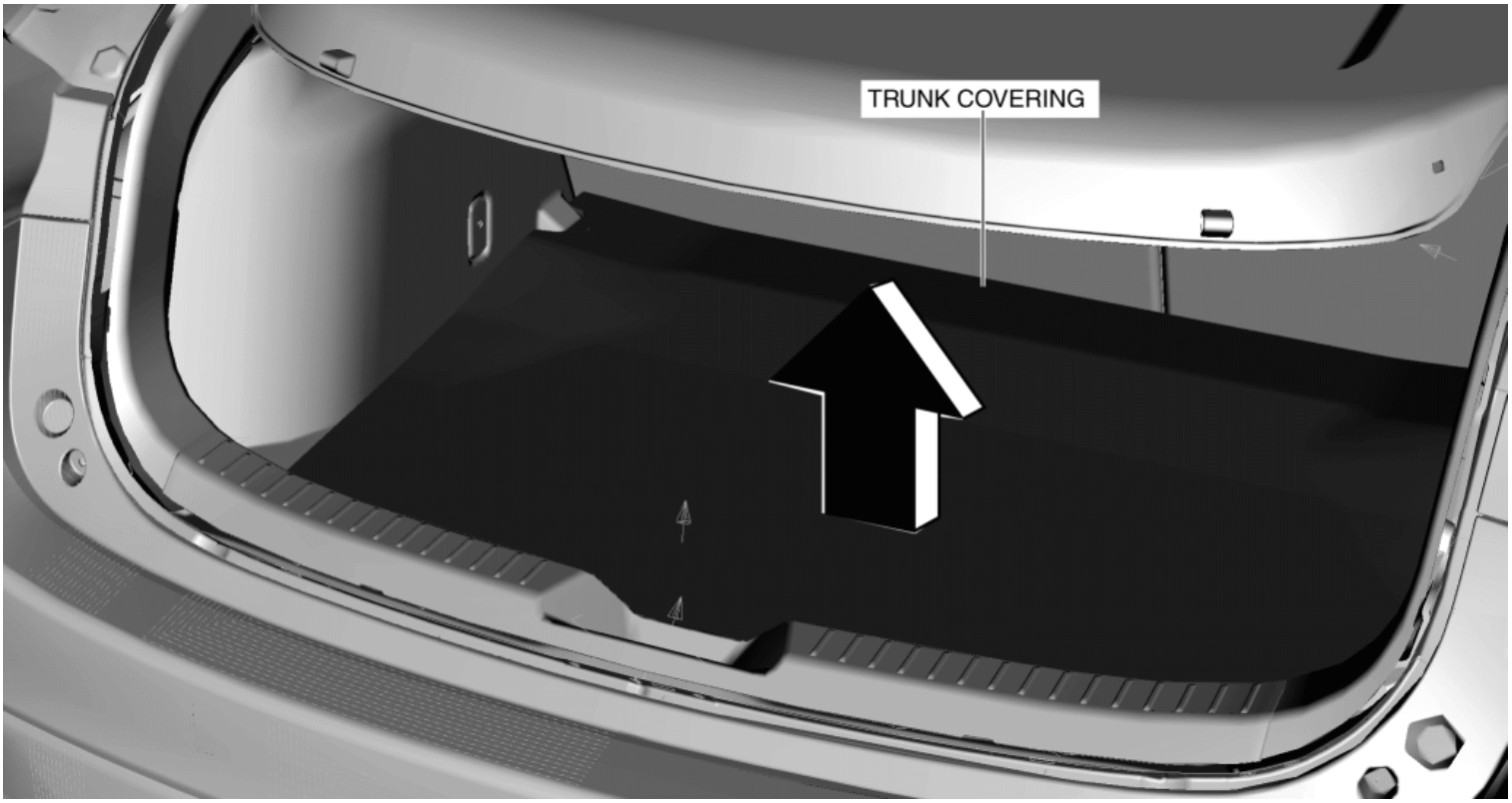

2. Install in the reverse order of removal.

2014 - Mazda3 - Body and Accessories

LIFTGATE RECESS REMOVAL/INSTALLATION

1. Insert the remover tool into service hole A at the position shown in the figure.

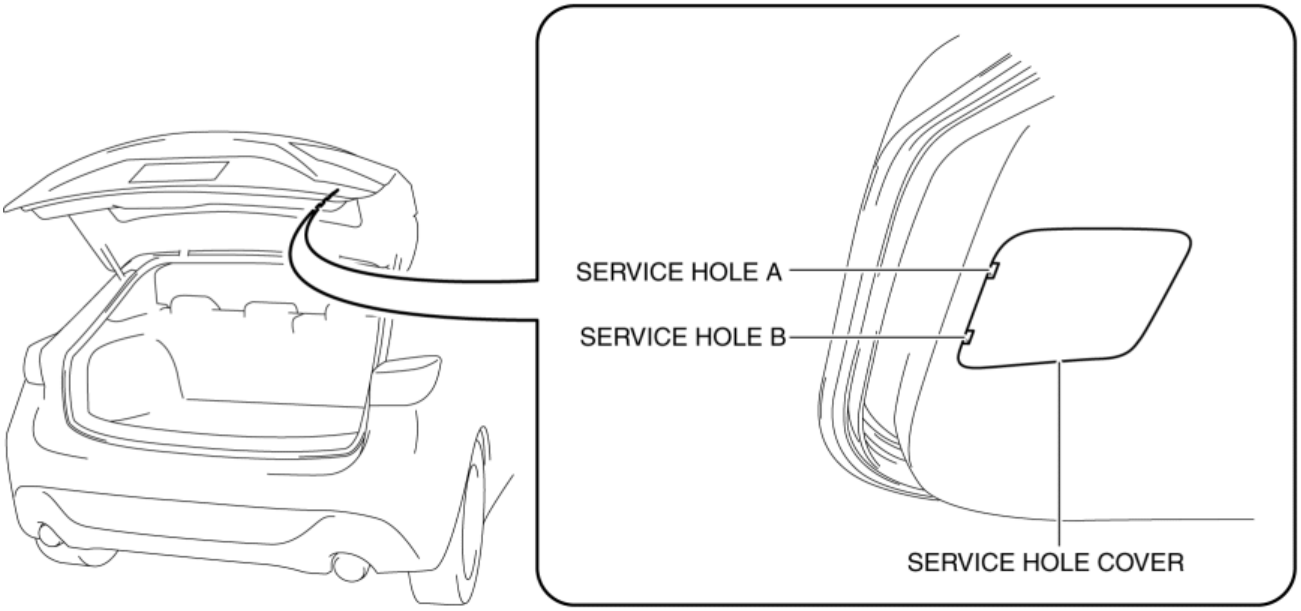

2. Move the remover tool in the direction of arrow (1) shown in the figure to detach tabs A and B of the service hole cover from the liftgate lower trim.

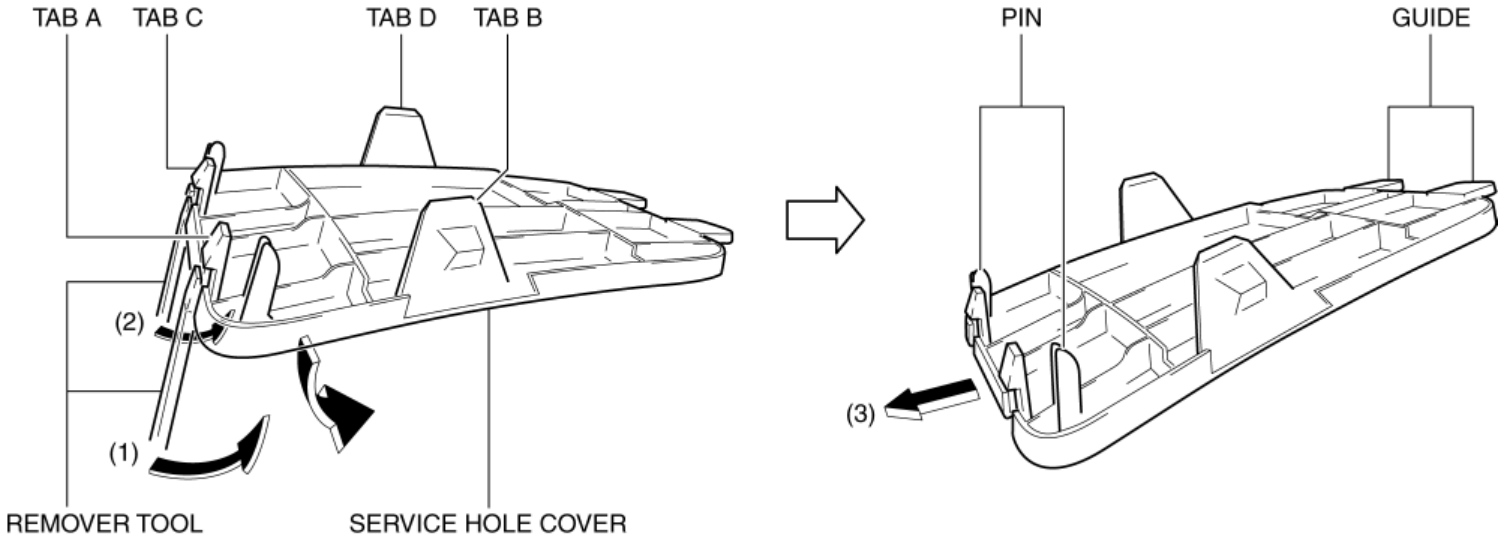

3. Insert the remover tool into service hole B at the position shown in the figure.

4. Move the remover tool in the direction of arrow (2) shown in the figure to detach tabs C and D of the service hole cover from the liftgate lower trim.

5. Move the service hole cover in the direction of arrow (3) shown in the figure to pull the pins and guides of the service hole cover out, and remove the service hole cover.

6. Insert the remover tool into the opening of the service hole cover, and while pressing hooks A in the direction of arrow (4) shown in the figure, move the liftgate recess in the direction of arrow (5).

CAUTION:

- If hooks A are removed or disconnected without pressing in the upper part of the liftgate recess, hooks A could be damaged resulting in rattle noise occurring. When removing or disconnecting hooks A, always press in the upper part of the liftgate recess.

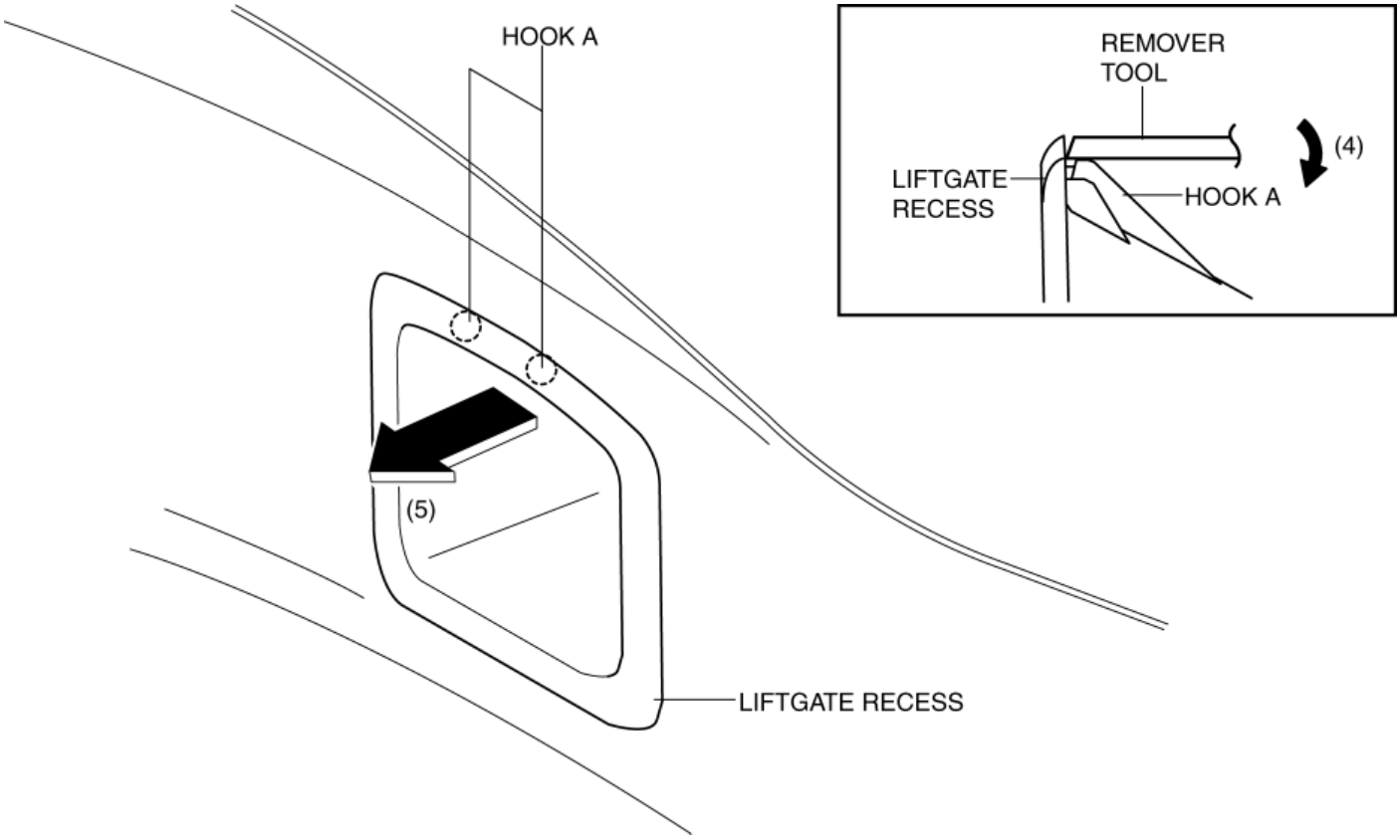

7. Remove the liftgate recess in the direction of the arrow (6) shown in the figure avoiding hooks B.

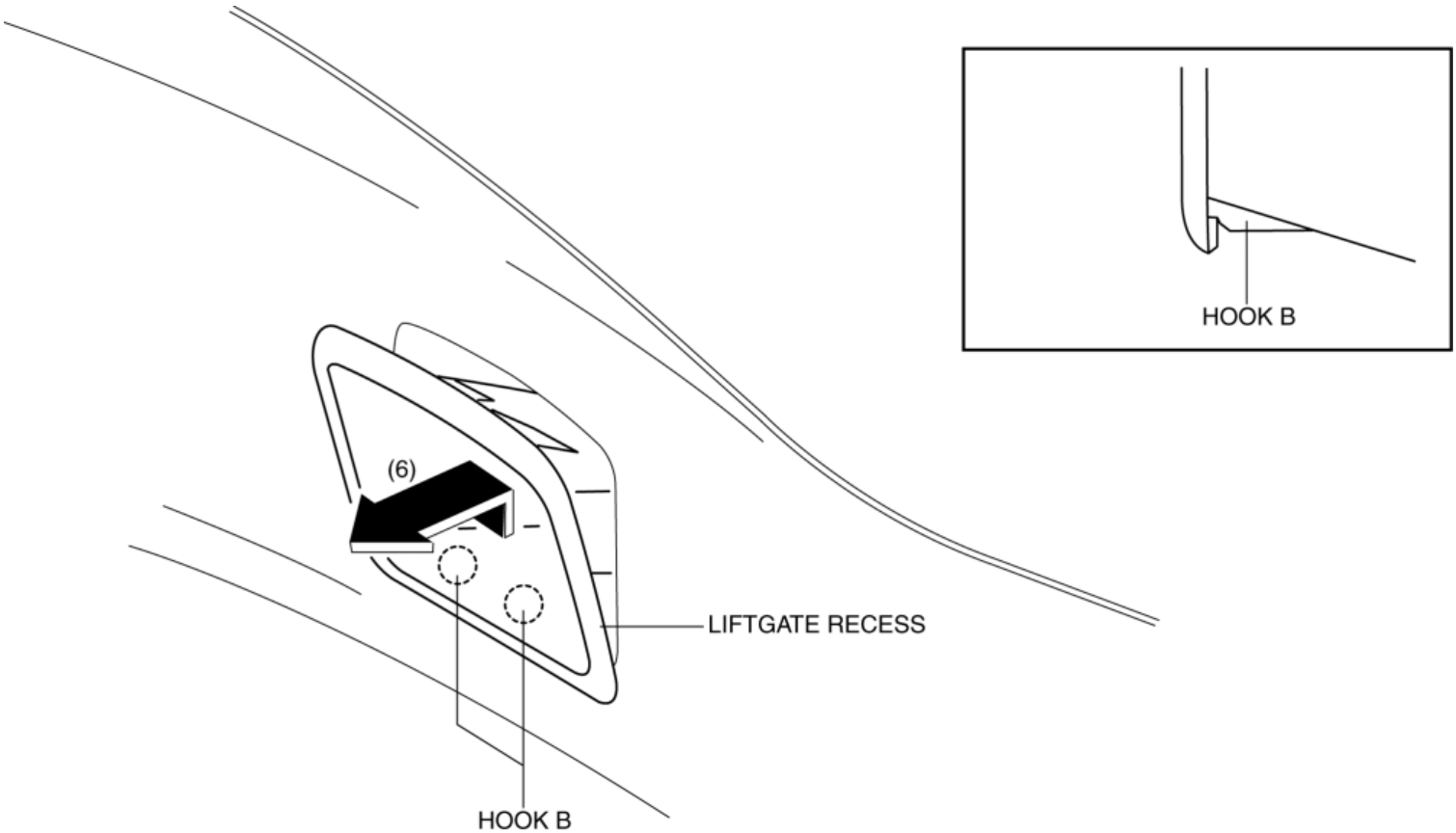

8. Install in the reverse order of removal.

2014 - Mazda3 - Body and Accessories

SHOCK ABSORBING PAD REMOVAL/INSTALLATION

4SD

Front

1. Set the wheel blocks for both the front and rear wheels.
2. Disconnect the negative battery cable. (See **NEGATIVE BATTERY CABLE DISCONNECTION/CONNECTION [SKYACTIV-G 2.0, SKYACTIV-G 2.5]**.)
3. Shift the selector lever from the P position to the D position (ATX).
4. Remove the sunroof seaming welt. (with sunroof system)
5. Remove the following parts:
    a. A-pillar trim (See **A-PILLAR TRIM REMOVAL/INSTALLATION**.)
    b. Sunvisor (See **SUNVISOR REMOVAL/INSTALLATION**.)
    c. Front map light (dual light type) (See **FRONT MAP LIGHT REMOVAL/INSTALLATION**.)
    d. Assist handle (See **ASSIST HANDLE REMOVAL/INSTALLATION**.)
    e. Front scuff plate (See **FRONT SCUFF PLATE REMOVAL/INSTALLATION**.)
    f. Rear scuff plate (See **REAR SCUFF PLATE REMOVAL/INSTALLATION**.)
    g. B-pillar lower trim (See **B-PILLAR LOWER TRIM REMOVAL/INSTALLATION**.)
    h. Adjust anchor cover (See **FRONT SEAT BELT REMOVAL/INSTALLATION**.)
    i. Upper anchor installation bolt on the seat belt (See **FRONT SEAT BELT REMOVAL/INSTALLATION**.)
    j. B-pillar upper trim (See **B-PILLAR UPPER TRIM REMOVAL/INSTALLATION**.)
6. Set the tire house trim aside. (See **TIRE HOUSE TRIM REMOVAL/INSTALLATION**.)
7. Remove the following parts:
    a. C-pillar trim (See **C-PILLAR TRIM REMOVAL/INSTALLATION**.)
    b. Upper panel (See **UPPER PANEL REMOVAL**.) (See **UPPER PANEL INSTALLATION**.)
    c. Rear console (See **REAR CONSOLE REMOVAL/INSTALLATION**.)
    d. Shift lever knob (MTX) (See **MANUAL TRANSAXLE SHIFT MECHANISM REMOVAL/INSTALLATION [C66M-R]**.)
    e. Selector lever knob (ATX) (See **AUTOMATIC TRANSAXLE SHIFT MECHANISM REMOVAL/INSTALLATION**.)
    f. Shift panel (See **SHIFT PANEL REMOVAL/INSTALLATION**.)
    g. Front console box (See **FRONT CONSOLE BOX REMOVAL/INSTALLATION**.)
    h. CD player (with CD player) (See **CD PLAYER REMOVAL**.) (See **CD PLAYER INSTALLATION**.)
    i. Glove compartment (See **GLOVE COMPARTMENT REMOVAL/INSTALLATION**.)
    j. Decoration panel (See **DECORATION PANEL REMOVAL/INSTALLATION**.)
    k. Side wall (See **SIDE WALL REMOVAL/INSTALLATION**.)
    l. Front console (See **FRONT CONSOLE REMOVAL/INSTALLATION**.)
    m. Headliner (See **HEADLINER REMOVAL/INSTALLATION**.)
8. Pinch the tab using pincers, remove the tab in the direction of the arrow (1) shown in the figure.

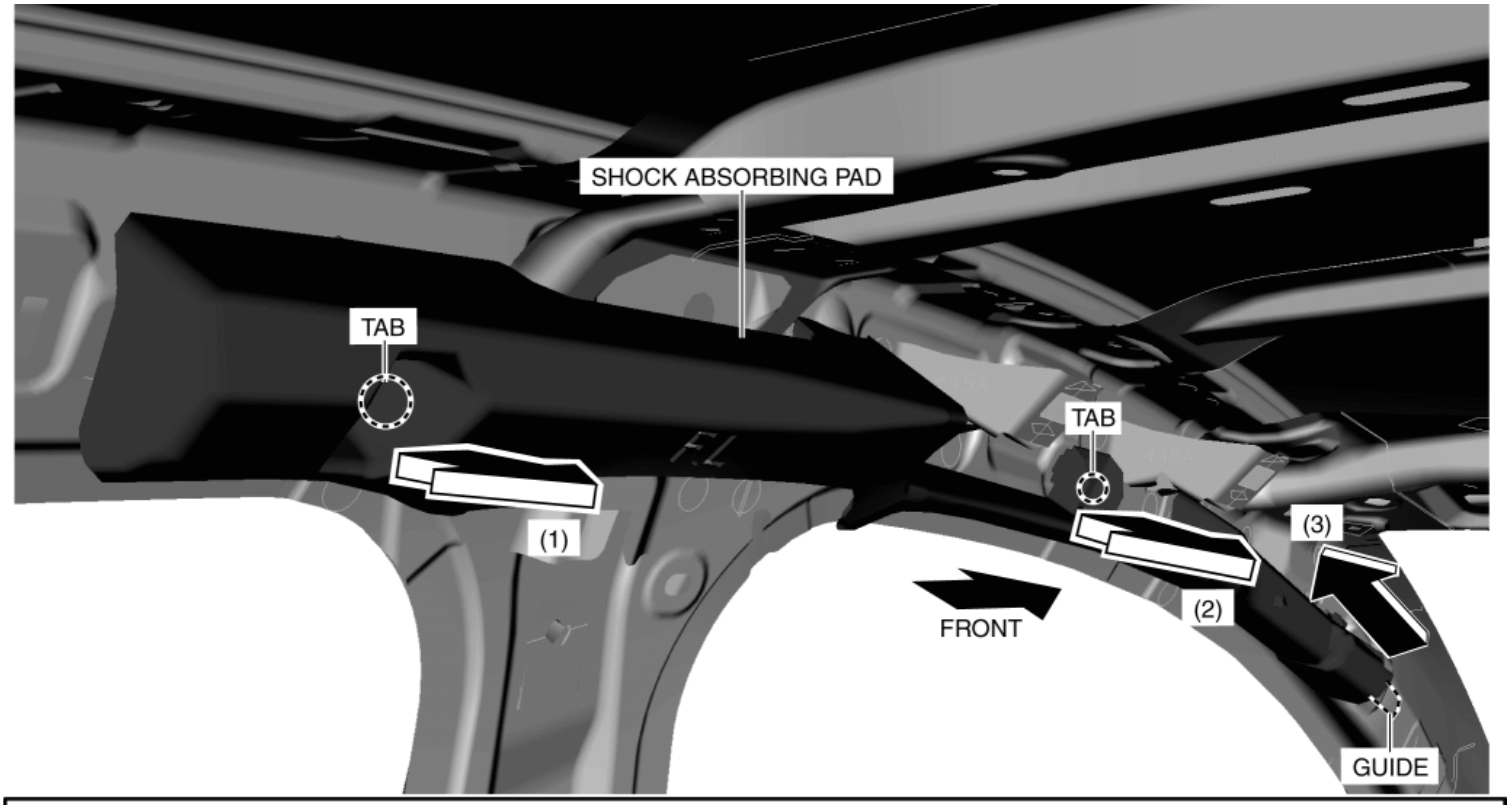

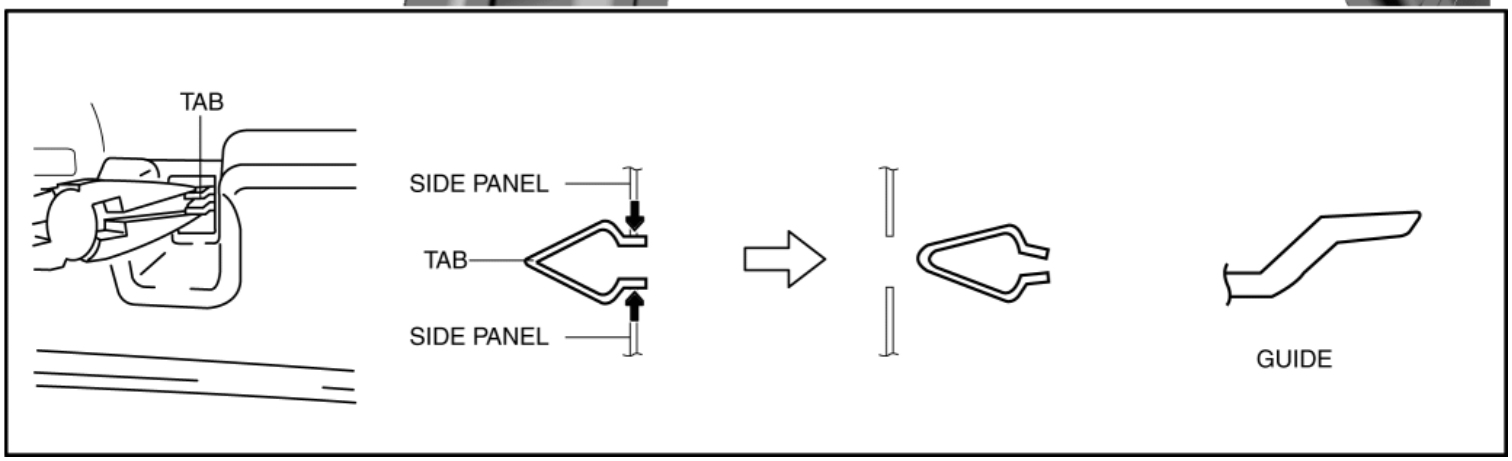

9. Pinch the tab using pincers, remove the tab in the direction of the arrow (2) shown in the figure.

10. Pull the shock-absorbing pad in the direction of the arrow (3) and remove it while detaching guide.

11. Install in the reverse order of removal.

Rear

1. Set the wheel blocks for both the front and rear wheels.

2. Disconnect the negative battery cable. (See **NEGATIVE BATTERY CABLE DISCONNECTION/CONNECTION [SKYACTIV-G 2.0, SKYACTIV-G 2.5]**.)

3. Shift the selector lever from the P position to the D position (ATX).

4. Remove the sunroof seaming welt. (with sunroof system)

5. Remove the following parts:

   a. A-pillar trim (See **A-PILLAR TRIM REMOVAL/INSTALLATION**.)

   b. Sunvisor (See **SUNVISOR REMOVAL/INSTALLATION**.)

   c. Front map light (dual light type) (See **FRONT MAP LIGHT REMOVAL/INSTALLATION**.)

   d. Assist handle (See **ASSIST HANDLE REMOVAL/INSTALLATION**.)

   e. Front scuff plate (See **FRONT SCUFF PLATE REMOVAL/INSTALLATION**.)

f. Rear scuff plate (See **REAR SCUFF PLATE REMOVAL/INSTALLATION**.)

g. B-pillar lower trim (See **B-PILLAR LOWER TRIM REMOVAL/INSTALLATION**.)

h. Adjust anchor cover (See **FRONT SEAT BELT REMOVAL/INSTALLATION**.)

i. Upper anchor installation bolt on the seat belt (See **FRONT SEAT BELT REMOVAL/INSTALLATION**.)

j. B-pillar upper trim (See **B-PILLAR UPPER TRIM REMOVAL/INSTALLATION**.)

6. Set the tire house trim aside. (See **TIRE HOUSE TRIM REMOVAL/INSTALLATION**.)
7. Remove the following parts:

a. C-pillar trim (See **C-PILLAR TRIM REMOVAL/INSTALLATION**.)

b. Upper panel (See **UPPER PANEL REMOVAL**.) (See **UPPER PANEL INSTALLATION**.)

c. Rear console (See **REAR CONSOLE REMOVAL/INSTALLATION**.)

d. Shift lever knob (MTX) (See **MANUAL TRANSAXLE SHIFT MECHANISM REMOVAL/INSTALLATION [C66M-R]**.)

e. Selector lever knob (ATX) (See **AUTOMATIC TRANSAXLE SHIFT MECHANISM REMOVAL/INSTALLATION**.)

f. Shift panel (See **SHIFT PANEL REMOVAL/INSTALLATION**.)

g. Front console box (See **FRONT CONSOLE BOX REMOVAL/INSTALLATION**.)

h. CD player (with CD player) (See **CD PLAYER REMOVAL**.) (See **CD PLAYER INSTALLATION**.)

i. Glove compartment (See **GLOVE COMPARTMENT REMOVAL/INSTALLATION**.)

j. Decoration panel (See **DECORATION PANEL REMOVAL/INSTALLATION**.)

k. Side wall (See **SIDE WALL REMOVAL/INSTALLATION**.)

l. Front console (See **FRONT CONSOLE REMOVAL/INSTALLATION**.)

m. Headliner (See **HEADLINER REMOVAL/INSTALLATION**.)

8. Pinch the tab using pincers, remove tabs, then remove the shock-absorbing pad in the direction of the arrow shown in the figure.

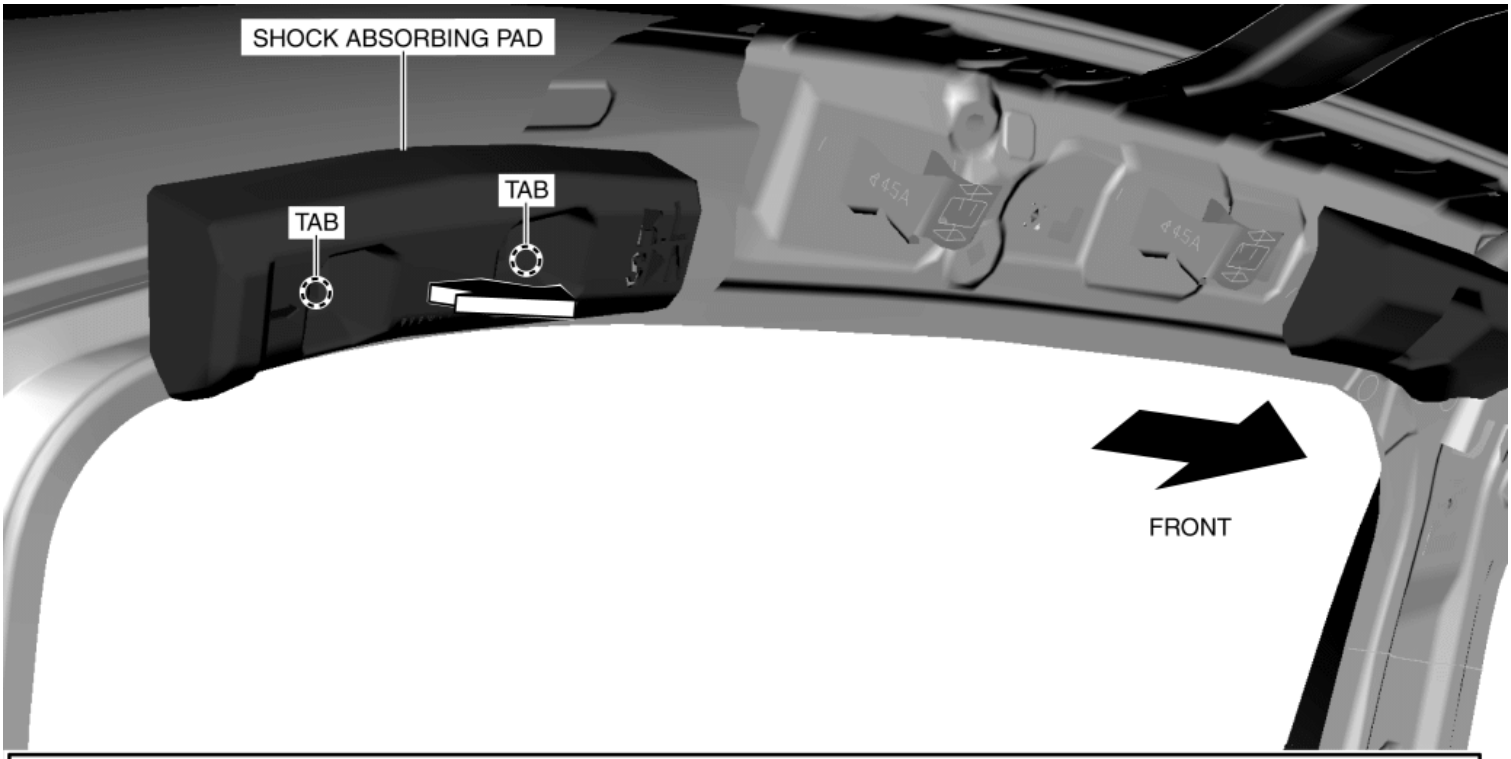

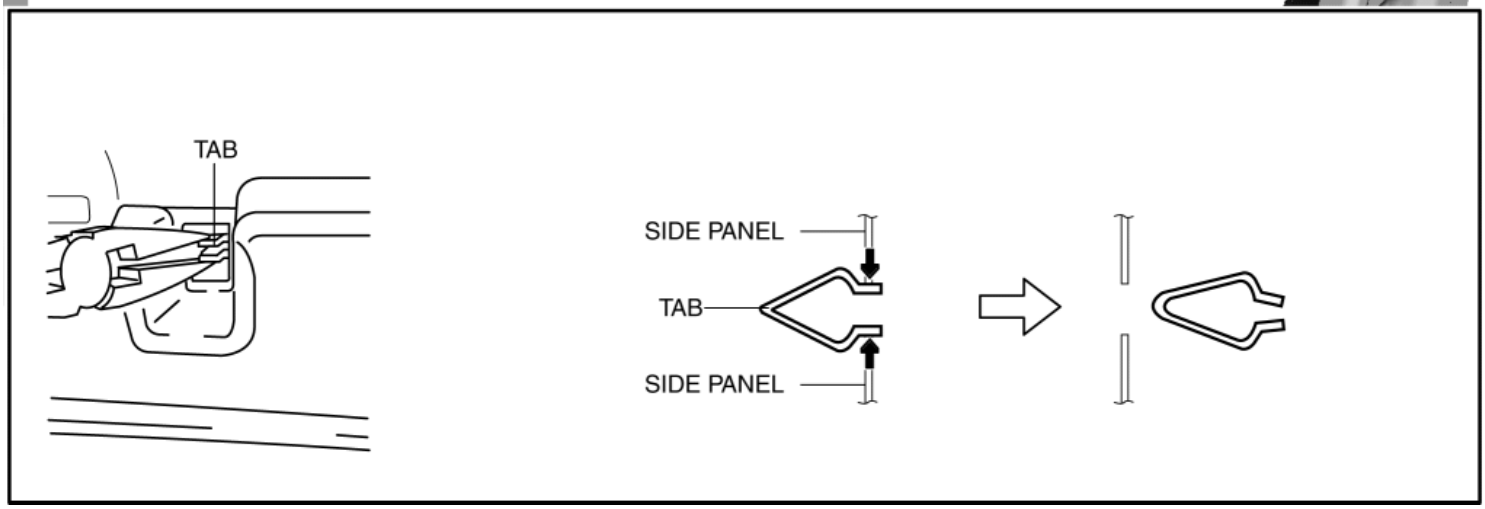

9. Install in the reverse order of removal.

5HB

Front

1. Set the wheel blocks for both the front and rear wheels.
2. Disconnect the negative battery cable. (See **NEGATIVE BATTERY CABLE DISCONNECTION/CONNECTION [SKYACTIV-G 2.0, SKYACTIV-G 2.5]**.)
3. Shift the selector lever from the P position to the D position (ATX).
4. Remove the sunroof seaming welt. (with sunroof system)
5. Remove the following parts:
   a. A-pillar trim (See **A-PILLAR TRIM REMOVAL/INSTALLATION**.)
   b. Sunvisor (See **SUNVISOR REMOVAL/INSTALLATION**.)
   c. Front map light (dual light type) (See **FRONT MAP LIGHT REMOVAL/INSTALLATION**.)
   d. Assist handle (See **ASSIST HANDLE REMOVAL/INSTALLATION**.)
   e. Front scuff plate (See **FRONT SCUFF PLATE REMOVAL/INSTALLATION**.)

f. Rear scuff plate (See **REAR SCUFF PLATE REMOVAL/INSTALLATION**.)

g. B-pillar lower trim (See **B-PILLAR LOWER TRIM REMOVAL/INSTALLATION**.)

h. Adjust anchor cover (See **FRONT SEAT BELT REMOVAL/INSTALLATION**.)

i. Upper anchor installation bolt on the seat belt (See **FRONT SEAT BELT REMOVAL/INSTALLATION**.)

j. B-pillar upper trim (See **B-PILLAR UPPER TRIM REMOVAL/INSTALLATION**.)

6. Set the tire house trim aside. (See **TIRE HOUSE TRIM REMOVAL/INSTALLATION**.)

7. Remove the following parts:

a. Rear package tray (See **REAR PACKAGE TRAY REMOVAL/INSTALLATION**.)

b. Trunk covering (See **TRUNK COVERING REMOVAL/INSTALLATION**.)

c. Trunk board (See **TRUNK BOARD REMOVAL/INSTALLATION**.)

d. Trunk end trim (See **TRUNK END TRIM REMOVAL/INSTALLATION**.)

e. Trunk side upper trim (See **TRUNK SIDE UPPER TRIM REMOVAL/INSTALLATION**.)

f. Trunk side trim (LH only) (See **TRUNK SIDE TRIM REMOVAL/INSTALLATION**.)

g. C-pillar trim (See **C-PILLAR TRIM REMOVAL/INSTALLATION**.)

h. Upper panel (See **UPPER PANEL REMOVAL**.) (See **UPPER PANEL INSTALLATION**.)

i. Rear console (See **REAR CONSOLE REMOVAL/INSTALLATION**.)

j. Shift lever knob (MTX) (See **MANUAL TRANSAXLE SHIFT MECHANISM REMOVAL/INSTALLATION [C66M-R]**.)

k. Selector lever knob (ATX) (See **AUTOMATIC TRANSAXLE SHIFT MECHANISM REMOVAL/INSTALLATION**.)

l. Shift panel (See **SHIFT PANEL REMOVAL/INSTALLATION**.)

m. Front console box (See **FRONT CONSOLE BOX REMOVAL/INSTALLATION**.)

n. CD player (with CD player) (See **CD PLAYER REMOVAL**.) (See **CD PLAYER INSTALLATION**.)

o. Glove compartment (See **GLOVE COMPARTMENT REMOVAL/INSTALLATION**.)

p. Decoration panel (See **DECORATION PANEL REMOVAL/INSTALLATION**.)

q. Side wall (See **SIDE WALL REMOVAL/INSTALLATION**.)

r. Front console (See **FRONT CONSOLE REMOVAL/INSTALLATION**.)

s. Headliner (See **HEADLINER REMOVAL/INSTALLATION**.)

8. Pinch the tab using pincers, remove the tab in the direction of the arrow (1) shown in the figure.

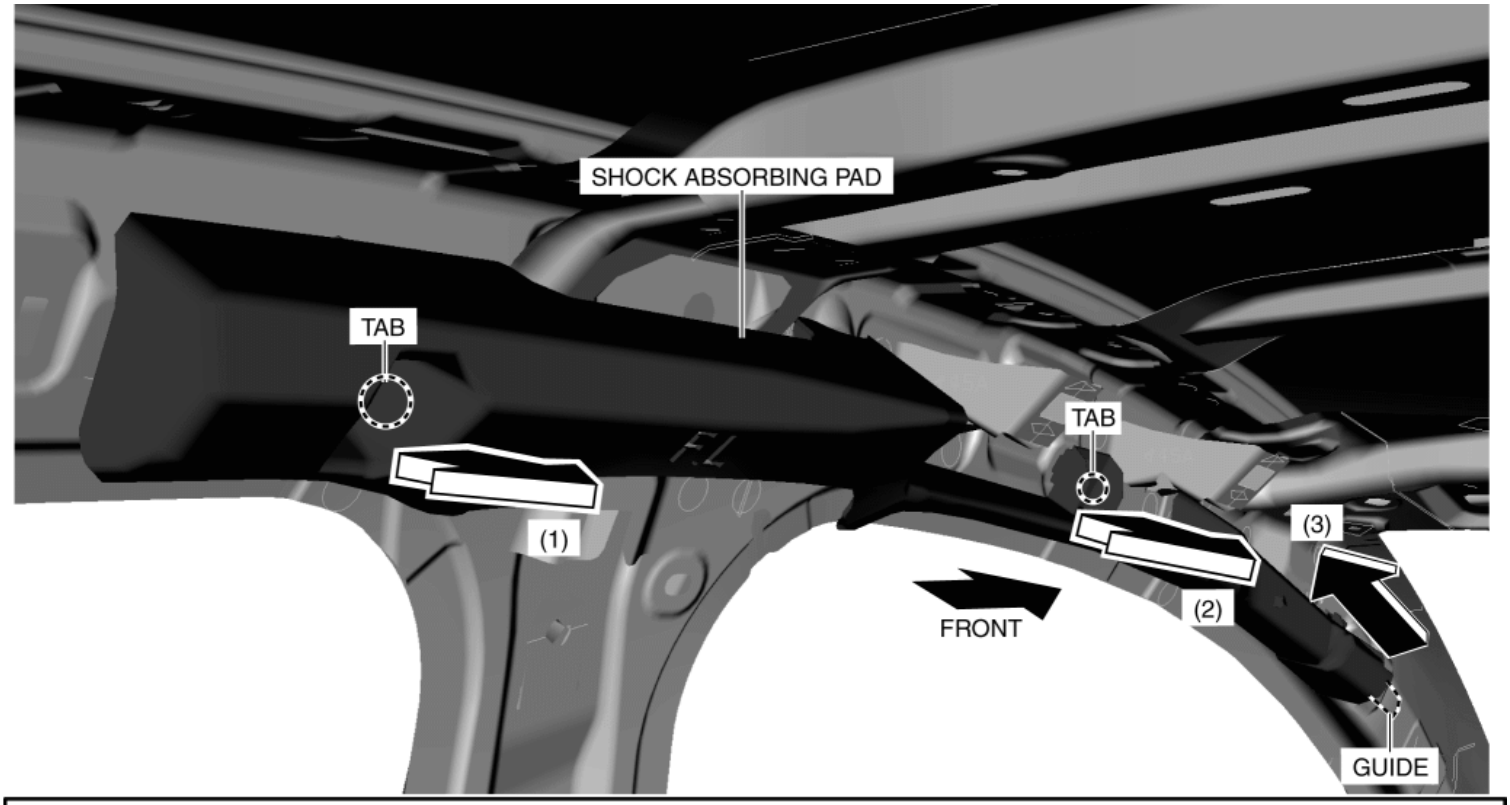

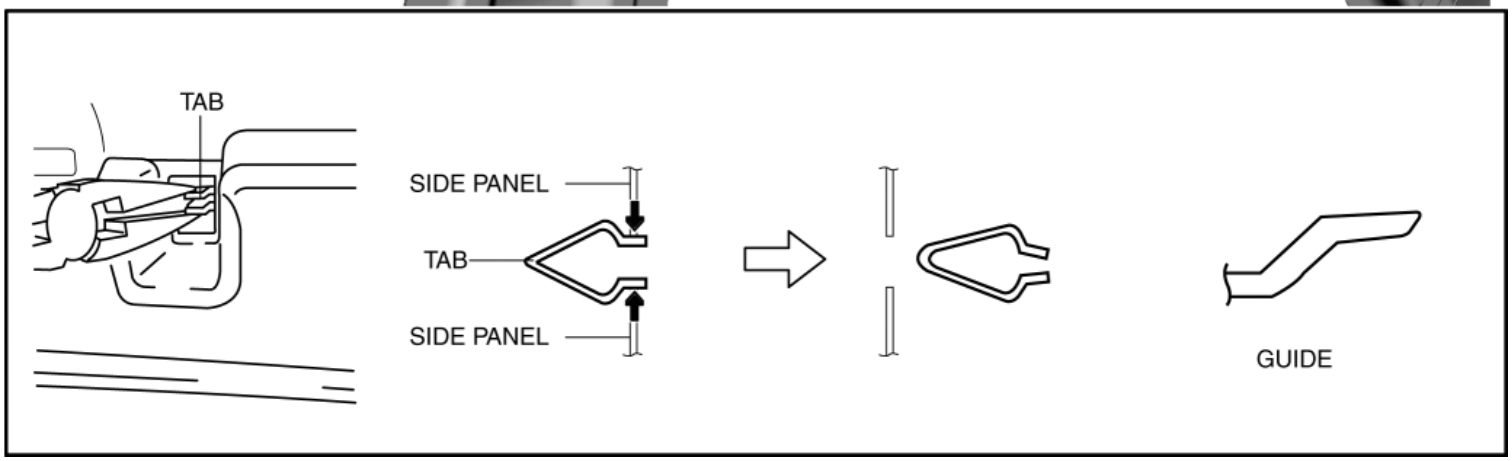

9. Pinch the tab using pincers, remove the tab in the direction of the arrow (2) shown in the figure.

10. Pull the shock-absorbing pad in the direction of the arrow (3) and remove it while detaching guide.

11. Install in the reverse order of removal.

Rear

1. Set the wheel blocks for both the front and rear wheels.

2. Disconnect the negative battery cable. (See **NEGATIVE BATTERY CABLE DISCONNECTION/CONNECTION [SKYACTIV-G 2.0, SKYACTIV-G 2.5]**.)

3. Shift the selector lever from the P position to the D position (ATX).

4. Remove the sunroof seaming welt. (with sunroof system)

5. Remove the following parts:

   a. A-pillar trim (See **A-PILLAR TRIM REMOVAL/INSTALLATION**.)

   b. Sunvisor (See **SUNVISOR REMOVAL/INSTALLATION**.)

   c. Front map light (dual light type) (See **FRONT MAP LIGHT REMOVAL/INSTALLATION**.)

   d. Assist handle (See **ASSIST HANDLE REMOVAL/INSTALLATION**.)

   e. Front scuff plate (See **FRONT SCUFF PLATE REMOVAL/INSTALLATION**.)

f. Rear scuff plate (See **REAR SCUFF PLATE REMOVAL/INSTALLATION**.)

g. B-pillar lower trim (See **B-PILLAR LOWER TRIM REMOVAL/INSTALLATION**.)

h. Adjust anchor cover (See **FRONT SEAT BELT REMOVAL/INSTALLATION**.)

i. Upper anchor installation bolt on the seat belt (See **FRONT SEAT BELT REMOVAL/INSTALLATION**.)

j. B-pillar upper trim (See **B-PILLAR UPPER TRIM REMOVAL/INSTALLATION**.)

6. Set the tire house trim aside. (See **TIRE HOUSE TRIM REMOVAL/INSTALLATION**.)
7. Remove the following parts:

a. Rear package tray (See **REAR PACKAGE TRAY REMOVAL/INSTALLATION**.)

b. Trunk covering (See **TRUNK COVERING REMOVAL/INSTALLATION**.)

c. Trunk board (See **TRUNK BOARD REMOVAL/INSTALLATION**.)

d. Trunk end trim (See **TRUNK END TRIM REMOVAL/INSTALLATION**.)

e. Trunk side upper trim (See **TRUNK SIDE UPPER TRIM REMOVAL/INSTALLATION**.)

f. Trunk side trim (LH only) (See **TRUNK SIDE TRIM REMOVAL/INSTALLATION**.)

g. C-pillar trim (See **C-PILLAR TRIM REMOVAL/INSTALLATION**.)

h. Upper panel (See **UPPER PANEL REMOVAL**.) (See **UPPER PANEL INSTALLATION**.)

i. Rear console (See **REAR CONSOLE REMOVAL/INSTALLATION**.)

j. Shift lever knob (MTX) (See **MANUAL TRANSAXLE SHIFT MECHANISM REMOVAL/INSTALLATION [C66M-R]**.)

k. Selector lever knob (ATX) (See **AUTOMATIC TRANSAXLE SHIFT MECHANISM REMOVAL/INSTALLATION**.)

l. Shift panel (See **SHIFT PANEL REMOVAL/INSTALLATION**.)

m. Front console box (See **FRONT CONSOLE BOX REMOVAL/INSTALLATION**.)

n. CD player (with CD player) (See **CD PLAYER REMOVAL**.) (See **CD PLAYER INSTALLATION**.)

o. Glove compartment (See **GLOVE COMPARTMENT REMOVAL/INSTALLATION**.)

p. Decoration panel (See **DECORATION PANEL REMOVAL/INSTALLATION**.)

q. Side wall (See **SIDE WALL REMOVAL/INSTALLATION**.)

r. Front console (See **FRONT CONSOLE REMOVAL/INSTALLATION**.)

s. Headliner (See **HEADLINER REMOVAL/INSTALLATION**.)

8. Pinch the tab using pincers, remove tabs, then remove the shock-absorbing pad in the direction of the arrow shown in the figure.

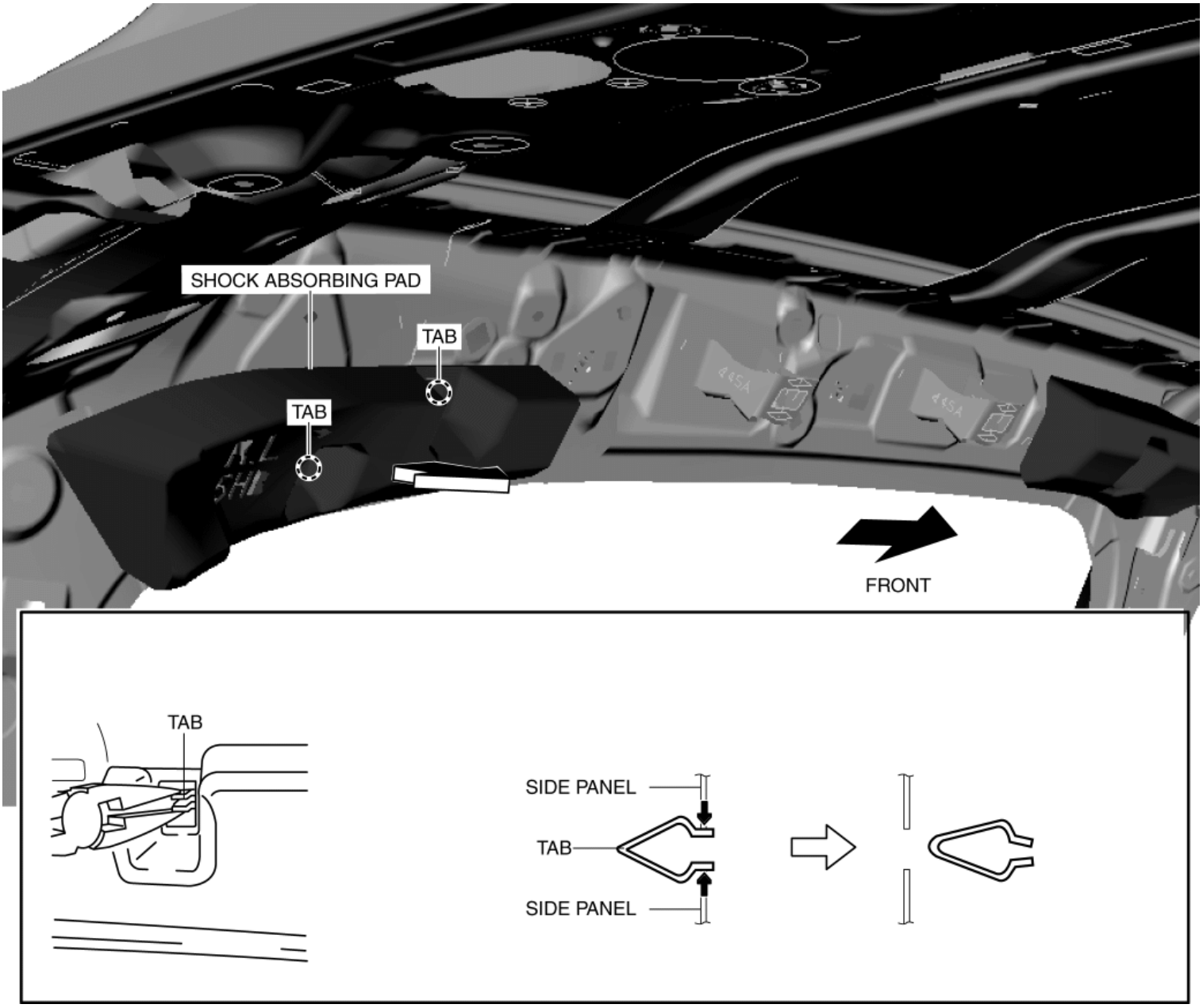

9. Install in the reverse order of removal.

2014 - Mazda3 - Body and Accessories

DASHBOARD DISASSEMBLY/ASSEMBLY

1. Disassemble in the order indicated in the table.

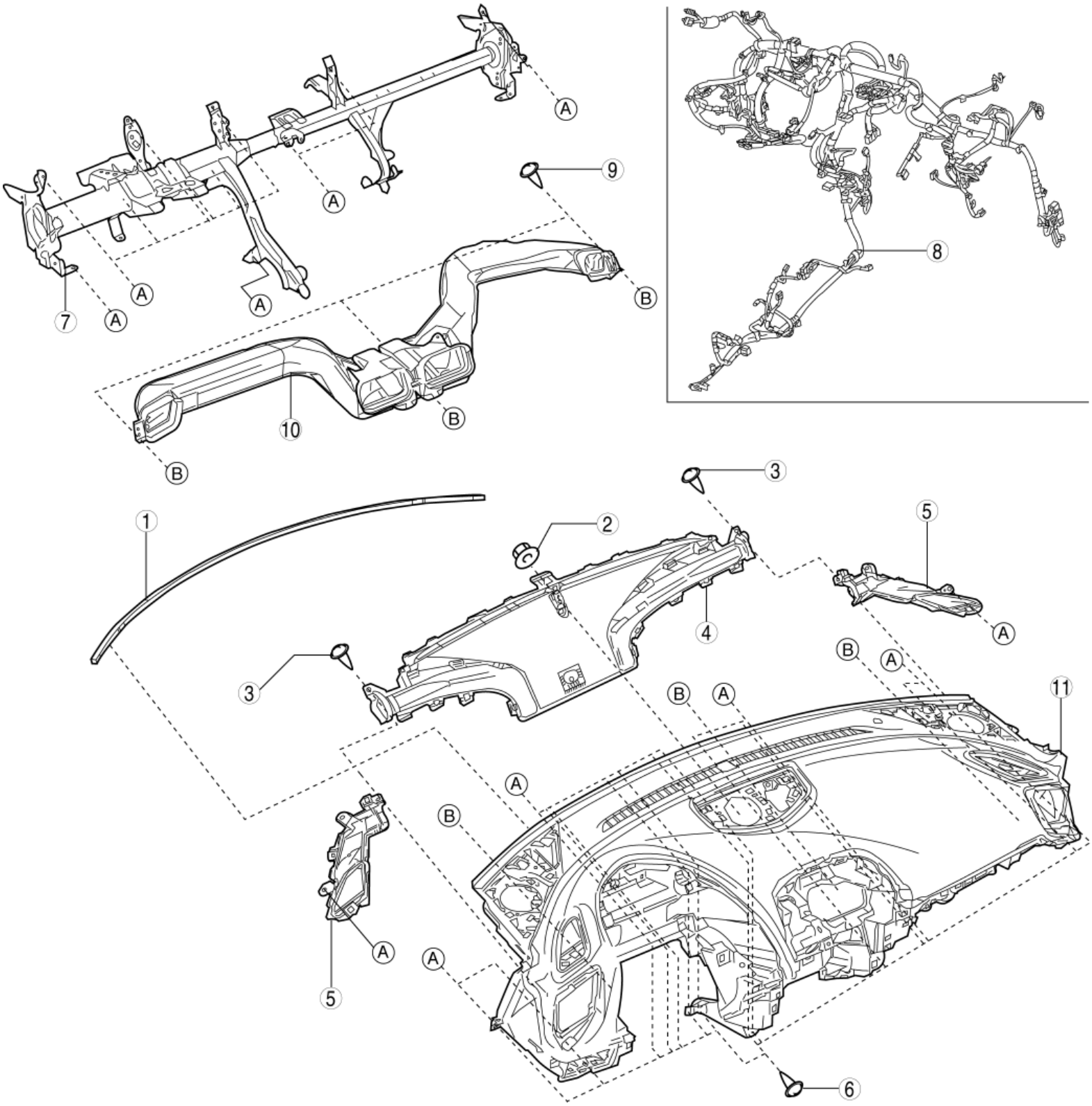

1	Seal tape
2	Nut
3	Screw
4	Center defroster
5	Side defroster
6	Screw
7	Dashboard member
8	Wiring harness
9	Screw
10	Duct
11	Dashboard

2. Assemble in the reverse order of disassembly.

2014 - Mazda3 - Body and Accessories

COLUMN COVER REMOVAL / INSTALLATION

1. Pull down the steering wheel.
2. Press the shaded area shown in the figure using your thumb, and lift the upper column cover in the direction of arrow (1).

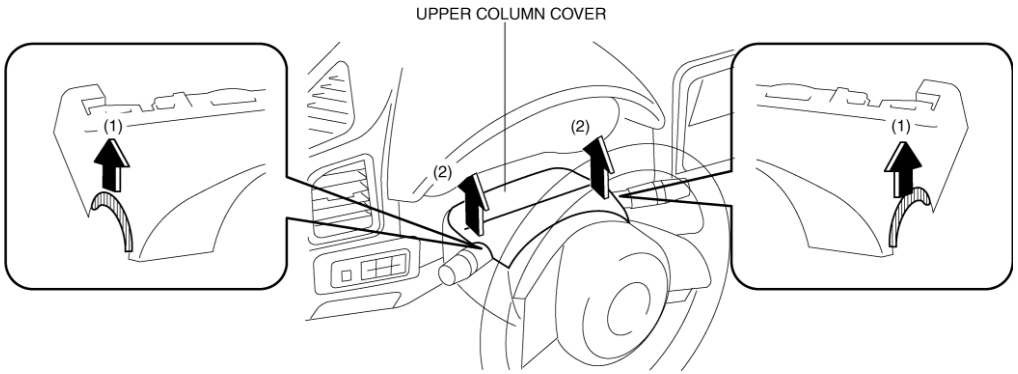

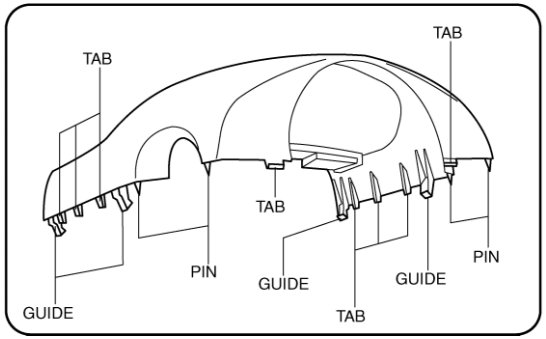

3. Pull the upper column cover in the direction of the arrow (2) and remove it while detaching pins, tabs and guides.
4. Remove hooks from the meter hood.

CAUTION:

- If the cover of the meter hood is deformed, it may not return to its original condition. When removing the cover of the meter hood, detach hooks one by one from the upper column cover.

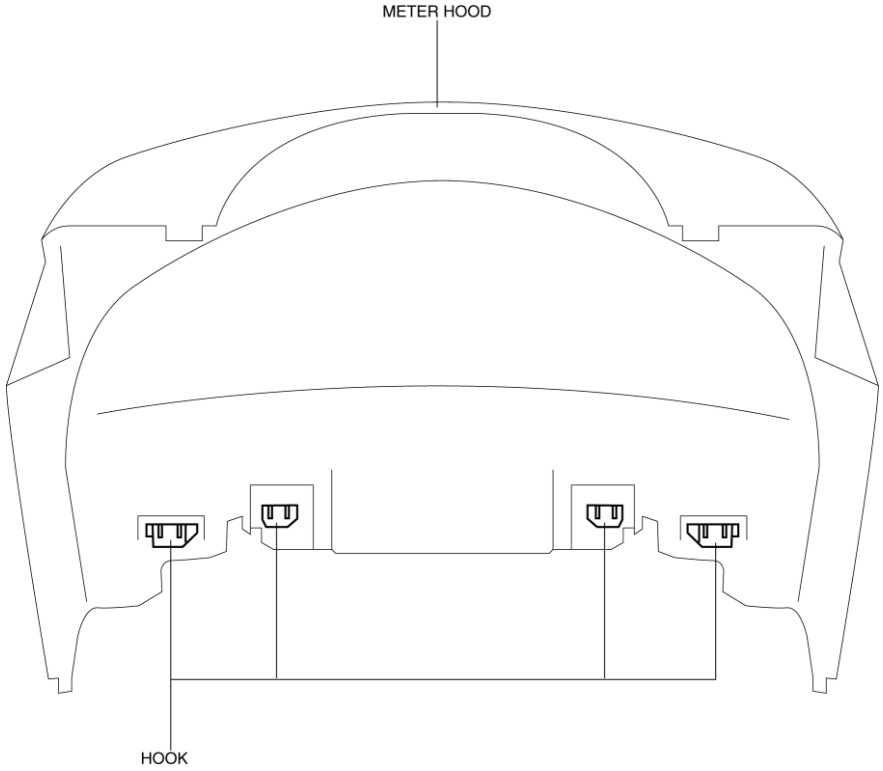

5. Pull up the steering wheel.

6. Remove screws.

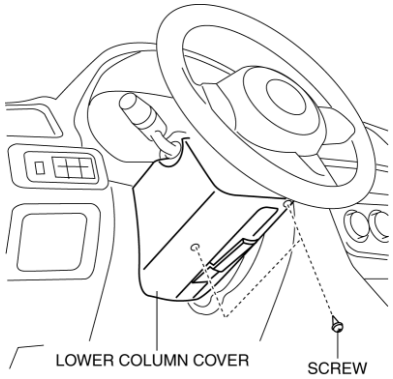

7. Pull down the lower column cover in the direction of arrow (4) while keeping it open in the direction of arrow (3) shown in the figure.

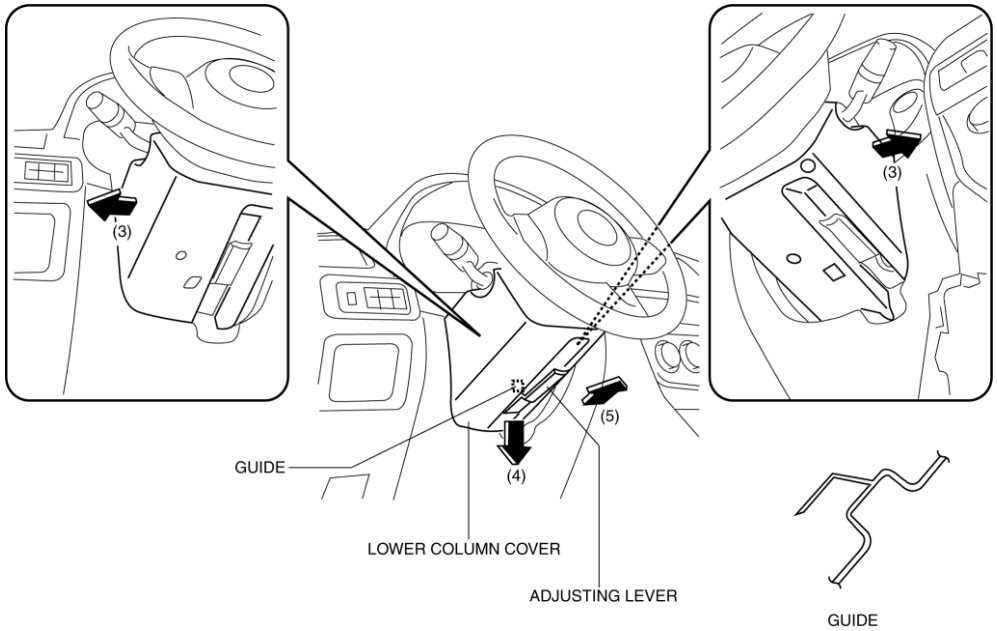

8. Lower the adjusting lever to the bottommost position.

CAUTION:

- If the adjuster lever is pulled down to the very bottom and the lower column cover is removed while the steering wheel is not secured, the lower column cover will interfere with the driver's side lower panel and could cause damage to the lower column cover and driver's side lower panel. Secure the steering wheel when removing the lower column cover.

9. Set the adjusting lever aside in the direction of arrow (5) shown in the figure and remove the lower column cover while detaching the guide.

10. Install in the reverse order of removal.

2014 - Mazda3 - Body and Accessories

LOWER PANEL REMOVAL/INSTALLATION

Driver-side

1. Set the wheel blocks for both the front and rear wheels.
2. Disconnect the negative battery cable. (See **NEGATIVE BATTERY CABLE DISCONNECTION/CONNECTION [SKYACTIV-G 2.0, SKYACTIV-G 2.5]**.)
3. Shift the selector lever from the P position to the D position (ATX).
4. Remove the following parts:
    a. Upper panel (See **UPPER PANEL REMOVAL**.) (See **UPPER PANEL INSTALLATION**.)
    b. Rear console (See **REAR CONSOLE REMOVAL/INSTALLATION**.)
    c. Shift lever knob (MTX) (See **MANUAL TRANSAXLE SHIFT MECHANISM REMOVAL/INSTALLATION [C66M-R]**.)
    d. Selector lever knob (ATX) (See **AUTOMATIC TRANSAXLE SHIFT MECHANISM REMOVAL/INSTALLATION**.)
    e. Shift panel (See **SHIFT PANEL REMOVAL/INSTALLATION**.)
    f. Front console box (See **FRONT CONSOLE BOX REMOVAL/INSTALLATION**.)
    g. CD player (with CD player) (See **CD PLAYER REMOVAL**.) (See **CD PLAYER INSTALLATION**.)
    h. Side wall (See **SIDE WALL REMOVAL/INSTALLATION**.)
    i. Glove compartment (See **GLOVE COMPARTMENT REMOVAL/INSTALLATION**.)
    j. Decoration panel (See **DECORATION PANEL REMOVAL/INSTALLATION**.)
    k. Front console (See **FRONT CONSOLE REMOVAL/INSTALLATION**.)
    l. Driver-side front scuff plate (See **FRONT SCUFF PLATE REMOVAL/INSTALLATION**.)
    m. Driver-side front side trim (See **FRONT SIDE TRIM REMOVAL/INSTALLATION**.)
    n. Hood release lever (See **HOOD RELEASE LEVER AND RELEASE CABLE REMOVAL/INSTALLATION**.)
    o. Fuel-filler lid opener lever (See **FUEL-FILLER LID OPENER AND LEVER REMOVAL/INSTALLATION**.)
5. Remove bolt.

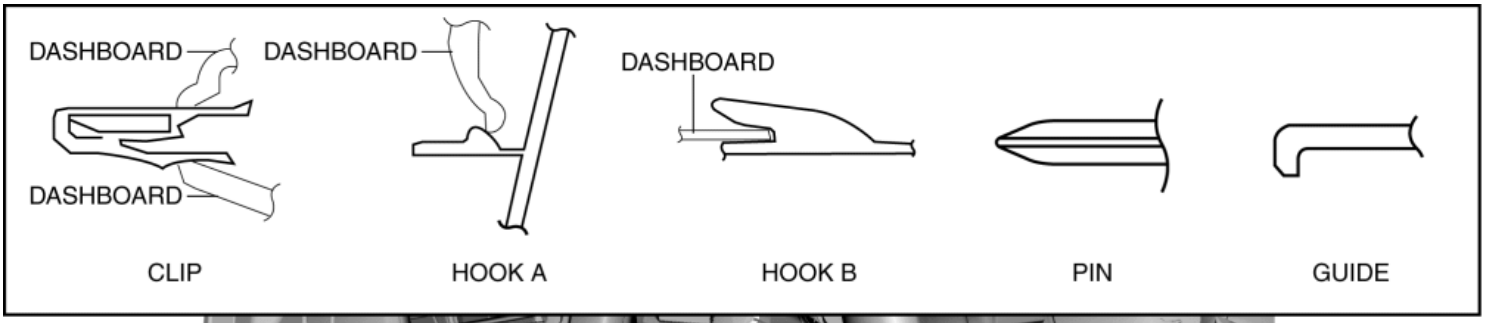

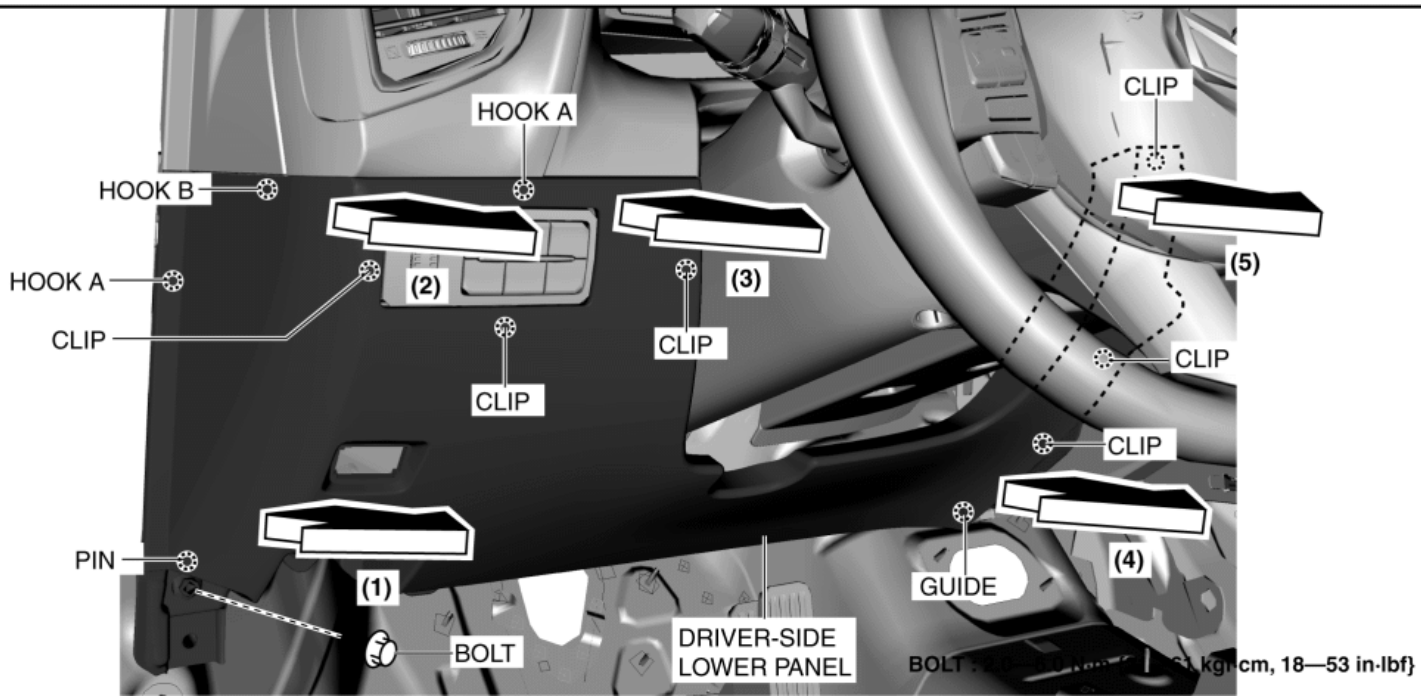

6. Pull the driver-side lower panel in the direction of the arrow in the order of (1), (2), (3), (4), (5) while detaching clip, hooks A, hook B, pin and guide.

7. Disconnect the trunk lid opener switch connector. (only 4SD)

8. Install in the reverse order of removal.

Passenger-side

Removal

1. Disconnect the negative battery cable. (See **NEGATIVE BATTERY CABLE DISCONNECTION/CONNECTION [SKYACTIV-G 2.0, SKYACTIV-G 2.5]**.)

2. Remove the following parts:

   a. Passenger-side front scuff plate (See **FRONT SCUFF PLATE REMOVAL/INSTALLATION**.)

   b. Passenger-side front side trim (See **FRONT SIDE TRIM REMOVAL/INSTALLATION**.)

   c. Glove compartment (See **GLOVE COMPARTMENT REMOVAL/INSTALLATION**.)

   d. Decoration panel (See **DECORATION PANEL REMOVAL/INSTALLATION**.)

   e. Dashboard under cover (See **DASHBOARD UNDER COVER REMOVAL/INSTALLATION**.)

3. Remove bolts.

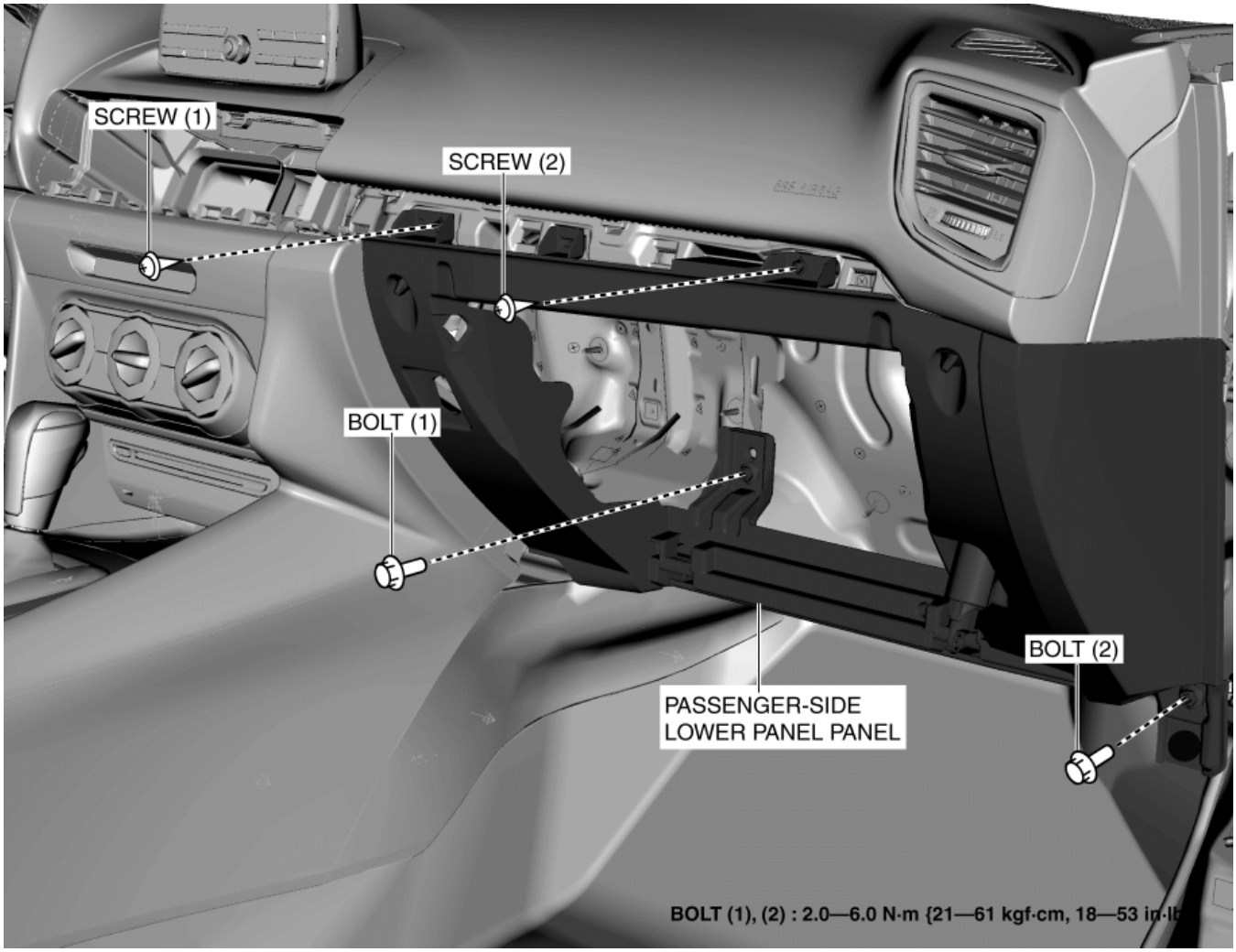

4. Remove screws.

5. Pull the passenger-side lower panel in the direction of the arrow in the order of (1), (2), (3), (4) and remove it while detaching clips, hook A, hook B, pin and guide.

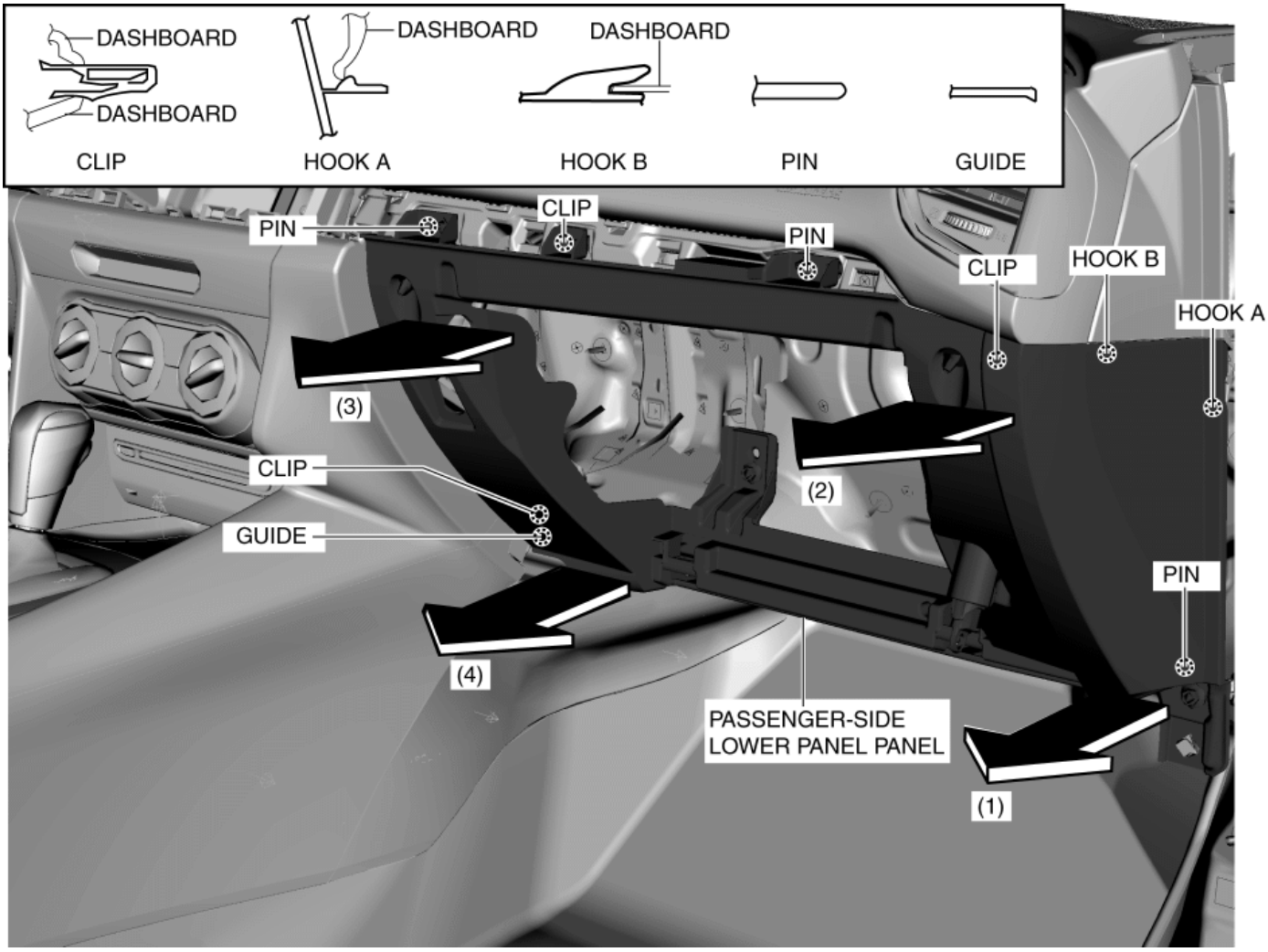

Installation

1. Install clips, hook A, hook B, pin and guide while pressing the shaded area shown in the figure for the passenger-side lower panel in the direction of the arrow in the order of (1), (2), (3), (4) and (5).

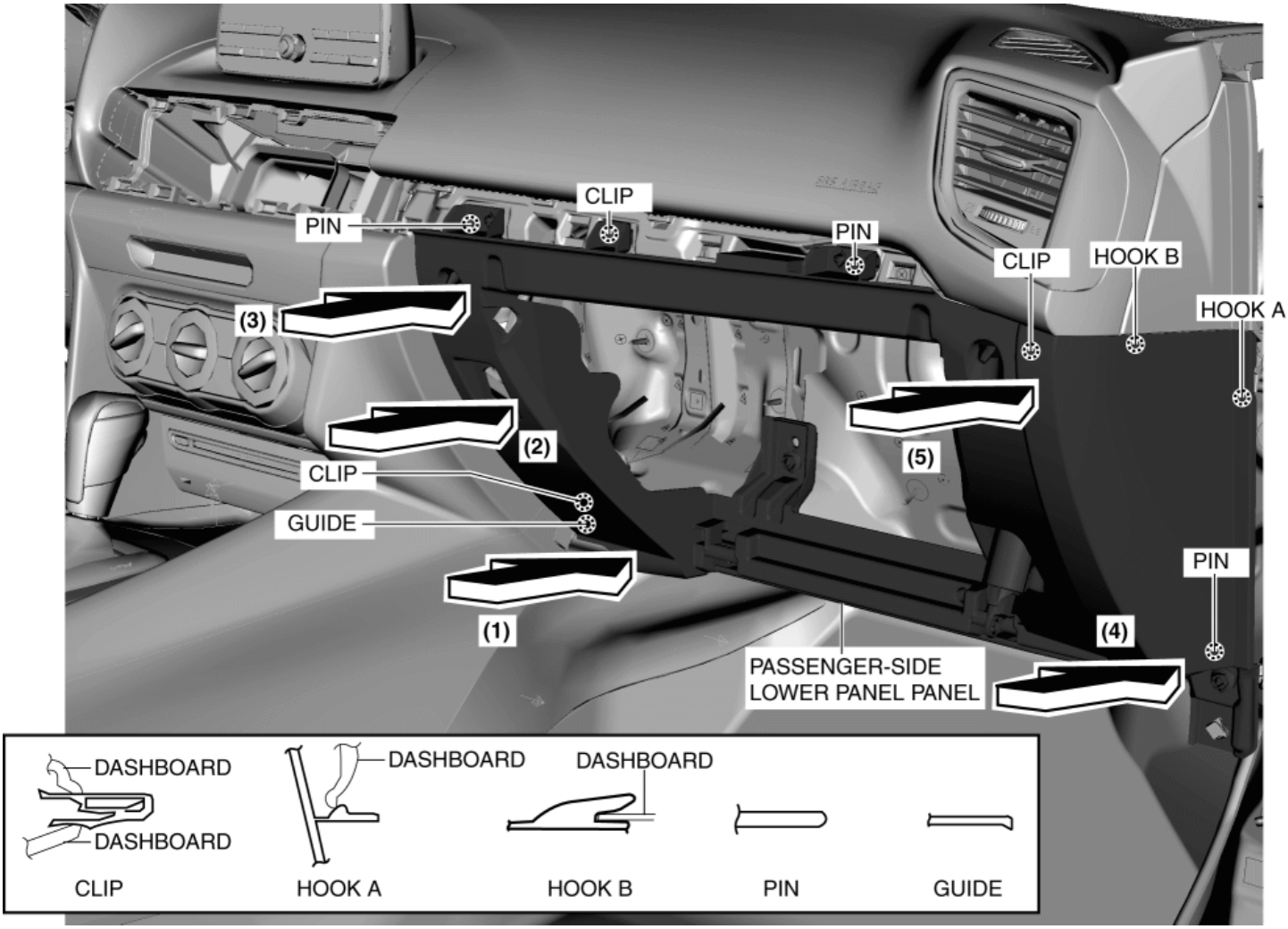

2. Install screw (1).

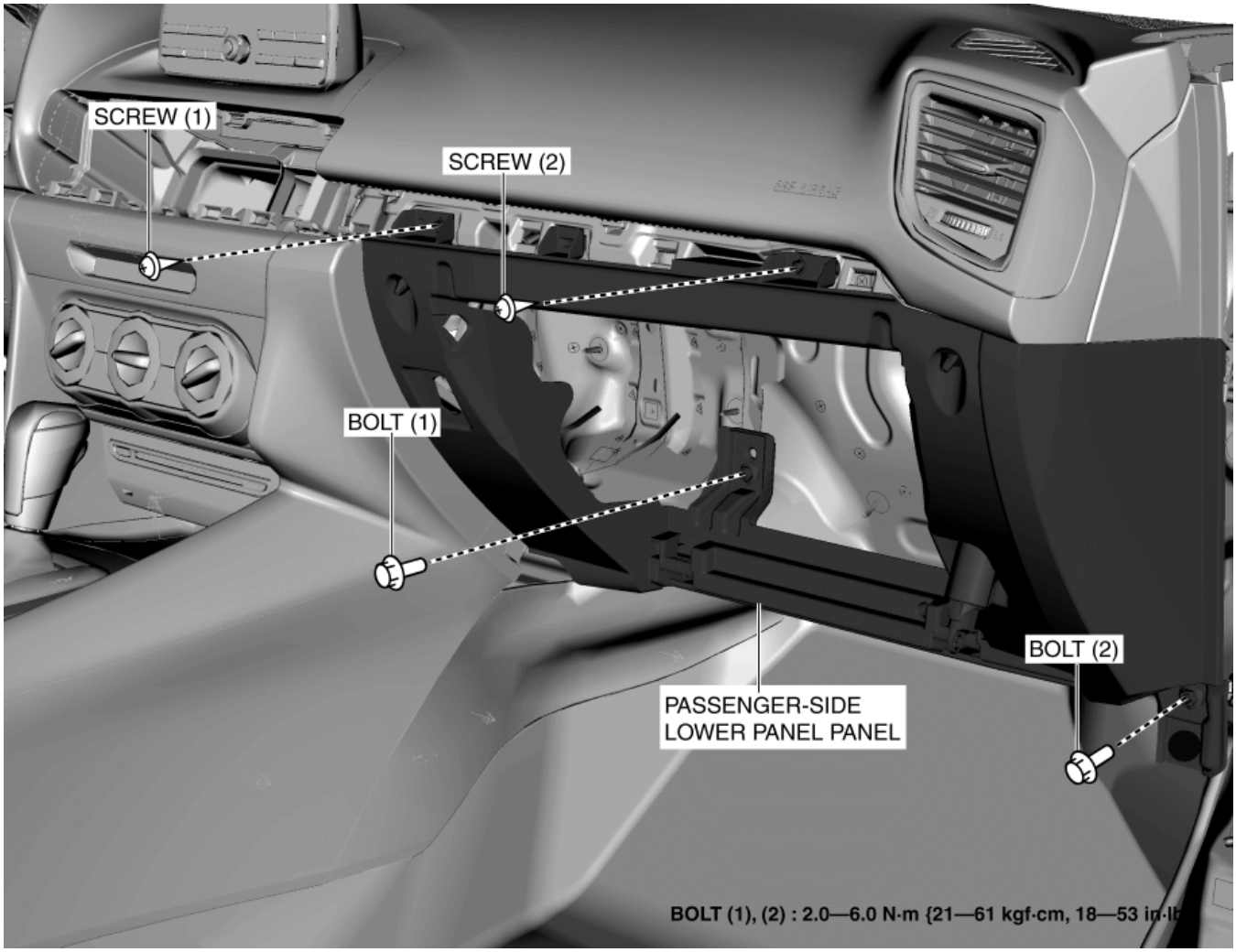

3. Install screw (2).

4. Install bolt (1).

5. Install bolt (2).

6. Install the following parts:

   a. Dashboard under cover (See **DASHBOARD UNDER COVER REMOVAL/INSTALLATION**.)

   b. Decoration panel (See **DECORATION PANEL REMOVAL/INSTALLATION**.)

   c. Glove compartment (See **GLOVE COMPARTMENT REMOVAL/INSTALLATION**.)

   d. Passenger-side front side trim (See **FRONT SIDE TRIM REMOVAL/INSTALLATION**.)

   e. Passenger-side front scuff plate (See **FRONT SCUFF PLATE REMOVAL/INSTALLATION**.)

7. Connect the negative battery cable. (See **NEGATIVE BATTERY CABLE DISCONNECTION/CONNECTION [SKYACTIV-G 2.0, SKYACTIV-G 2.5]**.)

8. After installing the passenger-side lower panel and glove compartment, measure the clearance, and verify that the measurement value is within the specification shown in the figure.

   - If the measurement value is not within the specification after measuring the clearance between the passenger-side lower panel and glove compartment, adjust the passenger-side lower panel to the proper position. (See **Passenger-side lower panel adjustment**.)

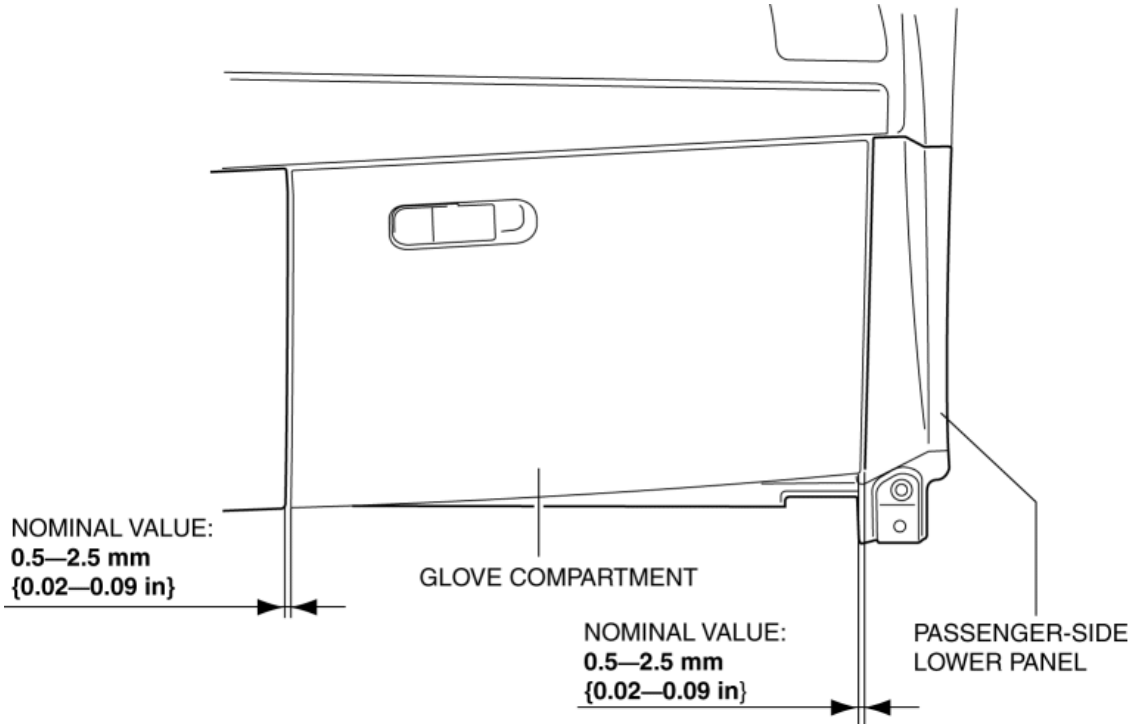

Passenger-side lower panel adjustment

1. Remove the glove compartment. (See **GLOVE COMPARTMENT REMOVAL / INSTALLATION**.)
2. Loosen bolts.
    - If the passenger-side lower panel moves in the lateral direction when bolts are loosened, go to the Step 3 and 4.
    - If the passenger-side lower panel does not move in the lateral direction when bolts are loosened, go to the Step 5.

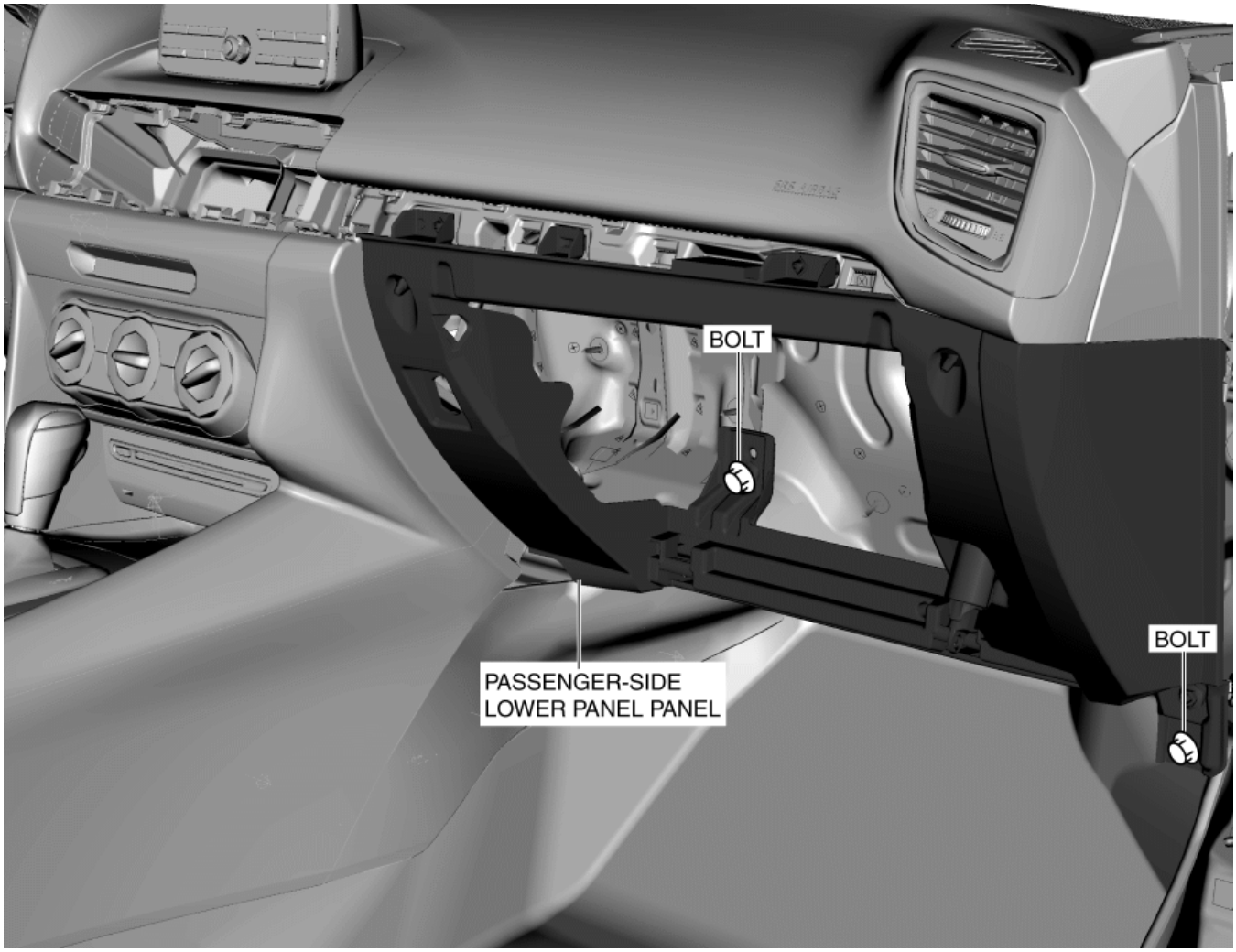

3. Remove bolts.

4. Install bolts in the order of (1), (2) shown in the figure.

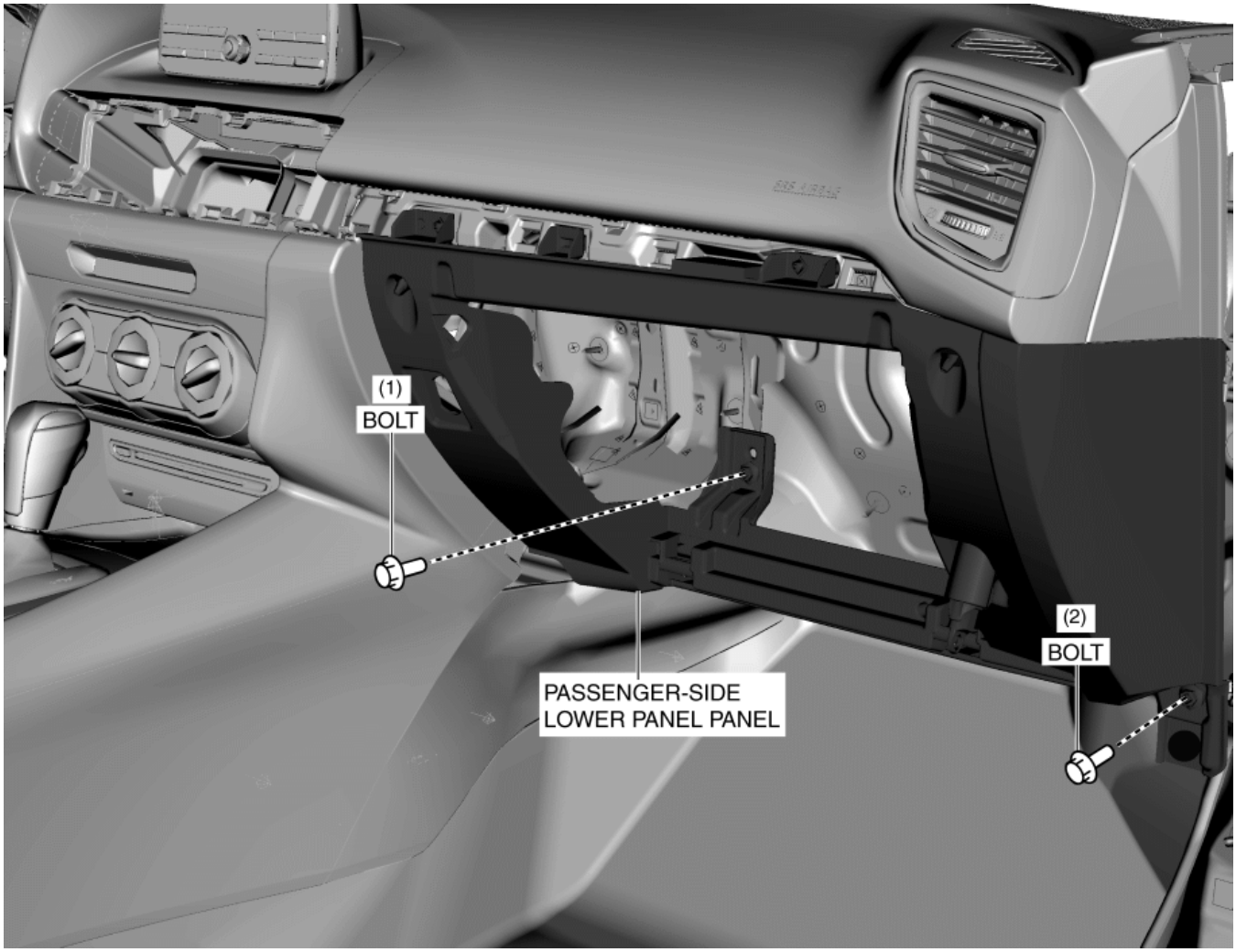

5. Install bolts in the order of (1) and (2) while pressing the shaded area shown in the figure for the passenger-side lower panel.

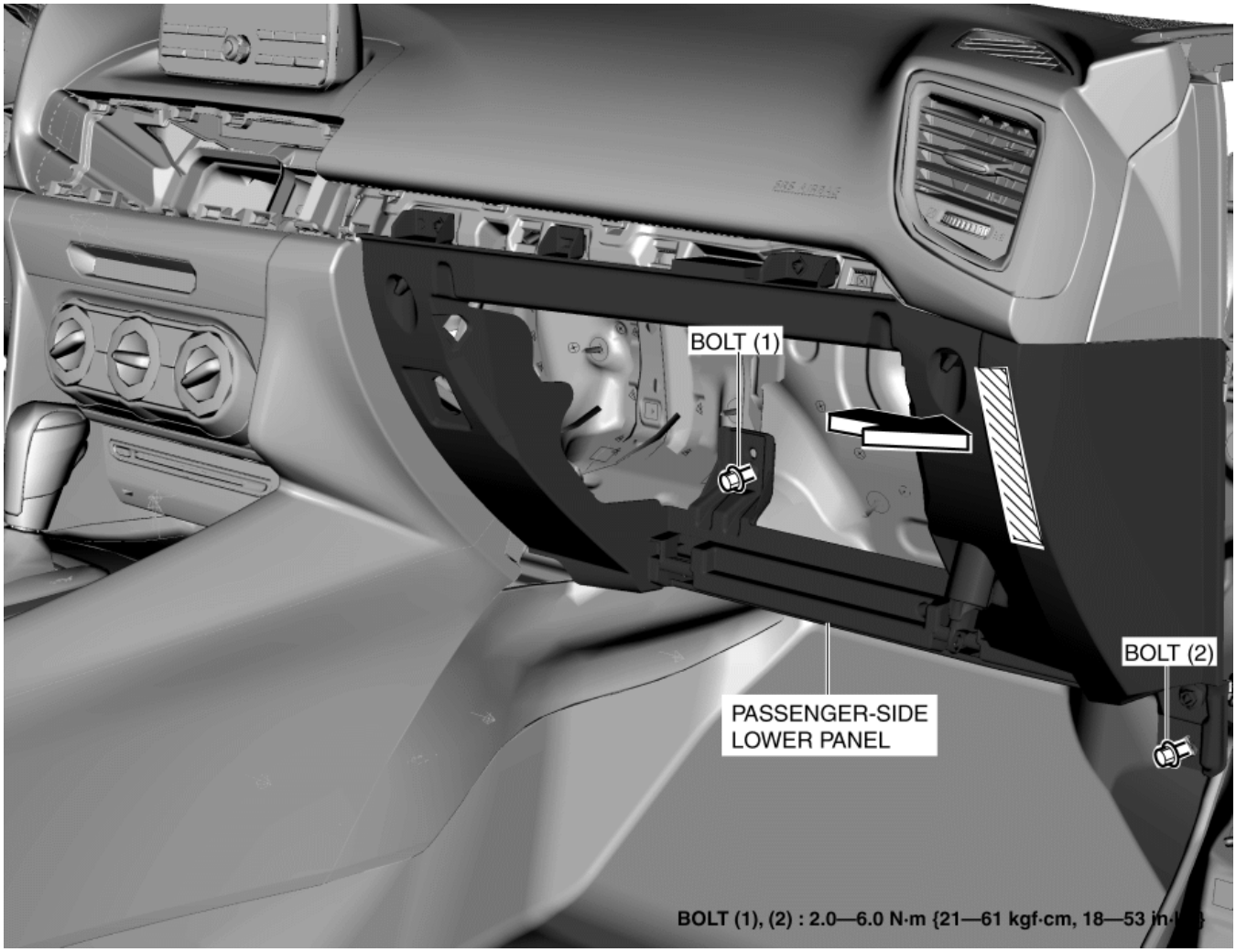

6. Install the glove compartment, measure the clearance between the glove compartment and passenger-side lower panel again, and verify that it is within the specification.

- If it is not within the specification after measuring the clearance, repeat the adjustment procedure from Step 1.

2014 - Mazda3 - Body and Accessories

METER HOOD REMOVAL/INSTALLATION

1. Disconnect the negative battery cable. (See **NEGATIVE BATTERY CABLE DISCONNECTION/CONNECTION [SKYACTIV-G 2.0, SKYACTIV-G 2.5]**.)

2. Remove the upper column cover. (See **COLUMN COVER REMOVAL/INSTALLATION**.)

3. Remove the meter hood in the direction of the arrows in the order of (1), (2), (3) while detaching the clips, pins and guides.

With Active Driving Display

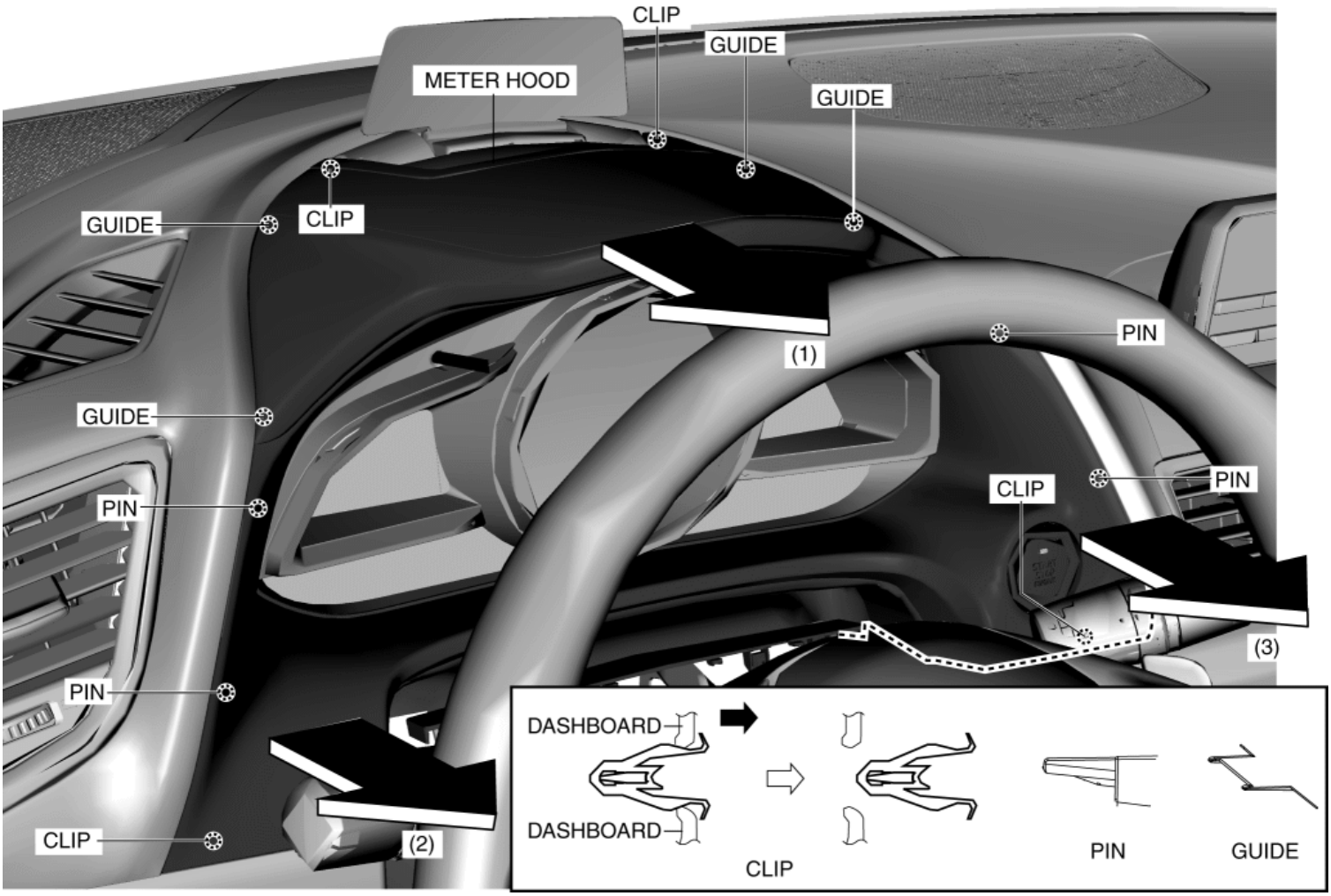

Without Active Driving Display

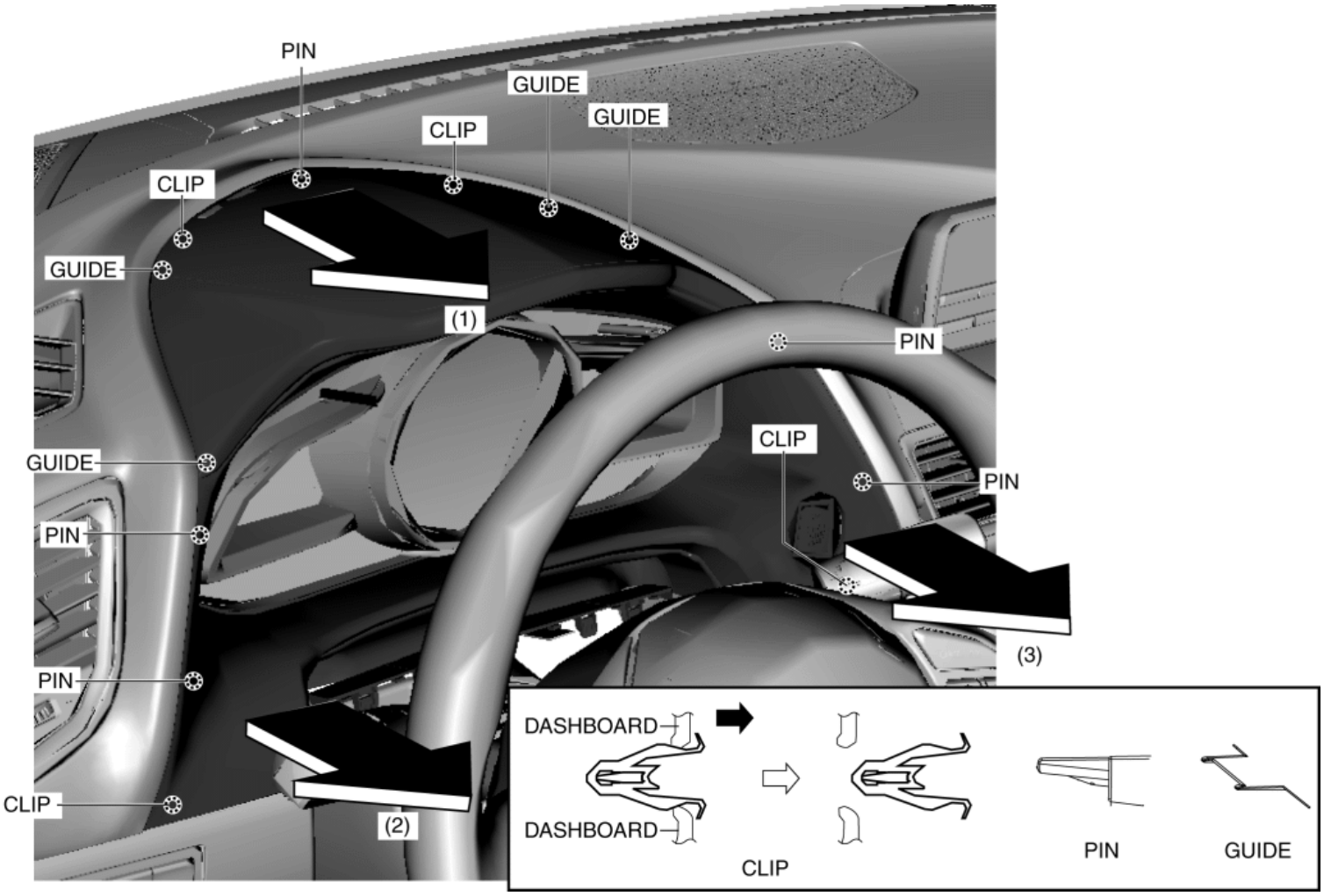

4. Disconnect the start switch connector.

5. Remove the dashboard harness clip.

6. Install in the reverse order of removal.

2014 - Mazda3 - Body and Accessories

GLOVE COMPARTMENT REMOVAL/INSTALLATION

1. Open the glove lid.
2. Pull the stay damper in the direction of the arrow (1) shown in the figure and remove the hook A.

CAUTION:

- If the glove compartment is closed without being joined to the stay damper, the stay damper may be damaged. Verify that the stay damper is joined to the glove compartment before closing the glove compartment.

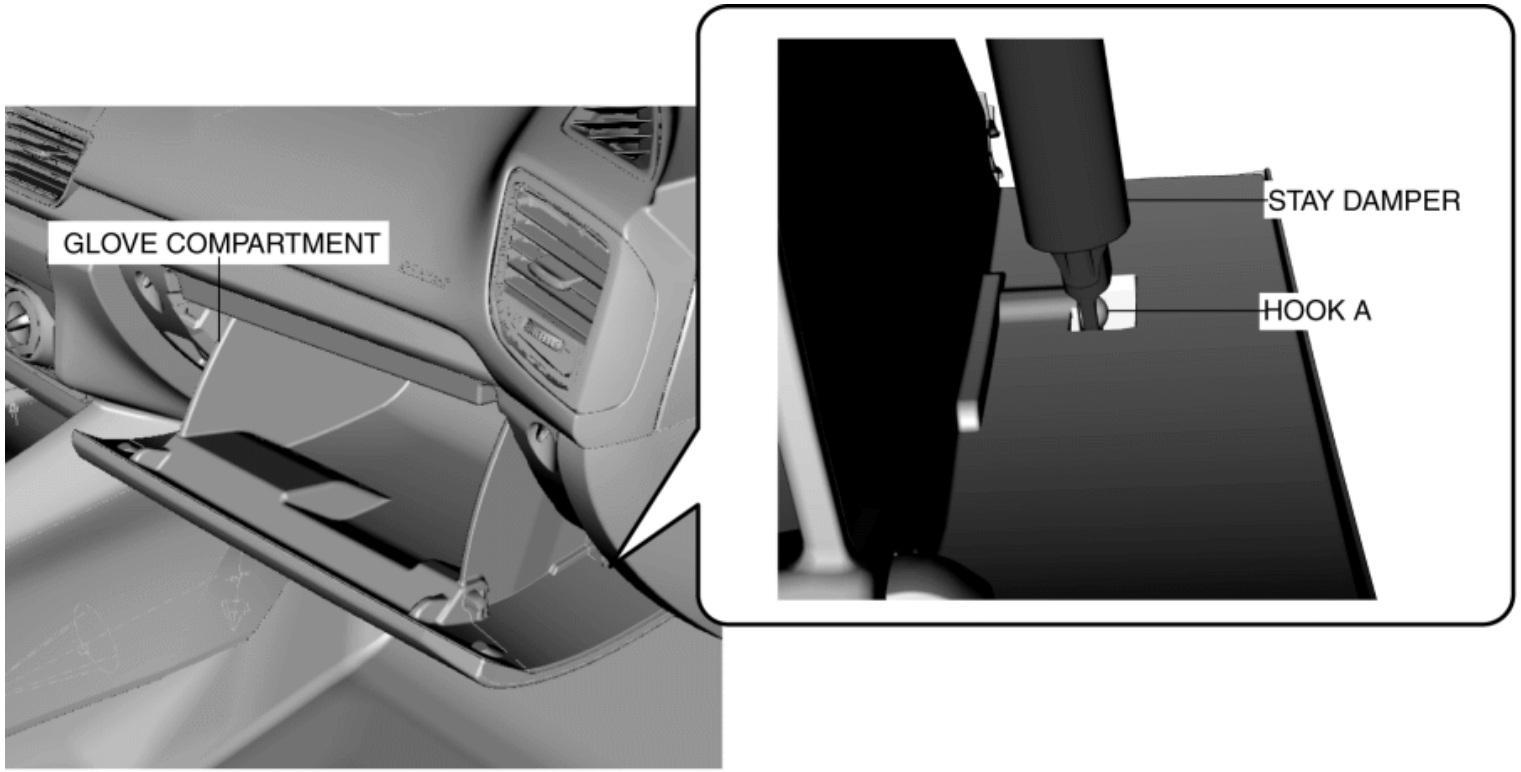

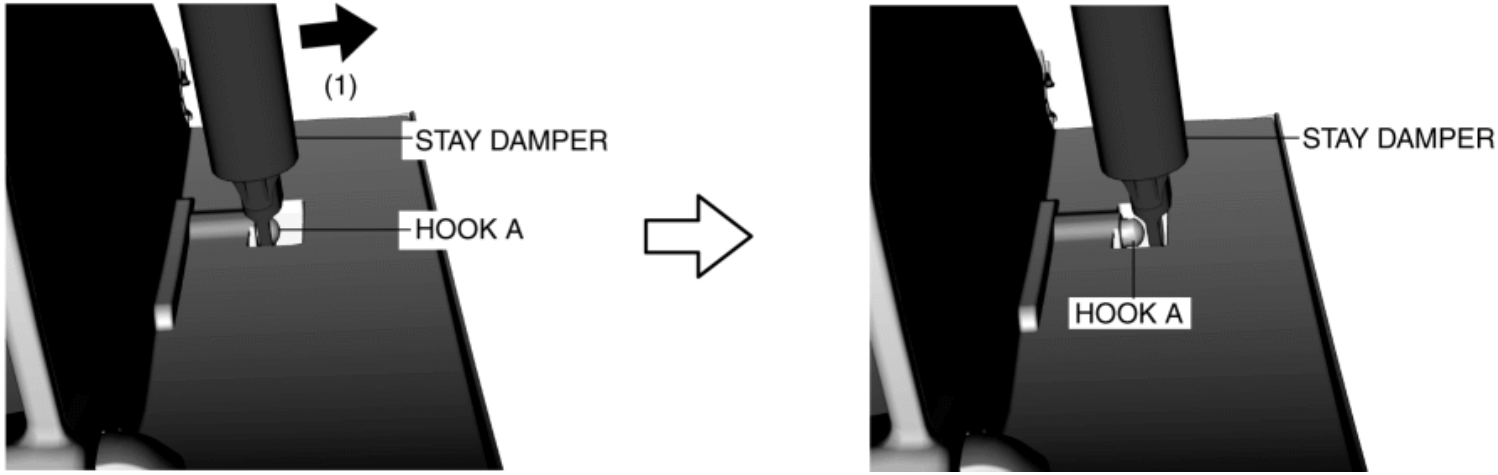

3. Push the glove compartment end in the direction of the arrow (2) and remove hooks B.

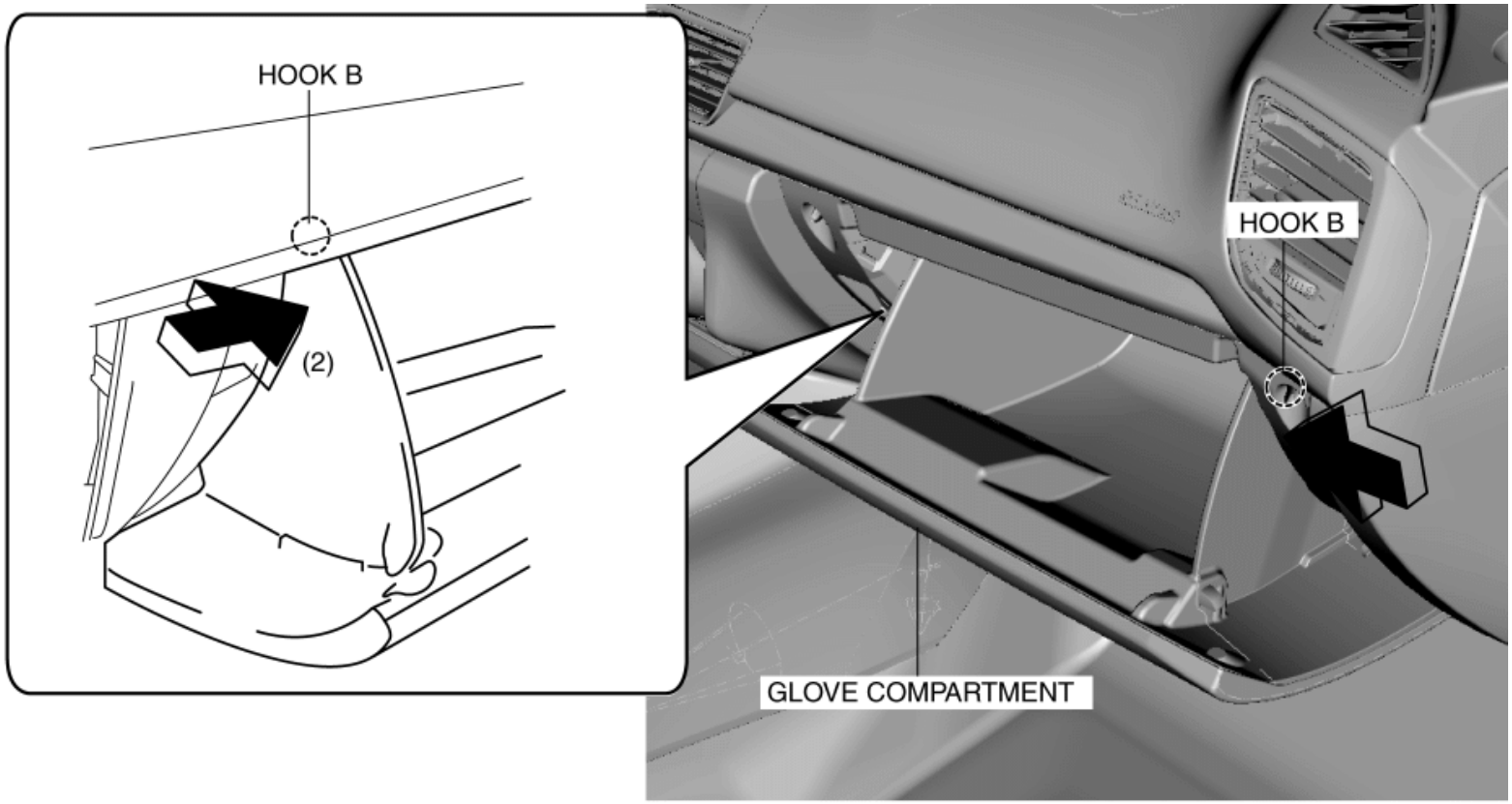

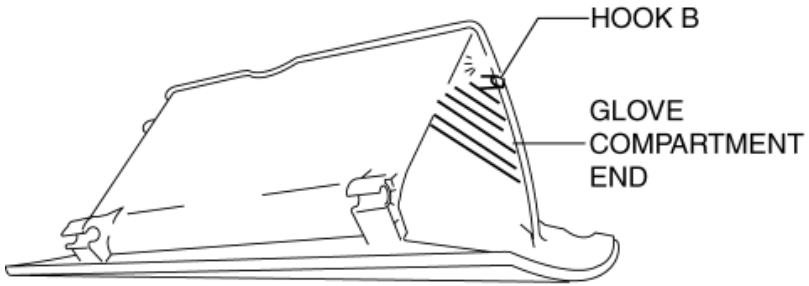

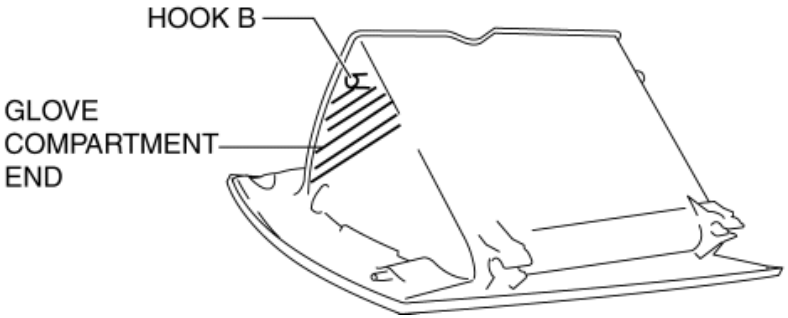

CAUTION:

- When disengaging hooks B, the hooks could interfere with the lower panel and cause scratches or damage. When removing hooks B, press in the ends of the glove compartment to a location which does not interfere with the lower panel.

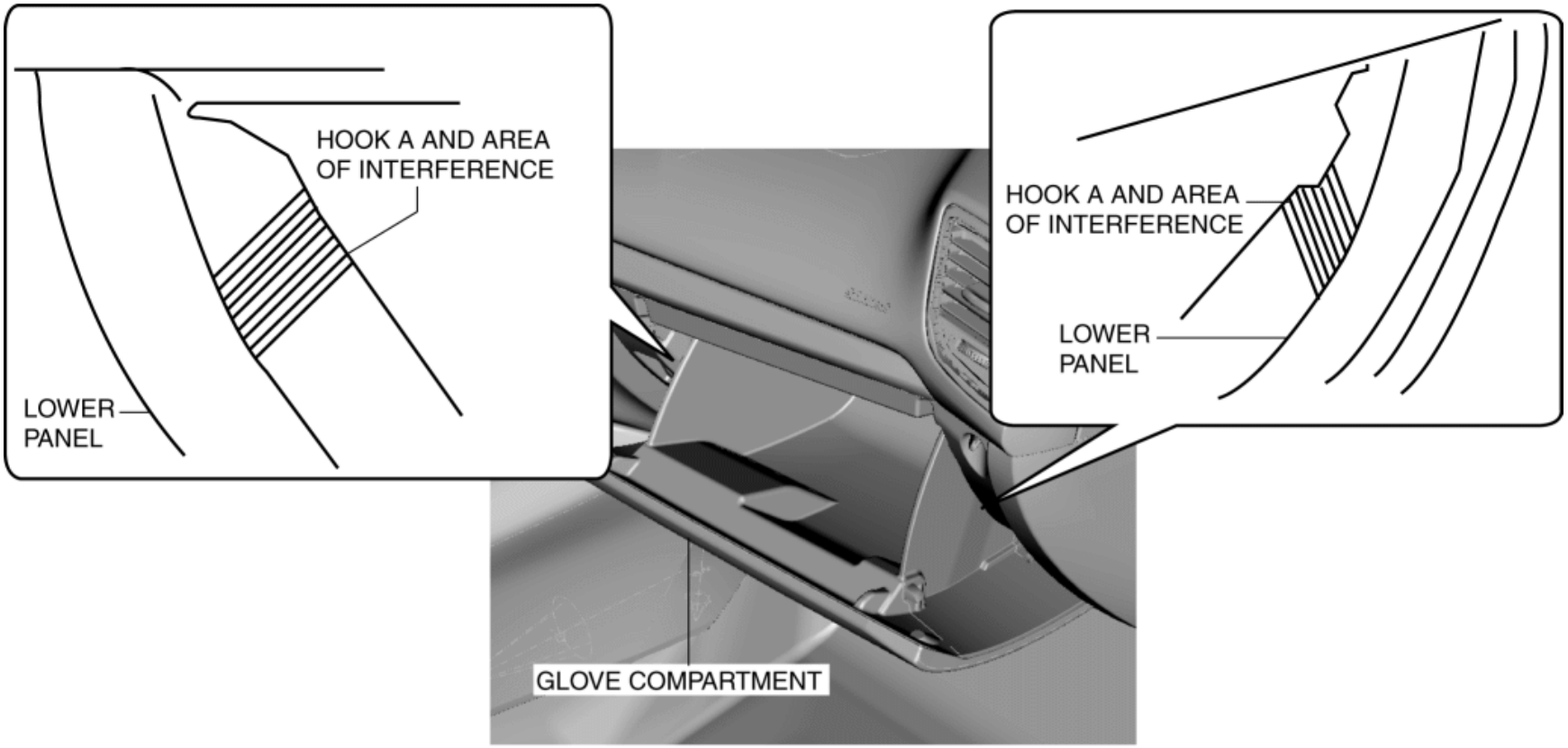

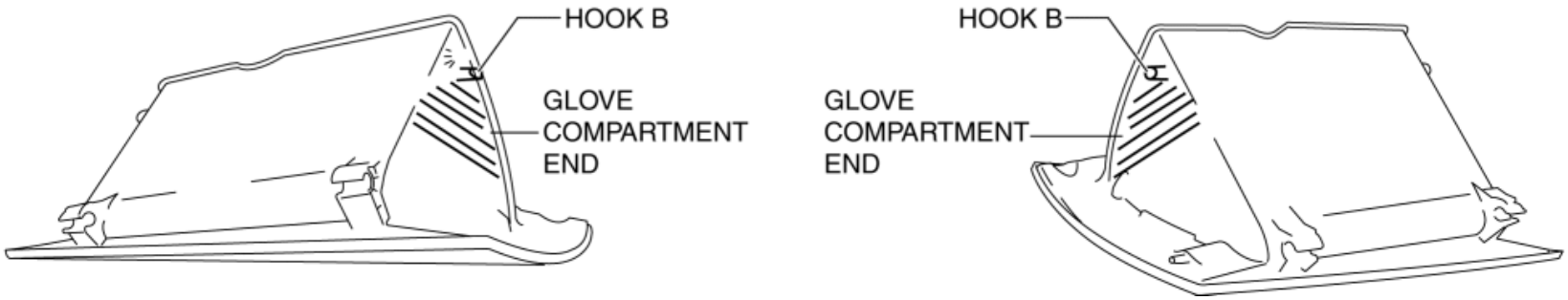

4. Pull down the glove compartment in the direction of the arrow (3).

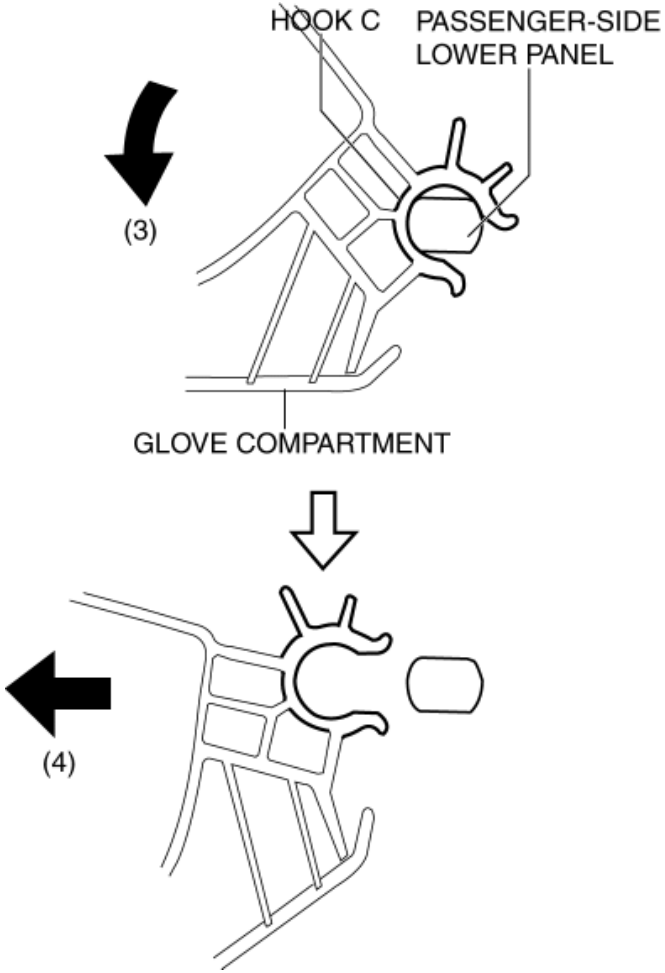

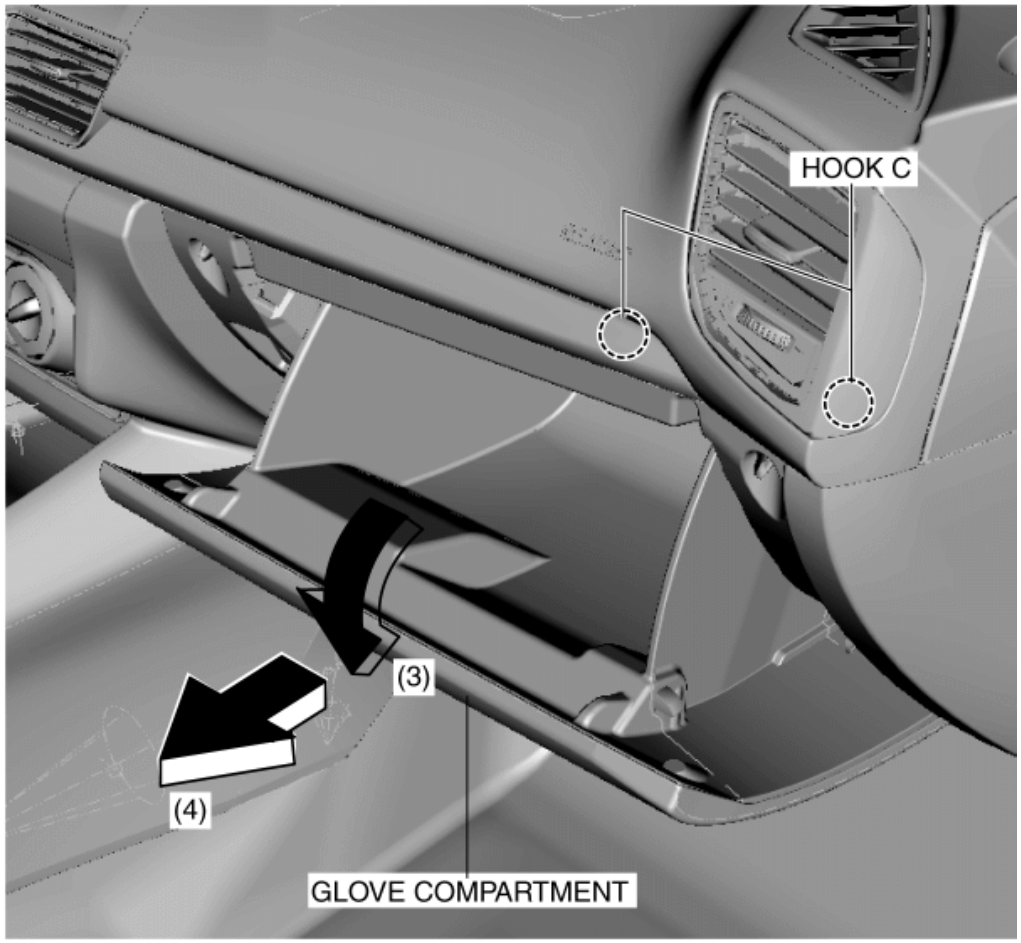

5. Pull the glove compartment in the direction of the arrow (4) and remove it while detaching hooks C.

6. Install in the reverse order of removal.

2014 - Mazda3 - Body and Accessories

VENTILATOR GRILLE REMOVAL/INSTALLATION

Side Ventilator Grille

Removal

1. Using the remover tool, release the ventilator grille tabs A at the positions shown in the figure and remove the bezel.

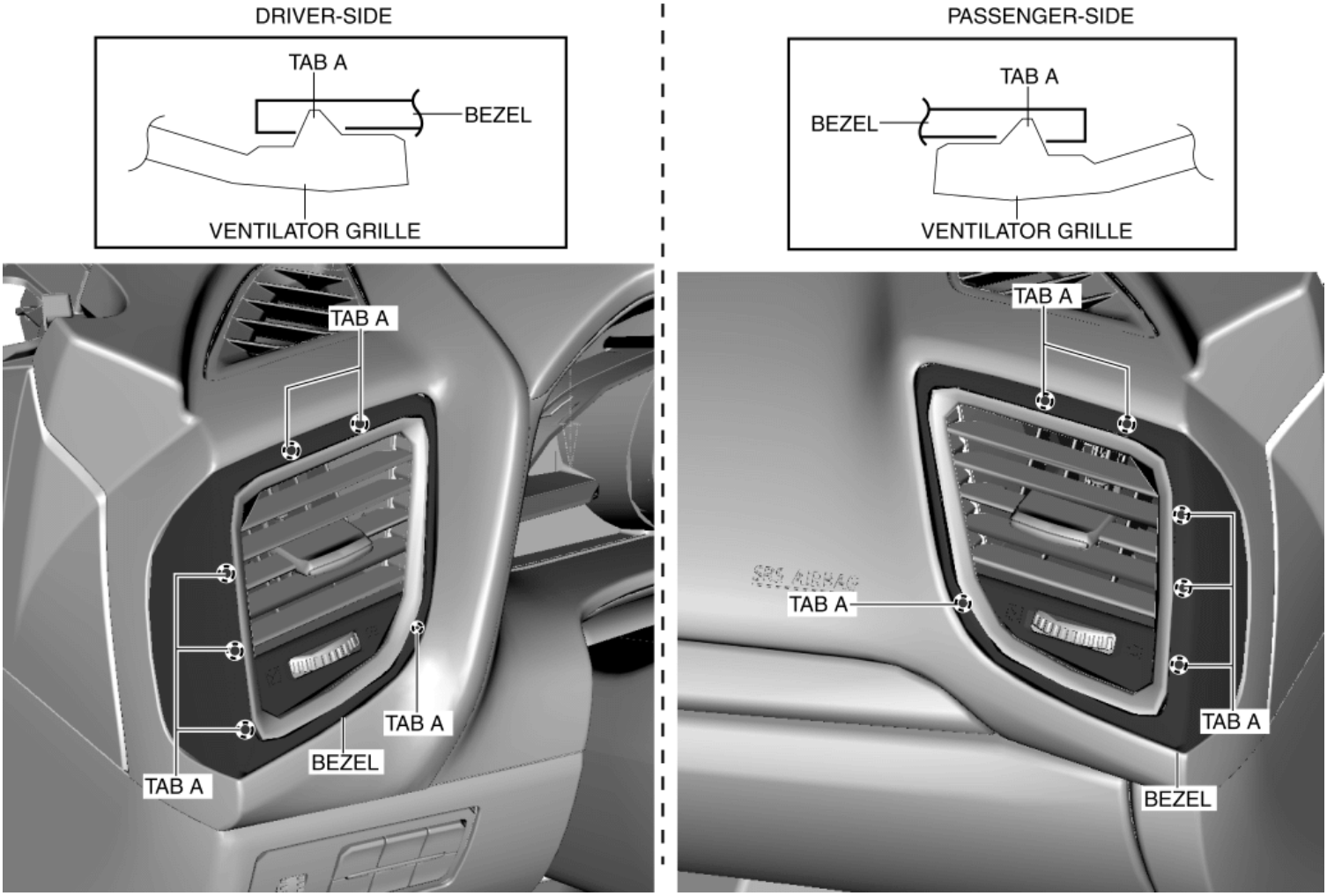

2. Insert the tape-wrapped flathead screwdriver into the position shown in the figure, move the side ventilator grille in the direction of arrow (1) shown in the figure, and remove the tab B from the dashboard.

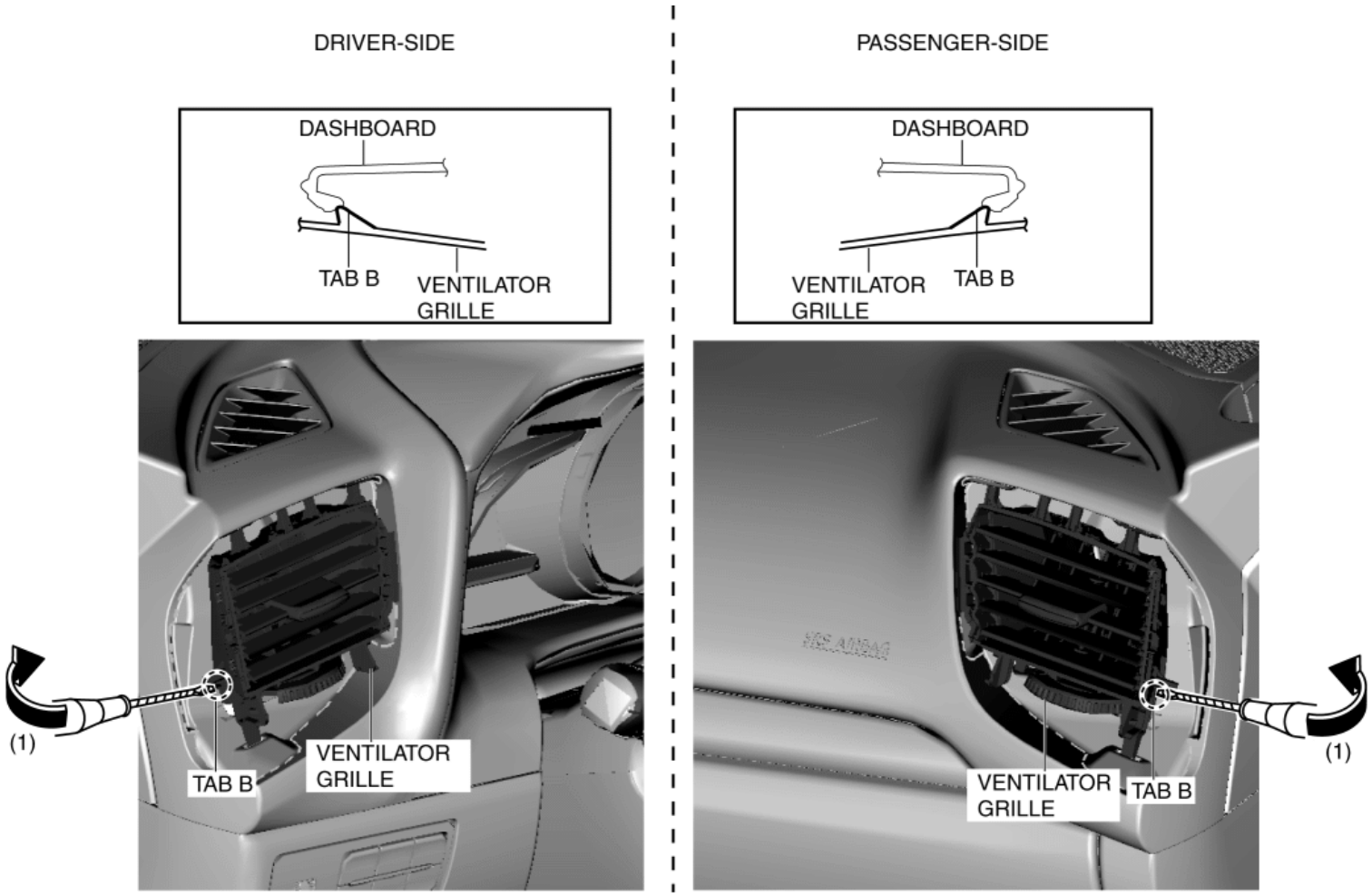

Installation

1. Assemble the ventilator grille and bezel.

2. Move the ventilator grille component in the direction shown by the arrow in the figure and install the ventilator grille component to the dashboard.

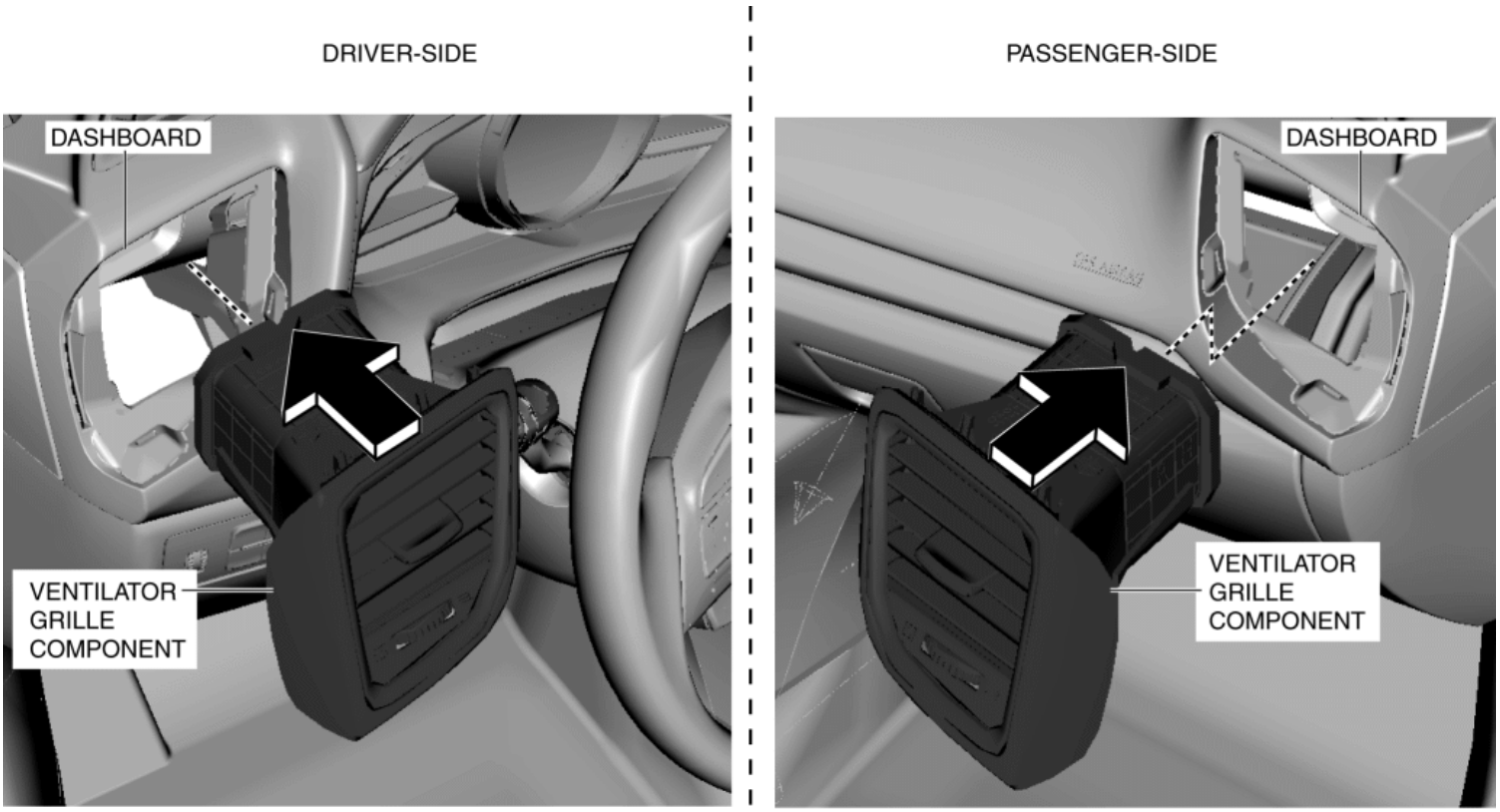

Center Ventilator Grille

1. Disconnect the negative battery cable. (See **NEGATIVE BATTERY CABLE DISCONNECTION/CONNECTION [SKYACTIV-G 2.0, SKYACTIV-G 2.5]**.)
2. Remove the glove compartment. (See **GLOVE COMPARTMENT REMOVAL/INSTALLATION**.)
3. Remove the decoration panel. (See **DECORATION PANEL REMOVAL/INSTALLATION**.)
4. Remove screws.

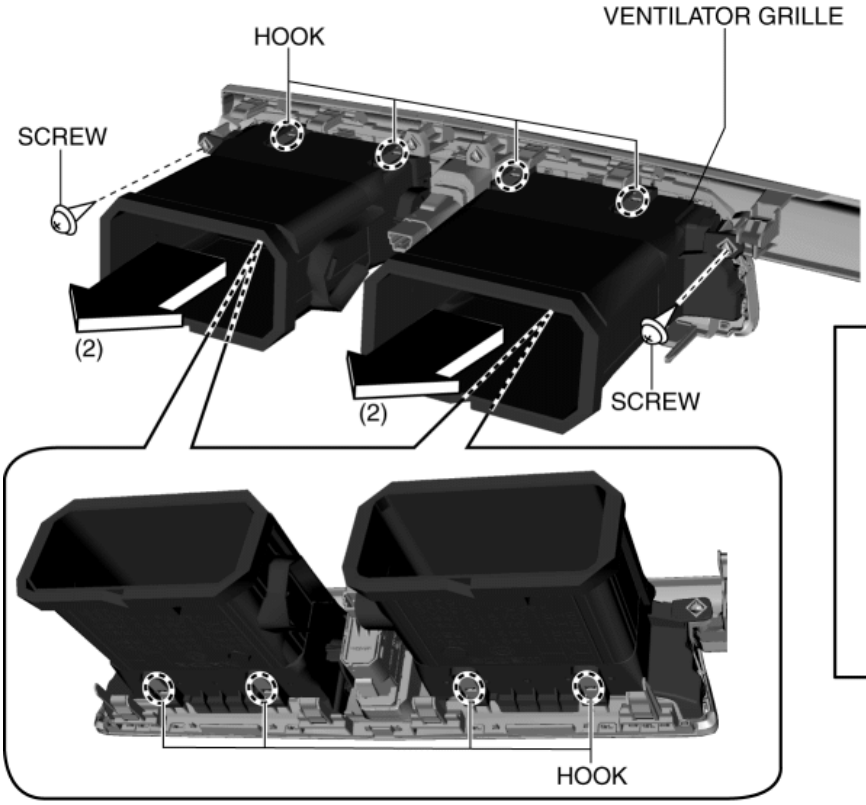

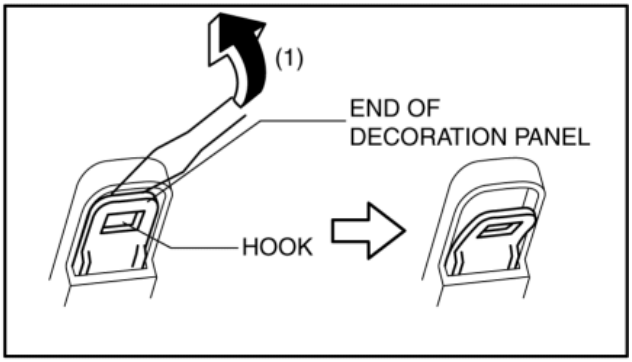

5. Push the end of decoration panel in the direction of arrow (1) and detach hooks.

CAUTION:

- If excessive force is applied to the end of the decoration panel, it could damage the decoration panel. When disengaging the hooks, be careful not to apply excessive force to the hooks.

6. Remove the ventilator grille in the direction of the arrow (2) shown in the figure.

7. Install in the reverse order of removal.

2014 - Mazda3 - Body and Accessories

KNEE BOLSTER REMOVAL/INSTALLATION

1. Set the wheel blocks for both the front and rear wheels.
2. Disconnect the negative battery cable. (See **NEGATIVE BATTERY CABLE DISCONNECTION/CONNECTION [SKYACTIV-G 2.0, SKYACTIV-G 2.5]**.)
3. Shift the selector lever from the P position to the D position (ATX).
4. Remove the following parts:
    a. Upper panel (See **UPPER PANEL REMOVAL**.) (See **UPPER PANEL INSTALLATION**.)
    b. Rear console (See **REAR CONSOLE REMOVAL/INSTALLATION**.)
    c. Shift lever knob (MTX) (See **MANUAL TRANSAXLE SHIFT MECHANISM REMOVAL/INSTALLATION [C66M-R]**.)
    d. Selector lever knob (ATX) (See **AUTOMATIC TRANSAXLE SHIFT MECHANISM REMOVAL/INSTALLATION**.)
    e. Shift panel (See **SHIFT PANEL REMOVAL/INSTALLATION**.)
    f. Front console box (See **FRONT CONSOLE BOX REMOVAL/INSTALLATION**.)
    g. CD player (with CD player) (See **CD PLAYER REMOVAL**.) (See **CD PLAYER INSTALLATION**.)
    h. Glove compartment (See **GLOVE COMPARTMENT REMOVAL/INSTALLATION**.)
    i. Decoration panel (See **DECORATION PANEL REMOVAL/INSTALLATION**.)
    j. Side wall (See **SIDE WALL REMOVAL/INSTALLATION**.)
    k. Front console (See **FRONT CONSOLE REMOVAL/INSTALLATION**.)
    l. Driver-side front scuff plate (See **FRONT SCUFF PLATE REMOVAL/INSTALLATION**.)
    m. Driver-side front side trim (See **FRONT SIDE TRIM REMOVAL/INSTALLATION**.)
    n. Hood release lever (See **HOOD RELEASE LEVER AND RELEASE CABLE REMOVAL/INSTALLATION**.)
    o. Fuel-filler lid opener lever (See **FUEL-FILLER LID OPENER AND LEVER REMOVAL/INSTALLATION**.)
    p. Driver-side lower panel (See **LOWER PANEL REMOVAL/INSTALLATION**.)
5. Remove the bolts.

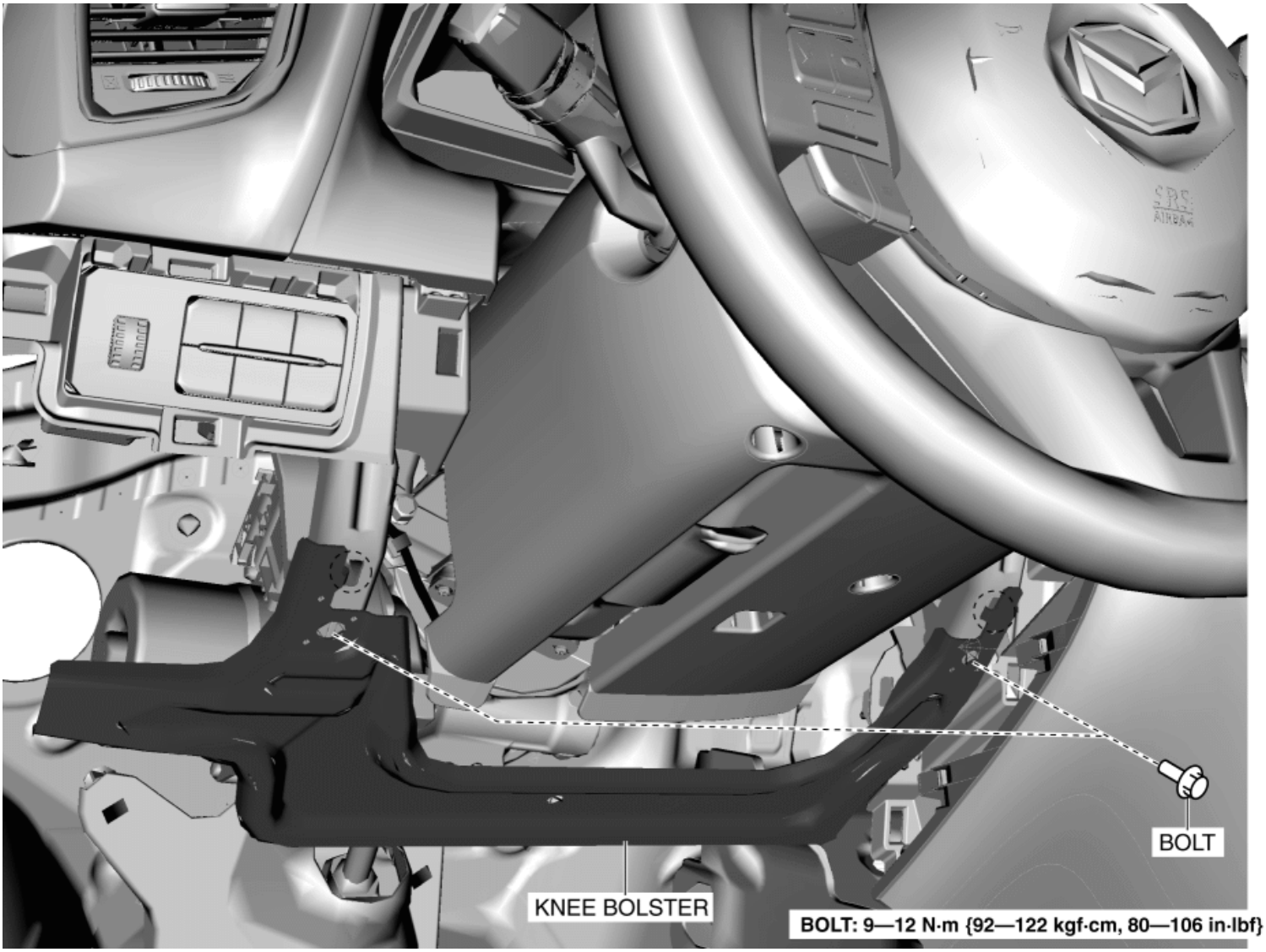

6. Pull the knee bolster in the direction of the arrow in the order of (1), (2) while detaching hooks.

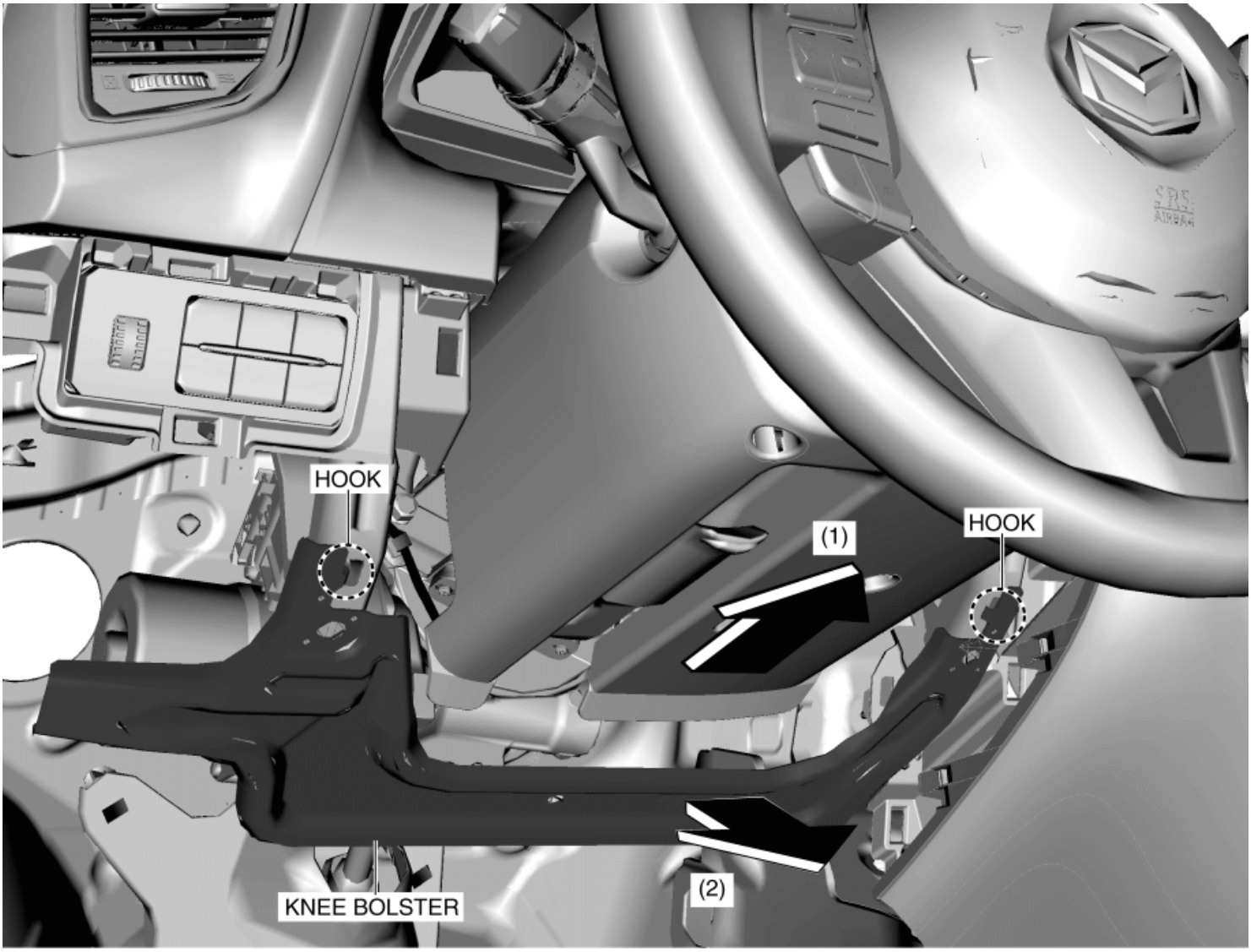

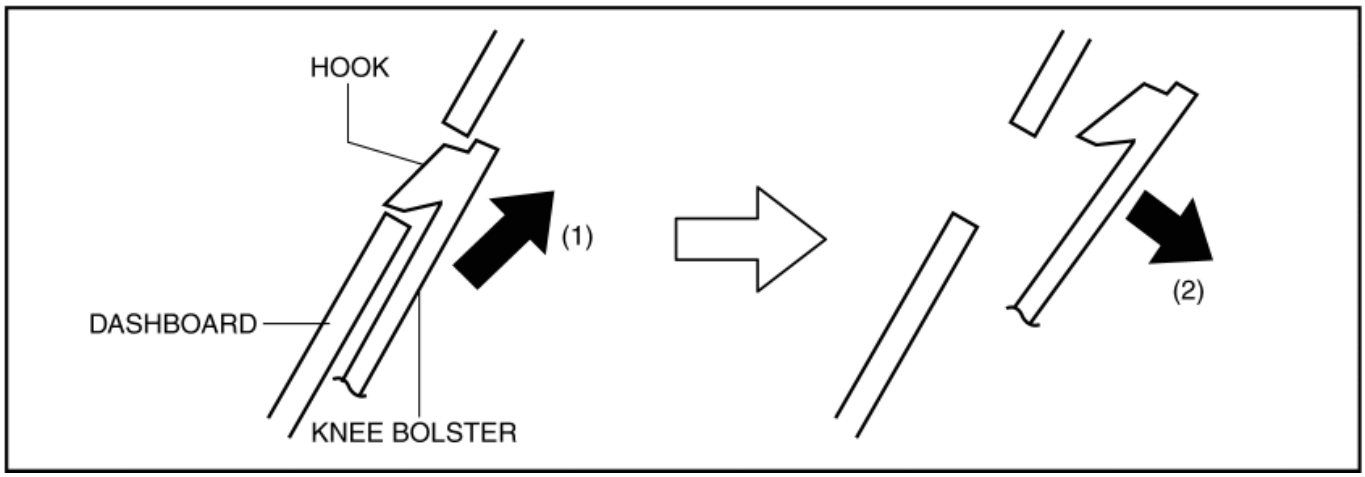

7. Install in the reverse order of removal.

2014 - Mazda3 - Body and Accessories

SIDE WALL REMOVAL/INSTALLATION

LH

1. Pull the side wall in the direction of the arrow in the order of (1), (2) and remove it while detaching hooks and clip.

CAUTION:

- If hooks and clip are removed forcefully, guide may be damaged. Carefully remove hooks and clip so as not to damage guide.

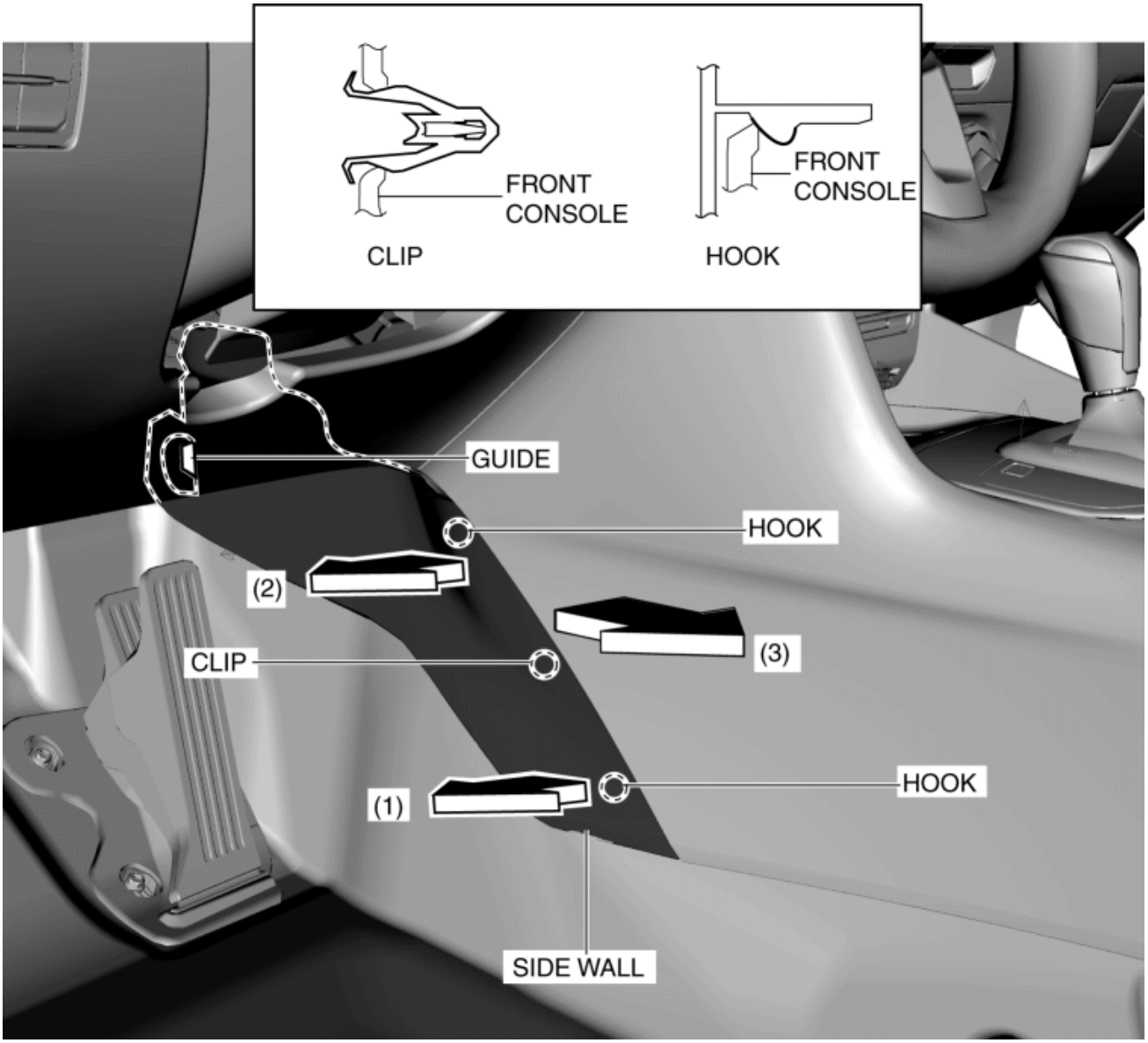

2. Pull the side wall in the direction of the arrow (3) and remove it while detaching guide.

3. Install in the reverse order of removal.

RH

1. Pull the side wall in the direction of the arrow in the order of (1), (2) and remove it while detaching hooks.

CAUTION:

- If hooks are removed forcefully, guide may be damaged. Carefully remove hooks so as not to damage guide.

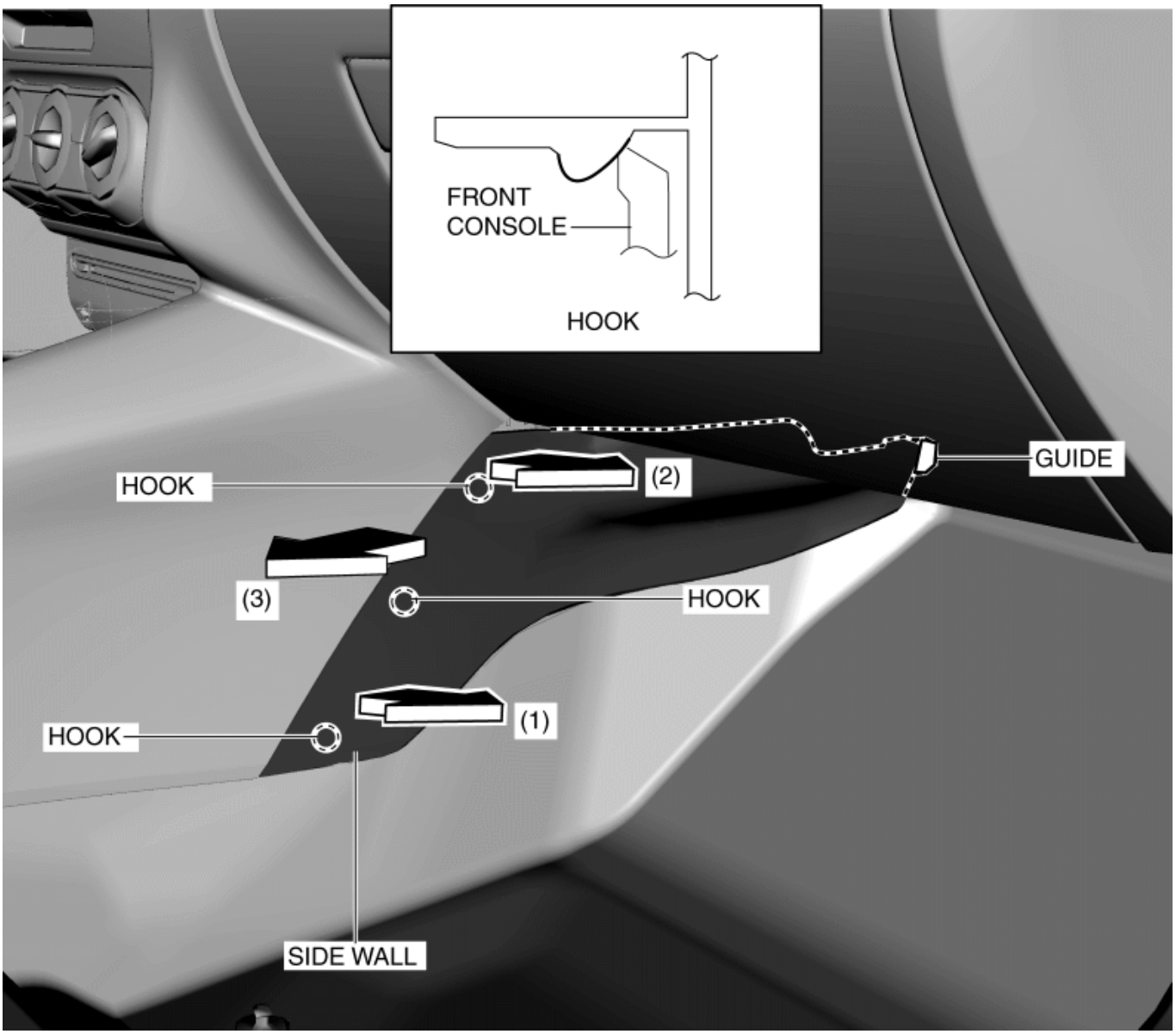

2. Pull the side wall in the direction of the arrow (3) and remove it while detaching guide.

3. Install in the reverse order of removal.

2014 - Mazda3 - Body and Accessories

DASHBOARD UNDER COVER REMOVAL/INSTALLATION

1. Detach hooks in the direction of the arrows in the order of (1), (2) shown in the figure.

CAUTION:

- If hooks and pins are removed forcefully, guide may be damaged. Carefully remove hooks and pins so as not to damage guide.

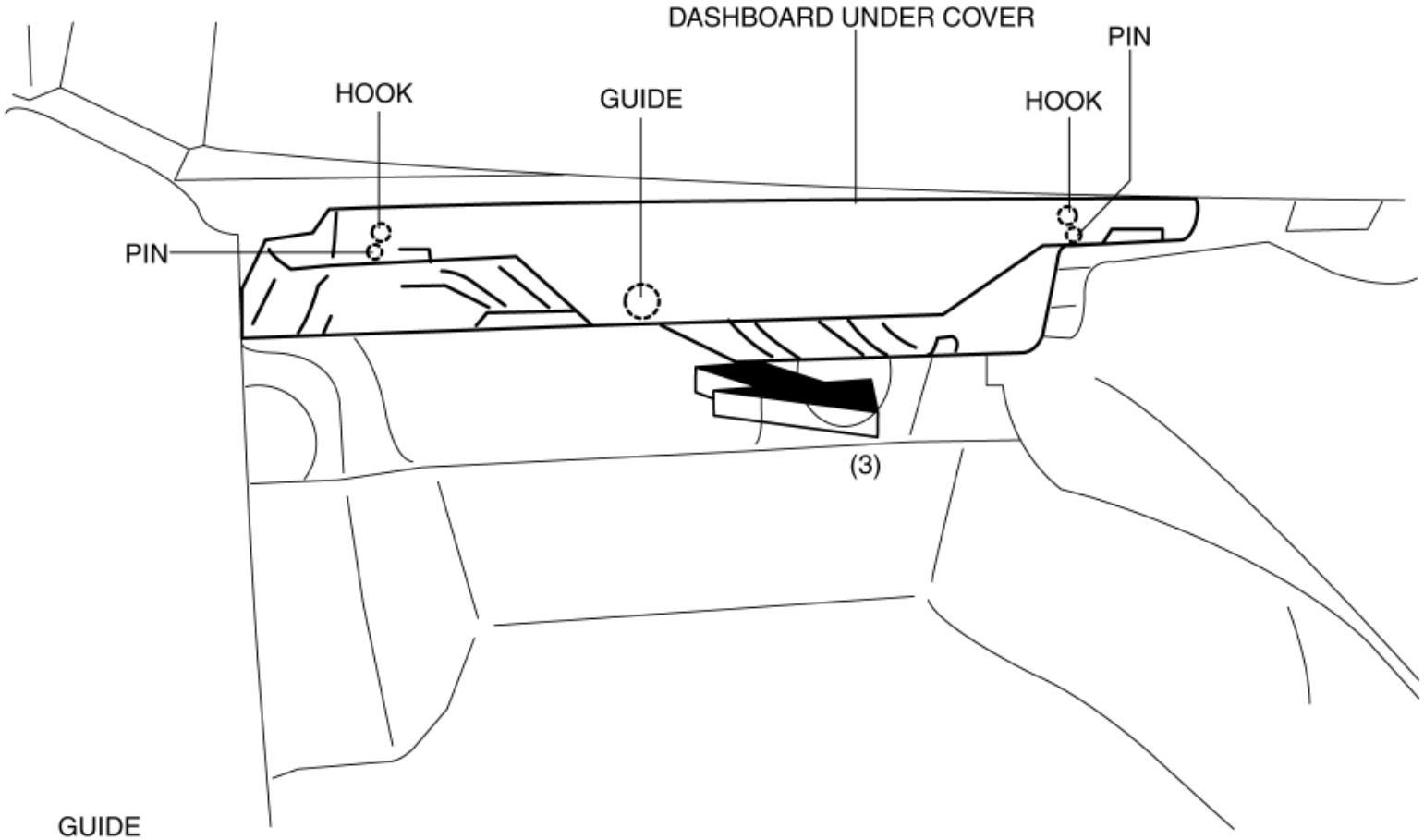

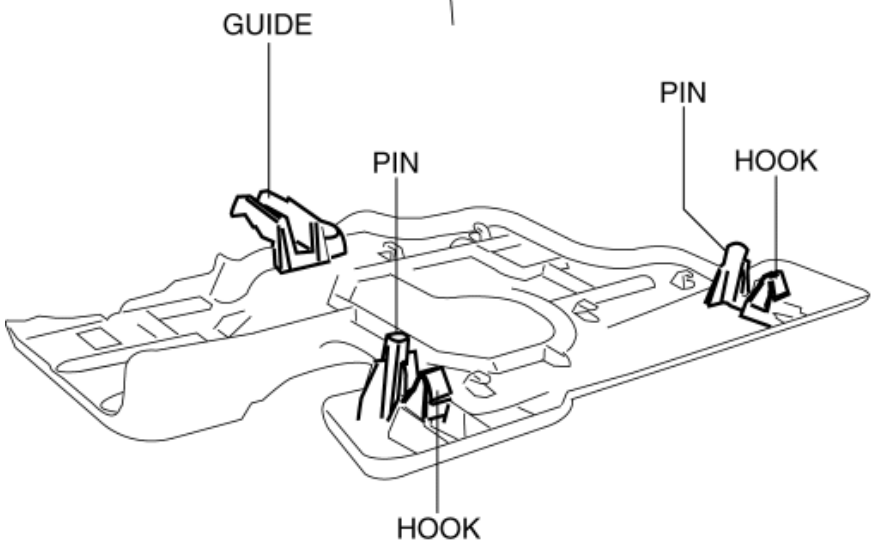

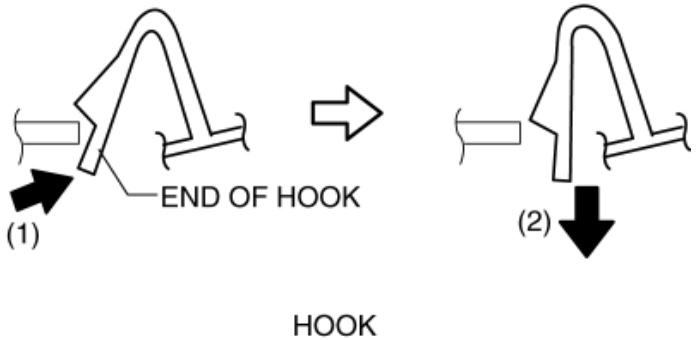

2. Remove the dashboard under cover in the direction of the arrow (3) shown in the figure while detaching the guide.

3. Install in the reverse order of removal.

DASHBOARD UNDER COVER REMOVAL/INSTALLATION

2014 - Mazda3 - Body and Accessories

UPPER PANEL REMOVAL

1. Disconnect the negative battery cable. (with commander switch) (See **NEGATIVE BATTERY CABLE DISCONNECTION/CONNECTION [SKYACTIV-G 2.0, SKYACTIV-G 2.5]**.)

2. Open the console lid.

3. Remove the button, then open the fastener.

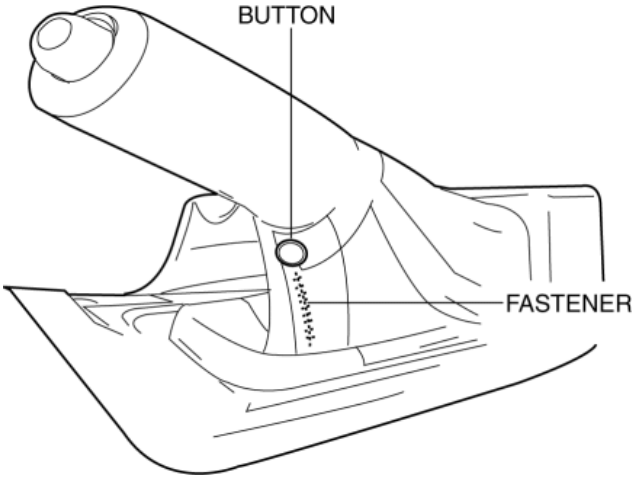

4. Pull the upper panel in the order of arrows (1), (2), and (3) as shown in the figure and remove it while detaching clips A, hooks, and clips B.

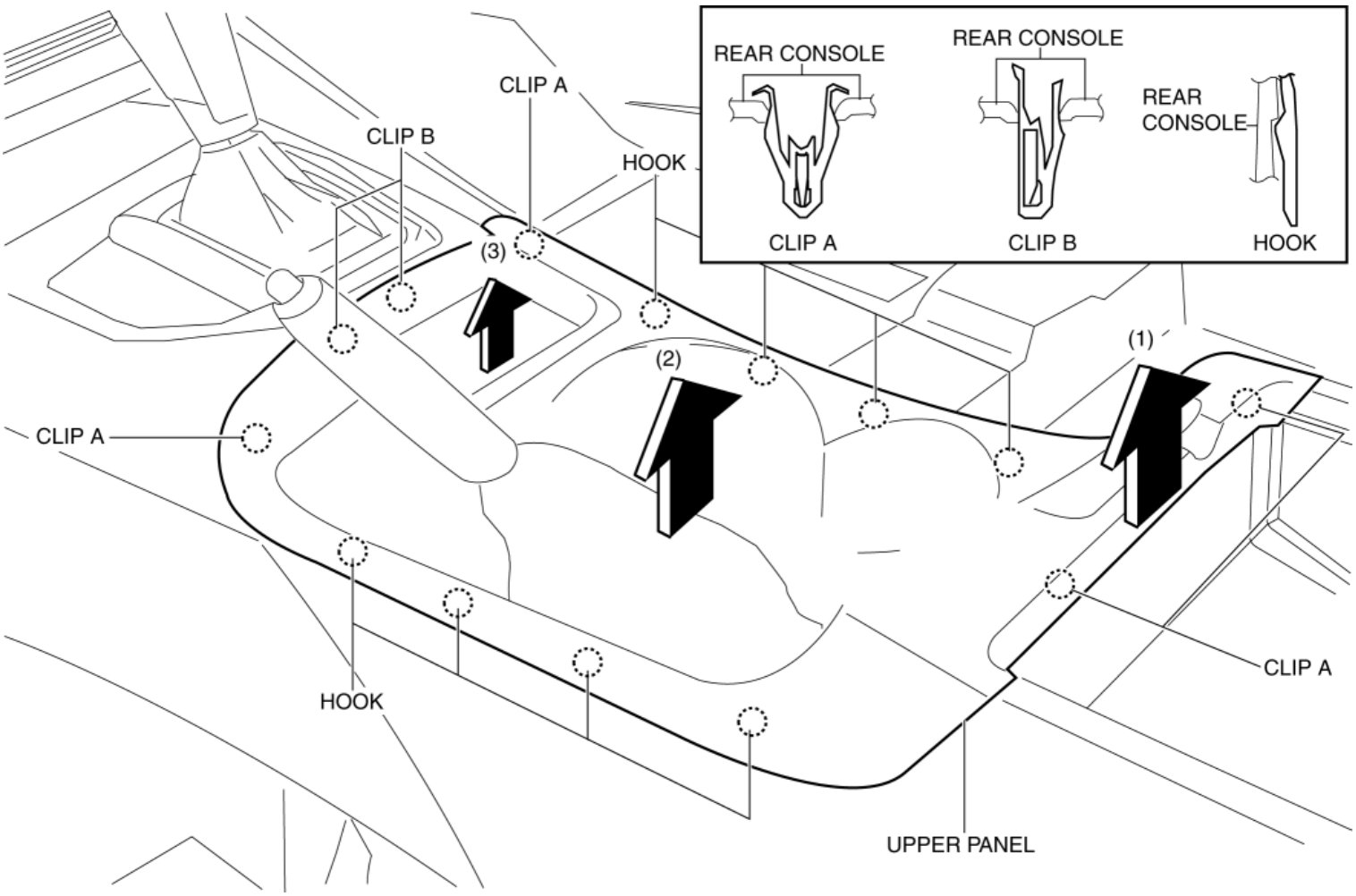

5. Disconnect the commander switch connector (with commander switch).

2014 - Mazda3 - Body and Accessories

UPPER PANEL INSTALLATION

NOTE:

- When clips B are removed at the front of the upper panel, clips for the rear of the shift panel may be disengaged.

1. Connect the commander switch connector (with commander switch).
2. Verify that the clips on the end of the shift panel are disengaged from the front console.

CAUTION:

- If the upper panel is installed with the upper panel hooks not inserted into the grooves of the console, the hooks could come out or be bent inward and damaged. Verify that the hooks are inserted into the grooves and then install.

3. Press the upper panel in the order of arrows (1), (2), and (3) as shown in the figure, and install hooks, clips A, clips B and clips C.

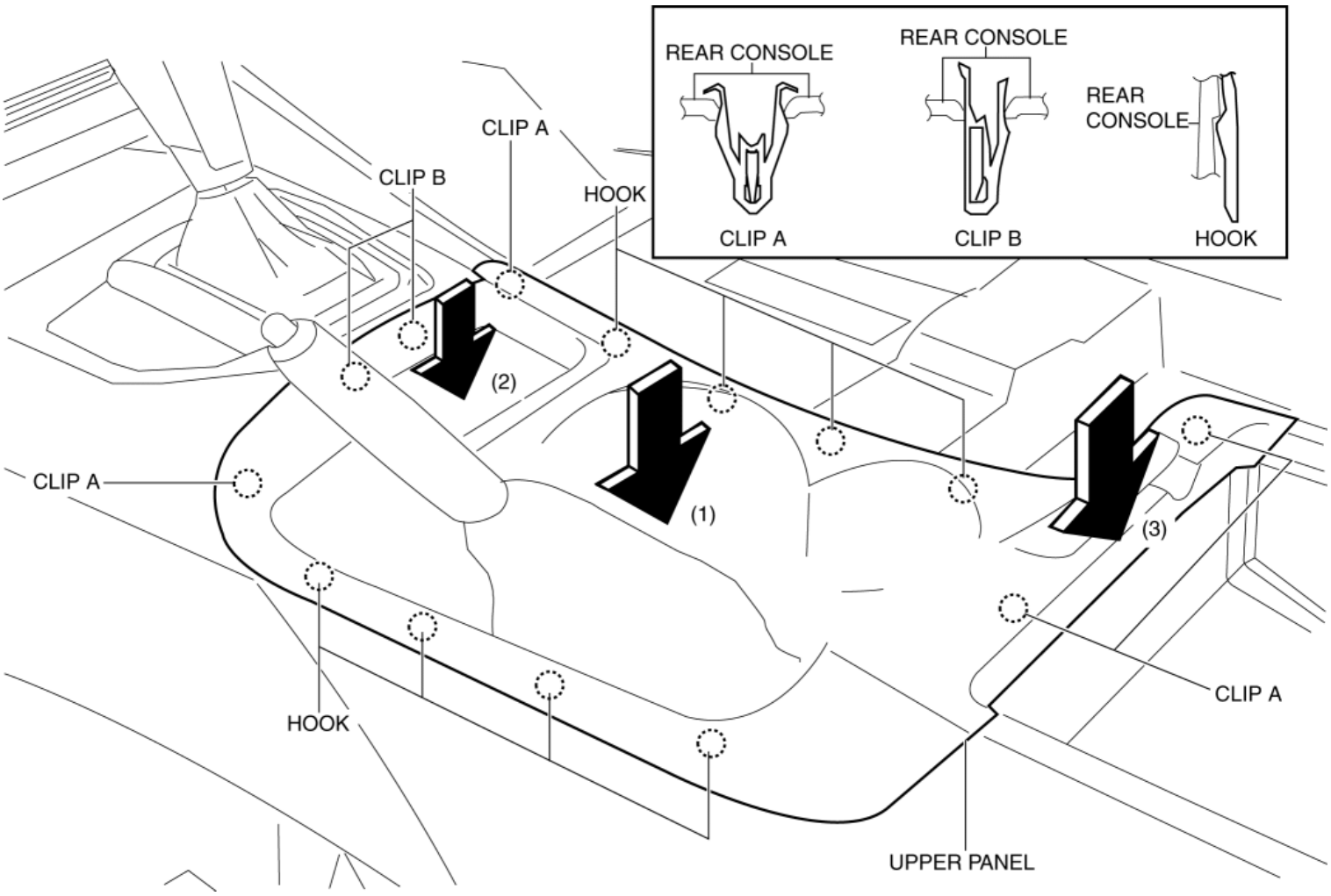

4. Fasten the fastener and button.

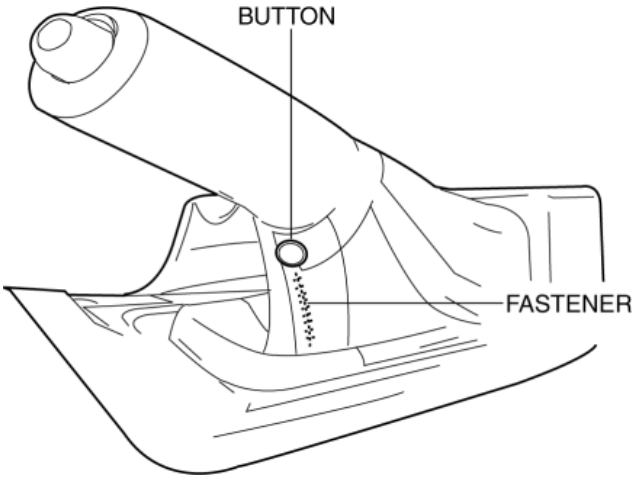

5. Close the console lid.

6. Connect the negative battery cable. (with commander switch) (See **NEGATIVE BATTERY CABLE DISCONNECTION/CONNECTION [SKYACTIV-G 2.0, SKYACTIV-G 2.5]**.)

2014 - Mazda3 - Body and Accessories

SHIFT PANEL REMOVAL/INSTALLATION

ATX

1. Disconnect the negative battery cable. (See **NEGATIVE BATTERY CABLE DISCONNECTION/CONNECTION [SKYACTIV-G 2.0, SKYACTIV-G 2.5]**.)

2. Remove the following parts:

   a. Upper panel (See **UPPER PANEL REMOVAL**.) (See **UPPER PANEL INSTALLATION**.)

   b. Selector lever knob (See **AUTOMATIC TRANSAXLE SHIFT MECHANISM REMOVAL/INSTALLATION**.)

3. Remove clip A.

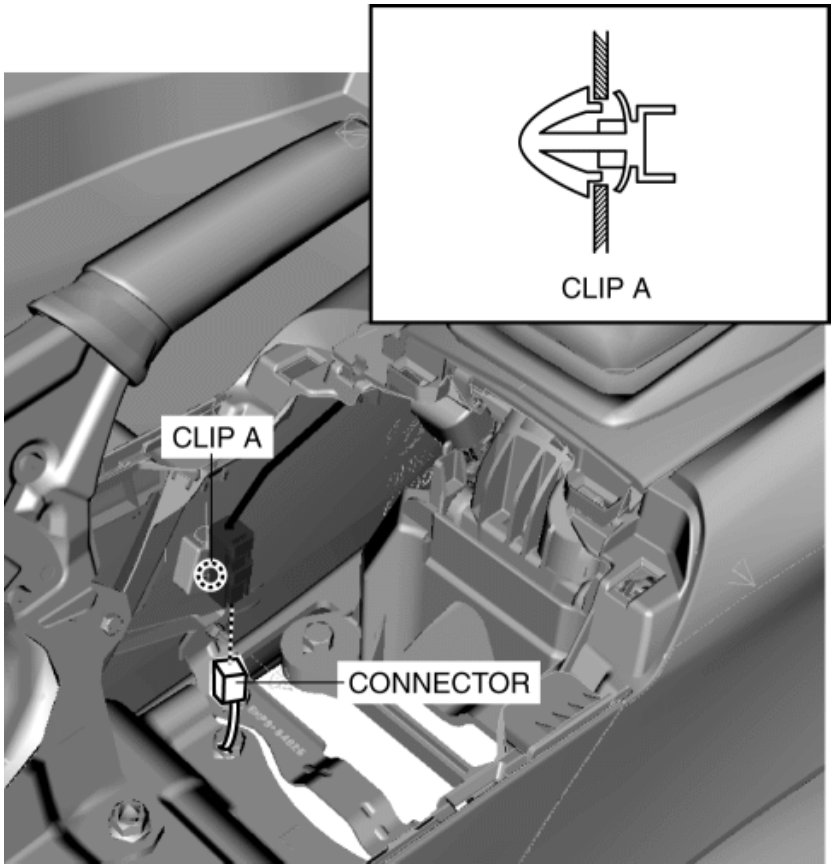

4. Disconnect the connector.

5. Remove the shift panel in the direction of the arrows in the order of (1), (2), (3), (4) while detaching hooks, clips B and clip C.

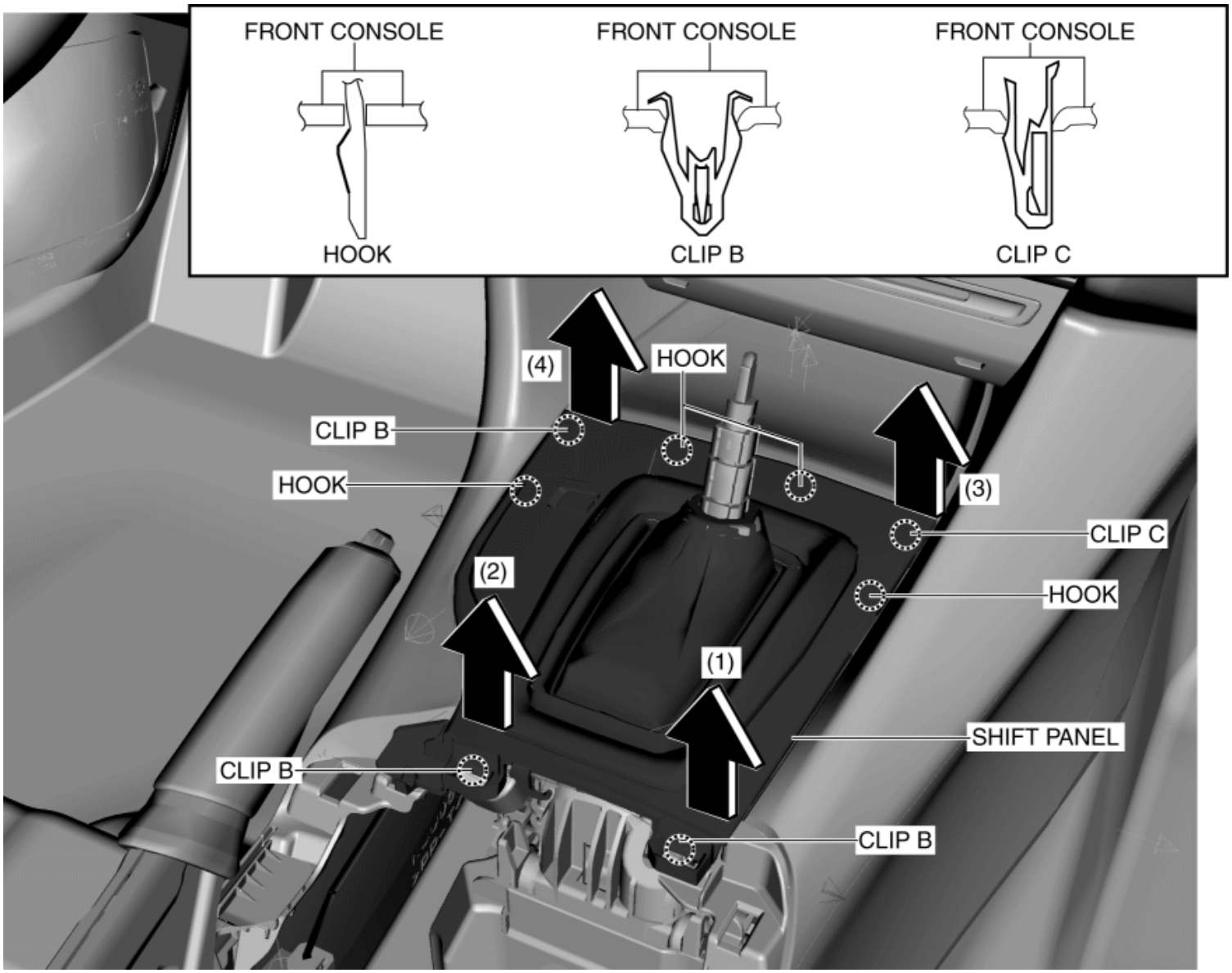

6. Install in the reverse order of removal.

MTX

1. Disconnect the negative battery cable. (with commander switch) (See **NEGATIVE BATTERY CABLE DISCONNECTION/CONNECTION [SKYACTIV-G 2.0, SKYACTIV-G 2.5]**.)

2. Remove the following parts:

   a. Upper panel (See **UPPER PANEL REMOVAL**.) (See **UPPER PANEL INSTALLATION**.)

   b. Shift lever knob (See **MANUAL TRANSAXLE SHIFT MECHANISM REMOVAL/INSTALLATION [C66M-R]**.)

3. Remove the shift panel in the direction of the arrows in the order of (1), (2), (3), (4) while detaching hooks, clips A and clip B.

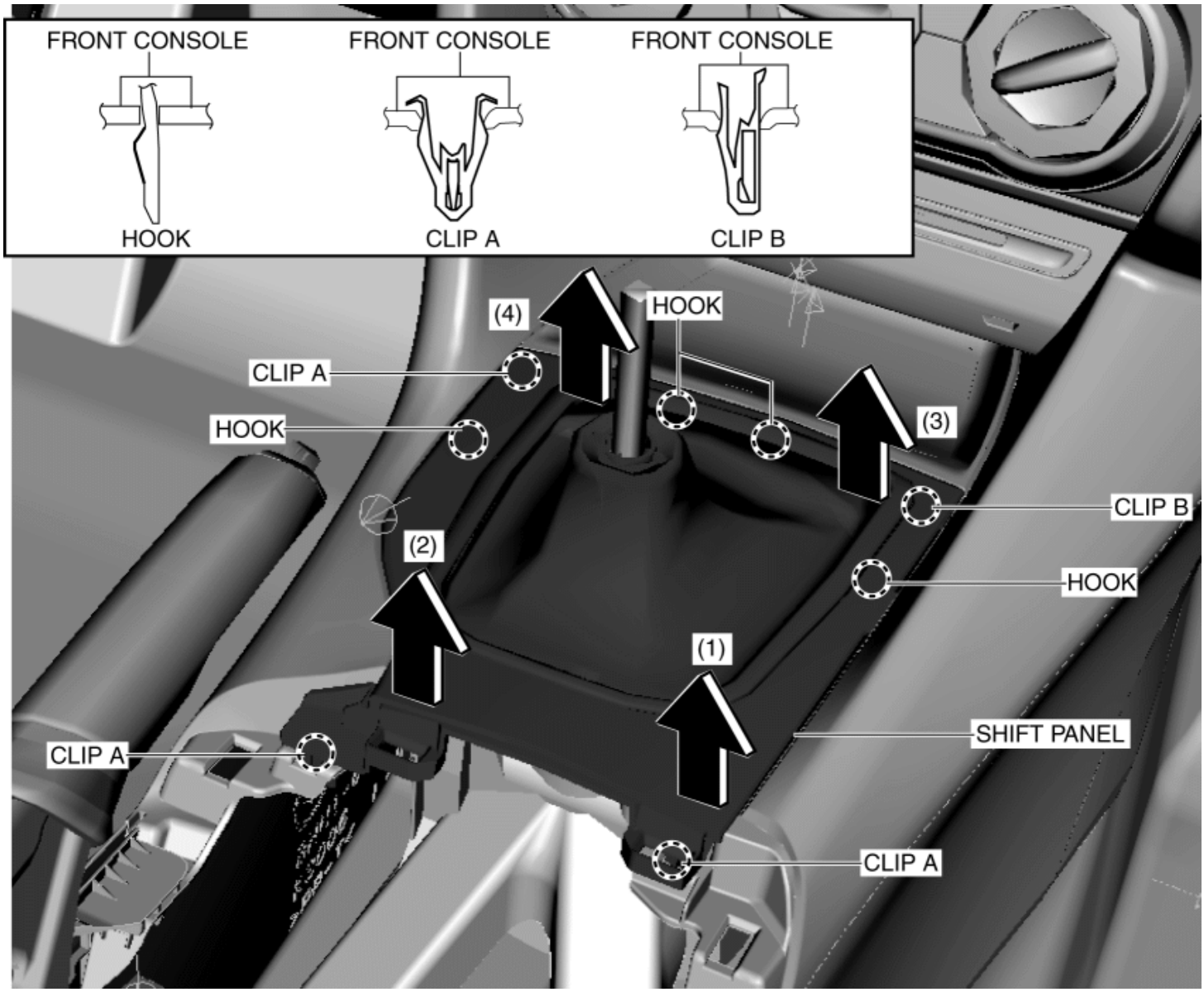

4. Install in the reverse order of removal.

2014 - Mazda3 - Body and Accessories

FRONT CONSOLE BOX REMOVAL/INSTALLATION

ATX

1. Disconnect the negative battery cable. (See **NEGATIVE BATTERY CABLE DISCONNECTION/CONNECTION [SKYACTIV-G 2.0, SKYACTIV-G 2.5]**.)
2. Remove the following parts:
   a. Upper panel (See **UPPER PANEL REMOVAL**.) (See **UPPER PANEL INSTALLATION**.)
   b. Selector lever knob (See **AUTOMATIC TRANSAXLE SHIFT MECHANISM REMOVAL/INSTALLATION**.)
   c. Shift panel (See **SHIFT PANEL REMOVAL/INSTALLATION**.)
3. Insert a remover tool in the position indicated by the arrow (1) in the figure and detach clip (1).

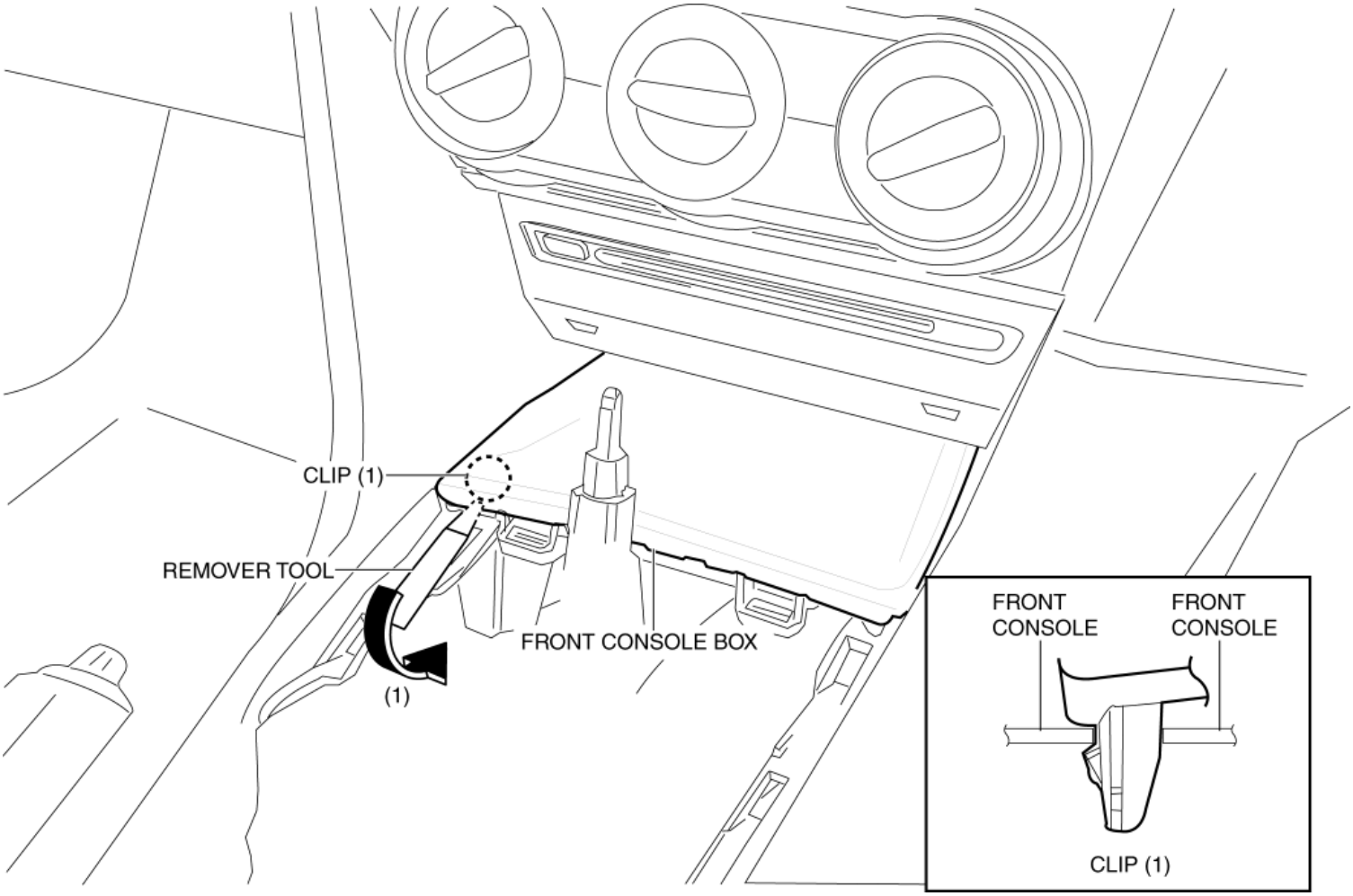

4. Insert a remover tool in the position indicated by the arrow (2) in the figure and detach clip (2).

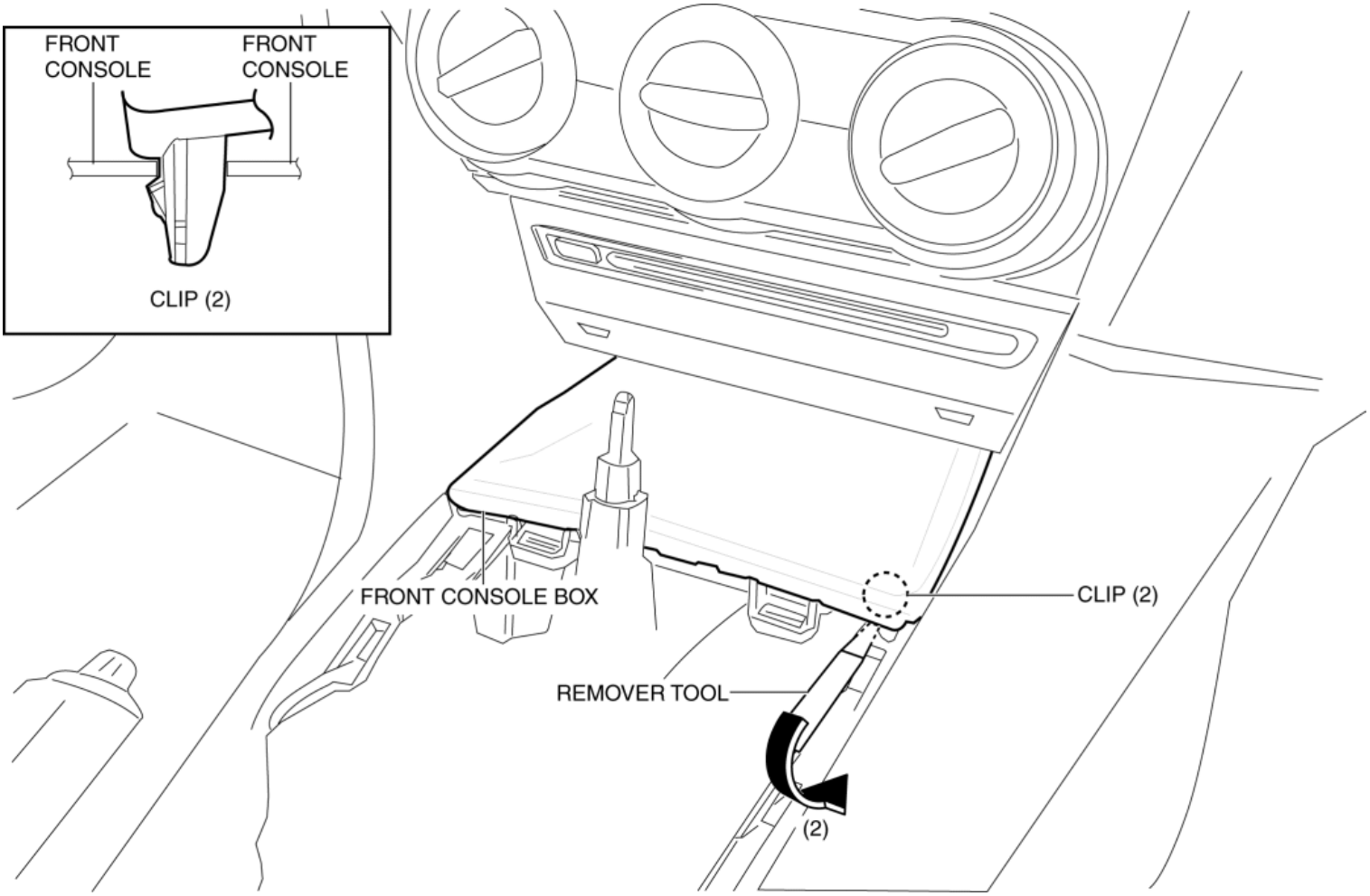

5. Remove the front console box in the direction of the arrow (3) shown in the figure while detaching guide.

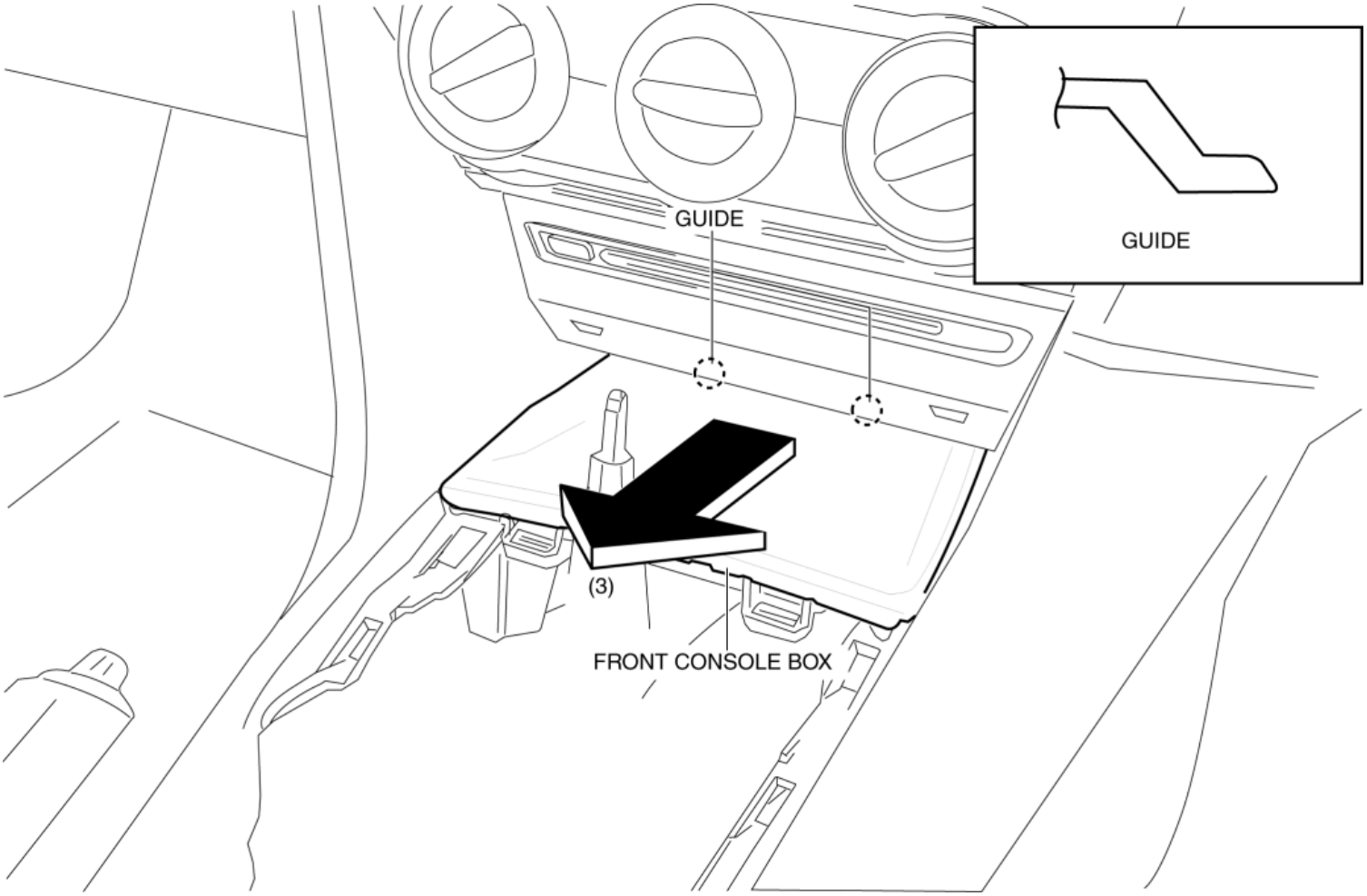

6. Install in the reverse order of removal.

MTX

1. Disconnect the negative battery cable. (with commander switch) (See **NEGATIVE BATTERY CABLE DISCONNECTION/CONNECTION [SKYACTIV-G 2.0, SKYACTIV-G 2.5]**.)

2. Remove the following parts:

   a. Upper panel (See **UPPER PANEL REMOVAL**.) (See **UPPER PANEL INSTALLATION**.)

   b. Shift lever knob (See **MANUAL TRANSAXLE SHIFT MECHANISM REMOVAL/INSTALLATION [C66M-R]**.)

   c. Shift panel (See **SHIFT PANEL REMOVAL/INSTALLATION**.)

3. Insert a remover tool in the position indicated by the arrow (1) in the figure and detach clip (1).

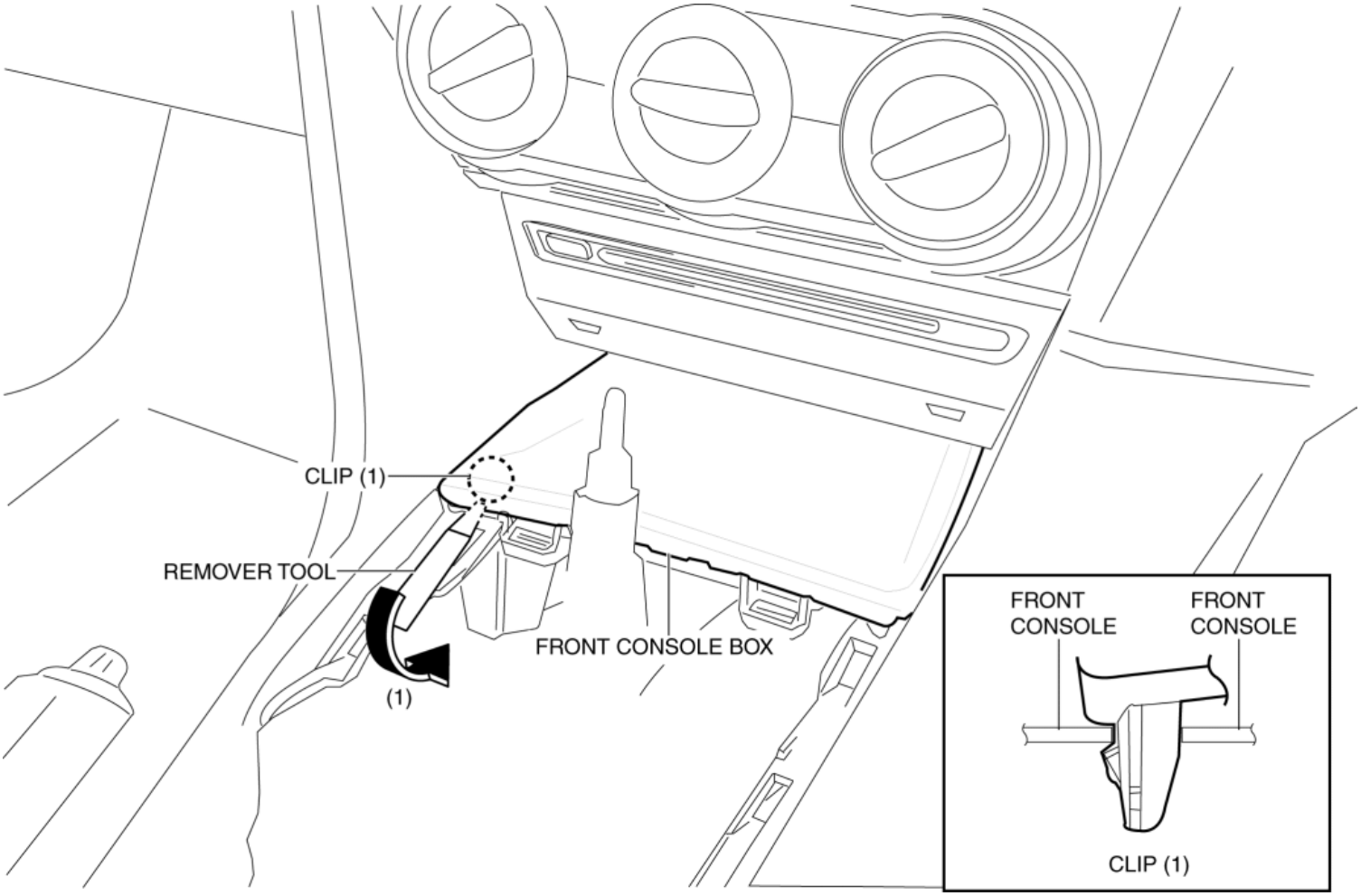

4. Insert a remover tool in the position indicated by the arrow (2) in the figure and detach clip (2).

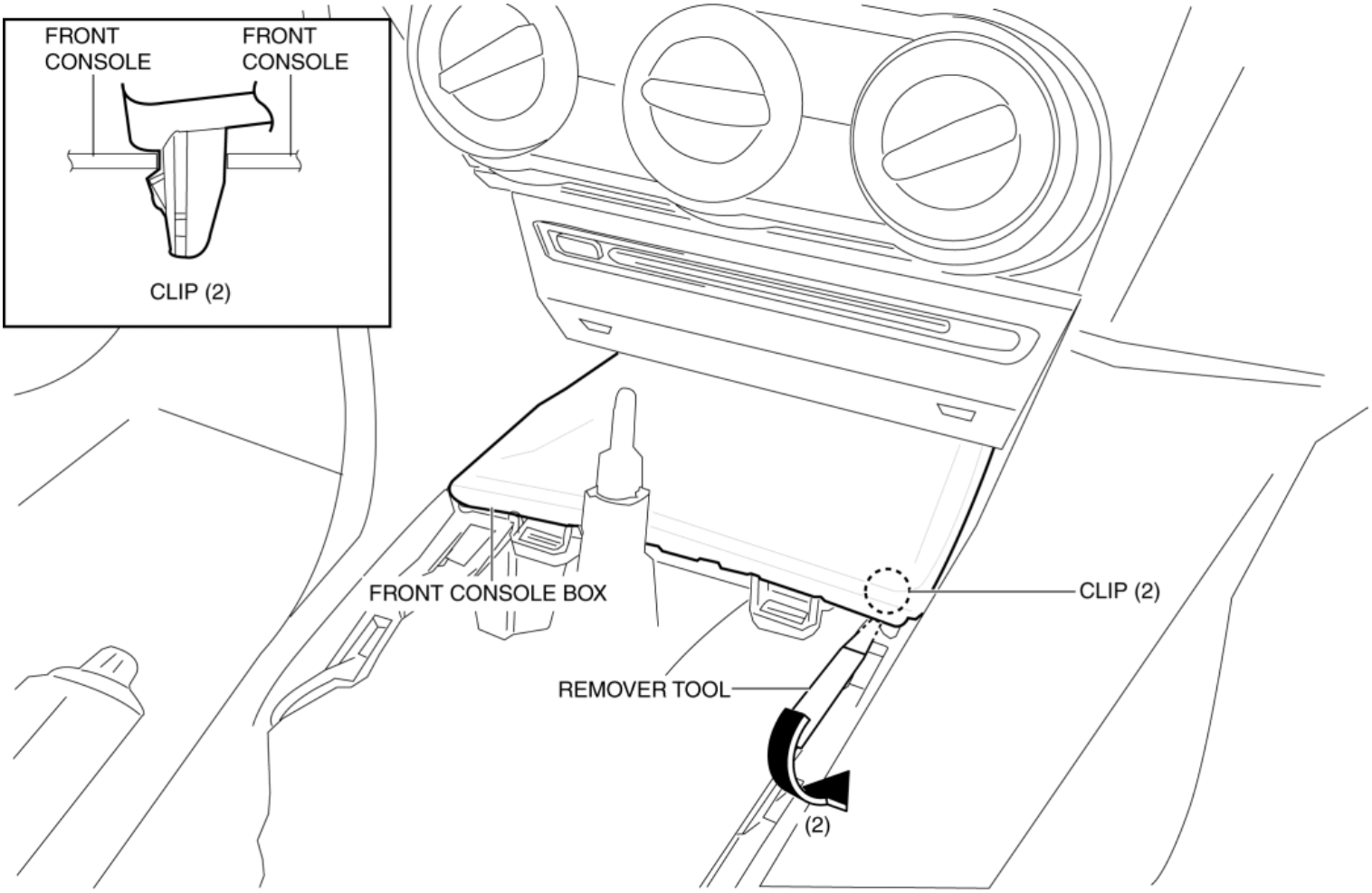

5. Remove the front console box in the direction of the arrow (3) shown in the figure while detaching guide.

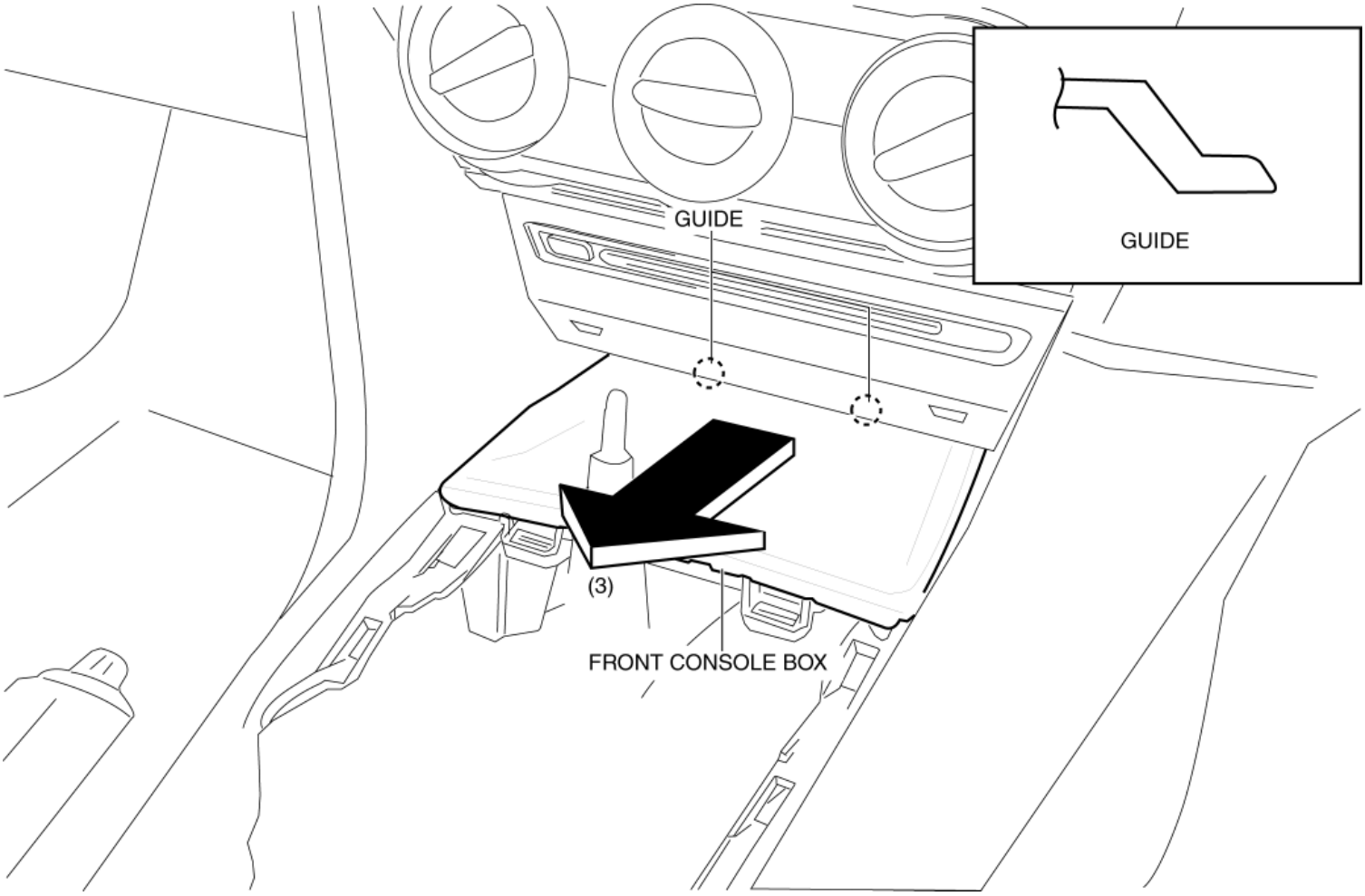

6. Install in the reverse order of removal.

2014 - Mazda3 - Body and Accessories

REAR CONSOLE REMOVAL/INSTALLATION

1. Disconnect the negative battery cable. (See **NEGATIVE BATTERY CABLE DISCONNECTION/CONNECTION [SKYACTIV-G 2.0, SKYACTIV-G 2.5]**.)

2. Open the rear console lid.

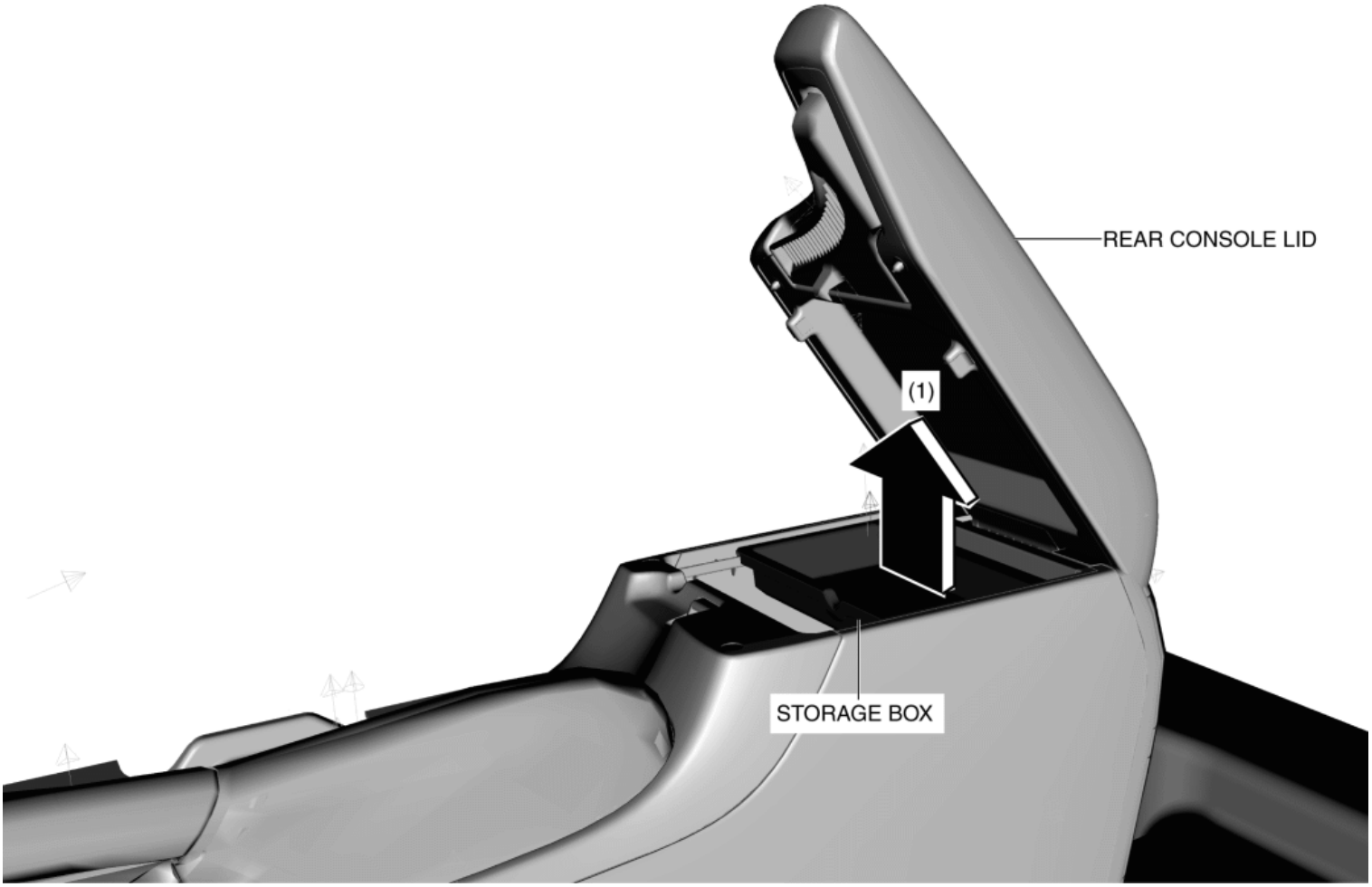

3. Remove the storage box in the direction of the arrow (1) shown in the figure.

4. Remove the console mat.

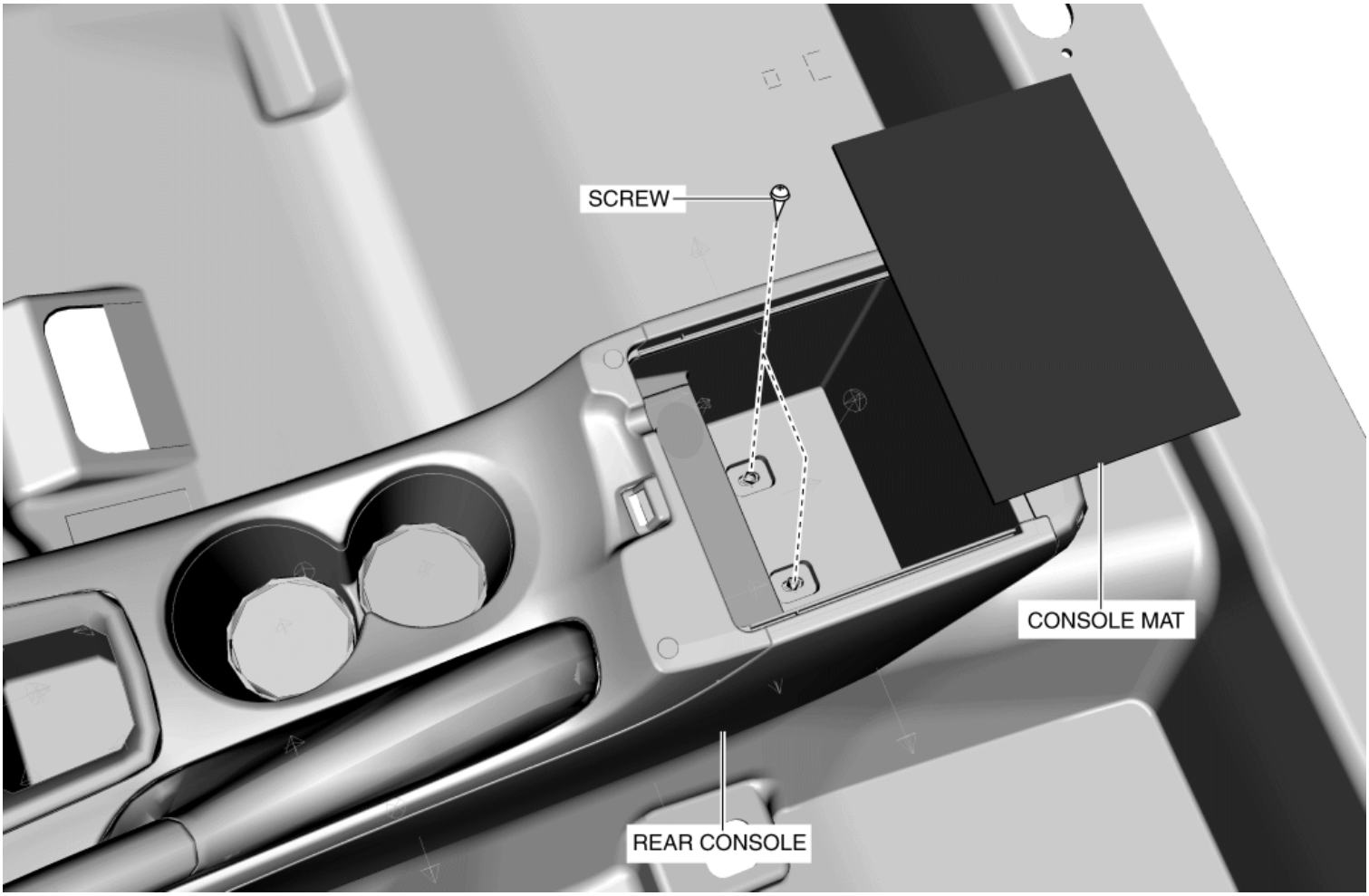

5. Remove screws.

6. Remove the upper panel. (See **UPPER PANEL REMOVAL**.) (See **UPPER PANEL INSTALLATION**.)

7. Pull the console-up in the direction of the arrow (2) and remove it while detaching clips A, guides A.

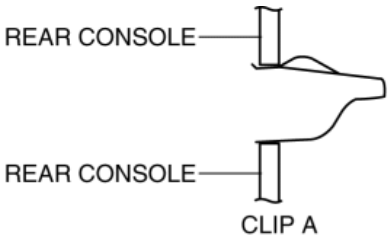

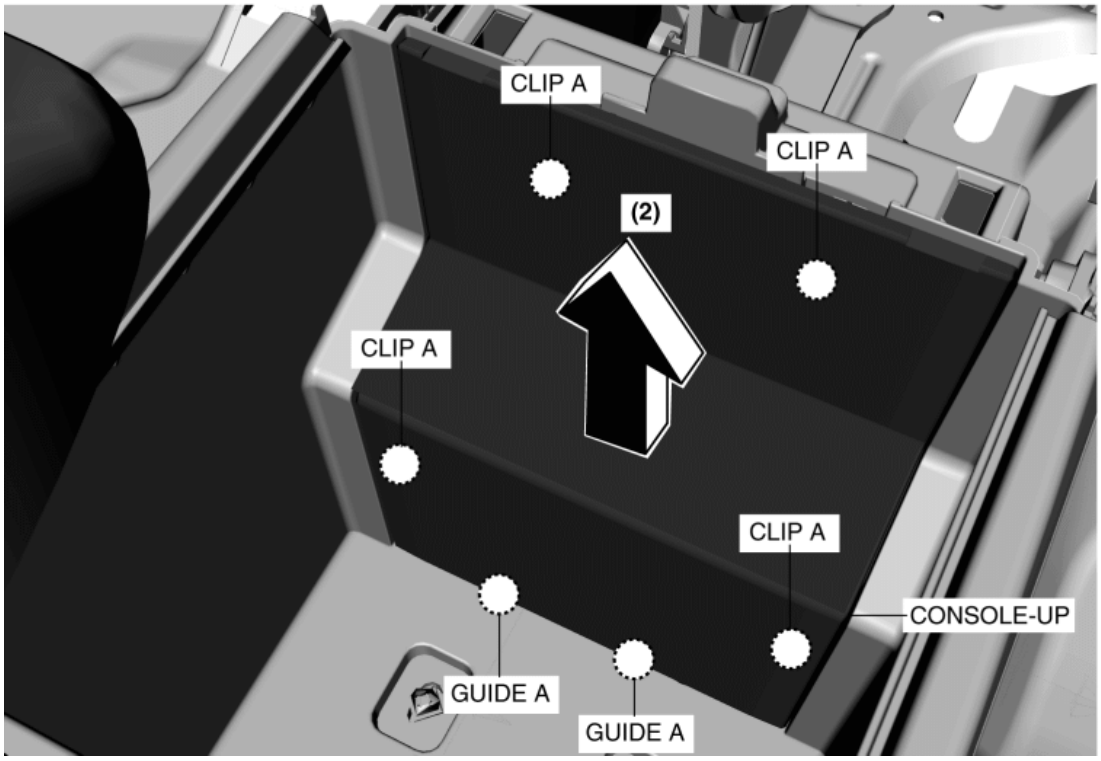

8. Disconnect the auxiliary jack/USB port/SD card slot hub connector. (with center display and with CD player)

9. Disconnect the auxiliary jack/USB port connector. (without center display and with CD player)

10. Disconnect the center accessory socket connector.

11. Pull the rear console in the direction of the arrow (3) and remove it from the front console while detaching clips B, guides B.

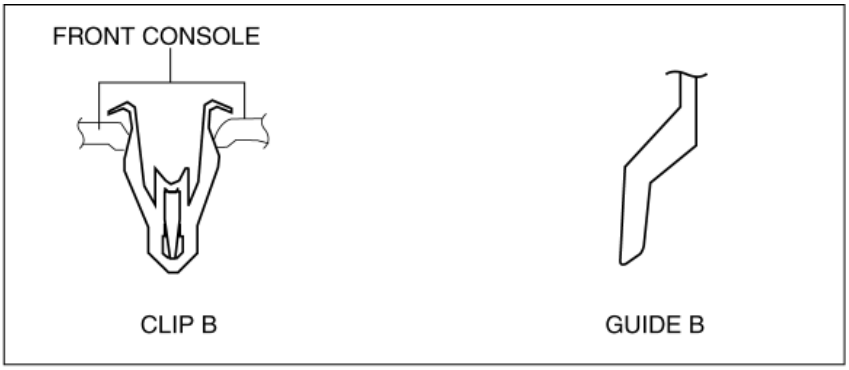

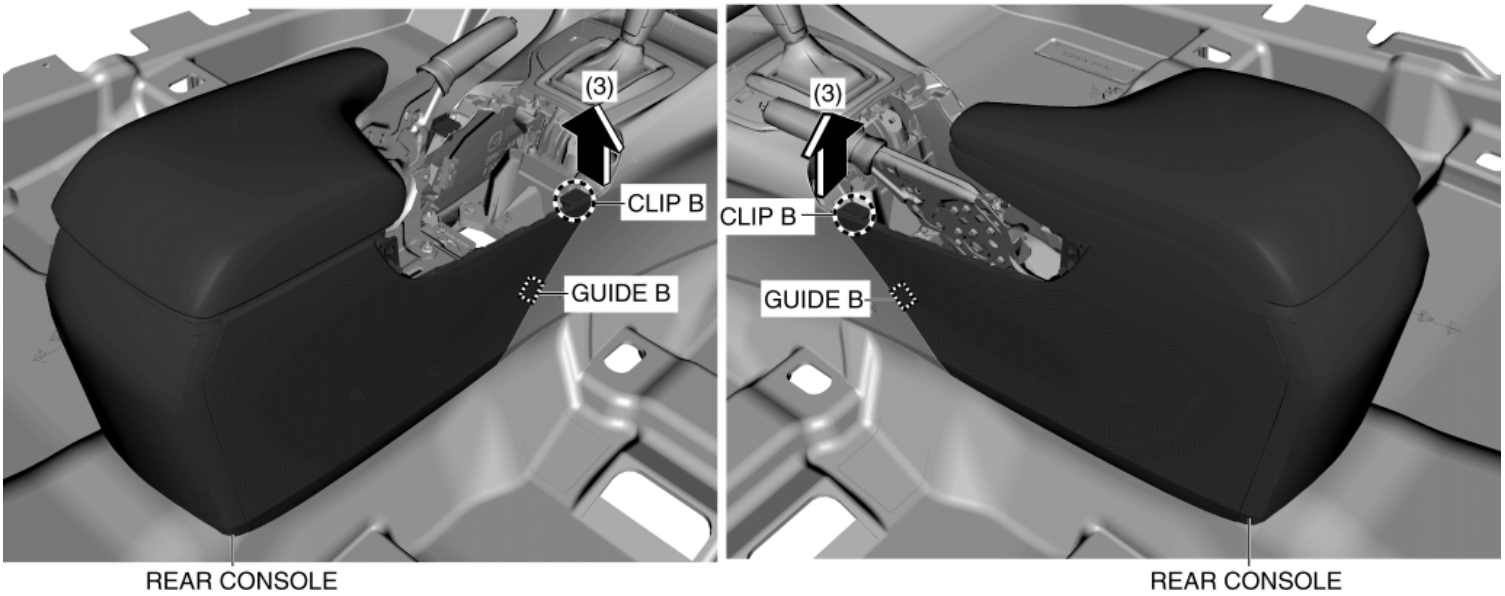

12. Remove the rear console in the direction of the arrow (4) shown in the figure.

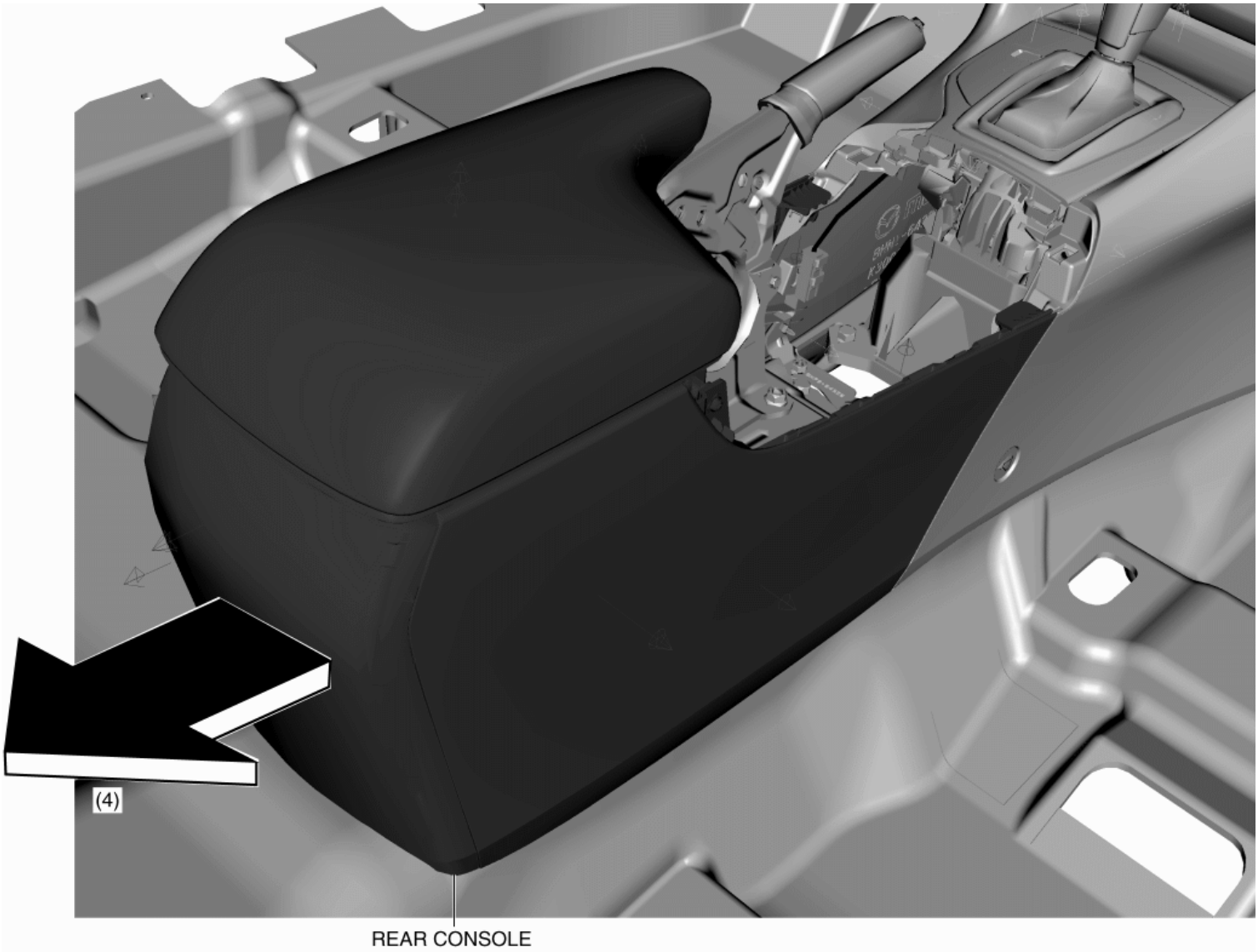

13. Install in the reverse order of removal.

2014 - Mazda3 - Body and Accessories

REAR CONSOLE DISASSEMBLY/ASSEMBLY

1. Disassemble in the order indicated in the table.

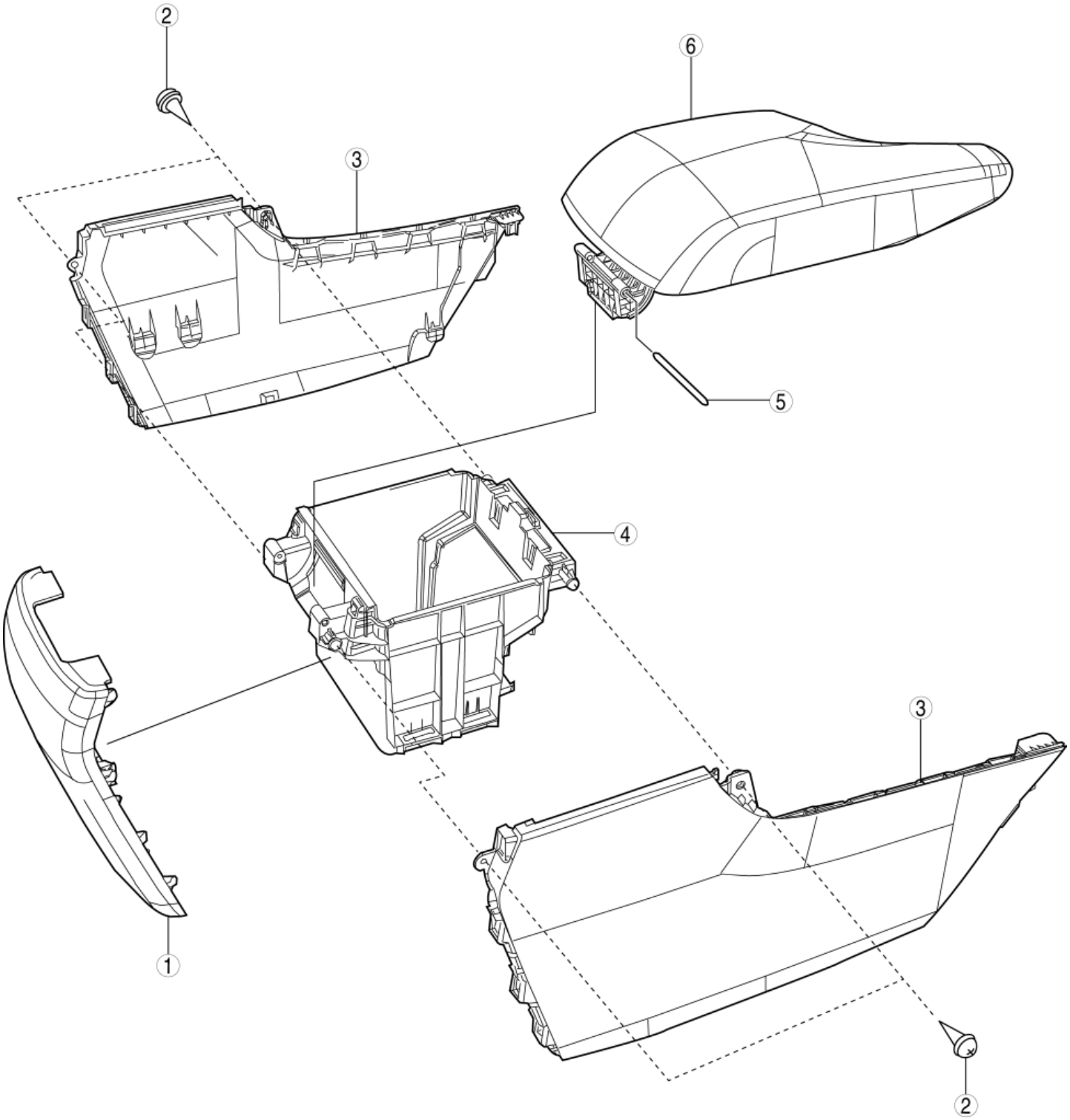

1	Console panel

2	Screw
3	Side panel (See **Side Panel Removal Note**.)
4	Rear console box
5	Pin
6	Rear console lid

2. Assemble in the reverse order of disassembly.

Side Panel Removal Note

1. Move the side panel in the order of arrows (1) and (2) shown in the figure and remove the guide from the rear console box.

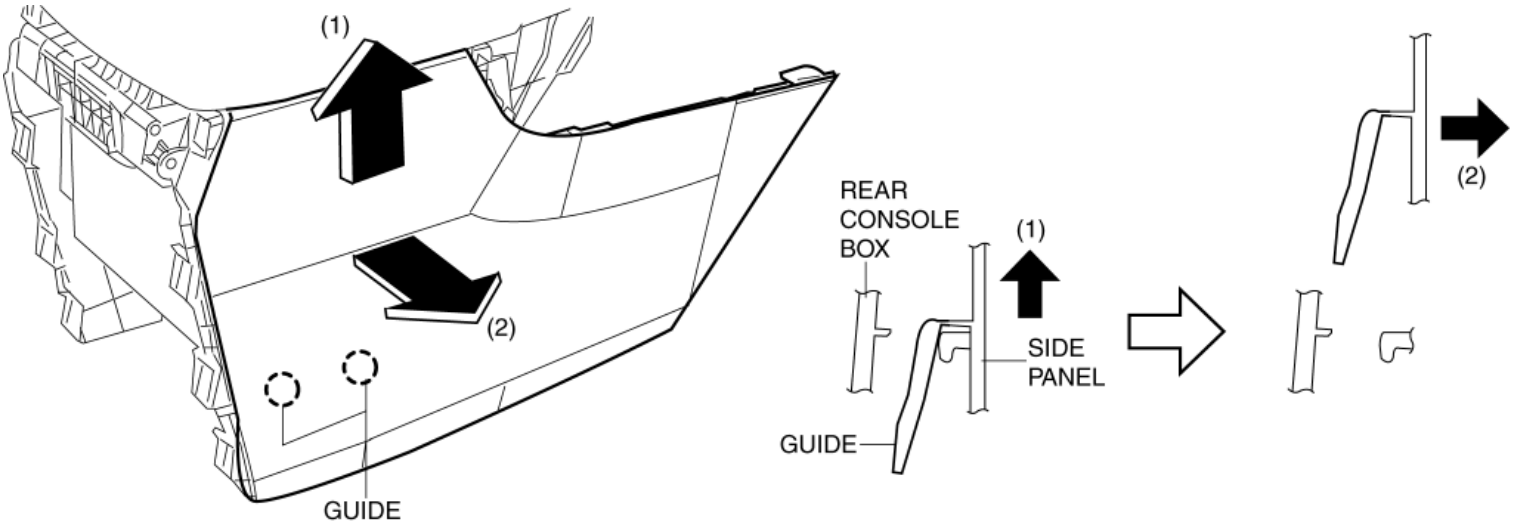

2014 - Mazda3 - Body and Accessories

DECORATION PANEL REMOVAL/INSTALLATION

CAUTION:

- To prevent scratches or damage, apply protective tape to the position shown in the figure.
- If work using protective tape is performed in an area where the temperature can increase drastically or the protective tape is left adhered for a long period of time, tape adhesive could remain area where the protective tape was applied when the it is peeled off. When applying protective tape, avoid areas where the temperature of the tape can increase drastically and peel off the protective tape soon after the work is completed.

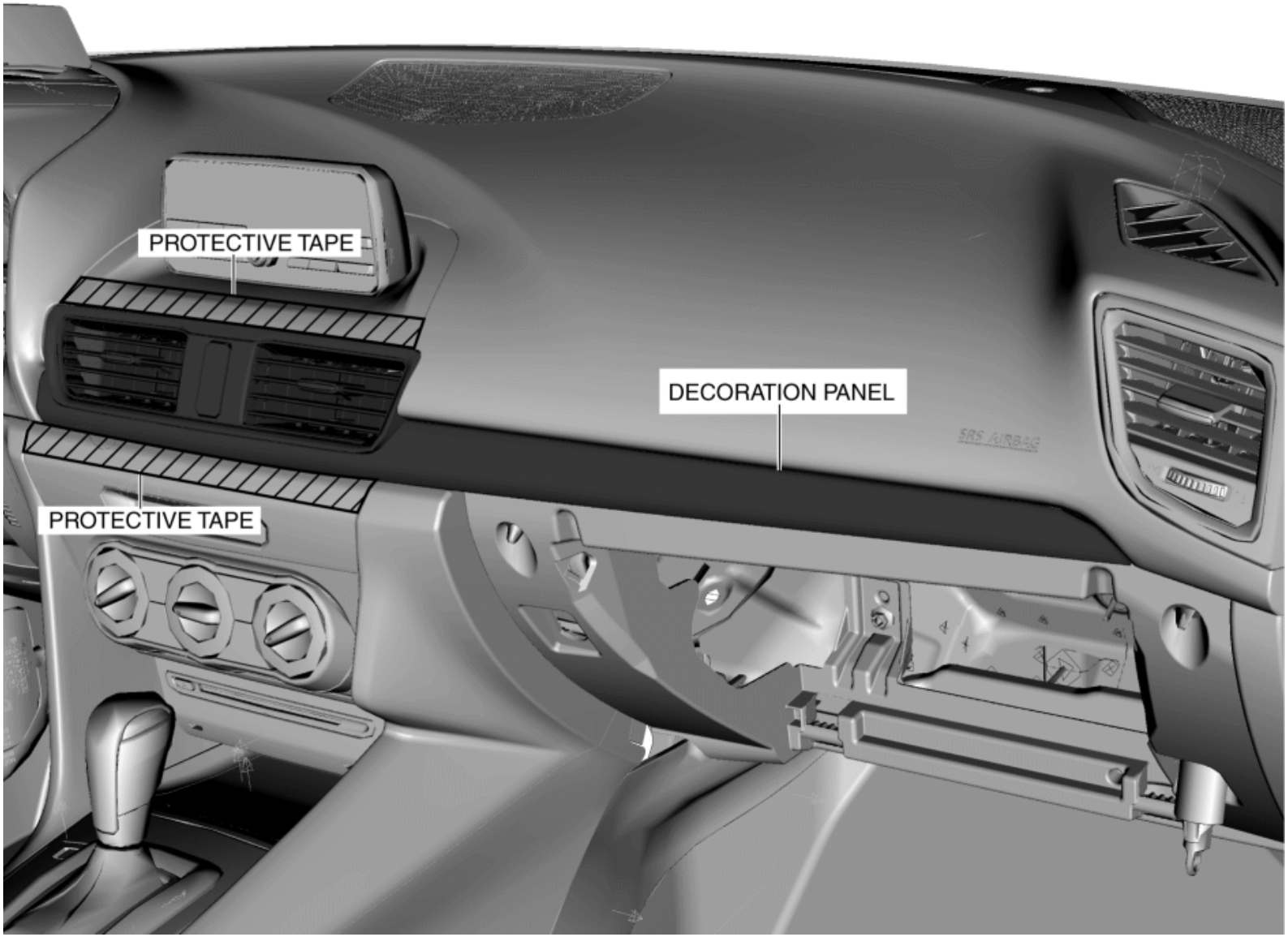

1. Disconnect the negative battery cable. (See **NEGATIVE BATTERY CABLE DISCONNECTION/CONNECTION [SKYACTIV-G 2.0, SKYACTIV-G 2.5]**.)
2. Remove the glove compartment. (See **GLOVE COMPARTMENT REMOVAL/INSTALLATION**.)
3. Press out clips A shown in the figure towards the rear of the vehicle.

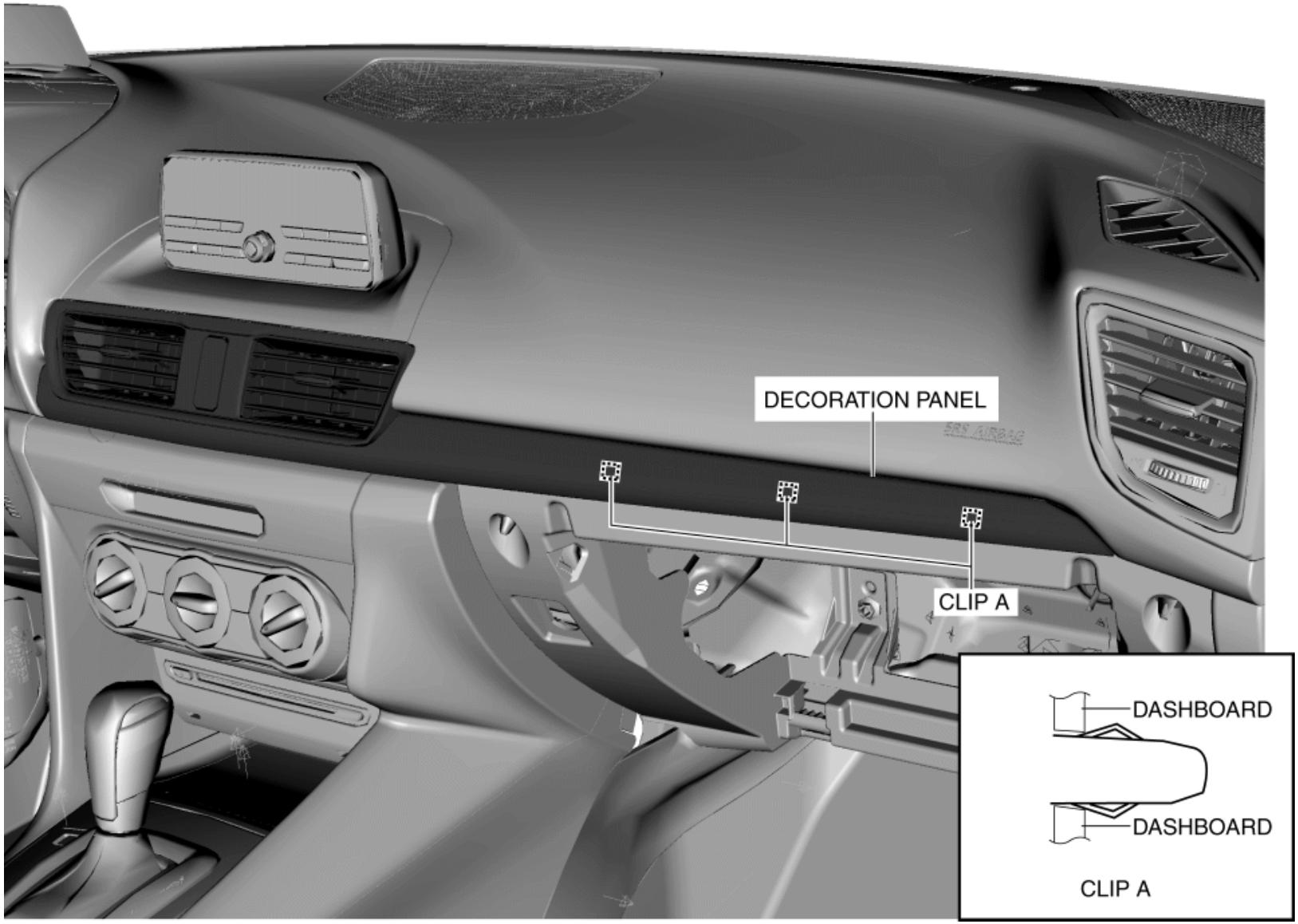

4. While pressing clip A with a finger, insert the remover tool into the position shown in the figure, move the decoration panel, and disengage decoration panel clip A from the lower panel.

CAUTION:

- If the decoration panel is pulled with excessive force when disengaging clip A, the center ventilator grille and decoration panel connection could be damaged. When disengaging clip A, be careful not to damage the decoration panel.

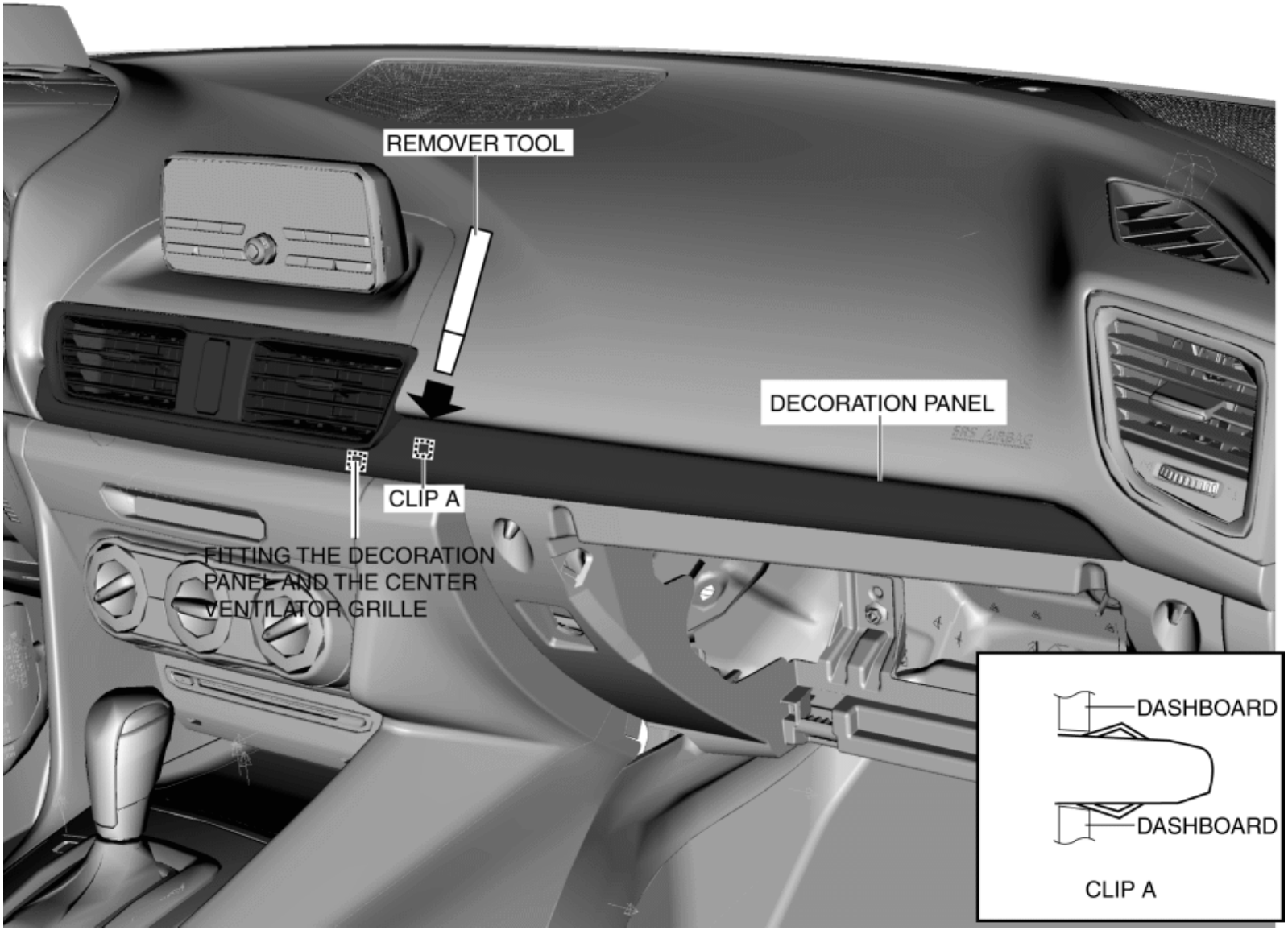

5. Insert the remover tool into the position shown in the figure and move the decoration panel in the direction of arrow (1) shown in the figure, and disengage clip B from the dashboard.

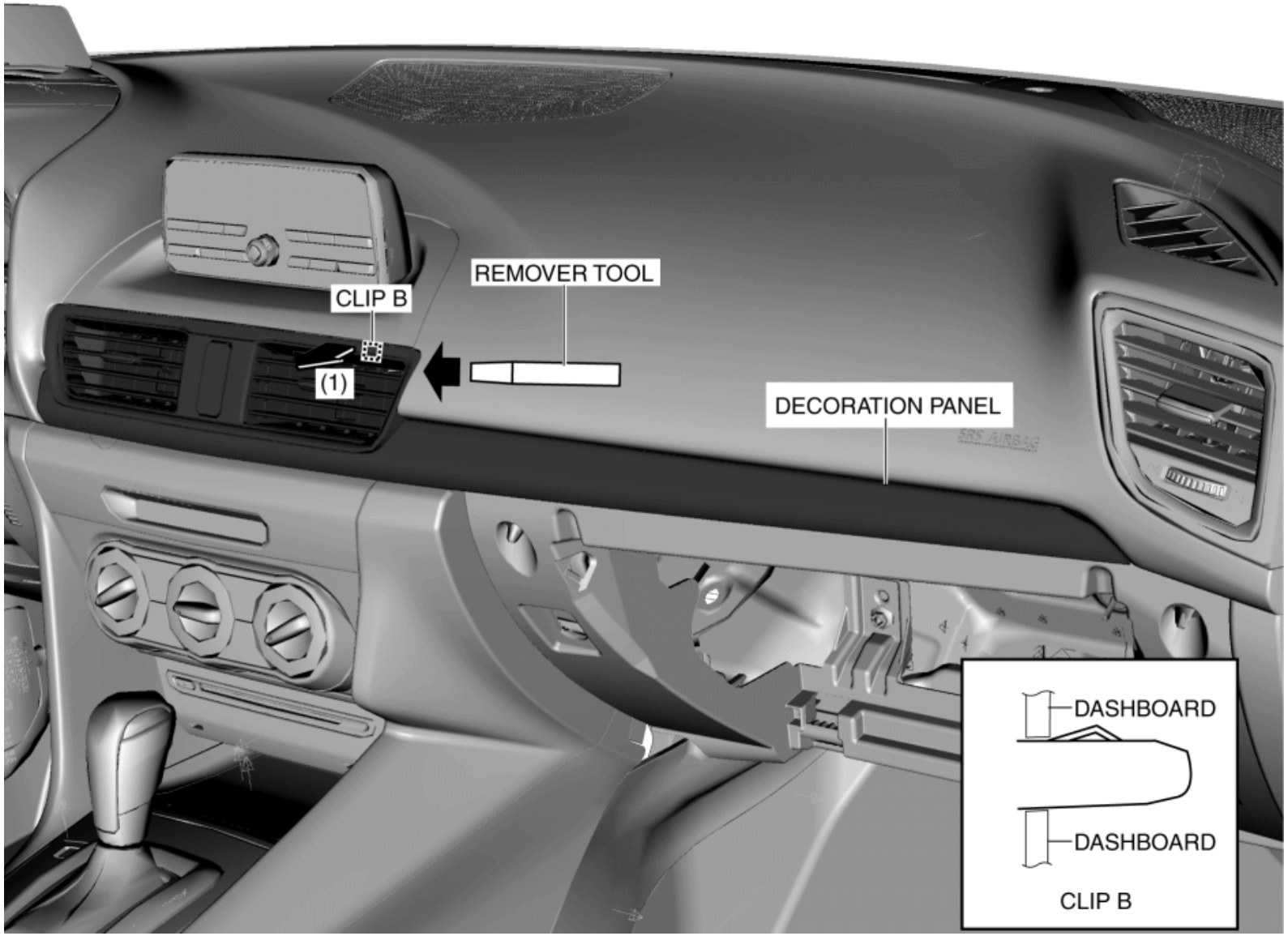

6. Insert the remover tool into the position shown in the figure, move the decoration panel in the direction of arrow (2) shown in the figure, and remove clip B from the dashboard.

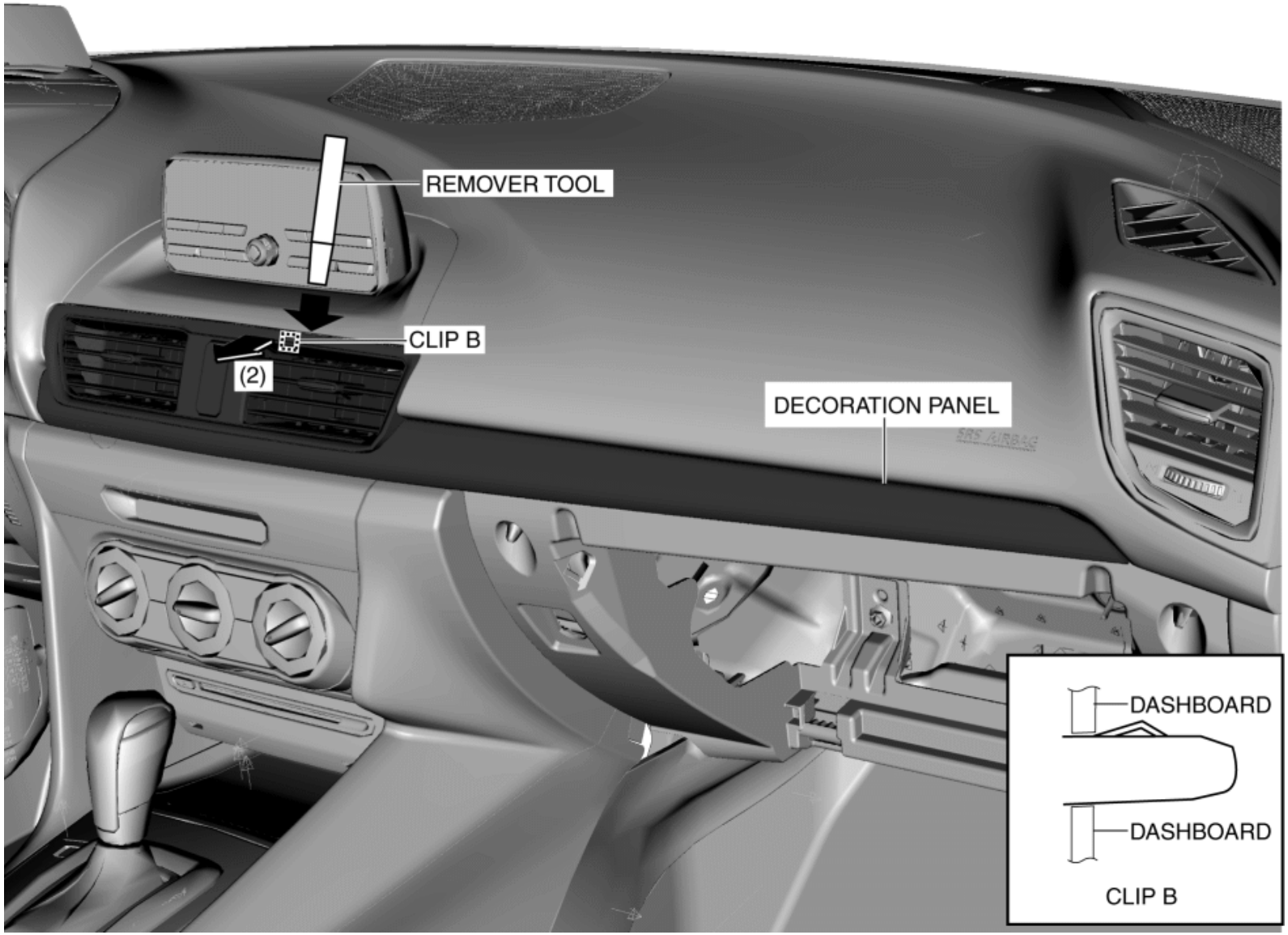

7. Hold the shaded areas shown in the figure, pull the decoration panel straight out in the direction (towards rear of vehicle) of arrows (3) shown in the figure, and disconnect clips B, clips C from the instrument panel.

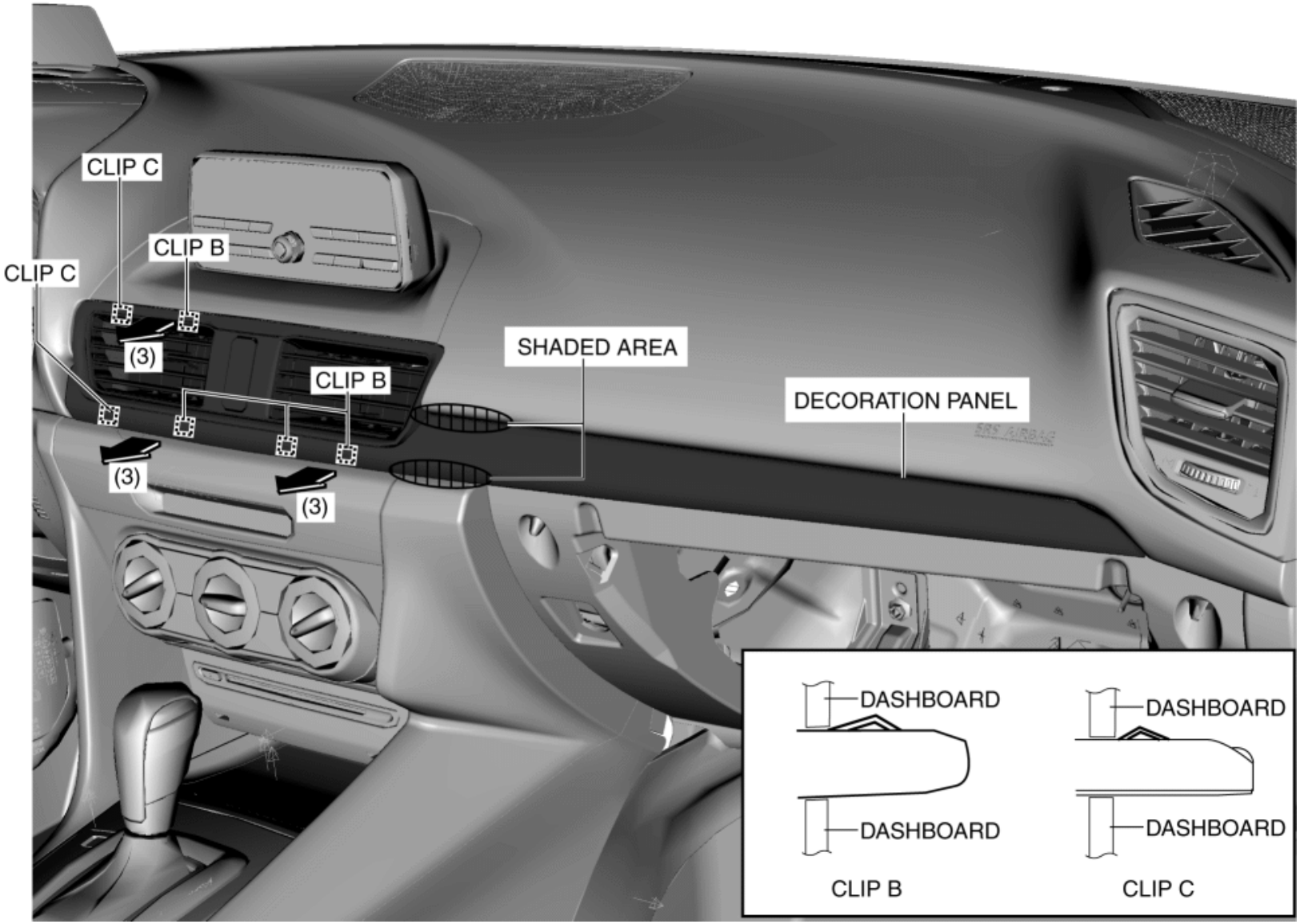

CAUTION:

- If the decoration panel is pulled out while tilted, the center ventilator grille and decoration panel connection could be damaged. Pull the decoration panel straight out toward the rear of the vehicle when removing.

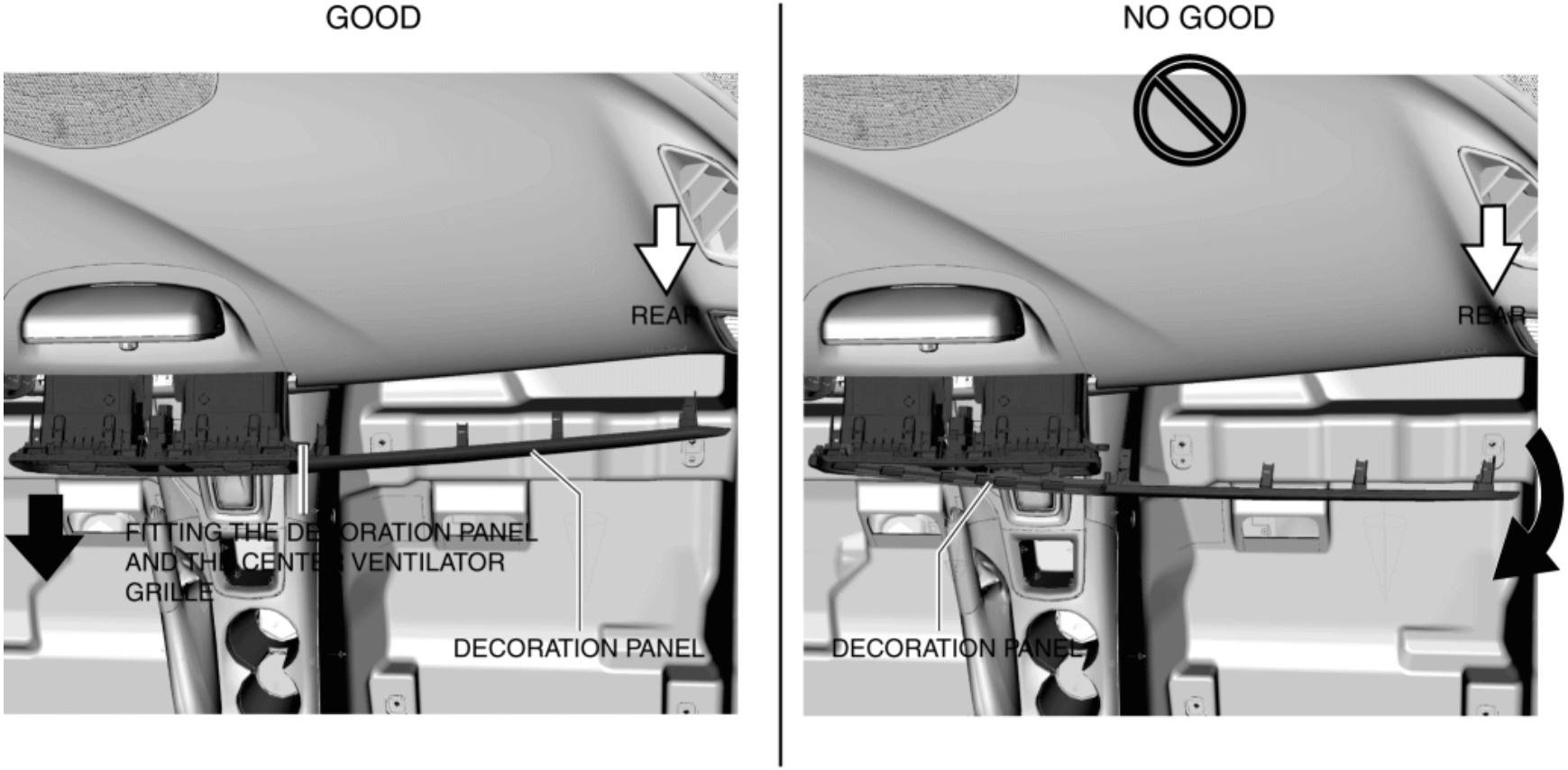

8. Disconnect the hazard warning switch connector.

9. Install in the reverse order of removal.

2014 - Mazda3 - Body and Accessories

DECORATION PANEL DISASSEMBLY/ASSEMBLY

1. Disassemble in the order indicated in the table.

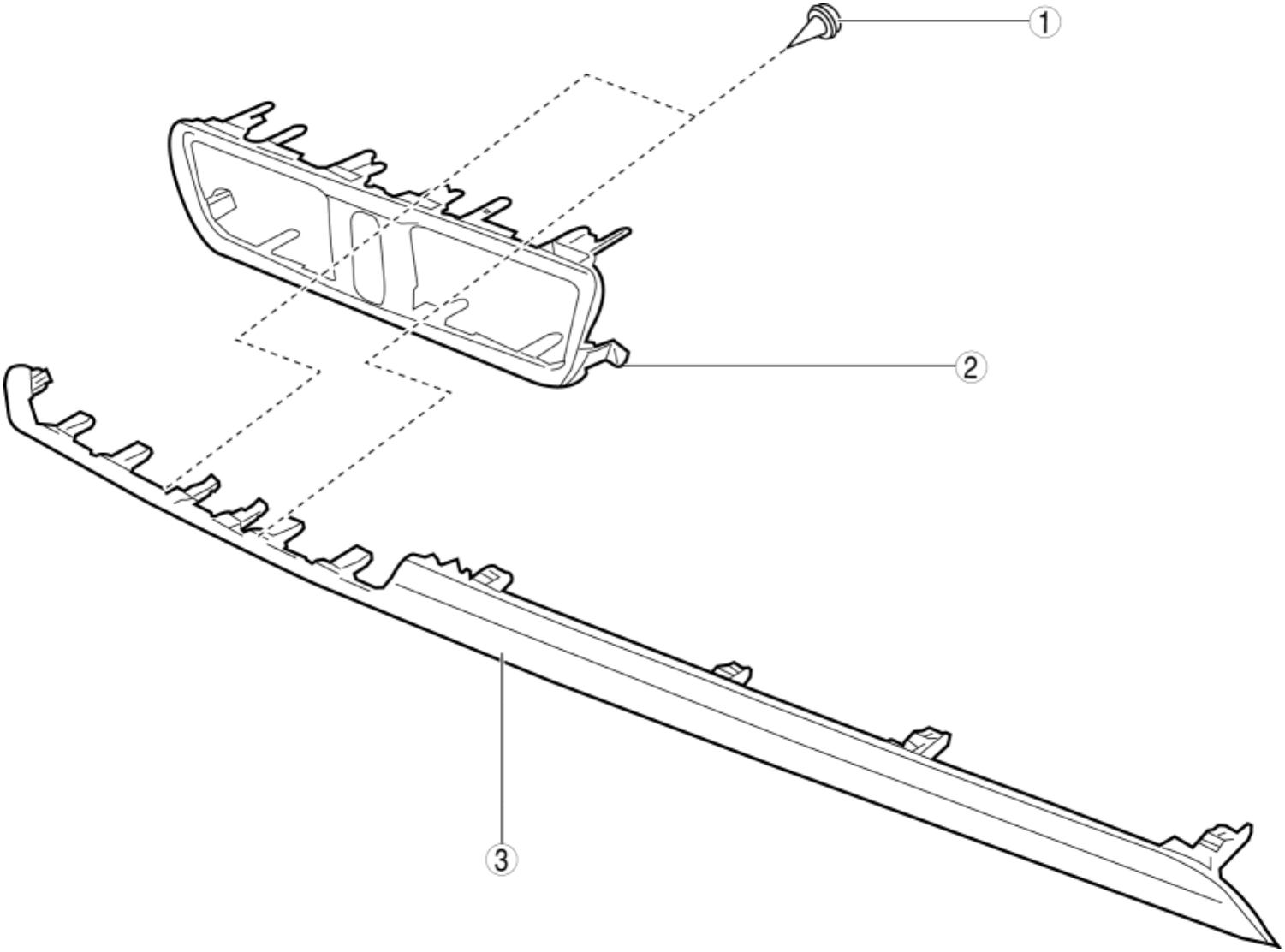

1	Screw
2	Bezel
3	Decoration plate

2. Assemble in the reverse order of disassembly.

2014 - Mazda3 - Body and Accessories

A-PILLAR TRIM REMOVAL/INSTALLATION

1. Partially peel back the seaming welt.

2. Grasp the shaded areas shown in the figure, and pull the A-pillar trim in the direction of the arrow (1) while detaching clips A, clip B.

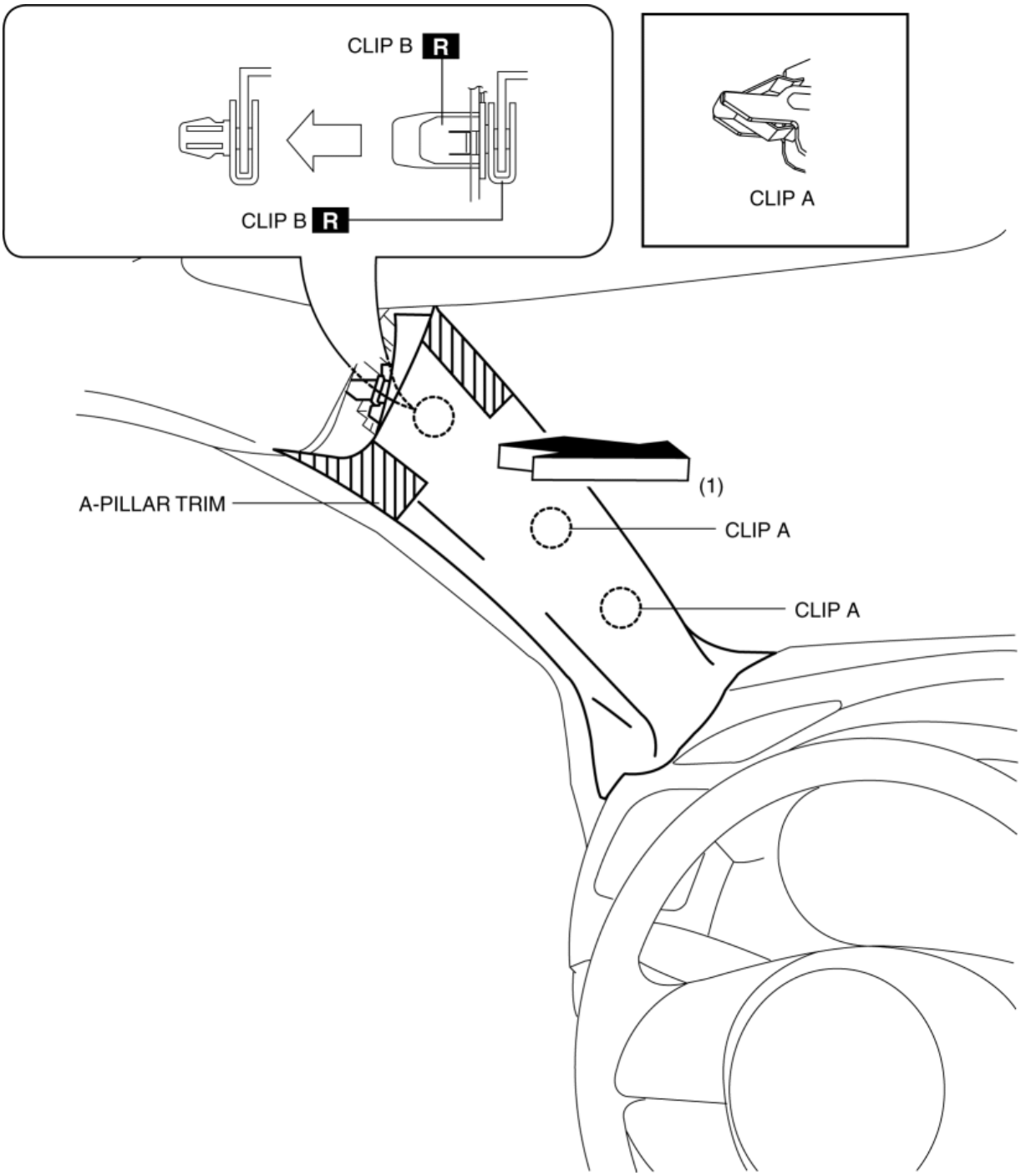

3. Cut the lead wire connecting clips B and grommet using a nipper.

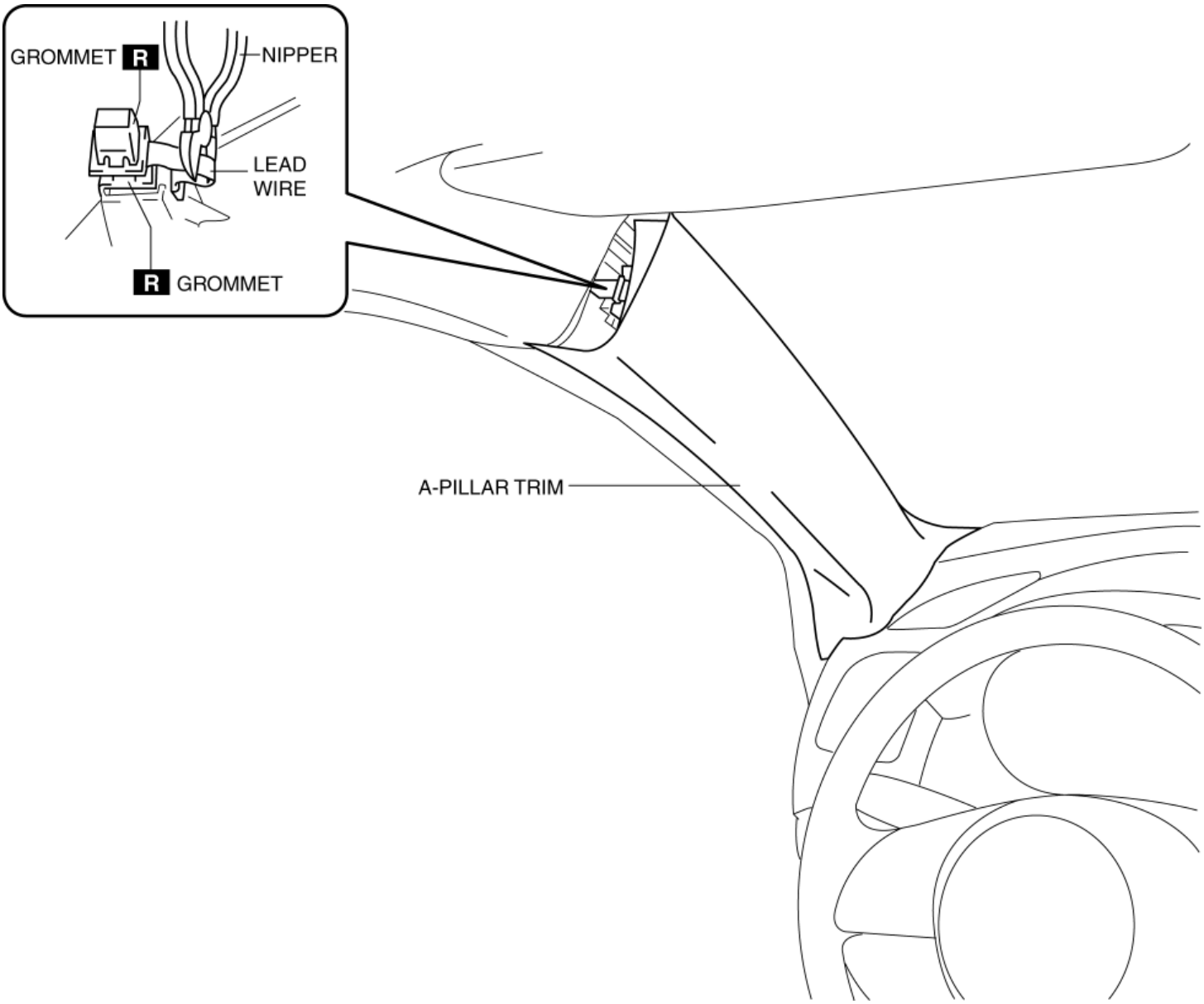

4. Pull the A-pillar trim in the direction of the arrow in the order of (2) and remove the A-pillar trim while detaching guides.

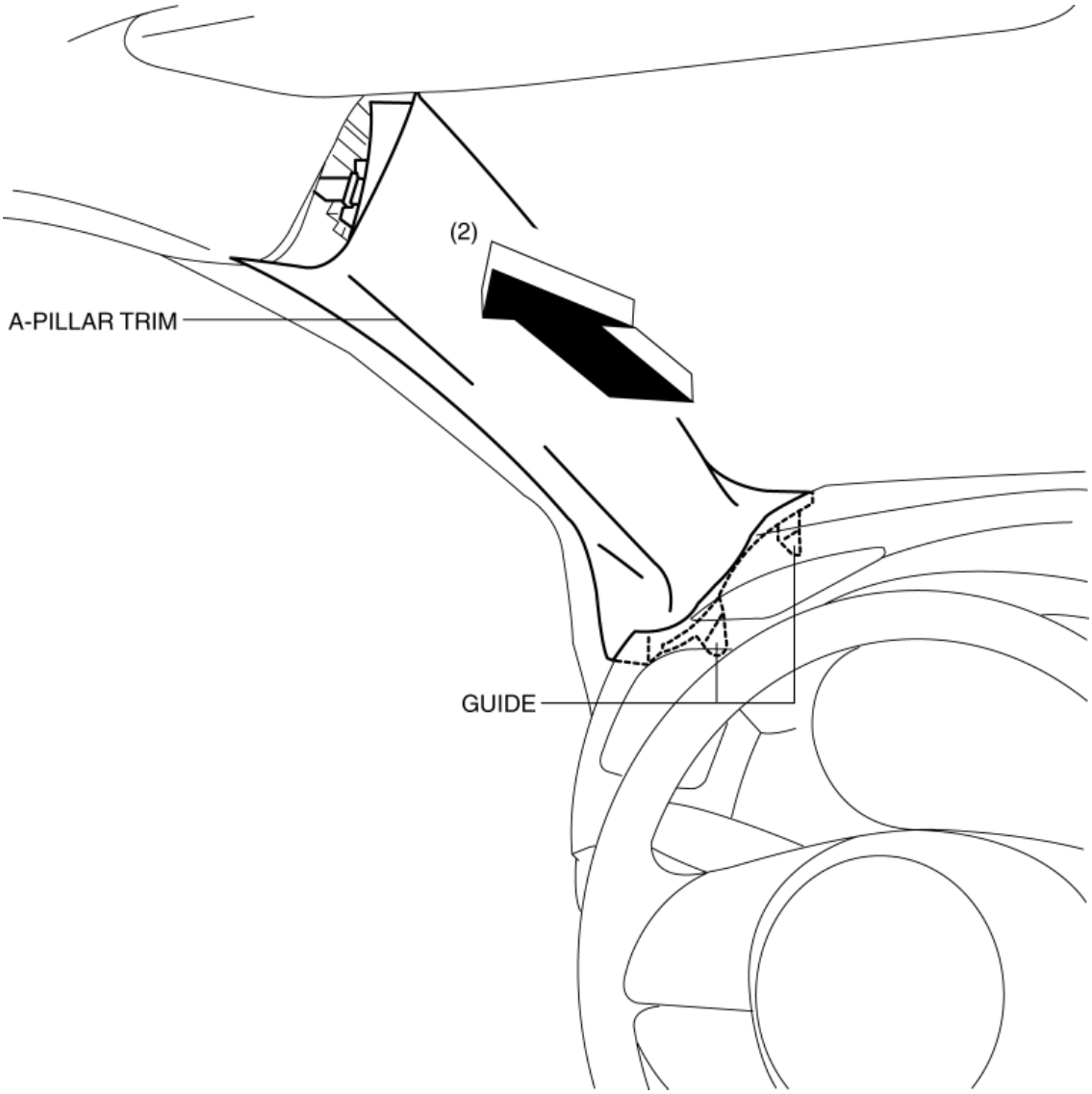

5. Move the hook in the direction of arrow (3) shown in the figure using a tape-wrapped flathead screwdriver and detach it from the front pillar inner panel.

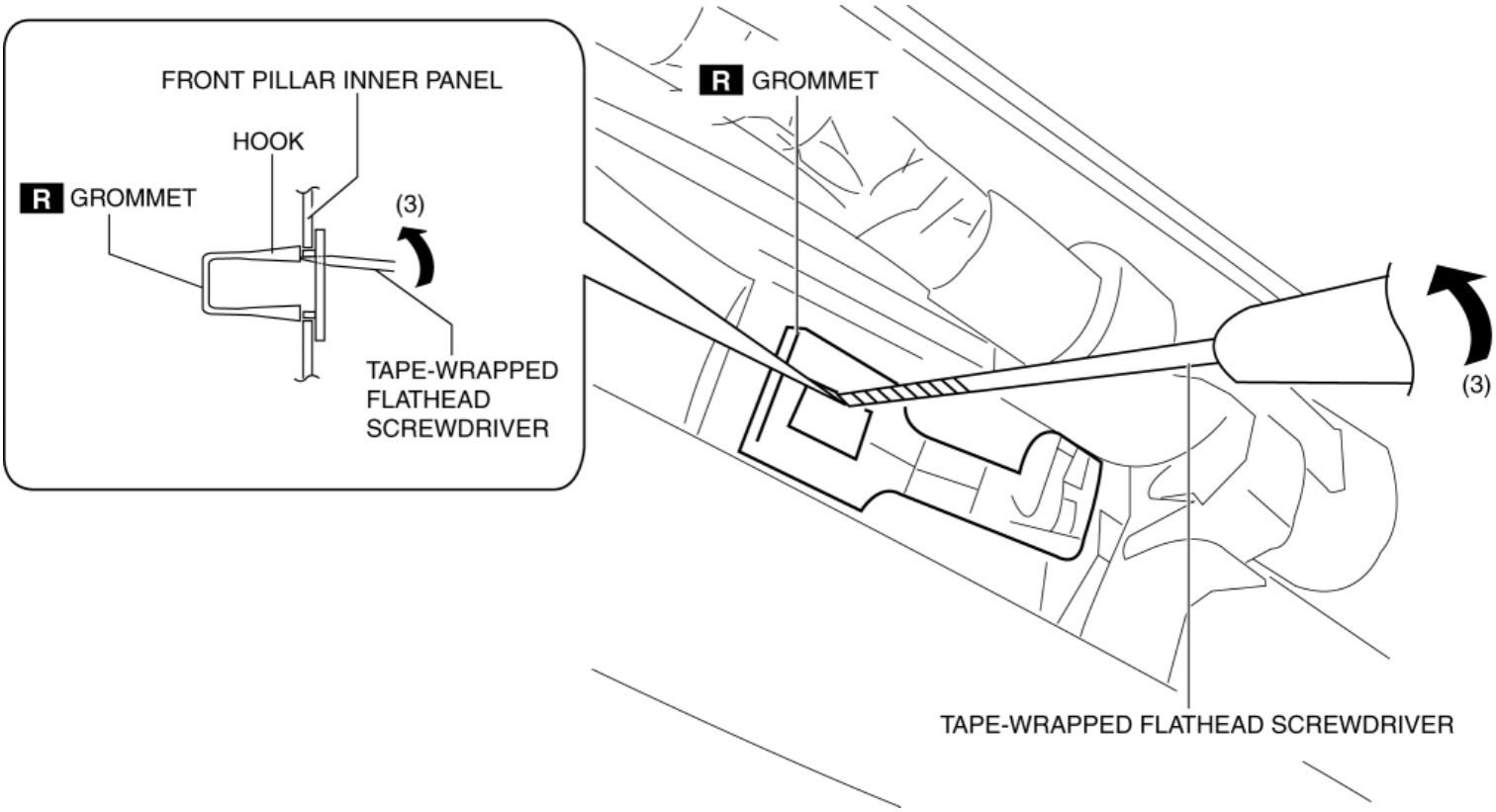

6. Move the hook in the direction of arrow (4) shown in the figure using a tape-wrapped flathead screwdriver and detach it from the front pillar inner panel.

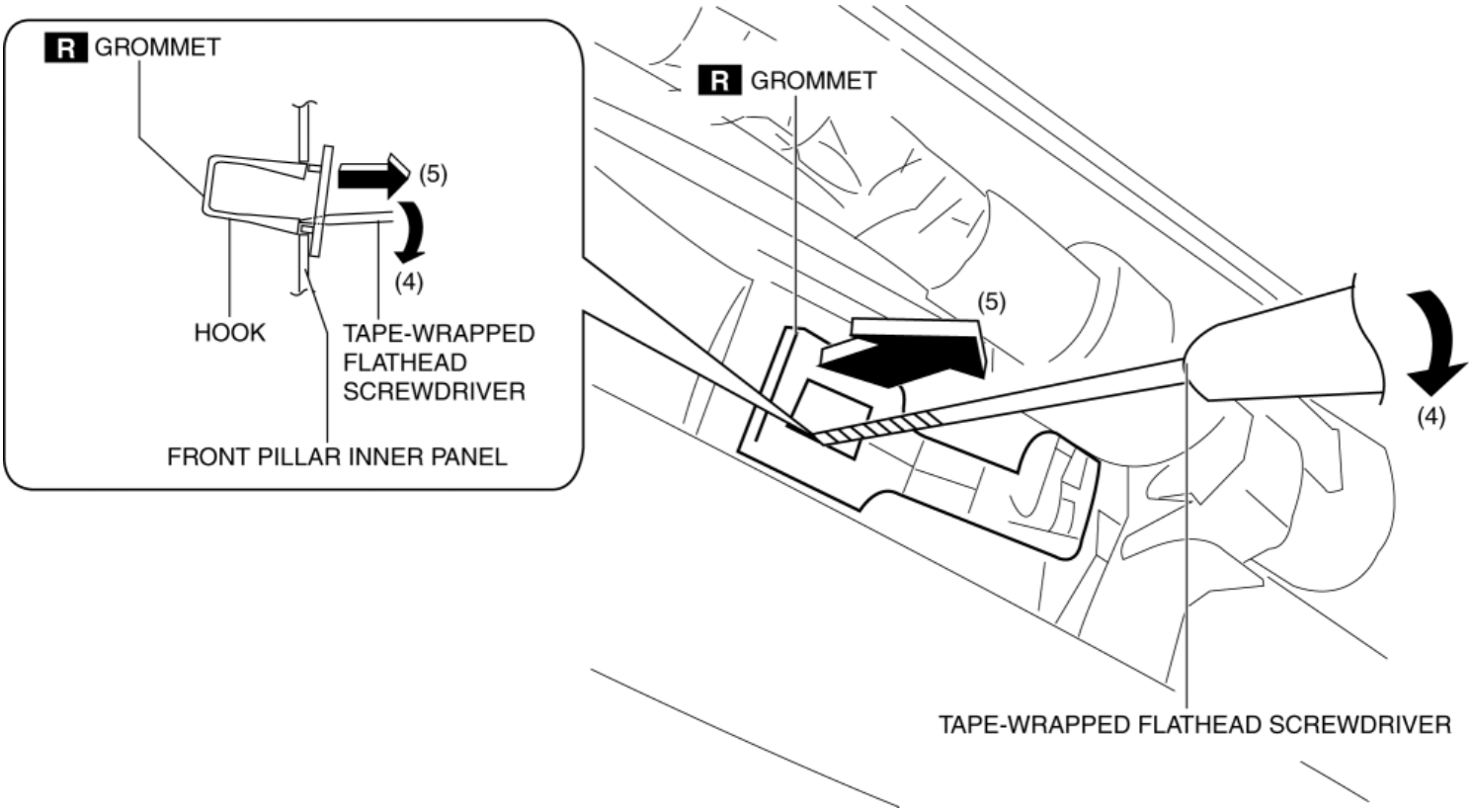

7. Remove the grommet in the direction of the arrow (5) shown in the figure.

8. When installing the A-pillar, install new clips B and grommet to the A-pillar trim in advance.

9. Install in the reverse order of removal.

A-PILLAR TRIM REMOVAL/INSTALLATION

2014 - Mazda3 - Body and Accessories

FRONT SIDE TRIM REMOVAL/INSTALLATION

1. Remove the front scuff plate. (See **FRONT SCUFF PLATE REMOVAL/INSTALLATION**.)
2. Partially peel back the seaming welt.
3. Remove the cap nut.

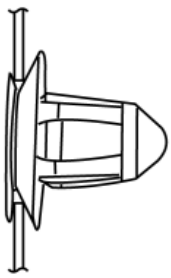

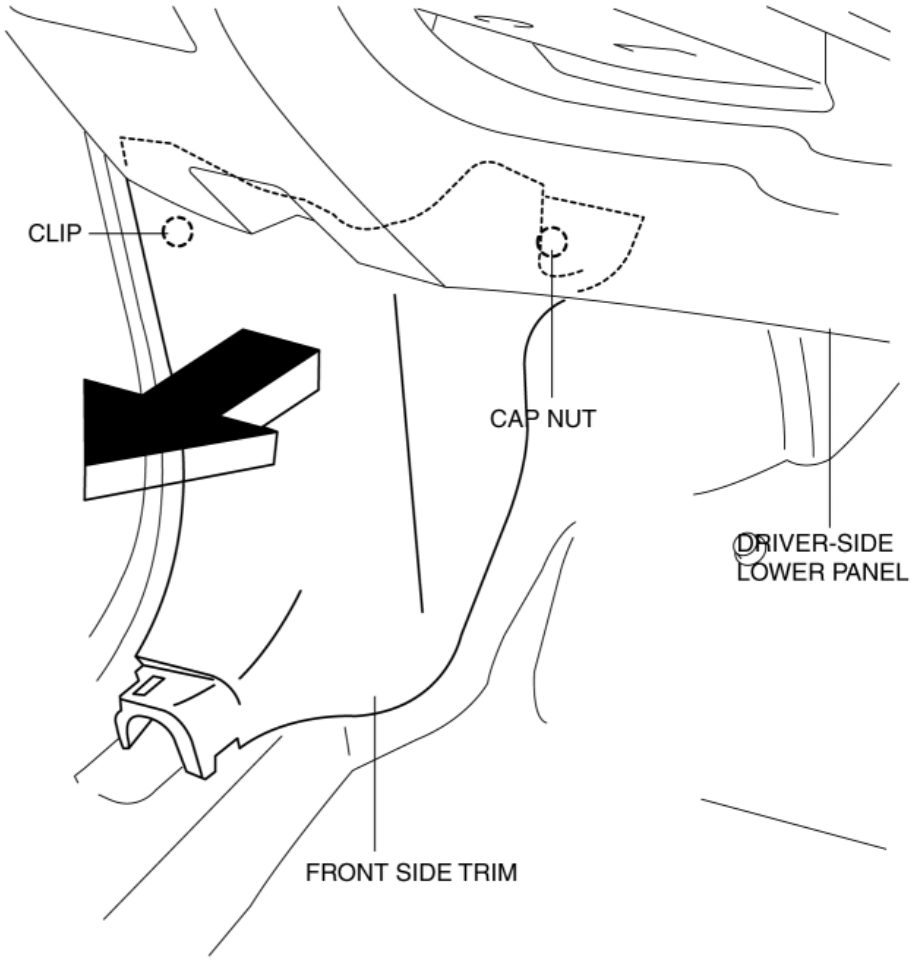

4. Pull the front side trim in the direction of the arrow shown in the figure and remove it while detaching the clip.
5. Install in the reverse order of removal.

2014 - Mazda3 - Body and Accessories

TIRE HOUSE TRIM REMOVAL/INSTALLATION

4SD

1. Remove the following parts:
    a. Rear scuff plate (See **REAR SCUFF PLATE REMOVAL/INSTALLATION**)
    b. Rear seat cushion (See **REAR SEAT CUSHION REMOVAL/INSTALLATION**.)
    c. Rear seat back (See **REAR SEAT BACK REMOVAL/INSTALLATION**.)
2. Partially peel back the seaming welt.
3. Remove the fastener.

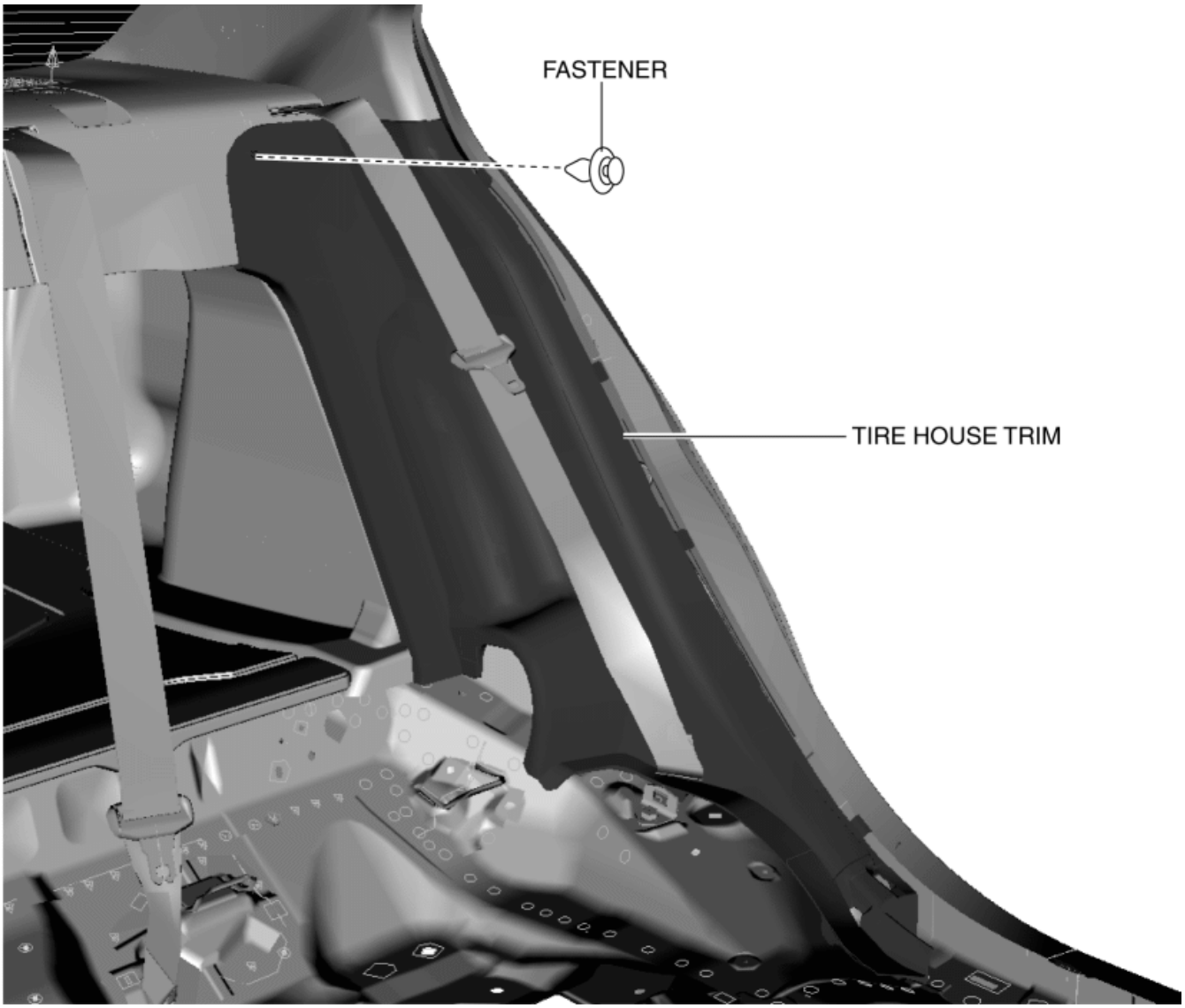

4. Move the tire house trim in the order of arrows (1) and (2) shown in the figure while setting the rear seat back aside, and remove the clips from the body.

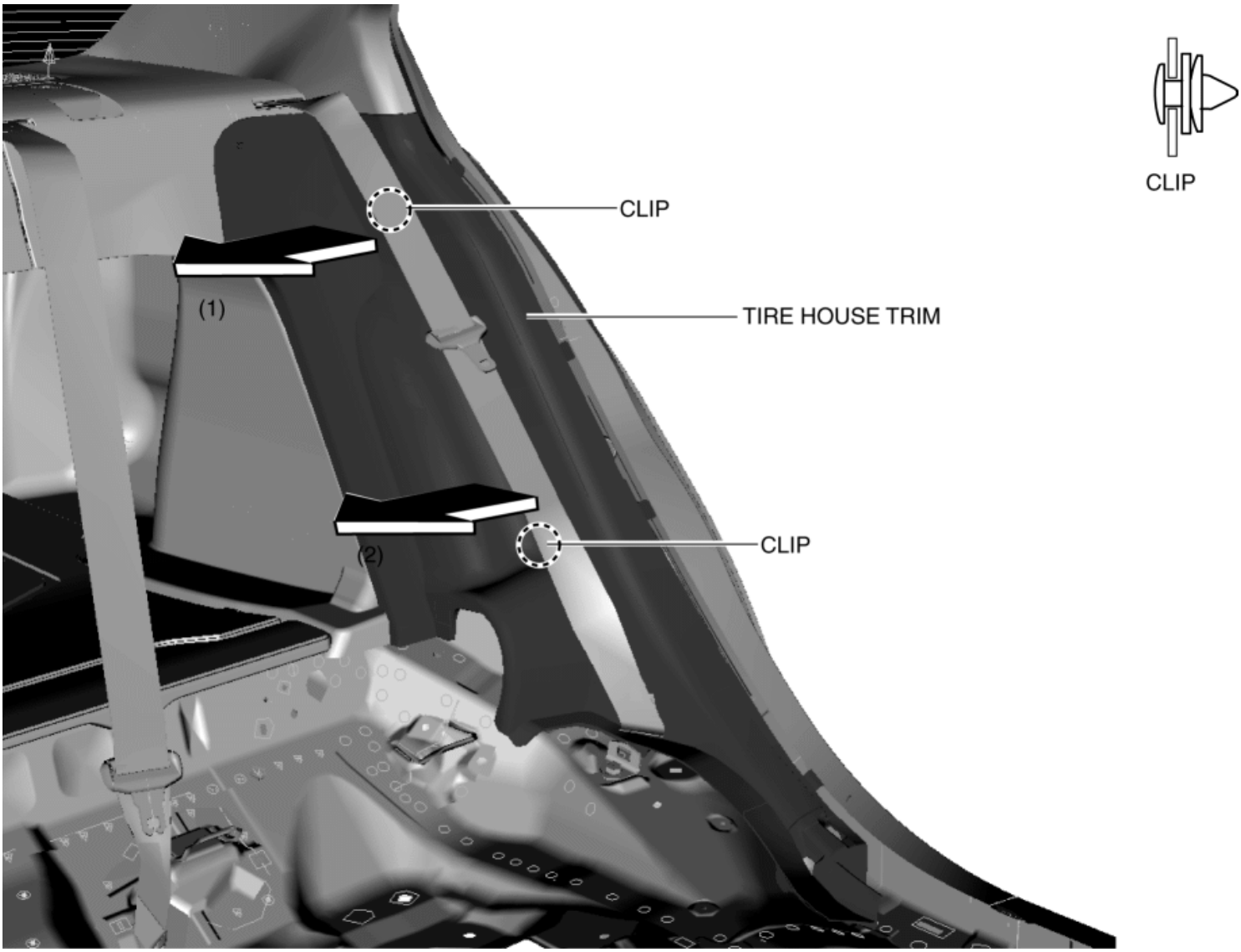

5. Remove the tire house trim.

6. Install in the reverse order of removal.

5HB

1. Remove the following parts:

   a. Rear scuff plate (See **REAR SCUFF PLATE REMOVAL/INSTALLATION**)

   b. Rear seat cushion (See **REAR SEAT CUSHION REMOVAL/INSTALLATION**.)

   c. Rear seat back (See **REAR SEAT BACK REMOVAL/INSTALLATION**.)

2. Partially peel back the seaming welt.

3. Move the tire house trim in the order of arrows (1) and (2) shown in the figure while setting the rear seat back aside, and remove the clips from the body.

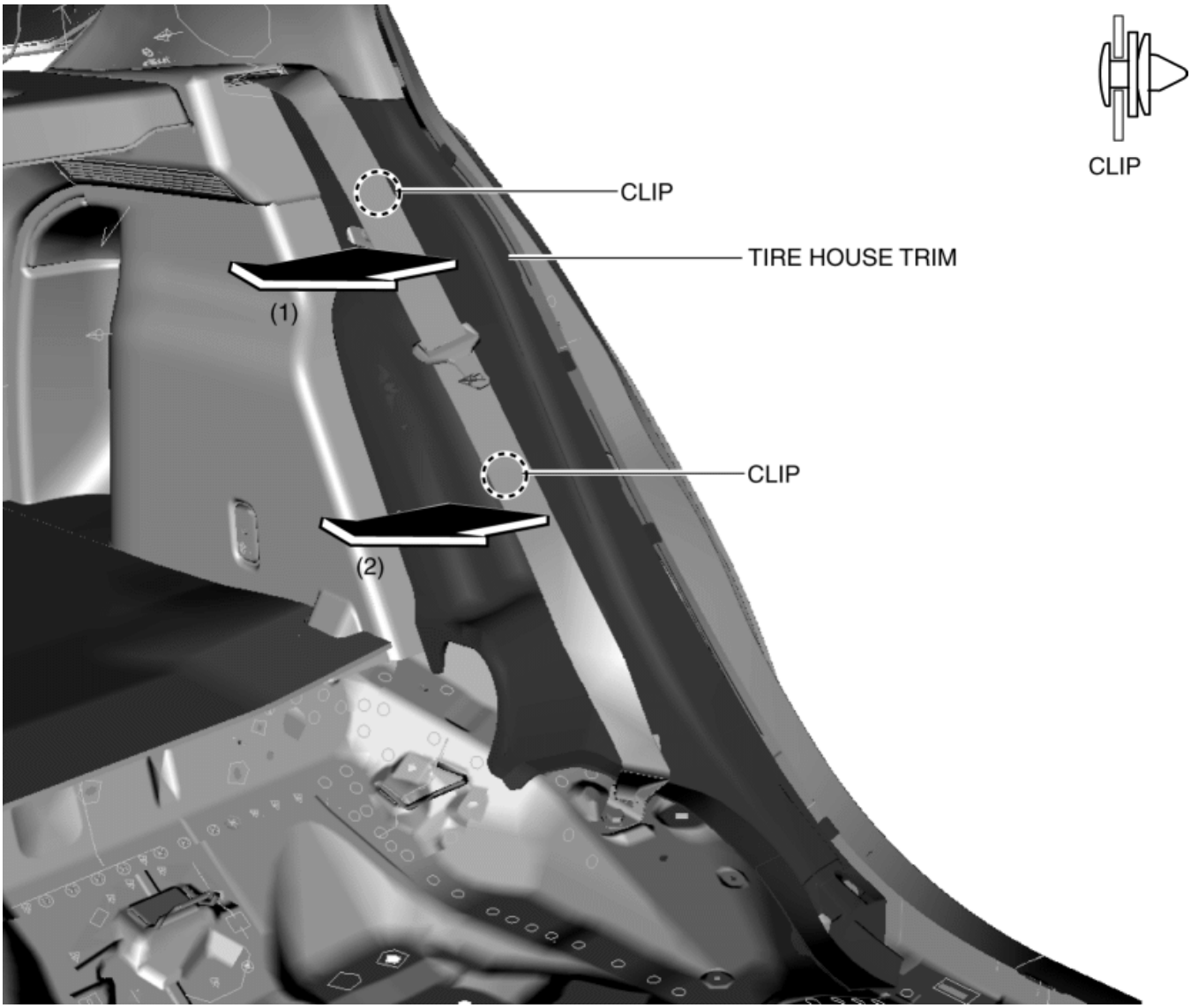

4. Remove the tire house trim.

5. Install in the reverse order of removal.

2014 - Mazda3 - Body and Accessories

REAR PACKAGE TRIM REMOVAL/INSTALLATION

1. Disconnect the negative battery cable. (See **NEGATIVE BATTERY CABLE DISCONNECTION/CONNECTION [SKYACTIV-G 2.0, SKYACTIV-G 2.5]**.)

2. Remove the following parts:

   a. Rear scuff plate (See **REAR SCUFF PLATE REMOVAL/INSTALLATION**.)

   b. Rear seat cushion (See **REAR SEAT CUSHION REMOVAL/INSTALLATION**.)

   c. Rear seat back (See **REAR SEAT BACK REMOVAL/INSTALLATION**.)

   d. Tire house trim (See **TIRE HOUSE TRIM REMOVAL/INSTALLATION**.)

   e. C-pillar trim (See **C-PILLAR TRIM REMOVAL/INSTALLATION**.)

   f. High-mount brake light (See **HIGH-MOUNT BRAKE LIGHT REMOVAL/INSTALLATION**.)

3. Remove fasteners.

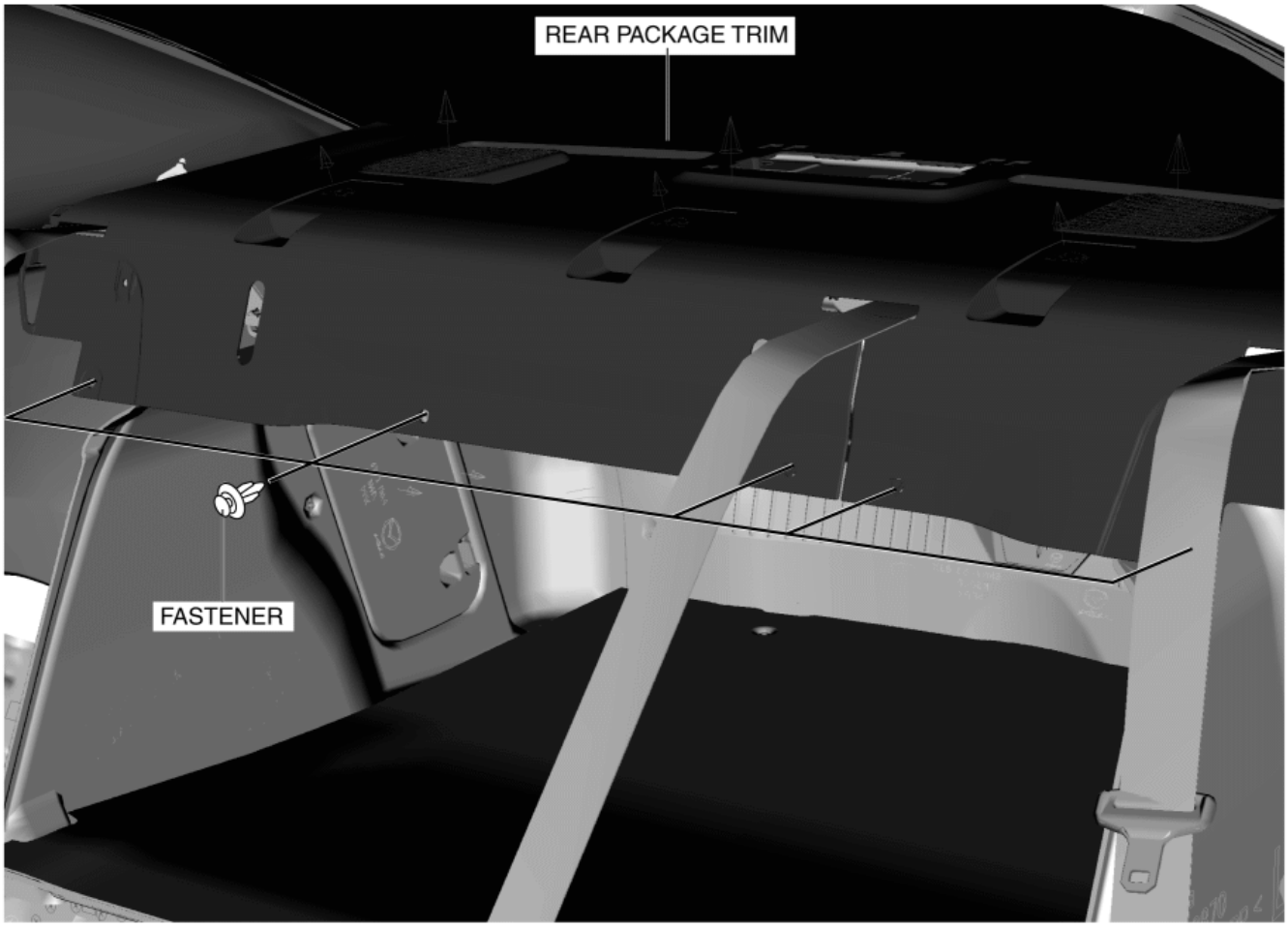

4. Remove clips.

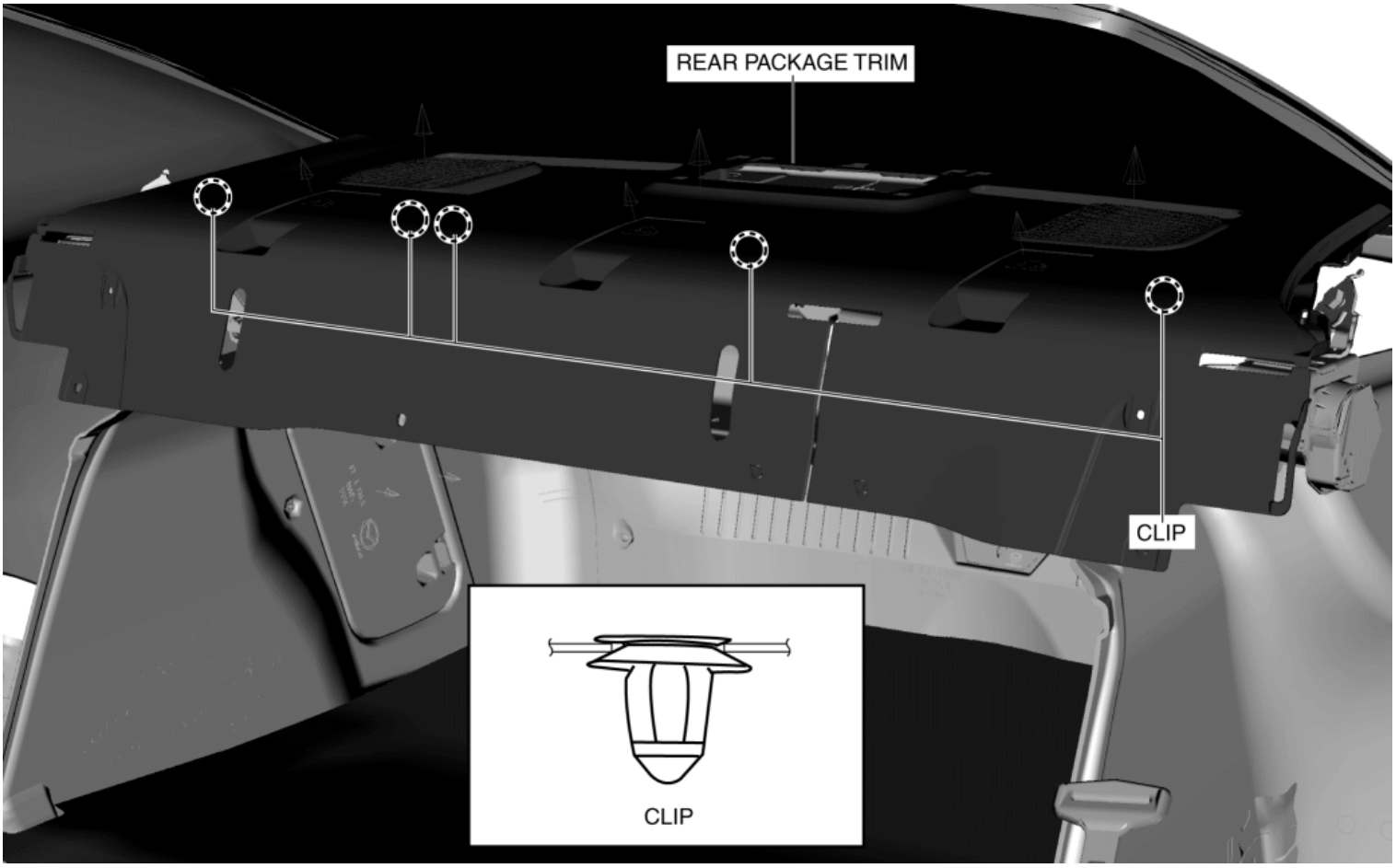

5. Pull up the rear package trim in the direction of the arrow (1) shown in the figure while remove the hook, pull the rear package trim in the direction of the arrow (2), and remove it.

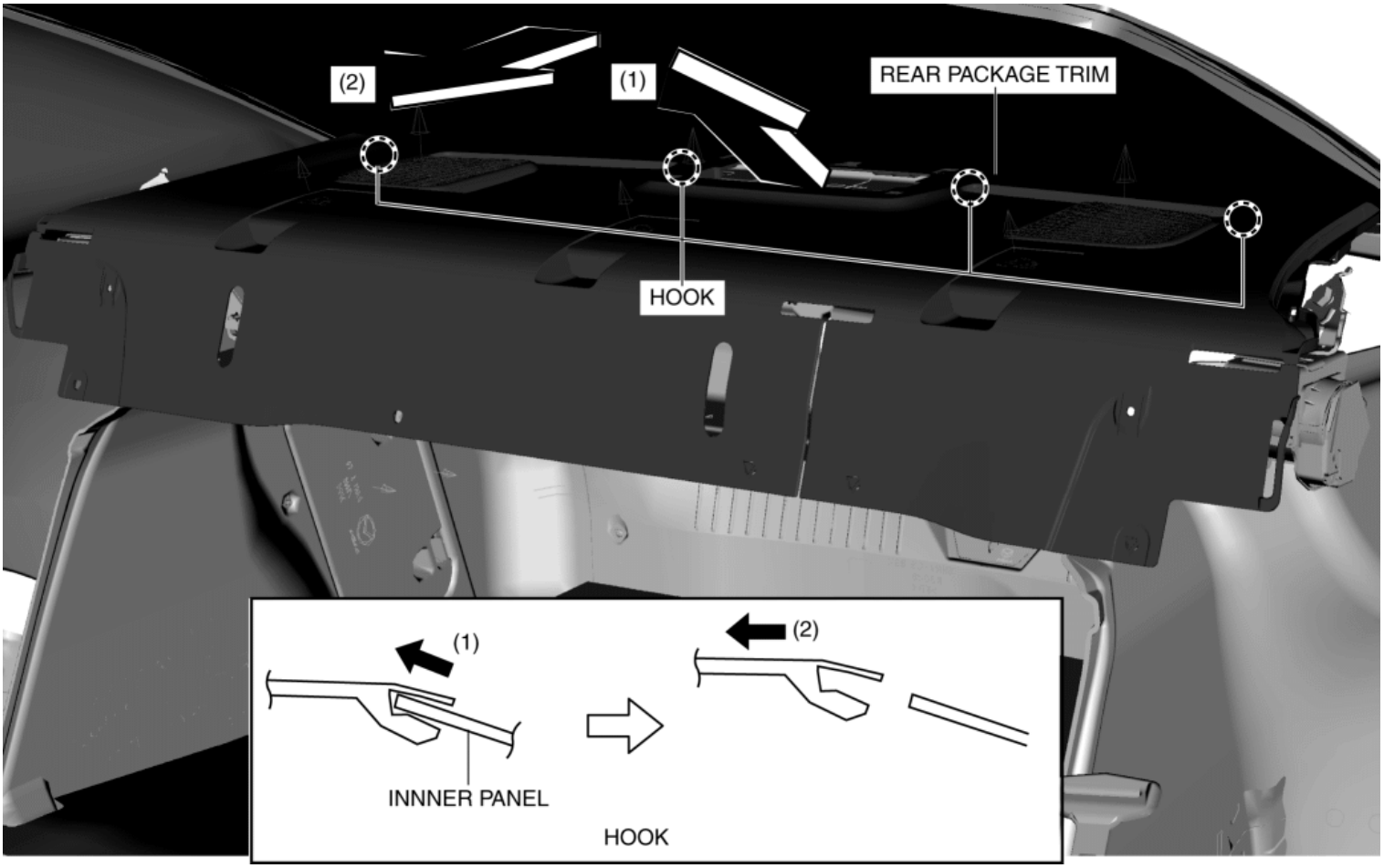

6. Install in the reverse order of removal.

2014 - Mazda3 - Body and Accessories

REAR PACKAGE TRAY REMOVAL/INSTALLATION

1. Move the hooks in the direction of arrows (1) shown in the figure to disengage them from the strap hangers.

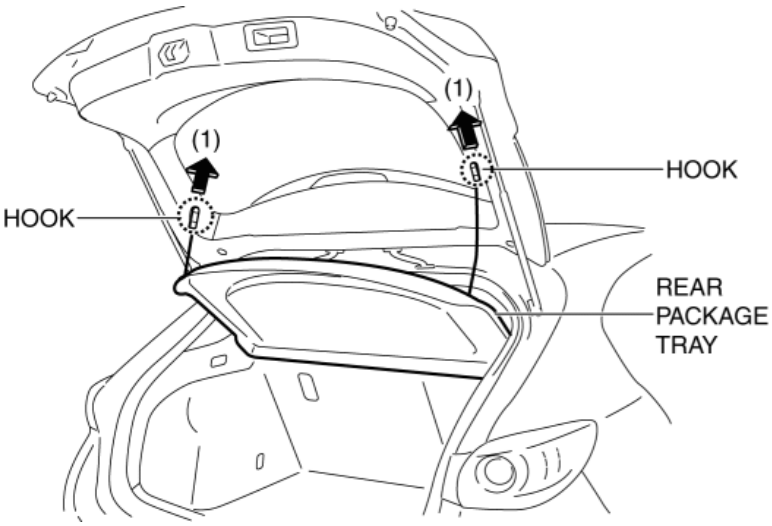

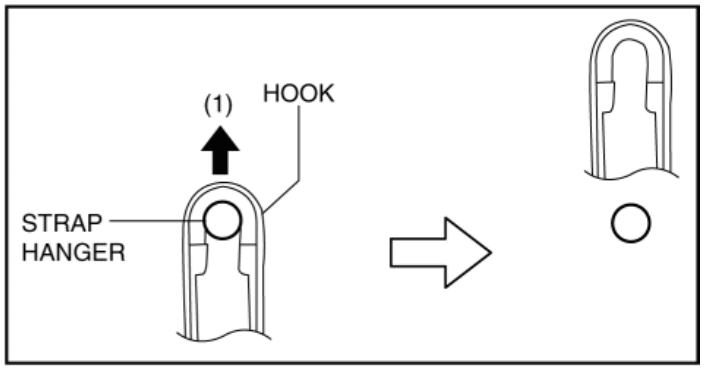

2. Move the rear package tray in the direction of the arrow in the order of arrow (2), (3) shown in the figure and unhook the cover from the pins of the trunk side upper trim.

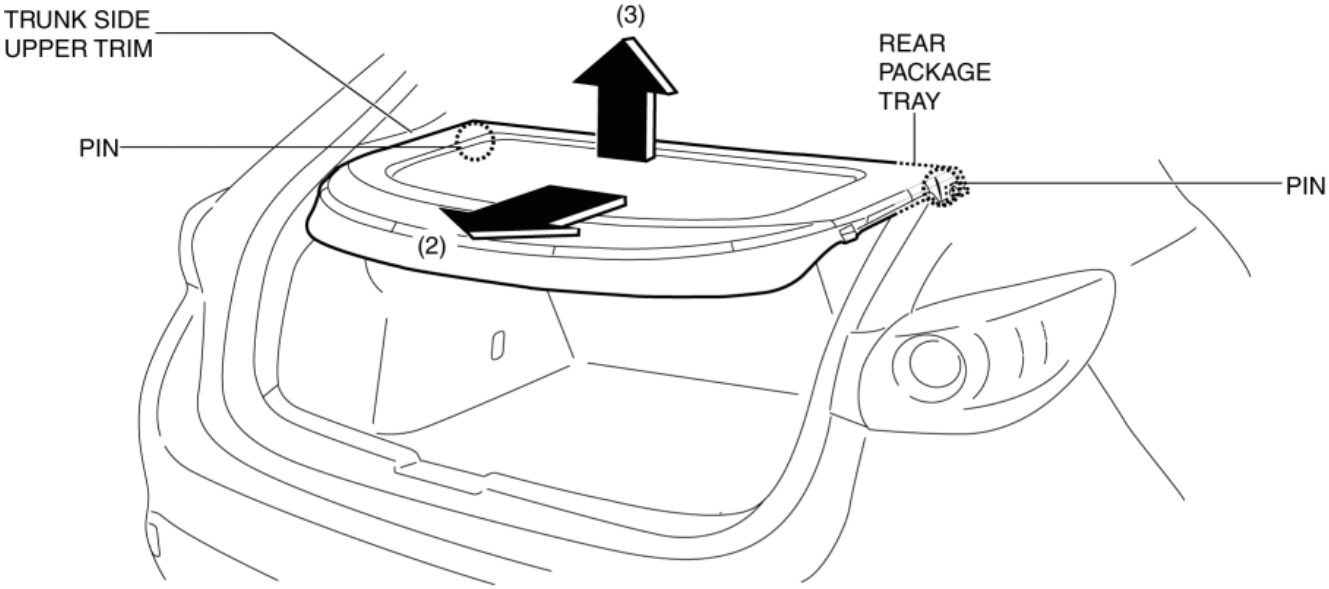

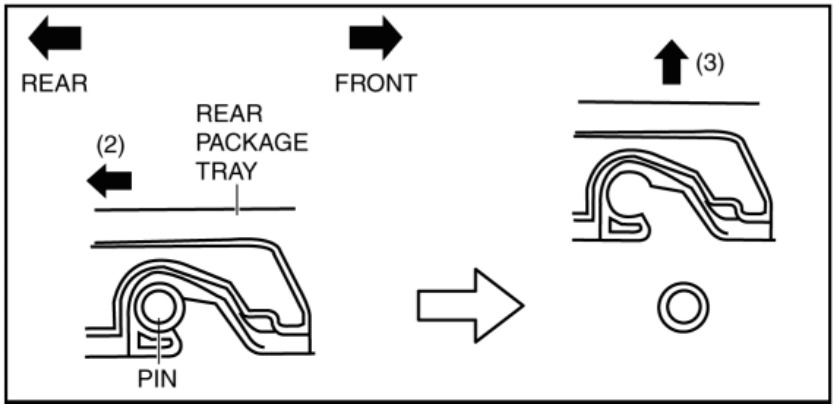

3. Install in the reverse order of removal.

2014 - Mazda3 - Body and Accessories

B-PILLAR LOWER TRIM REMOVAL/INSTALLATION

1. Remove the front scuff plate. (See **FRONT SCUFF PLATE REMOVAL/INSTALLATION**.)

2. Remove the rear scuff plate. (See **REAR SCUFF PLATE REMOVAL/INSTALLATION**.)

3. Partially peel back the seaming welt.

4. Grasp the shaded areas shown in the figure, and pull the B-pillar lower trim in the direction of the arrow in the order of (1), (2) while detaching hooks, pins A.

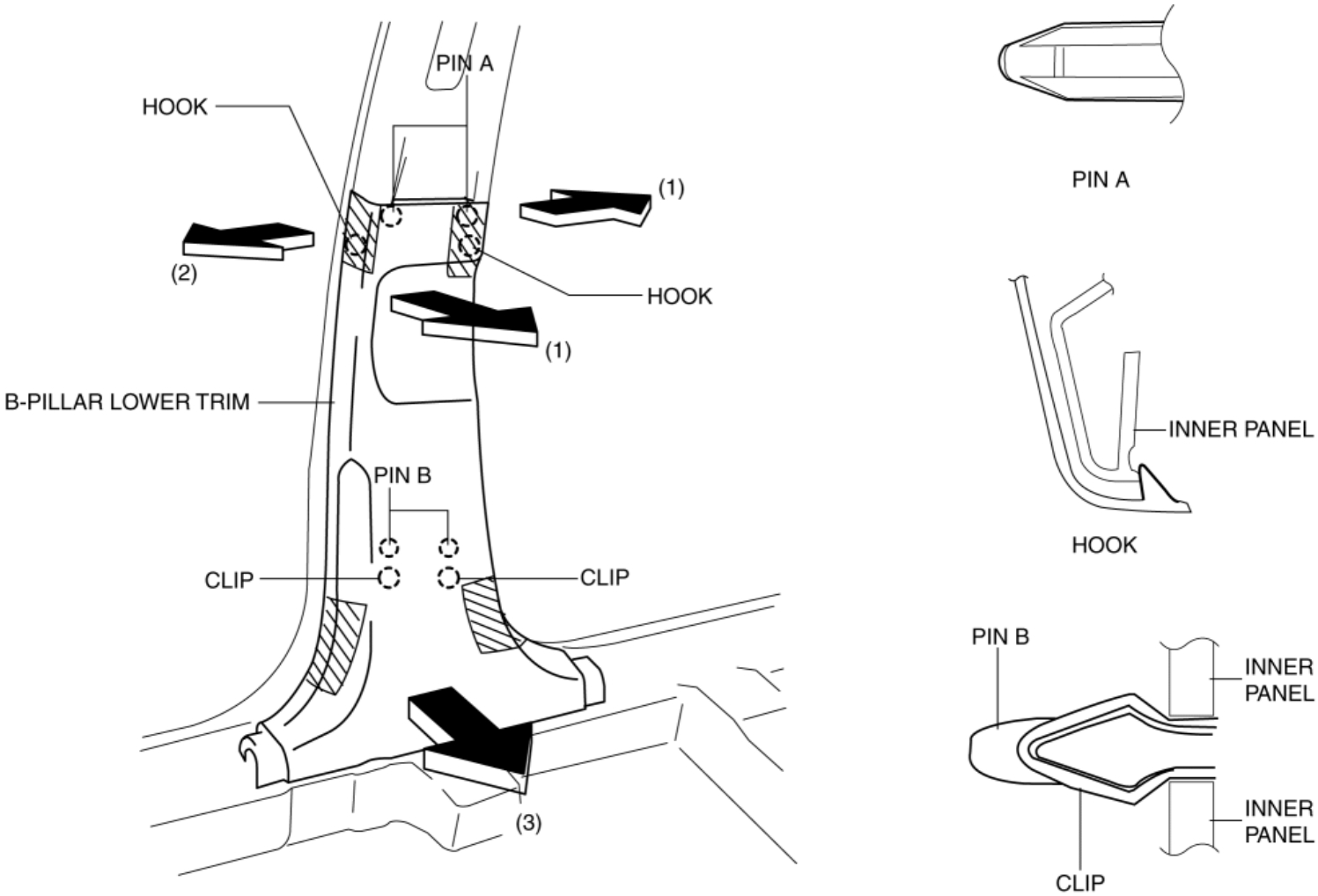

5. Grasp the shaded area shown in the figure, and pull the B-pillar lower trim in the direction of the arrow (3) while detaching the clips, pins B.

6. Install in the reverse order of removal.

2014 - Mazda3 - Body and Accessories

B-PILLAR UPPER TRIM REMOVAL/INSTALLATION

1. Remove the following parts:
   a. Front scuff plate (See **FRONT SCUFF PLATE REMOVAL/INSTALLATION**.)
   b. Rear scuff plate (See **REAR SCUFF PLATE REMOVAL/INSTALLATION**.)
   c. B-pillar lower trim (See **B-PILLAR LOWER TRIM REMOVAL/INSTALLATION**.)
   d. Adjuster anchor cover (See **FRONT SEAT BELT REMOVAL/INSTALLATION**.)
   e. Upper anchor installation bolts on the front seat belt (See **FRONT SEAT BELT REMOVAL/INSTALLATION**.)
2. Partially peel back the seaming welt.
3. Grasp the shaded area shown in the figure, and pull the B-pillar upper trim in the direction of the arrow (1) while detaching clips, pin A, pin B.

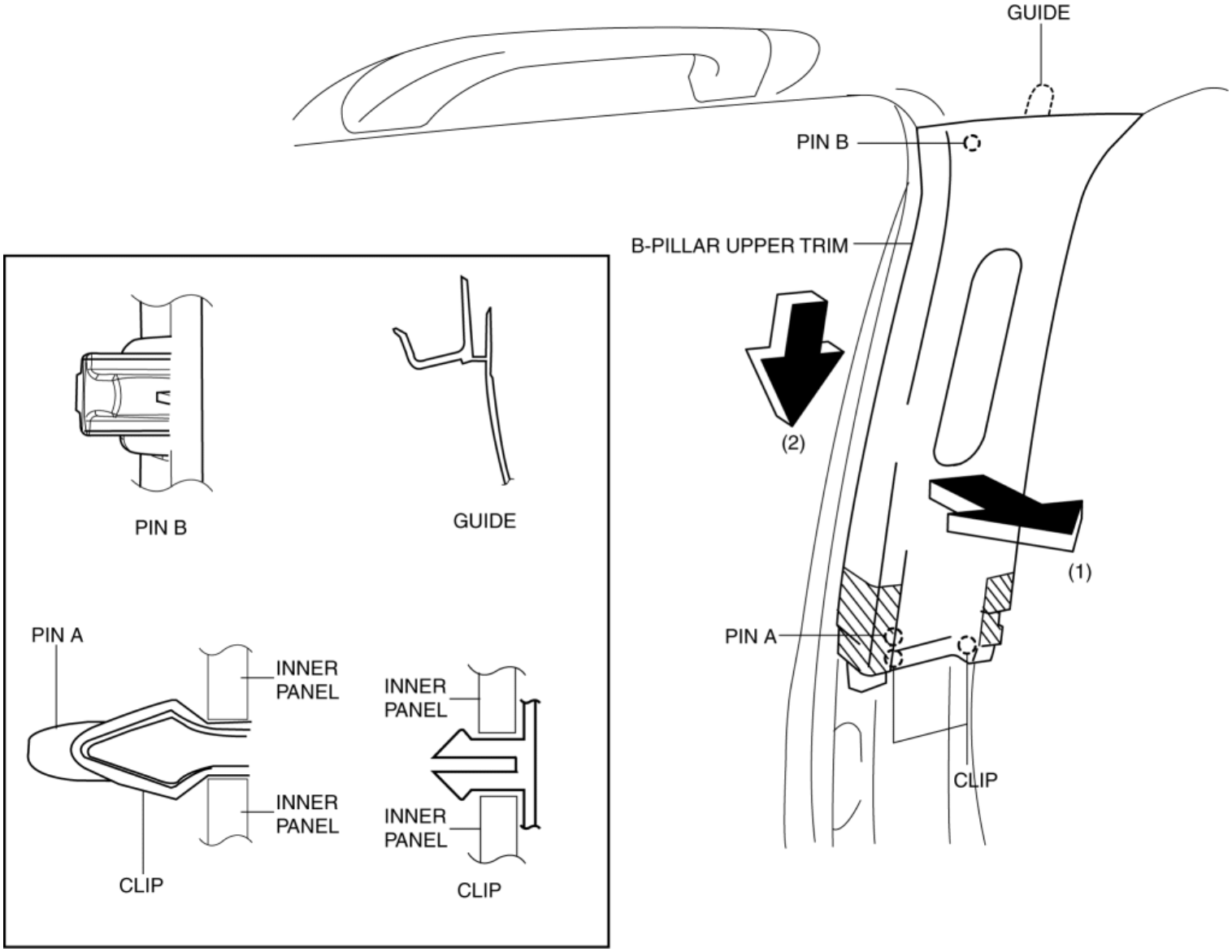

4. Remove the B-pillar upper trim in the direction of the arrow (2) shown in the figure while detaching the guide.

CAUTION:

- If clips, pin A and pin B are removed forcefully, guide may be damaged. Carefully remove clips, pin A and pin B so as

not to damage guide.

5. Install in the reverse order of removal.

2014 - Mazda3 - Body and Accessories

C-PILLAR TRIM REMOVAL/INSTALLATION

4SD

1. Lower the rear seat back.
2. Remove the fastener.

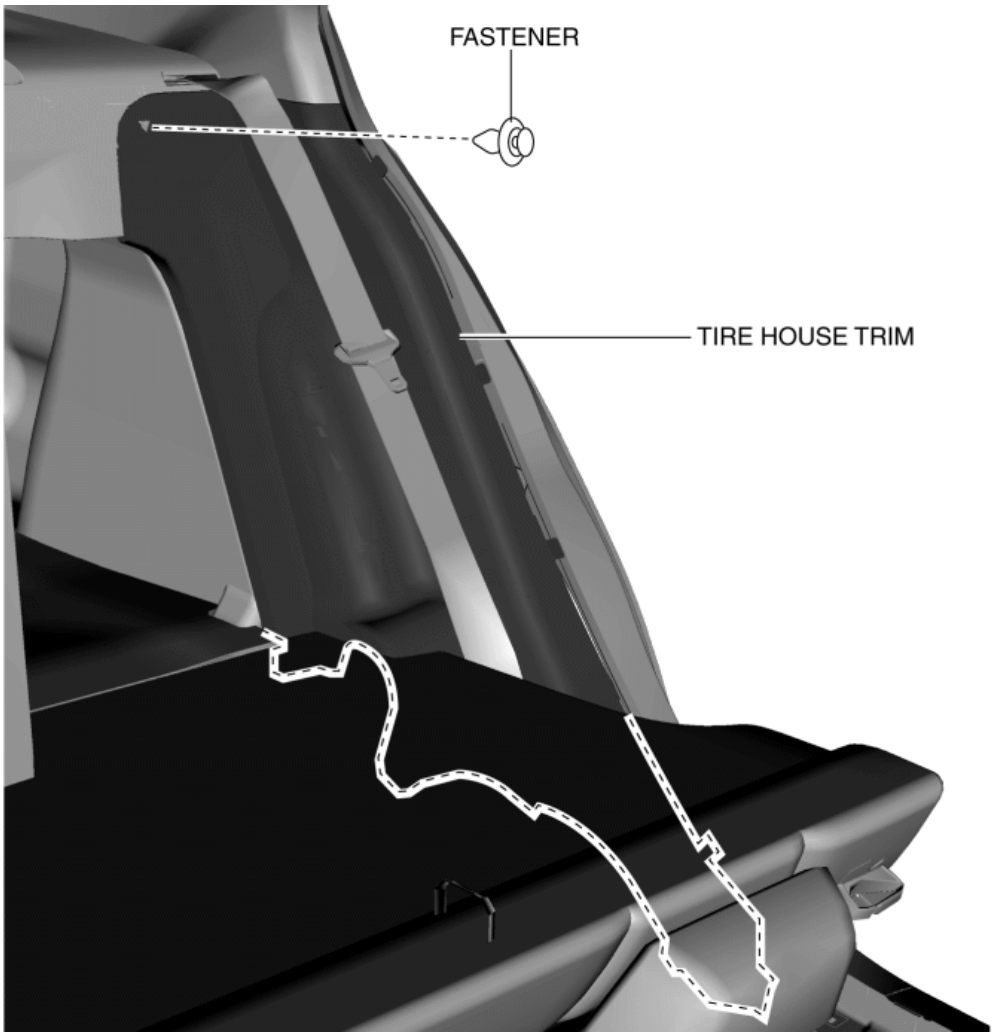

3. Set the tire house trim aside. (See **TIRE HOUSE TRIM REMOVAL/INSTALLATION**.)
4. Pull the C-pillar trim in the direction of the arrow in the order of (1), (2) while detaching clips A, clip B and clip C.

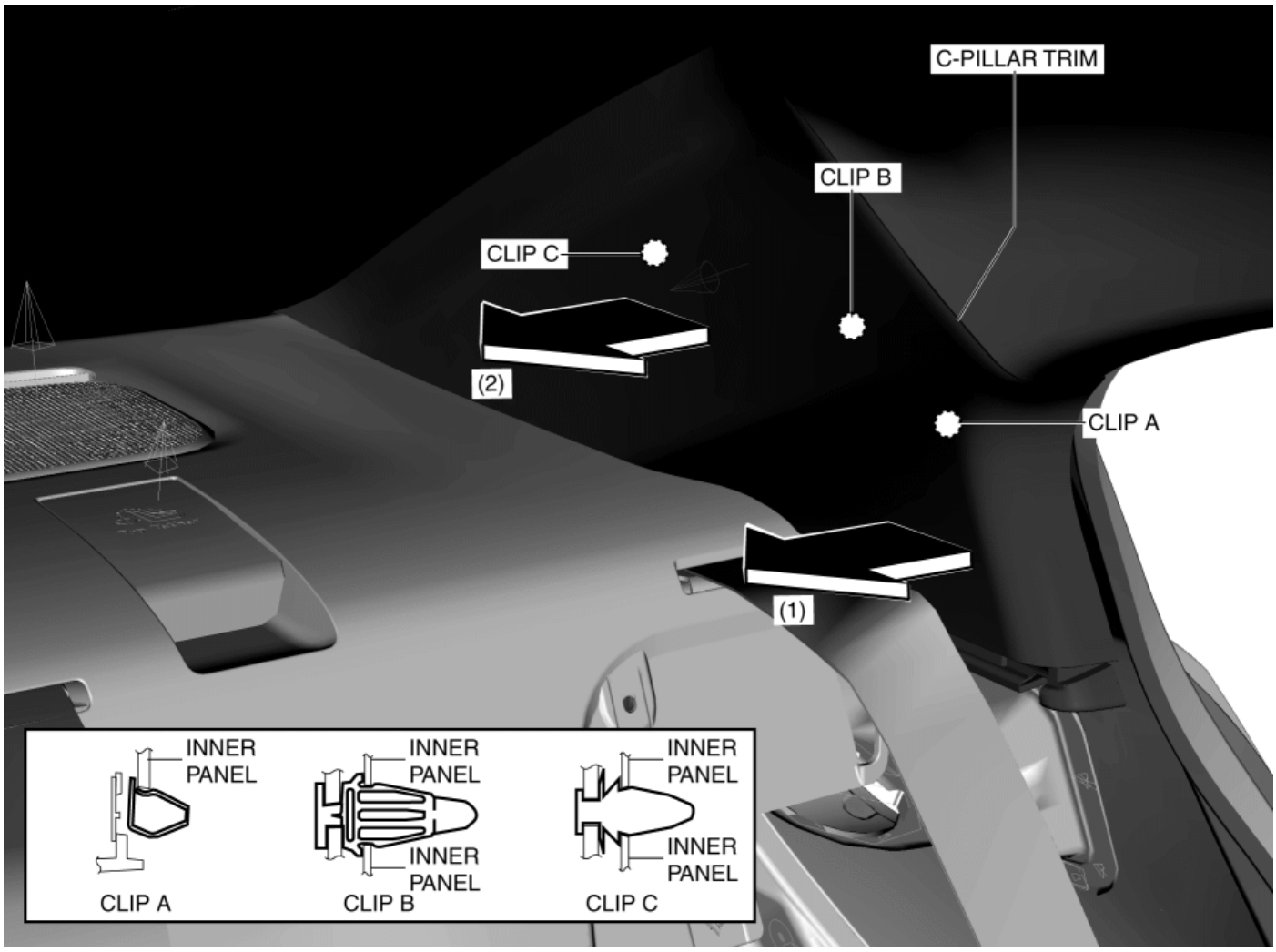

5. Remove the C-pillar trim in the direction of the arrow in the order of (3), (4) while detaching guide (1), guide (2), and guide (3).

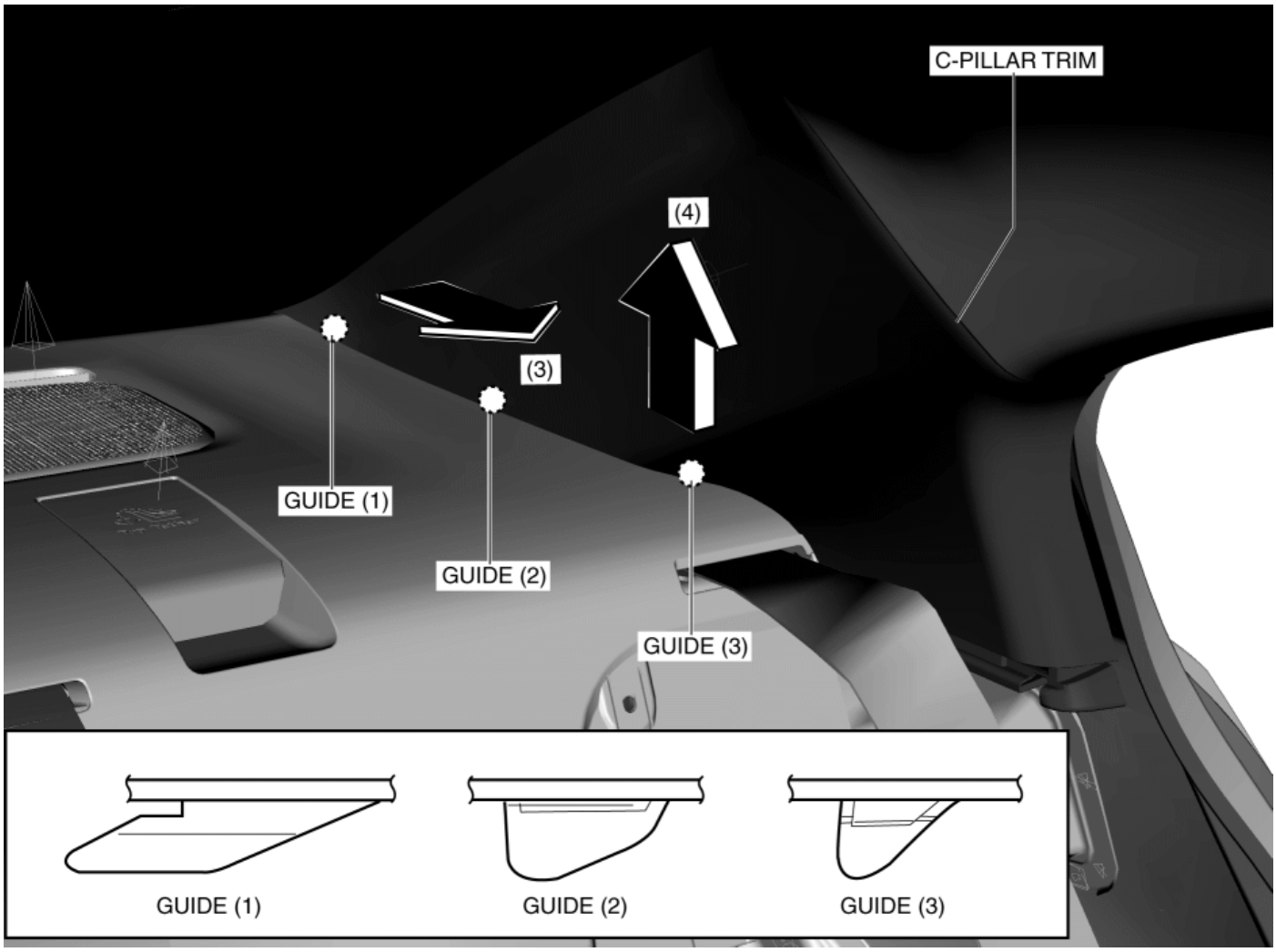

6. Install in the reverse order of removal.

5HB

1. Disconnect the negative battery cable. (See **NEGATIVE BATTERY CABLE DISCONNECTION/CONNECTION [SKYACTIV-G 2.0, SKYACTIV-G 2.5]**.)
2. Remove the following parts:
   a. Rear package tray (See **REAR PACKAGE TRAY REMOVAL/INSTALLATION**Rear package tray.)
   b. Trunk covering (See **TRUNK COVERING REMOVAL/INSTALLATION**.)
   c. Trunk end trim (See **TRUNK END TRIM REMOVAL/INSTALLATION**.)
3. Set the tire house trim aside. (See **TIRE HOUSE TRIM REMOVAL/INSTALLATION**.)
4. Remove the trunk side upper trim (See **TRUNK SIDE UPPER TRIM REMOVAL/INSTALLATION**.)
5. Remove the fastener.

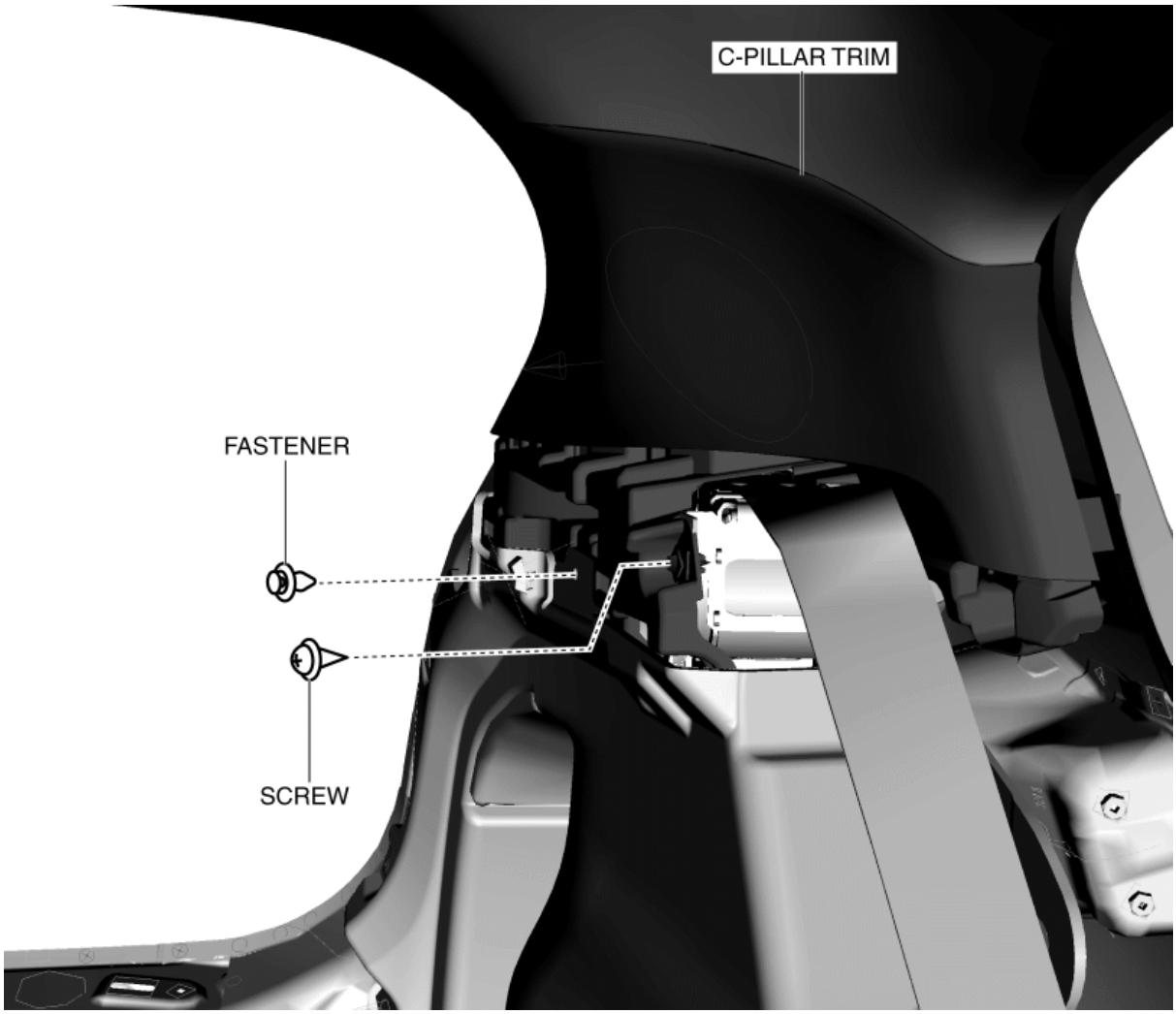

6. Remove the screw.

7. Pull the C-pillar trim in the direction of the arrow (1) while detaching clip A, clip B.

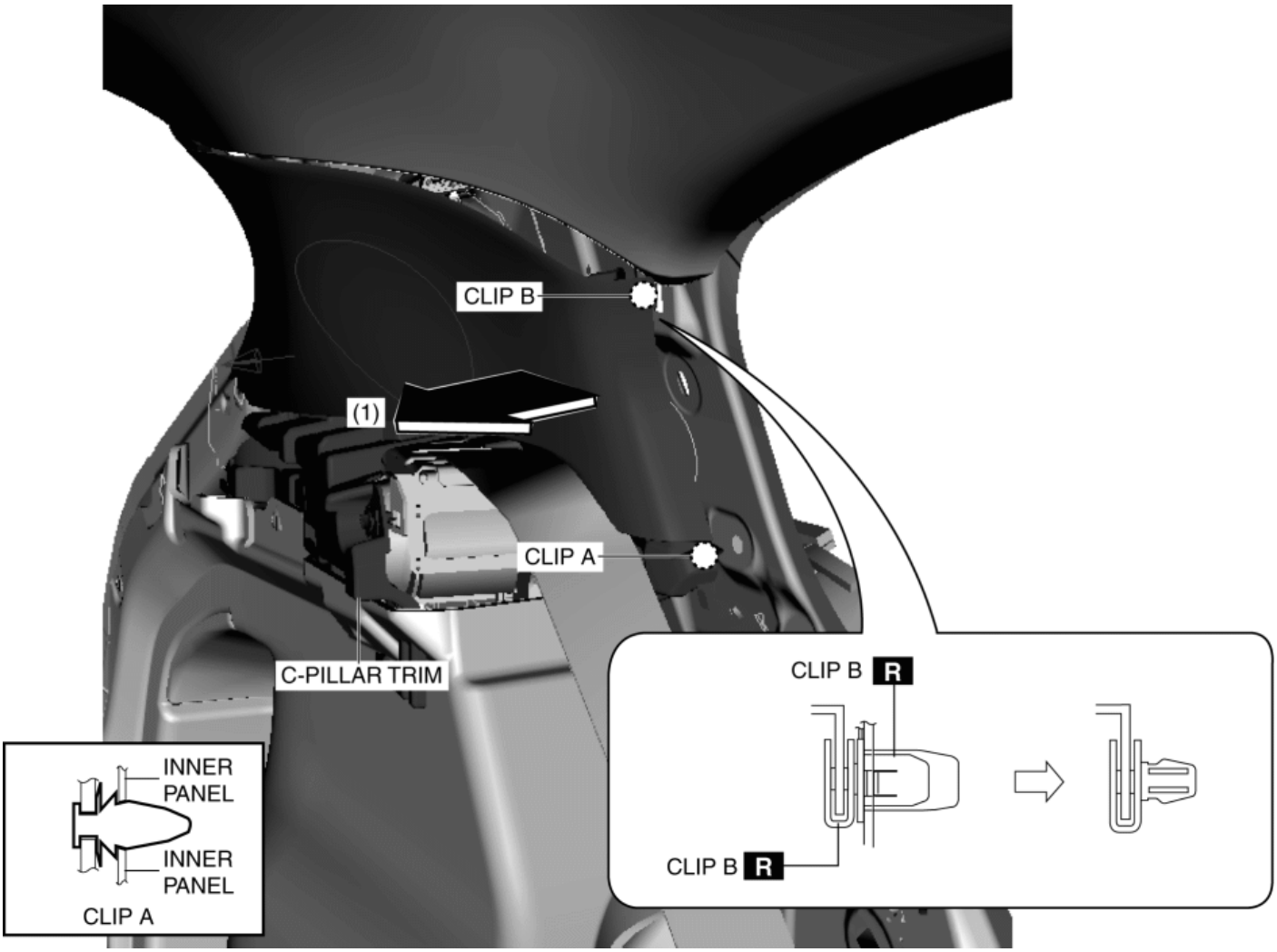

8. Cut the lead wire connecting clips B and grommet using a nipper.

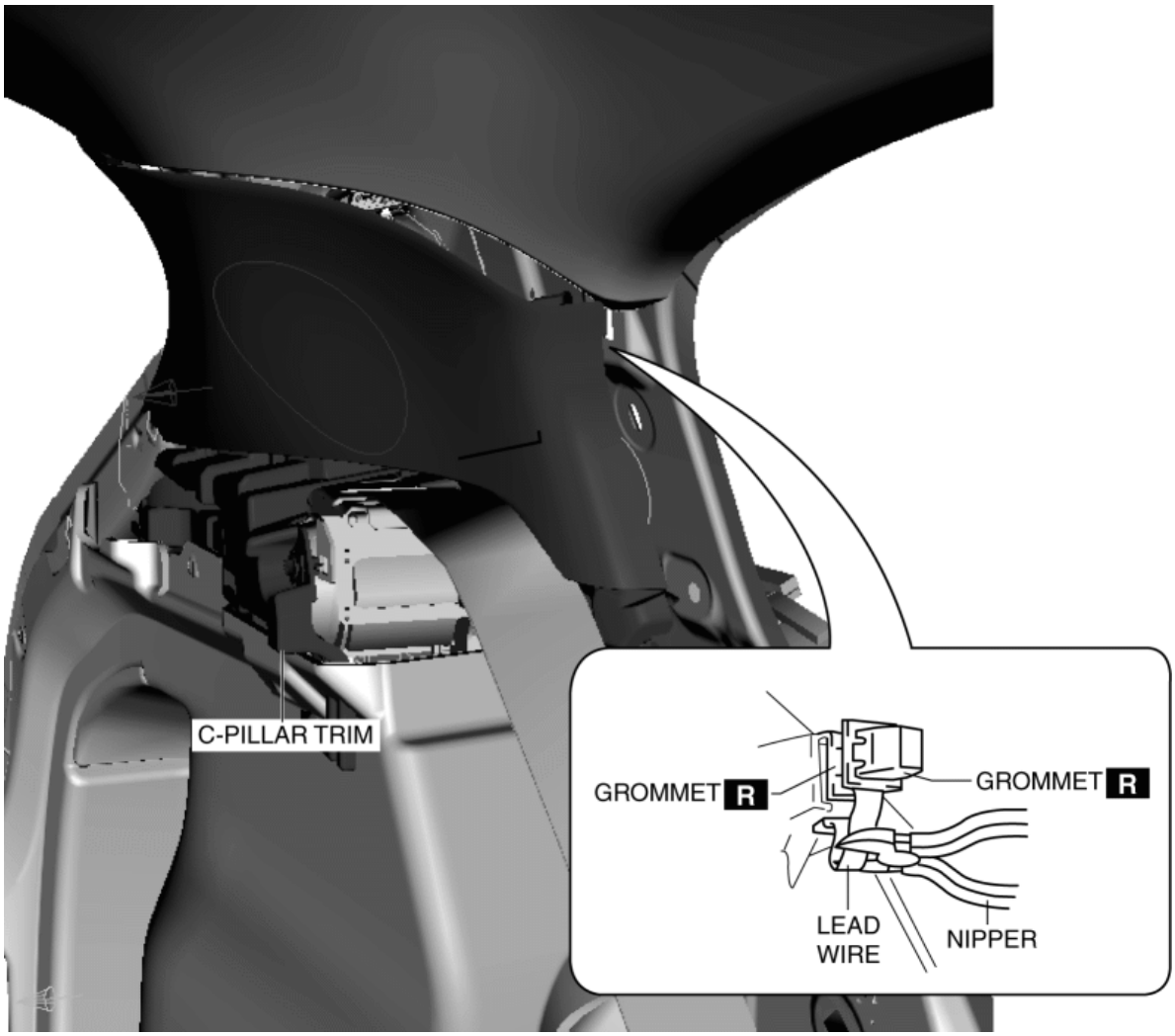

9. Slightly bend back the trunk side trim. (with rear speaker) (See **TRUNK SIDE TRIM REMOVAL/INSTALLATION**.)

10. Pull the C-pillar trim in the direction of the arrow (2) while detaching clips A.

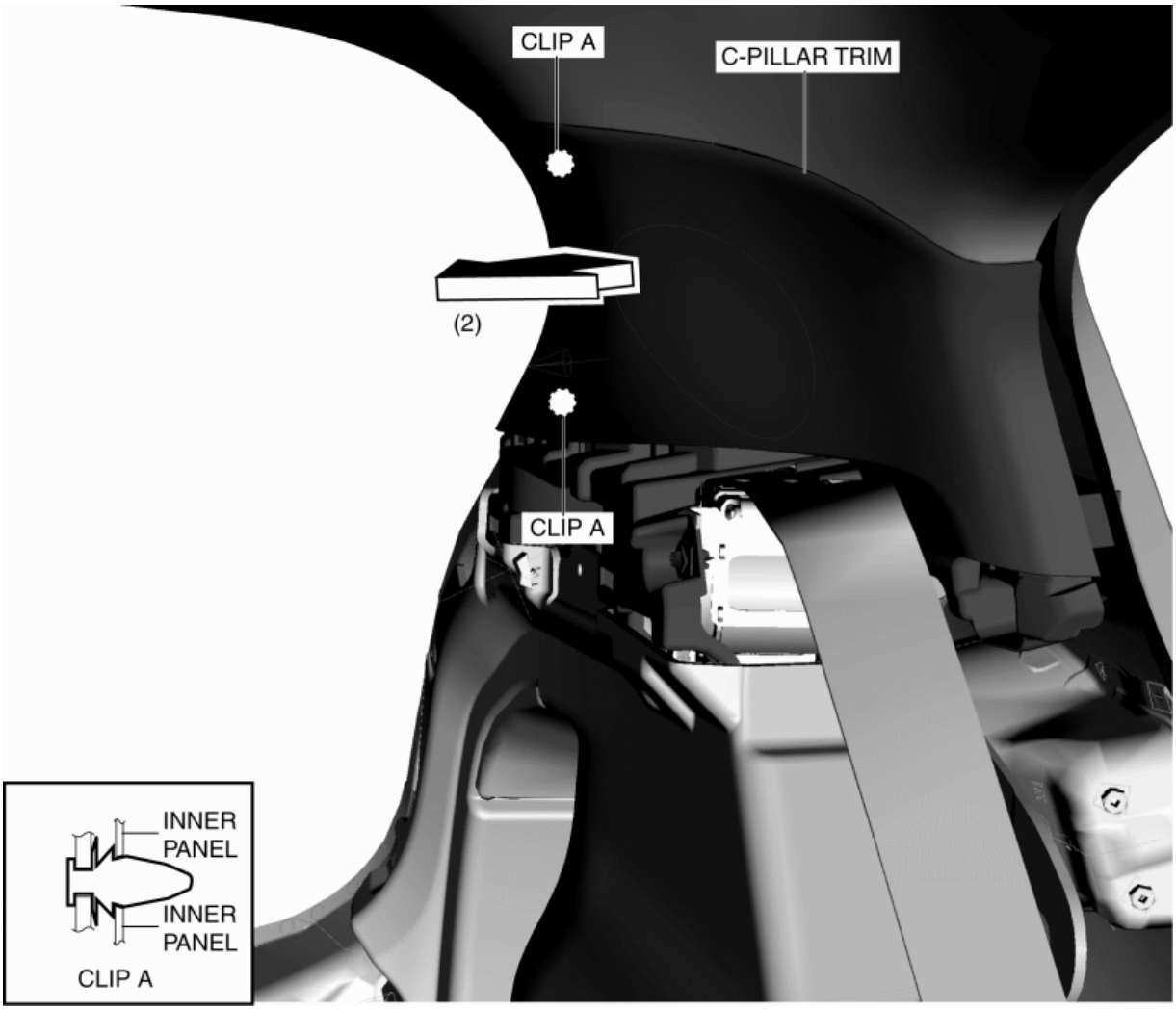

11. Move the hook in the direction of arrow (3) shown in the figure using a tape-wrapped flathead screwdriver and detach it from the inner panel.

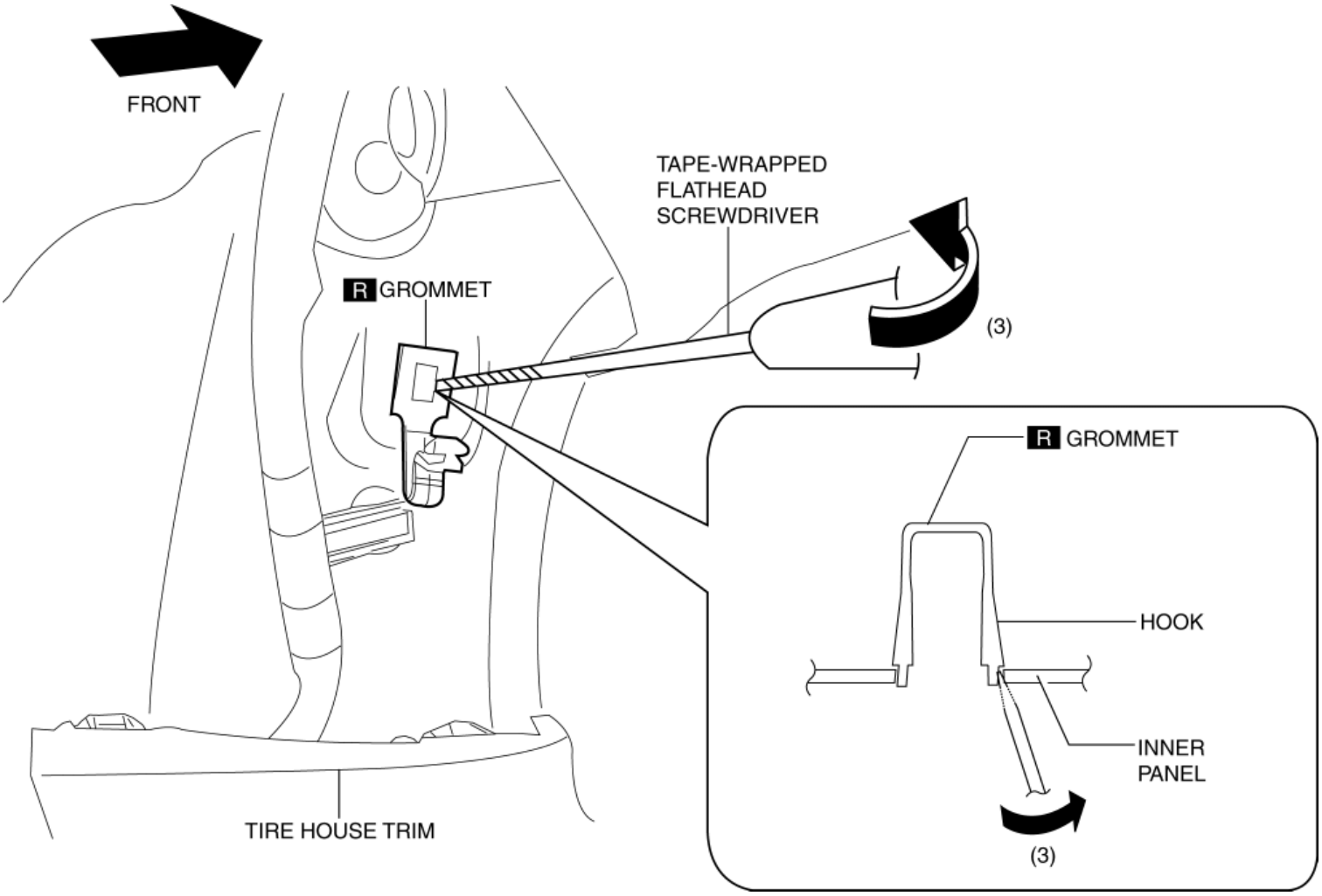

12. Move the hook in the direction of arrow (4) shown in the figure using a tape-wrapped flathead screwdriver and detach it from the inner panel.

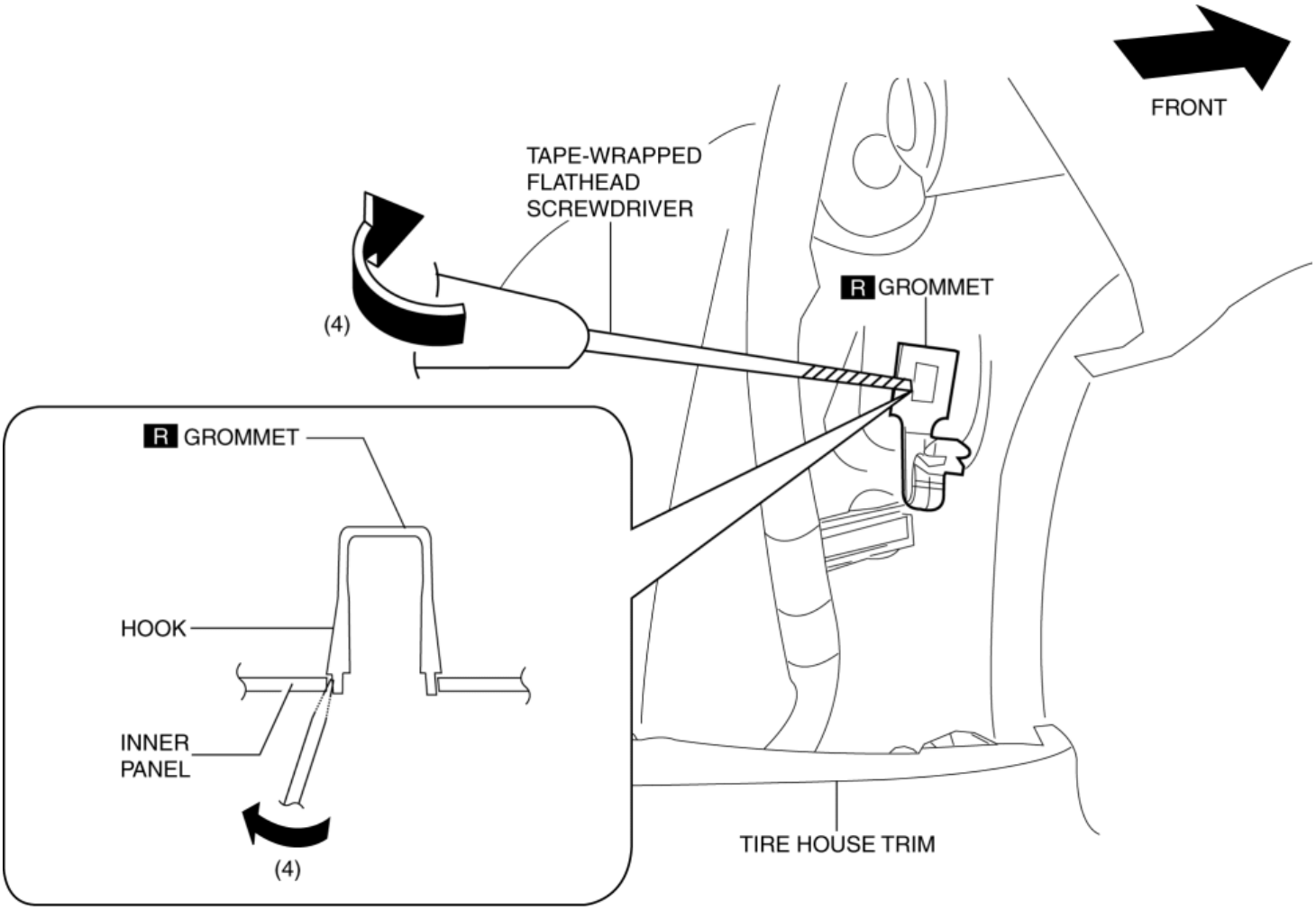

13. When installing the C-pillar, install new clips B and grommet to the C-pillar trim in advance.

14. Disconnect the rear speaker connector. (with rear speaker)

15. Install in the reverse order of removal.

2014 - Mazda3 - Body and Accessories

FRONT SCUFF PLATE REMOVAL/INSTALLATION

1. Grasp the shaded area shown in the figure, detach tab A while pulling the front scuff plate in the direction of the arrow (1) shown in the figure, then detach the hook A, clip A, and pin A while pulling in the direction of the arrow (2).

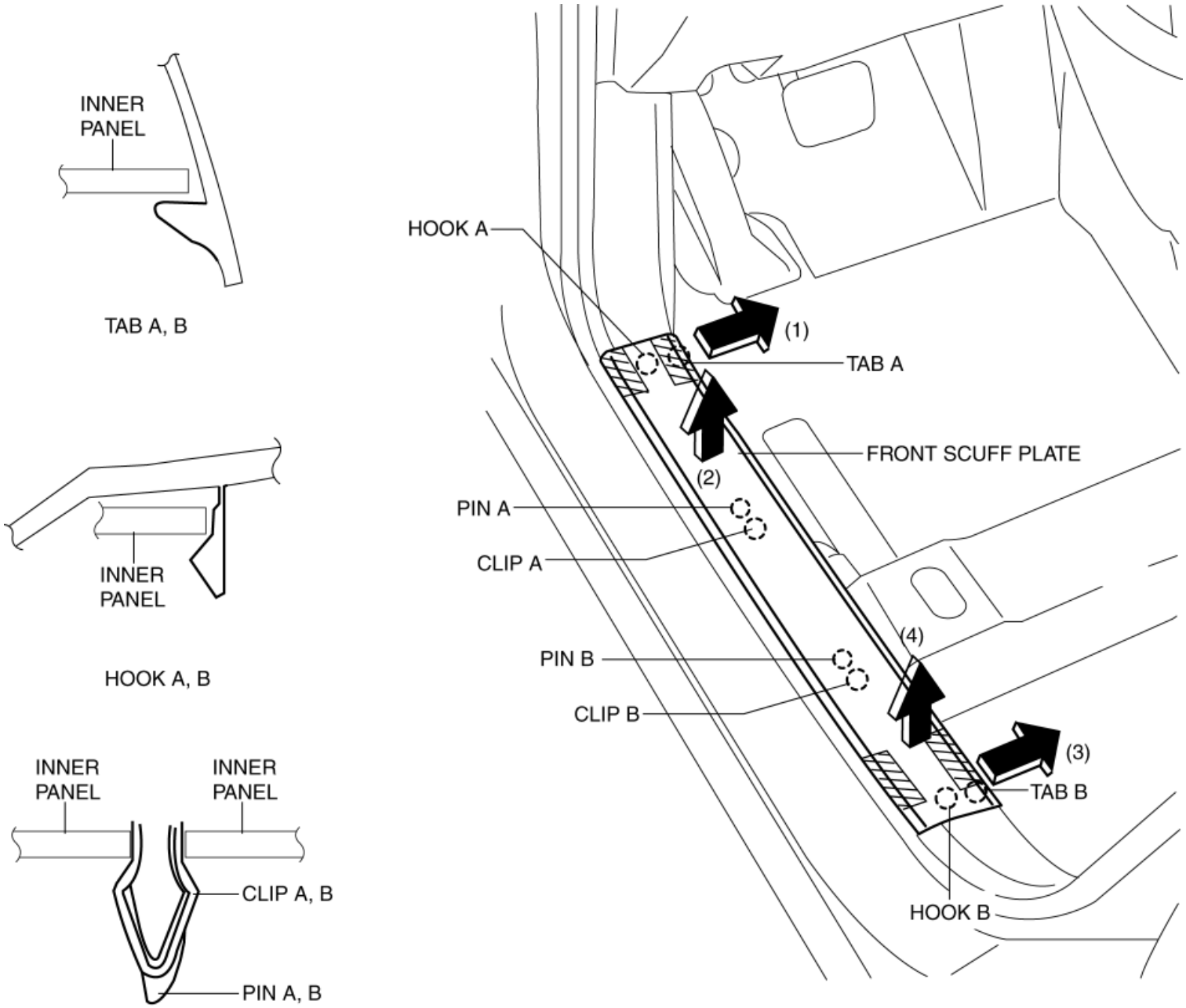

2. Grasp the shaded area shown in the figure, detach tab B while pulling the front scuff plate in the direction of the arrow (3) shown in the figure, then detach the hook B, clip B and pin B while pulling in the direction of the arrow (4).

3. Install in the reverse order of removal.

2014 - Mazda3 - Body and Accessories

REAR SCUFF PLATE REMOVAL/INSTALLATION

1. Grasp the shaded area shown in the figure, detach tab A while pulling the rear scuff plate in the direction of the arrow (1) shown in the figure, then detach hook A, clip A, pin A while pulling in the direction of the arrow (2).

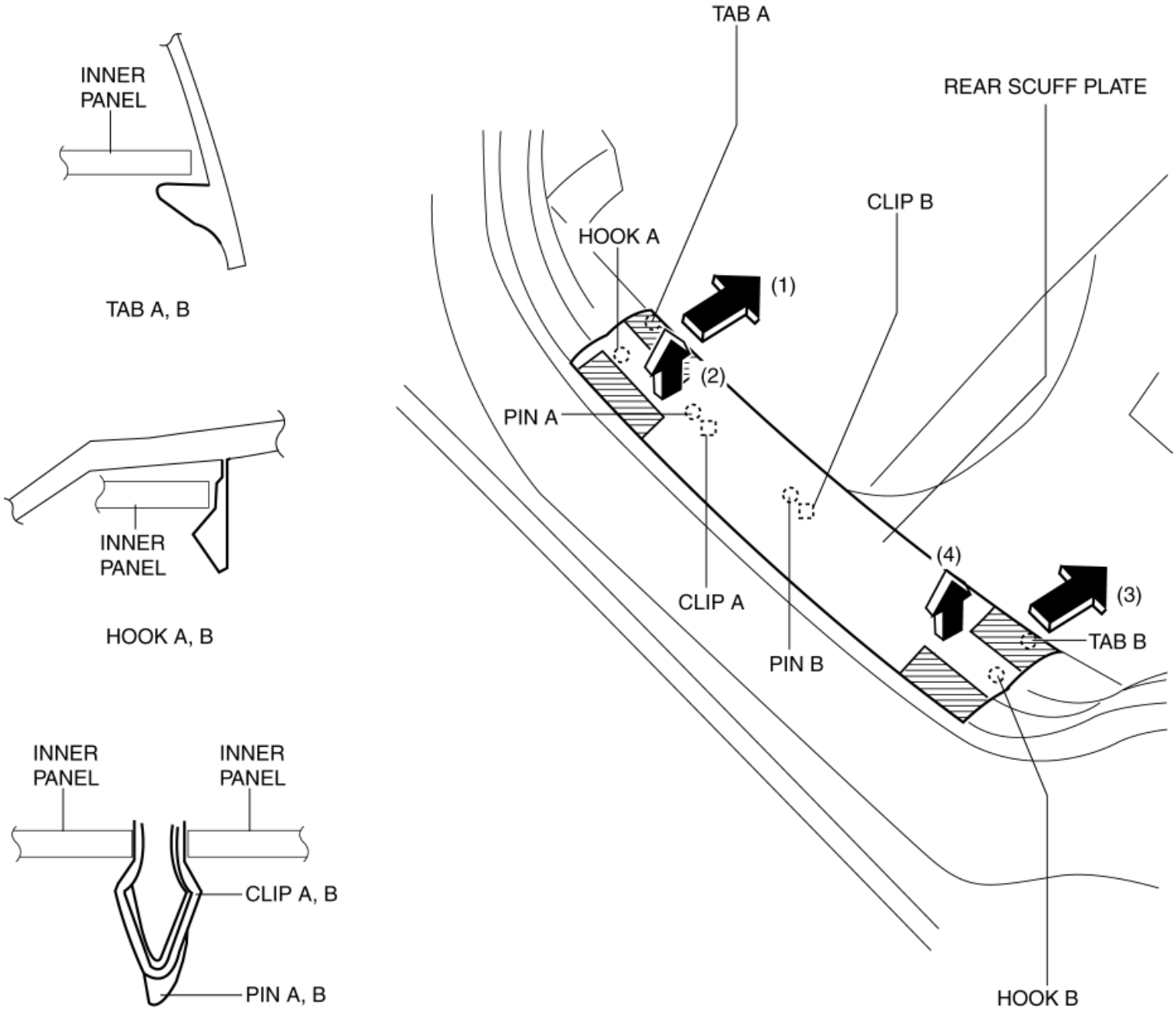

2. Grasp the shaded area shown in the figure, detach tab B while pulling the rear scuff plate in the direction of the arrow (3) shown in the figure, then detach hook B, clip B, pin B while pulling in the direction of the arrow (4).

3. Install in the reverse order of removal.

2014 - Mazda3 - Body and Accessories

REAR DOOR TRIM DISASSEMBLY/ASSEMBLY

1. Disassemble in the order shown in the figure.

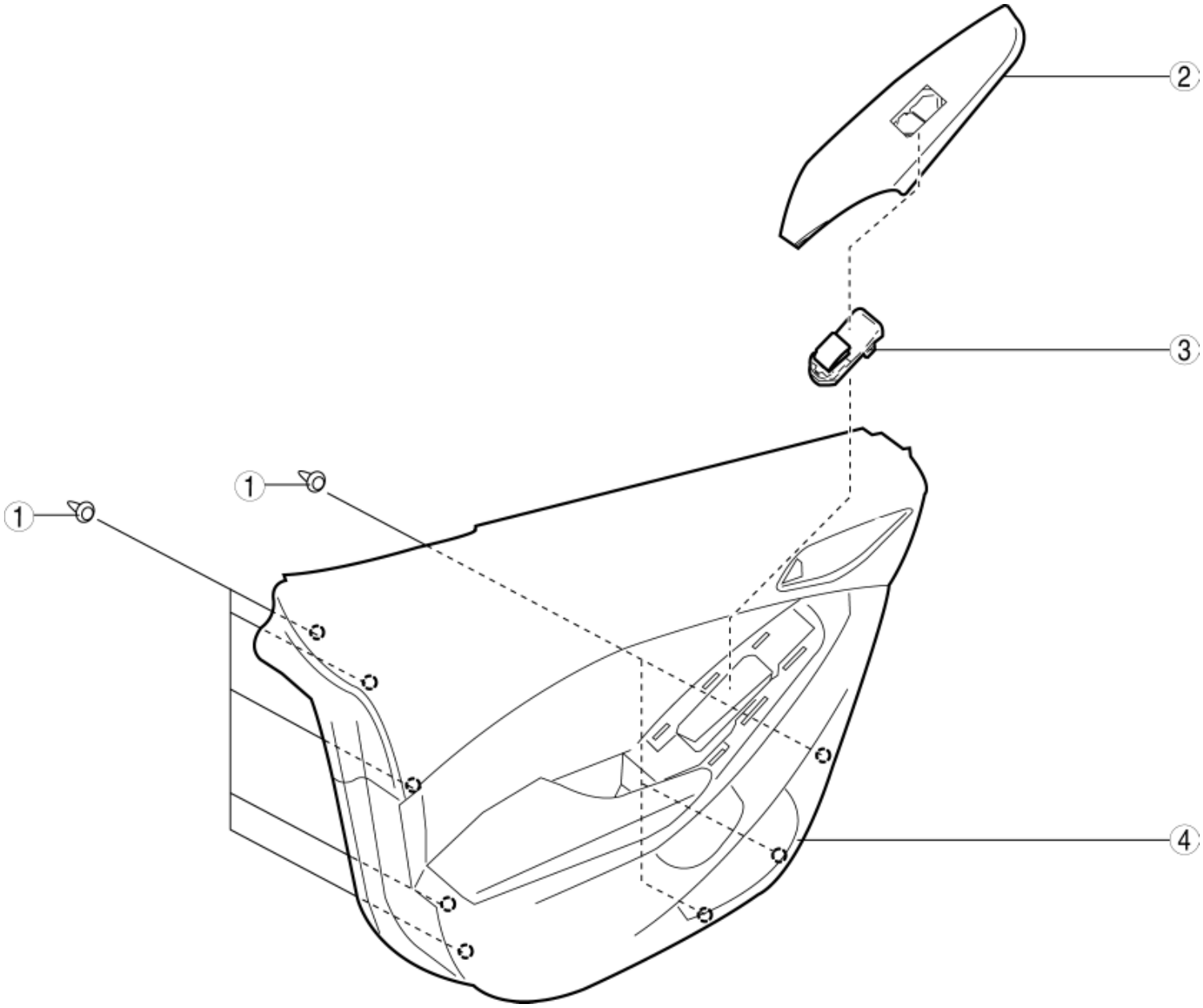

1	Fastener
2	Switch panel cover (See **POWER WINDOW SUBSWITCH REMOVAL/INSTALLATION**.)
3	Power window subswitch

4	Rear door trim

2. Assemble in the reverse order of disassembly.

2014 - Mazda3 - Body and Accessories

TRUNK END TRIM REMOVAL/INSTALLATION

4SD

1. Remove the trunk covering. (See **TRUNK COVERING REMOVAL/INSTALLATION**.)
2. Remove the lock bezel in the direction of the arrow (1) shown in the figure while detaching tabs.

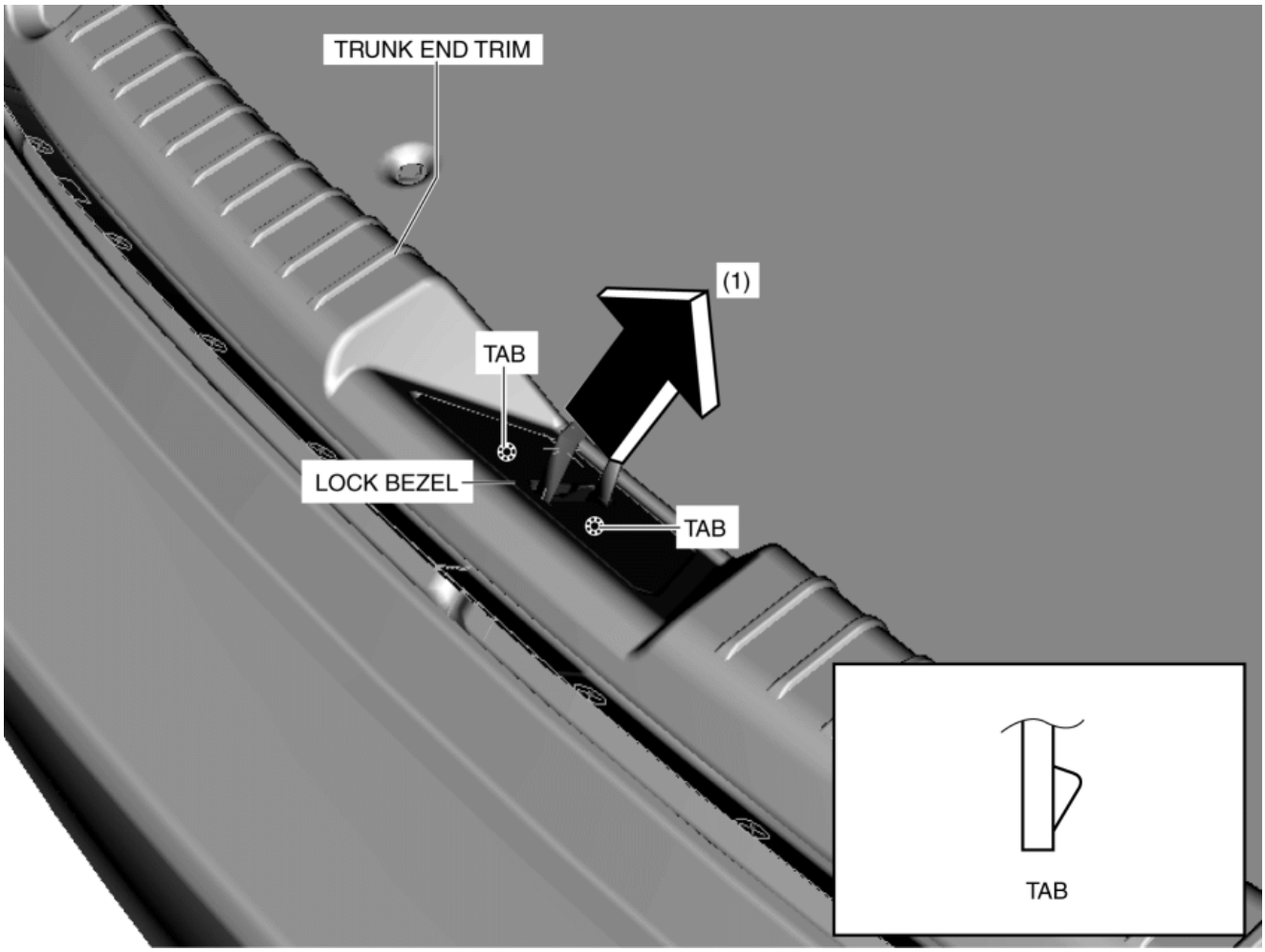

3. Partially peel back the seaming welt.
4. Remove fasteners.

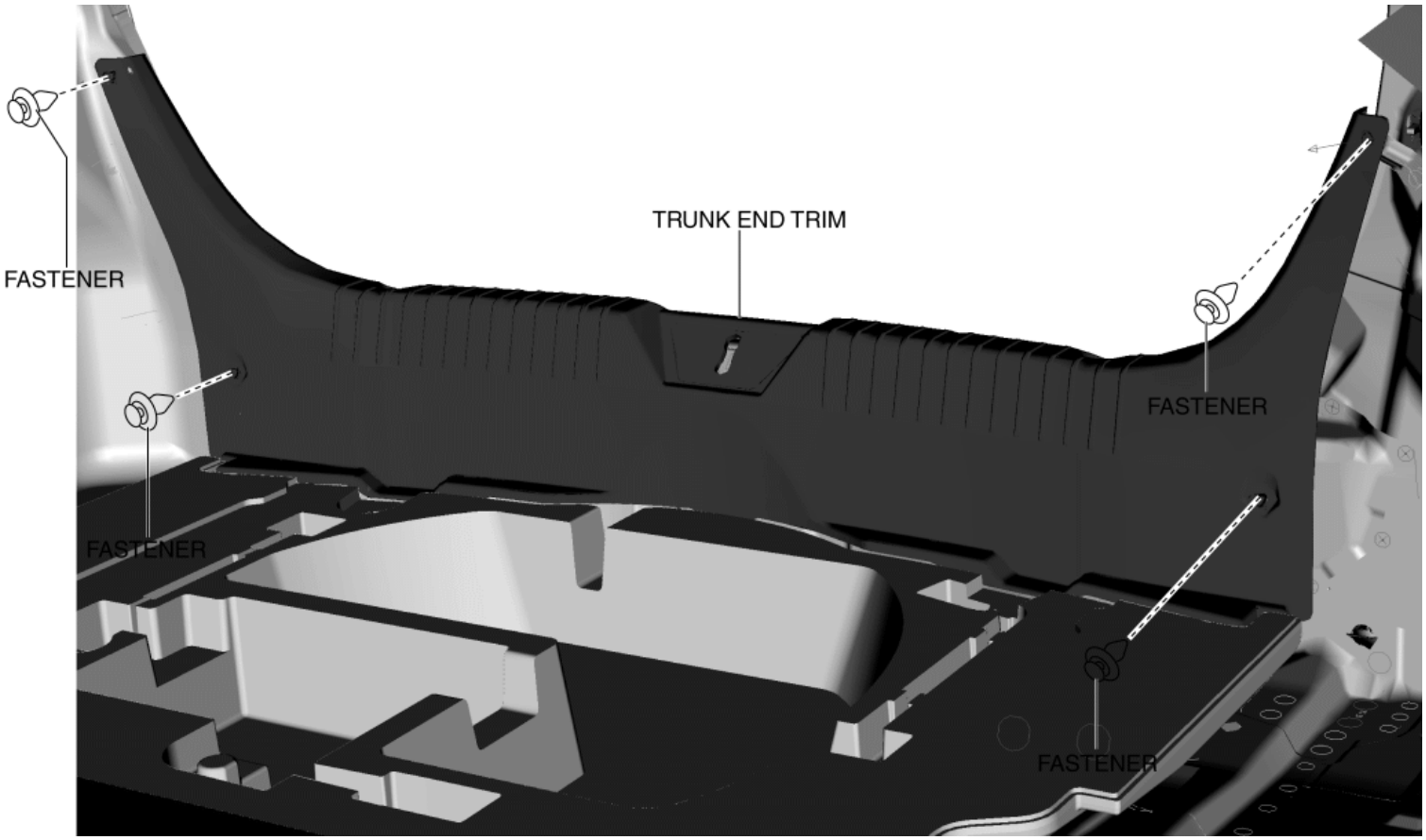

5. Pull the trunk end trim in the direction of the arrow in the order of (2), (3) shown in the figure while detaching clips A, pins A, clips B, pins B and guides.

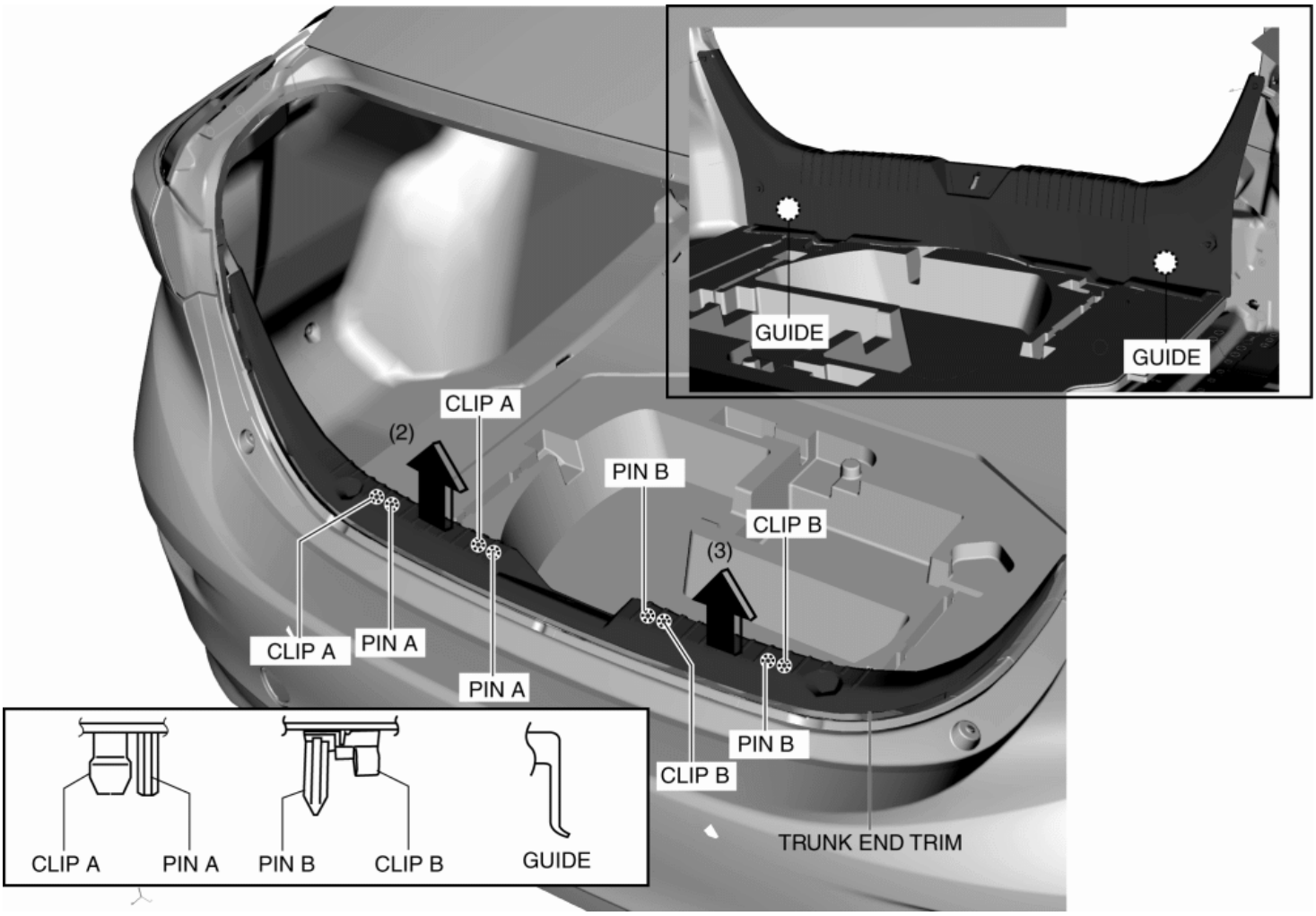

6. Install in the reverse order of removal.

5HB

1. Remove the trunk covering. (See **TRUNK COVERING REMOVAL/INSTALLATION**.)
2. Remove the lock bezel in the direction of the arrow (1) shown in the figure while detaching tabs.

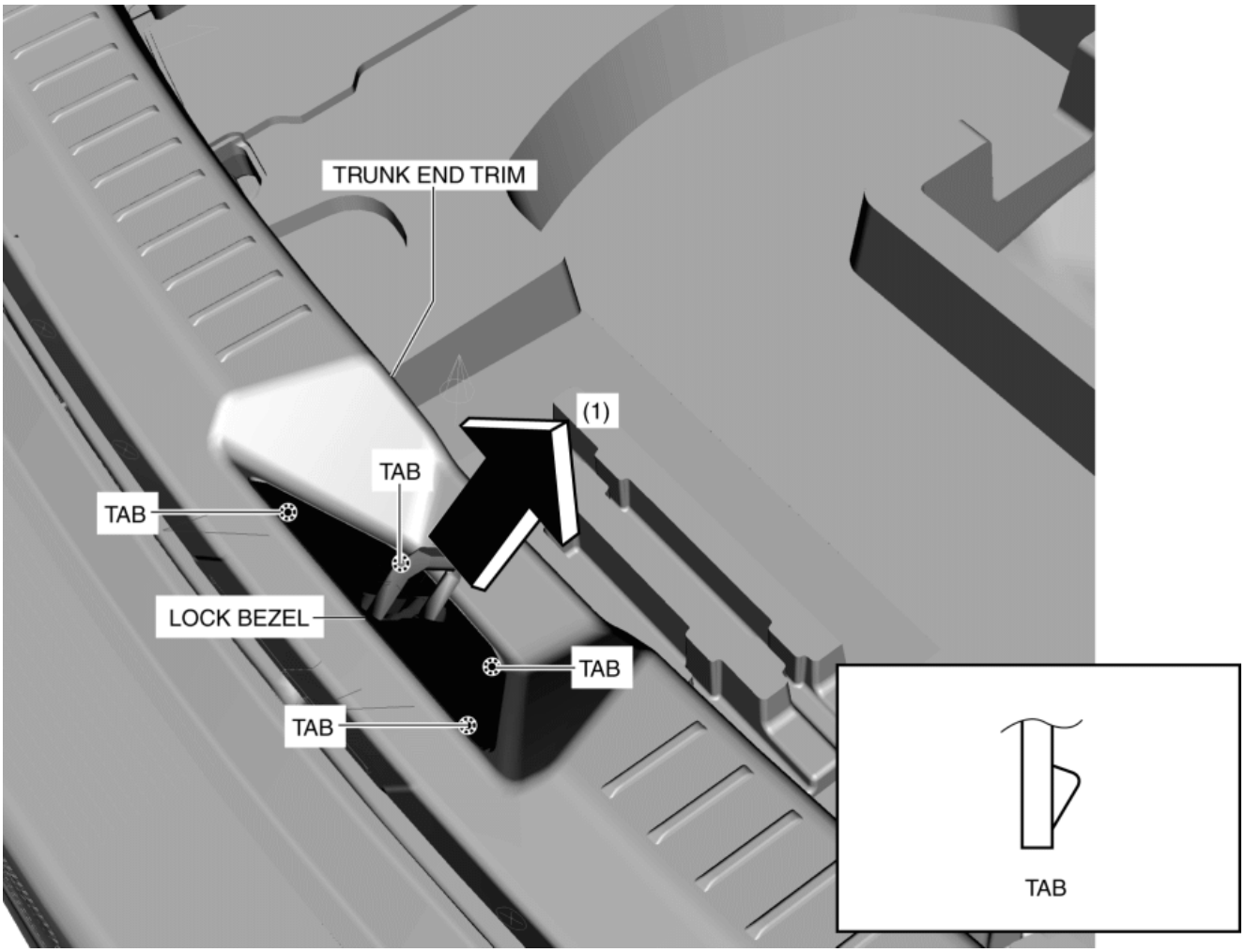

3. Partially peel back the seaming welt.

4. Remove fasteners.

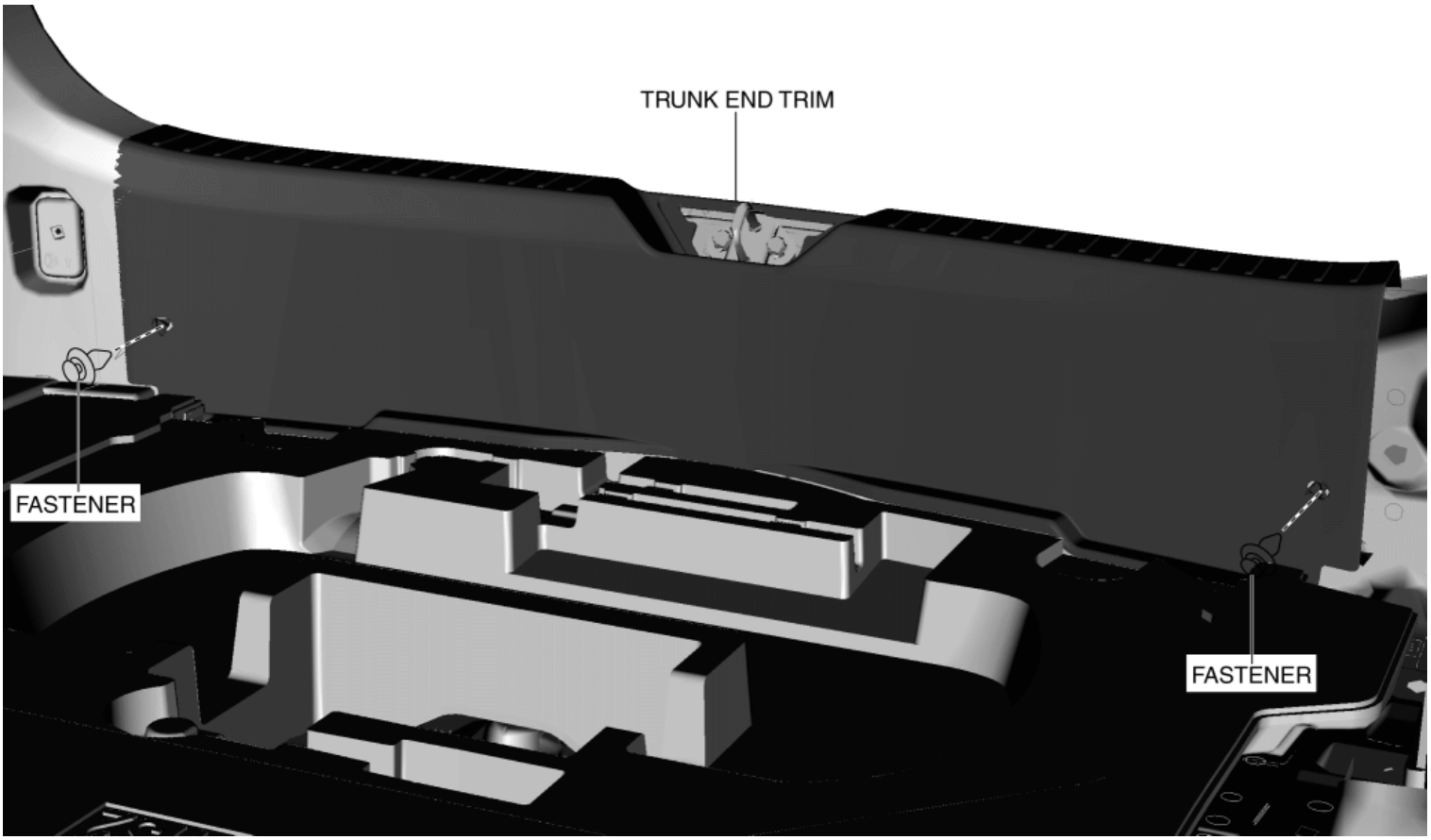

5. Pull the trunk end trim in the direction of the arrow in the order of (2), (3) shown in the figure while detaching clips A, pins A, clips B, pins B and guides.

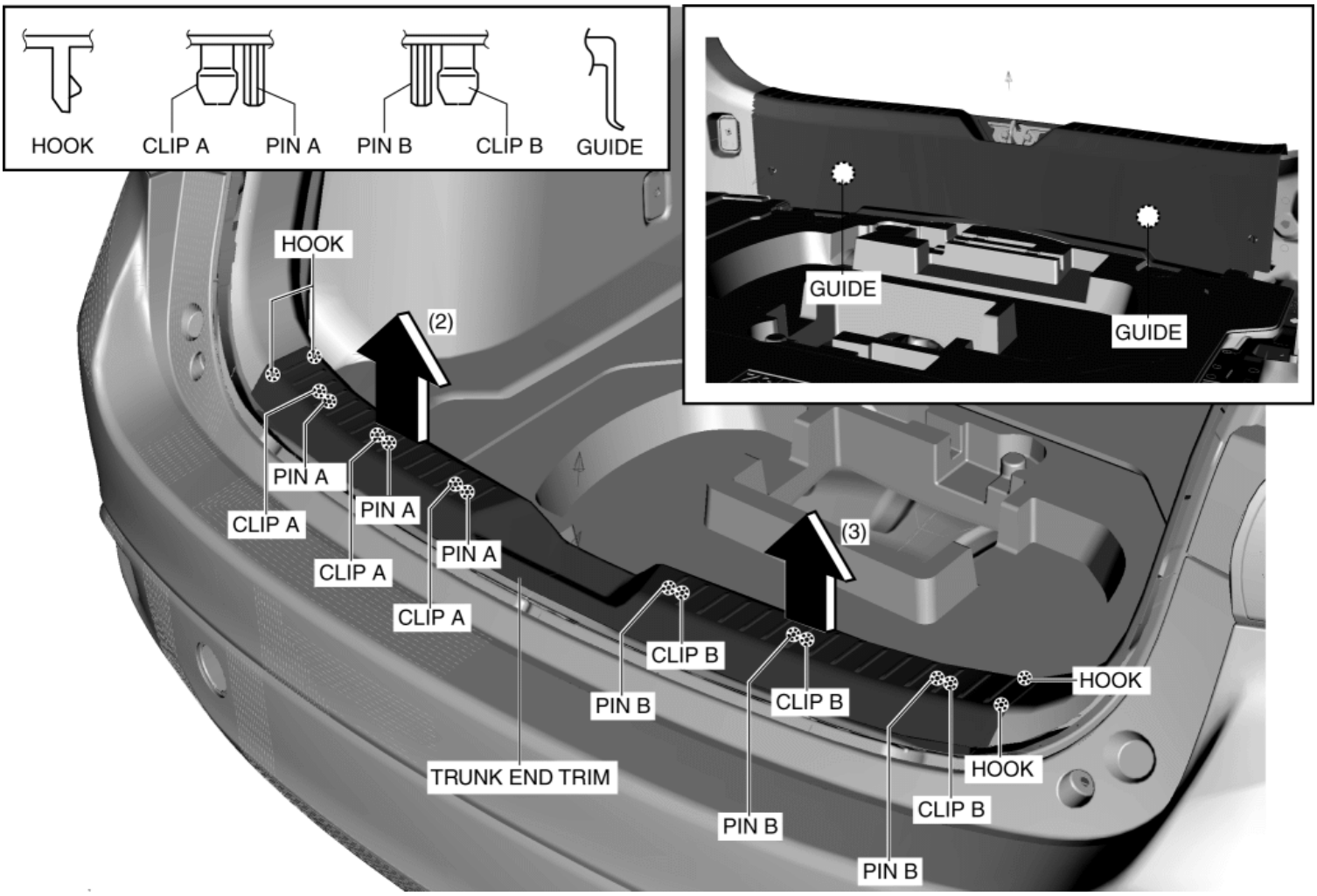

6. Pull the trunk end trim in the direction of the arrow in the order of (3), (4) shown in the figure while detaching hooks, clips B, pins B.

7. Install in the reverse order of removal.

2014 - Mazda3 - Body and Accessories

TRUNK SIDE TRIM REMOVAL/INSTALLATION

4SD

1. Remove the following parts:
   a. Trunk covering (See **TRUNK COVERING REMOVAL/INSTALLATION**.)
   b. Trunk board (See **TRUNK BOARD REMOVAL/INSTALLATION**.)
   c. Trunk end trim (See **TRUNK END TRIM REMOVAL/INSTALLATION**.)
2. Remove fasteners (1).

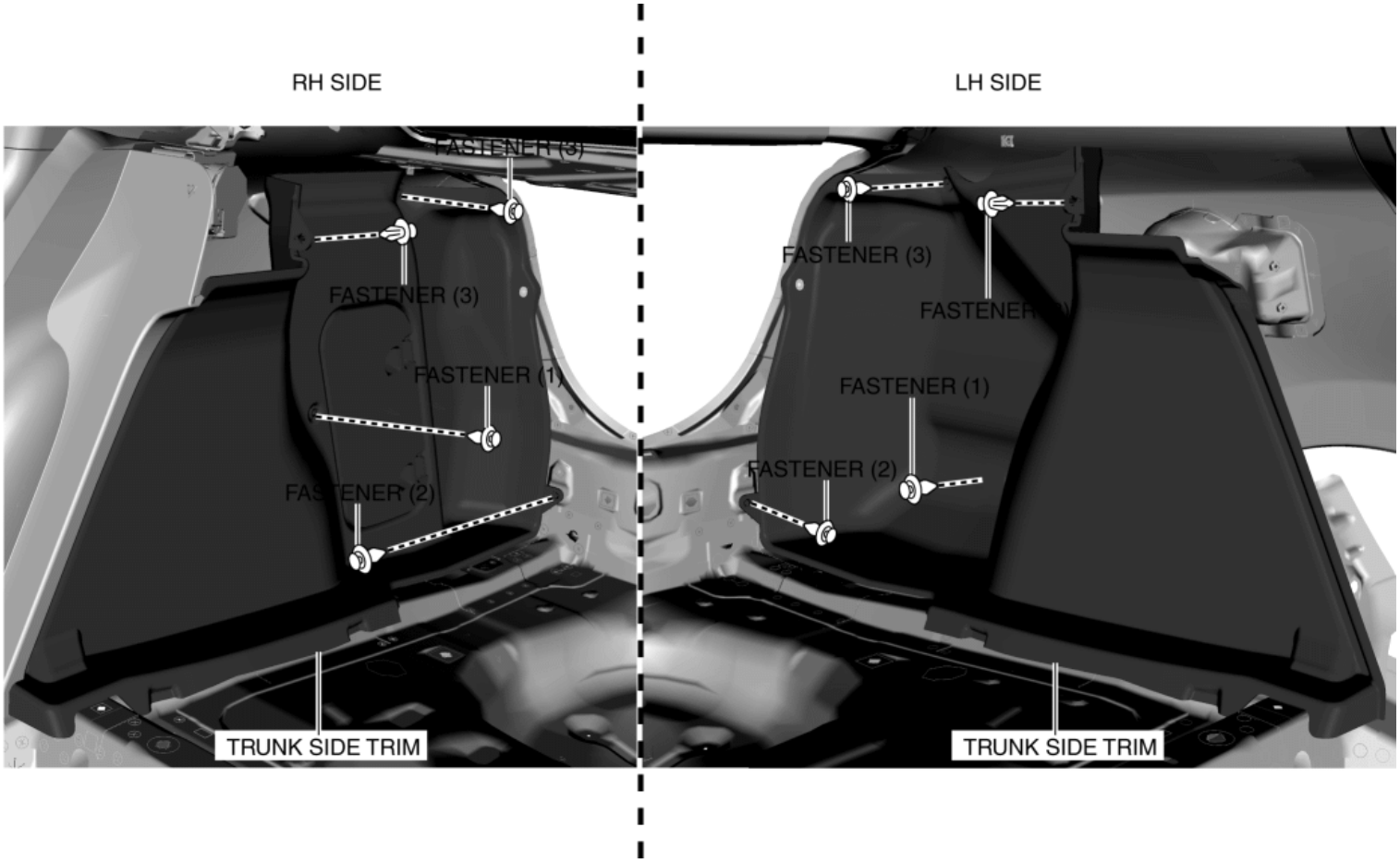

3. Remove fasteners (2).
4. Remove fasteners (3).
5. Move the trunk side trim in the direction of arrows (4) shown in the figure, and remove the trunk side trim while setting the tire house trim aside.

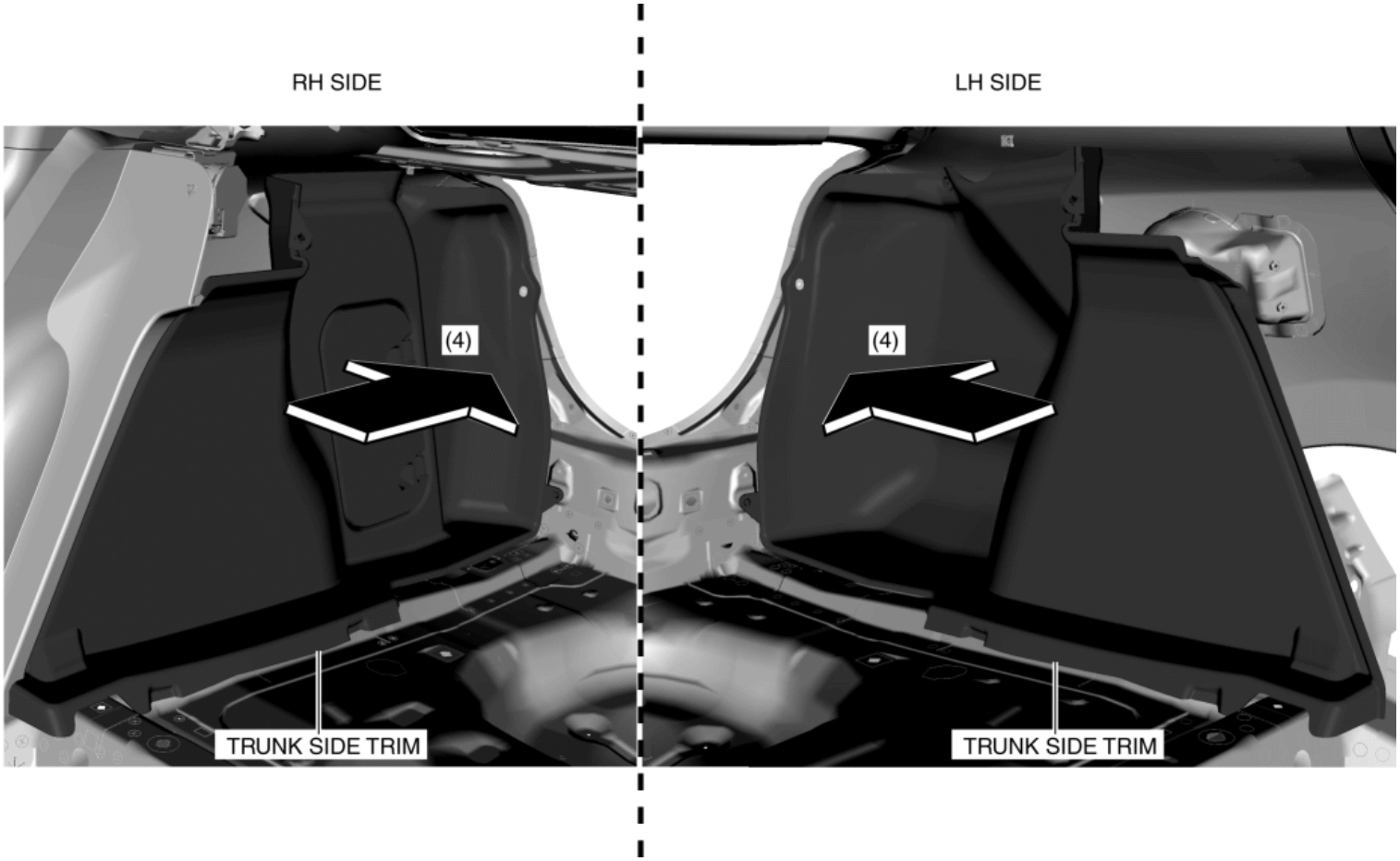

6. Install in the reverse order of removal.

5HB

1. Disconnect the negative battery cable. (See **NEGATIVE BATTERY CABLE DISCONNECTION/CONNECTION [SKYACTIV-G 2.0, SKYACTIV-G 2.5]**.)

2. Remove the following parts:

   a. Rear package tray (See **REAR PACKAGE TRAY REMOVAL/INSTALLATION**.)

   b. Trunk covering (See **TRUNK COVERING REMOVAL/INSTALLATION**.)

   c. Trunk board (See **TRUNK BOARD REMOVAL/INSTALLATION**.)

   d. Trunk end trim (See **TRUNK END TRIM REMOVAL/INSTALLATION**.)

   e. Rear seat cushion (See **REAR SEAT CUSHION REMOVAL/INSTALLATION**.)

   f. Rear seat back (See **REAR SEAT BACK REMOVAL/INSTALLATION**.)

   g. Rear scuff plate (See **REAR SCUFF PLATE REMOVAL/INSTALLATION**.)

   h. Tire house trim (See **TIRE HOUSE TRIM REMOVAL/INSTALLATION**.)

   i. Trunk side upper trim (See **TRUNK SIDE UPPER TRIM REMOVAL/INSTALLATION**.)

3. Remove the fastener (1).

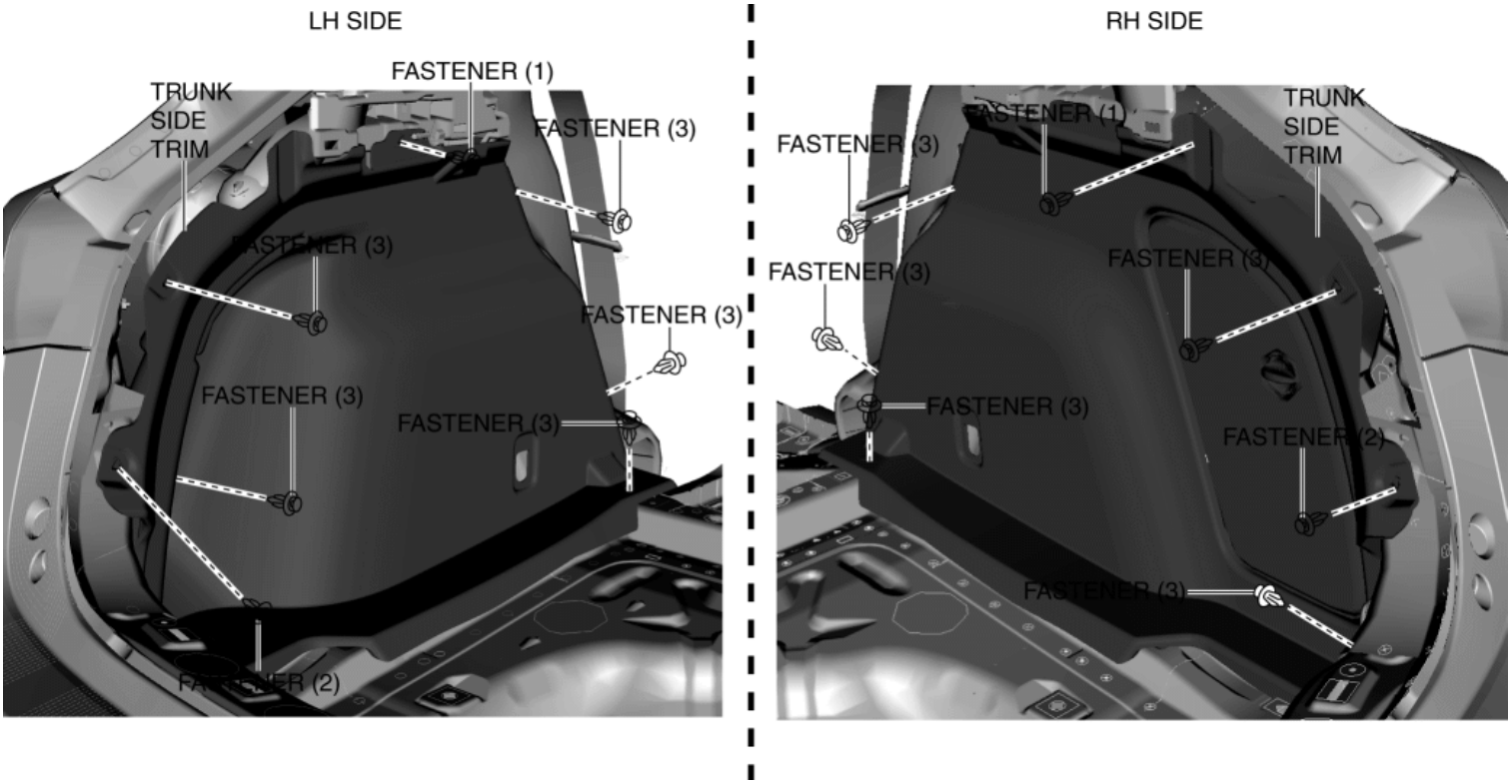

4. Remove the fastener (2).

5. Remove fasteners (3).

6. Remove the pin, then remove the cargo hook cover.

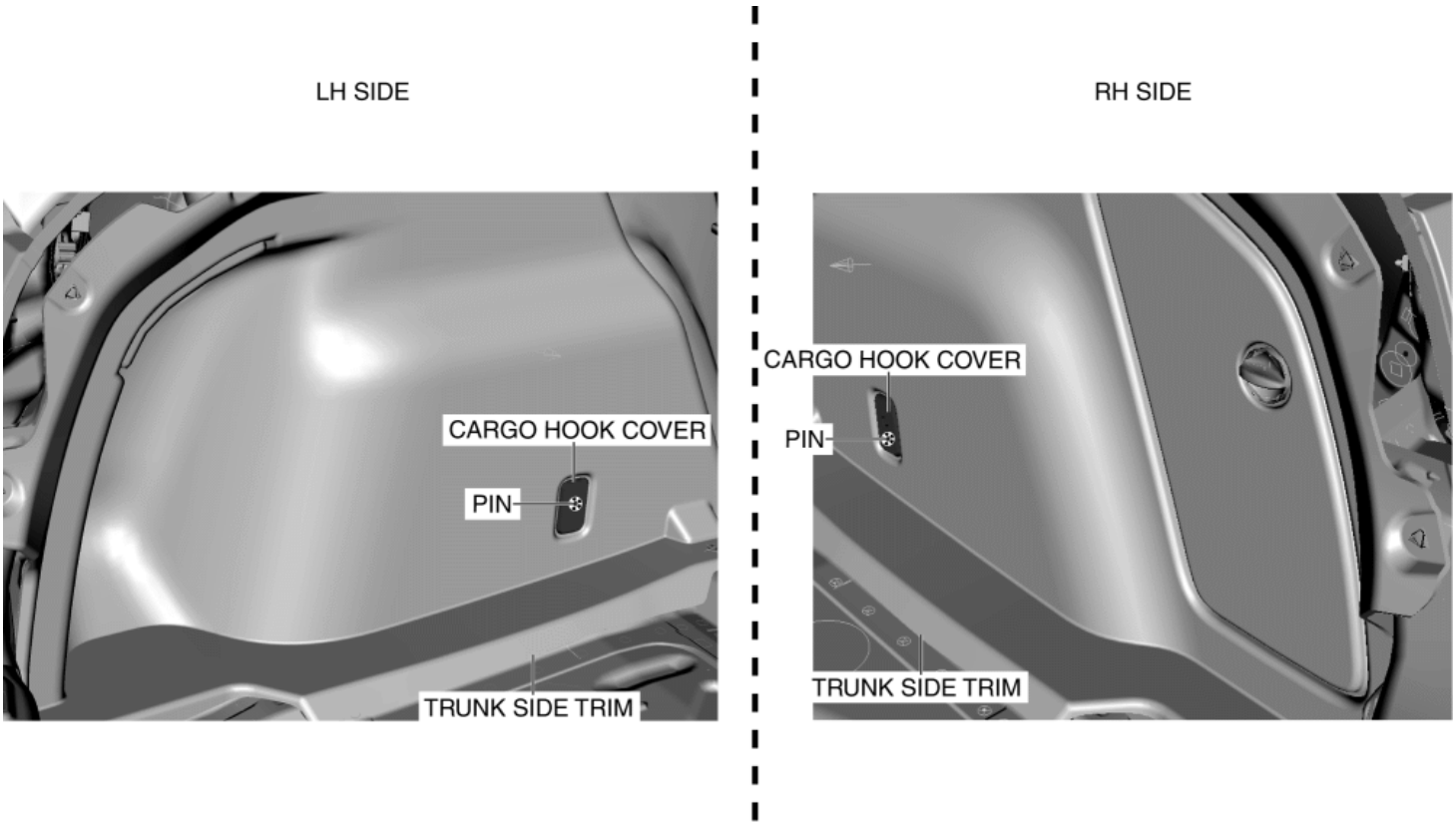

7. Remove the trunk side trim in the direction of the arrow (4) shown in the figure. (See **Trunk Side Trim Installation Note**.)

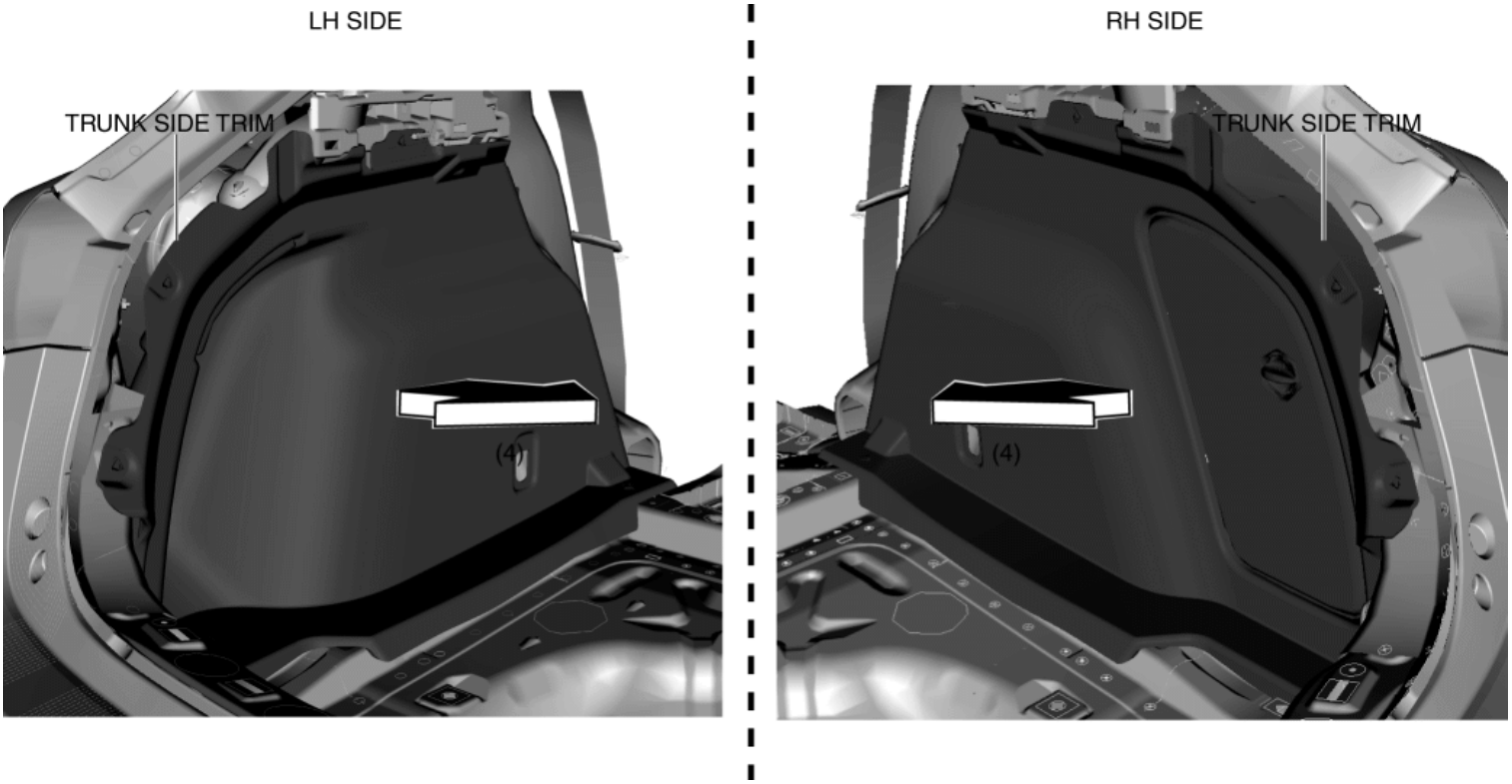

8. Install in the reverse order of removal.

Trunk Side Trim Installation Note

1. If the cargo compartment light wiring harness is routed incorrectly, the trunk side upper trim will interfere with the cargo compartment light wiring harness when installing the trunk side upper trim which could damage the cargo compartment light wiring harness. When routing the cargo compartment light wiring harness, route it through the slit area shown in the figure. (LH only)

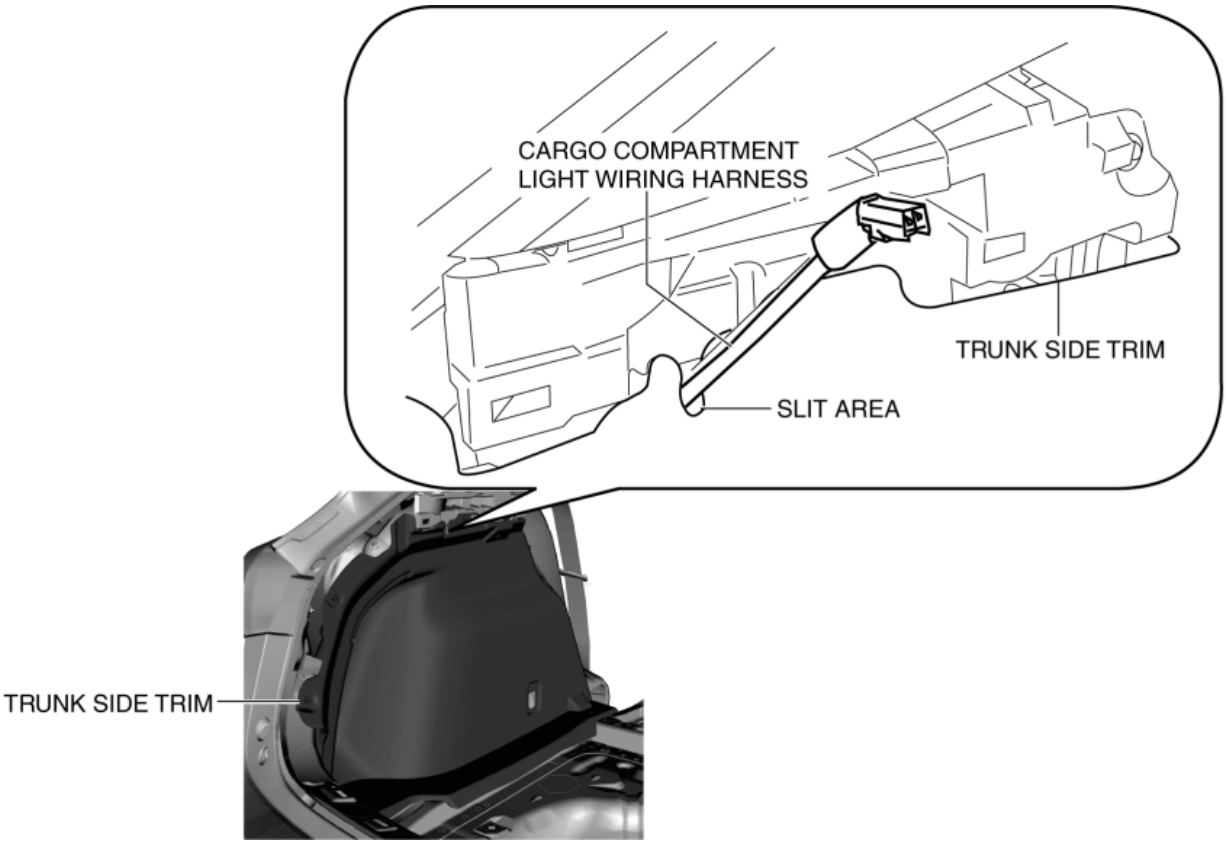

TRUNK SIDE TRIM REMOVAL/INSTALLATION

2014 - Mazda3 - Body and Accessories

TRUNK SIDE UPPER TRIM REMOVAL/INSTALLATION

1. Disconnect the negative battery cable. (See **NEGATIVE BATTERY CABLE DISCONNECTION/CONNECTION [SKYACTIV-G 2.0, SKYACTIV-G 2.5]**.)

2. Remove the following parts:

   a. Rear package tray (See **REAR PACKAGE TRAY REMOVAL/INSTALLATION**.)

   b. Trunk covering (See **TRUNK COVERING REMOVAL/INSTALLATION**.)

   c. Trunk end trim (See **TRUNK END TRIM REMOVAL/INSTALLATION**.)

3. Set the tire house trim aside. (See **TIRE HOUSE TRIM REMOVAL/INSTALLATION**.)

4. Remove the fastener.

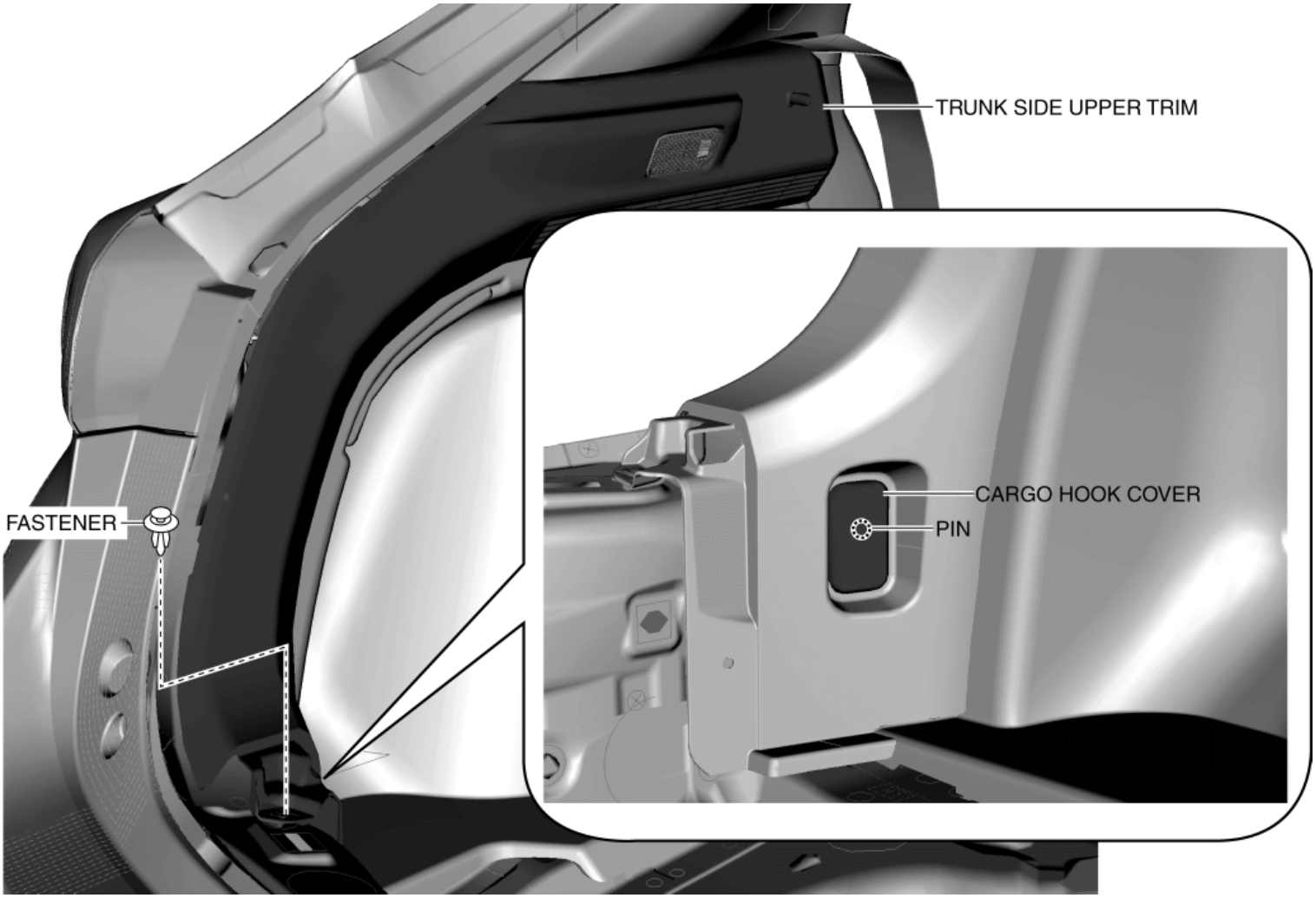

5. Remove the pin, then remove the cargo hook cover.

6. Partially peel back the seaming welt.

7. Pull the trunk side upper trim in the direction of the arrow in the order of (1), (2), (3), (4) and remove it while detaching clips A, clips B and hooks.

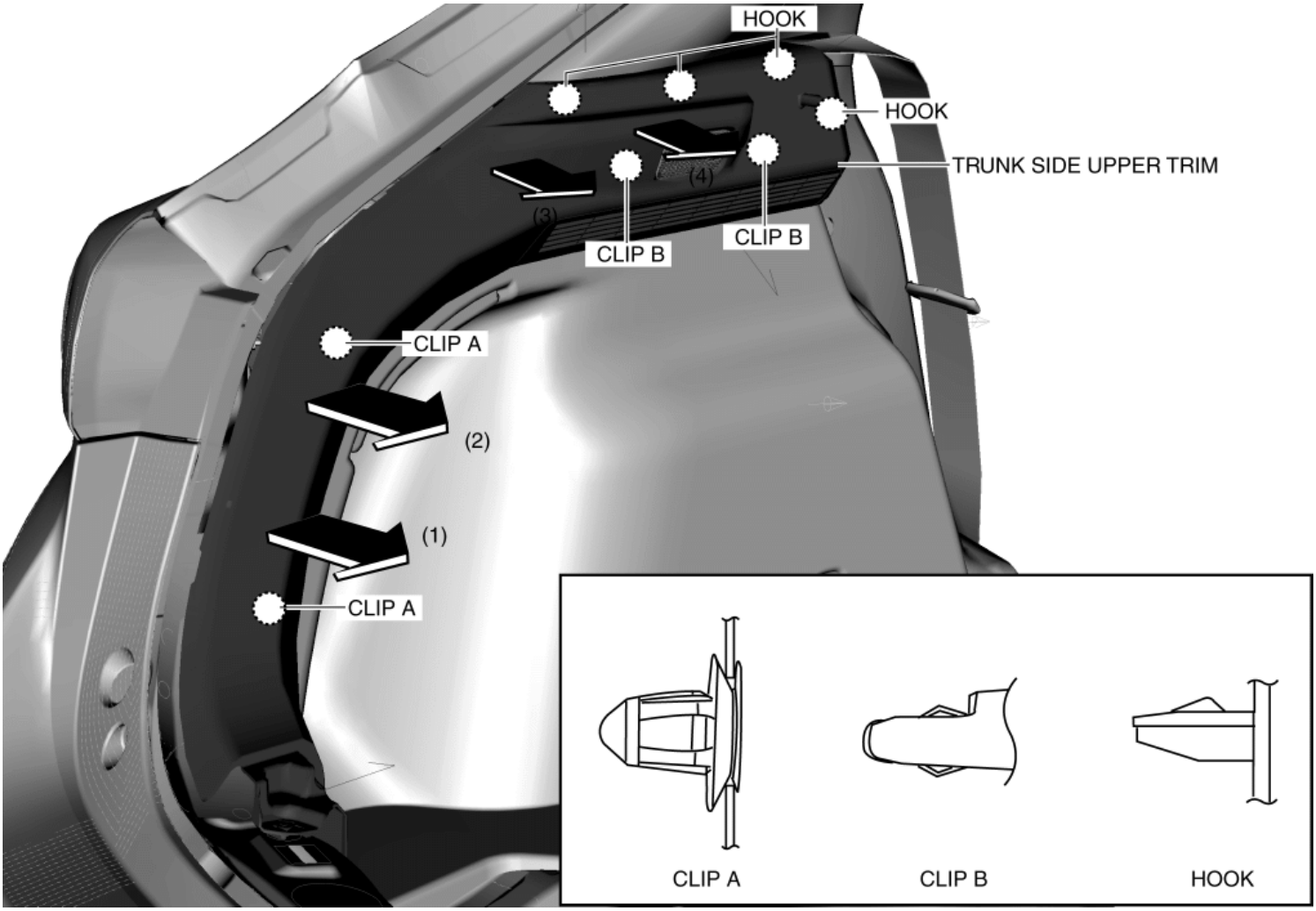

8. Disconnect the cargo room light connector. (LH only)

9. Install in the reverse order of removal.

2014 - Mazda3 - Body and Accessories

FRONT DOOR TRIM REMOVAL/INSTALLATION

1. Disconnect the negative battery cable. (See **NEGATIVE BATTERY CABLE DISCONNECTION/CONNECTION [SKYACTIV-G 2.0, SKYACTIV-G 2.5]**.)

2. Remove the inner handle cover while detach tabs A, pin A.

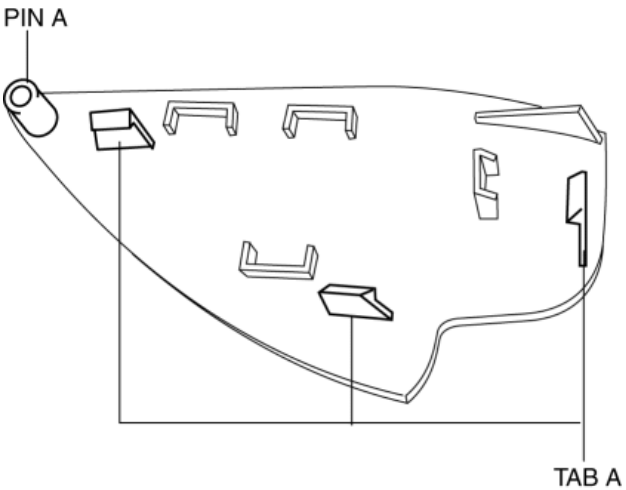

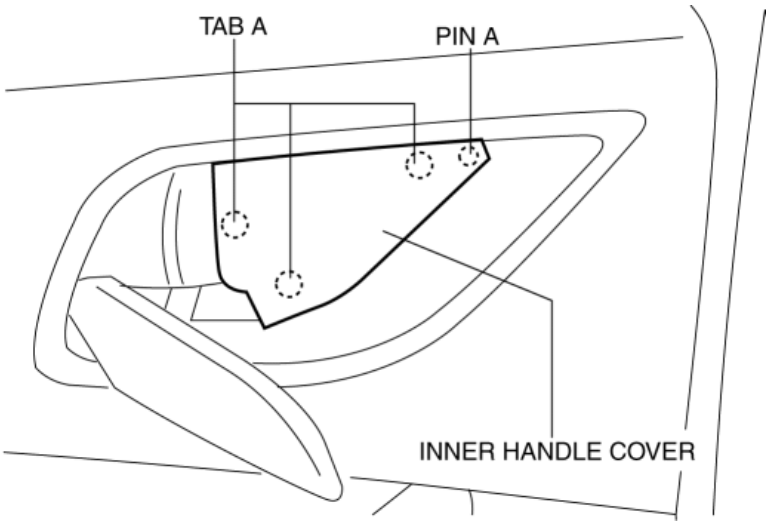

3. Remove the screw A.

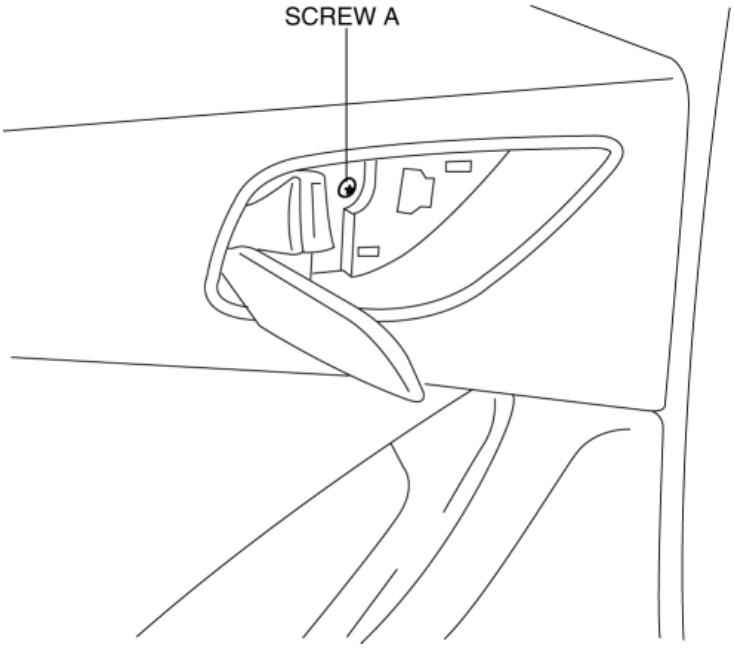

4. Remove the cover, then remove the screw B.

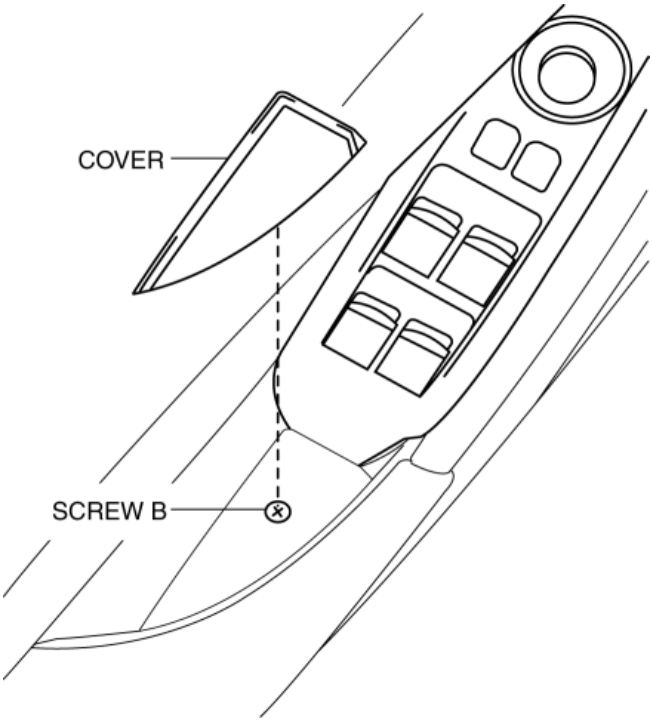

5. Grasp the shaded area shown in the figure, and pull the front door trim in the direction of the arrow in the order of (1), (2), (3), (4) while detaching clips A, hooks A and pin B.

CAUTION:

- If the front door trim is removed in the same way as past vehicles by pulling it upward, it could damage clips A and pin B. When removing the front door trim, always pull it in the direction of the arrow shown in the figure.

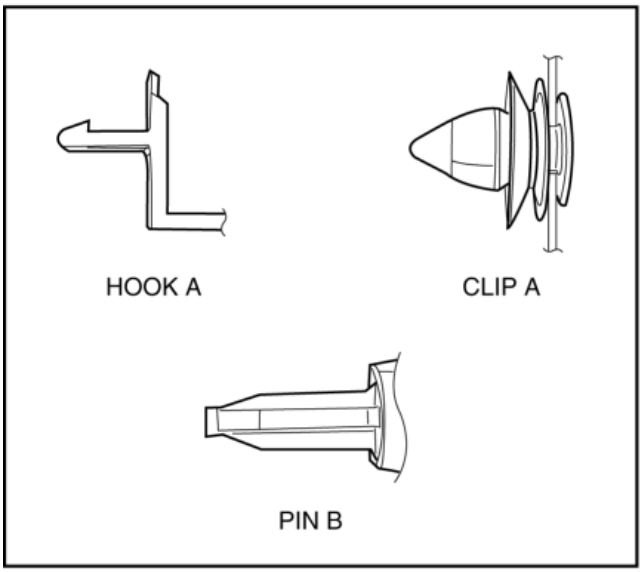

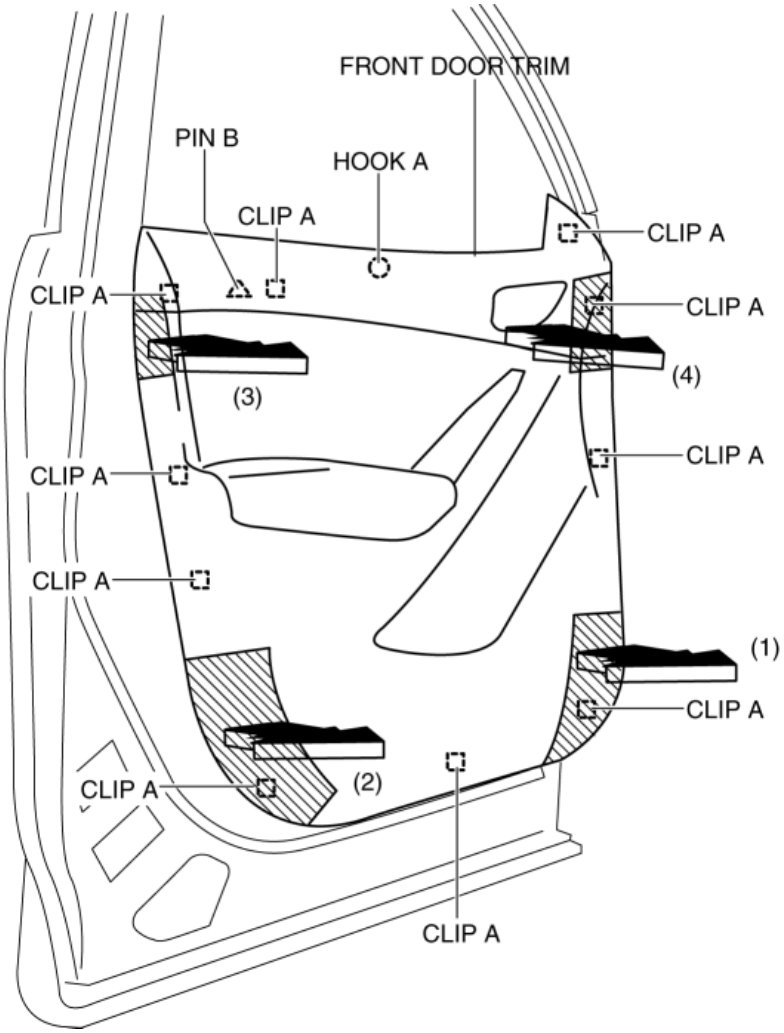

6. Remove tab B in the direction of the arrow (5) shown in the figure.

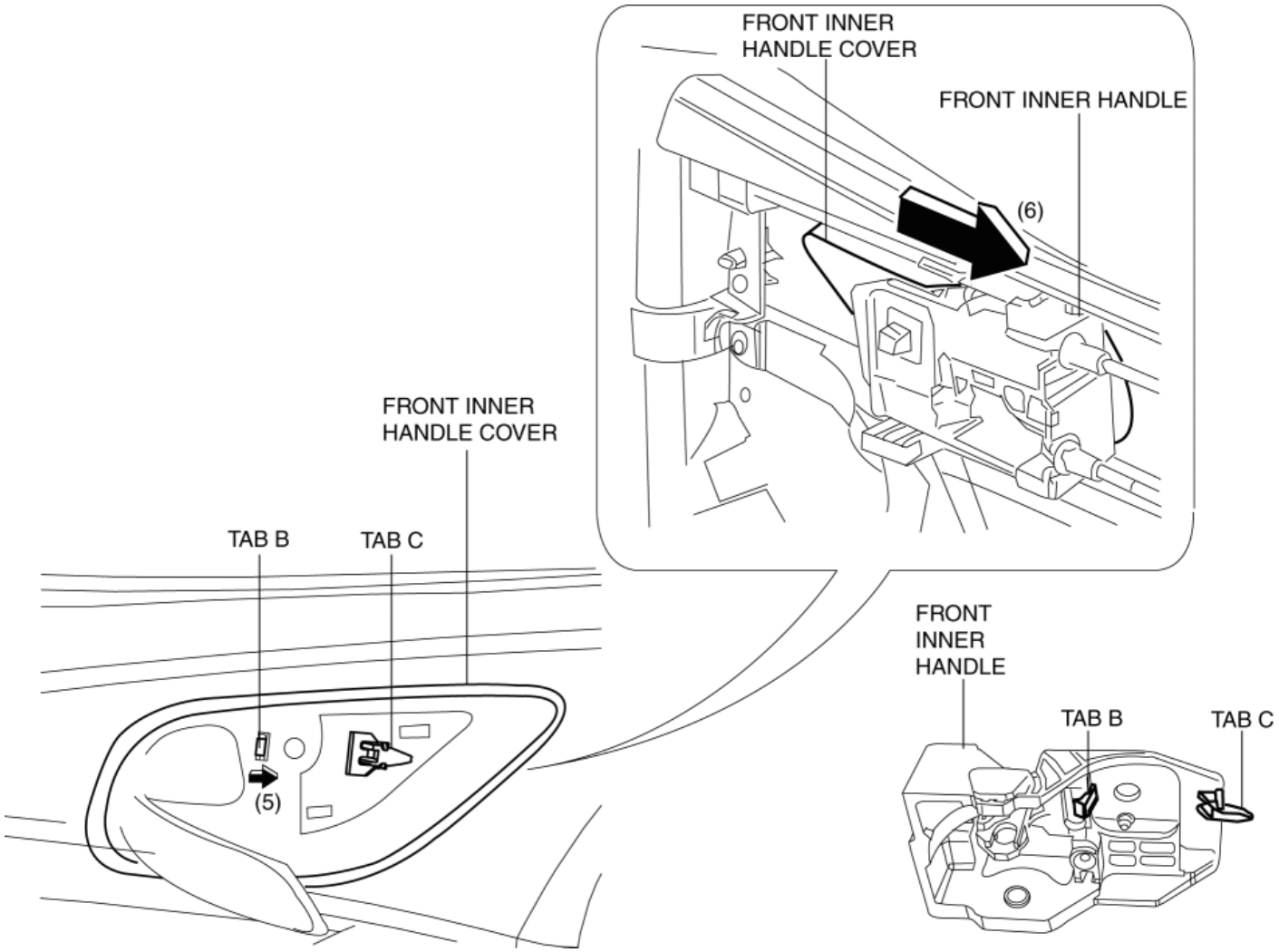

7. Remove the front inner handle in the direction of the arrow (6) shown in the figure while detaching tab C.

8. Disconnect the power window main switch connector (driver-side) or power window subswitch connector (passenger-side).

9. Install in the reverse order of removal.

2014 - Mazda3 - Body and Accessories

FRONT DOOR TRIM DISASSEMBLY/ASSEMBLY

Driver-side

1. Disassemble in the order shown in the figure.

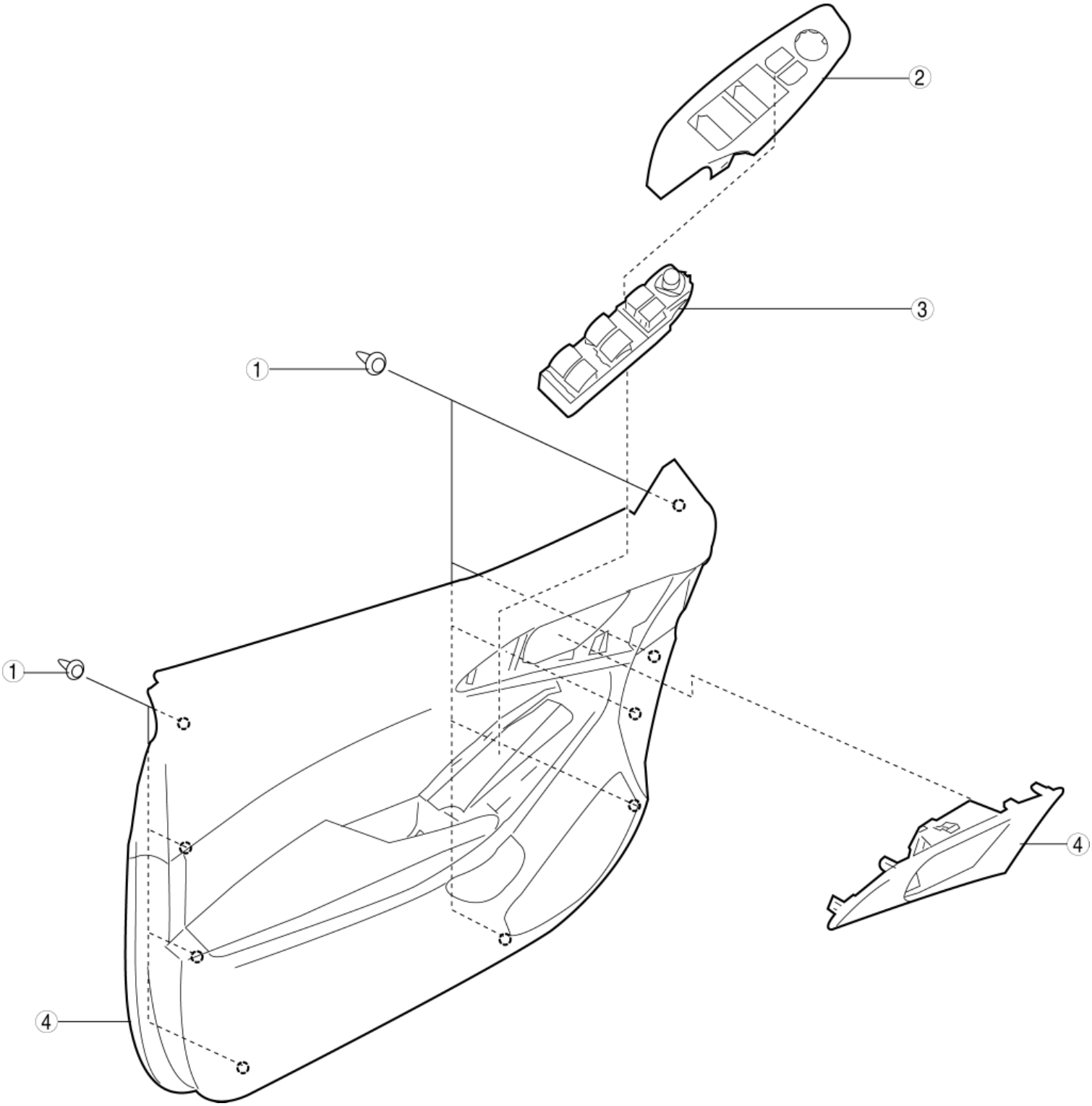

1	Fastener
2	Switch panel cover (See **POWER WINDOW MAIN SWITCH REMOVAL/INSTALLATION**.)
3	Power window main switch
4	Decoration panel
5	Front door trim

2. Assemble in the reverse order of disassembly.

Passenger-side

1. Disassemble in the order shown in the figure.

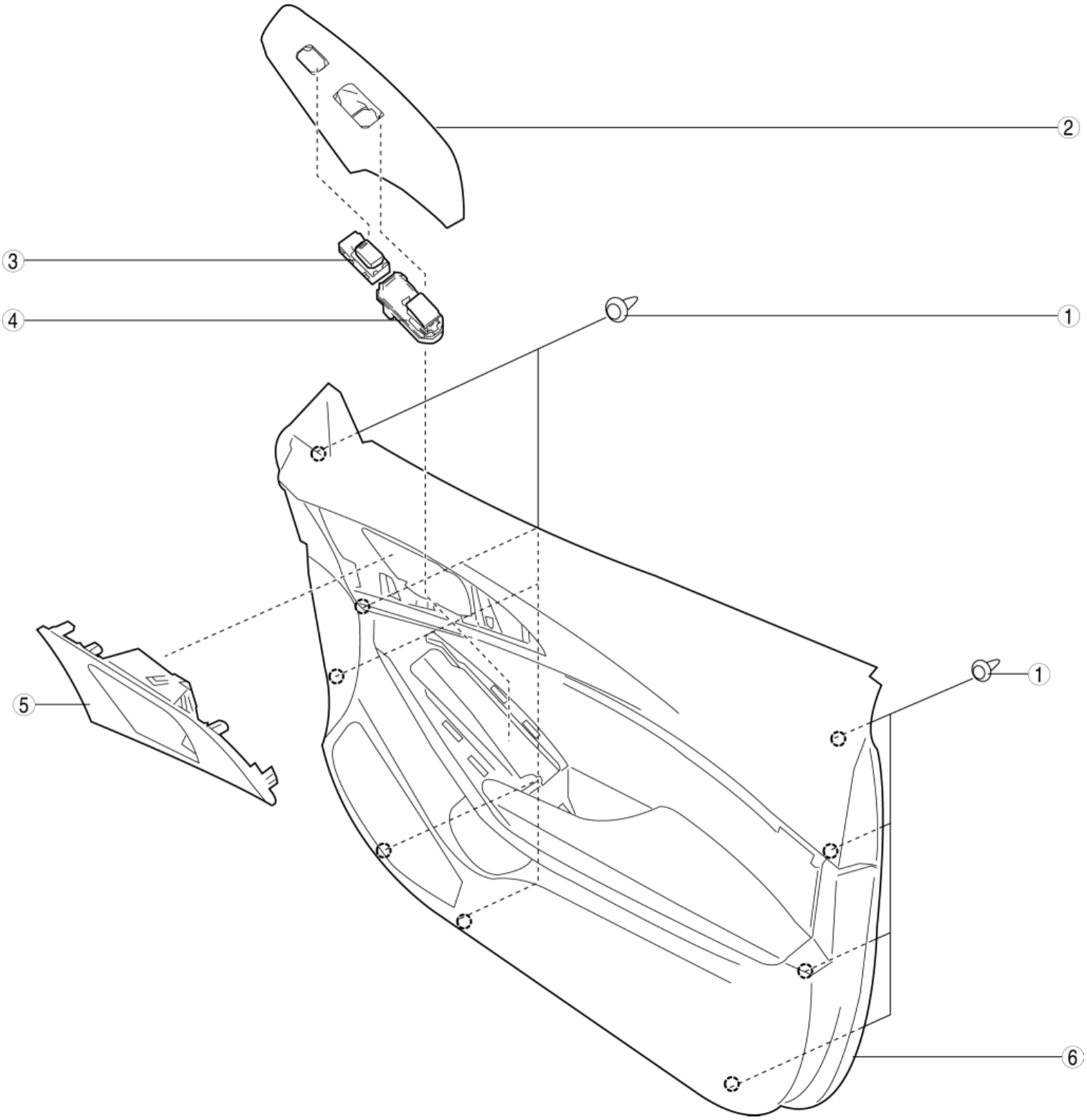

1	Fastener
2	Switch panel cover (See **POWER WINDOW SUBSWITCH REMOVAL/INSTALLATION**.)
3	Lock switch
4	Power window subswitch

5	Decoration panel
6	Front door trim

2. Assemble in the reverse order of disassembly.

2014 - Mazda3 - Body and Accessories

REAR DOOR TRIM REMOVAL/INSTALLATION

1. Disconnect the negative battery cable. (See **NEGATIVE BATTERY CABLE DISCONNECTION/CONNECTION [SKYACTIV-G 2.0, SKYACTIV-G 2.5]**.)

2. Remove the inner handle cover while detach tabs A, pin A.

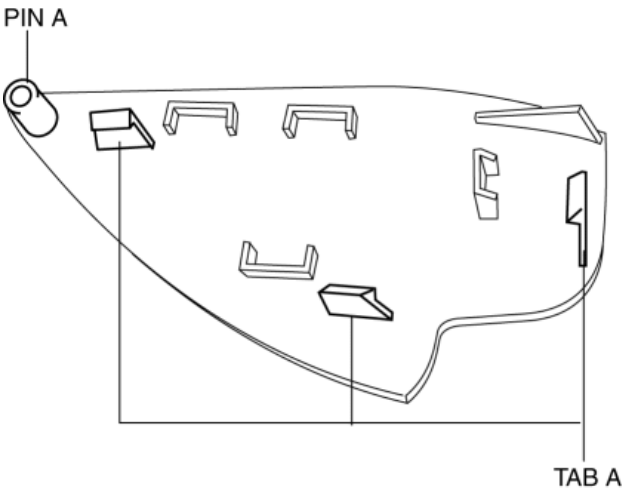

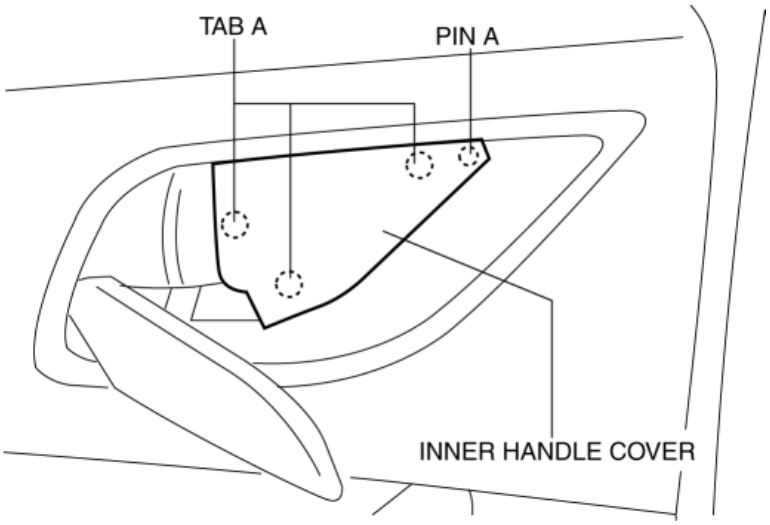

3. Remove the screw A.

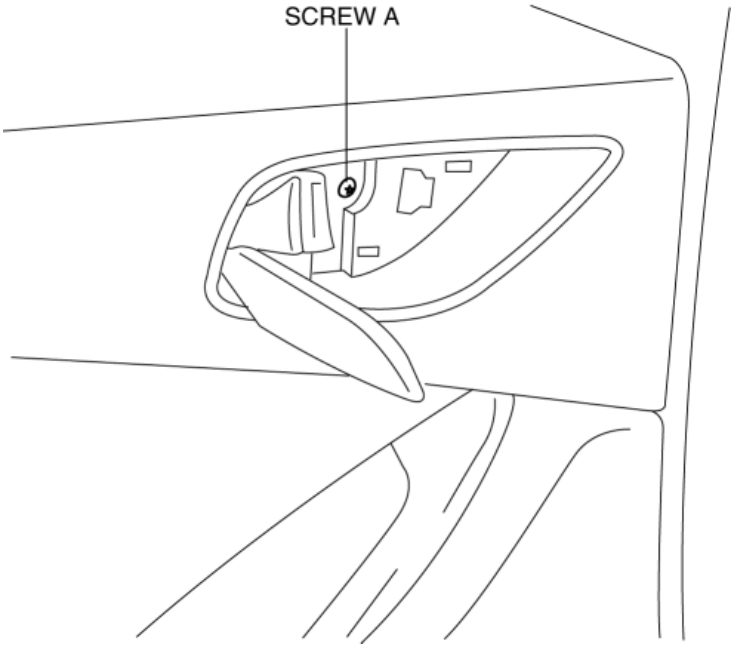

4. Remove the cover, then remove the screw B.

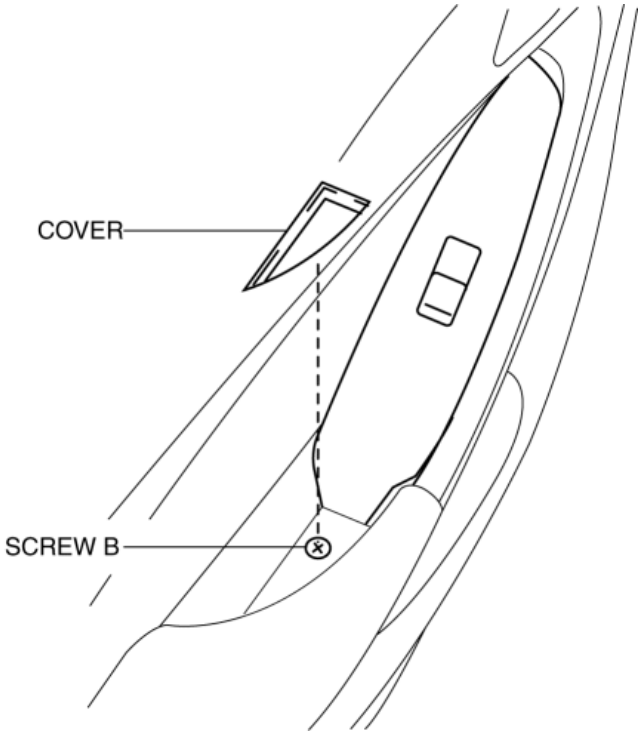

5. Grasp the shaded areas shown in the figure, and pull the rear door trim in the direction of the arrow in the order of (1), (2), (3), (4) while detaching clips A, hooks A and pin B.

CAUTION:

- If the rear door trim is removed in the same way as past vehicles by pulling it upward, it could damage clips A and pin B. When removing the rear door trim, always pull it in the direction of the arrows shown in the figure.

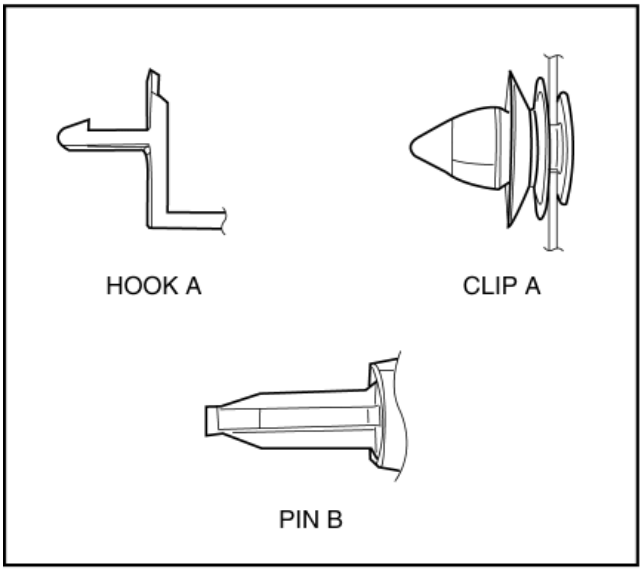

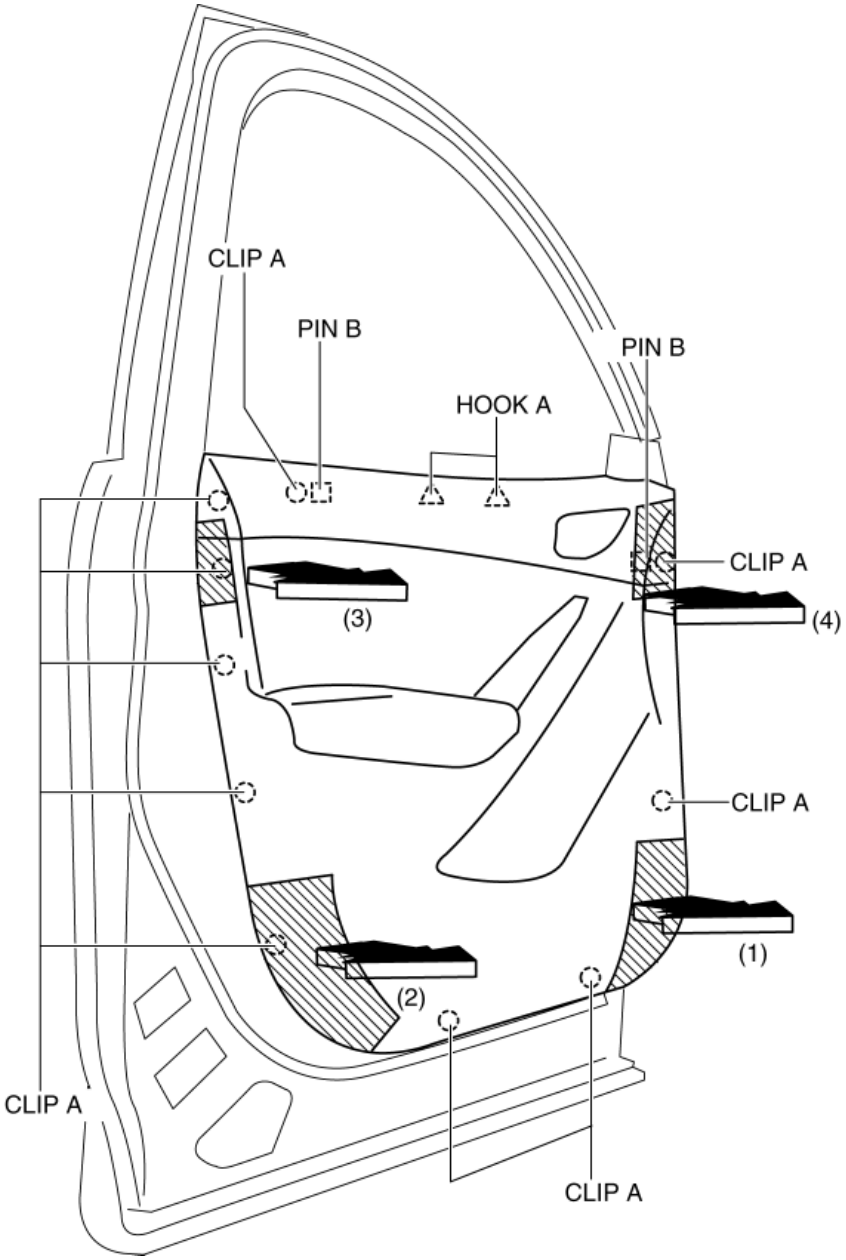

6. Remove tab B in the direction of the arrow (5) shown in the figure.

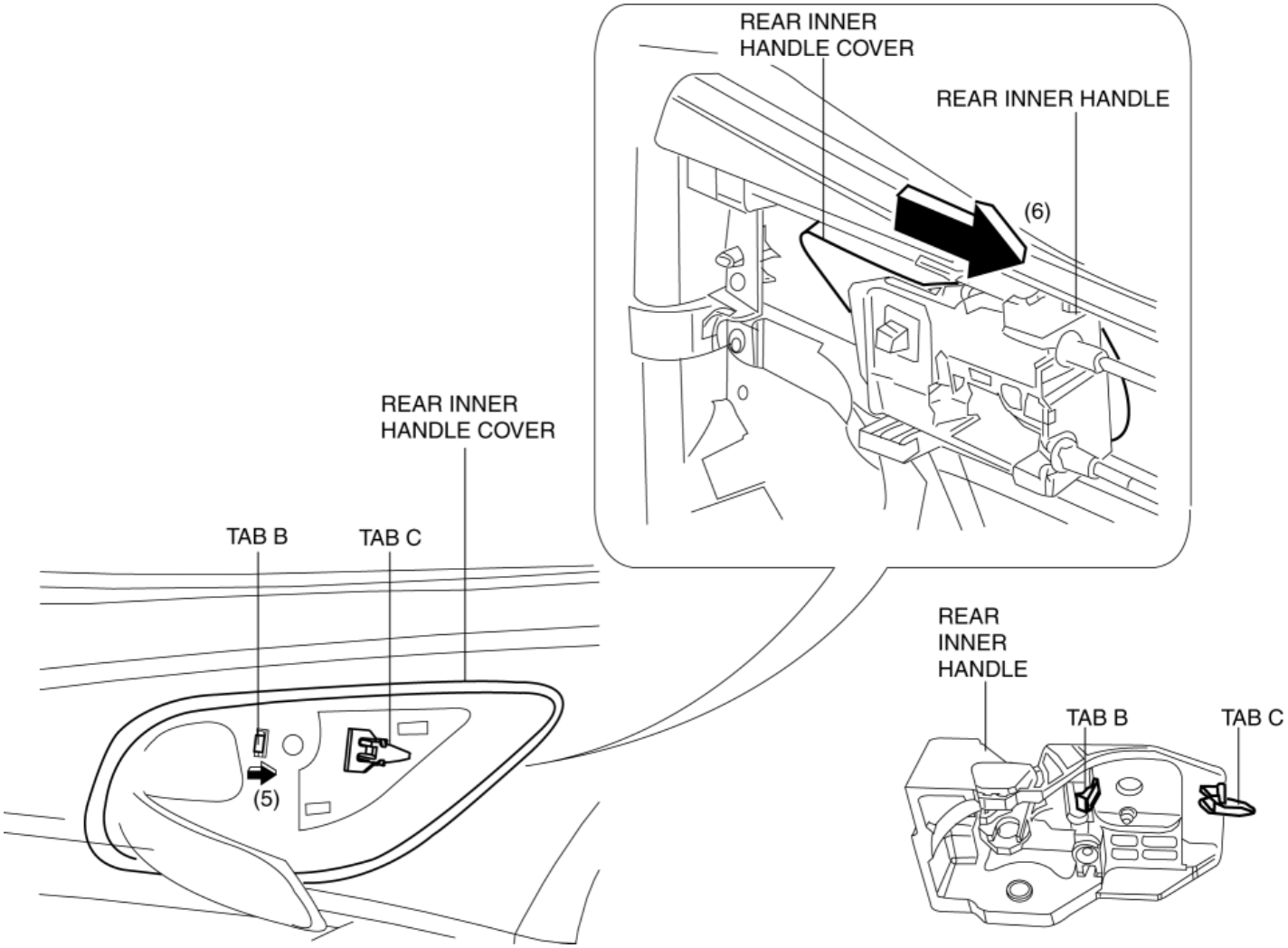

7. Remove the rear inner handle in the direction of the arrow (6) shown in the figure while detaching tab C.

8. Disconnect the power window subswitch connector.

9. Install in the reverse order of removal.

2014 - Mazda3 - Body and Accessories

TRUNK LID RECESS REMOVAL/INSTALLATION

1. Using a remover tool, push hooks A in the direction of the arrow (1) shown in the figure and remove it.

CAUTION:

- If hooks A are removed or disconnected without pressing in the upper part of the trunk lid recess, hooks A could be damaged resulting in rattle noise occurring. When removing or disconnecting hooks A, always press in the upper part of the trunk lid recess.

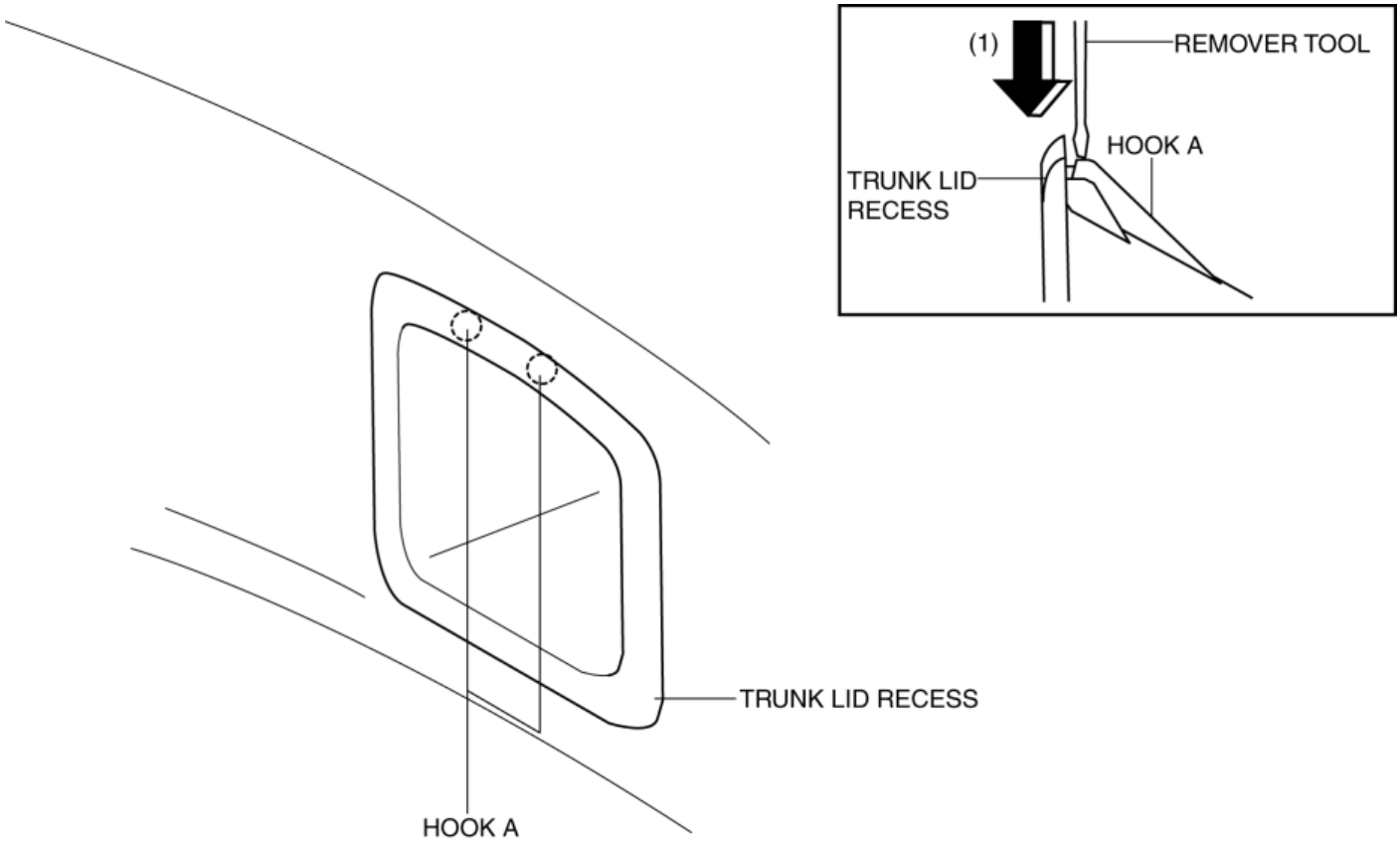

2. Remove the trunk lid recess in the direction of the arrow (2) shown in the figure avoiding hooks B.

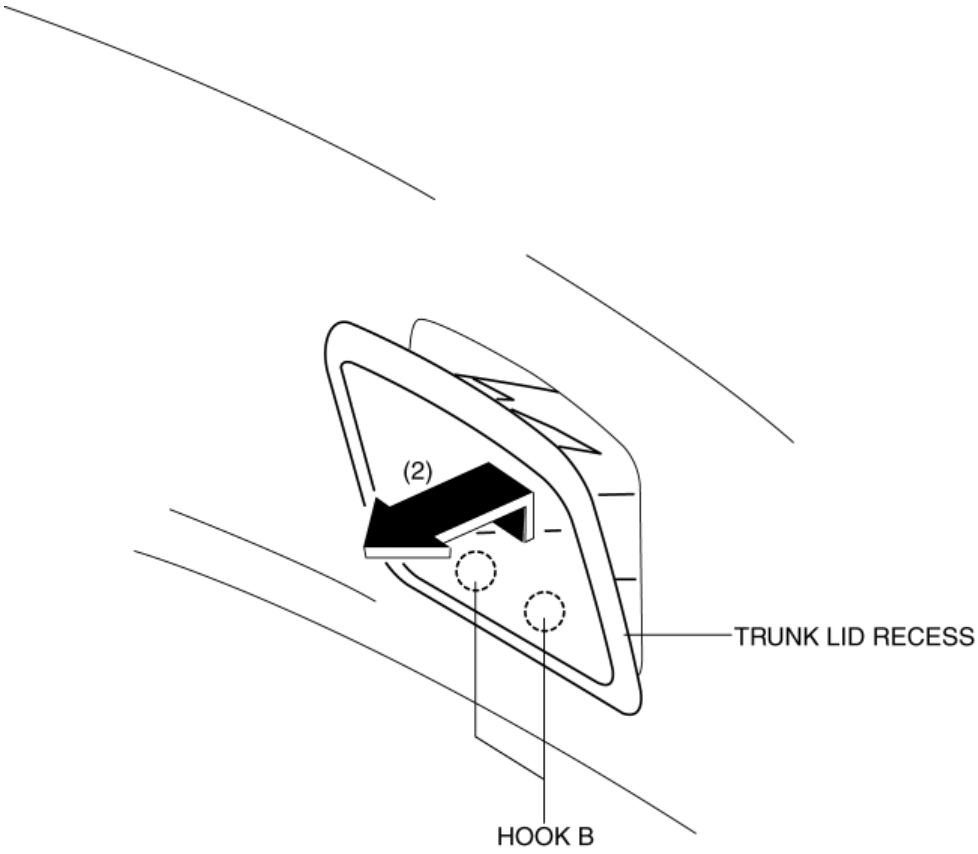

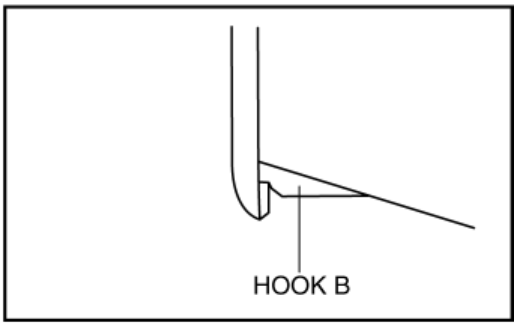

3. Install in the reverse order of removal.

2014 - Mazda3 - Body and Accessories

TRUNK BOARD REMOVAL/INSTALLATION

4SD

1. Remove the trunk covering. (See **TRUNK COVERING REMOVAL/INSTALLATION**.)
2. Remove trunk board in the direction of the arrow (1) shown in the figure.

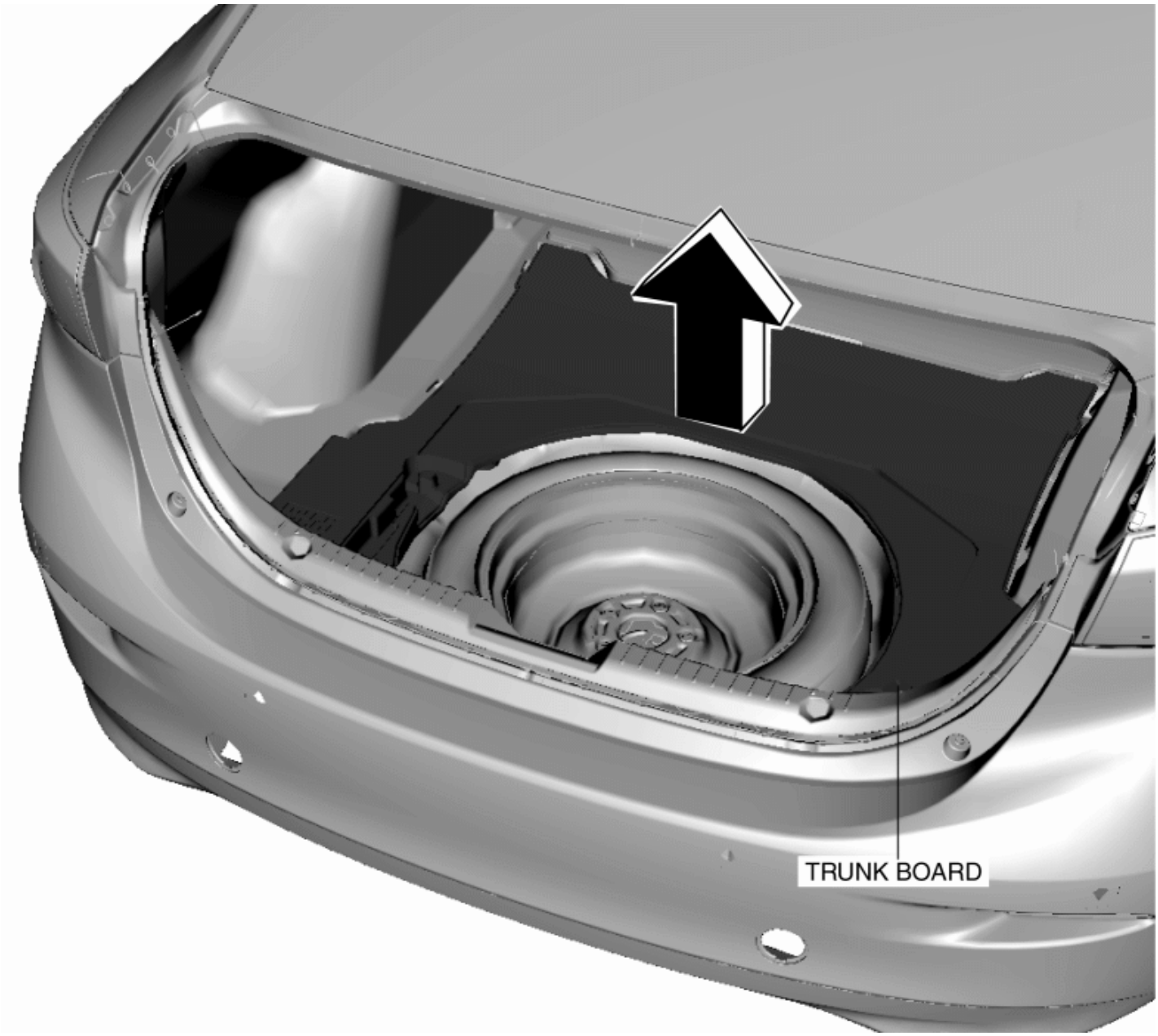

3. Install in the reverse order of removal.

5HB

1. Remove the trunk covering. (See **TRUNK COVERING REMOVAL/INSTALLATION**.)
2. Remove trunk board in the direction of the arrow (1) shown in the figure.

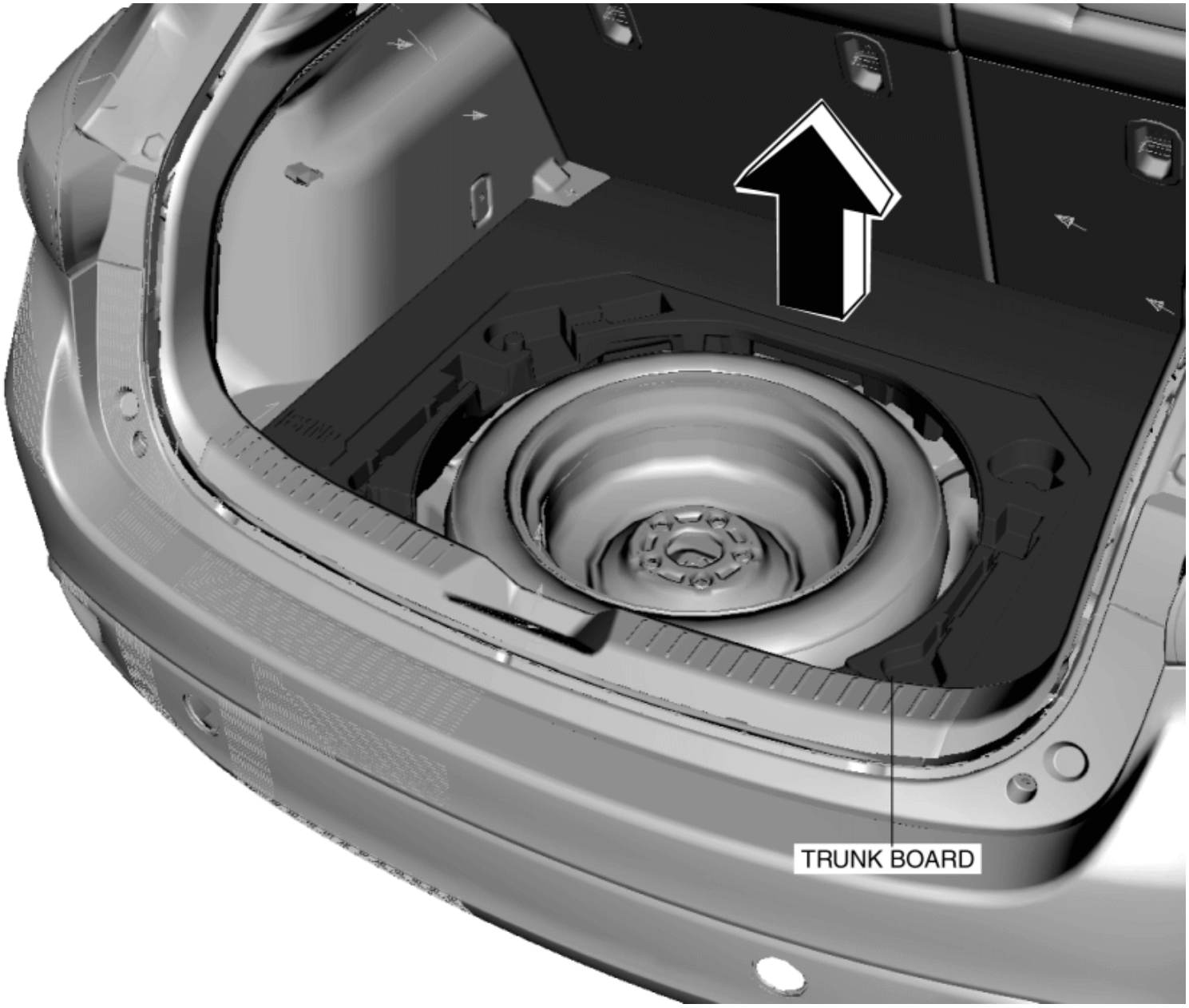

3. Install in the reverse order of removal.

2014 - Mazda3 - Body and Accessories

LIFTGATE UPPER TRIM REMOVAL/INSTALLATION

1. Take the shaded area shown in the figure, detach tab A while pulling the liftgate upper trim in the direction of the arrow (1) shown in the figure, then detach clips A, clip B, and pin while pulling in the direction of the arrow (2).

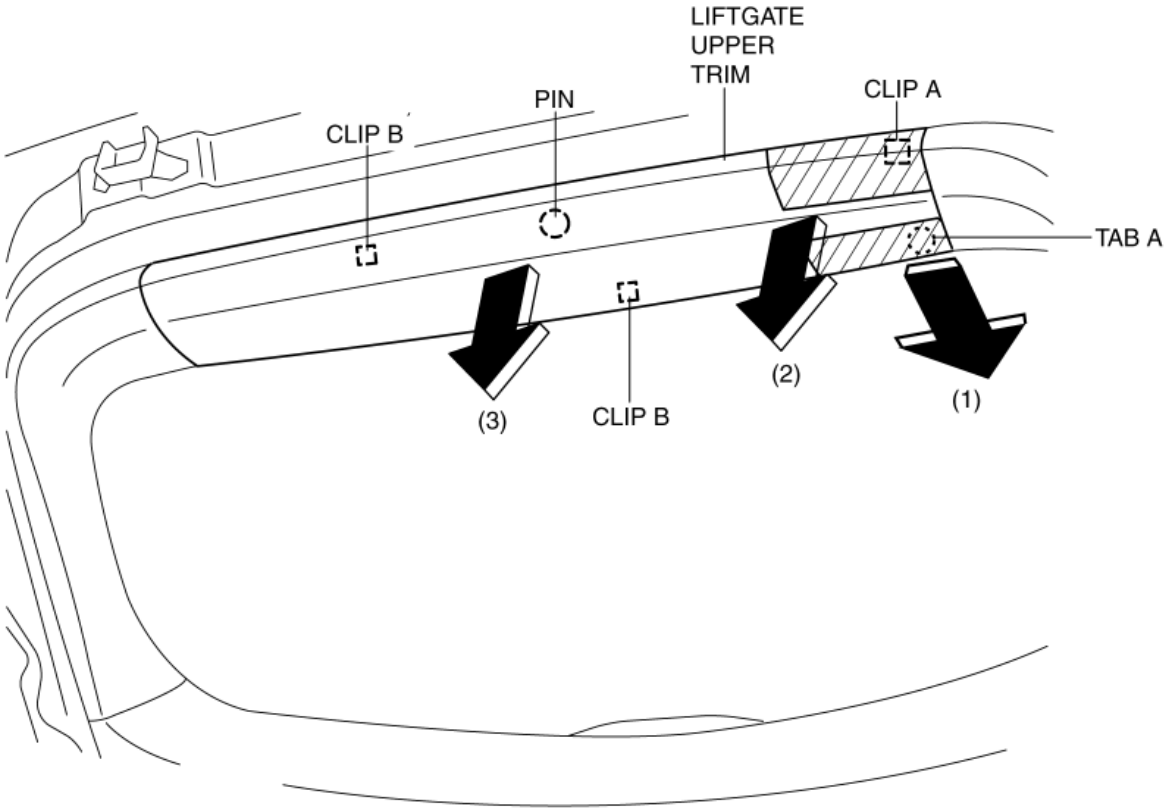

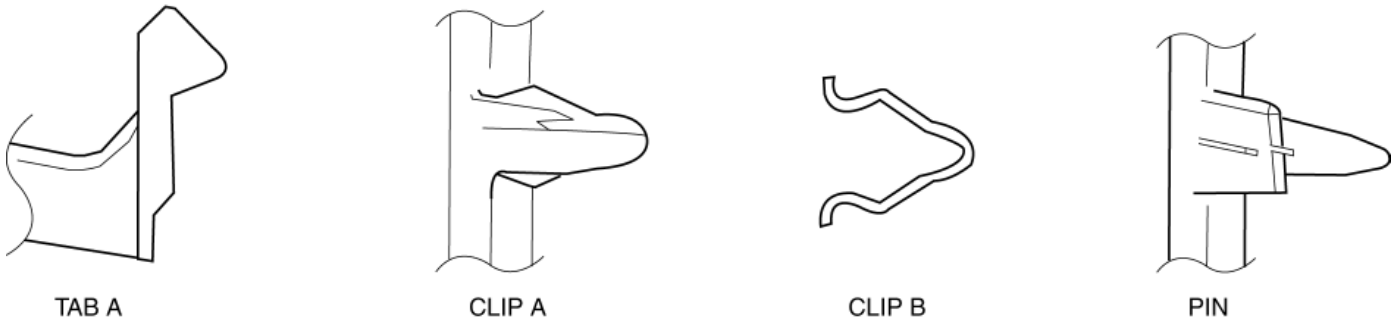

2. Take the shaded area shown in the figure, detach tab B while pulling the liftgate upper trim in the direction of the arrow (3) shown in the figure, then detach the clip C, while pulling in the direction of the arrow (4).

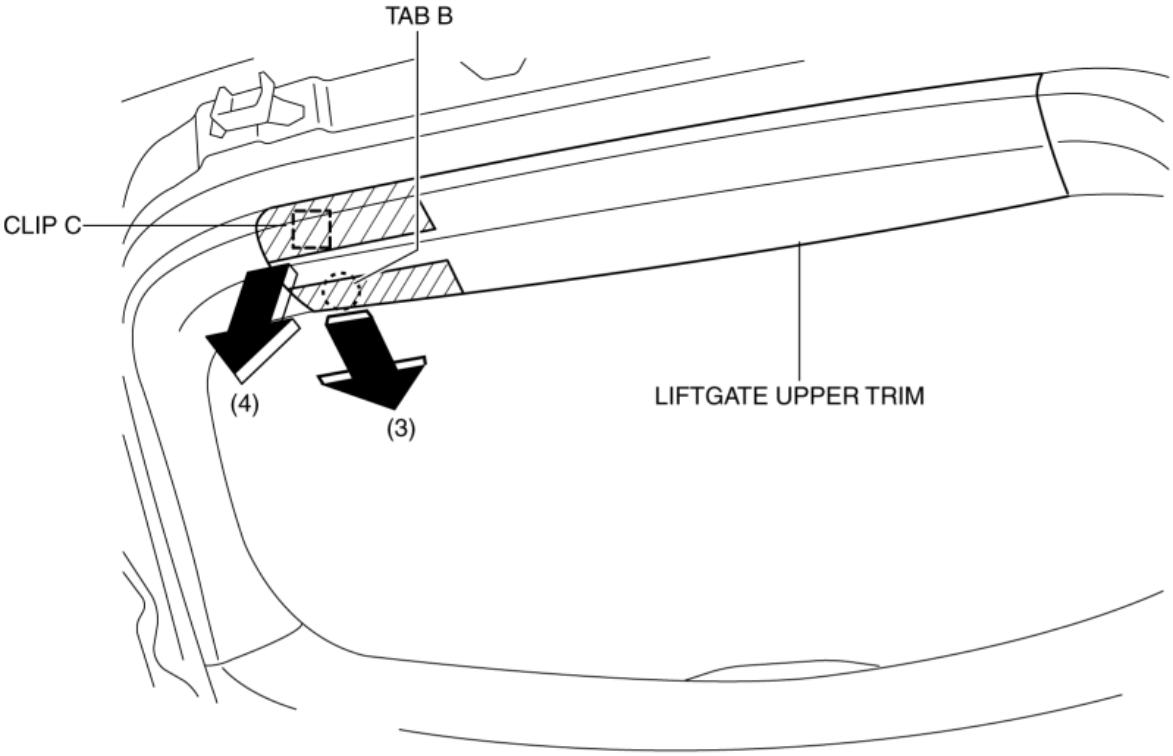

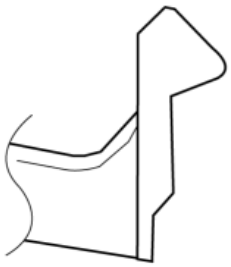

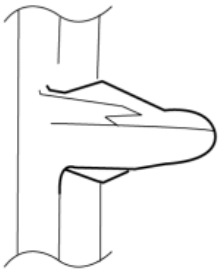

3. Install in the reverse order of removal.

2014 - Mazda3 - Body and Accessories

LIFTGATE SIDE TRIM REMOVAL/INSTALLATION

1. Remove the liftgate upper trim. (See **LIFTGATE UPPER TRIM REMOVAL/INSTALLATION**.)
2. Move the hooks in the direction of arrows (1) shown in the figure to disengage them from the strap hangers.

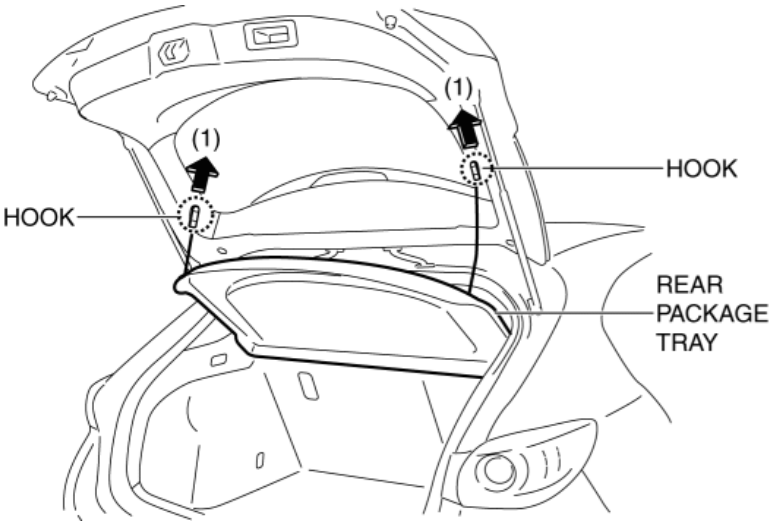

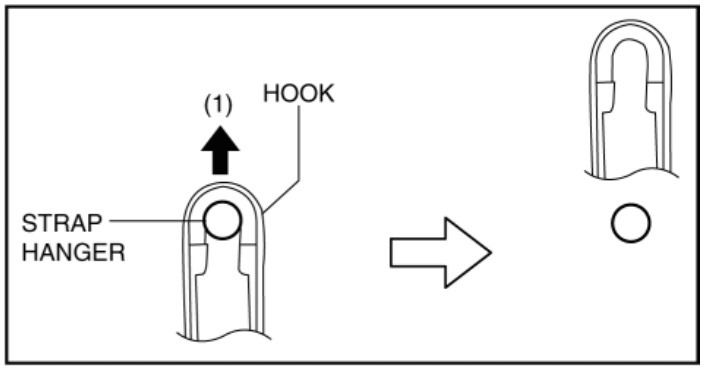

3. Pull the point A of the strap hanger as shown in the figure.

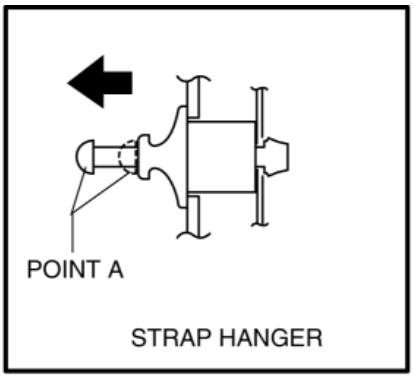

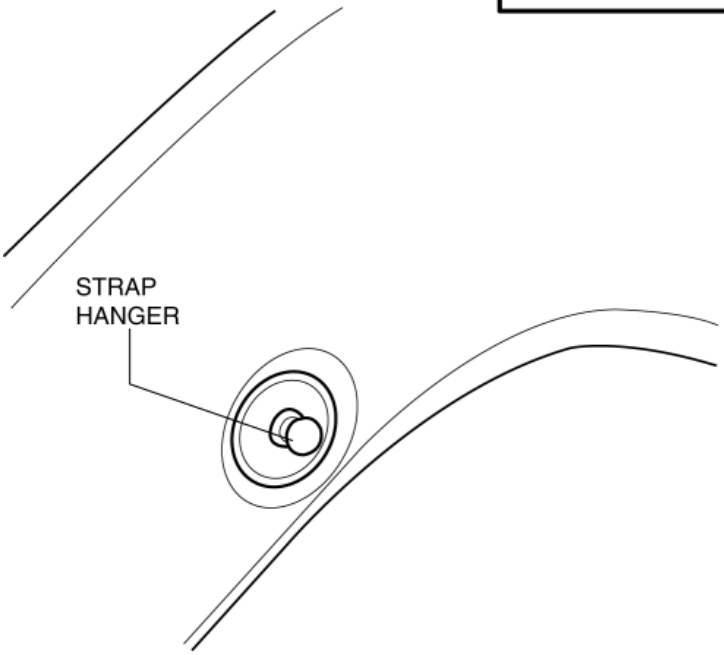

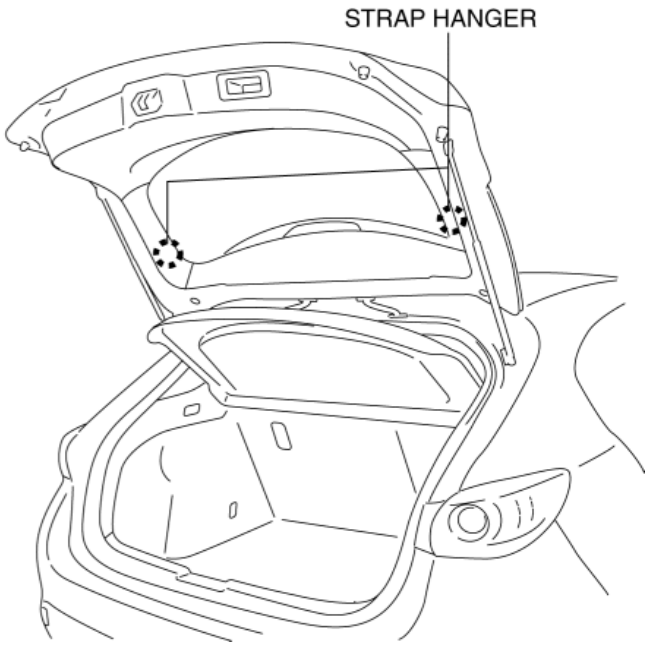

4. Remove the strap hanger.

5. Remove the fastener.

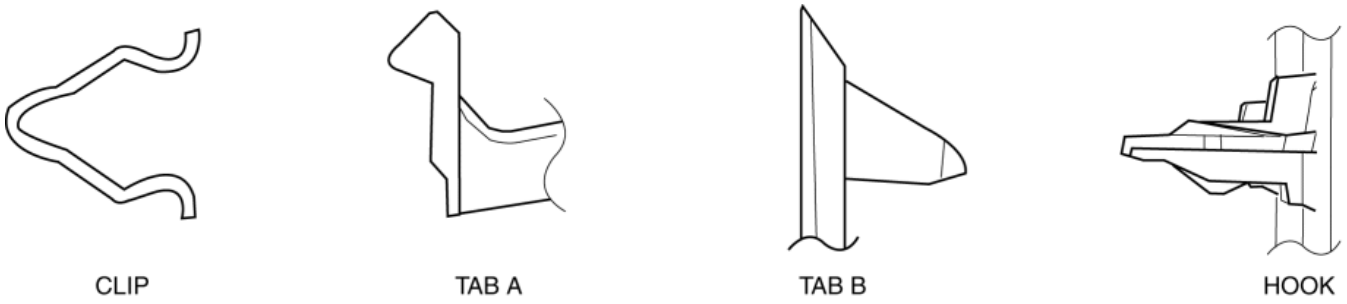

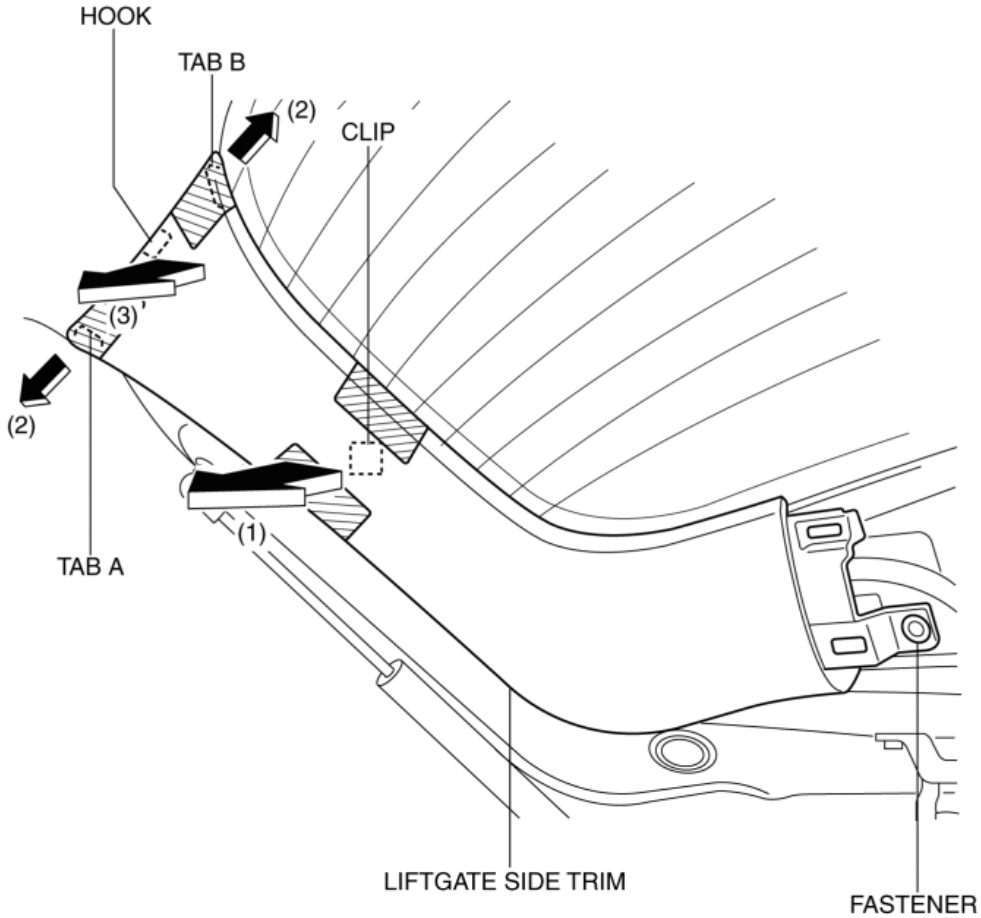

6. Take the shaded area shown in the figure, and pull the liftgate side trim in the direction of the arrow (1) while detaching clips.

7. Take the shaded area shown in the figure, detach tab A, tab B while pulling the liftgate side trim in the direction of the arrow (2) shown in the figure, then detach the hook while pulling in the direction of the arrow (3).

8. Install in the reverse order of removal.

2014 - Mazda3 - Body and Accessories

LIFTGATE LOWER TRIM REMOVAL/INSTALLATION

1. Remove the following parts:
    a. Liftgate upper trim (See **LIFTGATE UPPER TRIM REMOVAL/INSTALLATION**.)
    b. Liftgate side trim (See **LIFTGATE SIDE TRIM REMOVAL/INSTALLATION**.)
    c. Liftgate recess (See **LIFTGATE RECESS REMOVAL/INSTALLATION**.)
2. Remove fasteners.

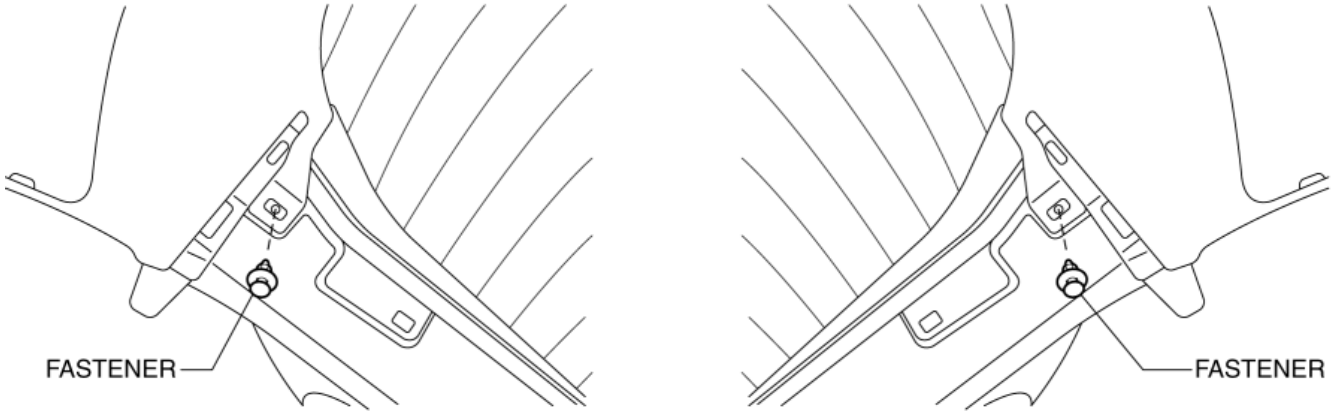

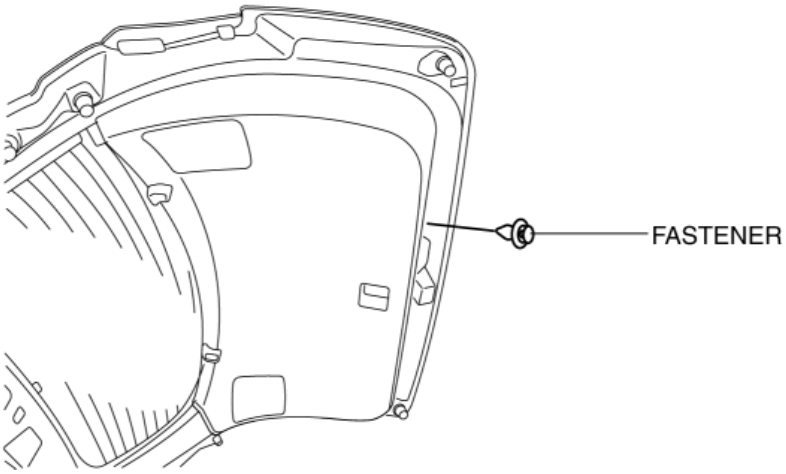

3. Take the shaded area shown in the figure, and pull the liftgate lower trim in the direction of the arrow in the order of (1), (2), (3), (4) and remove it while detaching clips A, clips B, pins.

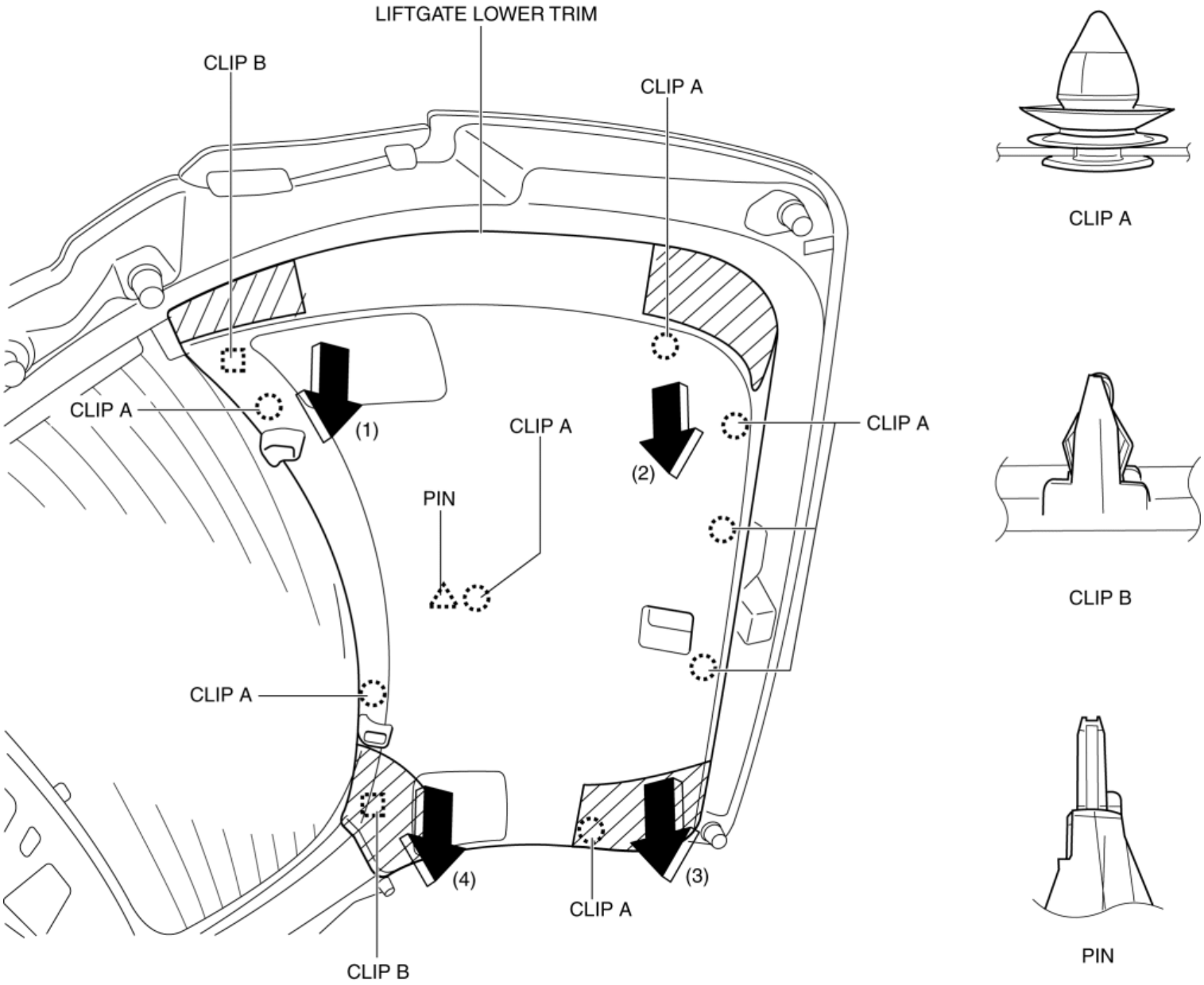

4. Install in the reverse order of removal.

2014 - Mazda3 - Body and Accessories

TRUNK LID TRIM REMOVAL/INSTALLATION

1. Remove the trunk lid recess. (See **TRUNK LID RECESS REMOVAL/INSTALLATION**.)
2. Remove the fasteners, then remove the trunk lid trim.

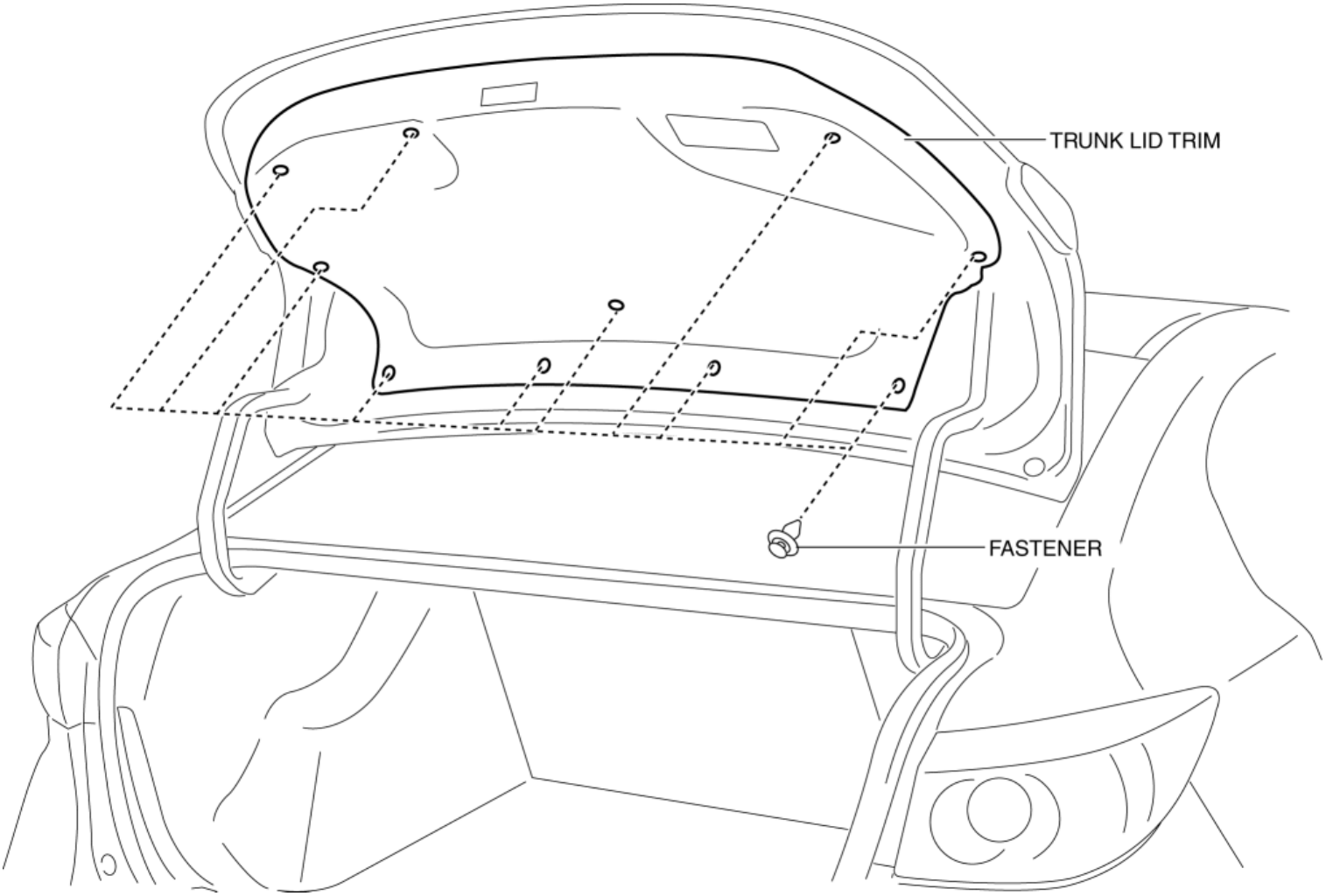

3. Install in the reverse order of removal.

2014 - Mazda3 - Body and Accessories

ASSIST HANDLE REMOVAL/INSTALLATION

Removal

1. Insert a remover tool into the service hole and remove the assist handle covers.

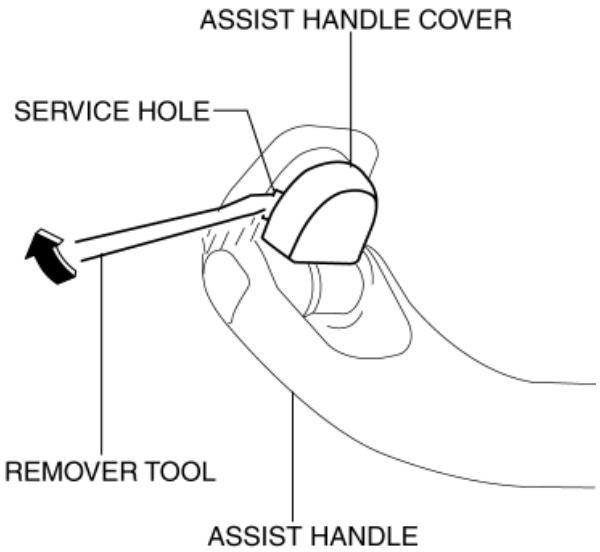

2. Remove the assist handle in the direction of the arrow (1) and (2), while detaching the clips.

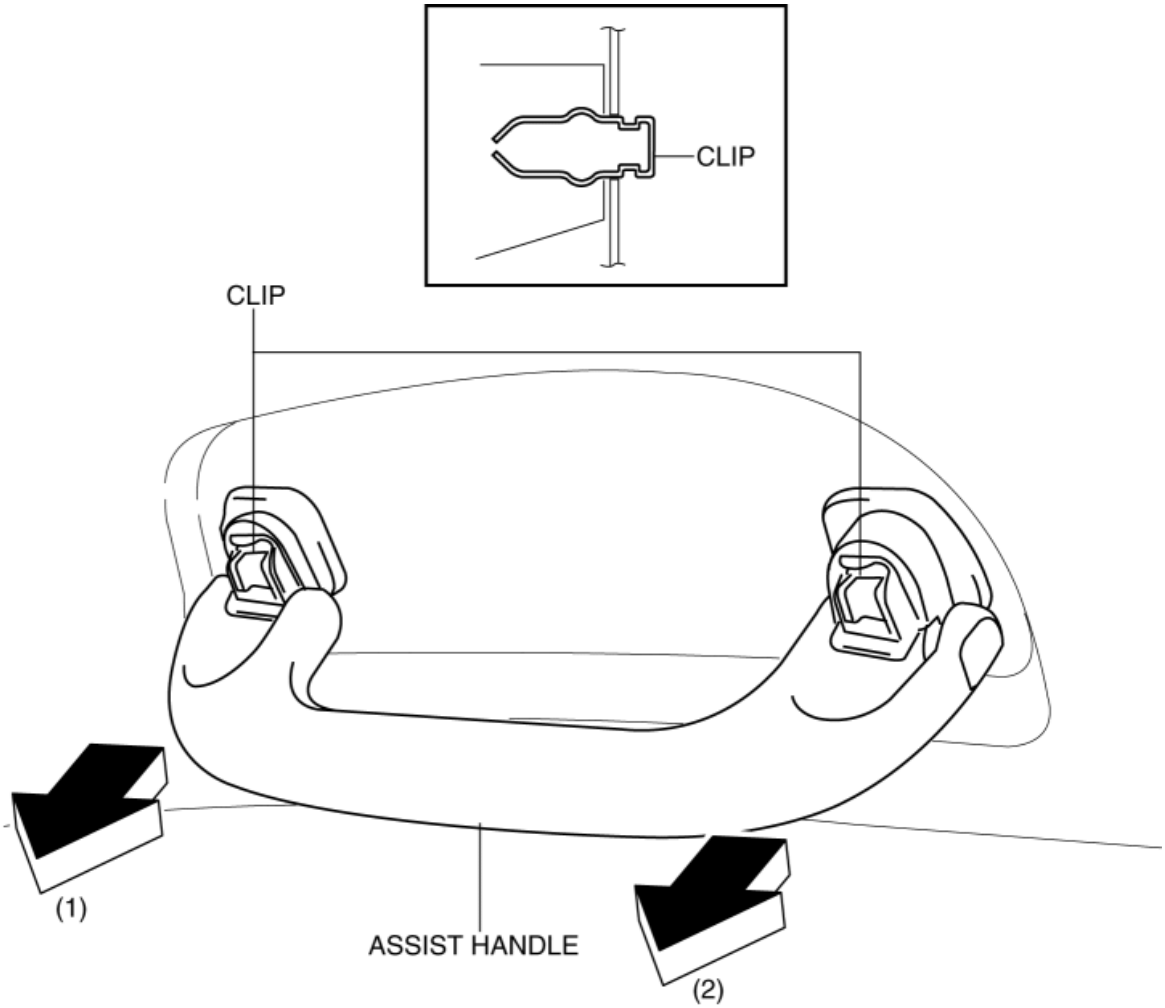

NOTE:

- Remove the assist handle by shaking it up and down.

Installation

1. Push the assist handle in the direction of the arrow shown in the figure.

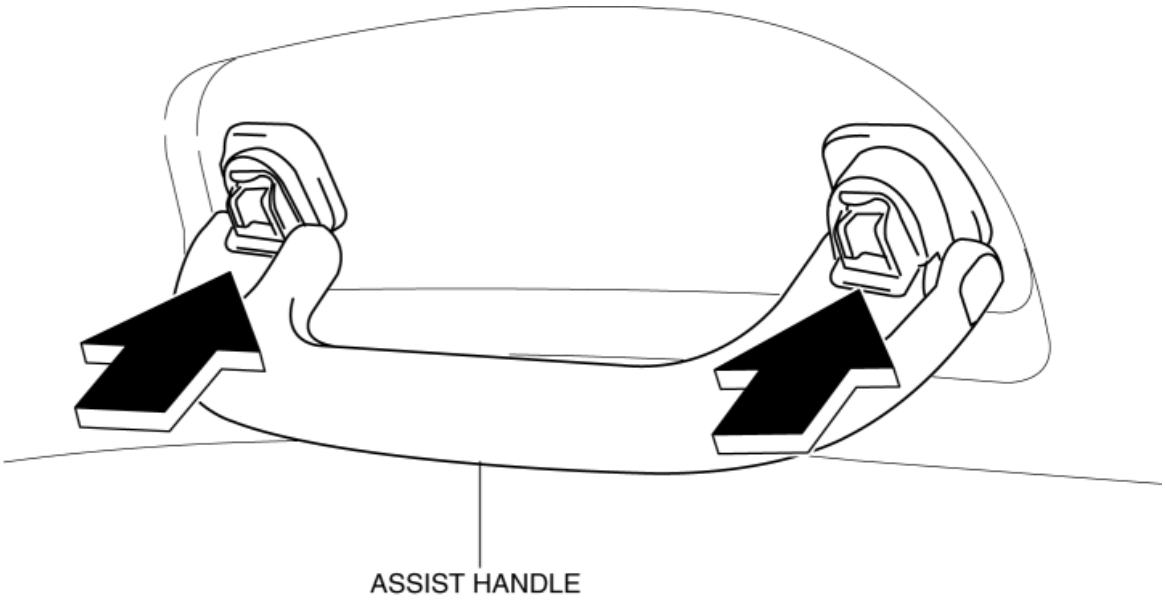

2. Push the assist handle cover assembled to install the assist handle.

ASSIST HANDLE REMOVAL/INSTALLATION

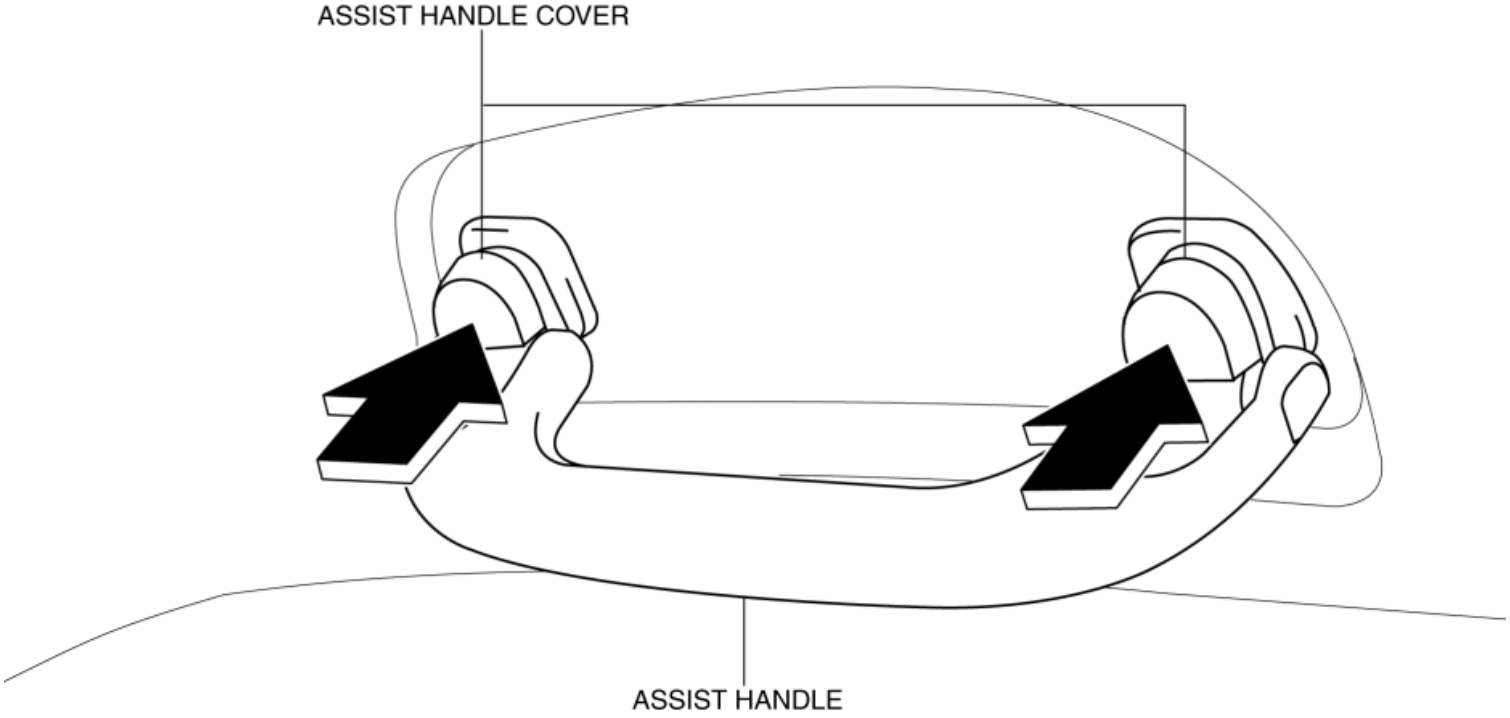

2014 - Mazda3 - Body and Accessories

SUNVISOR REMOVAL/INSTALLATION

1. Disconnect the negative battery cable. (See **NEGATIVE BATTERY CABLE DISCONNECTION/CONNECTION [SKYACTIV-G 2.0, SKYACTIV-G 2.5]**.)

2. Remove screw A.

3. Remove the sunvisor in the direction of the arrow (1) shown in the figure while detaching hook B.

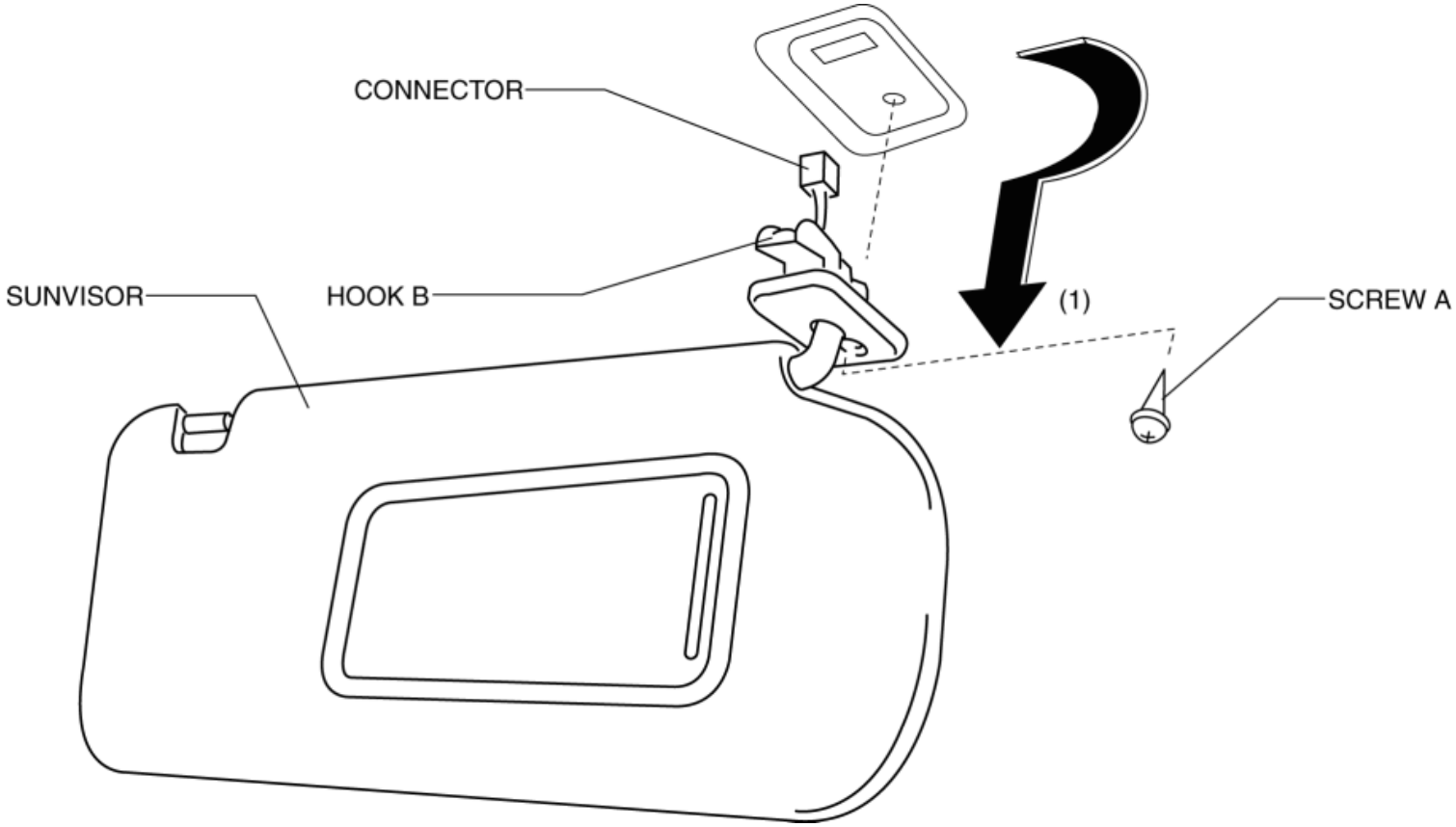

4. Disconnect the vanity mirror illumination connector (with vanity mirror illumination).

5. Press the center adaptor tabs in the direction of the arrow (2) shown in the figure using two remover tool.

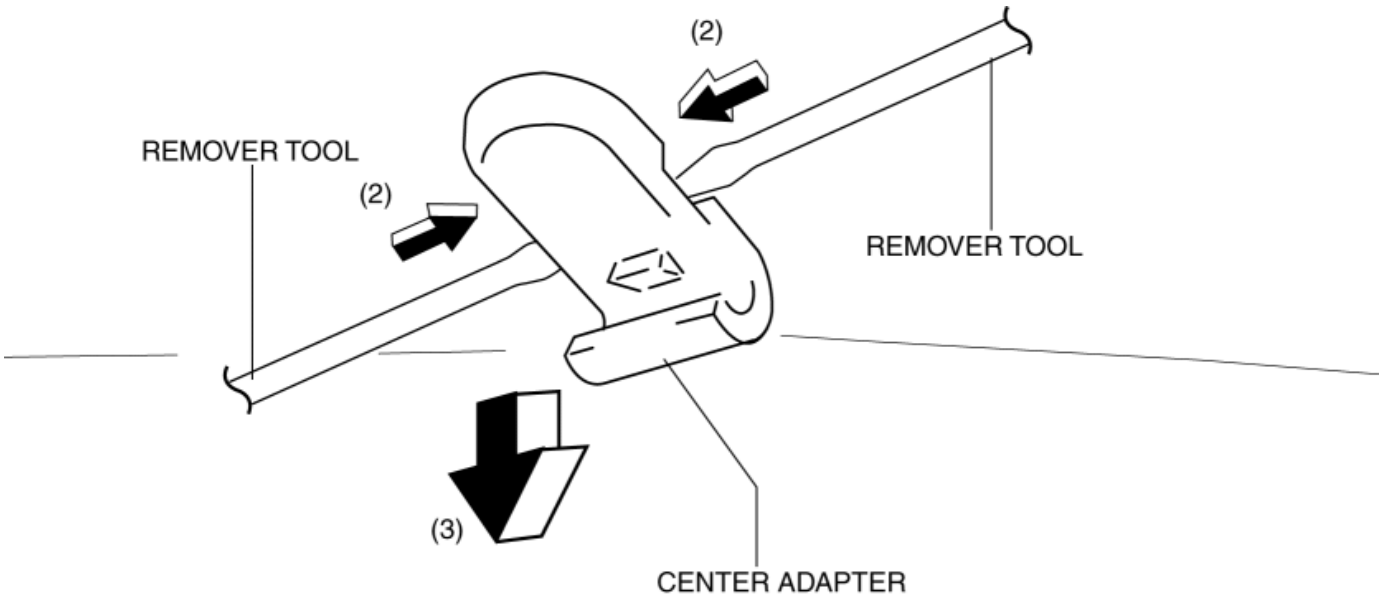

6. Remove the center adaptor in the direction of the arrow (3) shown in the figure.

7. Install in the reverse order of removal.

2014 - Mazda3 - Body and Accessories

HEADLINER REMOVAL/INSTALLATION

4SD

1. Set the wheel blocks for both the front and rear wheels.
2. Disconnect the negative battery cable. (See **NEGATIVE BATTERY CABLE DISCONNECTION/CONNECTION [SKYACTIV-G 2.0, SKYACTIV-G 2.5]**.)
3. Shift the selector lever from the P position to the D position (ATX).
4. Remove the sunroof seaming welt. (with sunroof system)
5. Remove the following parts:
    a. A-pillar trim (See **A-PILLAR TRIM REMOVAL/INSTALLATION**.)
    b. Sunvisor (See **SUNVISOR REMOVAL/INSTALLATION**.)
    c. Front map light (dual light type) (See **FRONT MAP LIGHT REMOVAL/INSTALLATION**.)
    d. Assist handle (See **ASSIST HANDLE REMOVAL/INSTALLATION**.)
    e. Front scuff plate (See **FRONT SCUFF PLATE REMOVAL/INSTALLATION**.)
    f. Rear scuff plate (See **REAR SCUFF PLATE REMOVAL/INSTALLATION**.)
    g. B-pillar lower trim (See **B-PILLAR LOWER TRIM REMOVAL/INSTALLATION**.)
    h. Adjust anchor cover (See **FRONT SEAT BELT REMOVAL/INSTALLATION**.)
    i. Upper anchor installation bolt on the seat belt (See **FRONT SEAT BELT REMOVAL/INSTALLATION**.)
    j. B-pillar upper trim (See **B-PILLAR UPPER TRIM REMOVAL/INSTALLATION**.)
6. Set the tire house trim aside. (See **TIRE HOUSE TRIM REMOVAL/INSTALLATION**.)
7. Remove the following parts:
    a. C-pillar trim (See **C-PILLAR TRIM REMOVAL/INSTALLATION**.)
    b. Upper panel (See **UPPER PANEL REMOVAL**.) (See **UPPER PANEL INSTALLATION**.)
    c. Rear console (See **REAR CONSOLE REMOVAL/INSTALLATION**.)
    d. Shift lever knob (MTX) (See **MANUAL TRANSAXLE SHIFT MECHANISM REMOVAL/INSTALLATION [C66M-R]**.)
    e. Selector lever knob (ATX) (See **AUTOMATIC TRANSAXLE SHIFT MECHANISM REMOVAL/INSTALLATION**.)
    f. Shift panel (See **SHIFT PANEL REMOVAL/INSTALLATION**.)
    g. Front console box (See **FRONT CONSOLE BOX REMOVAL/INSTALLATION**.)
    h. CD player (with CD player) (See **CD PLAYER REMOVAL**.) (See **CD PLAYER INSTALLATION**.)
    i. Glove compartment (See **GLOVE COMPARTMENT REMOVAL/INSTALLATION**.)
    j. Decoration panel (See **DECORATION PANEL REMOVAL/INSTALLATION**.)
    k. Side wall (See **SIDE WALL REMOVAL/INSTALLATION**.)
    l. Front console (See **FRONT CONSOLE REMOVAL/INSTALLATION**.)
8. Set the selector lever component aside. (ATX) (See **AUTOMATIC TRANSAXLE SHIFT MECHANISM REMOVAL/INSTALLATION**.)
9. Set the shift lever component aside. (MTX) (See **MANUAL TRANSAXLE SHIFT MECHANISM REMOVAL/INSTALLATION [C66M-R]**.)
10. Affix protective tape to the position shown in the figure.

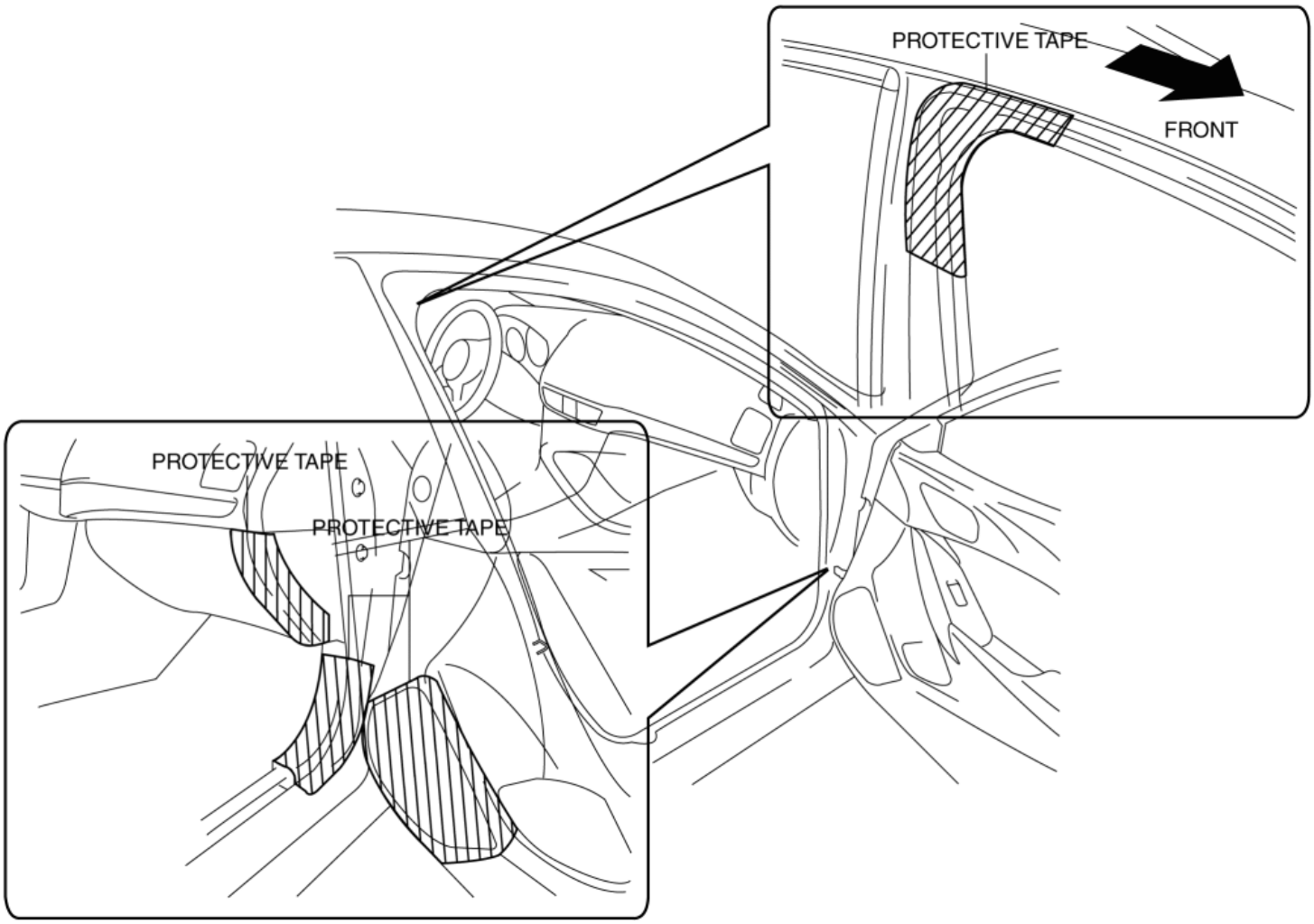

11. Disconnect the roof wiring harness connector and remove the roof wiring harness connector clip from the body.

12. Temporarily install the seaming welt shown in the figure to the headliner.

CAUTION:

- If fasteners are removed without temporarily installing the seaming welt, the headliner may fall off and the part may be damaged. Before removing fasteners, temporarily install the seaming welt to prevent the headliner from falling off.

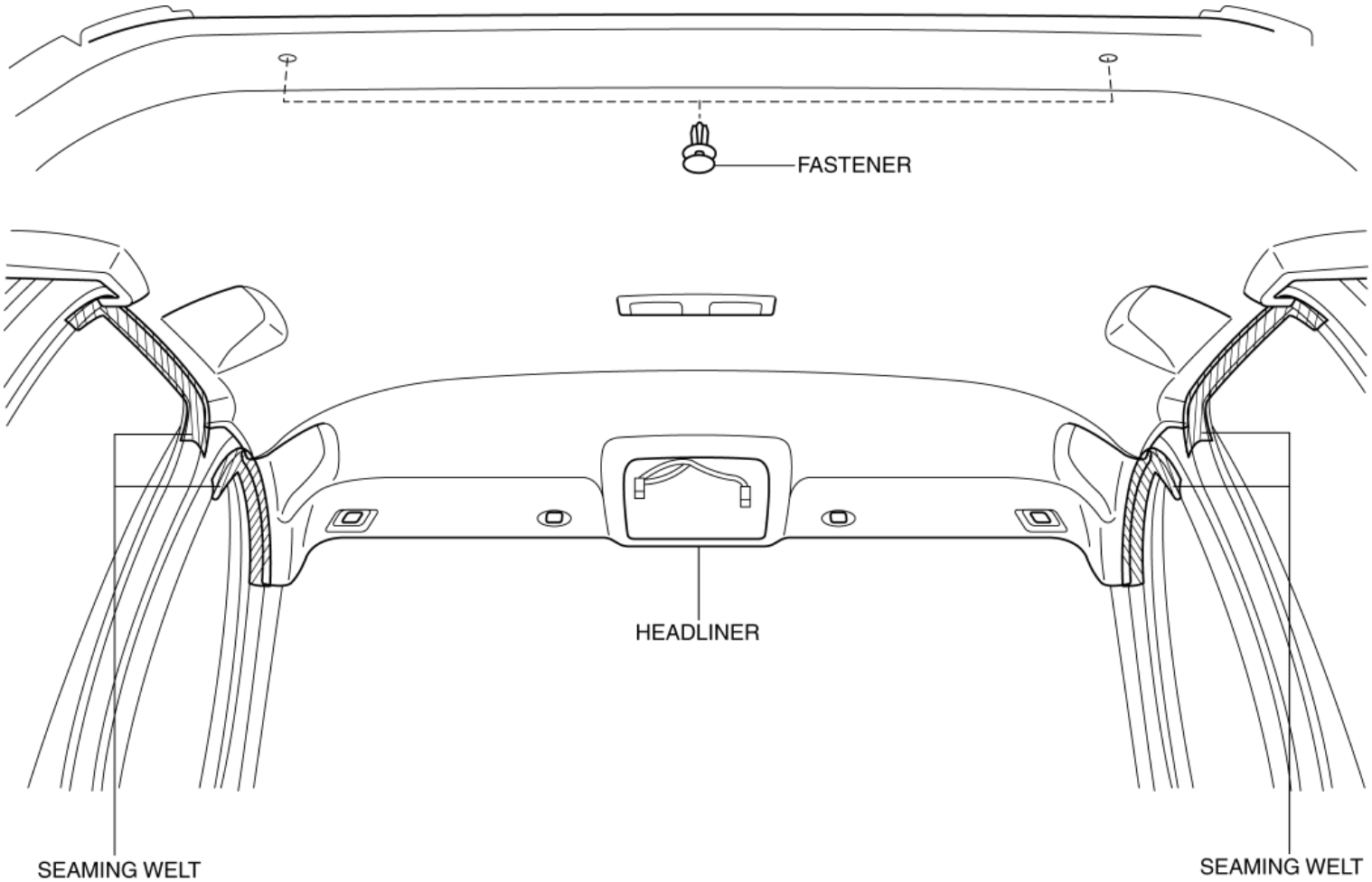

13. Open all of the doors (front/rear).

14. Remove fasteners.

15. Partially peel back the seaming welt. Take the headliner out from the opened passenger-side door opening.

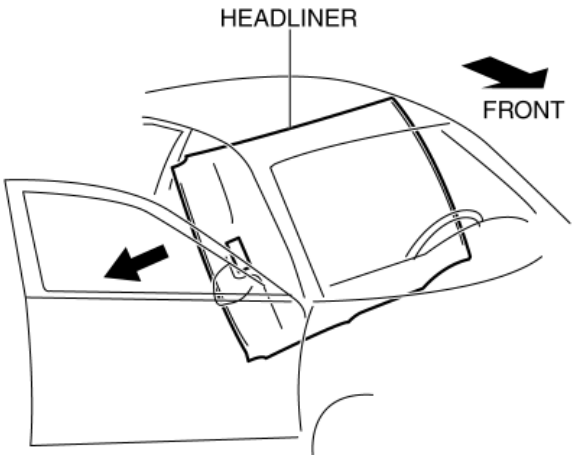

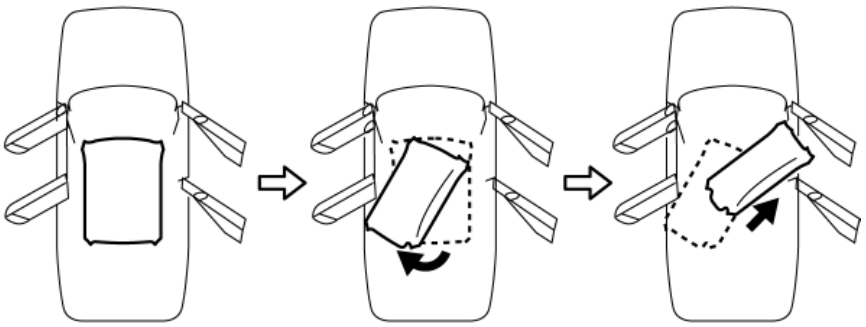

16. Install in the reverse order of removal.

5HB

1. Set the wheel blocks for both the front and rear wheels.

2. Disconnect the negative battery cable. (See **NEGATIVE BATTERY CABLE DISCONNECTION/CONNECTION [SKYACTIV-G 2.0, SKYACTIV-G 2.5]**.)

3. Shift the selector lever from the P position to the D position (ATX).

4. Remove the sunroof seaming welt. (with sunroof system)

5. Remove the following parts:
   a. A-pillar trim (See **A-PILLAR TRIM REMOVAL/INSTALLATION**.)
   b. Sunvisor (See **SUNVISOR REMOVAL/INSTALLATION**.)
   c. Front map light (dual light type) (See **FRONT MAP LIGHT REMOVAL/INSTALLATION**.)
   d. Assist handle (See **ASSIST HANDLE REMOVAL/INSTALLATION**.)
   e. Front scuff plate (See **FRONT SCUFF PLATE REMOVAL/INSTALLATION**.)
   f. Rear scuff plate (See **REAR SCUFF PLATE REMOVAL/INSTALLATION**.)
   g. B-pillar lower trim (See **B-PILLAR LOWER TRIM REMOVAL/INSTALLATION**.)
   h. Adjust anchor cover (See **FRONT SEAT BELT REMOVAL/INSTALLATION**.)
   i. Upper anchor installation bolt on the seat belt (See **FRONT SEAT BELT REMOVAL/INSTALLATION**.)
   j. B-pillar upper trim (See **B-PILLAR UPPER TRIM REMOVAL/INSTALLATION**.)
6. Set the tire house trim aside. (See **TIRE HOUSE TRIM REMOVAL/INSTALLATION**.)
7. Remove the following parts:
   a. Rear package tray (See **REAR PACKAGE TRAY REMOVAL/INSTALLATION**.)
   b. Trunk covering (See **TRUNK COVERING REMOVAL/INSTALLATION**.)
   c. Trunk board (See **TRUNK BOARD REMOVAL/INSTALLATION**.)
   d. Trunk end trim (See **TRUNK END TRIM REMOVAL/INSTALLATION**.)
   e. Trunk side upper trim (See **TRUNK SIDE UPPER TRIM REMOVAL/INSTALLATION**.)
   f. Trunk side trim (LH only) (See **TRUNK SIDE TRIM REMOVAL/INSTALLATION**.)
   g. C-pillar trim (See **C-PILLAR TRIM REMOVAL/INSTALLATION**.)
   h. Upper panel (See **UPPER PANEL REMOVAL**.) (See **UPPER PANEL INSTALLATION**.)
   i. Rear console (See **REAR CONSOLE REMOVAL/INSTALLATION**.)
   j. Shift lever knob (MTX) (See **MANUAL TRANSAXLE SHIFT MECHANISM REMOVAL/INSTALLATION [C66M-R]**.)
   k. Selector lever knob (ATX) (See **AUTOMATIC TRANSAXLE SHIFT MECHANISM REMOVAL/INSTALLATION**.)
   l. Shift panel (See **SHIFT PANEL REMOVAL/INSTALLATION**.)
   m. Front console box (See **FRONT CONSOLE BOX REMOVAL/INSTALLATION**.)
   n. CD player (with CD player) (See **CD PLAYER REMOVAL**.) (See **CD PLAYER INSTALLATION**.)
   o. Glove compartment (See **GLOVE COMPARTMENT REMOVAL/INSTALLATION**.)
   p. Decoration panel (See **DECORATION PANEL REMOVAL/INSTALLATION**.)
   q. Side wall (See **SIDE WALL REMOVAL/INSTALLATION**.)
   r. Front console (See **FRONT CONSOLE REMOVAL/INSTALLATION**.)
8. Set the selector lever component aside. (ATX) (See **AUTOMATIC TRANSAXLE SHIFT MECHANISM REMOVAL/INSTALLATION**.)
9. Set the shift lever component aside. (MTX) (See **MANUAL TRANSAXLE SHIFT MECHANISM REMOVAL/INSTALLATION [C66M-R]**.)
10. Affix protective tape to the position shown in the figure.

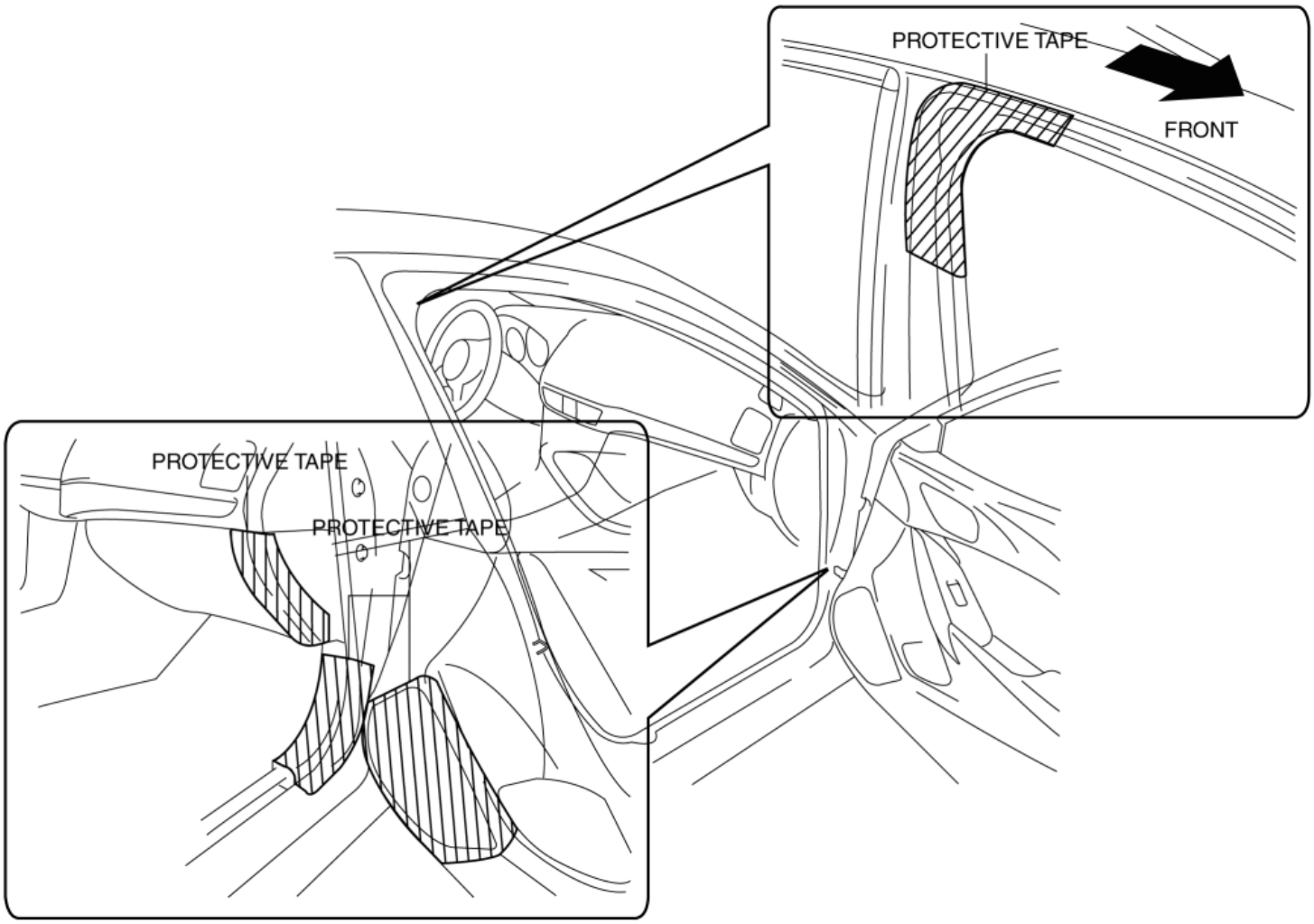

11. Disconnect the roof wiring harness connector and remove the roof wiring harness connector clip from the body.

12. Disconnect the rear washer hose C. (See **REAR WASHER HOSE REMOVAL / INSTALLATION**.)

13. Temporarily install the seaming welt shown in the figure to the headliner.

CAUTION:

- If fasteners are removed without temporarily installing the seaming welt, the headliner may fall off and the part may be damaged. Before removing fasteners, temporarily install the seaming welt to prevent the headliner from falling off.

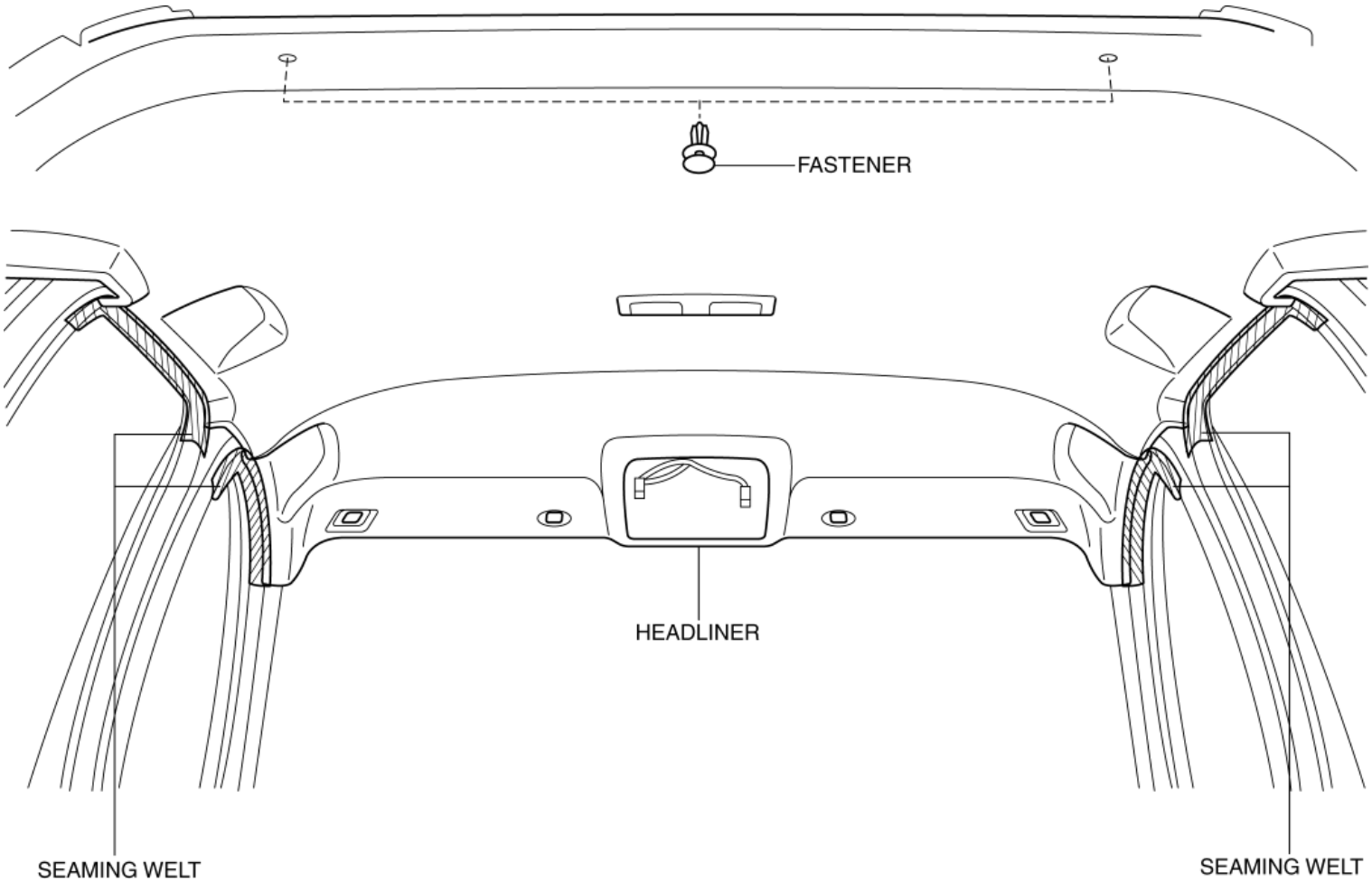

14. Open all of the doors (front/rear).

15. Remove fasteners.

16. Partially peel back the seaming welt. Take the headliner out from the opened passenger-side door opening.

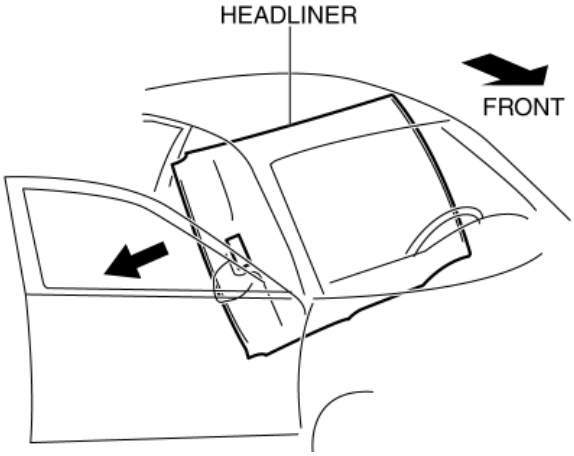

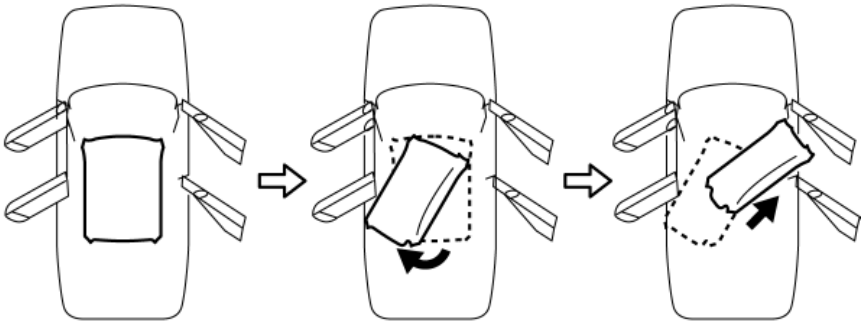

17. Install in the reverse order of removal.

2014 - Mazda3 - Body and Accessories

FLOOR INSULATOR REMOVAL/INSTALLATION

Driver-side

1. Set the wheel blocks for both the front and rear wheels.
2. Disconnect the negative battery cable. (See **NEGATIVE BATTERY CABLE DISCONNECTION/CONNECTION [SKYACTIV-G 2.0, SKYACTIV-G 2.5]**.)
3. Shift the selector lever from the P position to the D position (ATX).
4. Remove the following parts:
   a. Driver-side front scuff plate (See **FRONT SCUFF PLATE REMOVAL/INSTALLATION**.)
   b. Driver-side front side trim (See **FRONT SIDE TRIM REMOVAL/INSTALLATION**.)
   c. Upper panel (See **UPPER PANEL REMOVAL**.) (See **UPPER PANEL INSTALLATION**.)
   d. Rear console (See **REAR CONSOLE REMOVAL/INSTALLATION**.)
   e. Shift lever knob (MTX) (See **MANUAL TRANSAXLE SHIFT MECHANISM REMOVAL/INSTALLATION [C66M-R]**.)
   f. Selector lever knob (ATX) (See **AUTOMATIC TRANSAXLE SHIFT MECHANISM REMOVAL/INSTALLATION**.)
   g. Shift panel (See **SHIFT PANEL REMOVAL/INSTALLATION**.)
   h. Front console box (See **FRONT CONSOLE BOX REMOVAL/INSTALLATION**.)
   i. CD player (with CD player) (See **CD PLAYER REMOVAL**.) (See **CD PLAYER INSTALLATION**.)
   j. Glove compartment (See **GLOVE COMPARTMENT REMOVAL/INSTALLATION**.)
   k. Decoration panel (See **DECORATION PANEL REMOVAL/INSTALLATION**.)
   l. Side wall (See **SIDE WALL REMOVAL/INSTALLATION**.)
   m. Front console (See **FRONT CONSOLE REMOVAL/INSTALLATION**.)
   n. Accelerator pedal (See **ACCELERATOR PEDAL REMOVAL/INSTALLATION [SKYACTIV-G 2.0, SKYACTIV-G 2.5]**.)
   o. Joint cover (See **STEERING WHEEL AND COLUMN REMOVAL/INSTALLATION**.)
5. Partially peel back the floor covering.
6. Remove the tab in the direction of the arrow (1) shown in the figure.

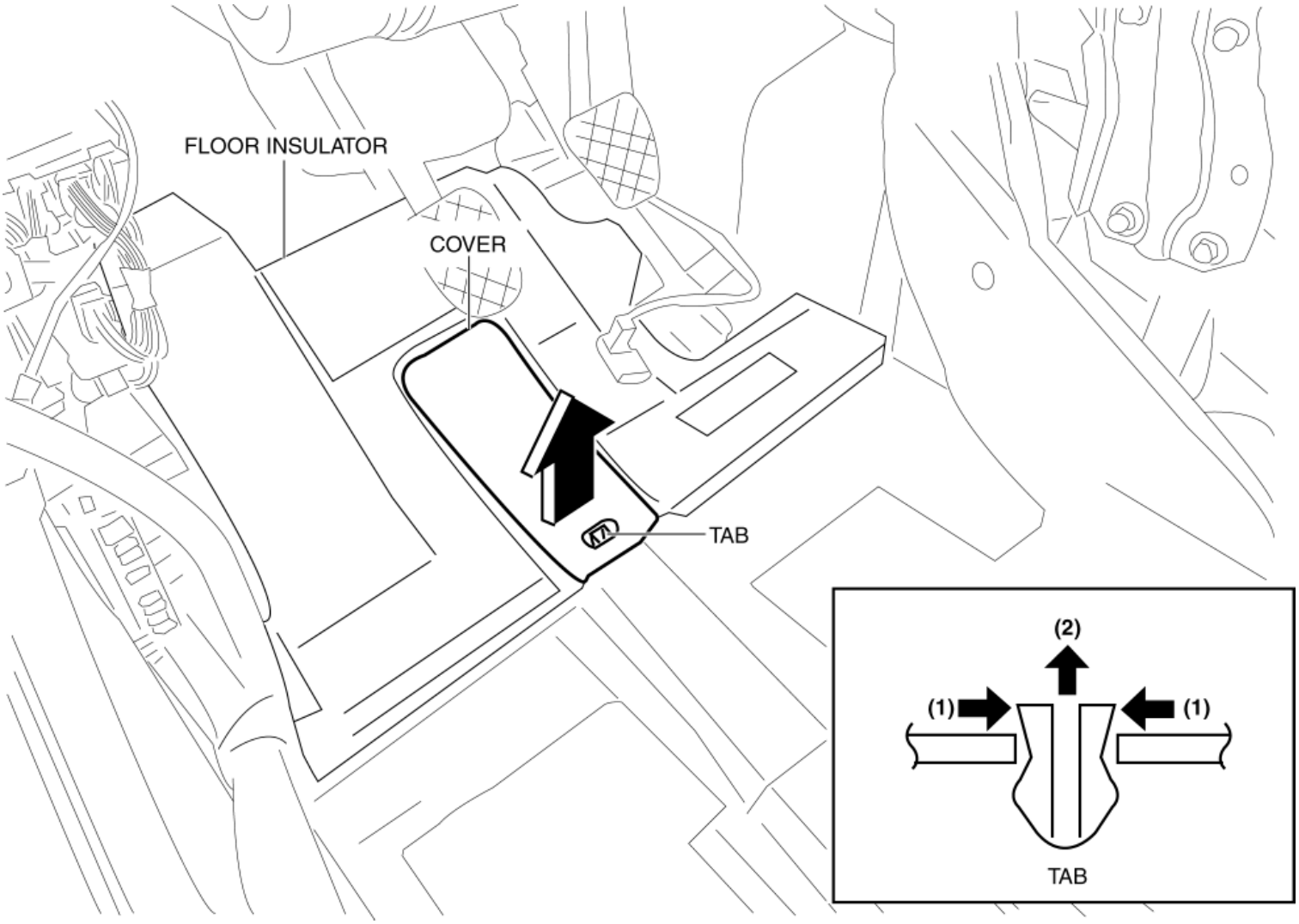

7. Remove the cover in the direction of the arrow (2) shown in the figure.

8. Pull the floor insulator in the direction of the arrow (3) and remove it.

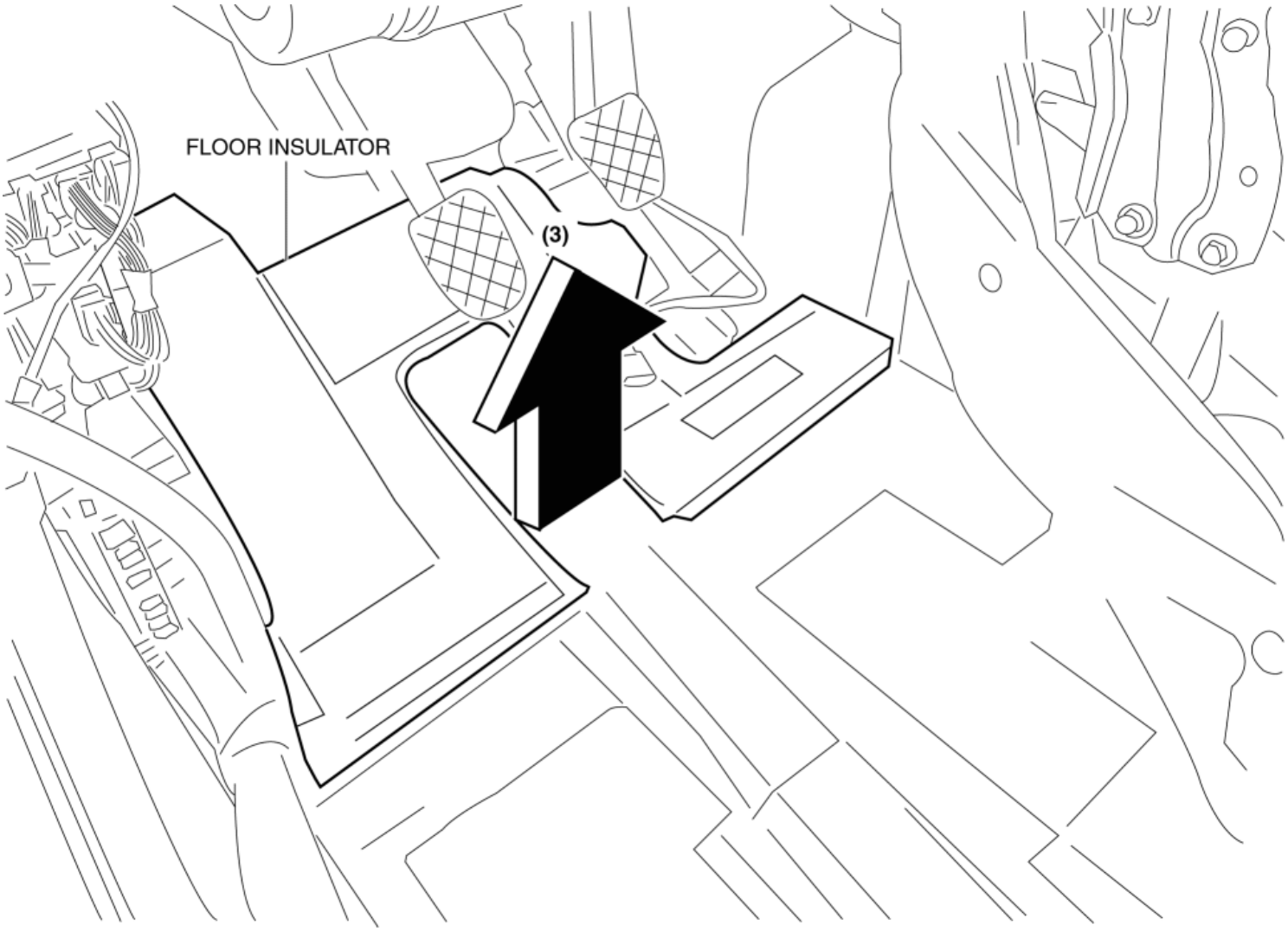

9. Install in the reverse order of removal.

Passenger-side

1. Set the wheel blocks for both the front and rear wheels.

2. Disconnect the negative battery cable. (See **NEGATIVE BATTERY CABLE DISCONNECTION/CONNECTION [SKYACTIV-G 2.0, SKYACTIV-G 2.5]**.)

3. Shift the selector lever from the P position to the D position (ATX).

4. Remove the following parts:

   a. Passenger-side front scuff plate (See **FRONT SCUFF PLATE REMOVAL/INSTALLATION**.)

   b. Passenger-side side trim (See **FRONT SIDE TRIM REMOVAL/INSTALLATION**.)

   c. Upper panel (See **UPPER PANEL REMOVAL**.) (See **UPPER PANEL INSTALLATION**.)

   d. Rear console (See **REAR CONSOLE REMOVAL/INSTALLATION**.)

   e. Shift lever knob (MTX) (See **MANUAL TRANSAXLE SHIFT MECHANISM REMOVAL/INSTALLATION [C66M-R]**.)

   f. Selector lever knob (ATX) (See **AUTOMATIC TRANSAXLE SHIFT MECHANISM REMOVAL/INSTALLATION**.)

   g. Shift panel (See **SHIFT PANEL REMOVAL/INSTALLATION**.)

   h. Front console box (See **FRONT CONSOLE BOX REMOVAL/INSTALLATION**.)

   i. CD player (with CD player) (See **CD PLAYER REMOVAL**.) (See **CD PLAYER INSTALLATION**.)

   j. Glove compartment (See **GLOVE COMPARTMENT REMOVAL/INSTALLATION**.)

   k. Decoration panel (See **DECORATION PANEL REMOVAL/INSTALLATION**.)

l. Side wall (See **SIDE WALL REMOVAL/INSTALLATION**.)

m. Front console (See **FRONT CONSOLE REMOVAL/INSTALLATION**.)

5. Partially peel back the floor covering.

6. Remove the fastener.

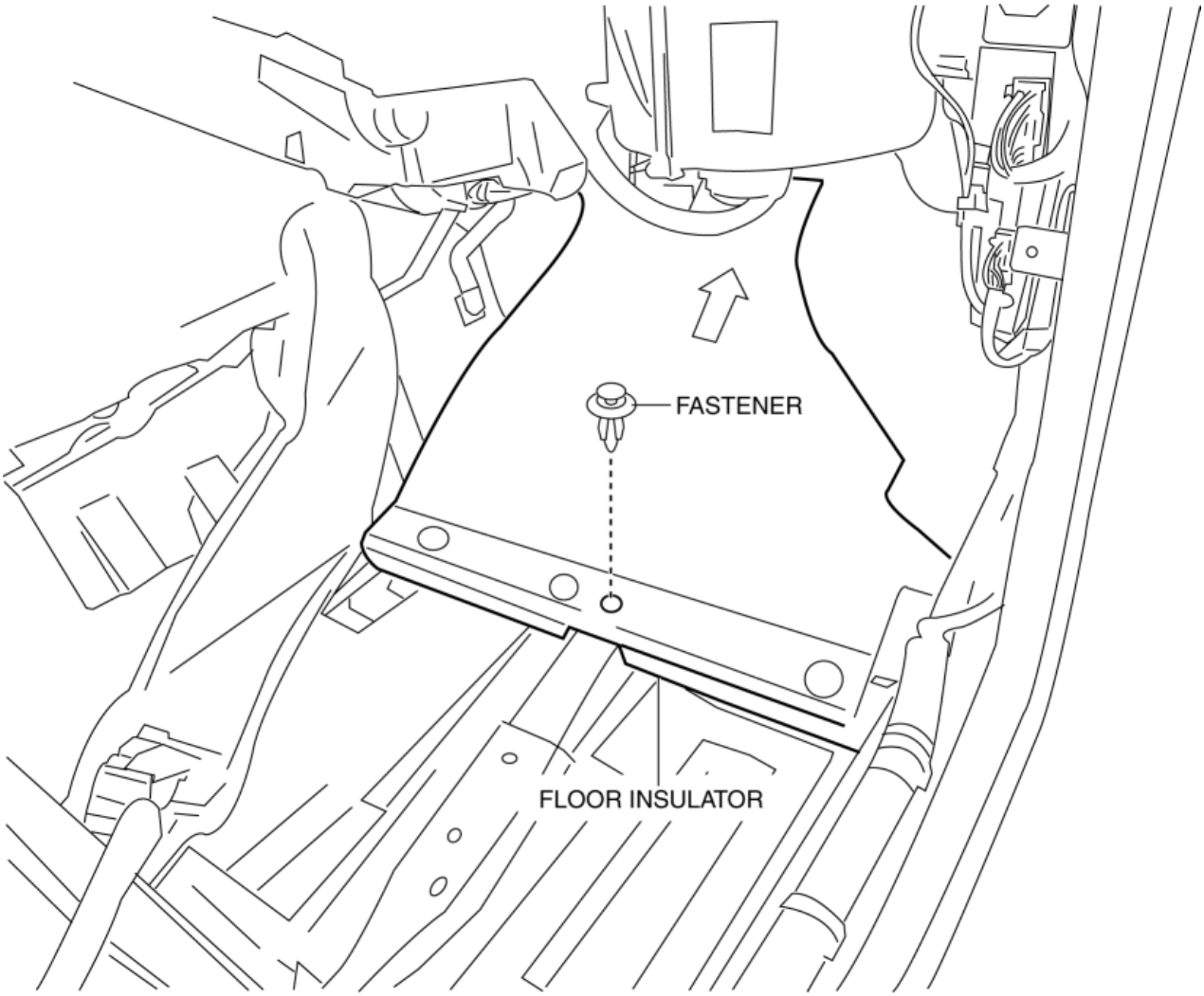

7. Pull the floor insulator in the direction of the arrow and remove it.

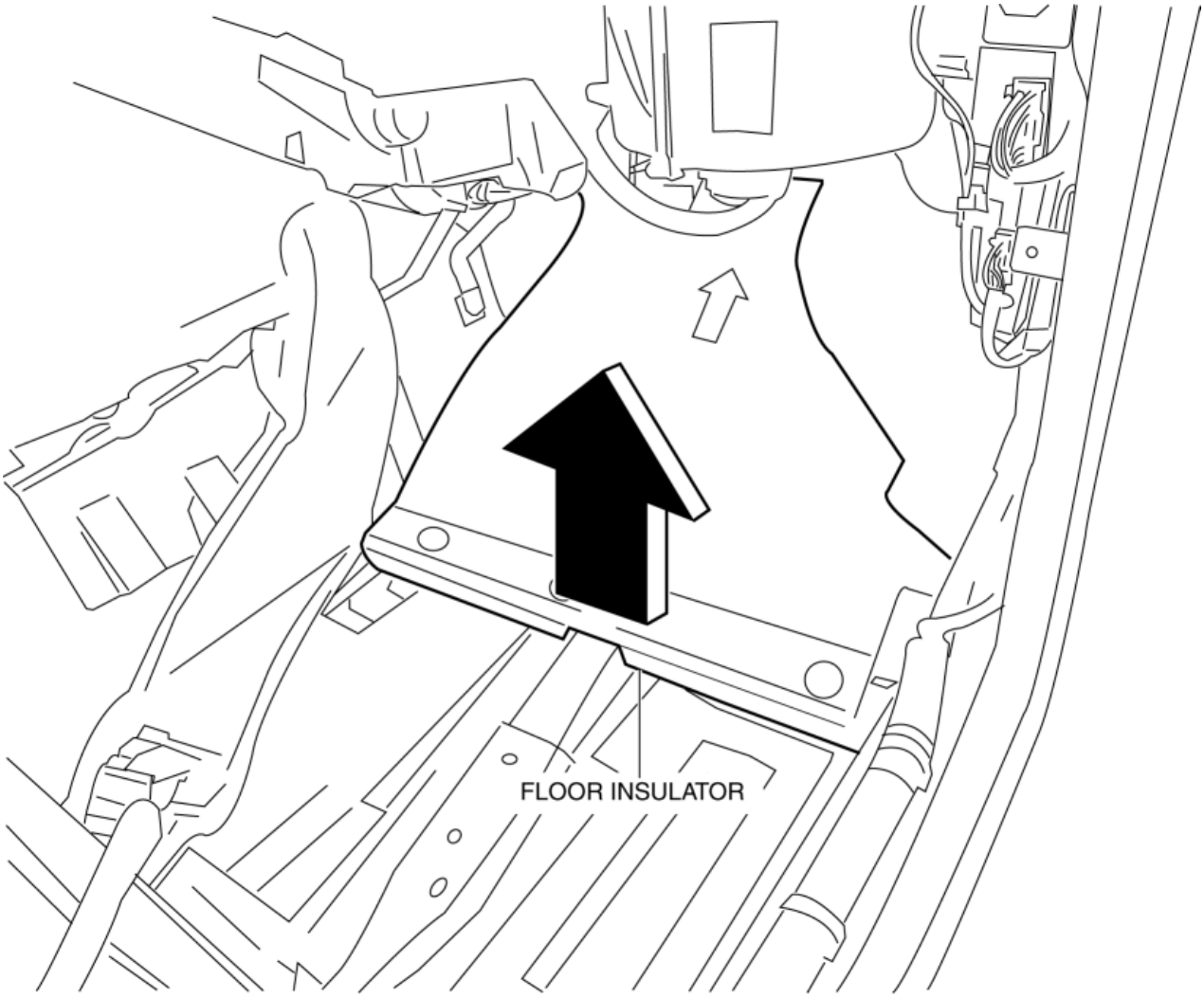

8. Install in the reverse order of removal.

2014 - Mazda3 - Body and Accessories

FLOOR COVERING REMOVAL/INSTALLATION

1. Set the wheel blocks for both the front and rear wheels.
2. Disconnect the negative battery cable. (See **NEGATIVE BATTERY CABLE DISCONNECTION/CONNECTION [SKYACTIV-G 2.0, SKYACTIV-G 2.5]**.)
3. Shift the selector lever from the P position to the D position (ATX).
4. Remove the following parts:
    a. Front seat (See **FRONT SEAT REMOVAL/INSTALLATION**.)
    b. Lower anchor of the front seat belt (See **FRONT SEAT BELT REMOVAL/INSTALLATION**.)
    c. Upper panel (See **UPPER PANEL REMOVAL**.) (See **UPPER PANEL INSTALLATION**.)
    d. Rear console (See **REAR CONSOLE REMOVAL/INSTALLATION**.)
    e. Shift lever knob (MTX) (See **MANUAL TRANSAXLE SHIFT MECHANISM REMOVAL/INSTALLATION [C66M-R]**.)
    f. Selector lever knob (ATX) (See **AUTOMATIC TRANSAXLE SHIFT MECHANISM REMOVAL/INSTALLATION**.)
    g. Shift panel (See **SHIFT PANEL REMOVAL/INSTALLATION**.)
    h. Front console box (See **FRONT CONSOLE BOX REMOVAL/INSTALLATION**.)
    i. CD player (with CD player) (See **CD PLAYER REMOVAL**.) (See **CD PLAYER INSTALLATION**.)
    j. Side wall (See **SIDE WALL REMOVAL/INSTALLATION**.)
    k. Glove compartment (See **GLOVE COMPARTMENT REMOVAL/INSTALLATION**.)
    l. Decoration panel (See **DECORATION PANEL REMOVAL/INSTALLATION**.)
    m. Front console (See **FRONT CONSOLE REMOVAL/INSTALLATION**.)
    n. Front scuff plate (See **FRONT SCUFF PLATE REMOVAL/INSTALLATION**.)
    o. Front side trim (See **FRONT SIDE TRIM REMOVAL/INSTALLATION**.)
    p. Rear scuff plate (See **REAR SCUFF PLATE REMOVAL/INSTALLATION**.)
    q. B-pillar lower trim (See **B-PILLAR LOWER TRIM REMOVAL/INSTALLATION**.)
    r. Rear seat cushion (See **REAR SEAT CUSHION REMOVAL/INSTALLATION**.)
    s. Shift lever component (MTX) (See **MANUAL TRANSAXLE SHIFT MECHANISM REMOVAL/INSTALLATION [C66M-R]**.)
    t. Selector lever component (ATX) (See **AUTOMATIC TRANSAXLE SHIFT MECHANISM REMOVAL/INSTALLATION**.)
5. Remove nuts.

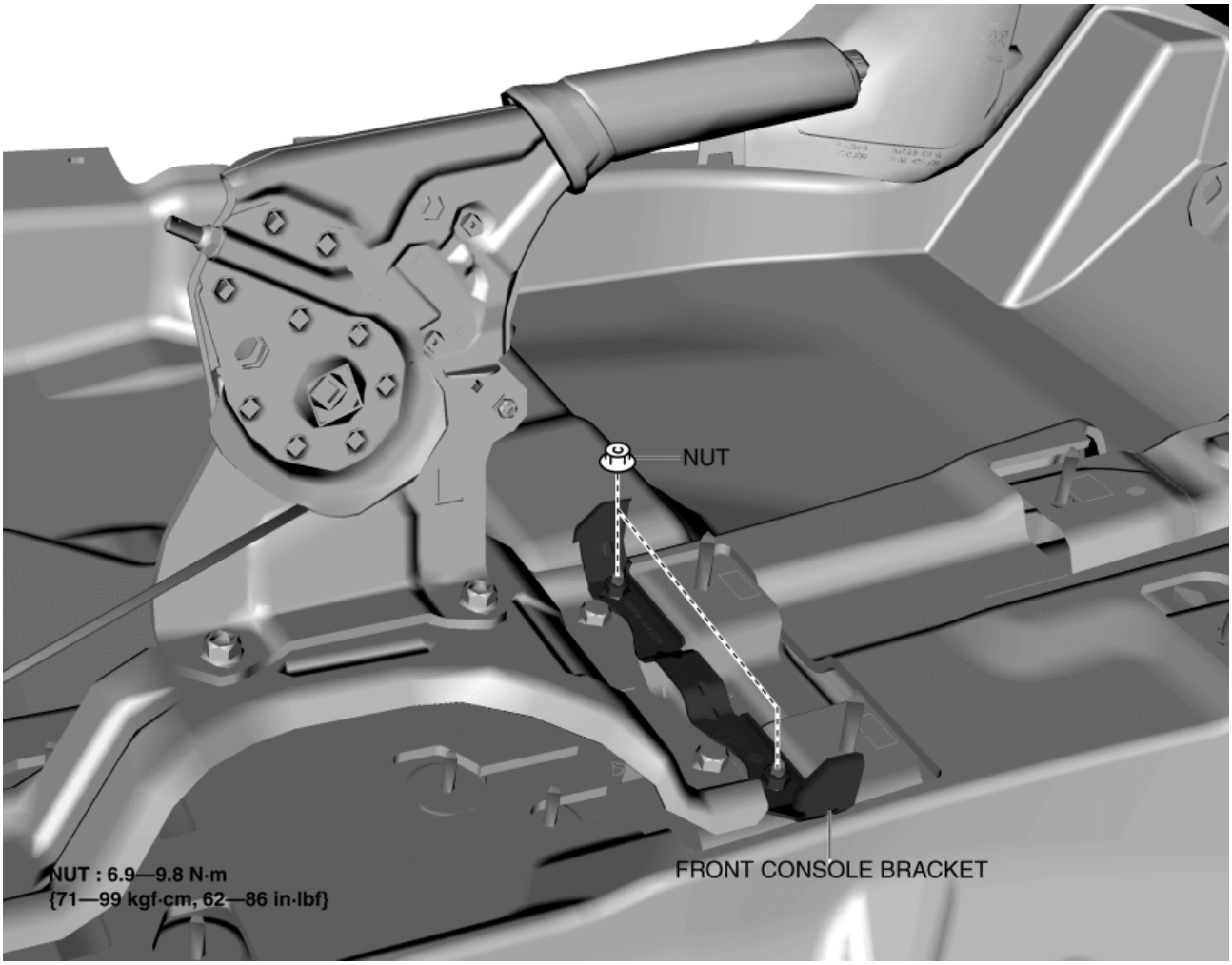

6. Remove the front console bracket.

7. Remove bolts.

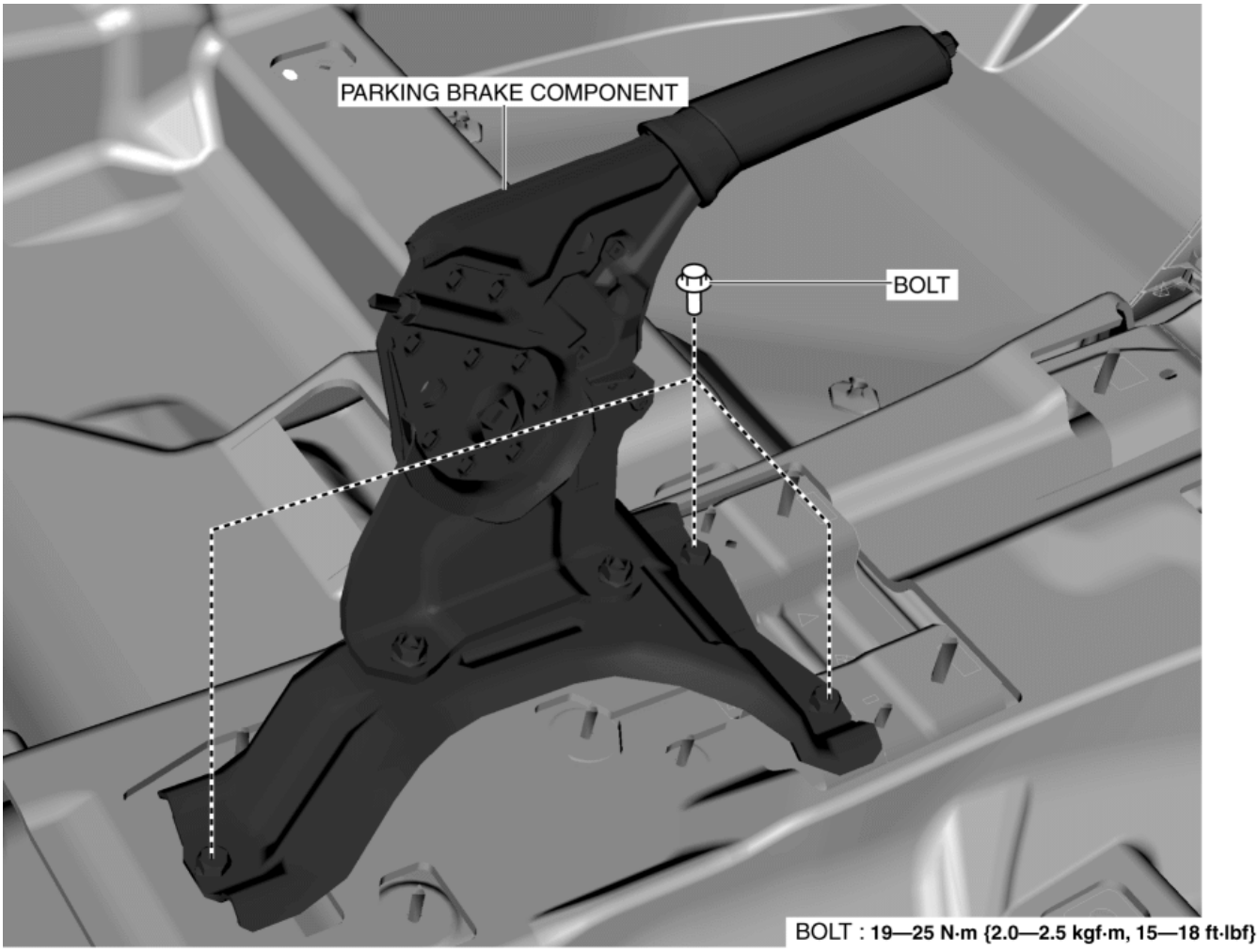

8. Remove the parking brake lever component.

9. Disconnect the service plug (With i-ELOOP) (See **SERVICE PLUG DISCONNECTION/CONNECTION [i-ELOOP]**.)

10. Remove the following parts:

    a. SAS control module (See **SAS CONTROL MODULE REMOVAL/INSTALLATION [TWO-STEP DEPLOYMENT CONTROL SYSTEM]**.) (See **SAS CONTROL MODULE REMOVAL/INSTALLATION [STANDARD DEPLOYMENT CONTROL SYSTEM]**.)

    b. DC-DC converter (with i-ELOOP) (See **DC-DC CONVERTER REMOVAL/INSTALLATION [i-ELOOP]**.)

    c. Audio amplifier (with Bose®) (See **AUDIO AMPLIFIER REMOVAL/INSTALLATION**.)

    d. Joint cover (See **STEERING WHEEL AND COLUMN REMOVAL/INSTALLATION**.)

    e. Accelerator pedal (See **ACCELERATOR PEDAL REMOVAL/INSTALLATION [SKYACTIV-G 2.0, SKYACTIV-G 2.5]**.)

11. Disconnect the dashboard harness connectors.

12. Remove the clips shown in the figure.

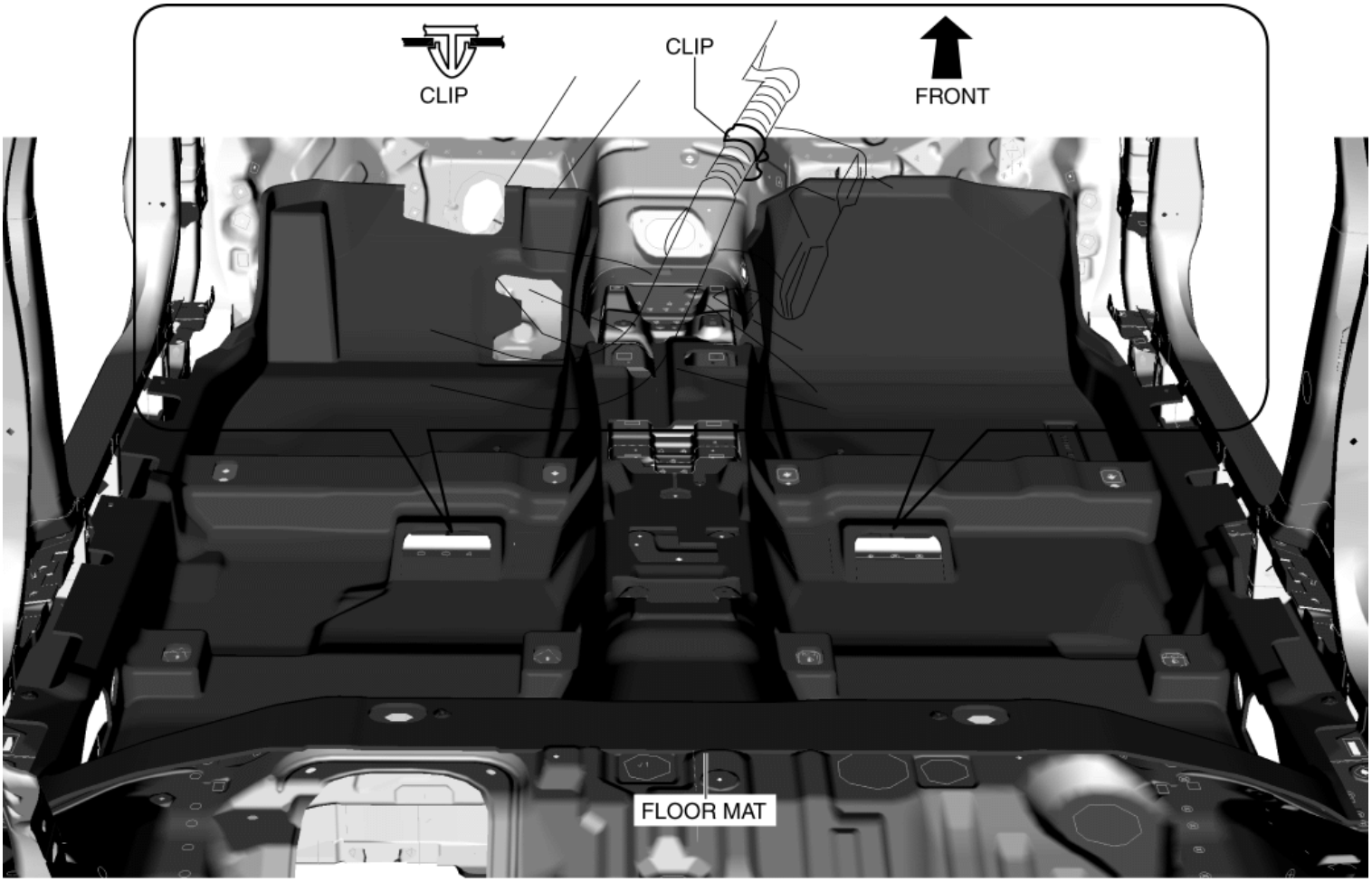

13. Remove the fasteners.

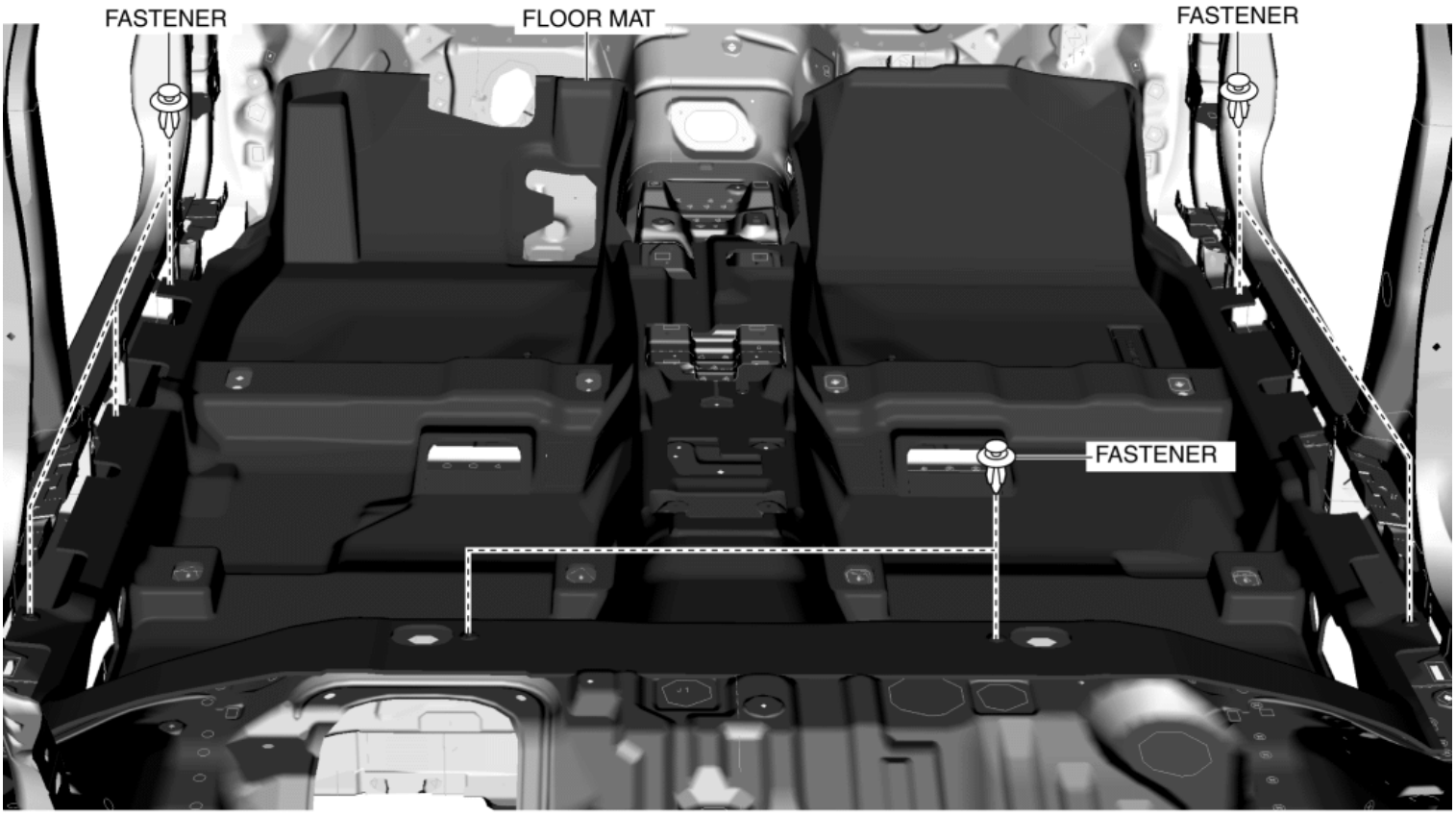

14. Take the floor covering out from the door opening.
15. Install in the reverse order of removal. (See **Floor Covering Installation Note**.)

Floor Covering Installation Note

CAUTION:

- When installing the floor covering, the floor covering may press the A/C unit drain hose and deform it. When installing the floor covering, align the floor covering to the body to prevent deforming the A/C unit drain hose.
- Place the floor covering with it aligned to the body.
- Before installing the side wall, verify that the A/C unit drain hose is not deformed.

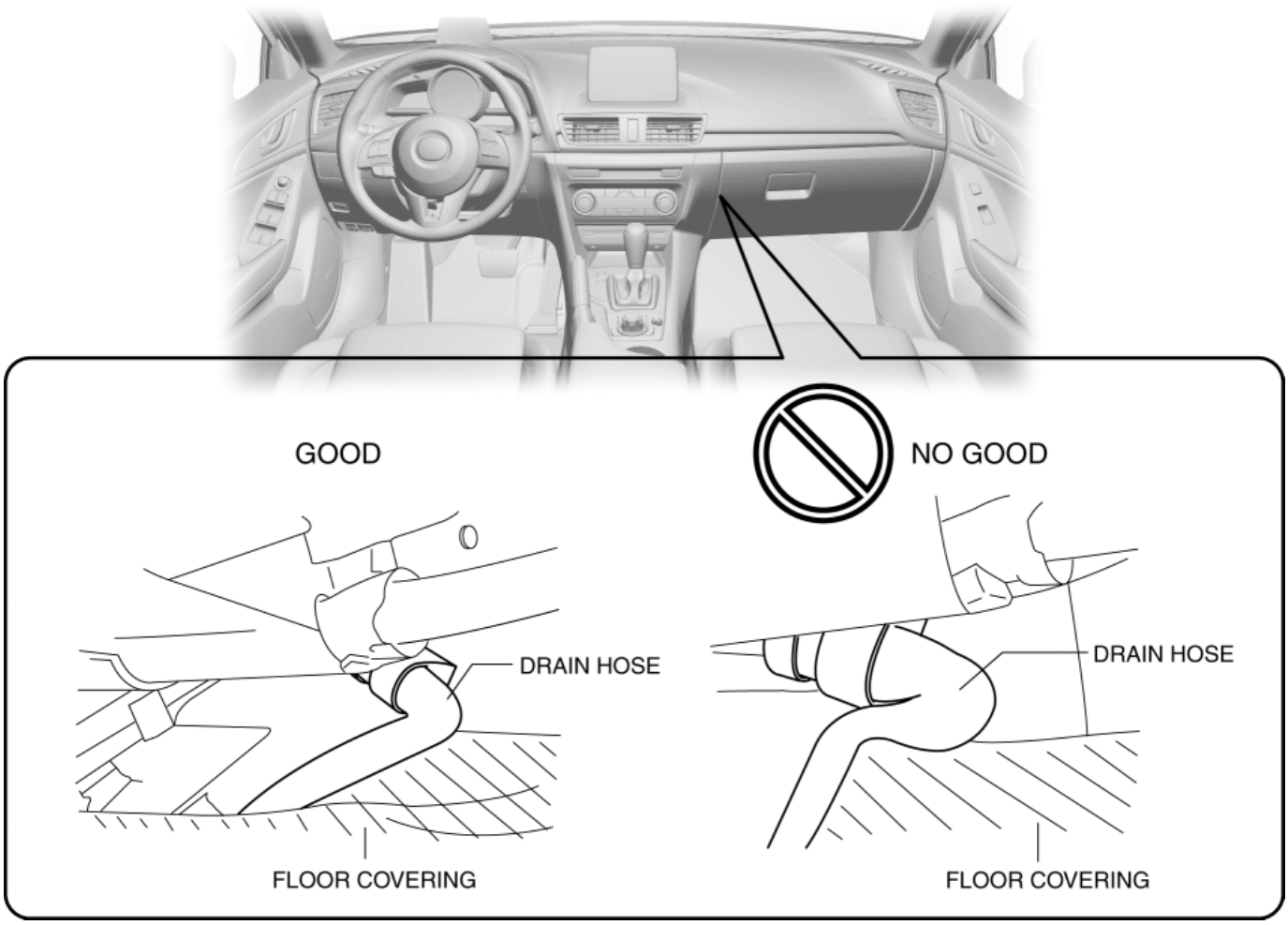

- If the rear seat cushion lock lever is covered by the floor mat, the rear seat cushion lock cannot be released. When installing the floor mat, do not cover the rear seat cushion lock lever with the mat.

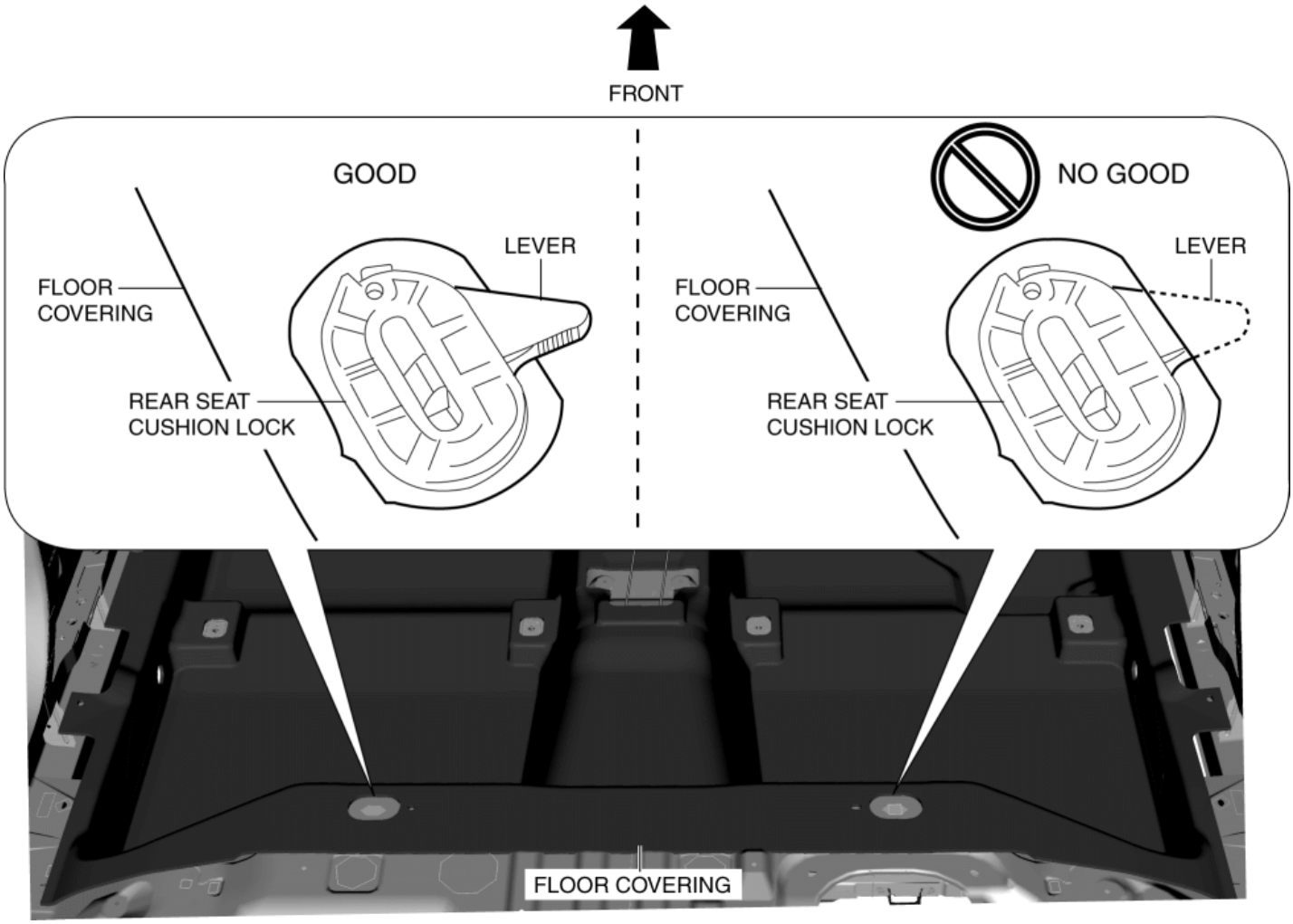
FRONT
GOOD
NO GOOD
LEVER
FLOOR COVERING
REAR SEAT CUSHION LOCK
LEVER
FLOOR COVERING
REAR SEAT CUSHION LOCK
FLOOR COVERING

2014 - Mazda3 - Body and Accessories

LIGHTING SYSTEMS LOCATION INDEX

Exterior

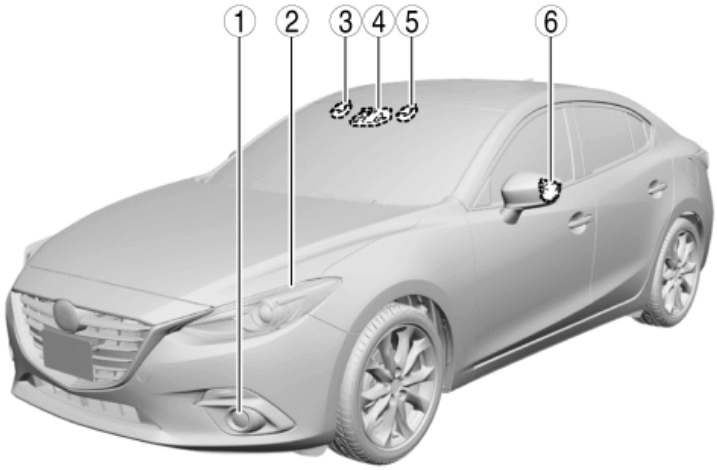

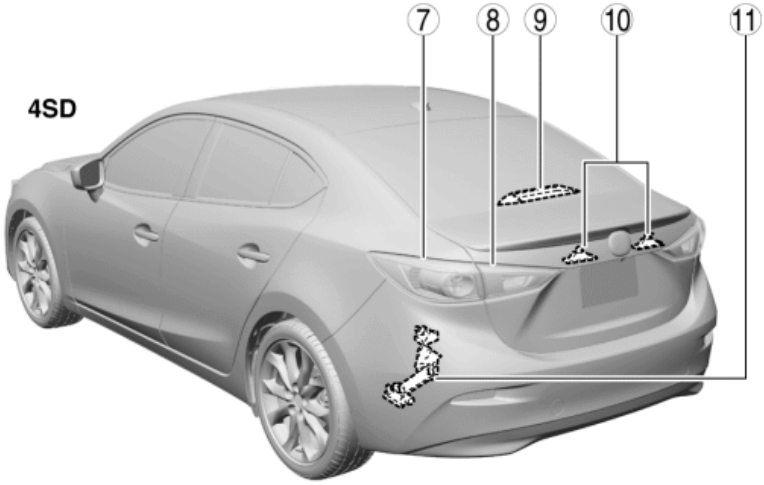

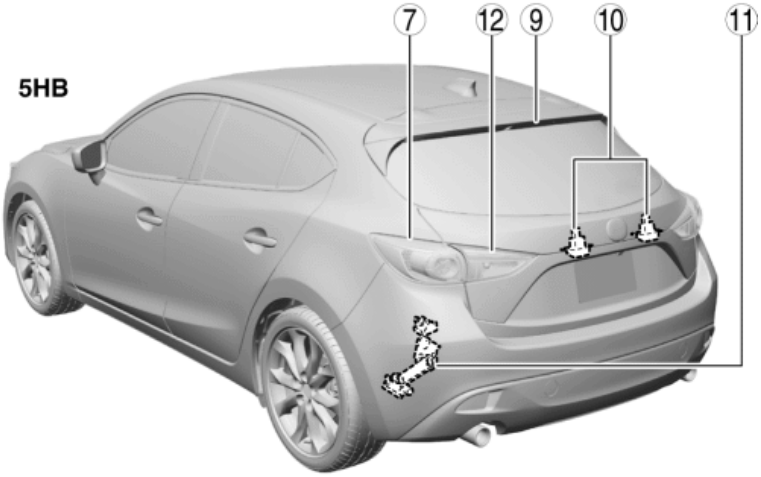

1	Front fog light (with front fog lights) (See **FRONT FOG LIGHT REMOVAL/INSTALLATION**.) (See **FRONT FOG LIGHT BULB REMOVAL/INSTALLATION**.) (See **FRONT FOG LIGHT AIMING**.)
2	Front combination light (See **DISCHARGE HEADLIGHT SERVICE WARNINGS**.) (See **FRONT COMBINATION LIGHT REMOVAL/INSTALLATION**.)

	(See **FRONT COMBINATION LIGHT DISASSEMBLY/ASSEMBLY**.) (See **HEADLIGHT BULB REMOVAL/INSTALLATION**.) (See **HEADLIGHT AIMING**.) (See **IGNITER REMOVAL/INSTALLATION**.) (See **DISCHARGE HEADLIGHT CONTROL MODULE REMOVAL/INSTALLATION**.) (See **DISCHARGE HEADLIGHT SYSTEM INSPECTION**.) (See **HEADLIGHT LEVELING ACTUATOR INSPECTION**.) (See **FRONT SIDE MARKER LIGHT/PARKING LIGHT BULB REMOVAL/INSTALLATION**.)
3	Auto light sensor (with auto light system and without high beam control (HBC) system and smart city brake support (SCBS)) (See **AUTO LIGHT SENSOR REMOVAL/INSTALLATION**.) (See **LIGHTING SYSTEM PERSONALIZATION FEATURES SETTING PROCEDURE**.)
4	Forward sensing camera (FSC) (with forward sensing camera (FSC)) (See **FORWARD SENSING CAMERA (FSC) REMOVAL/INSTALLATION**.) (See **FORWARD SENSING CAMERA (FSC) CLIP REMOVAL/INSTALLATION**.) (See **FORWARD SENSING CAMERA (FSC) COVER REMOVAL/INSTALLATION**.) (See **FORWARD SENSING CAMERA (FSC) SHORT-CORD REMOVAL/INSTALLATION**.) (See **FORWARD SENSING CAMERA (FSC) SHORT-CORD INSPECTION**.) (See **FORWARD SENSING CAMERA (FSC) AIMING**.) (See **FORWARD SENSING CAMERA (FSC) CONFIGURATION (USING READ/WRITE FUNCTION)**.) (See **FORWARD SENSING CAMERA (FSC) CONFIGURATION (USING AS-BUILT DATA)**.) (See **FORWARD SENSING CAMERA (FSC) PERSONALIZATION FEATURES SETTING PROCEDURE**.) (See **LIGHTING SYSTEM PERSONALIZATION FEATURES SETTING PROCEDURE**.)
5	Auto light sensor (with auto light system and with high beam control (HBC) system or smart city brake support (SCBS)) (See **AUTO LIGHT SENSOR REMOVAL/INSTALLATION**.) (See **LIGHTING SYSTEM PERSONALIZATION FEATURES SETTING PROCEDURE**.)
6	Side turn light (with side turn light) (See **SIDE TURN LIGHT REMOVAL/INSTALLATION**.) (See **SIDE TURN LIGHT INSPECTION**.)
7	Rear combination light (See **REAR COMBINATION LIGHT REMOVAL/INSTALLATION**.) (See **REAR TURN LIGHT BULB REMOVAL/INSTALLATION**.) (See **BRAKE LIGHT/REAR SIDE MARKER LIGHT/TAILLIGHT BULB REMOVAL/INSTALLATION**.)
8	Trunk lid light (4SD) (See **TRUNK LID LIGHT REMOVAL/INSTALLATION**.) (See **BACK-UP LIGHT BULB REMOVAL/INSTALLATION**.)
9	High-mount brake light (See **HIGH-MOUNT BRAKE LIGHT REMOVAL/INSTALLATION**.)
10	License plate lights (See **LICENSE PLATE LIGHT REMOVAL/INSTALLATION**.)

	(See **LICENSE PLATE LIGHT BULB REMOVAL/INSTALLATION**.)
11	Auto leveling sensor (with headlight auto leveling system) (See **AUTO LEVELING SENSOR REMOVAL/INSTALLATION**.) (See **AUTO LEVELING SENSOR INSPECTION**.) (See **HEADLIGHT AUTO LEVELING SYSTEM INITIALIZATION**.)
12	Liftgate light (5HB) (See **LIFTGATE LIGHT REMOVAL/INSTALLATION**.) (See **BACK-UP LIGHT BULB REMOVAL/INSTALLATION**.)

Interior

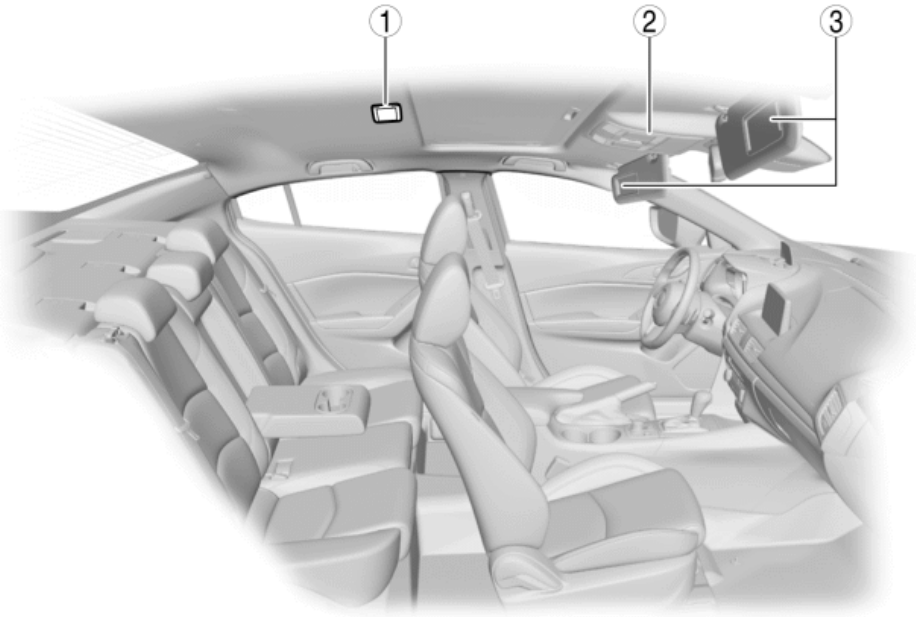

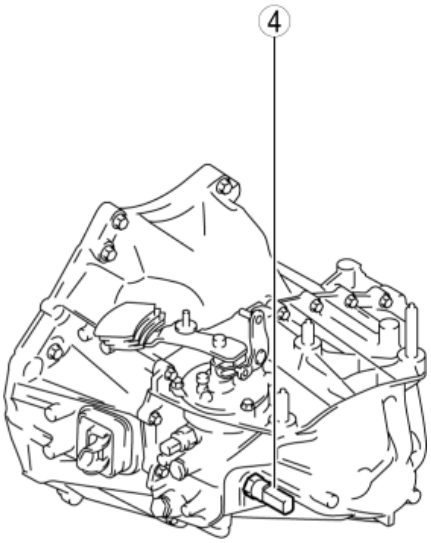

MANUAL TRANSAXLE

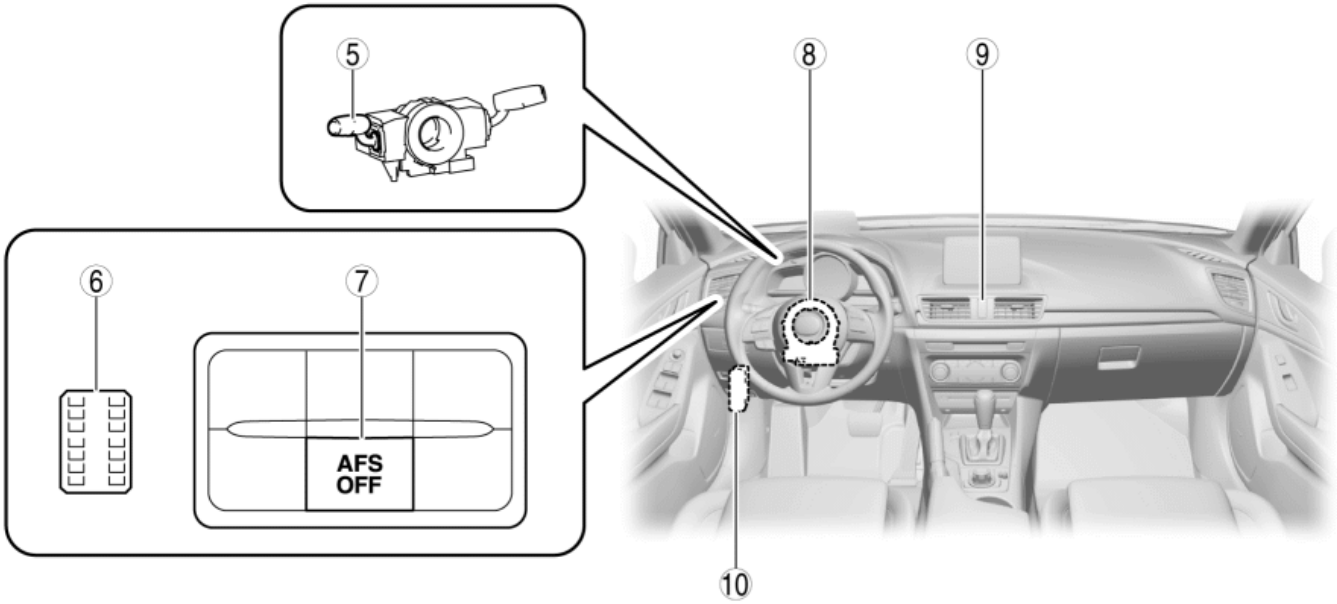

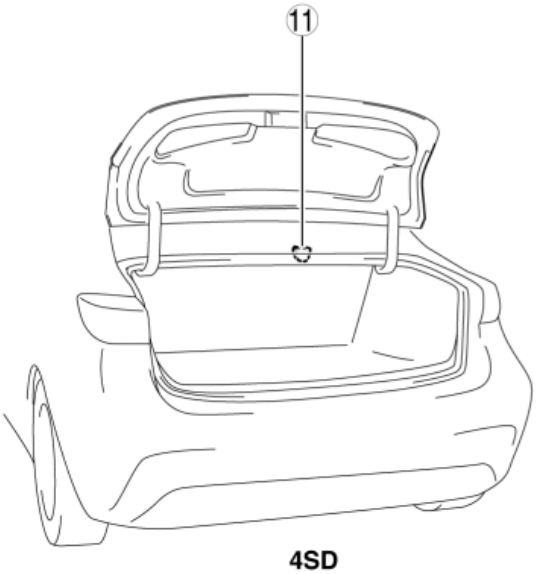

4SD

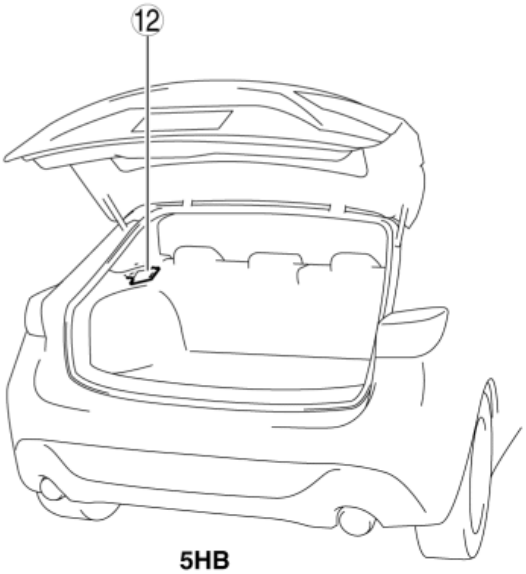

5HB

1	Rear map light (with rear map light) (See **LIGHTING SYSTEM PERSONALIZATION FEATURES SETTING PROCEDURE**.) (See **REAR MAP LIGHT REMOVAL/INSTALLATION**.) (See **REAR MAP LIGHT BULB REMOVAL/INSTALLATION**.)
2	Front map light (See **LIGHTING SYSTEM PERSONALIZATION FEATURES SETTING PROCEDURE**.) (See **FRONT MAP LIGHT REMOVAL/INSTALLATION**.) (See **FRONT MAP LIGHT BULB REMOVAL/INSTALLATION**.) (See **FRONT MAP LIGHT INSPECTION**.)
3	Vanity mirror illumination (with vanity mirror illumination) (See **VANITY MIRROR ILLUMINATION BULB REMOVAL/INSTALLATION**.) (See **VANITY MIRROR ILLUMINATION INSPECTION**.)
4	Back-up light switch (MTX) (See **BACK-UP LIGHT SWITCH INSPECTION**.)
5	Light switch (See **LIGHT SWITCH REMOVAL/INSTALLATION**.) (See **LIGHT SWITCH INSPECTION**.) (See **FRONT FOG LIGHT SWITCH INSPECTION**.)
6	Headlight leveling switch (with headlight manual leveling system) (See **HEADLIGHT LEVELING SWITCH REMOVAL/INSTALLATION**.) (See **HEADLIGHT LEVELING SWITCH INSPECTION**.)
7	AFS OFF switch (with AFS) (See **ADAPTIVE FRONT LIGHTING SYSTEM (AFS) OFF SWITCH REMOVAL/INSTALLATION**.) (See **ADAPTIVE FRONT LIGHTING SYSTEM (AFS) OFF SWITCH INSPECTION**.)
8	Steering angle sensor (with AFS or smart city brake support (SCBS)) (See **STEERING ANGLE SENSOR REMOVAL/INSTALLATION**.) (See **STEERING ANGLE SENSOR INSPECTION**.)
9	Hazard warning switch (See **HAZARD WARNING SWITCH REMOVAL/INSTALLATION**.) (See **HAZARD WARNING SWITCH INSPECTION**.)
10	AFS control module (with AFS) (See **ADAPTIVE FRONT LIGHTING SYSTEM (AFS) CONTROL MODULE REMOVAL/INSTALLATION**.) (See **HEADLIGHT AUTO LEVELING SYSTEM INITIALIZATION**.)
11	Trunk compartment light (4SD) (See **TRUNK COMPARTMENT LIGHT BULB REMOVAL/INSTALLATION**.)
12	Cargo compartment light (5HB) (See **CARGO COMPARTMENT LIGHT REMOVAL/INSTALLATION**.)

	(See **CARGO COMPARTMENT LIGHT BULB REMOVAL/INSTALLATION**.) (See **CARGO COMPARTMENT LIGHT INSPECTION**.)

2014 - Mazda3 - Body and Accessories

DISCHARGE HEADLIGHT SERVICE WARNINGS

Discharge Headlight Service Warnings

- When replacing a discharge headlight bulb, performing the servicing with the negative battery cable connected or in a wet work area could result in electrocution. When replacing a discharge headlight bulb, perform the servicing under the following conditions:
    - Switch the ignition off and disconnect the negative battery cable.
    - Perform the servicing out of the rain and in a dry work area.
    - Thoroughly dry your hands.
- Because the discharge headlight bulb connector instantly produces **approx. 25,000 V** of high voltage, inserting a finger or a tester probe could result in electrocution. When turning the light switch on, do not insert a finger or tester probe into the discharge headlight bulb connector.

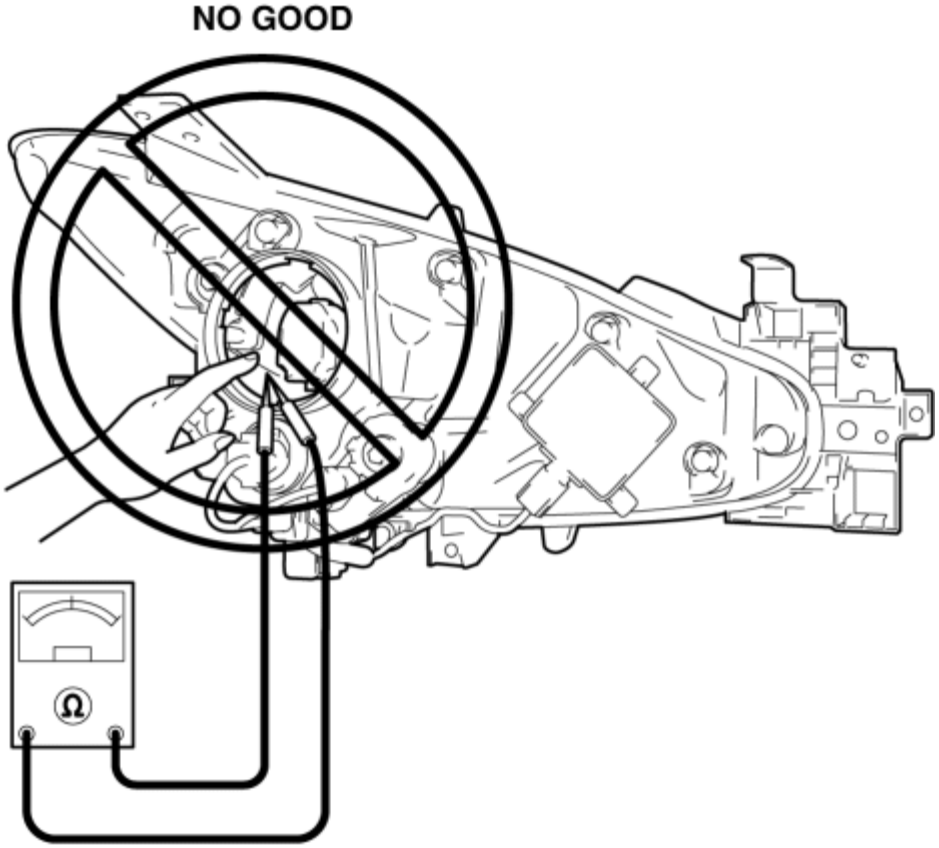

- If a discharge headlight bulb is turned on before completely assembling the discharge headlight related parts to a front combination light, it could result in electrocution. Before illuminating the discharge headlights, completely assemble the discharge headlight related

parts to the front combination lights and install the front combination lights to the vehicle.

Discharge Headlight Control Module Servicing Warnings

- If the discharge headlight control module tester is used to do a part inspection or the discharge headlight control module is disassembled, electrocution could result from the high voltage around the module. Do not do a part inspection of or disassemble the discharge headlight control module.

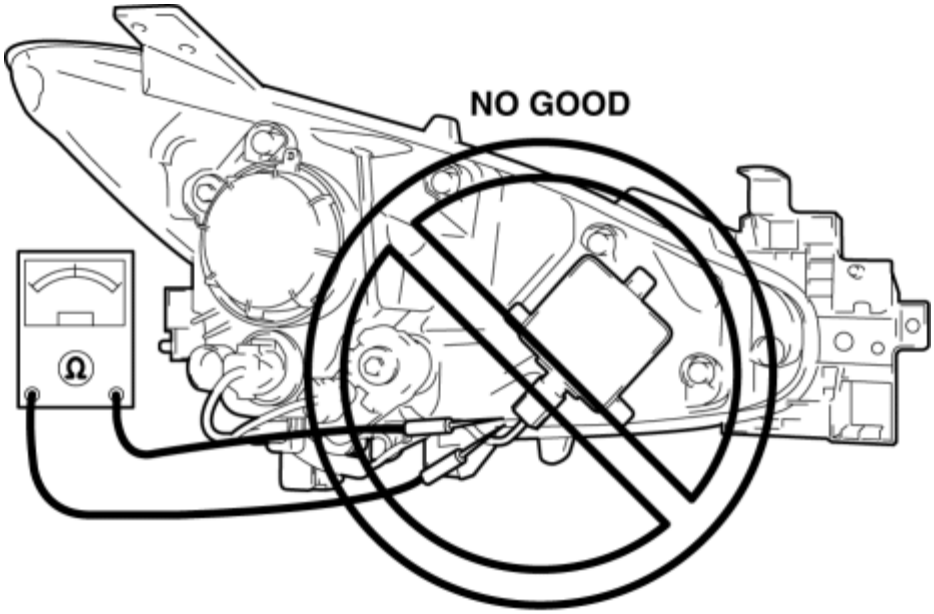

Reusing Discharge Headlight Control Module

- A discharge headlight control module damaged in an accident could leak high voltage around the module and cause electrocution. In addition, even if the discharge headlights are turned on without any exterior damage to the module, a light-illumination malfunction could occur after a period of time has elapsed due to internal damage of a module. If a discharge headlight control module is reused, perform the following inspection and verify that the module is not malfunctioning.
    - Perform the tests for the discharge headlight bulb several times under cold-bulb conditions (turn off the discharge headlight bulb for **approx. 10 min or more**, then turn it on) and under warm-bulb conditions (turn on the discharge headlight bulb for **approx. 15 min or more**, turn it off for **approx. 1 min**, then turn it on again), and verify that the discharge headlight bulb turns on normally.
    - Inspect the discharge headlight bulb illumination until it turns on evenly directly after cold-bulb illumination for **approx. 5 min**, and verify that the discharge headlight bulb illumination has no flicker or uneven brightness level.
    - Equip with normal discharge headlight bulbs and turn them on for **approx. 30 min**, and verify that the illumination condition is stabilized with no difference in brightness level between left and right.

DISCHARGE HEADLIGHT SERVICE WARNINGS

2014 - Mazda3 - Body and Accessories

FRONT COMBINATION LIGHT REMOVAL/INSTALLATION

WARNING:

- Incorrect servicing of the discharge headlights could result in electrical shock. Before servicing the discharge headlights, always refer to the service warnings. (See **DISCHARGE HEADLIGHT SERVICE WARNINGS**.)

NOTE:

- Fogging or condensation on the inside of the front combination lights may occur due to a natural phenomenon occurring as a result of a temperature difference between the interior and exterior of the combination lights. However, it has no effect on the light performance because the temperature inside the front combination lights rises after illuminating the headlights or a period of time has elapsed.

1. Disconnect the negative battery cable. (See **NEGATIVE BATTERY CABLE DISCONNECTION/CONNECTION [SKYACTIV-G 2.0, SKYACTIV-G 2.5]**.)
2. Remove the set plate. (See **SET PLATE REMOVAL/INSTALLATION**.)
3. Remove the front bumper. (See **FRONT BUMPER REMOVAL/INSTALLATION**.)
4. To prevent scratches or damage, affix protective tape to the position shown in the figure.

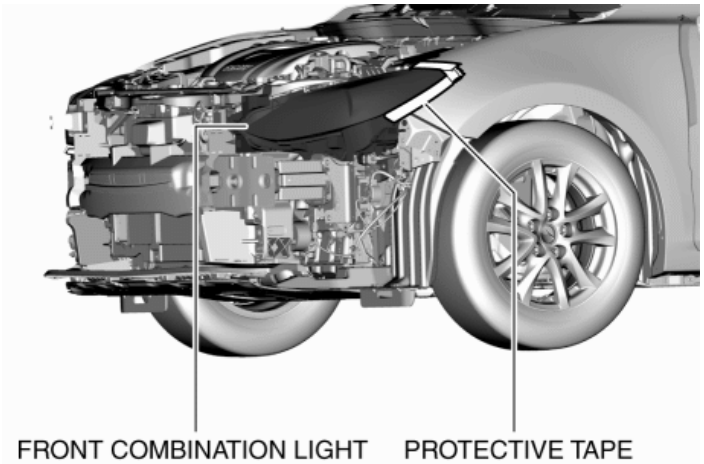

CAUTION:

- When removing the front combination light from the body, it could interfere with the body and cause scratching or damage to the body. When removing the front combination light from the body, apply protective tape to the body.

5. Disconnect the connector.

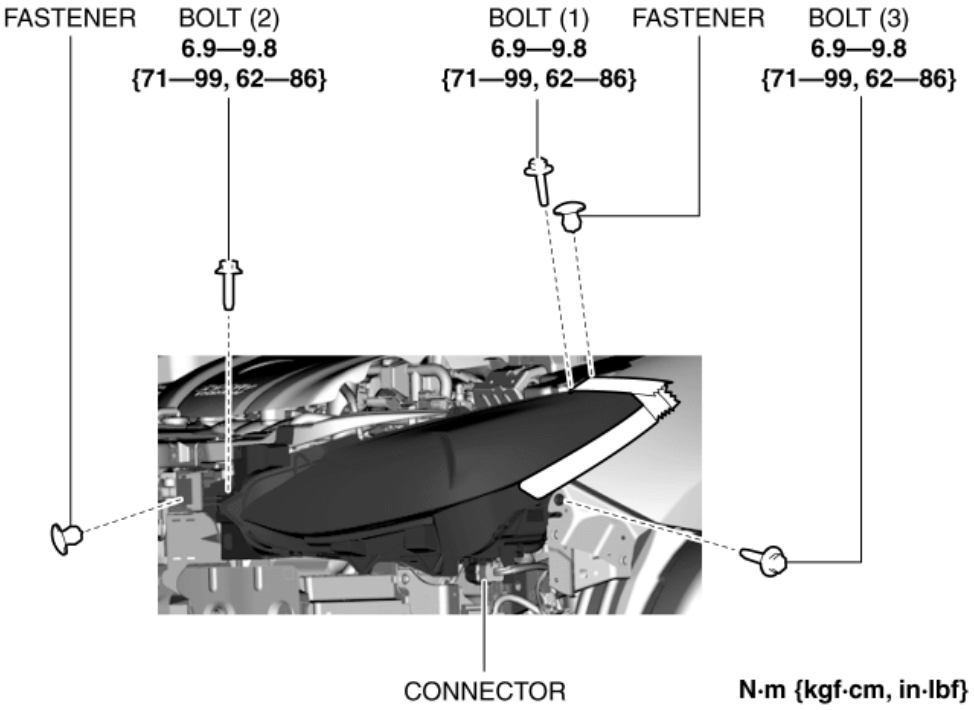

6. Remove the bolts in the order of (1), (2), and (3).

7. Remove the fasteners.

8. Pull the front combination light in the direction of the arrow shown in the figure while partially setting the intake air guide aside, and pull out the front combination light pins from the body.

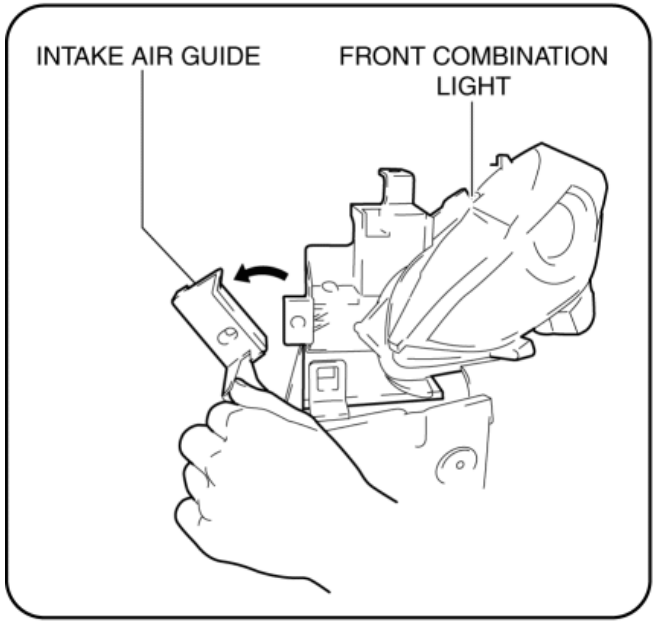

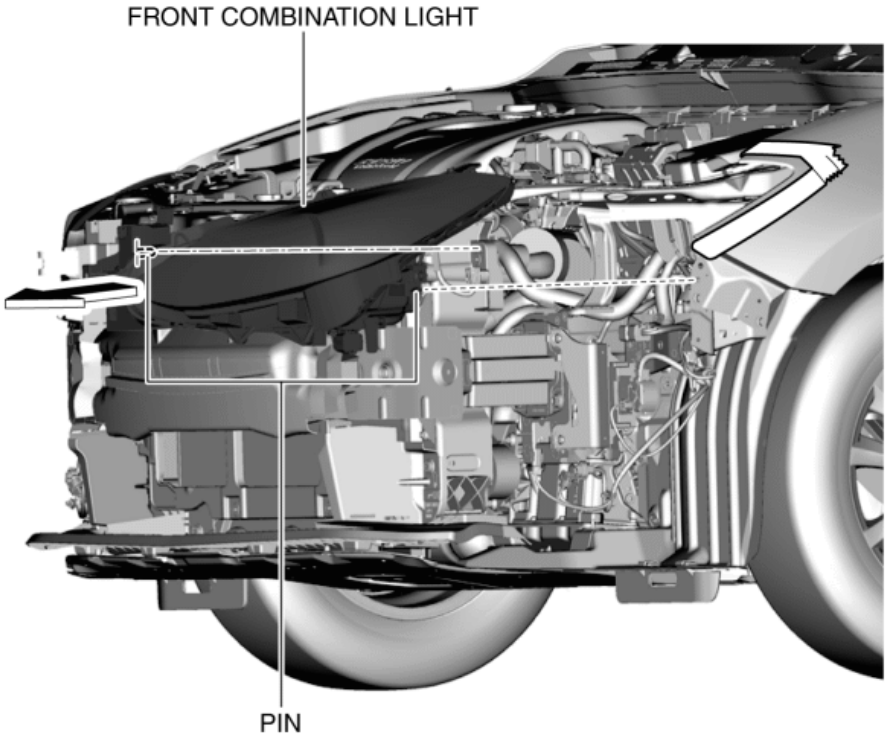

9. Remove the front combination light.

10. Install in the reverse order of removal.

11. Adjust the headlight aiming. (See **HEADLIGHT AIMING**.)

2014 - Mazda3 - Body and Accessories

FRONT COMBINATION LIGHT DISASSEMBLY/ASSEMBLY

1. Disassemble in the order shown in the figure.

Without discharge headlight system

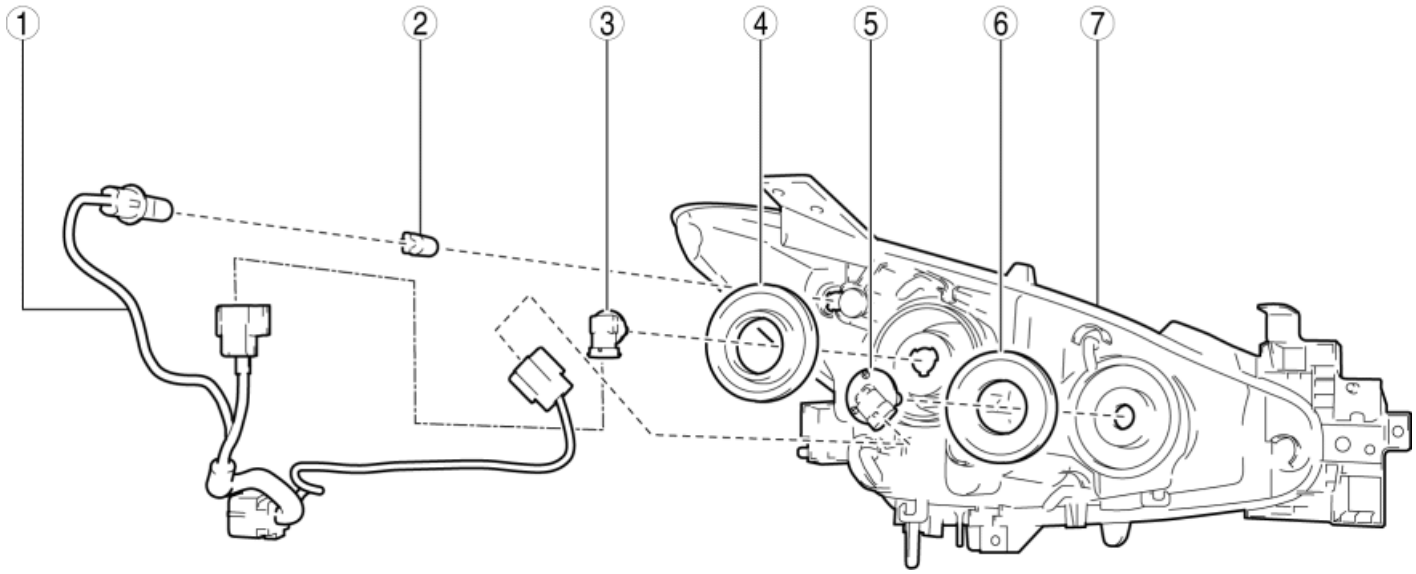

1	Short-cord (See **Short Cord Removal Note**.)
2	Front side marker light/parking light bulb (See **FRONT SIDE MARKER LIGHT/PARKING LIGHT BULB REMOVAL/INSTALLATION**.)
3	Headlight LO bulb (See **HEADLIGHT BULB REMOVAL/INSTALLATION**.)
4	Cover No.1 (See **Cover Installation Note**.)
5	Headlight HI bulb (See **HEADLIGHT BULB REMOVAL/INSTALLATION**.)
6	Cover No.2 (See **Cover Installation Note**.)
7	Front combination light

With discharge headlight system

WITHOUT AFS

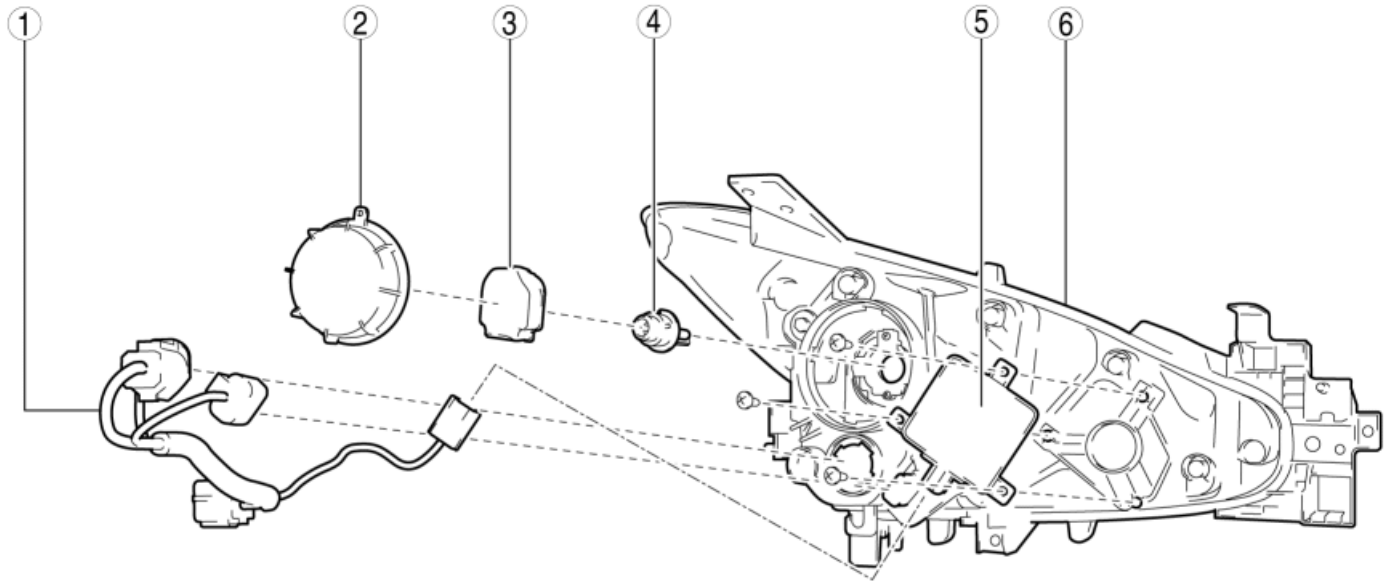

WITH AFS

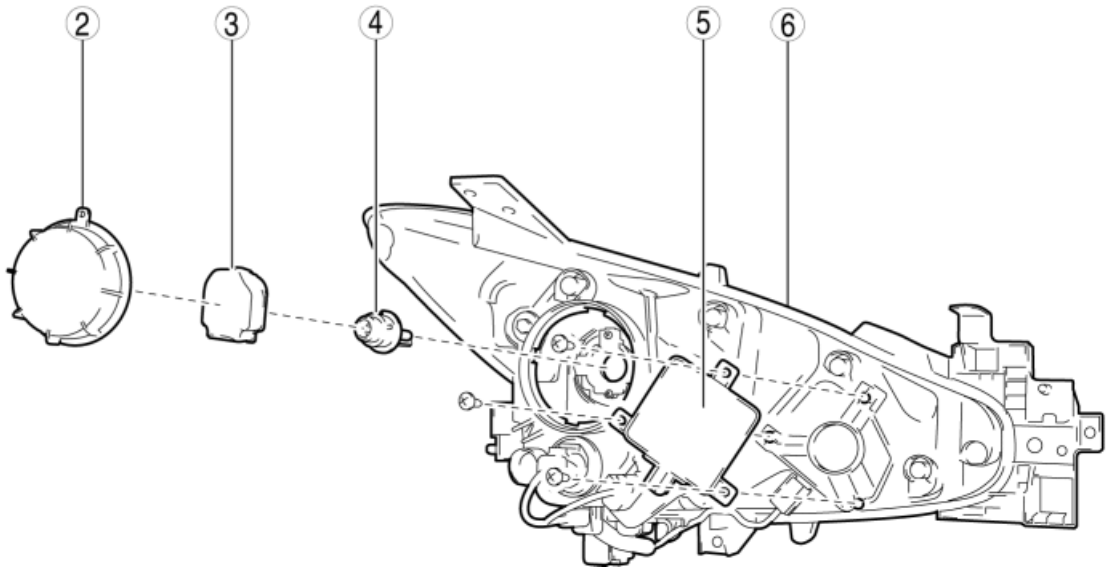

1	Short-cord (See **Short Cord Removal Note**.)
2	Cover (See **Cover Installation Note**.)
3	Igniter (See **IGNITER REMOVAL/INSTALLATION**.)
4	Headlight HI/LO bulb (See **HEADLIGHT BULB REMOVAL/INSTALLATION**.)

5	Discharge headlight control module (See **DISCHARGE HEADLIGHT CONTROL MODULE REMOVAL/INSTALLATION**.)
6	Front combination light

2. Assemble in the reverse order of disassembly.

Short Cord Removal Note

1. While pressing the clip tabs in the direction of arrows (1) shown in the figure, press the clip in the direction of arrow (2) to detach the clip tabs from the front combination light.

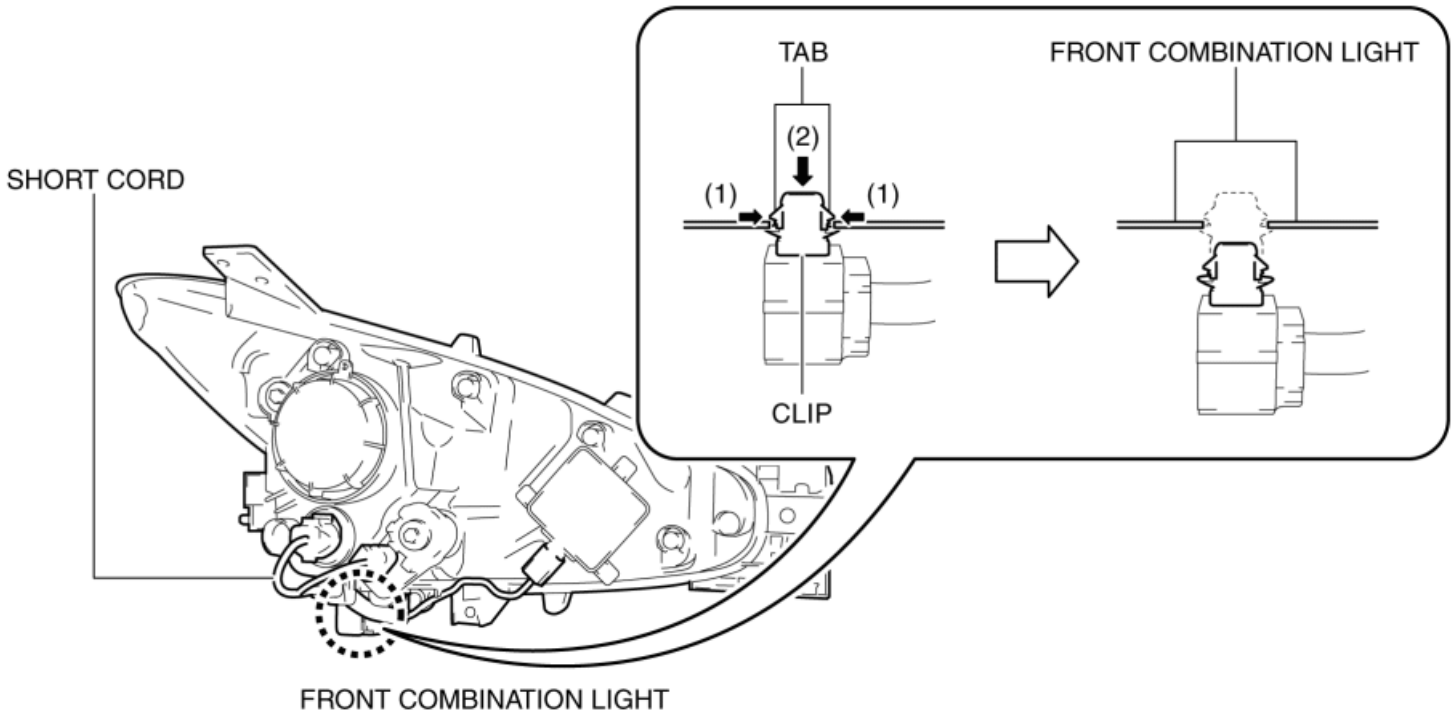

2. Pull the clip out of the front combination light and remove the short cord.

Cover Installation Note

1. Install the cover to the housing so that there is no gap between the housing and the cover.

CAUTION:

- If there is a gap between the housing and the cover, water may penetrate through the gap, causing a front combination light malfunction. Verify that there is no gap between the cover and the housing.

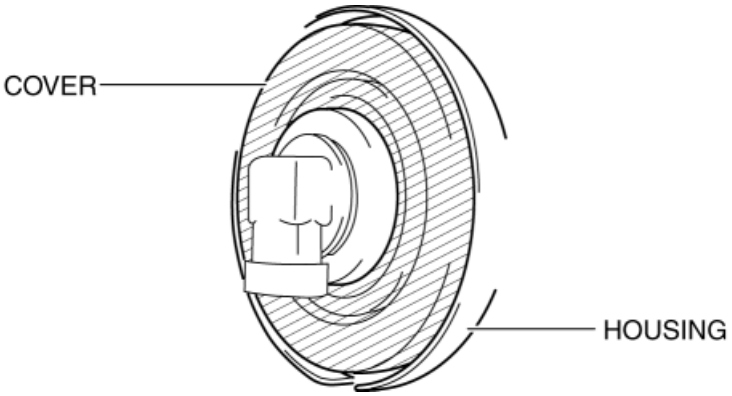

2014 - Mazda3 - Body and Accessories

HEADLIGHT BULB REMOVAL/INSTALLATION

Without Discharge Headlight System

Headlight LO bulb (LH)

1. Turn the steering wheel to the right until it locks.
2. Disconnect the negative battery cable. (See **NEGATIVE BATTERY CABLE DISCONNECTION/CONNECTION [SKYACTIV-G 2.0, SKYACTIV-G 2.5]**.)
3. Partially peel back the front mudguard (LH). (See **MUDGUARD REMOVAL/INSTALLATION**.)
4. Disconnect the connector.

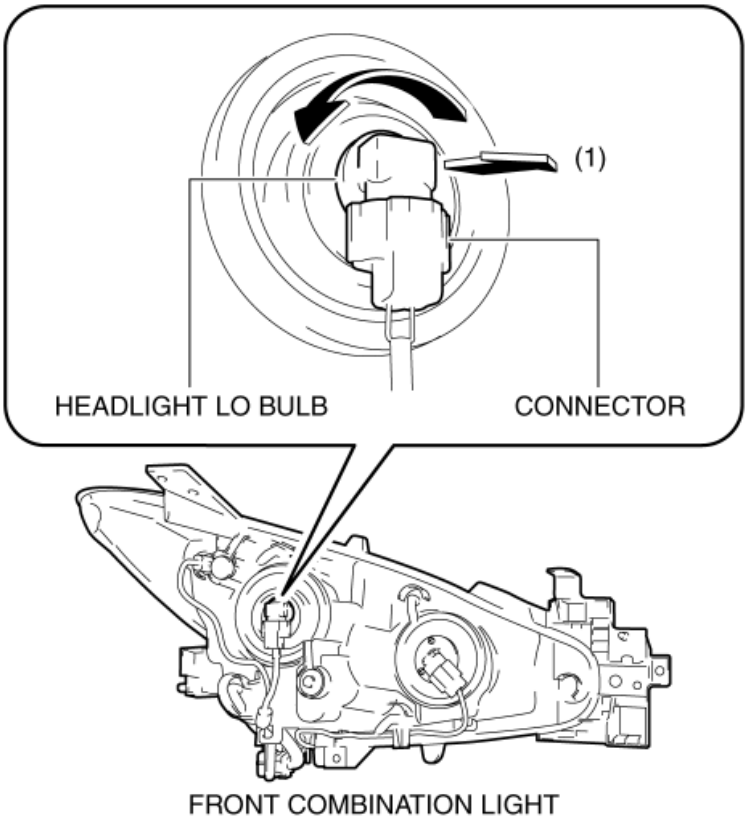

5. Turn the headlight LO bulb counterclockwise and remove it in the direction of arrow (1) shown in the figure.

CAUTION:

- The bulb reaches high temperatures when illuminated. If there is oil or dirt on the surface of the bulb, excessive heat will build up and the life of the bulb will be shortened. When replacing the bulb, hold the metal flange, not the glass.

6. Install in the reverse order of removal.

Headlight LO bulb (RH)

1. Disconnect the negative battery cable. (See **NEGATIVE BATTERY CABLE DISCONNECTION/CONNECTION [SKYACTIV-G 2.0,**

SKYACTIV-G 2.5].)

2. Disconnect the connector.

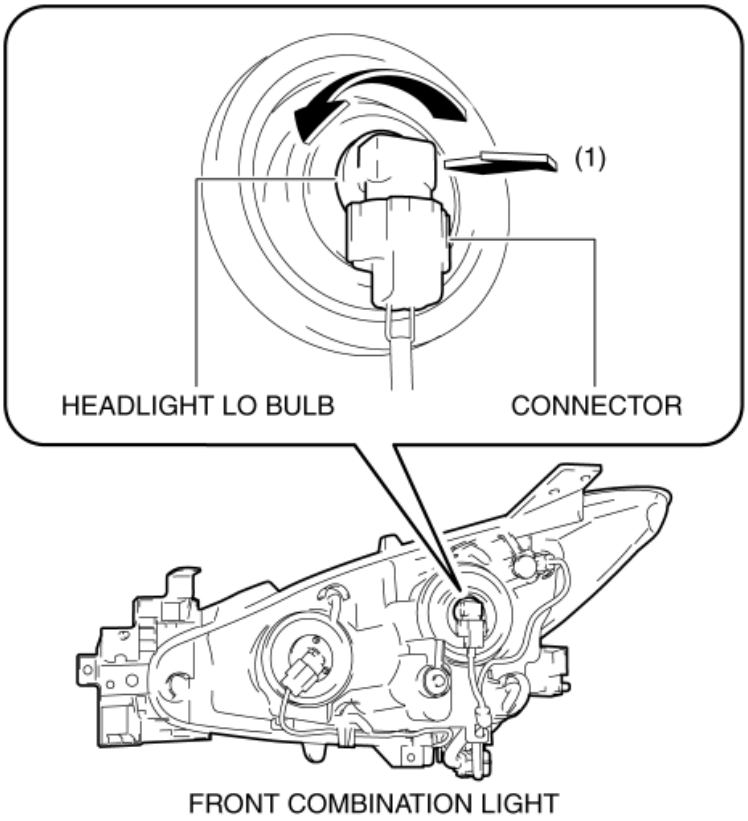

3. Turn the headlight LO bulb counterclockwise and remove it in the direction of arrow (1) shown in the figure.

CAUTION:

- The bulb reaches high temperatures when illuminated. If there is oil or dirt on the surface of the bulb, excessive heat will build up and the life of the bulb will be shortened. When replacing the bulb, hold the metal flange, not the glass.

4. Install in the reverse order of removal.

Headlight HI bulb

1. Disconnect the negative battery cable. (See **NEGATIVE BATTERY CABLE DISCONNECTION/CONNECTION [SKYACTIV-G 2.0, SKYACTIV-G 2.5]**.)

2. Disconnect the connector.

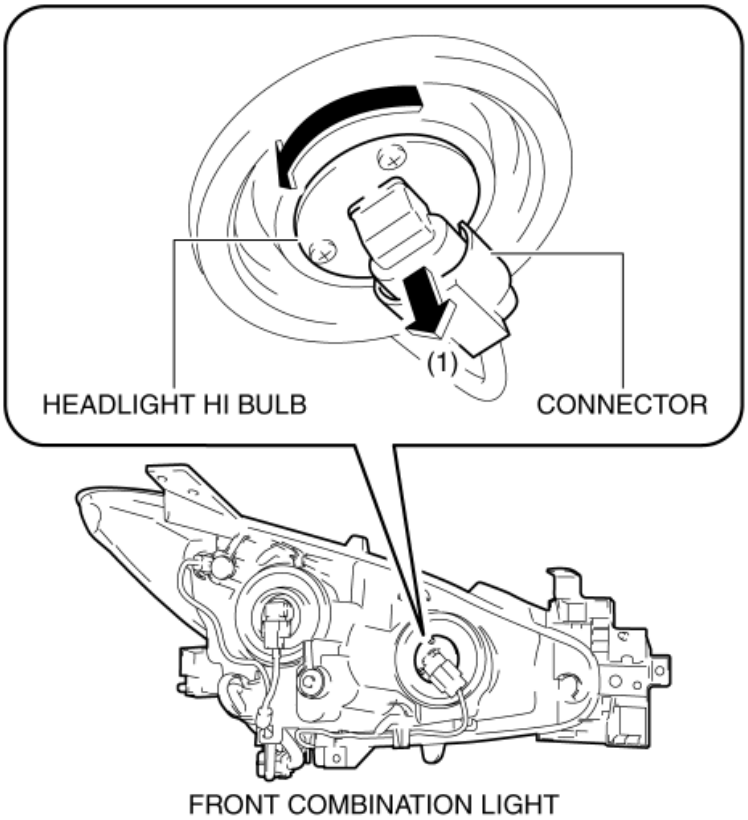

3. Turn the headlight HI bulb counterclockwise and remove it in the direction of arrow (1) shown in the figure.

CAUTION:

- The bulb reaches high temperatures when illuminated. If there is oil or dirt on the surface of the bulb, excessive heat will build up and the life of the bulb will be shortened. When replacing the bulb, hold the metal flange, not the glass.

4. Install in the reverse order of removal.

With Discharge Headlight System

WARNING:

- Incorrect servicing of the discharge headlights could result in electrical shock. Before servicing the discharge headlights, always refer to the service warnings. (See **DISCHARGE HEADLIGHT SERVICE WARNINGS**.)

Headlight HI/LO bulb (LH)

1. Turn the steering wheel to the right until it locks.

2. Disconnect the negative battery cable. (See **NEGATIVE BATTERY CABLE DISCONNECTION/CONNECTION [SKYACTIV-G 2.0, SKYACTIV-G 2.5]**.)

3. Partially peel back the front mudguard (LH). (See **MUDGUARD REMOVAL/INSTALLATION**.)

4. Remove the igniter (LH). (See **IGNITER REMOVAL/INSTALLATION**.)

5. Move the headlight HI/LO bulb retaining wires in the direction of arrows (1) shown in the figure, pull them in the direction of arrow (2), and disconnect the headlight HI/LO bulb retaining wires from the reflector.

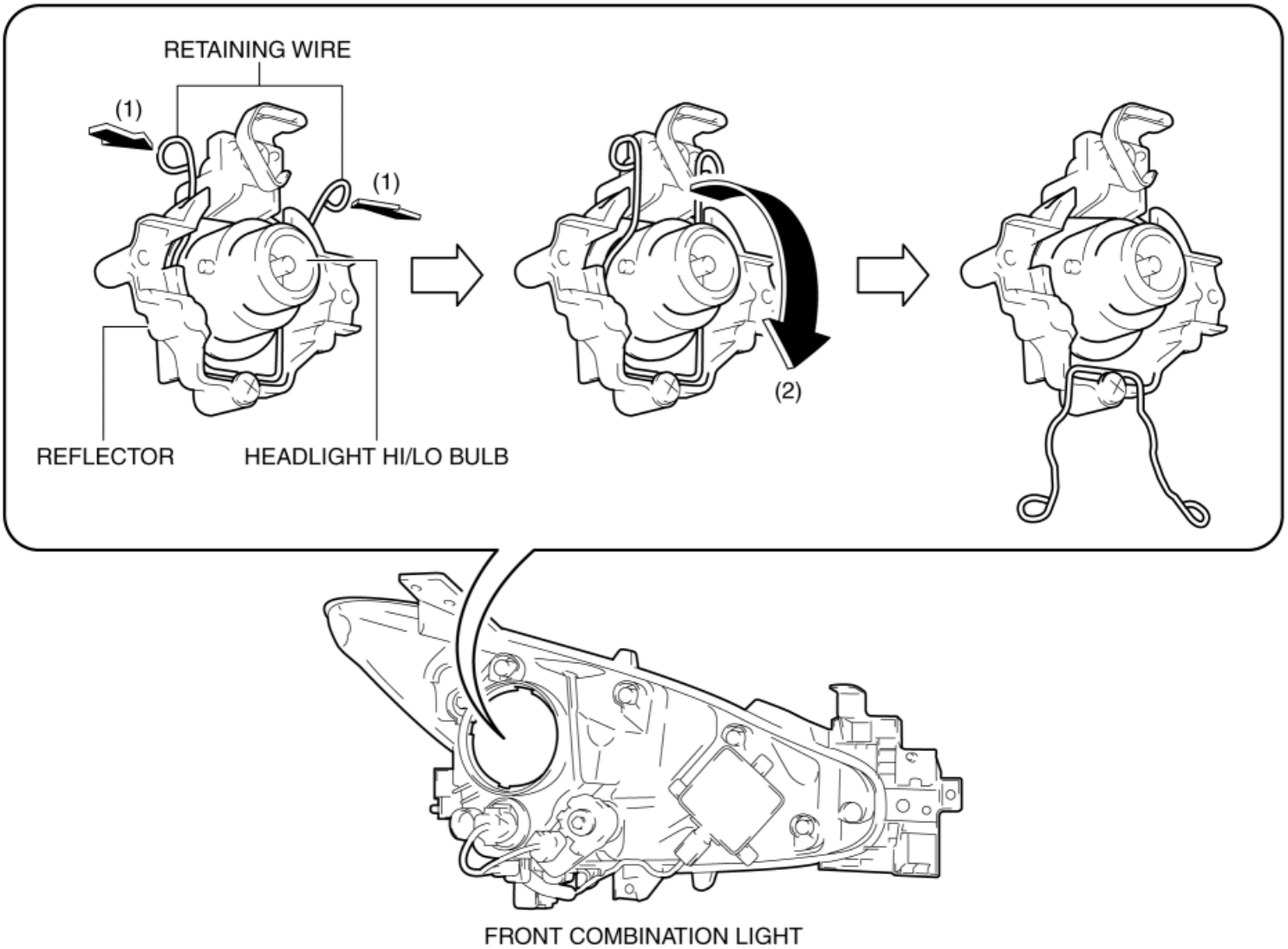

6. Remove the headlight HI/LO bulb.

CAUTION:

- The bulb reaches high temperatures when illuminated. If there is oil or dirt on the surface of the bulb, excessive heat will build up and the life of the bulb will be shortened. When replacing the bulb, hold the metal flange, not the glass.

7. Install in the reverse order of removal.

Headlight HI/LO bulb (RH)

1. Disconnect the negative battery cable. (See **NEGATIVE BATTERY CABLE DISCONNECTION/CONNECTION [SKYACTIV-G 2.0, SKYACTIV-G 2.5]**.)

2. Remove the igniter (RH). (See **IGNITER REMOVAL/INSTALLATION**.)

3. Move the headlight HI/LO bulb retaining wires in the direction of arrows (1) shown in the figure, pull them in the direction of arrow (2), and disconnect the headlight HI/LO bulb retaining wires from the reflector.

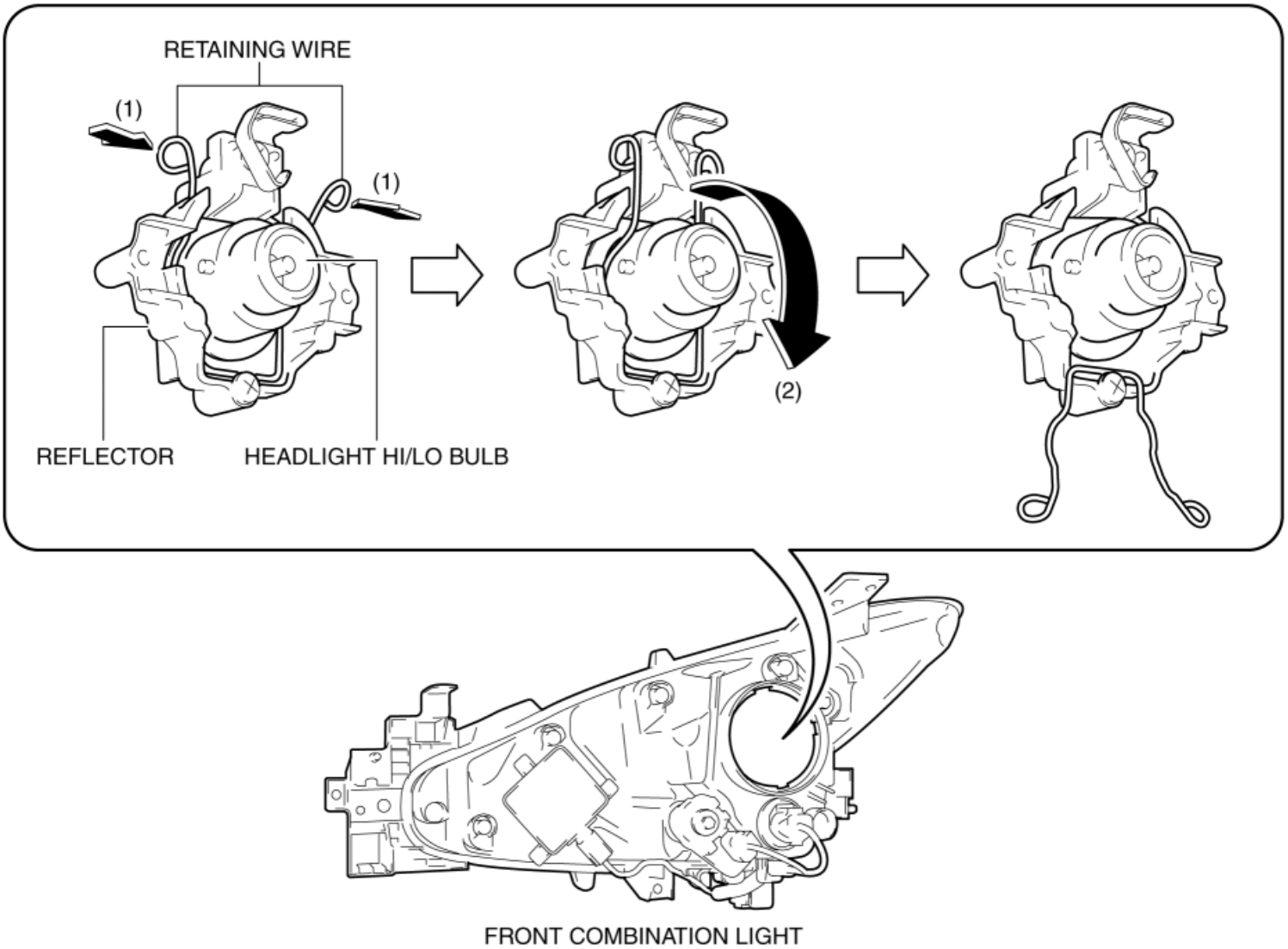

4. Remove the headlight HI/LO bulb.

CAUTION:

- The bulb reaches high temperatures when illuminated. If there is oil or dirt on the surface of the bulb, excessive heat will build up and the life of the bulb will be shortened. When replacing the bulb, hold the metal flange, not the glass.

5. Install in the reverse order of removal.

2014 - Mazda3 - Body and Accessories

HEADLIGHT AIMING

NOTE:

- If the following servicing is done, perform the headlight aiming adjustment.
  - Front combination light replacement
  - Suspension replacement and removal/installation, servicing requiring vehicle height to be changed
- If servicing was done which changes the vehicle height, perform the headlight auto leveling system initial setting first to record the vehicle height under the unloaded condition to the AFS control module, then perform headlight aiming. (With headlight auto leveling system)
- For vehicles without the discharge headlight system, the aiming adjustment is done on the low beams only because the reflector is integrated with the low and high beams.
- For vehicles with the discharge headlight system, the aiming adjustment is done on the low beams only because the low and high beams use the same bulb.

1. Empty the vehicle except for the spare tire, jack and vehicle tools.
2. Adjust the tire pressure to the specification. (See **WHEEL AND TIRE SPECIFICATION**.)
3. Move the vehicle to level ground.
4. Sit on the driver-side seat alone.
5. Make an adjustment-use screen as shown in the figure using double-weight, white paper.

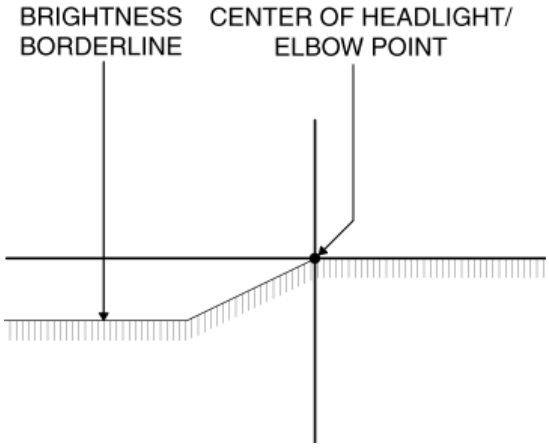

6. Line up the vehicle with the wall so that the distance to the headlights is **3 m {9.8 ft}** from the wall.

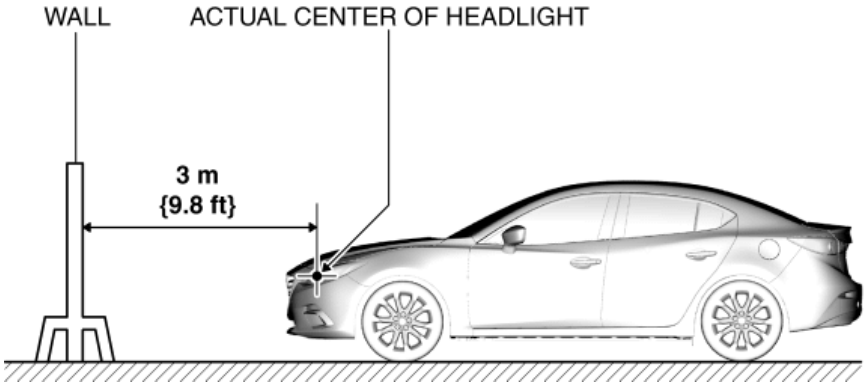

7. Measure the height at the center point of the headlight.

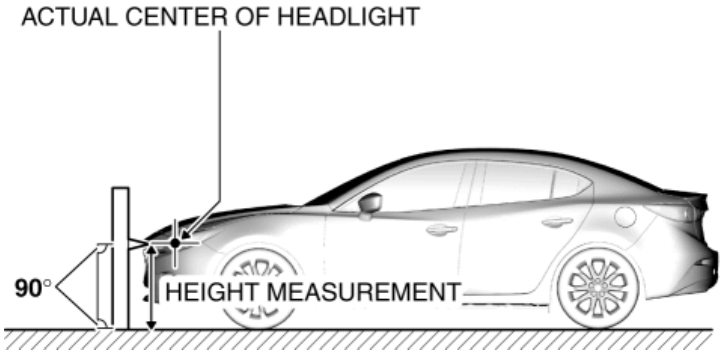

NOTE:

- Measure the height at the center point of the headlight in which the aiming is being adjusted because the vehicle height differs depending on vehicle conditions.

8. Align the center of the headlight with the center of the adjustment-use screen.

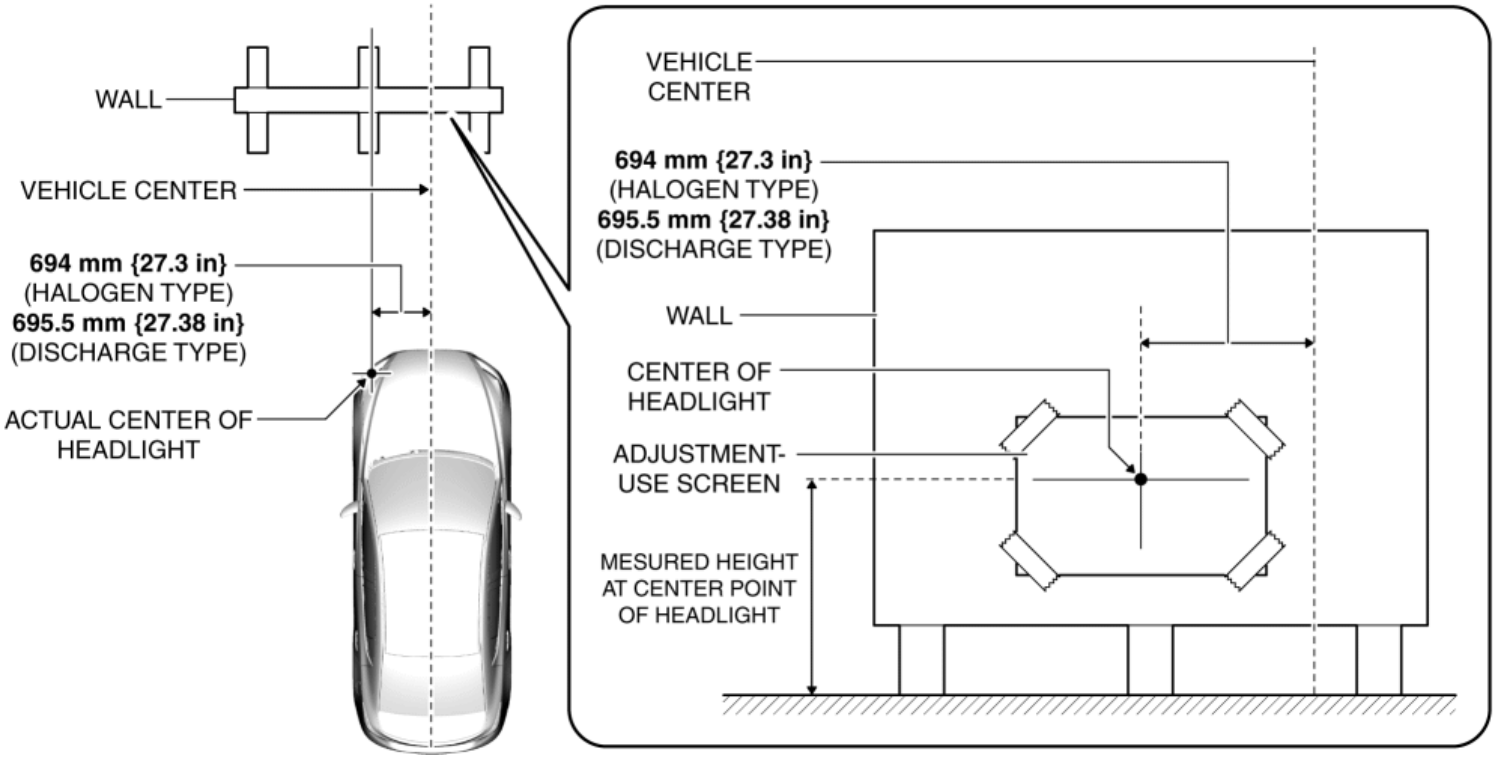

9. Set a partition in front of the headlight which is not being adjusted to block the light.

10. Start the engine and charge the battery.

11. Turn on the headlight low beams.

12. Set the headlight leveling switch to the [0] position. (With headlight manual leveling system)

13. Verify that the actual elbow point of the headlight is at the elbow point position indicated by the adjustment-use screen.

- If the actual elbow point of the headlight is not at the elbow point position indicated by the adjustment-use screen, adjust by turning the aiming adjustment screw.

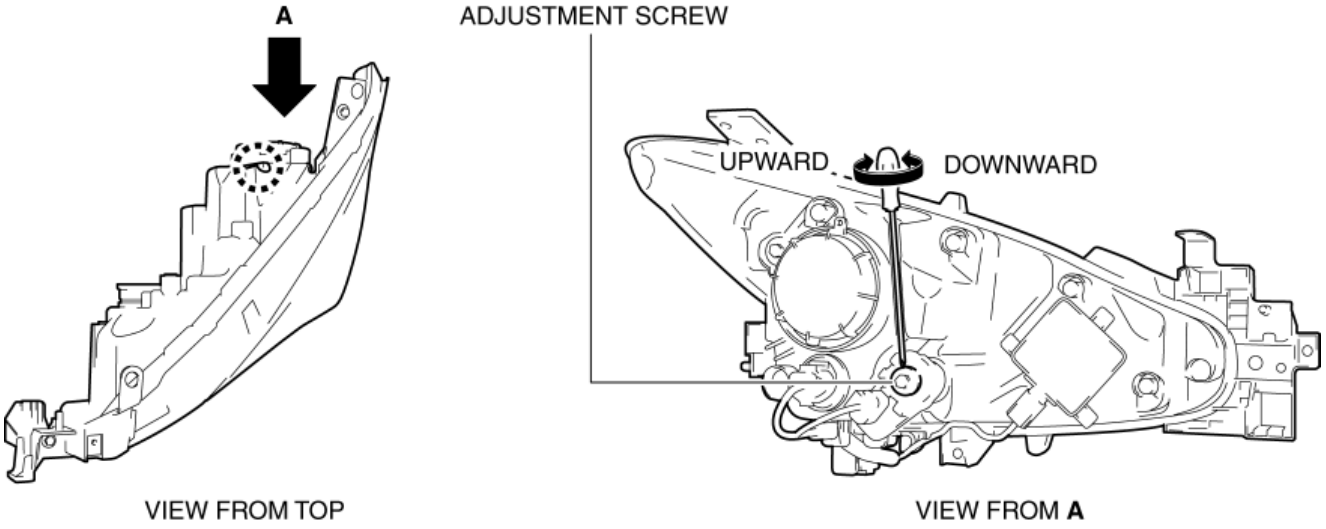
A
ADJUSTMENT SCREW
UPWARD
DOWNWARD
VIEW FROM TOP
VIEW FROM A

2014 - Mazda3 - Body and Accessories

IGNITER REMOVAL/INSTALLATION

WARNING:

- Incorrect servicing of the discharge headlights could result in electrical shock. Before servicing the discharge headlights, always refer to the service warnings. (See **DISCHARGE HEADLIGHT SERVICE WARNINGS**.)

Igniter (LH)

1. Turn the steering wheel to the right until it locks.
2. Disconnect the negative battery cable. (See **NEGATIVE BATTERY CABLE DISCONNECTION/CONNECTION [SKYACTIV-G 2.0, SKYACTIV-G 2.5]**.)
3. Partially peel back the front mudguard (LH). (See **MUDGUARD REMOVAL/INSTALLATION**.)
4. Turn the cover counterclockwise and remove it in the direction of arrow (1) shown in the figure.

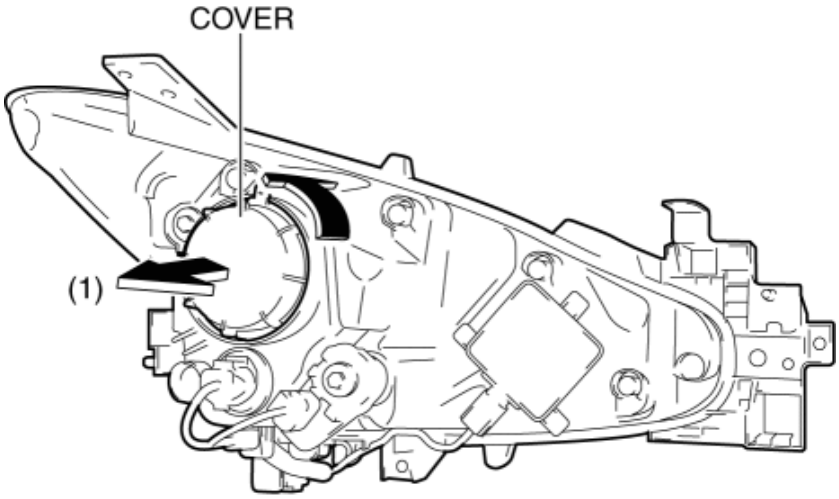

FRONT COMBINATION LIGHT

5. Turn the igniter counterclockwise and pull out it in the direction of arrow (2) shown in the figure.

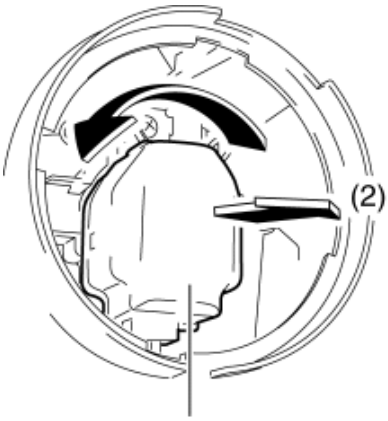

IGNITER

6. While pressing the connector tab in the direction of arrow (3) shown in the figure, press the igniter in the direction of arrow (4) to detach the connector tab from the igniter.

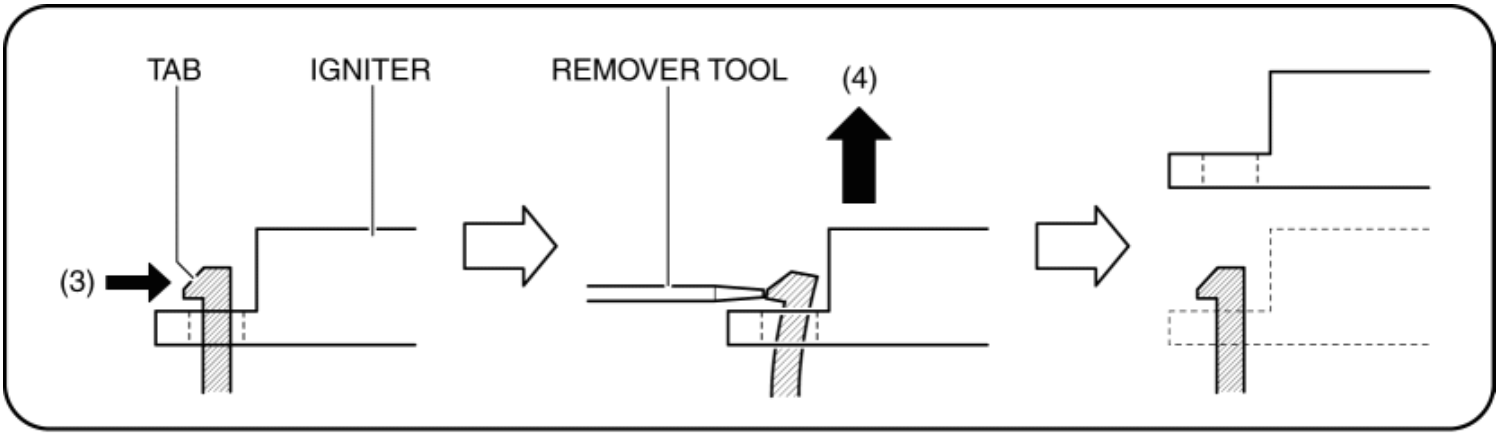

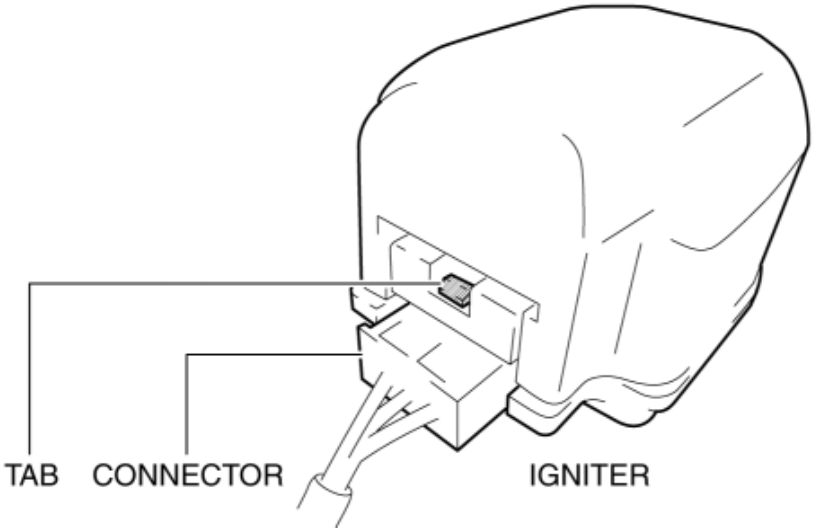

7. Disconnect the connector and remove the igniter. (See **Igniter Installation Note (With AFS)**.)

8. Install in the reverse order of removal.

Igniter (RH)

1. Disconnect the negative battery cable. (See **NEGATIVE BATTERY CABLE DISCONNECTION/CONNECTION [SKYACTIV-G 2.0, SKYACTIV-G 2.5]**.)

2. Turn the cover counterclockwise and remove it in the direction of arrow (1) shown in the figure.

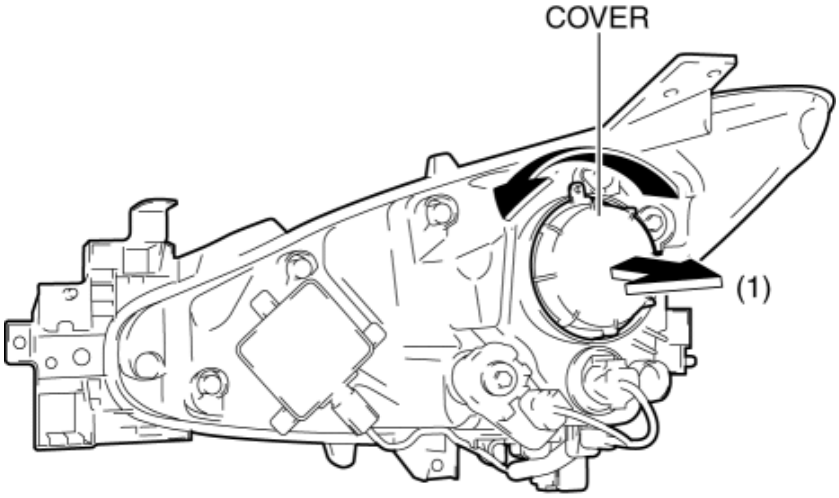

FRONT COMBINATION LIGHT

3. Turn the igniter counterclockwise and pull out it in the direction of arrow (2) shown in the figure.

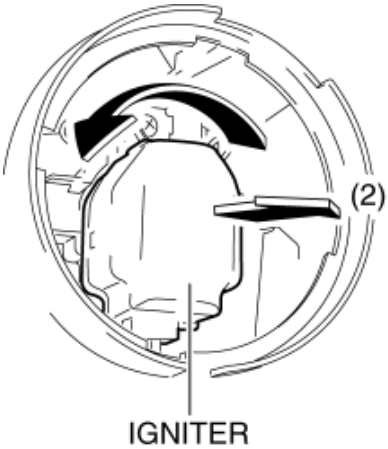

4. While pressing the connector tab in the direction of arrow (3) shown in the figure, press the igniter in the direction of arrow (4) to detach the connector tab from the igniter.

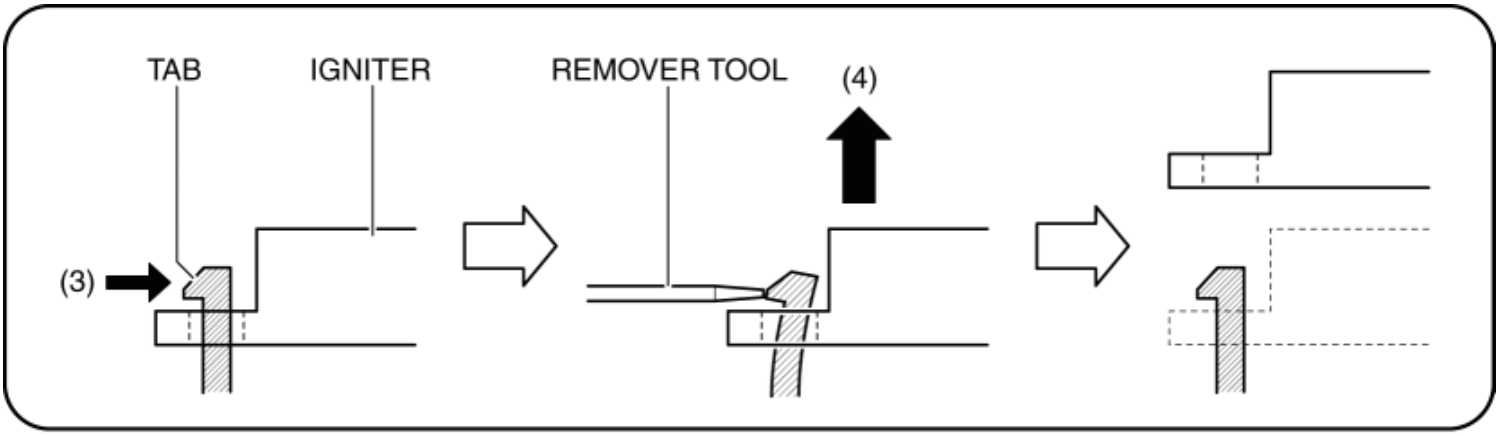

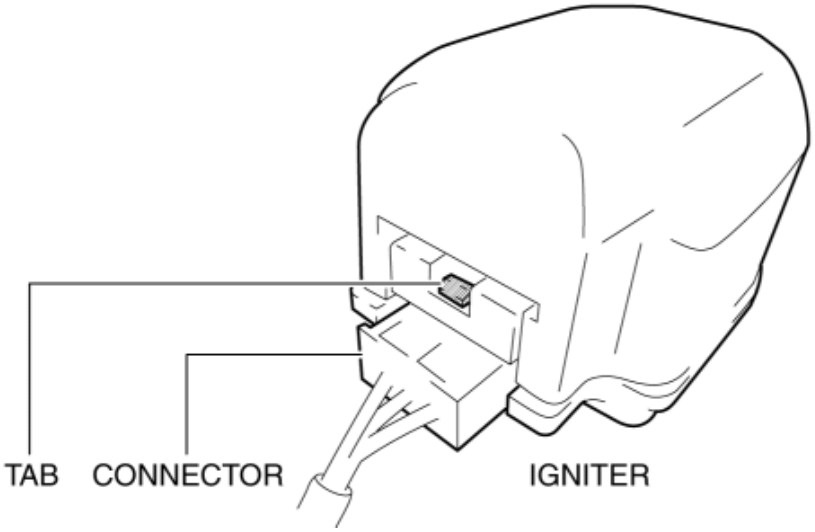

5. Disconnect the connector and remove the igniter. (See **Igniter Installation Note (With AFS)**.)

6. Install in the reverse order of removal.

Igniter Installation Note (With AFS)

CAUTION:

- If the igniter is installed in the wrong direction, the igniter may contact the housing when the AFS operates, causing the AFS not to operate normally. After installing the igniter to the position shown in the figure, verify that the igniter does not contact the housing.

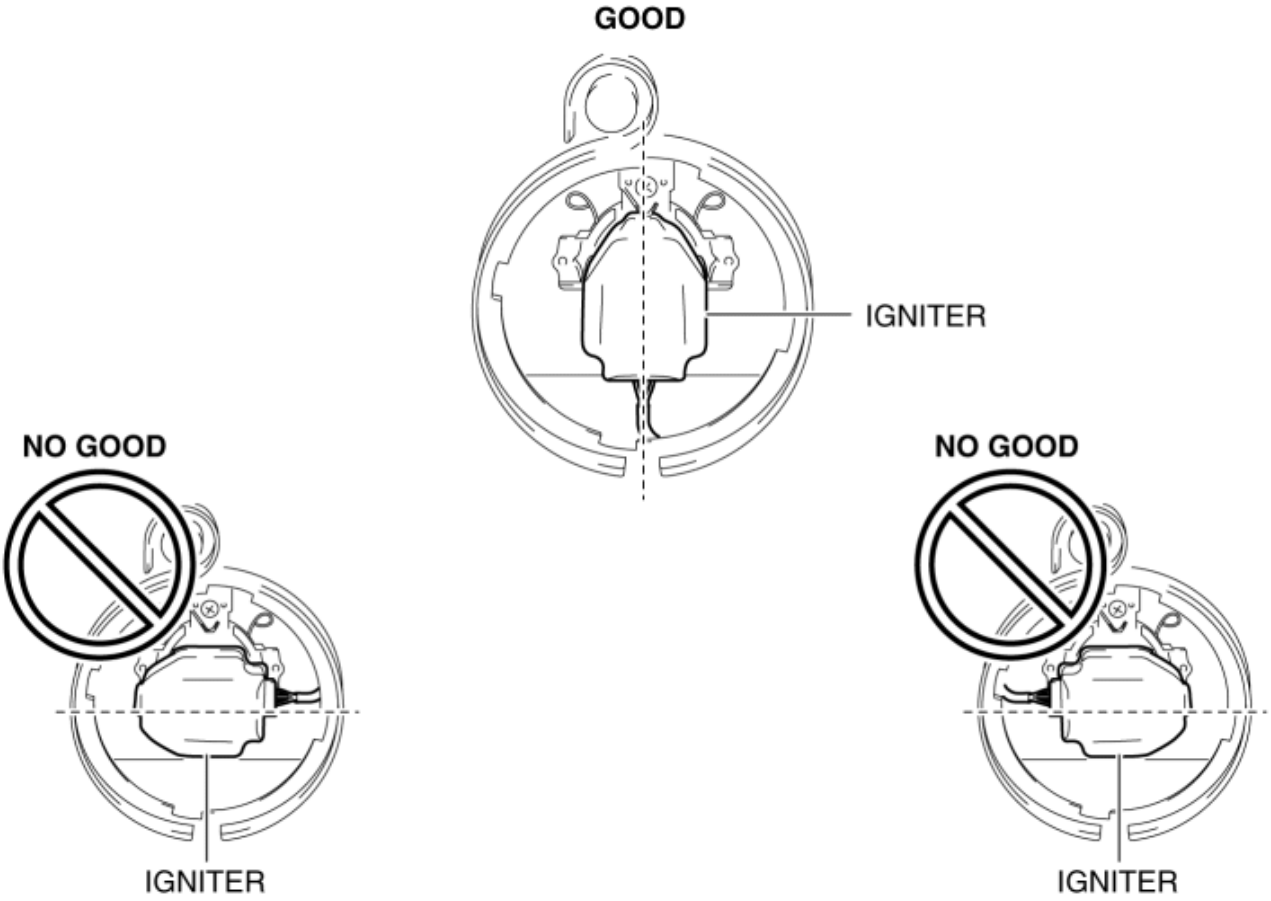
GOOD
IGNITER
NO GOOD
IGNITER
NO GOOD
IGNITER

2014 - Mazda3 - Body and Accessories

DISCHARGE HEADLIGHT CONTROL MODULE REMOVAL/INSTALLATION

WARNING:

- Incorrect servicing of the discharge headlights could result in electrical shock. Before servicing the discharge headlights, always refer to the service warnings. (See **DISCHARGE HEADLIGHT SERVICE WARNINGS**.)

1. Disconnect the negative battery cable. (See **NEGATIVE BATTERY CABLE DISCONNECTION/CONNECTION [SKYACTIV-G 2.0, SKYACTIV-G 2.5]**.)
2. Remove the set plate. (See **SET PLATE REMOVAL/INSTALLATION**.)
3. Remove the front bumper. (See **FRONT BUMPER REMOVAL/INSTALLATION**.)
4. Remove the front combination light. (See **FRONT COMBINATION LIGHT REMOVAL/INSTALLATION**.)
5. Disconnect the connector.

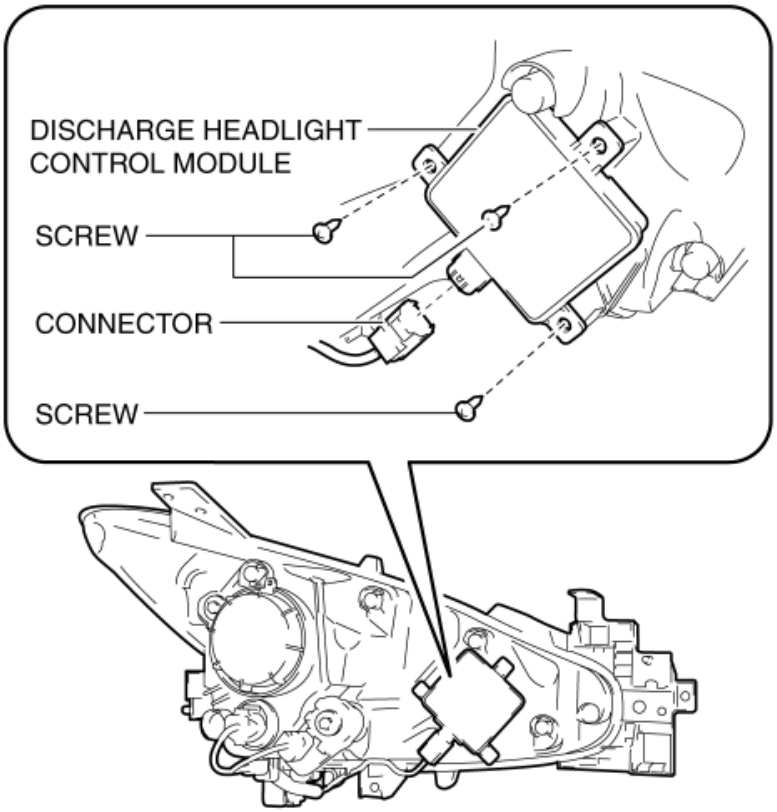

FRONT COMBINATION LIGHT

6. Remove the screws.
7. Open the cover and insert the remover tool into the position shown in the figure.

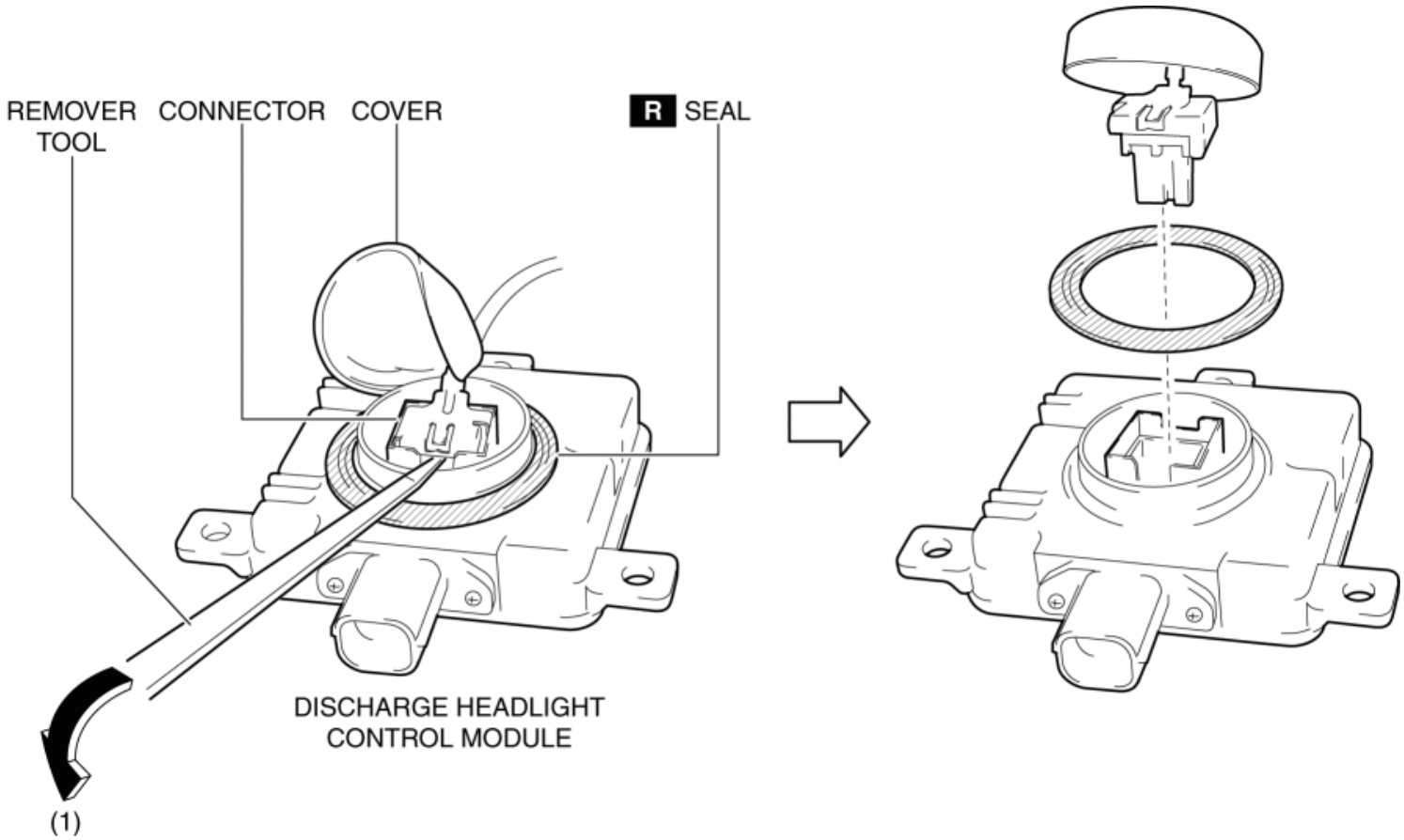

8. Move the remover tool in the direction of arrow (1) shown in the figure and lift up the connector to disengage it from the discharge headlight control module.

9. Disconnect the connector and remove the discharge headlight control module.

10. Remove the seal.

11. Install in the reverse order of removal.

2014 - Mazda3 - Body and Accessories

DISCHARGE HEADLIGHT SYSTEM INSPECTION

WARNING:

- Incorrect servicing of the discharge headlights could result in electrical shock. Before servicing the discharge headlights, always refer to the service warnings. (See **DISCHARGE HEADLIGHT SERVICE WARNINGS**.)

System Wiring Diagram

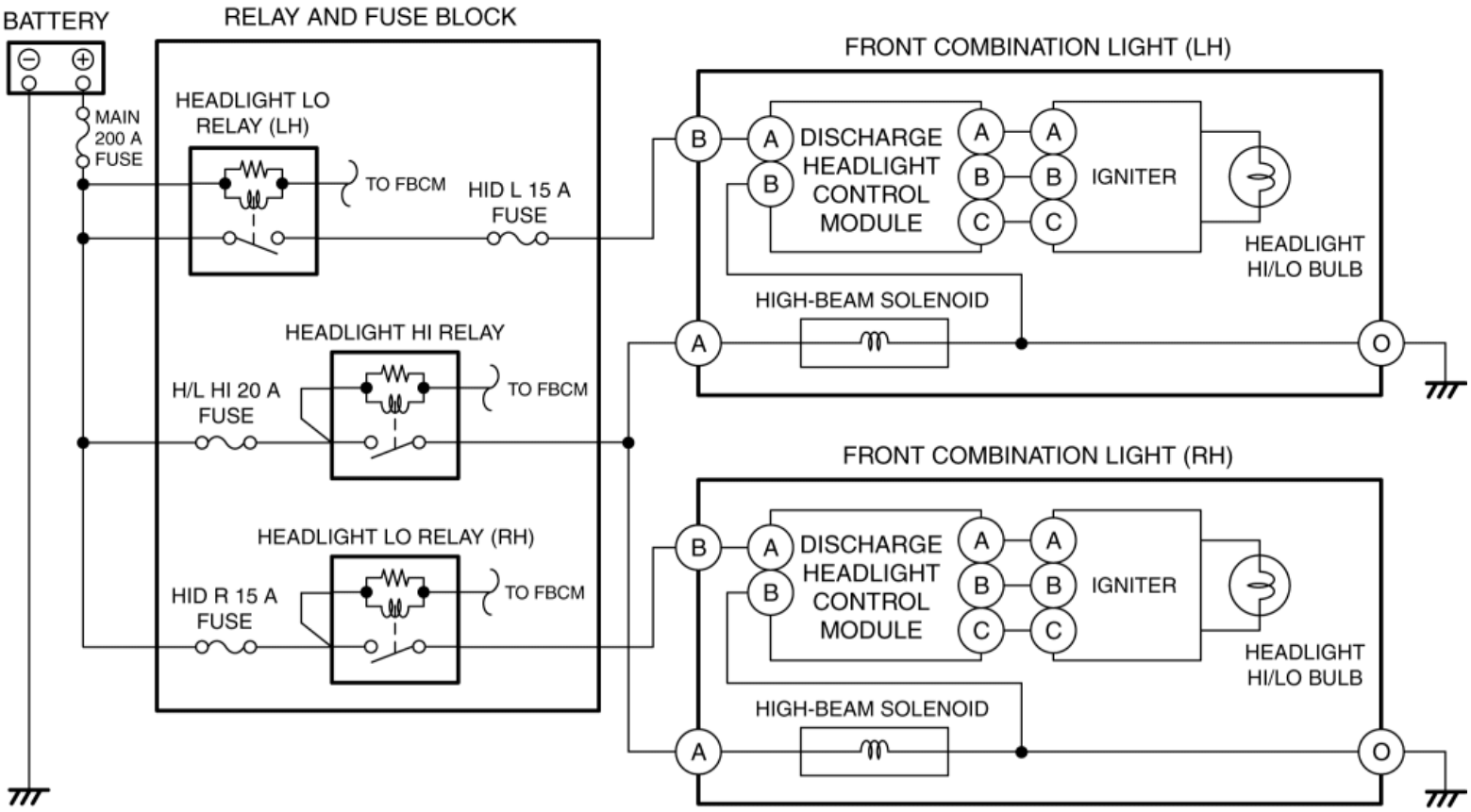

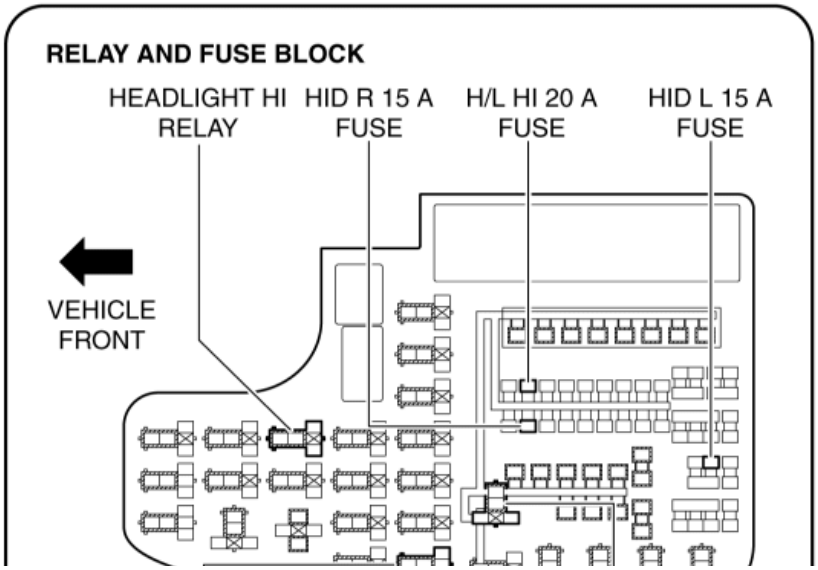

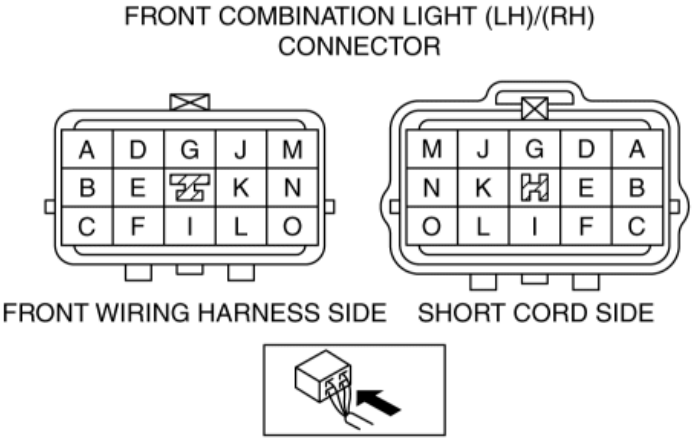

DISCHARGE HEADLIGHT CONTROL MODULE CONNECTOR

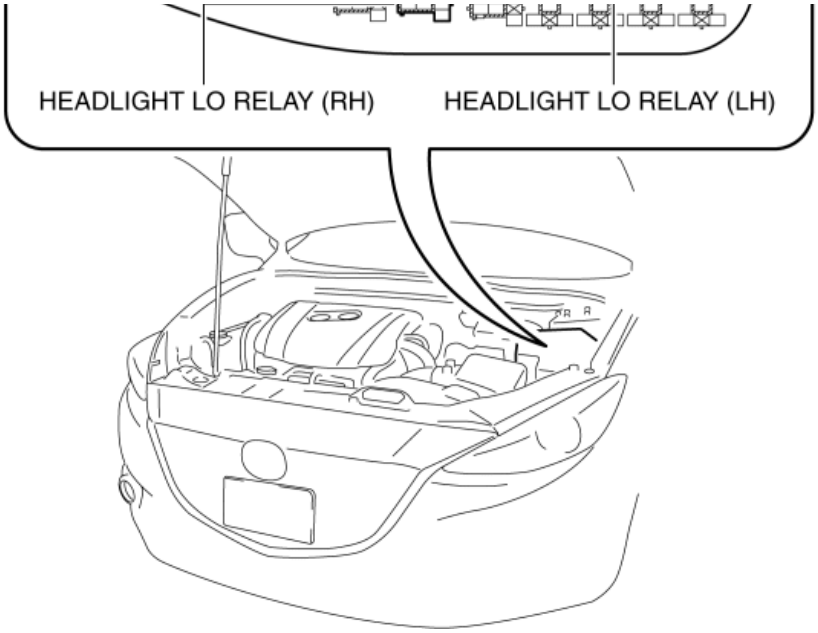

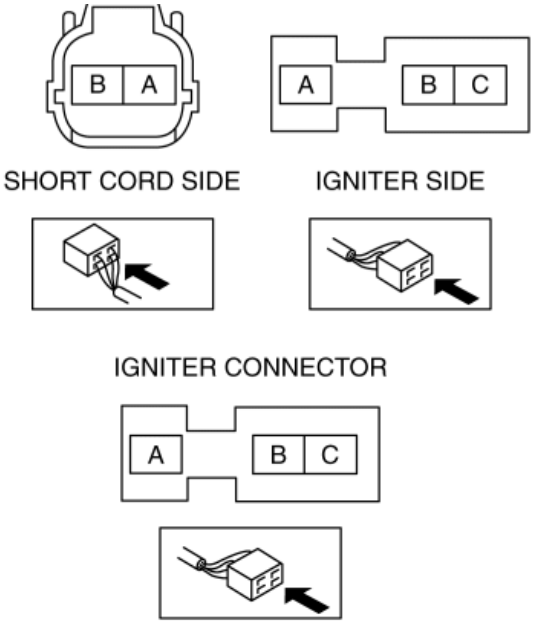

Diagnostic Procedure

Step	Inspection		Action
1	**VERIFY FRONT BODY CONTROL MODULE (FBCM) DTCs** • Perform the DTC inspection for the front body control module (FBCM) using the M-MDS. (See **DTC INSPECTION [FRONT BODY CONTROL MODULE (FBCM)]**.) • Is a DTC displayed?	Yes	Repair the malfunctioning location according to the applicable DTC troubleshooting. (See **DTC TABLE [FRONT BODY CONTROL MODULE (FBCM)]**.)
		No	Go to the next step.
2	**INSPECT RELAY** • Disconnect the negative battery cable. (See **NEGATIVE BATTERY CABLE DISCONNECTION/CONNECTION [SKYACTIV-G 2.0, SKYACTIV-G 2.5]**.) • Remove the following relays: ▪ Headlight LO relay (LH) ▪ Headlight LO relay (RH) ▪ Headlight HI relay • Inspect the relays. (See **RELAY INSPECTION**.) • Are the relays normal?	Yes	Install the relays, then go to the next step.
		No	Replace the malfunctioning relay.
3	**INSPECT LIGHT SWITCH** • Inspect the light switch. (See **LIGHT SWITCH INSPECTION**.) • Is the light switch normal?	Yes	Install the light switch, then go to the next step. (See **LIGHT SWITCH REMOVAL/INSTALLATION**.)
		No	Replace the light switch.

			(See **LIGHT SWITCH REMOVAL/INSTALLATION**.)
4	**INSPECT FRONT COMBINATION LIGHT CONNECTOR** • Disconnect the front combination light connector. (See **FRONT COMBINATION LIGHT REMOVAL/INSTALLATION**.) • Inspect the connector engagement and connection condition and inspect the terminals for damage, deformation, corrosion, or disconnection. • Is the connector normal?	Yes	Go to the next step.
		No	Repair or replace the connector.
5	**INSPECT FRONT COMBINATION LIGHT GROUND CIRCUIT FOR OPEN CIRCUIT** • Verify that the front combination light connector is disconnected. • Inspect for continuity between front combination light terminal O (front wiring harness side) and body ground. • Is there continuity?	Yes	Go to the next step.
		No	Refer to the wiring diagram and verify if there is a common connector between front combination light terminal O and body ground. **If there is a common connector:** • Inspect the common connector and terminals for corrosion, damage, or disconnection and the common wiring harnesses for open circuit to determine the malfunctioning location. • Repair or replace the malfunctioning location. **If there is no common connector:** • Repair or replace the wiring harness which has an open circuit.
6	**INSPECT HEADLIGHT LO POWER SUPPLY CIRCUIT** • Verify that the front combination light connector is disconnected. • Connect the negative battery cable. (See **NEGATIVE BATTERY CABLE DISCONNECTION/CONNECTION [SKYACTIV-G 2.0, SKYACTIV-G 2.5]**.) • Operate the light switch to the HEAD position. • Measure the voltage at front combination light terminal B (front wiring harness side). • Is the voltage **B+**?	Yes	Operate the light switch to the OFF position, then go to the next step.
		No	Inspect the HID L 15 A fuse and HID R 15 A fuse. • If a fuse is blown: ▪ Refer to the wiring diagram and verify if there is a common connector between HID L 15 A fuse or HID R 15 A fuse and front combination light terminal B. **If there is a common connector:** • Inspect the common connector and terminals for corrosion, damage, or disconnection and the common wiring harnesses for short to ground to determine the malfunctioning location. • Repair or replace the malfunctioning location. **If there is no common connector:** • Repair or replace the wiring harness which is shorted to ground. • Replace the blown fuse. • If a fuse is damaged: ▪ Replace the damaged fuse. • If both fuses are normal:

			▪ Refer to the wiring diagram and verify if there is a common connector between positive battery terminal and front combination light terminal B. **If there is a common connector:** • Inspect the common connector and terminals for corrosion, damage, or disconnection and the common wiring harnesses for open circuit to determine the malfunctioning location. • Repair or replace the malfunctioning location. **If there is no common connector:** • Repair or replace the wiring harness which has an open circuit.
7	**INSPECT HEADLIGHT HI POWER SUPPLY CIRCUIT** • Verify that the front combination light connector is disconnected. • Operate the light switch to the HEAD and HI position. • Measure the voltage at front combination light terminal A (front wiring harness side). • Is the voltage **B+**?	Yes	Operate the light switch to the OFF position, then go to the next step.
		No	Inspect the H/L HI 20 A fuse. • If the fuse is blown: ▪ Refer to the wiring diagram and verify if there is a common connector between H/L HI 20 A fuse and front combination light terminal A. **If there is a common connector:** • Inspect the common connector and terminals for corrosion, damage, or disconnection and the common wiring harnesses for short to ground to determine the malfunctioning location. • Repair or replace the malfunctioning location. **If there is no common connector:** • Repair or replace the wiring harness which is shorted to ground. • Replace the blown fuse. • If the fuse is damaged: ▪ Replace the damaged fuse. • If the fuse is normal: ▪ Refer to the wiring diagram and verify if there is a common connector between positive battery terminal and front combination light terminal A. **If there is a common connector:** • Inspect the common

			connector and terminals for corrosion, damage, or disconnection and the common wiring harnesses for open circuit to determine the malfunctioning location. • Repair or replace the malfunctioning location. **If there is no common connector:** • Repair or replace the wiring harness which has an open circuit.
8	**INSPECT DISCHARGE HEADLIGHT CONTROL MODULE CONNECTOR** • Disconnect the negative battery cable. (See **NEGATIVE BATTERY CABLE DISCONNECTION/CONNECTION [SKYACTIV-G 2.0, SKYACTIV-G 2.5]**.) • Disconnect the discharge headlight control module connector. (See **DISCHARGE HEADLIGHT CONTROL MODULE REMOVAL/INSTALLATION**.) • Inspect the connector engagement and connection condition and inspect the terminals for damage, deformation, corrosion, or disconnection. • Is the connector normal?	Yes	Go to the next step.
		No	Repair or replace the connector.
9	**INSPECT FRONT COMBINATION LIGHT INTERNAL CIRCUIT FOR OPEN CIRCUIT** • Verify that the following connectors are disconnected. ▪ Front combination light ▪ Discharge headlight control module • Inspect for continuity in the wiring harness between the following terminals: ▪ Front combination light terminal B (short cord side) and discharge headlight control module terminal A (short cord side) ▪ Front combination light terminal O (short cord side) and discharge headlight control module terminal B (short cord side) ▪ Front combination light terminal A (short cord side) and front combination	Yes	Go to the next step.
		No	Replace the front combination light. (See **FRONT COMBINATION LIGHT REMOVAL/INSTALLATION**.)

	light terminal O (short cord side) ▪ Discharge headlight control module terminal A (igniter side) and igniter terminal A ▪ Discharge headlight control module terminal B (igniter side) and igniter terminal B ▪ Discharge headlight control module terminal C (igniter side) and igniter terminal C • Is there continuity?		
10	**VERIFY IF MALFUNCTION CAUSE IS HEADLIGHT HI/LO BULB** • Install a normal headlight HI/LO bulb. (See **HEADLIGHT BULB REMOVAL/INSTALLATION**.) • Reconnect all the disconnected connectors. • Connect the negative battery cable. (See **NEGATIVE BATTERY CABLE DISCONNECTION/CONNECTION [SKYACTIV-G 2.0, SKYACTIV-G 2.5]**.) • Operate the light switch to the HEAD position. • Does the headlight LO turn on?	Yes	Replace the headlight HI/LO bulb. (See **HEADLIGHT BULB REMOVAL/INSTALLATION**.)
		No	Operate the light switch to the OFF position, then go to the next step.
11	**VERIFY IF MALFUNCTION CAUSE IS DISCHARGE HEADLIGHT CONTROL MODULE OR IGNITER** • Disconnect the negative battery cable. (See **NEGATIVE BATTERY CABLE DISCONNECTION/CONNECTION [SKYACTIV-G 2.0, SKYACTIV-G 2.5]**.) • Install a normal igniter. (See **IGNITER REMOVAL/INSTALLATION**.) • Connect the negative battery cable. (See **NEGATIVE BATTERY CABLE DISCONNECTION/CONNECTION [SKYACTIV-G 2.0, SKYACTIV-G 2.5]**.) • Operate the light switch to the HEAD position. • Does the headlight LO turn on?	Yes	Replace the igniter. (See **IGNITER REMOVAL/INSTALLATION**.)
		No	Replace the discharge headlight control module. (See **DISCHARGE HEADLIGHT CONTROL MODULE REMOVAL/INSTALLATION**.)

2014 - Mazda3 - Body and Accessories

ADAPTIVE FRONT LIGHTING SYSTEM (AFS) CONTROL MODULE REMOVAL/INSTALLATION

NOTE:

- The AFS control module stores the vehicle specification information.
- A new AFS control module does not store any vehicle specification information.
- When the ignition is switched ON after the AFS control module is replaced, the AFS control module reads the vehicle specification information sent via CAN transmission from the instrument cluster, and stores the vehicle specification information.
- The AFS control module records the vehicle height while it is unoccupied.
- Even if the battery is disconnected, the unoccupied vehicle height recorded by the AFS control module is not erased.
- The new AFS control module does not record the vehicle height while it is unoccupied.
- When the headlight auto leveling system initialization is performed after the AFS control module is replaced, the AFS control module inputs the vehicle height from the auto leveling sensor and records the vehicle height in unloaded condition.

1. Disconnect the negative battery cable. (See **NEGATIVE BATTERY CABLE DISCONNECTION/CONNECTION [SKYACTIV-G 2.0, SKYACTIV-G 2.5]**.)
2. Remove the front scuff plate (LH). (See **FRONT SCUFF PLATE REMOVAL/INSTALLATION**.)
3. Remove the front side trim (LH). (See **FRONT SIDE TRIM REMOVAL/INSTALLATION**.)
4. Disconnect the connector.

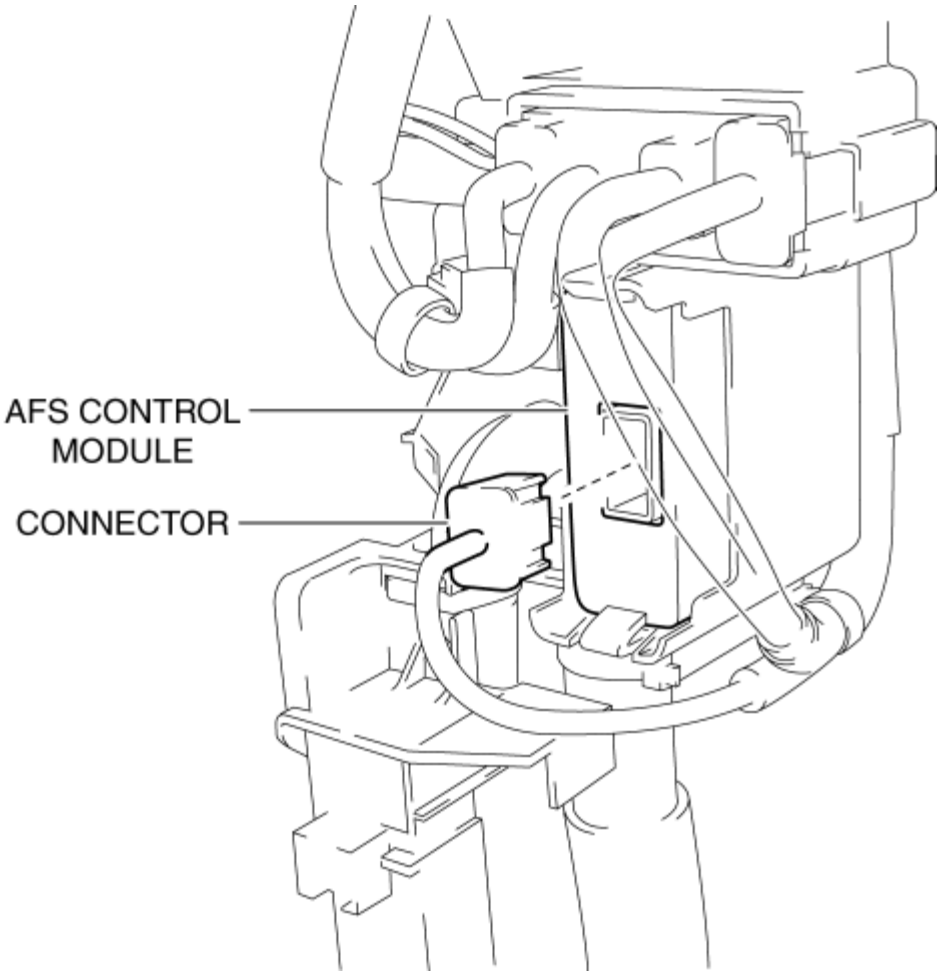

5. While pressing hook A of the bracket in the direction of arrow (1) shown in the figure, pull the AFS control module in the direction of arrow (2) to detach hook A of the bracket from the AFS control module.

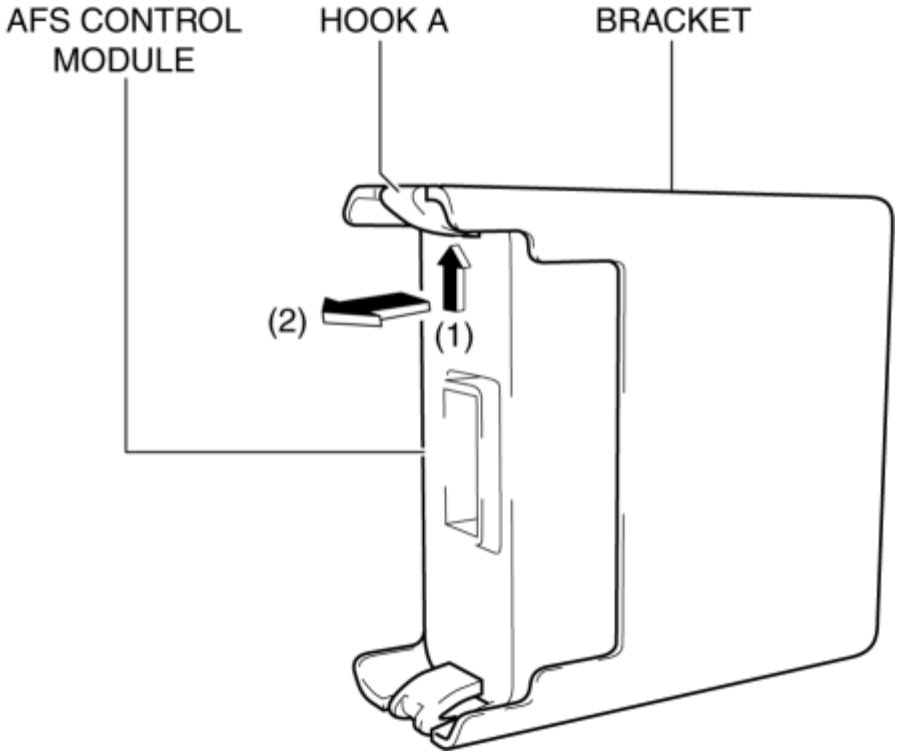

6. While pressing hook B of the bracket in the direction of arrow (3) shown in the figure, pull the

AFS control module in the direction of arrow (4) to detach hook B of the bracket from the AFS control module.

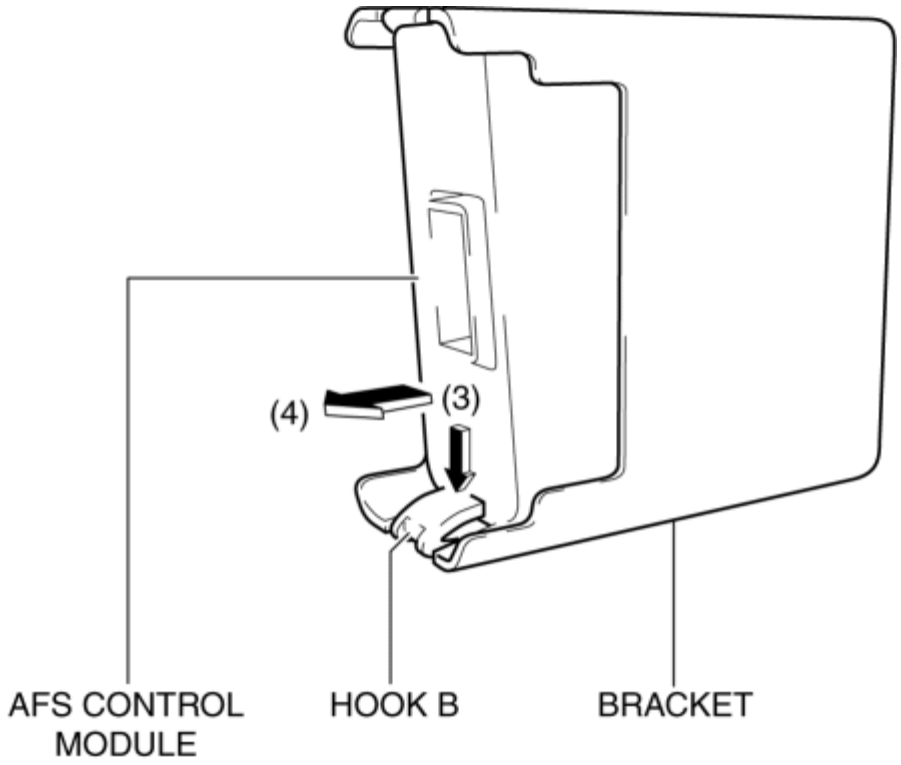

7. Remove the AFS control module.

8. Install in the reverse order of removal.

9. Switch the ignition ON (engine off or on) and perform the AFS control module configuration.

10. Clear the DTC. (See **CLEARING DTC [ADAPTIVE FRONT LIGHTING SYSTEM (AFS)]**.)

11. If the AFS control module is replaced with a new one, perform the headlight auto leveling system initialization. (See **HEADLIGHT AUTO LEVELING SYSTEM INITIALIZATION**.)

2014 - Mazda3 - Body and Accessories

ADAPTIVE FRONT LIGHTING SYSTEM (AFS) OFF SWITCH REMOVAL/INSTALLATION

NOTE:

- The AFS OFF switch is integrated with the cluster switch.
- Refer to CLUSTER SWITCH REMOVAL/INSTALLATION for the AFS OFF switch removal/installation. (See **CLUSTER SWITCH REMOVAL/INSTALLATION**.)

2014 - Mazda3 - Body and Accessories

ADAPTIVE FRONT LIGHTING SYSTEM (AFS) OFF SWITCH INSPECTION

NOTE:

- The AFS OFF switch is integrated with the cluster switch.
- If the AFS OFF switch is to be replaced, replace the cluster switch. (See **CLUSTER SWITCH REMOVAL/INSTALLATION**.)

Resistance Inspection

1. Disconnect the negative battery cable. (See **NEGATIVE BATTERY CABLE DISCONNECTION/CONNECTION [SKYACTIV-G 2.0, SKYACTIV-G 2.5]**.)
2. Remove the following parts:
   a. Driver's side front scuff plate (See **FRONT SCUFF PLATE REMOVAL/INSTALLATION**.)
   b. Driver's side front side trim (See **FRONT SIDE TRIM REMOVAL/INSTALLATION**.)
   c. Cluster switch (See **CLUSTER SWITCH REMOVAL/INSTALLATION**.)
3. Measure the resistance between cluster switch terminals B and C under the following conditions.

   Resistance with AFS OFF switch pressed and held

   - 501.44—511.56 ohms

   Resistance with any switch not pressed

   - 1,139.99—1,163.01 ohms

CIRCUIT WITH AFS OFF SWITCH PRESSED AND HELD

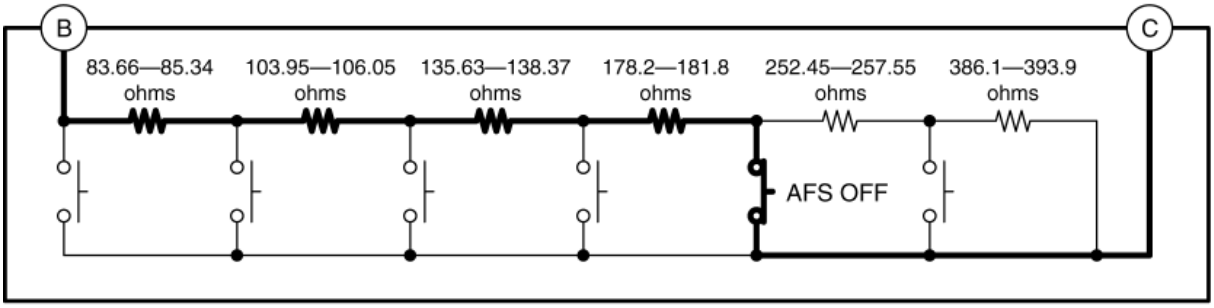

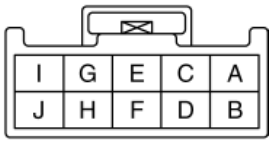

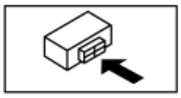

CIRCUIT WITH ANY SWITCH NOT PRESSED

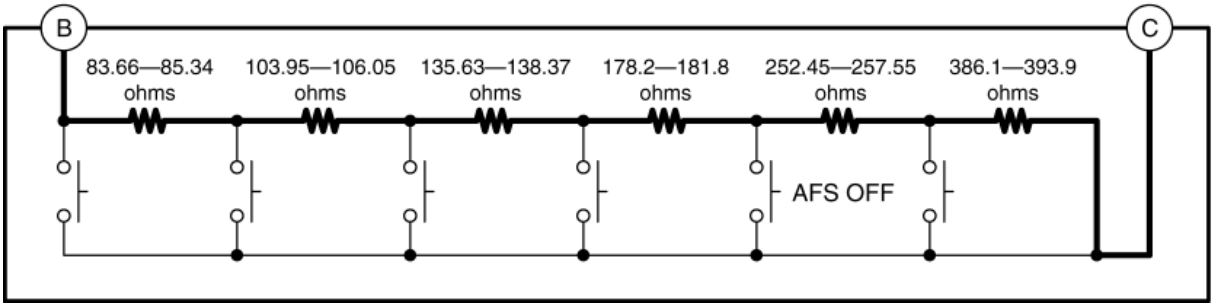

- If not within the specification, replace the cluster switch. (See **CLUSTER SWITCH REMOVAL/INSTALLATION**.)

LED Illumination Inspection

1. Disconnect the negative battery cable. (See **NEGATIVE BATTERY CABLE DISCONNECTION/CONNECTION [SKYACTIV-G 2.0, SKYACTIV-G 2.5]**.)

2. Remove the following parts:

   a. Driver's side front scuff plate (See **FRONT SCUFF PLATE REMOVAL/INSTALLATION**.)

   b. Driver's side front side trim (See **FRONT SIDE TRIM REMOVAL/INSTALLATION**.)

   c. Cluster switch (See **CLUSTER SWITCH REMOVAL/INSTALLATION**.)

3. Apply battery positive voltage to cluster switch terminal J, and connect terminal I to ground.

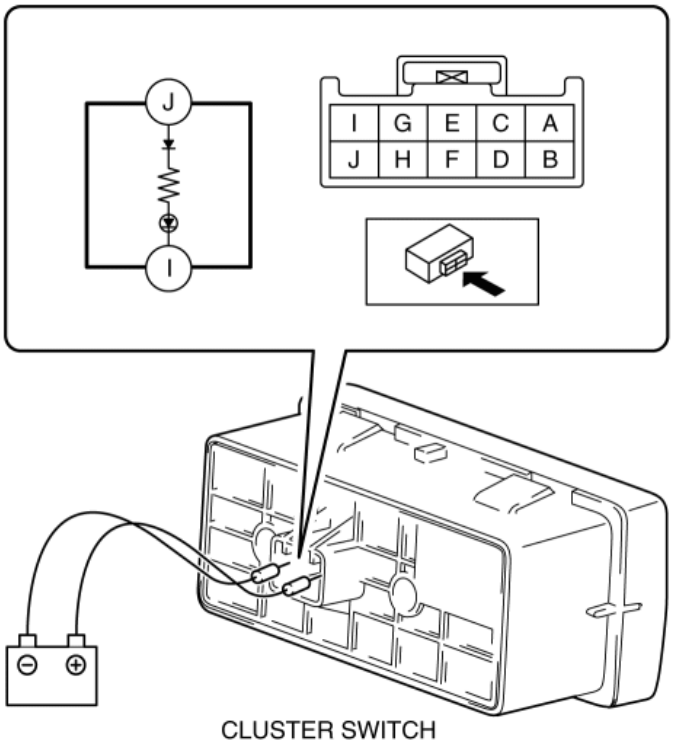

4. Verify that the LED is turned on.

   - If the LED does not turn on, replace the cluster switch. (See **CLUSTER SWITCH REMOVAL/INSTALLATION**.)

2014 - Mazda3 - Body and Accessories

STEERING ANGLE SENSOR REMOVAL/INSTALLATION

NOTE:

- If the steering angle sensor is removed from the clock spring, the steering angle sensor absolute angle could change, therefore, do not remove the steering angle sensor from the clock spring.
- When replacing the steering angle sensor, replace it together with the clock spring. (See **CLOCK SPRING REMOVAL/INSTALLATION [TWO-STEP DEPLOYMENT CONTROL SYSTEM]**.) (See **CLOCK SPRING REMOVAL/INSTALLATION [STANDARD DEPLOYMENT CONTROL SYSTEM]**.)

2014 - Mazda3 - Body and Accessories

STEERING ANGLE SENSOR INSPECTION

NOTE:

- If the steering angle sensor is removed from the clock spring, the steering angle sensor absolute angle could change, therefore, do not remove the steering angle sensor from the clock spring.
- If the steering angle sensor is replaced, replace it together with the clock spring. (See **CLOCK SPRING REMOVAL/INSTALLATION [TWO-STEP DEPLOYMENT CONTROL SYSTEM]**.) (See **CLOCK SPRING REMOVAL/INSTALLATION [STANDARD DEPLOYMENT CONTROL SYSTEM]**.)

1. Remove the column cover. (See **COLUMN COVER REMOVAL/INSTALLATION**.)

2. Connect the plus (+) end of a tester to steering angle sensor terminal A and the minus (-) end of the tester to terminal B (ground).

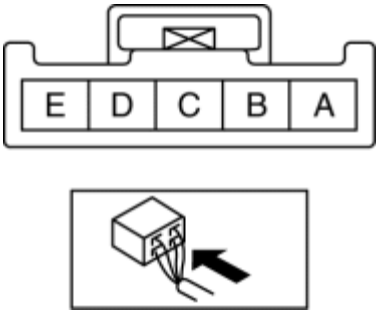

3. Switch the ignition ON (engine off or on).

4. Turn the steering wheel to the right and left.

5. Verify that the voltage between steering angle sensor terminals A and B (ground) is as indicated in the table.

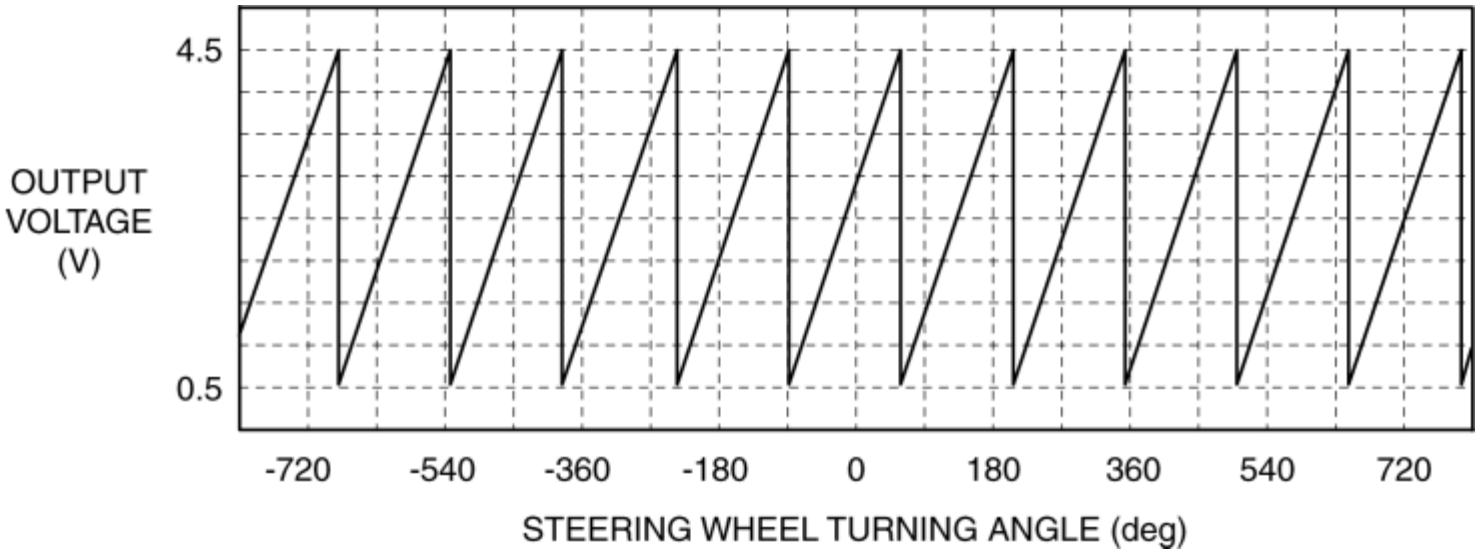

If the voltage can be verified as indicated in the table, go to the next step.

- If not as indicated in the table, replace the clock spring. (See **CLOCK SPRING REMOVAL/INSTALLATION [TWO-STEP DEPLOYMENT CONTROL SYSTEM]**.) (See **CLOCK SPRING REMOVAL/INSTALLATION [STANDARD DEPLOYMENT CONTROL SYSTEM]**.)

6. Switch the ignition off.

7. Connect the plus (+) end of a tester to steering angle sensor terminal C and the minus (-) end of the tester to terminal B (ground).

8. Switch the ignition ON (engine off or on).

9. Turn the steering wheel to the right and left.

10. Verify that the voltage between steering angle sensor terminals C and B (ground) is as indicated in the table.

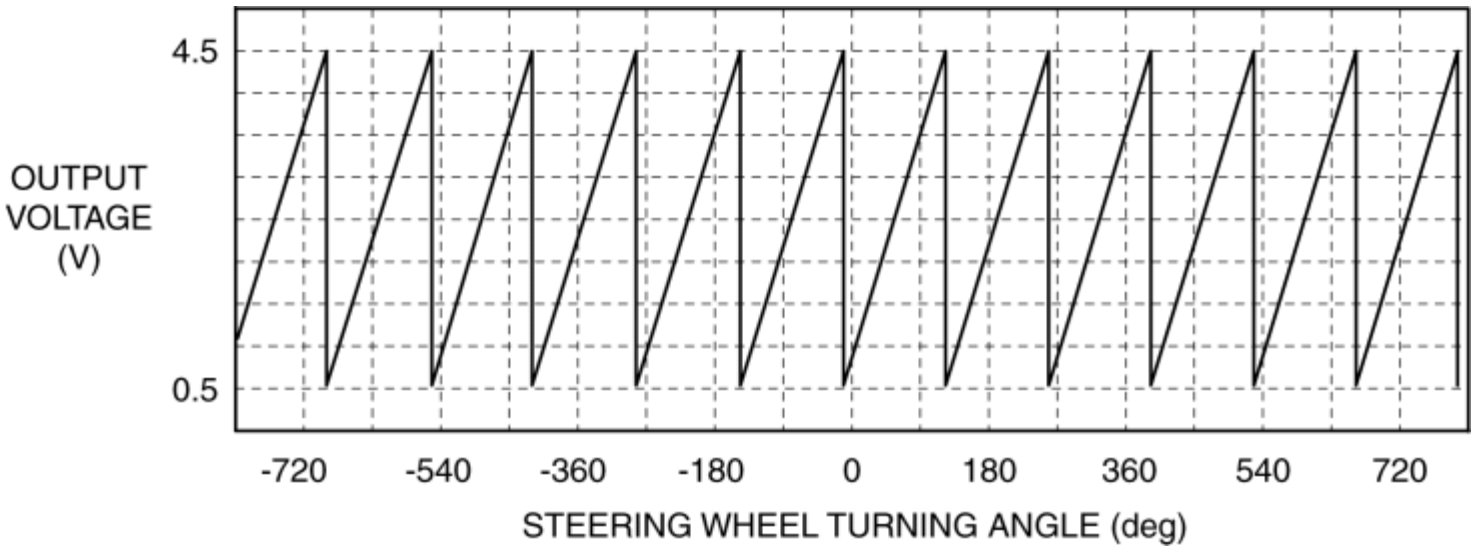

- If not as indicated in the table, replace the clock spring. (See **CLOCK SPRING REMOVAL/INSTALLATION [TWO-STEP DEPLOYMENT CONTROL SYSTEM]**.) (See **CLOCK SPRING REMOVAL/INSTALLATION [STANDARD DEPLOYMENT CONTROL SYSTEM]**.)

2014 - Mazda3 - Body and Accessories

HEADLIGHT LEVELING ACTUATOR INSPECTION

NOTE:

- The headlight leveling actuator is integrated in the front combination light.
- Perform the headlight auto leveling system actuator inspection using the headlight leveling actuator operation check mode. (See **HEADLIGHT LEVELING ACTUATOR OPERATION CHECK MODE [ADAPTIVE FRONT LIGHTING SYSTEM (AFS)]**.)
- To replace the headlight leveling actuator, replace the front combination light as a single unit. (See **FRONT COMBINATION LIGHT REMOVAL/INSTALLATION**.)

1. Disconnect the negative battery cable. (See **NEGATIVE BATTERY CABLE DISCONNECTION/CONNECTION [SKYACTIV-G 2.0, SKYACTIV-G 2.5]**.)
2. Remove the set plate. (See **SET PLATE REMOVAL/INSTALLATION**.)
3. Remove the front bumper. (See **FRONT BUMPER REMOVAL/INSTALLATION**.)
4. Connect the negative battery cable. (See **NEGATIVE BATTERY CABLE DISCONNECTION/CONNECTION [SKYACTIV-G 2.0, SKYACTIV-G 2.5]**.)
5. Verify that the voltages of each of the terminals are as indicated in the terminal voltage table.
    - If the voltage is not as indicated in the table, inspect the parts under Inspection item(s).
        - If the system does not work normally even though the parts under Inspection item(s) or related wiring harnesses do not have any malfunction, replace the front combination light. (See **FRONT COMBINATION LIGHT REMOVAL/INSTALLATION**.)

Terminal Voltage Table (Reference)

FRONT COMBINATION LIGHT
WIRING HARNESS-SIDE CONNECTOR

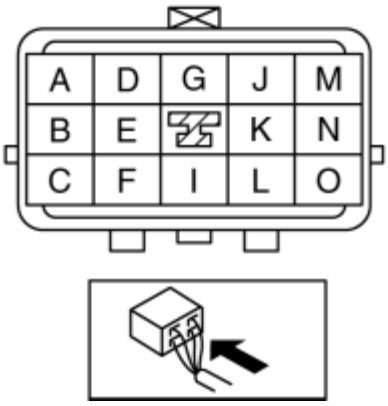

Terminal	Signal name	Connected to	Measurement condition		Voltage (V)	Inspection item(s)
F	Headlight leveling actuator signal	Headlight leveling switch	Light switch in HEAD position	Headlight leveling switch position 0	Approx. 10.1	• Headlight leveling switch • Related wiring harness
				Headlight leveling switch position -	Approx. 9.4	
				Headlight leveling switch position 1	Approx. 8.7	
				Headlight leveling switch position -	Approx. 7.9	
				Headlight leveling switch position 2	Approx. 7.2	
				Headlight leveling switch position -	Approx. 6.5	
				Headlight leveling switch position 3	Approx. 5.8	
				Headlight leveling switch position -	Approx. 5.1	
				Headlight leveling switch	Approx.	

				position 4	4.4	
				Headlight leveling switch position -	Approx. 3.6	
				Headlight leveling switch position 5	Approx. 2.9	
I	Headlight leveling actuator power supply	• Headlight leveling switch • Headlight LO relay (LH)	Light switch in HEAD position		B+	• Headlight leveling switch • Headlight LO relay (LH) • Related wiring harness
			Light switch in OFF position		1.0 or less	
L	Ground	• Headlight leveling switch • Body ground	Under any condition		1.0 or less	• Headlight leveling switch • Related wiring harness

2014 - Mazda3 - Body and Accessories

FRONT SIDE MARKER LIGHT/PARKING LIGHT BULB REMOVAL/INSTALLATION

NOTE:

- The LED-type parking light (with discharge headlight system) cannot be replaced separately. If there is any malfunction in the LED, replace the front combination light as a single unit. (See **FRONT COMBINATION LIGHT REMOVAL/INSTALLATION**.)

1. Turn the steering wheel in the direction opposite to the side on which the bulb is to be removed.

2. Disconnect the negative battery cable. (See **NEGATIVE BATTERY CABLE DISCONNECTION/CONNECTION [SKYACTIV-G 2.0, SKYACTIV-G 2.5]**.)

3. Slightly bend back the front mudguard. (See **MUDGUARD REMOVAL/INSTALLATION**.)

4. Turn the socket counterclockwise and remove it in the direction of arrow (1) shown in the figure.

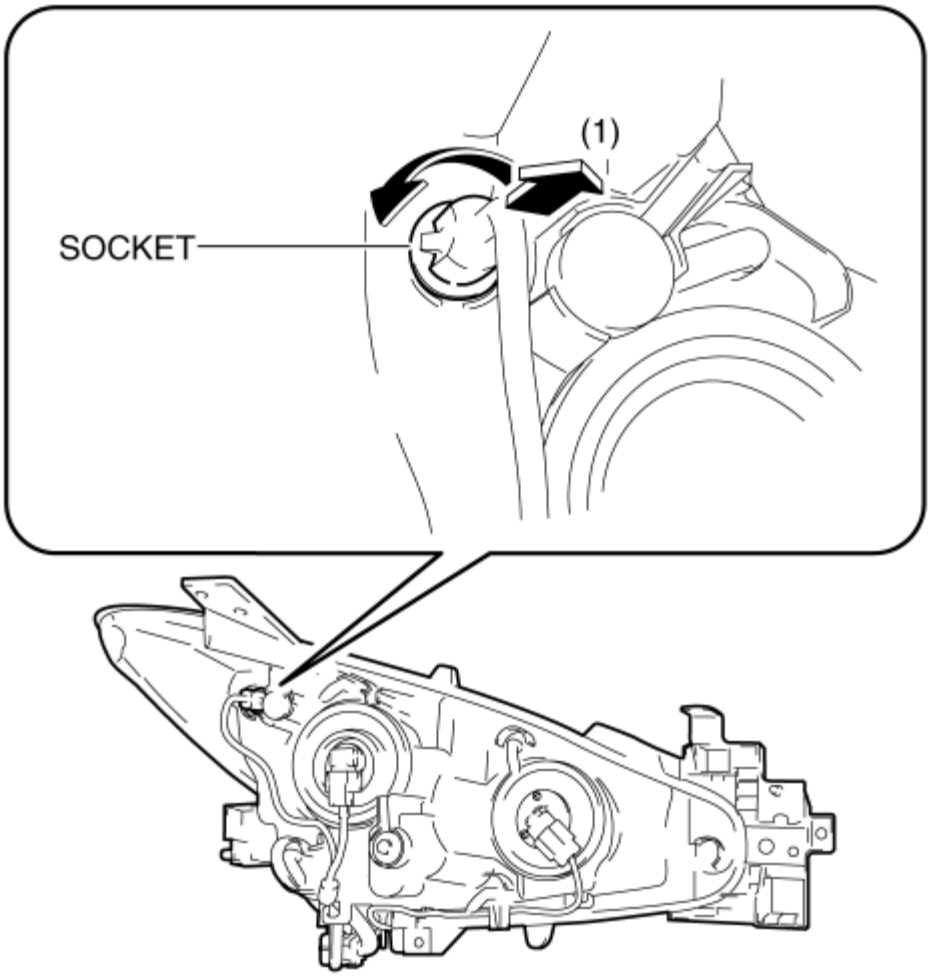

FRONT COMBINATION LIGHT

CAUTION:

- The bulb reaches high temperatures when illuminated. If there is oil or dirt on the surface of the bulb, excessive heat will build up and the life of the bulb will be shortened. When replacing the bulb, hold the metal flange, not the glass.

5. Remove the front side marker light/parking light bulb.

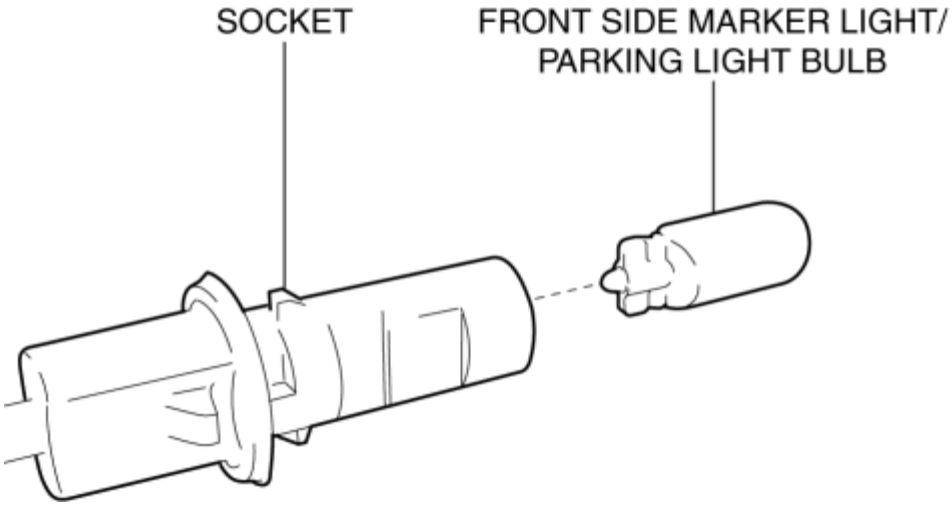

6. Install in the reverse order of removal.

2014 - Mazda3 - Body and Accessories

FRONT TURN LIGHT REMOVAL/INSTALLATION

1. Disconnect the negative battery cable. (See **NEGATIVE BATTERY CABLE DISCONNECTION/CONNECTION [SKYACTIV-G 2.0, SKYACTIV-G 2.5]**.)

2. Partially peel back front mudguard. (See **MUDGUARD REMOVAL/INSTALLATION**.)

3. Disconnect the connector.

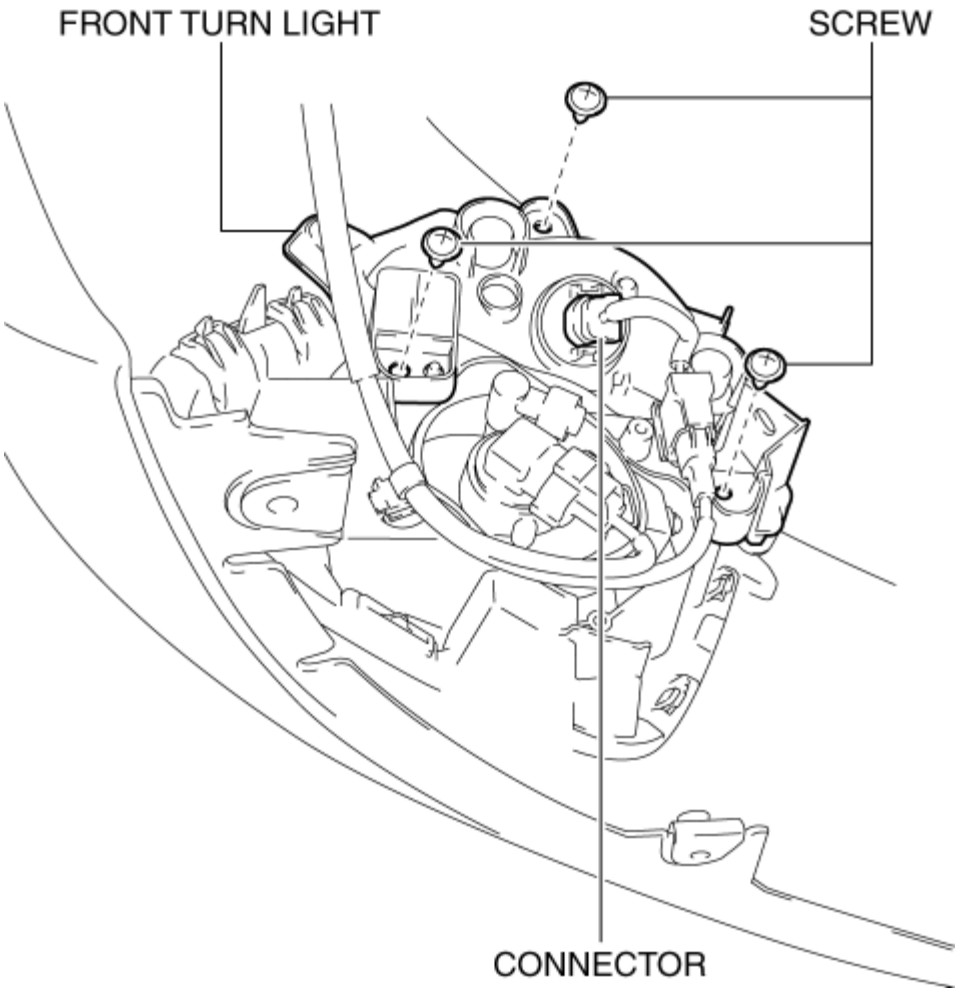

4. Remove the screws.

5. Pull out the front turn light from the pins and remove the front turn light.

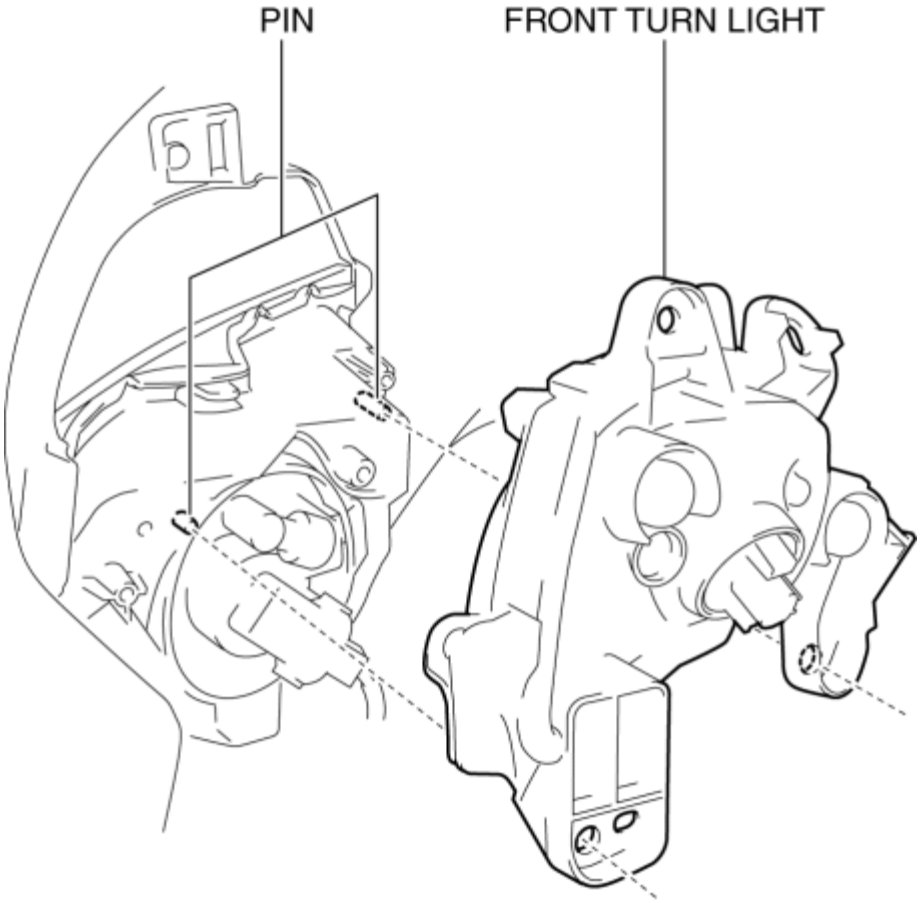

6. Install in the reverse order of removal.

2014 - Mazda3 - Body and Accessories

FRONT TURN LIGHT BULB REMOVAL/INSTALLATION

1. Disconnect the negative battery cable. (See **NEGATIVE BATTERY CABLE DISCONNECTION/CONNECTION [SKYACTIV-G 2.0, SKYACTIV-G 2.5]**.)

2. Partially peel back the front mudguard. (See **MUDGUARD REMOVAL/INSTALLATION**.)

3. Disconnect the connector.

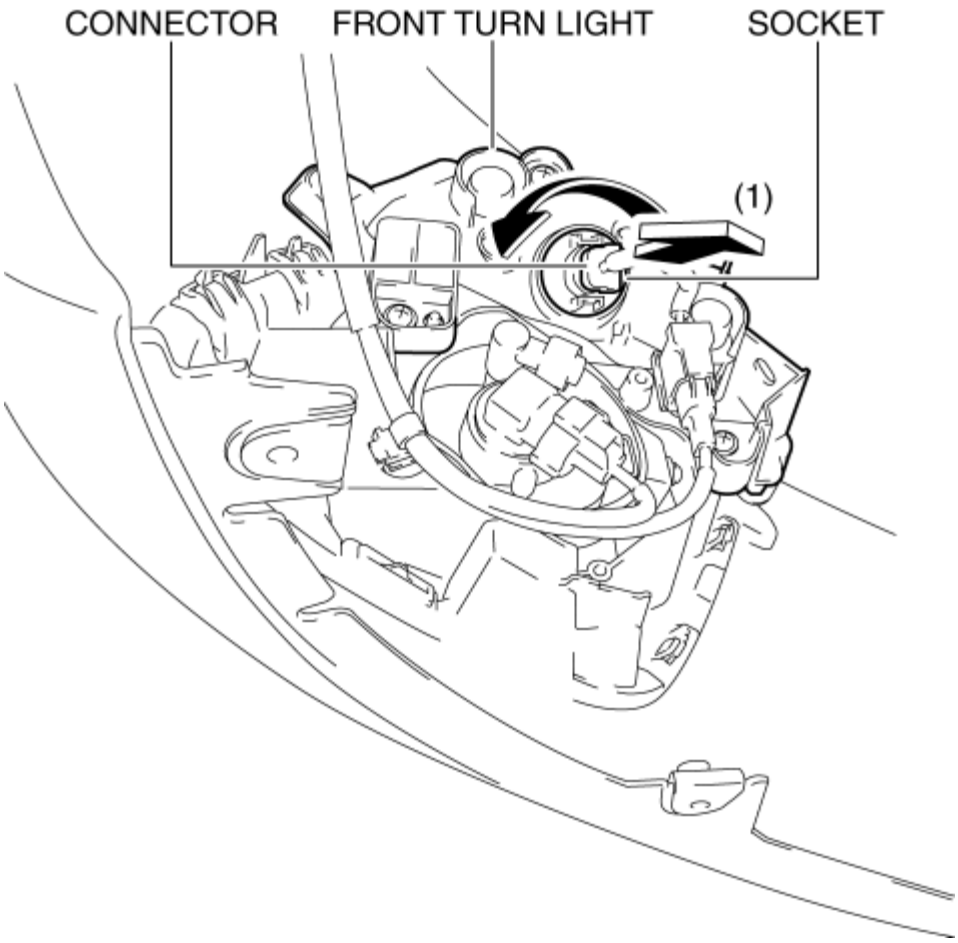

4. Turn the socket counterclockwise and remove it in the direction of arrow (1) shown in the figure.

5. Remove the front turn light bulb.

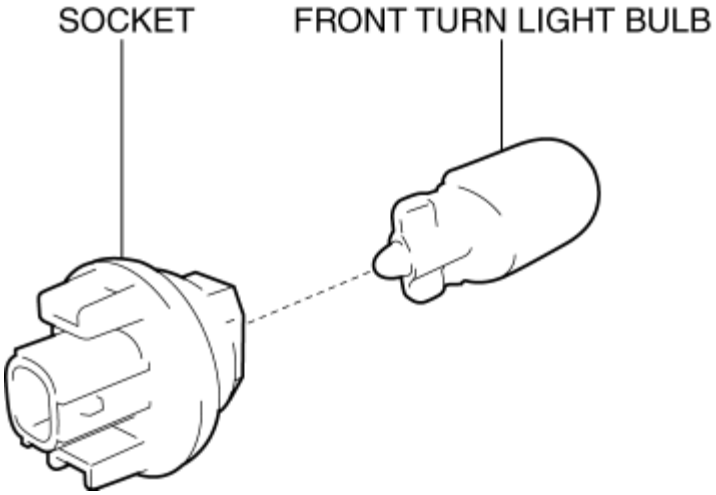

CAUTION:

- The bulb reaches high temperatures when illuminated. If there is oil or dirt on the surface of the bulb, excessive heat will build up and the life of the bulb will be shortened. When replacing the bulb, hold the metal flange, not the glass.

6. Install in the reverse order of removal.

2014 - Mazda3 - Body and Accessories

FRONT TURN LIGHT SHORT CORD REMOVAL/INSTALLATION

1. Disconnect the negative battery cable. (See **NEGATIVE BATTERY CABLE DISCONNECTION/CONNECTION [SKYACTIV-G 2.0, SKYACTIV-G 2.5]**.)

2. Partially peel back front mudguard. (See **MUDGUARD REMOVAL/INSTALLATION**.)

3. Insert the remover tool into the position shown in the figure.

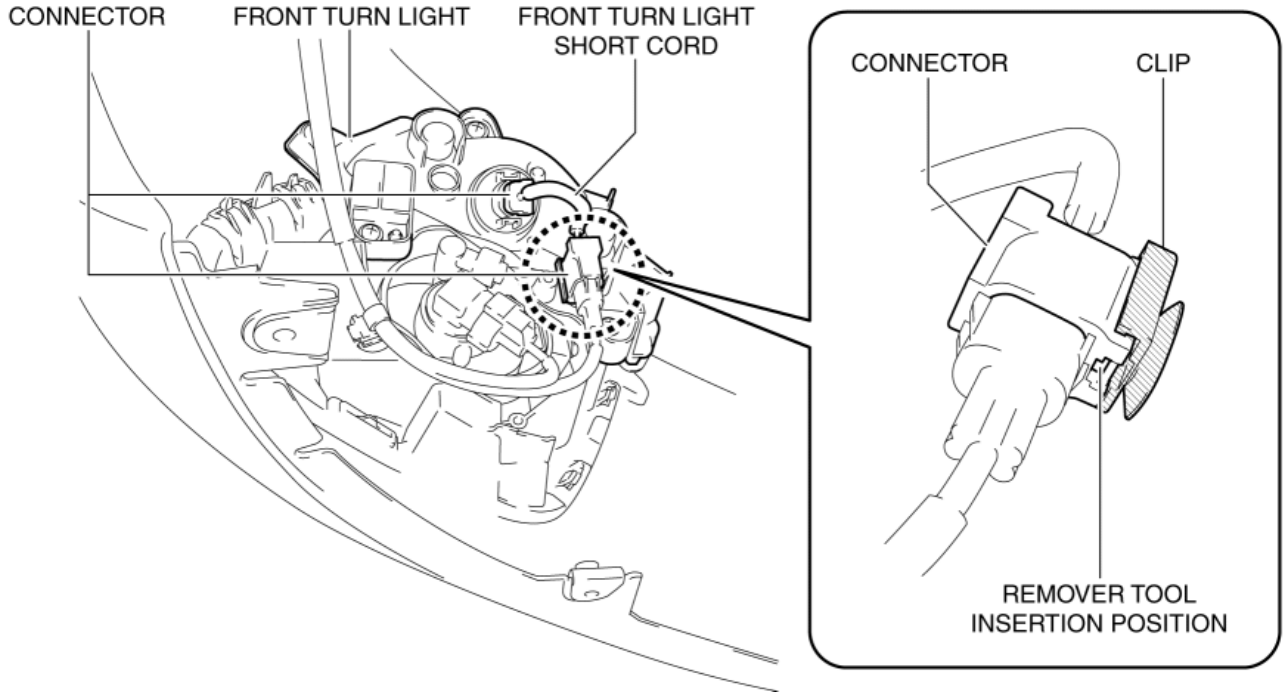

4. While pressing the connector hook in the direction of arrow (1) shown in the figure using the remover tool, move the connector in the direction of arrow (2) and remove the connector from the clip.

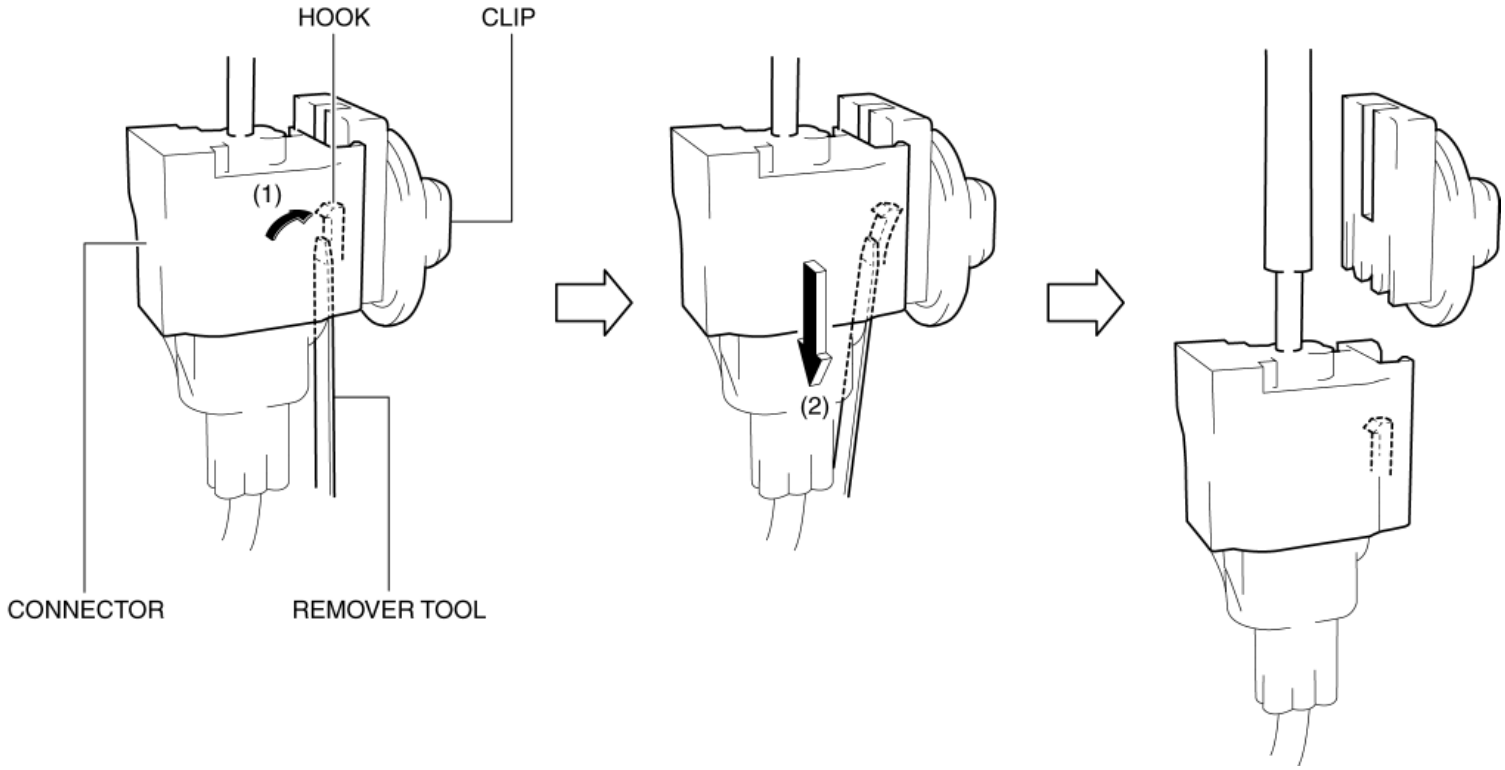

5. Disconnect the connectors and remove the front turn light short cord.

6. Install in the reverse order of removal.

2014 - Mazda3 - Body and Accessories

FRONT TURN LIGHT SHORT CORD INSPECTION

1. Disconnect the negative battery cable. (See **NEGATIVE BATTERY CABLE DISCONNECTION/CONNECTION [SKYACTIV-G 2.0, SKYACTIV-G 2.5]**.)

2. Partially peel back front mudguard. (See **MUDGUARD REMOVAL/INSTALLATION**.)

3. Remove the front turn light short cord. (See **FRONT TURN LIGHT SHORT CORD REMOVAL/INSTALLATION**.)

4. Verify that the continuity between the front turn light short cord terminals is as indicated in the table.

○—○ : Continuity

Test condition	Front wiring harness connector terminal		Front turn light connector terminal	
	A	D	A	B
Under any condition	○			○
		○	○	

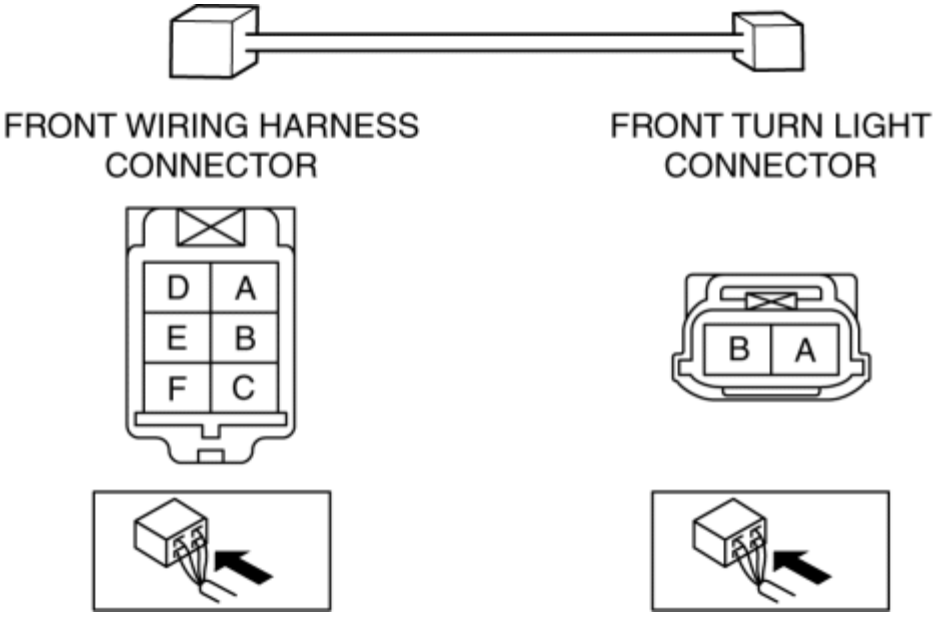

- If not as indicated in the table, replace the front turn light short cord. (See **FRONT TURN LIGHT SHORT CORD REMOVAL/INSTALLATION**.)

FRONT TURN LIGHT SHORT CORD INSPECTION

2014 - Mazda3 - Body and Accessories

FRONT FOG LIGHT REMOVAL/INSTALLATION

1. Disconnect the negative battery cable. (See **NEGATIVE BATTERY CABLE DISCONNECTION/CONNECTION [SKYACTIV-G 2.0, SKYACTIV-G 2.5]**.)

2. Partially peel back the front mudguard. (See **MUDGUARD REMOVAL/INSTALLATION**.)

3. Remove the front fog light bezel No.1. (See **FRONT FOG LIGHT BEZEL REMOVAL/INSTALLATION**.)

4. Remove the screws.

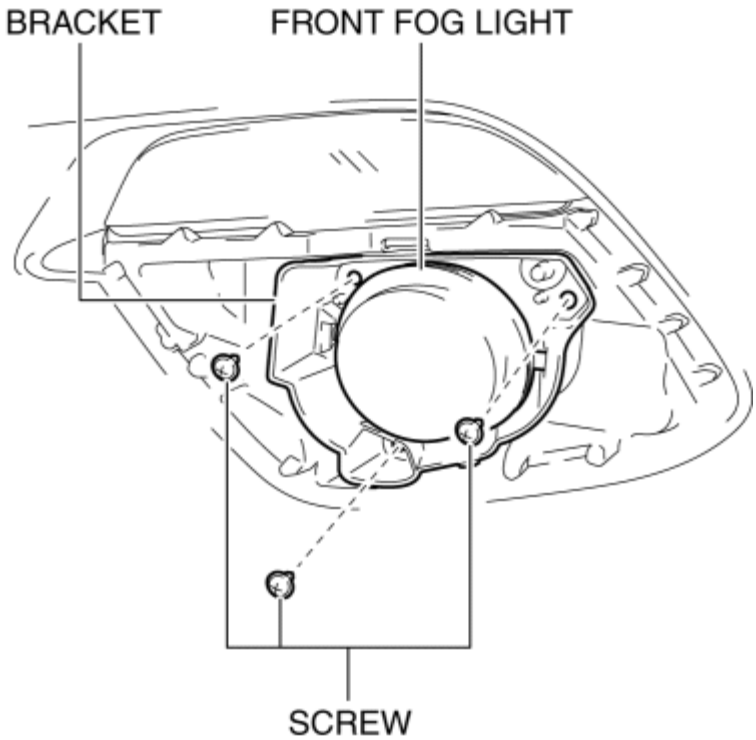

5. Pull out the pins from the bracket and pull out the front fog light and the bracket from the front bumper.

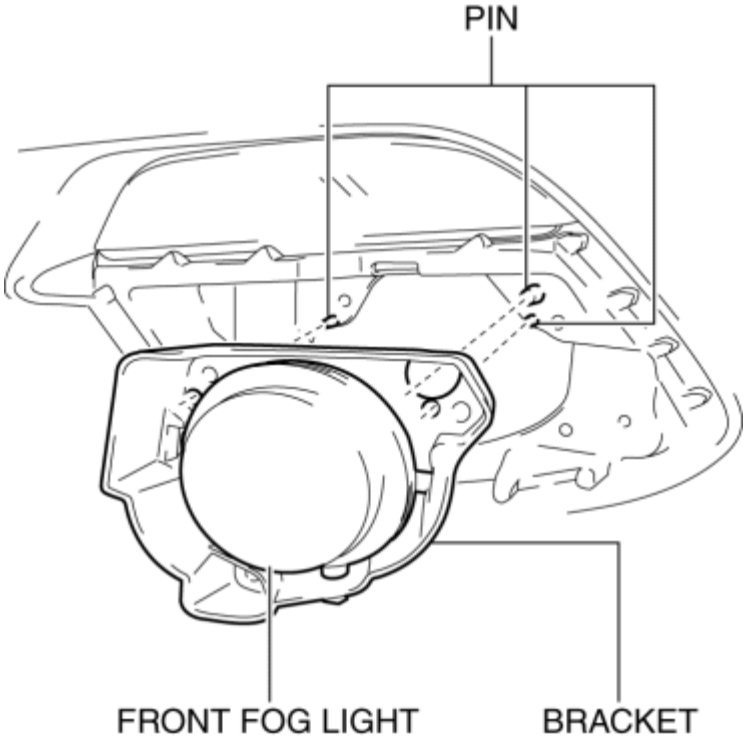

6. Disconnect the connector and remove the front fog light and the bracket.

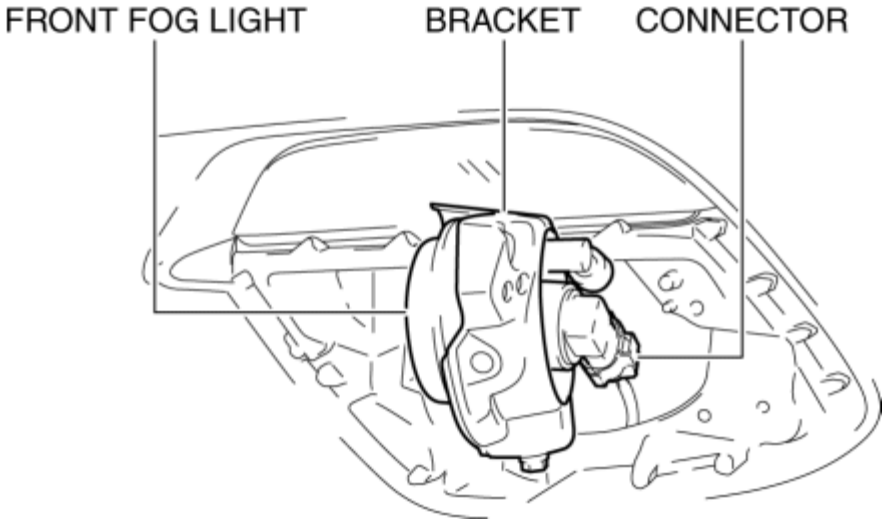

7. Remove the screw.

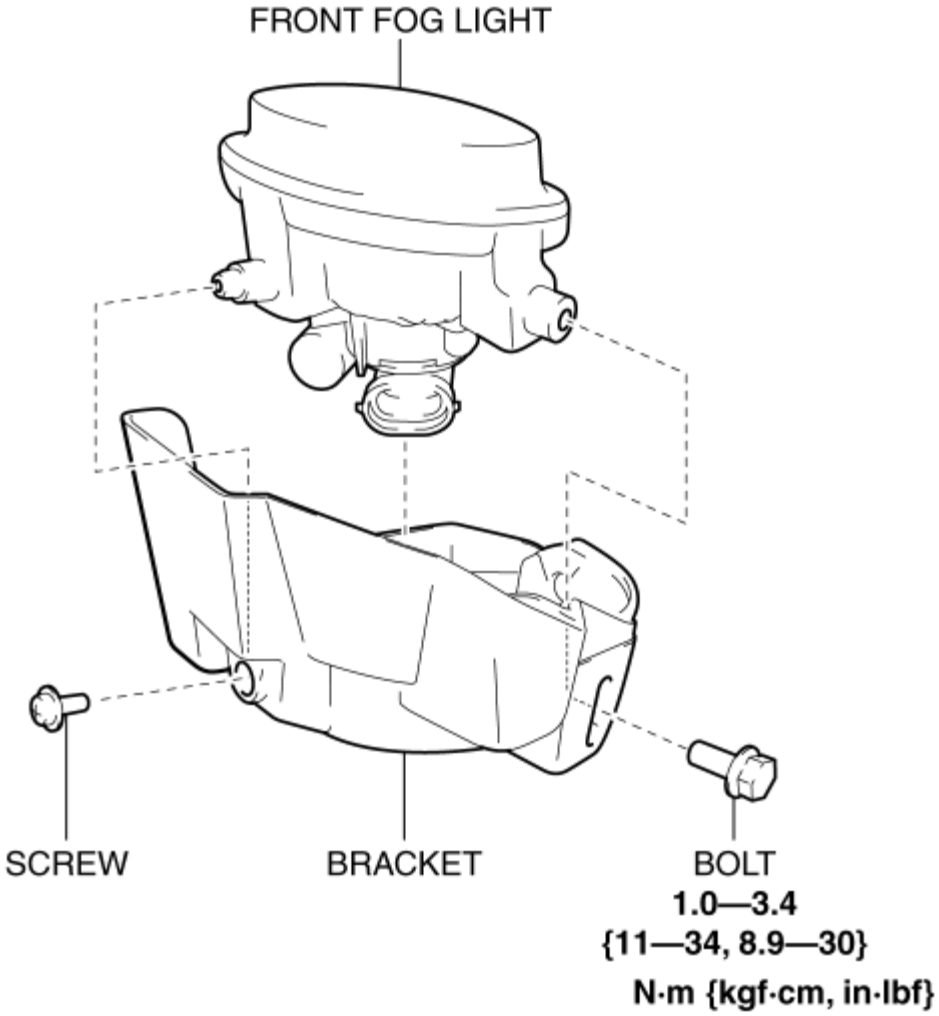

8. Remove the bolt.

9. Remove the front fog light from the bracket.

10. Install in the reverse order of removal.

11. Adjust the front fog light aiming. (See **FRONT FOG LIGHT AIMING**.)

2014 - Mazda3 - Body and Accessories

FRONT FOG LIGHT BULB REMOVAL/INSTALLATION

1. Disconnect the negative battery cable. (See **NEGATIVE BATTERY CABLE DISCONNECTION/CONNECTION [SKYACTIV-G 2.0, SKYACTIV-G 2.5]**.)

2. Partially peel back front mudguard. (See **MUDGUARD REMOVAL/INSTALLATION**.)

3. Disconnect the connector.

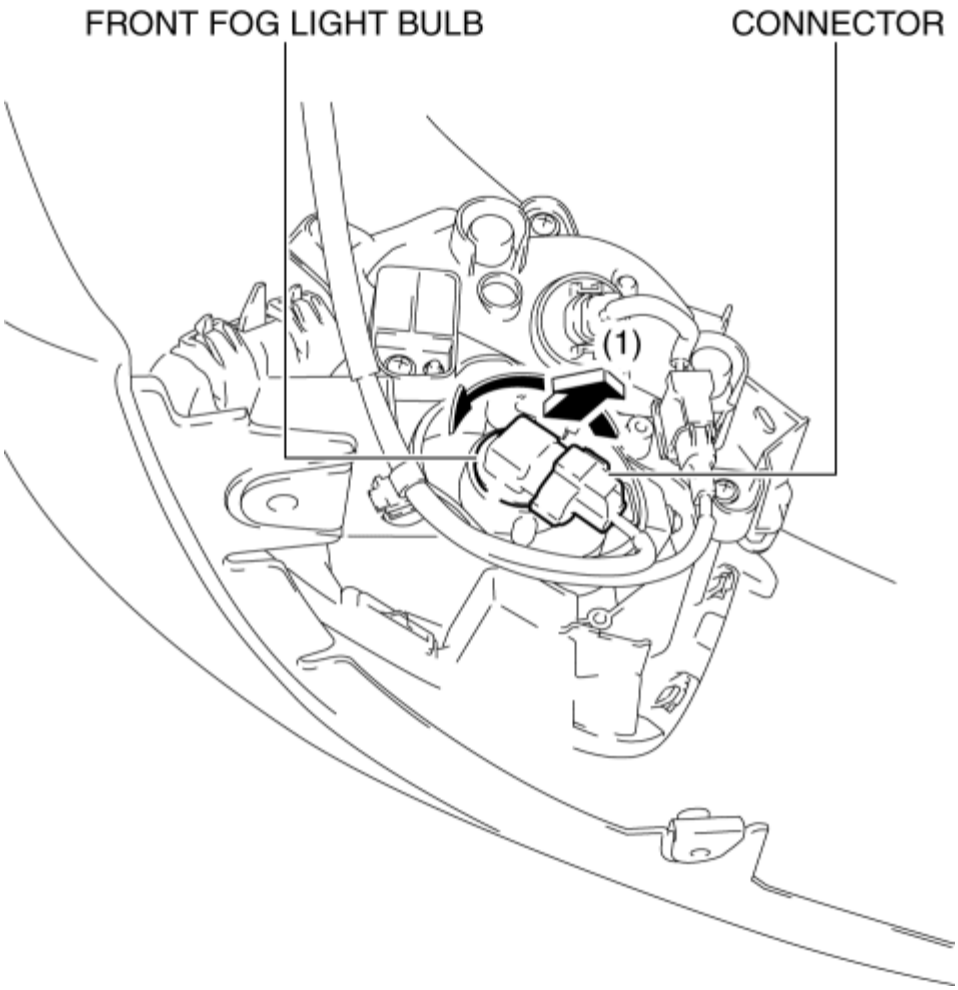

4. Turn the front fog light bulb counterclockwise and remove it in the direction of arrow (1) shown in the figure.

CAUTION:

- The bulb reaches high temperatures when illuminated. If there is oil or dirt on the surface of the bulb, excessive heat will build up and the life of the bulb will be shortened. When replacing the bulb, hold the metal flange, not the glass.

5. Install in the reverse order of removal.

FRONT FOG LIGHT BULB REMOVAL/INSTALLATION

2014 - Mazda3 - Body and Accessories

FRONT FOG LIGHT AIMING

NOTE:

- If the following servicing is done, perform the front fog light aiming adjustment.
  - Front fog light replacement
  - Suspension replacement and removal/installation, servicing requiring vehicle height to be changed

1. Empty the vehicle except for the spare tire, jack and vehicle tools.
2. Adjust the tire pressure to the specification. (See **WHEEL AND TIRE SPECIFICATION**.)
3. Move the vehicle to level ground.
4. Sit on the driver-side seat alone.
5. Make an adjustment-use screen as shown in the figure using double-weight, white paper. (Common to both left and right)

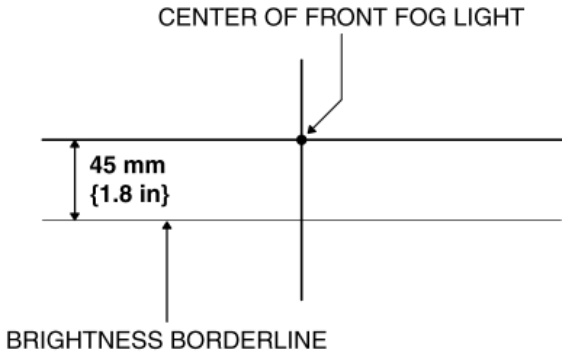

6. Line up the vehicle with the wall so that the distance to the front fog lights is **3 m {9.8 ft}** from the wall.

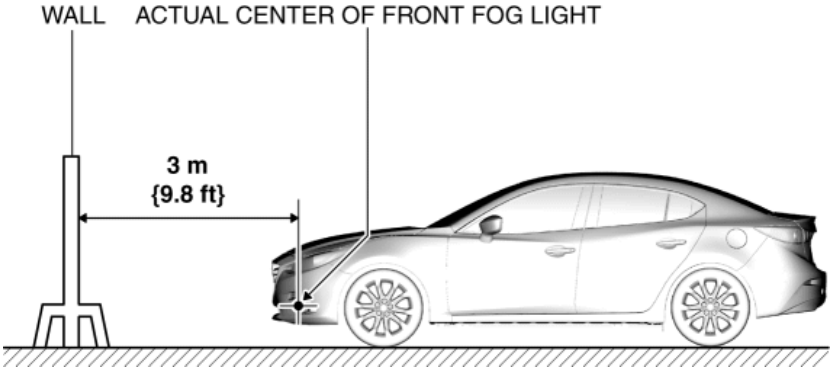

7. Measure the height at the center point of the front fog lights.

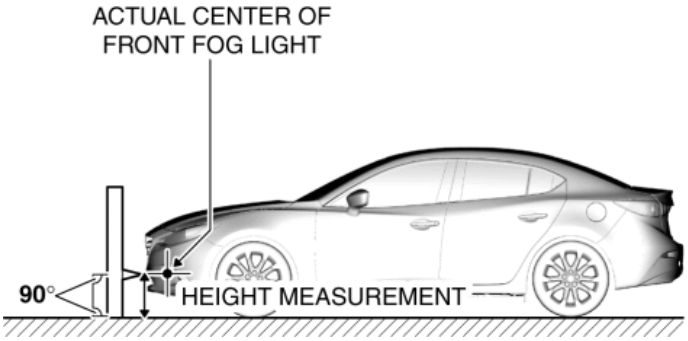

NOTE:

- Measure the height at the center point of the front fog light in which the aiming is being adjusted because the vehicle height differs depending on vehicle conditions.

8. Align the center point of the front fog light with the center of the adjustment-use screen.

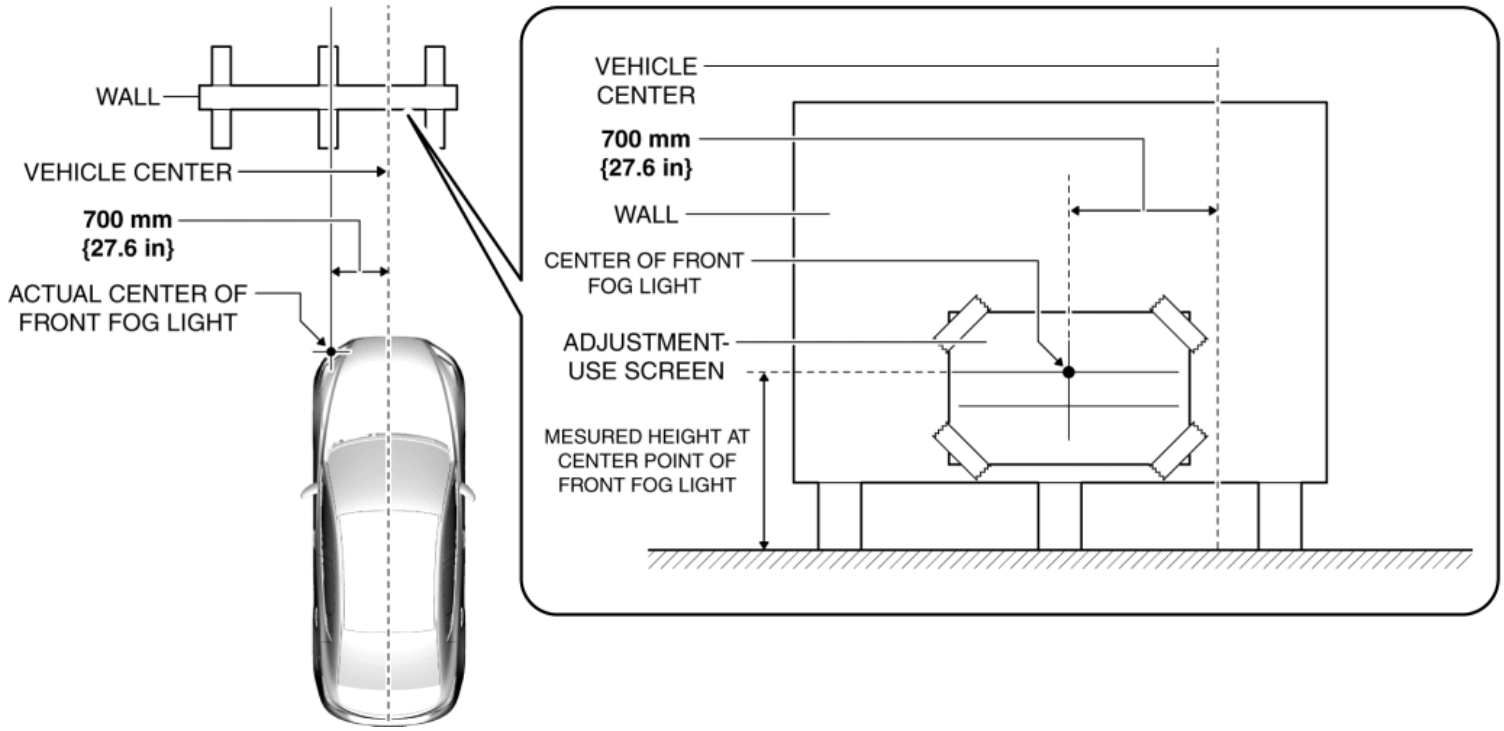

9. Set a partition in front of the front fog light which is not being adjusted to block the light.

10. Start the engine and charge the battery.

11. Turn on the front fog lights.

12. Verify that the actual brightness borderline of the fog light is at the brightness borderline position indicated by the adjustment-use screen.

- If the actual brightness borderline is not in the position indicated on the adjustment-use screen, perform the following adjustment:

a. Disconnect the negative battery cable. (See **NEGATIVE BATTERY CABLE DISCONNECTION/CONNECTION [SKYACTIV-G 2.0, SKYACTIV-G 2.5]**.)

b. Partially peel back the front mudguard. (See **MUDGUARD REMOVAL/INSTALLATION**.)

c. Remove the front fog light bezel No.1. (See **FRONT FOG LIGHT BEZEL REMOVAL/INSTALLATION**.)

d. Remove the front fog light and the bracket before cutting the front fog light hole cover located on the bolt installation hole. (See **FRONT FOG LIGHT REMOVAL/INSTALLATION**.)

e. Cutout the hatch-marked area of the front fog light hole cover shown in the figure.

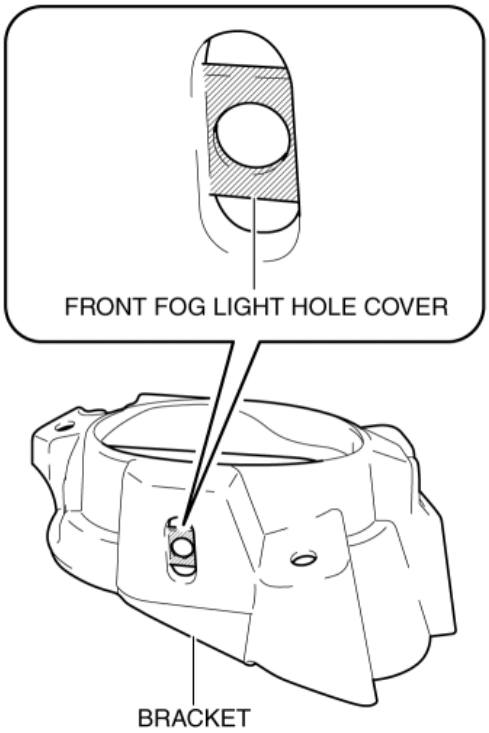

NOTE:

- Remove all the shaded area shown in the figure so that the front fog light hole cover does not interfere with the bolt.

f. Install the front fog light to the bracket and temporarily tighten the bolt.

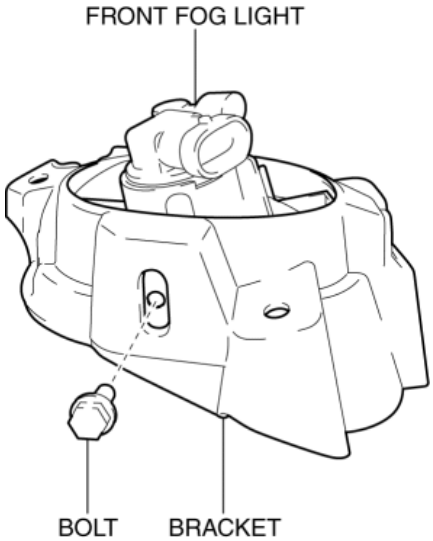

g. Install the front fog light and the bracket to the front bumper. (See **FRONT FOG LIGHT REMOVAL / INSTALLATION**.)

h. Move the front fog light in the direction of the arrow shown in the figure and adjust the brightness borderline.

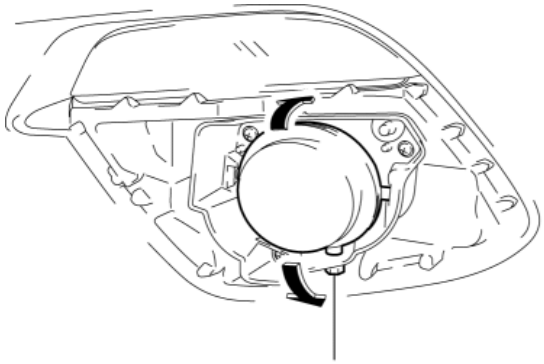

N·m {kgf·cm, in·lbf}

i. Tighten the bolt.

j. Assemble the front fog light completely. (See **FRONT FOG LIGHT REMOVAL/INSTALLATION**.)

k. Install the front fog light bezel No.1. (See **FRONT FOG LIGHT BEZEL REMOVAL/INSTALLATION**.)

l. Install the front mudguard. (See **MUDGUARD REMOVAL/INSTALLATION**.)

m. Connect the negative battery cable. (See **NEGATIVE BATTERY CABLE DISCONNECTION/CONNECTION [SKYACTIV-G 2.0, SKYACTIV-G 2.5]**.)

2014 - Mazda3 - Body and Accessories

SIDE TURN LIGHT REMOVAL/INSTALLATION

1. Disconnect the negative battery cable. (See **NEGATIVE BATTERY CABLE DISCONNECTION/CONNECTION [SKYACTIV-G 2.0, SKYACTIV-G 2.5]**.)
2. Remove the outer mirror glass. (See **OUTER MIRROR GLASS REMOVAL**.) (See **OUTER MIRROR GLASS INSTALLATION**.)
3. Remove the upper outer mirror garnish. (See **OUTER MIRROR GARNISH REMOVAL/INSTALLATION**.)
4. Remove the screws.

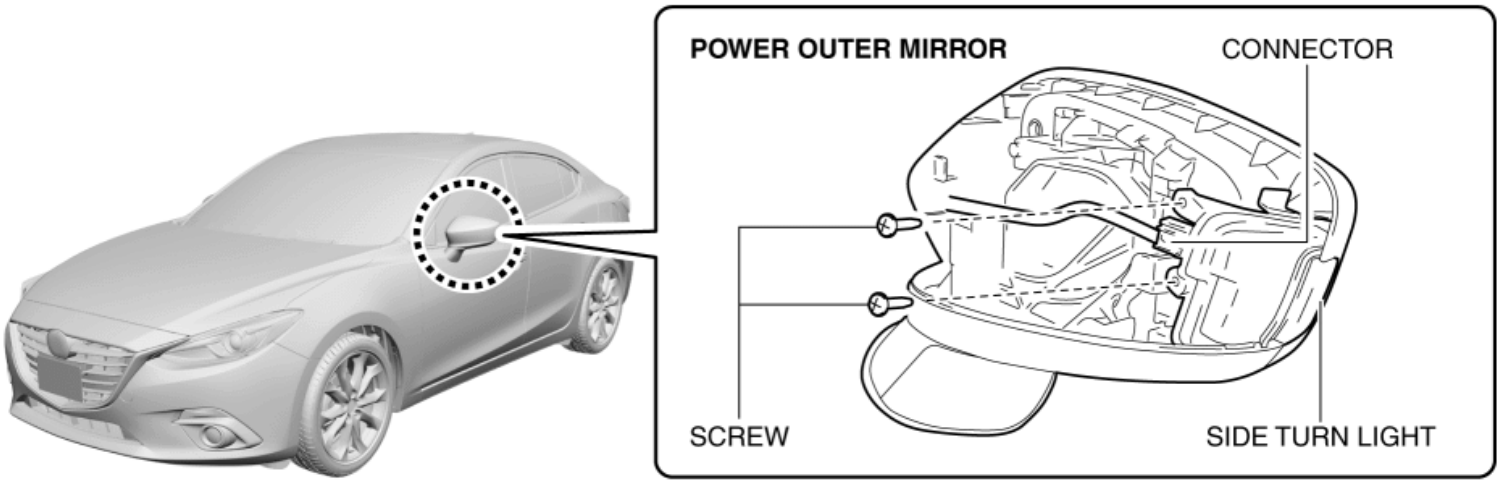

5. Remove the side turn light.
6. Disconnect the connector.
7. Install in the reverse order of removal.

2014 - Mazda3 - Body and Accessories

SIDE TURN LIGHT INSPECTION

LED Illumination Inspection

1. Disconnect the negative battery cable. (See **NEGATIVE BATTERY CABLE DISCONNECTION/CONNECTION [SKYACTIV-G 2.0, SKYACTIV-G 2.5]**.)

2. Remove the following parts:

   a. Outer mirror glass (See **OUTER MIRROR GLASS REMOVAL**.) (See **OUTER MIRROR GLASS INSTALLATION**.)

   b. Upper outer mirror garnish (See **OUTER MIRROR GARNISH REMOVAL/INSTALLATION**.)

   c. Side turn light (See **SIDE TURN LIGHT REMOVAL/INSTALLATION**.)

3. Apply battery voltage to side turn light terminal A, and connect terminal B to ground.

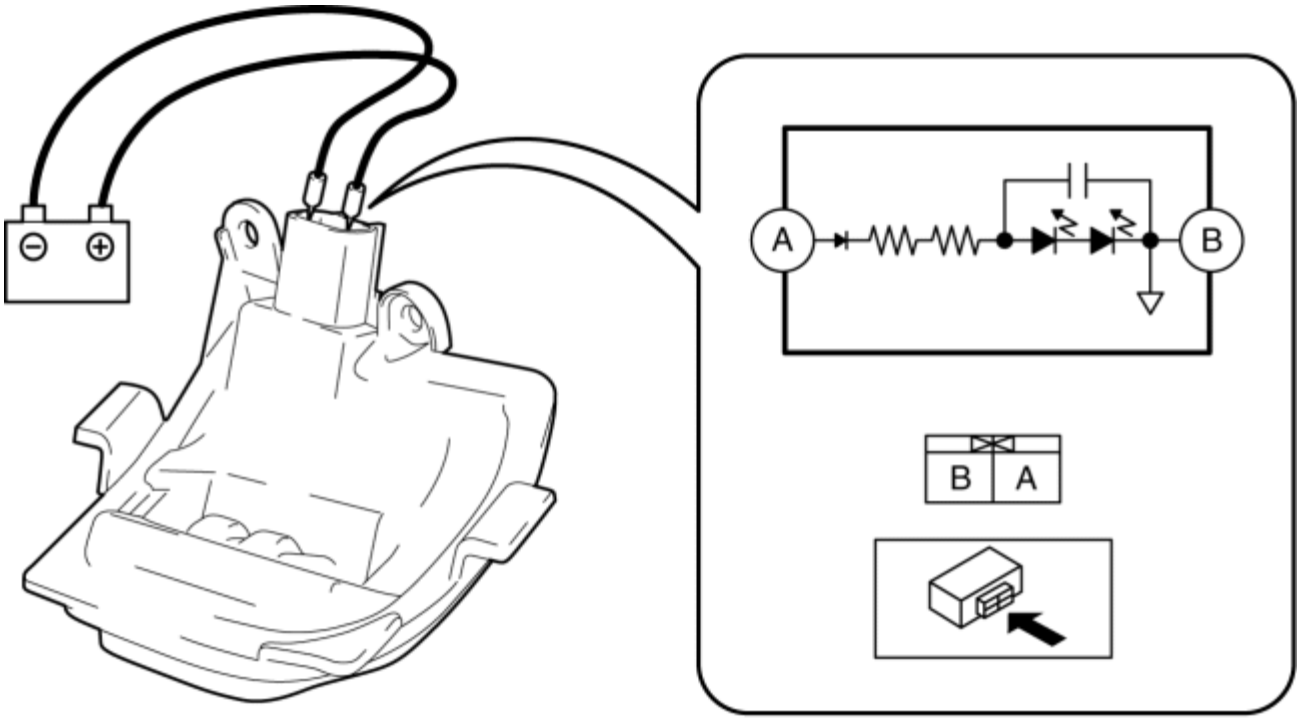

SIDE TURN LIGHT

4. Verify that the LED turns on.

   - If the LED does not turn on, replace the side turn light. (See **SIDE TURN LIGHT REMOVAL/INSTALLATION**.)

Continuity Inspection

1. Disconnect the negative battery cable. (See **NEGATIVE BATTERY CABLE DISCONNECTION/CONNECTION [SKYACTIV-G 2.0, SKYACTIV-G 2.5]**.)

2. Remove the following parts:

   a. Outer mirror glass (See **OUTER MIRROR GLASS REMOVAL**.) (See **OUTER MIRROR GLASS INSTALLATION**.)

   b. Upper outer mirror garnish (See **OUTER MIRROR GARNISH REMOVAL/INSTALLATION**.)

   c. Side turn light (See **SIDE TURN LIGHT REMOVAL/INSTALLATION**.)

   d. Front door trim (See **FRONT DOOR TRIM REMOVAL/INSTALLATION**.)

   e. Power outer mirror connector (See **POWER OUTER MIRROR REMOVAL/INSTALLATION**.)

3. Verify that the continuity between the power outer mirror terminals and side turn light terminals are as indicated in the table.

○——○ : Continuity

Test condition	Power outer mirror connector terminal		Side turn light connector terminal	
	E	G	A	B
Under any condition	○	———	○	
		○	———	○

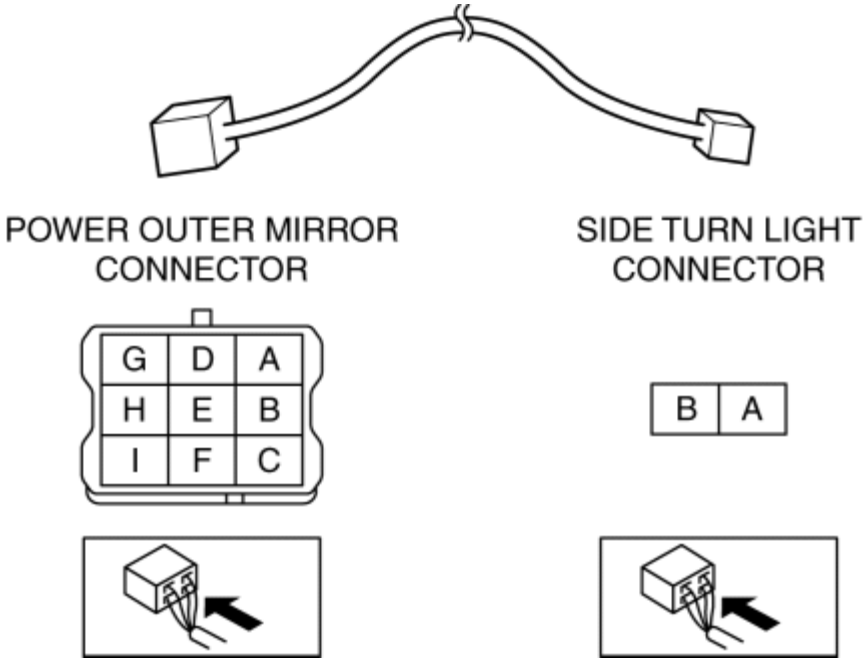

- If not as indicated in the table, replace the power outer mirror. (See **POWER OUTER MIRROR REMOVAL/INSTALLATION**.)

SIDE TURN LIGHT INSPECTION

2014 - Mazda3 - Body and Accessories

REAR COMBINATION LIGHT REMOVAL/INSTALLATION

NOTE:

- Fogging or condensation on the inside of the rear combination lights may occur due to a natural phenomenon occurring as a result of a temperature difference between the interior and exterior of the combination lights. However, it has no effect on the light performance because the temperature inside the rear combination lights rises after illuminating a rear turn light or a period of time has elapsed.

4SD

1. Disconnect the negative battery cable. (See **NEGATIVE BATTERY CABLE DISCONNECTION/CONNECTION [SKYACTIV-G 2.0, SKYACTIV-G 2.5]**.)

2. Partially peel back the trunk side trim. (See **TRUNK SIDE TRIM REMOVAL/INSTALLATION**.)

3. Disconnect the connectors.

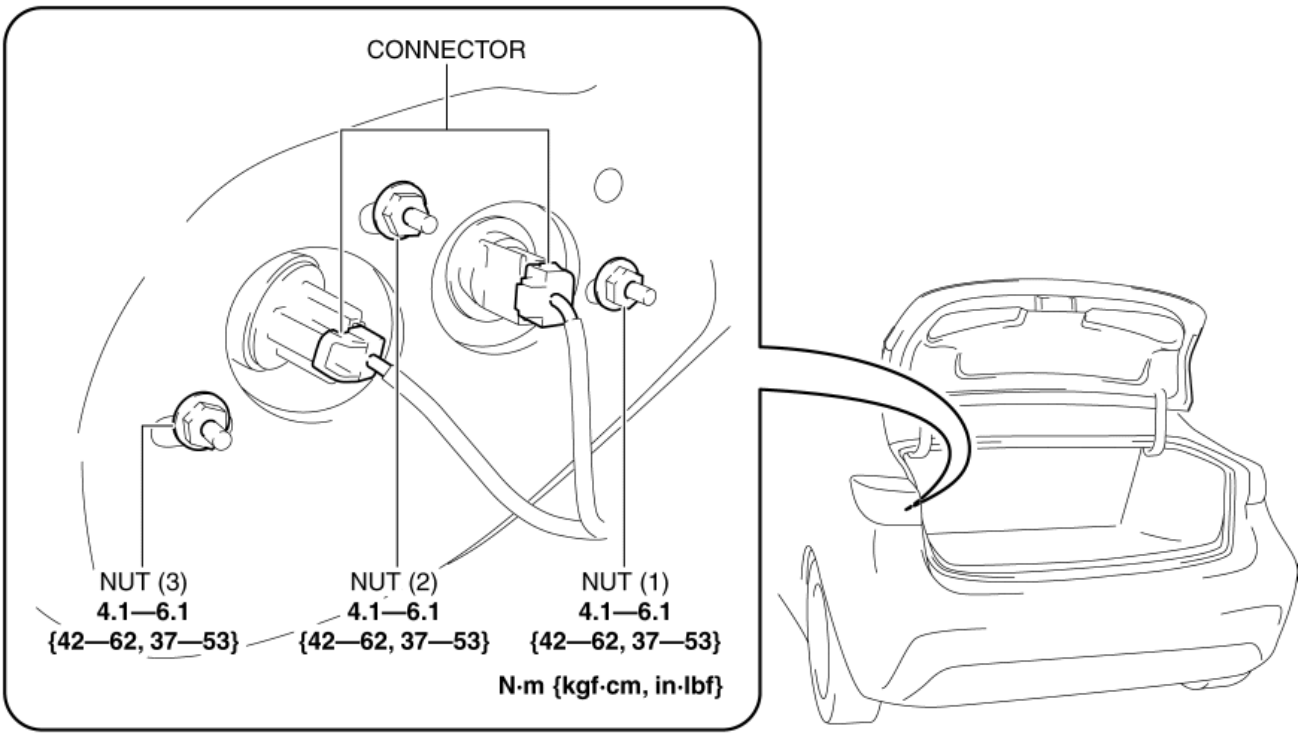

4. Remove the nuts in the order of (1), (2), and (3).

5. To prevent scratches or damage, affix protective tape to the position shown in the figure.

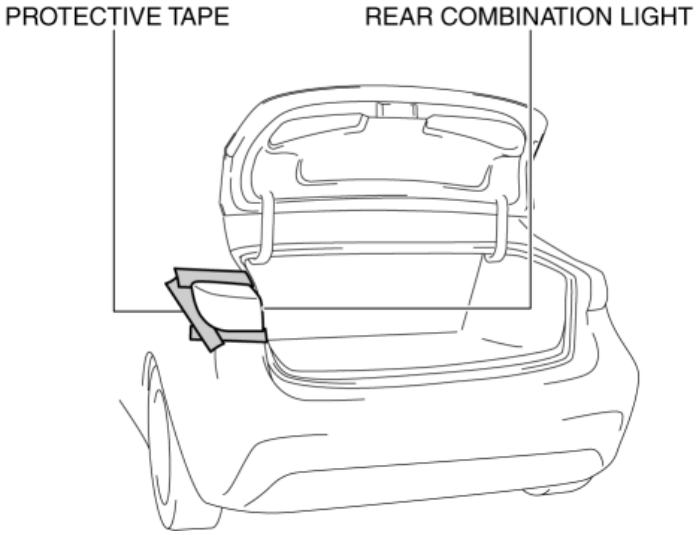

CAUTION:

- When removing the rear combination light from the body, it could interfere with the body and cause scratching or damage to the body. When removing the rear combination light from the body, apply protective tape to the body.

6. Pull the rear combination light in the direction of the arrow shown in the figure and pull out pin, stud bolts and hook from the body. (See **Grommet Installation Note**.)

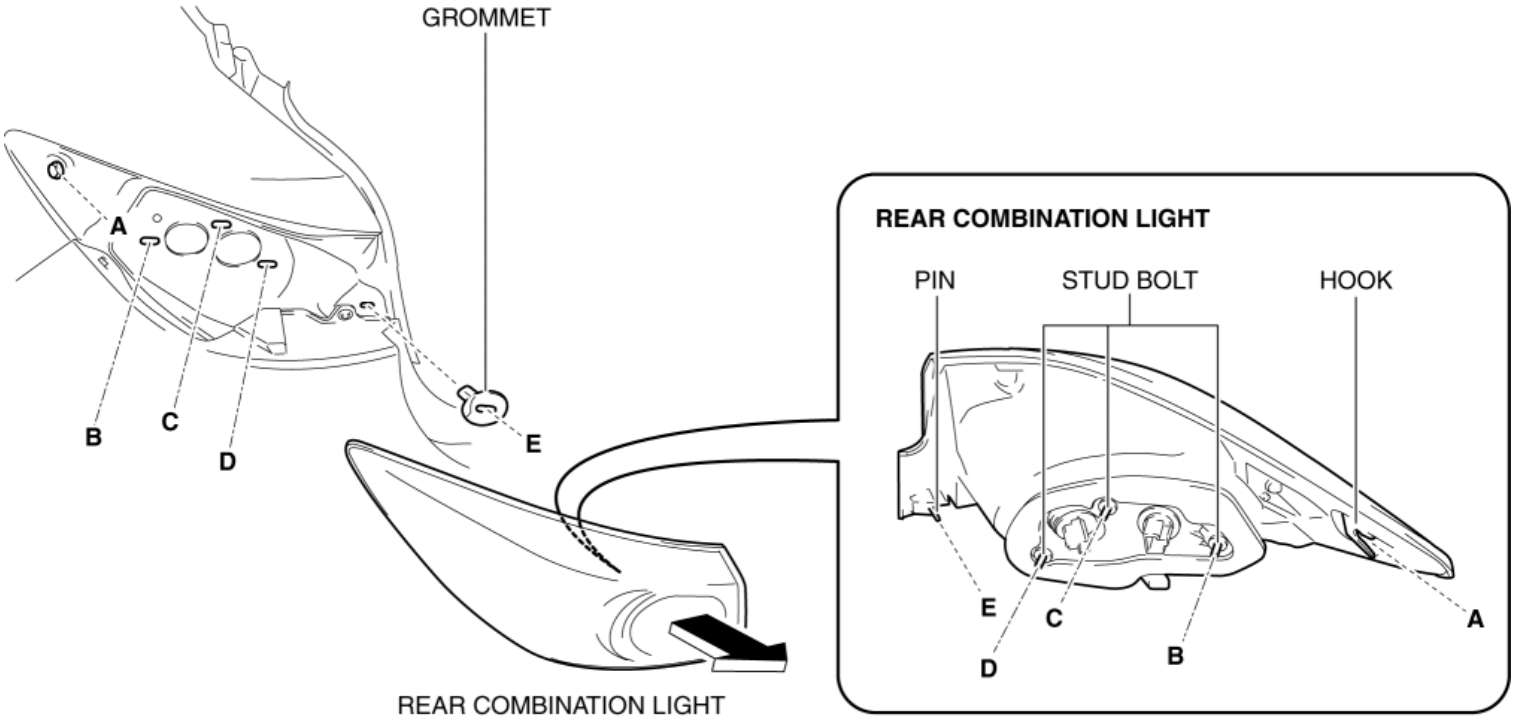

CAUTION:

- When removing the rear combination light from the body, the grommet could fall off and become lost. When removing the rear combination light from the body, verify that the grommet remains in the body.

7. Remove the rear combination light.

8. Install in the reverse order of removal.

5HB

1. Disconnect the negative battery cable. (See **NEGATIVE BATTERY CABLE DISCONNECTION/CONNECTION [SKYACTIV-G 2.0, SKYACTIV-G 2.5]**.)

2. Perform the following procedure:

Rear combination light (LH) removal:

- Remove the service hole cover (LH).

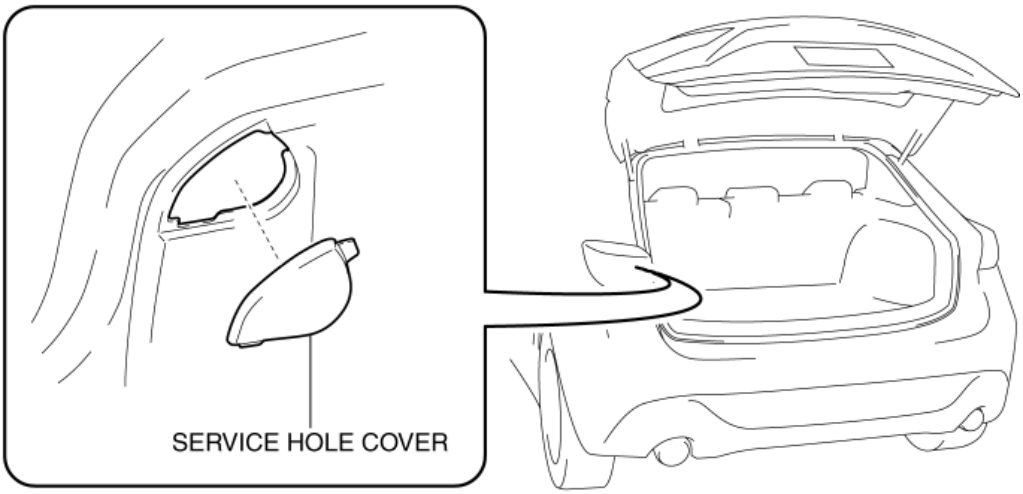

Rear combination light (RH) removal:

- Turn the knob counterclockwise and release the lock.

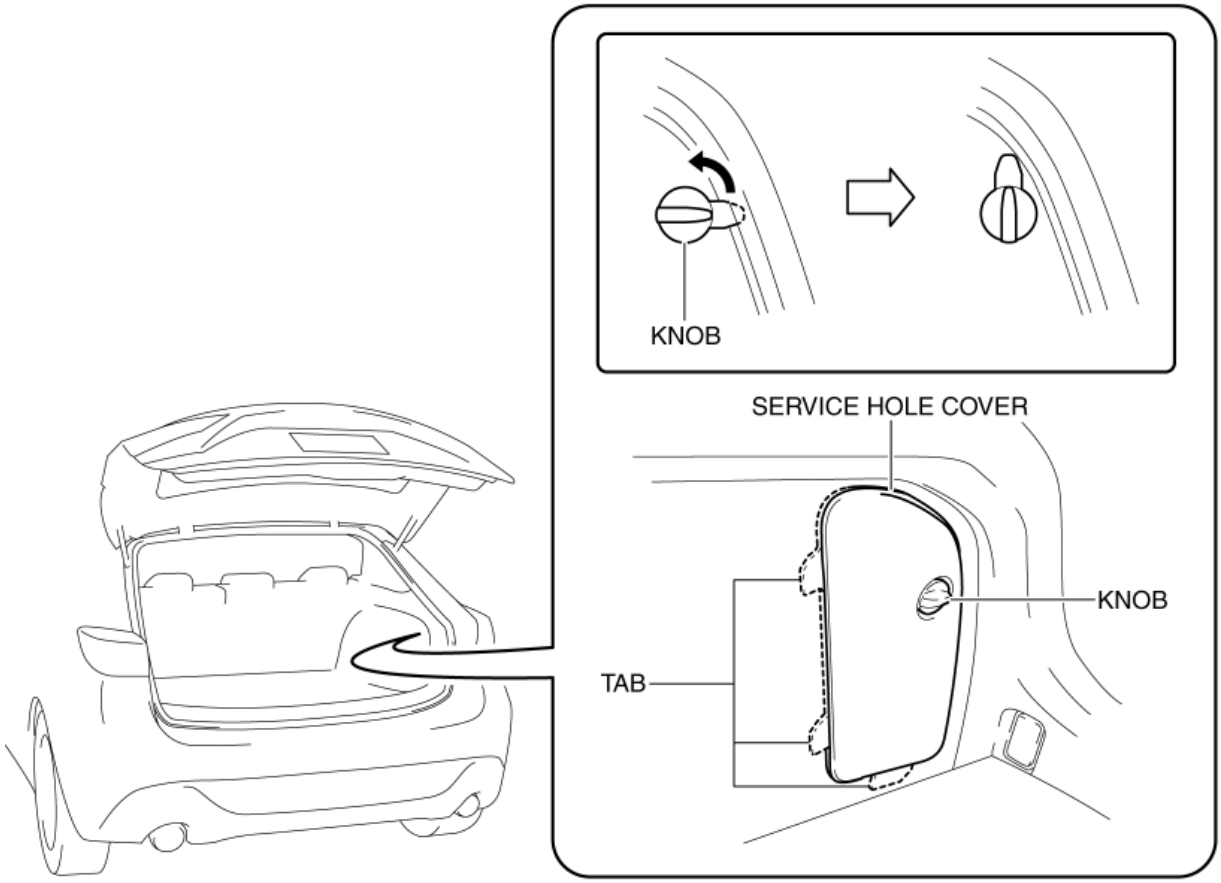

- Pull out the tabs of the service hole cover (RH) from the trunk side trim, and remove the service hole cover (RH).

3. Disconnect the connectors.

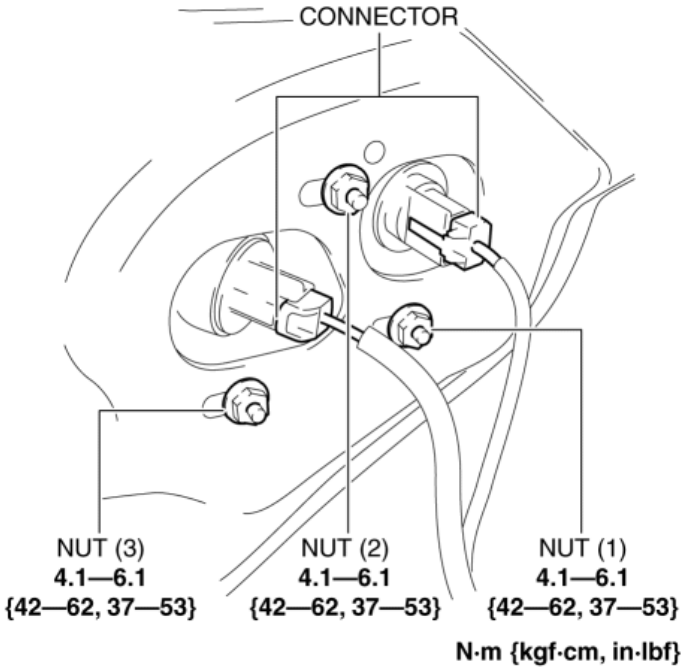

4. Remove the nuts in the order of (1), (2), and (3).

5. To prevent scratches or damage, affix protective tape to the position shown in the figure.

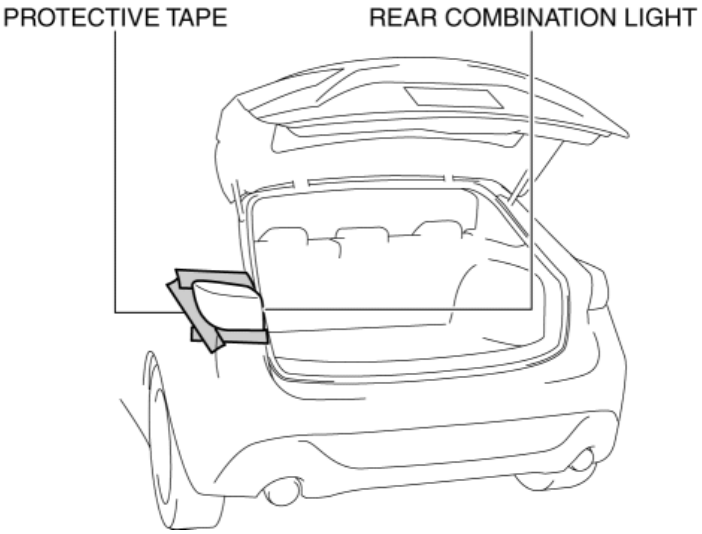

CAUTION:

- When removing the rear combination light from the body, it could interfere with the body and cause scratching or damage to the body. When removing the rear combination light from the body, apply protective tape to the body.

6. Pull the rear combination light in the direction of the arrow shown in the figure and pull out pin, stud bolts and hook from the body. (See **Grommet Installation Note**.)

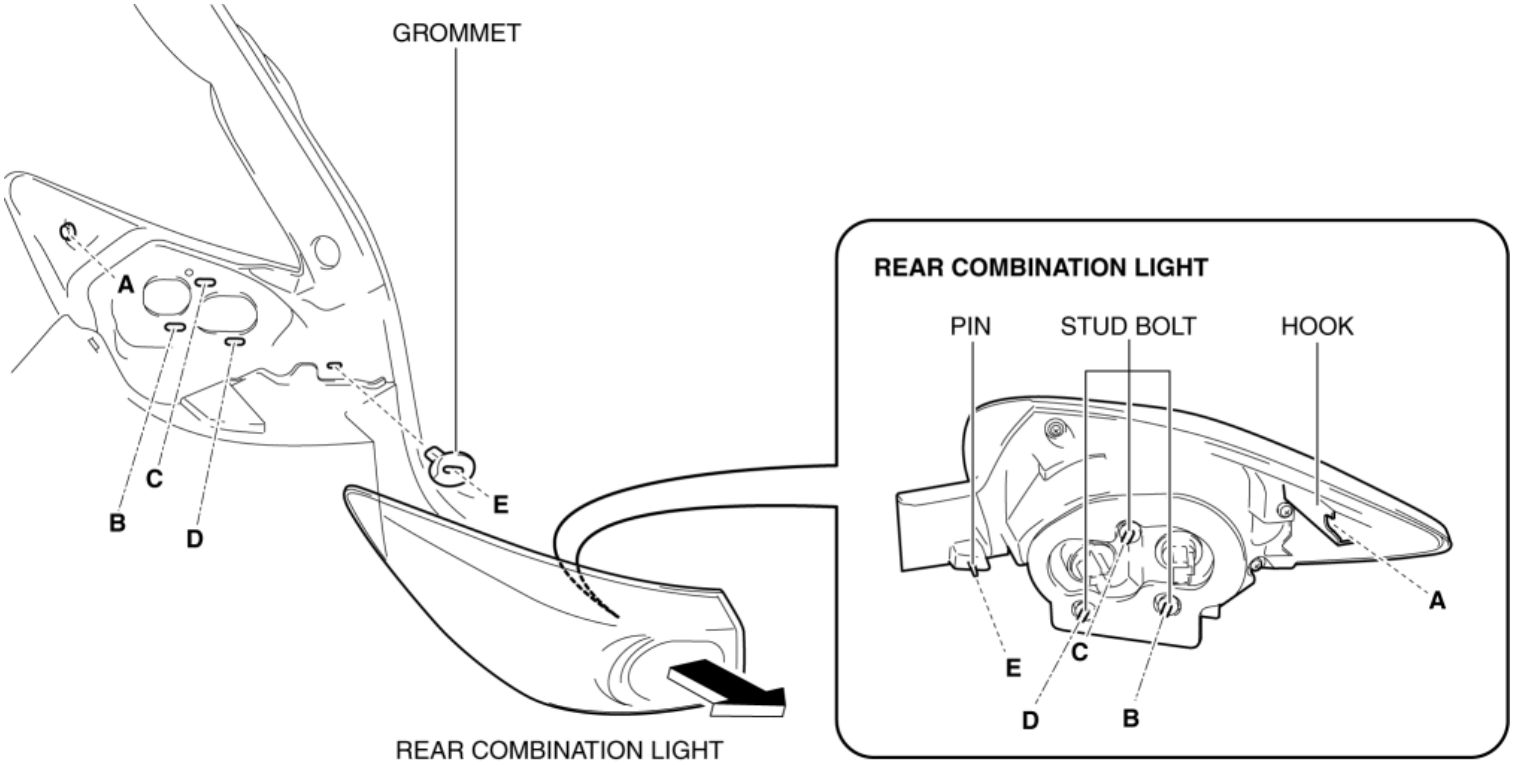

CAUTION:

- When removing the rear combination light from the body, a grommet could fall off and become lost. When removing the rear combination light from the body, verify that the grommet remains in the body.

7. Remove the rear combination light.

8. Install in the reverse order of removal.

Grommet Installation Note

1. Install the grommet with the arrow pointed outward of the vehicle.

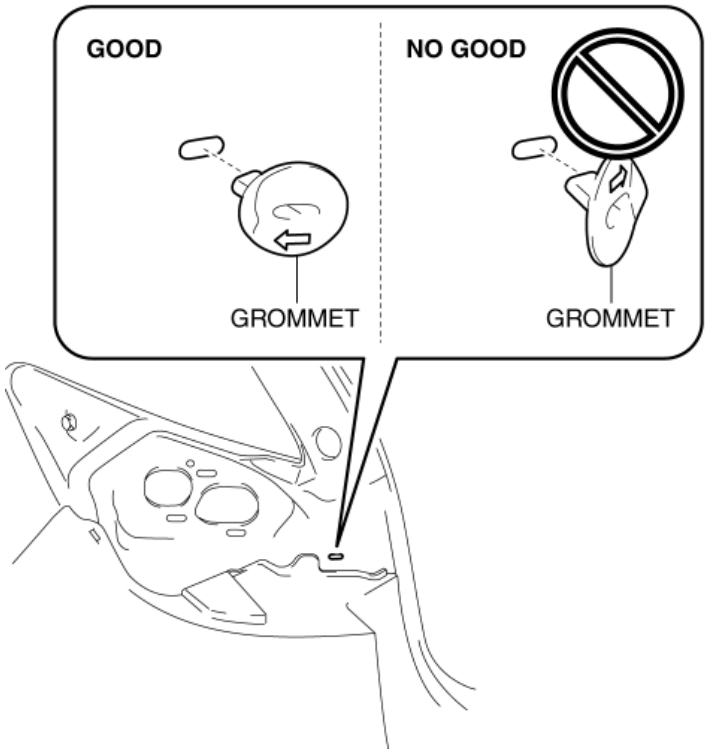

2014 - Mazda3 - Body and Accessories

BRAKE LIGHT/REAR SIDE MARKER LIGHT/TAILLIGHT BULB REMOVAL/INSTALLATION

NOTE:

- The LED-type brake light/rear side marker light/taillight cannot be replaced as a single unit. If there is any malfunction in the LED, replace the rear combination light as a single unit. (See **REAR COMBINATION LIGHT REMOVAL/INSTALLATION**.)

4SD

1. Disconnect the negative battery cable. (See **NEGATIVE BATTERY CABLE DISCONNECTION/CONNECTION [SKYACTIV-G 2.0, SKYACTIV-G 2.5]**.)
2. Partially peel back the trunk side trim. (See **TRUNK SIDE TRIM REMOVAL/INSTALLATION**.)
3. Turn the socket counterclockwise and remove it in the direction of arrow (1) shown in the figure.

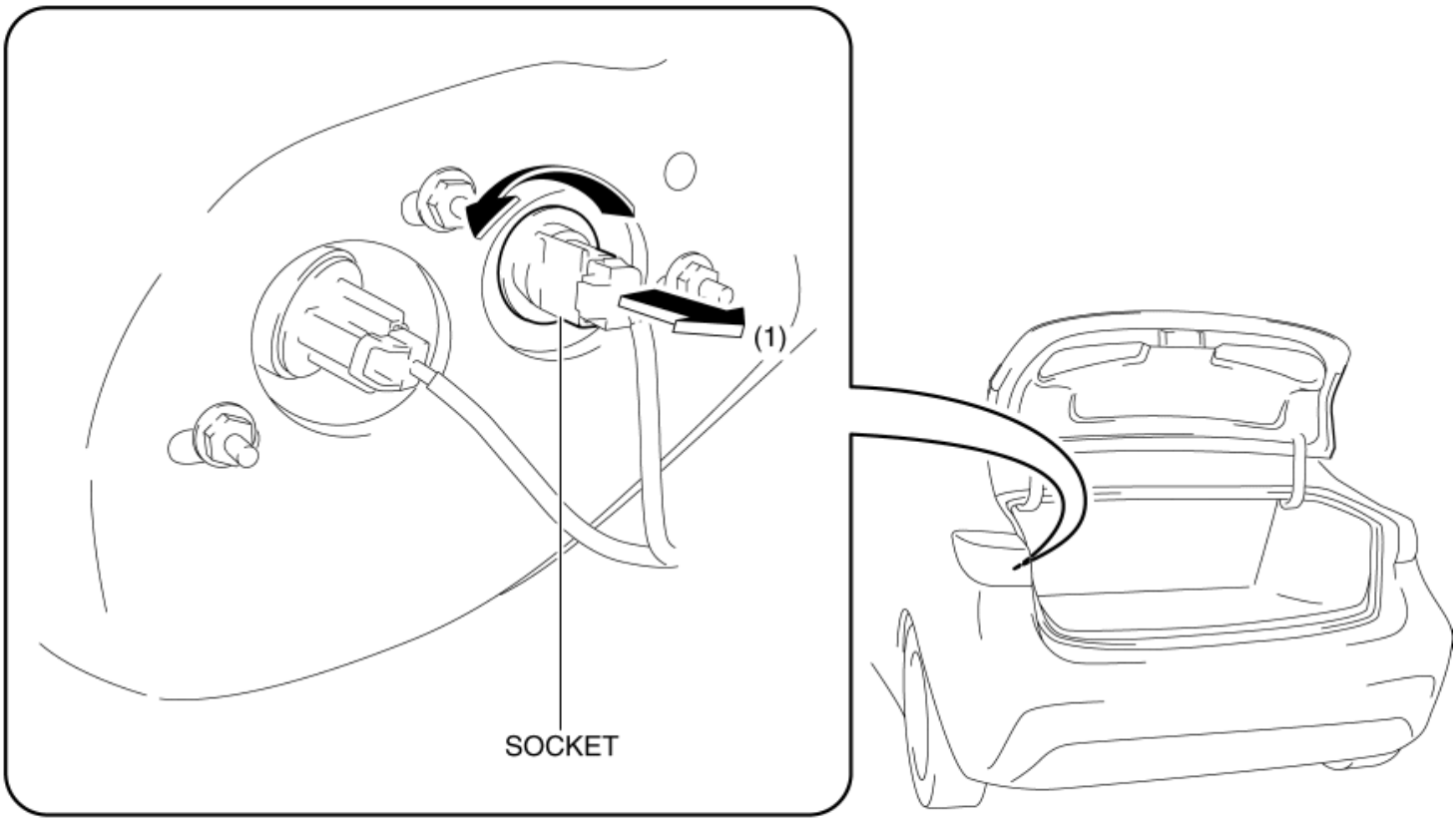

4. Remove the brake light/rear side marker light/taillight bulb.

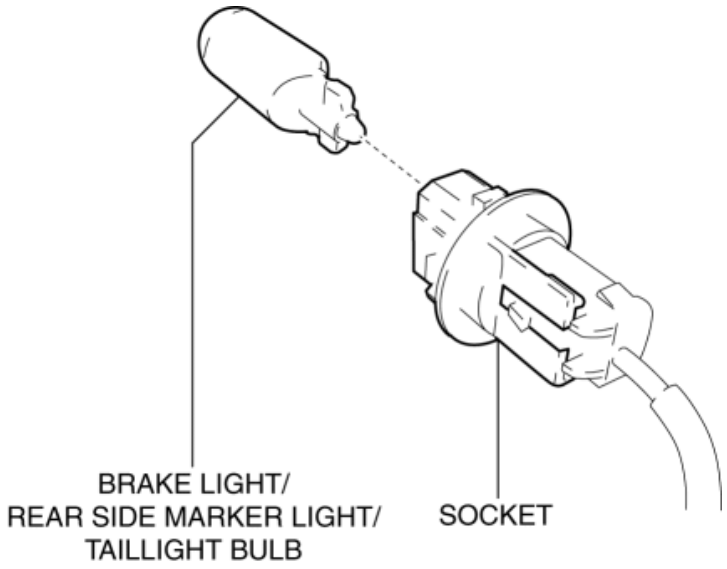

CAUTION:

- The bulb reaches high temperatures when illuminated. If there is oil or dirt on the surface of the bulb, excessive heat will build up and the life of the bulb will be shortened. When replacing the bulb, hold the metal flange, not the glass.

5. Install in the reverse order of removal.

5HB

1. Disconnect the negative battery cable. (See **NEGATIVE BATTERY CABLE DISCONNECTION/CONNECTION [SKYACTIV-G 2.0, SKYACTIV-G 2.5]**.)

2. Perform the following procedure:

When removing brake light/rear side marker light/taillight bulb (LH):

- Remove the service hole cover (LH).

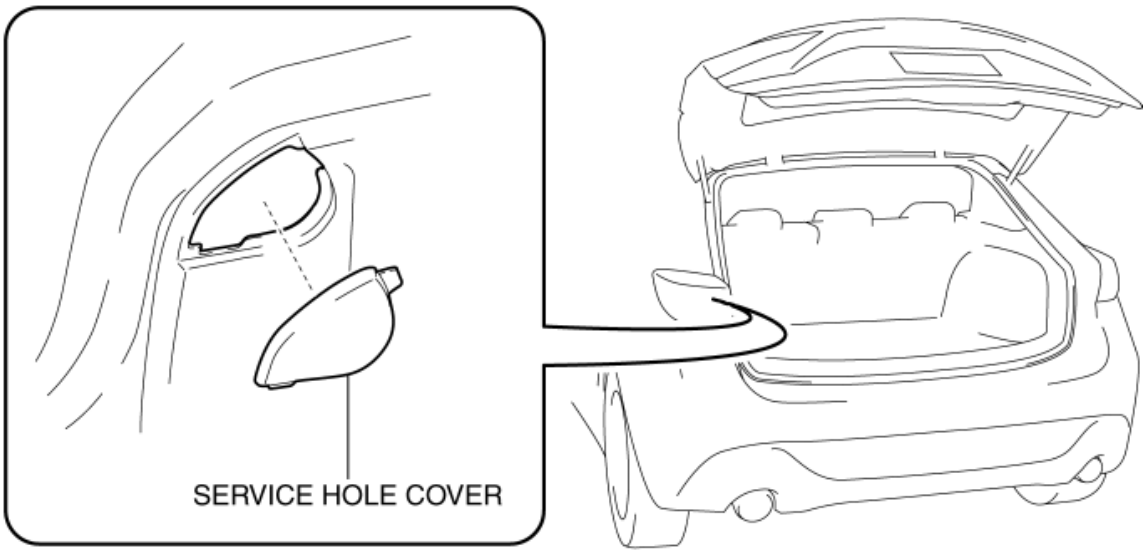

When removing brake light/rear side marker light/taillight bulb (RH):

- Turn the knob counterclockwise and release the lock.

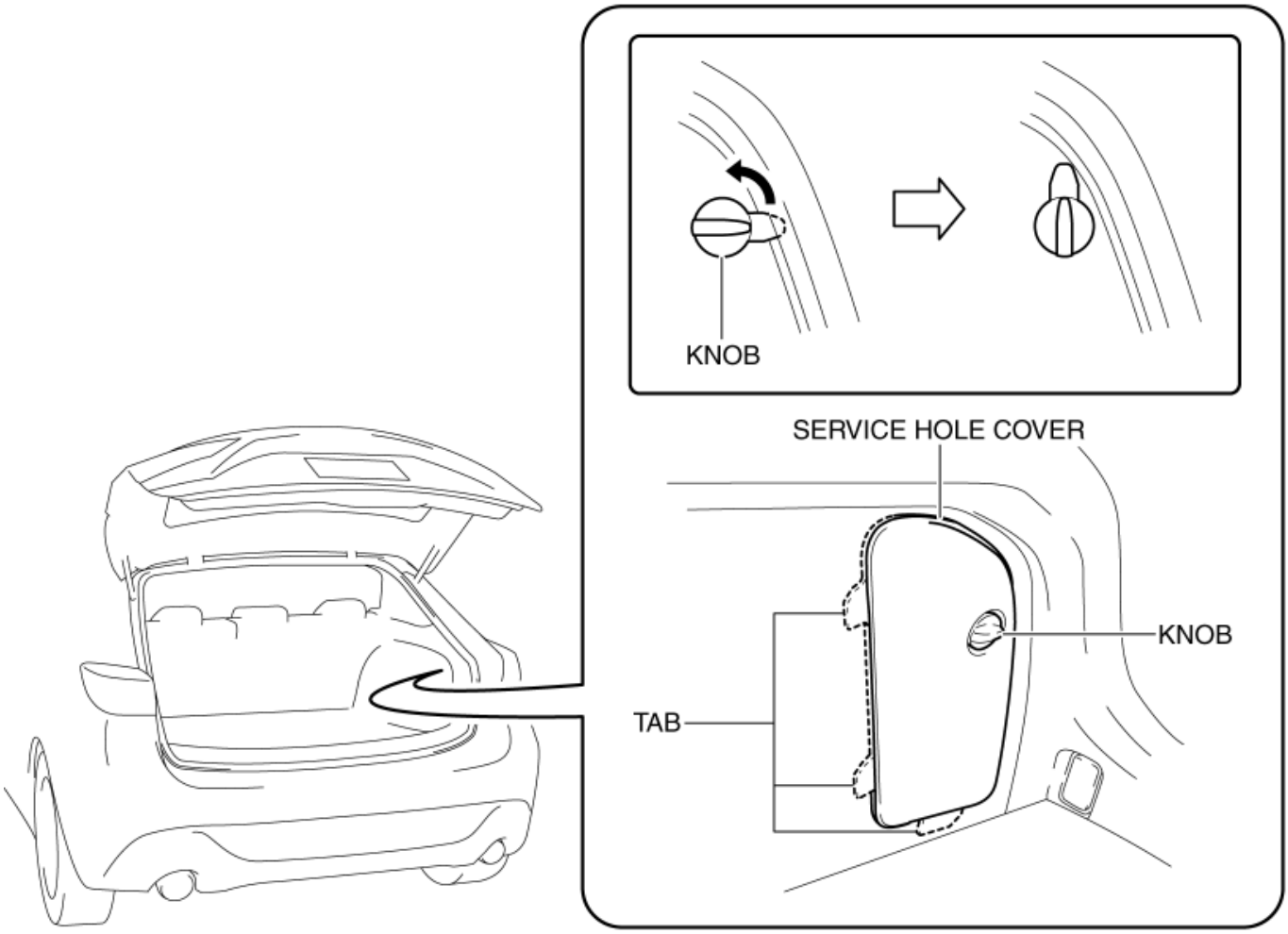

- Pull out the tabs of the service hole cover (RH) from the trunk side trim, and remove the service hole cover (RH).

3. Turn the socket counterclockwise and remove it in the direction of arrow (1) shown in the figure.

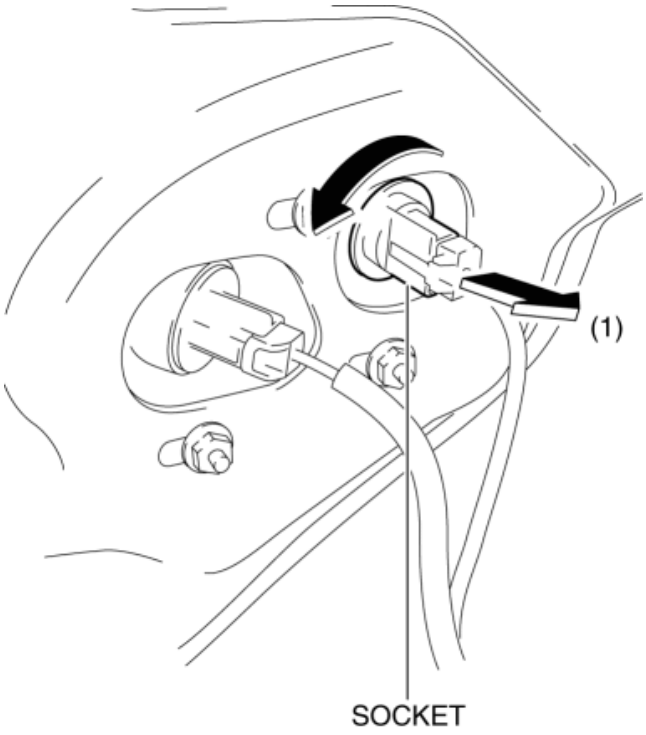

4. Remove the brake light/rear side marker light/taillight bulb.

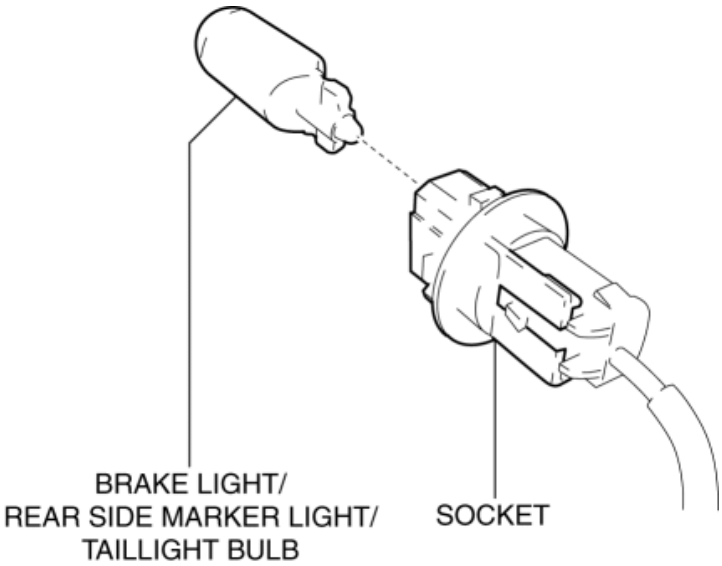

CAUTION:

- The bulb reaches high temperatures when illuminated. If there is oil or dirt on the surface of the bulb, excessive heat will build up and the life of the bulb will be shortened. When replacing the bulb, hold the metal flange, not the glass.

5. Install in the reverse order of removal.

2014 - Mazda3 - Body and Accessories

REAR TURN LIGHT BULB REMOVAL/INSTALLATION

4SD

1. Disconnect the negative battery cable. (See **NEGATIVE BATTERY CABLE DISCONNECTION/CONNECTION [SKYACTIV-G 2.0, SKYACTIV-G 2.5]**.)
2. Partially peel back the trunk side trim. (See **TRUNK SIDE TRIM REMOVAL/INSTALLATION**.)
3. Turn the socket counterclockwise and remove it in the direction of arrow (1) shown in the figure.

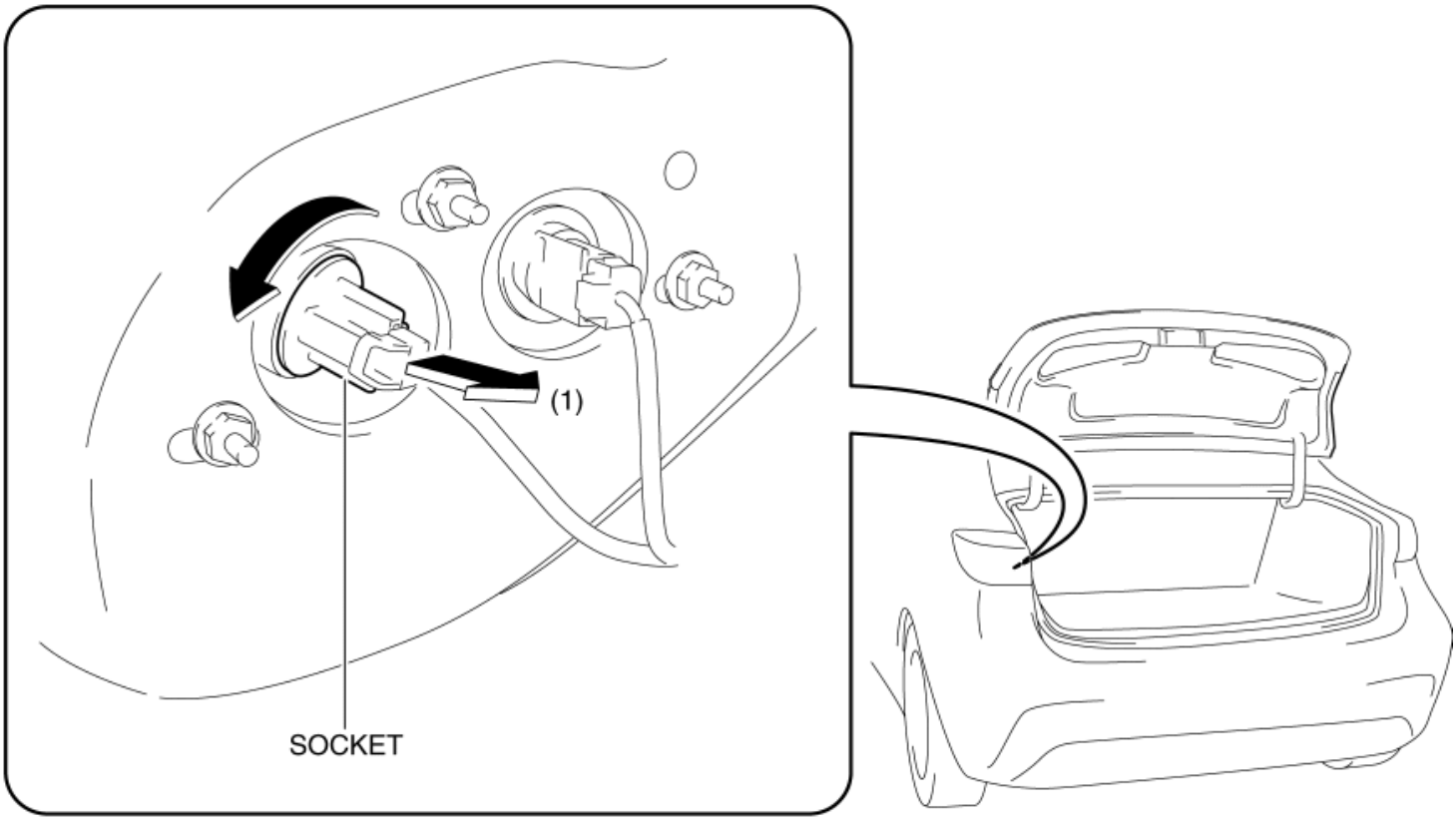

4. Remove the rear turn light bulb.

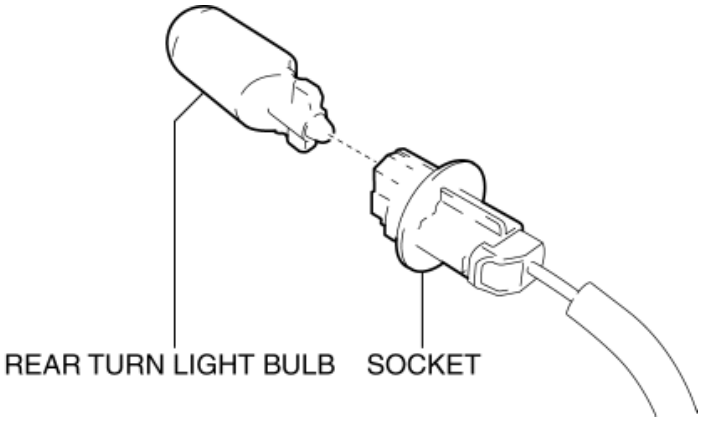

CAUTION:

- The bulb reaches high temperatures when illuminated. If there is oil or dirt on the surface of the bulb, excessive heat will build up and the life of the bulb will be shortened. When replacing the bulb, hold the metal flange, not the glass.

5. Install in the reverse order of removal.

5HB

1. Disconnect the negative battery cable. (See **NEGATIVE BATTERY CABLE DISCONNECTION/CONNECTION [SKYACTIV-G 2.0, SKYACTIV-G 2.5]**.)

2. Perform the following procedure:

When removing rear turn light bulb (LH):

- Remove the service hole cover (LH).

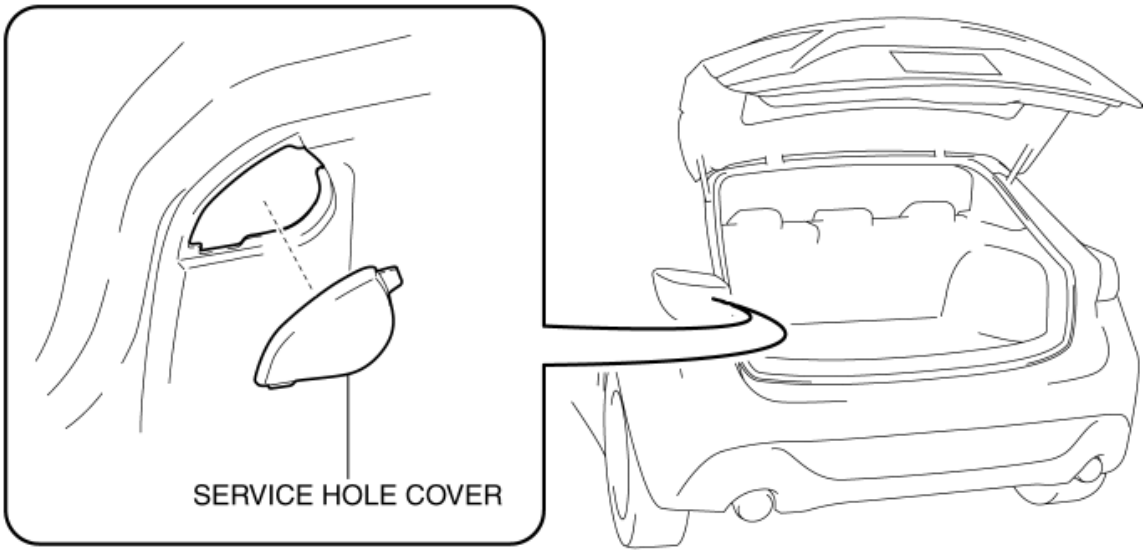

When removing rear turn light bulb (RH):

- Turn the knob counterclockwise and release the lock.

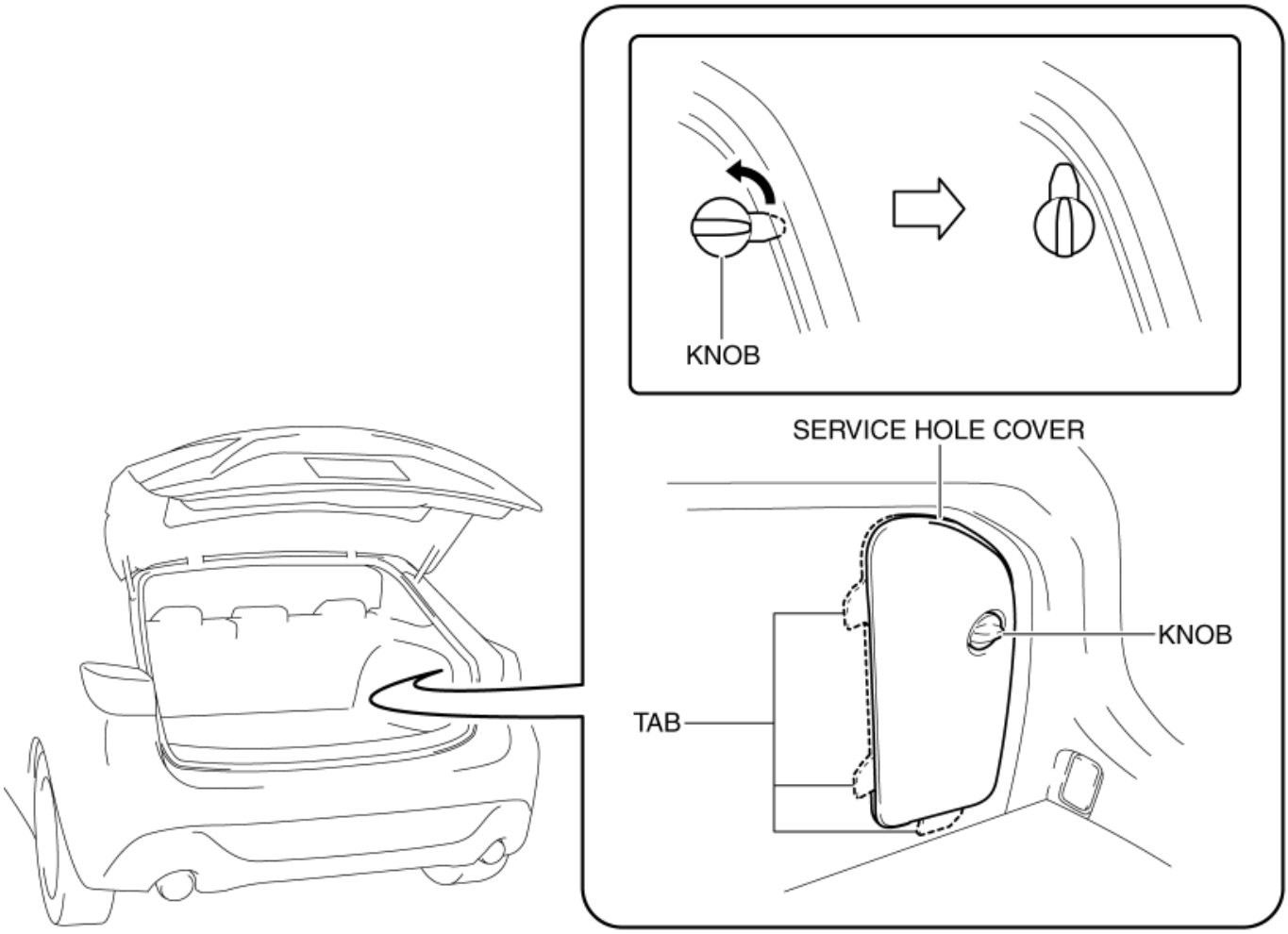

- Pull the tabs of the service hole cover (RH) from the trunk side trim and remove the service hole cover (RH).

3. Turn the socket counterclockwise and remove it in the direction of arrow (1) shown in the figure.

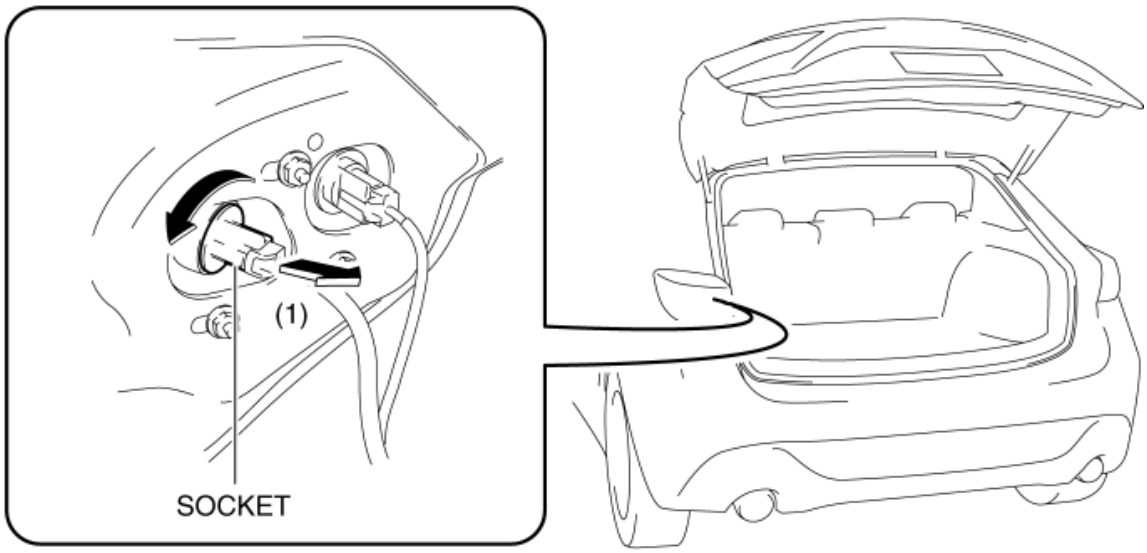

4. Remove the rear turn light bulb.

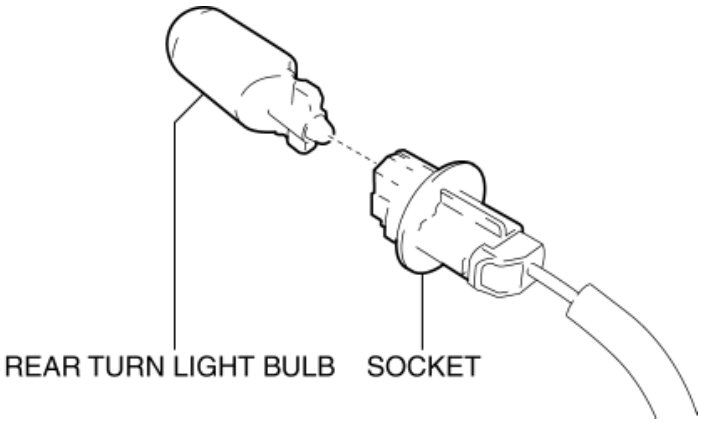

CAUTION:

- The bulb reaches high temperatures when illuminated. If there is oil or dirt on the surface of the bulb, excessive heat will build up and the life of the bulb will be shortened. When replacing the bulb, hold the metal flange, not the glass.

5. Install in the reverse order of removal.

2014 - Mazda3 - Body and Accessories

BACK-UP LIGHT BULB REMOVAL/INSTALLATION

4SD

1. Disconnect the negative battery cable. (See **NEGATIVE BATTERY CABLE DISCONNECTION/CONNECTION [SKYACTIV-G 2.0, SKYACTIV-G 2.5]**.)
2. Partially peel back the trunk lid trim. (See **TRUNK LID TRIM REMOVAL/INSTALLATION**.)
3. Disconnect the connector.

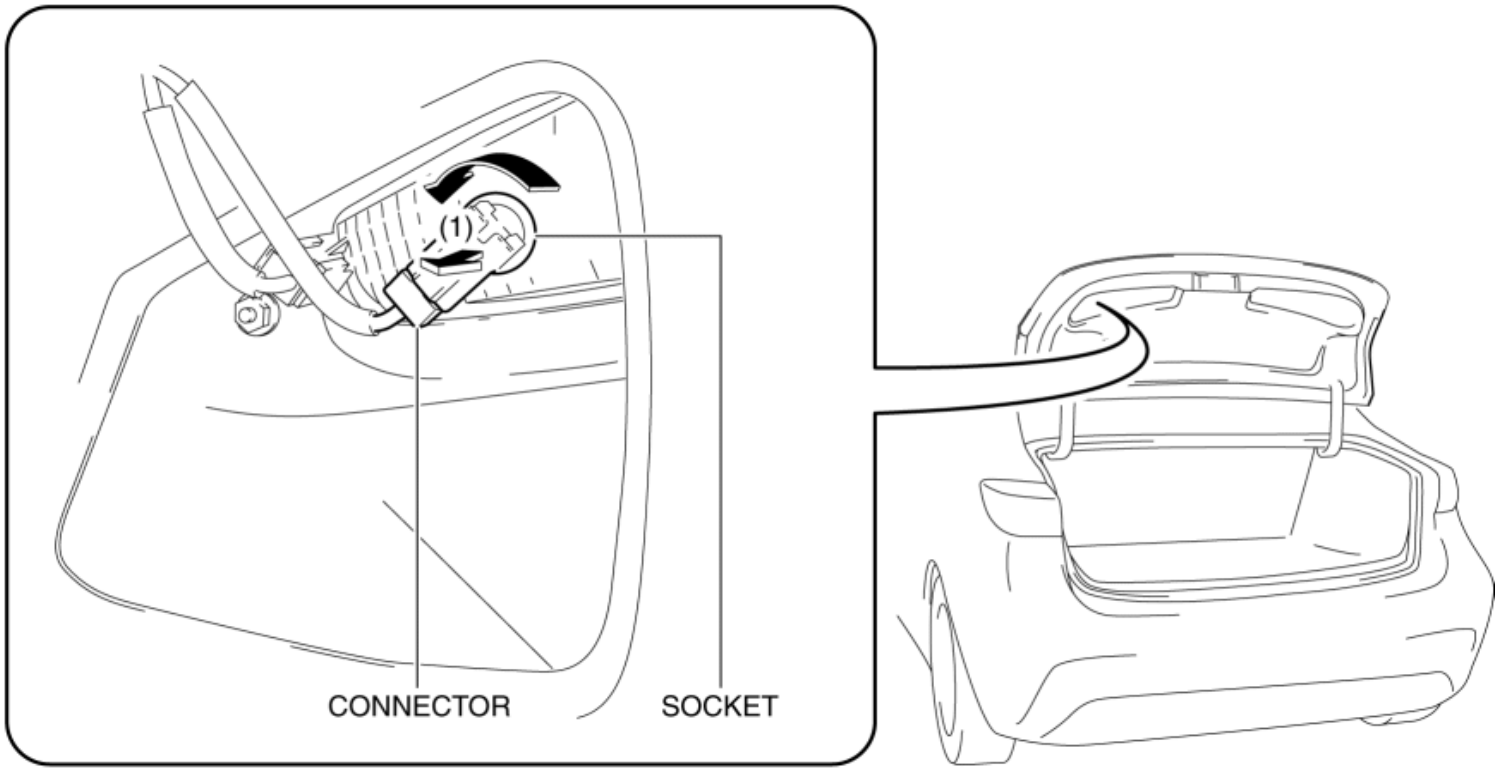

4. Turn the socket counterclockwise and remove it in the direction of arrow (1) shown in the figure.
5. Remove the back-up light bulb.

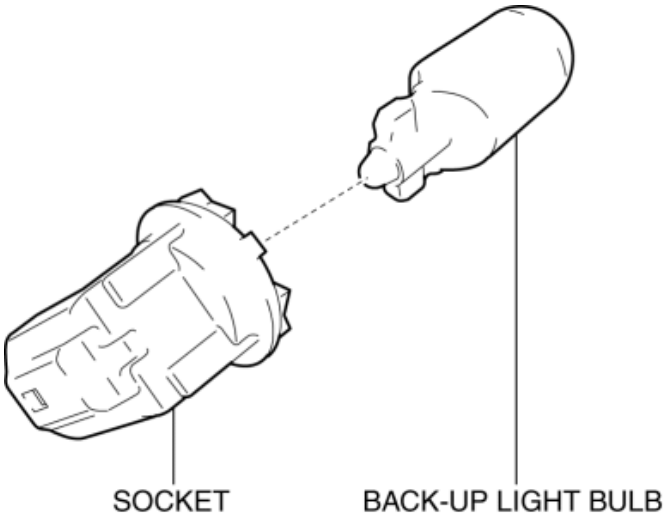

CAUTION:

- The bulb reaches high temperatures when illuminated. If there is oil or dirt on the surface of the bulb, excessive heat will build up and the life of the bulb will be shortened. When replacing the bulb, hold the metal flange, not the glass.

6. Install in the reverse order of removal.

5HB

1. Disconnect the negative battery cable. (See **NEGATIVE BATTERY CABLE DISCONNECTION/CONNECTION [SKYACTIV-G 2.0, SKYACTIV-G 2.5]**.)

2. Remove the service hole cover.

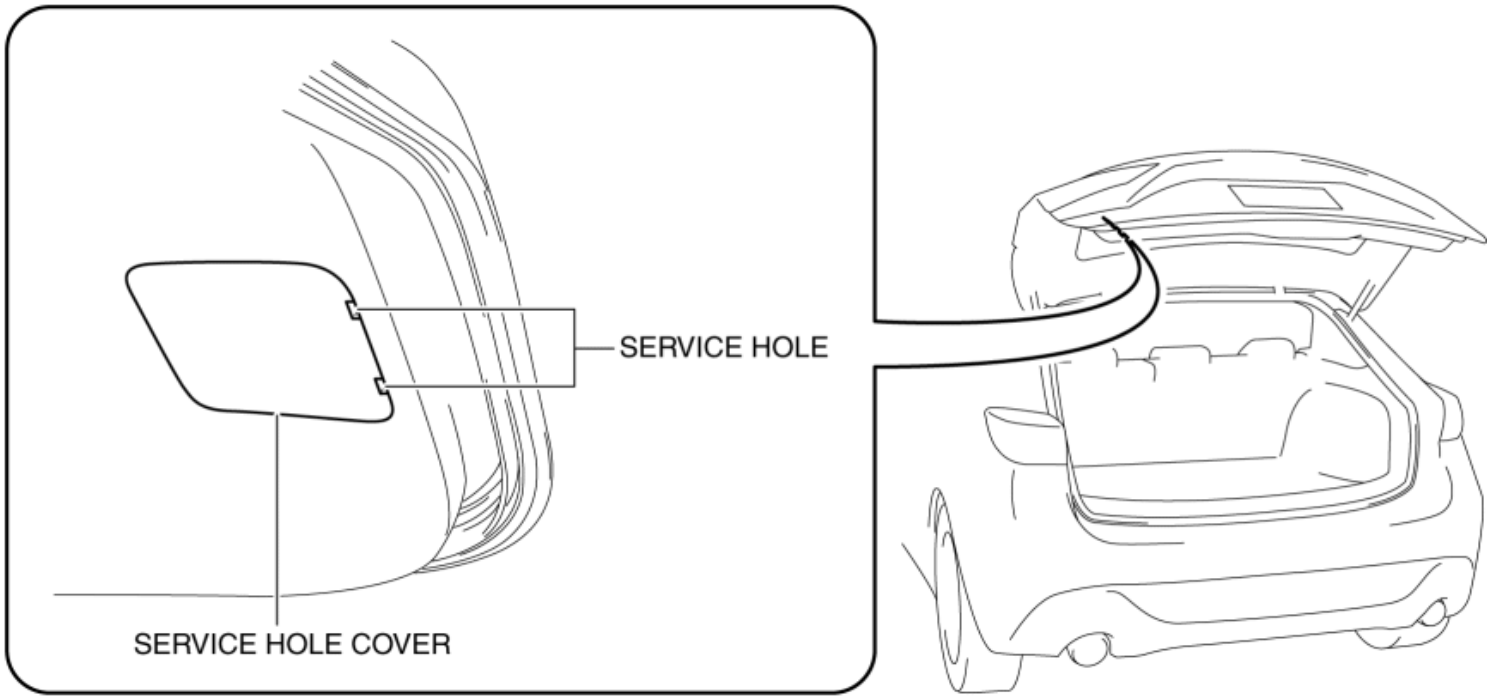

3. Disconnect the connector.

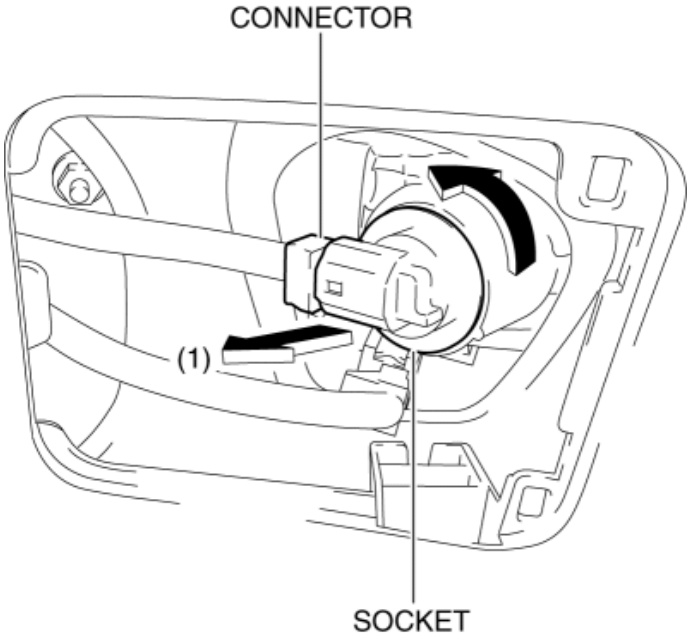

4. Turn the socket counterclockwise and remove it in the direction of arrow (1) shown in the figure.

5. Remove the back-up light bulb.

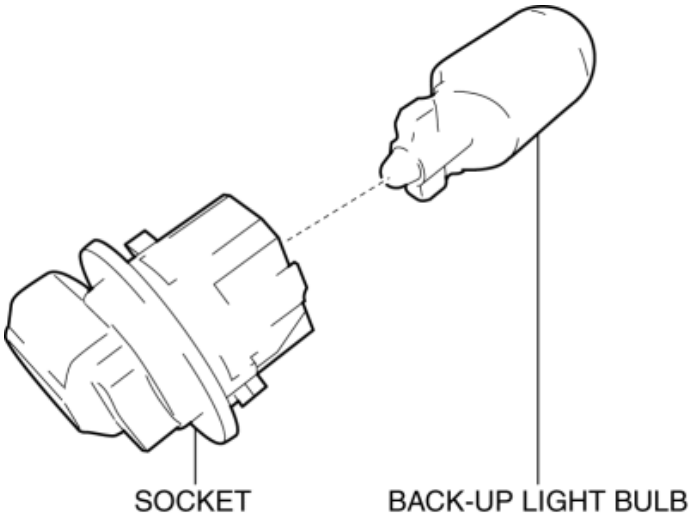

CAUTION:

- The bulb reaches high temperatures when illuminated. If there is oil or dirt on the surface of the bulb, excessive heat will build up and the life of the bulb will be shortened. When replacing the bulb, hold the metal flange, not the glass.

6. Install in the reverse order of removal.

2014 - Mazda3 - Body and Accessories

TRUNK LID LIGHT REMOVAL/INSTALLATION

NOTE:

- Fogging or condensation may occur on the inside of the trunk lid light because of a natural phenomenon occurring as a result of a temperature difference between the interior and exterior of the trunk lid light. However, it has no effect on the light performance because the phenomenon is resolved when temperature inside the trunk lid light rises after the back-up light turns on or a period of time has elapsed.

1. Disconnect the negative battery cable. (See **NEGATIVE BATTERY CABLE DISCONNECTION/CONNECTION [SKYACTIV-G 2.0, SKYACTIV-G 2.5]**.)

2. Partially peel back the trunk lid trim. (See **TRUNK LID TRIM REMOVAL/INSTALLATION**.)

3. Disconnect the connector.

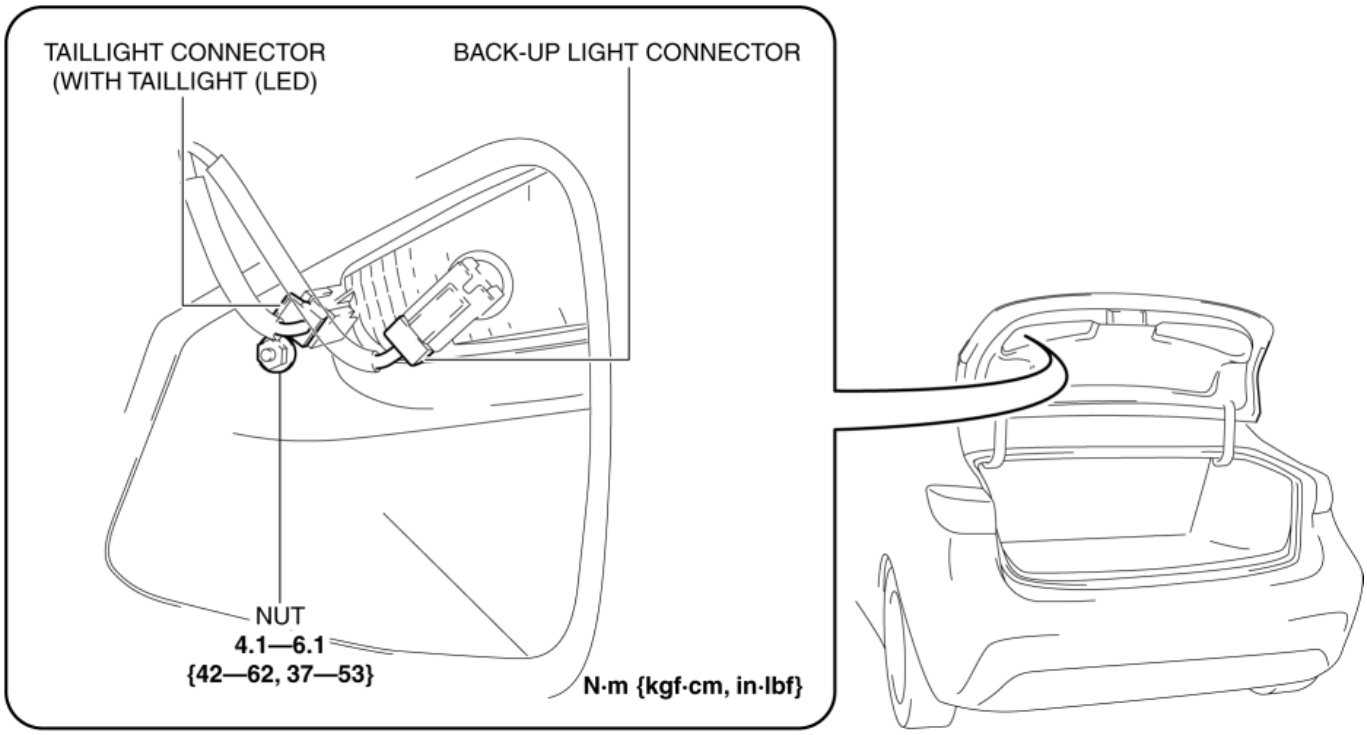

4. Remove the nut.

5. Insert the remover tool into the service hole at the position shown in the figure.

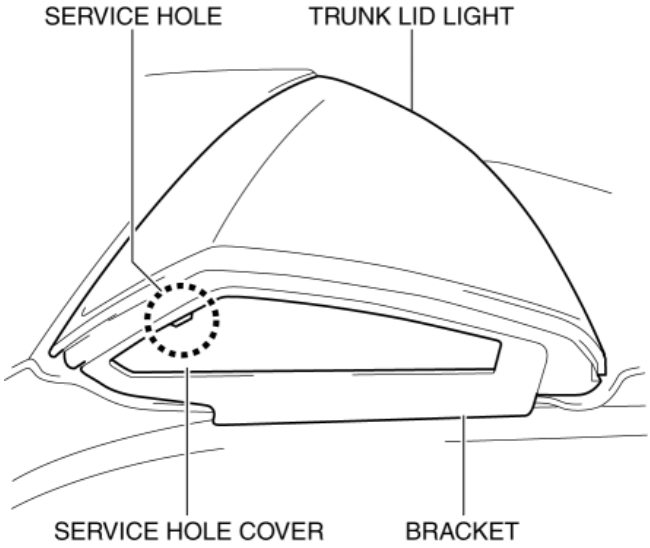

6. Move the remover tool in the direction of arrow (1) shown in the figure to detach the tab of the service hole cover from the bracket.

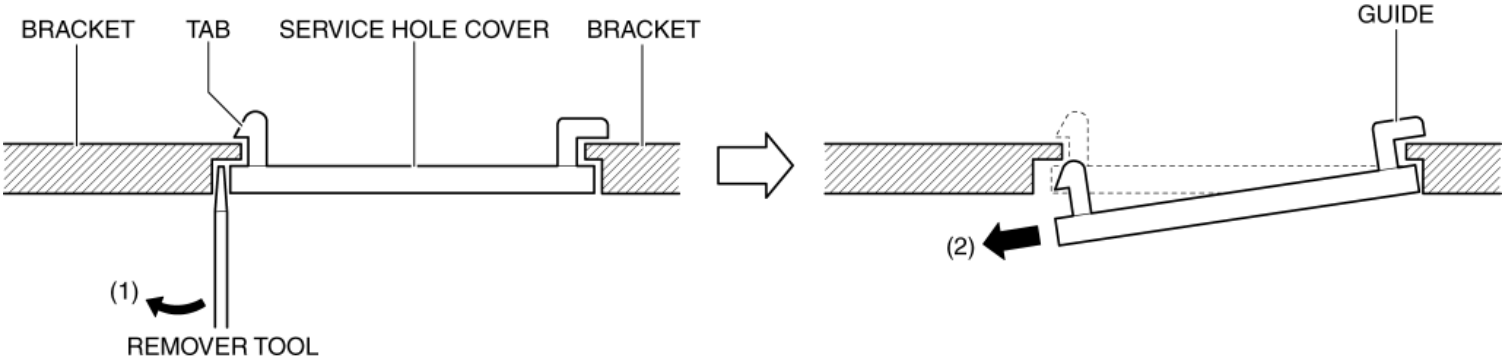

7. Pull the guide of the service hole cover in the direction of arrow (2) shown in the figure and remove the service hole cover.

8. Insert the remover tool into the gap between tab (1) of the bracket and the trunk lid light.

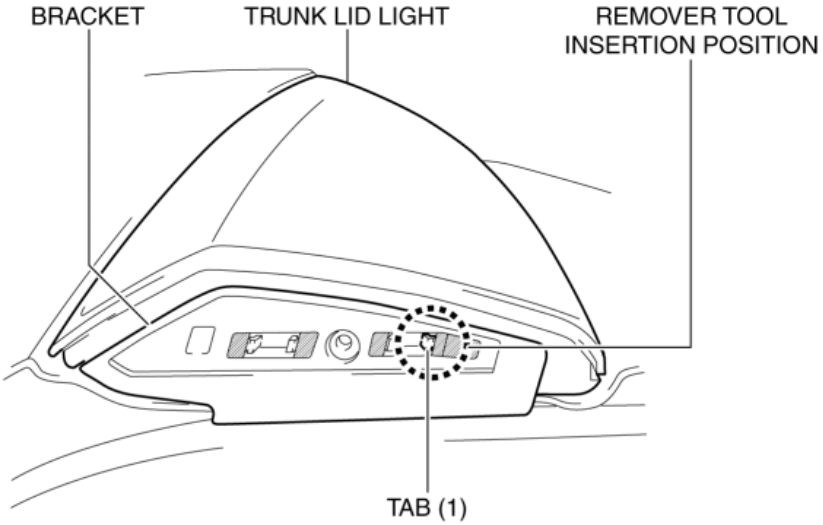

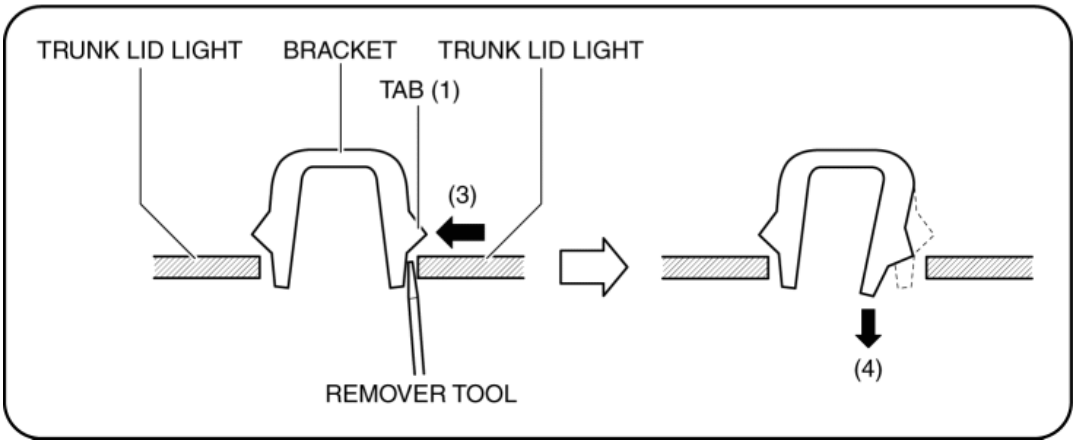

9. While pressing tab (1) of the bracket in the direction of arrow (3) shown in the figure using the remover tool, pull the bracket in the direction of arrow (4) to detach tab (1) of the bracket from the trunk lid light.

10. Insert the remover tool into the gap between tab (2) of the bracket and the trunk lid light.

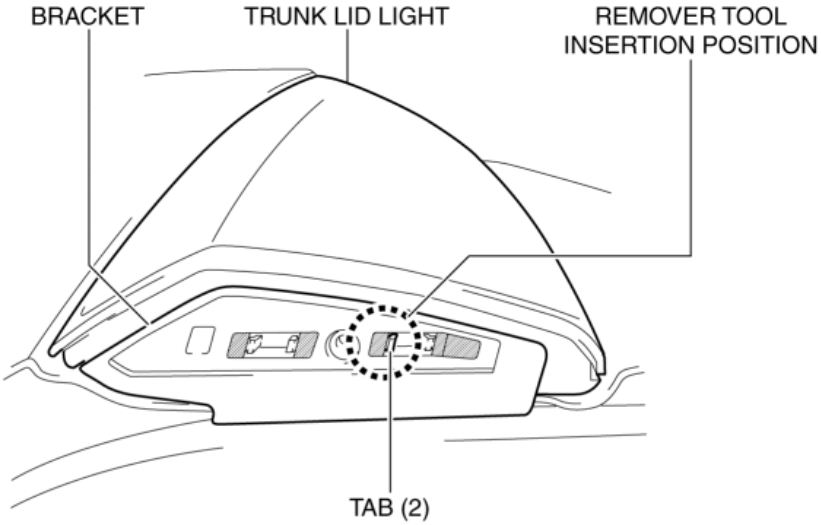

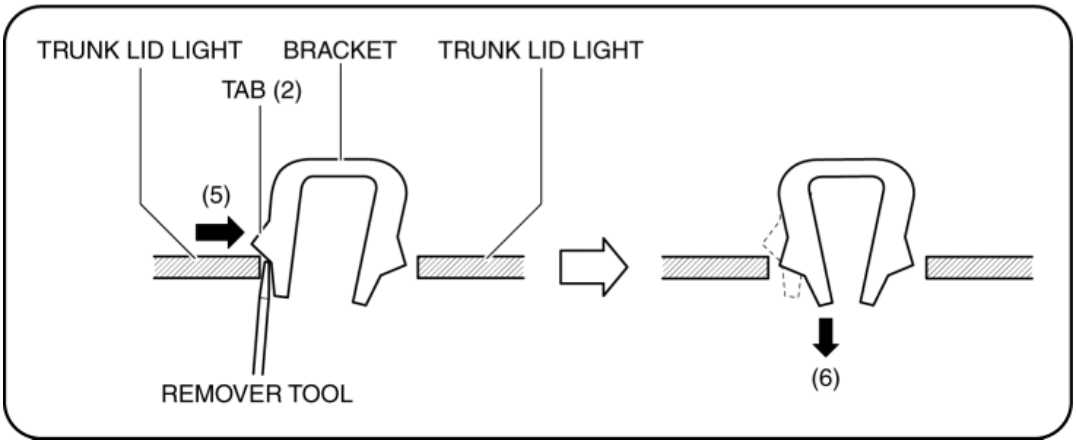

11. While pressing tab (2) of the bracket in the direction of arrow (5) shown in the figure using the remover tool, pull the bracket in the direction of arrow (6) to detach tab (2) of the bracket from the trunk lid light.

12. Insert the remover tool into the gap between tab (3) of the bracket and the trunk lid light.

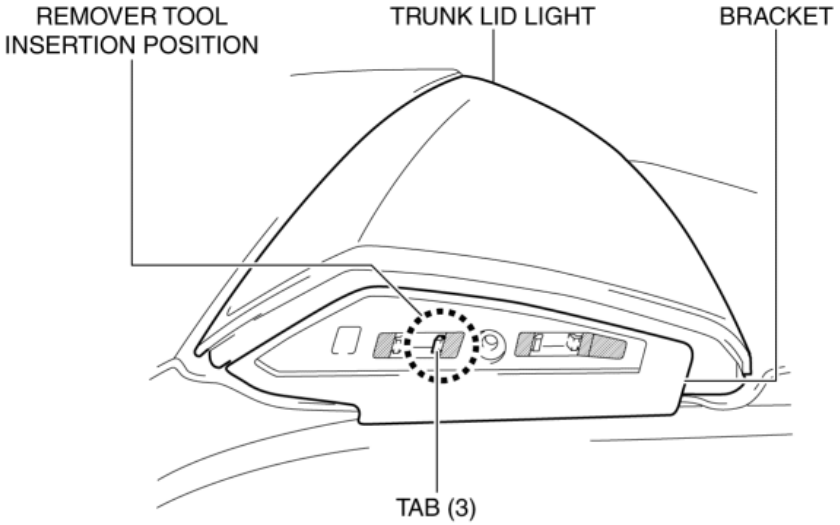

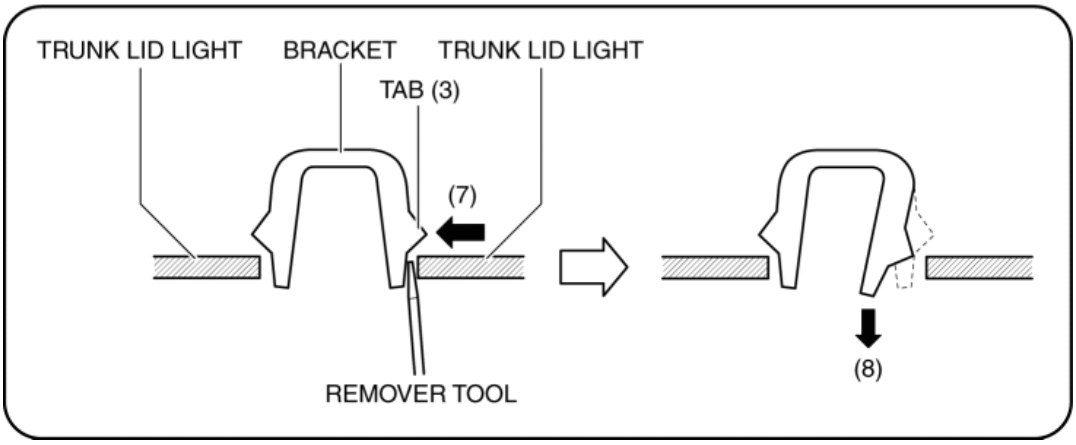

13. While pressing tab (3) of the bracket in the direction of arrow (7) shown in the figure using the remover tool, pull the bracket in the direction of arrow (8) to detach tab (3) of the bracket from the trunk lid light.

14. Insert the remover tool into the gap between tab (4) of the bracket and the trunk lid light.

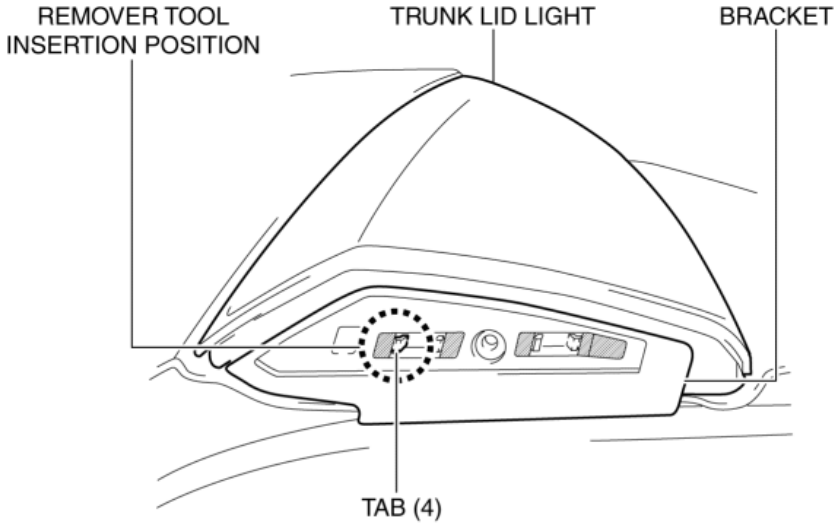

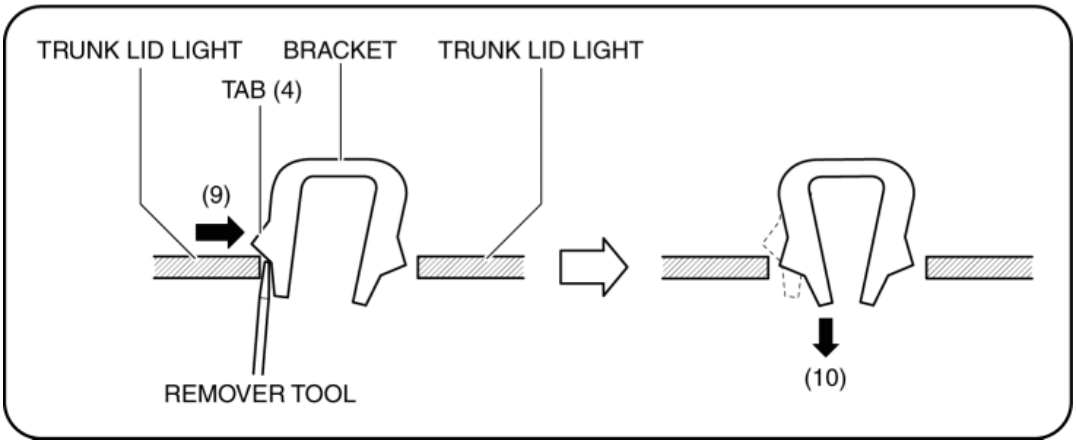

15. While pressing tab (4) of the bracket in the direction of arrow (9) shown in the figure using the remover tool, pull the bracket in the direction of arrow (10) to detach tab (4) of the bracket from the trunk lid light.

16. Detach all the tabs of the bracket from the trunk lid light and remove the bracket from the trunk lid light.

17. To prevent scratches or damage, affix protective tape to the position shown in the figure.

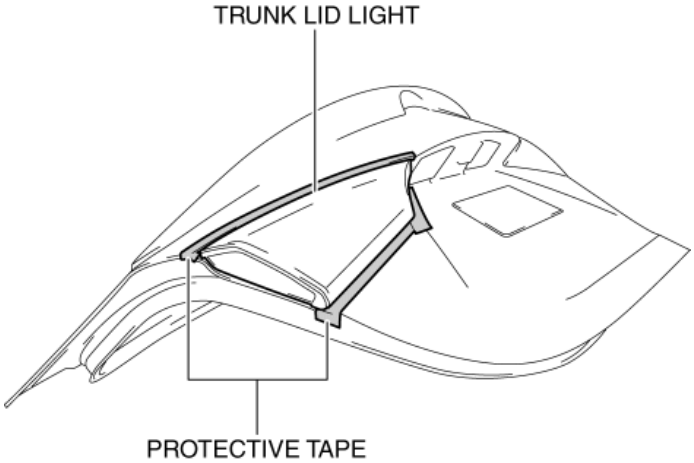

CAUTION:

- When removing the trunk lid light from the trunk lid, the trunk lid light could contact the trunk lid and damage it. Apply protective tape to the trunk lid before removing the trunk lid light from the trunk lid.

18. Pull the trunk lid light in the direction of the arrow shown in the figure and pull out the guides, pin and stud bolt from the trunk lid.

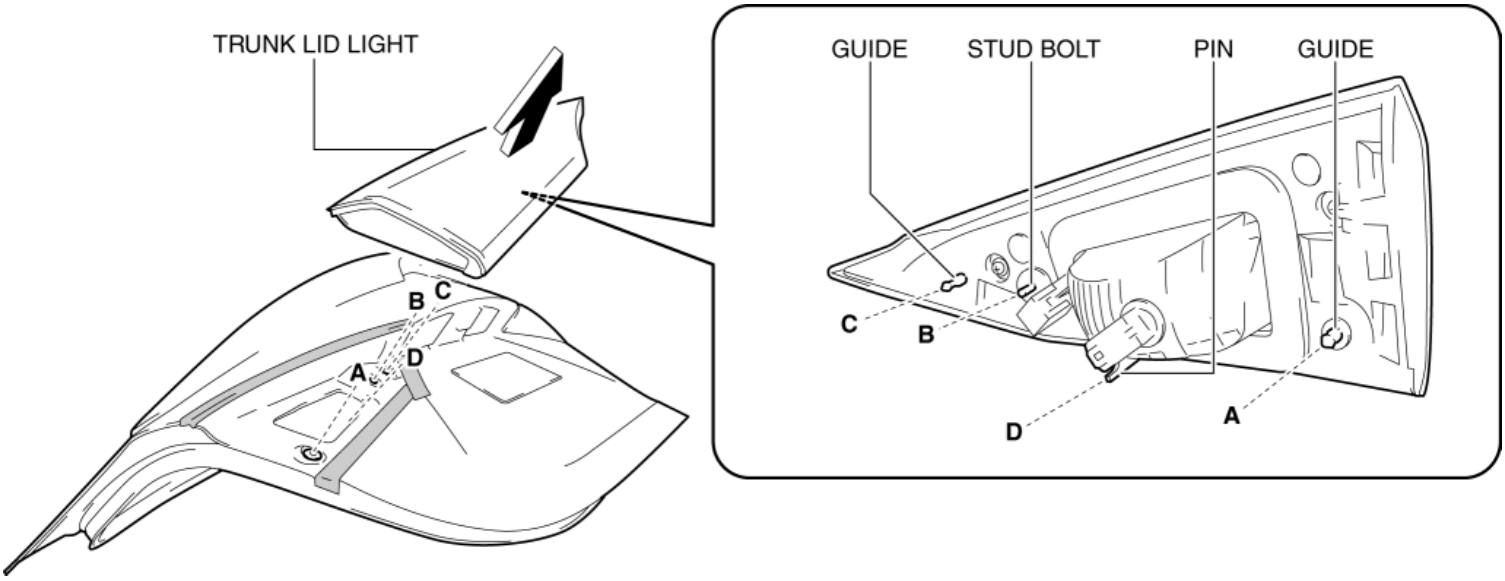

CAUTION:

- When removing the trunk lid light from the trunk lid, the trunk lid light could fall off and be damaged. When removing the trunk lid light from the trunk lid, hold the trunk lid light on the lens side with a hand.

19. Remove the trunk lid light.

20. While pressing tabs of grommet A in the direction of arrow (11) shown in the figure, push out grommet A in the direction of arrow (12) to remove grommet A from the trunk lid.

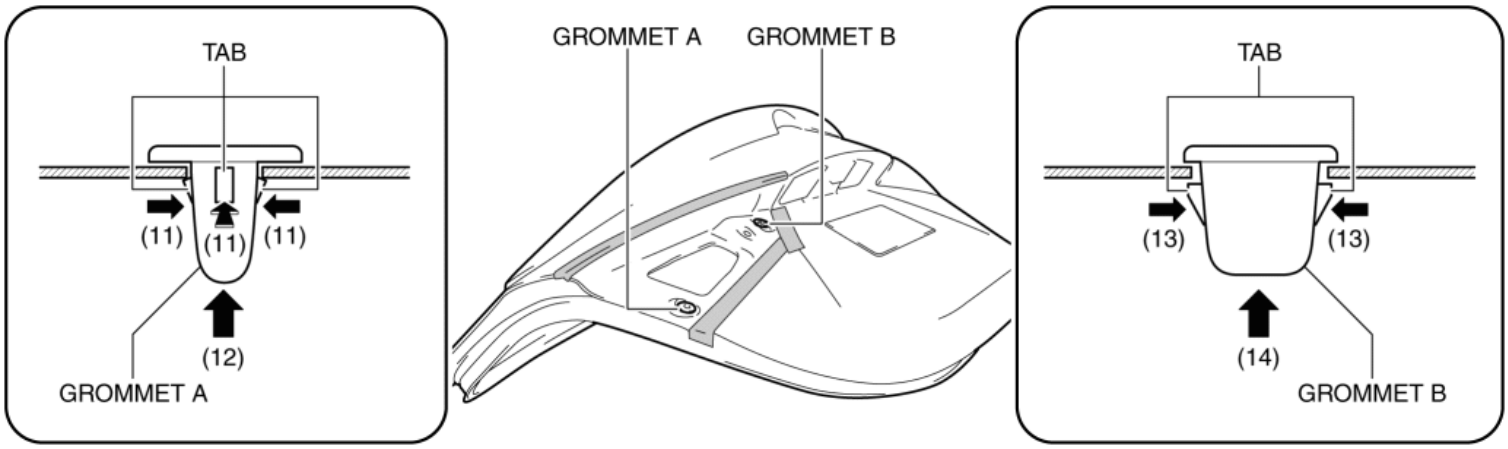

21. While pressing tabs of grommet B in the direction of arrow (13) shown in the figure, push out grommet B in the direction of arrow (14) to remove grommet B from the trunk lid.

22. Install in the reverse order of removal.

2014 - Mazda3 - Body and Accessories

LIFTGATE LIGHT REMOVAL/INSTALLATION

NOTE:

- Fogging or dew condensation may occur on the inside of the liftgate light because of a natural phenomenon occurring as a result of a temperature difference between the interior and exterior of the liftgate light. However, it has no effect on the light performance because the phenomenon is resolved when temperature inside the liftgate light rises after the back-up light turns on or a period of time has elapsed.

1. Disconnect the negative battery cable. (See **NEGATIVE BATTERY CABLE DISCONNECTION/CONNECTION [SKYACTIV-G 2.0, SKYACTIV-G 2.5]**.)

2. Remove the following parts:

   a. Liftgate upper trim (See **LIFTGATE UPPER TRIM REMOVAL/INSTALLATION**.)

   b. Liftgate side trim (See **LIFTGATE SIDE TRIM REMOVAL/INSTALLATION**.)

   c. Liftgate recess (See **LIFTGATE RECESS REMOVAL/INSTALLATION**.)

   d. Liftgate lower trim (See **LIFTGATE LOWER TRIM REMOVAL/INSTALLATION**.)

   e. Liftgate garnish (See **LIFTGATE GARNISH REMOVAL/INSTALLATION**.)

3. Disconnect the connector.

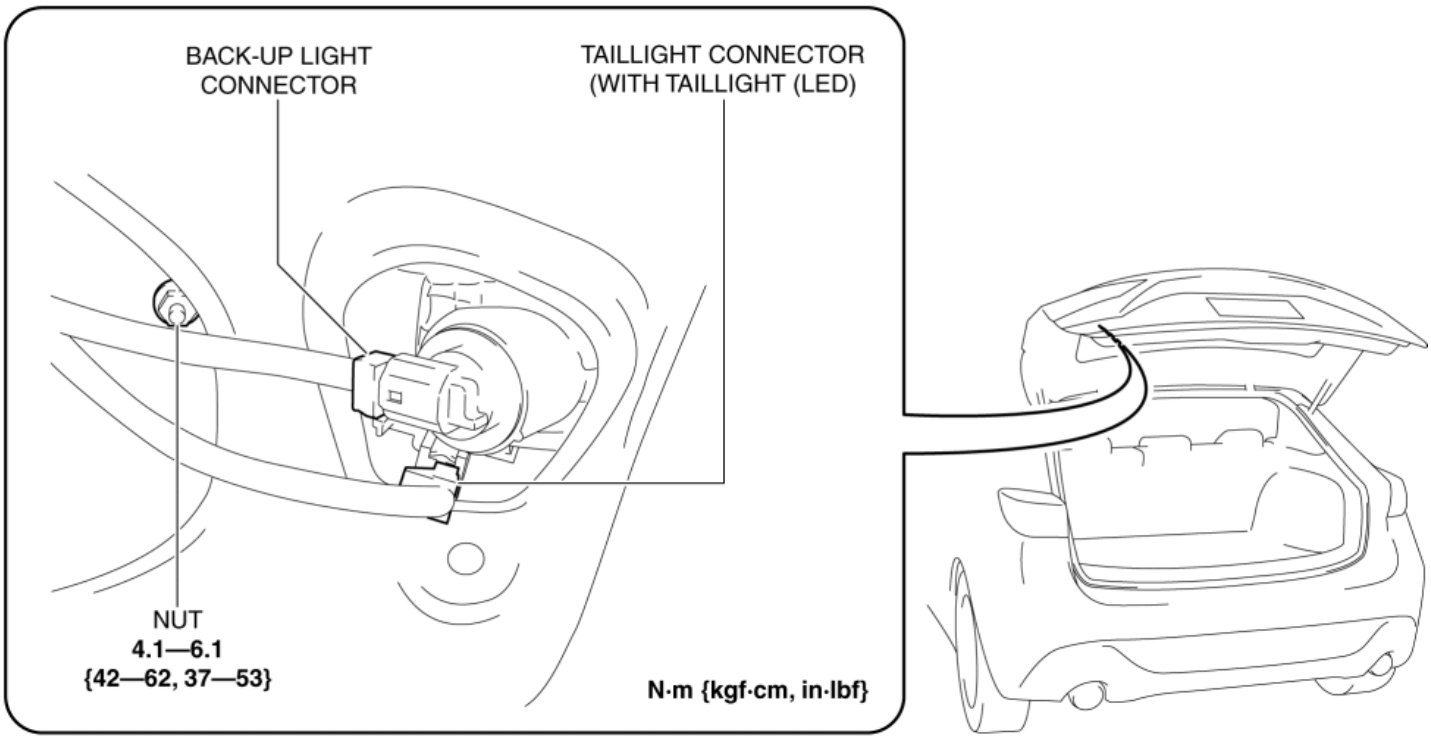

4. Remove the nut.

5. Insert the remover tool into the service hole at the position shown in the figure.

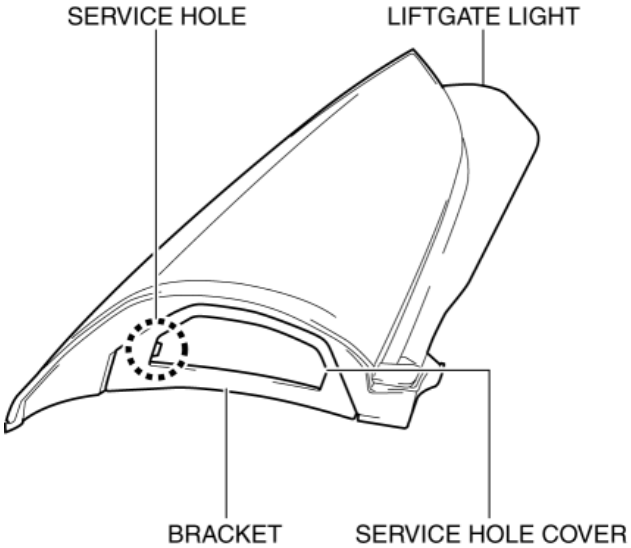

6. Move the remover tool in the direction of arrow (1) shown in the figure to detach the tab of the service hole cover from the bracket.

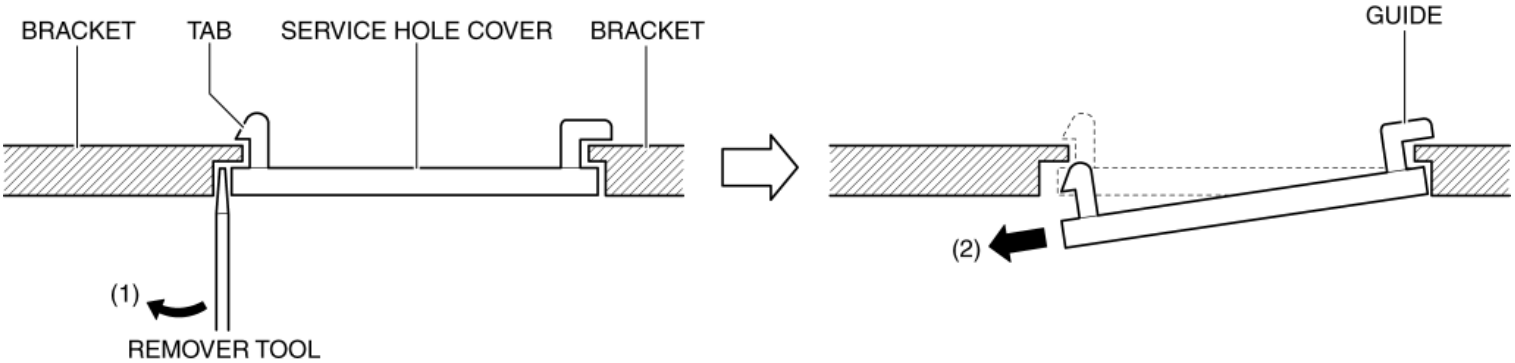

7. Pull the guide of the service hole cover in the direction of arrow (2) shown in the figure and remove the service hole cover.

8. Insert the remover tool into the gap between tab (1) of the bracket and liftgate light.

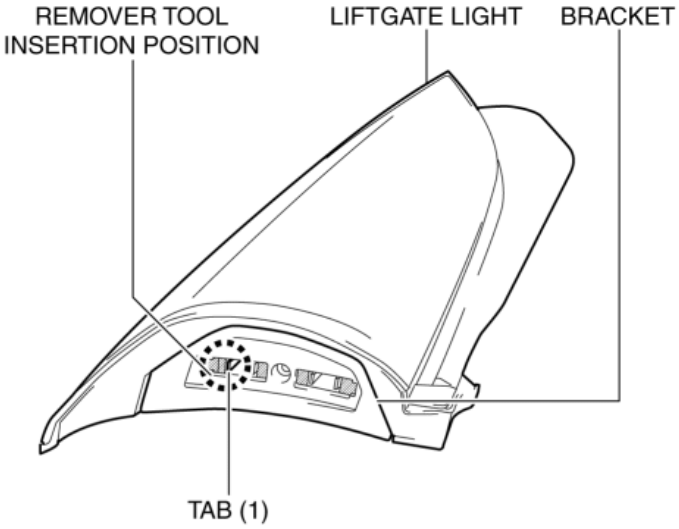

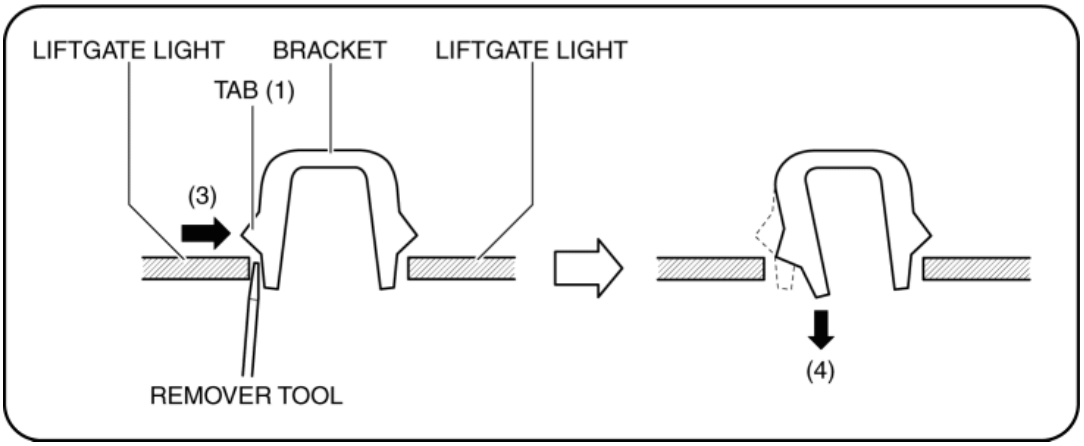

9. While pressing tab (1) of the bracket in the direction of arrow (3) shown in the figure using the remover tool, pull the bracket in the direction of arrow (4) to detach tab (1) of the bracket from the liftgate light.

10. Insert the remover tool into the gap between tab (2) of the bracket and the liftgate light.

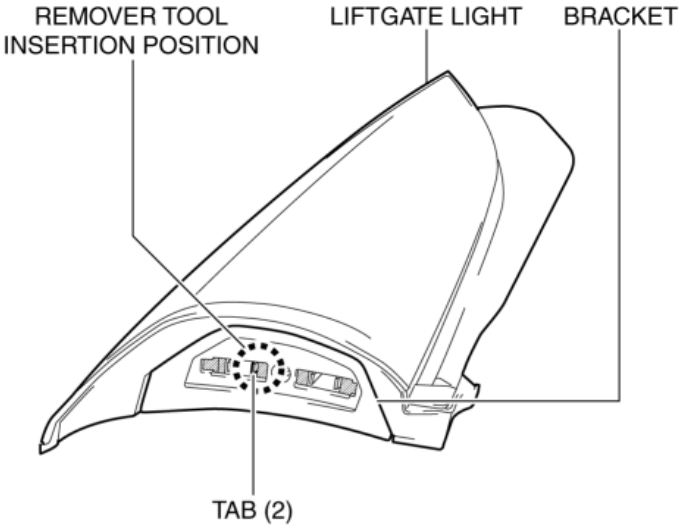

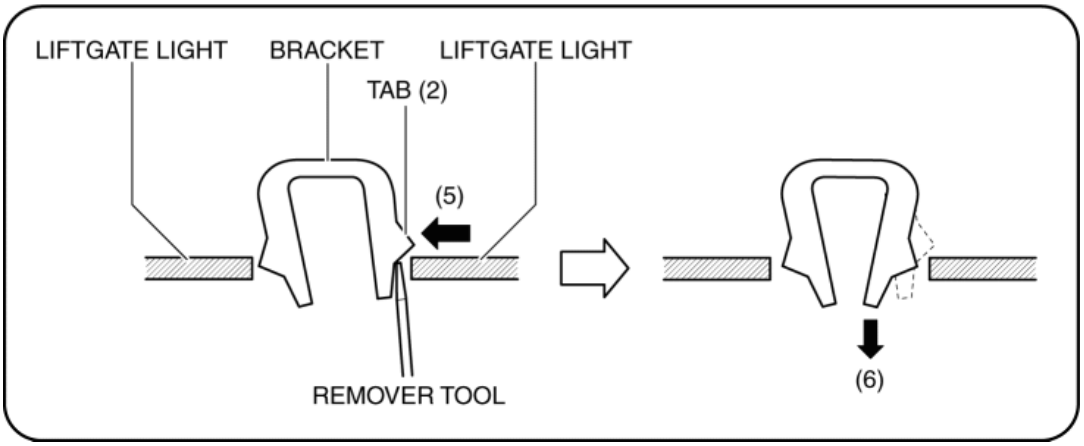

11. While pressing tab (2) of the bracket in the direction of arrow (5) shown in the figure using the remover tool, pull the bracket in the direction of arrow (6) to detach tab (2) of the bracket from the liftgate light.

12. Insert the remover tool into the gap between tab (3) of the bracket and the liftgate light.

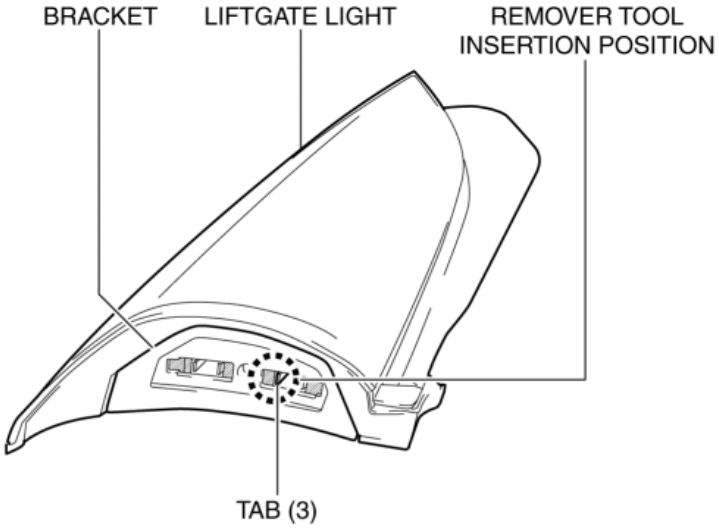

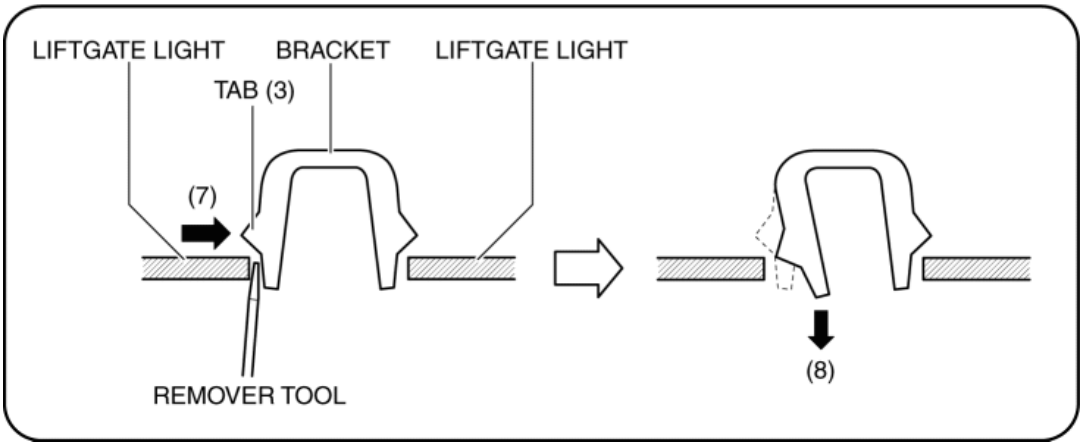

13. While pressing tab (3) of the bracket in the direction of arrow (7) shown in the figure using the remover tool, pull the bracket in the direction of arrow (8) to detach tab (3) of the bracket from the liftgate light.

14. Insert the remover tool into the gap between tab (4) of the bracket and the liftgate light.

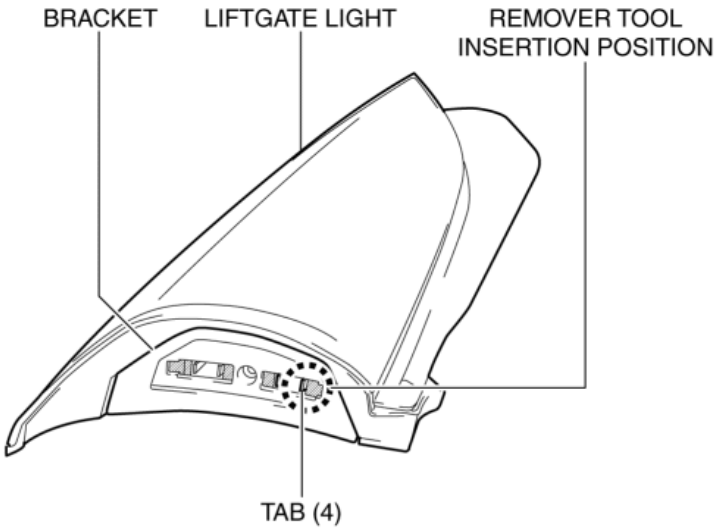

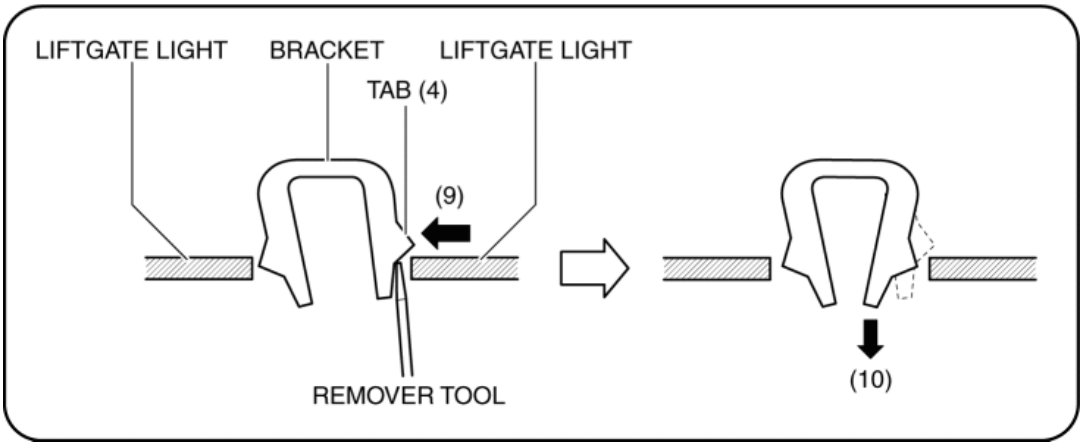

15. While pressing tab (4) of the bracket in the direction of arrow (9) shown in the figure using the remover tool, pull the bracket in the direction of arrow (10) to detach tab (4) of the bracket from the liftgate light.

16. Detach all the tabs of the bracket from the liftgate light and remove the bracket from the liftgate light.

17. To prevent scratches, apply protective tape to the position shown in the figure.

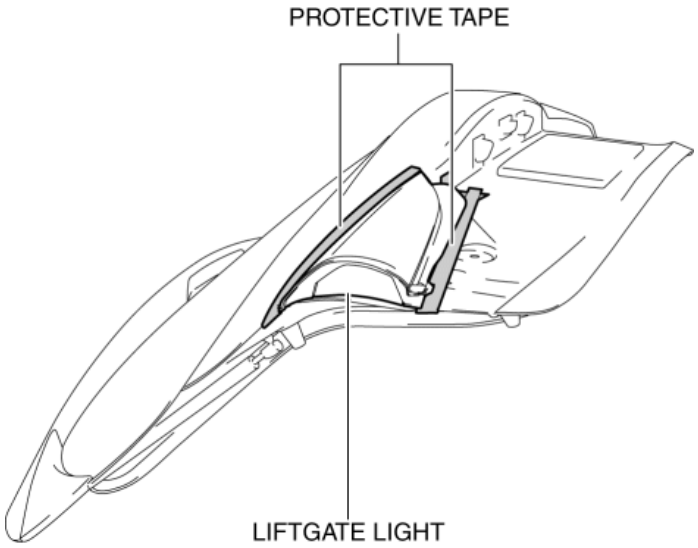

CAUTION:

- When removing the liftgate light from the liftgate, the liftgate light could contact the liftgate and damage it. Apply protective tape to the liftgate before removing the liftgate light from the liftgate.

18. Move the liftgate light in the direction of the arrow shown in the figure and pull out the hook, guide, pins, and stud bolt from the liftgate.

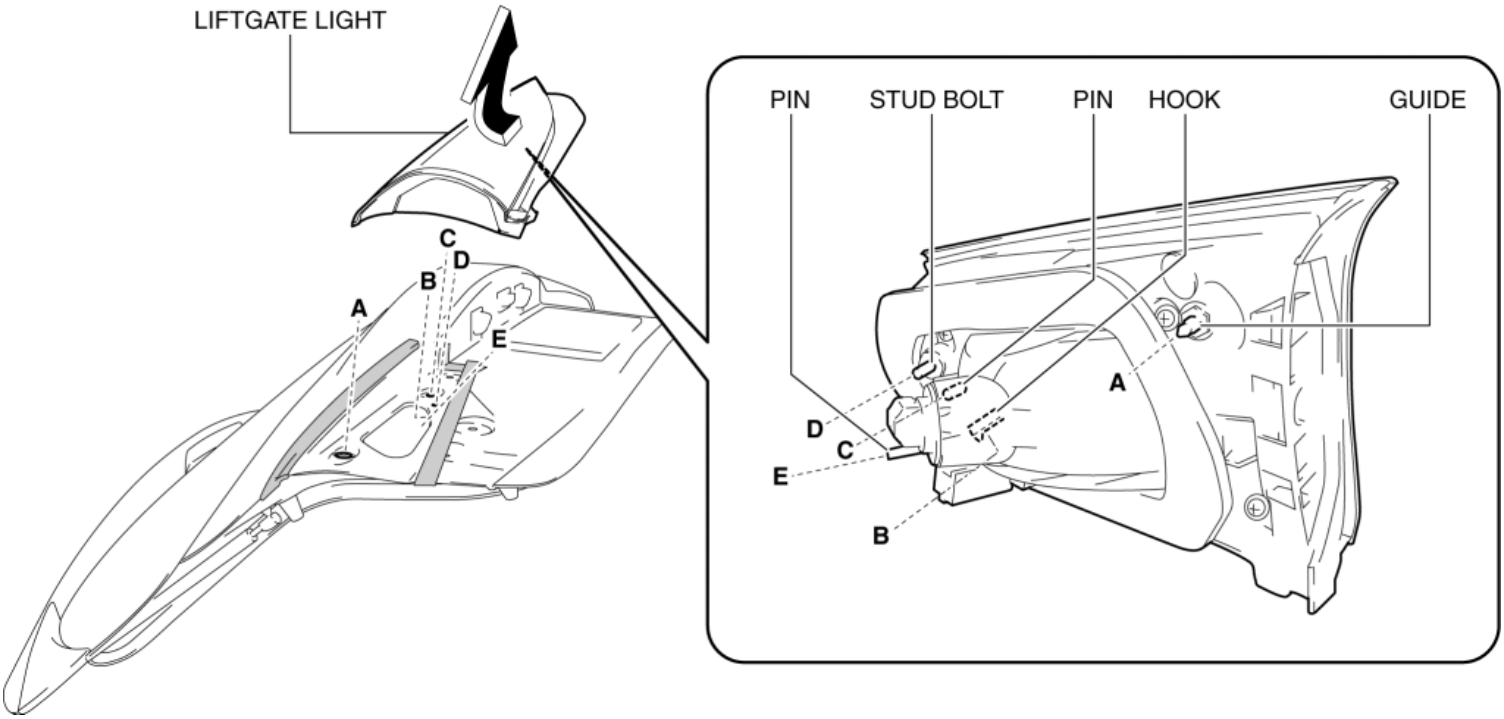

CAUTION:

- When removing the liftgate light from the liftgate, the liftgate light may fall off and be damaged. Remove the liftgate light from the liftgate while holding the liftgate light on the lens side by hand.

19. Remove the liftgate light.

20. While pressing tabs of the grommet in the direction of arrow (11) shown in the figure, push out the grommet in the direction of arrow (12) to remove the grommet from the liftgate.

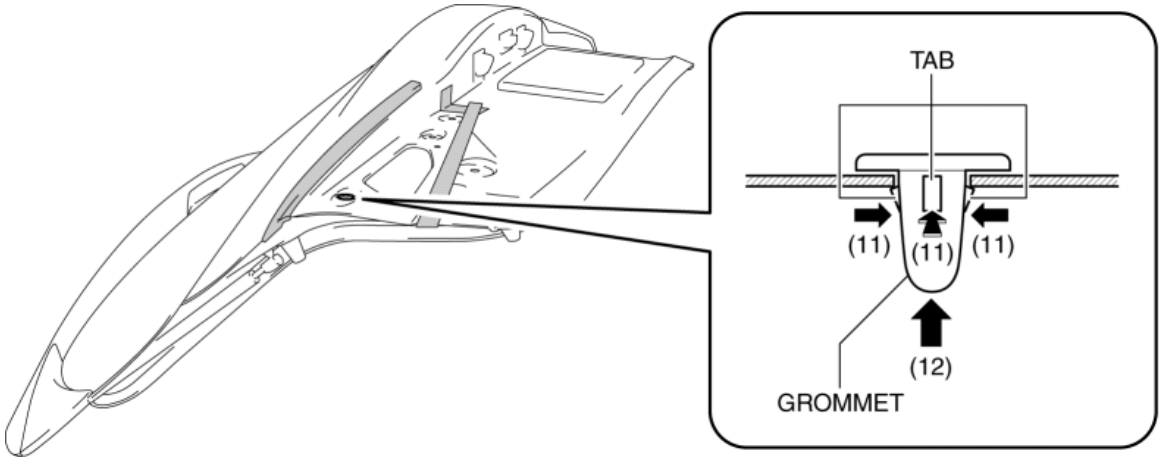

21. Install in the reverse order of removal.

2014 - Mazda3 - Body and Accessories

HIGH-MOUNT BRAKE LIGHT REMOVAL/INSTALLATION

4SD

NOTE:

- When removing the high-mount brake light, the procedure can be facilitated by folding down the rear seat.

1. Disconnect the negative battery cable. (See **NEGATIVE BATTERY CABLE DISCONNECTION/CONNECTION [SKYACTIV-G 2.0, SKYACTIV-G 2.5]**.)

2. Insert the remover tool in the gap between the high-mount brake light cover and the rear package trim.

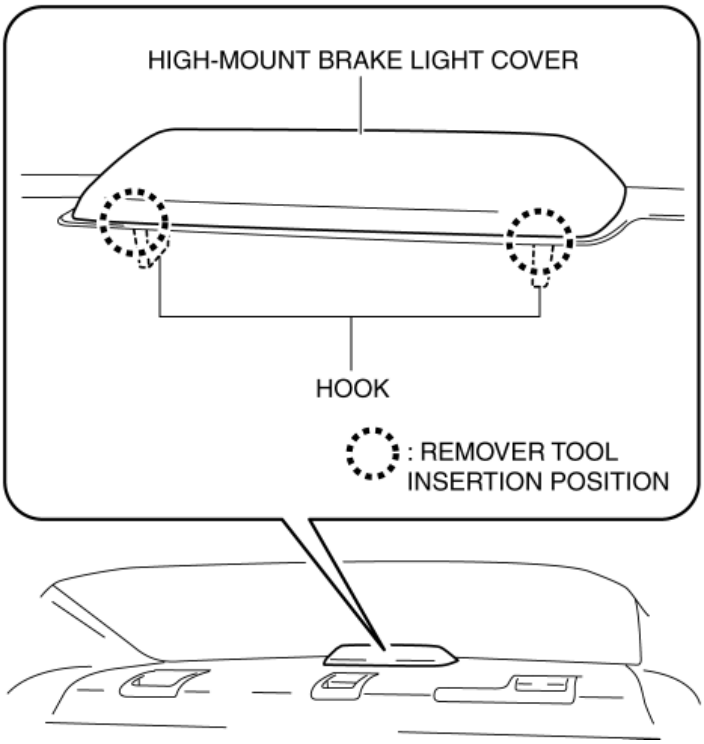

3. While pressing the hook in the direction of arrow (1) shown in the figure, lift up the high-mount brake light cover in the direction of arrow (2) shown in the figure and pull out the hook from the rear package trim.

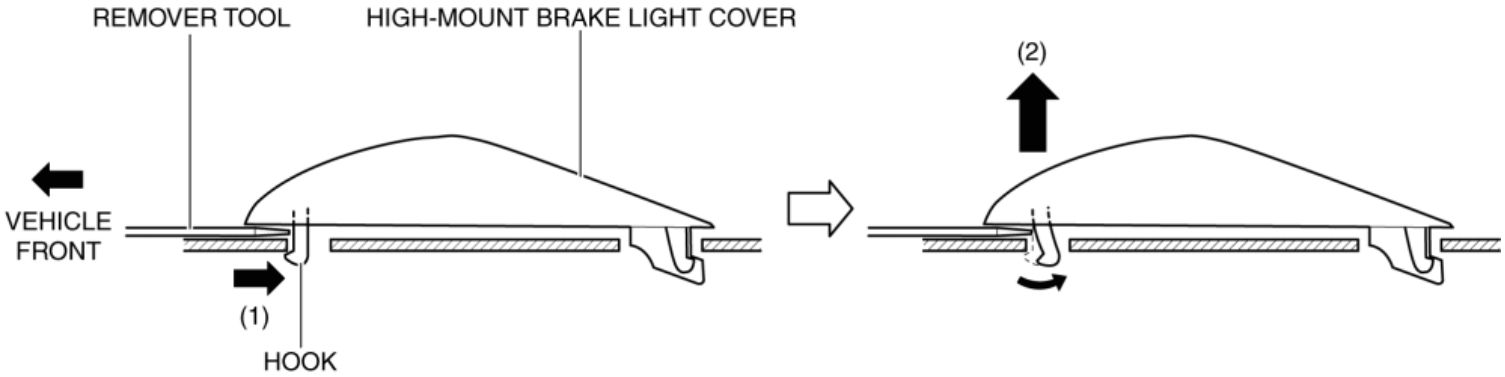

4. Move the high-mount brake light cover in the direction of arrow (3) shown in the figure and pull out the guide from the rear package trim.

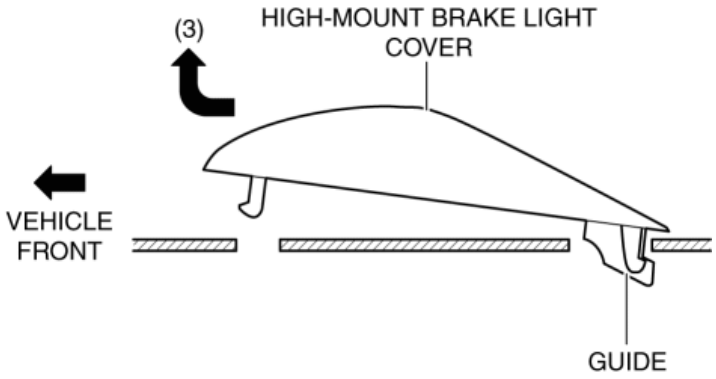

5. Disconnect the connector.

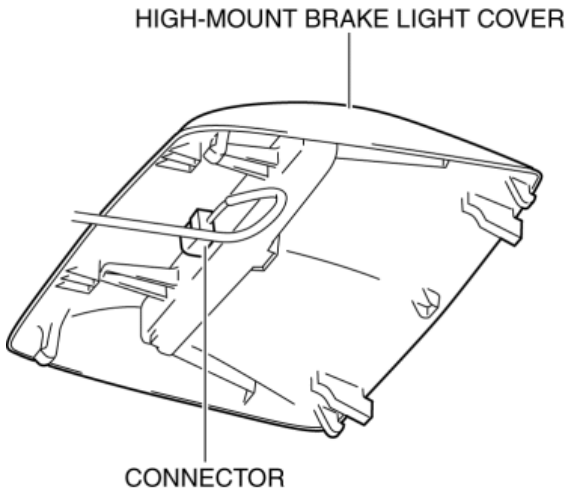

6. Move the high-mount brake light in the direction of arrows (4) shown in the figure and disconnect the tabs of the high-mount brake light cover from the high-mount brake light.

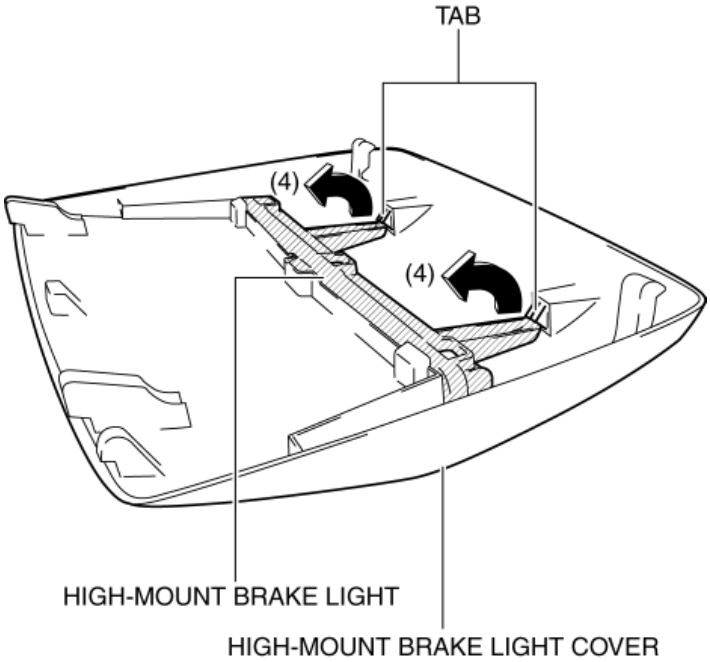

7. Remove the high-mount brake light.

8. Install in the reverse order of removal.

5HB

1. Disconnect the negative battery cable. (See **NEGATIVE BATTERY CABLE DISCONNECTION/CONNECTION [SKYACTIV-G 2.0, SKYACTIV-G 2.5]**.)

2. Remove the liftgate upper trim. (See **LIFTGATE UPPER TRIM REMOVAL/INSTALLATION**.)

3. Remove the rear spoiler. (See **REAR SPOILER REMOVAL**.) (See **REAR SPOILER INSTALLATION**.)

4. While pressing the tabs of the clip in the direction of arrows (1) shown in the figure, pull the clip in the direction of arrow (2) to detach the clip tabs from the rear spoiler.

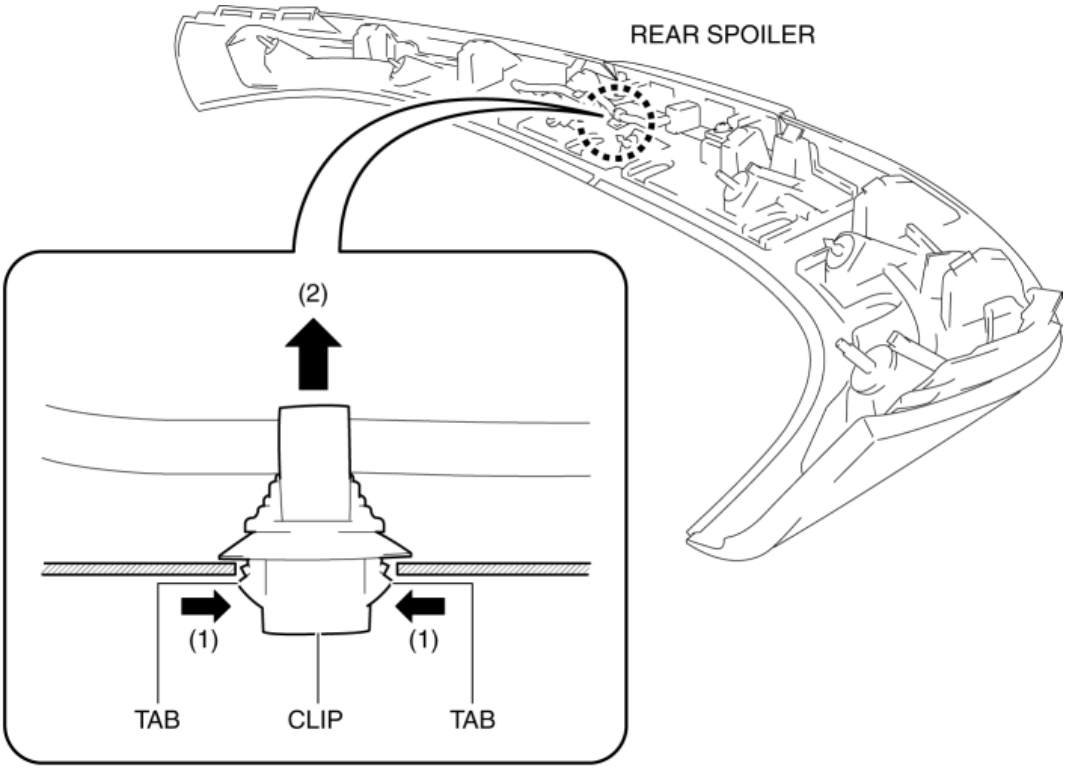

5. Remove the screws.

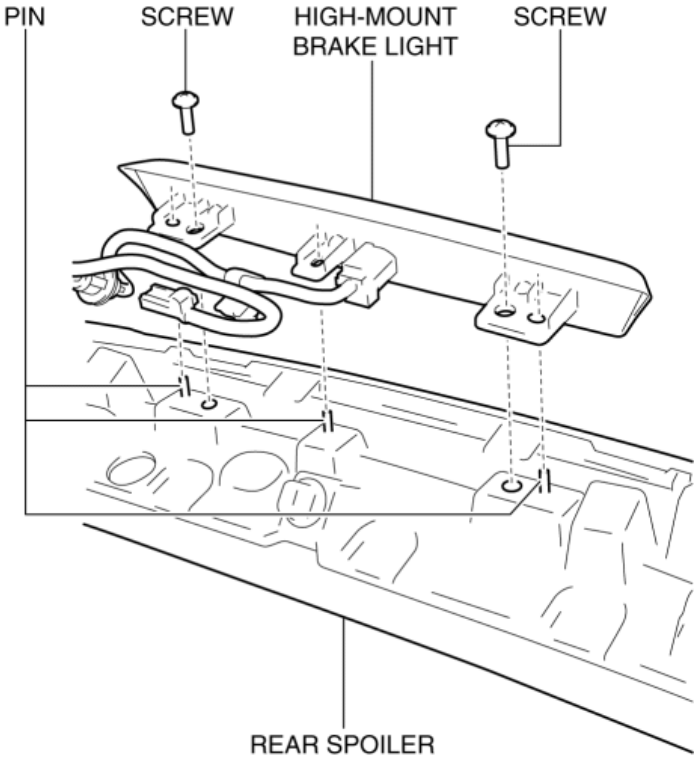

6. Remove the high-mount brake light.

7. Install in the reverse order of removal.

2014 - Mazda3 - Body and Accessories

LICENSE PLATE LIGHT REMOVAL/INSTALLATION

4SD

1. Disconnect the negative battery cable. (See **NEGATIVE BATTERY CABLE DISCONNECTION/CONNECTION [SKYACTIV-G 2.0, SKYACTIV-G 2.5]**.)

2. Remove the trunk lid recess. (See **TRUNK LID RECESS REMOVAL/INSTALLATION**.)

3. Remove the trunk lid trim. (See **TRUNK LID TRIM REMOVAL/INSTALLATION**.)

4. Disconnect the connector.

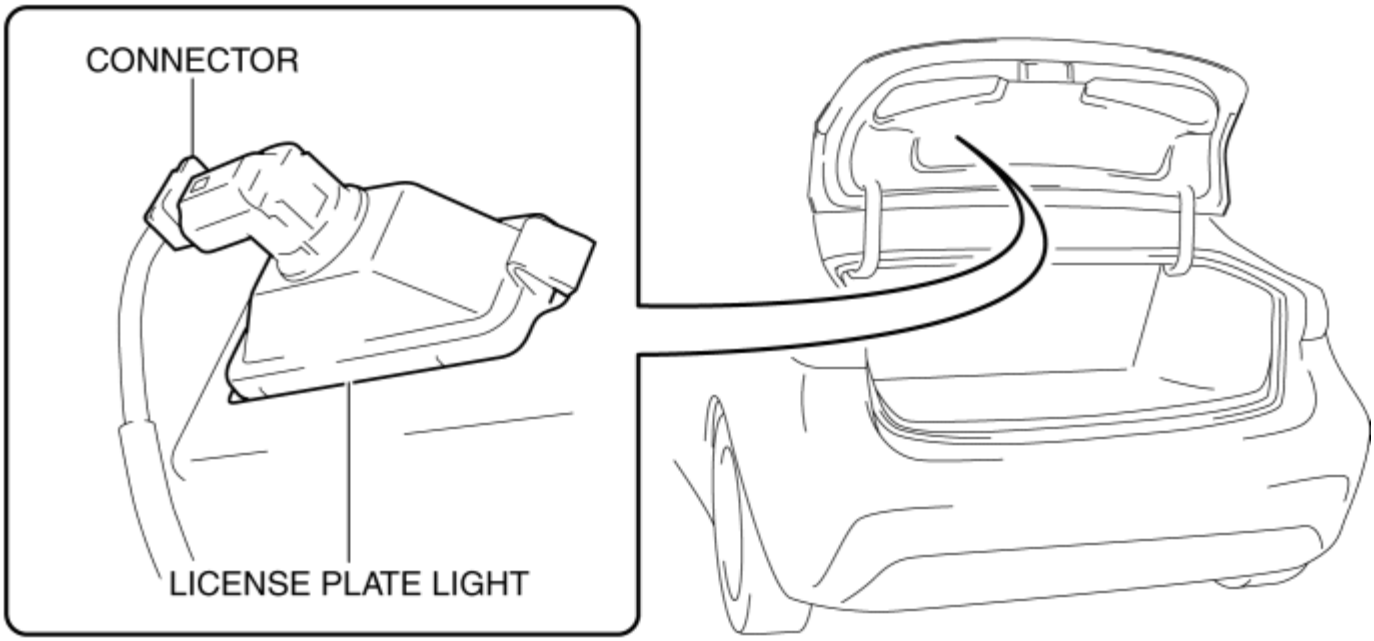

5. While pressing the license plate light hook in the direction of arrow (1) shown in the figure, press the license plate light in the direction of arrow (2), and disconnect the license plate light hook from the trunk lid.

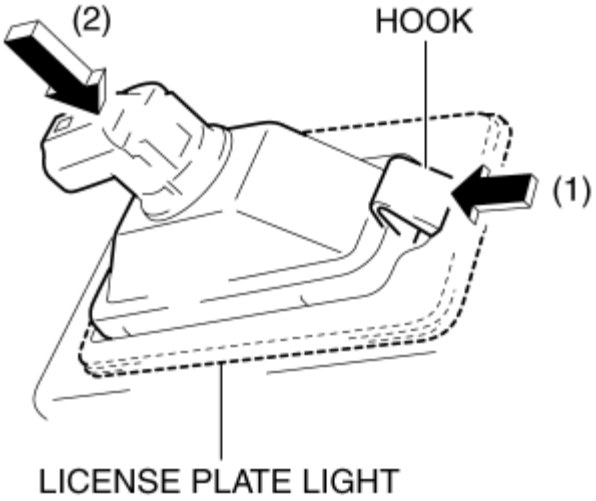

CAUTION:

- When removing the license plate light from the trunk lid, the license plate light could fall off and be damaged. Remove the license plate light from the trunk lid while holding the license plate light on the lens side with a hand.

6. Remove the license plate light.

7. Install in the reverse order of removal.

5HB

1. Disconnect the negative battery cable. (See **NEGATIVE BATTERY CABLE DISCONNECTION/CONNECTION [SKYACTIV-G 2.0, SKYACTIV-G 2.5]**.)

2. Remove the following parts:

   a. Liftgate upper trim (See **LIFTGATE UPPER TRIM REMOVAL/INSTALLATION**.)

   b. Liftgate side trim (See **LIFTGATE SIDE TRIM REMOVAL/INSTALLATION**.)

   c. Liftgate recess (See **LIFTGATE RECESS REMOVAL/INSTALLATION**.)

   d. Liftgate lower trim (See **LIFTGATE LOWER TRIM REMOVAL/INSTALLATION**.)

3. Disconnect the connector.

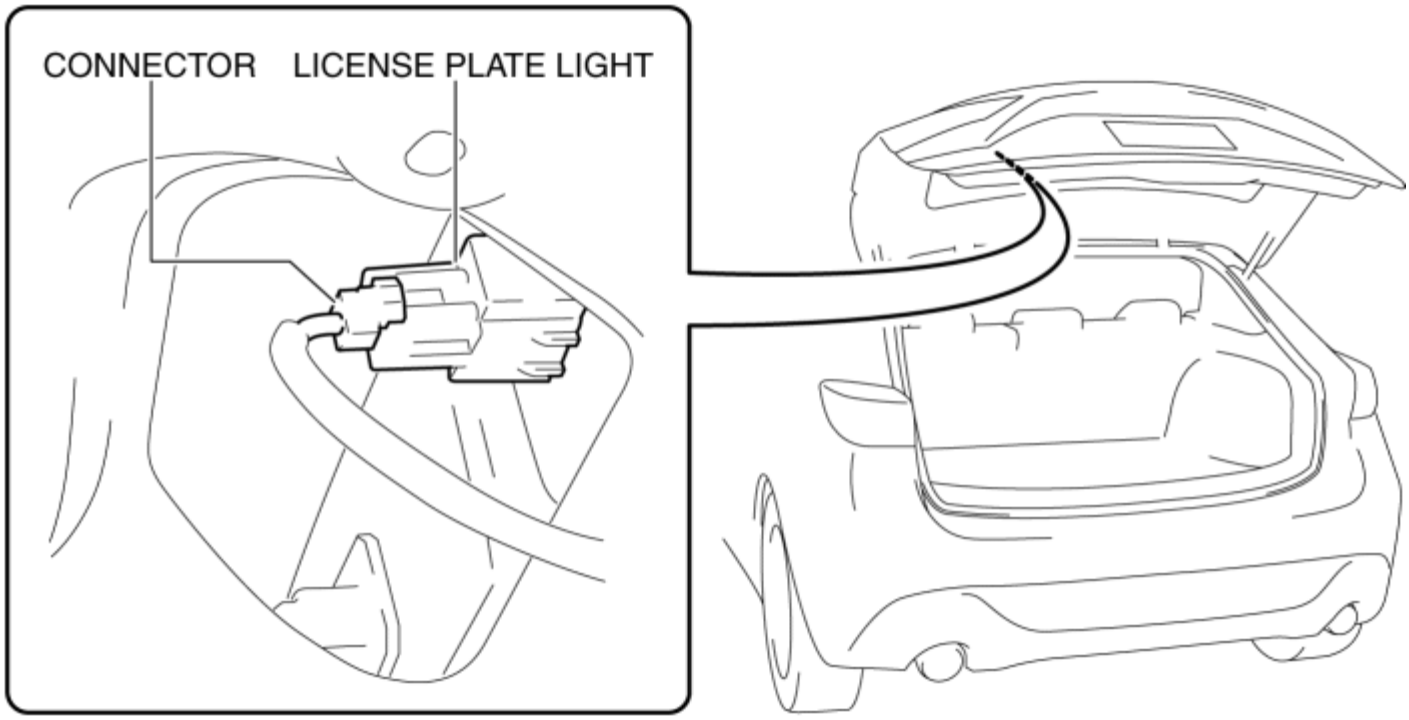

4. While pressing the license plate light tabs in the direction of arrows (1) shown in the figure, press the license plate light in the direction of arrow (2), and disconnect the license plate light tabs from the liftgate.

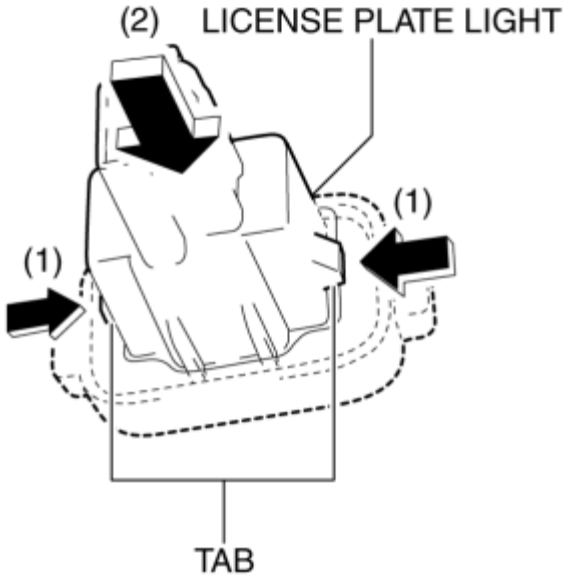

CAUTION:

- When removing the license plate light from the liftgate, the license plate light could fall off and be damaged. When removing the license plate light from the liftgate, press the lens side of the license plate light with a hand.

5. Remove the license plate light.

6. Install in the reverse order of removal.

LICENSE PLATE LIGHT REMOVAL/INSTALLATION

2014 - Mazda3 - Body and Accessories

LICENSE PLATE LIGHT BULB REMOVAL/INSTALLATION

4SD

1. Disconnect the negative battery cable. (See **NEGATIVE BATTERY CABLE DISCONNECTION/CONNECTION [SKYACTIV-G 2.0, SKYACTIV-G 2.5]**.)
2. Partially peel back the trunk lid trim. (See **TRUNK LID TRIM REMOVAL/INSTALLATION**.)
3. Turn the socket counterclockwise and remove it in the direction of arrow (1) shown in the figure.

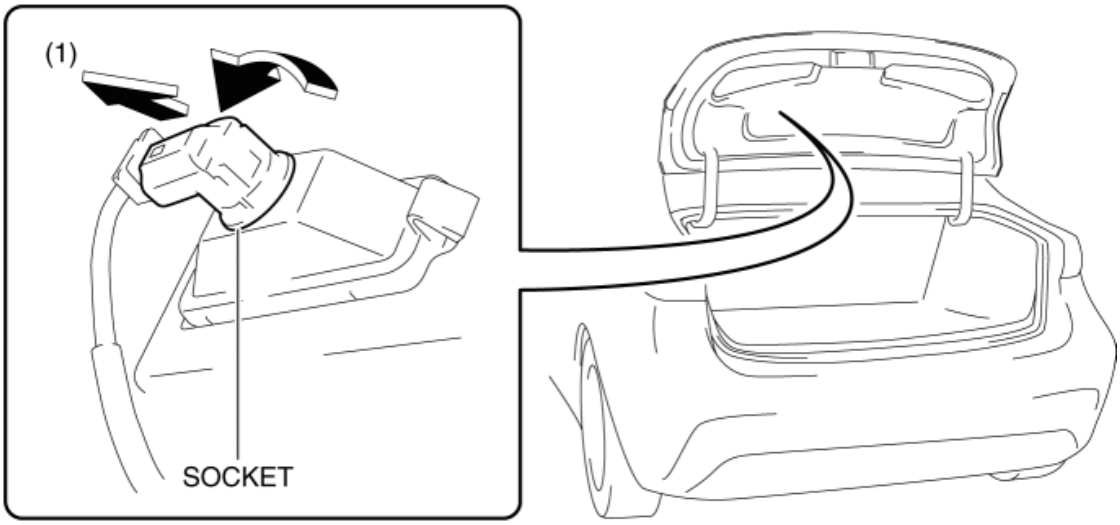

4. Remove the license plate light bulb.

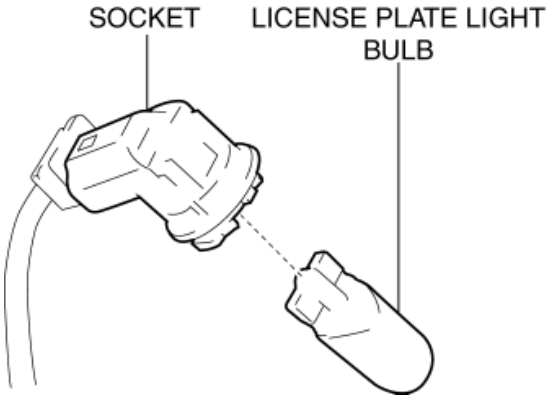

CAUTION:

- The bulb reaches high temperatures when illuminated. If there is oil or dirt on the surface of the bulb, excessive heat will build up and the life of the bulb will be shortened. When replacing the bulb, hold the metal flange, not the glass.

5. Install in the reverse order of removal.

5HB

1. Disconnect the negative battery cable. (See **NEGATIVE BATTERY CABLE DISCONNECTION/CONNECTION [SKYACTIV-G 2.0, SKYACTIV-G 2.5]**.)

2. Insert the remover tool into the service hole at the position shown in the figure.

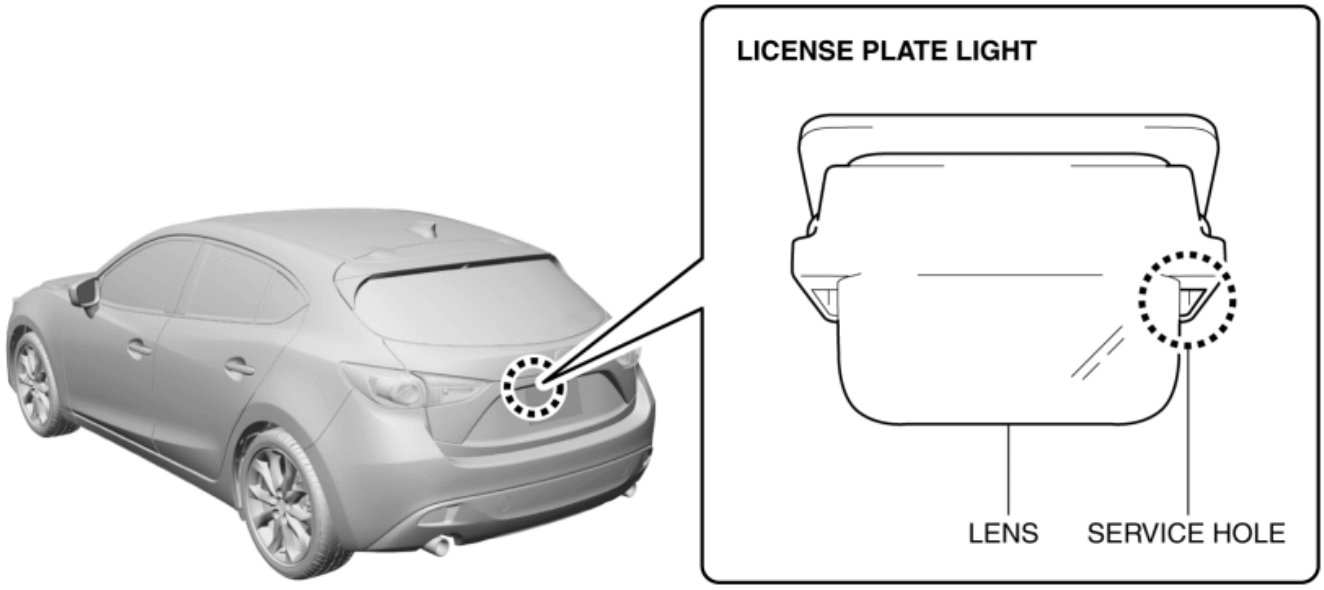

3. Move the remover tool in the direction of arrow (1) shown in the figure to pull the lens in the direction of arrow (2) and detach the lens from the license plate light tab.

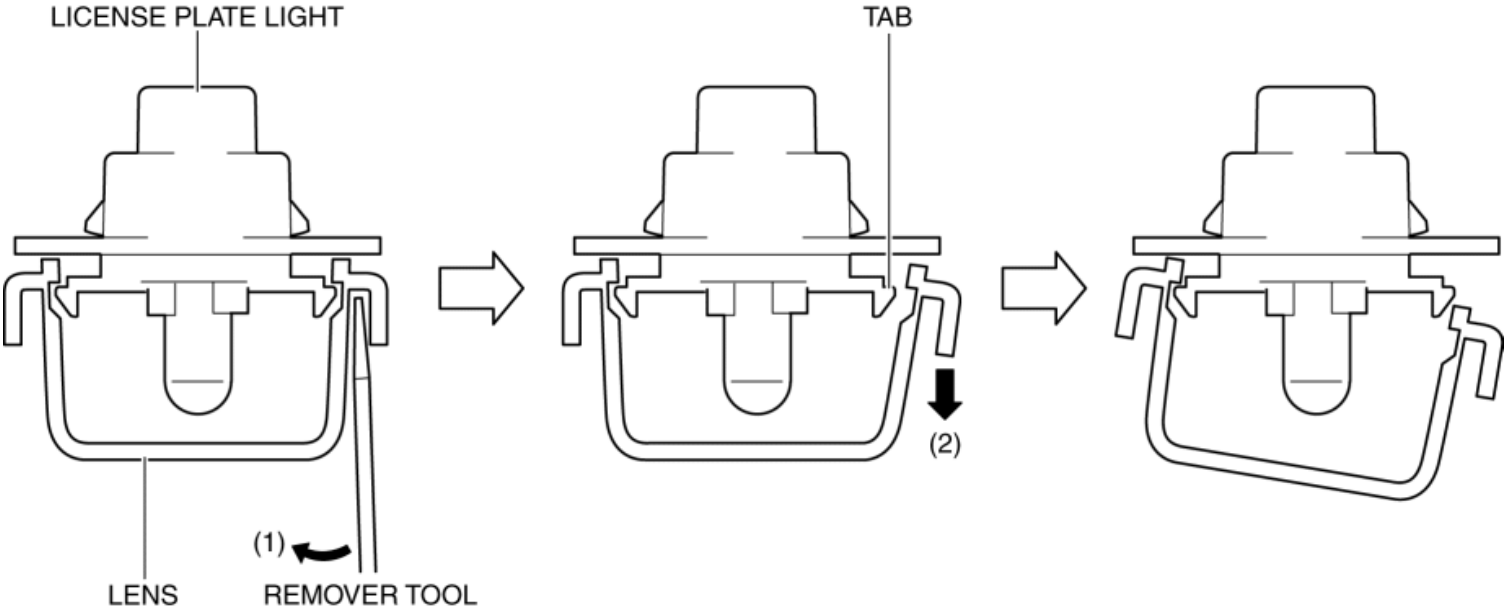

4. Remove the lens.

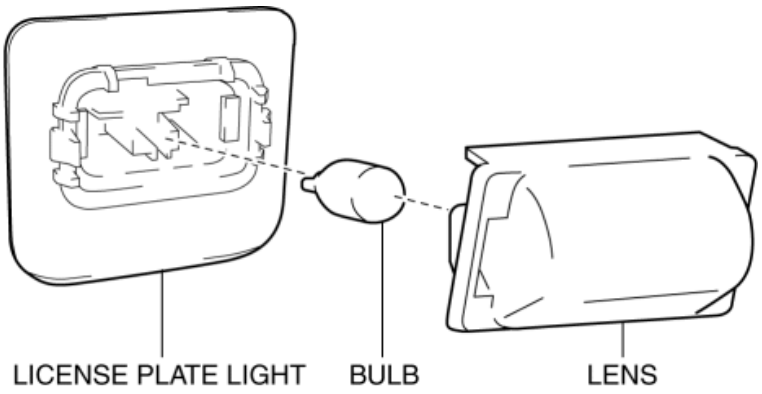

5. Remove the license plate light bulb.

CAUTION:

- The bulb reaches high temperatures when illuminated. If there is oil or dirt on the surface of the bulb, excessive heat will build up and the life of the bulb will be shortened. When replacing the bulb, hold the metal flange, not the glass.

6. Install in the reverse order of removal.

2014 - Mazda3 - Body and Accessories

AUTO LEVELING SENSOR REMOVAL/INSTALLATION

1. Disconnect the negative battery cable. (See **NEGATIVE BATTERY CABLE DISCONNECTION/CONNECTION [SKYACTIV-G 2.0, SKYACTIV-G 2.5]**.)

2. While pressing the clip tabs in the direction of arrows (1) shown in the figure, press the clip in the direction of arrow (2) to remove the clip from the auto leveling sensor.

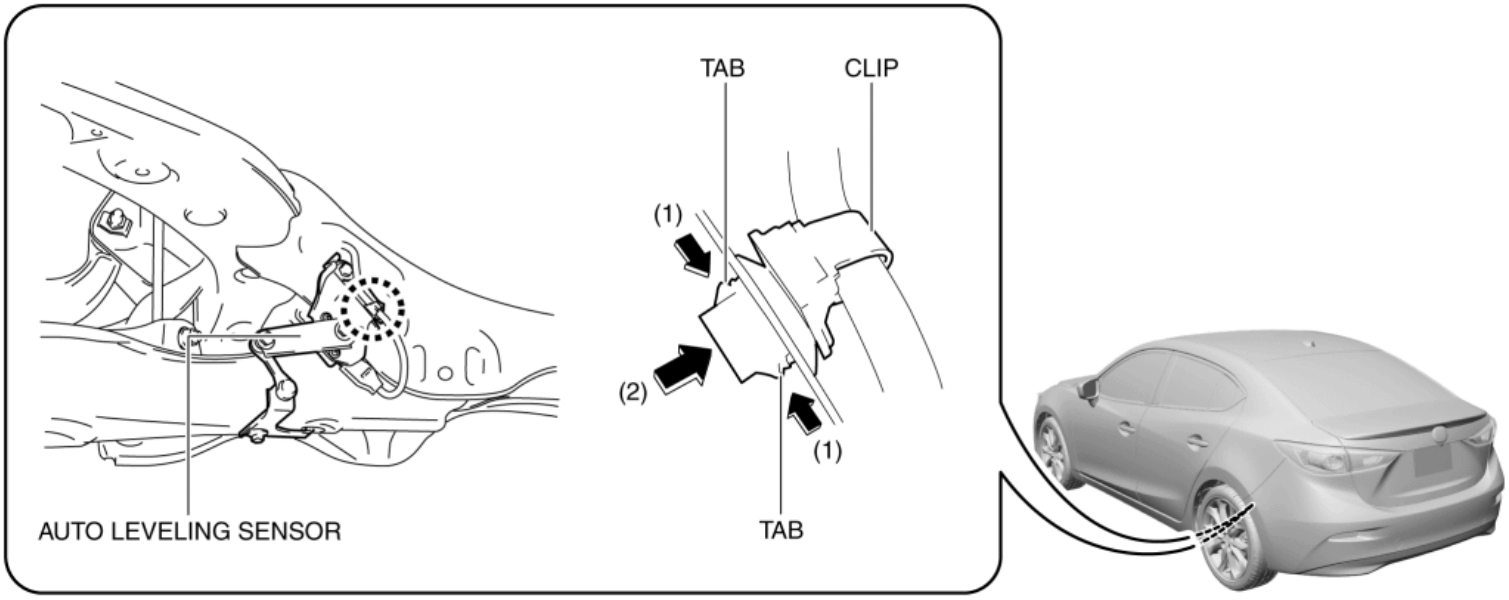

3. Disconnect the connector.

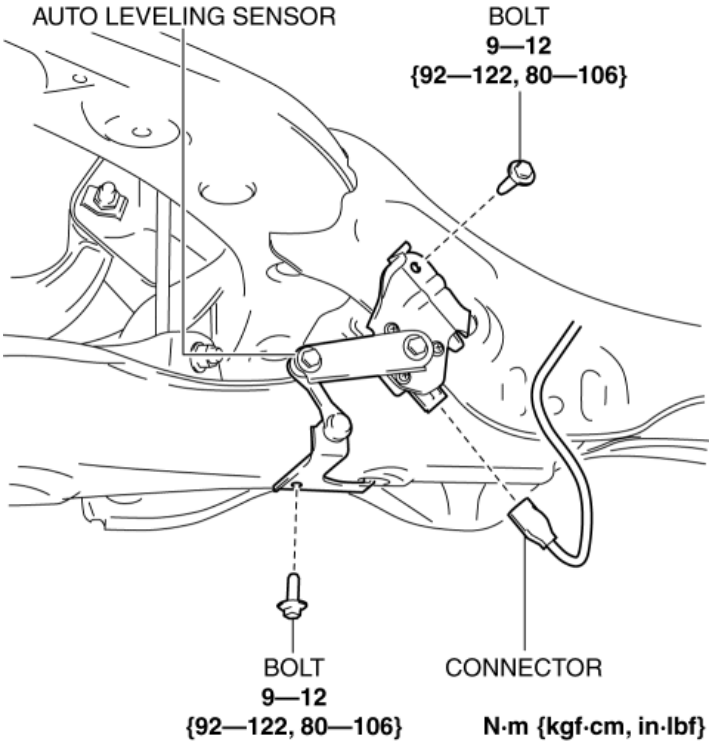

4. Remove the bolts.

5. Pull the guides from the rear crossmember and remove the auto leveling sensor from the rear crossmember.

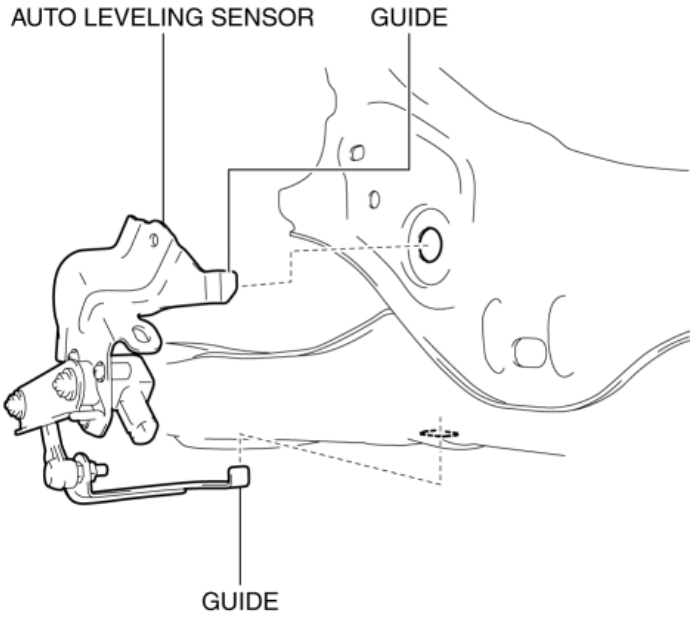

6. Install in the reverse order of removal.

7. Perform headlight auto leveling system initialization. (See **HEADLIGHT AUTO LEVELING SYSTEM INITIALIZATION**.)

2014 - Mazda3 - Body and Accessories

AUTO LEVELING SENSOR INSPECTION

1. Disconnect the negative battery cable. (See **NEGATIVE BATTERY CABLE DISCONNECTION/CONNECTION [SKYACTIV-G 2.0, SKYACTIV-G 2.5]**.)

2. Remove the auto leveling sensor. (See **AUTO LEVELING SENSOR REMOVAL/INSTALLATION**.)

3. Prepare three dry cell batteries **(1.5 V)**.

4. Connect the three dry cell batteries in a series.

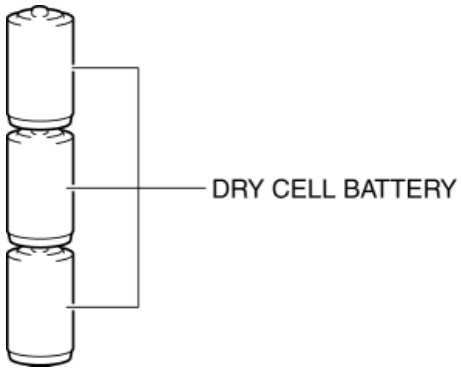

5. Connect the positive pole of the dry cell batteries to auto leveling sensor terminal C, and the negative pole to terminal A.

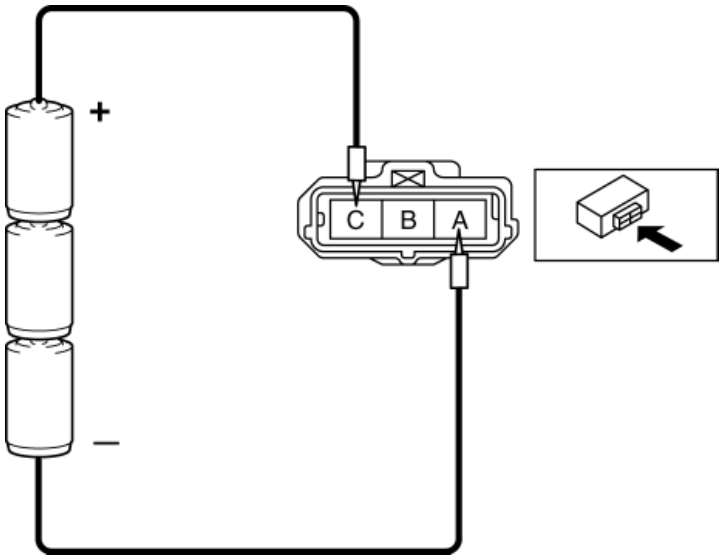

6. Connect the tester as shown in the figure with **approx. 4.5 V** of voltage applied between auto leveling sensor terminals A and C, and measure the voltage at auto leveling sensor terminal B.

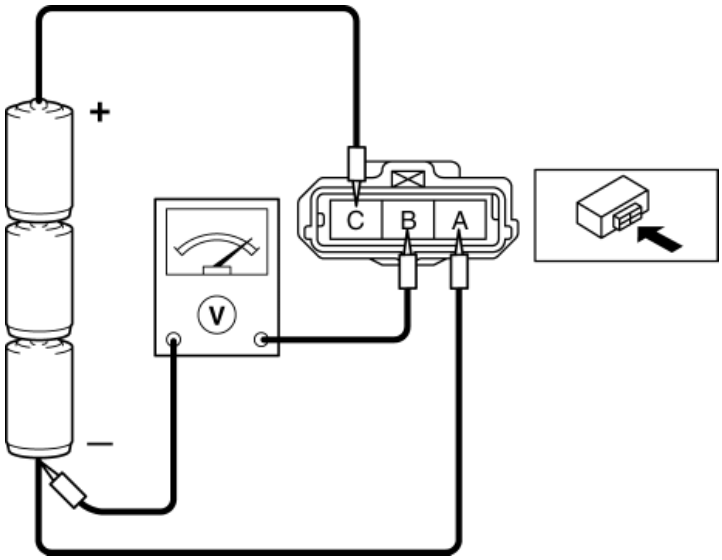

7. Verify that the voltage fluctuates linearly between **0.5—4.5 V** as shown in the figure when slowly moving the auto leveling sensor link upward or downward.

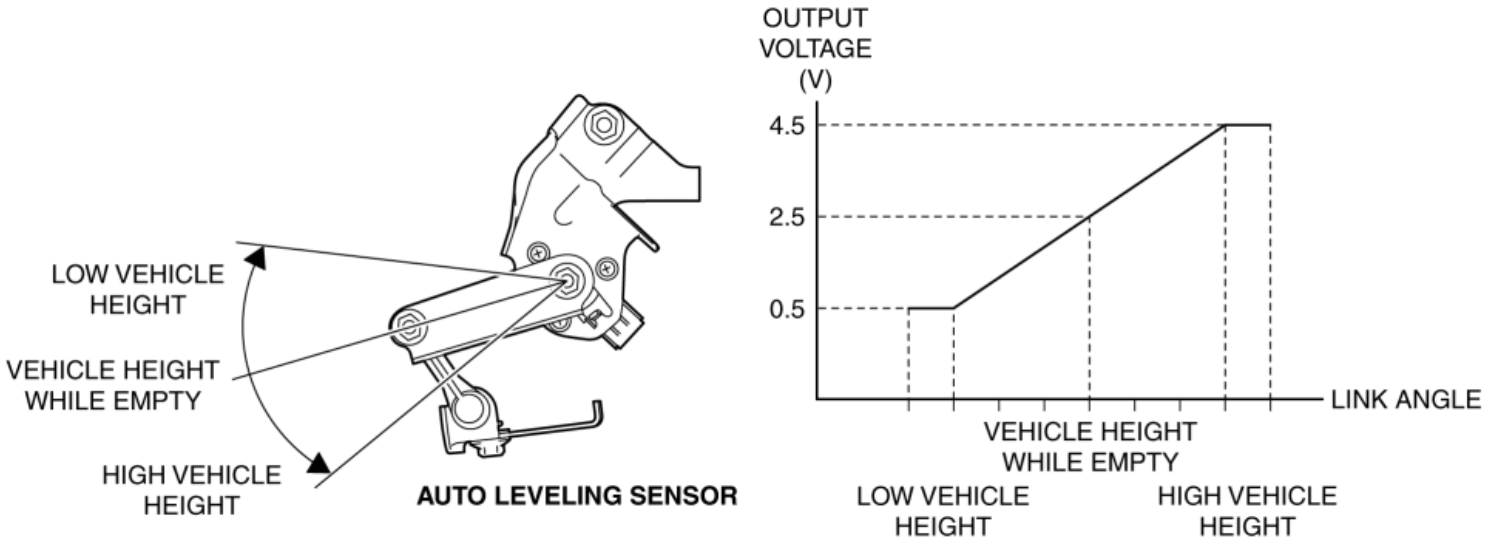

- If the voltage cannot be verified as indicated in the figure, replace the auto leveling sensor. (See **AUTO LEVELING SENSOR REMOVAL/INSTALLATION**.)

2014 - Mazda3 - Body and Accessories

HEADLIGHT AUTO LEVELING SYSTEM INITIALIZATION

NOTE:

- The AFS control module records the vehicle height in unoccupied condition by performing the headlight auto leveling system initialization.
- Perform headlight auto leveling system initialization if any of the following services is performed.
    - AFS control module replacement
    - Auto leveling sensor replacement or removal/installation
    - Any service which changes vehicle height, such as suspension replacement or removal/installation
- Two different procedures are available for the headlight auto leveling system initialization; one which uses the M-MDS, and one which does not.

Procedure Using M-MDS

CAUTION:

- Perform Steps 5 and 6 **within 30 s**.

1. Empty the vehicle except for the spare tire, jack and vehicle tools.
2. Adjust the tire pressure to the specification. (See **WHEEL AND TIRE SPECIFICATION**.)
3. Move the vehicle to level ground.
4. Connect the M-MDS to the DLC-2.
5. Switch the ignition ON (engine off or on).

NOTE:

- The AFS OFF indicator light continues flashing during the first initialization, however, continue the work because it does not indicate an improper procedure.

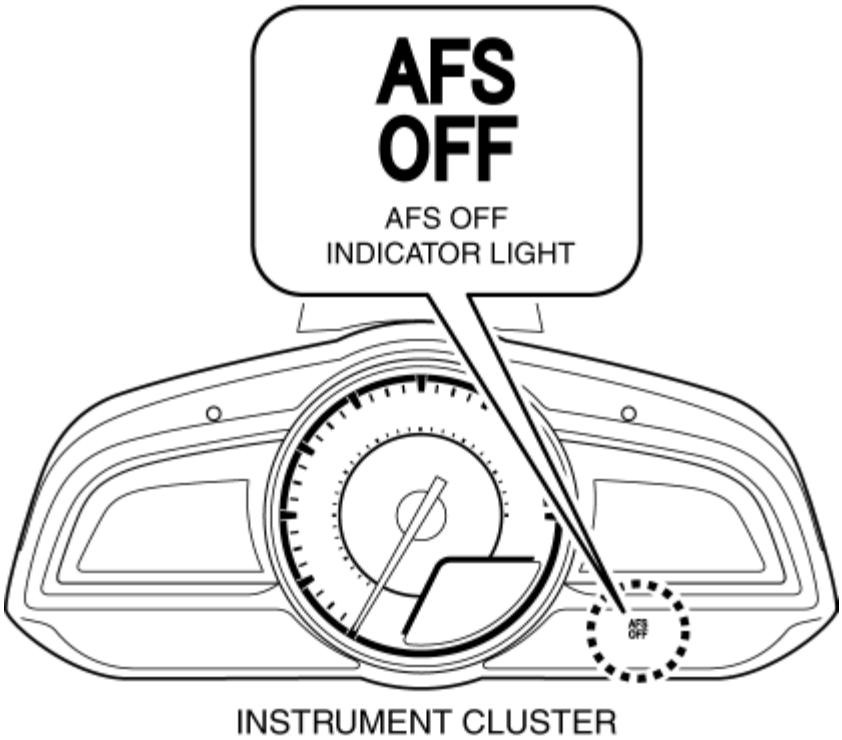

6. After vehicle identification, the following can be selected from the M-MDS initial screen.
    a. "Electrical"
    b. "ExteriorLighting"
    c. "Headlamp"
    d. "Auto Leveling Sensor"
    e. "Auto Leveling Sensors Calibration"
7. Verify the AFS OFF indicator light.
    - The initialization is completed if the AFS OFF indicator light flashes **three times every 0.25 s** and turns off. Go to the next step.

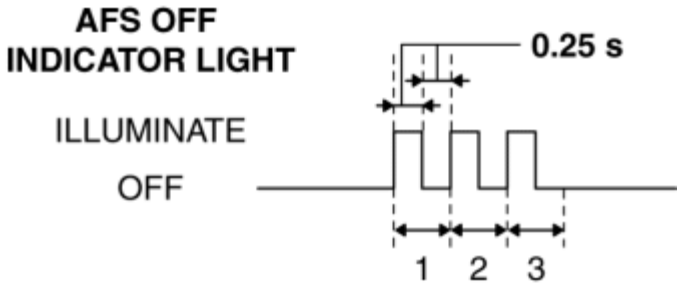

    - If the AFS OFF indicator light continues flashing, the procedure may have been performed incorrectly. Repeat the procedure from Step 5.
    - If the AFS OFF indicator light turns on, the headlight auto leveling system may have a malfunction. Perform the DTC inspection. (See **DTC INSPECTION [ADAPTIVE FRONT LIGHTING SYSTEM (AFS)]**.)
        - Repair or replace the malfunctioning location, then repeat the procedure from Step 5.

8. Adjust the headlight aiming. (See **HEADLIGHT AIMING**.)

Procedure Not Using M-MDS

CAUTION:

- Perform Steps 4 and 5 **within 30 s**.

1. Empty the vehicle except for the spare tire, jack and vehicle tools.
2. Adjust the tire pressure to the specification. (See **WHEEL AND TIRE SPECIFICATION**.)
3. Move the vehicle to level ground.
4. Switch the ignition ON (engine off or on).

NOTE:

- The AFS OFF indicator light continues flashing during the first initialization, however, continue the work because it does not indicate an improper procedure.

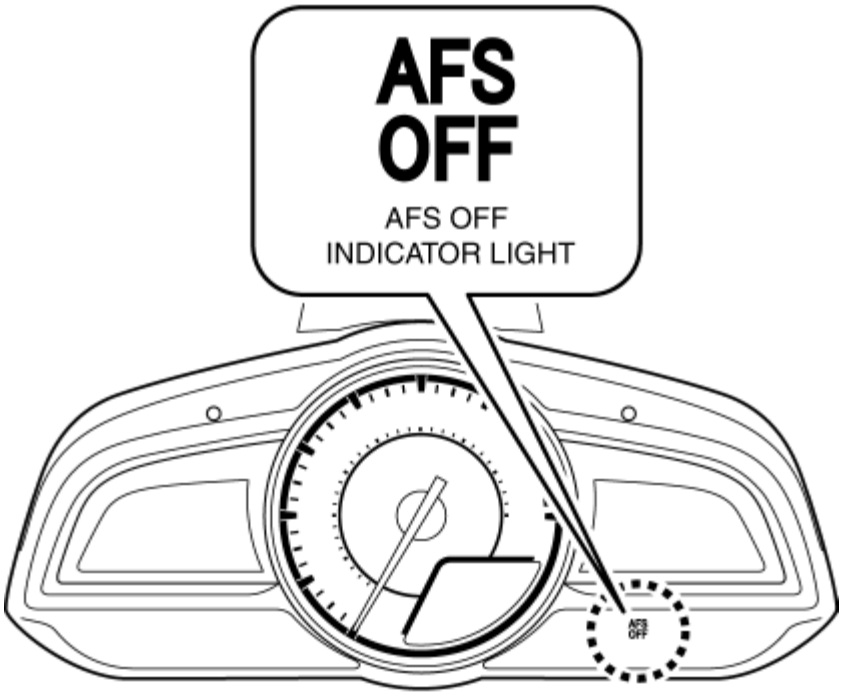

INSTRUMENT CLUSTER

5. Using a jumper wire, connect DLC-2 terminals B and J (ground) **three times at 0.5—1.5 s intervals** as shown in the figure.

CAUTION:

- If the terminals are mistakenly connected, vehicle damage or fire could occur. When connecting with the jumper wire, thoroughly verify what terminals are being connected to prevent a miss-connection.

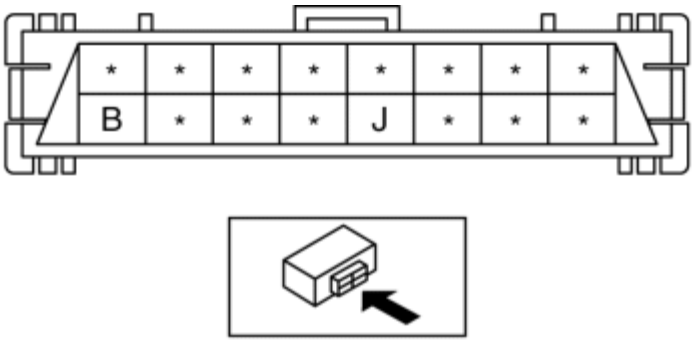

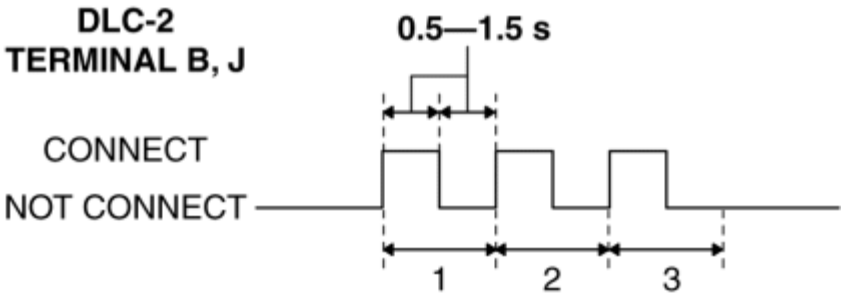

6. Verify the AFS OFF indicator light.

- The initialization is completed if the AFS OFF indicator light flashes **three times every 0.25 s** and turns off. Go to the next step.

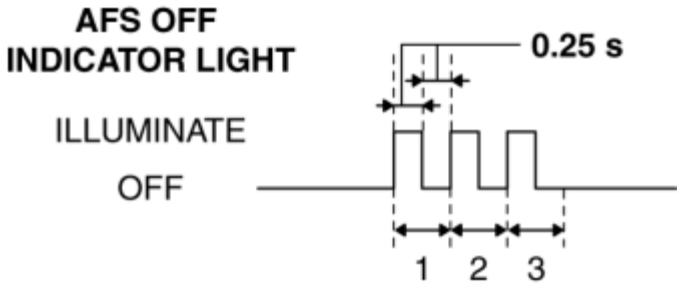

- If the AFS OFF indicator light continues flashing, the procedure may be performed incorrectly. Repeat the procedure from Step 4.
- If the AFS OFF indicator light turns on, the headlight auto leveling system may have a malfunction. Perform the DTC inspection. (See **DTC INSPECTION [ADAPTIVE FRONT LIGHTING SYSTEM (AFS)]**.)
    - Repair or replace the malfunctioning location, then repeat the procedure from Step 4.

7. Adjust the headlight aiming. (See **HEADLIGHT AIMING**.)

2014 - Mazda3 - Body and Accessories

BACK-UP LIGHT SWITCH INSPECTION

1. Disconnect the negative battery cable. (See **NEGATIVE BATTERY CABLE DISCONNECTION/CONNECTION [SKYACTIV-G 2.0, SKYACTIV-G 2.5]**.)

2. Remove the air cleaner component. (ex: air cleaner, air hose) (See **INTAKE-AIR SYSTEM REMOVAL/INSTALLATION [SKYACTIV-G 2.0, SKYACTIV-G 2.5]**.)

3. Disconnect the back-up light switch connector. (See **BACK-UP LIGHT SWITCH REMOVAL/INSTALLATION [C66M-R]**.)

4. Verify that the continuity between the back-up light switch terminals is as indicated in the table.

○—○ : Continuity

Shift lever position	Terminal	
	A	D
Reverse	○	○
Other		

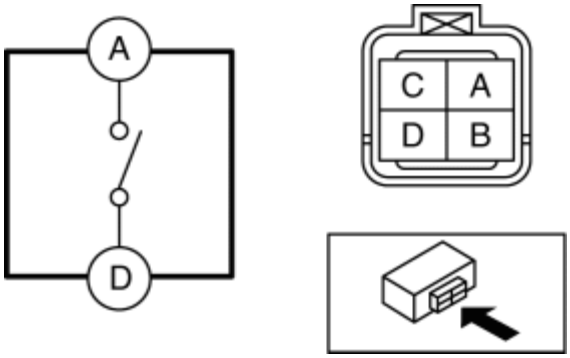

- If not as indicated in the table, replace the back-up light switch. (See **BACK-UP LIGHT SWITCH REMOVAL/INSTALLATION [C66M-R]**.)

2014 - Mazda3 - Body and Accessories

LIGHT SWITCH REMOVAL/INSTALLATION

1. Disconnect the negative battery cable. (See **NEGATIVE BATTERY CABLE DISCONNECTION/CONNECTION [SKYACTIV-G 2.0, SKYACTIV-G 2.5]**.)

2. Remove the column cover. (See **COLUMN COVER REMOVAL/INSTALLATION**.)

3. Rotate the steering wheel until the service hole is visible in the position shown in the figure.

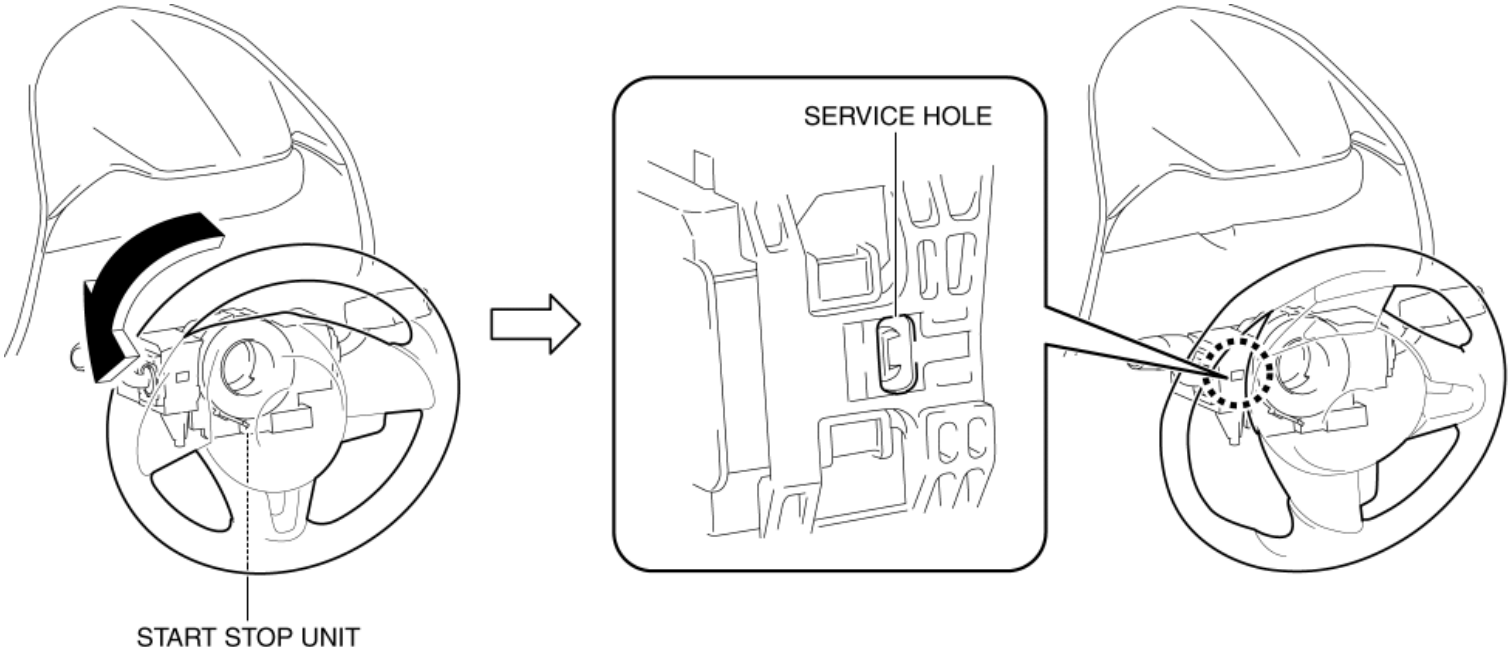

4. While pressing the light switch tab in the direction of arrow (1) shown in the figure, pull out the light switch in the direction of arrow (2) shown in the figure, and detach the light switch tab from the start stop unit.

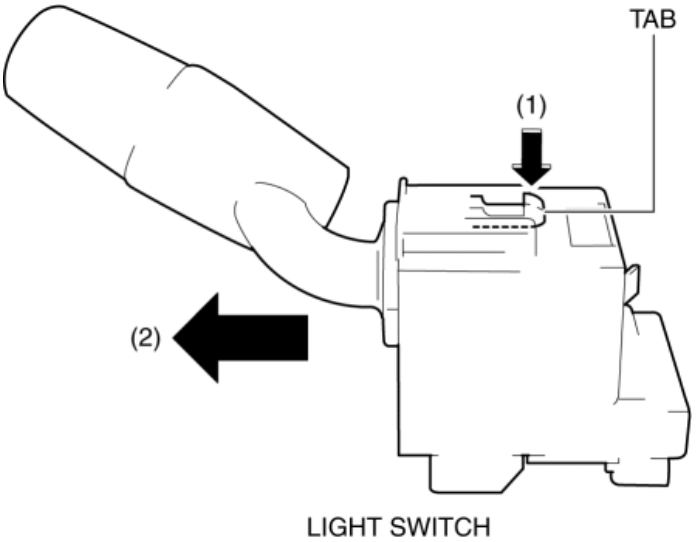

5. Remove the light switch.

6. Install in the reverse order of removal.

LIGHT SWITCH REMOVAL/INSTALLATION

2014 - Mazda3 - Body and Accessories

LIGHT SWITCH INSPECTION

Light Switch

1. Disconnect the negative battery cable. (See **NEGATIVE BATTERY CABLE DISCONNECTION/CONNECTION [SKYACTIV-G 2.0, SKYACTIV-G 2.5]**.)
2. Remove the column cover. (See **COLUMN COVER REMOVAL/INSTALLATION**.)
3. Remove the light switch. (See **LIGHT SWITCH REMOVAL/INSTALLATION**.)
4. Verify that the continuity between the light switch terminals is as indicated in the table.

Without auto light system

○—○ : Continuity

Switch position			Terminal					
Light	Dimmer	FLASH-TO-PASS	C	D	E	F	I	K
OFF	—	Off			○	○		
		On	○		○	○		○
TNS	—	Off		○	○			
		On	○	○	○			○
HEAD	LO	Off		○	○			○
		On	○	○	○			○
	HI	—		○	○		○	○

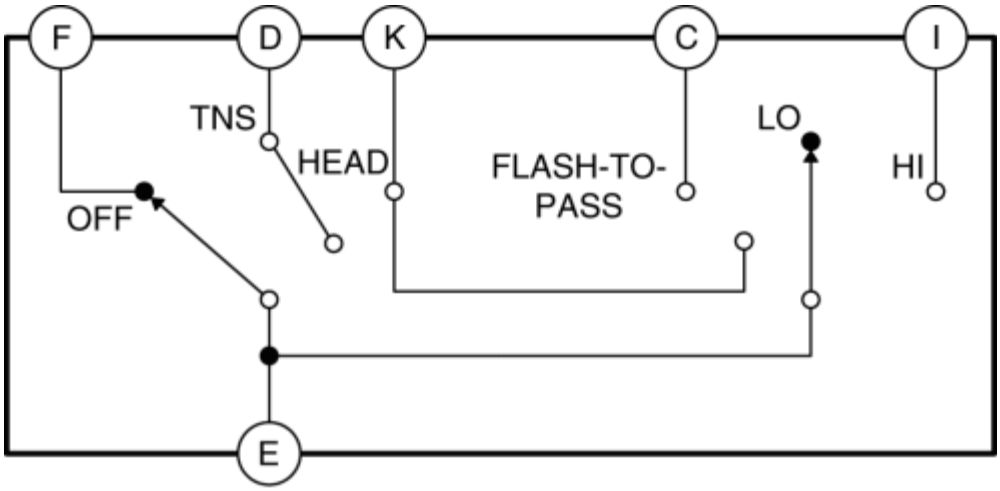

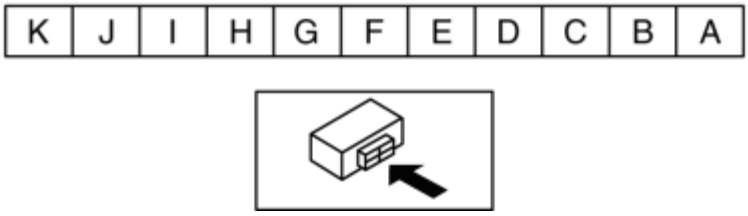

With auto light system

○—○ : Continuity

Switch position			Terminal					
Light	Dimmer	FLASH-TO-PASS	C	D	E	F	I	K
OFF	—	Off			○—○			
		On	○	○	○	○		○
AUTO	LO	Off						
		On	○	○	○			○
TNS	—	Off		○—○				
		On	○	○	○			○
HEAD	LO	Off		○—○				○
		On	○	○	○			○
	HI	—		○—○			○	○

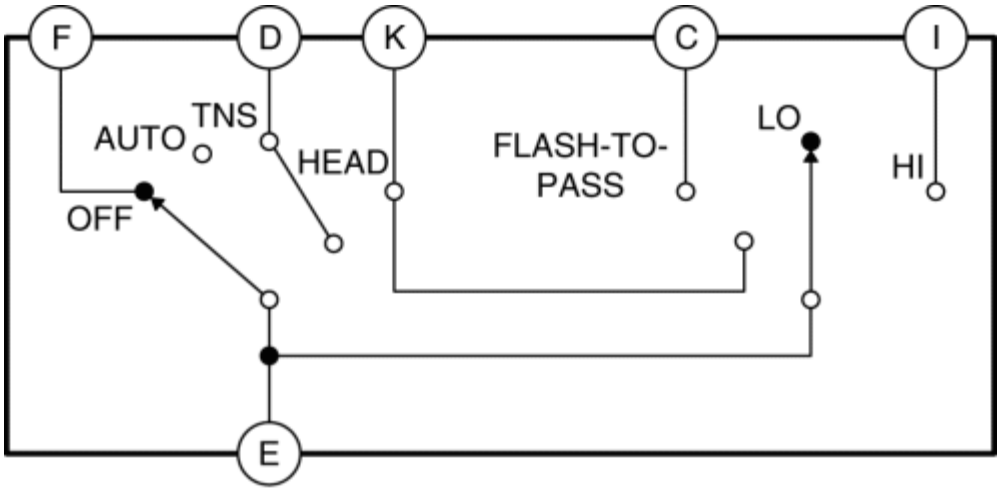

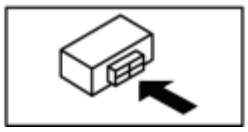

- If not as indicated in the table, replace the light switch. (See **LIGHT SWITCH REMOVAL/INSTALLATION**.)

Turn Switch

1. Disconnect the negative battery cable. (See **NEGATIVE BATTERY CABLE DISCONNECTION/CONNECTION [SKYACTIV-G 2.0, SKYACTIV-G 2.5]**.)
2. Remove the column cover. (See **COLUMN COVER REMOVAL/INSTALLATION**.)
3. Remove the light switch. (See **LIGHT SWITCH REMOVAL/INSTALLATION**.)
4. Verify that the continuity between the light switch terminals is as indicated in the table.

○—○ : Continuity

Switch position	Terminal		
	A	B	E
RH		○	○
OFF			
LH	○		○

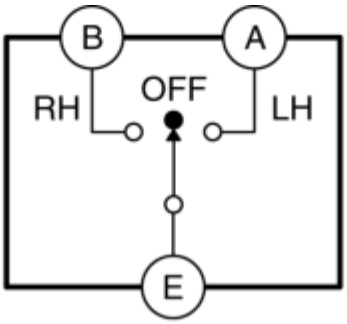

K	J	I	H	G	F	E	D	C	B	A

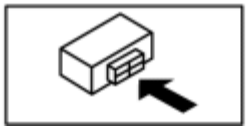

- If not as indicated in the table, replace the light switch. (See **LIGHT SWITCH REMOVAL/INSTALLATION**.)

2014 - Mazda3 - Body and Accessories

FRONT FOG LIGHT SWITCH INSPECTION

1. Disconnect the negative battery cable. (See **NEGATIVE BATTERY CABLE DISCONNECTION/CONNECTION [SKYACTIV-G 2.0, SKYACTIV-G 2.5]**.)
2. Remove the column cover. (See **COLUMN COVER REMOVAL/INSTALLATION**.)
3. Remove the light switch. (See **LIGHT SWITCH REMOVAL/INSTALLATION**.)
4. Verify that the continuity between the light switch terminals is as indicated in the table.

○—○ : Continuity

Switch position	Terminal	
	E	G
F.FOG	○	○
OFF		

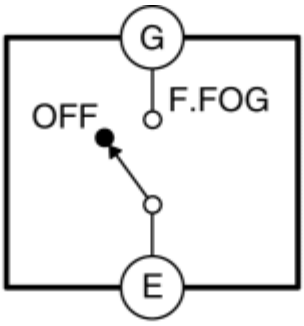

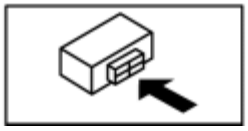

- If not as indicated in the table, replace the light switch. (See **LIGHT SWITCH REMOVAL/INSTALLATION**.)

2014 - Mazda3 - Body and Accessories

HAZARD WARNING SWITCH REMOVAL/INSTALLATION

1. Disconnect the negative battery cable. (See **NEGATIVE BATTERY CABLE DISCONNECTION/CONNECTION [SKYACTIV-G 2.0, SKYACTIV-G 2.5]**.)

2. Remove the glove compartment. (See **GLOVE COMPARTMENT REMOVAL/INSTALLATION**.)

3. Remove the decoration panel. (See **DECORATION PANEL REMOVAL/INSTALLATION**.)

4. While pressing the hazard warning switch hooks in the direction of arrows (1) shown in the figure, press the hazard warning switch in the direction of arrow (2), and disconnect the hazard warning switch hooks from the decoration panel.

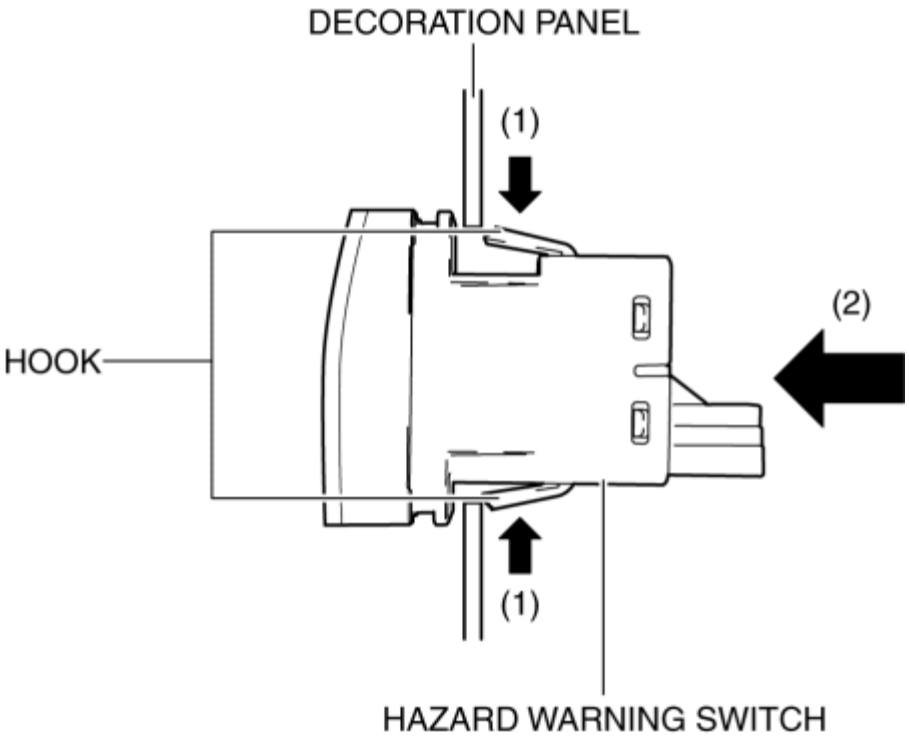

5. Remove the hazard warning switch.

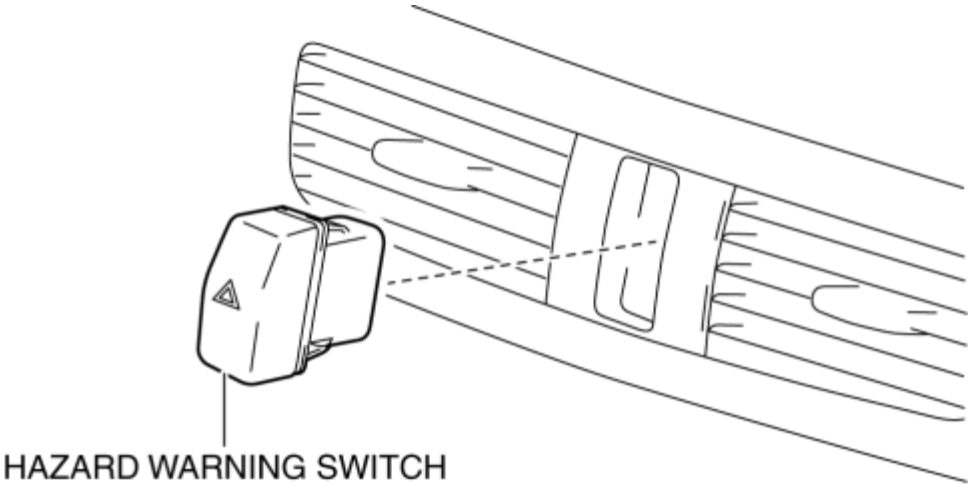

6. Install in the reverse order of removal.

2014 - Mazda3 - Body and Accessories

HAZARD WARNING SWITCH INSPECTION

Continuity Inspection

1. Disconnect the negative battery cable. (See **NEGATIVE BATTERY CABLE DISCONNECTION/CONNECTION [SKYACTIV-G 2.0, SKYACTIV-G 2.5]**.)
2. Remove the glove compartment. (See **GLOVE COMPARTMENT REMOVAL/INSTALLATION**.)
3. Remove the decoration panel. (See **DECORATION PANEL REMOVAL/INSTALLATION**.)
4. Verify that the continuity between the hazard warning switch terminals is as indicated in the table.

○—○ : Continuity

Switch position	Terminal	
	C	D
On	○	○
Off		

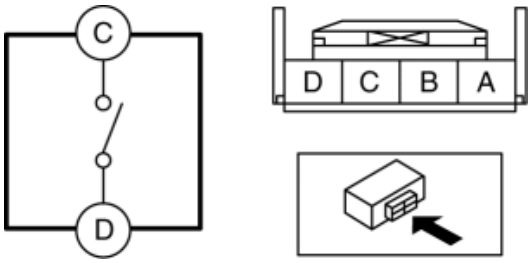

- If not as indicated in the table, replace the hazard warning switch. (See **HAZARD WARNING SWITCH REMOVAL/INSTALLATION**.)

LED Illumination Inspection

1. Disconnect the negative battery cable. (See **NEGATIVE BATTERY CABLE DISCONNECTION/CONNECTION [SKYACTIV-G 2.0, SKYACTIV-G 2.5]**.)
2. Remove the glove compartment. (See **GLOVE COMPARTMENT REMOVAL/INSTALLATION**.)
3. Remove the decoration panel. (See **DECORATION PANEL REMOVAL/INSTALLATION**.)
4. Apply battery voltage to hazard warning switch terminal A, and connect terminal B to ground.

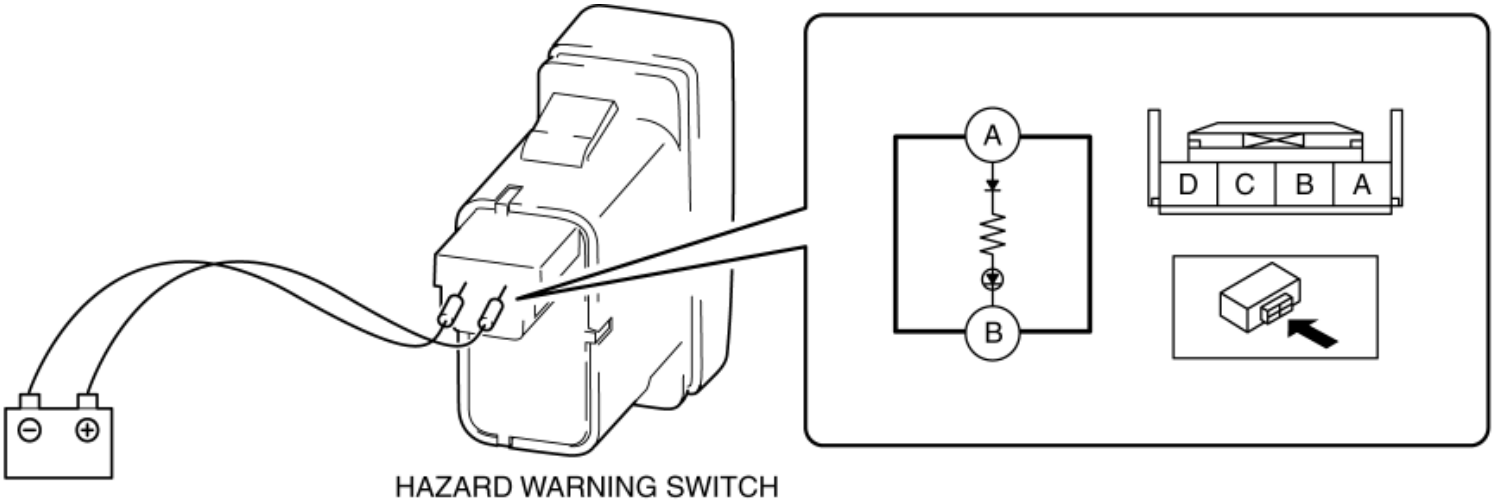

5. Verify that the LED is turned on.

- If the LED does not turn on, replace the hazard warning switch. (See **HAZARD WARNING SWITCH REMOVAL/INSTALLATION**.)

2014 - Mazda3 - Body and Accessories

HEADLIGHT LEVELING SWITCH REMOVAL/INSTALLATION

NOTE:

- The headlight leveling switch is integrated with the cluster switch.
- Refer to CLUSTER SWITCH REMOVAL/INSTALLATION for the headlight leveling switch removal/installation. (See **CLUSTER SWITCH REMOVAL/INSTALLATION**.)

2014 - Mazda3 - Body and Accessories

HEADLIGHT LEVELING SWITCH INSPECTION

NOTE:

- The headlight leveling switch is integrated with the cluster switch.
- If the headlight leveling switch is to be replaced, replace the cluster switch. (See **CLUSTER SWITCH REMOVAL/INSTALLATION**.)

1. Disconnect the negative battery cable. (See **NEGATIVE BATTERY CABLE DISCONNECTION/CONNECTION [SKYACTIV-G 2.0, SKYACTIV-G 2.5]**.)
2. Remove the following parts:
   a. Driver's side front scuff plate (See **FRONT SCUFF PLATE REMOVAL/INSTALLATION**.)
   b. Driver's side front side trim (See **FRONT SIDE TRIM REMOVAL/INSTALLATION**.)
   c. Cluster switch (See **CLUSTER SWITCH REMOVAL/INSTALLATION**.)
3. Verify that the resistance between the cluster switch terminals is as indicated in the table.

○—⩘—○ : Resistance

Switch position	Terminal			Resistance (ohms)
	D	E	F	
0	○—⩘—○			470.25—479.75
-	○—⩘—○			648.45—661.55
1	○—⩘—○			826.65—843.35
-	○—⩘—○			1,004.85—1,025.15
2	○—⩘—○			1,183.05—1,206.95
-	○—⩘—○			1,361.25—1,388.75
3	○—⩘—○			1,539.45—1,570.55
-	○—⩘—○			1,717.65—1,752.35
4	○—⩘—○			1,895.85—1,934.15
-	○—⩘—○			2,074.05—2,115.95
5	○—⩘—○			2,252.25—2,297.75
All positions	○	—⩘—	○	2,976.93—3,037.07

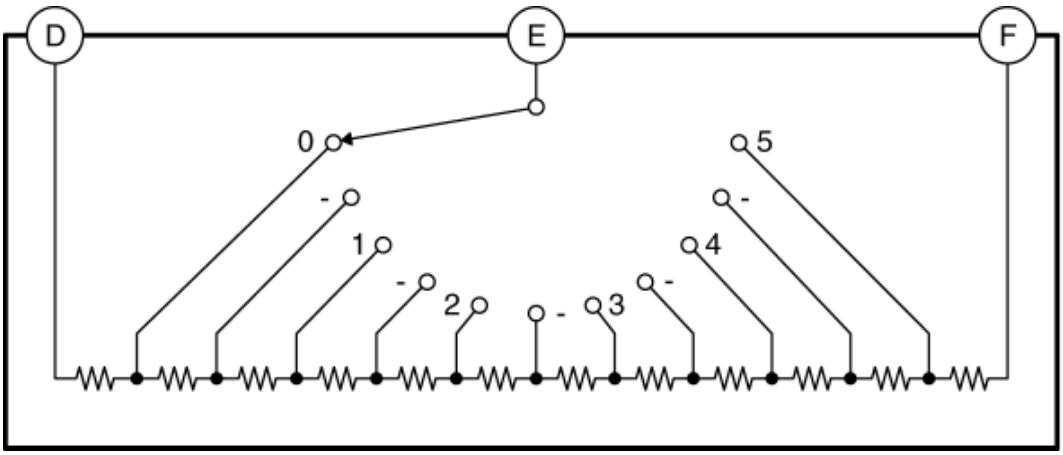

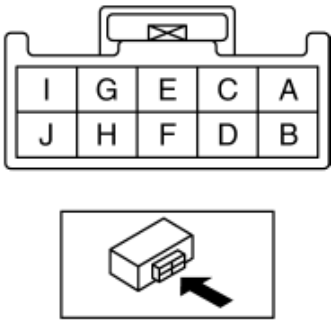

- If not as indicated in the table, replace the cluster switch. (See **CLUSTER SWITCH REMOVAL/INSTALLATION**.)

2014 - Mazda3 - Body and Accessories

AUTO LIGHT SENSOR REMOVAL/INSTALLATION

NOTE:

- The auto light sensor is integrated with the rain sensor as a single unit.
- When replacing the auto light sensor, refer to RAIN SENSOR REMOVAL/INSTALLATION. (See **RAIN SENSOR REMOVAL/INSTALLATION**.)

2014 - Mazda3 - Body and Accessories

LIGHTING SYSTEM PERSONALIZATION FEATURES SETTING PROCEDURE

Turn Light System

- There are two methods for personalizing the turn light system: One using the M-MDS and the other using the center display (with center display). Refer to the following and perform the setting.

  Using M-MDS

  - CONTROL SYSTEM PERSONALIZATION FEATURES SETTING PROCEDURE

  Using center display

  - CENTER DISPLAY PERSONALIZATION FEATURES SETTING PROCEDURE

Auto Light System

- There are two methods for personalizing the auto light system: One using the M-MDS and the other using the center display (with center display). Refer to the following and perform the setting.

  Using M-MDS

  - CONTROL SYSTEM PERSONALIZATION FEATURES SETTING PROCEDURE

  Using center display

  - CENTER DISPLAY PERSONALIZATION FEATURES SETTING PROCEDURE

Auto Light-Off System

- There are two methods for personalizing the auto light-off system: One using the M-MDS and the other using the center display (with center display). Refer to the following and perform the setting.

  Using M-MDS

  - CONTROL SYSTEM PERSONALIZATION FEATURES SETTING PROCEDURE

  Using center display

  - CENTER DISPLAY PERSONALIZATION FEATURES SETTING PROCEDURE

High Beam Control (HBC) System

- There are two methods for personalizing the high beam control (HBC) system: One using the M-MDS and the other using the center display (with center display). Refer to the following and perform the setting.

  Using M-MDS

  - FORWARD SENSING CAMERA (FSC) PERSONALIZATION FEATURES SETTING PROCEDURE

  Using center display

  - CENTER DISPLAY PERSONALIZATION FEATURES SETTING PROCEDURE

Room Light Control System

- There are two methods for personalizing the room light control system: One using the M-MDS and the other using the center display (with center display). Refer to the following and perform the setting.

  Using M-MDS

- **CONTROL SYSTEM PERSONALIZATION FEATURES SETTING PROCEDURE**

  Using center display

- **CENTER DISPLAY PERSONALIZATION FEATURES SETTING PROCEDURE**

DRL System (Except Canada Specs.)

Function	Initial setting	Setting contents	Control module
The DRL system function can be set.	On (DRL illumination)	Off (DRL non-illumination)/On (DRL illumination)	Front body control module (FBCM)

- Perform the following procedure to change the DRL illumination/non-illumination setting.

NOTE:

- Because each procedure needs to be completed within a predetermined period of time, refer to the following procedure before performing the set up work, and then verify the content of the work and the time limit.

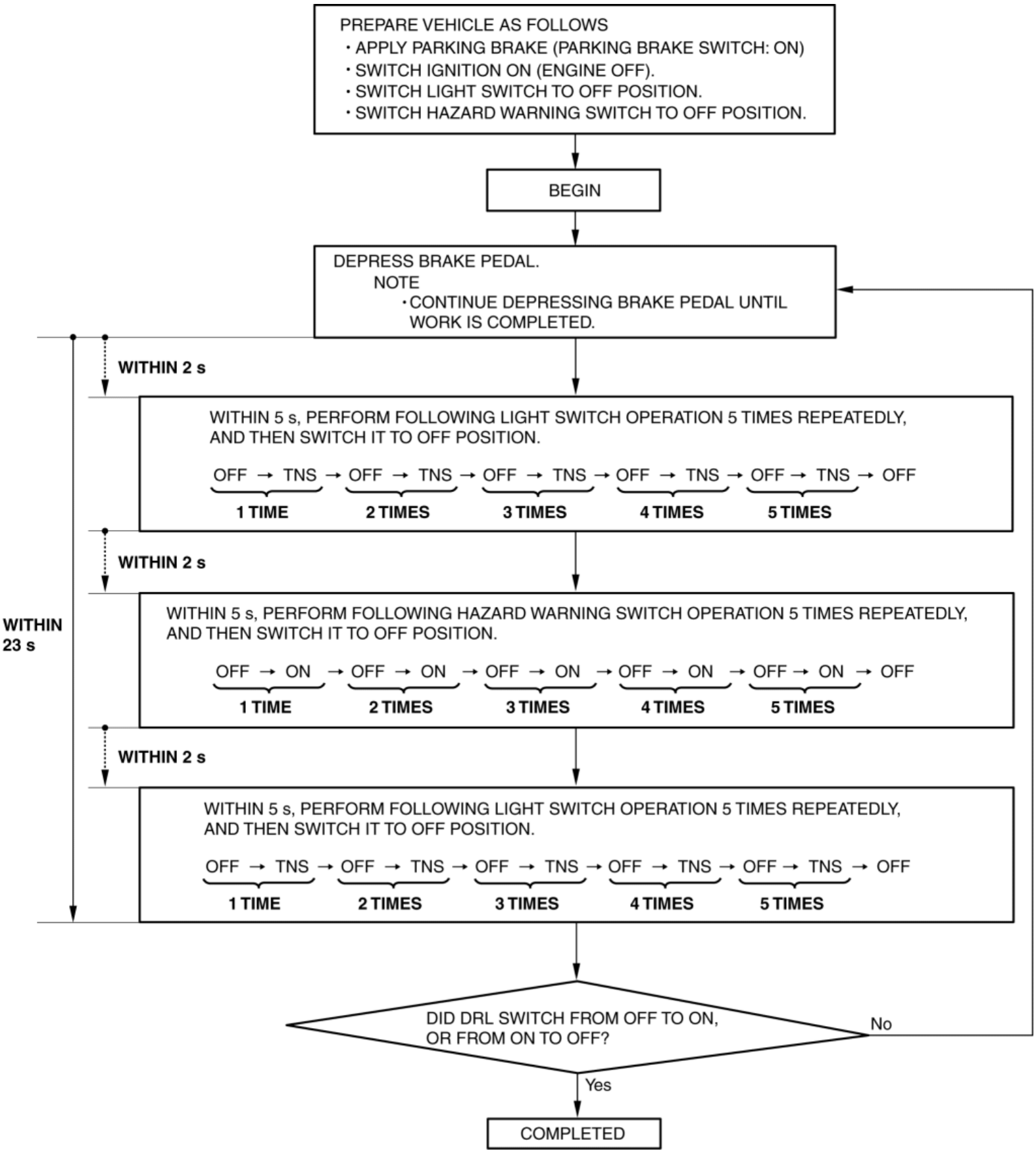
PREPARE VEHICLE AS FOLLOWS
・APPLY PARKING BRAKE (PARKING BRAKE SWITCH: ON)
・SWITCH IGNITION ON (ENGINE OFF).
・SWITCH LIGHT SWITCH TO OFF POSITION.
・SWITCH HAZARD WARNING SWITCH TO OFF POSITION.
BEGIN
DEPRESS BRAKE PEDAL.
NOTE
・CONTINUE DEPRESSING BRAKE PEDAL UNTIL WORK IS COMPLETED.
WITHIN 2 s
WITHIN 5 s, PERFORM FOLLOWING LIGHT SWITCH OPERATION 5 TIMES REPEATEDLY, AND THEN SWITCH IT TO OFF POSITION.
OFF → TNS → OFF → TNS → OFF → TNS → OFF → TNS → OFF → TNS → OFF
1 TIME
2 TIMES
3 TIMES
4 TIMES
5 TIMES
WITHIN 2 s
WITHIN 5 s, PERFORM FOLLOWING HAZARD WARNING SWITCH OPERATION 5 TIMES REPEATEDLY, AND THEN SWITCH IT TO OFF POSITION.
OFF → ON → OFF → ON → OFF → ON → OFF → ON → OFF → ON → OFF
1 TIME
2 TIMES
3 TIMES
4 TIMES
5 TIMES
WITHIN 2 s
WITHIN 5 s, PERFORM FOLLOWING LIGHT SWITCH OPERATION 5 TIMES REPEATEDLY, AND THEN SWITCH IT TO OFF POSITION.
OFF → TNS → OFF → TNS → OFF → TNS → OFF → TNS → OFF → TNS → OFF
1 TIME
2 TIMES
3 TIMES
4 TIMES
5 TIMES
WITHIN 23 s
DID DRL SWITCH FROM OFF TO ON, OR FROM ON TO OFF?
No
Yes
COMPLETED

2014 - Mazda3 - Body and Accessories

FRONT MAP LIGHT REMOVAL/INSTALLATION

Without Sunglasses Holder

Single light type

NOTE:

- The front map light can be removed without having to remove the headliner from the vehicle.

1. Perform the following procedure.

4SD

- Set the wheel blocks for both the front and rear wheels.
- Disconnect the negative battery cable. (See **NEGATIVE BATTERY CABLE DISCONNECTION/CONNECTION [SKYACTIV-G 2.0, SKYACTIV-G 2.5]**.)
- Shift the selector lever from the P position to the D position (ATX).
- Remove the sunroof seaming welt. (with sunroof system)
- Remove the following parts:
  - A-pillar trim (See **A-PILLAR TRIM REMOVAL/INSTALLATION**.)
  - Sunvisor (See **SUNVISOR REMOVAL/INSTALLATION**.)
  - Assist handle (See **ASSIST HANDLE REMOVAL/INSTALLATION**.)
  - Front scuff plate (See **FRONT SCUFF PLATE REMOVAL/INSTALLATION**.)
  - Rear scuff plate (See **REAR SCUFF PLATE REMOVAL/INSTALLATION**.)
  - B-pillar lower trim (See **B-PILLAR LOWER TRIM REMOVAL/INSTALLATION**.)
  - Adjust anchor cover (See **FRONT SEAT BELT REMOVAL/INSTALLATION**.)
  - Upper anchor installation bolt on the seat belt (See **FRONT SEAT BELT REMOVAL/INSTALLATION**.)
  - B-pillar upper trim (See **B-PILLAR UPPER TRIM REMOVAL/INSTALLATION**.)
- Set the tire house trim aside. (See **TIRE HOUSE TRIM REMOVAL/INSTALLATION**.)
- Remove the C-pillar trim. (See **C-PILLAR TRIM REMOVAL/INSTALLATION**.)
- Remove the headliner. (See **HEADLINER REMOVAL/INSTALLATION**.)

5HB

- Set the wheel blocks for both the front and rear wheels.
- Disconnect the negative battery cable. (See **NEGATIVE BATTERY CABLE DISCONNECTION/CONNECTION [SKYACTIV-G 2.0, SKYACTIV-G 2.5]**.)
- Shift the selector lever from the P position to the D position (ATX).
- Remove the sunroof seaming welt. (with sunroof system)
- Remove the following parts:
  - A-pillar trim (See **A-PILLAR TRIM REMOVAL/INSTALLATION**.)
  - Sunvisor (See **SUNVISOR REMOVAL/INSTALLATION**.)
  - Assist handle (See **ASSIST HANDLE REMOVAL/INSTALLATION**.)
  - Front scuff plate (See **FRONT SCUFF PLATE REMOVAL/INSTALLATION**.)
  - Rear scuff plate (See **REAR SCUFF PLATE REMOVAL/INSTALLATION**.)

- B-pillar lower trim (See **B-PILLAR LOWER TRIM REMOVAL/INSTALLATION**.)
- Adjust anchor cover (See **FRONT SEAT BELT REMOVAL/INSTALLATION**.)
- Upper anchor installation bolt on the seat belt (See **FRONT SEAT BELT REMOVAL/INSTALLATION**.)
- B-pillar upper trim (See **B-PILLAR UPPER TRIM REMOVAL/INSTALLATION**.)

- Set the tire house trim aside. (See **TIRE HOUSE TRIM REMOVAL/INSTALLATION**.)
- Remove the following parts:
  - Rear package tray (See **REAR PACKAGE TRAY REMOVAL/INSTALLATION**.)
  - Trunk covering (See **TRUNK COVERING REMOVAL/INSTALLATION**.)
  - Trunk board (See **TRUNK BOARD REMOVAL/INSTALLATION**.)
  - Trunk end trim (See **TRUNK END TRIM REMOVAL/INSTALLATION**.)
  - Trunk side upper trim (See **TRUNK SIDE UPPER TRIM REMOVAL/INSTALLATION**.)
  - Trunk side trim (LH only) (See **TRUNK SIDE TRIM REMOVAL/INSTALLATION**.)
  - C-pillar trim (See **C-PILLAR TRIM REMOVAL/INSTALLATION**.)
  - Headliner (See **HEADLINER REMOVAL/INSTALLATION**.)

2. Disconnect the connector.

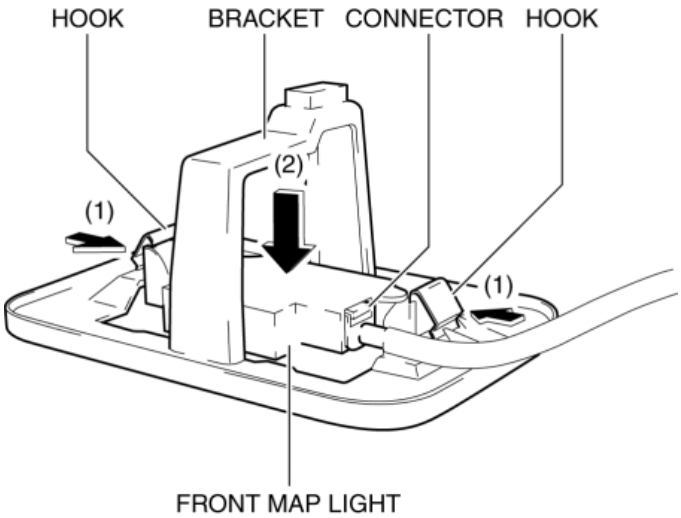

3. While pressing the hooks of the front map light in the direction of arrows (1) shown in the figure, press out the front map light in the direction of arrow (2) to detach the hooks from the bracket.

CAUTION:

- When removing the front map light from the bracket, the front map light may fall off and be damaged. Remove the front map light from the bracket while holding the front map light on the lens side by hand.

4. Remove the front map light.

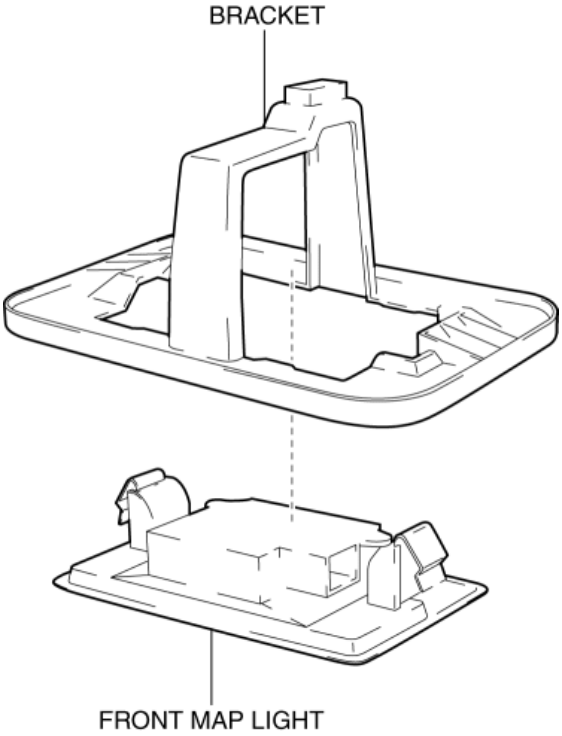

5. Install in the reverse order of removal.

Dual light type

1. Disconnect the negative battery cable. (See **NEGATIVE BATTERY CABLE DISCONNECTION/CONNECTION [SKYACTIV-G 2.0, SKYACTIV-G 2.5]**.)

2. Pull out sections A of the front map light in the direction of arrow (1) shown in the figure and detach the clips from the bracket.

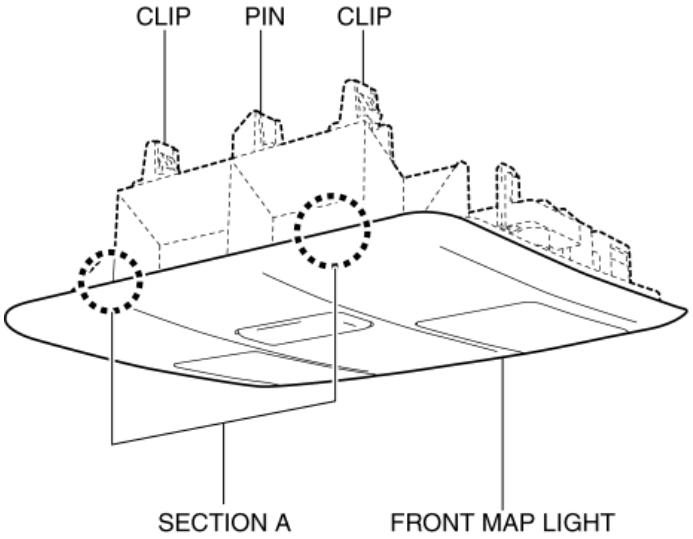

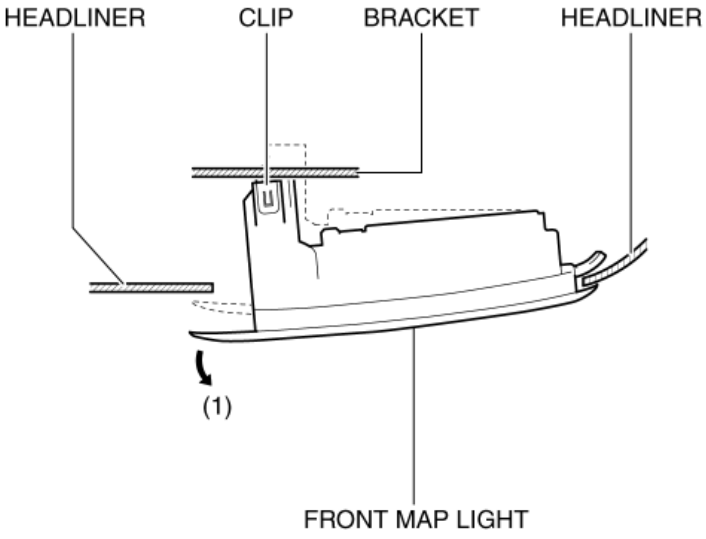

CAUTION:

- Be careful not to pull the connector out strongly when removing the front map light. Otherwise, the contact surface of the wiring harness secured to the headliner will come off and the wiring harness could be pulled out. If the front map light is installed with the wiring harness pulled out, the wiring harness could get caught between the headliner and front map light bracket resulting in an open or short circuit in the wiring harness.

3. Move the front map light in the direction of arrow (2) shown in the figure and pull out the front map light hooks from the headliner.

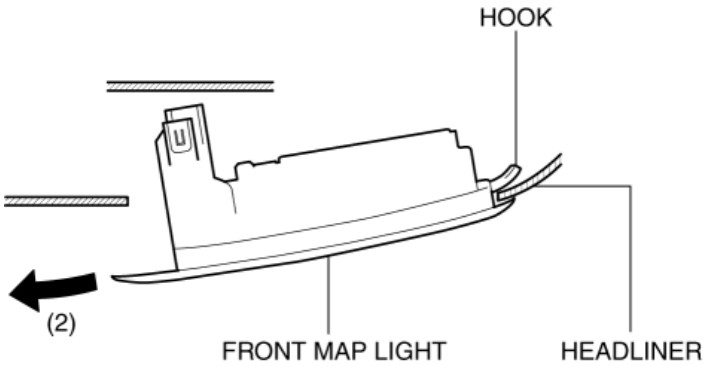

4. Disconnect the connector and remove the front map light from the headliner.

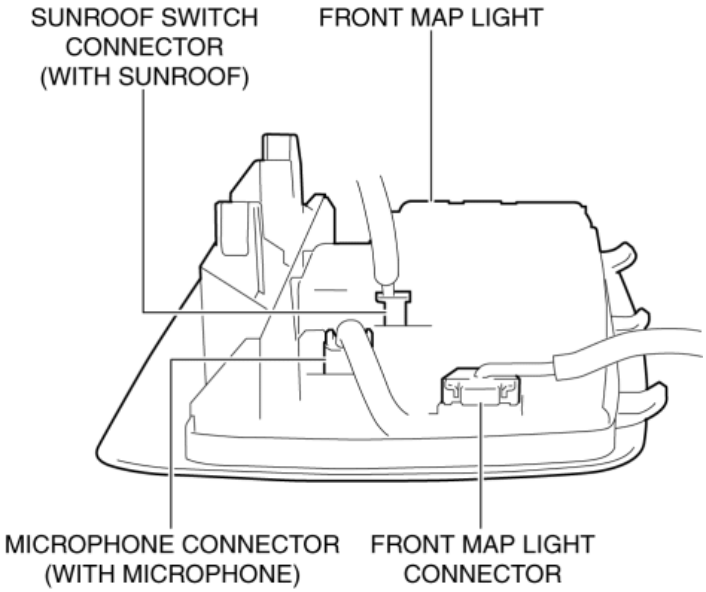

CAUTION:

- When removing the front map light from the headliner, the front map light may fall off and be damaged. Remove the front map light from the headliner while holding the front map light on the lens side by hand.

5. Install in the reverse order of removal.

With Sunglasses Holder

1. Disconnect the negative battery cable. (See **NEGATIVE BATTERY CABLE DISCONNECTION/CONNECTION [SKYACTIV-G 2.0, SKYACTIV-G 2.5]**.)

2. Open the sunglasses holder.

3. Remove the screws.

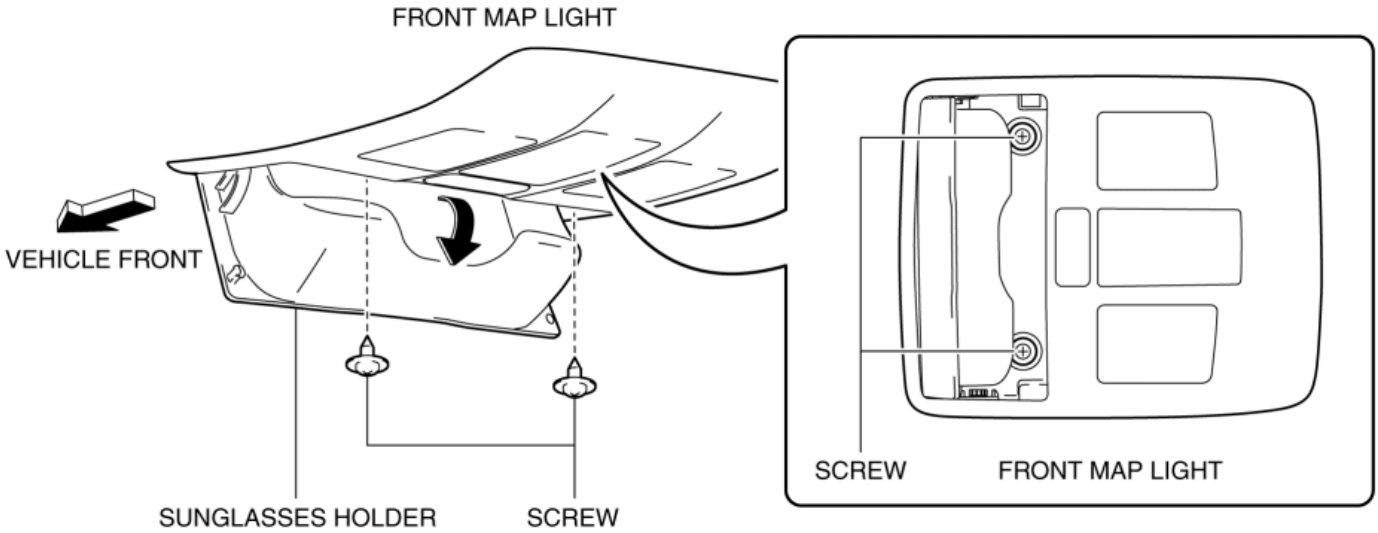

4. Move the front map light in the direction of arrow (1) shown in the figure and pull out the pin from the bracket.

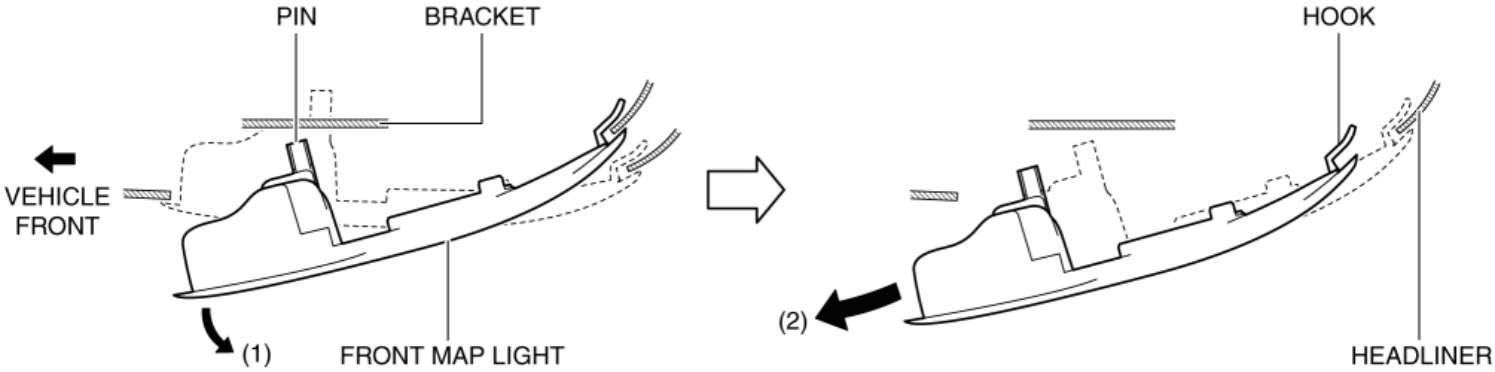

CAUTION:

- Be careful not to pull the connector out strongly when removing the front map light. Otherwise, the contact surface of the wiring harness secured to the headliner will come off and the wiring harness could be pulled out. If the front map light is installed with the wiring harness pulled out, the wiring harness could get caught between the headliner and front map light bracket resulting in an open or short circuit in the wiring harness.

5. Move the front map light in the direction of arrow (2) shown in the figure and pull out the front map light hooks from the headliner.

6. Disconnect the connector and remove the front map light from the headliner.

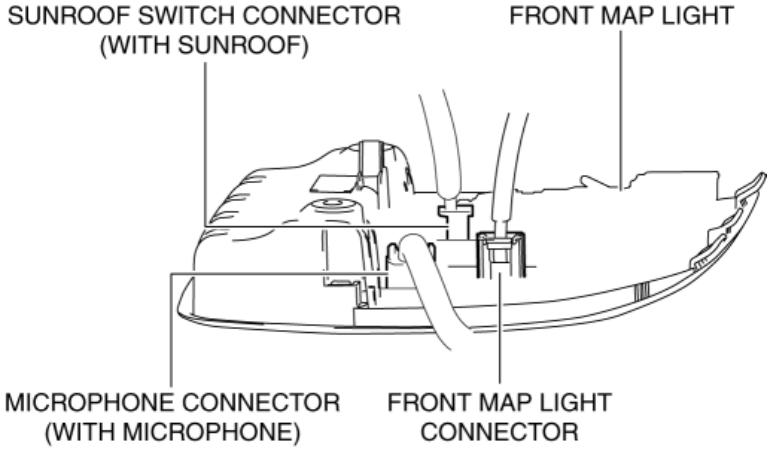

CAUTION:

- When removing the front map light from the headliner, the front map light may fall off and be damaged. Remove the front map light from the headliner while holding the front map light on the lens side by hand.

7. Install in the reverse order of removal.

FRONT MAP LIGHT REMOVAL/INSTALLATION

2014 - Mazda3 - Body and Accessories

FRONT MAP LIGHT BULB REMOVAL/INSTALLATION

Single Light Type

1. Disconnect the negative battery cable. (See **NEGATIVE BATTERY CABLE DISCONNECTION/CONNECTION [SKYACTIV-G 2.0, SKYACTIV-G 2.5]**.)

2. To prevent scratches, apply protective tape to the position shown in the figure.

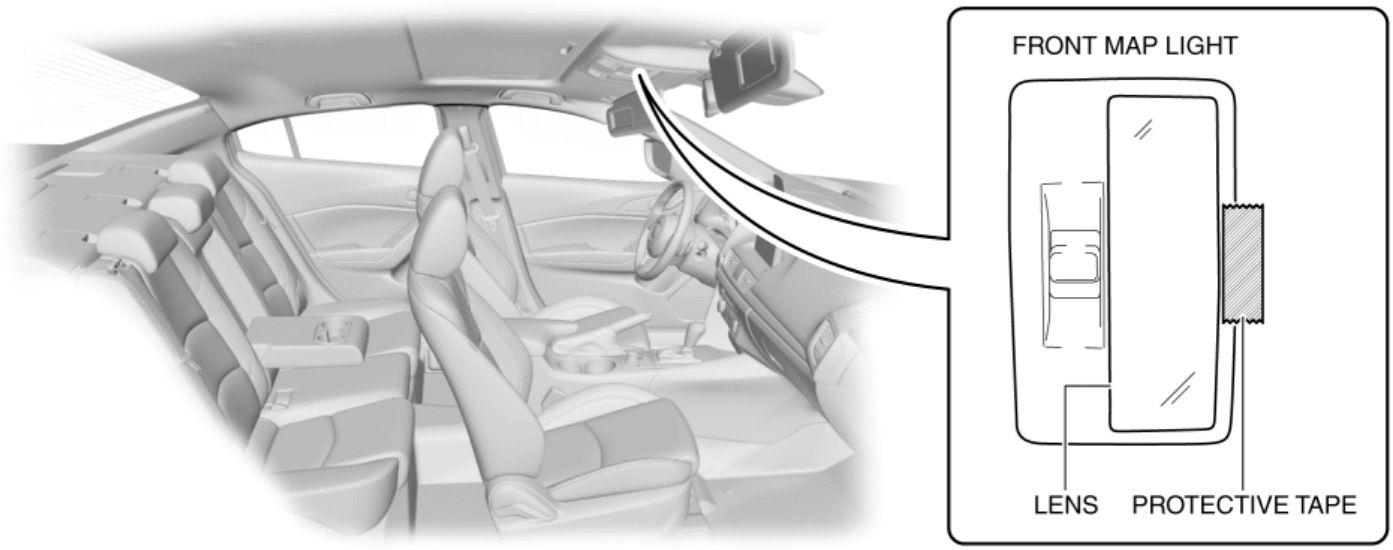

CAUTION:

- When inserting the remover tool in the gap between the front map light and the lens, the remover tool could interfere with the front map light and scratch or damage it. When removing the lens from the front map light, apply protective tape to the front map light.

3. Insert the remover tool into the service hole at the position shown in the figure.

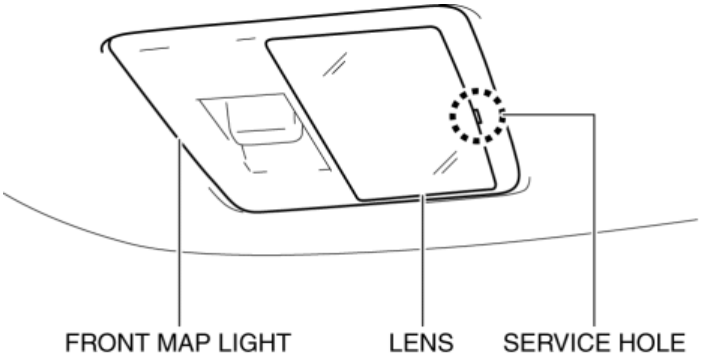

4. Move the remover tool in the direction shown in the figure and detach the lens tabs from the front map light.

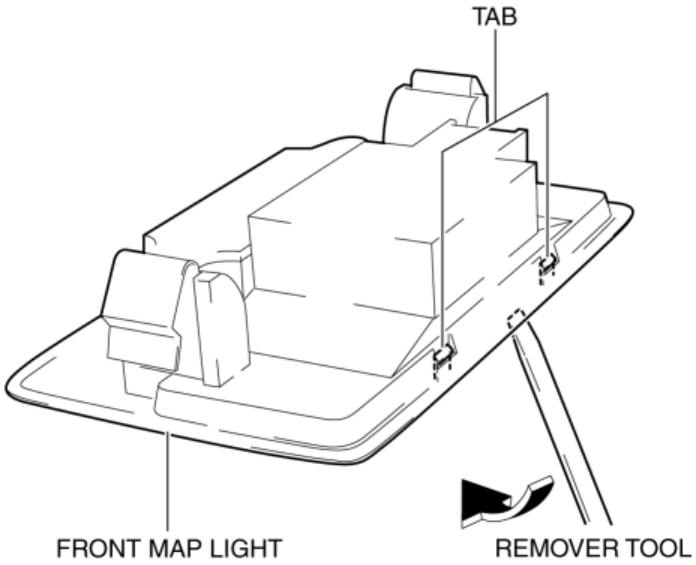

5. Pull out the lens tabs from the front map light and remove the lens from the front map light.

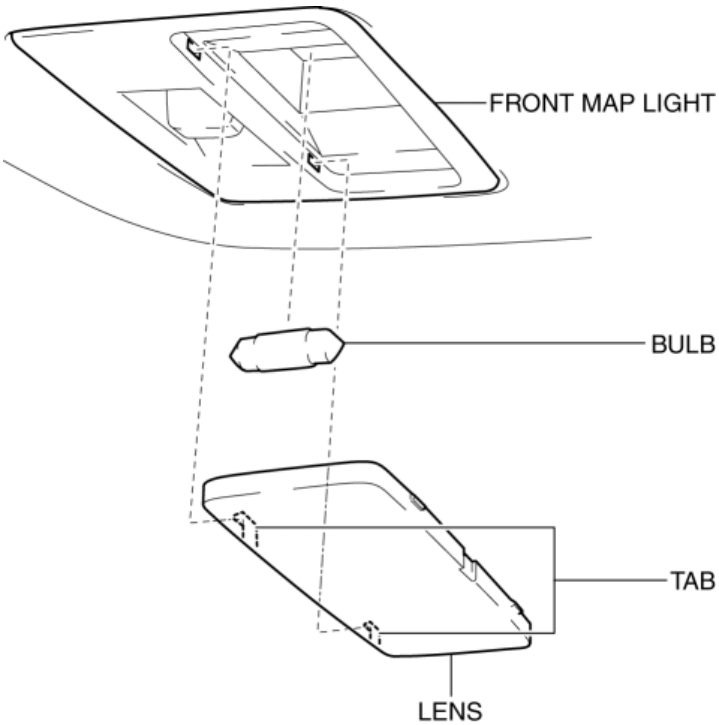

6. Remove the front map light bulb.

CAUTION:

- The bulb reaches high temperatures when illuminated. If there is oil or dirt on the surface of the bulb, excessive heat will build up and the life of the bulb will be shortened. When replacing the bulb, hold the metal flange, not the glass.

7. Install in the reverse order of removal.

Dual Light Type

1. Disconnect the negative battery cable. (See **NEGATIVE BATTERY CABLE DISCONNECTION/CONNECTION [SKYACTIV-G 2.0, SKYACTIV-G 2.5]**.)

2. To prevent scratches, apply protective tape to the position shown in the figure.

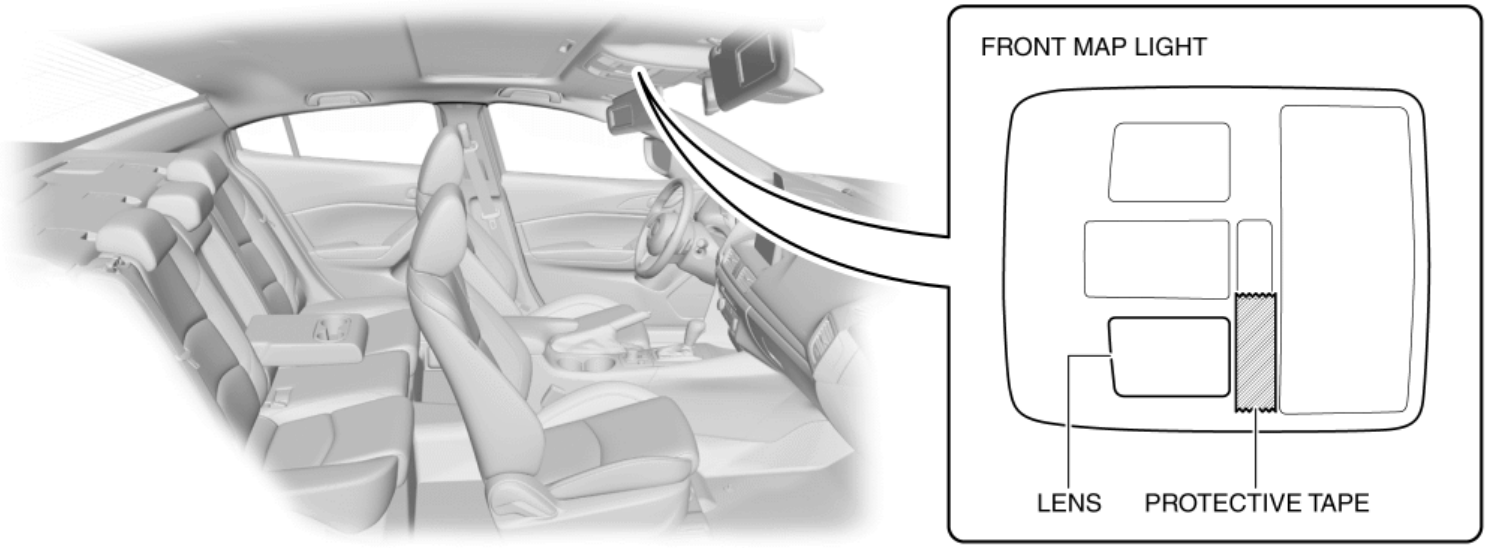

CAUTION:

- When inserting the remover tool in the gap between the front map light and the lens, the remover tool could interfere with the front map light and scratch or damage it. When removing the lens from the front map light, apply protective tape to the front map light.

3. Press the lens to assure a space for inserting the remover tool.

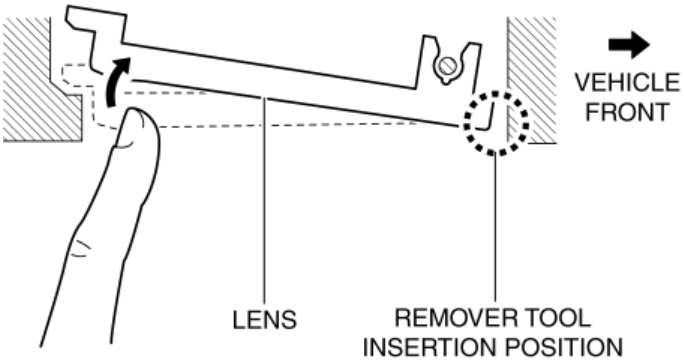

4. Insert the remover tool into the gap between the lens and the front map light.

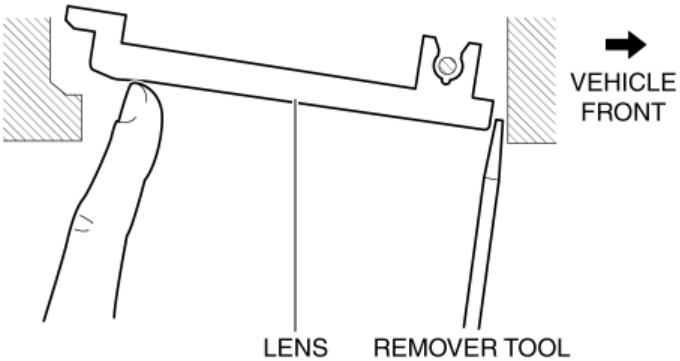

5. Move the remover tool in the direction of arrow (1) shown in the figure, pull out the lens from the pin.

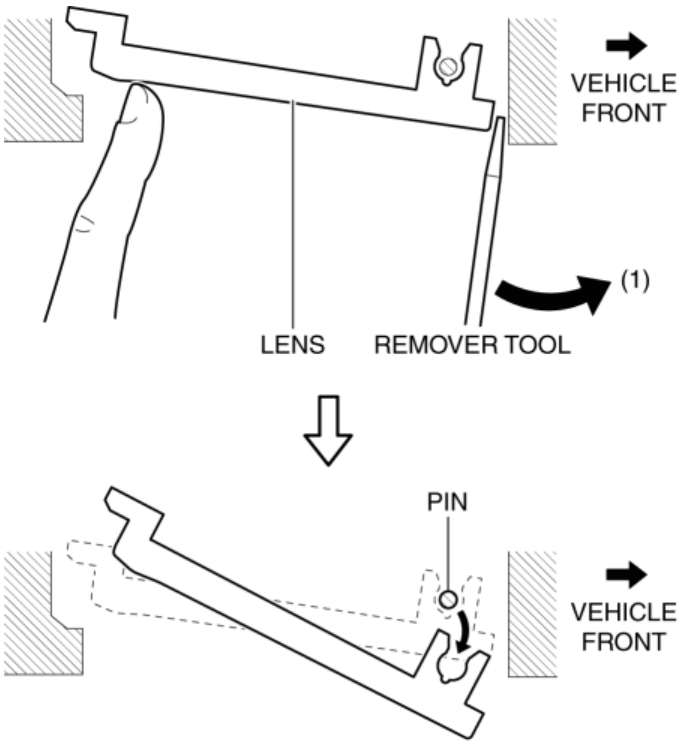

6. Remove the lens from the front map light.

7. Press the spring of the front map light in the direction of arrow (2) shown in the figure and disengage the front map light bulb from the spring.

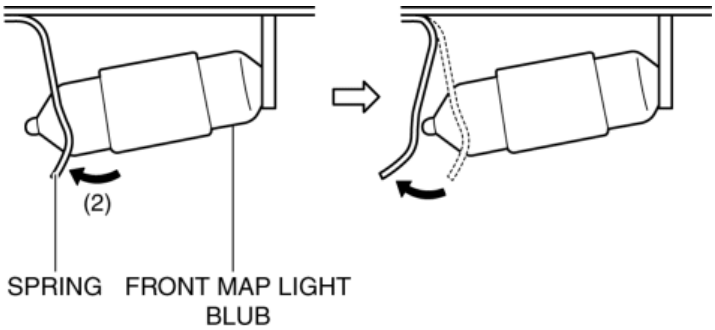

8. Remove the front map light bulb.

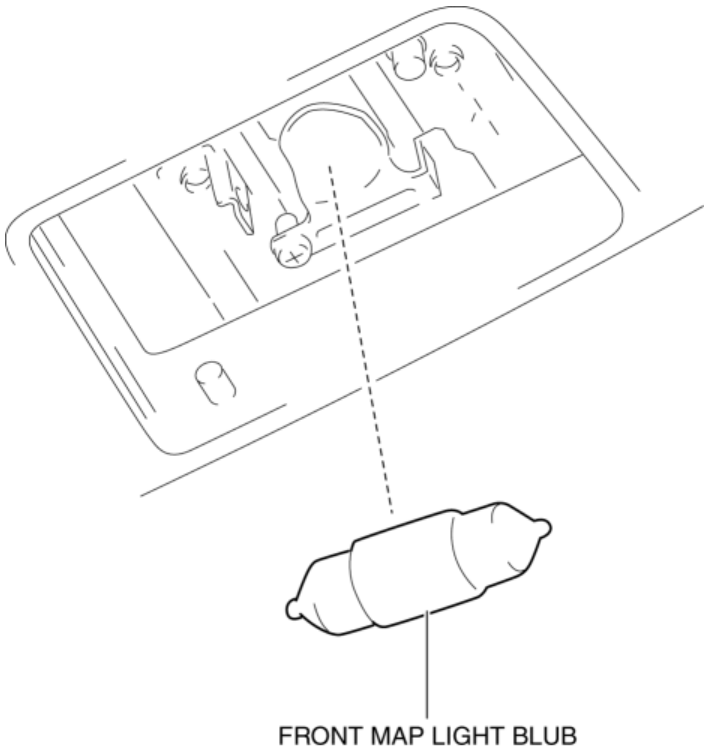

CAUTION:

- The bulb reaches high temperatures when illuminated. If there is oil or dirt on the surface of the bulb, excessive heat will build up and the life of the bulb will be shortened. When replacing the bulb, hold the metal flange, not the glass.

9. Install in the reverse order of removal.

2014 - Mazda3 - Body and Accessories

FRONT MAP LIGHT INSPECTION

Single Light Type

NOTE:

- The front map light can be removed without having to remove the headliner from the vehicle.

1. Perform the following procedure.

4SD

- Set the wheel blocks for both the front and rear wheels.
- Disconnect the negative battery cable. (See **NEGATIVE BATTERY CABLE DISCONNECTION/CONNECTION [SKYACTIV-G 2.0, SKYACTIV-G 2.5]**.)
- Shift the selector lever from the P position to the D position (ATX).
- Remove the sunroof seaming welt. (with sunroof system)
- Remove the following parts:
  - A-pillar trim (See **A-PILLAR TRIM REMOVAL/INSTALLATION**.)
  - Sunvisor (See **SUNVISOR REMOVAL/INSTALLATION**.)
  - Assist handle (See **ASSIST HANDLE REMOVAL/INSTALLATION**.)
  - Front scuff plate (See **FRONT SCUFF PLATE REMOVAL/INSTALLATION**.)
  - Rear scuff plate (See **REAR SCUFF PLATE REMOVAL/INSTALLATION**.)
  - B-pillar lower trim (See **B-PILLAR LOWER TRIM REMOVAL/INSTALLATION**.)
  - Adjust anchor cover (See **FRONT SEAT BELT REMOVAL/INSTALLATION**.)
  - Upper anchor installation bolt on the seat belt (See **FRONT SEAT BELT REMOVAL/INSTALLATION**.)
  - B-pillar upper trim (See **B-PILLAR UPPER TRIM REMOVAL/INSTALLATION**.)
- Set the tire house trim aside. (See **TIRE HOUSE TRIM REMOVAL/INSTALLATION**.)
- Remove the C-pillar trim. (See **C-PILLAR TRIM REMOVAL/INSTALLATION**.)

- Remove the headliner. (See **HEADLINER REMOVAL/INSTALLATION**.)

5HB

- Set the wheel blocks for both the front and rear wheels.
- Disconnect the negative battery cable. (See **NEGATIVE BATTERY CABLE DISCONNECTION/CONNECTION [SKYACTIV-G 2.0, SKYACTIV-G 2.5]**.)
- Shift the selector lever from the P position to the D position (ATX).
- Remove the sunroof seaming welt. (with sunroof system)
- Remove the following parts:
    - A-pillar trim (See **A-PILLAR TRIM REMOVAL/INSTALLATION**.)
    - Sunvisor (See **SUNVISOR REMOVAL/INSTALLATION**.)
    - Assist handle (See **ASSIST HANDLE REMOVAL/INSTALLATION**.)
    - Front scuff plate (See **FRONT SCUFF PLATE REMOVAL/INSTALLATION**.)
    - Rear scuff plate (See **REAR SCUFF PLATE REMOVAL/INSTALLATION**.)
    - B-pillar lower trim (See **B-PILLAR LOWER TRIM REMOVAL/INSTALLATION**.)
    - Adjust anchor cover (See **FRONT SEAT BELT REMOVAL/INSTALLATION**.)
    - Upper anchor installation bolt on the seat belt (See **FRONT SEAT BELT REMOVAL/INSTALLATION**.)
    - B-pillar upper trim (See **B-PILLAR UPPER TRIM REMOVAL/INSTALLATION**.)
- Set the tire house trim aside. (See **TIRE HOUSE TRIM REMOVAL/INSTALLATION**.)
- Remove the following parts:
    - Rear package tray (See **REAR PACKAGE TRAY REMOVAL/INSTALLATION**.)
    - Trunk covering (See **TRUNK COVERING REMOVAL/INSTALLATION**.)
    - Trunk board (See **TRUNK BOARD REMOVAL/INSTALLATION**.)
    - Trunk end trim (See **TRUNK END TRIM REMOVAL/INSTALLATION**.)
    - Trunk side upper trim (See **TRUNK SIDE UPPER TRIM REMOVAL/INSTALLATION**.)
    - Trunk side trim (LH only) (See **TRUNK SIDE TRIM REMOVAL/INSTALLATION**.)
    - C-pillar trim (See **C-PILLAR TRIM REMOVAL/INSTALLATION**.)
    - Headliner (See **HEADLINER REMOVAL/INSTALLATION**.)

2. Remove the front map light. (See **FRONT MAP LIGHT REMOVAL/INSTALLATION**.)

3. Verify that the continuity between the front map light terminals is as indicated in the table.

: Bulb

Room light switch	Terminal		
	B	C	D
OFF			
ON	○	○	○
DOOR		○	○

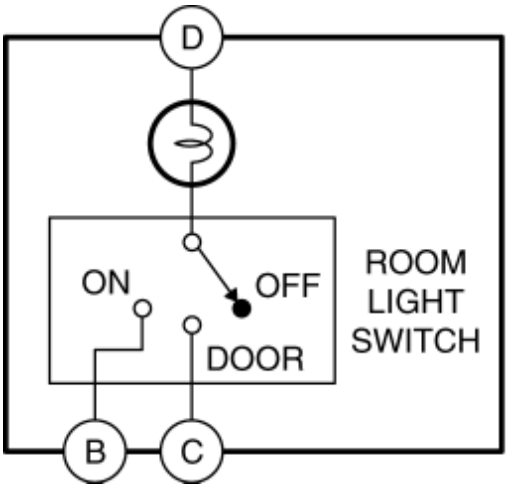

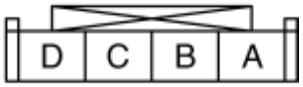

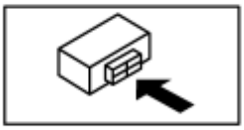

- If not as indicated in the table, replace the front map light bulb or front map light. (See **FRONT MAP LIGHT BULB REMOVAL/INSTALLATION**.) (See **FRONT MAP LIGHT REMOVAL/INSTALLATION**.)

Dual Light Type

Front map light switch

1. Disconnect the negative battery cable. (See **NEGATIVE BATTERY CABLE DISCONNECTION/CONNECTION [SKYACTIV-G 2.0, SKYACTIV-G 2.5]**.)

2. Remove the front map light. (See **FRONT MAP LIGHT REMOVAL/INSTALLATION**.)

3. Verify that the continuity between the front map light terminals is as indicated in the table.

FRONT MAP LIGHT INSPECTION

: Bulb

Front map light switch		Terminal		
LH	RH	A	F	G
OFF	ON			
ON	OFF			
OFF	OFF			
ON	ON			

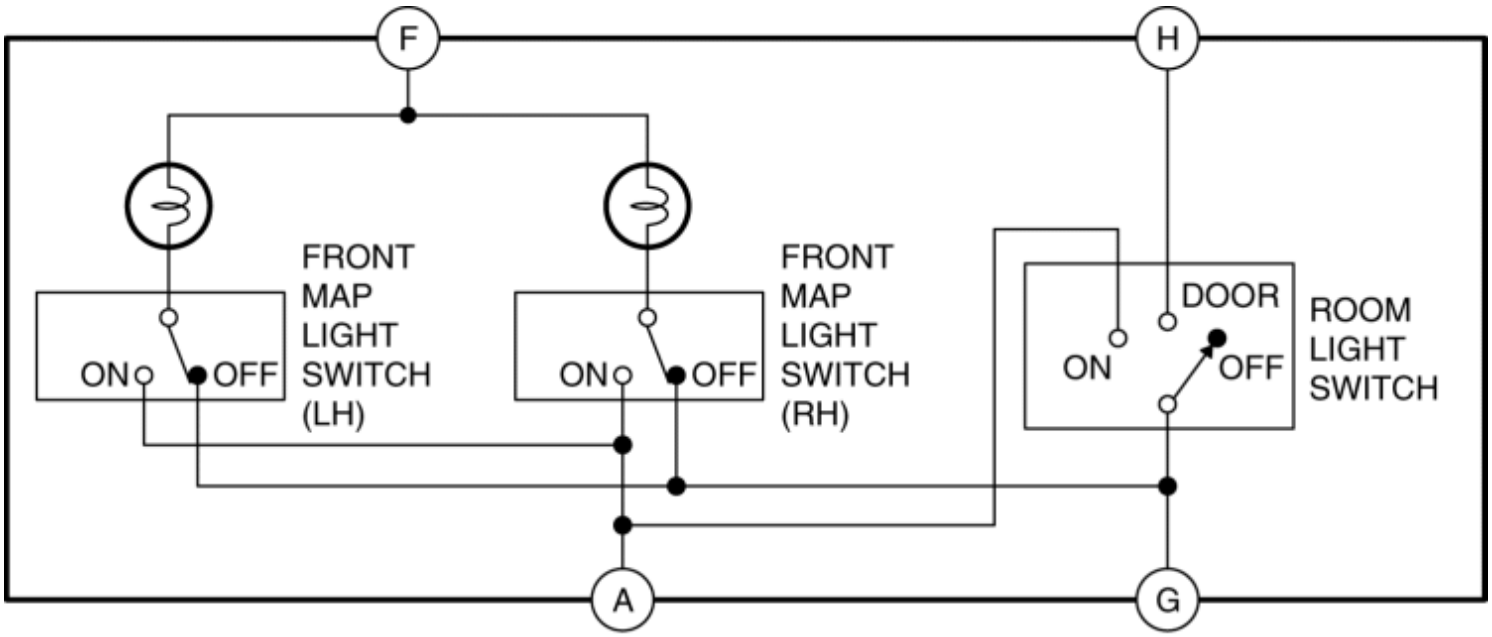

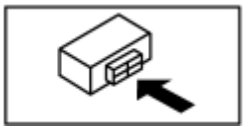

- If not as indicated in the table, replace the front map light bulb or the front map

light. (See **FRONT MAP LIGHT BULB REMOVAL/INSTALLATION**.) (See **FRONT MAP LIGHT REMOVAL/INSTALLATION**.)

Room light switch

1. Disconnect the negative battery cable. (See **NEGATIVE BATTERY CABLE DISCONNECTION/CONNECTION [SKYACTIV-G 2.0, SKYACTIV-G 2.5]**.)
2. Remove the front map light. (See **FRONT MAP LIGHT REMOVAL/INSTALLATION**.)
3. Verify that the continuity between the front map light terminals is as indicated in the table.

○—○ : Continuity

Room light switch	Terminal		
	A	G	H
OFF			
ON	○—○		
DOOR		○—○	

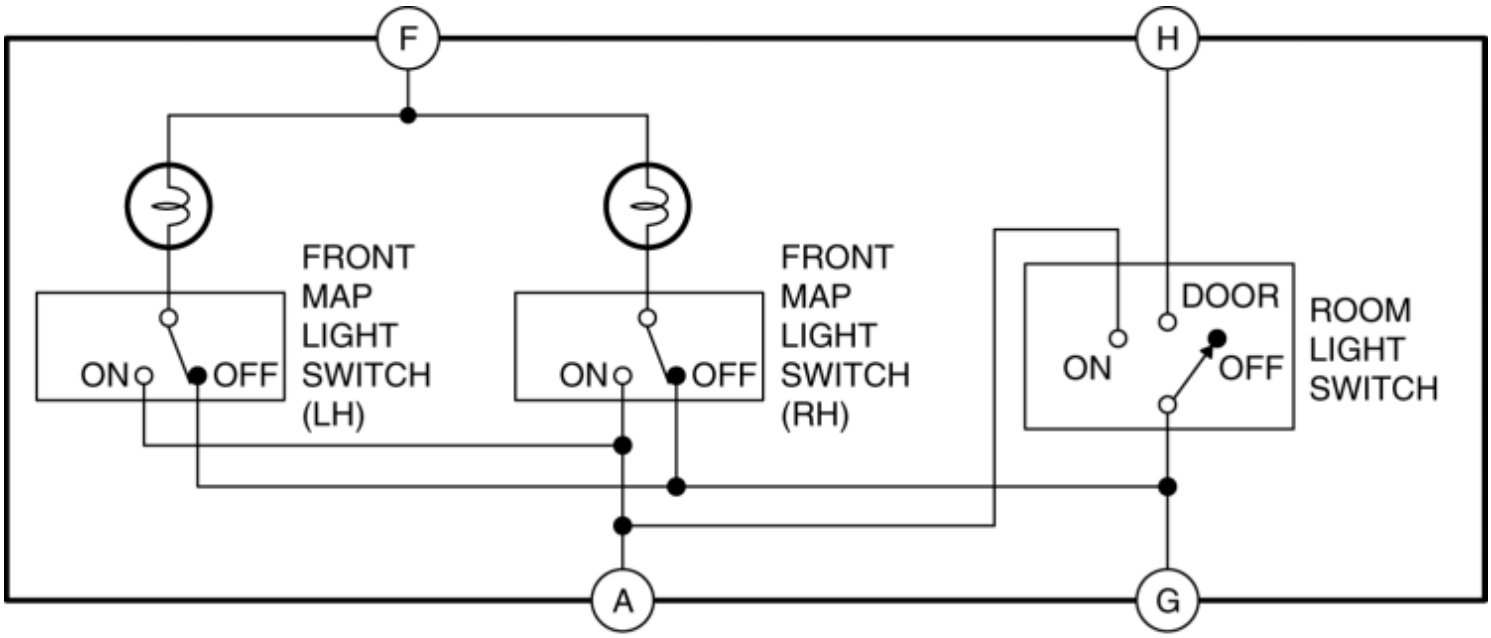

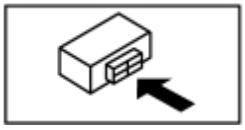

- If not as indicated in the table, replace the front map light. (See **FRONT MAP LIGHT REMOVAL/INSTALLATION**.)

2014 - Mazda3 - Body and Accessories

REAR MAP LIGHT BULB REMOVAL/INSTALLATION

1. Disconnect the negative battery cable. (See **NEGATIVE BATTERY CABLE DISCONNECTION/CONNECTION [SKYACTIV-G 2.0, SKYACTIV-G 2.5]**.)

2. To prevent scratches or damage, affix protective tape to the position shown in the figure.

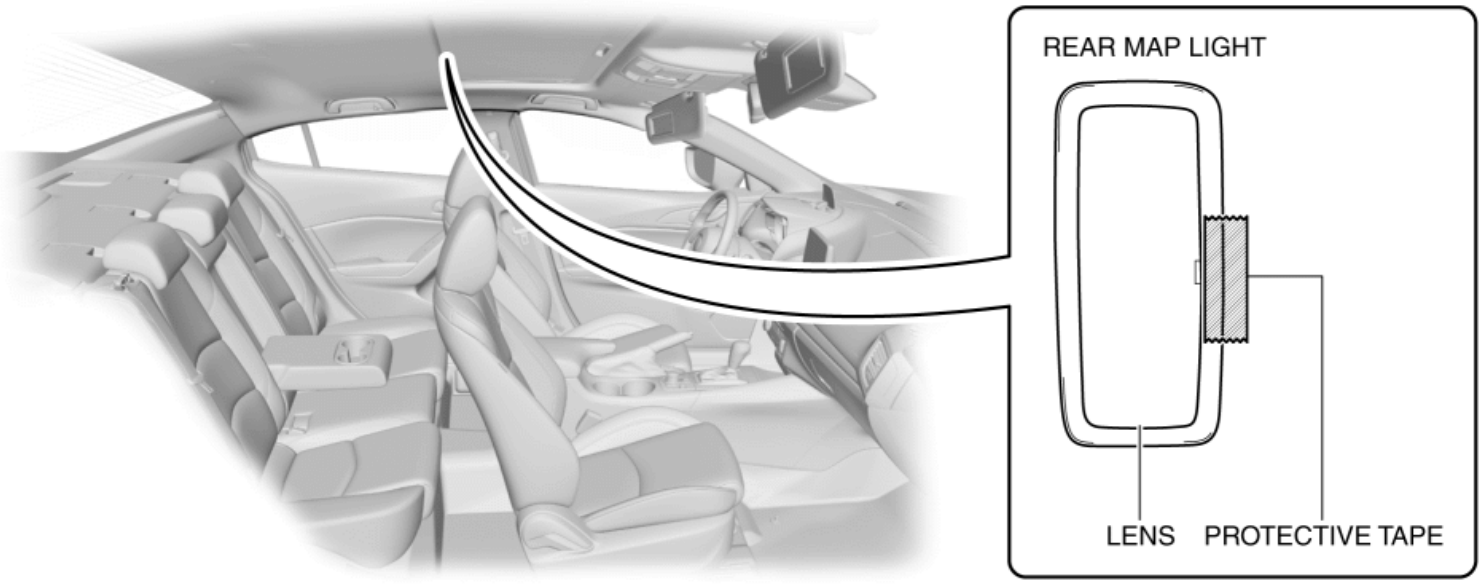

CAUTION:

- When inserting the remover tool in the gap between the rear map light and the lens, the remover tool may contact the rear map light and damage it. Apply protective tape to the rear map light before removing the lens from the rear map light.

3. Insert the remover tool into the service hole at the position shown in the figure.

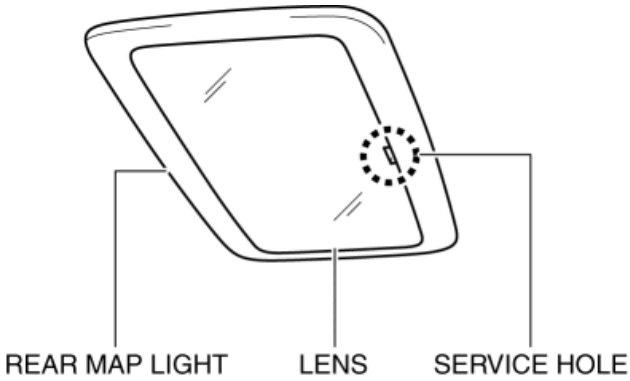

4. Move the remover tool in the direction of the arrow shown in the figure to detach the lens tabs from the rear map light.

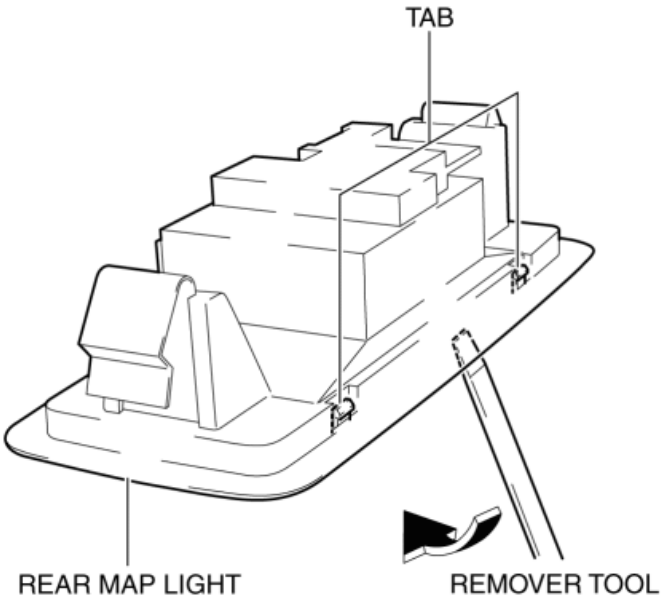

5. Pull out the lens tabs from the rear map light and remove the lens from the rear map light.

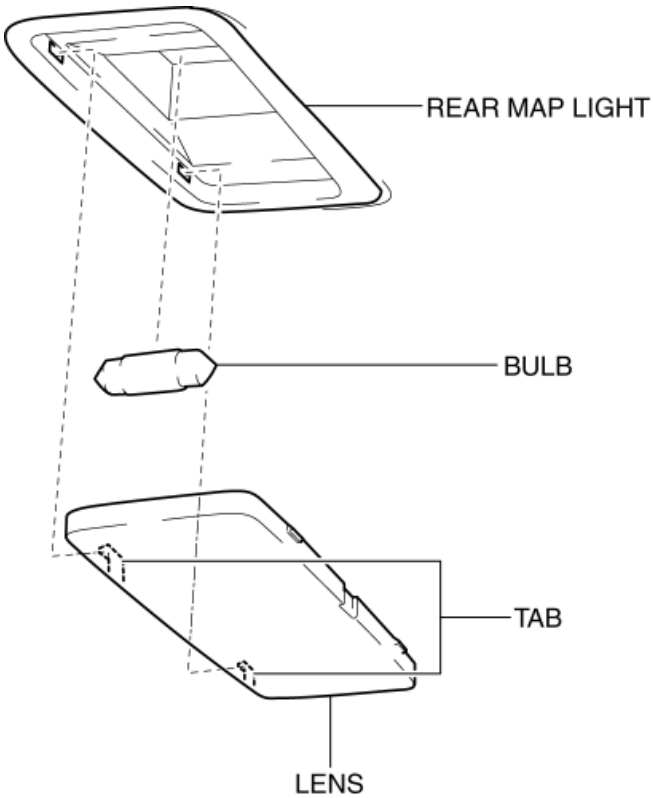

6. Remove the rear map light bulb.

CAUTION:

- The bulb reaches high temperatures when illuminated. If there is oil or dirt on the surface of the bulb, excessive heat will build up and the life of the bulb will be shortened. When replacing the bulb, hold the metal flange, not the glass.

7. Install in the reverse order of removal.

2014 - Mazda3 - Body and Accessories

REAR MAP LIGHT REMOVAL/INSTALLATION

NOTE:

- The rear map light can be removed without having to remove the headliner from the vehicle.

1. Perform the following procedure.

4SD

- Set the wheel blocks for both the front and rear wheels.
- Disconnect the negative battery cable. (See **NEGATIVE BATTERY CABLE DISCONNECTION/CONNECTION [SKYACTIV-G 2.0, SKYACTIV-G 2.5]**.)
- Shift the selector lever from the P position to the D position (ATX).
- Remove the sunroof seaming welt. (with sunroof system)
- Remove the following parts:
  - A-pillar trim (See **A-PILLAR TRIM REMOVAL/INSTALLATION**.)
  - Sunvisor (See **SUNVISOR REMOVAL/INSTALLATION**.)
  - Front map light (dual light type) (See **FRONT MAP LIGHT REMOVAL/INSTALLATION**.)
  - Assist handle (See **ASSIST HANDLE REMOVAL/INSTALLATION**.)
  - Front scuff plate (See **FRONT SCUFF PLATE REMOVAL/INSTALLATION**.)
  - Rear scuff plate (See **REAR SCUFF PLATE REMOVAL/INSTALLATION**.)
  - B-pillar lower trim (See **B-PILLAR LOWER TRIM REMOVAL/INSTALLATION**.)
  - Adjust anchor cover (See **FRONT SEAT BELT REMOVAL/INSTALLATION**.)
  - Upper anchor installation bolt on the seat belt (See **FRONT SEAT BELT REMOVAL/INSTALLATION**.)
  - B-pillar upper trim (See **B-PILLAR UPPER TRIM REMOVAL/INSTALLATION**.)
- Set the tire house trim aside. (See **TIRE HOUSE TRIM REMOVAL/INSTALLATION**.)
- Remove the C-pillar trim. (See **C-PILLAR TRIM REMOVAL/INSTALLATION**.)
- Remove the headliner. (See **HEADLINER REMOVAL/INSTALLATION**.)

5HB

- Set the wheel blocks for both the front and rear wheels.
- Disconnect the negative battery cable. (See **NEGATIVE BATTERY CABLE DISCONNECTION/CONNECTION [SKYACTIV-G 2.0, SKYACTIV-G 2.5]**.)
- Shift the selector lever from the P position to the D position (ATX).
- Remove the sunroof seaming welt. (with sunroof system)
- Remove the following parts:
    - A-pillar trim (See **A-PILLAR TRIM REMOVAL/INSTALLATION**.)
    - Sunvisor (See **SUNVISOR REMOVAL/INSTALLATION**.)
    - Front map light (dual light type) (See **FRONT MAP LIGHT REMOVAL/INSTALLATION**.)
    - Assist handle (See **ASSIST HANDLE REMOVAL/INSTALLATION**.)
    - Front scuff plate (See **FRONT SCUFF PLATE REMOVAL/INSTALLATION**.)
    - Rear scuff plate (See **REAR SCUFF PLATE REMOVAL/INSTALLATION**.)
    - B-pillar lower trim (See **B-PILLAR LOWER TRIM REMOVAL/INSTALLATION**.)
    - Adjust anchor cover (See **FRONT SEAT BELT REMOVAL/INSTALLATION**.)
    - Upper anchor installation bolt on the seat belt (See **FRONT SEAT BELT REMOVAL/INSTALLATION**.)
    - B-pillar upper trim (See **B-PILLAR UPPER TRIM REMOVAL/INSTALLATION**.)
- Set the tire house trim aside. (See **TIRE HOUSE TRIM REMOVAL/INSTALLATION**.)
- Remove the following parts:
    - Rear package tray (See **REAR PACKAGE TRAY REMOVAL/INSTALLATION**.)
    - Trunk covering (See **TRUNK COVERING REMOVAL/INSTALLATION**.)
    - Trunk board (See **TRUNK BOARD REMOVAL/INSTALLATION**.)
    - Trunk end trim (See **TRUNK END TRIM REMOVAL/INSTALLATION**.)
    - Trunk side upper trim (See **TRUNK SIDE UPPER TRIM REMOVAL/INSTALLATION**.)
    - Trunk side trim (LH only) (See **TRUNK SIDE TRIM REMOVAL/INSTALLATION**.)
    - C-pillar trim (See **C-PILLAR TRIM REMOVAL/INSTALLATION**.)

- Headliner (See **HEADLINER REMOVAL/INSTALLATION**.)

2. Disconnect the connector.

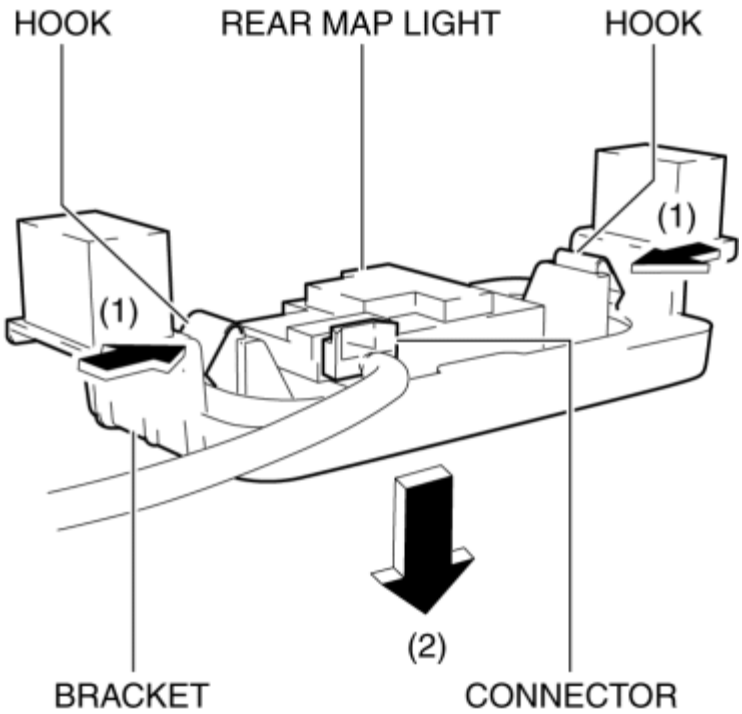

3. While pressing the hooks of the rear map light in the direction of arrows (1) shown in the figure, pull the rear map light in the direction of arrow (2) to detach the hooks of the rear map light from the bracket.

CAUTION:

- When removing the rear map light from the bracket, the rear map light may fall off and be damaged. Remove the rear map light from the bracket while holding the rear map light on the lens side by hand.

4. Remove the rear map light.

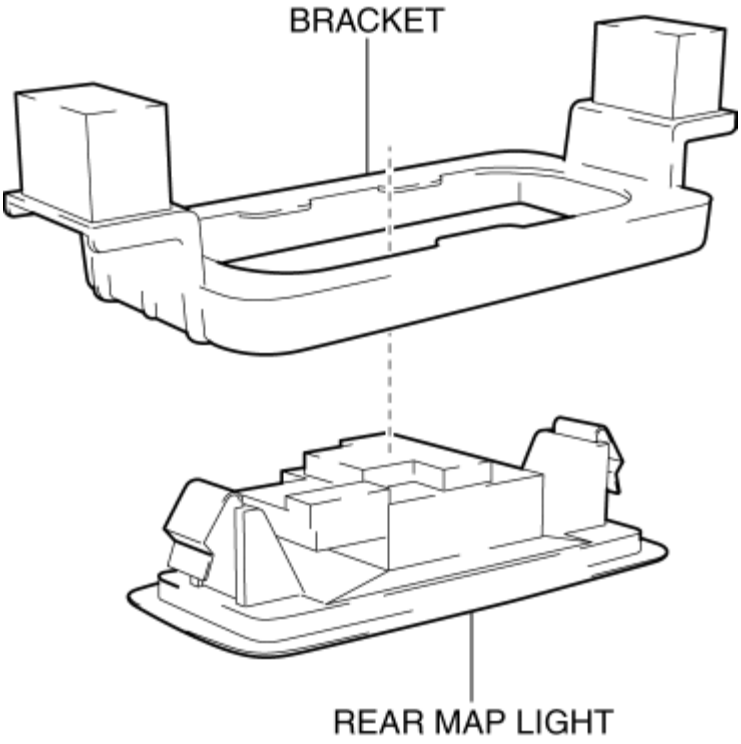

5. Install in the reverse order of removal.

2014 - Mazda3 - Body and Accessories

CARGO COMPARTMENT LIGHT REMOVAL/INSTALLATION

1. Disconnect the negative battery cable. (See **NEGATIVE BATTERY CABLE DISCONNECTION/CONNECTION [SKYACTIV-G 2.0, SKYACTIV-G 2.5]**.)

2. To prevent scratches or damage, apply protective tape to the position shown in the figure.

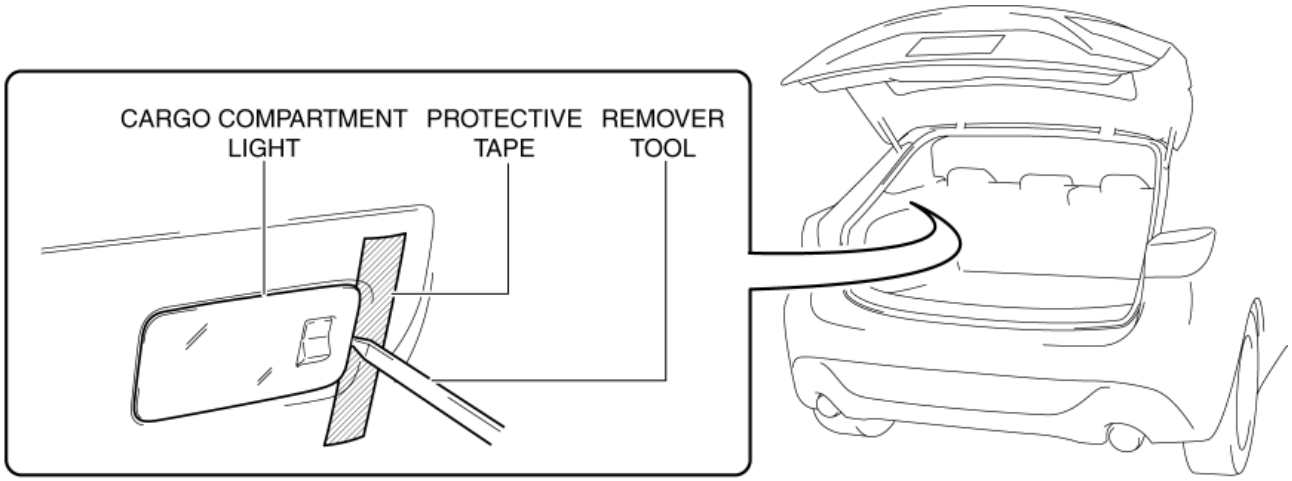

CAUTION:

- When inserting the remover tool in the gap between the cargo compartment light and the trunk side upper trim, the remover tool could interfere with the trunk side upper trim and scratch or damage it. When removing the cargo compartment light from the trunk side upper trim, apply protective tape to the trunk side upper trim.

3. Insert the remover tool into the gap between the cargo compartment light and the trunk side upper trim.

4. Move the remover tool in the direction of arrow (1) shown in the figure and pull out the tab of the cargo compartment light from the trunk side upper trim.

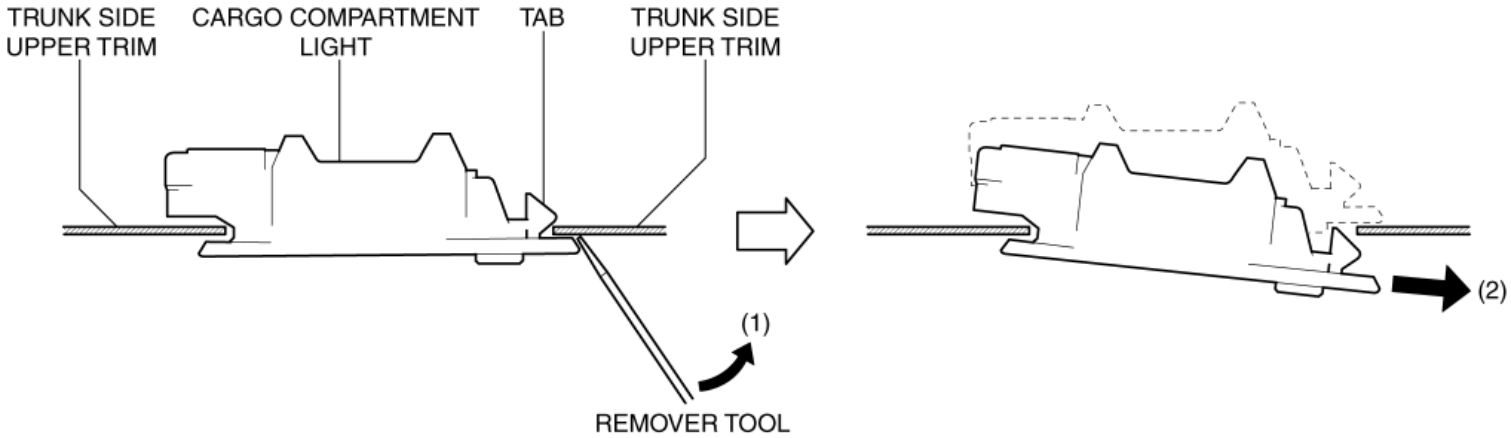

5. Move the cargo compartment light in the direction of arrow (2) shown in the figure and pull out the cargo compartment light from the trunk side upper trim.

6. Disconnect the connector and remove the cargo compartment light.

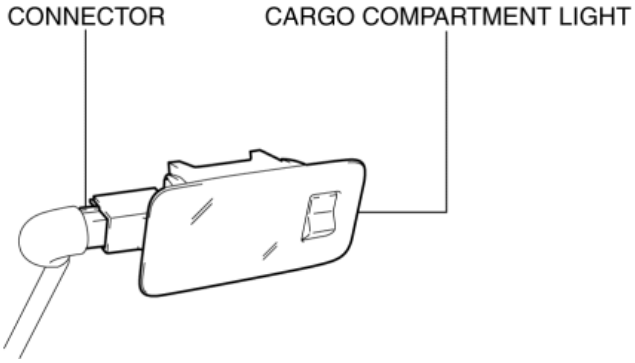

7. Install in the reverse order of removal.

2014 - Mazda3 - Body and Accessories

CARGO COMPARTMENT LIGHT BULB REMOVAL/INSTALLATION

1. Disconnect the negative battery cable. (See **NEGATIVE BATTERY CABLE DISCONNECTION/CONNECTION [SKYACTIV-G 2.0, SKYACTIV-G 2.5]**.)

CAUTION:

- If the cargo compartment light bulb is removed without disconnecting the negative battery cable, the circuit may be shorted and the related parts such as the rear body control module (RBCM) may be damaged. Always disconnect the negative battery cable before removing the cargo compartment light bulb.

2. To prevent scratches, apply protective tape to the position shown in the figure.

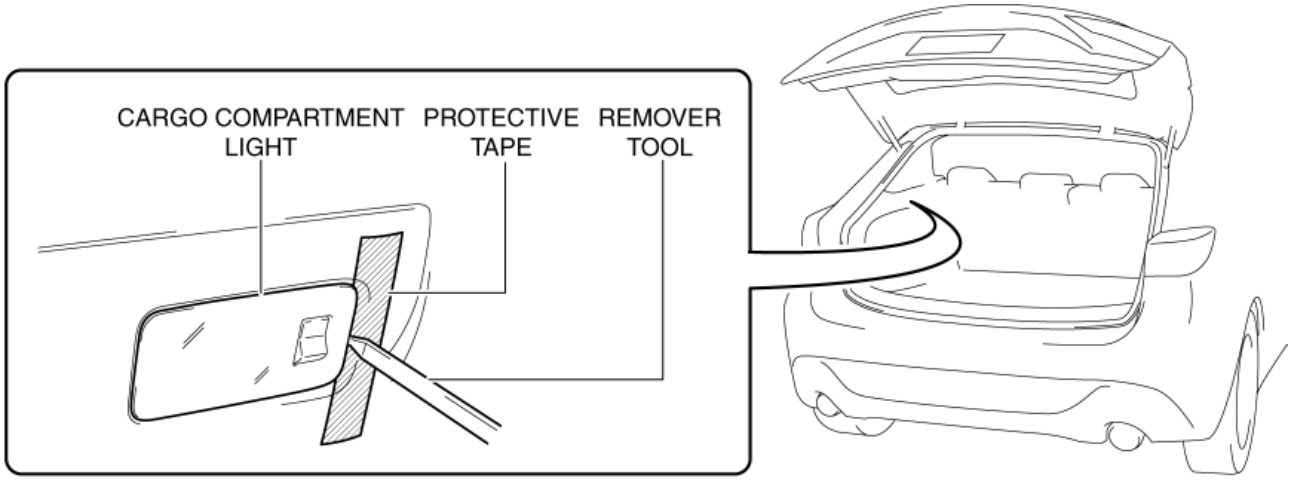

CAUTION:

- When inserting the remover tool in the gap between the cargo compartment light and the trunk side upper trim, the remover tool could interfere with the trunk side upper trim and scratch or damage it. Before removing the cargo compartment light from the trunk side upper trim, apply protective tape to the trunk side upper trim.

3. Insert the remover tool into the gap between the cargo compartment light and the trunk side upper trim.

4. Move the remover tool in the direction of arrow (1) shown in the figure and pull out the tab of the cargo compartment light from the trunk side upper trim.

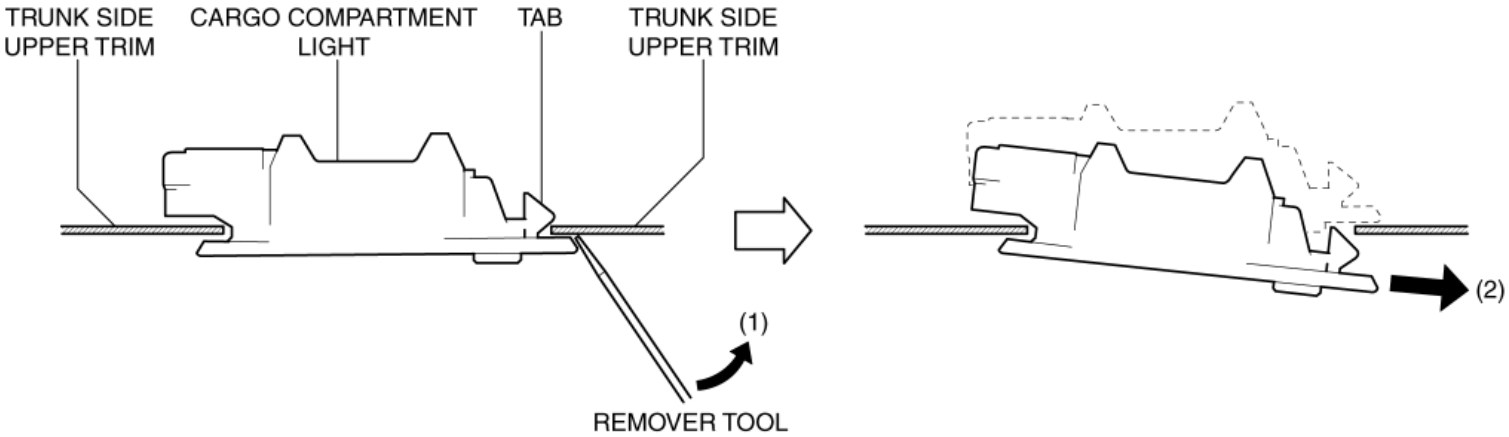

5. Move the cargo compartment light in the direction of arrow (2) shown in the figure and pull out the cargo compartment light from the trunk side upper trim.

6. Press the spring in the direction of the arrow shown in the figure to detach the spring from the cargo compartment light bulb.

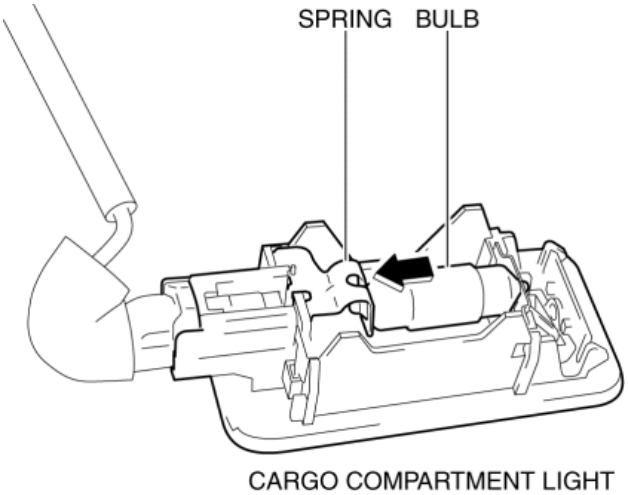

7. Remove the cargo compartment light bulb.

CAUTION:

- The bulb reaches high temperatures when illuminated. If there is oil or dirt on the surface of the bulb, excessive heat will build up and the life of the bulb will be shortened. When replacing the bulb, hold the metal flange, not the glass.

8. Install in the reverse order of removal.

2014 - Mazda3 - Body and Accessories

CARGO COMPARTMENT LIGHT INSPECTION

1. Disconnect the negative battery cable. (See **NEGATIVE BATTERY CABLE DISCONNECTION/CONNECTION [SKYACTIV-G 2.0, SKYACTIV-G 2.5]**.)

2. Remove the cargo compartment light. (See **CARGO COMPARTMENT LIGHT REMOVAL/INSTALLATION**.)

3. Verify that the continuity between the cargo compartment light terminals is as indicated in the table.

: Bulb

Switch position	Terminal	
	A	B
On		
Off		

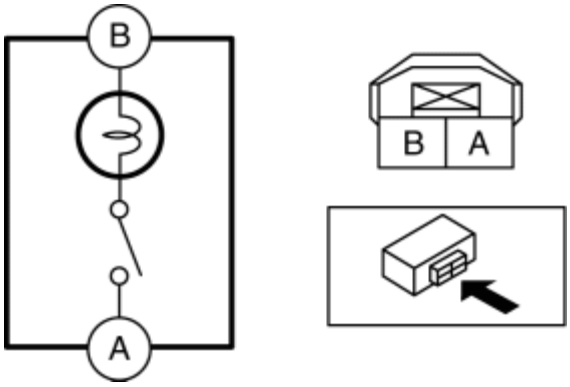

- If not as indicated in the table, replace the cargo compartment light bulb or the cargo compartment light. (See **CARGO COMPARTMENT LIGHT BULB REMOVAL/INSTALLATION**.) (See **CARGO COMPARTMENT LIGHT REMOVAL/INSTALLATION**.)

2014 - Mazda3 - Body and Accessories

TRUNK COMPARTMENT LIGHT BULB REMOVAL/INSTALLATION

1. Disconnect the negative battery cable. (See **NEGATIVE BATTERY CABLE DISCONNECTION/CONNECTION [SKYACTIV-G 2.0, SKYACTIV-G 2.5]**.)

2. While pressing the lens in the direction of arrows (1) shown in the figure, move the lens in the direction of arrow (2) to detach the lens tabs from the rear package trim.

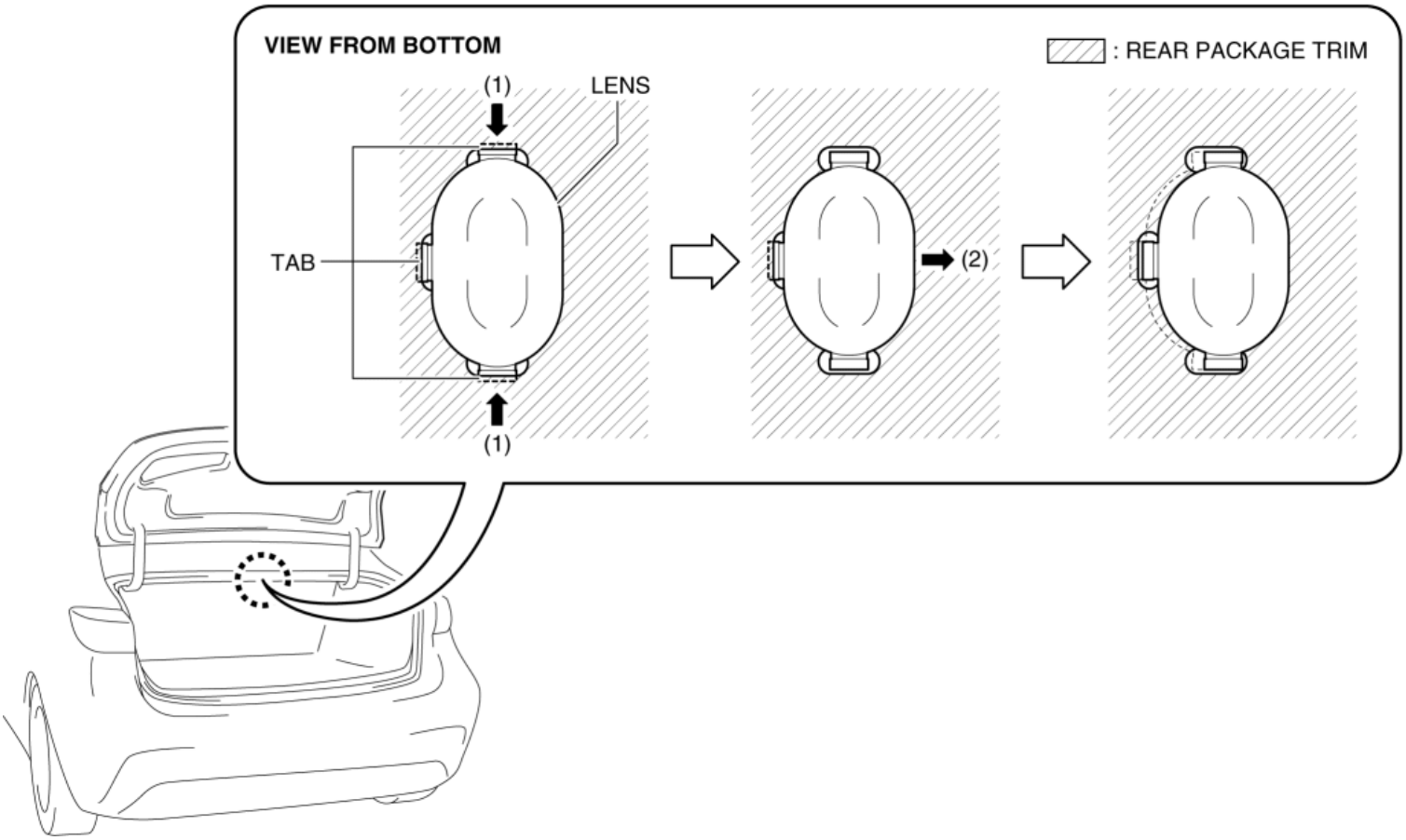

3. Remove the lens.

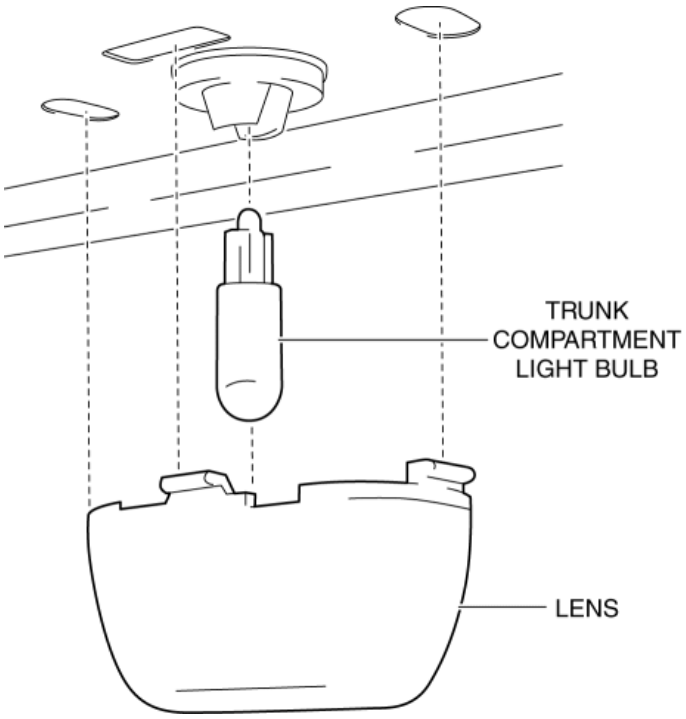

4. Remove the trunk compartment light bulb.

CAUTION:

- The bulb reaches high temperatures when illuminated. If there is oil or dirt on the surface of the bulb, excessive heat will build up and the life of the bulb will be shortened. When replacing the bulb, hold the metal flange, not the glass.

5. Install in the reverse order of removal.

2014 - Mazda3 - Body and Accessories

VANITY MIRROR ILLUMINATION BULB REMOVAL/INSTALLATION

1. Disconnect the negative battery cable. (See **NEGATIVE BATTERY CABLE DISCONNECTION/CONNECTION [SKYACTIV-G 2.0, SKYACTIV-G 2.5]**.)

2. Insert the remover tool into the service hole at the position shown in the figure.

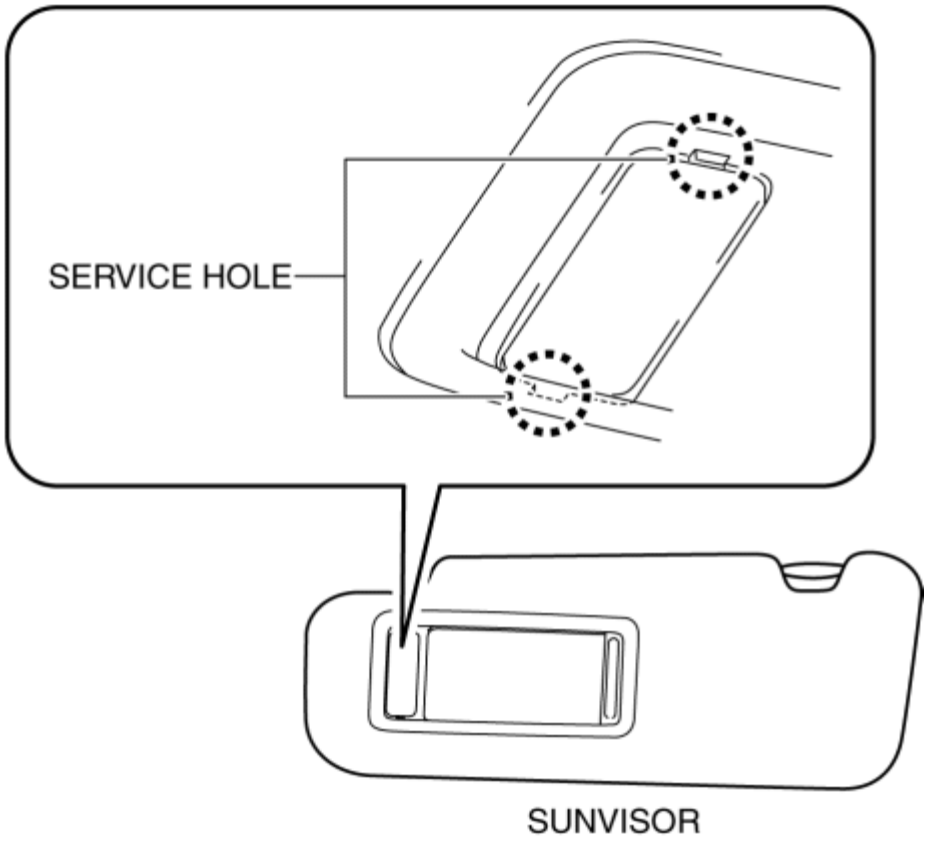

3. Move the remover tool in the direction of arrow (1) shown in the figure to pull out the lens and detach the lens tabs from the sunvisor.

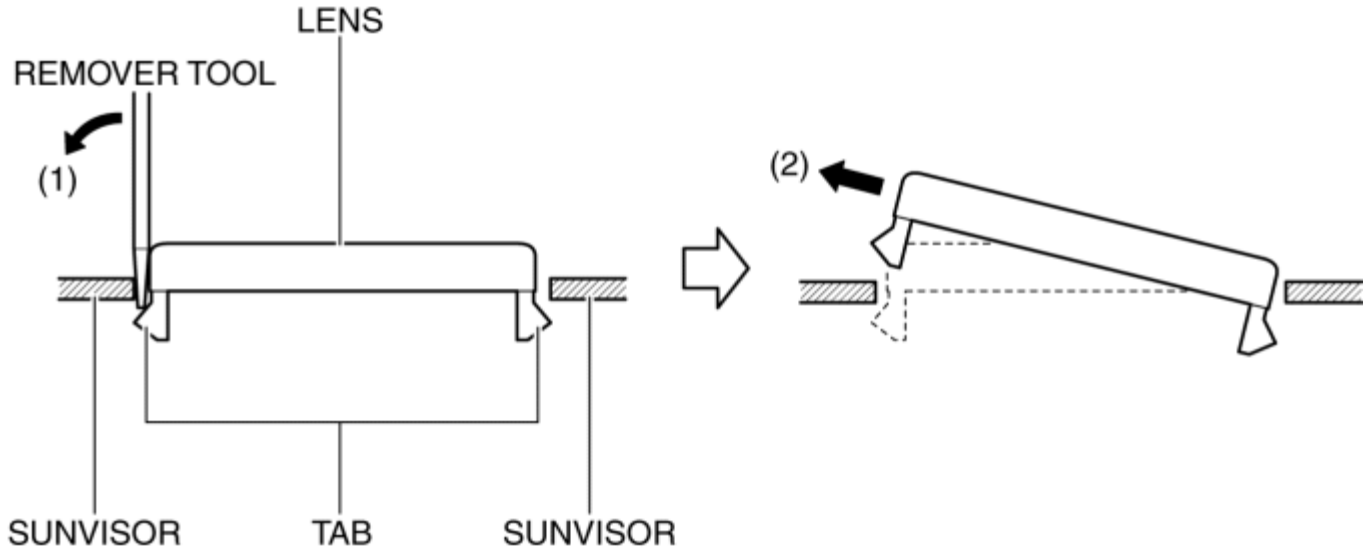

4. Pull the lens in the direction of arrow (2) shown in the figure to remove it.

5. Remove the vanity mirror illumination bulb.

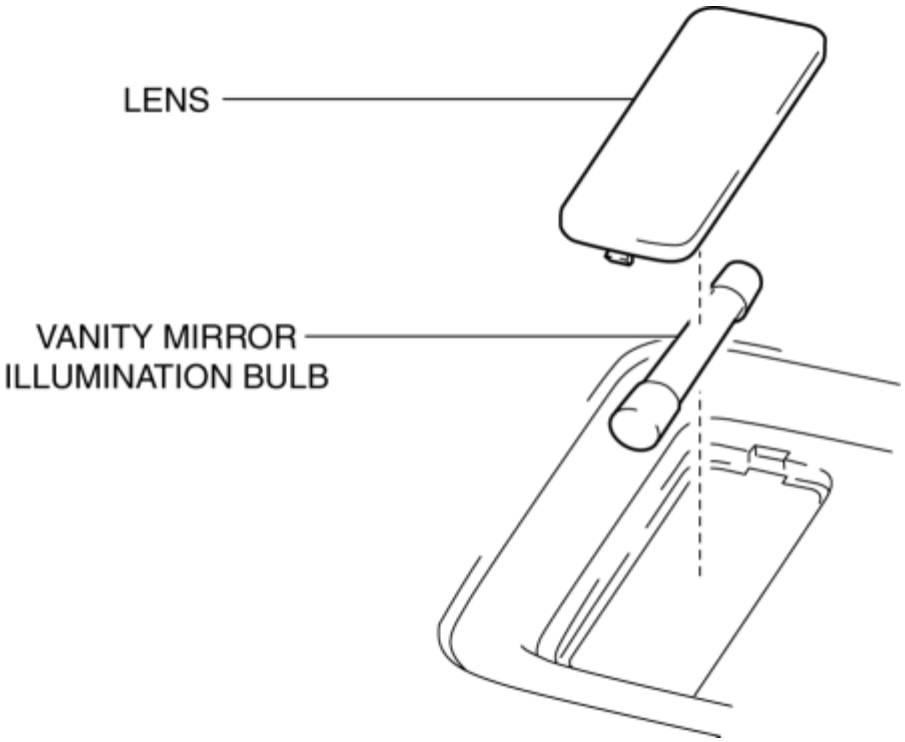

CAUTION:

- The bulb reaches high temperatures when illuminated. If there is oil or dirt on the surface of the bulb, excessive heat will build up and the life of the bulb will be shortened. When replacing the bulb, hold the metal flange, not the glass.

6. Install in the reverse order of removal.

2014 - Mazda3 - Body and Accessories

VANITY MIRROR ILLUMINATION INSPECTION

1. Disconnect the negative battery cable. (See **NEGATIVE BATTERY CABLE DISCONNECTION/CONNECTION [SKYACTIV-G 2.0, SKYACTIV-G 2.5]**.)
2. Remove the sunvisor. (See **SUNVISOR REMOVAL/INSTALLATION**.)
3. Verify that the continuity between the vanity mirror illumination terminals is as indicated in the table.

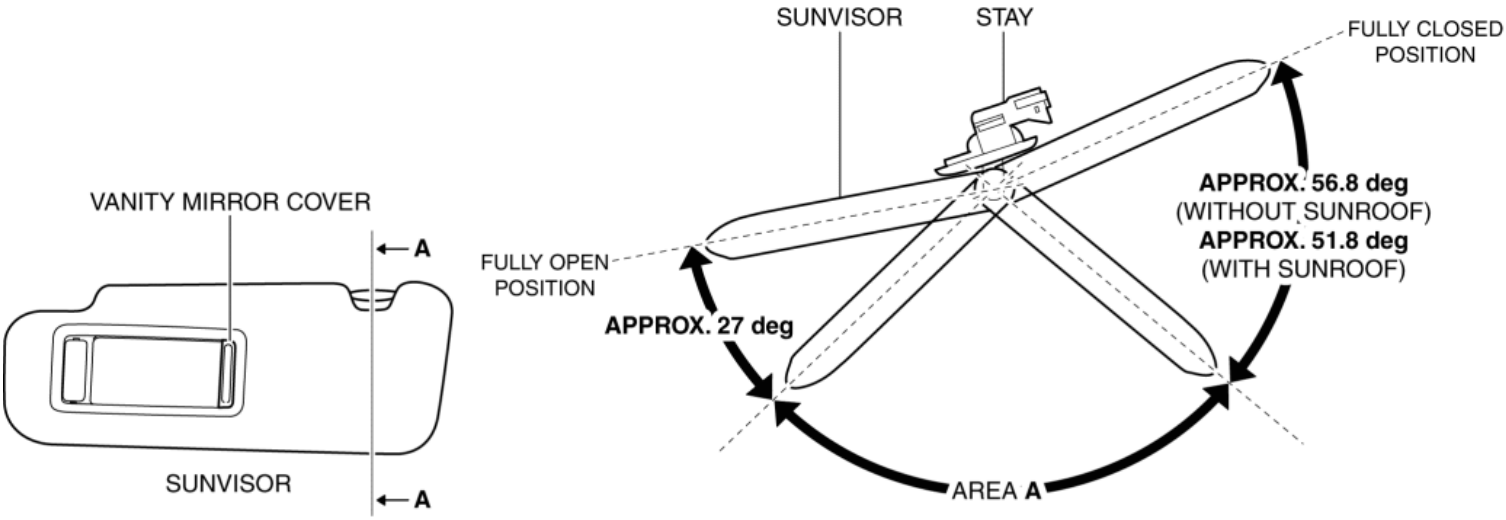

SEC. A—A

: Bulb

Vanity mirror cover condition	Sunvisor condition	Terminal	
		A	B
Fully open	Within range **A** shown in figure	○	○
Except above	Except above		

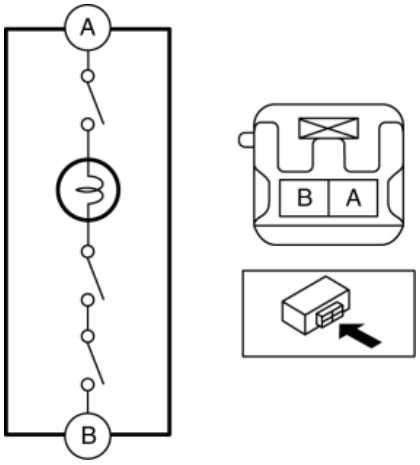

- If not as indicated in the table, replace the vanity mirror illumination bulb or the sunvisor. (See **VANITY MIRROR ILLUMINATION BULB REMOVAL/INSTALLATION**.) (See **SUNVISOR REMOVAL/INSTALLATION**.)

VANITY MIRROR ILLUMINATION INSPECTION

2014 - Mazda3 - Body and Accessories

WIPER/WASHER SYSTEM LOCATION INDEX

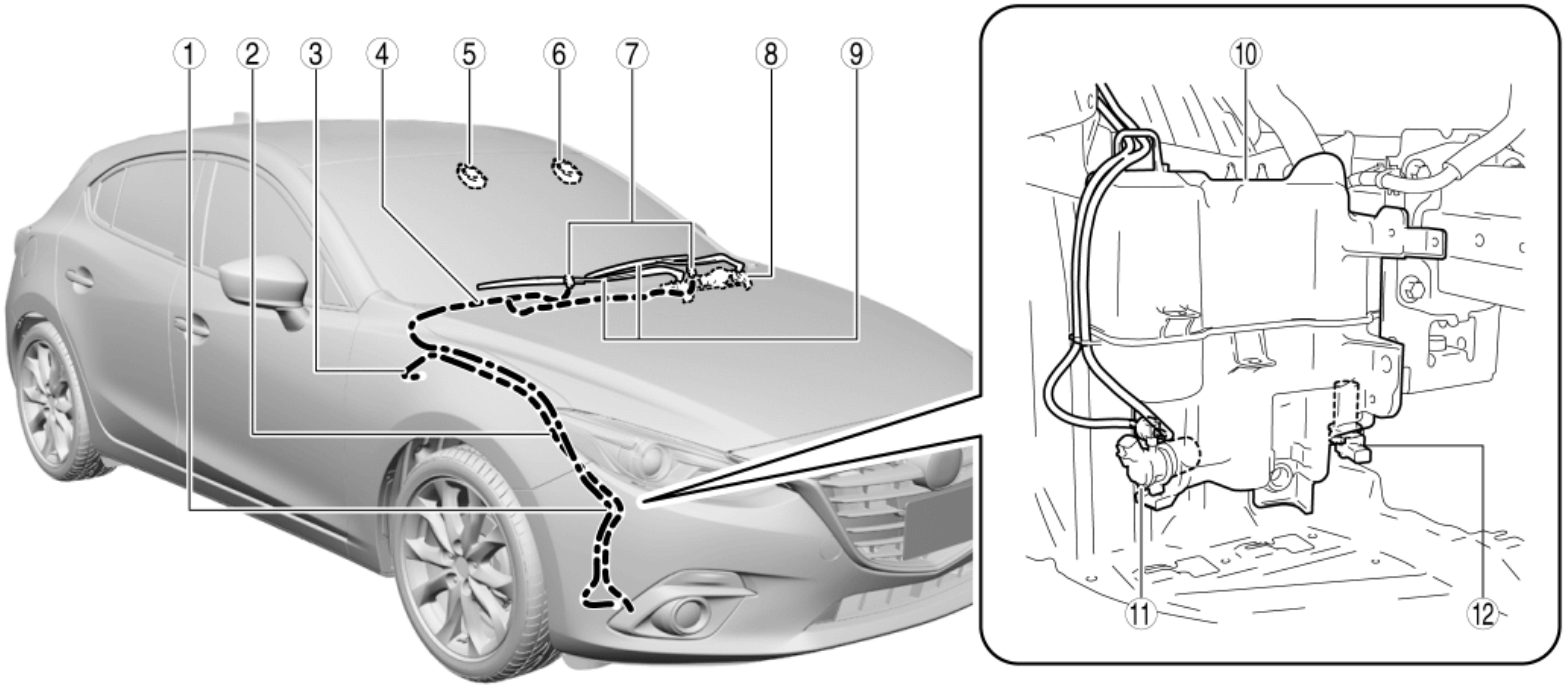

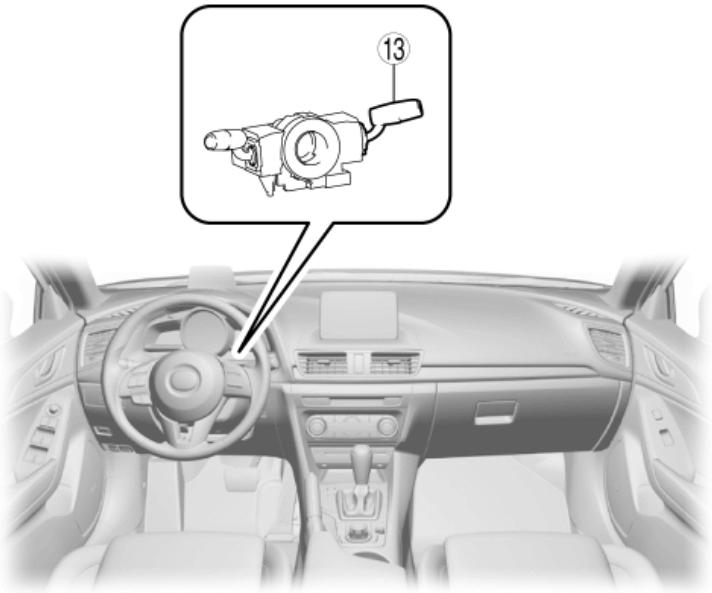

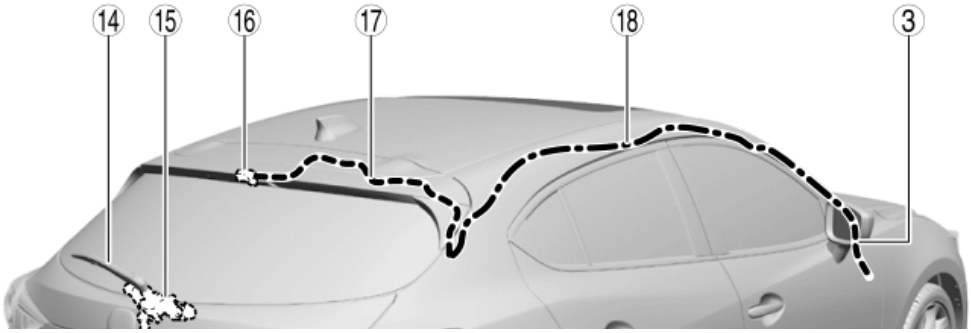

1	Windshield washer hose A (See **WINDSHIELD WASHER HOSE REMOVAL/INSTALLATION**.)
2	Rear washer hose A (5HB) (See **REAR WASHER HOSE REMOVAL/INSTALLATION**.)
3	Rear washer hose B (5HB) (See **REAR WASHER HOSE REMOVAL/INSTALLATION**.)
4	Windshield washer hose B (See **WINDSHIELD WASHER HOSE REMOVAL/INSTALLATION**.)
5	Rain sensor (with auto wiper system and without forward sensing camera (FSC) and smart city brake support (SCBS)) (See **RAIN SENSOR REMOVAL/INSTALLATION**.) (See **RAIN SENSOR INITIALIZATION SETTING**.) (See **WIPER/WASHER SYSTEM PERSONALIZATION FEATURES SETTING PROCEDURE**.)
6	Rain sensor (with auto wiper system and with forward sensing camera (FSC) or smart city brake support (SCBS)) (See **RAIN SENSOR REMOVAL/INSTALLATION**.) (See **RAIN SENSOR INITIALIZATION SETTING**.) (See **WIPER/WASHER SYSTEM PERSONALIZATION FEATURES SETTING PROCEDURE**.)
7	Windshield washer nozzle (See **WINDSHIELD WASHER NOZZLE REMOVAL/INSTALLATION**.) (See **WINDSHIELD WASHER NOZZLE ADJUSTMENT**.)
8	Windshield wiper motor and link (See **WINDSHIELD WIPER MOTOR AND LINK REMOVAL/INSTALLATION**.) (See **WINDSHIELD WIPER MOTOR INSPECTION**.)
9	Windshield wiper arm and blade (See **WINDSHIELD WIPER ARM AND BLADE REMOVAL/INSTALLATION**.) (See **WINDSHIELD WIPER ARM AND BLADE ADJUSTMENT**.)
10	Washer tank (See **WASHER TANK REMOVAL/INSTALLATION**.)
11	Washer motor (See **WASHER MOTOR REMOVAL/INSTALLATION**.)

	(See **WASHER MOTOR INSPECTION**.)
12	Washer fluid-level sensor (with washer fluid-level sensor) (See **WASHER FLUID-LEVEL SENSOR REMOVAL/INSTALLATION**.) (See **WASHER FLUID-LEVEL SENSOR INSPECTION**.)
13	Wiper and washer switch (See **WIPER AND WASHER SWITCH REMOVAL/INSTALLATION**.) (See **WIPER AND WASHER SWITCH INSPECTION**.) (See **WIPER/WASHER SYSTEM PERSONALIZATION FEATURES SETTING PROCEDURE**.)
14	Rear wiper arm and blade (5HB) (See **REAR WIPER ARM AND BLADE REMOVAL/INSTALLATION**.) (See **REAR WIPER ARM AND BLADE ADJUSTMENT**.)
15	Rear wiper motor (5HB) (See **REAR WIPER MOTOR REMOVAL/INSTALLATION**.) (See **REAR WIPER MOTOR INSPECTION**.)
16	Rear washer nozzle (5HB) (See **REAR WASHER NOZZLE REMOVAL/INSTALLATION**.) (See **REAR WASHER NOZZLE ADJUSTMENT**.)
17	Rear washer hose D (5HB) (See **REAR WASHER HOSE REMOVAL/INSTALLATION**.)
18	Rear washer hose C (5HB) (See **REAR WASHER HOSE REMOVAL/INSTALLATION**.)

2014 - Mazda3 - Body and Accessories

WINDSHIELD WIPER ARM AND BLADE REMOVAL/INSTALLATION

Windshield Wiper Arm

1. Open the hood.

2. Carefully pull the cap up in the direction of arrow (1) shown in the figure while slightly shaking it, and detach the cap from the windshield wiper arm.

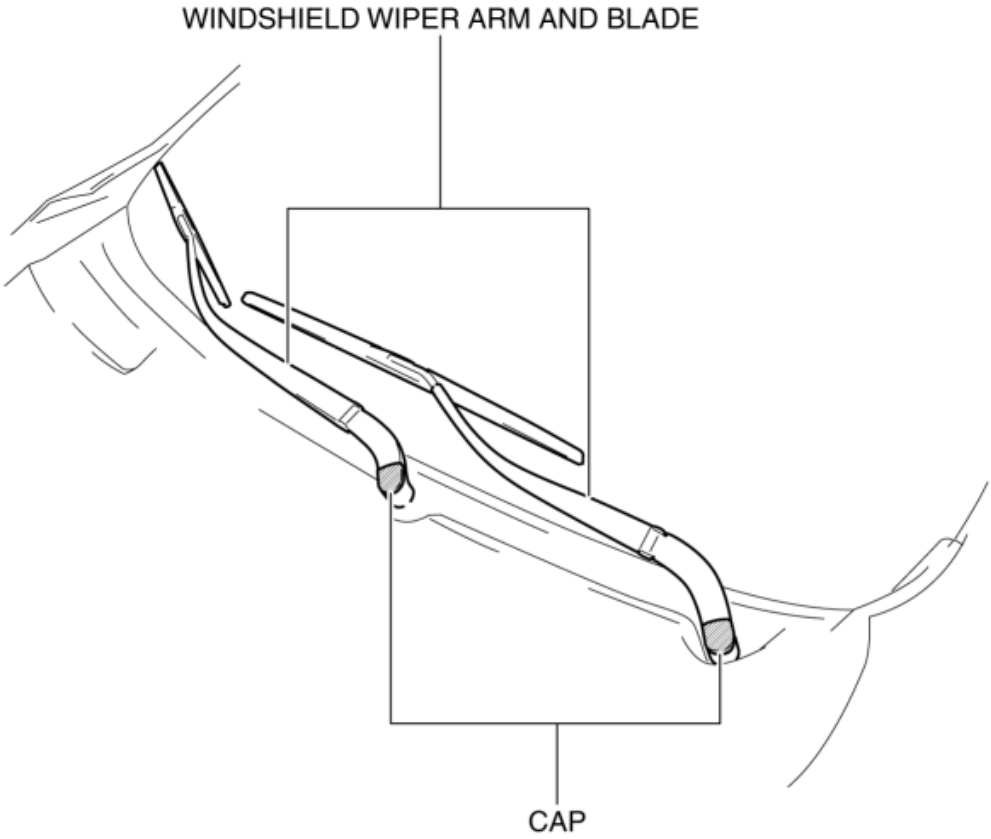

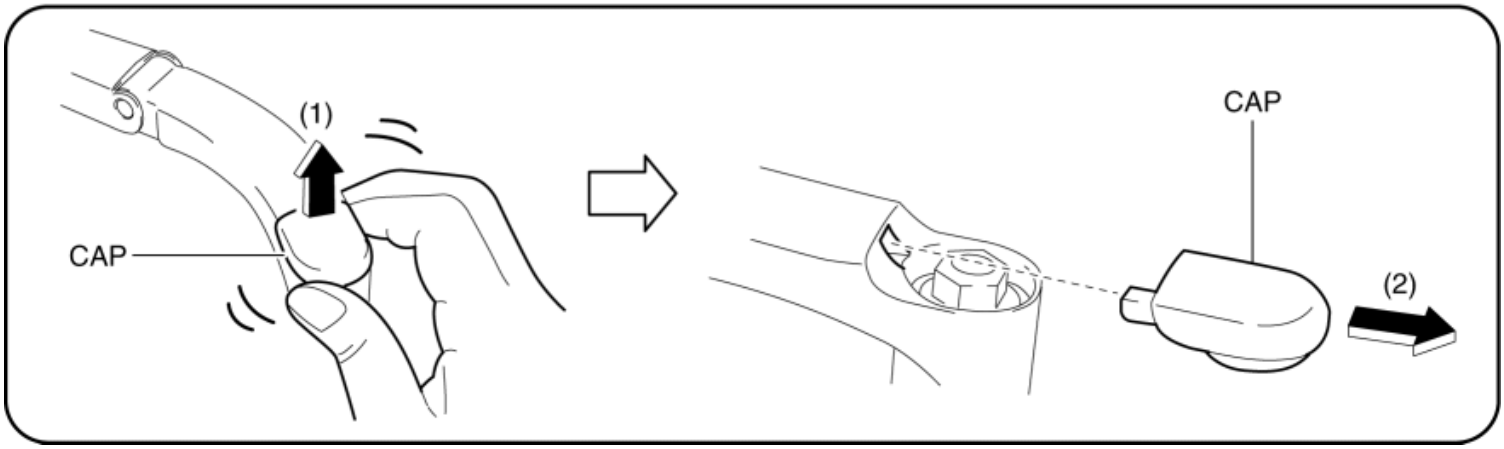

CAUTION:

- If excessive force is applied when removing the cap, the tabs could break. Carefully remove the

cap.

3. Remove the cap from the windshield wiper arm by pulling the cap in the direction of arrow (2) shown in the figure.

4. While pressing the windshield wiper arm as shown in the figure, loosen the nut without completely removing it.

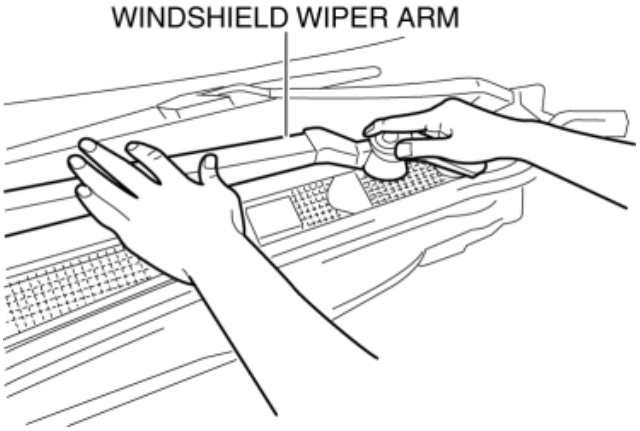

5. Close the hood.

6. Raise the windshield wiper arm as shown in the figure.

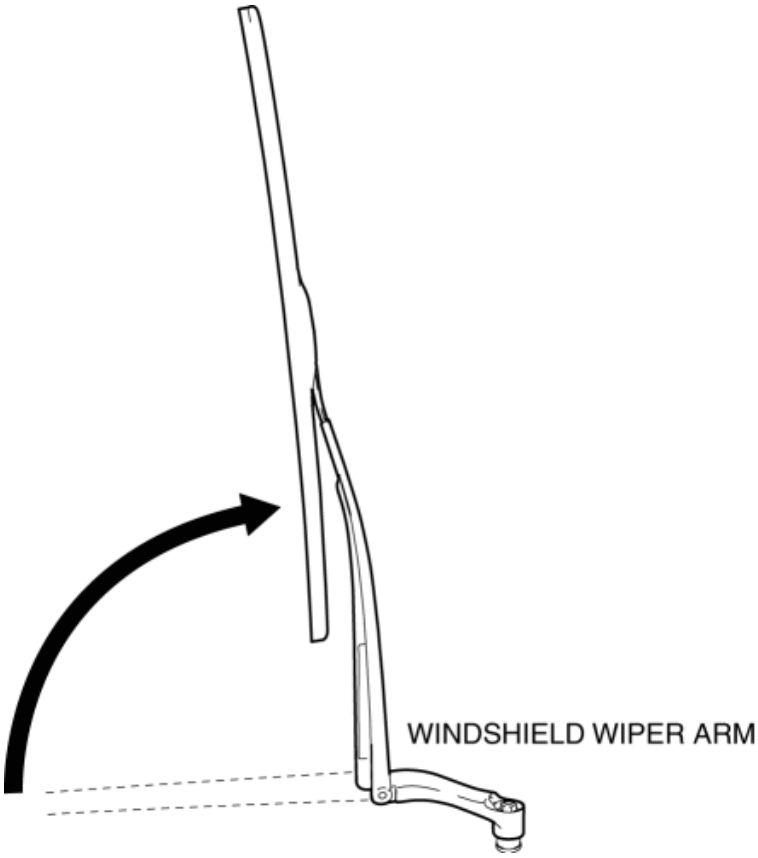

7. Pull the windshield wiper arm up to the loosened nut.

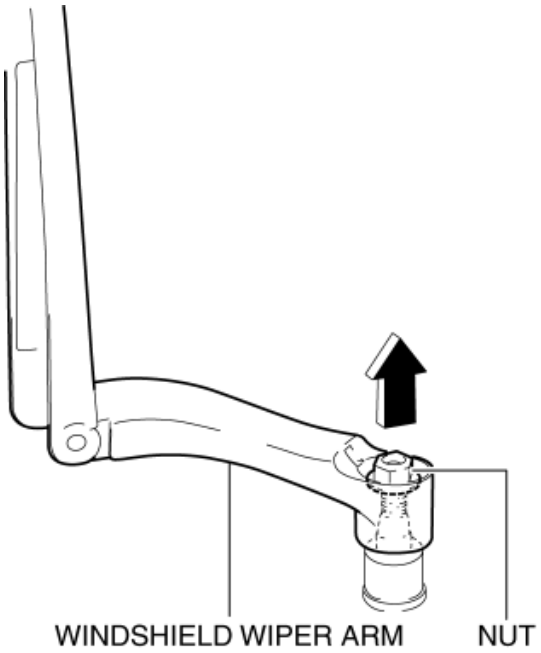

CAUTION:

- If the windshield wiper arm is pulled up with the nut completely removed, the windshield wiper arm could contact the hood when it is removed. Always pull up the windshield wiper arm with the nut not completely removed.

8. Remove the nut.

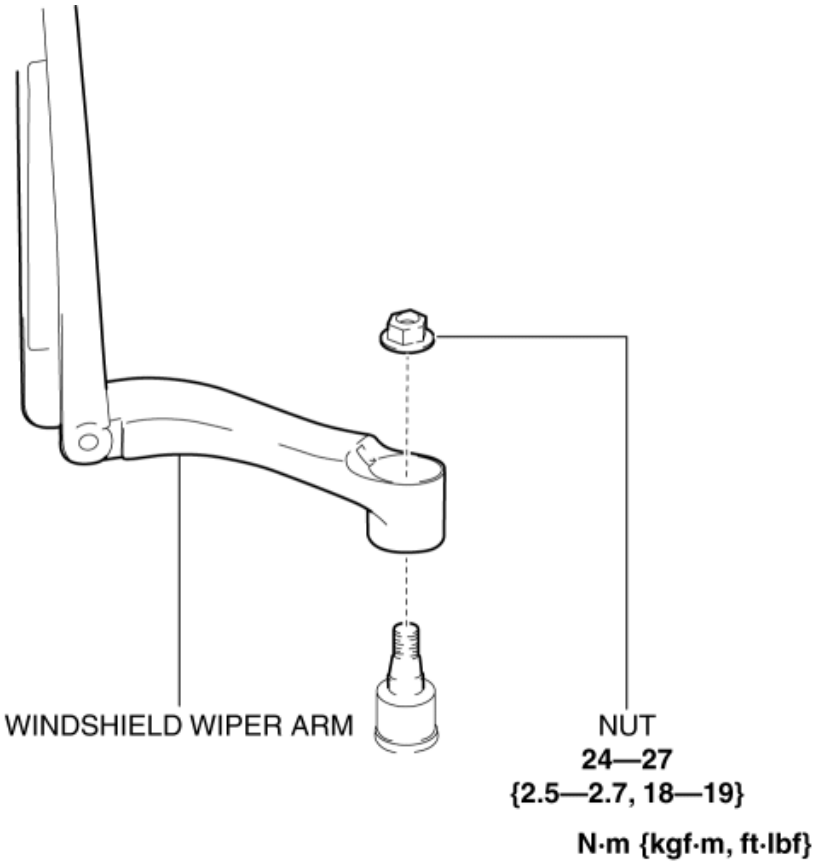

9. Remove the windshield wiper arm. (See **Windshield wiper arm installation note**)

10. Install in the reverse order of removal.

11. Adjust the windshield wiper arm and blade. (See **WINDSHIELD WIPER ARM AND BLADE ADJUSTMENT**.)

Windshield wiper arm installation note

1. Clean the serrated connecting part with a wire brush before installing the windshield wiper arm.

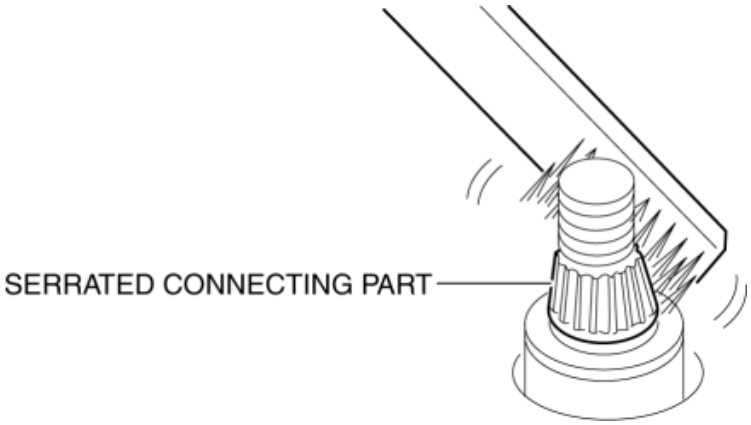

Windshield Wiper Blade

1. Pull the windshield wiper blade tab up in the direction of arrow (1) shown in the figure.

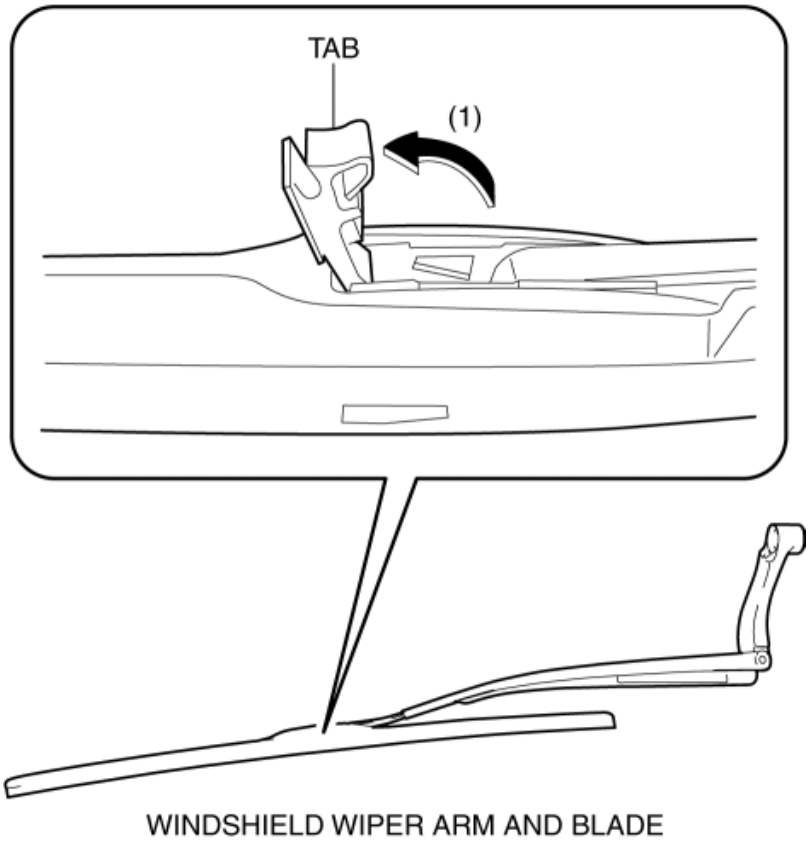

2. Tilt the windshield wiper blade in the direction of arrow (2) shown in the figure, press it in the direction of arrow (3) shown in the figure, and detach the windshield wiper arm from the windshield wiper blade.

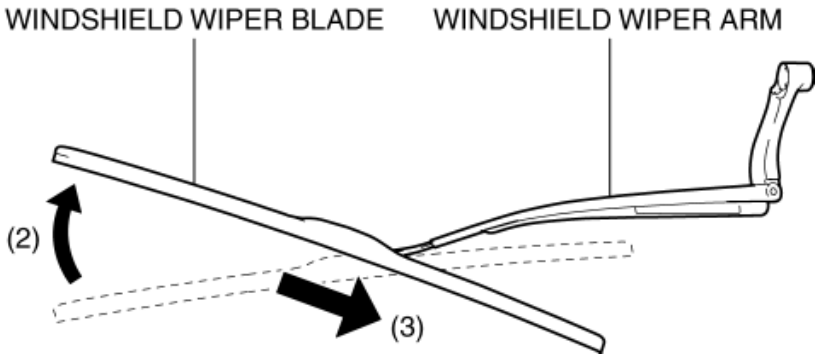

3. Remove the windshield wiper blade.

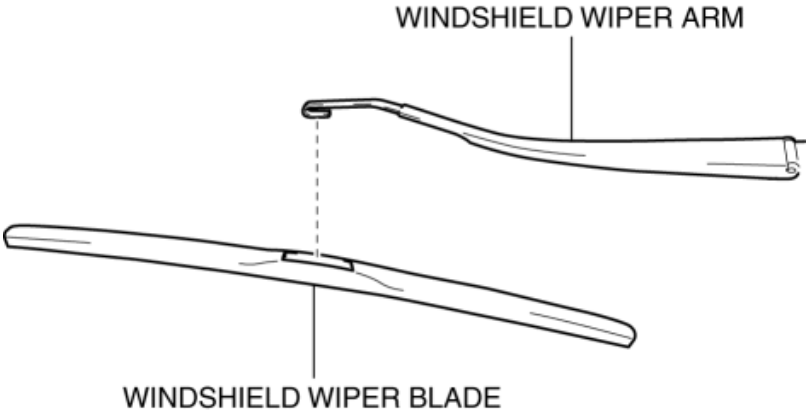

CAUTION:

- If the windshield wiper arm end is placed directly on the windshield after removing the windshield wiper blade, it could scratch the windshield. If the windshield wiper arm end is to be placed on the windshield, place it on a rag to protect the windshield.

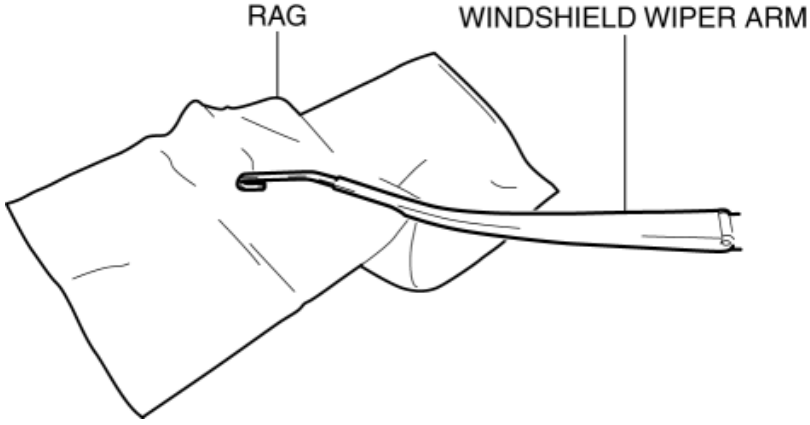

4. Install in the reverse order of removal.

2014 - Mazda3 - Body and Accessories

WINDSHIELD WIPER ARM AND BLADE ADJUSTMENT

1. Switch the ignition ON (engine off or on).
2. Operate the windshield wiper at low speed.
3. Turn off the windshield wiper switch during windshield wiper low operation, and stop the windshield wiper motor mid-way.
4. Verify that the windshield wipers stop at the park position as a result of the auto-stop operating.
5. Remove the windshield wiper arm. (See **WINDSHIELD WIPER ARM AND BLADE REMOVAL/INSTALLATION**.)
6. Install the windshield wiper arm to the serrated connecting part, align the windshield wiper arm and blade end with the hollowed marks in the ceramic coating while sliding the windshield wiper arm onto the grooves of the serrated connecting part one by one, and temporarily tighten the nut.

NOTE:

- If the hollowed marks in the ceramic coating cannot be located, adjust the windshield wiper blade end to the area shown in the figure and temporarily tighten the nut.

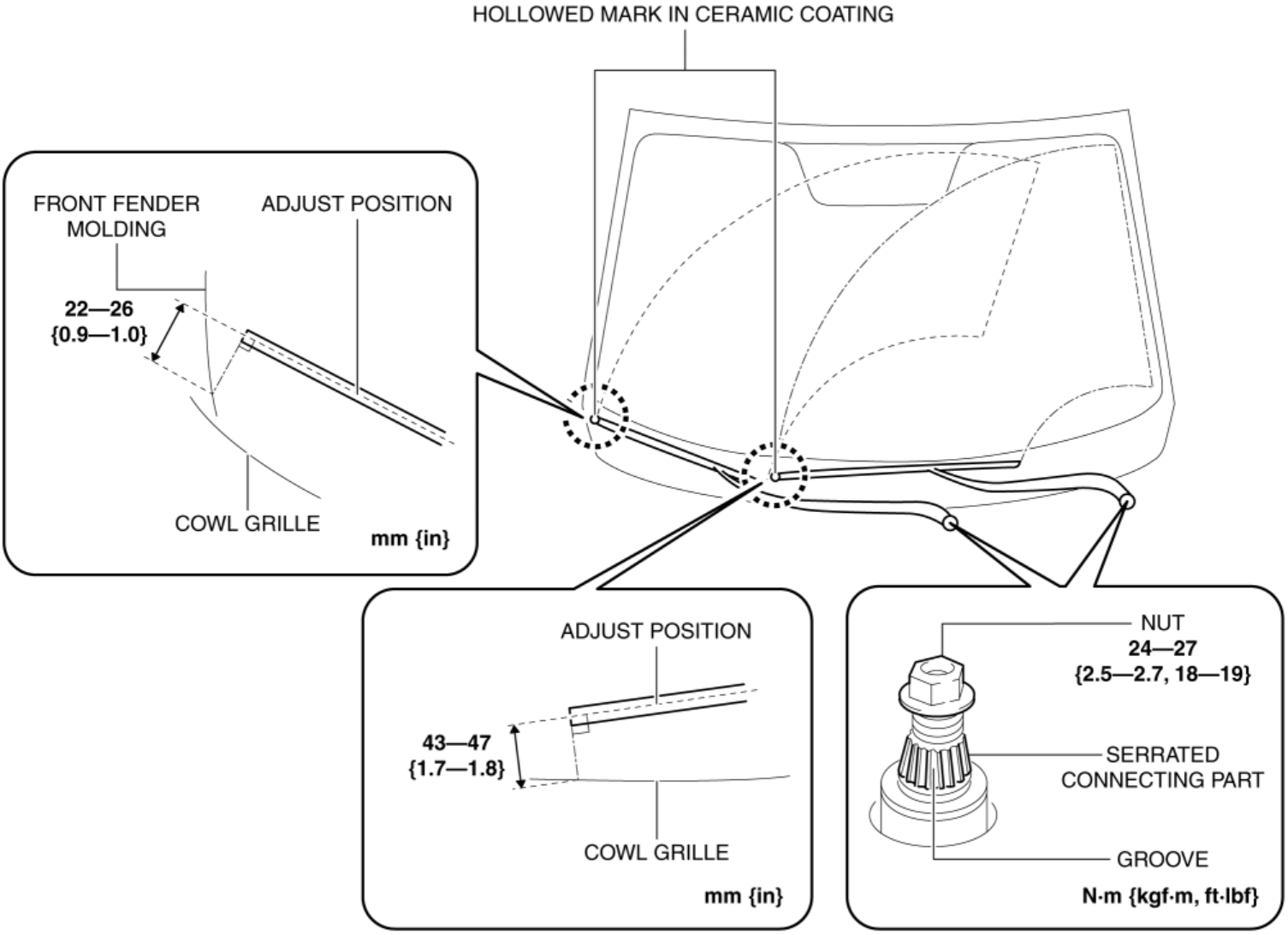

- If the windshield wiper arm and blade has not been installed correctly to the area shown in the figure, repeat the adjustment procedure.
- If the windshield wiper arm and blade is installed correctly to the area shown in the figure, tighten the nut completely.

7. Install the windshield wiper arm. (See **WINDSHIELD WIPER ARM AND BLADE REMOVAL/INSTALLATION**.)

2014 - Mazda3 - Body and Accessories

WINDSHIELD WIPER MOTOR AND LINK REMOVAL/INSTALLATION

1. Disconnect the negative battery cable. (See **NEGATIVE BATTERY CABLE DISCONNECTION/CONNECTION [SKYACTIV-G 2.0, SKYACTIV-G 2.5]**.)

2. Remove the windshield wiper arm and blade. (See **WINDSHIELD WIPER ARM AND BLADE REMOVAL/INSTALLATION**.)

3. Remove the cowl grille. (See **COWL GRILLE REMOVAL/INSTALLATION**.)

4. Apply protective tape to the area where the windshield end interferes with the windshield wiper motor and link as shown in the figure.

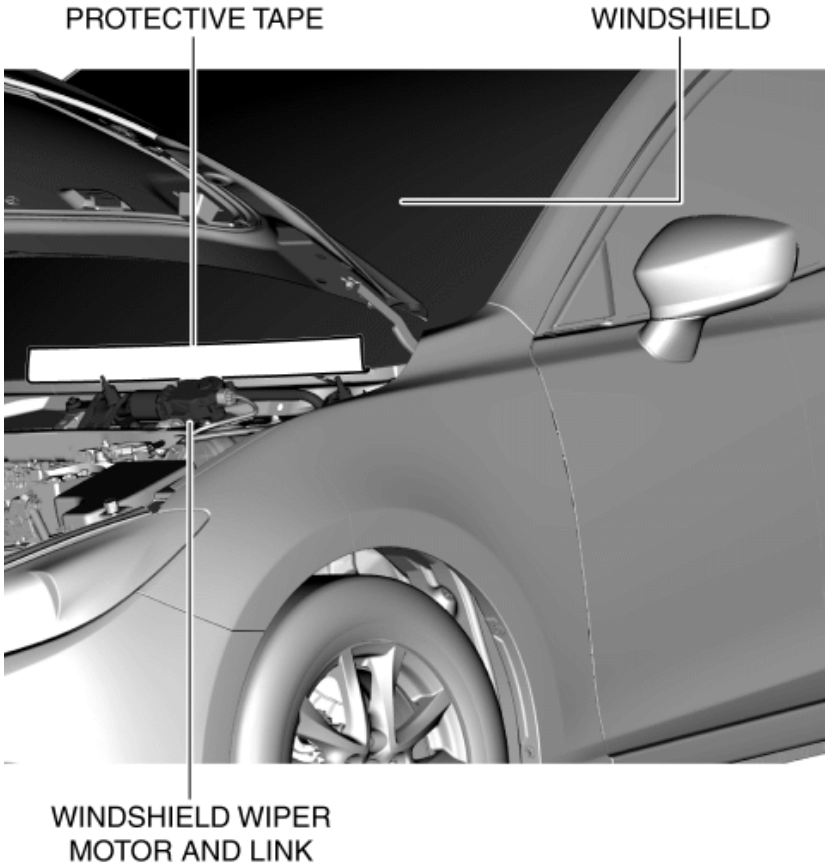

CAUTION:

- Always apply protective tape to the windshield end. If the windshield wiper motor and link contacts the windshield, it could damage the windshield.

5. Disconnect the connector.

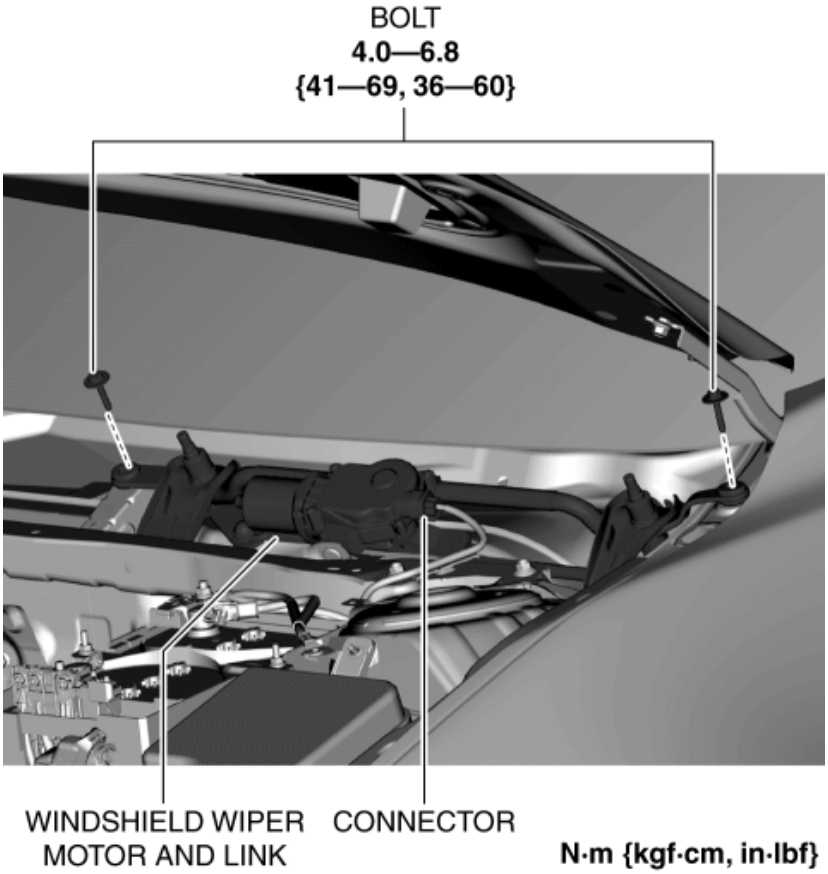

6. Remove the bolts.

7. Pull the windshield wiper motor and link out from the pin and remove it.

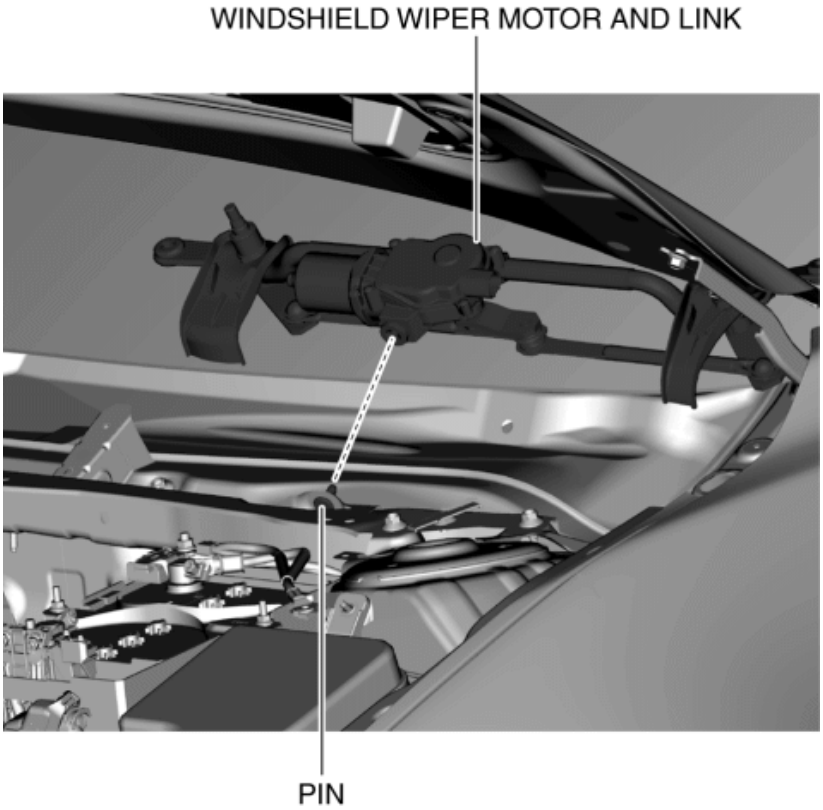

8. Secure the position of the windshield wiper link shown in the figure in a vise.

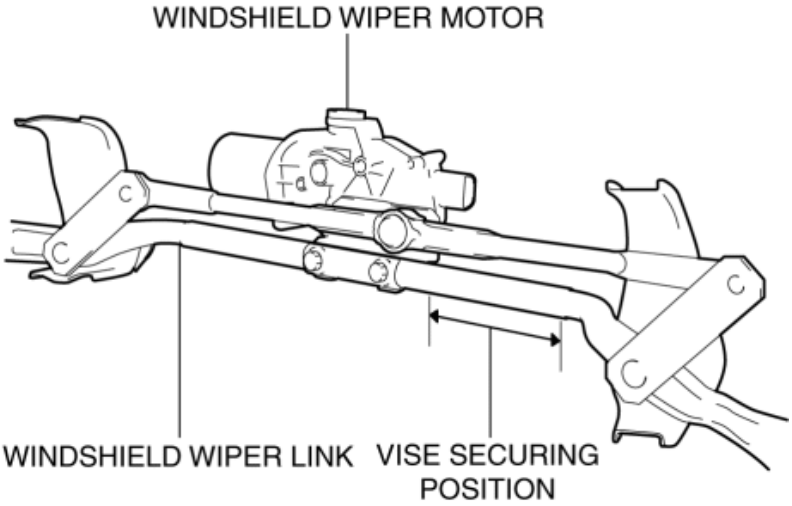

CAUTION:

- If the vise is tightened with excessive force, it could deform or damage the windshield wiper link. When securing the windshield wiper link in the vise, be careful not to deform or damage the windshield wiper link.
- Protect the windshield wiper link by placing a rag in the vise when securing it in the vise. Otherwise, it could damage the area where the vise is secured.

9. Insert a tape-wrapped flathead screwdriver into the gap between windshield wiper links No.1 and 2.

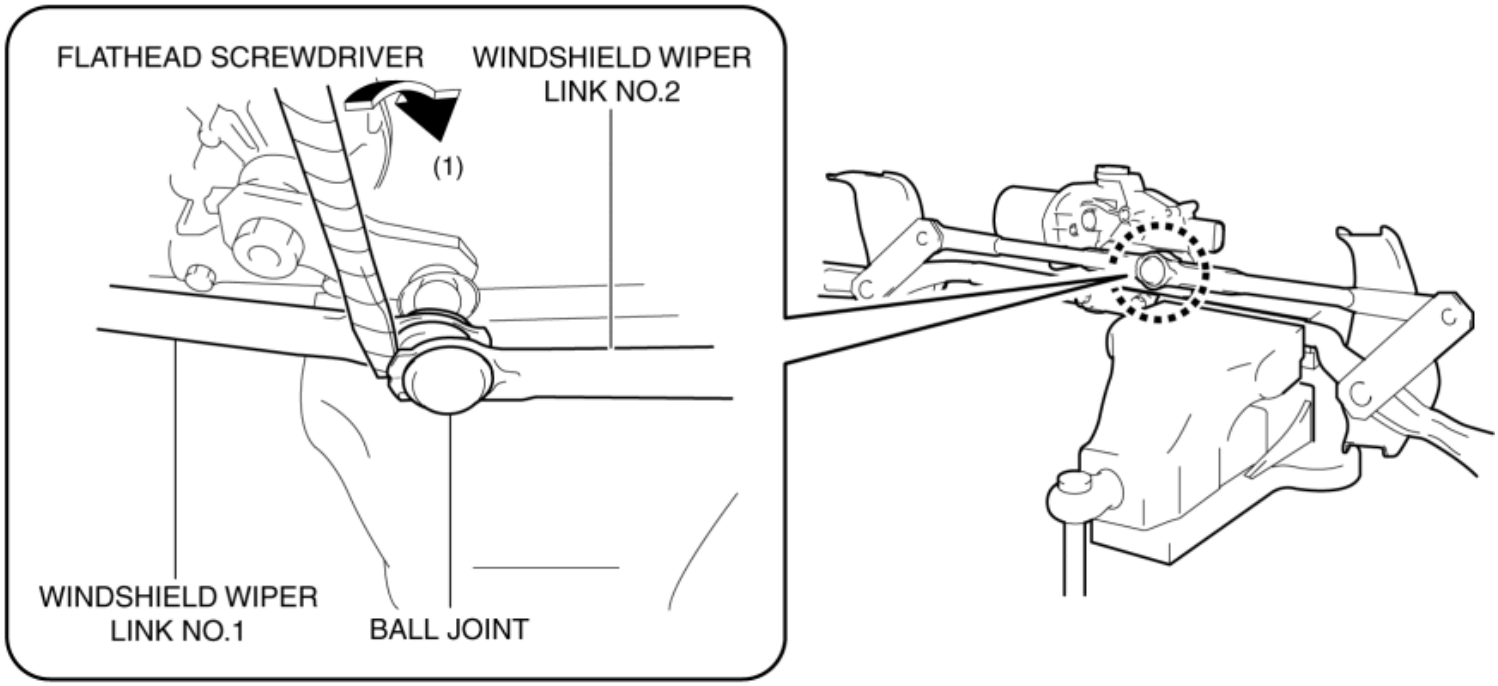

10. Move the flathead screwdriver in the direction of arrow (1) shown in the figure and remove the windshield wiper motor and the ball joint for windshield wiper link No.2. (See **Ball Joint Assembly Note**.)

11. Remove the rubber seal.

12. Insert a flathead screwdriver into the gap between the windshield wiper motor and windshield wiper link No.1.

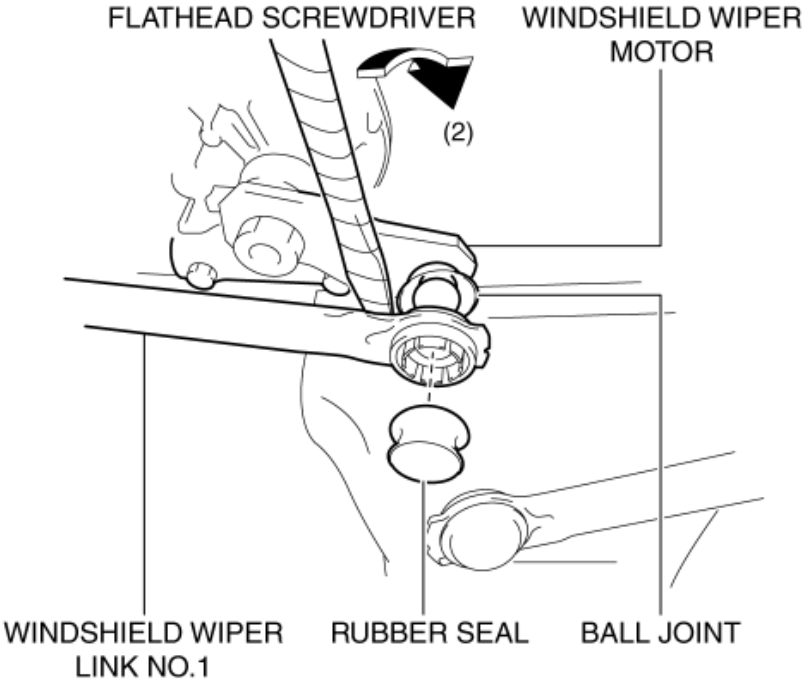

13. Move the flathead screwdriver in the direction of arrow (2) shown in the figure and remove the windshield wiper motor and the ball joint for windshield wiper link No.1. (See **Ball Joint Assembly Note**.)

14. Remove the bolts.

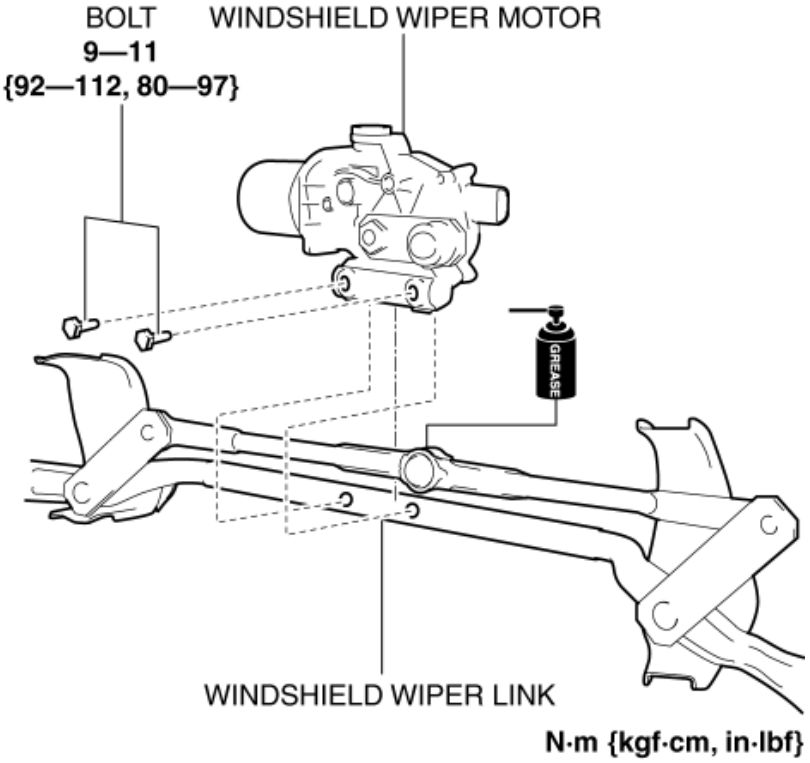

15. Remove the windshield wiper motor from the windshield wiper link.

16. Install in the reverse order of removal.

Ball Joint Assembly Note

1. When assembling the ball joint, use a clean rag to protect the links, and squeeze using a pair of protective tape-wrapped pliers.

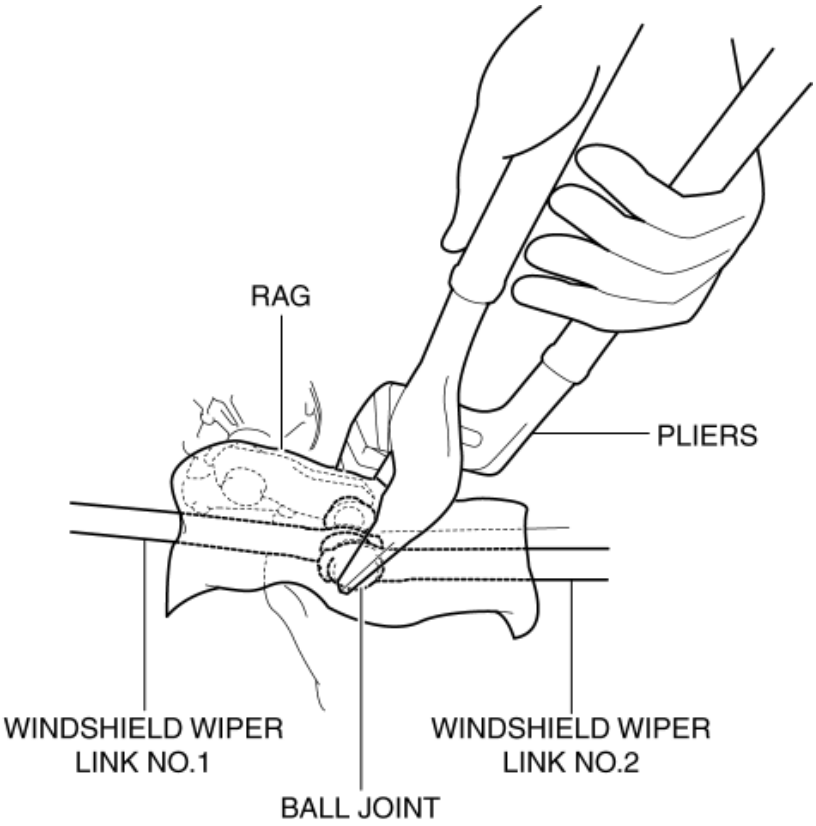
RAG
PLIERS
WINDSHIELD WIPER
LINK NO.1
WINDSHIELD WIPER
LINK NO.2
BALL JOINT

2014 - Mazda3 - Body and Accessories

WINDSHIELD WIPER MOTOR INSPECTION

Windshield Wiper Motor Inspection

1. Disconnect the negative battery cable. (See **NEGATIVE BATTERY CABLE DISCONNECTION/CONNECTION [SKYACTIV-G 2.0, SKYACTIV-G 2.5]**.)

2. Remove the following parts:

   a. Windshield wiper arm and blade (See **WINDSHIELD WIPER ARM AND BLADE REMOVAL/INSTALLATION**.)

   b. Cowl grille (See **COWL GRILLE REMOVAL/INSTALLATION**.)

   c. Windshield wiper motor connector (See **WINDSHIELD WIPER MOTOR AND LINK REMOVAL/INSTALLATION**.)

3. Apply battery positive voltage and connect the ground to the windshield wiper motor terminals, and then verify the operation condition.

B+ terminal	Ground terminal	Windshield wiper motor operation status
A	C	LO
B	C	HI

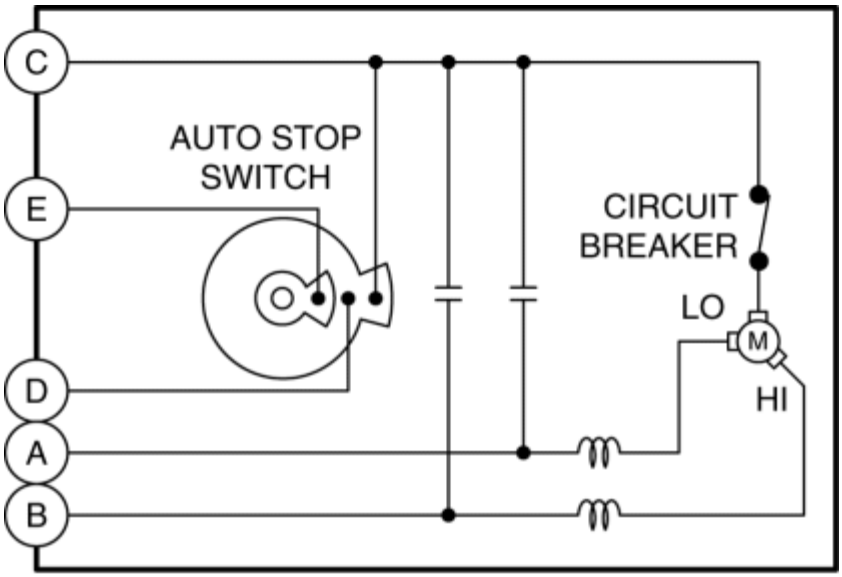

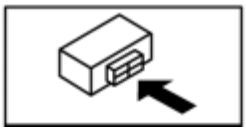

- If the windshield wiper motor does not operate as indicated in the table, replace the windshield wiper motor. (See **WINDSHIELD WIPER MOTOR AND LINK REMOVAL/INSTALLATION**.)

Auto-stop Operation Inspection

1. Disconnect the negative battery cable. (See **NEGATIVE BATTERY CABLE DISCONNECTION/CONNECTION [SKYACTIV-G 2.0, SKYACTIV-G 2.5]**.)

2. Remove the following parts:

   a. Windshield wiper arm and blade (See **WINDSHIELD WIPER ARM AND BLADE REMOVAL/INSTALLATION**.)

   b. Cowl grille (See **COWL GRILLE REMOVAL/INSTALLATION**.)

   c. Windshield wiper motor connector (See **WINDSHIELD WIPER MOTOR AND LINK REMOVAL/INSTALLATION**.)

3. Connect the battery voltage to windshield wiper motor terminal A, connect the ground to terminal C, and operate the windshield wiper motor at low speed.

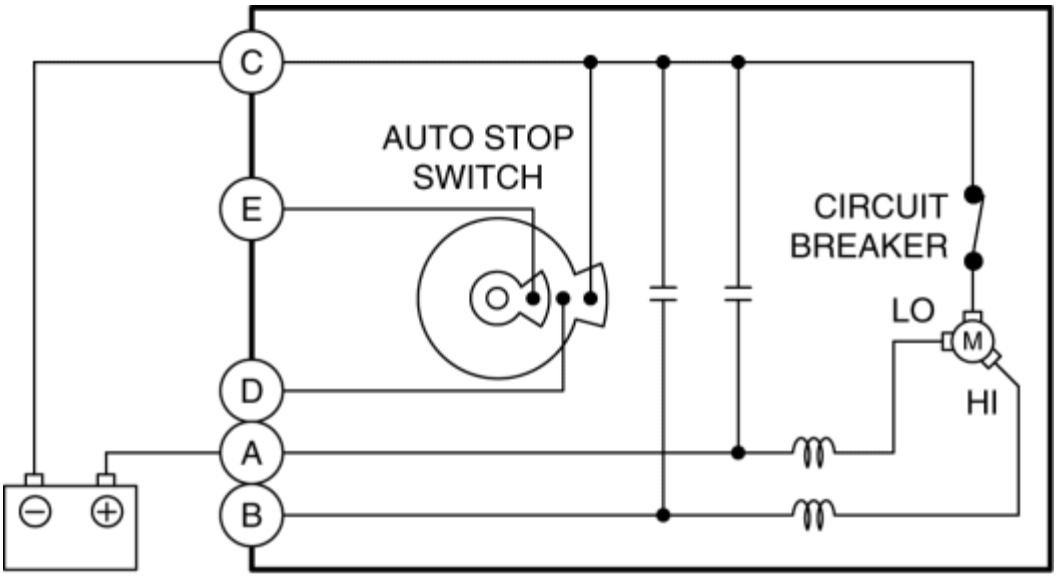

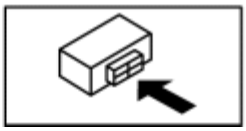

4. Disconnect the battery voltage from terminal A during windshield wiper low operation, and stop the windshield wiper motor mid-way.

5. Connect windshield wiper motor terminals A and D using a jumper wire.

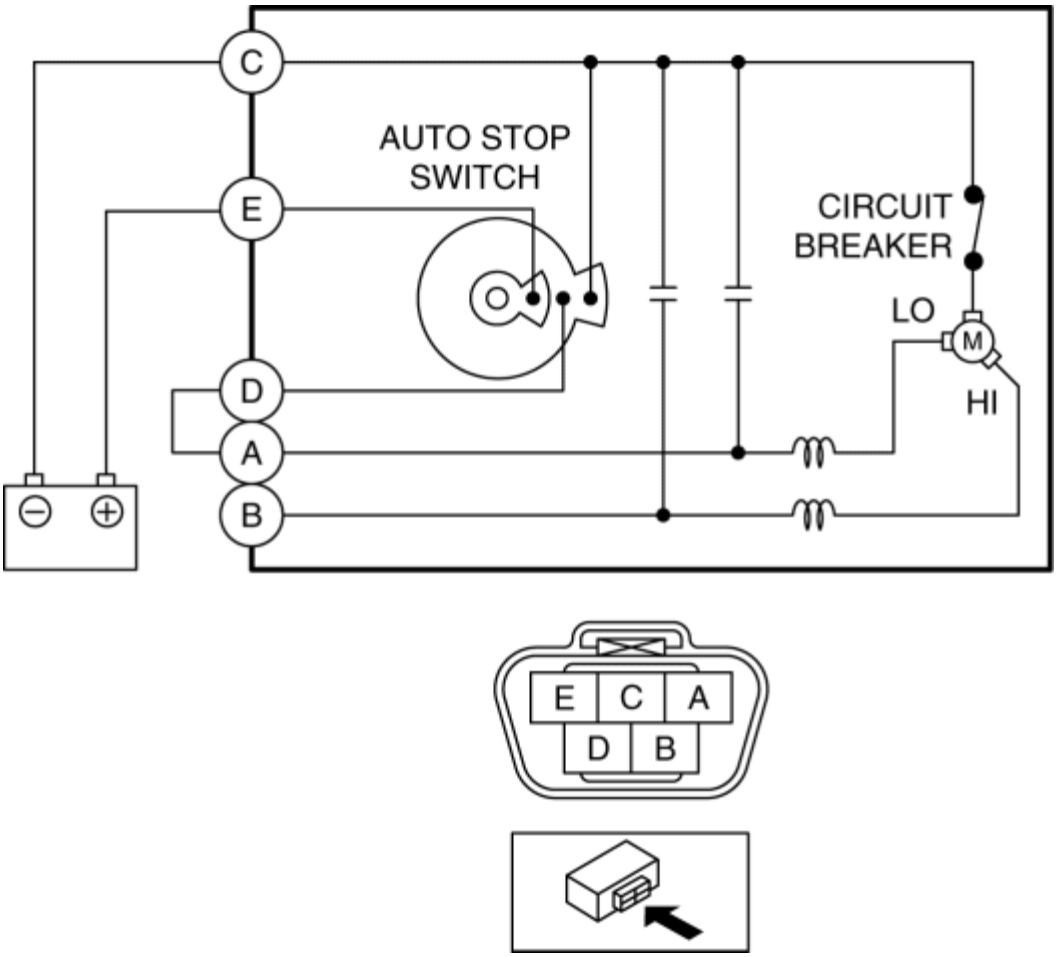

6. Connect the battery positive voltage to windshield wiper motor terminal E.

7. Verify that the windshield wipers stop at the park position as a result of the auto-stop operating.

- If the windshield wipers do not stop at the park position, replace the windshield wiper motor. (See **WINDSHIELD WIPER MOTOR AND LINK REMOVAL/INSTALLATION**.)

2014 - Mazda3 - Body and Accessories

WASHER TANK REMOVAL/INSTALLATION

NOTE:

- If the procedure is performed with washer fluid in the washer tank, the washer fluid may leak out. When performing the procedure, place a container under the washer tank to collect washer fluid, and perform the procedure.

1. Disconnect the negative battery cable. (See **NEGATIVE BATTERY CABLE DISCONNECTION/CONNECTION [SKYACTIV-G 2.0, SKYACTIV-G 2.5]**.)

2. Remove the set plate. (See **SET PLATE REMOVAL/INSTALLATION**.)

3. Remove the front bumper. (See **FRONT BUMPER REMOVAL/INSTALLATION**.)

4. Insert the remover tool into the service hole at the position shown in the figure.

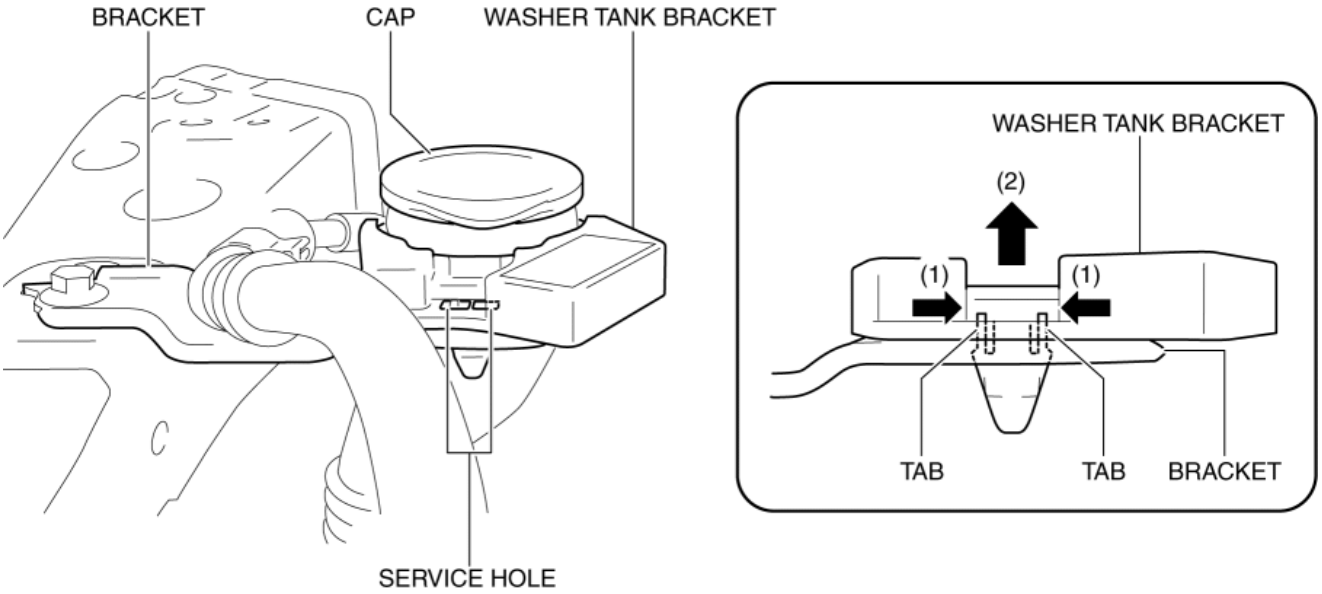

5. While pressing the washer tank bracket tabs in the direction of the arrows (1) shown in the figure, pull the washer tank bracket in the direction of the arrow (2) and pull out the washer tank bracket from the bracket.

6. Remove the cap.

7. Move the washer funnel in the direction of arrow (4) shown in the figure while pressing it in the direction of arrows (3) shown in the figure, and remove the washer funnel from the washer tank bracket.

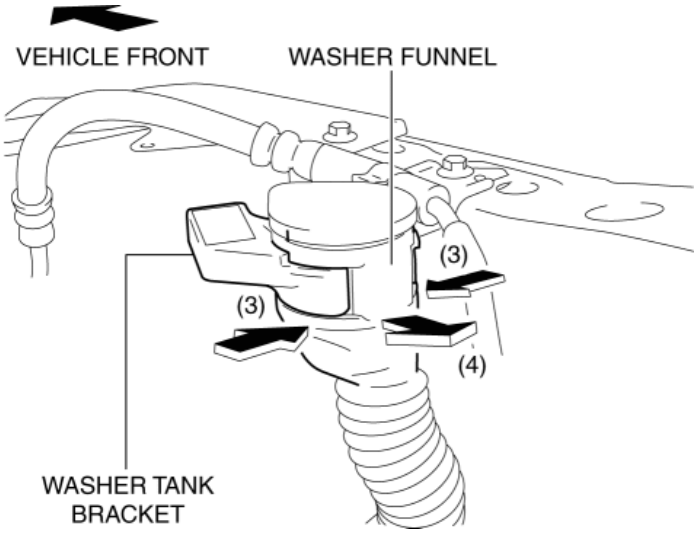

8. Disconnect the connectors.

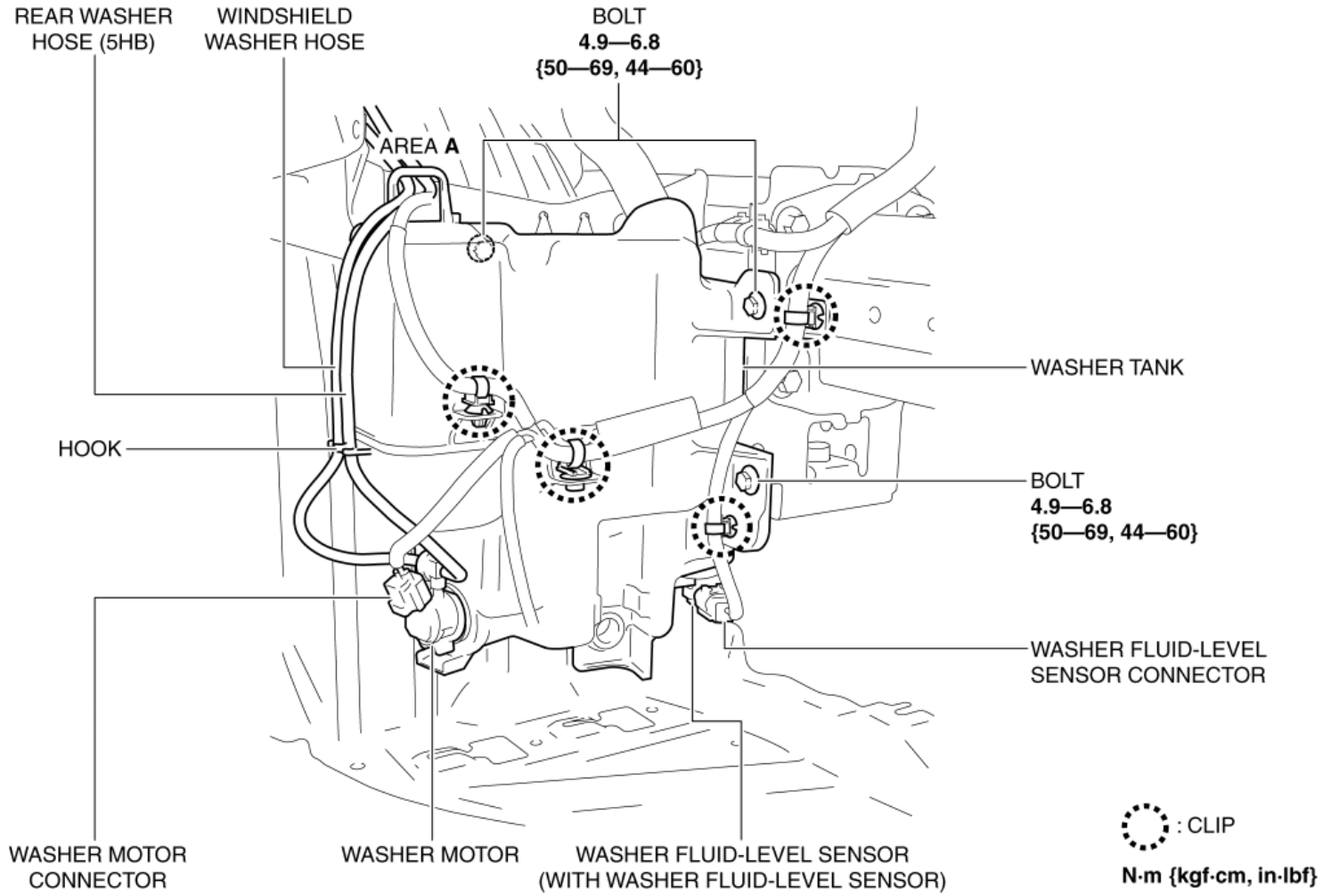

9. Press out the clip in the direction of arrow (6) shown in the figure while pressing the clip tabs in the direction of arrows (5) shown in the figure, and remove the clip from the washer tank.

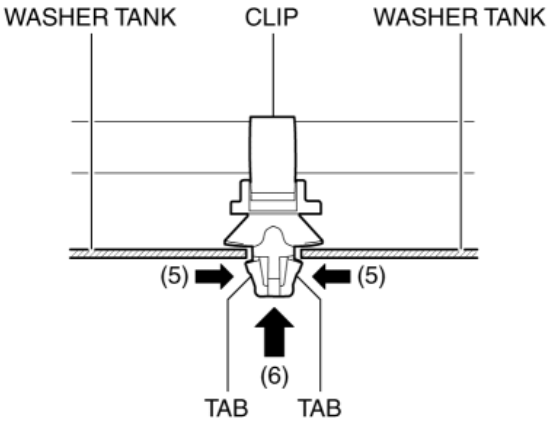

10. Disconnect the washer hose from the washer motor.

11. Remove the washer hose from the washer tank hook. (See **WINDSHIELD WASHER HOSE REMOVAL/INSTALLATION**.) (See **REAR WASHER HOSE REMOVAL/INSTALLATION**.)

12. Pull out the washer hose from area A of the washer tank.

13. Remove the bolts.

14. Move the washer tank in the direction of arrow (7) shown in the figure and pull out the washer tank hook from the vehicle.

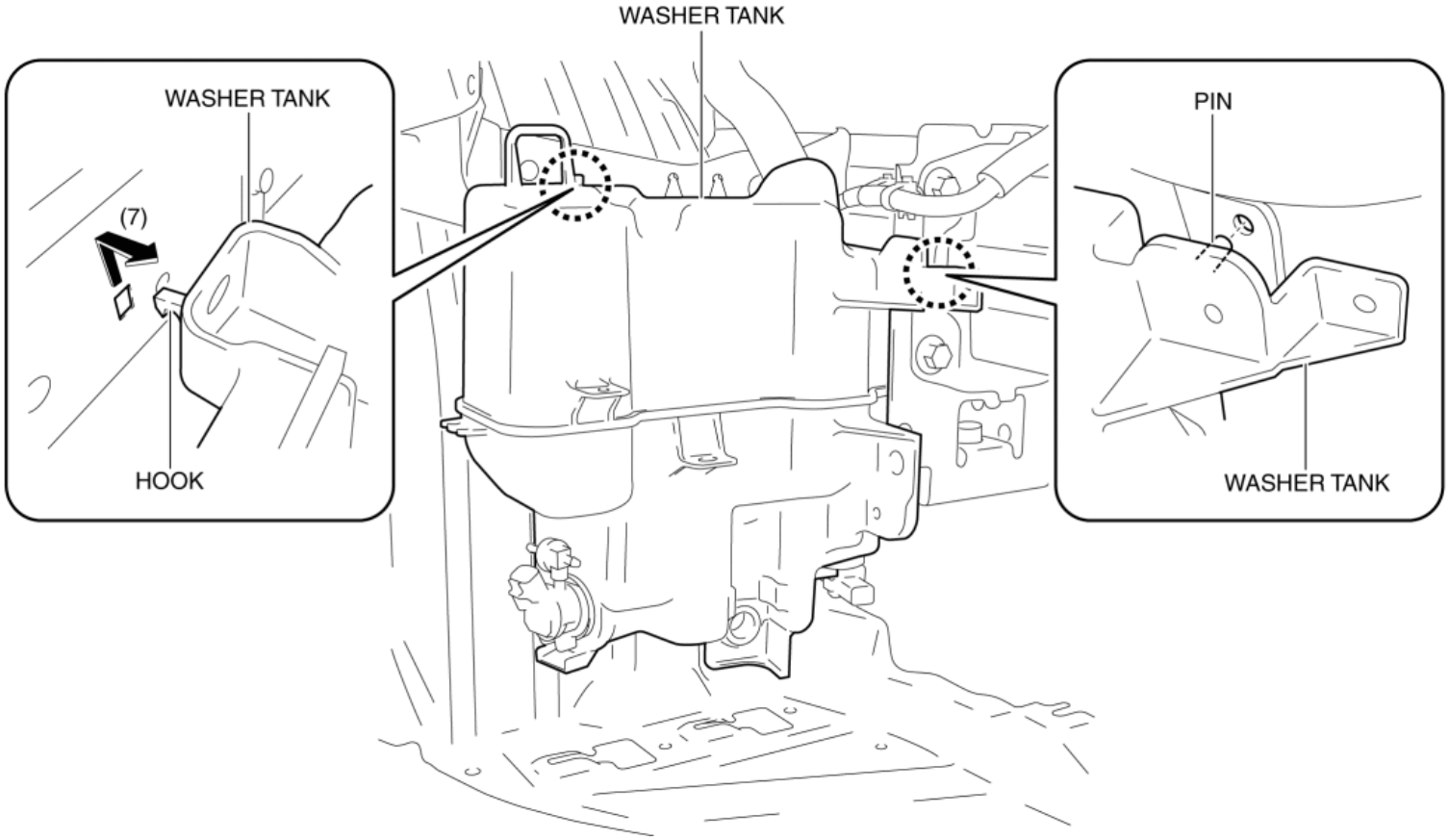

15. Pull out the washer tank pin and remove the washer tank from the vehicle.
16. Remove the washer motor. (See **WASHER MOTOR REMOVAL/INSTALLATION**.)
17. Remove the washer fluid-level sensor (with washer fluid-level sensor). (See **WASHER FLUID-LEVEL SENSOR REMOVAL/INSTALLATION**.)
18. Install in the reverse order of removal.

2014 - Mazda3 - Body and Accessories

WASHER MOTOR REMOVAL/INSTALLATION

NOTE:

- If the procedure is performed with washer fluid in the washer tank, the washer fluid may leak out. When performing the procedure, place a container under the washer tank to collect washer fluid, and perform the procedure.

1. Disconnect the negative battery cable. (See **NEGATIVE BATTERY CABLE DISCONNECTION/CONNECTION [SKYACTIV-G 2.0, SKYACTIV-G 2.5]**.)

2. Remove the set plate. (See **SET PLATE REMOVAL/INSTALLATION**.)

3. Remove the front bumper. (See **FRONT BUMPER REMOVAL/INSTALLATION**.)

4. Disconnect the connector.

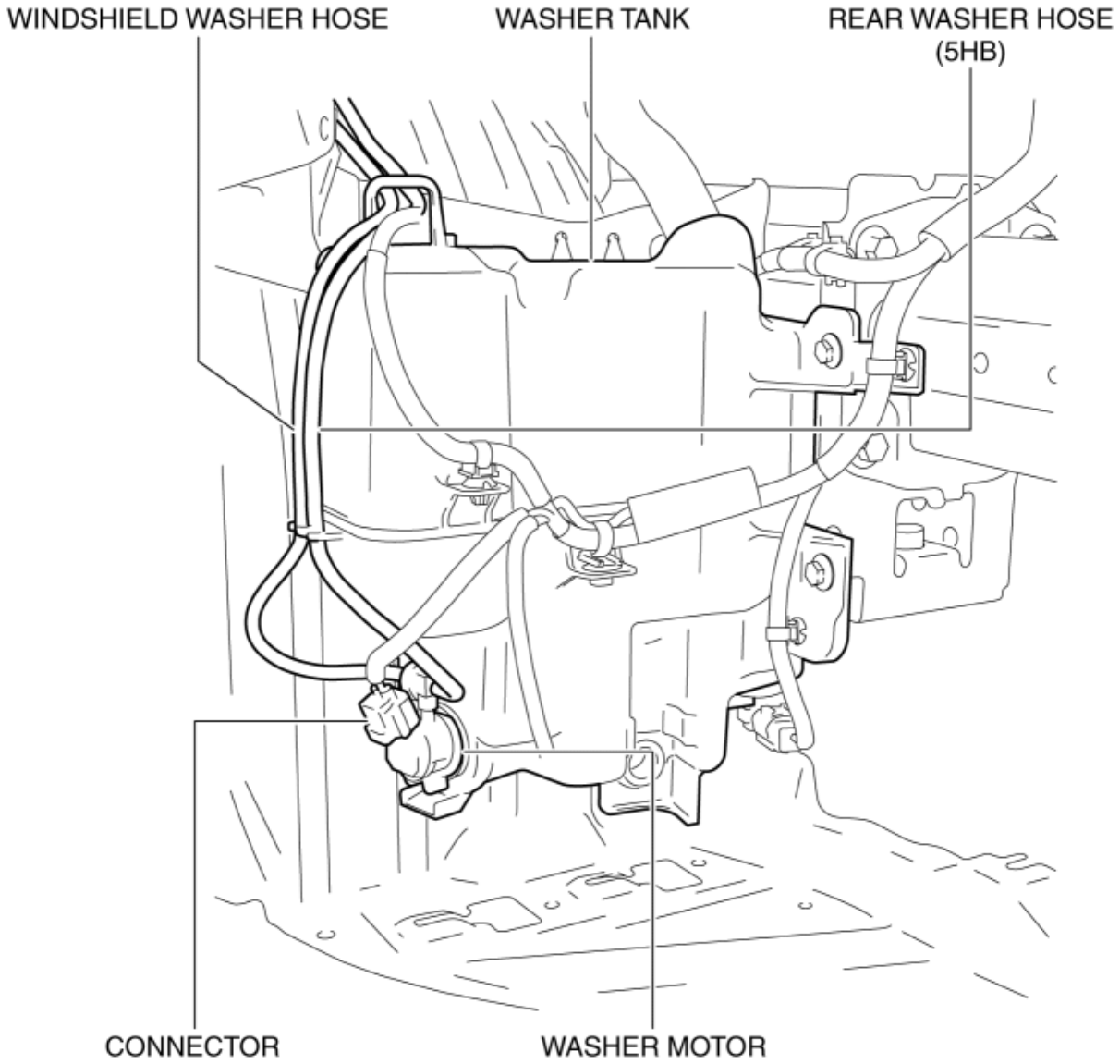

5. Disconnect the washer hose from the washer motor.

6. Remove the washer motor in the direction of arrow (2) shown in the figure while moving it in the direction of arrow (1) shown in the figure.

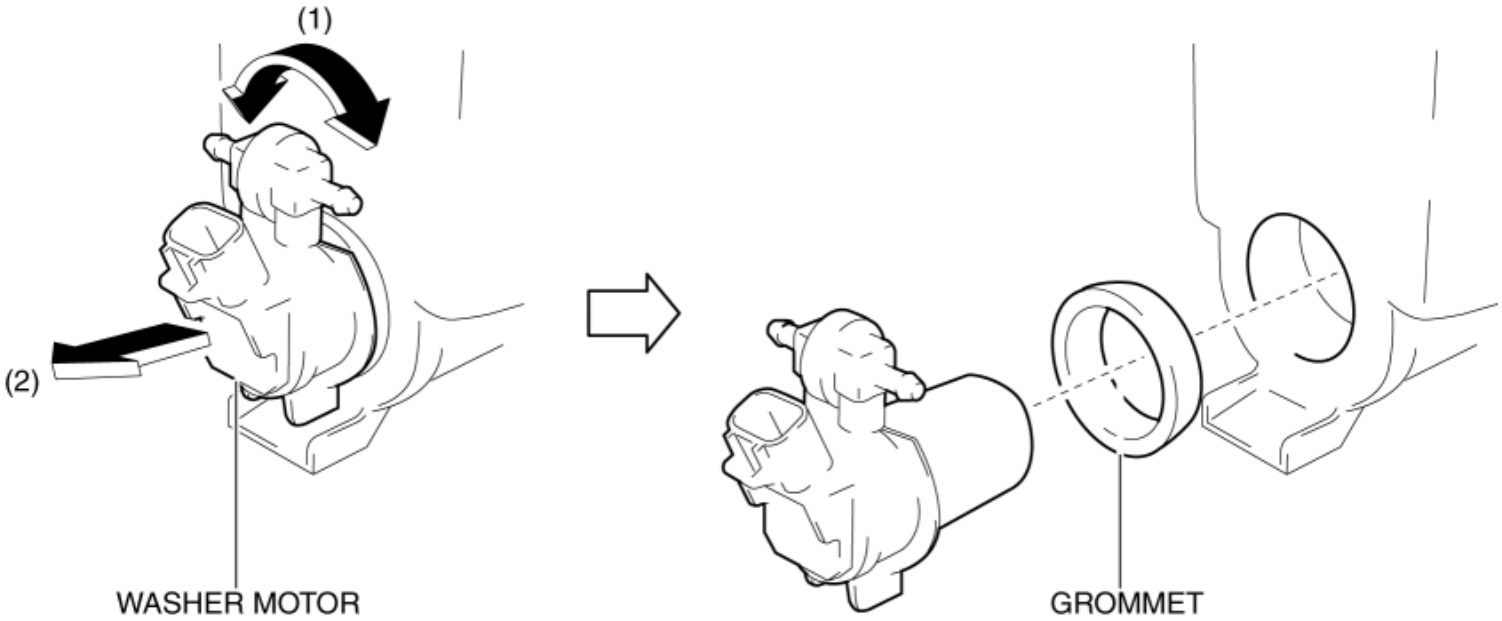

7. Remove the grommet.

8. Install in the reverse order of removal.

2014 - Mazda3 - Body and Accessories

WASHER MOTOR INSPECTION

NOTE:

- If the procedure is performed with washer fluid in the washer tank, the washer fluid may leak out. When performing the procedure, place a container under the washer tank to collect washer fluid, and perform the procedure.

4SD

1. Disconnect the negative battery cable. (See **NEGATIVE BATTERY CABLE DISCONNECTION/CONNECTION [SKYACTIV-G 2.0, SKYACTIV-G 2.5]**.)

2. Remove the set plate. (See **SET PLATE REMOVAL/INSTALLATION**.)

3. Remove the front bumper. (See **FRONT BUMPER REMOVAL/INSTALLATION**.)

4. Disconnect the connector. (See **WASHER MOTOR REMOVAL/INSTALLATION**.)

5. Disconnect the washer hose from the washer motor. (See **WASHER MOTOR REMOVAL/INSTALLATION**.)

6. Apply battery voltage to washer motor terminal A, and connect terminal B to ground.

WARNING:

- Water sprayed on the battery and ground could cause electrocution. When performing the washer motor inspection, prepare a container to collect washer fluid and be careful not to spray washer fluid.

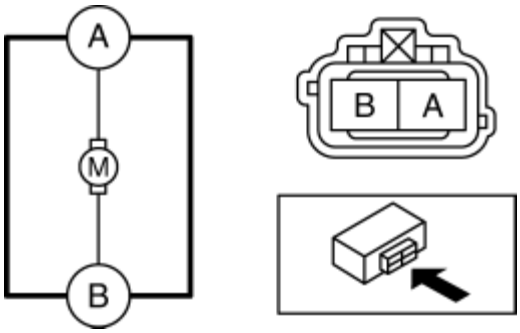

7. Verify that washer fluid sprays from the washer motor.

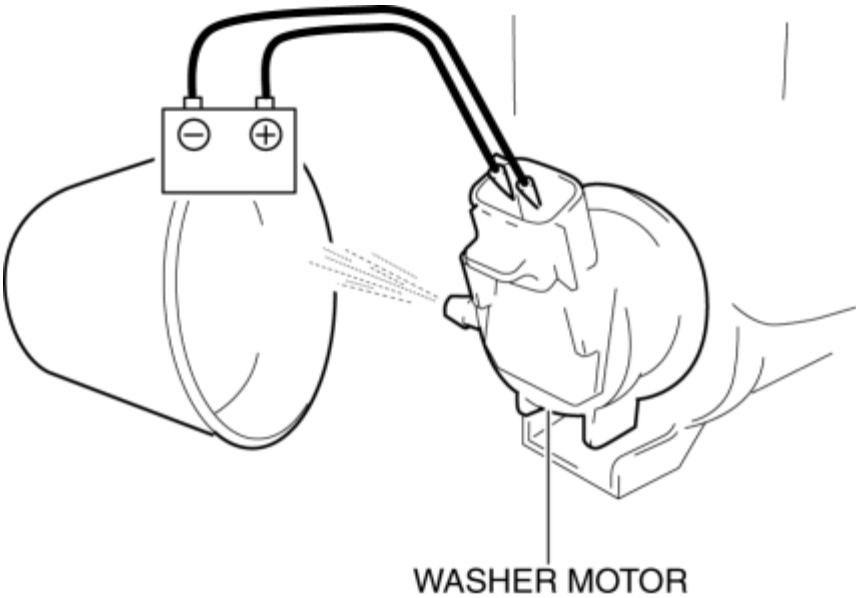

- If washer fluid does not spray from the washer motor, replace the washer motor. (See **WASHER MOTOR REMOVAL/INSTALLATION**.)

5HB

1. Disconnect the negative battery cable. (See **NEGATIVE BATTERY CABLE DISCONNECTION/CONNECTION [SKYACTIV-G 2.0, SKYACTIV-G 2.5]**.)

2. Remove the set plate. (See **SET PLATE REMOVAL/INSTALLATION**.)

3. Remove the front bumper. (See **FRONT BUMPER REMOVAL/INSTALLATION**.)

4. Disconnect the connector. (See **WASHER MOTOR REMOVAL/INSTALLATION**.)

5. Disconnect the washer hose from the washer motor. (See **WASHER MOTOR REMOVAL/INSTALLATION**.)

6. Apply battery voltage to washer motor terminal A, and connect terminal B to ground.

WARNING:

- Water sprayed on the battery and ground could cause electrocution. When performing the washer motor inspection, prepare a container to collect washer fluid and be careful not to spray washer fluid.

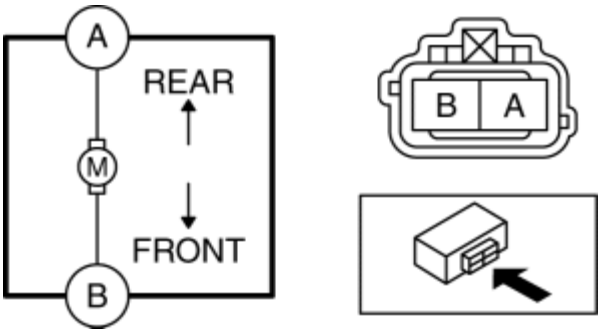

7. Verify that washer fluid sprays from the front side of the washer motor.

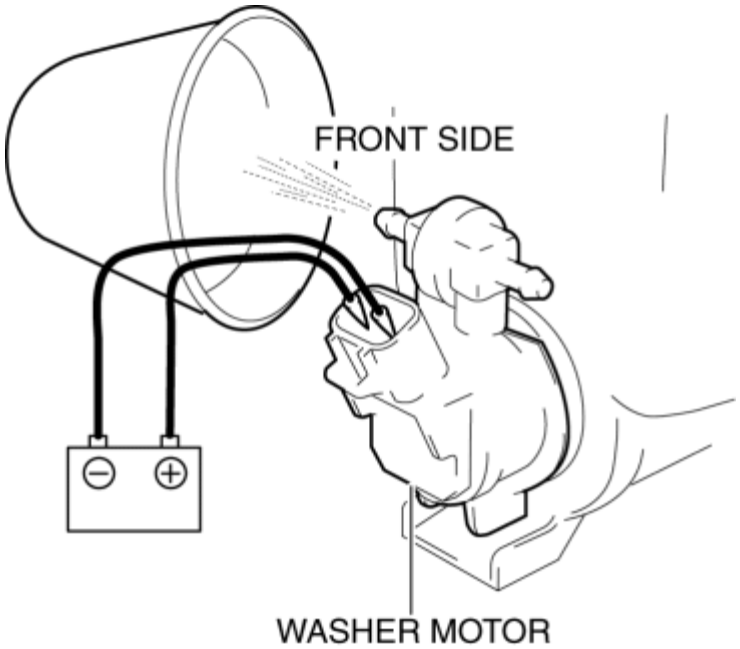

- If washer fluid does not spray from the front side of the washer motor, replace the washer motor. (See **WASHER MOTOR REMOVAL/INSTALLATION**.)

8. Apply battery positive voltage to washer motor terminal B, and connect terminal A to ground.

9. Verify that washer fluid sprays from the rear side of the washer motor.

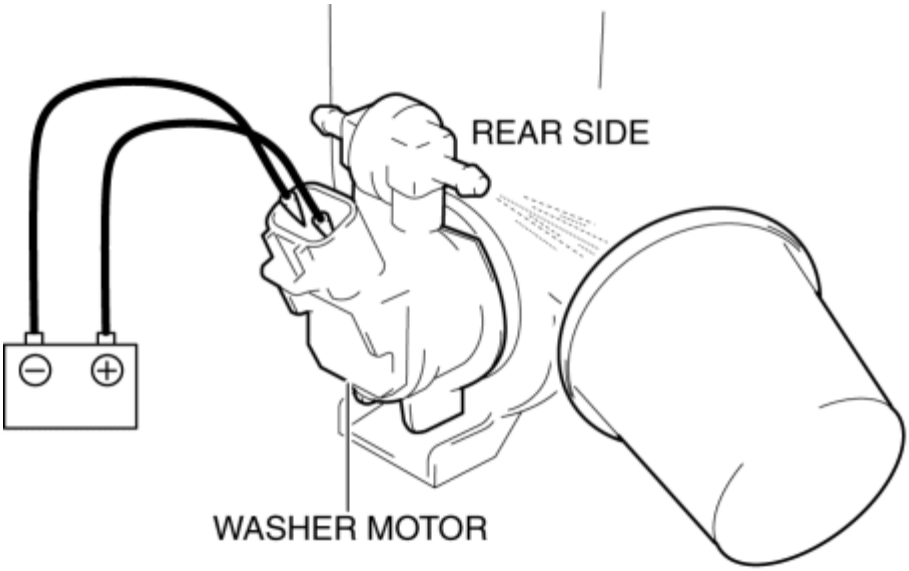

- If washer fluid does not spray from the rear side of the washer motor, replace the washer motor. (See **WASHER MOTOR REMOVAL/INSTALLATION**.)

2014 - Mazda3 - Body and Accessories

WINDSHIELD WASHER NOZZLE REMOVAL/INSTALLATION

1. Remove the windshield wiper arm and blade. (See **WINDSHIELD WIPER ARM AND BLADE REMOVAL/INSTALLATION**.)
2. Remove the cowl grille. (See **COWL GRILLE REMOVAL/INSTALLATION**.)
3. Disconnect the windshield washer hose from the windshield washer nozzle.

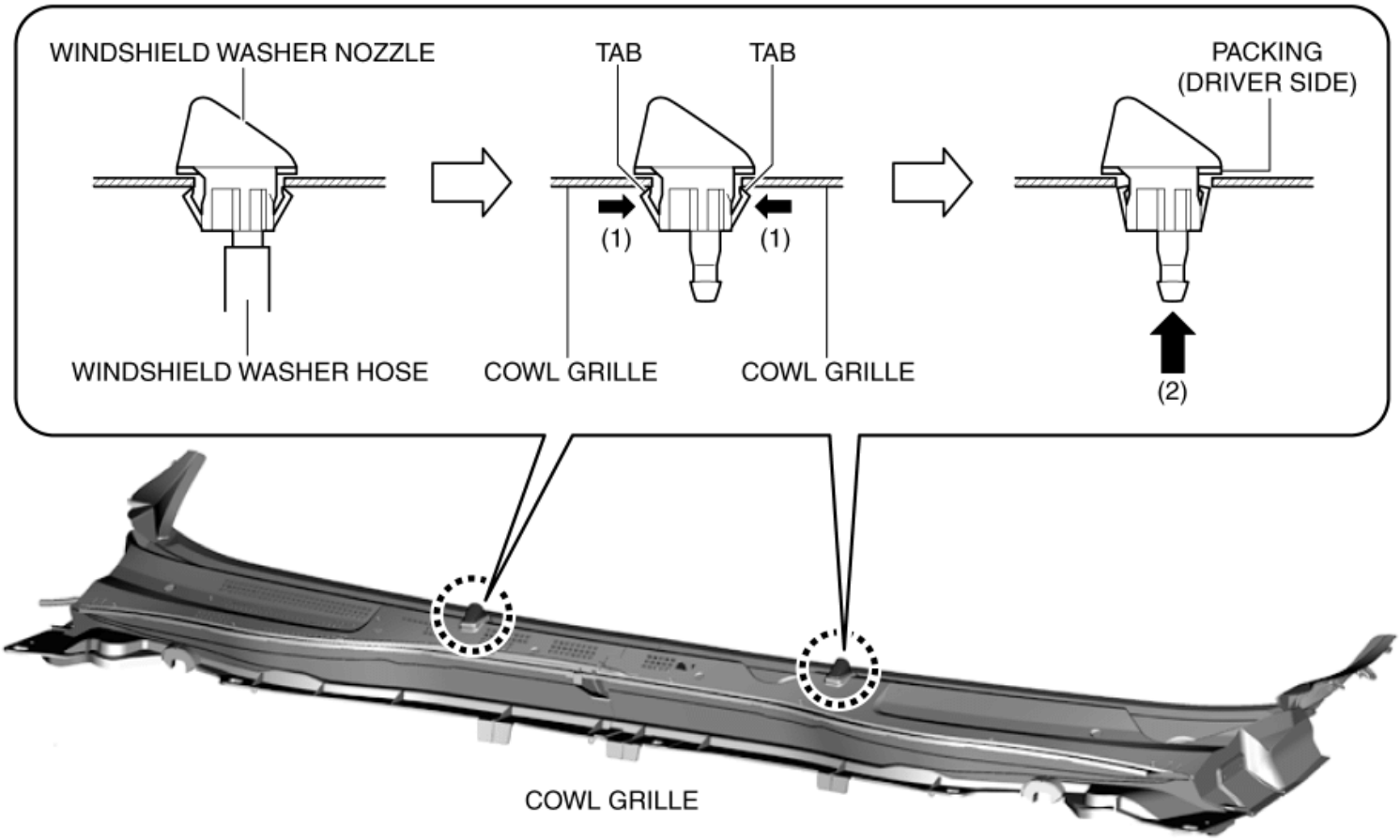

4. Press out the windshield washer nozzle in the direction of arrow (2) shown in the figure while pressing the windshield washer nozzle tabs in the direction of arrows (1) shown in the figure.
5. Remove the windshield washer nozzle.
6. Install in the reverse order of removal.
7. Adjust the windshield washer nozzle. (See **WINDSHIELD WASHER NOZZLE ADJUSTMENT**.)

2014 - Mazda3 - Body and Accessories

WINDSHIELD WASHER NOZZLE ADJUSTMENT

CAUTION:

- Do not insert objects into the injection nozzle when adjusting the nozzle. If the nozzle is adjusted by inserting a stick-like object into the nozzle, it could deform the injection nozzle and the washer fluid may not spray normally.

1. Insert the remover tool into the adjustment holes of the windshield washer nozzle and adjust the area where washer fluid is sprayed as shown in the figure.

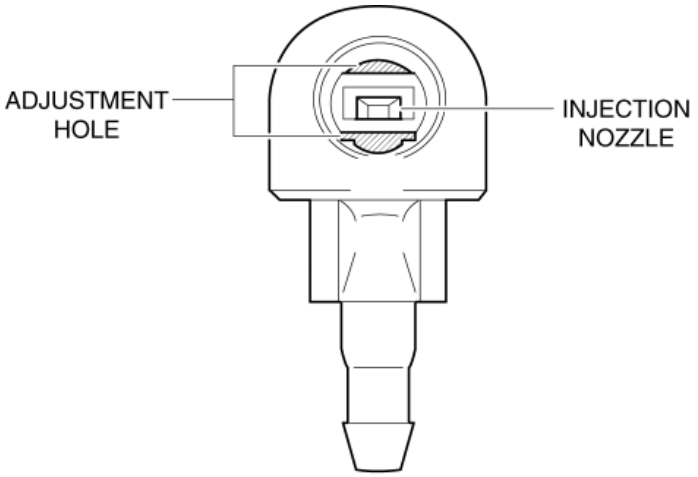

WINDSHIELD WASHER NOZZLE

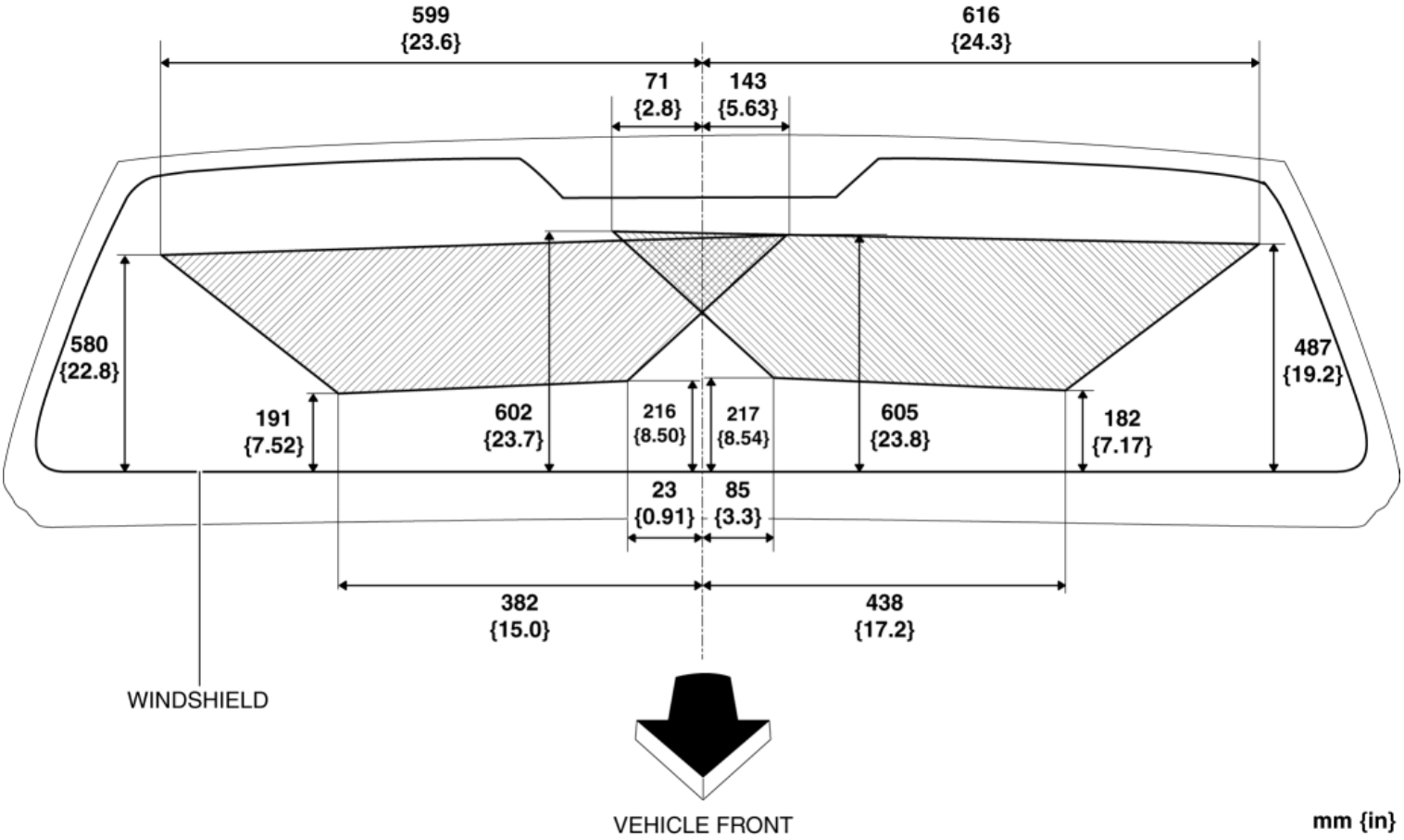

WINDSHIELD WASHER NOZZLE ADJUSTMENT

2014 - Mazda3 - Body and Accessories

WASHER FLUID-LEVEL SENSOR INSPECTION

1. Disconnect the negative battery cable. (See **NEGATIVE BATTERY CABLE DISCONNECTION/CONNECTION [SKYACTIV-G 2.0, SKYACTIV-G 2.5]**.)

2. Remove the set plate. (See **SET PLATE REMOVAL/INSTALLATION**.)

3. Remove the front bumper. (See **FRONT BUMPER REMOVAL/INSTALLATION**.)

4. Disconnect the connector. (See **WASHER FLUID-LEVEL SENSOR REMOVAL/INSTALLATION**.)

5. Verify that the continuity between the washer fluid-level sensor terminals is as indicated in the table.

○——○ : Continuity

Washer fluid level	Terminal	
	A	B
Above low		
Below low	○	○

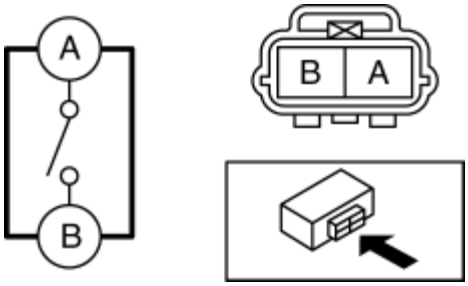

- If not as indicated in the table, replace the washer fluid-level sensor. (See **WASHER FLUID-LEVEL SENSOR REMOVAL/INSTALLATION**.)

2014 - Mazda3 - Body and Accessories

WASHER FLUID-LEVEL SENSOR REMOVAL/INSTALLATION

NOTE:

- If the procedure is performed with washer fluid in the washer tank, the washer fluid may leak out. When performing the procedure, place a container under the washer tank to collect washer fluid, and perform the procedure.

1. Disconnect the negative battery cable. (See **NEGATIVE BATTERY CABLE DISCONNECTION/CONNECTION [SKYACTIV-G 2.0, SKYACTIV-G 2.5]**.)
2. Remove the set plate. (See **SET PLATE REMOVAL/INSTALLATION**.)
3. Remove the front bumper. (See **FRONT BUMPER REMOVAL/INSTALLATION**.)
4. Disconnect the connector.

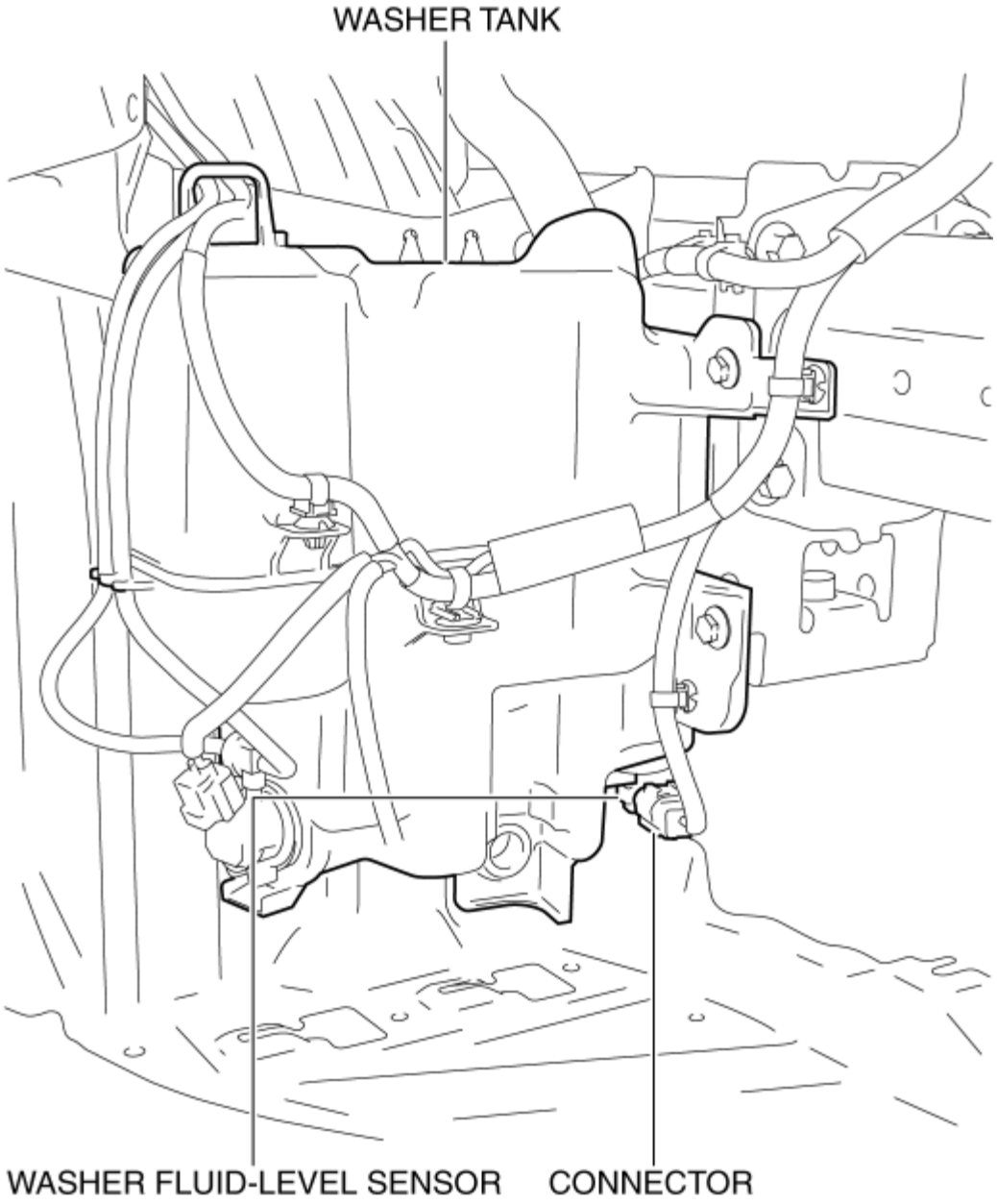

5. Remove the washer fluid-level sensor.

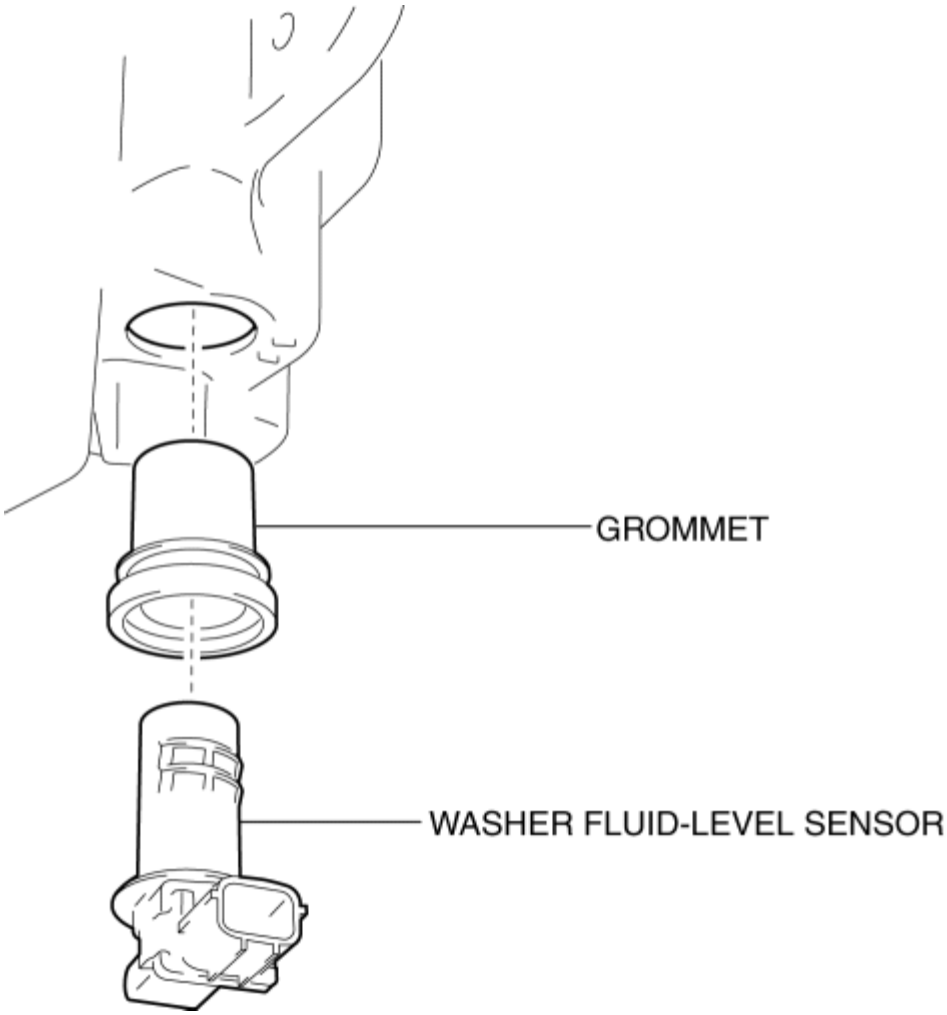

6. Remove the grommet.

7. Install in the reverse order of removal.

2014 - Mazda3 - Body and Accessories

WINDSHIELD WASHER HOSE REMOVAL/INSTALLATION

Windshield Washer Hose A

1. Remove the front mudguard (RH). (See **MUDGUARD REMOVAL/INSTALLATION**.)
2. Disconnect windshield washer hose A from the washer motor.

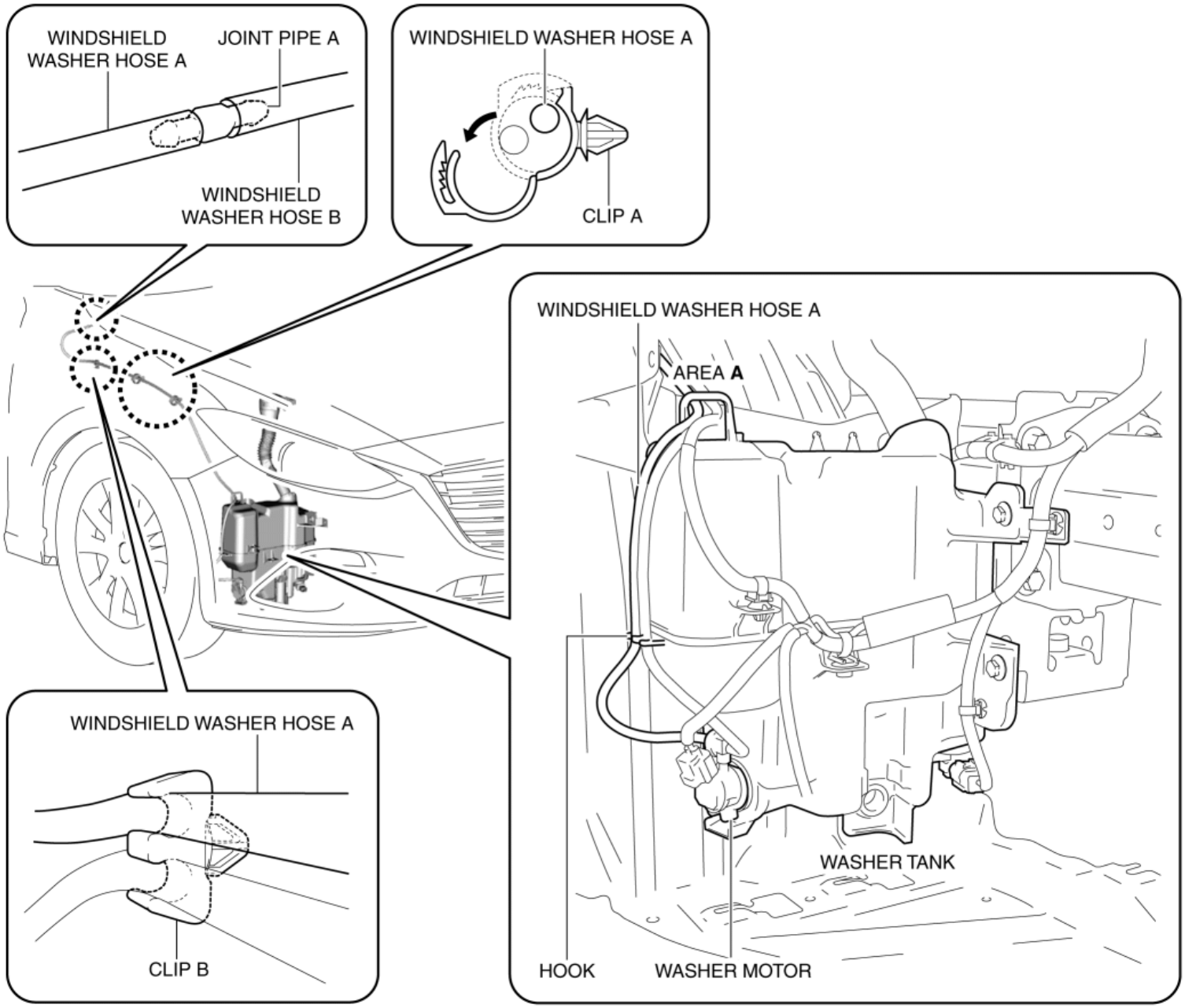

3. Remove windshield washer hose A from the washer tank hook. (See **Windshield washer hose A installation note**.)
4. Pull out windshield washer hose A from area A of the washer tank.
5. Remove windshield washer hose A from clips A and B.
6. Disconnect windshield washer hose B from joint pipe A.
7. Remove windshield washer hose A.

8. Install in the reverse order of removal.

Windshield washer hose A installation note

1. When installing windshield washer hose A to the washer tank hook, align the hook with the upper part of the white mark and install.

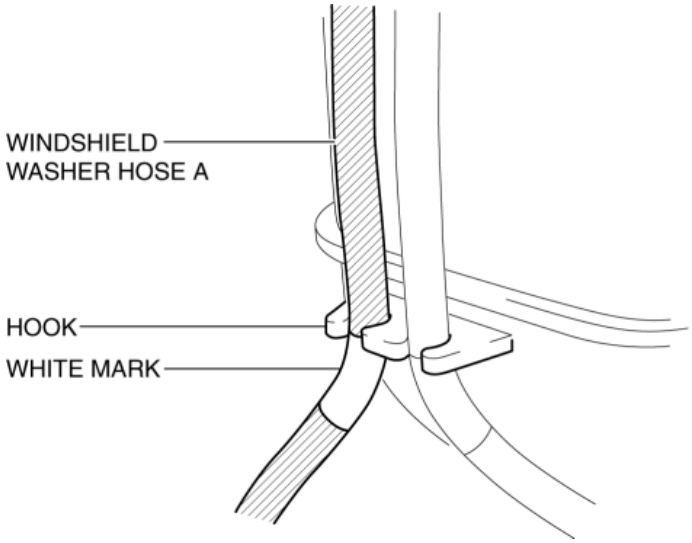

Windshield Washer Hose B

1. Remove the windshield wiper arm and blade. (See **WINDSHIELD WIPER ARM AND BLADE REMOVAL/INSTALLATION**.)
2. Remove the cowl grille. (See **COWL GRILLE REMOVAL/INSTALLATION**.)
3. Disconnect windshield washer hose C from joint pipe B.

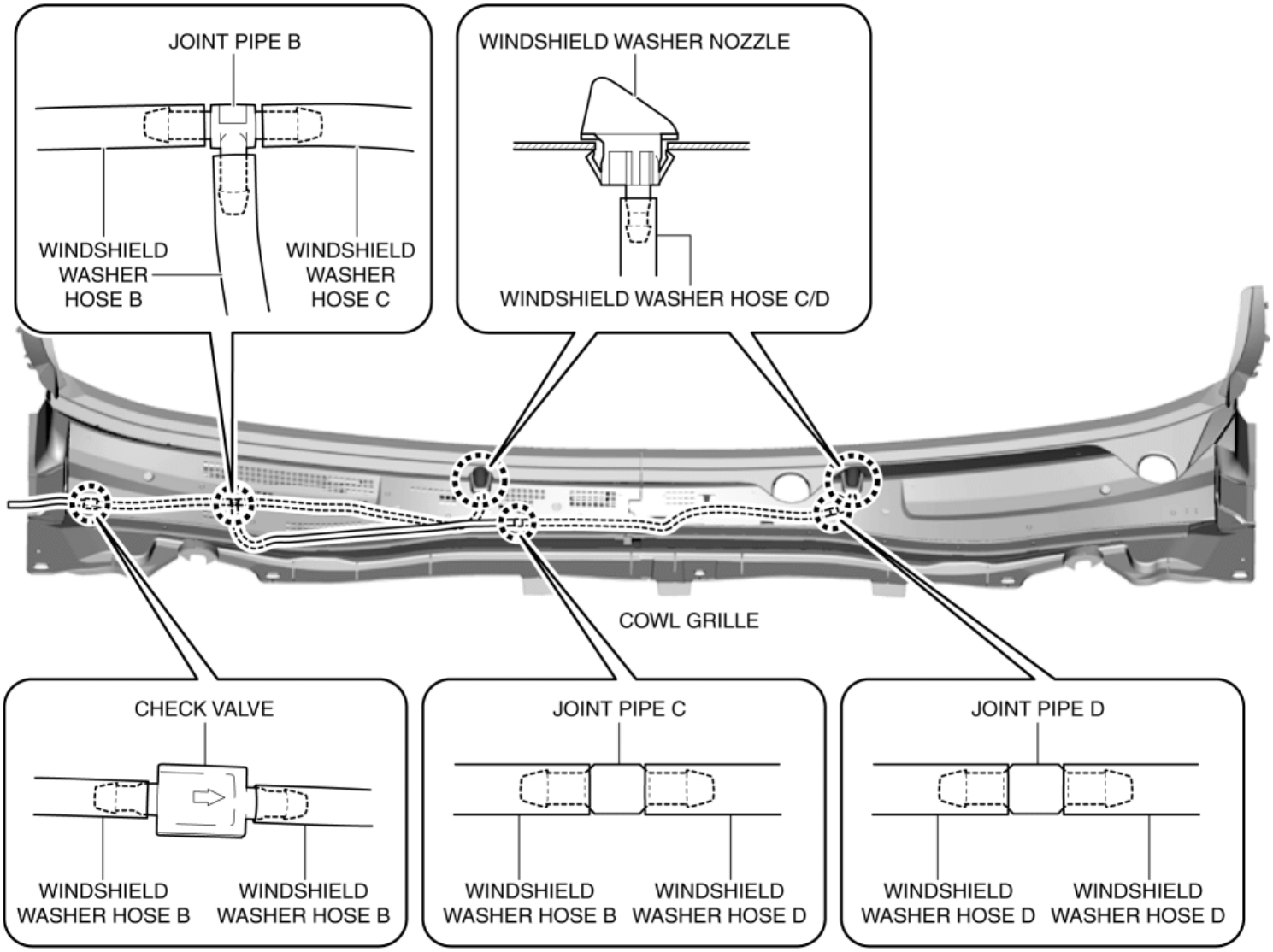

4. Disconnect windshield washer hose B from joint pipe C.

5. Install in the reverse order of removal.

2014 - Mazda3 - Body and Accessories

REAR WIPER ARM AND BLADE REMOVAL/INSTALLATION

Rear Wiper Arm

1. Pull the cap in the direction of arrows (1) shown in the figure and detach the cap tabs from the rear wiper arm.

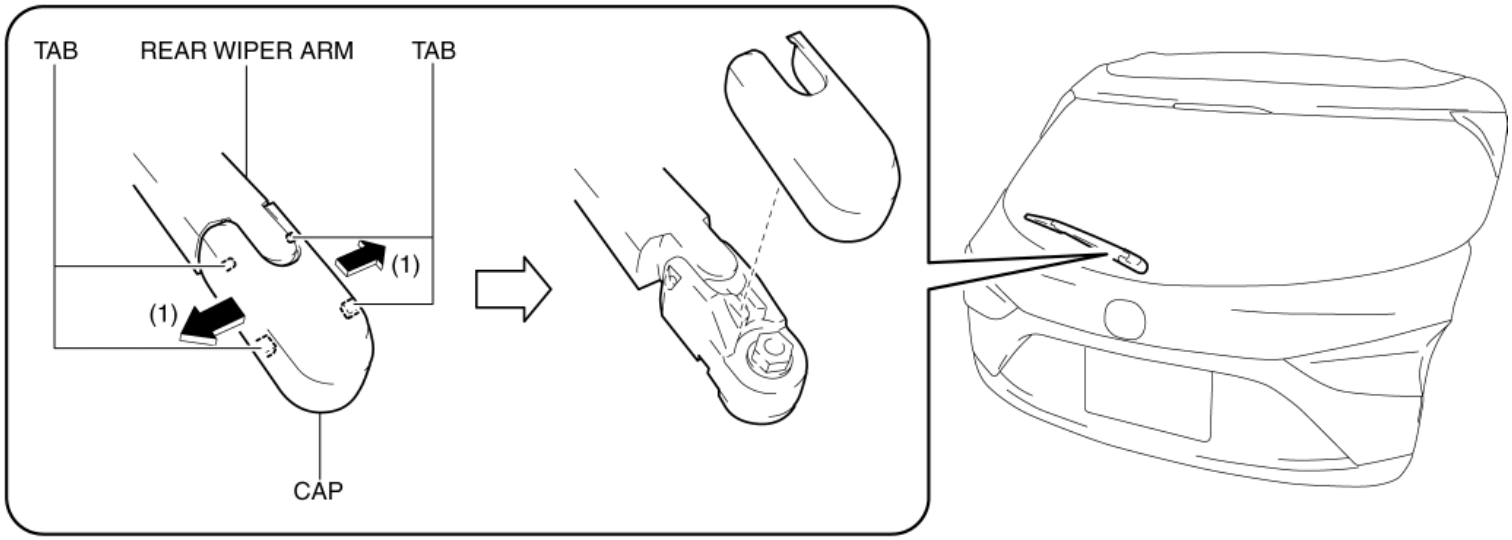

2. Remove the cap.
3. Remove the nut with the rear wiper arm pressed as shown in the figure.

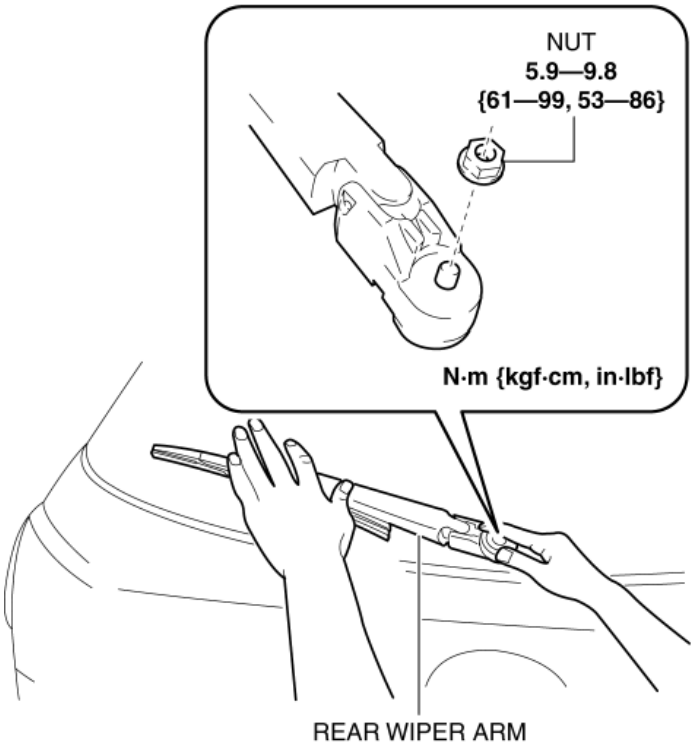

4. Raise the rear wiper arm as shown in the figure and pull out the rear wiper arm from the serrated connecting part.

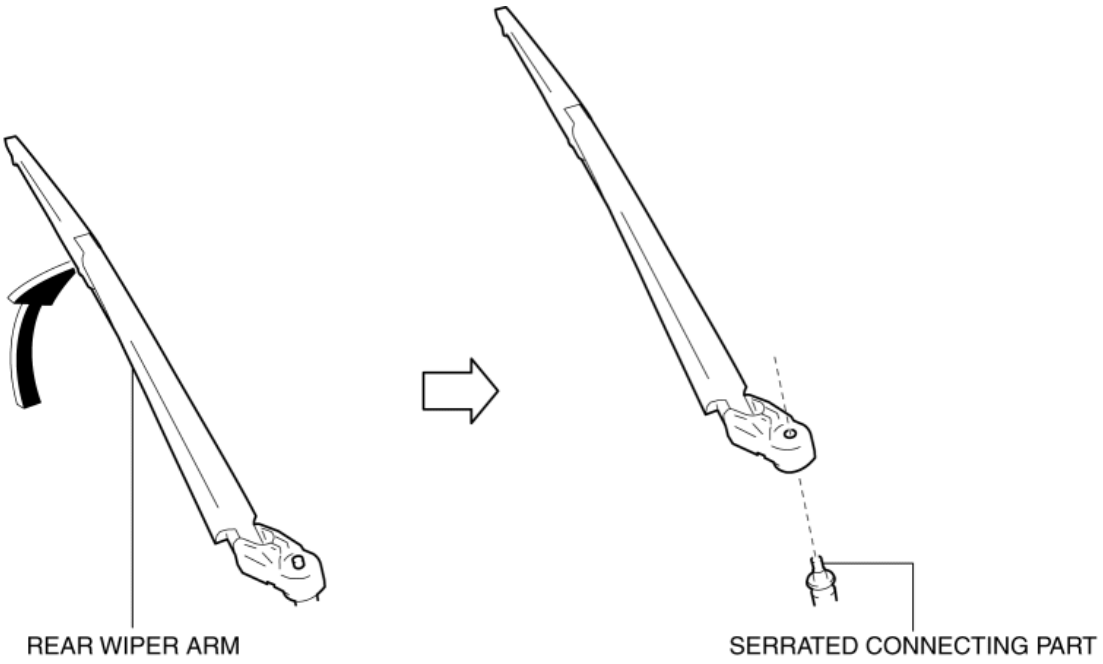

5. Install in the reverse order of removal.
6. Adjust the rear wiper arm and blade. (See **REAR WIPER ARM AND BLADE ADJUSTMENT**.)

Rear wiper arm installation note

1. Clean the serrated connecting part with a wire brush before installing the rear wiper arm.

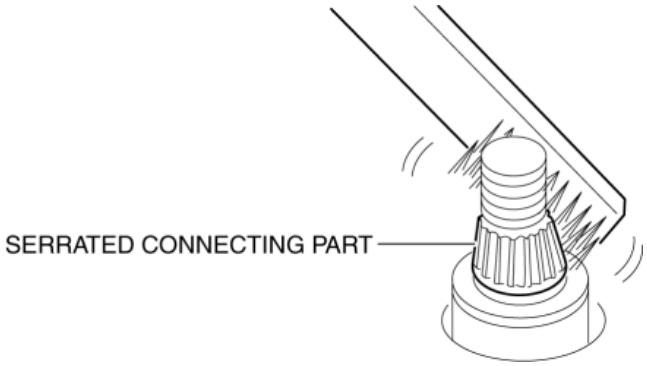

Rear Wiper Blade

1. Move the rear wiper blade in the direction of arrow (1) shown in the figure and detach the rear wiper blade from the rear wiper arm.

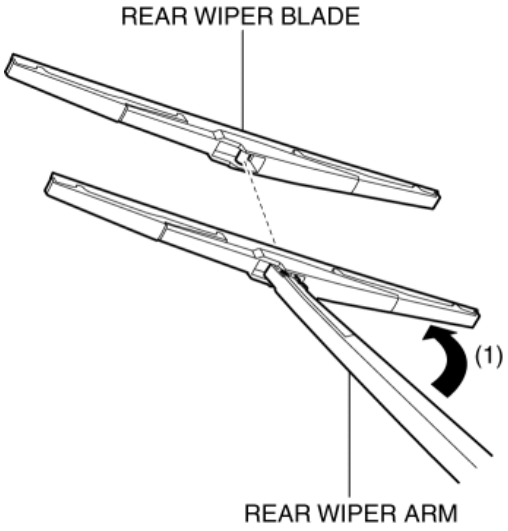

2. Remove the rear wiper blade.
3. Install in the reverse order of removal.

2014 - Mazda3 - Body and Accessories

REAR WIPER ARM AND BLADE ADJUSTMENT

1. Switch the ignition ON (engine off or on).
2. Operate the rear wiper.
3. Turn off the rear wiper switch during rear wiper operation and stop the rear wiper motor mid-way.
4. Verify that the rear wiper stops at the park position as a result of the auto-stop operating.
5. Remove the rear wiper arm. (See **REAR WIPER ARM AND BLADE REMOVAL/INSTALLATION**.)
6. Install the rear wiper arm to the serrated connecting part, adjust the rear wiper arm and blade end to the area shown in the figure while sliding the rear wiper arm onto the grooves of the serrated connecting part one by one, and temporarily tighten the nut.

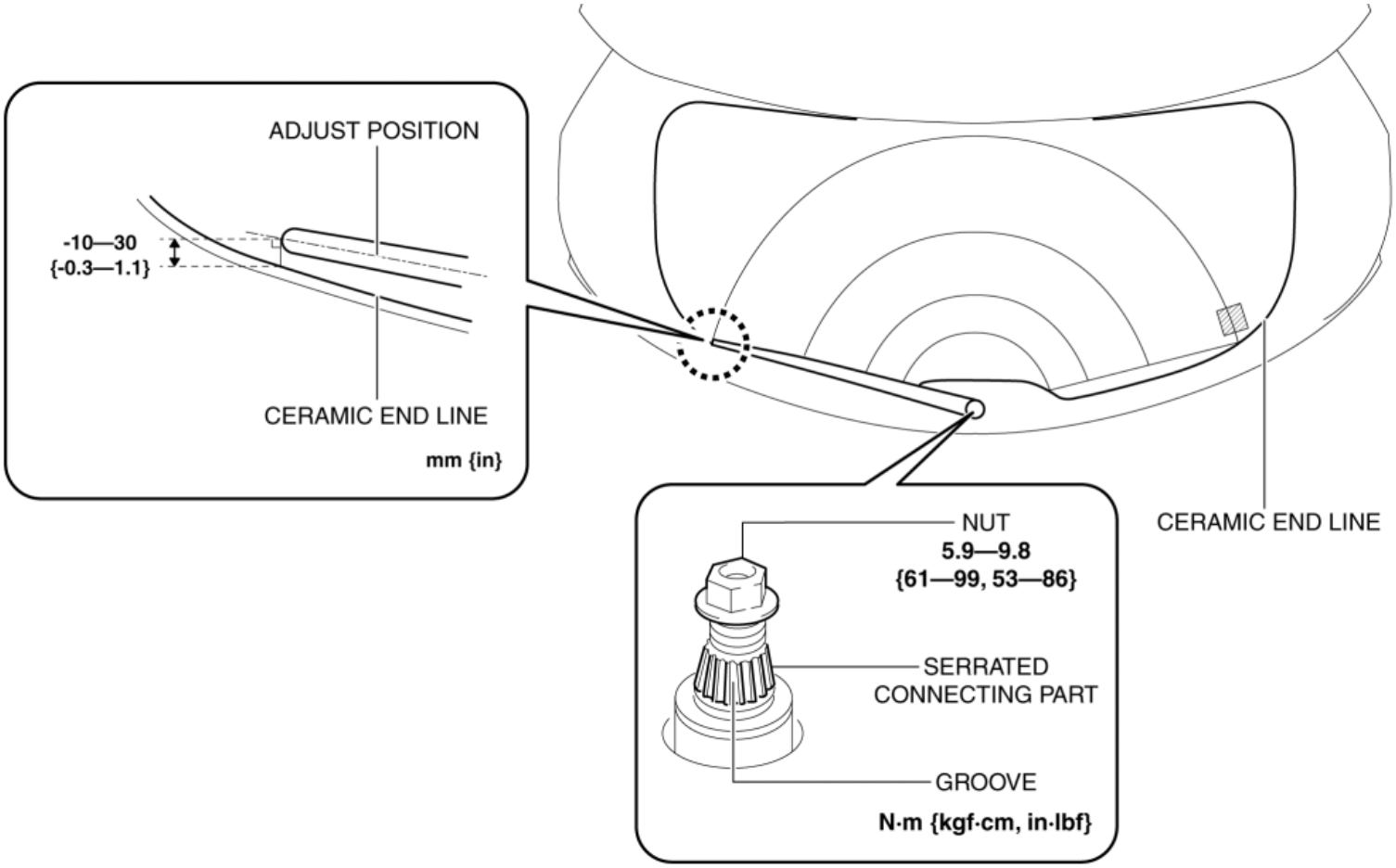

- If the rear wiper arm and blade is not installed to the area shown in the figure, repeat the adjustment procedure.
- If the rear wiper arm and blade is installed to the area shown in the figure, tighten the nut completely.

7. Install the rear wiper arm. (See **REAR WIPER ARM AND BLADE REMOVAL/INSTALLATION**.)

2014 - Mazda3 - Body and Accessories

REAR WIPER MOTOR REMOVAL/INSTALLATION

1. Disconnect the negative battery cable. (See **NEGATIVE BATTERY CABLE DISCONNECTION/CONNECTION [SKYACTIV-G 2.0, SKYACTIV-G 2.5]**.)

2. Remove the following parts:

   a. Rear wiper arm and blade (See **REAR WIPER ARM AND BLADE REMOVAL/INSTALLATION**.)

   b. Liftgate upper trim (See **LIFTGATE UPPER TRIM REMOVAL/INSTALLATION**.)

   c. Liftgate side trim (See **LIFTGATE SIDE TRIM REMOVAL/INSTALLATION**.)

   d. Liftgate recess (See **LIFTGATE RECESS REMOVAL/INSTALLATION**.)

   e. Liftgate lower trim (See **LIFTGATE LOWER TRIM REMOVAL/INSTALLATION**.)

3. Disconnect the connector.

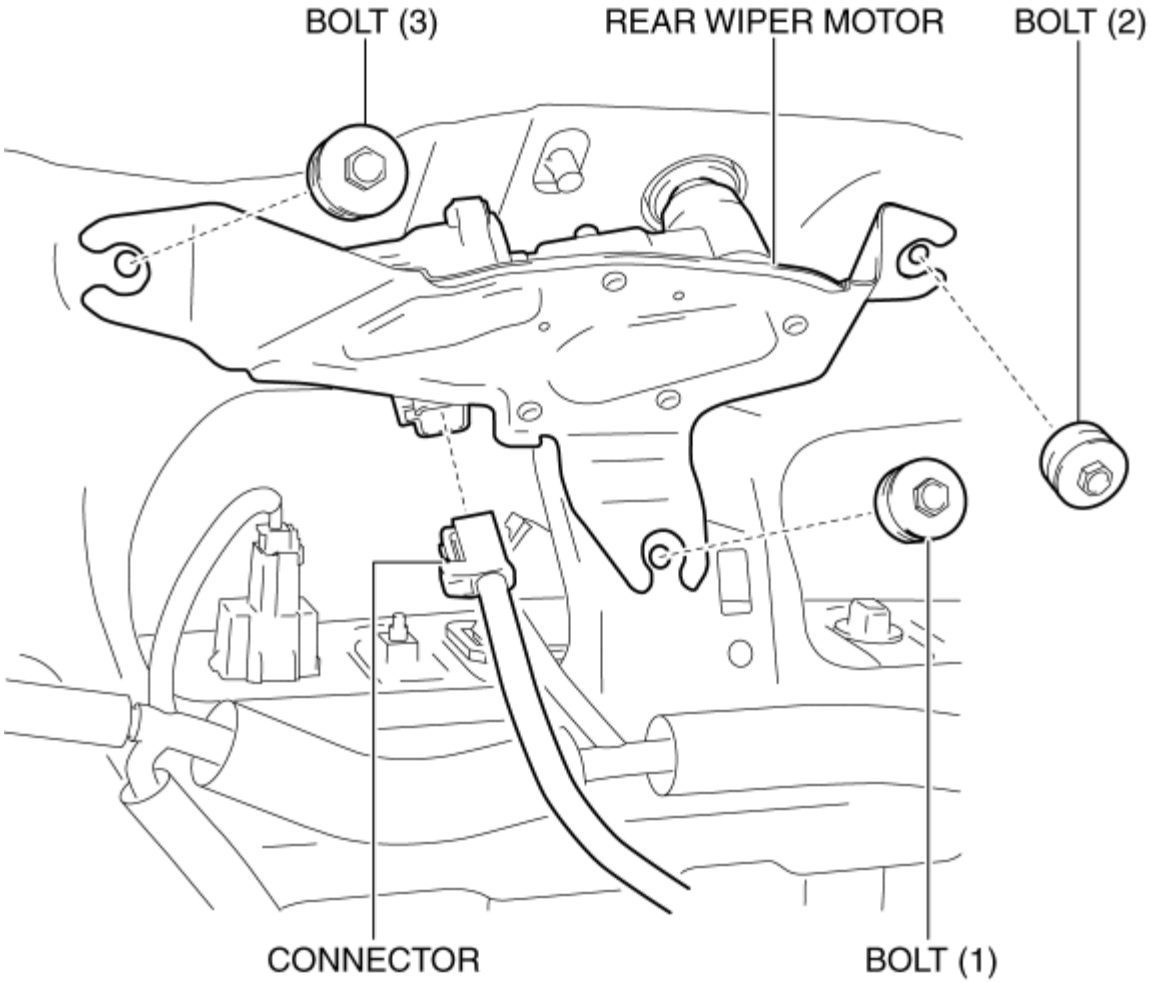

4. Remove the bolts in the order of (1), (2), and (3). (See **Rear Wiper Motor Installation Note**.)

5. Pull out the rear wiper motor pin from the outer bushing and remove the rear wiper motor.

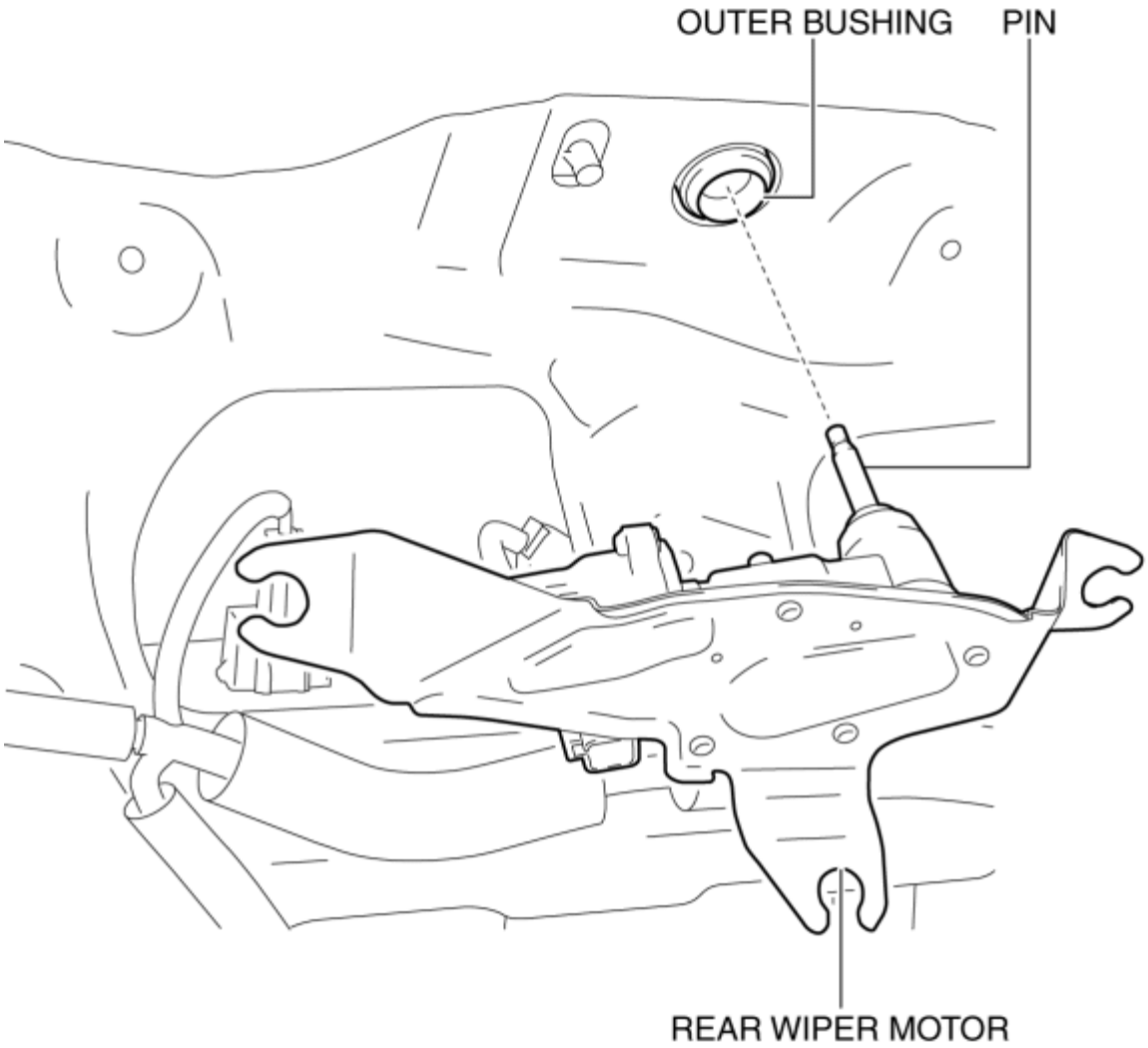

6. Press in the outer bushing from the outside of the liftgate.

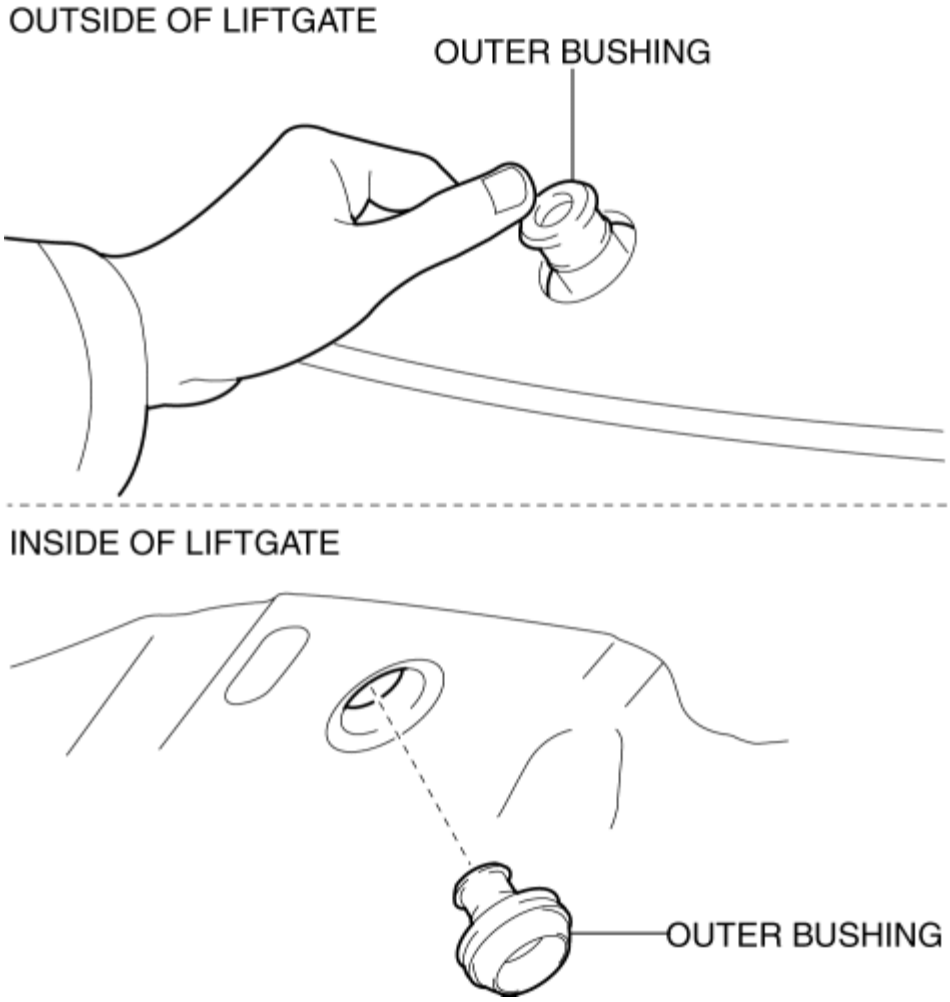

7. Pull the outer bushing from the inside of the liftgate and remove it.

8. Install in the reverse order of removal.

Rear Wiper Motor Installation Note

1. When installing the rear wiper motor to the liftgate, temporarily tighten bolt (2) and install bolts in the order of (3), (2), and (1).

REAR WIPER MOTOR REMOVAL/INSTALLATION

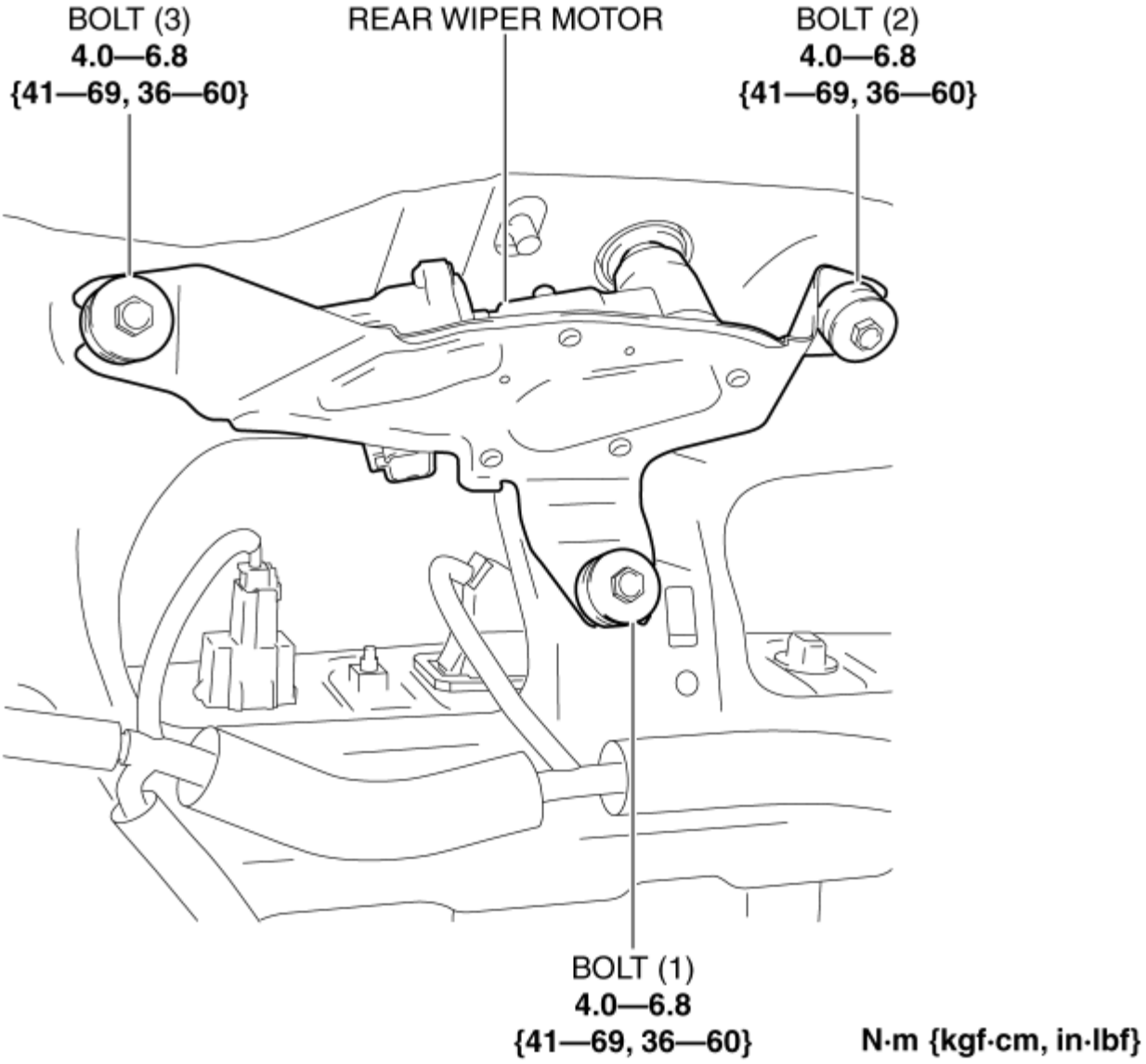

2014 - Mazda3 - Body and Accessories

REAR WIPER MOTOR INSPECTION

Rear Wiper Motor Inspection

1. Disconnect the negative battery cable. (See **NEGATIVE BATTERY CABLE DISCONNECTION/CONNECTION [SKYACTIV-G 2.0, SKYACTIV-G 2.5]**.)

2. Remove the following parts:

   a. Rear wiper arm and blade (See **REAR WIPER ARM AND BLADE REMOVAL/INSTALLATION**.)

   b. Liftgate upper trim (See **LIFTGATE UPPER TRIM REMOVAL/INSTALLATION**.)

   c. Liftgate side trim (See **LIFTGATE SIDE TRIM REMOVAL/INSTALLATION**.)

   d. Liftgate recess (See **LIFTGATE RECESS REMOVAL/INSTALLATION**.)

   e. Liftgate lower trim (See **LIFTGATE LOWER TRIM REMOVAL/INSTALLATION**.)

3. Disconnect the connector. (See **REAR WIPER MOTOR REMOVAL/INSTALLATION**.)

4. Apply battery positive voltage to rear wiper motor terminal B and connect terminal A to the ground, and then verify the operation condition.

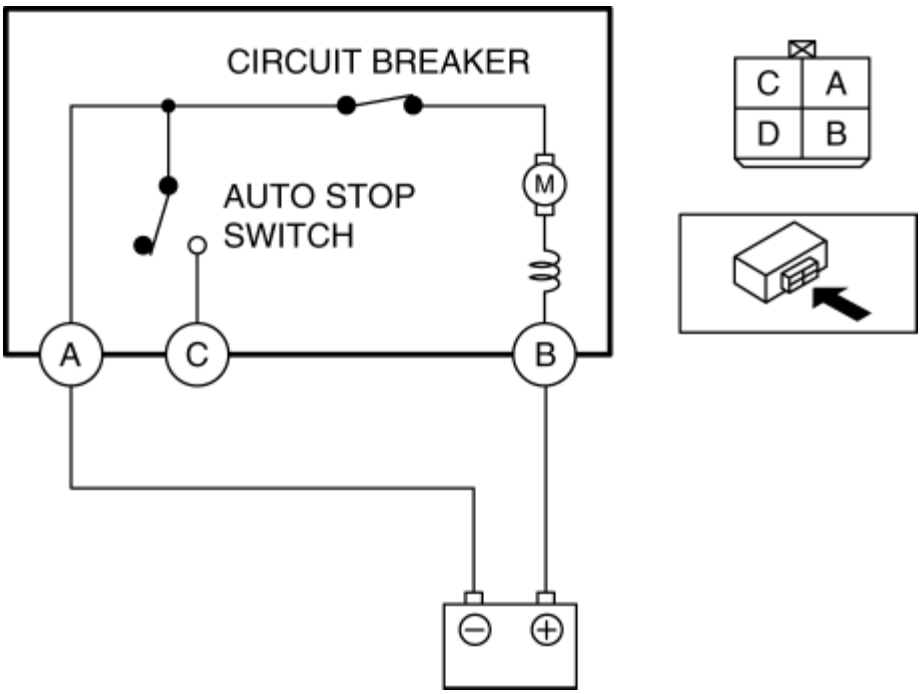

- If the rear wiper motor does not operate normally, replace it. (See **REAR WIPER MOTOR REMOVAL/INSTALLATION**.)

Auto-stop Operation Inspection

1. Disconnect the negative battery cable. (See **NEGATIVE BATTERY CABLE DISCONNECTION/CONNECTION [SKYACTIV-G 2.0, SKYACTIV-G 2.5]**.)

2. Remove the following parts:

   a. Rear wiper arm and blade (See **REAR WIPER ARM AND BLADE REMOVAL/INSTALLATION**.)

   b. Liftgate upper trim (See **LIFTGATE UPPER TRIM REMOVAL/INSTALLATION**.)

   c. Liftgate side trim (See **LIFTGATE SIDE TRIM REMOVAL/INSTALLATION**.)

   d. Liftgate recess (See **LIFTGATE RECESS REMOVAL/INSTALLATION**.)

   e. Liftgate lower trim (See **LIFTGATE LOWER TRIM REMOVAL/INSTALLATION**.)

3. Disconnect the connector. (See **REAR WIPER MOTOR REMOVAL/INSTALLATION**.)

4. Apply battery positive voltage to rear wiper motor terminal B and connect terminals A and C to the ground, and then operate the rear wiper motor.

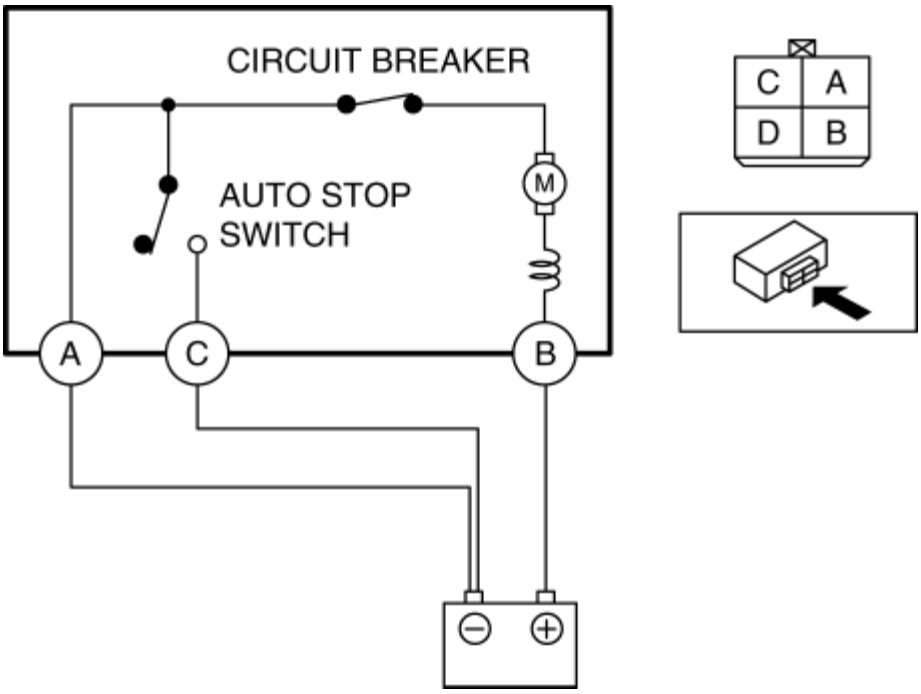

5. Disconnect the battery voltage from terminal B during rear wiper motor operation, and stop the windshield wiper motor mid-way.

6. Verify that the rear wiper stops at the park position as a result of the auto-stop operating.

   - If the rear wiper does not stop at the park position, replace the rear wiper motor. (See **REAR WIPER MOTOR REMOVAL/INSTALLATION**.)

2014 - Mazda3 - Body and Accessories

REAR WASHER NOZZLE REMOVAL/INSTALLATION

1. Disconnect the negative battery cable. (See **NEGATIVE BATTERY CABLE DISCONNECTION/CONNECTION [SKYACTIV-G 2.0, SKYACTIV-G 2.5]**.)

2. Remove the liftgate upper trim. (See **LIFTGATE UPPER TRIM REMOVAL/INSTALLATION**.)

3. Remove the rear spoiler. (See **REAR SPOILER REMOVAL**.) (See **REAR SPOILER INSTALLATION**.)

4. Disconnect the rear washer hose from the rear washer nozzle.

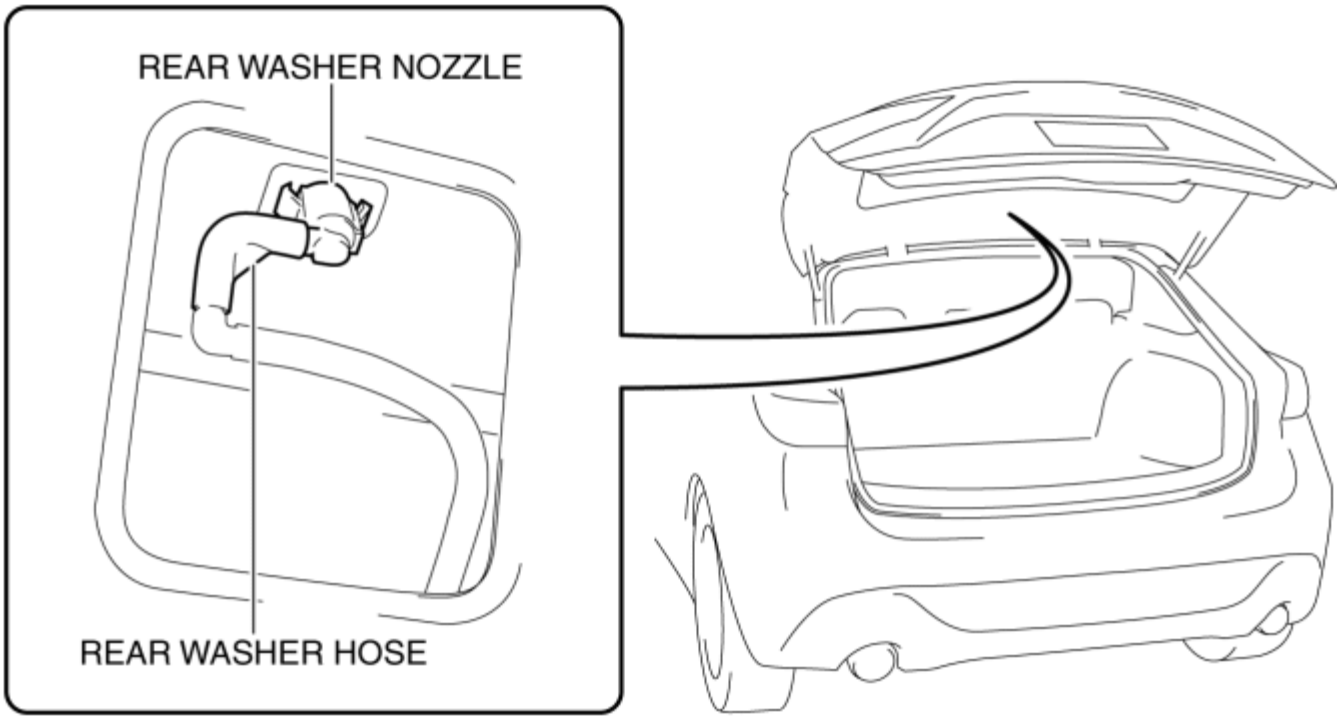

5. Press out the rear washer nozzle in the direction of arrow (2) shown in the figure while pressing the rear washer nozzle tabs in the direction of arrows (1) shown in the figure.

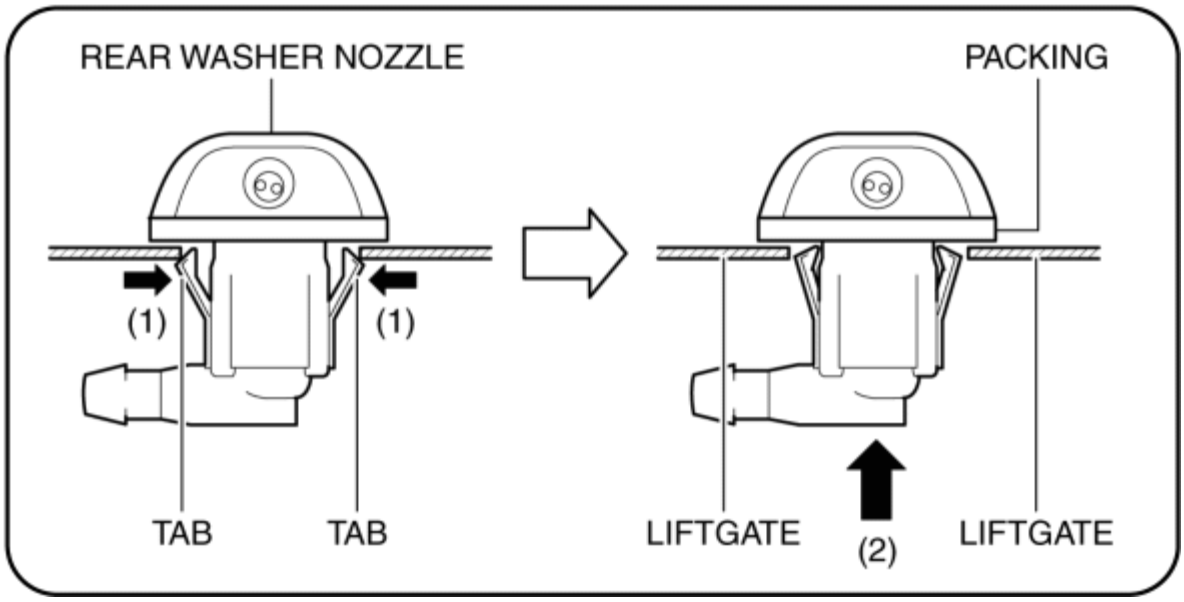

6. Remove the rear washer nozzle.

7. Install in the reverse order of removal.

8. Adjust the rear washer nozzle. (See **REAR WASHER NOZZLE ADJUSTMENT**.)

2014 - Mazda3 - Body and Accessories

REAR WASHER NOZZLE ADJUSTMENT

CAUTION:

- If the nozzle angle is adjusted with excessive force by inserting a needle or similar thin tool into the rear washer nozzle, it could damage the nozzle internally. When adjusting the rear washer nozzle, be careful not to apply excessive force.

1. Insert a needle or similar thin tool into the rear washer nozzle and adjust the area where washer fluid is sprayed as shown in the figure.

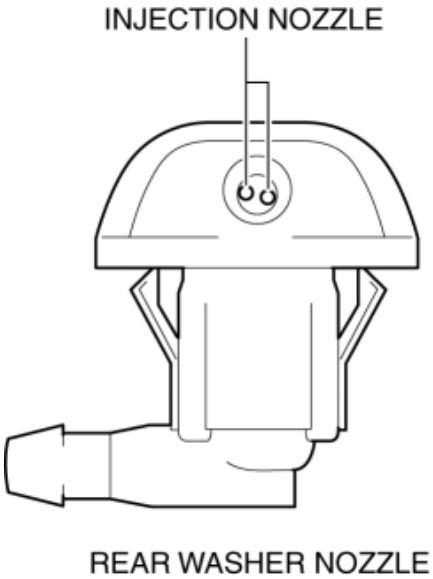

REAR WASHER NOZZLE ADJUSTMENT

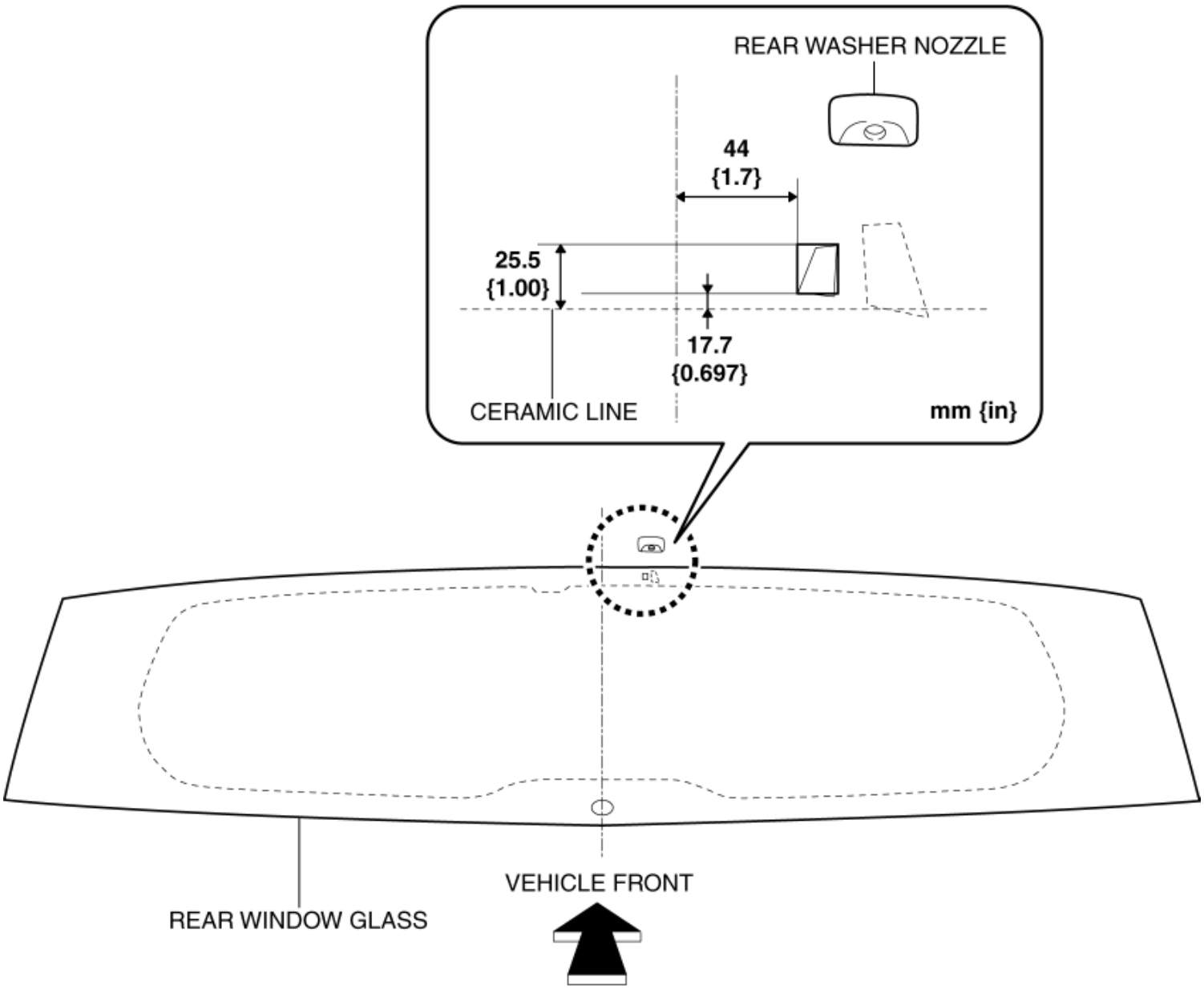

2014 - Mazda3 - Body and Accessories

REAR WASHER HOSE REMOVAL/INSTALLATION

Rear Washer Hose A

1. Remove the front mudguard (RH). (See **MUDGUARD REMOVAL/INSTALLATION**.)
2. Disconnect rear washer hose A from the washer motor.

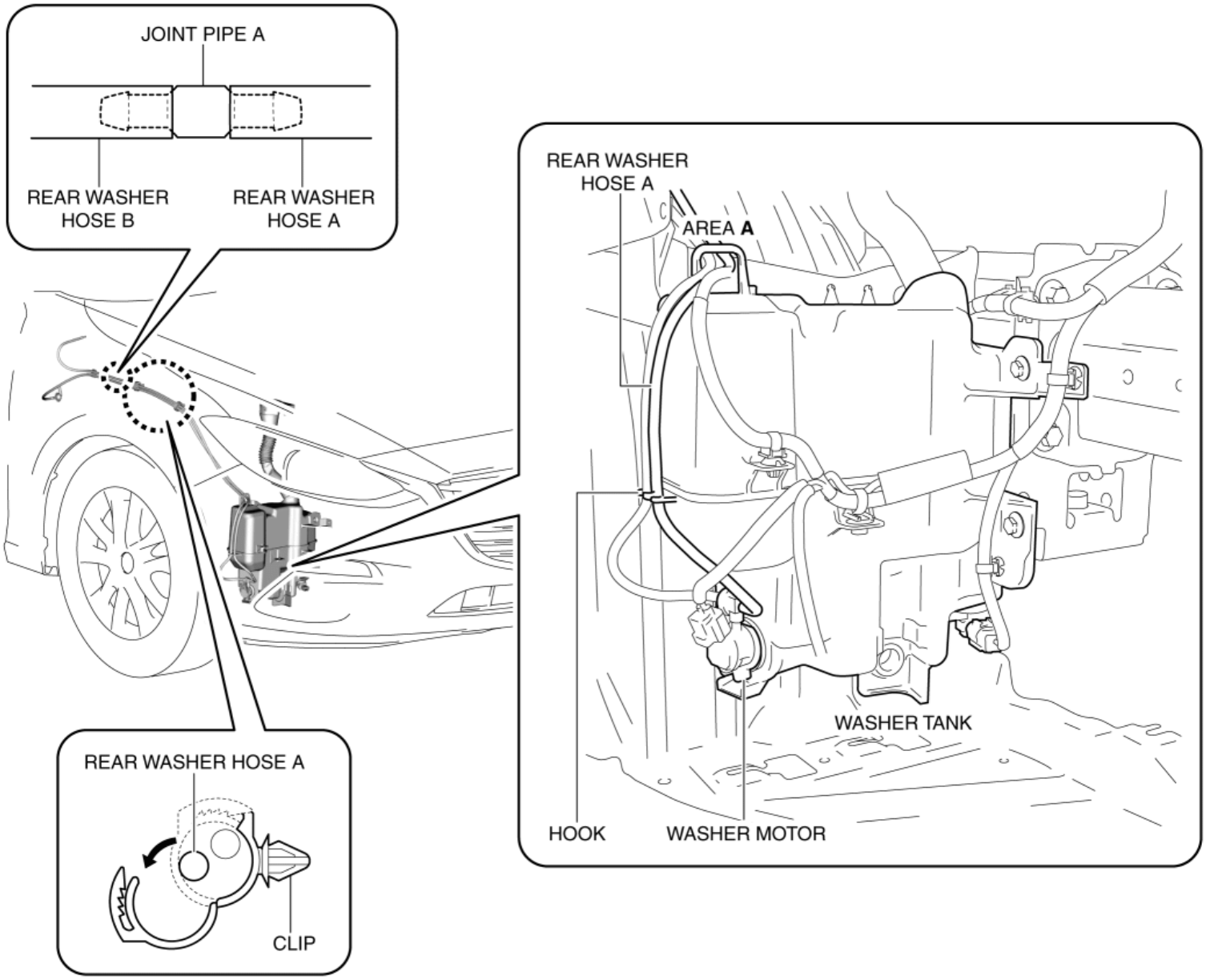

3. Remove rear washer hose A from washer tank hook. (See **Rear washer hose A installation note**.)
4. Pull out rear washer hose A from area A of the washer tank.
5. Remove rear washer hose A from the clip.
6. Disconnect rear washer hose B from joint pipe A.
7. Remove rear washer hose A.
8. Install in the reverse order of removal.

Rear washer hose A installation note

1. When installing rear washer hose A to the washer tank hook, align the upper part of the yellow mark with the hook and install.

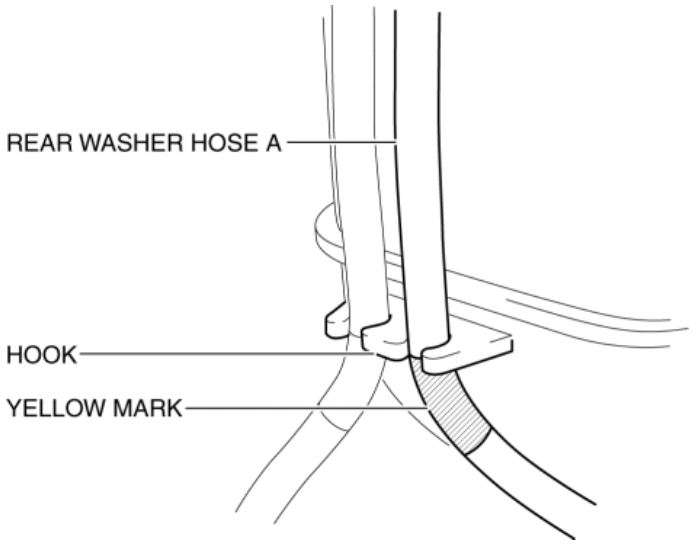

Rear Washer Hose B

1. Remove the front mudguard (RH). (See **MUDGUARD REMOVAL/INSTALLATION**.)
2. Disconnect rear washer hose B from joint pipe A.

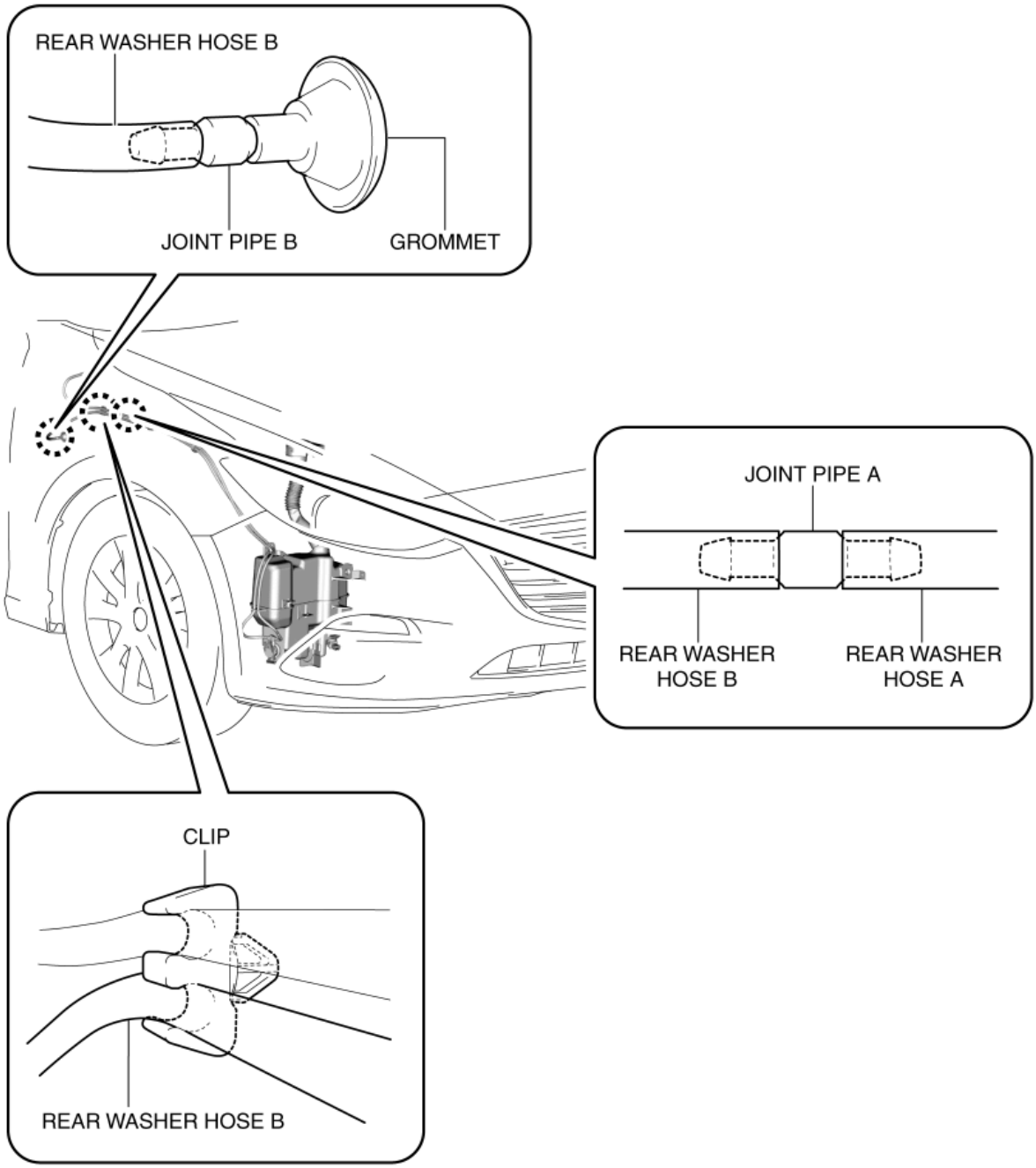

3. Remove rear washer hose B from the clip.

4. Disconnect the negative battery cable. (See **NEGATIVE BATTERY CABLE DISCONNECTION/CONNECTION [SKYACTIV-G 2.0, SKYACTIV-G 2.5]**.)

5. Remove the following parts:

   a. Front scuff plate (RH) (See **FRONT SCUFF PLATE REMOVAL/INSTALLATION**.)

   b. Front side trim (RH) (See **FRONT SIDE TRIM REMOVAL/INSTALLATION**.)

   c. Glove compartment (See **GLOVE COMPARTMENT REMOVAL/INSTALLATION**.)

   d. Dashboard under cover (See **DASHBOARD UNDER COVER REMOVAL/INSTALLATION**.)

   e. Bluetooth unit (without center display, with Bluetooth system) (See **Bluetooth® UNIT REMOVAL/INSTALLATION**.)

   f. Tuner and amp unit (with center display) (See **TUNER AND AMP UNIT (TAU) REMOVAL/INSTALLATION**.)

   g. A-pillar trim (RH) (See **A-PILLAR TRIM REMOVAL/INSTALLATION**.)

6. Remove the grommet from the body.

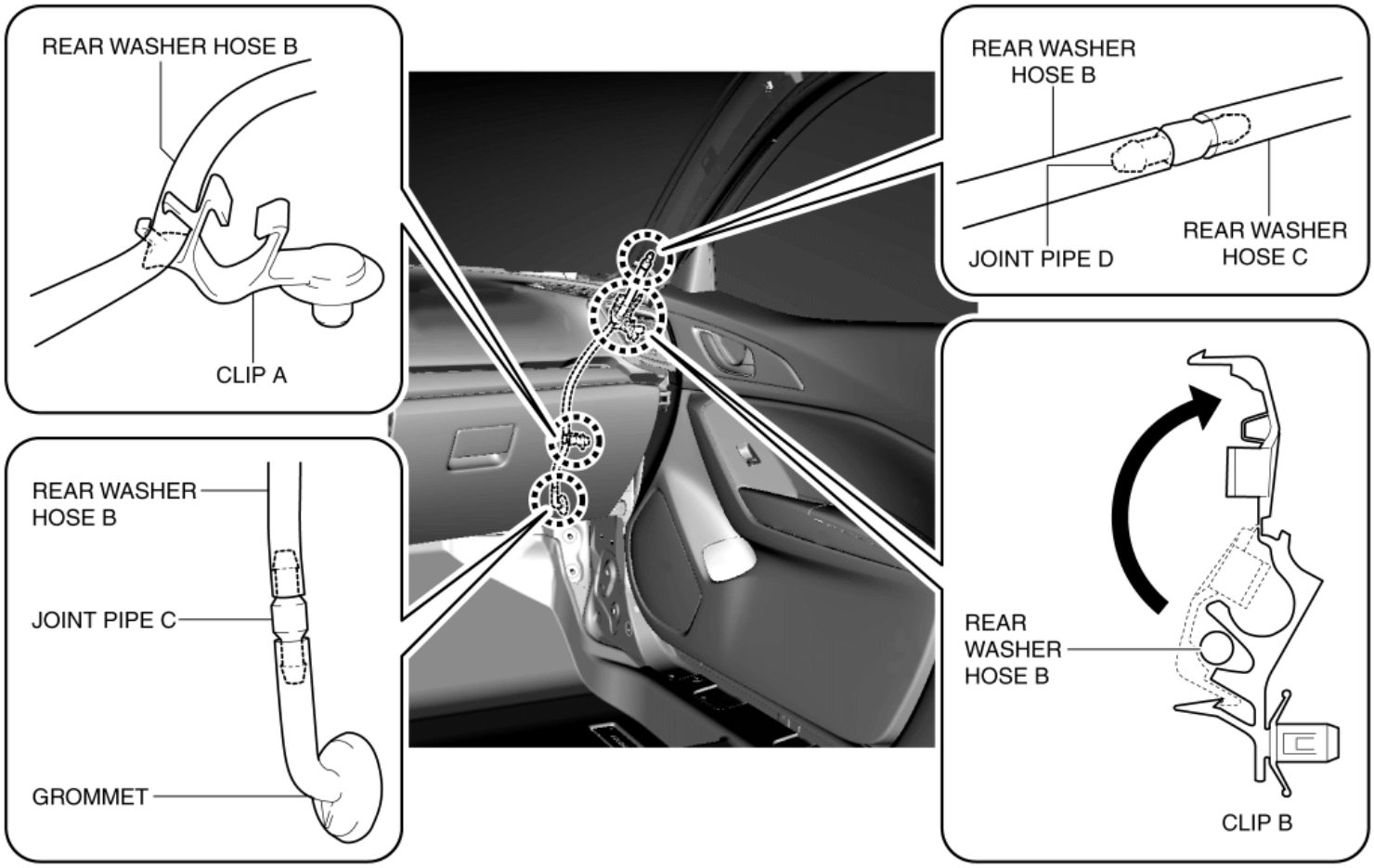

7. Remove rear washer hose B from clips A and B.
8. Disconnect rear washer hose C from joint pipe D.
9. Remove rear washer hose B.
10. Install in the reverse order of removal.

Rear Washer Hose C

1. Set the wheel blocks for both the front and rear wheels.
2. Disconnect the negative battery cable. (See **NEGATIVE BATTERY CABLE DISCONNECTION/CONNECTION [SKYACTIV-G 2.0, SKYACTIV-G 2.5]**.)
3. Shift the selector lever from the P position to the D position (ATX).
4. Remove the sunroof seaming welt. (with sunroof system)
5. Remove the following parts:
   a. A-pillar trim (See **A-PILLAR TRIM REMOVAL/INSTALLATION**.)
   b. Sunvisor (See **SUNVISOR REMOVAL/INSTALLATION**.)
   c. Front map light (dual light type) (See **FRONT MAP LIGHT REMOVAL/INSTALLATION**.)
   d. Assist handle (See **ASSIST HANDLE REMOVAL/INSTALLATION**.)
   e. Front scuff plate (See **FRONT SCUFF PLATE REMOVAL/INSTALLATION**.)
   f. Rear scuff plate (See **REAR SCUFF PLATE REMOVAL/INSTALLATION**.)
   g. B-pillar lower trim (See **B-PILLAR LOWER TRIM REMOVAL/INSTALLATION**.)
   h. Adjust anchor cover (See **FRONT SEAT BELT REMOVAL/INSTALLATION**.)
   i. Upper anchor installation bolt on the seat belt (See **FRONT SEAT BELT REMOVAL/INSTALLATION**.)
   j. B-pillar upper trim (See **B-PILLAR UPPER TRIM REMOVAL/INSTALLATION**.)
6. Set the tire house trim aside. (See **TIRE HOUSE TRIM REMOVAL/INSTALLATION**.)

7. Remove the following parts:
   a. Rear package tray (See **REAR PACKAGE TRAY REMOVAL/INSTALLATION**.)
   b. Trunk covering (See **TRUNK COVERING REMOVAL/INSTALLATION**.)
   c. Trunk board (See **TRUNK BOARD REMOVAL/INSTALLATION**.)
   d. Trunk end trim (See **TRUNK END TRIM REMOVAL/INSTALLATION**.)
   e. Trunk side upper trim (See **TRUNK SIDE UPPER TRIM REMOVAL/INSTALLATION**.)
   f. Trunk side trim (LH only) (See **TRUNK SIDE TRIM REMOVAL/INSTALLATION**.)
   g. C-pillar trim (See **C-PILLAR TRIM REMOVAL/INSTALLATION**.)
   h. Upper panel (See **UPPER PANEL REMOVAL**.) (See **UPPER PANEL INSTALLATION**.)
   i. Rear console (See **REAR CONSOLE REMOVAL/INSTALLATION**.)
   j. Shift lever knob (MTX) (See **MANUAL TRANSAXLE SHIFT MECHANISM REMOVAL/INSTALLATION [C66M-R]**.)
   k. Selector lever knob (ATX) (See **AUTOMATIC TRANSAXLE SHIFT MECHANISM REMOVAL/INSTALLATION**.)
   l. Shift panel (See **SHIFT PANEL REMOVAL/INSTALLATION**.)
   m. Front console box (See **FRONT CONSOLE BOX REMOVAL/INSTALLATION**.)
   n. CD player (with CD player) (See **CD PLAYER REMOVAL**.) (See **CD PLAYER INSTALLATION**.)
   o. Glove compartment (See **GLOVE COMPARTMENT REMOVAL/INSTALLATION**.)
   p. Decoration panel (See **DECORATION PANEL REMOVAL/INSTALLATION**.)
   q. Side wall (See **SIDE WALL REMOVAL/INSTALLATION**.)
   r. Front console (See **FRONT CONSOLE REMOVAL/INSTALLATION**.)
8. Set the selector lever component aside. (ATX) (See **AUTOMATIC TRANSAXLE SHIFT MECHANISM REMOVAL/INSTALLATION**.)
9. Set the shift lever component aside. (MTX) (See **MANUAL TRANSAXLE SHIFT MECHANISM REMOVAL/INSTALLATION [C66M-R]**.)
10. Remove the headliner. (See **HEADLINER REMOVAL/INSTALLATION**.)
11. Remove the tape.

Without sunroof

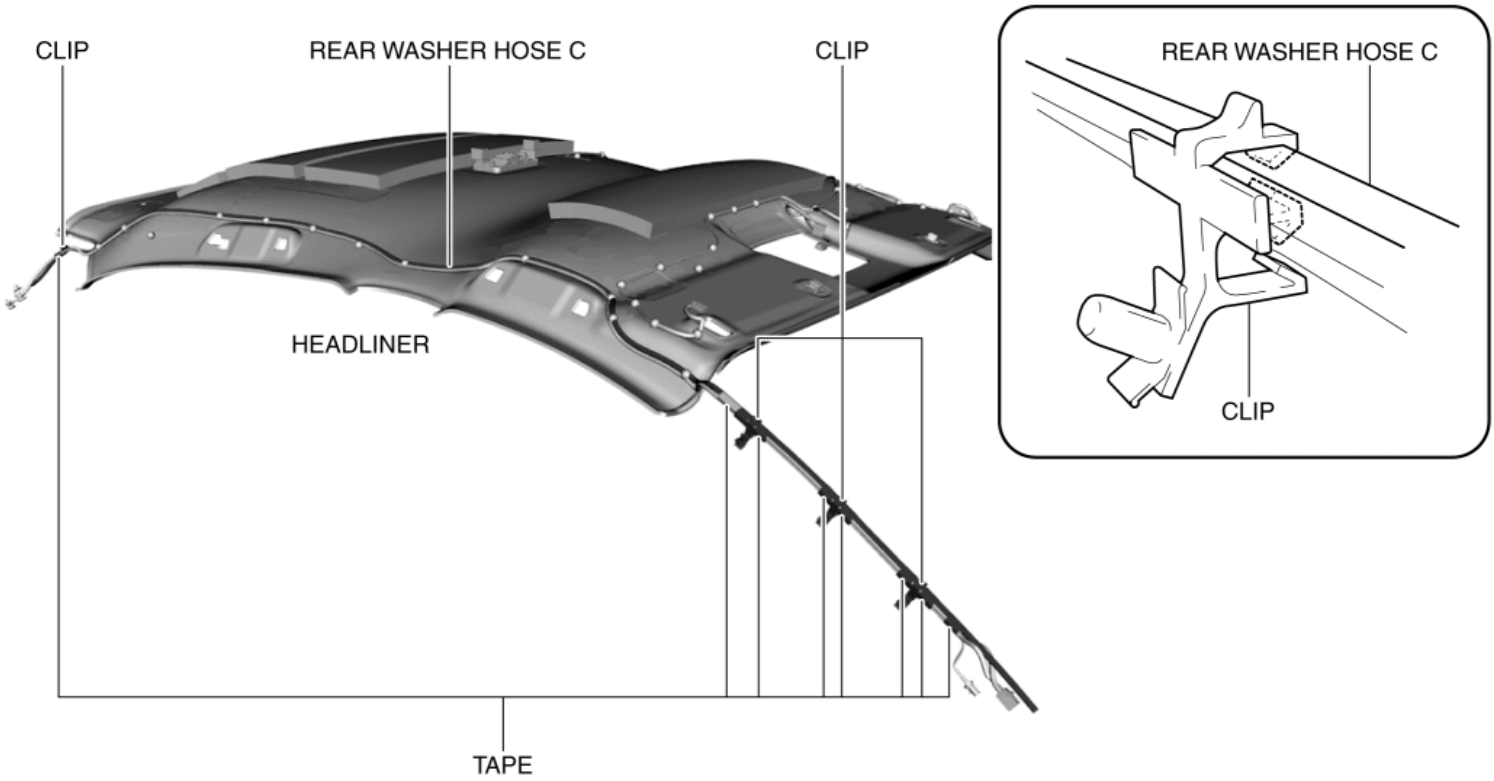

With sunroof

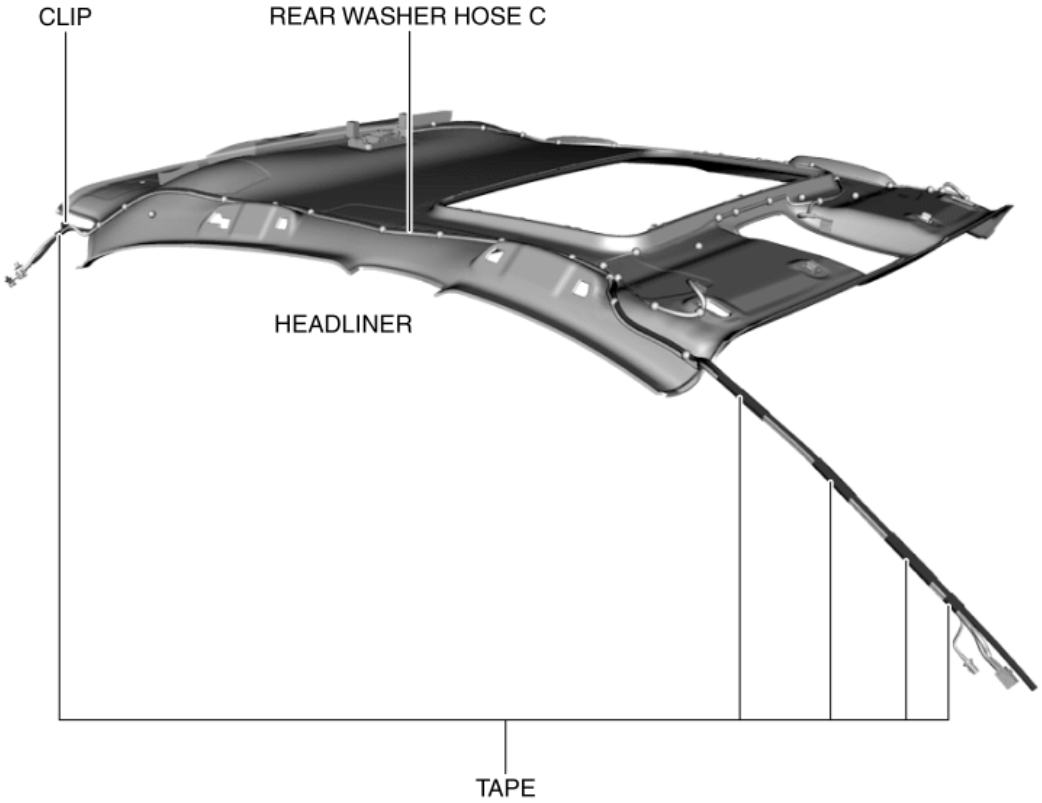

12. Remove rear washer hose C from the clip.
13. Remove rear washer hose C. (See **Rear washer hose C installation note**.)
14. Install in the reverse order of removal.

Rear washer hose C installation note

1. When installing rear washer hose C to the headliner, cut rear washer hose C according to the following dimensions.

Without sunroof

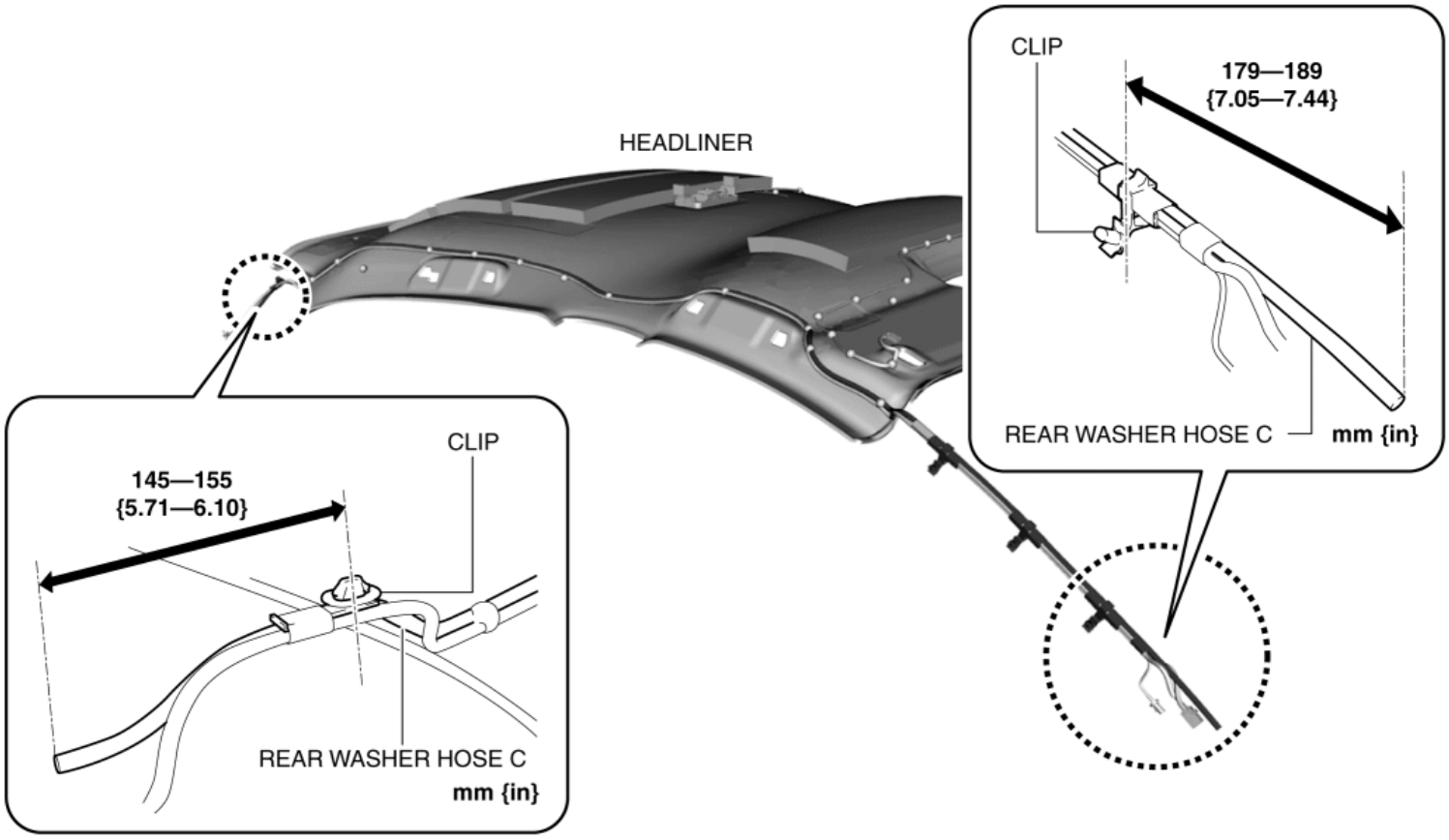

With sunroof

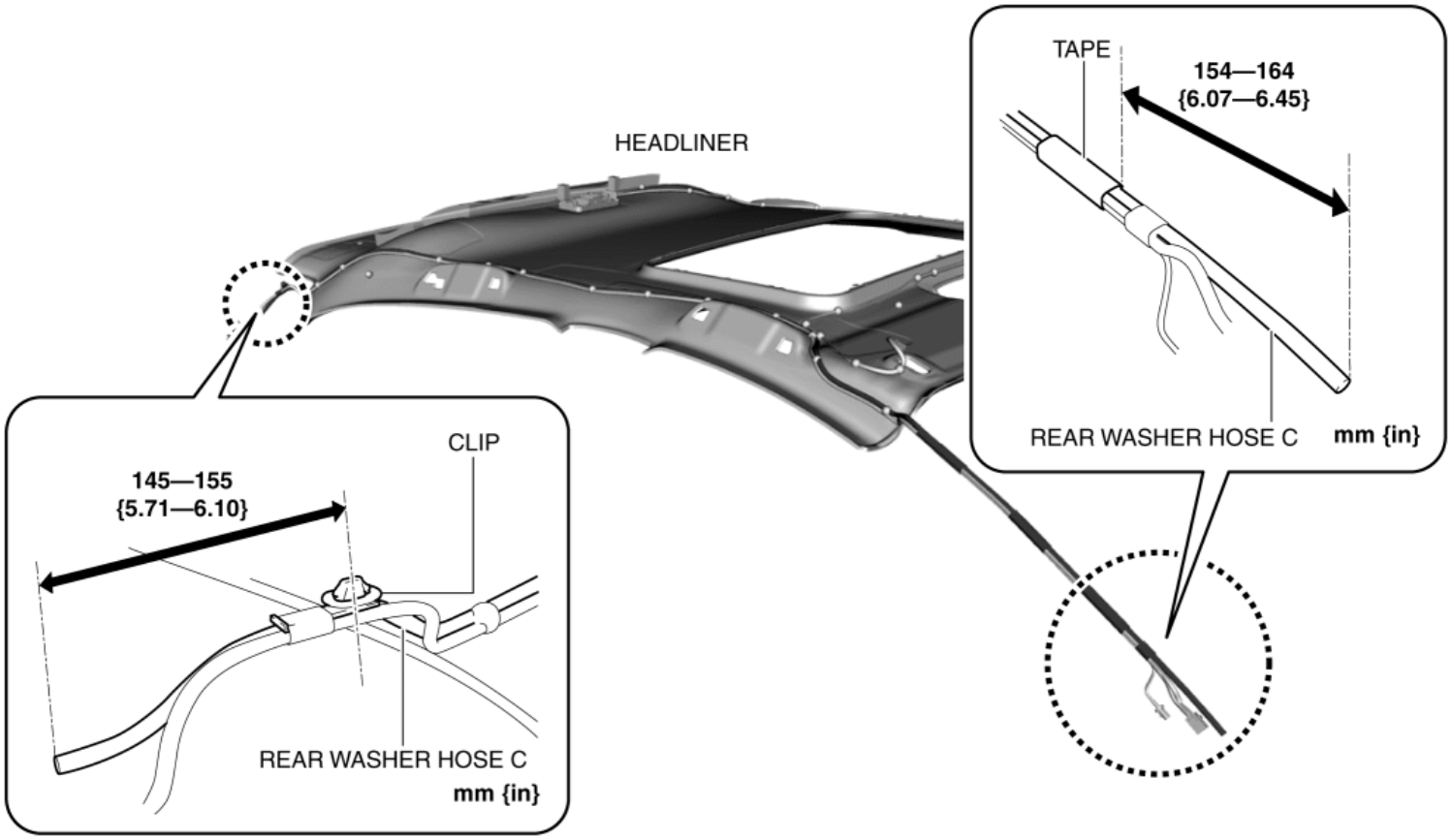

Rear Washer Hose D

1. Disconnect the negative battery cable. (See **NEGATIVE BATTERY CABLE DISCONNECTION/CONNECTION [SKYACTIV-G 2.0, SKYACTIV-G**

2.5].)

2. Remove the following parts:
   a. Rear package tray (See **REAR PACKAGE TRAY REMOVAL/INSTALLATION**.)
   b. Trunk covering (See **TRUNK COVERING REMOVAL/INSTALLATION**.)
   c. Trunk end trim (See **TRUNK END TRIM REMOVAL/INSTALLATION**.)
3. Set the tire house trim aside. (See **TIRE HOUSE TRIM REMOVAL/INSTALLATION**.)
4. Remove the following parts:
   a. Trunk side upper trim (See **TRUNK SIDE UPPER TRIM REMOVAL/INSTALLATION**.)
   b. C pillar trim (RH) (See **C-PILLAR TRIM REMOVAL/INSTALLATION**.)
   c. Liftgate upper trim (See **LIFTGATE UPPER TRIM REMOVAL/INSTALLATION**.)
5. Partially peel back the headliner. (See **HEADLINER REMOVAL/INSTALLATION**.)
6. Disconnect rear washer hose C from joint pipe E.

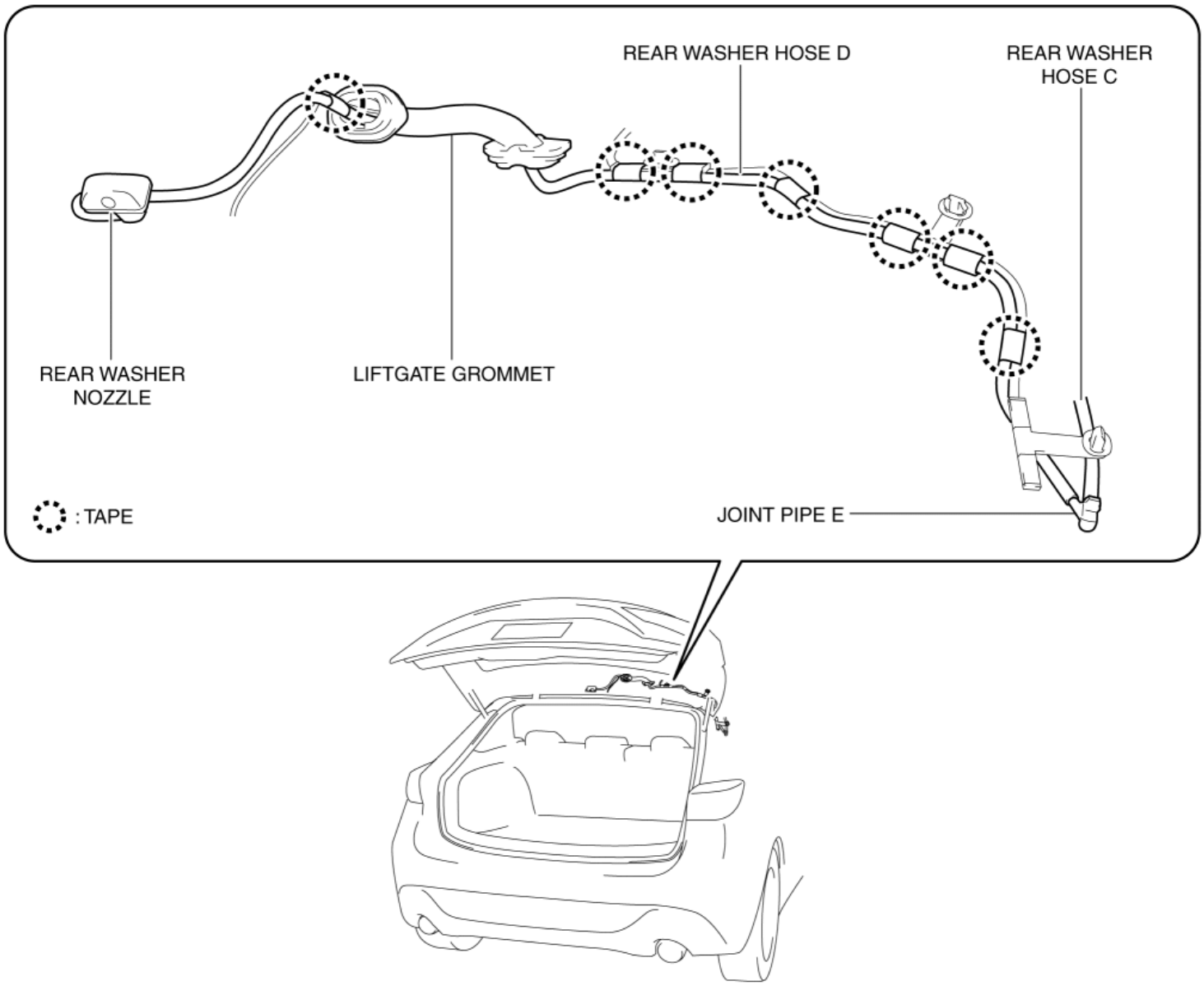

7. Remove the tape.
8. Partially peel the liftgate grommet.

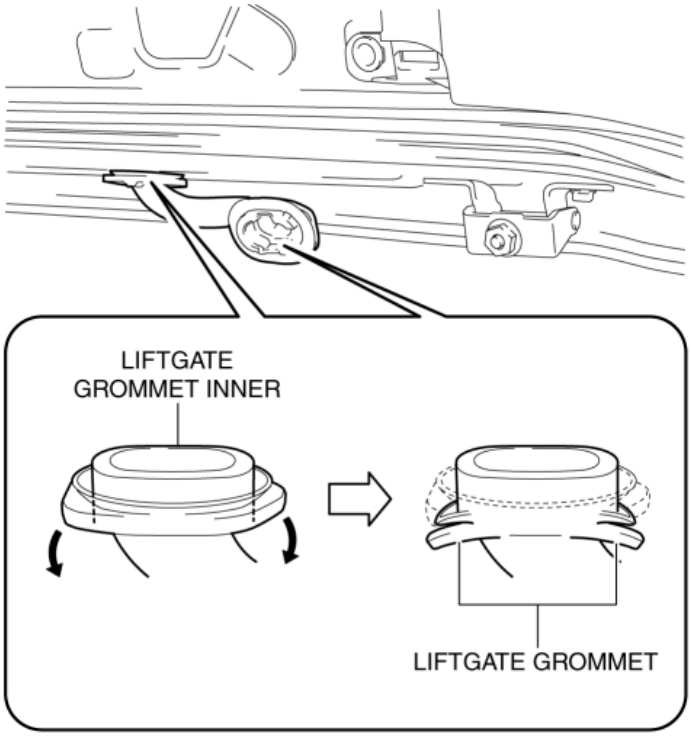

9. While pressing the tab of the liftgate grommet inner in the direction of arrow (1) shown in the figure using the remover tool, pull the liftgate grommet inner in the direction of arrow (2) shown in the figure to detach the tab of the liftgate grommet inner from the liftgate.

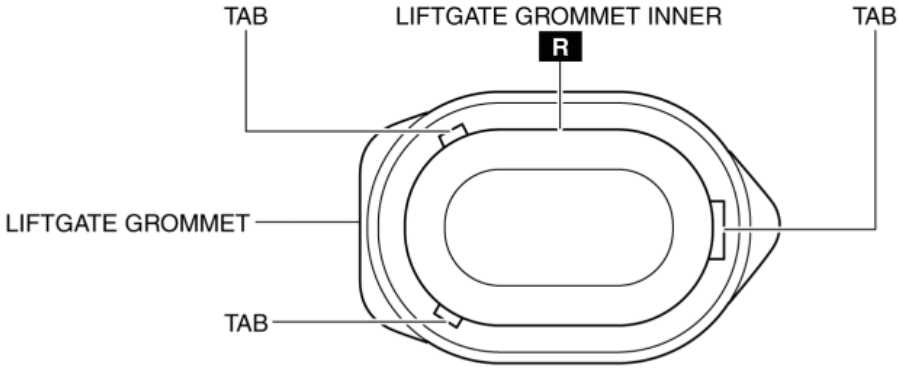

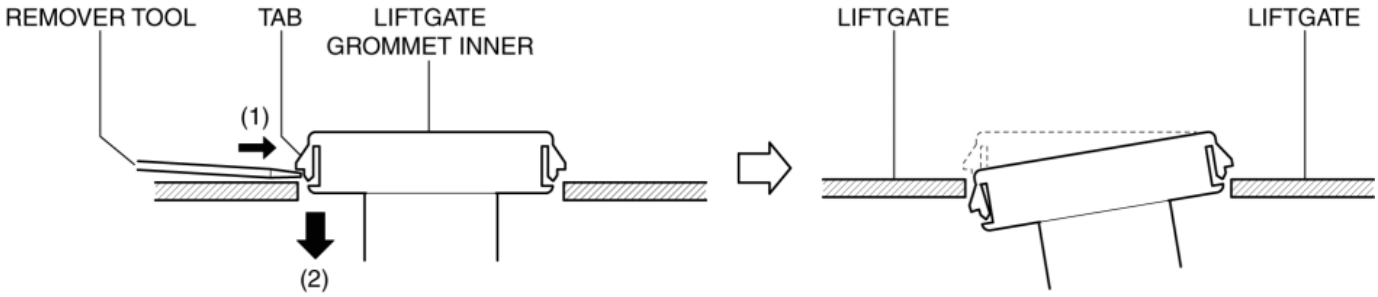

10. Detach all the tabs of the liftgate grommet inner from the liftgate and remove the liftgate grommet inner.

11. Disconnect rear washer hose D from the rear washer nozzle.

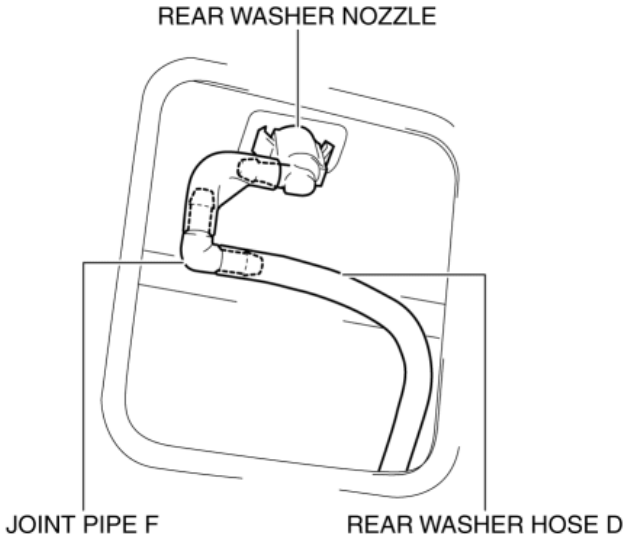

12. Disconnect rear washer hose D from joint pipe F.
13. Remove rear washer hose D.
14. Install in the reverse order of removal.

2014 - Mazda3 - Body and Accessories

WIPER AND WASHER SWITCH REMOVAL/INSTALLATION

1. Disconnect the negative battery cable. (See **NEGATIVE BATTERY CABLE DISCONNECTION/CONNECTION [SKYACTIV-G 2.0, SKYACTIV-G 2.5]**.)

2. Remove the column cover. (See **COLUMN COVER REMOVAL/INSTALLATION**.)

3. Rotate the steering wheel until the service hole in the position shown in the figure is visible.

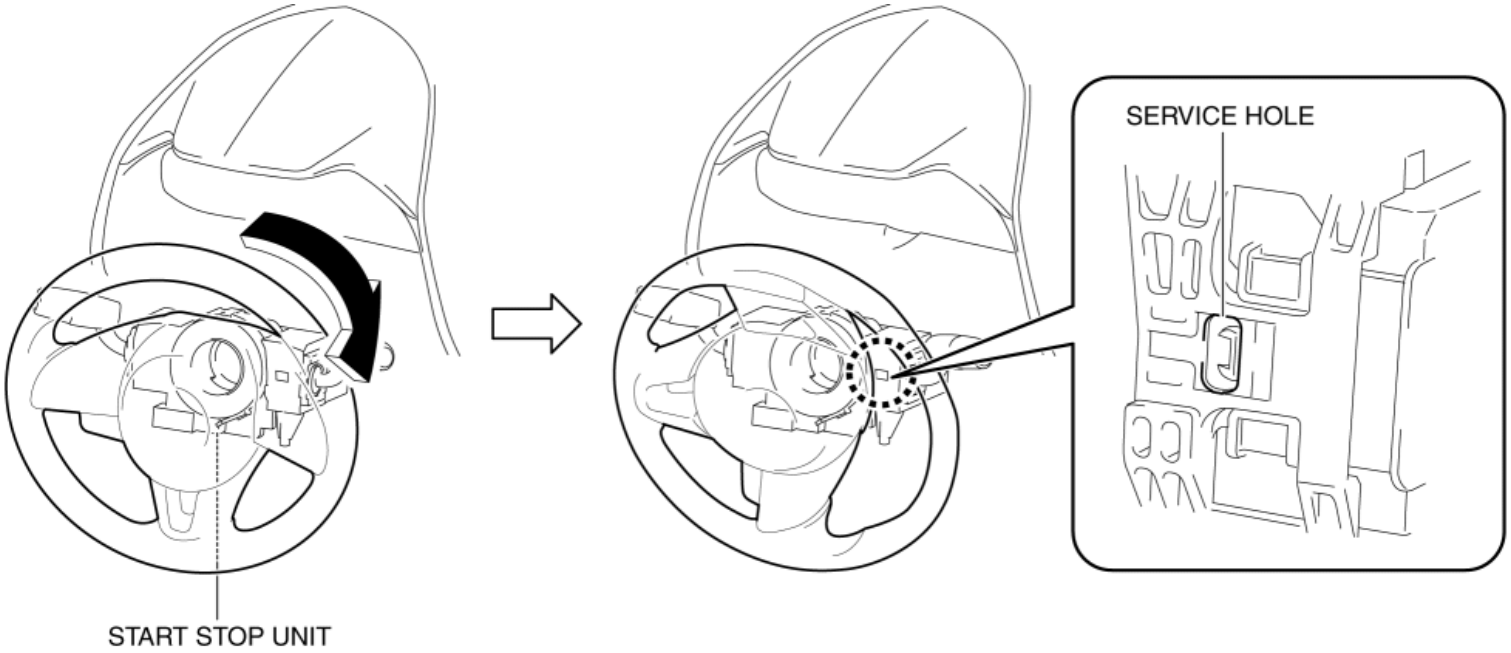

4. While pressing the wiper and washer switch tab in the direction of arrow (1) shown in the figure, pull out the wiper and washer switch in the direction of arrow (2) shown in the figure, and detach the wiper and washer switch tab and the start stop unit.

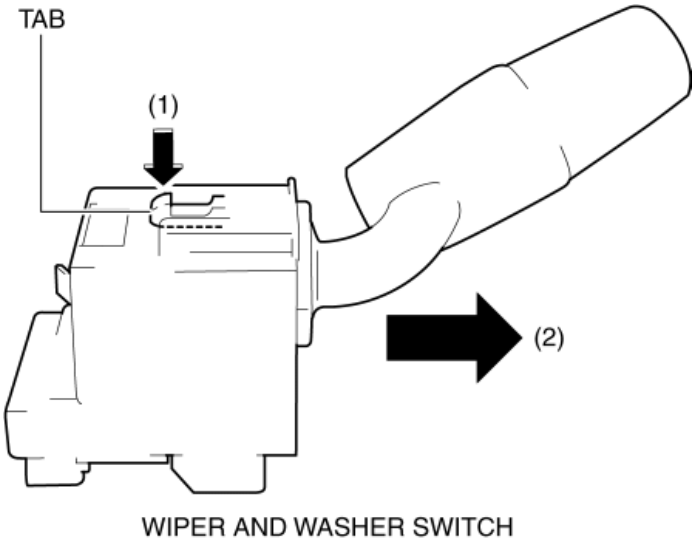

5. Remove the wiper and washer switch.

6. Install in the reverse order of removal.

2014 - Mazda3 - Body and Accessories

WIPER AND WASHER SWITCH INSPECTION

Windshield Wiper Switch

1. Disconnect the negative battery cable. (See **NEGATIVE BATTERY CABLE DISCONNECTION/CONNECTION [SKYACTIV-G 2.0, SKYACTIV-G 2.5]**.)

2. Remove the column cover. (See **COLUMN COVER REMOVAL/INSTALLATION**.)

3. Remove the wiper and washer switch. (See **WIPER AND WASHER SWITCH REMOVAL/INSTALLATION**.)

4. Verify that the continuity between the wiper and washer switch terminals is as indicated in the table.

○—○ : Continuity

Switch position		Terminal					
		B	C	G	I	J	K
Windshield wiper switch	MIST	○	—	○			
	OFF						
	INT/AUTO		○	○			
	LO	○	—	○			
	HI	○	○	○			
Auto VOL	-2 (Low)			○	○	○	○
	-1			○	○	—	○
	0			○	—	—	○
	+1			○	—	○	○
	+2 (Fast)			○	—	○	

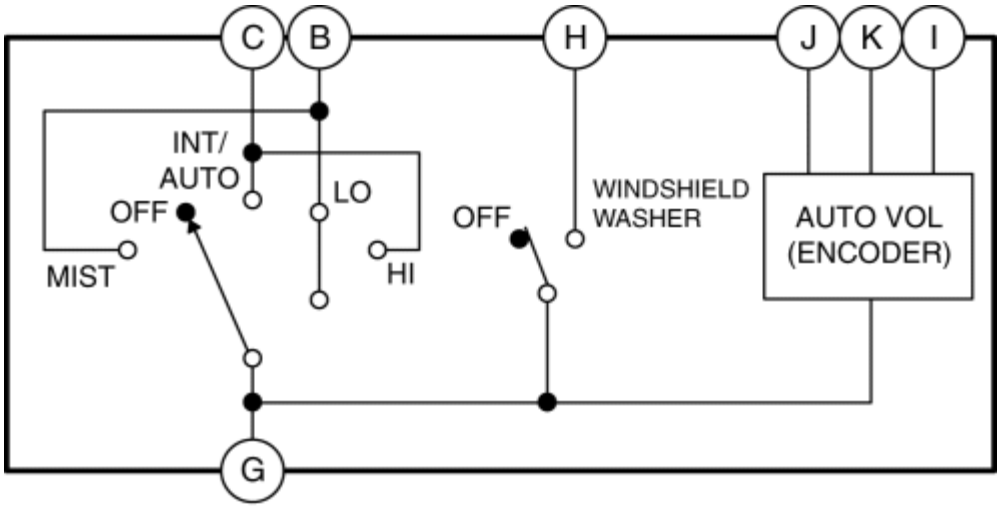

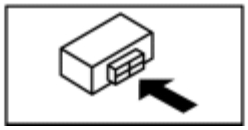

- If the continuity is not as indicated in the table, replace the wiper and washer switch. (See **WIPER AND WASHER SWITCH REMOVAL/INSTALLATION**.)

Windshield Washer Switch

1. Disconnect the negative battery cable. (See **NEGATIVE BATTERY CABLE DISCONNECTION/CONNECTION [SKYACTIV-G 2.0, SKYACTIV-G 2.5]**.)

2. Remove the column cover. (See **COLUMN COVER REMOVAL/INSTALLATION**.)

3. Remove the wiper and washer switch. (See **WIPER AND WASHER SWITCH REMOVAL/INSTALLATION**.)

4. Verify that the continuity between the wiper and washer switch terminals is as indicated in the table.

○—○ : Continuity

Switch position	Terminal	
	G	H
WINDSHIELD WASHER	○	○
OFF		

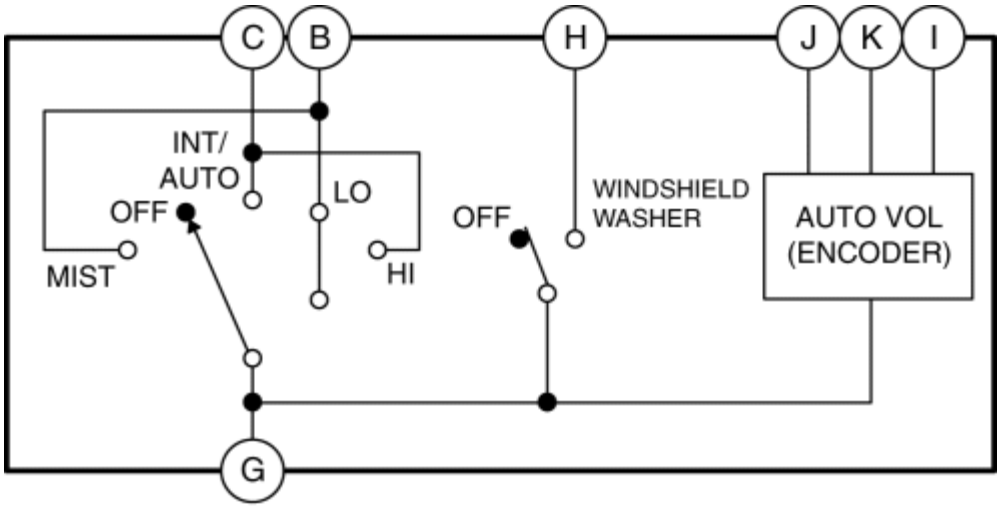

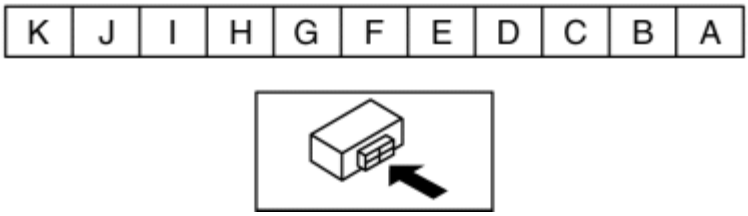

- If the continuity is not as indicated in the table, replace the wiper and washer switch. (See **WIPER AND WASHER SWITCH REMOVAL/INSTALLATION**.)

Rear Wiper and Washer Switch

1. Disconnect the negative battery cable. (See **NEGATIVE BATTERY CABLE DISCONNECTION/CONNECTION [SKYACTIV-G 2.0, SKYACTIV-G 2.5]**.)

2. Remove the column cover. (See **COLUMN COVER REMOVAL/INSTALLATION**.)

3. Remove the wiper and washer switch. (See **WIPER AND WASHER SWITCH REMOVAL/INSTALLATION**.)

4. Verify that the continuity between the wiper and washer switch terminals is as indicated in the table.

○—○ : Continuity

Switch position		Terminal			
		D	E	F	G
Rear wiper switch	OFF				
	R.INT	○	—	—	○
	ON		○	—	○
REAR WASHER 1				○	○
REAR WASHER 2			○	○	○

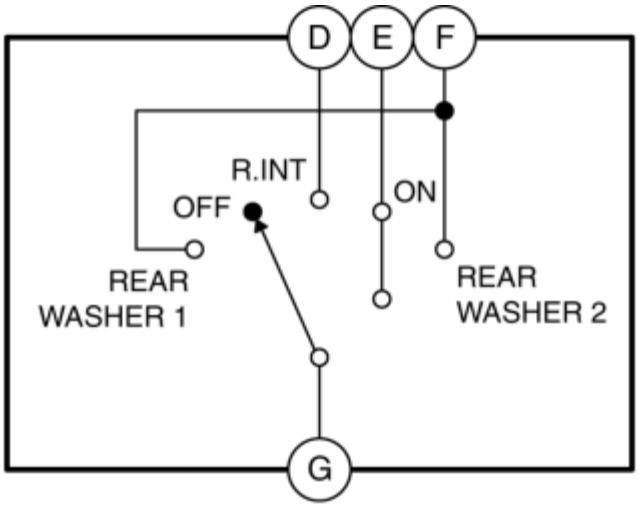

K	J	I	H	G	F	E	D	C	B	A

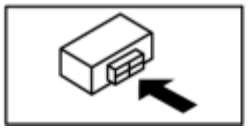

- If the continuity is not as indicated in the table, replace the wiper and washer switch. (See **WIPER AND WASHER SWITCH REMOVAL/INSTALLATION**.)

2014 - Mazda3 - Body and Accessories

RAIN SENSOR REMOVAL/INSTALLATION

Without Forward Sensing Camera (FSC) and Smart City Brake Support (SCBS)

1. Disconnect the negative battery cable. (See **NEGATIVE BATTERY CABLE DISCONNECTION/CONNECTION [SKYACTIV-G 2.0, SKYACTIV-G 2.5]**.)

2. Open the rain sensor cover in the direction of arrows (1) shown in the figure and detach the rain sensor cover tabs from the rain sensor.

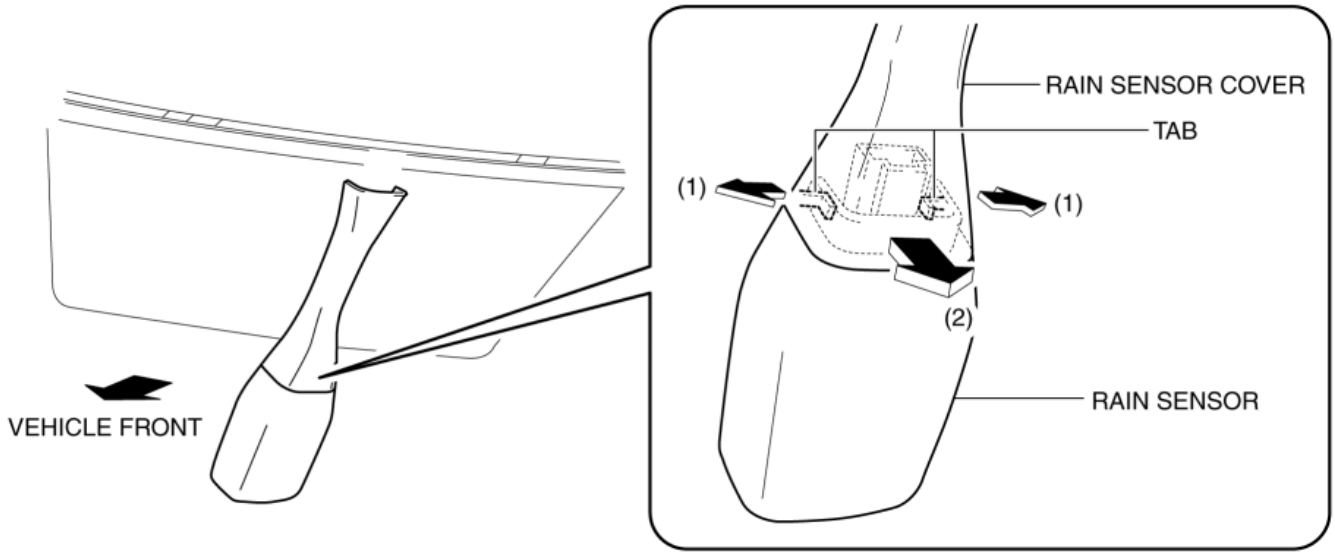

3. Remove the rain sensor cover from the rain sensor in the direction of arrow (2) shown in the figure.

4. Disconnect the connector.

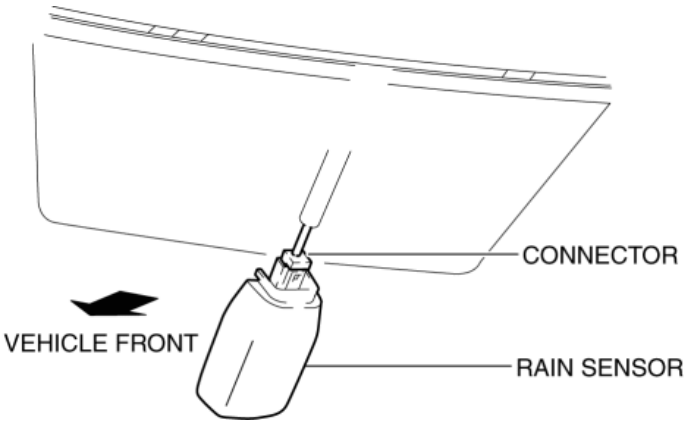

5. Insert the remover tool into the gap between the rain sensor and the tab (1).

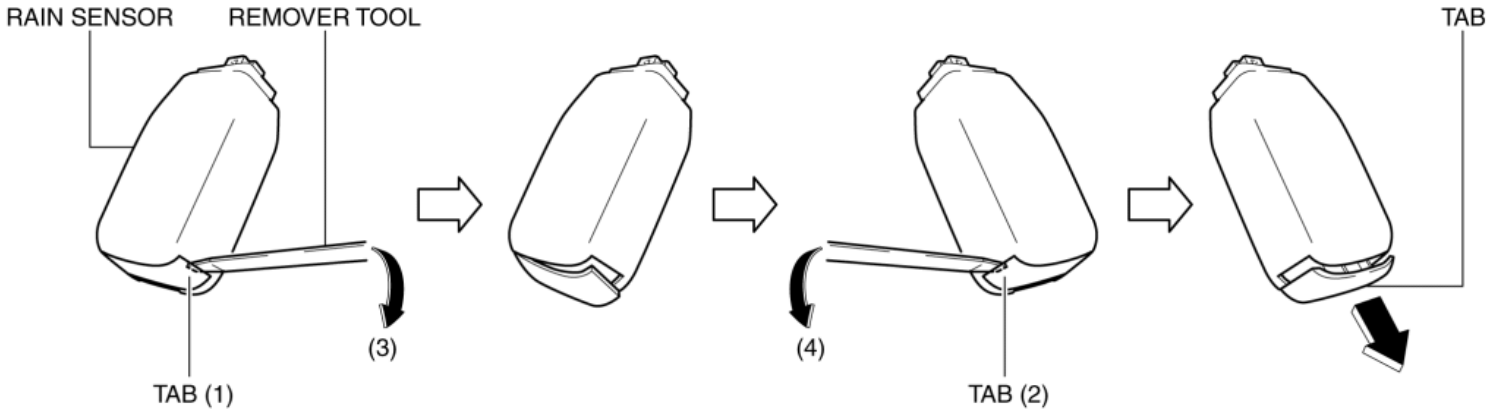

6. Move the remover tool in the direction of arrow (3) shown in the figure and detach the tab (1) from the rain sensor.

7. Insert the remover tool into the gap between the rain sensor and the tab (2).

8. Move the remover tool in the direction of arrow (4) shown in the figure and detach the tab (2) from the rain sensor.

9. Pull out the tab from the rain sensor.

10. Move the rain sensor in the direction of arrow (5) shown in the figure and pull out the rain sensor from the bracket.

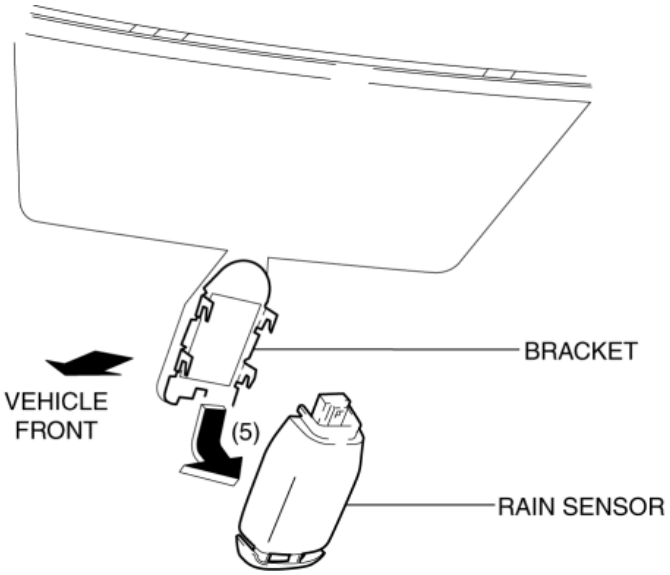

11. Peel off the rain sensor protective sheet from the rain sensor.

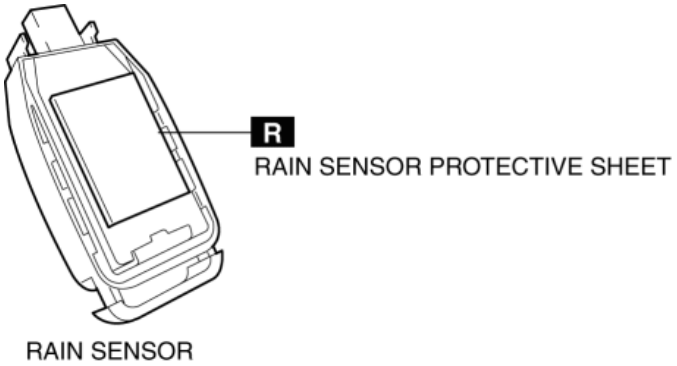

12. Install in the reverse order of removal. (See **Rain Sensor Installation Note**.)

13. If the rain sensor is replaced, perform the following sensitivity setting procedure for the auto lights.

CAUTION:

- If the auto light sensitivity setting is not performed after replacing the rain sensor (auto light sensor), the rain sensor will be unable to detect the correct illumination level and the auto light/wiper system will not operate normally. If the rain sensor is replaced, perform the auto light sensitivity setting.

a. Using the M-MDS, verify the current auto light sensitivity setting. (See **CONTROL SYSTEM PERSONALIZATION FEATURES SETTING PROCEDURE**.)

b. Change the sensitivity setting to a value other than the auto light sensitivity setting verified in Step 1.

c. Re-set to the auto light sensitivity setting verified in Step 1.

With Forward Sensing Camera (FSC) or Smart City Brake Support (SCBS)

1. Disconnect the negative battery cable. (See **NEGATIVE BATTERY CABLE DISCONNECTION/CONNECTION [SKYACTIV-G 2.0, SKYACTIV-G 2.5]**.)

2. Remove the cover. (See **FORWARD SENSING CAMERA (FSC) REMOVAL/INSTALLATION**.)

3. Disconnect the connector.

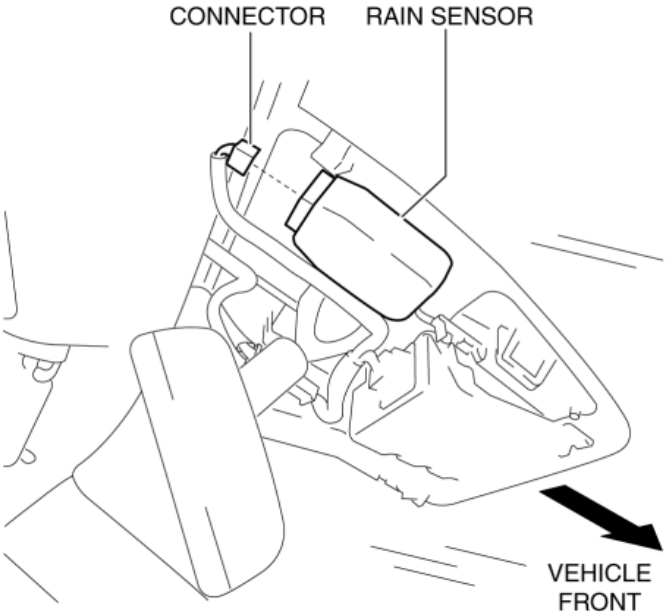

4. Insert the remover tool into the gap between the rain sensor and the tab (1).

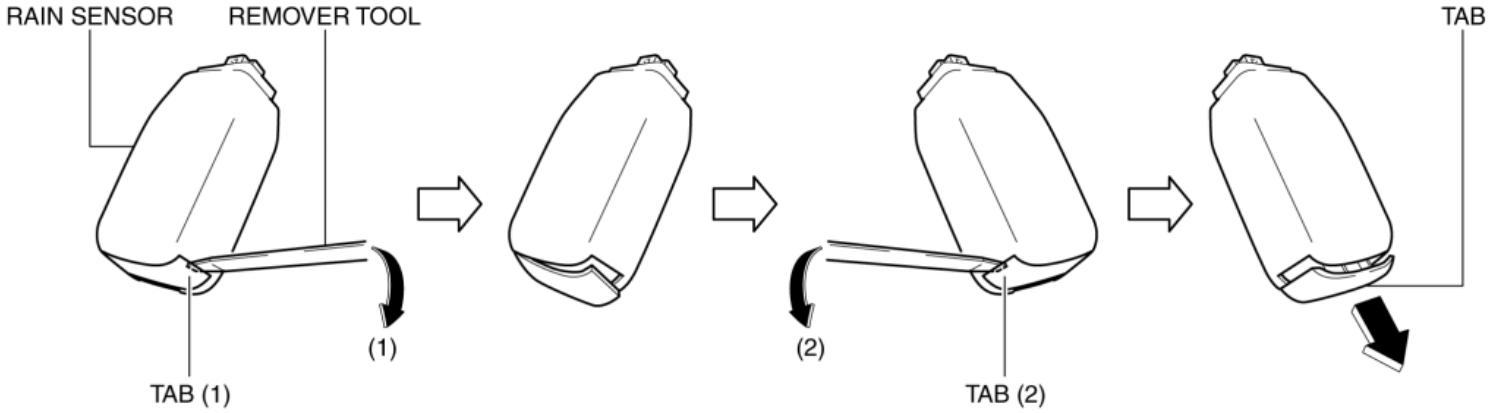

5. Move the remover tool in the direction of arrow (1) shown in the figure and detach the tab (1) from the rain sensor.

6. Insert the remover tool into the gap between the rain sensor and the tab (2).

7. Move the remover tool in the direction of arrow (2) shown in the figure and detach the tab (2) from the rain sensor.

8. Pull out the tab from the rain sensor.

9. Move the rain sensor in the direction of arrow (3) shown in the figure and pull out the rain sensor from the bracket.

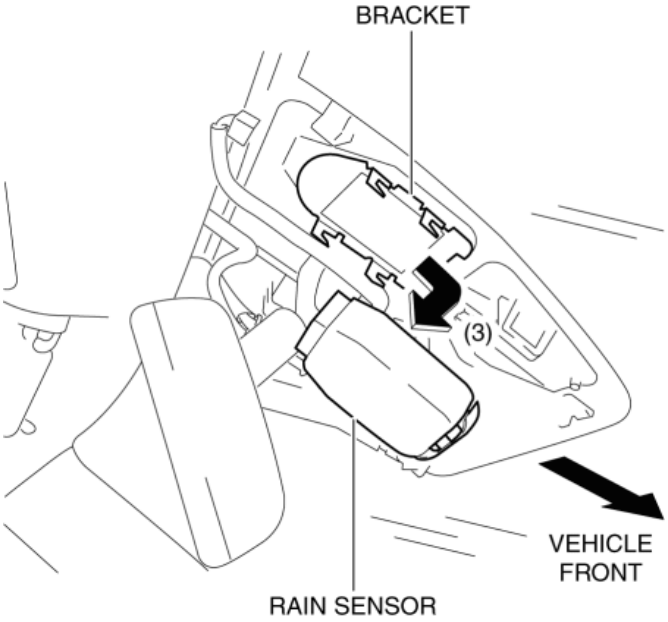

10. Peel off the rain sensor protective sheet from the rain sensor.

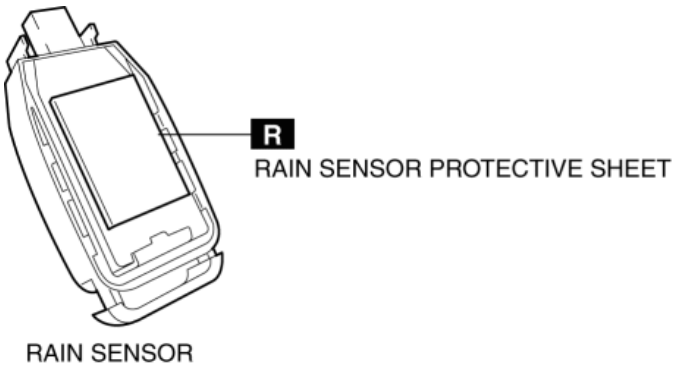

11. Install in the reverse order of removal. (See **Rain Sensor Installation Note**.)

12. If the rain sensor is replaced, perform the following sensitivity setting procedure for the auto lights.

CAUTION:

- If the auto light sensitivity setting is not performed after replacing the rain sensor (auto light sensor), the rain sensor will be unable to detect the correct illumination level and the auto light/wiper system will not operate normally. If the rain sensor is replaced, perform the auto light sensitivity setting.

a. Using the M-MDS, verify the current auto light sensitivity setting. (See **CONTROL SYSTEM PERSONALIZATION FEATURES SETTING PROCEDURE**.)

b. Change the sensitivity setting to a value other than the auto light sensitivity setting verified in Step 1.

c. Re-set to the auto light sensitivity setting verified in Step 1.

Rain Sensor Installation Note

CAUTION:

- If the rate at which the rain sensor reflects or transmits infrared light between the rain sensor and the windshield, or through the protective sheet, is changed, the rain sensor will determine that there is a problem in the rain detection function and stop the auto wiper system control. Be careful of the following when installing the rain sensor:
    - Do not reuse the rain sensor protective sheet.
    - Do not touch the rain sensor lens, rain sensor protective sheet, and sensor installation area on the windshield with your fingers.
    - Verify that there are no air bubbles after installing the rain sensor.

1. Wipe off any oil or dirt from the rain sensor lens and the windshield using a clean rag.

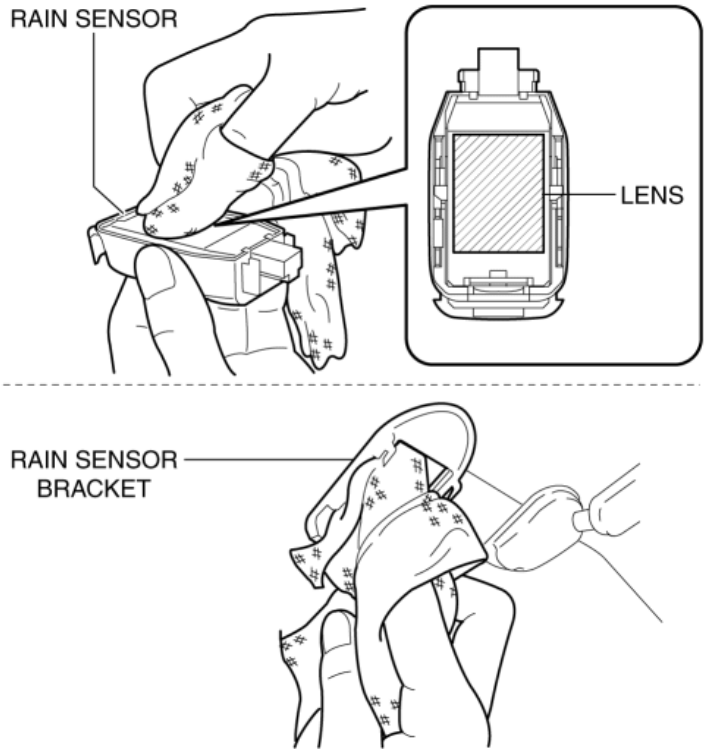

2. Peel off adhesive tape backing A from a new rain sensor protective sheet.

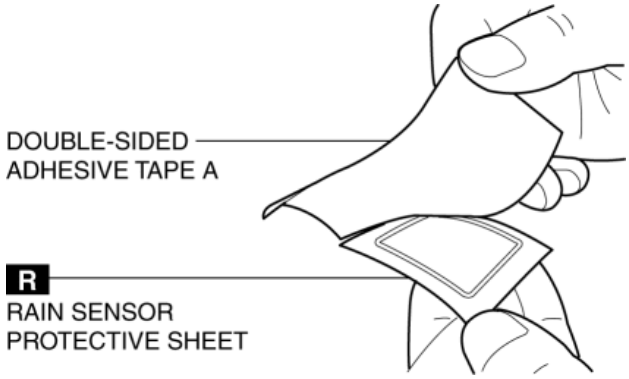

3. Adhere a new rain sensor protective sheet to the rain sensor lens.

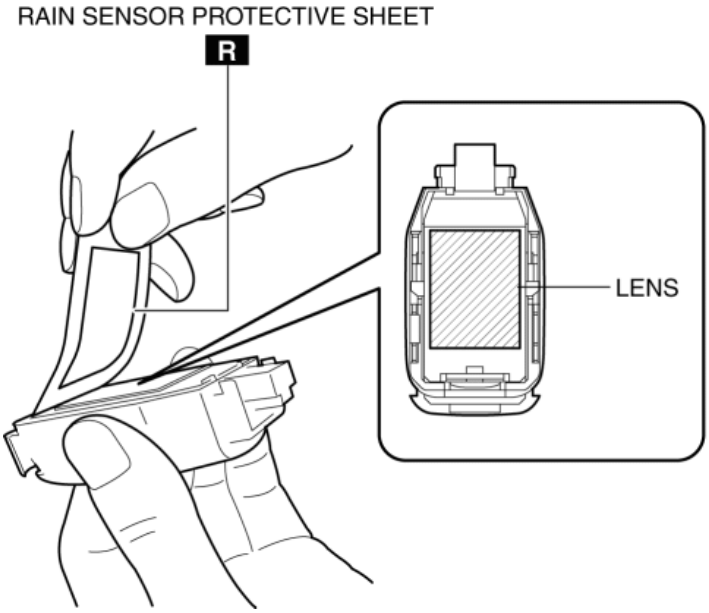

4. Peel off adhesive tape backing B from the rain sensor protective sheet.

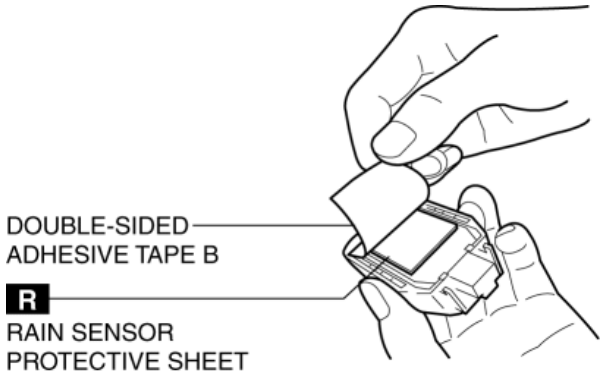

5. Move the rain sensor in the direction of arrow (1) shown in the figure and install the rain sensor to the bracket.

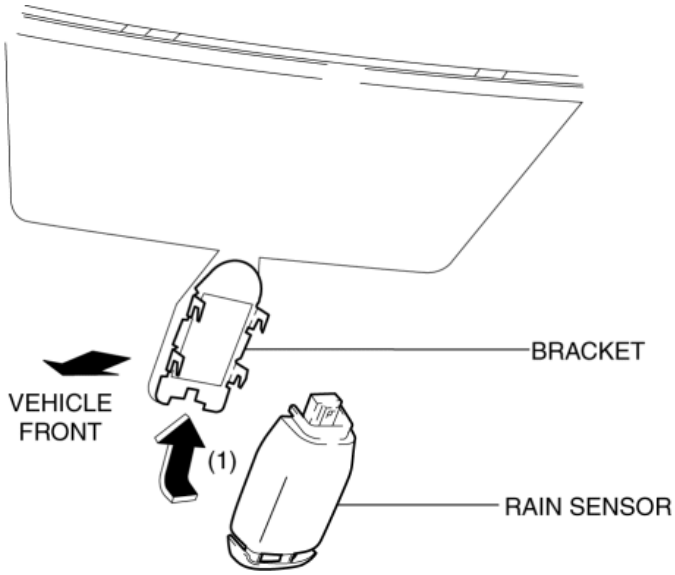

6. Press the rain sensor in the direction (direction of arrow (2) shown in figure) of the windshield and press out any air bubbles.

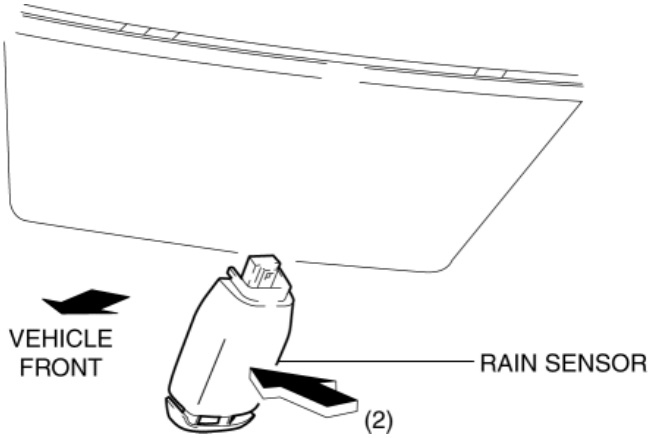

7. Verify that there are no air bubbles between the rain sensor and the windshield.

2014 - Mazda3 - Body and Accessories

RAIN SENSOR INITIALIZATION SETTING

NOTE:

- When the ignition is switched ON (engine off or on), the rain sensor detects the condition of the windshield surface, and performs initialization automatically.

2014 - Mazda3 - Body and Accessories

WIPER/WASHER SYSTEM PERSONALIZATION FEATURES SETTING PROCEDURE

Auto Wiper System

Using M-MDS

- For details on the method for setting the auto wiper system personalization features, refer to the control system personalization features setting. (See **CONTROL SYSTEM PERSONALIZATION FEATURES SETTING PROCEDURE**.)

Using center display

- The user can enable or disable the auto wiper function by operating the center display. Refer to the entertainment system personalization features setting. (See **CENTER DISPLAY PERSONALIZATION FEATURES SETTING PROCEDURE**.)

2014 - Mazda3 - Body and Accessories

ENTERTAINMENT LOCATION INDEX

With center display

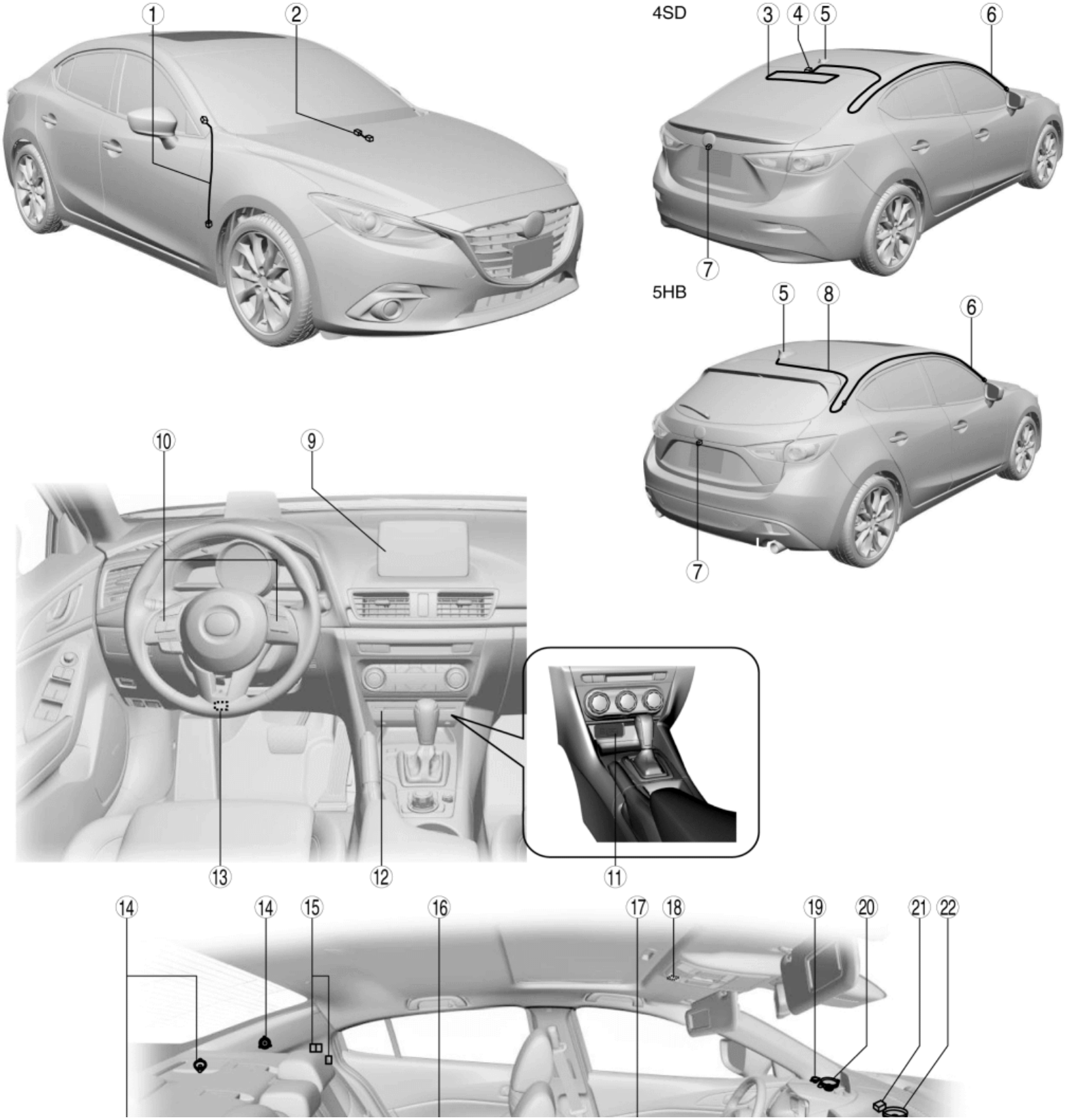

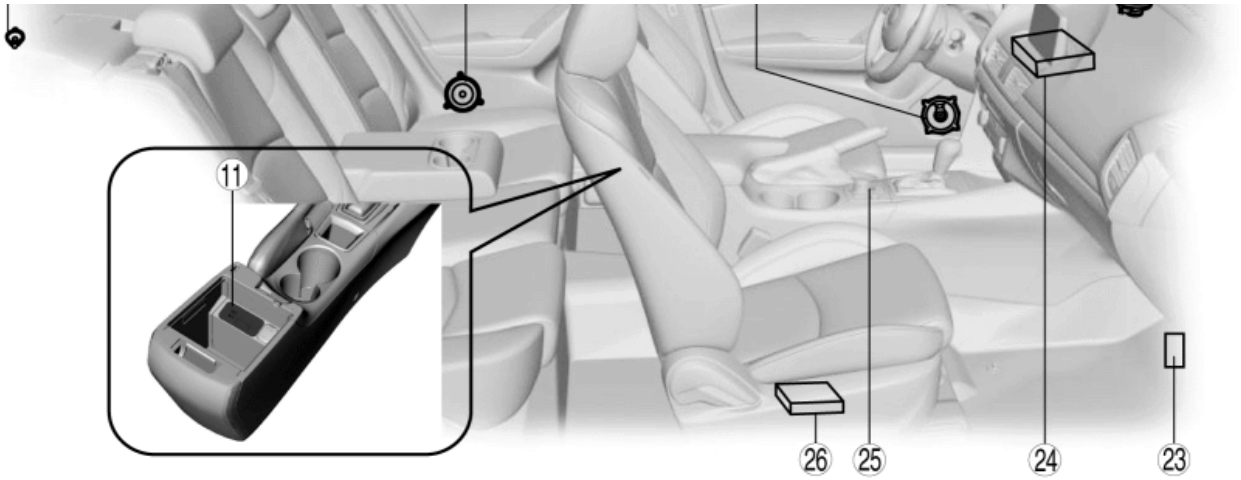

1	Antenna feeder No.1 (See **ANTENNA FEEDER NO.1 REMOVAL/INSTALLATION**.) (See **ANTENNA FEEDER NO.1 INSPECTION**.)
2	GPS antenna feeder (with car-navigation system) (See **GPS ANTENNA FEEDER REMOVAL/INSTALLATION**.) (See **GPS ANTENNA FEEDER INSPECTION**.)
3	Glass antenna (See **GLASS ANTENNA INSPECTION**.)
4	Antenna amplifier (See **ANTENNA AMPLIFIER REMOVAL/INSTALLATION**.) (See **ANTENNA AMPLIFIER INSPECTION**.)
5	Center roof antenna (See **CENTER ROOF ANTENNA REMOVAL/INSTALLATION**.) (See **CENTER ROOF ANTENNA INSPECTION**.)
6	Antenna feeder No.2 (See **ANTENNA FEEDER NO.2 REMOVAL**.) (See **ANTENNA FEEDER NO.2 INSTALLATION**.) (See **ANTENNA FEEDER NO.2 INSPECTION**.)
7	Rear mount camera (with park assist system) (See **REAR MOUNT CAMERA REMOVAL/INSTALLATION**.)
8	Antenna feeder No.3 (See **ANTENNA FEEDER NO.3 REMOVAL/INSTALLATION**.) (See **ANTENNA FEEDER NO.3 INSPECTION**.)
9	Center display (See **CENTER DISPLAY REMOVAL/INSTALLATION**.) (See **CENTER DISPLAY PERSONALIZATION FEATURES SETTING PROCEDURE**.)

10	Steering switch (See **STEERING SWITCH REMOVAL/INSTALLATION**.) (See **STEERING SWITCH INSPECTION**.)
11	Auxiliary jack/USB port/SD card slot hub (See **AUXILIARY JACK/USB PORT/SD CARD SLOT HUB REMOVAL/INSTALLATION**.) (See **AUXILIARY JACK/USB PORT/SD CARD SLOT HUB INSPECTION**.)
12	CD player (with CD player) (See **CD PLAYER REMOVAL**.) (See **CD PLAYER INSTALLATION**.)
13	AudioPilot ®2 microphone (with Bose®) (See **AudioPilot®2 MICROPHONE REMOVAL/INSTALLATION**.)
14	Rear speaker (with Bose®) (See **REAR SPEAKER REMOVAL/INSTALLATION**.) (See **REAR SPEAKER INSPECTION**.)
15	Condenser (See **CONDENSER REMOVAL/INSTALLATION**.)
16	Rear door speaker (See **REAR DOOR SPEAKER REMOVAL/INSTALLATION**.) (See **REAR DOOR SPEAKER INSPECTION**.)
17	Front door speaker (See **FRONT DOOR SPEAKER REMOVAL/INSTALLATION**.) (See **FRONT DOOR SPEAKER INSPECTION**.)
18	Microphone (See **MICROPHONE REMOVAL/INSTALLATION**.)
19	Tweeter (without Bose®) (See **TWEETER REMOVAL/INSTALLATION**.) (See **TWEETER INSPECTION**.)
20	Front side speaker (with Bose®) (See **FRONT SIDE SPEAKER REMOVAL/INSTALLATION**.) (See **FRONT SIDE SPEAKER INSPECTION**.)
21	GPS antenna (with car-navigation system) (See **GLOBAL POSITIONING SYSTEM (GPS) ANTENNA REMOVAL/INSTALLATION**.)
22	Front center speaker (with Bose®) (See **FRONT CENTER SPEAKER REMOVAL/INSTALLATION**.) (See **FRONT CENTER SPEAKER INSPECTION**.)

23	Tuner and amp unit (TAU) (See **TUNER AND AMP UNIT (TAU) REMOVAL/INSTALLATION**.)
24	Connectivity master unit (CMU) (See **CONNECTIVITY MASTER UNIT (CMU) REMOVAL/INSTALLATION**.) (See **CONNECTIVITY MASTER UNIT (CMU) DISASSEMBLY/ASSEMBLY**.) (See **Bluetooth® PAIRING PROCEDURE**.) (See **MAINTENANCE MONITOR OPERATION PROCEDURE**.)
25	Commander switch (See **COMMANDER SWITCH REMOVAL/INSTALLATION**.)
26	Audio amplifier (With Bose®) (See **AUDIO AMPLIFIER REMOVAL/INSTALLATION**.)

Without center display

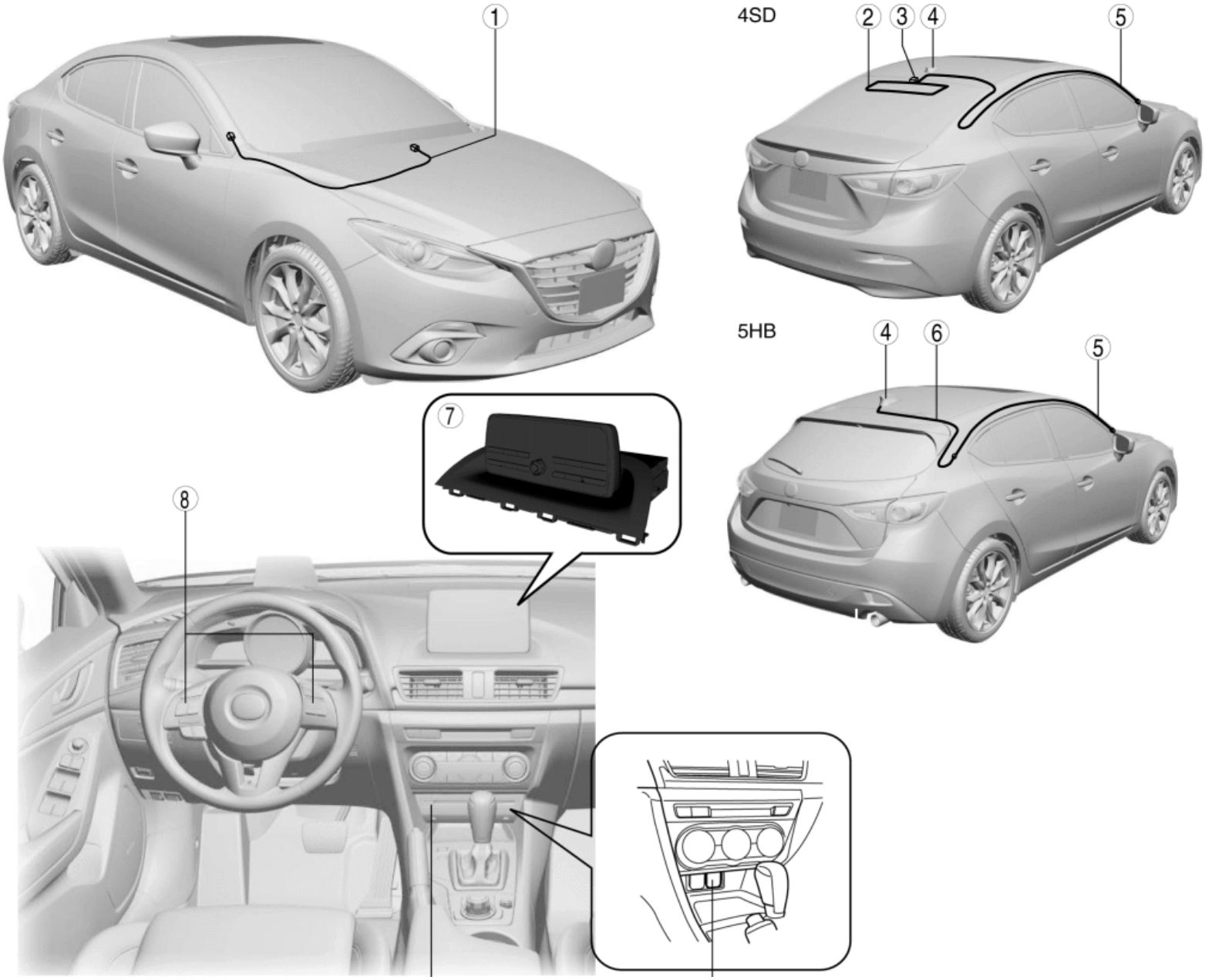

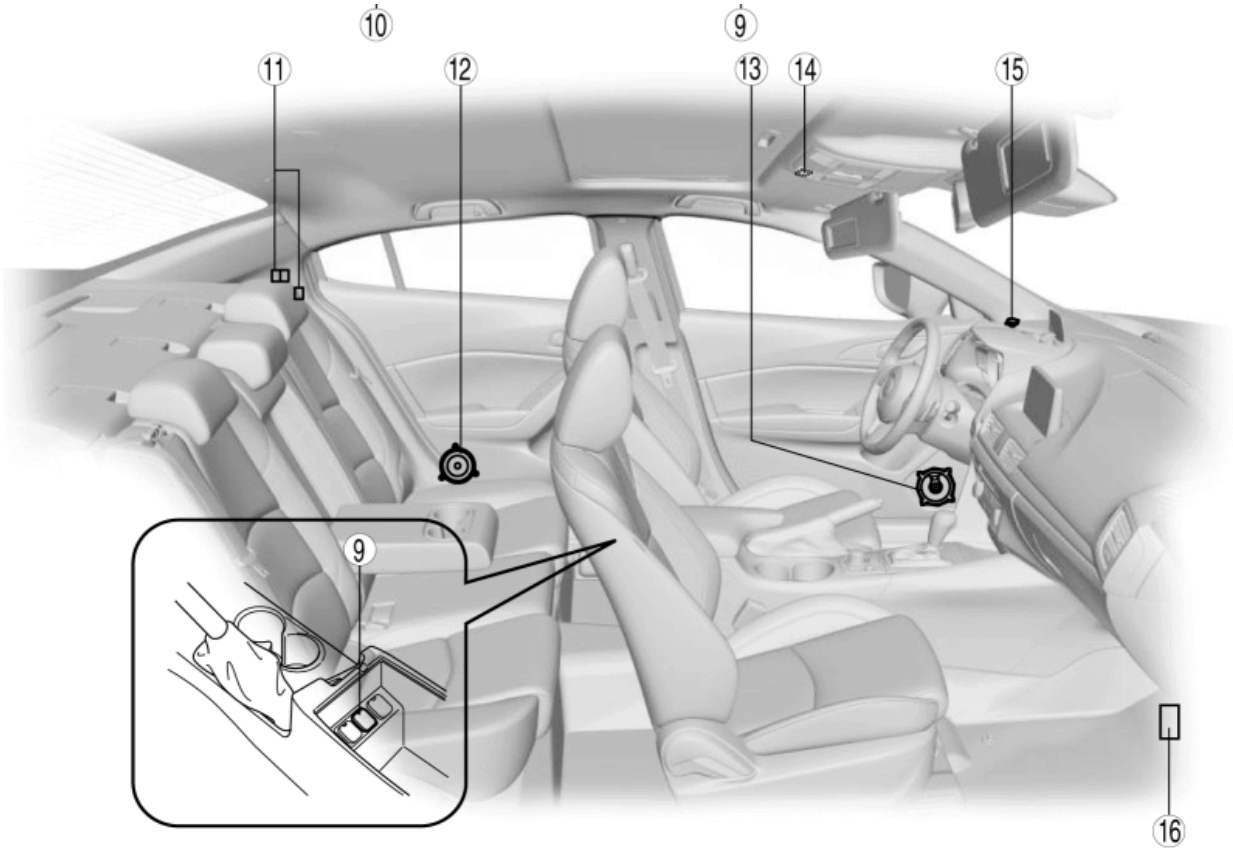

1	Antenna feeder No.1 (See **ANTENNA FEEDER NO.1 REMOVAL/INSTALLATION**.) (See **ANTENNA FEEDER NO.1 INSPECTION**.)
2	Glass antenna (See **GLASS ANTENNA INSPECTION**.)
3	Antenna amplifier (See **ANTENNA AMPLIFIER REMOVAL/INSTALLATION**.) (See **ANTENNA AMPLIFIER INSPECTION**.)
4	Center roof antenna (See **CENTER ROOF ANTENNA REMOVAL/INSTALLATION**.) (See **CENTER ROOF ANTENNA INSPECTION**.)
5	Antenna feeder No.2 (See **ANTENNA FEEDER NO.2 REMOVAL**.) (See **ANTENNA FEEDER NO.2 INSTALLATION**.) (See **ANTENNA FEEDER NO.2 INSPECTION**.)
6	Antenna feeder No.3 (See **ANTENNA FEEDER NO.3 REMOVAL/INSTALLATION**.) (See **ANTENNA FEEDER NO.3 INSPECTION**.)
7	Audio unit

	(See **AUDIO UNIT REMOVAL/INSTALLATION**.)
8	Steering switch (See **STEERING SWITCH REMOVAL/INSTALLATION**.) (See **STEERING SWITCH INSPECTION**.)
9	Auxiliary jack/USB port (See **AUXILIARY JACK/USB PORT REMOVAL/INSTALLATION**.) (See **AUXILIARY JACK/USB PORT INSPECTION**.)
10	CD player (with CD player) (See **CD PLAYER REMOVAL**.) (See **CD PLAYER INSTALLATION**.)
11	Condenser (See **CONDENSER REMOVAL/INSTALLATION**.)
12	Rear door speaker (See **REAR DOOR SPEAKER REMOVAL/INSTALLATION**.) (See **REAR DOOR SPEAKER INSPECTION**.)
13	Front door speaker (See **FRONT DOOR SPEAKER REMOVAL/INSTALLATION**.) (See **FRONT DOOR SPEAKER INSPECTION**.)
14	Microphone (See **MICROPHONE REMOVAL/INSTALLATION**.)
15	Tweeter (See **TWEETER REMOVAL/INSTALLATION**.) (See **TWEETER INSPECTION**.)
16	Bluetooth® unit (with Bluetooth® system) (See **Bluetooth® UNIT REMOVAL/INSTALLATION**.) (See **Bluetooth® PAIRING PROCEDURE**.)

2014 - Mazda3 - Body and Accessories

AUDIO UNIT REMOVAL/INSTALLATION

1. Disconnect the negative battery cable. (See **NEGATIVE BATTERY CABLE DISCONNECTION/CONNECTION [SKYACTIV-G 2.0, SKYACTIV-G 2.5]**.)

2. Remove the glove compartment. (See **GLOVE COMPARTMENT REMOVAL/INSTALLATION**.)

3. Remove the decoration panel. (See **DECORATION PANEL REMOVAL/INSTALLATION**.)

4. Remove the bolt.

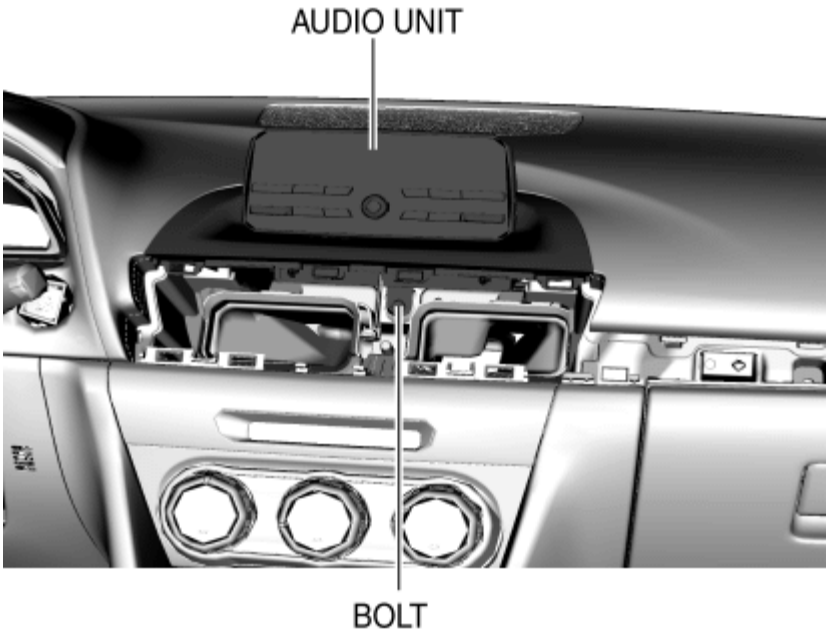

6.9—9.8 N·m {71—99 kgf·cm, 62—86 in·lbf}

5. Pull the audio unit in the order of arrows (1) and (2) shown in the figure, and detach clips A and B from the dashboard.

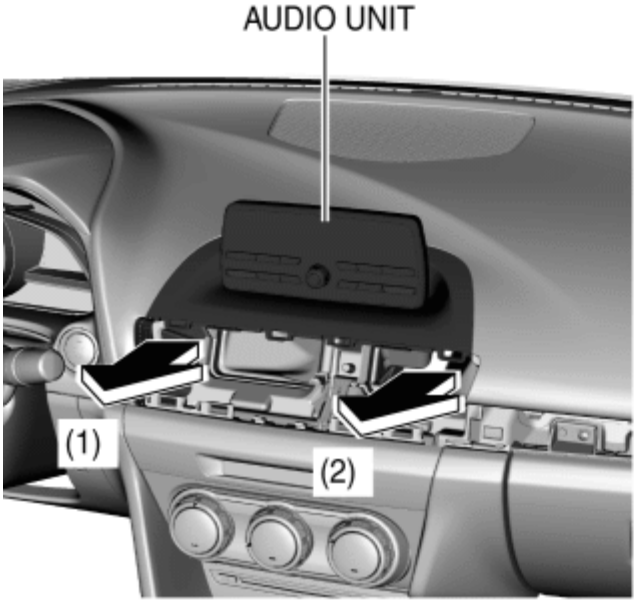

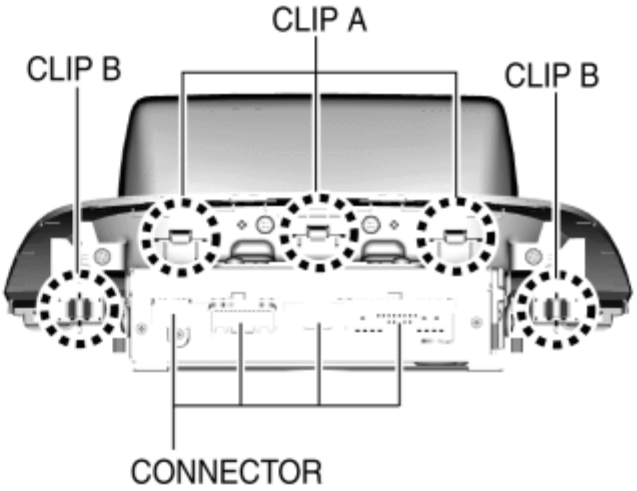

6. Disconnect the connectors.

7. Remove the audio unit.

8. Install in the reverse order of removal.

2014 - Mazda3 - Body and Accessories

CENTER DISPLAY REMOVAL/INSTALLATION

1. Disconnect the negative battery cable. (See **NEGATIVE BATTERY CABLE DISCONNECTION/CONNECTION [SKYACTIV-G 2.0, SKYACTIV-G 2.5]**.)

2. Remove the glove compartment. (See **GLOVE COMPARTMENT REMOVAL/INSTALLATION**.)

3. Remove the decoration panel. (See **DECORATION PANEL REMOVAL/INSTALLATION**.)

4. Remove the bolt.

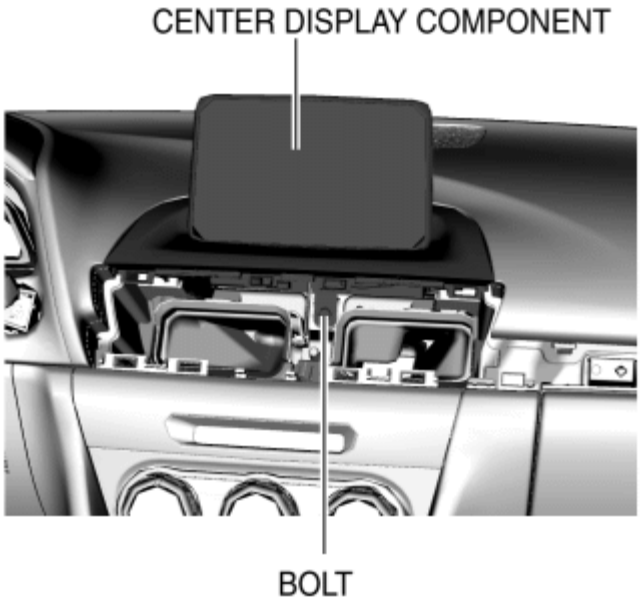

6.9—9.8 N·m {71—99 kgf·cm, 62—86 in·lbf}

5. Pull the center display component in the order of arrows (1) and (2) shown in the figure, and detach clips A and B from the dashboard.

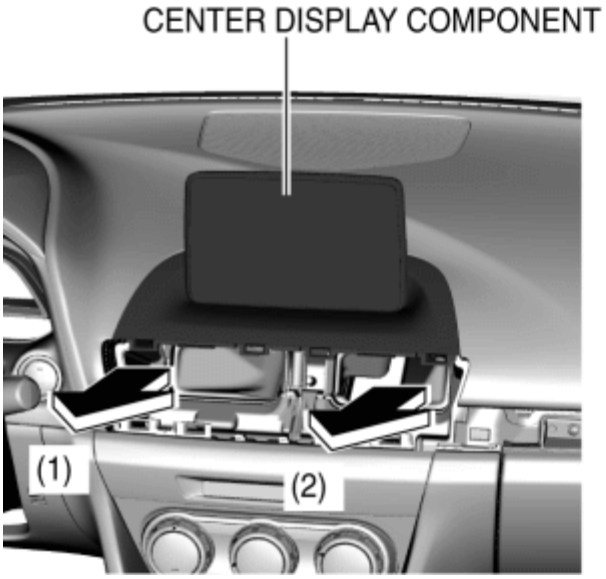

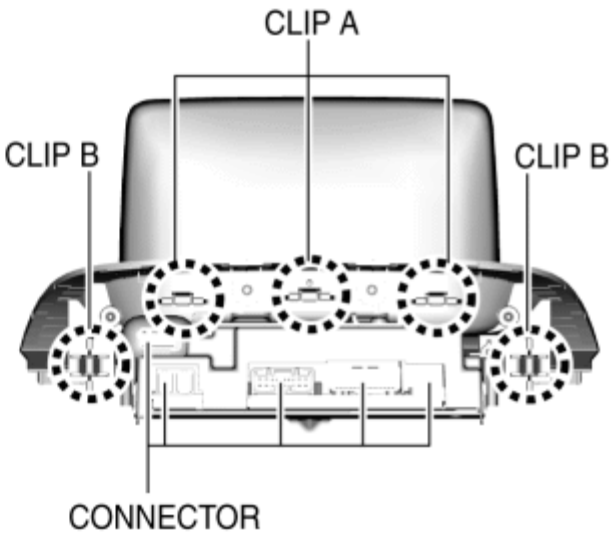

6. Disconnect the connectors.

7. Remove the center display component.

8. Remove the connectivity master unit (CMU). (See **CONNECTIVITY MASTER UNIT (CMU) REMOVAL/INSTALLATION**.)

9. Install in the reverse order of removal.

2014 - Mazda3 - Body and Accessories

CONNECTIVITY MASTER UNIT (CMU) REMOVAL/INSTALLATION

NOTE:

- The connectivity master unit (CMU) prior to replacement stores the vehicle specification information.
- A new CMU does not store any vehicle specification information.
- When the ignition is switched ON after the CMU is replaced, the CMU reads the vehicle specification information sent via CAN transmission from the instrument cluster using the automatic configuration function, and stores it.
- The Bluetooth® pairing information recorded in the CMU cannot be written to a new CMU. Therefore, the Bluetooth® pairing information will be eliminated if the CMU is replaced. Before replacing the CMU, explain to the customer that the Bluetooth® pairing resetting is required.

1. Disconnect the negative battery cable. (See **NEGATIVE BATTERY CABLE DISCONNECTION/CONNECTION [SKYACTIV-G 2.0, SKYACTIV-G 2.5]**.)
2. Remove the glove compartment. (See **GLOVE COMPARTMENT REMOVAL/INSTALLATION**.)
3. Remove the decoration panel. (See **DECORATION PANEL REMOVAL/INSTALLATION**.)
4. Remove the center display component. (See **CENTER DISPLAY REMOVAL/INSTALLATION**.)
5. Disconnect the connector.

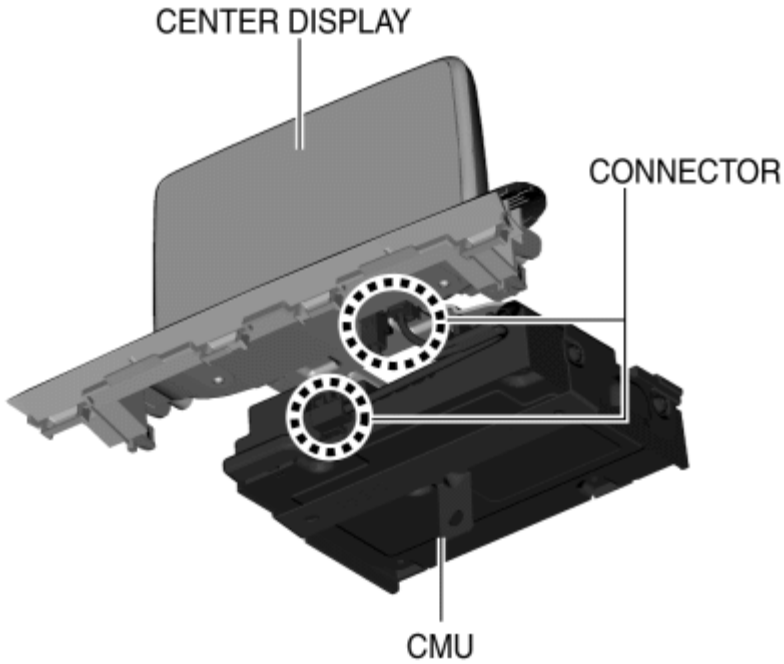

6. Remove the screws.

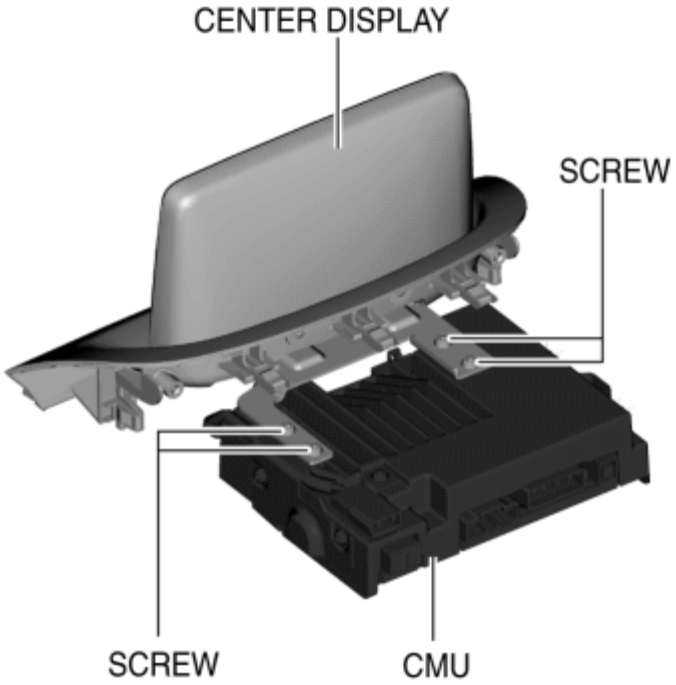

7. Remove the CMU.

8. Install in the reverse order of removal.

9. Switch the ignition ON (engine off or on) and perform the CMU automatic configuration.

10. Using the M-MDS, verify that DTC U2300:55 is not displayed.

- If DTC U2300:55 is displayed, go to the DTC troubleshooting procedure. (See **DTC U2300:55 [CONNECTIVITY MASTER UNIT]**.)

2014 - Mazda3 - Body and Accessories

CONNECTIVITY MASTER UNIT (CMU) DISASSEMBLY/ASSEMBLY

1. Disassemble in the order indicated in the table.

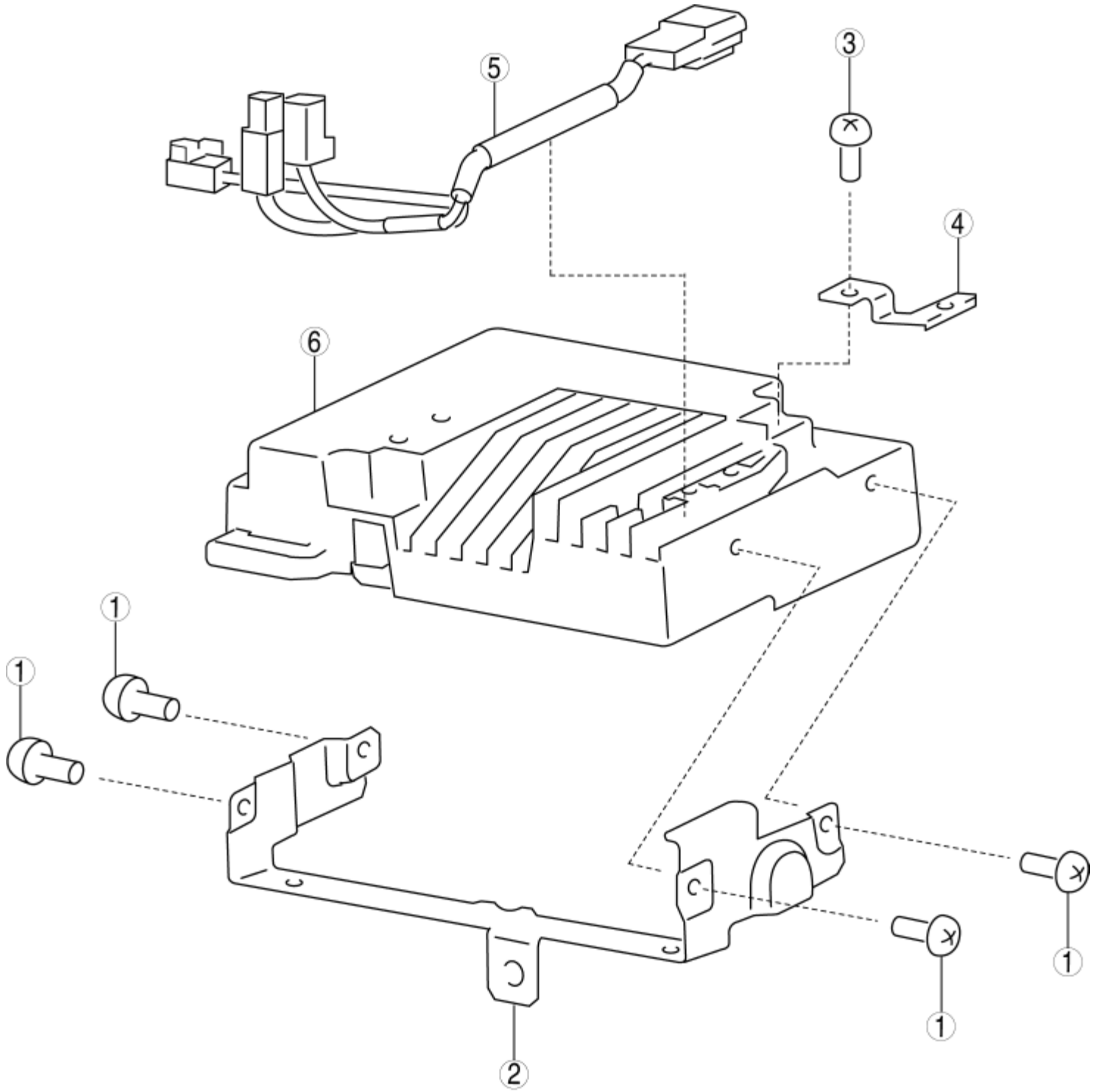

1	Screw A
2	Bracket A
3	Screw B
4	Bracket B
5	Short-cord
6	Connectivity master unit (CMU)

2. Assemble in the reverse order of disassembly.

2014 - Mazda3 - Body and Accessories

TUNER AND AMP UNIT (TAU) REMOVAL/INSTALLATION

1. Disconnect the negative battery cable. (See **NEGATIVE BATTERY CABLE DISCONNECTION/CONNECTION [SKYACTIV-G 2.0, SKYACTIV-G 2.5]**.)
2. Remove the following parts:
   a. Front scuff plate (RH) (See **FRONT SCUFF PLATE REMOVAL/INSTALLATION**.)
   b. Front side trim (RH) (See **FRONT SIDE TRIM REMOVAL/INSTALLATION**.)
   c. Glove compartment (See **GLOVE COMPARTMENT REMOVAL/INSTALLATION**.)
   d. Dashboard under cover (See **DASHBOARD UNDER COVER REMOVAL/INSTALLATION**.)
3. Remove the nuts.

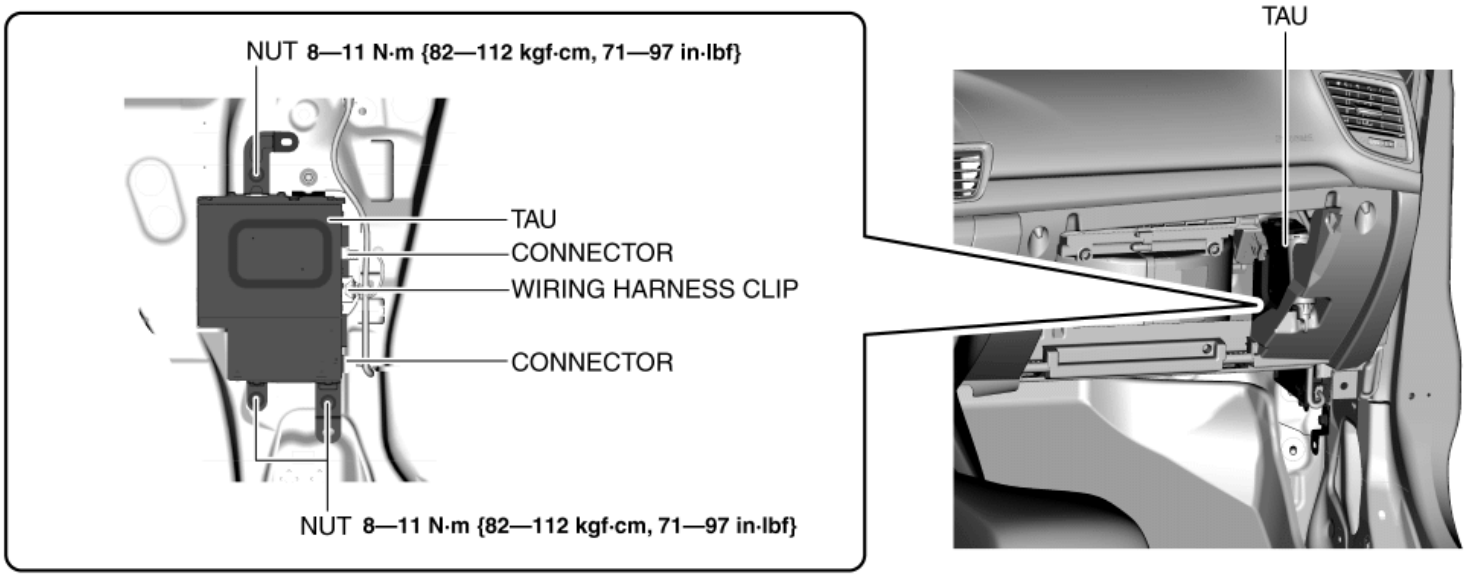

4. Disconnect the connectors.
5. Pull out the wiring harness clip.
6. Remove the tuner and amp unit (TAU).
7. Remove the clip.

BOLT: **8—11 N·m {82—112 kgf·cm, 71—97 in·lbf}**

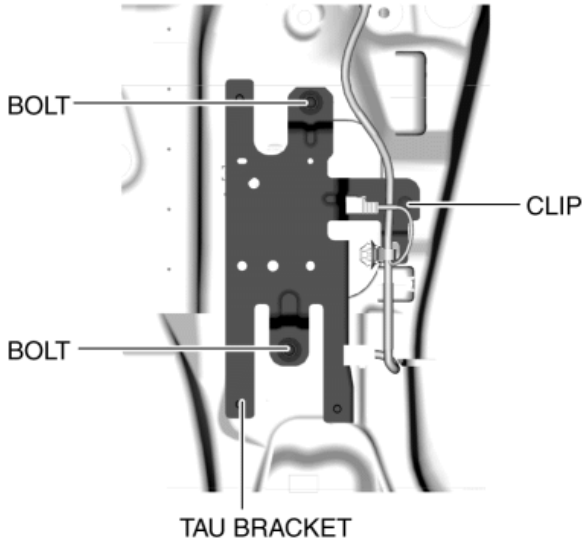

8. Remove the bolts.
9. Remove the TAU bracket.
10. Install in the reverse order of removal.

2014 - Mazda3 - Body and Accessories

CD PLAYER REMOVAL

1. Disconnect the negative battery cable. (See **NEGATIVE BATTERY CABLE DISCONNECTION/CONNECTION [SKYACTIV-G 2.0, SKYACTIV-G 2.5]**.)

2. Shift the selector lever from the P position to the D position (ATX).

3. Insert the SSTs (removing tool) into the positions shown in the figure and disengage the CD player from the front console.

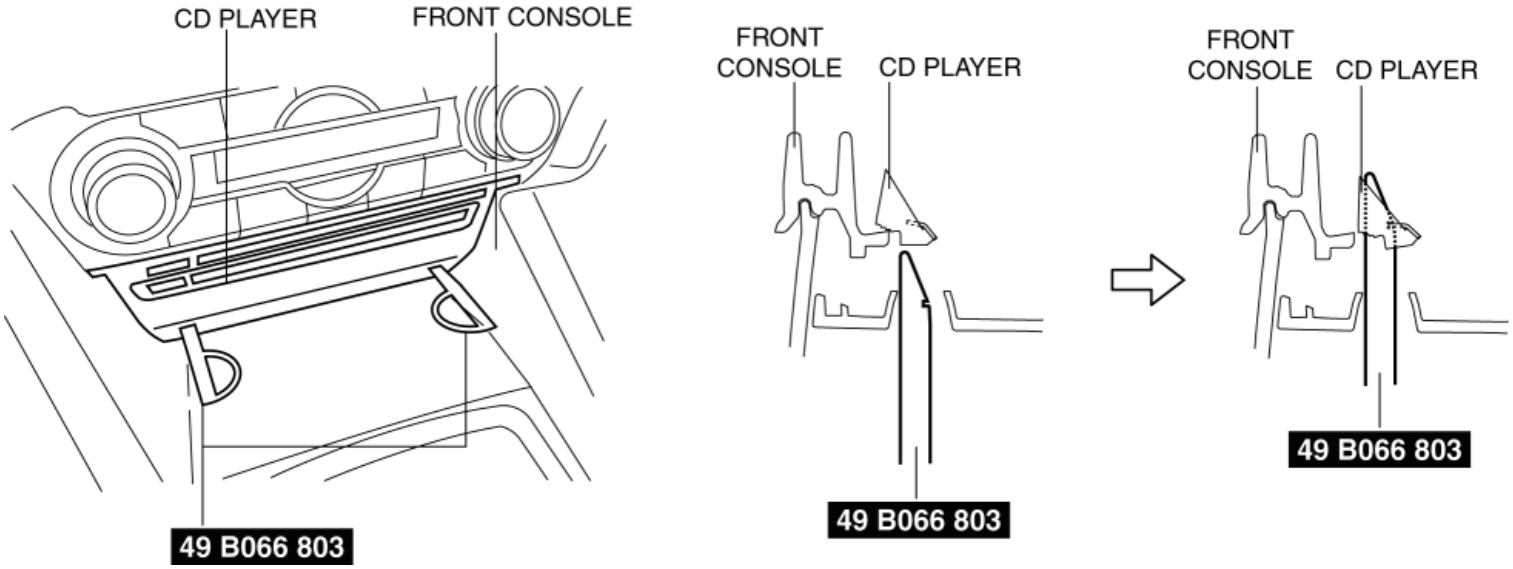

4. Pull the SSTs (removing tool) in the direction shown in the figure and remove the CD player from the front console.

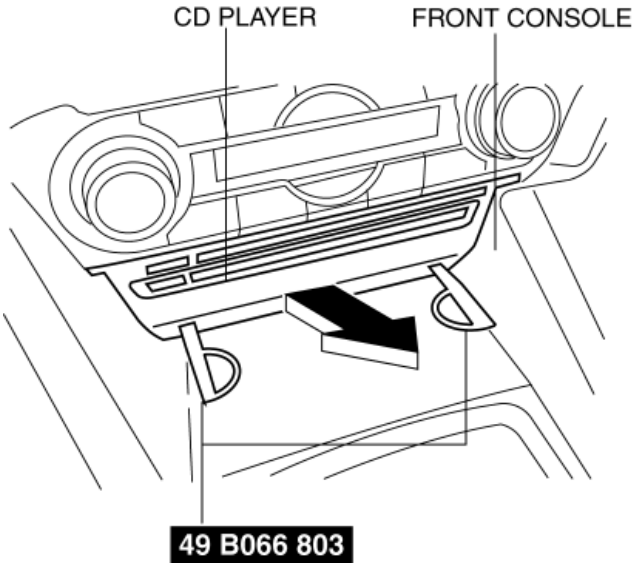

5. Disconnect the connector.

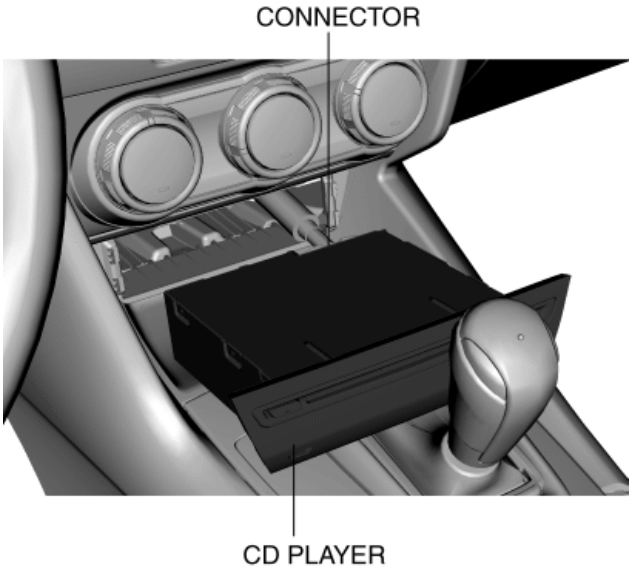

6. Remove the CD player.

7. While pulling the SSTs (removing tool) in the direction of arrow (2) shown in the figure, press the CD player spring in the direction of arrow (1) shown in the figure.

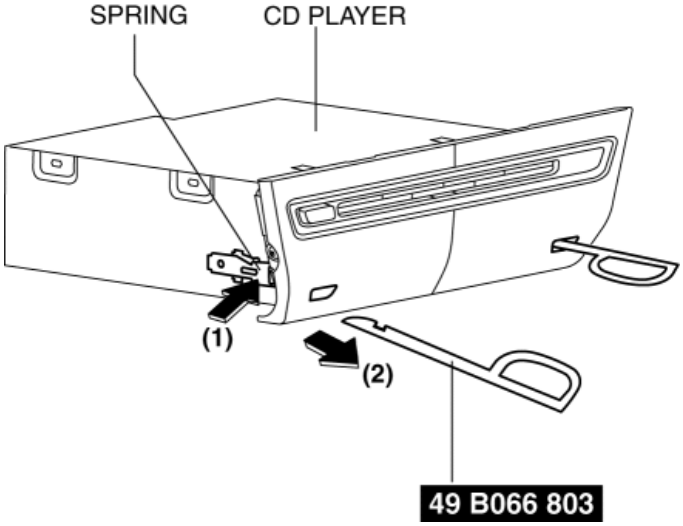

2014 - Mazda3 - Body and Accessories

CD PLAYER INSTALLATION

1. Connect the connector.

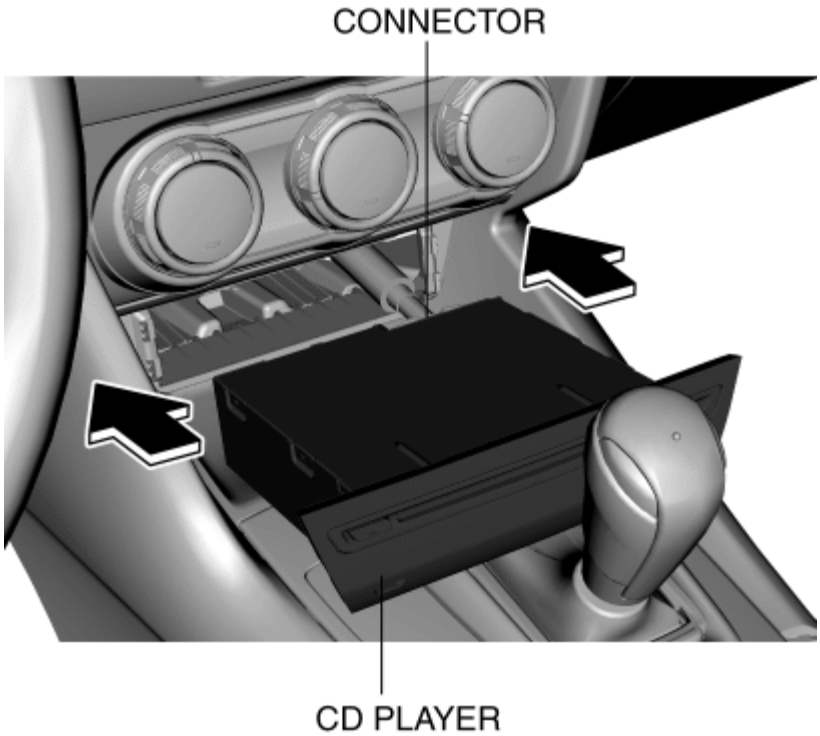

2. Install the CD player.

3. Connect the negative battery cable. (See **NEGATIVE BATTERY CABLE DISCONNECTION/CONNECTION [SKYACTIV-G 2.0, SKYACTIV-G 2.5]**.)

2014 - Mazda3 - Body and Accessories

CENTER DISPLAY PERSONALIZATION FEATURES SETTING PROCEDURE

Smart City Brake Support (SCBS) System

1. Switch the ignition ON (engine off or on).
2. Select [Settings] on the center display.
3. Select [Safety] on the center display.
4. Select an item name, and then select option.

Display of center display	Function	Initial setting	Settings	Control module
Smart City Brake Support	The operation of smart city brake support (SCBS) can be turned off.	On	On / Off	Laser sensor

Blind Spot Monitoring (BSM) System

1. Switch the ignition ON (engine off or on).
2. Select [Settings] on the center display.
3. Select [Safety] on the center display.
4. Select an item name, and then select option.

Display of center display	Function	Initial setting	Settings	Control module
Blind Spot Monitor Volume	The volume of the blind spot monitoring (BSM) warning alarm can be changed.	High	High / Low / Off	Instrument cluster

Lane Departure Warning System (LDWS)

1. Switch the ignition ON (engine off or on).
2. Select [Settings] on the center display.
3. Select [Safety] on the center display.
4. Select [Lane Departure Warning System] on the center display.
5. Select an item name, and then select option.

Display of center display	Function	Initial setting	Settings	Control module
Timing	The distance between the warning-trigger lines for the Lane Departure Warning System (LDWS) and vehicle lanes can be changed.	Before Line	At Line / Before Line	FSC
Warning	The warning operation sensitivity of the lane departure warning system (LDWS) can be changed.	Low	High / Low	FSC
Sound	The type of the LDWS warning alarm can be changed.	Beep	Beep / Rumble	Instrument cluster
Beep Volume	The volume of the LDWS warning alarm (Beep) can be changed.	High or Low*1	High / Low	Instrument cluster
Rumble Strip Volume	The volume of the LDWS warning alarm (Rumble) can be changed.	High or Low*1	High / Mid / Low	Instrument cluster
Reset	Returns the setting content of the lane departure warning system to the initial setting.	No	No / Yes	• FSC • Instrument cluster

*1

The initial value differs depending on the market.

Auto Wiper System

1. Switch the ignition ON (engine off or on).
2. Select [Settings] on the center display.
3. Select [Vehicle] on the center display.
4. Select an item name, and then select option.

Display of center display	Function	Initial setting	Settings	Control module
Rain Sensing Wiper	Auto wiper system can be set to operable or inoperable.	On	On / Off	Rear body control module (RBCM)

Door Locks Systems

1. Switch the ignition ON (engine off or on).
2. Select [Settings] on the center display.
3. Select [Vehicle] on the center display.
4. Select [Door Lock] on the center display.
5. Select an item name, and then select option.

Power door lock system

Display of center display	Function	Initial setting	Settings	Control module
Auto Door Lock Mode	Auto door lock function can be changed.	Lock:When Driving, Unlock: IGN Off	Off / Lock: When Driving / Lock:When Driving, Unlock: IGN Off / Lock: Shifting from Park / Lock: Shifting from Park, Unlock: In Park	Rear body control module (RBCM)
Unlock Mode	2-step unlocking system can be set.	Once Driver's, Twice: All Doors	Once: ALL Doors / Once Driver's, Twice: All Doors	Rear body control module (RBCM)
Reset	Returns the setting content of the door lock system to the initial setting.	No	No / Yes	• Rear body control module (RBCM) • Start stop unit

Advanced keyless entry system

Display of center display	Function	Initial setting	Settings	Control module
Keyless Lock Beep Volume	The keyless beeper volume can be adjusted.	Medium	High / Medium / Low / Off	Start stop unit
Auto Door Relock Time	The operation start time of the auto re-lock function can be changed.	60 seconds	30 seconds / 60 seconds / 90 seconds	Start stop unit
Walk Away Lock	The out-of-area (reception area) type auto lock function can be set.	Off	Off / On	Start stop unit
Reset	Returns the setting content of the door lock system to the initial setting.	No	No / Yes	• Rear body control module (RBCM) • Start stop unit

Keyless entry system

Display of center display	Function	Initial setting	Settings	Control module
Auto Door Relock Time	The operation start time of the auto re-lock function can be changed.	60 seconds	30 seconds / 60 seconds / 90 seconds	Start stop unit
Reset	Returns the setting content of the door lock system to the initial setting.	No	No / Yes	• Rear body control module (RBCM) • Start stop unit

Turn Light System

1. Switch the ignition ON (engine off or on).
2. Select [Settings] on the center display.
3. Select [Vehicle] on the center display.
4. Select [Turn] on the center display.
5. Select an item name, and then select option.

Display of center display	Function	Initial setting	Settings	Control module
3-Flash Turn Signal	The turn light system can be switched between operable and inoperable.	On	On / Off	Rear body control module (RBCM)
Turn Signal Volume	The volume of the turn and hazard indicator alarm can be changed.	High	High / Low	Instrument cluster
Reset	Returns the setting content of the turn light system to the initial setting.	No	No / Yes	• Rear body control module (RBCM) • Instrument cluster

Lighting Systems

1. Switch the ignition ON (engine off or on).
2. Select [Settings] on the center display.
3. Select [Vehicle] on the center display.
4. Select [Lighting] on the center display.
5. Select an item name, and then select option.

Room light control system

Display of center	Function	Initial	Settings	Control module

display		setting		
Interior Light Timeout - Doors Open	• The front/rear map light illumination time after any door is opened can be changed. • The trunk compartment light (4SD)/cargo compartment light (5HB) illumination time after the trunk lid (4SD)/liftgate (5HB) is opened can be changed.	30 minutes	60 minutes / 30 minutes / 10 minutes	Rear body control module (RBCM)
Interior Light Timeout - Doors Closed	The front/rear map light illumination time after all the doors are closed can be changed.	15 seconds	60 seconds / 30 seconds / 15 seconds / 7.5 seconds	Rear body control module (RBCM)
Reset	Returns the setting content of the lighting system to the initial setting.	No	No / Yes	• Front body control module (FBCM) • Rear body control module (RBCM) • FSC • Instrument cluster

High beam control (HBC) system

Display of center display	Function	Initial setting	Settings	Control module
High Beam Control	The high beam control (HBC) system can be switched between operable and inoperable.	On	On / Off	FSC
				• Front body control module (FBCM)

Reset	Returns the setting content of the lighting system to the initial setting.	No	No / Yes	• Rear body control module (RBCM) • FSC • Instrument cluster

Lights-on reminder warning alarm

Display of center display	Function	Initial setting	Settings	Control module
Light On Reminder Vol	The volume for the lights-on reminder warning alarm can be changed.	Off*1	High / Low / Off	Instrument cluster
Reset	Returns the setting content of the lighting system to the initial setting.	No	No / Yes	• Front body control module (FBCM) • Rear body control module (RBCM) • FSC • Instrument cluster

*1

The setting of the lights-on reminder can be changed with the time setting of auto light off system set to Off.

Auto light-off system

Display of center display	Function	Initial setting	Settings	Control module
Headlight	The headlight emitted time of	30	120 seconds / 90 seconds	Rear body control module

Off Timer	the auto light off timer can be changed.	seconds	/ 60 seconds / 30 seconds / Off	(RBCM)
Reset	Returns the setting content of the lighting system to the initial setting.	No	No / Yes	• Front body control module (FBCM) • Rear body control module (RBCM) • FSC • Instrument cluster

DRL system

Display of center display	Function	Initial setting	Settings	Control module
Daytime Running Lights	The DRL system function can be set.	On	On / Off	Front body control module (FBCM)
Reset	Returns the setting content of the lighting system to the initial setting.	No	No / Yes	• Front body control module (FBCM) • Rear body control module (RBCM) • FSC • Instrument cluster

Auto light system

Display of center	Function	Initial setting	Settings	Control module

display				
Auto Headlight On	Auto light sensor sensitivity can be changed.	Medium	Light / Medium Light / Medium / Medium Dark / Dark	Rear body control module (RBCM)
Reset	Returns the setting content of the lighting system to the initial setting.	No	No / Yes	• Front body control module (FBCM) • Rear body control module (RBCM) • FSC • Instrument cluster

Language

1. Switch the ignition ON (engine off or on).
2. Select [Settings] on the center display.
3. Select [System] on the center display.
4. Select an item name, and then select option.

Display of center display	Function	Initial setting	Settings	Control module
Language	The display language can be changed.	US English	US English / Spanish / Canadian French	Connectivity master unit

Distance

1. Switch the ignition ON (engine off or on).
2. Select [Settings] on the center display.
3. Select [System] on the center display.
4. Select an item name, and then select option.

Display of center display	Function	Initial setting	Settings	Control module
Distance	The distance unit can be changed.	Miles or km*1	Miles / km	Instrument cluster

*1

The initial value differs depending on the market.

Temperature (type A,B instrument cluster only)

1. Switch the ignition ON (engine off or on).
2. Select [Settings] on the center display.
3. Select [System] on the center display.
4. Select an item name, and then select option.

Display of center display	Function	Initial setting	Settings	Control module
Temp*1	The temperature unit can be changed.	F° or C°*2	F° / C°	Instrument cluster

*1

The initial value differs depending on the market.

*2

The setting of the lights-on reminder can be changed with the time setting of auto light off system set to Off.

2014 - Mazda3 - Body and Accessories

Bluetooth® PAIRING PROCEDURE

Without center display

1. Switch the ignition ON (engine off or on).

2. Turn the audio unit on.

3. Select [BT SETUP] by operating the MENU button of the audio unit, and press the POWER/VOLUME button.

4. Select [PAIR DEVICE] by operating the POWER/VOLUME button of the audio unit, and press the POWER/VOLUME button.

NOTE:

- If seven Bluetooth devices have been programmed, "MEMORY FULL" is displayed and the pairing programming is not performed.

5. After "ENTER PIN" is displayed in the audio unit display for approx. 3 s, verify that "PIN 0000 (initial value is 0000)" (4-digit pairing code) is displayed.

6. Input the verified 4-digit pairing code by operating the PRESET 1 button, PRESET 2 button, PRESET 3 button, and PRESET 4 button of the audio unit, and press the POWER/VOLUME button.

7. Verify that "PAIRING" flashes in the display of the audio unit.

8. Input the same 4-digit pairing code which was input to the audio unit to the Bluetooth®-enabled device.

9. After completing the pairing programming, verify that the "Musical note symbol" is displayed in the audio unit display, and then "PAIR SUCCESS" approx. 3 s afterward.

NOTE:

- If the pairing programming fails, "Err" flashes in the audio unit display for approx. 3 s and the screen returns to the [PAIR DEVICE] screen.

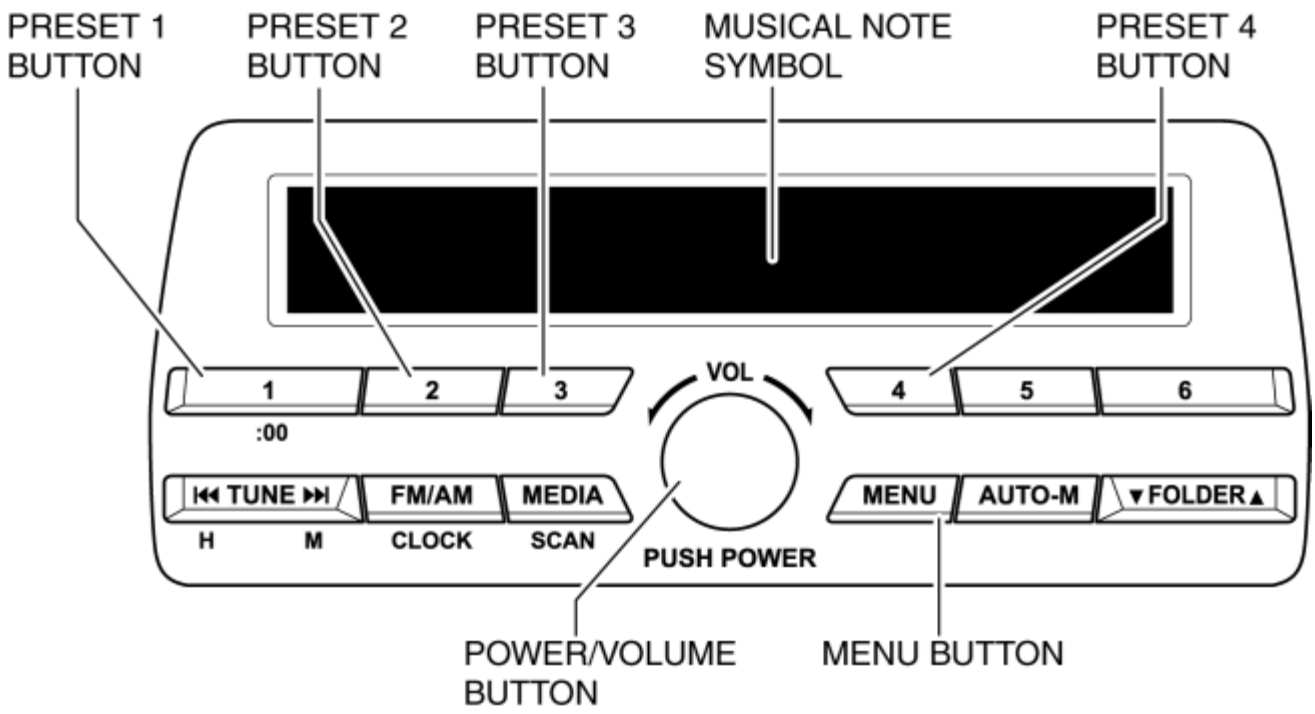

With center display

Introduction

- The Bluetooth® pairing procedure differs depending on the version of the Bluetooth®-enabled device. Ask the customer in advance what the Bluetooth®-enabled device's version was when the Bluetooth® pairing was performed.

NOTE:

- A maximum of seven Bluetooth-enabled devices can be programmed to one vehicle.

If Bluetooth®-enabled device is version 2.0

1. Switch the ignition ON (engine off or on).
2. Select "Settings" from the home screen of the center display as shown in the figure.

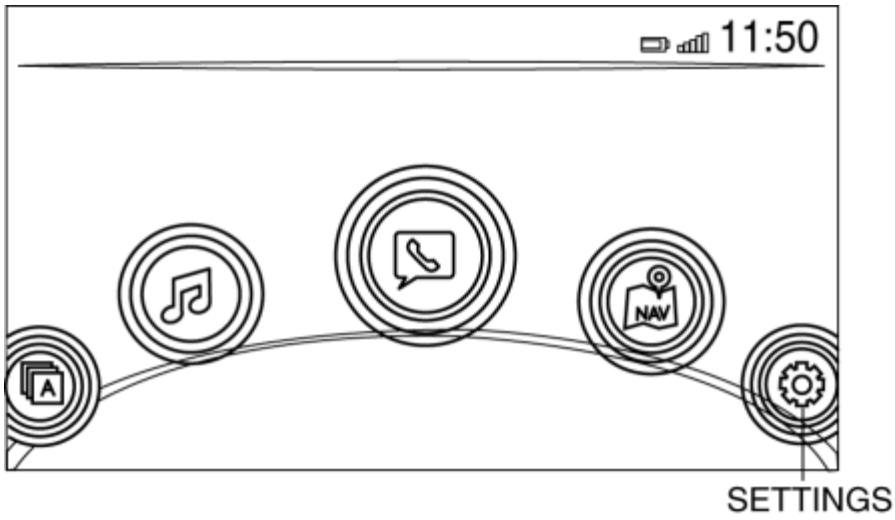

3. Select the following on the center display.
    - [Devices]
    - [Bluetooth]
    - Bluetooth setting ON
    - [Add New Device]
4. Verify that the 4-digit pairing code (initial value "0000") is indicated in the center display.
5. Input the 4-digit pairing code indicated in the center display into the Bluetooth®-enabled device.

NOTE:

- After inputting the 4-digit pairing code, the connectivity master unit (CMU) initiates the pairing programming with the Bluetooth®-enabled device.

6. Verify that "Pairing complete Connection complete"is indicated in the center display.

NOTE:

- If the Mobile 911 screen is displayed in the center display, end the Mobile 911 setting according to the instructions on the screen.
    - If "YES" is selected on the center display, the Mobile 911 function is valid.
    - If "NO" is selected on the center display, the Mobile 911 function is invalid.

If Bluetooth-enabled device is version 2.1 and later

1. Switch the ignition ON (engine off or on).
2. Select "Settings" from the home screen of the center display as shown in the figure.

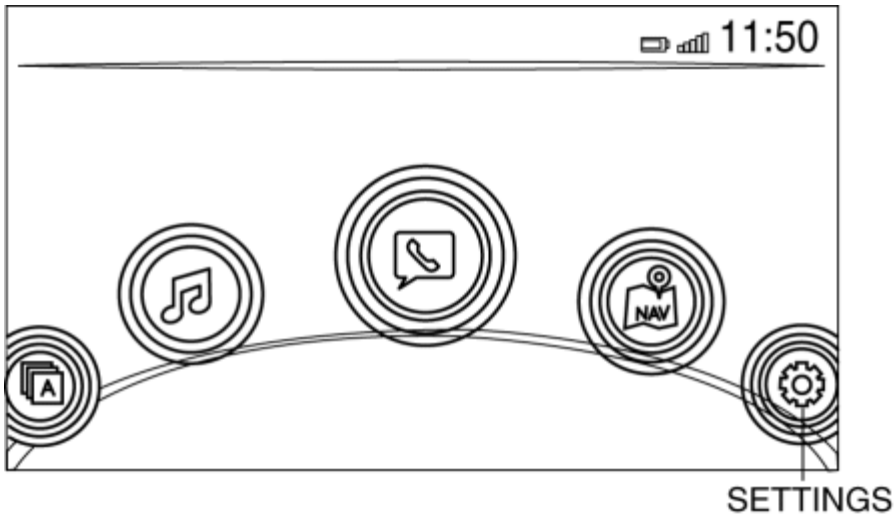

3. Select the following on the center display.
    - [Devices]
    - [Bluetooth]
    - Bluetooth setting ON
    - [Add New Device]
4. Verify the 6-digit code displayed in the center display and the Bluetooth-enabled device.

NOTE:

- When "Add New Device" is selected, the CMU searches for a Bluetooth®-enabled device. If the CMU detects a Bluetooth®-enabled device, a 6-digit code is displayed in the center display.

5. Select [YES] on the center display.

NOTE:

- When "YES" is selected, the CMU initiates the pairing programming with the Bluetooth®-enabled device.

6. Verify that "Pairing complete Connection complete" is indicated in the center display.

NOTE:

- If the Mobile 911 screen is displayed in the center display, end the Mobile 911 setting according to the instructions on the screen.
    - If "YES" is selected on the center display, the Mobile 911 function is valid.
    - If "NO" is selected on the center display, the Mobile 911 function is invalid.

2014 - Mazda3 - Body and Accessories

MAINTENANCE MONITOR OPERATION PROCEDURE

NOTE:

- The maintenance monitor displays a message when any of the following display conditions is met based on the preset maintenance period.

  Display condition

  - Day setting: Remaining days are 15 days or less
  - Distance setting: Remaining distance is 500 km
- The instrument cluster displays a message at approx. 5 s intervals according to the following priority order when multiple display conditions are met.
  - Scheduled maintenance
  - Tire rotation
  - Oil inspection/replacement
- The maintenance monitor setting information recorded in the connectivity master unit cannot be written to a new connectivity master unit, therefore, the maintenance monitor is set to the initial setting value if the connectivity master unit is replaced. Before replacing the connectivity master unit, explain to the customer that the maintenance monitor is reset to the initial setting value.
- After implementing the maintenance, reset the maintenance monitor items that were implemented.

Scheduled Maintenance Setting Procedure

1. Switch the ignition ON (engine off or on).
2. Select [Applications] on the center display.
3. Select [Scheduled Maintenance] on the center display.
4. Select the following items and change the setting.

Display of center display	Function	Initial setting	Setting contents	Control unit
Setting	Display/non-display of the scheduled maintenance can be set.	On	On / Off	Connectivity master unit

Time	Number of days to display of scheduled maintenance can be set.	4 months	1-36 months	Connectivity master unit
Distance	Distance to display of scheduled maintenance can be set.	8,000 km / 5,000 miles	0-99500 km (0-99750 miles)	Connectivity master unit
Reset	Maintenance monitor setting can be reset to the initial value.	Back	Back / Reset	Connectivity master unit

Tire Rotation Setting Procedure

1. Switch the ignition ON (engine off or on).
2. Select [Applications] on the center display.
3. Select [Tire Rotation] on the center display.
4. Select the following items and change the setting.

Display of center display	Function	Initial setting	Setting contents	Control unit
Setting	Display/non-display of the tire rotation can be set.	On	On / Off	Connectivity master unit
Distance	Distance to display of tire rotation can be set.	8,000 km / 5,000 miles	0-99500 km (0-99750 miles)	Connectivity master unit
Reset	Maintenance monitor setting can be reset to the initial value.	Back	Back / Reset	Connectivity master unit

Oil Change Setting Procedure

Canada

- Switch the ignition ON (engine off or on).
- Select [Applications] on the center display.
- Select [Oil Change] on the center display.
- Select the following items and change the setting.

Display of center display	Function	Initial setting	Setting contents	Control unit
Setting	Display/non-display of the oil inspection/replacement can be set.	Off	Off / On	Connectivity master unit
Distance	Distance to display of oil inspection/replacement can be set.	8,000 km / 5,000 miles	0-99500 km (0-99750 miles)	Connectivity master unit
Reset	Maintenance monitor setting can be reset to the initial value.	Back	Back / Reset	Connectivity master unit

U.S.A. and Puerto Rico

CAUTION:

- Do not select "Flexible" under the following driving conditions.
    - The vehicle is used as a police car, taxi, or for driving instruction.
    - The vehicle is driven under dusty conditions.
    - The vehicle is idled or driven at low speeds for extended periods.

Using M-MDS

- Connect the M-MDS to the DLC-2.
- After vehicle identification is completed, select the following from the M-MDS initial screen.
    - "Powertrain"
    - "Engine Oil Maintenance Monitor"
- Select "ON*1" or "OFF" from the M-MDS screen.

*1

When oil inspection/replacement is set to "ON", the engine oil deterioration condition is calculated based on the frequency of engine starts and the distance travelled. Because the engine oil deterioration condition cannot be calculated correctly if engine oil other than Mazda genuine oil (0W-20) or Castrol oil (0W-20) is used, use Mazda genuine oil (0W-20) or Castrol oil (0W-20) when setting the oil inspection/replacement to "ON".

Using center display

- Switch the ignition ON (engine off or on).
- Select [Applications] on the center display.
- Select [Oil Change] on the center display.
- Select the following items and change the setting.

Display of center display	Function	Initial setting	Setting contents	Control unit
Setting	Display (Fixed, Flexible)/non-display of the oil inspection/replacement can be set.	Off	Off / Fixed / Flexible*1	Connectivity master unit
Distance*2	Distance to display of oil inspection/replacement can be set.	8,000 km / 5,000 miles	0-99500 km (0-99750 miles)	Connectivity master unit
Oil Life*3	Oil life to oil inspection/replacement can be displayed.	100%	—	Connectivity master unit
Reset	Maintenance monitor setting can be reset to the initial value.	Back	Back / Reset	Connectivity master unit

*1

When "Flexible" is selected, the engine oil deterioration condition is calculated based on the frequency of engine starts and the distance travelled. Because the engine oil deterioration condition cannot be calculated correctly if engine oil other than Mazda genuine oil (0W-20) or Castrol oil (0W-20) is used, use Mazda genuine oil (0W-20) or Castrol oil (0W-20) when selecting "Flexible".

*2

If "Fixed" is selected in setting

*3

If "Flexible" is selected in setting

2014 - Mazda3 - Body and Accessories

AUDIO AMPLIFIER REMOVAL/INSTALLATION

1. Disconnect the negative battery cable. (See **NEGATIVE BATTERY CABLE DISCONNECTION/CONNECTION [SKYACTIV-G 2.0, SKYACTIV-G 2.5]**.)

2. Slide the seat rearward (RH).

3. Remove the bolt.

BOLT: **9—12 N·m {92—122 kgf·cm, 80—106 in·lbf}**

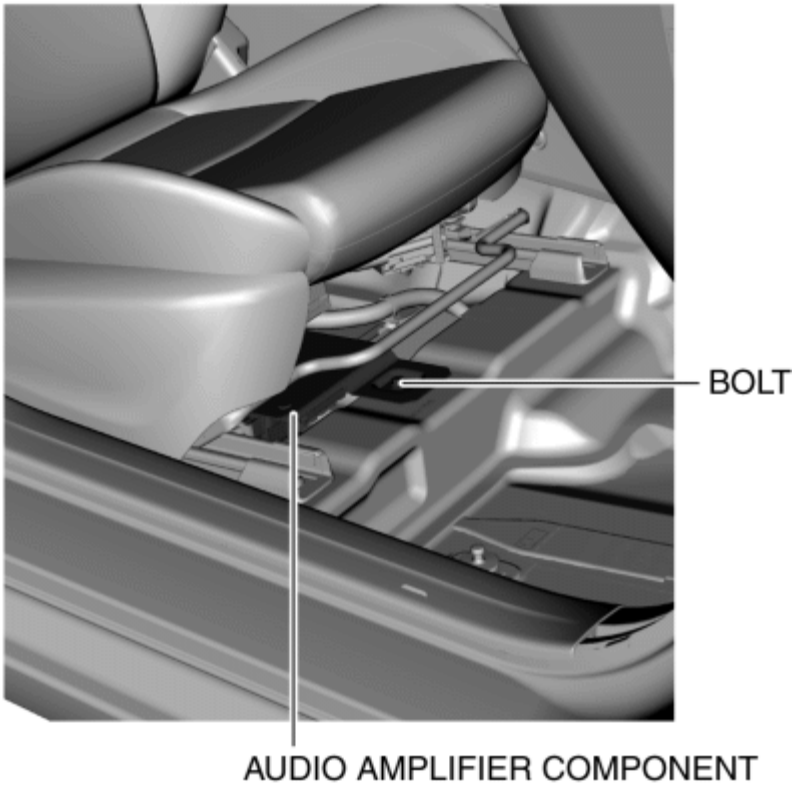

4. Slide the seat forward (RH).

5. Remove the bolt.

BOLT: 9—12 N·m {92—122 kgf·cm, 80—106 in·lbf}

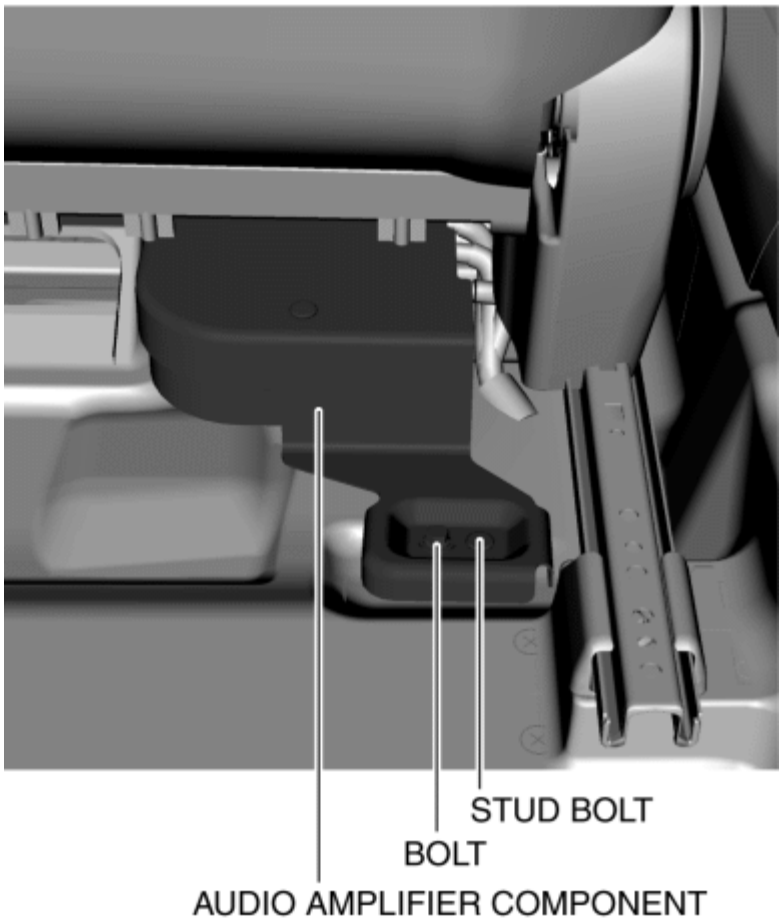

6. Raise the audio amplifier component and remove the stud bolt from the body.

7. Disconnect the connectors.

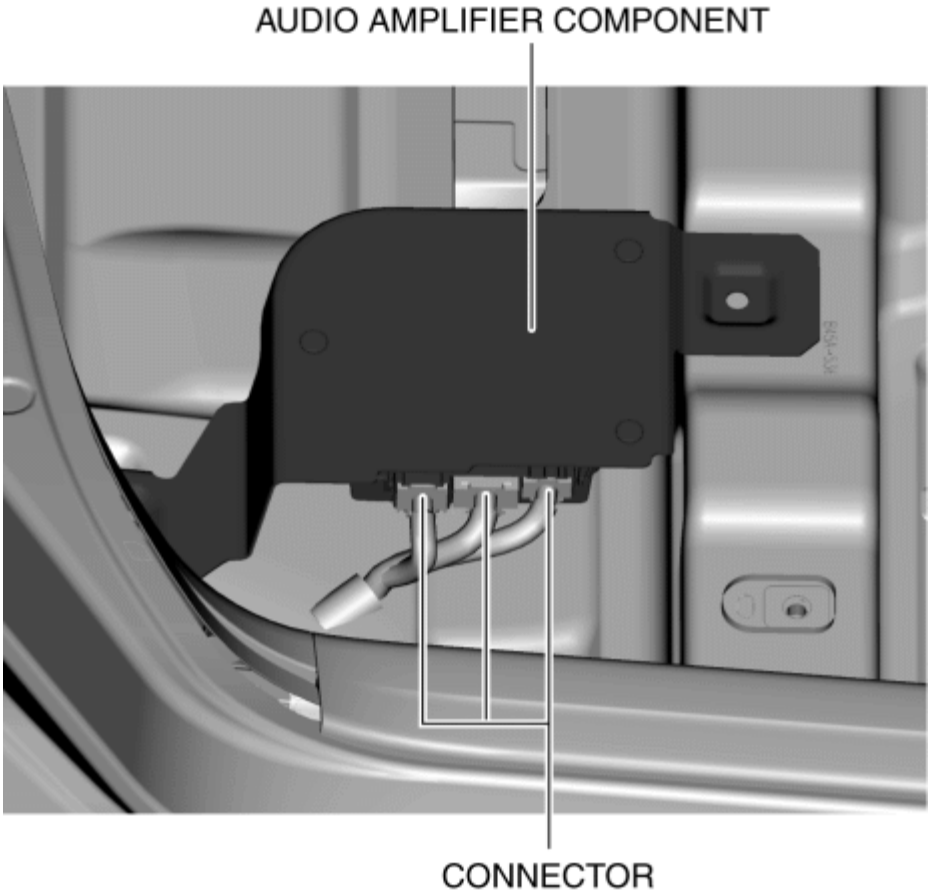

8. Remove the nuts.

NUT: **9—12 N·m {92—122 kgf·cm, 80—106 in·lbf}**

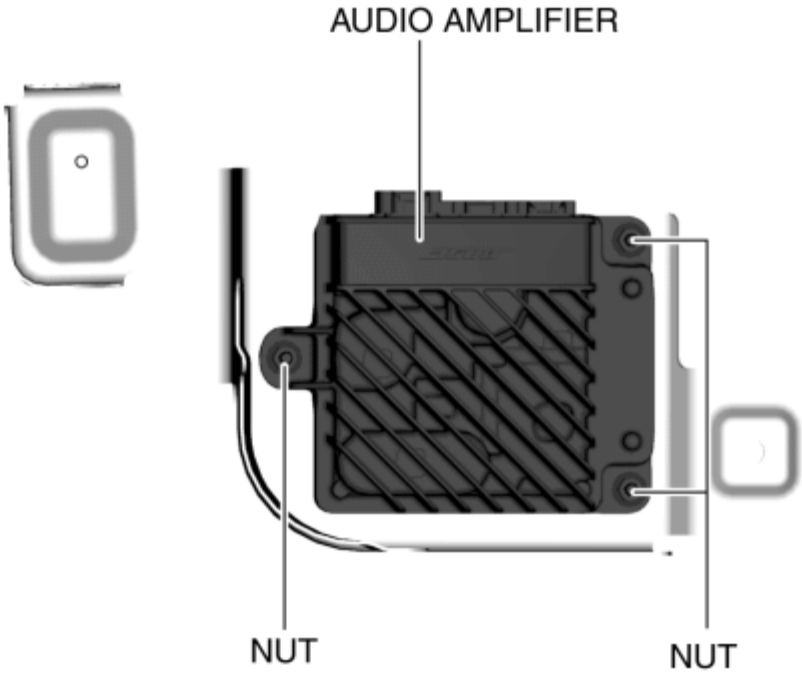

9. Remove the audio amplifier.

10. Install in the reverse order of removal.

2014 - Mazda3 - Body and Accessories

FRONT DOOR SPEAKER REMOVAL/INSTALLATION

Without Bose®

NOTE:

- If the procedure is performed while holding the front door speaker cone, it could deform the cone causing a malfunction. Therefore, perform the procedure while holding any part other than the cone.

1. Disconnect the negative battery cable. (See **NEGATIVE BATTERY CABLE DISCONNECTION/CONNECTION [SKYACTIV-G 2.0, SKYACTIV-G 2.5]**.)

2. Remove the front door trim. (See **FRONT DOOR TRIM REMOVAL/INSTALLATION**.)

3. Disconnect the connector.

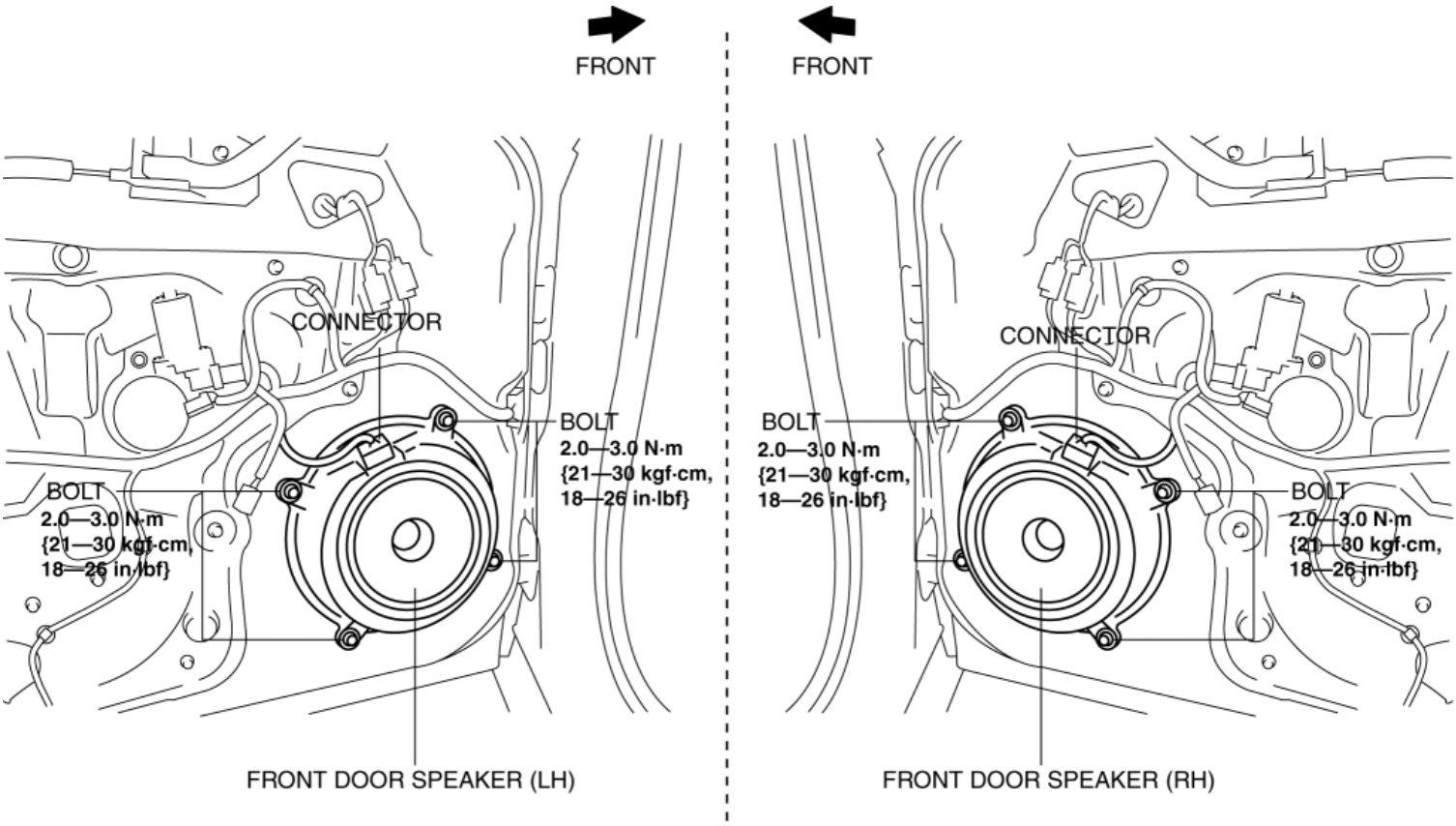

4. Remove the bolts.

5. Pull the front door speaker in the direction of the arrow shown in the figure and remove it while detaching the pins.

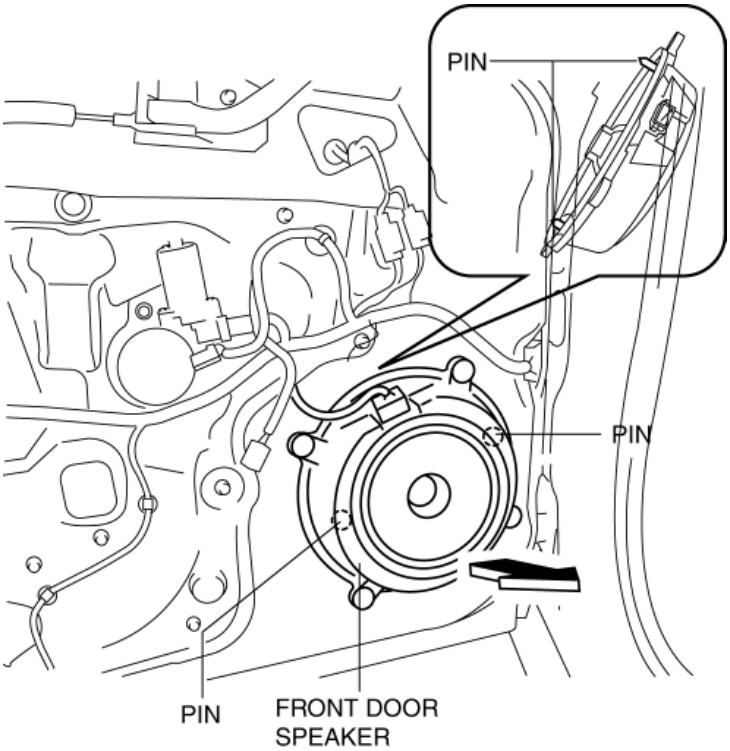

6. Install in the reverse order of removal.

With Bose®

1. Disconnect the negative battery cable. (See **NEGATIVE BATTERY CABLE DISCONNECTION/CONNECTION [SKYACTIV-G 2.0, SKYACTIV-G 2.5]**.)

2. Remove the front door trim. (See **FRONT DOOR TRIM REMOVAL/INSTALLATION**.)

3. Disconnect the connector.

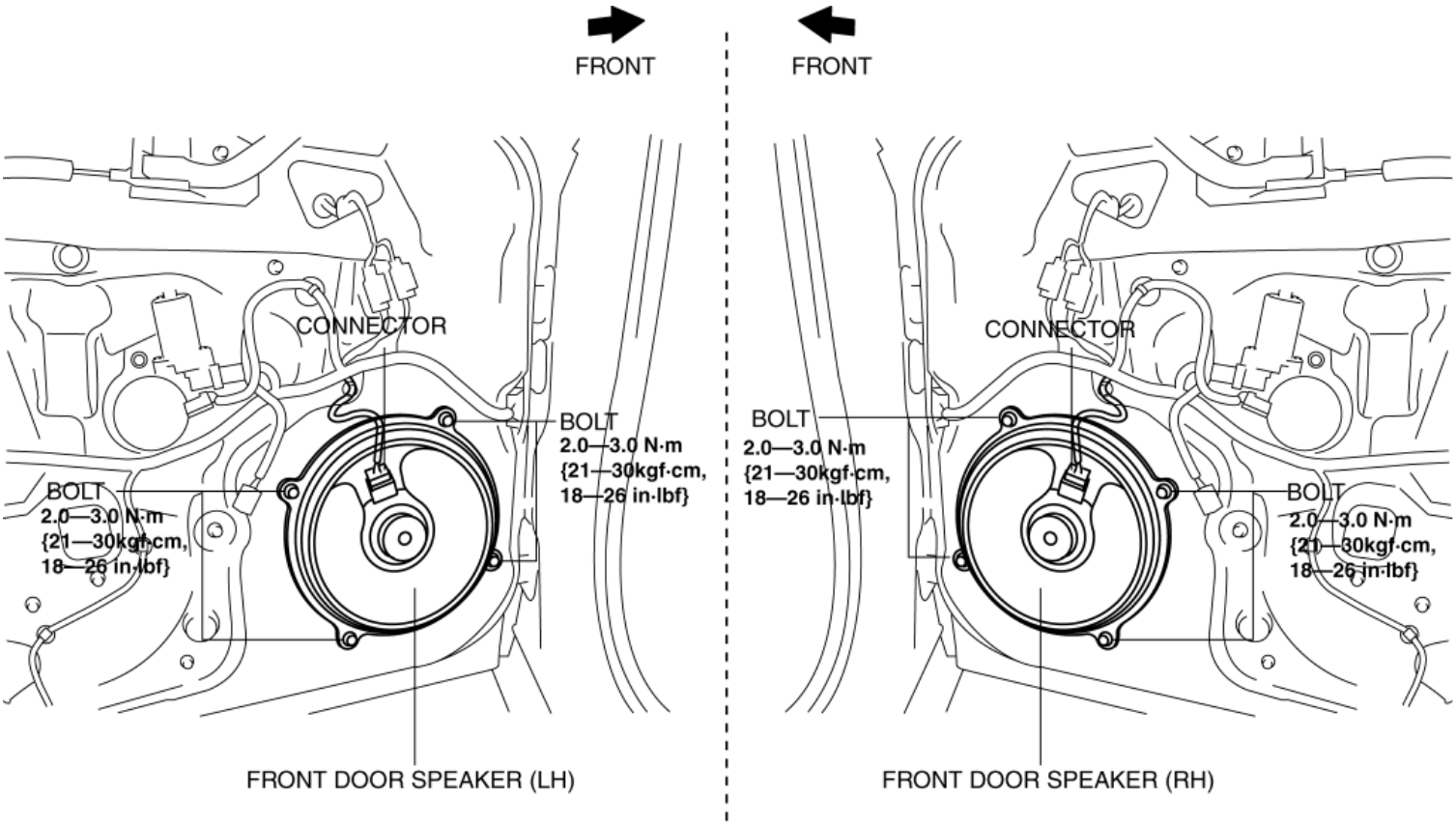

4. Remove the bolts.

5. Pull the front door speaker in the direction of the arrow shown in the figure and remove it while detaching the pins.

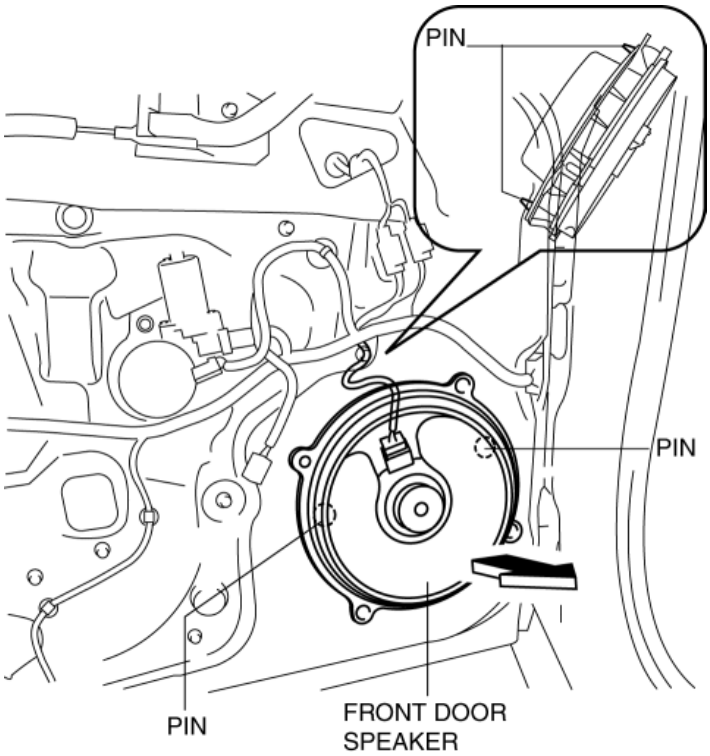

6. Remove the screws.

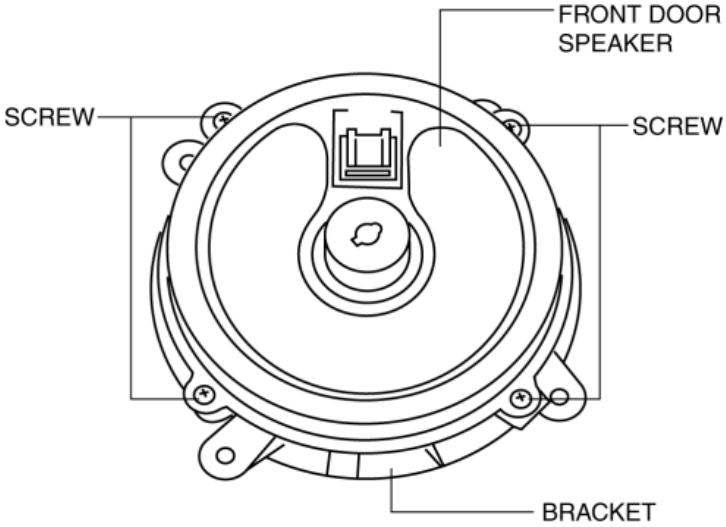

7. Remove the front door speaker from the bracket.

8. Install in the reverse order of removal.

2014 - Mazda3 - Body and Accessories

FRONT DOOR SPEAKER INSPECTION

1. Disconnect the negative battery cable. (See **NEGATIVE BATTERY CABLE DISCONNECTION/CONNECTION [SKYACTIV-G 2.0, SKYACTIV-G 2.5]**.)

2. Remove the front door trim. (See **FRONT DOOR TRIM REMOVAL/INSTALLATION**.)

3. Disconnect the front door speaker connector. (See **FRONT DOOR SPEAKER REMOVAL/INSTALLATION**.)

4. Inspect the resistance between front door speaker terminals B and C.

Front door speaker resistance

- Without Bose® : 3.4—4.6 ohms
- With Bose® : 1.25 ohms

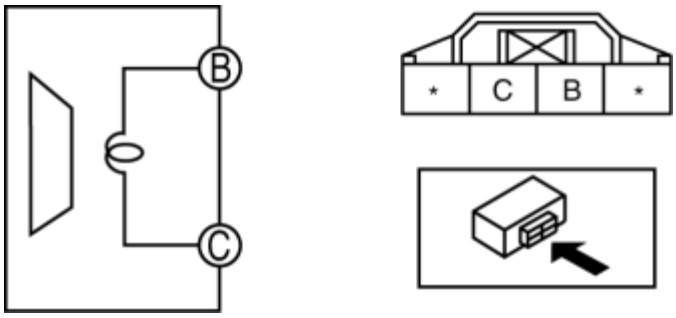

- If not within the specification, replace the front door speaker. (See **FRONT DOOR SPEAKER REMOVAL/INSTALLATION**.)

2014 - Mazda3 - Body and Accessories

REAR DOOR SPEAKER REMOVAL/INSTALLATION

Without Bose®

NOTE:

- If the procedure is performed while holding the rear door speaker cone, it could deform the cone causing a malfunction. Therefore, perform the procedure while holding any part other than the cone.

1. Disconnect the negative battery cable. (See **NEGATIVE BATTERY CABLE DISCONNECTION/CONNECTION [SKYACTIV-G 2.0, SKYACTIV-G 2.5]**.)

2. Remove the rear door trim. (See **REAR DOOR TRIM REMOVAL/INSTALLATION**.)

3. Disconnect the connector.

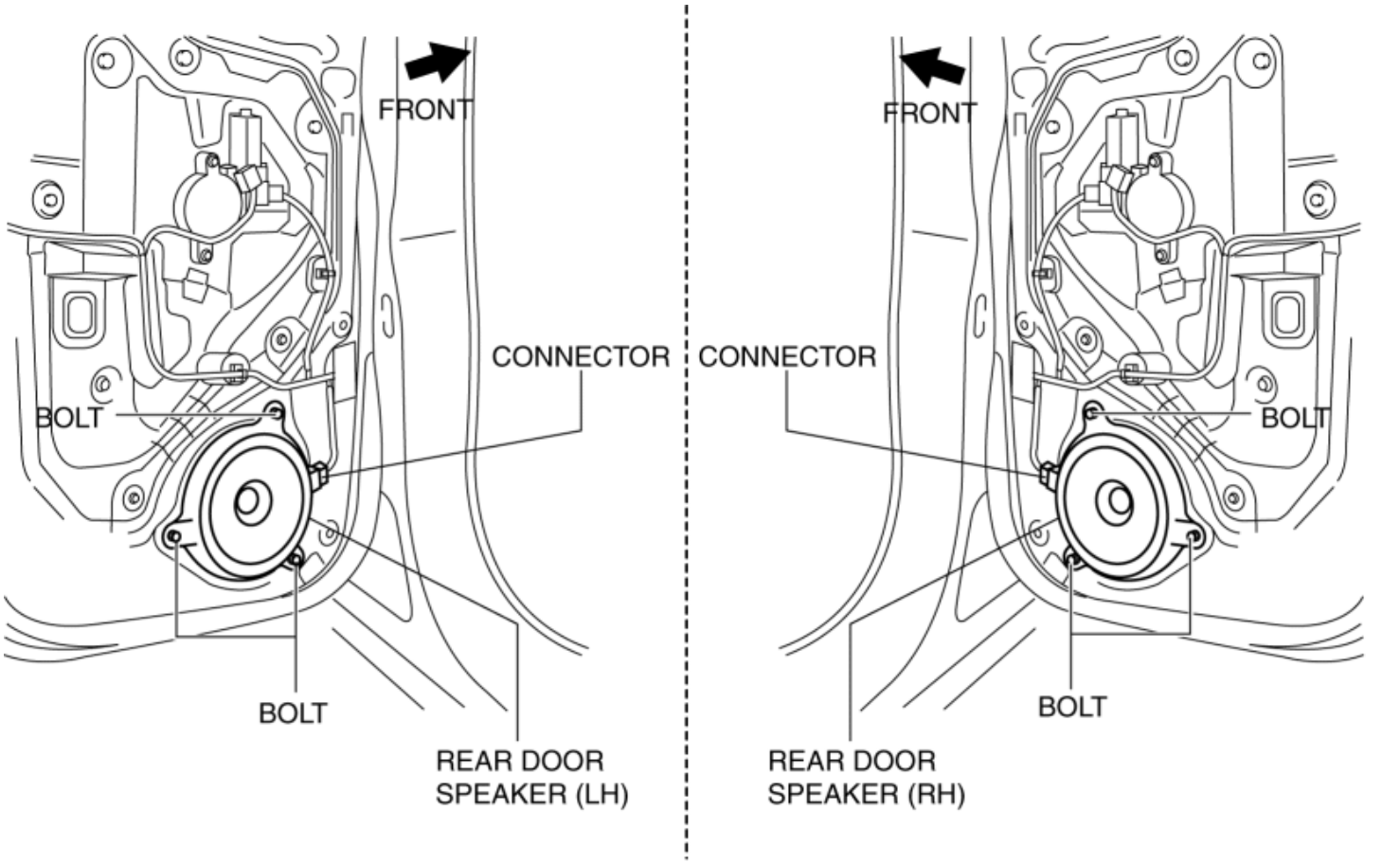

BOLT: 2.0—3.0 N·m {21—30 kgf·cm, 18—26 in·lbf}

4. Remove the bolts.

5. Pull the rear door speaker in the direction of the arrow shown in the figure and remove it while detaching the pins.

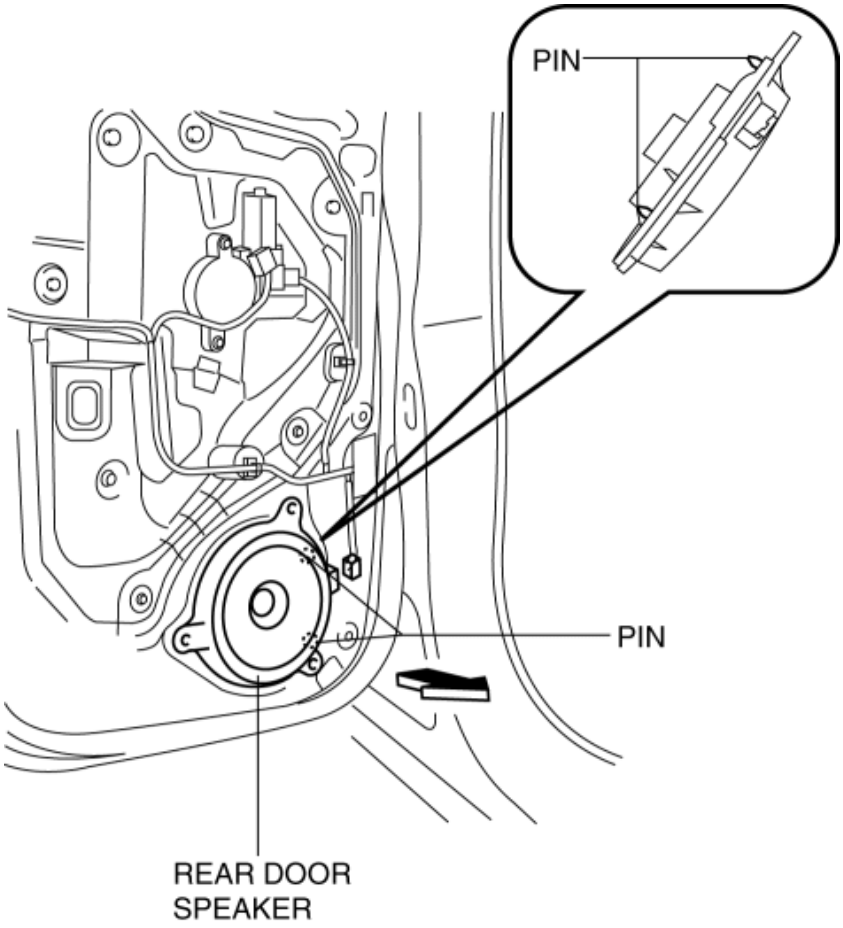

6. Install in the reverse order of removal.

With Bose®

1. Disconnect the negative battery cable. (See **NEGATIVE BATTERY CABLE DISCONNECTION/CONNECTION [SKYACTIV-G 2.0, SKYACTIV-G 2.5]**.)

2. Remove the rear door trim. (See **REAR DOOR TRIM REMOVAL/INSTALLATION**.)

3. Disconnect the connector.

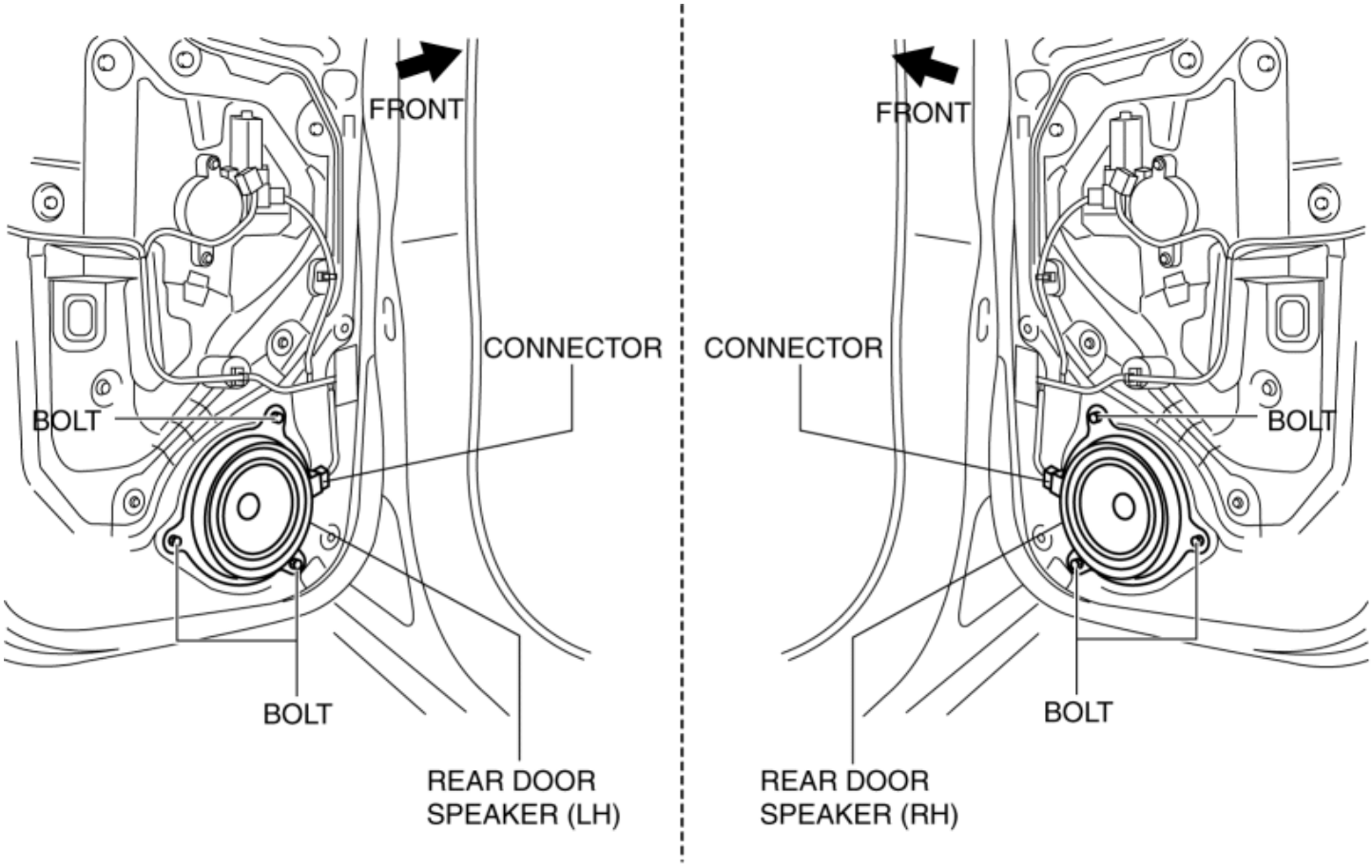

BOLT: 2.0—3.0 N·m {21—30 kgf·cm, 18—26 in·lbf}

4. Remove the bolts.

5. Pull the rear door speaker in the direction of the arrow shown in the figure and remove it while detaching the pins.

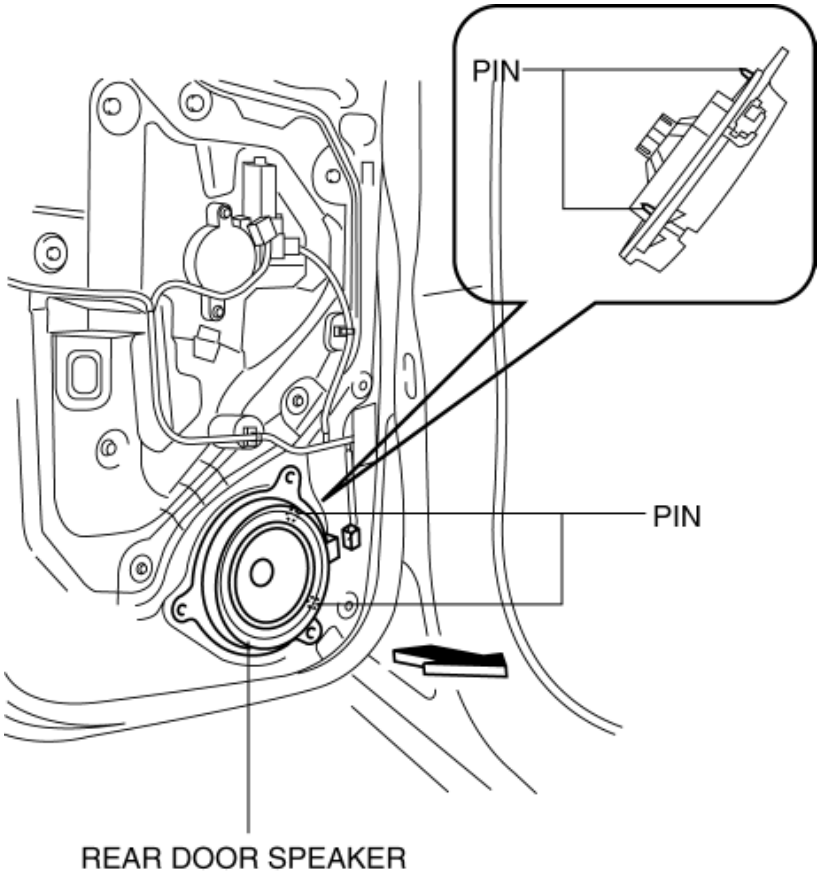

6. Install in the reverse order of removal.

2014 - Mazda3 - Body and Accessories

REAR DOOR SPEAKER INSPECTION

1. Disconnect the negative battery cable. (See **NEGATIVE BATTERY CABLE DISCONNECTION/CONNECTION [SKYACTIV-G 2.0, SKYACTIV-G 2.5]**.)

2. Remove the rear door trim. (See **REAR DOOR TRIM REMOVAL/INSTALLATION**.)

3. Disconnect the rear door speaker connector. (See **REAR DOOR SPEAKER REMOVAL/INSTALLATION**.)

4. Inspect the resistance between rear door speaker terminals B and C.

Rear door speaker resistance

- Without Bose® : 3.4—4.6 ohms
- With Bose® : 3.7 ohms

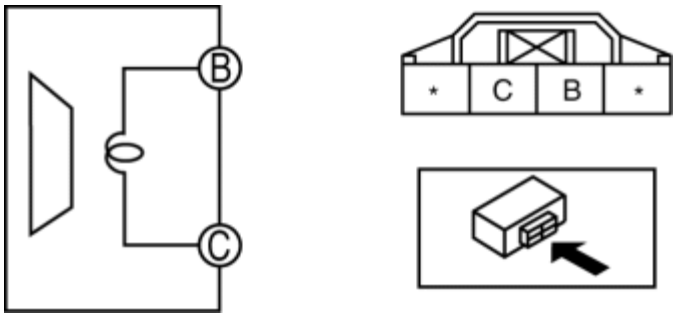

- If not within the specification, replace the rear door speaker. (See **REAR SPEAKER REMOVAL/INSTALLATION**.)

2014 - Mazda3 - Body and Accessories

FRONT CENTER SPEAKER REMOVAL/INSTALLATION

1. Disconnect the negative battery cable. (See **NEGATIVE BATTERY CABLE DISCONNECTION/CONNECTION [SKYACTIV-G 2.0, SKYACTIV-G 2.5]**.)

2. Remove the center speaker grille. (See **SPEAKER GRILLE REMOVAL/INSTALLATION**.)

3. Remove the screws.

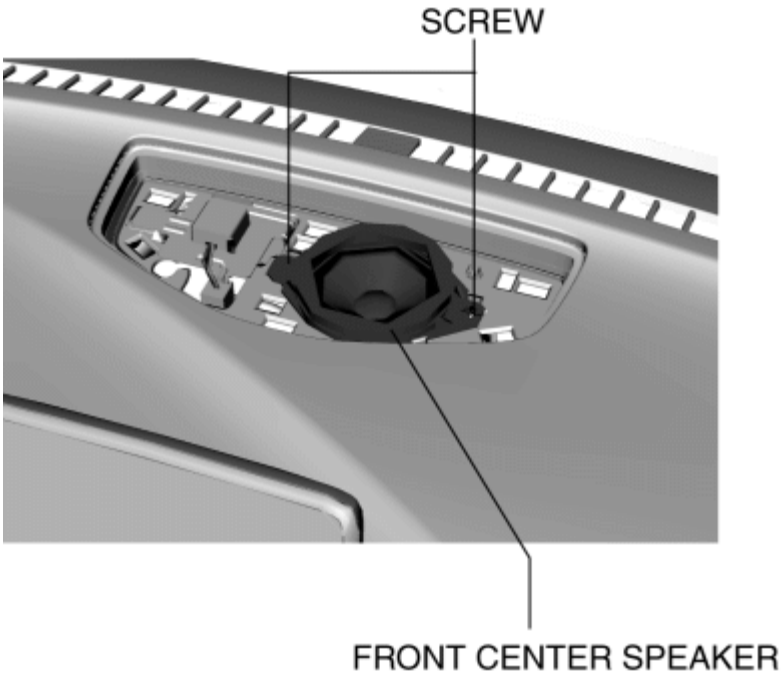

4. Remove the front center speaker.

5. Disconnect the connector.

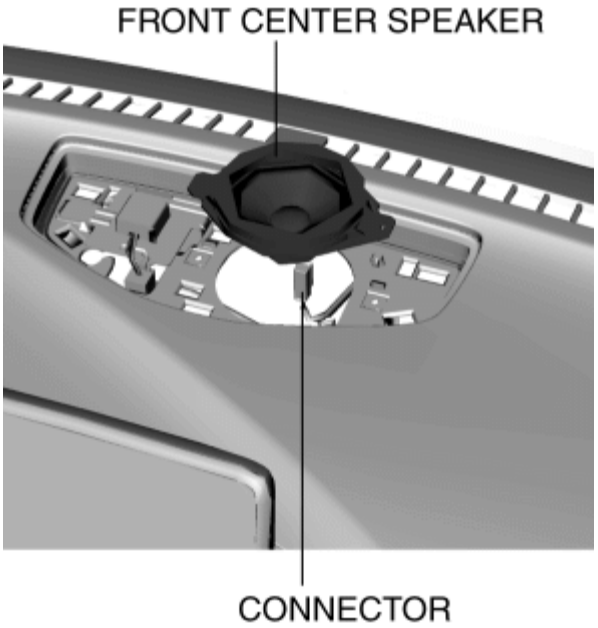

6. Install in the reverse order of removal.

2014 - Mazda3 - Body and Accessories

FRONT CENTER SPEAKER INSPECTION

1. Disconnect the negative battery cable. (See **NEGATIVE BATTERY CABLE DISCONNECTION/CONNECTION [SKYACTIV-G 2.0, SKYACTIV-G 2.5]**.)

2. Remove the center speaker grille. (See **SPEAKER GRILLE REMOVAL/INSTALLATION**.)

3. Remove the front center speaker. (See **FRONT CENTER SPEAKER REMOVAL/INSTALLATION**.)

4. Inspect the resistance between front center speaker terminals A and B.

Front center speaker resistance

- 3.24—3.96 ohms

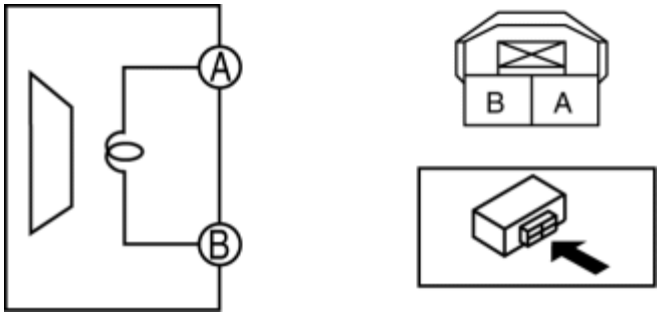

- If not within the specification, replace the front center speaker. (See **FRONT CENTER SPEAKER REMOVAL/INSTALLATION**.)

2014 - Mazda3 - Body and Accessories

FRONT SIDE SPEAKER REMOVAL/INSTALLATION

NOTE:

- If the procedure is performed while holding the front side speaker cone, it could deform the cone causing a malfunction. Therefore, perform the procedure while holding any part other than the cone.

1. Disconnect the negative battery cable. (See **NEGATIVE BATTERY CABLE DISCONNECTION/CONNECTION [SKYACTIV-G 2.0, SKYACTIV-G 2.5]**.)

2. Remove the side speaker grille. (See **SPEAKER GRILLE REMOVAL/INSTALLATION**.)

3. Remove the screws.

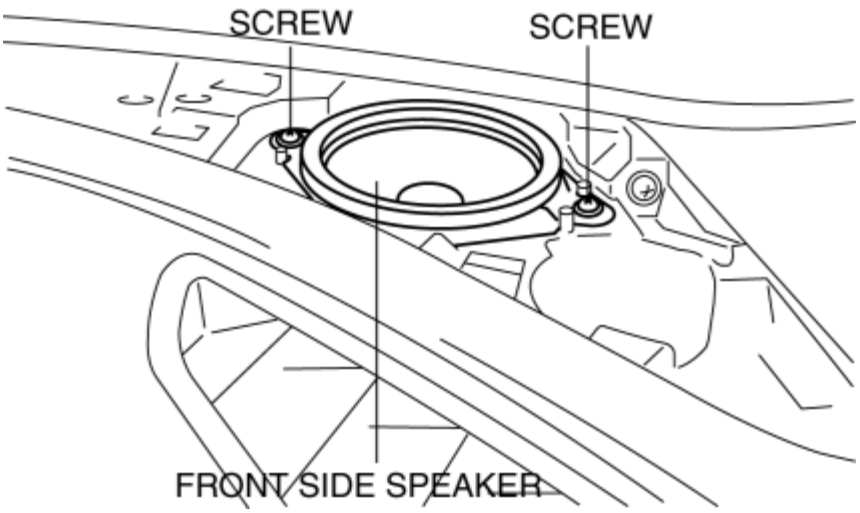

4. Remove the front side speaker.

5. Disconnect the connector.

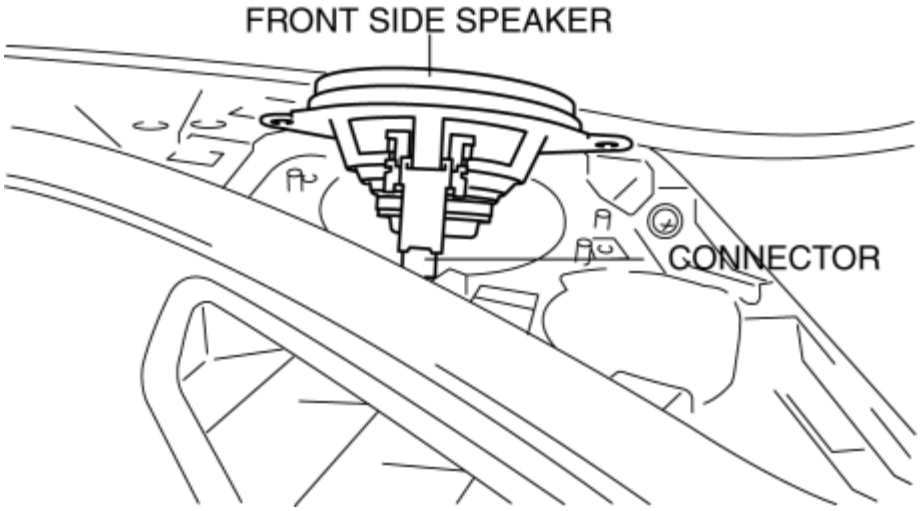

6. Install in the reverse order of removal.

2014 - Mazda3 - Body and Accessories

FRONT SIDE SPEAKER INSPECTION

1. Disconnect the negative battery cable. (See **NEGATIVE BATTERY CABLE DISCONNECTION/CONNECTION [SKYACTIV-G 2.0, SKYACTIV-G 2.5]**.)

2. Remove the side speaker grille. (See **SPEAKER GRILLE REMOVAL/INSTALLATION**.)

3. Remove the front side speaker. (See **FRONT SIDE SPEAKER REMOVAL/INSTALLATION**.)

4. Inspect the resistance between front side speaker terminals A and B.

Front side speaker resistance

- 3.24—3.96 ohms

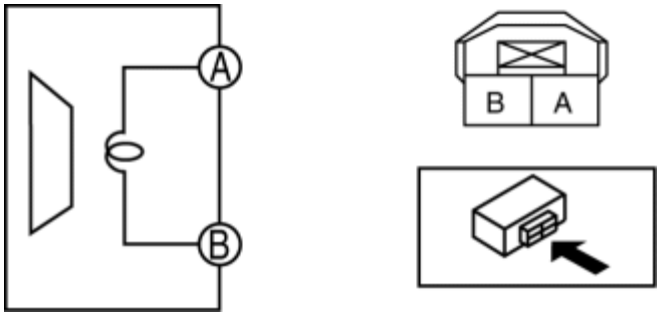

- If not within the specification, replace the front side speaker. (See **FRONT SIDE SPEAKER REMOVAL/INSTALLATION**.)

2014 - Mazda3 - Body and Accessories

REAR SPEAKER REMOVAL/INSTALLATION

NOTE:

- If the procedure is performed while holding the rear speaker cone, it could deform the cone causing a malfunction. Therefore, perform the procedure while holding any part other than the cone.

4SD

1. Disconnect the negative battery cable. (See **NEGATIVE BATTERY CABLE DISCONNECTION/CONNECTION [SKYACTIV-G 2.0, SKYACTIV-G 2.5]**.)
2. Remove the following parts:
   a. Rear scuff plate (See **REAR SCUFF PLATE REMOVAL/INSTALLATION**.)
   b. Rear seat cushion (See **REAR SEAT CUSHION REMOVAL/INSTALLATION**.)
   c. Rear seat back (See **REAR SEAT BACK REMOVAL/INSTALLATION**.)
   d. Tire house trim (See **TIRE HOUSE TRIM REMOVAL/INSTALLATION**.)
   e. C-pillar trim (See **C-PILLAR TRIM REMOVAL/INSTALLATION**.)
   f. High-mount brake light (See **HIGH-MOUNT BRAKE LIGHT REMOVAL/INSTALLATION**.)
   g. Rear package trim (See **REAR PACKAGE TRIM REMOVAL/INSTALLATION**.)
3. Remove the screws.

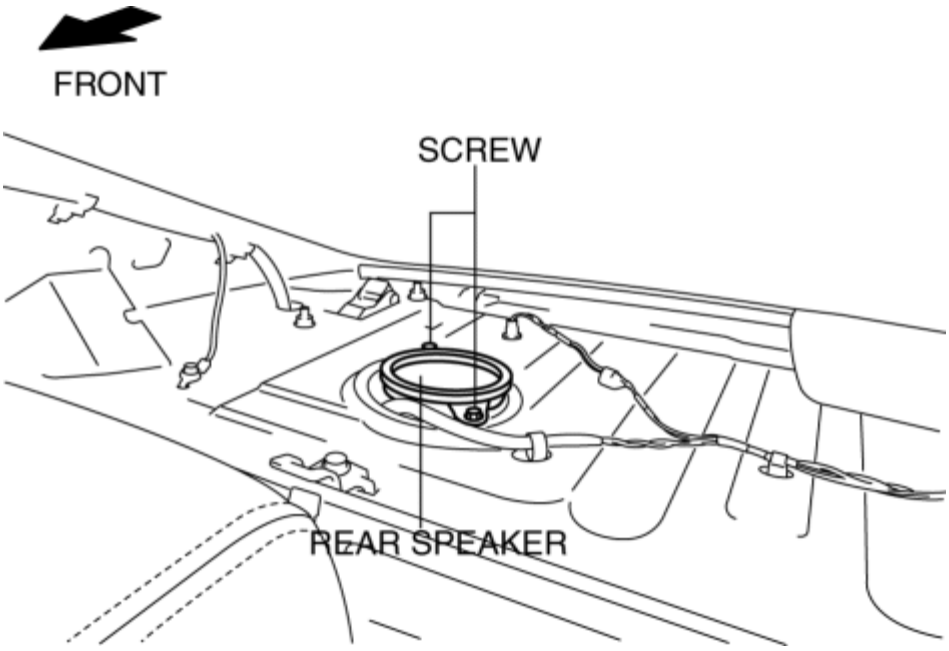

4. Remove the rear speaker.

5. Disconnect the connector.

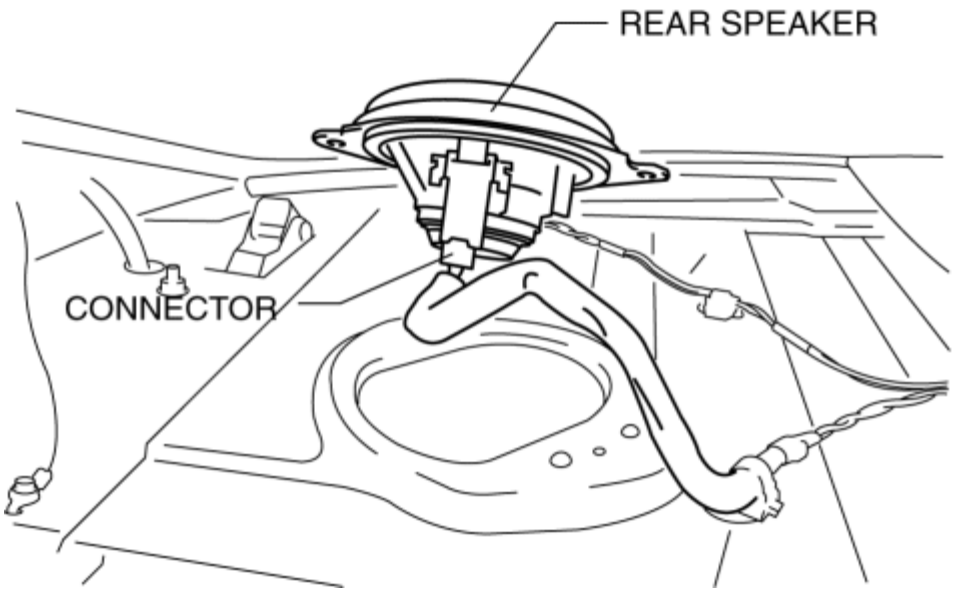

6. Install in the reverse order of removal.

5HB

1. Disconnect the negative battery cable. (See **NEGATIVE BATTERY CABLE DISCONNECTION/CONNECTION [SKYACTIV-G 2.0, SKYACTIV-G 2.5]**.)

2. Remove the following parts:

   a. Rear package tray (See **REAR PACKAGE TRAY REMOVAL/INSTALLATION**.)

   b. Trunk covering (See **TRUNK COVERING REMOVAL/INSTALLATION**.)

   c. Trunk end trim (See **TRUNK END TRIM REMOVAL/INSTALLATION**.)

   d. Tire house trim (See **TIRE HOUSE TRIM REMOVAL/INSTALLATION**.)

   e. Trunk side upper trim (See **TRUNK SIDE UPPER TRIM REMOVAL/INSTALLATION**.)

   f. C-pillar trim (See **C-PILLAR TRIM REMOVAL/INSTALLATION**.)

3. Disconnect the connector.

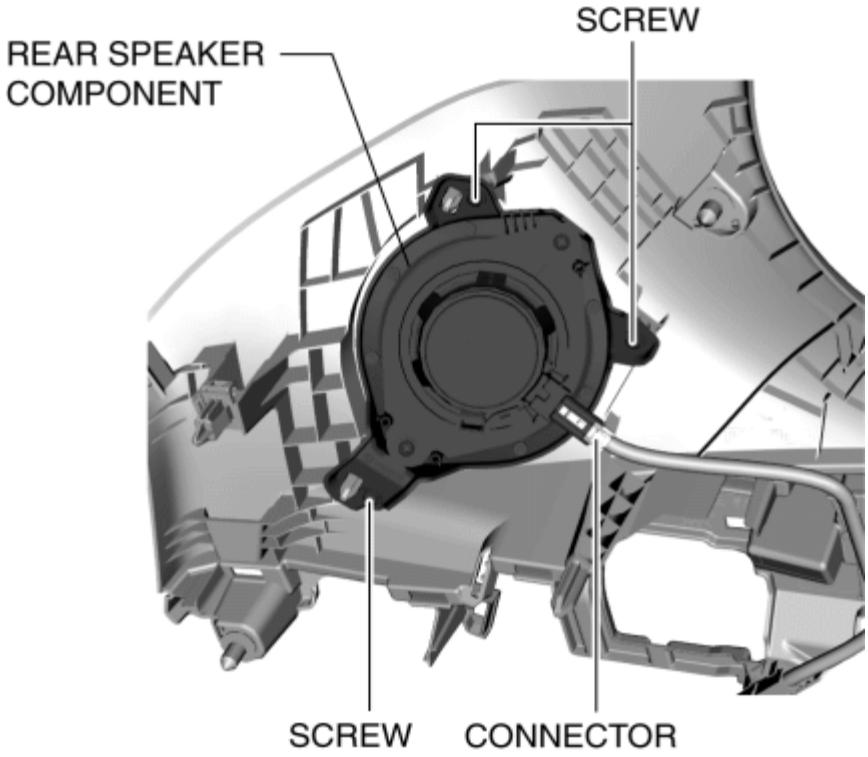

4. Remove the screws.

5. Remove the rear speaker component.

6. Remove the screws.

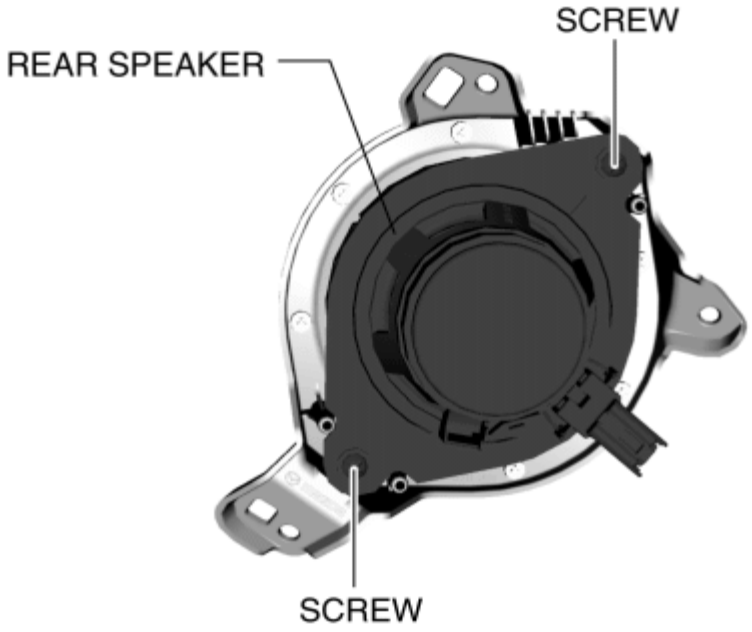

7. Remove the rear speaker.

8. Install in the reverse order of removal.

2014 - Mazda3 - Body and Accessories

REAR SPEAKER INSPECTION

4SD

1. Disconnect the negative battery cable. (See **NEGATIVE BATTERY CABLE DISCONNECTION/CONNECTION [SKYACTIV-G 2.0, SKYACTIV-G 2.5]**.)
2. Remove the following parts:
   a. Rear scuff plate (See **REAR SCUFF PLATE REMOVAL/INSTALLATION**.)
   b. Rear seat cushion (See **REAR SEAT CUSHION REMOVAL/INSTALLATION**.)
   c. Rear seat back (See **REAR SEAT BACK REMOVAL/INSTALLATION**.)
   d. Tire house trim (See **TIRE HOUSE TRIM REMOVAL/INSTALLATION**.)
   e. C-pillar trim (See **C-PILLAR TRIM REMOVAL/INSTALLATION**.)
   f. High-mount brake light (See **HIGH-MOUNT BRAKE LIGHT REMOVAL/INSTALLATION**.)
   g. Rear package trim (See **REAR PACKAGE TRIM REMOVAL/INSTALLATION**.)
   h. Rear speaker (See **REAR SPEAKER REMOVAL/INSTALLATION**.)
3. Inspect the resistance between rear speaker terminals B and C.

Rear speaker resistance

- 3.24—3.96 ohms

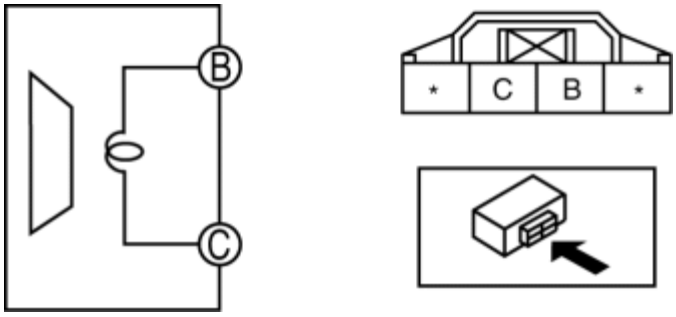

- If not within the specification, replace the rear speaker. (See **REAR SPEAKER REMOVAL/INSTALLATION**.)

5HB

1. Disconnect the negative battery cable. (See **NEGATIVE BATTERY CABLE DISCONNECTION/CONNECTION [SKYACTIV-G 2.0, SKYACTIV-G 2.5]**.)

2. Remove the following parts:

   a. Rear package tray (See **REAR PACKAGE TRAY REMOVAL/INSTALLATION**.)

   b. Trunk covering (See **TRUNK COVERING REMOVAL/INSTALLATION**.)

   c. Trunk end trim (See **TRUNK END TRIM REMOVAL/INSTALLATION**.)

3. Inspect the resistance between rear speaker terminals B and C.

   Rear speaker resistance

   - 3.24—3.96 ohms

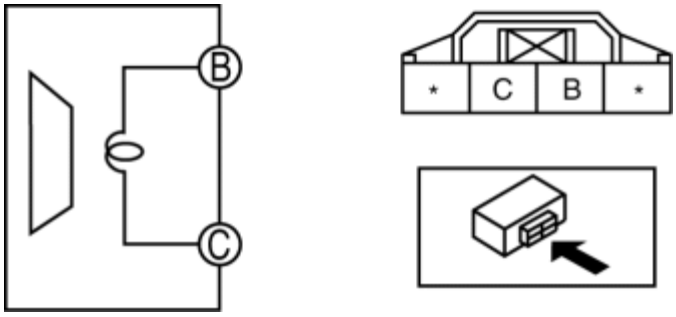

   - If not within the specification, replace the rear speaker. (See **REAR SPEAKER REMOVAL/INSTALLATION**.)

2014 - Mazda3 - Body and Accessories

TWEETER REMOVAL/INSTALLATION

NOTE:

- If the procedure is performed while holding the tweeter cone, it could deform the cone causing a malfunction. Therefore, perform the procedure while holding any part other than the cone.

1. Disconnect the negative battery cable. (See **NEGATIVE BATTERY CABLE DISCONNECTION/CONNECTION [SKYACTIV-G 2.0, SKYACTIV-G 2.5]**.)

2. Remove the side speaker grille. (See **SPEAKER GRILLE REMOVAL/INSTALLATION**.)

3. Remove the screws.

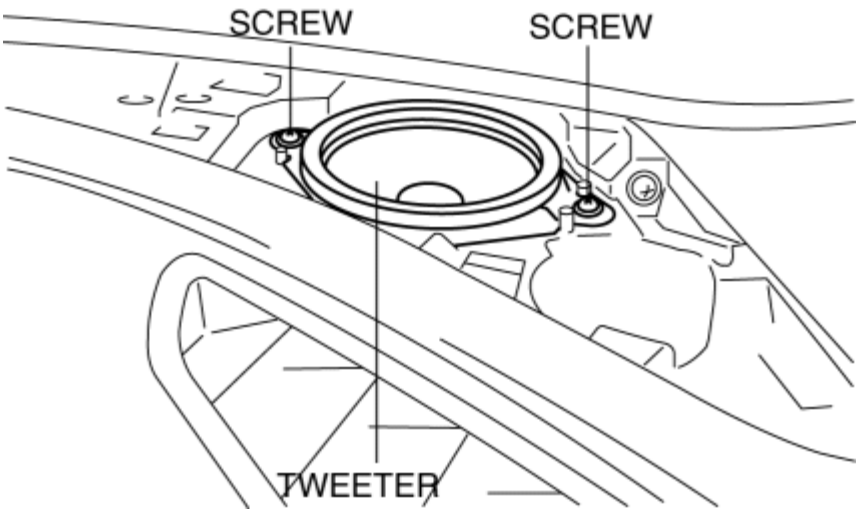

4. Remove the tweeter.

5. Disconnect the connector.

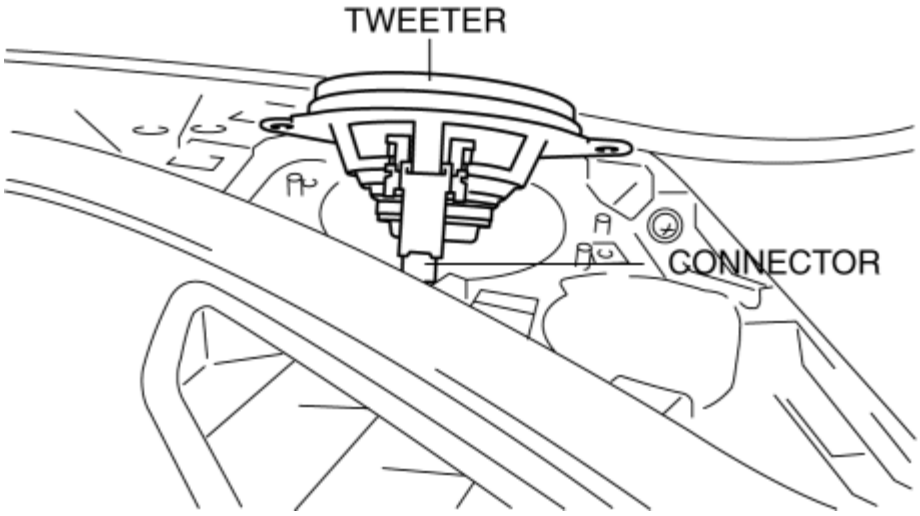

6. Install in the reverse order of removal.

2014 - Mazda3 - Body and Accessories

TWEETER INSPECTION

1. Connect the negative battery cable. (See **NEGATIVE BATTERY CABLE DISCONNECTION/CONNECTION [SKYACTIV-G 2.0, SKYACTIV-G 2.5]**.)

2. Remove the side speaker grille. (See **SPEAKER GRILLE REMOVAL/INSTALLATION**.)

3. Remove the tweeter. (See **TWEETER REMOVAL/INSTALLATION**.)

4. Inspect the resistance between tweeter terminals A and B.

Tweeter resistance

- 3.4—4.6 ohms

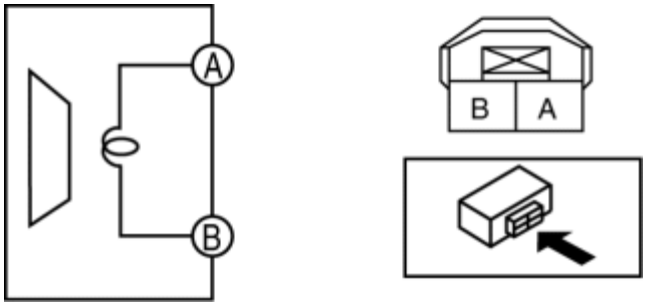

- If not within the specification, replace the tweeter. (See **TWEETER REMOVAL/INSTALLATION**.)

2014 - Mazda3 - Body and Accessories

AudioPilot®2 MICROPHONE REMOVAL/INSTALLATION

NOTE:

- AudioPilot®2 is a registered trademark of Bose® Corporation.

1. Disconnect the negative battery cable. (See **NEGATIVE BATTERY CABLE DISCONNECTION/CONNECTION [SKYACTIV-G 2.0, SKYACTIV-G 2.5]**.)

2. Disconnect the connector.

3. Remove the nut.

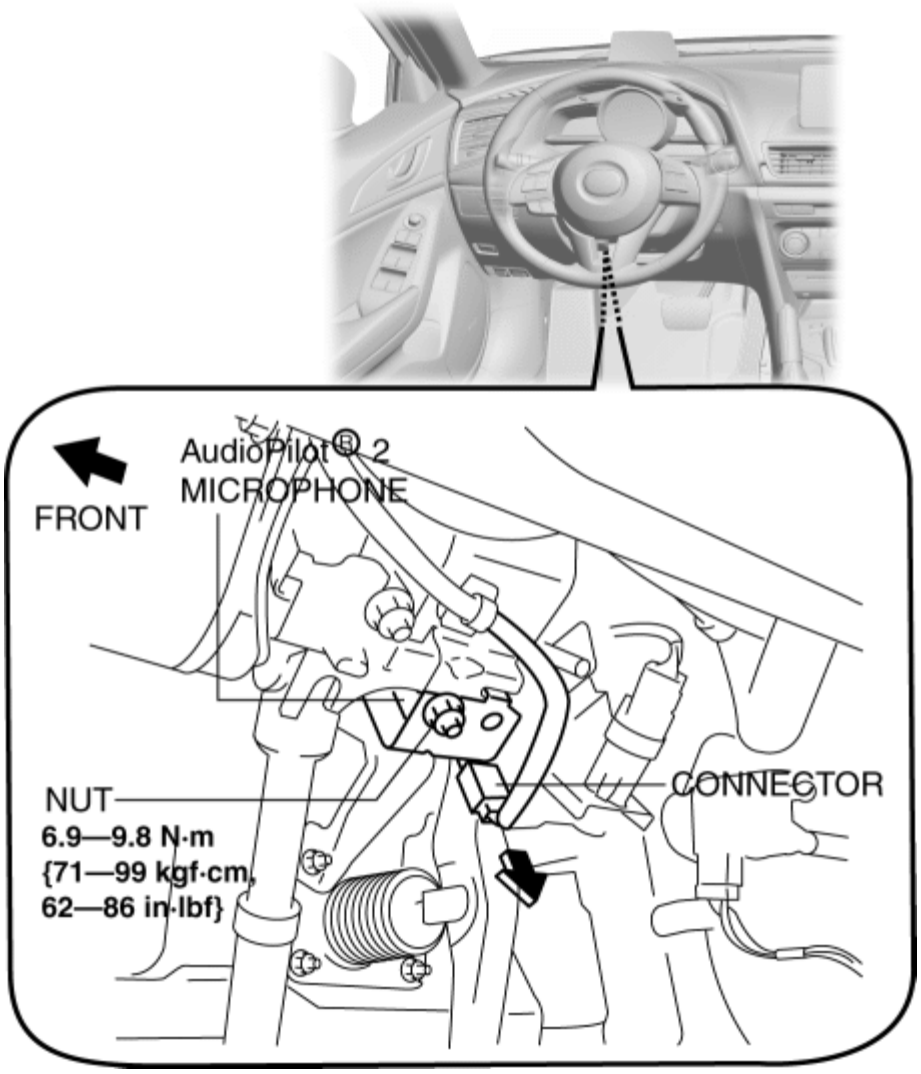

4. Remove the AudioPilot®2 microphone.

5. Install in the reverse order of removal.

2014 - Mazda3 - Body and Accessories

CENTER ROOF ANTENNA REMOVAL/INSTALLATION

4SD

1. Disconnect the negative battery cable. (See **NEGATIVE BATTERY CABLE DISCONNECTION/CONNECTION [SKYACTIV-G 2.0, SKYACTIV-G 2.5]**.)
2. Remove the following parts:
    a. A-pillar trim (See **A-PILLAR TRIM REMOVAL/INSTALLATION**.)
    b. Sunvisor (See **SUNVISOR REMOVAL/INSTALLATION**.)
    c. Front map light (dual light type) (See **FRONT MAP LIGHT REMOVAL/INSTALLATION**.)
    d. Assist handle (See **ASSIST HANDLE REMOVAL/INSTALLATION**.)
    e. Front scuff plate (See **FRONT SCUFF PLATE REMOVAL/INSTALLATION**.)
    f. Rear scuff plate (See **REAR SCUFF PLATE REMOVAL/INSTALLATION**.)
    g. B-pillar lower trim (See **B-PILLAR LOWER TRIM REMOVAL/INSTALLATION**.)
    h. Adjust anchor cover (See **FRONT SEAT BELT REMOVAL/INSTALLATION**.)
    i. Upper anchor installation bolt on the seat belt (See **FRONT SEAT BELT REMOVAL/INSTALLATION**.)
    j. B-pillar upper trim (See **B-PILLAR UPPER TRIM REMOVAL/INSTALLATION**.)
3. Set the tire house trim aside. (See **TIRE HOUSE TRIM REMOVAL/INSTALLATION**.)
4. Remove the following parts:
    a. C-pillar trim (See **C-PILLAR TRIM REMOVAL/INSTALLATION**.)
    b. Upper panel (See **UPPER PANEL REMOVAL**.) (See **UPPER PANEL INSTALLATION**.)
    c. Rear console (See **REAR CONSOLE REMOVAL/INSTALLATION**.)
    d. Shift lever knob (MTX) (See **MANUAL TRANSAXLE SHIFT MECHANISM REMOVAL/INSTALLATION [C66M-R]**.)
    e. Selector lever knob (ATX) (See **AUTOMATIC TRANSAXLE SHIFT MECHANISM REMOVAL/INSTALLATION**.)
    f. Shift panel (See **SHIFT PANEL REMOVAL/INSTALLATION**.)
    g. Front console box (See **FRONT CONSOLE BOX REMOVAL/INSTALLATION**.)
    h. CD player (with CD player) (See **CD PLAYER REMOVAL**.) (See **CD PLAYER INSTALLATION**.)

i. Glove compartment (See **GLOVE COMPARTMENT REMOVAL / INSTALLATION**.)

j. Decoration panel (See **DECORATION PANEL REMOVAL / INSTALLATION**.)

k. Side wall (See **SIDE WALL REMOVAL / INSTALLATION**.)

l. Front console (See **FRONT CONSOLE REMOVAL / INSTALLATION**.)

m. Headliner (See **HEADLINER REMOVAL / INSTALLATION**.)

5. Disconnect the connector.

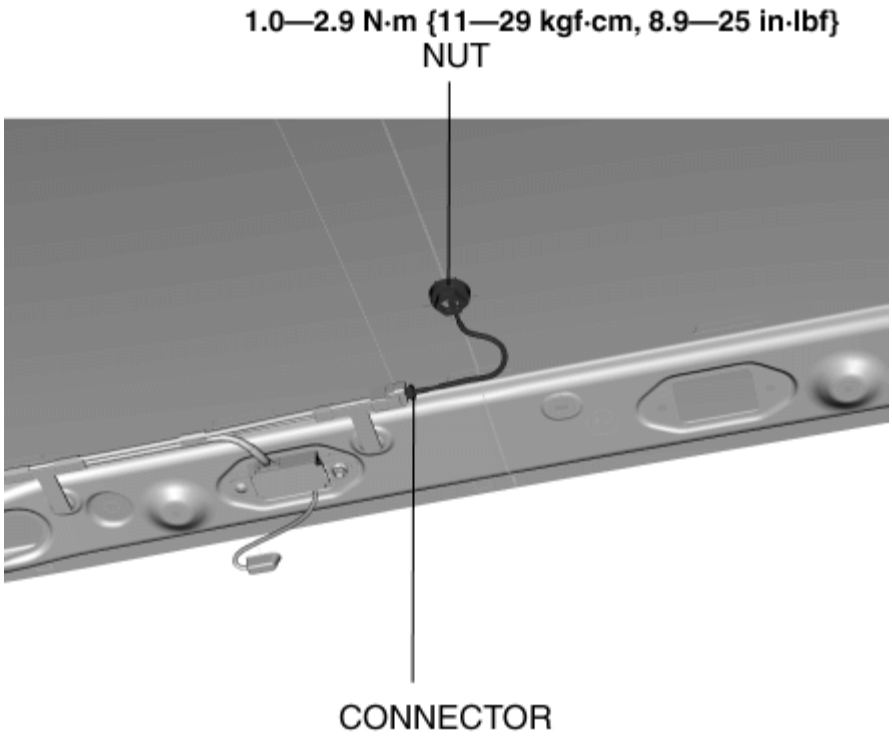

6. Remove the nut.

7. While pressing the center roof antenna tabs in the direction of arrows (1) shown in the figure, press the center roof antenna in the direction of arrow (2) to detach the center roof antenna tabs from the body.

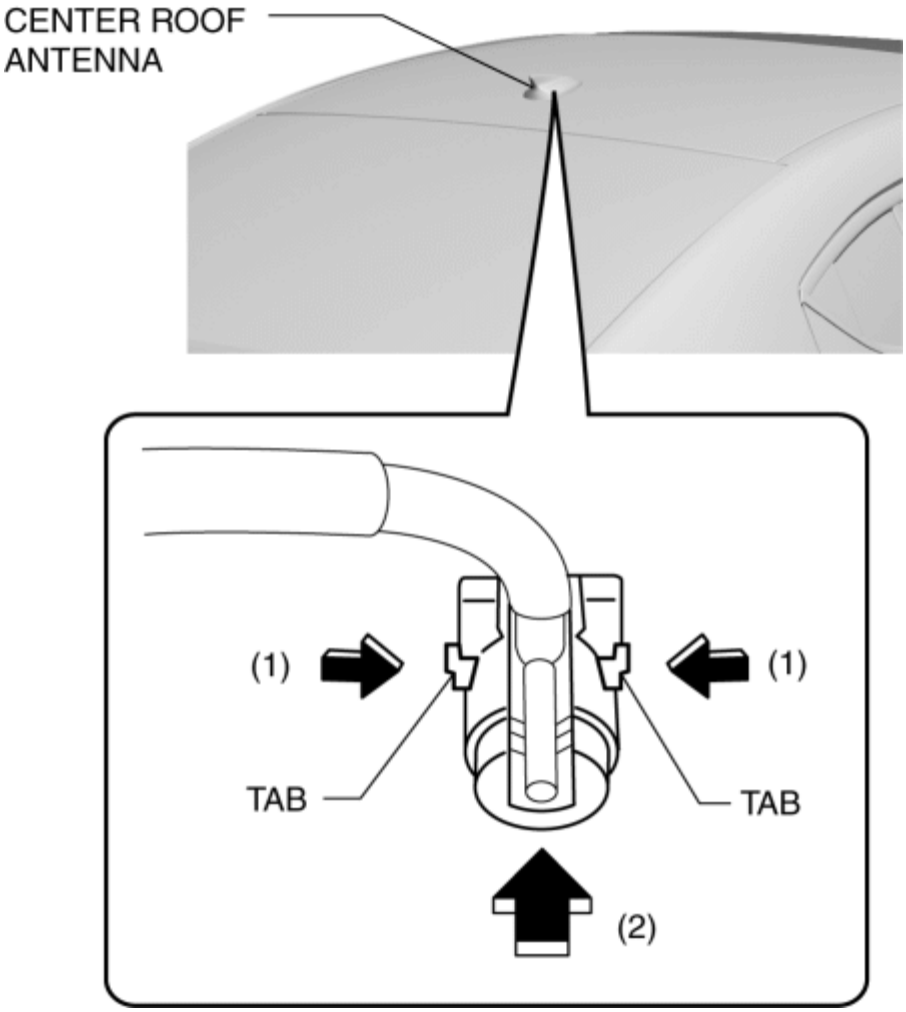

8. Install in the reverse order of removal.

5HB

1. Disconnect the negative battery cable. (See **NEGATIVE BATTERY CABLE DISCONNECTION/CONNECTION [SKYACTIV-G 2.0, SKYACTIV-G 2.5]**.)
2. Remove the following parts:
    a. Rear package tray (See **REAR PACKAGE TRAY REMOVAL/INSTALLATION**.)
    b. Trunk covering (See **TRUNK COVERING REMOVAL/INSTALLATION**.)
    c. Trunk end trim (See **TRUNK END TRIM REMOVAL/INSTALLATION**.)
3. Set the tire house trim aside. (See **TIRE HOUSE TRIM REMOVAL/INSTALLATION**.)
4. Remove the following parts:
    a. Trunk side upper trim (See **TRUNK SIDE UPPER TRIM REMOVAL/INSTALLATION**.)
    b. C-pillar trim (See **C-PILLAR TRIM REMOVAL/INSTALLATION**.)
    c. Rear assist handle (See **ASSIST HANDLE REMOVAL/INSTALLATION**.)
5. Partially peel back the headliner.

NOTE:

- If the headliner is peeled back excessively, the headliner could become creased. Be careful not to peel back the headliner excessively.

6. Disconnect the connector.

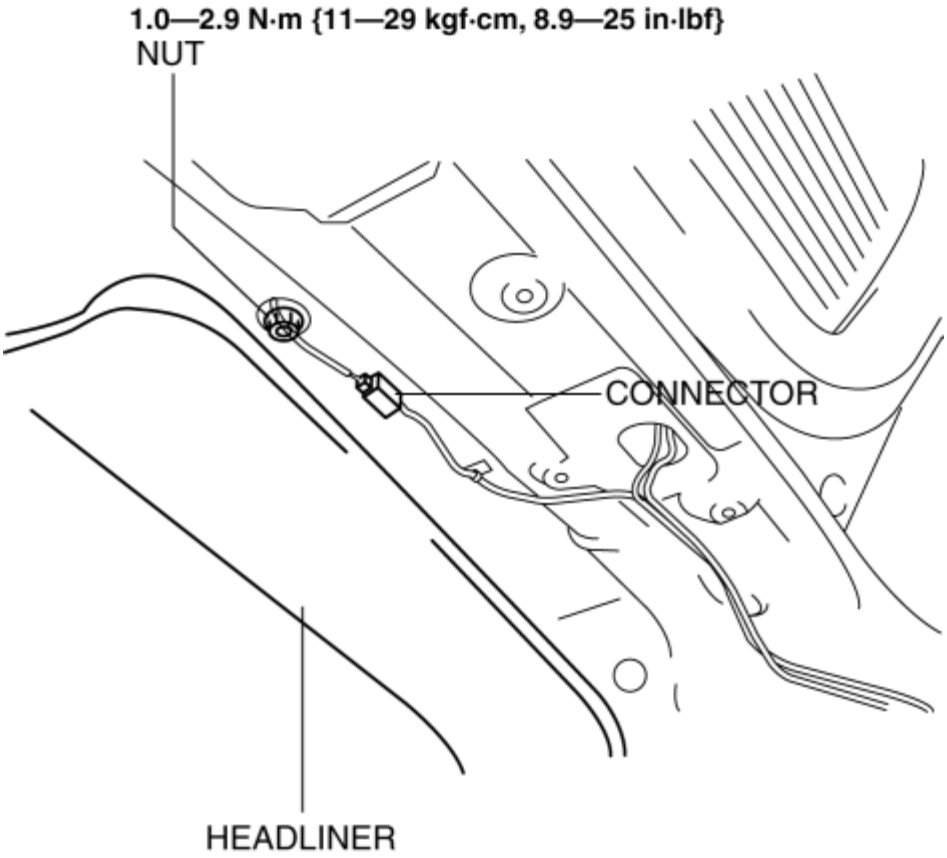

7. Remove the nut.

8. While pressing the center roof antenna tabs in the direction of arrows (1) shown in the figure, press the center roof antenna in the direction of arrow (2) to detach the center roof antenna tabs from the body.

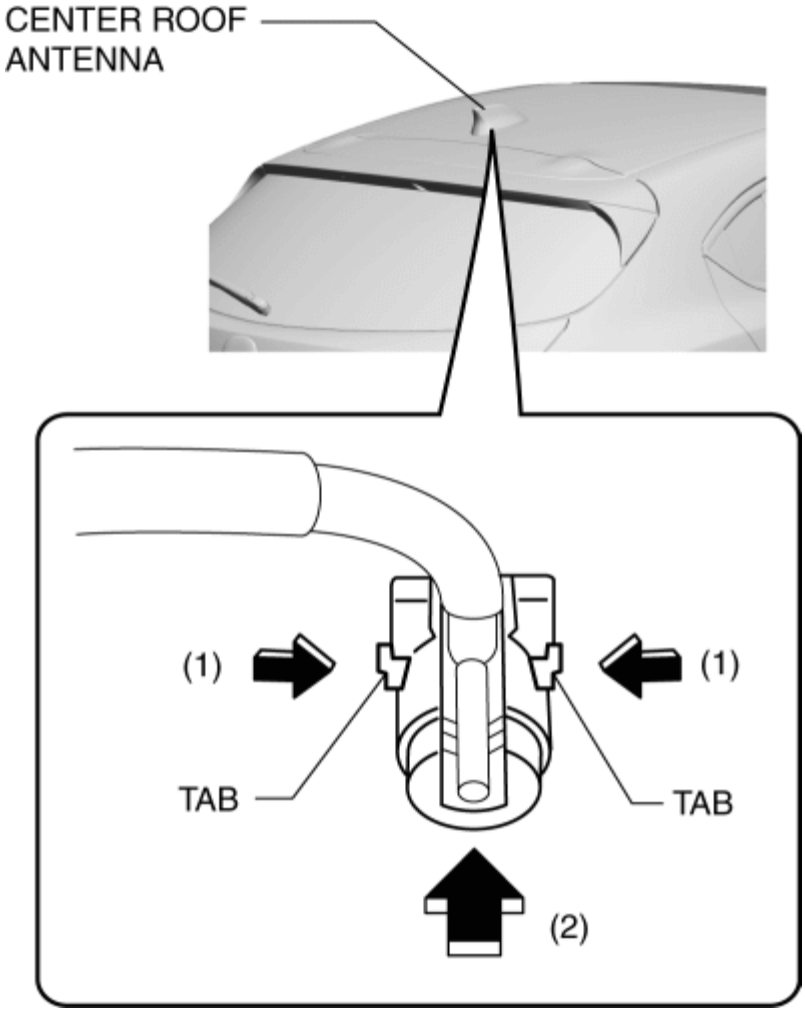

9. Remove the center roof antenna.

10. Install in the reverse order of removal.

2014 - Mazda3 - Body and Accessories

CENTER ROOF ANTENNA INSPECTION

NOTE:

- The center roof antenna is integrated with the antenna amplifier.

Type A (With rod)

Antenna amplifier inspection (5HB)

1. Disconnect the negative battery cable. (See **NEGATIVE BATTERY CABLE DISCONNECTION/CONNECTION [SKYACTIV-G 2.0, SKYACTIV-G 2.5]**.)
2. Remove the following parts:
   a. Rear package tray (See **REAR PACKAGE TRAY REMOVAL/INSTALLATION**.)
   b. Trunk covering (See **TRUNK COVERING REMOVAL/INSTALLATION**.)
   c. Trunk end trim (See **TRUNK END TRIM REMOVAL/INSTALLATION**.)
3. Set the tire house trim aside. (See **TIRE HOUSE TRIM REMOVAL/INSTALLATION**.)
4. Remove the following parts:
   a. Trunk side upper trim (See **TRUNK SIDE UPPER TRIM REMOVAL/INSTALLATION**.)
   b. C-pillar trim (See **C-PILLAR TRIM REMOVAL/INSTALLATION**.)
   c. Rear assist handle (See **ASSIST HANDLE REMOVAL/INSTALLATION**.)
5. Partially peel back the headliner.

   NOTE:

   - Be careful not to peel back the headliner excessively. Otherwise it could create a fold-seam in the headliner.

6. Connect the negative battery cable. (See **NEGATIVE BATTERY CABLE DISCONNECTION/CONNECTION [SKYACTIV-G 2.0, SKYACTIV-G 2.5]**.)
7. Switch the ignition ON (engine off).
8. Turn the audio unit power on.
9. Tune in the radio.
10. Verify that the battery voltage is supplied to center roof antenna terminal B.

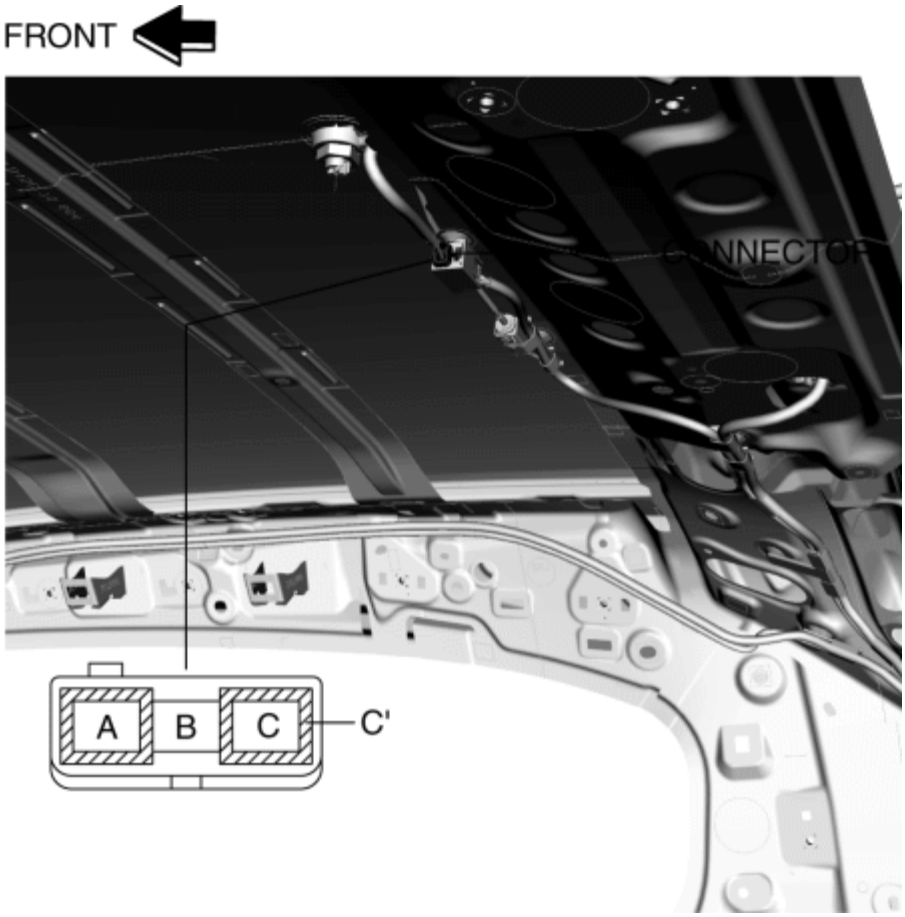

- If the battery voltage cannot be verified, inspect the audio unit and antenna feeder.
- If the battery voltage can be verified, go to the feeder line inspection.

Feeder line inspection

1. Disconnect the negative battery cable. (See **NEGATIVE BATTERY CABLE DISCONNECTION/CONNECTION [SKYACTIV-G 2.0, SKYACTIV-G 2.5]**.)
2. Remove the center roof antenna. (See **CENTER ROOF ANTENNA REMOVAL/INSTALLATION**.)
3. Verify that there is no continuity between center roof antenna sections A’ and C.

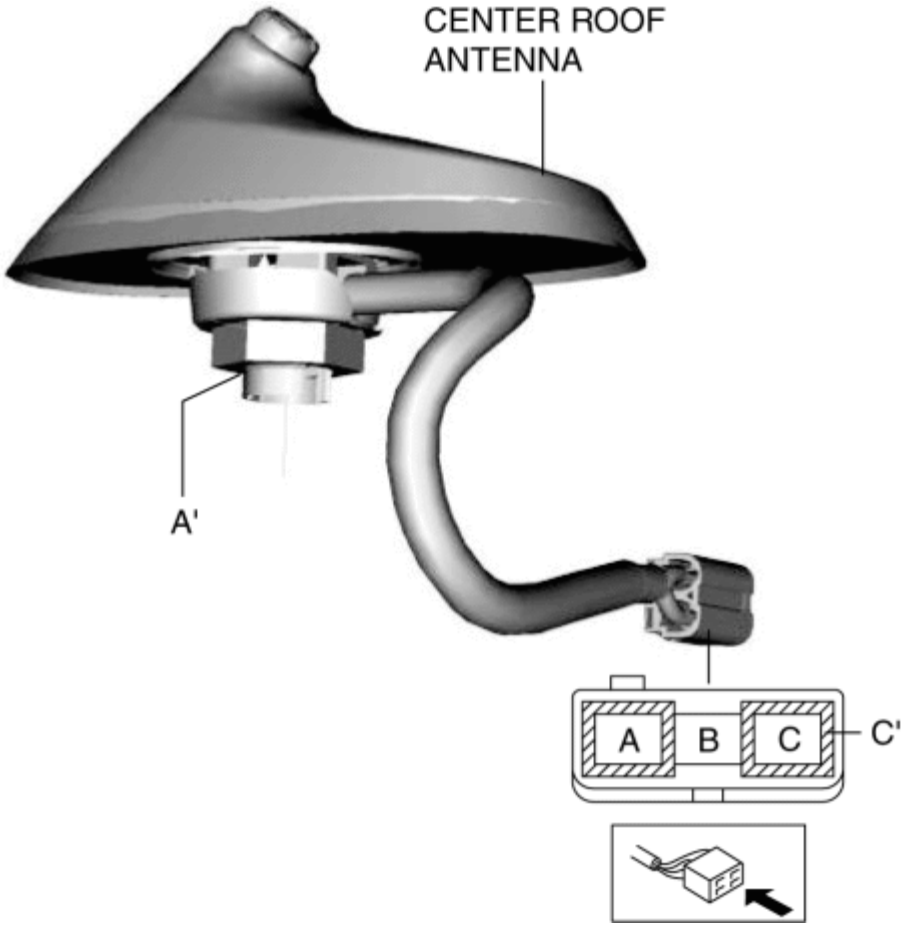

- If there is continuity, replace the center roof antenna.

4. Install the center roof antenna.

5. Verify that the continuity between the center roof antenna terminals is as indicated in the table.

○—○ :Continuity

Test condition	Terminal					BODY GND
	CENTER ROOF ANTENNA INSTALLATION NUT	CENTER ROOF ANTENNA CONNECTOR				
	A'	A	B	C	C'	
Under any condition	○				○	○

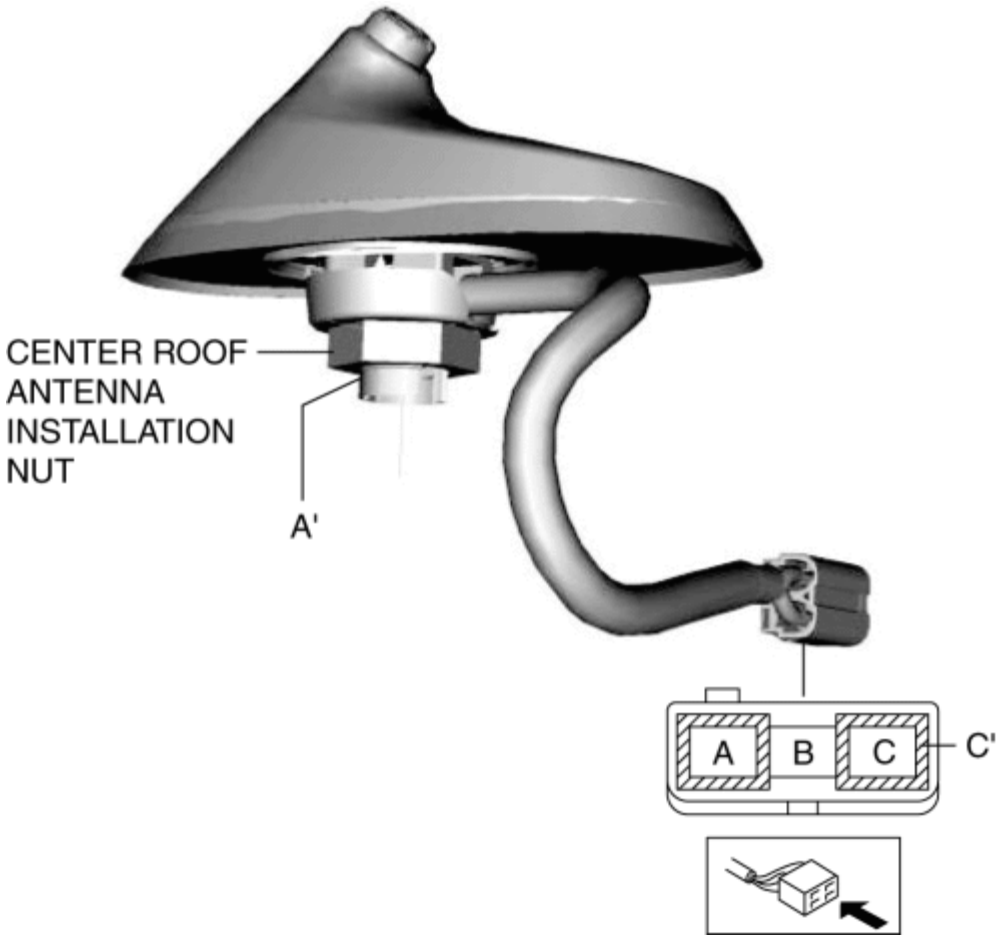

- If the continuity is not as indicated in the table, verify the installation condition of the center roof antenna installation nut.
- If the installation condition of the center roof antenna installation nut is normal, replace the center roof antenna.

Type B (Without rod)

Antenna amplifier inspection (5HB)

1. Disconnect the negative battery cable. (See **NEGATIVE BATTERY CABLE DISCONNECTION/CONNECTION [SKYACTIV-G 2.0, SKYACTIV-G 2.5]**.)
2. Remove the following parts:
   a. Rear package tray (See **REAR PACKAGE TRAY REMOVAL/INSTALLATION**.)
   b. Trunk covering (See **TRUNK COVERING REMOVAL/INSTALLATION**.)
   c. Trunk end trim (See **TRUNK END TRIM REMOVAL/INSTALLATION**.)
3. Set the tire house trim aside. (See **TIRE HOUSE TRIM REMOVAL/INSTALLATION**.)
4. Remove the following parts:
   a. Trunk side upper trim (See **TRUNK SIDE UPPER TRIM REMOVAL/INSTALLATION**.)

b. C-pillar trim (See **C-PILLAR TRIM REMOVAL/INSTALLATION**.)

c. Rear assist handle (See **ASSIST HANDLE REMOVAL/INSTALLATION**.)

5. Partially peel back the headliner.

NOTE:

- Be careful not to peel back the headliner excessively. Otherwise it could create a fold-seam in the headliner.

6. Connect the negative battery cable. (See **NEGATIVE BATTERY CABLE DISCONNECTION/CONNECTION [SKYACTIV-G 2.0, SKYACTIV-G 2.5]**.)

7. Switch the ignition ON (engine off).

8. Turn the audio unit power on.

9. Tune in the radio.

10. Verify that the battery voltage is supplied to center roof antenna terminal B.

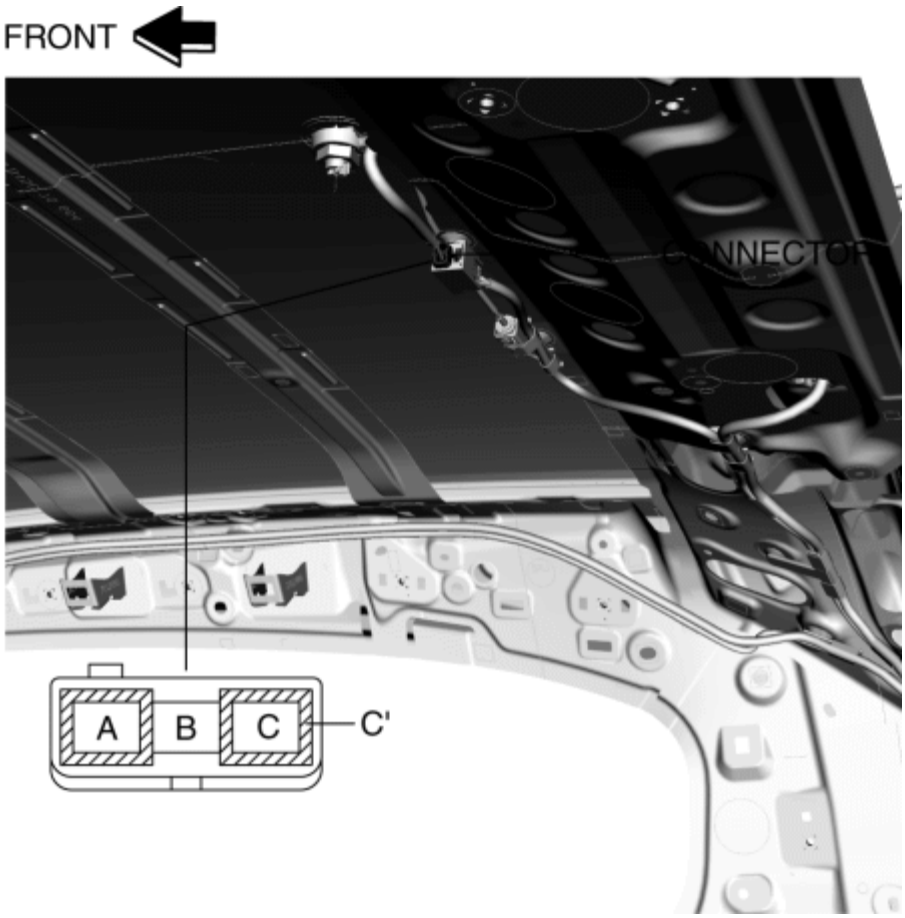

- If the battery voltage cannot be verified, inspect the audio unit and antenna feeder.
- If the battery voltage can be verified, go to the feeder line inspection.

Feeder line inspection

1. Disconnect the negative battery cable. (See **NEGATIVE BATTERY CABLE**

DISCONNECTION/CONNECTION [SKYACTIV-G 2.0, SKYACTIV-G 2.5].)

2. Remove the center roof antenna. (See **CENTER ROOF ANTENNA REMOVAL/INSTALLATION**.)

3. Verify that there is no continuity between center roof antenna sections A' and C and A (with SiriusXM satellite radio system only).

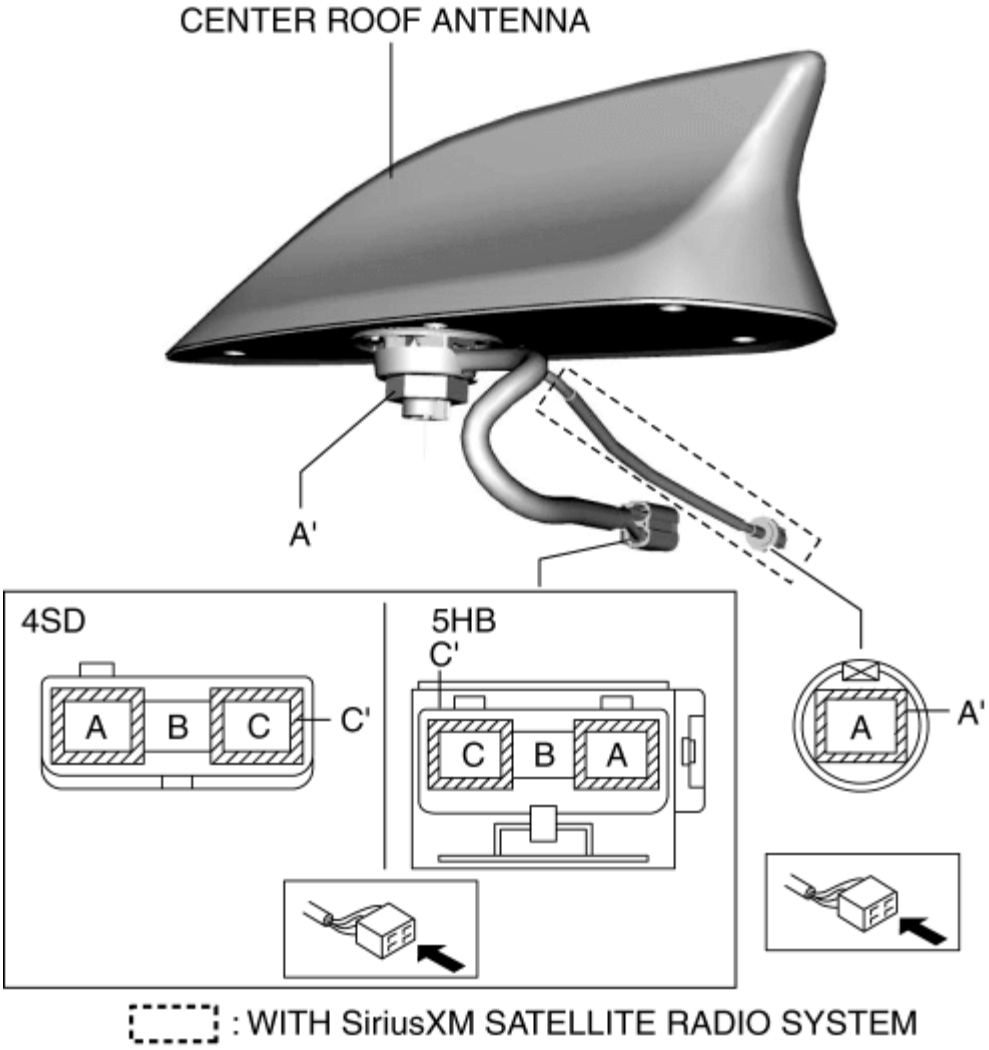

- If there is continuity, replace the center roof antenna.

4. Install the center roof antenna.

5. Verify that the continuity between the center roof antenna terminals is as indicated in the table.

○—○ :Continuity

Test condition	Terminal							BODY GND
	CENTER ROOF ANTENNA INSTALLATION NUT	CENTER ROOF ANTENNA CONNECTOR				SiriusXM SATELLITE RADIO CONNECTOR		
	A'	A	B	C	C'	A	A'	
Under any condition	○				○		○	○

: WITH SiriusXM SATELLITE RADIO SYSTEM

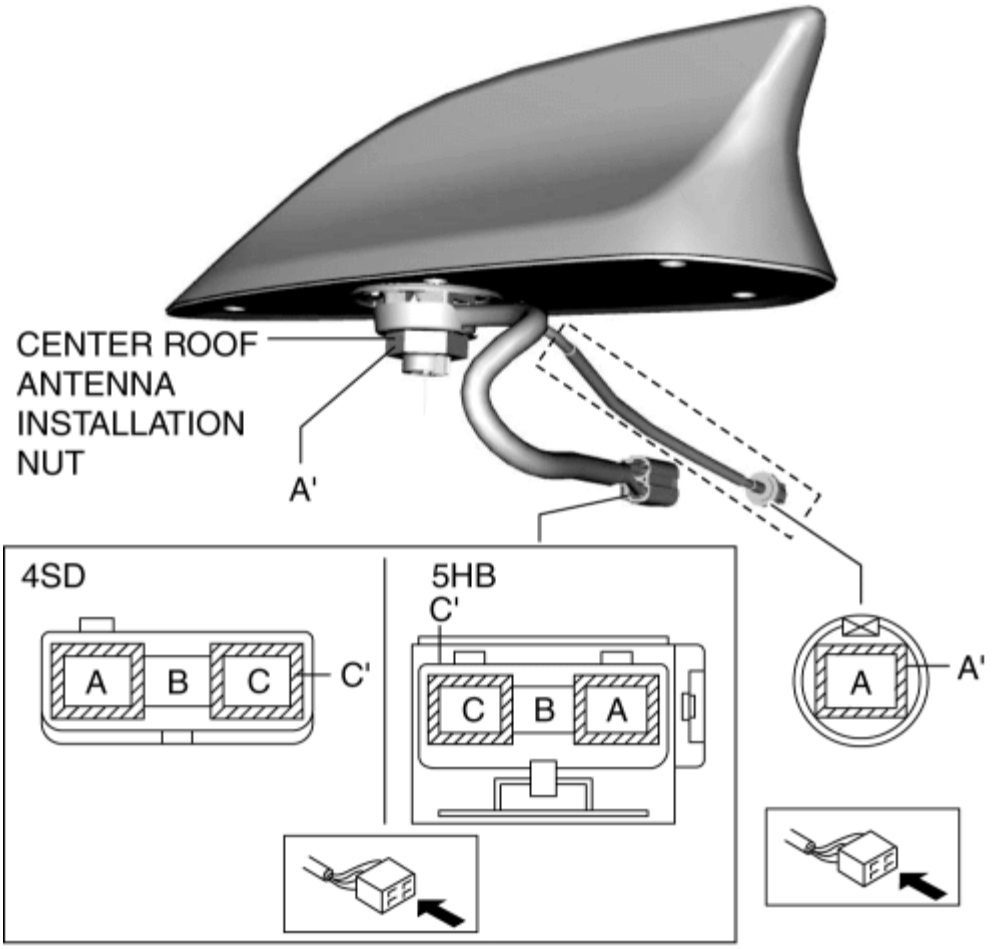

: WITH SiriusXM SATELLITE RADIO SYSTEM

- If the continuity is not as indicated in the table, verify the installation condition of the center roof antenna installation nut.
- If the installation condition of the center roof antenna installation nut is normal, replace the center roof antenna.

2014 - Mazda3 - Body and Accessories

GLASS ANTENNA INSPECTION

1. Disconnect the negative battery cable. (See **NEGATIVE BATTERY CABLE DISCONNECTION/CONNECTION [SKYACTIV-G 2.0, SKYACTIV-G 2.5]**.)

2. Remove the glass antenna terminal cover. (See **ANTENNA AMPLIFIER REMOVAL/INSTALLATION**.)

3. Visually inspect the glass antenna for damage.

4. Verify that the continuity is as indicated in the table.

○—○ : Continuity

Test condition	Terminal	
	A	B
Under any condition	○	○

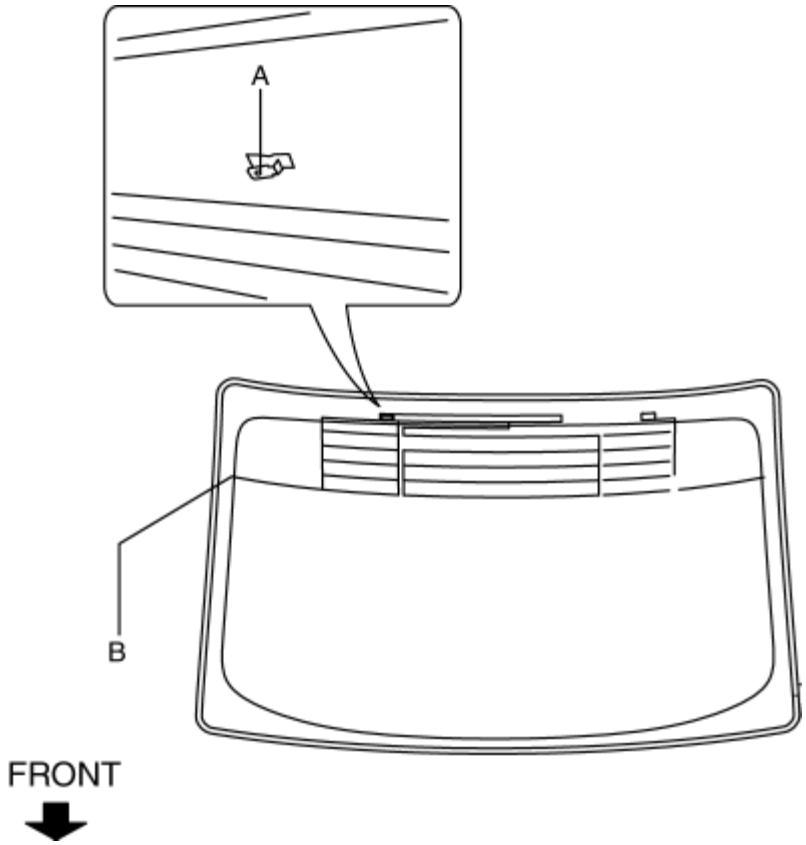

- If not as indicated in the table, repair the glass antenna. (See **REAR WINDOW DEFROSTER/GLASS ANTENNA REPAIR**.)

GLASS ANTENNA INSPECTION

2014 - Mazda3 - Body and Accessories

ANTENNA AMPLIFIER REMOVAL/INSTALLATION

1. Disconnect the negative battery cable. (See **NEGATIVE BATTERY CABLE DISCONNECTION/CONNECTION [SKYACTIV-G 2.0, SKYACTIV-G 2.5]**.)
2. Remove the following parts:
   a. A-pillar trim (See **A-PILLAR TRIM REMOVAL/INSTALLATION**.)
   b. Sunvisor (See **SUNVISOR REMOVAL/INSTALLATION**.)
   c. Front map light (dual light type) (See **FRONT MAP LIGHT REMOVAL/INSTALLATION**.)
   d. Assist handle (See **ASSIST HANDLE REMOVAL/INSTALLATION**.)
   e. Front scuff plate (See **FRONT SCUFF PLATE REMOVAL/INSTALLATION**.)
   f. Rear scuff plate (See **REAR SCUFF PLATE REMOVAL/INSTALLATION**.)
   g. B-pillar lower trim (See **B-PILLAR LOWER TRIM REMOVAL/INSTALLATION**.)
   h. Adjust anchor cover (See **FRONT SEAT BELT REMOVAL/INSTALLATION**.)
   i. Upper anchor installation bolt on the seat belt (See **FRONT SEAT BELT REMOVAL/INSTALLATION**.)
   j. B-pillar upper trim (See **B-PILLAR UPPER TRIM REMOVAL/INSTALLATION**.)
3. Set the tire house trim aside. (See **TIRE HOUSE TRIM REMOVAL/INSTALLATION**.)
4. Remove the following parts:
   a. C-pillar trim (See **C-PILLAR TRIM REMOVAL/INSTALLATION**.)
   b. Upper panel (See **UPPER PANEL REMOVAL**.) (See **UPPER PANEL INSTALLATION**.)
   c. Rear console (See **REAR CONSOLE REMOVAL/INSTALLATION**.)
   d. Shift lever knob (MTX) (See **MANUAL TRANSAXLE SHIFT MECHANISM REMOVAL/INSTALLATION [C66M-R]**.)
   e. Selector lever knob (ATX) (See **AUTOMATIC TRANSAXLE SHIFT MECHANISM REMOVAL/INSTALLATION**.)
   f. Shift panel (See **SHIFT PANEL REMOVAL/INSTALLATION**.)
   g. Front console box (See **FRONT CONSOLE BOX REMOVAL/INSTALLATION**.)
   h. CD player (with CD player) (See **CD PLAYER REMOVAL**.) (See **CD PLAYER INSTALLATION**.)
   i. Glove compartment (See **GLOVE COMPARTMENT REMOVAL/INSTALLATION**.)
   j. Decoration panel (See **DECORATION PANEL REMOVAL/INSTALLATION**.)
   k. Side wall (See **SIDE WALL REMOVAL/INSTALLATION**.)
   l. Front console (See **FRONT CONSOLE REMOVAL/INSTALLATION**.)
   m. Headliner (See **HEADLINER REMOVAL/INSTALLATION**.)
5. Disconnect the connector. (with SiriusXM satellite radio system)

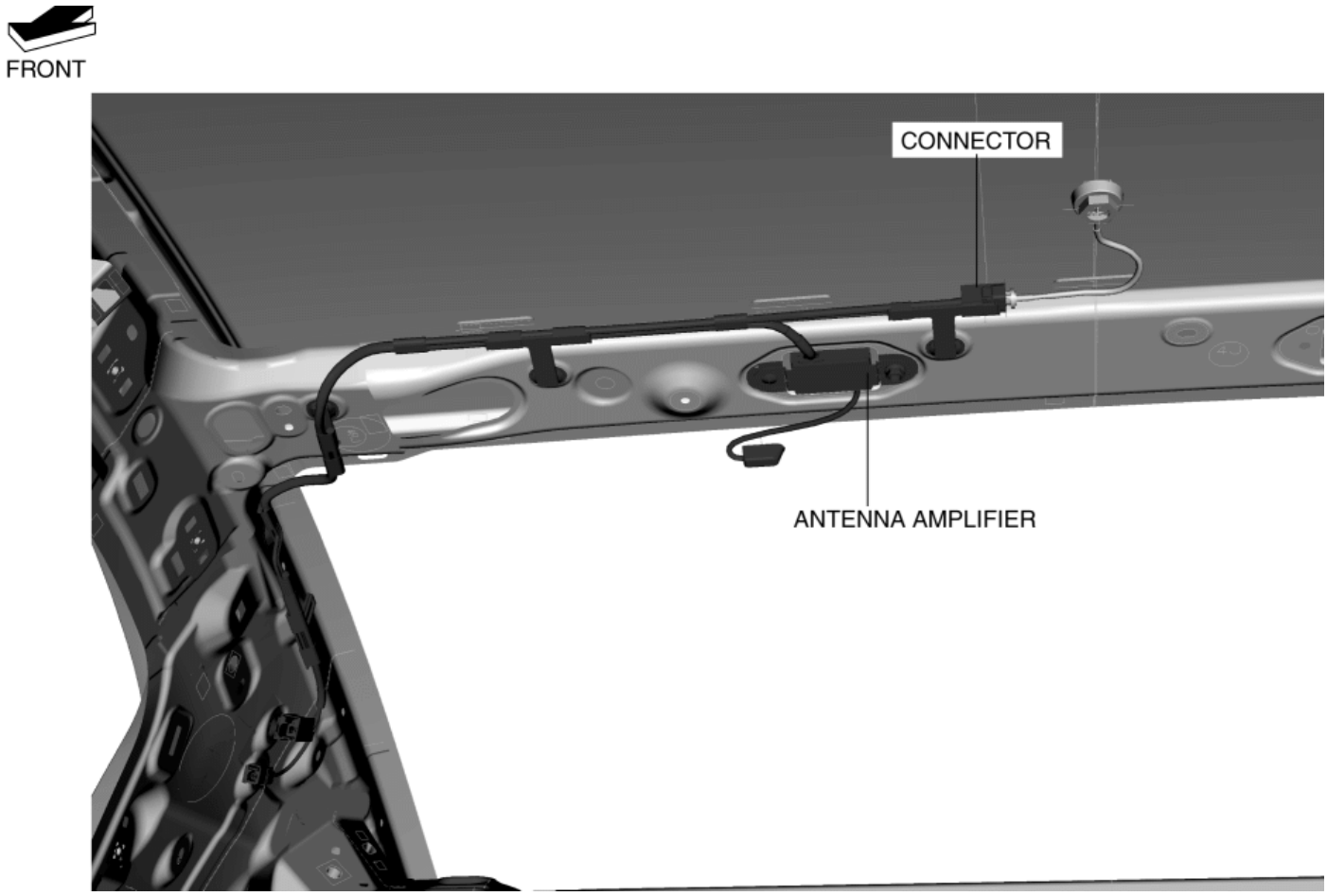

6. Remove clips A, B, C and D.

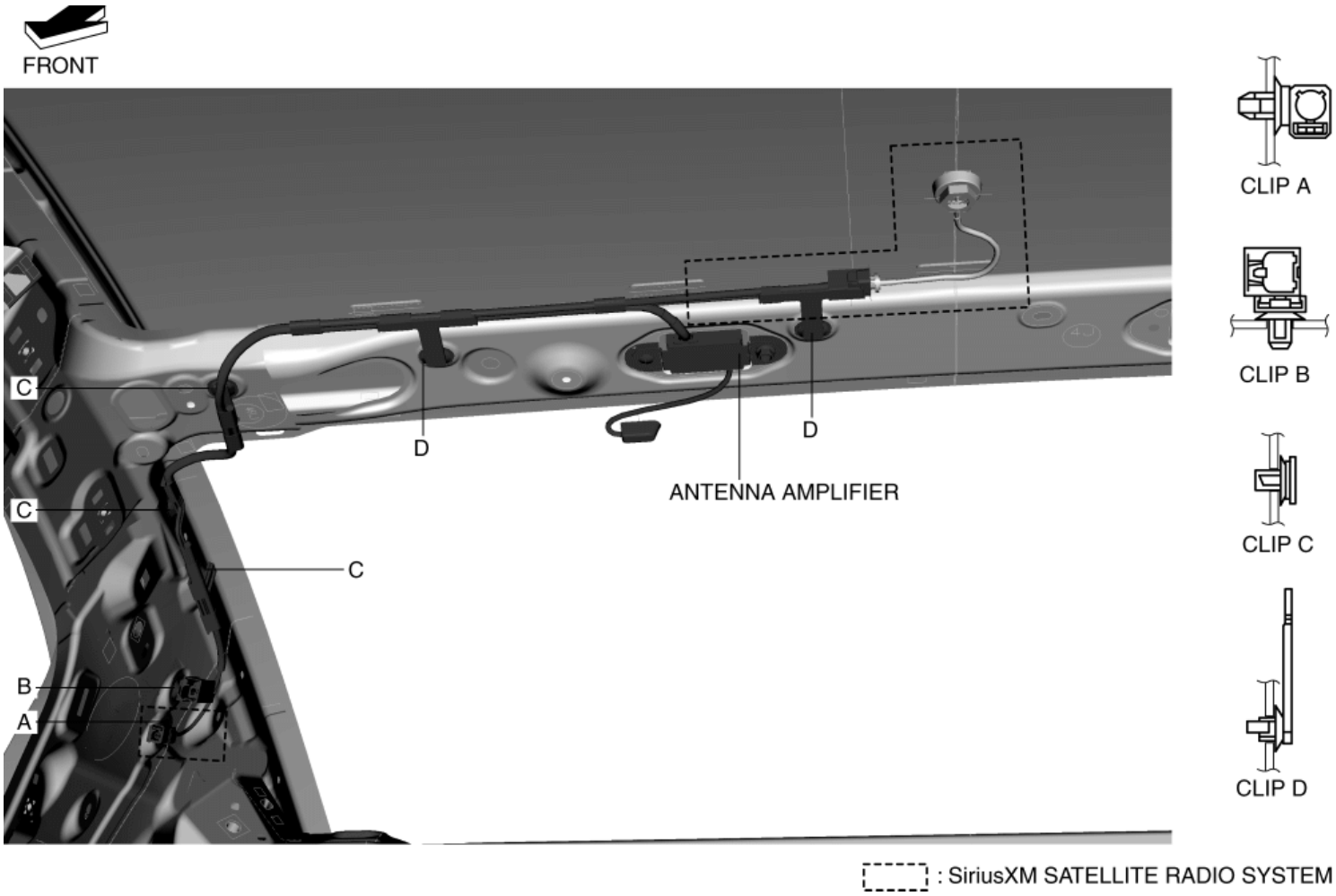

7. Remove the glass antenna terminal cover in the direction of the arrow shown in the figure.

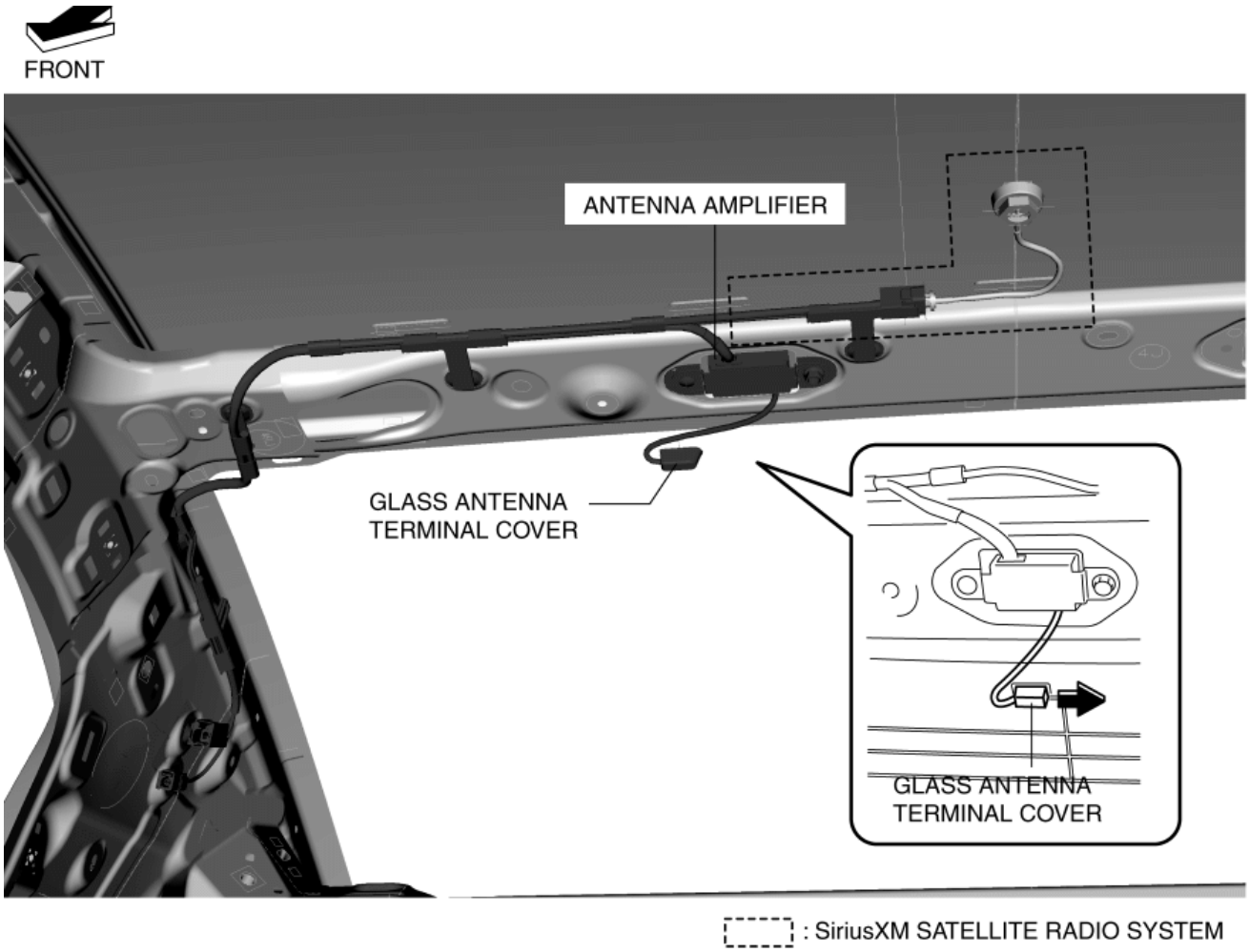

8. Remove the clip E.

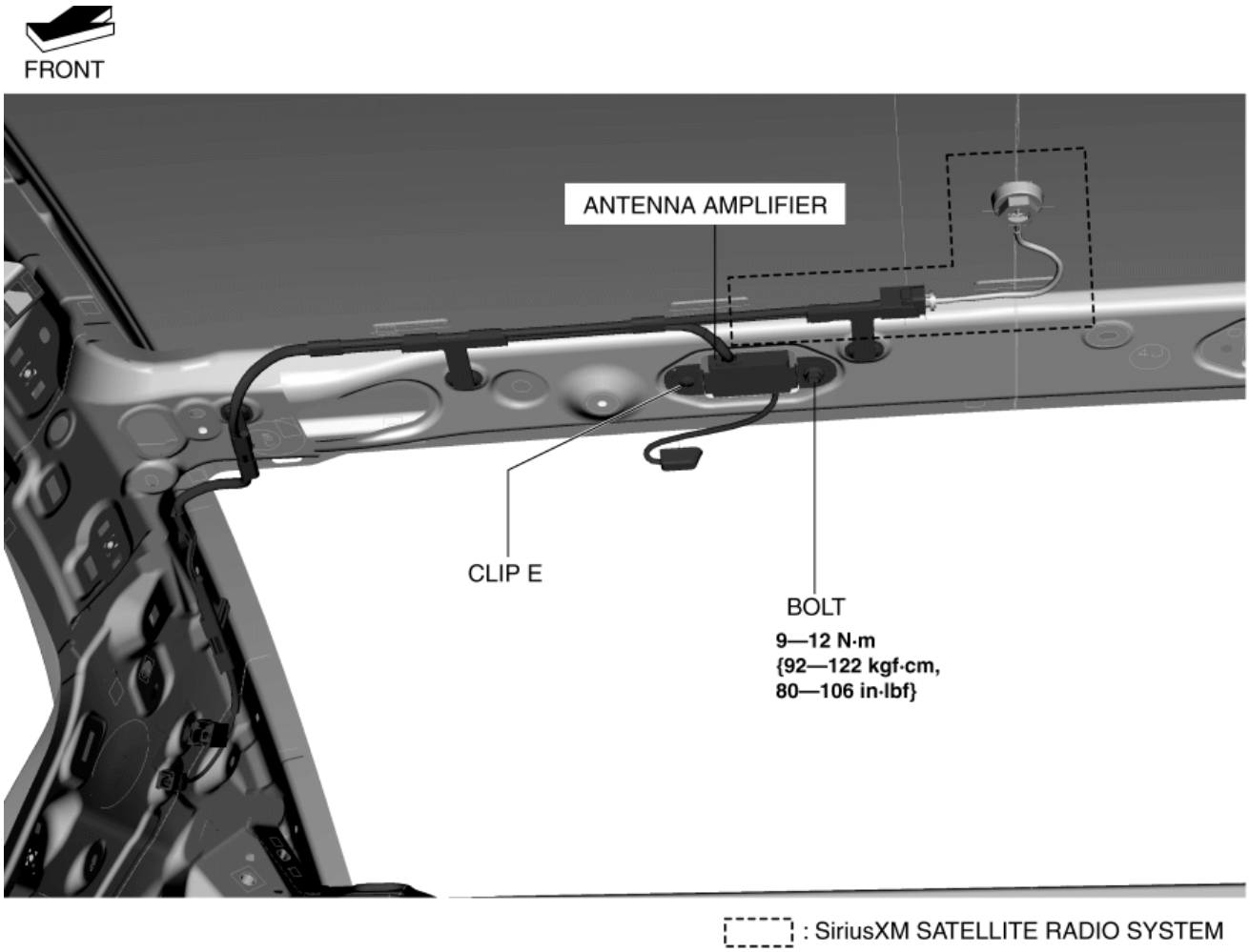

9. Remove the bolt.

10. Remove the antenna amplifier.

11. Install in the reverse order of removal.

2014 - Mazda3 - Body and Accessories

ANTENNA AMPLIFIER INSPECTION

1. Disconnect the negative battery cable. (See **NEGATIVE BATTERY CABLE DISCONNECTION/CONNECTION [SKYACTIV-G 2.0, SKYACTIV-G 2.5]**.)

2. Remove the following parts:

   a. A-pillar trim (See **A-PILLAR TRIM REMOVAL/INSTALLATION**.)

   b. Sunvisor (See **SUNVISOR REMOVAL/INSTALLATION**.)

   c. Front map light (dual light type) (See **FRONT MAP LIGHT REMOVAL/INSTALLATION**.)

   d. Assist handle (See **ASSIST HANDLE REMOVAL/INSTALLATION**.)

   e. Front scuff plate (See **FRONT SCUFF PLATE REMOVAL/INSTALLATION**.)

   f. Rear scuff plate (See **REAR SCUFF PLATE REMOVAL/INSTALLATION**.)

   g. B-pillar lower trim (See **B-PILLAR LOWER TRIM REMOVAL/INSTALLATION**.)

   h. Adjust anchor cover (See **FRONT SEAT BELT REMOVAL/INSTALLATION**.)

   i. Upper anchor installation bolt on the seat belt (See **FRONT SEAT BELT REMOVAL/INSTALLATION**.)

   j. B-pillar upper trim (See **B-PILLAR UPPER TRIM REMOVAL/INSTALLATION**.)

3. Set the tire house trim aside. (See **TIRE HOUSE TRIM REMOVAL/INSTALLATION**.)

4. Remove the following parts:

   a. C-pillar trim (See **C-PILLAR TRIM REMOVAL/INSTALLATION**.)

   b. Upper panel (See **UPPER PANEL REMOVAL**.) (See **UPPER PANEL INSTALLATION**.)

   c. Rear console (See **REAR CONSOLE REMOVAL/INSTALLATION**.)

   d. Shift lever knob (MTX) (See **MANUAL TRANSAXLE SHIFT MECHANISM REMOVAL/INSTALLATION [C66M-R]**.)

   e. Selector lever knob (ATX) (See **AUTOMATIC TRANSAXLE SHIFT MECHANISM REMOVAL/INSTALLATION**.)

   f. Shift panel (See **SHIFT PANEL REMOVAL/INSTALLATION**.)

   g. Front console box (See **FRONT CONSOLE BOX REMOVAL/INSTALLATION**.)

   h. CD player (with CD player) (See **CD PLAYER REMOVAL**.) (See **CD PLAYER INSTALLATION**.)

   i. Glove compartment (See **GLOVE COMPARTMENT REMOVAL/INSTALLATION**.)

   j. Decoration panel (See **DECORATION PANEL REMOVAL/INSTALLATION**.)

k. Side wall (See **SIDE WALL REMOVAL / INSTALLATION**.)

l. Front console (See **FRONT CONSOLE REMOVAL / INSTALLATION**.)

m. Headliner (See **HEADLINER REMOVAL / INSTALLATION**.)

5. Switch the ignition ON (engine off or on).

6. Turn the radio power to ON.

7. Verify that voltage is B+ at the antenna amplifier terminal B.

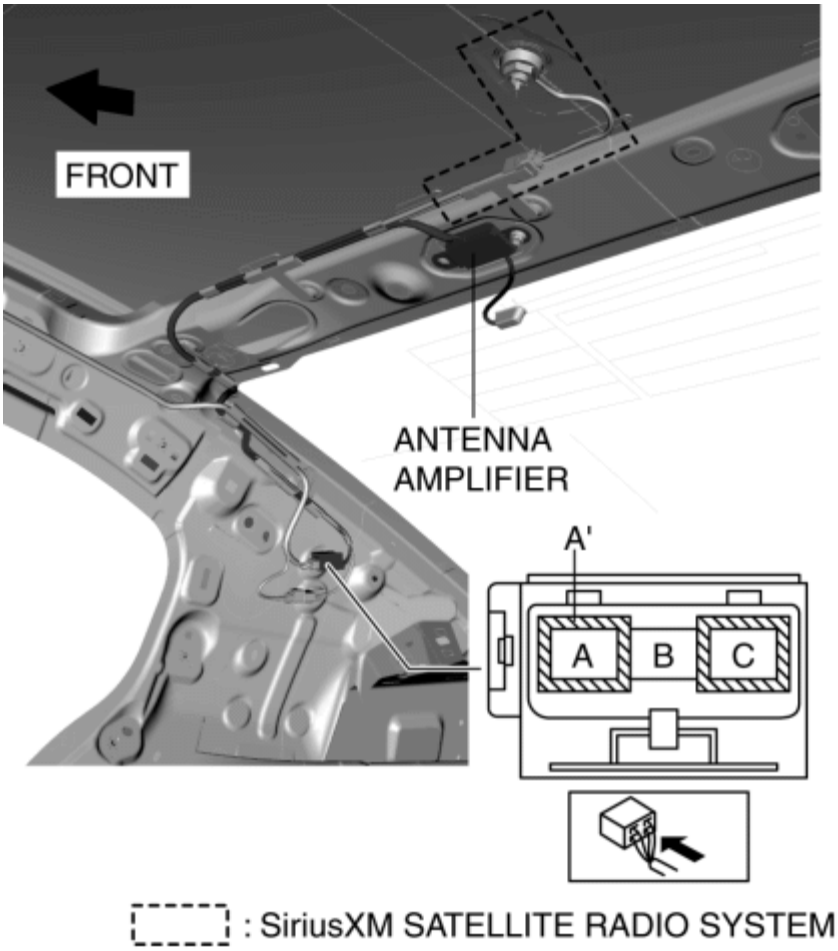

- If the battery voltage cannot be verified, replace the antenna amplifier.

2014 - Mazda3 - Body and Accessories

CONDENSER REMOVAL/INSTALLATION

1. Disconnect the negative battery cable. (See **NEGATIVE BATTERY CABLE DISCONNECTION/CONNECTION [SKYACTIV-G 2.0, SKYACTIV-G 2.5]**.)

2. Remove the following parts:

   a. Rear seat cushion (LH) (See **REAR SEAT CUSHION REMOVAL/INSTALLATION**.)

   b. Rear scuff plate (LH) (See **REAR SCUFF PLATE REMOVAL/INSTALLATION**.)

   c. Rear seat back (See **REAR SEAT BACK REMOVAL/INSTALLATION**.)

   d. Tire house trim (LH) (See **TIRE HOUSE TRIM REMOVAL/INSTALLATION**.)

   e. C-pillar trim (LH) (See **C-PILLAR TRIM REMOVAL/INSTALLATION**.)

3. Disconnect the connectors.

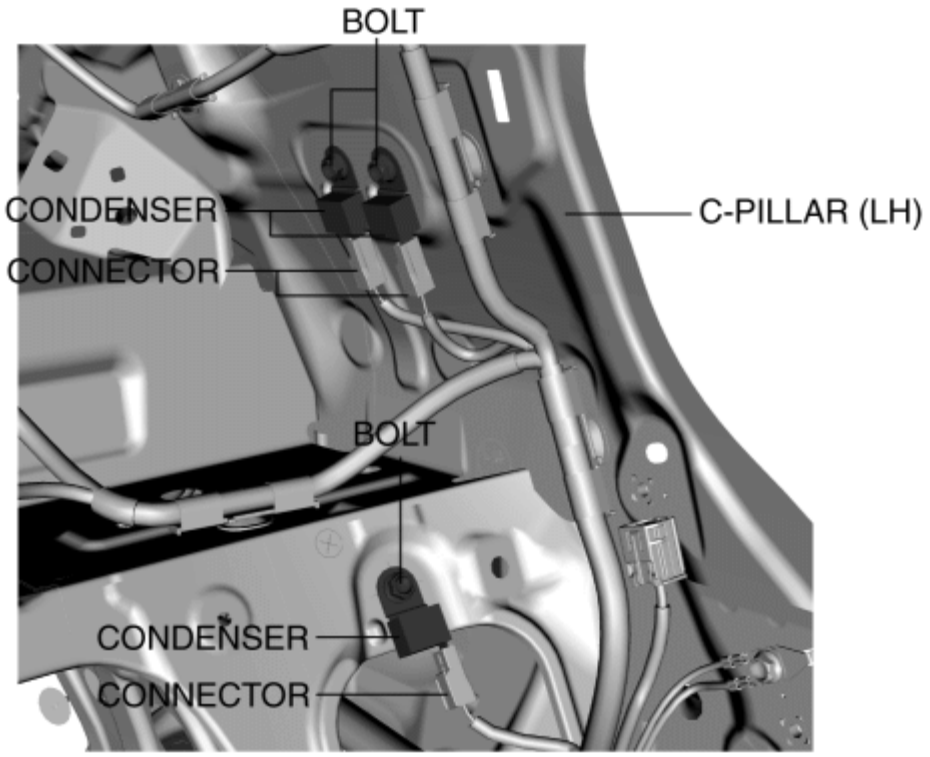

BOLT : **9—12 N·m {92—122 kgf·cm, 80—106 in·lbf}**

4. Remove the bolts.

5. Remove the condensers.

6. Install in the reverse order of removal.

2014 - Mazda3 - Body and Accessories

ANTENNA FEEDER NO.1 REMOVAL/INSTALLATION

Without Center Display

1. Disconnect the negative battery cable. (See **NEGATIVE BATTERY CABLE DISCONNECTION/CONNECTION [SKYACTIV-G 2.0, SKYACTIV-G 2.5]**.)
2. Remove the following parts:
   a. A-pillar trim (See **A-PILLAR TRIM REMOVAL/INSTALLATION**.)
   b. Glove compartment (See **GLOVE COMPARTMENT REMOVAL/INSTALLATION**.)
   c. Decoration panel (See **DECORATION PANEL REMOVAL/INSTALLATION**.)
   d. Audio unit (See **AUDIO UNIT REMOVAL/INSTALLATION**.)
3. Remove clips A, B, C, D, E and F.

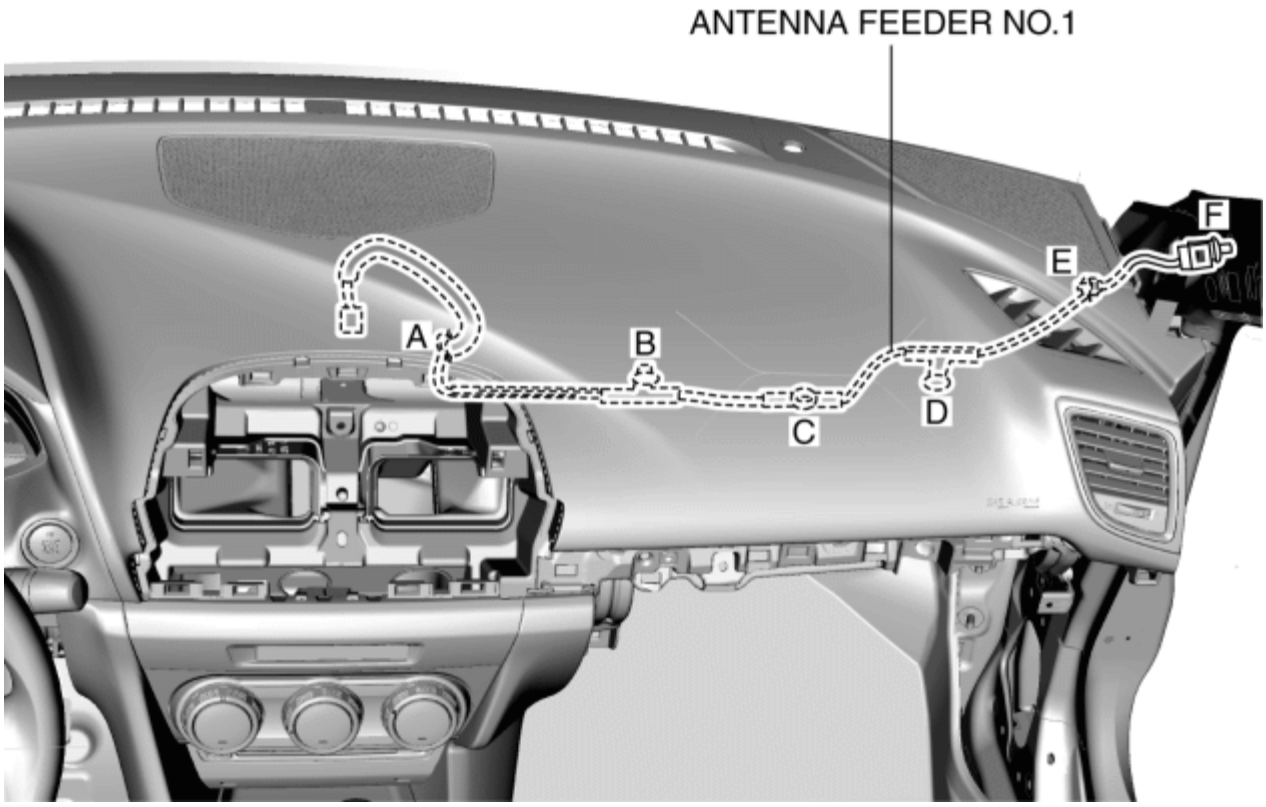

4. Remove antenna feeder No.1.
5. Install in the reverse order of removal.

With Center Display

1. Disconnect the negative battery cable. (See **NEGATIVE BATTERY CABLE DISCONNECTION/CONNECTION [SKYACTIV-G 2.0, SKYACTIV-G 2.5]**.)

2. Remove the following parts:

   a. Front scuff plate (LH) (See **FRONT SCUFF PLATE REMOVAL/INSTALLATION**.)

   b. Front side trim (LH) (See **FRONT SIDE TRIM REMOVAL/INSTALLATION**.)

   c. Glove compartment (See **GLOVE COMPARTMENT REMOVAL/INSTALLATION**.)

   d. A-pillar trim (See **A-PILLAR TRIM REMOVAL/INSTALLATION**.)

3. Remove clips A, B, C, D and E.

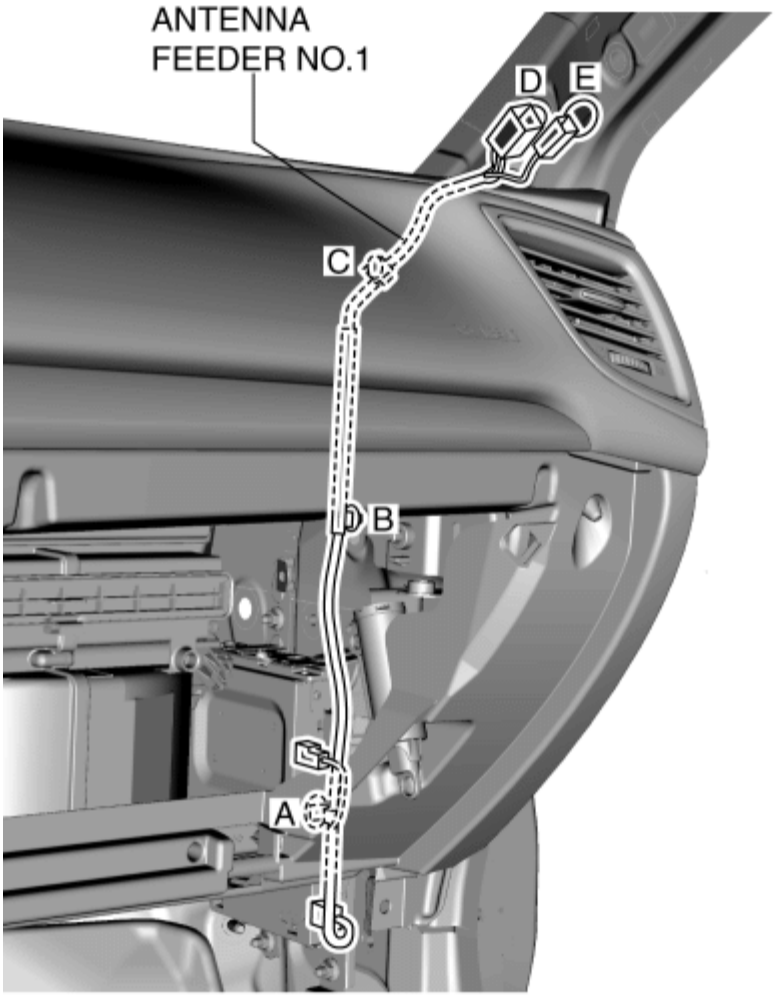

E :WITH SiriusXM SATELLITE RADIO SYSTEM

4. Remove antenna feeder No.1.

5. Install in the reverse order of removal.

2014 - Mazda3 - Body and Accessories

ANTENNA FEEDER NO.1 INSPECTION

Without Center Display

1. Disconnect the negative battery cable. (See **NEGATIVE BATTERY CABLE DISCONNECTION/CONNECTION [SKYACTIV-G 2.0, SKYACTIV-G 2.5]**.)
2. Remove the following parts:
   a. Glove compartment (See **GLOVE COMPARTMENT REMOVAL/INSTALLATION**.)
   b. Decoration panel (See **DECORATION PANEL REMOVAL/INSTALLATION**.)
   c. A-pillar trim (RH) (See **A-PILLAR TRIM REMOVAL/INSTALLATION**.)
3. Disconnect antenna feeder No.2.

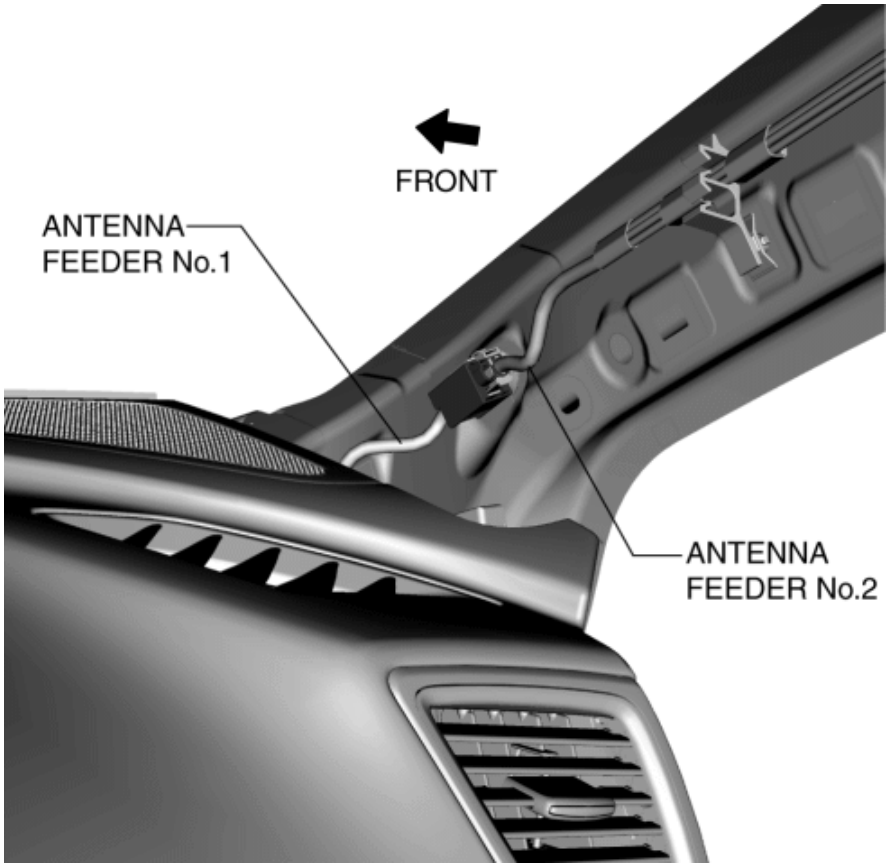

4. Verify that the continuity between antenna feeder No.1 terminals is as indicated in the table.

○—○ : Continuity

Test condition	Terminal						
	AUDIO UNIT			ANTENNA FEEDER NO.2 SIDE CONNECTOR			
	4A	4B	4B'	A	B	C	C'
Under any condition	○				○		
		○				○	
			○				○

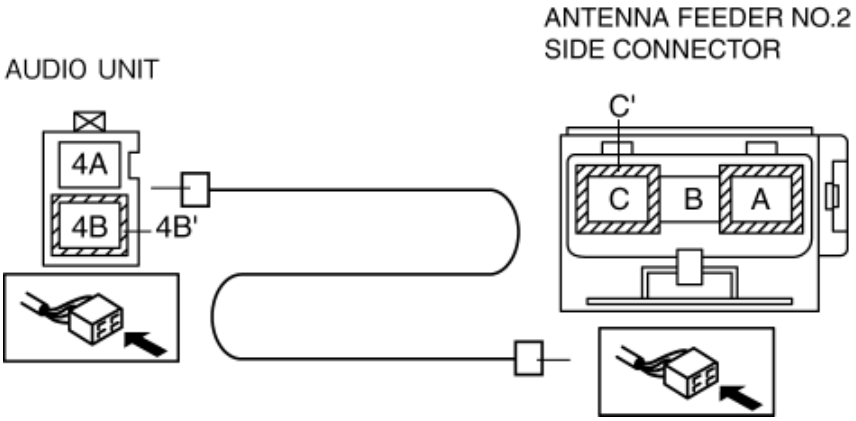

- If not as indicated in the table, replace antenna feeder No.1.

With Center Display

1. Disconnect the negative battery cable. (See **NEGATIVE BATTERY CABLE DISCONNECTION/CONNECTION [SKYACTIV-G 2.0, SKYACTIV-G 2.5]**.)
2. Remove the following parts:
   a. Front scuff plate (RH) (See **FRONT SCUFF PLATE REMOVAL/INSTALLATION**.)
   b. Front side trim (RH) (See **FRONT SIDE TRIM REMOVAL/INSTALLATION**.)
   c. A-pillar trim (RH) (See **A-PILLAR TRIM REMOVAL/INSTALLATION**.)
3. Disconnect the SiriusXM satellite radio unit connector. (with SiriusXM satellite radio system)
4. Disconnect antenna feeder No.2.

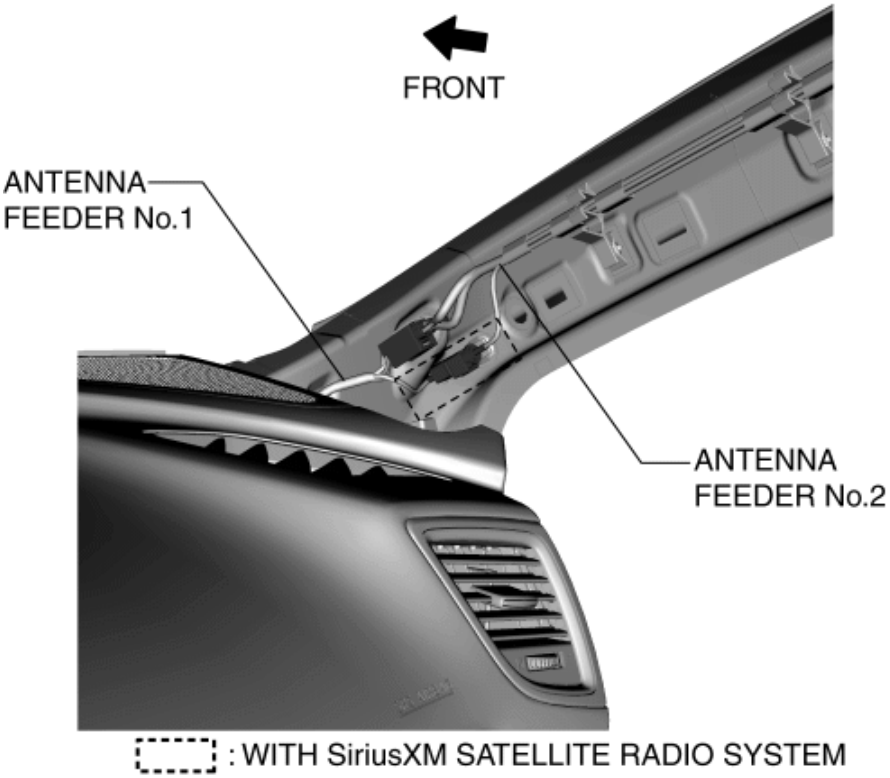

5. Verify that the continuity between antenna feeder No.1 terminals is as indicated in the table.

: Continuity

Test condition	Terminal										
	TUNER AND AMP UNIT			SiriusXM SATELLITE RADIO CONNECTOR (TUNER AND AMP UNIT SIDE)		ANTENNA FEEDER NO.2 SIDE CONNECTOR		ANTENNA FEEDER NO.2 SIDE CONNECTOR			
	3A	3B	3B'	A	A'	A	A'	A	B	C	C'
Under any condition	○								○		
		○								○	
			○								○
				○		○					
					○		○				

: WITH SiriusXM SATELLITE RADIO SYSTEM

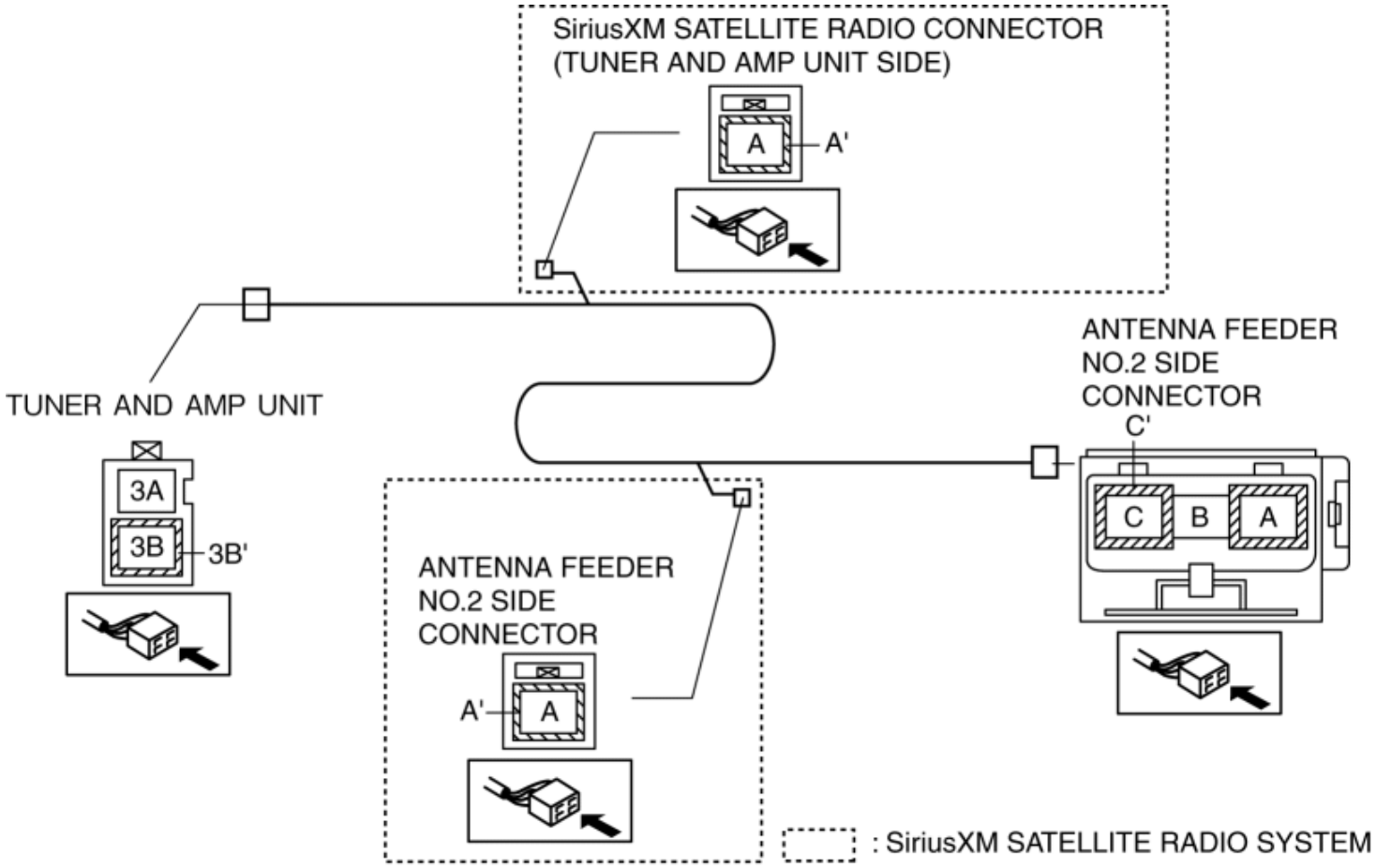

- If not as indicated in the table, replace antenna feeder No.1.

2014 - Mazda3 - Body and Accessories

ANTENNA FEEDER NO.2 REMOVAL

4SD

1. Disconnect the negative battery cable. (See **NEGATIVE BATTERY CABLE DISCONNECTION/CONNECTION [SKYACTIV-G 2.0, SKYACTIV-G 2.5]**.)
2. Remove the following parts:
    a. A-pillar trim (See **A-PILLAR TRIM REMOVAL/INSTALLATION**.)
    b. Sunvisor (See **SUNVISOR REMOVAL/INSTALLATION**.)
    c. Front map light (dual light type) (See **FRONT MAP LIGHT REMOVAL/INSTALLATION**.)
    d. Assist handle (See **ASSIST HANDLE REMOVAL/INSTALLATION**.)
    e. Front scuff plate (See **FRONT SCUFF PLATE REMOVAL/INSTALLATION**.)
    f. Rear scuff plate (See **REAR SCUFF PLATE REMOVAL/INSTALLATION**.)
    g. B-pillar lower trim (See **B-PILLAR LOWER TRIM REMOVAL/INSTALLATION**.)
    h. Adjust anchor cover (See **FRONT SEAT BELT REMOVAL/INSTALLATION**.)
    i. Upper anchor installation bolt on the seat belt (See **FRONT SEAT BELT REMOVAL/INSTALLATION**.)
    j. B-pillar upper trim (See **B-PILLAR UPPER TRIM REMOVAL/INSTALLATION**.)
3. Set the tire house trim aside. (See **TIRE HOUSE TRIM REMOVAL/INSTALLATION**.)
4. Remove the following parts:
    a. C-pillar trim (See **C-PILLAR TRIM REMOVAL/INSTALLATION**.)
    b. Upper panel (See **UPPER PANEL REMOVAL**.)
    c. Rear console (See **REAR CONSOLE REMOVAL/INSTALLATION**.)
    d. Shift lever knob (MTX) (See **MANUAL TRANSAXLE SHIFT MECHANISM REMOVAL/INSTALLATION [C66M-R]**.)
    e. Selector lever knob (ATX) (See **AUTOMATIC TRANSAXLE SHIFT MECHANISM REMOVAL/INSTALLATION**.)
    f. Shift panel (See **SHIFT PANEL REMOVAL/INSTALLATION**.)
    g. Front console box (See **FRONT CONSOLE BOX REMOVAL/INSTALLATION**.)
    h. CD player (with CD player) (See **CD PLAYER REMOVAL**.)
    i. Glove compartment (See **GLOVE COMPARTMENT REMOVAL/INSTALLATION**.)
    j. Decoration panel (See **DECORATION PANEL REMOVAL/INSTALLATION**.)
    k. Side wall (See **SIDE WALL REMOVAL/INSTALLATION**.)
    l. Front console (See **FRONT CONSOLE REMOVAL/INSTALLATION**.)
    m. Headliner (See **HEADLINER REMOVAL/INSTALLATION**.)

5. Peel off the tape shown in the figure and remove antenna feeder No.2.

Without sunroof

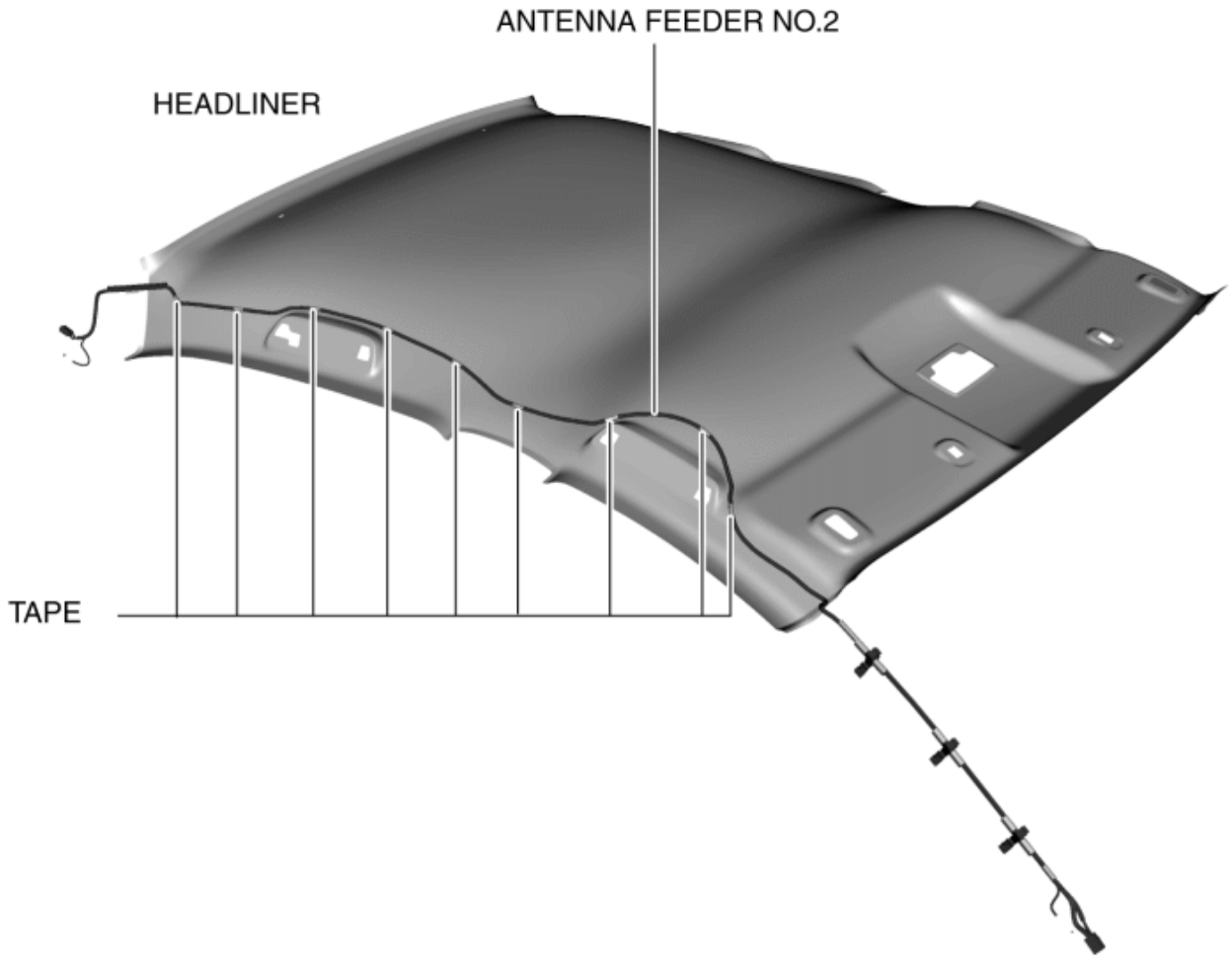

With sunroof

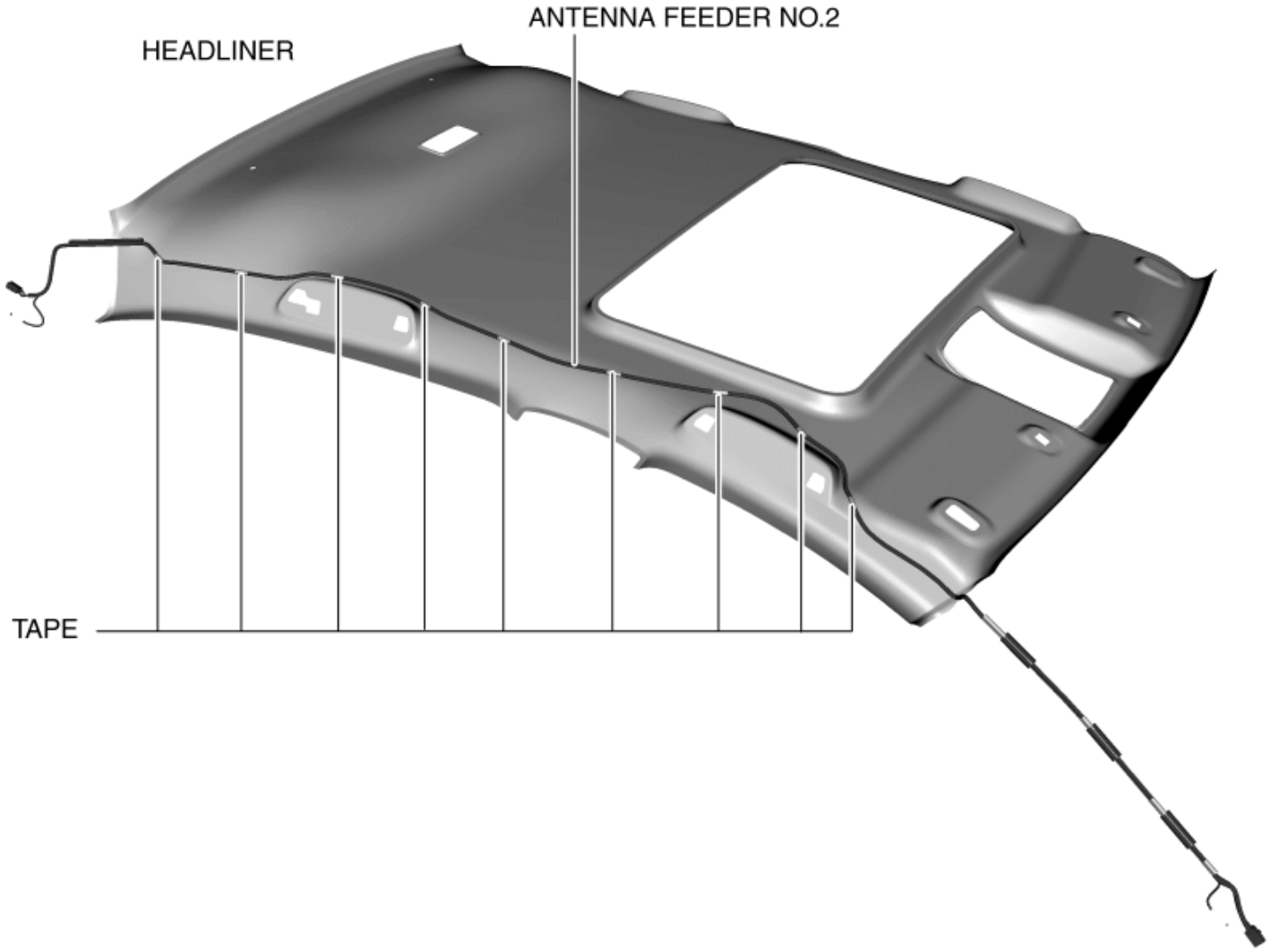

5HB

1. Disconnect the negative battery cable. (See **NEGATIVE BATTERY CABLE DISCONNECTION/CONNECTION [SKYACTIV-G 2.0, SKYACTIV-G 2.5]**.)

2. Remove the following parts:

   a. A-pillar trim (See **A-PILLAR TRIM REMOVAL/INSTALLATION**.)

   b. Sunvisor (See **SUNVISOR REMOVAL/INSTALLATION**.)

   c. Front map light (dual light type) (See **FRONT MAP LIGHT REMOVAL/INSTALLATION**.)

   d. Assist handle (See **ASSIST HANDLE REMOVAL/INSTALLATION**.)

   e. Front scuff plate (See **FRONT SCUFF PLATE REMOVAL/INSTALLATION**.)

   f. Rear scuff plate (See **REAR SCUFF PLATE REMOVAL/INSTALLATION**.)

   g. B-pillar lower trim (See **B-PILLAR LOWER TRIM REMOVAL/INSTALLATION**.)

   h. Adjust anchor cover (See **FRONT SEAT BELT REMOVAL/INSTALLATION**.)

   i. Upper anchor installation bolt on the seat belt (See **FRONT SEAT BELT REMOVAL/INSTALLATION**.)

   j. B-pillar upper trim (See **B-PILLAR UPPER TRIM REMOVAL/INSTALLATION**.)

3. Set the tire house trim aside. (See **TIRE HOUSE TRIM REMOVAL/INSTALLATION**.)

4. Remove the following parts:

   a. Rear package tray (See **REAR PACKAGE TRAY REMOVAL/INSTALLATION**.)

   b. Trunk covering (See **TRUNK COVERING REMOVAL/INSTALLATION**.)

   c. Trunk board (See **TRUNK BOARD REMOVAL/INSTALLATION**.)

   d. Trunk end trim (See **TRUNK END TRIM REMOVAL/INSTALLATION**.)

   e. Trunk side upper trim (See **TRUNK SIDE UPPER TRIM REMOVAL/INSTALLATION**.)

   f. Trunk side trim (LH only) (See **TRUNK SIDE TRIM REMOVAL/INSTALLATION**.)

   g. C-pillar trim (See **C-PILLAR TRIM REMOVAL/INSTALLATION**.)

   h. Upper panel (See **UPPER PANEL REMOVAL**.)

   i. Rear console (See **REAR CONSOLE REMOVAL/INSTALLATION**.)

   j. Shift lever knob (MTX) (See **MANUAL TRANSAXLE SHIFT MECHANISM REMOVAL/INSTALLATION [C66M-R]**.)

   k. Selector lever knob (ATX) (See **AUTOMATIC TRANSAXLE SHIFT MECHANISM REMOVAL/INSTALLATION**.)

   l. Shift panel (See **SHIFT PANEL REMOVAL/INSTALLATION**.)

   m. Front console box (See **FRONT CONSOLE BOX REMOVAL/INSTALLATION**.)

   n. CD player (with CD player) (See **CD PLAYER REMOVAL**.)

   o. Glove compartment (See **GLOVE COMPARTMENT REMOVAL/INSTALLATION**.)

   p. Decoration panel (See **DECORATION PANEL REMOVAL/INSTALLATION**.)

   q. Side wall (See **SIDE WALL REMOVAL/INSTALLATION**.)

   r. Front console (See **FRONT CONSOLE REMOVAL/INSTALLATION**.)

   s. Headliner (See **HEADLINER REMOVAL/INSTALLATION**.)

5. Peel off the tape shown in the figure and remove antenna feeder No.2.

Without sunroof

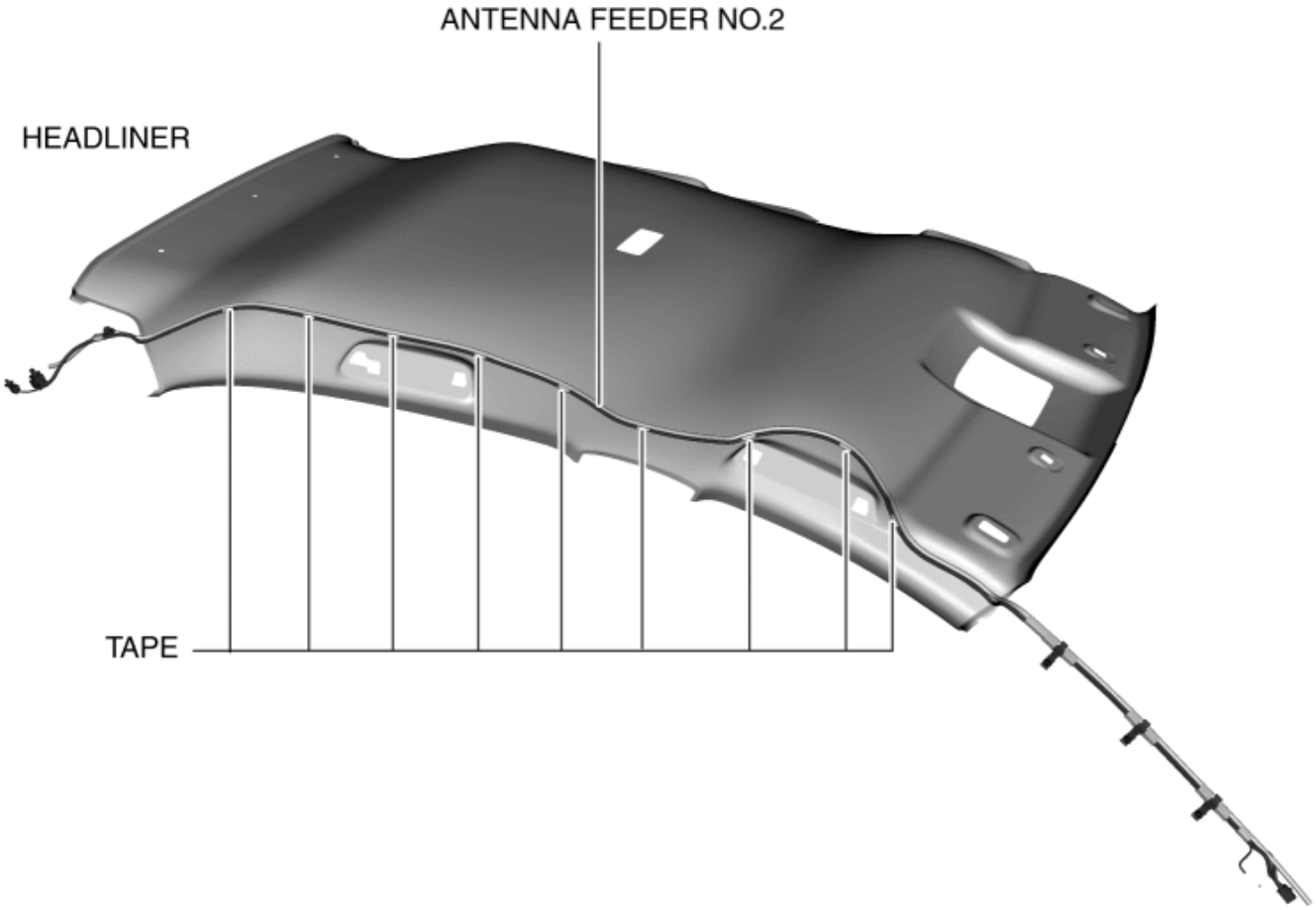

With sunroof

ANTENNA FEEDER NO.2 REMOVAL

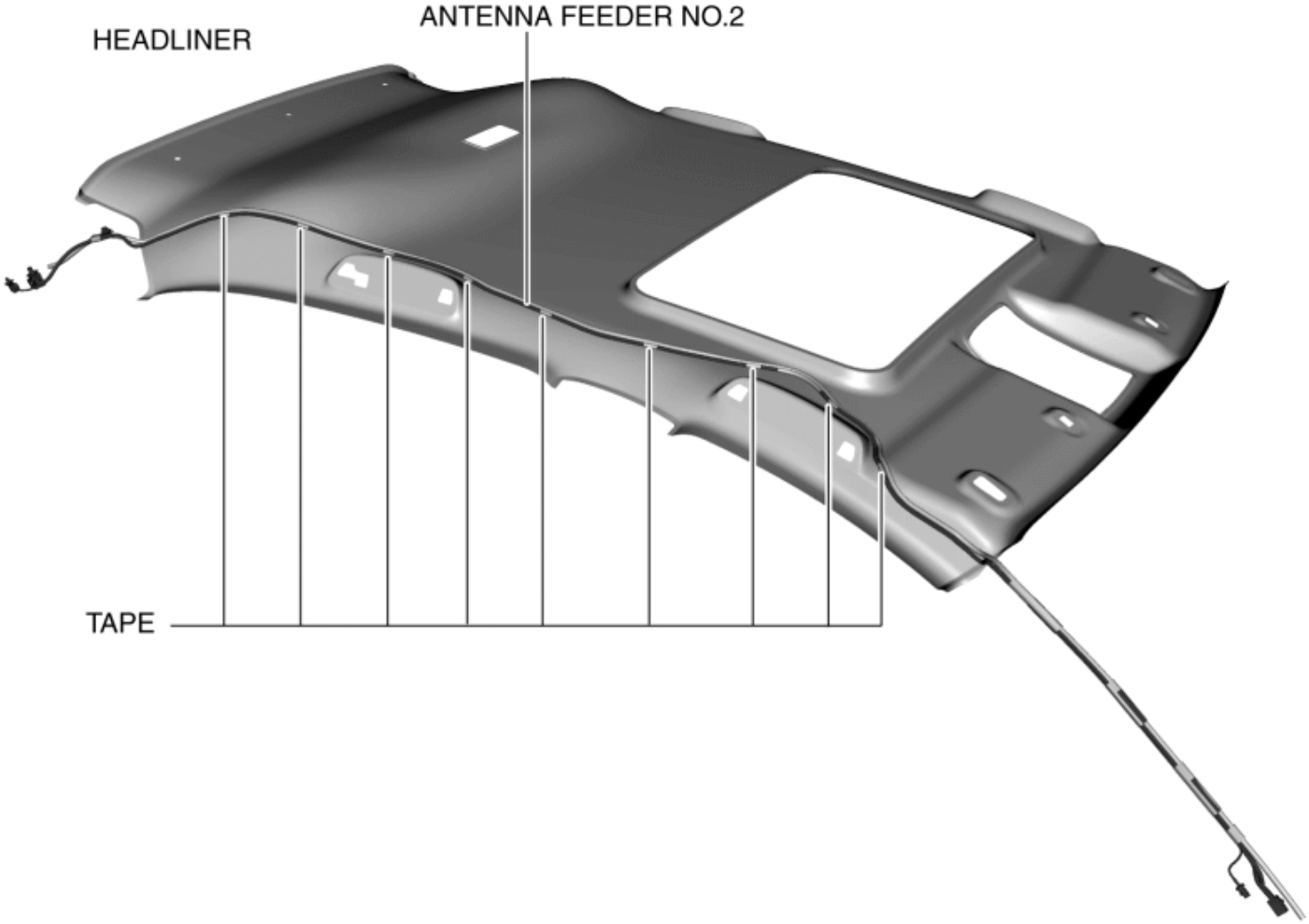

2014 - Mazda3 - Body and Accessories

ANTENNA FEEDER NO.2 INSTALLATION

4SD

1. Affix tape shown in the figure and install antenna feeder No.2.

Without sunroof

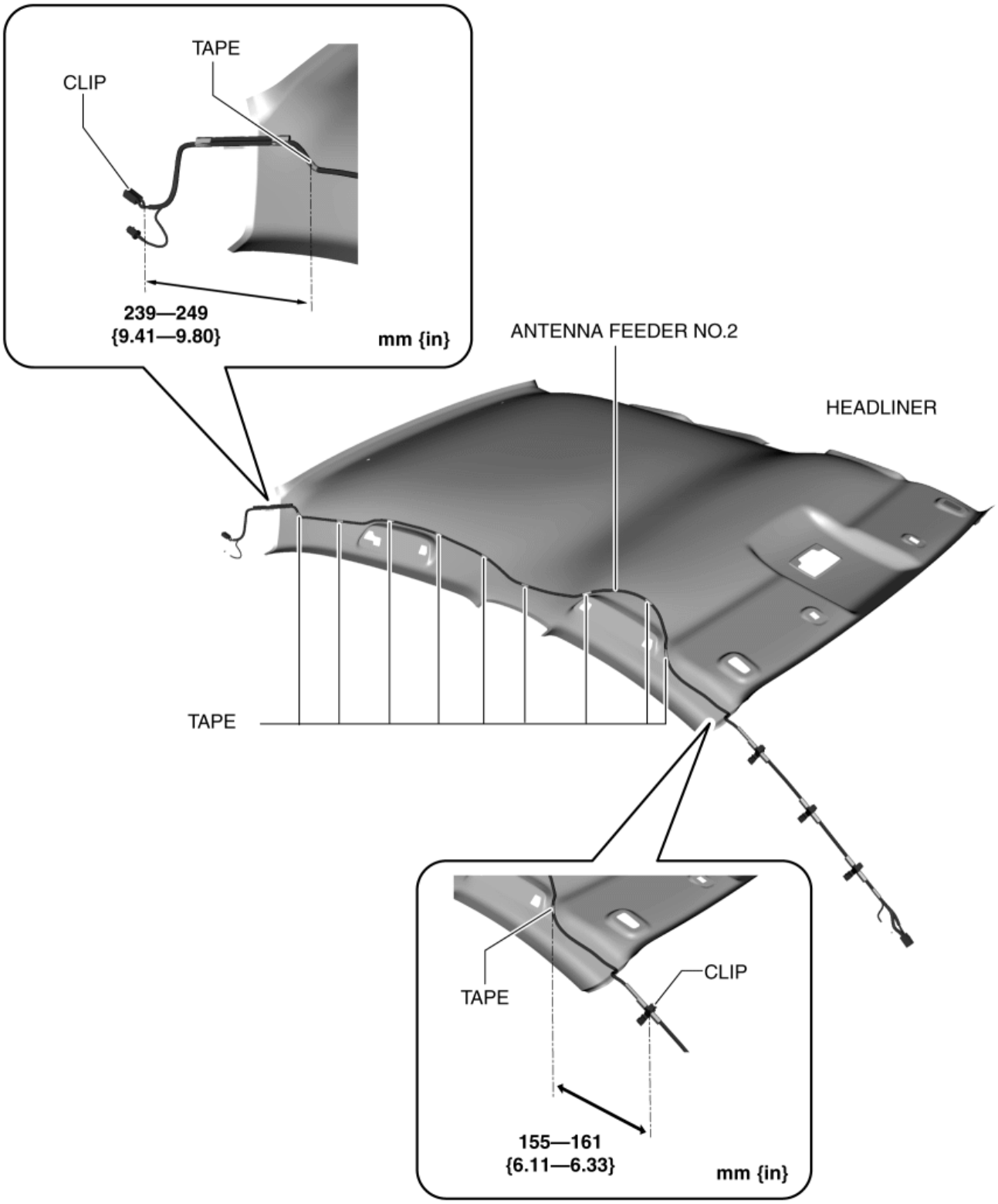

With sunroof

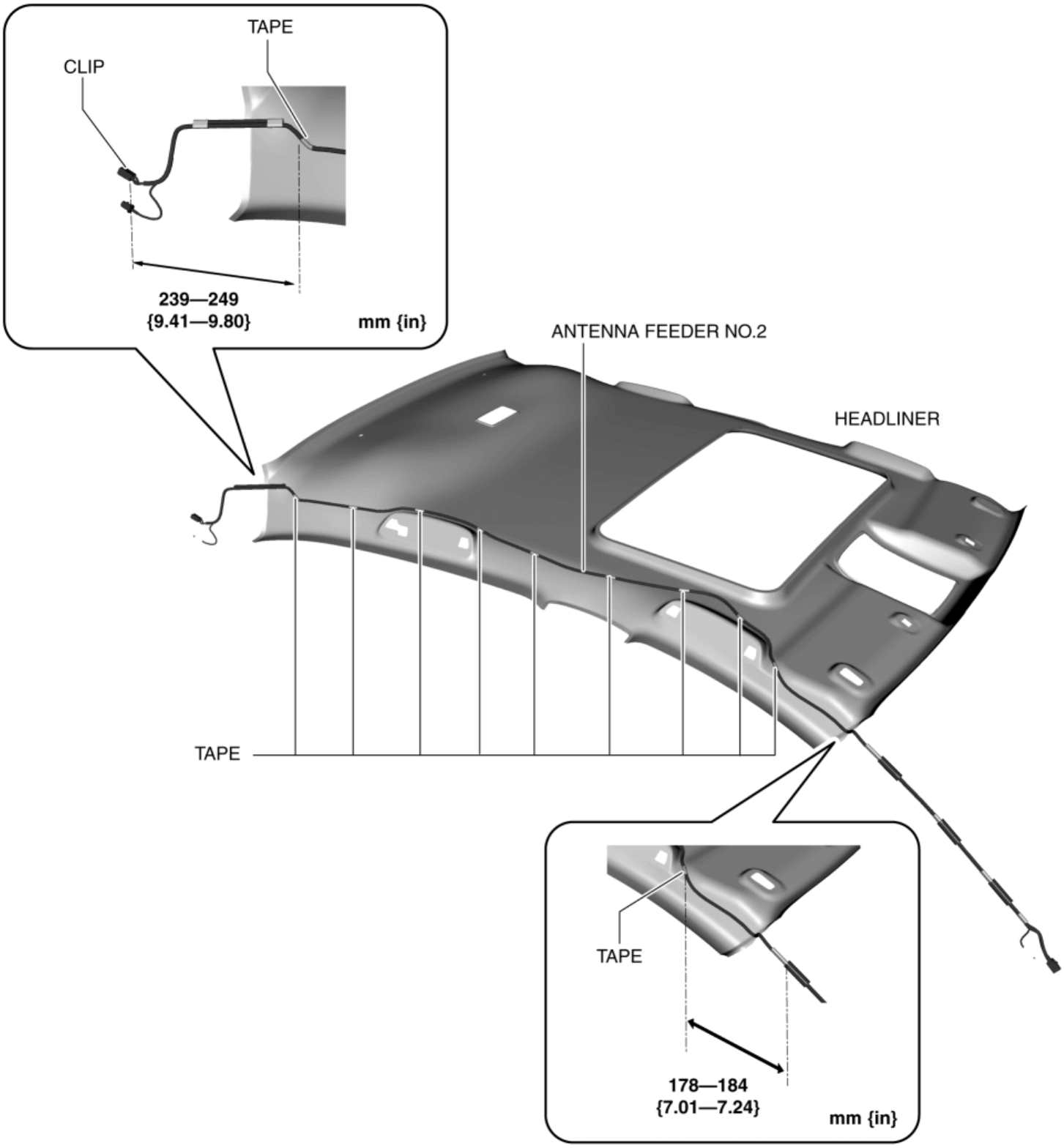

2. Installation the following parts:

   a. Headliner (See **HEADLINER REMOVAL / INSTALLATION**.)

   b. Front console (See **FRONT CONSOLE REMOVAL / INSTALLATION**.)

   c. Side wall (See **SIDE WALL REMOVAL / INSTALLATION**.)

   d. Decoration panel (See **DECORATION PANEL REMOVAL / INSTALLATION**.)

   e. Glove compartment (See **GLOVE COMPARTMENT REMOVAL / INSTALLATION**.)

   f. CD player (with CD player) (See **CD PLAYER INSTALLATION**.)

   g. Front console box (See **FRONT CONSOLE BOX REMOVAL / INSTALLATION**.)

h. Shift panel (See **SHIFT PANEL REMOVAL/INSTALLATION**.)

i. Selector lever knob (ATX) (See **AUTOMATIC TRANSAXLE SHIFT MECHANISM REMOVAL/INSTALLATION**.)

j. Shift lever knob (MTX) (See **MANUAL TRANSAXLE SHIFT MECHANISM REMOVAL/INSTALLATION [C66M-R]**.)

k. Rear console (See **REAR CONSOLE REMOVAL/INSTALLATION**.)

l. Upper panel (See **UPPER PANEL INSTALLATION**.)

m. C-pillar trim (See **C-PILLAR TRIM REMOVAL/INSTALLATION**.)

n. Tire house trim (See **TIRE HOUSE TRIM REMOVAL/INSTALLATION**.)

o. B-pillar upper trim (See **B-PILLAR UPPER TRIM REMOVAL/INSTALLATION**.)

p. Upper anchor installation bolt on the seat belt (See **FRONT SEAT BELT REMOVAL/INSTALLATION**.)

q. Adjust anchor cover (See **FRONT SEAT BELT REMOVAL/INSTALLATION**.)

r. B-pillar lower trim (See **B-PILLAR LOWER TRIM REMOVAL/INSTALLATION**.)

s. Rear scuff plate (See **REAR SCUFF PLATE REMOVAL/INSTALLATION**.)

t. Front scuff plate (See **FRONT SCUFF PLATE REMOVAL/INSTALLATION**.)

u. Assist handle (See **ASSIST HANDLE REMOVAL/INSTALLATION**.)

v. Front map light (dual light type) (See **FRONT MAP LIGHT REMOVAL/INSTALLATION**.)

w. Sunvisor (See **SUNVISOR REMOVAL/INSTALLATION**.)

x. A-pillar trim (See **A-PILLAR TRIM REMOVAL/INSTALLATION**.)

3. Connect the negative battery cable. (See **NEGATIVE BATTERY CABLE DISCONNECTION/CONNECTION [SKYACTIV-G 2.0, SKYACTIV-G 2.5]**.)

5HB

1. Affix tape shown in the figure and install antenna feeder No.2.

Without sunroof

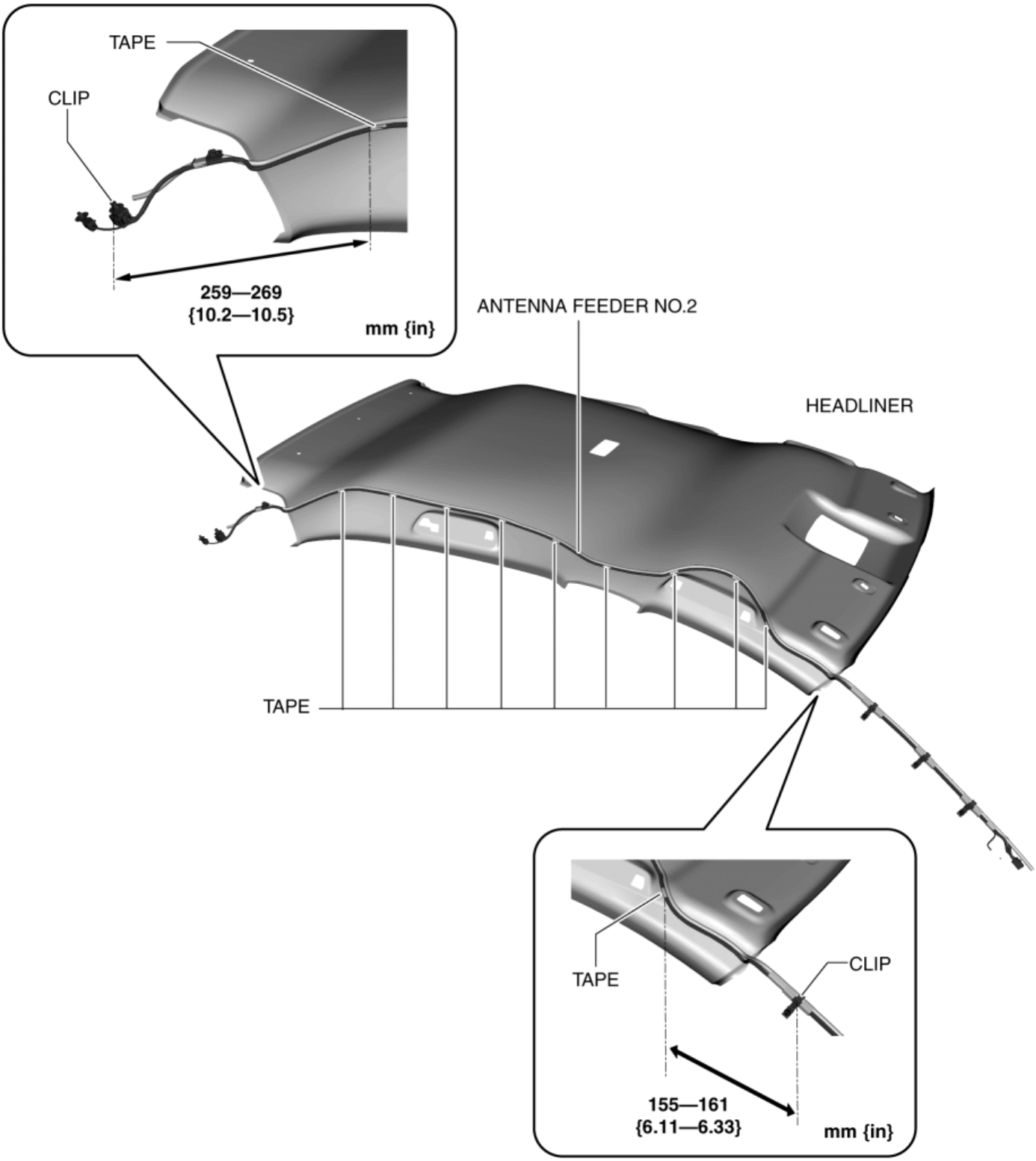

With sunroof

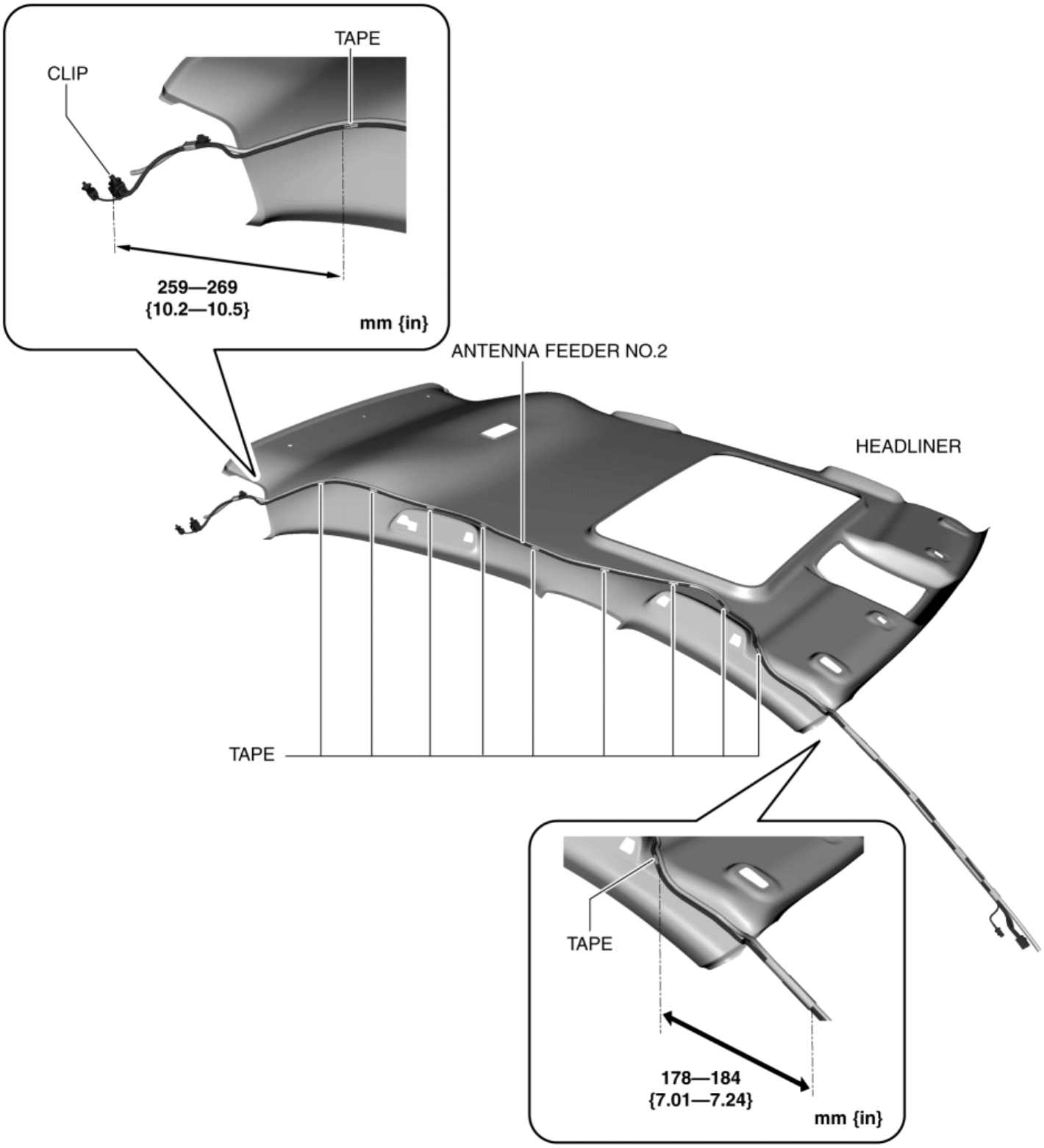

2. Installation the following parts:

   a. Headliner (See **HEADLINER REMOVAL / INSTALLATION**.)

   b. Front console (See **FRONT CONSOLE REMOVAL / INSTALLATION**.)

   c. Side wall (See **SIDE WALL REMOVAL / INSTALLATION**.)

   d. Decoration panel (See **DECORATION PANEL REMOVAL / INSTALLATION**.)

   e. Glove compartment (See **GLOVE COMPARTMENT REMOVAL / INSTALLATION**.)

   f. CD player (with CD player) (See **CD PLAYER INSTALLATION**.)

   g. Front console box (See **FRONT CONSOLE BOX REMOVAL / INSTALLATION**.)

h. Shift panel (See **SHIFT PANEL REMOVAL/INSTALLATION**.)

i. Selector lever knob (ATX) (See **AUTOMATIC TRANSAXLE SHIFT MECHANISM REMOVAL/INSTALLATION**.)

j. Shift lever knob (MTX) (See **MANUAL TRANSAXLE SHIFT MECHANISM REMOVAL/INSTALLATION [C66M-R]**.)

k. Rear console (See **REAR CONSOLE REMOVAL/INSTALLATION**.)

l. Upper panel (See **UPPER PANEL INSTALLATION**.)

m. C-pillar trim (See **C-PILLAR TRIM REMOVAL/INSTALLATION**.)

n. Trunk side trim (LH only) (See **TRUNK SIDE TRIM REMOVAL/INSTALLATION**.)

o. Trunk side upper trim (See **TRUNK SIDE UPPER TRIM REMOVAL/INSTALLATION**.)

p. Trunk end trim (See **TRUNK END TRIM REMOVAL/INSTALLATION**.)

q. Trunk board (See **TRUNK BOARD REMOVAL/INSTALLATION**.)

r. Trunk covering (See **TRUNK COVERING REMOVAL/INSTALLATION**.)

s. Rear package tray (See **REAR PACKAGE TRAY REMOVAL/INSTALLATION**.)

t. Tire house trim (See **TIRE HOUSE TRIM REMOVAL/INSTALLATION**.)

u. B-pillar upper trim (See **B-PILLAR UPPER TRIM REMOVAL/INSTALLATION**.)

v. Upper anchor installation bolt on the seat belt (See **FRONT SEAT BELT REMOVAL/INSTALLATION**.)

w. Adjust anchor cover (See **FRONT SEAT BELT REMOVAL/INSTALLATION**.)

x. B-pillar lower trim (See **B-PILLAR LOWER TRIM REMOVAL/INSTALLATION**.)

y. Rear scuff plate (See **REAR SCUFF PLATE REMOVAL/INSTALLATION**.)

z. Front scuff plate (See **FRONT SCUFF PLATE REMOVAL/INSTALLATION**.)

aa. Assist handle (See **ASSIST HANDLE REMOVAL/INSTALLATION**.)

ab. Front map light (dual light type) (See **FRONT MAP LIGHT REMOVAL/INSTALLATION**.)

ac. Sunvisor (See **SUNVISOR REMOVAL/INSTALLATION**.)

ad. A-pillar trim (See **A-PILLAR TRIM REMOVAL/INSTALLATION**.)

3. Connect the negative battery cable. (See **NEGATIVE BATTERY CABLE DISCONNECTION/CONNECTION [SKYACTIV-G 2.0, SKYACTIV-G 2.5]**.)

2014 - Mazda3 - Body and Accessories

ANTENNA FEEDER NO.2 INSPECTION

4SD

1. Disconnect the negative battery cable. (See **NEGATIVE BATTERY CABLE DISCONNECTION/CONNECTION [SKYACTIV-G 2.0, SKYACTIV-G 2.5]**.)
2. Remove the A-pillar trim (RH). (See **A-PILLAR TRIM REMOVAL/INSTALLATION**.)
3. Remove the C-pillar trim (RH). (See **C-PILLAR TRIM REMOVAL/INSTALLATION**.)
4. Disconnect antenna feeder No.1.

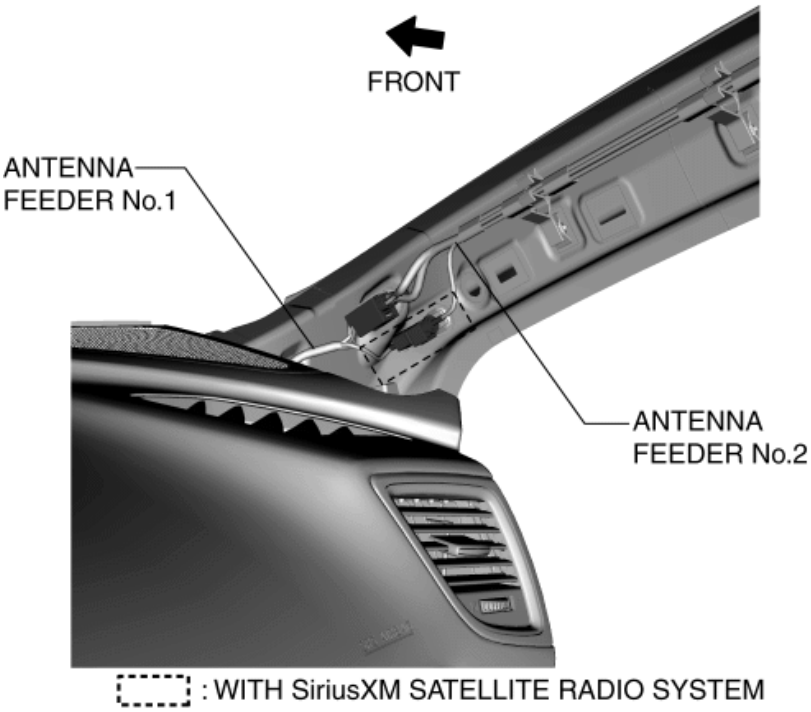

5. Disconnect antenna amplifier.

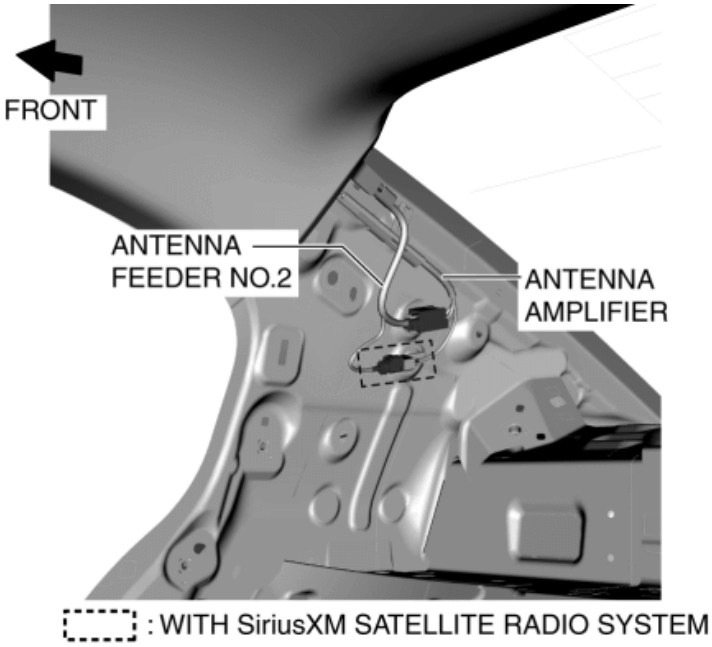

6. Verify that the continuity between antenna feeder No.2 terminals is as indicated in the table.

○—○ : Continuity

Test condition	Terminal											
	ANTENNA FEEDER NO.2 SIDE CONNECTOR				ANTENNA FEEDER NO.2 SIDE CONNECTOR		CENTER ROOF ANTENNA SIDE CONNECTOR		ANTENNA AMPLIFIER SIDE CONNECTOR			
	A	B	C	C'	A	A'	A	A'	A	B	C	C'
Under any condition			○	○							○	
		○	○	○					○	○	○	○
				○								○
					○	○	○					
						○	○	○				

: WITH SiriusXM SATELLITE RADIO SYSTEM

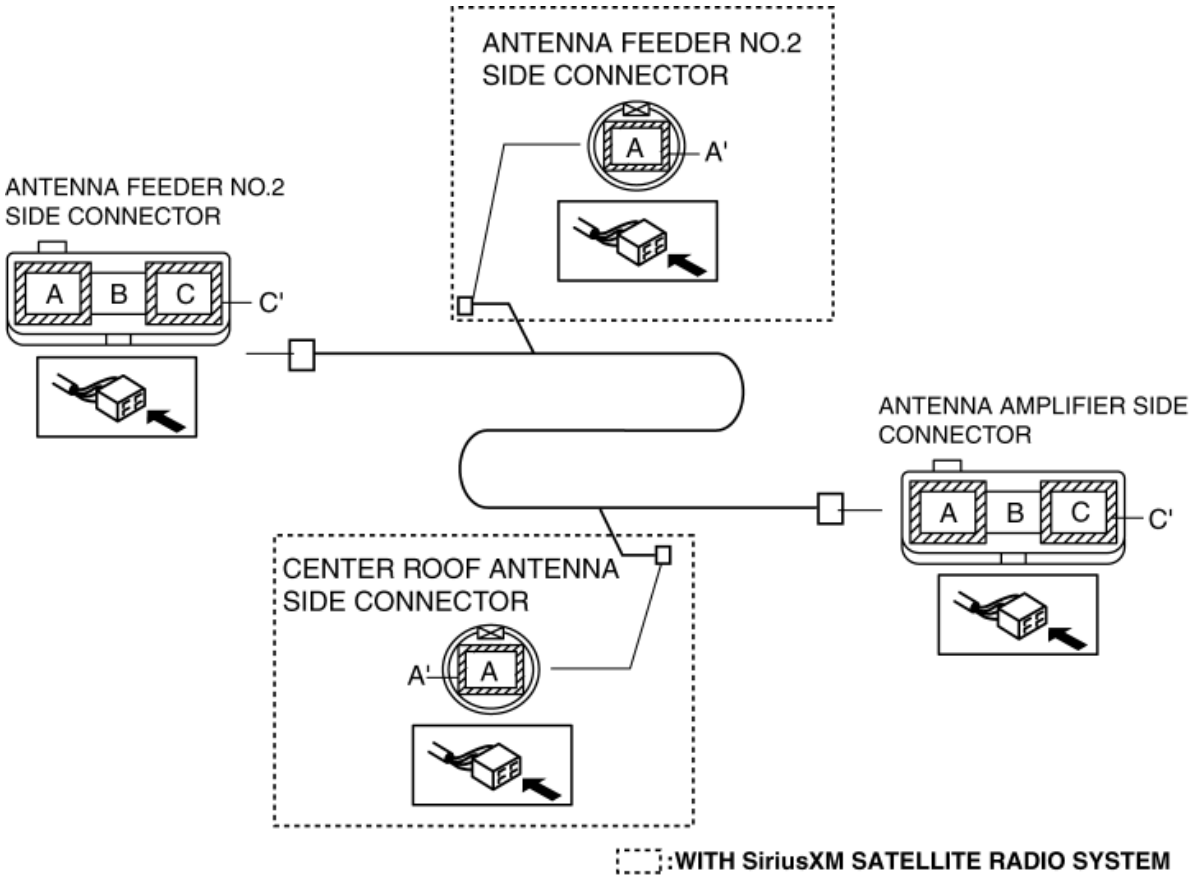

- If not as indicated in the table, replace antenna feeder No.2.

5HB

1. Disconnect the negative battery cable. (See **NEGATIVE BATTERY CABLE DISCONNECTION/CONNECTION [SKYACTIV-G 2.0, SKYACTIV-G 2.5]**.)
2. Remove the following parts:
   a. A-pillar trim (RH) (See **A-PILLAR TRIM REMOVAL/INSTALLATION**.)
   b. Rear package tray (See **REAR PACKAGE TRAY REMOVAL/INSTALLATION**.)
   c. Trunk covering (See **TRUNK COVERING REMOVAL/INSTALLATION**.)
   d. Trunk end trim (See **TRUNK END TRIM REMOVAL/INSTALLATION**.)
3. Set the tire house trim aside. (See **TIRE HOUSE TRIM REMOVAL/INSTALLATION**.)
4. Remove the trunk side upper trim. (See **TRUNK SIDE UPPER TRIM REMOVAL/INSTALLATION**.)
5. Remove the C-pillar trim. (See **C-PILLAR TRIM REMOVAL/INSTALLATION**.)
6. Disconnect antenna feeder No.1.

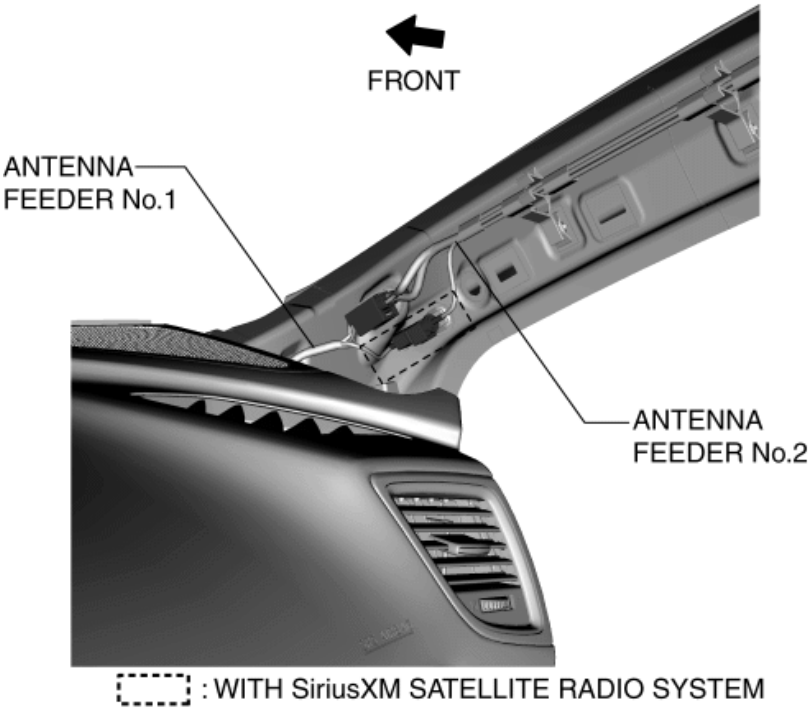

7. Disconnect antenna feeder No.3.

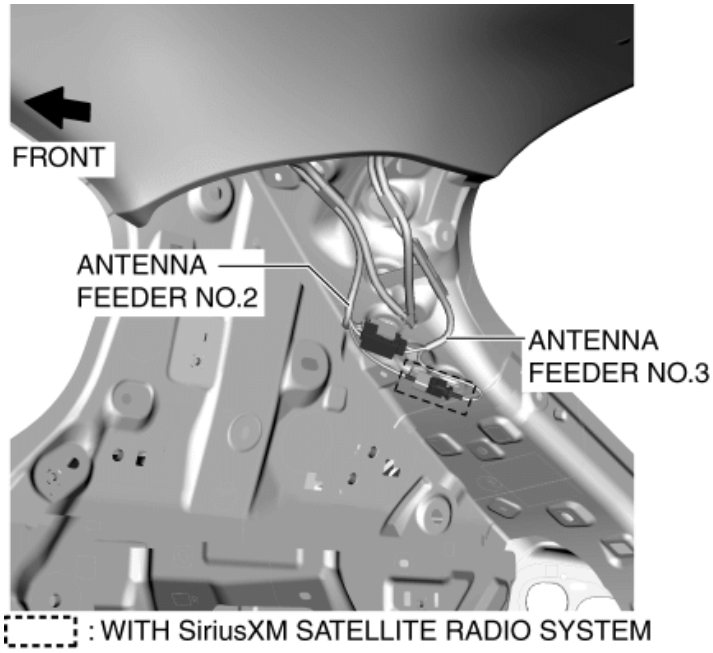

8. Verify that the continuity between antenna feeder No.2 terminals is as indicated in the table.

○—○ : Continuity

Test condition	Terminal											
	ANTENNA FEEDER NO.2 SIDE CONNECTOR				ANTENNA FEEDER NO.2 SIDE CONNECTOR		ANTENNA FEEDER NO.3 SIDE CONNECTOR		ANTENNA FEEDER NO.3 SIDE CONNECTOR			
	A	B	C	C'	A	A'	A	A'	A	B	C	C'
Under any condition			○	———	———	———	———	———	———	———	○	
		○	———	———	———	———	———	———	———	○		
				○	———	———	———	———	———	———	———	○
					○	———	○					
						○	———	○				

⬚ : WITH SiriusXM SATELLITE RADIO SYSTEM

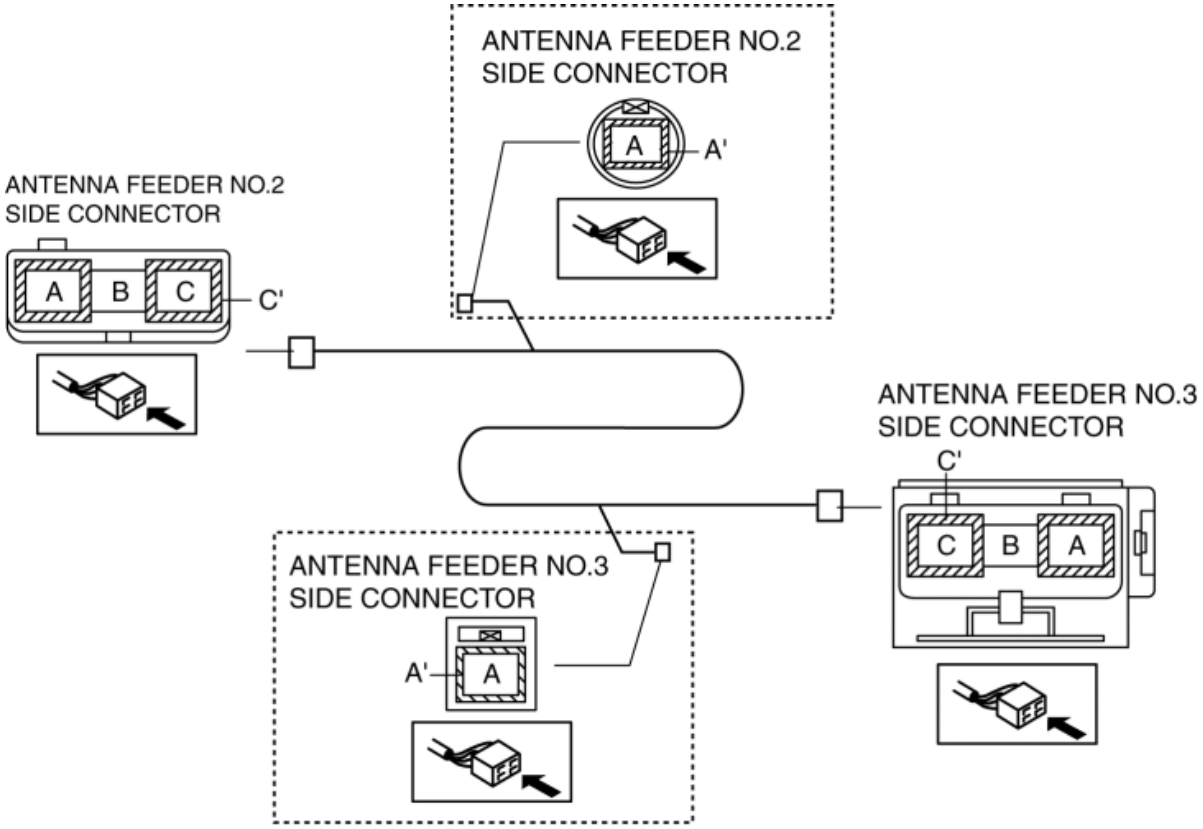

⬚ :WITH SiriusXM SATELLITE RADIO SYSTEM

- If not as indicated in the table, replace antenna feeder No.2.

2014 - Mazda3 - Body and Accessories

ANTENNA FEEDER NO.3 REMOVAL/INSTALLATION

1. Disconnect the negative battery cable. (See **NEGATIVE BATTERY CABLE DISCONNECTION/CONNECTION [SKYACTIV-G 2.0, SKYACTIV-G 2.5]**.)
2. Remove the following parts:
   a. Rear package tray (See **REAR PACKAGE TRAY REMOVAL/INSTALLATION**.)
   b. Trunk covering (See **TRUNK COVERING REMOVAL/INSTALLATION**.)
   c. Trunk end trim (See **TRUNK END TRIM REMOVAL/INSTALLATION**.)
3. Set the tire house trim aside. (See **TIRE HOUSE TRIM REMOVAL/INSTALLATION**.)
4. Remove the following parts:
   a. Trunk side upper trim (See **TRUNK SIDE UPPER TRIM REMOVAL/INSTALLATION**.)
   b. C-pillar trim (See **C-PILLAR TRIM REMOVAL/INSTALLATION**.)
   c. Rear assist handle (See **ASSIST HANDLE REMOVAL/INSTALLATION**.)
5. Partially peel back the headliner.

NOTE:

- If the headliner is peeled back excessively, the headliner could become creased. Be careful not to peel back the headliner excessively.

6. Disconnect the connectors.
7. Detach clip A.

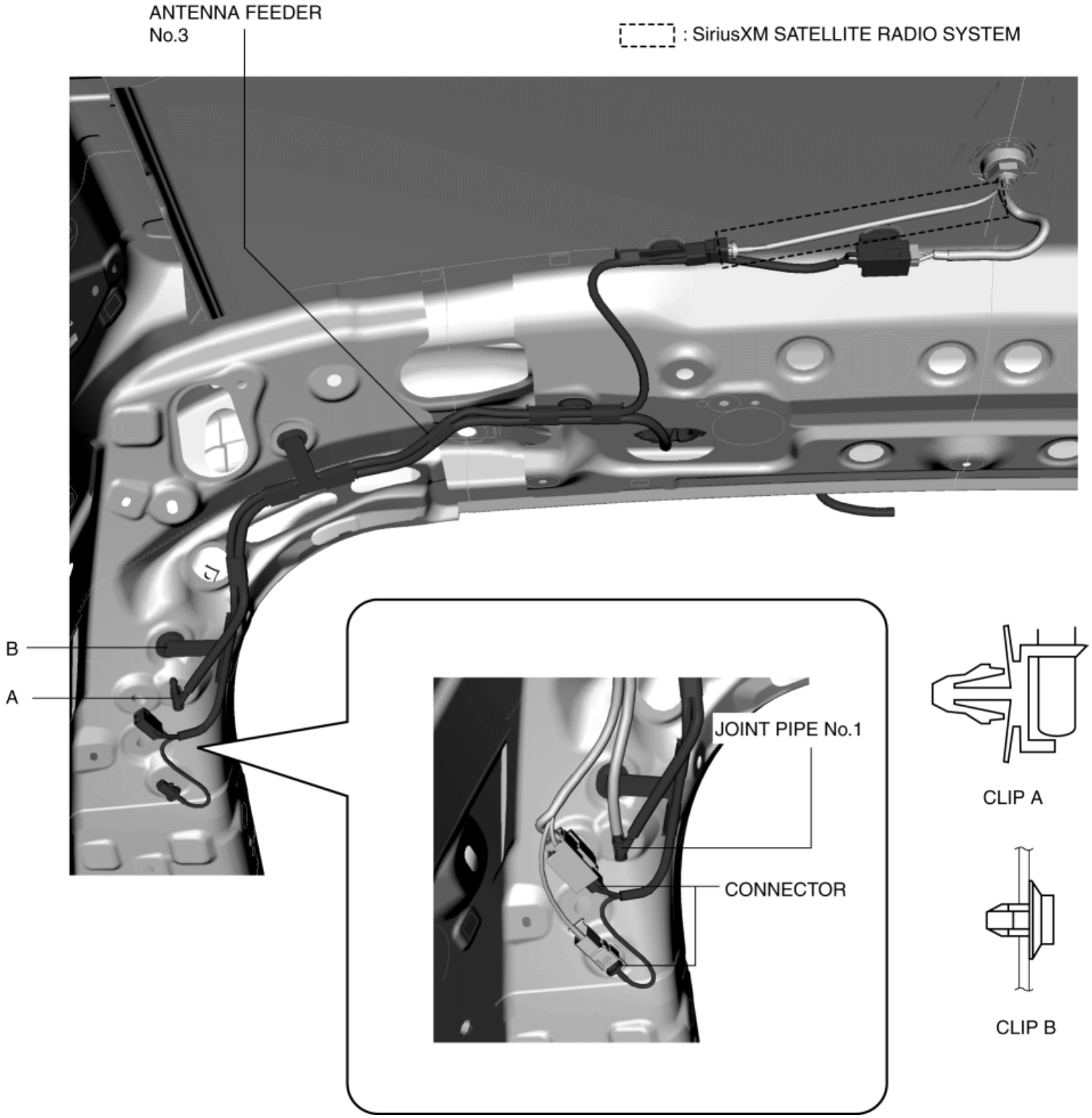

8. Remove the joint pipe No.1 clip B.

9. Remove clips C, D and E.

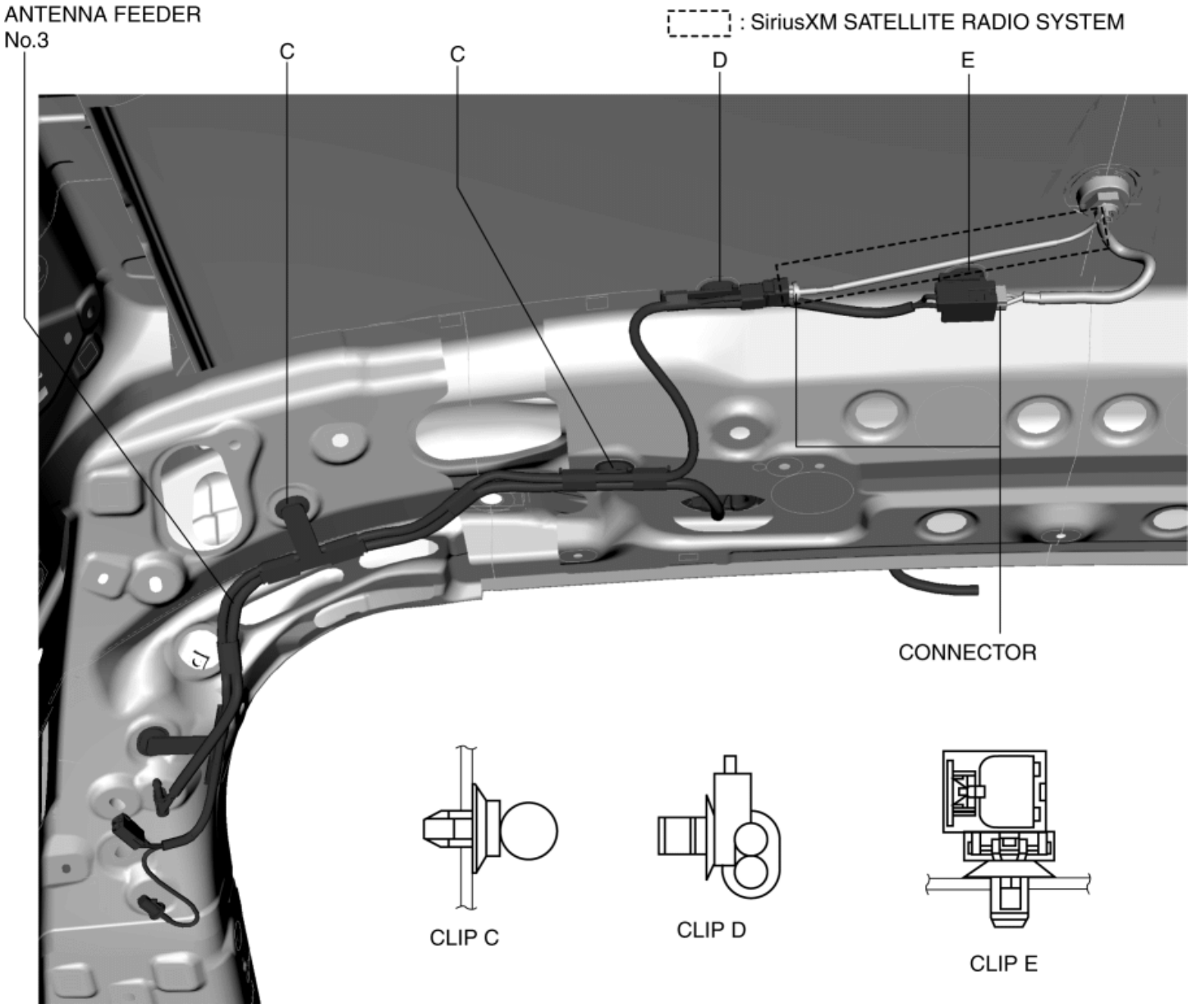

10. Disconnect the connector.
11. Remove the rear washer hose D. (See **REAR WASHER HOSE REMOVAL/INSTALLATION**.)
12. Remove antenna feeder No.3.
13. Install in the reverse order of removal.

2014 - Mazda3 - Body and Accessories

ANTENNA FEEDER NO.3 INSPECTION

1. Disconnect the negative battery cable. (See **NEGATIVE BATTERY CABLE DISCONNECTION/CONNECTION [SKYACTIV-G 2.0, SKYACTIV-G 2.5]**.)
2. Remove the following parts:
   a. Rear package tray (See **REAR PACKAGE TRAY REMOVAL/INSTALLATION**.)
   b. Trunk covering (See **TRUNK COVERING REMOVAL/INSTALLATION**.)
   c. Trunk end trim (See **TRUNK END TRIM REMOVAL/INSTALLATION**.)
3. Set the tire house trim aside. (See **TIRE HOUSE TRIM REMOVAL/INSTALLATION**.)
4. Remove the following parts:
   a. Trunk side upper trim (See **TRUNK SIDE UPPER TRIM REMOVAL/INSTALLATION**.)
   b. C-pillar trim (See **C-PILLAR TRIM REMOVAL/INSTALLATION**.)
   c. Rear assist handle (See **ASSIST HANDLE REMOVAL/INSTALLATION**.)
5. Partially peel back the headliner.

NOTE:

- If the headliner is peeled back excessively, the headliner could become creased. Be careful not to peel back the headliner excessively.

6. Disconnect antenna feeder No.2.
7. Disconnect the center roof antenna connector.
8. Verify that the continuity between antenna feeder No.3 terminals is as indicated in the table.

○—○ : Continuity

Test condition	Terminal											
	ANTENNA FEEDER NO.3 SIDE CONNECTOR				ANTENNA FEEDER NO.3 SIDE CONNECTOR		CENTER ROOF ANTENNA SIDE CONNECTOR		CENTER ROOF ANTENNA SIDE CONNECTOR			
	A	B	C	C'	A	A'	A	A'	A	B	C	C'
Under any condition		○								○		
			○								○	
				○								○
					○		○					
						○		○				

: WITH SiriusXM SATELLITE RADIO SYSTEM

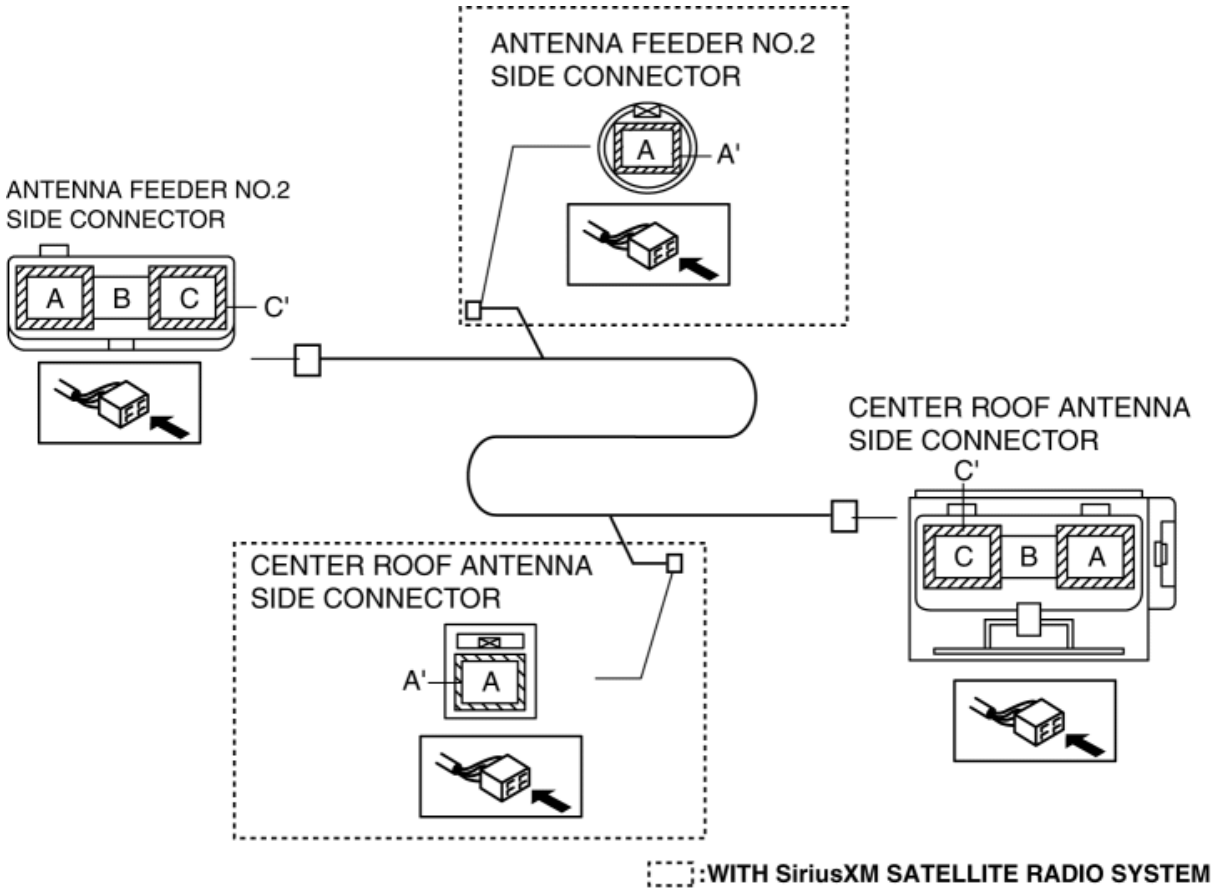

- If not as indicated in the table, replace antenna feeder No.3.

2014 - Mazda3 - Body and Accessories

GLOBAL POSITIONING SYSTEM (GPS) ANTENNA REMOVAL/INSTALLATION

1. Disconnect the negative battery cable. (See **NEGATIVE BATTERY CABLE DISCONNECTION/CONNECTION [SKYACTIV-G 2.0, SKYACTIV-G 2.5]**.)

2. Remove the center speaker grille. (see **SPEAKER GRILLE REMOVAL/INSTALLATION**.)

3. Remove the screw.

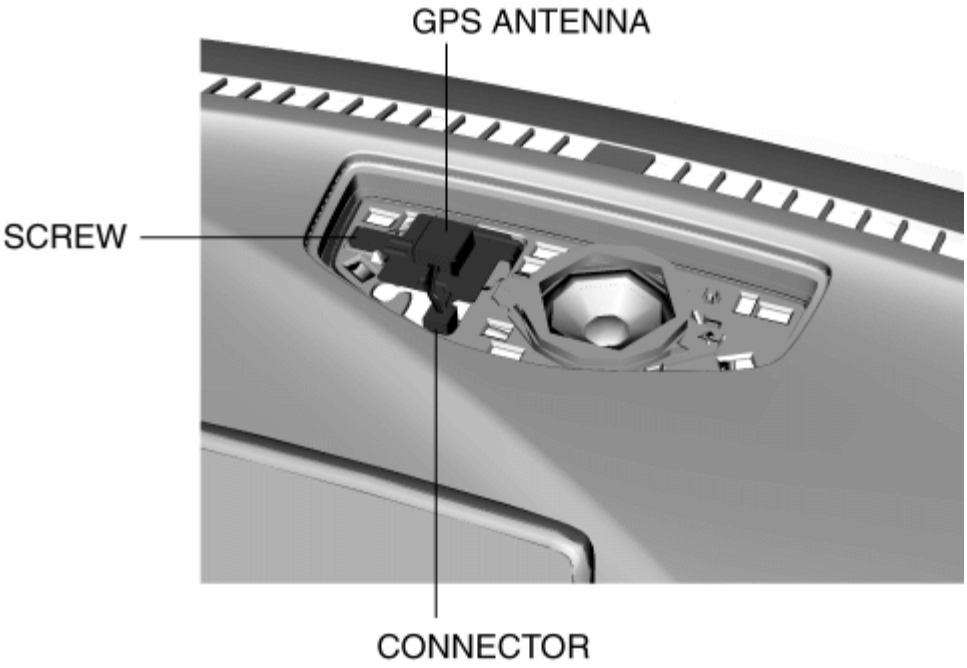

4. Remove the GPS antenna.

5. Disconnect the connector.

6. Install in the reverse order of removal.

2014 - Mazda3 - Body and Accessories

GPS ANTENNA FEEDER REMOVAL/INSTALLATION

1. Disconnect the negative battery cable. (See **NEGATIVE BATTERY CABLE DISCONNECTION/CONNECTION [SKYACTIV-G 2.0, SKYACTIV-G 2.5]**.)

2. Remove the following parts:

   a. Center speaker grille (See **SPEAKER GRILLE REMOVAL/INSTALLATION**.)

   b. Global positioning system (GPS) antenna (See **GLOBAL POSITIONING SYSTEM (GPS) ANTENNA REMOVAL/INSTALLATION**.)

   c. Glove compartment (See **GLOVE COMPARTMENT REMOVAL/INSTALLATION**.)

   d. Decoration panel (See **DECORATION PANEL REMOVAL/INSTALLATION**.)

   e. Center display (See **CENTER DISPLAY REMOVAL/INSTALLATION**.)

3. While pressing the clip tabs in the direction of the arrows (1) shown in the figure, press the GPS antenna feeder in the direction of the arrow (2) to detach the clip tabs from the dashboard.

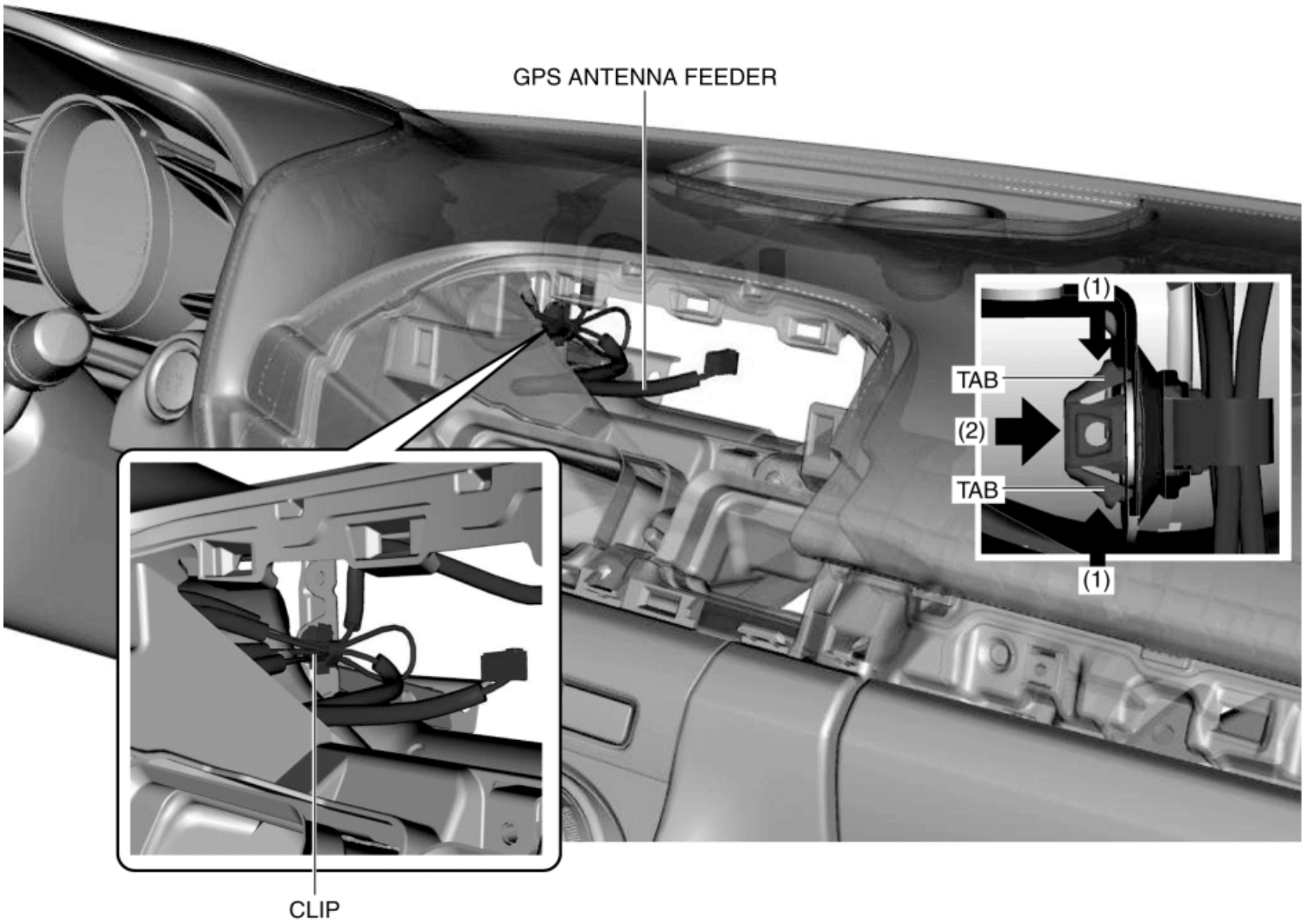

4. Remove the GPS antenna feeder.

5. Install in the reverse order of removal.

2014 - Mazda3 - Body and Accessories

GPS ANTENNA FEEDER INSPECTION

1. Disconnect the negative battery cable. (See **NEGATIVE BATTERY CABLE DISCONNECTION/CONNECTION [SKYACTIV-G 2.0, SKYACTIV-G 2.5]**.)

2. Remove the following parts:

   a. Glove compartment (See **GLOVE COMPARTMENT REMOVAL/INSTALLATION**.)

   b. Decoration panel (See **DECORATION PANEL REMOVAL/INSTALLATION**.)

   c. Center display (See **CENTER DISPLAY REMOVAL/INSTALLATION**.)

   d. Center speaker grille (See **SPEAKER GRILLE REMOVAL/INSTALLATION**.)

3. Disconnect the GPS antenna connector. (See **GLOBAL POSITIONING SYSTEM (GPS) ANTENNA REMOVAL/INSTALLATION**.)

4. Verify that the continuity is as indicated in the table.

○—○ : Continuity

Test condition	Terminal			
	Connectivity master unit (CMU)		GPS antenna	
	A	A'	A	A'
Under any condition	○		○	
		○		○

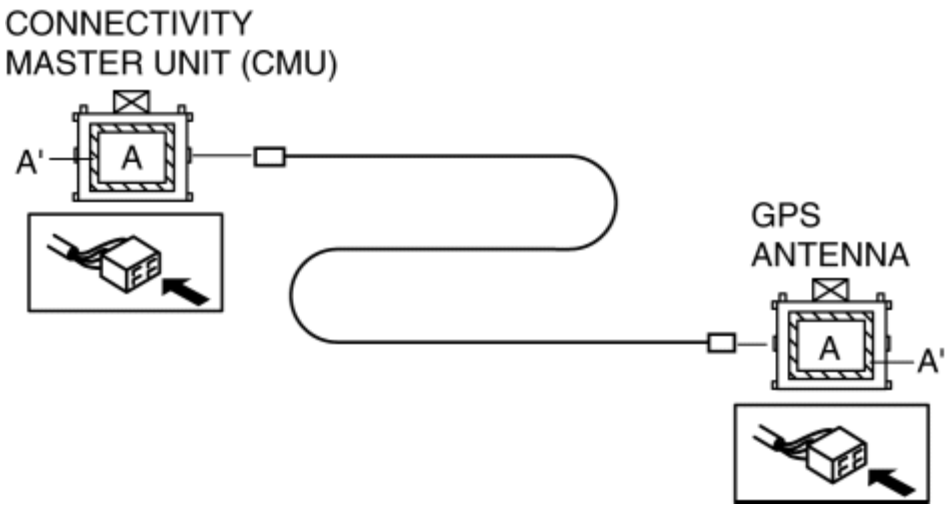

- If not as indicated in the table, replace GPS antenna feeder.

GPS ANTENNA FEEDER INSPECTION

2014 - Mazda3 - Body and Accessories

STEERING SWITCH REMOVAL/INSTALLATION

WARNING:

- Handling the driver-side air bag module improperly can accidentally operate (deploy) the air bag module, which may seriously injure you. Read the service warnings and cautions before handling the air bag module. (See **AIR BAG SYSTEM SERVICE WARNINGS [TWO-STEP DEPLOYMENT CONTROL SYSTEM]**.) (See **AIR BAG SYSTEM SERVICE WARNINGS [STANDARD DEPLOYMENT CONTROL SYSTEM]**.) (See **AIR BAG SYSTEM SERVICE CAUTIONS [TWO-STEP DEPLOYMENT CONTROL SYSTEM]**.) (See **AIR BAG SYSTEM SERVICE CAUTIONS [STANDARD DEPLOYMENT CONTROL SYSTEM]**.)

Without Steering Shift Switch

1. Switch the ignition off.

2. Disconnect the negative battery cable and wait for 1 min or more. (See **NEGATIVE BATTERY CABLE DISCONNECTION/CONNECTION [SKYACTIV-G 2.0, SKYACTIV-G 2.5]**.)

3. Remove the driver-side air bag module. (See **DRIVER-SIDE AIR BAG MODULE REMOVAL [TWO-STEP DEPLOYMENT CONTROL SYSTEM]**.) (See **DRIVER-SIDE AIR BAG MODULE INSTALLATION [TWO-STEP DEPLOYMENT CONTROL SYSTEM]**.) (See **DRIVER-SIDE AIR BAG MODULE REMOVAL [STANDARD DEPLOYMENT CONTROL SYSTEM]**.) (See **DRIVER-SIDE AIR BAG MODULE INSTALLATION [STANDARD DEPLOYMENT CONTROL SYSTEM]**.)

4. Remove the steering wheel. (See **STEERING WHEEL AND COLUMN REMOVAL/INSTALLATION**.)

5. Affix protective tape to the gaps between the steering wheel and cover as shown in the figure.

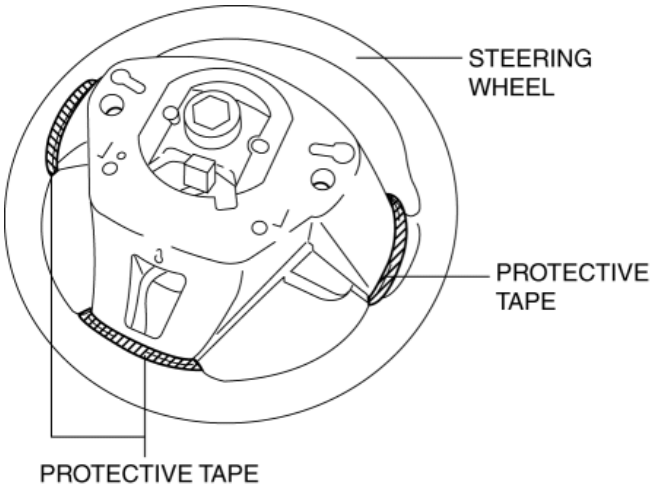

6. Using a tape-wrapped flathead screwdriver, press the cover tabs in the direction of the arrows shown in the figure to detach the cover tabs from the steering wheel.

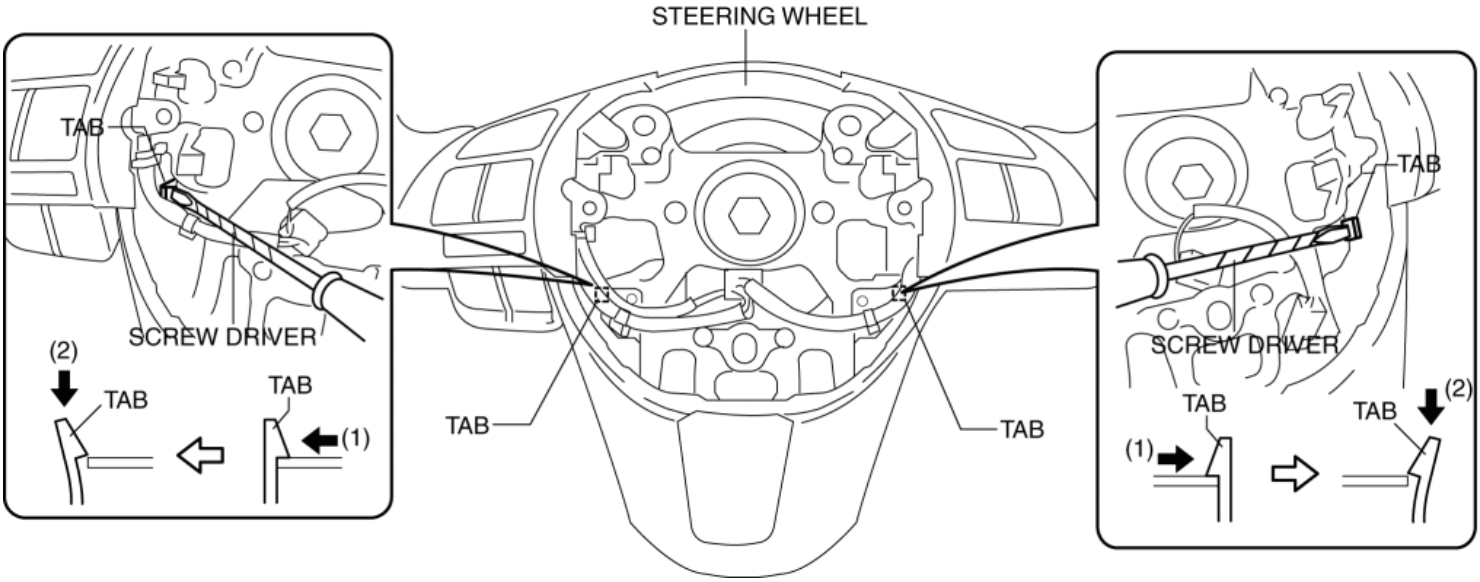

7. Insert the fastener remover into the clearance between the steering wheel and cover as shown in the figure.

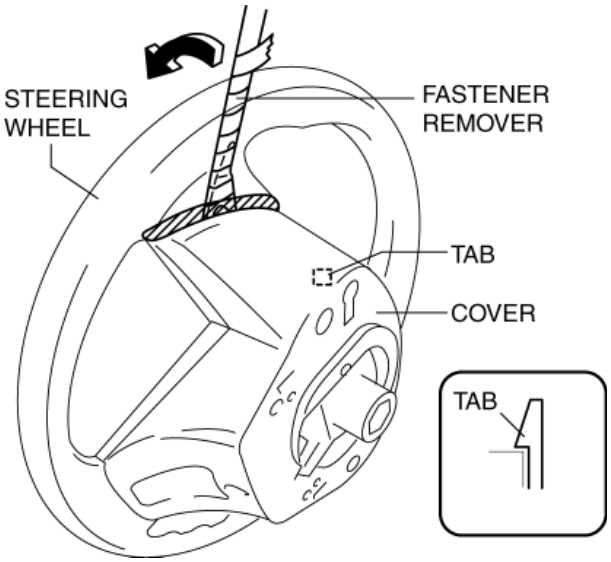

8. Move the fastener remover in the direction of the arrow shown in the figure and detach cover tab from the steering wheel.

9. Remove the cover while detaching the pins from the steering wheel.

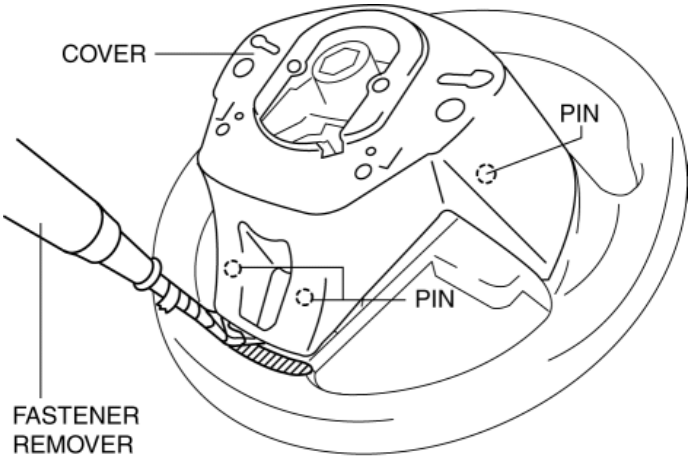

10. While pressing the clip tabs in the direction of the arrows (1) shown in the figure, press the clip in the direction of the arrow (2) to detach the clip tabs from the steering wheel.

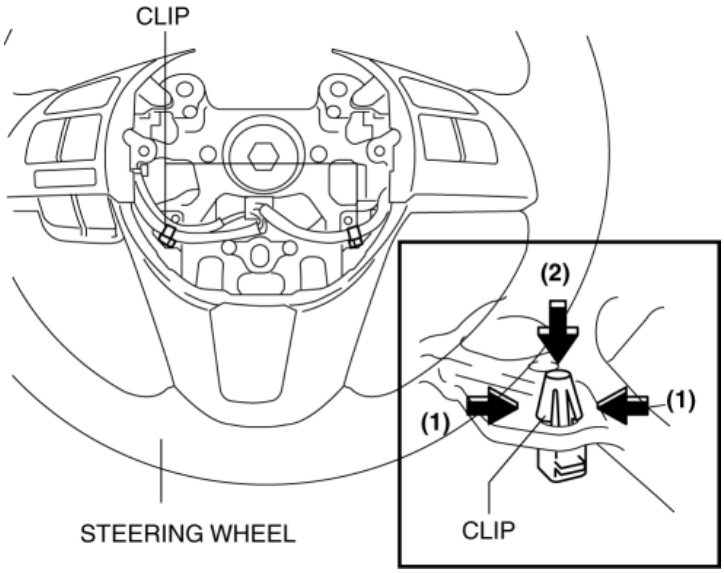

11. Detach the clip.

12. While pressing the tabs of the steering switch in the direction of the arrows (1) shown in the figure, press the steering switch in the direction of the arrow (2) to detach the tabs of the steering switch from the steering wheel.

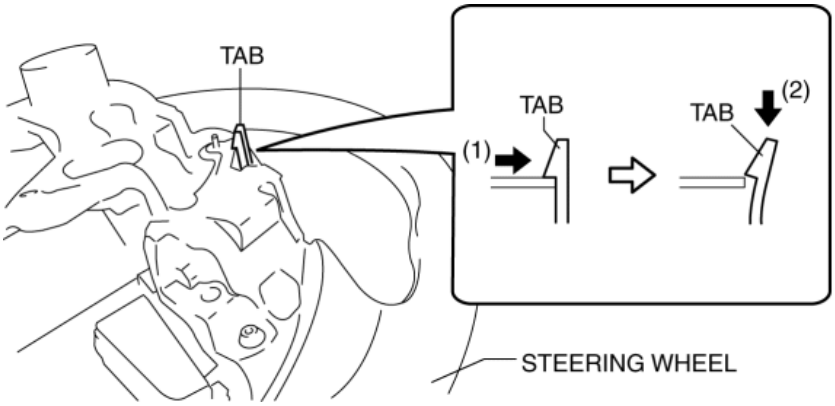

13. Insert a fastener remover into the position shown in the figure.

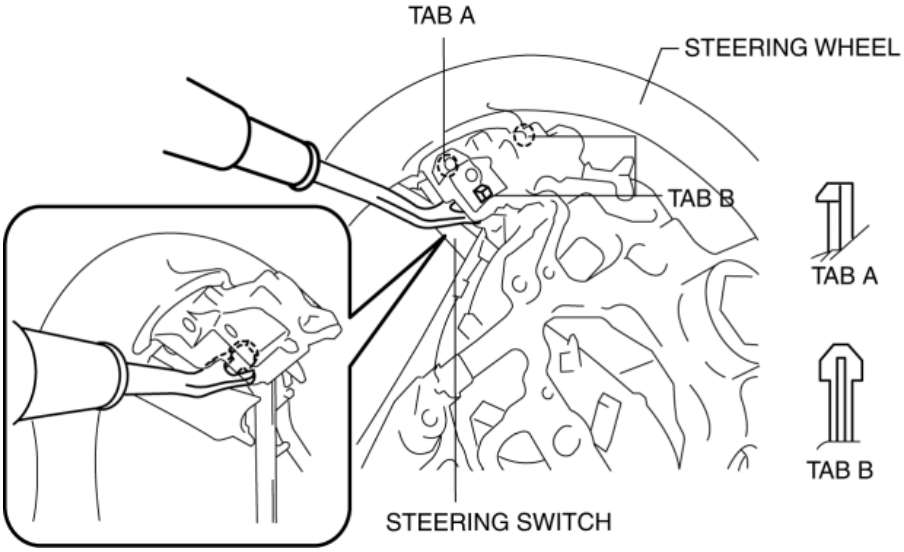

14. Move the fastener remover straight in the direction shown in the figure and remove the tabs of the steering switch from the steering wheel.

CAUTION:

- When removing the pins of the steering switch, pull them out straight. If the fastener remover is moved at an angle, the pins could be damaged.

NOTE:

- Because the pins of the steering switch are installed to the hard plastic area of the steering wheel, the engagement is strong.

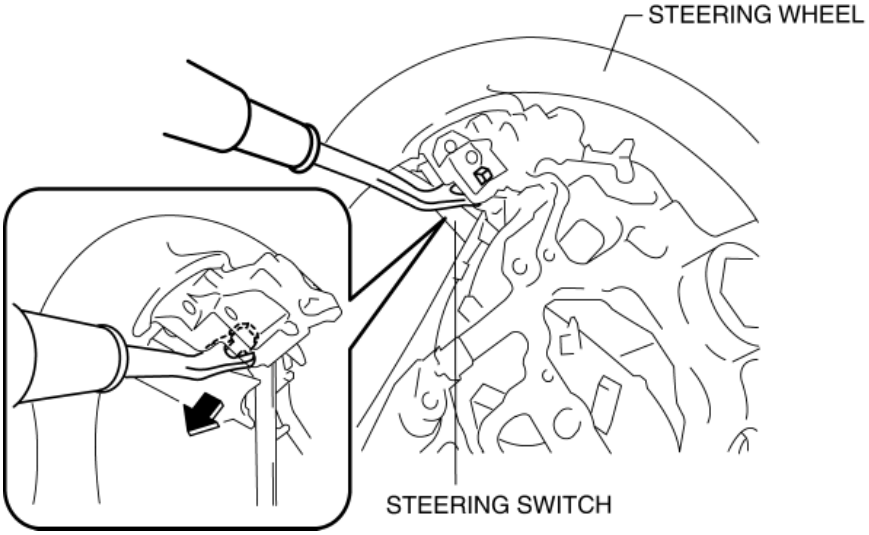

15. Remove the steering switch while detaching the pin and tabs of the steering wheel.

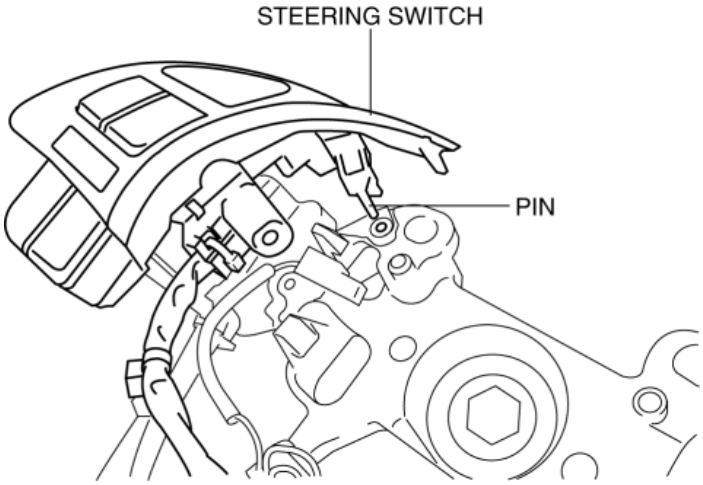

16. Install in the reverse order of removal.

With Steering Shift Switch

1. Switch the ignition off.

2. Disconnect the negative battery cable and wait for 1 min or more. (See **NEGATIVE BATTERY CABLE DISCONNECTION/CONNECTION [SKYACTIV-G 2.0, SKYACTIV-G 2.5]**.)

3. Remove the driver-side air bag module. (See **DRIVER-SIDE AIR BAG MODULE REMOVAL [TWO-STEP DEPLOYMENT CONTROL SYSTEM]**.) (See **DRIVER-SIDE AIR BAG MODULE INSTALLATION [TWO-STEP DEPLOYMENT CONTROL SYSTEM]**.) (See **DRIVER-SIDE AIR BAG MODULE REMOVAL [STANDARD DEPLOYMENT CONTROL SYSTEM]**.) (See **DRIVER-SIDE AIR BAG MODULE INSTALLATION [STANDARD DEPLOYMENT CONTROL SYSTEM]**.)

4. Remove the steering wheel. (See **STEERING WHEEL AND COLUMN REMOVAL/INSTALLATION**.)

5. Remove the screws.

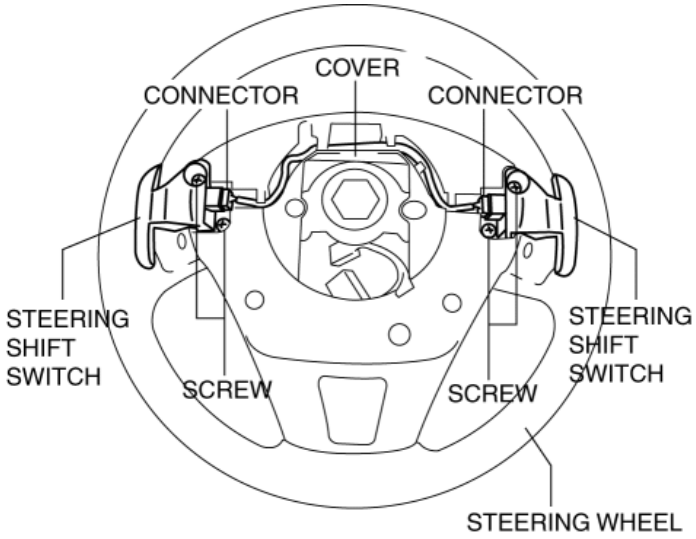

6. Disconnect the connectors.

7. While pressing the pin tabs in the direction of arrows (1) shown in the figure, press the pin in the direction of arrow (2) to detach the cover pin from the steering wheel.

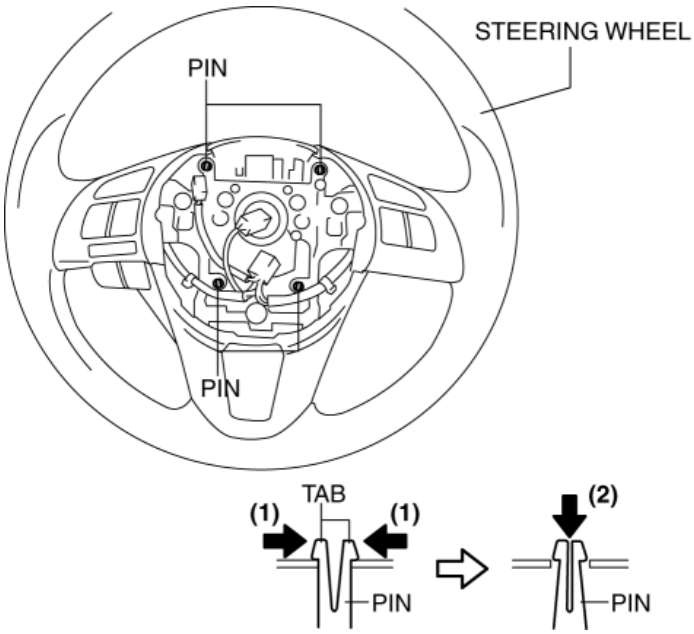

8. Using a tape-wrapped flathead screwdriver, press the cover tabs in the direction of the arrows shown in the figure to detach the cover tabs from the steering wheel.

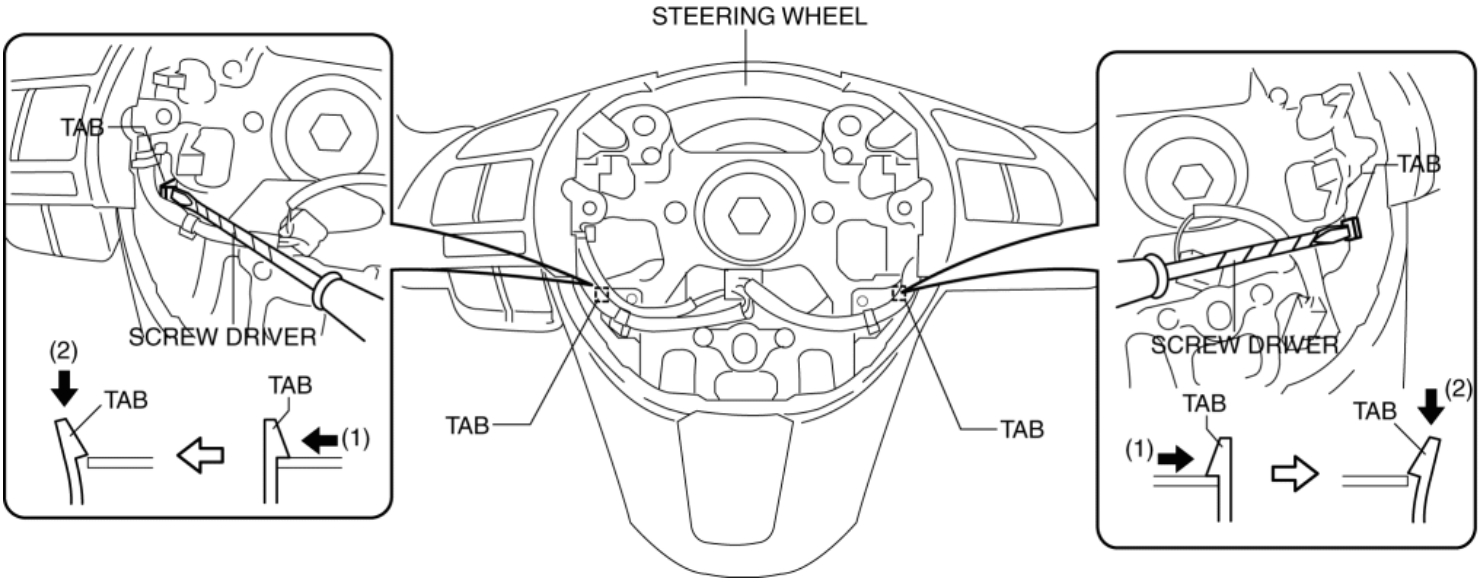

9. Remove the cover.

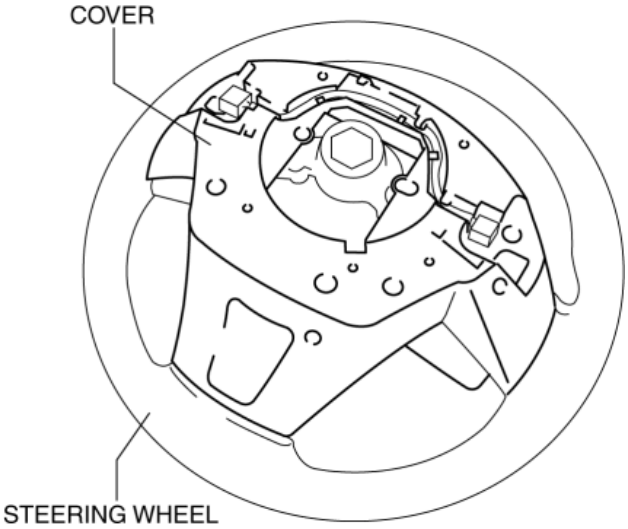

10. While pressing the clip tabs in the direction of the arrows (1) shown in the figure, press the clip in the direction of the arrow (2) to detach the clip tabs from the steering wheel.

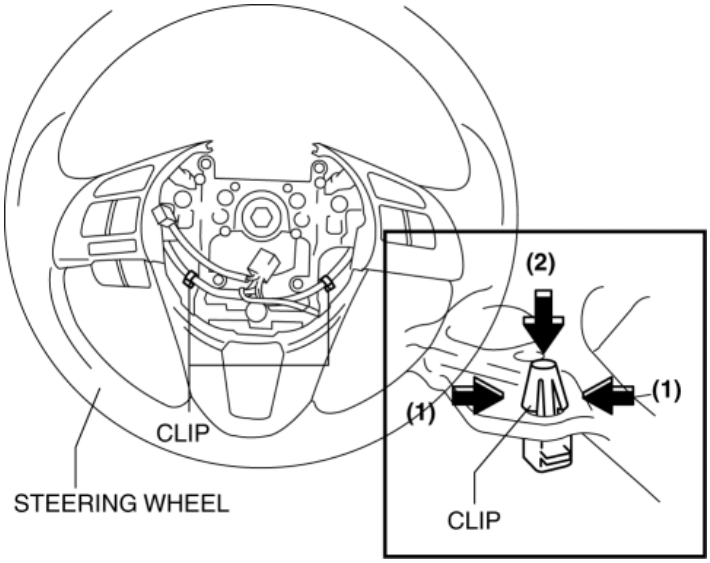

11. Detach the clip.

12. While pressing the tabs of the steering switch in the direction of the arrows (1) shown in the figure, press the steering switch in the direction of the arrow (2) to detach the tabs of the steering switch from the steering wheel.

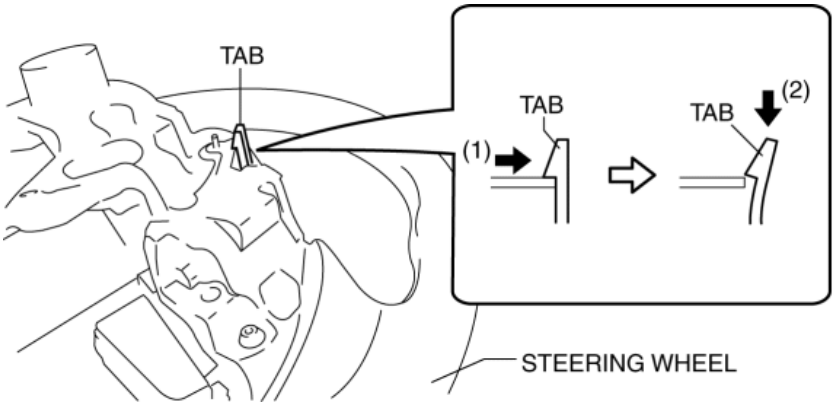

13. Insert a fastener remover into the position shown in the figure.

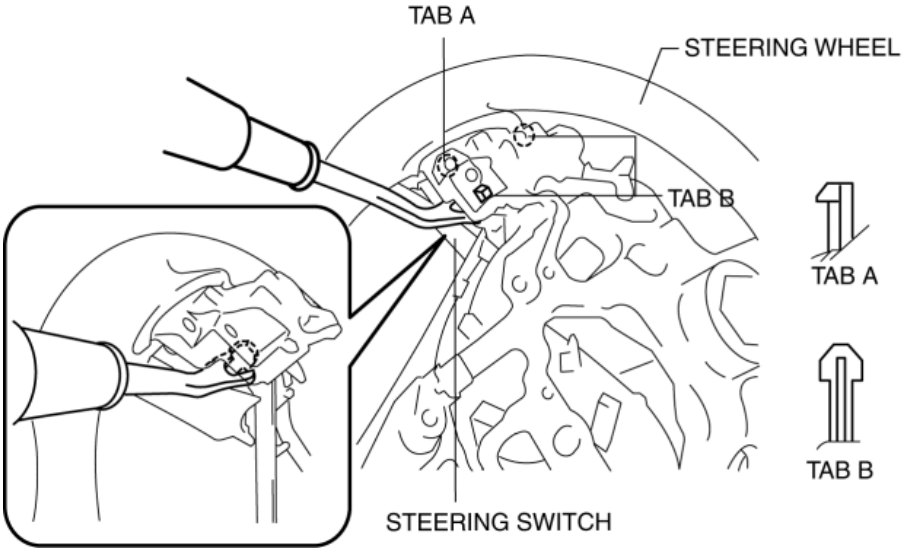

14. Move the fastener remover straight in the direction shown in the figure and remove the tabs of the steering switch from the steering wheel.

CAUTION:

- When removing the pins of the steering switch, pull them out straight. If the fastener remover is moved at an angle, the pins could be damaged.

NOTE:

- Because the pins of the steering switch are installed to the hard plastic area of the steering wheel, the engagement is strong.

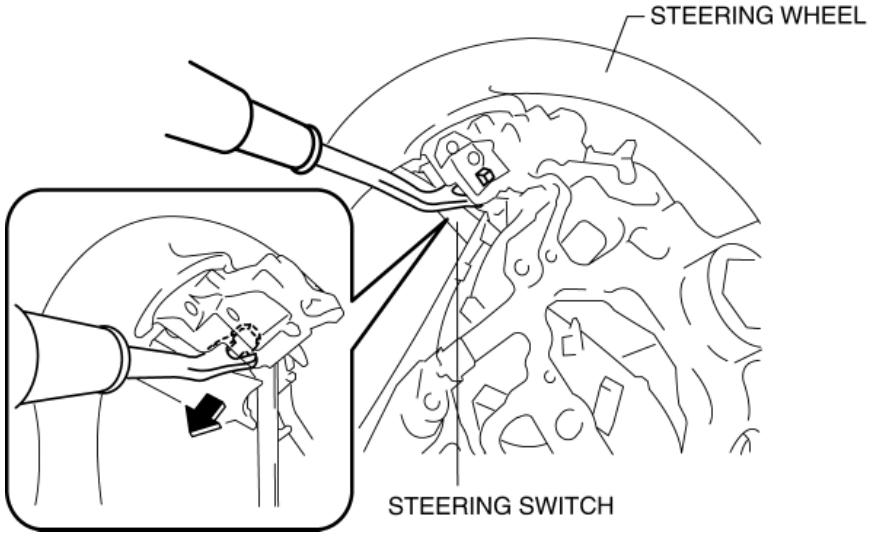

15. Remove the steering switch while detaching the pin and tabs of the steering wheel.

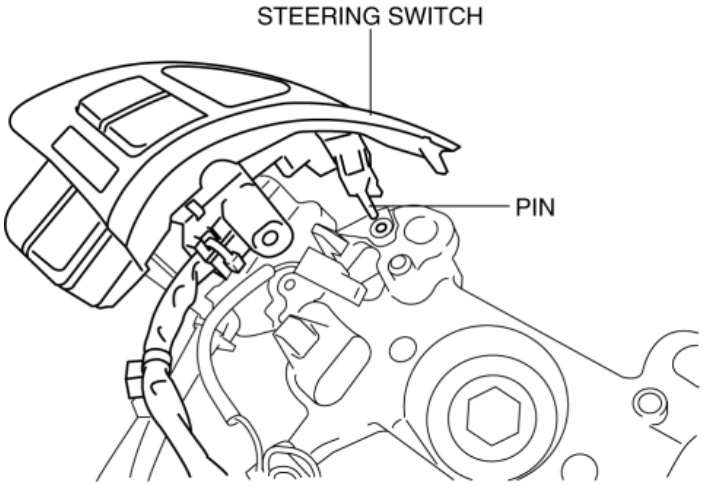

16. Install in the reverse order of removal.

2014 - Mazda3 - Body and Accessories

STEERING SWITCH INSPECTION

Resistance Inspection

WARNING:

- Handling the driver-side air bag module improperly can accidentally operate (deploy) the air bag module, which may seriously injure you. Read the service warnings and cautions before handling the air bag module. (See **AIR BAG SYSTEM SERVICE WARNINGS [TWO-STEP DEPLOYMENT CONTROL SYSTEM]**.) (See **AIR BAG SYSTEM SERVICE CAUTIONS [TWO-STEP DEPLOYMENT CONTROL SYSTEM]**.) (See **AIR BAG SYSTEM SERVICE WARNINGS [STANDARD DEPLOYMENT CONTROL SYSTEM]**.) (See **AIR BAG SYSTEM SERVICE CAUTIONS [STANDARD DEPLOYMENT CONTROL SYSTEM]**.)

1. Switch the ignition OFF.

2. Disconnect the negative battery cable and wait for 1 min or more. (See **NEGATIVE BATTERY CABLE DISCONNECTION/CONNECTION [SKYACTIV-G 2.0, SKYACTIV-G 2.5]**.)

3. Remove the driver-side air bag module. (See **DRIVER-SIDE AIR BAG MODULE REMOVAL [TWO-STEP DEPLOYMENT CONTROL SYSTEM]**.) (See **DRIVER-SIDE AIR BAG MODULE INSTALLATION [TWO-STEP DEPLOYMENT CONTROL SYSTEM]**.) (See **DRIVER-SIDE AIR BAG MODULE REMOVAL [STANDARD DEPLOYMENT CONTROL SYSTEM]**.) (See **DRIVER-SIDE AIR BAG MODULE INSTALLATION [STANDARD DEPLOYMENT CONTROL SYSTEM]**.)

4. Remove the steering wheel. (See **STEERING WHEEL AND COLUMN REMOVAL/INSTALLATION**.)

Cue/automatic band selector switch or volume adjustment switch

1. Measure the resistance between steering switches H and J under the following conditions:

    - Resistance with volume adjustment switch (-) pressed and held

        - 53.064—54.136 ohms

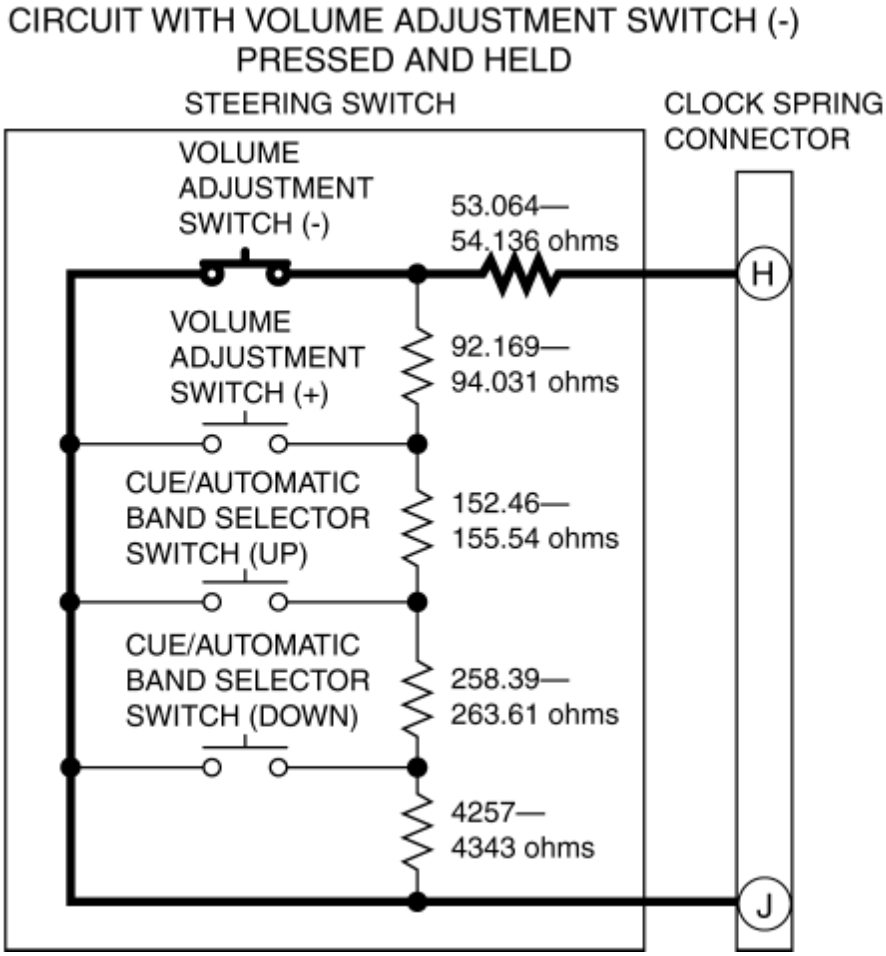

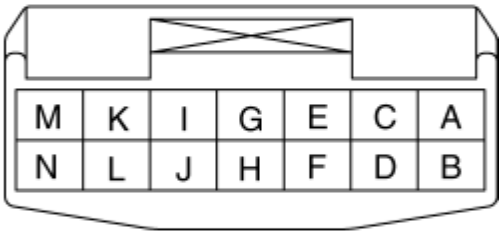

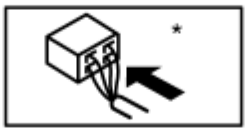

*:PART WIRING HARNESS SIDE

- Resistance with volume adjustment switch (+) pressed and held
  - 145.233—148.167 ohms

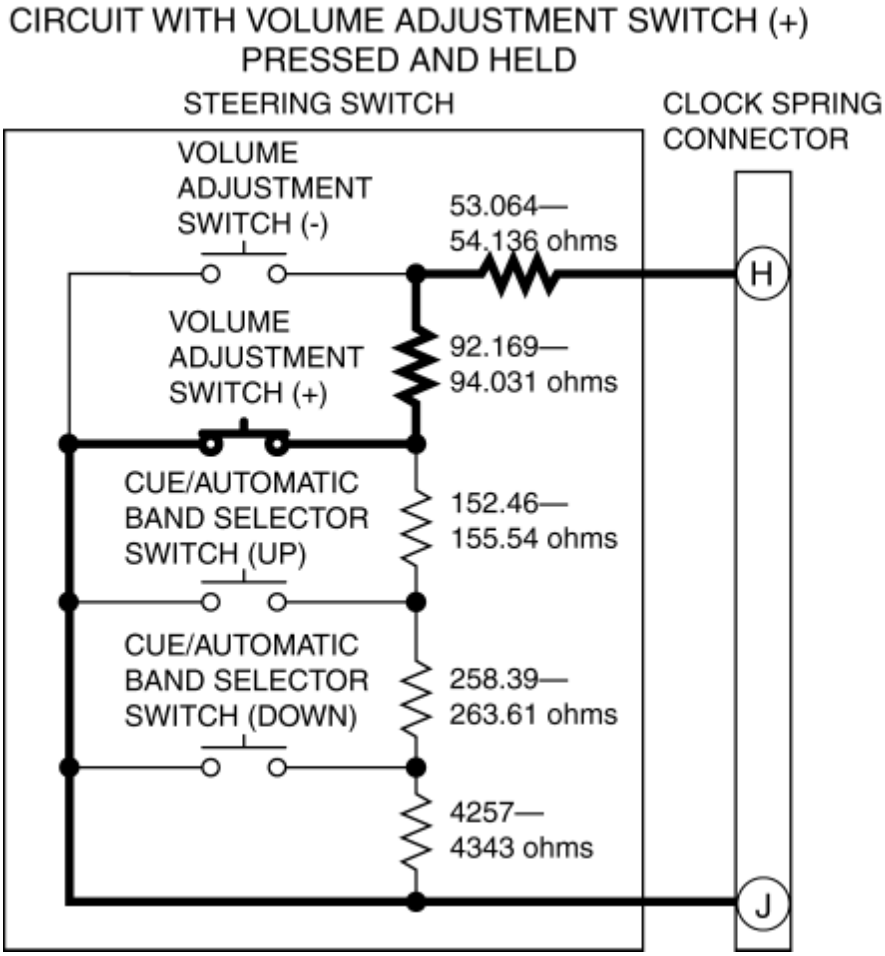

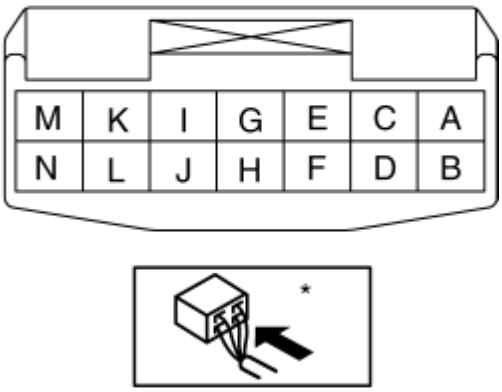

- Resistance with cue/automatic band selector switch (up) pressed and held
  - 297.693—303.707 ohms

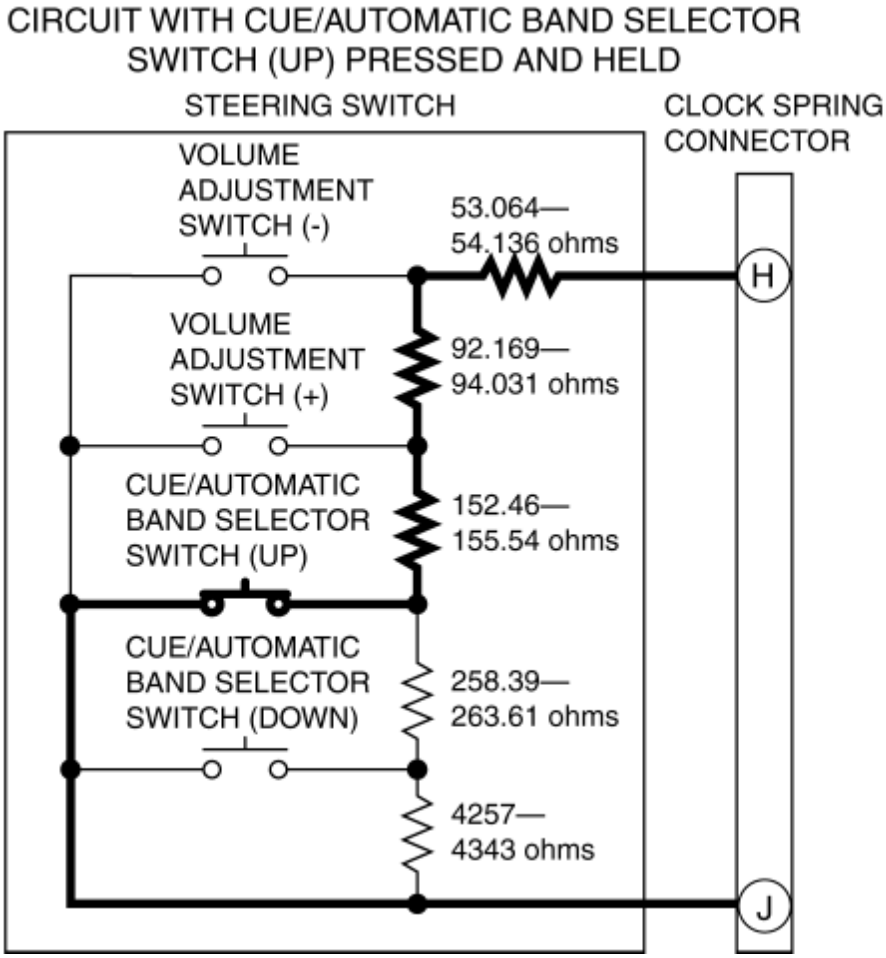

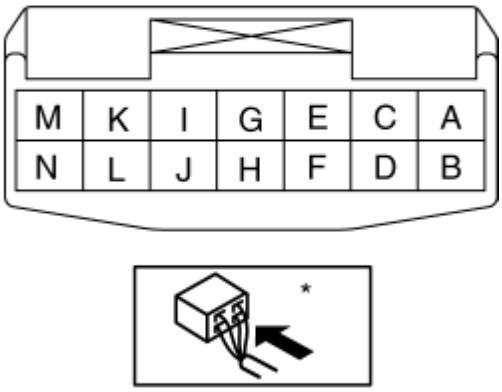

*:PART WIRING HARNESS SIDE

- Resistance with cue/automatic band selector switch (down) pressed and held
  - 556.083—567.317 ohms

CIRCUIT WITH CUE/AUTOMATIC BAND SELECTOR SWITCH (DOWN) PRESSED AND HELD

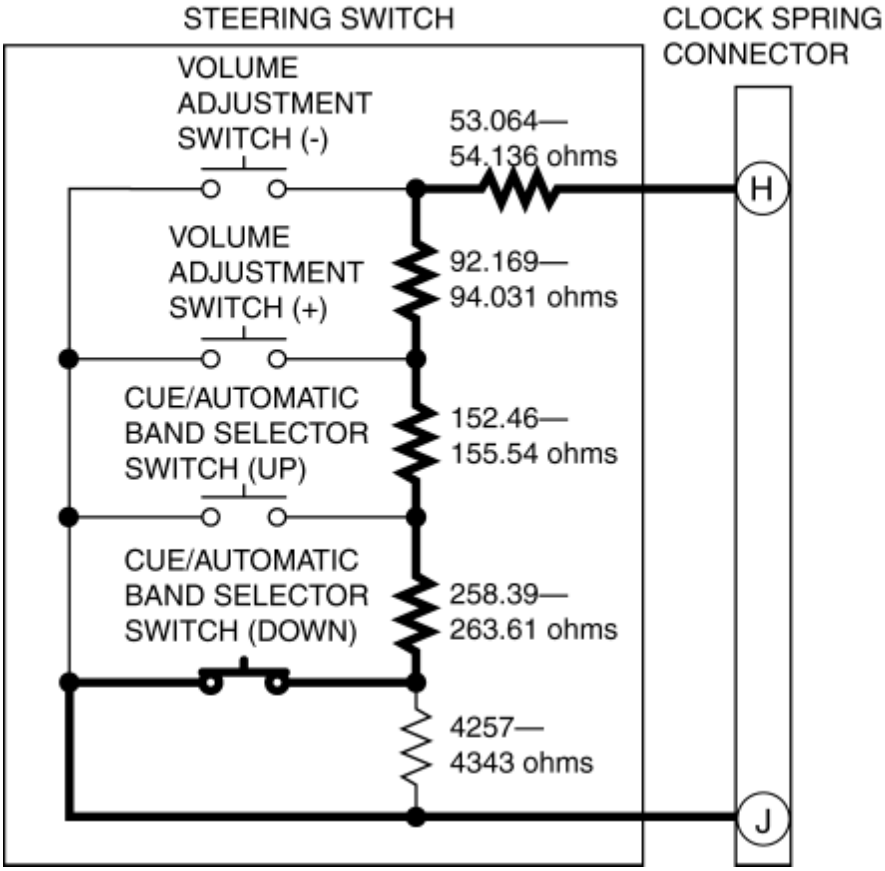

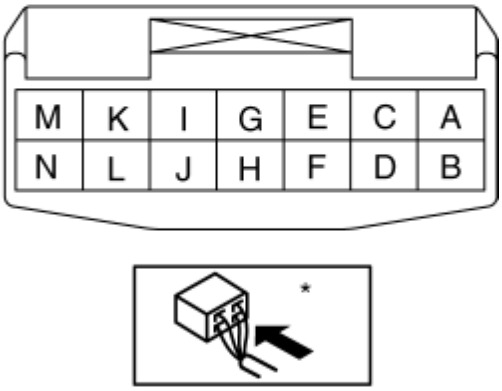

*:PART WIRING HARNESS SIDE

- Resistance with any switches not pressed
  - 4,813.083—4,910.317 ohms

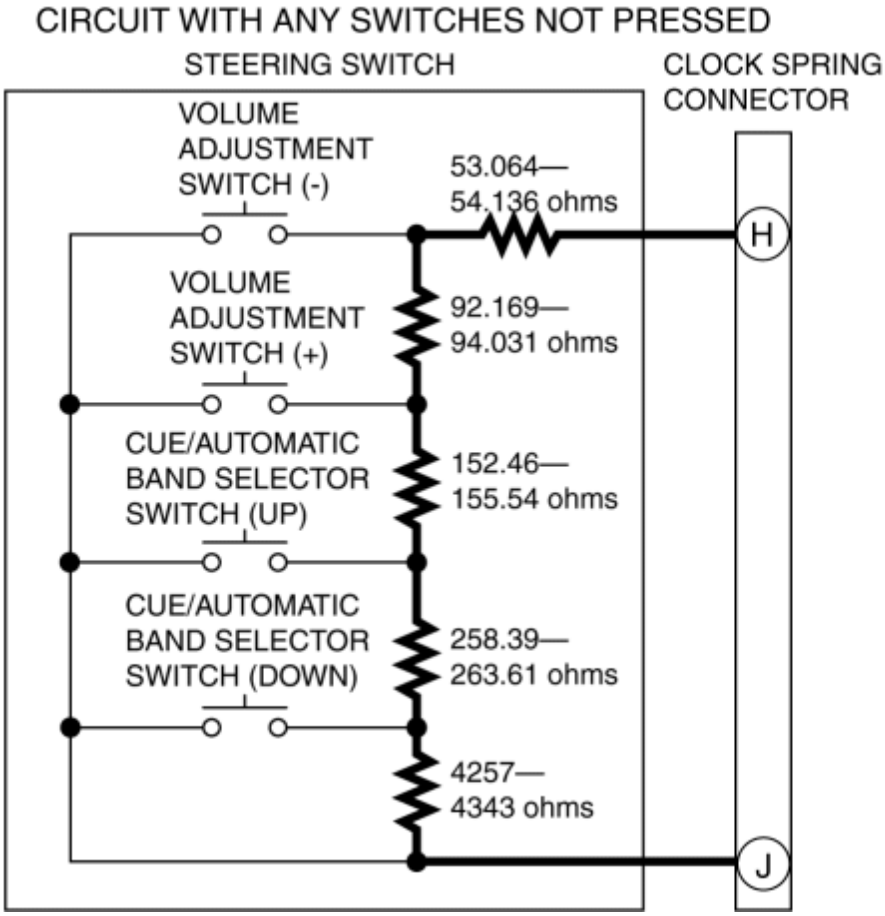

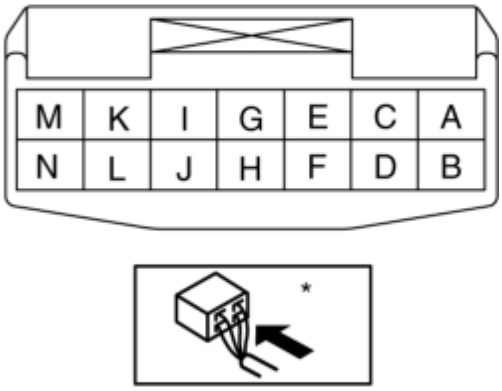

*:PART WIRING HARNESS SIDE

- If not within the specification, replace the steering switch.

Talk button or pick-up button or hang-up button

1. Measure the resistance between steering switches M and J under the following conditions:
    - Resistance with talk button pressed and held
        - 103.95—106.05 ohms

CIRCUIT WITH TALK BUTTON PRESSED AND HELD

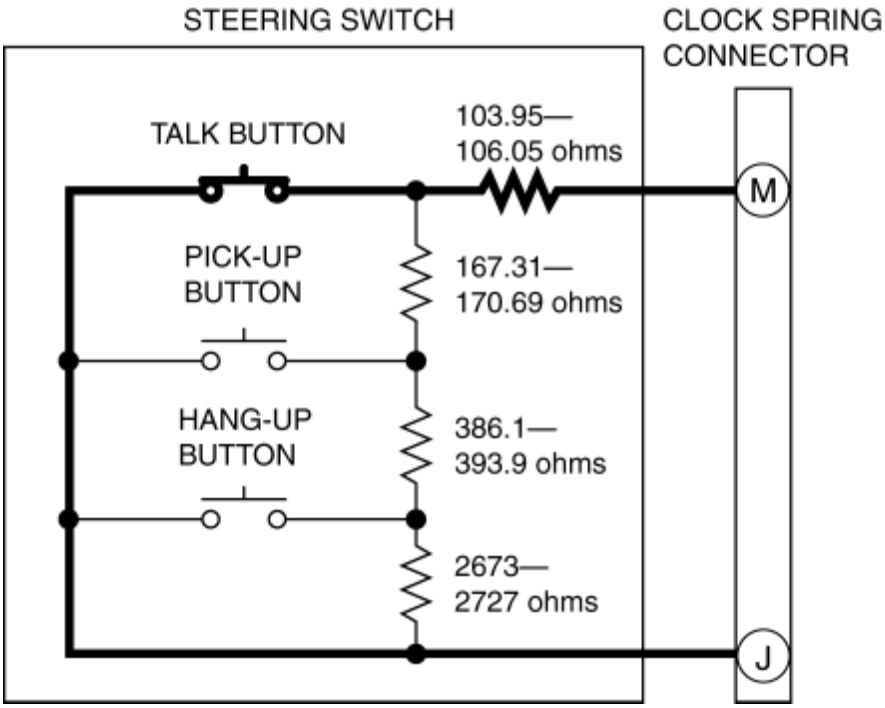

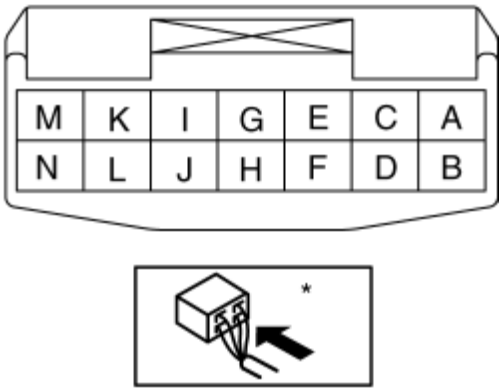

*:PART WIRING HARNESS SIDE

- Resistance with pick-up button pressed and held
  - 271.26—276.74 ohms

CIRCUIT WITH PICK-UP BUTTON PRESSED AND HELD

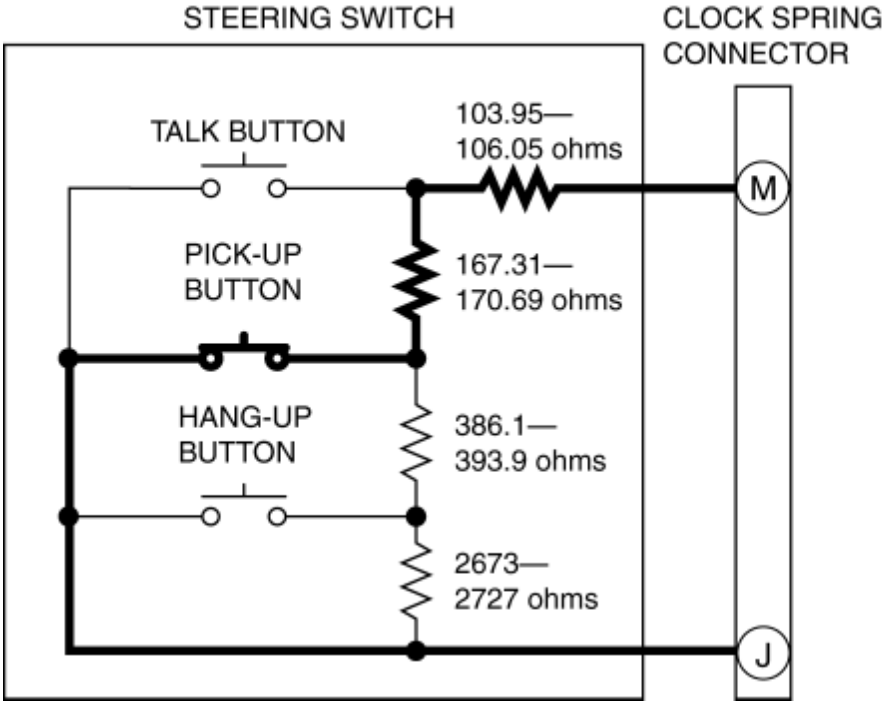

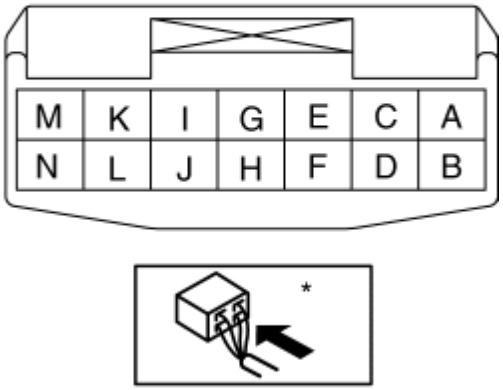

*:PART WIRING HARNESS SIDE

- Resistance with hang-up button pressed and held
  - 657.36—670.64 ohms

CIRCUIT WITH HANG-UP BUTTON PRESSED AND HELD

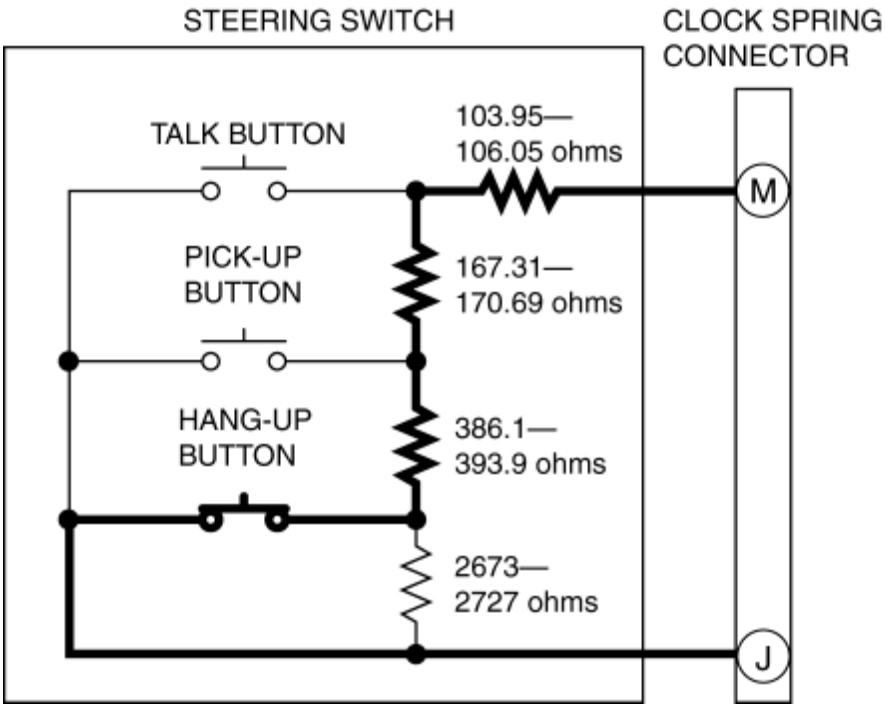

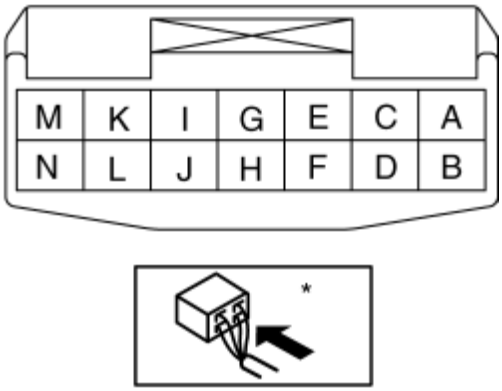

*:PART WIRING HARNESS SIDE

- Resistance with any switches not pressed
  - 3,330.36—3,397.64 ohms

CIRCUIT WITH ANY SWITCHES NOT PRESSED

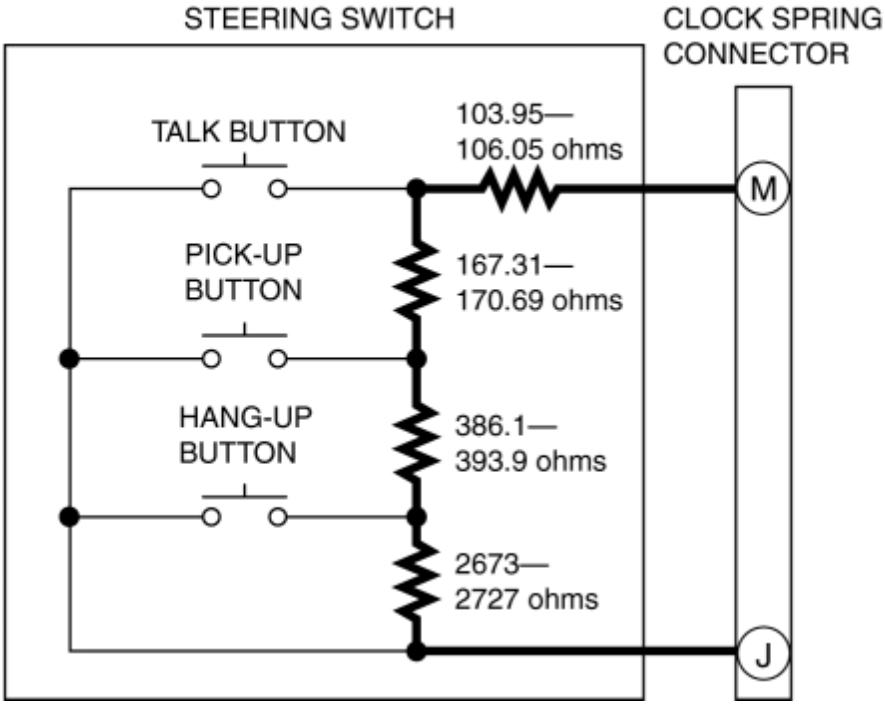

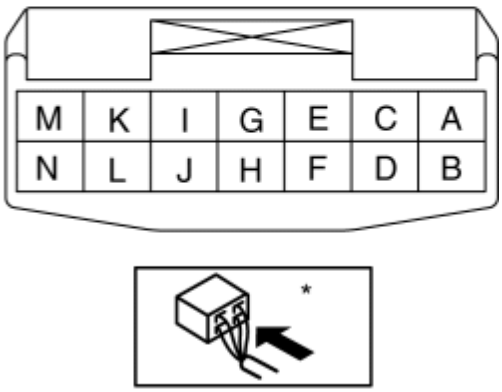

*:PART WIRING HARNESS SIDE

- If not within the specification, replace the steering switch.

INFO button or up switch or down switch

1. Measure the resistance between steering switches D and L under the following conditions:

- Resistance with up switch pressed and held
  - 0 ohms

CIRCUIT WITH UP SWITCH PRESSED AND HELD

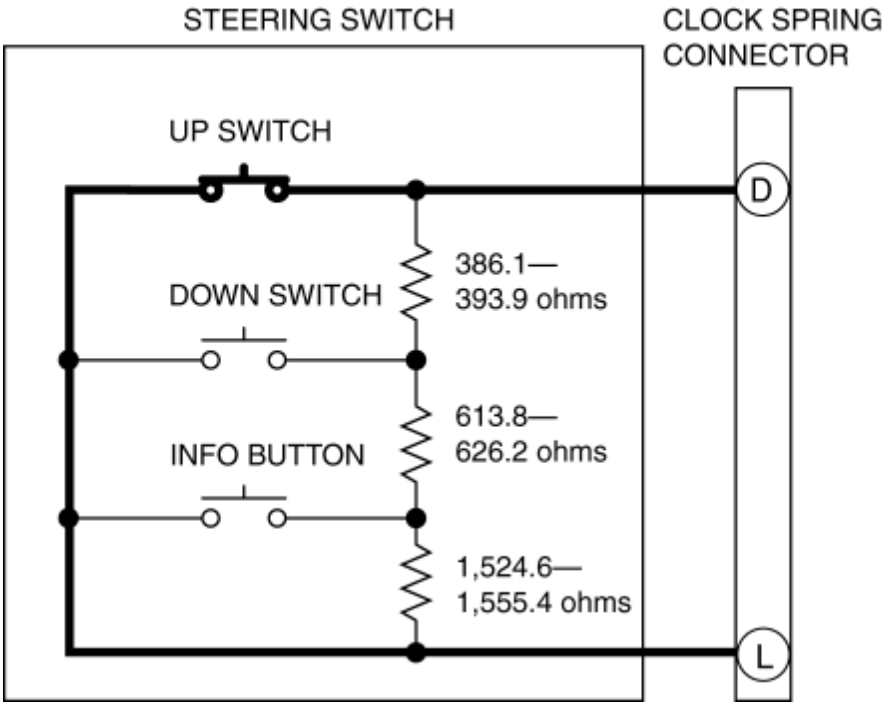

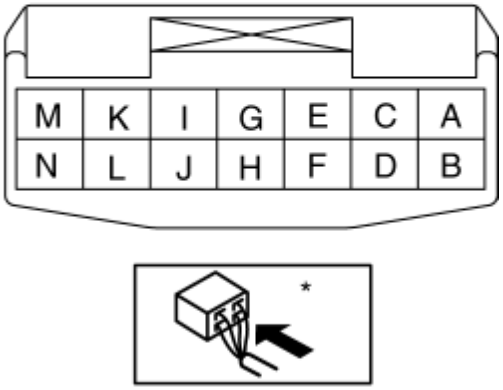

*:PART WIRING HARNESS SIDE

- Resistance with down switch pressed and held
  - 386.1—393.9 ohms

CIRCUIT WITH DOWN SWITCH PRESSED AND HELD

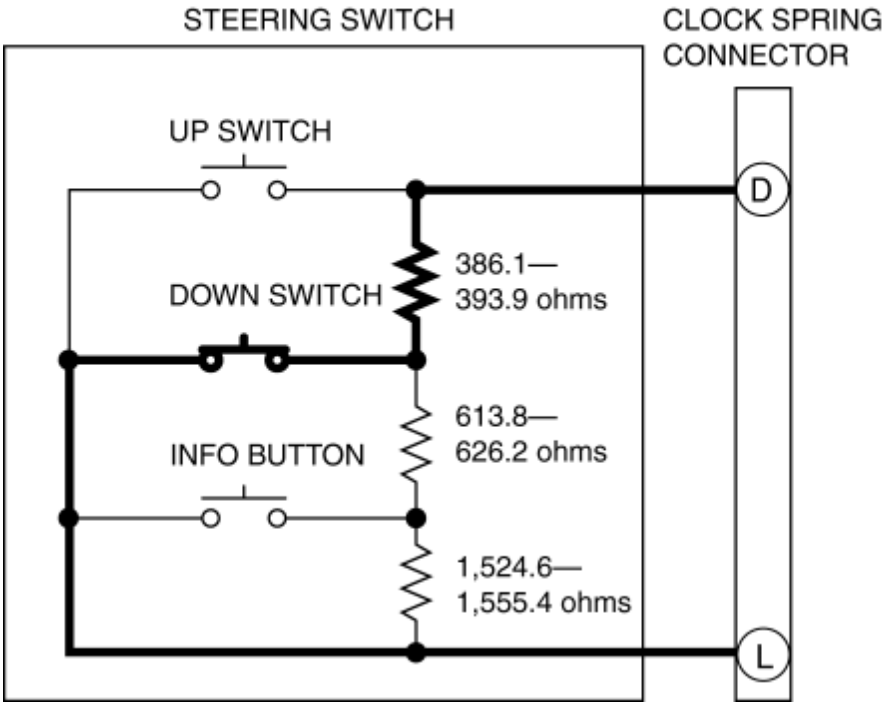

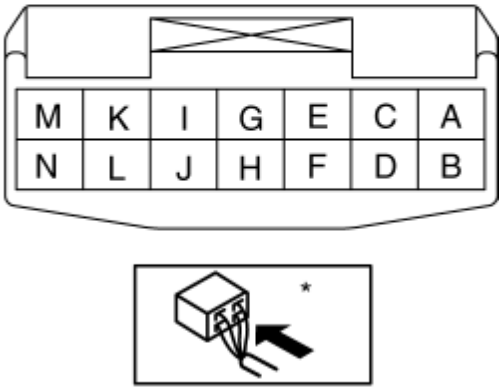

*:PART WIRING HARNESS SIDE

- Resistance with INFO button pressed and held
  - 999.9—1,020.1

CIRCUIT WITH INFO BUTTON PRESSED AND HELD

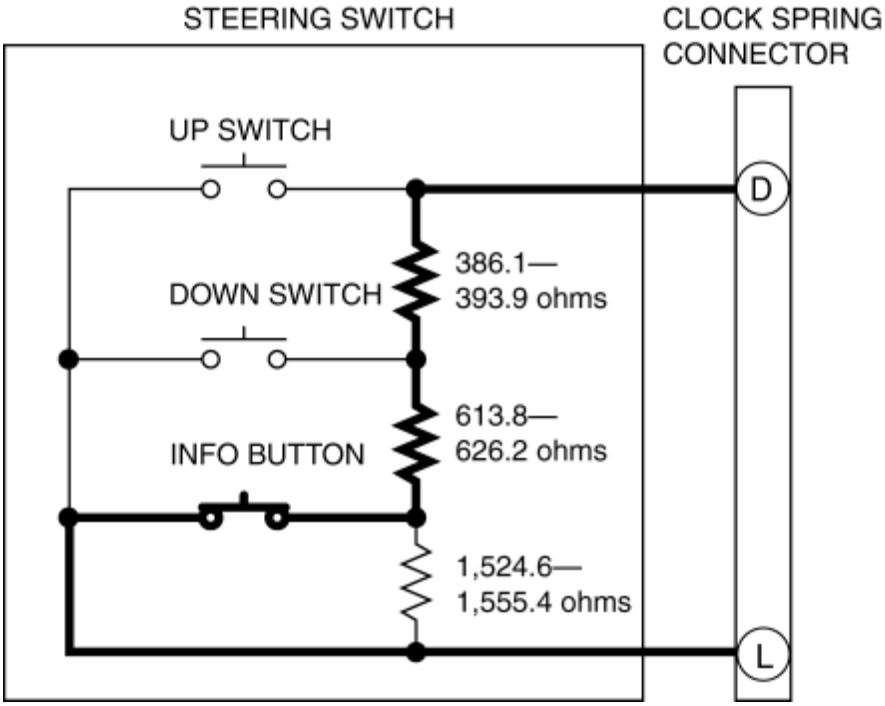

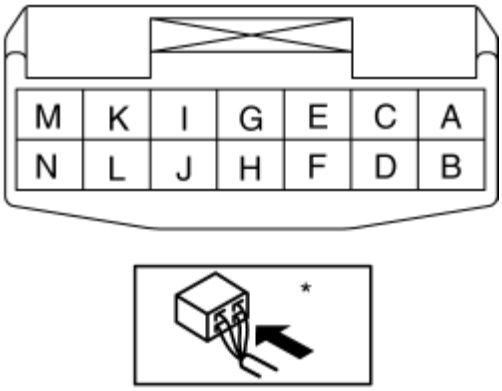

*:PART WIRING HARNESS SIDE

- Resistance with any switches not pressed
  - 2,524.5—2,575.5 ohms

CIRCUIT WITH ANY SWITCHES NOT PRESSED

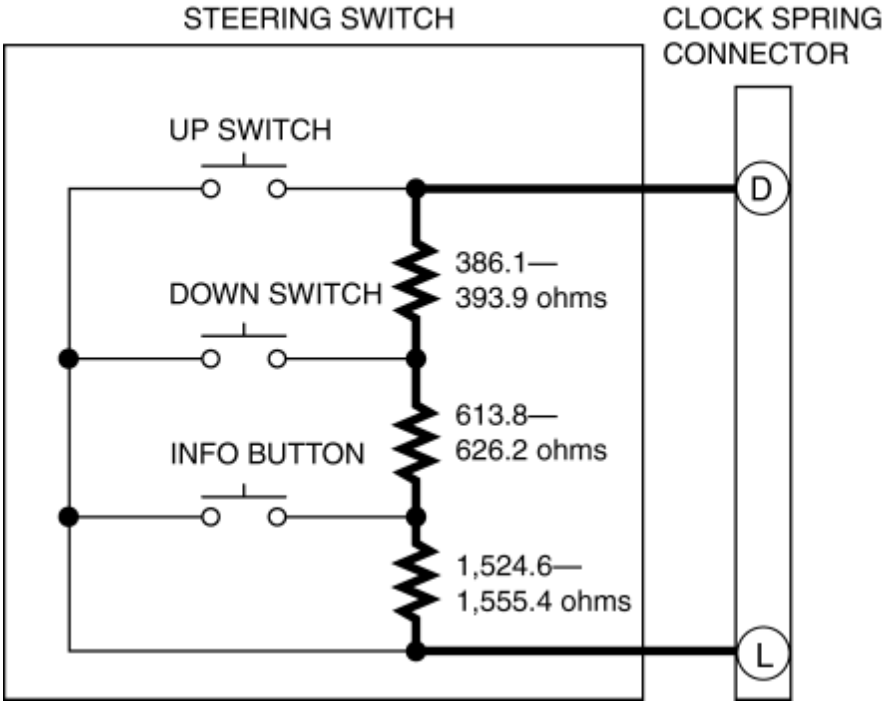

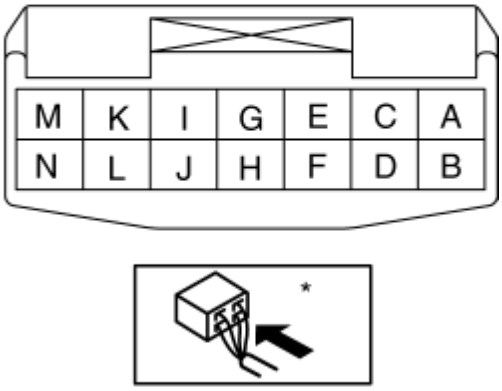

*:PART WIRING HARNESS SIDE

- If not within the specification, replace the steering switch.

LED Illumination Inspection

WARNING:

- Handling the driver-side air bag module improperly can accidentally operate (deploy) the air bag module, which may seriously injure you. Read the service warnings and cautions before handling the air bag module. (See **AIR BAG SYSTEM SERVICE WARNINGS [TWO-STEP DEPLOYMENT CONTROL SYSTEM]**.) (See **AIR BAG SYSTEM SERVICE CAUTIONS [TWO-STEP DEPLOYMENT CONTROL SYSTEM]**.) (See **AIR BAG SYSTEM SERVICE WARNINGS [STANDARD DEPLOYMENT CONTROL SYSTEM]**.) (See **AIR BAG SYSTEM SERVICE CAUTIONS [STANDARD DEPLOYMENT CONTROL SYSTEM]**.)

1. Switch the ignition OFF.

2. Disconnect the negative battery cable and wait for 1 min or more. (See **NEGATIVE BATTERY CABLE DISCONNECTION/CONNECTION [SKYACTIV-G 2.0, SKYACTIV-G 2.5]**.)

3. Remove the driver-side air bag module. (See **DRIVER-SIDE AIR BAG MODULE REMOVAL [TWO-STEP DEPLOYMENT CONTROL SYSTEM]**.) (See **DRIVER-SIDE AIR BAG MODULE INSTALLATION [TWO-STEP DEPLOYMENT CONTROL SYSTEM]**.) (See **DRIVER-SIDE AIR BAG MODULE REMOVAL [STANDARD DEPLOYMENT CONTROL SYSTEM]**.) (See **DRIVER-SIDE AIR BAG MODULE INSTALLATION [STANDARD DEPLOYMENT CONTROL SYSTEM]**.)

4. Remove the steering wheel. (See **STEERING WHEEL AND COLUMN REMOVAL/INSTALLATION**.)

5. Apply battery positive voltage to steering switch terminal F, and connect terminal B to ground.

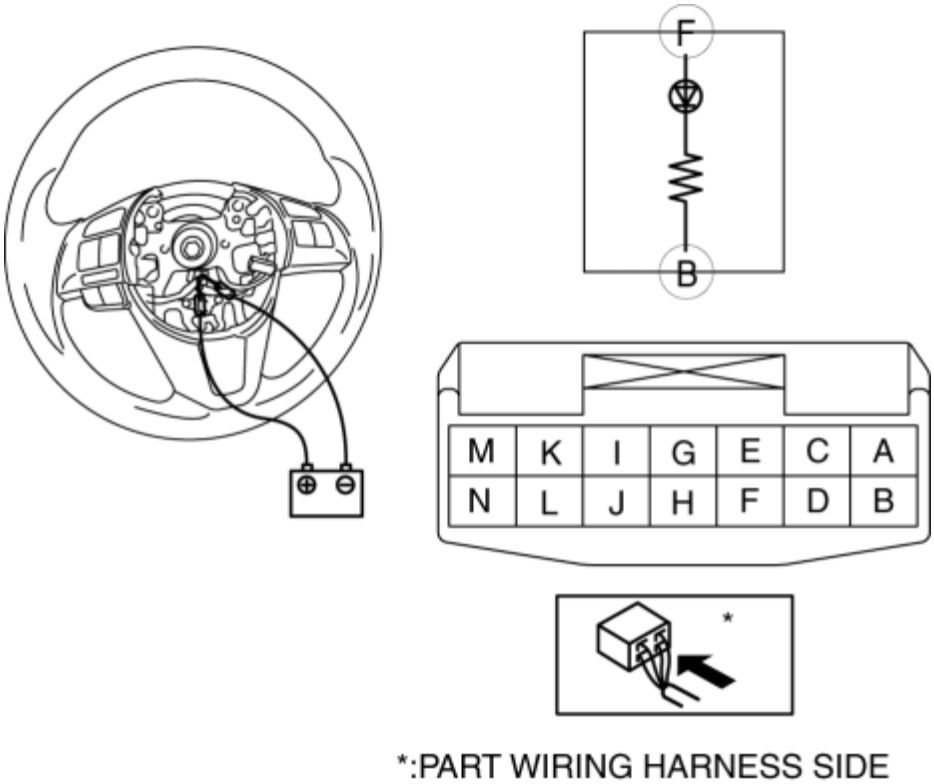

6. Verify that the LED illuminates.

- If the LED does not illuminate, replace the steering switch. (See **STEERING SWITCH REMOVAL/INSTALLATION**.)

2014 - Mazda3 - Body and Accessories

COMMANDER SWITCH REMOVAL/INSTALLATION

CAUTION:

- The audio unit communicates with the commander switch and records the presence/non-presence of the commander switch when the ignition is switched to ACC or ON (engine off or on) after connecting the negative battery cable.
- If the commander switch is installed with the negative battery cable connected when the audio unit records that there is no commander switch, the commander switch does not operate.
- For the commander switch installation/removal, disconnect the negative battery cable, switch the ignition to ACC or ON (engine off or on) after the servicing is completed, and the audio unit records the presence/non-presence of the commander switch.

1. Disconnect the negative battery cable. (See **NEGATIVE BATTERY CABLE DISCONNECTION/CONNECTION [SKYACTIV-G 2.0, SKYACTIV-G 2.5]**.)

2. Remove the upper panel (See **UPPER PANEL REMOVAL**.) (See **UPPER PANEL INSTALLATION**.)

3. Remove the screws.

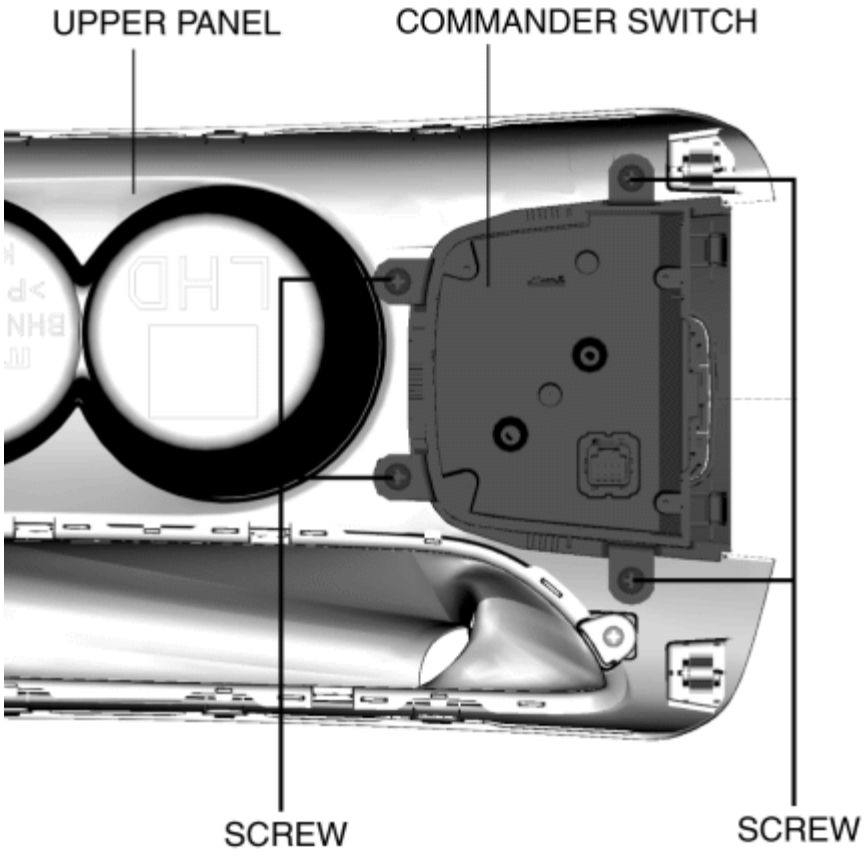

4. Remove the commander switch.

5. Install in the reverse order of removal.

2014 - Mazda3 - Body and Accessories

MICROPHONE REMOVAL/INSTALLATION

1. Disconnect the negative battery cable. (See **NEGATIVE BATTERY CABLE DISCONNECTION/CONNECTION [SKYACTIV-G 2.0, SKYACTIV-G 2.5]**.)

2. Remove the front map light. (See **FRONT MAP LIGHT REMOVAL/INSTALLATION**.)

3. While pressing tabs A of the voice recognition microphone in the direction of the arrows (1) shown in the figure using a tape-wrapped flathead screwdriver, pull the voice recognition microphone in the direction of the arrow (2) shown in the figure to detach tabs A of the voice recognition microphone from the front map light.

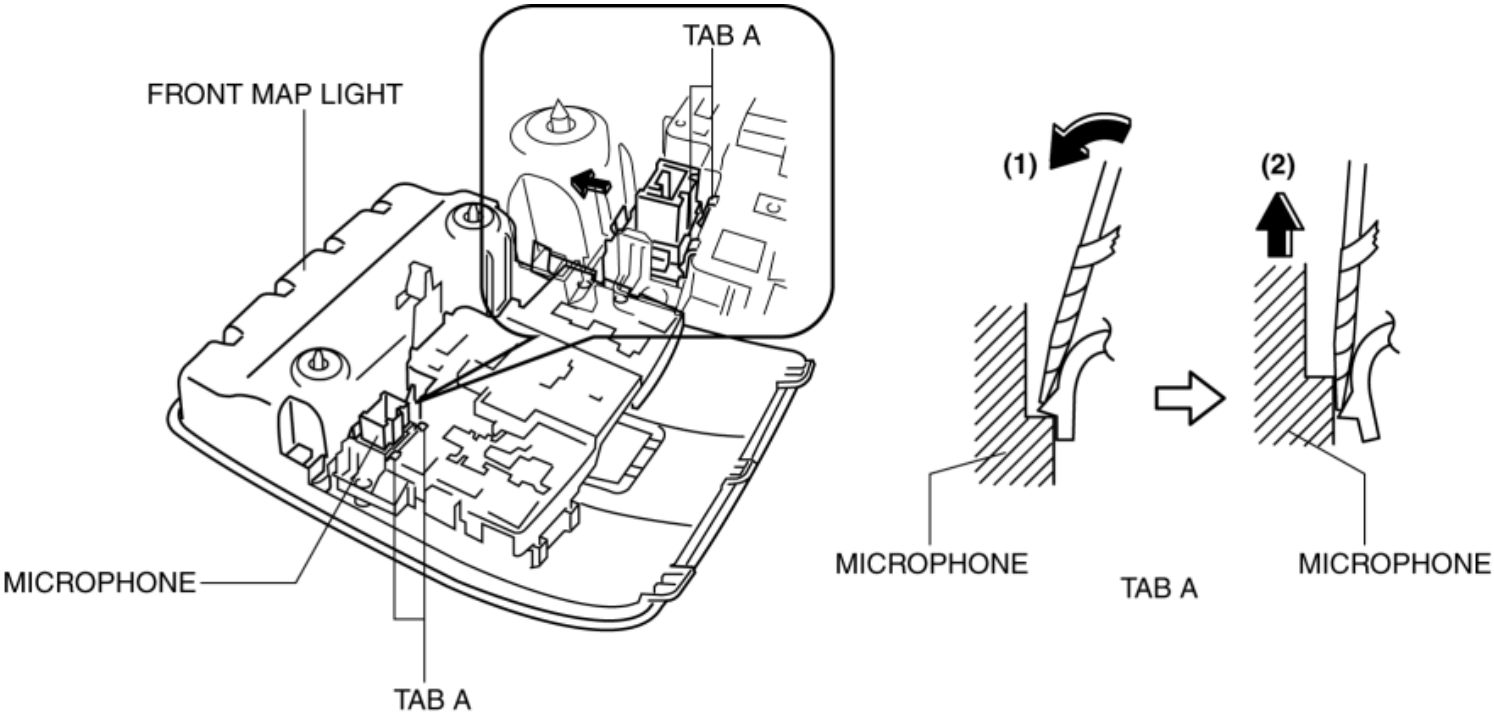

4. While pulling tab B of the voice recognition microphone in the direction of the arrow (1) shown in the figure, pull the voice recognition microphone in the direction of the arrow (2) shown in the figure to detach tab B of the voice recognition microphone from the front map light.

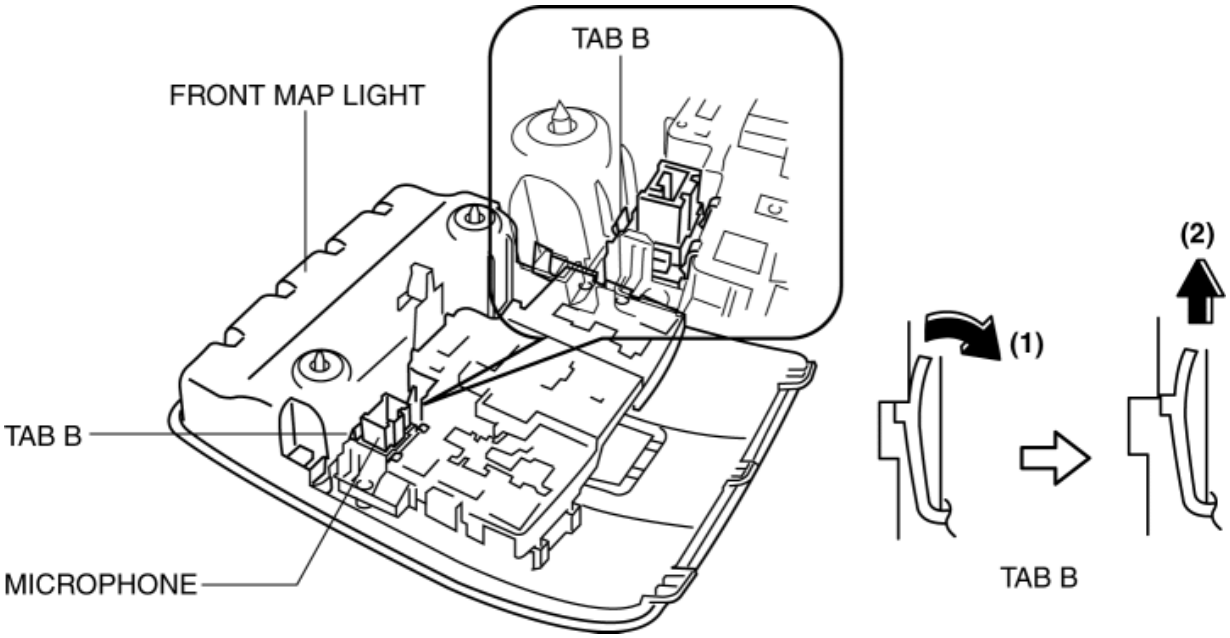

5. Remove the microphone.

6. Install in the reverse order of removal.

2014 - Mazda3 - Body and Accessories

Bluetooth® UNIT REMOVAL/INSTALLATION

CAUTION:

- The audio unit communicates with the Bluetooth® unit and records the presence/non-presence of the Bluetooth® unit when the ignition is switched to ACC or ON (engine off or on) after connecting the negative battery cable.
- If the commander switch is installed with the negative battery cable connected when the audio unit records that there is no Bluetooth® unit, the Bluetooth® unit does not operate.
- For the Bluetooth® unit installation/removal, disconnect the negative battery cable, switch the ignition to ACC or ON (engine off or on) after the servicing is completed, and the audio unit records the presence/non-presence of the Bluetooth® unit.

NOTE:

- The Bluetooth® pairing information recorded in the Bluetooth® unit cannot be written to a new Bluetooth® unit. Therefore, the Bluetooth® pairing formation will be eliminated if the Bluetooth® unit is replaced. Before replacing the Bluetooth® unit, explain to the customer that the Bluetooth® pairing resetting is required.

1. Disconnect the negative battery cable. (See **NEGATIVE BATTERY CABLE DISCONNECTION/CONNECTION [SKYACTIV-G 2.0, SKYACTIV-G 2.5]**.)
2. Remove the following parts:
   a. Front scuff plate (RH) (See **FRONT SCUFF PLATE REMOVAL/INSTALLATION**.)
   b. Front side trim (RH) (See **FRONT SIDE TRIM REMOVAL/INSTALLATION**.)
   c. Glove compartment (See **GLOVE COMPARTMENT REMOVAL/INSTALLATION**.)
   d. Dashboard under cover (See **DASHBOARD UNDER COVER REMOVAL/INSTALLATION**.)
3. Remove the clip.

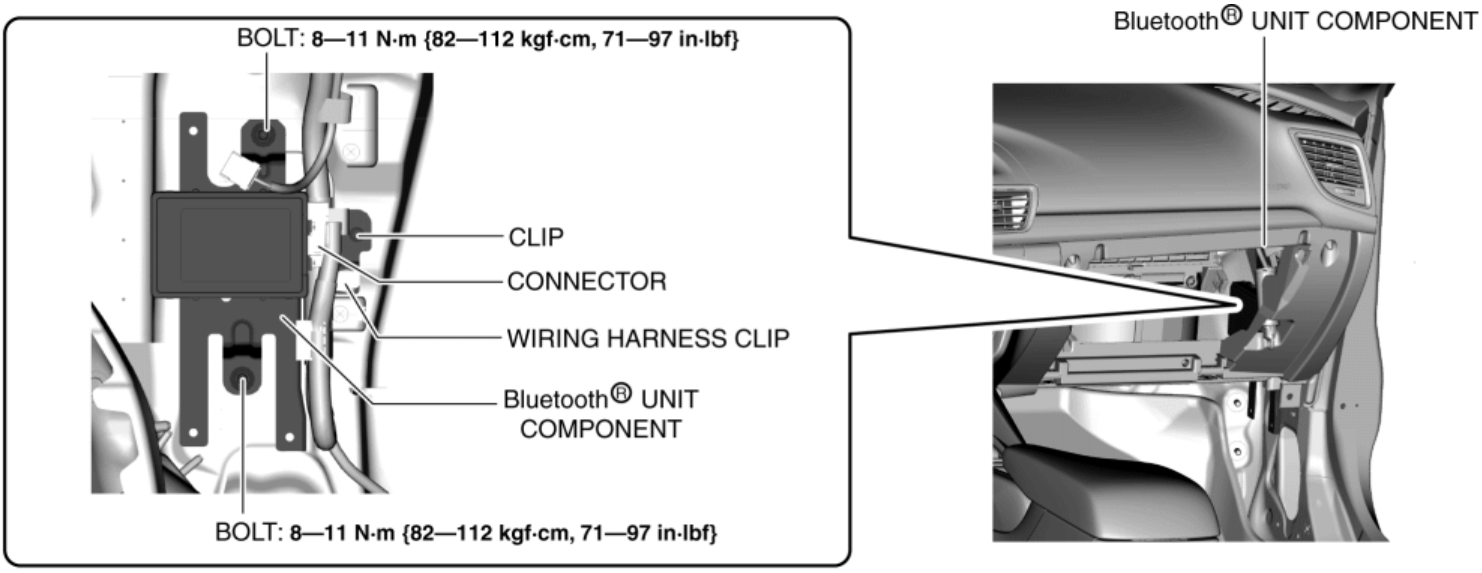

4. Remove the bolts.
5. Disconnect the connector.
6. Remove the wiring harness clip.
7. Remove the Bluetooth® unit component.
8. Remove the screws.

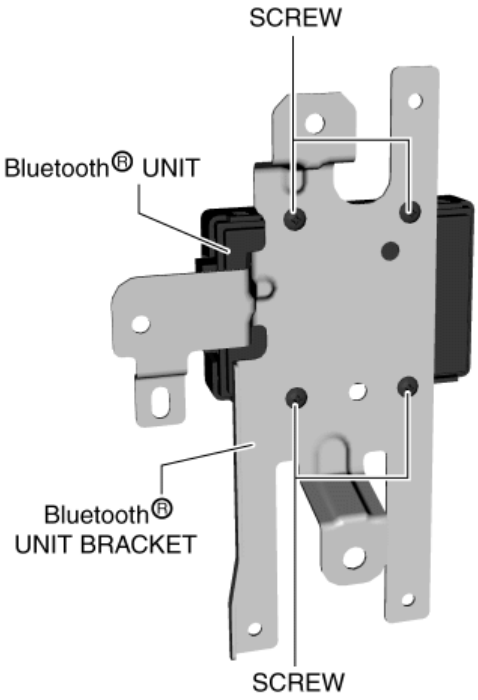

9. Remove the Bluetooth® unit.

10. Install in the reverse order of removal.

2014 - Mazda3 - Body and Accessories

AUXILIARY JACK/USB PORT REMOVAL/INSTALLATION

Front

1. Disconnect the negative battery cable. (See **NEGATIVE BATTERY CABLE DISCONNECTION/CONNECTION [SKYACTIV-G 2.0, SKYACTIV-G 2.5]**.)
2. Remove the following parts:
   a. Glove compartment (See **GLOVE COMPARTMENT REMOVAL/INSTALLATION**.)
   b. Decoration panel (See **DECORATION PANEL REMOVAL/INSTALLATION**.)
   c. Upper panel (See **UPPER PANEL REMOVAL**.) (See **UPPER PANEL INSTALLATION**.)
   d. Rear console (See **REAR CONSOLE REMOVAL/INSTALLATION**.)
   e. Shift lever knob (MTX) (See **MANUAL TRANSAXLE SHIFT MECHANISM REMOVAL/INSTALLATION [C66M-R]**.)
   f. Selector lever knob (ATX) (See **AUTOMATIC TRANSAXLE SHIFT MECHANISM REMOVAL/INSTALLATION**.)
   g. Shift panel (See **SHIFT PANEL REMOVAL/INSTALLATION**.)
   h. Front console box (See **FRONT CONSOLE BOX REMOVAL/INSTALLATION**.)
   i. Side wall (See **SIDE WALL REMOVAL/INSTALLATION**.)
   j. Front console (See **FRONT CONSOLE REMOVAL/INSTALLATION**.)
3. While pressing the auxiliary jack/USB port tabs in the direction of the arrows (1) shown in the figure, press the auxiliary jack/USB port in the direction of the arrow (2) to detach the auxiliary jack/USB port tabs from the front console.

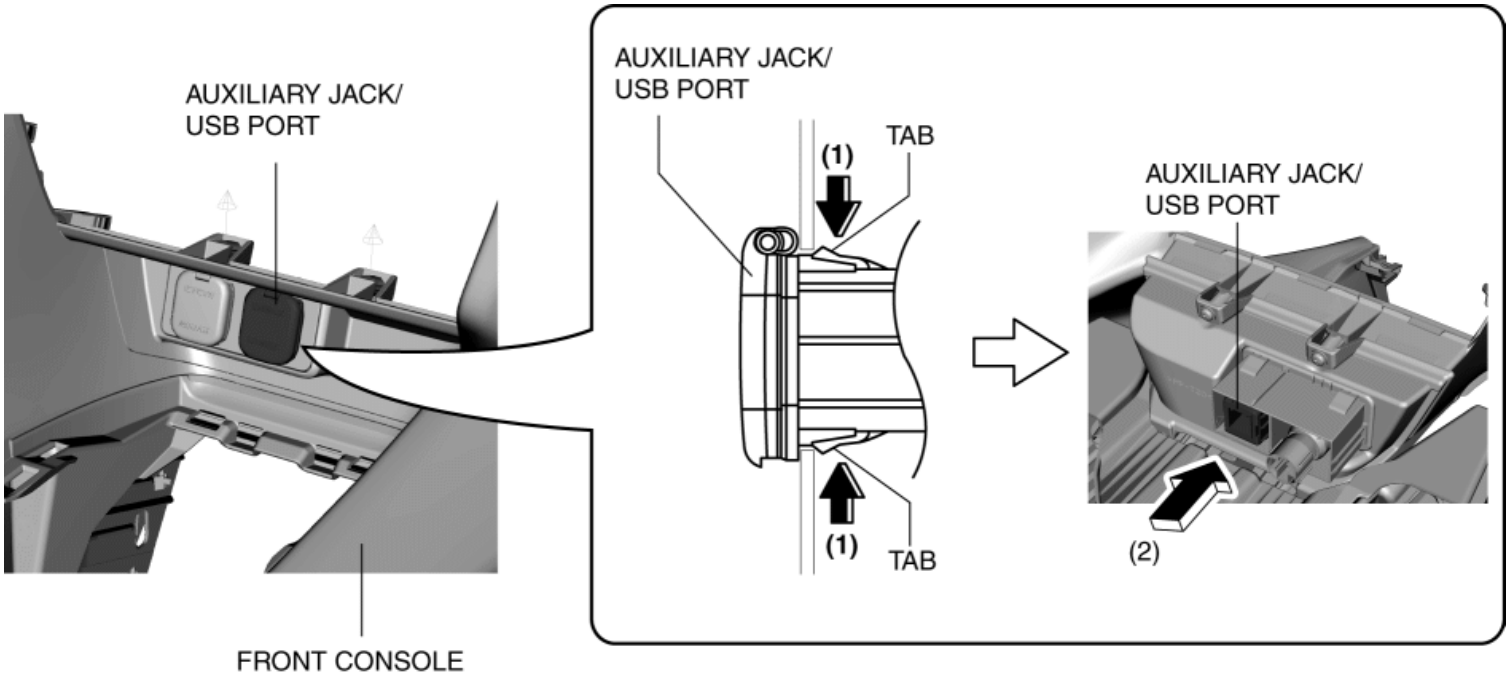

4. Remove the auxiliary jack/USB port.
5. Install in the reverse order of removal.

Rear

1. Disconnect the negative battery cable. (See **NEGATIVE BATTERY CABLE DISCONNECTION/CONNECTION [SKYACTIV-G 2.0, SKYACTIV-G 2.5]**.)

2. Remove the console-up. (See **REAR CONSOLE REMOVAL/INSTALLATION**.)

3. While pressing the auxiliary jack/USB port tabs in the direction of the arrows (1) shown in the figure, press the auxiliary jack/USB port in the direction of the arrow (2) to detach the auxiliary jack/USB port tabs from the console-up.

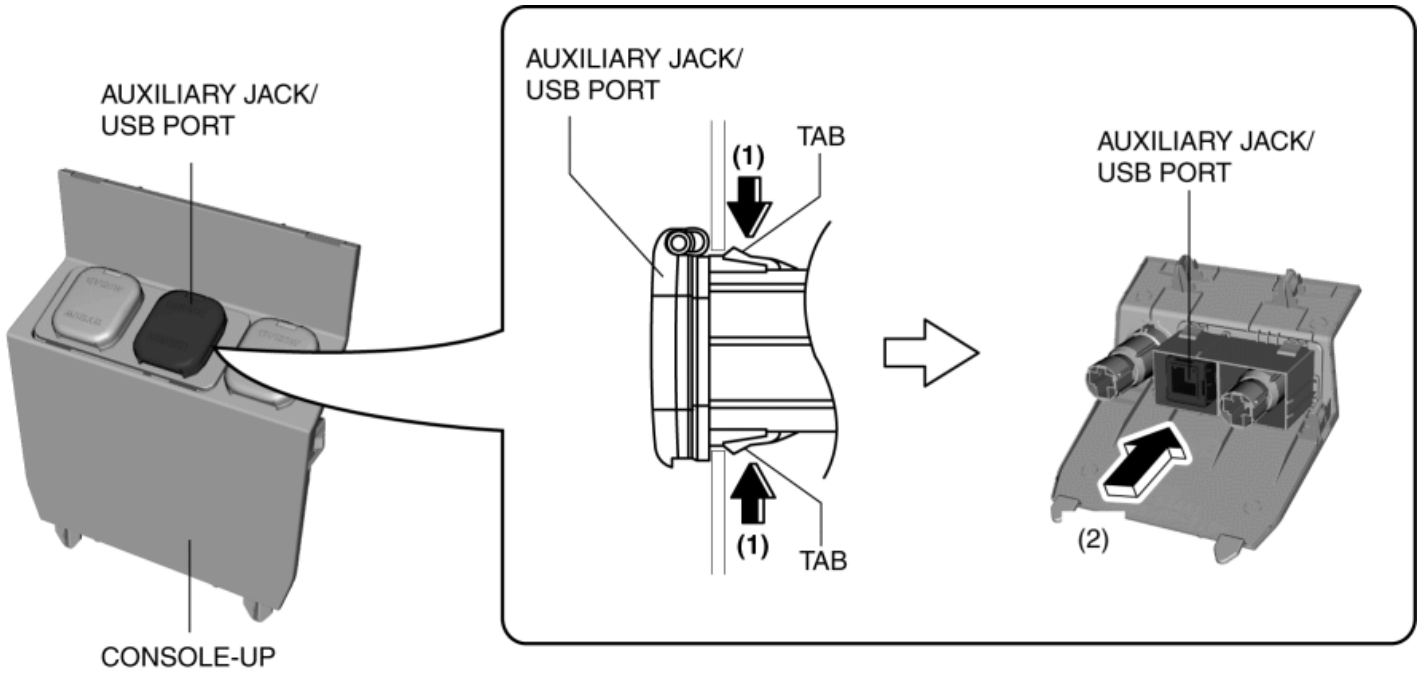

4. Remove the auxiliary jack/USB port.

5. Install in the reverse order of removal.

2014 - Mazda3 - Body and Accessories

AUXILIARY JACK/USB PORT INSPECTION

Auxiliary Jack Inspection

Front

1. Disconnect the negative battery cable. (See **NEGATIVE BATTERY CABLE DISCONNECTION/CONNECTION [SKYACTIV-G 2.0, SKYACTIV-G 2.5]**.)
2. Remove the following parts:
   a. Glove compartment (See **GLOVE COMPARTMENT REMOVAL/INSTALLATION**.)
   b. Decoration panel (See **DECORATION PANEL REMOVAL/INSTALLATION**.)
   c. Upper panel (See **UPPER PANEL REMOVAL**.) (See **UPPER PANEL INSTALLATION**.)
   d. Rear console (See **REAR CONSOLE REMOVAL/INSTALLATION**.)
   e. Shift lever knob (MTX) (See **MANUAL TRANSAXLE SHIFT MECHANISM REMOVAL/INSTALLATION [C66M-R]**.)
   f. Selector lever knob (ATX) (See **AUTOMATIC TRANSAXLE SHIFT MECHANISM REMOVAL/INSTALLATION**.)
   g. Shift panel (See **SHIFT PANEL REMOVAL/INSTALLATION**.)
   h. Front console box (See **FRONT CONSOLE BOX REMOVAL/INSTALLATION**.)
   i. Side wall (See **SIDE WALL REMOVAL/INSTALLATION**.)
   j. Front console (See **FRONT CONSOLE REMOVAL/INSTALLATION**.)
   k. Auxiliary jack/USB port (See **AUXILIARY JACK/USB PORT REMOVAL/INSTALLATION**.)
3. Connect a commercially-available plug to the auxiliary jack/USB port.

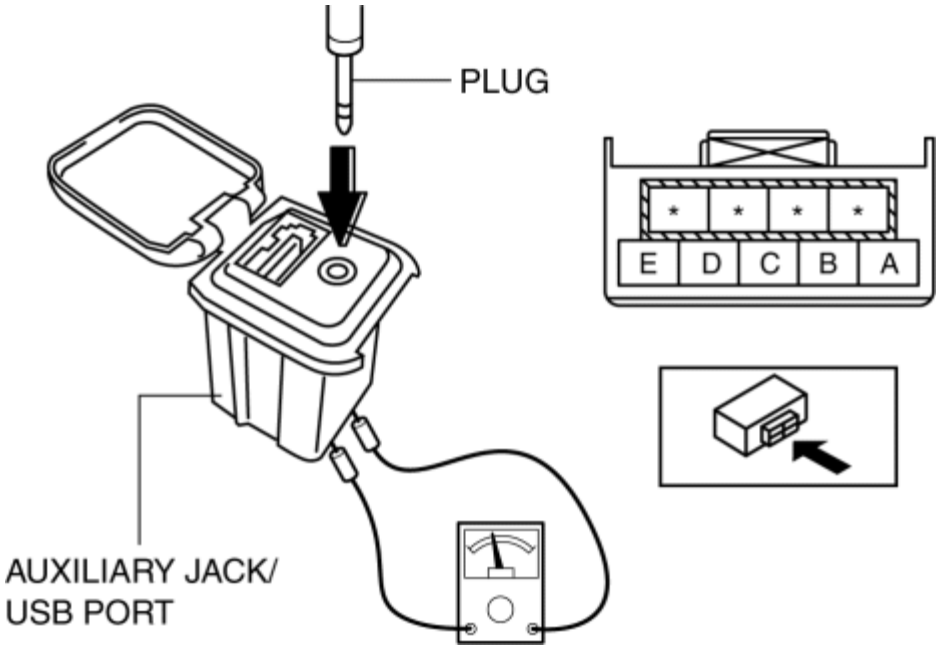

4. Verify that the continuity between the auxiliary jack/USB port terminals is as indicated in the table.

○—○ : Continuity

Test condition	Terminal				
	A	B	C	D	E
Plug is connected	○	—	—	—	○
Plug is not connected					

- If not as indicated in the table, replace the auxiliary jack/USB port.

Rear

1. Disconnect the negative battery cable. (See **NEGATIVE BATTERY CABLE DISCONNECTION/CONNECTION [SKYACTIV-G 2.0, SKYACTIV-G 2.5]**.)

2. Remove the console-up. (See **REAR CONSOLE REMOVAL/INSTALLATION**.)

3. Remove the Auxiliary jack/USB port. (See **AUXILIARY JACK/USB PORT REMOVAL/INSTALLATION**.)

4. Connect a commercially-available plug to the auxiliary jack/USB port.

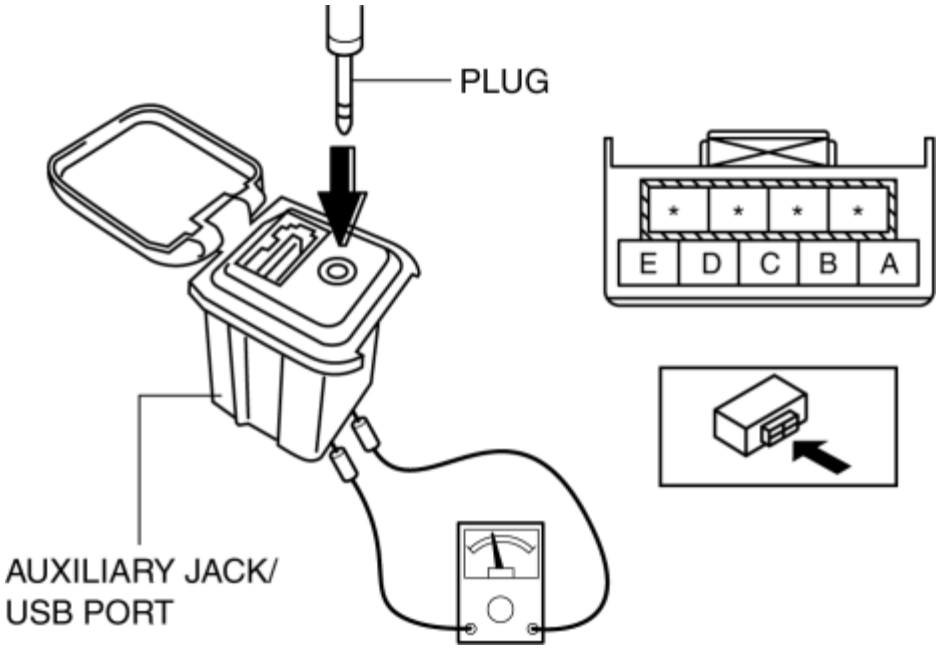

5. Verify that the continuity between the auxiliary jack/USB port terminals is as indicated in the table.

○—○ : Continuity

Test condition	Terminal				
	A	B	C	D	E
Plug is connected	○				○
Plug is not connected					

- If not as indicated in the table, replace the auxiliary jack/USB port.

USB Port Inspection

Front

1. Disconnect the negative battery cable. (See **NEGATIVE BATTERY CABLE DISCONNECTION/CONNECTION [SKYACTIV-G 2.0, SKYACTIV-G 2.5]**.)

2. Remove the following parts:

   a. Glove compartment (See **GLOVE COMPARTMENT REMOVAL/INSTALLATION**.)

   b. Decoration panel (See **DECORATION PANEL REMOVAL/INSTALLATION**.)

   c. Upper panel (See **UPPER PANEL REMOVAL**.) (See **UPPER PANEL INSTALLATION**.)

   d. Rear console (See **REAR CONSOLE REMOVAL/INSTALLATION**.)

   e. Shift lever knob (MTX) (See **MANUAL TRANSAXLE SHIFT MECHANISM REMOVAL/INSTALLATION [C66M-R]**.)

   f. Selector lever knob (ATX) (See **AUTOMATIC TRANSAXLE SHIFT MECHANISM**

REMOVAL/INSTALLATION.)

g. Shift panel (See **SHIFT PANEL REMOVAL/INSTALLATION**.)

h. Front console box (See **FRONT CONSOLE BOX REMOVAL/INSTALLATION**.)

i. Side wall (See **SIDE WALL REMOVAL/INSTALLATION**.)

j. Front console (See **FRONT CONSOLE REMOVAL/INSTALLATION**.)

k. Auxiliary jack/USB port (See **AUXILIARY JACK/USB PORT REMOVAL/INSTALLATION**.)

3. Insert the pins to positions UA', UB', UC', and UD' shown in the figure from the side of the USB device insertion area for the auxiliary jack/USB port, and verify the continuity at the insertion side and terminal side of the USB device.

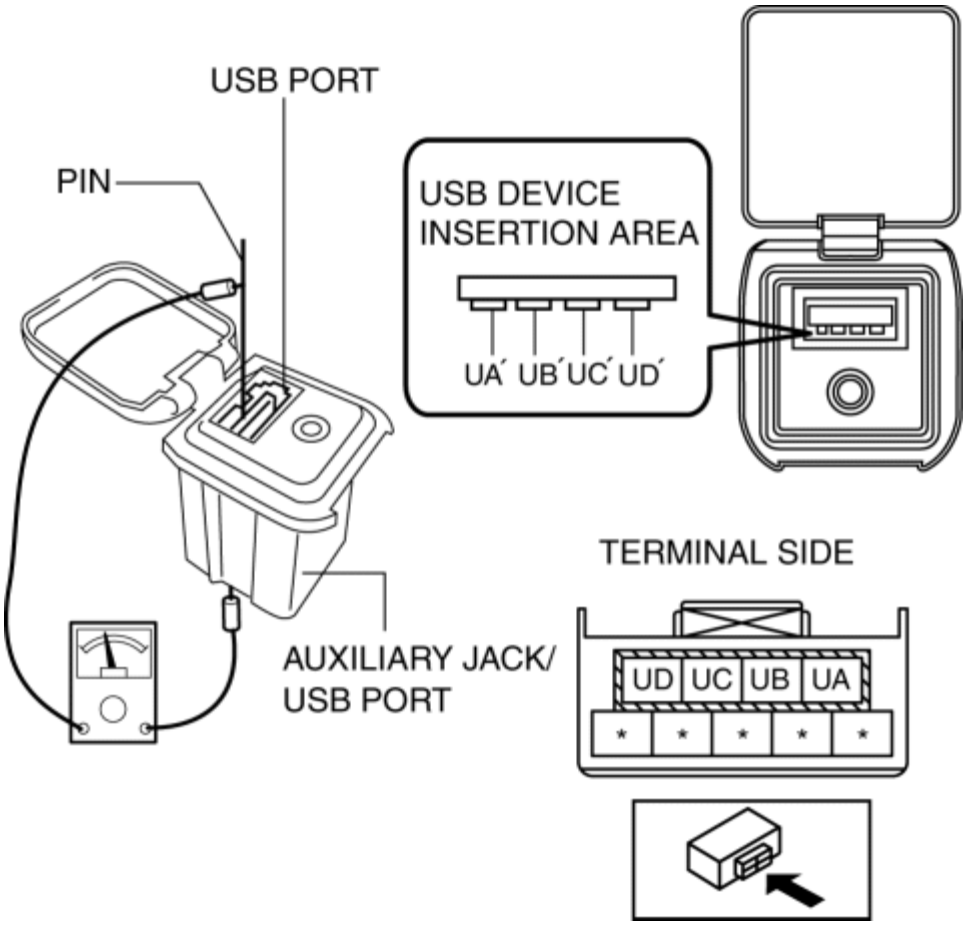

4. Verify that the continuity at the insertion side and terminal side of the USB device is as indicated in the table.

NOTE:

- When inspecting the USB device insertion side, touch it with a paper clip or similar thin pin without directly inserting a tester into the terminals.

○—○ : Continuity

Test condition	Terminal							
	Terminal side				USB devise insertion area			
	UA	UB	UC	UD	UA'	UB'	UC'	UD'
Under any condition	○				○			
		○				○		
			○				○	
				○				○

- If not as indicated in the table, replace the auxiliary jack/USB port.

Rear

1. Disconnect the negative battery cable. (See **NEGATIVE BATTERY CABLE DISCONNECTION/CONNECTION [SKYACTIV-G 2.0, SKYACTIV-G 2.5]**.)

2. Remove the console-up. (See **REAR CONSOLE REMOVAL/INSTALLATION**.)

3. Remove the Auxiliary jack/USB port. (See **AUXILIARY JACK/USB PORT REMOVAL/INSTALLATION**.)

4. Insert the pins to positions UA', UB', UC', and UD' shown in the figure from the side of the USB device insertion area for the auxiliary jack/USB port, and verify the continuity at the insertion side and terminal side of the USB device.

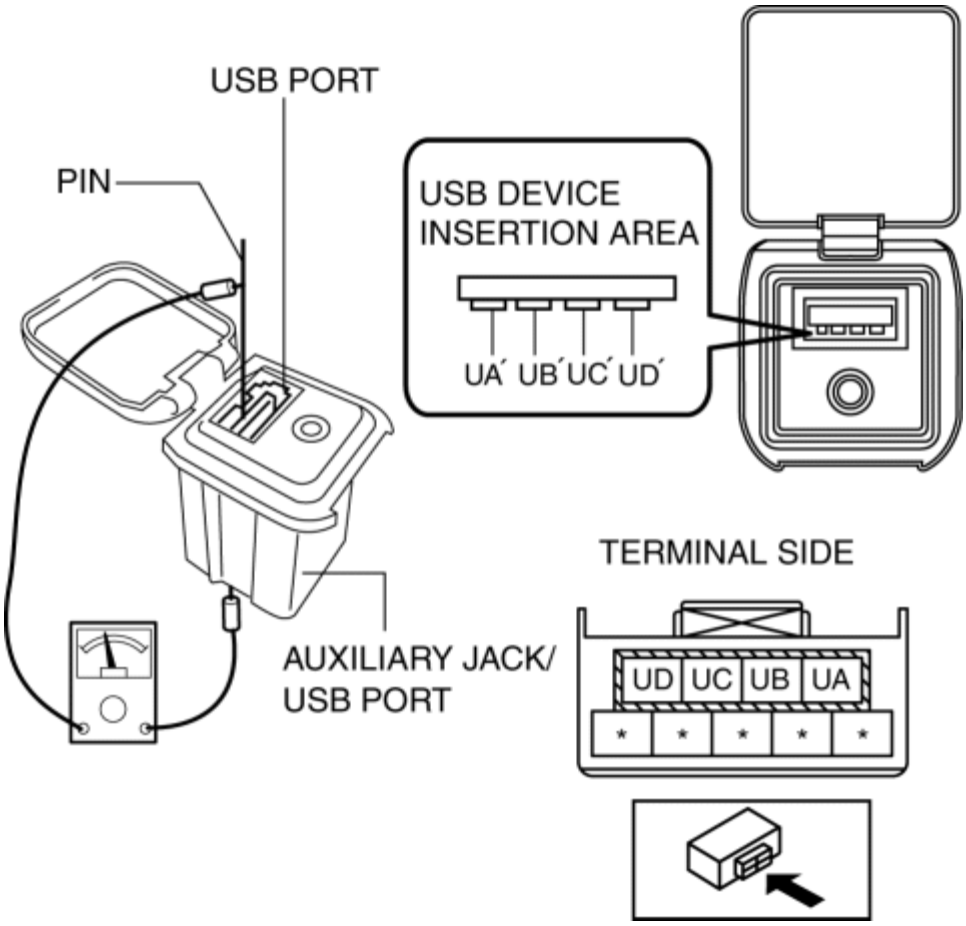

5. Verify that the continuity at the insertion side and terminal side of the USB device is as indicated in the table.

NOTE:

- When inspecting the USB device insertion side, touch it with a paper clip or similar thin pin without directly inserting a tester into the terminals.

○—○ : Continuity

Test condition	Terminal							
	Terminal side				USB devise insertion area			
	UA	UB	UC	UD	UA'	UB'	UC'	UD'
Under any condition	○	—	—	—	○			
		○	—	—	—	○		
			○	—	—	—	○	
				○	—	—	—	○

- If not as indicated in the table, replace the auxiliary jack/USB port.

AUXILIARY JACK/USB PORT INSPECTION

2014 - Mazda3 - Body and Accessories

AUXILIARY JACK/USB PORT/SD CARD SLOT HUB REMOVAL/INSTALLATION

1. Disconnect the negative battery cable. (See **NEGATIVE BATTERY CABLE DISCONNECTION/CONNECTION [SKYACTIV-G 2.0, SKYACTIV-G 2.5]**.)

2. Remove the console-up. (See **REAR CONSOLE REMOVAL/INSTALLATION**.)

3. While pressing the auxiliary jack/USB port/SD card slot hub tabs in the direction of the arrows (1) shown in the figure, press the auxiliary jack/USB port/SD card slot hub in the direction of the arrow (2) to detach the auxiliary jack/USB port/SD card slot hub tabs from the console-up.

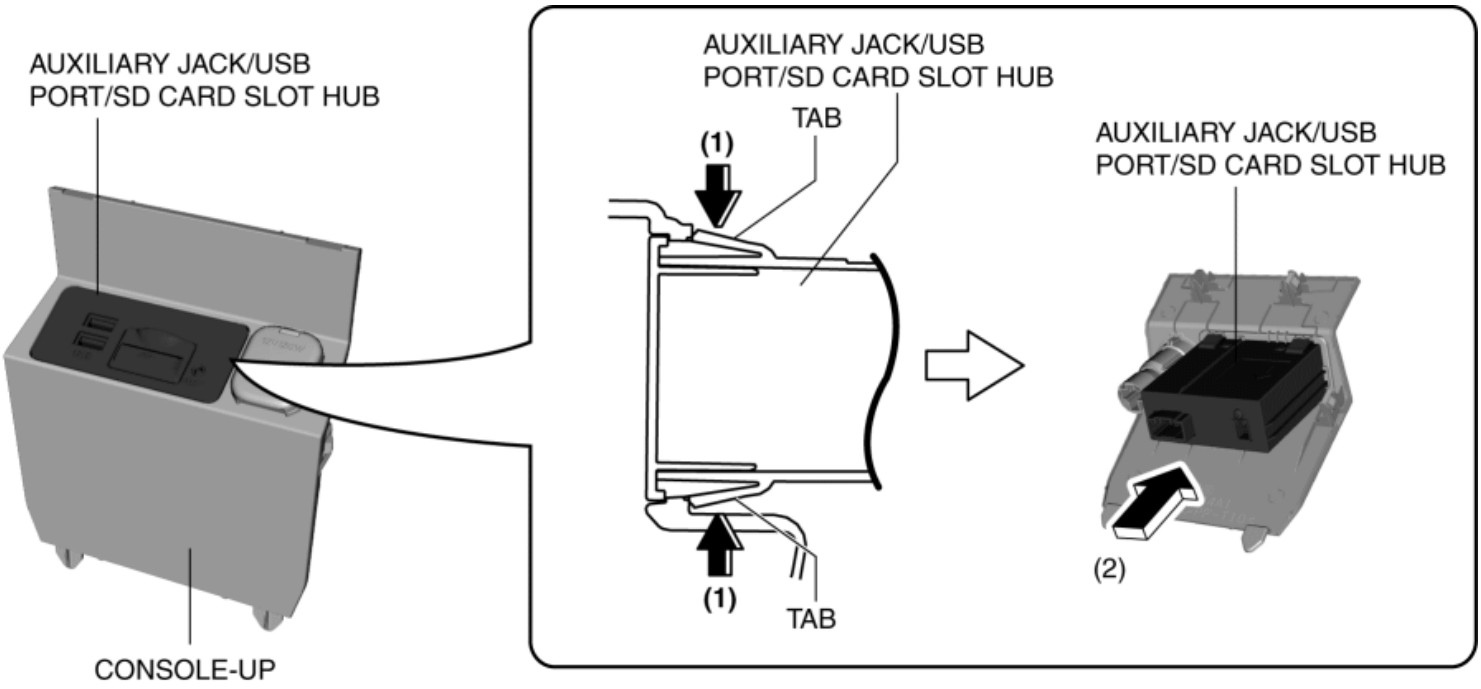

4. Remove the auxiliary jack/USB port/SD card slot hub.

5. Install in the reverse order of removal.

2014 - Mazda3 - Body and Accessories

AUXILIARY JACK/USB PORT/SD CARD SLOT HUB INSPECTION

NOTE:

- The integrity of the auxiliary jack/USB port/SD card slot hub cannot be determined by a single unit inspection. When inspecting the auxiliary jack/USB port/SD card slot hub, perform the following procedure.

1. Connect the M-MDS to the DLC-2.

2. Perform the connectivity master unit (CMU) DTC inspection and verify if DTCs related to the auxiliary jack/USB port/SD card slot hub are detected. (See **DTC INSPECTION [CONNECTIVITY MASTER UNIT]**.)

    - If DTCs are detected, repair the malfunctioning location according to the applicable DTC troubleshooting. (See **DTC TABLE [CONNECTIVITY MASTER UNIT]**.)
    - If DTCs are not detected, repair the malfunctioning location according to the symptom troubleshooting. (See **SYMPTOM TROUBLESHOOTING [ENTERTAINMENT SYSTEM [WITH CENTER DISPLAY]]**.)

2014 - Mazda3 - Body and Accessories

REAR MOUNT CAMERA REMOVAL/INSTALLATION

CAUTION:

- The audio unit communicates with the rear mount camera and records the presence/non-presence of the rear mount camera when the ignition is switched to ACC or ON (engine off or on) after connecting the negative battery cable.
- If the commander switch is installed with the negative battery cable connected when the audio unit records that there is no rear mount camera, the rear mount camera does not operate.
- For the rear mount camera installation/removal, disconnect the negative battery cable, switch the ignition to ACC or ON (engine off or on) after the servicing is completed, and the audio unit records the presence/non-presence of the rear mount camera.

4SD

1. Disconnect the negative battery cable. (See **NEGATIVE BATTERY CABLE DISCONNECTION/CONNECTION [SKYACTIV-G 2.0, SKYACTIV-G 2.5]**.)
2. Partially peel back the trunk lid trim.
3. Disconnect the connector.

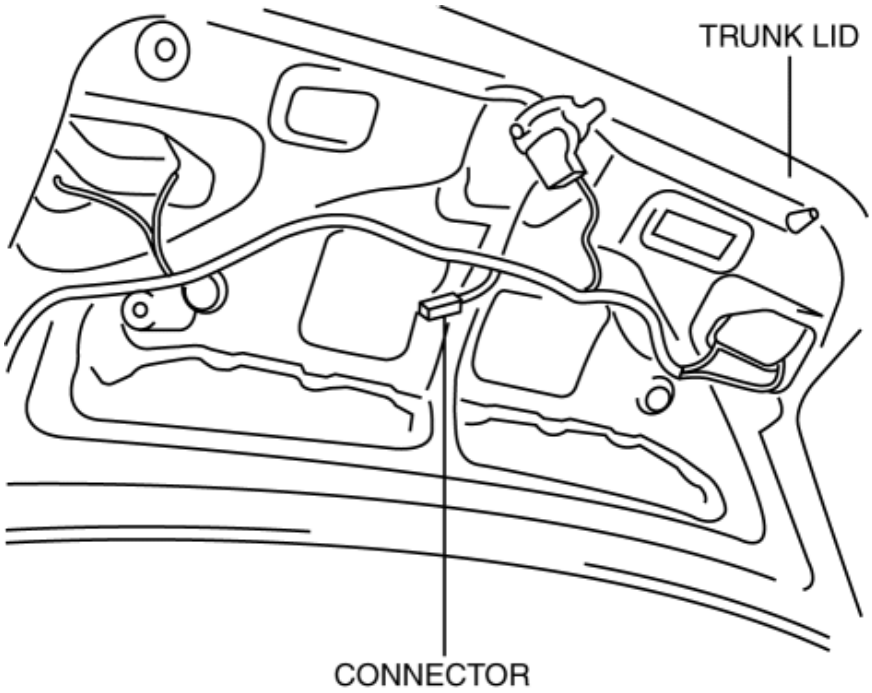

4. Press the rear mount camera tabs in the direction of arrows (1) shown in the figure, press the rear mount camera in the direction of arrow (2) shown in the figure, and disengage the rear mount camera tabs from the trunk lid.

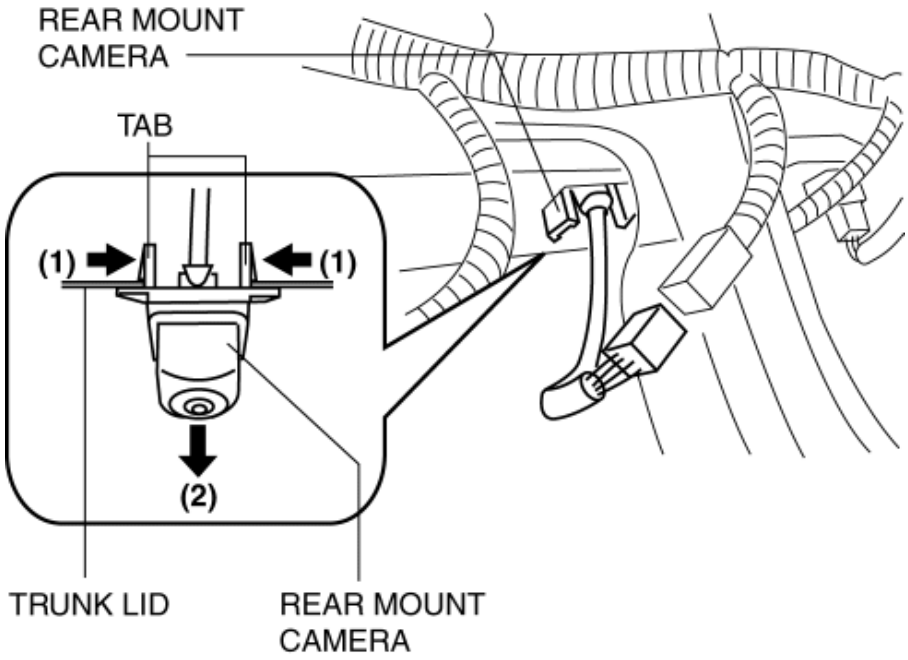

5. Remove the rear mount camera.

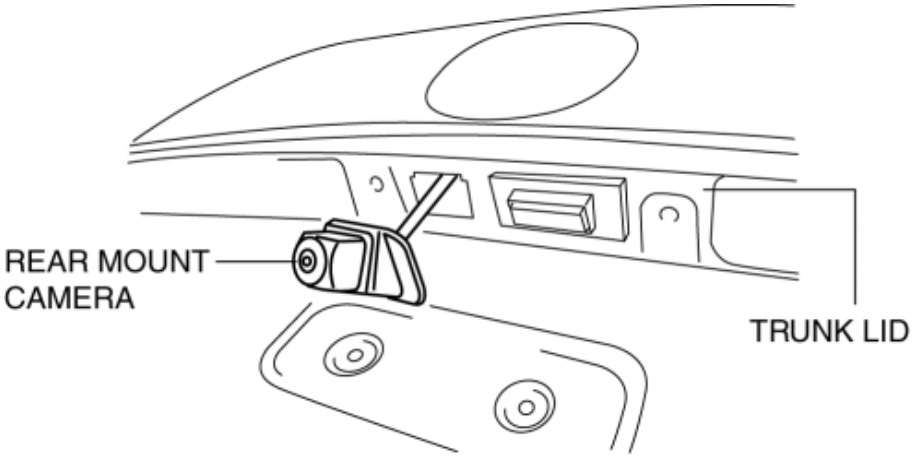

6. Install in the reverse order of removal.

5HB

1. Disconnect the negative battery cable. (See **NEGATIVE BATTERY CABLE DISCONNECTION/CONNECTION [SKYACTIV-G 2.0, SKYACTIV-G 2.5]**.)

2. Remove the following parts:

   a. Liftgate upper trim (See **LIFTGATE UPPER TRIM REMOVAL/INSTALLATION**.)

   b. Liftgate side trim (See **LIFTGATE SIDE TRIM REMOVAL/INSTALLATION**.)

   c. Liftgate recess (See **LIFTGATE RECESS REMOVAL/INSTALLATION**.)

   d. Liftgate lower trim (See **LIFTGATE LOWER TRIM REMOVAL/INSTALLATION**.)

   e. Liftgate garnish (See **LIFTGATE GARNISH REMOVAL/INSTALLATION**.)

3. Disconnect the connector.

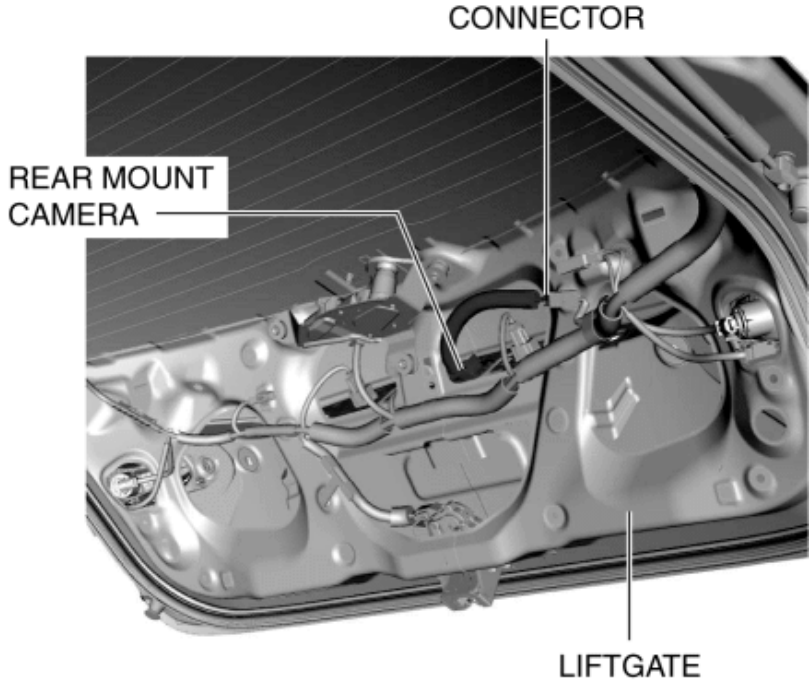

4. Press the rear mount camera tabs in the direction of arrows (1) shown in the figure, press the rear mount camera in the direction of arrow (2) shown in the figure, and disengage the rear mount camera tabs from the liftgate.

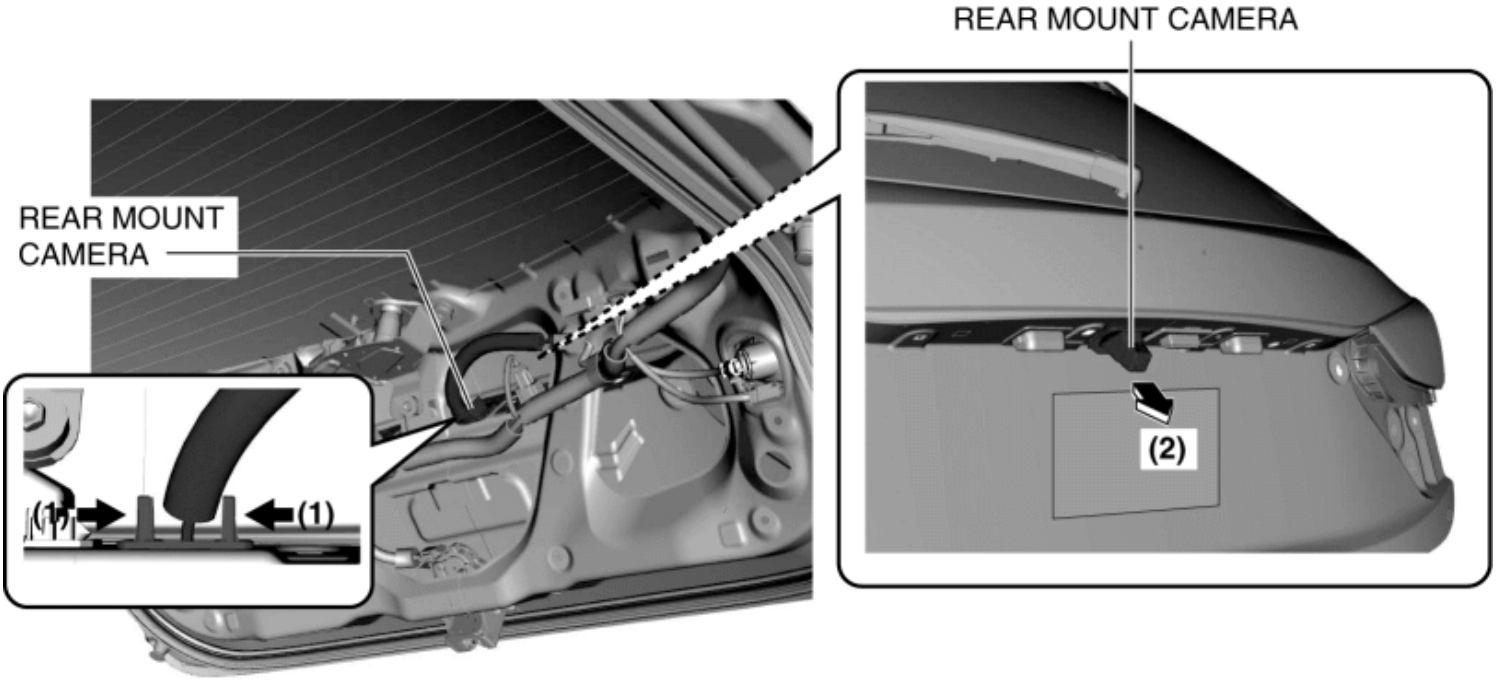

5. Remove the rear mount camera.

6. Install in the reverse order of removal.

2014 - Mazda3 - Body and Accessories

POWER SYSTEM LOCATION INDEX

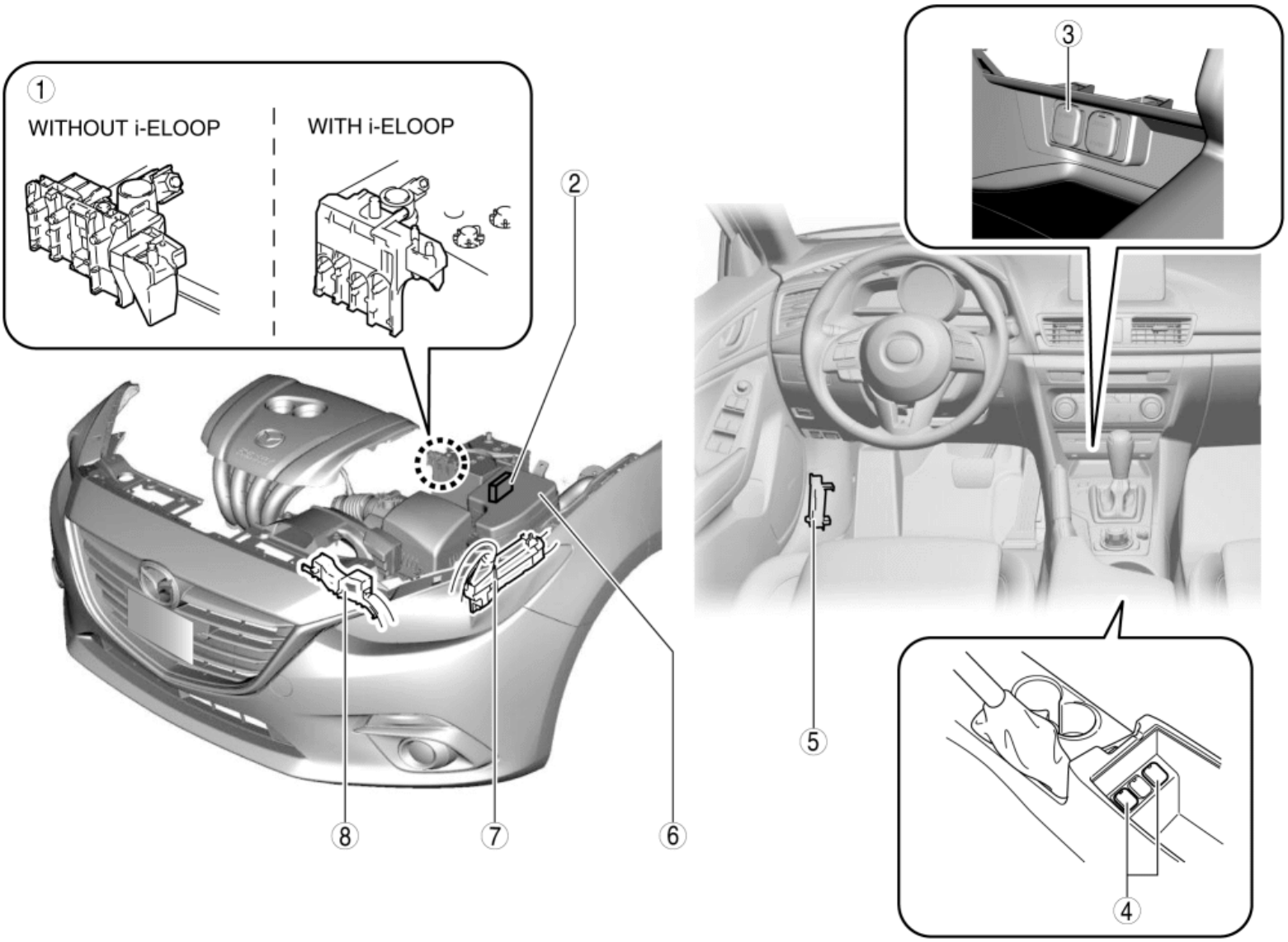

1	Main fuse (See **MAIN FUSE REMOVAL/INSTALLATION**.)
2	Multiplex slow blow fuse (See **MULTIPLEX SLOW BLOW FUSE REMOVAL/INSTALLATION**.)
3	Front accessory socket (See **FRONT ACCESSORY SOCKET REMOVAL/INSTALLATION**.) (See **FRONT ACCESSORY SOCKET INSPECTION**.)
4	Center accessory socket

	(See **CENTER ACCESSORY SOCKET REMOVAL/INSTALLATION**.) (See **CENTER ACCESSORY SOCKET INSPECTION**.)
5	Fuse block (See **FUSE BLOCK REMOVAL/INSTALLATION**.)
6	Relay and fuse block (See **RELAY AND FUSE BLOCK REMOVAL/INSTALLATION**.) (See **FUSE SERVICE CAUTIONS**.) (See **RELAY LOCATION**.) (See **RELAY INSPECTION**.)
7	Front wiring harness protector No.2 (See **FRONT WIRING HARNESS PROTECTOR REMOVAL/INSTALLATION**.)
8	Front wiring harness protector No.1 (See **FRONT WIRING HARNESS PROTECTOR REMOVAL/INSTALLATION**.)

2014 - Mazda3 - Body and Accessories

RELAY AND FUSE BLOCK REMOVAL/INSTALLATION

NOTE:

- When replacing the relay and fuse block, it is necessary to switch terminals from the relay and fuse block terminal prior to replacement to the relay and fuse block terminal on the replacement. When switching terminals, ready the replacement relay and fuse block before pulling out the terminal of the relay and fuse block prior to replacement. This is because it is necessary to switch the terminals one at a time so that the installation positions are not mistaken.

Removal

1. Disconnect the negative battery cable. (See **NEGATIVE BATTERY CABLE DISCONNECTION/CONNECTION [SKYACTIV-G 2.0, SKYACTIV-G 2.5]**.)

2. Remove the air cleaner case. (See **INTAKE-AIR SYSTEM REMOVAL/INSTALLATION [SKYACTIV-G 2.0, SKYACTIV-G 2.5]**.)

3. Remove the battery tray. (See **BATTERY REMOVAL/INSTALLATION [SKYACTIV-G 2.0, SKYACTIV-G 2.5]**.)

4. While pressing the relay and fuse block upper cover hook in the direction of the arrow (1) shown in the figure, lift up the relay and fuse block upper cover in the direction of the arrow (2) to detach the relay and fuse block upper cover hook from the relay and fuse block middle cover tab.

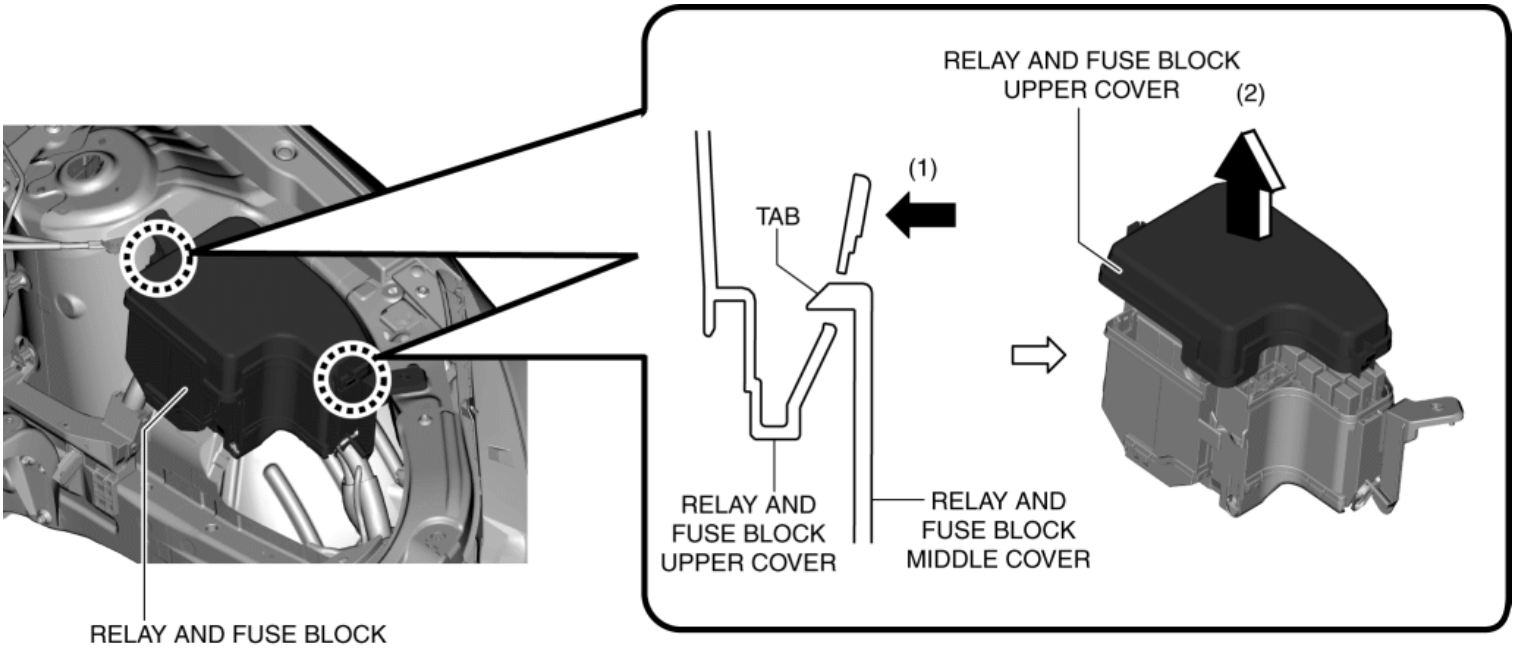

5. Remove the relay and fuse block upper cover.

6. Remove the front body control module (FBCM). (See **FRONT BODY CONTROL MODULE (FBCM) REMOVAL/INSTALLATION**.)

7. Remove the multiplex slow blow fuse. (See **MULTIPLEX SLOW BLOW FUSE REMOVAL/INSTALLATION**.)

8. Remove all the relays and fuses.

CAUTION:

- If the relay and fuse block is removed with the relays and fuses installed, the area around the relay and fuse block may contact the relays or fuses and damage the them. Before removing the relay and fuse block, remove all the relays and fuses.

9. While pressing the relay and fuse block hook in the direction of the arrow (3) shown in the figure, set the emission wiring harness away in the direction of the arrow (4) shown in the figure from the relay and fuse block hook.

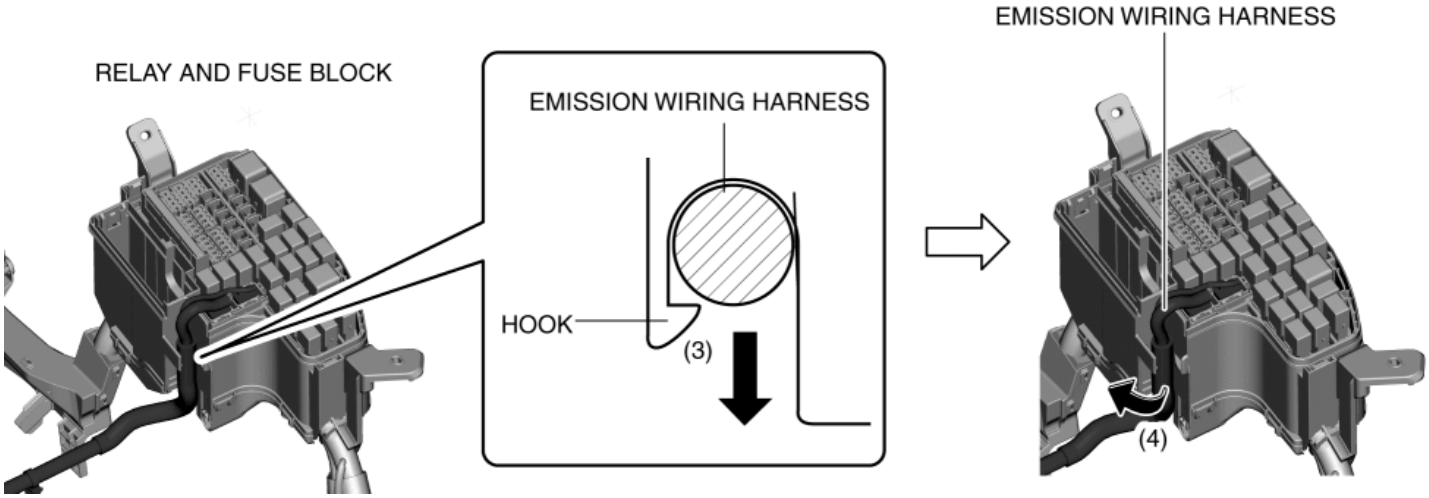

10. Disconnect the emission wiring harness connectors.

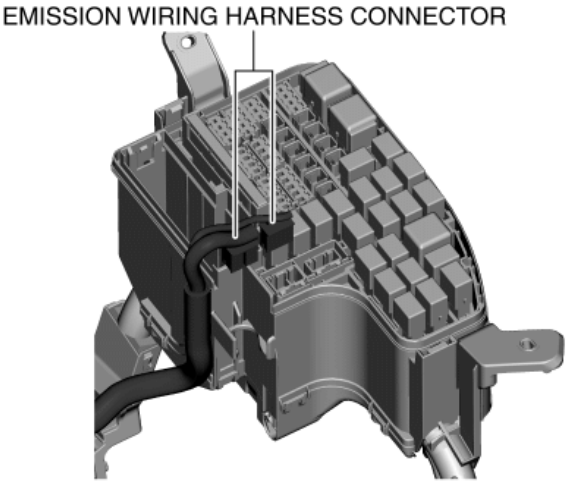

RELAY AND FUSE BLOCK

11. Remove the nut and bolt.

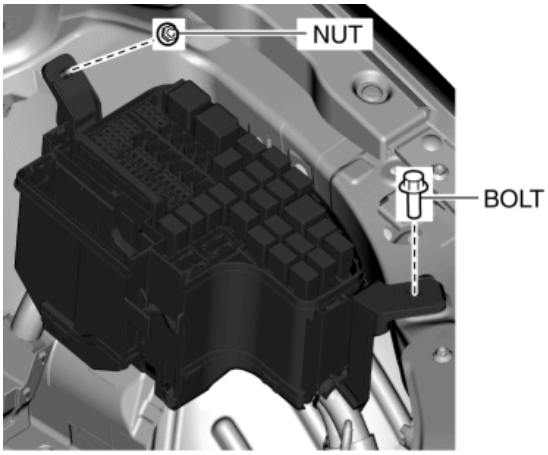

RELAY AND FUSE BLOCK

12. Pull out the relay and fuse block from the stud bolt and set it aside as shown in the figure.

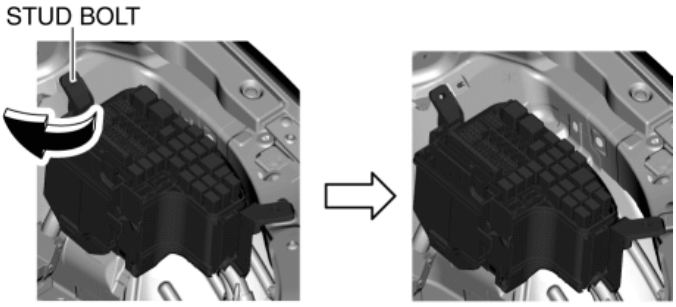

RELAY AND FUSE BLOCK

13. While pressing the clip tabs of front wiring harness protector No.2 in the direction of the arrows (5) shown in the figure, pull the clip of front wiring harness protector No.2 in the direction of the arrow (6) shown in the figure to detach the clip tabs of front wiring harness protector No.2 from the engine mount.

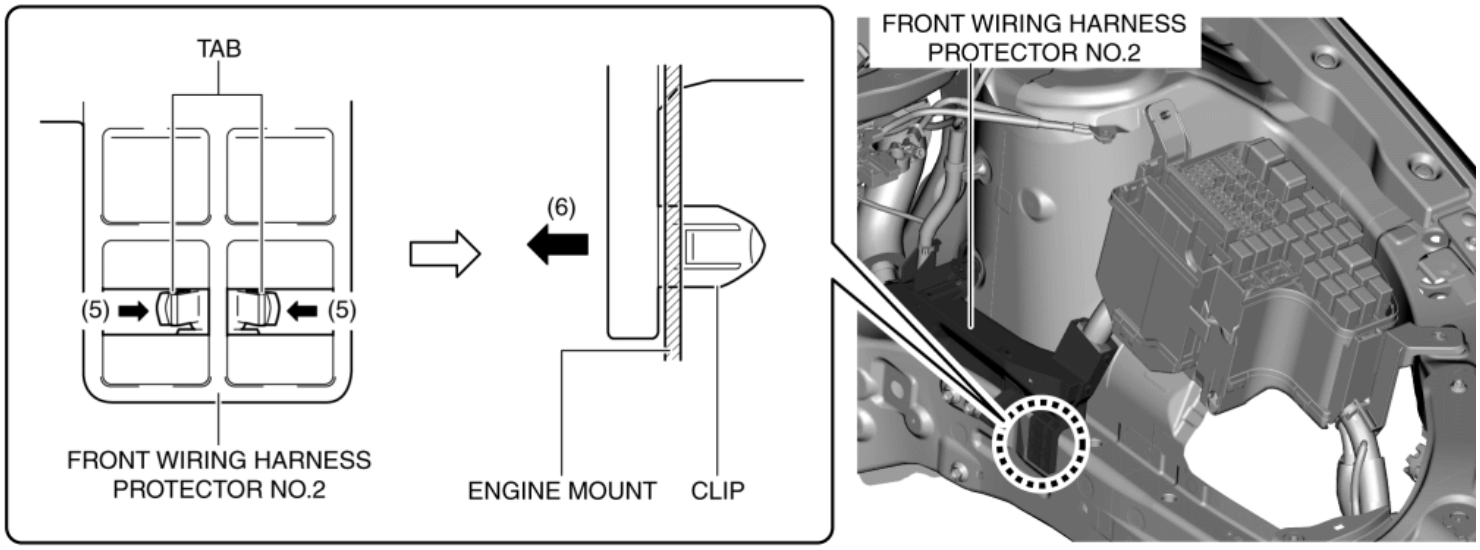

14. Pull out the front wiring harness protector No.2 clip.

15. Lift up the front wiring harness protector No.2 cap in the direction of the arrow shown in the figure.

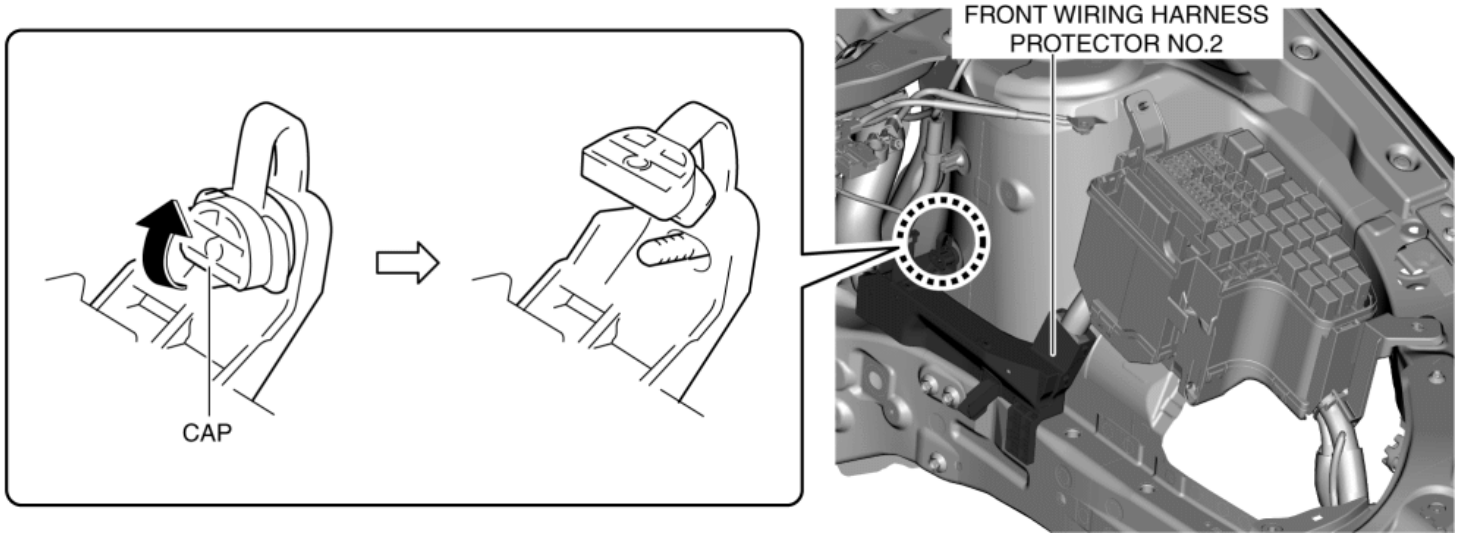

16. Pull out the front wiring harness protector No.2 from the stud bolt and set it aside as shown in the figure.

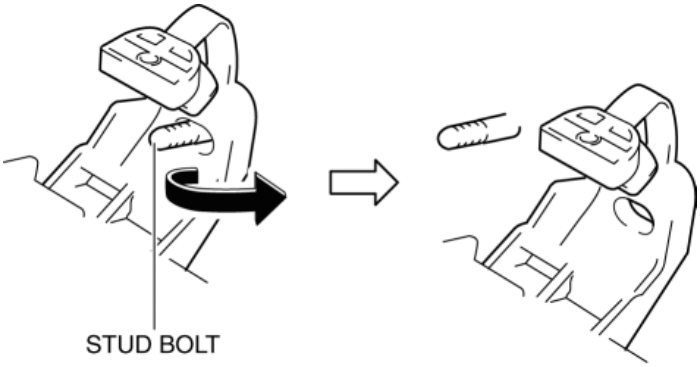

17. Cut the bands shown in the figure.

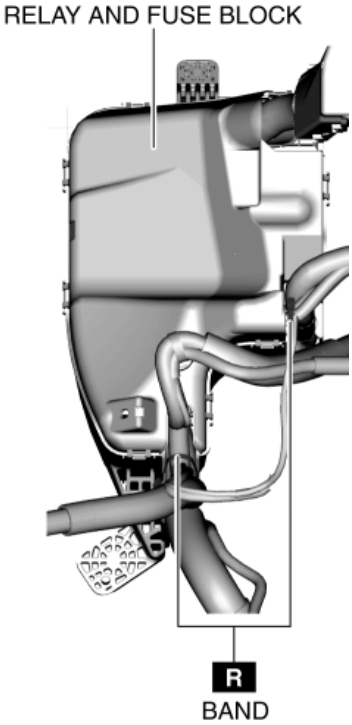

18. Insert a flathead screwdriver into the gap between the relay and fuse block middle cover tabs and the relay and fuse block lower cover as shown in the figure.

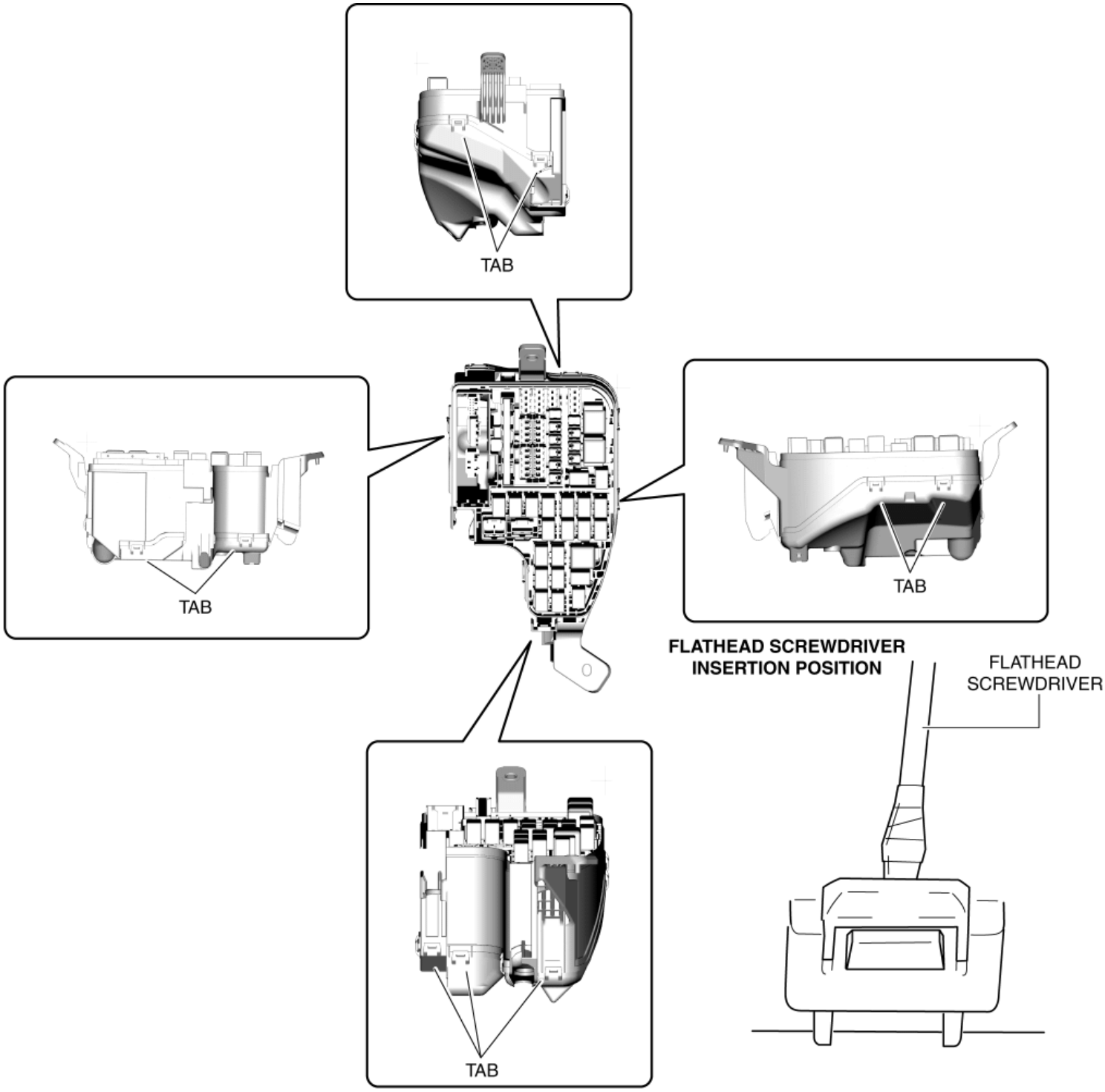

19. Move the flathead screwdriver in the direction of the arrow (7) shown in the figure, and pull down the relay and fuse block lower cover in the direction of the arrow (8) shown in the figure to detach the relay and fuse block middle cover tab from the relay and fuse block lower cover.

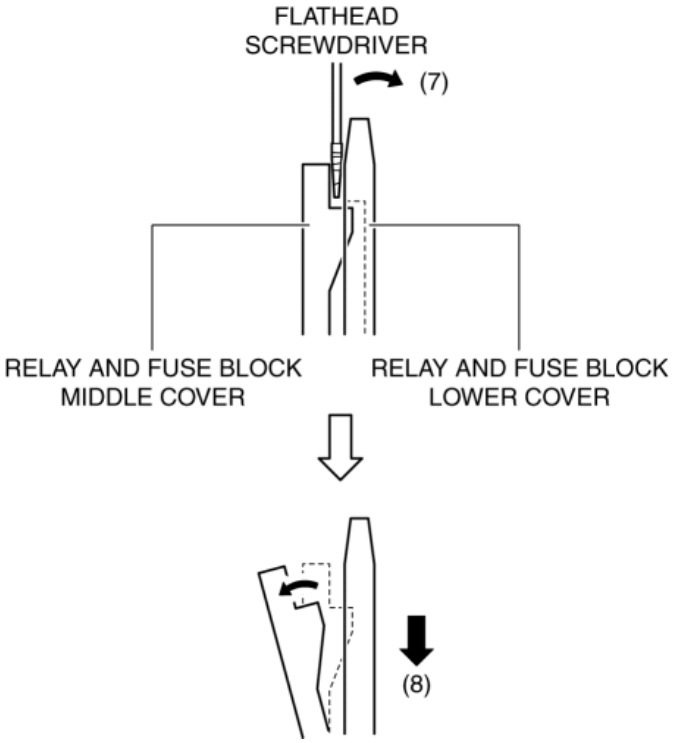

20. Detach all of the relay and fuse block middle cover and the relay and fuse block lower cover.

21. While pressing the wiring harness clip tabs in the direction of the arrows (9) shown in the figure, push out the wiring harness clip in the direction of the arrow (10) shown in the figure to detach the wiring harness clip tabs from the relay and fuse block lower cover.

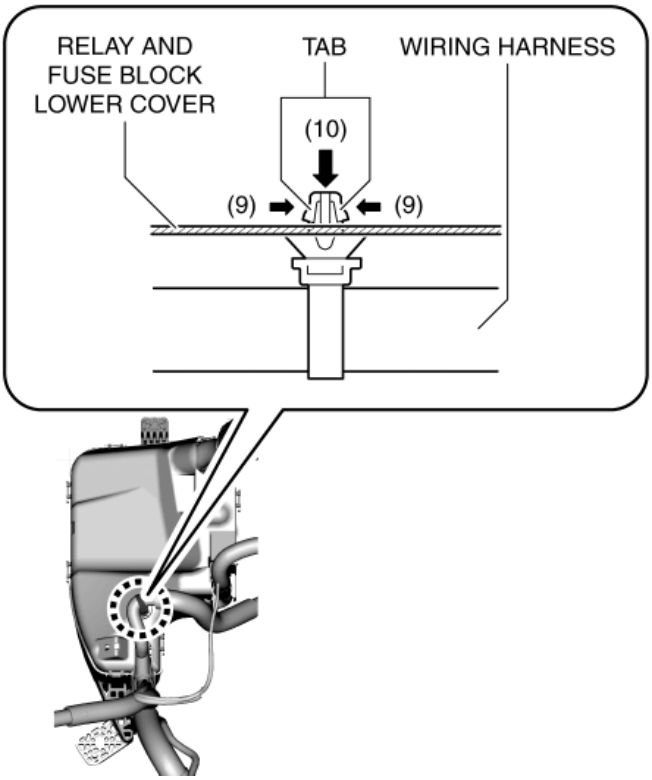

22. Pull out the wiring harness clip.

23. Remove the relay and fuse block lower cover.

24. Insert a flathead screwdriver into the service hole in the position shown in the figure.

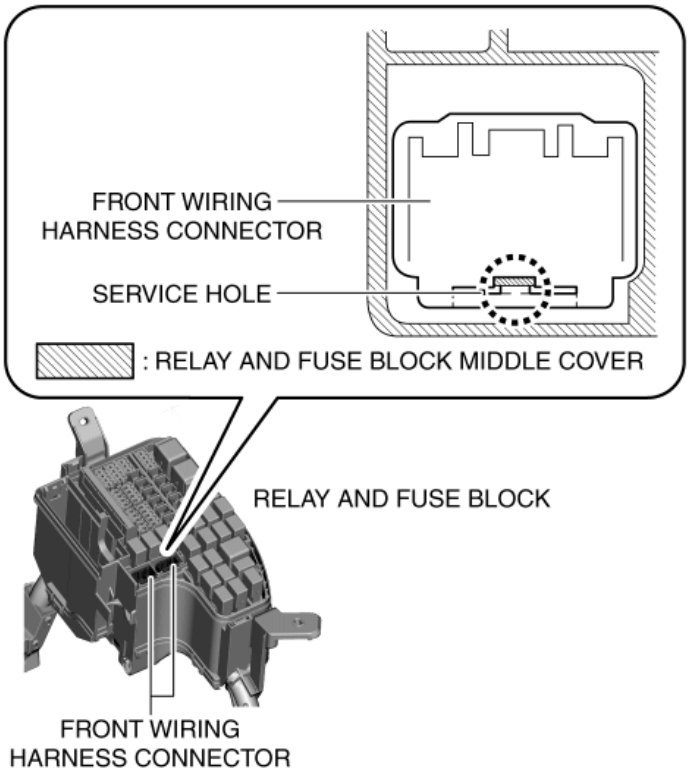

25. Move the flathead screwdriver in the direction of the arrow (11) shown in the figure, and lift up the front wiring harness connector in the direction of the arrow (12) shown in the figure to detach the front wiring harness connector tab from the relay and fuse block middle cover.

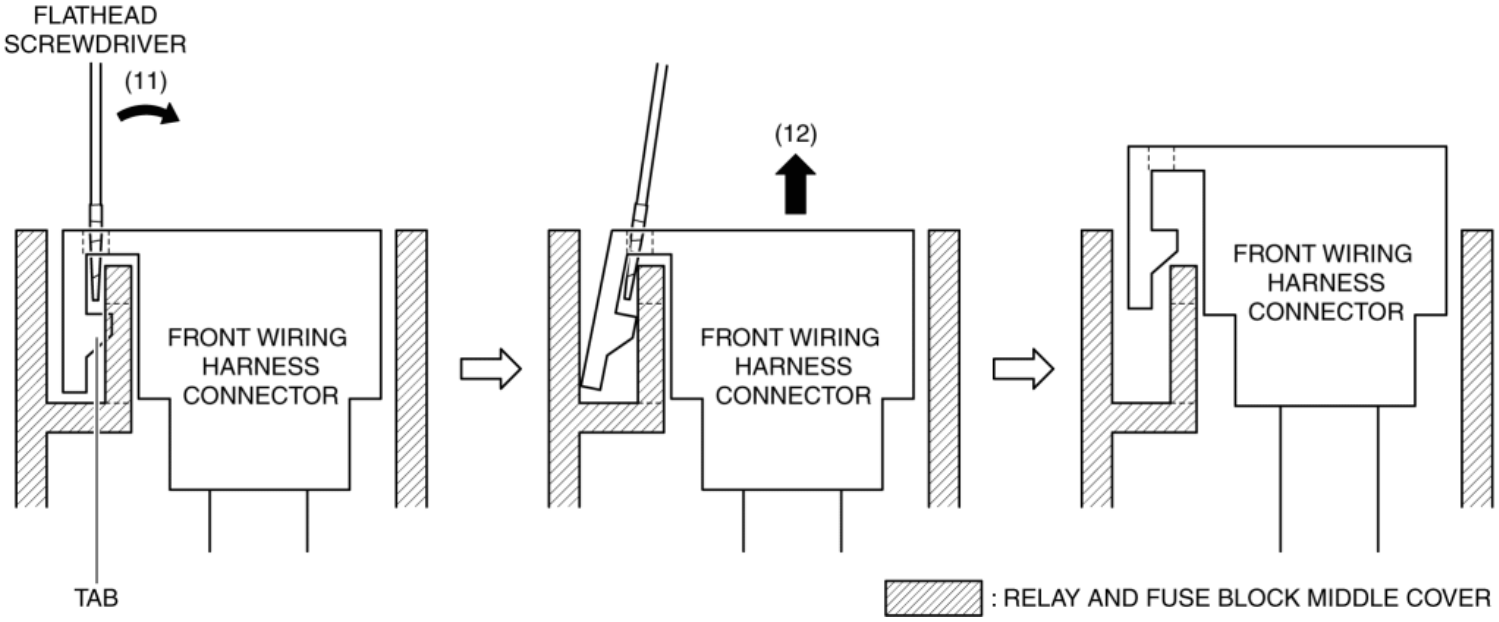

26. Move the front wiring harness connector in the direction of the arrow shown in the figure, release the hook, and pull it out from the relay and fuse block middle cover.

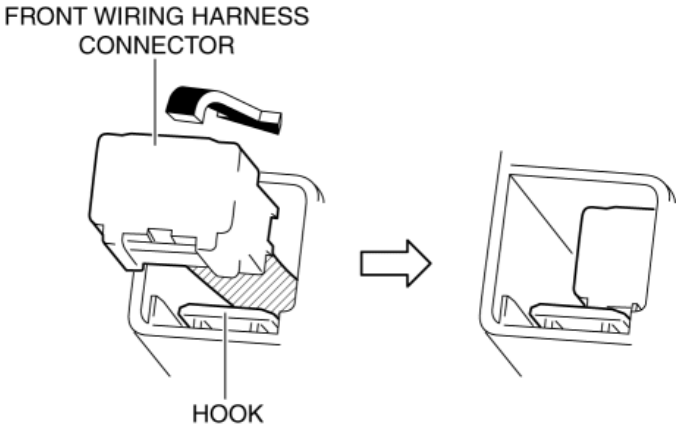

27. Pull out all the front wiring harness connectors from the relay and fuse block middle cover.

28. Insert the flathead screwdriver into the gap between the relay and fuse block middle cover and the relay and fuse block shown in the figure.

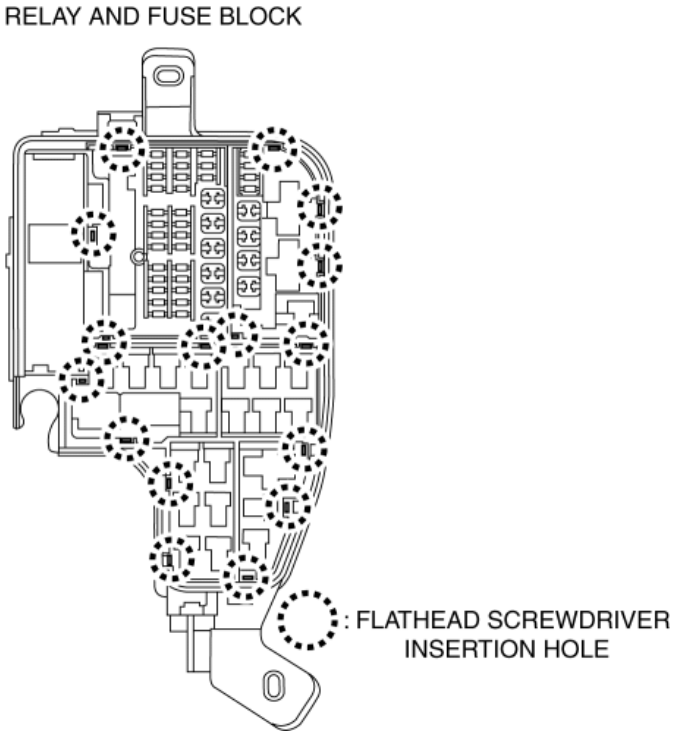

29. Move the flathead screwdriver in the direction of the arrow (13) shown in the figure, and pull up the relay and fuse block middle cover in the direction of the arrow (14) shown in the figure to detach the relay and fuse block tab from the relay and fuse block middle cover.

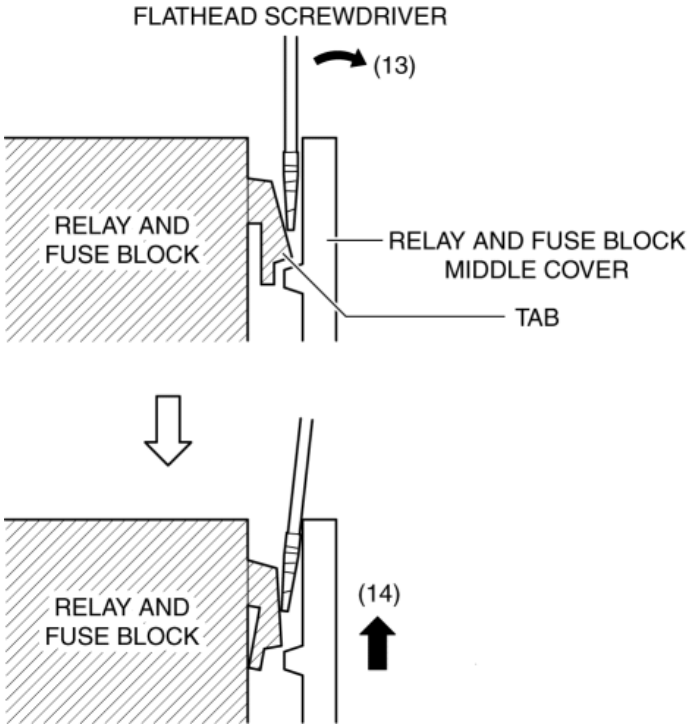

30. Detach all the relay and fuse block tabs from the relay and fuse block middle cover, and remove the relay and fuse block middle cover.

31. Set the removed relay and fuse block aside so that it does not scratch the vehicle and parts.

Installation

1. Move the flathead screwdriver in the direction of the arrow (1) shown in the figure, and pull the wiring harness in the direction of the arrow (2) while pressing the stopper to detach the relay or fuse terminal from the stopper.

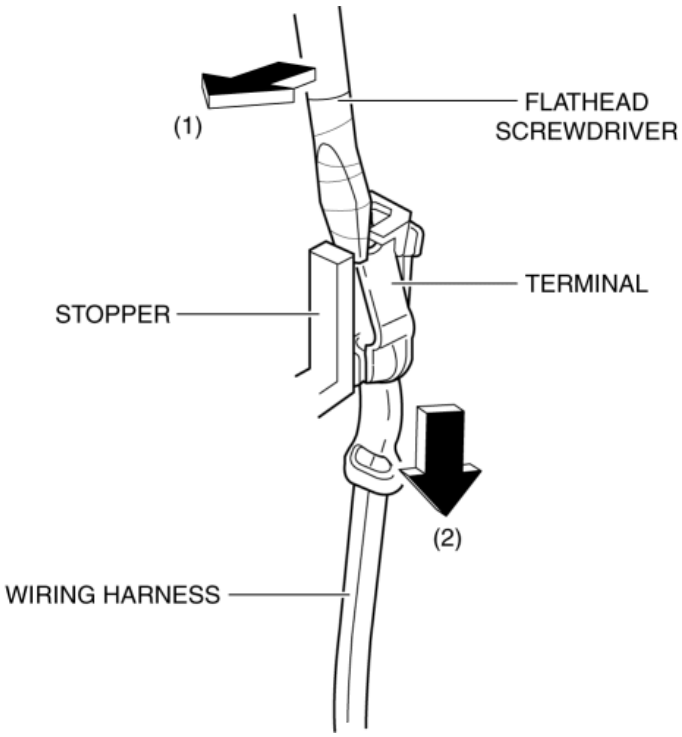

2. Relocate all relay and fuse terminals to the new relay and fuse block.

CAUTION:

- If terminals are installed incorrectly, it could damage electrical accessories and burn wiring harnesses. When relocating terminals after replacing the relay and fuse block, line up the relay and fuse blocks of old and news parts and always verify each of the wiring harnesses in the wiring diagram so that the installation positions are correct.

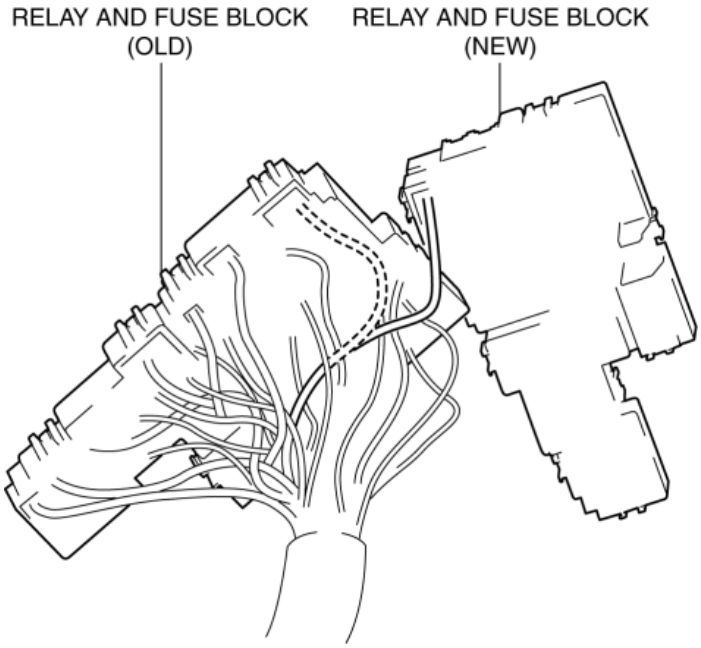

- A terminal disconnection could cause electronic components and the system to not operate normally due to poor contact. After terminal relocation, lightly pull the wiring harnesses to verify that they cannot be pulled out.

3. Temporarily install the ground.

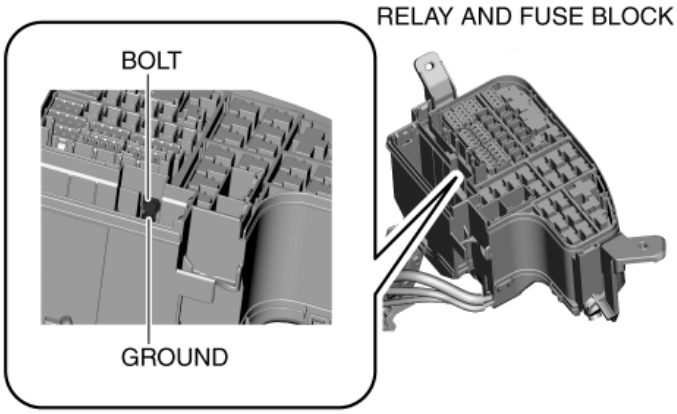

4. Move the relay and fuse block middle cover in the direction of arrow shown in the figure and insert the relay and fuse block tab into the relay and fuse block middle cover.

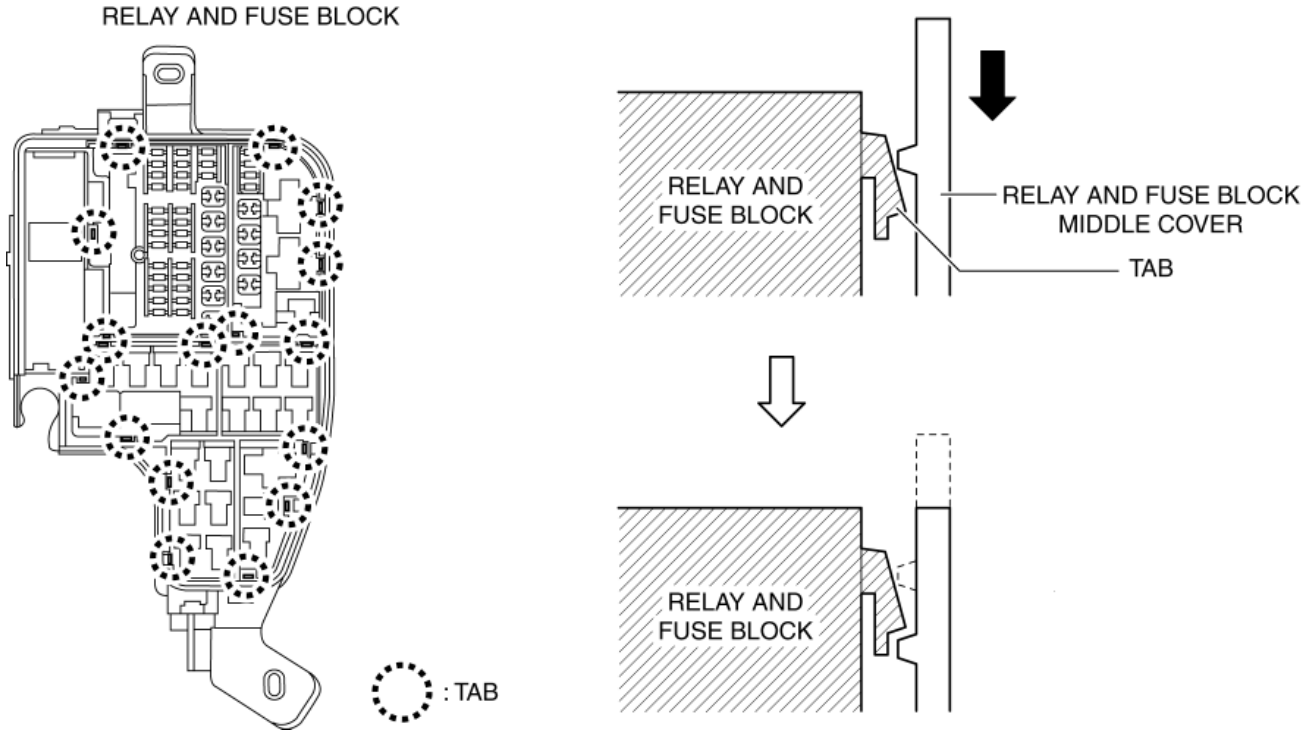

5. Insert all the relay and fuse block tabs into the relay and fuse block middle cover and install the relay and fuse block middle cover.

6. Insert the front wiring harness connector into the relay and fuse block middle cover.

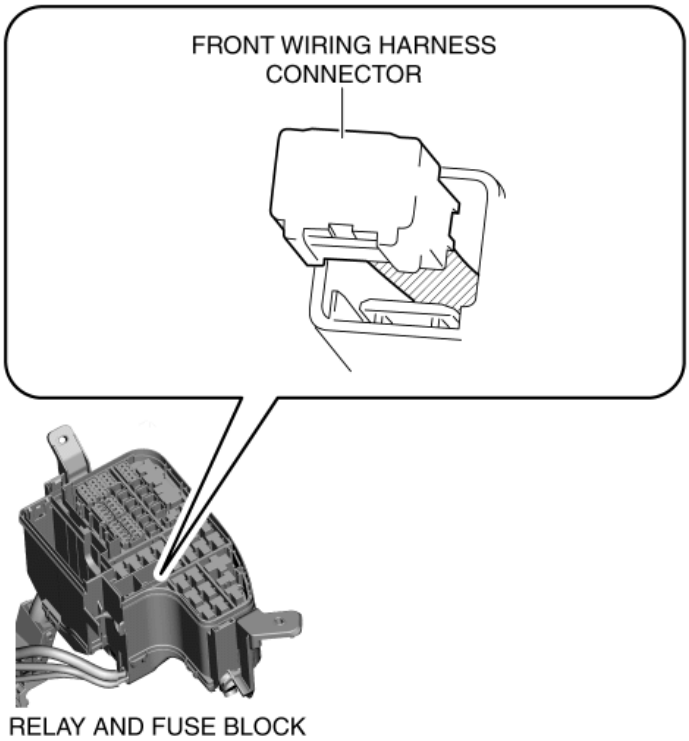

7. Move the front wiring harness connector in the direction of arrow shown in the figure to engage the front wiring harness connector tab with the relay and fuse block middle cover.

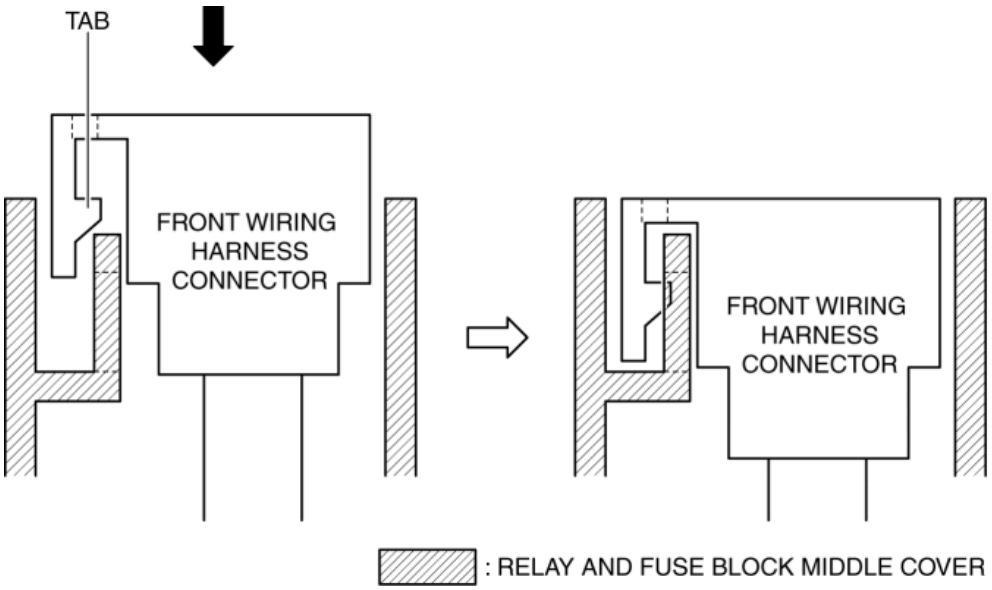

8. Install all the front wiring harness connectors to the relay and fuse block middle cover.

9. Move the relay and fuse block lower cover in the direction of arrow shown in the figure and insert the relay and fuse block middle cover tab into the relay and fuse block lower cover.

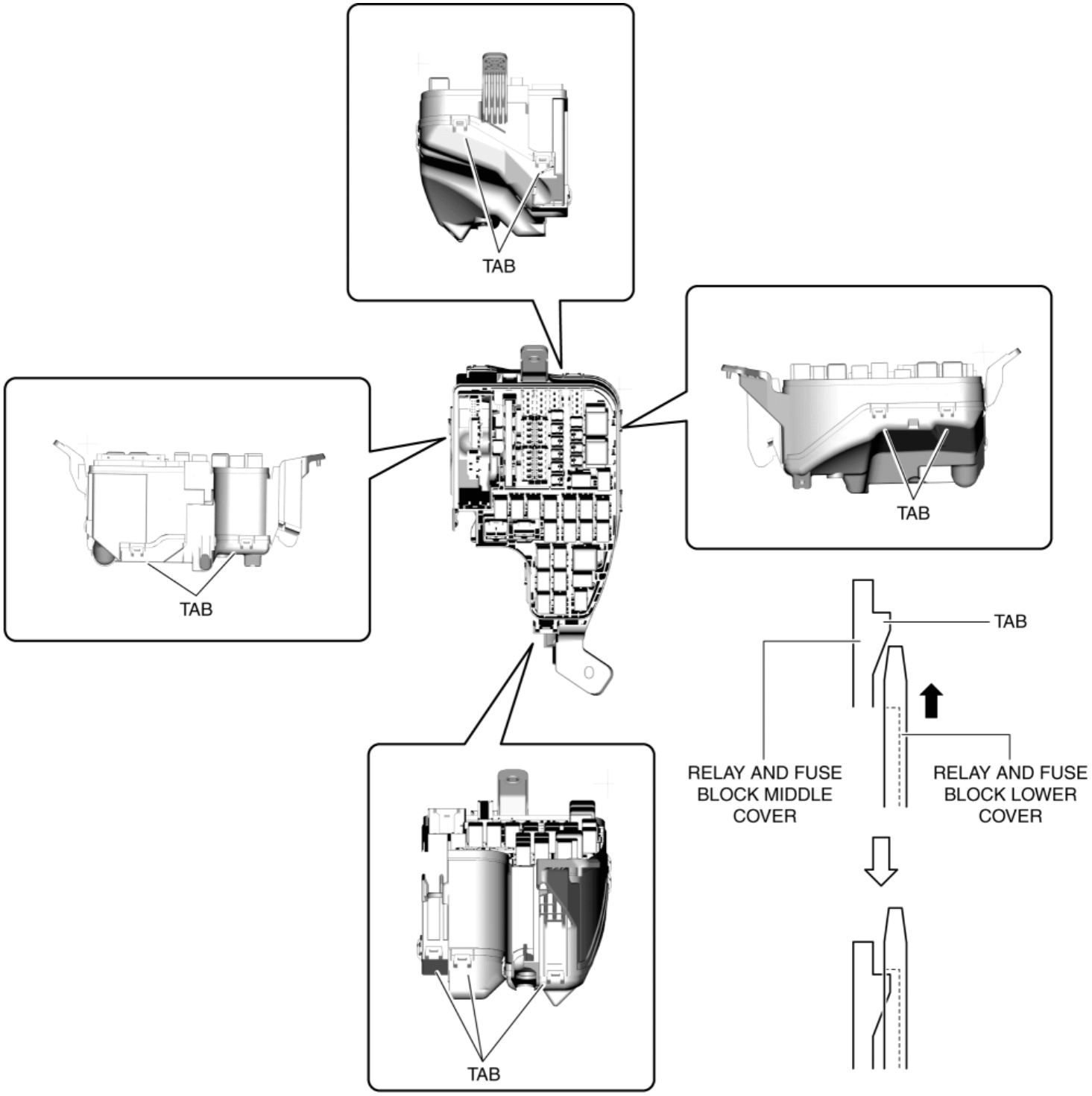

10. Insert all the relay and fuse block middle cover tabs into the relay and fuse block lower cover and install the relay and fuse block lower cover.

11. Install the wiring harness clip to the relay and fuse block lower cover.

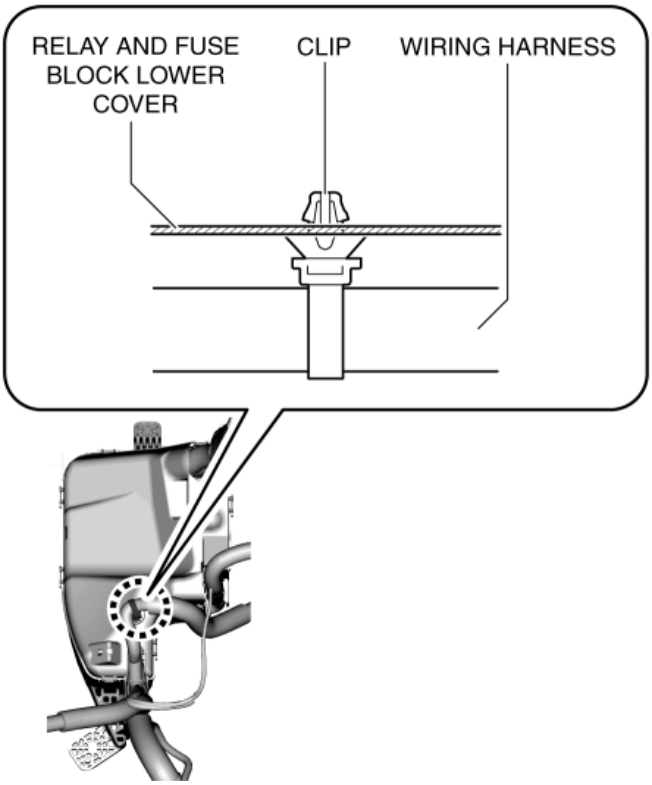

12. Install the bands shown in the figure.

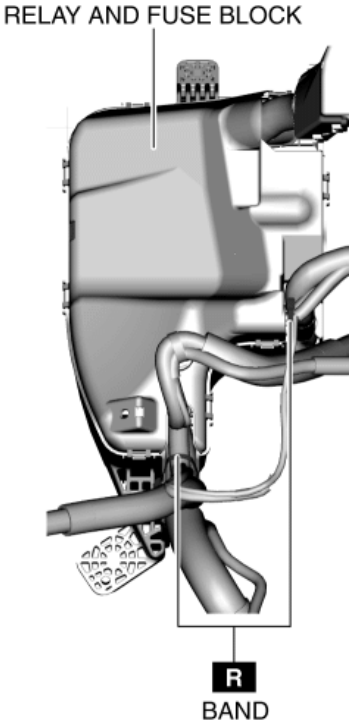

13. Insert the front wiring harness protector No.2 into the stud bolt.

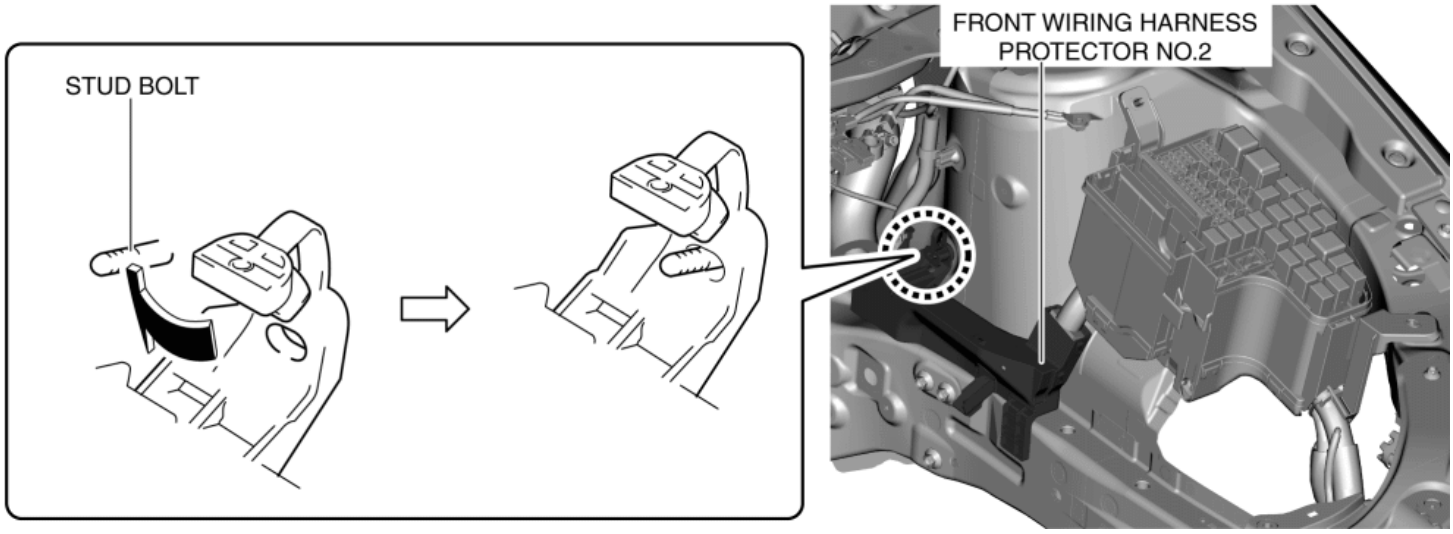

14. Insert the front wiring harness protector No.2 cap into the stud bolt.

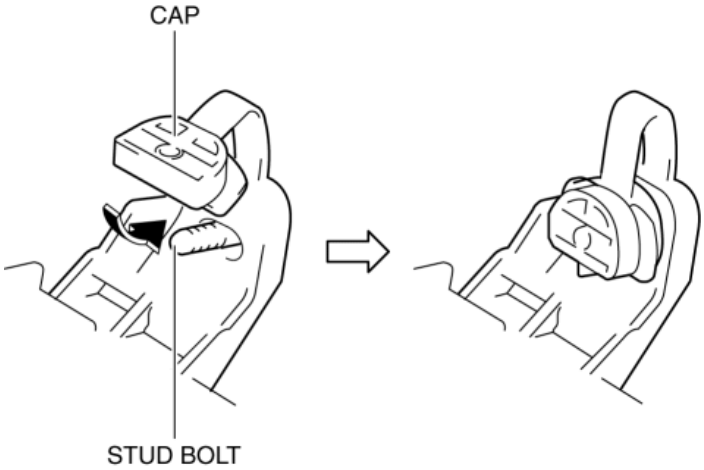

15. Install the front wiring harness protector No.2 clip to the engine mount.

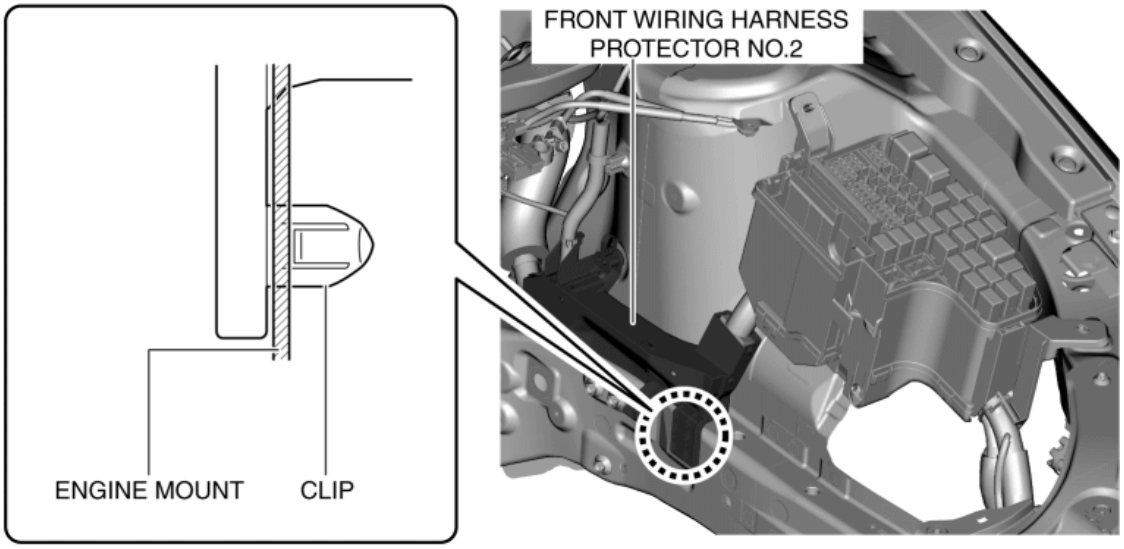

16. Insert the relay and fuse block into the stud bolt.

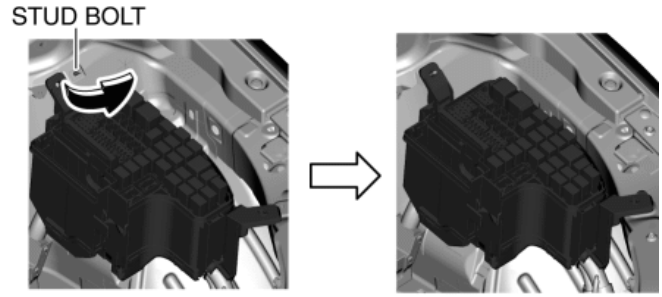

RELAY AND FUSE BLOCK

17. Install the nut and bolt.

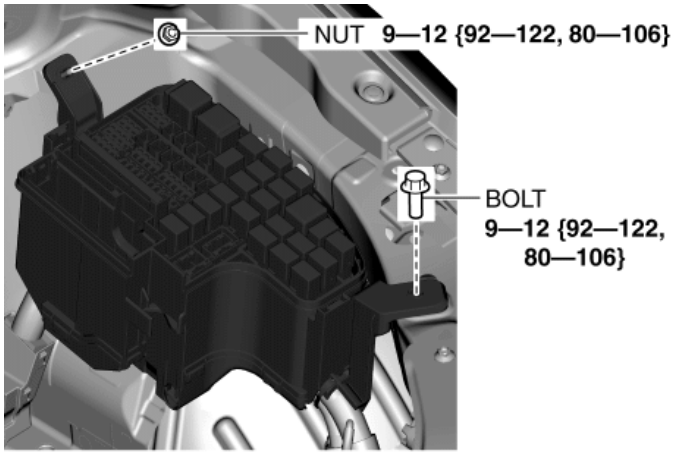

RELAY AND FUSE BLOCK

N·m {kgf·cm, in·lbf}

18. Connect the emission wiring harness connectors.

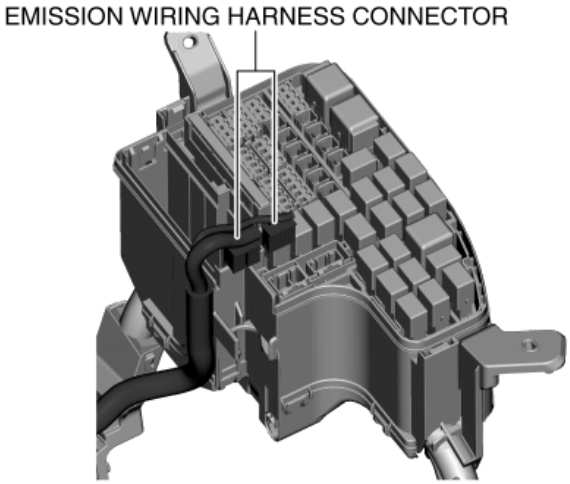

RELAY AND FUSE BLOCK

19. Press the emission wiring harness into the relay and fuse block hook.

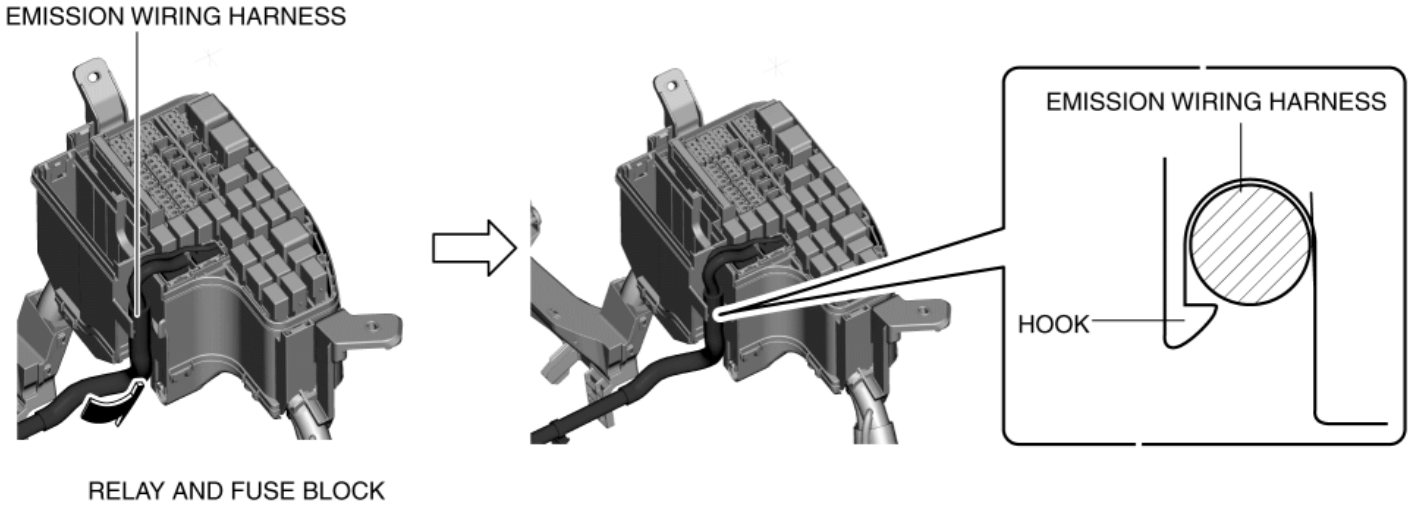

20. Remove the bolt temporarily tightened in Step 3 of [INSTALLATION].

21. Install the multiplex slow blow fuse. (See **MULTIPLEX SLOW BLOW FUSE REMOVAL/INSTALLATION**.)

22. Install the front body control module (FBCM). (See **FRONT BODY CONTROL MODULE (FBCM) REMOVAL/INSTALLATION**.)

23. Install the relay and fuse block upper cover.

24. Install the parts removed in Steps 2 and 3 in “REMOVAL”. (See **Removal**.)

25. Perform the "Verify Relay and Fuse Block Replacement". (See **Verify relay and fuse block replacement**.)

26. Connect the negative battery cable. (See **NEGATIVE BATTERY CABLE DISCONNECTION/CONNECTION [SKYACTIV-G 2.0, SKYACTIV-G 2.5]**.)

Verify relay and fuse block replacement

1. Temporarily connect the negative battery cable to verify that the related wiring harness is not heated.

2. Switch the ignition ON (engine off).

3. Verify that the fuse is not blown and the related wiring harness is not heated.

4. Perform the initial settings for the following systems:

    - Power window system (See **POWER WINDOW SYSTEM INITIALIZATION PROCEDURE**.)
    - Sunroof system (See **SUNROOF SYSTEM INITIALIZATION PROCEDURE**.)
    - Tire pressure monitoring system (TPMS) (See **TIRE PRESSURE MONITORING SYSTEM INITIALIZATION PROCEDURE**.)

5. Verify DTCs using the M-MDS.

    - If a DTC is displayed, repair the malfunctioning part according to the corresponding DTC inspection.
        - After completion of repairs, clear all DTCs stored in the module.

6. If there is no malfunction in Step 1, 3, and 5, start the engine and maintain the idle status.

7. Operate all the switches of the interior/exterior lights of the vehicle and verify that all the light bulbs illuminate and flash.

8. Operate the audio, climate control, wiper switch, and selector lever (ATX) and verify that they operate correctly.

9. Shift the selector lever to the P position, race the engine at **approx. 3,000 rpm** from engine idling, and verify that there is no malfunction. (ATX)

10. Perform a road test and verify that low speed, acceleration, shift-up, and shift-down conditions are normal. (ATX)

2014 - Mazda3 - Body and Accessories

FRONT WIRING HARNESS PROTECTOR REMOVAL/INSTALLATION

Front Wiring Harness Protector No.1

1. Disconnect the negative battery cable. (See **NEGATIVE BATTERY CABLE DISCONNECTION/CONNECTION [SKYACTIV-G 2.0, SKYACTIV-G 2.5]**.)

2. Remove the air cleaner case. (See **INTAKE-AIR SYSTEM REMOVAL/INSTALLATION [SKYACTIV-G 2.0, SKYACTIV-G 2.5]**.)

3. Insert a tape-wrapped flathead screwdriver into the service hole in the position shown in the figure.

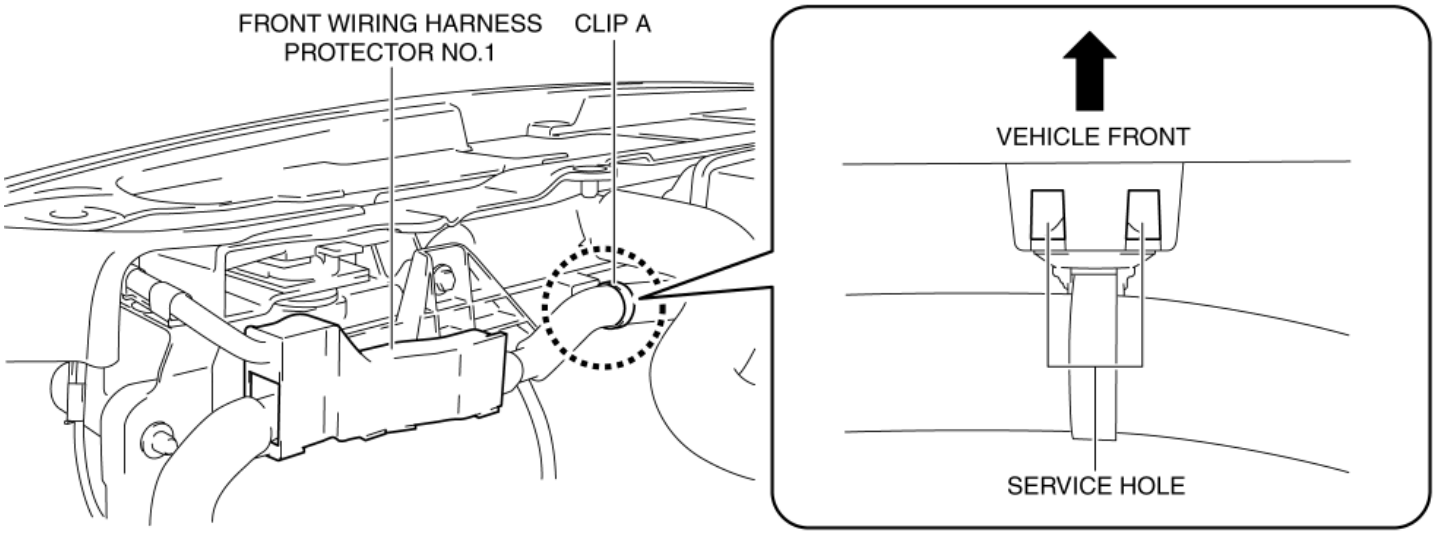

4. While pressing the tabs of clip A in the direction of the arrows (1) shown in the figure, pull clip A in the direction of the arrow (2) shown in the figure to detach the tabs of clip A from the radiator.

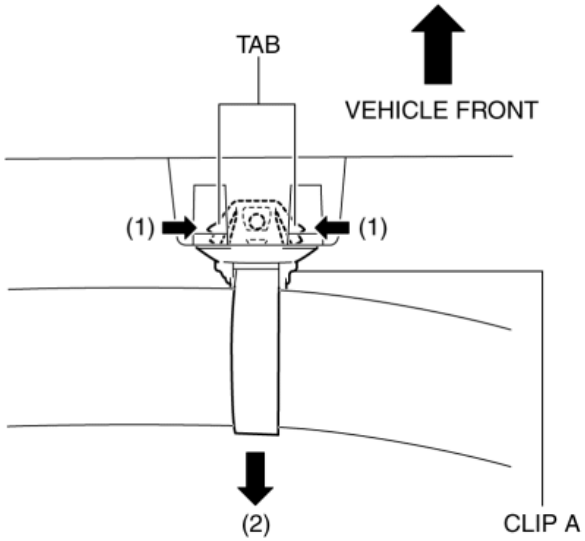

5. Pull out clip A.

6. While pressing the tabs of clip B in the direction of the arrows (3) shown in the figure, pull clip B in the direction of the arrow (4) shown in the figure to detach the tabs of clip B from the front bumper.

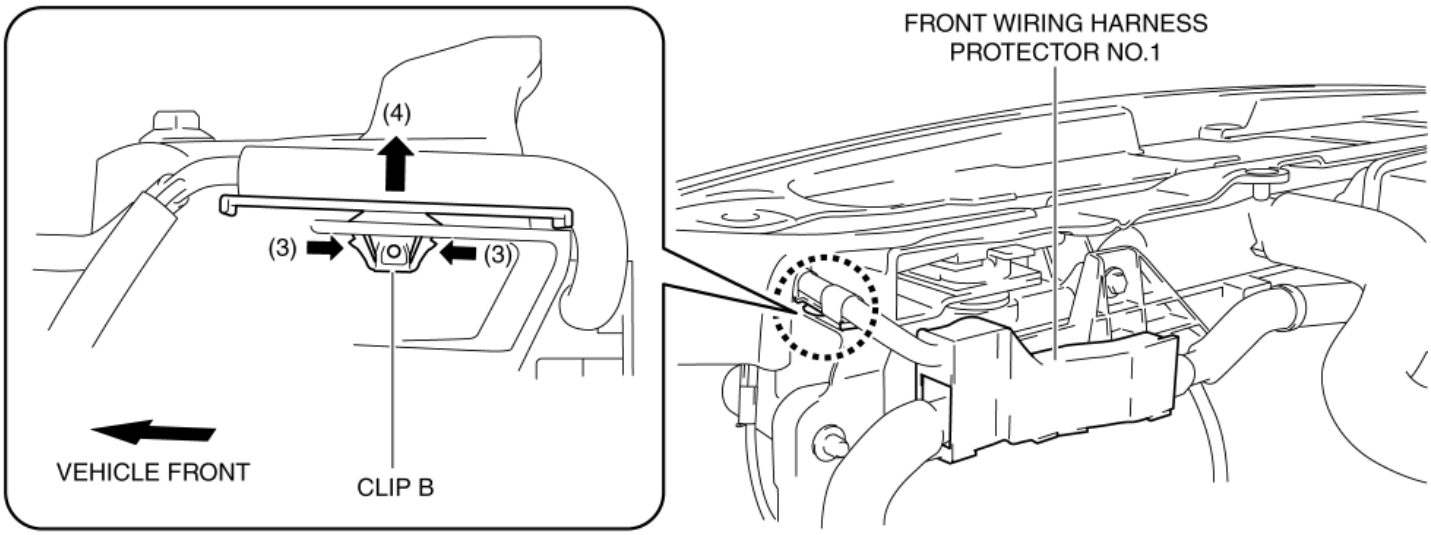

7. Pull out clip B.

8. While pressing the clip tabs in the direction of the arrows (5) shown in the figure, pull the front wiring harness protector No.1 in the direction of the arrow (6) to detach the clip tabs from the radiator.

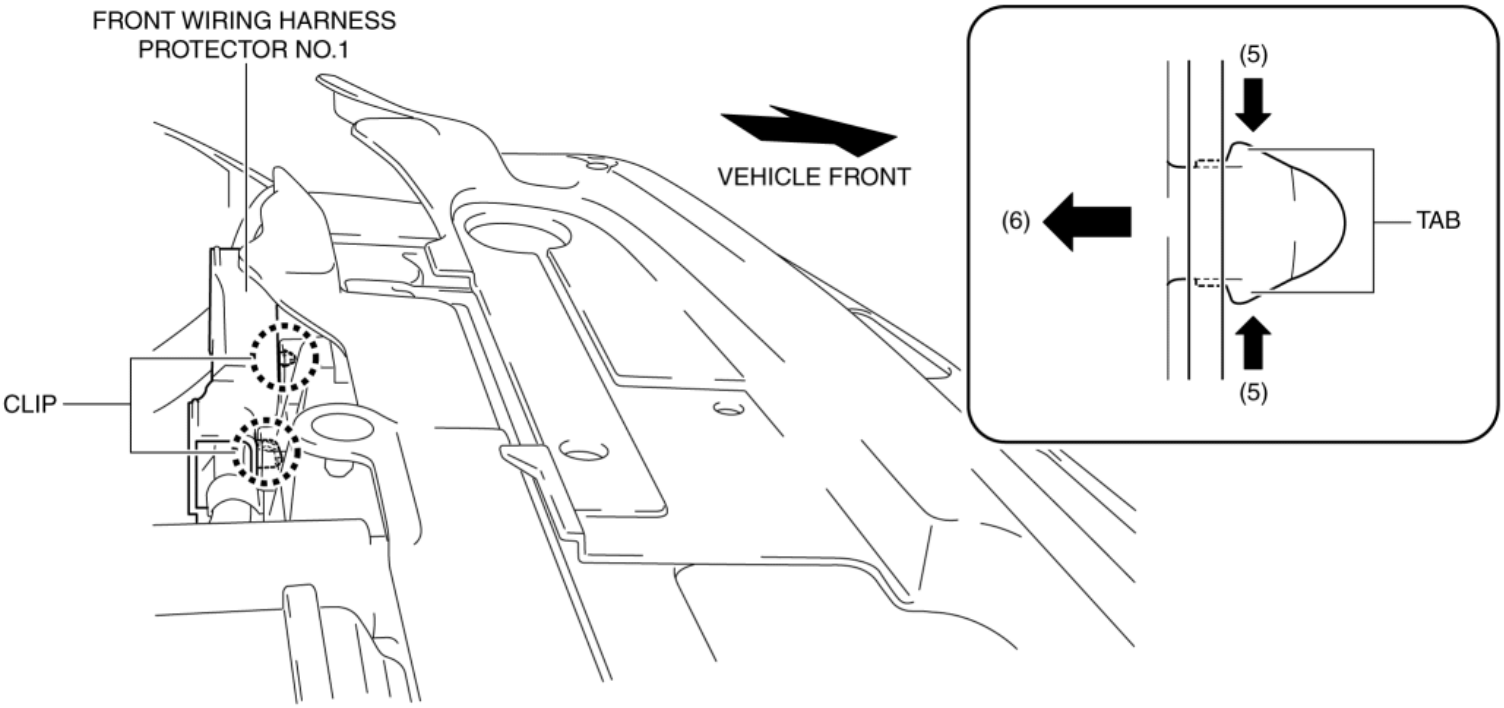

9. Detach all the clip tabs from the radiator and pull out the front wiring harness protector No.1 from the radiator.

10. Insert a remover tool into the front wiring harness protector No.1 tabs in the positions shown in the figure.

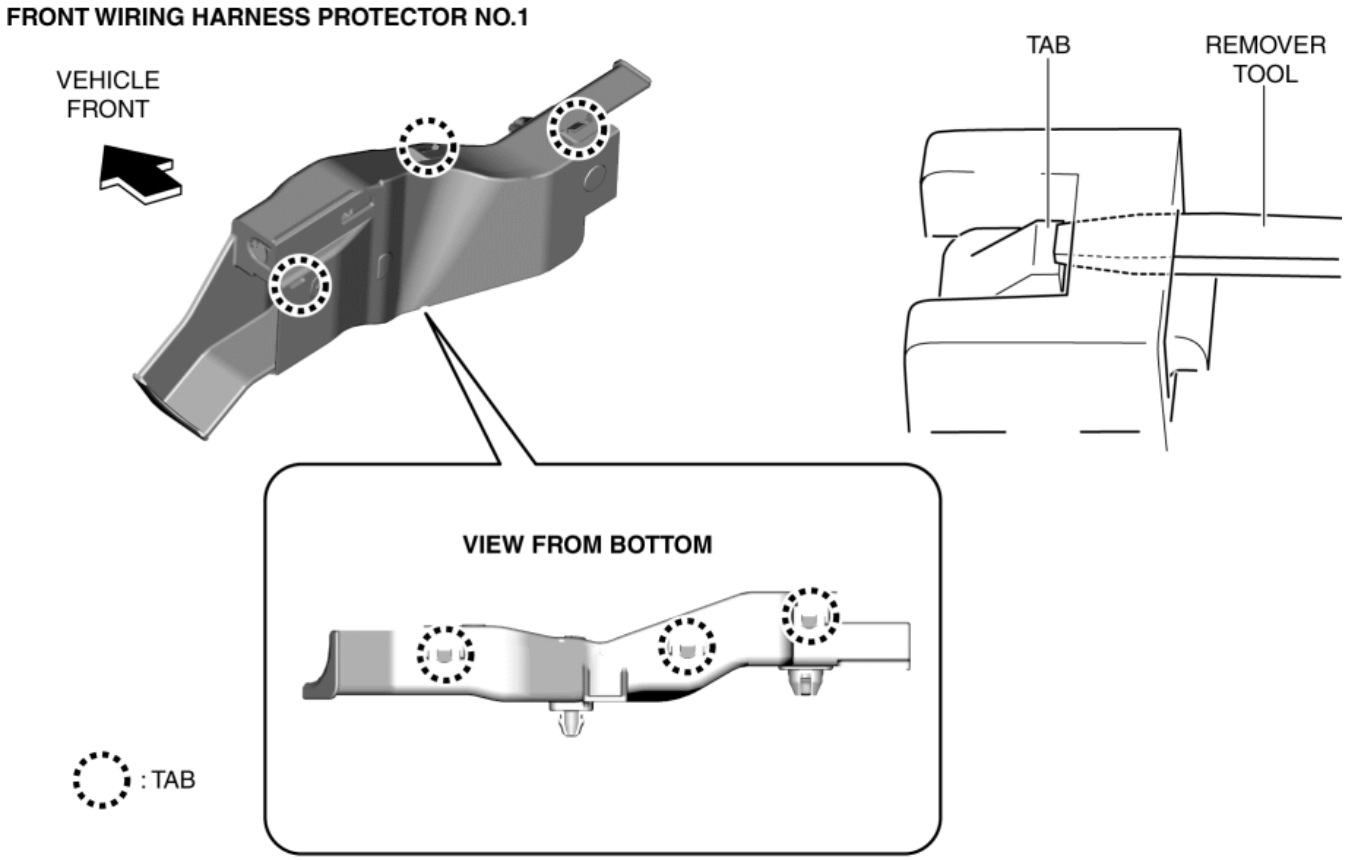

11. While lifting up the hook in the direction of the arrow (7) shown in the figure using a remover tool, pull the hook in the direction of the arrows (8) shown in the figure to detach the tab from the hook.

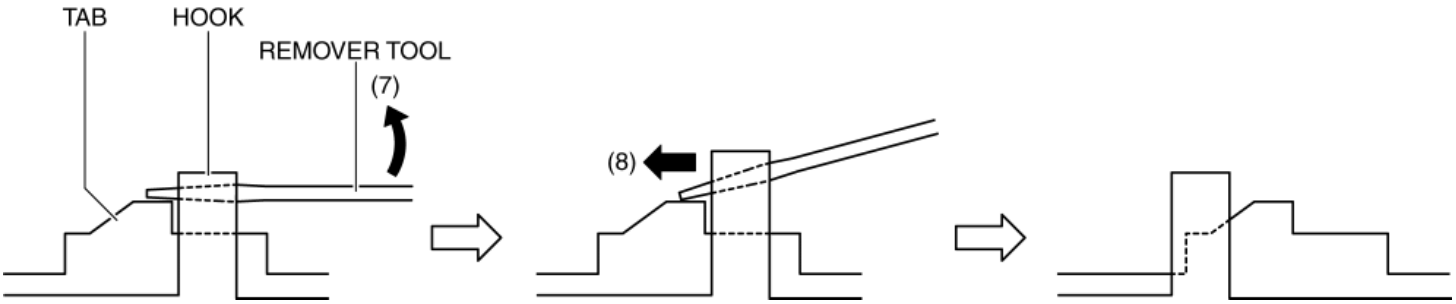

12. Detach all the tabs from hooks and remove the front wiring harness protector No.1.

13. Install in the reverse order of removal.

Front Wiring Harness Protector No.2

1. Disconnect the negative battery cable. (See **NEGATIVE BATTERY CABLE DISCONNECTION/CONNECTION [SKYACTIV-G 2.0, SKYACTIV-G 2.5]**.)

2. Remove the battery tray. (See **BATTERY REMOVAL/INSTALLATION [SKYACTIV-G 2.0, SKYACTIV-G 2.5]**.)

3. While pressing the clip tabs of front wiring harness protector No.2 in the direction of the arrows (1) shown in the figure, pull the clip of front wiring harness protector No.2 in the direction of the arrow (2) shown in the figure to detach the clip tabs of front wiring harness protector No.2 from the engine mount.

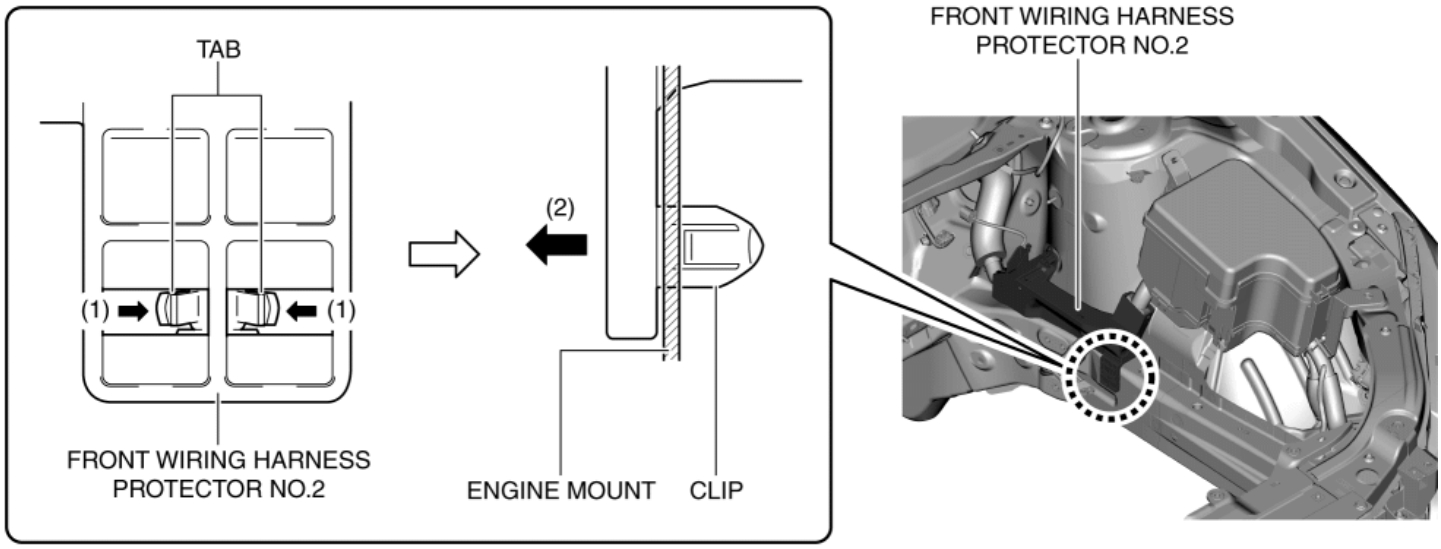

4. Pull out the clip.

5. Lift up the cap of front wiring harness protector No.2 in the direction of the arrow shown in the figure.

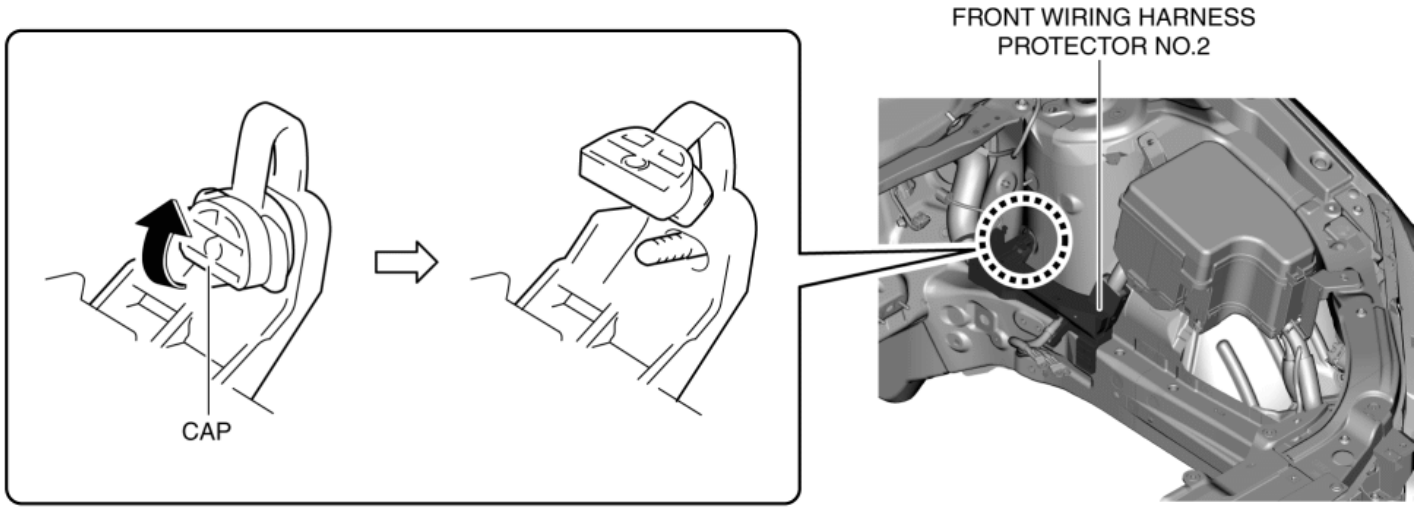

6. Pull out the front wiring harness protector No.2 from the stud bolt and set it aside as shown in the figure.

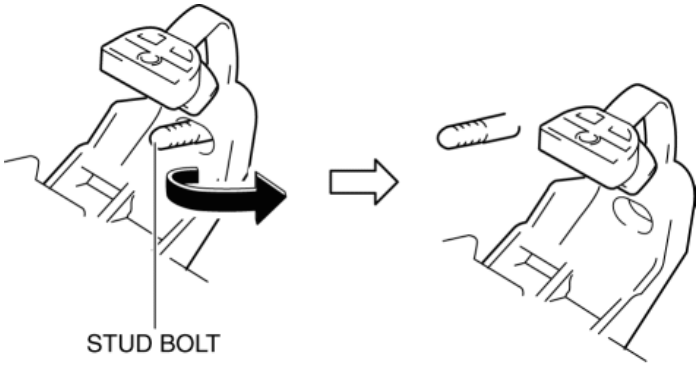

7. While pressing the clip tabs in the direction of the arrows (3) shown in the figure, push out the clip in the direction of the arrow (4) shown in the figure to detach the clip tabs from the front wiring harness protector No.2.

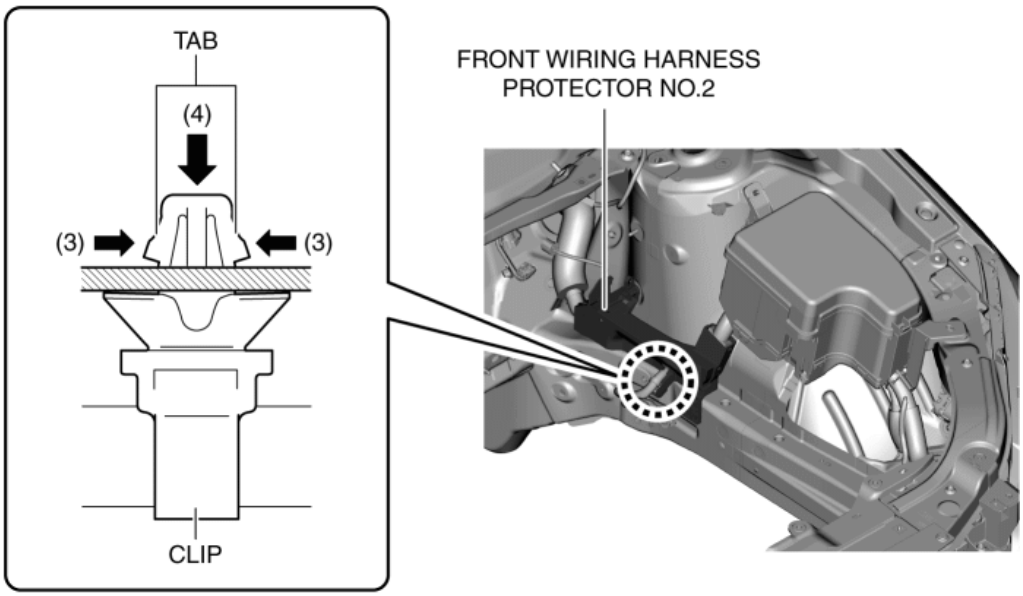

8. Pull out the clip.

9. Insert the remover tool into the front wiring harness protector No.2 tabs in the positions shown in the figure.

FRONT WIRING HARNESS PROTECTOR NO.2

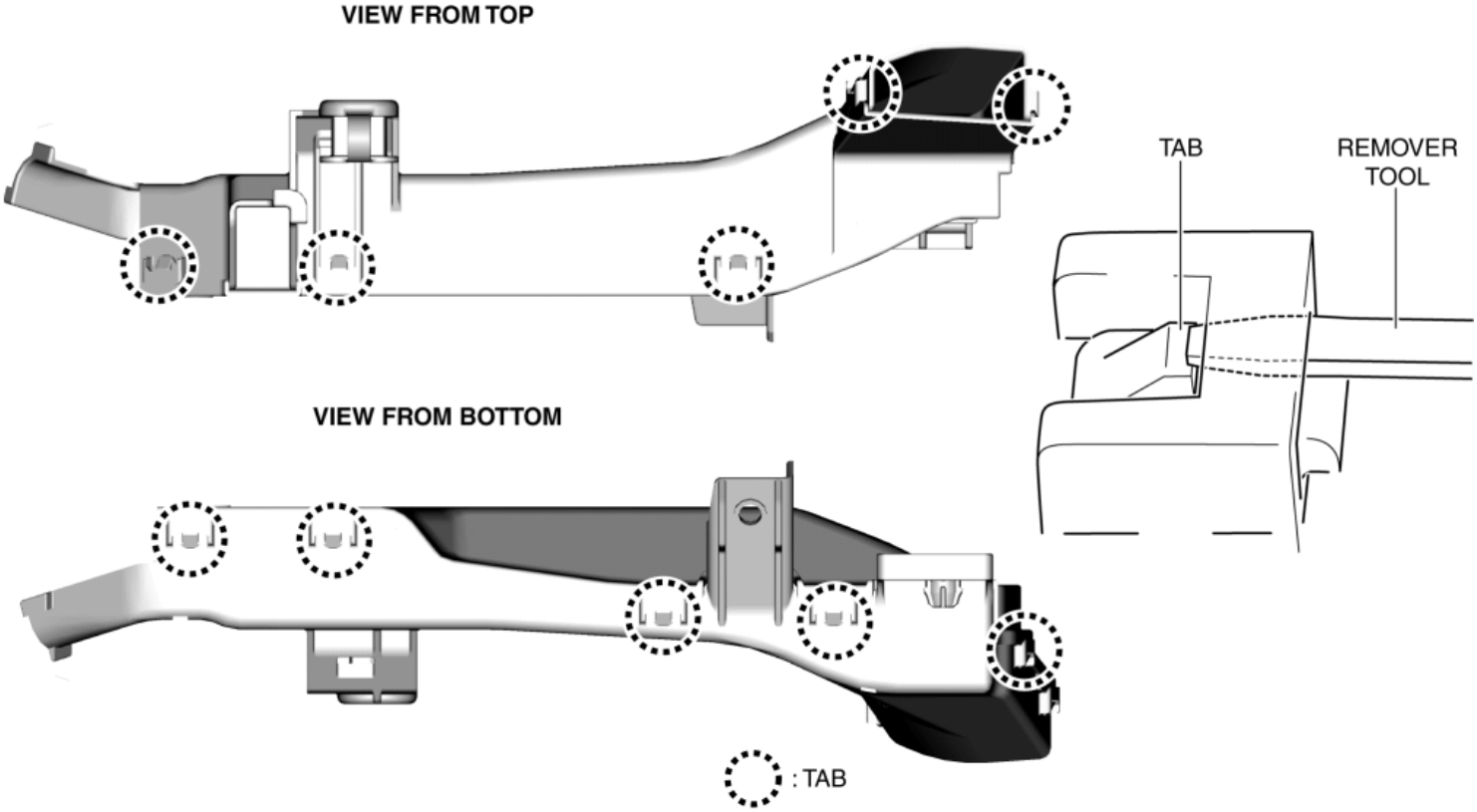

10. While lifting up the hook in the direction of the arrow (5) shown in the figure using a remover tool, pull the hook in the direction of the arrows (6) shown in the figure to detach the tab from the hook.

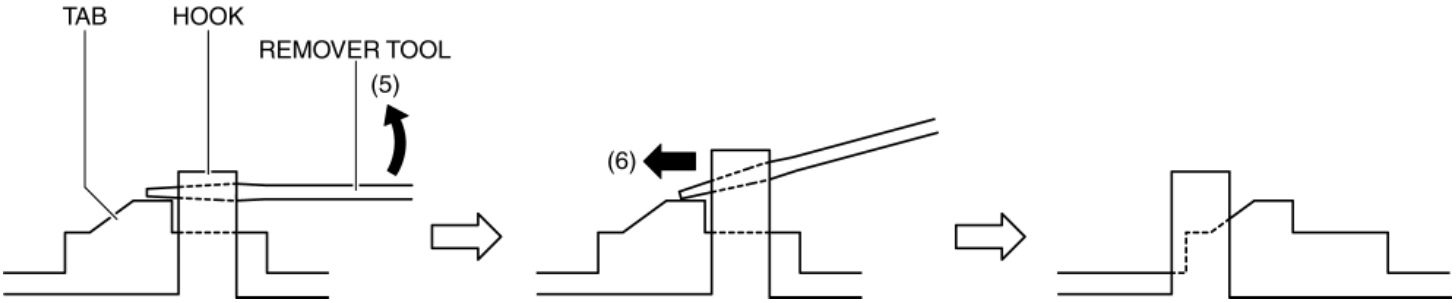

11. Detach all the tabs from hooks and remove the front wiring harness protector No.2.

12. Install in the reverse order of removal.

2014 - Mazda3 - Body and Accessories

FUSE BLOCK REMOVAL/INSTALLATION

NOTE:

- When replacing the fuse block, it is necessary to switch terminals from the fuse block terminal prior to replacement to the fuse block terminal on the replacement. When switching terminals, ready the replacement fuse block before pulling out the terminal of the fuse block prior to replacement. This is because it is necessary to switch the terminals one at a time so that the installation positions are not mistaken.

Removal

1. Disconnect the negative battery cable. (See **NEGATIVE BATTERY CABLE DISCONNECTION/CONNECTION [SKYACTIV-G 2.0, SKYACTIV-G 2.5]**.)
2. Remove the following parts:
   a. Front scuff plate (LH) (See **FRONT SCUFF PLATE REMOVAL/INSTALLATION**.)
   b. Front side trim (LH) (See **FRONT SIDE TRIM REMOVAL/INSTALLATION**.)
   c. LF control unit (with advanced keyless entry system) (See **LF CONTROL UNIT REMOVAL/INSTALLATION**.)
3. Remove all the fuses.
4. Cut the bands shown in the figure.

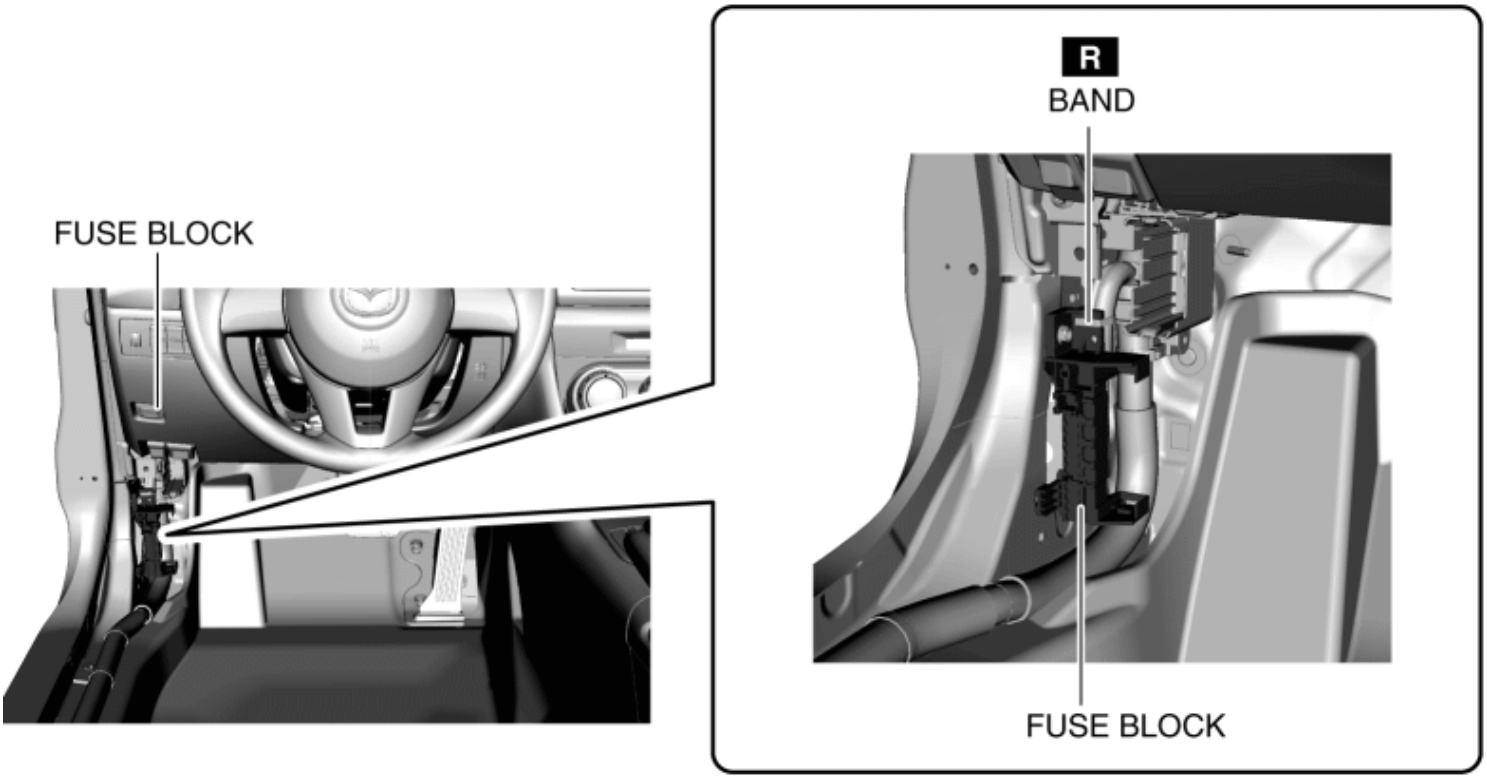

5. Remove the bolt.

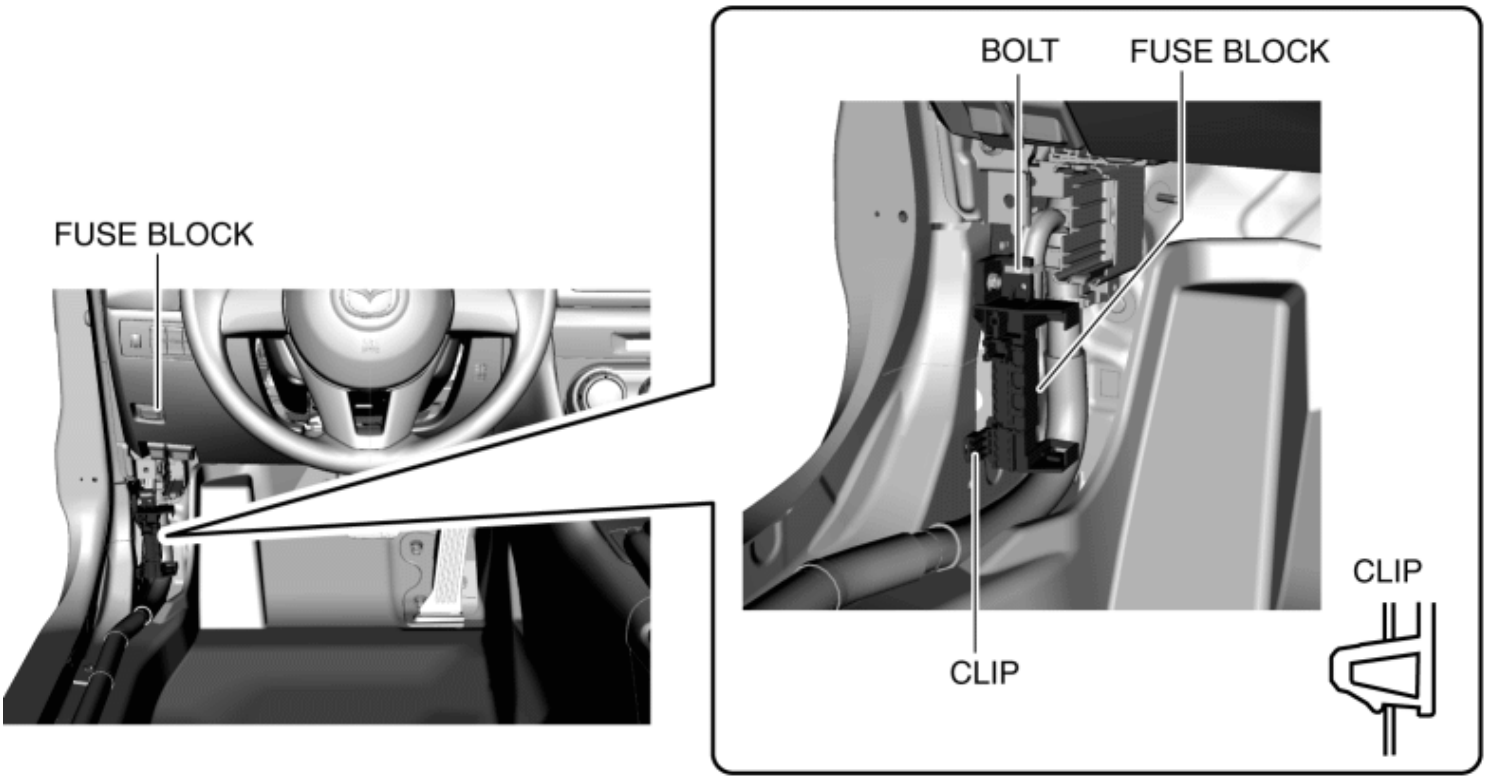

6. Remove the fuse block clip from the body.

7. Set the removed fuse block aside so that it does not scratch the vehicle and parts.

Installation

1. Move the flathead screwdriver in the direction of the arrow (1) shown in the figure, and pull the wiring harness in the direction of the arrow (2) while pressing the stopper to detach the fuse terminal from the stopper.

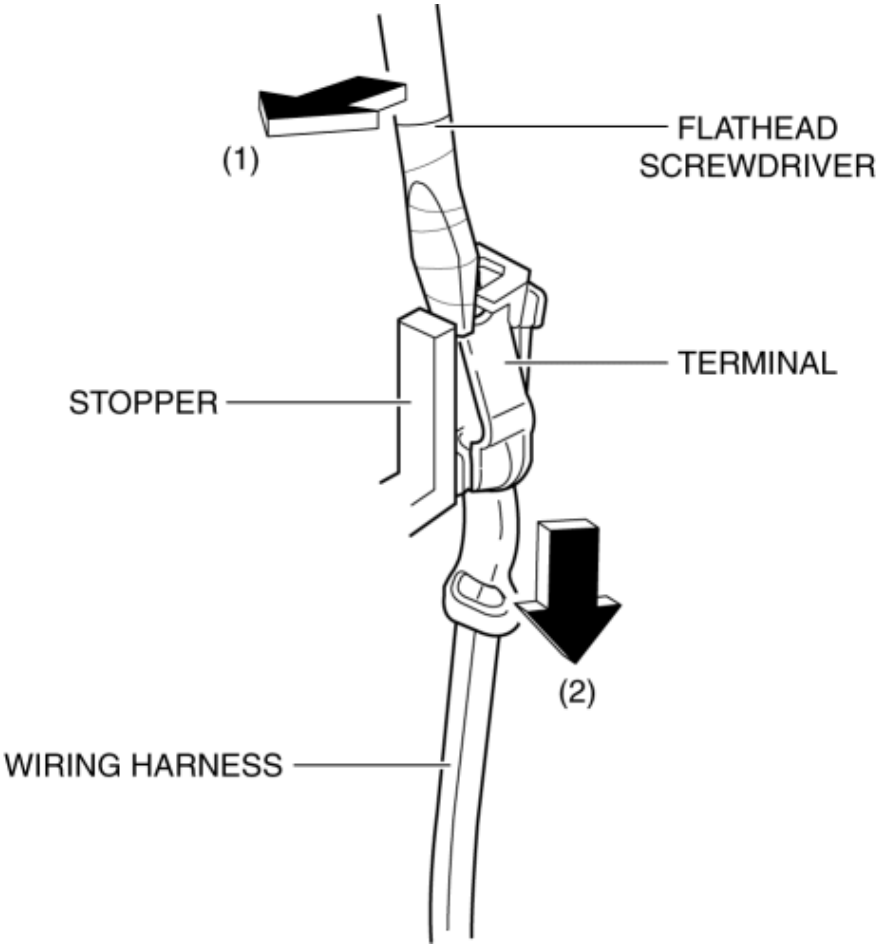

2. Relocate all fuse terminals to the new fuse block.

CAUTION:

- If terminals are installed incorrectly, it could damage electrical accessories and burn wiring harnesses. When relocating terminals after replacing the fuse block, line up the fuse blocks of old and news parts and always verify each of the wiring harnesses in the wiring diagram so that the installation positions are correct.

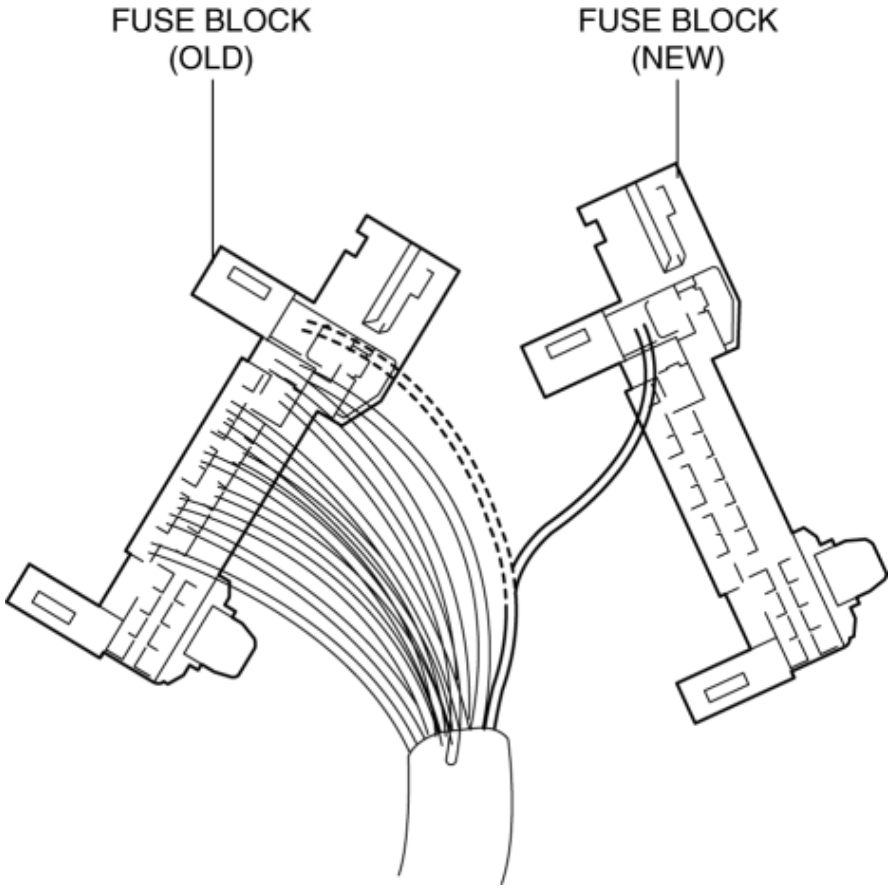

- A terminal disconnection could cause electronic components and the system to not operate normally due to poor contact. After terminal relocation, lightly pull the wiring harnesses to verify that they cannot be pulled out.

3. Install the fuse block clip to the body.

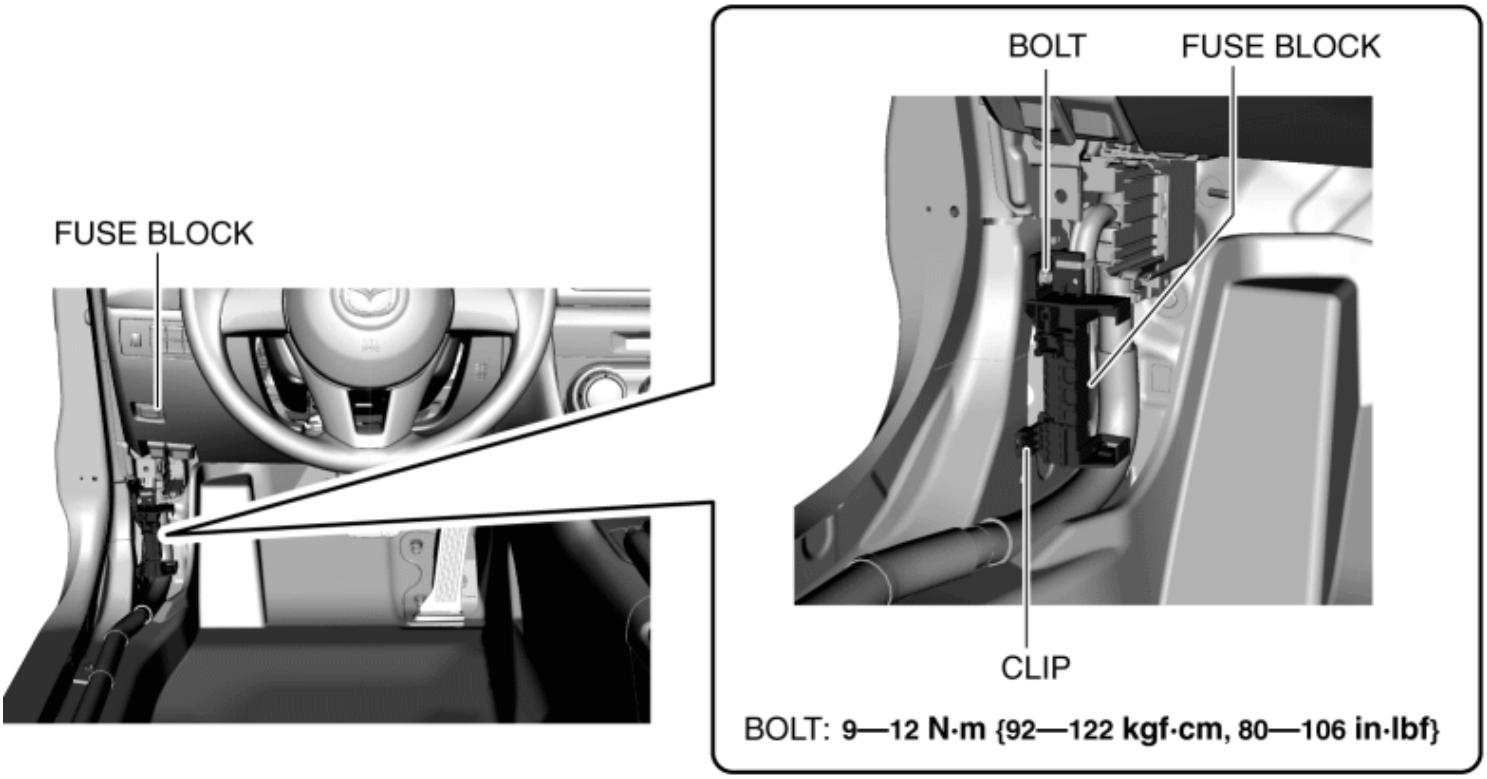

4. Install the bolt.

5. Install the bands shown in the figure.

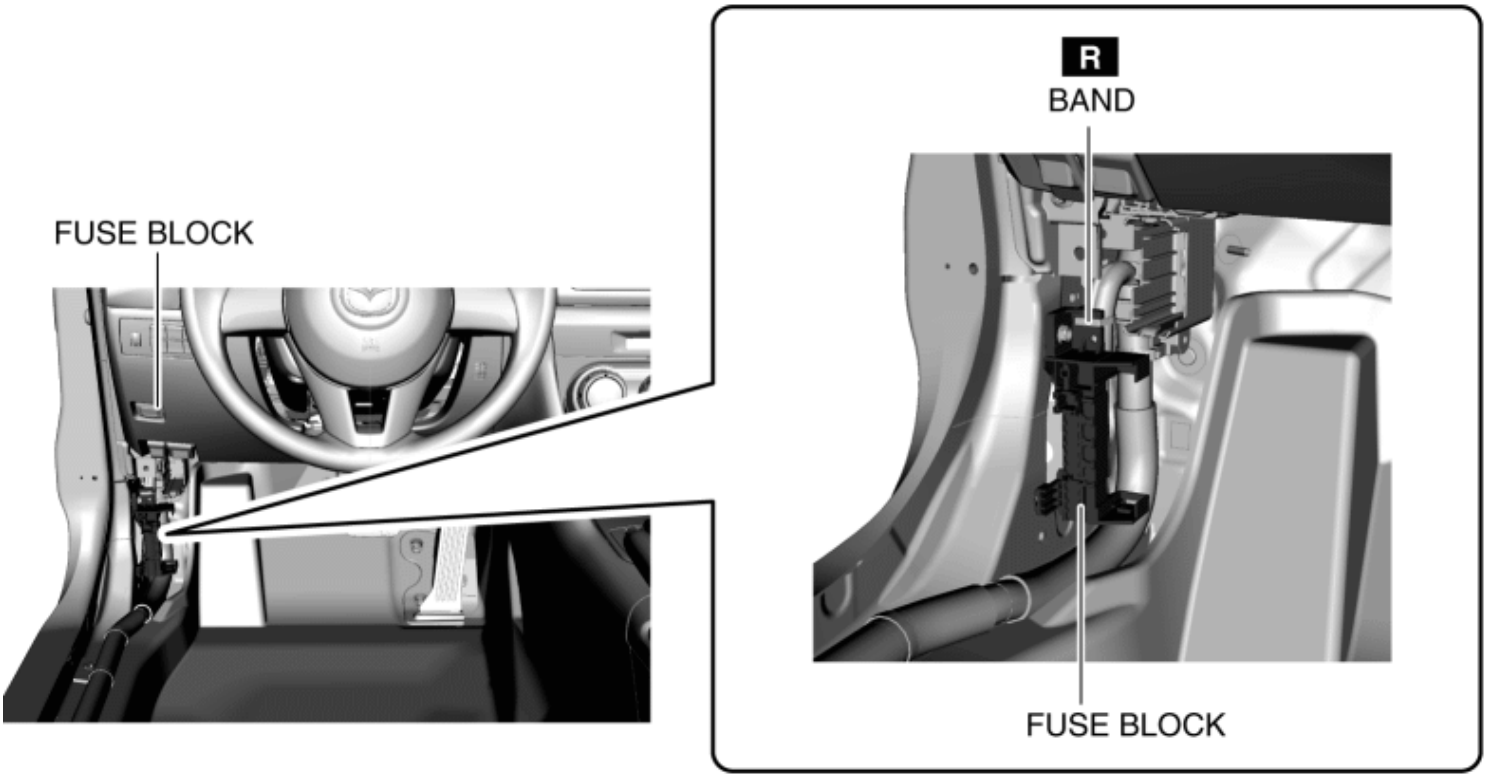

6. Install all the fuses.

7. Install the following parts:

   a. LF control unit (with advanced keyless entry system) (See **LF CONTROL UNIT REMOVAL/INSTALLATION**.)

   b. Front side trim (LH) (See **FRONT SIDE TRIM REMOVAL/INSTALLATION**.)

   c. Front scuff plate (LH) (See **FRONT SCUFF PLATE REMOVAL/INSTALLATION**.)

8. Perform the "Verify Fuse Block Replacement". (See **Verify Fuse Block Replacement**.)

9. Connect the negative battery cable. (See **NEGATIVE BATTERY CABLE DISCONNECTION/CONNECTION [SKYACTIV-G 2.0, SKYACTIV-G 2.5]**.)

Verify Fuse Block Replacement

1. Temporarily connect the negative battery cable to verify that the related wiring harness is not heated.

2. Switch the ignition ON (engine off).

3. Verify that the fuse is not blown and the related wiring harness is not heated.

4. Perform the initial settings for the following systems:

   - Power window system (See **POWER WINDOW SYSTEM INITIALIZATION PROCEDURE**.)
   - Sunroof system (See **SUNROOF SYSTEM INITIALIZATION PROCEDURE**.)
   - Tire pressure monitoring system (TPMS) (See **TIRE PRESSURE MONITORING SYSTEM INITIALIZATION PROCEDURE**.)

5. Verify DTCs using the M-MDS.

- If a DTC is displayed, repair the malfunctioning part according to the corresponding DTC inspection.
    - After completion of repairs, clear all DTCs stored in the module.

6. If there is no malfunction in Step 1, 3, and 5, start the engine and maintain the idle status.

7. Operate all the switches of the interior/exterior lights of the vehicle and verify that all the light bulbs illuminate and flash.

8. Operate the audio, climate control, wiper switch, and selector lever (ATX) and verify that they operate correctly.

9. Shift the selector lever to the P position, race the engine at **approx. 3,000 rpm** from engine idling, and verify that there is no malfunction. (ATX)

10. Perform a road test and verify that low speed, acceleration, shift-up, and shift-down conditions are normal. (ATX)

2014 - Mazda3 - Body and Accessories

FUSE SERVICE CAUTIONS

CAUTION:

- If a fuse is burnt out, inspect the cause and repair the malfunctioning part, and always replace a fuse with one of the specified value. If the fuse is replaced before repairing a malfunction, it may burn out again.

2014 - Mazda3 - Body and Accessories

MAIN FUSE REMOVAL/INSTALLATION

1. Disconnect the negative battery cable. (See **NEGATIVE BATTERY CABLE DISCONNECTION/CONNECTION [SKYACTIV-G 2.0, SKYACTIV-G 2.5]**.)

2. Insert a tape-wrapped flathead screwdriver into the service hole in the position shown in the figure.

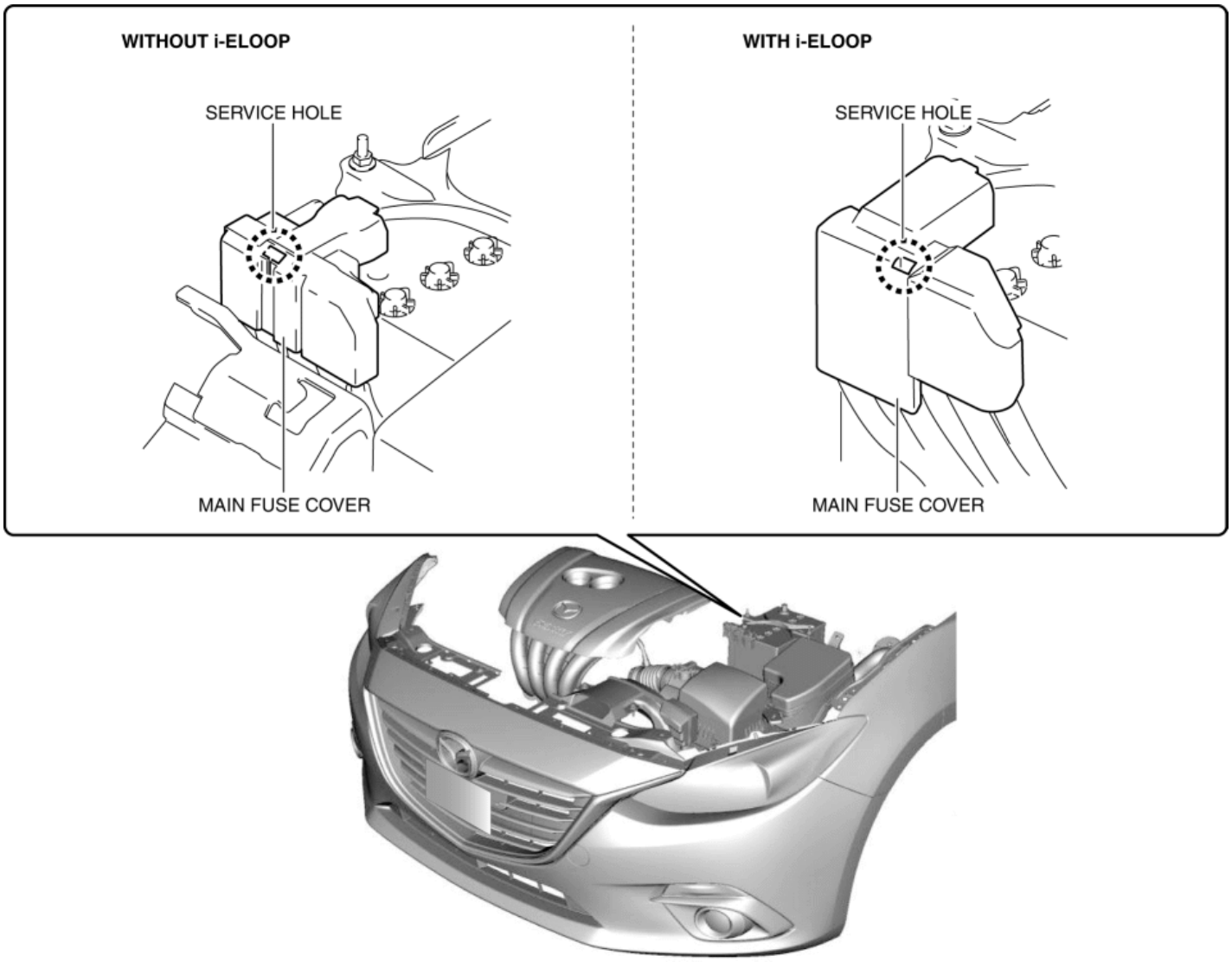

3. Move the flathead screwdriver in the direction of the arrow (1) shown in the figure, and pull up the main fuse cover in the direction of the arrow (2) shown in the figure to detach the main fuse cover tab from the main fuse.

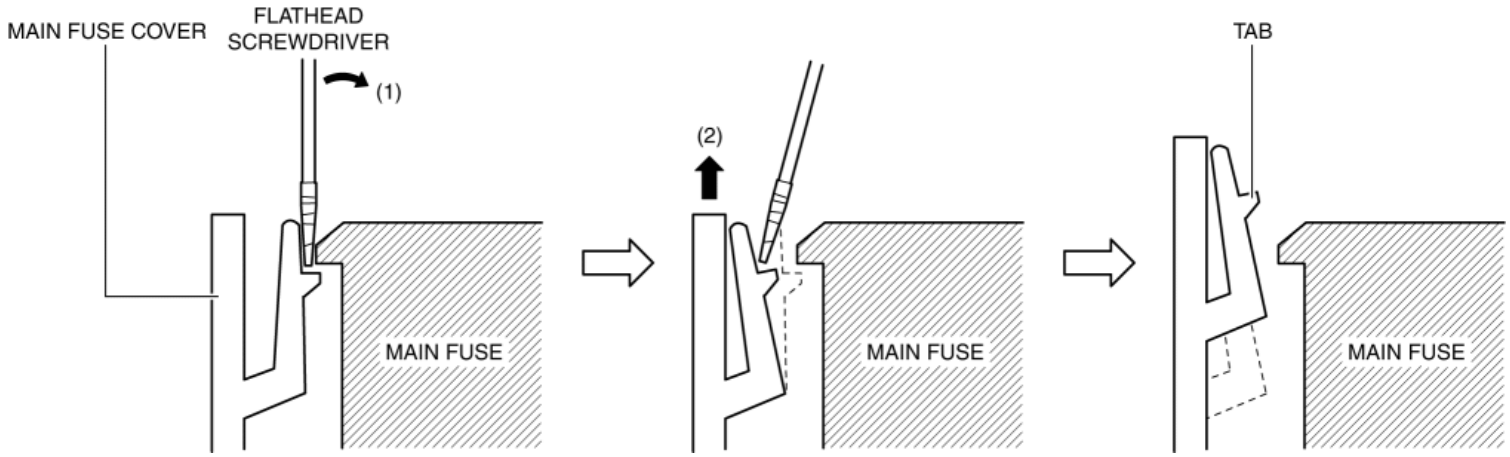

4. Remove the main fuse cover.

5. Remove the nuts.

Without i-ELOOP

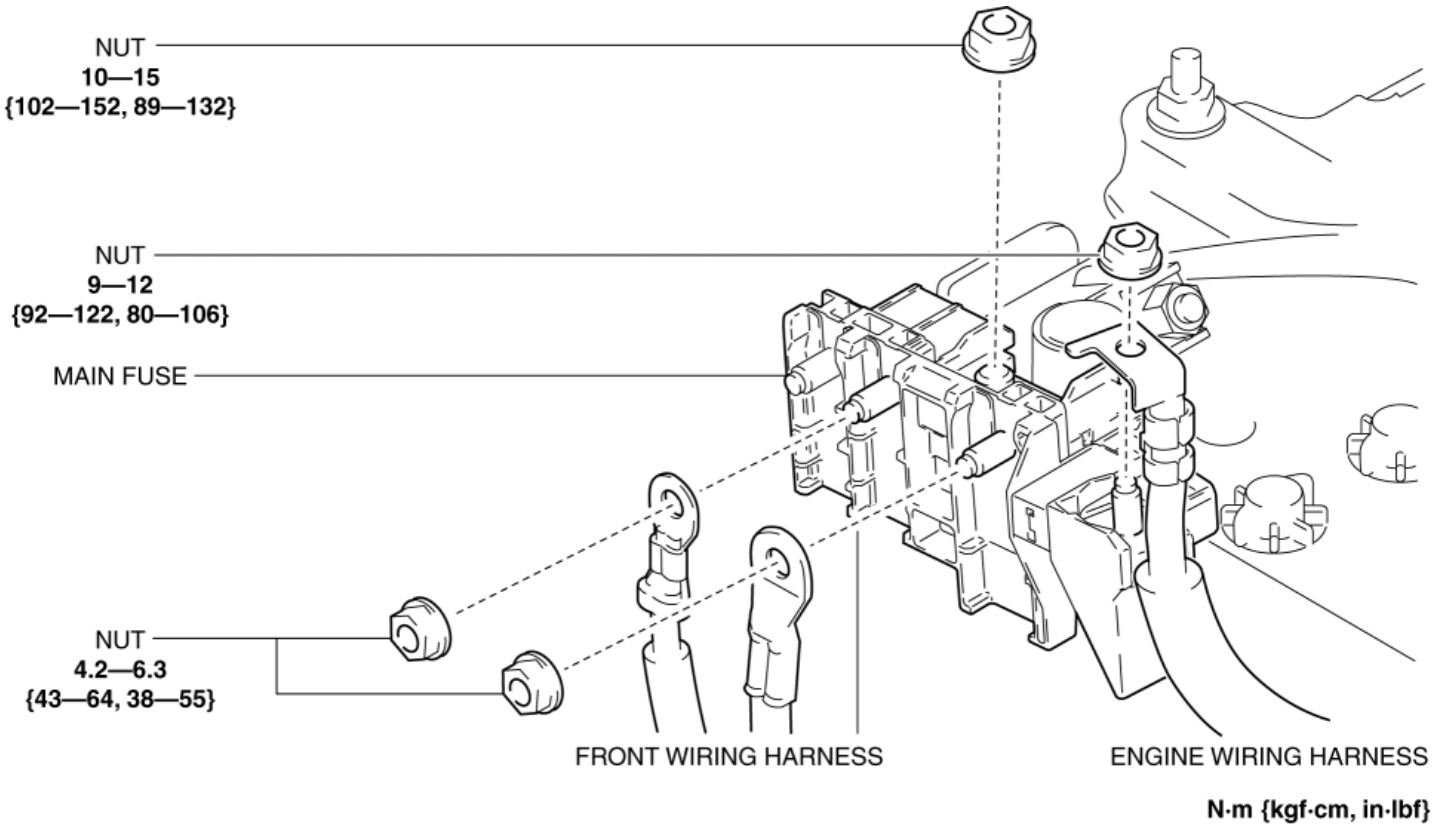

With i-ELOOP

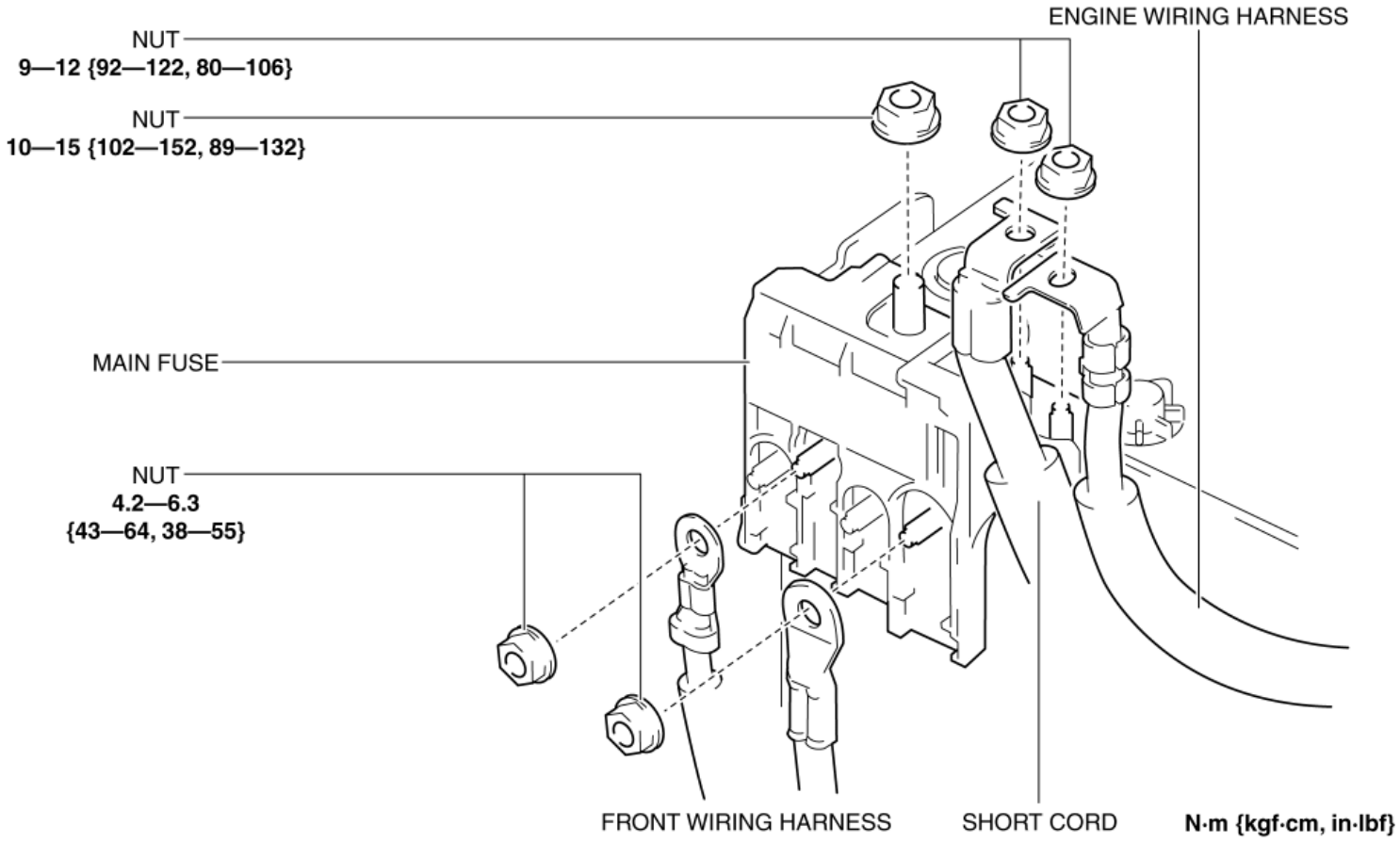

6. Remove the main fuse.

7. Install in the reverse order of removal.

2014 - Mazda3 - Body and Accessories

MULTIPLEX SLOW BLOW FUSE REMOVAL/INSTALLATION

1. Disconnect the negative battery cable. (See **NEGATIVE BATTERY CABLE DISCONNECTION/CONNECTION [SKYACTIV-G 2.0, SKYACTIV-G 2.5]**.)
2. Remove the relay and fuse block upper cover. (See **RELAY AND FUSE BLOCK REMOVAL/INSTALLATION**.)
3. Remove the front body control module (FBCM). (See **FRONT BODY CONTROL MODULE (FBCM) REMOVAL/INSTALLATION**.)
4. Remove the bolt.

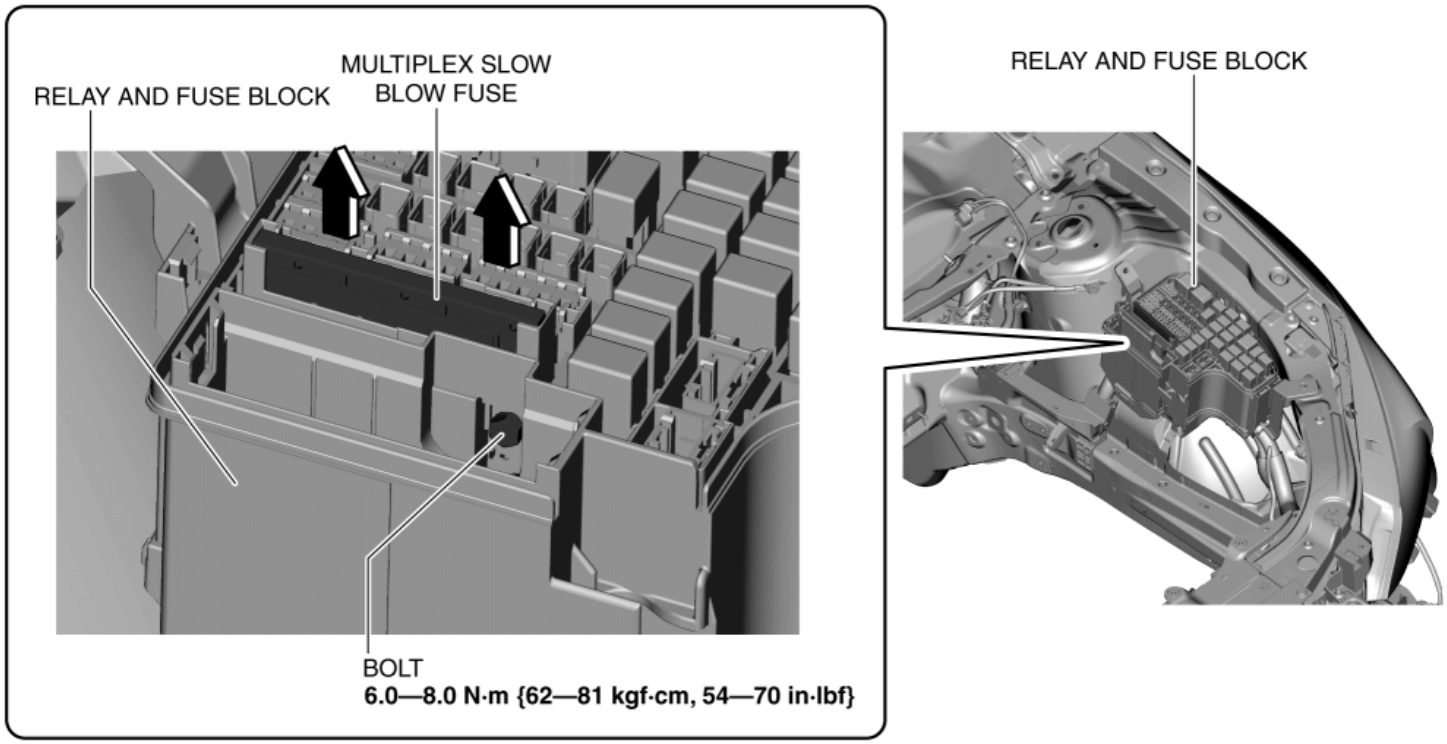

5. Remove the multiplex slow blow fuse.
6. Install in the reverse order of removal.

2014 - Mazda3 - Body and Accessories

FORCED IGNITION ON

NOTE:

- The forced ignition ON procedure forces a power supply to each part when no power is available even after the ignition switch has been operated. However, the engine cannot be started and the steering cannot be unlocked.
- In order to perform a forced ignition ON, the M-MDS is necessary. If the servicing is being done outside of an Authorized Mazda dealership, contact an Authorized Mazda dealership for instructions.

1. Verify that the vehicle is in accordance with the following conditions:
    - Communication between start stop unit and M-MDS is enabled.
    - There are no remote transmitters in the vehicle.
    - All the doors, hood, and trunk lid (4SD)/liftgate (5HB) are closed.
2. Get PCM part number from As-built site.
3. Connect the M-MDS to the DLC-2.
4. Select "Manual Vehicle Entry".
5. Select the “All other” from Vehicle list.
6. Input the PCM part number on the following screen.

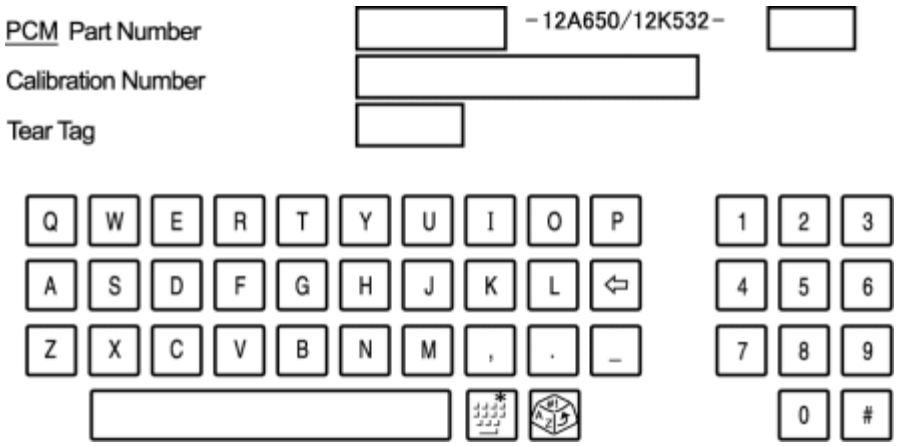

7. After the vehicle is identified, select the following items from the initialization screen of the M-MDS.
    - Select the "Body".
    - Select the "Special Ignition ON".
8. Perform the procedure according to the directions on the screen.

9. Delete the session, but keep the ignition ON.

10. Normal vehicle identification.

2014 - Mazda3 - Body and Accessories

RELAY LOCATION

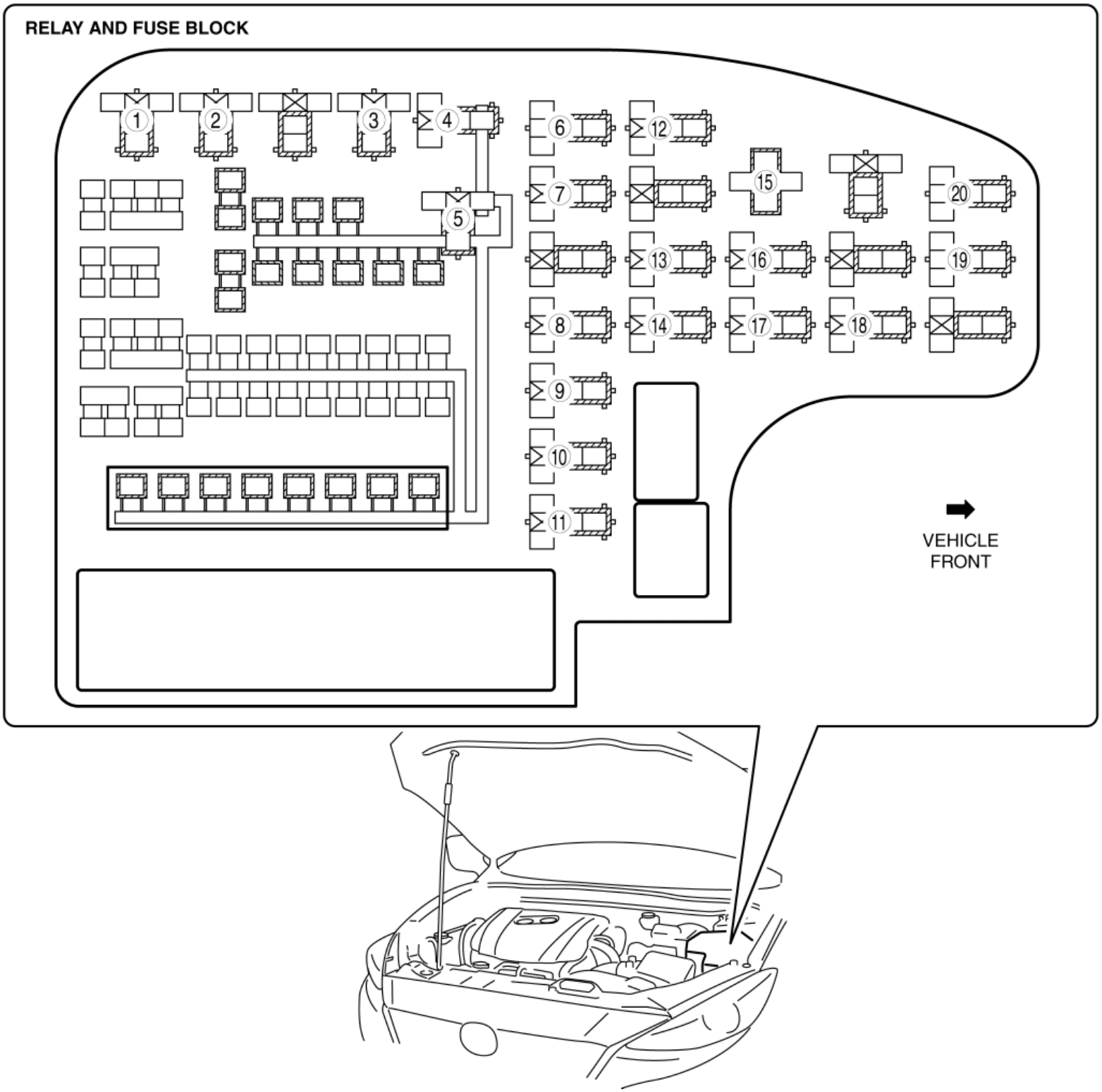

1	Cooling fan relay No.1

2	Rear window defroster relay
3	ACC relay
4	IG1 relay
5	• Headlight LO relay (Without discharge headlight system) • Headlight LO relay (LH) (With discharge headlight system)
6	• DRL relay (Without discharge headlight system) • Headlight LO relay (RH) (With discharge headlight system)
7	Starter relay
8	Electric variable valve timing relay
9	Fuel pump relay
10	Fuel injector relay
11	Main relay
12	Cooling fan relay No.2
13	Horn relay
14	Front fog light relay
15	Blower relay
16	TNS relay
17	Headlight HI relay
18	A/C relay
19	Cooling fan relay No.3
20	Brake light relay

2014 - Mazda3 - Body and Accessories

RELAY INSPECTION

Relay Type

Connector type	Part name
Type A	• Cooling fan relay No.1 • Cooling fan relay No.2 • Rear window defroster relay • ACC relay • Headlight LO relay (Without discharge headlight system) • Headlight LO relay (LH) (With discharge headlight system) • Headlight LO relay (RH) (With discharge headlight system) • Starter relay • Main relay • Horn relay • Front fog light relay • TNS relay • Headlight HI relay • A/C relay
Type B	• DRL relay (Without discharge headlight system) • Cooling fan relay No.3 • Brake light relay
Type C	• Blower relay
	• IG1 relay • Electric variable valve timing relay

Type D	• Fuel pump relay • Fuel injector relay

Type A

1. Remove the relay. (See **RELAY LOCATION**.)
2. Verify the continuity between relay terminals C and D.

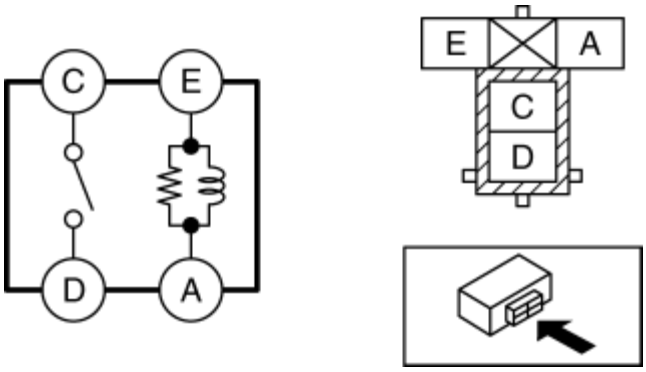

   - If it can be verified, replace the relay. (See **RELAY LOCATION**.)
   - If it cannot be verified, go to the next step.
3. Verify the continuity between relay terminals E and A.
   - If it can be verified, go to the next step.
   - If it cannot be verified, replace the relay. (See **RELAY LOCATION**.)
4. Apply battery voltage to relay terminal E, and connect terminal A to ground.
5. Verify the continuity between relay terminals C and D.
   - If it cannot be verified, replace the relay. (See **RELAY LOCATION**.)

Type B

1. Remove the relay. (See **RELAY LOCATION**.)
2. Verify the continuity between relay terminals C and D.

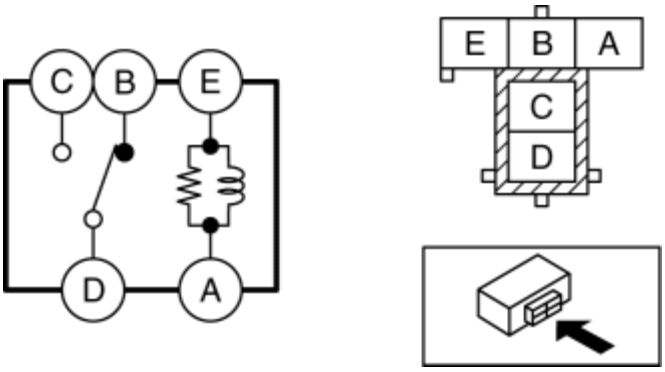

- If it can be verified, replace the relay. (See **RELAY LOCATION**.)
- If it cannot be verified, go to the next step.

3. Verify the continuity between the relay terminals E and A.
   - If it can be verified, go to the next step.
   - If it cannot be verified, replace the relay. (See **RELAY LOCATION**.)
4. Verify the continuity between the relay terminals B and D.
   - If it can be verified, go to the next step.
   - If it cannot be verified, replace the relay. (See **RELAY LOCATION**.)
5. Apply battery voltage to relay terminal E, and connect terminal A to ground.
6. Verify the continuity between relay terminals C and D.
   - If it cannot be verified, replace the relay. (See **RELAY LOCATION**.)

Type C

1. Remove the relay. (See **RELAY LOCATION**.)
2. Verify the continuity between the relay terminals C and A.

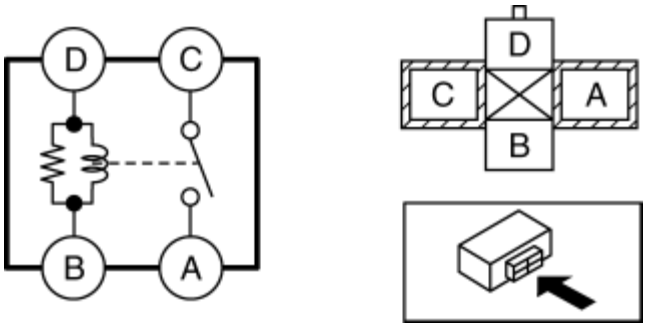

   - If it can be verified, replace the relay. (See **RELAY LOCATION**.)
   - If it cannot be verified, go to the next step.
3. Verify the continuity between the relay terminals D and B.
   - If it can be verified, go to the next step.
   - If it cannot be verified, replace the relay. (See **RELAY LOCATION**.)
4. Apply battery voltage to relay terminal D, and connect terminal B to ground.
5. Verify the continuity between relay terminals C and A.
   - If it cannot be verified, replace the relay. (See **RELAY LOCATION**.)

Type D

1. Remove the relay. (See **RELAY LOCATION**.)

2. Verify the continuity between relay terminals D and C.

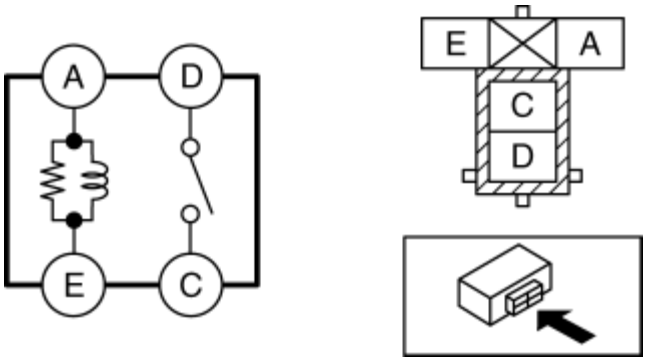

- If it can be verified, replace the relay. (See **RELAY LOCATION**.)
- If it cannot be verified, go to the next step.

3. Verify the continuity between relay terminals A and E.

- If it can be verified, go to the next step.
- If it cannot be verified, replace the relay. (See **RELAY LOCATION**.)

4. Apply battery voltage to relay terminal A, and connect terminal E to ground.

5. Verify the continuity between relay terminals D and C.

- If it cannot be verified, replace the relay. (See **RELAY LOCATION**.)

2014 - Mazda3 - Body and Accessories

FRONT ACCESSORY SOCKET REMOVAL/INSTALLATION

1. Disconnect the negative battery cable. (See **NEGATIVE BATTERY CABLE DISCONNECTION/CONNECTION [SKYACTIV-G 2.0, SKYACTIV-G 2.5]**.)

2. Remove the following parts:

   a. Glove compartment (See **GLOVE COMPARTMENT REMOVAL/INSTALLATION**.)

   b. Decoration panel (See **DECORATION PANEL REMOVAL/INSTALLATION**.)

   c. Upper panel (See **UPPER PANEL REMOVAL**.) (See **UPPER PANEL INSTALLATION**.)

   d. Rear console (See **REAR CONSOLE REMOVAL/INSTALLATION**.)

   e. Shift lever knob (MTX) (See **MANUAL TRANSAXLE SHIFT MECHANISM REMOVAL/INSTALLATION [C66M-R]**.)

   f. Selector lever knob (ATX) (See **AUTOMATIC TRANSAXLE SHIFT MECHANISM REMOVAL/INSTALLATION**.)

   g. Shift panel (See **SHIFT PANEL REMOVAL/INSTALLATION**.)

   h. Front console box (See **FRONT CONSOLE BOX REMOVAL/INSTALLATION**.)

   i. Side wall (See **SIDE WALL REMOVAL/INSTALLATION**.)

   j. Front console (See **FRONT CONSOLE REMOVAL/INSTALLATION**.)

3. Insert a tape-wrapped flathead screwdriver into the gap between the cap tab and socket.

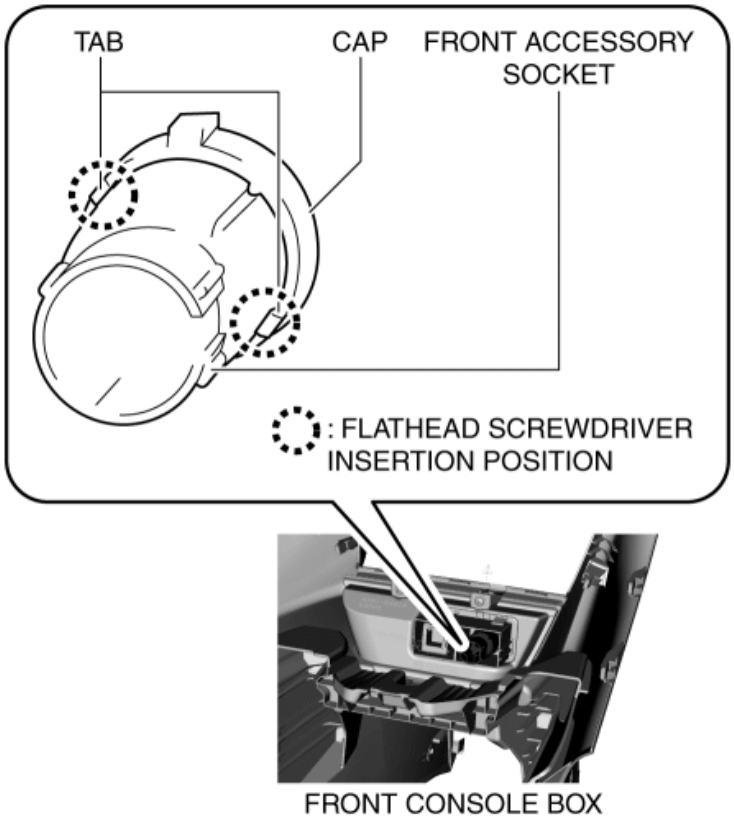

4. Move the flathead screwdriver in the direction of the arrows (1) shown in the figure, and press the front accessory socket in the direction of the arrow (2) shown in the figure to detach the cap tabs from the socket.

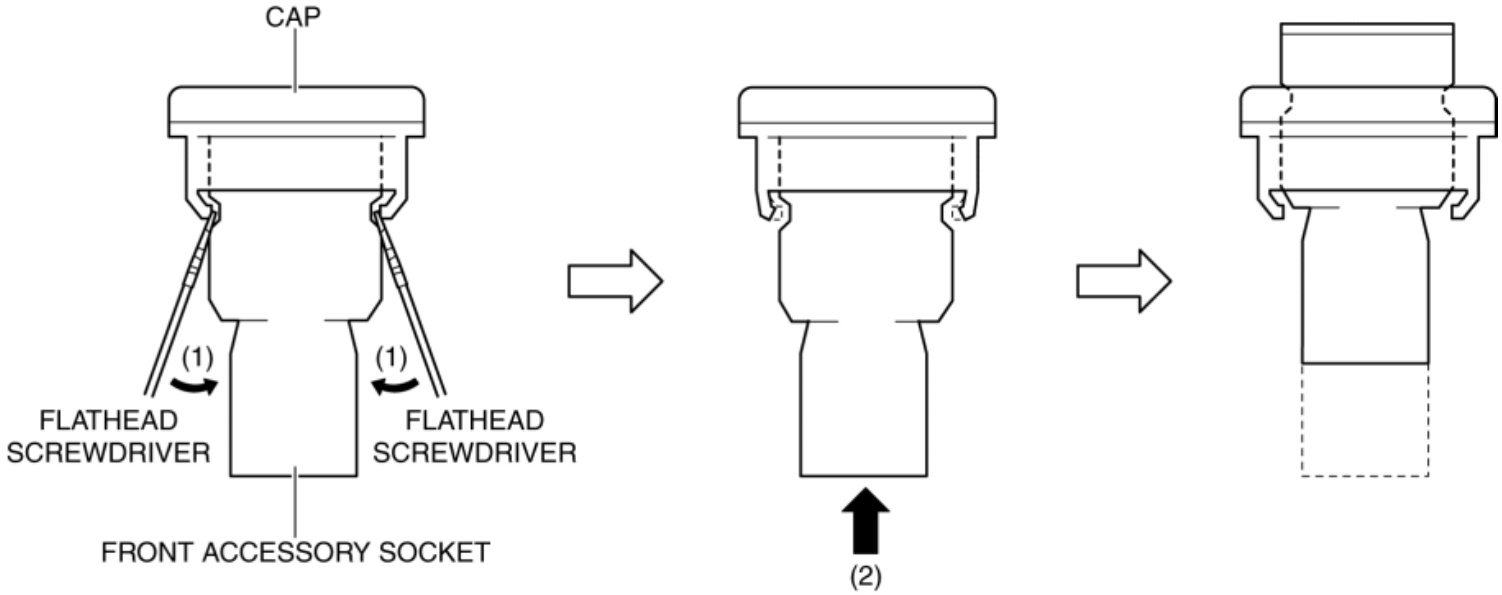

5. Pull the front accessory socket in the direction of the arrow shown in the figure and remove it.

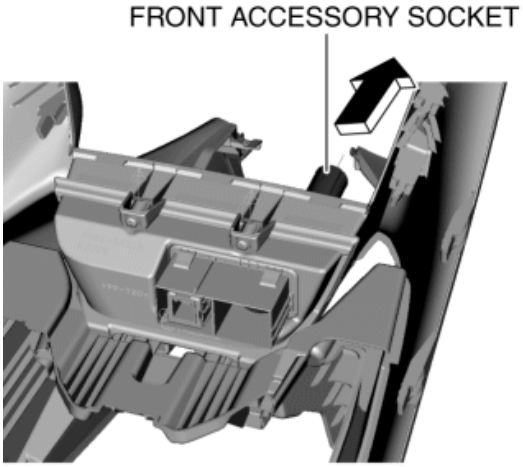

6. While pressing the cap tabs in the direction of arrows (3) shown in the figure, press the cap in the direction of arrow (4) shown in the figure to detach the cap tabs from the front console.

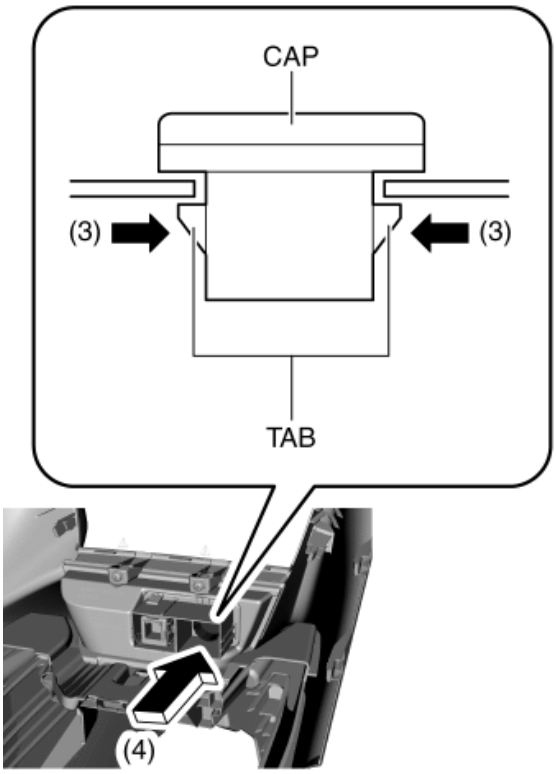

FRONT CONSOLE

7. Remove the cap.

8. Install in the reverse order of removal.

2014 - Mazda3 - Body and Accessories

FRONT ACCESSORY SOCKET INSPECTION

1. Disconnect the negative battery cable. (See **NEGATIVE BATTERY CABLE DISCONNECTION/CONNECTION [SKYACTIV-G 2.0, SKYACTIV-G 2.5]**.)

2. Remove the following parts:

   a. Glove compartment (See **GLOVE COMPARTMENT REMOVAL/INSTALLATION**.)

   b. Decoration panel (See **DECORATION PANEL REMOVAL/INSTALLATION**.)

   c. Upper panel (See **UPPER PANEL REMOVAL**.) (See **UPPER PANEL INSTALLATION**.)

   d. Rear console (See **REAR CONSOLE REMOVAL/INSTALLATION**.)

   e. Shift lever knob (MTX) (See **MANUAL TRANSAXLE SHIFT MECHANISM REMOVAL/INSTALLATION [C66M-R]**.)

   f. Selector lever knob (ATX) (See **AUTOMATIC TRANSAXLE SHIFT MECHANISM REMOVAL/INSTALLATION**.)

   g. Shift panel (See **SHIFT PANEL REMOVAL/INSTALLATION**.)

   h. Front console box (See **FRONT CONSOLE BOX REMOVAL/INSTALLATION**.)

   i. Side wall (See **SIDE WALL REMOVAL/INSTALLATION**.)

   j. Front console (See **FRONT CONSOLE REMOVAL/INSTALLATION**.)

   k. Front accessory socket (See **FRONT ACCESSORY SOCKET REMOVAL/INSTALLATION**.)

3. Connect the tester probe to the position shown in the figure and verify that there is continuity.

FRONT ACCESSORY SOCKET INSPECTION

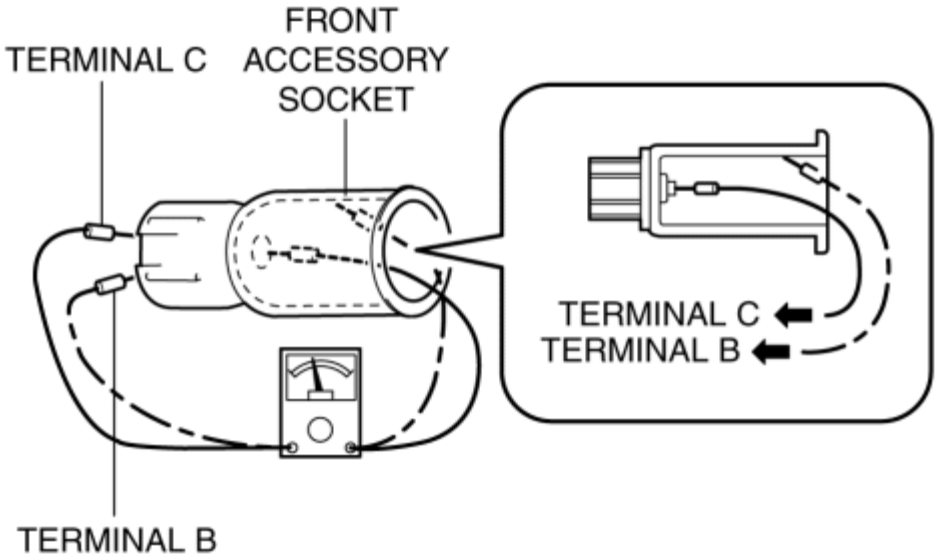

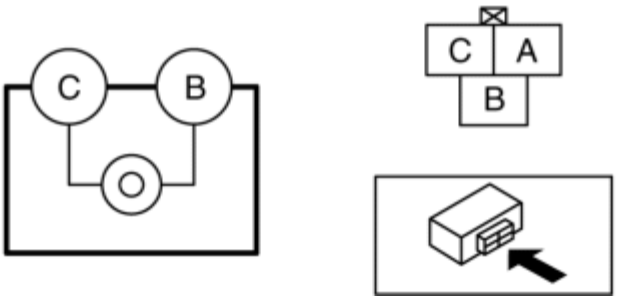

- If it cannot be verified, replace the front accessory socket.

2014 - Mazda3 - Body and Accessories

CENTER ACCESSORY SOCKET REMOVAL/INSTALLATION

1. Disconnect the negative battery cable. (See **NEGATIVE BATTERY CABLE DISCONNECTION/CONNECTION [SKYACTIV-G 2.0, SKYACTIV-G 2.5]**.)

2. Remove the console-up. (See **REAR CONSOLE REMOVAL/INSTALLATION**.)

3. Insert a tape-wrapped flathead screwdriver into the gap between the cap tab and socket.

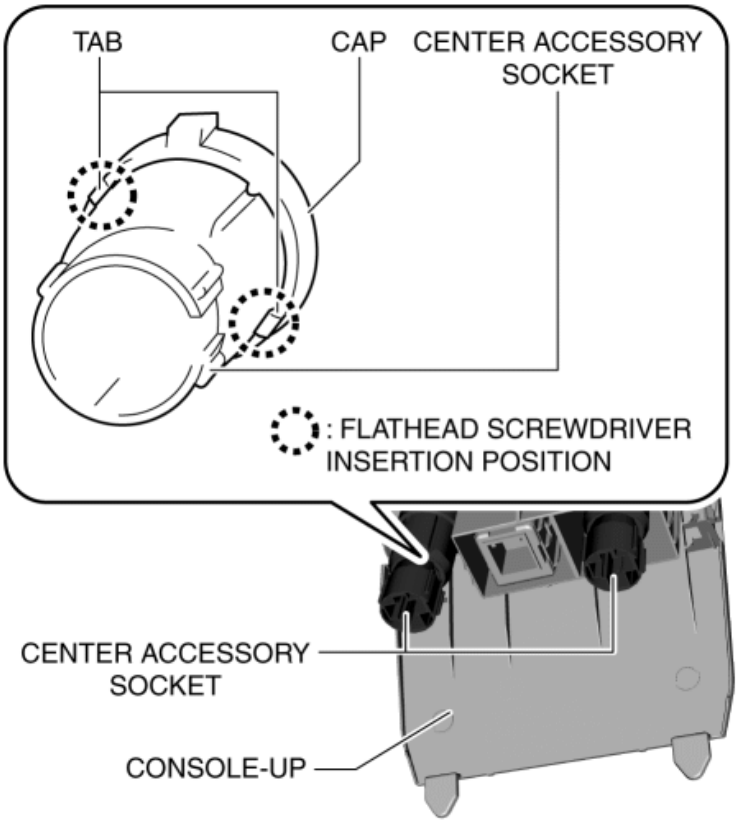

4. Move the flathead screwdriver in the direction of the arrows (1) shown in the figure, and press the center accessory socket in the direction of the arrow (2) shown in the figure to detach the cap tabs from the socket.

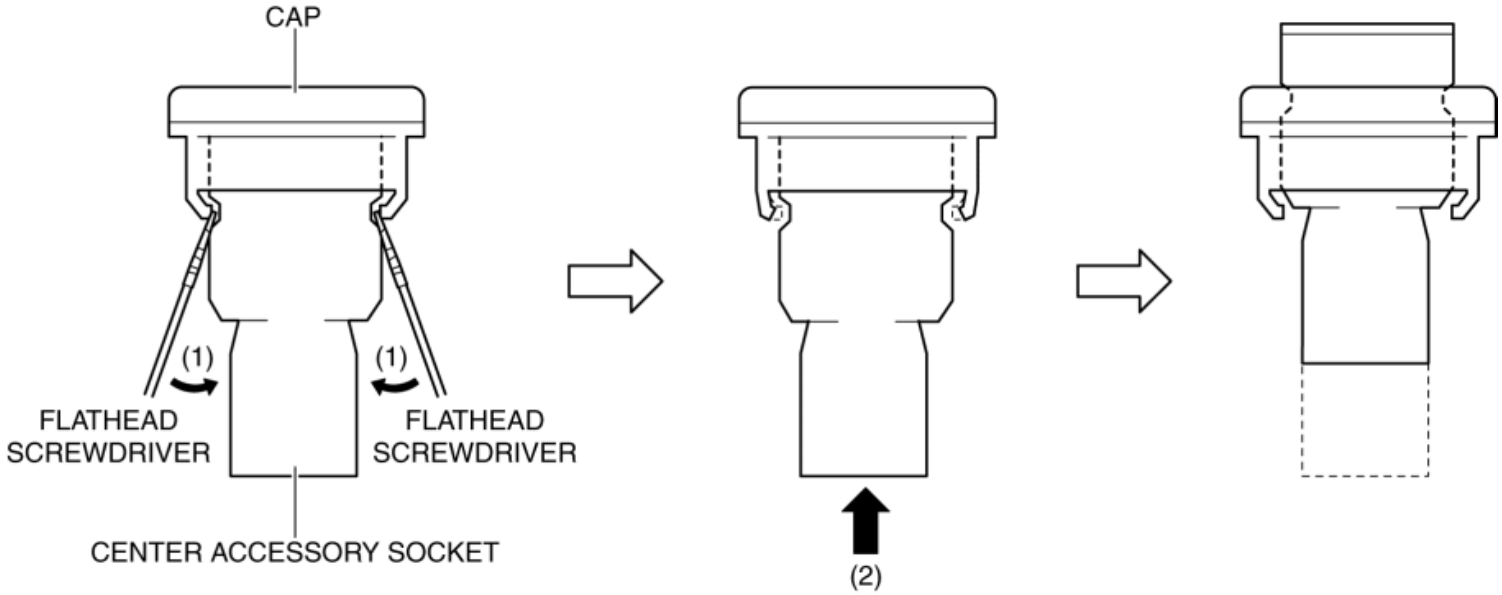

5. Pull the center accessory socket in the direction of the arrow shown in the figure and remove it.

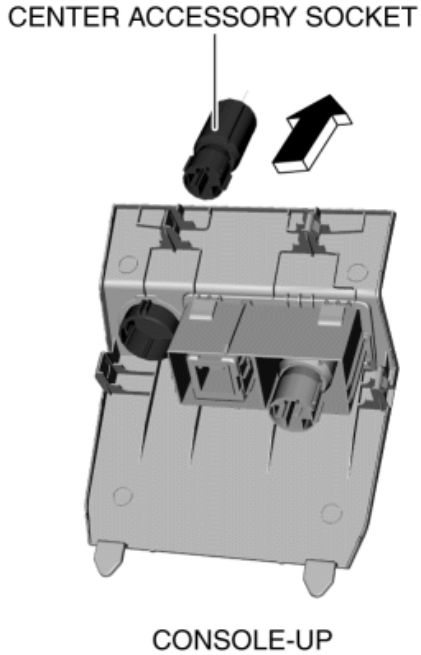

6. While pressing the cap tabs in the direction of arrows (3) shown in the figure, press the cap in the direction of arrow (4) shown in the figure to detach the cap tabs from the console-up.

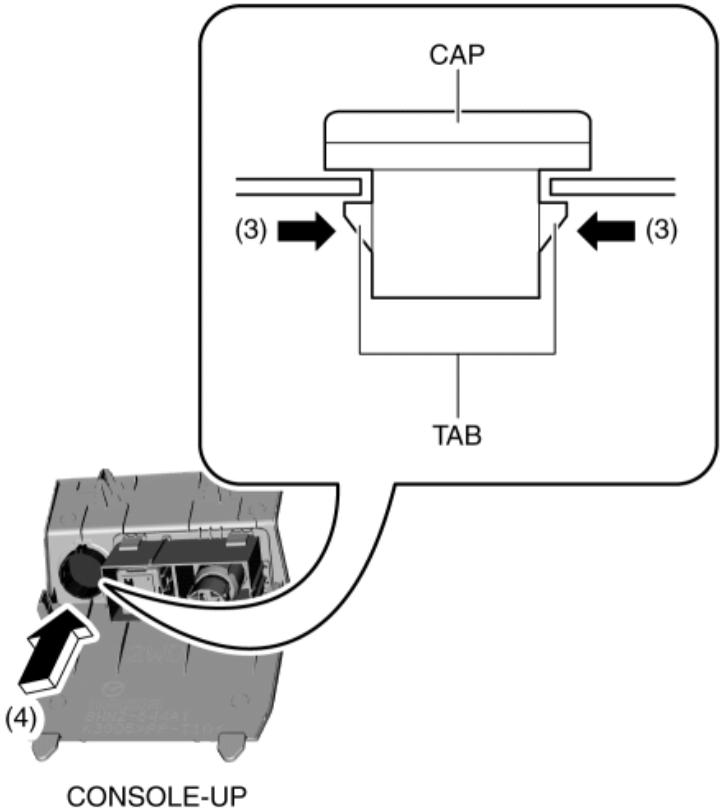

7. Remove the cap.
8. Install in the reverse order of removal.

2014 - Mazda3 - Body and Accessories

CENTER ACCESSORY SOCKET INSPECTION

1. Disconnect the negative battery cable. (See **NEGATIVE BATTERY CABLE DISCONNECTION/CONNECTION [SKYACTIV-G 2.0, SKYACTIV-G 2.5]**.)

2. Remove the console-up. (See **REAR CONSOLE REMOVAL/INSTALLATION**.)

3. Remove the center accessory socket. (See **CENTER ACCESSORY SOCKET REMOVAL/INSTALLATION**.)

4. Connect the tester probe to the position shown in the figure and verify that there is continuity.

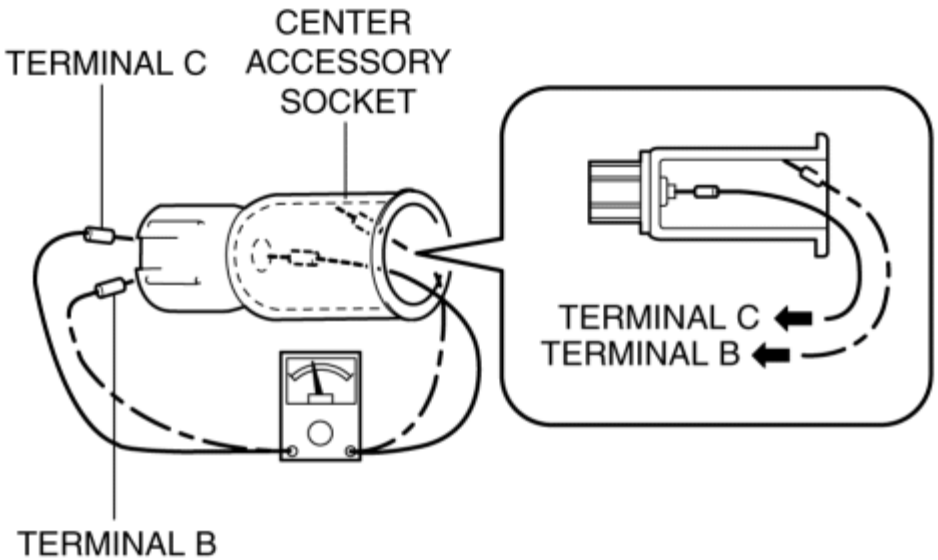

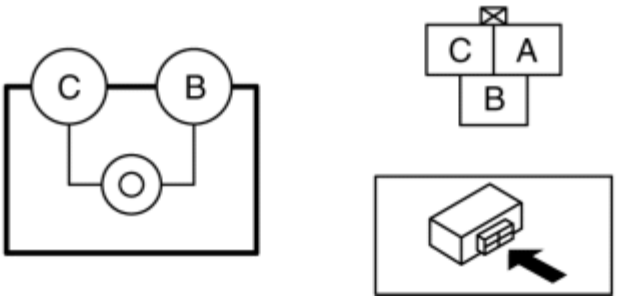

- If it cannot be verified, replace the center accessory socket.

2014 - Mazda3 - Body and Accessories

INSTRUMENTATION/DRIVER INFO. LOCATION INDEX

Interior

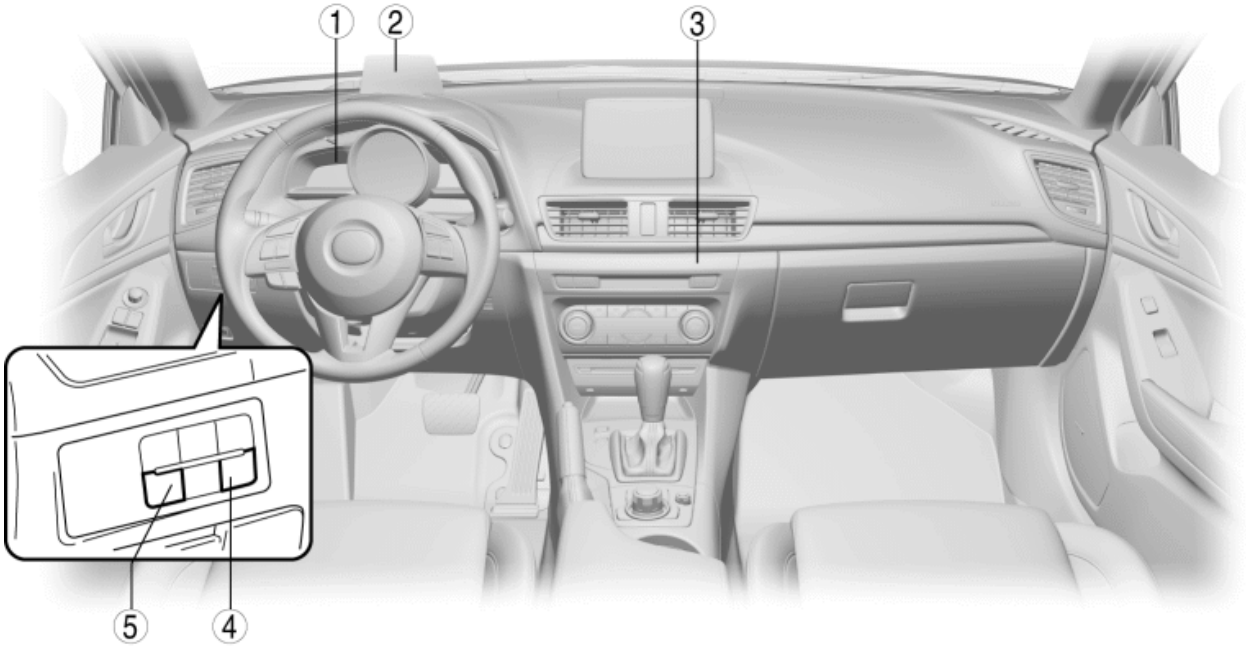

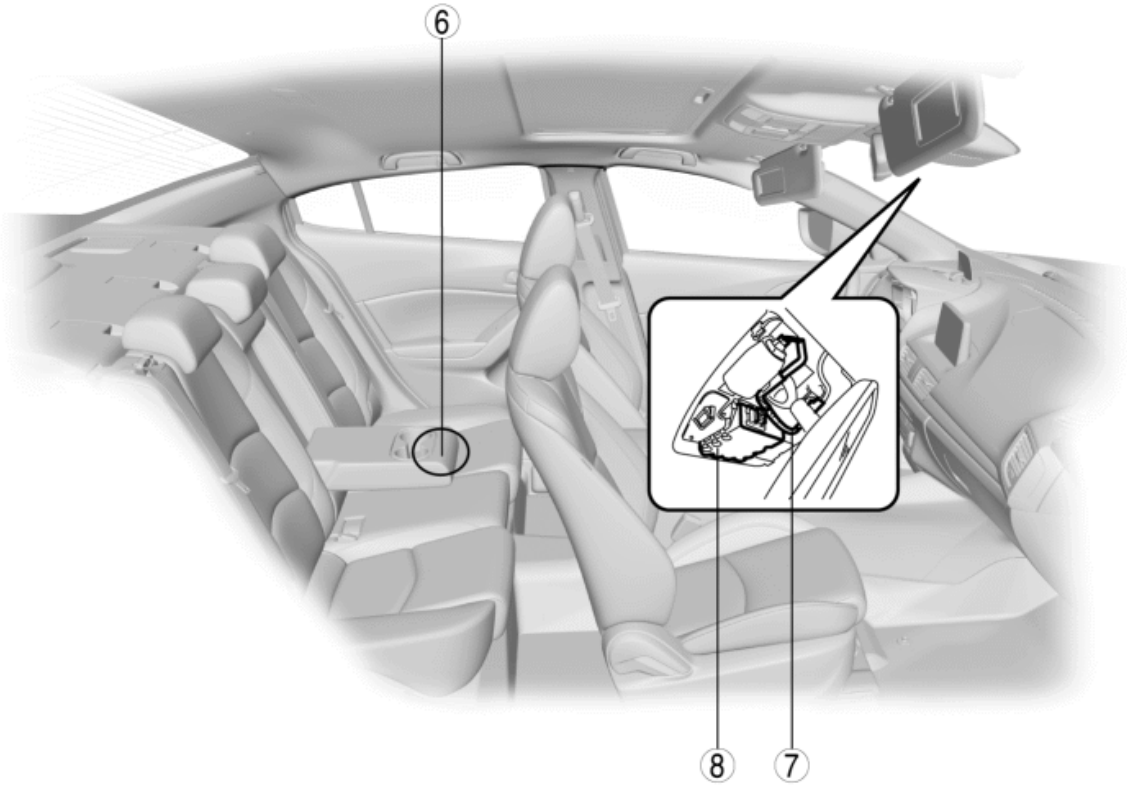

1	Instrument cluster (See **INSTRUMENT CLUSTER REMOVAL/INSTALLATION**.) (See **INSTRUMENT CLUSTER DISASSEMBLY/ASSEMBLY**.) (See **INSTRUMENT CLUSTER INSPECTION**.) (See **INSTRUMENT CLUSTER CONFIGURATION (USING READ/WRITE FUNCTION)**.) (See **INSTRUMENT CLUSTER CONFIGURATION (USING AS-BUILT DATA)**.) (See **INSTRUMENT CLUSTER PERSONALIZATION FEATURES SETTING PROCEDURE**.) (See **INSTRUMENT CLUSTER OPERATION RECORD**.)
2	Active driving display (with center display) (See **ACTIVE DRIVING DISPLAY REMOVAL/INSTALLATION**.) (See **ACTIVE DRIVING DISPLAY INSPECTION**.)
3	Indicator unit (See **INDICATOR UNIT REMOVAL/INSTALLATION**.) (See **INDICATOR UNIT INSPECTION**.)
4	LDWS switch (with lane departure warning system (LDWS)) (See **LDWS SWITCH REMOVAL/INSTALLATION**.) (See **LDWS SWITCH INSPECTION**.)
5	BSM OFF switch (with blind spot monitoring (BSM) system) (See **BLIND SPOT MONITORING (BSM) OFF SWITCH REMOVAL/INSTALLATION**.) (See **BLIND SPOT MONITORING (BSM) OFF SWITCH INSPECTION**.)
6	Fuel gauge sender unit (See **FUEL GAUGE SENDER UNIT REMOVAL/INSTALLATION**.) (See **FUEL GAUGE SENDER UNIT INSPECTION**.)
7	Forward sensing camera (FSC) short-cord (with lane departure warning system (LDWS)) (See **FORWARD SENSING CAMERA (FSC) SHORT-CORD REMOVAL/INSTALLATION**.) (See **FORWARD SENSING CAMERA (FSC) SHORT-CORD INSPECTION**.)
8	Forward sensing camera (FSC) (with lane departure warning system (LDWS)) (See **FORWARD SENSING CAMERA (FSC) REMOVAL/INSTALLATION**.) (See **FORWARD SENSING CAMERA (FSC) CLIP REMOVAL/INSTALLATION**.) (See **FORWARD SENSING CAMERA (FSC) COVER REMOVAL/INSTALLATION**.) (See **FORWARD SENSING CAMERA (FSC) AIMING**.) (See **FORWARD SENSING CAMERA (FSC) CONFIGURATION (USING READ/WRITE FUNCTION)**.) (See **FORWARD SENSING CAMERA (FSC) CONFIGURATION (USING AS-BUILT DATA)**.) (See **FORWARD SENSING CAMERA (FSC) PERSONALIZATION FEATURES SETTING PROCEDURE**.)

Exterior

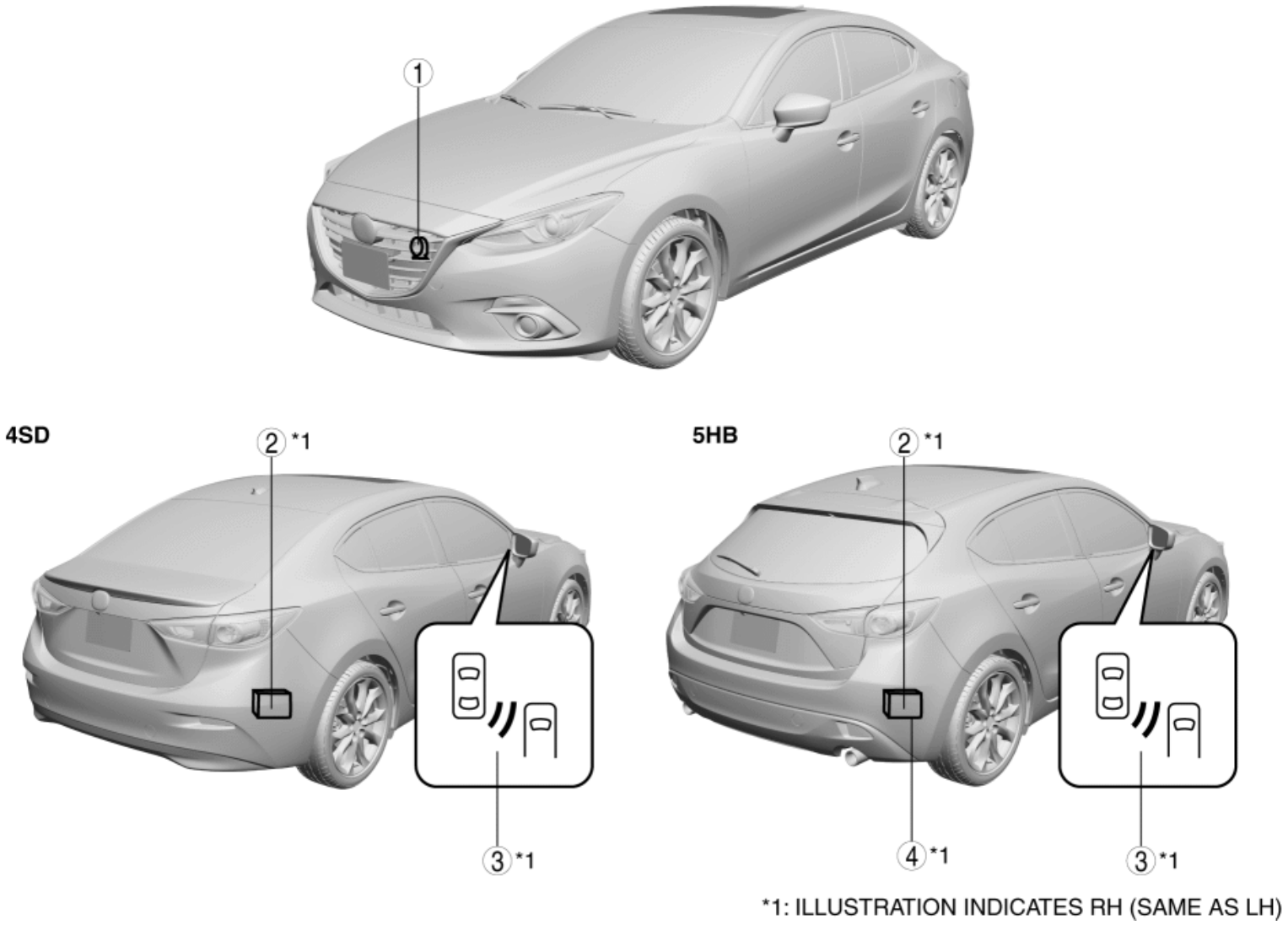

1	Horn (See **HORN REMOVAL/INSTALLATION**.) (See **HORN INSPECTION**.)
2	Blind spot monitoring (BSM) control module (with blind spot monitoring (BSM) system) (See **BLIND SPOT MONITORING (BSM) CONTROL MODULE REMOVAL/INSTALLATION**.) (See **BLIND SPOT MONITORING (BSM) CONTROL MODULE INSPECTION**.) (See **BLIND SPOT MONITORING (BSM) RADAR TEST**.)
3	Blind spot monitoring (BSM) warning indicator light (with blind spot monitoring (BSM) system) (See **BLIND SPOT MONITORING (BSM) INDICATOR LIGHT REMOVAL/INSTALLATION**.) (See **BLIND SPOT MONITORING (BSM) INDICATOR LIGHT INSPECTION**.)

4	Blind spot monitoring (BSM) bracket (with blind spot monitoring (BSM) system) (See **BLIND SPOT MONITORING (BSM) BRACKET REMOVAL/INSTALLATION**.)

2014 - Mazda3 - Body and Accessories

INSTRUMENT CLUSTER REMOVAL/INSTALLATION

CAUTION:

- If configuration is not performed when the instrument cluster is replaced with a new one, the vehicle specification information is not stored in the instrument cluster and the system will not operate normally.
- When performing configuration, it is necessary to read the vehicle specification information from the instrument cluster before replacing it. Connect the M-MDS to the vehicle and perform vehicle identification before removing the instrument cluster. The vehicle specification information is temporarily stored in the M-MDS.

NOTE:

- The instrument cluster prior to replacement stores the vehicle specification information.
- A new instrument cluster does not store any vehicle specification information.
- If the vehicle specification information from the instrument cluster prior to replacement cannot be read, perform the configuration using As-Built data.
- Because the personalization setting information stored in the instrument cluster cannot be written to a new instrument cluster, if the instrument cluster is replaced, the personalization setting information is at the initial setting. Therefore, before replacing the instrument cluster, verify the personalization setting information and reset the replaced instrument cluster with the information.

1. When replacing the instrument cluster, perform the configuration. (See **INSTRUMENT CLUSTER CONFIGURATION (USING READ/WRITE FUNCTION)**.)

2. Disconnect the negative battery cable. (See **NEGATIVE BATTERY CABLE DISCONNECTION/CONNECTION [SKYACTIV-G 2.0, SKYACTIV-G 2.5]**.)

3. Remove the following parts:

   a. Upper column cover (See **COLUMN COVER REMOVAL/INSTALLATION**.)

   b. Meter hood (See **METER HOOD REMOVAL/INSTALLATION**.)

4. Remove the screws.

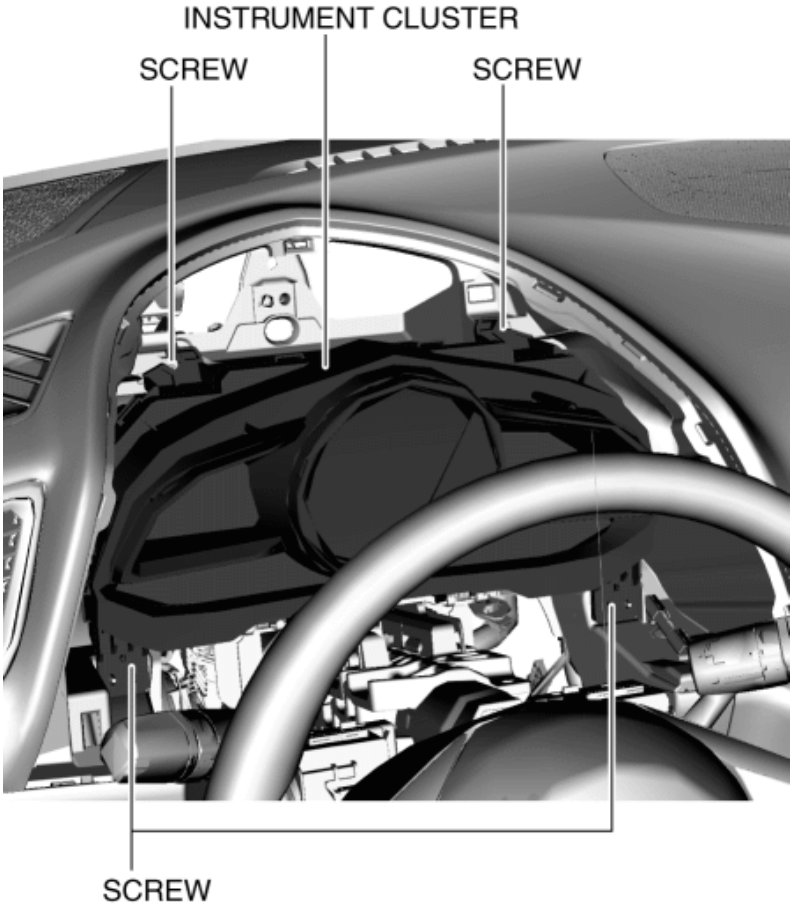

5. Cover the light switch, wiper switch, and start stop unit using a rag to prevent scratches.

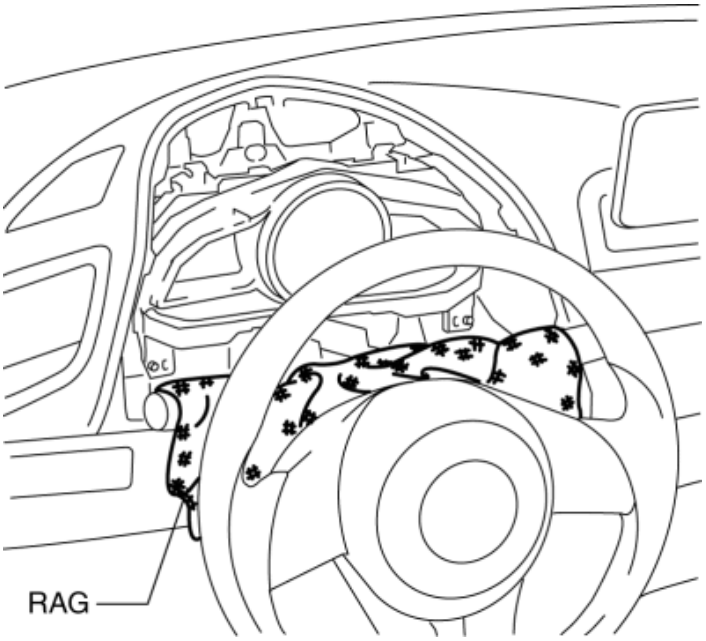

CAUTION:

- When removing the instrument cluster, the instrument cluster may contact the light switch, wiper switch, or the start stop unit and the instrument cluster may be scratched. When removing the instrument cluster, cover the light switch, wiper switch, and start stop unit using a rag.

6. Pull the instrument cluster outward to detach it from the instrument panel pins.

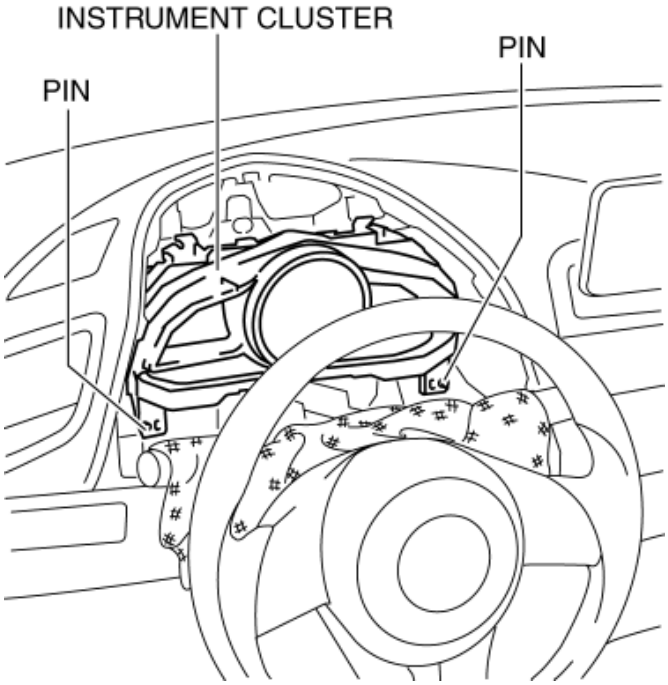

7. Rotate the instrument cluster in the direction of the arrow shown in the figure.

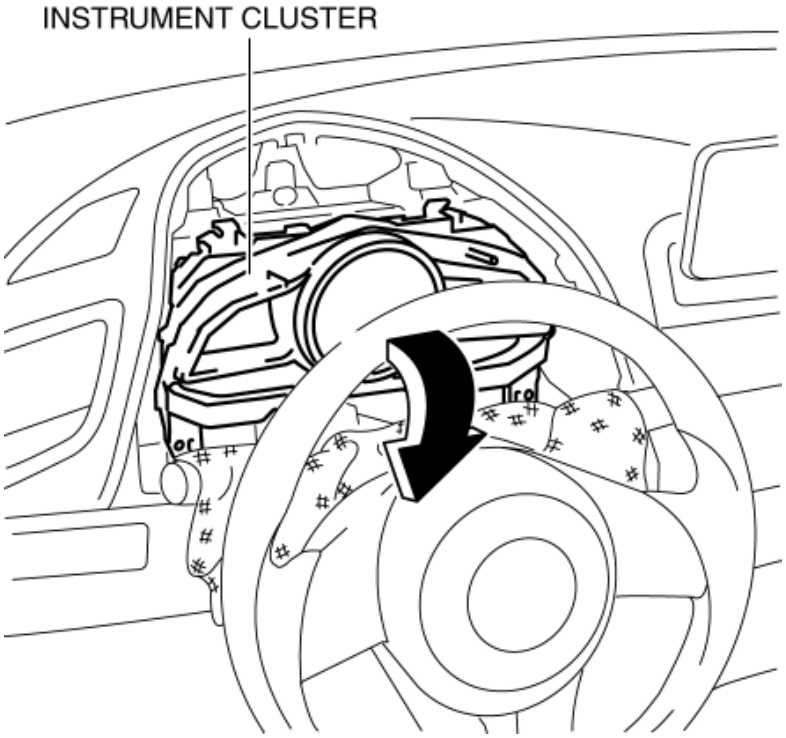

8. Disconnect the connector.

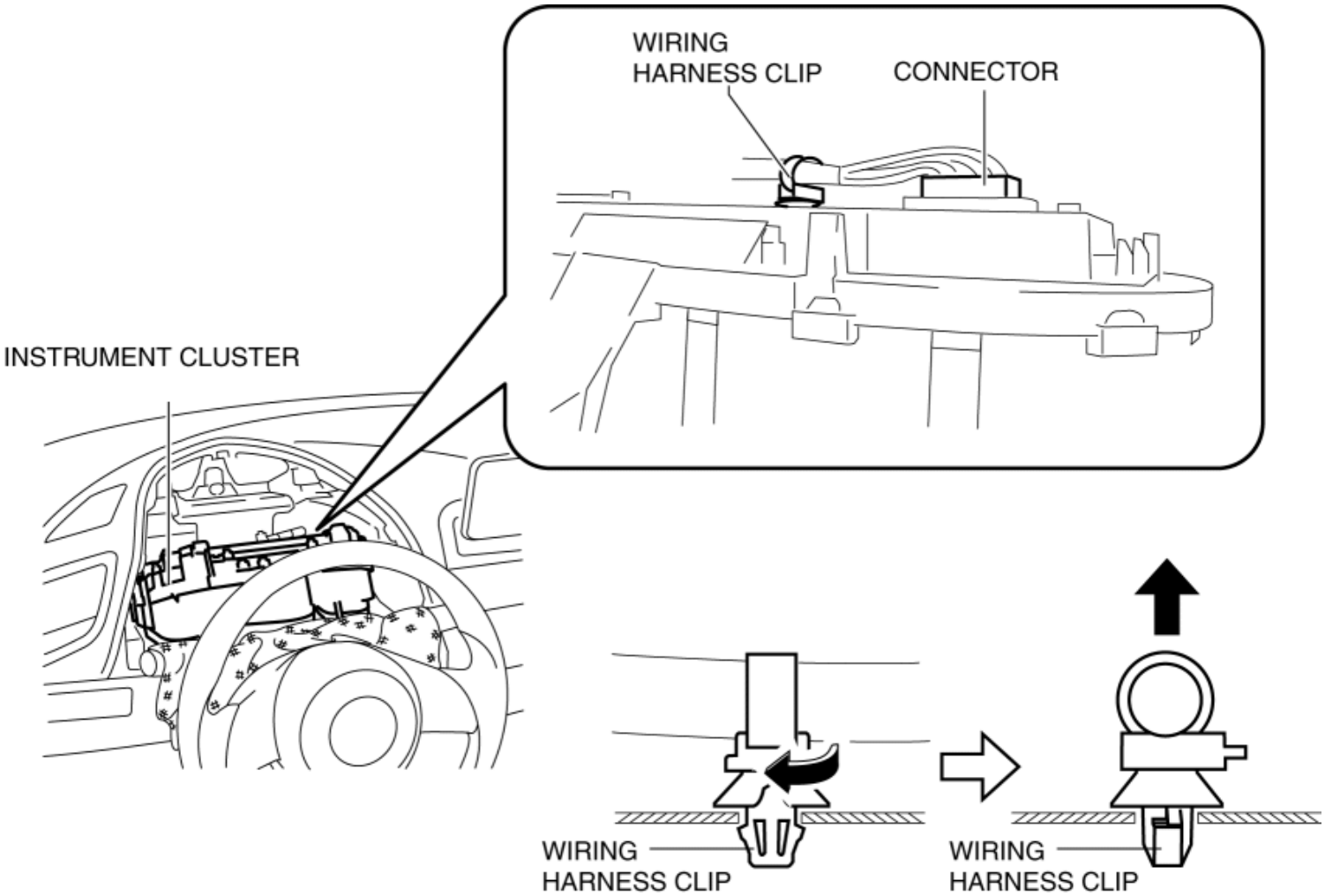

9. Remove the wiring harness clip.

10. Remove the instrument cluster by sliding it between the instrument panel and the steering.

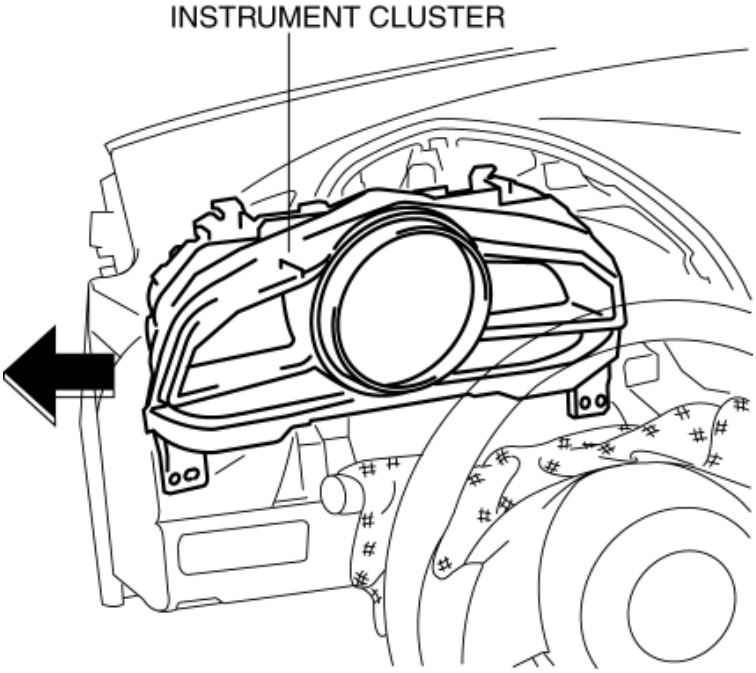

11. Install in the reverse order of removal.

CAUTION:

- If the instrument cluster is left for a long time with its screen facing down, grease applied to the needles may spill and the needles may not operate smoothly. When storing the instrument cluster, store it with its screen facing upward.

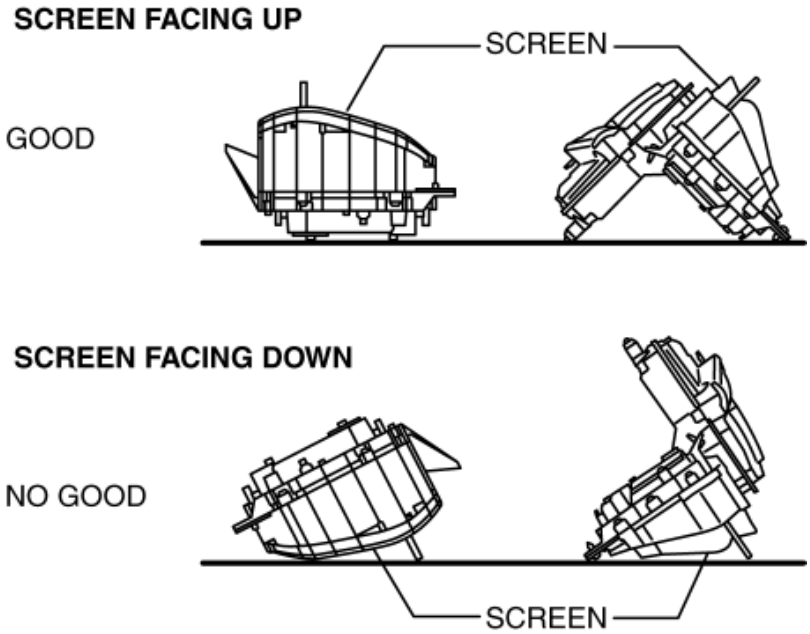

NOTE:

- If configuration cannot be performed by reading/writing of the vehicle specification information, perform the configuration using As-Built information after replacing the instrument cluster. (See **INSTRUMENT CLUSTER CONFIGURATION (USING AS-BUILT DATA)**.)

2014 - Mazda3 - Body and Accessories

INSTRUMENT CLUSTER DISASSEMBLY/ASSEMBLY

CAUTION:

- If the instrument cluster is hit forcefully during disassembly such as by being dropped, it could get damaged and the system may not operate normally. When disassembling the instrument cluster, perform the procedure on a workbench on clean clothes being careful not to drop it.

1. Disassemble in the order indicated in the table.

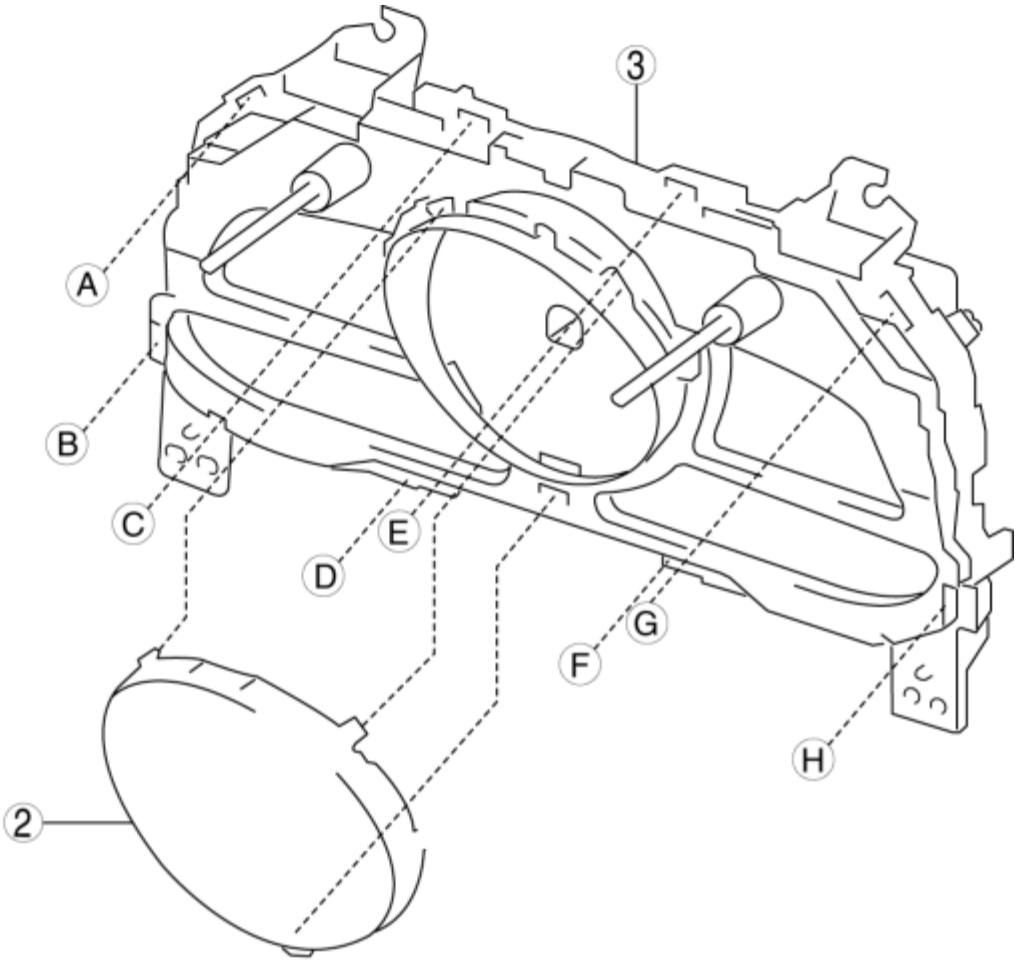
3
A
B
C
D
E
F
G
H
2

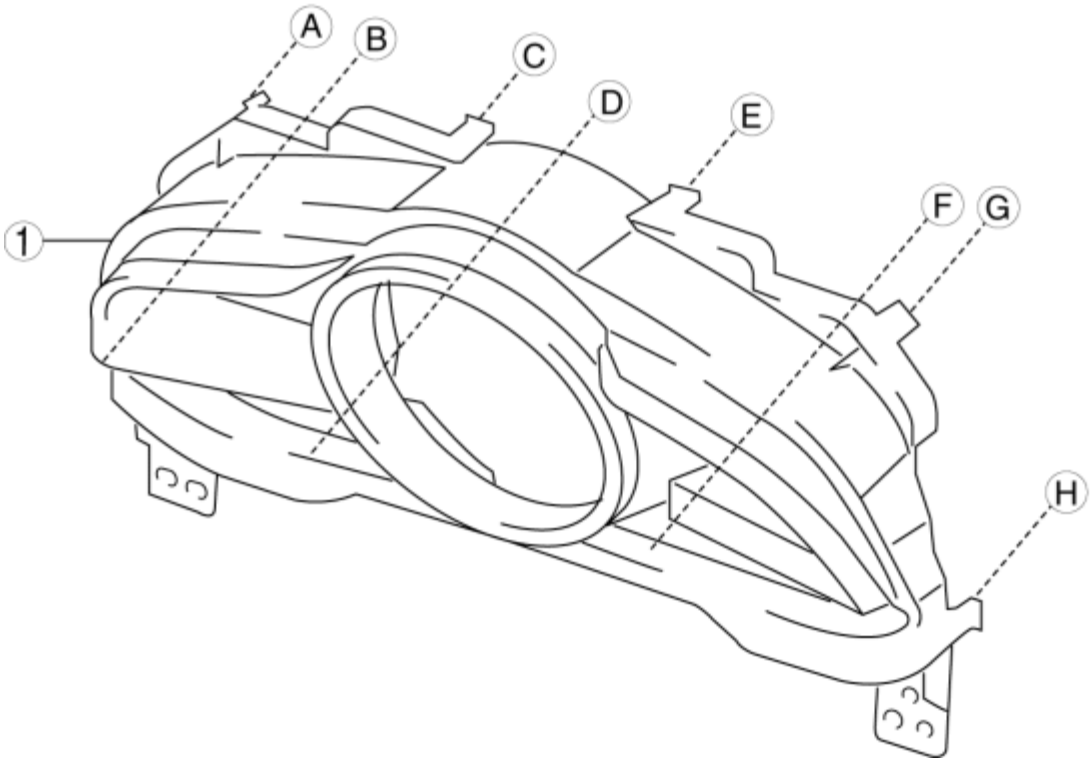
A
B
C
D
E
F
G
H
1

1	Cover
2	Panel
3	Instrument cluster

2. Assemble in the reverse order of disassembly.

2014 - Mazda3 - Body and Accessories

INSTRUMENT CLUSTER INSPECTION

Speedometer Inspection (Analog Speedometer Type)

Using a speedometer tester

CAUTION:

- When only the front or the rear wheels are driven using a speedometer tester, the DSC HU/CM may determine that the vehicle speed signal is in error and the engine cannot be stopped by the normal operation. If the engine cannot be stopped, perform an emergency engine stop operation. (See **SERVICE CAUTIONS**.)

1. Adjust the tire pressure to the specification.
2. Using a speedometer tester, verify that the tester reading is as indicated in the following table. **km/h**

Speedometer tester indication (km/h)	Allowable range (km/h)
20	17—23
40	37—43
60	57—63
80	77—83
100	97—103
120	116—124
140	136—144
160	156—164
180	176—184
200	196—204
220	215—225
240	235—245

mph

Speedometer tester indication (mph)	Allowable range (mph)
10	8—12
20	18—22
30	28—32
40	38—42

50	48—52
60	58—62
70	67—73
80	77—83
90	87—93
100	97—103
110	107—113
120	117—123
130	127—133
140	137—143
150	147—153

3. Verify that the speedometer reading is within the range indicated in the table.
    - If the speedometer does not operate or the indication is not within the allowable range, inspect the DTC inspection for the following control module and the related wiring harnesses.
        - PCM
        - TCM (ATX)
        - DSC HU/CM
    - If the PCM, TCM (ATX), DSC HU/CM, and related wiring harnesses are normal, replace the instrument cluster.

Using the M-MDS

1. Connect the M-MDS to the DLC-2.
2. After vehicle identification, select the following from the M-MDS initialization screen.
    a. “Data logger”
    b. “Module”
    c. “IC”
3. Using “SPEEDOMTR”, verify that the displayed information is as indicated in the table.

M-MDS display	Speedometer display
60 km/h	Speedometer needle moves to approx. 57—63 km/h {35—40 mph}.
120 km/h	Speedometer needle moves to approx. 116—124 km/h {72—77 mph}.
Off	Speedometer needle moves to the bottommost position.

- If the speedometer does not operate or the indication is not within the allowable range, inspect the DTC inspection for the following control module and the related wiring harnesses.
    - PCM
    - TCM (ATX)
    - DSC HU/CM
- If the PCM, TCM (ATX), DSC HU/CM, and related wiring harnesses are normal, replace the instrument cluster.

Speedometer Inspection (Digital Speedometer Type)

Using a speedometer tester

CAUTION:

- When only the front or the rear wheels are driven using a speedometer tester, the DSC HU/CM may determine that the vehicle speed signal is in error and the engine cannot be stopped by the normal operation. If the engine cannot be stopped, perform an emergency engine stop operation. (See **SERVICE CAUTIONS**.)

1. Adjust the tire pressure to the specification.
2. Using a speedometer tester, verify that the tester reading is as indicated in the following table. **km/h**

Speedometer tester indication (km/h)	Allowable range (km/h)
20	19—21
40	39—41
60	59—61
80	79—81
100	99—101
120	119—121
140	139—141
160	159—161
180	179—181
200	199—201
220	219—221
240	239—241

mph

Speedometer tester indication (mph)	Allowable range (mph)
10	9—11
20	19—21
30	29—31
40	39—41
50	49—51
60	59—61
70	69—71
80	79—81

90	89—91
100	99—101
110	109—111
120	119—121
130	129—131
140	139—141
150	149—151

3. Verify that the speedometer reading is within the range indicated in the table.
    - If the speedometer does not operate or the indication is not within the allowable range, inspect the DTC inspection for the following control module and the related wiring harnesses.
        - PCM
        - TCM (ATX)
        - DSC HU/CM
    - If the PCM, TCM (ATX), DSC HU/CM, and related wiring harnesses are normal, replace the instrument cluster.

Tachometer Inspection (Analog Tachometer Type Only)

CAUTION:

- If the engine speed exceeds the allowable range, the engine could be damaged. Therefore, when inspecting the tachometer, do not allow the engine speed to exceed the allowable range indicated on the tachometer.

1. Connect the M-MDS to the DLC-2.
2. After vehicle identification, select the following from the M-MDS initialization screen.
    a. “Data logger”
    b. “Module”
    c. “IC”
3. Using “TACHOMTR”, verify that the displayed information is as indicated in the table.

M-MDS display	Tachometer display
3000 RPM	Tachometer needle moves to approx. 3,050 rpm.
6000 RPM	Tachometer needle moves to approx. 6,100 rpm.
Off	Tachometer needle moves to bottommost position.

- If the tachometer does not operate or the indication is not within the allowable range, inspect the DTC inspection for the following control module and the related wiring harnesses.
    - PCM
- If the PCM and related wiring harnesses are normal, replace the instrument cluster.

Fuel Gauge/LCD Inspection

1. Connect the M-MDS to the DLC-2.
2. After vehicle identification, select the following from the M-MDS initialization screen.
    a. “Data logger”

b. “Module”

c. “IC”

3. Using “LCD_SEG”, verify that the LCD is illuminated.

TYPE A (Digital speed meter type)

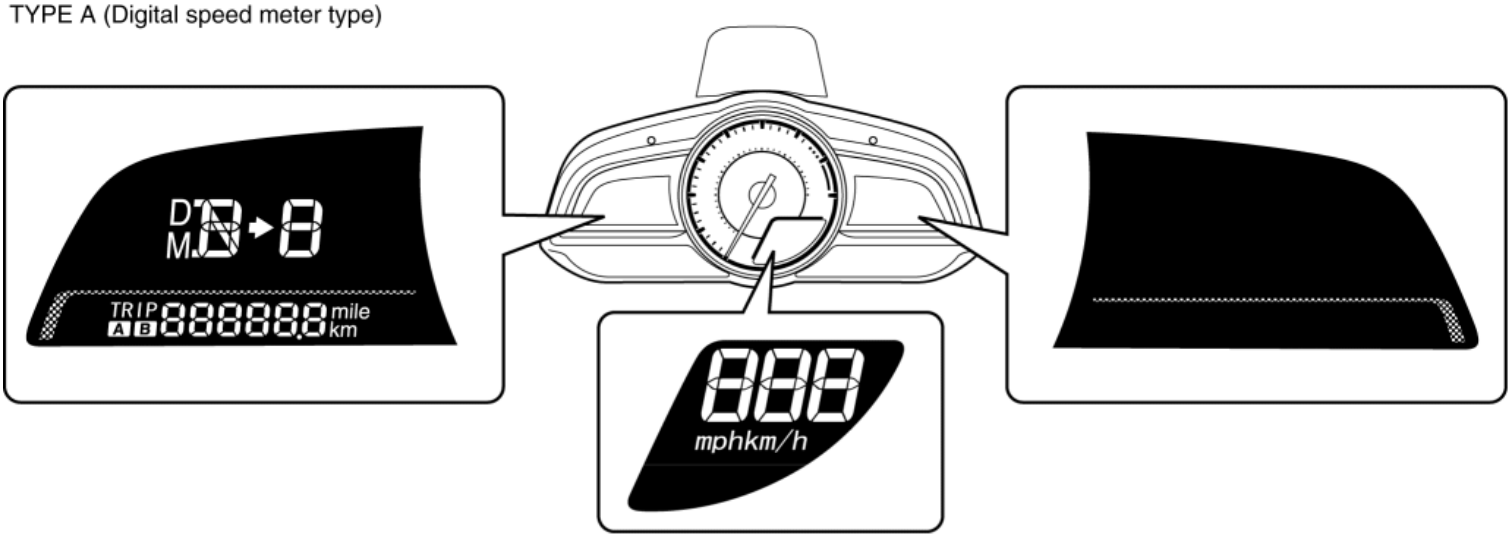

TYPE B (Analog speed meter type (with tachometer))

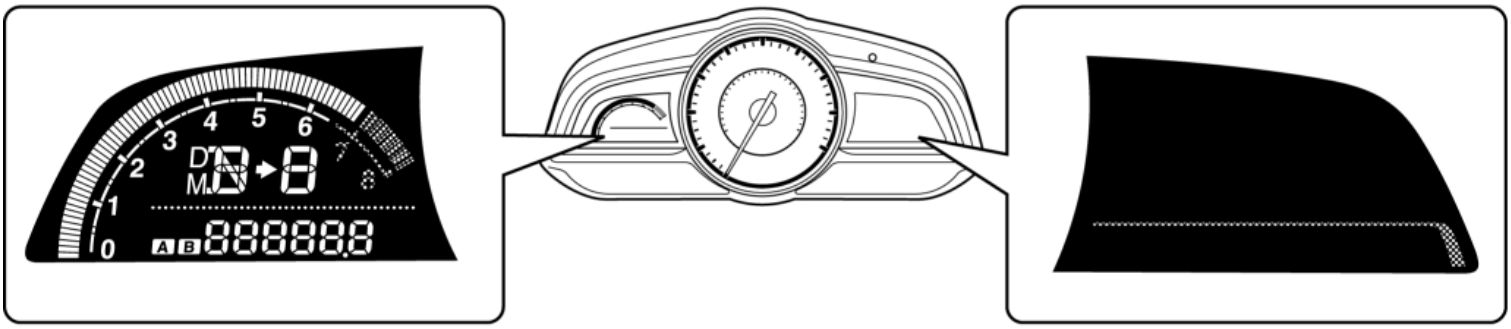

TYPE C (Analog speed meter type (without tachometer))

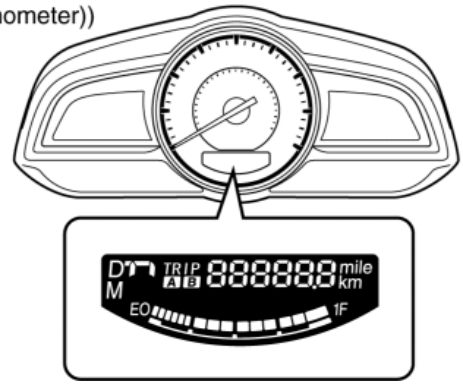

- If there are any non-illuminated area, replace the instrument cluster.

Warning/Indicator Light Illumination Inspection

1. Connect the M-MDS to the DLC-2.
2. After vehicle identification, select the following from the M-MDS initialization screen.

a. “Data logger”

b. “Module”

c. “IC”

3. Using “WL+IL”, verify that the warning/indicator lights in the following table are illuminated.

- If any of the warning/indicator lights are not displayed, replace the instrument cluster.

TYPE A (Digital speedometer type)

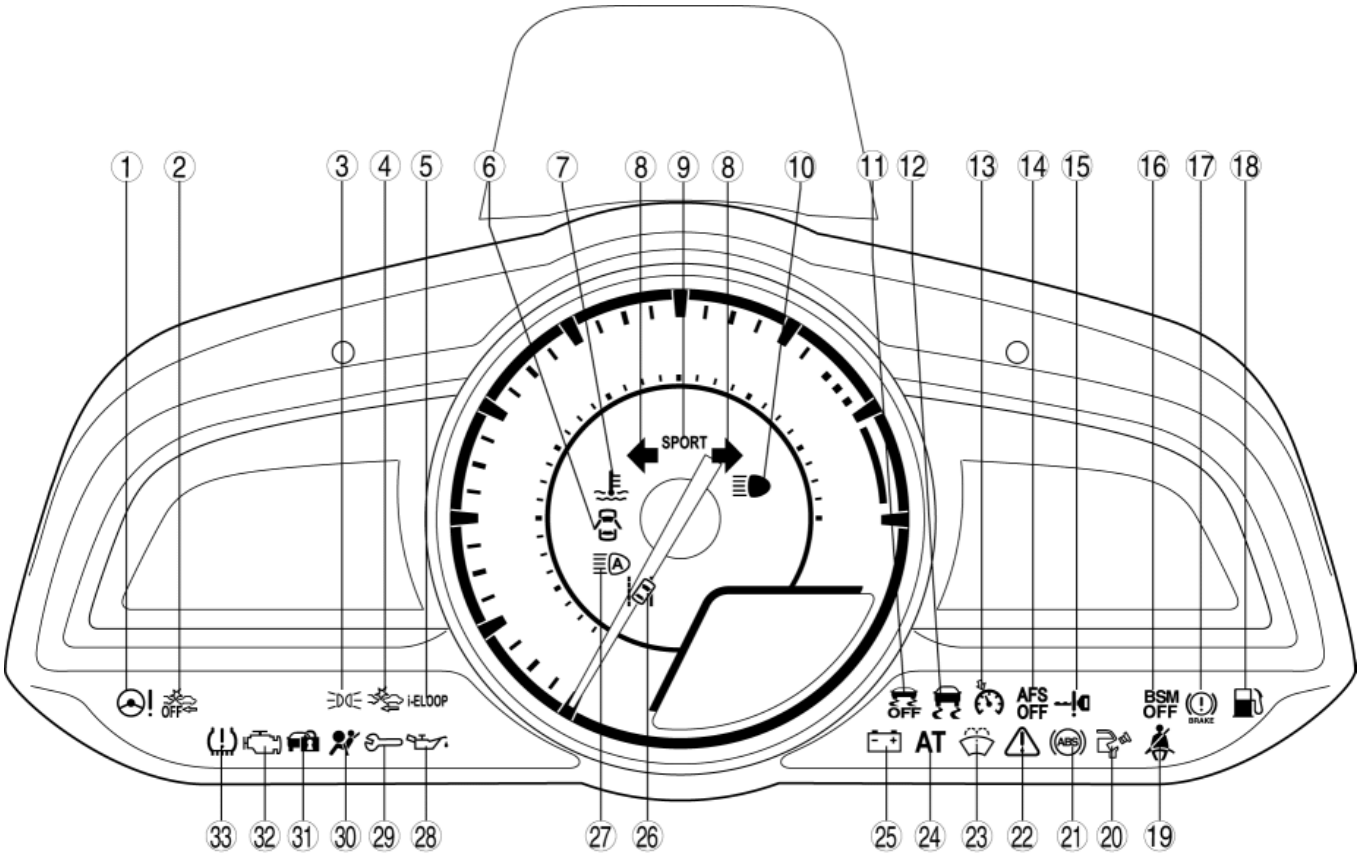

—: Not applicable

No.	Warning/Indicator lights	Name	Comment
1		Power steering malfunction indicator light	—
2	OFF	Smart city brake support (SCBS) OFF indicator light	With SCBS
3		Lights-on indicator light	—
4		Smart city brake support (SCBS) warning light (red)/indicator light (amber)	With SCBS
5	i-ELOOP	i-ELOOP indicator light (green)	With i-ELOOP
6		Door-ajar warning light	—
7		Low engine coolant temperature indicator light (blue)/high engine coolant temperature warning light (red)	—
8		Turn signal/hazard warning indicator lights	—
9	SPORT	SPORT indicator light	SKYACTIV-G 2.5
10		Headlight high-beam indicator light	—

11	OFF	DSC OFF indicator light	—
12		TCS/DSC indicator light	—
13		Cruise main indicator light (amber)/cruise set indicator light (green)	With cruise control system
14	AFS OFF	AFS OFF indicator light	With AFS
15		KEY warning light (red)/indicator light (green)	—
16	BSM OFF	BSM OFF indicator light	With BSM
17	BRAKE	Brake system warning light	—
18		Low fuel warning light	—
19		Seat belt warning light	—
20		Check fuel cap warning light	—
21	ABS	ABS warning light	—
22		Master warning light	—
23		Low washer fluid level warning light	—
24	AT	Automatic transaxle warning light	ATX
25		Charging system warning light	—
26		Lane departure warning system (LDWS) warning light (amber)/indicator light (green)	With LDWS
27		High beam control (HBC) system warning light (amber)/indicator light (green)	With HBC system
28		Engine oil pressure warning light	—
29		Wrench indicator light	—
30		Air bag/front seat belt pre-tensioner system warning light	—
31		Security indicator light	—
32		Check engine light	—
33		Tire pressure monitoring system warning light	With TPMS

TYPE B (Analog speedometer type (with tachometer))

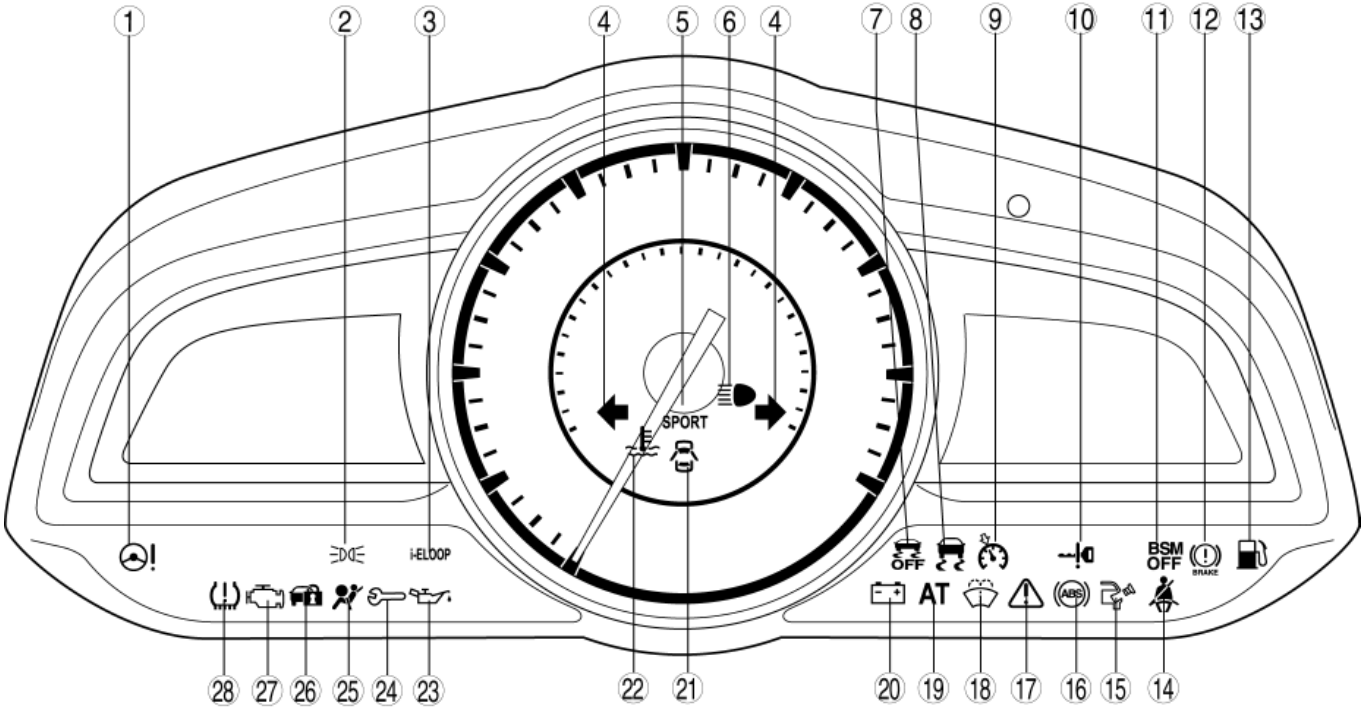

—: Not applicable

No.	Warning/Indicator lights	Name	Comment
1		Power steering malfunction indicator light	—
2		Lights-on indicator light	—
3	i-ELOOP	i-ELOOP indicator light (green)	With i-ELOOP
4		Turn signal/hazard warning indicator lights	—
5	SPORT	SPORT indicator light	SKYACTIV-G 2.5
6		Headlight high-beam indicator light	—
7	OFF	DSC OFF indicator light	—
8		TCS/DSC indicator light	—
9		Cruise main indicator light (amber)/cruise set indicator light (green)	With cruise control system
10		KEY warning light (red)/indicator light (green)	—
11	BSM OFF	BSM OFF indicator light	With BSM
12	BRAKE	Brake system warning light	—
13		Low fuel warning light	—
14		Seat belt warning light	—

15		Check fuel cap warning light	—
16		ABS warning light	—
17		Master warning light	—
18		Low washer fluid level warning light	—
19	AT	Automatic transaxle warning light	ATX
20		Charging system warning light	—
21		Door-ajar warning light	—
22		Low engine coolant temperature indicator light (blue)/high engine coolant temperature warning light (red)	—
23		Engine oil pressure warning light	—
24		Wrench indicator light	—
25		Air bag/front seat belt pre-tensioner system warning light	—
26		Security indicator light	—
27		Check engine light	—
28		Tire pressure monitoring system warning light	With TPMS

TYPE C (Analog speedometer type (without tachometer))

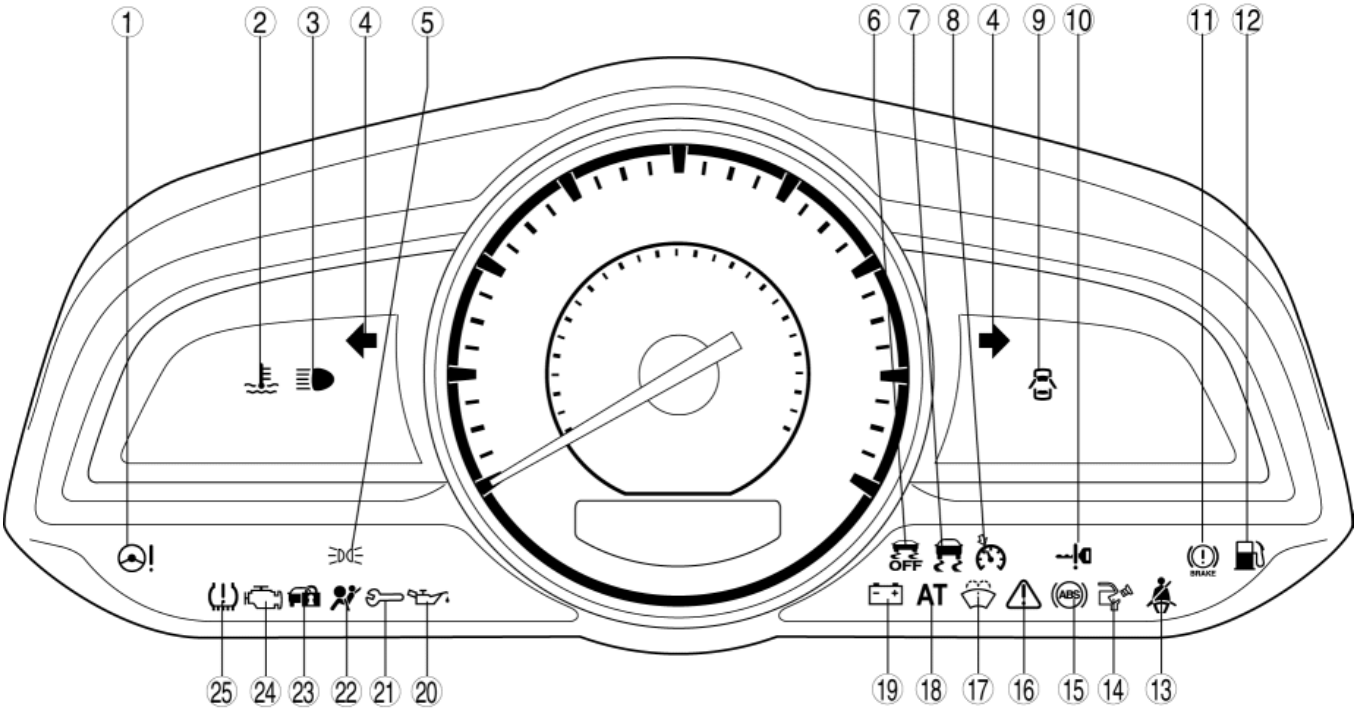

—: Not applicable

No.	Warning/Indicator lights	Name	Comment
1		Power steering malfunction indicator light	—
2		Low engine coolant temperature indicator light (blue)/high engine coolant temperature warning light (red)	—
3		Headlight high-beam indicator light	—
4		Turn signal/hazard warning indicator lights	—
5		Lights-on indicator light	—
6	OFF	DSC OFF indicator light	—
7		TCS/DSC indicator light	—
8		Cruise main indicator light (amber)/cruise set indicator light (green)	With cruise control system
9		Door-ajar warning light	—
10		KEY warning light (red)/indicator light (green)	—
11	BRAKE	Brake system warning light	—
12		Low fuel warning light	—
13		Seat belt warning light	—
14		Check fuel cap warning light	—
15	ABS	ABS warning light	—
16		Master warning light	—
17		Low washer fluid level warning light	—
18	AT	Automatic transaxle warning light	ATX
19		Charging system warning light	—
20		Engine oil pressure warning light	—
21		Wrench indicator light	—
22		Air bag/front seat belt pre-tensioner system warning light	—
23		Security indicator light	—
24		Check engine light	—

25		Tire pressure monitoring system warning light	With TPMS

Alarm Inspection

1. Connect the M-MDS to the DLC-2.
2. After vehicle identification, select the following from the M-MDS initialization screen.
   a. “Data logger”
   b. “Module”
   c. “IC”
3. Using “ALARM”, verify that the buzzer sounds.
   - If the buzzer does not sound, replace the instrument cluster.

2014 - Mazda3 - Body and Accessories

INSTRUMENT CLUSTER CONFIGURATION (USING READ/WRITE FUNCTION)

NOTE:

- When performing configuration, it is necessary to read the vehicle specification information from the instrument cluster before replacing it. Connect the M-MDS to the vehicle and perform vehicle identification before removing the instrument cluster. The vehicle specification information is temporarily stored in the M-MDS.

1. Connect the M-MDS to the DLC-2.
2. After vehicle identification, select the following from the M-MDS initialization screen.
    - “Module programming”
3. Then, select the following from the screen menu.
    - “Programmable Module Installation”
    - “IC”
4. Perform the configuration following the instructions on the screen.

CAUTION:

- When the configuration is performed, CAN communication between the instrument cluster and control module connected to the CAN line is cut temporarily, and communication error DTCs may be detected. After performing the configuration, verify the DTCs for the control module connected to the CAN line and clear it if any DTC is detected.

5. Verify the DTCs for all of the control modules connected to the CAN line.
    - If any DTC is stored, clear it.
    - If the DTC is cleared, finish the procedure because the configuration has been completed normally.
    - If the DTC remains, perform troubleshooting according to the DTC.

2014 - Mazda3 - Body and Accessories

INSTRUMENT CLUSTER CONFIGURATION (USING AS-BUILT DATA)

NOTE:

- If the configuration is performed using As-Built data, the set value of the personalization function is reset to the initial value (condition when shipped from factory). Verify the set value with the customer and perform the personalization function setting after performing the configuration using As-Built data.

1. Connect the M-MDS to the DLC-2.
2. After vehicle identification, select the following from the M-MDS initialization screen.
    - “Module programming”
3. Then, select the following from the screen menu.
    - “As-Built”
    - “IC”
4. Perform As-Built following the instructions on the screen.

CAUTION:

- When the configuration is performed, CAN communication between the instrument cluster and control module connected to the CAN line is cut temporarily, and communication error DTCs may be detected. After performing the configuration, verify the DTCs for the control module connected to the CAN line and clear it if any DTC is detected.

5. Verify the DTCs for all of the control modules connected to the CAN line.
    - If any DTC is stored, clear it.
    - If the DTC is cleared, finish the procedure because the configuration has been completed normally.
    - If the DTC remains, perform troubleshooting according to the DTC.

2014 - Mazda3 - Body and Accessories

INSTRUMENT CLUSTER OPERATION RECORD

1. Connect the M-MDS to the DLC-2.
2. After vehicle identification, select the following from the M-MDS initial screen.
    - “Operational Record”
3. Then, select the following from the screen menu.
    - “Meter Warning System”
4. Display the instrument cluster operation history according to the screen instructions.

2014 - Mazda3 - Body and Accessories

ACTIVE DRIVING DISPLAY REMOVAL/INSTALLATION

CAUTION:

- Do not open/close the combiner manually. Otherwise, the combiner could be damaged or it may cause a malfunction.

Replacing Active Driving Display as Single Component

1. Disconnect the negative battery cable. (See **NEGATIVE BATTERY CABLE DISCONNECTION/CONNECTION [SKYACTIV-G 2.0, SKYACTIV-G 2.5]**.)
2. Remove the following parts:
   a. Upper column cover (See **COLUMN COVER REMOVAL/INSTALLATION**.)
   b. Meter hood (See **METER HOOD REMOVAL/INSTALLATION**.)
   c. Instrument cluster (See **INSTRUMENT CLUSTER REMOVAL/INSTALLATION**.)
3. Remove the screws.

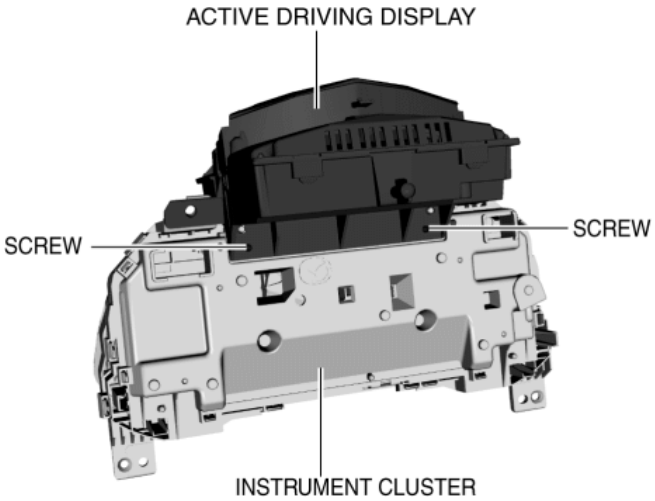

4. While pressing the instrument cluster tabs in the direction of arrows (1) shown in the figure, pull the wiring harness in the direction of arrow (2) and disconnect the wiring harness from the instrument cluster.

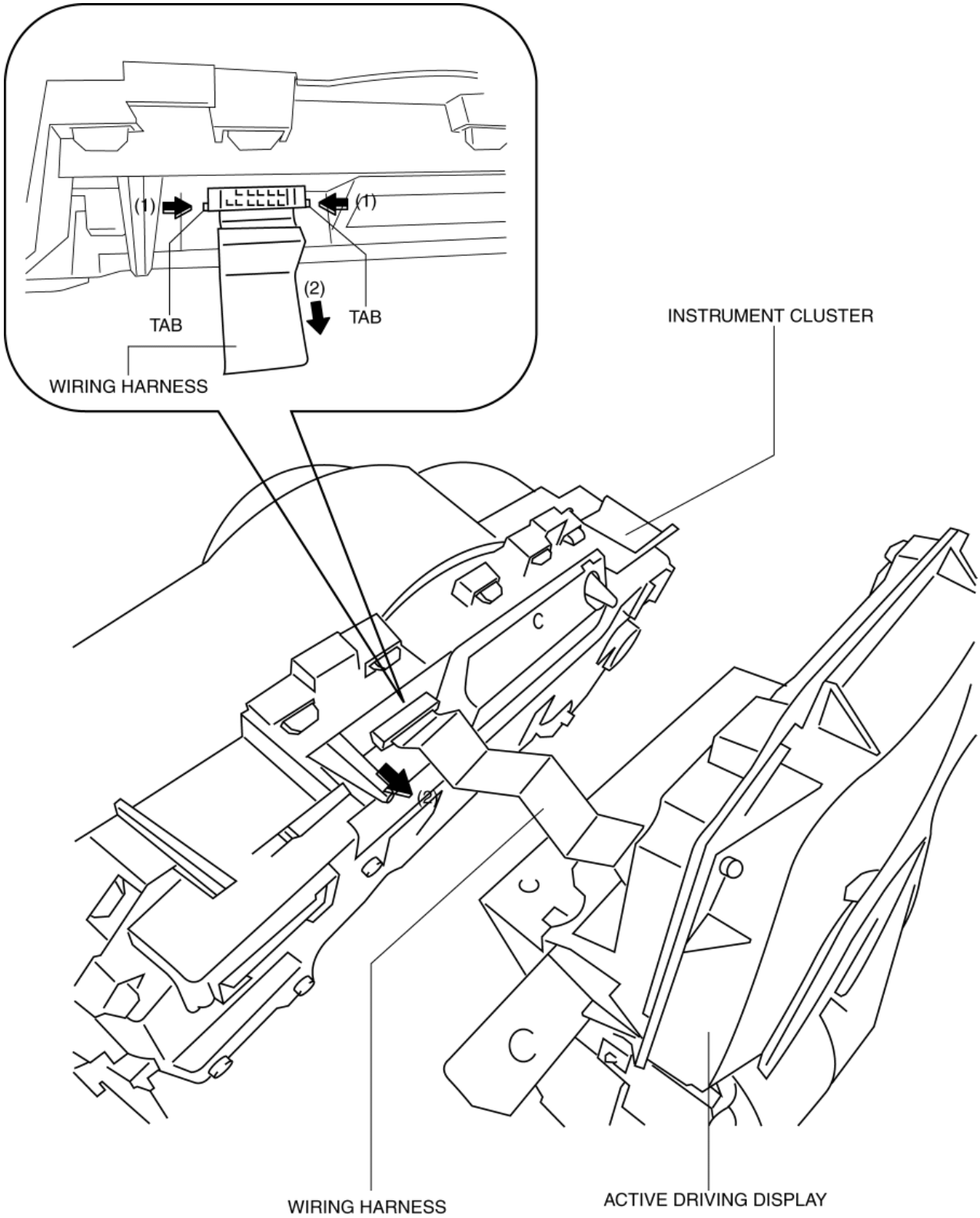

5. Remove the active driving display.

6. Install in the reverse order of removal.

Replacing Combiner

1. Refer to ACTIVE DRIVING DISPLAY INSPECTION and stop the combiner at an angle of 10 degrees. (See **ACTIVE DRIVING DISPLAY INSPECTION**.)

2. Switch the ignition off.

3. Disconnect the negative battery cable. (See **NEGATIVE BATTERY CABLE DISCONNECTION/CONNECTION [SKYACTIV-G 2.0, SKYACTIV-G 2.5]**.)

4. Remove the following parts:
   a. Upper column cover (See **COLUMN COVER REMOVAL/INSTALLATION**.)
   b. Meter hood (See **METER HOOD REMOVAL/INSTALLATION**.)
   c. Instrument cluster (See **INSTRUMENT CLUSTER REMOVAL/INSTALLATION**.)
5. Remove the combiner in the following order:

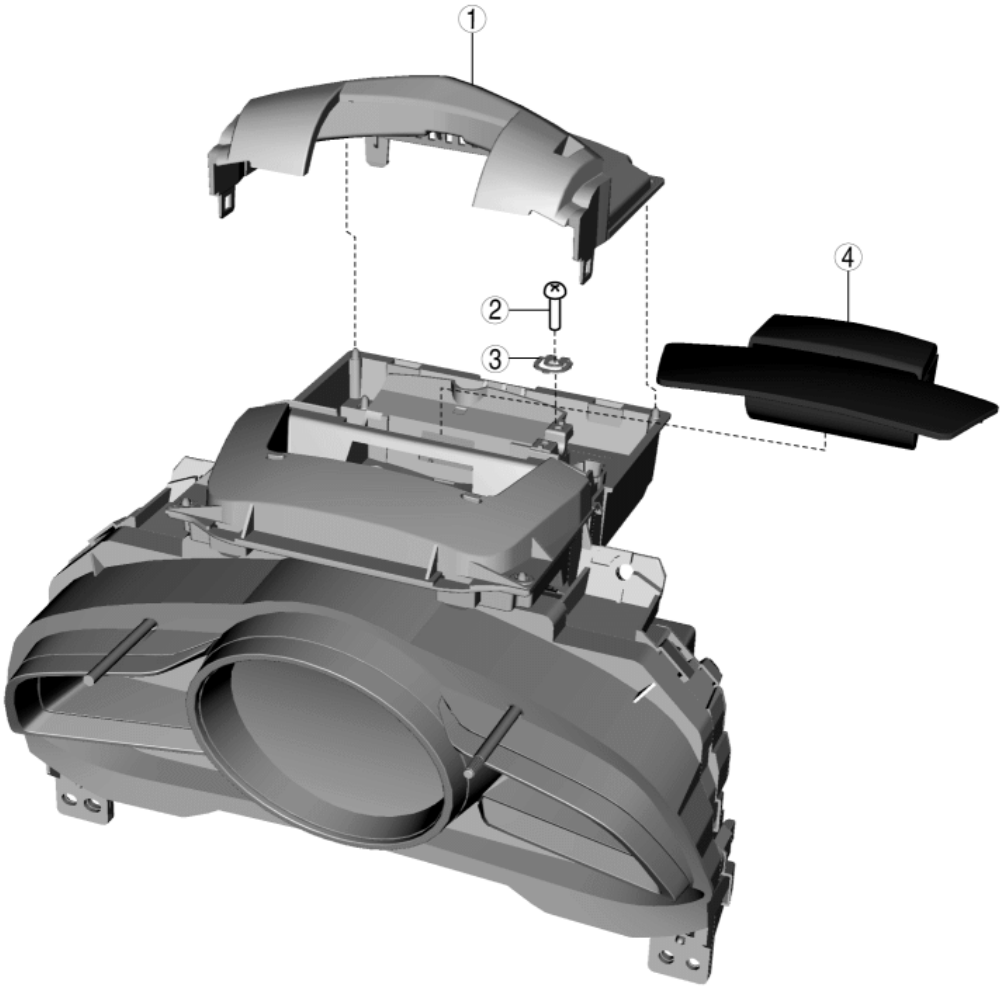

1	Cover
2	Screw
3	Spring
4	Combiner (See **Combiner assembly note**.)

6. Install in the reverse order of removal.

Combiner assembly note

- For the combiner assembly, verify that the combiner shaft is within 0.5 mm or more from the end surface of the bracket.

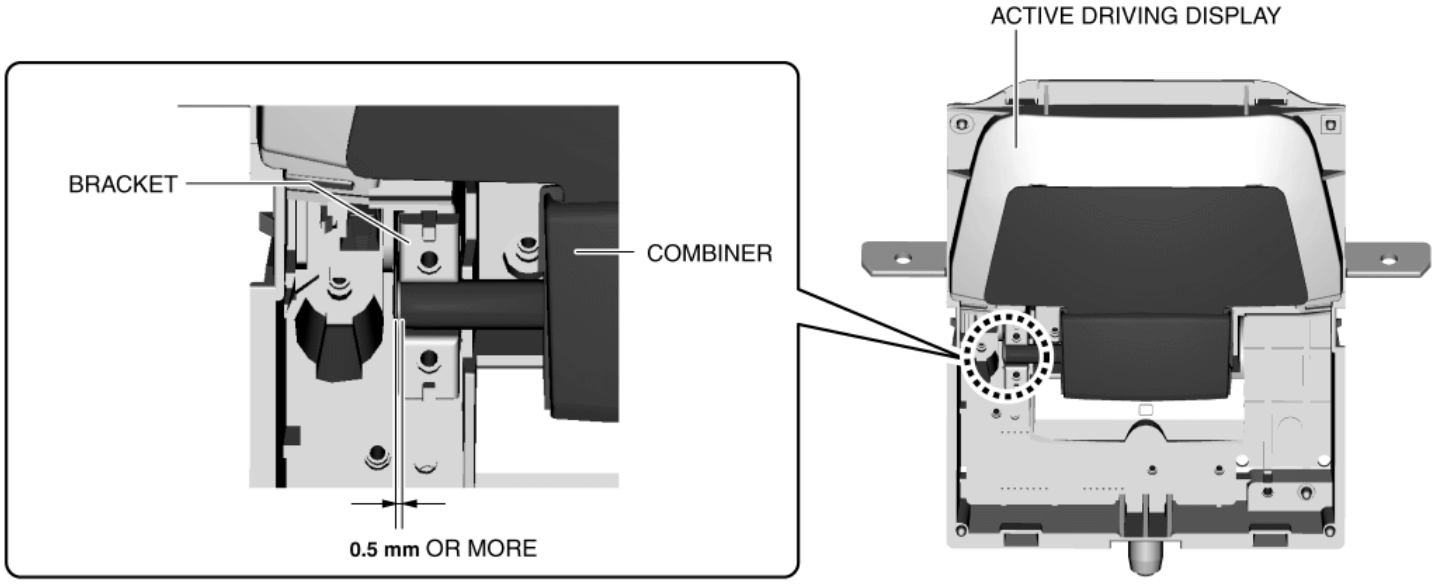
ACTIVE DRIVING DISPLAY
BRACKET
COMBINER
0.5 mm OR MORE

2014 - Mazda3 - Body and Accessories

ACTIVE DRIVING DISPLAY INSPECTION

1. Connect the M-MDS to the DLC-2.
2. After vehicle identification, select the following from the M-MDS initialization screen.
    a. "Data logger"
    b. "Module"
    c. "IC"
3. Using "LCD_SEG", verify that the display screen and open/close angle for the combiner change by pressing the tripmeter switch.

Number of times tripmeter switch is pressed	Display screen	Combiner open/close angle
—	ALL ON	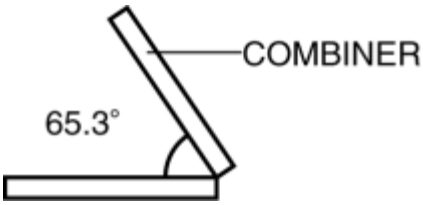
1 time	SCREEN NOT ILLUMINATED	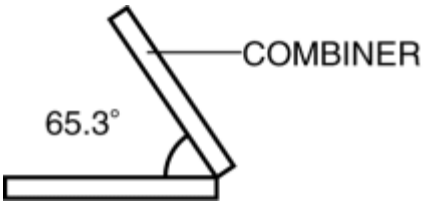
2 times	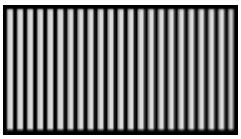	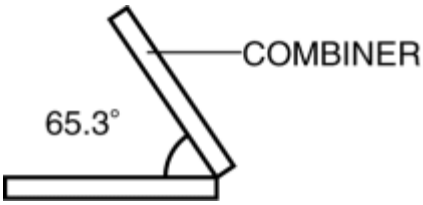
3 times		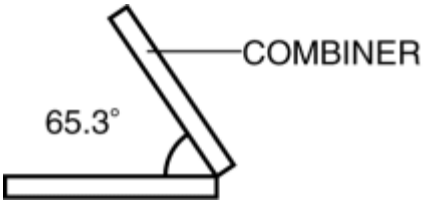

4 times	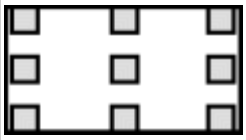	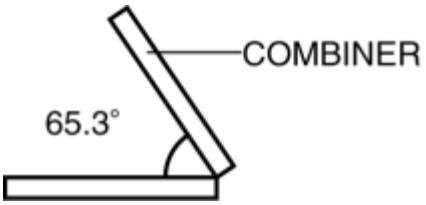
5 times	SCREEN NOT ILLUMINATED 	
6 times*1	SCREEN NOT ILLUMINATED 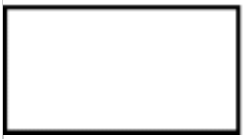	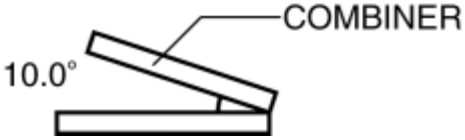

*1

Because the combiner open/close angle cannot switch if the tripmeter switch is pressed before the combiner fully closes, press the tripmeter switch after the combiner is fully closed.

- If the display screen and open/close angle for the active driving display cannot be changed, refer to the symptom troubleshooting.

2014 - Mazda3 - Body and Accessories

INSTRUMENT CLUSTER PERSONALIZATION FEATURES SETTING PROCEDURE

Blind Spot Monitoring (BSM) System

Using M-MDS

1. Connect the M-MDS to the DLC-2.
2. After vehicle identification, select the following from the M-MDS initialization screen.
   a. “Module programming”
   b. “Programmable Parameters”
3. Select menu in the “IC”.
4. Select an item name, and than select option.

Mazda Modular Diagnostic System (M-MDS) display	Function	Initial setting	Setting contents	Control unit
BSM Volume.	The volume of the blind spot monitoring (BSM) warning alarm can be changed.	High	Not Adopted. / OFF / Low / High	Instrument cluster

Using center display

- For the setting procedure of the personalization features using the center display, refer to "CENTER DISPLAY PERSONALIZATION FEATURES". (See **CENTER DISPLAY PERSONALIZATION FEATURES SETTING PROCEDURE**.)

Lane Departure Warning System (LDWS)

NOTE:

- For personalization of the warning timing and sensitivity, refer to the FORWARD SENSING CAMERA (FSC) PERSONALIZATION FEATURES SETTING PROCEDURE. (See **FORWARD SENSING CAMERA (FSC) PERSONALIZATION FEATURES SETTING PROCEDURE**.)

Using M-MDS

1. Connect the M-MDS to the DLC-2.
2. After vehicle identification, select the following from the M-MDS initialization screen.
   a. “Module programming”
   b. “Programmable Parameters”
3. Select menu in the “IC”.
4. Select an item name, and than select option.

Mazda Modular Diagnostic System (M-MDS) display	Function	Initial setting	Setting contents	Control unit

LDWS Sound.	The type of the LDWS warning alarm can be changed.	Rumble	Beep / Rumble	Instrument cluster

Using center display

- For the setting procedure of the personalization features using the center display, refer to "CENTER DISPLAY PERSONALIZATION FEATURES". (See **CENTER DISPLAY PERSONALIZATION FEATURES SETTING PROCEDURE**.)

Turn And Hazard Indicator Alarm

Using M-MDS

1. Connect the M-MDS to the DLC-2.
2. After vehicle identification, select the following from the M-MDS initialization screen.
   a. “Module programming”
   b. “Programmable Parameters”
3. Select menu in the “IC”.
4. Select an item name, and than select option.

Mazda Modular Diagnostic System (M-MDS) display	Function	Initial setting	Setting contents	Control unit
Turn Signal Volume	The volume of the turn and hazard indicator alarm can be changed.	High	Not Adopted / Low / High	Instrument cluster

Using center display

- For the setting procedure of the personalization features using the center display, refer to "CENTER DISPLAY PERSONALIZATION FEATURES". (See **CENTER DISPLAY PERSONALIZATION FEATURES SETTING PROCEDURE**.)

Lights-on Reminder Warning Alarm

Using M-MDS

1. Connect the M-MDS to the DLC-2.
2. After vehicle identification, select the following from the M-MDS initialization screen.
   a. “Module programming”
   b. “Programmable Parameters”
3. Select menu in the “IC”.
4. Select an item name, and than select option.

Mazda Modular Diagnostic System (M-MDS) display	Function	Initial setting	Setting contents	Control unit
Lights-on Reminder Volume.	The volume for the lights-on reminder warning alarm can be changed.	OFF*1	Not Adopted. / OFF / Low / High	Instrument cluster

*1

The setting of the lights-on reminder can be changed with the time setting of auto light off system set to Off.

Using center display

- For the setting procedure of the personalization features using the center display, refer to "CENTER DISPLAY PERSONALIZATION FEATURES". (See **CENTER DISPLAY PERSONALIZATION FEATURES SETTING PROCEDURE**.)

Temperature

NOTE:

- When the ambient temperature display is switched, the set A/C cabin temperature display is also changed.

Using instrument cluster (without center display)

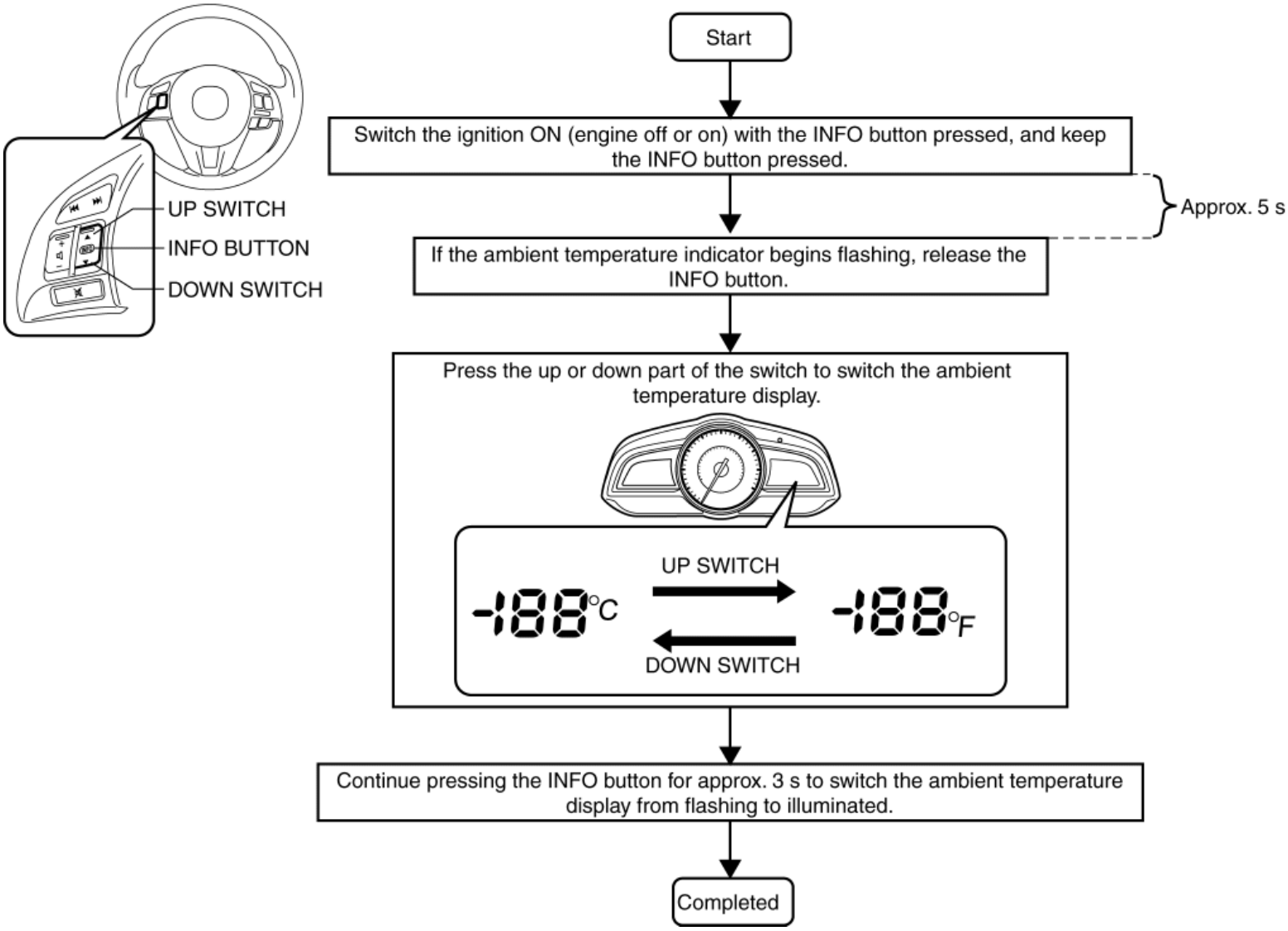

Using center display

- For the setting procedure of the personalization features using the center display, refer to "CENTER DISPLAY PERSONALIZATION FEATURES". (See **CENTER DISPLAY PERSONALIZATION FEATURES SETTING PROCEDURE**.)

2014 - Mazda3 - Body and Accessories

FORWARD SENSING CAMERA (FSC) PERSONALIZATION FEATURES SETTING PROCEDURE

High Beam Control (HBC) System

Using M-MDS

1. Connect the M-MDS to the DLC-2.
2. After vehicle identification, select the following from the M-MDS initialization screen.
   a. “Module programming“
   b. “Programmable Parameters”
3. Select menu in the “FSC”.
4. Select an item name, and than select option.

Mazda Modular Diagnostic System (M-MDS) display	Function	Initial setting	Setting contents	Control unit
High Beam Control.	The high beam control (HBC) system can be switched between operable and inoperable.	ON	Not Adopted. / OFF / ON	Forward sensing camera (FSC)

Using center display

- For the setting procedure of the personalization features using the center display, refer to "CENTER DISPLAY PERSONALIZATION FEATURES". (See **CENTER DISPLAY PERSONALIZATION FEATURES SETTING PROCEDURE**.)

Lane Departure Warning System (LDWS)

NOTE:

- For personalization of the warning sound and volume, refer to the INSTRUMENT CLUSTER PERSONALIZATION FEATURES SETTING PROCEDURE. (See **INSTRUMENT CLUSTER PERSONALIZATION FEATURES SETTING PROCEDURE**.)

Using M-MDS

1. Connect the M-MDS to the DLC-2.
2. After vehicle identification, select the following from the M-MDS initialization screen.
   a. “Module programming“
   b. “Programmable Parameters”
3. Select menu in the “FSC”.
4. Select an item name, and than select option.

Mazda Modular Diagnostic System (M-MDS) display	Function	Initial setting	Setting contents	Control unit
LDWS Timing.	The distance between the warning-trigger lines for the Lane Departure Warning System (LDWS) and vehicle lanes can be changed.	Late	Not Adopted / Adaptive / Early / Medium / Late	Forward sensing camera (FSC)
LDWS Warning.	The warning operation sensitivity of the lane departure warning system (LDWS) can be changed.	Often	Not Adopted. / Often / Medium / Rare	Forward sensing camera (FSC)

Using center display

- For the setting procedure of the personalization features using the center display, refer to "CENTER DISPLAY PERSONALIZATION FEATURES". (See **CENTER DISPLAY PERSONALIZATION FEATURES SETTING PROCEDURE**.)

2014 - Mazda3 - Body and Accessories

INSTRUMENT CLUSTER DATA RESET PROCEDURE

CAUTION:

- Explain the reset items to the customer for their understanding, and then perform the data reset.
- Related information can be reset collectively using the following procedure:

  Trip computer-related information

  - Average fuel economy
  - Average vehicle speed
  - TRIP value

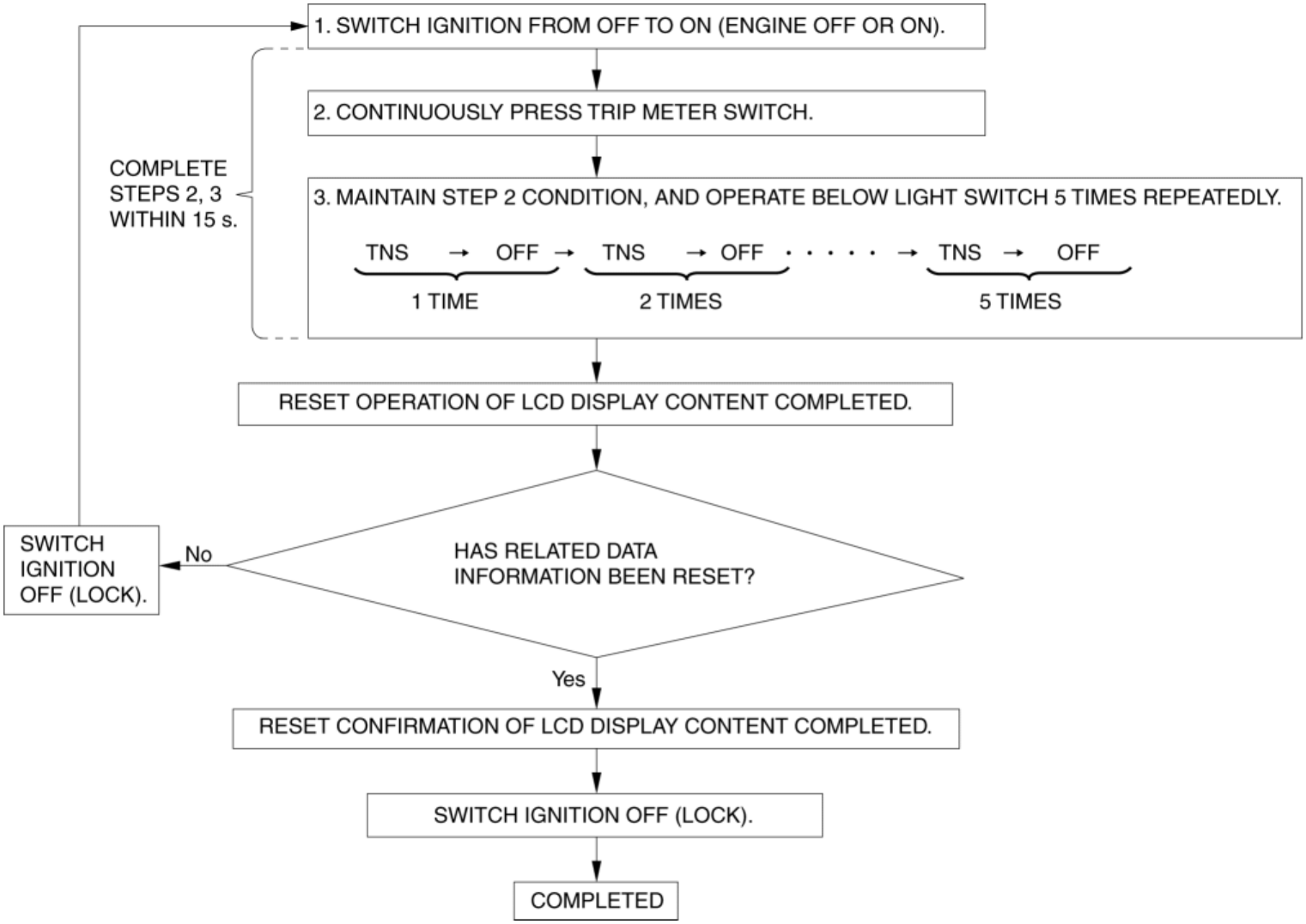

2014 - Mazda3 - Body and Accessories

FUEL GAUGE SENDER UNIT REMOVAL/INSTALLATION

WARNING:

- Always keep sparks and flames away from fuel when servicing the fuel system. Fuel can be easily ignited which could cause serious injury or death, and damage to equipment.
- Fuel line spills and leakage from the pressurized fuel system are dangerous. Fuel can ignite and cause serious injury or death and damage. Fuel can also irritate skin and eyes. To prevent this, always complete the Fuel Line Safety Procedure, while referring to the BEFORE SERVICE PRECAUTION.
- A person charged with static electricity could cause a fire or explosion, resulting in death or serious injury. Before draining fuel, make sure to discharge static electricity by touching a vehicle.

CAUTION:

- If the fuel gauge level indicates 3/4 or more, the fuel surface is higher than the fuel pump unit and fuel gauge sender unit installation surface. If servicing is performed under this condition, fuel leakage could result. Always drain the fuel before performing the operation and keep the fuel in the fuel tank at less than half.

NOTE:

- For the fuel gauge sender unit removal/installation, refer to the fuel pump removal/installation because the fuel gauge sender unit is integrated with the fuel pump. (See **FUEL PUMP UNIT REMOVAL/INSTALLATION [SKYACTIV-G 2.0, SKYACTIV-G 2.5]**.)

2014 - Mazda3 - Body and Accessories

FUEL GAUGE SENDER UNIT INSPECTION

NOTE:

- For the fuel gauge sender unit removal/installation, refer to the fuel pump removal/installation because the fuel gauge sender unit is integrated with the fuel pump. (See **FUEL PUMP UNIT REMOVAL/INSTALLATION [SKYACTIV-G 2.0, SKYACTIV-G 2.5]**.)

1. Verify that the resistance at fuel gauge sender unit terminals D and C is as indicated in the table according to the height of the float.

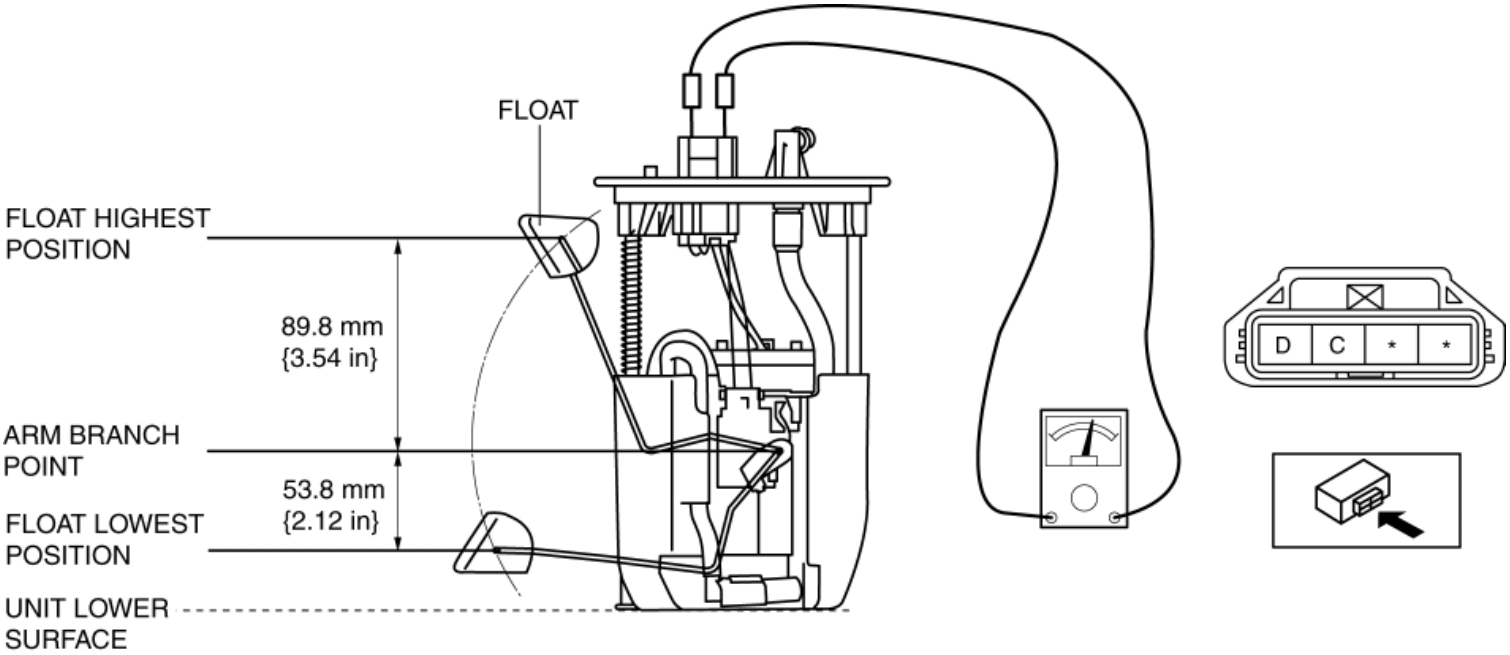

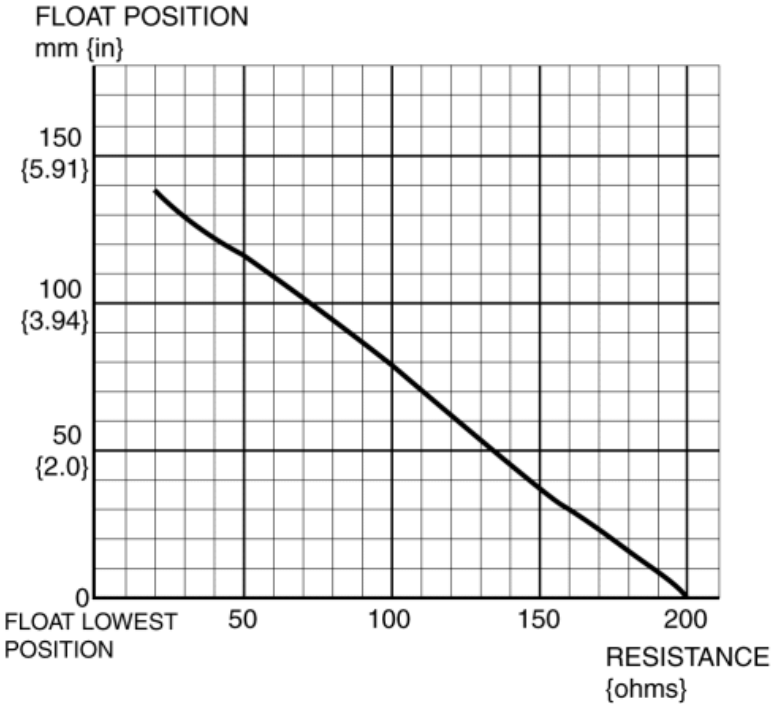

- If not as indicated in the table, replace the fuel gauge sender unit.

FUEL GAUGE SENDER UNIT INSPECTION

2014 - Mazda3 - Body and Accessories

HORN REMOVAL/INSTALLATION

1. Disconnect the negative battery cable. (See **NEGATIVE BATTERY CABLE DISCONNECTION/CONNECTION [SKYACTIV-G 2.0, SKYACTIV-G 2.5]**.)
2. Remove the set plate. (See **SET PLATE REMOVAL/INSTALLATION**.)
3. Remove the front bumper. (See **FRONT BUMPER REMOVAL/INSTALLATION**.)
4. Disconnect the connector.

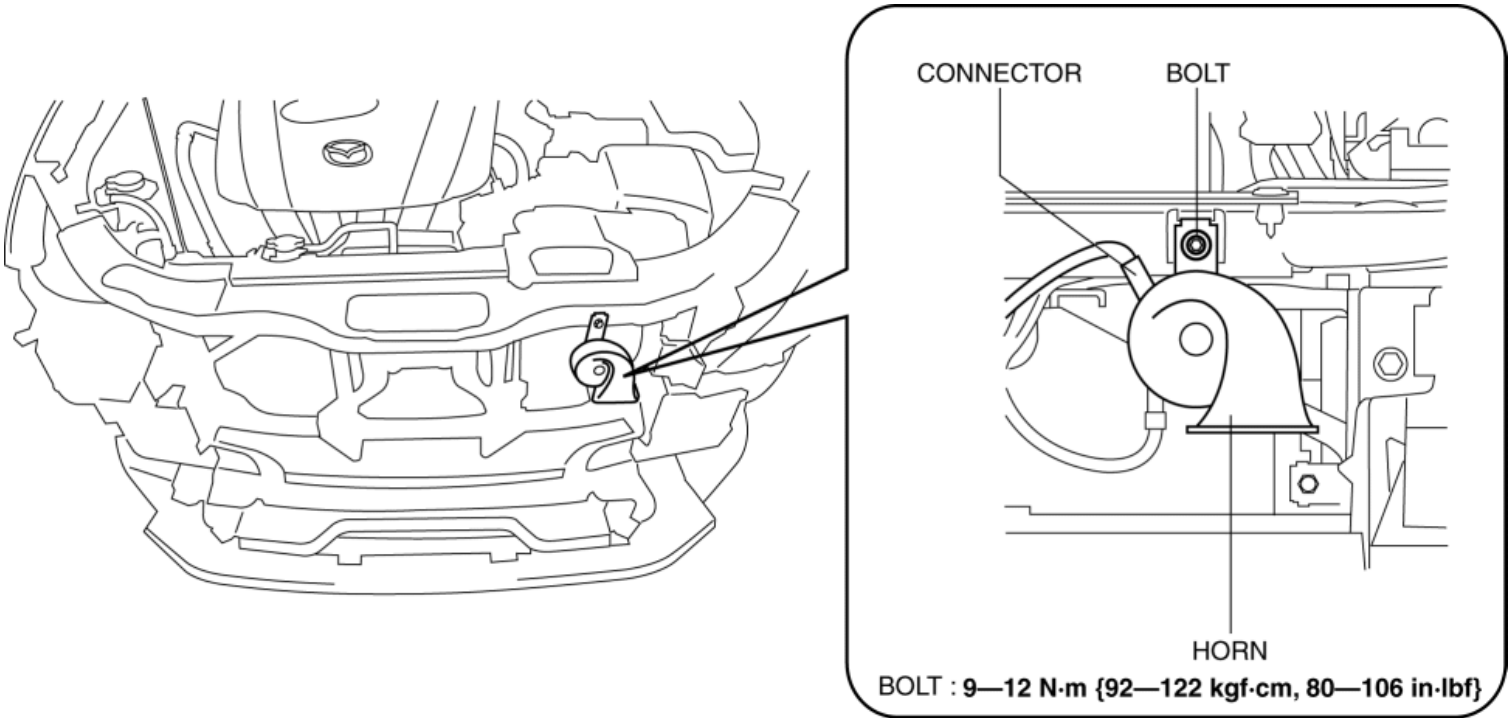

5. Remove the bolt.
6. Remove the horn.
7. Install in the reverse order of removal.

2014 - Mazda3 - Body and Accessories

HORN INSPECTION

1. Disconnect the negative battery cable. (See **NEGATIVE BATTERY CABLE DISCONNECTION/CONNECTION [SKYACTIV-G 2.0, SKYACTIV-G 2.5]**.)

2. Remove the set plate. (See **SET PLATE REMOVAL/INSTALLATION**.)

3. Remove the front bumper. (See **FRONT BUMPER REMOVAL/INSTALLATION**.)

4. Remove the horn. (See **HORN REMOVAL/INSTALLATION**.)

5. Apply battery positive voltage to horn terminal, and connect the horn retaining bolt to ground as shown in the figure, and then verify that the horn sounds.

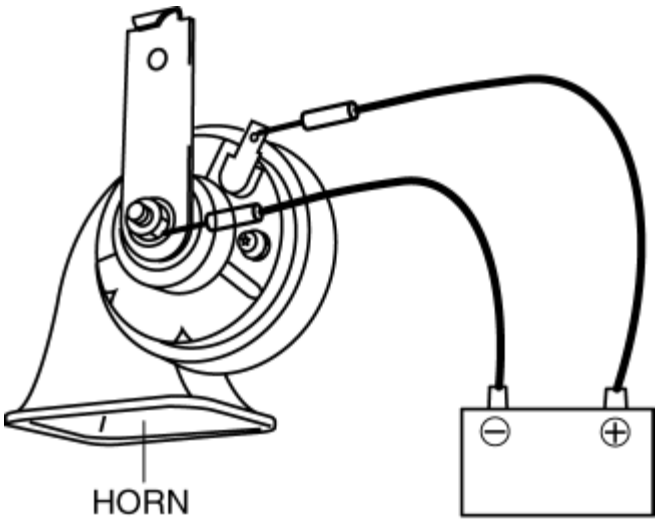

- If the horn does not sound, replace the horn.

2014 - Mazda3 - Body and Accessories

BLIND SPOT MONITORING (BSM) CONTROL MODULE REMOVAL/INSTALLATION

4SD

1. Disconnect the negative battery cable. (See **NEGATIVE BATTERY CABLE DISCONNECTION/CONNECTION [SKYACTIV-G 2.0, SKYACTIV-G 2.5]**.)

2. Remove the rear combination light. (See **REAR COMBINATION LIGHT REMOVAL/INSTALLATION**.)

3. Remove the rear bumper. (See **REAR BUMPER REMOVAL/INSTALLATION**.)

4. Disconnect the connector.

ILLUSTRATION INDICATES LEFT SIDE. (RH SIDE IDENTICAL)

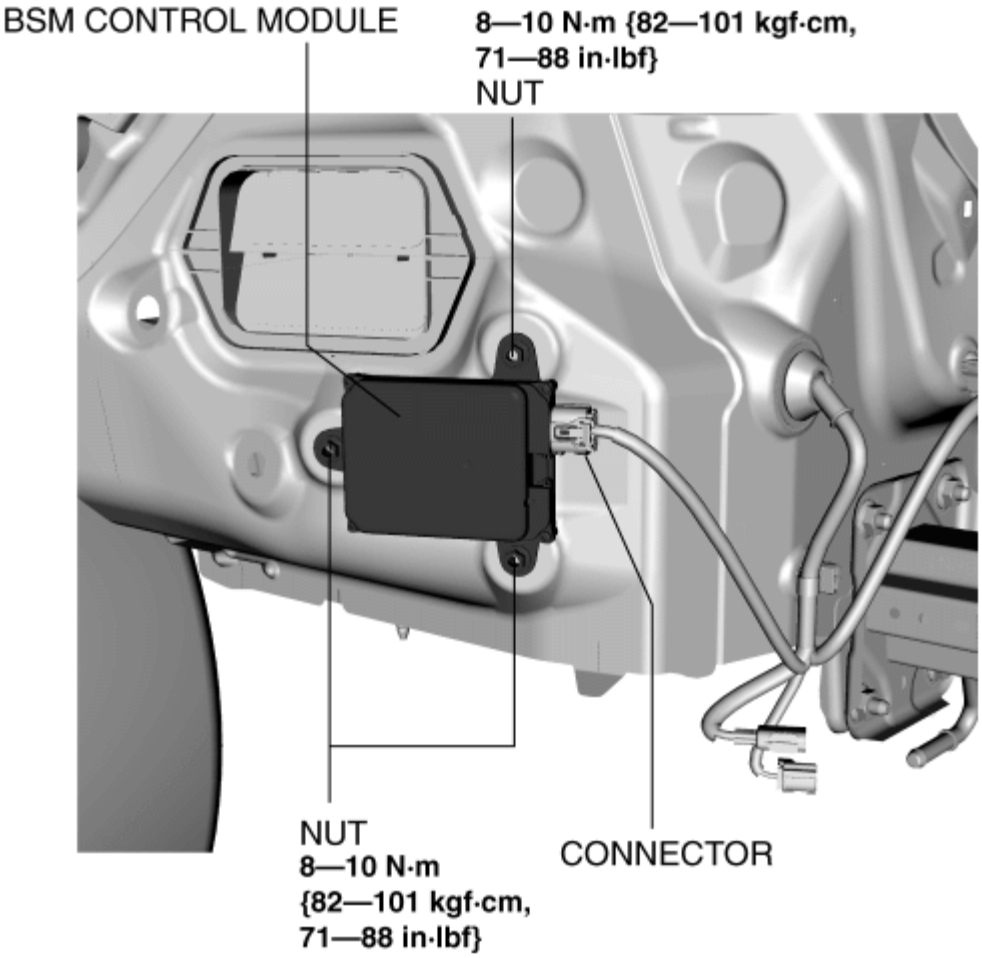

5. Remove the nuts.

6. Remove the BSM control module.

7. Install in the reverse order of removal.

8. Perform the BSM radar test. (See **BLIND SPOT MONITORING (BSM) RADAR TEST**.)

CAUTION:

- If the BSM control module is replaced, not performing the BSM radar test will cause a deviation in the radar emission angle which could result in the system not detecting a vehicle approaching from the rear correctly. If the BSM control module is replaced, perform the BSM radar test.

5HB

1. Disconnect the negative battery cable. (See **NEGATIVE BATTERY CABLE DISCONNECTION/CONNECTION [SKYACTIV-G 2.0, SKYACTIV-G 2.5]**.)

2. Remove the rear combination light. (See **REAR COMBINATION LIGHT REMOVAL/INSTALLATION**.)

3. Remove the rear bumper. (See **REAR BUMPER REMOVAL/INSTALLATION**.)

4. Disconnect the connector.

ILLUSTRATION INDICATES LEFT SIDE. (RH SIDE IDENTICAL)

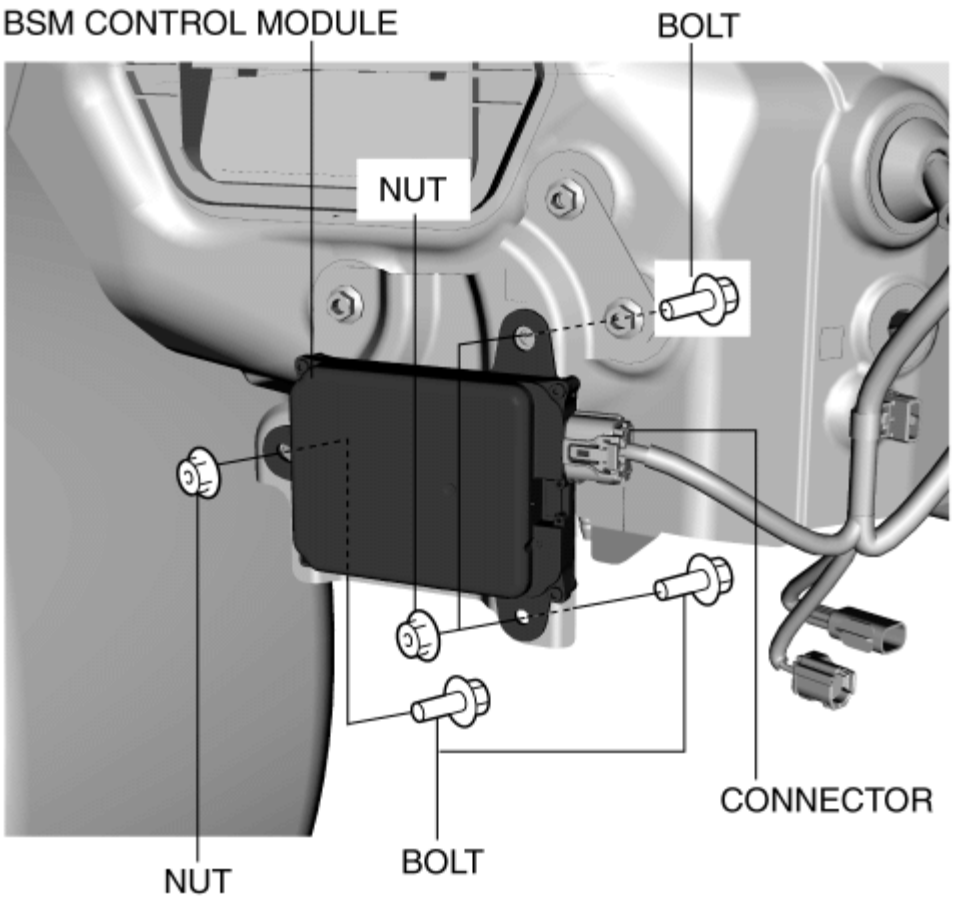

NUT: **8—10 N·m {82—101 kgf·cm, 71—88 in·lbf}**

5. Remove the nuts.

6. Remove the bolts.

7. Remove the BSM control module.

8. Install in the reverse order of removal.

9. Perform the BSM radar test. (See **BLIND SPOT MONITORING (BSM) RADAR TEST**.)

CAUTION:

- If the BSM control module is replaced, not performing the BSM radar test will cause a deviation in the radar emission angle which could result in the system not detecting a vehicle approaching from the rear correctly. If the BSM control module is replaced, perform the BSM radar test.

2014 - Mazda3 - Body and Accessories

BLIND SPOT MONITORING (BSM) CONTROL MODULE INSPECTION

1. Disconnect the negative battery cable. (See **NEGATIVE BATTERY CABLE DISCONNECTION/CONNECTION [SKYACTIV-G 2.0, SKYACTIV-G 2.5]**.)

2. Remove the rear combination light. (See **REAR COMBINATION LIGHT REMOVAL/INSTALLATION**.)

3. Remove the rear bumper. (See **REAR BUMPER REMOVAL/INSTALLATION**.)

4. Connect the negative battery cable. (See **NEGATIVE BATTERY CABLE DISCONNECTION/CONNECTION [SKYACTIV-G 2.0, SKYACTIV-G 2.5]**.)

5. Verify that the voltages of each of the terminals are as indicated in the terminal voltage table (reference).

- If the voltage is not as specified in the terminal voltage table (reference), inspect the parts under Inspection item(s) and related wiring harnesses.
  - If the system does not operate normally even though the inspection items are normal, replace the BSM control module (RH) or BSM control module (LH).

Terminal Voltage Table (Reference)

BSM control module (LH)

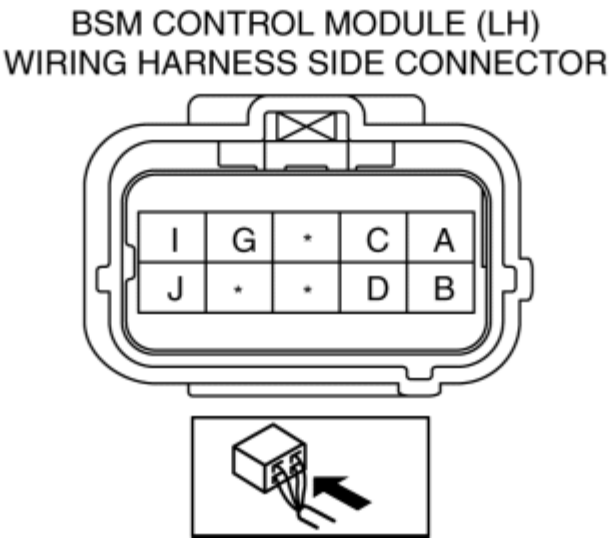

Terminal	Signal name	Connected to	Measurement conditions	Voltage (V)	Inspection item(s)
A	Local CAN_H	BSM control module (RH)	Because this terminal is for communication, determination using terminal voltage inspection is not possible.		
B	Local CAN_L	BSM control module (RH)	Because this terminal is for communication, determination using terminal voltage inspection is not possible.		
C	MS-CAN_H	Related module	Because this terminal is for communication, determination using terminal voltage inspection is not possible.		
D	MS-CAN_L	Related module	Because this terminal is for communication, determination using terminal voltage inspection is not possible.		
E	—	—	—	—	—
F	—	—	—	—	—
G	BSM indicator light (LH) signal	BSM indicator light (LH)	Turn off BSM indicator light using BSM system active command WRN_IND_L	0.8 or less	BSM indicator light (LH)
			Turn on BSM indicator light using rear BSM system active command WRN_IND_L	B+	
H	—	—	—	—	—
I	Power position (IG1)	IG relay	Ignition switched ON (engine off or on)	B+	• C/U IG1 fuse • IG relay
			Ignition switched off or ACC	1.0 or less	
J	Ground	Body ground	Under any condition	1.0 or less	Body ground

BSM control module (RH)

BSM CONTROL MODULE (RH)
WIRING HARNESS SIDE CONNECTOR

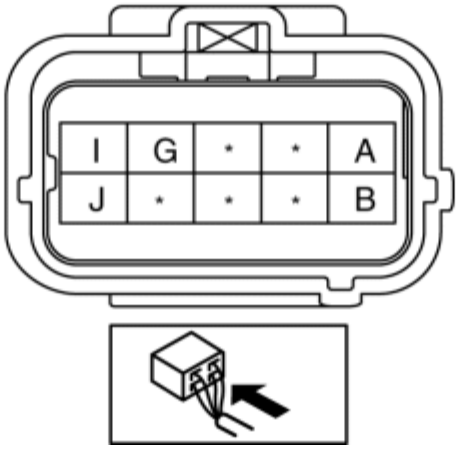

Terminal	Signal name	Connected to	Measurement conditions	Voltage (V)	Inspection item(s)
A	Local CAN_H	BSM control module (LH)	Because this terminal is for communication, determination using terminal voltage inspection is not possible.		
B	Local CAN_L	BSM control module (LH)	Because this terminal is for communication, determination using terminal voltage inspection is not possible.		
C	—	—	—	—	—
D	—	—	—	—	—
E	—	—	—	—	—
F	—	—	—	—	—
G	BSM indicator light (RH) signal	BSM indicator light (RH)	Turn off BSM indicator light using BSM system active command WRN_IND_R	0.8 or less	BSM indicator light (RH)
			Turn on BSM indicator light using rear BSM system active command WRN_IND_R	B+	
H	—	—	—	—	—
I	Power position (IG1)	IG relay	Ignition switched ON (engine off or on)	B+	• C/U IG1 fuse • IG relay
			Ignition switched off or ACC	1.0 or less	

J	Ground	Body ground	Under any condition	1.0 or less	Body ground

2014 - Mazda3 - Body and Accessories

BLIND SPOT MONITORING (BSM) BRACKET REMOVAL/INSTALLATION

1. Disconnect the negative battery cable. (See **NEGATIVE BATTERY CABLE DISCONNECTION/CONNECTION [SKYACTIV-G 2.0, SKYACTIV-G 2.5]**.)

2. Remove the rear combination light. (See **REAR COMBINATION LIGHT REMOVAL/INSTALLATION**.)

3. Remove the rear bumper. (See **REAR BUMPER REMOVAL/INSTALLATION**.)

4. Remove the BSM control module. (See **BLIND SPOT MONITORING (BSM) CONTROL MODULE REMOVAL/INSTALLATION**.)

5. Remove the nuts.

ILLUSTRATION INDICATES LEFT SIDE. (RH SIDE IDENTICAL)

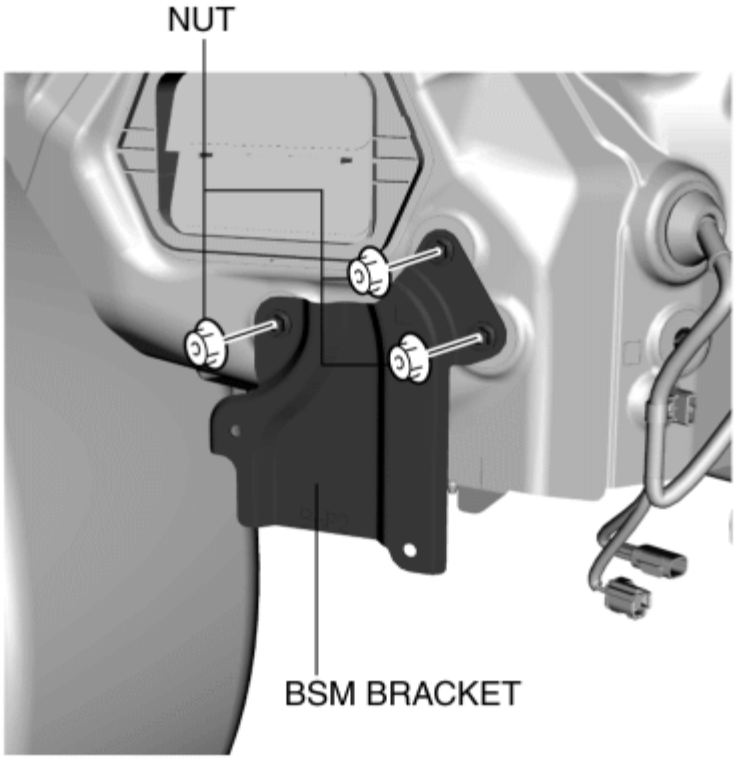

NUT: **8—10 N·m {82—101 kgf·cm, 71—88 in·lbf}**

6. Remove the BSM bracket.

7. Install in the reverse order of removal.

8. Perform the BSM radar test. (See **BLIND SPOT MONITORING (BSM) RADAR TEST**.)

CAUTION:

- If the BSM control module is replaced, not performing the BSM radar test will cause a deviation in the radar emission angle which could result in the system not detecting a vehicle approaching from the rear correctly. If the BSM control module is replaced, perform the BSM radar test.

2014 - Mazda3 - Body and Accessories

BLIND SPOT MONITORING (BSM) RADAR TEST

NOTE:

- The BSM radar test stores the radar angles in the BSM control module based on the forced emission of radar at a SST (reflector) and performing aiming based on the induced tolerance with the radar as it is currently installed and reflected from the SST (reflector).
- Perform the BSM radar test when replacing the BSM control module, or the rear bumper.
- As there are two BSM control modules, one each on the left and right, radar aiming is performed for each side.
- The BSM radar test cannot be performed correctly if obstructions which interfere with radar emission are stuck on the BSM control modules or the rear bumper. Perform the following procedure before performing the radar test.
    - Verify that there is no water, dirt, sticker adhesion, or repairs done using putty application on the surface of the rear bumper, and that there is no dirt or scratches on the BSM control modules.

Radar test procedure

1. Empty the vehicle by having all occupants leave the vehicle and remove all the cargo except for the spare tire, jack and tools equipped on the vehicle.

2. Adjust the air pressure of each tire to the specified value. (See **WHEEL AND TIRE SPECIFICATION**.)

3. Move the vehicle to level ground.

CAUTION:

- If the setting surface height and angle between the vehicle and the SST (reflector) differs, a correct radar test cannot be done. Perform the radar test with the vehicle and SST (reflector) set on level ground.

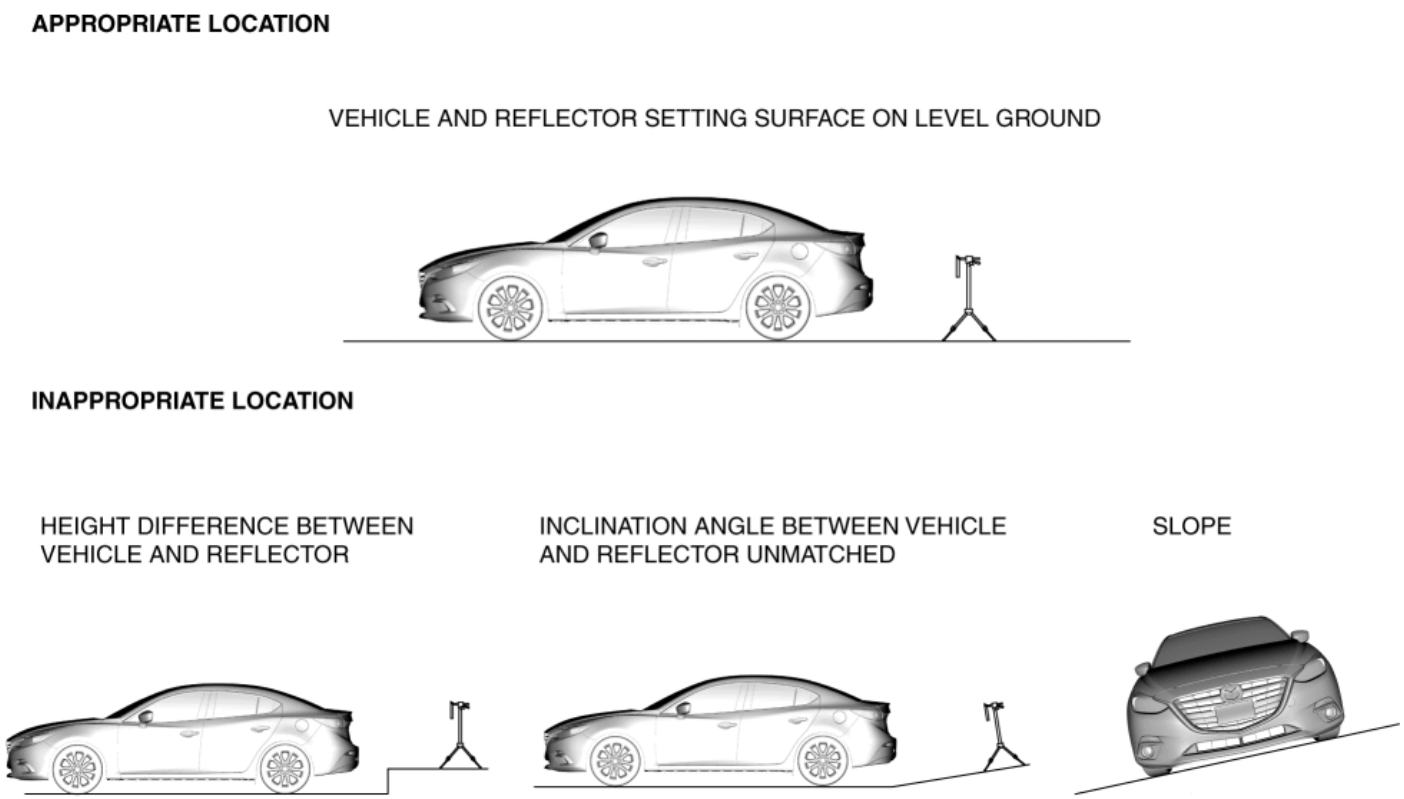

4. Verify that there are no obstructions which interfere with radar emissions such as metal objects in the radar emission area shown in the figure.

CAUTION:

- If the radar test is performed in the shaded area shown in the figure with obstructions such as covered drain gutters in the floor or other metal reflective objects, it could result in the radar test not being performed correctly. Move all obstructions out of the area, and when performing the radar test, do not have personnel standing in the area.

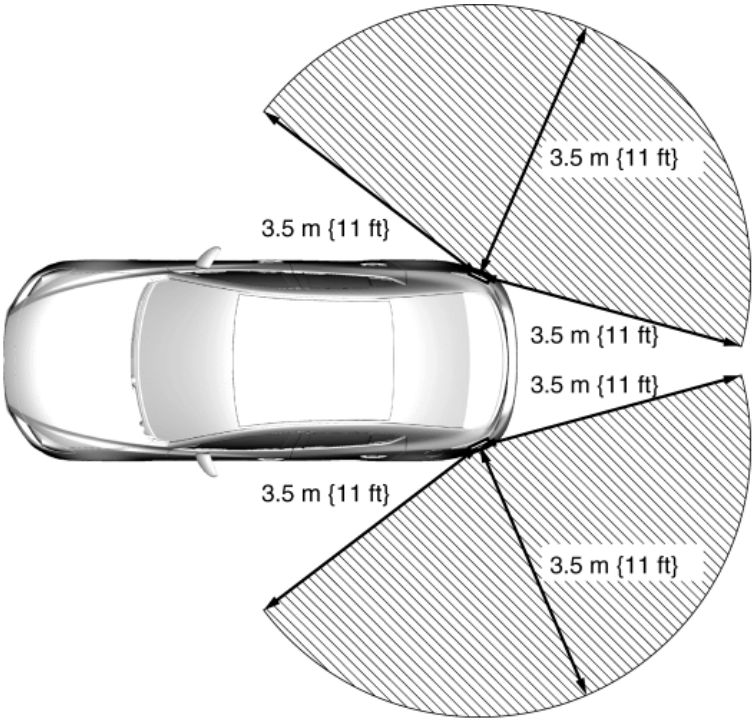

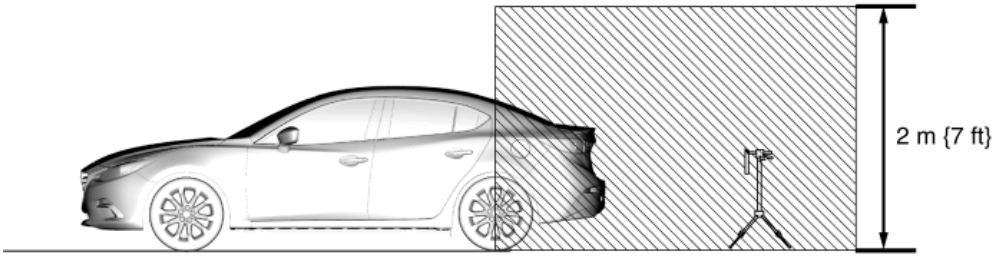

5. Using the M-MDS, perform a DTC inspection of the BSM control modules and verify that no DTCs are displayed. (See **DTC INSPECTION [BLIND SPOT MONITORING (BSM)]**.)

NOTE:

- If any DTCs are displayed, perform malfunction repair referring to the applicable DTC troubleshooting. (See **DTC TABLE [BLIND SPOT MONITORING (BSM)]**.)

6. Adjust the SST (plum-bob) so that it is aligned with the center of the brand emblem, determine the center position at the front of the vehicle, and mark the center position (point A) on the floor surface.

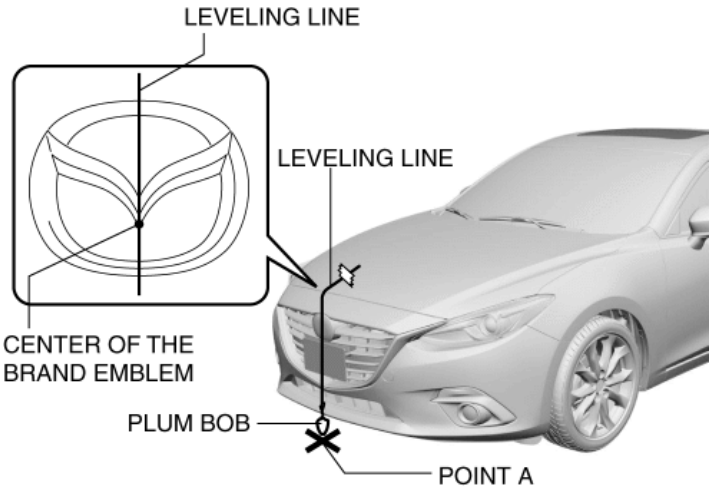

NOTE:

- The center of the brand emblem indicates the center position of the vehicle.

7. Adjust the SST (plum-bob) so that it is aligned with the center of the brand emblem, determine the center position at the rear of the vehicle, and mark the center position (point B) on the floor surface.

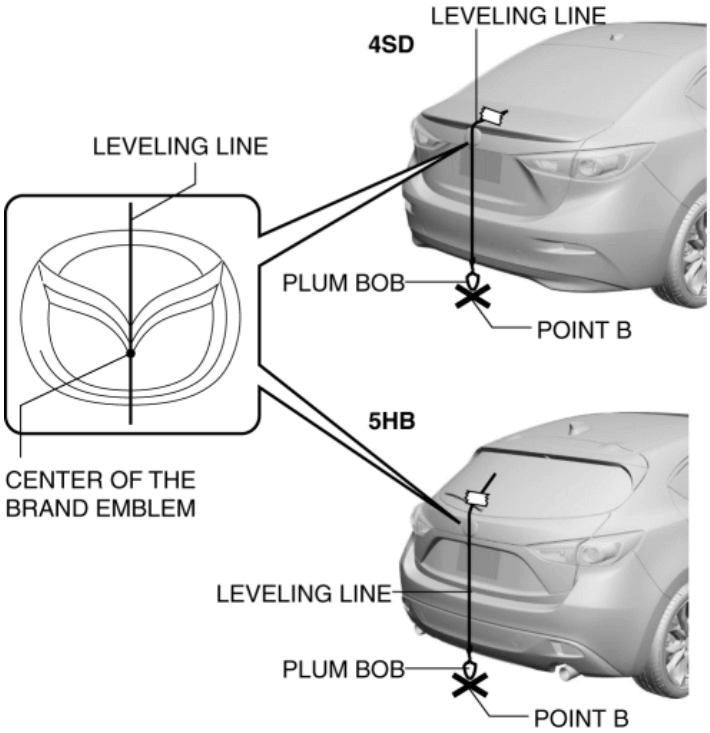

NOTE:

- The center of the brand emblem indicates the center position of the vehicle.

8. Secure the end of the leveling line over point A.

NOTE:

- Use a commercially-available leveling line.

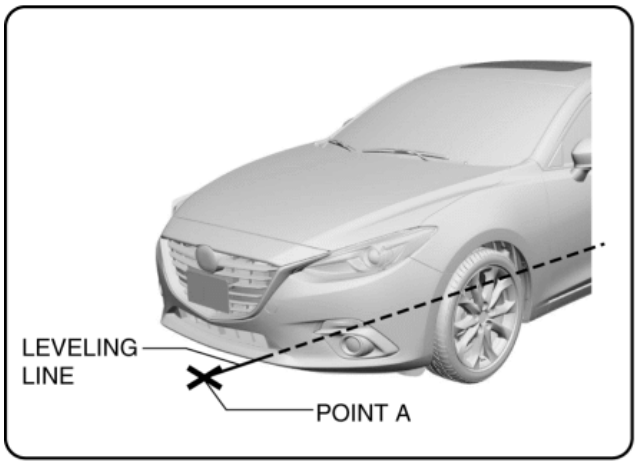

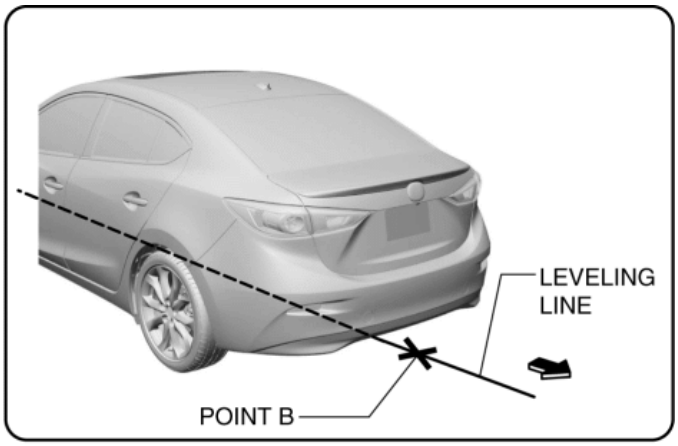

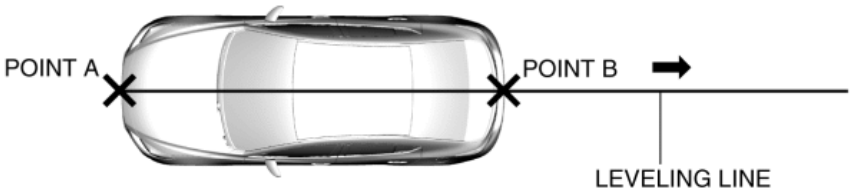

9. Pull the unsecured end of the leveling line over the vehicle and to the rear and adjust it so that passes over point B.

10. Mark the line (position C) within the range of **156.8 cm {61.73 in}** from point B and in the direction rearward of the vehicle.

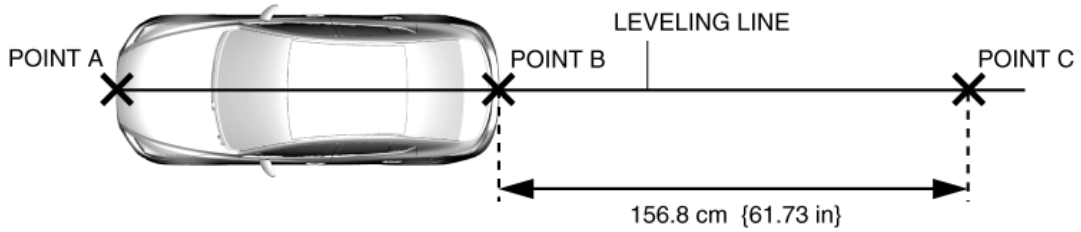

11. Mark the points (points D and E) (SST (reflector) installation reference points) **170.5 cm {67.13 in}** from point C on the line which runs perpendicular to the vehicle center line (SST (reflector) installation reference point).

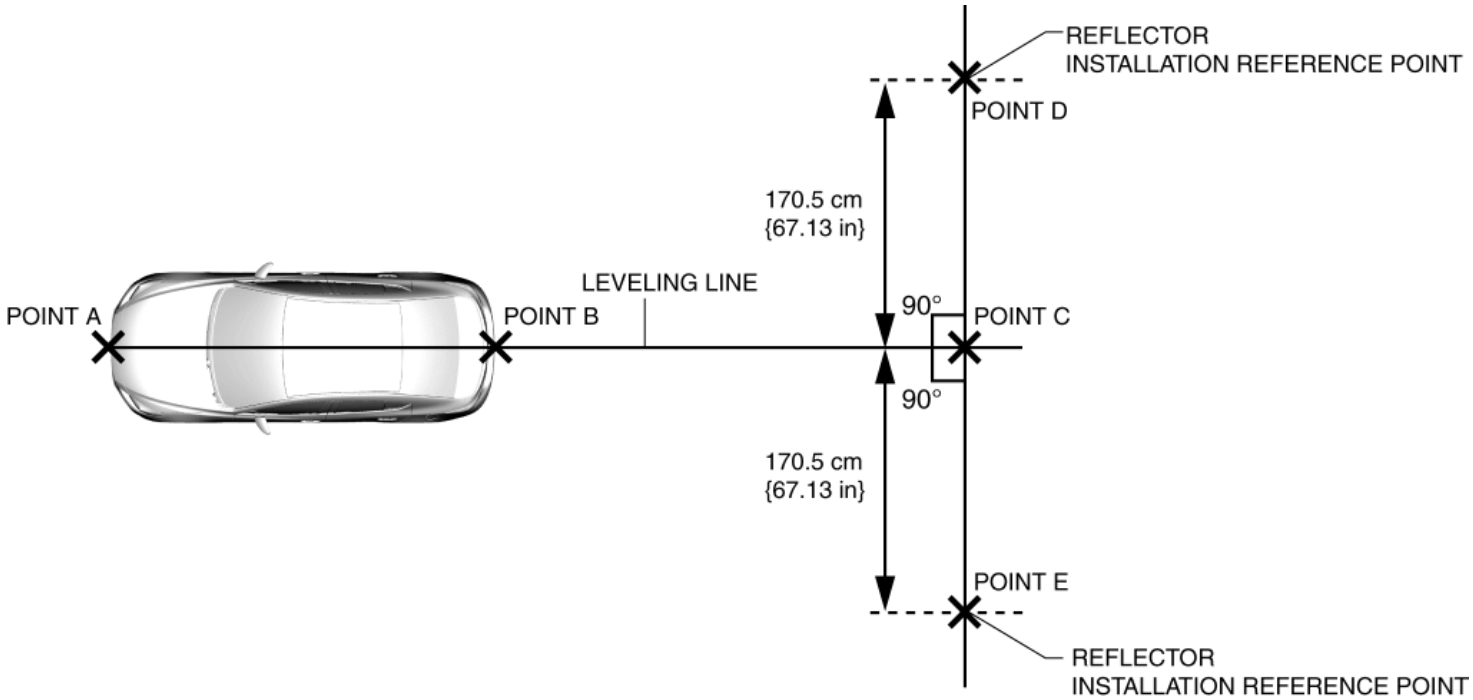

12. Pull the connected points D, C and E lines (SST (reflector) installation line).

13. Install the SST (reflector and plum bob) to the SST (tripod).

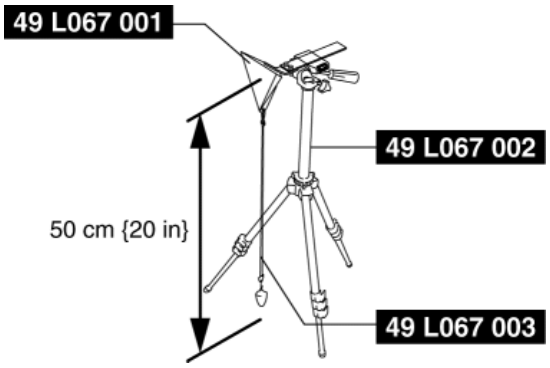

14. Adjust so that the height of the SST (reflector) from the floor surface is **50 cm {20 in}**.

15. Level the SST (reflector) by adjusting the leveling bubble on the SST (tripod) so that it is centered on the bubble reference line.

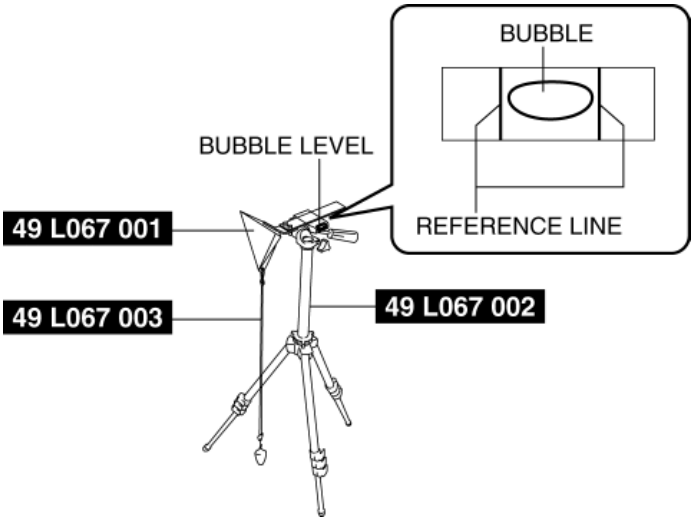

16. Align point D or point E with the end of the SST (plum bomb).

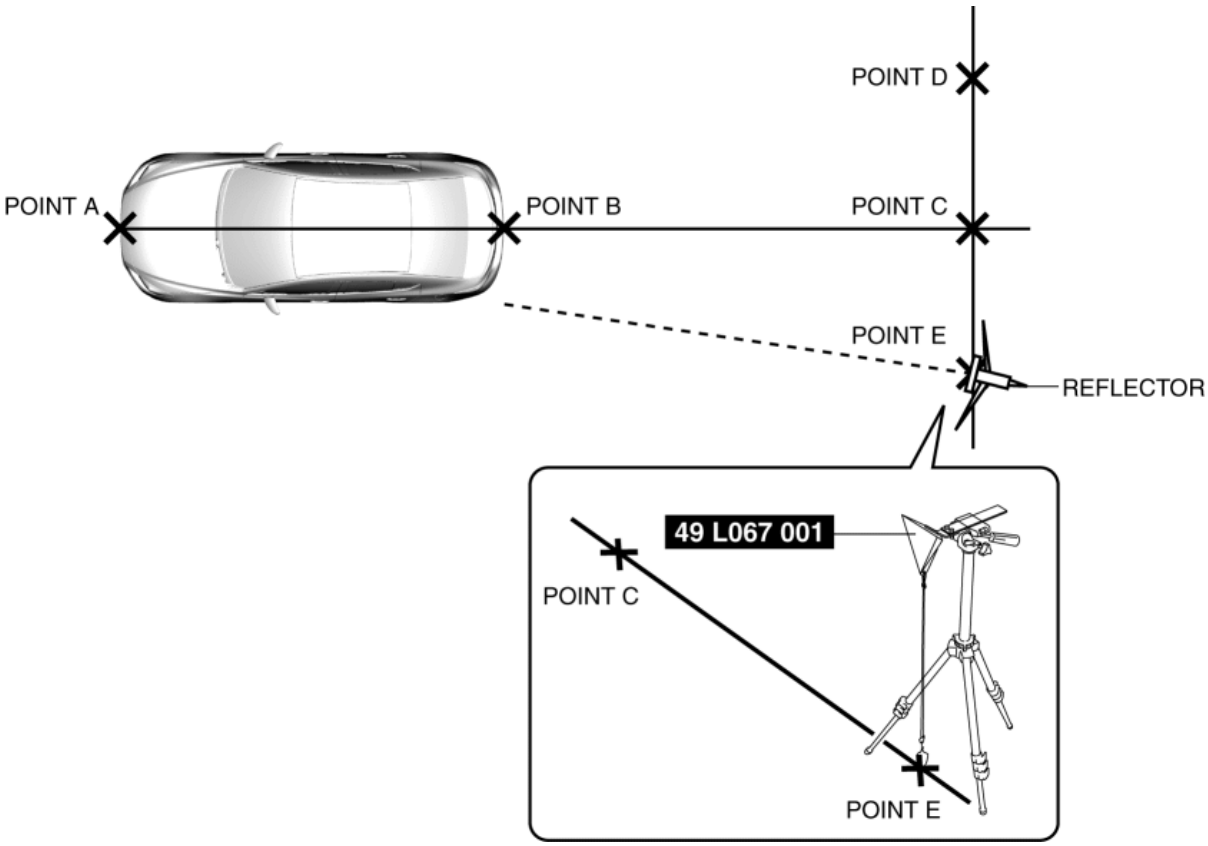

17. Adjust the reflecting surface of the SST (reflector) so that it faces the radar emission surface (near a rear bumper corner) of BSM control module.

18. Perform the radar test using the M-MDS.

19. Connect the M-MDS to the DLC-2.

20. After vehicle identification, the following can be selected from the M-MDS initialization screen.

- "Electrical"
- "BSM Radar Test"

21. Select either the left or right side of the BSM control module.

NOTE:

- The radar test can be performed on either the left or right side, however, perform aiming on both the left and right sides.

22. Verify the M-MDS display.

- If "TEST PASSED" is displayed

Radar test is completed

- If "TEST FAILED" is displayed
  - Perform an inspection according to the following table.

Step	Inspection	Action	
1	**VERIFY REFLECTOR POSITION** • Verify if the reflector installation position is correct. • Is the reflector set in the correct position?	Yes	Go to the next step.
		No	Set the reflector in the correct position and perform the BSM radar test.
2	**INSPECT REAR BUMPER** • Remove the rear bumper. (See **REAR BUMPER REMOVAL/INSTALLATION**.) • Perform the BSM radar test. • Is "Procedure completed correctly." displayed?	Yes	Replace the rear bumper and perform the BSM radar test. (See **REAR BUMPER REMOVAL/INSTALLATION**.)
		No	Go to the next step.
3	**VERIFY IF BSM CONTROL MODULE OR BSM BRACKET IS MIS-INSTALLED AND IF THERE IS DISTORTION TO VEHICLE INSTALLATION SURFACE** • Verify whether a BSM control module or BSM bracket has been mis-installed, and if there is distortion to the vehicle installation surface. • Is there poor installation or distortion?	Yes	Repair or replace the malfunctioning part and perform the BSM radar test.
		No	Go to the next step.
4	**RE-PERFORM THE BSM RADAR TEST** • Perform the BSM radar test. • Repeat the M-MDS operation for the BSM radar test 2 or 3 times (Steps 20 to 21). • Is "Procedure completed correctly." displayed?	Yes	BSM radar test is completed.
		No	Replace the BSM control module.

2014 - Mazda3 - Body and Accessories

BLIND SPOT MONITORING (BSM) OFF SWITCH REMOVAL/INSTALLATION

NOTE:

- The BSM OFF switch is integrated with the cluster switch.
- For the BSM OFF switch removal/installation, refer to CLUSTER SWITCH REMOVAL/INSTALLATION. (See **CLUSTER SWITCH REMOVAL/INSTALLATION**.)

2014 - Mazda3 - Body and Accessories

BLIND SPOT MONITORING (BSM) OFF SWITCH INSPECTION

NOTE:

- The BSM OFF switch is integrated with the cluster switch.
- For the BSM OFF switch removal/installation, refer to CLUSTER SWITCH REMOVAL/INSTALLATION. (See **CLUSTER SWITCH REMOVAL/INSTALLATION**.)

Resistance Inspection

1. Disconnect the negative battery cable. (See **NEGATIVE BATTERY CABLE DISCONNECTION/CONNECTION [SKYACTIV-G 2.0, SKYACTIV-G 2.5]**.)
2. Remove the BSM OFF switch. (See **BLIND SPOT MONITORING (BSM) OFF SWITCH REMOVAL/INSTALLATION**.)
3. Measure the resistance between BSM OFF switches B and C under the following conditions:
    - Resistance with BSM OFF switch pressed and held
        - 323.24—329.76 ohms
    - Resistance with any switches not pressed
        - 1,139.99—1,163.01 ohms

CIRCUIT WITH BSM OFF SWITCH PRESSED AND HELD

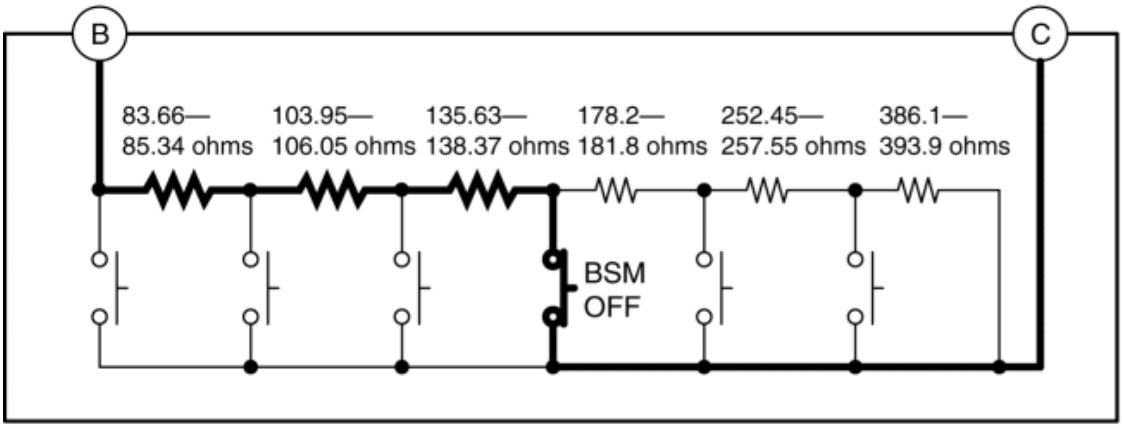

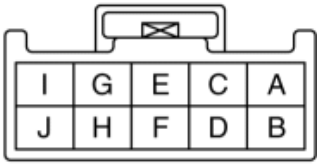

CIRCUIT WITH ANY SWITCHES NOT PRESSED

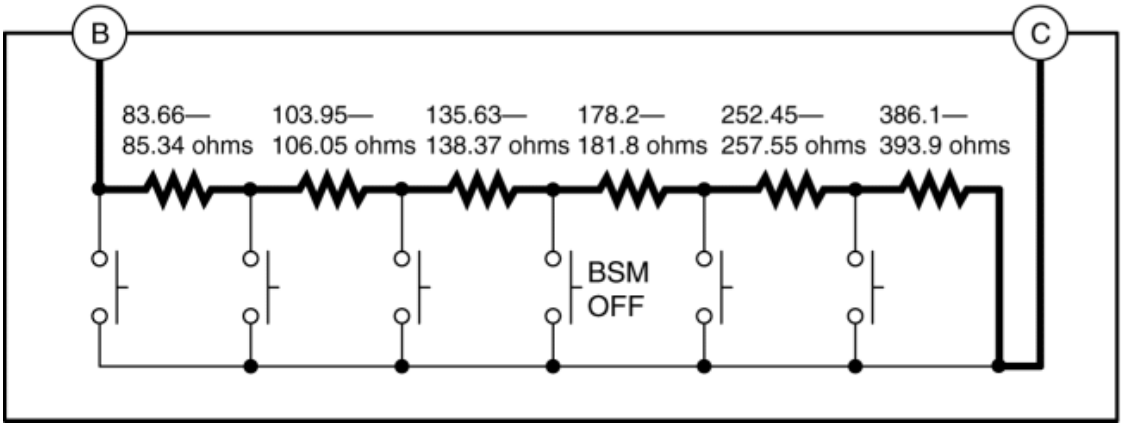

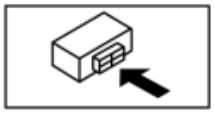

- If not within the specification, replace the cluster switch. (See **CLUSTER SWITCH REMOVAL/INSTALLATION**.)

LED Illumination Inspection

1. Disconnect the negative battery cable. (See **NEGATIVE BATTERY CABLE DISCONNECTION/CONNECTION [SKYACTIV-G 2.0, SKYACTIV-G 2.5]**.)
2. Remove the BSM OFF switch. (See **BLIND SPOT MONITORING (BSM) OFF SWITCH REMOVAL/INSTALLATION**.)
3. Apply battery positive voltage to cluster switch terminal J, and connect terminal I to ground.

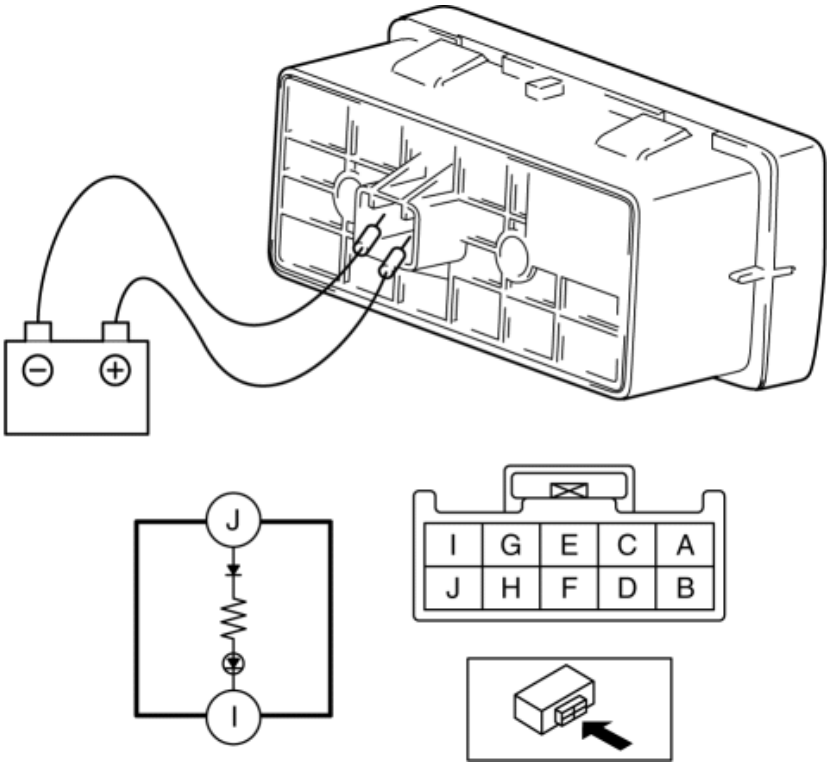

4. Verify that the LED illuminates.

- If there is any malfunction, replace the cluster switch. (See **CLUSTER SWITCH REMOVAL/INSTALLATION**.)

2014 - Mazda3 - Body and Accessories

BLIND SPOT MONITORING (BSM) INDICATOR LIGHT REMOVAL/INSTALLATION

NOTE:

- The BSM indicator lights are integrated into the outer mirror glass.
- For the BSM indicator light removal/installation, refer to the outer mirror glass removal/installation. (See **OUTER MIRROR GLASS REMOVAL**.) (See **OUTER MIRROR GLASS INSTALLATION**.)

2014 - Mazda3 - Body and Accessories

BLIND SPOT MONITORING (BSM) INDICATOR LIGHT INSPECTION

NOTE:

- The BSM indicator lights are integrated into the outer mirror glass.
- For the BSM indicator light inspection, refer to the outer mirror glass inspection. (See **OUTER MIRROR GLASS INSPECTION**.)

2014 - Mazda3 - Body and Accessories

INDICATOR UNIT REMOVAL/INSTALLATION

1. Disconnect the negative battery cable. (See **NEGATIVE BATTERY CABLE DISCONNECTION/CONNECTION [SKYACTIV-G 2.0, SKYACTIV-G 2.5]**.)

2. Remove the following parts:

   a. Glove compartment (See **GLOVE COMPARTMENT REMOVAL/INSTALLATION**.)

   b. Decoration panel (See **DECORATION PANEL REMOVAL/INSTALLATION**.)

   c. Upper panel (See **UPPER PANEL REMOVAL**.) (See **UPPER PANEL INSTALLATION**.)

   d. Rear console (See **REAR CONSOLE REMOVAL/INSTALLATION**.)

   e. Shift lever knob (MTX) (See **MANUAL TRANSAXLE SHIFT MECHANISM REMOVAL/INSTALLATION [C66M-R]**.)

   f. Selector lever knob (ATX) (See **AUTOMATIC TRANSAXLE SHIFT MECHANISM REMOVAL/INSTALLATION**.)

   g. Shift panel (See **SHIFT PANEL REMOVAL/INSTALLATION**.)

   h. Front console box (See **FRONT CONSOLE BOX REMOVAL/INSTALLATION**.)

   i. CD player (with CD player) (See **CD PLAYER REMOVAL**.) (See **CD PLAYER INSTALLATION**.)

   j. Side wall (See **SIDE WALL REMOVAL/INSTALLATION**.)

   k. Front console (See **FRONT CONSOLE REMOVAL/INSTALLATION**.)

   l. Climate control unit (See **CLIMATE CONTROL UNIT REMOVAL/INSTALLATION [FULL-AUTO AIR CONDITIONER]**.)(See **CLIMATE CONTROL UNIT REMOVAL/INSTALLATION [MANUAL AIR CONDITIONER]**.)

3. While pressing the indicator unit tabs in the direction of arrows (1) shown in the figure using the remover tool, press the indicator unit in the direction of arrow (2) to detach the indicator unit tabs from the climate control unit.

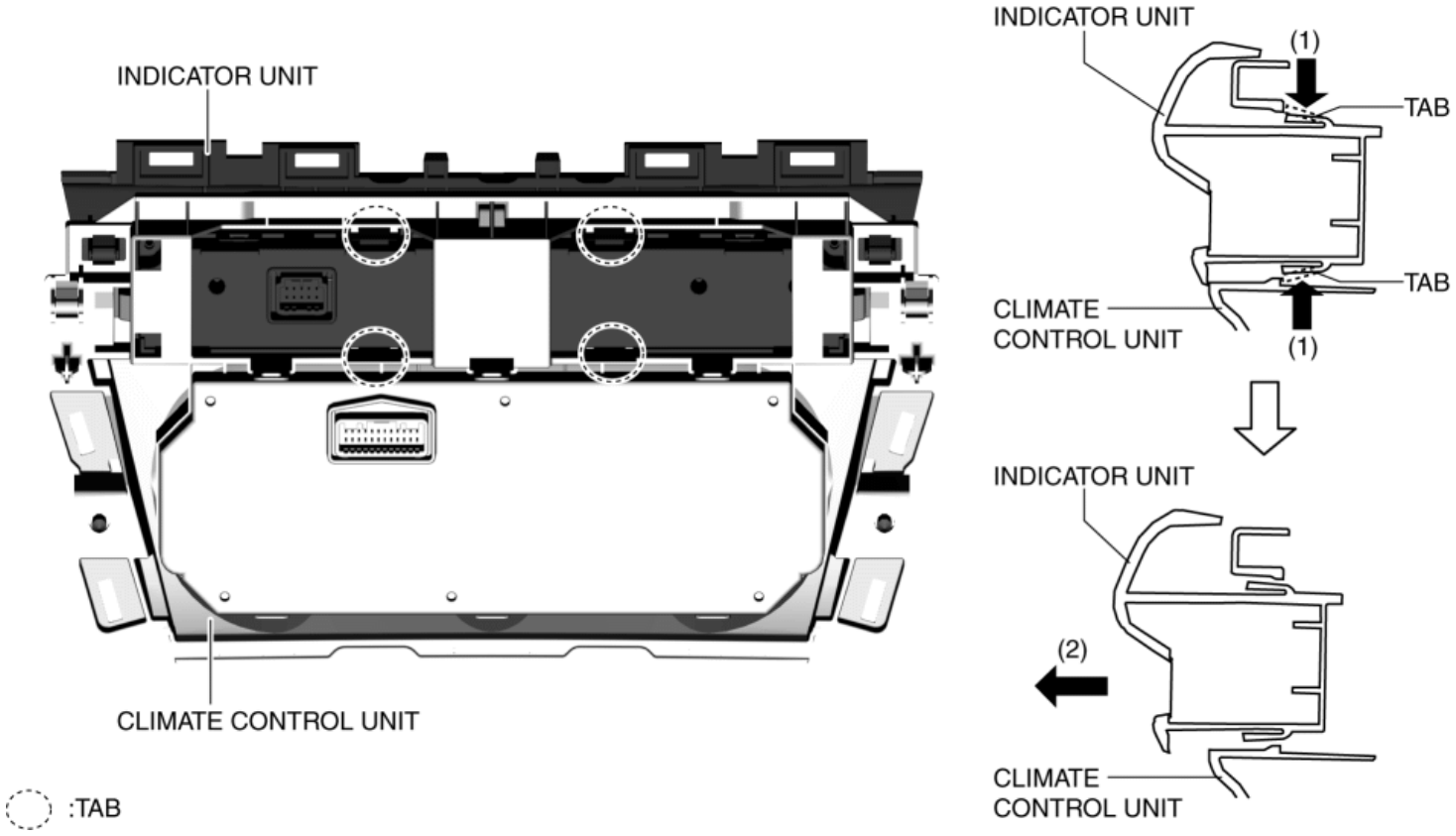

4. While pressing the clip tabs in the direction of arrows (3) shown in the figure, press the indicator unit in the direction of arrow (4) to detach the indicator unit tabs from the climate control unit.

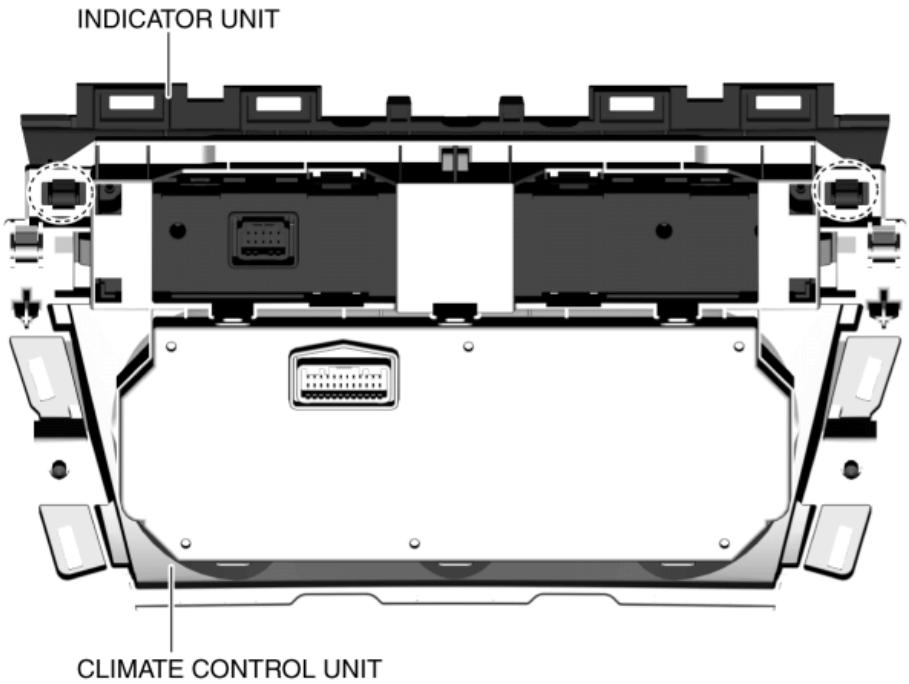

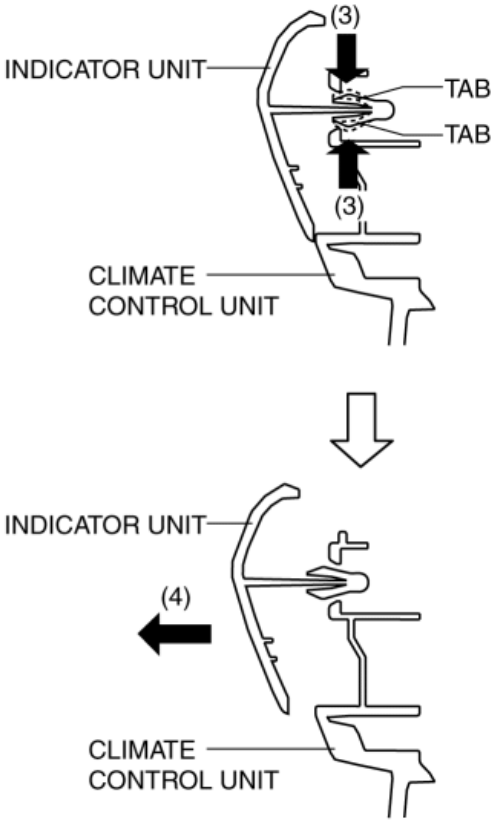

:CLIP

5. Remove the indicator unit.

6. Install in the reverse order of removal.

2014 - Mazda3 - Body and Accessories

INDICATOR UNIT INSPECTION

Terminal Voltage Inspection

1. Disconnect the negative battery cable. (See **NEGATIVE BATTERY CABLE DISCONNECTION/CONNECTION [SKYACTIV-G 2.0, SKYACTIV-G 2.5]**.)

2. Remove the following parts:

   a. Glove compartment (See **GLOVE COMPARTMENT REMOVAL/INSTALLATION**.)

   b. Decoration panel (See **DECORATION PANEL REMOVAL/INSTALLATION**.)

   c. Upper panel (See **UPPER PANEL REMOVAL**.) (See **UPPER PANEL INSTALLATION**.)

   d. Rear console (See **REAR CONSOLE REMOVAL/INSTALLATION**.)

   e. Shift lever knob (MTX) (See **MANUAL TRANSAXLE SHIFT MECHANISM REMOVAL/INSTALLATION [C66M-R]**.)

   f. Selector lever knob (ATX) (See **AUTOMATIC TRANSAXLE SHIFT MECHANISM REMOVAL/INSTALLATION**.)

   g. Shift panel (See **SHIFT PANEL REMOVAL/INSTALLATION**.)

   h. Front console box (See **FRONT CONSOLE BOX REMOVAL/INSTALLATION**.)

   i. CD player (with CD player) (See **CD PLAYER REMOVAL**.) (See **CD PLAYER INSTALLATION**.)

   j. Side wall (See **SIDE WALL REMOVAL/INSTALLATION**.)

   k. Front console (See **FRONT CONSOLE REMOVAL/INSTALLATION**.)

   l. Climate control unit (See **CLIMATE CONTROL UNIT REMOVAL/INSTALLATION [FULL-AUTO AIR CONDITIONER]**.) (See **CLIMATE CONTROL UNIT REMOVAL/INSTALLATION [MANUAL AIR CONDITIONER]**.)

3. Reconnect the negative battery cable. (See **NEGATIVE BATTERY CABLE DISCONNECTION/CONNECTION [SKYACTIV-G 2.0, SKYACTIV-G 2.5]**.)

4. Verify that the voltages of each of the terminals are as indicated in the terminal voltage table (reference).

   - If the voltage is not as specified in the terminal voltage table (reference), inspect the parts under Inspection item(s) and related wiring harnesses.

     - If the system does not work normally even though the inspection items or related wiring harnesses do not have any malfunction, replace the indicator unit.

Terminal Voltage Table (Reference)

INDICATOR UNIT WIRING HARNESS SIDE CONNECTOR

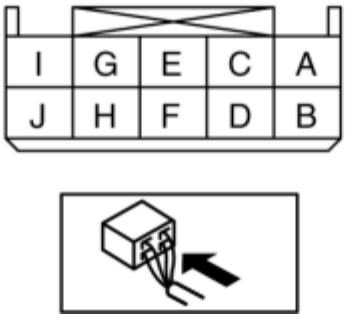

Terminal	Signal name	Connected to	Measurement conditions		Voltage (V)	Inspection item(s)
A	Power supply	METER1 10A fuse	Ignition switch ON (engine off or on)		B+	• METER1 10A fuse • Battery
			Ignition switch off or ACC		1.0 or less	
B	Power supply	ROOM 15 A fuse	Under any condition		B+	• ROOM 15 A fuse • Battery
C	Power supply	C/U IG1 15A fuse	Ignition switch ON (engine off or on)		B+	• C/U IG1 15A fuse • Battery
			Ignition switch off or ACC		1.0 or less	
D	Seat warmer switch signal	Seat warmer control unit	Because this terminal is for communication, determination using terminal voltage inspection is not possible.			
E	Passenger air bag deactivation (PAD) indicator	Instrument cluster	Ignition switched ON (engine off)	Luggage of 45 kg or more on front passenger's seat (PAD OFF indicator off)	Approx. 9	Instrument cluster
				No load on front passenger's seat (PAD OFF indicator on)	1.0 or less	

F	Ground	Body ground	Under any condition		1.0 or less	Body ground
G	Instrument cluster signal	Instrument cluster	Because this terminal is for communication, determination using terminal voltage inspection is not possible.			
H	—	—	—		—	—
I	—	—	—		—	—
J	Passenger air bag deactivation (PAD) indicator	Instrument cluster	Ignition switched ON (engine off)	Luggage of 45 kg or more on front passenger's seat (PAD OFF indicator off)	1.0 or less	Instrument cluster
				No load on front passenger's seat (PAD OFF indicator on)	Approx. 7	

LED Illumination Inspection

When using M-MDS

1. Connect the M-MDS to the DLC-2.
2. After vehicle identification, select the following from the M-MDS initialization screen.
   - "Data logger"
   - "Module"
   - "IC"
3. Using "LCD_SEG", verify that the following warning/indicator lights are turned on.

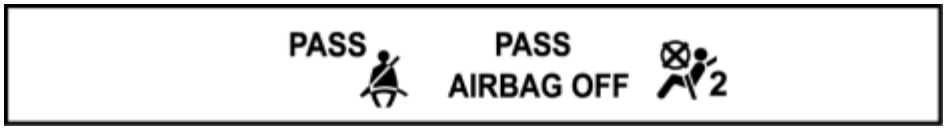

- If any one of the warning/indicator lights is not displayed, replace the indicator unit.

When not using M-MDS

1. Switch the ignition ON (engine off or on).
2. Using a jumper wire, connect indicator unit terminal G and body ground for 5 s or more.

CAUTION:

- If the terminals are mistakenly connected, vehicle damage or fire could occur. When connecting with the jumper wire, thoroughly verify what terminals are being connected to prevent a miss-connection.

3. Verify that the following warning/indicator lights are turned on.

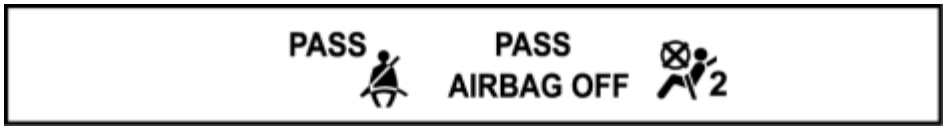

- If any one of the warning/indicator lights is not displayed, replace the indicator unit.

2014 - Mazda3 - Body and Accessories

FORWARD SENSING CAMERA (FSC) REMOVAL/INSTALLATION

CAUTION:

- If configuration is not performed when the FSC is replaced with a new one, the vehicle specification information is not stored in the FSC and the system will not operate normally.
- When performing configuration, it is necessary to read the vehicle specification information from the FSC before replacing it. Connect the M-MDS to the vehicle and perform vehicle identification before removing the FSC. The vehicle specification information is temporarily stored in the M-MDS.

NOTE:

- The FSC prior to replacement stores the vehicle specification information.
- A new FSC does not store any vehicle specification information.
- If the vehicle specification information from the FSC prior to replacement cannot be read, perform the configuration using As-Built data.

1. When replacing the FSC, perform the configuration. (See **FORWARD SENSING CAMERA (FSC) CONFIGURATION (USING READ/WRITE FUNCTION)**.)

2. Disconnect the negative battery cable. (See **NEGATIVE BATTERY CABLE DISCONNECTION/CONNECTION [SKYACTIV-G 2.0, SKYACTIV-G 2.5]**.)

3. Pull cover A in the direction of the arrow shown in the figure and detach tab A of cover A and cover B.

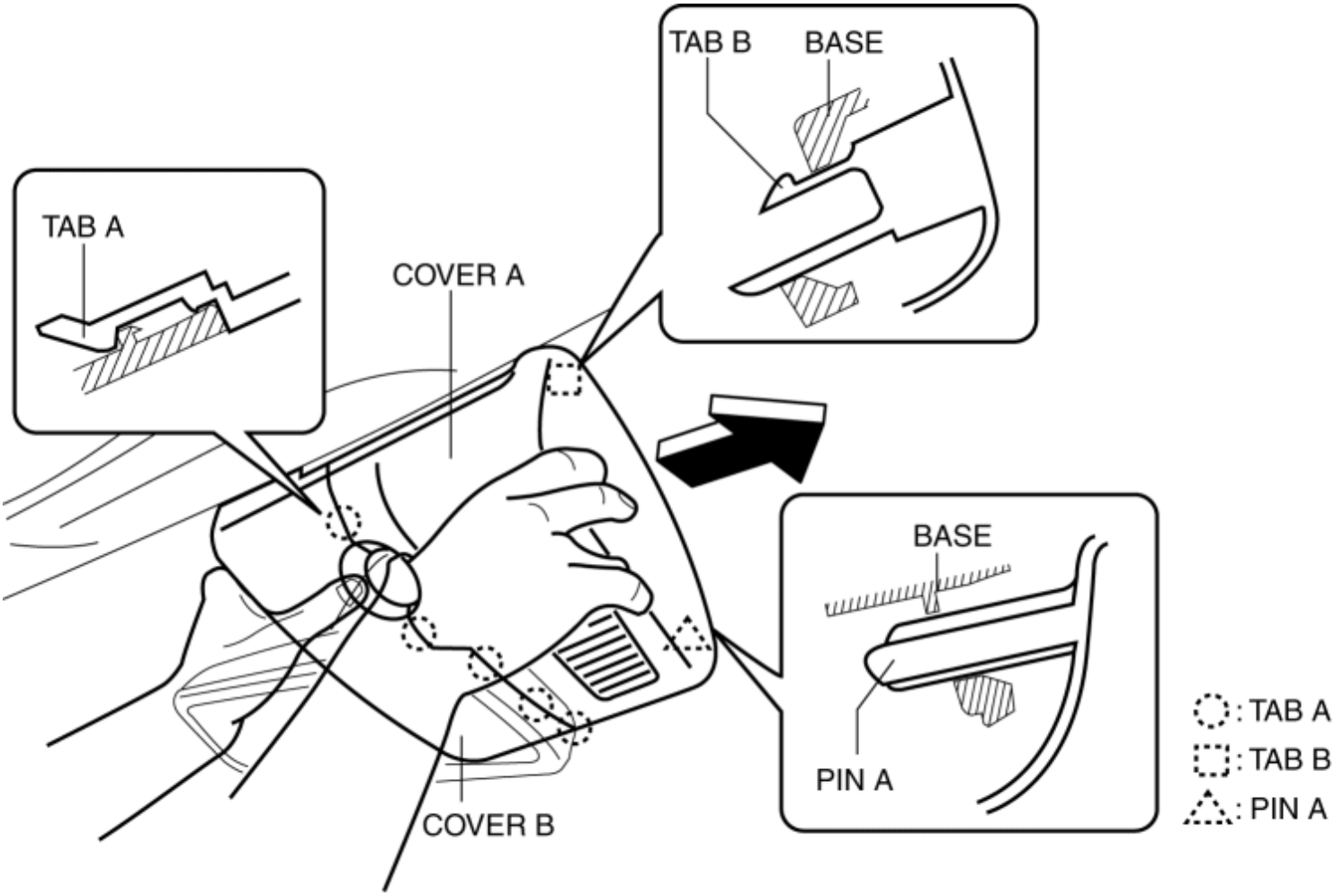

4. Pull cover A in the direction of the arrow shown in the figure, detach the tab B and pin A for cover A and the base, and remove cover A from the base.

5. Remove the wiring harness from the hook.

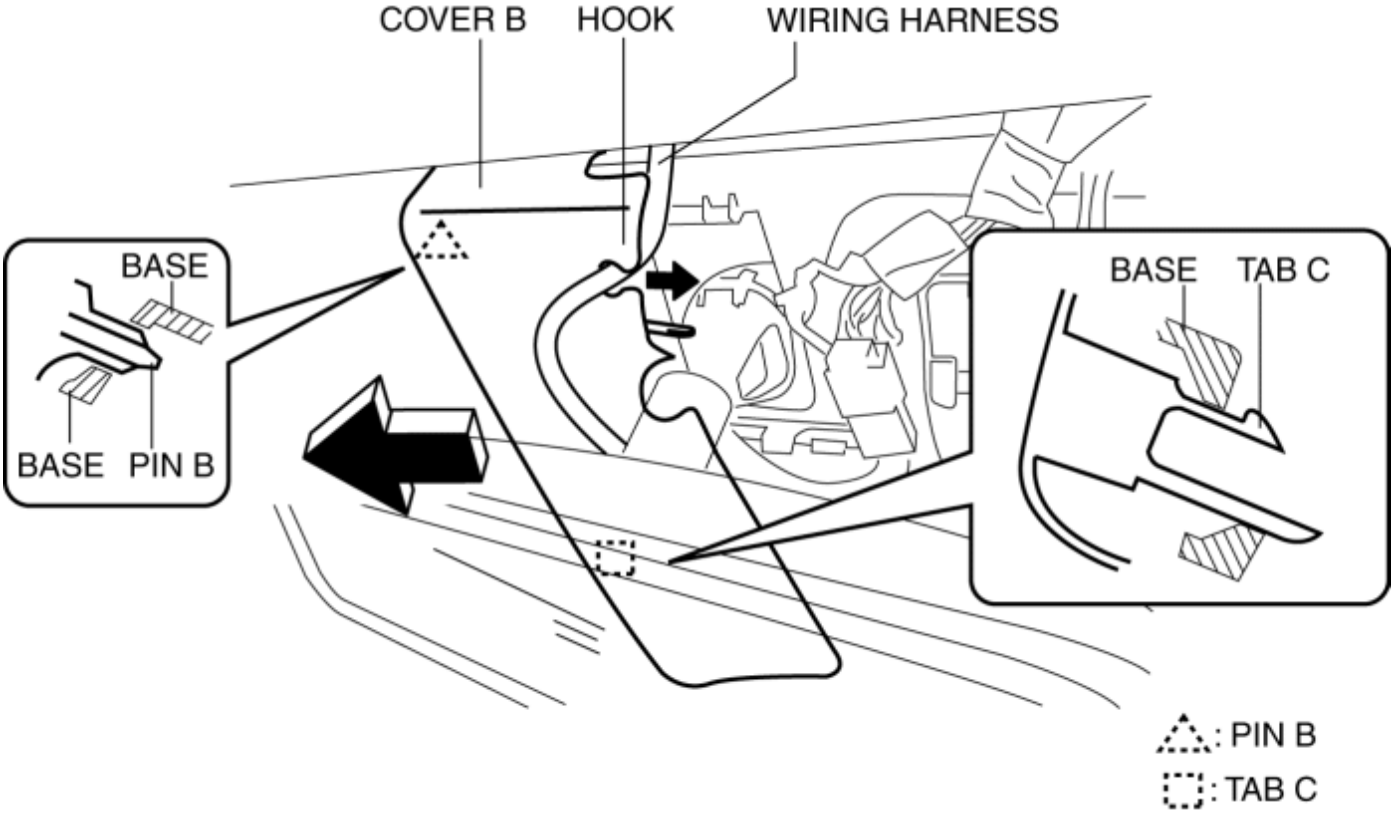

6. Pull cover B in the direction of the arrow shown in the figure, detach the pin B and tab C for cover B and the base, and remove cover B from the base.

7. Disconnect the connector.

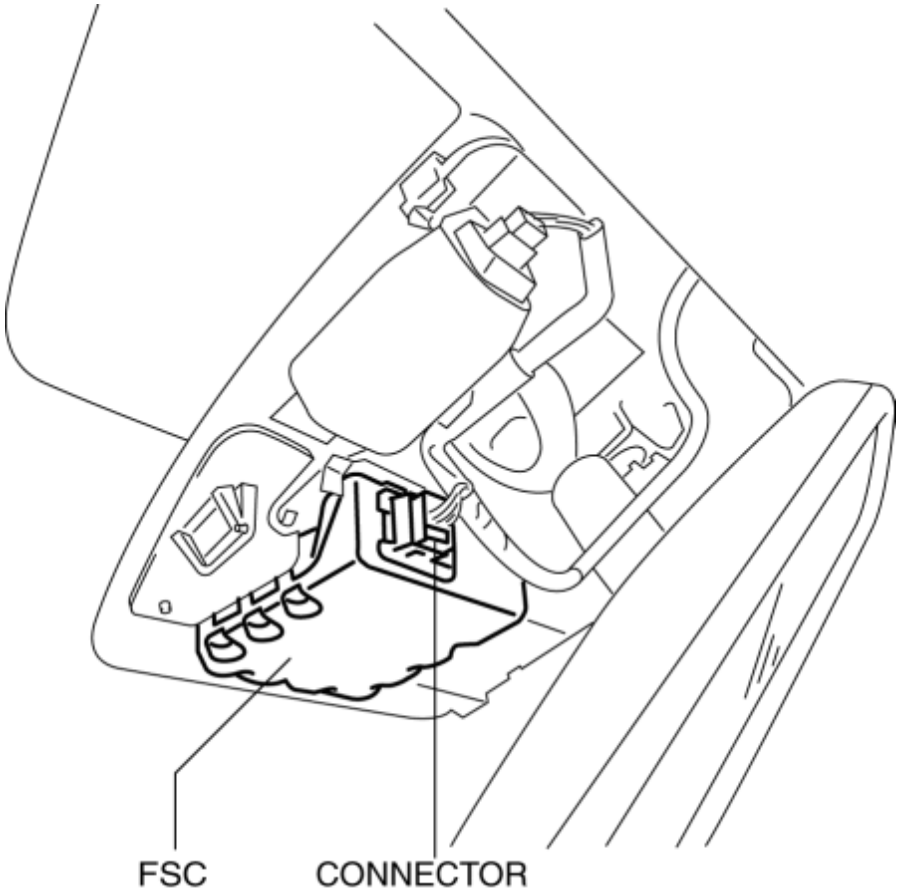

8. Pull the FSC in the direction of the arrow shown in the figure and remove the FSC pin from

FSC clip A.

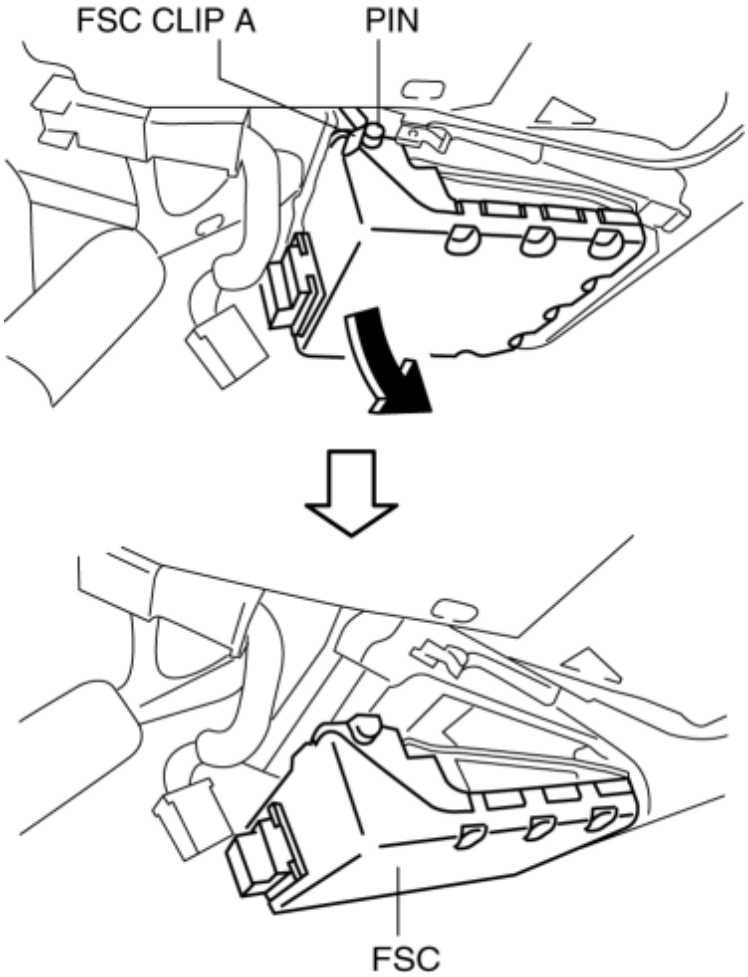

9. Rotate the FSC in the direction of the arrow shown in the figure, remove the FSC hook from FSC clip B, and remove the FSC.

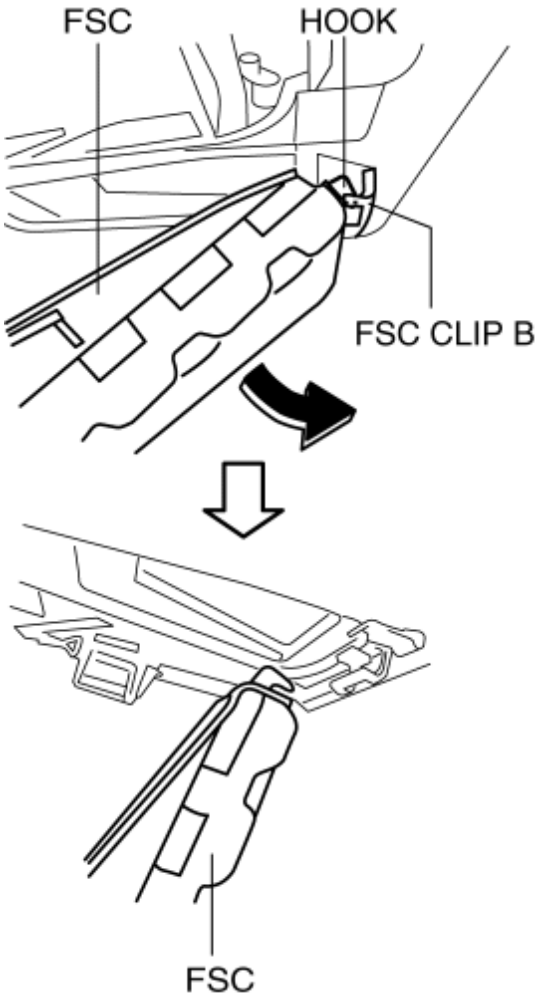

10. Install in the reverse order of removal.

NOTE:

- If configuration cannot be performed by reading/writing of the vehicle specification information, perform the configuration using As-Built information after replacing the FSC. (See **FORWARD SENSING CAMERA (FSC) CONFIGURATION (USING AS-BUILT DATA)**.)

11. If the FSC is replaced, perform the FSC aiming (See **FORWARD SENSING CAMERA (FSC) AIMING**.).

CAUTION:

- If FSC aiming is not performed after replacing the FSC, the high beam control (HBC) system and the lane departure warning system (LDWS) will not operate because the FSC cannot store the camera shot angle. If the FSC is replaced, perform the FSC aiming.

2014 - Mazda3 - Body and Accessories

FORWARD SENSING CAMERA (FSC) CLIP REMOVAL/INSTALLATION

NOTE:

- The forward sensing camera (FSC) clips include clips A and B.

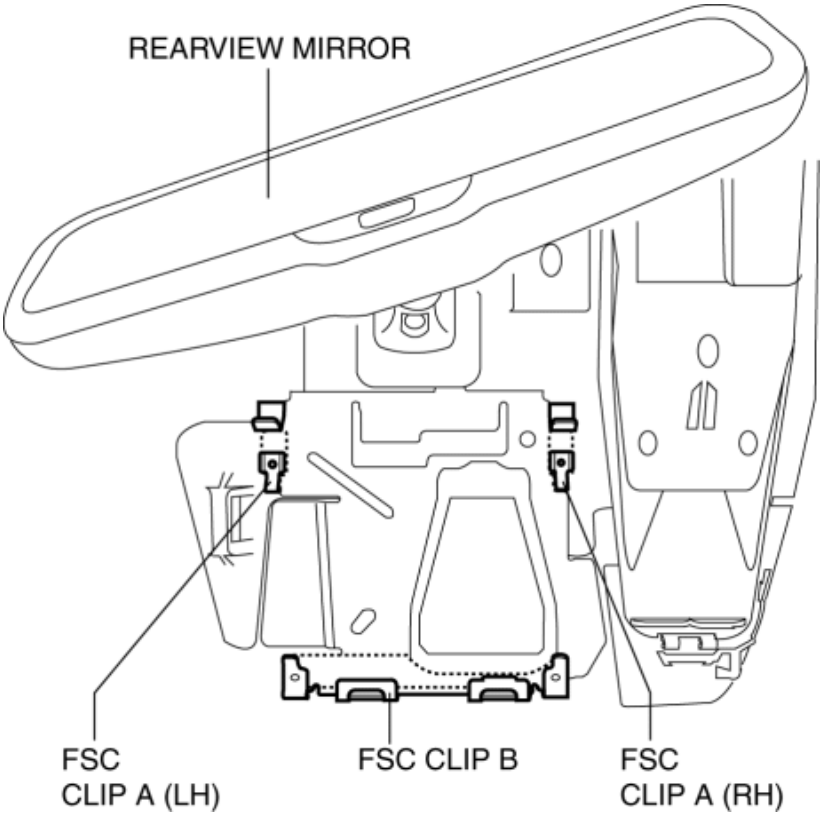

FSC clip A

1. Disconnect the negative battery cable. (See **NEGATIVE BATTERY CABLE DISCONNECTION/CONNECTION [SKYACTIV-G 2.0, SKYACTIV-G 2.5]**.)

2. Remove the following parts:

   a. Cover (See **FORWARD SENSING CAMERA (FSC) REMOVAL/INSTALLATION**.)

   b. Forward sensing camera (FSC) (See **FORWARD SENSING CAMERA (FSC) REMOVAL/INSTALLATION**.)

   c. Laser sensor (See **LASER SENSOR REMOVAL/INSTALLATION**.)

3. Insert a tape-wrapped flathead screwdriver into the gap between the base and FSC clip A.

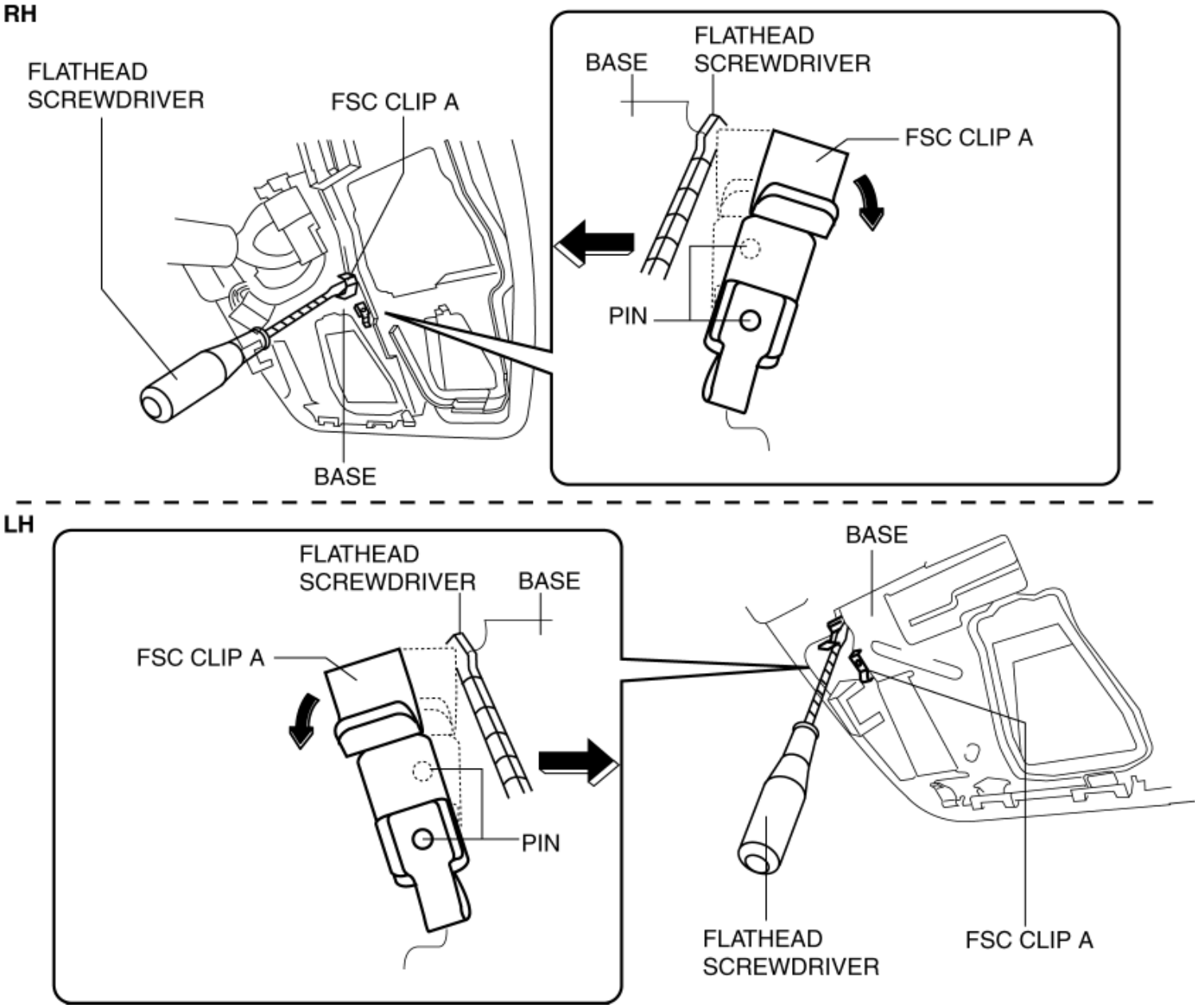

4. Move the flathead screwdriver in the direction of the arrow shown in the figure and rotate FSC clip A.

5. In addition, rotate FSC clip A, detach the base pin and FSC clip A, and then remove FSC clip A.

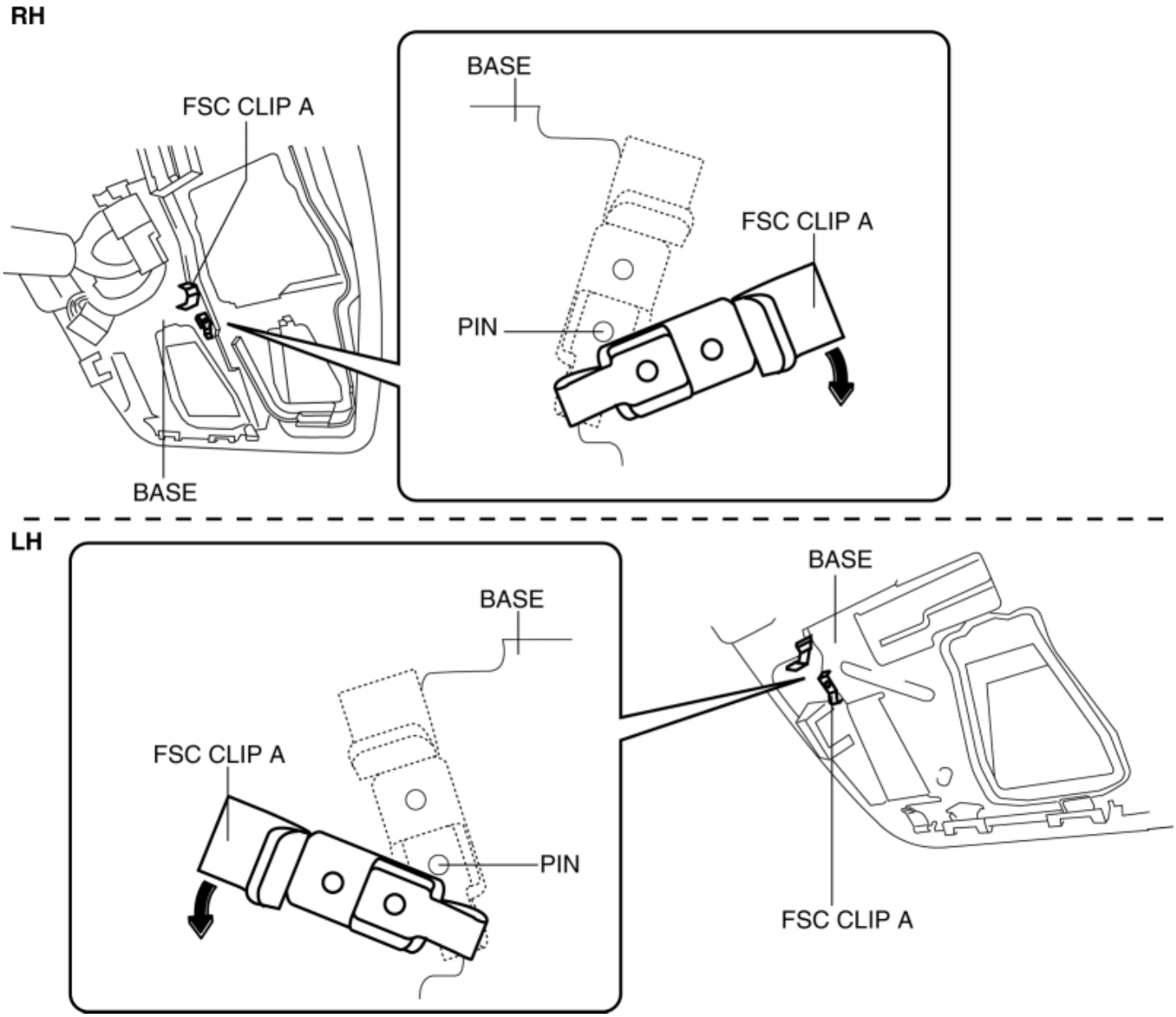

6. Install in the reverse order of removal.

7. If the FSC clip is replaced, perform the FSC aiming. (See **FORWARD SENSING CAMERA (FSC) AIMING**.)

CAUTION:

- If FSC aiming is not performed after replacing the FSC, the high beam control (HBC) system and the lane departure warning system (LDWS) will not operate because the FSC cannot store the camera shot angle. If the FSC clip is replaced, perform the FSC aiming.

FSC clip B

1. Disconnect the negative battery cable. (See **NEGATIVE BATTERY CABLE DISCONNECTION/CONNECTION [SKYACTIV-G 2.0, SKYACTIV-G 2.5]**.)

2. Remove the following parts:

   a. Cover (See **FORWARD SENSING CAMERA (FSC) REMOVAL/INSTALLATION**.)

   b. Forward sensing camera (FSC) (See **FORWARD SENSING CAMERA (FSC) REMOVAL/INSTALLATION**.)

c. Laser sensor (See **LASER SENSOR REMOVAL/INSTALLATION**.)

3. Insert a tape-wrapped flathead screwdriver into the gap between the base and FSC clip B.

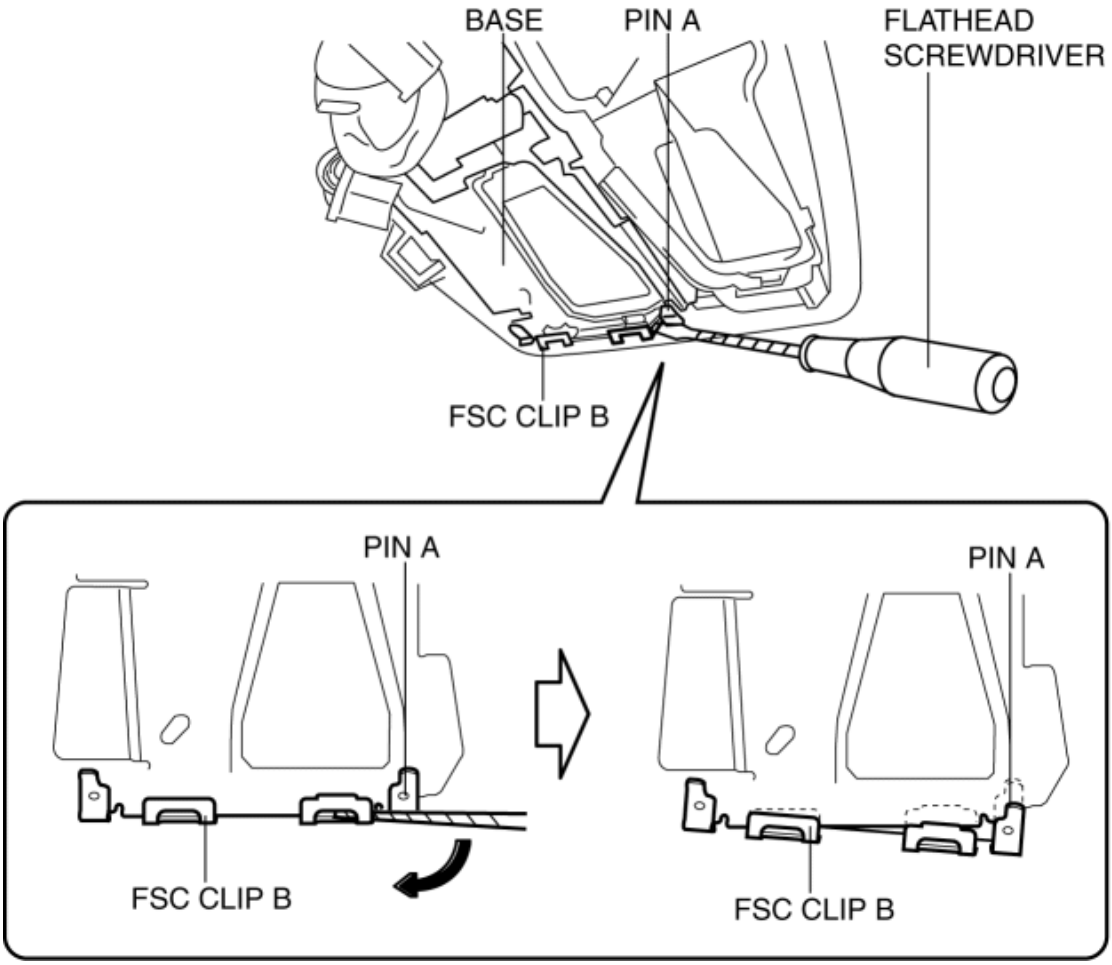

4. Move the flathead screwdriver in the direction of the arrow shown in the figure, rotate FSC clip B, and detach base pin A and FSC clip B.

5. Insert a tape-wrapped flathead screwdriver into the gap between the base and FSC clip B.

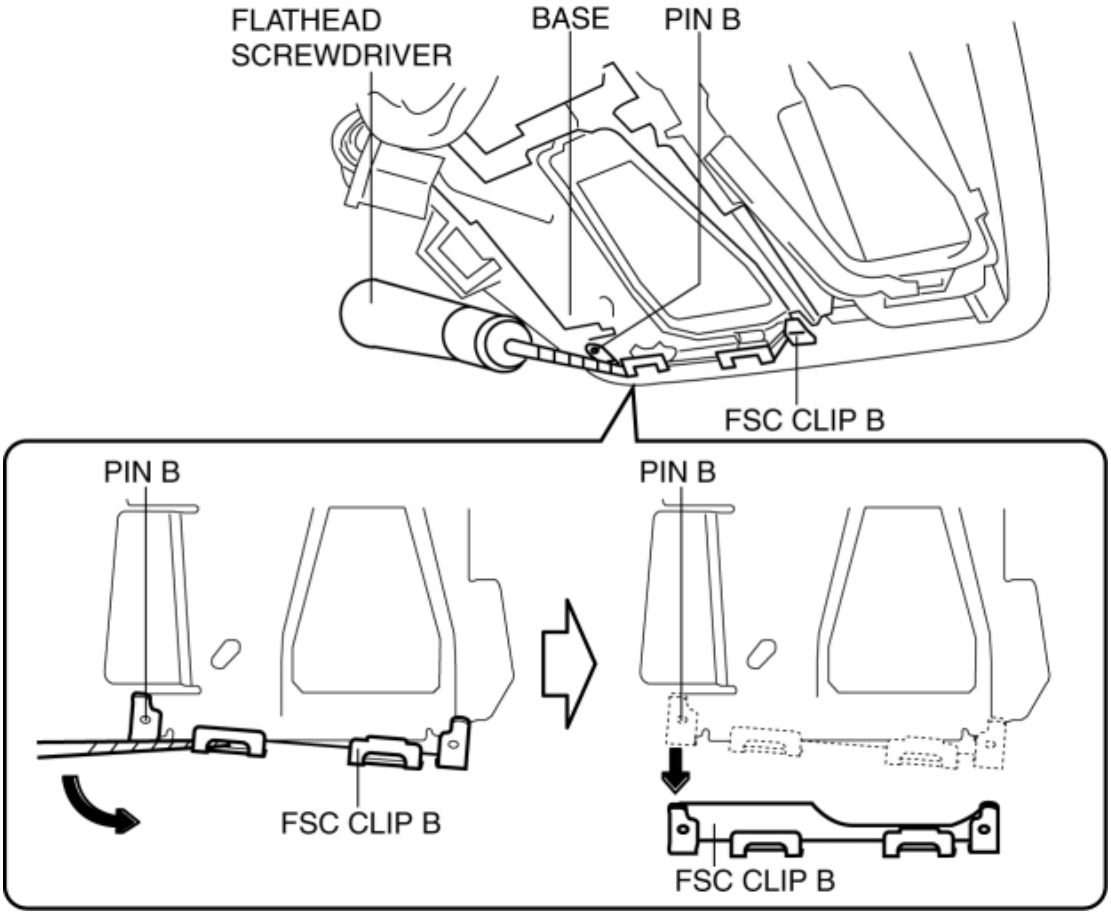

6. Move the flathead screwdriver in the direction of the arrow shown in the figure, pull down FSC clip B, detach base pin B and FSC clip B, and remove FSC clip B.

7. Install in the reverse order of removal.

8. If the FSC clip is replaced, perform the FSC aiming. (See **FORWARD SENSING CAMERA (FSC) AIMING**.)

CAUTION:

- If FSC aiming is not performed after replacing the FSC, the high beam control (HBC) system and the lane departure warning system (LDWS) will not operate because the FSC cannot store the camera shot angle. If the FSC clip is replaced, perform the FSC aiming.

2014 - Mazda3 - Body and Accessories

FORWARD SENSING CAMERA (FSC) COVER REMOVAL/INSTALLATION

1. Disconnect the negative battery cable. (See **NEGATIVE BATTERY CABLE DISCONNECTION/CONNECTION [SKYACTIV-G 2.0, SKYACTIV-G 2.5]**.)

2. Remove the cover. (See **FORWARD SENSING CAMERA (FSC) REMOVAL/INSTALLATION**.)

3. Remove the forward sensing camera (FSC). (See **FORWARD SENSING CAMERA (FSC) REMOVAL/INSTALLATION**.)

4. Pull the FSC cover in the direction of the arrow shown in the figure and detach tab of FSC cover.

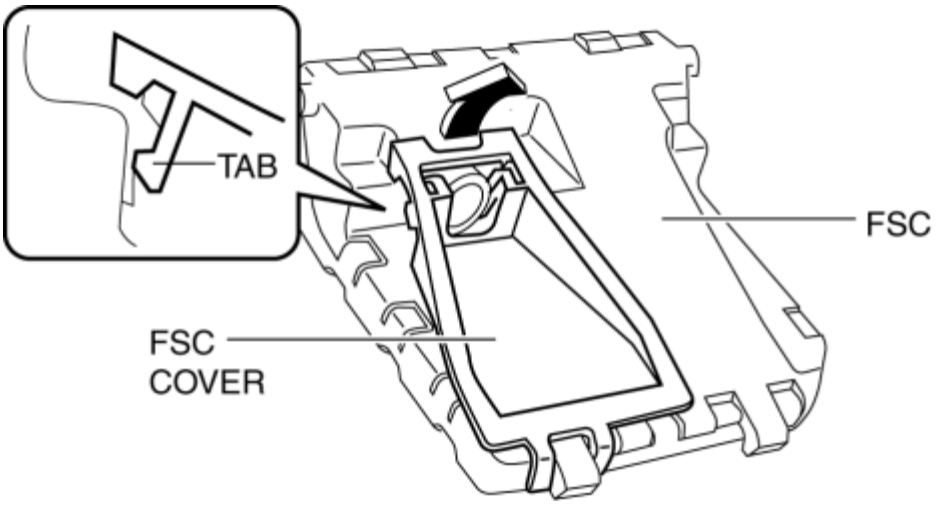

5. Rotate the FSC cover in the direction of the arrow shown in the figure, remove the FSC cover from FSC hook, and remove the FSC cover.

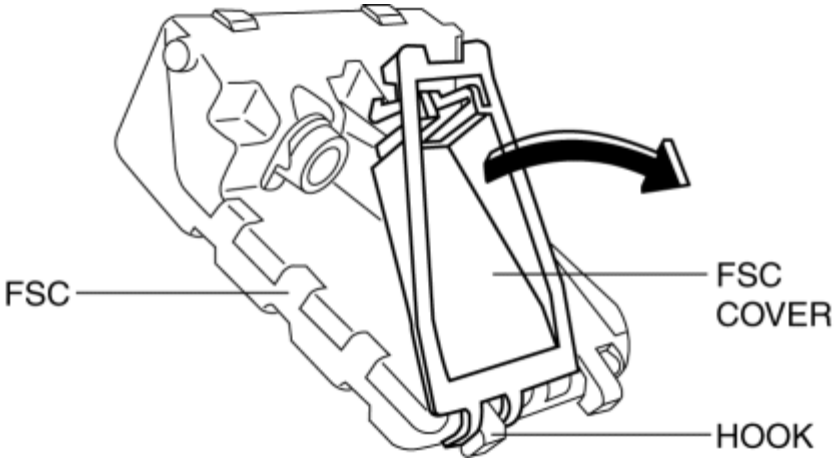

6. Install in the reverse order of removal.

FORWARD SENSING CAMERA (FSC) COVER REMOVAL/INSTALLATION

2014 - Mazda3 - Body and Accessories

FORWARD SENSING CAMERA (FSC) SHORT-CORD REMOVAL/INSTALLATION

1. Disconnect the negative battery cable. (See **NEGATIVE BATTERY CABLE DISCONNECTION/CONNECTION [SKYACTIV-G 2.0, SKYACTIV-G 2.5]**.)

2. Remove the cover. (See **FORWARD SENSING CAMERA (FSC) REMOVAL/INSTALLATION**.)

3. Remove the auto-dimming mirror. (See **AUTO-DIMMING MIRROR REMOVAL/INSTALLATION**.)

4. Disconnect the connector.

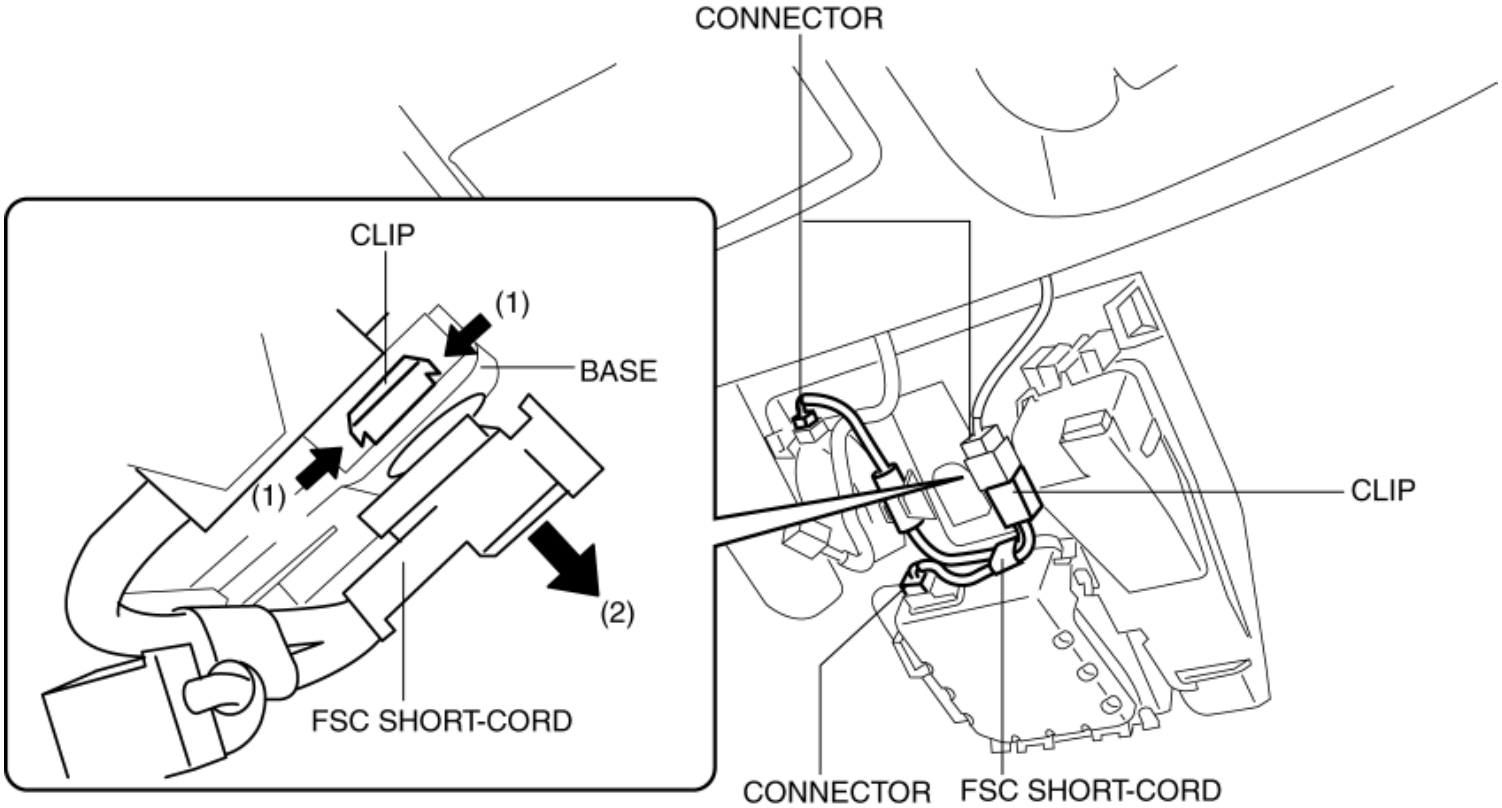

5. Pull out the FSC short-cord in the direction of arrow (2) shown in the figure while pressing the clip in the direction of arrow (1) shown in the figure, detach the clip and base, and remove the FSC short-cord.

6. Install in the reverse order of removal.

2014 - Mazda3 - Body and Accessories

FORWARD SENSING CAMERA (FSC) SHORT-CORD INSPECTION

1. Disconnect the negative battery cable. (See **NEGATIVE BATTERY CABLE DISCONNECTION/CONNECTION [SKYACTIV-G 2.0, SKYACTIV-G 2.5]**.)

2. Remove the following parts:

   a. Cover (See **FORWARD SENSING CAMERA (FSC) REMOVAL/INSTALLATION**.)

   b. Auto-dimming mirror (See **AUTO-DIMMING MIRROR REMOVAL/INSTALLATION**.)

   c. FSC short-cord (See **FORWARD SENSING CAMERA (FSC) SHORT-CORD REMOVAL/INSTALLATION**.)

3. Verify that the continuity between the FSC short-cord terminals is as indicated in the table.

○—○ : Continuity

Test condition	Terminal													
	Vehicle wiring harness (C27) side connector							Auto light sensor / rain sensor side connector			FSC side connector			
	A	B	C	D	E	G	H	A	B	D	A	C	E	I
Under any condition	○													○
		○								○				
			○									○		
				○				○						
					○								○	
						○					○			
							○		○					

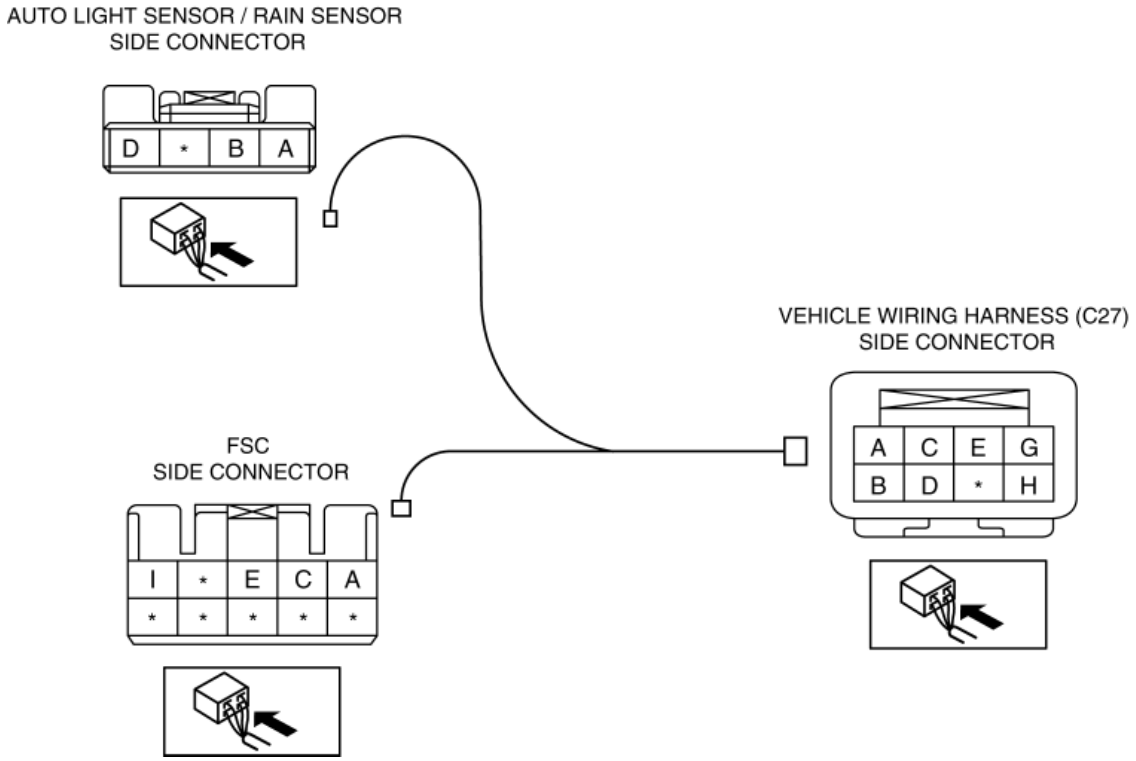

- If not as indicated in the table, replace the FSC short-cord.

2014 - Mazda3 - Body and Accessories

FORWARD SENSING CAMERA (FSC) AIMING

NOTE:

- The forward sensing camera (FSC) aiming procedure stores the camera shot angle in the FSC by reading a target used for aiming into the FSC.
- Perform the FSC aiming if any of the following procedure is performed.
    - FSC replacement
    - FSC clip replacement
    - Windshield replacement
- If an obstruction on the windshield or camera lens is blocking the scene in front of the vehicle, the target used for aiming cannot be read-in and aiming will not be performed correctly. Perform the following procedure before performing the aiming.
    - Verify that there is no water, dirt or sticker adhesion on the windshield, and that there is nothing on the camera lens such as dust or soiling.

Aiming procedure

1. Empty the vehicle by having all occupants leave the vehicle and remove all the cargo except for the spare tire, jack and tools.
2. Adjust the air pressure of each tire to the specified value. (See **WHEEL AND TIRE SPECIFICATION**.)
3. Move the vehicle to level ground.

CAUTION:

- If the setting surface height and angle between the vehicle and the target differs, correct FSC aiming cannot be done. Perform the FSC aiming with the vehicle and target setting surface on level ground.

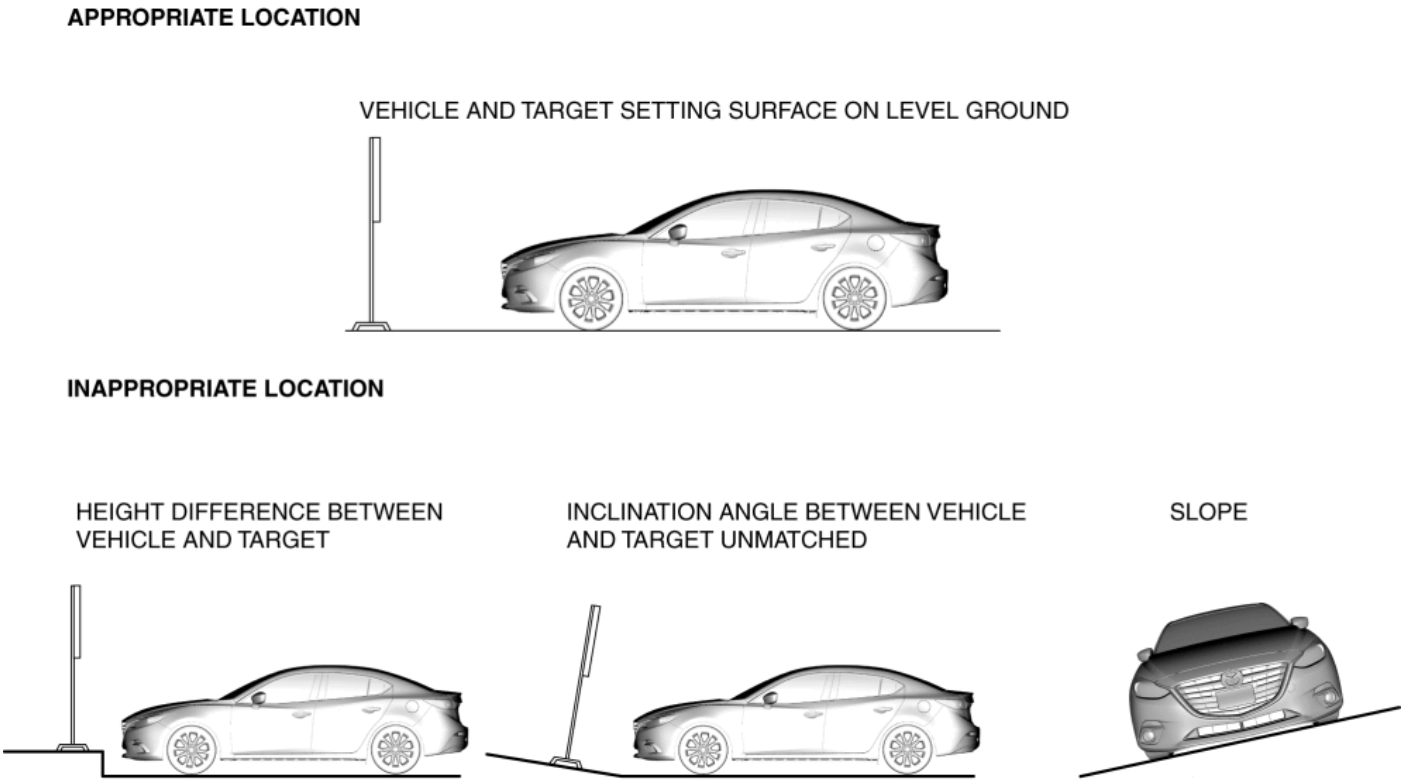

4. Verify that there are no obstructions such as metal objects in the shaded areas shown in the figure.

CAUTION:

- If the FSC aiming is performed with obstructions such as white and black patterned objects or reflective metal in the shaded areas, the FSC will determine such obstructions as targets and the FSC aiming procedure will not be performed correctly.

Move all obstructions away from the shaded areas, and when performing the aiming, do not have personnel standing in the shaded areas.

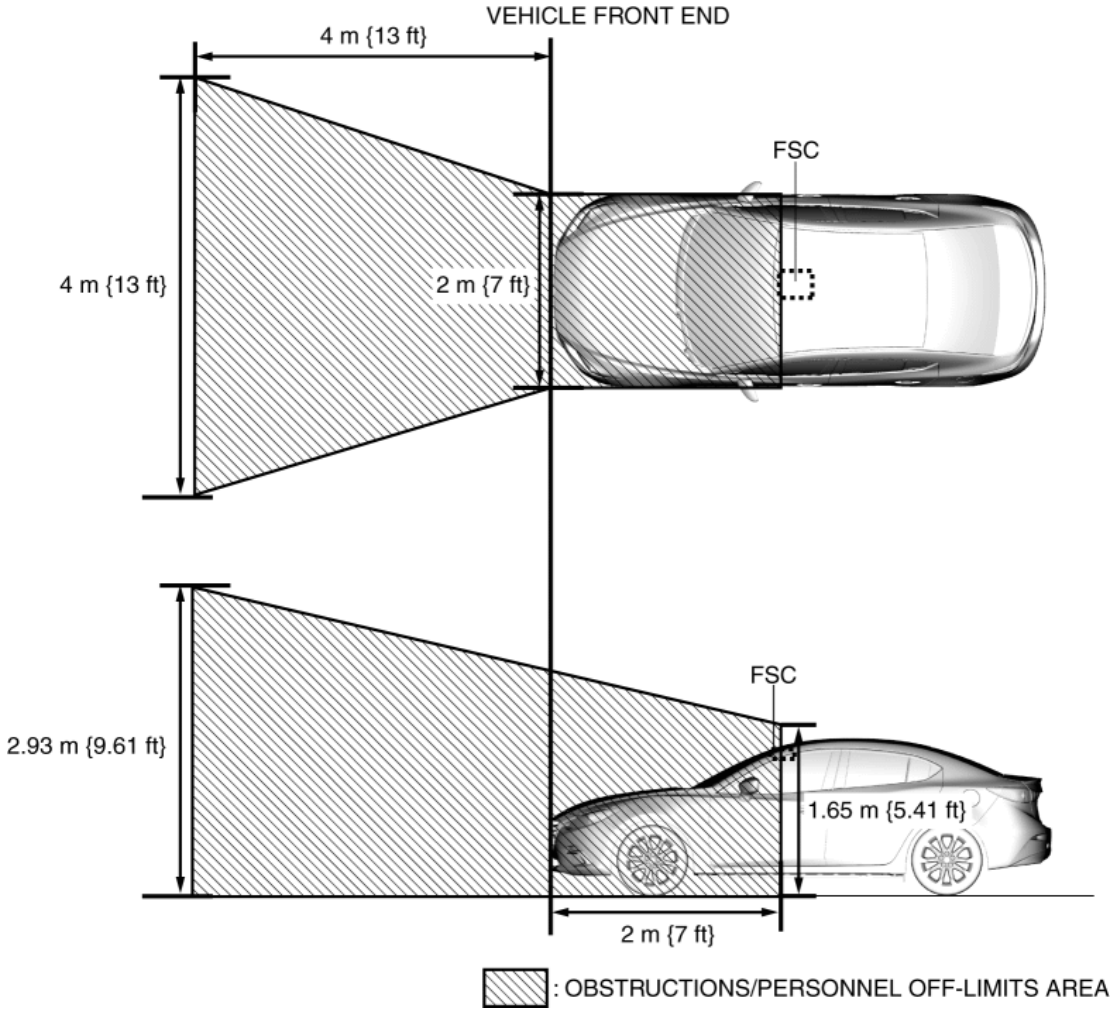

5. Perform the DTC inspection for the FSC using the M-MDS and verify that no DTCs other than B115E:54 are displayed. (See **DTC INSPECTION [FORWARD SENSING CAMERA (FSC)]**.)

NOTE:

- Because DTC B115E:54 is output if aiming is not performed, continue to perform the FSC aiming only if DTC B115E:54 is output. (See **DTC TABLE [FORWARD SENSING CAMERA (FSC)]**.)

6. Adjust the SST (plum-bob) so that it is aligned with the center of the brand emblem, determine the center position at the front of the vehicle, and mark the center position (point A) on the floor surface.

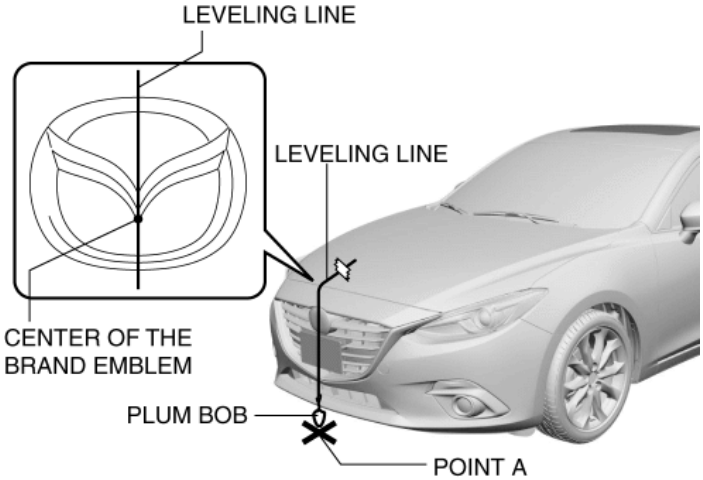

NOTE:

- The center of the brand emblem indicates the center position of the vehicle.

7. Adjust the SST (plum-bob) so that it is aligned with the center of the brand emblem, determine the center position at the rear of the

vehicle, and mark the center position (point B) on the floor surface.

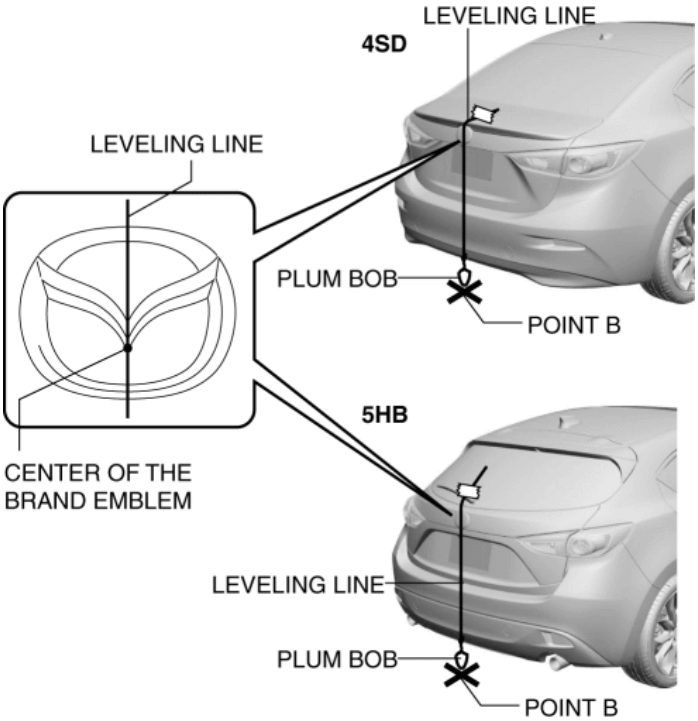

NOTE:

- The center of the brand emblem indicates the center position of the vehicle.

8. Secure the end of the leveling line over point B.

NOTE:

- Use a commercially-available leveling line.

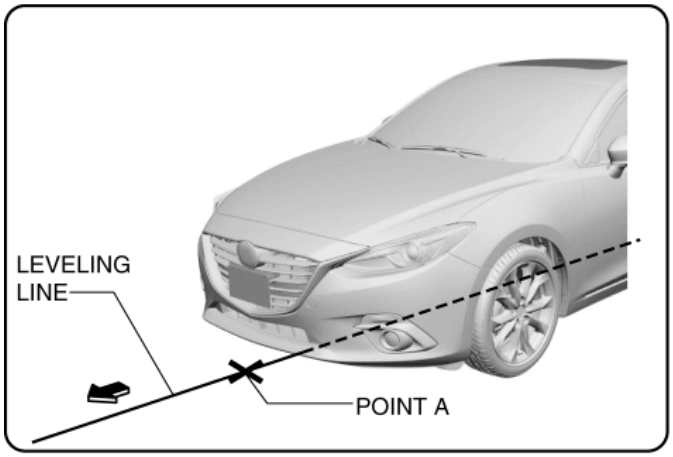

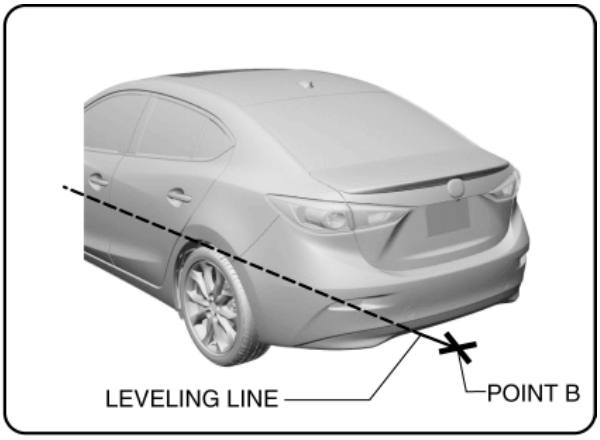

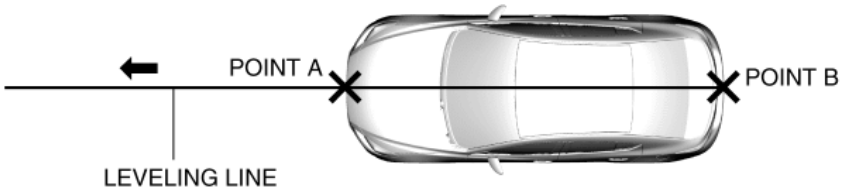

9. Pull the unsecured end of the leveling line over the vehicle and to the front and adjust it so that it passes over point A.

10. Mark the line (position A) at the point **50 cm {20 in}** from point A and in the direction forward of the vehicle.

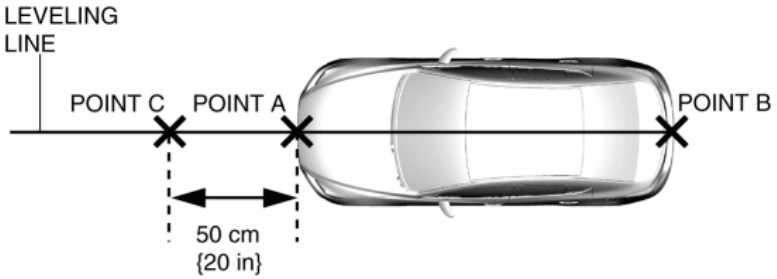

11. Mark the points (points D and E) **35 cm {14 in}** from point C on the line which runs perpendicular to the vehicle center line.

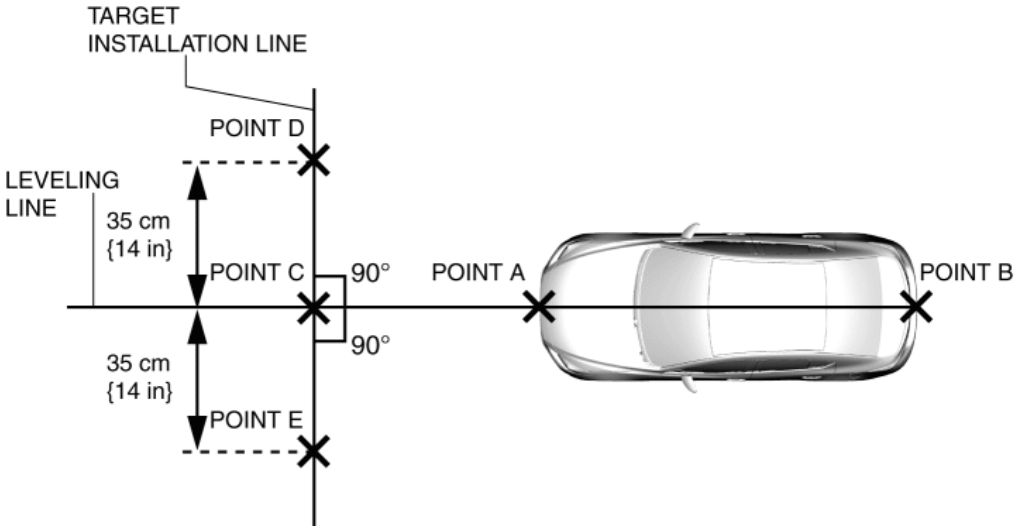

12. Pull the connected points D, C and E lines (target setting line).

13. Print out 2 sheets of the following target paper without using scaling.

NOTE:

- If the target sheets cannot be printed, follow the dimensions shown in Step 15 to make target sheets.

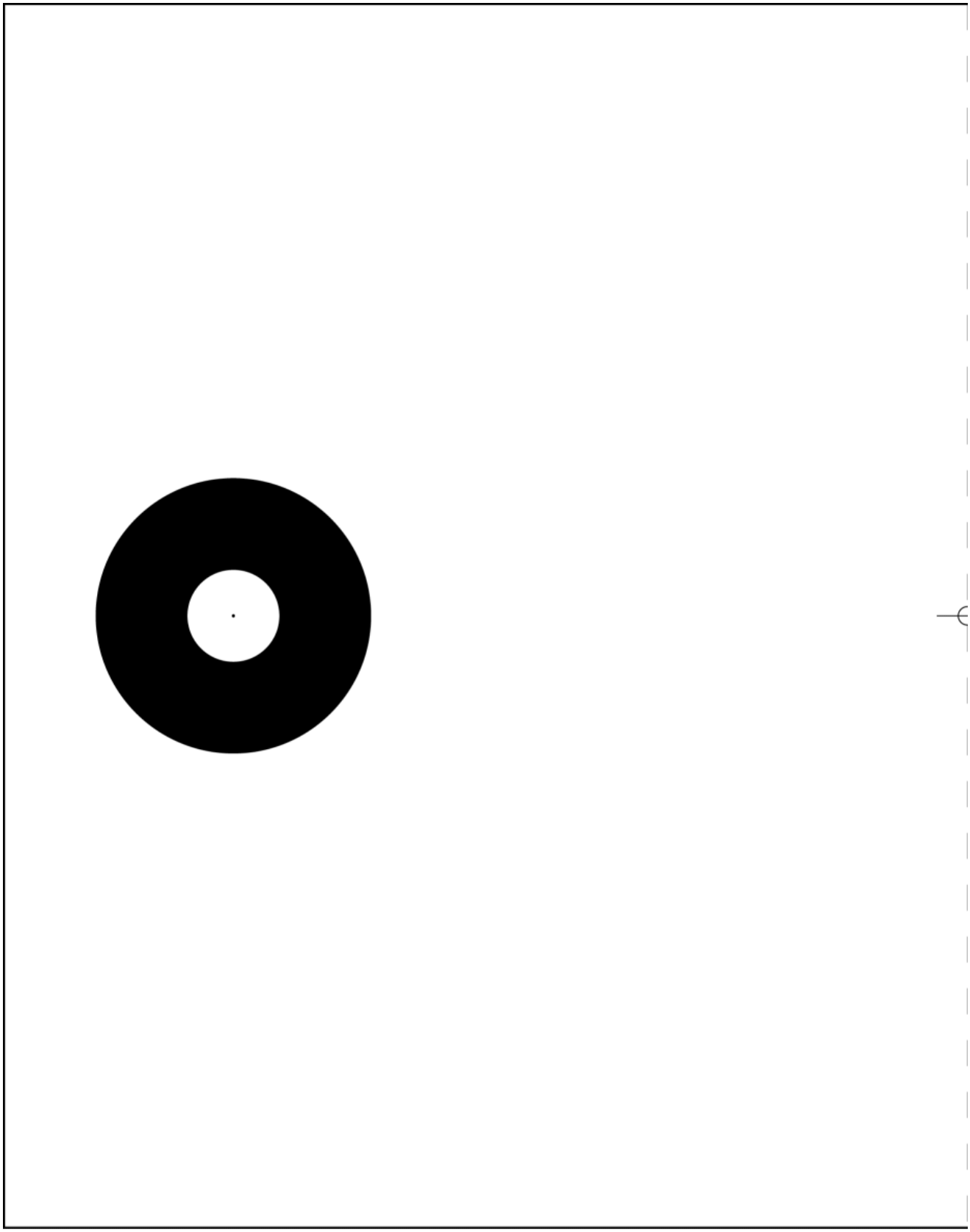

14. Cut the printed target sheets along the dotted line and line up the two sheets at their respective center marks as shown in the figure, and then affix cellophane tape to the back of the target.

CAUTION:

- When taping the two target sheets together, if cellophane tape is affixed to the front of the target sheets it could reflect light and adversely affect the aiming accuracy. When taping the two target sheets together, affix the cellophane tape to the back of the target pattern.

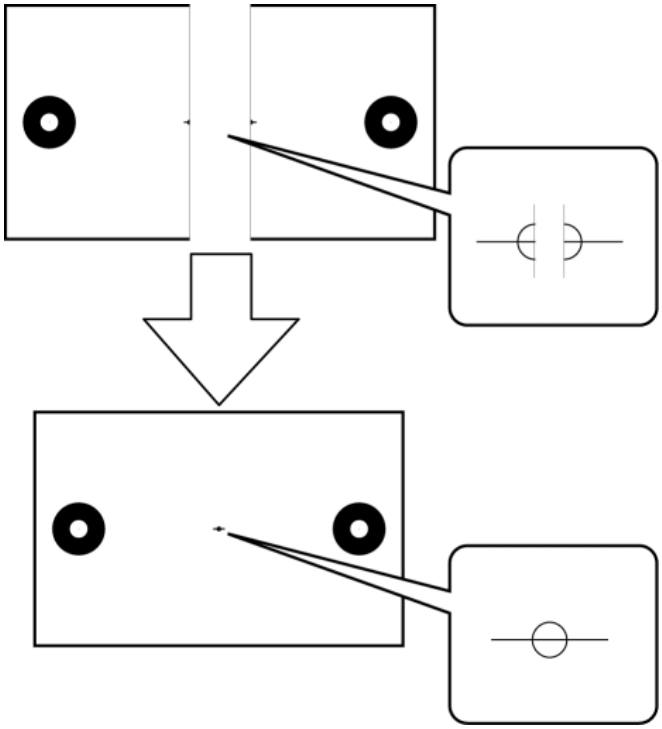

15. Verify that the taped-together target is of the dimensions shown in the figure.

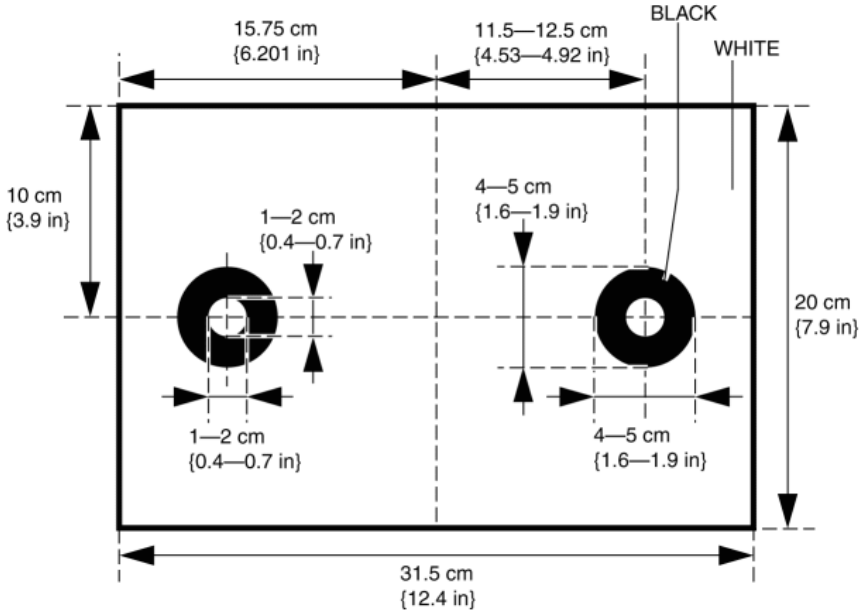

16. Affix double-sided adhesive tape to the back of the target.

CAUTION:

- When affixing the target, if tape is affixed to the front of the target it could reflect light and adversely affect the aiming accuracy. When affixing the target, affix the double-sided adhesive tape to the back of the target, and then affix it to the board.

17. Align the target to the height shown in the figure, and affix it to a board.

NOTE:

- Use a wooden board which does not reflect light to affix the target.

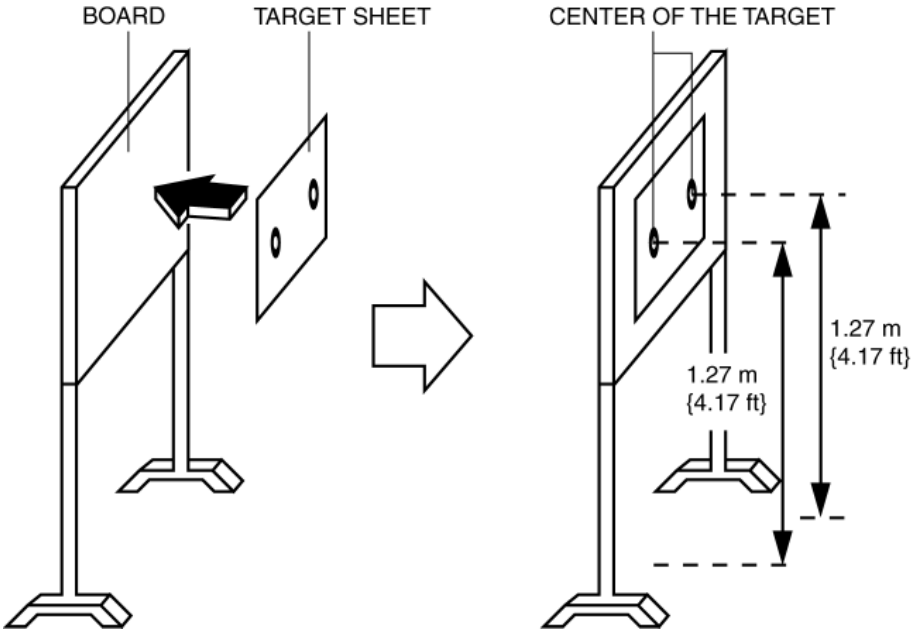

18. Align the center of the target with point C using the SST (plum bob).

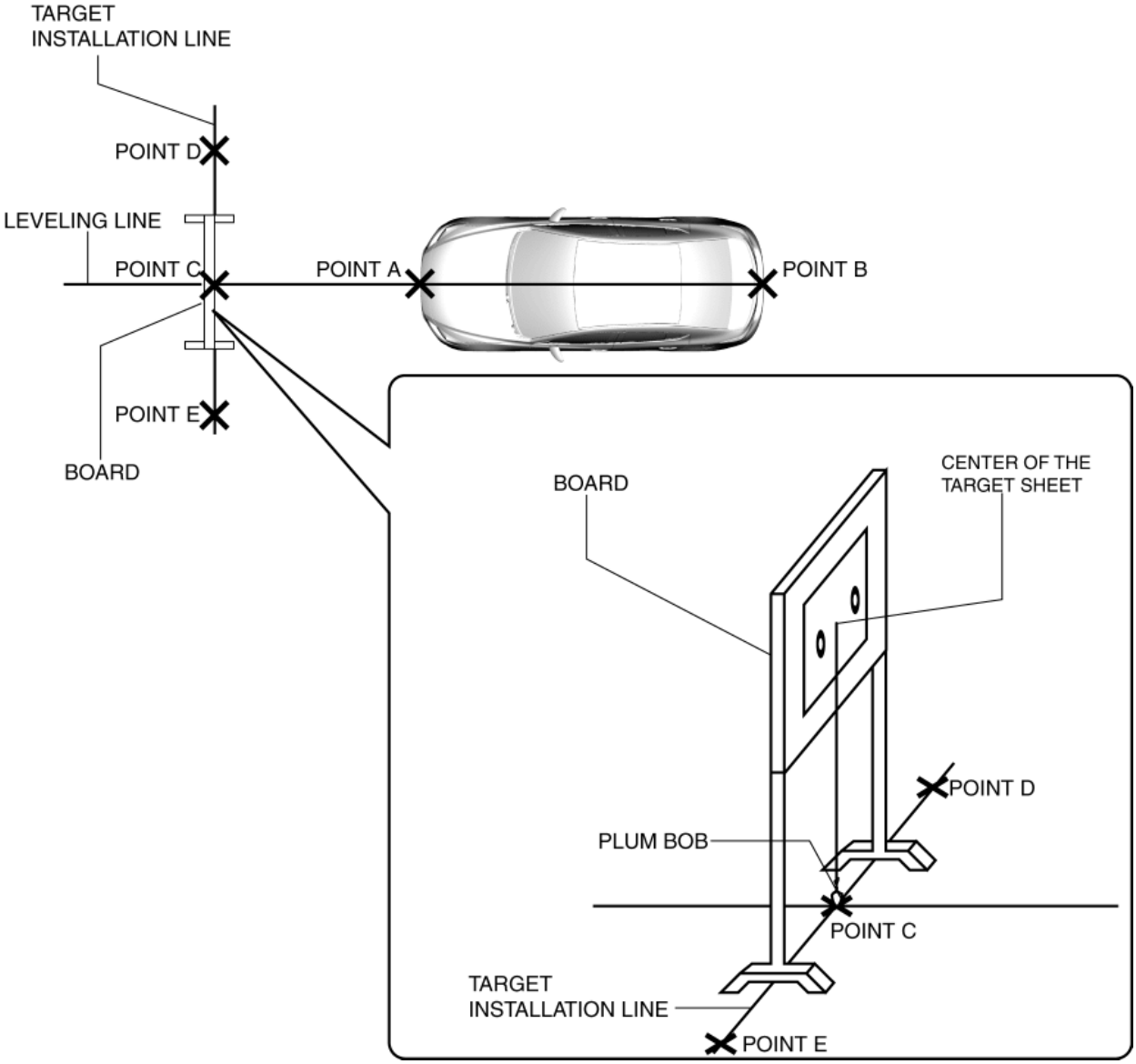

19. Align so that the board and the target setting line are level with the center of point C.

20. Connect the M-MDS (IDS) to the DLC-2.

21. After vehicle identification, the following can be selected from the M-MDS initialization screen.
    - "Electrical"
    - "FSC Aiming"
22. Input the following values according to the instructions on the M-MDS screen.

Item		Value	
		mm	in
Input height from the ground to the wheel house.	Front Left	703	$27\frac{2}{3}$
	Front Right	703	$27\frac{2}{3}$
	Rear Left	699	$27\frac{1}{2}$
	Rear Right	699	$27\frac{1}{2}$
Input the distance from the target to the front wheel center.		-1,424	-56
Input the distance from the lens center to the vehicle center.		26	1
Input the distance from the ground to the target center.		1,285	$50\frac{3}{5}$

23. Perform the FSC aiming procedure according to the directions on the M-MDS.
24. Verify the M-MDS display.
    - If "Procedure successful" is displayed
        - FSC aiming completed
    - If "Procedure unsuccessful" is displayed
        - Perform an inspection according to the following table for the error code procedure.
        - If an error code other than the error codes in the following table is displayed, verify the following and re-perform the FSC aiming if there is no malfunction, as there could be a communication error between the FSC and the diagnostic tester.
            - Is the battery positive voltage for the vehicle 8 V or more?
            - Is the ignition switched ON (engine off or on)?

Error code	Detection condition
01	Target set position or input value is incorrect
02	Visibility where aiming is performed is bright or dark, target soiled
03	Target is not detected
04	Target moves during aiming
05	Input vehicle value exceeds specification
06	Aiming result is required during aiming
08	Aiming result is required for FSC with aiming not completed

FF	Aiming cannot be performed due to communication error

Error code 01/05

Step	Inspection	Action	
1	**VERIFY VEHICLE HEIGHT INPUT VALUE** • Verify the vehicle height indicated in Step 22 for aiming with the input value. • Is the value input correctly?	Yes	Go to the next step.
		No	Input the vehicle height indicated in Step 22 for aiming, then go to the next step.
2	**VERIFY TARGET POSITION** • Verify the following: ▪ Are the vehicle and target set on level ground? ▪ Is the target set to the position indicated in the procedure? ▪ Are the board and the target set line parallel and is the height at the center of the target correct? ▪ Is the target produced as indicated in the procedure? ▪ Is there any dirt, cracks, damage, or wrinkling on the target and board? • Is there any malfunction?	Yes	Repair the target for malfunction and go to the next step.
		No	Go to the next step.
3	**PERFORM FSC AIMING** • Perform the FSC aiming. • Is the FSC aiming completed normally?	Yes	FSC aiming is completed.
		No	**Error code 01 or 05 is displayed** • Go to the next step. **Code other than error cord 01 or 05 is displayed** • Go to the procedure for the displayed error code.
4	**PERFORM FSC AIMING AT ACTUAL MEASURED VALUE OF VEHICLE HEIGHT** • Measure the vehicle height according to the actual measurement procedure for the wheel house height. (See **Wheel house height measurement procedure**.) • Input the actual measured value and perform the FSC aiming. • Is the FSC aiming completed normally?	Yes	The FSC aiming is completed.
		No	Go to the next step.
5	**VERIFY DTC** • Perform the DTC inspection for the FSC. • Is the DTC displayed?	Yes	• Go to the applicable DTC inspection. (See **DTC TABLE [FORWARD SENSING CAMERA (FSC)]**.) • After the diagnostic procedure is completed, perform the FSC aiming.
		No	Re-perform the FSC aiming, and replace the FSC if the FSC aiming is not completed normally. (See **FORWARD SENSING CAMERA (FSC) REMOVAL/INSTALLATION**.)

Error code 02/03/04

Step	Inspection	Action	
1	**VERIFY TARGET AND TARGET SETTING ENVIRONMENT** • Verify the following: ▪ Is there any dirt or damage on the windshield, FSC lens, and FSC cover?	Yes	Repair the malfunctioning part and go to the next step.
		No	Go to the next step.

	▪ Does direct sunlight penetrate the camera or target surroundings? ▪ Is the camera or target surroundings shadowed? ▪ Is there any dirt, cracks, damage, or wrinkling on the target and board? ▪ Is the target produced in white and black? ▪ Is there any obstruction or moving object within the shaded area indicated in Step 4 for aiming? ▪ Is the target produced as indicated in the procedure? ▪ Does the target move during aiming? • Is there any malfunction?		
2	**PERFORM FSC AIMING** • Perform the FSC aiming. • Is the FSC aiming completed normally?	Yes	The FSC aiming is completed.
		No	**Error code 02 or 03 or 04 is displayed** • Go to the next step. **Code other than error code 02 or 03 or 04 is displayed** • Go to the procedure for the displayed error code.
3	**PERFORM FSC AIMING WITH ACTUAL MEASURED VALUE OF VEHICLE HEIGHT** • Measure the vehicle height according to the actual measurement procedure for the wheel house height. (See **Wheel house height measurement procedure**.) • Input the actually measured value and perform the FSC aiming. • Is the FSC aiming completed normally?	Yes	The FSC aiming is completed.
		No	Go to the next step.
4	**VERIFY DTC** • Perform the DTC inspection for the FSC. • Is the DTC displayed?	Yes	• Go to the applicable DTC inspection. (See **DTC TABLE [FORWARD SENSING CAMERA (FSC)]**.) • After the diagnostic procedure is completed, perform the FSC aiming.
		No	Re-perform the FSC aiming, and replace the FSC if the FSC aiming is not completed normally. (See **FORWARD SENSING CAMERA (FSC) REMOVAL/INSTALLATION**.)

Error code 06/08

Step	Inspection	Action	
1	**PERFORM FSC AIMING** • Re-perform the FSC aiming. • Is the FSC aiming completed normally?	Yes	The FSC aiming is completed.
		No	**Error code 06 or 08 is displayed** • Go to the next step. **Code other than error code 06 or 08 is displayed** • Go to the procedure for the displayed error code.
2	**VERIFY DTC** • Perform the DTC inspection for the FSC. • Is the DTC displayed?	Yes	• Go to the applicable DTC inspection. (See **DTC TABLE [FORWARD SENSING CAMERA (FSC)]**.) • After the diagnostic procedure is completed, perform the FSC aiming.
		No	Re-perform the FSC aiming, and replace the FSC if the FSC aiming is not completed

			normally. (See **FORWARD SENSING CAMERA (FSC) REMOVAL/INSTALLATION**.)

Error code FF

Step	Inspection	Action	
1	**VERIFY DTC** • Perform the DTC inspection for the FSC. • Is the DTC displayed?	Yes	• Go to the applicable DTC inspection. (See **DTC TABLE [FORWARD SENSING CAMERA (FSC)]**.) • After the diagnostic procedure is completed, perform the FSC aiming.
		No	Re-perform the FSC aiming, and replace the FSC if the FSC aiming is not completed normally. (See **FORWARD SENSING CAMERA (FSC) REMOVAL/INSTALLATION**.)

Wheel house height measurement procedure

1. Adjust the SST (plum bob) so that it crosses the center of the wheel and identify the center position of the wheel house.

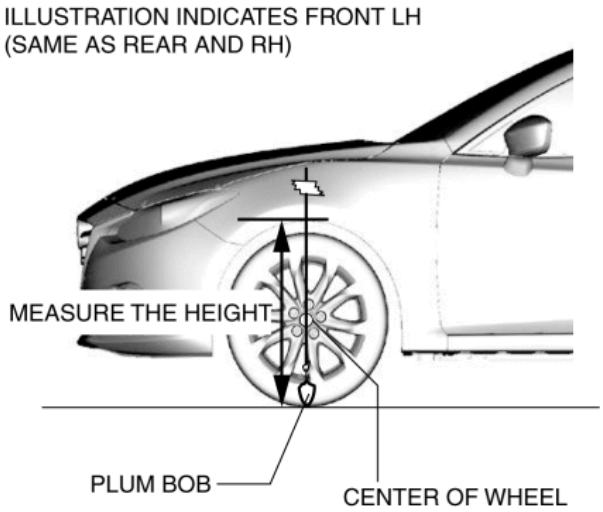

2. Measure the height from the uppermost part of the wheel house to the floor.

2014 - Mazda3 - Body and Accessories

FORWARD SENSING CAMERA (FSC) CONFIGURATION (USING READ/WRITE FUNCTION)

NOTE:

- When performing configuration, it is necessary to read the vehicle specification information from the FSC before replacing it. Connect the M-MDS to the vehicle and perform vehicle identification before removing the FSC. The vehicle specification information is temporarily stored in the M-MDS.

1. Connect the M-MDS to the DLC-2.
2. After vehicle identification, select the following from the M-MDS initialization screen.
    - “Module programming”
3. Then, select the following from the screen menu.
    - “Programmable Module Installation”
    - “FSC”
4. Perform the configuration following the instructions on the screen.

CAUTION:

- When the configuration is performed, CAN communication between the FSC and control module connected to the CAN line is cut temporarily, and communication error DTCs may be detected. After performing the configuration, verify the DTCs for the control module connected to the CAN line and clear it if any DTC is detected.

5. Verify the DTCs for all of the control modules connected to the CAN line.
    - If any DTC is stored, clear it.
    - If the DTC is cleared, finish the procedure because the configuration has been completed normally.
    - If the DTC remains, perform troubleshooting according to the DTC.

2014 - Mazda3 - Body and Accessories

FORWARD SENSING CAMERA (FSC) CONFIGURATION (USING AS-BUILT DATA)

NOTE:

- If the configuration is performed using As-Built data, the set value of the personalization function is reset to the initial value (condition when shipped from factory). Verify the set value with the customer and perform the personalization function setting after performing the configuration using As-Built data.

1. Connect the M-MDS to the DLC-2.
2. After vehicle identification, select the following from the M-MDS initialization screen.
    - “Module programming”
3. Then, select the following from the screen menu.
    - “As-Built”
    - “FSC”
4. Perform As-Built following the instructions on the screen.

CAUTION:

- When the configuration is performed, CAN communication between the FSC and control module connected to the CAN line is cut temporarily, and communication error DTCs may be detected. After performing the configuration, verify the DTCs for the control module connected to the CAN line and clear it if any DTC is detected.

5. Verify the DTCs for all of the control modules connected to the CAN line.
    - If any DTC is stored, clear it.
    - If the DTC is cleared, finish the procedure because the configuration has been completed normally.
    - If the DTC remains, perform troubleshooting according to the DTC.

2014 - Mazda3 - Body and Accessories

LDWS SWITCH REMOVAL/INSTALLATION

NOTE:

- The LDWS switch is integrated with the cluster switch.
- For the LDWS switch removal/installation, refer to CLUSTER SWITCH REMOVAL/INSTALLATION. (See **CLUSTER SWITCH REMOVAL/INSTALLATION**.)

2014 - Mazda3 - Body and Accessories

LDWS SWITCH INSPECTION

NOTE:

- The LDWS switch is integrated with the cluster switch.
- For the LDWS switch removal/installation, refer to CLUSTER SWITCH REMOVAL/INSTALLATION. (See **CLUSTER SWITCH REMOVAL/INSTALLATION**.)

Resistance Inspection

1. Disconnect the negative battery cable. (See **NEGATIVE BATTERY CABLE DISCONNECTION/CONNECTION [SKYACTIV-G 2.0, SKYACTIV-G 2.5]**.)
2. Remove the LDWS switch. (See **LDWS SWITCH REMOVAL/INSTALLATION**.)
3. Measure the resistance between LDWS switches B and C under the following conditions:
    - Resistance with LDWS switch pressed and held
        - 753.89—769.11 ohms
    - Resistance with any switches not pressed
        - 1,139.99—1,163.01 ohms

CIRCUIT WITH LDWS SWITCH PRESSED AND HELD

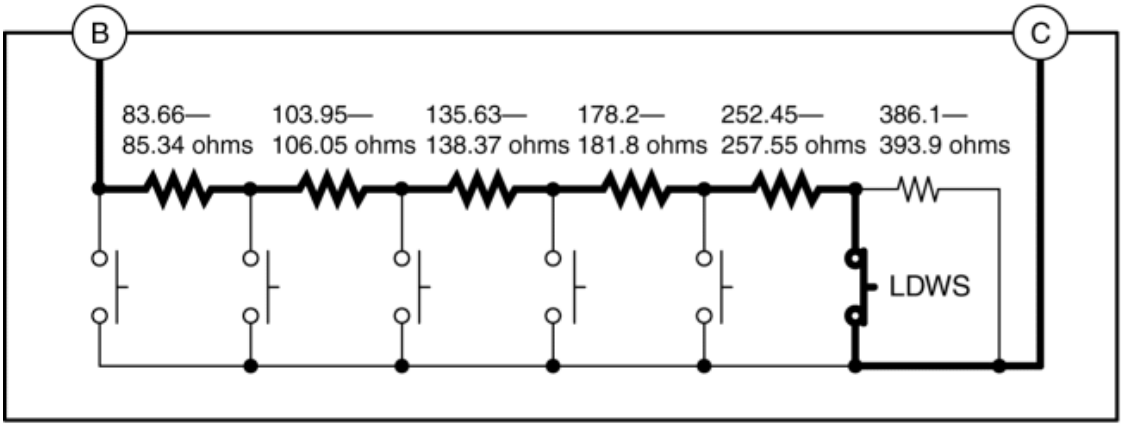

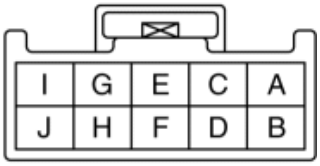

CIRCUIT WITH ANY SWITCHES NOT PRESSED

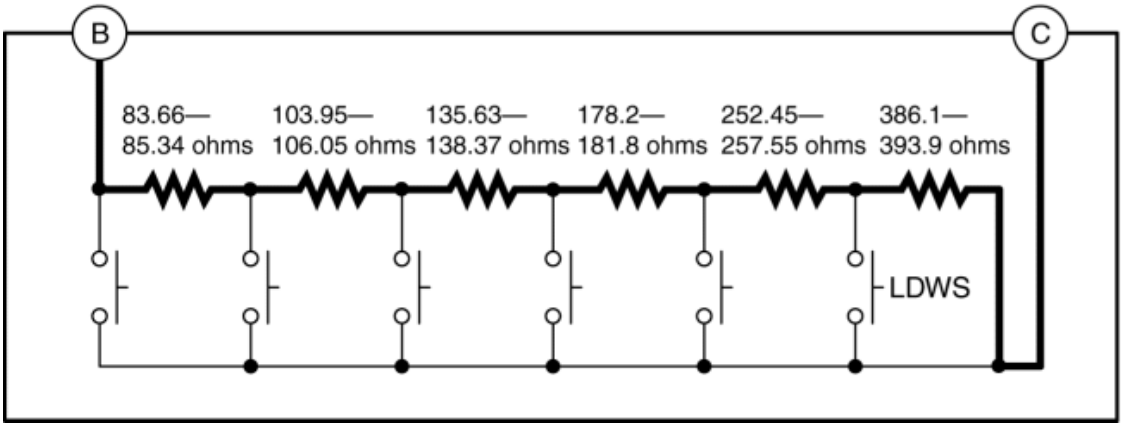

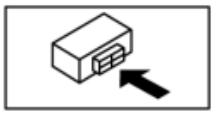

- If not within the specification, replace the cluster switch. (See **CLUSTER SWITCH REMOVAL/INSTALLATION**.)

LED Illumination Inspection

1. Disconnect the negative battery cable. (See **NEGATIVE BATTERY CABLE DISCONNECTION/CONNECTION [SKYACTIV-G 2.0, SKYACTIV-G 2.5]**.)

2. Remove the LDWS switch. (See **LDWS SWITCH REMOVAL/INSTALLATION**.)

3. Apply battery positive voltage to LDWS switch terminal J, and connect terminal I to ground.

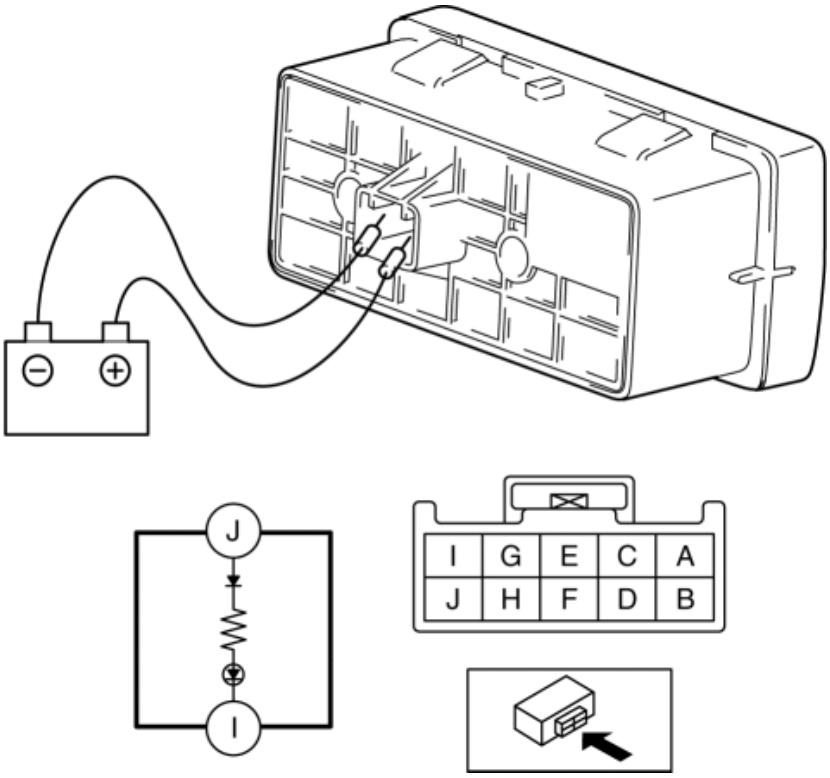

4. Verify that the LED illuminates.

- If there is any malfunction, replace the cluster switch. (See **CLUSTER SWITCH REMOVAL/INSTALLATION**.)

2014 - Mazda3 - Body and Accessories

ACTIVE AIR SHUTTER LOCATION INDEX

1	Active air shutter (See **ACTIVE AIR SHUTTER REMOVAL/INSTALLATION**.) (See **ACTIVE AIR SHUTTER INSPECTION**.)
2	Active air shutter cover (See **ACTIVE AIR SHUTTER REMOVAL/INSTALLATION**.)

2014 - Mazda3 - Body and Accessories

ACTIVE AIR SHUTTER REMOVAL/INSTALLATION

CAUTION:

- If the active air shutter is disassembled and re-assembled, it may not operate normally. Do not disassemble the active air shutter because it is not designed to be disassembled.

1. Disconnect the negative battery cable. (See **NEGATIVE BATTERY CABLE DISCONNECTION/CONNECTION [SKYACTIV-G 2.0, SKYACTIV-G 2.5]**.)

2. Remove the set plate. (See **SET PLATE REMOVAL/INSTALLATION**.)

3. Remove the front bumper. (See **FRONT BUMPER REMOVAL/INSTALLATION**.)

4. Disconnect the connector.

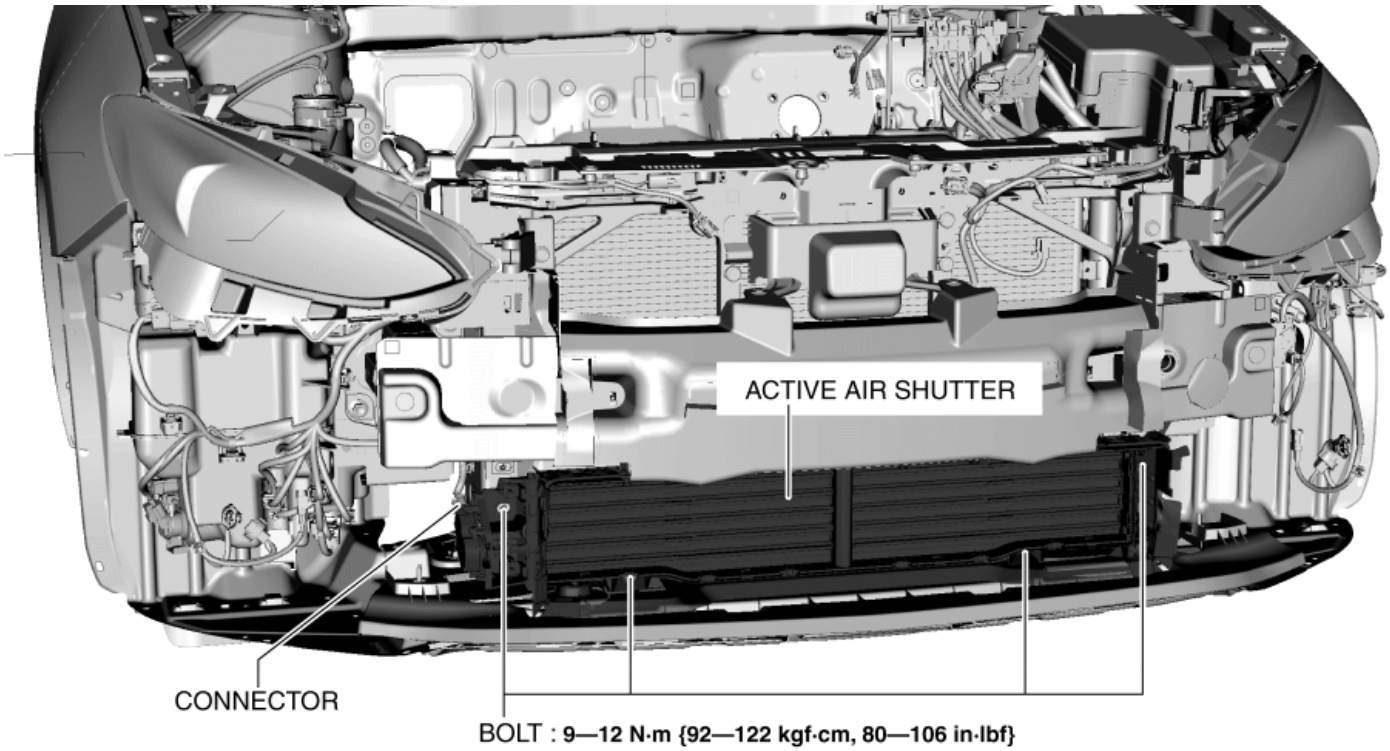

5. Remove the bolts.

6. Insert the remover tool into the service hole shown in the figure.

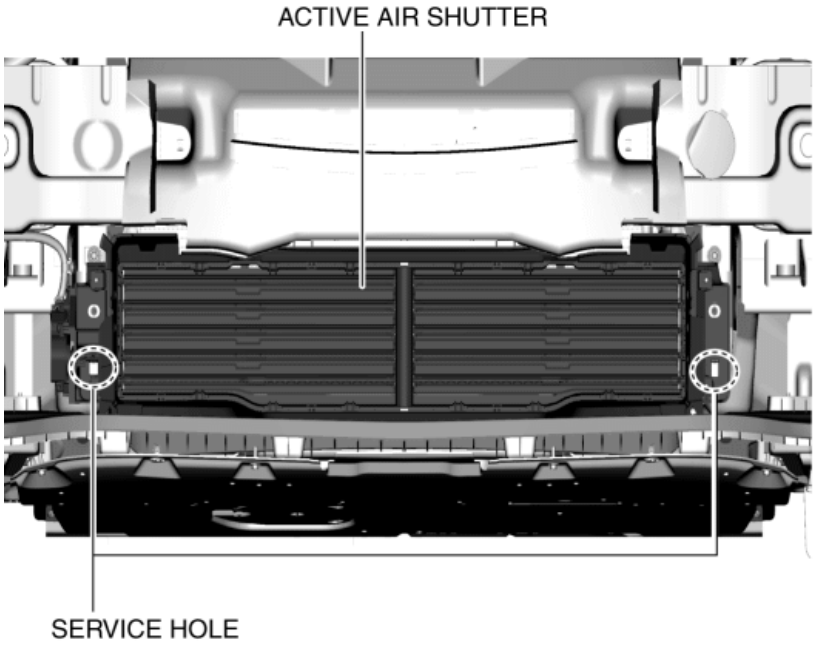

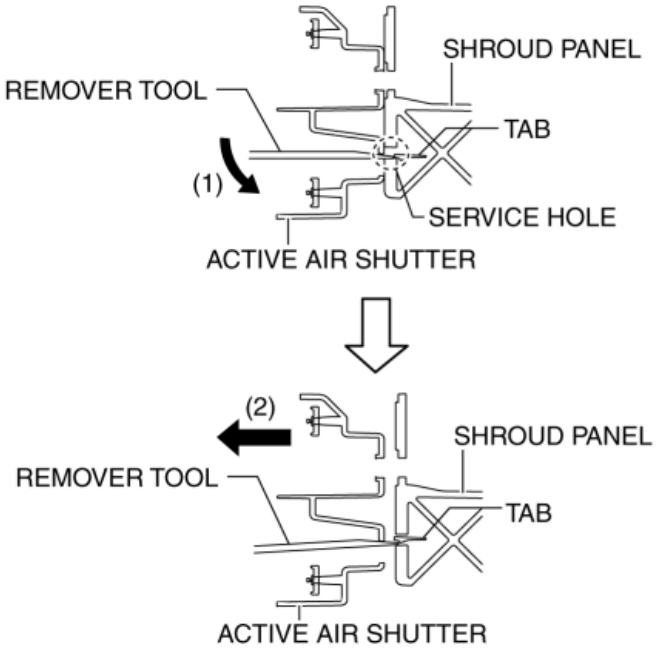

7. While moving the remover tool in the direction of arrow (1) shown in the figure, pull the active air shutter in the direction of arrow (2) to detach the tabs of the active air shutter from the shroud panel.

8. Remove the active air shutter.

9. Remove the active air shutter cover. (See **ACTIVE AIR SHUTTER COVER REMOVAL/INSTALLATION**.)

10. Install in the reverse order of removal.

2014 - Mazda3 - Body and Accessories

ACTIVE AIR SHUTTER COVER REMOVAL/INSTALLATION

1. Disconnect the negative battery cable. (See **NEGATIVE BATTERY CABLE DISCONNECTION/CONNECTION [SKYACTIV-G 2.0, SKYACTIV-G 2.5]**.)

2. Remove the set plate. (See **SET PLATE REMOVAL/INSTALLATION**.)

3. Remove the front bumper. (See **FRONT BUMPER REMOVAL/INSTALLATION**.)

4. Remove the active air shutter. (See **ACTIVE AIR SHUTTER REMOVAL/INSTALLATION**.)

5. Remove the screws.

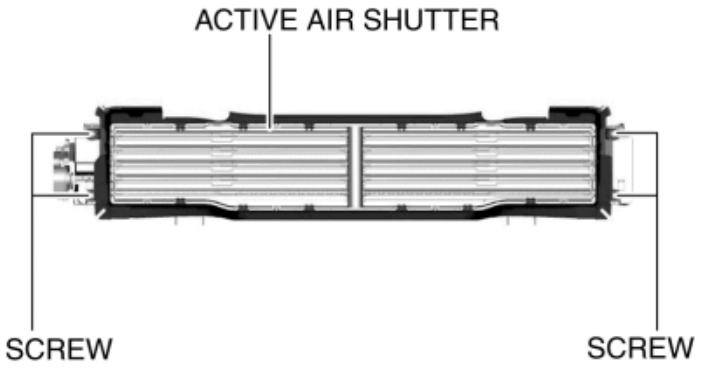

6. While pressing the frame tabs in the direction of arrow (1) shown in the figure, pull the active air shutter cover in the direction of arrow (2) to detach the active air shutter cover from the frame tabs.

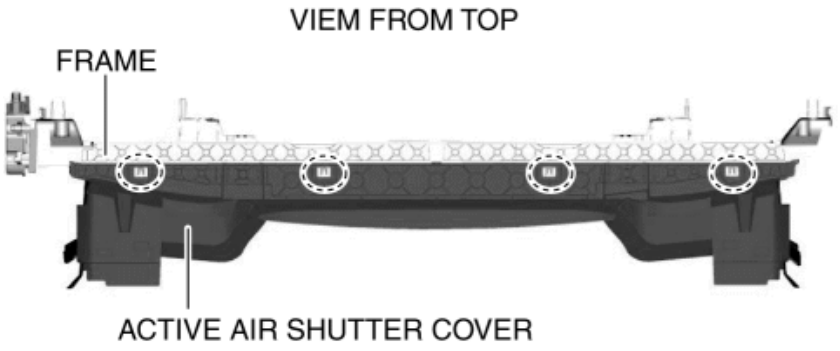

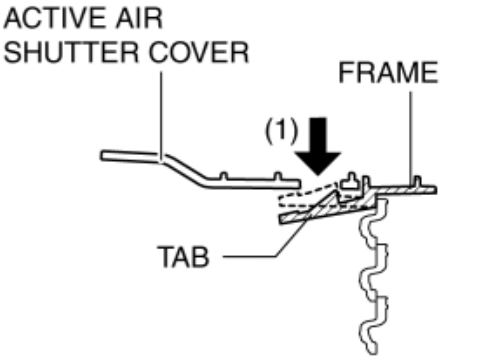

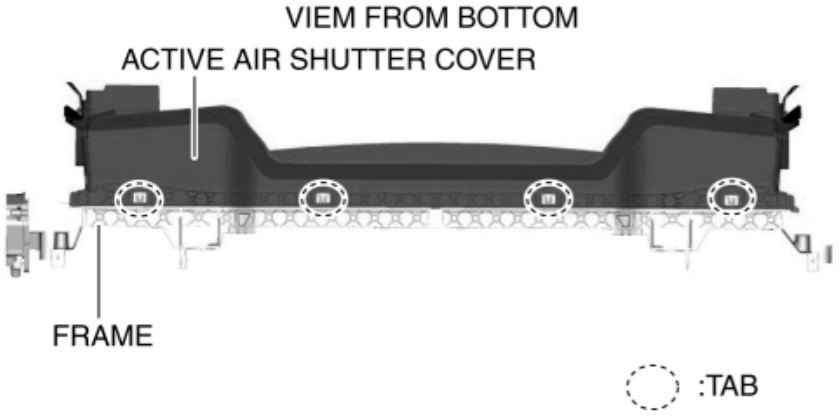

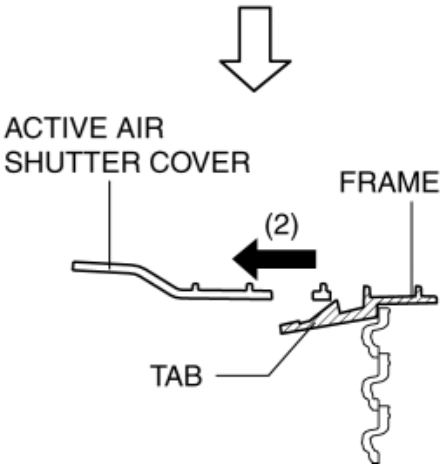

7. Detach all tabs and remove the active air shutter cover from the frame.
8. Install in the reverse order of removal.

2014 - Mazda3 - Body and Accessories

ACTIVE AIR SHUTTER INSPECTION

1. Connect the M-MDS to the DLC-2.

2. Perform the KOEO or KOER self-test for the PCM using the M-MDS and verify that PCM DTC P05A0:00, P059F:00, P05C0:00, P05A3:00, or U0284:00 is not output. (See **KOEO/KOER SELF TEST [SKYACTIV-G 2.0, SKYACTIV-G 2.5]**.)

- If PCM DTC P05A0:00, P059F:00, P05C0:00, P05A3:00, or U0284:00 is output, perform the applicable DTC inspection. (See **DTC TABLE [SKYACTIV-G 2.0, SKYACTIV-G 2.5]**.)

3. Inspect the active air shutter for foreign material penetration, shutter distortion, sticker adhering, or excessive soiling visually or by touching with a hand.

- If there is any malfunction, repair the malfunctioning location.

4. Using the M-MDS simulation function (simulation item: AIRSHUT_DSD), force operate the active air shutter. (See **ON-BOARD DIAGNOSTIC TEST [SKYACTIV-G 2.0, SKYACTIV-G 2.5]**.)

NOTE:

- If the active air shutter fully open/closed position learning is not completed, the active air shutter cannot be forcibly operated. If the active air shutter is to be forcibly operated, perform the active air shutter fully open/closed position learning.
- If the active air shutter does not operate, replace the active air shutter. (See **ACTIVE AIR SHUTTER REMOVAL/INSTALLATION**.)

2014 - Mazda3 - Body and Accessories

CONTROL SYSTEM LOCATION INDEX

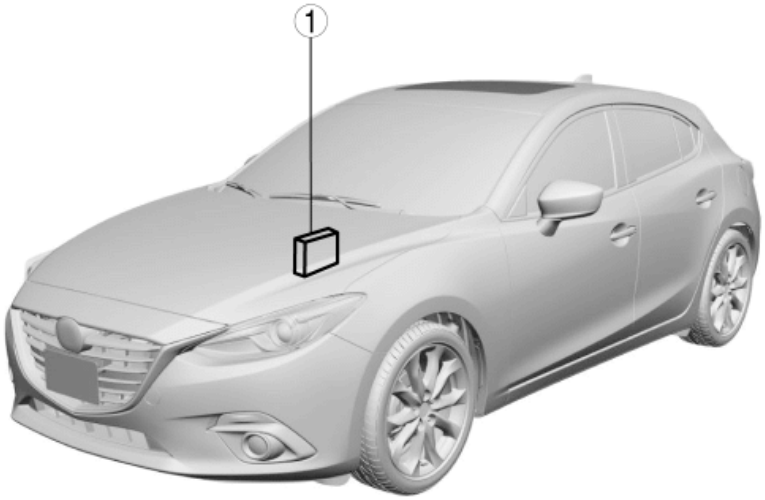

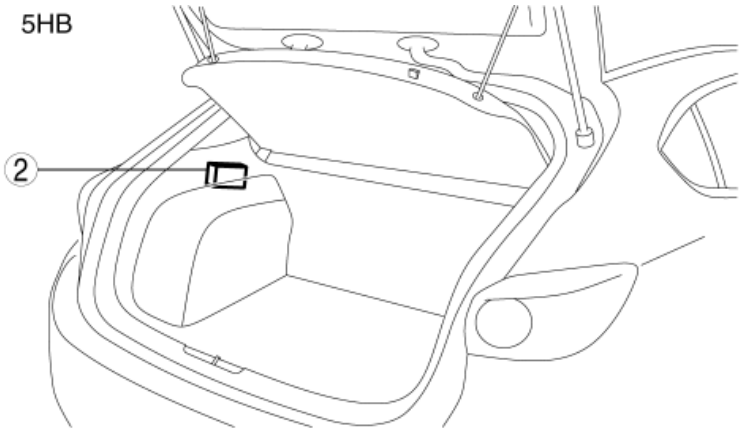

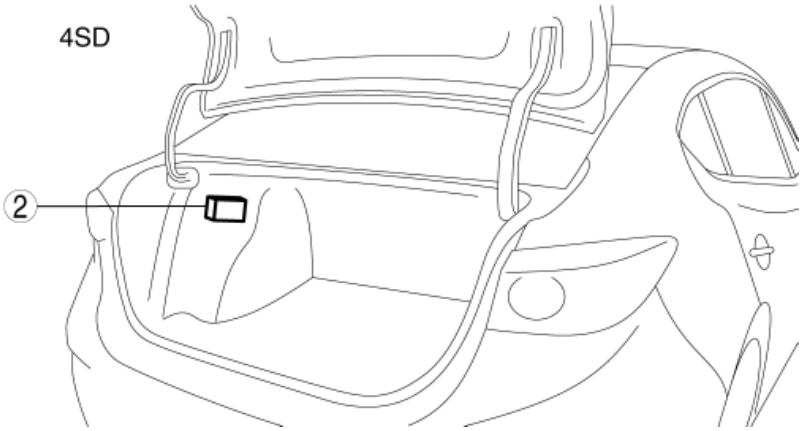

1	Front body control module (FBCM) (See **FRONT BODY CONTROL MODULE (FBCM) REMOVAL / INSTALLATION**.) (See **FRONT BODY CONTROL MODULE (FBCM) INSPECTION**.) (See **FRONT BODY CONTROL MODULE (FBCM) CONFIGURATION (USING READ / WRITE FUNCTION)**.) (See **FRONT BODY CONTROL MODULE (FBCM) CONFIGURATION (USING AS-BUILT DATA)**.)
2	Rear body control module (RBCM) (See **REAR BODY CONTROL MODULE (RBCM) REMOVAL / INSTALLATION**.) (See **REAR BODY CONTROL MODULE (RBCM) INSPECTION**.) (See **REAR BODY CONTROL MODULE (RBCM) BRACKET REMOVAL / INSTALLATION**.) (See **REAR BODY CONTROL MODULE (RBCM) CONFIGURATION (USING READ / WRITE FUNCTION)**.) (See **REAR BODY CONTROL MODULE (RBCM) CONFIGURATION (USING AS-BUILT DATA)**.) (See **CONTROL SYSTEM PERSONALIZATION FEATURES SETTING PROCEDURE**.)

2014 - Mazda3 - Body and Accessories

FRONT BODY CONTROL MODULE (FBCM) REMOVAL/INSTALLATION

CAUTION:

- If configuration is not performed when the front body control module (FBCM) is replaced with a new one, the vehicle specification information is not stored in the front body control module (FBCM) and the system will not operate normally.
- When performing configuration, it is necessary to read the vehicle specification information from the front body control module (FBCM) before replacing it. Connect the M-MDS to the vehicle and perform vehicle identification before removing the front body control module (FBCM). The vehicle specification information is temporarily stored in the M-MDS.

NOTE:

- The front body control module (FBCM) prior to replacement stores the vehicle specification information.
- A new front body control module (FBCM) does not store any vehicle specification information.
- If the vehicle specification information from the front body control module (FBCM) prior to replacement cannot be read, perform the configuration using As-Built data.

1. When replacing the front body control module (FBCM), perform the configuration. (See **FRONT BODY CONTROL MODULE (FBCM) CONFIGURATION (USING READ/WRITE FUNCTION)**.)

2. Disconnect the negative battery cable. (See **NEGATIVE BATTERY CABLE DISCONNECTION/CONNECTION [SKYACTIV-G 2.0, SKYACTIV-G 2.5]**.)

3. Remove the fuse box cover. (See **RELAY AND FUSE BLOCK REMOVAL/INSTALLATION**.)

4. Insert a remover tool into the position shown in the figure.

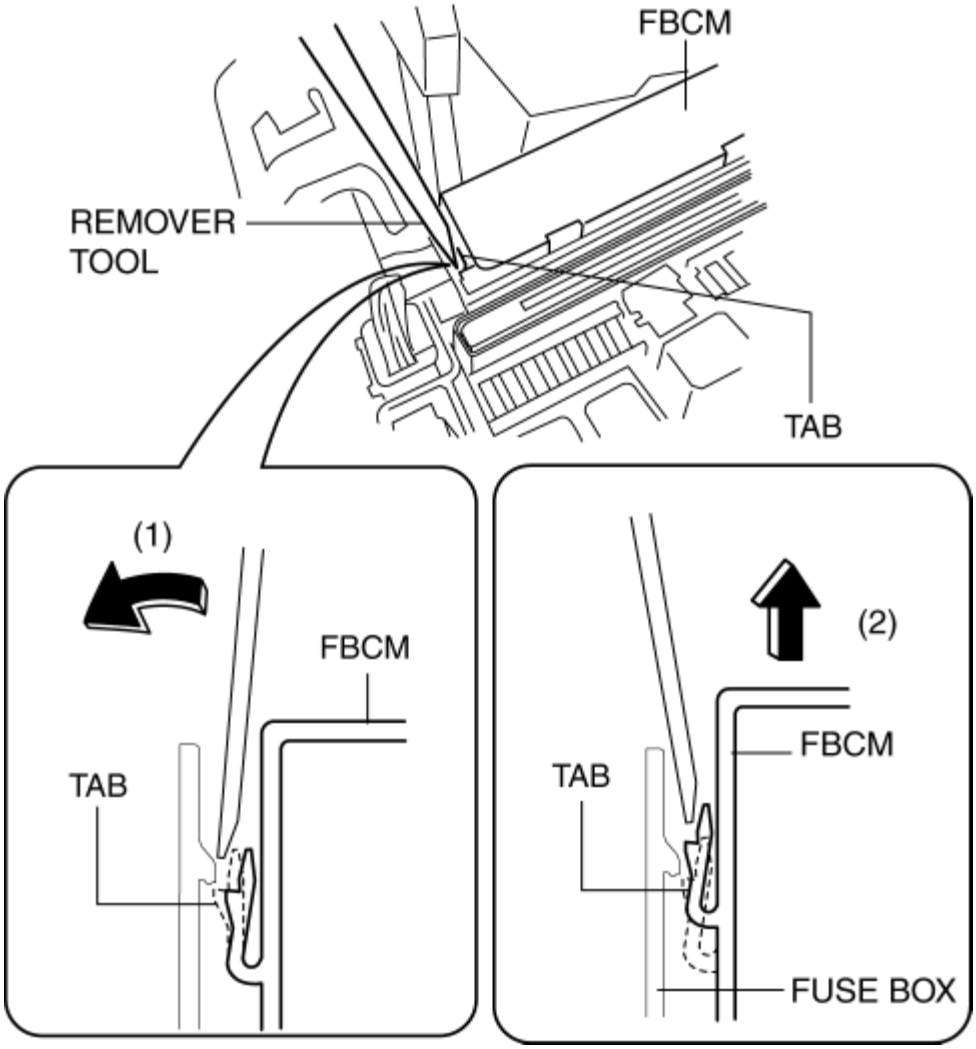

5. Move the remover tool in the direction of arrow (1) shown in the figure and lift the front body control module (FBCM) in the direction of arrow (2) to detach its tab from the fuse box.

6. Insert a remover tool into the position shown in the figure.

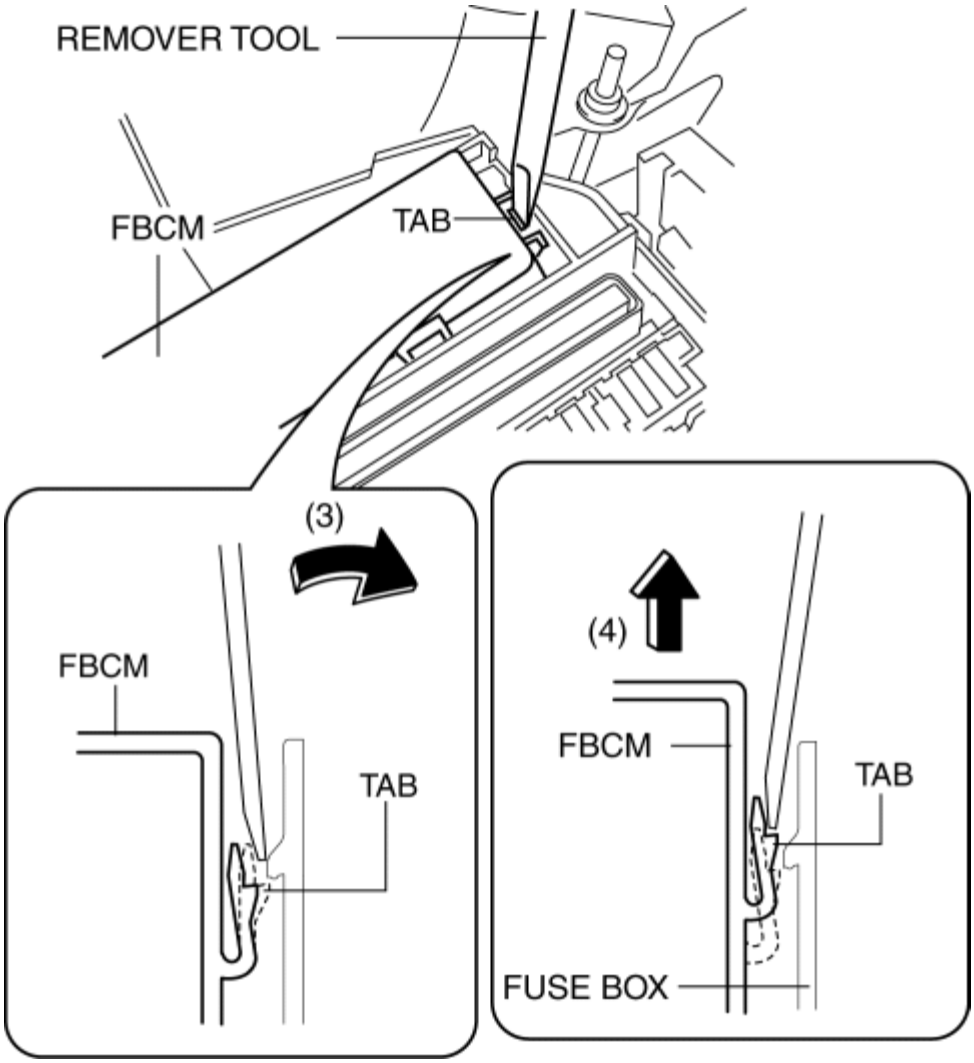

7. Move the remover tool in the direction of arrow (3) shown in the figure and lift the front body control module (FBCM) in the direction of arrow (4) to detach its tab from the fuse box.

8. Pull the front body control module (FBCM) in the direction of the arrow shown in the figure to remove it from the fuse box.

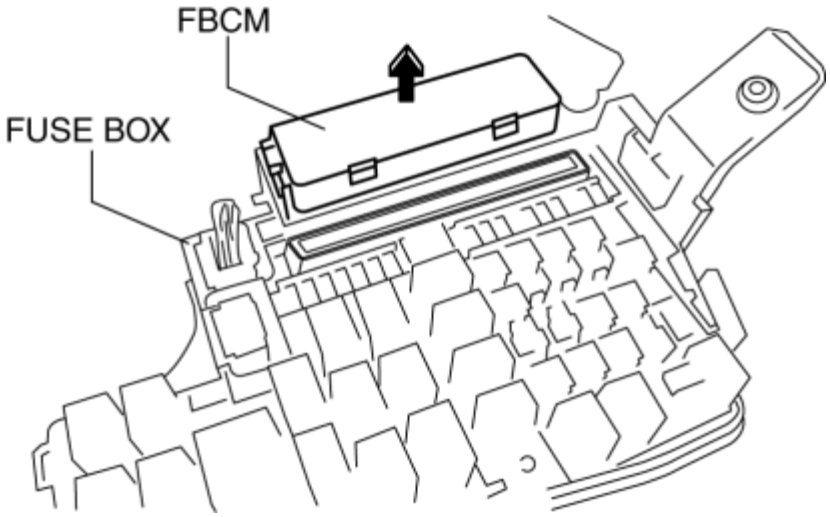

9. Disconnect the connectors shown in the figure.

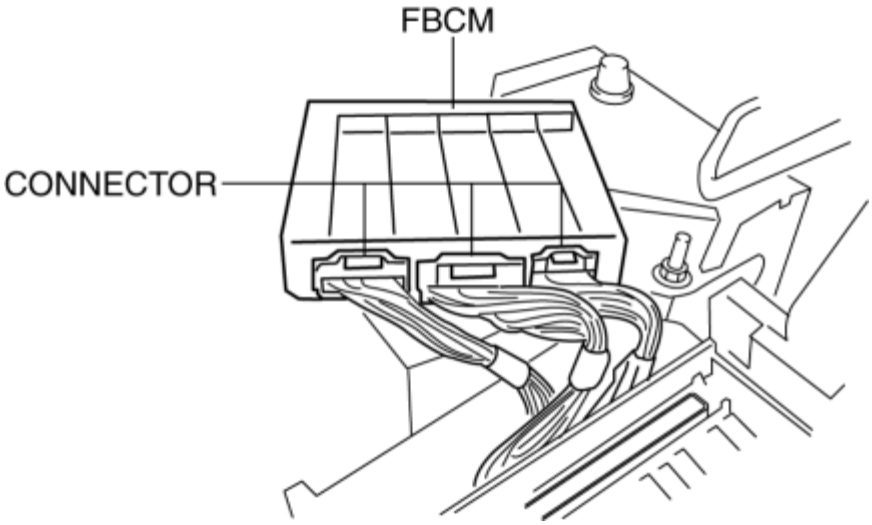

10. Install in the reverse order of removal.

NOTE:

- If configuration cannot be performed by reading/writing of the vehicle specification information, perform the configuration using As-Built information after replacing the front body control module (FBCM). (See **FRONT BODY CONTROL MODULE (FBCM) CONFIGURATION (USING AS-BUILT DATA)**.)

2014 - Mazda3 - Body and Accessories

FRONT BODY CONTROL MODULE (FBCM) INSPECTION

1. Remove the fuse box cover. (See **RELAY AND FUSE BLOCK REMOVAL/INSTALLATION**.)

2. Remove the front body control module (FBCM) from the fuse box. (See **FRONT BODY CONTROL MODULE (FBCM) REMOVAL/INSTALLATION**.)

3. Verify that the voltages of each of the terminals are as indicated in the Terminal Voltage Table (Reference). (See **Terminal Voltage Table (Reference)**)

- If the voltage is not as specified in the terminal voltage table (reference), inspect the parts under Inspection item(s) and related wiring harnesses.
  - If the system does not work normally even though the inspection items or related wiring harnesses do not have any malfunction, replace the front body control module (FBCM).

Terminal Voltage Table (Reference)

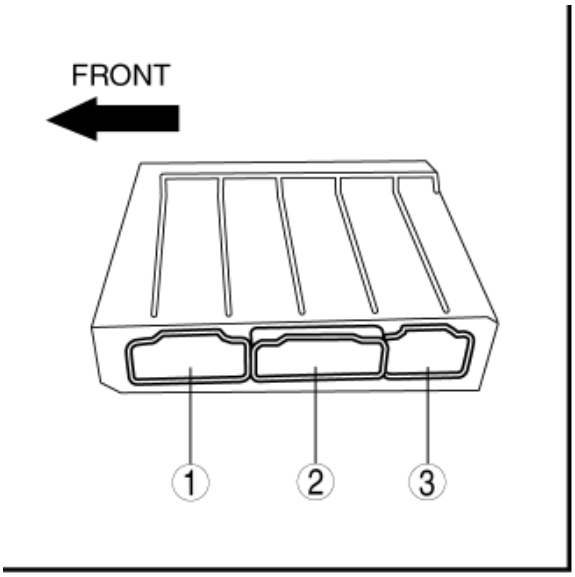

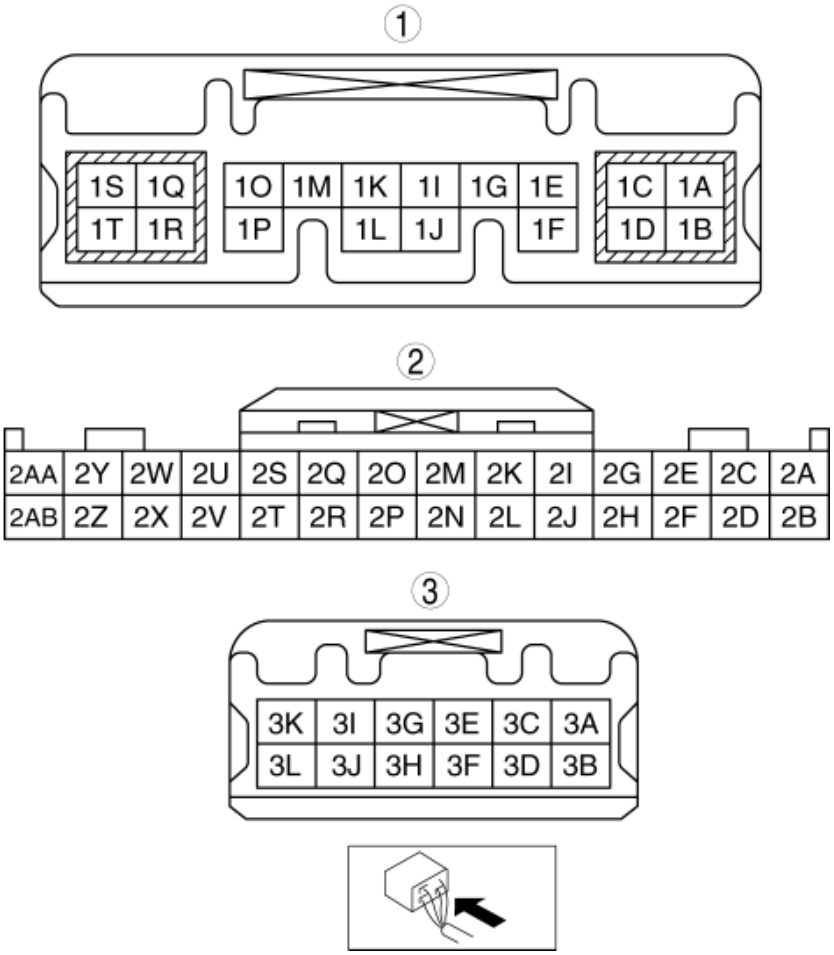

Terminal	Signal	Connected to	Measurement conditions	Voltage	Inspection item(s)

					(V)	
1A	Power supply	HAZARD 25 A fuse	Under any condition		B+	• HAZARD 25 A fuse • Battery
1B	Power supply	HAZARD 25 A fuse	Under any condition		B+	• HAZARD 25 A fuse • Battery
1C	Ignition power supply	• Climate control unit • Seat warmer control unit • A/C relay	Ignition switched ON (engine off)		B+	• Climate control unit • Seat warmer control unit • A/C relay
			Ignition switched OFF		1.0 or less	
1D	Signal ground	Body ground	Under any condition		1.0 or less	Body ground
1E	Rear turn light (RH) control	• Rear turn light (RH) • Side turn light (RH)	Ignition switched ON (engine off)	Turn switch at right turn light position	1.0 or less B+	• Rear turn light (RH) • Side turn light (RH)
				Turn switch is in position other than above	1.0 or less	
1F	—	—	—		—	—
1G	Front turn light (RH) control	Front turn light (RH)	Ignition switched ON (engine off)	Turn switch at right turn light position	1.0 or less B+	Front turn light (RH)
				Turn switch is in position other than above	1.0 or less	
1H	—	—	—		—	—
1I	License light control	TNS relay	Light switch at TNS position		B+	TNS relay
			Light switch at OFF position		1.0 or less	
1J	—	—	—		—	—
1K	—	—	—		—	—
1L	Horn relay control	Horn relay	Horn switch not pressed		B+	Horn relay
			Horn switch pressed		1.0 or	

					less	
1M	Headlight relay (LO) control	• Headlight LO relay (halogen type) • Headlight LO relay (LH) (discharge type)	Light switch at HEAD position		1.0 or less	• Headlight LO relay (halogen type) • Headlight LO relay (LH) (discharge type)
			Light switch is in position other than above		B+	
1N	—	—	—		—	—
1O*1	Theft-deterrent horn input signal	Rear body control module (RBCM)	M-MDS is connected and theft-deterrent is sounded using data monitor function		1.0 or less	Rear body control module (RBCM)
			M-MDS is connected and theft-deterrent is not sounded using data monitor function		B+	
1P	Rear window defroster relay control	Rear window defroster relay	Ignition switched ON (engine off)	Rear window defroster switch OFF	B+	Rear window defroster relay
				Rear window defroster switch ON	1.0 or less	
1Q	—	—	—		—	—
1R*1	Theft-deterrent horn power supply	R.WIPER 15 A fuse	Under any condition		B+	• R.WIPER 15 A fuse • Battery
1S	—	—	—		—	—
1T*1	Theft-deterrent horn output signal	Theft-deterrent horn	M-MDS is connected and theft-deterrent is sounded using data monitor function		B+	Theft-deterrent horn
			M-MDS is connected and theft-deterrent is not sounded using data monitor function		1.0 or less	
2A	Interior light power supply	ROOM 15 A fuse	Under any condition		B+	• ROOM 15 A fuse • Battery
2B	Front turn light (LH) control	Front turn light (LH)	Ignition switched ON (engine off)	Turn switch at left turn light position	1.0 or less B+	Front turn light (LH)

				Turn switch is in position other than above	1.0 or less	
2C*2	Daytime running light control	• DRL relay (Halogen type) • Front combination light (LH, RH) (Discharge type)	Ignition switched ON (engine off) and light switch OFF	Daytime running light illuminates	B+	• DRL relay (Halogen type) • Front combination light (LH, RH) (Discharge type)
				Daytime running light turns off	1.0 or less	
2D	Rear turn light (LH) control	• Rear turn light (LH) • Side turn light (LH)	Ignition switched ON (engine off)	Turn switch at left turn light position	1.0 or less B+	• Rear turn light (LH) • Side turn light (LH)
				Turn switch is in position other than above	1.0 or less	
2E*7	LIN communication	Current sensor	Terminal used for communication therefore determination based on terminal voltage is not possible.			
2F	—	—	—		—	—
2G*3	LIN communication	Auto-light sensor/rain sensor	Terminal used for communication therefore determination based on terminal voltage is not possible.			
2H	—	—	—		—	—
2I	CAN_L	CAN system related module	Terminal used for communication therefore determination based on terminal voltage is not possible.			
2J*6	LIN communication	Climate control unit	Terminal used for communication therefore determination based on terminal voltage is not possible.			
2K	CAN_H	CAN system related module	Terminal used for communication therefore determination based on terminal voltage is not possible.			
2L	CAN_L	CAN system related module	Terminal used for communication therefore determination based on terminal voltage is not possible.			
2M	Ignition power supply	• Auto-light sensor/rain sensor • C/U IG1 15 A fuse	Ignition switched ON (engine off)		B+	• Auto-light sensor/rain sensor • C/U IG1 15 A fuse
			Ignition switched OFF		1.0 or less	
2N	CAN_L	CAN system related module	Terminal used for communication therefore determination based on terminal voltage is not possible.			
2O	—	—	—		—	—

2P	CAN_H	CAN system related module	Terminal used for communication therefore determination based on terminal voltage is not possible.			
2Q	Brake fluid level switch signal	Brake fluid level sensor	Ignition switched ON (engine off)	Brake fluid level is less than MIN (brake fluid level sensor ON)	1.0 or less	Brake fluid level sensor
				Brake fluid level is MIN or more (brake fluid level sensor OFF)	Wave pattern (See **Pattern 1**.)	
2R	CAN_H	CAN system related module	Terminal used for communication therefore determination based on terminal voltage is not possible.			
2S	Washer level switch signal	Washer fluid-level sensor	Ignition switched ON (engine off)	Washer level is less than MIN (washer fluid-level sensor ON)	1.0 or less	Washer fluid-level sensor
				Washer level is MIN or more (washer fluid-level sensor OFF)	Wave pattern (See **Pattern 1**.)	
2T	—	—	—		—	—
2U	Ignition power supply	Start stop unit	Ignition switched ON (engine off)		B+	Start stop unit
			Ignition switched OFF		1.0 or less	
2V	Headlight relay (LO) control (discharge type)	Headlight LO relay (RH)	Light switch at HEAD position		1.0 or less	Headlight LO relay (RH)
			Light switch is in position other than above		B+	
2W	Headlight (LO) switch signal	Start stop unit	Light switch at HEAD position		1.0 or less	Start stop unit
			Light switch at OFF position		B+	
2X	Headlight relay (HI) control	Headlight HI relay	Headlight at HEAD position and dimmer switch at LO position		B+	Headlight HI relay
			Headlight at HEAD position and dimmer switch at HIGH or passing position		1.0 or less	
	Windshield		Windshield wiper switch at ON position		1.0 or less	

2Y	wiper (LO) switch signal	Start stop unit	Windshield wiper switch at OFF position		B+	Start stop unit
2Z	Blower motor relay control	Blower relay	Ignition switched ON (engine off)	Operate blower motor using fan switch	1.0 or less	Blower relay
				Press climate control unit OFF button to stop blower motor	B+	
2AA	Autostop switch signal	Windshield wiper motor	Ignition switched ON (engine off)	Turn windshield wiper switch ON and wiper is operated	B+	Windshield wiper motor
				Windshield wiper switch OFF	1.0 or less	
2AB *4	Front fog light relay control	Front fog light relay	Light switch at HEAD position	Front fog light switch OFF	B+	Front fog light relay
				Front fog light switch ON	1.0 or less	
3A	Wiper power supply	WIPER 20 A fuse	Under any condition		B+	• WIPER 20 A fuse • Battery
3B	Wiper power supply	WIPER 20 A fuse	Under any condition		B+	• WIPER 20 A fuse • Battery
3C	Windshield wiper motor (HI) control	Windshield wiper motor	Ignition switched ON (engine off)	Windshield wiper switch at HI position	B+	Windshield wiper motor
				Windshield wiper switch at OFF position	1.0 or less	
3D	Power ground	Body ground	Under any condition		1.0 or less	Body ground
3E	Windshield wiper motor (HI) control	Windshield wiper motor	Ignition switched ON (engine off)	Windshield wiper switch at HI position	B+	Windshield wiper motor
				Windshield wiper switch at OFF position	1.0 or less	
				Windshield		

3F	Windshield washer motor control	Washer motor	Ignition switched ON (engine off)	washer switch ON	B+	Washer motor
				Windshield washer switch OFF	1.0 or less	
3G	Windshield wiper motor (LOW) control	Windshield wiper motor	Ignition switched ON (engine off)	Windshield wiper switch at LOW position	B+	Windshield wiper motor
				Windshield wiper switch at OFF position	1.0 or less	
3H	Rear window washer motor control	Washer motor	Ignition switched ON (engine off)	Rear window washer switch ON	B+	Washer motor
				Rear washer switch OFF	1.0 or less	
3I	Windshield wiper motor (LOW) control	Windshield wiper motor	Ignition switched ON (engine off)	Windshield wiper switch at LOW position	B+	Windshield wiper motor
				Windshield wiper switch at OFF position	1.0 or less	
3J	Interior illumination power supply	• Audio unit • Trunk lid opener switch • Selector illumination • Hazard warning switch • Climate control unit*6 • Clock spring • Cluster switch	Light switch at TNS position		B+	• Audio unit • Trunk lid opener switch • Selector illumination • Hazard warning switch • Climate control unit*6 • Clock spring • Cluster switch
			Light switch at OFF position		—*5	
3K	Power supply	HAZARD 25 A fuse	Under any condition		B+	• HAZARD 25 A fuse • Battery
3L	Power supply	HAZARD 25 A fuse	Under any condition		B+	• HAZARD 25 A fuse

					• Battery

*1
With theft-deterrent system
*2
With DRL system
*3
With auto wiper / auto light system
*4
With front fog light system
*5
The measured voltage changes according to the tester specification, therefore determination based on terminal voltage is not possible.
*6
With manual air conditioner
*7
With i-ELOOP

Inspection Using an Oscilloscope (Reference)

Pattern 1

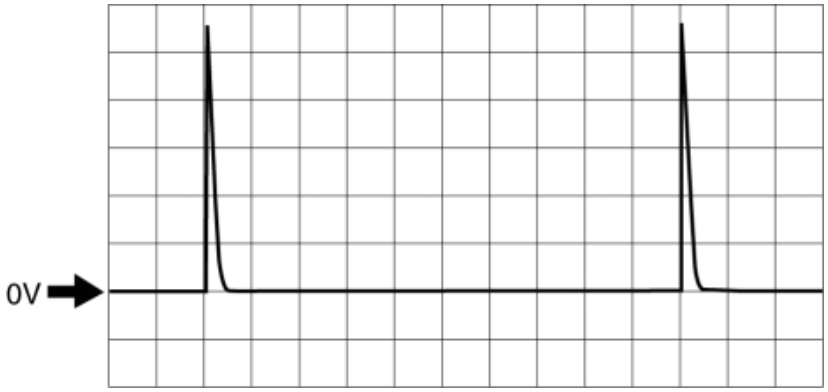

- Terminal:
  - Brake fluid level switch signal: 2Q (+) ground (-)
  - Washer level switch signal: 2S (+) ground (-)
- Oscilloscope setting: 2 V/DIV (Y), 1 ms/DIV (X), DC range

2014 - Mazda3 - Body and Accessories

FRONT BODY CONTROL MODULE (FBCM) CONFIGURATION (USING READ/WRITE FUNCTION)

NOTE:

- When performing configuration, it is necessary to read the vehicle specification information from the front body control module (FBCM) before replacing it. Connect the M-MDS to the vehicle and perform vehicle identification before removing the front body control module (FBCM). The vehicle specification information is temporarily stored in the M-MDS.

1. Connect the M-MDS to the DLC-2.

2. After the vehicle is identified, select the following items from the initialization screen of the M-MDS.

    - Select “Module Programming”.

3. Then, select items from the screen menu in the following order.

    - Select “Programmable Module Installation”.
    - Select “F_BCM”.

4. Perform the configuration according to the directions on the screen.

CAUTION:

- When the configuration is performed, CAN communication between the front body control module (FBCM) and control module connected to the CAN line is cut temporarily, and communication error DTCs may be detected. After performing the configuration, verify the DTCs for the control module connected to the CAN line and clear it if any DTC is detected.

5. Verify the DTCs for all of the control modules connected to the CAN line.

    - If any DTC is stored, clear it.
    - If the DTC is cleared, finish the procedure because the configuration has been completed normally.
    - If the DTC remains, perform troubleshooting according to the DTC.

2014 - Mazda3 - Body and Accessories

FRONT BODY CONTROL MODULE (FBCM) CONFIGURATION (USING AS-BUILT DATA)

NOTE:

- If the configuration is performed using As-Built data, the set value of the personalization function is reset to the initial value (condition when shipped from factory). Verify the set value with the customer and perform the personalization function setting after performing the configuration using As-Built data.

1. Connect the M-MDS to the DLC-2.

2. After the vehicle is identified, select the following items from the initialization screen of the M-MDS.

    - Select “Module Programming”.

3. Then, select items from the screen menu in the following order.

    - Select “As-Built”.
    - Select “F_BCM”.

4. Perform the configuration according to the directions on the screen.

CAUTION:

- When the configuration is performed, CAN communication between the front body control module (FBCM) and control module connected to the CAN line is cut temporarily, and communication error DTCs may be detected. After performing the configuration, verify the DTCs for the control module connected to the CAN line and clear it if any DTC is detected.

5. Verify the DTCs for all of the control modules connected to the CAN line.

    - If any DTC is stored, clear it.
    - If the DTC is cleared, finish the procedure because the configuration has been completed normally.
    - If the DTC remains, perform troubleshooting according to the DTC.

2014 - Mazda3 - Body and Accessories

REAR BODY CONTROL MODULE (RBCM) REMOVAL/INSTALLATION

CAUTION:

- If configuration is not performed when the rear body control module (RBCM) is replaced with a new one, the vehicle specification information is not stored in the rear body control module (RBCM) and the system will not operate normally.
- When performing configuration, it is necessary to read the vehicle specification information from the rear body control module (RBCM) before replacing it. Connect the M-MDS to the vehicle and perform vehicle identification before removing the rear body control module (RBCM). The vehicle specification information is temporarily stored in the M-MDS.

NOTE:

- The rear body control module (RBCM) prior to replacement stores the vehicle specification information.
- A new rear body control module (RBCM) does not store any vehicle specification information.
- If the vehicle specification information from the rear body control module (RBCM) prior to replacement cannot be read, perform the configuration using As-Built data.
- The rear body control module (RBCM) stores personalization setting information. The stored information is not cleared even if the battery power is disconnected.
- Because the personalization setting information stored in the rear body control module (RBCM) cannot be written to a new rear body control module (RBCM), if the rear body control module (RBCM) is replaced, the personalization setting information is at the initial setting. Therefore, before replacing the rear body control module (RBCM), verify the personalization setting information and reset the replaced rear body control module (RBCM) with the information.

1. When replacing the rear body control module (RBCM), perform the configuration. (See **REAR BODY CONTROL MODULE (RBCM) CONFIGURATION (USING READ/WRITE FUNCTION)**.)

2. Disconnect the negative battery cable. (See **NEGATIVE BATTERY CABLE DISCONNECTION/CONNECTION [SKYACTIV-G 2.0, SKYACTIV-G 2.5]**.)

3. Remove the following parts:

   - Rear package tray (5HB only) (See **REAR PACKAGE TRAY REMOVAL/INSTALLATION**.)
   - Trunk covering (5HB only) (See **TRUNK COVERING REMOVAL/INSTALLATION**.)
   - Trunk end trim (5HB only) (See **TRUNK END TRIM REMOVAL/INSTALLATION**.)

4. Pull back the tire house trim (LH) to a position which allows for the removal of the Trunk side upper trim (LH). (5HB only) (See **TIRE HOUSE TRIM REMOVAL/INSTALLATION**.)

5. Remove the trunk side upper trim (LH). (5HB only) (See **TRUNK SIDE UPPER TRIM REMOVAL/INSTALLATION**.)

6. Pull back the trunk side trim (LH) to a position which allows for the removal of the rear body control module (RBCM). (See **TRUNK SIDE TRIM REMOVAL/INSTALLATION**.)

7. While pressing the rear body control module (RBCM) tab in the direction of arrow (1) shown in the figure, pull it in the direction of arrow (2) to detach the tab from the body.

REAR BODY CONTROL MODULE (RBCM) REMOVAL/INSTALLATION

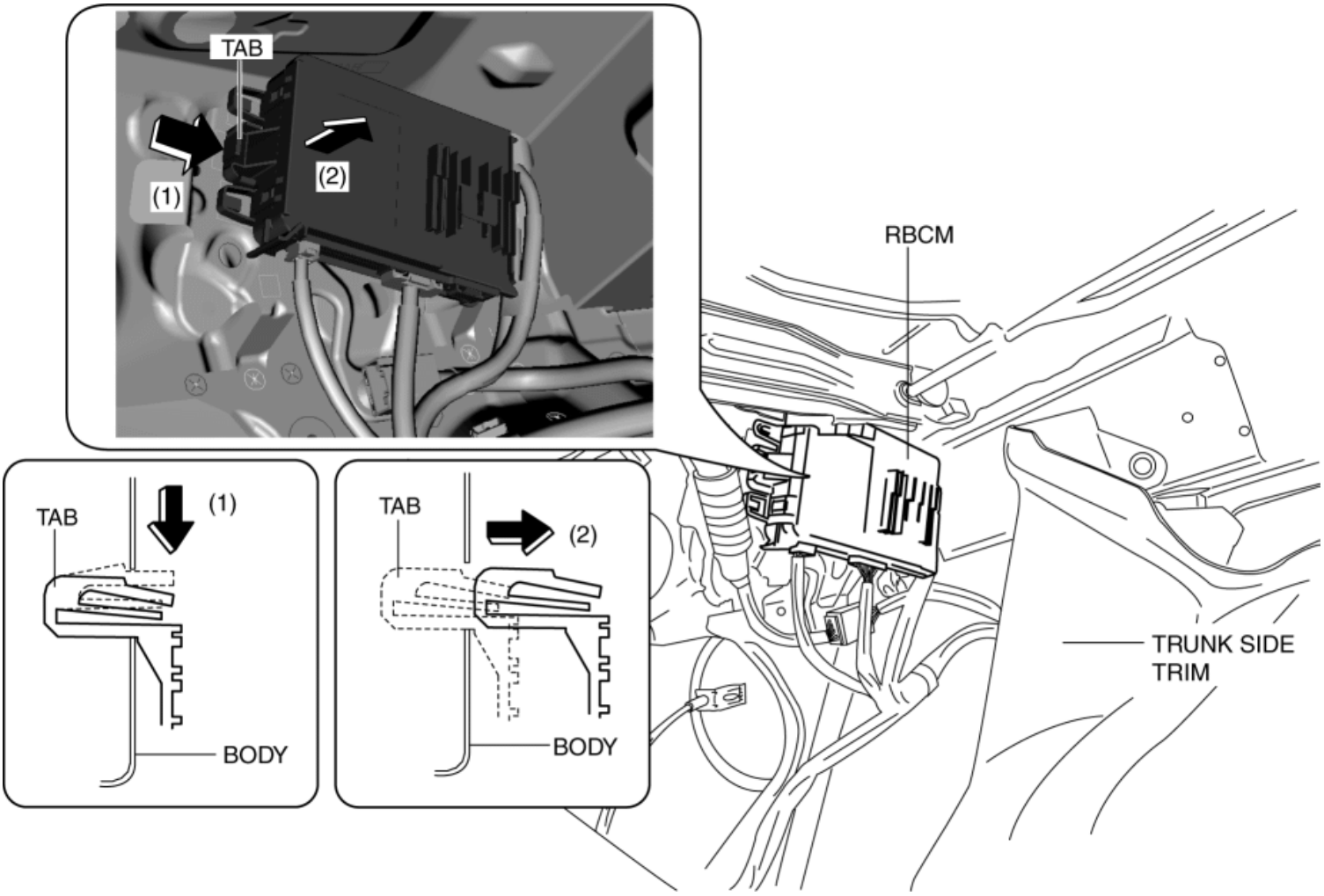

5HB

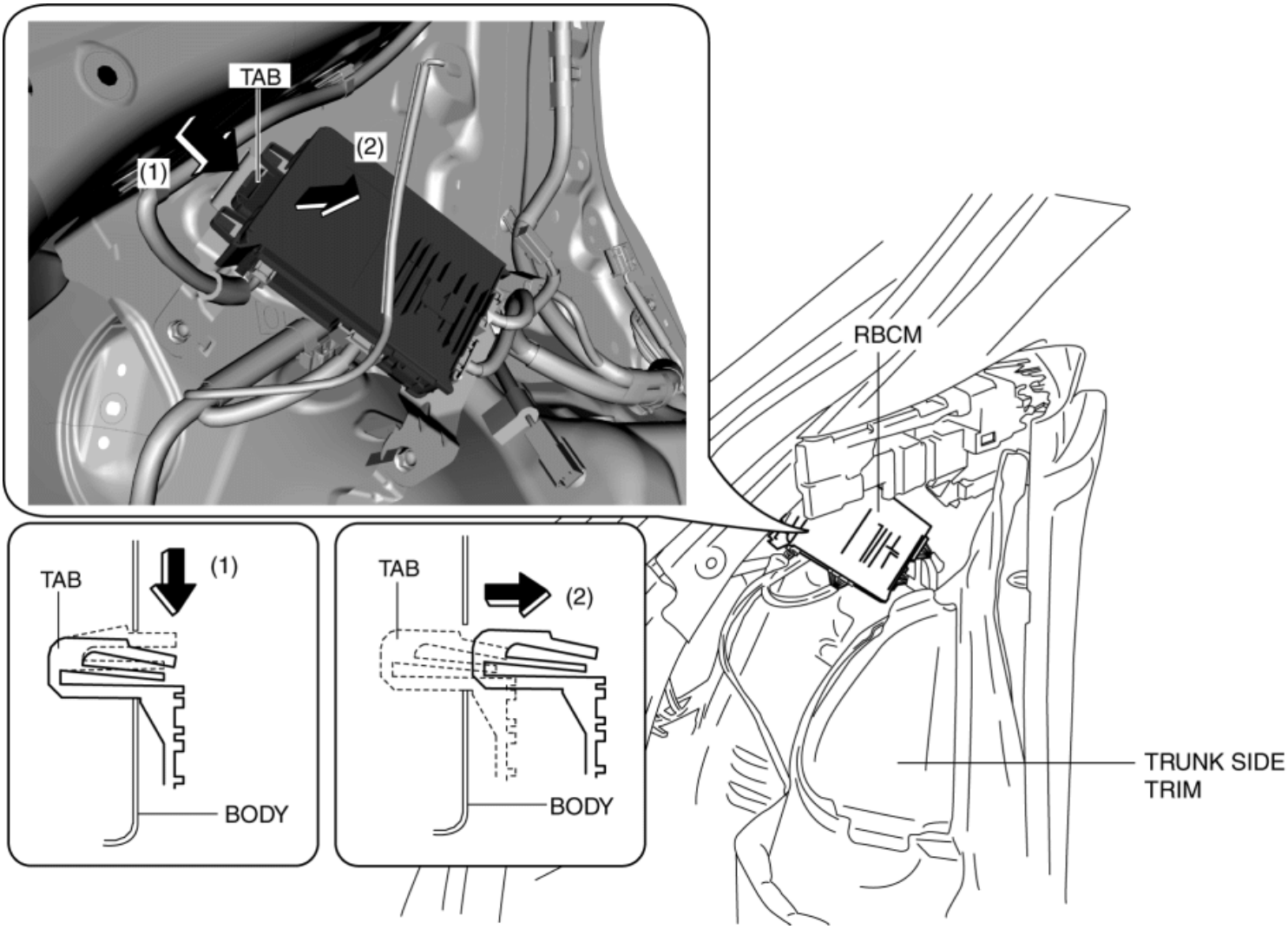

8. Pull the rear body control module (RBCM) up in the direction of the arrow to detach the hook from the body.

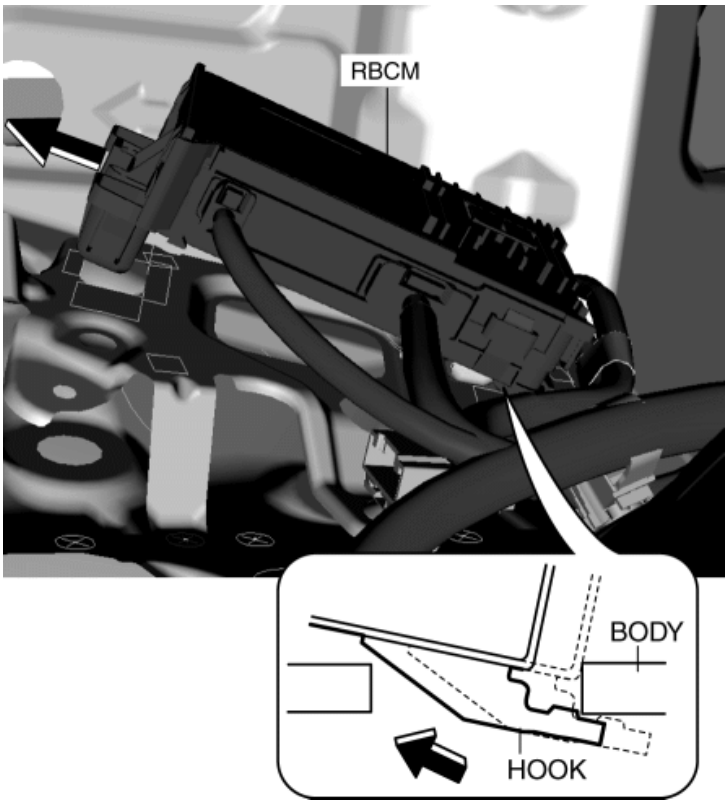

9. Disconnect the connectors shown in the figure.

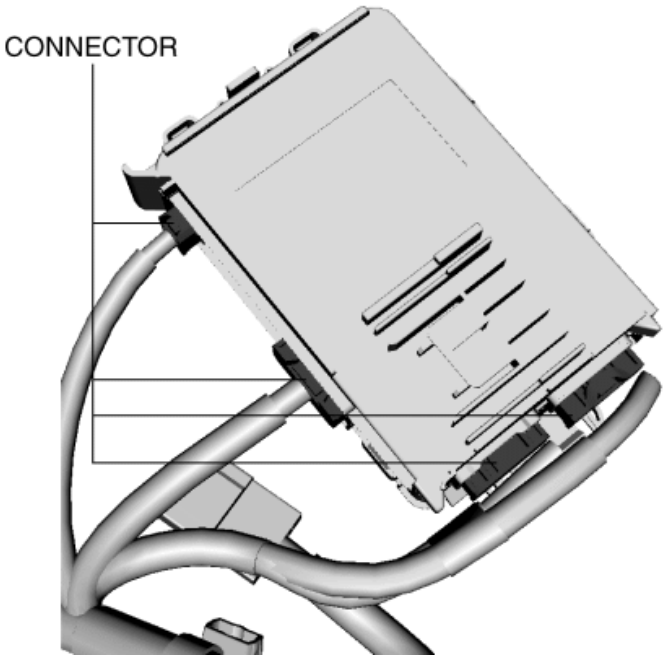

10. Remove the rear body control module (RBCM).

11. Install in the reverse order of removal.

NOTE:

- If configuration cannot be performed by reading/writing of the vehicle specification information, perform the configuration using As-Built information after replacing the rear body control module (RBCM). (See **REAR BODY CONTROL MODULE (RBCM) CONFIGURATION (USING AS-BUILT DATA)**.)

2014 - Mazda3 - Body and Accessories

REAR BODY CONTROL MODULE (RBCM) INSPECTION

1. Disconnect the negative battery cable. (See **NEGATIVE BATTERY CABLE DISCONNECTION/CONNECTION [SKYACTIV-G 2.0, SKYACTIV-G 2.5]**.)

2. Remove the following parts:

- Rear package tray (5HB only) (See **REAR PACKAGE TRAY REMOVAL/INSTALLATION**.)
- Trunk covering (5HB only) (See **TRUNK COVERING REMOVAL/INSTALLATION**.)
- Trunk end trim (5HB only) (See **TRUNK END TRIM REMOVAL/INSTALLATION**.)
- Rear seat cushion (5HB only) (See **REAR SEAT CUSHION REMOVAL/INSTALLATION**.)
- Rear scuff plate (LH) (5HB only) (See **REAR SCUFF PLATE REMOVAL/INSTALLATION**.)
- Tire house trim (LH) (5HB only) (See **TIRE HOUSE TRIM REMOVAL/INSTALLATION**.)
- Trunk side upper trim (LH) (5HB only) (See **TRUNK SIDE UPPER TRIM REMOVAL/INSTALLATION**.)
- Trunk side trim (LH) (See **TRUNK SIDE TRIM REMOVAL/INSTALLATION**.)

3. Remove the rear body control module (RBCM) from the body with the connector connected. (See **REAR BODY CONTROL MODULE (RBCM) REMOVAL/INSTALLATION**.)

4. Connect the negative battery cable. (See **NEGATIVE BATTERY CABLE DISCONNECTION/CONNECTION [SKYACTIV-G 2.0, SKYACTIV-G 2.5]**.)

5. Verify that the voltages of each of the terminals are as indicated in the Terminal Voltage Table (Reference). (See **Terminal Voltage Table (Reference)**)

- If the voltage is not as specified in the terminal voltage table (reference), inspect the parts under Inspection item(s) and related wiring harnesses.
    - If the system does not work normally even though the inspection items or related wiring harnesses do not have any malfunction, replace the rear body control module (RBCM).

Terminal Voltage Table (Reference)

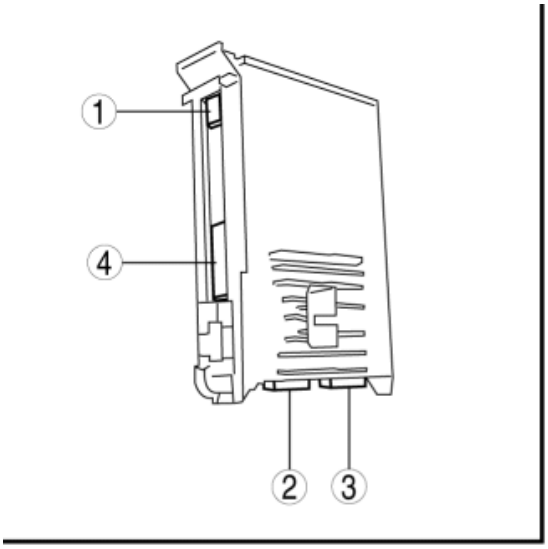

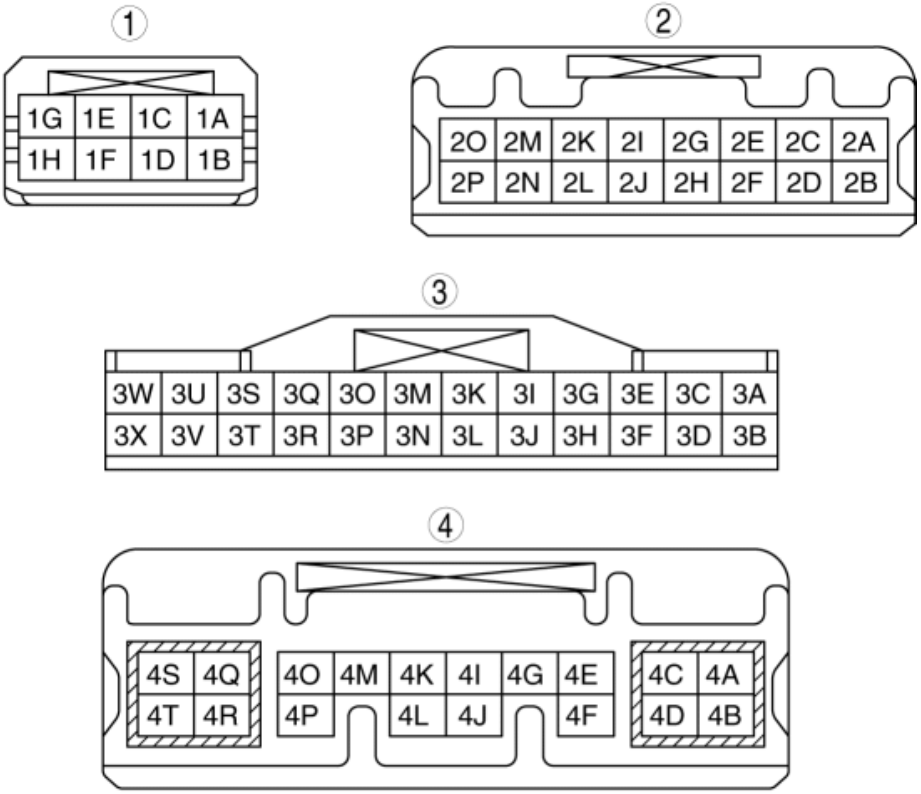

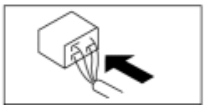

Terminal	Signal	Connected to	Measurement conditions	Voltage (V)	Inspection item(s)
1A	—	—	—	—	—
1B	Interior light ground	• Front map light • Vanity mirror illumination (LH, RH)*1	Under any condition	1.0 or less	• Front map light • Vanity mirror illumination (LH, RH)*1
1C	—	—	—	—	—
1D	—	—	—	—	—
1E	Interior light control	Front map light	Under any condition	1.0 or less	Front map light
1F	—	—	—	—	—
1G	—	—	—	—	—
		• Front map light			• Front map light

1H	Interior light power supply	• Rear map light • Vanity mirror illumination (LH, RH)*1	Under any condition	B+	• Rear map light • Vanity mirror illumination (LH, RH)*1
2A	—	—	—	—	—
2B	Power supply	D.LOCK 25 A fuse	Under any condition	B+	• D.LOCK 25 A fuse • Battery
2C	Door lock control	Door lock actuator	Lock driver-side door lock switch from unlock	1.0 or less → B+ → 1.0 or less	Door lock actuator
			Unlock driver-side door lock switch from lock	1.0 or less	
2D	Trunk lid opener switch signal (interior)	Trunk lid opener switch (interior)	Trunk lid opener switch (interior) pressed	1.0 or less	Trunk lid opener switch (interior)
			Trunk lid opener switch (interior) not pressed	B+	
2E	Door unlock control	Door lock actuator (driver's door)	Unlock driver-side door lock switch from lock	1.0 or less → B+ → 1.0 or less	Door lock actuator (driver's door)
			Lock driver-side door lock switch from unlock	1.0 or less	
2F*2	Theft-deterrent horn relay control	Front body control module (FBCM)	Connected to M-MDS and using data monitor function, theft-deterrent sound activates	1.0 or less	Front body control module (FBCM)
			Connected to M-MDS and using data monitor function, theft-deterrent sound does not activate	B+	
2G	Double locking system control	Door lock actuator (except driver's door)	Press transmitter lock button two times (double locking system operation condition)	B+ → 1.0 or less	Door lock actuator (except driver's door)
			Except above	1.0 or less	
2H*4	Brake light control	Brake light relay	Connect the M-MDS and turn on the "STOP_LMP_CS" using the rear body control module (RBCM) simulation function	1.0 or less	Brake light relay*4
			Connect the M-MDS and turn off the "STOP_LMP_CS" using the rear body	B+	

			control module (RBCM) simulation function		
2I	Ignition power supply	METER1 10 A fuse	Ignition switched ON (engine off)	B+	• METER1 10 A fuse • Battery
			Ignition switched OFF	1.0 or less	
2J*4	Brake switch signal	• Start stop unit • Brake switch • PCM • Brake light relay	Brake pedal depressed	B+	• Start stop unit • Brake switch • PCM • Brake light relay
			Brake pedal not depressed	1.0 or less	
2K	—	—	—	—	—
2L	—	—	—	—	—
2M	Power supply	R.WIPER 15 A fuse	Under any condition	B+	• R.WIPER 15 A fuse • Battery
2N	—	—	—	—	—
2O	—	—	—	—	—
2P	Power supply	ROOM 15 A fuse	Under any condition	B+	• ROOM 15 A fuse • Battery
3A	—	—	—	—	—
3B	ISO communication	Start stop unit	Terminal used for communication therefore determination based on terminal voltage is not possible.		
3C	Fuel sensor ground	Fuel gauge sender unit	Under any condition	1.0 or less	Fuel gauge sender unit
3D	Serial communication	Power window main switch	Terminal used for communication therefore determination based on terminal voltage is not possible.		
3E	CAN_H	CAN system related module	Terminal used for communication therefore determination based on terminal voltage is not possible.		
3F	Door lock switch signal	Door lock switch (LH, RH)	Door lock switch unlocked	1.0 or less	Door lock switch (LH, RH)
			Other	4.5	
			Door lock switch locked	2.2	
3G	CAN_L	CAN system related module	Terminal used for communication therefore determination based on terminal voltage is not possible.		

3H	Driver-side door key cylinder switch signal	Door key cylinder switch	Door key cylinder is turned to unlock side	1.0 or less	Door key cylinder switch
			Other	4.5	
			Door key cylinder is turned to lock side	2.2	
3I	Fuel sensor signal	Fuel gauge sender unit	Inspect the fuel gauge sender unit and related wiring harnesses because the terminal voltage at this terminal cannot be examined. (See **FUEL GAUGE SENDER UNIT INSPECTION**.)		
3J	Lock input (lock-link switch (passenger's side, rear door))	Door lock-link switch (passenger's side, rear door)	The passenger-side and rear doors are all locked	4.6	Door lock-link switch (passenger's side, rear door)
			Among the passenger-side and rear doors, at least one door is unlocked	1.0 or less	
3K	—	—	—	—	—
3L*3	Hood latch switch signal	Hood latch switch	Hood open (Hood latch switch OFF)	4.6	Hood latch switch
			Hood is closed (Hood latch switch ON)	1.0 or less	
3M	Unlock input (front door lock-link switch (driver's door))	Door lock-link switch (driver's door)	Driver's door locked	4.6	Door lock-link switch (driver's door)
			Driver's door unlocked	1.0 or less	
3N	—	—	—	—	—
3O	Lock input (front door lock-link switch (driver's door))	• Door lock-link switch (driver's door) • Start stop unit	Driver's door locked	1.0 or less	• Door lock-link switch (driver's door) • Start stop unit
			Driver's door unlocked	4.6	
3P	—	—	—	—	—
3Q	Rear door switch (RH) signal	Door latch switch (RR)	Rear door (RH) open	1.0 or less	Rear door switch (RH)
			Rear door (RH) closed	B+	
3R	—	—	—	—	—
3S	Rear door switch (LH)	Door latch switch (LR)	Rear door (LH) open	1.0 or less	Rear door switch (LH)

	signal		Rear door (LH) closed	B+	
3T	—	—	—	—	—
3U	Front door switch (passenger's door) signal	Door latch switch (passenger's door)	Front door (passenger's door) open	1.0 or less	Front door switch (passenger's door)
			Front door (passenger's door) closed	B+	
3V	—	—	—	—	—
3W	Front door switch (driver's door) signal	Door latch switch (driver's door)	Front door (driver's door) open	1.0 or less	Front door switch (driver's door)
			Front door (driver's door) closed	B+	
3X	—	—	—	—	—
4A	Rear window wiper motor power supply	Rear wiper motor	Ignition switched ON (engine off)	B+	Rear wiper motor
			Ignition switched OFF	1.0 or less	
4B	Power ground	Body ground	Under any condition	1.0 or less	• Body ground
4C	Trunk lid release / Liftgate lock actuator control	• Liftgate lock actuator (5HB) • Trunk lid opener (4SD)	• Press liftgate opener switch (5HB) • Press trunk lid opener switch (4SD)	B+ → 1.0 or less	• Liftgate lock actuator (5HB) • Trunk lid opener (4SD)
			Except above	1.0 or less	
4D*4	Brake light control	Brake light relay	Brake pedal is depressed or PID/data monitor command STOP_LMP_CS is on	B+	Brake light relay*4
			Brake pedal not depressed	1.0 or less	
4E	—	—	—	—	—
4F	Cargo compartment light power supply	• Cargo compartment light (5HB) • Trunk compartment light (4SD)	Under any condition	B+	• Cargo compartment light (5HB) • Trunk compartment light (4SD)
4G	CAN_H	CAN system related module	Terminal used for communication therefore determination based on terminal voltage is not possible.		
4H	—	—	—	—	—

4I	—	—	—		—	—
4J	CAN_L	CAN system related module	Terminal used for communication therefore determination based on terminal voltage is not possible.			
4K	Trunk lid / liftgate latch switch signal	• Liftgate lock actuator (5HB) • Trunk lid opener (4SD)	• Liftgate open (5HB) • Trunk lid open (4SD)		1.0 or less	• Liftgate lock actuator (5HB) • Trunk lid opener (4SD)
			• Liftgate closed (5HB) • Trunk lid (4SD)		B+	
4L	—	—	—		—	—
4M	Liftgate opener switch signal (5HB)	Liftgate opener switch	Liftgate opener switch pressed		1.0 or less	• Liftgate opener switch (5HB) • Trunk lid opener switch (4SD)
			Liftgate opener switch not pressed		4.5	
	Trunk lid opener switch signal (exterior) (4SD)	Trunk lid opener switch (exterior)	Trunk lid opener switch (exterior) pressed		1.0 or less	
			Trunk lid opener switch (exterior) not pressed		4.5	
4N	—	—	—		—	—
4O	—	—	—		—	—
4P	Cargo compartment light control	Cargo compartment light (5HB)	Cargo compartment light switched ON	Liftgate open	1.0 or less	Cargo compartment light (5HB)
				Liftgate closed	B+	
	Trunk compartment light control	Trunk compartment light (4SD)	Trunk lid open		1.0 or less	
			Trunk lid closed		B+	
4Q	—	—	—		—	—
4R	Signal ground	Body ground	Under any condition		1.0 or less	Body ground
4S	Back-up light control	• Back-up light (LH, RH) • Auto dimming mirror	Ignition switched ON (engine off)	• Selector lever at R position (AT vehicle) • Shift lever at R position (MT vehicle)	B+	• Back-up light switch • Auto dimming mirror

				Other	1.0 or less	
4T	Rear wiper motor control (LO)	Rear wiper motor	Ignition switched ON (engine off)	Turn rear wiper switch ON and wiper is operated	1.0 or less	Rear wiper motor
				Rear wiper switch at OFF	B+	

*1 **With vanity mirror illumination**

*2 **With theft-deterrent system**

*3 **With hood latch switch**

*4 **With smart brake support**

2014 - Mazda3 - Body and Accessories

REAR BODY CONTROL MODULE (RBCM) BRACKET REMOVAL/INSTALLATION

1. Disconnect the negative battery cable. (See **NEGATIVE BATTERY CABLE DISCONNECTION/CONNECTION [SKYACTIV-G 2.0, SKYACTIV-G 2.5]**.)

2. Remove the following parts:

    - Rear package tray (See **REAR PACKAGE TRAY REMOVAL/INSTALLATION**.)
    - Trunk covering (See **TRUNK COVERING REMOVAL/INSTALLATION**.)
    - Trunk end trim (See **TRUNK END TRIM REMOVAL/INSTALLATION**.)
    - Rear seat cushion (See **REAR SEAT CUSHION REMOVAL/INSTALLATION**.)
    - Rear seat back (See **REAR SEAT BACK REMOVAL/INSTALLATION**.)
    - Rear scuff plate (LH) (See **REAR SCUFF PLATE REMOVAL/INSTALLATION**.)
    - Tire house trim (LH) (See **TIRE HOUSE TRIM REMOVAL/INSTALLATION**.)
    - Trunk side upper trim (LH) (See **TRUNK SIDE UPPER TRIM REMOVAL/INSTALLATION**.)
    - Trunk side trim (LH) (See **TRUNK SIDE TRIM REMOVAL/INSTALLATION**.)
    - Rear body control module (RBCM) (See **REAR BODY CONTROL MODULE (RBCM) REMOVAL/INSTALLATION**.)

3. Remove the bolts.

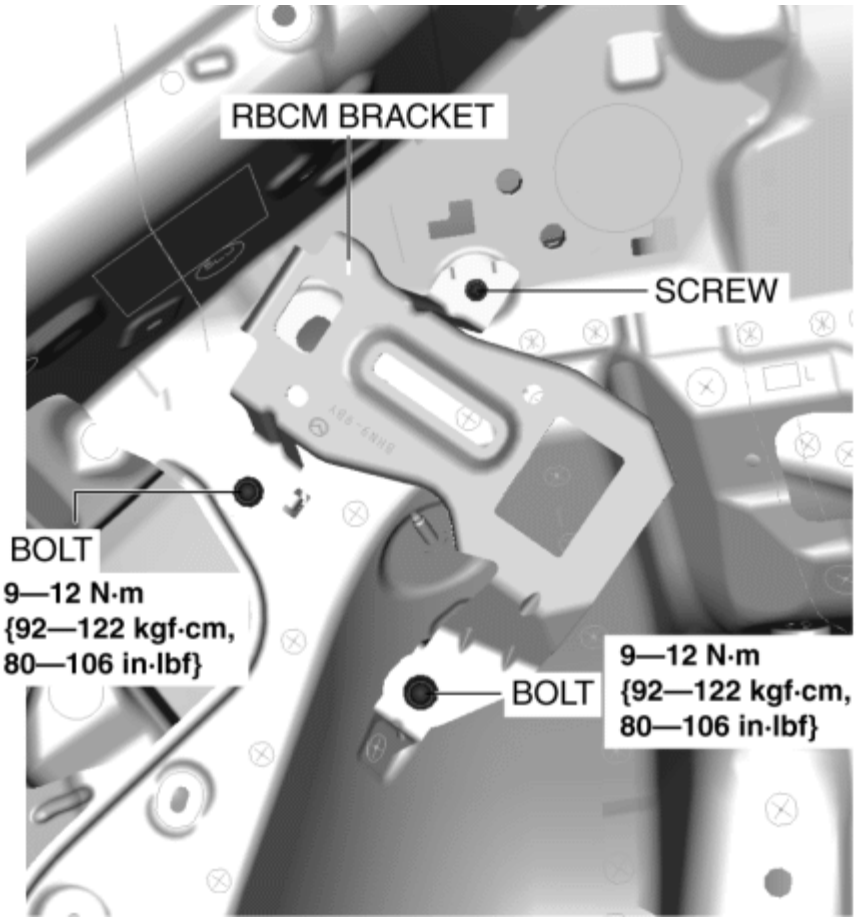

4. Remove the screw.

5. Remove the rear body control module (RBCM) bracket.

6. Install in the reverse order of removal.

2014 - Mazda3 - Body and Accessories

REAR BODY CONTROL MODULE (RBCM) CONFIGURATION (USING READ/WRITE FUNCTION)

NOTE:

- When performing configuration, it is necessary to read the vehicle specification information from the rear body control module (RBCM) before replacing it. Connect the M-MDS to the vehicle and perform vehicle identification before removing the rear body control module (RBCM). The vehicle specification information is temporarily stored in the M-MDS.

1. Connect the M-MDS to the DLC-2.

2. After the vehicle is identified, select the following items from the initialization screen of the M-MDS.

    - Select “Module Programming”.

3. Then, select items from the screen menu in the following order.

    - Select “Programmable Module Installation”.
    - Select “R_BCM”.

4. Perform the configuration according to the directions on the screen.

CAUTION:

- When the configuration is performed, CAN communication between the rear body control module (RBCM) and control module connected to the CAN line is cut temporarily, and communication error DTCs may be detected. After performing the configuration, verify the DTCs for the control module connected to the CAN line and clear it if any DTC is detected.

5. Verify the DTCs for all of the control modules connected to the CAN line.

    - If any DTC is stored, clear it.
    - If the DTC is cleared, finish the procedure because the configuration has been completed normally.
    - If the DTC remains, perform troubleshooting according to the DTC.

2014 - Mazda3 - Body and Accessories

REAR BODY CONTROL MODULE (RBCM) CONFIGURATION (USING AS-BUILT DATA)

NOTE:

- If the configuration is performed using As-Built data, the set value of the personalization function is reset to the initial value (condition when shipped from factory). Verify the set value with the customer and perform the personalization function setting after performing the configuration using As-Built data.

1. Connect the M-MDS to the DLC-2.

2. After the vehicle is identified, select the following items from the initialization screen of the M-MDS.

    - Select “Module Programming”.

3. Then, select items from the screen menu in the following order.

    - Select “As-Built”.
    - Select “R_BCM”.

4. Perform the configuration according to the directions on the screen.

CAUTION:

- When the configuration is performed, CAN communication between the rear body control module (RBCM) and control module connected to the CAN line is cut temporarily, and communication error DTCs may be detected. After performing the configuration, verify the DTCs for the control module connected to the CAN line and clear it if any DTC is detected.

5. Verify the DTCs for all of the control modules connected to the CAN line.

    - If any DTC is stored, clear it.
    - If the DTC is cleared, finish the procedure because the configuration has been completed normally.
    - If the DTC remains, perform troubleshooting according to the DTC.

2014 - Mazda3 - Body and Accessories

CONTROL SYSTEM PERSONALIZATION FEATURES SETTING PROCEDURE

Security And Locks

Power door lock system (Using M-MDS)

1. Connect the M-MDS to DLC-2.
2. After the vehicle is identified, select the following items from the initial screen of the M-MDS.
    - Select the “Module Programming”.
    - Select “Programmable Parameters”.
    - Select menu in the R_BCM.
3. Select an item name, and then select option.

M-MDS display	Function	Initial setting	Setting contents	Control unit
Auto Door Lock Mode.	Auto door lock function can be changed.	Lock: Driving, Unlock: IGN Off.	Not Adopted./OFF/Lock When Driving./Lock: Driving, Unlock: IGN Off./Lock When Shifting Out Of P./Lock: Shift From P, Unlock: In P.	Rear body control module (RBCM)

Power door lock system (Using center display)

- (See **CENTER DISPLAY PERSONALIZATION FEATURES SETTING PROCEDURE**.)

Lighting Systems

Turn light system (Using M-MDS)

1. Connect the M-MDS to DLC-2.
2. After the vehicle is identified, select the following items from the initial screen of the M-MDS.

- Select the “Module Programming”.
- Select “Programmable Parameters”.
- Select menu in the R_BCM.

3. Select an item name, and then select option.

M-MDS display	Function	Initial setting	Setting contents	Control unit
3-Flash Turn Signal.	The turn light system can be switched between operable and inoperable.	OFF	Not Adopted./OFF/ON	Rear body control module (RBCM)

Turn light system (Using center display)

- (See **CENTER DISPLAY PERSONALIZATION FEATURES SETTING PROCEDURE**.)
- Turn light system

Auto light system (Using M-MDS)

1. Connect the M-MDS to DLC-2.
2. After the vehicle is identified, select the following items from the initial screen of the M-MDS.
   - Select the “Module Programming”.
   - Select “Programmable Parameters”.
   - Select menu in the R_BCM.
3. Select an item name, and then select option.

M-MDS display	Function	Initial setting	Setting contents	Control unit
Auto-headlight On.	Auto light sensor sensitivity can be changed.	Medium	Not Adopted./Dark/Medium Dark/Medium/Medium Light/Light	Rear body control module (RBCM)

Auto light system (Using center display)

- (See **CENTER DISPLAY PERSONALIZATION FEATURES SETTING PROCEDURE**.)

Auto light-off system (Using M-MDS)

1. Connect the M-MDS to DLC-2.
2. After the vehicle is identified, select the following items from the initial screen of the M-MDS.
    - Select the “Module Programming”.
    - Select “Programmable Parameters”.
    - Select menu in the R_BCM.
3. Select an item name, and then select option.

M-MDS display	Function	Initial setting	Setting contents	Control unit
Headlight Off Timer.	The headlight emitted time of the auto light off timer can be changed.	30 seconds.	Not Adopted./0 seconds./30 seconds./60 seconds./90 seconds./120 seconds.	Rear body control module (RBCM)

Auto light-off system (Using center display)

- (See **CENTER DISPLAY PERSONALIZATION FEATURES SETTING PROCEDURE**.)

Room light control system (Using M-MDS)

1. Connect the M-MDS to DLC-2.
2. After the vehicle is identified, select the following items from the initial screen of the M-MDS.
    - Select the “Module Programming”.
    - Select “Programmable Parameters”.
    - Select menu in the R_BCM.
3. Select an item name, and then select option.

M-MDS display	Function	Initial setting	Setting contents	Control unit
Interior Light Timeout-Door	• The front/rear map light and courtesy light illumination time after any door is opened can be changed.	30	Not Adopted./30 minutes./60	Rear body control

Open.	• The trunk compartment light illumination time after the trunk lid is opened can be changed.	minutes.	minutes./10 minutes.	module (RBCM)
Interior Light Timeout-Door Closed.	The front/rear map light and courtesy light illumination time after all the doors are closed can be changed.	15 seconds.	Not Adopted./15 seconds./7.5 seconds./30 seconds./60 seconds.	Rear body control module (RBCM)

Room light control system (Using center display)

- (See **CENTER DISPLAY PERSONALIZATION FEATURES SETTING PROCEDURE**.)

Wiper/washer System

Auto wiper system (Using M-MDS)

1. Connect the M-MDS to DLC-2.
2. After the vehicle is identified, select the following items from the initial screen of the M-MDS.
    - Select the “Module Programming”.
    - Select “Programmable Parameters”.
    - Select menu in the R_BCM.
3. Select an item name, and then select option.

M-MDS display	Function	Initial setting	Setting contents	Control unit
Rain Sensing Wipers.	Auto wiper system can be set to operable or inoperable.	On (Rein Sensing)	Not Adopted./Off (Intermittent)/On (Rein Sensing)	Rear body control module (RBCM)

Auto wiper system (Using center display)

- (See **CENTER DISPLAY PERSONALIZATION FEATURES SETTING PROCEDURE**.)

CONTROL SYSTEM PERSONALIZATION FEATURES SETTING PROCEDURE

2014 - Mazda3 - Body and Accessories

BODY AND ACCESSORIES TECHNICAL DATA

Item			Spec (W) × Quantity
Exterior	Headlight LO bulb	Halogen type	55 × 2
	Headlight HI bulb		60 × 2
	Headlight HI/LO bulb	Discharge type	35 × 2
	Front side marker light/parking light bulb (without discharge headlight system)		5 × 2
	Front side marker light bulb (with discharge headlight system)		5 × 2
	Parking light/DRL (LED)*1 (with discharge headlight system)		4 / 14
	Front turn light bulb		21 × 2
	Front fog light bulb		55 × 2
	Side turn light (LED)		0.6
	Rear turn light bulb		21 × 2
	Brake light/rear side marker light/taillight	Bulb type	21 / 5 × 2
		LED type*2	2.7 / 2.1
	Back-up light bulb	4SD	18 × 2
		5HB	21 × 2
	Taillight (LED) (trunk lid light (4SD)/liftgate light (5HB))		1.3
		Rear window glass: Clear glass (4SD)	1.8

	High-mount brake light (LED)	Rear window glass: Dark tinted glass (4SD)	2.4
		5HB	1.8
	License plate light bulb		5 × 2
Interior	Front map light bulb	Dual light type	8 × 2
		Single light type	10 × 1
	Rear map light bulb		10 × 1
	Trunk compartment light bulb (4SD)		3 × 1
	Cargo compartment light bulb (5HB)		5 × 1
	Vanity mirror illumination bulb		2 × 2

*1

The LED for the parking light cannot be replaced separately. If there is any malfunction in the LED, replace the front combination light as a single unit.

*2

The LED for the LED type brake light/rear side marker light/taillight cannot be replaced separately. If there is any malfunction in the LED, replace the rear combination light as a single unit.

< Previous

2014 - Mazda3 - Body and Accessories

BODY AND ACCESSORIES SST

49 L067 001 Reflector	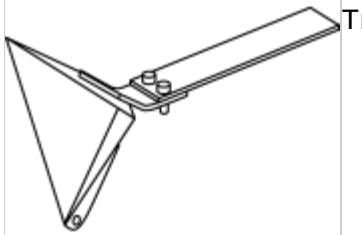	49 L067 002 Tripod		49 L067 003 Plum-bob	
49 L067 006 Plum-bob		49 L088 009 Feeler tool kit	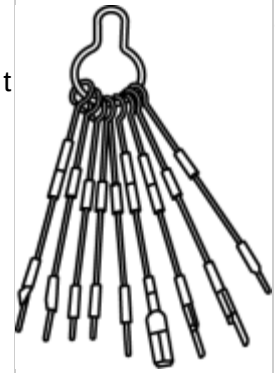	49 B066 803 Removing tool	

< Previous

Next >

2014 - Mazda3 - Multiplex Communication System

FOREWORD

- If there is any vehicle malfunction complaint lodged by a customer, perform malfunction diagnosis according to the troubleshooting procedure. (See **Troubleshooting Procedure**.)

Troubleshooting Procedure

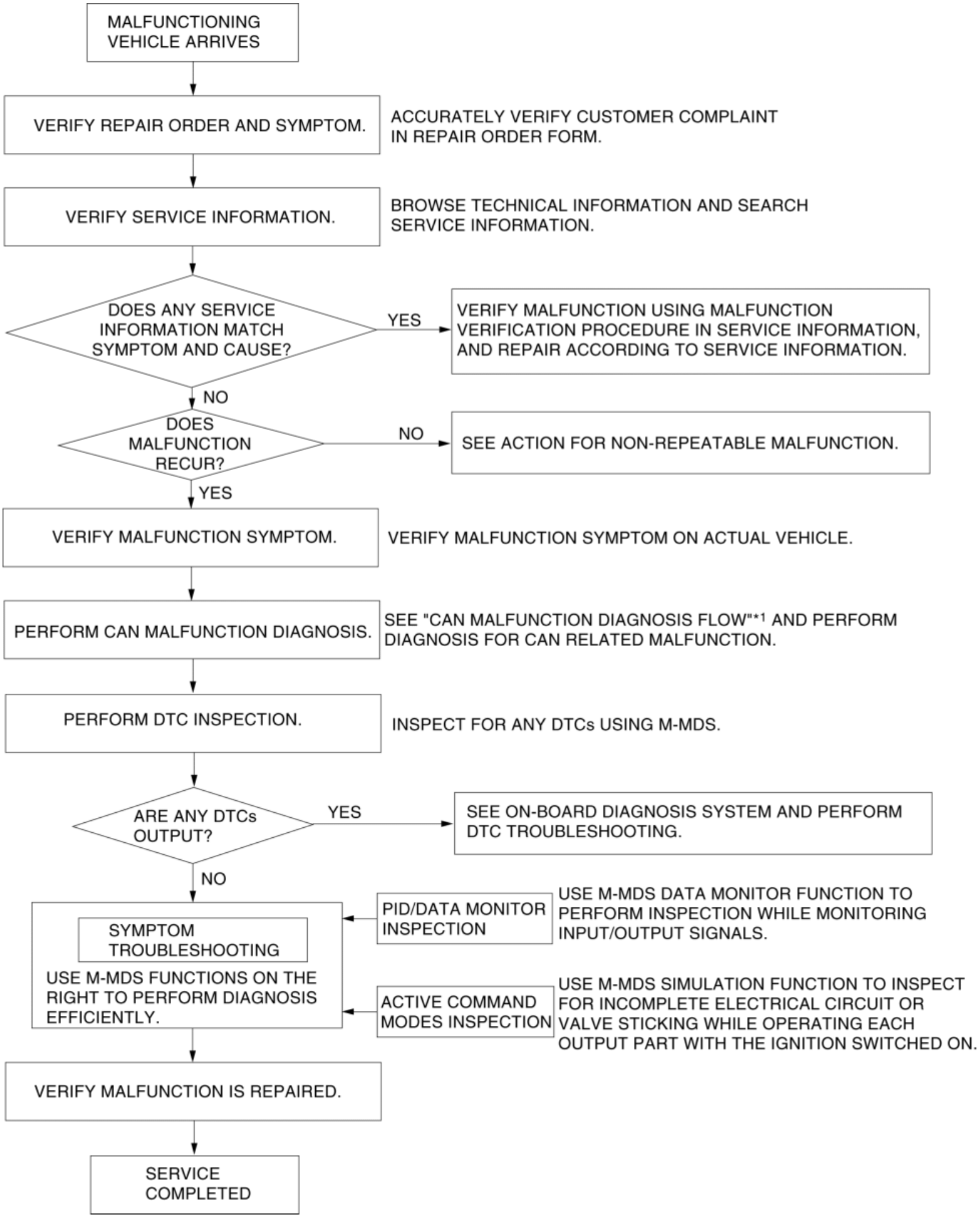
MALFUNCTIONING VEHICLE ARRIVES
VERIFY REPAIR ORDER AND SYMPTOM.
ACCURATELY VERIFY CUSTOMER COMPLAINT IN REPAIR ORDER FORM.
VERIFY SERVICE INFORMATION.
BROWSE TECHNICAL INFORMATION AND SEARCH SERVICE INFORMATION.
DOES ANY SERVICE INFORMATION MATCH SYMPTOM AND CAUSE?
YES
VERIFY MALFUNCTION USING MALFUNCTION VERIFICATION PROCEDURE IN SERVICE INFORMATION, AND REPAIR ACCORDING TO SERVICE INFORMATION.
NO
DOES MALFUNCTION RECUR?
NO
SEE ACTION FOR NON-REPEATABLE MALFUNCTION.
YES
VERIFY MALFUNCTION SYMPTOM.
VERIFY MALFUNCTION SYMPTOM ON ACTUAL VEHICLE.
PERFORM CAN MALFUNCTION DIAGNOSIS.
SEE "CAN MALFUNCTION DIAGNOSIS FLOW"*1 AND PERFORM DIAGNOSIS FOR CAN RELATED MALFUNCTION.
PERFORM DTC INSPECTION.
INSPECT FOR ANY DTCs USING M-MDS.
ARE ANY DTCs OUTPUT?
YES
SEE ON-BOARD DIAGNOSIS SYSTEM AND PERFORM DTC TROUBLESHOOTING.
NO
SYMPTOM TROUBLESHOOTING
USE M-MDS FUNCTIONS ON THE RIGHT TO PERFORM DIAGNOSIS EFFICIENTLY.
PID/DATA MONITOR INSPECTION
USE M-MDS DATA MONITOR FUNCTION TO PERFORM INSPECTION WHILE MONITORING INPUT/OUTPUT SIGNALS.
ACTIVE COMMAND MODES INSPECTION
USE M-MDS SIMULATION FUNCTION TO INSPECT FOR INCOMPLETE ELECTRICAL CIRCUIT OR VALVE STICKING WHILE OPERATING EACH OUTPUT PART WITH THE IGNITION SWITCHED ON.
VERIFY MALFUNCTION IS REPAIRED.
SERVICE COMPLETED

*1

(See CONTROLLER AREA NETWORK (CAN) MALFUNCTION DIAGNOSIS FLOW.)

Action for non-repeatable malfunction

- If the malfunction does not recur, verify the malfunction cause by performing the following actions:
  - Based on the repair order form, attempt to drive the vehicle or perform tests to replicate the malfunction, record the data (such as CAN circuit voltage) at that time, and detect the malfunction cause.
  - Refer to [Determining Open Circuit Location] based on the recorded DTC, shake the wiring harness or connector of the electrical component which is suspected to be the cause of the malfunction, and inspect for any changes in CAN system voltage or occurrence of any DTCs.

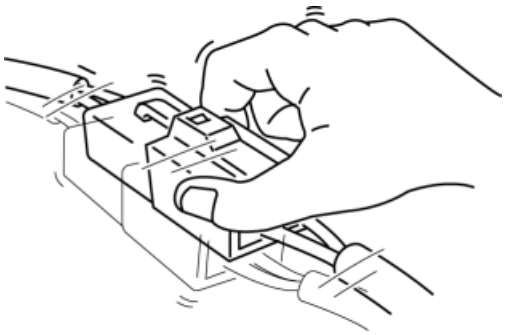

  - Inspect the female terminals on the connector of the electric component which is suspected to be the cause of the malfunction for poor connection.

Next >

2014 - Mazda3 - Multiplex Communication System

CONTROLLER AREA NETWORK (CAN) MALFUNCTION DIAGNOSIS FLOW

- If there is any vehicle malfunction complaint lodged by a customer, refer to “FOREWORD” and perform CAN malfunction diagnosis following the steps in the troubleshooting procedure. (See **FOREWORD**.)

CAN malfunction diagnosis flow

NOTE:

- The flowchart and the diagnosis flow of the diagnosis procedure are the same thing, and the detailed procedure of the flowchart is the diagnosis procedure.
- The step numbers in the flowchart indicate the step numbers of the diagnosis procedure.

Flowchart

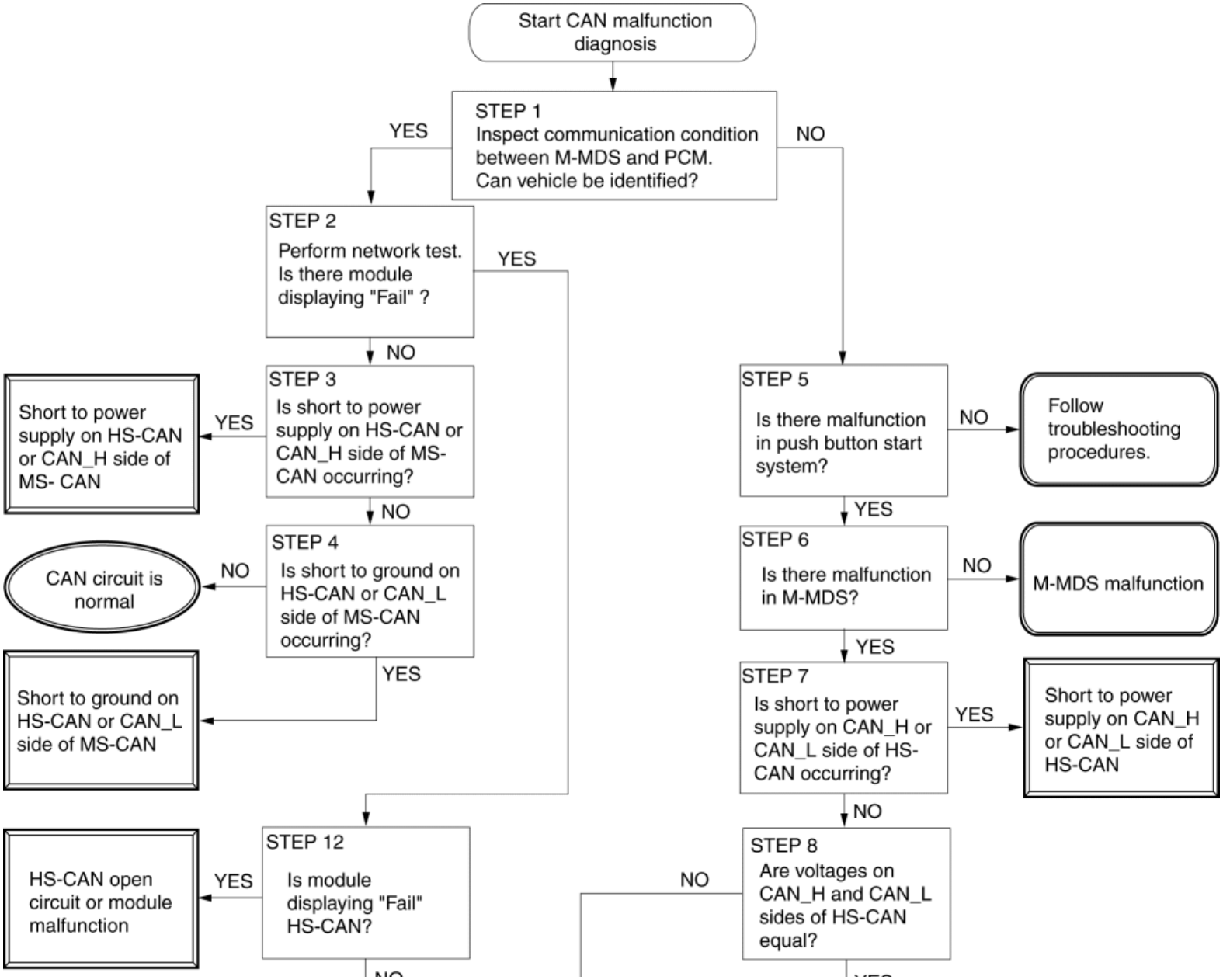

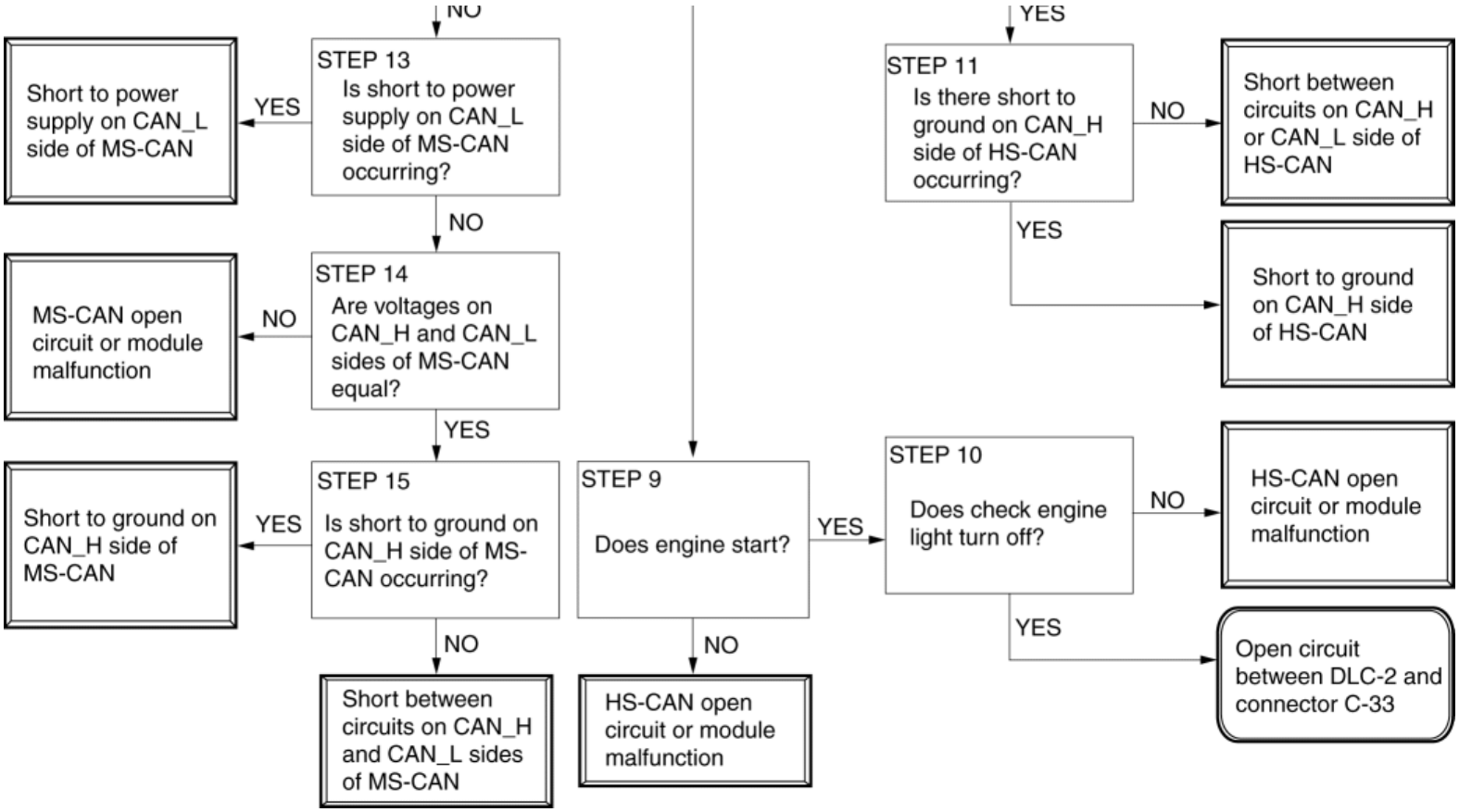

Diagnostic procedure

Step	Inspection		Action
1	**INSPECT IF COMMUNICATION BETWEEN M-MDS AND PCM IS POSSIBLE** • Connect the M-MDS to the DLC-2. • Switch the ignition ON (engine off). • Perform vehicle identification. • Can the vehicle be identified?	Yes	Go to the next step.
		No	Go to Step 5 as a malfunction in the HS-CAN circuit has occurred.
2	**INSPECT MODULE FOR INABILITY TO COMMUNICATE DUE TO CAN MALFUNCTION** • Implement the network test using the M-MDS. (See **NETWORK TEST**.) • Is there a module indicating a malfunction?	Yes	Go to Step 12 as a malfunction in the CAN circuit has occurred.
		No	Go to the next step.
3	**INSPECT FOR SHORT TO POWER SUPPLY IN CAN_H SIDE OF MS-CAN OR HS-CAN** • Measure the voltage between the following terminals: ▪ Between DLC-2 terminal F (CAN_H side of HS CAN) and body ground ▪ Between DLC-2 terminal L (CAN_H side of MS CAN) and body ground • Is B+ voltage measured between any of the terminals? **NOTE:** • If a short to power supply other than the B+ power supply has occurred, a constant voltage other than	Yes	A short to power supply in the CAN_H side of MS-CAN or HS-CAN. Determine the location of the short to power supply according to the diagnosis procedure for determining the location of a short to power supply. (See **DETERMINING SHORT TO POWER SUPPLY LOCATION (HS-CAN)**.) (See **DETERMINING SHORT TO POWER SUPPLY LOCATION (MS-CAN)**.)
		No	Go to the next step.

	B+ can be measured.		
4	**INSPECT FOR SHORT TO GROUND IN CAN_L SIDE OF HS-CAN OR MS-CAN** • Measure the voltage between the following terminals: ▪ Between DLC-2 terminal E (CAN_L side of HS-CAN) and ground ▪ Between DLC-2 terminal K (CAN_L side of MS-CAN) and ground • Is the voltage measured as 0 V?	Yes	A short to ground on the CAN_L side of the HS-CAN or MS-CAN has occurred. Determine the location of the short to ground according to the diagnosis procedure for determining the location of a short to ground. (See **DETERMINING SHORT TO GROUND LOCATION (HS-CAN)**.) (See **DETERMINING SHORT TO GROUND LOCATION (MS-CAN)**.)
		No	The current CAN circuit is normal, return to FOREWARD, and go to the next step of the CAN malfunction diagnosis in the troubleshooting procedure. (See **FOREWORD**.)
5	**VERIFY IF PUSH BUTTON START SYSTEM HAS MALFUNCTION** • Switch the ignition ON (engine off). • Can the ignition be switched ON?	Yes	Go to the next step.
		No	A malfunction in the push button start system has occurred. Perform diagnosis according to the symptom troubleshooting.
6	**INSPECT FOR MALFUNCTION IN M-MDS** • Connect the M-MDS to a normal vehicle and implement vehicle identification. • Can the vehicle be identified?	Yes	Go to the next step.
		No	A malfunction in the M-MDS can be considered. Repair the M-MDS.
7	**INSPECT HS-CAN FOR SHORT TO POWER SUPPLY** • Measure the voltage between the following terminals: ▪ Between DLC-2 terminal F (CAN_H side) and body ground ▪ Between DLC-2 terminal E (CAN_L side) and body ground • Is B+ voltage measured between any of the terminals? **NOTE:** ▪ If a short to power supply other than the B+ power supply has occurred, a constant voltage other than B+ can be measured.	Yes	A short to power supply in the CAN_H side or CAN_L of HS-CAN has occurred. Determine the location of the short to power supply according to the diagnosis procedure for determining the location of a short to power supply. (See **DETERMINING SHORT TO POWER SUPPLY LOCATION (HS-CAN)**.)
		No	Go to the next step.
8	**INSPECT HS-CAN FOR OPEN CIRCUIT** • Measure the voltage between the following terminals: ▪ Between DLC-2 terminal F (CAN_H side) and body ground ▪ Between DLC-2 terminal E (CAN_L side) and body ground • Is the voltage between both terminals (CAN_H side and CAN_L side) equal?	Yes	Go to Step 11 as a short to ground or a short between circuits has occurred in the HS-CAN.
		No	Go to the next step.
9	**DETERMINE IF OPEN CIRCUIT LOCATION IN HS-CAN CIRCUIT IS BETWEEN DLC AND CONNECTOR C-33 OR ELSEWHERE** • Start the engine to verify that the immobilizer system operates normally. • Can the engine be started? **NOTE:**	Yes	Go to the next step.
		No	An open circuit has occurred between the PCM and connector C-33 in the HS-CAN. Determine the location of the open circuit according to the diagnosis procedure for determining the location of an open circuit.

	• If there is an open circuit in the wiring harness between the PCM and the start stop unit, the engine cannot be started because the key ID number verification for the immobilizer system is performed by CAN communication.		(See **DETERMINING OPEN CIRCUIT LOCATION (HS-CAN)**.)
10	**DETERMINE IF OPEN CIRCUIT LOCATION IN HS-CAN CIRCUIT IS BETWEEN DLC AND CONNECTOR C-33 OR ELSEWHERE** • Switch the ignition ON (engine off). • Verify if the check engine light in the instrument cluster illuminates. • Start the engine. • Verify if the check engine light turns off. • Does the check engine light turn off?	Yes	An open circuit between DLC-2 and connector C-33 has occurred. Repair or replace the wiring harness for an open circuit, then return to Step 1.
		No	An open circuit has occurred between the PCM and connector C-33 in the HS-CAN. Determine the location of the open circuit according to the diagnosis procedure for determining the location of an open circuit. (See **DETERMINING OPEN CIRCUIT LOCATION (HS-CAN)**.)
11	**VERIFY MALFUNCTION OCCURRED IN HS-CAN CIRCUIT** • Measure the voltage between the following terminals: ▪ Between DLC-2 terminal F (CAN_H side) and body ground ▪ Between DLC-2 terminal E (CAN_L side) and body ground • Is the voltage between both terminals (CAN_H side and CAN_L side) 0 V?	Yes	A short to ground in CAN_H side of HS-CAN has occurred. Determine the location of the short to ground according to the diagnosis procedure for determining the location of a short to ground. (See **DETERMINING SHORT TO GROUND LOCATION (HS-CAN)**.)
		No	A short between circuits in the CAN_H side and the CAN_L side of HS-CAN has occurred. Determine the location of the short between circuits according to the diagnosis procedure for determining the location of a short between circuits. (See **DETERMINING SHORT BETWEEN CIRCUITS LOCATION (HS-CAN)**.)
12	**DETERMINE CAN COMMUNICATION SPECIFICATION IN WHICH MALFUNCTION OCCURS** • Refer to the CAN communication specification quick reference table and verify the CAN communication specification (HS-CAN or MS-CAN) that is connected to the module which is indicating a malfunction. (See **CAN communication specification quick reference table**.) • Is the module that is indicating a malfunction HS-CAN?	Yes	An open circuit in the HS-CAN has occurred. Determine the location of the open circuit according to the diagnosis procedure for determining the location of an open circuit. (See **DETERMINING OPEN CIRCUIT LOCATION (HS-CAN)**.)
		No	Go to the next step.
13	**INSPECT CAN_L SIDE OF MS-CAN FOR SHORT TO POWER SUPPLY** • Measure voltage between DLC-2 terminal K (CAN_L side) and body ground. • Can B+ voltage be measured? **NOTE:** • If a short to power supply other than the B+ power supply has occurred, a constant voltage other than B+ can be measured.	Yes	A short to power supply in the CAN_L side of the MS-CAN has occurred. Determine the location of the short to power supply according to the diagnosis procedure for determining the location of a short to power supply. (See **DETERMINING SHORT TO POWER SUPPLY LOCATION (MS-CAN)**.)
		No	Go to the next step.
14	**INSPECT MS-CAN FOR OPEN CIRCUIT** • Measure the voltage between the following terminals: ▪ Between DLC-2 terminal L (CAN_H side) and body ground	Yes	Go to the next step.
		No	Open circuit in MS-CAN has occurred. Determine the location of the open circuit

	Between DLC-2 terminal K (CAN_L side) and body ground • Is the voltage between both terminals (CAN_H side and CAN_L side) equal?		according to the diagnosis procedure for determining the location of an open circuit. (See **DETERMINING OPEN CIRCUIT LOCATION (MS-CAN)**.)
15	**VERIFY MALFUNCTION OCCURRED IN MS-CAN** • Measure the voltage between the following terminals: ▪ Between DLC-2 terminal L (CAN_H side) and body ground ▪ Between DLC-2 terminal K (CAN_L side) and body ground • Is the voltage between both terminals (CAN_H side and CAN_L side) equal?	Yes	A short to ground in the CAN_H side of the MS-CAN has occurred. Determine the location of the short to ground according to the diagnosis procedure for determining the location of a short to ground. (See **DETERMINING SHORT TO GROUND LOCATION (MS-CAN)**.)
		No	A short between circuits on the CAN_H side and CAN_L side of MS-CAN has occurred. Determine the location of the short between circuits according to the diagnosis procedure for determining the location of a short between circuits. (See **DETERMINING SHORT BETWEEN CIRCUITS LOCATION (MS-CAN)**.)

CAN communication specification quick reference table

CAN communication related module (M-MDS display)	CAN communication specification	
	HS-CAN	MS-CAN
PCM (PCM)	×	
DSC HU/CM (ABS)	×	
Front body control module (FBCM) (F_BCM)	×	
TCM (TCM)	×	
DC-DC CONVERTER (DCDC)	×	
AFS control module (AFS)	×	
Laser sensor (SCBS)	×	
Forward sensing camera (FSC) (FSC)	×	
Start stop unit		

(SSU)	×	
EPS control module (EPS)	×	
SAS control module (RCM)	×	
Connectivity master unit (CMU)	×	
Audio amplifier (AM)	×	
Instrument cluster (IC)	×	
Climate control unit (EATC)		×
BSM control module (LH) (BSML)		×
Rear body control module (RBCM) (R_BCM)		×

HS-CAN signal waveform

CAN circuit condition	Signal waveform (reference)
Normal	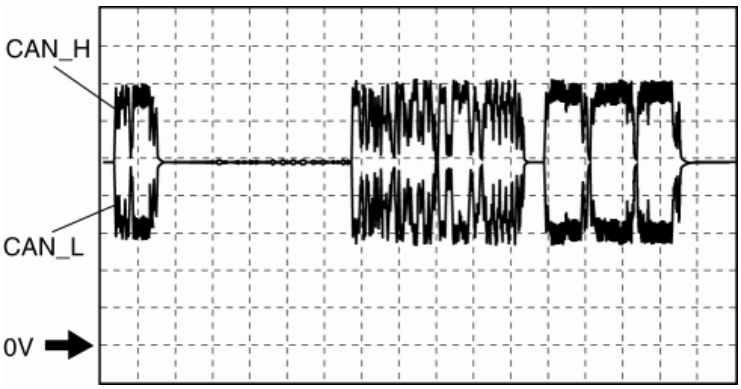
	• CAN_H ▪ Connection terminal: DLC-2: terminal F (+) ↔ body ground (—) ▪ Oscilloscope setting: 0.5 V/DIV (Y), 200 µs/DIV (X), DC range • CAN_L ▪ Connection terminal: DLC-2: terminal E (+) ↔ Body ground (—) ▪ Oscilloscope setting: 0.5 V/DIV (Y), 200 µs/DIV (X), DC range

MS-CAN signal waveform

CAN circuit condition	Signal waveform (reference)
Normal	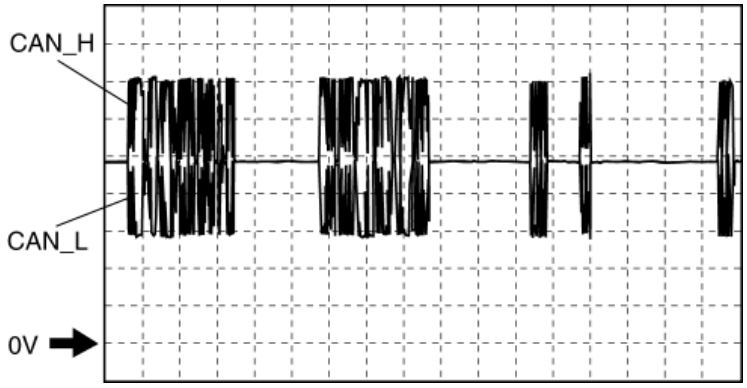
	• CAN_H ▪ Connection terminal: DLC-2: terminal L (+) ↔ Body ground (—) ▪ Oscilloscope setting: 0.5 V/DIV (Y), 1 ms/DIV (X), DC range • CAN_L ▪ Connection terminal: DLC-2: terminal K (+) ↔ Body ground (—) ▪ Oscilloscope setting: 0.5 V/DIV (Y), 1 ms/DIV (X), DC range

2014 - Mazda3 - Multiplex Communication System

NETWORK TEST

1. Connect the M-MDS to the DLC-2.

2. After the vehicle is identified, select the "NETWORK TEST" from the initialization screen of the M-MDS.

3. Verify the unit with a communication error according to the directions on the screen.

2014 - Mazda3 - Multiplex Communication System

DTC TABLE

CAUTION:

- If there is any vehicle malfunction complaint lodged by a customer, refer to "FOREWORD" and perform CAN malfunction diagnosis following the steps in the troubleshooting procedure. (See **FOREWORD**.)

HS-CAN

DTC output module (M-MDS display)	DTC	Malfunction location
PCM (PCM)	U0073:00	Unit communication error
	U0101:00	Communication error with TCM
	U0121:00	Communication error with DSC HU/CM
	U0131:00	Communication error with EPS control module
	U0140:00	Communication error with front body control module (FBCM)
	U0151:00	Communication error with SAS control module
	U0155:00	Communication error with instrument cluster
	U0214:00	Communication error with start stop unit
	U0235:00	Communication error with laser sensor
DSC HU/CM	U0001:88	Unit communication error
	U0100:00	Communication error with PCM
	U0101:00	Communication error with TCM
	U0131:00	Communication error with EPS control module

(ABS)		
	U0151:00	Communication error with SAS control module
	U0155:00	Communication error with instrument cluster
	U0235:00	Communication error with laser sensor
Front body control module (FBCM) (F_BCM)	U0001:88	Unit communication error
	U0100:00	Communication error with PCM
	U0101:00	Communication error with TCM
	U0121:00	Communication error with DSC HU/CM
	U0151:00	Communication error with SAS control module
	U0155:00	Communication error with instrument cluster
	U0214:00	Communication error with start stop unit
	U023A:00	Communication error with forward sensing camera (FSC)
TCM*1 (TCM)	U0073:00	Unit communication error
	U0100:00	Communication error with PCM
	U0121:00	Communication error with DSC HU/CM
	U0131:00	Communication error with EPS control module
	U0155:00	Communication error with instrument cluster
DC-DC converter*2 (DCDC)	U0001:88	Unit communication error
	U0100:00	Communication error with PCM
	U0155:00	Communication error with instrument cluster
AFS control module*3	U0001:88	Unit communication error
	U0100:00	Communication error with PCM
	U0131:00	Communication error with EPS control module

(AFS)		
	U0140:00	Communication error with front body control module (FBCM)
	U0155:00	Communication error with instrument cluster
Laser sensor*4 (SCBS)	U0001:00	Unit communication error
	U0100:00	Communication error with PCM
	U0121:00	Communication error with DSC HU/CM
	U0131:00	Communication error with EPS control module
	U0155:00	Communication error with instrument cluster
Forward sensing camera (FSC)*5 (FSC)	U0001:88	Unit communication error
	U0100:00	Communication error with PCM
	U0121:00	Communication error with DSC HU/CM
	U0131:00	Communication error with EPS control module
	U0140:00	Communication error with front body control module (FBCM)
	U0155:00	Communication error with instrument cluster
	U0214:00	Communication error with start stop unit
Start stop unit (SSU)	U0001:88	Unit communication error
	U0100:00	Communication error with PCM
	U0101:00	Communication error with TCM
	U0121:00	Communication error with DSC HU/CM
	U0121:87	Communication error with DSC HU/CM
	U0131:00	Communication error with EPS control module
	U0140:00	Communication error with front body control module (FBCM)
	U0146:00	Communication error with instrument cluster

	U0151:00	Communication error with SAS control module
	U0155:00	Communication error with instrument cluster
EPS control module (EPS)	U0001:88	Unit communication error
	U0100:00	Communication error with PCM
	U0121:00	Communication error with DSC HU/CM
	U0155:00	Communication error with instrument cluster
	U0214:00	Communication error with start stop unit
SAS control module (RCM)	U0001:88	Unit communication error
	U0155:00	Communication error with instrument cluster
Connectivity master unit*6 (CMU)	U0001:88	Unit communication error
	U0100:00	Communication error with PCM
	U0101:00	Communication error with TCM
	U0121:00	Communication error with DSC HU/CM
	U0131:00	Communication error with EPS control module
	U0140:00	Communication error with front body control module (FBCM)
	U0151:00	Communication error with SAS control module
	U0155:00	Communication error with instrument cluster
	U0182:00	Communication error with AFS control module
	U0214:00	Communication error with start stop unit
	U0235:00	Communication error with laser sensor
	U023A:00	Communication error with forward sensing camera (FSC)
Audio amplifier*7		

(AM)	U0001:88	Unit communication error
Instrument cluster (IC)	U0001:88	Unit communication error
	U0100:00	Communication error with PCM
	U0101:00	Communication error with TCM
	U0121:00	Communication error with DSC HU/CM
	U0131:00	Communication error with EPS control module
	U0140:00	Communication error with front body control module (FBCM)
	U0151:00	Communication error with SAS control module
	U0182:00	Communication error with AFS control module
	U0214:00	Communication error with start stop unit
	U0235:00	Communication error with laser sensor
	U023A:00	Communication error with forward sensing camera (FSC)

*1 **ATX vehicles**

*2 **With i-ELOOP system**

*3 **With AFS system**

*4 **With smart city brake support**

*5 **With forward sensing camera**

*6 **With center display**

*7 **With Bose®**

MS-CAN

DTC output module (M-MDS display)	DTC	Malfunction location

Instrument cluster (IC)	U0010:88	Unit communication error
	U0142:00	Communication error with rear body control module (RBCM)
	U0232:00	Communication error with BSM control module
Climate control unit (EATC)	U0010:88	Unit communication error
	U0155:00	Communication error with instrument cluster
BSM control module (LH) *1 (BSML)	U0001:88	Unit communication error
	U0100:00	Communication error with PCM
	U0131:00	Communication error with EPS control module
	U0155:00	Communication error with instrument cluster
	U0214:00	Communication error with start stop unit
Rear body control module (RBCM) (R_BCM)	U0010:88	Unit communication error
	U0155:00	Communication error with instrument cluster

*1 **With BSM system**

2014 - Mazda3 - Multiplex Communication System

DETERMINING OPEN CIRCUIT LOCATION (HS-CAN)

CAUTION:

- Perform the following malfunction diagnosis only when it is diagnosed with a open circuit by CONTROLLER AREA NETWORK (CAN) MALFUNCTION DIAGNOSIS FLOW. (See **CONTROLLER AREA NETWORK (CAN) MALFUNCTION DIAGNOSIS FLOW**.)
- If the malfunctioning part is detected in the communication line, before disconnecting the related connector for inspection, press the connector in the connection direction to verify that there is no looseness or disconnection.
- When disconnecting the connector, verify that there is no damage, deformation, or corrosion of the connector terminals.

1. Verify the CAN system-related module DTCs and the failed module on the M-MDS screen.

2. Apply the communication error DTC and the failed module to DTC output pattern and malfunctioning location, and select the possible cause for the diagnostic result and the reference for the inspection item. (See **DTC output pattern and malfunctioning location**.)

NOTE:

- The open circuit location can be determined by the DTC indicated in the DTC output pattern and malfunctioning location chart. DTCs not listed in the chart are not used for the determination of the open circuit location. (See **DTC output pattern and malfunctioning location**.)

3. Inspect the possible cause and inspection item of the applicable malfunctioning part.

4. After repairs, return to CONTROLLER AREA NETWORK (CAN) MALFUNCTION DIAGNOSIS FLOW, and verify that the repairs have been completed. (See **CONTROLLER AREA NETWORK (CAN) MALFUNCTION DIAGNOSIS FLOW**.)

DTC output pattern and malfunctioning location

Cross (×): Communication error-related DTC and failed module

M-MDS display DTC output module	DTC	DTC output pattern and malfunctioning location																		
PCM (PCM)	U0101:00					×														
	U0121:00		×																	
	U0131:00													×						
	U0140:00			×																
	U0151:00														×	×				
	U0155:00														×			×		×
	U0214:00												×							
	U0235:00									×										
	U0100:00	×																		

ABS (DSC HU/CM)	U0101:00					×														
	U0131:00													×						
	U0151:00														×	×				
	U0155:00																	×		×
	U0235:00									×										
F_BCM (Front body control module (FBCM))	U0100:00	×																		
	U0101:00					×														
	U0121:00		×																	
	U0151:00														×	×				
	U0155:00														×			×		×
	U0214:00												×							
	U023A:00										×									
TCM*1 (TCM)	U0100:00	×			×															
	U0121:00		×		×															
	U0131:00													×						
	U0155:00														×			×		×
DCDC*2 (DC-DC converter)	U0100:00	×			×		×													
	U0155:00														×			×		×
AFS*3 (AFS control module)	U0100:00	×			×		×													
	U0131:00													×						
	U0140:00			×	×		×													
	U0155:00														×			×		×
SCBS**4 (Laser sensor)	U0100:00	×			×		×			×										
	U0121:00		×		×		×			×										
	U0131:00													×						
	U0155:00														×			×		×
	U0100:00	×			×		×			×										

FSC*5 (Forward sensing camera (FSC))	U0121:00		×		×		×			×										
	U0131:00														×					
	U0140:00			×	×		×			×										
	U0155:00															×			×		×
	U0214:00													×						
SSU (Start stop unit)	U0100:00	×			×		×			×			×							
	U0101:00					×	×			×			×							
	U0121:00		×		×		×			×			×							
	U0121:87		×		×		×			×			×							
	U0131:00														×					
	U0140:00			×	×		×			×			×							
	U0146:00															×				
	U0151:00															×	×			
	U0155:00															×			×		×
EPS (EPS control module	U0100:00	×			×		×			×			×							
	U0121:00		×		×		×			×			×							
	U0155:00															×					×
	U0214:00													×						
RCM (SAS control module)	U0155:00																		×		×
CMU (Connectivity master unit)	U0100:00	×			×		×			×			×							
	U0101:00					×	×			×			×							
	U0121:00		×		×		×			×			×							
	U0131:00														×					
	U0140:00			×	×		×			×			×							
	U0151:00																×			
	U0155:00																		×		×
	U0182:00								×	×			×							

	U0214:00												×							
	U0235:00									×		×								
	U023A:00										×	×								
IC (Instrument cluster)	U0100:00	×			×		×			×			×							
	U0101:00					×	×			×			×							
	U0121:00		×		×		×			×			×							
	U0131:00														×					
	U0140:00			×	×		×			×			×							
	U0151:00															×				
	U0182:00								×	×			×							
	U0214:00													×						
	U0235:00										×		×							
	U023A:00											×	×							
M-MDS display module		[Fail] display pattern																		
PCM		×			×		×			×			×							
ABS			×		×		×			×			×							
F_BCM				×	×		×			×			×							
TCM*1						×	×			×			×							
DCDC*2								×		×			×							
AFS*3									×	×			×							
SCBS*4											×		×							
FSC*5												×	×							
SSU														×						
EPS															×					
RCM																×	×			
CMU*6																×		×		
AM*7																×			×	×

IC															×			×		×
Diagnostic result																				
Possible cause and inspection item	A	B	C	D	E	F	G	H	I	J	K	L	M	N	O	P	Q	R	S	T

*1 **ATX vehicles**

*2 **With i-ELOOP system**

*3 **With AFS system**

*4 **With smart city brake support**

*5 **With forward sensing camera**

*6 **With center display**

*7 **With Bose®**

A

Possible cause

- Connector terminal disconnection, poor contact, damage, deformation, corrosion
- PCM power supply voltage or body ground malfunction
- Open circuit in wiring harness between PCM and front body control module (FBCM)
- PCM malfunction
- CAN circuit in front body control module (FBCM) malfunction

System wiring diagram

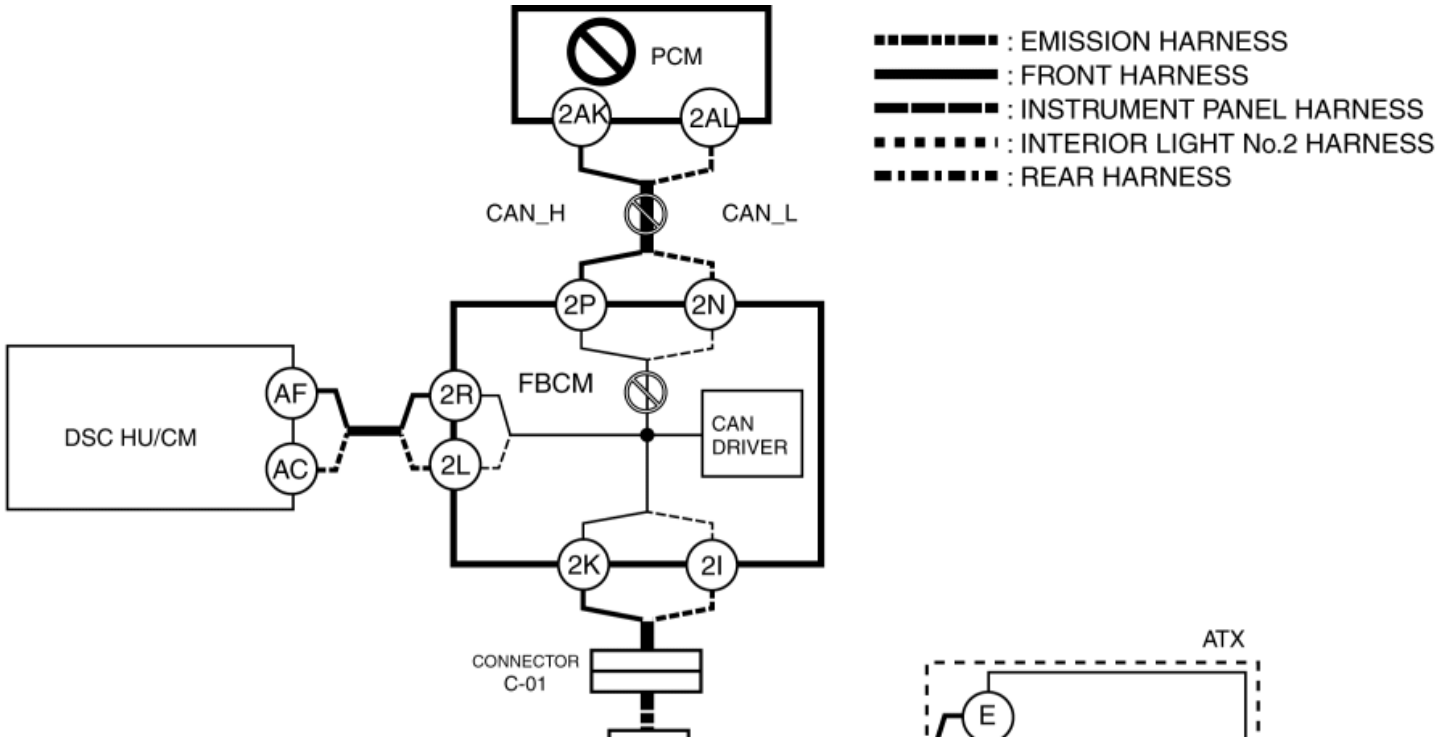

DETERMINING OPEN CIRCUIT LOCATION (HS-CAN)

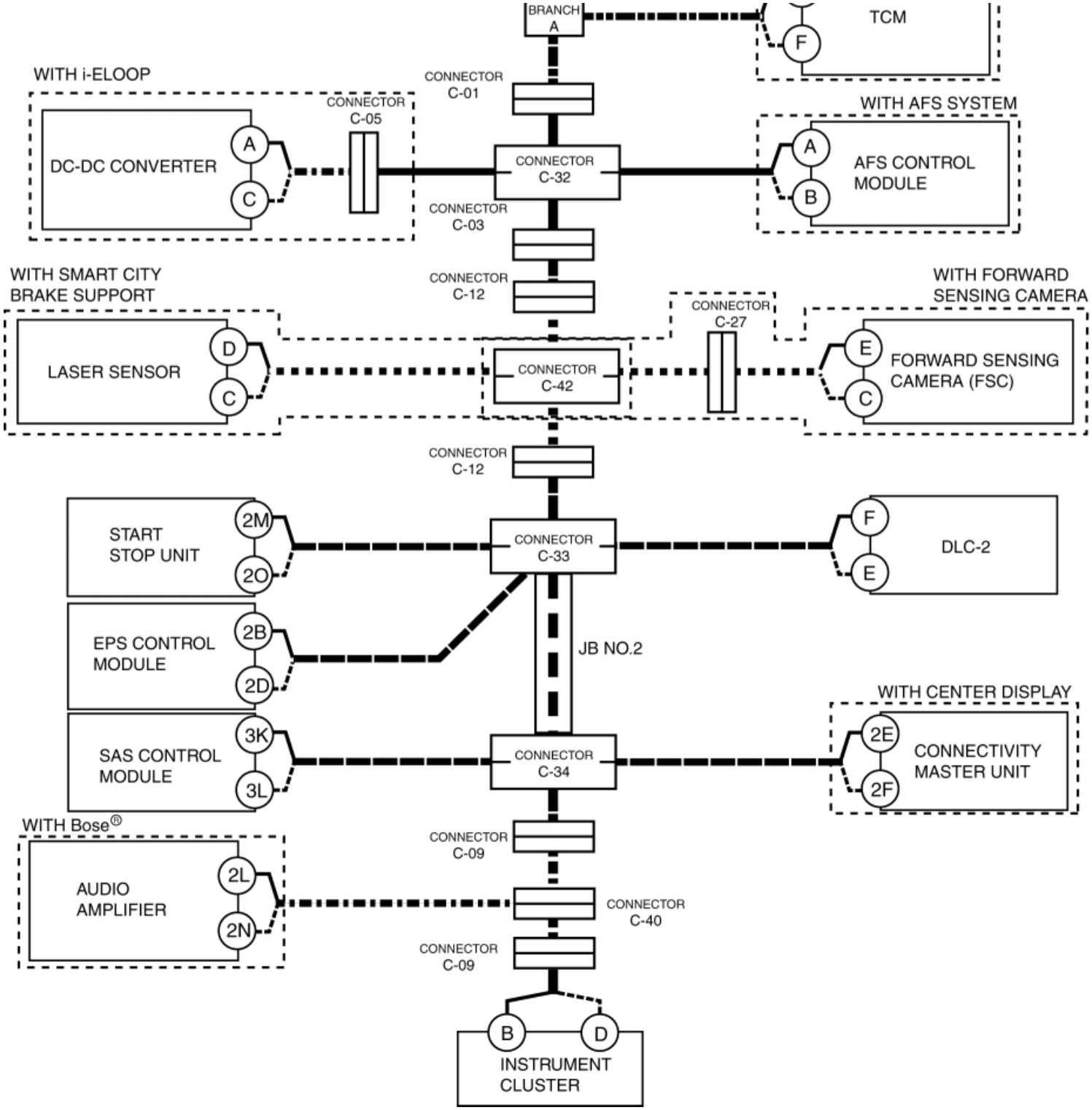

Inspection item

- PCM power supply voltage-related wiring harness and fuse
- PCM body ground related wiring harness
- PCM connector
- Front body control module (FBCM) connector
- Wiring harness between PCM terminal 2AK and Front body control module (FBCM) terminal 2P
- Wiring harness between PCM terminal 2AL and Front body control module (FBCM) terminal 2N

PCM

- Front body control module (FBCM)
  - Between front body control module (FBCM) terminal 2P and front body control module (FBCM) terminal 2K
  - Between front body control module (FBCM) terminal 2N and front body control module (FBCM) terminal 2I

B

Possible cause

- Connector terminal disconnection, poor contact, damage, deformation, corrosion
- DSC HU/CM power supply voltage or body ground malfunction
- Open circuit in wiring harness between DSC HU/CM and front body control module (FBCM)
- DSC HU/CM control module malfunction
- CAN circuit in front body control module (FBCM) malfunction

System wiring diagram

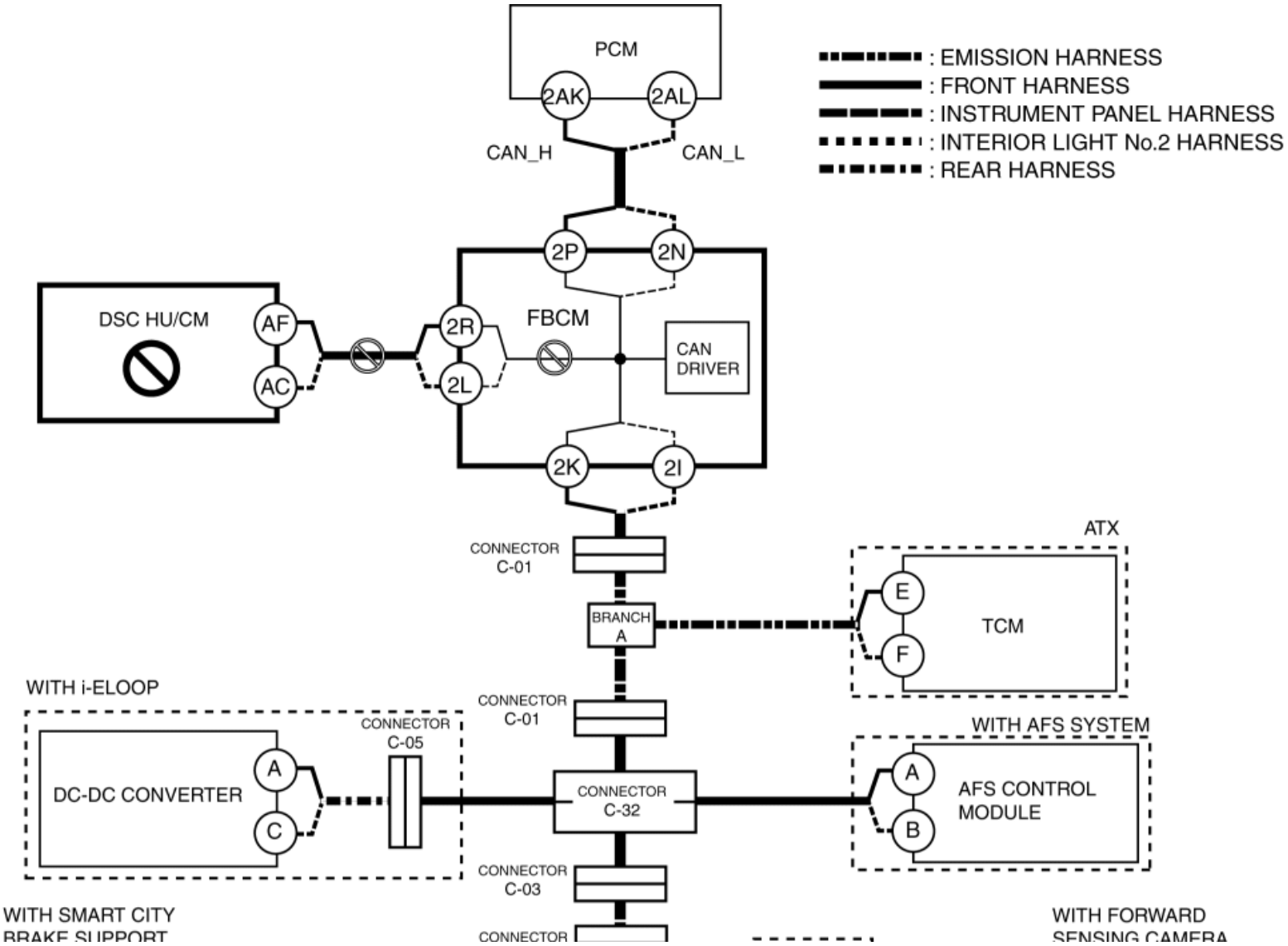

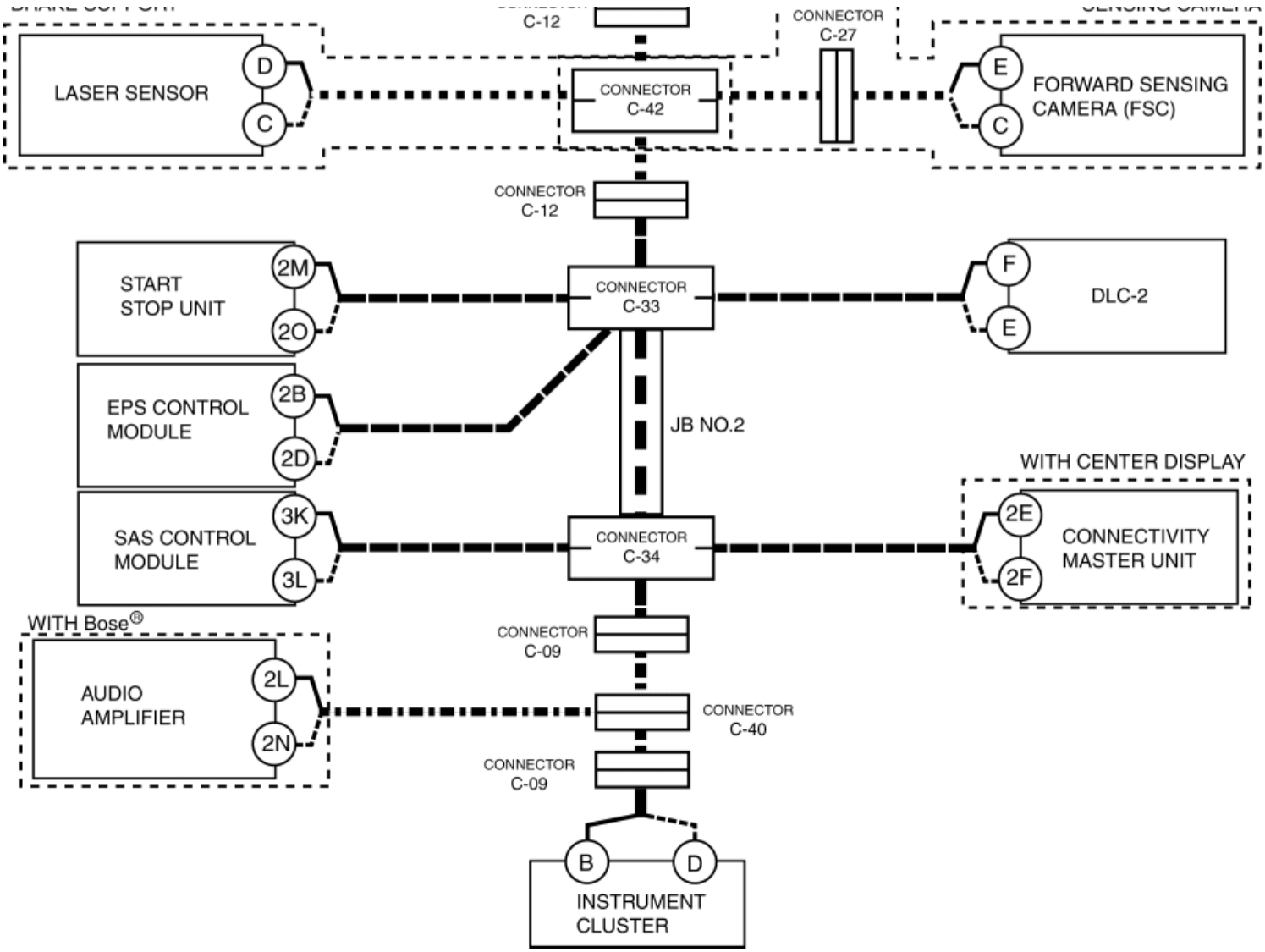

Inspection item

- DSC HU/CM power supply voltage-related wiring harness and fuse
- DSC HU/CM body ground related wiring harness
- Front body control module (FBCM) connector
- DSC HU/CM connector
- Wiring harness between front body control module (FBCM) terminal 2R and DSC HU/CM terminal AF
- Wiring harness between front body control module (FBCM) terminal 2L and DSC HU/CM terminal AC
- DSC HU/CM
- Front body control module (FBCM)
    - Between front body control module (FBCM) terminal 2R and front body control module (FBCM) terminal 2K
    - Between front body control module (FBCM) terminal 2L and front body control module (FBCM) terminal 2I

C

Possible cause

- Connector terminal disconnection, poor contact, damage, deformation, corrosion
- Front body control module (FBCM) power supply voltage or body ground malfunction
- Front body control module (FBCM) malfunction

System wiring diagram

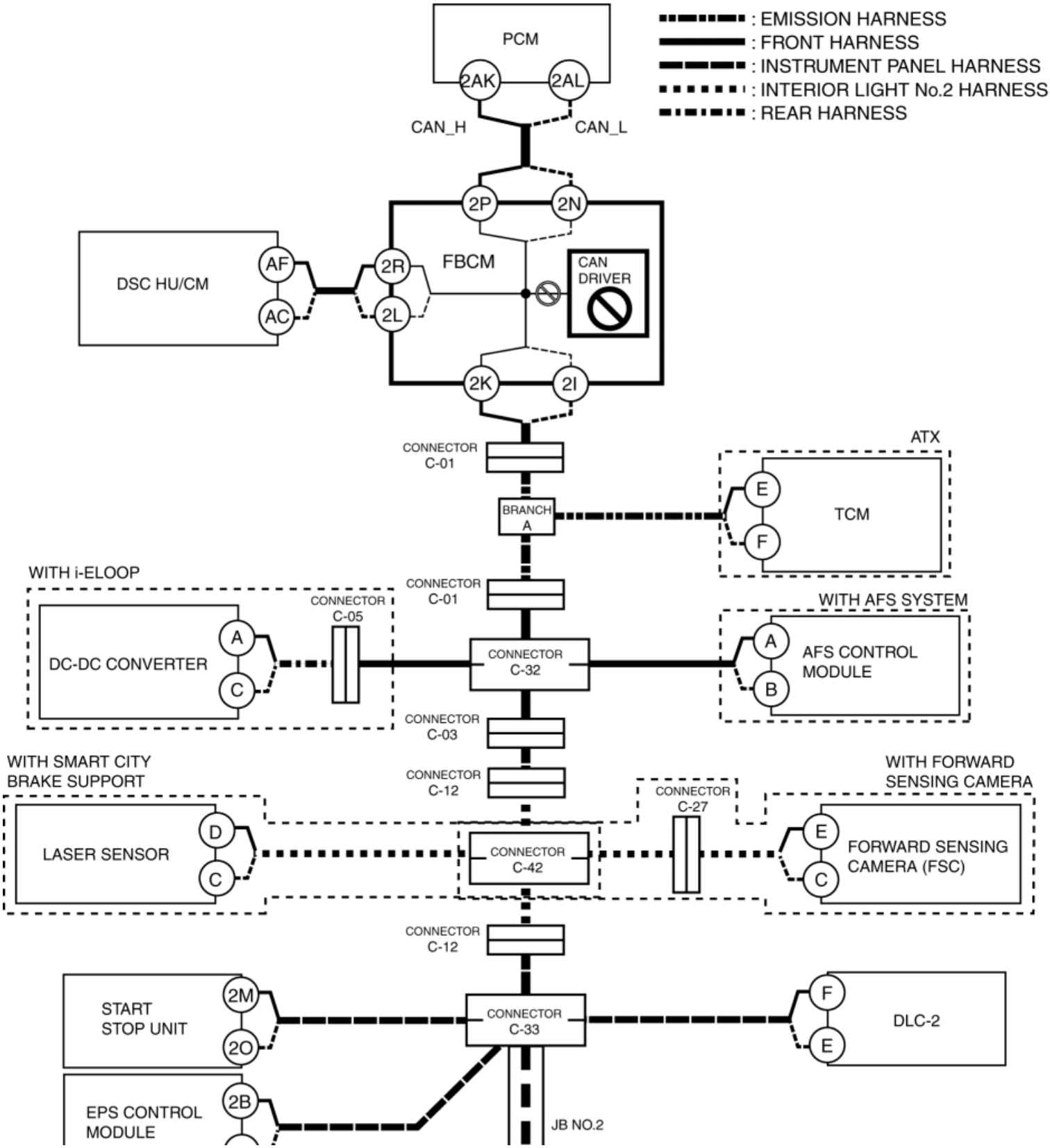

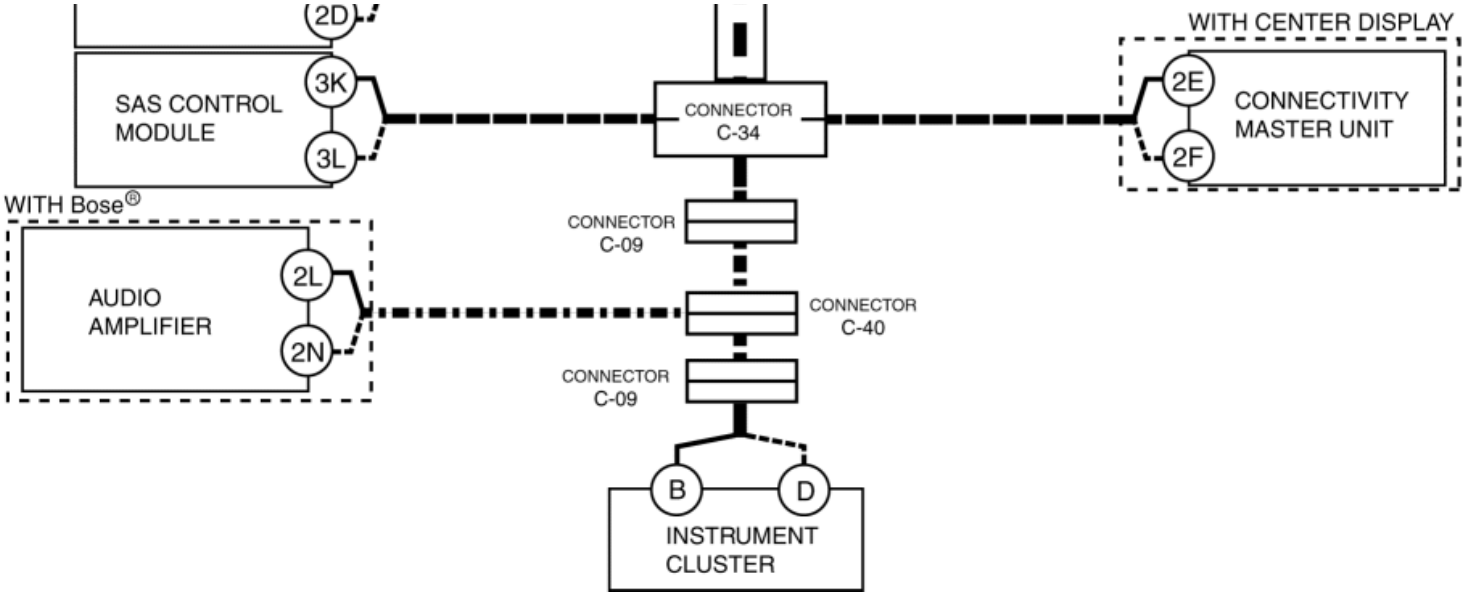

Inspection item

- Front body control module (FBCM) power supply voltage-related wiring harness and fuse
- Front body control module (FBCM) body ground related wiring harness
- Front body control module (FBCM)

D

ATX vehicles

Possible cause

- Connector terminal disconnection, poor contact, damage, deformation, corrosion
- Open circuit in wiring harness between front body control module (FBCM) and connector C-01
- Open circuit in wiring harness between connector C-01 and branch A
- Connector C-01 malfunction
- CAN circuit in front body control module (FBCM) malfunction

System wiring diagram

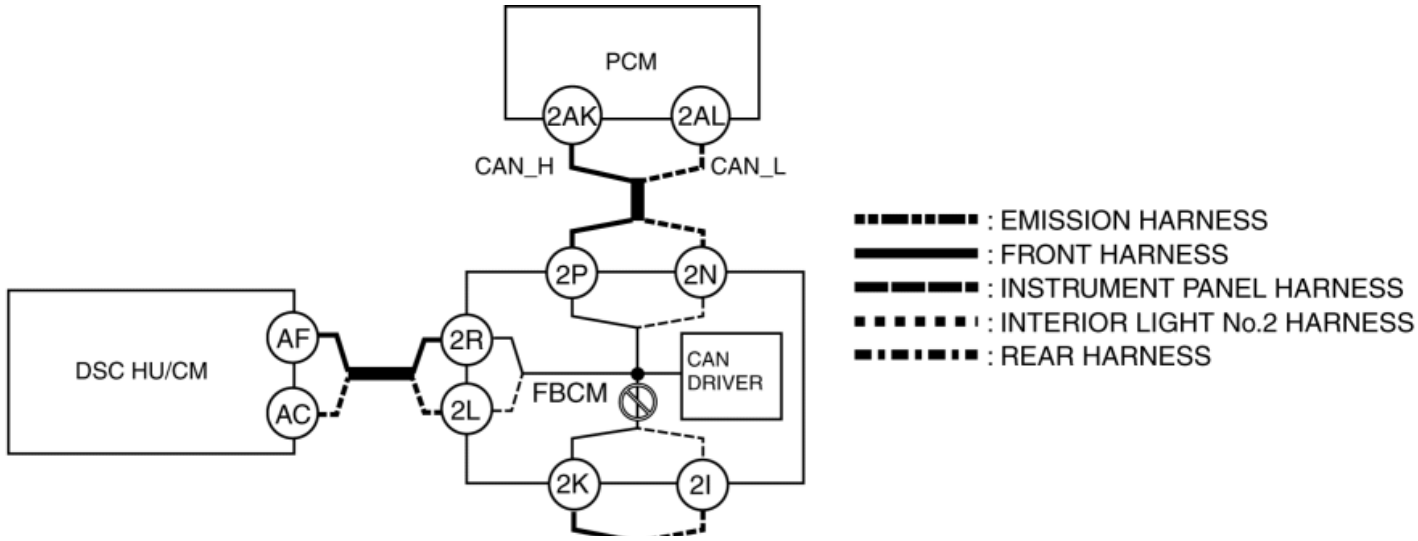

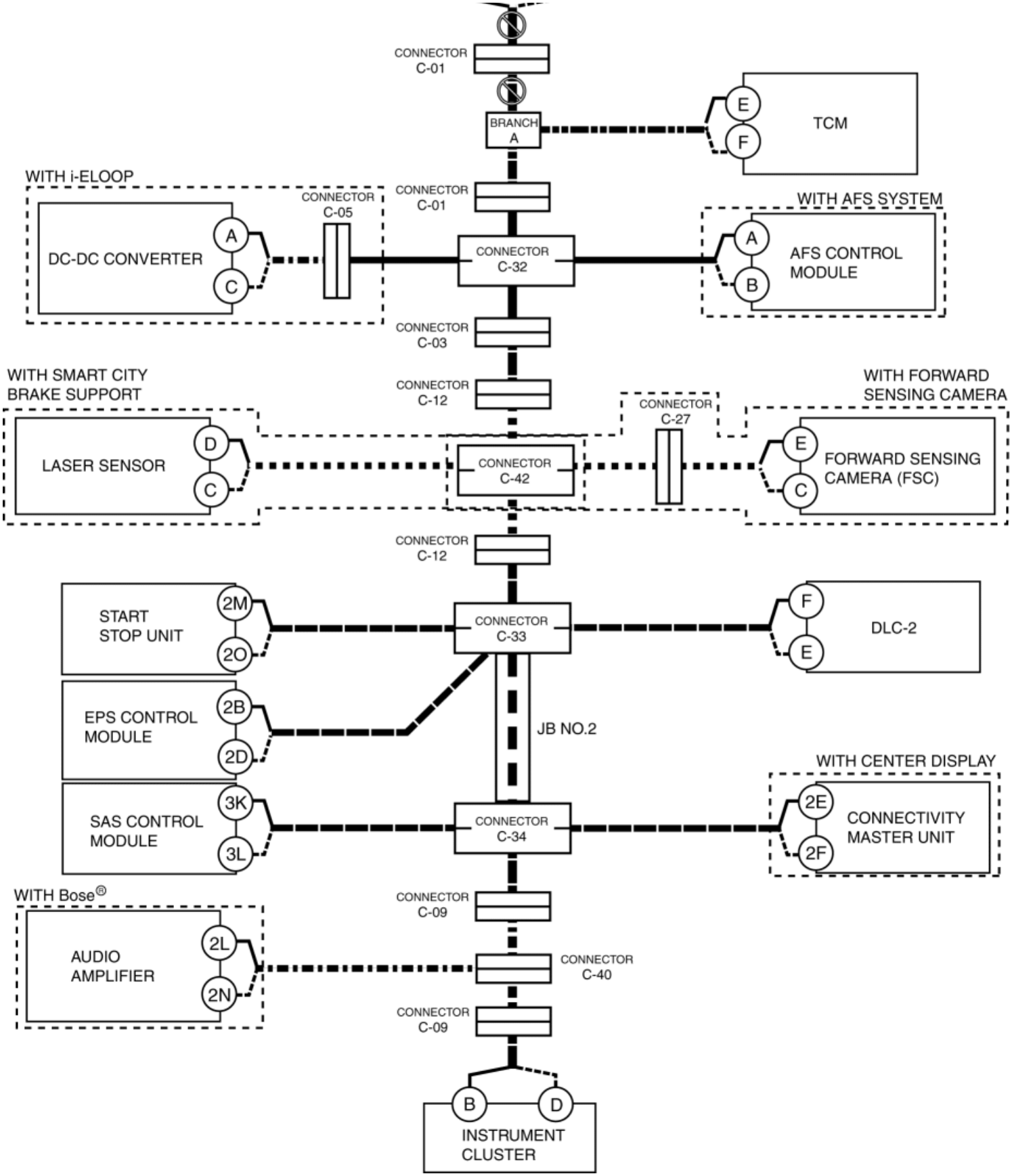

Inspection item

- Front body control module (FBCM) connector
- Connector C-01
- Wiring harness between front body control module (FBCM) terminal 2K and connector C-01

- Wiring harness between front body control module (FBCM) terminal 2I and connector C-01
- Wiring harness between connector C-01 and branch A
- Front body control module (FBCM)
  - Between front body control module (FBCM) terminal 2P and front body control module (FBCM) terminal 2K
  - Between front body control module (FBCM) terminal 2N and front body control module (FBCM) terminal 2I

MTX vehicles

Possible cause

- Connector terminal disconnection, poor contact, damage, deformation, corrosion
- Open circuit in wiring harness between front body control module (FBCM) and connector C-01
- Open circuit in wiring harness between connector C-01 and connector C-01
- Open circuit in wiring harness between connector C-01 and connector C-32
- Connector C-01 malfunction
- Connector C-32 malfunction
- CAN circuit in front body control module (FBCM) malfunction

System wiring diagram

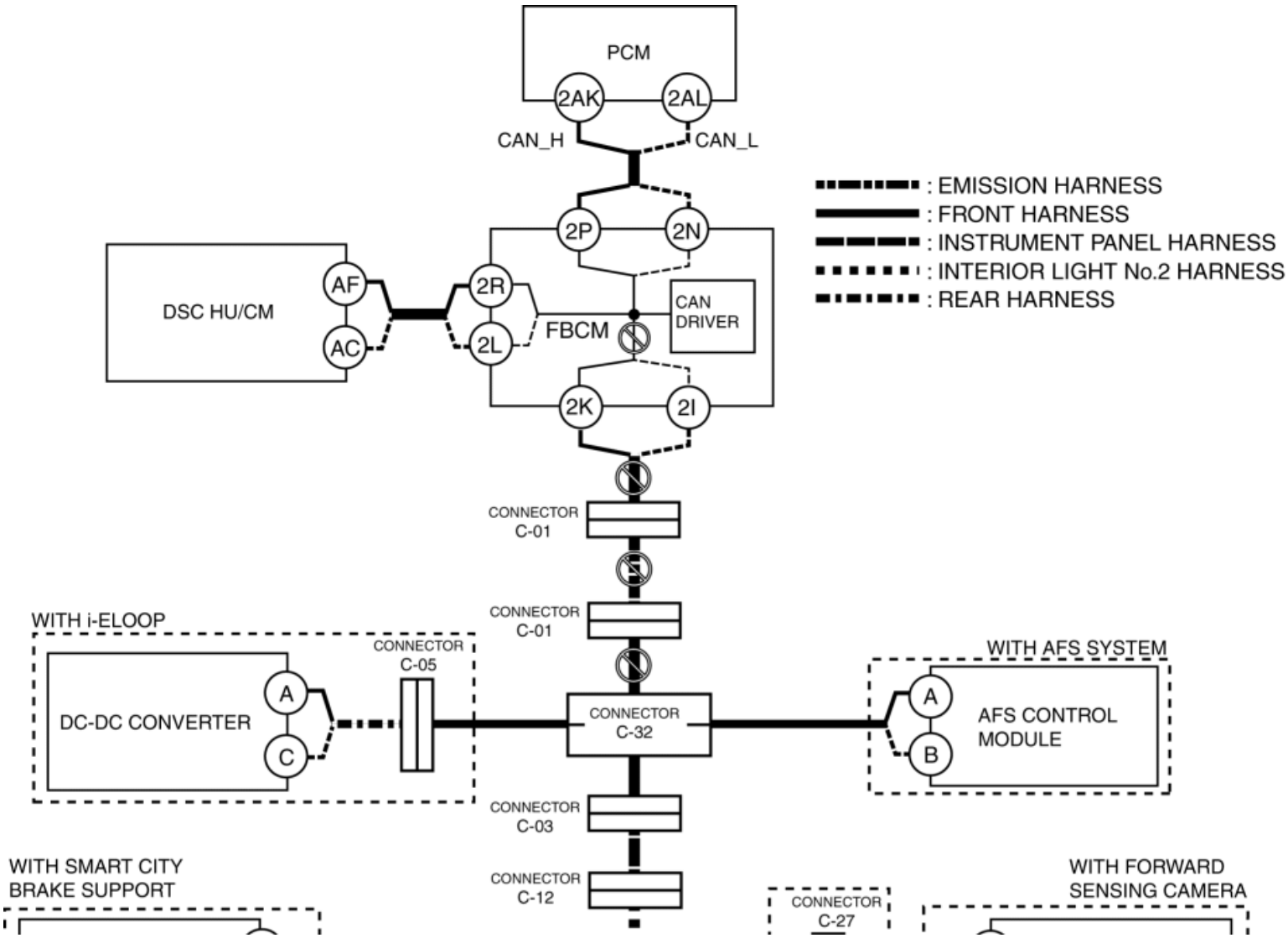

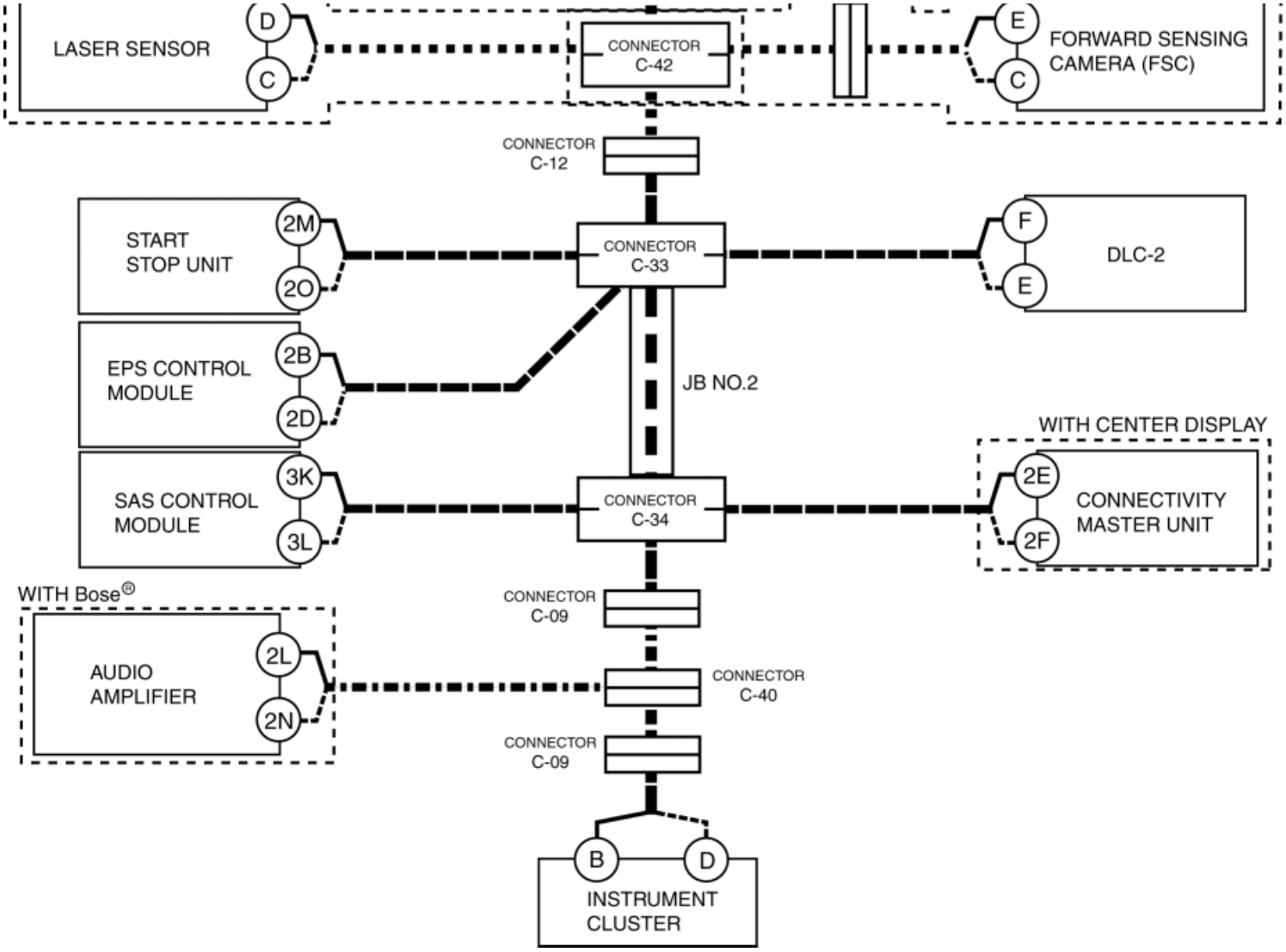

Inspection item

- Front body control module (FBCM) connector
- Connector C-01
- Connector C-32
- Wiring harness between front body control module (FBCM) terminal 2K and connector C-01
- Wiring harness between front body control module (FBCM) terminal 2I and connector C-01
- Wiring harness between connector C-01 and connector C-01
- Wiring harness between connector C-01 and connector C-32
- Front body control module (FBCM)
    - Between front body control module (FBCM) terminal 2P and front body control module (FBCM) terminal 2K
    - Between front body control module (FBCM) terminal 2N and front body control module (FBCM) terminal 2I

E

Possible cause

Connector terminal disconnection, poor contact, damage, deformation, corrosion

- TCM power supply voltage or body ground malfunction
- Open circuit in wiring harness between TCM and branch A
- TCM malfunction

System wiring diagram

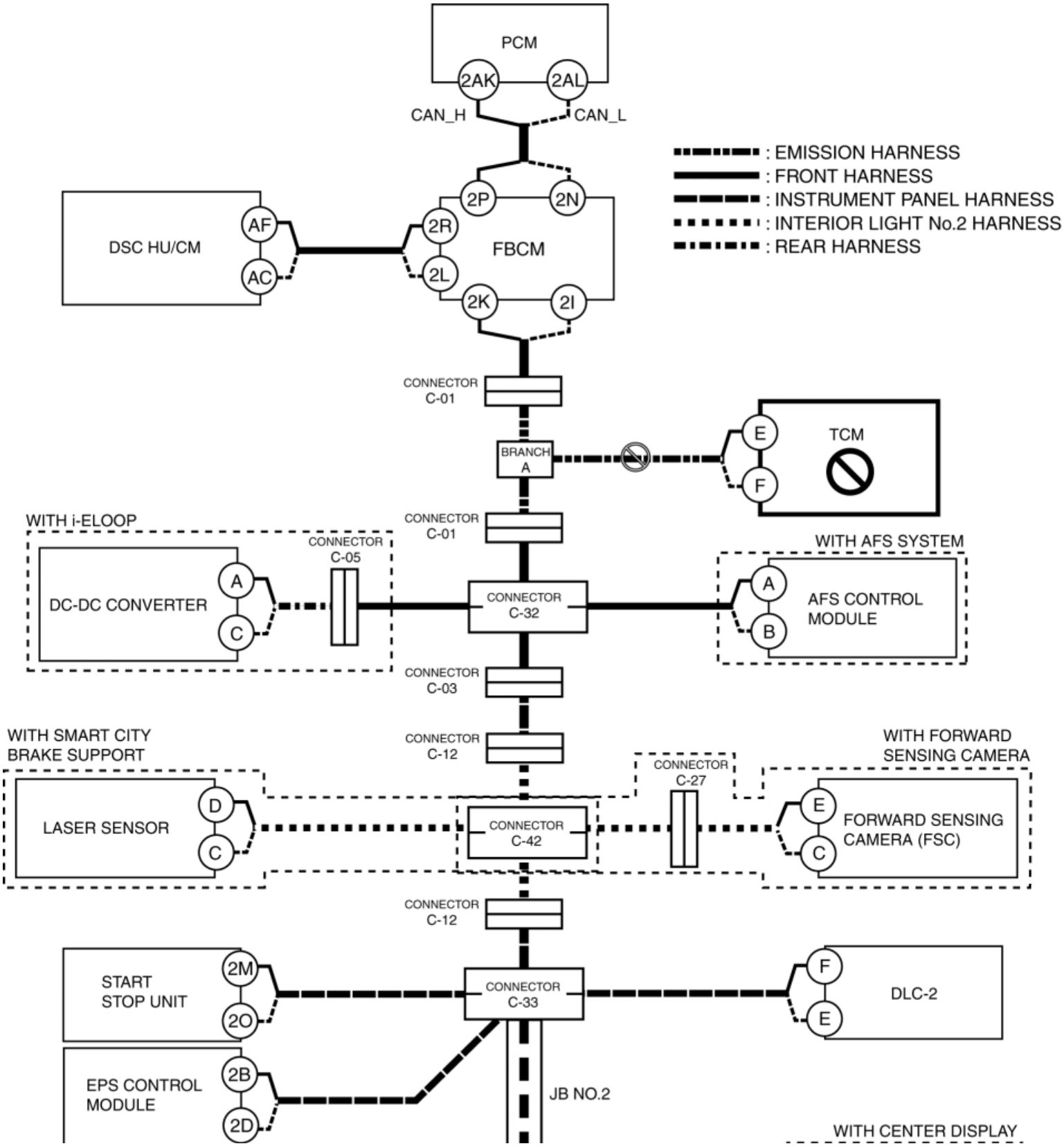

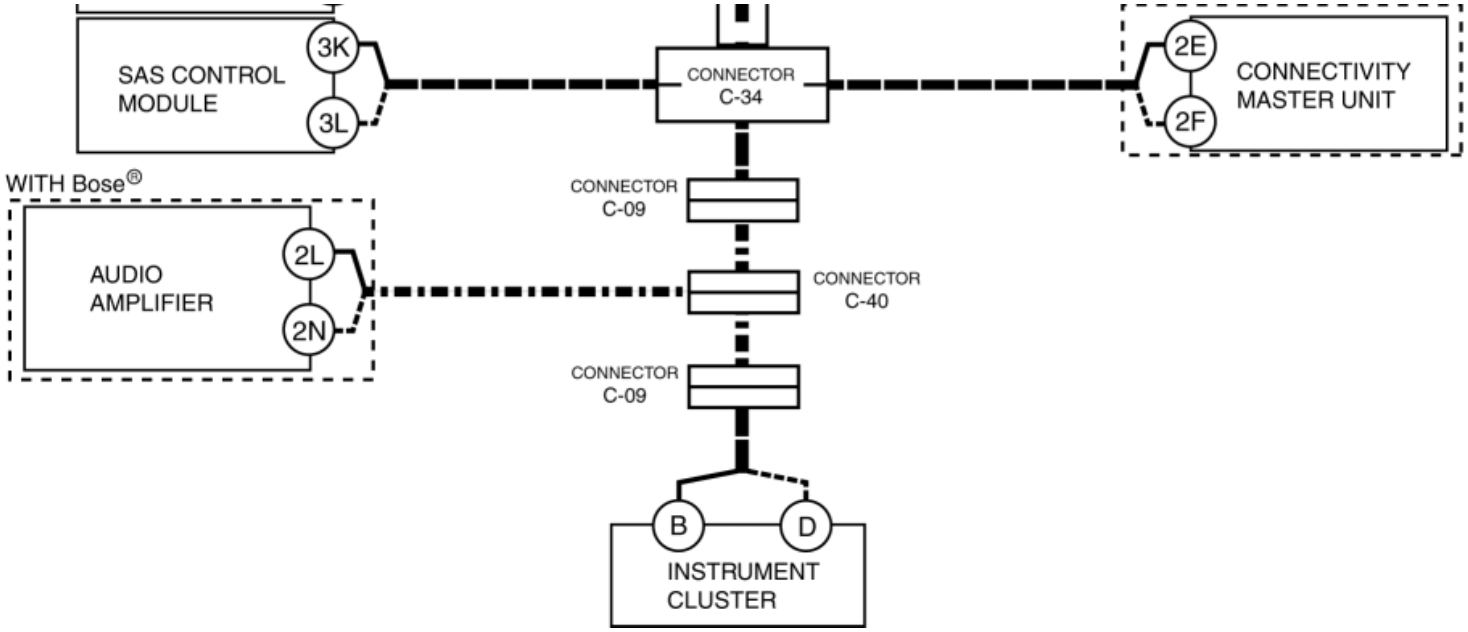

Inspection item

- TCM power supply voltage-related wiring harness and fuse
- TCM body ground related wiring harness
- TCM connector
- Wiring harness between TCM terminal E and branch A
- Wiring harness between TCM terminal F and branch A
- TCM

F

Possible cause

- Connector terminal disconnection, poor contact, damage, deformation, corrosion
- Open circuit in wiring harness between branch A and connector C-01
- Open circuit in wiring harness between connector C-01 and connector C-32
- Connector C-01 malfunction
- Connector C-32 malfunction

System wiring diagram

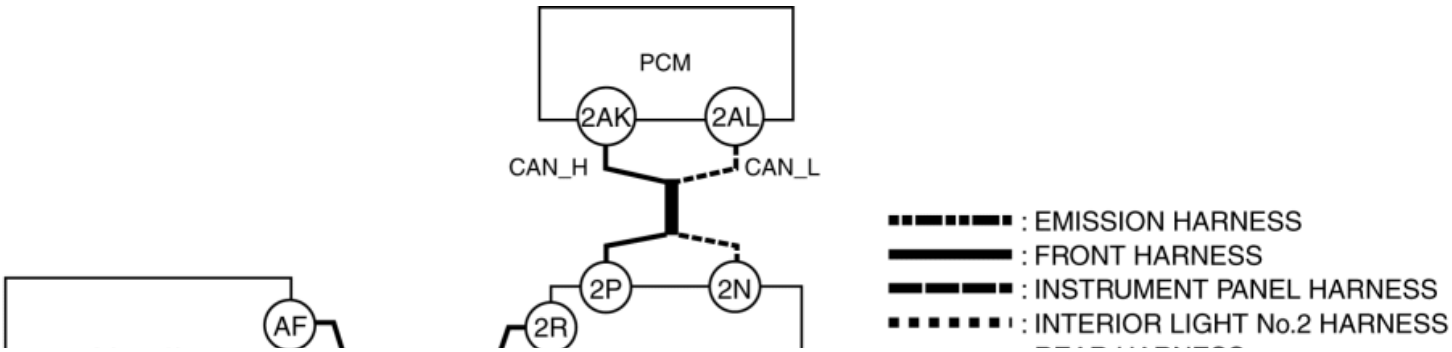

DETERMINING OPEN CIRCUIT LOCATION (HS-CAN)

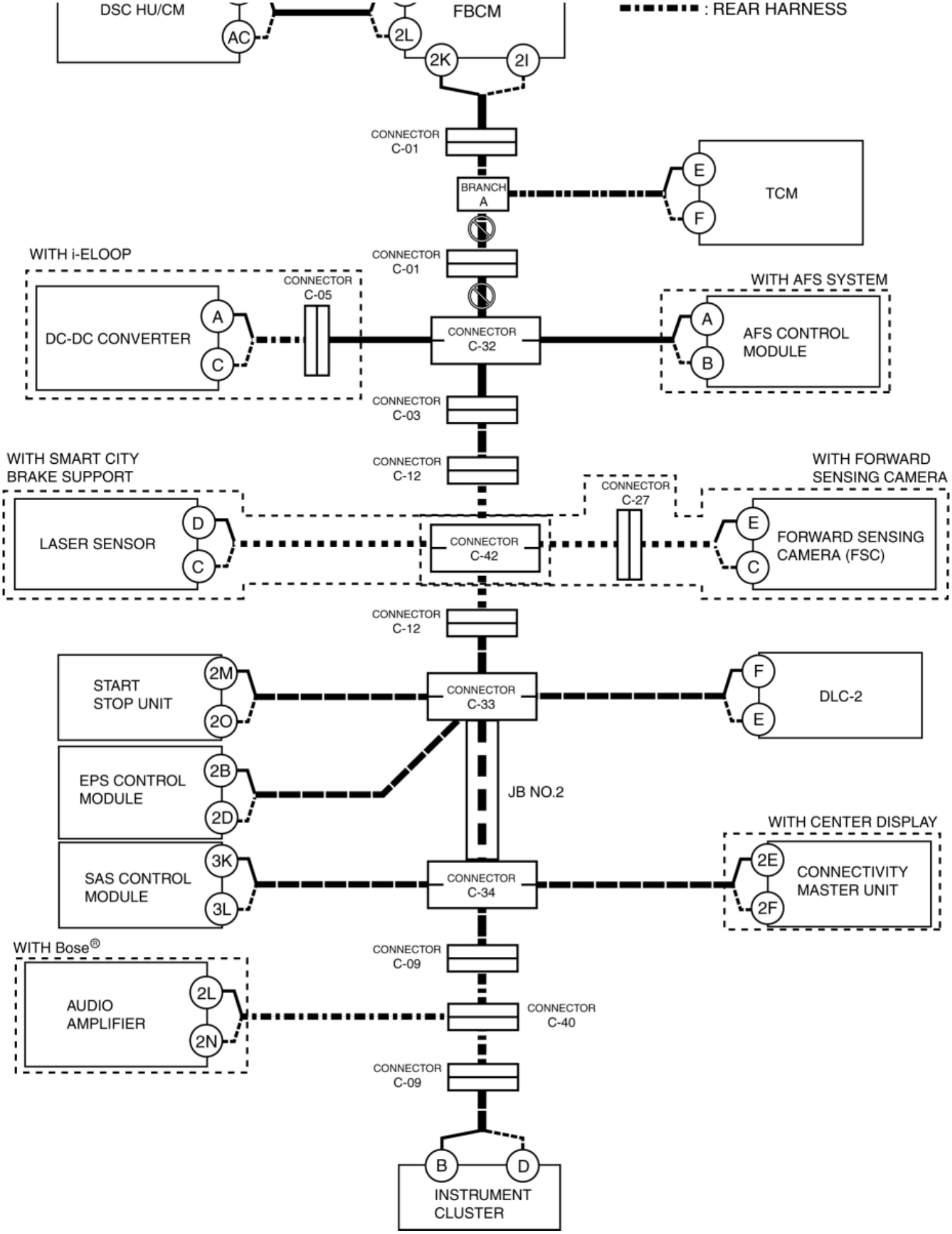

Inspection item

- Connector C-01
- Connector C-32
- Wiring harness between branch A and connector C-01
- Wiring harness between connector C-01 and connector C-32

G

Possible cause

- Connector terminal disconnection, poor contact, damage, deformation, corrosion
- DC-DC converter power supply voltage or body ground malfunction
- Open circuit in wiring harness between DC-DC converter and connector C-05
- Open circuit in wiring harness between connector C-05 and connector C-32
- Connector C-05 malfunction
- Connector C-32 malfunction
- DC-DC converter malfunction

System wiring diagram

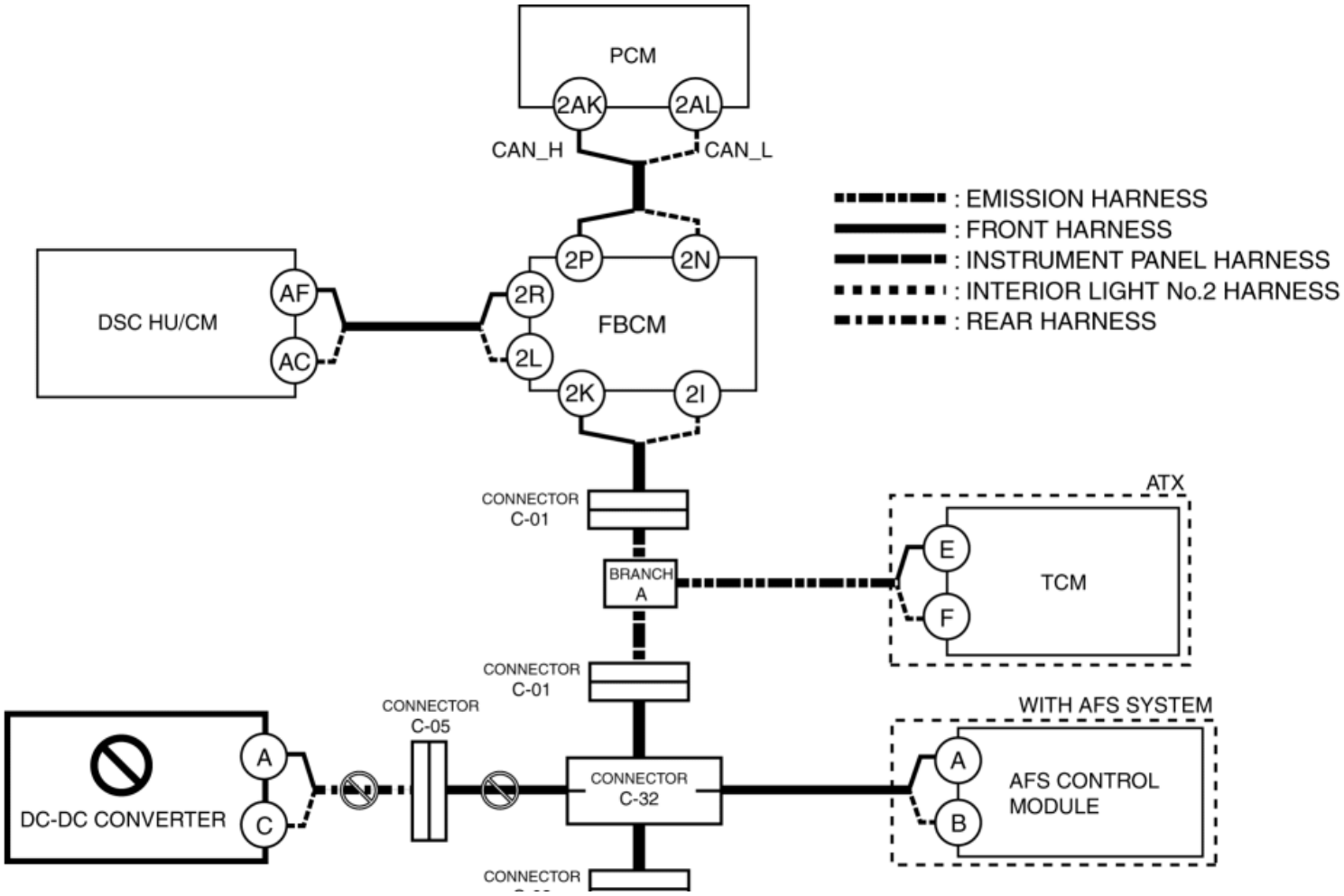

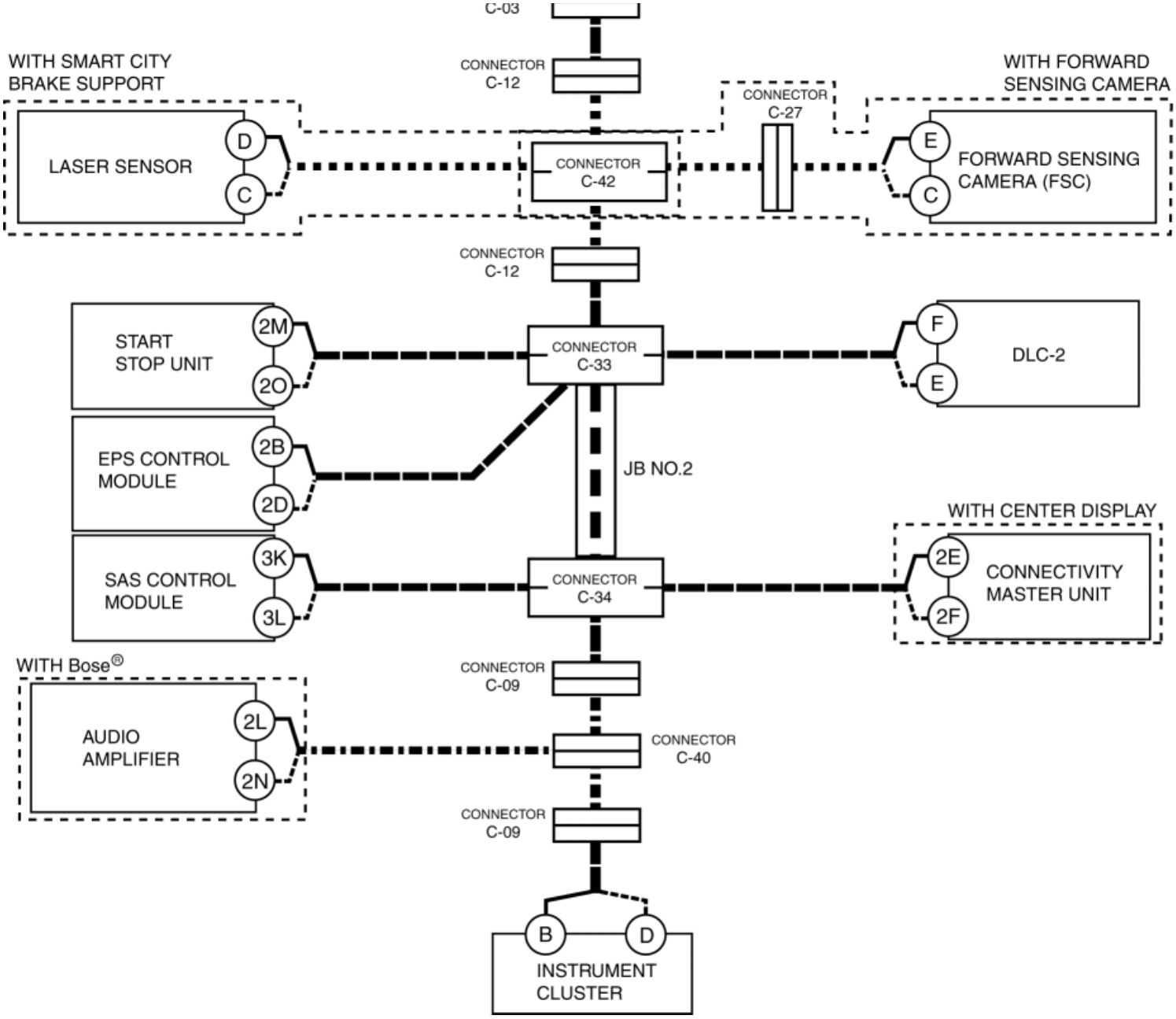

Inspection item

- DC-DC converter power supply voltage-related wiring harness and fuse
- DC-DC converter body ground related wiring harness
- DC-DC converter connector
- Connector C-05
- Connector C-32
- Wiring harness between DC-DC converter terminal A and connector C-05
- Wiring harness between DC-DC converter terminal C and connector C-05
- Wiring harness between connector C-05 and connector C-32
- DC-DC converter

H

Possible cause

- Connector terminal disconnection, poor contact, damage, deformation, corrosion
- AFS control module power supply voltage or body ground malfunction
- Open circuit in wiring harness between AFS control module and connector C-32
- Connector C-32 malfunction
- AFS control module malfunction

System wiring diagram

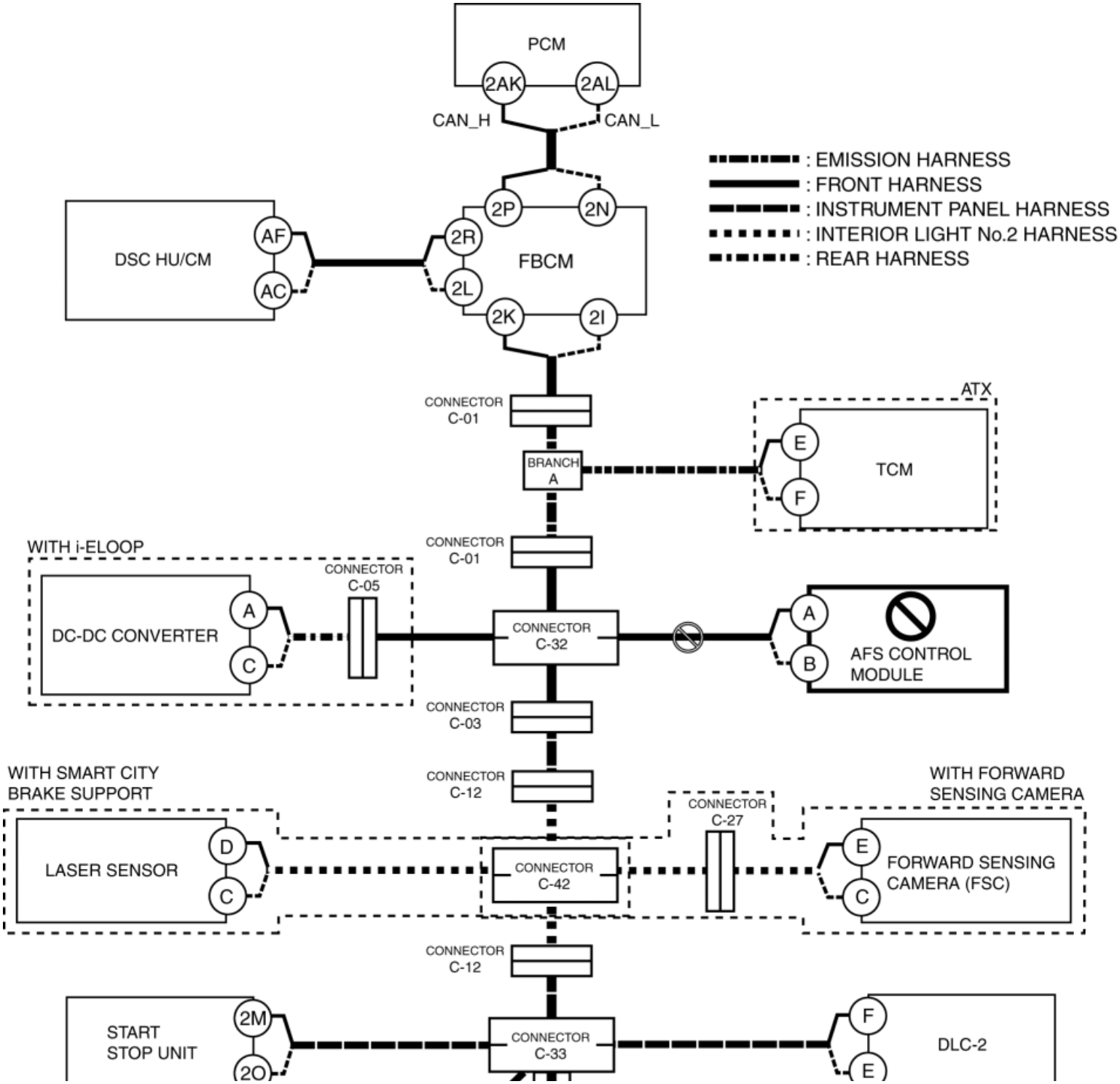

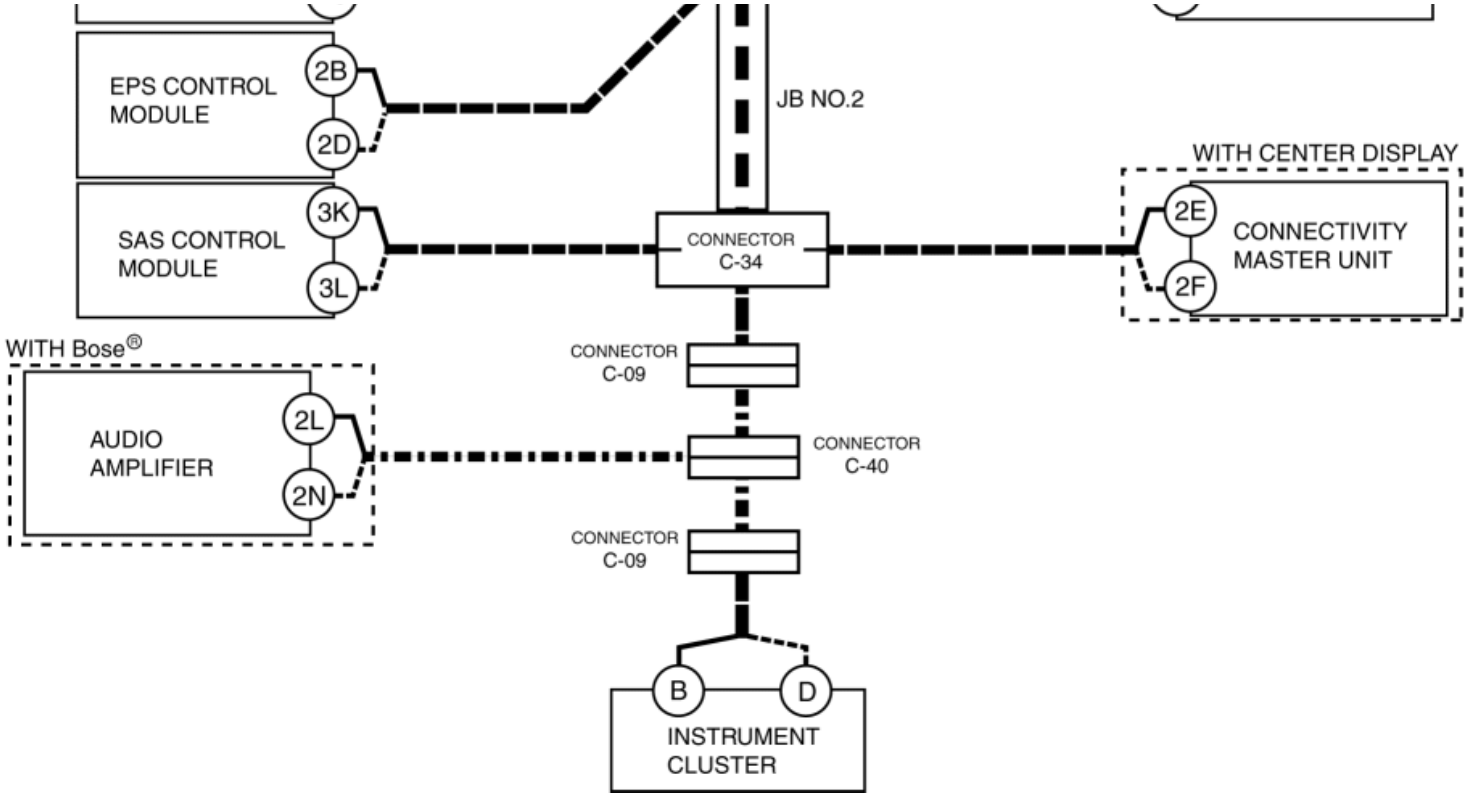

Inspection item

- AFS control module power supply voltage-related wiring harness and fuse
- AFS control module body ground related wiring harness
- AFS control module connector
- Connector C-32
- Wiring harness between AFS control module terminal A and connector C-32
- Wiring harness between AFS control module terminal B and connector C-32
- AFS control module

I

Possible cause

- Connector terminal disconnection, poor contact, damage, deformation, corrosion
- Open circuit in wiring harness between connector C-32 and connector C-03
- Open circuit in wiring harness between connector C-03 and connector C-12
- Open circuit in wiring harness between connector C-12 and connector C-42
- Connector C-32 malfunction
- Connector C-03 malfunction
- Connector C-12 malfunction
- Connector C-42 malfunction

System wiring diagram

DETERMINING OPEN CIRCUIT LOCATION (HS-CAN)

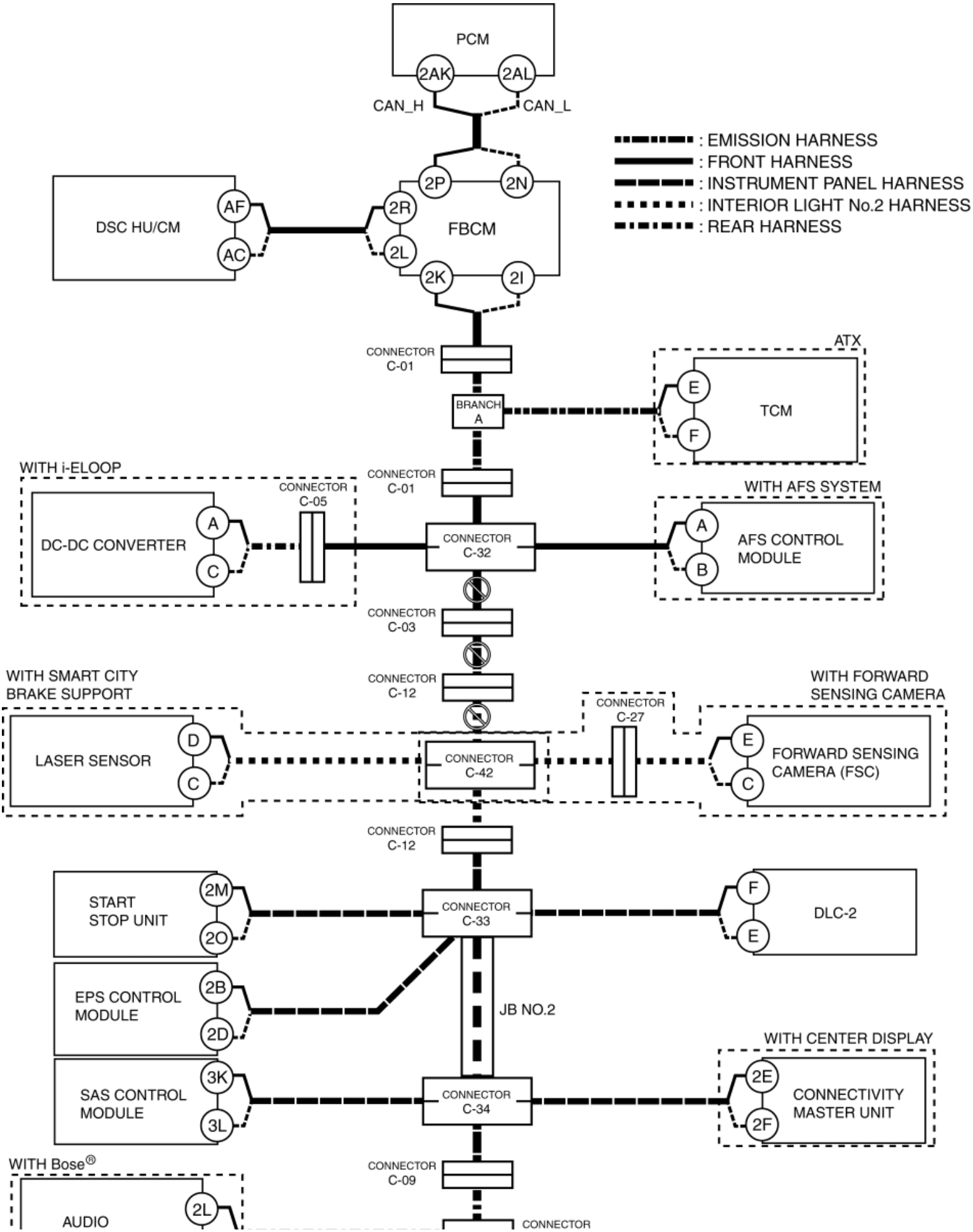

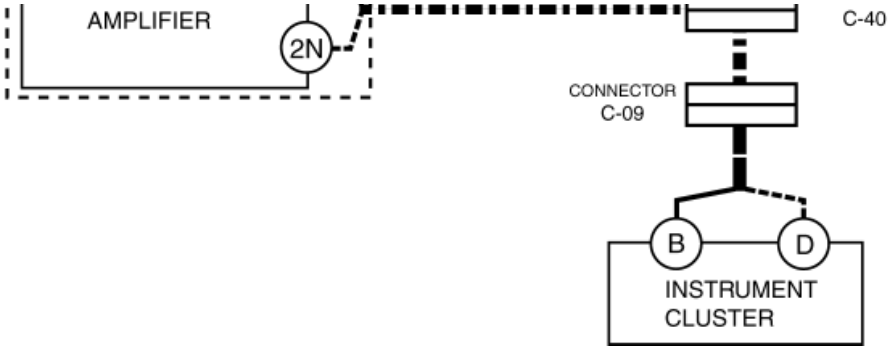

Inspection item

- Connector C-32
- Connector C-03
- Connector C-12
- Connector C-42
- Wiring harness between connector C-32 and connector C-03
- Wiring harness between connector C-03 and connector C-12
- Wiring harness between connector C-12 and connector C-42

J

Possible cause

- Connector terminal disconnection, poor contact, damage, deformation, corrosion
- Laser sensor power supply voltage or body ground malfunction
- Open circuit in wiring harness between Laser sensor and connector C-42
- Connector C-42 malfunction
- Laser sensor malfunction

System wiring diagram

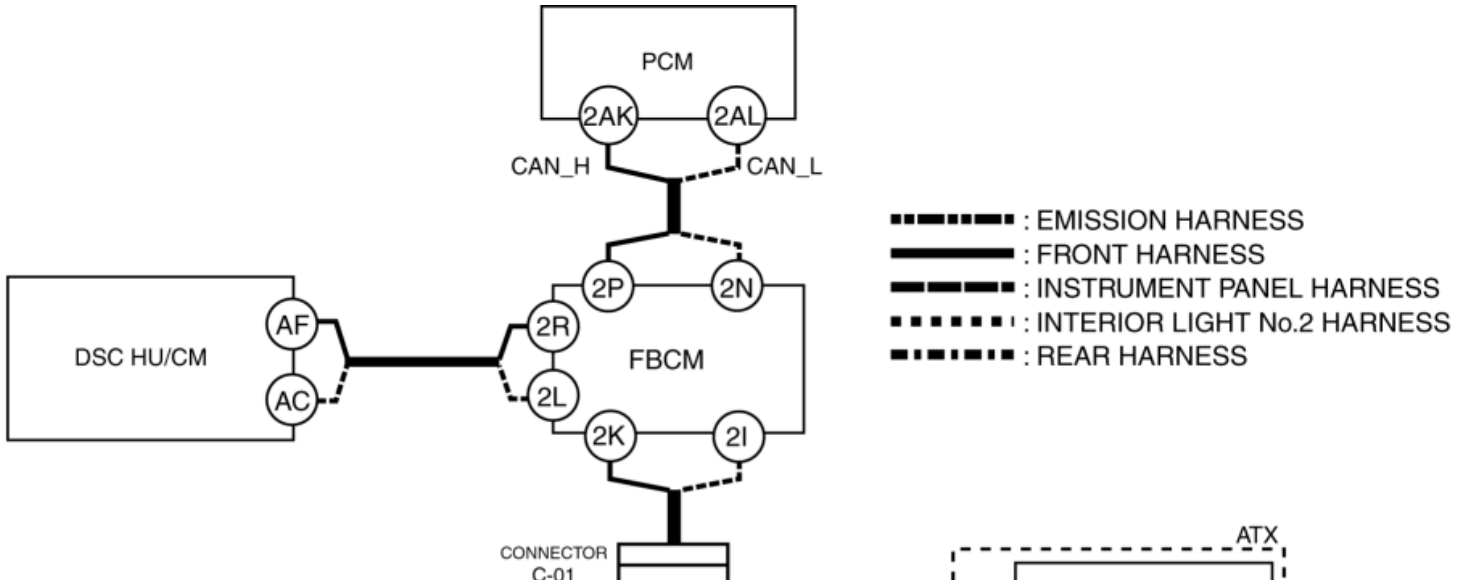

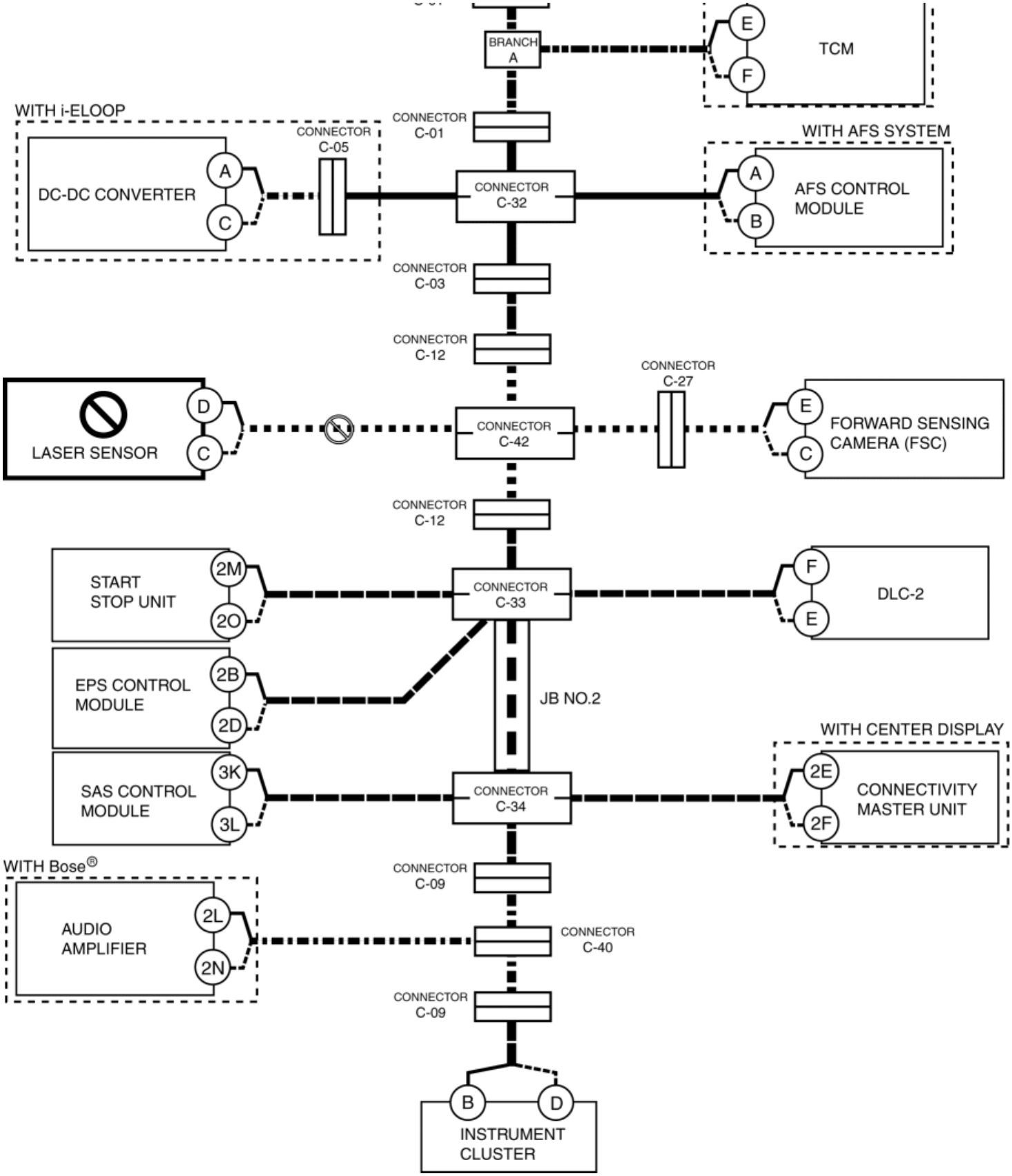

Inspection item

- Laser sensor power supply voltage-related wiring harness and fuse
- Laser sensor body ground related wiring harness
- Laser sensor connector

- Connector C-42
- Wiring harness between laser sensor terminal D and connector C-42
- Wiring harness between laser sensor terminal C and connector C-42
- Laser sensor

K

Possible cause

- Connector terminal disconnection, poor contact, damage, deformation, corrosion
- Forward sensing camera (FSC) power supply voltage or body ground malfunction
- Open circuit in wiring harness between forward sensing camera (FSC) and connector C-27
- Open circuit in wiring harness between connector C-27 and connector C-42
- Connector C-27 malfunction
- Connector C-42 malfunction
- Forward sensing camera (FSC) malfunction

System wiring diagram

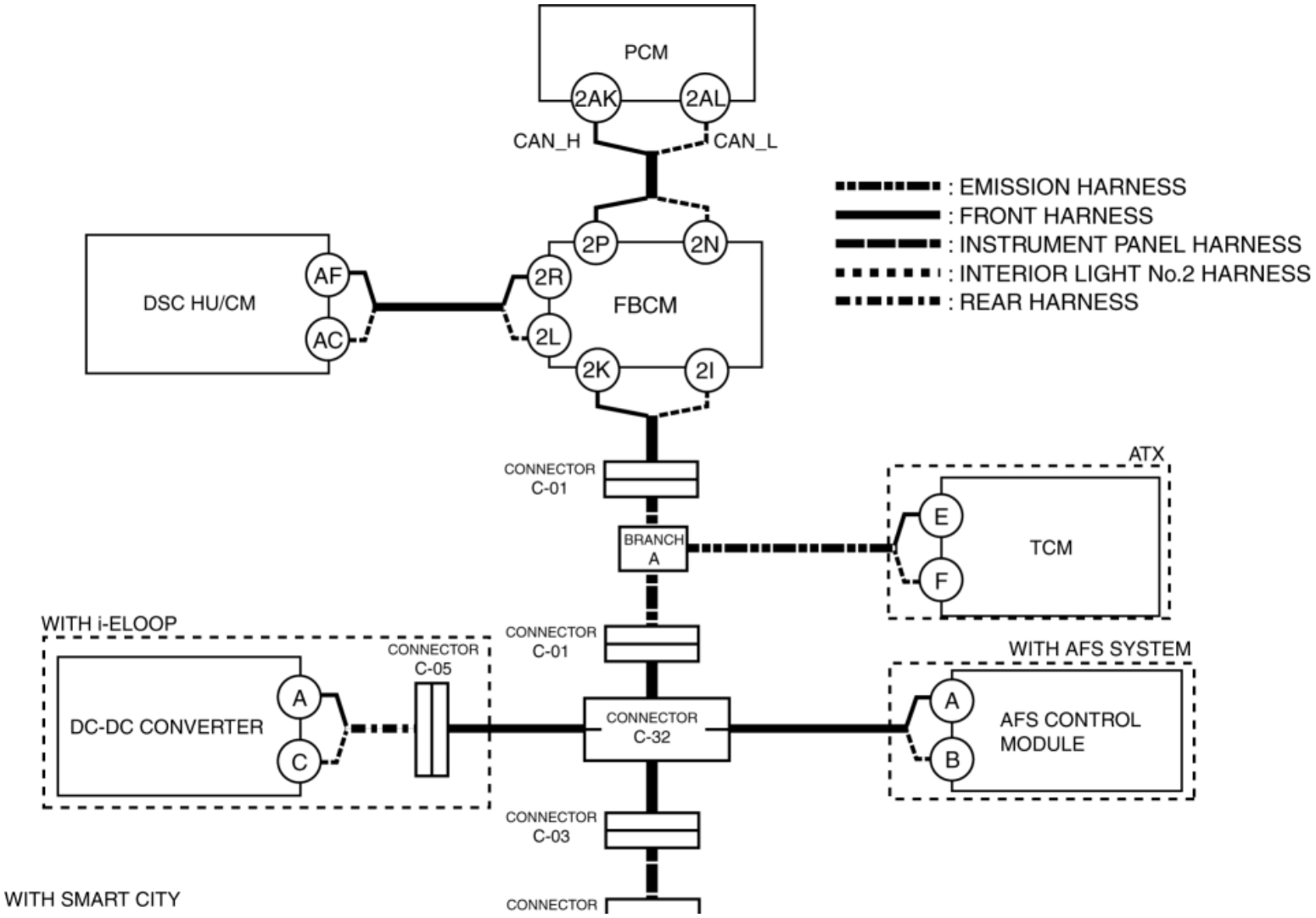

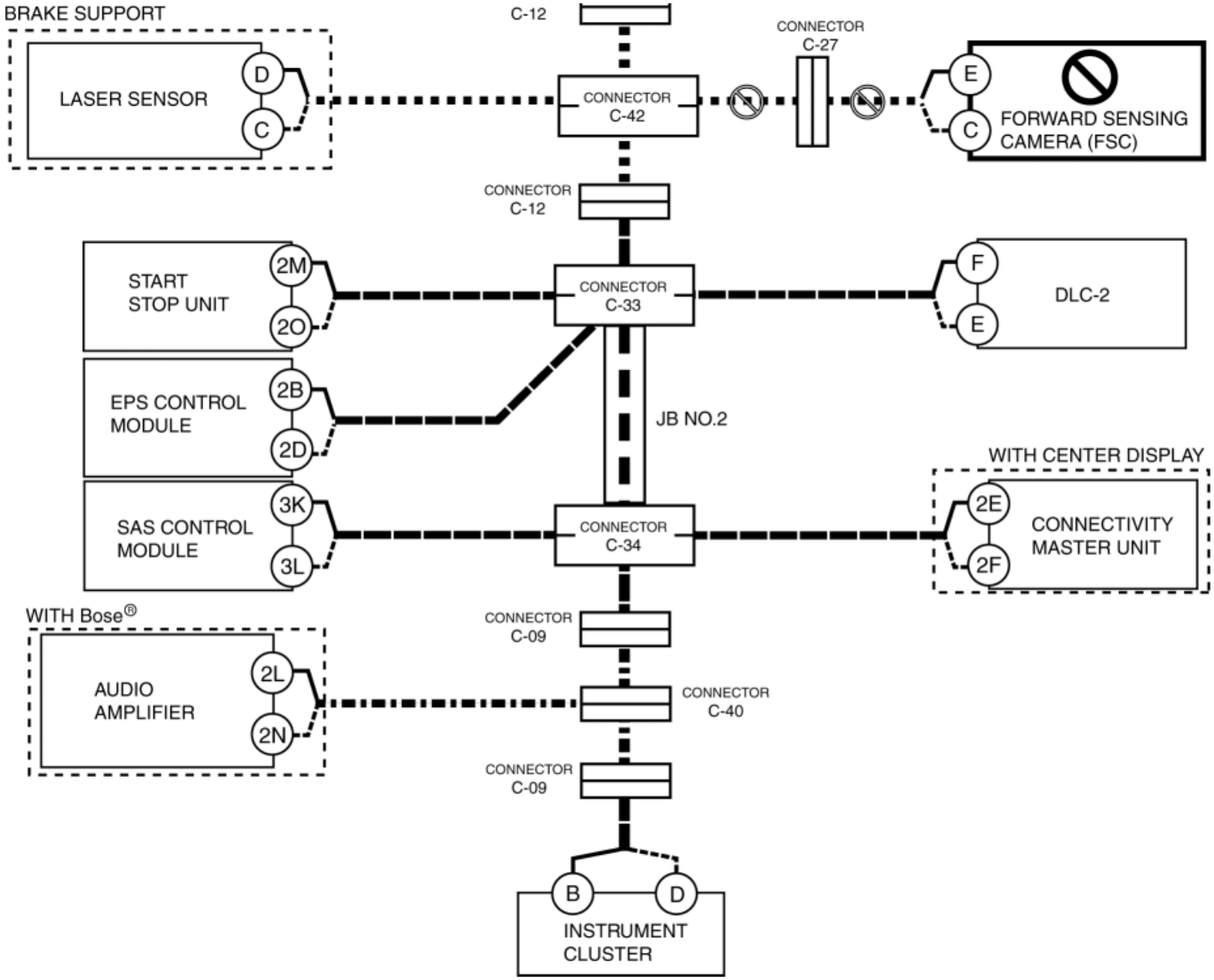

Inspection item

- Forward sensing camera (FSC) power supply voltage-related wiring harness and fuse
- Forward sensing camera (FSC) body ground related wiring harness
- Forward sensing camera (FSC) connector
- Connector C-27
- Connector C-42
- Wiring harness between forward sensing camera (FSC) terminal E and connector C-27
- Wiring harness between forward sensing camera (FSC) terminal C and connector C-27
- Wiring harness between connector C-27 and connector C-42
- Forward sensing camera (FSC)

L

Possible cause

- Connector terminal disconnection, poor contact, damage, deformation, corrosion
- Open circuit in wiring harness between connector C-42 and connector C-12
- Open circuit in wiring harness between connector C-12 and connector C-33
- Connector C-42 malfunction
- Connector C-12 malfunction
- Connector C-33 malfunction

System wiring diagram

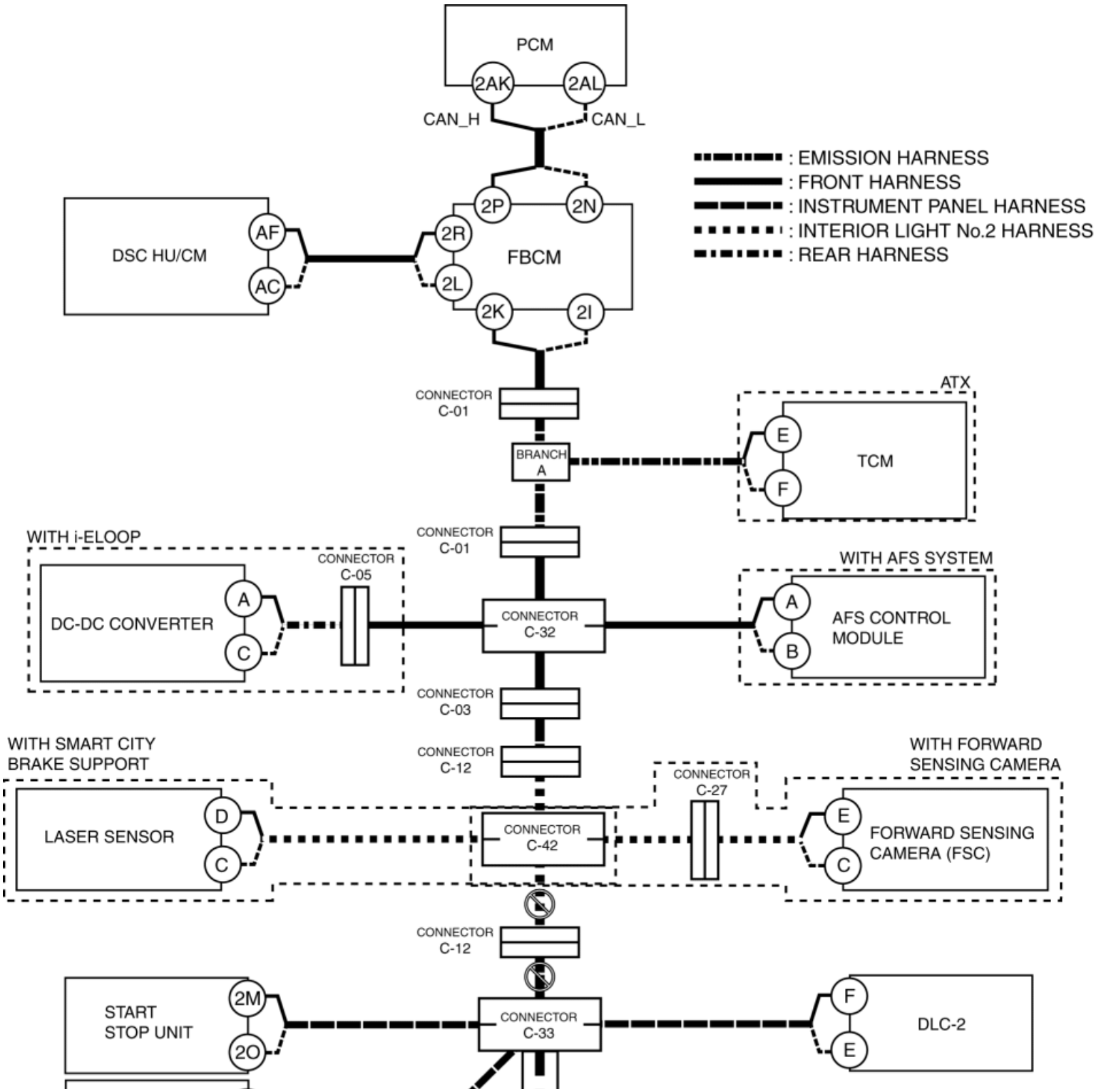

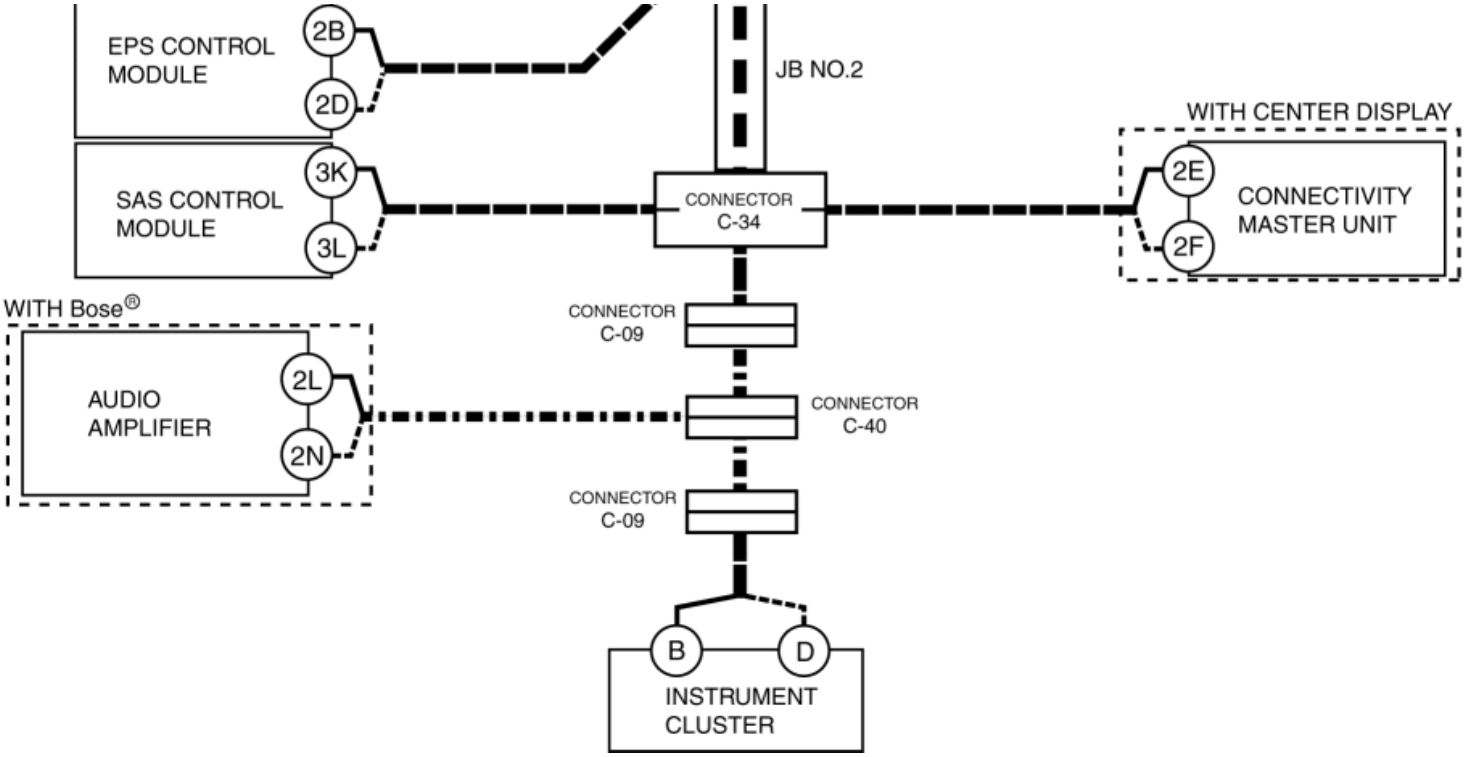

Inspection item

- Connector C-42
- Connector C-12
- Connector C-33
- Wiring harness between connector C-42 and connector C-12
- Wiring harness between connector C-12 and connector C-33

M

Possible cause

- Connector terminal disconnection, poor contact, damage, deformation, corrosion
- Start stop unit power supply voltage or body ground malfunction
- Open circuit in wiring harness between start stop unit and connector C-33
- Connector C-33 malfunction
- Start stop unit malfunction

System wiring diagram

DETERMINING OPEN CIRCUIT LOCATION (HS-CAN)

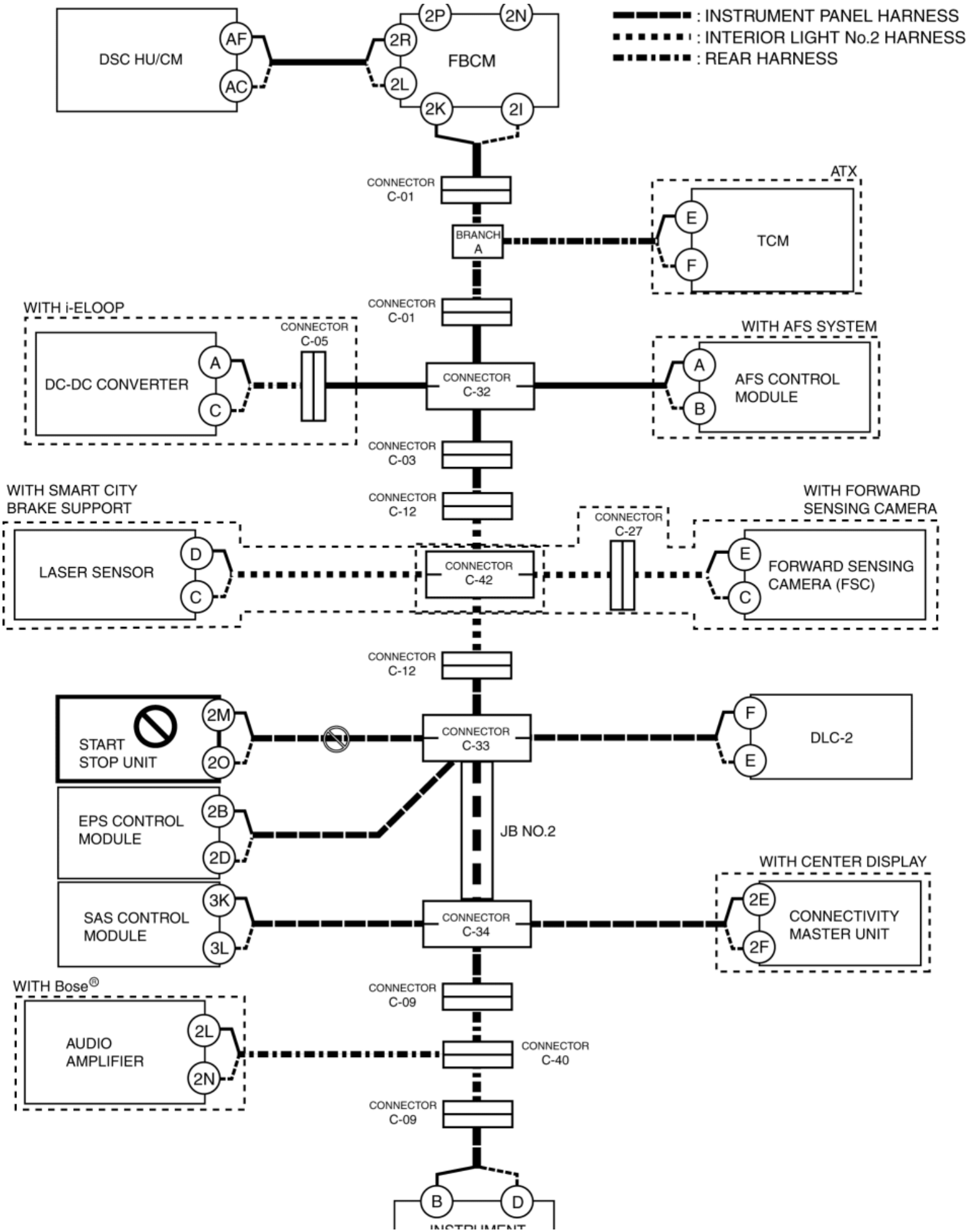

Inspection item

- Start stop unit power supply voltage-related wiring harness and fuse
- Start stop unit body ground related wiring harness
- Start stop unit connector
- Connector C-33
- Wiring harness between start stop unit terminal 2M and connector C-33
- Wiring harness between start stop unit terminal 2O and connector C-33
- Start stop unit

N

Possible cause

- Connector terminal disconnection, poor contact, damage, deformation, corrosion
- EPS control module power supply voltage or body ground malfunction
- Open circuit in wiring harness between EPS control module and connector C-33
- Connector C-33 malfunction
- EPS control module malfunction

System wiring diagram

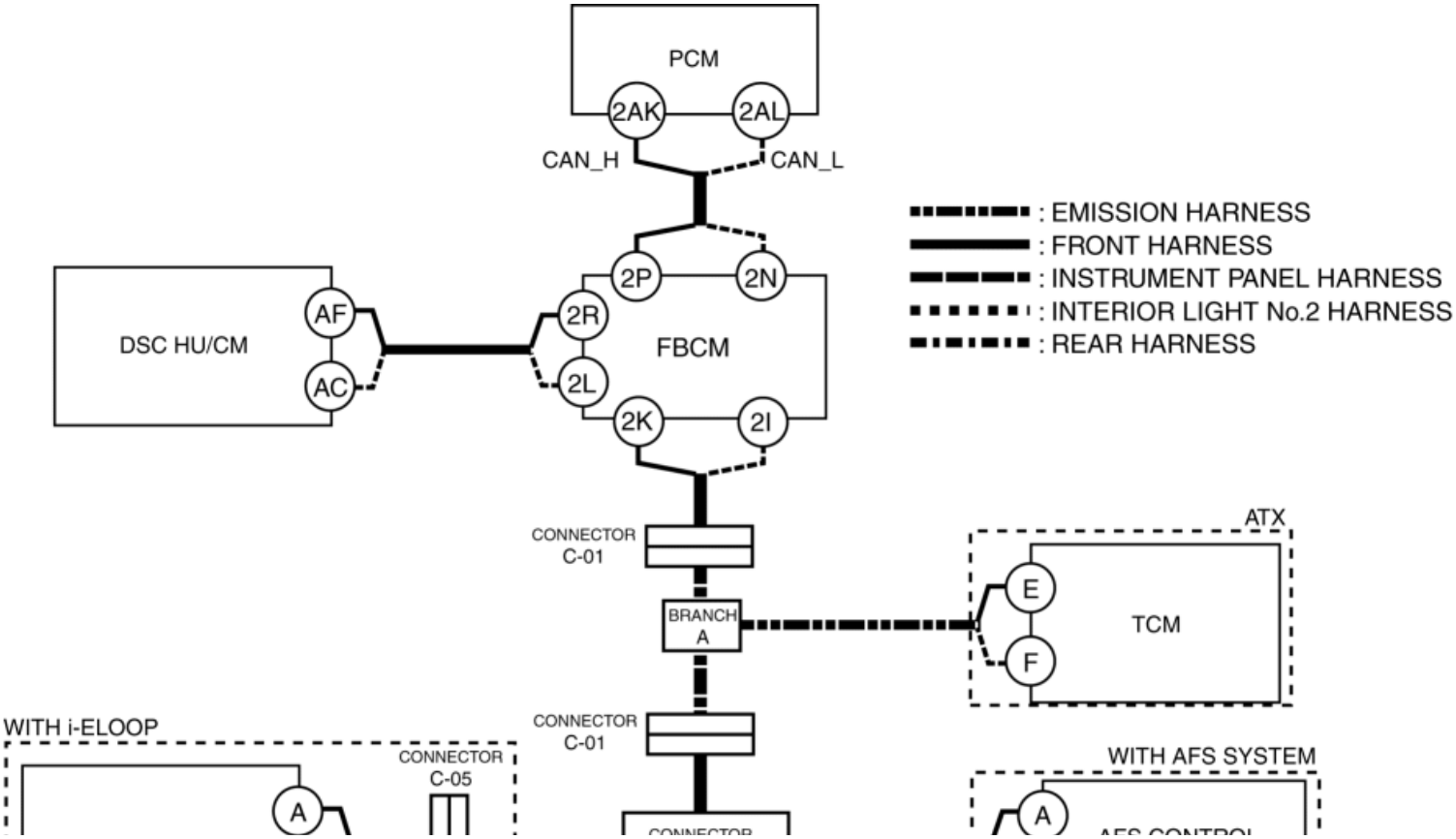

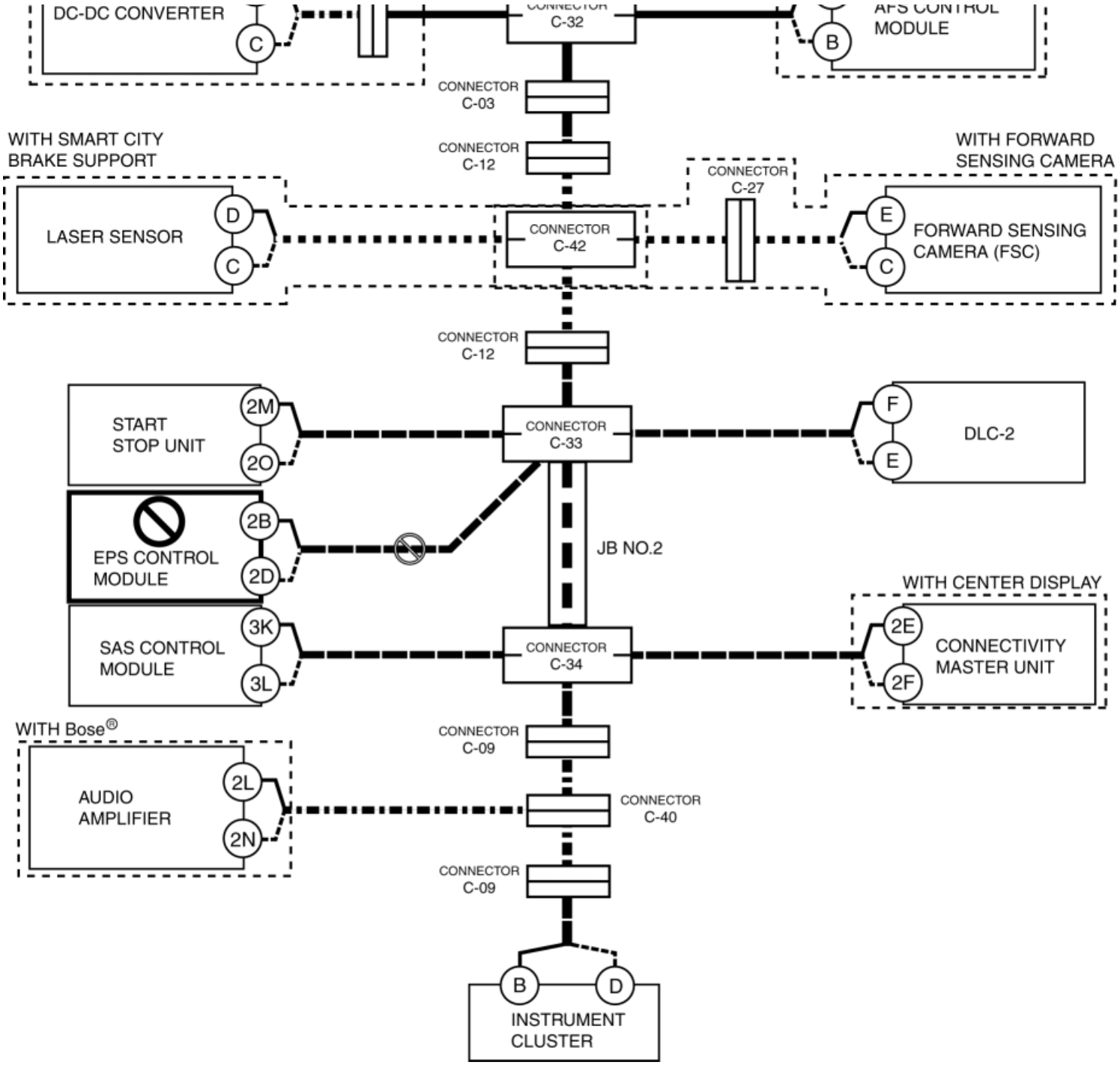

Inspection item

- EPS control module power supply voltage-related wiring harness and fuse
- EPS control module body ground related wiring harness
- EPS control module connector
- Connector C-33
- Wiring harness between EPS control module terminal 2B and connector C-33
- Wiring harness between EPS control module terminal 2D and connector C-33
- EPS control module

O

Possible cause

- Connector terminal disconnection, poor contact, damage, deformation, corrosion
- Connector C-33 malfunction
- Connector C-34 malfunction
- JB No.2 malfunction

System wiring diagram

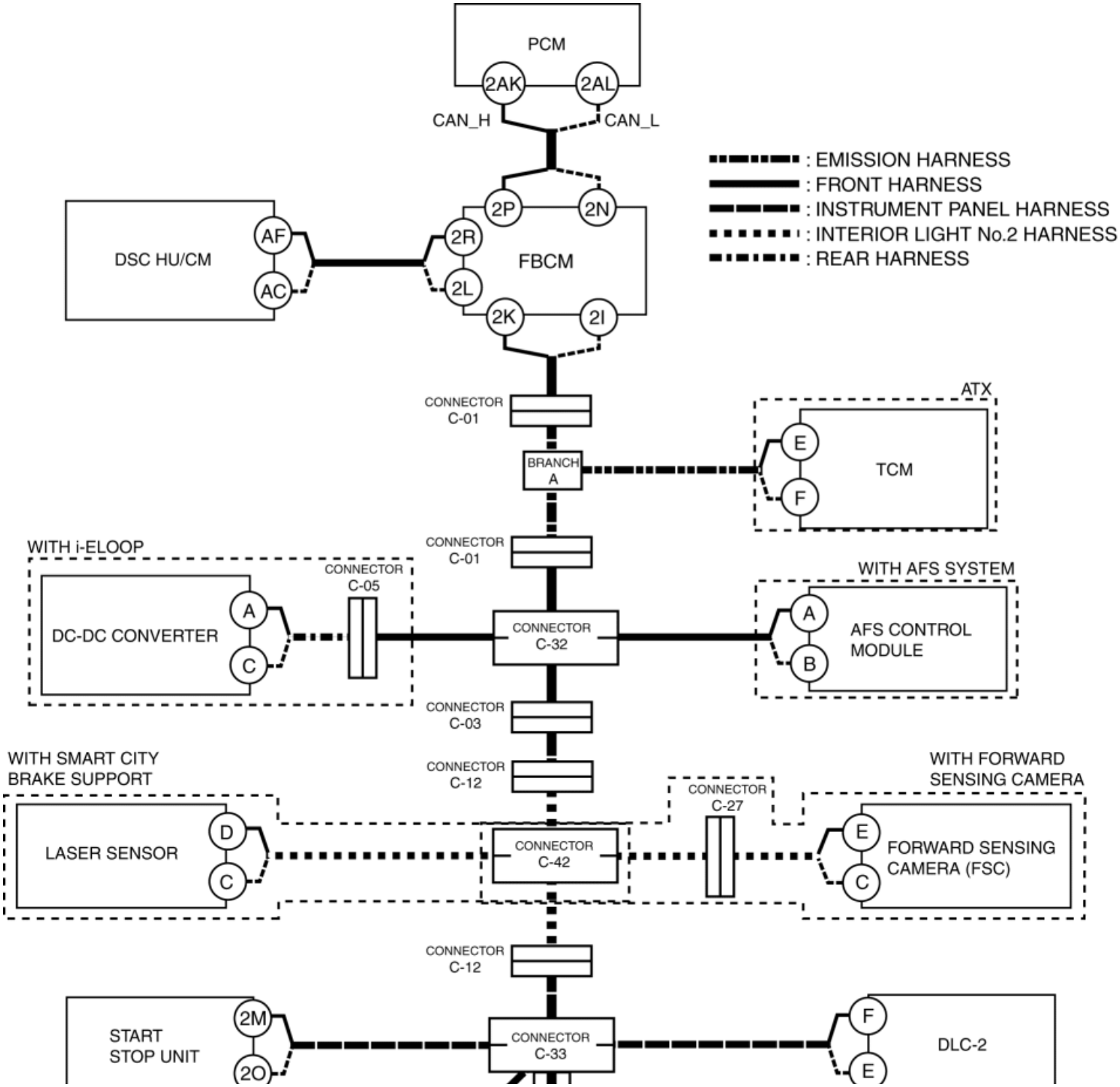

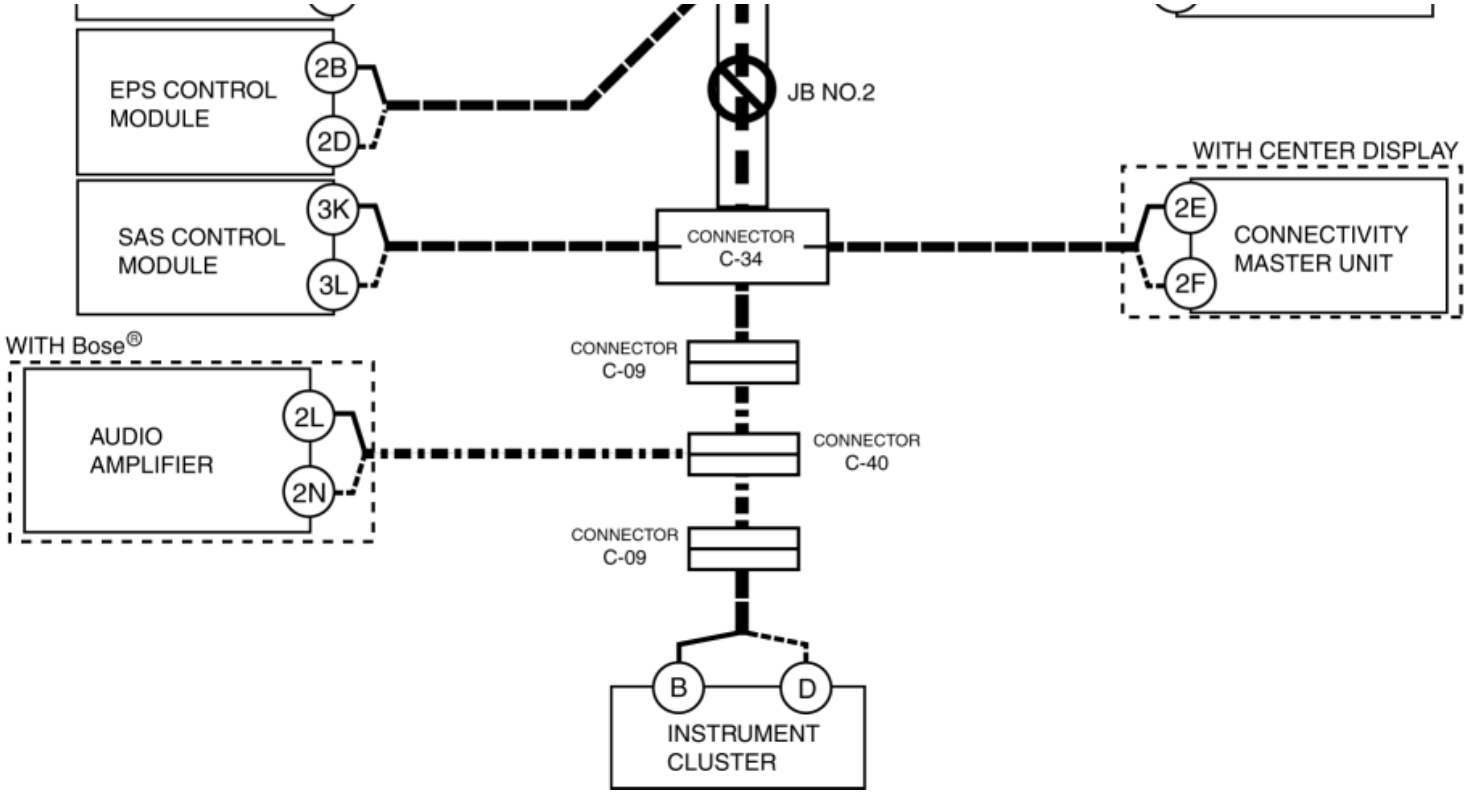

Inspection item

- Connector C-33
- Connector C-34
- JB No.2

P

Possible cause

- Connector terminal disconnection, poor contact, damage, deformation, corrosion
- SAS control module power supply voltage or body ground malfunction
- Open circuit in wiring harness between SAS control module and connector C-34
- Connector C-34 malfunction
- SAS control module malfunction

System wiring diagram

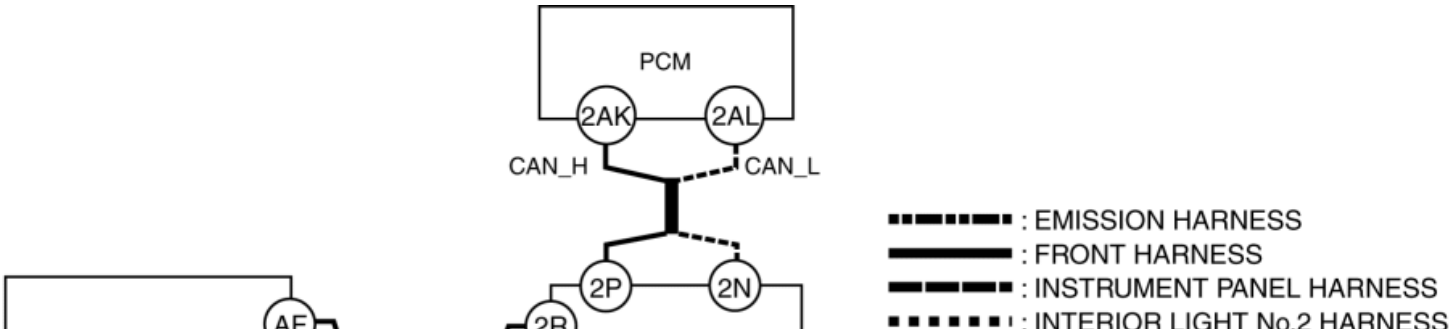

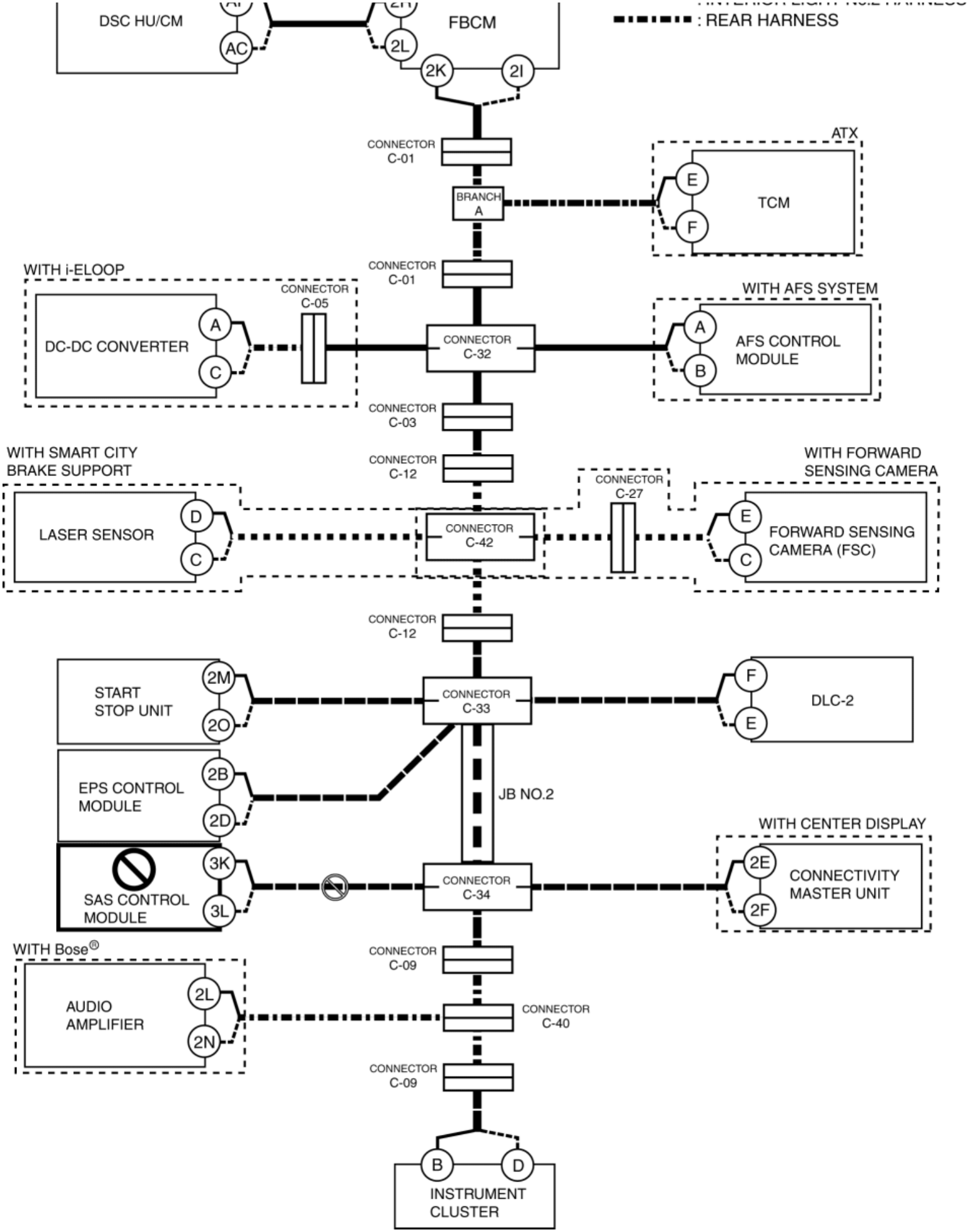
DSC HU/CM
AC
2H
2L
FBCM
2K
2I
: REAR HARNESS
CONNECTOR C-01
BRANCH A
ATX
E
F
TCM
CONNECTOR C-01
WITH i-ELOOP
CONNECTOR C-05
DC-DC CONVERTER
A
C
CONNECTOR C-32
WITH AFS SYSTEM
A
B
AFS CONTROL MODULE
CONNECTOR C-03
CONNECTOR C-12
WITH SMART CITY BRAKE SUPPORT
LASER SENSOR
D
C
CONNECTOR C-42
CONNECTOR C-27
WITH FORWARD SENSING CAMERA
E
C
FORWARD SENSING CAMERA (FSC)
CONNECTOR C-12
START STOP UNIT
2M
2O
CONNECTOR C-33
F
E
DLC-2
EPS CONTROL MODULE
2B
2D
JB NO.2
WITH CENTER DISPLAY
SAS CONTROL MODULE
3K
3L
CONNECTOR C-34
2E
2F
CONNECTIVITY MASTER UNIT
WITH Bose®
AUDIO AMPLIFIER
2L
2N
CONNECTOR C-09
CONNECTOR C-40
CONNECTOR C-09
B
D
INSTRUMENT CLUSTER

Inspection item

WARNING:

- Handling the component parts of the SRS air bag system improperly can accidentally operate (deploy) the air bag module, which may seriously injure you. Read the service warnings and cautions before handling the air bag system components of the SRS air bag system.

  (See **AIR BAG SYSTEM SERVICE WARNINGS [TWO-STEP DEPLOYMENT CONTROL SYSTEM]**.)

  (See **AIR BAG SYSTEM SERVICE WARNINGS [STANDARD DEPLOYMENT CONTROL SYSTEM]**.)

  (See **AIR BAG SYSTEM SERVICE CAUTIONS [TWO-STEP DEPLOYMENT CONTROL SYSTEM]**.)

  (See **AIR BAG SYSTEM SERVICE CAUTIONS [STANDARD DEPLOYMENT CONTROL SYSTEM]**.)
- SAS control module power supply voltage-related wiring harness and fuse
- SAS control module body ground related wiring harness
- SAS control module connector
- Connector C-34
- Wiring harness between SAS control module terminal 3K and connector C-34
- Wiring harness between SAS control module terminal 3L and connector C-34
- SAS control module

Q

Possible cause

- Connector terminal disconnection, poor contact, damage, deformation, corrosion
- Connectivity master unit power supply voltage or body ground malfunction
- Open circuit in wiring harness between connectivity master unit and connector C-34
- Connector C-34 malfunction
- Connectivity master unit malfunction

System wiring diagram

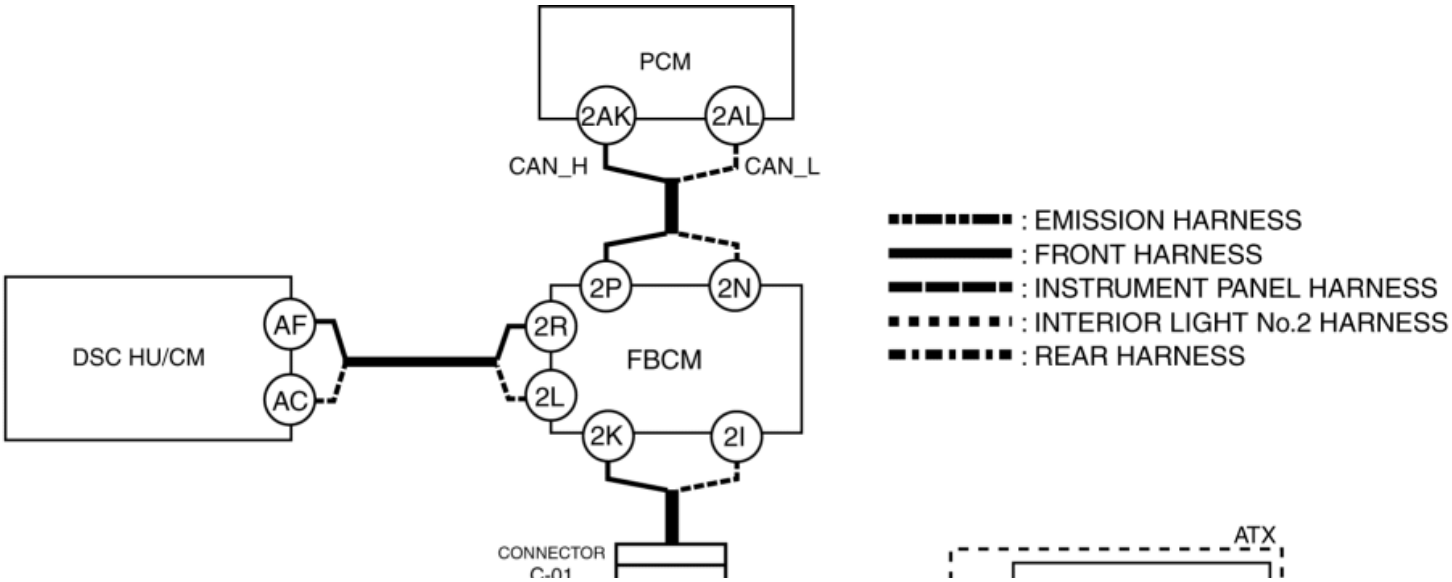

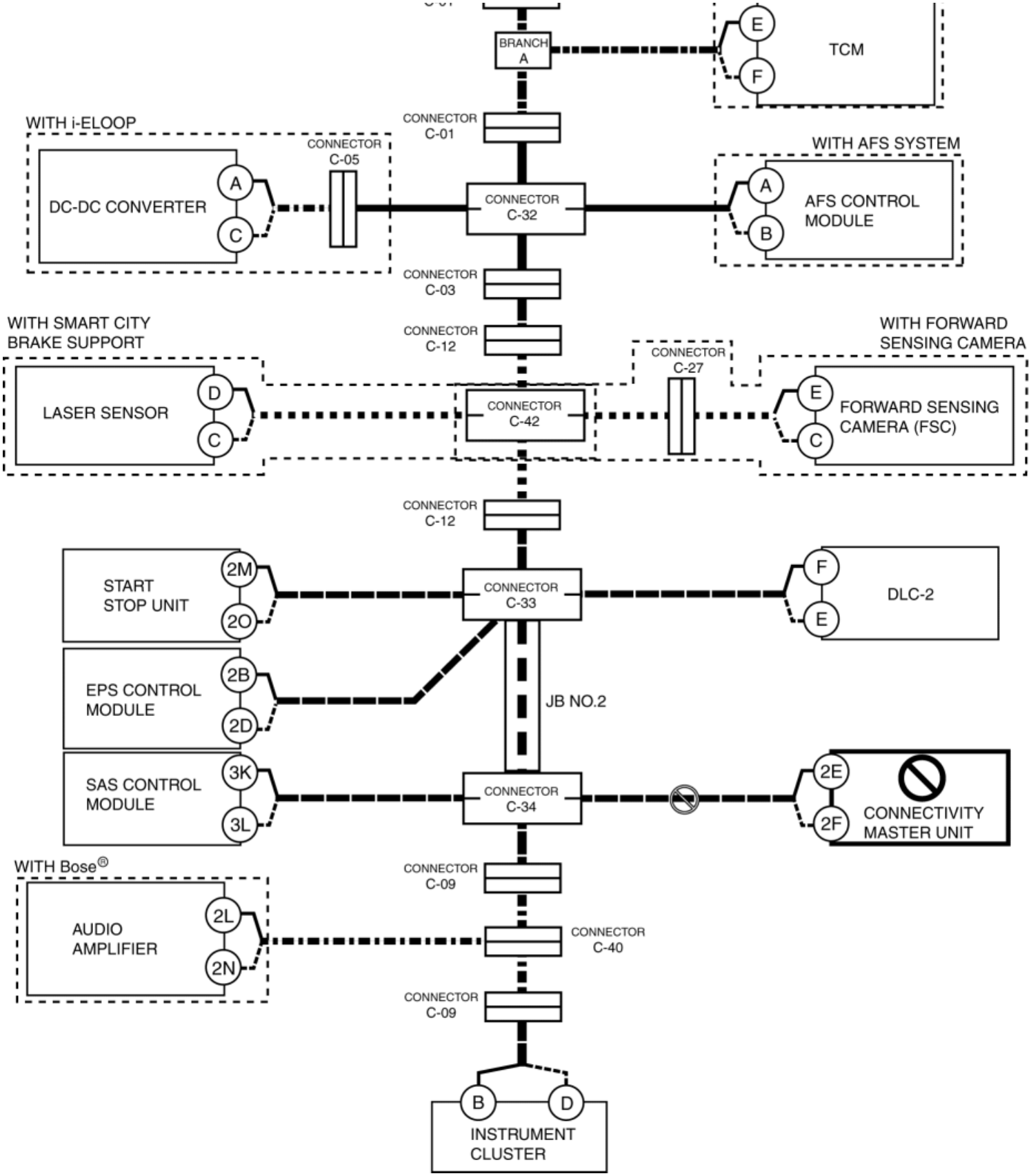

Inspection item

- Connectivity master unit power supply voltage-related wiring harness and fuse
- Connectivity master unit body ground related wiring harness
- Connectivity master unit connector

- Connector C-34
- Wiring harness between connectivity master unit terminal 2E and connector C-34
- Wiring harness between connectivity master unit terminal 2F and connector C-34
- Connectivity master unit

R

Possible cause

- Connector terminal disconnection, poor contact, damage, deformation, corrosion
- Open circuit in wiring harness between connector C-34 and connector C-09
- Open circuit in wiring harness between connector C-09 and connector C-40
- Connector C-34 malfunction
- Connector C-09 malfunction
- Connector C-40 malfunction

System wiring diagram

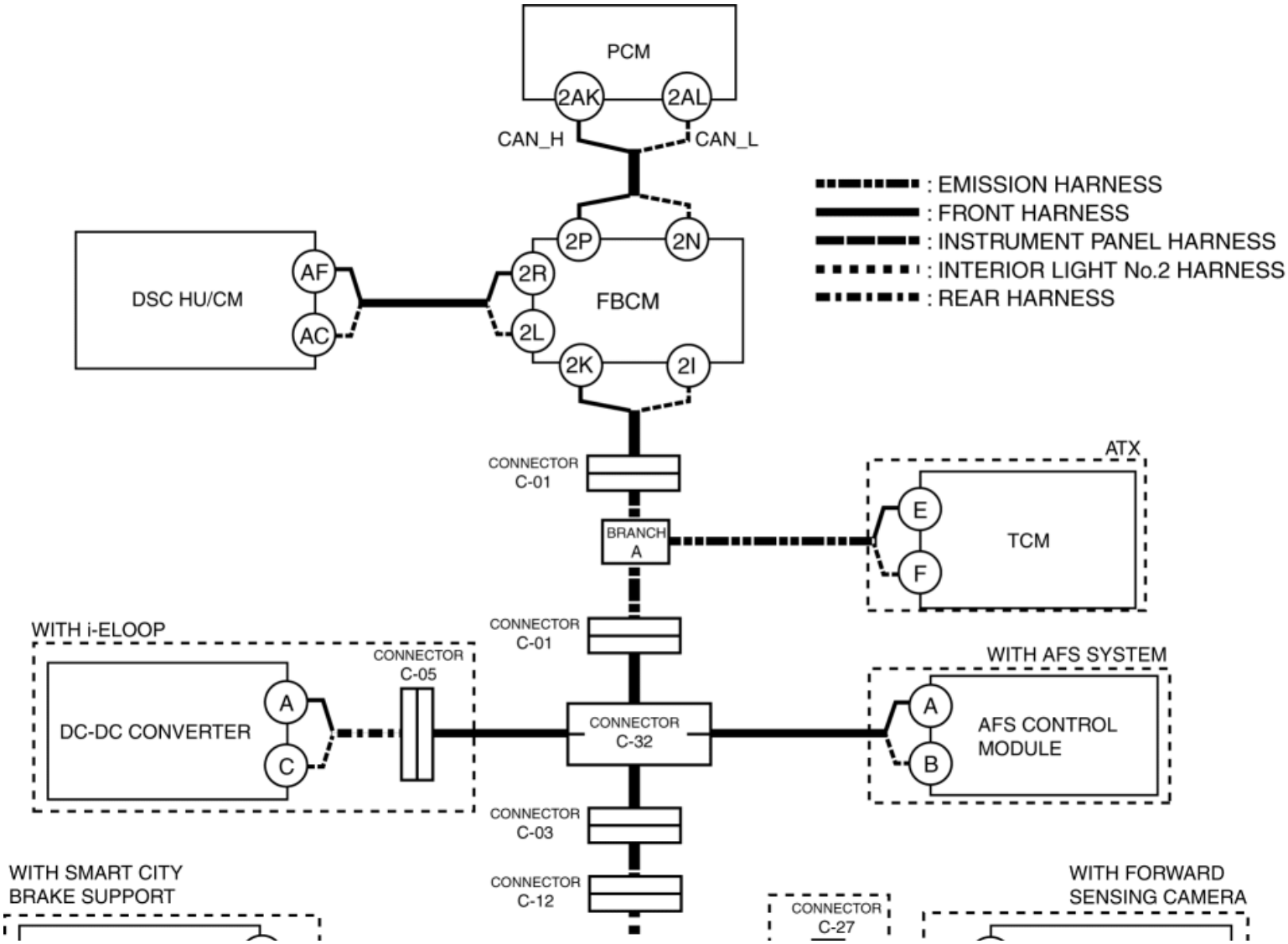

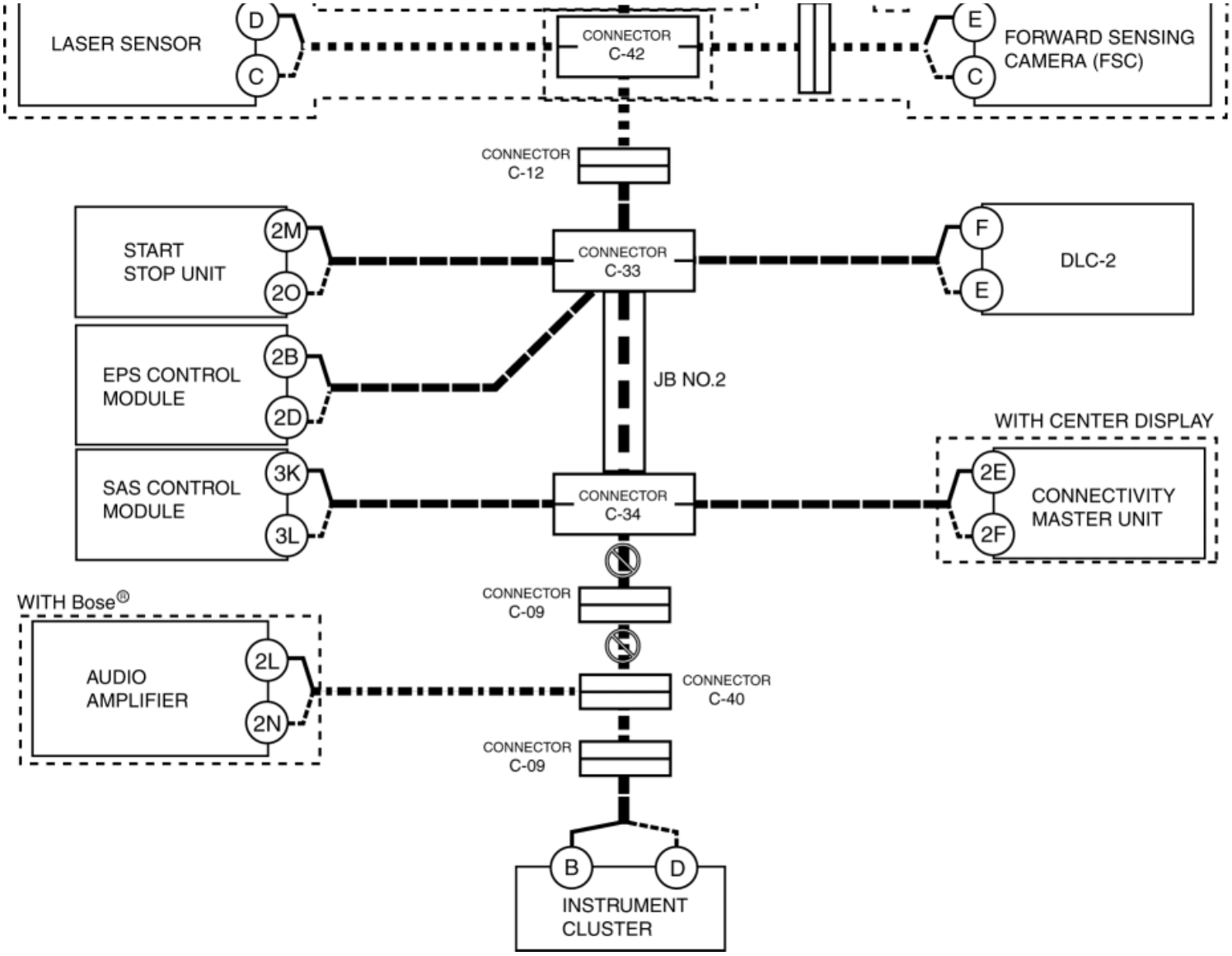

Inspection item

- Connector C-34
- Connector C-09
- Connector C-40
- Wiring harness between connector C-34 and connector C-09
- Wiring harness between connector C-09 and connector C-40

S

Possible cause

- Connector terminal disconnection, poor contact, damage, deformation, corrosion
- Audio amplifier power supply voltage or body ground malfunction
- Open circuit in wiring harness between audio amplifier and connector C-40
- Connector C-40 malfunction

- Audio amplifier malfunction

System wiring diagram

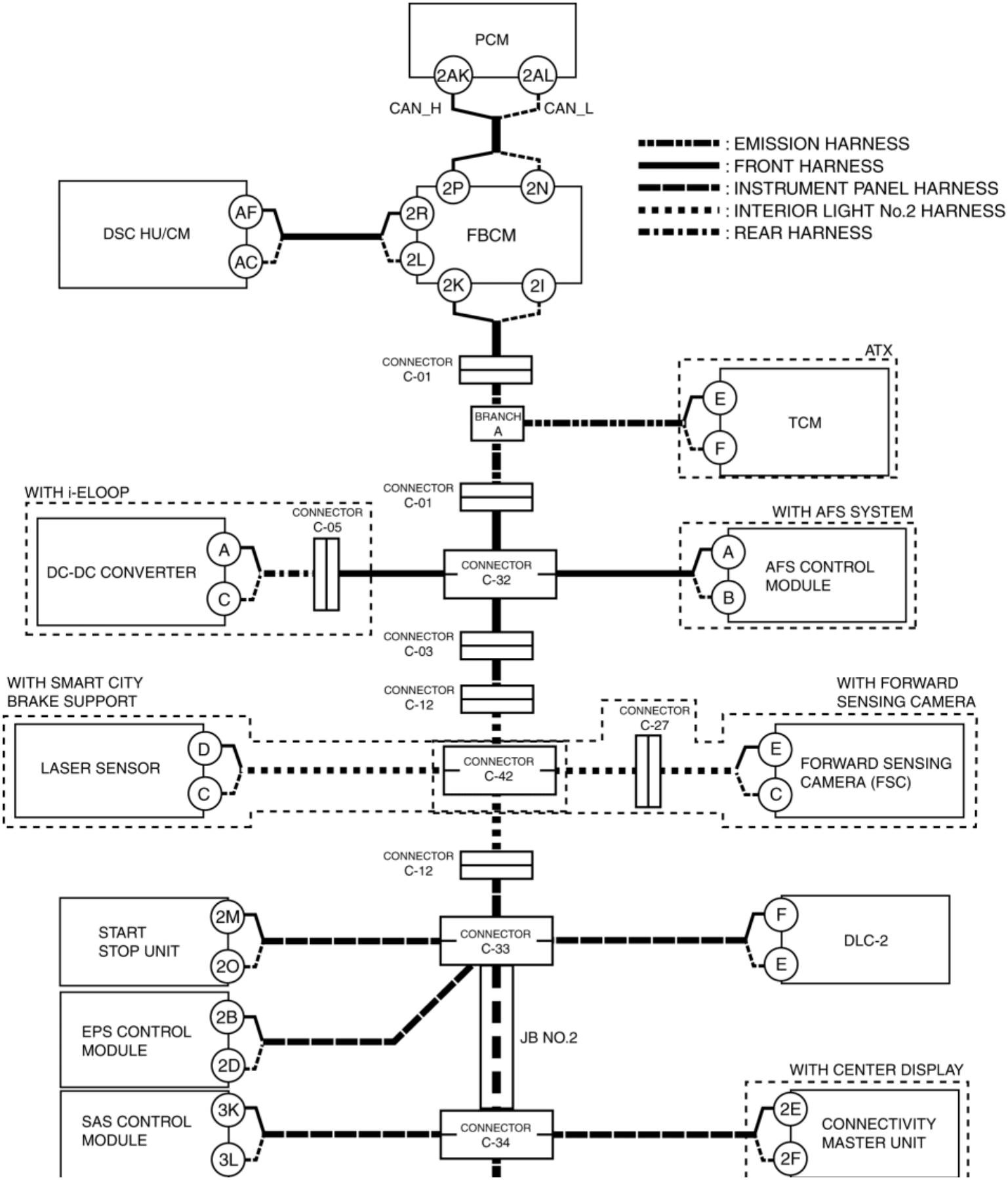

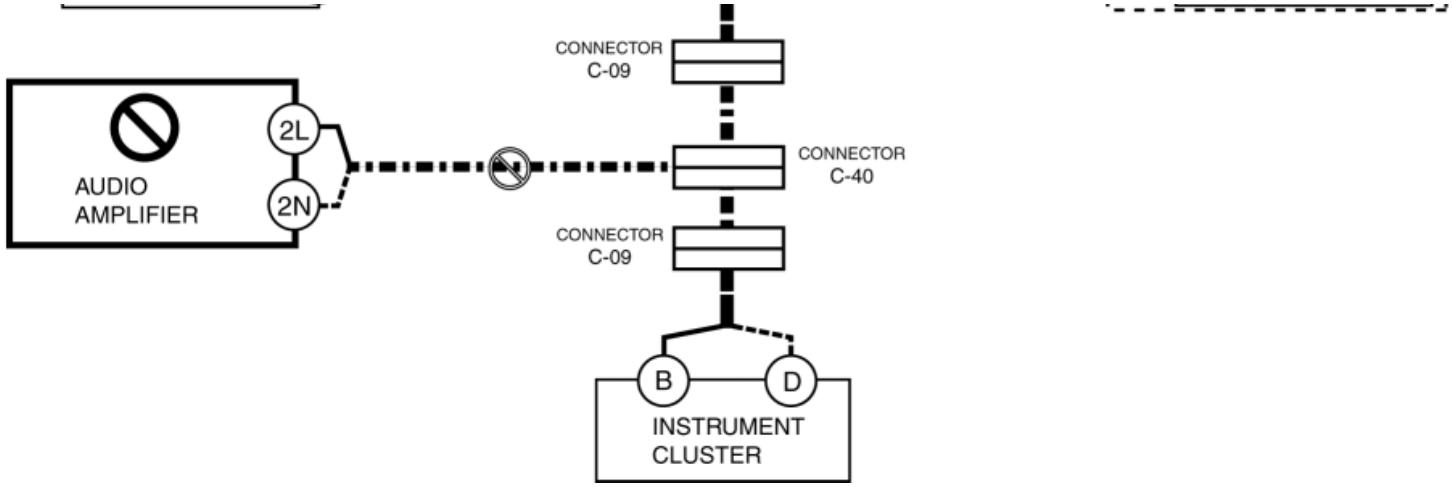

Inspection item

- Audio amplifier power supply voltage-related wiring harness and fuse
- Audio amplifier body ground related wiring harness
- Audio amplifier connector
- Connector C-40
- Wiring harness between audio amplifier terminal 2L and connector C-40
- Wiring harness between audio amplifier terminal 2N and connector C-40
- Audio amplifier

T

Possible cause

- Connector terminal disconnection, poor contact, damage, deformation, corrosion
- Instrument cluster power supply voltage or body ground malfunction
- Open circuit in wiring harness between connector C-40 and connector C-09
- Connector C-40 malfunction
- Connector C-09 malfunction
- Instrument cluster malfunction

System wiring diagram

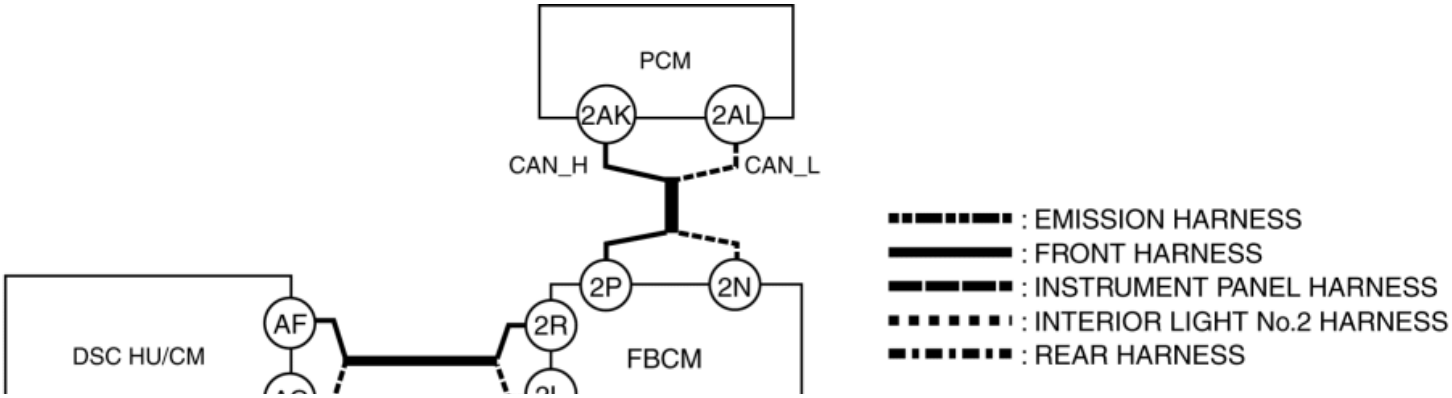

DETERMINING OPEN CIRCUIT LOCATION (HS-CAN)

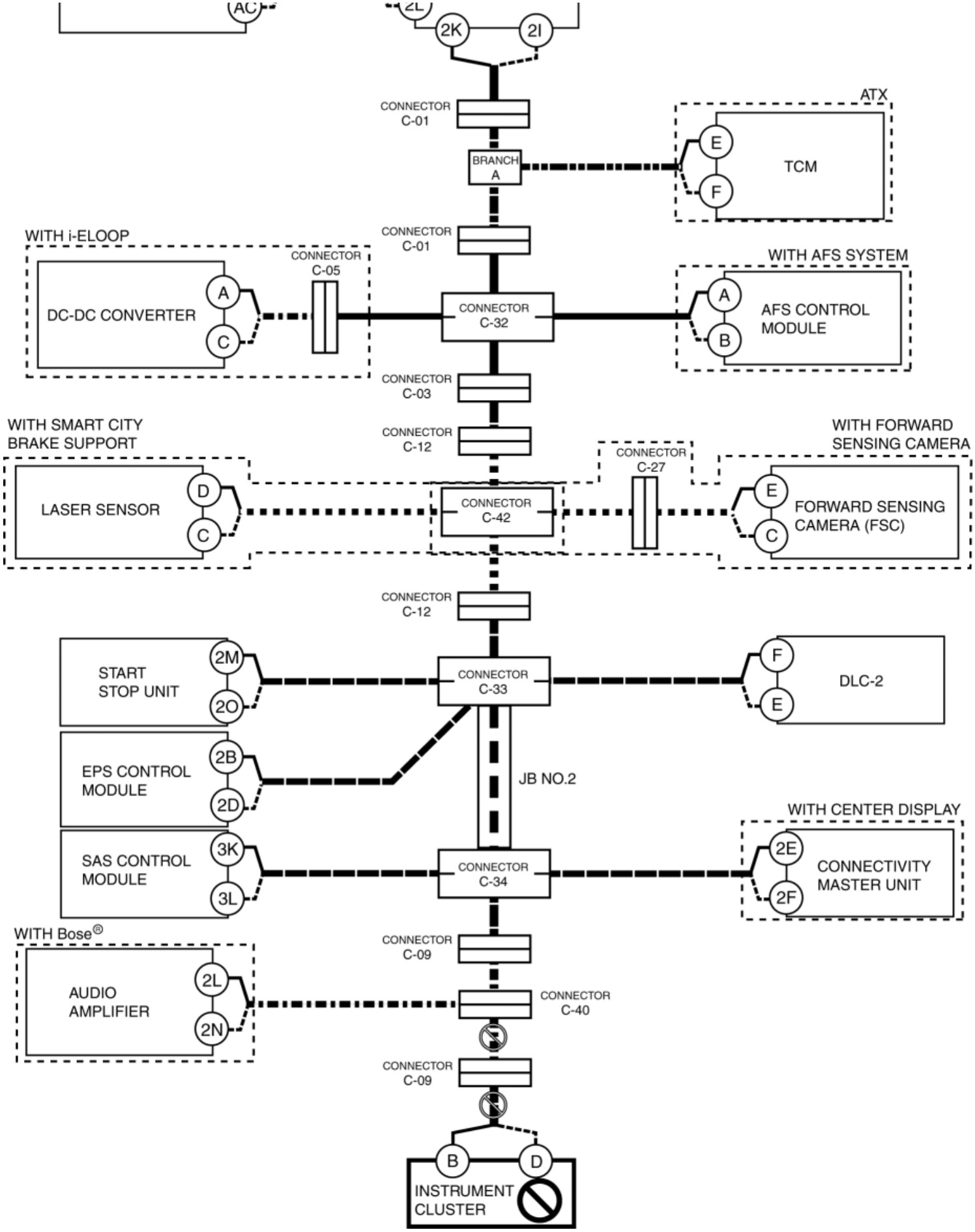

Inspection item

- Instrument cluster power supply voltage-related wiring harness and fuse
- Instrument cluster body ground related wiring harness
- Instrument cluster connector
- Connector C-40
- Connector C-09
- Wiring harness between connector C-40 and connector C-09
- Wiring harness between instrument cluster terminal B and connector C-09
- Wiring harness between instrument cluster terminal D and connector C-09
- Instrument cluster

2014 - Mazda3 - Multiplex Communication System

DETERMINING SHORT TO GROUND LOCATION (HS-CAN)

CAUTION:

- Perform the following malfunction diagnosis only when it is diagnosed with a short to ground by CONTROLLER AREA NETWORK (CAN) MALFUNCTION DIAGNOSIS FLOW. (See **CONTROLLER AREA NETWORK (CAN) MALFUNCTION DIAGNOSIS FLOW**.)

System wiring diagram

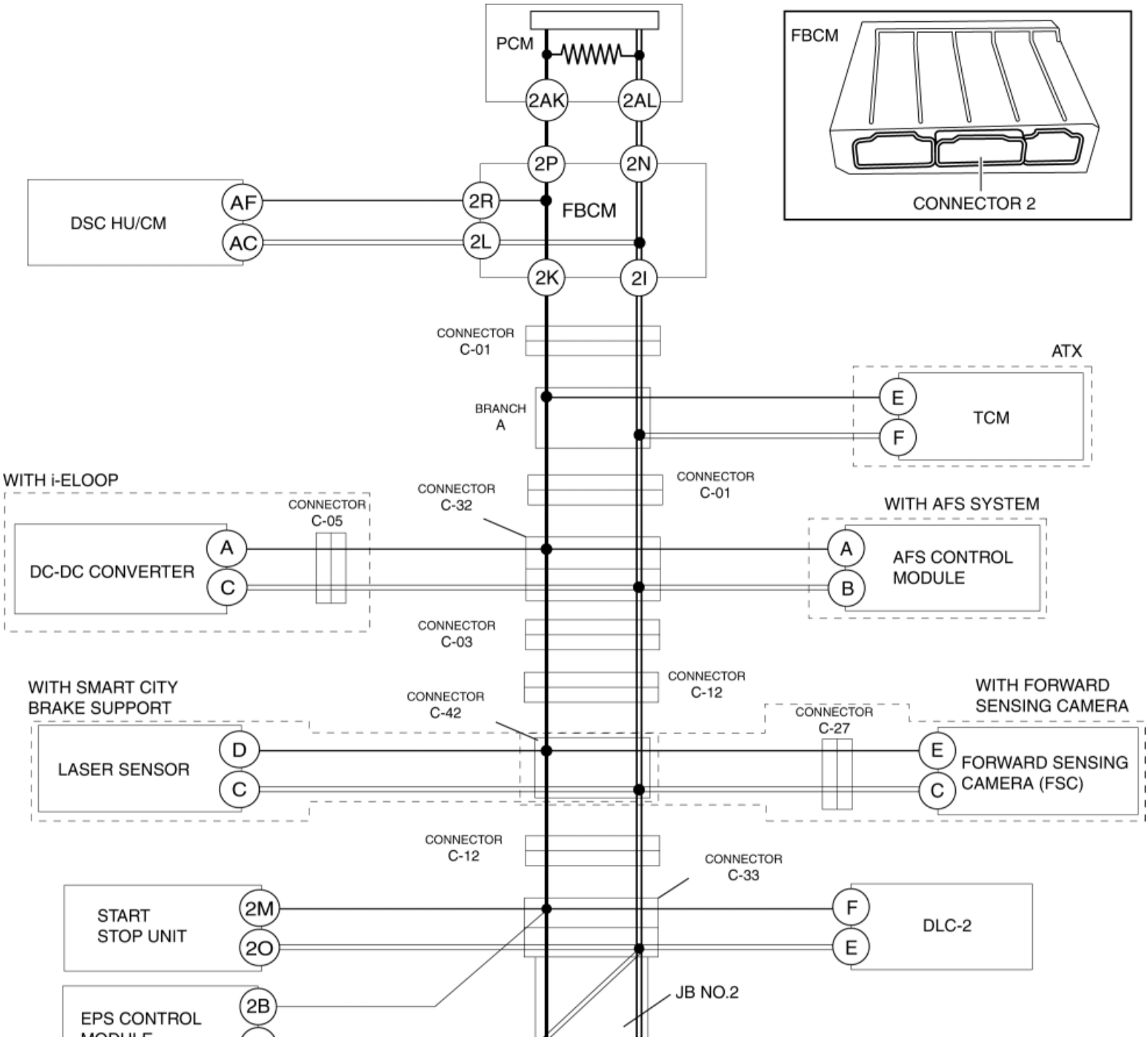

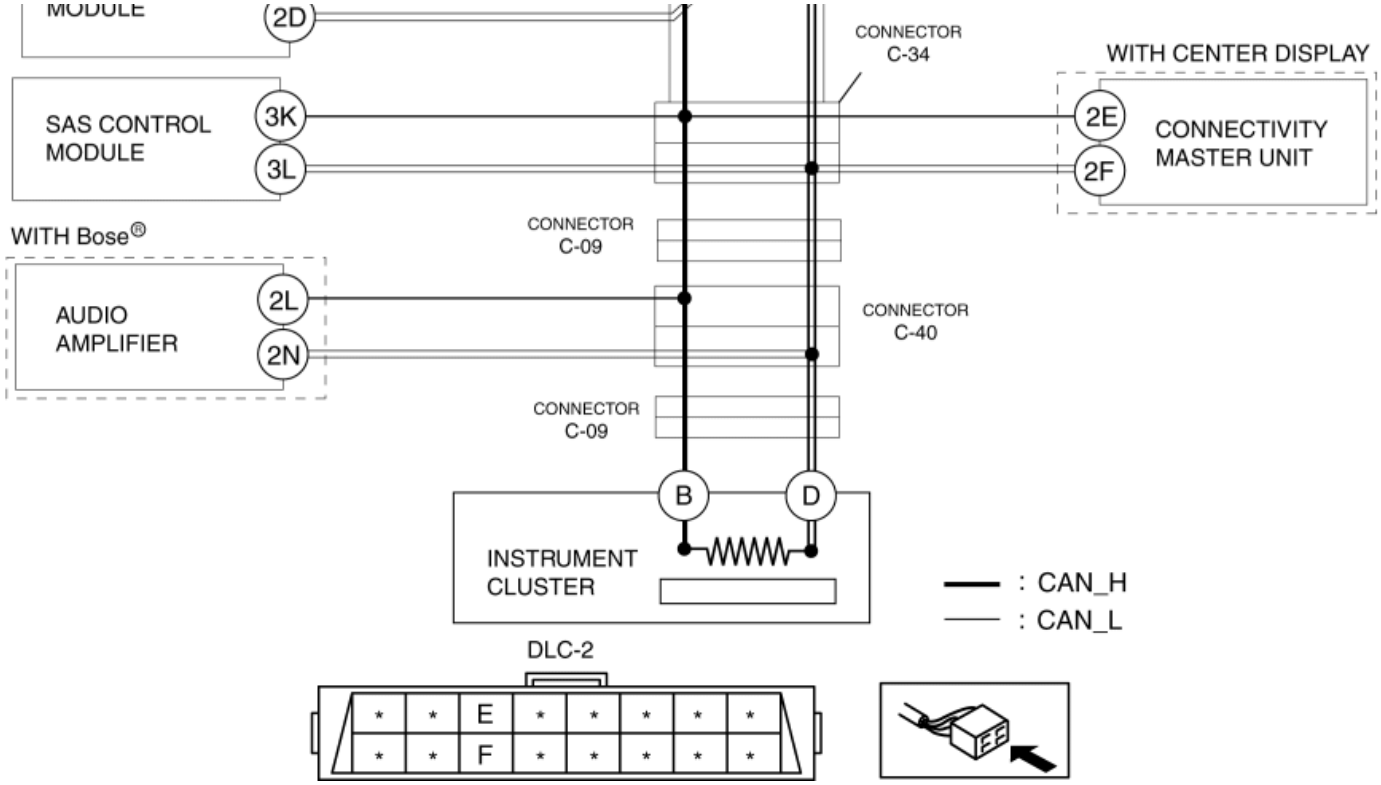

Determination procedure

CAUTION:

- When disconnecting the connector, verify that there is no looseness, damage, deformation, corrosion, or poor connection of the connector terminals.
- When inspecting the DLC-2, touch it with a paper clip or similar thin pin without directly inserting a tester into the terminals.

Step	Inspection		Action
1	**INSPECT FOR SHORT TO GROUND BETWEEN FRONT BODY CONTROL MODULE (FBCM) AND INSTRUMENT CLUSTER** • Disconnect the negative battery cable. (See **NEGATIVE BATTERY CABLE DISCONNECTION/CONNECTION [SKYACTIV-G 2.0, SKYACTIV-G 2.5]**.) • Disconnect connector 2 which has front body control module (FBCM) terminals 2P and 2N. • Inspect for continuity at the following terminals: ▪ Between DLC-2 terminal F and body ground ▪ Between DLC-2 terminal E and body ground • Is there continuity?	Yes	Go to Step 5.
		No	Go to the next step.
2	**INSPECT CAN LINE IN FRONT BODY CONTROL MODULE (FBCM) FOR SHORT TO GROUND**	Yes	Replace the front body control module (FBCM) because there is a short to ground in the front body control module (FBCM).

	• Inspect for continuity at the following terminals: ▪ Between front body control module (FBCM) terminal 2P and body ground ▪ Between front body control module (FBCM) terminal 2N and body ground • Is there continuity?		(See **FRONT BODY CONTROL MODULE (FBCM) REMOVAL/INSTALLATION**.)
		No	Go to the next step.
3	**INSPECT FOR SHORT TO GROUND BETWEEN DSC HU/CM AND FRONT BODY CONTROL MODULE (FBCM)** • Inspect for continuity at the following terminals: ▪ Between DSC HU/CM terminal AF and body ground ▪ Between DSC HU/CM terminal AC and body ground • Is there continuity?	Yes	Go to the next step.
		No	Go to Step 37.
4	**INSPECT CAN LINE IN DSC HU/CM FOR SHORT TO GROUND** • Disconnect the DSC HU/CM connector. • Inspect for continuity at the following terminals: ▪ Between DSC HU/CM terminal AF (wiring harness side) and body ground ▪ Between DSC HU/CM terminal AC (wiring harness side) and body ground • Is there continuity?	Yes	Repair or replace the wiring harness between the DSC HU/CM and front body control module (FBCM) because the wiring harness is shorted to ground.
		No	Replace the DSC HU/CM because there is a short to ground in the DSC HU/CM. (See **DSC HU/CM REMOVAL/INSTALLATION**.)
5	**INSPECT FOR SHORT TO GROUND BETWEEN CONNECTOR C-01 AND INSTRUMENT CLUSTER** • Disconnect connector C-01. • Inspect for continuity at the following terminals: ▪ Between DLC-2 terminal F and body ground ▪ Between DLC-2 terminal E and body ground • Is there continuity?	Yes	Go to Step 8.
		No	Go to the next step.
6	**INSPECT FOR SHORT TO GROUND BETWEEN CONNECTOR C-01 AND TCM** • Inspect for continuity at the following terminals: ▪ Between TCM terminal E and body ground ▪ Between TCM terminal F	Yes	Go to the next step.
		No	Repair or replace the wiring harness between the front body control module (FBCM) and connector C-01 because the wiring harness is shorted to ground.

	and body ground • Is there continuity?		
7	**INSPECT CAN LINE IN TCM FOR SHORT TO GROUND** • Disconnect the TCM connector. • Inspect for continuity at the following terminals: ▪ Between TCM terminal E (wiring harness side) and body ground ▪ Between TCM terminal F (wiring harness side) and body ground • Is there continuity?	Yes	Repair or replace the wiring harness between the TCM and connector C-01 because the wiring harness is shorted to ground.
		No	Replace the TCM because there is a short to ground in the TCM. (See **CONTROL VALVE BODY REMOVAL/INSTALLATION [FW6A-EL]**.)
8	**INSPECT FOR SHORT TO GROUND BETWEEN CONNECTOR C-32 AND INSTRUMENT CLUSTER** • Disconnect connector C-32. • Inspect for continuity at the following terminals: ▪ Between DLC-2 terminal F and body ground ▪ Between DLC-2 terminal E and body ground • Is there continuity?	Yes	Go to Step 14.
		No	Go to the next step.
9	**INSPECT FOR SHORT TO GROUND BETWEEN DC-DC CONVERTER AND CONNECTOR C-32** • Inspect for continuity at the following terminals: ▪ Between DC-DC converter terminal A and body ground ▪ Between DC-DC converter terminal C and body ground • Is there continuity?	Yes	Go to the next step.
		No	Go to Step 12.
10	**INSPECT FOR SHORT TO GROUND BETWEEN DC-DC CONVERTER AND CONNECTOR C-05** • Disconnect connector C-05. • Inspect for continuity at the following terminals: ▪ Between DC-DC converter terminal A and body ground ▪ Between DC-DC converter terminal C and body ground • Is there continuity?	Yes	Go to the next step.
		No	Repair or replace the wiring harness between connector C-05 and connector C-32 because the wiring harness is shorted to ground.
11	**INSPECT CAN LINE IN DC-DC CONVERTER FOR SHORT TO GROUND** • Disconnect the DC-DC converter connector. • Inspect for continuity at the following	Yes	Repair or replace the wiring harness between the DC-DC converter and connector C-05 because the wiring harness is shorted to ground.
		No	Replace the DC-DC converter because there is a short to ground

	terminals: ▪ Between DC-DC converter terminal A (wiring harness side) and body ground ▪ Between DC-DC converter terminal C (wiring harness side) and body ground • Is there continuity?		in the DC-DC converter. (See **DC-DC CONVERTER REMOVAL/INSTALLATION [i-ELOOP]**.)
12	**INSPECT FOR SHORT TO GROUND BETWEEN CONNECTOR C-32 AND AFS CONTROL MODULE** • Inspect for continuity at the following terminals: ▪ Between AFS control module terminal A and body ground ▪ Between AFS control module terminal B and body ground • Is there continuity?	Yes	Go to the next step.
		No	Repair or replace the wiring harness between the connector C-01 and connector C-32 because the wiring harness is shorted to ground.
13	**INSPECT FOR SHORT TO GROUND BETWEEN AFS CONTROL MODULE AND CONNECTOR C-32** • Disconnect the AFS control module connector. • Inspect for continuity at the following terminals: ▪ Between AFS control module terminal A (wiring harness side) and body ground ▪ Between AFS control module terminal B (wiring harness side) and body ground • Is there continuity?	Yes	Repair or replace the wiring harness between the AFS control module and connector C-32 because the wiring harness is shorted to ground.
		No	Replace the AFS control module because there is a short to ground in the AFS control module. (See **ADAPTIVE FRONT LIGHTING SYSTEM (AFS) CONTROL MODULE REMOVAL/INSTALLATION**.)
14	**INSPECT FOR SHORT TO GROUND BETWEEN CONNECTOR C-03 AND INSTRUMENT CLUSTER** • Disconnect connector C-03. • Inspect for continuity at the following terminals: ▪ Between DLC-2 terminal F and body ground ▪ Between DLC-2 terminal E and body ground • Is there continuity?	Yes	Go to the next step.
		No	Repair or replace the wiring harness between connector C-03 and connector C-32 because the wiring harness is shorted to ground.
15	**INSPECT FOR SHORT TO GROUND BETWEEN CONNECTOR C-12 AND INSTRUMENT CLUSTER** • Disconnect connector C-12. • Inspect for continuity at the following terminals: ▪ Between DLC-2 terminal F and body ground ▪ Between DLC-2 terminal E	Yes	Go to Step 22.
		No	Go to the next step.

	and body ground • Is there continuity?		
16	**INSPECT FOR SHORT TO GROUND BETWEEN LASER SENSOR / FORWARD SENSING CAMERA (FSC) AND CONNECTOR C-12** • Inspect for continuity at the following terminals: ▪ Between laser sensor terminal D and body ground (with smart city brake support) ▪ Between laser sensor terminal C and body ground (with smart city brake support) ▪ Between forward sensing camera (FSC) terminal E and body ground (with forward sensing camera) ▪ Between forward sensing camera (FSC) terminal C and body ground (with forward sensing camera) • Is there continuity?	Yes	Go to the next step.
		No	Repair or replace the wiring harness between connector C-03 and connector C-12 because the wiring harness is shorted to ground.
17	**INSPECT FOR SHORT TO GROUND BETWEEN LASER SENSOR AND CONNECTOR C-42** • Disconnect connector C-42. • Inspect for continuity at the following terminals: ▪ Between laser sensor terminal D and body ground ▪ Between laser sensor terminal C and body ground • Is there continuity?	Yes	Go to the next step.
		No	Go to Step 19.
18	**INSPECT CAN LINE IN LASER SENSOR FOR SHORT TO GROUND** • Disconnect the laser sensor connector. • Inspect for continuity at the following terminals: ▪ Between laser sensor terminal D (wiring harness side) and body ground ▪ Between laser sensor terminal C (wiring harness side) and body ground • Is there continuity?	Yes	Repair or replace the wiring harness between the laser sensor and connector C-42 because the wiring harness is shorted to ground.
		No	Replace the laser sensor because there is a short to ground in the laser sensor. (See **LASER SENSOR REMOVAL/INSTALLATION**.)
19	**INSPECT FOR SHORT TO GROUND BETWEEN FORWARD SENSING CAMERA (FSC) AND CONNECTOR C-42** • Inspect for continuity at the following terminals: ▪ Between forward sensing	Yes	Go to the next step.
		No	Repair or replace the wiring harness between connector C-12 and connector C-42 because the wiring harness is shorted to ground.

	camera (FSC) terminal E and body ground ▪ Between forward sensing camera (FSC) terminal C and body ground • Is there continuity?		
20	**INSPECT FOR SHORT TO GROUND BETWEEN FORWARD SENSING CAMERA (FSC) AND CONNECTOR C-27** • Disconnect connector C-27. • Inspect for continuity at the following terminals: ▪ Between forward sensing camera (FSC) terminal E and body ground ▪ Between forward sensing camera (FSC) terminal C and body ground • Is there continuity?	Yes	Go to the next step.
		No	Repair or replace the wiring harness between connector C-42 and connector C-27 because the wiring harness is shorted to ground.
21	**INSPECT CAN LINE IN FORWARD SENSING CAMERA (FSC) FOR SHORT TO GROUND** • Disconnect the forward sensing camera (FSC) connector. • Inspect for continuity at the following terminals: ▪ Between forward sensing camera (FSC) terminal E (wiring harness side) and body ground ▪ Between forward sensing camera (FSC) terminal C (wiring harness side) and body ground • Is there continuity?	Yes	Repair or replace the wiring harness between the forward sensing camera (FSC) and connector C-27 because the wiring harness is shorted to ground.
		No	Replace the forward sensing camera (FSC) because there is a short to ground in the forward sensing camera (FSC). (See **FORWARD SENSING CAMERA (FSC) REMOVAL/INSTALLATION**.)
22	**INSPECT FOR SHORT TO GROUND BETWEEN CONNECTOR C-33 AND DLC-2** • Disconnect connector C-33. • Inspect for continuity at the following terminals: ▪ Between DLC-2 terminal F and body ground ▪ Between DLC-2 terminal E and body ground • Is there continuity?	Yes	Repair or replace the wiring harness between DLC-2 and connector C-33 because the wiring harness is shorted to ground.
		No	Go to the next step.
23	**INSPECT FOR SHORT TO GROUND BETWEEN START STOP UNIT AND CONNECTOR C-33** • Inspect for continuity at the following terminals: ▪ Between start stop unit terminal 2M and body ground ▪ Between start stop unit terminal 2O and body	Yes	Go to the next step.
		No	Go to Step 25.

	ground • Is there continuity?		
24	**INSPECT CAN LINE IN START STOP UNIT FOR SHORT TO GROUND** • Disconnect the start stop unit connector. • Inspect for continuity at the following terminals: ▪ Between start stop unit terminal 2M (wiring harness side) and body ground ▪ Between start stop unit terminal 2O (wiring harness side) and body ground • Is there continuity?	Yes	Repair or replace the wiring harness between the start stop unit and connector C-33 because the wiring harness is shorted to ground.
		No	Replace the start stop unit because there is a short to ground in the start stop unit. (See **START STOP UNIT REMOVAL/INSTALLATION**.)
25	**INSPECT FOR SHORT TO GROUND BETWEEN EPS CONTROL MODULE AND CONNECTOR C-33** • Inspect for continuity at the following terminals: ▪ Between EPS control module terminal 2B and body ground ▪ Between EPS control module terminal 2D and body ground • Is there continuity?	Yes	Go to the next step.
		No	Go to Step 27.
26	**INSPECT CAN LINE IN EPS CONTROL MODULE FOR SHORT TO GROUND** • Disconnect the EPS control module connector. • Inspect for continuity at the following terminals: ▪ Between EPS control module terminal 2B (wiring harness side) and body ground ▪ Between EPS control module terminal 2D (wiring harness side) and body ground • Is there continuity?	Yes	Repair or replace the wiring harness between the EPS control module and connector C-33 because the wiring harness is shorted to ground.
		No	Replace the EPS control module because there is a short to ground in the EPS control module. (See **STEERING WHEEL AND COLUMN REMOVAL/INSTALLATION**.)
27	**INSPECT FOR SHORT TO GROUND BETWEEN CONNECTOR C-34 AND INSTRUMENT CLUSTER** • Disconnect connector C-34. • Connect connector C-33. • Inspect for continuity at the following terminals: ▪ Between DLC-2 terminal F and body ground ▪ Between DLC-2 terminal E and body ground	Yes	Replace the JB No.2 because there is a short to ground in the JB No.2.
		No	Go to the next step.

	• Is there continuity?		
28	**INSPECT FOR SHORT TO GROUND BETWEEN SAS CONTROL MODULE AND CONNECTOR C-34** • Inspect for continuity at the following terminals: ▪ Between SAS control module terminal 3K and body ground ▪ Between SAS control module terminal 3L and body ground • Is there continuity?	Yes	Go to the next step.
		No	Go to Step 30.
29	**INSPECT CAN LINE IN SAS CONTROL MODULE FOR SHORT TO GROUND** • Disconnect the SAS control module connector. • Inspect for continuity at the following terminals: ▪ Between SAS control module terminal 3K (wiring harness side) and body ground ▪ Between SAS control module terminal 3L (wiring harness side) and body ground • Is there continuity?	Yes	Repair or replace the wiring harness between the SAS control module and connector C-34 because the wiring harness is shorted to ground.
		No	Replace the SAS control module because there is a short to ground in the SAS control module. (See **SAS CONTROL MODULE REMOVAL/INSTALLATION [TWO-STEP DEPLOYMENT CONTROL SYSTEM]**.) (See **SAS CONTROL MODULE REMOVAL/INSTALLATION [STANDARD DEPLOYMENT CONTROL SYSTEM]**.)
30	**INSPECT FOR SHORT TO GROUND BETWEEN CONNECTIVITY MASTER UNIT AND CONNECTOR C-34** • Inspect for continuity at the following terminals: ▪ Between connectivity master unit terminal 2E and body ground ▪ Between connectivity master unit terminal 2F and body ground • Is there continuity?	Yes	Go to the next step.
		No	Go to Step 32.
31	**INSPECT CAN LINE IN CONNECTIVITY MASTER UNIT FOR SHORT TO GROUND** • Disconnect the connectivity master unit connector. • Inspect for continuity at the following terminals: ▪ Between connectivity master unit terminal 2E (wiring harness side) and body ground ▪ Between connectivity master unit terminal 2F (wiring harness side) and body ground • Is there continuity?	Yes	Repair or replace the wiring harness between the connectivity master unit and connector C-34 because the wiring harness is shorted to ground.
		No	Replace the connectivity master unit because there is a short to ground in the connectivity master unit. (See **CONNECTIVITY MASTER UNIT (CMU) REMOVAL/INSTALLATION**.)
	INSPECT FOR SHORT TO GROUND BETWEEN		

32	**CONNECTOR C-09 AND INSTRUMENT CLUSTER** • Disconnect connector C-09. • Connect connector C-34. • Inspect for continuity at the following terminals: ▪ Between DLC-2 terminal F and body ground ▪ Between DLC-2 terminal E and body ground • Is there continuity?	Yes	Repair or replace the wiring harness between the connector C-34 and connector C-09 because the wiring harness is shorted to ground.
		No	Go to the next step.
33	**INSPECT FOR SHORT TO GROUND BETWEEN AUDIO AMPLIFIER AND CONNECTOR C-09** • Inspect for continuity at the following terminals: ▪ Between audio amplifier terminal 2L and body ground ▪ Between audio amplifier terminal 2N and body ground • Is there continuity?	Yes	Go to the next step.
		No	Go to Step 36.
34	**INSPECT FOR SHORT TO GROUND BETWEEN AUDIO AMPLIFIER AND CONNECTOR C-40** • Disconnect connector C-40. • Inspect for continuity at the following terminals: ▪ Between audio amplifier terminal 2L and body ground ▪ Between audio amplifier terminal 2N and body ground • Is there continuity?	Yes	Go to the next step.
		No	Repair or replace the wiring harness between connector C-40 and connector C-09 because the wiring harness is shorted to ground.
35	**INSPECT CAN LINE IN AUDIO AMPLIFIER FOR SHORT TO GROUND** • Disconnect the audio amplifier connector. • Inspect for continuity at the following terminals: ▪ Between audio amplifier terminal 2L (wiring harness side) and body ground ▪ Between audio amplifier terminal 2N (wiring harness side) and body ground • Is there continuity?	Yes	Repair or replace the wiring harness between the audio amplifier and connector C-40 because the wiring harness is shorted to ground.
		No	Replace the audio amplifier because there is a short to ground in the audio amplifier. (See **AUDIO AMPLIFIER REMOVAL/INSTALLATION**.)
36	**INSPECT CAN LINE IN INSTRUMENT CLUSTER FOR SHORT TO GROUND** • Disconnect the instrument cluster connector.	Yes	Repair or replace the wiring harness between the instrument cluster and connector C-09 because the wiring harness is shorted to ground.

	• Inspect for continuity at the following terminals: ▪ Between instrument cluster terminal B (wiring harness side) and body ground ▪ Between instrument cluster terminal D (wiring harness side) and body ground • Is there continuity?	No	Replace the instrument cluster because there is a short to ground in the instrument cluster. (See **INSTRUMENT CLUSTER REMOVAL/INSTALLATION**.)
37	**INSPECT CAN LINE IN PCM FOR SHORT TO GROUND** • Disconnect the PCM connector. • Inspect for continuity at the following terminals: ▪ Between PCM terminal 2AK (wiring harness side) and body ground ▪ Between PCM terminal 2AL (wiring harness side) and body ground • Is there continuity?	Yes	Repair or replace the wiring harness between the PCM and front body control module (FBCM) because the wiring harness is shorted to ground.
		No	Replace the PCM because there is a short to ground in the PCM. (See **PCM REMOVAL/INSTALLATION [SKYACTIV-G 2.0, SKYACTIV-G 2.5]**.)

2014 - Mazda3 - Multiplex Communication System

DETERMINING SHORT TO POWER SUPPLY LOCATION (HS-CAN)

CAUTION:

- Perform the following malfunction diagnosis only when it is diagnosed with a short to power supply by CONTROLLER AREA NETWORK (CAN) MALFUNCTION DIAGNOSIS FLOW. (See **CONTROLLER AREA NETWORK (CAN) MALFUNCTION DIAGNOSIS FLOW**.)

System wiring diagram

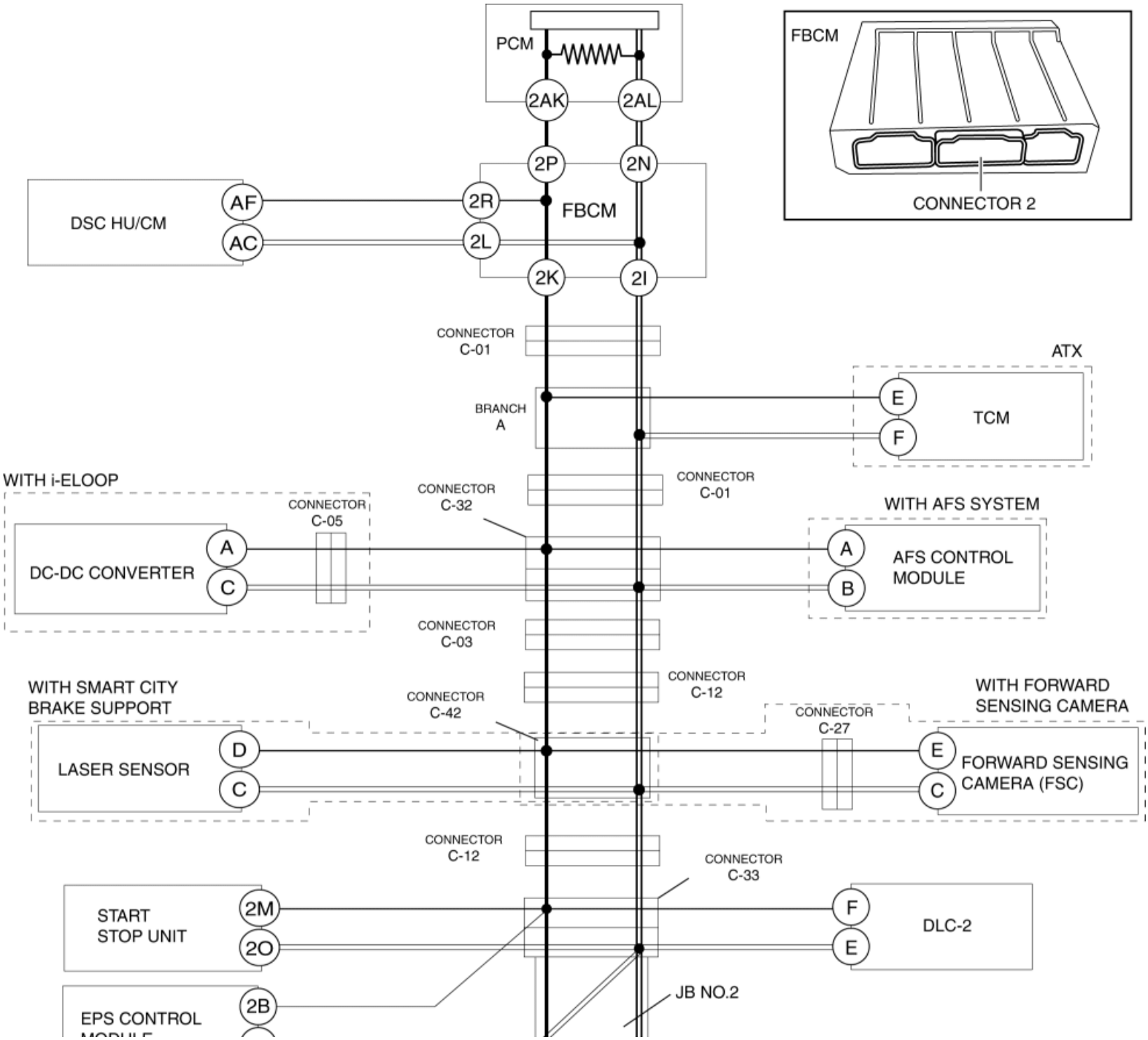

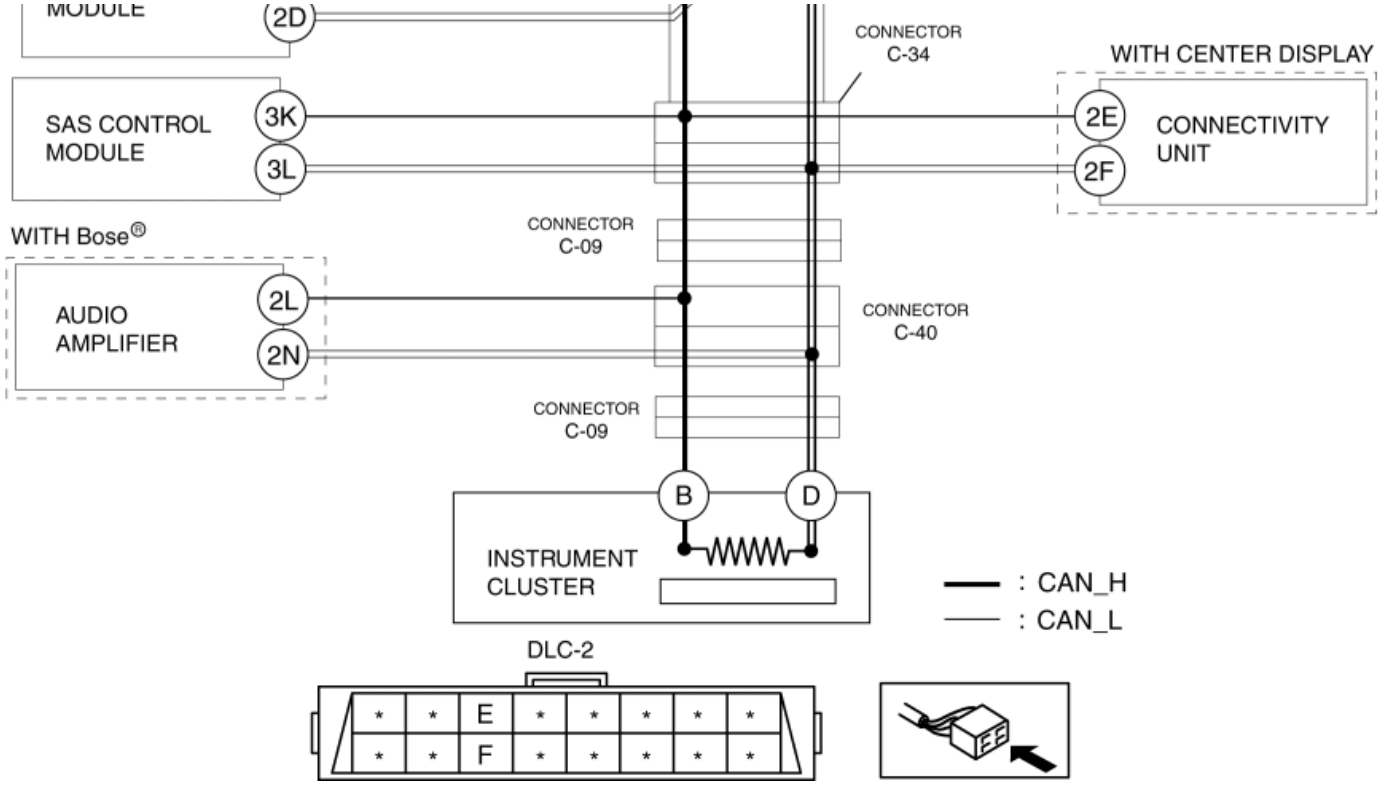

Determination procedure

CAUTION:

- When disconnecting the connector, verify that there is no looseness, damage, deformation, corrosion, or poor connection of the connector terminals.
- When inspecting the DLC-2, touch it with a paper clip or similar thin pin without directly inserting a tester into the terminals.
- Disconnect the negative battery cable before performing any work that requires handling of connectors.

NOTE:

- If the ignition does not turn on even if the ignition is switched ON, switch the ignition ON referring to the forced ignition ON procedure. (See **FORCED IGNITION ON**.)

Step	Inspection		Action
1	**INSPECT FOR SHORT TO POWER SUPPLY BETWEEN FRONT BODY CONTROL MODULE (FBCM) AND INSTRUMENT CLUSTER** • Disconnect the negative battery cable. (See **NEGATIVE BATTERY CABLE DISCONNECTION/CONNECTION [SKYACTIV-G 2.0, SKYACTIV-G 2.5]**.) • Disconnect connector 2 which has front body control module (FBCM) terminals 2K and 2I • Connect the negative battery cable. (See **NEGATIVE BATTERY CABLE DISCONNECTION/CONNECTION [SKYACTIV-G 2.0, SKYACTIV-G 2.5]**.) • Switch the ignition ON (engine off).	Yes	Go to the next step.
		No	Go to Step 4.

	Measure the voltage at DLC-2 terminals F and E. • Is the voltage between 1.5 — 3.5 V?		
2	**INSPECT CAN LINE BETWEEN DSC HU/CM AND FRONT BODY CONTROL MODULE (FBCM) FOR SHORT TO POWER SUPPLY** • Measure the voltage at DSC HU/CM terminals AF and AC. • Is the voltage between 1.5 — 3.5 V?	Yes	Go to Step 36.
		No	Go to the next step.
3	**INSPECT DSC HU/CM FOR SHORT TO POWER SUPPLY** • Switch the ignition off. • Disconnect the negative battery cable. (See **NEGATIVE BATTERY CABLE DISCONNECTION/CONNECTION [SKYACTIV-G 2.0, SKYACTIV-G 2.5]**.) • Disconnect the DSC HU/CM connector. • Connect connector 2 which has front body control module (FBCM) terminals 2K and 2I • Connect the negative battery cable. (See **NEGATIVE BATTERY CABLE DISCONNECTION/CONNECTION [SKYACTIV-G 2.0, SKYACTIV-G 2.5]**.) • Switch the ignition ON (engine off). • Measure the voltage at DLC-2 terminals F and E. • Is the voltage between 1.5 — 3.5 V?	Yes	Replace the DSC HU/CM because there is a short to the power supply in the DSC HU/CM. (See **DSC HU/CM REMOVAL/INSTALLATION**.)
		No	Repair or replace the wiring harness between DSC HU/CM and the front body control module (FBCM) because the wiring harness is shorted to the power supply.
4	**INSPECT CAN LINE BETWEEN CONNECTOR C-01 AND INSTRUMENT CLUSTER FOR SHORT TO POWER SUPPLY** • Switch the ignition off. • Disconnect the negative battery cable. (See **NEGATIVE BATTERY CABLE DISCONNECTION/CONNECTION [SKYACTIV-G 2.0, SKYACTIV-G 2.5]**.) • Disconnect connector C-01. • Connect the negative battery cable. (See **NEGATIVE BATTERY CABLE DISCONNECTION/CONNECTION [SKYACTIV-G 2.0, SKYACTIV-G 2.5]**.) • Switch the ignition ON (engine off). • Measure the voltage at DLC-2 terminals F and E. • Is the voltage between 1.5 — 3.5 V?	Yes	Go to the next step.
		No	Go to Step 7.
5	**INSPECT CAN LINE BETWEEN TCM AND CONNECTOR C-01 FOR SHORT TO POWER SUPPLY** • Measure the voltage at TCM terminals E and F. • Is the voltage between 1.5 — 3.5 V?	Yes	Repair or replace the wiring harness between the front body control module (FBCM) and connector C-01 because the wiring harness is shorted to the power supply.
		No	Go to the next step.
6	**INSPECT TCM FOR SHORT TO POWER SUPPLY**	Yes	Replace the TCM because there is a short to the power supply in

	• Switch the ignition off. • Disconnect the negative battery cable. (See **NEGATIVE BATTERY CABLE DISCONNECTION/CONNECTION [SKYACTIV-G 2.0, SKYACTIV-G 2.5]**.) • Connect connector C-01. • Disconnect the TCM connector. • Connect the negative battery cable. (See **NEGATIVE BATTERY CABLE DISCONNECTION/CONNECTION [SKYACTIV-G 2.0, SKYACTIV-G 2.5]**.) • Switch the ignition ON (engine off). • Measure the voltage at DLC-2 terminals F and E. • Is the voltage between 1.5 — 3.5 V?		the TCM. (See **CONTROL VALVE BODY REMOVAL/INSTALLATION [FW6A-EL]**.)
		No	Repair or replace the wiring harness between the TCM and connector C-01 because the wiring harness is shorted to the power supply.
7	**INSPECT CAN LINE BETWEEN CONNECTOR C-32 AND INSTRUMENT CLUSTER FOR SHORT TO POWER SUPPLY** • Switch the ignition off. • Disconnect the negative battery cable. (See **NEGATIVE BATTERY CABLE DISCONNECTION/CONNECTION [SKYACTIV-G 2.0, SKYACTIV-G 2.5]**.) • Disconnect connector C-32. • Connect the negative battery cable. (See **NEGATIVE BATTERY CABLE DISCONNECTION/CONNECTION [SKYACTIV-G 2.0, SKYACTIV-G 2.5]**.) • Switch the ignition ON (engine off). • Measure the voltage at DLC-2 terminals F and E. • Is the voltage between 1.5 — 3.5 V?	Yes	Go to the next step.
		No	Go to Step 13.
8	**INSPECT CAN LINE BETWEEN DC-DC CONVERTER AND CONNECTOR C-32 FOR SHORT TO POWER SUPPLY** • Measure the voltage at DC-DC converter terminals A and C. • Is the voltage between 1.5 — 3.5 V?	Yes	Go to Step 11.
		No	Go to the next step.
9	**INSPECT CAN LINE BETWEEN DC-DC CONVERTER AND CONNECTOR C-05 FOR SHORT TO POWER SUPPLY** • Switch the ignition off. • Disconnect the negative battery cable. (See **NEGATIVE BATTERY CABLE DISCONNECTION/CONNECTION [SKYACTIV-G 2.0, SKYACTIV-G 2.5]**.) • Disconnect connector C-05. • Connect the negative battery cable. (See **NEGATIVE BATTERY CABLE DISCONNECTION/CONNECTION [SKYACTIV-G 2.0, SKYACTIV-G 2.5]**.)	Yes	Repair or replace the wiring harness between connector C-32 and connector C-05 because the wiring harness is shorted to the power supply.
		No	Go to the next step.

	Switch the ignition ON (engine off). • Measure the voltage at DC-DC converter terminals A and C. • Is the voltage between 1.5 — 3.5 V?		
10	**INSPECT DC-DC CONVERTER FOR SHORT TO POWER SUPPLY** • Switch the ignition off. • Disconnect the negative battery cable. (See **NEGATIVE BATTERY CABLE DISCONNECTION/CONNECTION [SKYACTIV-G 2.0, SKYACTIV-G 2.5]**.) • Connect connector C-05. • Connect connector C-32. • Disconnect the DC-DC converter connector. • Connect the negative battery cable. (See **NEGATIVE BATTERY CABLE DISCONNECTION/CONNECTION [SKYACTIV-G 2.0, SKYACTIV-G 2.5]**.) • Switch the ignition ON (engine off). • Measure the voltage at DLC-2 terminals F and E. • Is the voltage between 1.5 — 3.5 V?	Yes	Replace the DC-DC converter because there is a short to the power supply in the DC-DC converter. (See **DC-DC CONVERTER REMOVAL/INSTALLATION [i-ELOOP]**.)
		No	Repair or replace the wiring harness between the DC-DC converter and connector C-05 because the wiring harness is shorted to the power supply.
11	**INSPECT CAN LINE BETWEEN AFS CONTROL MODULE AND CONNECTOR C-32 FOR SHORT TO POWER SUPPLY** • Measure the voltage at AFS control module terminals A and B. • Is the voltage between 1.5 — 3.5 V?	Yes	Repair or replace the wiring harness between the connector C-01 and connector C-32 because the wiring harness is shorted to the power supply.
		No	Go to the next step.
12	**INSPECT AFS CONTROL MODULE FOR SHORT TO POWER SUPPLY** • Switch the ignition off. • Disconnect the negative battery cable. (See **NEGATIVE BATTERY CABLE DISCONNECTION/CONNECTION [SKYACTIV-G 2.0, SKYACTIV-G 2.5]**.) • Connect connector C-32. • Disconnect the AFS control module connector. • Connect the negative battery cable. (See **NEGATIVE BATTERY CABLE DISCONNECTION/CONNECTION [SKYACTIV-G 2.0, SKYACTIV-G 2.5]**.) • Switch the ignition ON (engine off). • Measure the voltage at DLC-2 terminals F and E. • Is the voltage between 1.5 — 3.5 V?	Yes	Replace the AFS control module because there is a short to the power supply in the AFS control module. (See **ADAPTIVE FRONT LIGHTING SYSTEM (AFS) CONTROL MODULE REMOVAL/INSTALLATION**.)
		No	Repair or replace the wiring harness between the AFS control module and connector C-32 because the wiring harness is shorted to the power supply.
13	**INSPECT CAN LINE BETWEEN CONNECTOR C-03 AND INSTRUMENT CLUSTER FOR SHORT TO POWER SUPPLY** • Switch the ignition off.	Yes	Repair or replace the wiring harness between connector C-03 and connector C-32 because the wiring harness is shorted to the power supply.

	• Disconnect the negative battery cable. (See **NEGATIVE BATTERY CABLE DISCONNECTION/CONNECTION [SKYACTIV-G 2.0, SKYACTIV-G 2.5]**.) • Disconnect connector C-03. • Connect the negative battery cable. (See **NEGATIVE BATTERY CABLE DISCONNECTION/CONNECTION [SKYACTIV-G 2.0, SKYACTIV-G 2.5]**.) • Switch the ignition ON (engine off). • Measure the voltage at DLC-2 terminals F and E. • Is the voltage between 1.5 — 3.5 V?	No	Go to the next step.
14	**INSPECT CAN LINE BETWEEN CONNECTOR C-12 AND INSTRUMENT CLUSTER FOR SHORT TO POWER SUPPLY** • Switch the ignition off. • Disconnect the negative battery cable. (See **NEGATIVE BATTERY CABLE DISCONNECTION/CONNECTION [SKYACTIV-G 2.0, SKYACTIV-G 2.5]**.) • Disconnect connector C-12. • Connect the negative battery cable. (See **NEGATIVE BATTERY CABLE DISCONNECTION/CONNECTION [SKYACTIV-G 2.0, SKYACTIV-G 2.5]**.) • Switch the ignition ON (engine off). • Measure the voltage at DLC-2 terminals F and E. • Is the voltage between 1.5 — 3.5 V?	Yes	Go to the next step.
		No	Go to Step 21.
15	**INSPECT CAN LINE BETWEEN CONNECTOR C-12 AND LASER SENSOR / FORWARD SENSING CAMERA (FSC) FOR SHORT TO POWER SUPPLY** • Measure the voltage at laser sensor terminals D and C (with smart city brake support). • Measure the voltage at the forward sensing camera (FSC) terminals E and C (with forward sensing camera). • Is the voltage between 1.5 — 3.5 V?	Yes	Repair or replace the wiring harness between connector C-03 and connector C-12 because the wiring harness is shorted to the power supply.
		No	Go to the next step.
16	**INSPECT CAN LINE BETWEEN LASER SENSOR AND CONNECTOR C-42 FOR SHORT TO POWER SUPPLY** • Switch the ignition off. • Disconnect the negative battery cable. (See **NEGATIVE BATTERY CABLE DISCONNECTION/CONNECTION [SKYACTIV-G 2.0, SKYACTIV-G 2.5]**.) • Disconnect connector C-42. • Connect the negative battery cable. (See **NEGATIVE BATTERY CABLE DISCONNECTION/CONNECTION [SKYACTIV-G 2.0, SKYACTIV-G 2.5]**.)	Yes	Go to Step 18.
		No	Go to the next step.

	• Switch the ignition ON (engine off). • Measure the voltage at laser sensor terminals D and C. • Is the voltage between 1.5 — 3.5 V?		
17	**INSPECT LASER SENSOR FOR SHORT TO POWER SUPPLY** • Switch the ignition off. • Disconnect the negative battery cable. (See **NEGATIVE BATTERY CABLE DISCONNECTION/CONNECTION [SKYACTIV-G 2.0, SKYACTIV-G 2.5]**.) • Disconnect the laser sensor connector. • Connect connector C-42. • Connect connector C-12. • Connect the negative battery cable. (See **NEGATIVE BATTERY CABLE DISCONNECTION/CONNECTION [SKYACTIV-G 2.0, SKYACTIV-G 2.5]**.) • Switch the ignition ON (engine off). • Measure the voltage at DLC-2 terminals F and E. • Is the voltage between 1.5 — 3.5 V?	Yes	Replace the laser sensor because there is a short to the power supply in the laser sensor. (See **LASER SENSOR REMOVAL/INSTALLATION**.)
		No	Repair or replace the wiring harness between the laser sensor and connector C-42 because the wiring harness is shorted to the power supply.
18	**INSPECT CAN LINE BETWEEN FORWARD SENSING CAMERA (FSC) AND CONNECTOR C-42 FOR SHORT TO POWER SUPPLY** • Measure the voltage at forward sensing camera (FSC) terminals E and C. • Is the voltage between 1.5 — 3.5 V?	Yes	Repair or replace the wiring harness between connector C-12 and connector C-42 because the wiring harness is shorted to the power supply.
		No	Go to the next step.
19	**INSPECT CAN LINE BETWEEN CONNECTOR C-27 AND FORWARD SENSING CAMERA (FSC) FOR SHORT TO POWER SUPPLY** • Switch the ignition off. • Disconnect the negative battery cable. (See **NEGATIVE BATTERY CABLE DISCONNECTION/CONNECTION [SKYACTIV-G 2.0, SKYACTIV-G 2.5]**.) • Disconnect connector C-27. • Connect the negative battery cable. (See **NEGATIVE BATTERY CABLE DISCONNECTION/CONNECTION [SKYACTIV-G 2.0, SKYACTIV-G 2.5]**.) • Switch the ignition ON (engine off). • Measure the voltage at the forward sensing camera (FSC) terminals E and C. • Is the voltage between 1.5 — 3.5 V?	Yes	Repair or replace the wiring harness between connector C-42 and connector C-27 because the wiring harness is shorted to the power supply.
		No	Go to the next step.
20	**INSPECT FORWARD SENSING CAMERA (FSC) FOR SHORT TO POWER SUPPLY** • Switch the ignition off.	Yes	Replace the forward sensing camera (FSC) because there is a short to the power supply in the forward sensing camera (FSC). (See **FORWARD SENSING CAMERA (FSC)**

	• Disconnect the negative battery cable. (See **NEGATIVE BATTERY CABLE DISCONNECTION/CONNECTION [SKYACTIV-G 2.0, SKYACTIV-G 2.5]**.) • Disconnect the forward sensing camera (FSC) connector. • Connect connector C-42. • Connect connector C-12. • Connect connector C-27. • Connect the negative battery cable. (See **NEGATIVE BATTERY CABLE DISCONNECTION/CONNECTION [SKYACTIV-G 2.0, SKYACTIV-G 2.5]**.) • Switch the ignition ON (engine off). • Measure the voltage at DLC-2 terminals F and E. • Is the voltage between 1.5 — 3.5 V?		**REMOVAL/INSTALLATION**.)
		No	Repair or replace the wiring harness between the forward sensing camera (FSC) and connector C-27 because the wiring harness is shorted to the power supply.
21	**INSPECT CAN LINE BETWEEN CONNECTOR C-33 AND DLC-2 FOR SHORT TO POWER SUPPLY** • Switch the ignition off. • Disconnect the negative battery cable. (See **NEGATIVE BATTERY CABLE DISCONNECTION/CONNECTION [SKYACTIV-G 2.0, SKYACTIV-G 2.5]**.) • Disconnect connector C-33. • Connect the negative battery cable. (See **NEGATIVE BATTERY CABLE DISCONNECTION/CONNECTION [SKYACTIV-G 2.0, SKYACTIV-G 2.5]**.) • Switch the ignition ON (engine off). • Measure the voltage at DLC-2 terminals F and E. • Is the voltage 0 V?	Yes	Go to the next step.
		No	Repair or replace the wiring harness between connector C-33 and DLC-2 because the wiring harness is shorted to the power supply.
22	**INSPECT CAN LINE BETWEEN START STOP UNIT AND CONNECTOR C-33 FOR SHORT TO POWER SUPPLY** • Measure the voltage at start stop unit terminals 2M and 2O. • Is the voltage between 1.5 — 3.5 V?	Yes	Go to Step 24.
		No	Go to the next step.
23	**INSPECT START STOP UNIT FOR SHORT TO POWER SUPPLY** • Switch the ignition off. • Disconnect the negative battery cable. (See **NEGATIVE BATTERY CABLE DISCONNECTION/CONNECTION [SKYACTIV-G 2.0, SKYACTIV-G 2.5]**.) • Disconnect the start stop unit connector. • Connect connector C-33. • Connect the negative battery cable.	Yes	Replace the start stop unit because there is a short to the power supply in the start stop unit. (See **START STOP UNIT REMOVAL/INSTALLATION**.)
		No	Repair or replace the wiring harness between the start stop unit and connector C-33 because the wiring harness is shorted to the power supply.

	(See **NEGATIVE BATTERY CABLE DISCONNECTION/CONNECTION [SKYACTIV-G 2.0, SKYACTIV-G 2.5]**.) • Switch the ignition ON (engine off). • Measure the voltage at DLC-2 terminals F and E. • Is the voltage between 1.5 — 3.5 V?		
24	**INSPECT CAN LINE BETWEEN EPS CONTROL MODULE AND CONNECTOR C-33 FOR SHORT TO POWER SUPPLY** • Measure the voltage at EPS control module terminals 2B and 2D. • Is the voltage between 1.5 — 3.5 V?	Yes	Go to Step 26.
		No	Go to the next step.
25	**INSPECT EPS CONTROL MODULE FOR SHORT TO POWER SUPPLY** • Switch the ignition off. • Disconnect the negative battery cable. (See **NEGATIVE BATTERY CABLE DISCONNECTION/CONNECTION [SKYACTIV-G 2.0, SKYACTIV-G 2.5]**.) • Connect connector C-33. • Disconnect the EPS control module connector. • Connect the negative battery cable. (See **NEGATIVE BATTERY CABLE DISCONNECTION/CONNECTION [SKYACTIV-G 2.0, SKYACTIV-G 2.5]**.) • Switch the ignition ON (engine off). • Measure the voltage at DLC-2 terminals F and E. • Is the voltage between 1.5 — 3.5 V?	Yes	Replace the EPS control module because there is a short to the power supply in the EPS control module. (See **STEERING WHEEL AND COLUMN REMOVAL/INSTALLATION**.)
		No	Repair or replace the wiring harness between the EPS control module and connector C-33 because the wiring harness is shorted to the power supply.
26	**INSPECT JB No.2 FOR SHORT TO POWER SUPPLY** • Switch the ignition off. • Disconnect the negative battery cable. (See **NEGATIVE BATTERY CABLE DISCONNECTION/CONNECTION [SKYACTIV-G 2.0, SKYACTIV-G 2.5]**.) • Disconnect connector C-34. • Connect connector C-33. • Connect the negative battery cable. (See **NEGATIVE BATTERY CABLE DISCONNECTION/CONNECTION [SKYACTIV-G 2.0, SKYACTIV-G 2.5]**.) • Switch the ignition ON (engine off). • Measure the voltage at DLC-2 terminals F and E. • Is the voltage between 1.5 — 3.5 V?	Yes	Go to the next step.
		No	Replace the JB No.2 because there is a short to the power supply in the JB No.2.
27	**INSPECT CAN LINE BETWEEN CONNECTIVITY MASTER UNIT AND CONNECTOR C-34 FOR SHORT TO POWER SUPPLY**	Yes	Go to Step 29.
		No	Go to the next step.

	Measure the voltage at connectivity master unit terminals 2E and 2F. • Is the voltage between 1.5 — 3.5 V?		
28	**INSPECT CONNECTIVITY MASTER UNIT FOR SHORT TO POWER SUPPLY** • Switch the ignition off. • Disconnect the negative battery cable. (See **NEGATIVE BATTERY CABLE DISCONNECTION/CONNECTION [SKYACTIV-G 2.0, SKYACTIV-G 2.5]**.) • Connect connector C-34. • Disconnect the connectivity master unit connector. • Connect the negative battery cable. (See **NEGATIVE BATTERY CABLE DISCONNECTION/CONNECTION [SKYACTIV-G 2.0, SKYACTIV-G 2.5]**.) • Switch the ignition ON (engine off). • Measure the voltage at DLC-2 terminals F and E. • Is the voltage between 1.5 — 3.5 V?	Yes	Replace the connectivity master unit because there is a short to the power supply in the connectivity master unit. (See **CONNECTIVITY MASTER UNIT (CMU) REMOVAL/INSTALLATION**.)
		No	Repair or replace the wiring harness between the connectivity master unit and connector C-34 because the wiring harness is shorted to the power supply.
29	**INSPECT CAN LINE BETWEEN INSTRUMENT CLUSTER AND CONNECTOR C-09 FOR SHORT TO POWER SUPPLY** • Switch the ignition off. • Disconnect the negative battery cable. (See **NEGATIVE BATTERY CABLE DISCONNECTION/CONNECTION [SKYACTIV-G 2.0, SKYACTIV-G 2.5]**.) • Disconnect connector C-09. • Connect the negative battery cable. (See **NEGATIVE BATTERY CABLE DISCONNECTION/CONNECTION [SKYACTIV-G 2.0, SKYACTIV-G 2.5]**.) • Switch the ignition ON (engine off). • Measure the voltage at instrument cluster terminals B and D. • Is the voltage between 1.5 — 3.5 V?	Yes	Go to the next step.
		No	Go to Step 33.
30	**INSPECT CAN LINE BETWEEN AUDIO AMPLIFIER AND CONNECTOR C-09 FOR SHORT TO POWER SUPPLY** • Measure the voltage at audio amplifier terminals 2L and 2N. • Is the voltage between 1.5 - 3.5 V?	Yes	Go to Step 34.
		No	Go to the next step.
31	**INSPECT CAN LINE BETWEEN AUDIO AMPLIFIER AND CONNECTOR C-40 FOR SHORT TO POWER SUPPLY** • Switch the ignition off. • Disconnect the negative battery cable. (See **NEGATIVE BATTERY CABLE DISCONNECTION/CONNECTION [SKYACTIV-G 2.0, SKYACTIV-G 2.5]**.)	Yes	Repair or replace the wiring harness between connector C-40 and connector C-09 because the wiring harness is shorted to the power supply.
		No	Go to the next step.

	• Disconnect connector C-40. • Connect the negative battery cable. (See **NEGATIVE BATTERY CABLE DISCONNECTION/CONNECTION [SKYACTIV-G 2.0, SKYACTIV-G 2.5]**.) • Switch the ignition ON (engine off). • Measure the voltage at audio amplifier terminals 2L and 2N. • Is the voltage between 1.5 — 3.5 V?		
32	**INSPECT AUDIO AMPLIFIER FOR SHORT TO POWER SUPPLY** • Switch the ignition off. • Disconnect the negative battery cable. (See **NEGATIVE BATTERY CABLE DISCONNECTION/CONNECTION [SKYACTIV-G 2.0, SKYACTIV-G 2.5]**.) • Connect connector C-40. • Connect connector C-09. • Disconnect the audio amplifier connector. • Connect the negative battery cable. (See **NEGATIVE BATTERY CABLE DISCONNECTION/CONNECTION [SKYACTIV-G 2.0, SKYACTIV-G 2.5]**.) • Switch the ignition ON (engine off). • Measure the voltage at DLC-2 terminals F and E. • Is the voltage between 1.5 — 3.5 V?	Yes	Replace the audio amplifier because there is a short to the power supply in the audio amplifier. (See **AUDIO AMPLIFIER REMOVAL/INSTALLATION**.)
		No	Repair or replace the wiring harness between the audio amplifier and connector C-40 because the wiring harness is shorted to the power supply.
33	**INSPECT INSTRUMENT CLUSTER FOR SHORT TO POWER SUPPLY** • Switch the ignition off. • Disconnect the negative battery cable. (See **NEGATIVE BATTERY CABLE DISCONNECTION/CONNECTION [SKYACTIV-G 2.0, SKYACTIV-G 2.5]**.) • Connect connector C-09. • Disconnect the instrument cluster connector. • Connect the negative battery cable. (See **NEGATIVE BATTERY CABLE DISCONNECTION/CONNECTION [SKYACTIV-G 2.0, SKYACTIV-G 2.5]**.) • Switch the ignition ON (engine off). • Measure the voltage at DLC-2 terminals F and E. • Is the voltage between 1.5 — 3.5 V?	Yes	Replace the instrument cluster because there is a short to the power supply in the instrument cluster. (See **INSTRUMENT CLUSTER REMOVAL/INSTALLATION**.)
		No	Repair or replace the wiring harness between the instrument cluster and connector C-09 because the wiring harness is shorted to the power supply.
34	**INSPECT SAS CONTROL MODULE FOR SHORT TO POWER SUPPLY** • Switch the ignition off.	Yes	Go to the next step.
		No	Repair or replace the wiring harness between SAS control

	Disconnect the negative battery cable. (See **NEGATIVE BATTERY CABLE DISCONNECTION/CONNECTION [SKYACTIV-G 2.0, SKYACTIV-G 2.5]**.) • Disconnect the SAS control module connector. • Connect the negative battery cable. (See **NEGATIVE BATTERY CABLE DISCONNECTION/CONNECTION [SKYACTIV-G 2.0, SKYACTIV-G 2.5]**.) • Switch the ignition ON (engine off). • Measure the voltage at SAS control module terminals 3K and 3L. (wiring harness side) • Is the voltage 0 V?		module and connector C-34 because the wiring harness is shorted to the power supply.
35	**INSPECT CAN LINE BETWEEN CONNECTOR C-09 AND CONNECTOR C-34 FOR SHORT TO POWER SUPPLY** • Switch the ignition off. • Disconnect the negative battery cable. (See **NEGATIVE BATTERY CABLE DISCONNECTION/CONNECTION [SKYACTIV-G 2.0, SKYACTIV-G 2.5]**.) • Disconnect connector C-34. • Connect the negative battery cable. (See **NEGATIVE BATTERY CABLE DISCONNECTION/CONNECTION [SKYACTIV-G 2.0, SKYACTIV-G 2.5]**.) • Switch the ignition ON (engine off). • Measure the voltage at DLC-2 terminals F and E. • Is the voltage between 1.5 — 3.5 V?	Yes	Replace the SAS control module connector because there is a short to the power supply in the SAS control module connector. (See **SAS CONTROL MODULE REMOVAL/INSTALLATION [TWO-STEP DEPLOYMENT CONTROL SYSTEM]**.) (See **SAS CONTROL MODULE REMOVAL/INSTALLATION [STANDARD DEPLOYMENT CONTROL SYSTEM]**.)
		No	Repair or replace the wiring harness between connector C-09 and connector C-34 because the wiring harness is shorted to the power supply.
36	**INSPECT CAN LINE BETWEEN PCM AND FRONT BODY CONTROL MODULE (FBCM) FOR SHORT TO POWER SUPPLY** • Measure the voltage at PCM terminals 2AK and 2AL. • Is the voltage between 1.5 — 3.5 V?	Yes	Replace the front body control module (FBCM) because there is a short to the power supply in the front body control module (FBCM). (See **FRONT BODY CONTROL MODULE (FBCM) REMOVAL/INSTALLATION**.)
		No	Go to the next step.
37	**INSPECT PCM FOR SHORT TO POWER SUPPLY** • Switch the ignition off. • Disconnect the negative battery cable. (See **NEGATIVE BATTERY CABLE DISCONNECTION/CONNECTION [SKYACTIV-G 2.0, SKYACTIV-G 2.5]**.) • Disconnect the PCM connector. • Connect connector 2 which has front body control module (FBCM) terminals 2K and 2I • Connect the negative battery cable. (See **NEGATIVE BATTERY CABLE DISCONNECTION/CONNECTION [SKYACTIV-G**	Yes	Replace the PCM because there is a short to the power supply in the PCM. (See **PCM REMOVAL/INSTALLATION [SKYACTIV-G 2.0, SKYACTIV-G 2.5]**.)
		No	Repair or replace the wiring harness between the PCM and front body control module (FBCM) because the wiring harness is shorted to the power supply.

	2.0, SKYACTIV-G 2.5].) • Switch the ignition ON (engine off). • Measure the voltage at DLC-2 terminals F and E. • Is the voltage between 1.5 — 3.5 V?		

2014 - Mazda3 - Multiplex Communication System

DETERMINING SHORT BETWEEN CIRCUITS LOCATION (HS-CAN)

CAUTION:

- Perform the following malfunction diagnosis only when it is diagnosed with a short between circuits by CONTROLLER AREA NETWORK (CAN) MALFUNCTION DIAGNOSIS FLOW. (See **CONTROLLER AREA NETWORK (CAN) MALFUNCTION DIAGNOSIS FLOW**.)

System wiring diagram

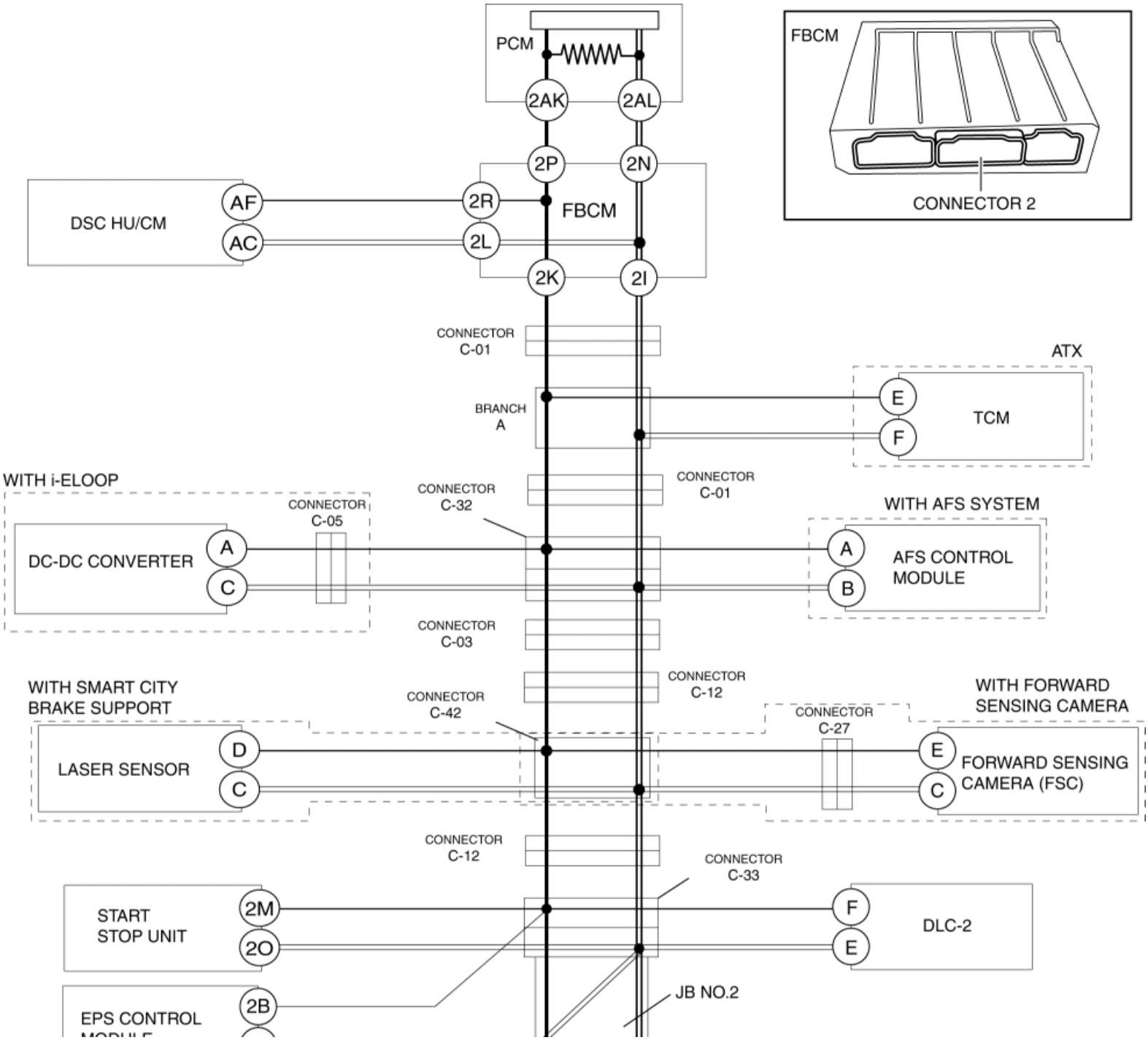

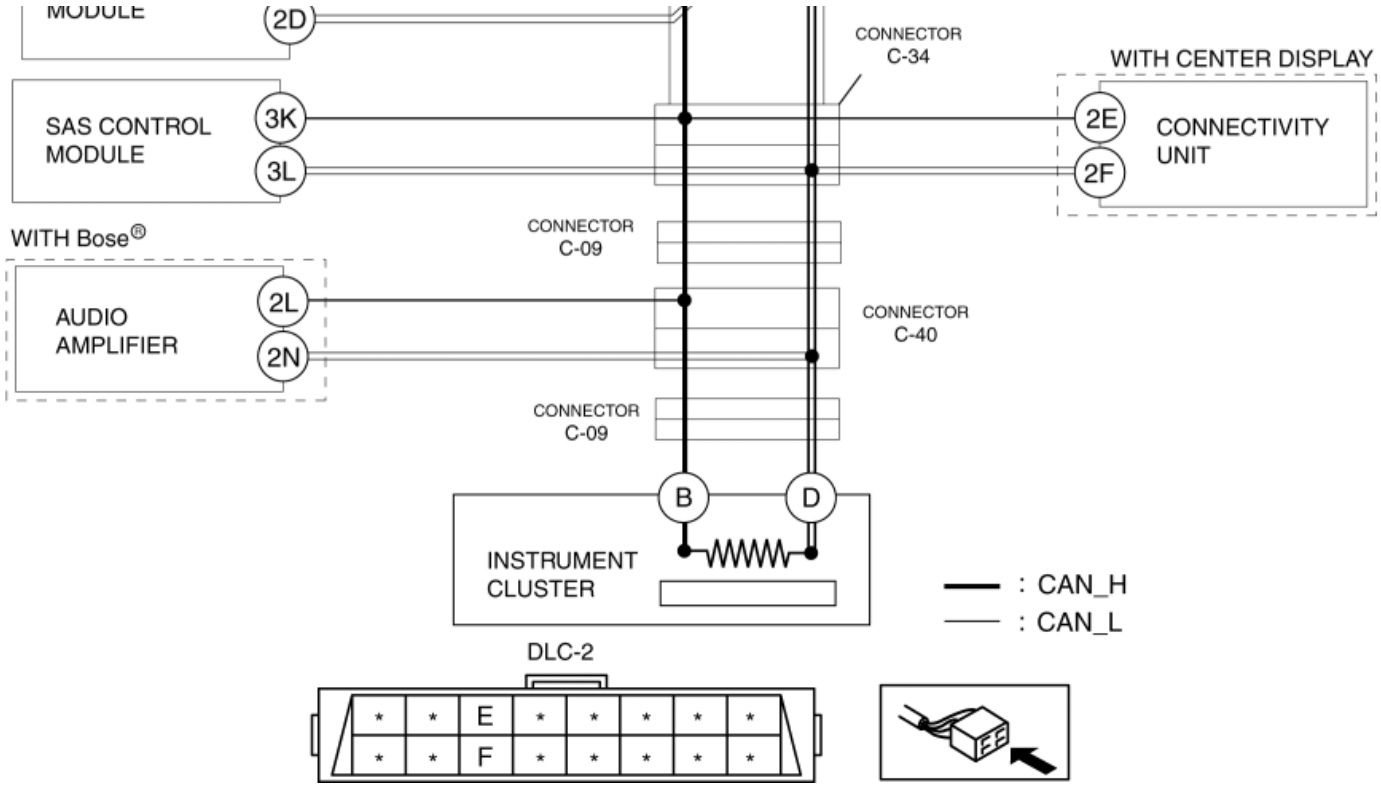

Determination procedure

CAUTION:

- When disconnecting the connector, verify that there is no looseness, damage, deformation, corrosion, or poor connection of the connector terminals.
- When inspecting the DLC-2, touch it with a paper clip or similar thin pin without directly inserting a tester into the terminals.
- Disconnect the negative battery cable before performing any work that requires handling of connectors.

Step	Inspection		Action
1	**INSPECT BETWEEN FRONT BODY CONTROL MODULE (FBCM) AND INSTRUMENT CLUSTER FOR SHORT BETWEEN CIRCUITS** • Disconnect the negative battery cable. (See **NEGATIVE BATTERY CABLE DISCONNECTION/CONNECTION [SKYACTIV-G 2.0, SKYACTIV-G 2.5]**.) • Disconnect connector 2 which has front body control module (FBCM) terminals 2K and 2I. • Connect the negative battery cable. (See **NEGATIVE BATTERY CABLE DISCONNECTION/CONNECTION [SKYACTIV-G 2.0, SKYACTIV-G 2.5]**.) • Switch the ignition ON (engine off). • Measure the voltage at DLC-2 terminals F and E. • Is the voltage at DLC-2 terminals F and E	Yes	Go to Step 5.
		No	Go to the next step.

	the same?		
2	**INSPECT FRONT BODY CONTROL MODULE (FBCM) FOR SHORT BETWEEN CIRCUITS** • Switch the ignition off. • Disconnect the negative battery cable. (See **NEGATIVE BATTERY CABLE DISCONNECTION/CONNECTION [SKYACTIV-G 2.0, SKYACTIV-G 2.5]**.) • Inspect for continuity between front body control module (FBCM) terminals 2K and 2I. • Is there continuity?	Yes	Replace the front body control module (FBCM) because there is a short between circuits in the front body control module (FBCM). (See **FRONT BODY CONTROL MODULE (FBCM) REMOVAL/INSTALLATION**.)
		No	Go to the next step.
3	**INSPECT BETWEEN DSC HU/CM AND FRONT BODY CONTROL MODULE (FBCM) FOR SHORT BETWEEN CIRCUITS** • Inspect for continuity between DSC HU/CM terminals AF and AC. • Is there continuity?	Yes	Go to the next step.
		No	Go to Step 37.
4	**INSPECT DSC HU/CM FOR SHORT BETWEEN CIRCUITS** • Disconnect the DSC HU/CM connector. • Inspect for continuity between DSC HU/CM terminals AF and AC (wiring harness side). • Is there continuity?	Yes	Repair or replace the wiring harness between the DSC HU/CM and front body control module (FBCM) because the wiring harness is shorted between circuits.
		No	Replace the DSC HU/CM because there is a short between circuits in the DSC HU/CM. (See **DSC HU/CM REMOVAL/INSTALLATION**.)
5	**INSPECT BETWEEN CONNECTOR C-01 AND INSTRUMENT CLUSTER FOR SHORT BETWEEN CIRCUITS** • Switch the ignition off. • Disconnect the negative battery cable. (See **NEGATIVE BATTERY CABLE DISCONNECTION/CONNECTION [SKYACTIV-G 2.0, SKYACTIV-G 2.5]**.) • Disconnect connector C-01. • Connect the negative battery cable. (See **NEGATIVE BATTERY CABLE DISCONNECTION/CONNECTION [SKYACTIV-G 2.0, SKYACTIV-G 2.5]**.) • Switch the ignition ON (engine off). • Measure the voltage at DLC-2 terminals F and E. • Is the voltage at DLC-2 terminals F and E the same?	Yes	Go to Step 8.
		No	Go to the next step.
6	**INSPECT BETWEEN TCM AND CONNECTOR C-01 FOR SHORT BETWEEN CIRCUITS** • Switch the ignition off. • Disconnect the negative battery cable. (See **NEGATIVE BATTERY CABLE DISCONNECTION/CONNECTION [SKYACTIV-G 2.0, SKYACTIV-G 2.5]**.) • Inspect for continuity between TCM	Yes	Go to the next step.
		No	Repair or replace the wiring harness between the front body control module (FBCM) and connector C-01 because the wiring harness is shorted between circuits.

	terminals E and F. • Is there continuity?		
7	**INSPECT TCM FOR SHORT BETWEEN CIRCUITS** • Disconnect the TCM connector. • Inspect for continuity between TCM terminals E and F (wiring harness side). • Is there continuity?	Yes	Repair or replace the wiring harness between the TCM and connector C-01 because the wiring harness is shorted between circuits.
		No	Replace the TCM because there is a short between circuits in the TCM. (See **CONTROL VALVE BODY REMOVAL/INSTALLATION [FW6A-EL]**.)
8	**INSPECT BETWEEN CONNECTORS C-32 AND INSTRUMENT CLUSTER FOR SHORT BETWEEN CIRCUITS** • Disconnect connector C-32. • Connect the negative battery cable. (See **NEGATIVE BATTERY CABLE DISCONNECTION/CONNECTION [SKYACTIV-G 2.0, SKYACTIV-G 2.5]**.) • Switch the ignition ON (engine off). • Measure the voltage at DLC-2 terminals F and E. • Is the voltage at DLC-2 terminals F and E the same?	Yes	Go to Step 14.
		No	Go to the next step.
9	**INSPECT BETWEEN DC-DC CONVERTER AND CONNECTOR C-32 FOR SHORT BETWEEN CIRCUITS** • Switch the ignition off. • Disconnect the negative battery cable. (See **NEGATIVE BATTERY CABLE DISCONNECTION/CONNECTION [SKYACTIV-G 2.0, SKYACTIV-G 2.5]**.) • Inspect for continuity between DC-DC converter terminals A and C. • Is there continuity?	Yes	Go to the next step.
		No	Go to Step 12.
10	**INSPECT BETWEEN DC-DC CONVERTER AND CONNECTOR C-05 FOR SHORT BETWEEN CIRCUITS** • Disconnect connector C-05. • Inspect for continuity between DC-DC converter terminals A and C. • Is there continuity?	Yes	Go to the next step.
		No	Repair or replace the wiring harness between connector C-32 and connector C-05 because the wiring harness is shorted between circuits.
11	**INSPECT DC-DC CONVERTER FOR SHORT BETWEEN CIRCUITS** • Disconnect the DC-DC converter connector. • Inspect for continuity between DC-DC converter terminals A and C (wiring harness side). • Is there continuity?	Yes	Repair or replace the wiring harness between the DC-DC converter and connector C-05 because the wiring harness is shorted between circuits.
		No	Replace the DC-DC converter because there is a short between circuits in the DC-DC converter. (See **DC-DC CONVERTER REMOVAL/INSTALLATION [i-ELOOP]**.)
12	**INSPECT BETWEEN AFS CONTROL MODULE AND CONNECTOR C-32 FOR SHORT BETWEEN CIRCUITS** • Inspect for continuity between AFS control module terminals A and B.	Yes	Go to the next step.
		No	Repair or replace the wiring harness between connector C-01 and connector C-32 because the wiring harness is shorted between

	• Is there continuity?		circuits.
13	**INSPECT AFS CONTROL MODULE FOR SHORT BETWEEN CIRCUITS** • Disconnect the AFS control module connector. • Inspect for continuity between AFS control module terminals A and B (wiring harness side). • Is there continuity?	Yes	Repair or replace the wiring harness between the AFS control module and connector C-32 because the wiring harness is shorted between circuits.
		No	Replace the AFS control module because there is a short between circuits in the AFS control module. (See **ADAPTIVE FRONT LIGHTING SYSTEM (AFS) CONTROL MODULE REMOVAL/INSTALLATION**.)
14	**INSPECT BETWEEN CONNECTOR C-03 AND INSTRUMENT CLUSTER FOR SHORT BETWEEN CIRCUITS** • Switch the ignition off. • Disconnect the negative battery cable. (See **NEGATIVE BATTERY CABLE DISCONNECTION/CONNECTION [SKYACTIV-G 2.0, SKYACTIV-G 2.5]**.) • Disconnect connector C-03. • Connect the negative battery cable. (See **NEGATIVE BATTERY CABLE DISCONNECTION/CONNECTION [SKYACTIV-G 2.0, SKYACTIV-G 2.5]**.) • Switch the ignition ON (engine off). • Measure the voltage at DLC-2 terminals F and E. • Is the voltage at DLC-2 terminals F and E the same?	Yes	Go to the next step.
		No	Repair or replace the wiring harness between connector C-32 and connector C-03 because the wiring harness is shorted between circuits.
15	**INSPECT BETWEEN CONNECTOR C-12 AND INSTRUMENT CLUSTER FOR SHORT BETWEEN CIRCUITS** • Switch the ignition off. • Disconnect the negative battery cable. (See **NEGATIVE BATTERY CABLE DISCONNECTION/CONNECTION [SKYACTIV-G 2.0, SKYACTIV-G 2.5]**.) • Disconnect connector C-12. • Connect the negative battery cable. (See **NEGATIVE BATTERY CABLE DISCONNECTION/CONNECTION [SKYACTIV-G 2.0, SKYACTIV-G 2.5]**.) • Switch the ignition ON (engine off). • Measure the voltage at DLC-2 terminals F and E. • Is the voltage at DLC-2 terminals F and E the same?	Yes	Go to Step 22.
		No	Go to the next step.
16	**INSPECT BETWEEN LASER SENSOR / FORWARD SENSING CAMERA (FSC) AND CONNECTORS C-12 FOR SHORT BETWEEN CIRCUITS** • Switch the ignition off. • Disconnect the negative battery cable.	Yes	Go to the next step.
		No	Repair or replace the wiring harness between connector C-03 and connector C-12 because the wiring harness is shorted between circuits.

	(See **NEGATIVE BATTERY CABLE DISCONNECTION/CONNECTION [SKYACTIV-G 2.0, SKYACTIV-G 2.5]**.) • Inspect for continuity between laser sensor terminals D and C (with smart city brake support). • Inspect for continuity between forward sensing camera (FSC) terminals E and C (with forward sensing camera). • Is there continuity?		
17	**INSPECT BETWEEN CONNECTOR C-42 AND LASER SENSOR FOR SHORT BETWEEN CIRCUITS** • Disconnect connector C-42. • Inspect for continuity between laser sensor terminals D and C. • Is there continuity?	Yes	Go to the next step.
		No	Go to Step 19.
18	**INSPECT LASER SENSOR FOR SHORT BETWEEN CIRCUITS** • Disconnect the laser sensor connector. • Inspect for continuity between laser sensor terminals D and C (wiring harness side). • Is there continuity?	Yes	Repair or replace the wiring harness between the laser sensor and connector C-42 because the wiring harness is shorted between circuits.
		No	Replace the laser sensor because there is a short between circuits in the laser sensor. (See **LASER SENSOR REMOVAL/INSTALLATION**.)
19	**INSPECT BETWEEN FORWARD SENSING CAMERA (FSC) AND CONNECTOR C-42 FOR SHORT BETWEEN CIRCUITS** • Inspect for continuity between forward sensing camera (FSC) terminals E and C. • Is there continuity?	Yes	Go to the next step.
		No	Repair or replace the wiring harness between connector C-12 and connector C-42 because the wiring harness is shorted between circuits.
20	**INSPECT BETWEEN FORWARD SENSING CAMERA (FSC) AND CONNECTOR C-27 FOR SHORT BETWEEN CIRCUITS** • Disconnect connector C-27. • Inspect for continuity between forward sensing camera (FSC) terminals E and C. • Is there continuity?	Yes	Go to the next step.
		No	Repair or replace the wiring harness between connector C-42 and connector C-27 because the wiring harness is shorted between circuits.
21	**INSPECT FORWARD SENSING CAMERA (FSC) FOR SHORT BETWEEN CIRCUITS** • Disconnect the forward sensing camera (FSC) connector. • Inspect for continuity between forward sensing camera (FSC) terminals E and C (wiring harness side). • Is there continuity?	Yes	Repair or replace the wiring harness between the forward sensing camera (FSC) and connector C-27 because the wiring harness is shorted between circuits.
		No	Replace the forward sensing camera (FSC) because there is a short between circuits in the forward sensing camera (FSC). (See **FORWARD SENSING CAMERA (FSC) REMOVAL/INSTALLATION**.)
22	**INSPECT BETWEEN CONNECTOR C-33 AND DLC-2 FOR SHORT BETWEEN CIRCUITS** • Switch the ignition off. • Disconnect the negative battery cable. (See **NEGATIVE BATTERY CABLE DISCONNECTION/CONNECTION [SKYACTIV-G 2.0, SKYACTIV-G 2.5]**.)	Yes	Repair or replace the wiring harness between connector C-33 and DLC-2 because the wiring harness is shorted between circuits.
		No	Go to the next step.

	• Disconnect connector C-33. • Inspect for continuity between DLC-2 terminals F and E. • Is there continuity?		
23	**INSPECT BETWEEN START STOP UNIT AND CONNECTOR C-33 FOR SHORT BETWEEN CIRCUITS** • Inspect for continuity between start stop unit terminals 2M and 2O. • Is there continuity?	Yes	Go to the next step.
		No	Go to Step 25.
24	**INSPECT START STOP UNIT FOR SHORT BETWEEN CIRCUITS** • Disconnect the start stop unit connector. • Is there continuity between start stop unit terminals 2M and 2O (wiring harness side). • Is there continuity?	Yes	Repair or replace the wiring harness between the start stop unit and connector C-33 because the wiring harness is shorted between circuits.
		No	Replace the start stop unit because there is a short between circuits in the start stop unit. (See **START STOP UNIT REMOVAL/INSTALLATION**.)
25	**INSPECT BETWEEN EPS CONTROL MODULE AND CONNECTOR C-33 FOR SHORT BETWEEN CIRCUITS** • Inspect for continuity between EPS control module terminals 2B and 2D. • Is there continuity?	Yes	Go to the next step.
		No	Go to Step 27.
26	**INSPECT EPS CONTROL MODULE FOR SHORT BETWEEN CIRCUITS** • Disconnect the EPS control module connector. • Is there continuity between EPS control module terminals 2B and 2D (wiring harness side). • Is there continuity?	Yes	Repair or replace the wiring harness between the EPS control module and connector C-33 because the wiring harness is shorted between circuits.
		No	Replace the EPS control module because there is a short between circuits in the EPS control module. (See **STEERING WHEEL AND COLUMN REMOVAL/INSTALLATION**.)
27	**INSPECT JB No.2 FOR SHORT BETWEEN CIRCUITS** • Connect connector C-33. • Disconnect connector C-34. • Connect the negative battery cable. (See **NEGATIVE BATTERY CABLE DISCONNECTION/CONNECTION [SKYACTIV-G 2.0, SKYACTIV-G 2.5]**.) • Switch the ignition ON (engine off). • Measure the voltage at DLC-2 terminals F and E. • Is the voltage at DLC-2 terminals F and E the same?	Yes	Replace the JB No.2 because there is a short between circuits in the JB No.2.
		No	Go to the next step.
28	**INSPECT BETWEEN CONNECTIVITY MASTER UNIT AND CONNECTOS C-34 FOR SHORT BETWEEN CIRCUITS** • Switch the ignition off. • Disconnect the negative battery cable. (See **NEGATIVE BATTERY CABLE DISCONNECTION/CONNECTION [SKYACTIV-G 2.0, SKYACTIV-G 2.5]**.) • Inspect for continuity between connectivity	Yes	Go to the next step.
		No	Go to Step 30.

	master unit terminals 2E and 2F. • Is there continuity?		
29	**INSPECT CONNECTIVITY MASTER UNIT FOR SHORT BETWEEN CIRCUITS** • Disconnect the connectivity master unit. • Inspect for continuity between connectivity master unit terminals 2E and 2F (wiring harness side). • Is there continuity?	Yes	Repair or replace the wiring harness between connectivity master unit and connector C-34 because the wiring harness is shorted between circuits.
		No	Replace the connectivity master unit because there is a short between circuits in the connectivity master unit. (See **CONNECTIVITY MASTER UNIT (CMU) REMOVAL/INSTALLATION**.)
30	**INSPECT BETWEEN SAS CONTORL MODULE AND CONNECTOS C-34 FOR SHORT BETWEEN CIRCUITS** • Inspect for continuity between SAS control module terminals 3K and 3L. • Is there continuity?	Yes	Go to the next step.
		No	Go to Step 32.
31	**INSPECT SAS CONTORL MODULE FOR SHORT BETWEEN CIRCUITS** • Disconnect the SAS control module. • Inspect for continuity between SAS control module terminals 3K and 3L (wiring harness side). • Is there continuity?	Yes	Repair or replace the wiring harness between SAS control module and connector C-34 because the wiring harness is shorted between circuits.
		No	Replace the SAS control module because there is a short between circuits in the SAS control module. (See **SAS CONTROL MODULE REMOVAL/INSTALLATION [TWO-STEP DEPLOYMENT CONTROL SYSTEM]**.) (See **SAS CONTROL MODULE REMOVAL/INSTALLATION [STANDARD DEPLOYMENT CONTROL SYSTEM]**.)
32	**INSPECT BETWEEN CONNECTOR C-09 AND CONNECTOR C-34 FOR SHORT BETWEEN CIRCUITS** • Disconnect connector C-09. • Connect connector C-34. • Connect the negative battery cable. (See **NEGATIVE BATTERY CABLE DISCONNECTION/CONNECTION [SKYACTIV-G 2.0, SKYACTIV-G 2.5]**.) • Switch the ignition ON (engine off). • Measure the voltage at DLC-2 terminals F and E. • Is the voltage at DLC-2 terminals F and E the same?	Yes	Repair or replace the wiring harness between connector C-34 and connector C-09 because the wiring harness is shorted between circuits.
		No	Go to the next step.
33	**INSPECT BETWEEN AUDIO AMPLIFIER AND CONNECTOR C-09 FOR SHORT BETWEEN CIRCUITS** • Switch the ignition off. • Disconnect the negative battery cable. (See **NEGATIVE BATTERY CABLE DISCONNECTION/CONNECTION [SKYACTIV-G 2.0, SKYACTIV-G 2.5]**.) • Inspect for continuity between audio amplifier terminals 2L and 2N. • Is there continuity?	Yes	Go to the next step.
		No	Go to Step 36.
34	**INSPECT BETWEEN AUDIO AMPLIFIER AND CONNECTOR C-40 FOR SHORT BETWEEN CIRCUITS**	Yes	Go to the next step.

	• Disconnect connector C-40. • Inspect for continuity between audio amplifier terminals 2L and 2N. • Is there continuity?	No	Repair or replace the wiring harness between connector C-09 and connector C-40 because the wiring harness is shorted between circuits.
35	**INSPECT AUDIO AMPLIFIER FOR SHORT BETWEEN CIRCUITS** • Disconnect the audio amplifier connector. • Is there continuity between audio amplifier terminals 2L and 2N (wiring harness side). • Is there continuity?	Yes	Repair or replace the wiring harness between the audio amplifier and connector C-40 because the wiring harness is shorted between circuits.
		No	Replace the audio amplifier because there is a short between circuits in the audio amplifier. (See **AUDIO AMPLIFIER REMOVAL/INSTALLATION**.)
36	**INSPECT INSTRUMENT CLUSTER FOR SHORT BETWEEN CIRCUITS** • Disconnect the instrument cluster connector. • Is there continuity between instrument cluster terminals B and D (wiring harness side). • Is there continuity?	Yes	Repair or replace the wiring harness between the instrument cluster and connector C-09 because the wiring harness is shorted between circuits.
		No	Replace the instrument cluster because there is a short between circuits in the instrument cluster. (See **INSTRUMENT CLUSTER REMOVAL/INSTALLATION**.)
37	**INSPECT PCM FOR SHORT BETWEEN CIRCUITS** • Disconnect the PCM connector. • Inspect for continuity between PCM terminals 2AK and 2AL (wiring harness side). • Is there continuity?	Yes	Repair or replace the wiring harness between the PCM and front body control module (FBCM) because the wiring harness is shorted between circuits.
		No	Replace the PCM because there is a short between circuits in the PCM. (See **PCM REMOVAL/INSTALLATION [SKYACTIV-G 2.0, SKYACTIV-G 2.5]**.)

2014 - Mazda3 - Multiplex Communication System

DETERMINING OPEN CIRCUIT LOCATION (MS-CAN)

CAUTION:

- Perform the following malfunction diagnosis only when it is diagnosed with a open circuit by CONTROLLER AREA NETWORK (CAN) MALFUNCTION DIAGNOSIS FLOW. (See **CONTROLLER AREA NETWORK (CAN) MALFUNCTION DIAGNOSIS FLOW**.)
- If the malfunctioning part is detected in the communication line, before disconnecting the related connector for inspection, press the connector in the connection direction to verify that there is no looseness or disconnection.
- When disconnecting the connector, verify that there is no damage, deformation, or corrosion of the connector terminals.

1. Verify DTCs of the modules related to the CAN system.

2. Apply the communication error DTC and the failed module to DTC output pattern and malfunctioning location, and select the possible cause for the diagnostic result and the reference for the inspection item. (See **DTC output pattern and malfunctioning location**.)

NOTE:

- The open circuit location can be determined by the DTC indicated in the DTC output pattern and malfunctioning location chart. DTCs not listed in the chart are not used for the determination of the open circuit location. (See **DTC output pattern and malfunctioning location**.)

3. Inspect the possible cause and inspection item of the applicable malfunctioning part.

4. After repairs, return to CONTROLLER AREA NETWORK (CAN) MALFUNCTION DIAGNOSIS FLOW, and verify that the repairs have been completed. (See **CONTROLLER AREA NETWORK (CAN) MALFUNCTION DIAGNOSIS FLOW**.)

DTC output pattern and malfunctioning location

Cross (×): Communication error-related DTC and failed module

M-MDS display DTC output module	DTC	DTC output pattern and malfunctioning location				
IC (Instrument cluster)	U0142:00			×		×
	U0232:00			×	×	
EATC (Climate control unit)	U0155:00	×				
BSML*1 (BSM control module (LH))	U0100:00	×				
	U0131:00	×				
	U0155:00	×				
	U0214:00	×				

R_BCM (Rear body control module (RBCM))	U0155:00	×				
M-MDS display module		[Fail] display pattern				
IC		×				
EATC			×			
BSML*1				×	×	
R_BCM				×		×
Diagnostic result						
Possible cause and inspection item		**A**	**B**	**C**	**D**	**E**

*1 **With BSM system**

A

Possible cause

- Connector terminal disconnection, poor contact, damage, deformation, corrosion
- Instrument cluster power supply voltage or body ground malfunction
- Open circuit in wiring harness between information display and connector C-34
- JB No.2 malfunction
- Connector C-34 malfunction
- Connector C-33 malfunction
- Instrument cluster malfunction

System wiring diagram

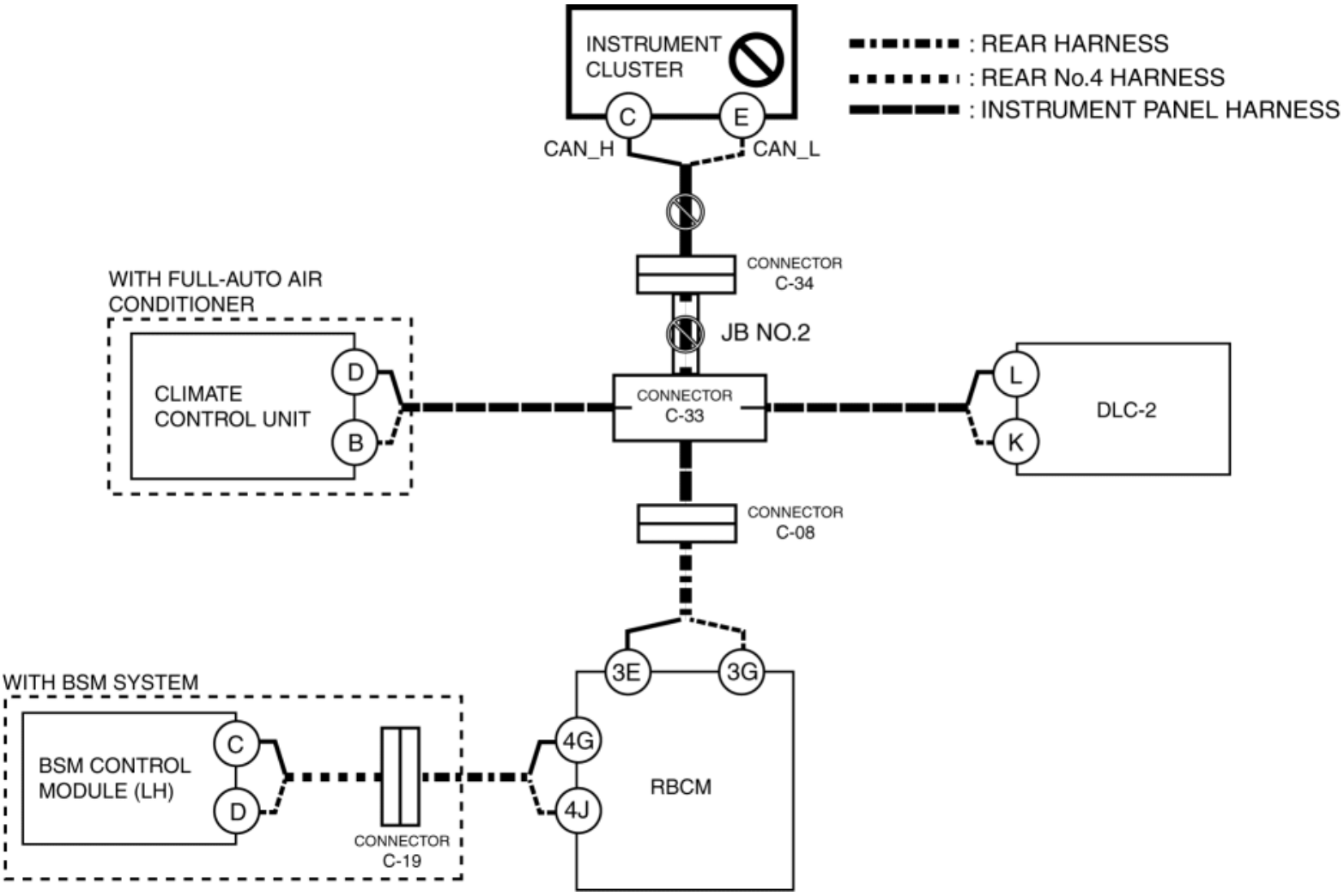

Inspection item

- Instrument cluster power supply voltage-related wiring harness and fuse
- Instrument cluster body ground related wiring harness
- JB No.2
- Connector C-34
- Connector C-33
- Wiring harness between Instrument cluster terminal C and connector C-34
- Wiring harness between Instrument cluster terminal E and connector C-34
- Instrument cluster

B

Possible cause

- Connector terminal disconnection, poor contact, damage, deformation, corrosion
- Climate control unit power supply voltage or body ground malfunction
- Open circuit in wiring harness between climate control unit and connector C-33

- Connector C-33 malfunction
- Climate control unit malfunction

System wiring diagram

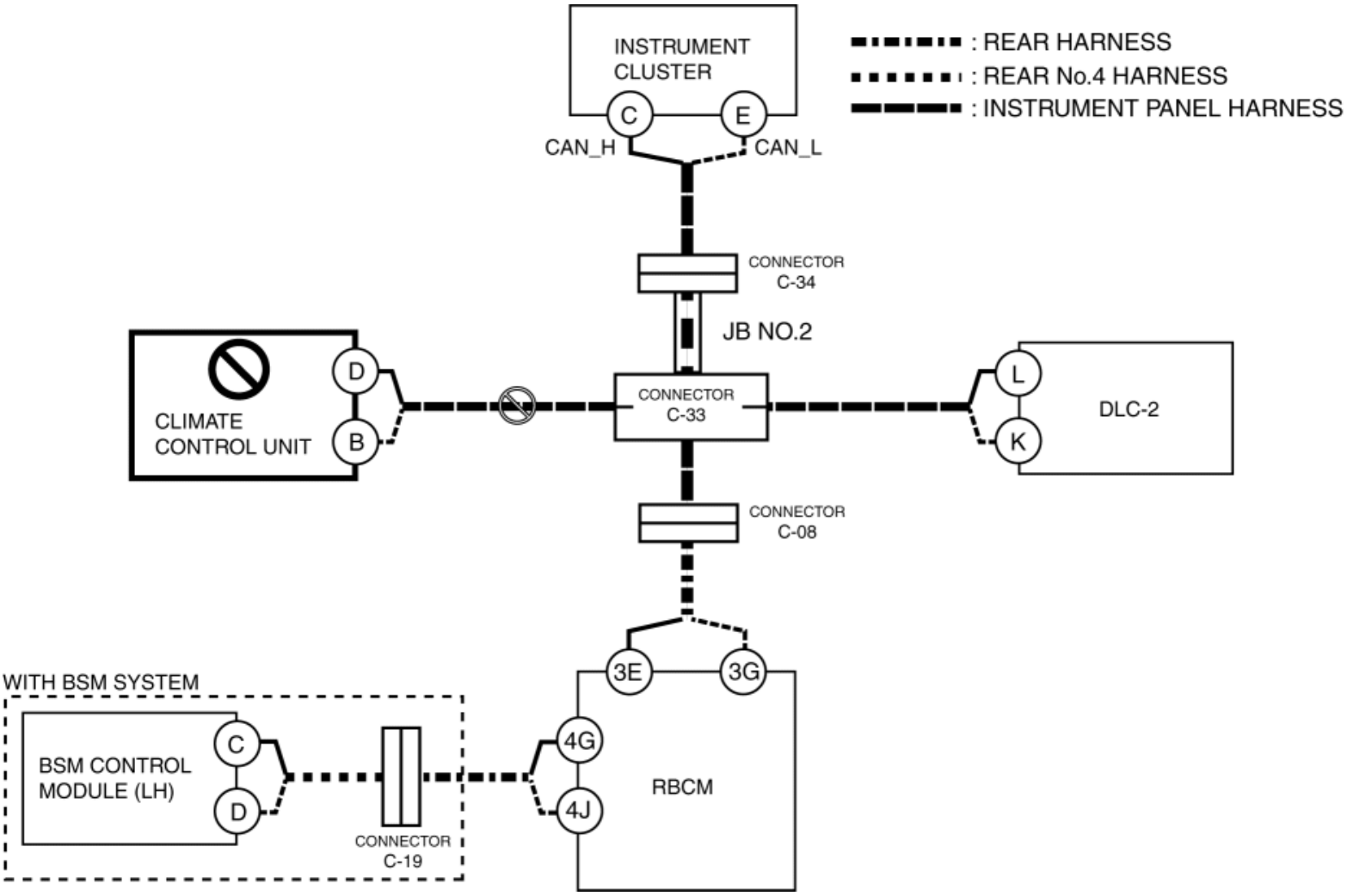

Inspection item

- Climate control unit power supply voltage-related wiring harness and fuse
- Climate control unit body ground related wiring harness
- Climate control unit connector
- Connector C-33
- Wiring harness between climate control unit D and connector C-33
- Wiring harness between climate control unit B and connector C-33
- Climate control unit

C

Possible cause

- Connector terminal disconnection, poor contact, damage, deformation, corrosion
- Open circuit in wiring harness between connector C-33 and connector C-08
- Open circuit in wiring harness between connector C-08 and rear body control module (RBCM)
- Connector C-08 malfunction
- CAN circuit in rear body control module (RBCM) malfunction

System wiring diagram

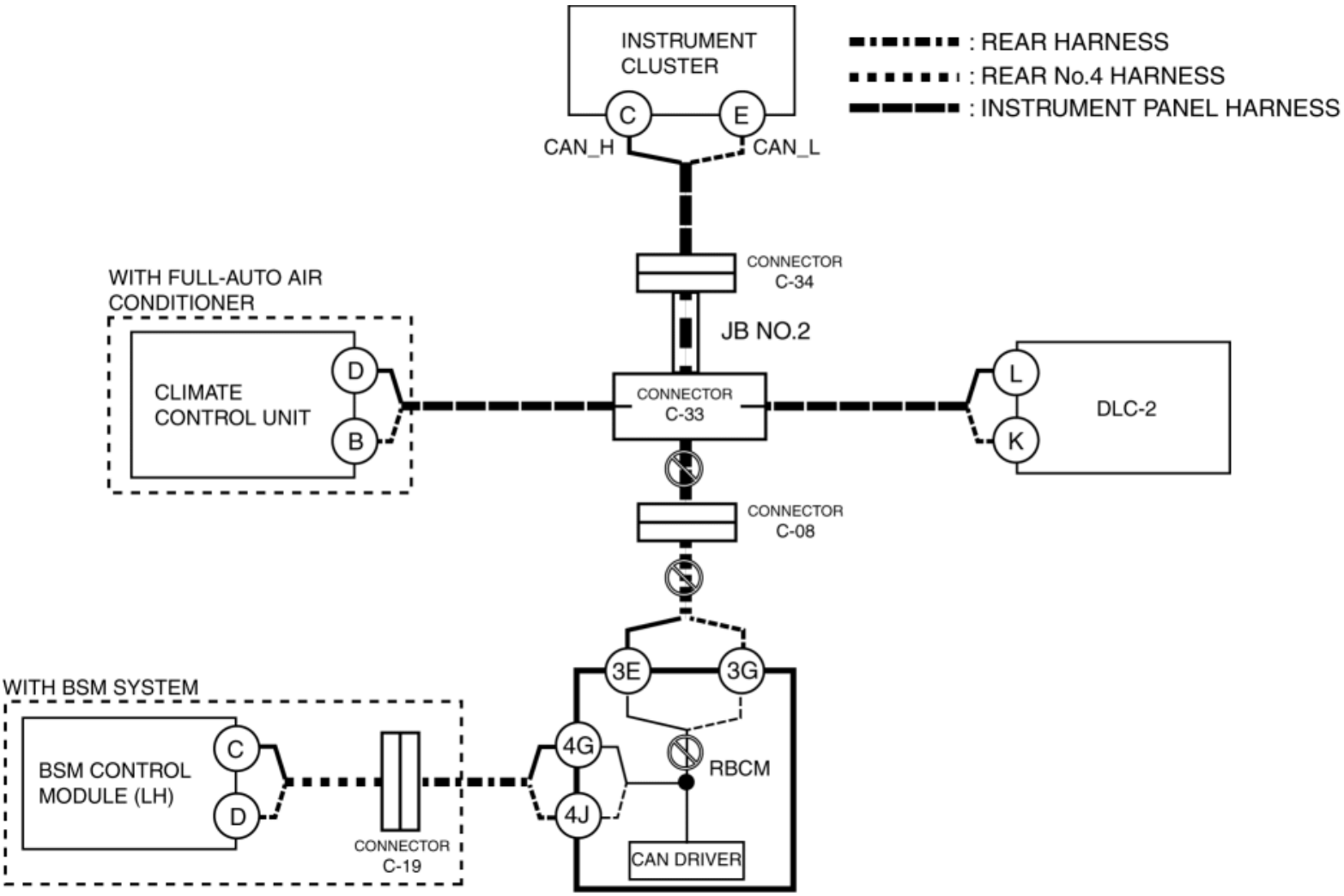

Inspection item

- Rear body control module (RBCM) connector
- Connector C-08
- Wiring harness between branch C-33 and connector C-08
- Wiring harness between rear body control module (RBCM) terminal 3E and connector C-08
- Wiring harness between rear body control module (RBCM) terminal 3G and connector C-08
- Rear body control module (RBCM)
    - Between rear body control module (RBCM) terminal 3E and rear body control module (RBCM) terminal 4G
    - Between rear body control module (RBCM) terminal 3G and rear body control module (RBCM)

terminal 4J

D

Possible cause

- Connector terminal disconnection, poor contact, damage, deformation, corrosion
- BSM control module (LH) power supply voltage or body ground malfunction
- Open circuit in wiring harness between BSM control module (LH) and connector C-19
- Open circuit in wiring harness between connector C-19 and rear body control module (RBCM)
- connector C-19 malfunction
- BSM control module (LH) malfunction
- CAN circuit in rear body control module (RBCM) malfunction

System wiring diagram

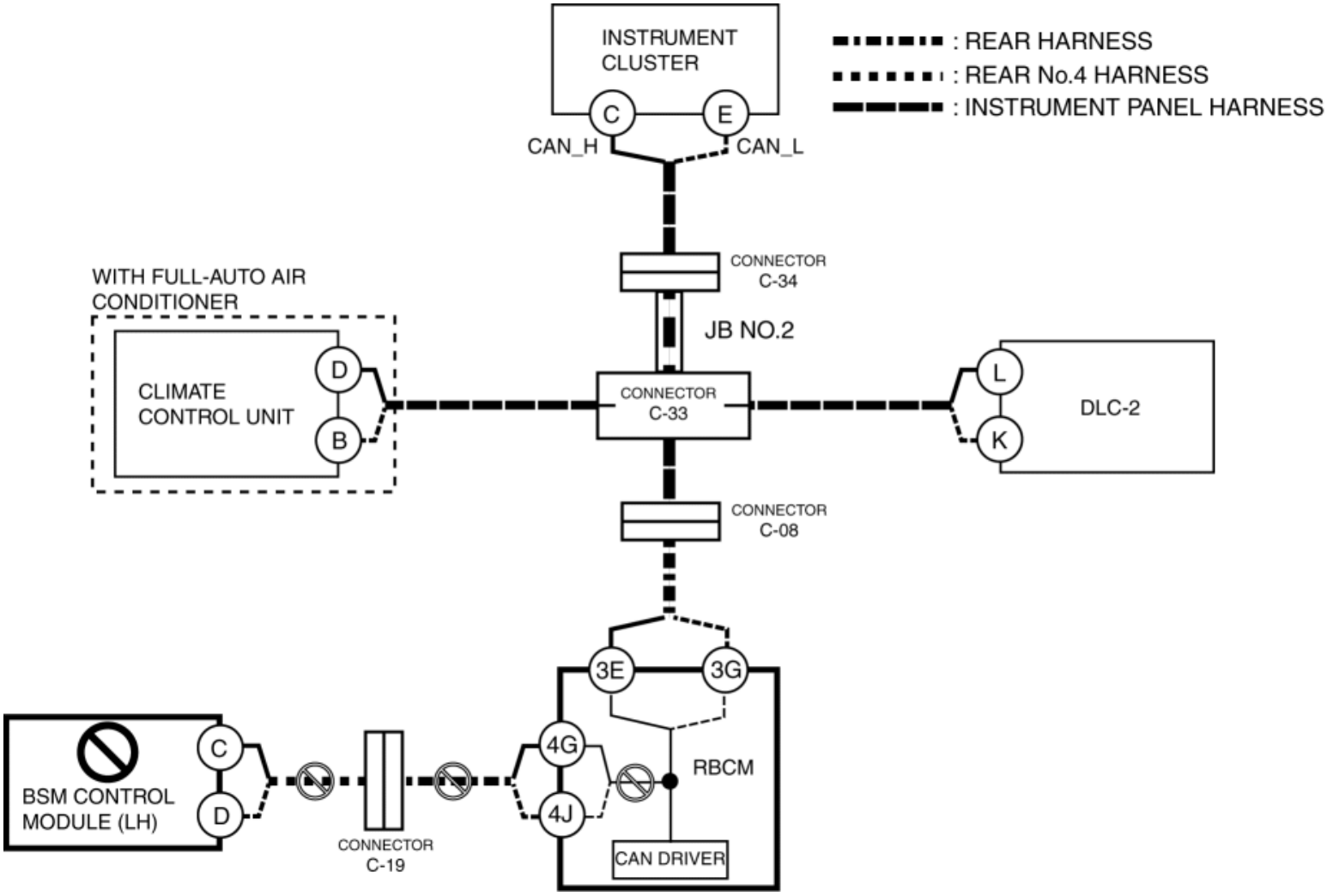

Inspection item

- BSM control module (LH) power supply voltage-related wiring harness and fuse

- BSM control module (LH) body ground related wiring harness
- BSM control module (LH) connector
- Rear body control module (RBCM) connector
- connector C-19
- Wiring harness between BSM control module (LH) terminal C and connectors C-19
- Wiring harness between BSM control module (LH) terminal D and connectors C-19
- Wiring harness between connector C-19 and rear body control module (RBCM) terminal 4G
- Wiring harness between connector C-19 and rear body control module (RBCM) terminal 4J
- Rear body control module (RBCM)
    - Between rear body control module (RBCM) terminal 4G and rear body control module (RBCM) terminal 3E
    - Between rear body control module (RBCM) terminal 4J and rear body control module (RBCM) terminal 3G

E

Possible cause

- Connector terminal disconnection, poor contact, damage, deformation, corrosion
- Rear body control module (RBCM) power supply voltage or body ground malfunction
- Rear body control module (RBCM) malfunction

System wiring diagram

DETERMINING OPEN CIRCUIT LOCATION (MS-CAN)

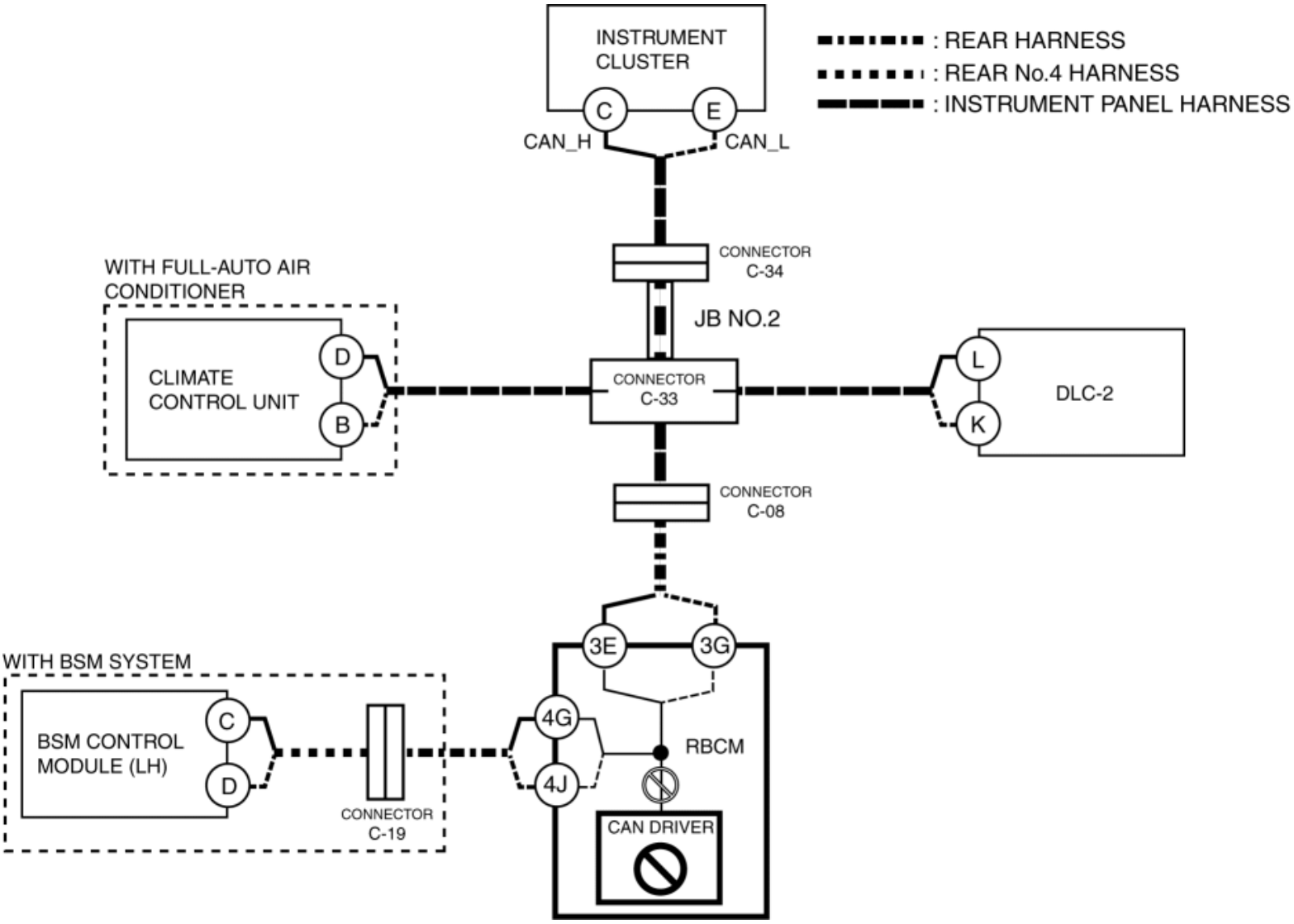

Inspection item

- Rear body control module (RBCM) power supply voltage-related wiring harness and fuse
- Rear body control module (RBCM) body ground related wiring harness
- Rear body control module (RBCM)

2014 - Mazda3 - Multiplex Communication System

DETERMINING SHORT TO GROUND LOCATION (MS-CAN)

CAUTION:

- Perform the following malfunction diagnosis only when it is diagnosed with a short to ground by CONTROLLER AREA NETWORK (CAN) MALFUNCTION DIAGNOSIS FLOW. (See **CONTROLLER AREA NETWORK (CAN) MALFUNCTION DIAGNOSIS FLOW**.)

System wiring diagram

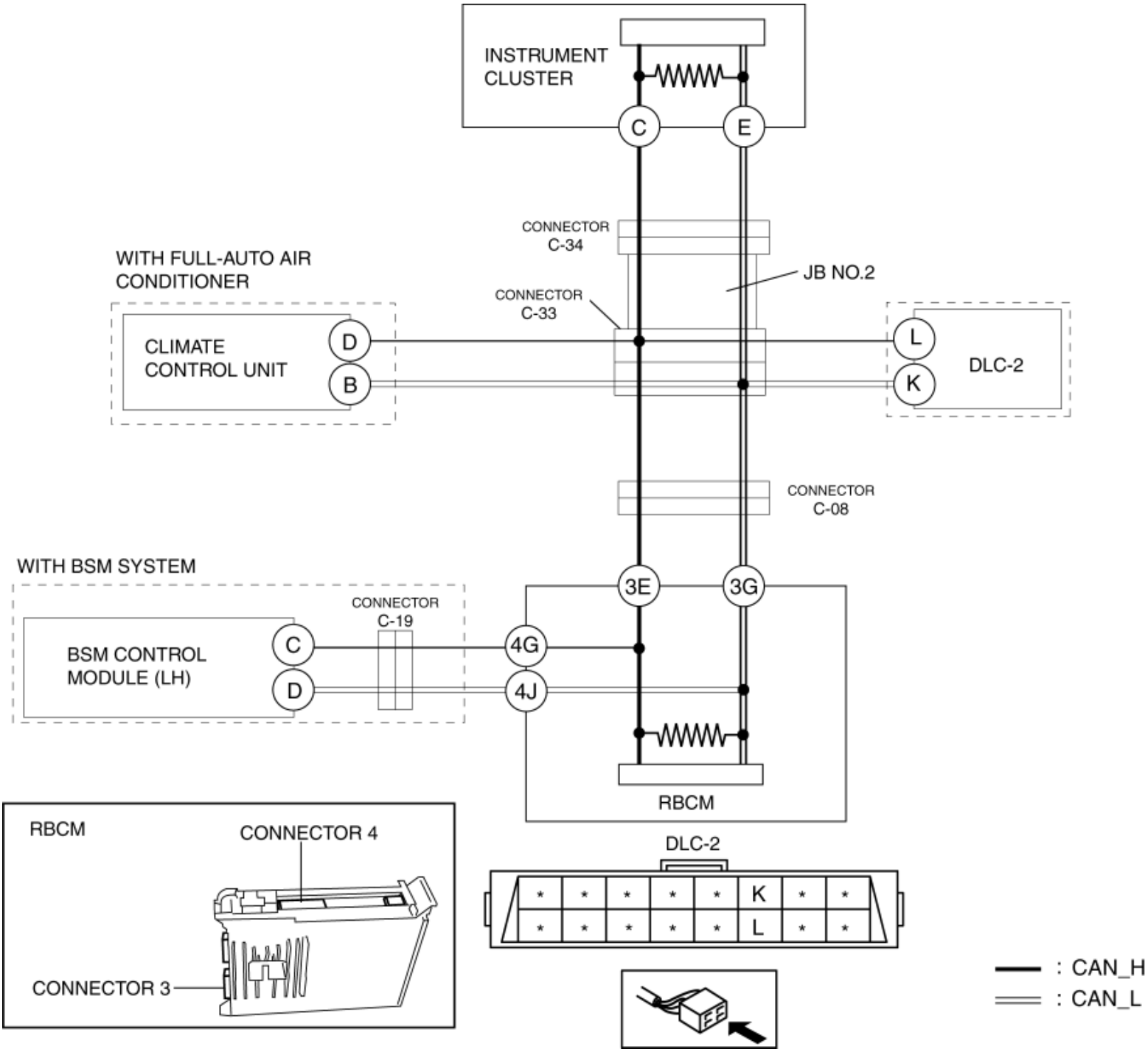

Determination procedure

CAUTION:

- When disconnecting the connector, verify that there is no looseness, damage, deformation, corrosion, or poor connection of the connector terminals.
- When inspecting the DLC-2, touch it with a paper clip or similar thin pin without directly inserting a tester into the terminals.

Step	Inspection	Action

1	**INSPECT FOR SHORT TO GROUND BETWEEN CONNECTOR C-34 AND INSTRUMENT CLUSTER** • Disconnect the negative battery cable. (See **NEGATIVE BATTERY CABLE DISCONNECTION/CONNECTION [SKYACTIV-G 2.0, SKYACTIV-G 2.5]**.) • Disconnect connector C-34. • Inspect for continuity at the following terminals: ▪ Between DLC-2 terminal L and body ground ▪ Between DLC-2 terminal K and body ground • Is there continuity?	Yes	Go to Step 3.
		No	Go to the next step.
2	**INSPECT CAN LINE IN INSTRUMENT CLUSTER FOR SHORT TO GROUND** • Disconnect the instrument cluster connector. • Inspect for continuity at the following terminals: ▪ Between instrument cluster terminal C and body ground ▪ Between instrument cluster terminal E and body ground • Is there continuity?	Yes	Repair or replace the wiring harness between the instrument cluster and connector C-34 because the wiring harness is shorted to ground.
		No	Replace the instrument cluster because there is a short to ground in the instrument cluster. (See **INSTRUMENT CLUSTER REMOVAL/INSTALLATION**.)
3	**INSPECT CAN LINE IN JB No.2 FOR SHORT TO GROUND** • Connect connector C-34. • Disconnect connector C-33. • Inspect for continuity at the following terminals: ▪ Between instrument cluster terminal C and body ground ▪ Between instrument cluster terminal E and body ground • Is there continuity?	Yes	Replace the JB No.2 because there is a short to ground in the JB No.2.
		No	Go to the next step.
4	**INSPECT FOR SHORT TO GROUND BETWEEN CONNECTOR C-33 AND DLC-2** • Inspect for continuity at the following terminals:	Yes	Repair or replace the wiring harness between connector C-33 and DLC-2 because the wiring harness is shorted to ground.

	Between DLC-2 terminal L and body ground ▪ Between DLC-2 terminal K and body ground • Is there continuity?	No	Go to the next step.
5	**INSPECT FOR SHORT TO GROUND BETWEEN CONNECTOR C-33 AND CLIMATE CONTROL UNIT** • Inspect for continuity at the following terminals: ▪ Between climate control unit terminal D and body ground ▪ Between climate control unit terminal B and body ground • Is there continuity?	Yes	Go to the next step.
		No	Go to Step 7.
6	**INSPECT CAN LINE IN CLIMATE CONTROL UNIT FOR SHORT TO GROUND** • Disconnect the climate control unit connector. • Inspect for continuity at the following terminals: ▪ Between climate control unit terminal D (wiring harness side) and body ground ▪ Between climate control unit terminal B (wiring harness side) and body ground • Is there continuity?	Yes	Repair or replace the wiring harness between the climate control unit and connector C-33 because the wiring harness is shorted to ground.
		No	Replace the climate control unit because there is a short to ground inside the climate control unit. (See **CLIMATE CONTROL UNIT REMOVAL/INSTALLATION [FULL-AUTO AIR CONDITIONER]**.)
7	**INSPECT FOR SHORT TO GROUND BETWEEN CONNECTOR C-08 AND CONNECTOR C-33** • Disconnect connector C-08. • Connect connector C-33. • Inspect for continuity at the following terminals: ▪ Between DLC-2 terminal L and body ground ▪ Between DLC-2 terminal K and body ground • Is there continuity?	Yes	Repair or replace the wiring harness between connector C-08 and connector C-33 because the wiring harness is shorted to ground.
		No	Go to the next step.
8	**INSPECT FOR SHORT TO GROUND BETWEEN GROUND BETWEEN BSM CONTROL MODULE (LH)**	Yes	Go to the next step.

	AND REAR BODY CONTROL MODULE (RBCM) • Disconnect the rear body control module (RBCM) connector. • Inspect for continuity at the following terminals: ▪ Between rear body control module (RBCM) terminal 4G (wiring harness side) and body ground ▪ Between rear body control module (RBCM) terminal 4J (wiring harness side) and body ground • Is there continuity?	No	Go to Step 11.
9	**INSPECT FOR SHORT TO GROUND BETWEEN BSM CONTROL MODULE (LH) AND CONNECTOR C-19** • Disconnect connector C-19. • Inspect for continuity at the following terminals: ▪ Between BSM control module (LH) terminal C and body ground ▪ Between BSM control module (LH) terminal D and body ground • Is there continuity?	Yes	Go to the next step.
		No	Repair or replace the wiring harness between the rear body control module (RBCM) and connector C-19 because the wiring harness is shorted to ground.
10	**INSPECT CAN LINE IN BSM CONTROL MODULE (LH) FOR SHORT TO GROUND** • Disconnect the BSM control module (LH) connector. • Inspect for continuity at the following terminals: ▪ Between BSM control module (LH) terminal C (wiring harness side) and body ground ▪ Between BSM control module (LH) terminal D (wiring harness side) and body ground • Is there continuity?	Yes	Repair or replace the wiring harness between the BSM control module (LH) and connector C-19 because the wiring harness is shorted to ground.
		No	Replace the BSM control module (LH) because there is a short to ground in the BSM control module (LH). (See **BLIND SPOT MONITORING (BSM) CONTROL MODULE REMOVAL/INSTALLATION**.)
11	**INSPECT CAN LINE IN REAR BODY CONTROL MODULE (RBCM) FOR SHORT TO GROUND** • Inspect for continuity at the following terminals: ▪ Between rear body control module (RBCM)	Yes	Repair or replace the wiring harness between the rear body control module (RBCM) and connector C-08 because the wiring harness is shorted to ground.
		No	Replace the rear body control module (RBCM) because there is a short to ground in the rear body control

	terminal 3E and body ground ▪ Between rear body control module (RBCM) terminal 3G and body ground • Is there continuity?		module (RBCM). (See **REAR BODY CONTROL MODULE (RBCM) REMOVAL/INSTALLATION**.)

2014 - Mazda3 - Multiplex Communication System

DETERMINING SHORT TO POWER SUPPLY LOCATION (MS-CAN)

CAUTION:

- Perform the following malfunction diagnosis only when it is diagnosed with a short to the power supply by CONTROLLER AREA NETWORK (CAN) MALFUNCTION DIAGNOSIS FLOW. (See **CONTROLLER AREA NETWORK (CAN) MALFUNCTION DIAGNOSIS FLOW**.)

System wiring diagram

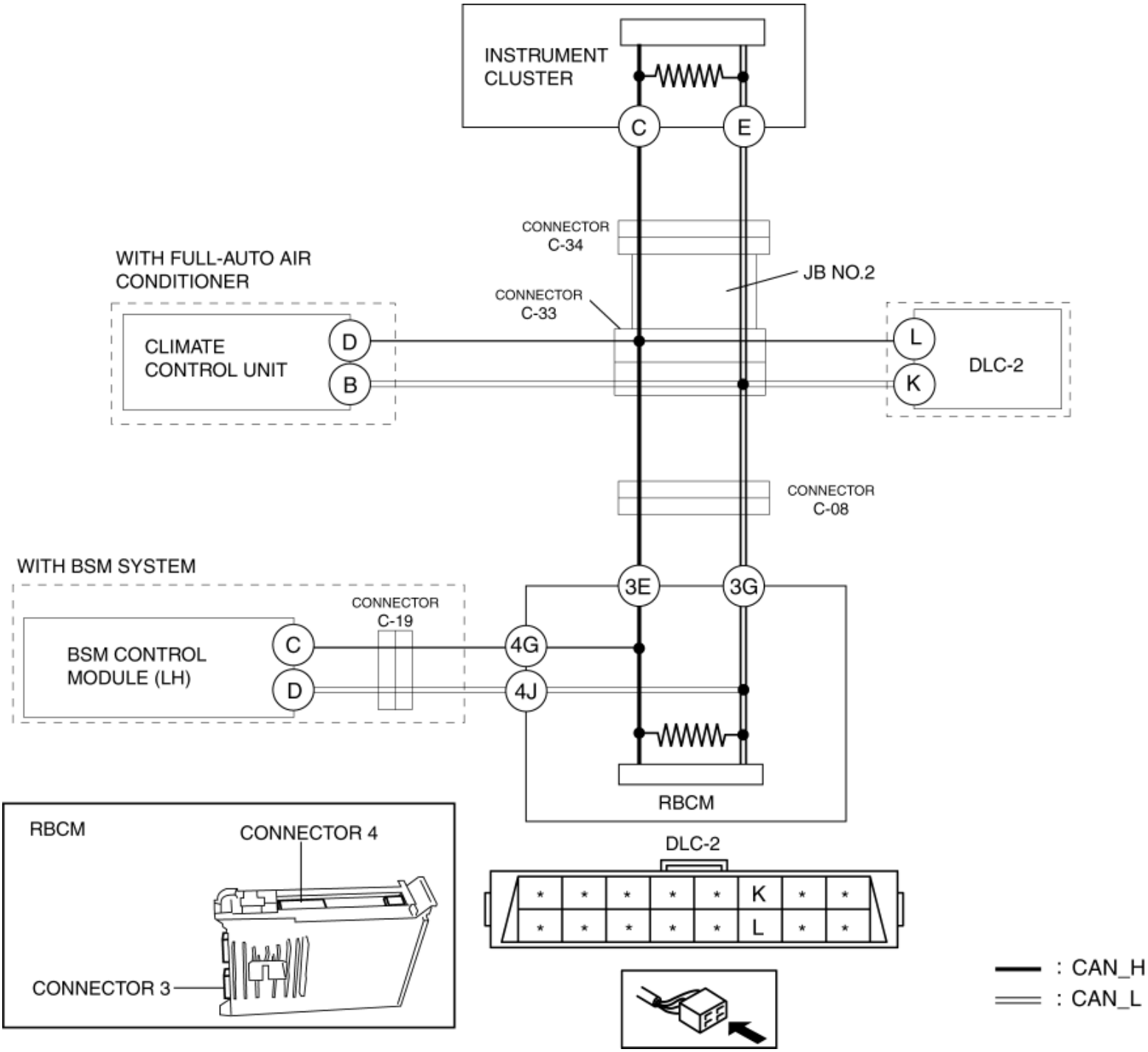

Determination procedure

CAUTION:

- When disconnecting the connector, verify that there is no looseness, damage, deformation, corrosion, or poor connection of the connector terminals.
- When inspecting the DLC-2, touch it with a paper clip or similar thin pin without directly inserting a tester into the terminals.
- Disconnect the negative battery cable before performing any work that requires handling of connectors.

Step	Inspection		Action
1	**INSPECT FOR SHORT TO POWER SUPPLY BETWEEN CONNECTOR C-34 AND INSTRUMENT CLUSTER** • Switch the ignition off. • Disconnect the negative battery cable. (See **NEGATIVE BATTERY CABLE DISCONNECTION/CONNECTION [SKYACTIV-G 2.0, SKYACTIV-G 2.5]**.) • Disconnect connector C-34. • Connect the negative battery cable. (See **NEGATIVE BATTERY CABLE DISCONNECTION/CONNECTION [SKYACTIV-G 2.0, SKYACTIV-G 2.5]**.) • Switch the ignition ON (engine off). • Measure the voltage at instrument cluster terminals C and E. • Is the voltage between 1.5 — 3.5 V?	Yes	Go to Step 3.
		No	Go to the next step.
2	**INSPECT INSTRUMENT CLUSTER FOR SHORT TO POWER SUPPLY** • Switch the ignition off. • Disconnect the negative battery cable. (See **NEGATIVE BATTERY CABLE DISCONNECTION/CONNECTION [SKYACTIV-G 2.0, SKYACTIV-G 2.5]**.) • Disconnect the instrument cluster connector. • Connect connector C-34. • Connect the negative battery cable. (See **NEGATIVE BATTERY CABLE DISCONNECTION/CONNECTION [SKYACTIV-G 2.0, SKYACTIV-G 2.5]**.) • Switch the ignition ON (engine off). • Measure the voltage at DLC-2 terminals L and K. • Is the voltage between 1.5 — 3.5 V?	Yes	Replace the instrument cluster because there is a short to the power supply in the instrument cluster. (See **INSTRUMENT CLUSTER REMOVAL/INSTALLATION**.)
		No	Repair or replace the wiring harness between the instrument cluster and connector C-34 because the wiring harness is shorted to the power supply.
3	**INSPECT JB No.2 FOR SHORT TO POWER SUPPLY** • Switch the ignition off. • Disconnect the negative battery cable.	Yes	Go to the next step.
		No	Replace the JB No.2 because there is a short to the power supply in the JB No.2.

	(See **NEGATIVE BATTERY CABLE DISCONNECTION/CONNECTION [SKYACTIV-G 2.0, SKYACTIV-G 2.5]**.) • Connect the instrument cluster connector. • Connect connector C-34. • Disconnect connector C-33. • Connect the negative battery cable. (See **NEGATIVE BATTERY CABLE DISCONNECTION/CONNECTION [SKYACTIV-G 2.0, SKYACTIV-G 2.5]**.) • Switch the ignition ON (engine off). • Measure the voltage at instrument cluster terminals C and E. • Is the voltage between 1.5 — 3.5 V?		
4	**INSPECT FOR SHORT TO POWER SUPPLY BETWEEN CONNECTOR C-33 AND DLC-2** • Measure the voltage at DLC-2 terminals L and K. • Is the voltage 0 V?	Yes	Go to the next step.
		No	Repair or replace the wiring harness between the DLC-2 and connector C-33 because the wiring harness is shorted to the power supply.
5	**INSPECT FOR SHORT TO POWER SUPPLY BETWEEN CONNECTOR C-33 AND CLIMATE CONTROL UNIT** • Measure the voltage at climate control unit terminals D and B. • Is the voltage between 1.5 — 3.5 V?	Yes	Go to Step 7.
		No	Go to the next step.
6	**INSPECT CLIMATE CONTROL UNIT FOR SHORT TO POWER SUPPLY** • Switch the ignition off. • Disconnect the negative battery cable. (See **NEGATIVE BATTERY CABLE DISCONNECTION/CONNECTION [SKYACTIV-G 2.0, SKYACTIV-G 2.5]**.) • Disconnect the climate control unit connector. • Connect connector C-33. • Connect the negative battery cable. (See **NEGATIVE BATTERY CABLE DISCONNECTION/CONNECTION [SKYACTIV-G 2.0, SKYACTIV-G 2.5]**.) • Switch the ignition ON (engine off). • Measure the voltage at DLC-2 terminals L and K.	Yes	Replace the climate control unit because there is a short to the power supply in the climate control unit. (See **CLIMATE CONTROL UNIT REMOVAL/INSTALLATION [FULL-AUTO AIR CONDITIONER]**.)
		No	Repair or replace the wiring harness between the climate control unit and connector C-33 because the wiring harness is shorted to the power supply.

	• Is the voltage between 1.5 — 3.5 V?		
7	**INSPECT FOR SHORT TO POWER SUPPLY BETWEEN CONNECTOR C-33 AND CONNECTOR C-08** • Switch the ignition off. • Disconnect the negative battery cable. (See **NEGATIVE BATTERY CABLE DISCONNECTION/CONNECTION [SKYACTIV-G 2.0, SKYACTIV-G 2.5]**.) • Connect connector C-33. • Disconnect the connector C-08. • Connect the negative battery cable. (See **NEGATIVE BATTERY CABLE DISCONNECTION/CONNECTION [SKYACTIV-G 2.0, SKYACTIV-G 2.5]**.) • Switch the ignition ON (engine off). • Measure the voltage at DLC-2 terminals L and K. • Is the voltage between 1.5 — 3.5 V?	Yes	Go to the next step.
		No	Repair or replace the wiring harness between connector C-33 and connector C-08 because the wiring harness is shorted to the power supply.
8	**INSPECT FOR SHORT TO POWER SUPPLY BETWEEN BSM CONTROL MODULE (LH) AND REAR BODY CONTROL MODULE (RBCM)** • Switch the ignition off. • Disconnect the negative battery cable. (See **NEGATIVE BATTERY CABLE DISCONNECTION/CONNECTION [SKYACTIV-G 2.0, SKYACTIV-G 2.5]**.) • Disconnect the rear body control module (RBCM) connector. • Connect the negative battery cable. (See **NEGATIVE BATTERY CABLE DISCONNECTION/CONNECTION [SKYACTIV-G 2.0, SKYACTIV-G 2.5]**.) • Switch the ignition ON (engine off). • Measure the voltage at BSM control modules (LH) terminals C and D. • Is the voltage between 1.5 — 3.5 V?	Yes	Go to Step 11.
		No	Go to the next step.
9	**INSPECT FOR SHORT TO POWER SUPPLY BETWEEN BSM CONTROL MODULE (LH) AND CONNECTOR C-19** • Switch the ignition off.	Yes	Repair or replace the wiring harness between the rear body control module (RBCM) and connector C-19 because the wiring harness is shorted to the power supply.

	• Disconnect the negative battery cable. (See **NEGATIVE BATTERY CABLE DISCONNECTION/CONNECTION [SKYACTIV-G 2.0, SKYACTIV-G 2.5]**.) • Disconnect connector C-19. • Connect the negative battery cable. (See **NEGATIVE BATTERY CABLE DISCONNECTION/CONNECTION [SKYACTIV-G 2.0, SKYACTIV-G 2.5]**.) • Switch the ignition ON (engine off). • Measure the voltage at BSM control modules (LH) terminals C and D. • Is the voltage between 1.5 — 3.5 V?	No	Go to the next step.
10	**INSPECT BSM CONTROL MODULE (LH) FOR SHORT TO POWER SUPPLY** • Switch the ignition off. • Disconnect the negative battery cable. (See **NEGATIVE BATTERY CABLE DISCONNECTION/CONNECTION [SKYACTIV-G 2.0, SKYACTIV-G 2.5]**.) • Disconnect the BSM control modules (LH) connector. • Connect connector C-19. • Connect the rear body control module (RBCM) connector. • Connect connector C-08. • Connect connector C-33. • Connect the negative battery cable. (See **NEGATIVE BATTERY CABLE DISCONNECTION/CONNECTION [SKYACTIV-G 2.0, SKYACTIV-G 2.5]**.) • Switch the ignition ON (engine off). • Measure the voltage at DLC-2 terminals L and K. • Is the voltage between 1.5 - 3.5 V?	Yes	Replace the BSM control modules (LH) because there is a short to power supply in the BSM control modules (LH). (See **BLIND SPOT MONITORING (BSM) CONTROL MODULE REMOVAL/INSTALLATION**.)
		No	Repair or replace the wiring harness between the BSM control modules (LH) and connector C-19 because the wiring harness is shorted to the power supply.
11	**INSPECT REAR BODY CONTROL MODULE (RBCM) FOR SHORT TO POWER SUPPLY** • Switch the ignition off. • Disconnect the negative battery cable. (See **NEGATIVE BATTERY CABLE**	Yes	Replace the rear body control module (RBCM) because there is a short to the power supply in the rear body control module (RBCM). (See **REAR BODY CONTROL MODULE (RBCM) REMOVAL/INSTALLATION**.)

	DISCONNECTION/CONNECTION [SKYACTIV-G 2.0, SKYACTIV-G 2.5].) • Connect connector C-08. • Connect connector C-33. • Connect the negative battery cable. (See **NEGATIVE BATTERY CABLE DISCONNECTION/CONNECTION [SKYACTIV-G 2.0, SKYACTIV-G 2.5]**.) • Switch the ignition ON (engine off). • Measure the voltage at DLC-2 terminals L and K. • Is the voltage between 1.5 - 3.5 V?	No	Repair or replace the wiring harness between the rear body control module (RBCM) and connector C-08 because the wiring harness is shorted to the power supply.

< Previous

2014 - Mazda3 - Multiplex Communication System

DETERMINING SHORT BETWEEN CIRCUITS LOCATION (MS-CAN)

CAUTION:

- Perform the following malfunction diagnosis only when it is diagnosed with a short between circuits by CONTROLLER AREA NETWORK (CAN) MALFUNCTION DIAGNOSIS FLOW. (See **CONTROLLER AREA NETWORK (CAN) MALFUNCTION DIAGNOSIS FLOW**.)

System wiring diagram

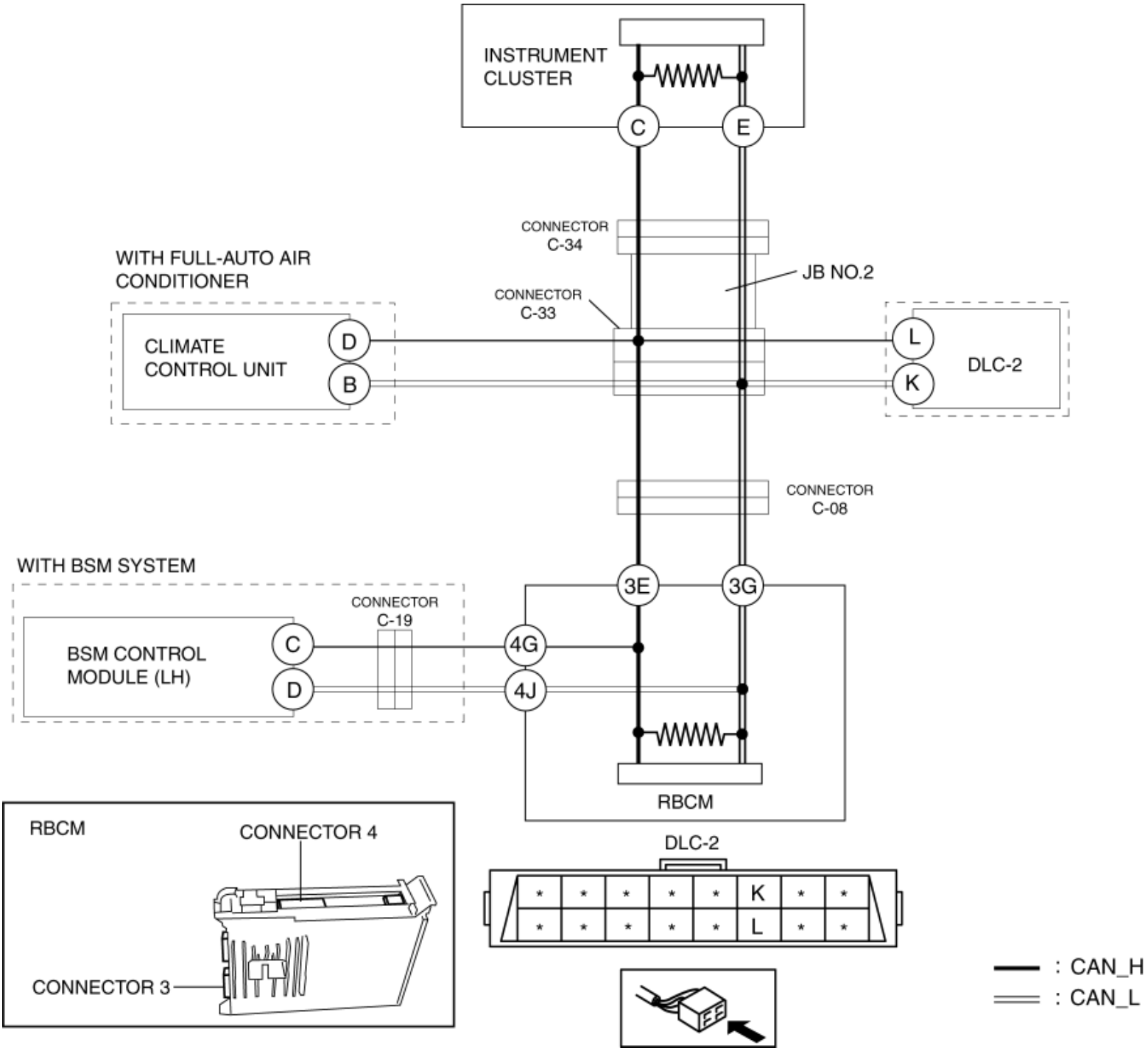

Determination procedure

CAUTION:

- When disconnecting the connector, verify that there is no looseness, damage, deformation, corrosion, or poor connection of the connector terminals.
- When inspecting the DLC-2, touch it with a paper clip or similar thin pin without directly inserting a tester into the terminals.
- Disconnect the negative battery cable before performing any work that requires handling of connectors.

Step	Inspection		Action
1	**INSPECT BETWEEN CONNECTOR C-34 AND INSTRUMENT CLUSTER FOR SHORT BETWEEN CIRCUITS** • Disconnect the negative battery cable. (See **NEGATIVE BATTERY CABLE DISCONNECTION/CONNECTION [SKYACTIV-G 2.0, SKYACTIV-G 2.5]**) • Disconnect connector C-34. • Connect the negative battery cable. (See **NEGATIVE BATTERY CABLE DISCONNECTION/CONNECTION [SKYACTIV-G 2.0, SKYACTIV-G 2.5]**) • Switch the ignition ON (engine off). • Measure the voltage at instrument cluster terminals C and E. • Is the voltage at instrument cluster terminals C and E the same?	Yes	Go to the next step.
		No	Go to Step 3.
2	**INSPECT INSTRUMENT CLUSTER FOR SHORT BETWEEN CIRCUITS** • Switch the ignition off. • Disconnect the negative battery cable. (See **NEGATIVE BATTERY CABLE DISCONNECTION/CONNECTION [SKYACTIV-G 2.0, SKYACTIV-G 2.5]**) • Disconnect the instrument cluster connector. • Inspect for continuity between instrument cluster terminals C and E (wiring harness side). • Is there continuity?	Yes	Repair or replace the wiring harness between the instrument cluster and connector C-34 because the wiring harness is shorted between circuits.
		No	Replace the instrument cluster because there is a short between circuits in the instrument cluster. (See **INSTRUMENT CLUSTER REMOVAL/INSTALLATION**)
3	**INSPECT JB No.2 FOR SHORT BETWEEN CIRCUITS** • Disconnect connector C-33. • Connect connector C-34. • Inspect for continuity between instrument cluster terminals C and E (wiring harness side). • Is there continuity?	Yes	Replace the JB No.2 because there is a short between circuits in the JB No.2.
		No	Go to the next step.
4	**INSPECT BETWEEN CONNECTOR C-33 AND DLC-2 FOR SHORT BETWEEN CIRCUITS** • Inspect for continuity between DLC-2 terminals L and K.	Yes	Repair or replace the wiring harness between connector C-33 and DLC-2 because the wiring harness is shorted between circuits.
		No	Go to the next step.

	Is there continuity?		
5	**INSPECT BETWEEN CONNECTOR C-33 AND CLIMATE CONTROL UNIT FOR SHORT BETWEEN CIRCUITS** • Inspect for continuity between climate control unit terminals D and B. • Is there continuity?	Yes	Go to the next step.
		No	Go to Step 7.
6	**INSPECT CLIMATE CONTROL UNIT FOR SHORT BETWEEN CIRCUITS** • Disconnect the climate control unit connector. • Inspect for continuity between climate control unit terminals D and B (wiring harness side). • Is there continuity?	Yes	Repair or replace the wiring harness between the climate control unit and connector C-33 because the wiring harness is shorted between circuits.
		No	Replace the climate control unit because there is a short between circuits inside the climate control unit. (See **CLIMATE CONTROL UNIT REMOVAL / INSTALLATION [FULL-AUTO AIR CONDITIONER]**)
7	**INSPECT BETWEEN CONNECTOR C-08 AND CONNECTOR C-33 FOR SHORT BETWEEN CIRCUITS** • Disconnect connector C-08. • Connect connector C-33. • Inspect for continuity between DLC-2 terminals L and K. • Is there continuity?	Yes	Repair or replace the wiring harness between connector C-08 and connector C-33 because the wiring harness is shorted between circuits.
		No	Go to the next step.
8	**INSPECT BETWEEN BSM CONTROL MODULE (LH) AND REAR BODY CONTROL MODULE (RBCM) FOR SHORT BETWEEN CIRCUITS** • Disconnect the rear body control module (RBCM) connector. • Inspect the continuity between BSM control module (LH) terminals C and D. • Is there continuity?	Yes	Go to the next step.
		No	Go to Step 11.
9	**INSPECT BETWEEN BSM CONTROL MODULE (LH) AND CONNECTOR C-19 FOR SHORT BETWEEN CIRCUITS** • Disconnect connector C-19. • Inspect the continuity between BSM control module (LH) terminals C and D. • Is there continuity?	Yes	Go to the next step.
		No	Repair or replace the wiring harness between the rear body control module (RBCM) and connector C-19 because the wiring harness is shorted between circuits.
10	**INSPECT BSM CONTROL MODULE (LH) FOR SHORT BETWEEN CIRCUITS** • Disconnect the BSM control module (LH) connector. • Inspect for continuity between BSM	Yes	Repair or replace the wiring harness between the BSM control module (LH) and connector C-19 because the wiring harness is shorted between circuits.
		No	Replace the BSM control module (LH) because there is a

	control module (LH) terminals C and D (wiring harness side). • Is there continuity?		short between circuits in the BSM control module (LH). (See **BLIND SPOT MONITORING (BSM) CONTROL MODULE REMOVAL/INSTALLATION**)
11	**INSPECT REAR BODY CONTROL MODULE (RBCM) FOR SHORT BETWEEN CIRCUITS** • Inspect for continuity between rear body control module (RBCM) terminals 3E and 3G (wiring harness side). • Is there continuity?	Yes	Repair or replace the wiring harness between the rear body control module (RBCM) and connector C-08 because the wiring harness is shorted between circuits.
		No	Replace the rear body control module (RBCM) because there is a short between circuits in the rear body control module (RBCM). (See **REAR BODY CONTROL MODULE (RBCM) REMOVAL/INSTALLATION**)

< Previous

2014 - Mazda3 - Personalized Features

PERSONALIZATION FEATURES

- The following systems can be personalized.
- When performing a personalization setting, refer to the referenced section for the detailed setting procedure.

Security And Locks

Advanced keyless entry system

NOTE:

- There are two types of personalization procedures; one using the M-MDS and the other using the center display.

Personalization features	Setting contents	Setting procedure
The advanced keyless entry system and push button start system functions can be disabled.	Enabled. / Disabled.	M-MDS is used. (See **SECURITY AND LOCKS PERSONALIZATION FEATURES SETTING PROCEDURE**.)
The out-of-area (reception area) type auto lock function can be set.	Not Adopted. / OFF / ON	M-MDS is used. (See **SECURITY AND LOCKS PERSONALIZATION FEATURES SETTING PROCEDURE**.)
	Off / On	Center display is used for the setting. (See **CENTER DISPLAY PERSONALIZATION FEATURES SETTING PROCEDURE**.)
The operation start time of the auto re-lock	Not Adopted. / 30 seconds / 60 seconds / 90 seconds	M-MDS is used. (See **SECURITY AND LOCKS PERSONALIZATION FEATURES SETTING PROCEDURE**.)

function can be changed.	30 seconds / 60 seconds / 90 seconds	Center display is used for the setting. (See **CENTER DISPLAY PERSONALIZATION FEATURES SETTING PROCEDURE**.)
The keyless beeper volume can be adjusted.	Not Adopted. / Off / Low / Medium / High	M-MDS is used. (See **SECURITY AND LOCKS PERSONALIZATION FEATURES SETTING PROCEDURE**.)
	High / Medium / Low / Off	Center display is used for the setting. (See **CENTER DISPLAY PERSONALIZATION FEATURES SETTING PROCEDURE**.)
Returns the setting content of the door lock system to the initial setting.	No / Yes	Center display is used for the setting. (See **CENTER DISPLAY PERSONALIZATION FEATURES SETTING PROCEDURE**.)

Keyless entry system

NOTE:

- There are two types of personalization procedures; one using the M-MDS and the other using the center display.

Personalization features	Setting contents	Setting procedure
The keyless entry system and push button start system functions can be disabled.	Enabled. / Disabled.	M-MDS is used. (See **SECURITY AND LOCKS PERSONALIZATION FEATURES SETTING PROCEDURE**.)
The operation start time of the auto re-lock function can be changed.	Not Adopted. / 30 seconds / 60 seconds / 90 seconds	M-MDS is used. (See **SECURITY AND LOCKS PERSONALIZATION FEATURES SETTING PROCEDURE**.)
	30 seconds / 60 seconds / 90 seconds	Center display is used for the setting. (See **CENTER DISPLAY PERSONALIZATION FEATURES SETTING**

		PROCEDURE.)
Returns the setting content of the door lock system to the initial setting.	No / Yes	Center display is used for the setting. (See **CENTER DISPLAY PERSONALIZATION FEATURES SETTING PROCEDURE**.)

Power door lock system

NOTE:

- There are two types of personalization procedures; one using the M-MDS and the other using the center display.

Personalization features	Setting contents	Setting procedure
2-step unlocking system can be set.	Not Adopted. / Touch Once: All Doors. / Once: Driver's, Twice: All Doors.	M-MDS is used. (See **SECURITY AND LOCKS PERSONALIZATION FEATURES SETTING PROCEDURE**.)
	Once Driver's, Twice: All Doors	Center display is used for the setting. (See **CENTER DISPLAY PERSONALIZATION FEATURES SETTING PROCEDURE**.)
Auto door lock function can be changed.	Not Adopted. / OFF / Lock When Driving. / Lock: Driving, Unlock: IGN Off. / Lock When Shifting Out Of P. / Lock: Shift From P, Unlock: In P.	M-MDS is used. (See **CONTROL SYSTEM PERSONALIZATION FEATURES SETTING PROCEDURE**.)
	Lock:When Driving, Unlock: IGN Off	Center display is used for the setting. (See **CENTER DISPLAY PERSONALIZATION FEATURES SETTING PROCEDURE**.)
Returns the setting content of the door lock system to the initial setting.	No / Yes	Center display is used for the setting. (See **CENTER DISPLAY PERSONALIZATION FEATURES SETTING PROCEDURE**.)

Lighting Systems

Auto light system

NOTE:

- There are two types of personalization procedures; one using the M-MDS and the other using the center display.

Personalization features	Setting contents	Setting procedure
Auto light sensor sensitivity can be changed.	Not Adopted./Dark/Medium Dark/Medium/Medium Light/Light	M-MDS is used. (See **CONTROL SYSTEM PERSONALIZATION FEATURES SETTING PROCEDURE**.)
	Light/Medium Light/ Medium/Medium Dark/Dark	Center display is used for the setting. (See **CENTER DISPLAY PERSONALIZATION FEATURES SETTING PROCEDURE**.)
Returns the setting content of the lighting system to the initial setting.	No / Yes	Center display is used for the setting. (See **CENTER DISPLAY PERSONALIZATION FEATURES SETTING PROCEDURE**.)

Auto light-off system

NOTE:

- There are two types of personalization procedures; one using the M-MDS and the other using the center display.

Personalization features	Setting contents	Setting procedure
	Not Adopted./0 seconds./30 seconds./60 seconds./90 seconds./120 seconds.	M-MDS is used. (See **CONTROL SYSTEM PERSONALIZATION FEATURES SETTING PROCEDURE**.)

The headlight emitted time of the auto light off timer can be changed.		
	120 seconds / 90 seconds / 60 seconds / 30 seconds / Off	Center display is used for the setting. (See **CENTER DISPLAY PERSONALIZATION FEATURES SETTING PROCEDURE**.)
Returns the setting content of the lighting system to the initial setting.	No / Yes	Center display is used for the setting. (See **CENTER DISPLAY PERSONALIZATION FEATURES SETTING PROCEDURE**.)

DRL system (Except canada specs.)

NOTE:

- There are two types of personalization procedures; one using the M-MDS and the other using the center display.

Personalization features	Setting contents	Setting procedure
The DRL system function can be set.	Off (DRL non-illumination)/On (DRL illumination)	M-MDS is used. (See **LIGHTING SYSTEM PERSONALIZATION FEATURES SETTING PROCEDURE**.)
	On / Off	Center display is used for the setting. (See **CENTER DISPLAY PERSONALIZATION FEATURES SETTING PROCEDURE**.)
Returns the setting content of the lighting system to the initial setting.	No / Yes	Center display is used for the setting. (See **CENTER DISPLAY PERSONALIZATION FEATURES SETTING PROCEDURE**.)

Turn light system

NOTE:

- There are two types of personalization procedures; one using the M-MDS and the other using the center display.

Personalization features	Setting contents	Setting procedure
The turn light system can be switched between operable and inoperable.	Not Adopted./OFF/ON	M-MDS is used. (See **CONTROL SYSTEM PERSONALIZATION FEATURES SETTING PROCEDURE**.)
	On / Off	Center display is used for the setting. (See **CENTER DISPLAY PERSONALIZATION FEATURES SETTING PROCEDURE**.)
Returns the setting content of the lighting system to the initial setting.	No / Yes	Center display is used for the setting. (See **CENTER DISPLAY PERSONALIZATION FEATURES SETTING PROCEDURE**.)

Room light control system

NOTE:

- There are two types of personalization procedures; one using the M-MDS and the other using the center display.

Personalization features	Setting contents	Setting procedure
• The front/rear map light illumination time after any door is opened can be changed. • The trunk compartment light (4SD)/cargo compartment light (5HB) illumination time after the trunk lid (4SD)/liftgate (5HB) is opened can be changed.	Not Adopted./30 minutes./60 minutes./10 minutes.	M-MDS is used. (See **CONTROL SYSTEM PERSONALIZATION FEATURES SETTING PROCEDURE**.)
	60 minutes / 30 minutes / 10 minutes	Center display is used for the setting. (See **CENTER DISPLAY PERSONALIZATION FEATURES SETTING PROCEDURE**.)
	Not Adopted./15 seconds./7.5 seconds./30 seconds./60 seconds.	M-MDS is used. (See **CONTROL SYSTEM PERSONALIZATION FEATURES SETTING PROCEDURE**.)

The front/rear map light illumination time after all the doors are closed can be changed.	60 seconds / 30 seconds / 15 seconds / 7.5 seconds	Center display is used for the setting. (See **CENTER DISPLAY PERSONALIZATION FEATURES SETTING PROCEDURE**.)
Returns the setting content of the lighting system to the initial setting.	No / Yes	Center display is used for the setting. (See **CENTER DISPLAY PERSONALIZATION FEATURES SETTING PROCEDURE**.)

High Beam Control (HBC) System

NOTE:

- There are two types of personalization procedures; one using the M-MDS and the other using the center display.

Personalization features	Setting contents	Setting procedure
The high beam control (HBC) system can be switched between operable and inoperable.	Not Adopted./OFF/ON	M-MDS is used. (See **FORWARD SENSING CAMERA (FSC) PERSONALIZATION FEATURES SETTING PROCEDURE**.)
	On / Off	Center display is used for the setting. (See **CENTER DISPLAY PERSONALIZATION FEATURES SETTING PROCEDURE**.)
Returns the setting content of the lighting system to the initial setting.	No / Yes	Center display is used for the setting. (See **CENTER DISPLAY PERSONALIZATION FEATURES SETTING PROCEDURE**.)

Wiper / Washer System

Auto wiper system

NOTE:

- There are two types of personalization procedures; one using the M-MDS and the other using the center display.

Personalization features	Setting contents	Setting procedure
Auto wiper system can be set to operable or inoperable.	Not Adopted./ Off (Intermittent)/On (Rain Sensing)	M-MDS is used. (See **CONTROL SYSTEM PERSONALIZATION FEATURES SETTING PROCEDURE**.)
	On / Off	Center display is used for the setting. (See **CENTER DISPLAY PERSONALIZATION FEATURES SETTING PROCEDURE**.)

Instrumentation/Driver Info.

Temperature

Personalization features	Setting contents	Setting procedure
The temperature unit can be changed. *1	F°/ C°	Center display is used for the setting. (See **CENTER DISPLAY PERSONALIZATION FEATURES SETTING PROCEDURE**.)

*1

When the ambient temperature display is switched, the set A/C cabin temperature display is also changed. (with dual type)

Distance

Personalization features	Setting contents	Setting procedure

The distance unit can be changed.	Miles / Km	Center display is used for the setting. (See **CENTER DISPLAY PERSONALIZATION FEATURES SETTING PROCEDURE**.)

Language

Personalization features	Setting contents	Setting procedure
The display language can be changed.	English / Français / Español	Center display is used for the setting. (See **CENTER DISPLAY PERSONALIZATION FEATURES SETTING PROCEDURE**.)

Turn And Hazard Indicator Alarm

NOTE:

- There are two types of personalization procedures; one using the M-MDS and the other using the center display.

Personalization features	Setting contents	Setting procedure
The volume of the turn and hazard indicator alarm can be changed.	Not Adopted. / Low / High	M-MDS is used. (See **INSTRUMENT CLUSTER PERSONALIZATION FEATURES SETTING PROCEDURE**.)
	High / Low	Center display is used for the setting. (See **CENTER DISPLAY PERSONALIZATION FEATURES SETTING PROCEDURE**.)

Lights-on Reminder Warning Alarm

NOTE:

- There are two types of personalization procedures; one using the M-MDS and the other using the center display.

Personalization features	Setting contents	Setting procedure

The volume for the lights-on reminder warning alarm can be changed.	Not Adopted. / OFF / Low / High	M-MDS is used. (See **INSTRUMENT CLUSTER PERSONALIZATION FEATURES SETTING PROCEDURE**.)
	High / Low / Off	Center display is used for the setting. (See **CENTER DISPLAY PERSONALIZATION FEATURES SETTING PROCEDURE**.)

Blind Spot Monitoring (BSM) System

NOTE:

- There are two types of personalization procedures; one using the M-MDS and the other using the center display.

Personalization features	Setting contents	Setting procedure
The volume of the blind spot monitoring (BSM) warning alarm can be changed.	Not Adopted. / OFF / Low / High	M-MDS is used. (See **INSTRUMENT CLUSTER PERSONALIZATION FEATURES SETTING PROCEDURE**.)
	High / Low / Off	Center display is used for the setting. (See **CENTER DISPLAY PERSONALIZATION FEATURES SETTING PROCEDURE**.)

Lane Departure Warning System (LDWS)

NOTE:

- There are two types of personalization procedures; one using the M-MDS and the other using the center display.

Personalization features	Setting contents	Setting procedure
The volume of the LDWS warning alarm (Rumble) can be changed.	High / Mid / Low	Center display is used for the setting. (See **CENTER DISPLAY PERSONALIZATION FEATURES SETTING PROCEDURE**.)

The volume of the LDWS warning alarm (Beep) can be changed.	High / Low	Center display is used for the setting. (See **CENTER DISPLAY PERSONALIZATION FEATURES SETTING PROCEDURE**.)
The type of the LDWS warning alarm can be changed.	Beep / Rumble	M-MDS is used. (See **INSTRUMENT CLUSTER PERSONALIZATION FEATURES SETTING PROCEDURE**.)
	Beep / Rumble	Center display is used for the setting. (See **CENTER DISPLAY PERSONALIZATION FEATURES SETTING PROCEDURE**.)
The distance between the warning-trigger lines for the Lane Departure Warning System (LDWS) and vehicle lanes can be changed.	Not Adopted / Adaptive / Early / Medium / Late	M-MDS is used. (See **FORWARD SENSING CAMERA (FSC) PERSONALIZATION FEATURES SETTING PROCEDURE**.)
	At Line / Before Line	Center display is used for the setting. (See **CENTER DISPLAY PERSONALIZATION FEATURES SETTING PROCEDURE**.)
The warning operation sensitivity of the lane departure warning system (LDWS) can be changed.	Not Adopted. / Often / Medium / Rare	M-MDS is used. (See **FORWARD SENSING CAMERA (FSC) PERSONALIZATION FEATURES SETTING PROCEDURE**.)
	High / Low	Center display is used for the setting. (See **CENTER DISPLAY PERSONALIZATION FEATURES SETTING PROCEDURE**.)
Returns the setting content of the lane departure warning system to the initial setting.	No / Yes	Center display is used for the setting. (See **CENTER DISPLAY PERSONALIZATION FEATURES SETTING PROCEDURE**.)

Smart City Brake Support (SCBS)

Personalization features	Setting contents	Setting procedure
The operation of smart city brake support (SCBS) can be turned off.	On / Off	Center display is used for the setting. (See **CENTER DISPLAY PERSONALIZATION FEATURES SETTING PROCEDURE**.)

Next >

2014 - Mazda3 - I-ELOOP

FOREWORD [i-ELOOP]

Procedure Before i-ELOOP-Related Part Servicing

WARNING:

- If the terminal of one of the i-ELOOP-related parts contacts the vehicle body with the service plug of the capacitor (i-ELOOP) connected, it could cause a fire and damage to electrical parts. In addition, if the terminal contacts your body, it could cause electrocution. Disconnect the service plug of the capacitor (i-ELOOP) before disconnecting the i-ELOOP-related part terminal. (See **SERVICE PLUG DISCONNECTION/CONNECTION [i-ELOOP]**.)
    - For the i-ELOOP-related part terminals, refer to the “PROCEDURE BEFORE i-ELOOP-RELATED PART SERVICING”. (See **PROCEDURE BEFORE i-ELOOP-RELATED PART SERVICING [i-ELOOP]**.)

Troubleshooting Procedure

- If there is any vehicle malfunction complaint lodged by a customer, perform malfunction diagnosis according to the troubleshooting procedure.

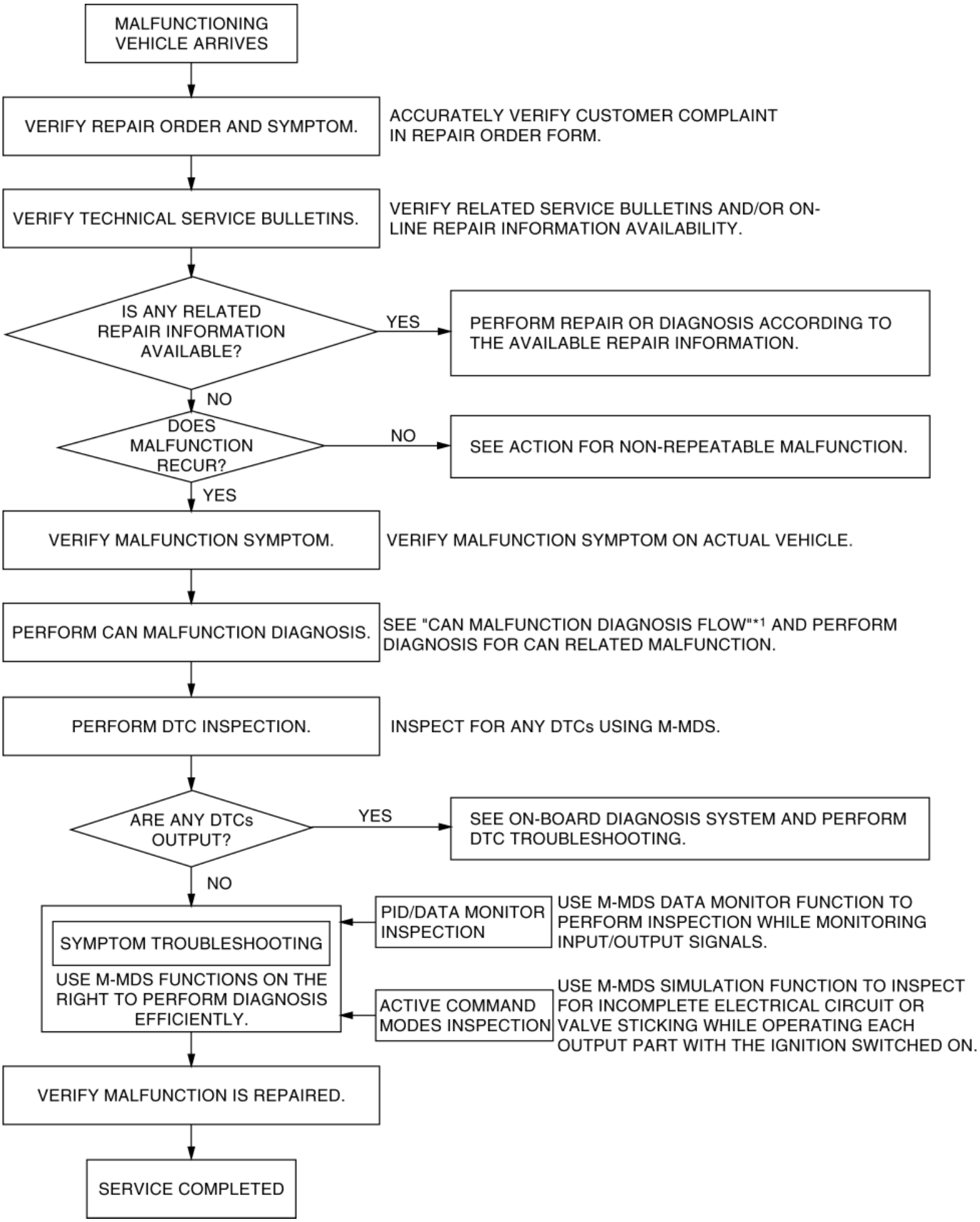
MALFUNCTIONING VEHICLE ARRIVES
VERIFY REPAIR ORDER AND SYMPTOM.
ACCURATELY VERIFY CUSTOMER COMPLAINT IN REPAIR ORDER FORM.
VERIFY TECHNICAL SERVICE BULLETINS.
VERIFY RELATED SERVICE BULLETINS AND/OR ON-LINE REPAIR INFORMATION AVAILABILITY.
IS ANY RELATED REPAIR INFORMATION AVAILABLE?
YES
PERFORM REPAIR OR DIAGNOSIS ACCORDING TO THE AVAILABLE REPAIR INFORMATION.
NO
DOES MALFUNCTION RECUR?
NO
SEE ACTION FOR NON-REPEATABLE MALFUNCTION.
YES
VERIFY MALFUNCTION SYMPTOM.
VERIFY MALFUNCTION SYMPTOM ON ACTUAL VEHICLE.
PERFORM CAN MALFUNCTION DIAGNOSIS.
SEE "CAN MALFUNCTION DIAGNOSIS FLOW"*1 AND PERFORM DIAGNOSIS FOR CAN RELATED MALFUNCTION.
PERFORM DTC INSPECTION.
INSPECT FOR ANY DTCs USING M-MDS.
ARE ANY DTCs OUTPUT?
YES
SEE ON-BOARD DIAGNOSIS SYSTEM AND PERFORM DTC TROUBLESHOOTING.
NO
SYMPTOM TROUBLESHOOTING
USE M-MDS FUNCTIONS ON THE RIGHT TO PERFORM DIAGNOSIS EFFICIENTLY.
PID/DATA MONITOR INSPECTION
USE M-MDS DATA MONITOR FUNCTION TO PERFORM INSPECTION WHILE MONITORING INPUT/OUTPUT SIGNALS.
ACTIVE COMMAND MODES INSPECTION
USE M-MDS SIMULATION FUNCTION TO INSPECT FOR INCOMPLETE ELECTRICAL CIRCUIT OR VALVE STICKING WHILE OPERATING EACH OUTPUT PART WITH THE IGNITION SWITCHED ON.
VERIFY MALFUNCTION IS REPAIRED.
SERVICE COMPLETED

*1

(See CONTROLLER AREA NETWORK (CAN) MALFUNCTION DIAGNOSIS FLOW.)

Action for Non-repeatable Malfunction

- If the malfunction does not recur, verify the malfunction cause by performing the following actions:
  - Based on the repair order form, attempt to drive the vehicle or perform tests to replicate the malfunction, record the data (such as PCM circuit voltage) at that time, and detect the malfunction cause.
  - Shake the wiring harness or connector of the electrical component which is suspected to be the cause of the malfunction, and inspect for malfunction or occurrence of any DTCs.

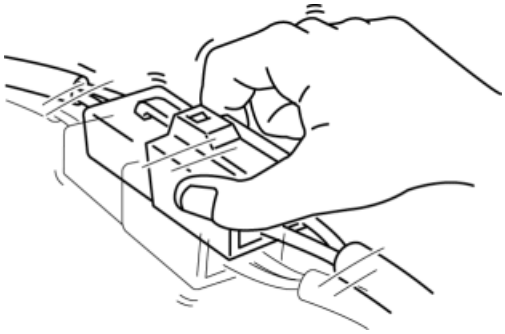

  - Inspect the female terminals on the connector of the electric component which is suspected to be the cause of the malfunction for poor connection.

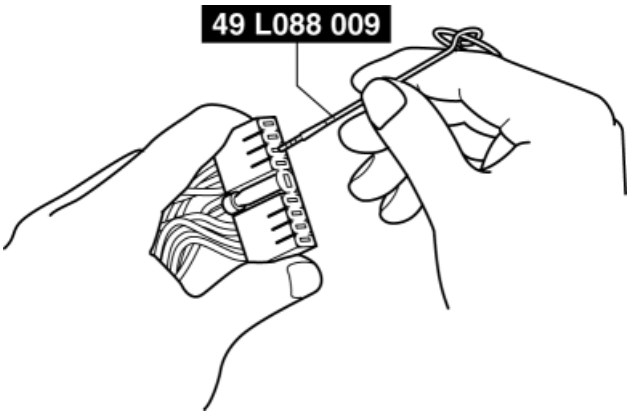

Next >

2014 - Mazda3 - I-ELOOP

DTC INSPECTION [i-ELOOP]

CMDTC Self Test

1. Connect the M-MDS to the DLC-2.
2. After the vehicle is identified, select the following items from the initialization screen of the M-MDS.
   a. Select “Self Test”.
   b. Select “All CMDTCs”.
3. Verify the DTC according to the directions on the screen.
   - If any DTCs are displayed, perform troubleshooting according to the corresponding DTC inspection after recording the snapshot data.
4. After completion of repairs, clear all DTCs stored in the DC-DC converter (See **CLEARING DTC [i-ELOOP]**.)

ODDTC Self Test

1. Connect the M-MDS to the DLC-2.
2. After the vehicle is identified, select the following items from the initialization screen of the M-MDS.
   a. Select “Self Test”.
   b. Select “Modules”.
   c. Select “DCDC”.
3. Verify the DTC according to the directions on the screen.
   - If any DTCs are displayed, perform troubleshooting according to the corresponding DTC inspection after recording the snapshot data.
4. After completion of repairs, clear all DTCs stored in the DC-DC converter (See **CLEARING DTC [i-ELOOP]**.)

Snapshot Data

NOTE:

- Snapshot data items are not displayed, according to detected DTC.
- The data for all DTCs currently detected is stored.

—: Not applicable

Snapshot data item	Unit	Data contents	Data read/use method	Corresponding data monitor items
VPWR	V	Power supply voltage	—	—
		DC-DC converter input		

DCDC_IN_V	V	voltage (input terminal voltage)	—	DCDC_IN_V
CONV_OUT_V	V	DC-DC converter circuit output voltage	—	CONV_OUT_V
DCDC_OUT_V	V	DC-DC converter output voltage (output terminal voltage)	—	DCDC_OUT_V
DCDC_OUT_I	A	DC-DC converter output current	—	DCDC_OUT_I
IR_LOAD_I	A	Output current to compensating load at IR	—	IR_LOAD_I
CFG_STATUS	Config Complete/Not Configured/Config Error	Instrument cluster configuration status	—	—
ECT_STATUS	Under 0 degrees C/0 - Under 80 degrees C/Over 80 degrees C/FAIL	Engine coolant temperature status	—	—
SHIFT_STATUS	P/N/D/R/FAIL	Selector lever position status	When DTC is detected, instrument cluster displays selector lever position in M-MDS.	—
APP_STATUS	Accelerator Pedal Off/Under20%/Over20%/FAIL	Accelerator pedal position status	—	—
RPM_STATUS	Engine Stop/Under1500rpm/Over1500rpm/FAIL	Engine speed status	When DTC is detected, instrument cluster displays engine speed in M-MDS.	—
VSPD_STATUS	Stop/0-10km/h/Over10km/h/FAIL	Vehicle speed status	When DTC is detected, instrument cluster displays vehicle speed in M-MDS.	—
IG-ON_TIMER	hh:mm:ss*1	Elapsed time since ignition was switched ON **NOTE:** • The instrument cluster records the elapsed time since the ignition was switched ON.	When DTC is detected, instrument cluster displays elapsed time since ignition was switched on in M-MDS.	—
		Accumulated total elapsed time since vehicle completion until detects a DTC	The elapsed time when the DC-DC converter detected a DTC can be calculated by performing the following procedure.	

TOTAL_TIME	hh:mm:ss*1		**NOTE:** • When the ROOM removed, and the ignition is switched to off, the time is not included in the elapsed time.	• Verify the PID item TOTAL_TIME of the instrument cluster. • Verify the snapshot data item TOTAL_TIME. • Subtract 2 from 1.	—
TOTAL_DIST	km	Miles	Accumulated total traveled distance from completion of vehicle until instrument cluster detects DTC (Odometer value in instrument cluster)	The distance traveled when the DC-DC converter detected a DTC can be calculated by performing the following procedure. • Verify the odometer value in the instrument cluster. • Verify the snapshot data item TOTAL_DIST. • Subtract 2 from 1.	—
IC_VPWR	V		Instrument cluster power supply voltage	When DTC is detected, instrument cluster displays power supply voltage value of instrument cluster in M-MDS.	—
AAT	°C	°F	Ambient temperature	—	—
			• Key Out: Ignition switched to off • Key Recently Out (Position 0): Elapsed time **within 3 s** since ignition was switched to off • Accessory (Position 1): Ignition is switched		

PWR_MODE_KEY	Key Out/Key Recently Out (Position 0)/Accessory (Position 1)/Post Ignition (Position 2)/Ignition On (Position 2)/Running (Position 2)/Running - Starting	to ACC • Post Ignition (Position 2): Elapsed time **within 3 s** since ignition was switched ON • Ignition On (Position 2): Ignition switched ON (engine off) • Running (Position 2): Ignition switched ON (engine on) • Running - Starting: Cranking condition	When DTC is detected, instrument cluster displays ignition switch status in M-MDS.	—

*1

The seconds may be indicated after the decimal point.

2014 - Mazda3 - I-ELOOP

CLEARING DTC [i-ELOOP]

1. Connect the M-MDS to the DLC 2.

2. After the vehicle is identified, select the following items from the initialization screen of the M-MDS.

    a. Select “Self Test”.

    b. Select “Modules”.

    c. Select “DCDC”.

3. Then, select the “Retrieve CMDTCs” and perform procedures according to directions on the M-MDS screen.

4. Verify the DTC according to the directions on the M-MDS screen.

5. Press the clear button on the DTC screen to clear the DTC.

6. Verify that no DTCs are displayed.

7. Switch the ignition off.

2014 - Mazda3 - I-ELOOP

PID/DATA MONITOR INSPECTION [i-ELOOP]

1. Connect the M-MDS to the DLC-2.

2. After the vehicle is identified, select the following items from the initialization screen of the M-MDS.

    a. Select “DataLogger”.

    b. Select “Modules”.

    c. Select “DCDC”.

3. Select the applicable PID from the PID table.

4. Verify the PID data according to the directions on the screen.

NOTE:

- The PID data screen function is used for monitoring the calculated value of input/output signals in the module. Therefore, if the monitored value of the output component is not within the specification, it is necessary to inspect the monitored value of input component corresponding to the applicable output part control. In addition, because the system does not display an output part malfunction as an abnormality in the monitored value, it is necessary to inspect the output component individually.
- When detecting DTCs, PIDs related to a malfunctioning system may not display even if the module is normal. Therefore, if a PID is not displayed, it is necessary to verify the DTC, perform malfunction diagnosis of the DTC that was detected, and do repairs.

—: Not applicable

Item	Unit/Condition	description	Condition/Specification (Reference)
BYPS_COUNT	—	Count of Bypass Relay actuation	• Displays operation amount of the bypass relay.
BYPS_RLY_STAT1	Low/High	State of Bypass Relay Signal 1	• Displays the bypass relay signal status.
BYPS_RLY_STAT2	Low/High	State of Bypass Relay Signal 2	• Displays the bypass relay signal status.
			• Displays the bypass relay status. ▪ Bypass relay OFF: Bypass OFF

BYPS_STAT	Bypass Off/Bypass On/Bypass Off fault/Bypass On fault	State of Bypass circuit within DC-DC Converter	▪ Bypass relay ON: Bypass On ▪ Bypass relay OFF (Fail): Off fault ▪ Bypass relay ON (Fail): On fault
C_MEAS_END_V	V	DCDC Input Voltage at end of measurement of capacitance at IR	• Displays the DC-DC converter input voltage when the measurement of the capacitor (i-ELOOP) capacitance is completed.
C_MEAS_STAT	Completion/Incompletion/No directions	State of Electric capacity measurement	• Displays the measurement status of capacitor (i-ELOOP) capacitance. ▪ Measurement completed: Completion ▪ Measurement not completed: Incompletion ▪ No indication of measurement: No directions
C_MEAS_STR_V	V	DCDC Input Voltage at start of measurement of capacitance at IR	• Displays the DC-DC converter input voltage when measurement of capacitor (i-ELOOP) capacitance is started.
			• Displays the charge circuit status. ▪ Charge circuit stopped: Off ▪ Charged by capacitor (i-ELOOP) and battery: Charge (to Bat) ▪ Charged by capacitor (i-ELOOP) and

CHG/DIS_STAT	Off/Charge (to Bat)/Discharge (to GND)/Fault (Off)/Fault (to Bat)/Fault (to GND))	State of charge/discharge circuit within DC-DC Converter	GND: Discharge (to GND) ▪ Charge circuit malfunction (charge circuit stopped): Fault (Off) ▪ Charge circuit malfunction (charged by capacitor (i-ELOOP) and battery): Fault (to Bat) ▪ Charge circuit malfunction (charged by capacitor (i-ELOOP) and GND): Fault (to GND)
CONV_OUT_V	V	Converter circuit Output Voltage	• Displays the output voltage in voltage reduction circuit.
CONV_STAT	Ready/Power Output (Stop)/Power Output (Normal)/Power Output (Limit)/Safe Mode/Error	State of Converter circuit within DC-DC Converter	• Displays the voltage reduction circuit operation status. ▪ Preparation for voltage reduction completed: Ready ▪ Output stopped: Power Output (Stop) ▪ During output: Power Output (Normal) ▪ Target output value not achieved due to limit: Power Output (Limit) ▪ Self-protection status (voltage

			reduction circuit inoperable): Safe Mode ▪ Voltage reduction circuit malfunction: Error
CAPA_TEMP	°C, °F	Capacitor (i-ELOOP) temperature	• Displays the capacitor (i-ELOOP) temperature.
DCDC_IN_V	V	DCDC Input Voltage (Input Terminal Voltage)	• Displays the DC-DC converter input voltage.
DCDC_OUT_I	A	DCDC Output Current	• Displays the DC-DC converter output current.
DCDC_OUT_V	V	DCDC Output Voltage (Output Terminal Voltage)	• Displays the DC-DC converter output voltage.
DCDC_TEMP	—	DC-DC converter temperature	• Displays the DC-DC converter temperature
DEGEN_COUNT	—	Count of Degeneracy shift	• Displays the number of times the system switches to safe mode due to high temperature in the DC-DC converter.
DEGEN_WARN	Ok/Degeneration warning/Degeneration	Warning of Degeneracy	• Displays the control status due to high temperature in the DC-DC converter.
IG_STAT	Off/On	State of IG signal input	• Displays the power supply status from the IG1 relay.
IR_SW_STAT	Connect (On)/Disconnect (Off)/Fault (On)/Fault (Off)	State of IG ON circuit within DC-DC converter	• Displays the IG ON relay operation status. ▪ IG ON relay ON: Connect (On) ▪ IG ON relay OFF: Disconnect (Off)

			▪ IG ON relay ON (Fail): Fault (On) ▪ IG ON relay OFF (Fail): Fault (Off)
OUT_M_CUR1	A	Output Mean Current in IG On (last time)	• Displays the average value of the DC-DC converter output current from the previous time the ignition was switched ON.
OUT_M_CUR2	A	Output Mean Current in IG On (2 times before)	• Displays the average value of the DC-DC converter output current from the previous 2 times that the ignition was switched ON.
OUT_M_CUR3	A	Output Mean Current in IG On (3 times before)	• Displays the average value of the DC-DC converter output current from the previous 3 times that the ignition was switched ON.
OUT_M_CUR4	A	Output Mean Current in IG On (4 times before)	• Displays the average value of the DC-DC converter output current from the previous 4 times that the ignition was switched ON.
OUT_M_CUR5	A	Output Mean Current in IG On (5 times before)	• Displays the average value of the DC-DC converter output current from the previous 5 times that the ignition was switched ON.
PURGE_RESLT	Charged/Purged/Fault	Result of charge purge on capacitor (i-ELOOP) after IG Off	• Displays the purge result of the capacitor (i-ELOOP) electrical charge after the ignition is switched off.
SAFE_M_COUNT	—	Count of Safe Mode shift	• Displays the number of times the system switches to safe mode for the DC-DC converter.

2014 - Mazda3 - I-ELOOP

DTC TABLE [i-ELOOP]

×: Applicable—: Not applicable

DTC No.	Check engine light	Master warning light	Charging system warning light	Condition	Fail-safe function	Drive cycle	Self test type*1	Memory function	Page
P0C39:00	OFF	ON	OFF	Capacitor (i-ELOOP) temperature sensor system: function/circuit malfunction	—	1	C, D	×	(See **DTC P0C39:00 [i-ELOOP]**.)
P1628:11	OFF	OFF	ON	DC-DC converter system: power supply voltage low input	—	1	C, D	×	(See **DTC P1628:11 [i-ELOOP]**.)
U0001:88	OFF	OFF	OFF	CAN system communication error (HS-CAN)	—	1	C, D	×	(See **DTC U0001:88, U0100:00, U0155:00 [i-ELOOP]**.)
U0100:00	OFF	OFF	OFF	CAN communication: communication error to PCM	—	1	C, D	×	
U0155:00	OFF	OFF	OFF	CAN communication: communication error to instrument cluster	—	1	C, D	×	
U0401:68	OFF	OFF	OFF	Signal error from PCM	—	1	C, D	×	(See **DTC U0401:68 [i-ELOOP]**.)
U3000:44	OFF	OFF	OFF	DC-DC converter internal malfunction	—	1	C, D	×	(See **DTC U3000:44 [i-ELOOP]**.)
U3000:49	OFF	OFF	OFF	DC-DC converter internal malfunction	—	1	C, D	×	(See **DTC U3000:49 [i-ELOOP]**.)
U3000:4B	OFF	OFF	OFF	DC-DC converter internal temperature malfunction	—	1	C, D	×	(See **DTC U3000:4B [i-ELOOP]**.)

U3003:16	OFF	OFF	OFF	DC-DC converter system: power supply voltage low input	—	1	C, D	×	(See **DTC U3003:16 [i-ELOOP]**.)
U3003:17	OFF	OFF	OFF	DC-DC converter system: power supply voltage high input	—	1	C, D	×	(See **DTC U3003:17 [i-ELOOP]**.)

*1

C: CMDTC self test, D: ODDTC self test

2014 - Mazda3 - I-ELOOP

DTC P0C39:00 [i-ELOOP]

DTC P0C39:00	Capacitor (i-ELOOP) temperature sensor system: function/circuit malfunction
DETECTION CONDITION	• Any one of the following conditions is met: ▪ A condition in which the capacitor (i-ELOOP) temperature sensor voltage is **less than 0.05 V** (**less than −50 °C {−58 °F}**) continues for **1 s**. ▪ A condition in which the capacitor (i-ELOOP) temperature sensor voltage is **4.95 V or more** (**90 °C {194 °F} or more**) continues for **1 s**.
FAIL-SAFE FUNCTION	• Not applicable
POSSIBLE CAUSE	• Capacitor (i-ELOOP) connector or terminals malfunction • DC-DC converter connector or terminals malfunction • Short to ground in wiring harness between capacitor (i-ELOOP) terminal 1A and DC-DC converter terminal 1E • Short to power supply in wiring harness between capacitor (i-ELOOP) terminal 1A and DC-DC converter terminal 1E • Capacitor (i-ELOOP) temperature sensor signal circuit and ground circuit are shorted to each other • Open circuit in wiring harness between the following terminals: ▪ Capacitor (i-ELOOP) terminal 1A—DC-DC converter terminal 1E ▪ Capacitor (i-ELOOP) terminal 1B—DC-DC converter terminal 1D • Capacitor (i-ELOOP) temperature sensor malfunction • DC-DC converter malfunction

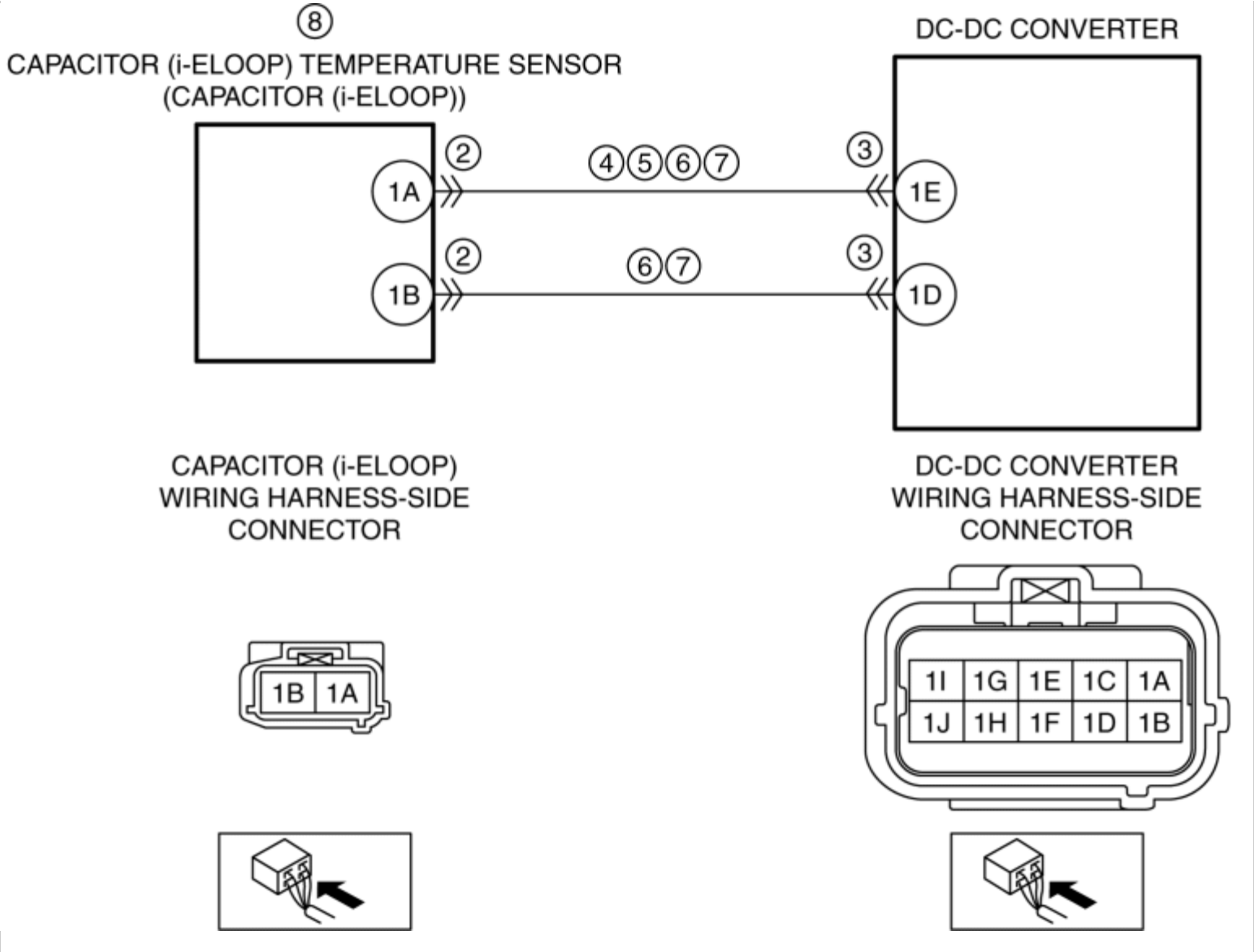

Diagnostic Procedure

STEP	INSPECTION		ACTION
1	**VERIFY RELATED REPAIR INFORMATION AVAILABILITY** • Verify related Service Bulletins and/or on-line repair information availability. • Is any related repair information available?	Yes	Perform repair or diagnosis according to the available repair information. • If the vehicle is not repaired, go to the next step.
		No	Go to the next step.
2	**INSPECT CAPACITOR (i-ELOOP) CONNECTOR CONDITION** • Switch the ignition off. • Disconnect the negative battery cable.	Yes	Repair or replace the connector and/or terminals, then go to Step 9.
		No	Go to the next step.

	(See **NEGATIVE BATTERY CABLE DISCONNECTION/CONNECTION [SKYACTIV-G 2.0, SKYACTIV-G 2.5]**.) • Remove the service plug. (See **SERVICE PLUG DISCONNECTION/CONNECTION [i-ELOOP]**.) • Disconnect the capacitor (i-ELOOP) connector. • Inspect for poor connection (such as damaged/pulled-out pins, corrosion). • Is there any malfunction?		
3	**INSPECT DC-DC CONVERTER CONNECTOR CONDITION** • Disconnect the DC-DC converter connector. • Inspect for poor connection (such as damaged/pulled-out pins, corrosion). • Is there any malfunction?	Yes	Repair or replace the connector and/or terminals, then go to Step 9.
		No	Go to the next step.
4	**INSPECT CAPACITOR (i-ELOOP) TEMPERATURE SENSOR SIGNAL CIRCUIT FOR SHORT TO GROUND** • Verify that the capacitor (i-ELOOP) and DC-DC converter connectors are disconnected. • Inspect for continuity between capacitor (i-ELOOP) terminal 1A (wiring harness-side) and body ground. • Is there continuity?	Yes	Refer to the wiring diagram and verify whether or not there is a common connector between capacitor (i-ELOOP) terminal 1A and DC-DC converter terminal 1E. **If there is a common connector:** • Determine the malfunctioning part by inspecting the common connector and the terminal for corrosion, damage, or pin disconnection, and the common wiring harness for a short to ground. • Repair or replace the malfunctioning part. **If there is no common connector:** • Repair or replace the wiring harness which has a short to ground. Go to Step 9.

		No	Go to the next step.
5	**INSPECT CAPACITOR (i-ELOOP) TEMPERATURE SENSOR SIGNAL CIRCUIT FOR SHORT TO POWER SUPPLY** • Verify that the capacitor (i-ELOOP) and DC-DC converter connectors are disconnected. • Reconnect the negative battery cable. (See **NEGATIVE BATTERY CABLE DISCONNECTION/CONNECTION [SKYACTIV-G 2.0, SKYACTIV-G 2.5]**.) • Switch the ignition ON (engine off). • Measure the voltage at the capacitor (i-ELOOP) terminal 1A (wiring harness-side). • Is the voltage **0 V**?	Yes	Go to the next step.
		No	Refer to the wiring diagram and verify whether or not there is a common connector between capacitor (i-ELOOP) terminal 1A and DC-DC converter terminal 1E. **If there is a common connector:** • Determine the malfunctioning part by inspecting the common connector and the terminal for corrosion, damage, or pin disconnection, and the common wiring harness for a short to power supply. • Repair or replace the malfunctioning part. **If there is no common connector:** • Repair or replace the wiring harness which has a short to power supply. Go to Step 9.
6	**INSPECT CAPACITOR (i-ELOOP) TEMPERATURE SENSOR SIGNAL CIRCUIT AND GROUND CIRCUIT FOR SHORT TO EACH OTHER** • Verify that the capacitor (i-ELOOP) and DC-DC converter connectors are disconnected. • Switch the ignition off. • Disconnect the negative battery cable. (See **NEGATIVE BATTERY CABLE DISCONNECTION/CONNECTION [SKYACTIV-G 2.0, SKYACTIV-G 2.5]**.) • Inspect for continuity between capacitor (i-ELOOP) terminals 1A and 1B (wiring harness-side).	Yes	Refer to the wiring diagram and verify whether or not there is a common connector between the following terminals: • Capacitor (i-ELOOP) terminal 1A—DC-DC converter terminal 1E • Capacitor (i-ELOOP) terminal 1B—DC-DC converter terminal 1D **If there is a common connector:** • Determine the malfunctioning part by inspecting the common connector and the terminal for corrosion, damage, or pin disconnection, and the common wiring harness for a short to each other. • Repair or replace the malfunctioning part.

	• Is there continuity?		**If there is no common connector:** • Repair or replace the wiring harness which has a short to each other. Go to Step 9.
		No	Go to the next step.
7	**INSPECT CAPACITOR (i-ELOOP) TEMPERATURE SENSOR CIRCUIT FOR OPEN CIRCUIT** • Verify that the capacitor (i-ELOOP) and DC-DC converter connectors are disconnected. • Inspect for continuity between the following terminals (wiring harness-side): ▪ Capacitor (i-ELOOP) terminal 1A—DC-DC converter terminal 1E ▪ Capacitor (i-ELOOP) terminal 1B—DC-DC converter terminal 1D • Is there continuity?	Yes	Go to the next step.
		No	Refer to the wiring diagram and verify whether or not there is a common connector between the following terminals: • Capacitor (i-ELOOP) terminal 1A—DC-DC converter terminal 1E • Capacitor (i-ELOOP) terminal 1B—DC-DC converter terminal 1D **If there is a common connector:** • Determine the malfunctioning part by inspecting the common connector and the terminal for corrosion, damage, or pin disconnection, and the common wiring harness for an open circuit. • Repair or replace the malfunctioning part. **If there is no common connector:** • Repair or replace the wiring harness which has an open circuit. Go to Step 9.
8	**INSPECT CAPACITOR (i-ELOOP) TEMPERATURE SENSOR** • Inspect the capacitor (i-ELOOP) temperature sensor. (See **CAPACITOR (i-ELOOP) INSPECTION [i-ELOOP]**.) • Is there any malfunction?	Yes	Replace the capacitor (i-ELOOP), then go to the next step. (See **CAPACITOR (i-ELOOP) REMOVAL/INSTALLATION [i-ELOOP]**.)
		No	Go to the next step.
9	**VERIFY DTC TROUBLESHOOTING COMPLETED** • Always reconnect all	Yes	Repeat the inspection from Step 1. • If the malfunction recurs, replace

	disconnected connectors. • Reconnect the negative battery cable. (See **NEGATIVE BATTERY CABLE DISCONNECTION/CONNECTION [SKYACTIV-G 2.0, SKYACTIV-G 2.5]**.) • Reinstall the service plug. (See **SERVICE PLUG DISCONNECTION/CONNECTION [i-ELOOP]**.) • Clear the DTC for the DC-DC converter using the M-MDS. (See **CLEARING DTC [i-ELOOP]**.) • Switch the ignition off. • Switch the ignition ON (engine on) and wait for **1 s or more**. • Retrieve the DC-DC converter DTCs using the M-MDS. (See **DTC INSPECTION [i-ELOOP]**.) • Is the same DTC present?		the DC-DC converter. (See **DC-DC CONVERTER REMOVAL/INSTALLATION [i-ELOOP]**.) Go to the next step.
		No	Go to the next step.
10	**VERIFY IF OTHER DTCs DISPLAYED** • Are any other DTCs displayed?	Yes	Repair or replace the malfunctioning part according to the applicable DTC troubleshooting. (See **DTC TABLE [i-ELOOP]**.)
		No	DTC troubleshooting completed.

2014 - Mazda3 - I-ELOOP

DTC P1628:11 [i-ELOOP]

DTC P1628:00	DC-DC converter system: power supply voltage low input
DETECTION CONDITION	• An ignition off determination continues while the DC-DC converter receives signals during a **5 s** period from the PCM at intervals of **less than 0.1 s**.
FAIL-SAFE FUNCTION	• Not applicable

POSSIBLE CAUSE	• DC-DC converter connector or terminals malfunction
	• Short to ground or open circuit in DC-DC converter power supply circuit
	  ▪ Short to ground in wiring harness between IG1 relay terminal C and DC-DC converter terminal 1H
	  ▪ C/U IG1 15 A fuse malfunction
	  ▪ Open circuit in wiring harness between IG1 relay terminal C and DC-DC converter terminal 1H
	• Short to ground in wiring harness between electric load (such as start stop unit or non-genuine part) connected to C/U IG1 15 A fuse and C/U IG1 15 A fuse, or short to ground in electric load part
	• DC-DC converter malfunction

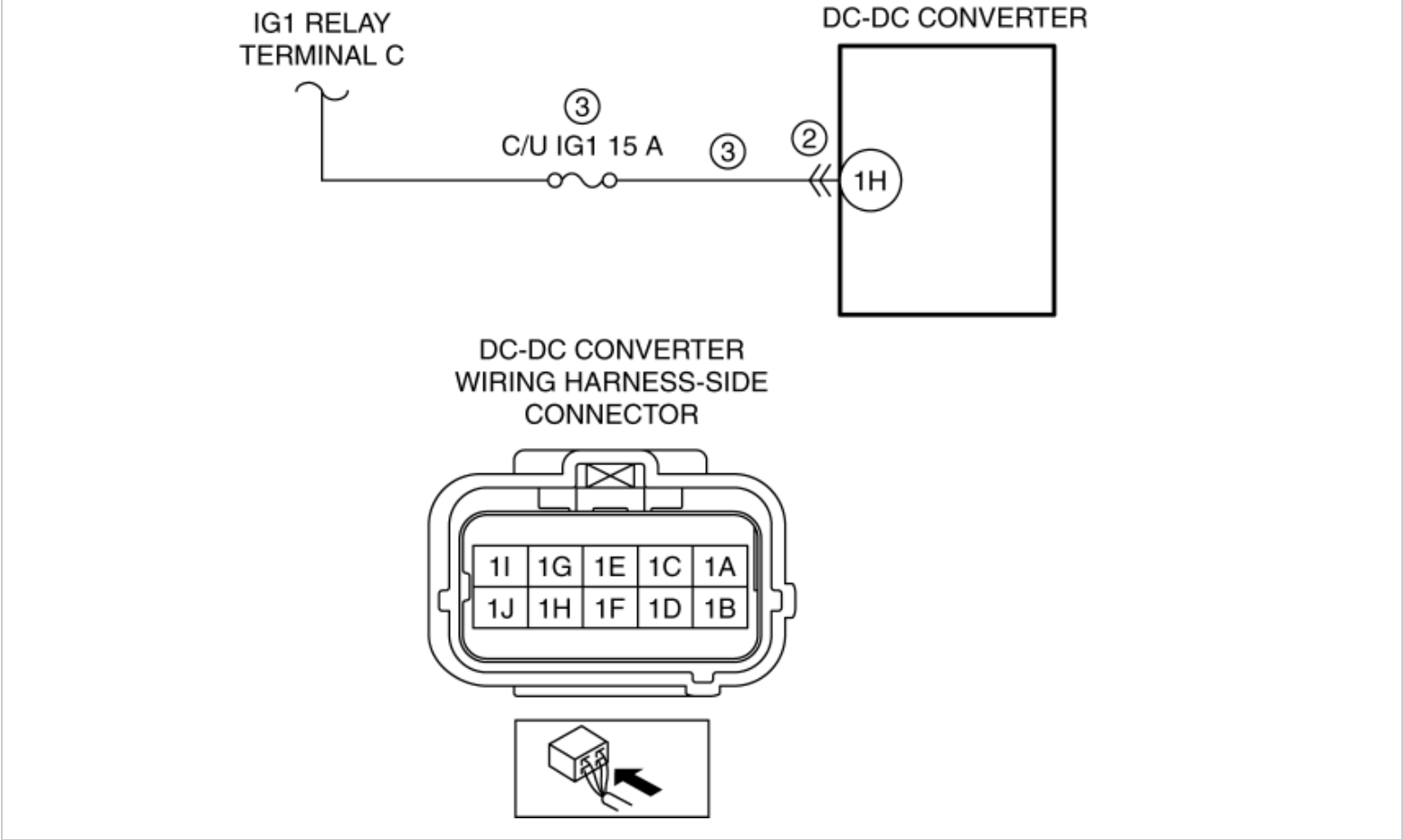

Diagnostic Procedure

STEP	INSPECTION		ACTION
1	**VERIFY RELATED REPAIR INFORMATION AVAILABILITY** • Verify related Service Bulletins and/or on-line repair information availability. • Is any related repair information available?	Yes	Perform repair or diagnosis according to the available repair information. • If the vehicle is not repaired, go to the next step.
		No	Go to the next step.
2	**INSPECT DC-DC CONVERTER CONNECTOR CONDITION** • Switch the ignition off. • Disconnect the negative battery cable. (See **NEGATIVE BATTERY CABLE DISCONNECTION/CONNECTION [SKYACTIV-G 2.0, SKYACTIV-G 2.5]**.) • Remove the service plug. (See **SERVICE PLUG DISCONNECTION/CONNECTION [i-ELOOP]**.)	Yes	Repair or replace the connector and/or terminals, then go to Step 5.
		No	Go to the next step.

	• Disconnect the DC-DC converter connector.Disconnect the DC-DC converter connector. • Inspect for poor connection (such as damaged/pulled-out pins, corrosion). • Is there any malfunction?		
3	**INSPECT DC-DC CONVERTER POWER SUPPLY CIRCUIT FOR SHORT TO GROUND OR OPEN CIRCUIT** • Verify that the DC-DC converter connector is disconnected. • Reconnect the negative battery cable. (See **NEGATIVE BATTERY CABLE DISCONNECTION/CONNECTION [SKYACTIV-G 2.0, SKYACTIV-G 2.5]**.) • Switch the ignition ON (engine off). • Measure the voltage at the DC-DC converter terminal 1H (wiring harness-side). • Is the voltage **B+**?	Yes	Go to the next step.
		No	Inspect the C/U IG1 15 A fuse. • If the fuse is blown: ▪ Refer to the wiring diagram and verify whether or not there is a common connector between IG1 relay terminal C and DC-DC converter terminal 1H. **If there is a common connector:** • Determine the malfunctioning part by inspecting the common connector and the terminal for corrosion, damage, or pin disconnection, and the common wiring harness for a short to ground. • Repair or replace the malfunctioning part. **If there is no common connector:** • Repair or replace the wiring harness which has a short to ground. • Replace the fuse.

			• If the fuse is damaged: ▪ Replace the fuse. • If the fuse is normal: ▪ Refer to the wiring diagram and verify whether or not there is a common connector between IG1 relay terminal C and DC-DC converter terminal 1H. **If there is a common connector:** • Determine the malfunctioning part by inspecting the common connector and the terminal for corrosion, damage, or pin disconnection, and the common wiring harness for an open circuit. • Repair or replace the malfunctioning part. **If there is no common connector:** • Repair or replace the wiring harness which has an open circuit. Go to Step 5.
4	**VERIFY WIRING HARNESS RELATED TO ELECTRIC LOAD PART CONNECTED TO C/U IG1 15 A FUSE** • Switch the ignition off. • Disconnect the negative battery cable. (See **NEGATIVE BATTERY CABLE DISCONNECTION/CONNECTION [SKYACTIV-G 2.0, SKYACTIV-G 2.5]**.)	Yes	Repair or replace the malfunction part, then go to the next step.
		No	Go to the next step.

	• Verify the wiring harness condition related to the electric load part connected to the C/U IG1 15 A fuse. • Is there any malfunction?		
5	**VERIFY DTC TROUBLESHOOTING COMPLETED** • Always reconnect all disconnected connectors. • Reconnect the negative battery cable. (See **NEGATIVE BATTERY CABLE DISCONNECTION/CONNECTION [SKYACTIV-G 2.0, SKYACTIV-G 2.5]**.) • Reinstall the service plug. (See **SERVICE PLUG DISCONNECTION/CONNECTION [i-ELOOP]**.) • Clear the DTC for the DC-DC converter using the M-MDS. (See **CLEARING DTC [i-ELOOP]**.) • Switch the ignition off. • Switch the ignition ON (engine off) and wait for **5 s or more**. • Retrieve the DC-DC converter DTCs using the M-MDS. (See **DTC INSPECTION [i-ELOOP]**.) • Is the same DTC present?	Yes	Repeat the inspection from Step 1. • If the malfunction recurs, replace the DC-DC converter. (See **DC-DC CONVERTER REMOVAL/INSTALLATION [i-ELOOP]**.) Go to the next step.
		No	Go to the next step.
6	**VERIFY IF OTHER DTCs DISPLAYED** • Are any other DTCs displayed?	Yes	Repair or replace the malfunctioning part according to the applicable DTC troubleshooting. (See **DTC TABLE [i-ELOOP]**.)
		No	DTC troubleshooting completed.

2014 - Mazda3 - I-ELOOP

DTC U0001:88, U0100:00, U0155:00 [i-ELOOP]

DTC U0001:88	CAN system communication error (HS-CAN)
DETECTION CONDITION	• Malfunction in CAN bus communication line.
FAIL-SAFE FUNCTION	• Not applicable
POSSIBLE CAUSE	• CAN bus communication line malfunction • DC-DC converter malfunction
SYSTEM WIRING DIAGRAM	• Not applicable

DTC U0100:00	CAN communication: communication error to PCM
DETECTION CONDITION	• Communication error between the DC-DC converter and PCM continues for **5 s or more**.
FAIL-SAFE FUNCTION	• Not applicable
POSSIBLE CAUSE	• CAN communication line between DC-DC converter and PCM malfunction • PCM malfunction • DC-DC converter malfunction
SYSTEM WIRING DIAGRAM	• Not applicable

DTC U0155:00	CAN communication: communication error to instrument cluster

DETECTION CONDITION	• Communication error between the DC-DC converter and instrument cluster continues for **5 s or more**.
FAIL-SAFE FUNCTION	• Not applicable
POSSIBLE CAUSE	• CAN communication line between DC-DC converter and instrument cluster malfunction • Instrument cluster malfunction • DC-DC converter malfunction
SYSTEM WIRING DIAGRAM	• Not applicable

Diagnostic Procedure

- Inspect according to the diagnostic procedure in ON-BOARD DIAGNOSTIC [MULTIPLEX COMMUNICATION SYSTEM]. (See **FOREWORD**.)

2014 - Mazda3 - I-ELOOP

DTC U0401:68 [i-ELOOP]

DTC U0401:68	Signal error from PCM

DETECTION CONDITION	• When any of the following conditions is met:
	  ▪ PCM internal malfunction
	  ▪ CAN communication line between PCM and DC-DC converter malfunction

FAIL-SAFE FUNCTION	• Not applicable

POSSIBLE CAUSE	• CAN drive error (DC-DC converter or PCM)
	• CAN communication line between PCM and DC-DC converter malfunction
	  ▪ PCM terminal 2AK—Front body control module (FBCM) terminal 2P
	  ▪ PCM terminal 2AL—Front body control module (FBCM) terminal 2N
	  ▪ Front body control module (FBCM) terminal 2K—DC-DC converter terminal 1A
	  ▪ Front body control module (FBCM) terminal 2I—DC-DC converter terminal 1C
	• Front body control module (FBCM) malfunction
	• DC-DC converter connector or terminals malfunction
	• PCM connector or terminals malfunction
	• DC-DC converter malfunction
	• PCM malfunction

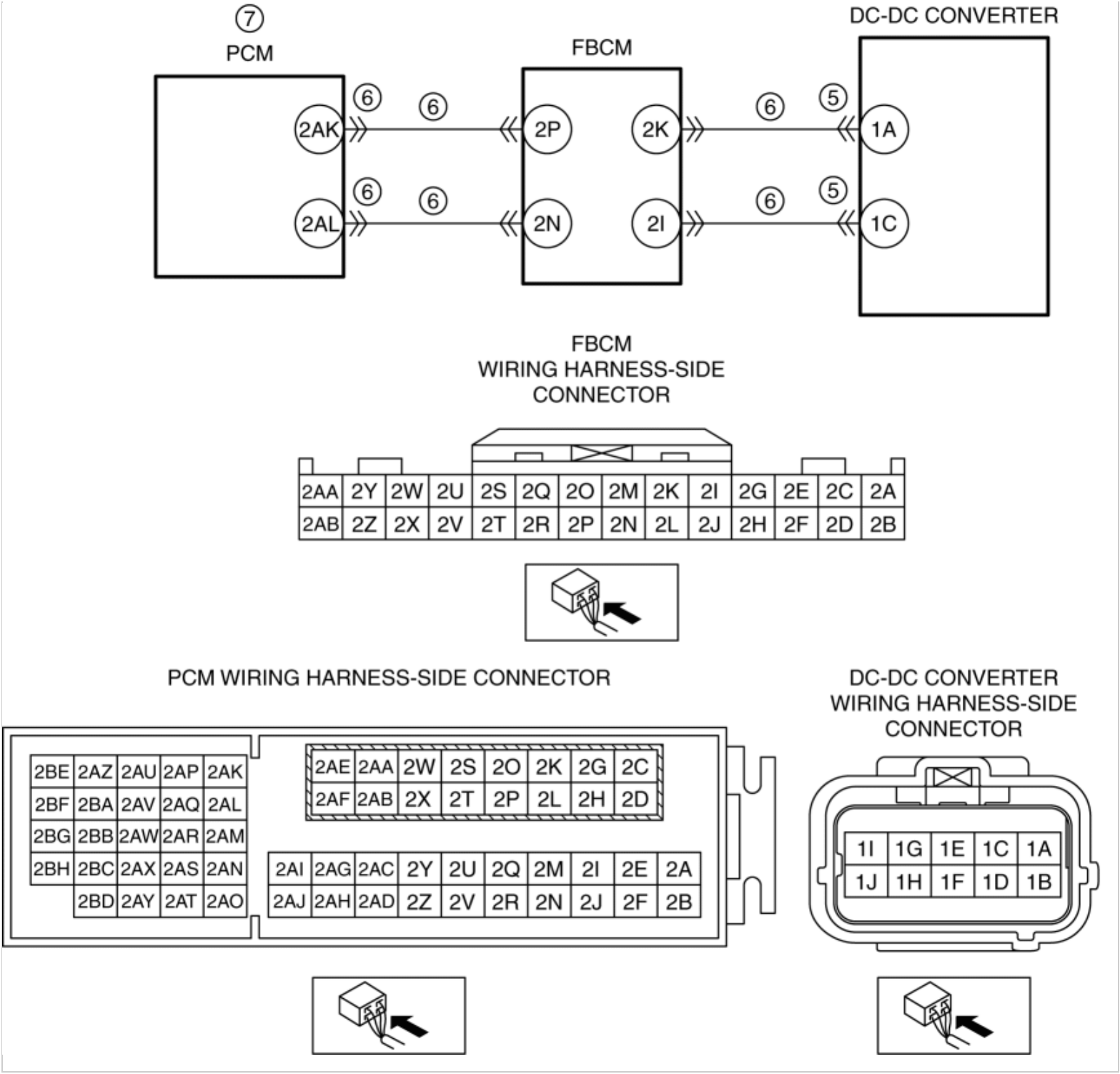

Diagnostic Procedure

STEP	INSPECTION		ACTION
1	**VERIFY RELATED REPAIR INFORMATION AVAILABILITY** • Verify related Service Bulletins and/or on-line repair information availability. • Is any related repair information available?	Yes	Perform repair or diagnosis according to the available repair information. • If the vehicle is not repaired, go to the next step.
		No	Go to the next step.

2	**VERIFY PCM DTCs** • Switch the ignition off, then ON (engine off). • Retrieve the PCM DTCs using the M-MDS. (See **ON-BOARD DIAGNOSTIC TEST [SKYACTIV-G 2.0, SKYACTIV-G 2.5]**.) • Are any DTCs present?	Yes	Repair or replace the malfunctioning part according to the applicable DTC troubleshooting. (See **DTC TABLE [SKYACTIV-G 2.0, SKYACTIV-G 2.5]**.)
		No	Go to the next step.
3	**CONFIRM FRONT BODY CONTROL MODULE (FBCM) DTC** • Perform the front body control module (FBCM) DTC inspection using the M-MDS. (See **DTC INSPECTION [FRONT BODY CONTROL MODULE (FBCM)]**.) • Are any DTCs present?	Yes	Repair or replace the malfunctioning part according to the applicable DTC troubleshooting. (See **DTC TABLE [FRONT BODY CONTROL MODULE (FBCM)]**.)
		No	Go to the next step.
4	**CONFIRM INSTRUMENT CLUSTER DTC** • Perform the instrument cluster DTC inspection using the M-MDS. (See **DTC INSPECTION [INSTRUMENT CLUSTER]**.) • Are any DTCs present?	Yes	Repair or replace the malfunctioning part according to the applicable DTC troubleshooting. (See **DTC TABLE [INSTRUMENT CLUSTER]**.)
		No	Go to the next step.
5	**INSPECT DC-DC CONVERTER CONNECTOR CONDITION** • Switch the ignition off. • Disconnect the negative battery cable. (See **NEGATIVE BATTERY CABLE DISCONNECTION/CONNECTION [SKYACTIV-G 2.0, SKYACTIV-G 2.5]**.) • Remove the service plug. (See **SERVICE PLUG DISCONNECTION/CONNECTION [i-ELOOP]**.) • Disconnect the DC-DC converter connector. • Inspect for poor connection (such as damaged/pulled-out pins, corrosion). • Is there any malfunction?	Yes	Repair or replace the connector and/or terminals, then go to Step 7.
		No	Go to the next step.
	INSPECT PCM CONNECTOR CONDITION		

6	• Disconnect the PCM connector. • Inspect for poor connection (such as damaged/pulled-out pins, corrosion). • Is there any malfunction?	Yes	Repair or replace the connector and/or terminals, then go to the next step.
		No	CAN communication line can be considered the cause. • Refer to the wiring diagram and verify whether or not there is a common connector between the following terminals: ▪ PCM terminal 2AK—Front body control module (FBCM) terminal 2P ▪ PCM terminal 2AL—Front body control module (FBCM) terminal 2N ▪ Front body control module (FBCM) terminal 2K—DC-DC converter terminal 1A ▪ Front body control module (FBCM) terminal 2I—DC-DC converter terminal 1C **If there is a common connector:** ▪ Determine the malfunctioning part by inspecting the common connector and the terminal for corrosion, damage, or pin disconnection, and the common wiring harness for a malfunction. ▪ Repair or replace the malfunctioning part. **If there is no common connector:** ▪ Repair or replace the wiring harness. If the malfunction recurs, replace the DC-DC converter. (See **DC-DC CONVERTER REMOVAL/INSTALLATION [i-ELOOP]**.) Go to the next step.
7	**VERIFY DTC TROUBLESHOOTING COMPLETED** • Always reconnect all disconnected connectors. • Reconnect the negative battery cable. (See **NEGATIVE BATTERY CABLE DISCONNECTION/CONNECTION [SKYACTIV-G 2.0, SKYACTIV-G 2.5]**.) • Reinstall the service plug.	Yes	Repeat the inspection from Step 1. • If the malfunction recurs, replace the PCM. (See **PCM REMOVAL/INSTALLATION [SKYACTIV-G 2.0, SKYACTIV-G 2.5]**.) Go to the next step.
		No	Go to the next step.

	(See **SERVICE PLUG DISCONNECTION/CONNECTION [i-ELOOP]**.) • Clear the DTC for the DC-DC converter using the M-MDS. (See **CLEARING DTC [i-ELOOP]**.) • Switch the ignition off. • Switch the ignition ON (engine off) and wait for **5 s or more**. • Retrieve the DC-DC converter DTCs using the M-MDS. (See **DTC INSPECTION [i-ELOOP]**.) • Is the same DTC present?		
8	**VERIFY IF OTHER DTCs DISPLAYED** • Are any other DTCs displayed?	Yes	Repair or replace the malfunctioning part according to the applicable DTC troubleshooting. (See **DTC TABLE [i-ELOOP]**.)
		No	DTC troubleshooting completed.

2014 - Mazda3 - I-ELOOP

DTC U3000:44 [i-ELOOP]

DTC U3000:44	DC-DC converter internal malfunction
DETECTION CONDITION	• A malfunction in the DC-DC converter is detected.
FAIL-SAFE FUNCTION	• Not applicable
POSSIBLE CAUSE	• DC-DC converter internal malfunction
SYSTEM WIRING DIAGRAM	• Not applicable

Diagnostic Procedure

STEP	INSPECTION		ACTION
1	**VERIFY RELATED REPAIR INFORMATION AVAILABILITY** • Verify related Service Bulletins and/or on-line repair information availability. • Is any related repair information available?	Yes	Perform repair or diagnosis according to the available repair information. • If the vehicle is not repaired, go to the next step.
		No	Go to the next step.
2	**PERFORM DTC INSPECTION AND VERIFY DC-DC CONVERTER MALFUNCTION** • Clear the DTC for the DC-DC converter using the M-MDS. (See **CLEARING DTC [i-ELOOP]**.) • Switch the ignition off. • Switch the ignition ON (engine off) and wait for **5 s or more**. • Retrieve the DC-DC converter DTCs using the M-MDS. (See **DTC INSPECTION [i-ELOOP]**.)	Yes	Replace the DC-DC converter, then go to the next step. (See **DC-DC CONVERTER REMOVAL/INSTALLATION [i-ELOOP]**.)
		No	Go to the next step.

	Is the same DTC present?		
3	**VERIFY IF OTHER DTCs DISPLAYED** • Are any other DTCs displayed?	Yes	Repair or replace the malfunctioning part according to the applicable DTC troubleshooting. (See **DTC TABLE [i-ELOOP]**.)
		No	DTC troubleshooting completed.

2014 - Mazda3 - I-ELOOP

DTC U3000:49 [i-ELOOP]

DTC U3000:49	DC-DC converter internal malfunction
DETECTION CONDITION	• A malfunction in the DC-DC converter is detected.
FAIL-SAFE FUNCTION	• Not applicable
POSSIBLE CAUSE	• DC-DC converter internal malfunction
SYSTEM WIRING DIAGRAM	• Not applicable

Diagnostic Procedure

STEP	INSPECTION		ACTION
1	**VERIFY RELATED REPAIR INFORMATION AVAILABILITY** • Verify related Service Bulletins and/or on-line repair information availability. • Is any related repair information available?	Yes	Perform repair or diagnosis according to the available repair information. • If the vehicle is not repaired, go to the next step.
		No	Go to the next step.
2	**PERFORM DTC INSPECTION AND VERIFY DC-DC CONVERTER MALFUNCTION** • Clear the DTC for the DC-DC converter using the M-MDS. (See **CLEARING DTC [i-ELOOP]**.) • Start the engine. • Leave for **1 min** while idling with no electrical load. • Leave for **1 min** while racing with high electrical load.(DC-DC converter terminal 3A voltage is **16 V or more**) • Switch the ignition off.	Yes	Replace the DC-DC converter, then go to the next step. (See **DC-DC CONVERTER REMOVAL/INSTALLATION [i-ELOOP]**.)
		No	Go to the next step.

	• Switch the ignition ON. • Retrieve the DC-DC converter DTCs using the M-MDS. (See **DTC INSPECTION [i-ELOOP]**.) • Is the same DTC present?		
3	**PERFORM DTC INSPECTION AND VERIFY DC-DC CONVERTER MALFUNCTION** • Start the engine. • Leave for **1 min** while racing with high electrical load. (DC-DC converter terminal 3A voltage is **18 V or more**.) • Switch the ignition off. • Remove the service plug. (See **SERVICE PLUG DISCONNECTION/CONNECTION [i-ELOOP]**.) • Disconnect the negative battery cable. (See **NEGATIVE BATTERY CABLE DISCONNECTION/CONNECTION [SKYACTIV-G 2.0, SKYACTIV-G 2.5]**.) • Wait for **2 min**. • Reconnect the negative battery cable. (See **NEGATIVE BATTERY CABLE DISCONNECTION/CONNECTION [SKYACTIV-G 2.0, SKYACTIV-G 2.5]**.) • Reinstall the service plug. (See **SERVICE PLUG DISCONNECTION/CONNECTION [i-ELOOP]**.) • Wait for **1 min**. • Switch the ignition ON. • Retrieve the DC-DC converter DTCs using the M-MDS. (See **DTC INSPECTION [i-ELOOP]**.) • Is the same DTC present?	Yes	Replace the DC-DC converter, then go to the next step. (See **DC-DC CONVERTER REMOVAL/INSTALLATION [i-ELOOP]**.)
		No	Go to the next step.
4	**VERIFY IF OTHER DTCs DISPLAYED** • Are any other DTCs displayed?	Yes	Repair or replace the malfunctioning part according to the applicable DTC troubleshooting. (See **DTC TABLE [i-ELOOP]**.)

		No	DTC troubleshooting completed.

2014 - Mazda3 - I-ELOOP

DTC U3000:4B [i-ELOOP]

DTC U3000:4B	DC-DC converter internal temperature malfunction
DETECTION CONDITION	• A condition in which the DC-DC converter internal temperature is abnormally high or low is detected.
FAIL-SAFE FUNCTION	• Not applicable
POSSIBLE CAUSE	• DC-DC converter malfunction
SYSTEM WIRING DIAGRAM	• Not applicable

Diagnostic Procedure

STEP	INSPECTION		ACTION
1	**VERIFY RELATED REPAIR INFORMATION AVAILABILITY** • Verify related Service Bulletins and/or on-line repair information availability. • Is any related repair information available?	Yes	Perform repair or diagnosis according to the available repair information. • If the vehicle is not repaired, go to the next step.
		No	Go to the next step.
2	**PERFORM DTC INSPECTION AND VERIFY DC-DC CONVERTER MALFUNCTION** • Clear the DTC for the DC-DC converter using the M-MDS. (See **CLEARING DTC [i-ELOOP]**.) • Switch the ignition off. • Switch the ignition ON (engine off) and wait for **5 s or more**. • Retrieve the DC-DC converter DTCs using the M-MDS.	Yes	Replace the DC-DC converter, then go to the next step. (See **DC-DC CONVERTER REMOVAL/INSTALLATION [i-ELOOP]**.)
		No	Go to the next step.

	(See **DTC INSPECTION [i-ELOOP]**.) • Is the same DTC present?		
3	**VERIFY IF OTHER DTCs DISPLAYED** • Are any other DTCs displayed?	Yes	Repair or replace the malfunctioning part according to the applicable DTC troubleshooting. (See **DTC TABLE [i-ELOOP]**.)
		No	DTC troubleshooting completed.

2014 - Mazda3 - I-ELOOP

DTC U3003:16 [i-ELOOP]

DTC U3003:16	DC-DC converter system: power supply voltage low input
DETECTION CONDITION	• The following condition is met for a continuous **5 s** period: ▪ DC-DC converter terminal 4A voltage: **8 V or less**
FAIL-SAFE FUNCTION	• Not applicable
POSSIBLE CAUSE	• PCM DTC or pending code is stored. • Battery malfunction • DC-DC converter connector or terminals malfunction • STARTER 250 A fuse malfunction • Short to ground in wiring harness between battery positive terminal and DC-DC converter terminal 4A • Open circuit in wiring harness between battery positive terminal and DC-DC converter terminal 4A • Generator malfunction • DC-DC converter malfunction

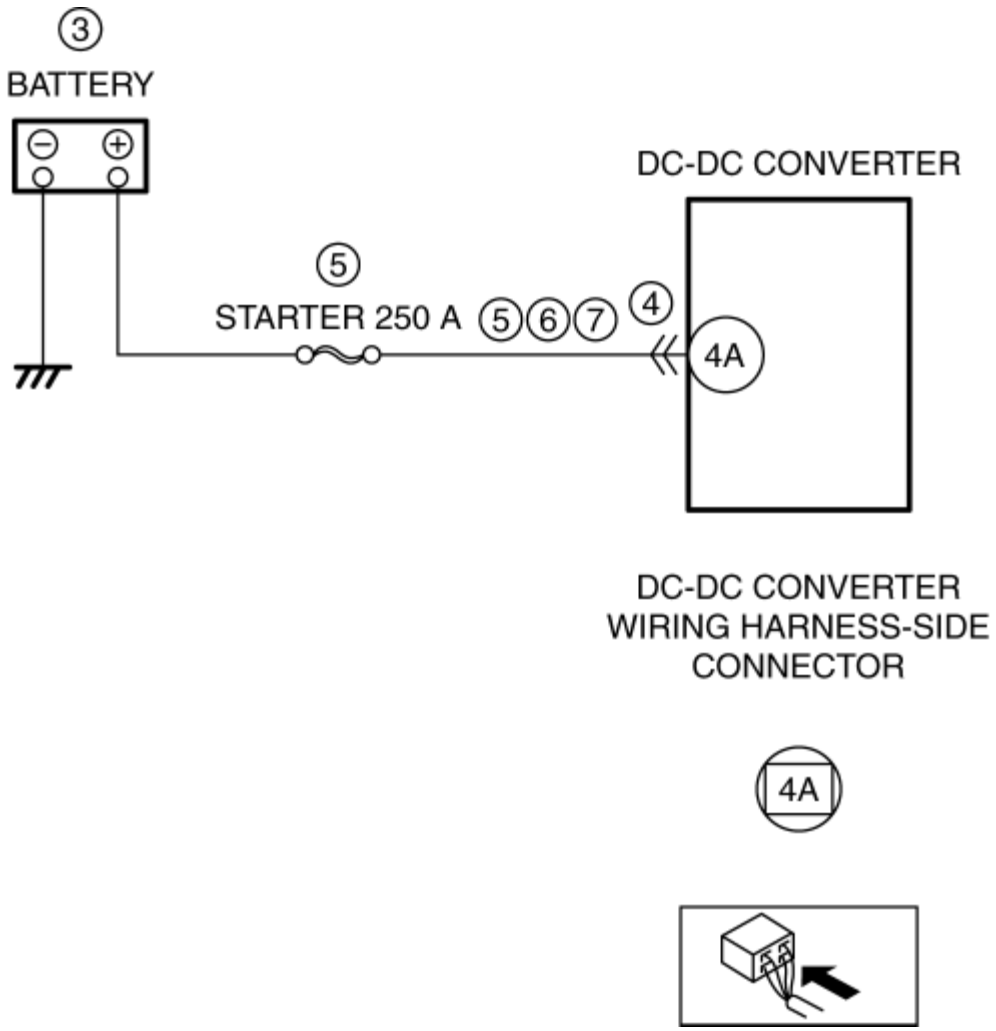

Diagnostic Procedure

STEP	INSPECTION		ACTION
1	**VERIFY RELATED REPAIR INFORMATION AVAILABILITY** • Verify related Service Bulletins and/or on-line repair information availability. • Is any related repair information available?	Yes	Perform repair or diagnosis according to the available repair information. • If the vehicle is not repaired, go to the next step.
		No	Go to the next step.
2	**VERIFY PCM DTCs** • Switch the ignition off, then ON (engine off). • Retrieve the PCM DTCs using the M-MDS. (See **ON-BOARD DIAGNOSTIC TEST [SKYACTIV-G 2.0, SKYACTIV-G 2.5]**.)	Yes	Repair or replace the malfunctioning part according to the applicable DTC troubleshooting. (See **DTC TABLE [SKYACTIV-G 2.0, SKYACTIV-G 2.5]**.)
		No	Go to the next step.

	• Are any DTCs present?		
3	**INSPECT BATTERY** • Inspect the battery. (See **BATTERY INSPECTION [SKYACTIV-G 2.0, SKYACTIV-G 2.5]**.) • Is there any malfunction?	Yes	Recharge or replace the battery, then go to Step 9. (See **BATTERY RECHARGING [SKYACTIV-G 2.0, SKYACTIV-G 2.5]**.) (See **BATTERY REMOVAL/INSTALLATION [SKYACTIV-G 2.0, SKYACTIV-G 2.5]**.)
		No	Go to the next step.
4	**INSPECT DC-DC CONVERTER CONNECTOR CONDITION** • Switch the ignition off. • Disconnect the negative battery cable. (See **NEGATIVE BATTERY CABLE DISCONNECTION/CONNECTION [SKYACTIV-G 2.0, SKYACTIV-G 2.5]**.) • Remove the service plug. (See **SERVICE PLUG DISCONNECTION/CONNECTION [i-ELOOP]**.) • Disconnect the DC-DC converter connector. • Inspect for poor connection (such as damaged/pulled-out pins, corrosion). • Is there any malfunction?	Yes	Repair or replace the connector and/or terminals, then go to Step 9.
		No	Go to the next step.
5	**INSPECT STARTER 250 A FUSE** • Remove the STARTER 250 A fuse. • Inspect the STARTER 250 A fuse. • Is there any malfunction?	Yes	If the fuse is blown: • Refer to the wiring diagram and verify whether or not there is a common connector between battery positive terminal and DC-DC converter terminal 4A. **If there is a common connector:** ▪ Determine the malfunctioning part by inspecting the common connector and the

			terminal for corrosion, damage, or pin disconnection, and the common wiring harness for a short to ground. ▪ Repair or replace the malfunctioning part. **If there is no common connector:** ▪ Repair or replace the wiring harness which has a short to ground. ▪ Replace the fuse. If the fuse is damaged: • Replace the fuse. Go to Step 9.
		No	Reinstall the STARTER 250 A fuse, then go to the next step.
6	**INSPECT DC-DC CONVERTER CIRCUIT FOR SHORT TO GROUND** • Verify that the DC-DC converter connector is disconnected. • Inspect for continuity between DC-DC converter terminal 4A (wiring harness-side) and body ground. • Is there continuity?	Yes	Refer to the wiring diagram and verify whether or not there is a common connector between battery positive terminal and DC-DC converter terminal 4A. **If there is a common connector:** • Determine the malfunctioning part by inspecting the common connector and the terminal for corrosion, damage, or pin disconnection, and the common wiring harness for a short to ground. • Repair or replace the malfunctioning part. **If there is no common connector:** • Repair or replace the wiring harness which has a short to ground.

			Go to Step 9.
		No	Go to the next step.
7	**INSPECT DC-DC CONVERTER CIRCUIT FOR OPEN CIRCUIT** • Verify that the DC-DC converter connector is disconnected. • Inspect for continuity between battery positive terminal and DC-DC converter terminal 4A (wiring harness-side). • Is there continuity?	Yes	Go to the next step.
		No	Refer to the wiring diagram and verify whether or not there is a common connector between battery positive terminal and DC-DC converter terminal 4A. **If there is a common connector:** • Determine the malfunctioning part by inspecting the common connector and the terminal for corrosion, damage, or pin disconnection, and the common wiring harness for an open circuit. • Repair or replace the malfunctioning part. **If there is no common connector:** • Repair or replace the wiring harness which has an open circuit. Go to Step 9.
8	**INSPECT GENERATOR** • Inspect the generator. (See **GENERATOR INSPECTION [SKYACTIV-G 2.0, SKYACTIV-G 2.5 (WITH i-ELOOP)]**.) • Is there any malfunction?	Yes	Replace the generator, then go to the next step. (See **GENERATOR REMOVAL/INSTALLATION [SKYACTIV-G 2.0, SKYACTIV-G 2.5 (WITH i-ELOOP)]**.)
		No	Go to the next step.
9	**VERIFY DTC TROUBLESHOOTING COMPLETED** • Always reconnect all disconnected connectors. • Reconnect the negative battery cable. (See **NEGATIVE BATTERY CABLE DISCONNECTION/CONNECTION [SKYACTIV-G 2.0, SKYACTIV-G 2.5]**.) • Reinstall the service plug. (See **SERVICE PLUG**	Yes	Repeat the inspection from Step 1. • If the malfunction recurs, replace the DC-DC converter. (See **DC-DC CONVERTER REMOVAL/INSTALLATION [i-ELOOP]**.) Go to the next step.
		No	Go to the next step.

	DISCONNECTION/CONNECTION [i-ELOOP].) • Clear the DTC for the DC-DC converter using the M-MDS. (See **CLEARING DTC [i-ELOOP]**.) • Switch the ignition off. • Switch the ignition ON (engine off) and wait for **5 s or more**. • Retrieve the DC-DC converter DTCs using the M-MDS. (See **DTC INSPECTION [i-ELOOP]**.) • Is the same DTC present?		
10	**VERIFY IF OTHER DTCs DISPLAYED** • Are any other DTCs displayed?	Yes	Repair or replace the malfunctioning part according to the applicable DTC troubleshooting. (See **DTC TABLE [i-ELOOP]**.)
		No	DTC troubleshooting completed.

2014 - Mazda3 - I-ELOOP

DTC U3003:17 [i-ELOOP]

DTC U3003:17	DC-DC converter system: power supply voltage high input
DETECTION CONDITION	• The following condition is met for a continuous **5 s** period: ▪ DC-DC converter terminal 4A voltage: **16 V or more**
FAIL-SAFE FUNCTION	• Not applicable
POSSIBLE CAUSE	• PCM DTC or pending code is stored. • Battery malfunction • Generator malfunction • DC-DC converter malfunction
SYSTEM WIRING DIAGRAM	• Not applicable

Diagnostic Procedure

STEP	INSPECTION		ACTION
1	**VERIFY RELATED REPAIR INFORMATION AVAILABILITY** • Verify related Service Bulletins and/or on-line repair information availability. • Is any related repair information available?	Yes	Perform repair or diagnosis according to the available repair information. • If the vehicle is not repaired, go to the next step.
		No	Go to the next step.
2	**VERIFY PCM DTCs** • Switch the ignition off, then ON (engine off). • Retrieve the PCM DTCs using the M-MDS.	Yes	Repair or replace the malfunctioning part according to the applicable DTC troubleshooting. (See **DTC TABLE [SKYACTIV-G 2.0, SKYACTIV-G 2.5]**.)

	(See **ON-BOARD DIAGNOSTIC TEST [SKYACTIV-G 2.0, SKYACTIV-G 2.5]**.) • Are any DTCs present?	No	Go to the next step.
3	**INSPECT BATTERY** • Inspect the battery. (See **BATTERY INSPECTION [SKYACTIV-G 2.0, SKYACTIV-G 2.5]**.) • Is there any malfunction?	Yes	Recharge or replace the battery, then go to Step 5. (See **BATTERY RECHARGING [SKYACTIV-G 2.0, SKYACTIV-G 2.5]**.) (See **BATTERY REMOVAL/INSTALLATION [SKYACTIV-G 2.0, SKYACTIV-G 2.5]**.)
		No	Go to the next step.
4	**INSPECT GENERATOR** • Inspect the generator. (See **GENERATOR INSPECTION [SKYACTIV-G 2.0, SKYACTIV-G 2.5 (WITH i-ELOOP)]**.) • Is there any malfunction?	Yes	Replace the generator, then go to the next step. (See **GENERATOR REMOVAL/INSTALLATION [SKYACTIV-G 2.0, SKYACTIV-G 2.5 (WITH i-ELOOP)]**.)
		No	Go to the next step.
5	**VERIFY DTC TROUBLESHOOTING COMPLETED** • Clear the DTC for the DC-DC converter using the M-MDS. (See **CLEARING DTC [i-ELOOP]**.) • Switch the ignition off. • Switch the ignition ON (engine off) and wait for **5 s or more**. • Retrieve the DC-DC converter DTCs using the M-MDS. (See **DTC INSPECTION [i-ELOOP]**.) • Is the same DTC present?	Yes	Repeat the inspection from Step 1. • If the malfunction recurs, replace the DC-DC converter. (See **DC-DC CONVERTER REMOVAL/INSTALLATION [i-ELOOP]**.) Go to the next step.
		No	Go to the next step.
6	**VERIFY IF OTHER DTCs DISPLAYED** • Are any other DTCs displayed?	Yes	Repair or replace the malfunctioning part according to the applicable DTC troubleshooting. (See **DTC TABLE [i-ELOOP]**.)
		No	DTC troubleshooting completed.

DTC U3003:17 [i-ELOOP]

2014 - Mazda3 - I-ELOOP

SYMPTOM DIAGNOSTIC INDEX [i-ELOOP]

- Verify the malfunctioning symptom and perform malfunction diagnosis according to the applicable No. item.
- The diagnostic troubleshooting procedure includes many steps in which inspection/verification should be performed while the malfunction symptom is occurring.

NO.	Malfunction symptom	Description
1	No.1 “i-ELOOP Inspection Required” is displayed in LCD	• “i-ELOOP Inspection Required” is displayed in LCD • Master warning light is illuminated
2	No.2 Pre-charge mode is performed frequently	• “i-ELOOP changing”is displayed in LCD frequently
3	No.3 i-ELOOP-related gauge in LCD does not move	• Only three gauge segments of the regenerative braking power generation gauge are displayed/only one gauge segment of the capacitor (i-ELOOP) accumulation gauge is displayed

2014 - Mazda3 - I-ELOOP

QUICK DIAGNOSTIC CHART [i-ELOOP]

×: Applicable

		Generator malfunction	Generator drive belt malfunction	Capacitor (i-ELOOP) malfunction	DC-DC converter malfunction	PCM malfunction	Instrument cluster malfunction	i-ELOOP-related part wiring harness malfunction	Engine-related part malfunction	Transmission-related part malfunction	Low battery recharge efficiency	Bypass mode operating
1	"i-ELOOP Inspection Required" is displayed in LCD			×	×	×	×	×				
2	Pre-charge mode is performed frequently	×	×	×	×	×	×	×				
3	i-ELOOP-related gauge in LCD does not move						×		×	×	×	×

2014 - Mazda3 - I-ELOOP

No.1 "i-ELOOP Inspection Required" IS DISPLAYED IN LCD [i-ELOOP]

Description

- “i-ELOOP Inspection Required” is displayed in LCD
- Master warning light is illuminated

Possible Cause

i-ELOOP-related component malfunction (DTCs are detected)

- Capacitor (i-ELOOP) malfunction
- DC-DC converter malfunction
- PCM malfunction
- i-ELOOP-related part wiring harness malfunction

Instrument cluster incorrect display

- Instrument cluster malfunction

Diagnostic Procedure

STEP	INSPECTION	RESULTS	ACTION
1	**VERIFY DTCs** • Using the M-MDS, display the DTCs related to the PCM, DC-DC converter, and instrument cluster. (See **ON-BOARD DIAGNOSTIC TEST [SKYACTIV-G 2.0, SKYACTIV-G 2.5]**.) (See **DTC INSPECTION [i-ELOOP]**.)	Yes	Repair the malfunctioning part according to the applicable DTC troubleshooting. (See **DTC TABLE [SKYACTIV-G 2.0, SKYACTIV-G 2.5]**.) (See **DTC TABLE [i-ELOOP]**.) (See **DTC TABLE [INSTRUMENT**

	(See **DTC INSPECTION [INSTRUMENT CLUSTER]**.) • Are any DTCs displayed?		**CLUSTER]**.)
		No	Inspect the instrument cluster and replace it if there is any malfunction. (See **INSTRUMENT CLUSTER REMOVAL/INSTALLATION**.)

2014 - Mazda3 - I-ELOOP

No.2 PRE-CHARGE MODE IS PERFORMED FREQUENTLY [i-ELOOP]

Description

NOTE:

- If the vehicle is jump started, leave the jumper connected until the warning message is no longer displayed.
- If vehicle is driven while the warning is displayed, a warning sound will be heard and power steering assist will be limited.
- “i-ELOOP changing” is displayed in the LCD frequently.

Possible Cause

Capacitor (i-ELOOP) voltage is low

- Vehicle is left for a long period
- Capacitor (i-ELOOP) malfunction (if DTC is not detected)

i-ELOOP-related part wiring harness malfunction

- Independently and frequently displayed DTC
    - P0A12:00, P0A94:00, P1794:00, U3000:49
- DTC which is displayed frequently after a malfunction occurs caused in combination with a capacitor (i-ELOOP) voltage decrease due to the capacitor (i-ELOOP) not being used for long periods
    - P0A12:00, P0A94:00, P1628:11, P2502:00, P2503:00, U3000:49

Instrument cluster incorrect display

- Instrument cluster malfunction

Diagnostic Procedure

No.2 PRE-CHARGE MODE IS PERFORMED FREQUENTLY [i-ELOOP]

STEP	INSPECTION	RESULTS	ACTION
1	**VERIFY DTCs** • Using the M-MDS, display the DTCs related to the PCM, DC-DC converter, and instrument cluster. (See **ON-BOARD DIAGNOSTIC TEST [SKYACTIV-G 2.0, SKYACTIV-G 2.5]**.) (See **DTC INSPECTION [i-ELOOP]**.) (See **DTC INSPECTION [INSTRUMENT CLUSTER]**.) • Are any DTCs displayed?	Yes	Repair the malfunctioning part according to the applicable DTC troubleshooting. (See **DTC TABLE [SKYACTIV-G 2.0, SKYACTIV-G 2.5]**.) (See **DTC TABLE [i-ELOOP]**.) (See **DTC TABLE [INSTRUMENT CLUSTER]**.)
		No	Go to the next step.
2	**ASK CUSTOMER** • Ask the customer if the vehicle is left undriven for long periods frequently. • Does the customer tends to leave the vehicle undriven for long periods?	Yes	Explain to the customer that the vehicle is normal and that if the vehicle is left undriven for long periods the capacitor (i-ELOOP) voltage is lowered and charging is required.
		No	Go to the next step.
3	**VERIFY IF CAPACITOR (i-ELOOP) HAS MALFUNCTION** • Inspect the capacitor (i-ELOOP). (See **CAPACITOR (i-ELOOP) INSPECTION [i-ELOOP]**.) • Is the capacitor (i-ELOOP) normal?	Yes	Inspect the instrument cluster and replace it if there is any malfunction. (See **INSTRUMENT CLUSTER REMOVAL/INSTALLATION**.)
		No	Replace the capacitor (i-ELOOP). (See **CAPACITOR (i-ELOOP) REMOVAL/INSTALLATION [i-ELOOP]**.)

2014 - Mazda3 - I-ELOOP

No.3 i-ELOOP-RELATED GAUGE IN LCD DOES NOT MOVE [i-ELOOP]

Description

- Only three gauge segments of the regenerative braking power generation gauge are displayed/only one gauge segment of the capacitor (i-ELOOP) accumulation gauge is displayed

Possible Cause

Bypass Mode Is Operating

- Vehicle electric load (current consumption) is **50 A or more**
- Voltage reduction circuit in DC-DC converter is malfunctioning
- Ambient temperature is **less than 0 °C {32 °F}**
- Battery charge condition is **less than 65 %**

Instrument cluster incorrect display

- Instrument cluster malfunction

Other

- Engine-related part malfunction
- Transmission-related part malfunction

Diagnostic Procedure

STEP	INSPECTION	RESULTS	ACTION
1	**VERIFY DTCs**	Yes	Repair the malfunctioning part according to the

	Using the M-MDS, display the DTCs related to the PCM, TCM (ATX), and instrument cluster. (See **ON-BOARD DIAGNOSTIC TEST [SKYACTIV-G 2.0, SKYACTIV-G 2.5]**.) (See **ON-BOARD DIAGNOSTIC SYSTEM DTC INSPECTION [FW6A-EL]**.) (See **DTC INSPECTION [INSTRUMENT CLUSTER]**.) • Are any DTCs displayed?		applicable DTC troubleshooting. (See **DTC TABLE [SKYACTIV-G 2.0, SKYACTIV-G 2.5]**.) (See **ON-BOARD DIAGNOSTIC SYSTEM DTC TABLE [FW6A-EL]**.) (See **DTC TABLE [INSTRUMENT CLUSTER]**.)
		No	Go to the next step.
2	**VERIFY MALFUNCTION CONDITION** • Verify the current display condition of the LCD. • Does the i-ELOOP-related gauge in the LCD operate?	Yes	Go to the next step.
		No	Go to Step 4.
3	**ASK CUSTOMER** • Was the ambient temperature low when the symptom occurred?	Yes	Explain to the customer that the vehicle is normal and that i-ELOOP does not operate to assure battery power supply.
		No	Explain to the customer that the vehicle is normal and that i-ELOOP does not operate to prioritize battery charging.
4	**VERIFY BYPASS MODE OPERATION CONDITION** • Access the DC-DC converter PID BYPS_STAT using the M-MDS. (See **PID/DATA MONITOR INSPECTION [i-ELOOP]**.) • Is BYPS_STAT display "Bypass On"?	Yes	Go to the next step.
		No	Inspect the instrument cluster and replace it if there is any malfunction. (See **INSTRUMENT CLUSTER REMOVAL/INSTALLATION**)
5	**VERIFY CAUSE OF BYPASS MODE OPERATION** • Access the DC-DC converter PID DCDC_OUT_I using the M-MDS. (See **PID/DATA MONITOR INSPECTION [i-ELOOP]**.) • Is DCDC_OUT_I value **50 A or more**?	Yes	Explain to the customer that the vehicle is normal and that i-ELOOP does not operate because of the vehicle electrical load.
		No	Go to the next step.

6	**VERIFY AMBIENT TEMPERATURE** • Access the PCM PID AMB_TEMP using the M-MDS. (See **ON-BOARD DIAGNOSTIC TEST [SKYACTIV-G 2.0, SKYACTIV-G 2.5]**.) • Is AMB_TEMP value **less than 0 °C {32 °F}**?	Yes	Explain to the customer that the vehicle is normal and that i-ELOOP does not operate to assure battery power supply.
		No	Go to the next step.
7	**VERIFY BATTERY CHARGE CONDITION** • Access the PCM PID BATT_SOC using the M-MDS. (See **ON-BOARD DIAGNOSTIC TEST [SKYACTIV-G 2.0, SKYACTIV-G 2.5]**.) • Is BATT_SOC value **less than 65%**?	Yes	Explain to the customer that the vehicle is normal and that i-ELOOP does not operate to prioritize battery charging.
		No	Inspect the instrument cluster and replace it if there is any malfunction. (See **INSTRUMENT CLUSTER REMOVAL/INSTALLATION**)

2014 - Mazda3 - I-ELOOP

CHARGING SYSTEM LOCATION INDEX [SKYACTIV-G 2.0, SKYACTIV-G 2.5 (WITH i-ELOOP)]

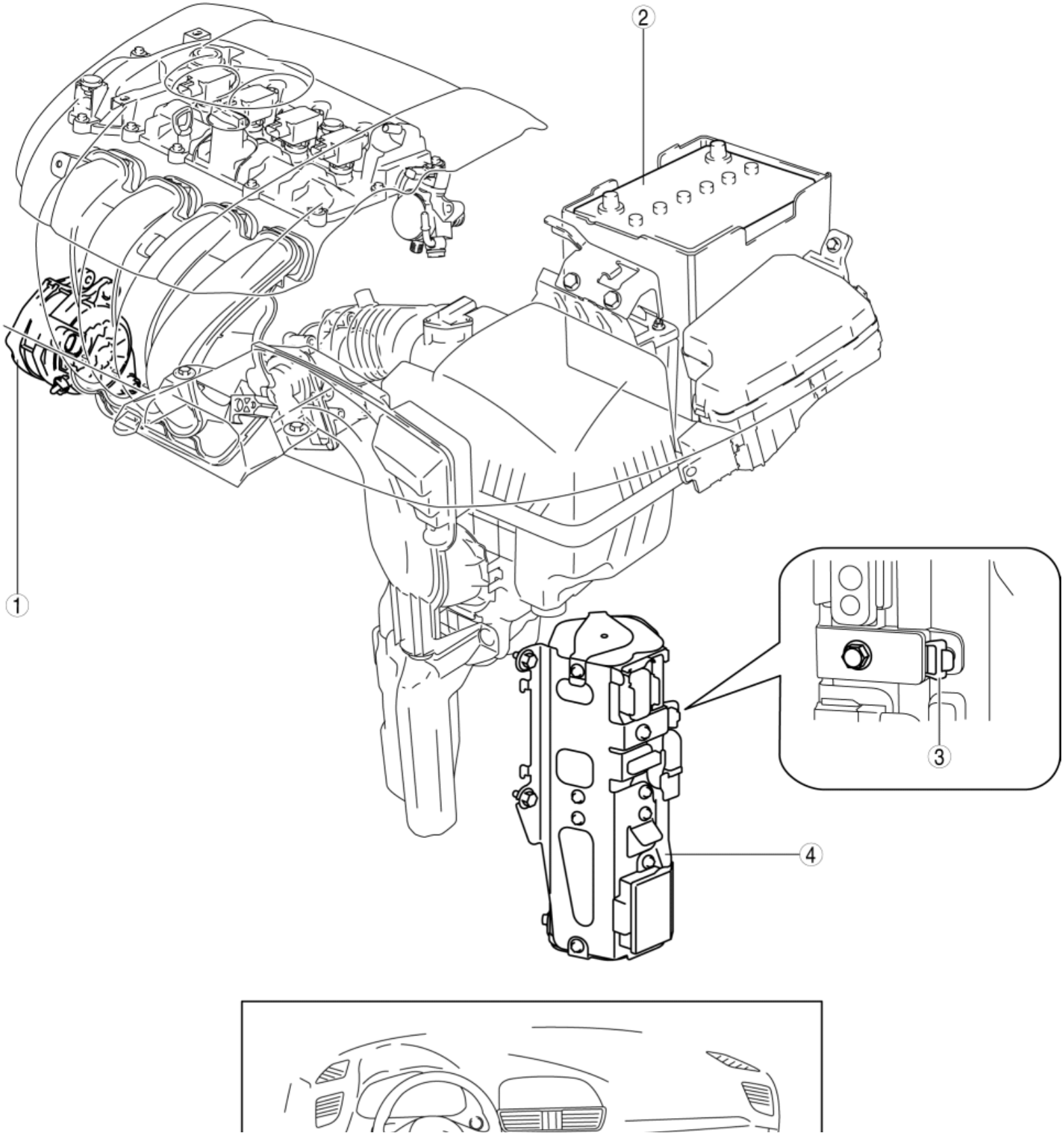

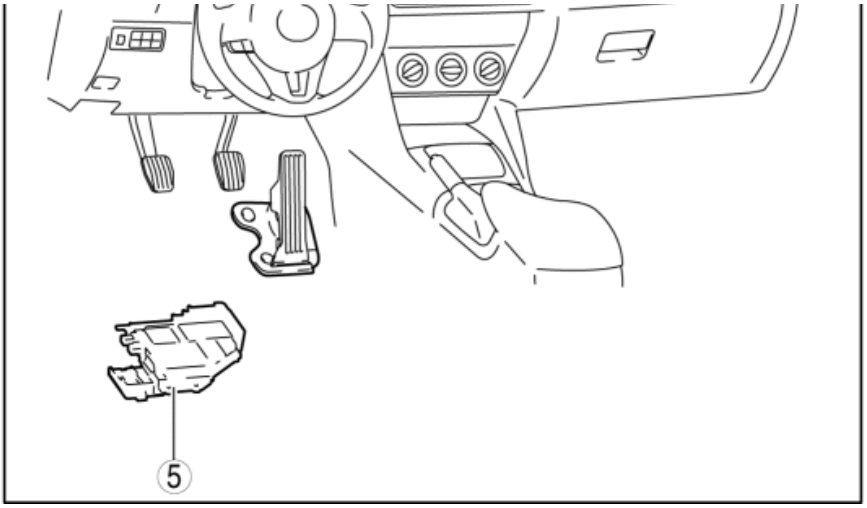

1	Generator (See **GENERATOR REMOVAL/INSTALLATION [SKYACTIV-G 2.0, SKYACTIV-G 2.5 (WITH i-ELOOP)]**.) (See **GENERATOR INSPECTION [SKYACTIV-G 2.0, SKYACTIV-G 2.5 (WITH i-ELOOP)]**.) (See **GENERATOR DISASSEMBLY/ASSEMBLY [SKYACTIV-G 2.0, SKYACTIV-G 2.5 (WITH i-ELOOP)]**.)
2	Battery (See **NEGATIVE BATTERY CABLE DISCONNECTION/CONNECTION [SKYACTIV-G 2.0, SKYACTIV-G 2.5]**.) (See **BATTERY REMOVAL/INSTALLATION [SKYACTIV-G 2.0, SKYACTIV-G 2.5]**.) (See **BATTERY INSPECTION [SKYACTIV-G 2.0, SKYACTIV-G 2.5]**.) (See **BATTERY RECHARGING [SKYACTIV-G 2.0, SKYACTIV-G 2.5]**.)
3	Service plug (See **SERVICE PLUG DISCONNECTION/CONNECTION [i-ELOOP]**.)
4	Capacitor (i-ELOOP) (See **CAPACITOR (i-ELOOP) REMOVAL/INSTALLATION [i-ELOOP]**.) (See **CAPACITOR (i-ELOOP) INSPECTION [i-ELOOP]**.) (See **CAPACITOR (i-ELOOP) COMPULSORY DISCHARGE [i-ELOOP]**.)
5	DC-DC converter (See **DC-DC CONVERTER REMOVAL/INSTALLATION [i-ELOOP]**.) (See **DC-DC CONVERTER INSPECTION [i-ELOOP]**.)

2014 - Mazda3 - I-ELOOP

PROCEDURE BEFORE i-ELOOP-RELATED PART SERVICING [i-ELOOP]

Procedure Before i-ELOOP-Related Part Servicing

WARNING:

- If the terminal of one of the i-ELOOP-related parts contacts the vehicle body with the service plug of the capacitor connected, it could cause a fire and damage to electrical parts. In addition, if the terminal contacts your body, it could cause electrocution. Disconnect the service plug of the capacitor before disconnecting the i-ELOOP-related part terminal. (See **SERVICE PLUG DISCONNECTION/CONNECTION [i-ELOOP]**.)

  i-ELOOP-related part terminal

  - Battery cable terminal of capacitor (i-ELOOP)
  - Engine wiring harness terminal of capacitor (i-ELOOP)
  - Battery cable terminal of DC-DC converter
  - Generator terminal B cable

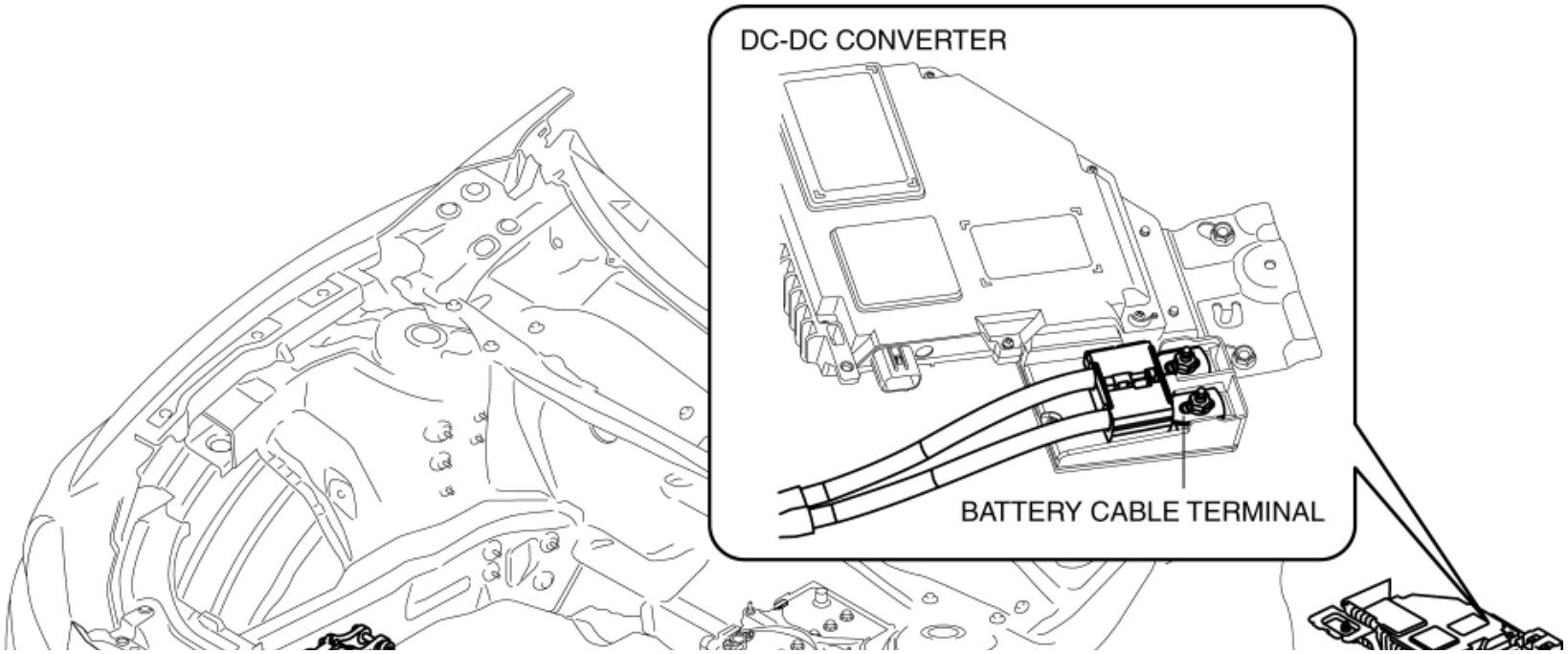

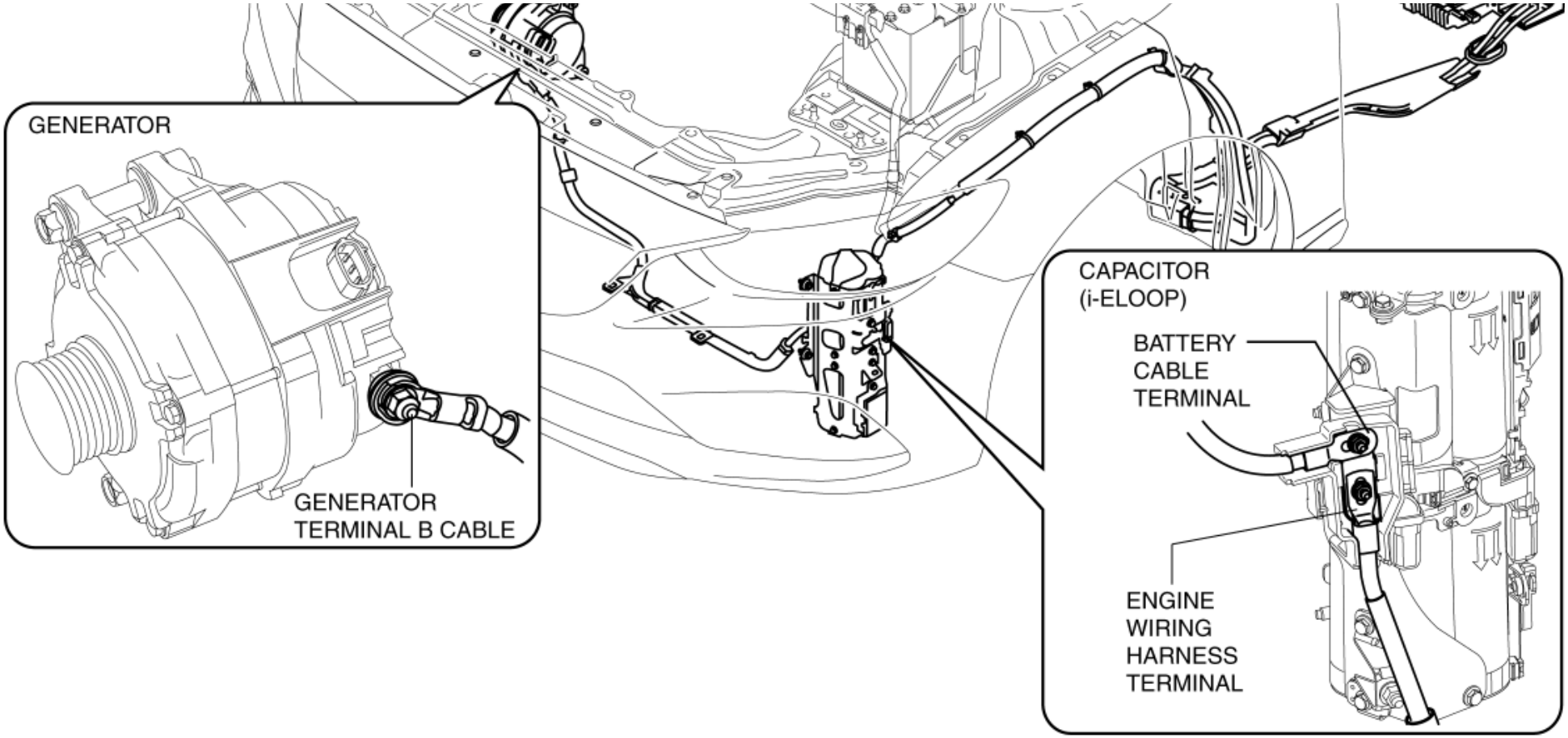
GENERATOR
GENERATOR
TERMINAL B CABLE
CAPACITOR
(i-ELOOP)
BATTERY
CABLE
TERMINAL
ENGINE
WIRING
HARNESS
TERMINAL

2014 - Mazda3 - I-ELOOP

SERVICE PLUG DISCONNECTION/CONNECTION [i-ELOOP]

Procedure Before i-ELOOP-Related Part Servicing

WARNING:

- If the terminal of one of the i-ELOOP-related parts contacts the vehicle body with the service plug of the capacitor connected, it could cause a fire and damage to electrical parts. In addition, if the terminal contacts your body, it could cause electrocution. Disconnect the service plug of the capacitor before disconnecting the i-ELOOP-related part terminal. (See **Service Plug Disconnection/Connection**.)
    - For the i-ELOOP-related part terminals, refer to the “PROCEDURE BEFORE i-ELOOP-RELATED PART SERVICING”. (See **PROCEDURE BEFORE i-ELOOP-RELATED PART SERVICING [i-ELOOP]**.)

Service Plug Disconnection/Connection

CAUTION:

- Do not get dust or oil on the service plug because it could increase the resistance in the capacitor (i-ELOOP).

1. Disconnect the negative battery cable. (See **NEGATIVE BATTERY CABLE DISCONNECTION/CONNECTION [SKYACTIV-G 2.0, SKYACTIV-G 2.5]**.)
2. Turn the steering wheel completely to the right.
3. Remove the 3 fasteners for the front mudguard (LH) shown in the figure.

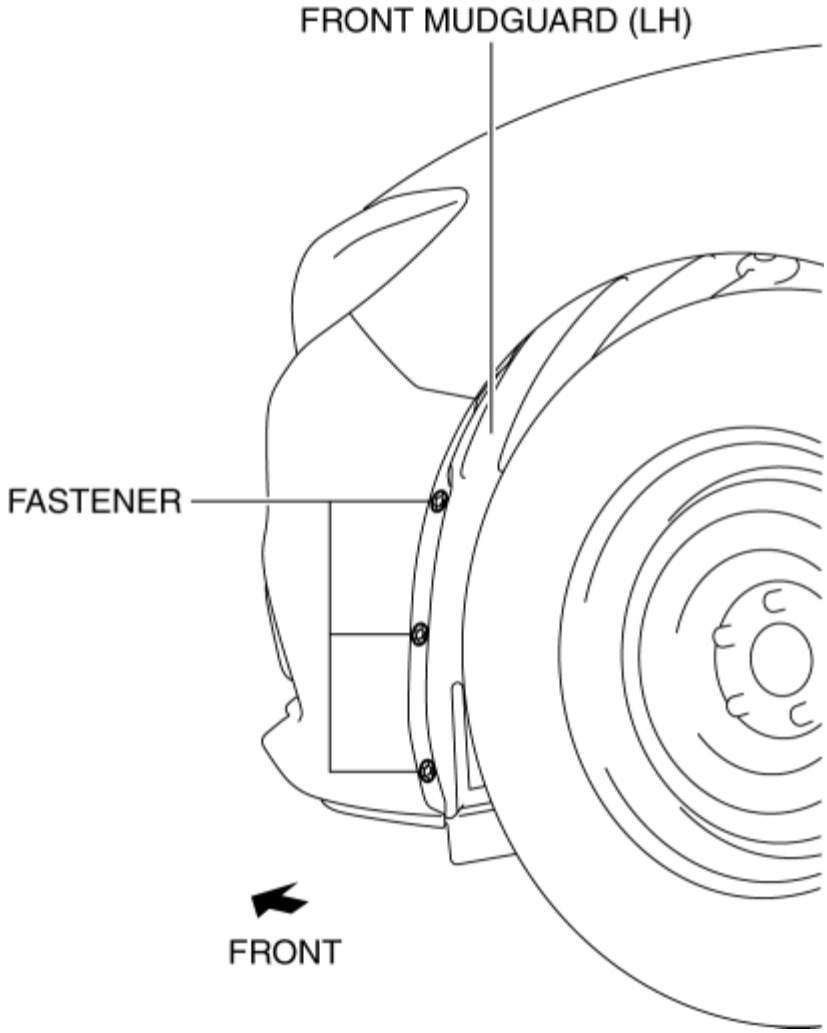

4. Remove the service plug installation bolt shown in the figure.

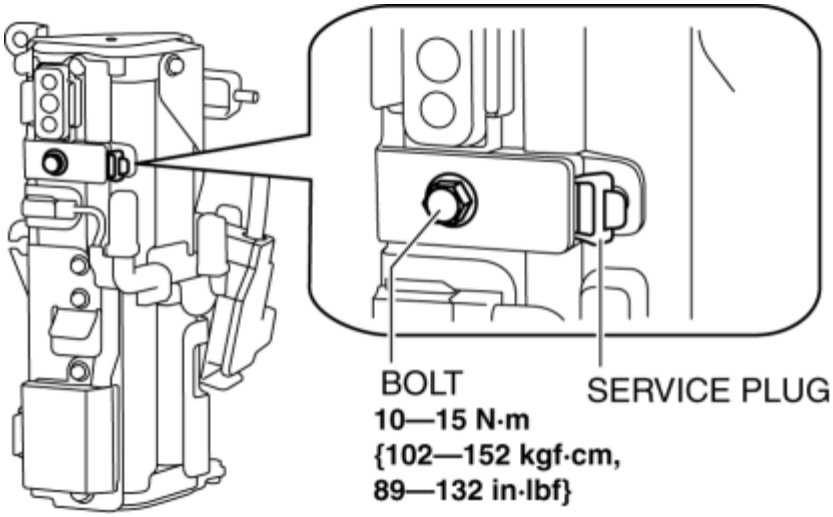

5. Pull the service plug in the direction of the arrow shown in the figure.

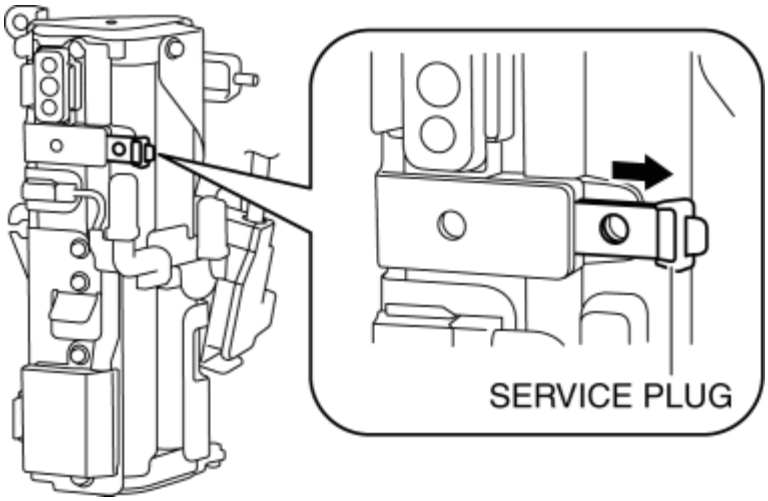

NOTE:

- The service plug cannot be completely removed.

6. Using the removed installation bolt, fix the service plug at the position to which it was pulled out.

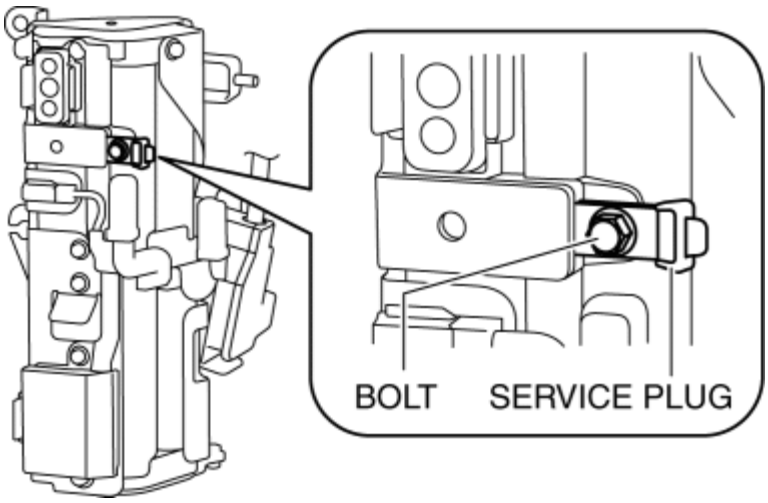

7. Perform removal/installation of target i-ELOOP related parts.

8. Install in the reverse order of removal.

2014 - Mazda3 - I-ELOOP

GENERATOR REMOVAL/INSTALLATION [SKYACTIV-G 2.0, SKYACTIV-G 2.5 (WITH i-ELOOP)]

WARNING:

- Remove and install all parts when the engine is cold, otherwise they can cause severe burns or serious injury.

Procedure Before i-ELOOP-Related Part Servicing

WARNING:

- If the terminal of one of the i-ELOOP-related parts contacts the vehicle body with the service plug of the capacitor connected, it could cause a fire and damage to electrical parts. In addition, if the terminal contacts your body, it could cause electrocution. Disconnect the service plug of the capacitor before disconnecting the i-ELOOP-related part terminal. (See **SERVICE PLUG DISCONNECTION/CONNECTION [i-ELOOP]**.)
    - For the i-ELOOP-related part terminals, refer to the “PROCEDURE BEFORE i-ELOOP-RELATED PART SERVICING”. (See **PROCEDURE BEFORE i-ELOOP-RELATED PART SERVICING [i-ELOOP]**.)

Generator Removal/Installation

1. Disconnect the negative battery cable. (See **NEGATIVE BATTERY CABLE DISCONNECTION/CONNECTION [SKYACTIV-G 2.0, SKYACTIV-G 2.5]**.)
2. Disconnect the service plug. (See **SERVICE PLUG DISCONNECTION/CONNECTION [i-ELOOP]**.)
3. Remove the front under cover No.2. (See **FRONT UNDER COVER No.2 REMOVAL/INSTALLATION**.)
4. Remove the generator drive belt. (See **DRIVE BELT REMOVAL/INSTALLATION [SKYACTIV-G 2.0, SKYACTIV-G 2.5]**.)
5. Remove the A/C compressor with the cooler hose still connected and secure it using wire or rope so that it is out of the way. (with A/C) (See **A/C COMPRESSOR REMOVAL/INSTALLATION**.)
6. Remove in the order indicated in the table.
7. Install in the reverse order of removal.

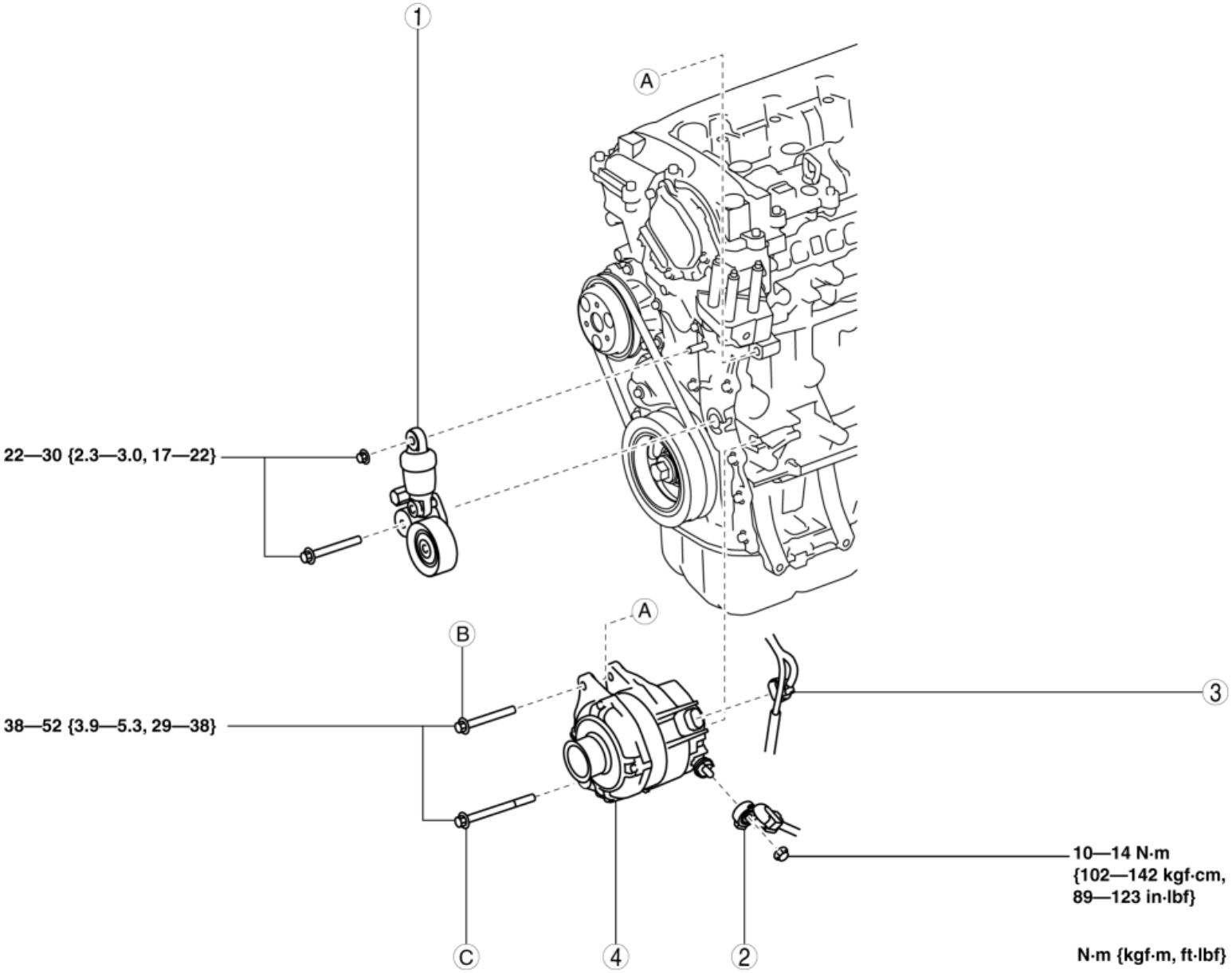

1	Drive belt auto tensioner (See **Drive belt auto tensioner installation note**.)
2	Terminal B cable
3	Generator connector
4	Generator (See **Generator removal note**.) (See **Generator installation note**.)

Generator removal note

1. Fully loosen the generator lower bolt and pull it outward until it contacts the body frame.

NOTE:

The generator can be removed without fully removing the lower bolt from the engine.

2. Remove the generator upper bolt.
3. Remove the generator together with the lower bolt from the engine.
4. Remove the generator from above the engine compartment.

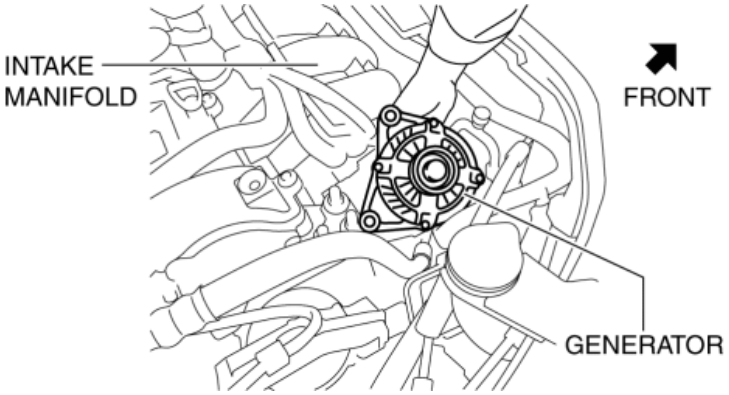

Generator installation note

1. To facilitate the installation of the generator to the engine, grasp the spacer in the bolt installation hole using pliers and push it down to the nut side.

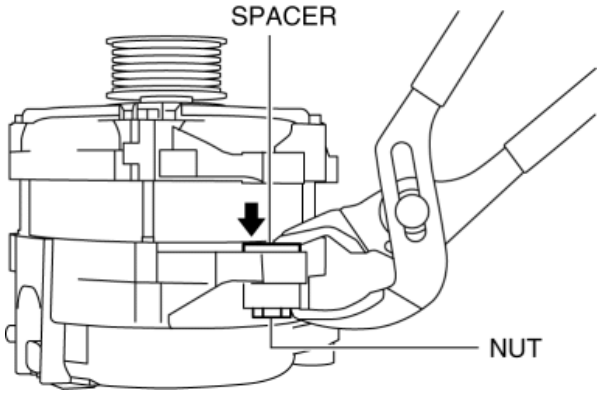

2. Temporarily install the generator to the engine with the bolt C.

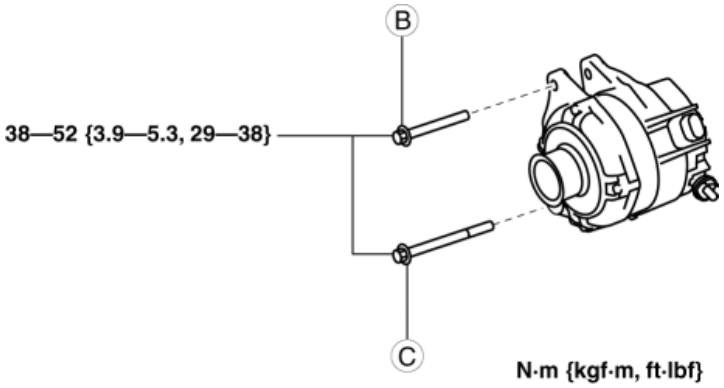

3. Align the generator fixing hole with the engine side hole, then temporarily tighten the generator installation bolt B.
4. Securely tighten the generator installation bolts in the order of B, C.

Drive belt auto tensioner installation note

CAUTION:

- To allow the drive belt auto tensioner to function correctly, always bleed the air from the drive belt auto tensioner using the following procedure after assembling the drive belt auto tensioner.

1. Install the drive belt auto tensioner to the engine.

CAUTION:

- To prevent damage to the drive belt auto tensioner, do not apply excessive torque after the tensioner moves full-stroke.

2. Insert the wrench onto the cast hexagon on the drive belt auto tensioner, move the drive belt auto tensioner up and down at full-stroke three times to bleed the air.

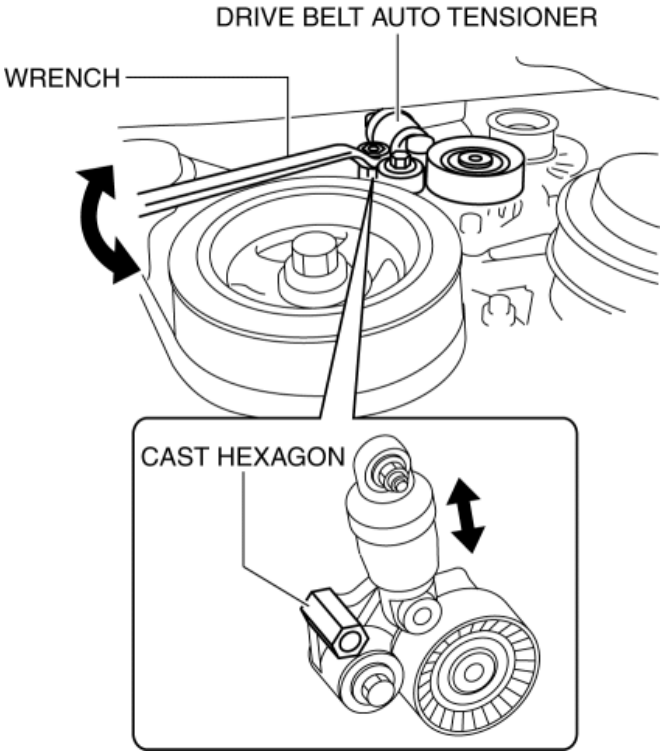

NOTE:

- By moving the drive belt auto tensioner up and down full-stroke three times, the piston inside the tensioner moves to bleed the air.

2014 - Mazda3 - I-ELOOP

GENERATOR INSPECTION [SKYACTIV-G 2.0, SKYACTIV-G 2.5 (WITH i-ELOOP)]

CAUTION:

1. Do not apply direct battery positive voltage to generator terminal 2A and 2B, otherwise it could cause damage to the internal parts (regulator) of the generator.

Charging System Warning Light

1. Verify that the battery is fully charged.

2. Verify that the assembly condition of the drive belt is normal. (See **DRIVE BELT INSPECTION [SKYACTIV-G 2.0, SKYACTIV-G 2.5]**.)

3. Switch the ignition ON (engine off), verify that the charging system warning light illuminates.

   - If it does not illuminate, inspect the charging system warning light and the wiring harness.

     1. If the charging system warning light and the wiring harness are normal, inspect the PCM.

4. Verify that the charging system warning light turns off after the engine is started.

   - If the charging system warning light does not turn off, perform the DTC inspection, then perform troubleshooting according to the corresponding diagnostic procedure. (See **ON-BOARD DIAGNOSTIC TEST [SKYACTIV-G 2.0, SKYACTIV-G 2.5]**.) (See **DTC TABLE [SKYACTIV-G 2.0, SKYACTIV-G 2.5]**.)

Generator

Generator voltage inspection

1. Verify that the battery is fully charged.

2. Verify that the assembly condition of the drive belt is normal. (See **DRIVE BELT INSPECTION [SKYACTIV-G 2.0, SKYACTIV-G 2.5]**.)

3. Turn off all electrical loads.

4. Start the engine.

5. Verify that the generator rotates smoothly without any noise while the engine is running.

   - If there is any noise, find the cause and repair or replace the generator.

6. Measure the voltage at each terminal using a tester.

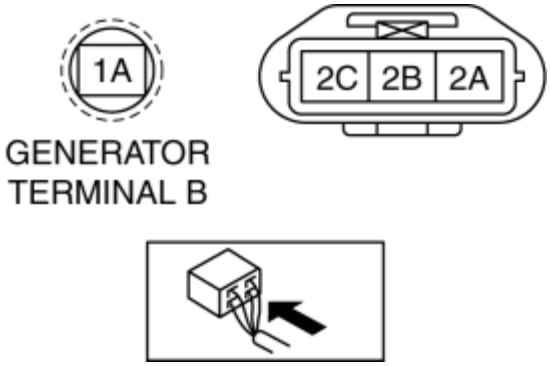

- If not as specified, find the cause and repair or replace the applicable part.

Generator standard voltage [IG-ON]

- Terminal 1A: Capacitor voltage
- Terminal 2A: Approx. 1.0 V
- Terminal 2B: Approx. 1.0 V
- Terminal 2C: B+

Generator standard voltage [Idle, 20 °C {68 °F}]

- Terminal 1A: Capacitor voltage
- Terminal 2A, 2B: Turn the electrical loads (such as headlights, blower motor, rear window defroster, brake lights) on and verify that the voltage reading increases.
- Terminal 2C: B+

Generator current inspection

NOTE:

1. Since the charging current decreases rapidly after starting the engine, carry out the following procedure quickly, and read the maximum current value.

1. Verify that the battery is fully charged.

2. Verify that the assembly condition of the drive belt is normal. (See **DRIVE BELT INSPECTION [SKYACTIV-G 2.0, SKYACTIV-G 2.5]**.)

3. Disconnect the negative battery cable.

4. Connect a tester, which can read **120 A or more**, between generator terminal B and generator terminal B cable.

5. Connect the negative battery cable. (See **NEGATIVE BATTERY CABLE DISCONNECTION/CONNECTION [SKYACTIV-G 2.0, SKYACTIV-G 2.5]**.)

6. Turn off all electrical loads.

7. Start the engine.

NOTE:

1. When the electrical load on the vehicle is low, the specified current cannot be verified although the generator is normal. In this case, increase the electrical load (Leave the headlights turned on for a while, then discharge the battery, or use a similar method.) and recheck.
2. If the generator itself or the ambient temperature are too high, the specified current also cannot be verified. In this case, cool down the generator and recheck.

8. With the electric loads such as headlights, blower motor, rear window defroster, brake lights turned on, verify that the current increases.

   1. If not as specified, replace the generator. (See **GENERATOR REMOVAL/INSTALLATION [SKYACTIV-G 2.0, SKYACTIV-G 2.5 (WITH i-ELOOP)]**.)

Generator generated current maximum value (with i-ELOOP) (reference value) [Ambient temperature: 20 °C {68 °F}, Engine hot]

Engine speed (rpm)	Terminal 1A voltage (V)	Generator output current (A)
1,000	15	130
2,000	15	150

Generator Internal Parts

Rotor

1. Measure the resistance between the slip rings using a tester.

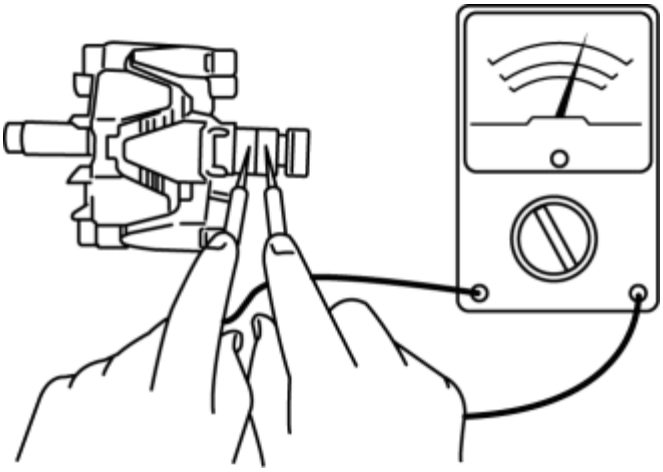

- If not within specification, replace the rotor.

  Generator rotor resistance (between slip rings) [20 °C {68 °F}]

- 1.8—2.1 ohms

2. Verify that there is no continuity between the slip ring and core using a tester.

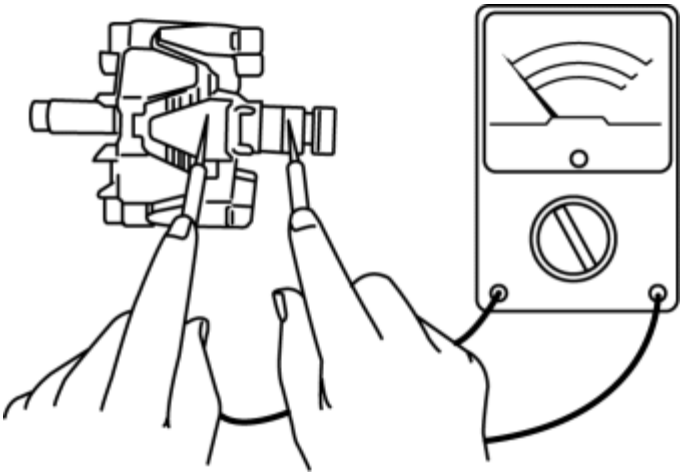

- If there is continuity, replace the rotor.

3. Inspect the slip ring surface condition.

- If the slip ring surface is rough, use a lathe or fine sandpaper to make it smooth.

Stator coil

1. Verify that the continuity is as indicated in the table.

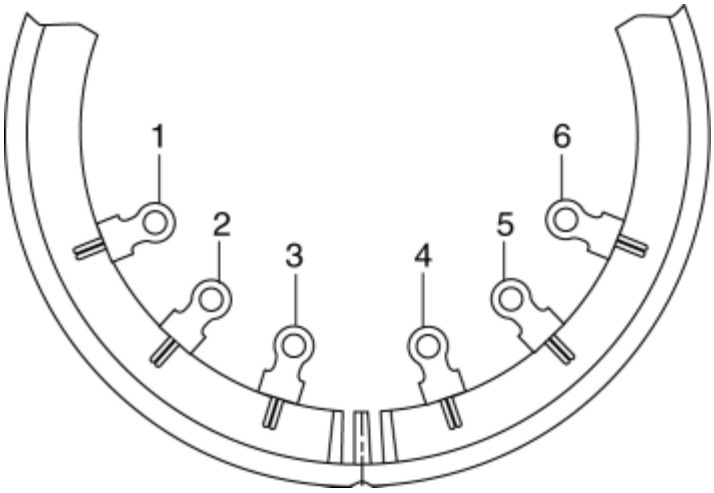

○—○ : Continuity

Terminal					
1	2	3	4	5	6
○—○					
○		○			
	○—○				
			○—○		
			○		○
				○—○	

- If there is any malfunction, replace the stator.

2. Verify that there is no continuity between the stator coil leads and core using a tester.

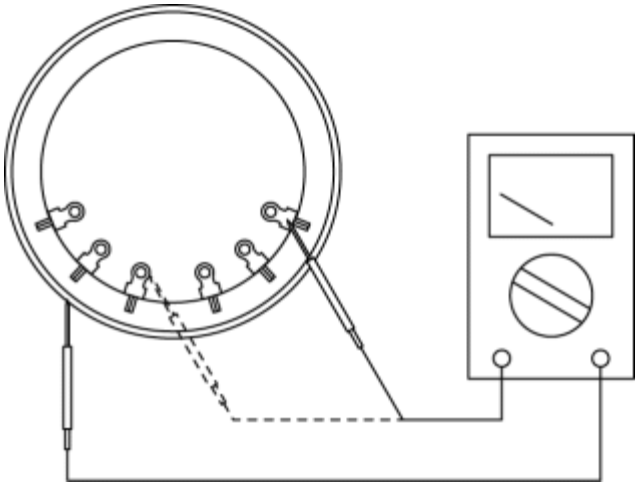

- If there is continuity, replace the stator coil.

Brush

1. Inspect brushes for wear.

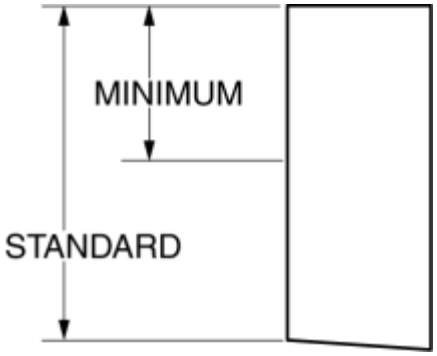

- If any brush is worn almost to or beyond the limit, replace all of the brushes.

  Generator brush length

- Standard: 22.5 mm {0.886 in}
- Minimum: 5.0 mm {0.20 in}

Brush spring

1. Measure the force of the brush spring using a spring pressure gauge.
2. Read the spring pressure gauge at the brush tip projection of **2 mm {0.08 in}.**

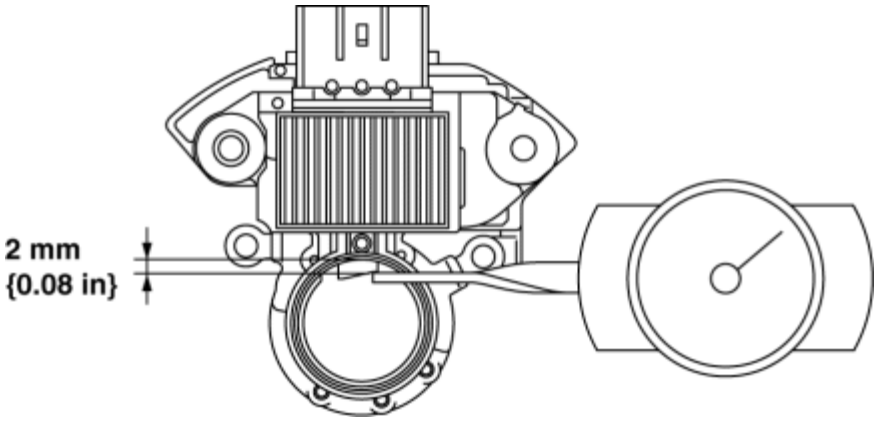

- If not within specification, replace the brush spring.

  Generator brush spring force

- Standard: 4.1—5.3 N {0.42—0.54 kgf, 1.0—1.1 lbf}
- Minimum: 1.7 N {0.17 kgf, 0.38 lbf}

Rectifier (Using an analog circuit tester)

1. Inspect for continuity of the diodes using an analog circuit tester.

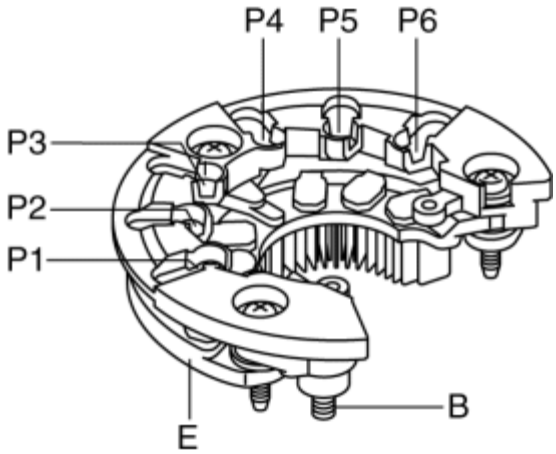

- If not as specified, replace the rectifier.

Specification

Negative	Positive	Continuity
E	P1, P2, P3, P4, P5, P6	Yes
B		No
P1, P2, P3, P4, P5, P6	E	No
	B	Yes

Rectifier (Using a digital circuit tester)

1. Inspect for continuity of the diodes using a digital circuit tester.
   - If not as specified, replace the rectifier.

Specification

Negative	Positive	Continuity
E	P1, P2, P3, P4, P5, P6	No
B		Yes
P1, P2, P3, P4, P5, P6	E	Yes
	B	No

Bearing

1. Inspect for abnormal noise, looseness, and sticking.

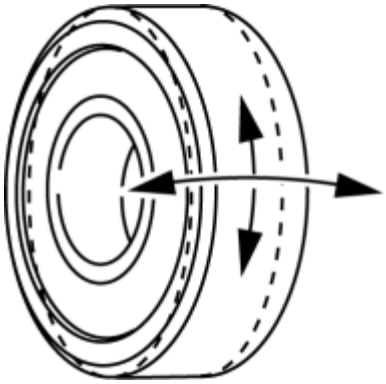

   - Replace the bearing if necessary.

2014 - Mazda3 - I-ELOOP

GENERATOR DISASSEMBLY/ASSEMBLY [SKYACTIV-G 2.0, SKYACTIV-G 2.5 (WITH i-ELOOP)]

1. Disassemble in the order indicated in the table.
2. Assemble in the reverse order of disassembly.

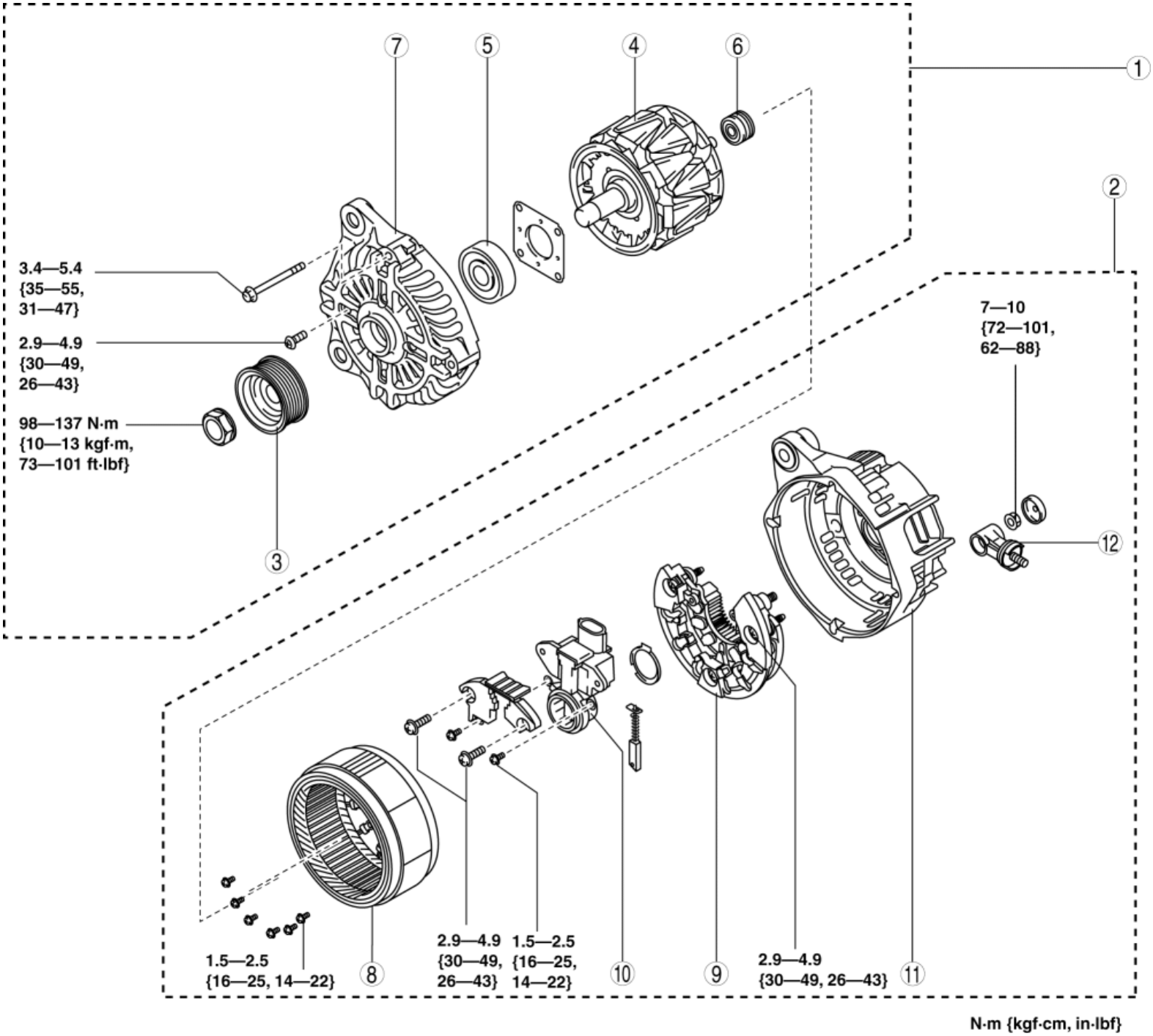

1	Rotor component

2	Stator coil component
3	Pulley
4	Rotor
5	Front bearing
6	Rear bearing
7	Front cover
8	Stator coil (See **Stator Coil Disassembly/Assembly Note**.)
9	Rectifier
10	Regulator component
11	Rear cover
12	Terminal B component

Stator Coil Disassembly/Assembly Note

CAUTION:

- Melt the solder quickly, otherwise the diodes (rectifier) and regulator will be damaged by excessive heat.

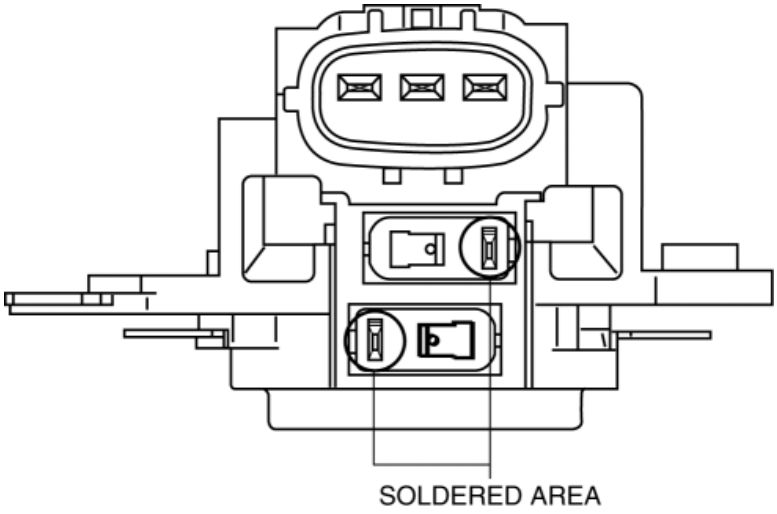

2014 - Mazda3 - I-ELOOP

CAPACITOR (i-ELOOP) REMOVAL/INSTALLATION [i-ELOOP]

Procedure Before i-ELOOP-Related Part Servicing

WARNING:

- If the terminal of one of the i-ELOOP-related parts contacts the vehicle body with the service plug of the capacitor connected, it could cause a fire and damage to electrical parts. In addition, if the terminal contacts your body, it could cause electrocution. Disconnect the service plug of the capacitor before disconnecting the i-ELOOP-related part terminal. (See **SERVICE PLUG DISCONNECTION/CONNECTION [i-ELOOP]**.)
    - For the i-ELOOP-related part terminals, refer to the “PROCEDURE BEFORE i-ELOOP-RELATED PART SERVICING”. (See **PROCEDURE BEFORE i-ELOOP-RELATED PART SERVICING [i-ELOOP]**.)

Cautions On Handling Capacitor (i-ELOOP)

CAUTION:

- If the capacitor (i-ELOOP) is placed on its side, its function may be lost. When storing/transporting the capacitor, do not place it on its side. (Store/transport in upright position)
- Do not use a capacitor (i-ELOOP) that has been dropped because it may not operate correctly.
- When disposing of the capacitor (i-ELOOP), perform compulsory discharge of the capacitor before disposal. (See **CAPACITOR (i-ELOOP) COMPULSORY DISCHARGE [i-ELOOP]**.)

Capacitor (i-ELOOP) Removal/Installation

1. Disconnect the negative battery cable. (See **NEGATIVE BATTERY CABLE DISCONNECTION/CONNECTION [SKYACTIV-G 2.0, SKYACTIV-G 2.5]**.)
2. Remove the front under cover No.1. (See **FRONT UNDER COVER No.1 REMOVAL/INSTALLATION**.)
3. Set the front mudguard (LH) aside as shown in the figure. (See **MUDGUARD REMOVAL/INSTALLATION**.)

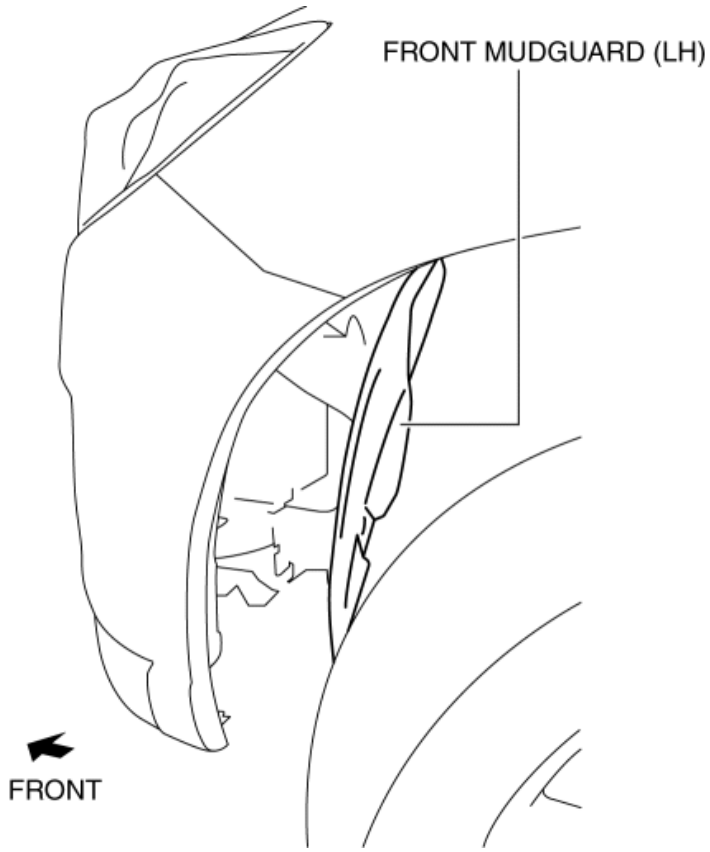

4. Disconnect the service plug. (See **SERVICE PLUG DISCONNECTION/CONNECTION [i-ELOOP]**.)

5. Remove in the order indicated in the table.

6. Install in the reverse order of removal.

7. When disposing of the capacitor (i-ELOOP), perform compulsory discharge of the capacitor before disposal. (See **CAPACITOR (i-ELOOP) COMPULSORY DISCHARGE [i-ELOOP]**.)

8. If the capacitor (i-ELOOP) is replaced with a new one, idle the engine to charge the capacitor.

NOTE:

- A warning message is displayed in the instrument cluster while the capacitor is charging. Continue idling the engine until the warning message no longer appears.

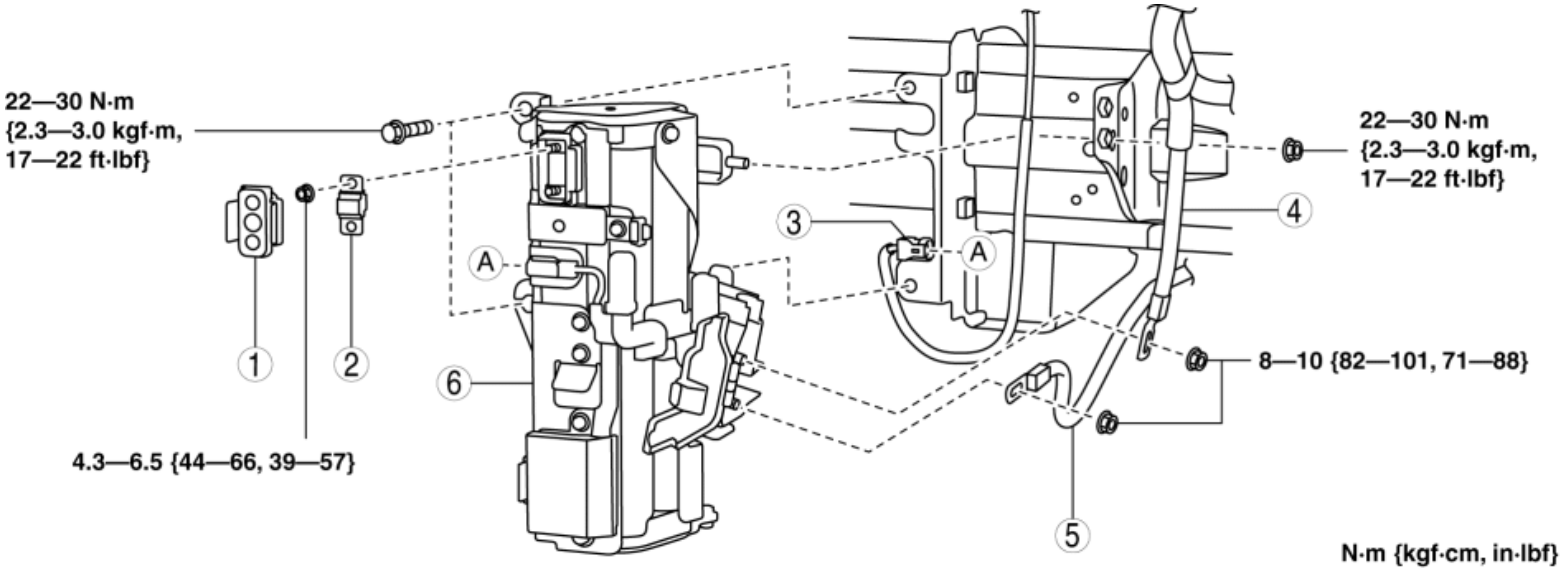

1	Fuse cover (for fuse removal/installation only)
2	Fuse (for fuse removal/replacement only)
3	Capacitor connector, wiring harness
4	Battery cable
5	Engine wiring harness
6	Capacitor (i-ELOOP) (See **Capacitor (i-ELOOP) installation note**.)

Capacitor (i-ELOOP) installation note

1. When replacing a capacitor (i-ELOOP) with a new one, remove the short-wire installed to the new capacitor.

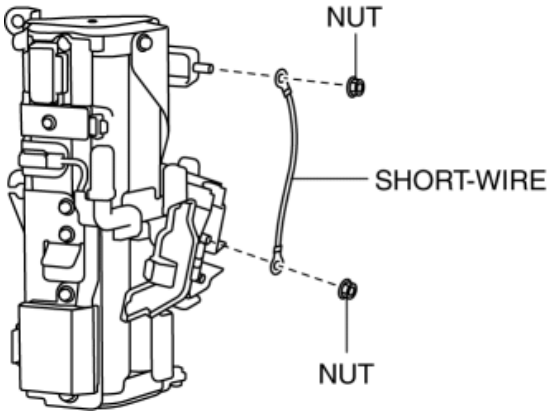

NOTE:

- Dispose of the removed short-wire and nuts as they are unnecessary.

2014 - Mazda3 - I-ELOOP

CAPACITOR (i-ELOOP) INSPECTION [i-ELOOP]

1. Verify that the capacitor (i-ELOOP) related DTC is detected. (See **DTC INSPECTION [i-ELOOP]**.) (See **ON-BOARD DIAGNOSTIC TEST [SKYACTIV-G 2.0, SKYACTIV-G 2.5]**.)

- If DTCs are detected, repair the malfunctioning part according to the applicable DTC troubleshooting.
- If a DTC is not detected, go to the next step.

2. Turn the steering wheel completely to the right.

3. Remove the front under cover No.1. (See **FRONT UNDER COVER No.1 REMOVAL/INSTALLATION**.)

4. Remove the 3 fasteners for the front mudguard (LH) shown in the figure.

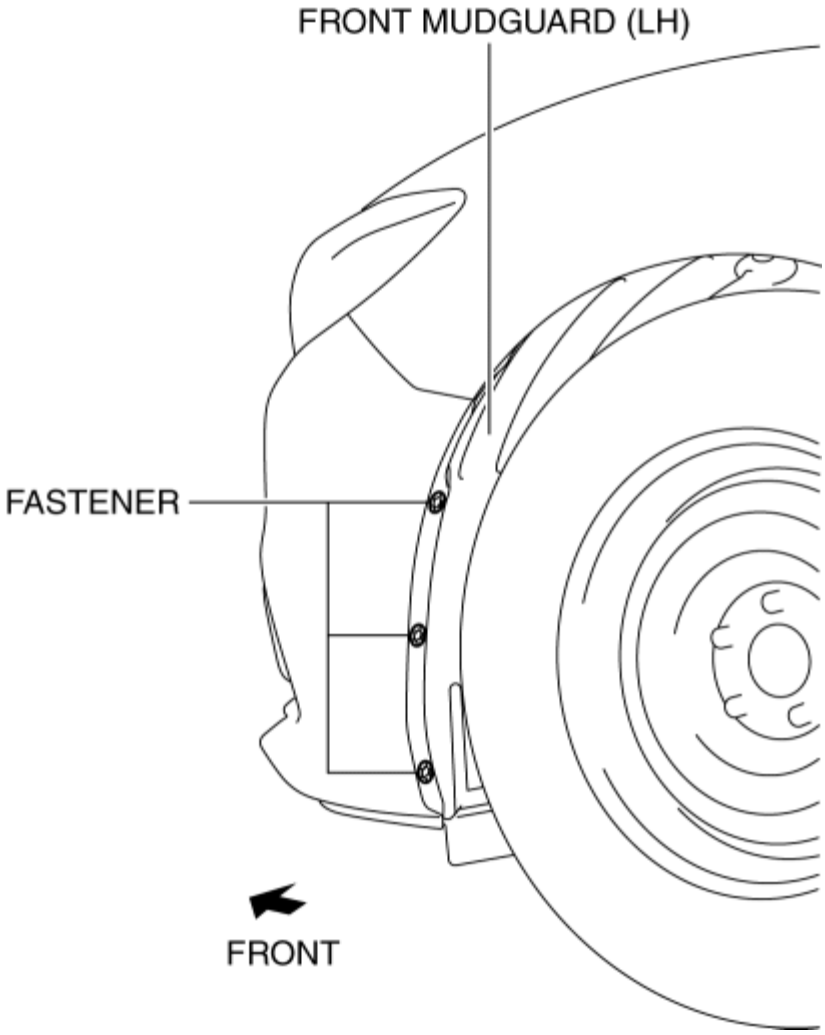

5. Do a visual inspection of the capacitor (i-ELOOP).

- If the capacitor (i-ELOOP) is damaged, replace it. (See **CAPACITOR (i-ELOOP)**

REMOVAL / INSTALLATION [i-ELOOP].)

6. Install in the reverse order of removal.

2014 - Mazda3 - I-ELOOP

CAPACITOR (i-ELOOP) COMPULSORY DISCHARGE [i-ELOOP]

Capacitor (i-ELOOP) Disposal Note

WARNING:

- If the vehicle or parts are disposed of (scrapped) while the capacitor (i-ELOOP) is charged with electricity, it could cause the following accidents. Before disposing of the vehicle or parts, always discharge the capacitor (i-ELOOP) to prevent the following accidents from occurring:

  (See **Capacitor (i-ELOOP) Compulsory Discharge**.)

  - Ignition generated by a shorted current may ignite flammable objects
  - The wiring harness temperature increases by the shorted current while it is disconnected and cause severe burns and serious injury if the wiring harness is touched
  - Touching the wiring harness while your body is wet with the wiring harness disconnected may result in electrical shock

Capacitor (i-ELOOP) Compulsory Discharge

1. Disconnect the negative battery cable. (See **NEGATIVE BATTERY CABLE DISCONNECTION/CONNECTION [SKYACTIV-G 2.0, SKYACTIV-G 2.5]**.)
2. Disconnect the service plug. (See **SERVICE PLUG DISCONNECTION/CONNECTION [i-ELOOP]**.)
3. Remove the discharge box cover.

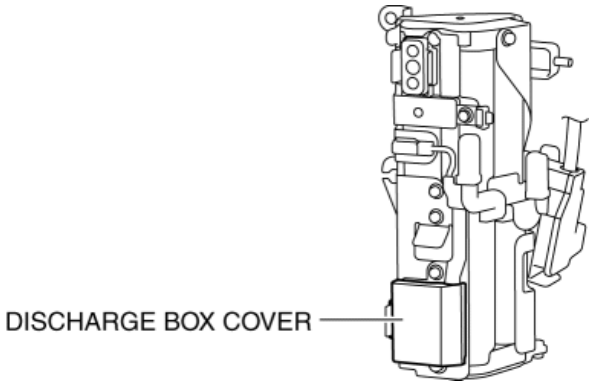

4. Connect the connector in the discharge box to the plug.

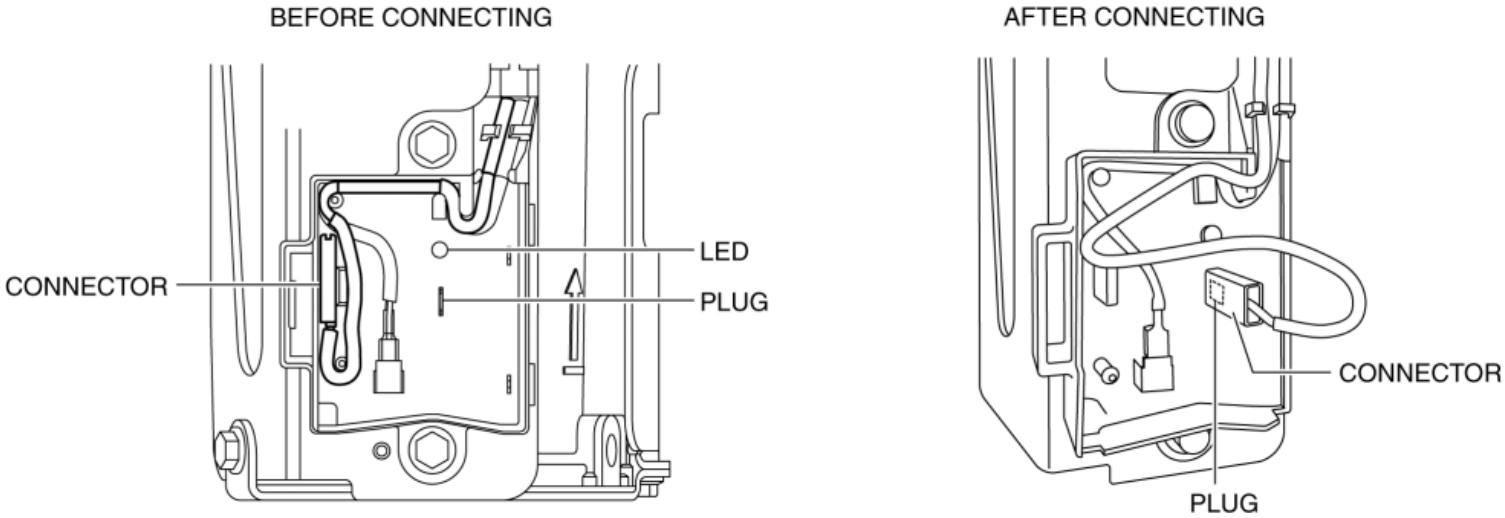

5. Verify that the LED which displays during discharging is displayed.

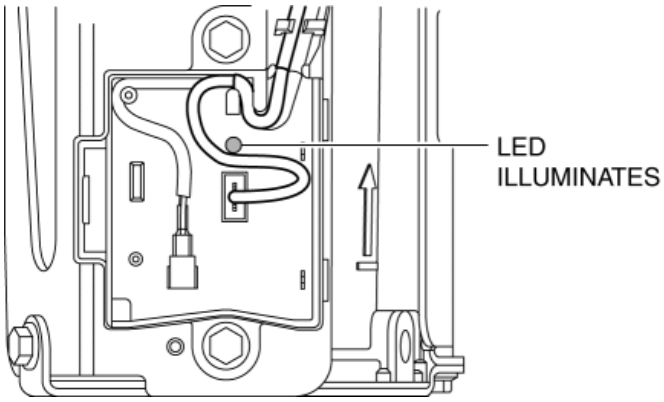

CAUTION:

- Do not touch the discharge box because the inside of the box becomes hot during discharging.

NOTE:

- The LED turns off when the discharge is completed. Completion of discharge takes a maximum of approx. 2 hours.

6. Verify that the LED turns off.

CAUTION:

- Do not return the service plug to the original position even after discharging is finished.

7. Dispose of the vehicle or the parts.

2014 - Mazda3 - I-ELOOP

DC-DC CONVERTER REMOVAL/INSTALLATION [i-ELOOP]

Procedure Before i-ELOOP-Related Part Servicing

WARNING:

- If the terminal of one of the i-ELOOP-related parts contacts the vehicle body with the service plug of the capacitor connected, it could cause a fire and damage to electrical parts. In addition, if the terminal contacts your body, it could cause electrocution. Disconnect the service plug of the capacitor before disconnecting the i-ELOOP-related part terminal. (See **SERVICE PLUG DISCONNECTION/CONNECTION [i-ELOOP]**.)
    - For the i-ELOOP-related part terminals, refer to the “PROCEDURE BEFORE i-ELOOP-RELATED PART SERVICING”. (See **PROCEDURE BEFORE i-ELOOP-RELATED PART SERVICING [i-ELOOP]**.)

DC-DC Converter Removal/Installation

1. Disconnect the negative battery cable. (See **NEGATIVE BATTERY CABLE DISCONNECTION/CONNECTION [SKYACTIV-G 2.0, SKYACTIV-G 2.5]**.)
2. Disconnect the service plug. (See **SERVICE PLUG DISCONNECTION/CONNECTION [i-ELOOP]**.)
3. Remove the front seat component (LH). (See **FRONT SEAT REMOVAL/INSTALLATION**.)
4. Remove in the order indicated in the table.
5. Install in the reverse order of removal.

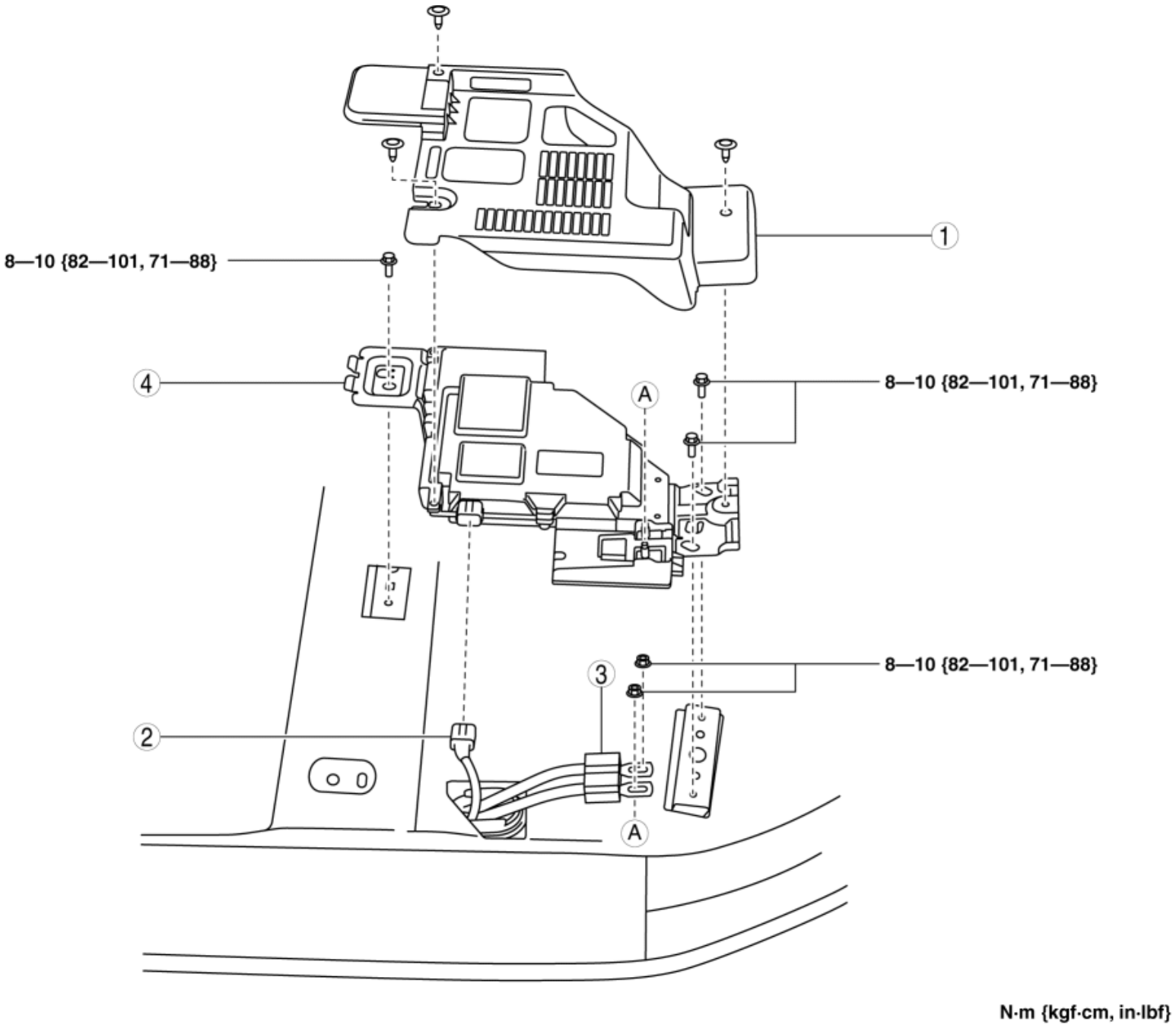

1	Cover (See **Cover installation note**.)
2	DC-DC converter connector
3	Battery cable (See **Battery cable removal note**.)
4	DC-DC converter

Battery cable removal note

1. Remove the battery cable terminal nuts.

2. Using a flathead screwdriver, shift the battery cable tab in the direction of the arrow, raise the battery cable and remove it.

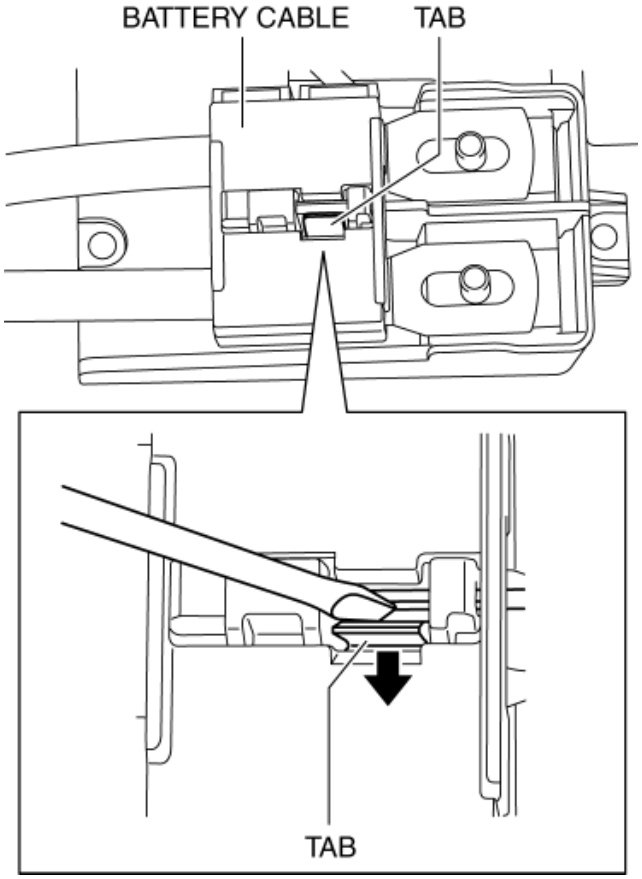

Cover installation note

1. Install the cover by attaching the cover hooks to the front end of the bracket as shown in the figure.

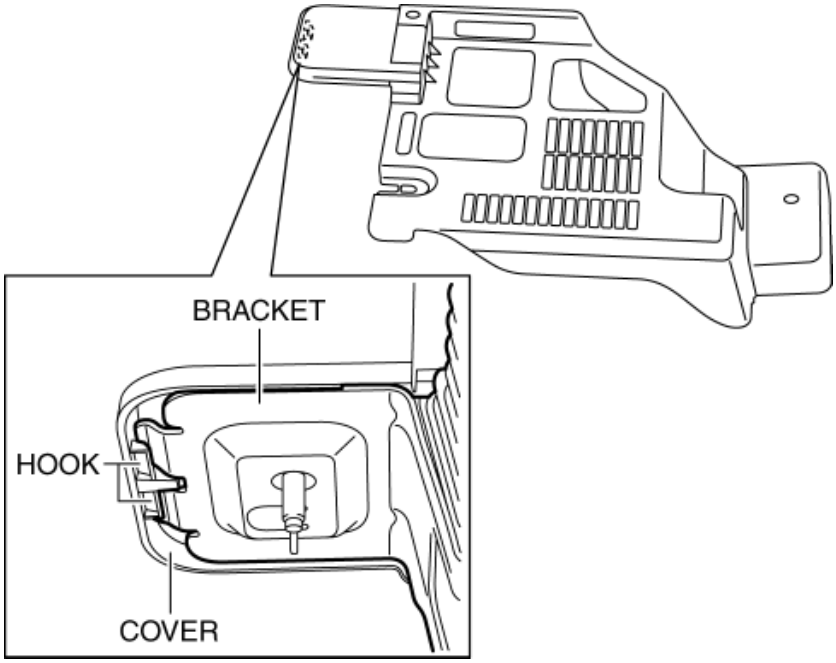

2014 - Mazda3 - I-ELOOP

DC-DC CONVERTER INSPECTION [i-ELOOP]

1. Verify that the DC-DC converter related DTC is detected. (See **DTC INSPECTION [i-ELOOP]**.) (See **ON-BOARD DIAGNOSTIC TEST [SKYACTIV-G 2.0, SKYACTIV-G 2.5]**.)

    - If DTCs are detected, repair the malfunctioning part according to the applicable DTC troubleshooting.
    - If a DTC is not detected, go to the next step.

2. Disconnect the negative battery cable. (See **NEGATIVE BATTERY CABLE DISCONNECTION/CONNECTION [SKYACTIV-G 2.0, SKYACTIV-G 2.5]**.)

3. Disconnect the service plug. (See **SERVICE PLUG DISCONNECTION/CONNECTION [i-ELOOP]**.)

4. Remove the front seat component (LH). (See **FRONT SEAT REMOVAL/INSTALLATION**.)

5. Remove the DC-DC converter cover. (See **DC-DC CONVERTER REMOVAL/INSTALLATION [i-ELOOP]**.)

6. Do a visual inspection of the DC-DC converter.

    - If the DC-DC converter is damaged, replace it. (See **DC-DC CONVERTER REMOVAL/INSTALLATION [i-ELOOP]**.)

7. Install in the reverse order of removal.

2014 - Mazda3 - I-ELOOP

i-ELOOP TECHNICAL DATA

Item	Specification
Generator standard voltage [IG-ON]	Terminal 1A: Capacitor voltage Terminal 2A: Approx. 1.0 V Terminal 2B: Approx. 1.0 V Terminal 2C: B+
Generator standard voltage [Idle, 20 °C {68 °F}]	Terminal 1A: Capacitor voltage Terminal 2A, 2B: Turn the electrical loads (such as headlights, blower motor, rear window defroster, brake lights) on and verify that the voltage reading increases. Terminal 2C: B+
Generator rotor resistance (between slip rings) [20 °C {68 °F}]	1.8—2.1 ohms
Generator brush length	Standard: 22.5 mm {0.886 in} Minimum: 5.0 mm {0.20 in}
Generator brush spring force	Standard: 4.1—5.3 N {0.42—0.54 kgf, 1.0—1.1 lbf} Minimum: 1.7 N {0.17 kgf, 0.38 lbf}

Generator generated current maximum value (with i-ELOOP) (reference value) [Ambient temperature: 20 °C {68 °F}, Engine hot]

Engine speed (rpm)	Terminal 1A voltage (V)	Generator output current (A)
1,000	15	130
2,000	15	150

< Previous

2014 - Mazda3 - I-ELOOP

i-ELOOP SST

1: Mazda SST number

2: Global SST number

1:49 L088 009 2:– Feeler tool kit	

< Previous

Connector 0140-108

Connector 0415-102

Connector 0415-104

Connector 0415-103

Connector 0415-105

Connector 0140-113

Connector 0140-136

Connector 0918-1101

Connector 0740-105

Connector 0740-208

Connector 0740-308

Connector 0740-210

Connector 0740-207

Connector 0740-307

Connector 0740-107

Connector 0740-211

Connector 0740-311

Connector 0920-113

Connector 0920-213

Connector 0920-313

Connector 0920-322A

Connector 0920-322B

Connector 0920-322C

Connector 0920-101A

Connector 0920-101B

Connector 0920-101C

Connector 0920-101D

Connector 0920-321

Connector 0912-401

Connector 0918-1102

Connector 0919-105

Connector 0920-206A

Connector 0920-306A

Connector 0920-206B

Connector 0920-306B

Connector 0920-106

Connector 0918-602

Connector 0918-603

Connector 0918-601

Connector 0740-106

Connector 0740-203

Connector 0740-303

Connector 0740-102

Connector 0740-202

Connector 0740-302

Connector 0920-102

Connector 0922-103

Connector 0918-701

Connector 0922-601

Connector 0922-602

Connector 0117-103B

Connector 0117-103A

Connector 0117-103C

Connector 0918-905

Connector 0920-103

Connector 0920-203

Connector 0920-303

Connector 0921-202

Connector 0920-204A

Connector 0920-204B

Connector 0920-304A

Connector 0920-304B

Connector D-102

Connector 0740-101

Connector 0740-201

Connector 0740-301A

Connector 0740-301B

Connector 0810-103

Connector 0922-201

Connector 0922-106

Connector 0140-129

Connector 0920-205

Connector 0920-305

Connector 0912-104

Connector 0918-704

Connector 0918-907

Connector 0920-201A

Connector 0920-201B

Connector 0920-301A

Connector 0920-301B

Connector 0920-201C

Connector 0920-201D

Connector 0920-301C

Connector 0920-301D

Connector 0112-101

Connector 0112-102

Connector 0140-107

Connector 0922-202

Connector 0140-130

Connector 0140-133

Connector D-101

Connector 0117-102A

Connector 0117-102C

Connector 0117-102D

Connector 0914-113

Connector 0914-220

Connector C-29

Connector C-30

Connector 0518-103

Connector 0810-104A

Connector 0810-104B

Connector 0740-309

Connector 0810-114

Connector 0810-108

Connector 0810-116

Connector 0810-118

Connector 0810-106

Connector 0810-112

Connector 0415-101

Connector 0140-119A

Connector 0140-119B

Connector 0140-111

Connector 0140-134

Connector 0140-104

Connector 0613-101A

Connector 0613-101B

Connector 0740-104

Connector 0740-205

Connector 0740-305

Connector 0140-105

Connector 0940-101A

Connector 0940-101B

Connector 0940-101C

Connector 0912-101A

Connector 0912-101B

Connector 0918-1301

Connector 0921-201

Connector 0920-320

Connector 0918-307

Connector 0918-308

Connector 0914-102

Connector 0914-210

Connector 0914-103

Connector 0914-211

Connector 0920-107

Connector 0920-207

Connector 0920-307

Connector 0920-108

Connector 0920-208

Connector 0920-308

Connector 0918-401

Connector 0918-402

Connector C-01

Connector C-02

Connector 0613-102

Connector C-03

Connector C-04

Connector C-05

Connector C-06

Connector C-07

Connector 0918-901

Connector 0914-206

Connector 0914-207

Connector 0920-316

Connector 0920-317

Connector 0918-507

Connector 0918-508

Connector 0140-124

Connector 0140-125

Connector 0140-126

Connector 0140-127

Connector 0140-121

Connector 0114-102A

Connector 0114-102B

Connector 0114-101

Connector 0140-135

Connector 0117-501A

Connector 0117-101A

Connector 0117-101B

Connector 0117-501B

Connector GND-1

Connector GND-2

Connector GND-3

Connector GND-4

Connector GND-8

Connector GND-9

Connector GND-10

Connector GND-11

Connector GND-12

Connector GND-13

Connector GND-14

Connector GND-15

Connector GND-16

Connector GND-17

Connector GND-19

Connector GND-20

Connector GND-21

Connector GND-22

Connector 0918-501

Connector 0912-102

Connector 0912-103

Connector 0918-702

Connector 0140-112

Connector 0914-111

Connector 0914-218

Connector 0922-203

Connector 0922-204

Connector 0140-114

Connector 0140-115

Connector 0140-116

Connector 0140-117

Connector 0922-301

Connector 0922-101

Connector C-12

Connector C-13

Connector C-08

Connector C-09

Connector C-10

Connector C-11

Connector C-45

Connector 0518-101

Connector 0810-126

Connector C-14

Connector C-15

Connector 0140-106

Connector C-27

Connector C-51

Connector C-52

Connector C-53

Connector C-54

Connector C-55

Connector C-56

Connector C-33

Connector C-34

Connector C-32

Connector C-35

Connector C-36

Connector C-37

Connector C-42

Connector C-38

Connector C-39

Connector C-40

Connector 0914-205

Connector 0914-109

Connector 0914-203

Connector 0914-204

Connector 0914-208

Connector 0914-101

Connector 0914-202

Connector 0140-109

Connector 0415-106

Connector 0914-201

Connector 0918-303

Connector 0918-304

Connector 0913-203

Connector 0914-107

Connector 0914-215

Connector 0918-506

Connector 0740-401

Connector 0140-120

Connector 0140-118

Connector 0920-104

Connector 0920-214

Connector 0920-314

Connector 0140-128

Connector 0140-103

Connector 0140-123

Connector 0922-104

Connector 0740-204

Connector 0740-304

Connector 0810-105A

Connector 0810-105B

Connector 0740-310

Connector 0810-125

Connector 0810-115

Connector 0810-109

Connector 0810-117

Connector 0810-119

Connector 0810-107

Connector 0810-113

Connector 0140-101A

Connector 0140-101B

Connector 0912-501B

Connector 0913-201

Connector 0912-501A

Connector 0912-502

Connector 0912-506

Connector 0912-504

Connector 0912-508

Connector 0912-505

Connector 0912-503

Connector 0912-507

Connector 0140-102

Connector 0914-108

Connector 0914-216

Connector 0940-102A

Connector 0940-102B

Connector 0940-102C

Connector 0940-102D

Connector 0914-104

Connector 0914-212

Connector 0914-105

Connector 0914-213

Connector 0920-109

Connector 0920-209

Connector 0920-309

Connector 0920-110

Connector 0920-210

Connector 0920-310

Connector C-20

Connector C-21

Connector C-22

Connector C-23

Connector C-18

Connector C-16

Connector C-17

Connector C-19

Connector 0918-703

Connector C-24

Connector C-25

Connector C-26

Connector C-43

Connector C-44

Connector 0918-902

Connector 0920-215

Connector 0920-315

Connector 0918-301

Connector 0918-302

Connector 0920-318

Connector 0920-319

Connector 0918-502

Connector 0918-503

Connector 0919-103

Connector 0913-204

Connector 0740-108

Connector 0740-209

Connector 0740-312

Connector 0914-112

Connector 0914-219

Connector 0914-209

Connector 0810-101C

Connector 0810-101A

Connector 0810-101B

Connector 0913-101

Connector 0810-121

Connector 0810-123

Connector 0810-122

Connector 0810-124

Connector 0810-120A

Connector 0810-120B

Connector 0517-103

Connector 0518-102

Connector 0913-102

Connector 0913-103

Connector 0913-104

Connector 0913-205

Connector 0920-111

Connector 0920-112

Connector 0920-211

Connector 0920-212

Connector 0920-311

Connector 0920-312

Connector C-31

Connector 0918-504

Connector 0918-505

Connector 0913-202

Connector 0740-206

Connector 0740-306

Connector 0140-122

Connector 0940-103A

Connector 0940-103B

Connector 0940-103C

Connector 0119-101A

Connector 0119-101B

Connector 0119-102

Connector 0918-1201

Connector 0517-104

Connector 0915-101

Connector 0915-102

Connector 0918-305

Connector 0918-306

Connector 0517-101

Connector 0914-401

Connector 0140-110

Connector 0918-906

Connector 0914-110

Connector 0914-217

Connector 0914-106

Connector 0914-214

Connector 0914-114

Connector 0914-221

Connector 0920-202A

Connector 0920-202B

Connector 0920-302A

Connector 0920-302B

Connector 0920-202C

Connector 0920-302C

Connector 0920-216

Connector 0920-217

Connector 0918-903

Connector 0918-904

Connector 0922-102

Connector 0919-102

Connector 0919-104

Connector 0919-101

2014 - Mazda3 - Body and Accessories

FILAMENT REPAIR

1. Clean the filament using isopropyl alcohol.
2. Attach tape to both sides of the filament.

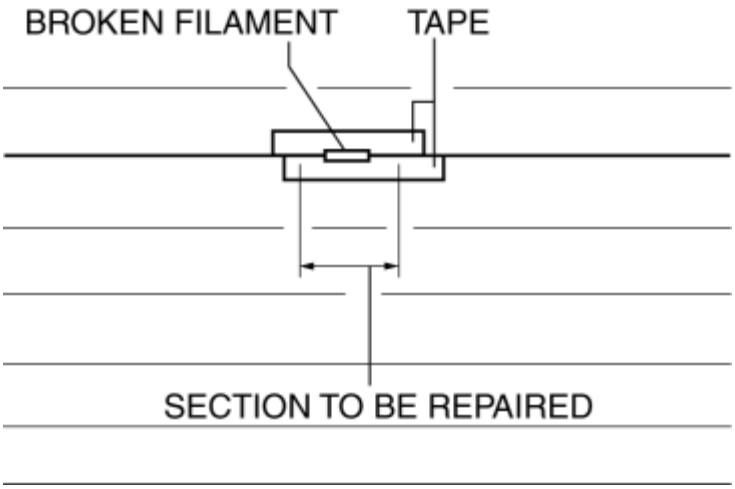

3. Using a small brush or marking pen, apply silver paint.
4. After **2—3 min,** carefully remove the tape without damaging the applied area.

CAUTION:

- Do not operate the rear window defroster until the paint is completely dry. It may cause other malfunctions if it is used before the paint is dry.

5. Dry the repaired part according to the following procedure.
   - When the room temperature is **25 °C {77 °F},** leave it as it is for **24 h.**
   - When a hot air blower is used, dry with the **150 °C {302 °F}** air for **30 min.**

GROUND POINTS

- This shows ground points of the harness.

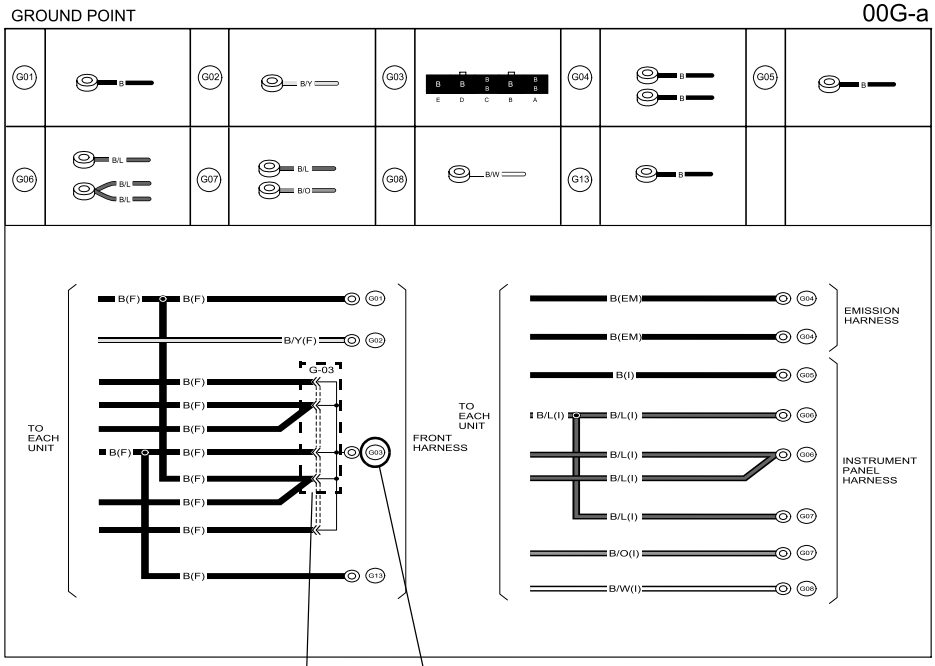

Ground indication	
On vehide	Indication
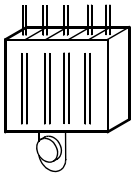	To circuit 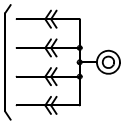

On circuit diagrams and ground points

The ground connection numbers in system circuit diagrams correspond to those in the ground point diagram.

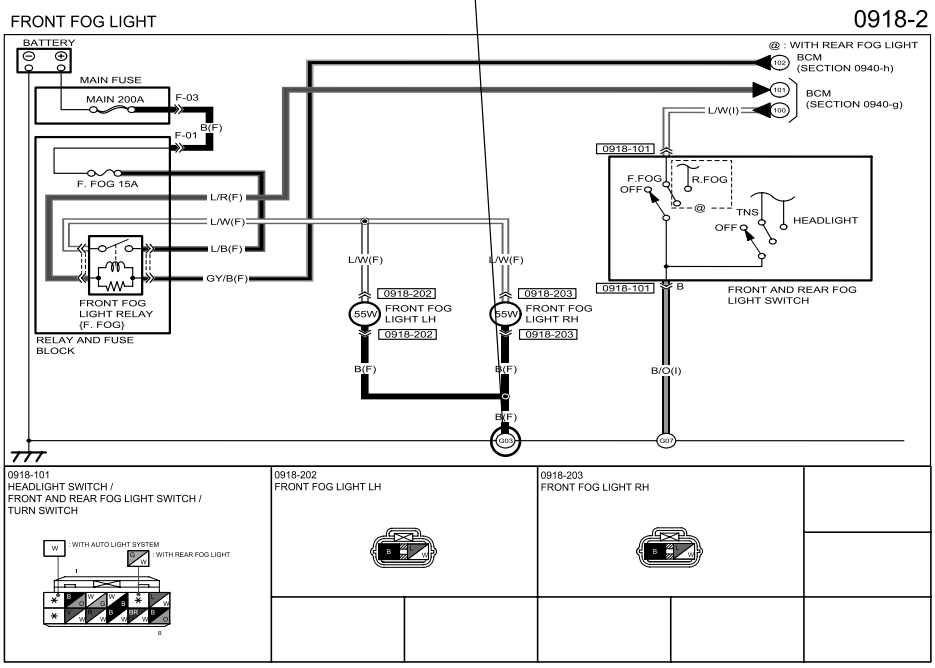

SYSTEM CIRCUIT DIAGRAM/CONNECTOR DIAGRAM

- These diagrams show the circuits for each system, from the power supply to the ground. The power supply side is on the upper part of the page, the ground side on the lower part. The diagrams describe circuits with the ignition switch off.
  Below is an explanation of the various points in the diagram.

System name

The number indicates that the circuit continues to the related system diagram.

{ } : Name indicated on fuse box cover

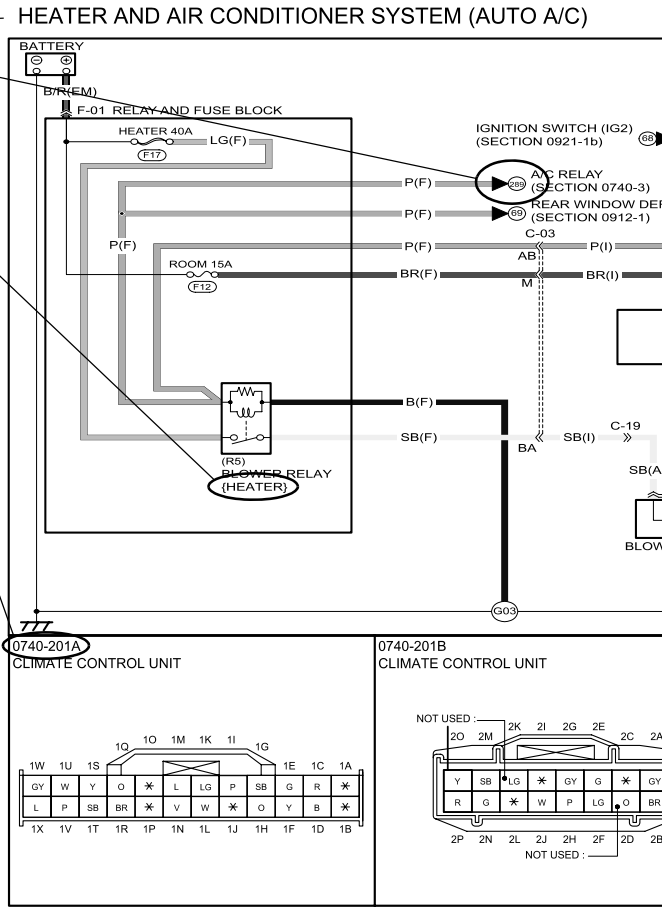

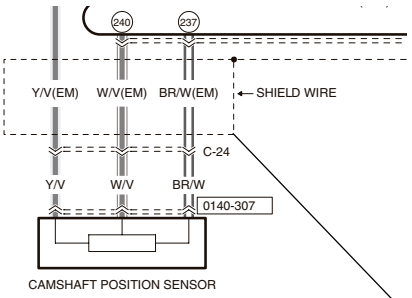

Indicates shielded wire.*

* Shielded wire :
Prevents signal disturbances from electrical interference.
Wire is covered by a metal meshing for grounding.

Connector code

The prefix letter indicates the system in which the connector is used.

- **F**: Fuse box connectors
- **J**: Joint box/Junction box connectors
- **C**: Common connectors
- **G**: Ground point connectors
- **D**: Data link connector
- **0112**: Cooling system connectors
- **0113**: Intake air system connectors
- **0114**: Fuel system connectors
- **0117**: Charging system connectors
- **0118**: Ignition system connectors
- **0119**: Starting system connectors
- **0120**: Cruise control system connectors
- **0140**: Engine control system connectors
- **0212**: Wheel and tires connectors
- **0318**: 4-Wheel drive connectors
- **0413**: Antilock brake system connectors
- **0414**: Traction control system connectors
- **0415**: Dynamic stability control connectors
- **0418**: Dynamic stability control/Roll stability control connectors
- **0513**: Automatic transmission connectors
- **0514**: Automatic transmission shift mechanism connectors
- **0517**: Automatic transaxle connectors
- **0518**: Automatic transaxle shift mechanism connectors
- **0613**: Electric power steering (EPS) connectors
- **0614**: Power steering connectors
- **0740**: Heater, ventilation & air conditioning (HVAC) control system connectors
- **0810**: Air bag system connectors
- **0811**: Seat belt connectors
- **0912**: Glass/Windows/Mirrors connectors
- **0913**: Seats connectors
- **0914**: Security and locks connectors
- **0915**: Sunroof connectors
- **0916**: Exterior trim connectors
- **0918**: Lighting systems connectors
- **0919**: Wiper/Washer system connectors
- **0920**: Entertainment connectors
- **0921**: Power systems
- **0922**: Instrumentation/Driver info. Connectors
- **0940**: Control system

Current symbol

Current flows in the direction of the arrow.

Multiplex communication

Indicates communication with connected parts.
Signals are transmitted back and forth between connected parts.

System code

0740-2a

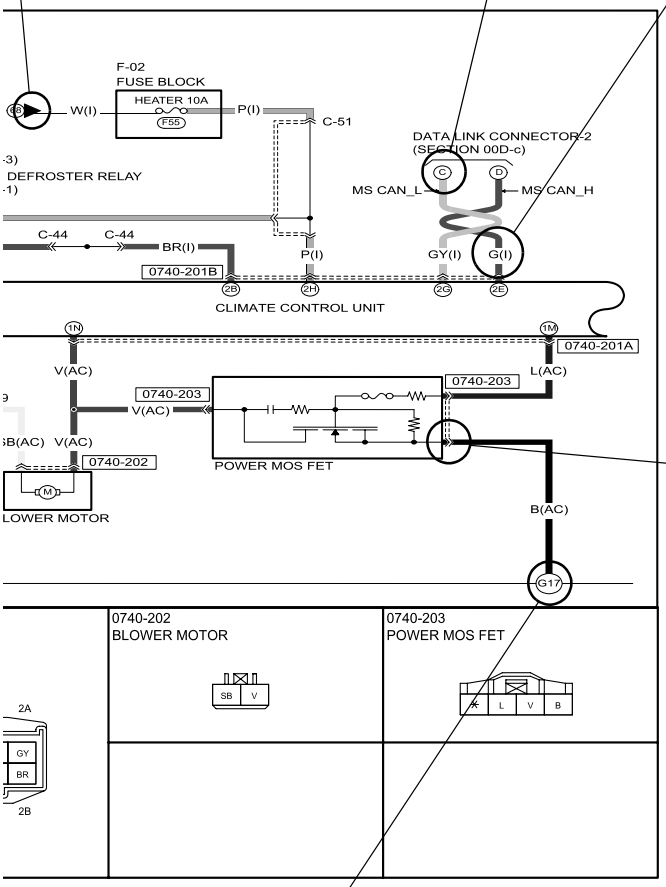

Wire color code (harness symbol)

- Two-color wires are indicated by a two-letter symbol.The first indicates the base color of the wire, the second the color of the stripe.
  For example:
  W/R is a white wire with a red strip
  BR/Y is a brown wire with a yellow strip

Symbol
(Example)

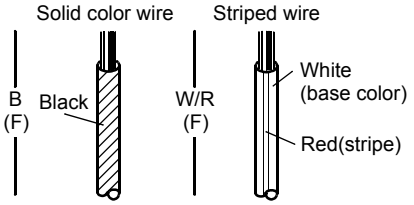

- The harness symbol is in ( ) following the harness symbols (refer to P-9.).

Connector symbols

- Male and female connectors are represented as follows in the circuit and connector diagrams.

		Circuit diagram symbol	Connector diagram symbol
Male	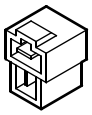	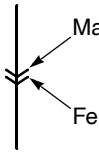 Male	
Female	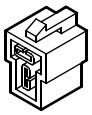	Female	

- Like connectors are linked by dashed lines between the connector symbols.
- Connector diagrams show connectors on the harness side. The terminal indicates the view from the harness side.

(Example)

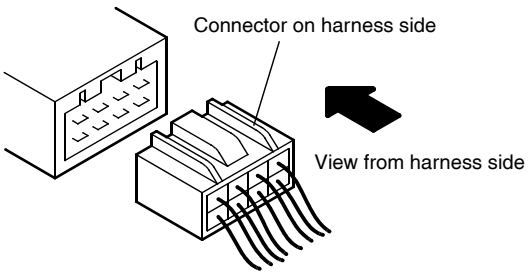

- Colors for connectors except white are given in locations.
- Unused terminals are indicated by ∗.

Ground numbers

A harness ground is represented differently than a unit ground.

Types of grounds	Symbol
Harness 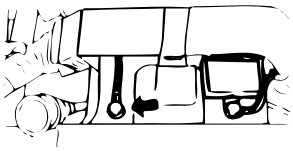	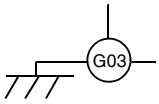
Unit 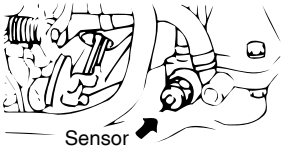	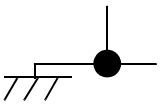

ROUTING DIAGRAM

- The routing diagram shows where electrical components are on the system circuit diagram by call out line and connector symbols.

Connector symbol

Shows the system that uses the connector.

(Example)

Connector	Symbol
Common connectors	C-11
System connectors	0912-301

Ground symbol

Shows the ground in system diagrams.

Component name

Shows the names of components in routing diagrams.

REAR WINDOW DEFROSTER (INCLUDES HEATED OUTER MIRROR INFORMATION) 0912-1

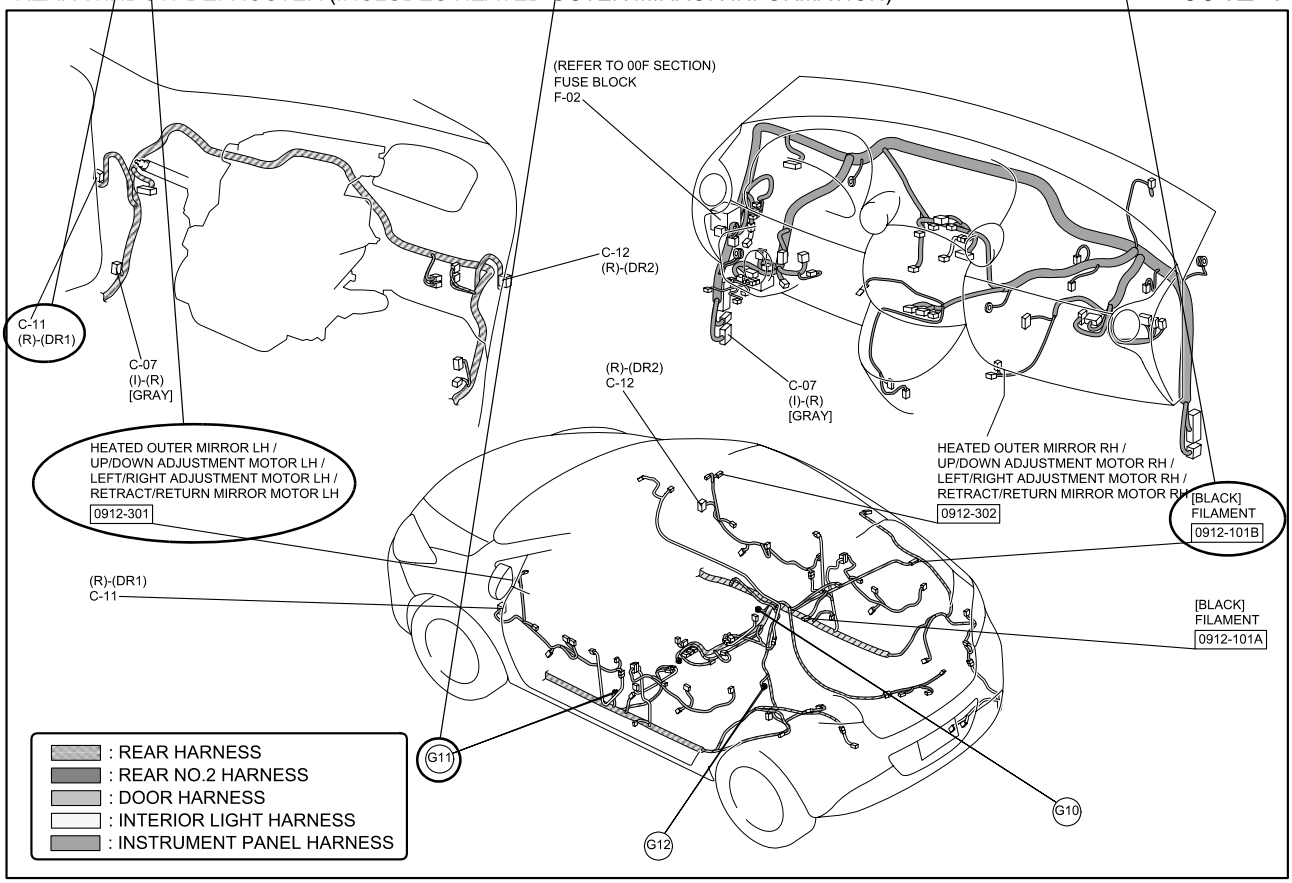

HARNESS SYMBOLS

DESCRIPTION OF HARNESS	SYMBOL		DESCRIPTION OF HARNESS	SYMBOL	
FRONT HARNESS	(F)		DOOR No. 1 HARNESS	(DR1)	—
FRONT No. 2 HARNESS	(F2)		DOOR No. 2 HARNESS	(DR2)	
ENGINE HARNESS	(E)		DOOR No. 3 HARNESS	(DR3)	
DASH HARNESS	(D)		DOOR No. 4 HARNESS	(DR4)	
REAR HARNESS	(R)		FLOOR HARNESS	(FR)	—
REAR No. 2 HARNESS	(R2)		INTERIOR LIGHT HARNESS	(IN)	—
REAR No. 3 HARNESS	(R3)		A/C HARNESS	(AC)	—
INSTRUMENT PANEL HARNESS	(I)	—	INJECTION HARNESS	(INJ)	—
EMISSION HARNESS	(EM)	—	HAND BRAKE HARNESS	(HB)	—
EMISSION No. 2 HARNESS	(EM2)				
EMISSION No. 3 HARNESS	(EM3)				

WIRING COLOR CODE

COLOR	CODE	COLOR	CODE
BLACK	B	ORANGE	O
BLUE	L	PINK	P
BROWN	BR	RED	R
DARK BLUE	DL	SKY BLUE	SB
DARK GREEN	DG	TAN	T
GRAY	GY	VIOLET	V
GREEN	G	WHITE	W
LIGHT BLUE	LB	YELLOW	Y
LIGHT GREEN	LG		

SYMBOLS

Symbol	Meaning	Symbol	Meaning
Battery	• Generates electricity through chemical reaction. • Supplies direct current to circuits.	Light 3.4W	• Emits light and generates heat when current flows through filament.
Ground (1) G01	• Connecting point to vehicle body or other ground wire where current flows from positive to negative terminal of battery. • Ground (1) indicates a ground point to body through wire harness. • Ground (2) indicates point where component is grounded directly to body. Remarks • Current will not flow through a circuit if ground is faulty.		
Ground (2)		Resistance	• A resistor with a constant value. • Mainly used to protect electrical components in circuits by maintaining rated voltage.
Ground (3)		Motor M	• Converts electrical energy into mechanical energy.

Reading Wiring Diagrams

Symbol	Meaning
Fuse	• Melts when current flow exceeds that specified for circuit, interrupts current flow. Precautions • Do not replace with fuses exceeding specified capacity. <Blade type> <Tube type> <Cartridge type> <Fusible link>
Fuse (For high current fuse)/ Fusible link	
Transistor (1) Collector (C) Base (B) **NPN** Emitter (E)	• Electrical switching component. • Turns on when voltage is applied to the base (B). Collector indication mark B E C E C B C E B
Transistor (2) Collector (C) Base (B) **PNP** Emitter (E)	• Reading code. 2 S C 828 A Revision mark A:High-frequency PNP B:Low-frequency PNP C:High-frequency NPN D:Low-frequency NPN Semiconductor Number of terminals
Switch (1) Normally open	• Allows or breaks current flow by opening and closing curcuits.
Switch (2) Normally closed	
Autostop switch	• Automatically shuts off circuit when certain conditions are met.

Symbol	Meaning
Pump	• Pulls in and discharges gases and liquids.
Cigarette lighter	• Electrical coil that generates heat.
Accessory socket	• Interior power supply.
Horn	• Generates sound when current flows.
Speaker	
Heater	• Generates heat when current flows.
Ignition switch ST B2 B1 IG2 OFF IG1 OFF ACC	• Turning ignition key switches circuit to operate various component. (NOTE) Ignition switch is called engine switch on diesel vehicles.
Harness **Connection** When circuit C-D is connected to circuit A-B, the connection D is indicated by a black mdot. **Selection** Diversion point D for the different circuits according to the vehicle's specification is indicated by a white dot.	A D B C For vehicles with ABS, use the A-B circuit. WITH ABS A D B WITHOUT ABS C For vehicles without ABS, use the C-B circuit.

Symbol	Meaning
Relay (1) Normally open	• Current flowing through coil produces electromagnetic force causing contact to close. No current to coil: No flow Current to coil: Flow

Symbol	Meaning	Symbol	Meaning
Relay (2) Normally closed	• Current flowing through coil produces electromagnetic force causing contact to open. No current to coil — Flow Current to coil — No flow		
Sensor (1)	• Detects characteristics such as intake manifold vacuum and airflow amount according to resistance variation.	Solenoid	• Current flowing through coil generates electromagnetic force to operate plungers.
Sensor (2)	• Detects resistance variation according to operation of other parts.	Diode	• Known as a semiconductor rectifier, the diode allows current flow in one direction only. Cathode(K) — Anode(A) Flow of electric current K A K A K A
Sensor (3)	• A resistor whose resistance variation according to temperature variation. • When temperature increases, resistance decreases.		
Sensor (4)	• Detects pulse signals from rotating object.	Light-emitting diode (LED)	• A diode that lights when current flows. • Unlike ordinary bulbs, the diode does not generate heat when lit. Cathode(K) — Anode(A) Cathode(K) Anode(A) Flow of current
Sensor (5)	• Generates potential difference when tension or pressure is applied.		
Capacitor	• Component that temporarily stores electrical charge.	Reference diode (Zener diode)	• Allows current to flow in one direction up to a certain voltage; allows current to flow in the other direction once that voltage is exceeded.

Symbol	Meaning
Extent of the change in the wiring position (1) E C A B B B B B B F D B E C A F D B	• The wiring position can be exchanged freely within the connector.
Extent of the change in the wiring position (2) E C A B B B B B B F D B E C A F D B	• The wiring position can be exchanged according to the following combinations only. Between A and B, Between C and D, Between E and F
Extent of the change in the wiring position (3) 3 L 2 B 1 B 5 L 4 B 8 B/Y 7 B 6 R 2 1 4 7	• The wiring position can be exchanged according to the following combinations only. Between 1, 2, 4 and 7. • The wiring positions may be indicated by numbers for some connectors.

SERVICE WARNING AND CAUTION FOR VEHICLES WITH SRS AIR BAG SYSTEM

If the SRS air bag system inspection is not performed correctly in accordance with the workshop manual procedures it could cause the system to operate (deploy) accidentally, resulting in injury.
Always follow the service warnings and cautions in the workshop manual when performing the SRS air bag system-related inspection or servicing.

SERVICE WARNING FOR VEHICLES WITH DISCHARGE HEADLIGHTS

If the discharge headlight inspection and servicing is not done using the correct procedures in the workshop manual, it could result in electrical shock.
Always follow the service warnings and cautions in the workshop manual when performing the discharge headlight-related inspection or servicing.

ABBREVIATIONS USED IN THIS MANUAL

3GR	THIRD GEAR
4GR	FOURTH GEAR
A	AMPERE
A/C	AIR CONDITIONING
A/F	AIR FUEL RATIO
AAS	AUTO ADJUSTING SUSPENSION
ABS	ANTILOCK BRAKE SYSTEM
ACC	ACCESSORIES
ACV	AIR CONTROL VALVE
ADD	ADDITIONAL
AIS	AIR INJECTION SYSTEM
ALL	AUTOMATIC LOAD LEVELING
AM	AMPLITUDE MODULATION
AMP	AMPLIFIER
ANT	ANTENNA
ASV	AIR SUPPLY VALVE
AT	AUTOMATIC TRANSMISSION
ATX	AUTOMATIC TRANSAXLE
B+	BATTERY POSITIVE VOLTAGE
BAC	BYPASS AIR CONTROL
BTN	BRAKE TAIL NUMBER
CAN	CONTROLLER AREA NETWORK
CIGAR	CIGARETTE
CIS	CONTINUOUS FUEL INJECTION SYSTEM
CKP	CRANKSHAFT POSITION SENSOR
CM	CONTROL MODULE
CMP	CAMSHAFT POSITION SENSOR
COMBI	COMBINATION
CON	CONDITIONER
CONT	CONTROL
CPU	CENTRAL PROCESSING UNIT
CV	CANISTER VENT
DEF	DEFROSTER
DI	DISTRIBUTOR IGNITION
DLC	DATA LINK CONNECTOR
DLI	DISTRIBUTORLESS IGNITION
DOHC	DOUBLE-OVERHEAD CAMSHAFT
DRL	DAYTIME RUNNING LIGHT

DSC	DYNAMIC STABILITY CONTROL
DTC	DIAGNOSTIC TROUBLE CODE(S)
DTM	DIAGNOSTIC TEST MODE
ECPS	ELECTRONICALLY CONTROLLED POWER STEERING
ECT	ENGINE CONTROL TEMPERATURE
EGR	EXHAUST GAS RECIRCULATION
EHPAS	ELECTRO HYDRAULIC POWER ASSIST STEERING
EI	ELECTRONIC IGNITION
ELEC	ELECTRIC
ELR	EMERGENCY LOCKING RETRACTOR
ET	ELECTRONIC THROTTLE
ETC	ELECTRONIC THROTTLE CONTROL
EPS	ELECTRIC POWER STEERING
EVAP	EVAPORATIVE EMISSION
F	FRONT
F/I	FUEL INJECTOR
FICB	FAST-IDLE CAM BREAKER
FM	FREQUENCY MODULATION
FP	FUEL PUMP
FPR	FUEL PUMP RELAY
GEN	GENERATOR
GND	GROUND
H/D	HEATER/DEFROSTER
HEAT	HEATER
HI	HIGH
HO2S	HEATED OXYGEN SENSOR
HS	HIGH SPEED
HU	HYDRAULIC UNIT
IAC	IDLE AIR CONTROL
IAT	INTAKE AIR TEMPERATURE
IG	IGNITION
ILLUMI	ILLUMINATION
INT	INTERMITTENT
JB	JOINT BOX
KS	KNOCK SENSOR
LCD	LIQUID CRYSTAL DISPLAY
LF	LEFT FRONT

LH	LEFT HAND
LO	LOW
LR	LEFT REAR
M	MOTOR
MAF	MASS AIR FLOW
MAP	MANIFOLD ABSOLUTE PRESSURE
MFI	MULTIPORT FUEL INJECTION
MID	MIDDLE
MIL	MALFUNCTION INDICATOR LAMP
MIN	MINUTE
MIX	MIXTURE
MPX	MULTIPLEX
MS	MIDDLE SPEED
MT	MANUAL TRANSMISSION
MTX	MANUAL TRANSAXLE
N	NEUTRAL
NC	NORMALLY CLOSED
NO	NORMALLY OPEN
O2S	OXYGEN SENSOR
OBD	ON-BOARD DIAGNOSTIC
O/D	OVER DRIVE
OFF	SWITCH OFF
ON	SWITCH ON
OSC	OSCILLATOR
P	POWER
P/S	POWER STEERING
PCM	POWERTRAIN CONTROL MODULE
PJB	PASSENGER JUNCTION BOX
PNP	PARK/NEUTRAL POSITION
PRC	PRESSURE REGULATOR CONTROL
PRG	PURGE SOLENOID VALVE
PSP	POWER STEERING PRESSURE
PTC	POSITIVE TEMPERATURE COEFFICIENT HEATER
PWM	PULSE WIDTH MODULATION
QSS	QUICK-START SYSTEM
R	REAR
REC	RECIRCULATION
RES	REAR ENTERTAINMENT SYSTEM
RF	RIGHT FRONT
RH	RIGHT HAND
RPM	REVOLUTIONS PER MINUTE
RR	RIGHT REAR
RSC	ROLL STABILITY CONTROL
SAS	SOPHISTICATED AIR BAG SENSOR
SFI	SEQUENTIAL MULTIPOINT FUEL INJECTION
SOL	SOLENOID

SPV	SPILL VALVE
ST	START
SW	SWITCH
TC	TURBOCHARGER
TCC	TORQUE CONVERTER CLUTCH
TCM	TRANSMISSION(TRANSAXLE) CONTROL MODULE
TCS	TRACTION CONTROL SYSTEM
TEMP	TEMPERATURE
TFT	TRANSAXLE FLUID TEMPERATURE
TICS	TRIPLE INDUCTION CONTROL SYSTEM
TNS	TAIL NUMBER SIDE LIGHTS
TP	THROTTLE POSITION SENSOR
TR	TRANSMISSION(TRANSAXLE) RANGE
TWS	TOTAL WIRING SYSTEM
V	VOLT
VAF	VOLUME AIR FLOW SENSOR
VENT	VENTILATION
VICS	VARIABLE INERTIA CHARGING SYSTEM
VOL	VOLUME
VR	VOLTAGE REGULATOR
VRIS	VARIABLE RESONANCE INDUCTION SYSTEM
VSS	VEHICLE SPEED SENSOR
VTCS	VARIABLE TUMBLE CONTROL SYSTEM
W	WATT(S)
WOT	WIDE OPEN THROTTLE

ELECTRICAL PARTS

B6U000000006W03

Battery Cable

- Before disconnecting connectors or removing electrical parts, disconnect the negative battery cable.

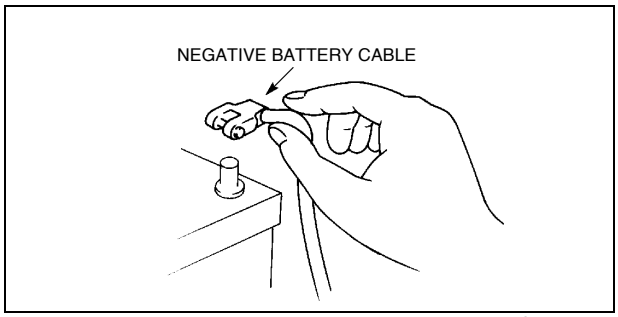

WGIWXX0007E

Wiring Harness

- To remove the wiring harness from the clip in the engine room, pry up the hook of the clip using a flathead screwdriver.

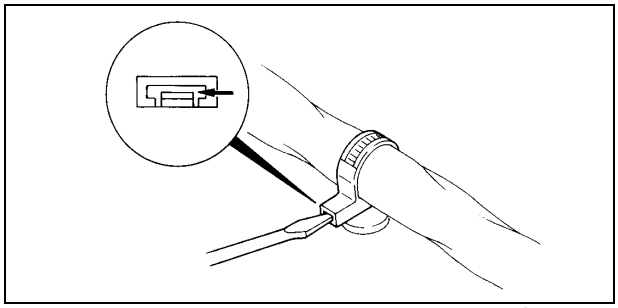

WGIWXX0039E

Caution

- **Do not remove the Harness protective tape. Otherwise, the wires could rub against the body, which could result in water penetration and electrical shorting.**

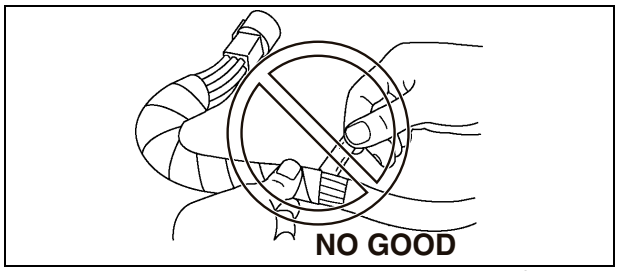

WGIWXX0040E

CONNECTORS

Disconnecting Connectors

- When disconnecting connector, grasp the connectors, not the wires.

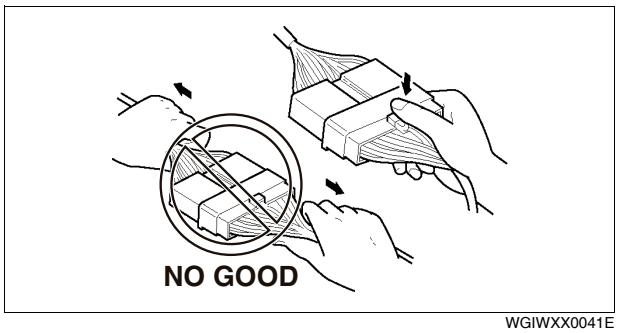

WGIWXX0041E

- Connectors can be disconnected by pressing or pulling the lock lever as shown.

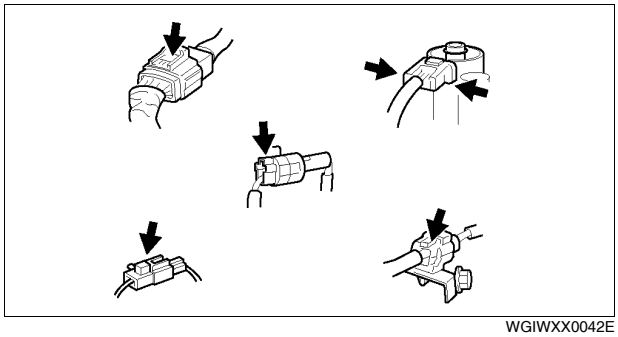

WGIWXX0042E

Locking Connector

- When locking connectors, listen for a click indicating they are securely locked.

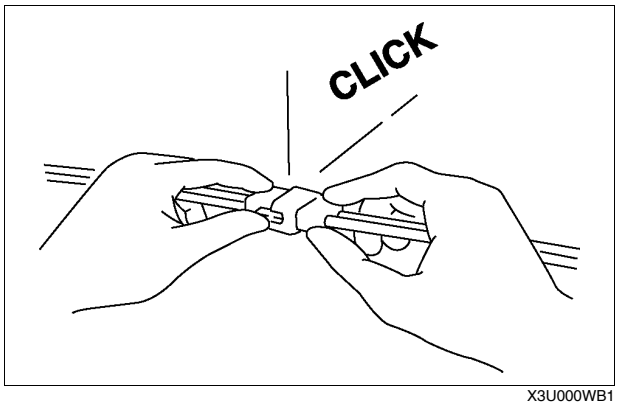

X3U000WB1

Inspection

- When a tester is used to inspect for continuity or measuring voltage, insert the tester probe from the wiring harness side.

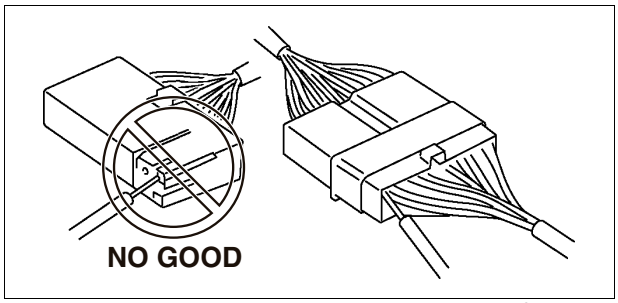

WGIWXX0044E

- Inspect the terminals of waterproof connectors from the connector side since they cannot be accessed from the wiring harness side.

  Caution
  - **To prevent damage to the terminal, wrap a thin wire around the tester probe before inserting into terminal.**

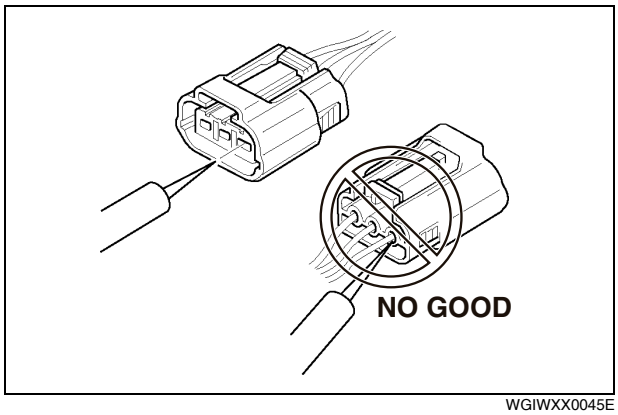

WGIWXX0045E

Terminals

Inspection

- Pull lightly on individual wires to verify that they are secured in the terminal.

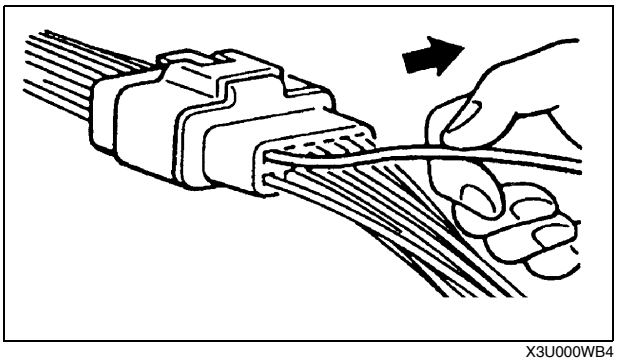

X3U000WB4

Replacement

- Use the appropriate tools to remove a terminal as shown. When installing a terminal, be sure to insert it until it locks securely.
- Insert a thin piece of metal from the terminal side of the connector and with the terminal locking tab pressed down, pull the terminal out from the connector.

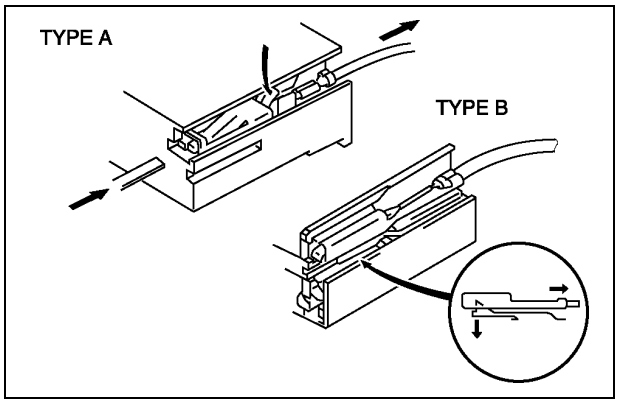

X3U000WB5

Sensors, Switches, And Relays

- Handle sensors, switches, and relays carefully. Do not drop them or strike them against other objects.

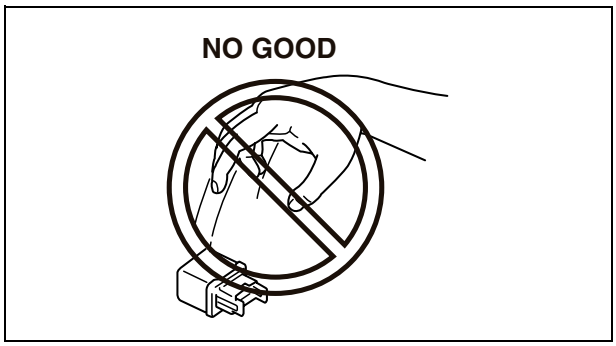

X3U000WB6

Fuse

Replacement

- When replacing a fuse, be sure to replace it with one of the same capacity. If a fuse fails again, the circuit probably has a short and the wiring should be inspected.
- Be sure the negative battery terminal is disconnected before replacing a main fuse.

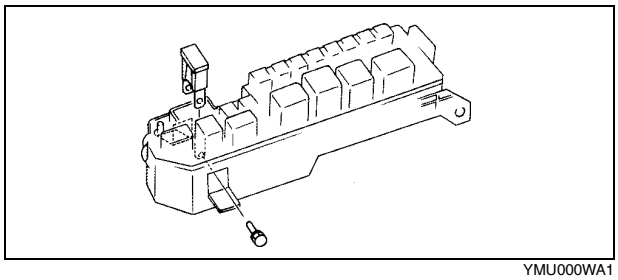

YMU000WA1

- When replacing a pullout fuse, use the fuse puller.

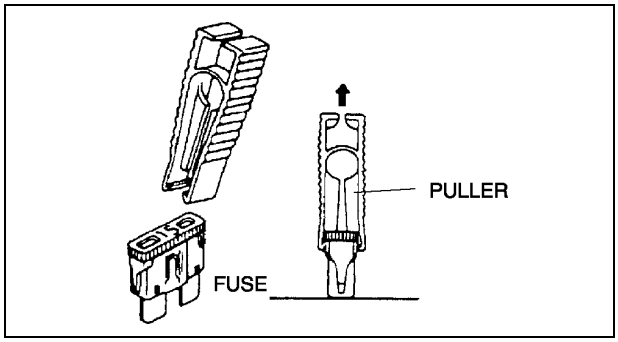

YMU000WAK

ELECTRICAL TROUBLESHOOTING TOOLS

Jumper Wire

- A jumper wire is used to create a temporary circuit. Connect the jumper wire between the terminals of a circuit to bypass a switch.

  Caution
  - **Do not connect a jumper wire from the power source line to a body ground. This may cause burning or other damage to wiring harnesses or electronic components.**

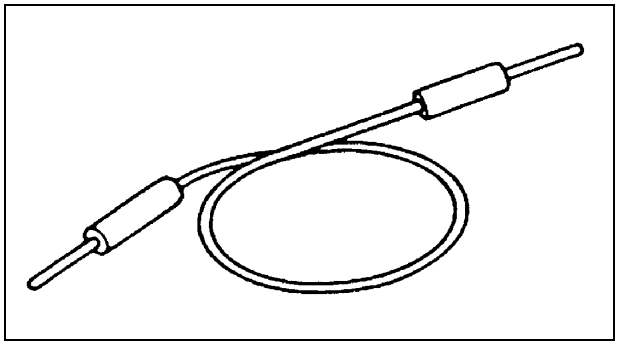

X3U000WBB

Voltmeter

- The DC voltmeter is used to measure circuit voltage. A voltmeter with a range of **15 V or more** is used by connecting the positive (+) probe (red lead wire) to the point where voltage will be measured and the negative (-) probe (black lead wire) to a body ground.

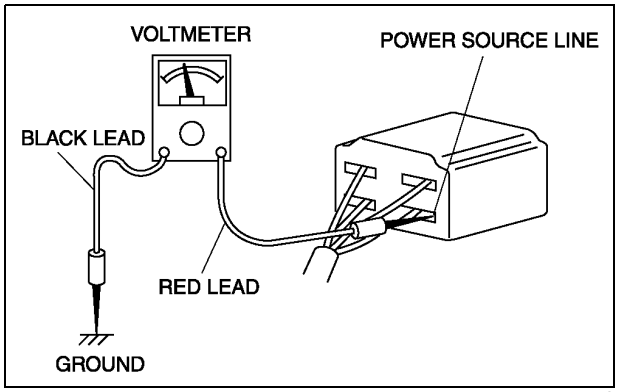

X3U000WBC

Ohmmeter

- The ohmmeter is used to measure the resistance between two points in a circuit and to inspect for continuity and short circuits.

  Caution
  - **Do not connect the ohmmeter to any circuit where voltage is applied. This will damage the ohmmeter.**

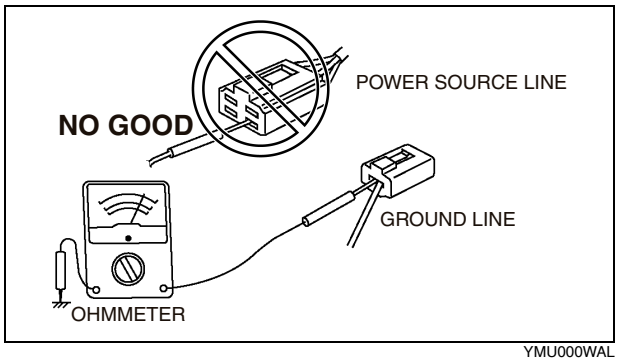

YMU000WAL

Bodyshop Manual - General Information

2014 - Mazda3

General Information

- VEHICLE IDENTIFICATION NUMBER (VIN) CODE
- VEHICLE IDENTIFICATION NUMBERS (VIN)
- HOW TO USE THIS MANUAL
- AIR BAG SYSTEM SERVICE WARNINGS [STANDARD DEPLOYMENT CONTROL SYSTEM]
- AIR BAG SYSTEM SERVICE WARNINGS [TWO-STEP DEPLOYMENT CONTROL SYSTEM]
- SERVICE PRECAUTIONS
- EFFICIENT REMOVAL OF BODY PANELS
- EFFICIENT INSTALLATION OF BODY PANELS
- INSTALLATION PREPARATIONS
- ANTICORROSION, SOUND INSULATION, AND VIBRATION INSULATION
- ABBREVIATION
- IDENTIFICATION NUMBER LOCATIONS
- BODY COLORS

Next >

2014 - Mazda3 - General Information

VEHICLE IDENTIFICATION NUMBER (VIN) CODE

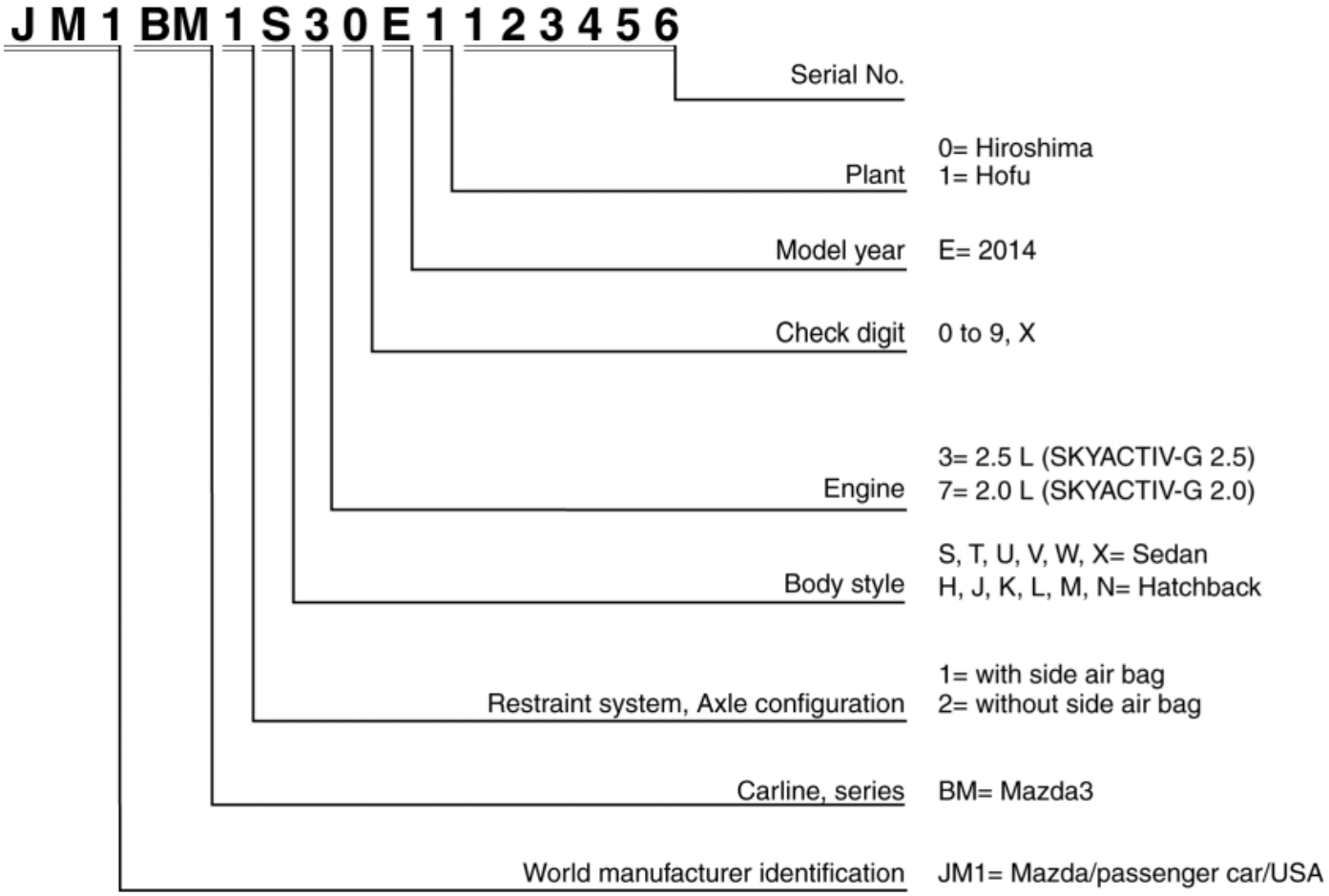

Next >

2014 - Mazda3 - General Information

VEHICLE IDENTIFICATION NUMBERS (VIN)

JM1 BM1H3*E#100001—

JM1 BM1H7*E#100001—

JM1 BM1J3*E#100001—

JM1 BM1J7*E#100001—

JM1 BM1K3*E#100001—

JM1 BM1K7*E#100001—

JM1 BM1L3*E#100001—

JM1 BM1L7*E#100001—

JM1 BM1M3*E#100001—

JM1 BM1M7*E#100001—

JM1 BM1N3*E#100001—

JM1 BM1N7*E#100001—

JM1 BM1S3*E#100001—

JM1 BM1S7*E#100001—

JM1 BM1T3*E#100001—

JM1 BM1T7*E#100001—

JM1 BM1U3*E#100001—

JM1 BM1U7*E#100001—

JM1 BM1V3*E#100001—

JM1 BM1V7*E#100001—

JM1 BM1W3*E#100001—

JM1 BM1W7*E#100001—

JM1 BM1X3*E#100001—

JM1 BM1X7*E#100001—

VEHICLE IDENTIFICATION NUMBERS (VIN)

2014 - Mazda3 - General Information

HOW TO USE THIS MANUAL

Efficient Replacement of Body Panels

- This section contains information on the body panels in regard to the welding types, number of spot welds, and cut and join locations that are necessary for panel removal and installation.
- The type of weld and position are indicated by symbols.
- Some sections have notes concerning the operation being performed. Thoroughly read and understand the notes before carrying out any procedures.

Example

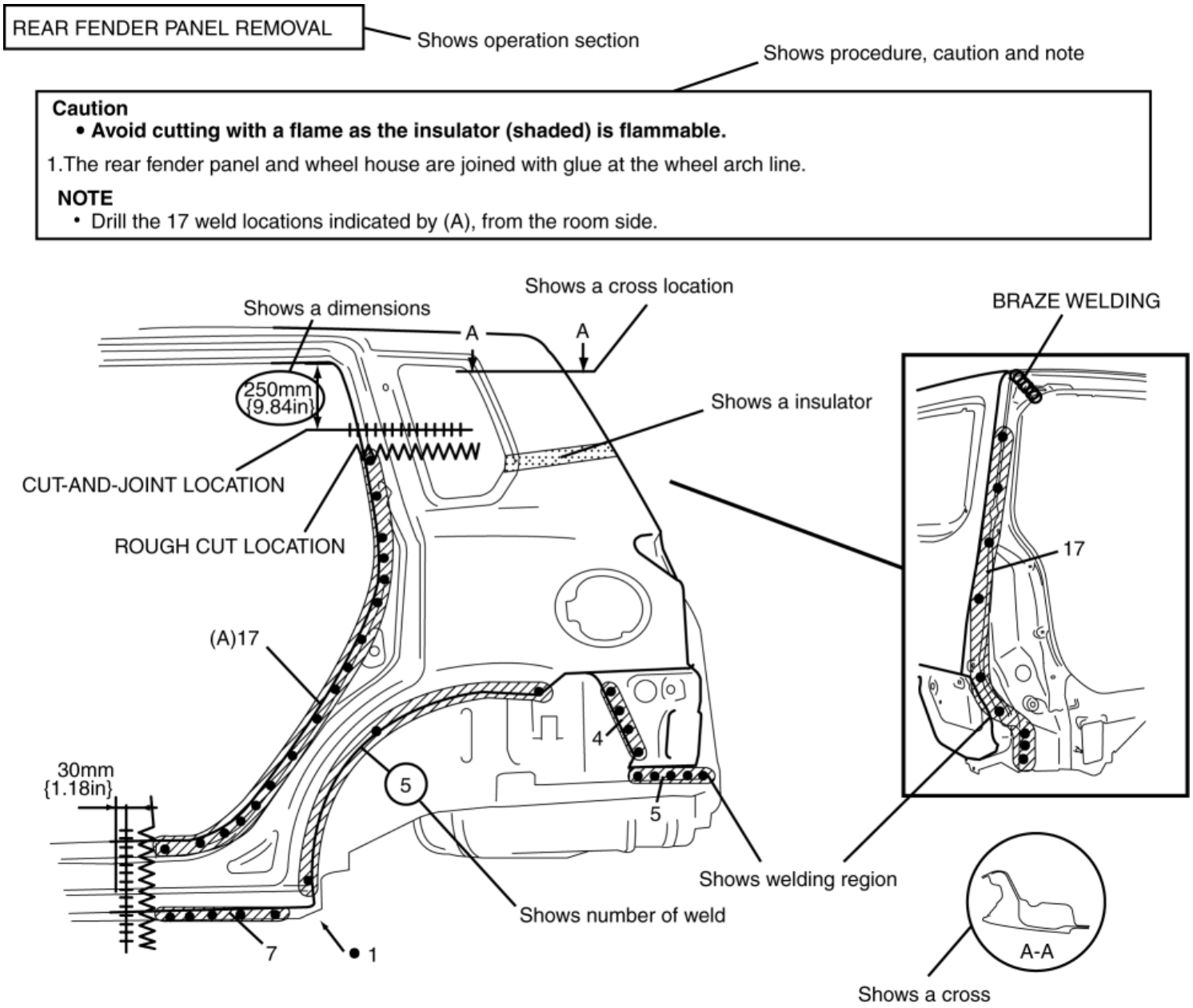

Symbols of Panel Replacement

- The following 6 symbols are used to indicate the type of weld that is used when replacing body panels.

SYMBOL	MEANING
●	Spot welding
■	Arc welding (plug welding)
+	Arc welding (spot welding)

SYMBOL	MEANING
|||||||||	Continuous arc welding (Cut-and-join location)
○○○	Brazing welding (oxyacetylene welding)
∧∨∧∨	Rough cut location

Body Dimensions (Flat plane Dimensions)

- Flat plane dimensions are the dimensions measured by projecting certain reference points onto a plane surface.

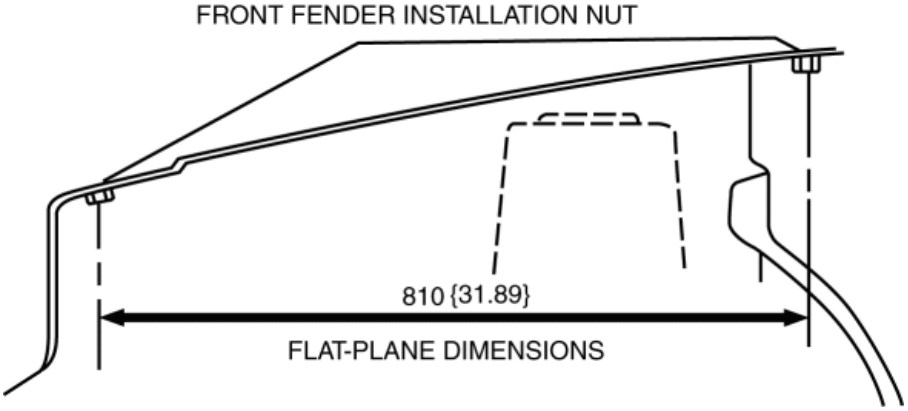

- When there are no specific indications, the standard points and dimensions are symmetrical in regard to the center of the vehicle.
- The hypothetical lines may differ according to the vehicle model.
- The schematic diagram shows the vehicle as it is projected from the underbody.

Example

Shows vehicle section

UNDERBODY FLAT-PLANE DIMENSIONS

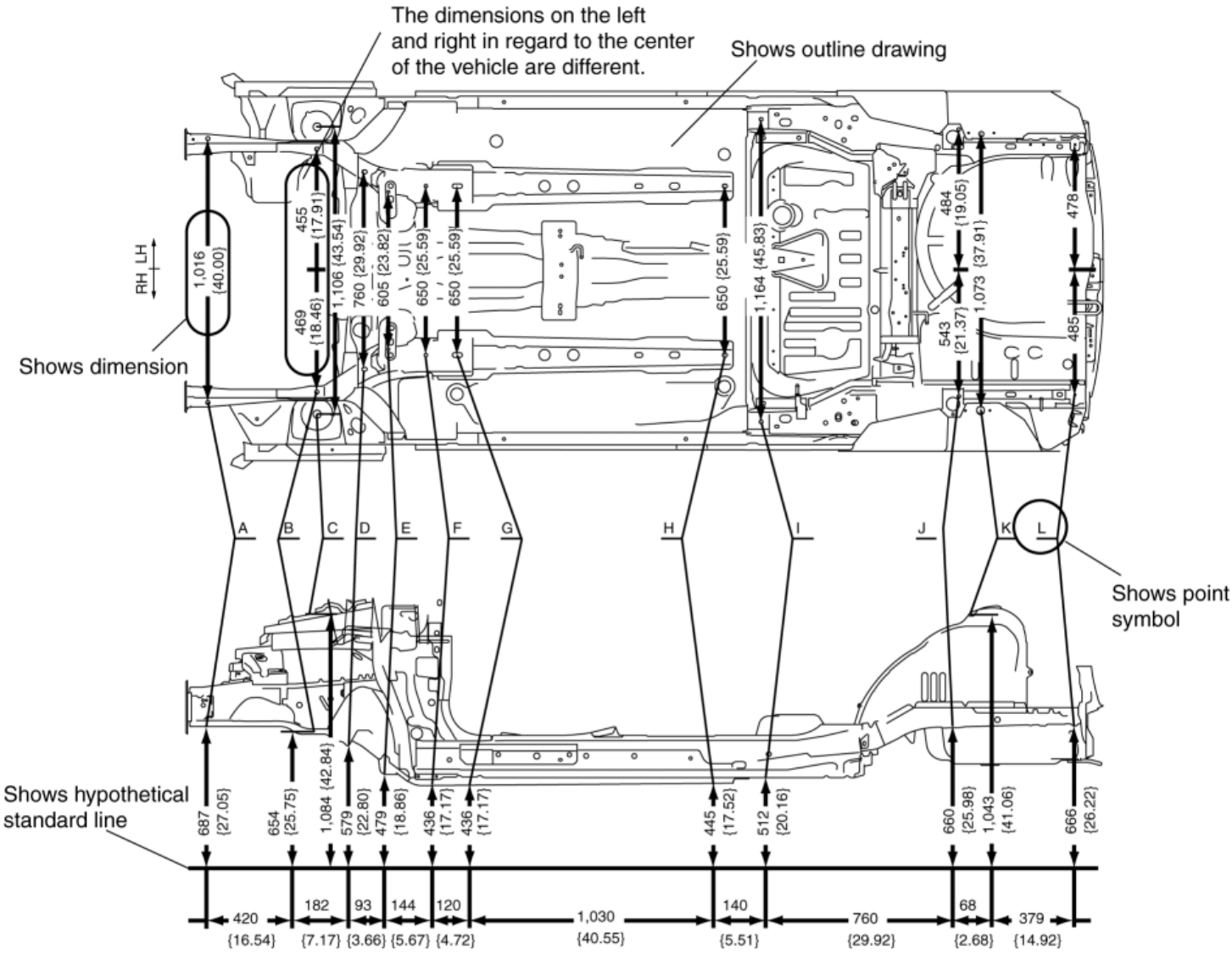

Point symbol	Designation	Hole diameter or bolt or nut size mm {in}
A	Crossmember No,1 standard hole	ϕ 16 {0.62}
B	Front side frame standard hole	ϕ 16 {0.62}
C	Front suspension mounting block surface hole center	ϕ 80 {3.14}
D	Front suspension mounting bolt	M14 {0.55}
E	Front frame rear standard hole	ϕ 16 {0.62}

Shows bolt size

Point symbol	Designation	Hole diameter or bolt or nut size mm {in}
F	Front frame rear standard hole	ϕ 18 {0.62}
G	Rear side frame standard hole	ϕ 16 {0.62}
H	Link bracket	17 × 29.5 {0.66×1.16}
I	Rear suspension housing	ϕ 12 {0.47}
J	Rear side frame standard hole	ϕ 16 {0.62}
K	Rear suspension housing	ϕ 31 {1.22}
L	Rear side frame standard hole	ϕ 12 {0.47}

Shows slot

Shows hole diameter

Body Dimensions (Straight line Dimensions)

- Straight line dimensions are the actual dimensions between two standard points.

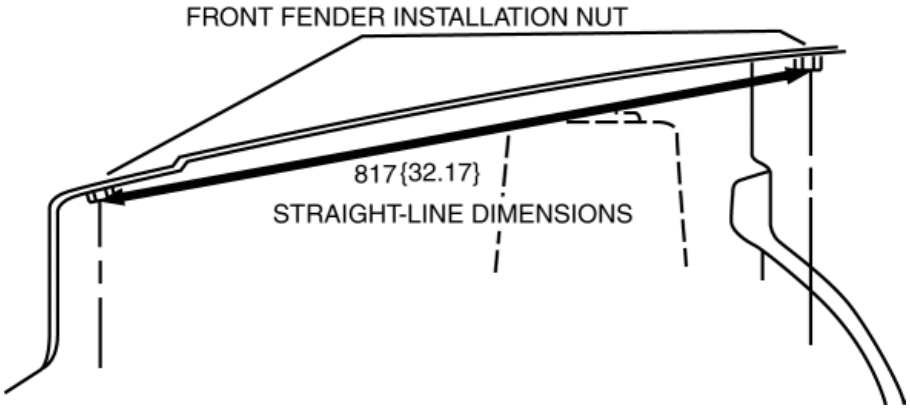

- When there are no specific indications, the standard points and dimensions are symmetrical in regard to the center of the vehicle.

Example

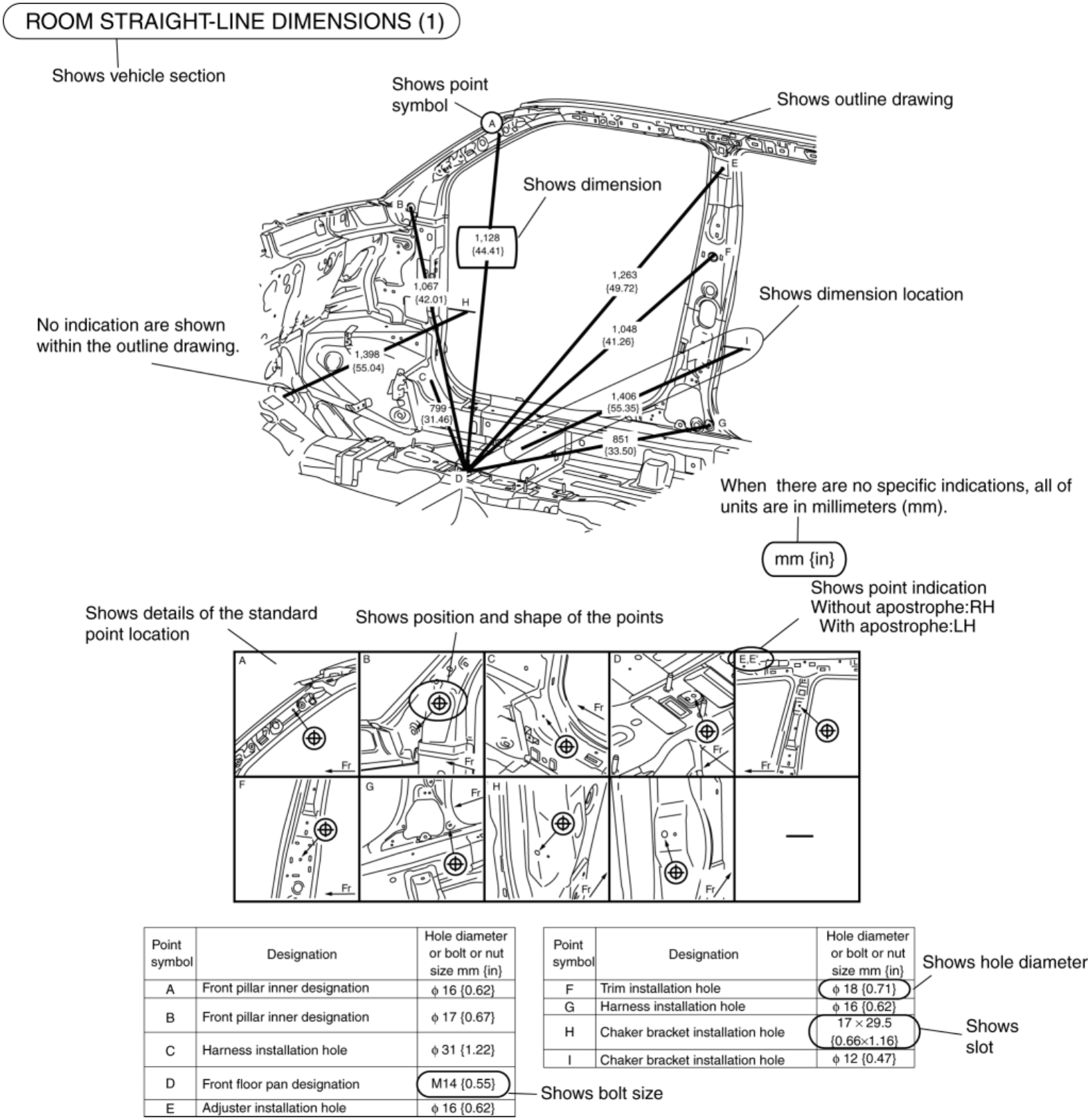

Point symbol	Designation	Hole diameter or bolt or nut size mm {in}
A	Front pillar inner designation	ϕ 16 {0.62}
B	Front pillar inner designation	ϕ 17 {0.67}
C	Harness installation hole	ϕ 31 {1.22}
D	Front floor pan designation	M14 {0.55}
E	Adjuster installation hole	ϕ 16 {0.62}

Point symbol	Designation	Hole diameter or bolt or nut size mm {in}
F	Trim installation hole	ϕ 18 {0.71}
G	Harness installation hole	ϕ 16 {0.62}
H	Chaker bracket installation hole	17 × 29.5 {0.66×1.16}
I	Chaker bracket installation hole	ϕ 12 {0.47}

Symbols of Body Dimensions

- The following 8 symbols are used to indicate the standard points.

SYMBOL	MEANING
	Center of circular hole
	Center elliptical hole
	Notch
	Panel seam, bead, etc.

SYMBOL	MEANING
(arrow only)	Bolt tip
	Center of rectangular-shaped hole
	Edge of rectangular-shaped hole

2014 - Mazda3 - General Information

AIR BAG SYSTEM SERVICE WARNINGS [STANDARD DEPLOYMENT CONTROL SYSTEM]

Air Bag Module Inspection

- **Inspecting an air bag module using a tester can operate (deploy) the air bag module, which may cause serious injury. Do not use a tester to inspect an air bag module. Always use the on-board diagnostic function to diagnose the air bag module for malfunctions.**

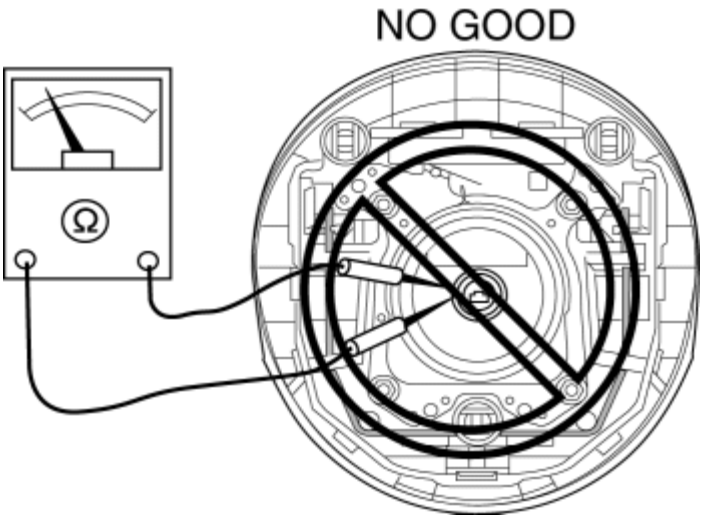

Air Bag Module Handling

- **Before removing the air bag module or disconnecting the air bag module connector, always switch the ignition off, disconnect the negative battery cable, and then wait for 1 min or more to allow the backup power supply of the SAS control module to deplete its stored power.**
- **Handling a live (undeployed) air bag module that is pointed toward your body could result in serious injury if the air bag module were to accidentally operate (deploy). When carrying a live (undeployed) air bag module, point the deployment surface away from your body to lessen the chance of injury in case it operates (deploys).**

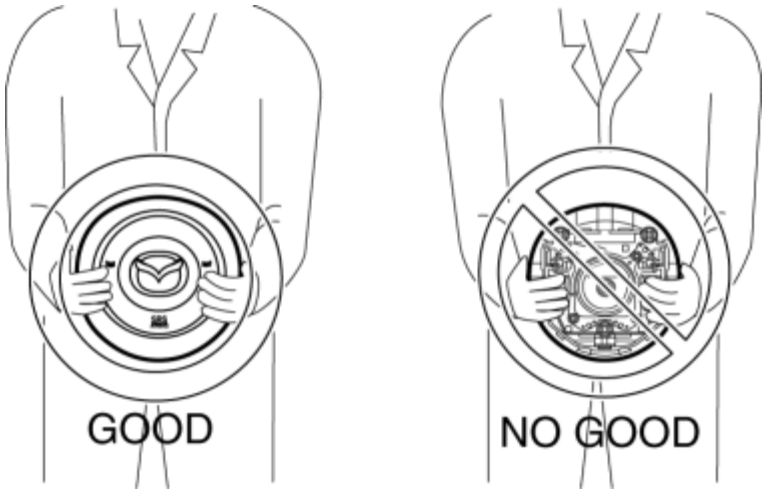

- **A live (undeployed) air bag module placed with its deployment surface to the ground is dangerous. If the air bag module were to accidentally operate (deploy), it could cause serious injury. Always place a live (undeployed) air bag module with its deployment surface up.**

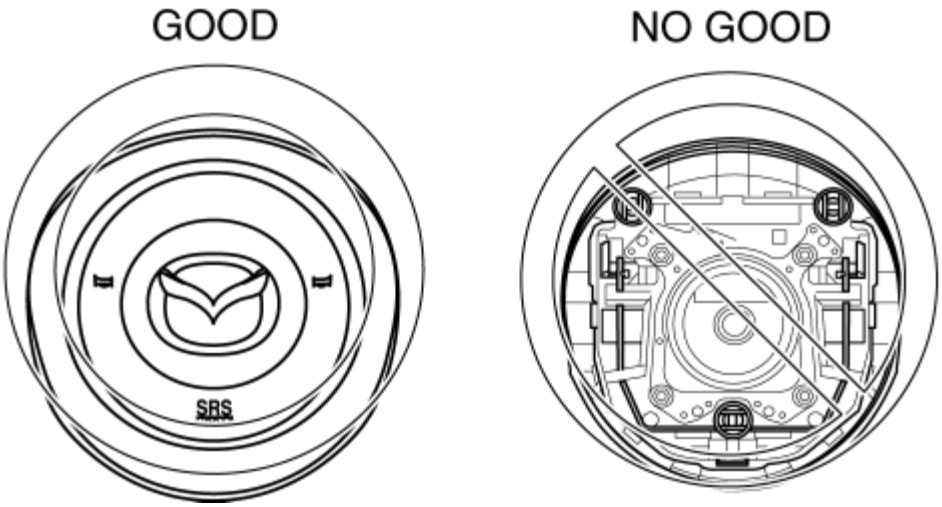

Side Air Bag Module Handling

- **Before removing the side air bag module or disconnecting the side air bag module connector, always switch the ignition off, disconnect the negative battery cable, and then wait for 1 min or more to allow the backup power supply of the SAS control module to deplete its stored power.**
- **When a side air bag module operates (deploys) due to a collision, the interior of the seat back (pad, frame, trim) may become damaged. If a side air bag does not operate (deploy) normally from a seat back that has been reused, a serious accident may result. After a side air bag has operated (deployed), always replace both the side air bag module and the seat back (pad, frame, trim) with new parts. After servicing, verify that the seat operates normally and that the wiring harness is not caught.**

SAS Control Module Handling

- **When connecting or disconnecting the SAS control module connector, a person**

charged with static electricity could accidentally operate (deploy) each air bag module. Before connecting or disconnecting the SAS control module connector, discharge any charged static electricity from your body.

- **Removing the SAS control module or disconnecting the SAS control module connector with the ignition ON can activate the sensor in the SAS control module and operate (deploy) the air bags and pre-tensioner seat belts, which may cause serious injury. Before removing the SAS control module or disconnecting the SAS control module connector, always switch the ignition off, disconnect the negative battery cable, and then wait for 1 min or more to allow the backup power supply of the SAS control module to deplete its stored power.**
- **Connecting the SAS control module connector with the SAS control module not securely fixed to the vehicle is dangerous. The sensor in the SAS control module could send an electrical signal to the air bag modules and pre-tensioner seat belts. This will operate (deploy) the air bags and pre-tensioner seat belts, which may result in serious injury. Therefore, before connecting the connector, securely fix the SAS control module to the vehicle.**
- **Because a sensor is built into the SAS control module, once the air bags and pre-tensioner seat belts have operated (deployed) due to a collision or other causes, the SAS control module must be replaced with a new one even if the used one does not have any visible external damage or deformation. The used SAS control module may have been damaged internally, which may cause improper operation. If the SAS control module is reused, the air bags and pre-tensioner seat belts may not operate (deploy) normally, which could result in a serious accident. Always replace the SAS control module with a new one. The SAS control module cannot be bench-checked or self-checked.**

Crash Zone Sensor Handling

- **Removing the crash zone sensor or disconnecting the crash zone sensor connector with the ignition ON can activate the crash zone sensor and operate (deploy) the air bags and pre-tensioner seat belts, which may cause serious injury. Before removing the crash zone sensor or disconnecting the crash zone sensor connector, always switch the ignition off, disconnect the negative battery cable, and then wait for 1 min or more to allow the backup power supply of the SAS control module to deplete its stored power.**
- **If the crash zone sensor is subjected to shock or the sensor is disassembled, the air bags and pre-tensioner seat belts may accidentally operate (deploy) and cause injury, or the system may fail to operate normally and cause a serious accident. Do not subject the crash zone sensor to shock or disassemble the sensor.**
- **Because a sensor is built into the crash zone sensor, once the air bags and pre-tensioner seat belts have operated (deployed) due to a collision or other causes, the crash zone sensor must be replaced with a new one even if the used one does not have any visible external damage or deformation. If the crash zone sensor is reused, the air bags and pre-tensioner seat belts may not operate (deploy) normally, which could result in a serious accident. Always replace the crash zone sensor with a new one. The crash zone sensor cannot be bench-checked or self-checked.**

Side Air Bag Sensor Handling

- **Removing the side air bag sensor or disconnecting the side air bag sensor connector with the ignition ON can activate the side air bag sensor and operate (deploy) the side air bag, which may cause serious injury. Before removing the side air bag sensor or disconnecting the side air bag sensor connector, always switch the ignition off, disconnect the negative battery cable, and then wait for 1 min or more to allow the backup power supply of the SAS control module to deplete its stored power.**
- **If the side air bag sensor is subjected to shock or the sensor is disassembled, the side air bag may accidentally operate (deploy) and cause injury, or the system may fail to operate normally and cause a serious accident. Do not subject the side air bag sensor to shock or disassemble the sensor.**
- **Because a sensor is built into the side air bag sensor, once the air bag has operated (deployed) due to a collision or other causes, the side air bag sensor must be replaced with a new one even if the used one does not have any visible external damage or deformation. If the side air bag sensor is reused, the side air bag may not operate (deploy) normally, which could result in a serious accident. Always replace the side air bag sensor with a new one. The side air bag sensor cannot be bench-checked or self-checked.**

Pre-tensioner Seat Belt Inspection

- **Inspecting a pre-tensioner seat belt using a tester can operate (deploy) the pre-tensioner seat belt, which may cause serious injury. Do not use a tester to inspect a pre-tensioner seat belt. Always use the on-board diagnostic function to diagnose the pre-tensioner seat belt for malfunctions.**

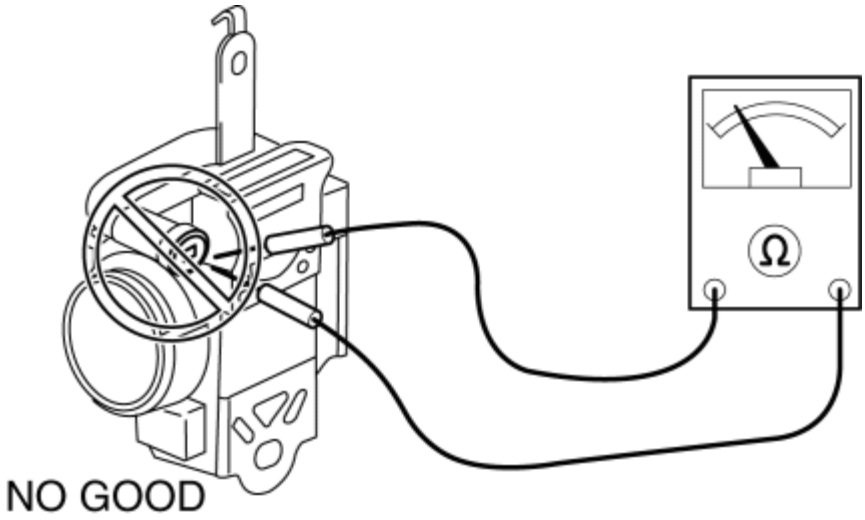

2014 - Mazda3 - General Information

AIR BAG SYSTEM SERVICE WARNINGS [TWO-STEP DEPLOYMENT CONTROL SYSTEM]

Air Bag Module Inspection

- **Inspecting an air bag module using a tester can operate (deploy) the air bag module, which may cause serious injury. Do not use a tester to inspect an air bag module. Always use the on-board diagnostic function to diagnose the air bag module for malfunctions.**

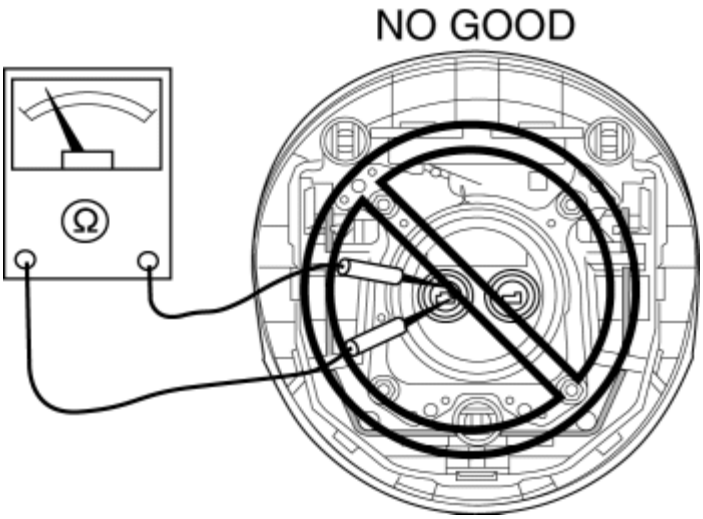

Air Bag Module Handling

- **Before removing the air bag module or disconnecting the air bag module connector, always switch the ignition off, disconnect the negative battery cable, and then wait for 1 min or more to allow the backup power supply of the SAS control module to deplete its stored power.**
- **Handling a live (undeployed) air bag module that is pointed toward your body could result in serious injury if the air bag module were to accidentally operate (deploy). When carrying a live (undeployed) air bag module, point the deployment surface away from your body to lessen the chance of injury in case it operates (deploys).**

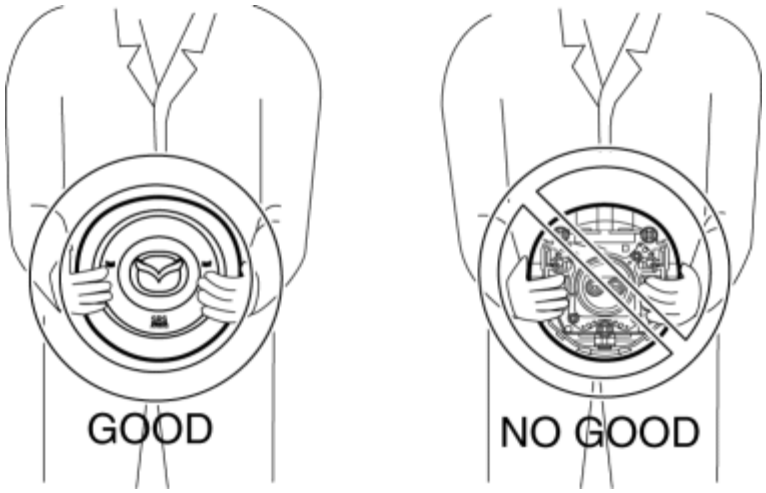

- **A live (undeployed) air bag module placed with its deployment surface to the ground is dangerous. If the air bag module were to accidentally operate (deploy), it could cause serious injury. Always place a live (undeployed) air bag module with its deployment surface up.**

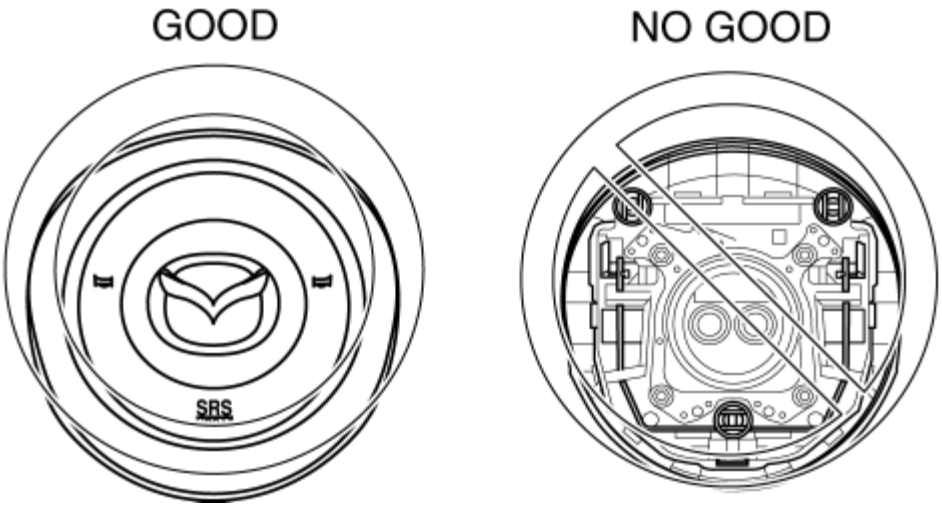

Side Air Bag Module Handling

- **Before removing the side air bag module or disconnecting the side air bag module connector, always switch the ignition off, disconnect the negative battery cable, and then wait for 1 min or more to allow the backup power supply of the SAS control module to deplete its stored power.**
- **When a side air bag module operates (deploys) due to a collision, the interior of the seat back (pad, frame, trim) may become damaged. If a side air bag does not operate (deploy) normally from a seat back that has been reused, a serious accident may result. After a side air bag has operated (deployed), always replace both the side air bag module and the seat back (pad, frame, trim) with new parts. After servicing, verify that the seat operates normally and that the wiring harness is not caught.**

SAS Control Module Handling

- **When connecting or disconnecting the SAS control module connector, a person**

charged with static electricity could accidentally operate (deploy) each air bag module and pre-tensioner seat belt. Before connecting or disconnecting the SAS control module connector, discharge any charged static electricity from your body.

- **Removing the SAS control module or disconnecting the SAS control module connector with the ignition ON can activate the sensor in the SAS control module and operate (deploy) the air bags, pre-tensioner seat belts and lap pre-tensioner seat belts which may cause serious injury. Before removing the SAS control module or disconnecting the SAS control module connector, always switch the ignition off, disconnect the negative battery cable, and then wait for 1 min or more to allow the backup power supply of the SAS control module to deplete its stored power.**
- **Connecting the SAS control module connector with the SAS control module not securely fixed to the vehicle is dangerous. The sensor in the SAS control module could send an electrical signal to the air bag modules, pre-tensioner seat belts and lap pre-tensioner seat belts. This will operate (deploy) the air bags, pre-tensioner seat belts and lap pre-tensioner seat belts, which may result in serious injury. Therefore, before connecting the connector, securely fix the SAS control module to the vehicle.**
- **Because a sensor is built into the SAS control module, once the air bags, pre-tensioner seat belts and lap pre-tensioner seat belts have operated (deployed) due to a collision or other causes, the SAS control module must be replaced with a new one even if the used one does not have any visible external damage or deformation. The used SAS control module may have been damaged internally, which may cause improper operation. If the SAS control module is reused, the air bags, pre-tensioner seat belts and lap pre-tensioner seat belts may not operate (deploy) normally, which could result in a serious accident. Always replace the SAS control module with a new one. The SAS control module cannot be bench-checked or self-checked.**

Crash Zone Sensor Handling

- **Removing the crash zone sensor or disconnecting the crash zone sensor connector with the ignition ON can activate the crash zone sensor and operate (deploy) the air bags, pre-tensioner seat belts and lap pre-tensioner seat belts which may cause serious injury. Before removing the crash zone sensor or disconnecting the crash zone sensor connector, always switch the ignition off, disconnect the negative battery cable, and then wait for 1 min or more to allow the backup power supply of the SAS control module to deplete its stored power.**
- **If the crash zone sensor is subjected to shock or the sensor is disassembled, the air bags, pre-tensioner seat belts and lap pre-tensioner seat belts may accidentally operate (deploy) and cause injury, or the system may fail to operate normally and cause a serious accident. Do not subject the crash zone sensor to shock or disassemble the sensor.**
- **Because a sensor is built into the crash zone sensor, once the air bags, pre-tensioner seat belts and lap pre-tensioner seat belts have operated (deployed) due to a collision or other causes, the crash zone sensor must be replaced with a new one even if the used one does not have any visible external damage or deformation. If the crash zone sensor is reused, the air bags, pre-tensioner seat belts and lap pre-tensioner seat belts may not operate (deploy) normally, which could result in a serious accident. Always replace the crash zone sensor with a**

new one. The crash zone sensor cannot be bench-checked or self-checked.

Side Air Bag Sensor Handling

- **Removing the side air bag sensor or disconnecting the side air bag sensor connector with the ignition ON can activate the side air bag sensor and operate (deploy) the side air bag, which may cause serious injury. Before removing the side air bag sensor or disconnecting the side air bag sensor connector, always switch the ignition off, disconnect the negative battery cable, and then wait for 1 min or more to allow the backup power supply of the SAS control module to deplete its stored power.**
- **If the side air bag sensor is subjected to shock or the sensor is disassembled, the side air bag may accidentally operate (deploy) and cause injury, or the system may fail to operate normally and cause a serious accident. Do not subject the side air bag sensor to shock or disassemble the sensor.**
- **Because a sensor is built into the side air bag sensor, once the air bag has operated (deployed) due to a collision or other causes, the side air bag sensor must be replaced with a new one even if the used one does not have any visible external damage or deformation. If the side air bag sensor is reused, the side air bag may not operate (deploy) normally, which could result in a serious accident. Always replace the side air bag sensor with a new one. The side air bag sensor cannot be bench-checked or self-checked.**

Pressure Sensor Handling

- **Removing the pressure sensor or disconnecting the pressure sensor connector with the ignition ON can activate the pressure sensor and operate (deploy) the side air bag, which may cause serious injury. Before removing the pressure sensor or disconnecting the pressure sensor connector, always switch the ignition off, disconnect the negative battery cable, and then wait for 1 min or more to allow the backup power supply of the SAS control module to deplete its stored power.**
- **If the pressure sensor is subjected to shock or the sensor is disassembled, the side air bag may accidentally operate (deploy) and cause injury, or the system may fail to operate normally and cause a serious accident. Do not subject the pressure sensor to shock or disassemble the sensor.**
- **Because a sensor is built into the pressure sensor, once the air bag has operated (deployed) due to a collision or other causes, the pressure sensor must be replaced with a new one even if the used one does not have any visible external damage or deformation. If the pressure sensor is reused, the side air bag may not operate (deploy) normally, which could result in a serious accident. Always replace the pressure sensor with a new one. The pressure sensor cannot be bench-checked or self-checked.**

Pre-tensioner Seat Belt Inspection

- **Inspecting a pre-tensioner seat belt using a tester can operate (deploy) the pre-tensioner seat belt, which may cause serious injury. Do not use a tester to**

inspect a pre-tensioner seat belt. Always use the on-board diagnostic function to diagnose the pre-tensioner seat belt for malfunctions.

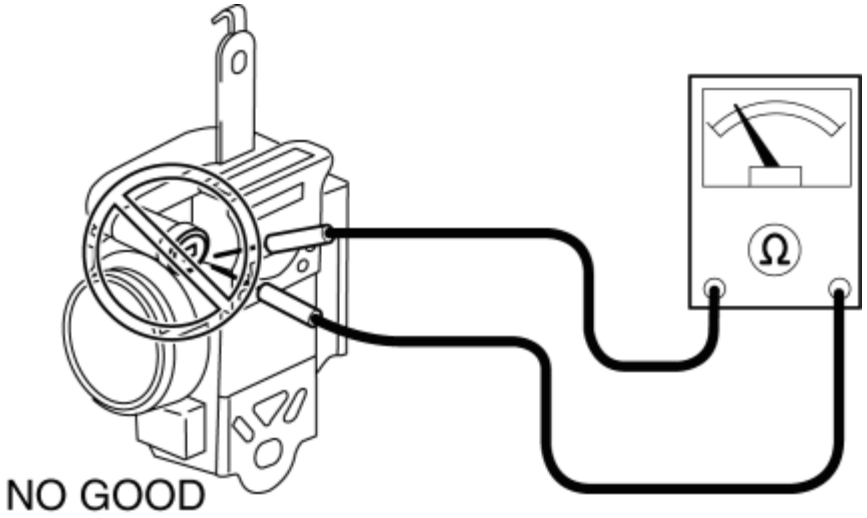

Lap Pre-tensioner Seat Belt Inspection

- **Inspecting a lap pre-tensioner seat belt using a tester can operate (deploy) the lap pre-tensioner seat belt, which may cause serious injury. Do not use a tester to inspect a lap pre-tensioner seat belt. Always use the on-board diagnostic function to diagnose the lap pre-tensioner seat belt for malfunctions.**

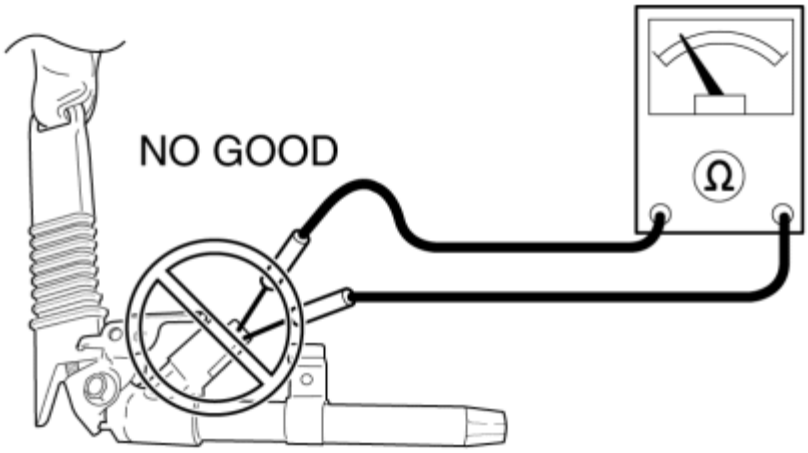

2014 - Mazda3 - General Information

SERVICE PRECAUTIONS

Arrangement of Workshop

- Arrangement of the workshop is important for safe and efficient work.

Safety Precautions

- Protective head covering and safety shoes should always be worn. Depending upon the nature of the work, gloves, safety glasses, ear protectors, face shield, etc., should also be used.

Vehicle Protection

- Use seat covers and floor covers.
- Use heat resistant protective covers to protect glass areas and seats from heat or sparks during welding.
- Protect items such as moldings, garnishes, and ornaments with tape when welding.

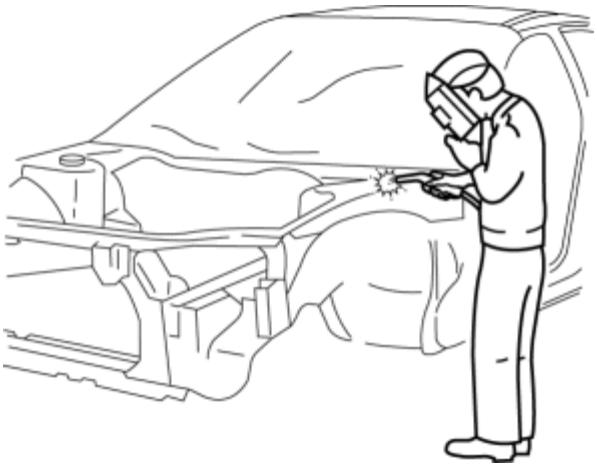

Remove Dangerous Articles

- Remove the fuel tank before using an open flame in that area. Plug connection piping to prevent fuel leakage.

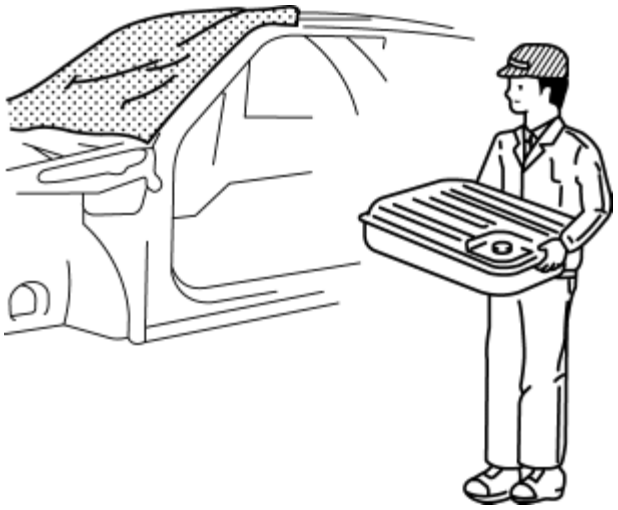

Use of Pulling Equipment

- When using pulling equipment, keep away from the pulling area and use safety wires to prevent accidents.

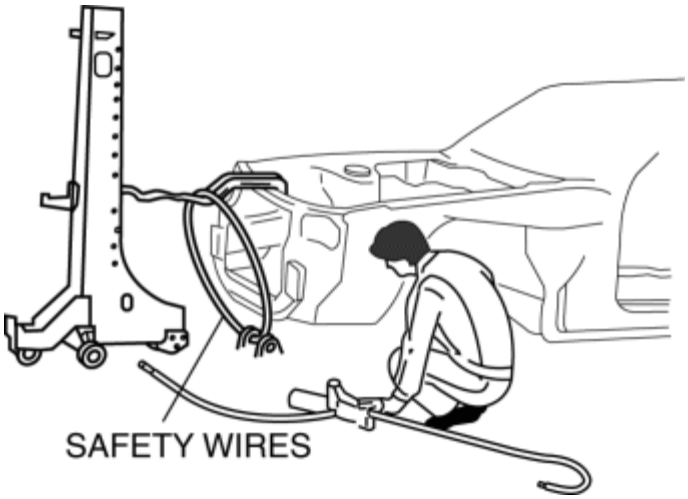

Prevent Short Circuits

- Switch the ignition to off.
- Disconnect the battery cables.

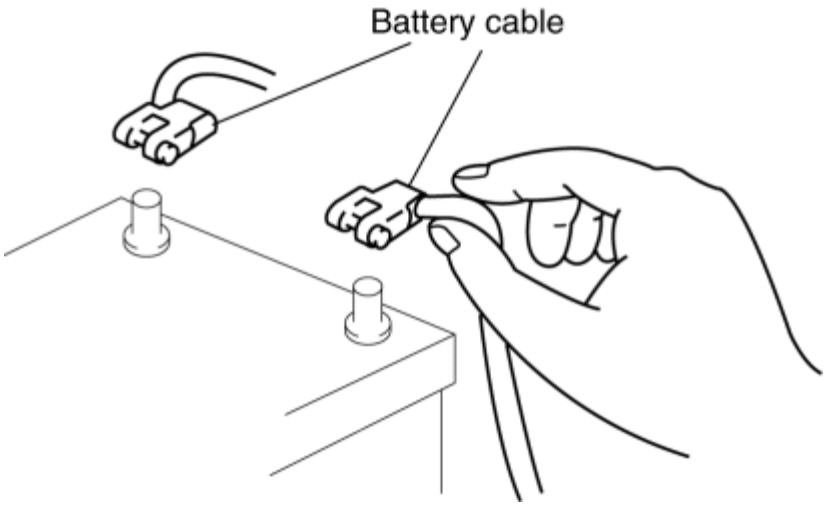

1. Securely connect the welding machine ground near the welding area.

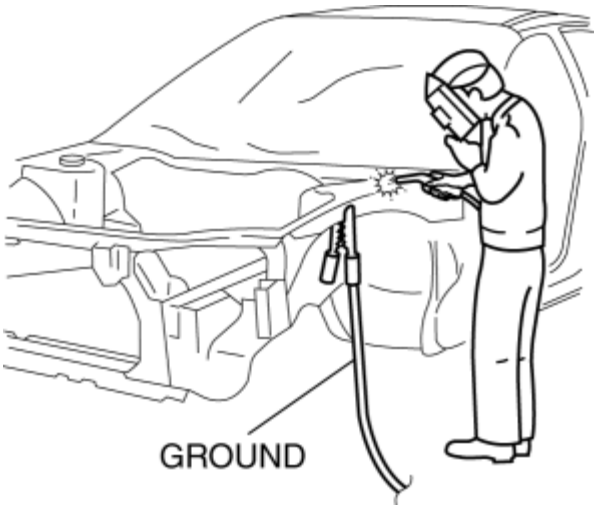

2014 - Mazda3 - General Information

EFFICIENT REMOVAL OF BODY PANELS

Body Measurements

- Before removal or rough cutting, first measure the body at and around the damaged area against the standard reference dimension specifications. If there is deformation, use frame repair equipment to make a rough correction.

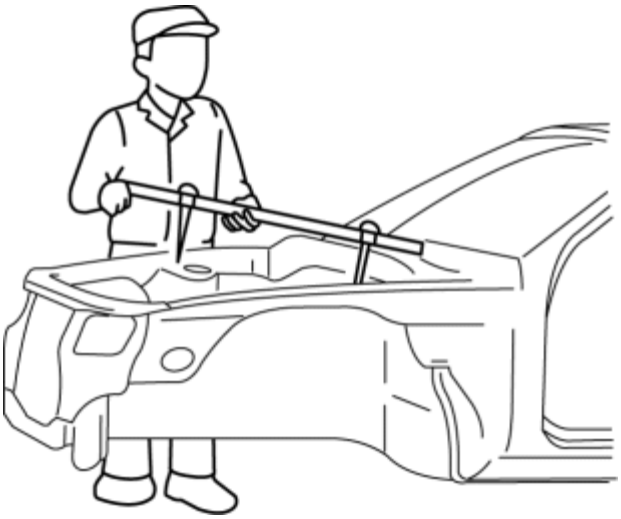

Prevention of Body Deformation

- Use a clamp or a jack for removal and reinforce at and around the rough cutting location to prevent deforming of the body.

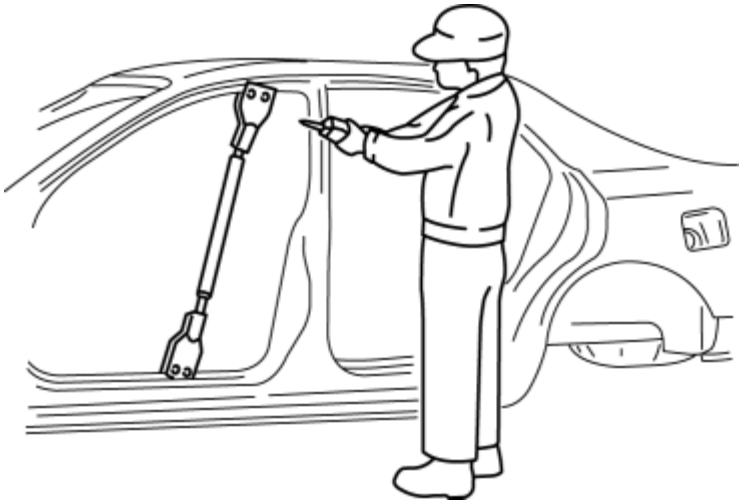

Selection of Cut and join Locations

- For parts where complete replacement is not feasible, careful cutting and joining operations should be followed. If the location to be cut is a flat area where there is no reinforcement, the selected cutting location should be where the welding distortion will be minimal.

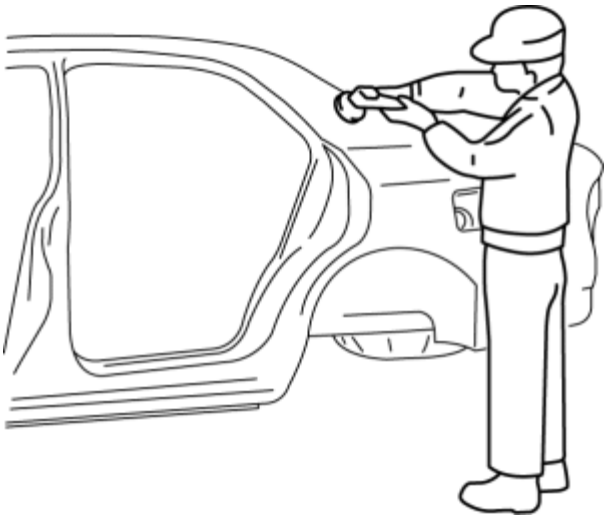

Removal of Associated Parts

- Protect moldings, garnishes, and ornaments with tape when removing associated parts.

Rough Cutting of Damaged Panel

- Verify that there are no parts (such as pipes, hoses, and wiring harness) nearby or on the opposite side of a panel which could be damaged by heat.
- For cut and join areas, allow for an overlap of 30—50 mm {1.2—1.9 in} and then rough cut the damaged panel.

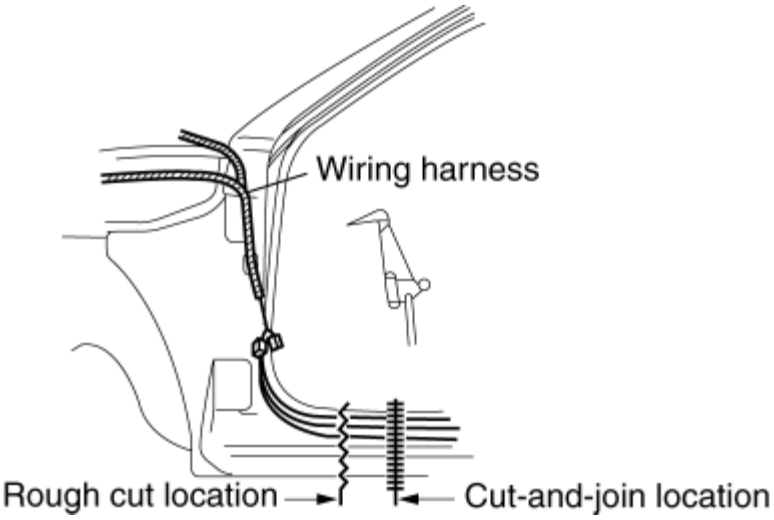

EFFICIENT REMOVAL OF BODY PANELS

2014 - Mazda3 - General Information

EFFICIENT INSTALLATION OF BODY PANELS

Checking Preweld Measurements And Watching

- Align to the standard reference dimensions, based upon the body dimensions illustration, so that new parts are installed in the correct position.

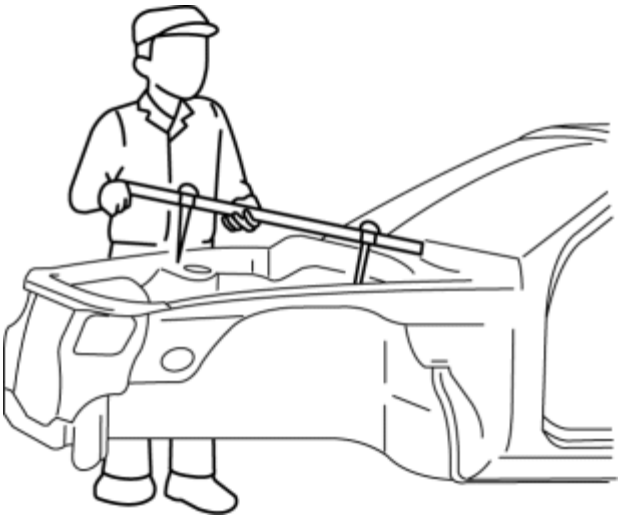

Welding Notes

- For the number of weld points, welding should be performed in accordance with the following reference standards.

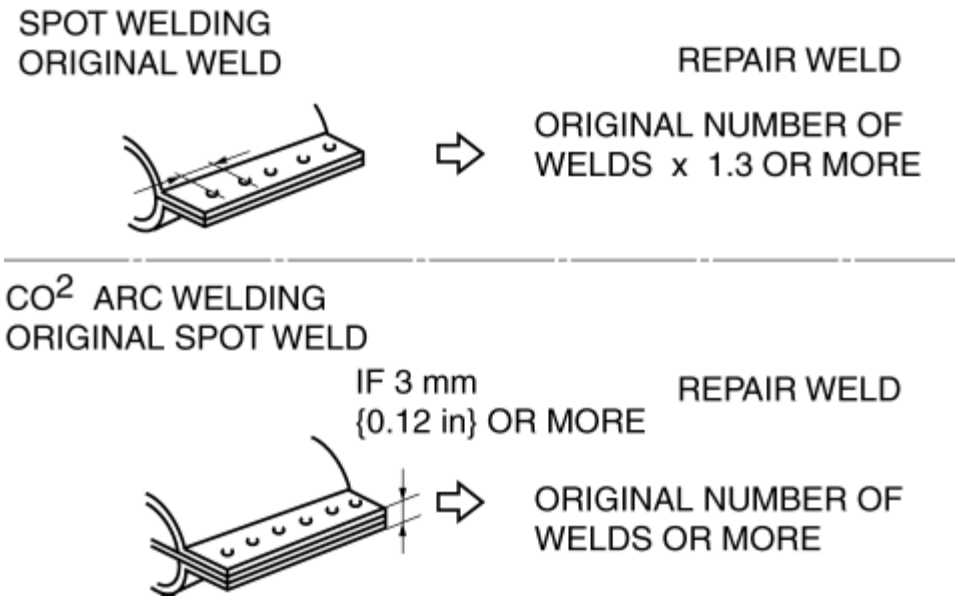

Spot Welding Notes

- The shape of the spot welder tip is D=(2×t)+3. If the upper panel thickness is different from that of the under panel, adjust to the thinner one.

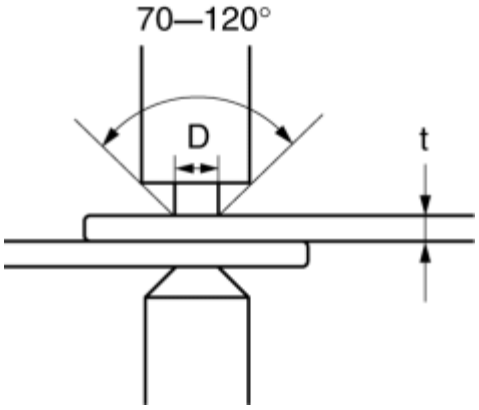

- Because the weld strength is affected by the shape of the spot welder tip, the optimum condition of the tip should always be maintained.

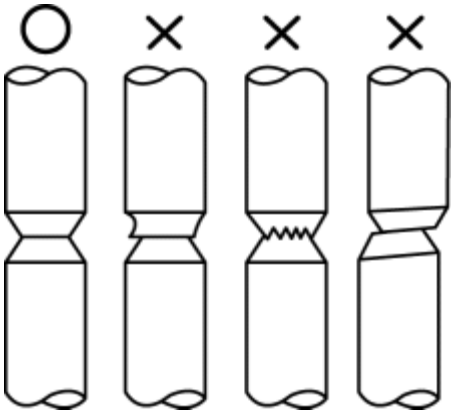

- Spot welds should be made at points other than the originally welded points.
- Before spot welding, make a trial weld using the same material as the body panel to check the weld strength.

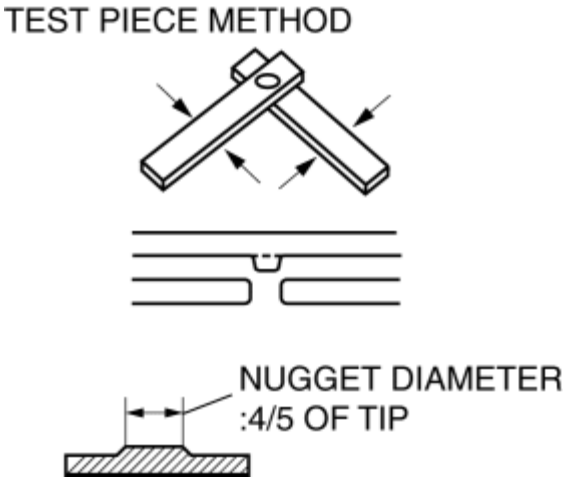

Checking Weld Strength

- Installation locations of the engine, chassis, and seat belts are designated as important safety locations for weld strength. Check weld strength by driving a chisel between the panels at every fourth or fifth weld spot, and every tenth regular weld location.

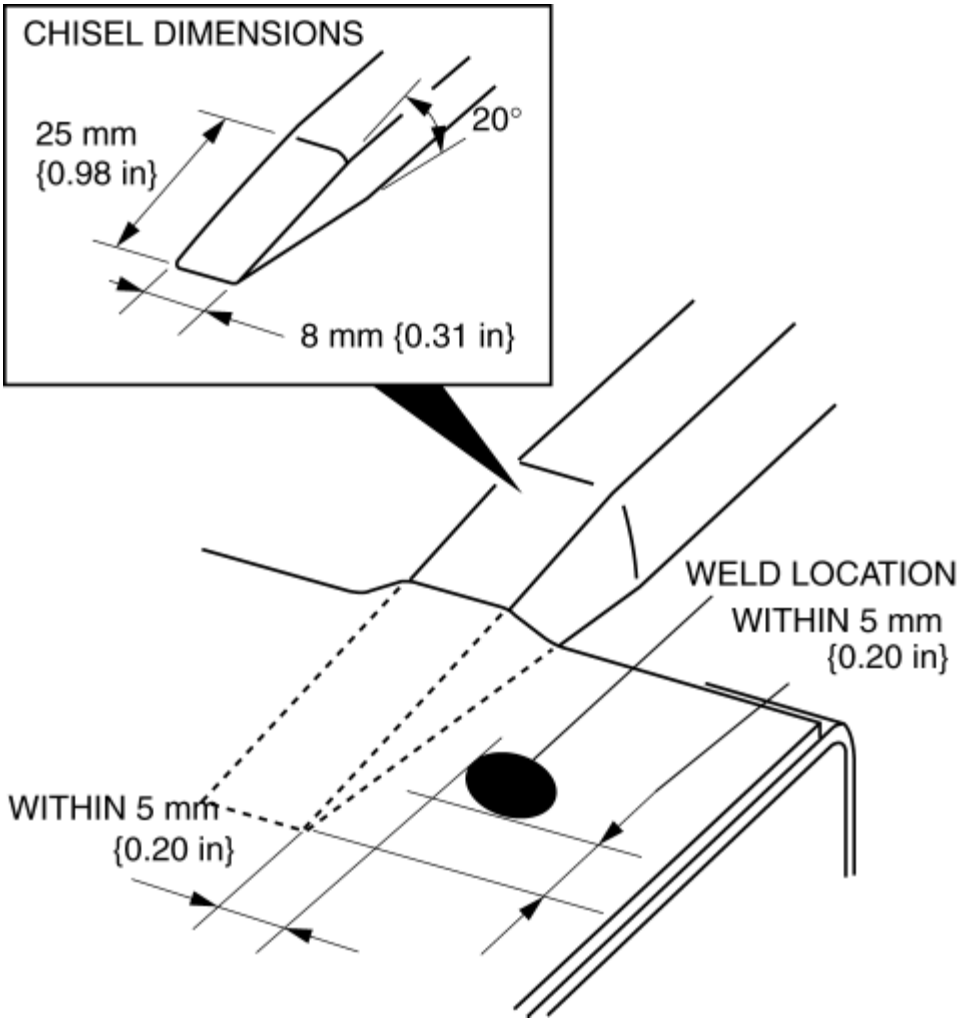

- Drive the chisel between the panels according to the number of panels as shown below.

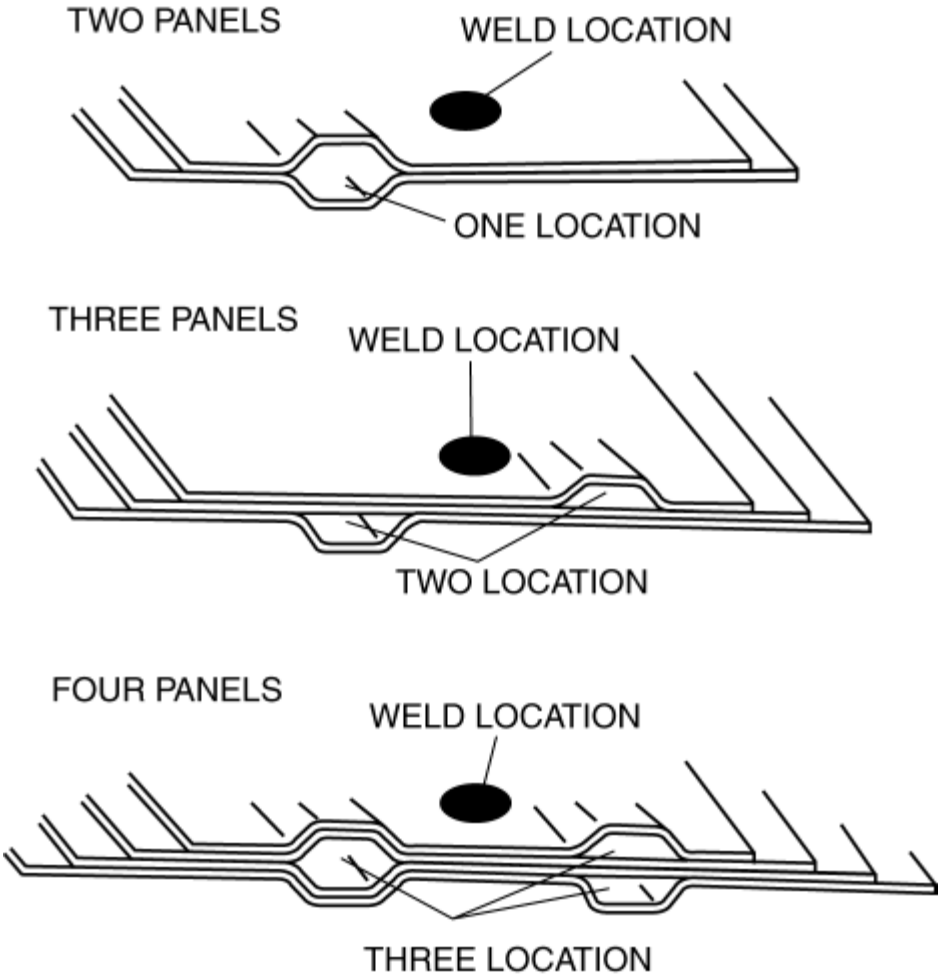

- To determine weld strength, drive the chisel between the panel and check whether the panels come apart. If the panels come apart, make another weld near the original weld.
- Restore the shape of the checked area.

2014 - Mazda3 - General Information

INSTALLATION PREPARATIONS

Rough Cutting of New Parts

- For cut and join areas, allow for an overlap of 30—50 mm {1.2—1.9 in} with the remaining area on the body side and then rough cut the new parts.

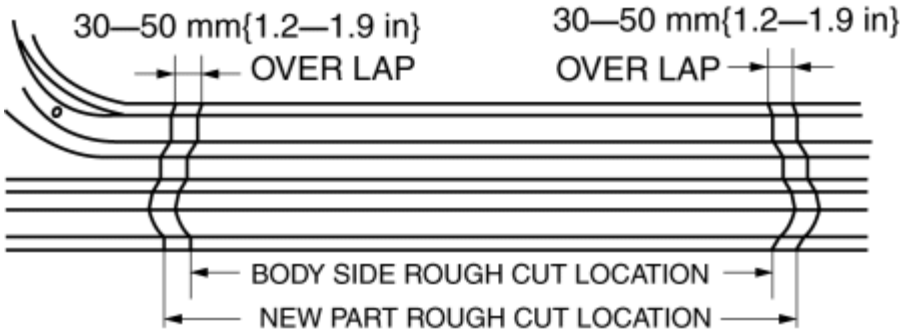

Determination of Welding Method

- If the total thickness at the area to be welded is 3 mm {0.12 in} or more, use a gas shielded arc welder to make the plug welds.

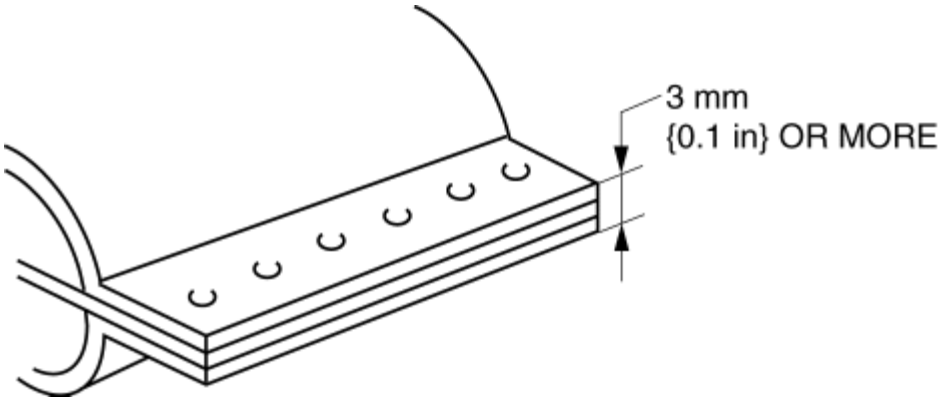

Making Holes for Arc Welding

- For places that cannot be spot welded, make a hole for arc welding using a punch or drill as follows.

(mm {in})

Panel thickness (φ)	Hole diameter (φ)
0.60—0.90 {0.024—0.035}	5.0 {0.20}
0.91—1.20 {0.036—0.047}	6.0 {0.24}
1.21—1.80 {0.0477—0.0708}	8.0 {0.31}
1.81—4.50 {0.072—0.177}	10.0 {0.394}

- Grind the shaded section indicated in the diagram below and create a hole in the part where the 3—4 plates are put together. Also, weld the plates together tightly so that gaps do not develop.

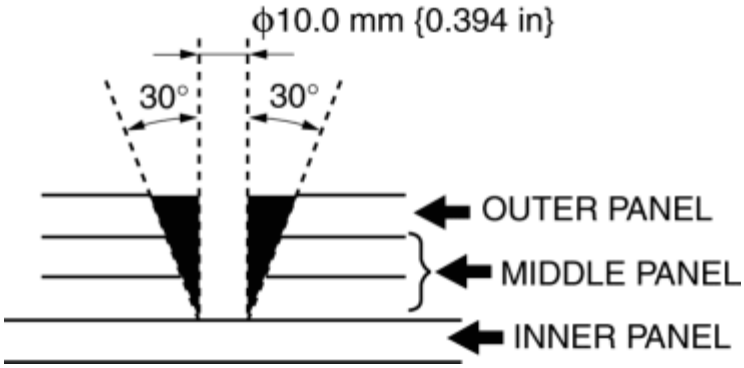

Application of Weld through Primer

- For treatment against corrosion, remove the paint grease, and other material from the portion of new part and body to be welded, and apply weld through primer.

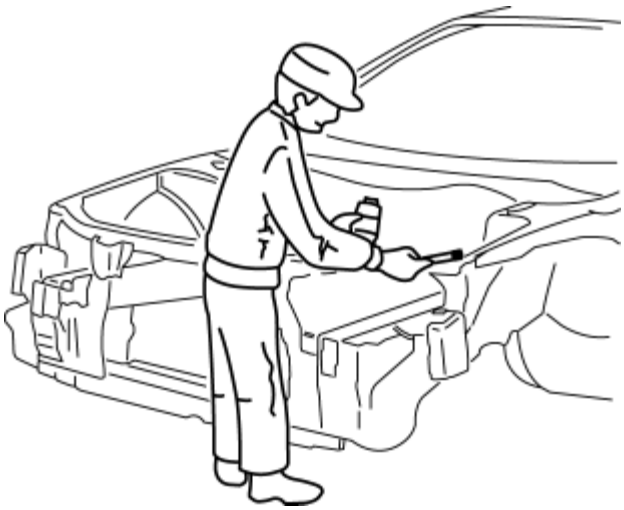

2014 - Mazda3 - General Information

ANTICORROSION, SOUND INSULATION, AND VIBRATION INSULATION

Body Sealing

- Apply body sealer where necessary.
- For locations where application of body sealer is difficult after installation, apply it before installation.

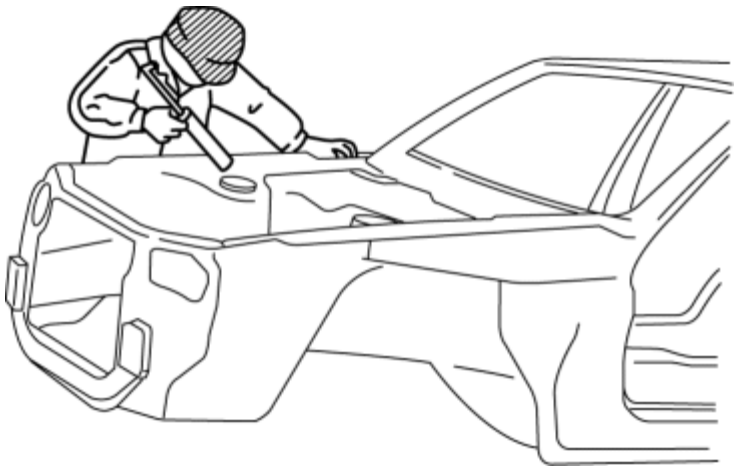

Application of Undercoating

- Apply an undercoat to the required location of the body.

Application of Rust Inhibitor

- Apply rust inhibitor (wax, oil, etc.) to the back of the welded areas.

Application of Dumping Sheet

- Apply dumping sheet by heating with an infrared ray lamp.

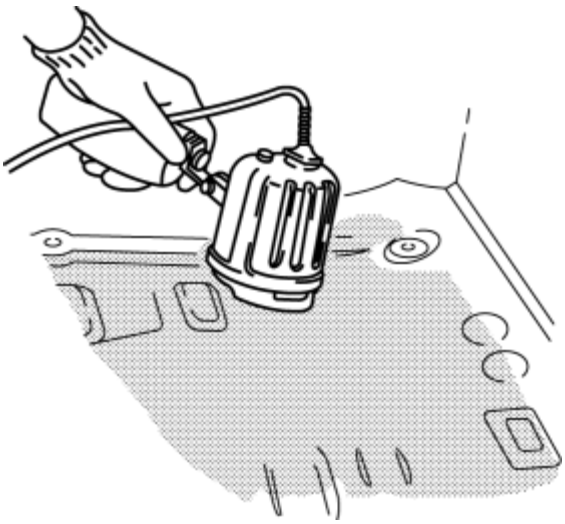

2014 - Mazda3 - General Information

ABBREVIATION

CLE	Clear
Fr	Front
LH	Left Hand
M	Metallic
MC	Mica
RH	Right Hand
Rr	Rear
4SD	4 door sedan
5HB	5 door hatchback

2014 - Mazda3 - General Information

IDENTIFICATION NUMBER LOCATIONS

Vehicle Identification Number (VIN)

- The VIN marking position is located on the floor as shown in the figure.

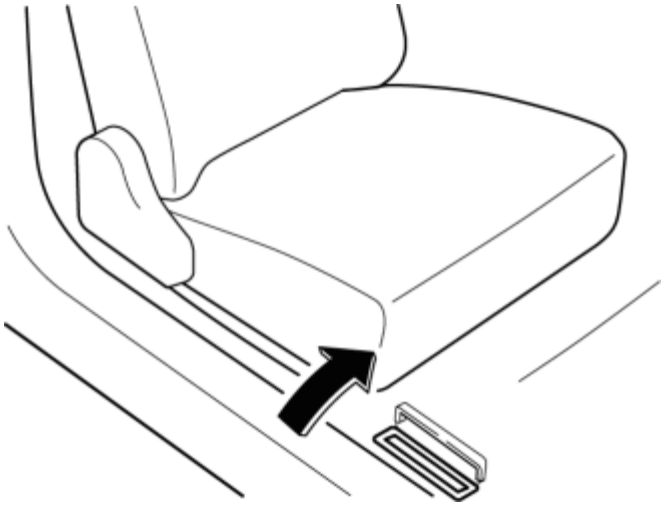

- If the VIN plate is adhered to the dashboard, it is located in the position shown in the figure.

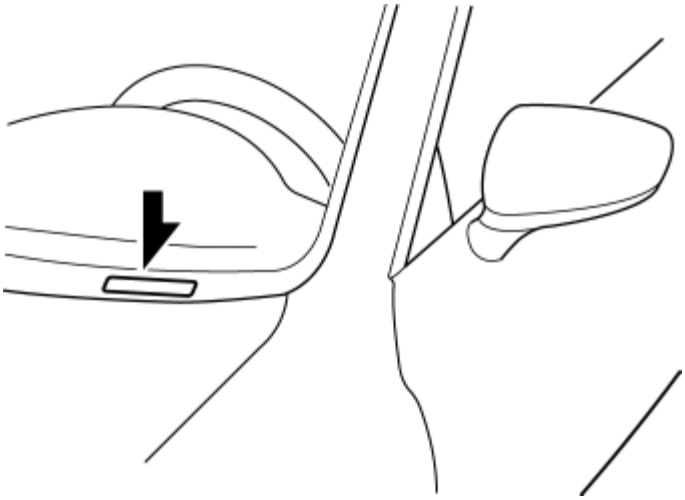

Engine Type / Number

IDENTIFICATION NUMBER LOCATIONS

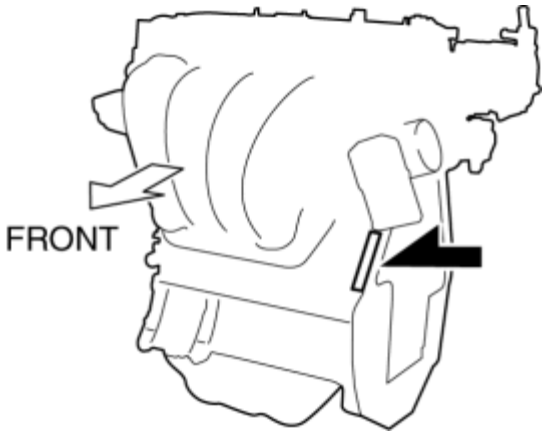

< Previous

2014 - Mazda3 - General Information

BODY COLORS

Color Code and Color Name

Color Code	Color Name
25D	Snowflake white pearl
38P	Aluminum metallic M
41V	Soul red M
41W	Jet black MC
42A	Meteor gray MC
42B	Blue reflex MC
42M	Deep crystal blue MC
42S	Titanium flash MC

Verification of Primary Color Mixture for Body Color

Confirm the primary color mixture for the body color at the paint manufacturer URL.

< Previous

2014 - Mazda3 Service Highlights

- General Information
- Engine
- Suspension
- Driveline/Axle
- Brakes
- Transmission/Transaxle
- Steering
- HVAC
- Restraints
- Body and Accessories
- Multiplex Communication System
- i-Eloop

Service Highlights - General Information

2014 - Mazda3

General Information

- AIM OF DEVELOPMENT
- VEHICLE IDENTIFICATION NUMBER (VIN) CODE
- VEHICLE IDENTIFICATION NUMBER (VIN)
- UNITS
- SAE STANDARDS
- ABBREVIATIONS

Service Highlights - Engine

2014 - Mazda3

Outline

- ENGINE [SKYACTIV-G 2.0, SKYACTIV-G 2.5]
- ENGINE ABBREVIATIONS

On-Board Diagnostics

- ON-BOARD DIAGNOSTIC OUTLINE [SKYACTIV-G 2.0, SKYACTIV-G 2.5]
- ON-BOARD DIAGNOSTIC SYSTEM TEST MODE [SKYACTIV-G 2.0, SKYACTIV-G 2.5]
- DTC DETECTION LOGIC AND CONDITIONS [SKYACTIV-G 2.0, SKYACTIV-G 2.5]
- KOEO/KOER SELF-TEST [SKYACTIV-G 2.0, SKYACTIV-G 2.5]
- ON-BOARD DIAGNOSTIC SYSTEM PID/DATA MONITOR FUNCTION [SKYACTIV-G 2.0, SKYACTIV-G 2.5]
- ON-BOARD DIAGNOSTIC SYSTEM ACTIVE COMMAND MODES FUNCTION [SKYACTIV-G 2.0, SKYACTIV-G 2.5]
- ON-BOARD DIAGNOSTIC SYSTEM EXTERNAL DIAGNOSTIC UNIT COMMUNICATION FUNCTION [SKYACTIV-G 2.0, SKYACTIV-G 2.5]
- ON-BOARD DIAGNOSTIC SYSTEM MALFUNCTION DISPLAY FUNCTION [SKYACTIV-G 2.0, SKYACTIV-G 2.5]
- ON-BOARD DIAGNOSTIC SYSTEM DIAGNOSTIC DATA MEMORY FUNCTION [SKYACTIV-G 2.0, SKYACTIV-G 2.5]
- CHECK ENGINE LIGHT [SKYACTIV-G 2.0, SKYACTIV-G 2.5]

Mechanical

- MECHANICAL [SKYACTIV-G 2.0, SKYACTIV-G 2.5]
- MILLER CYCLE ENGINE [SKYACTIV-G 2.0, SKYACTIV-G 2.5]
- CYLINDER HEAD COVER [SKYACTIV-G 2.0, SKYACTIV-G 2.5]
- CYLINDER HEAD [SKYACTIV-G 2.0, SKYACTIV-G 2.5]
- CYLINDER HEAD GASKET [SKYACTIV-G 2.0, SKYACTIV-G 2.5]
- CYLINDER BLOCK [SKYACTIV-G 2.0, SKYACTIV-G 2.5]
- CRANKSHAFT, MAIN BEARING [SKYACTIV-G 2.0, SKYACTIV-G 2.5]
- PISTON, PISTON RING, PISTON PIN [SKYACTIV-G 2.0, SKYACTIV-G 2.5]
- CONNECTING ROD, CONNECTING ROD BEARING [SKYACTIV-G 2.0, SKYACTIV-G 2.5]
- ENGINE FRONT COVER [SKYACTIV-G 2.0, SKYACTIV-G 2.5]
- CRANKSHAFT PULLEY [SKYACTIV-G 2.0, SKYACTIV-G 2.5]
- DRIVE BELT [SKYACTIV-G 2.0, SKYACTIV-G 2.5]
- VALVE MECHANISM [SKYACTIV-G 2.0, SKYACTIV-G 2.5]
- VALVE, VALVE SPRING, VALVE SEAL, VALVE GUIDE [SKYACTIV-G 2.0, SKYACTIV-G 2.5]
- CAMSHAFT [SKYACTIV-G 2.0, SKYACTIV-G 2.5]
- TIMING CHAIN, CHAIN TENSIONER [SKYACTIV-G 2.0, SKYACTIV-G 2.5]
- HYDRAULIC LASH ADJUSTER, ROCKER ARM [SKYACTIV-G 2.0, SKYACTIV-G 2.5]
- VARIABLE VALVE TIMING MECHANISM [SKYACTIV-G 2.0, SKYACTIV-G 2.5]
- ENGINE MOUNT [SKYACTIV-G 2.0, SKYACTIV-G 2.5]
- OIL CONTROL VALVE (OCV) [SKYACTIV-G 2.0, SKYACTIV-G 2.5]
- HYDRAULIC VARIABLE VALVE TIMING ACTUATOR [SKYACTIV-G 2.0, SKYACTIV-G 2.5]
- ELECTRIC VARIABLE VALVE TIMING ACTUATOR [SKYACTIV-G 2.0, SKYACTIV-G 2.5]

- ELECTRIC VARIABLE VALVE TIMING RELAY [SKYACTIV-G 2.0, SKYACTIV-G 2.5]
- BALANCER UNIT [SKYACTIV-G 2.5]

Lubrication

- LUBRICATION SYSTEM [SKYACTIV-G 2.0, SKYACTIV-G 2.5]
- OIL FILTER [SKYACTIV-G 2.0, SKYACTIV-G 2.5]
- OIL PAN [SKYACTIV-G 2.0, SKYACTIV-G 2.5]
- OIL STRAINER [SKYACTIV-G 2.0, SKYACTIV-G 2.5]
- OIL PUMP [SKYACTIV-G 2.0, SKYACTIV-G 2.5]
- OIL JET VALVE [SKYACTIV-G 2.0, SKYACTIV-G 2.5]
- ENGINE OIL SOLENOID VALVE [SKYACTIV-G 2.0, SKYACTIV-G 2.5]
- OIL SHOWER PIPE [SKYACTIV-G 2.0, SKYACTIV-G 2.5]

Cooling System

- COOLING SYSTEM [SKYACTIV-G 2.0, SKYACTIV-G 2.5]
- RADIATOR [SKYACTIV-G 2.0, SKYACTIV-G 2.5]
- COOLING SYSTEM CAP [SKYACTIV-G 2.0, SKYACTIV-G 2.5]
- THERMOSTAT [SKYACTIV-G 2.0, SKYACTIV-G 2.5]
- WATER PUMP [SKYACTIV-G 2.0, SKYACTIV-G 2.5]
- COOLING FAN COMPONENT [SKYACTIV-G 2.0, SKYACTIV-G 2.5]
- COOLING FAN RELAY [SKYACTIV-G 2.0, SKYACTIV-G 2.5]

In-Take Air System

- INTAKE-AIR SYSTEM [SKYACTIV-G 2.0, SKYACTIV-G 2.5]
- FRESH-AIR DUCT [SKYACTIV-G 2.0, SKYACTIV-G 2.5]
- RESONANCE CHAMBER [SKYACTIV-G 2.0, SKYACTIV-G 2.5]
- AIR CLEANER [SKYACTIV-G 2.0, SKYACTIV-G 2.5]
- THROTTLE BODY [SKYACTIV-G 2.0, SKYACTIV-G 2.5]
- VACUUM PUMP [SKYACTIV-G 2.0, SKYACTIV-G 2.5]
- INTAKE MANIFOLD [SKYACTIV-G 2.0, SKYACTIV-G 2.5]
- ACCELERATOR PEDAL, KICKDOWN SWITCH [SKYACTIV-G 2.0, SKYACTIV-G 2.5]

Fuel System

- FUEL SYSTEM [SKYACTIV-G 2.0, SKYACTIV-G 2.5]
- RETURNLESS FUEL SYSTEM [SKYACTIV-G 2.0, SKYACTIV-G 2.5]
- FUEL TANK [SKYACTIV-G 2.0, SKYACTIV-G 2.5]
- NON-RETURN VALVE [SKYACTIV-G 2.0, SKYACTIV-G 2.5]
- FUEL PUMP UNIT [SKYACTIV-G 2.0, SKYACTIV-G 2.5]
- FUEL DISTRIBUTOR [SKYACTIV-G 2.0, SKYACTIV-G 2.5]
- FUEL INJECTOR [SKYACTIV-G 2.0, SKYACTIV-G 2.5]
- QUICK RELEASE (FUEL SYSTEM) CONNECTOR [SKYACTIV-G 2.0, SKYACTIV-G 2.5]
- FUEL PUMP RELAY [SKYACTIV-G 2.0, SKYACTIV-G 2.5]
- FUEL INJECTOR RELAY [SKYACTIV-G 2.0, SKYACTIV-G 2.5]
- DIRECT FUEL INJECTION SYSTEM [SKYACTIV-G 2.0, SKYACTIV-G 2.5]
- HIGH PRESSURE FUEL PUMP [SKYACTIV-G 2.0, SKYACTIV-G 2.5]
- FUEL PUMP CONTROL MODULE [SKYACTIV-G 2.0, SKYACTIV-G 2.5]

Exhaust System

- EXHAUST SYSTEM [SKYACTIV-G 2.0, SKYACTIV-G 2.5]
- EXHAUST MANIFOLD [SKYACTIV-G 2.0, SKYACTIV-G 2.5]
- MAIN SILENCER [SKYACTIV-G 2.0, SKYACTIV-G 2.5]
- PRESILENCER [SKYACTIV-G 2.0, SKYACTIV-G 2.5]

Emissions System

- EMISSION SYSTEM [SKYACTIV-G 2.0, SKYACTIV-G 2.5]
- EXHAUST GAS PURIFICATION SYSTEM [SKYACTIV-G 2.0, SKYACTIV-G 2.5]
- CATALYTIC CONVERTER [SKYACTIV-G 2.0, SKYACTIV-G 2.5]
- POSITIVE CRANKCASE VENTILATION (PCV) SYSTEM [SKYACTIV-G 2.0, SKYACTIV-G 2.5]
- POSITIVE CRANKCASE VENTILATION (PCV) VALVE [SKYACTIV-G 2.0, SKYACTIV-G 2.5]
- EVAPORATIVE EMISSION (EVAP) CONTROL SYSTEM [SKYACTIV-G 2.0, SKYACTIV-G 2.5]
- PURGE SOLENOID VALVE [SKYACTIV-G 2.0, SKYACTIV-G 2.5]
- CATCH TANK [SKYACTIV-G 2.0, SKYACTIV-G 2.5]
- FUEL-FILLER CAP [SKYACTIV-G 2.0, SKYACTIV-G 2.5]
- CHARCOAL CANISTER [SKYACTIV-G 2.0, SKYACTIV-G 2.5]
- CANISTER VENT (CV) SOLENOID VALVE [SKYACTIV-G 2.0, SKYACTIV-G 2.5]
- FUEL SHUT-OFF VALVE [SKYACTIV-G 2.0, SKYACTIV-G 2.5]
- ROLLOVER VALVE [SKYACTIV-G 2.0, SKYACTIV-G 2.5]
- CHECK VALVE [SKYACTIV-G 2.0, SKYACTIV-G 2.5]
- EVAPORATIVE CHAMBER [SKYACTIV-G 2.0, SKYACTIV-G 2.5]
- QUICK RELEASE CONNECTOR (EMISSION SYSTEM) [SKYACTIV-G 2.0, SKYACTIV-G 2.5]

Charging System

- CHARGING SYSTEM [SKYACTIV-G 2.0, SKYACTIV-G 2.5 (WITHOUT i-ELOOP)]
- BATTERY [SKYACTIV-G 2.0, SKYACTIV-G 2.5]
- GENERATOR [SKYACTIV-G 2.0, SKYACTIV-G 2.5 (WITHOUT i-ELOOP)]
- CHARGING SYSTEM WARNING LIGHT [SKYACTIV-G 2.0, SKYACTIV-G 2.5]

Ignition System

- IGNITION SYSTEM [SKYACTIV-G 2.0, SKYACTIV-G 2.5]
- SPARK PLUG [SKYACTIV-G 2.0, SKYACTIV-G 2.5]
- IGNITION COIL [SKYACTIV-G 2.0, SKYACTIV-G 2.5]

Starting System

- STARTING SYSTEM [SKYACTIV-G 2.0, SKYACTIV-G 2.5]
- STARTER [SKYACTIV-G 2.0, SKYACTIV-G 2.5]
- STARTER RELAY [SKYACTIV-G 2.0, SKYACTIV-G 2.5]
- STARTER INTERLOCK SWITCH [SKYACTIV-G 2.0, SKYACTIV-G 2.5]

Cruise Control System

- CRUISE CONTROL SYSTEM [SKYACTIV-G 2.0, SKYACTIV-G 2.5]
- CRUISE MAIN INDICATOR LIGHT (AMBER), CRUISE SET INDICATOR LIGHT (GREEN) [SKYACTIV-G 2.0, SKYACTIV-G 2.5]

Control System

- ENGINE CONTROL SYSTEM [SKYACTIV-G 2.0, SKYACTIV-G 2.5]
- MAIN RELAY CONTROL [SKYACTIV-G 2.0, SKYACTIV-G 2.5]
- DRIVE-BY-WIRE CONTROL [SKYACTIV-G 2.0, SKYACTIV-G 2.5]
- HYDRAULIC VARIABLE VALVE TIMING CONTROL [SKYACTIV-G 2.0, SKYACTIV-G 2.5]
- ELECTRIC VARIABLE VALVE TIMING CONTROL [SKYACTIV-G 2.0, SKYACTIV-G 2.5]
- FUEL INJECTION CONTROL SYSTEM [SKYACTIV-G 2.0, SKYACTIV-G 2.5]
- FUEL PUMP CONTROL [SKYACTIV-G 2.0, SKYACTIV-G 2.5]
- HIGH PRESSURE FUEL PUMP CONTROL [SKYACTIV-G 2.0, SKYACTIV-G 2.5]
- ELECTRONIC SPARK ADVANCE CONTROL [SKYACTIV-G 2.0, SKYACTIV-G 2.5]
- PURGE CONTROL [SKYACTIV-G 2.0, SKYACTIV-G 2.5]
- AIR FUEL RATIO (A/F) SENSOR HEATER CONTROL [SKYACTIV-G 2.0, SKYACTIV-G 2.5]
- HEATED OXYGEN SENSOR (HO2S) HEATER CONTROL [SKYACTIV-G 2.0, SKYACTIV-G 2.5]
- A/C CUT-OFF CONTROL [SKYACTIV-G 2.0, SKYACTIV-G 2.5]
- ELECTRICAL FAN CONTROL [SKYACTIV-G 2.0, SKYACTIV-G 2.5]

- STARTER CUT-OFF CONTROL [SKYACTIV-G 2.0, SKYACTIV-G 2.5]
- GENERATOR CONTROL [SKYACTIV-G 2.0, SKYACTIV-G 2.5]
- ENGINE OIL CONTROL [SKYACTIV-G 2.0, SKYACTIV-G 2.5]
- ENGINE OIL WARNING LIGHT [SKYACTIV-G 2.0, SKYACTIV-G 2.5]
- WRENCH WARNING INDICATOR LIGHT [SKYACTIV-G 2.0, SKYACTIV-G 2.5]
- GEAR SHIFT INDICATOR [SKYACTIV-G 2.0, SKYACTIV-G 2.5]
- CHECK FUEL CAP WARNING LIGHT [SKYACTIV-G 2.0, SKYACTIV-G 2.5]
- ENGINE OIL MAINTENANCE MONITOR [SKYACTIV-G 2.0, SKYACTIV-G 2.5]
- OVER REV. WARNING ALARM [SKYACTIV-G 2.0, SKYACTIV-G 2.5]
- PCM [SKYACTIV-G 2.0, SKYACTIV-G 2.5]
- MAIN RELAY [SKYACTIV-G 2.0, SKYACTIV-G 2.5]
- NEUTRAL SWITCH [SKYACTIV-G 2.0, SKYACTIV-G 2.5]
- CLUTCH PEDAL POSITION (CPP) SWITCH [SKYACTIV-G 2.0, SKYACTIV-G 2.5]
- MASS AIR FLOW (MAF) SENSOR [SKYACTIV-G 2.0, SKYACTIV-G 2.5]
- INTAKE AIR TEMPERATURE (IAT) SENSOR [SKYACTIV-G 2.0, SKYACTIV-G 2.5]
- MANIFOLD ABSOLUTE PRESSURE (MAP) SENSOR [SKYACTIV-G 2.0, SKYACTIV-G 2.5]
- THROTTLE POSITION (TP) SENSOR [SKYACTIV-G 2.0, SKYACTIV-G 2.5]
- ACCELERATOR PEDAL POSITION (APP) SENSOR [SKYACTIV-G 2.0, SKYACTIV-G 2.5]
- CRANKSHAFT POSITION (CKP) SENSOR [SKYACTIV-G 2.0, SKYACTIV-G 2.5]
- CAMSHAFT POSITION (CMP) SENSOR [SKYACTIV-G 2.0, SKYACTIV-G 2.5]
- ENGINE COOLANT TEMPERATURE (ECT) SENSOR [SKYACTIV-G 2.0, SKYACTIV-G 2.5]
- BAROMETRIC PRESSURE (BARO) SENSOR [SKYACTIV-G 2.0, SKYACTIV-G 2.5]
- FUEL PRESSURE SENSOR [SKYACTIV-G 2.0, SKYACTIV-G 2.5]
- KNOCK SENSOR (KS) [SKYACTIV-G 2.0, SKYACTIV-G 2.5]
- CURRENT SENSOR [SKYACTIV-G 2.0, SKYACTIV-G 2.5]
- AIR FUEL RATIO (A/F) SENSOR [SKYACTIV-G 2.0, SKYACTIV-G 2.5]
- HEATED OXYGEN SENSOR (HO2S) [SKYACTIV-G 2.0, SKYACTIV-G 2.5]
- FUEL TANK PRESSURE SENSOR [SKYACTIV-G 2.0, SKYACTIV-G 2.5]
- ION SENSOR [SKYACTIV-G 2.0, SKYACTIV-G 2.5]

Drive Selection

- DRIVE SELECTION SYSTEM [SKYACTIV-G 2.0, SKYACTIV-G 2.5]
- DRIVE SELECTION SWITCH [SKYACTIV-G 2.0, SKYACTIV-G 2.5]
- SPORT MODE INDICATOR LIGHT [SKYACTIV-G 2.0, SKYACTIV-G 2.5]

Service Highlights - Suspension

2014 - Mazda3

Outline

- SUSPENSION

On-Board Diagnostics

- TIRE PRESSURE MONITORING SYSTEM (TPMS) WIRING DIAGRAM
- ON-BOARD DIAGNOSTIC SYSTEM (TIRE PRESSURE MONITORING SYSTEM)

Wheel and Tires

- WHEELS AND TIRES
- TIRE PRESSURE MONITORING SYSTEM (TPMS)
- TIRE PRESSURE MONITORING SYSTEM WARNING LIGHT
- TIRE PRESSURE MONITORING SYSTEM WARNING ALARM
- TIRE PRESSURE MONITORING SYSTEM SET SWITCH
- TIRE PRESSURE MONITORING SYSTEM OPERATION RECORD

Front Suspension

- FRONT SUSPENSION

Rear Suspension

- REAR SUSPENSION

Service Highlights - DriveLine/Axle

2014 - Mazda3

Outline

- DRIVELINE/AXLE

Front Axle

- FRONT AXLE

Rear Axle

- REAR AXLE

Drive Shaft

- FRONT DRIVE SHAFT

Service Highlights - Brakes

2014 - Mazda3

Outline

- BRAKES

On-Board Diagnostics

- ON-BOARD DIAGNOSTIC SYSTEM [DYNAMIC STABILITY CONTROL (DSC)]
- DLC-2 [DYNAMIC STABILITY CONTROL (DSC)]

On-Board Diagnostics

- ON-BOARD DIAGNOSTIC SYSTEM [LASER SENSOR]
- DLC-2 CONSTRUCTION [LASER SENSOR]

Conventional Brake System

- CONVENTIONAL BRAKE SYSTEM
- BRAKE PEDAL
- MASTER CYLINDER
- POWER BRAKE UNIT
- FRONT BRAKE (DISC)
- REAR BRAKE (DISC)

Parking Brake System

- PARKING BRAKE SYSTEM

Dynamic Stability Control

- DYNAMIC STABILITY CONTROL (DSC)
- DSC HU/CM
- ABS CONTROL
- EBD CONTROL
- TCS CONTROL
- DSC CONTROL
- HILL LAUNCH ASSIST (HLA)
- SMART CITY BRAKE SUPPORT (SCBS)
- SMART CITY BRAKE SUPPORT (SCBS) PERSONALIZATION
- CONTROLLER AREA NETWORK (CAN)
- ABS WHEEL-SPEED SENSOR AND ABS SENSOR ROTOR
- BRAKE FLUID PRESSURE SENSOR
- BRAKE SYSTEM/ABS WARNING LIGHT
- TCS/DSC INDICATOR LIGHT
- DSC OFF SWITCH, DSC OFF INDICATOR LIGHT

- SMART CITY BRAKE SUPPORT (SCBS) INDICATOR LIGHT/SMART CITY BRAKE SUPPORT (SCBS) WARNING LIGHT
- SMART CITY BRAKE SUPPORT (SCBS) OFF INDICATOR LIGHT
- LASER SENSOR

Service Highlights - Transmission/Transaxle

2014 - Mazda3

Outline

- TRANSMISSION/TRANSAXLE ABBREVIATIONS
- TRANSMISSION/TRANSAXLE FEATURES
- TRANSMISSION/TRANSAXLE SPECIFICATIONS
- TRANSMISSION/TRANSAXLE IDENTIFICATION

On-Board Diagnostics

- ON-BOARD DIAGNOSTIC SYSTEM OUTLINE [FW6A-EL]
- ON-BOARD DIAGNOSTIC SYSTEM MALFUNCTION DETECTION FUNCTION [FW6A-EL]
- ON-BOARD DIAGNOSTIC SYSTEM FAIL-SAFE FUNCTION [FW6A-EL]
- ON-BOARD DIAGNOSTIC SYSTEM DIAGNOSTIC DATA MEMORY FUNCTION [FW6A-EL]
- ON-BOARD DIAGNOSTIC SYSTEM MALFUNCTION INDICATION FUNCTION [FW6A-EL]
- ON-BOARD DIAGNOSTIC SYSTEM EXTERNAL TESTER COMMUNICATION FUNCTION [FW6A-EL]
- ON-BOARD DIAGNOSTIC SYSTEM PID/DATA MONITOR FUNCTION [FW6A-EL]
- ON-BOARD DIAGNOSTIC SYSTEM SIMULATION FUNCTION [FW6A-EL]

Clutch

- CLUTCH [C66M-R]

Manual Transaxle

- MANUAL TRANSAXLE [C66M-R]
- SHIFT AND SELECT MECHANISM [C66M-R]
- SYNCHRONIZER MECHANISM [C66M-R]
- POWERTRAIN SYSTEM [C66M-R]
- DIFFERENTIAL [C66M-R]

Manual Transaxle Shift Mechanism

- SHIFT LEVER [C66M-R]

Automatic Transaxle

- AUTOMATIC TRANSAXLE OUTLINE [FW6A-EL]
- POWERTRAIN SYSTEM OUTLINE [FW6A-EL]
- TORQUE CONVERTER [FW6A-EL]
- LOW CLUTCH [FW6A-EL]
- HIGH CLUTCH [FW6A-EL]
- R-3-5 BRAKE [FW6A-EL]
- 2-6 BRAKE [FW6A-EL]
- LOW AND REVERSE BRAKE [FW6A-EL]

- ONE-WAY CLUTCH [FW6A-EL]
- PLANETARY GEAR [FW6A-EL]
- PRIMARY GEAR [FW6A-EL]
- SECONDARY GEAR [FW6A-EL]
- OUTPUT GEAR [FW6A-EL]
- DIFFERENTIAL [FW6A-EL]
- POWER FLOW [FW6A-EL]
- PARKING MECHANISM [FW6A-EL]
- HYDRAULIC PRESSURE CONTROL SYSTEM OUTLINE [FW6A-EL]
- OIL PUMP [FW6A-EL]
- OIL STRAINER [FW6A-EL]
- CONTROL VALVE BODY [FW6A-EL]
- OIL COOLER [FW6A-EL]
- ELECTRONIC CONTROL SYSTEM OUTLINE [FW6A-EL]
- CONTROL VALVE BODY [FW6A-EL]
- TRANSAXLE RANGE SENSOR [FW6A-EL]
- M POSITION SWITCH [FW6A-EL]
- UP SWITCH [FW6A-EL]
- DOWN SWITCH [FW6A-EL]
- STEERING SHIFT SWITCH [FW6A-EL]
- TRANSAXLE FLUID TEMPERATURE (TFT) SENSOR [FW6A-EL]
- OIL PRESSURE SWITCH [FW6A-EL]
- TURBINE/INPUT SHAFT SPEED SENSOR, OUTPUT SHAFT SPEED SENSOR [FW6A-EL]
- PRESSURE CONTROL SOLENOID [FW6A-EL]
- SHIFT SOLENOID NO.1 [FW6A-EL]
- SHIFT SOLENOID NO.2 [FW6A-EL]
- SHIFT SOLENOID NO.3 [FW6A-EL]
- SHIFT SOLENOID NO.4 [FW6A-EL]
- TORQUE CONVERTER CLUTCH (TCC) CONTROL SOLENOID [FW6A-EL]
- ON/OFF SOLENOID [FW6A-EL]
- SHIFT POSITION INDICATOR LIGHT [FW6A-EL]
- GEAR POSITION INDICATOR [FW6A-EL]
- AUTOMATIC TRANSAXLE WARNING LIGHT [FW6A-EL]
- TCM [FW6A-EL]
- SHIFT POINT CONTROL (AUTOMATIC SHIFT CONTROL) [FW6A-EL]
- SHIFT POINT CONTROL (MANUAL SHIFT CONTROL) [FW6A-EL]
- TORQUE CONVERTER CLUTCH (TCC) CONTROL [FW6A-EL]
- SHIFT PRESSURE CONTROL (LINE PRESSURE CONTROL) [FW6A-EL]
- SHIFT PRESSURE CONTROL (DIRECT ELECTRIC SHIFT CONTROL) [FW6A-EL]
- SHIFT PRESSURE CONTROL (LEARNING CONTROL) [FW6A-EL]
- ENGINE-TRANSAXLE INTEGRATION CONTROL [FW6A-EL]

Automatic Transaxle Shift Mechanism

- AUTOMATIC TRANSAXLE SHIFT MECHANISM
- SHIFT-LOCK SYSTEM

Service Highlights - Steering

2014 - Mazda3

Outline

- STEERING

On-Board Diagnostics

- ON-BOARD DIAGNOSTIC SYSTEM [ELECTRIC POWER STEERING (EPS)]
- DLC-2 [ELECTRIC POWER STEERING (EPS)]

Electric Power Steering (EPS)

- ELECTRIC POWER STEERING SYSTEM
- STEERING COLUMN AND SHAFT
- STEERING GEAR AND LINKAGE
- ELECTRIC POWER STEERING (EPS) CONTROL MODULE
- ELECTRIC POWER STEERING (EPS) MOTOR
- TORQUE SENSOR
- REDUCTION GEAR
- CONTROLLER AREA NETWORK (CAN) OUTLINE
- POWER STEERING WARNING BUZZER
- POWER STEERING MALFUNCTION INDICATOR LIGHT

Service Highlights - HVAC

2014 - Mazda3

Outline

- HEATER, VENTILATION AND AIR CONDITIONING

On-Board Diagnostics

- ON-BOARD DIAGNOSTIC

Basic System

- VENTILATION SYSTEM
- A/C UNIT
- BLOWER SYSTEM
- BLOWER UNIT
- BLOWER MOTOR
- BLOWER FAN CONTROLLER
- AIR FILTER
- REFRIGERANT SYSTEM
- A/C COMPRESSOR
- MAGNET CLUTCH
- EXPANSION VALVE
- EVAPORATOR
- CONDENSER
- RECEIVER/DRIER
- REFRIGERANT LINE
- HEATER SYSTEM
- HEATER CORE

Control System

- FULL-AUTO AIR CONDITIONER SYSTEM [FULL-AUTO AIR CONDITIONER]
- CLIMATE CONTROL UNIT [FULL-AUTO AIR CONDITIONER]
- AMBIENT TEMPERATURE SENSOR [FULL-AUTO AIR CONDITIONER]
- PASSENGER COMPARTMENT TEMPERATURE SENSOR [FULL-AUTO AIR CONDITIONER]
- EVAPORATOR TEMPERATURE SENSOR [FULL-AUTO AIR CONDITIONER]
- SOLAR RADIATION SENSOR [FULL-AUTO AIR CONDITIONER]
- REFRIGERANT PRESSURE SENSOR [FULL-AUTO AIR CONDITIONER]
- AIR MIX ACTUATOR [FULL-AUTO AIR CONDITIONER]
- AIR INTAKE ACTUATOR [FULL-AUTO AIR CONDITIONER]
- AIRFLOW MODE ACTUATOR [FULL-AUTO AIR CONDITIONER]

Control System

MANUAL AIR CONDITIONER SYSTEM [MANUAL AIR CONDITIONER]

- CLIMATE CONTROL UNIT [MANUAL AIR CONDITIONER]
- AMBIENT TEMPERATURE SENSOR [MANUAL AIR CONDITIONER]
- EVAPORATOR TEMPERATURE SENSOR [MANUAL AIR CONDITIONER]
- REFRIGERANT PRESSURE SENSOR [MANUAL AIR CONDITIONER]
- AIR INTAKE ACTUATOR [MANUAL AIR CONDITIONER]

Service Highlights - Restraints

2014 - Mazda3

Outline

- RESTRAINTS

On-Board Diagnostics

- ON-BOARD DIAGNOSTIC [STANDARD DEPLOYMENT CONTROL SYSTEM]

On-Board Diagnostics

- ON-BOARD DIAGNOSTIC [TWO-STEP DEPLOYMENT CONTROL SYSTEM]

Air Bag System

- AIR BAG SYSTEM [TWO-STEP DEPLOYMENT CONTROL SYSTEM]
- SAS CONTROL MODULE [TWO-STEP DEPLOYMENT CONTROL SYSTEM]
- AIR BAG SYSTEM WARNING LIGHT [TWO-STEP DEPLOYMENT CONTROL SYSTEM]
- AIR BAG SYSTEM WARNING ALARM [TWO-STEP DEPLOYMENT CONTROL SYSTEM]
- PASSENGER SENSING SYSTEM [TWO-STEP DEPLOYMENT CONTROL SYSTEM]
- DRIVER-SIDE AIR BAG MODULE [TWO-STEP DEPLOYMENT CONTROL SYSTEM]
- PASSENGER-SIDE AIR BAG MODULE [TWO-STEP DEPLOYMENT CONTROL SYSTEM]
- SIDE AIR BAG MODULE [TWO-STEP DEPLOYMENT CONTROL SYSTEM]
- CURTAIN AIR BAG MODULE [TWO-STEP DEPLOYMENT CONTROL SYSTEM]
- PRE-TENSIONER SEAT BELT [TWO-STEP DEPLOYMENT CONTROL SYSTEM]
- LAP PRE-TENSIONER SEAT BELT [TWO-STEP DEPLOYMENT CONTROL SYSTEM]
- CRASH ZONE SENSOR [TWO-STEP DEPLOYMENT CONTROL SYSTEM]
- SIDE AIR BAG SENSOR [TWO-STEP DEPLOYMENT CONTROL SYSTEM]
- PRESSURE SENSOR [TWO-STEP DEPLOYMENT CONTROL SYSTEM]

Air Bag System

- AIR BAG SYSTEM [STANDARD DEPLOYMENT CONTROL SYSTEM]
- SAS CONTROL MODULE [STANDARD DEPLOYMENT CONTROL SYSTEM]
- AIR BAG SYSTEM WARNING LIGHT [STANDARD DEPLOYMENT CONTROL SYSTEM]
- AIR BAG SYSTEM WARNING ALARM [STANDARD DEPLOYMENT CONTROL SYSTEM]
- DRIVER-SIDE AIR BAG MODULE [STANDARD DEPLOYMENT CONTROL SYSTEM]
- PASSENGER-SIDE AIR BAG MODULE [STANDARD DEPLOYMENT CONTROL SYSTEM]
- SIDE AIR BAG MODULE [STANDARD DEPLOYMENT CONTROL SYSTEM]
- CURTAIN AIR BAG MODULE [STANDARD DEPLOYMENT CONTROL SYSTEM]
- PRE-TENSIONER SEAT BELT [STANDARD DEPLOYMENT CONTROL SYSTEM]
- CRASH ZONE SENSOR [STANDARD DEPLOYMENT CONTROL SYSTEM]
- SIDE AIR BAG SENSOR [STANDARD DEPLOYMENT CONTROL SYSTEM]

Seat Belts

- **SEAT BELT**

Service Highlights - Body and Accessories

2014 - Mazda3

Outline

- BODY AND ACCESSORIES

Body Panels

- BODY PANEL
- BODY SHELL
- FRONT BUMPER
- REAR BUMPER

Doors and Liftgate

- DOORS AND LIFTGATE
- SIDE IMPACT BAR
- DOOR MODULE PANEL
- DOOR PANEL

Glass/Windows/Mirrors

- GLASS/WINDOWS/MIRRORS
- REAR WINDOW DEFROSTER/OUTER MIRROR HEATER
- POWER WINDOW SYSTEM
- POWER WINDOW MOTOR
- POWER WINDOW REGULATOR
- POWER WINDOW MAIN SWITCH
- POWER WINDOW SUBSWITCH
- POWER OUTER MIRROR SYSTEM
- POWER OUTER MIRROR
- AUTO-DIMMING MIRROR

Seats

- SEAT
- FRONT SEAT
- REAR SEAT
- SEAT WARMER SYSTEM
- POWER SEAT SYSTEM

Security and Locks

- SECURITY AND LOCKS
- SECURITY AND LOCKS PERSONALIZATION
- POWER DOOR LOCK SYSTEM

- FRONT DOOR LOCK ACTUATOR
- FRONT DOOR LATCH SWITCH
- FRONT DOOR LOCK-LINK SWITCH
- KEY CYLINDER SWITCH
- REAR DOOR LOCK ACTUATOR
- REAR DOOR LATCH SWITCH
- REAR DOOR LOCK-LINK SWITCH
- LIFTGATE OPENER SYSTEM
- LIFTGATE LOCK ACTUATOR
- LIFTGATE LATCH SWITCH
- LIFTGATE OPENER SWITCH
- TRUNK LID OPENER SYSTEM
- TRUNK LID RELEASE ACTUATOR
- TRUNK LID LATCH SWITCH
- TRUNK LID OPENER SWITCH
- KEYLESS ENTRY SYSTEM
- ADVANCED KEYLESS ENTRY SYSTEM
- PUSH BUTTON START SYSTEM [ADVANCED KEYLESS ENTRY SYSTEM]
- PUSH BUTTON START SYSTEM [KEYLESS ENTRY SYSTEM]
- START STOP UNIT
- LF CONTROL UNIT
- KEYLESS ANTENNA [ADVANCED KEYLESS ENTRY SYSTEM]
- KEYLESS ANTENNA [KEYLESS ENTRY SYSTEM]
- REMOTE TRANSMITTER
- REQUEST SWITCH
- KEYLESS BEEPER
- KEYLESS RECEIVER
- PUSH BUTTON START
- KEYLESS WARNING ALARM
- ON-BOARD DIAGNOSIS SYSTEM [ADVANCED KEYLESS ENTRY SYSTEM]
- ON-BOARD DIAGNOSIS SYSTEM [START STOP UNIT]
- IMMOBILIZER SYSTEM
- COIL ANTENNA
- KEY WARNING LIGHT (RED)/KEY INDICATOR LIGHT (GREEN)
- SECURITY INDICATOR LIGHT
- ON-BOARD DIAGNOSIS SYSTEM [IMMOBILIZER SYSTEM]
- THEFT-DETERRENT SYSTEM
- HOOD LATCH SWITCH
- DOOR LOCK SYSTEM OPERATION RECORD
- THEFT-DETERRENT SYSTEM OPERATION RECORD

Sunroof

- SUNROOF
- SUNROOF UNIT
- SUNROOF MOTOR

Exterior Trim

- EXTERIOR TRIM
- AERODYNAMIC

Interior Trim

- INTERIOR TRIM
- FRONT CONSOLE BOX
- REAR CONSOLE
- DOOR TRIM

- TRUNK SIDE TRIM

Lighting Systems

- LIGHTING SYSTEMS
- LIGHTING SYSTEM PERSONALIZATION
- EXTERIOR LIGHTING SYSTEM
- FRONT COMBINATION LIGHT
- LIGHTS-ON INDICATOR LIGHT
- HEADLIGHT HIGH-BEAM INDICATOR LIGHT
- TURN SIGNAL/HAZARD WARNING INDICATOR LIGHTS
- DISCHARGE HEADLIGHT SYSTEM
- DISCHARGE HEADLIGHT CONTROL MODULE
- DISCHARGE HEADLIGHT BULB
- AUTO LIGHT-OFF SYSTEM
- AUTO LIGHT SYSTEM
- AUTO LIGHT SENSOR
- HEADLIGHT MANUAL LEVELING SYSTEM
- HEADLIGHT LEVELING SWITCH
- HEADLIGHT AUTO LEVELING SYSTEM
- AUTO LEVELING SENSOR
- HEADLIGHT LEVELING ACTUATOR
- ADAPTIVE FRONT LIGHTING SYSTEM (AFS)
- ADAPTIVE FRONT LIGHTING SYSTEM (AFS) CONTROL MODULE
- SWIVEL ACTUATOR
- AFS OFF INDICATOR LIGHT
- ON-BOARD DIAGNOSTIC [ADAPTIVE FRONT LIGHTING SYSTEM (AFS)]
- DRL (DAYTIME RUNNING LIGHT) SYSTEM
- HIGH BEAM CONTROL (HBC) SYSTEM
- HBC INDICATOR LIGHT (GREEN)/HBC WARNING LIGHT (AMBER)
- FRONT TURN LIGHT
- FRONT FOG LIGHT
- TURN LIGHT SYSTEM
- SIDE TURN LIGHT
- REAR COMBINATION LIGHT
- TRUNK LID LIGHT (4SD)/LIFTGATE LIGHT (5HB)
- HIGH-MOUNT BRAKE LIGHT
- LICENSE PLATE LIGHT
- INTERIOR LIGHTING SYSTEM
- ROOM LIGHT CONTROL SYSTEM
- FRONT MAP LIGHT
- REAR MAP LIGHT
- CARGO COMPARTMENT LIGHT
- STEERING ANGLE SENSOR

Wiper/Washer System

- WIPER/WASHER SYSTEM
- WIPER/WASHER SYSTEM PERSONALIZATION
- WINDSHIELD WIPER/WASHER SYSTEM
- WINDSHIELD WIPER MOTOR
- WINDSHIELD WASHER NOZZLE
- REAR WIPER/WASHER SYSTEM
- REAR WIPER MOTOR
- REAR WASHER NOZZLE
- WASHER MOTOR
- AUTO WIPER SYSTEM
- RAIN SENSOR

- WASHER FLUID LEVEL WARNING SYSTEM
- WASHER FLUID-LEVEL SENSOR

Entertainment System

- ENTERTAINMENT SYSTEM [WITHOUT CENTER DISPLAY]
- AUDIO UNIT [WITHOUT CENTER DISPLAY]
- CD PLAYER [WITHOUT CENTER DISPLAY]
- SPEAKER [WITHOUT Bose®, WITHOUT CENTER DISPLAY]
- CENTER ROOF ANTENNA [WITHOUT CENTER DISPLAY]
- GLASS ANTENNA [WITHOUT CENTER DISPLAY]
- ANTENNA AMPLIFIER [WITHOUT CENTER DISPLAY]
- STEERING SWITCH [WITHOUT CENTER DISPLAY]
- AUXILIARY JACK/USB PORT [WITHOUT CENTER DISPLAY]
- Bluetooth® UNIT [WITHOUT CENTER DISPLAY]
- MICROPHONE [WITHOUT CENTER DISPLAY]
- ON-BOARD DIAGNOSTIC [ENTERTAINMENT SYSTEM (WITHOUT CENTER DISPLAY)]

Entertainment System

- ENTERTAINMENT SYSTEM [WITH CENTER DISPLAY]
- CONNECTIVITY MASTER UNIT [WITH CENTER DISPLAY]
- TUNER AND AMP UNIT [WITH CENTER DISPLAY]
- CENTER DISPLAY [WITH CENTER DISPLAY]
- MAINTENANCE MONITOR [WITH CENTER DISPLAY]
- CD PLAYER [WITH CENTER DISPLAY]
- SPEAKER [WITHOUT Bose®, WITH CENTER DISPLAY]
- SPEAKER [WITH Bose®, WITH CENTER DISPLAY]
- AUDIO AMPLIFIER [WITH CENTER DISPLAY]
- CENTER ROOF ANTENNA [WITH CENTER DISPLAY]
- GLASS ANTENNA [WITH CENTER DISPLAY]
- GLOBAL POSITIONING SYSTEM (GPS) ANTENNA [WITH CENTER DISPLAY]
- ANTENNA AMPLIFIER [WITH CENTER DISPLAY]
- STEERING SWITCH [WITH CENTER DISPLAY]
- COMMANDER SWITCH [WITH CENTER DISPLAY]
- PARK ASSIST SYSTEM [WITH CENTER DISPLAY]
- REAR MOUNT CAMERA [WITH CENTER DISPLAY]
- AUXILIARY JACK/USB PORT/SD SLOT HUB [WITH CENTER DISPLAY]
- MICROPHONE [WITH CENTER DISPLAY]
- ON-BOARD DIAGNOSTIC [ENTERTAINMENT SYSTEM (WITH CENTER DISPLAY)]
- ON-BOARD DIAGNOSTIC [AUDIO AMPLIFIER (WITH CENTER DISPLAY)]

Power Systems

- POWER SYSTEMS
- RELAY AND FUSE BLOCK
- MULTIPLEX SLOW BLOW FUSE
- FUSE BLOCK
- MAIN FUSE
- ACCESSORY SOCKET

Instrumentation/Driver Info.

- INSTRUMENTATION/DRIVER INFO.
- INSTRUMENTATION/DRIVER INFO. PERSONALIZATION
- INSTRUMENT CLUSTER
- LIGHTS-ON REMINDER WARNING ALARM
- SEAT BELT WARNING ALARM
- PANEL LIGHT CONTROL INDICATOR ALARM

- TURN AND HAZARD INDICATOR ALARM
- LOW ENGINE COOLANT TEMPERATURE INDICATOR LIGHT (BLUE) / HIGH ENGINE COOLANT TEMPERATURE WARNING LIGHT (RED)
- DOOR-AJAR WARNING LIGHT
- SEAT BELT WARNING LIGHT
- LOW FUEL WARNING LIGHT
- MASTER WARNING LIGHT
- SPEEDOMETER
- TACHOMETER
- FUEL GAUGE
- ODOMETER / TRIPMETER
- PANEL LIGHT
- TRIP COMPUTER INFORMATION SYSTEM
- ACTIVE DRIVING DISPLAY
- AMBIENT TEMPERATURE DISPLAY
- BLIND SPOT MONITORING (BSM) SYSTEM
- BLIND SPOT MONITORING (BSM) CONTROL MODULE
- BLIND SPOT MONITORING (BSM) OFF INDICATOR LIGHT
- BLIND SPOT MONITORING (BSM) OFF SWITCH
- BLIND SPOT MONITORING (BSM) WARNING ALARM
- HORN
- LANE DEPARTURE WARNING SYSTEM (LDWS)
- FORWARD SENSING CAMERA (FSC)
- LDWS SWITCH
- LDWS WARNING ALARM
- LDWS INDICATOR LIGHT (GREEN) / LDWS WARNING LIGHT (AMBER)
- INDICATOR UNIT
- ON-BOARD DIAGNOSTIC [INSTRUMENT CLUSTER]
- ON-BOARD DIAGNOSTIC [BLIND SPOT MONITORING (BSM) SYSTEM]
- ON-BOARD DIAGNOSTIC [FORWARD SENSING CAMERA (FSC)]
- INSTRUMENT CLUSTER OPERATION RECORD

Active Air Shutter System

- ACTIVE AIR SHUTTER SYSTEM
- ACTIVE AIR SHUTTER CONTROL
- ACTIVE AIR SHUTTER

Control System

- CONTROL SYSTEM
- FRONT BODY CONTROL MODULE (FBCM)
- ON-BOARD DIAGNOSTIC SYSTEM [FRONT BODY CONTROL MODULE (FBCM)]
- REAR BODY CONTROL MODULE (RBCM)
- ON-BOARD DIAGNOSTIC SYSTEM [REAR BODY CONTROL MODULE (RBCM)]

Service Highlights - Multiplex Communication System

2014 - Mazda3

Outline

- MULTIPLEX COMMUNICATION SYSTEM

Service Highlights - I-ELOOP

2014 - Mazda3

Charging System

- i-ELOOP [i-ELOOP]
- i-ELOOP WARNING ALARM [i-ELOOP]
- i-ELOOP INDICATOR LIGHT [i-ELOOP]
- GENERATOR [i-ELOOP]
- CAPACITOR (i-ELOOP) [i-ELOOP]
- DC-DC CONVERTER [i-ELOOP]

Next >

2014 - Mazda3 - General Information

AIM OF DEVELOPMENT

Vehicle Outline

External view

4SD

5HB

Interior design

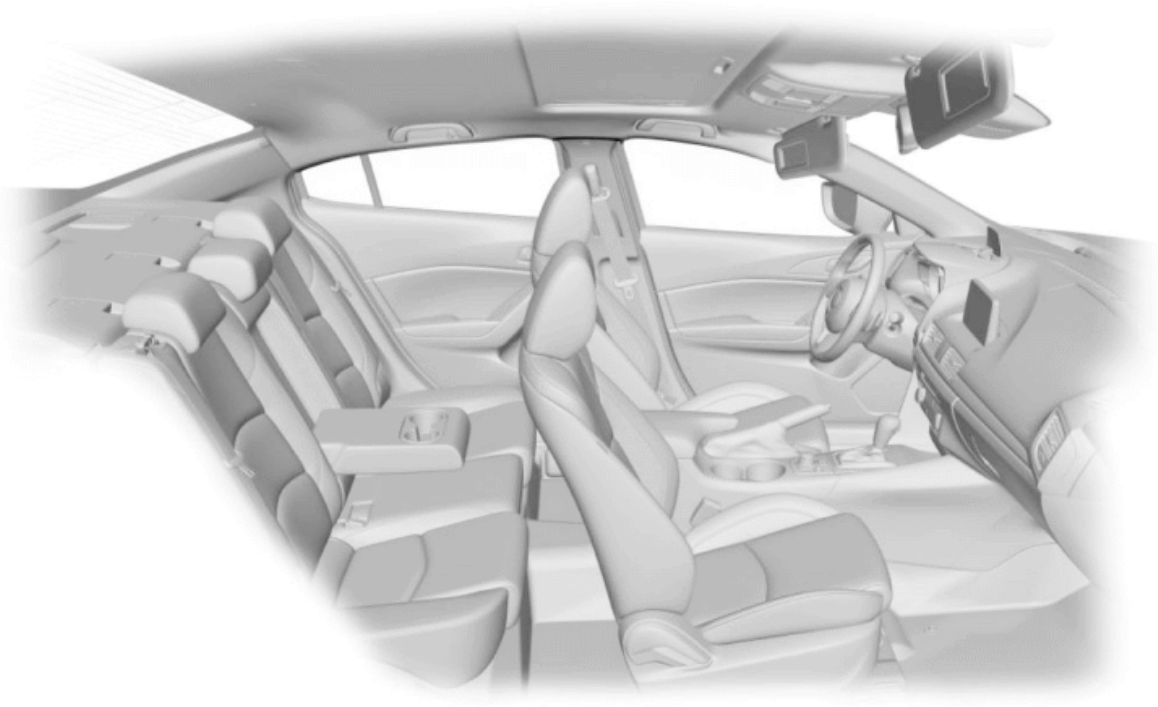

Engine

Engine mechanical

- For SKYACTIV-G 2.0 and SKYACTIV-G 2.5, the following have been adopted to lower fuel consumption.
    - Mechanical resistance loss improvement from:
        - Narrowed down crankshaft journal
        - Optimized piston skirt shape
        - Lowered piston ring tension
        - Roller follower adopted
        - Reduction of valve spring load
        - Stabilization of timing chain behavior
        - Optimized engine coolant passage
        - Optimized water pump impeller shape
        - Lowered drive belt tension

        - Optimized oil passage
        - Optimized oil pump shape
        - Oil pump discharging pressure control has been adopted.
    - Pumping loss improvement from:
        - Variable valve timing mechanism adopted on both sides of intake and exhaust.

Engine control

- L-jetronic and D-jetronic type detectors have been combined for intake air amount detection, improving the accuracy of the intake air amount measurement.
- Electric variable valve timing control has been adopted on the intake side by variably controlling the intake valve timing without any influence from the engine conditions, fuel efficiency and pumping loss reduction have been adopted.
- With the adoption of the i-ELOOP, charging efficiency during deceleration is improved. Because loss of engine force does not occur when the battery is recharged during deceleration, fuel economy is improved.

Suspension

- Front suspension
    - Strut-type suspension adopted
    - For the front crossmember, the welded flange has been eliminated (flange-less), the cross-section expanded and the connection rigidity of the welded parts improved to achieve both rigidity and light weight.
    - By adopting a 6-point rigid mount-type front crossmember, the force generated from the tires is transmitted directly, and an agile vehicle response in low-to-mid speed range has been adopted.

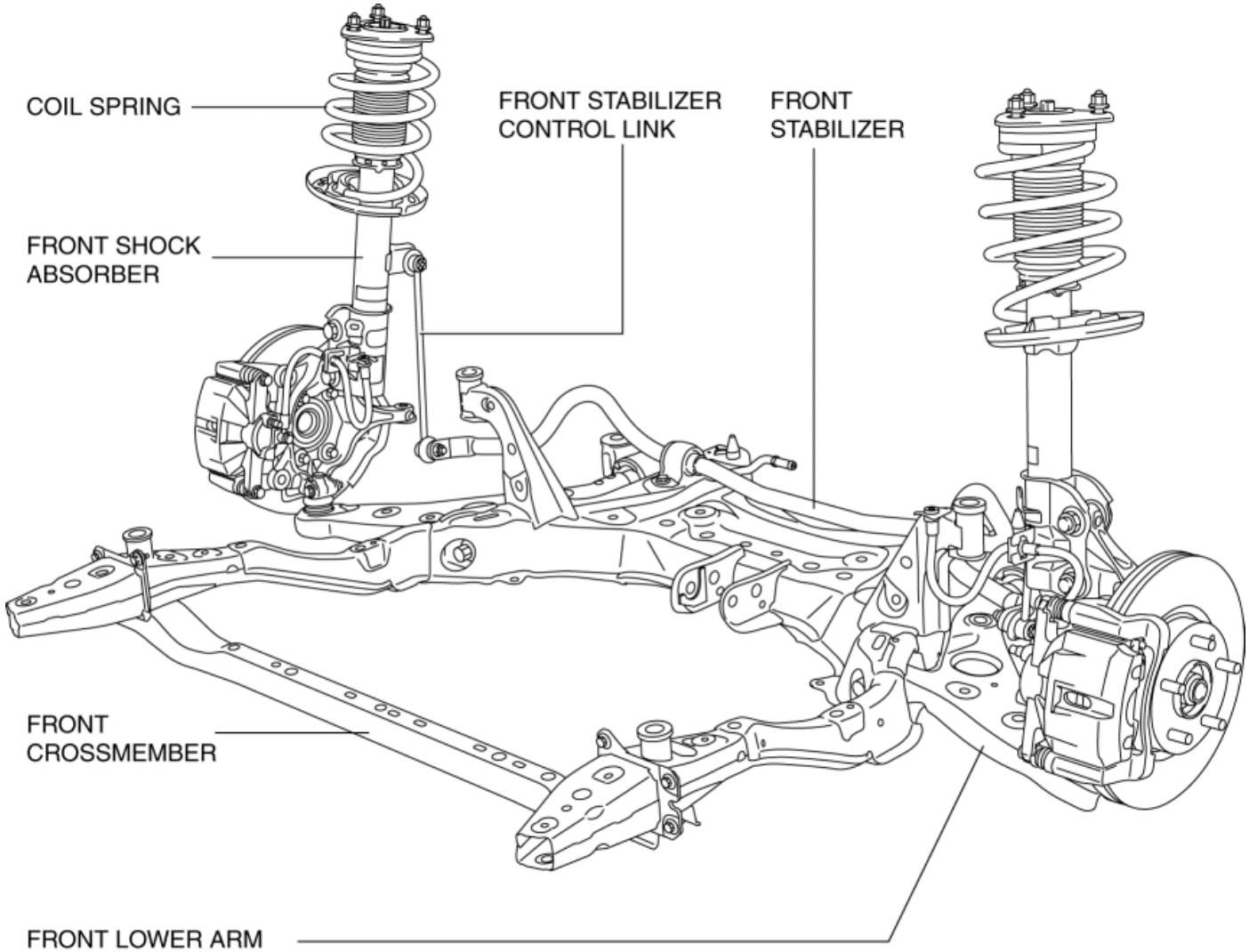

- Rear suspension
  - An E-type multi-link rear suspension has been adopted.
  - For the front crossmember, the welded flange has been eliminated (flange-less), the cross-section expanded, and the connection rigidity of the welded parts improved to achieve both rigidity and light weight.

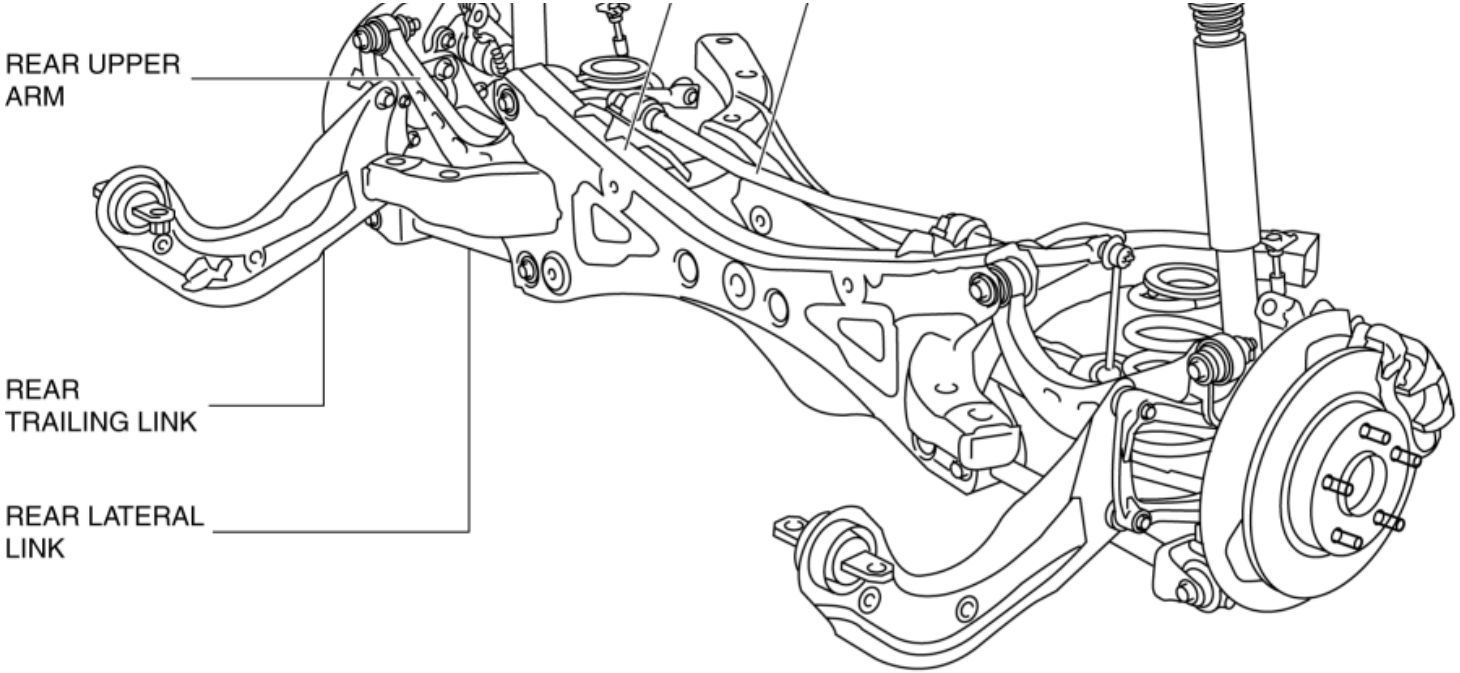

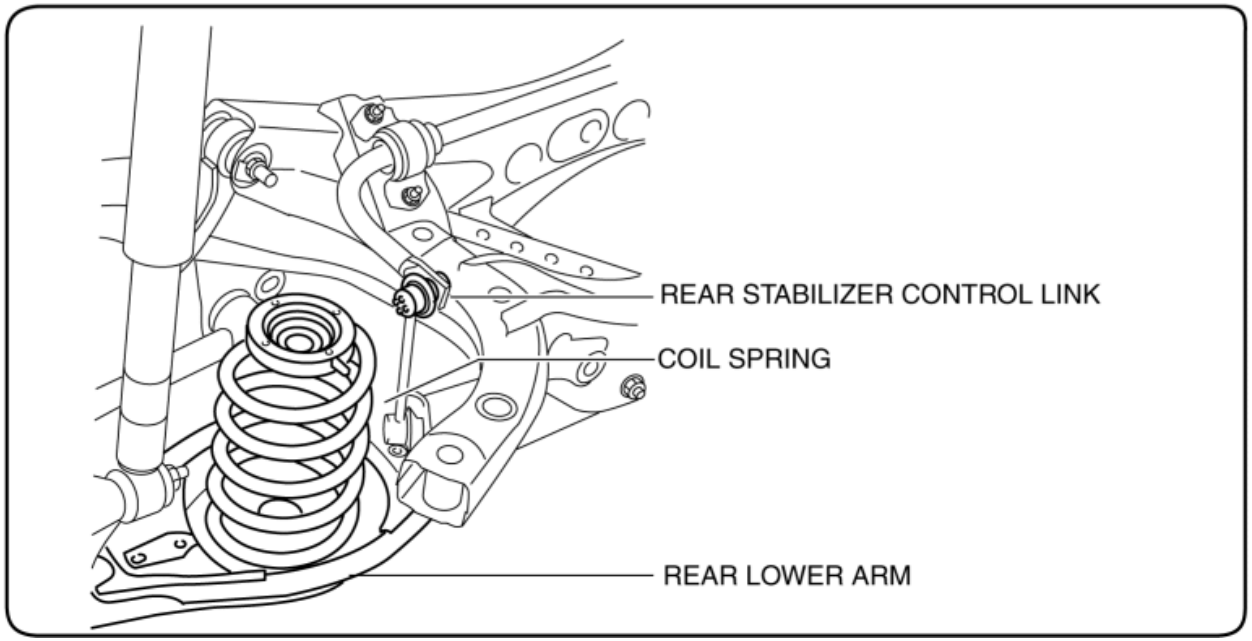

Brakes

- Conventional brake system

- A vacuum pump has been adopted, improving brake force.
- A large diameter, ventilated disc-type front brake has been adopted, improving braking force.
- A large diameter, solid disc-type rear brake has been adopted, improving braking force.

Vehicle front side

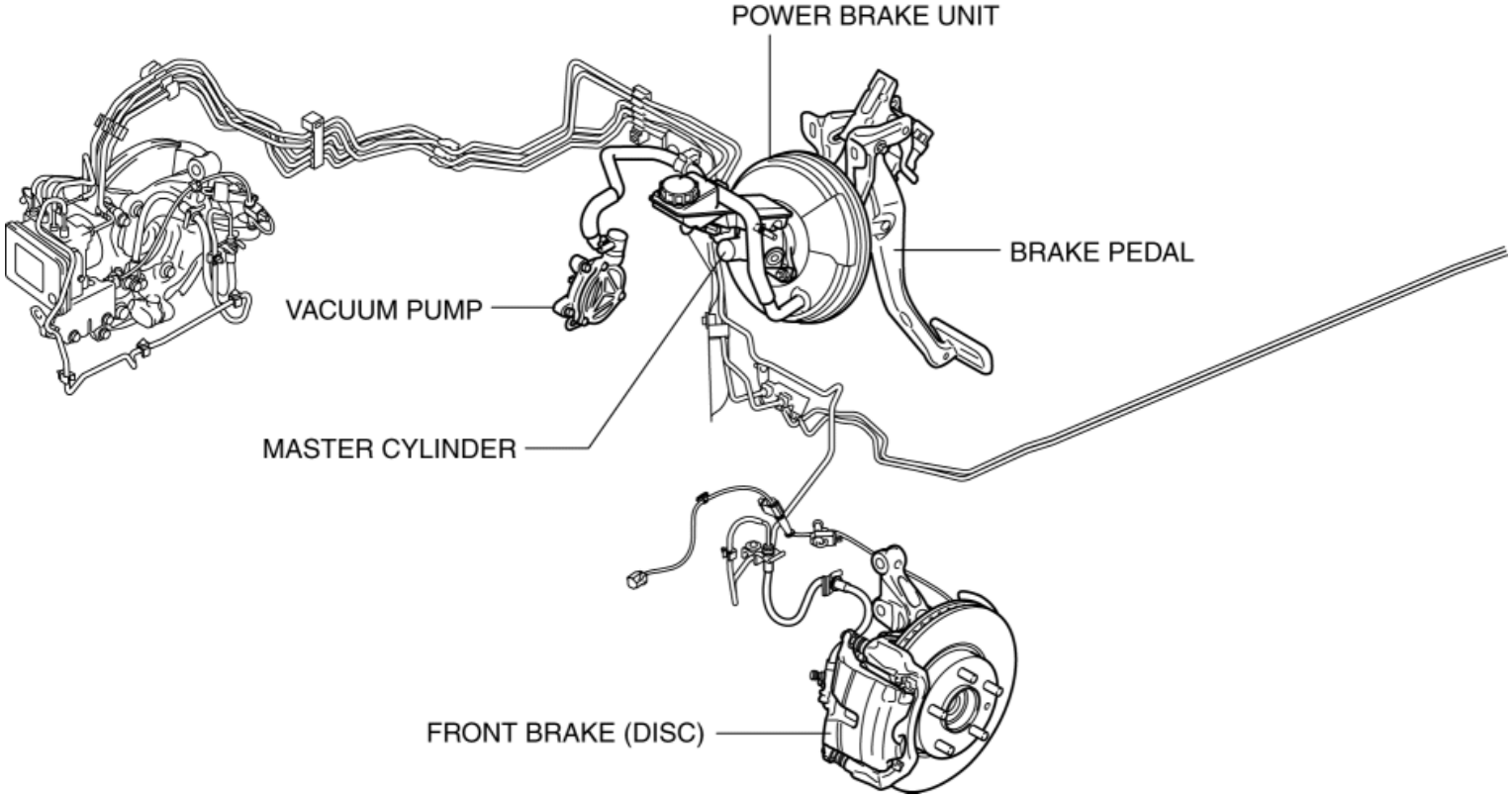

Vehicle rear side

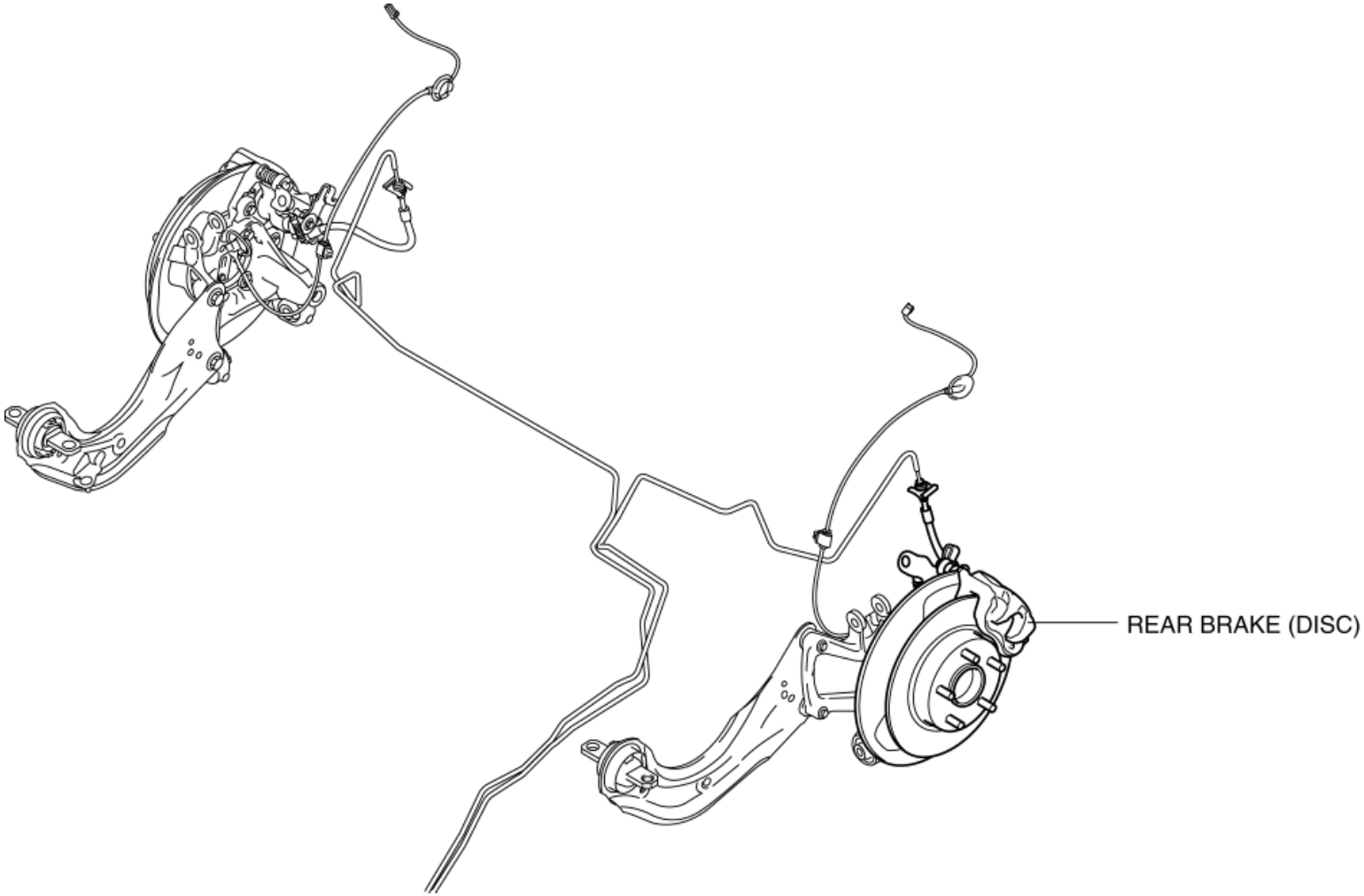

- Dynamic stability control
  - Electrical brake assist control has been adopted, improving safety.
  - The DSC HU/CM, integrating both the hydraulic unit (HU) and control module (CM), has been adopted, resulting in a size and weight reduction.
  - An enhanced malfunction diagnosis system, used with the Mazda Modular Diagnostic System (M-MDS) adopted, improving serviceability.
  - An automatic configuration function is being used, improving serviceability.
  - The lateral-G and yaw rate signals received between the sophisticated air bag sensor (SAS) control module and the DSC HU/CM via controller area network (CAN) lines instead of the conventional combined sensor has been adopted, improving serviceability.

Vehicle front side

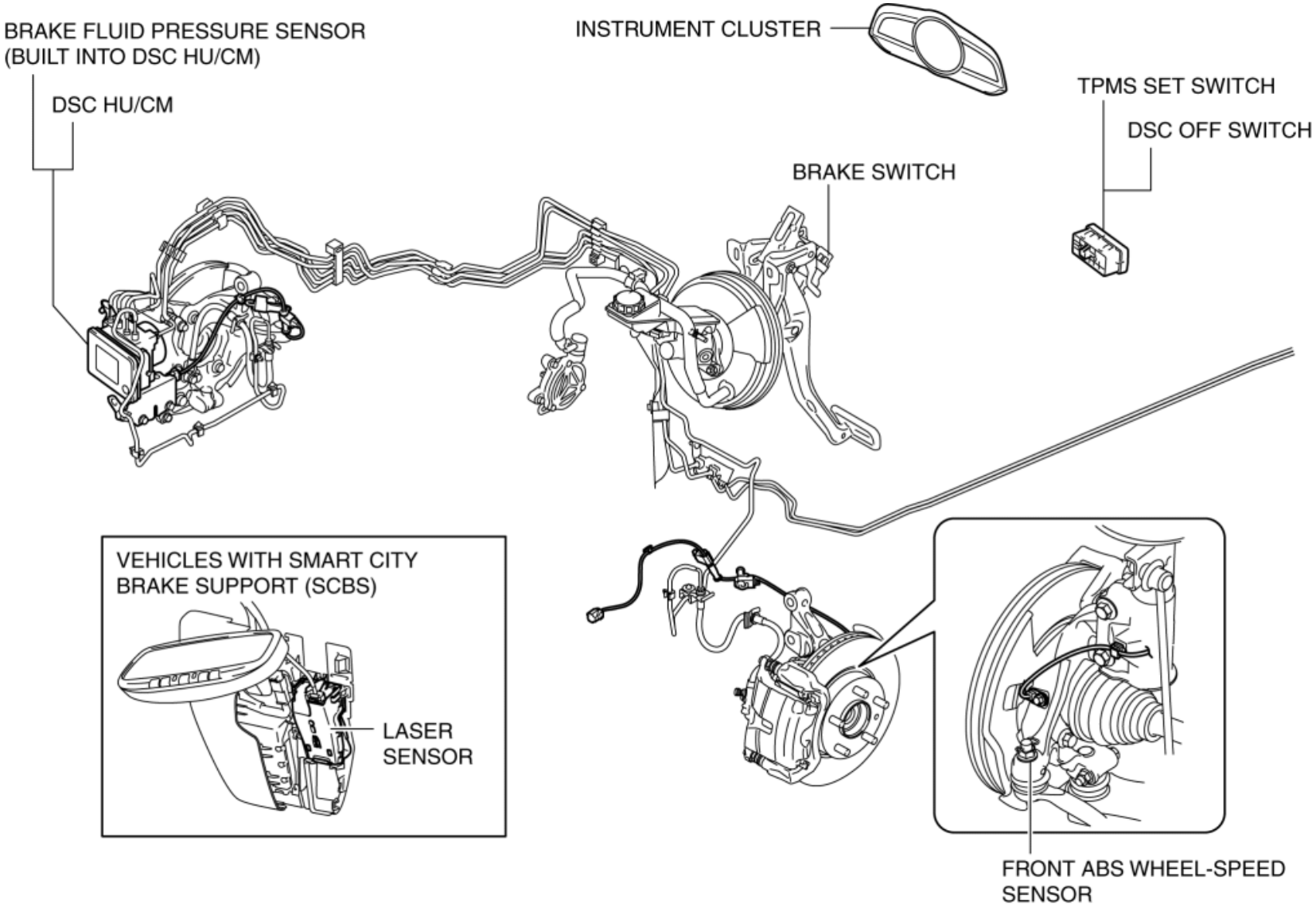

Warning light and indicator light

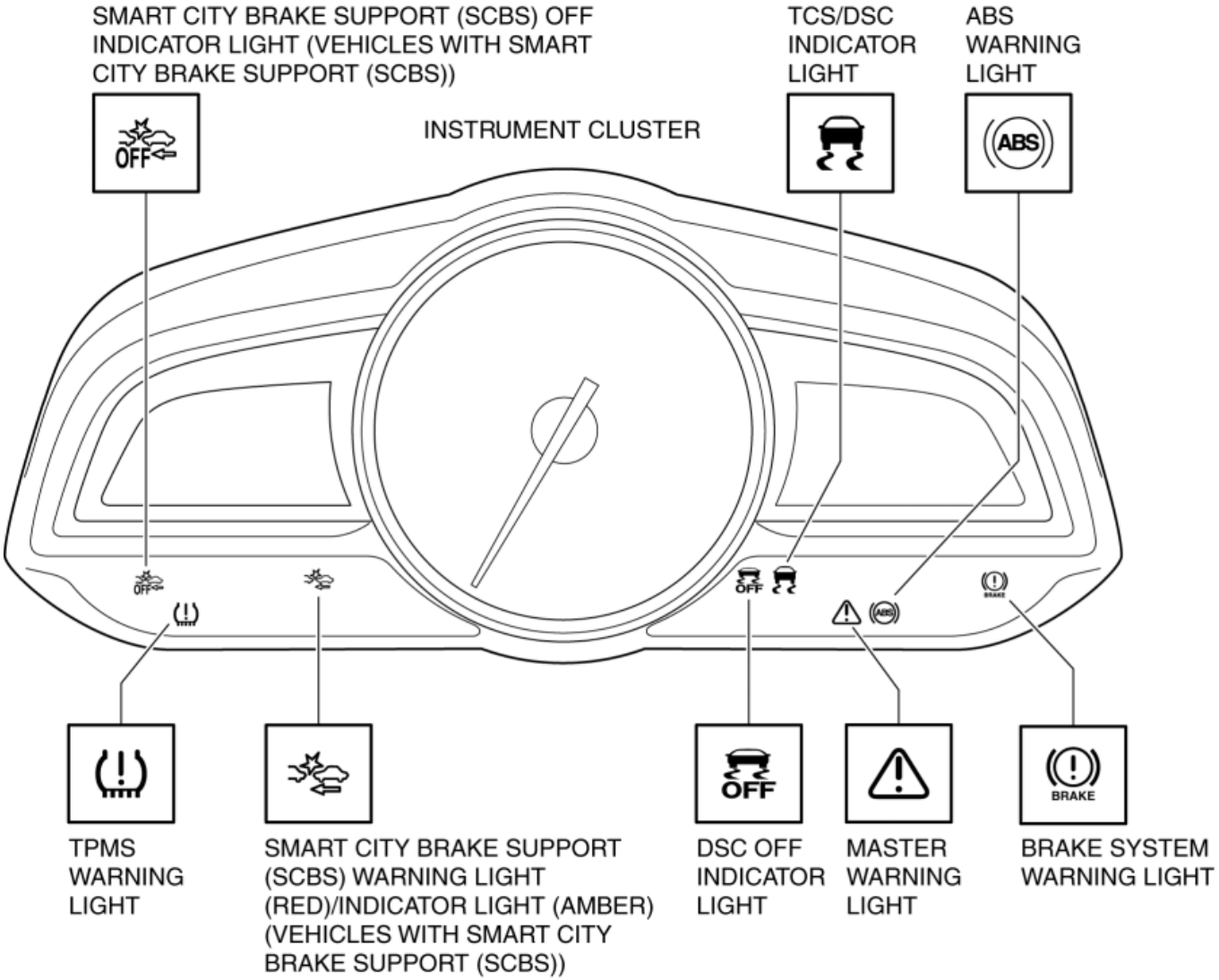

Vehicle rear side

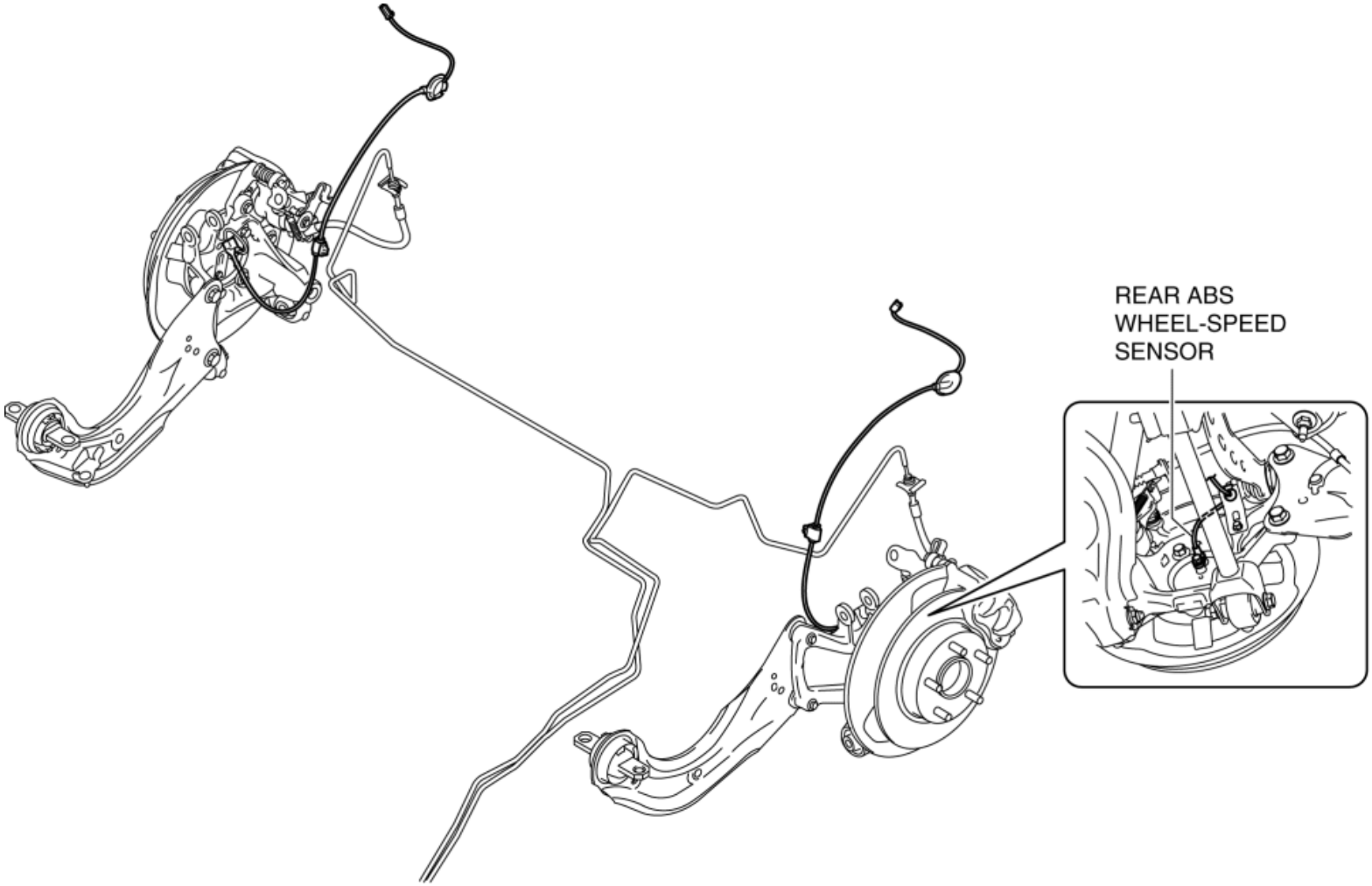

Transaxle

- Manual transaxle (C66M-R)
  - For SKYACTIV-G 2.0, six-speed C66M-R manual transaxle has been adopted.

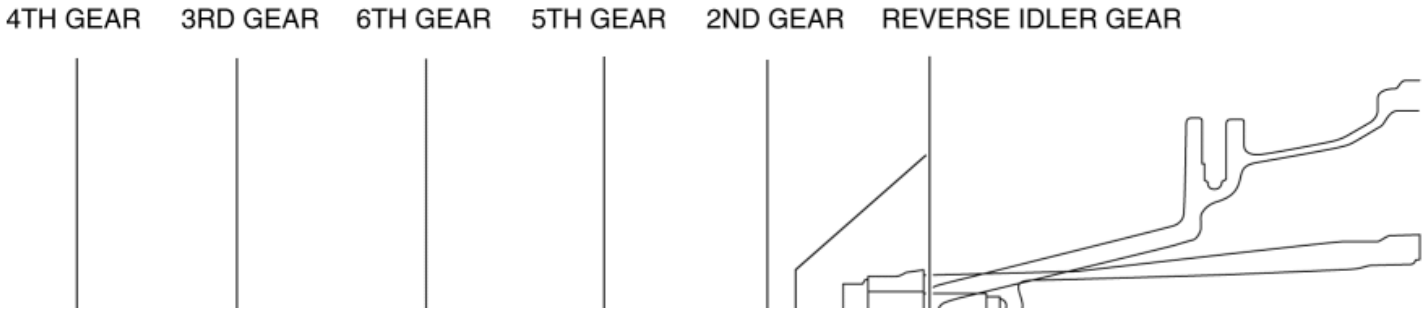

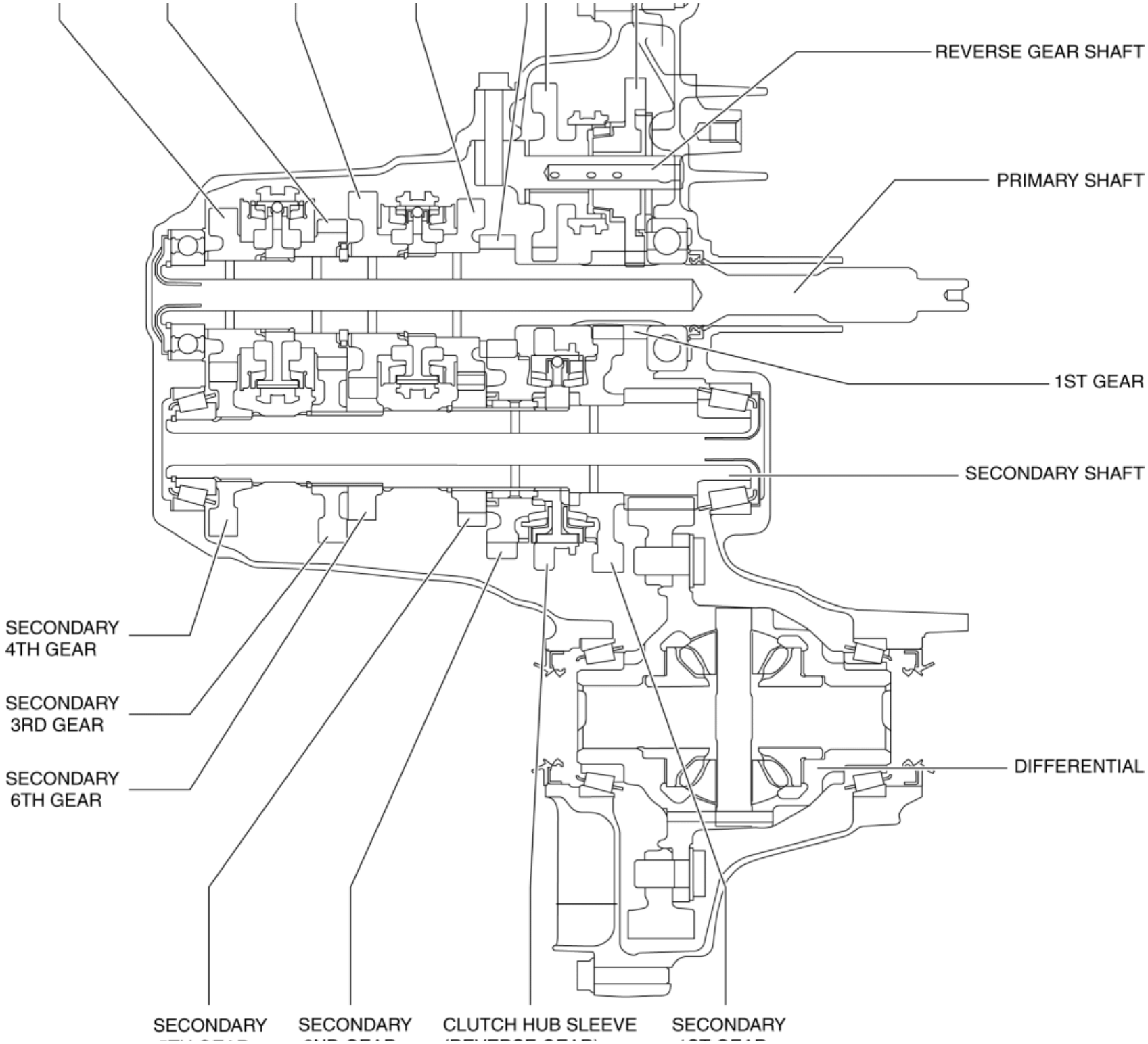
REVERSE GEAR SHAFT
PRIMARY SHAFT
1ST GEAR
SECONDARY SHAFT
SECONDARY 4TH GEAR
SECONDARY 3RD GEAR
SECONDARY 6TH GEAR
DIFFERENTIAL
SECONDARY
SECONDARY
CLUTCH HUB SLEEVE
SECONDARY

5TH GEAR 2ND GEAR (REVERSE GEAR) 1ST GEAR

- Automatic transaxle (FW6A-EL)
  - For SKYACTIV-G 2.0 and SKYACTIV-G 2.5, six-speed FW6A-EL automatic transaxle has been adopted.

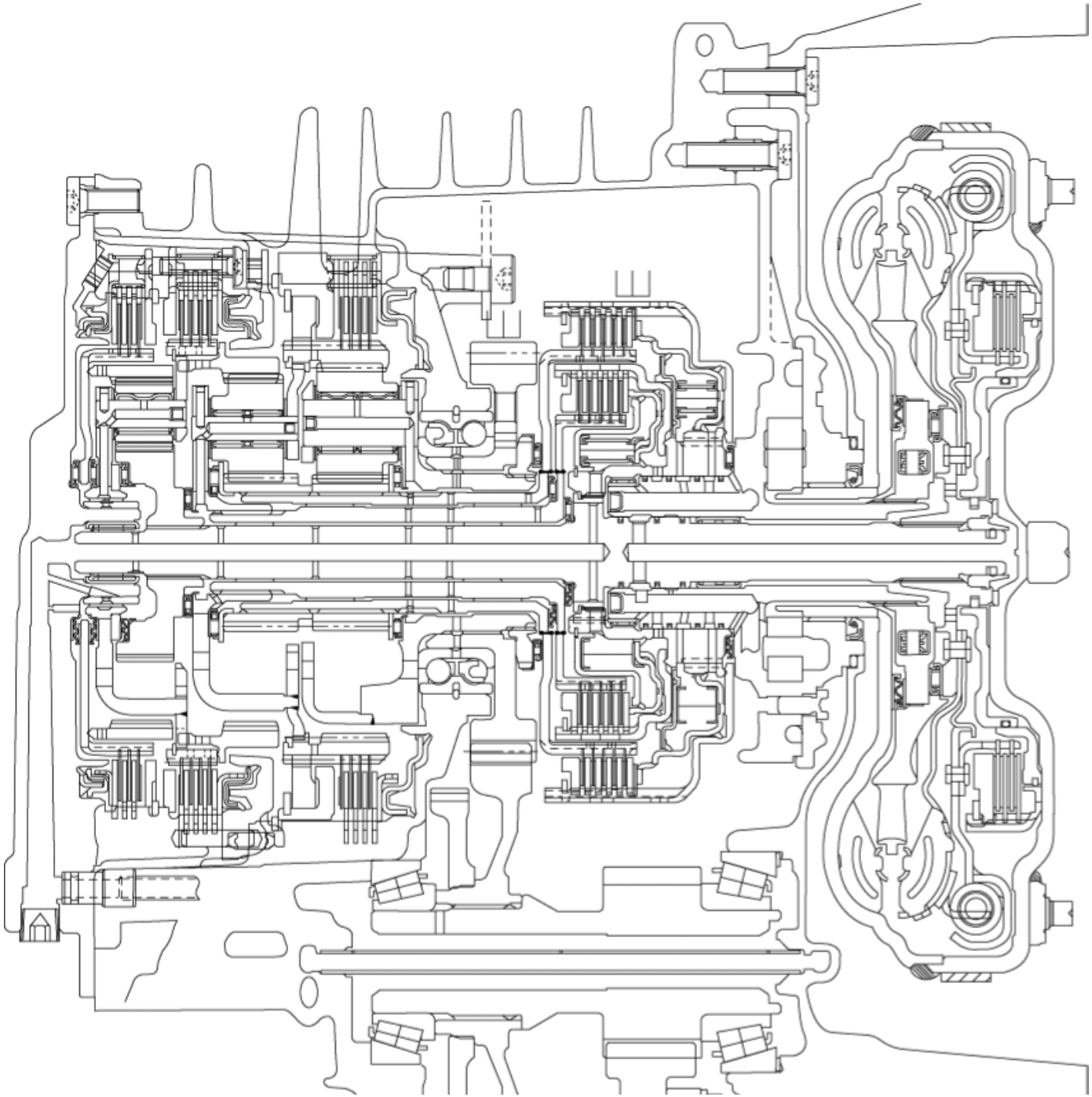

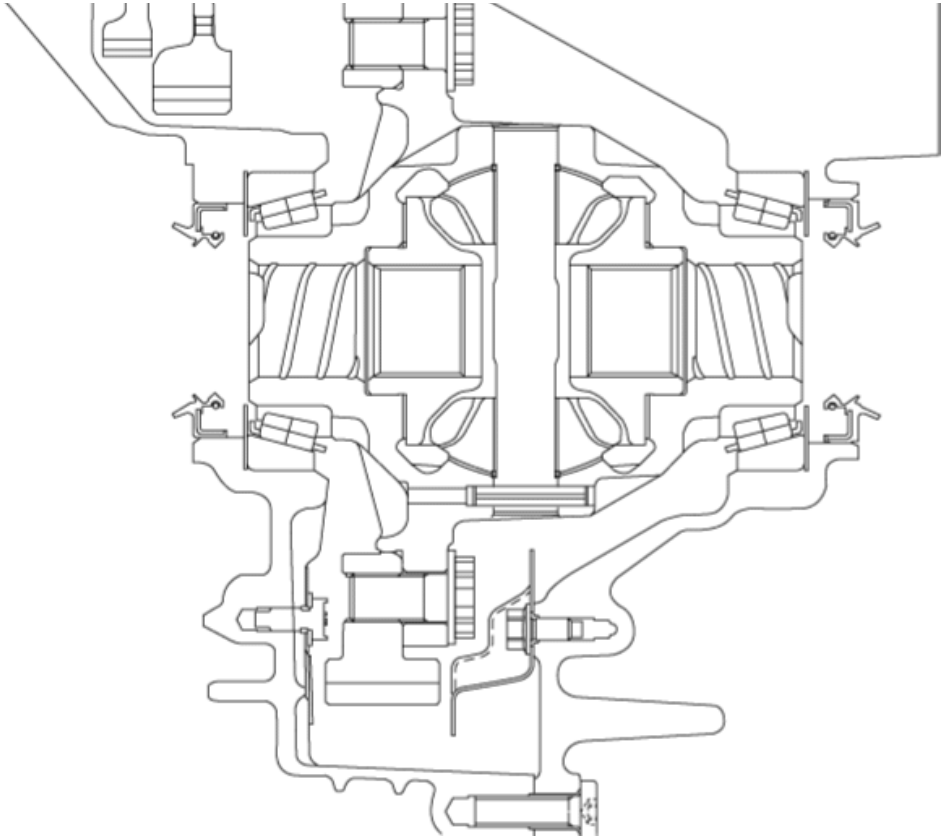

Steering

- Power steering
  - A column assist-type Electronic Power Steering (EPS) has been adopted.
  - EPS provides smooth handling from low to high speeds. This is a result of the excellent steering feel provided by the electronic control and the vehicle-speed responsive control.
  - EPS does not require a power steering oil pump and generates assist force only when the steering wheel is steered. As result, engine load is lowered and fuel efficiency is improved.
  - An automatic configuration and steering angle neutral position auto-learning function has been adopted, improving serviceability.

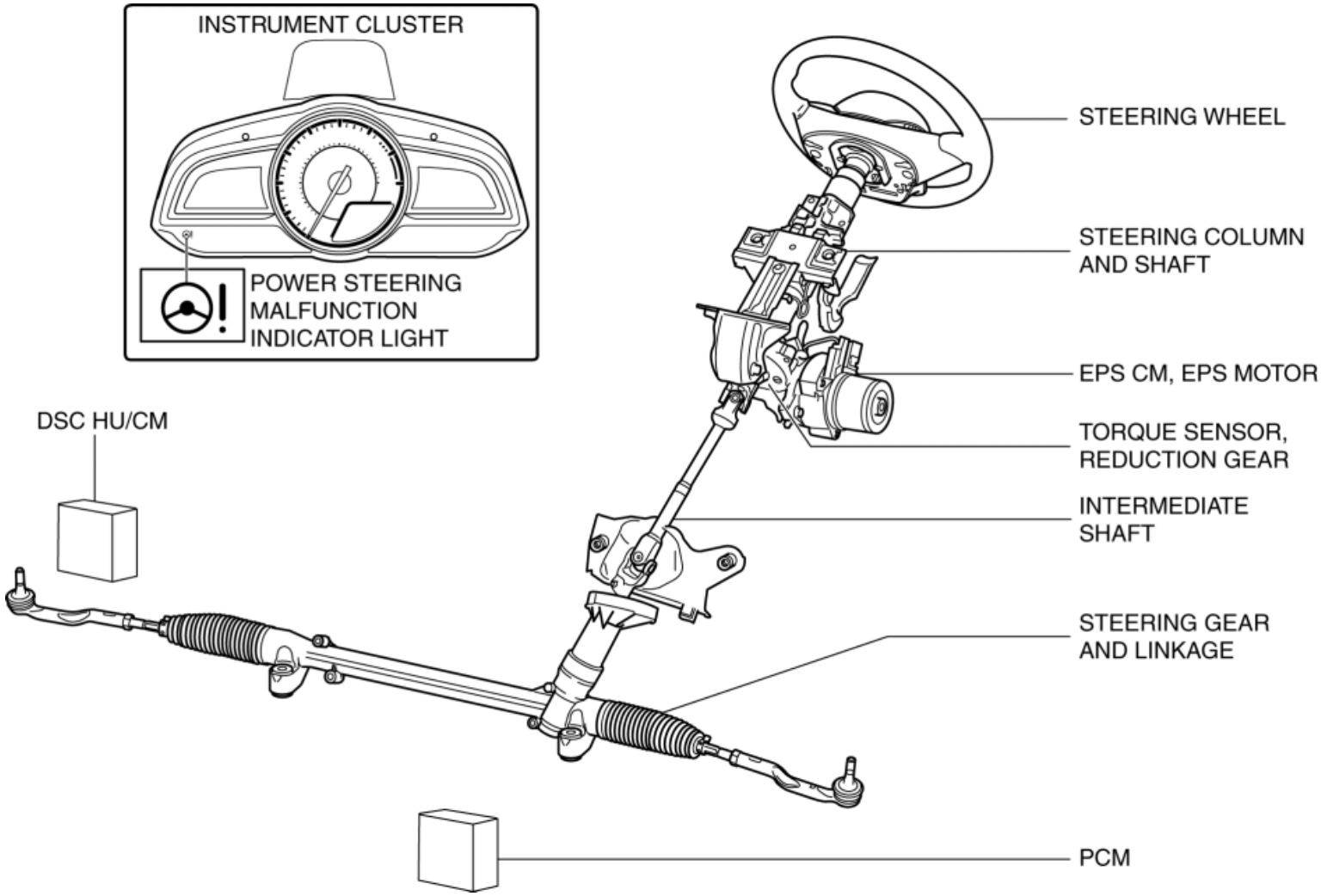

Safety

- A straight body structure has been adopted which is both highly rigid and light.
- A multi-load path body structure has been adopted which assures a high level of impact safety.
- A ring body structure has been adopted which improves the overall rigidity.
- An immobilizer system has been adopted. This anti-theft device prevents the engine from being started unless the encrypted identification code, transmitted from a special electronic chip embedded in the key, corresponds with the identification code registered in the vehicle.
- Curtain air bags have been adopted that deploy and cover the front and rear side windows to protect the heads of front and rear passengers.
- Side air bags that effectively protect the chest area have been adopted for the front seats.
- Pre-tensioner and load limiter mechanisms have been adopted for the front seat belts.

- Steering shaft with energy adsorbing mechanism adopted.
- An intrusion minimizing brake pedal has been adopted.
- Both ISOFIX and top tether anchors are provided in the rear seat for child-seat fixing.
- An auto-dimming mirror has adopted.
- ABS/DSC adopted.
- Hill launch assist (HLA) adopted.
- Smart city brake support (SCBC) adopted.

Driver's support

- Blind spot monitoring (BSM) system adopted.
- High beam control (HBC) system adopted.
- Lane departure warning system (LDWS) adopted.

Next >

2014 - Mazda3 - General Information

VEHICLE IDENTIFICATION NUMBER (VIN) CODE

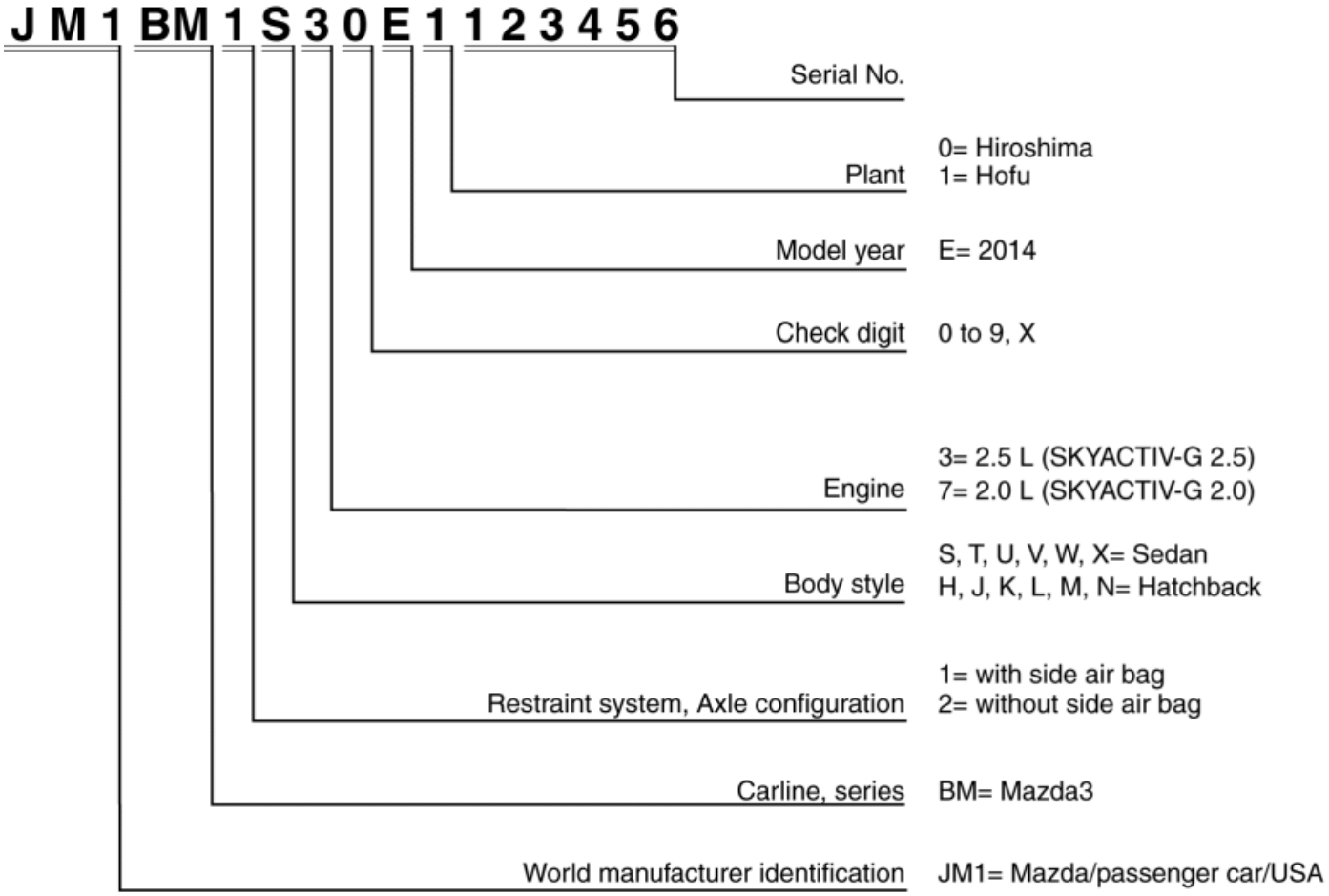

2014 - Mazda3 - General Information

VEHICLE IDENTIFICATION NUMBER (VIN)

JM1 BM1H3*E#100001—

JM1 BM1H7*E#100001—

JM1 BM1J3*E#100001—

JM1 BM1J7*E#100001—

JM1 BM1K3*E#100001—

JM1 BM1K7*E#100001—

JM1 BM1L3*E#100001—

JM1 BM1L7*E#100001—

JM1 BM1M3*E#100001—

JM1 BM1M7*E#100001—

JM1 BM1N3*E#100001—

JM1 BM1N7*E#100001—

JM1 BM1S3*E#100001—

JM1 BM1S7*E#100001—

JM1 BM1T3*E#100001—

JM1 BM1T7*E#100001—

JM1 BM1U3*E#100001—

JM1 BM1U7*E#100001—

JM1 BM1V3*E#100001—

JM1 BM1V7*E#100001—

JM1 BM1W3*E#100001—

JM1 BM1W7*E#100001—

JM1 BM1X3*E#100001—

JM1 BM1X7*E#100001—

VEHICLE IDENTIFICATION NUMBER (VIN)

2014 - Mazda3 - General Information

UNITS

Electric current	A (ampere)
Electric power	W (watt)
Electric resistance	ohm
Electric voltage	V (volt)
Length	mm (millimeter)
	in (inch)
Negative pressure	kPa (kilo pascal)
	mmHg (millimeters of mercury)
	inHg (inches of mercury)
Positive pressure	kPa (kilo pascal)
	kgf/cm^2 (kilogram force per square centimeter)
	psi (pounds per square inch)
Number of revolutions	rpm (revolutions per minute)
Torque	N·m (Newton meter)
	kgf·m (kilogram force meter)
	kgf·cm (kilogram force centimeter)
	ft·lbf (foot pound force)

	in·lbf (inch pound force)
Volume	L (liter)
	US qt (U.S. quart)
	Imp qt (Imperial quart)
	ml (milliliter)
	cc (cubic centimeter)
	cu in (cubic inch)
	fl oz (fluid ounce)
Weight	g (gram)
	oz (ounce)

Conversion From SI Units

- All numerical values in this manual are based on SI units. Numbers shown in conventional units are converted from these values.

Number Of Digits For Converted Values

- The number digits for converted values is the same as the number of significant figures[*1] of the SI unit.
- For the torque value, the number of significant figures is, in principle, 2 digits, in consideration of market practicalities. However, if the number of decimal places at the upper and lower limits of the converted value differs, the one with least number of decimal places is used. In addition, if the integer part is 3 digits or more, the integer part becomes the significant number of figures.

*1 **The number of significant figures is the number of digits from the left-most non-zero digit to the right-most digit including 0. (Example: 0.12 is 2 digits, 41.0 is 3 digits)**

Converted Value Rounding Off And Rounding Up/down

- If there is no tolerance in the SI unit value, after conversion, rounding off is to within the number of significant digits.

If there is tolerance in the SI unit value and the figure after conversion indicates the upper limit, the number of digits is rounded down to within the number of significant figures. If it indicates the lower limit, they are rounded up to within the number of significant figures.

- Even if the SI unit value is the same, the converted value may differ based on whether that value is the upper or lower limit.

2014 - Mazda3 - General Information

SAE STANDARDS

- In accordance with new regulations, SAE (Society of Automotive Engineers) standard names and abbreviations are now used in this manual. The table below lists the names and abbreviations that have been used in Mazda manuals up to now and their SAE equivalents.

SAE Standard		Remark	SAE Standard		Remark
Abbreviation	Name		Abbreviation	Name	
AP	Accelerator Pedal		MIL	Malfunction Indicator Lamp	
APP	Accelerator Pedal Position		MAP	Manifold Absolute Pressure	
ACL	Air Cleaner		MAF sensor	Mass Air Flow Sensor	
A/C	Air Conditioning		MFI	Multiport Fuel Injection	
A/F sensor	Air Fuel Ratio Sensor		OBD	On board Diagnostic System	
BARO	Barometric Pressure		OL	Open Loop	
B+	Battery Positive Voltage		OC	Oxidation Catalytic Converter	
CMP sensor	Camshaft Position Sensor		O2S	Oxygen sensor	
CAC	Charge Air Cooler		PNP	Park/Neutral Position	
CLS	Closed Loop System		PSP	Power Steering Pressure	
CTP	Closed Throttle Position		PCM	Powertrain Control Module	#3
CPP	Clutch Pedal Position		PAIR	Pulsed Secondary Air Injection	Pulsed injection
CIS	Continuous Fuel Injection System				

CKP sensor	Crankshaft Position Sensor		AIR	Secondary Air Injection	Injection with air pump
DLC	Data Link Connector				
DTM	Diagnostic Test Mode	#1			
DTC	Diagnostic Test Code(s)		SAPV	Secondary Air Pulse Valve	
DI	Distributor Ignition		SFI	Sequential Multiport Fuel Injection	
DLI	Distributorless Ignition				
EI	Electronic Ignition	#2	3GR	Third Gear	
ECT	Engine Coolant Temperature		TWC	Three Way Catalytic Converter	
EM	Engine Modification		TB	Throttle Body	
EVAP	Evaporative Emission		TP sensor	Throttle Position Sensor	
EGR	Exhaust Gas Recirculation		TCC	Torque Converter Clutch	
FC	Fan Control		TCM	Transmission (Transaxle) Control Module	
FF	Flexible Fuel				
4GR	Fourth Gear		TR	Transmission (Transaxle) Range	
GEN	Generator		TC	Turbocharger	
GND	Ground		VSS	Vehicle Speed Sensor	
HO2S	Heated Oxygen Sensor	With heater	VR	Voltage Regulator	
			VAF sensor	Volume Air Flow Sensor	
IAC	Idle Air Control		WU-TWC	Warm Up Three Way Catalytic Converter	#4
IAT	Intake Air Temperature				
KS	Knock Sensor		WOT	Wide Open Throttle	

- #1: Diagnostic trouble codes depend on the diagnostic test mode.
- #2: Controlled by the PCM
- #3: Device that controls engine and powertrain
- #4: Directly connected to exhaust manifold

< Previous

2014 - Mazda3 - General Information

ABBREVIATIONS

AAS	Active Adaptive Shift
ABS	Antilock Brake System
ABDC	After Bottom Dead Center
ACC	Accessories
AFS	Adaptive Front Lighting System
ALC	Auto Level Control
ALR	Automatic Locking Retractor
ATDC	After Top Dead Center
ATF	Automatic Transaxle Fluid
ATX	Automatic Transaxle
AWD	All-Wheel Drive
BBDC	Before Bottom Dead Center
BDC	Bottom Dead Center
BSM	Blind Spot Monitoring
BTDC	Before Top Dead Center
CAN	Controller Area Network
CCM	Comprehensive Component Monitor

CV	Canister Vent
CM	Control Module
CMU	Connectivity master unit
CPU	Central Processing Unit
DC	Drive Cycle
DRL	Daytime Running Light
DSC	Dynamic Stability Control
EBD	Electronic Brakeforce Distribution
EEPROM	Electrically Erasable Programmable Read-Only Memory
EHPAS	Electro Hydraulic Power Assist Steering
ELR	Emergency Locking Retractor
EPS	Electric Power Steering
ESA	Electronic Spark Advance
FBCM	Front Body Control Module
FET	Field Effect Transistor
FOW	Forward Obstruction Warning
GPS	Global Positioning System
HBC	High Beam Control
HF/TEL	Hands-Free Telephone
HI	High
HLA	Hydraulic Lash Adjuster
HS	High Speed

HU	Hydraulic Unit
IDS	Integrated Diagnostic Software
IG	Ignition
INT	Intermittent
KOEO	Key On Engine Off
KOER	Key On Engine Running
LCD	Liquid Crystal Display
LDWS	Lane Departure Warning System
LED	Light Emitting Diode
LF	Left Front
LH	Left Hand
LO	Low
LR	Left Rear
M	Motor
MAX	Maximum
MIN	Minimum
MOS	Metal Oxide Semiconductor
MRCC	Mazda Radar Cruise Control
MS	Middle Speed
MTX	Manual Transaxle
OCV	Oil Control Valve
OFF	Switch Off

ON	Switch On
PAD	Passenger Air Bag Deactivation
PCV	Positive Crankcase Ventilation
PID	Parameter Identification
P/W CM	Power Window Control Module
PTC	Positive Temperature Coefficient
RBCM	Rear Body Control Module
RCTA	Rear Crossing Traffic Alert
REC	Recirculate
RF	Right Front
RH	Right Hand
RR	Right Rear
SAS	Sophisticated Air Bag Sensor
SST	Special Service Tool
SW	Switch
TAU	Tuner and Amp Unit
TCS	Traction Control System
TDC	Top Dead Center
TFT	Transaxle Fluid Temperature
TNS	Tail Number Side Lights
TPMS	Tire Pressure Monitoring System
USB	Universal Serial Bus

VENT	Ventilation
1GR	First Gear
2GR	Second Gear
2WD	2-Wheel Drive
3GR	Third Gear
4GR	Fourth Gear
4SD	4 Door Sedan
5GR	Fifth Gear
5HB	5 Door Hatchback
6GR	Sixth Gear

< Previous

Next >

2014 - Mazda3 - Engine

ENGINE [SKYACTIV-G 2.0, SKYACTIV-G 2.5]

Special Features

- For SKYACTIV-G 2.0 and SKYACTIV-G 2.5, the following is have been adopted to lower fuel consumption.
    - Mechanical resistance loss improvement from:
        - Narrowed down crankshaft journal
        - Optimized piston skirt shape
        - Lowered piston ring tension
        - Roller follower adopted
        - Reduction of valve spring load
        - Stabilization of timing chain behavior
        - Optimized engine coolant passage
        - Optimized water pump impeller shape
        - Lowered drive belt tension
        - Optimized oil passage
        - Optimized oil pump shape
        - Oil pump discharging pressure control has been adopted.
    - Pumping loss improvement from:
        - Variable valve timing mechanism adopted on both sides of intake and exhaust.
- L-jetronic*1 and D-jetronic*2 type detectors have been combined for intake air amount detection, improving the accuracy of the intake air amount measurement.
    - MAF sensor adopted
    - MAP sensor adopted
    - IAT sensor No.1 and No.2 adopted
- Valve timing control has been adopted on both sides of the intake and exhaust, improving fuel economy and emission performance.

Intake side: Electric variable valve timing control

- Intake CMP sensor adopted
- Electric variable valve timing motor/driver adopted
- Electric variable valve timing relay adopted

Exhaust side: Hydraulic variable valve timing control

- Exhaust CMP sensor adopted

- Engine oil control has been adopted reducing engine load.
  - Engine oil solenoid valve adopted
- With the adoption of fuel pump control, fuel pump power consumption has been reduced, improving fuel economy.
  - Fuel pump control module adopted
- Generator output control adopted, fuel economy/idling stability improved.
  - Current sensor adopted
- With the adoption of the ion sensor, which detects pre-ignition, engine reliability has been improved.
- LIN communication has been adopted to the current sensor and active air shutter for simplified wiring harnesses. (with i-ELOOP)
- With the adoption of the i-ELOOP, charging efficiency during deceleration is improved. Because loss of engine force does not occur when the battery is recharged during deceleration, fuel economy is improved.

*1

Measures the intake air amount directly using the MAF sensor.

*2

Measures the intake air pressure introduced into the cylinder using the MAP sensor and calculates the intake air amount indirectly.

Specification

Item	Specification	
	SKYACTIV-G 2.0	SKYACTIV-G 2.5
MECHANICAL		
Type	Gasoline, 4 cycle	
Cylinder arrangement and number	In-line, 4 cylinder	
Combustion chamber	Pentroof	

Valve system			DOHC, timing chain driven, 16 valves	
Displacement		(ml {cc, cu in})	1,998 {1,998, 121.9}	2,488 {2,488, 151.8}
Bore × stroke		(mm {in})	83.5 × 91.2 {3.29 × 3.59}	89.0 × 100 {3.50 × 3.94}
Compression ratio			13.0:1	
Compression pressure		(kPa {kgf/cm^2, psi} [rpm])	885 {9.02, 128} [300]	954 {9.73, 138} [300]
LUBRICATION SYSTEM				
Type			Force-fed type	
Oil pressure (reference value) [Water temperature 80—90 °C {176—194°F}]		(kPa {kgf/cm^2, psi} [rpm])	Low oil pressure: 110—175 {1.13—1.78, 16.0—25.3}[1,500] High oil pressure: 300—430 {3.06—4.38, 43.6—62.3}[4,500]	
Oil pump	Type		Trochoid gear type	
Oil filter	Type		Full-flow, paper element	
	Bypass pressure	(kPa {kgf/cm^2, psi})	78—118 {0.80—1.20, 12.0—17.1}	
Oil capacity (approx. quantity)	Total (dry engine)	(L {US qt, Imp qt})	4.9 {5.2, 4.3}	5.4 {5.7, 4.8}
	Oil replacement	(L {US qt, Imp qt})	4.0 {4.2, 3.5}	4.3 {4.5, 3.8}
	Oil and oil filter replacement	(L {US qt, Imp qt})	4.2 {4.4, 3.7}	4.5 {4.8, 4.0}
COOLING SYSTEM				
Type			Water-cooled, Electromotive	
Coolant capacity (approx. quantity)		(L {US qt, Imp qt})	MTX : 6.3 {6.7, 5.5} ATX : 6.5 {6.9, 5.7}	6.8 {7.2, 6.0}
Water pump	Type		Centrifugal, V-belt-driven	

Thermostat	Type		Wax type
	Opening temperature	(°C {°F})	U.S.A. and Canada: 80.5—83.5 {177—182} Except U.S.A. and Canada: 86.5—89.5 {188—193}
	Full-open temperature	(°C {°F})	95 {203}
	Full-open lift	(mm {in})	8.5 {0.33} or more
Radiator	Type		Corrugated fin type
Cooling system cap	Valve opening pressure	(kPa {kgf/cm^2, psi})	93.2—122.6 {0.951—1.250, 13.6—17.7}
Cooling fan	Type		Electric type
	Number of blades		7
	Outer diameter	(mm {in})	Cooling fan No.1: 333 {13.1} Cooling fan No.2: 308 {12.1}
	Cooling fan motor output	(W)	Cooling fan No.1: 76 Cooling fan No.2: 74
FUEL SYSTEM			
Fuel injector	Type		High resistance
	Fuel supply method		Top-feed
	Drive types		Electronic type
Pressure regulator control pressure		(kPa {kgf/cm^2, psi})	Approx. 430 {4.38, 62.4}
Fuel pump	Type		Electric
Fuel tank	Capacity	(L {US gal, Imp gal})	50.0 {13.2, 11.0}
EMISSION SYSTEM			
			WU-TWC (monolith)

Catalyst	Type		TWC (monolith)	
EVAP control system	Type		Charcoal canister type	
PCV system	Type		Closed type	
CHARGING SYSTEM				
Battery	Voltage	(V)	12	
	Type		With i-ELOOP: Q-85 Without i-ELOOP: 55D23L (60 A·h/20HR), 75D23L (65 A·h/20HR)	
Generator	Output	(V-A)	With i-ELOOP: 12-150 Without i-ELOOP: 12-100	
Ignition system	Type		SEI	
	Spark advance		Electronic	
	Firing order		1—3—4—2 (all cylinders independent firing)	
			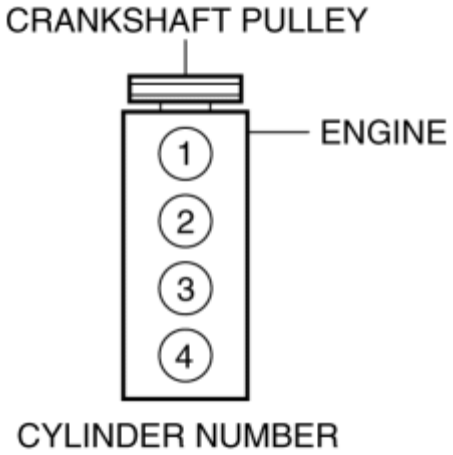	
Spark plug	Type		PE5R-18-110, PE5S-18-110	
STARTING SYSTEM				
Starter	Type		Coaxial reduction	
	Output	(kW)	1.0	1.4

CONTROL SYSTEM	
Neutral switch	ON/OFF
CPP switch	ON/OFF
MAF sensor	Hot film
IAT sensor	Cold resistor
MAP sensor	Sealant diaphragm
TP sensor	Hall element
APP sensor	Hall element
CKP sensor	MR element
CMP sensor	GMR element
ECT sensor	Thermistor
BARO sensor	Piezoelectric element
Fuel pressure sensor	Metal diaphragm
KS	Piezoelectric element
A/F sensor	Zirconia element
HO2S	Zirconia element
Fuel tank pressure sensor	Piezoelectric element

Valve timing

Item				Specification
	IN	Open	(°)	BTDC 42—ATDC 32
		Close	(°)	ABDC 36—ABDC 110
				SKYACTIV-G 2.0: BBDC 54—BBDC 9

Valve timing	EX	Open	(°)	SKYACTIV-G 2.5: BBDC 58—BBDC 13
		Close	(°)	SKYACTIV-G 2.0: ATDC 7—ATDC 52
				SKYACTIV-G 2.5: ATDC 6—ATDC 51

Engine oil specification

Item	U.S.A., Canada and Puerto Rico	Except U.S.A., Canada and Puerto Rico
Engine oil grade	(ILSAC)	API SERVICE SM SAE 5W-30 ENERGY CONSERVING II (ILSAC)
		API SM or ILSAC
Engine oil viscosity	0W-20	5W-30 (If SAE 5W-30 engine oil is not available, use SAE 5W-20 engine oil.)

Fuel type

Fuel	Octane Rating* (Anti-knock index)
Regular unleaded fuel	87 [(R+M)/2 method] or above (91 RON or above)

*
U.S. federal law requires that octane ratings be posted on gasoline station pumps.

Next >

2014 - Mazda3 - Engine

ENGINE ABBREVIATIONS

AAS	Active Adaptive Shift
ABS	Antilock Brake System
ABDC	After Bottom Dead Center
ACC	Accessories
AFS	Adaptive Front Lighting System
ALC	Auto Level Control
ALR	Automatic Locking Retractor
ATDC	After Top Dead Center
ATF	Automatic Transaxle Fluid
ATX	Automatic Transaxle
AWD	All-Wheel Drive
BBDC	Before Bottom Dead Center
BDC	Bottom Dead Center
BSM	Blind Spot Monitoring
BTDC	Before Top Dead Center
CAN	Controller Area Network
CCM	Comprehensive Component Monitor

CV	Canister Vent
CM	Control Module
CMU	Connectivity master unit
CPU	Central Processing Unit
DC	Drive Cycle
DRL	Daytime Running Light
DSC	Dynamic Stability Control
EBD	Electronic Brakeforce Distribution
EEPROM	Electrically Erasable Programmable Read-Only Memory
EHPAS	Electro Hydraulic Power Assist Steering
ELR	Emergency Locking Retractor
EPS	Electric Power Steering
ESA	Electronic Spark Advance
FBCM	Front Body Control Module
FET	Field Effect Transistor
FOW	Forward Obstruction Warning
GPS	Global Positioning System
HBC	High Beam Control
HF/TEL	Hands-Free Telephone
HI	High
HLA	Hydraulic Lash Adjuster
HS	High Speed

HU	Hydraulic Unit
IDS	Integrated Diagnostic Software
IG	Ignition
INT	Intermittent
KOEO	Key On Engine Off
KOER	Key On Engine Running
LCD	Liquid Crystal Display
LDWS	Lane Departure Warning System
LED	Light Emitting Diode
LF	Left Front
LH	Left Hand
LO	Low
LR	Left Rear
M	Motor
MAX	Maximum
MIN	Minimum
MOS	Metal Oxide Semiconductor
MRCC	Mazda Radar Cruise Control
MS	Middle Speed
MTX	Manual Transaxle
OCV	Oil Control Valve
OFF	Switch Off

ON	Switch On
PAD	Passenger Air Bag Deactivation
PCV	Positive Crankcase Ventilation
PID	Parameter Identification
P/W CM	Power Window Control Module
PTC	Positive Temperature Coefficient
RBCM	Rear Body Control Module
RCTA	Rear Crossing Traffic Alert
REC	Recirculate
RF	Right Front
RH	Right Hand
RR	Right Rear
SAS	Sophisticated Air Bag Sensor
SST	Special Service Tool
SW	Switch
TAU	Tuner and Amp Unit
TCS	Traction Control System
TDC	Top Dead Center
TFT	Transaxle Fluid Temperature
TNS	Tail Number Side Lights
TPMS	Tire Pressure Monitoring System
USB	Universal Serial Bus

VENT	Ventilation
1GR	First Gear
2GR	Second Gear
2WD	2-Wheel Drive
3GR	Third Gear
4GR	Fourth Gear
4SD	4 Door Sedan
5GR	Fifth Gear
5HB	5 Door Hatchback
6GR	Sixth Gear

2014 - Mazda3 - Engine

ON-BOARD DIAGNOSTIC OUTLINE [SKYACTIV-G 2.0, SKYACTIV-G 2.5]

Features

- The PCM performs self-diagnosis to check for malfunctions in the engine control system.
- If a malfunction occurs in the engine control system, the driver is notified.
- On-board diagnosis can be performed easily using an external tester.

To meet the OBD-II regulations	• Diagnostic test modes adopted
Improved serviceability	• DTCs adopted • KOEO/KOER self test function adopted • PID/DATA monitor function adopted • Active command modes function adopted

Block Diagram

ON-BOARD DIAGNOSTIC OUTLINE [SKYACTIV-G 2.0, SKYACTIV-G 2.5]

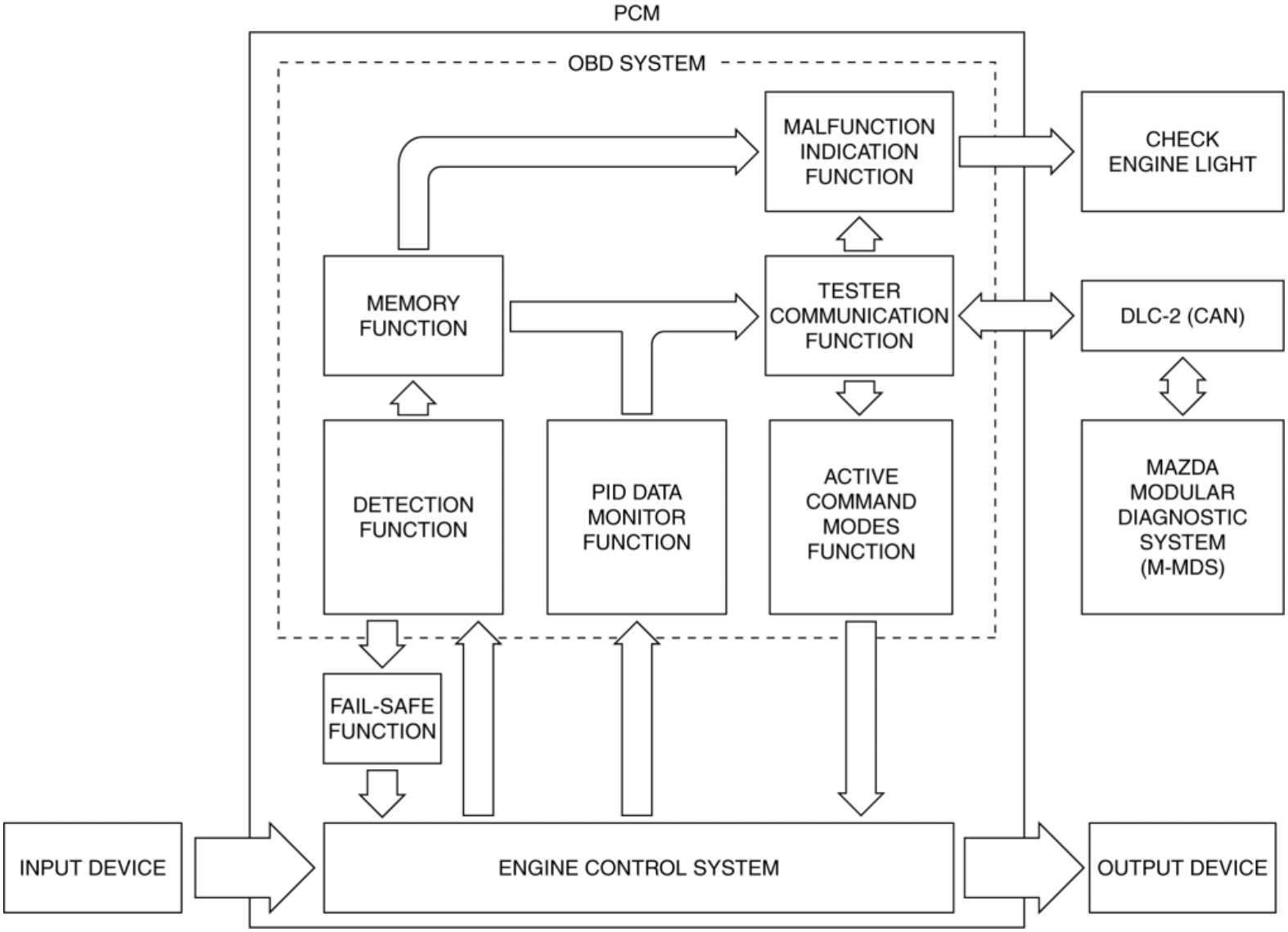

2014 - Mazda3 - Engine

ON-BOARD DIAGNOSTIC SYSTEM TEST MODE [SKYACTIV-G 2.0, SKYACTIV-G 2.5]

Diagnostic Test Mode

- To match the OBD-II regulations, the following diagnostic test modes are supported.

Diagnostic test mode	Item
Mode 01	Sending diagnostic data (PID data monitor/On-board system readiness test)
Mode 02	Sending freeze frame data
Mode 03	Sending emission-related malfunction code (Diagnostic trouble code: DTC)
Mode 04	Clearing/resetting emission-related malfunction information
Mode 06	Sending intermittent monitoring system test results (DMTR)
Mode 07	Sending continuous monitoring system test results (Pending code)
Mode 08	On-board device control (Simulation test, active command mode)
Mode 09	Request vehicle information

Sending Diagnostic Data (Mode 01)

PID data monitor

- The PID data monitor items are shown below.

PID data monitor table—: Not applicable

Full names	Unit
Monitor status since DTCs cleared	No unit
Fuel system loop status	Refer to list below.
LOAD	%
ECT	°C, °F
Short term fuel trim	%
Long term fuel trim	%
MAP	KPa {MPa}, mBar {Bar}, psi, in H20

Engine speed	rpm
Vehicle speed	km/h, mph
Spark advance	°
IAT	°C, °F
MAF	g/s
Absolute TP	%
A/F sensor and HO2S location	No unit
Input voltage from HO2S	V
OBD requirement according to vehicle design	No unit
Time since engine start	s
Distance travelled while check engine light is activated	km, miles
Fuel pressure	KPa {MPa}, mBar {Bar}, psi, in H20
Purge solenoid valve control signal	%
Fuel level input	%
Number of warm-up since DTCs cleared	No unit
Distance travelled since DTCs cleared	km, miles
EVAP system vapor pressure	KPa {MPa}, mBar {Bar}, psi, in H20
Barometric pressure	KPa {MPa}, mBar {Bar}, psi, in H20
A/F sensor output current	mA
Estimated catalyst converter temperature	°C, °F
Monitor status this driving cycle	—
PCM voltage	V
Absolute load value	%
Theoretical air/fuel ratio coefficient to calculate target air/fuel ratio	No unit
Relative TP	%
Ambient air temperature	°C, °F
TP from TP sensor No.2	%
APP from APP sensor No.1	%
APP from APP sensor No.2	%

Throttle valve actuator control signal	%
Short term fuel trim (HO2S)	%
Long term fuel trim (HO2S)	%

Meaning of fuel system loop status

- The following information is displayed on the tester
  - Feedback stops: ECT is lower than the determined feedback zone
  - Feedback operating: A/F sensor, HO2S being used for feedback is normal
  - Feedback stops: Open loop due to driving condition
  - Feedback stops: Open loop due to detected system fault
  - Feedback operating: Malfunction occurred in HO2S system

Sending Freeze Frame Data (Mode 02)

Freeze frame data

- The freeze frame data consists of data for vehicle and engine control system operation conditions when malfunctions in the engine control system are detected and stored in the PCM.
- Freeze frame data is stored at the instant the check engine light illuminates, and only a part of the DTC data is stored.
- If there are several malfunctions in the engine control system, only the data for the first malfunction will be stored.
- If a misfire or fuel injection control malfunction occurs, this data will overwrite the first malfunction that was stored.
- If the first stored freeze frame data is a misfire or fuel injection control malfunction, the data will not be overwritten.

Snapshot data

- The snapshot data stores the currently detected DTC data.
- The recording timing for the freeze frame data/snapshot data differs depending on the number of DTC drive cycles.
  - For a DTC with a drive cycle number 1, only the malfunction determination data is recorded.
  - For a DTC with a drive cycle number 2, both the malfunction determination and undetermined data is recorded.

Freeze frame data table

—: Not applicable

Freeze frame data item	Unit	Description	Corresponding PID data monitor item
FUELSYS1	OL/CL/OL-Drive/OL-Fault/CL-Fault	Fuel system status	FUELSYS
LOAD	%	Calculated engine load	—
ECT	°C, °F	Engine coolant temperature	ECT
SFT1	%	Short term fuel trim	SHRTFT1
LFT1	%	Long term fuel trim	LONGFT1
MAP	KPa {MPa}, mBar {Bar}, psi, in H20	Manifold absolute pressure	MAP
RPM	RPM	Engine speed	RPM

VS	KPH, MPH	Vehicle speed	VSS
SPARKADV	°	Ignition timing	SPARKADV
IAT	°C, °F	Intake air temperature	IAT
MAF	g/sec	Mass airflow	MAF
TP	%	Throttle valve position No.1	TP1
RUNTM	hh:mm:ss	Time from engine start	—
EVAPPCT	%	Purge solenoid valve controlled value	EVAPCP
FLI	%	Fuel level in fuel tank	FLI
WARMUPS	—	Number of warm-up cycle after DTC cleared	—
CLRDIST	km, ft {mi}	Mileage after DTC cleared	—
FTP	KPa {MPa}, mBar {Bar}, psi, in H20	Evaporative (EVAP) system vapor pressure	FTP
BARO	KPa {MPa}, mBar {Bar}, psi, in H20	Barometric pressure	BARO
CATTEMP11	°C, °F	Estimated catalytic converter temperature	CATT11_DSD
VPWR	V	Module supply voltage	VPWR
ALV	%	Engine load	LOAD
EQ_RAT	—	Target equivalence ratio (lambda)	EQ_RAT11_DSD
TP_REL	%	Relative throttle position	TP REL
AAT	°C, °F	Ambient air temperature	AAT
TP_B	%	Throttle valve position No.2	TP2
APP_D	%	Accelerator pedal position No.1	APP1
APP_E	%	Accelerator pedal position No.2	APP2
TAC_PCT	%	Target throttle valve position	ETC_DSD
FUEL_TYP	—	Type of fuel currently being utilized by the vehicle	—
STSO2FT1	%	Short term fuel trim (HO2S)	—
LGSO2FT1	%	Long term fuel trim (HO2S)	—
FRP	KPa {MPa}, mBar {Bar}, psi, in H20	Fuel pressure (absolute)	FUEL_PRES
ECT1_SUP	—	Engine coolant temperature No.1 support	—
ECT2_SUP	—	Engine coolant temperature No.2 support	—

ECT1	°C, °F	Engine coolant temperature No.1	ECT
ECT2	°C, °F	Engine coolant temperature No.2	ECT2_V
IAT11_SUP	—	Intake air temperature No.1 support	—
IAT12_SUP	—	Intake air temperature No.2 support	—
IAT11	°C, °F	Intake air temperature No.1	IAT
IAT12	°C, °F	Intake air temperature No.2	IAT2

Snapshot data table

—: Not applicable

Snapshot data item	Unit	Definition	Data read/use method	Corresponding PID data monitor item
ALTT_V	V	Generator output voltage	—	—
MIL	Off/On	Check engine light illumination status	—	MIL
APP1	V %	Accelerator pedal position No.1	—	APP1
APP2	V %	Accelerator pedal position No.2	—	APP2
TP1	V %	Throttle valve position No.1	—	TP1
TP2	V %	Throttle valve position No.2	—	TP2
ALT_CUR_DSD	A	Generator current desired	—	—
BATT_RES	ohm	Battery inferred internal resistance	—	—
TOTAL_TIME	hh:mm:ss	Total time	The elapsed time when the PCM detected a DTC can be calculated by performing the following procedure. • Verify the instrument cluster PID item TOTAL_TIME. • Verify the snapshot data item TOTAL_TIME. • Subtract 2 from 1.	—
			The distance traveled when the PCM detected a DTC can be calculated by performing the following procedure.	

TOTAL_DIST	km, ft {mi}	Total distance	• Verify the odometer value in the instrument cluster. • Verify the snapshot data item TOTAL_DIST. • Subtract 2 from 1.	—
FUELSYS	OL/CL/OL-Drive/OL-Fault/CL-Fault	Fuel system status	—	FUELSYS
LOAD_C	%	Calculated engine load	—	—
ECT	°C, °F	Engine coolant temperature	—	ECT
SHRTFT1	%	Short term fuel trim	—	SHRTFT1
LONGFT1	%	Long term fuel trim	—	LONGFT1
MAP	KPa {MPa}, mBar {Bar}, psi, in H20	Manifold absolute pressure	—	MAP
RPM	RPM	Engine speed	—	RPM
VSS	KPH, MPH	Vehicle speed	—	VSS
SPARKADV	°	Ignition timing	—	SPARKADV
IAT	°C, °F	Intake air temperature No.1	—	IAT
MAF	g/sec	Mass airflow	—	MAF
O2S12	V	HO2S	—	O2S12
EG_RUN_TIME	hh:mm:ss	Time from engine start	—	—
FUEL_PRES	KPa {MPa}, mBar {Bar}, psi, in H20	Fuel pressure	—	FUEL_PRES
SEGRP_DSD	%	Target EGR valve position	—	—
EVAPCP	%	Purge solenoid valve controlled value	—	EVAPCP
FLI	%	Fuel level in fuel tank	—	FLI
CLR_CNT	—	Number of warm-up cycle after DTC cleared	—	—
CLR_DIST	km, ft {mi}	Mileage after DTC cleared	—	—
FTP	KPa {MPa}, mBar {Bar}, psi, in H20	Fuel tank pressure	—	FTP
BARO	KPa {MPa}, mBar {Bar}, psi, in H20	Barometric pressure	—	BARO
CATT11_DSD	°C, °F	Estimated catalytic converter temperature	—	CATT11_DSD

VPWR	V	Module supply voltage	—	VPWR
LOAD	%	Engine load	—	LOAD
EQ_RAT11_DSD	—	Target equivalence ratio (lambda)	—	EQ_RAT11_DSD
TP_REL	%	Relative throttle position	—	TP REL
AAT	°C, °F	Ambient air temperature	—	AAT
ETC_DSD	%	Target throttle valve position	—	ETC_DSD
SHRTFT12	%	Short term fuel trim (HO2S)	—	—
LONGFT12	%	Long term fuel trim (HO2S)	—	—
FRP	KPa {MPa}, mBar {Bar}, psi, in H20	Fuel pressure (absolute)	—	FUEL_PRES
ECT2_SUP	—	Engine coolant temperature No.2 support	—	—
ECT2	°C, °F	Engine coolant temperature No.2	—	ECT2_V
IAT12	°C, °F	Intake air temperature No.2	—	IAT2

DTC 7-Digit Code Definition

- When related systems or components have failed, the CM stores the DTC of the malfunctioning part in the CM memory, and allows for the retrieval of the stored data using a scan tool when necessary. The DTCs are indicated using seven digits. Each digit indicates the following.

P 0 0 10:00

- Specify the malfunction area sub type
  - 00: No sub type information
  - 41: General checksum malfunction
- Manufacturer controlled
- Indicates subgroup

Powertrain (P code)	Network Electrical (U code)
0: Fuel and air metering and auxiliary emission controls	0: Network electrical
1: Fuel and air metering	1: Network communication
2: Fuel and air metering	2: Network communication
3: Ignition system or misfire	3: Network software
4: Auxiliary emission controls and auxiliary input	
5: Vehicle speed, idle control, and auxiliary input	
6: Computer and auxiliary output	
7: Transmission	
8: Transmission	

- Indicates who was responsible for DTC definition
  - 0: ISO/SAE controlled
  - 1: Manufacturer controlled
  - 2: There are ISO/SAE controlled just for powertrain, all others are manufacturer controlled.
  - 3: For P3000 to P3399 is manufacturer controlled, all others are ISO/SAE controlled.
- Indicates DTC function
  - B: Body
  - P: Powertrain
  - U: Network Electrical

Status Byte for DTC

- The two digits (two digits after hyphen (-)) after the 7-digit DTC.

P0010:00 - **

STATUS BYTE

- A code which indicates the pending code, current/past malfunction status, or warning illumination status.
- Can be read by performing a CMDTC self-test using the Mazda Modular Diagnostic System (M-MDS).
- For details on the status byte, refer to the explanation on the Mazda Modular Diagnostic System (M-MDS) when reading the DTC.

Sending Emission-related Malfunction Code (DTC) (Mode 03)

- The DTCs are shown below.

×: Applicable—: Not applicable

DTC No.	Check engine light	Master warning light	Charging system warning light	Engine oil warning light	Wrench warning indicator light	Check fuel cap warning light	Condition	Fail-safe function	Drive cycle	Monitor item	Self test type*1	Memory function

B10A2:00	OFF	OFF	OFF	OFF	OFF	OFF	Vehicle collision	×	1	Other	C	×
P0010:00	ON	OFF	OFF	OFF	OFF	OFF	Electric variable valve timing control circuit range/performance problem	×	1	CCM	C, R	×
P0011:00	ON	OFF	OFF	OFF	OFF	OFF	Electric variable valve timing control system: over-advanced	—	1	CCM	C	×
P0012:00	ON	OFF	OFF	OFF	OFF	OFF	Electric variable valve timing control system: over-retarded	—	1	CCM	C	×
P0014:00	ON	OFF	OFF	OFF	OFF	OFF	Hydraulic variable valve timing control system: over-advanced	—	2	CCM	C	×
P0015:00	ON	OFF	OFF	OFF	OFF	OFF	Hydraulic variable valve timing control system: over-retarded	—	2	CCM	C	×
P0016:00*9	ON	OFF	OFF	OFF	OFF	OFF	CKP-CMP (intake side) correlation problem	—	2	CCM	C	×
P0017:00*9	ON	OFF	OFF	OFF	OFF	OFF	CKP-CMP (exhaust side) correlation problem	—	2	CCM	C	×
P0031:00	ON	OFF	OFF	OFF	OFF	OFF	A/F sensor heater control circuit low input	×	2	A/F sensor heater, HO2S heater	C, R	×
P0032:00	ON	OFF	OFF	OFF	OFF	OFF	A/F sensor heater control circuit high input	×	2	A/F sensor heater, HO2S heater	C, R	×
P0037:00	ON	OFF	OFF	OFF	OFF	OFF	HO2S heater control circuit low input	×	2	A/F sensor heater, HO2S heater	C, R	×
P0038:00	ON	OFF	OFF	OFF	OFF	OFF	HO2S heater control circuit high input	×	2	A/F sensor heater, HO2S heater	C, R	×
P0053:00*9	ON	OFF	OFF	OFF	OFF	OFF	A/F sensor heater resistance	×	2	A/F sensor heater, HO2S heater	C, R	×
P0054:00*9	ON	OFF	OFF	OFF	OFF	OFF	HO2S heater resistance	×	2	A/F sensor heater, HO2S heater	C, R	×
P0069:00	ON	OFF	OFF	OFF	OFF	OFF	Manifold absolute pressure/atmospheric pressure correlation problem	—	2	CCM	C	×
P0072:00	OFF	OFF	OFF	OFF	OFF	OFF	Ambient temperature sensor circuit low input	—	1	Other	C, O, R	×
P0073:00	OFF	OFF	OFF	OFF	OFF	OFF	Ambient temperature sensor circuit high input	—	1	Other	C, O, R	×
P0088:00	ON	OFF	OFF	OFF	OFF	OFF	Fuel pressure sensor circuit range/performance problem	×	1	CCM	C	×
P0089:00	ON	OFF	OFF	OFF	OFF	OFF	Spill valve control solenoid valve control circuit range/performance problem	×	1	CCM	C, R	×

P0091:00	ON	OFF	OFF	OFF	OFF	OFF	Fuel pressure regulator control circuit low input	×	1	CCM	C, O, R	×
P0092:00	ON	OFF	OFF	OFF	OFF	OFF	Fuel pressure regulator control circuit high input	×	1	CCM	C, O, R	×
P0097:00	ON	OFF	OFF	OFF	OFF	OFF	IAT sensor No.2 circuit low input	—	1	CCM	C, O, R	×
P0098:00	ON	OFF	OFF	OFF	OFF	OFF	IAT sensor No.2 circuit high input	—	1	CCM	C, O, R	×
P0101:00	ON	OFF	OFF	OFF	OFF	OFF	MAF sensor circuit range/performance problem	—	2	CCM	C	×
P0102:00	ON	OFF	OFF	OFF	OFF	OFF	MAF sensor circuit low input	×	1	CCM	C, O, R	×
P0103:00	ON	OFF	OFF	OFF	OFF	OFF	MAF sensor circuit high input	×	1	CCM	C, O, R	×
P0107:00	ON	OFF	OFF	OFF	OFF	OFF	MAP sensor circuit low input	×	1	CCM	C, O, R	×
P0108:00	ON	OFF	OFF	OFF	OFF	OFF	MAP sensor circuit high input	×	1	CCM	C, O, R	×
P0112:00	ON	OFF	OFF	OFF	OFF	OFF	IAT sensor No.1 circuit low input	×	1	CCM	C, O, R	×
P0113:00	ON	OFF	OFF	OFF	OFF	OFF	IAT sensor No.1 circuit high input	×	1	CCM	C, O, R	×
P0116:00	ON	OFF	OFF	OFF	OFF	OFF	ECT sensor No.1 circuit range/performance problem	—	1	Engine cooling system	C	×
P0117:00	ON	OFF	OFF	OFF	OFF	OFF	ECT sensor No.1 circuit low input	×	1	Engine cooling system	C, O, R	×
P0118:00	ON	OFF	OFF	OFF	OFF	OFF	ECT sensor No.1 circuit high input	×	1	Engine cooling system	C, O, R	×
P011A:00*9	ON	OFF	OFF	OFF	OFF	OFF	ECT sensor No.1/No.2 performance problem	—	2	Engine cooling system	C	×
P0122:00	ON	OFF	OFF	OFF	OFF	OFF	TP sensor No.1 circuit low input	×	1	CCM	C, O, R	×
P0123:00	ON	OFF	OFF	OFF	OFF	OFF	TP sensor No.1 circuit high input	×	1	CCM	C, O, R	×
P0126:00*9	ON	OFF	OFF	OFF	OFF	OFF	Thermostat stuck open	—	2	Engine cooling system	C	×
P0130:00	ON	OFF	OFF	OFF	OFF	OFF	Voltage problem between PCM terminal 1AB and PCM terminal 1AG	×	2	A/F sensor, HO2S	C, R	×

P0131:00	ON	OFF	OFF	OFF	OFF	OFF	A/F sensor circuit low input	×	2	A/F sensor, HO2S	C, R	×
P0132:00	ON	OFF	OFF	OFF	OFF	OFF	A/F sensor circuit high input	×	2	A/F sensor, HO2S	C, R	×
P0133:00	ON	OFF	OFF	OFF	OFF	OFF	A/F sensor circuit slow response	×	2	A/F sensor, HO2S	C	×
P0134:00	ON	OFF	OFF	OFF	OFF	OFF	A/F sensor circuit no activity detected	×	2	A/F sensor, HO2S	C	×
P0137:00*9	ON	OFF	OFF	OFF	OFF	OFF	HO2S circuit low input	×	2	A/F sensor, HO2S	C	×
P0138:00	ON	OFF	OFF	OFF	OFF	OFF	HO2S circuit high input	—	2	A/F sensor, HO2S	C, O, R	×
P013A:00*9	ON	OFF	OFF	OFF	OFF	OFF	HO2S: Slow response (during transition from rich to lean)	—	2	A/F sensor, HO2S	C	×
P013B:00*9	ON	OFF	OFF	OFF	OFF	OFF	HO2S: Slow response (during transition from lean to rich)	—	2	A/F sensor, HO2S	C	×
P0140:00	ON	OFF	OFF	OFF	OFF	OFF	HO2S circuit no activity detected	—	2	A/F sensor, HO2S	C	×
P0171:00	ON	OFF	OFF	OFF	OFF	OFF	Fuel trim system too lean	—	2	Fuel system	C	×
P0172:00	ON	OFF	OFF	OFF	OFF	OFF	Fuel trim system too rich	—	2	Fuel system	C	×
P0192:00	ON	OFF	OFF	OFF	OFF	OFF	Fuel pressure sensor circuit low input	×	1	CCM	C, O, R	×
P0193:00	ON	OFF	OFF	OFF	OFF	OFF	Fuel pressure sensor circuit high input	×	1	CCM	C, O, R	×
P0201:00	ON	OFF	OFF	OFF	OFF	OFF	Fuel injector circuit/open cylinder No.1	—	1	CCM	C, O, R	×
P0202:00	ON	OFF	OFF	OFF	OFF	OFF	Fuel injector circuit/open cylinder No.2	—	1	CCM	C, O, R	×
P0203:00	ON	OFF	OFF	OFF	OFF	OFF	Fuel injector circuit/open cylinder No.3	—	1	CCM	C, O, R	×
P0204:00	ON	OFF	OFF	OFF	OFF	OFF	Fuel injector circuit/open cylinder No.4	—	1	CCM	C, O, R	×
P0222:00	ON	OFF	OFF	OFF	OFF	OFF	TP sensor No.2 circuit low input	×	1	CCM	C, O, R	×
P0223:00	ON	OFF	OFF	OFF	OFF	OFF	TP sensor No.2 circuit high input	×	1	CCM	C, O, R	×
P025B:00	OFF	OFF	OFF	OFF	OFF	OFF	Fuel pump control module circuit range/performance problem	×	1	CCM	C, O, R	×
P025C:00	OFF	OFF	OFF	OFF	OFF	OFF	Fuel pump control module result of on-board diagnostic test low input	—	1	CCM	C, O, R	×
P025D:00	OFF	OFF	OFF	OFF	OFF	OFF	Fuel pump control module result of on-board diagnostic test high input	—	1	CCM	C, O, R	×

P0300:00	Flash/ON	OFF	OFF	OFF	OFF	OFF	Random misfire detected	×	2	Misfire	C	×
P0301:00	Flash/ON	OFF	OFF	OFF	OFF	OFF	Cylinder No.1 misfire detected	×	2	Misfire	C	×
P0302:00	Flash/ON	OFF	OFF	OFF	OFF	OFF	Cylinder No.2 misfire detected	×	2	Misfire	C	×
P0303:00	Flash/ON	OFF	OFF	OFF	OFF	OFF	Cylinder No.3 misfire detected	×	2	Misfire	C	×
P0304:00	Flash/ON	OFF	OFF	OFF	OFF	OFF	Cylinder No.4 misfire detected	×	2	Misfire	C	×
P0327:00	ON	OFF	OFF	OFF	OFF	OFF	KS circuit low input	×	1	CCM	C, O, R	×
P0328:00	ON	OFF	OFF	OFF	OFF	OFF	KS circuit high input	×	1	CCM	C, O, R	×
P0335:00	ON	OFF	OFF	OFF	OFF	OFF	CKP sensor circuit problem	×	1	CCM	C, R	×
P0340:00	ON	OFF	OFF	OFF	OFF	OFF	Intake CMP sensor circuit problem	×	1	CCM	C, R	×
P0365:00	ON	OFF	OFF	OFF	OFF	OFF	Exhaust CMP sensor circuit problem	×	1	CCM	C, R	×
P0421:00	ON	OFF	OFF	OFF	OFF	OFF	Catalytic converter system	—	1 *13 or 2 *14	Catalyst	C	×
P0442:00 *9	ON	OFF	OFF	OFF	OFF	OFF	Evaporative gas leakage (leakage amount: low)	—	1	EVAP system	C	×
P0443:00	ON	OFF	OFF	OFF	OFF	OFF	Purge solenoid valve circuit problem	—	2	CCM	C, R	×
P0446:00 *9	ON	OFF	OFF	OFF	OFF	OFF	CV solenoid valve control circuit problem	—	1	CCM	C, R	×
P0451:00 *9	ON	OFF	OFF	OFF	OFF	OFF	Fuel tank pressure sensor: sensor characteristic malfunction	—	1	CCM	C	×
P0452:00 *9	ON	OFF	OFF	OFF	OFF	OFF	Fuel tank pressure sensor low input	—	1	CCM	C, O, R	×
P0453:00 *9	ON	OFF	OFF	OFF	OFF	OFF	Fuel tank pressure sensor high input	—	1	CCM	C, O, R	×
P0454:00 *9	ON	OFF	OFF	OFF	OFF	OFF	Fuel tank pressure sensor intermittent malfunction	—	1	CCM	C, R	×
P0455:00 *9	ON	OFF	OFF	OFF	OFF	OFF	Evaporative gas leakage (leakage amount: large)	—	1	EVAP system	C	×
P0456:00 *10	ON	OFF	OFF	OFF	OFF	OFF	Evaporative gas leakage (leakage amount: extremely low)	—	1	EVAP system	C	×
P0457:00 *9	ON *8	OFF	OFF	OFF	OFF	ON	Fuel-filler cap installation malfunction	—	1	EVAP system	C	×
P0460:00 *9	ON	OFF	OFF	OFF	OFF	OFF	Fuel level sensor circuit malfunction	—	2	CCM	C, R	×
	*11						Fuel gauge sender unit circuit					

P0461:00	ON	OFF	OFF	OFF	OFF	OFF	range/performance problem	—	2	CCM	C	×
P0462:00	ON*11	OFF	OFF	OFF	OFF	OFF	Fuel gauge sender unit circuit low input	—	2	CCM	C, O, R	×
P0463:00	ON*11	OFF	OFF	OFF	OFF	OFF	Fuel gauge sender unit circuit high input	—	2	CCM	C, O, R	×
P0480:00	OFF	OFF	OFF	OFF	OFF	OFF	Cooling fan relay No.1 control circuit malfunction	—	1	Other	C, O, R	×
P0482:00	OFF	OFF	OFF	OFF	OFF	OFF	Cooling fan relay No.2 and No.3 control circuit malfunction	—	1	Other	C, O, R	×
P0500:00	ON	OFF	OFF	OFF	OFF	OFF	VSS circuit problem	×	2	CCM	C	×
P0504:00	ON	ON	OFF	OFF	OFF	OFF	Brake switch circuit problem	—	1	Other	C	×
P0506:00	ON	OFF	OFF	OFF	OFF	OFF	IAC system RPM lower than expected	—	2	CCM	C	×
P0507:00	ON	OFF	OFF	OFF	OFF	OFF	IAC system RPM higher than expected	—	2	CCM	C	×
P050A:00*9	ON	OFF	OFF	OFF	OFF	OFF	Cold start IAC system performance problem	×	2	Cold start emission reduction strategy monitoring	C	×
P050B:00*9	ON	OFF	OFF	OFF	OFF	OFF	Cold start ignition timing performance problem	—	2	Cold start emission reduction strategy monitoring	C	×
P0520:00	OFF	OFF	OFF	OFF	OFF	OFF	Oil pressure switch circuit problem	—	1	Other	C, O	×
P0524:00	OFF	ON	OFF	ON*5	OFF	OFF	Engine oil pressure too low	—	1	Other	C	×
P0532:00	OFF	OFF	OFF	OFF	OFF	OFF	Refrigerant pressure sensor circuit low input	—	1	Other	C, O, R	×
P0533:00	OFF	OFF	OFF	OFF	OFF	OFF	Refrigerant pressure sensor circuit high input	—	1	Other	C, O, R	×
P057F:00*12	OFF	ON	OFF	OFF	OFF	OFF	Power system: Battery deterioration	×	1	Other	C	×
P058A:00*12	OFF	ON	ON*6	OFF	OFF	OFF	Current sensor: Function malfunction	×	2	Other	C	×
P059F:00*12	OFF	OFF	OFF	OFF	OFF	OFF	Active air shutter: Opening angle abnormality (spinning free)	×	2	Other	C	×
P05A0:00*12	OFF	OFF	OFF	OFF	OFF	OFF	Active air shutter: Opening angle abnormality (sticking)	×	2	Other	C	×
P05A3:00*12	OFF	ON	OFF	OFF	OFF	OFF	Active air shutter: Actuator internal malfunction	×	1 or 2	Other	C	×
P05C0:00*12	OFF	ON	OFF	OFF	OFF	OFF	Active air shutter: Actuator temperature abnormality	×	1	Other	C	×

P0600:00	ON	OFF	OFF	OFF	OFF	OFF	Serial communication link	—	1	CCM	C, O, R	×
P0601:00	ON	OFF	OFF	OFF	OFF	OFF	PCM memory check sum error	×	1	CCM	C, O, R	×
P0602:00	ON	OFF	OFF	OFF	OFF	OFF	PCM programming error	—	1	CCM	C, O, R	×
P0604:00	ON	OFF	OFF	OFF	OFF	OFF	PCM RAM error	×	1	CCM	C, O, R	×
P0606:00	ON	OFF	OFF	OFF	OFF	OFF	PCM processor error	×	1	CCM	C, O, R	×
P0607:00	ON	OFF	OFF	OFF	OFF	OFF	Control module performance problem	—	1	CCM	C, O, R	×
P0610:00	ON	OFF	OFF	OFF	OFF	OFF	PCM vehicle configuration error	—	1	CCM	C, O, R	×
P061B:00	ON	OFF	OFF	OFF	OFF	OFF	Internal control module torque calculation performance problem	×	1	CCM	C, O, R	×
P061D:00	ON	OFF	OFF	OFF	OFF	OFF	Internal control module engine air mass performance problem	×	1	CCM	C, O, R	×
P061F:00	OFF	OFF	OFF	OFF	OFF	OFF	Internal control module throttle valve actuator controller performance problem	—	1	Other	C, O, R	×
P0628:00	OFF	OFF	OFF	OFF	OFF	OFF	Fuel pump control module circuit low input	—	1	CCM	C, O, R	×
P0629:00	OFF	OFF	OFF	OFF	OFF	OFF	Fuel pump control module circuit high input	×	1	CCM	C, O, R	×
P0638:00	ON	OFF	OFF	OFF	OFF	OFF	Throttle valve actuator control range/performance problem	×	1	CCM	C, O, R	×
P064D:00	ON	OFF	OFF	OFF	OFF	OFF	Internal control module A/F sensor processor performance problem	—	1	A/F sensor, HO2S	C, R	×
P0685:00	ON	OFF	OFF	OFF	OFF	OFF	Main relay control circuit open	—	2	CCM	C	×
P06B8:00	ON	OFF	OFF	OFF	OFF	OFF	Internal control module non-volatile RAM error	—	1	Other	C, O, R	×
P06DA:00	OFF	ON	OFF	OFF	OFF	OFF	Engine oil solenoid valve circuit problem	×	1	Other	C, R	×
P0703:00	ON	ON	OFF	OFF	OFF	OFF	Brake switch input circuit problem	—	2	CCM	C	×
P0704:00*3	ON	OFF	OFF	OFF	OFF	OFF	CPP switch input circuit problem	—	2	CCM	C	×
P0850:00*3	ON	OFF	OFF	OFF	OFF	OFF	Neutral switch input circuit problem	—	2	CCM	C	×
P0A12:00*12	OFF	OFF	ON	OFF	OFF	OFF	DC-DC converter: low input/output	×	1	Other	C	×
P0A8D:00*12	OFF	ON	OFF	OFF	OFF	OFF	Power supply system circuit low	×	1	Other	C	×

							input					
P0A8F:00*12	OFF	ON	OFF	OFF	OFF	OFF	Power system: Low input	×	2	Other	C	×
P0A94:00*12	OFF	ON	ON	OFF	OFF	OFF	DC-DC converter: control circuit signal error	×	1	Other	C	×
P111A:00	OFF	OFF	OFF	OFF	OFF	OFF	Engine coolant temperature is high	×	1	Other	C	×
P117A:00	OFF	OFF	OFF	OFF	OFF	OFF	Engine oil temperature is high	×	1	Other	C	×
P1260:00	OFF	OFF	OFF	OFF	OFF	OFF	Immobilizer system problem	—	—	Other	C, O	—
P130C:00*9	ON	OFF	OFF	OFF	OFF	OFF	Pre-ignition detected	—	1	Other	C, R	×
P1380:00	OFF	OFF	OFF	OFF	OFF	OFF	Electric variable valve timing control circuit problem	×	1	CCM	C, R	×
P144A:00*9	ON	OFF	OFF	OFF	OFF	OFF	Evaporator system: clogging between fuel tank and fuel tank pressure sensor	—	1	EVAP system	C	×
P1450:00*9	ON	OFF	OFF	OFF	OFF	OFF	Evaporator system: abnormal negative pressure in fuel tank	—	1	EVAP system	C	×
P151B:00*2	OFF	OFF	OFF	OFF	OFF	OFF	IAC system problem	—	—	Other	R	×
P1794:00	OFF	ON	ON	OFF	OFF	OFF	Capacitor (i-ELOOP) system: Capacitor (i-ELOOP) malfunction	×	1	Other	C	×
P2090:00	ON	OFF	OFF	OFF	OFF	OFF	OCV circuit low input	×	1	CCM	C, R	×
P2091:00	ON	OFF	OFF	OFF	OFF	OFF	OCV circuit high input	×	1	CCM	C, R	×
P2096:00	ON	OFF	OFF	OFF	OFF	OFF	HO2S fuel injection control system: Air fuel too lean	—	2	Fuel system	C	×
P2097:00	ON	OFF	OFF	OFF	OFF	OFF	HO2S fuel injection control system: Air fuel too rich	—	2	Fuel system	C	×
P2101:00	ON	OFF	OFF	OFF	OFF	OFF	Throttle valve actuator control motor circuit range/performance problem	×	1	CCM	C, O	×
P2107:00	ON	OFF	OFF	OFF	OFF	OFF	Throttle valve actuator control module processor error	×	1	CCM	C, O, R	×
P2109:00	ON	OFF	OFF	OFF	OFF	OFF	TP sensor minimum stop range/performance problem	×	1	CCM	C, O, R	×
P2110:00	ON	OFF	OFF	OFF	OFF	OFF	Throttle valve actuator control system-forced limited RPM	×	1	CCM	C, R	×
P2112:00	ON	OFF	OFF	OFF	OFF	OFF	Throttle valve actuator motor current range/performance problem	×	1	CCM	C, R	×
P2119:00	ON	OFF	OFF	OFF	OFF	OFF	Throttle valve actuator control throttle body range/performance problem	×	1	CCM	C, R	×
											C, O,	

P2122:00	ON	OFF	OFF	OFF	OFF	OFF	APP sensor No.1 circuit low input	×	1	CCM	R	×
P2123:00	ON	OFF	OFF	OFF	OFF	OFF	APP sensor No.1 circuit high input	×	1	CCM	C, O, R	×
P2127:00	ON	OFF	OFF	OFF	OFF	OFF	APP sensor No.2 circuit low input	×	1	CCM	C, O, R	×
P2128:00	ON	OFF	OFF	OFF	OFF	OFF	APP sensor No.2 circuit high input	×	1	CCM	C, O, R	×
P2135:00	ON	OFF	OFF	OFF	OFF	OFF	TP sensor No.1/No.2 voltage correlation problem	×	1	CCM	C, O, R	×
P2138:00	ON	OFF	OFF	OFF	OFF	OFF	APP sensor No.1/No.2 voltage correlation problem	×	1	CCM	C, O, R	×
P2183:00*9	ON	OFF	OFF	OFF	OFF	OFF	ECT sensor No.2 circuit range/performance problem	—	2	Engine cooling system	C	×
P2184:00*9	ON	OFF	OFF	OFF	OFF	OFF	ECT sensor No.2 circuit low input	—	2	Engine cooling system	C, O, R	×
P2185:00*9	ON	OFF	OFF	OFF	OFF	OFF	ECT sensor No.2 circuit high input	—	2	Engine cooling system	C, O, R	×
P2199:00	ON	OFF	OFF	OFF	OFF	OFF	IAT sensor No.2 correlation problem	—	2	CCM	C	×
P2228:00	ON	OFF	OFF	OFF	OFF	OFF	BARO sensor circuit low input	×	1	CCM	C, O, R	×
P2229:00	ON	OFF	OFF	OFF	OFF	OFF	BARO sensor circuit high input	×	1	CCM	C, O, R	×
P2237:00	ON	OFF	OFF	OFF	OFF	OFF	Open circuit between A/F sensor terminal B and PCM terminal 1AG	×	2	A/F sensor, HO2S	C, R	×
P2243:00	ON	OFF	OFF	OFF	OFF	OFF	A/F sensor reference voltage circuit open	—	2	A/F sensor, HO2S	C, R	×
P2251:00	ON	OFF	OFF	OFF	OFF	OFF	Open circuit between A/F sensor terminal D and PCM terminal 1AB	—	2	A/F sensor, HO2S	C, R	×
P2299:00	OFF	OFF	OFF	OFF	OFF	OFF	Accelerator pedal: spring back malfunction	×	1	Other	C, R	×
P2302:00	OFF	OFF	OFF	OFF	OFF	OFF	Ion sensor No.1 circuit problem	—	1	Other	C, R	×
P2305:00	OFF	OFF	OFF	OFF	OFF	OFF	Ion sensor No.2 circuit problem	—	1	Other	C, R	×
P2308:00	OFF	OFF	OFF	OFF	OFF	OFF	Ion sensor No.3 circuit problem	—	1	Other	C, R	×
P2311:00	OFF	OFF	OFF	OFF	OFF	OFF	Ion sensor No.4 circuit problem	—	1	Other	C, R	×
P2502:00	OFF	OFF	ON*6	OFF	OFF	OFF	Generator system: Malfunction in voltage generated by generator	×	1	Other	C	×
P2503:00	OFF	OFF	ON*6	OFF	OFF	OFF	Generator system: Voltage	×	1	Other	C	×

							generated by generator is low					
P2504:00	OFF	OFF	ON*6	OFF	OFF	OFF	Generator system: Voltage generated by generator is high	×	1	Other	C	×
P2507:00	ON	OFF	OFF	OFF	OFF	OFF	PCM battery voltage low input	—	1	CCM	C, O, R	×
P2610:00	ON	OFF	OFF	OFF	OFF	OFF	Malfunction in instrument cluster	×	2	CCM	C, R	×
U0073:00	OFF	OFF	OFF	OFF	OFF	OFF	CAN system communication error (HS CAN)	—	1	Other	C, O, R	×
U0074:00*4	OFF	OFF	OFF	OFF	OFF	OFF	CAN system communication error (local CAN between PCM and TCM)	—	1	Other	C, O, R	×
U0101:00*4	ON	OFF	OFF	OFF	OFF	OFF	CAN communication: communication error to TCM	×	1	Other	C, O, R	×
U0121:00	ON	OFF	OFF	OFF	OFF	OFF	CAN communication: communication error to DSC HU/CM	×	1	Other	C, O, R	×
U0131:00	OFF	OFF	OFF	OFF	OFF	OFF	CAN communication: communication error to EPS control module	—	1	Other	C, O, R	×
U0140:00	OFF	OFF	OFF	OFF	OFF	OFF	CAN communication: communication error to front body control module (FBCM)	—	1	Other	C, O, R	×
U0151:00	OFF	OFF	OFF	OFF	OFF	OFF	CAN communication: communication error to SAS control module	—	1	Other	C, O, R	×
U0155:00	ON*11	OFF	OFF	OFF	OFF	OFF	CAN communication: communication error to instrument cluster	—	1	Other	C, O, R	×
U0214:00	OFF	OFF	OFF	OFF	OFF	OFF	CAN communication: communication error to start stop unit	—	1	Other	C, O, R	×
U0235:00	OFF	OFF	OFF	OFF	OFF	OFF	CAN communication: communication error to laser sensor	×	1	Other	C, O, R	×
U0284:00*12	OFF	ON	OFF	OFF	OFF	OFF	LIN communication system: communication error between active air shutter and PCM	×	1	Other	C	×
U0298:00*12	OFF	OFF	ON	OFF	OFF	OFF	CAN communication: communication error to DC-DC converter	—	1	Other	C, O, R	×
U0302:00*4	ON	OFF	OFF	OFF	OFF	OFF	TCM processor error	—	1	Other	C, O, R	×
U0315:00	OFF	OFF	OFF	OFF	OFF	OFF	DSC HU/CM error	—	1	Other	C, O, R	×
U0320:00	OFF	OFF	OFF	OFF	OFF	OFF	EPS control module error	—	1	Other	C, O, R	×

U0323:00	OFF	OFF	OFF	OFF	OFF	OFF	Instrument cluster error	—	1	Other	C, O, R	×
U0336:00	OFF	OFF	OFF	OFF	OFF	OFF	SAS control module error	—	1	Other	C, O, R	×
U0338:00	OFF	OFF	OFF	OFF	OFF	OFF	Start stop unit error	—	1	Other	C, O, R	×
U0433:00	OFF	OFF	OFF	OFF	OFF	OFF	Abnormal message from rear body control module (RBCM)	×	1	Other	C, O, R	×
U1007:00 *12	OFF	ON	ON *6	OFF	OFF	OFF	CAN/LIN communication system: current sensor information communication error with front body control module (FBCM)	×	1	Other	C, O, R	×
U2300:00	OFF	ON *7	OFF	OFF	OFF	OFF	Global central configuration error	×	1	Other	C, R	×
U3000:41	OFF	OFF	OFF	OFF	OFF	OFF	PCM processor error	—	—	Other	C, O	—

*1 **C: CMDTC self test, O: KOEO self test, R: KOER self test**

*2 **KOER self test only**

*3 **MTX**

*4 **ATX**

*5 **Message “Engine Oil Pressure Inspection Required” is frequently indicated in center display. (Type A instrument cluster)**

*6 **Message “Charging System Inspection Required” is frequently indicated in center display. (Type A instrument cluster)**

*7 **Message “Vehicle System Inspection Required” is frequently indicated in center display. (Type A instrument cluster)**

*8 **After two drive cycle since DTC was detected**

*9 **U.S.A. and CANADA**

*10 **CALIFORNIA**

*11 **The check engine light may be illuminated depending on the condition.**

*12 **Vehicles with i-ELOOP**

*13 **U.S.A.**

*14 **Except U.S.A.**

OBD-II Diagnostic Monitoring System Test Results (Mode 06)

- The items supported by the sending intermittent monitoring system are shown below.

OBD Monitor ID	Test ID	Description	Related system	Scaling ID	Unit
01	80	A/F sensor lean-to-rich response time (calculated)		20	Ratio
01	81	A/F sensor rich-to-lean response time (calculated)		20	Ratio
01	82	A/F sensor lean-to-rich response time (calculated)		20	Ratio

01	83	A/F sensor rich-to-lean response time (calculated)	A/F sensor, HO2S	20	Ratio
02	03	Low HO2S voltage for switch time calculation (constant)		0A	Voltage
02	04	High HO2S voltage for switch time calculation (constant)		0A	Voltage
02	05	HO2S rich-to-lean response time (calculated)		10	Time
02	06	HO2S lean-to-rich response time (calculated)		10	Time
02	80	HO2S response time out (calculated)		10	Time
21	80	A/F sensor and HO2S switching time ratio	Catalyst	20	Ratio
35	80	Over-retarded (electric variable valve timing)	Variable valve timing	9C	deg.CA
35	81	Over-advanced (electric variable valve timing)		9C	deg.CA
35	82	Over-retarded (hydraulic variable valve timing)		9C	deg.CA
35	83	Over-advanced (hydraulic variable valve timing)		9C	deg.CA
3A	80	Phase 0 end pressure result and test limits	EVAP system	FE	Pa
3A	81	Phase 4 vapor generation minimum change in pressure and test limits		FE	Pa
3A	82	Phase 0 end pressure result and test limits		FE	Pa
3B	80	Phase 2 0.040” cruise leak check vacuum bleed-up and test limits		FE	Pa
3C	81	EONV positive pressure test result and limits		FE	Pa
3C	82	EONV negative pressure (vacuum) test result and limits		FE	Pa
3C	83	Normalized average of four EONV tests results and limits		03	Raw Value
3D	80	Blocked EVAP system line-screening test		A9	Pa/s
3D	81	Blocked EVAP system line-fault confirmation test		FE	Pa
41	80	A/F sensor heater test result and limits	A/F sensor, HO2S	14	ohm
42	80	HO2S heater test result and limits		14	ohm
A2	0B	Cylinder No.1 average misfire counts for last 10 Drive Cycle	Misfire	24	Counts
A2	0C	Cylinder No.1 misfire counts for last/current Drive Cycle		24	Counts
A3	0B	Cylinder No.2 average misfire counts for last 10 Drive Cycle		24	Counts
A3	0C	Cylinder No.2 misfire counts for last/current Drive Cycle		24	Counts
A4	0B	Cylinder No.3 average misfire counts for last 10 Drive Cycle		24	Counts
A4	0C	Cylinder No.3 misfire counts for last/current Drive Cycle		24	Counts
A5	0B	Cylinder No.4 average misfire counts for last 10 Drive Cycle		24	Counts

A5	0C	Cylinder No.4 misfire counts for last/current Drive Cycle		24	Counts

Sending Continuous Monitoring System Test Results (pending code) (Mode 07)

- These appear when a problem is detected in a monitored system.

1-drive cycle type

- If any problems are detected in the first drive cycle, pending codes will be stored in the PCM memory, as well as DTCs.
- After pending codes are stored, if the PCM determines that the system is normal in any future drive cycle, the PCM deletes the pending codes.

2-drive cycle type

- The code for a failed system is stored in the PCM memory in the first drive cycle. If the PCM determines that the system returned to normal or the problem was mistakenly detected, PCM deletes the pending codes. If the problem is also found in the second drive cycle, the PCM determines that the system is malfunctioning, and stores the pending codes and the DTCs.
- After pending codes are stored, if the PCM determines that the system is normal in any future drive cycle, the PCM deletes the pending codes.

2014 - Mazda3 - Engine

DTC DETECTION LOGIC AND CONDITIONS [SKYACTIV-G 2.0, SKYACTIV-G 2.5]

DTC No.	Condition	Detection condition
B10A2:00	Vehicle collision	• A collision signal from the SAS control module is received.
P0010:00	Electric variable valve timing control circuit range/performance problem	• Any one of the following conditions is met: ▪ A malfunction is detected in the results of the on-board diagnostic test received from the electric variable valve timing driver. ▪ The motor speed signal received from the electric variable valve timing driver is in error.
P0011:00	Electric variable valve timing control system: over-advanced	• A condition in which the actual intake valve timing advances (excess advance) compared to the target intake valve timing continues for the specified period.
P0012:00	Electric variable valve timing control system: over-retarded	• A condition in which the actual intake valve timing retards (excess retard) compared to the target intake valve timing continues for the specified period.
P0014:00	Hydraulic variable valve timing control system: over-advanced	• A condition in which the actual exhaust valve timing advances (excess advance) compared to the target exhaust valve timing continues for the specified period.
P0015:00	Hydraulic variable valve timing control system: over-retarded	• A condition in which the actual exhaust valve timing retards (excess retard) compared to the target exhaust valve timing continues for the specified period.
P0016:00*4	CKP-CMP (intake side) correlation problem	• The PCM monitors the input pulses from the CKP sensor and intake CMP sensor. If the input pulse pick-up timing do not match each other, the PCM determines that the camshaft position does not coincide with the

		crankshaft position.
P0017:00*4	CKP-CMP (exhaust side) correlation problem	• The PCM monitors the input pulses from the CKP sensor and exhaust CMP sensor. If the input pulse pick-up timing do not match each other, the PCM determines that the camshaft position does not coincide with the crankshaft position.
P0031:00	A/F sensor heater control circuit low input	• When the PCM controls the A/F sensor heater, the voltage input to the PCM is too low.
P0032:00	A/F sensor heater control circuit high input	• When the PCM controls the A/F sensor heater, the voltage input to the PCM is too high.
P0037:00	HO2S heater control circuit low input	• When the PCM controls the HO2S heater, the voltage input to the PCM is too low.
P0038:00	HO2S heater control circuit high input	• When the PCM controls the HO2S heater, the voltage input to the PCM is too high.
P0053:00*4	A/F sensor heater resistance	• The PCM monitors the A/F sensor heater resistance when under the A/F sensor heater control. If the resistance is **more than 30 ohms**, the PCM determines that there is a A/F sensor circuit problem.
P0054:00*4	HO2S heater resistance	• The PCM monitors the HO2S heater resistance when under the HO2S heater control. If the resistance is **more than 34 ohms**, the PCM determines that there is a HO2S heater circuit problem.
P0069:00	Manifold absolute pressure/atmospheric pressure correlation problem	• The PCM monitors the difference between the intake manifold vacuum and the atmospheric pressure. If the difference is **below −12 kPa {−0.12 kgf/cm^2, −1.7 psi}** or **above 12 kPa {0.12 kgf/cm^2, 1.7 psi}** when the following conditions are met, the PCM determines that there is a MAP sensor performance problem. **MONITORING CONDITIONS** ▪ **12—15 s** from when ignition is switched off.
P0072:00	Ambient temperature sensor circuit low input	• The PCM monitors the input signal from the ambient temperature sensor. If the voltage from the ambient temperature sensor is **below 0.18 V**, the PCM determines that the ambient temperature sensor circuit has a malfunction.
		• The PCM monitors the input signal from the ambient

P0073:00	Ambient temperature sensor circuit high input	temperature sensor. If the voltage from the ambient temperature sensor is **above 4.88 V**, the PCM determines that the ambient temperature sensor circuit has a malfunction.
P0088:00	Fuel pressure sensor circuit range/performance problem	• The difference between the actual and target fuel pressure is equal to or **more than the 1.2 MPa {12 kgf/cm^2, 174 psi}**, even though the fuel pressure feedback amount is maintained low or high.
P0089:00	Spill valve control solenoid valve control circuit range/performance problem	• The average fuel pressure on the high pressure side, measured by the fuel pressure sensor, exceeds the specified value.
P0091:00	Fuel pressure regulator control circuit low input	• When the PCM turns the spill valve control solenoid valve off but the spill valve control solenoid valve control circuit voltage is low for **5 s**, the PCM determines that the spill valve control solenoid valve control circuit has a malfunction. **MONITORING CONDITIONS** ▪ The following conditions are met: • Engine speed: **5,700 rpm or less** • Battery voltage: **10.5 V or more**
P0092:00	Fuel pressure regulator control circuit high input	• When the PCM turns the spill valve control solenoid valve on but the spill valve control solenoid valve circuit voltage is high for **5 s**, the PCM determines that the spill valve control solenoid valve control circuit has a malfunction. **MONITORING CONDITIONS** ▪ The following conditions are met: • Engine speed: **5,700 rpm or less** • Battery voltage: **10.5 V or more**
P0097:00	IAT sensor No.2 circuit low input	• If the PCM detects that the IAT sensor No.2 voltage at the PCM terminal 1CE is **0.33 V or less** for **5 s**, the PCM determines that the IAT sensor No.2 circuit voltage is low.
P0098:00	IAT sensor No.2	• If the PCM detects that the IAT sensor No.2 voltage at the PCM terminal 1CE is **4.96 V or more** for **5 s**, the

	circuit high input	PCM determines that the IAT sensor No.2 circuit voltage is high.
P0101:00	MAF sensor circuit range/performance problem	• The difference between the intake air amount measured by the MAF sensor and the estimated intake air amount estimated by the MAP sensor is outside of the specified value.
P0102:00	MAF sensor circuit low input	• The PCM monitors input voltage from the MAF sensor. If the input voltage at the PCM terminal 2BC is **below 0.2 V** for **5 s**, the PCM determines that the MAF sensor circuit has a malfunction.
P0103:00	MAF sensor circuit high input	• The PCM monitors the input voltage from the MAF sensor. If the input voltage at the PCM terminal 2BC is **above 4.94 V** for **5 s**, the PCM determines that the MAF sensor circuit has a malfunction.
P0107:00	MAP sensor circuit low input	• The PCM monitors the input voltage from the MAP sensor. If the input voltage at the PCM terminal 1BW is **below 0.08 V** for **5 s**, the PCM determines that the MAP sensor circuit has a malfunction.
P0108:00	MAP sensor circuit high input	• The PCM monitors the input voltage from the MAP sensor. If the input voltage at the PCM terminal 1BW is **above 4.89 V** for **5 s**, the PCM determines that the MAP sensor circuit has a malfunction.
P0112:00	IAT sensor No.1 circuit low input	• The PCM monitors the IAT sensor No.1 signal. If the PCM detects that the IAT sensor No.1 voltage at the PCM terminal 2U is **below 0.19 V** for **5 s**, the PCM determines that the IAT sensor No.1 circuit has a malfunction.
P0113:00	IAT sensor No.1 circuit high input	• The PCM monitors the IAT sensor No.1 signal. If the PCM detects that the IAT sensor No.1 voltage at the PCM terminal 2U is **above 4.62 V** for **5 s**, the PCM determines that the IAT sensor No.1 circuit has a malfunction.
P0116:00	ECT sensor No.1 circuit range/performance problem	• During the **5 min** after the engine is started, the engine coolant temperature does not increase **above 6 °C {11 °F}**.
P0117:00	ECT sensor No.1 circuit low input	• The PCM monitors the ECT sensor No.1 signal. If the PCM detects that the ECT sensor No.1 voltage at the PCM terminal 1AK is **below 0.2 V** for **5 s**, the PCM determines that the ECT sensor No.1 circuit has a malfunction.

P0118:00	ECT sensor No.1 circuit high input	• The PCM monitors the ECT sensor No.1 signal. If the PCM detects that the ECT sensor No.1 voltage at the PCM terminal 1AK is **above 4.9 V** for **5 s**, the PCM determines that the ECT sensor No.1 circuit has a malfunction.
P011A:00*4	ECT sensor No.1/No.2 performance problem	• Any of the following conditions is met after the ignition is switched ON*1: ▪ The ECT sensor No.2 detected temperature is **approx. 25.0 °C {45.0 °F}** higher than the ECT sensor No.1. ▪ The ECT sensor No.2 detected temperature is **approx. −48.0 °C {−54.0 °F}**. ▪ The ECT sensor No.2 detected temperature is **approx. −28 °C {−50 °F}** lower than the ECT sensor No.1 when the intake air temperature is **15 °C {59 °F} or more***2. • *1: Ignition switch is ON when **6 h** or more have passed since the ignition was switched off. • *2: Perform determination according to the intake air temperature conditions when the calculated intake air amount **exceeds 5,000 g {176.4 oz}** (difference between ECT sensors No.1 and No.2 is determined engine coolant temperature value at engine start).
P0122:00	TP sensor No.1 circuit low input	• If the PCM detects that the TP sensor No.1 voltage at the PCM terminal 1BP is **below 0.1 V**, the PCM determines that the TP sensor No.1 circuit has a malfunction.
P0123:00	TP sensor No.1 circuit high input	• If the PCM detects that the TP sensor No.1 voltage at the PCM terminal 1BP is **above 4.9 V**, the PCM determines that the TP sensor No.1 circuit has a malfunction.
P0126:00*4	Thermostat stuck open	• Actual engine coolant temperature does not exceed **71 °C {160 °F}** even though the estimated engine coolant temperature after the engine is started exceeds **71 °C {160 °F}**.
P0130:00	Voltage problem between PCM terminal 1AB and PCM terminal 1AG	• A condition in which the voltage between PCM terminals 1AB and 1AG exceeds the specified range continues for the specified period or more.
		• Any one of the following conditions is met:

P0131:00	A/F sensor circuit low input	▪ Voltage of A/F sensor terminal F is less than specified value ▪ Voltage of A/F sensor terminal D is less than specified value ▪ Voltage of A/F sensor terminal B is less than specified value
P0132:00	A/F sensor circuit high input	• Any one of the following conditions is met: ▪ Voltage of A/F sensor terminal F is more than specified value ▪ Voltage of A/F sensor terminal D is more than specified value ▪ Voltage of A/F sensor terminal B is more than specified value
P0133:00	A/F sensor circuit slow response	• The response speed of the A/F sensor input signal when the air/fuel ratio is fluctuated is slow.
P0134:00	A/F sensor circuit no activity detected	• The condition in which the A/F sensor element impedance is the specified value or more continues for **35 s**.
P0137:00*4	HO2S circuit low input	• A condition in which the HO2S input voltage is less than the specified value continues for the specified period.
P0138:00	HO2S circuit high input	• A condition in which the HO2S input voltage exceeds the specified value continues for the specified period.
P013A:00*4	HO2S: Slow response (during transition from rich to lean)	• The response speed of the HO2S input signal when the air/fuel ratio is fluctuated from rich to lean is slow.
P013B:00*4	HO2S: Slow response (during transition from lean to rich)	• The response speed of the HO2S input signal when the air/fuel ratio is fluctuated from lean to rich is slow.
P0140:00	HO2S circuit no activity detected	• With the estimated temperature of the HO2S element exceeding the specified value, a condition in which the HO2S signal voltage is less than the specified value continues for the specified period.
P0171:00	Fuel trim system too	• Any one of the following conditions is met: ▪ While the engine is idling or the vehicle is driven, the fuel feedback correction amount (**30 %**) is the threshold or more, and the fuel learning correction amount is the specified value (**15 %**)

	lean	or more for **10 s or more**. ▪ While the engine is idling or the vehicle is driven, the fuel feedback correction amount reaches the upper limit (**25 % or more**) for **20 s or more**.
P0172:00	Fuel trim system too rich	• Any one of the following conditions is met: ▪ While the engine is idling or the vehicle is driven, the fuel feedback correction amount (SHRTFT1) is the threshold (**−25 %**) or less, and the fuel learning correction amount (LONGFT1) is the threshold (**−15 %**) or less for **10 s or more**. ▪ While the engine is idling or the vehicle is driven, the fuel feedback correction amount reaches the lower limit (**−25 % or less**) for **20 s or more**.
P0192:00	Fuel pressure sensor circuit low input	• If the input voltage at the PCM terminal 1CA is **less than 0.16 V** for **5 s**, the PCM determines that the fuel pressure sensor circuit is low.
P0193:00	Fuel pressure sensor circuit high input	• If the input voltage at the PCM terminal 1CA is **more than 4.86 V** for **5 s**, the PCM determines that the fuel pressure sensor circuit is high.
P0201:00	Fuel injector circuit/open cylinder No.1	• If the fuel injection verification signal is not input at **25 times** continuously even though the PCM drives the fuel injector No.1, the PCM determines that there is an open circuit in the fuel injector No.1 control circuit. **MONITORING CONDITIONS** ▪ The following conditions are met: • Battery voltage: **10.5 V or more** • Fuel injection control: except during fuel cut
P0202:00	Fuel injector circuit/open cylinder No.2	• If the fuel injection verification signal is not input at **25 times** continuously even though the PCM drives the fuel injector No.2, the PCM determines that there is an open circuit in the fuel injector No.2 control circuit. **MONITORING CONDITIONS** ▪ The following conditions are met: • Battery voltage: **10.5 V or more**

		• Fuel injection control: except during fuel cut
P0203:00	Fuel injector circuit/open cylinder No.3	• If the fuel injection verification signal is not input at **25 times** continuously even though the PCM drives the fuel injector No.3, the PCM determines that there is an open circuit in the fuel injector No.3 control circuit. **MONITORING CONDITIONS** ▪ The following conditions are met: • Battery voltage: **10.5 V or more** • Fuel injection control: except during fuel cut
P0204:00	Fuel injector circuit/open cylinder No.4	• If the fuel injection verification signal is not input at **25 times** continuously even though the PCM drives the fuel injector No.4, the PCM determines that there is an open circuit in the fuel injector No.4 control circuit. **MONITORING CONDITIONS** ▪ The following conditions are met: • Battery voltage: **10.5 V or more** • Fuel injection control: except during fuel cut
P0222:00	TP sensor No.2 circuit low input	• If the PCM detects that the TP sensor No.2 voltage at the PCM terminal 1BU is **below 0.1 V**, the PCM determines that the TP sensor No.2 circuit has a malfunction.
P0223:00	TP sensor No.2 circuit high input	• If the PCM detects that the TP sensor No.2 voltage at the PCM terminal 1BU is **above 4.9 V**, the PCM determines that the TP sensor No.2 circuit has a malfunction.
P025B:00	Fuel pump control module circuit range/performance problem	• When any of the following conditions is met: ▪ The temperature in the fuel pump control module is too high. ▪ Output duty ratio signal received from PCM is in error. ▪ Output signal from fuel pump control module is erratic (noise overlap).
	Fuel pump control	

P025C:00	module result of on-board diagnostic test low input	• Result of on-board test cannot be received from fuel pump control module (voltage is too low).
P025D:00	Fuel pump control module result of on-board diagnostic test high input	• Result of on-board test cannot be received from fuel pump control module (voltage is too high).
P0300:00	Random misfire detected	• Any one of the following conditions is met: ▪ The misfire rate for **every 200 rotations** of the crankshaft exceeds the specified value (misfire which may damage catalytic converter). ▪ The misfire rate for **every 1,000 rotations** of the crankshaft exceeds the specified value (misfire going against emission regulations).
P0301:00	Cylinder No.1 misfire detected	• Any one of the following conditions is met: ▪ The misfire rate of specific cylinders for **every 200 rotations** of the crankshaft exceeds the specified value (misfire which may damage catalytic converter). ▪ The misfire rate of specific cylinders for **every 1,000 rotations** of the crankshaft exceeds the specified value (misfire going against emission regulations).
P0302:00	Cylinder No.2 misfire detected	
P0303:00	Cylinder No.3 misfire detected	
P0304:00	Cylinder No.4 misfire detected	
P0327:00	KS circuit low input	• The PCM monitors input signal from the KS. If the input voltage is low for **5 s**, the PCM determines that the KS circuit has a malfunction.
P0328:00	KS circuit high input	• The PCM monitors input signal from the KS. If the input voltage is high for **5 s**, the PCM determines that the KS circuit has a malfunction.
P0335:00	CKP sensor circuit problem	• There is no CKP sensor signal input while the exhaust camshaft rotates **5 times**. • The CKP sensor input signal pattern, received while the crankshaft rotates **10 times**, is incorrect.
P0340:00	Intake CMP sensor circuit problem	• The intake CMP sensor input signal pattern, received while the crankshaft rotates **24 times**, is incorrect.
		• The exhaust CMP sensor input signal pattern, received

P0365:00	Exhaust CMP sensor circuit problem	while the crankshaft rotates **24 times**, is incorrect. • Cylinder identification is not completed while the crankshaft rotates **15 times**.
P0421:00	Catalytic converter system	• The fuel amount*1 supplied to the catalyst, from an HO2S output voltage of around **0 V** and until increasing to the specified value or more after recovery from fuel cut control, decreases below the specified value. However, determination must have been performed **11 times or more** after resetting battery and clearing DTCs. • *1: The estimated value is calculated based on the A/F sensor signal.
P0442:00*4	Evaporative gas leakage (leakage amount: low)	• Hole of **0.04 in (1.0 mm) or more** in evaporative gas passage
P0443:00	Purge solenoid valve circuit problem	• The purge control voltage at the PCM terminal 1AI is low or high relative to the PCM control condition.
P0446:00*4	CV solenoid valve control circuit problem	• The PCM monitors the CV solenoid valve circuit for an electrical failure. The test fails when the signal moves outside the minimum or maximum allowable calibrated parameters for a specified canister vent duty cycle by the PCM command.
P0451:00*4	Fuel tank pressure sensor: sensor characteristic malfunction	• The fuel tank pressure sensor input voltage is the threshold or more.
P0452:00*4	Fuel tank pressure sensor low input	• The PCM monitors the EVAP control system fuel tank pressure sensor input signal to the PCM. The test fails when the signal average drops below a minimum allowable calibrated parameter.
P0453:00*4	Fuel tank pressure sensor high input	• The PCM monitors the EVAP control system fuel tank pressure sensor input signal to the PCM. The test fails when the signal average jumps above a maximum allowable calibrated parameter.
P0454:00*4	Fuel tank pressure sensor intermittent malfunction	• Any one of the following conditions is met: ▪ The difference between the currently detected fuel tank pressure sensor input voltage and the previously detected input voltage is large. ▪ The input voltage of the fuel tank pressure sensor remains low or high.

P0455:00*4	Evaporative gas leakage (leakage amount: large)	• Hole of **0.09 in (2.25 mm) or more** in evaporative gas passage
P0456:00*5	Evaporative gas leakage (leakage amount: extremely low)	• Hole of **0.02 in (0.5 mm) or more** in evaporative gas passage
P0457:00*4	Fuel-filler cap installation malfunction	• Hole of **0.09 in (2.25 mm) or more** in evaporative gas passage
P0460:00*4	Fuel level sensor circuit malfunction	• The PCM monitors the fuel tank level sensor output signal. If the difference between maximum and minimum value of input signal is **25 % or more** for **14 s**, the PCM determines that there is a fuel level sensor circuit malfunction.
P0461:00	Fuel gauge sender unit circuit range/performance problem	• The change in the remaining fuel quantity in the fuel tank is **less than 5 %** when the amount of fuel consumption by fuel injection reaches **25 L {26 US qt, 22 Imp qt}**.
P0462:00	Fuel gauge sender unit circuit low input	• The PCM monitors the fuel level signal and fuel gauge sender unit output voltage from the instrument cluster. If the PCM detects a fuel level or fuel gauge sender unit output voltage that is too low, the PCM determines that the fuel gauge sender unit circuit has a malfunction.
P0463:00	Fuel gauge sender unit circuit high input	• The PCM monitors the fuel level signal and fuel gauge sender unit output voltage from the instrument cluster. If the PCM detects a fuel level or fuel gauge sender unit output voltage that is too high, the PCM determines that the fuel gauge sender unit circuit has a malfunction.
P0480:00	Cooling fan relay No.1 control circuit malfunction	• The cooling fan relay No.1 control voltage at the PCM terminal 2AU is low or cooling fan relay No.1 control current is high for a continuous **5 s** relative to the PCM control signal.
P0482:00	Cooling fan relay No.2 and No.3 control circuit malfunction	• The cooling fan relay No.2 and No.3 control voltage at the PCM terminal 2AV is low or cooling fan relay No.2 and No.3 control current is high for a continuous **5 s** relative to the PCM control signal.
		• An error in the wheel speed signal from the DSC HU/CM is detected by CAN when the following conditions are met:

P0500:00	VSS circuit problem	▪ Neutral switch and CPP switch: OFF (MTX) ▪ Shift position: except P or N position (ATX) ▪ Absolute load: **above 40 %** ▪ Engine speed: **above 2,000 rpm** ▪ Brake switch: OFF
P0504:00	Brake switch circuit problem	• The condition in which the brake switch No.1 and No.2 signals are both on or off for **3 s or more** is repeated five times when performing the brake operation.
P0506:00	IAC system RPM lower than expected	• The actual idle speed is lower than expected by **100 rpm** for **14 s**, when the brake pedal is depressed (brake switch is on). **NOTE:** • If the atmospheric pressure is **less than 72.3 kPa {0.737 kgf/cm^2, 10.5 psi}** or the intake air temperature is **below −10 °C {14 °F}**, the PCM cancels the diagnosis of DTC P0506:00.
P0507:00	IAC system RPM higher than expected	• The actual idle speed is higher than expected by **200 rpm** for **14 s**, when the brake pedal is depressed (brake switch is on). **NOTE:** • If the atmospheric pressure is **less than 72.3 kPa {0.737 kgf/cm^2, 10.5 psi}** or the intake air temperature is **below −10 °C {14 °F}**, the PCM cancels the diagnosis of DTC P0507:00.
P050A:00*4	Cold start IAC system performance problem	• The difference between the actual engine speed and the target engine speed is **100 rpm or more**.
P050B:00*4	Cold start ignition timing performance problem	• PCM internal RAM malfunction.
P0520:00	Oil pressure switch circuit problem	• The oil pressure switch is off for a continuous **5 s** even though the engine is stopped.
		• The oil pressure switch is on for a continuous **5 s** with the following condition met: (engine oil warning light

P0524:00	Engine oil pressure too low	illuminates when **1 s** has elapsed) ▪ When engine speed is **above 650 rpm** and engine coolant temperature is **30 °C {86 °F} or less** ▪ When engine speed is **above 1,500 rpm** and engine coolant temperature is **68 °C {154 °F} or less** ▪ When engine speed is **above 2,500 rpm** and engine coolant temperature is **68 °C {154 °F} or more**
P0532:00	Refrigerant pressure sensor circuit low input	• The PCM monitors input voltage from the refrigerant pressure sensor. If the input voltage at the PCM terminal 2AX is **below 0.1 V** for **5 s**, the PCM determines that the refrigerant pressure sensor circuit has a malfunction.
P0533:00	Refrigerant pressure sensor circuit high input	• The PCM monitors input voltage from the refrigerant pressure sensor. If the input voltage at the PCM terminal 2AX is **above 4.9 V** for **5 s**, the PCM determines that the refrigerant pressure sensor circuit has a malfunction.
P057F:00*6	Power system: Battery deterioration	• The battery charge/discharge flow exceeds the specification.
P058A:00*6	Current sensor: Function malfunction	• Error signal from the current sensor is received.
P059F:00*6	Active air shutter: Opening angle abnormality (spinning free)	• Active air shutter opening angle is certain value or more.
P05A0:00*6	Active air shutter: Opening angle abnormality (sticking)	• Active air shutter opening angle is certain value or less while intake air temperature is **5 °C {41 °F} or more**.
P05A3:00*6	Active air shutter: Actuator internal malfunction	• Any of the following conditions is met: ▪ Internal circuit of active air shutter actuator is malfunctioning ▪ Active air shutter Hall sensor is malfunctioning
P05C0:00*6	Active air shutter: Actuator temperature abnormality	• Internal temperature of active air shutter actuator is certain value or more.

P0600:00	Serial communication link	• PCM internal malfunction.
P0601:00	PCM memory check sum error	• PCM internal memory check sum error.
P0602:00	PCM programming error	• No configuration data in the PCM. **NOTE:** • If the “PCM CONFIGURATION” is successful, the PCM stores the DTC P0602:00 and illuminates the check engine light (system is normal). Clear the DTC P0602:00 using the M-MDS after the “PCM CONFIGURATION”. • The check engine light turns off after three drive cycles with no malfunction (DTCs remain in PCM).
P0604:00	PCM RAM error	• PCM internal RAM malfunction.
P0606:00	PCM processor error	• PCM internal CPU malfunction.
P0607:00	Control module performance problem	• PCM internal malfunction.
P0610:00	PCM vehicle configuration error	• PCM data configuration error.
P061B:00	Internal control module torque calculation performance problem	• Indicates an error occurred in the PCM. • There is a malfunction in the sensor input signal to the PCM.
P061D:00	Internal control module engine air mass performance problem	• Indicates an error occurred in the PCM.
P061F:00	Internal control module throttle valve actuator controller performance problem	• When any of the following conditions is met: ▪ Start stop unit internal malfunction ▪ CAN communication line malfunction between start stop unit and PCM ▪ PCM internal malfunction
P0628:00	Fuel pump control module circuit low	• When the PCM outputs a duty signal to the fuel pump control module, the difference in voltage between fuel

	input	pump unit terminals A and B is **less than 1.5 V** for a continuous **5 s**.
P0629:00	Fuel pump control module circuit high input	• The PCM detects over-current during the fuel pump control module control.
P0638:00	Throttle valve actuator control range/performance problem	• The PCM compares the actual TP with the target TP. If the difference is more than the threshold value, the PCM determines that there is a throttle valve actuator control range/performance problem.
P064D:00	Internal control module A/F sensor processor performance problem	• Malfunction in A/F sensor signal circuit in PCM occurs.
P0685:00	Main relay control circuit open	• The period of time in which the PCM power supply remains on after the ignition is switched off is not within the specified time.
P06B8:00	Internal control module non-volatile RAM error	• PCM internal EEPROM malfunction.
P06DA:00	Engine oil solenoid valve circuit problem	• The engine oil solenoid valve control current is high or the control voltage at the PCM terminal 1AS is low relative to the PCM control condition.
P0703:00	Brake switch input circuit problem	• The brake switch does not switch even though the vehicle is stopped **8 times** repeatedly from a vehicle speed of **30 km/h {19 mph} or more**.
P0704:00*2	CPP switch input circuit problem	• The PCM monitors changes in input voltage from the CPP switch. If the PCM does not detect a voltage change while the vehicle runs with vehicle speed **above 30 km/h {19 mph}** and stops **8 times** alternately, the PCM determines that the CPP switch circuit has a malfunction.
P0850:00*2	Neutral switch input circuit problem	• The PCM monitors changes in input voltage from the neutral switch. If the PCM does not detect a voltage change while driving the vehicle at a vehicle speed **above 30 km/h {19 mph}** and the clutch pedal is pressed and released **10 times** repeatedly, the PCM determines that the neutral switch circuit has a malfunction.
		• Any one of the following conditions is met: ▪ Any DC-DC converter terminal value,

P0A12:00*6	DC-DC converter: low input/output	either 3A or 4A, is specified value or less ▪ Ignition switch ON condition detected by DC-DC converter and PCM differ
P0A8D:00*6	Power supply system circuit low input	• Any one of the following conditions is met: ▪ PCM terminal voltage is **6.2 V or less** when engine starts. ▪ Battery internal resistance is specified value or more. ▪ Battery voltage is **11 V or less** after 30 s since system began switch to relay mode
P0A8F:00*6	Power system: Low input	• Any one of the following conditions is met: ▪ Battery voltage is **11 V or less** when ignition is switched off after leaving vehicle for **30 days or more**. ▪ Battery voltage is **11 V or less** for a continuous **5 days** when ignition is switched off.
P0A94:00*6	DC-DC converter: control circuit signal error	• Internal malfunction signal from DC-DC converter is received. • Condition in which DC-DC converter output voltage, based on demand voltage of PCM, is low continues. • When PCM outputs drive command signal for each type of relay in DC-DC converter, relay condition signal returned from DC-DC converter differs from drive command, or not returned
P111A:00	Engine coolant temperature is high	• The engine coolant temperature is **122 °C {252 °F} or more**.
P117A:00	Engine oil temperature is high	• Any one of the following conditions is met: ▪ With the transmission in 5th gear or lower gear, an engine speed of **6,100 rpm** (SKYACTIV-G 2.0)/**5,800 rpm** (SKYACTIV-G 2.5) **or more** continues for **6 min**. ▪ The estimated engine oil temperature **exceeds 140 °C {284 °F}** continues for **6 min** (with active air shutter).
P1260:00	Immobilizer system problem	• The start stop unit detects an immobilizer system malfunction.

P130C:00*4	Pre-ignition detected	• Pre-ignition is detected a few times continuously with the engine coolant temperature at **80 °C {176 °F} or more**.
P1380:00	Electric variable valve timing control circuit problem	• A malfunction is detected in the results of the on-board diagnostic test received from the electric variable valve timing driver.
P144A:00*4	Evaporator system: clogging between fuel tank and fuel tank pressure sensor	• The following conditions are all met while the vehicle is being driven: ▪ If negative pressure is inducted to the fuel tank via the intake manifold by the operation of the purge solenoid valve with the fuel tank in a sealed condition and the target negative pressure is reached within a shorter period of time than the estimated time. ▪ When the barometric pressure in the fuel tank is fixed and the purge solenoid valve is opened/closed, the negative pressure fluctuation in the fuel tank generates negative pressure exceeding the threshold.
P1450:00*4	Evaporator system: abnormal negative pressure in fuel tank	• Target negative pressure exceeding the specified time or more is generated from negative pressure inducted to the fuel tank by the operation of the purge solenoid valve after the fuel tank is sealed (CV solenoid valve ON).
P151B:00*1	IAC system problem	• The PCM cannot control the idle speed toward the target idle speed during the KOER self test.
P1794:00	Capacitor (i-ELOOP) system: Capacitor (i-	• Capacitor malfunction determined • Any one of the following conditions is met: ▪ Capacitor (i-ELOOP) internal resistance exceeds the specification. ▪ Capacitor (i-ELOOP) capacitance exceeds the specification. ▪ Capacitor (i-ELOOP) voltage exceeds the specification. • Capacitor (i-ELOOP) deterioration determined

	ELOOP) malfunction	• Any one of the following conditions is met: ▪ Capacitor (i-ELOOP) internal resistance exceeds the specification. ▪ Capacitor (i-ELOOP) capacitance is less the than specification. • Over-charge determined • Capacitor (i-ELOOP) voltage exceeds the specification.
P2090:00	OCV circuit low input	• The OCV control voltage relative to the PCM control is too low.
P2091:00	OCV circuit high input	• The OCV control voltage relative to the PCM control is too high.
P2096:00	HO2S fuel injection control system: Air fuel too lean	• Depending on the correction deviation of the A/F sensor, a condition in which the fuel feedback correction amount (SHRTFT12) for the HO2S is the specified value (**2 %**) or more and the sum (SHRTFT12+LONGFT12) of the fuel feedback correction amount and the fuel learning correction amount is the specified value (**2.3—2.5 %**) or more continues for a period of **25 s**.
P2097:00	HO2S fuel injection control system: Air fuel too rich	• Depending on the correction deviation of the A/F sensor, a condition in which the fuel feedback correction amount (SHRTFT12) for the HO2S is the specified value (**−2 %**) or less and the sum (SHRTFT12+LONGFT12) of the fuel feedback correction amount and the fuel learning correction amount is the specified value (**−2.5 — −2.3 %**) or less continues for a period of **25 s**.
P2101:00	Throttle valve actuator control motor circuit range/performance problem	• The PCM turns the main relay on, but if the input voltage is **6.0 V or less**, then the PCM determines that the main relay control circuit voltage is low. • There is a system error in the electrical throttle control system of the PCM.
P2107:00	Throttle valve actuator control module processor error	• PCM internal malfunction.
	TP sensor minimum stop	• If the fully-close throttle position is **5.1 ° or lower**, or **15.9 ° or more** (even though fully-closed throttle

P2109:00	range/performance problem	position learning is finished), the PCM determines there is a malfunction.
P2110:00	Throttle valve actuator control system-forced limited RPM	• PCM internal malfunction.
P2112:00	Throttle valve actuator motor current range/performance problem	• The throttle valve actuator control duty ratio is **95 % or more** with the ignition switched ON (engine on).
P2119:00	Throttle valve actuator control throttle body range/performance problem	• The PCM compares the actual TP with initial setting TP when the ignition is switched off. If the actual TP is higher than the initial setting TP, the PCM determines that there is a throttle valve return spring malfunction.
P2122:00	APP sensor No.1 circuit low input	• The PCM monitors the input voltage from APP sensor No.1. If the input voltage at the PCM terminal 2AN is **less than 0.1 V**, the PCM determines that the APP sensor No.1 circuit input voltage is low.
P2123:00	APP sensor No.1 circuit high input	• The PCM monitors the input voltage from APP sensor No.1. If the input voltage at the PCM terminal 2AN is **above 4.9 V**, the PCM determines that the APP sensor No.1 circuit input voltage is high.
P2127:00	APP sensor No.2 circuit low input	• The PCM monitors the input voltage from APP sensor No.2. If the input voltage at the PCM terminal 2AS is **less than 0.1 V**, the PCM determines that the APP sensor No.2 circuit has a malfunction.
P2128:00	APP sensor No.2 circuit high input	• The PCM monitors the input voltage from APP sensor No.2. If the input voltage at the PCM terminal 2AS is **more than 4.9 V**, the PCM determines that the APP sensor No.2 circuit has a malfunction.
P2135:00	TP sensor No.1/No.2 voltage correlation problem	• The PCM compares the input voltage from TP sensor No.1 with the input voltage from TP sensor No.2. If the difference is more than the specification, the PCM determines that there is a TP sensor No.1/No.2 voltage correlation problem.
P2138:00	APP sensor No.1/No.2 voltage correlation problem	• The PCM compares the input voltage from APP sensor No.1 with the input voltage from APP sensor No.2. If the difference is more than the specification, the PCM determines that there is an APP sensor No.1/No.2 angle correlation problem.

P2183:00*4	ECT sensor No.2 circuit range/performance problem	• When the ECT sensor No.2 detected temperature is **approx. 12.1 °C {21.8 °F}** higher than the IAT sensor No.1, or the ECT sensor No.2 detected temperature is **approx. −14.3 °C {−25.7 °F}** less than the IAT sensor No.1 with the ignition switched ON, the PCM detects a circuit range/performance problem.
P2184:00*4	ECT sensor No.2 circuit low input	• The PCM monitors the ECT sensor No.2 signal. If the PCM detects that the ECT sensor No.2 voltage at the PCM terminal 2F is **below 0.16 V** for **5 s**, the PCM determines that the ECT sensor No.2 circuit has a malfunction.
P2185:00*4	ECT sensor No.2 circuit high input	• The PCM monitors the ECT sensor No.2 signal. If the PCM detects that the ECT sensor No.2 voltage at the PCM terminal 2F is **above 4.92 V** for **5 s**, the PCM determines that the ECT sensor No.2 circuit has a malfunction.
P2199:00	IAT sensor No.2 correlation problem	• IAT sensor No.1 and IAT sensor No.2 are compared and correlation error occurs.
P2228:00	BARO sensor circuit low input	• The PCM monitors input voltage from the BARO sensor. If the input voltage is low for **5 s**, the PCM determines that the BARO sensor circuit has a malfunction.
P2229:00	BARO sensor circuit high input	• The PCM monitors input voltage from the BARO sensor. If the input voltage is high for **5 s**, the PCM determines that the BARO sensor circuit has a malfunction.
P2237:00	Open circuit between A/F sensor terminal B and PCM terminal 1AG	• After A/F sensor activation, a condition in which PCM terminal 1AB voltage is within the specified range continues for **5 s or more**.
P2243:00	A/F sensor reference voltage circuit open	• A condition in which the PCM terminal 1W voltage is the specified value or more continues for **30 s**.
P2251:00	Open circuit between A/F sensor terminal D and PCM terminal 1AB	• The following conditions are met: ▪ A/F sensor element impedance is specified value or more ▪ A/F sensor terminal F voltage (B+ terminal) is less than specified value or unstable.
	Accelerator pedal:	• When under the following conditions it is detected that the brake pedal is depressed during driving for the specified time*.

P2299:00	spring back malfunction	▪ Racing ▪ Engine speed: **875 rpm or more** • *: Specified time is **0.6—10 s** according to braking force calculated in PCM.
P2302:00	Ion sensor No.1 circuit problem	• After the engine is started, when the engine speed is **2,000 rpm or less**, the signal input to the PCM from ion sensor No.1 is in error.
P2305:00	Ion sensor No.2 circuit problem	• After the engine is started, when the engine speed is **2,000 rpm or less**, the signal input to the PCM from ion sensor No.2 is in error.
P2308:00	Ion sensor No.3 circuit problem	• After the engine is started, when the engine speed is **2,000 rpm or less**, the signal input to the PCM from ion sensor No.3 is in error.
P2311:00	Ion sensor No.4 circuit problem	• After the engine is started, when the engine speed is **2,000 rpm or less**, the signal input to the PCM from ion sensor No.4 is in error.
P2502:00	Generator system: Malfunction in voltage generated by generator	• The voltage generated by the generator is **17 V or higher** and the battery voltage is **11 V or less** for a continuous specified time.
P2503:00	Generator system: Voltage generated by generator is low	• A condition continues for a specified period of time in which the target generator output current calculated by the PCM is **20 A or more** and the generator output voltage is **8.5 V or less**.
P2504:00	Generator system: Voltage generated by generator is high	• The voltage generated by the generator is **18.5 V or higher** or the battery voltage is **16 V or higher** for a continuous specified time.
P2507:00	PCM battery voltage low input	• The PCM monitors the voltage of backup battery positive terminal. If the PCM detects that the battery positive terminal voltage is **below 6 V** for **5 s**, the PCM determines that the backup voltage circuit has a malfunction.
P2610:00	Malfunction in instrument cluster	• Malfunction detected in instrument cluster.
U0073:00	CAN system communication error (HS CAN)	• Malfunction in CAN bus communication line.
	CAN system	

U0074:00*3	communication error (local CAN between PCM and TCM)	• Malfunction in CAN bus communication line.
U0101:00*3	CAN communication: communication error to TCM	• Communication error between the PCM and TCM continues for **5 s or more**.
U0121:00	CAN communication: communication error to DSC HU/CM	• Communication error between the PCM and DSC HU/CM continues for **5 s or more**.
U0131:00	CAN communication: communication error to EPS control module	• Communication error between the PCM and EPS control module continues for **5 s or more**.
U0140:00	CAN communication: communication error to front body control module (FBCM)	• Communication error between the PCM and front body control module (FBCM) continues for **5 s or more**.
U0151:00	CAN communication: communication error to SAS control module	• Communication error between the PCM and SAS control module continues for **5 s or more**.
U0155:00	CAN communication: communication error to instrument cluster	• Communication error between the PCM and instrument cluster continues for **5 s or more**.
U0214:00	CAN communication: communication error to start stop unit	• Communication error between the PCM and start stop unit continues for **5 s or more**.
U0235:00	CAN communication: communication error to laser sensor	• Communication error between the PCM and laser sensor continues for **5 s or more**.
U0284:00*6	LIN communication system: communication error between active air shutter and PCM	• PCM detects a communication error between the PCM and active air shutter.
U0298:00*6	CAN communication: communication error to DC-DC converter	• PCM detects a communication error between the PCM and DC-DC converter.
U0302:00*3	TCM processor error	• When any of the following conditions is met: ▪ CAN communication line malfunction between TCM and PCM

		▪ TCM internal malfunction
U0315:00	DSC HU/CM error	• When any of the following conditions is met: ▪ CAN communication line malfunction between DSC HU/CM and PCM ▪ DSC HU/CM internal malfunction
U0320:00	EPS control module error	• When any of the following conditions is met: ▪ CAN communication line malfunction between EPS control module and PCM ▪ EPS control module internal malfunction
U0323:00	Instrument cluster error	• When any of the following conditions is met: ▪ CAN communication line malfunction between instrument cluster and PCM ▪ Instrument cluster internal malfunction
U0336:00	SAS control module error	• When any of the following conditions is met: ▪ CAN communication line malfunction between SAS control module and PCM ▪ SAS control module internal malfunction
U0338:00	Start stop unit error	• When any of the following conditions is met: ▪ CAN communication line malfunction between start stop unit and PCM ▪ Start stop unit internal malfunction
U0433:00	Abnormal message from rear body control module (RBCM)	• Correct data cannot be received from rear body control module (RBCM).
U1007:00 *6	CAN/LIN communication system: current sensor information communication error with front body control module (FBCM)	• PCM detects a current sensor information communication error from front body control module (FBCM).
		• Any of following conditions occurs:

U2300:00	Global central configuration error	▪ No configuration of the instrument cluster. ▪ The configuration signal with the estimated CAN ID is not sent from the instrument cluster. ▪ The configuration signal value sent via CAN from the instrument cluster is unknown or invalid. ▪ The configuration signal value sent via CAN from the instrument cluster is a value other than the estimated value. ▪ The configuration signal value sent via CAN from the instrument cluster does not match the PCM value.
U3000:41	PCM processor error	• Communication error in the PCM.

*1 **KOER self test only**

*2 **MTX**

*3 **ATX**

*4 **U.S.A. and CANADA**

*5 **CALIFORNIA**

*6 **Vehicles with i-ELOOP**

2014 - Mazda3 - Engine

KOEO/KOER SELF-TEST [SKYACTIV-G 2.0, SKYACTIV-G 2.5]

- On-board diagnosis is performed using the flow pre-set in the PCM, and according to the test execute command sent to the PCM from the external tester.
- If a malfunction is detected as a result of the on-board diagnosis, a DTC is recorded in the PCM.

KOEO (Key ON, Engine Off) Self Test

- The KOEO self test is a powertrain control system self-diagnosis, performed when the ignition is switched ON (engine off). A KOEO self test begins when the connected M-MDS sends an execute command to the PCM.
- As the KOEO self test is performed, the PCM performs the inspection for set DTCs and if a malfunction is detected, the DTC is displayed on the M-MDS.

KOER (Key ON, Engine Running) Self Test

- The KOER self test is a powertrain control system self-diagnosis, performed when the ignition is switched ON and the engine is idling. A KOER self test begins when the connected M-MDS sends an execute command to the PCM.
- As the KOER self test is performed, the PCM performs the inspection for set DTCs and if a malfunction is detected the DTC is displayed on the M-MDS.

2014 - Mazda3 - Engine

ON-BOARD DIAGNOSTIC SYSTEM PID/DATA MONITOR FUNCTION [SKYACTIV-G 2.0, SKYACTIV-G 2.5]

- The PID/DATA monitor items are shown below.

PID/DATA monitor item table—: Not applicable

Item (definition)	Definition	Unit/Condition
AAT*5	Ambient air temperature	°C, °F
AC_PRES*6	Refrigerant pressure input from refrigerant pressure sensor	KPa {MPa}, mBar {Bar}, psi, in H20
	Refrigerant pressure sensor voltage	V
AC_REQ	A/C switch status received by PCM via CAN	Off/On
ACCS	A/C relay status input from A/C relay	Off/On
AIRSHUT_ACT*1	Active air shutter position	%
AIRSHUT_CAL*1	Active air shutter fully open/closed position learning status	Not Done/Completed
ALTF	Field coil current control signal output to generator	%
ALTF_ACT*1	Actually measured value of field coil current signal input from generator	%
ALTT V*2	Generator output voltage	V
AMB_TEMP	Actually measured ambient temperature input from ambient temperature sensor	°C, °F
APP	Accelerator pedal opening angle (relative value) with the fully released status as 0% and fully depressed	%

	status as 100%	
APP1	Accelerator pedal opening angle (absolute value) input from APP sensor No.1	%
	APP sensor No.1 voltage	V
APP2	Accelerator pedal opening angle (absolute value) input from APP sensor No.2	%
	APP sensor No.2 voltage	V
ARPMDES	Target engine speed	RPM
BARO	Actually measured barometric pressure input from barometric pressure sensor built into PCM	KPa {MPa}, mBar {Bar}, psi, in H20
	BARO sensor voltage	V
BATT_CUR*1	Battery current	A
BATT_DAY*1	Number of days elapsed since current sensor initialization	—
BATT_RES*1	Battery internal resistance (estimated)	—
BATT_SOC*1	Battery charge condition (estimated)	%
BATT_TEMP*1	Battery temperature	°C, °F
BATT_V*1	Battery voltage	V
BOO	Brake switch (No.1 signal) ON/OFF status	High/Low
BPA	Brake switch (No.2 signal) ON/OFF status	High/Low
CAP_SYS_10*1	Open circuit in capacitor (i-ELOOP) (power cannot be supplied from capacitor)	Off/On
CAP_SYS 13*1	Capacitor (i-ELOOP) capacitance	Off/On

	malfunction	
CAP_SYS 14*1	Capacitor (i-ELOOP) capacitance deterioration	Off/On
CAP_SYS 15*1	Capacitor (i-ELOOP) internal resistance malfunction	Off/On
CAP_SYS 16*1	Capacitor (i-ELOOP) internal resistance deterioration	Off/On
CATT11_DSD	Estimated catalytic converter temperature	°C, °F
CHRGLP	Charging system warning light illumination status	Off/On
CPP*3	Clutch pedal position	Off/On
CPP/PNP*3	Shift lever position	Off/On
ECT	Engine coolant temperature	°C, °F
	ECT sensor No.1 voltage	V
ECT2_V*5	ECT sensor No.2 voltage	V
EQ_RAT11	Excess air factor (estimated value) to theoretical air/fuel ratio (14.7) by fuel feedback control	—
EQ_RAT11_DSD	Target excess air factor (estimated value) to theoretical air/fuel ratio (14.7) by fuel feedback control	—
ETC_ACT	Actual throttle valve opening angle	°
ETC_DSD	Target throttle valve opening angle (percent)	%
	Target throttle valve opening angle	°
EVAPCP	Purge solenoid valve control duty value	%
EVAPCV*5	CV solenoid valve operation status	Off/On

FAN1	Cooling fan relay No.1 operation status	Off/On
FAN3	Cooling fan relay No.2 and No.3 operation status	Off/On
FCL*5	Check fuel cap warning light illumination status	Off/On
FIA	Fuel injection amount	—
FLI	Fuel level	%
FP	Fuel pump relay operation status	Off/On
FP_DUTY	Fuel pump control module control duty value	%
FTP*5	Fuel tank pressure	KPa {MPa}, mBar {Bar}, psi, in H20
	Fuel tank pressure sensor voltage	V
FUEL_P_DSD	Target fuel pressure (high pressure fuel pump)	KPa {MPa}, mBar {Bar}, psi, in H20
FUEL_PRES	Fuel pressure	KPa {MPa}, mBar {Bar}, psi, in H20
	Fuel pressure sensor voltage	V
FUELPW	Fuel injection pulse width (fuel injector energization time) output to fuel injector	Sec
FUELSYS	Feedback status of fuel injection control is displayed OL: Feedback control is disabled at cold engine start CL: During feedback control by A/F sensor and HO2S OL_Drive: While feedback control is stopped OL_Fault: Feedback control is disable due to system malfunction CL_Fault: During feedback control	OL/CL/ OL_Drive/ OL_Fault/ CL_Fault

	with either A/F sensor or HO2S having a malfunction	
GEAR*4	Gear commanded	Unknown/1st/2nd/3rd/4th/5th/6th/Not in P/Park/Neutral/Drive/Reverse
HTR11	A/F sensor heater operation status	Off/On
	A/F sensor heater control duty value	%
HTR12	HO2S heater operation status	Off/On
	HO2S heater control duty value	%
IAT	Intake air temperature (No.1)	°C, °F
	IAT sensor No.1 voltage	V
IAT2	Intake air temperature (No.2)	°C, °F
	IAT sensor No.2 voltage	V
INGEAR*3	Gears are engaged	Off/On
ISC_FBK	ISC feedback value	%
ISC_FBK_LRN	Learning value for calculating ISC feedback amount	%
IVS	CTP condition	Off Idle/Idle
KNOCKR	Camshaft retard amount when knocking determined	°
LOAD	Ratio of actual amount of intake air to the maximum air charging amount (mass volume) of cylinder	%
LONGFT1	Fuel learning correction amount estimated based on A/F sensor signal	%
LONGFT12	Fuel learning correction amount estimated based on heated oxygen sensor signal	%
	Engine oil pressure condition	

LOW_OIL	Never Detected: Engine oil pressure is high Detected: Engine oil pressure is low	Never Detected/Detected
M_GEAR*3	Manual gear position	Neutral/1st gear/2nd gear/3rd gear/4th gear/5th gear/6th gear/Reverse/Undefined/Auto/In_Progress/YSF/Error
MAF	Mass air flow	g/Sec
	MAF sensor voltage	V
MAP	Manifold absolute pressure	KPa {MPa}, mBar {Bar}, psi, in H20
	MAP sensor voltage	V
MF_CAT1	Number of misfires in No.1 cylinder leading to catalytic converter temperature increase (catalytic converter temperature increases due to fuel combustion around catalytic converter after misfire)	—
MF_CAT_2	Number of misfires in No.2 cylinder leading to catalytic converter temperature increase (catalytic converter temperature increases due to fuel combustion around catalytic converter after misfire)	—
MF_CAT_3	Number of misfires in No.3 cylinder leading to catalytic converter temperature increase (catalytic converter temperature increases due to fuel combustion around catalytic converter after misfire)	—
MF_CAT_4	Number of misfires in No.4 cylinder leading to catalytic converter temperature increase (catalytic converter temperature increases due to fuel combustion around catalytic converter after misfire)	—
MF_CAT_FCC	Threshold of malfunction determination for number of misfires (total number in all cylinders) leading to catalytic converter temperature increase	—

MF_CAT_TTL	Number of misfires (total number in all cylinders) leading to catalytic converter temperature increase	—
MF_EMI1	Number of misfires in No.1 cylinder under conditions required by emission regulations	—
MF_EMI_2	Number of misfires in No.2 cylinder under conditions required by emission regulations	—
MF_EMI_3	Number of misfires in No.3 cylinder under conditions required by emission regulations	—
MF_EMI_4	Number of misfires in No.4 cylinder under conditions required by emission regulations	—
MF_EMI_FCC	Threshold of malfunction determination for number of misfires (total number in all cylinders) under conditions required by emission regulations	—
MF_EMI_TTL	Number of misfires (total number in all cylinders) under conditions required by emission regulations	—
MIL	Check engine light illumination status	Off/On
MIL_DIS	Travelled distance since check engine light illuminated	km {mph}, ft, mi
O2S11	A/F sensor current	μA
O2S12	HO2S voltage	V
OIL_P_SOL	Engine oil solenoid valve operation status	Off/On
OIL_TEMP	Estimated engine oil temperature	°C, °F
PN_SW*4	Parking/neutral	Open/Closed
PRE_CHG_DIS*1	Distance at pre-charge	km, ft {mi}

RO2FT1	Fuel correction amount based on HO2S signal including SHRTFT12 and LONGFT12	%
RPM	Engine speed	RPM
SHRTFT1	Fuel feedback correction amount estimated based on A/F sensor signal	%
SHRTFT12	Fuel feedback correction amount estimated based on HO2S signal	%
SPARKADV	Ignition timing	°
Test	Test mode operation condition due to forced override operation	Off/On
TH_M*5	Thermostat monitor	—
TH_M_MAX*5	Thermostat monitor max	—
TH_M_MIN*5	Thermostat monitor min	—
TP_REL	Throttle valve opening angle (relative value) with value at throttle valve fully open timing as the start point	%
TP1	TP sensor No.1 voltage	V
	Throttle valve position No.1	%
TP2	TP sensor No.2 voltage	V
	Throttle valve position No.2	%
TPCT	TP sensor No.1 voltage at CTP	V
TPCT2	TP sensor No.2 voltage at CTP	V
VPWR	Battery positive voltage	V
VSS	Vehicle speed	KPH, MPH
VT EX_DES	Desired exhaust valve timing	°

VT IN_ACT	Actual intake valve timing	°
VT IN_DES	Desired intake valve timing	°
VT_EX_ACT	Actual exhaust valve timing	°
VT_EX_DUTY	OCV control duty value	%

*1

Vehicles with i-ELOOP

*2

Vehicles without i-ELOOP

*3

MTX

*4

ATX

*5

U.S.A. and CANADA

*6

Vehicles with manual air conditioner

2014 - Mazda3 - Engine

ON-BOARD DIAGNOSTIC SYSTEM ACTIVE COMMAND MODES FUNCTION [SKYACTIV-G 2.0, SKYACTIV-G 2.5]

- The simulation items are shown below.

Simulation item table

Item	Applicable component	Unit/Condition	Operation condition
ACCS	A/C relay	Off/On	• Under the following conditions: ▪ Vehicle stopped ▪ Idling at P or N position
AIRSHUT_DSD	Active air shutter	%	**NOTE:** • If the active air shutter fully open/closed position learning is not completed, the active air shutter cannot be forcibly operated. When the active air shutter is forcibly operated, perform the active air shutter fully open/closed position learning. • Under the following conditions: ▪ Vehicle stopped ▪ Idling at P or N position ▪ Shutter fully open/closed position learning: completed
ARPMDES	Target engine speed	RPM	• Under the following conditions: ▪ Vehicle stopped ▪ Idling at P or N position
EVAPCP	Purge solenoid valve	%	• Under the following conditions: ▪ Vehicle stopped ▪ Idling at P or N position
EVAPCV	CV solenoid	Off/On	• Under the following conditions: ▪ Vehicle stopped

	valve		▪ Idling at P or N position
FAN1	Cooling fan relay No.1	Off/On	• Under the following conditions: ▪ Vehicle stopped ▪ Idling at P or N position
FAN3	Cooling fan relay No.3	Off/On	• Under the following conditions: ▪ Vehicle stopped ▪ Idling at P or N position
FP	Fuel pump relay	Off/On	• Under the following conditions: ▪ Vehicle stopped ▪ Idling at P or N position
INJ_1	Fuel injector No.1	OFF	• Under the following conditions: ▪ Vehicle stopped ▪ Idling at P or N position
INJ_2	Fuel injector No.2	OFF	• Under the following conditions: ▪ Vehicle stopped ▪ Idling at P or N position
INJ_3	Fuel injector No.3	OFF	• Under the following conditions: ▪ Vehicle stopped ▪ Idling at P or N position
INJ_4	Fuel injector No.4	OFF	• Under the following conditions: ▪ Vehicle stopped ▪ Idling at P or N position
OIL_P_SOL	Engine oil solenoid valve	Off/On	• Under the following conditions: ▪ Vehicle stopped ▪ Idling at P or N position
Test	Test mode	Off/On	• Under the following conditions: ▪ Vehicle stopped ▪ Idling at P or N position

VT EX_DES	OCV	°	• Under the following conditions: ▪ Vehicle stopped ▪ Idling at P or N position

2014 - Mazda3 - Engine

ON-BOARD DIAGNOSTIC SYSTEM EXTERNAL DIAGNOSTIC UNIT COMMUNICATION FUNCTION [SKYACTIV-G 2.0, SKYACTIV-G 2.5]

Outline

- Function for allowing both the PCM and external tester to receive and send data.
- The DLC-2 has been adopted as the communication medium.

Function

- The types of data which the PCM and external tester can receive and send using the external tester communication function include the following items:
    - Recording of engine control system information in the PCM.
    - Data related to exhaust emission such as input/output signals, the PCM-calculated values and system status.

DLC-2 Outline

- The DLC-2 located in the driver compartment is a service connector defined by OBD-II regulations.
- The following are functions for each terminal.

DLC-2

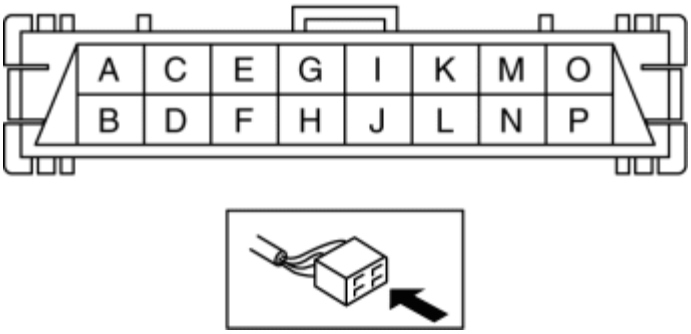

—: Not applicable

Terminal	Function
A	Battery positive voltage

B	—
C	—
D	—
E	CAN communication line LO (HS)
F	CAN communication line HI (HS)
G	—
H	Ground (signal)
I	—
J	Ground (chassis)
K	CAN communication line LO (MS)
L	CAN communication line HI (MS)
M	—
N	—
O	—
P	—

2014 - Mazda3 - Engine

ON-BOARD DIAGNOSTIC SYSTEM MALFUNCTION DISPLAY FUNCTION [SKYACTIV-G 2.0, SKYACTIV-G 2.5]

Outline

- Illuminates the check engine light to notify the driver of a malfunction occurring in the engine control system.
- The check engine light is built into the instrument cluster.

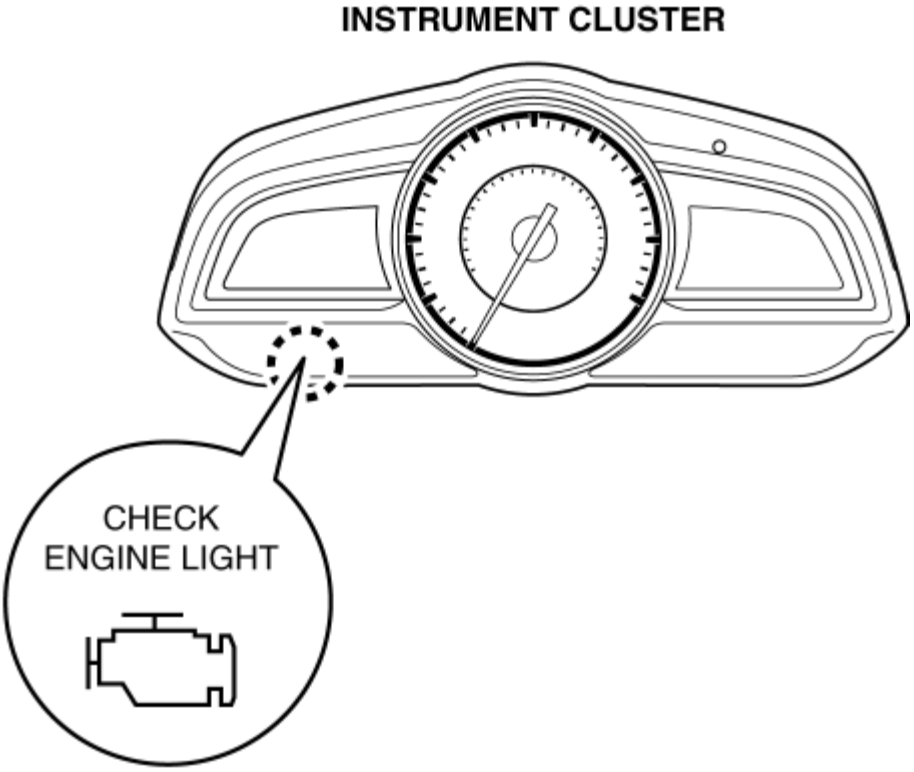

Function

- The check engine light illuminates when a malfunction occurs in the engine control system, and it illuminates at the same time a DTC is recorded in the PCM.
- The illumination/non-illumination conditions of the check engine light are determined by the number of drive cycles. (See **ON-BOARD DIAGNOSTIC SYSTEM TEST MODE [SKYACTIV-G 2.0, SKYACTIV-G 2.5]**.)

ON-BOARD DIAGNOSTIC SYSTEM MALFUNCTION DISPLAY FUNCTION [SKYACTIV-G 2.0, SKYACTIV-G 2.5]

2014 - Mazda3 - Engine

ON-BOARD DIAGNOSTIC SYSTEM DIAGNOSTIC DATA MEMORY FUNCTION [SKYACTIV-G 2.0, SKYACTIV-G 2.5]

Outline

- Records diagnostic data related to the engine control system in the PCM.

Function

- The diagnostic data recording/erasing conditions are determined by the number of drive cycles set for each item. (See **ON-BOARD DIAGNOSTIC SYSTEM TEST MODE [SKYACTIV-G 2.0, SKYACTIV-G 2.5]**.)
- Diagnostic data which can be recorded in the PCM are as follows:
    - Number of DTCs
    - DTC
    - Pending code
    - Freeze frame data
    - On-board diagnostic system diagnosis condition
    - On-board monitoring test results
- Another method for erasing diagnostic data is by using the memory clearing function of the external tester.

2014 - Mazda3 - Engine

CHECK ENGINE LIGHT [SKYACTIV-G 2.0, SKYACTIV-G 2.5]

Purpose / Function

- If a malfunction occurs in the engine control system, the light illuminates to warn the driver of the malfunction.

Construction

- The check engine light is built into the instrument cluster.

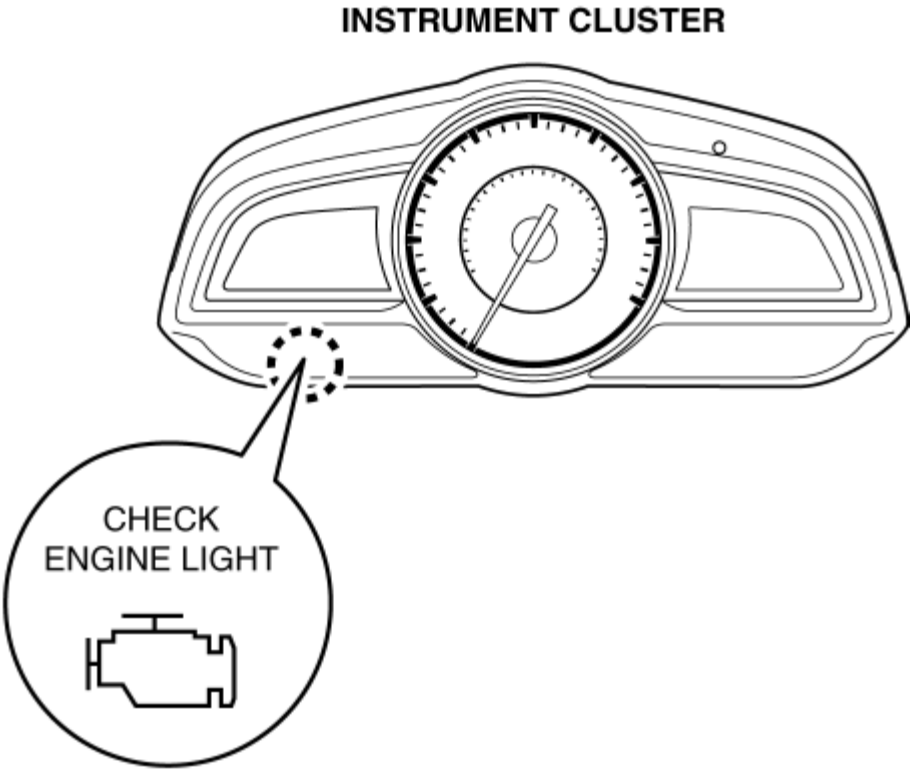

Operation

- The check engine light illuminates when a malfunction occurs in the engine control system, and it illuminates at the same time a DTC is recorded in the PCM.
- The illumination conditions for the check engine light are determined by the number of drive cycles set for each DTC. For details on the drive cycle, refer to “ON-BOARD DIAGNOSTIC SYSTEM TEST MODE”. (See **ON-BOARD DIAGNOSTIC SYSTEM TEST MODE [SKYACTIV-G 2.0, SKYACTIV-G 2.5]**.)

- For DTCs with one drive cycle, if a malfunction is detected in the first drive cycle, the check engine light illuminates.
- For DTCs with two drive cycles, if each malfunction is detected in the first and second drive cycles, the check engine light illuminates. However, if the same malfunction as the DTC stored in the PCM is detected, the check engine light illuminates in the first drive cycle even if the DTC is two drive cycles.
- If the PCM detects that the engine control system is continuously normal for three drive cycles, the illuminated check engine light turns off. However, the DTC is not cleared from the PCM at this time. If the PCM determines that the engine control system is continuously normal for **41** warm-up cycles*, the DTC is cleared.

*

A warm-up cycle is a drive cycle including the period until the engine is completely warmed up after a cold-engine starts. This cycle repeated 41 times is a 41 warm-up cycle.

- The PCM sends a check engine light illumination request to the instrument cluster via CAN communication.

2014 - Mazda3 - Engine

MECHANICAL [SKYACTIV-G 2.0, SKYACTIV-G 2.5]

Outline

- The sliding resistance*1 has been reduced by:
  - Adoption of a rocker arm (built in needle roller bearing)
  - Reducing load on the valve spring
  - Narrowing down the crankshaft journal
  - Optimizing the piston skirt shape
  - Adoption of a low-tension piston ring
  - Lowered tensioning of the drive belt
- A maintenance-free design for valve clearance has been achieved with the adoption of the HLA.
- With the adoption of a piston cavity, cooling loss has been reduced.
- The pumping loss*2 has been reduced with the adoption of the variable valve timing mechanism on both sides of the intake and exhaust.
- The timing chain behavior has been stabilized and sliding resistance has been reduced by optimizing the shape and rigidity of the timing chain-related parts.

*1 **Resistance (friction force) which occurs when two object slide against each other. The larger the sliding resistance, the greater the energy loss.**

*2 **Energy loss which occurs from each type of resistance corresponding to intake and exhaust is called pumping loss.**

Structural View

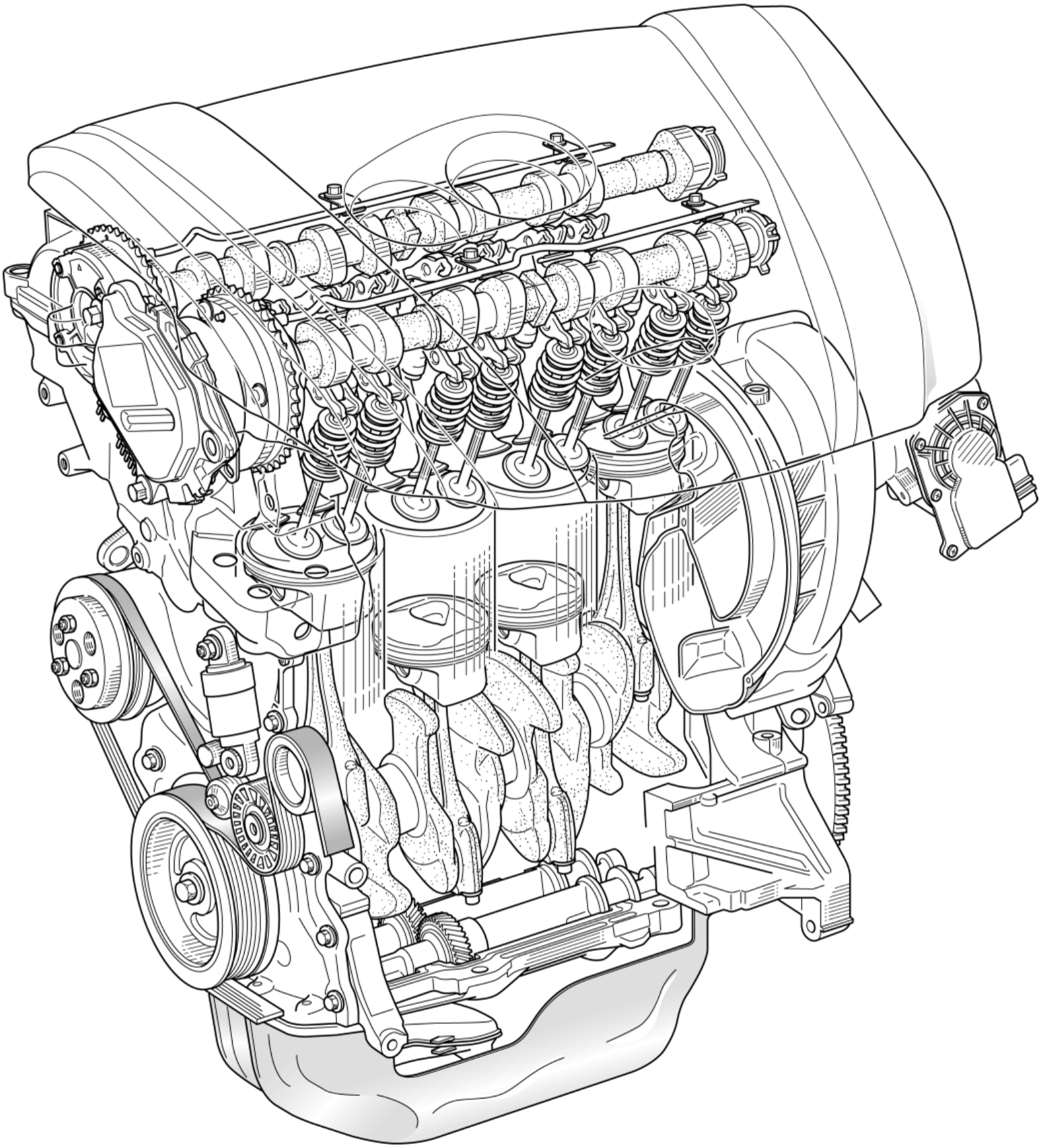

Structure

- Consists of the following parts:

Cylinder head cover		(See **CYLINDER HEAD COVER [SKYACTIV-G 2.0, SKYACTIV-G 2.5]**.)
Cylinder head		(See **CYLINDER HEAD [SKYACTIV-G 2.0, SKYACTIV-G 2.5]**.)
Cylinder head gasket		(See **CYLINDER HEAD GASKET [SKYACTIV-G 2.0, SKYACTIV-G 2.5]**.)
Cylinder block		(See **CYLINDER BLOCK [SKYACTIV-G 2.0, SKYACTIV-G 2.5]**.)
Crankshaft		(See **CRANKSHAFT, MAIN BEARING [SKYACTIV-G 2.0, SKYACTIV-G 2.5]**.)
Piston		(See **PISTON, PISTON RING, PISTON PIN [SKYACTIV-G 2.0, SKYACTIV-G 2.5]**.)
Connecting rod		(See **CONNECTING ROD, CONNECTING ROD BEARING [SKYACTIV-G 2.0, SKYACTIV-G 2.5]**.)
Engine front cover		(See **ENGINE FRONT COVER [SKYACTIV-G 2.0, SKYACTIV-G 2.5]**.)
Crankshaft pulley		(See **CRANKSHAFT PULLEY [SKYACTIV-G 2.0, SKYACTIV-G 2.5]**.)
Drive belt		(See **DRIVE BELT [SKYACTIV-G 2.0, SKYACTIV-G 2.5]**.)
Valve mechanism (See **VALVE MECHANISM [SKYACTIV-G 2.0, SKYACTIV-G 2.5]**.)	Valve	(See **VALVE, VALVE SPRING, VALVE SEAL, VALVE GUIDE [SKYACTIV-G 2.0, SKYACTIV-G 2.5]**.)
	HLA	(See **HYDRAULIC LASH ADJUSTER, ROCKER ARM [SKYACTIV-G 2.0, SKYACTIV-G 2.5]**.)
	Camshaft	(See **CAMSHAFT [SKYACTIV-G 2.0, SKYACTIV-G 2.5]**.)
Timing chain		(See **TIMING CHAIN, CHAIN TENSIONER [SKYACTIV-G 2.0, SKYACTIV-G 2.5]**.)
Variable valve timing mechanism (See **VARIABLE VALVE TIMING MECHANISM [SKYACTIV-G 2.0, SKYACTIV-G 2.5]**.)	OCV	(See **OIL CONTROL VALVE (OCV) [SKYACTIV-G 2.0, SKYACTIV-G 2.5]**.)
	Hydraulic variable valve timing actuator	(See **HYDRAULIC VARIABLE VALVE TIMING ACTUATOR [SKYACTIV-G 2.0, SKYACTIV-G 2.5]**.)
	Electric variable valve timing actuator	(See **ELECTRIC VARIABLE VALVE TIMING ACTUATOR [SKYACTIV-G 2.0, SKYACTIV-G 2.5]**.)
Electric variable valve timing relay		(See **ELECTRIC VARIABLE VALVE TIMING RELAY [SKYACTIV-G 2.0, SKYACTIV-G 2.5]**.)
Balancer unit (SKYACTIV-G 2.5)		(See **BALANCER UNIT [SKYACTIV-G 2.5]**.)
Engine mount		(See **ENGINE MOUNT [SKYACTIV-G 2.0, SKYACTIV-G 2.5]**.)

2014 - Mazda3 - Engine

MILLER CYCLE ENGINE [SKYACTIV-G 2.0, SKYACTIV-G 2.5]

Outline

- The Miller cycle engine is a high-efficiency engine which achieves high fuel economy performance by obtaining a high-expansion ratio.
- The Miller cycle engine achieves a high-expansion ratio without increasing its effective compression ratio by retarding the intake air valve close timing.

Operation

1. Intake air is introduced into the cylinder.

2. The intake valve is kept open after the intake stroke is finished to force the air in the cylinder to flow back to the intake pipe.

3. The compression stroke starts from the position in which the intake valve is closed (small compression).

4. The air-fuel mixture is combusted and the piston is pushed down to BDC (large expansion).

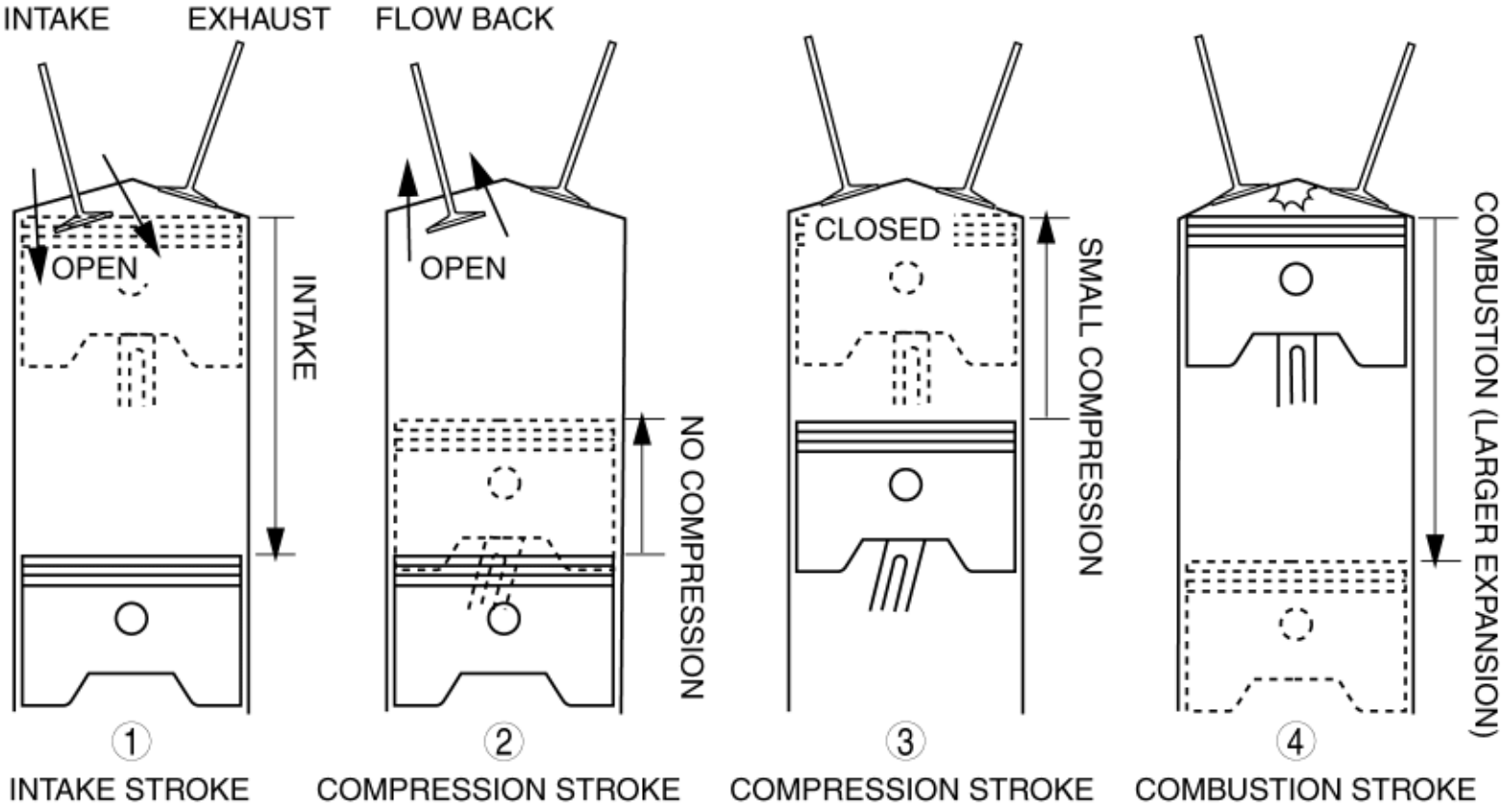

MILLER CYCLE ENGINE [SKYACTIV-G 2.0, SKYACTIV-G 2.5]

2014 - Mazda3 - Engine

CYLINDER HEAD COVER [SKYACTIV-G 2.0, SKYACTIV-G 2.5]

Purpose, Function

- The cylinder head cover prevents foreign matter penetration and engine oil spatter.
- The oil baffle plate reduces engine oil consumption by separating the engine oil from the blow-by gas.

Construction

- The lightweight cylinder head cover is made of hard plastic with excellent noise absorption.
- The cylinder head cover has the following parts:

CYLINDER HEAD COVER [SKYACTIV-G 2.0, SKYACTIV-G 2.5]

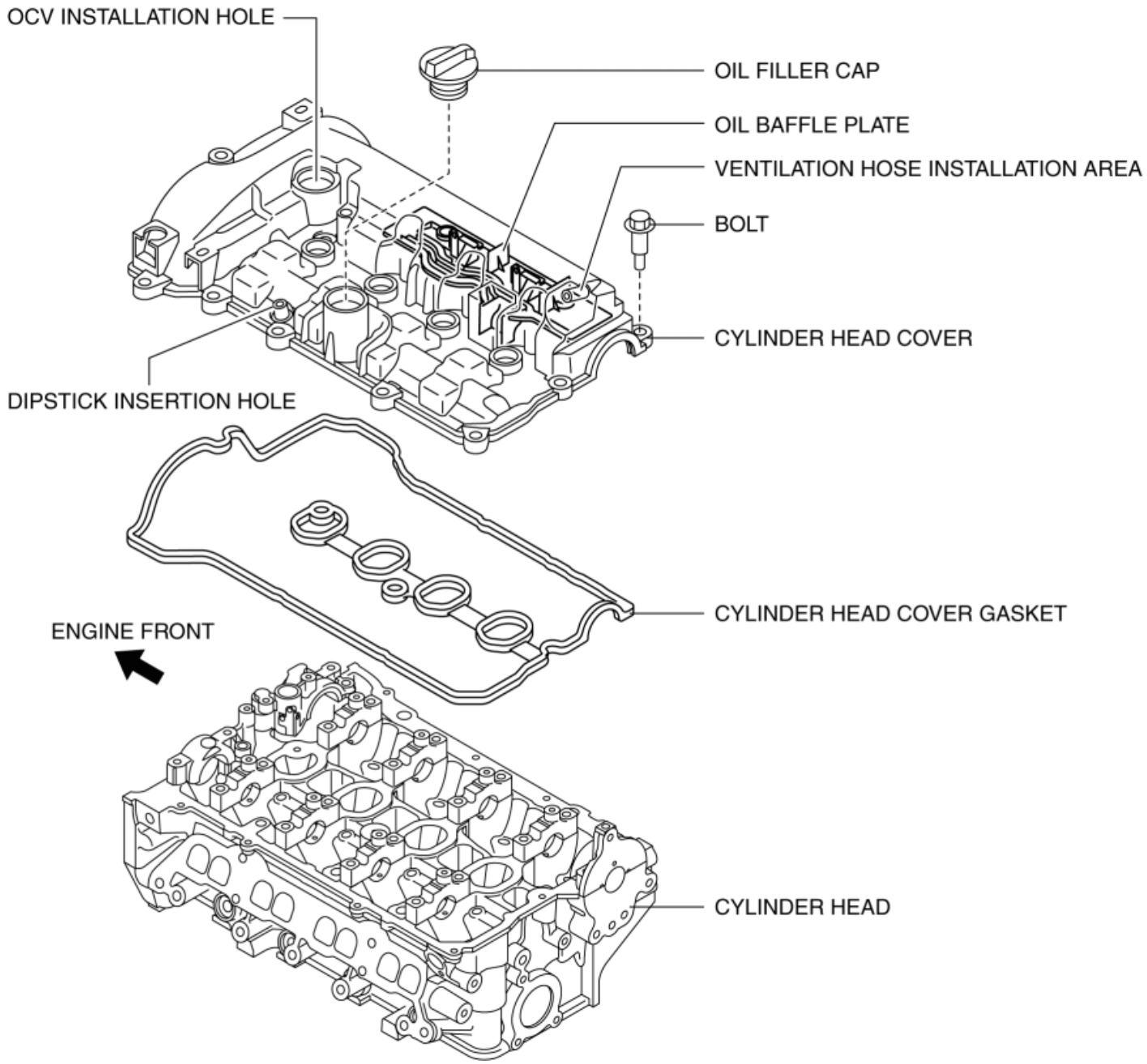

2014 - Mazda3 - Engine

CYLINDER HEAD [SKYACTIV-G 2.0, SKYACTIV-G 2.5]

Outline

- With the adoption of the rocker arm (built in needle roller bearing), the sliding resistance has been reduced.
- With the adoption of the HLA, the valve clearance is maintained at 0 mm at all times.
- The contact point of the rocker arm and cam is lubricated by the engine oil injected from the oil shower pipe.
- Because the SKYACTIV-G is implemented on the Miller cycle, the intake manifold vacuum is insufficient during the intake valve opening timing. To improve this, the intake manifold vacuum insufficiency is supplemented by the adoption of the vacuum pump. (See **VACUUM PUMP [SKYACTIV-G 2.0, SKYACTIV-G 2.5]**.)

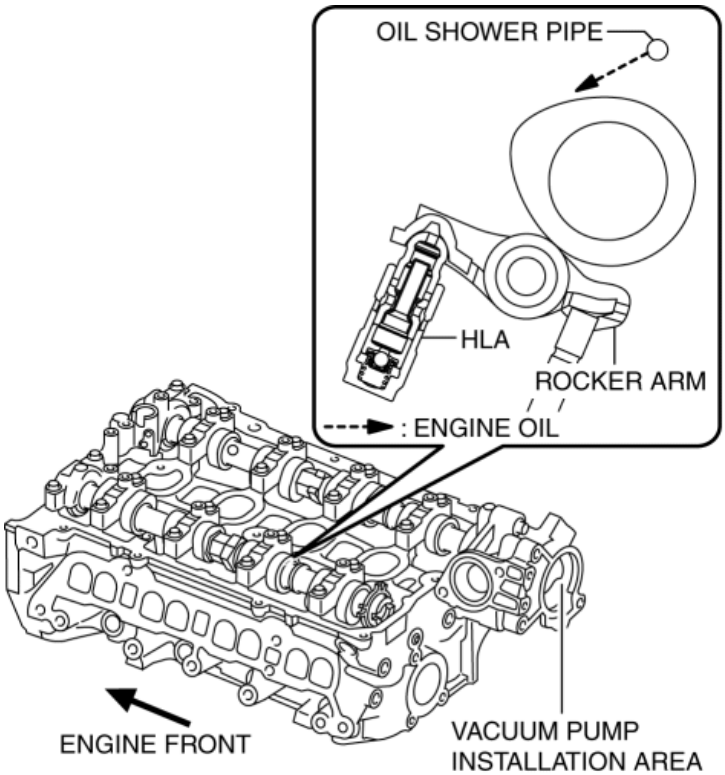

Purpose, Function

- The cylinder head forms the combustion chamber and intake and exhaust ports.

Construction

- The lightweight cylinder head is made of aluminum alloy with excellent thermal conductivity.
- Designing a compact pentroof combustion chamber and positioning the spark plugs on the top of the combustion chamber has improved the combustion efficiency.
- There are two intake valves and two exhaust valves per cylinder for a total of four valves and the intake/exhaust type has been changed to a cross-flow type, improving intake and exhaust efficiency.
- High pressurization is achieved by optimizing the intake port shape, improving the tumble ratio, increasing the combustion speed, and suppressing knocking.

*

With the adoption of plastic region tightening for the cylinder head bolts, axial force has been stabilized.

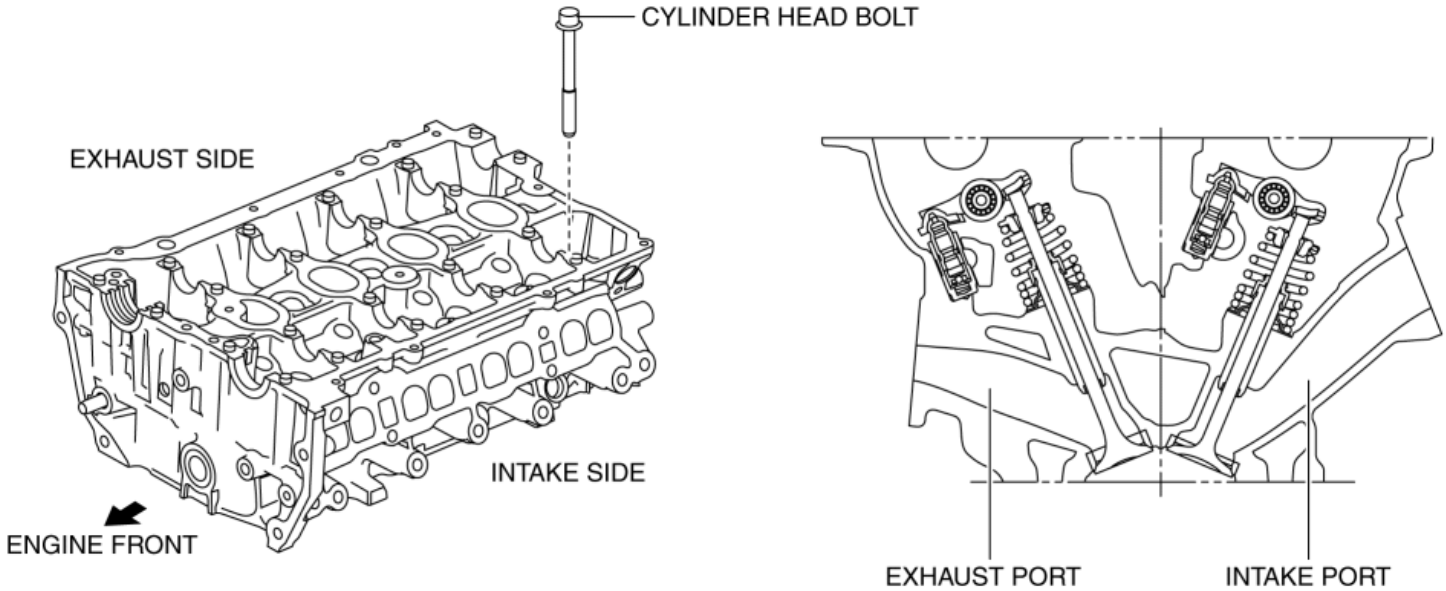

*

Plastic region tightening is a method of controlling the tightening using the rotation angle of a bolt. By tightening to the region (plastic tightening region) in which bolt deformation does not become irreversible, variation in axial force is suppressed.

2014 - Mazda3 - Engine

CYLINDER HEAD GASKET [SKYACTIV-G 2.0, SKYACTIV-G 2.5]

Purpose, Function

- The cylinder head gasket is installed between the cylinder head and cylinder block to prevent leakage of air-fuel mixture, combustion gas, engine oil, and engine coolant.

Construction

- A four-layer type metal gasket has been adopted for the cylinder head gasket.

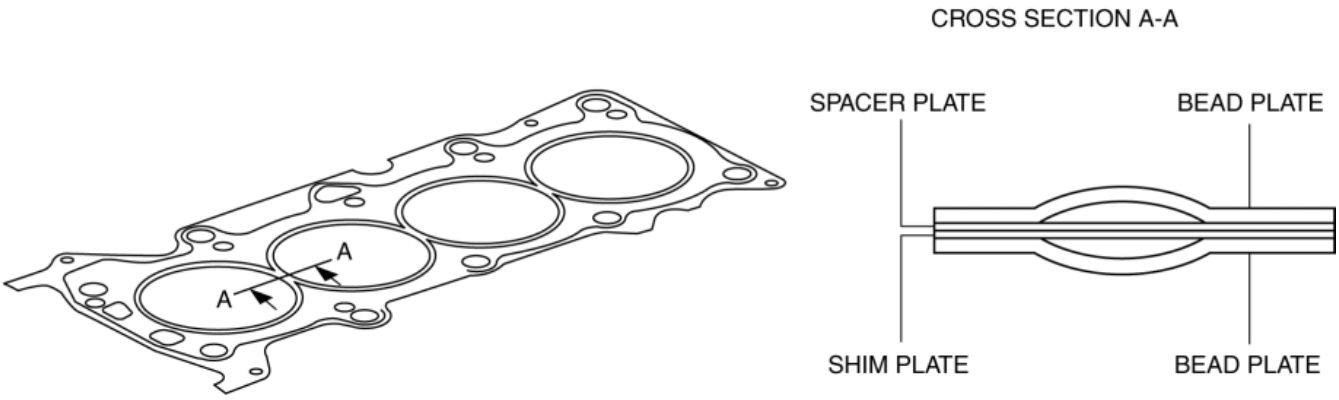

2014 - Mazda3 - Engine

CYLINDER BLOCK [SKYACTIV-G 2.0, SKYACTIV-G 2.5]

Purpose, Function

- The cylinder block forms the cylinder and crankcase.

Construction

- The cylinder block consists of the upper cylinder block and lower cylinder block.
- The cylinder block is an open deck type with excellent cooling performance.
- The lightweight cylinder block is made of aluminum alloy with excellent heat dispersion.
- With the adoption of the lower cylinder block, the coupling rigidity of the transaxle and support rigidity of the crankshaft have been improved reducing engine vibration.
- The oil separator function is set to the upper cylinder block, enhancing ventilation of the blow-by gas.

SKYACTIV-G 2.0

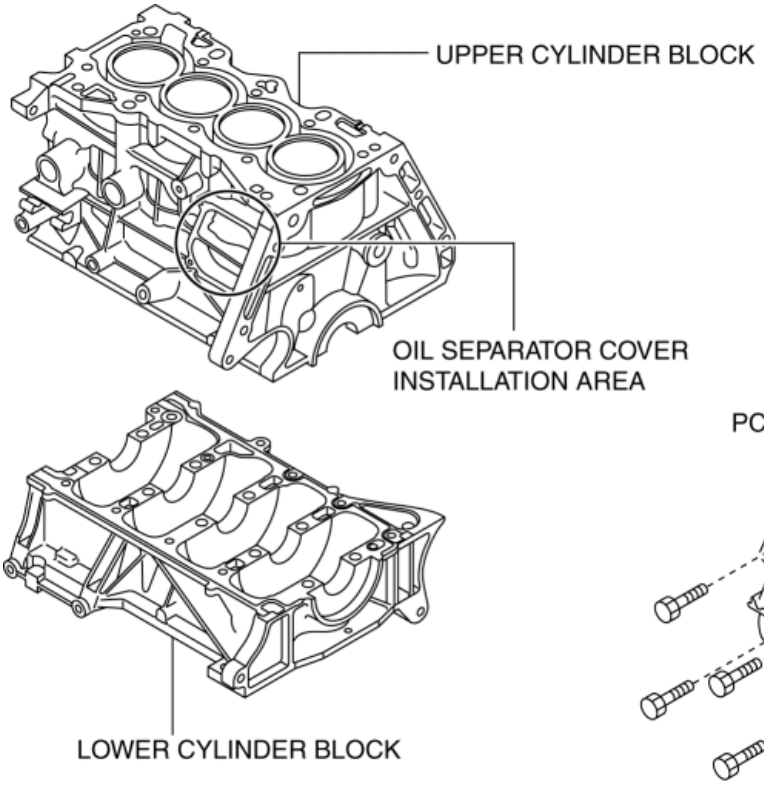

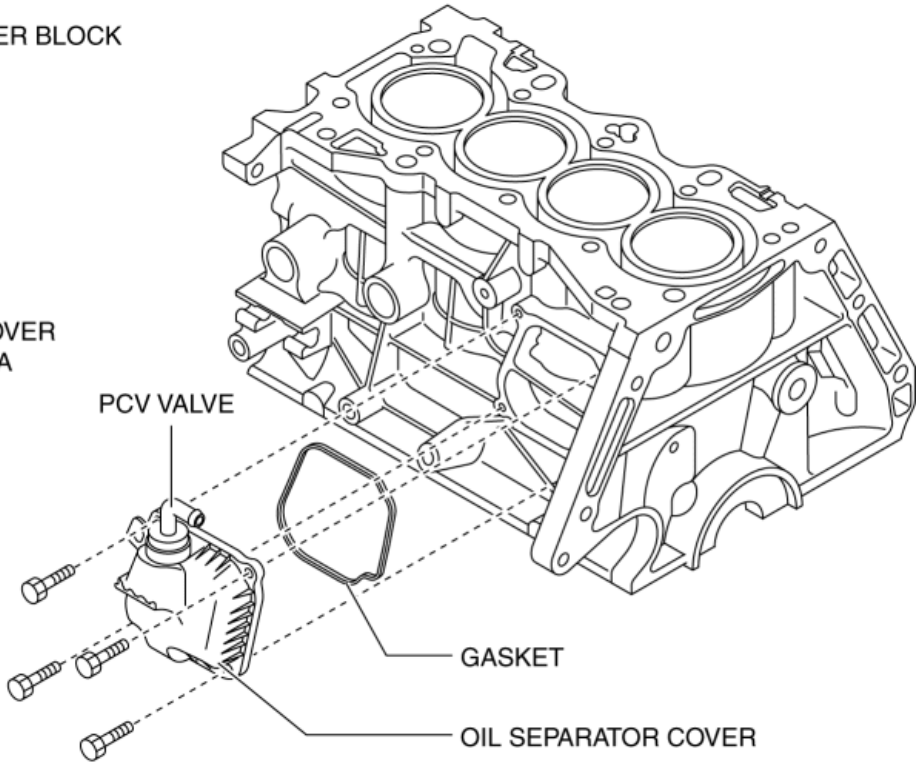

SKYACTIV-G 2.5

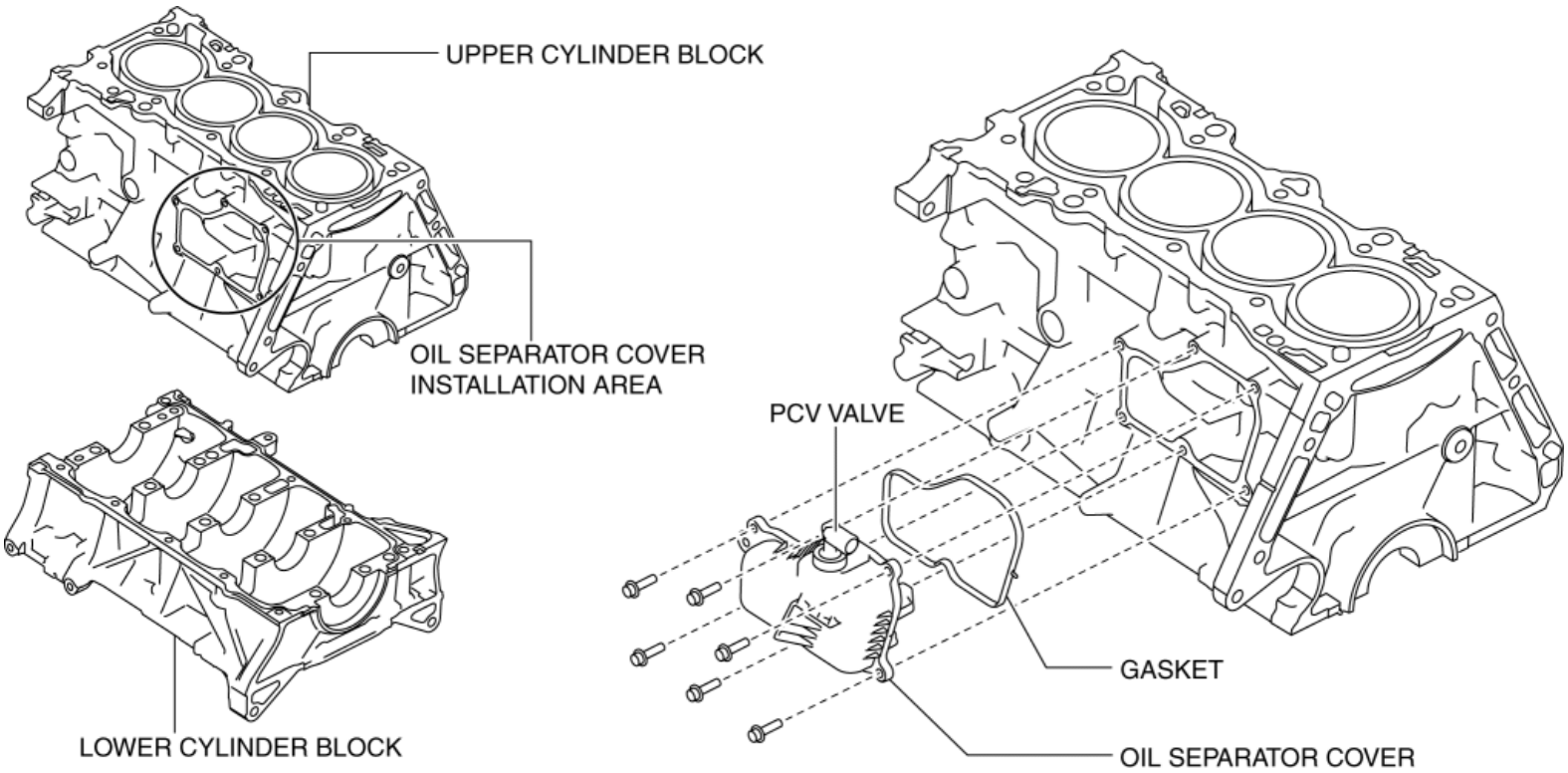
UPPER CYLINDER BLOCK
OIL SEPARATOR COVER
INSTALLATION AREA
LOWER CYLINDER BLOCK
PCV VALVE
GASKET
OIL SEPARATOR COVER

2014 - Mazda3 - Engine

CRANKSHAFT, MAIN BEARING [SKYACTIV-G 2.0, SKYACTIV-G 2.5]

Purpose, Function

- The crankshaft converts the reciprocating movement of the piston to a rotational movement via the connecting rod.
- The main bearing forms an oil film on the outer surface of the crankshaft journal to prevent wear due to sliding.

Construction

Crankshaft

- The crankshaft is installed to the inside (crankcase) of the cylinder block.

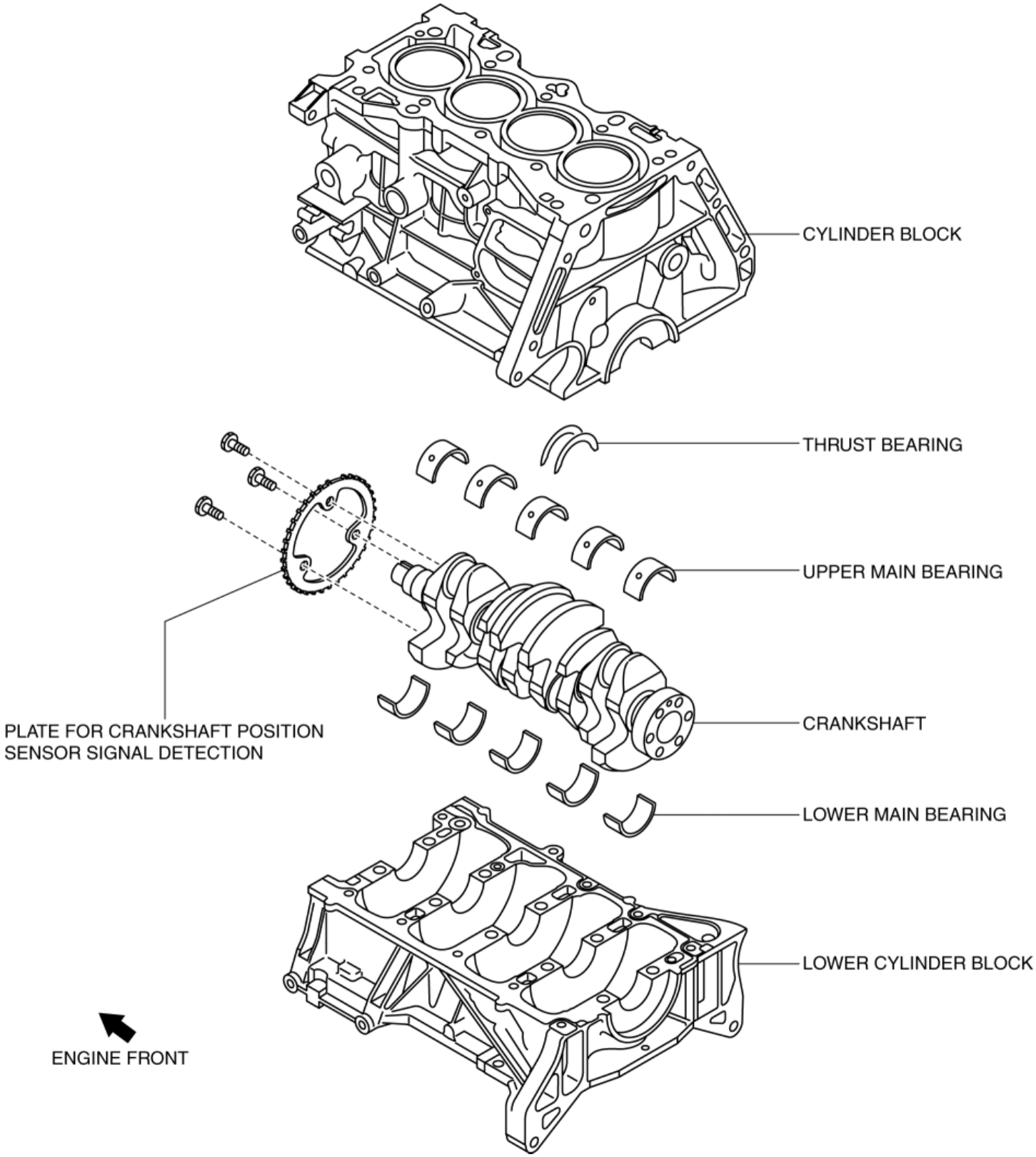

- The crankshaft has a key groove to match timing to the crankshaft pulley.
- The crankshaft has the following parts shown in the figure.

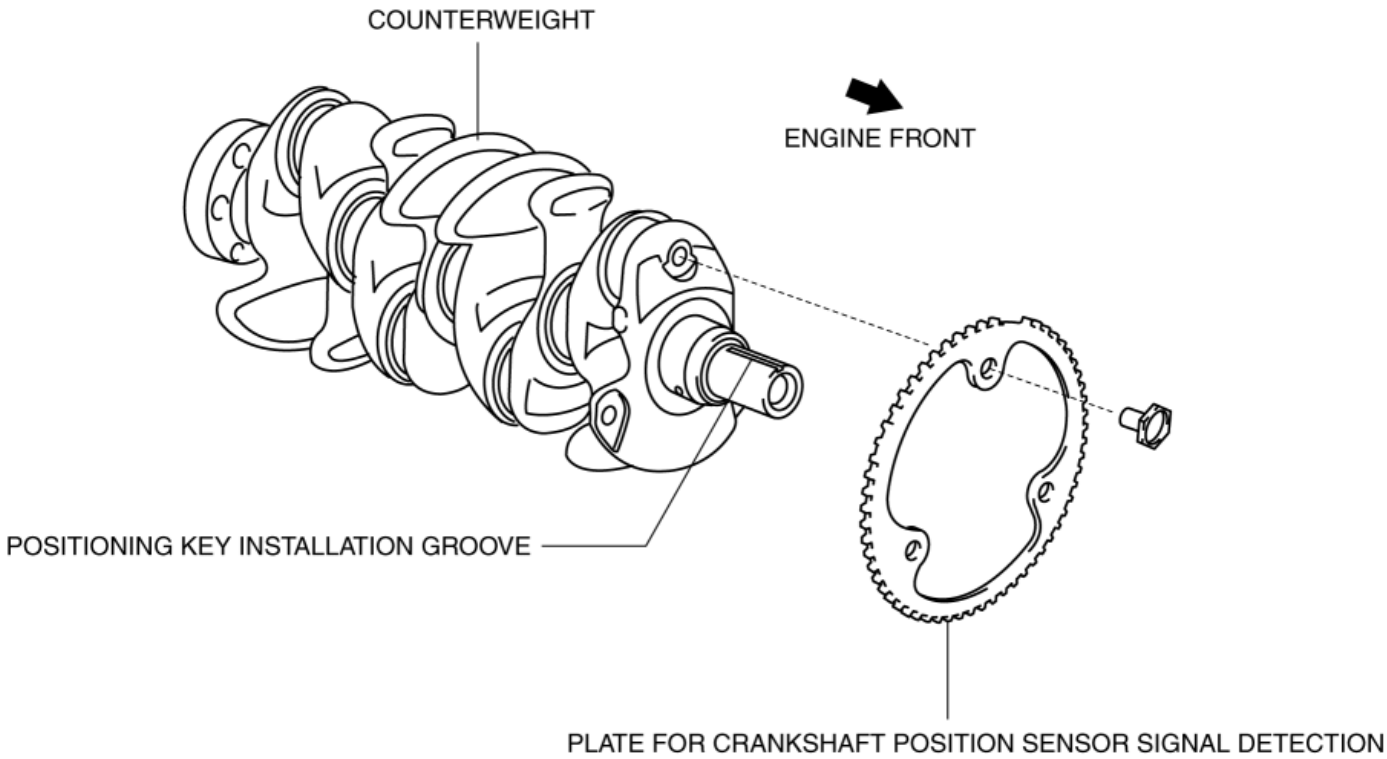

- The optimized shaft diameter ratio of the crankshaft journal and crank pin has reduced sliding resistance while maintaining rigidity.
- The steel crankshaft has five bearings and eight counterweights for improved accuracy in the rotational balance.
- The crankshaft journal and crank pin have been induction hardened* to bear high loads.
- The crankshaft has an oil passage for supplying engine oil to the crankshaft journal and crank pin.

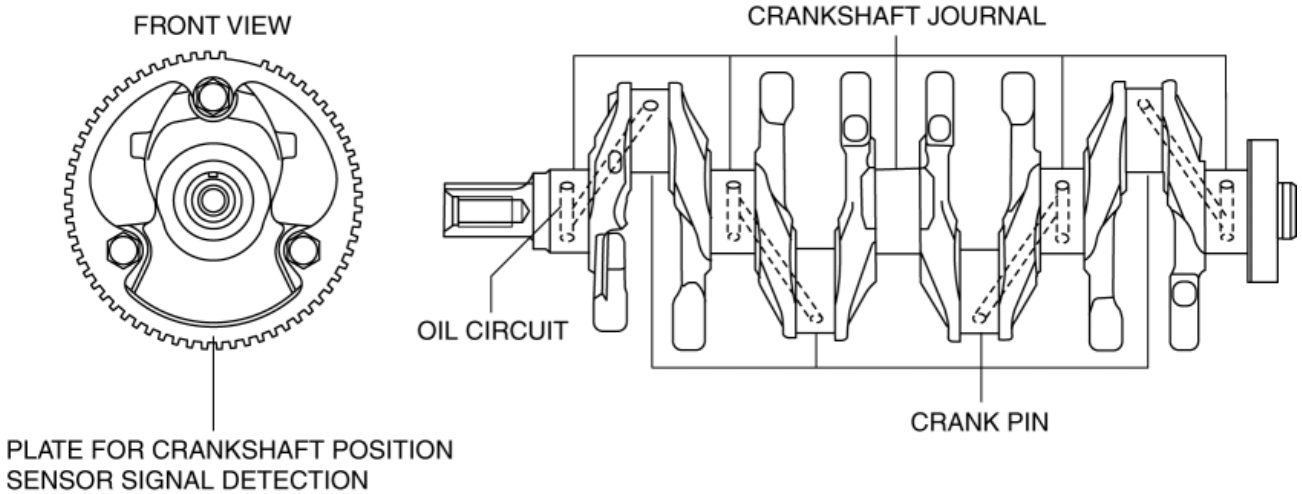

*
A type of heat processing method which improves hardness and strength only at the surface of the metal.

Main bearing

- The main bearing is installed to the outer surface of the crankshaft journal.
- The upper main bearing and lower main bearing are made of aluminum alloy.
- The upper main bearing has an oil groove and oil hole.
- Thrust force is suppressed by the thrust bearings on both sides of the No.3 journal.

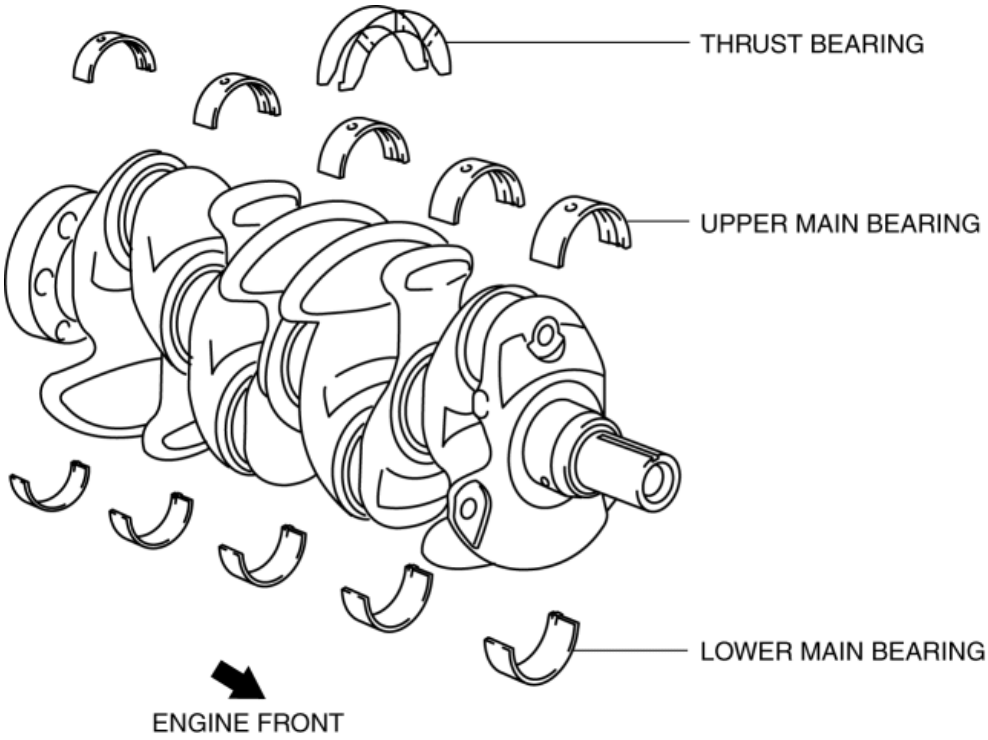
THRUST BEARING
UPPER MAIN BEARING
LOWER MAIN BEARING
ENGINE FRONT

2014 - Mazda3 - Engine

PISTON, PISTON RING, PISTON PIN [SKYACTIV-G 2.0, SKYACTIV-G 2.5]

Purpose, Function

Piston

- The piston in the cylinder of the cylinder block moves reciprocally by the pressure received when the air-fuel mixture combusts.

Piston ring

- The piston ring consists of the compression ring (top ring, second ring) and the oil ring, and has the following function.
    - The compression ring prevents leakage of pressure in the cylinder from the piston circumference.
    - The oil ring clears off extra engine oil adhered to the cylinder wall.
- The piston ring transmits piston heat to the cylinder wall to cool the piston.

Piston pin

- The reciprocating movement of the piston is transmitted to the connecting rod by the connection of the piston pin to connecting rod.

Construction

Piston

- The high-temperature strength piston is made of aluminum alloy with excellent thermal conductivity.
- The piston has a cavity on the top surface. As a result, the initial combustion flame is prevented from hitting the top surface of the piston to reduce cooling loss.

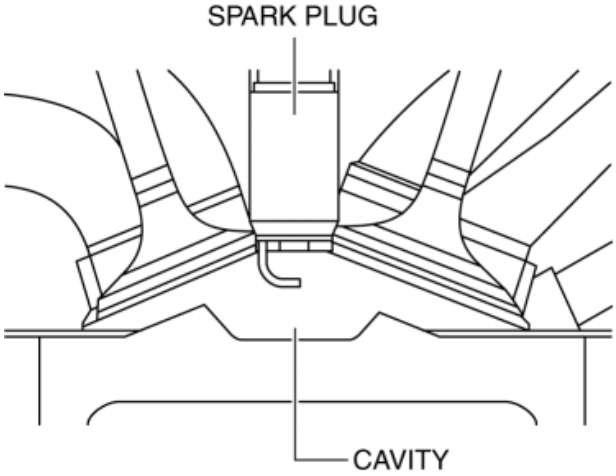

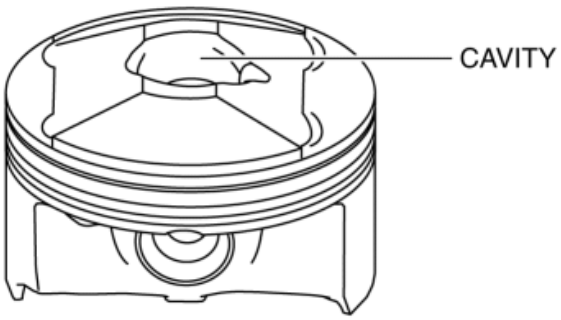

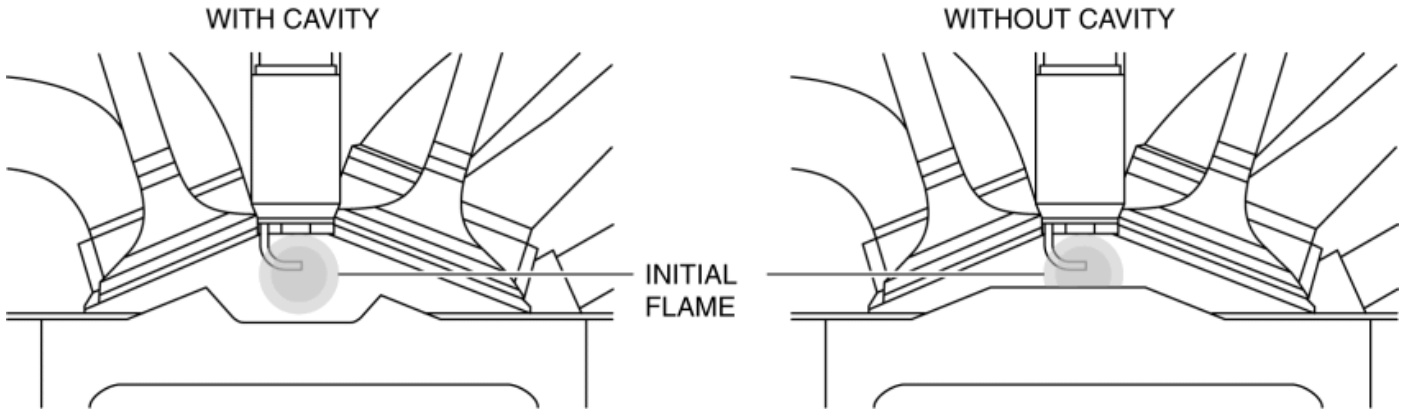

- The sliding resistance has been reduced by optimizing the piston skirt shape.
- A weight reduction is archived by optimizing the piston shape.
- With the adoption of the offset piston, piston slap is suppressed.

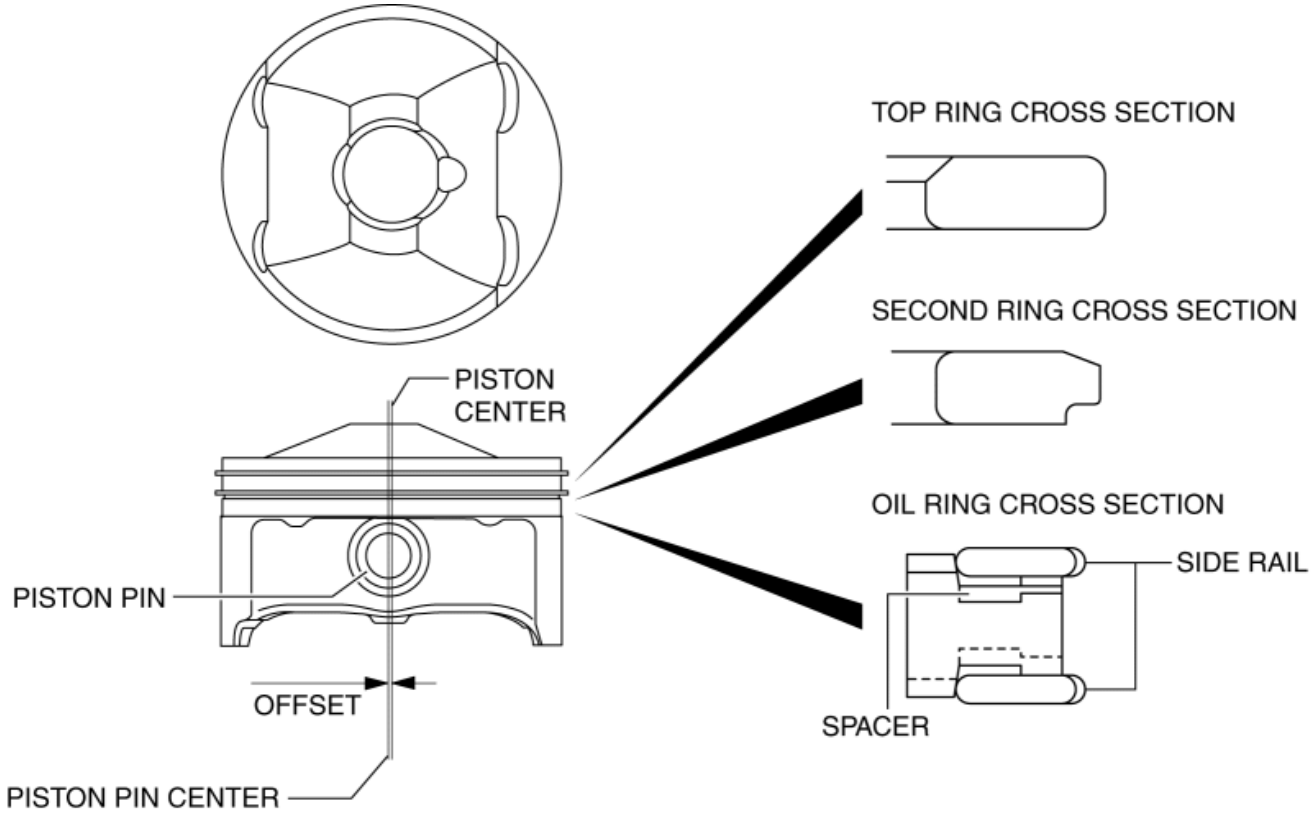

Piston ring

- A barrel-face ring for the top ring and a taper under cut ring for the second ring have been adopted.
- A three-piece oil ring consisting of a side rail and spacer have been adopted for the oil ring.
- Tracking capability to the cylinder wall has been improved by thinning down the piston ring. As a result, a low-tension piston ring has been implemented without increasing the engine oil consumption, and the sliding resistance has been reduced during reciprocating movement.

Piston pin

- The piston is a full-floating type.

2014 - Mazda3 - Engine

CONNECTING ROD, CONNECTING ROD BEARING [SKYACTIV-G 2.0, SKYACTIV-G 2.5]

Purpose, Function

Connecting rod

- The connecting rod transmits the reciprocating movement of the piston to the crankshaft by engaging the piston pin and crank pin.

Connecting rod bearing

- The connecting rod bearing forms an oil film on the outer surface of the crank pin to prevent wear due to sliding.

Construction

Connecting rod

- The connecting rod is installed between the piston pin and crank pin.
- High-strength, forged carbon steel has been adopted for weight reduction.
- A cracking method*1 for breaking off and separating the connecting rod from the connecting rod cap has been adopted for improved accuracy.
- Weight has been reduced by optimizing the shape from the I shaft to the large end.
- Reciprocating inertial weight, including the piston, has been reduced with the use of a full-float type for the connection with the piston and further tapering of the small end shape.
- With the adoption of the plastic region tightening method*2 for the connecting rod bolt, the stability of the axial force has been improved.

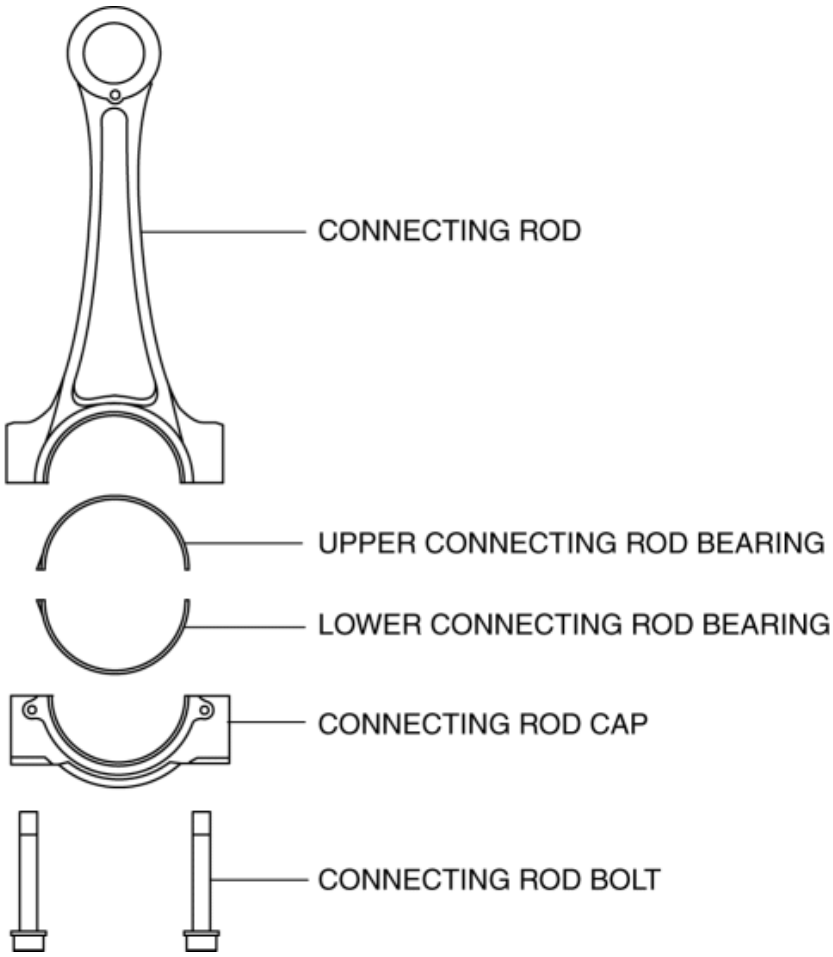

*1

Method of breaking off the large end proportion of the connecting rod after it has been integrally molded to separate the connecting rod from the connecting rod cap. When assembling the connecting rod and connecting rod cap, dowel pins are required to use the mating surface shape which was created during breaking process.

*2

Plastic region tightening is a method of controlling the tightening using the rotation angle of a bolt. By tightening to the region (plastic tightening region) in which bolt deformation does not become irreversible, variation in axial force is suppressed.

Connecting rod bearing

- The connecting rod bearing is installed on the outer surface of the crank pin.
- The upper and lower connecting rod bearings are made of aluminum alloy.

2014 - Mazda3 - Engine

ENGINE FRONT COVER [SKYACTIV-G 2.0, SKYACTIV-G 2.5]

Purpose, Function

- The engine front cover covers the front of the engine to prevent engine oil spillage, noise leakage, and foreign matter penetration.

Construction

- The engine front cover is installed to the front of the engine.

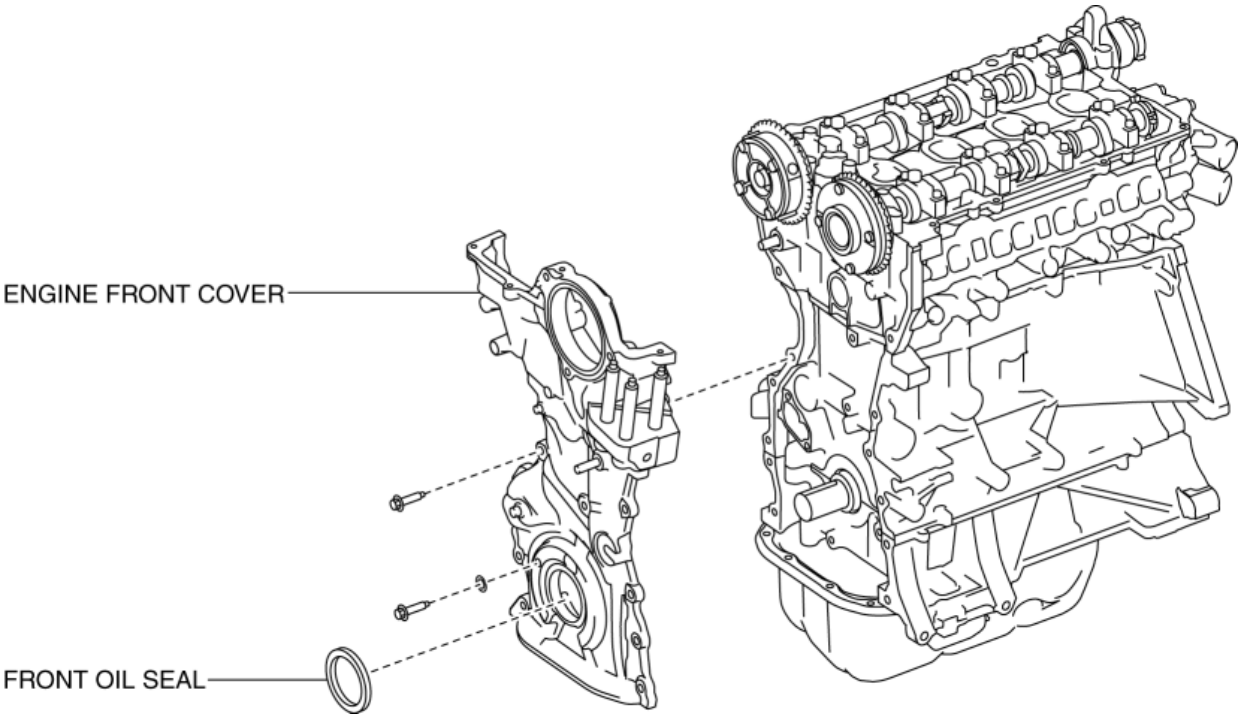

- The lightweight engine front cover is made of aluminum alloy with excellent noise absorption.
- The engine front cover has the following parts shown in the figure.

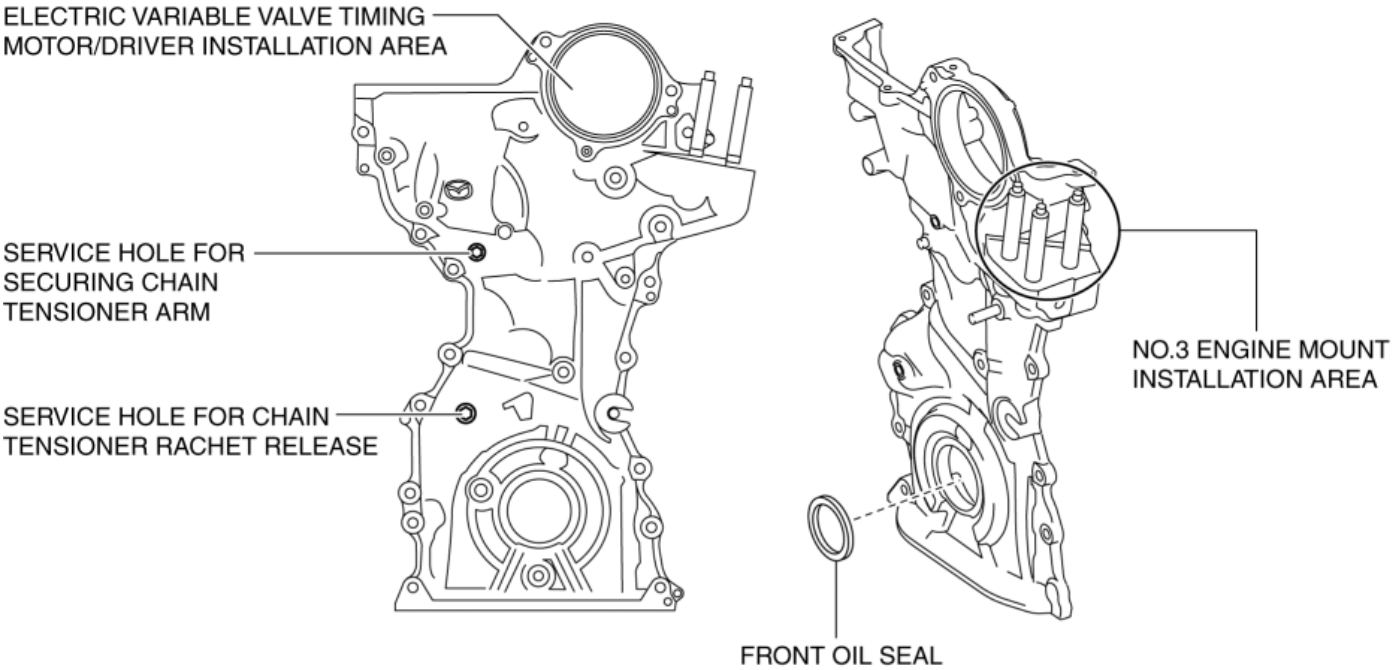
ELECTRIC VARIABLE VALVE TIMING MOTOR/DRIVER INSTALLATION AREA
SERVICE HOLE FOR SECURING CHAIN TENSIONER ARM
SERVICE HOLE FOR CHAIN TENSIONER RACHET RELEASE
NO.3 ENGINE MOUNT INSTALLATION AREA
FRONT OIL SEAL

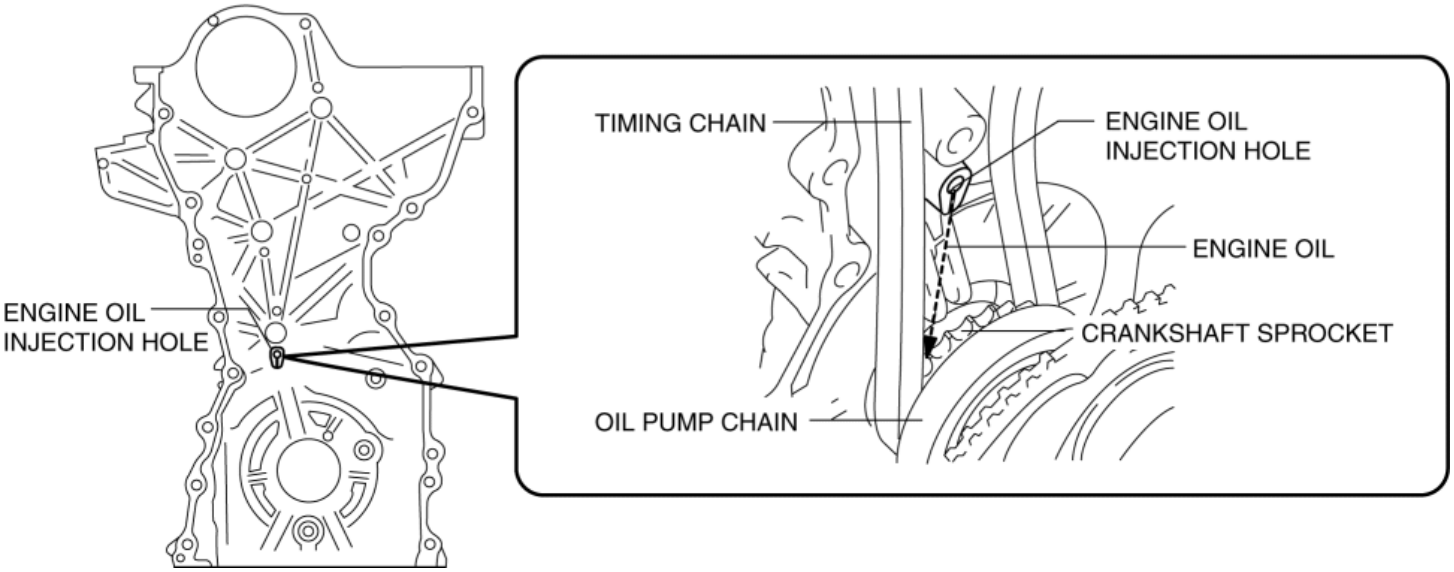
ENGINE OIL INJECTION HOLE
TIMING CHAIN
ENGINE OIL INJECTION HOLE
ENGINE OIL
CRANKSHAFT SPROCKET
OIL PUMP CHAIN

2014 - Mazda3 - Engine

CRANKSHAFT PULLEY [SKYACTIV-G 2.0, SKYACTIV-G 2.5]

Purpose, Function

- The crankshaft pulley transmits the drive force to the auxiliary parts via the drive belt.
- The crankshaft pulley suppresses torsional vibration of the crankshaft.

Construction

- The crankshaft pulley is installed to the front of the crankshaft.

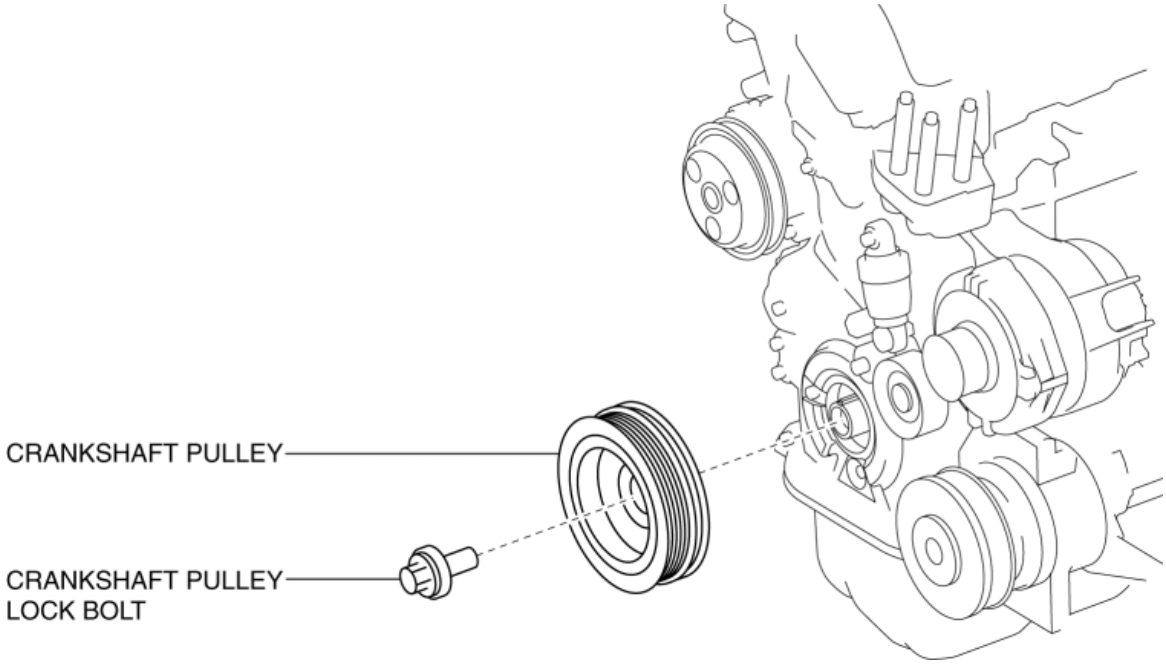

- The crankshaft pulley has a torsional damper for suppressing torsional vibration of the crankshaft.
- The crankshaft pulley has key groove to match the timing to the crankshaft.
- The crankshaft pulley has a timing mark indicating the piston position.

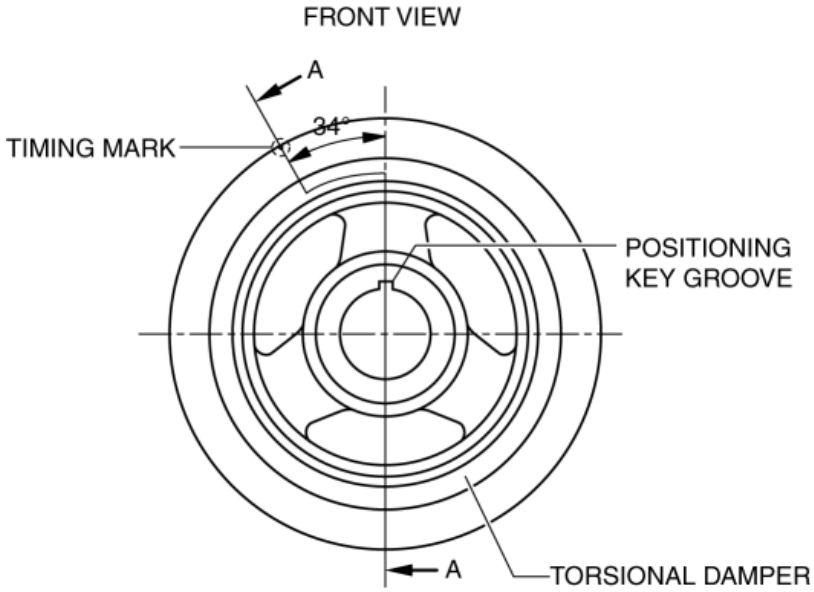
FRONT VIEW
A
34°
TIMING MARK
POSITIONING
KEY GROOVE
A
TORSIONAL DAMPER

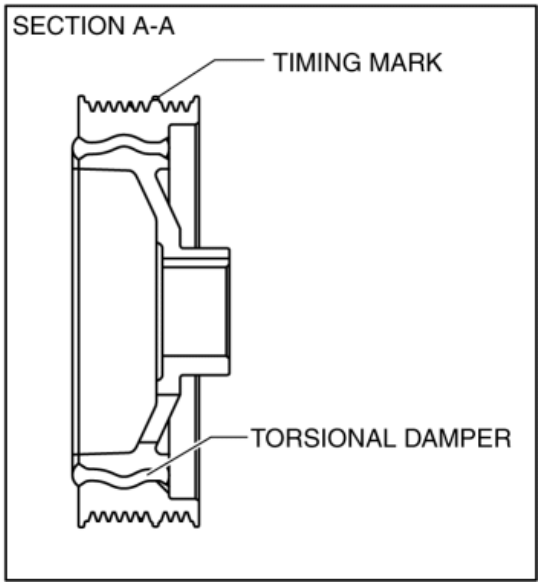
SECTION A-A
TIMING MARK
TORSIONAL DAMPER

2014 - Mazda3 - Engine

DRIVE BELT [SKYACTIV-G 2.0, SKYACTIV-G 2.5]

Purpose, Function

- The drive belt transmits rotation force of the crankshaft pulley to the pulley for the auxiliary parts.

Construction

- The drive belt is installed to the front of the engine.

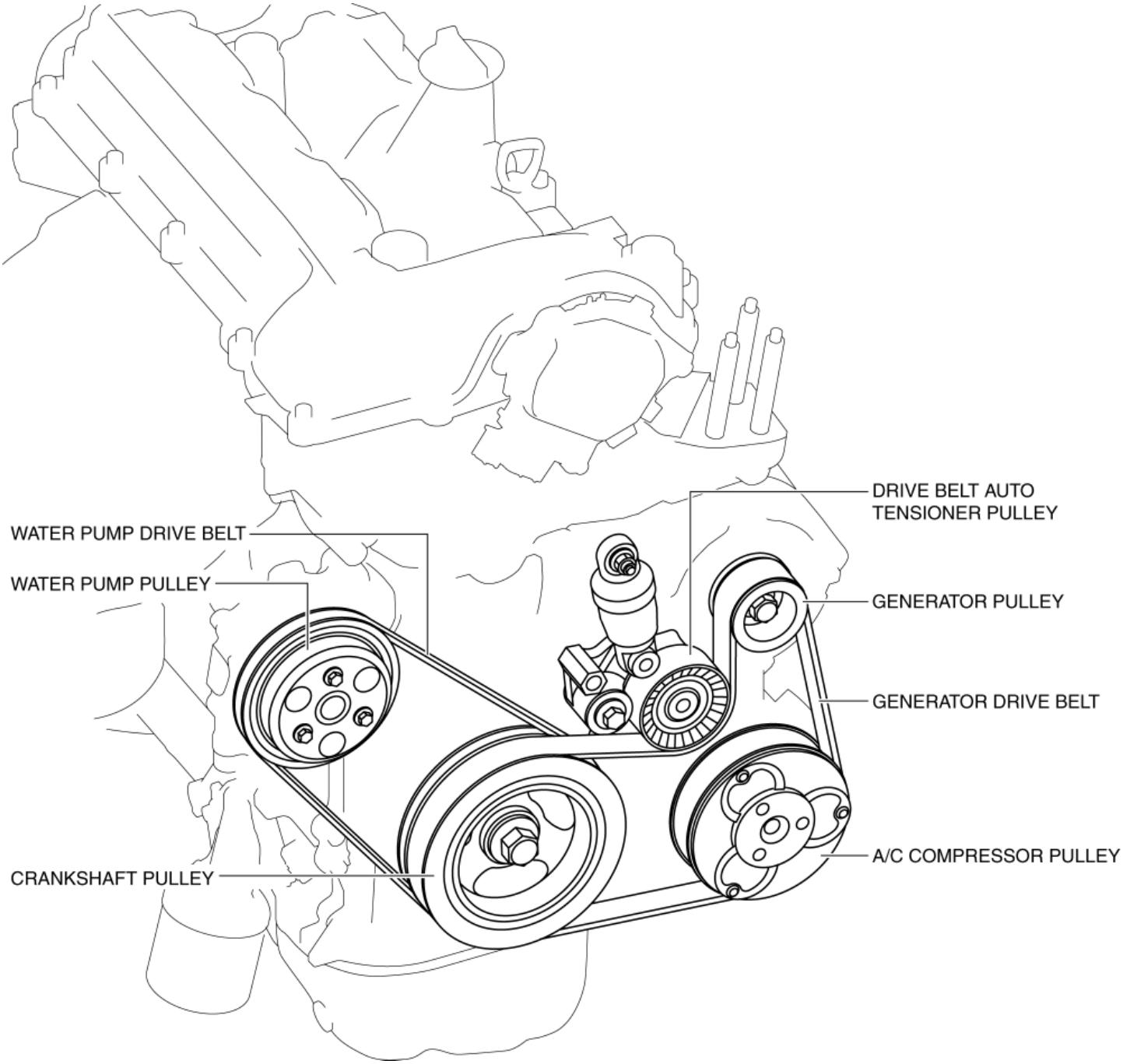

- A V-ribbed belt has been adopted for the drive belt.

- The water pump drive belt is a stretch type.
- Drive belt vibration is suppressed by shortening the distance between each pulley.
- With the adoption of the oil pressure type drive belt auto tensioner, the change in tension by the oil pressure damper operation is absorbed. As a result, the sliding resistance has been reduced by lowering the drive belt tension setting.

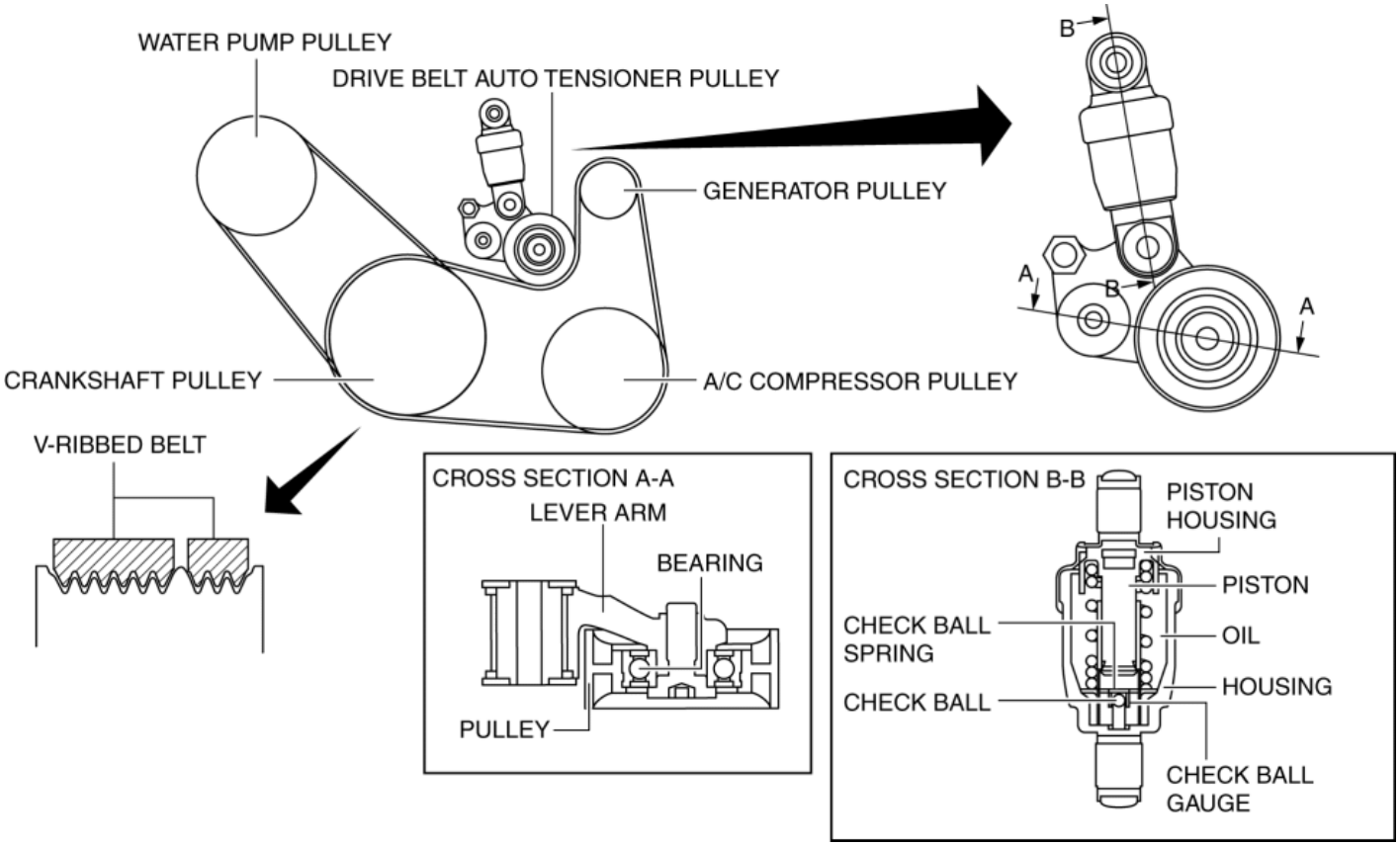

2014 - Mazda3 - Engine

VALVE MECHANISM [SKYACTIV-G 2.0, SKYACTIV-G 2.5]

Outline

- A DOHC type valve system has been adopted and consists of four valves (two intake valves and two exhaust valves) per cylinder for a total of 16 valves operated by two camshafts.

Structural View

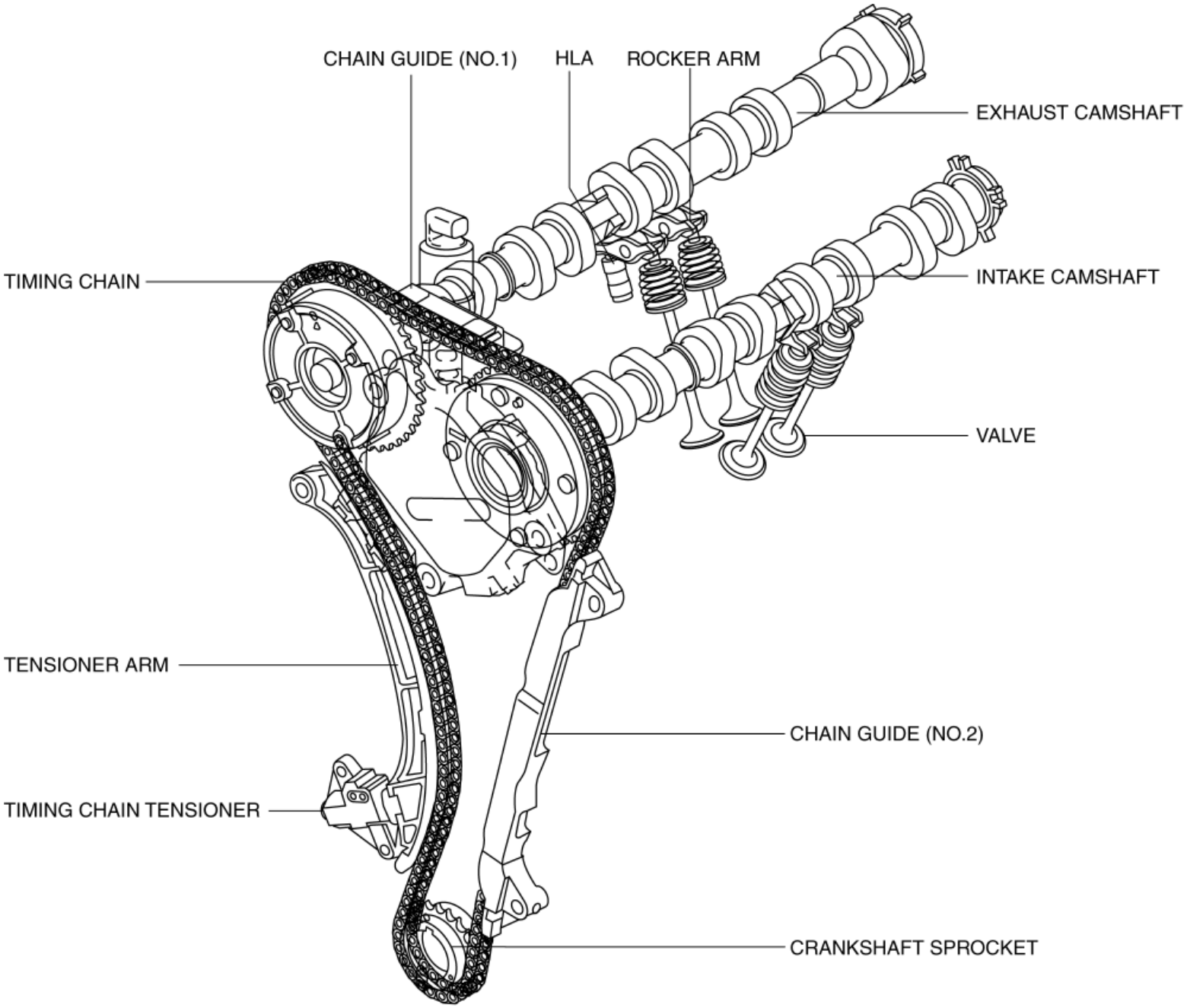

ILLUSTRATION SHOWS WITH SKYACTIV-G 2.0

2014 - Mazda3 - Engine

VALVE, VALVE SPRING, VALVE SEAL, VALVE GUIDE [SKYACTIV-G 2.0, SKYACTIV-G 2.5]

Purpose, Function

Valve

- The intake valve is pressed down by the cam, the intake air passage is opened, and air is introduced into the cylinder.
- The exhaust valve is pressed down by the cam, the exhaust air passage is opened, and combustion gas is exhausted from the cylinder.

Valve spring

- The valve spring adheres to the valve seat by pulling up the valve by spring force, and air tightness in the combustion chamber is maintained.

Valve seal

- The valve seal prevents engine oil from entering combustion chamber through the valve guide, and engine oil consumption is suppressed.

Valve guide

- The valve guide maintains the valve stem to open and close the valve smoothly.
- The valve guide cools the valve by transmitting valve heat to the cylinder head.

Construction

- The valve, valve spring, valve seal, and valve guide are assembled to the cylinder head as a single unit.

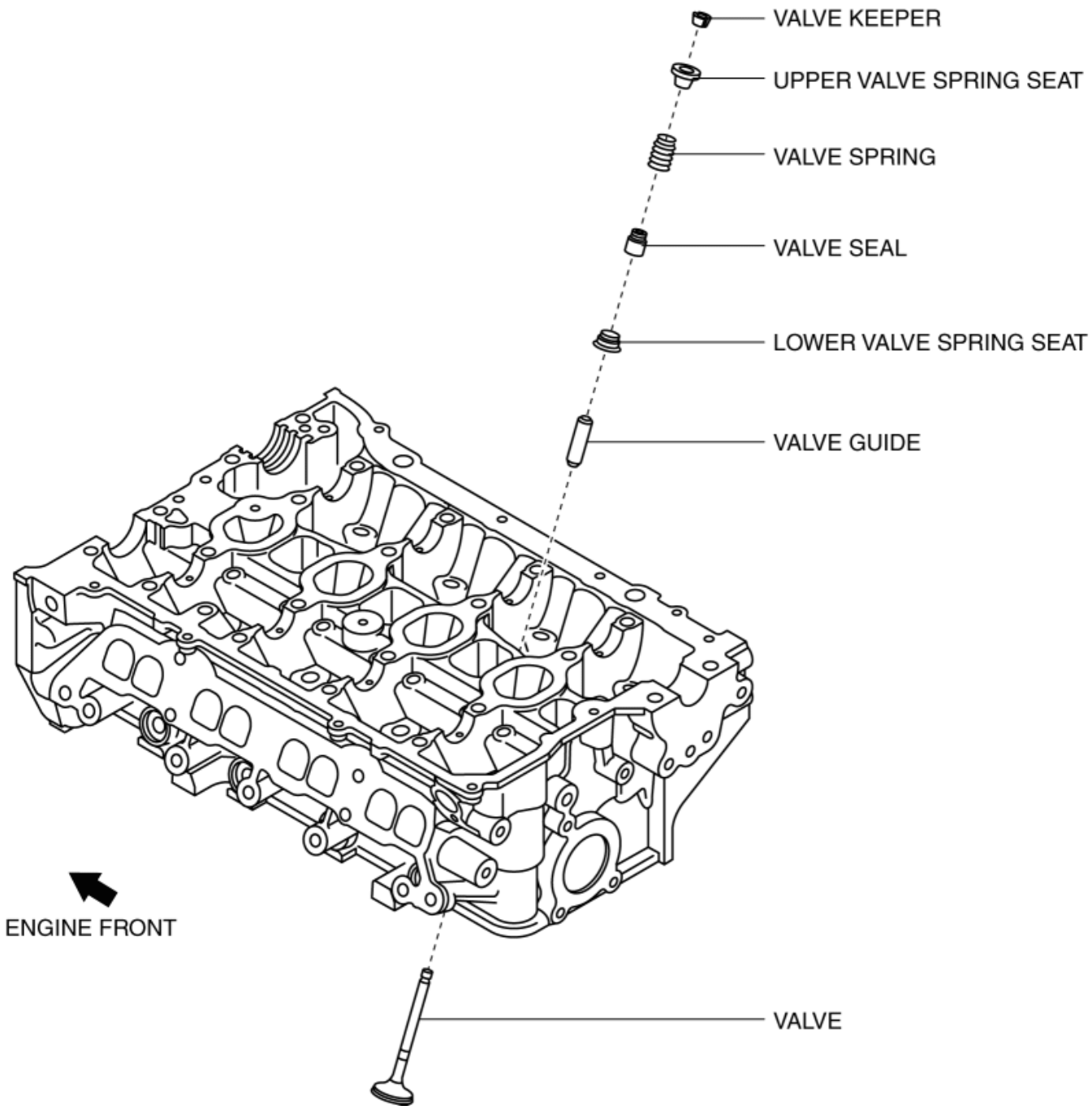

- The sliding resistance has been reduced by setting the valve spring load to the required minimum.
- The intake valve and exhaust valve are subjected to a salt-bath, soft-nitriding treatment to enhance wear resistance.
- Unequal pitch valve spring has been adopted. In addition, the upper diameter is smaller compared to the bottom diameter.
- The valve guide is made of sintered alloy with excellent wear resistance.

2014 - Mazda3 - Engine

CAMSHAFT [SKYACTIV-G 2.0, SKYACTIV-G 2.5]

Purpose, Function

- The camshaft is rotated by receiving the rotation force of the crankshaft via the timing chain. The valve is opened and closed according to the cam shape at this time.

Construction

- The camshaft is installed to the cylinder head.

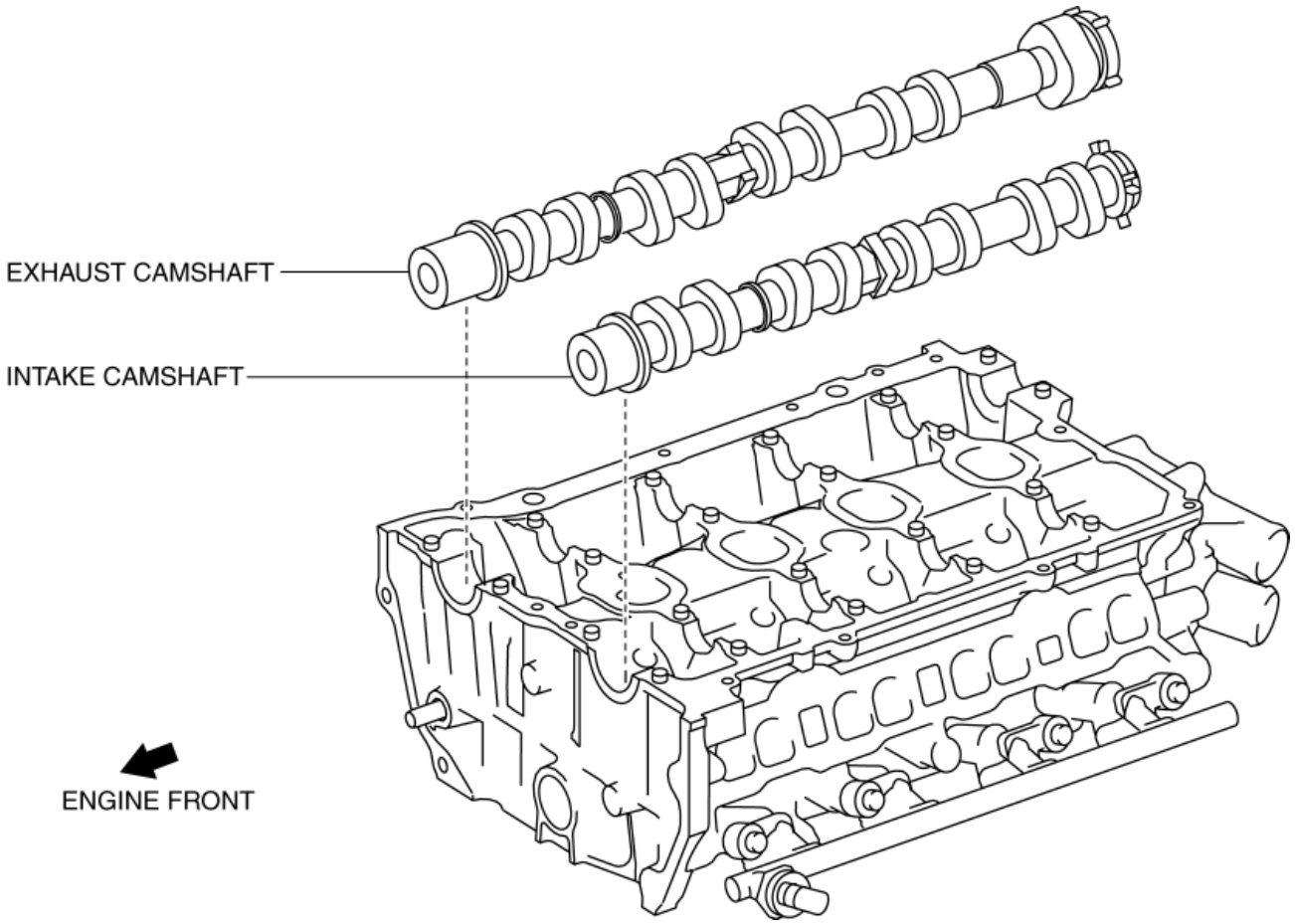

- The intake camshaft is a five-bearing type and the exhaust camshaft is a six-bearing type.
- The camshaft thrust force is suppressed by the No.1 journal.
- The camshaft has the following parts shown in the figure.

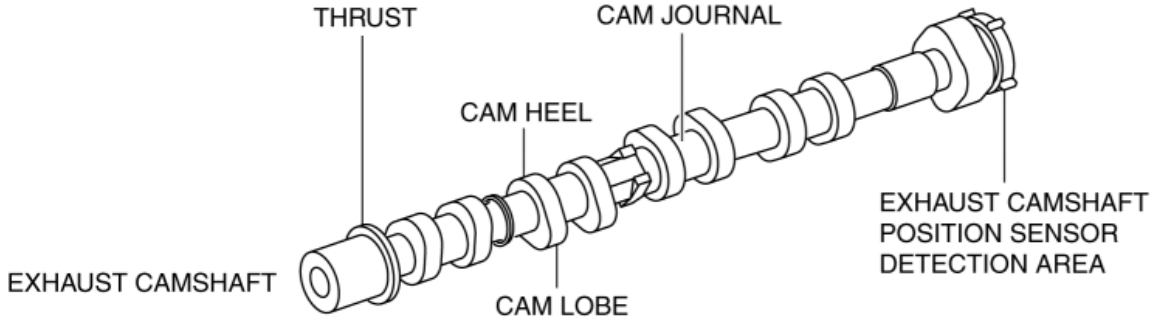

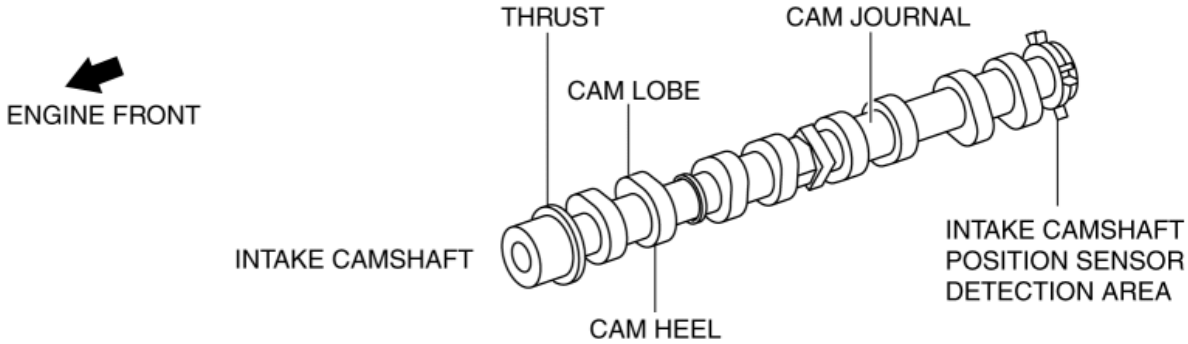

Valve timing

- SKYACTIV-G 2.0

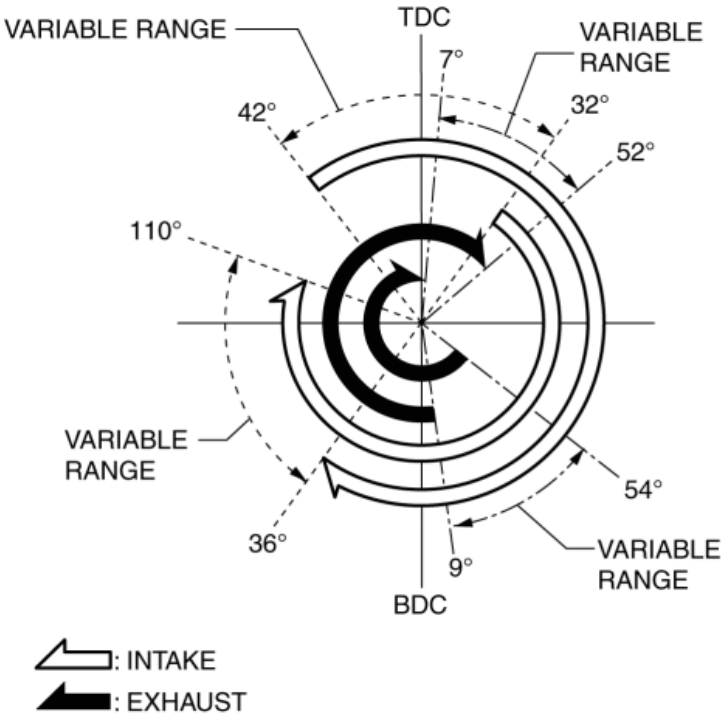

- SKYACTIV-G 2.5

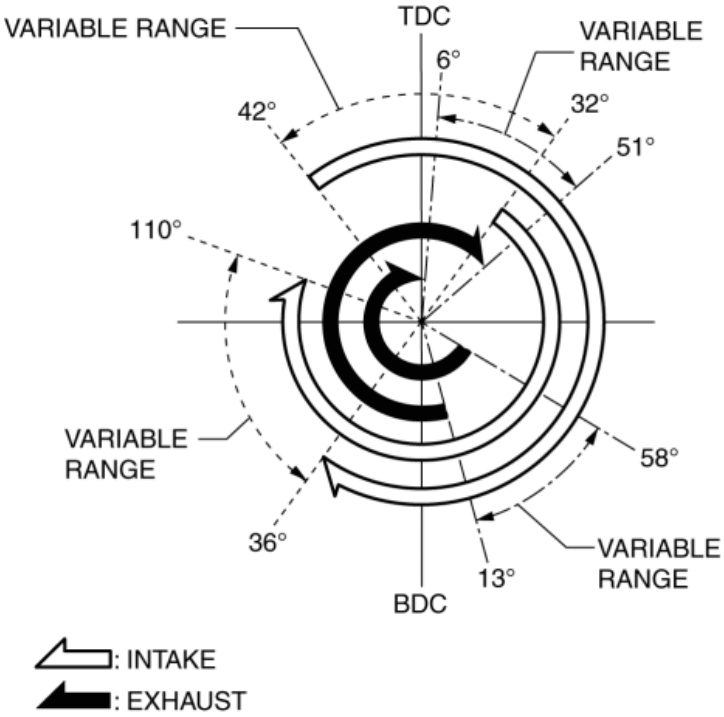

Item				Specification
Valve timing	IN	Open	(°)	BTDC 42—ATDC 32
		Close	(°)	ABDC 36—ABDC 110
	EX	Open	(°)	SKYACTIV-G 2.0: BBDC 54—BBDC 9
				SKYACTIV-G 2.5: BBDC 58—BBDC 13
		Close	(°)	SKYACTIV-G 2.0: ATDC 7—ATDC 52
				SKYACTIV-G 2.5: ATDC 6—ATDC 51

2014 - Mazda3 - Engine

TIMING CHAIN, CHAIN TENSIONER [SKYACTIV-G 2.0, SKYACTIV-G 2.5]

Purpose, Function

Timing chain

- The timing chain transmits the rotation force of the crankshaft to the camshaft to perform the rotation timing of the crankshaft and camshaft.

Chain tensioner

- The chain tensioner constantly maintains the timing chain tension and the timing chain operation is stabilized.

Construction

Timing chain

- The timing chain is installed between the camshaft sprocket and crankshaft sprocket.

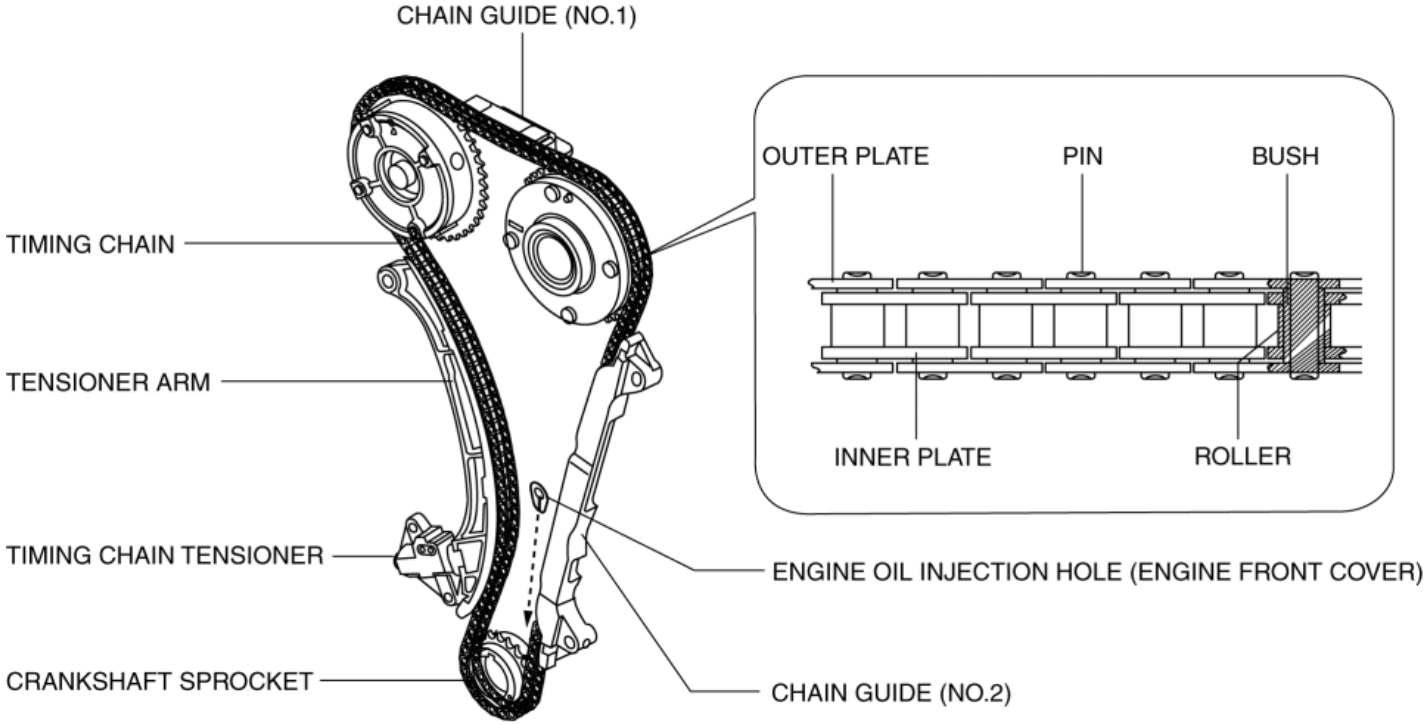

- Lubrication of the timing chain and each sprocket is performed using the engine oil from the engine front cover.
- Improvement of the rigidity of the chain guide and tensioner arm and the stability of the timing chain operation have reduced the sliding resistance.

Chain tensioner

- The chain tensioner is installed to the cylinder block (engine front).
- An oil pressure type chain tensioner has been adopted for the chain tensioner.

OPERATION

Chain tensioner

- Fluctuation in the timing chain tension by oil pressure and spring force is suppressed, and the tension is maintained at a constant.

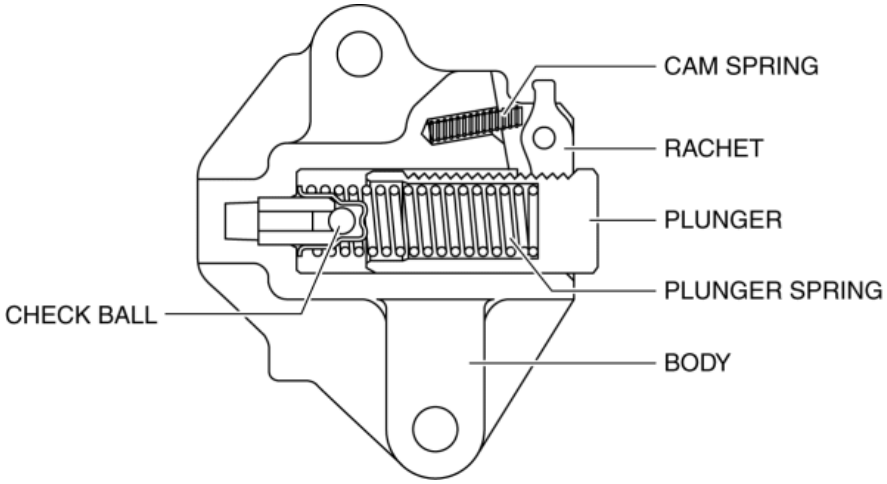

2014 - Mazda3 - Engine

HYDRAULIC LASH ADJUSTER, ROCKER ARM [SKYACTIV-G 2.0, SKYACTIV-G 2.5]

Purpose, Function

HLA

- The HLA maintains the valve clearance at a constant 0 mm and maintenance-free valve clearance is archived.

Rocker arm

- With the adoption of the needle roller bearing built into the rocker arm, the contact to the cam employs rolling contact to reduce sliding resistance.

Construction

HLA

- The HLA is installed to the cylinder head.

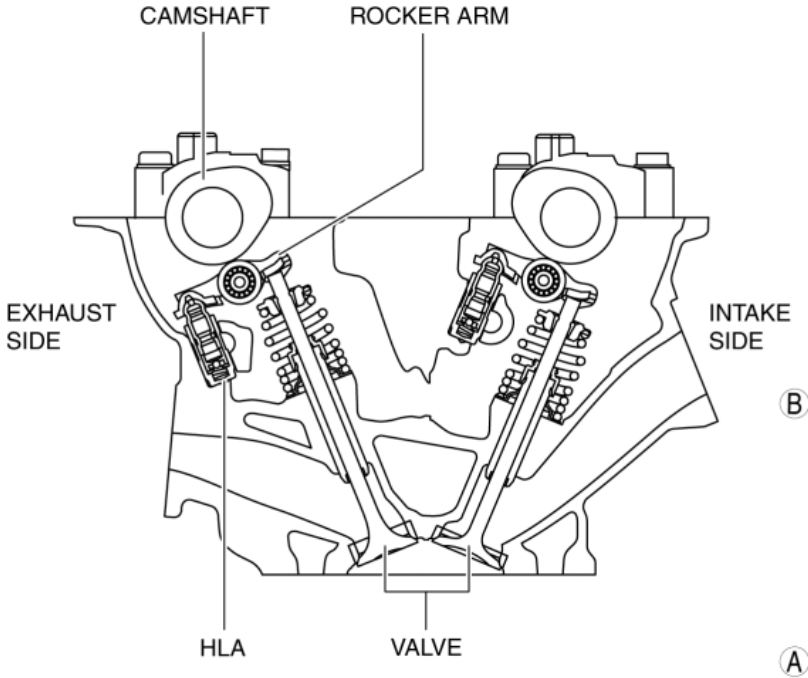

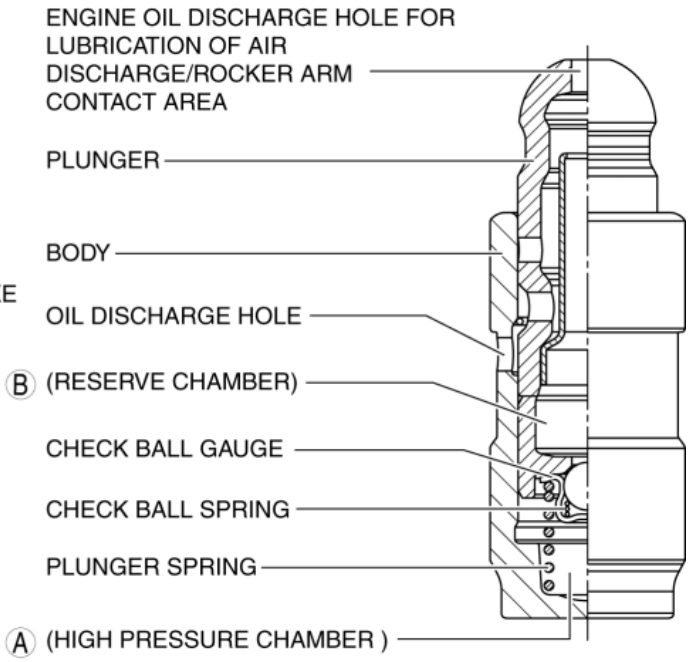

Rocker arm

- The rocker arm is installed to the HLA and upper area of the valve.
- The needle roller bearing is built into the rocker arm.

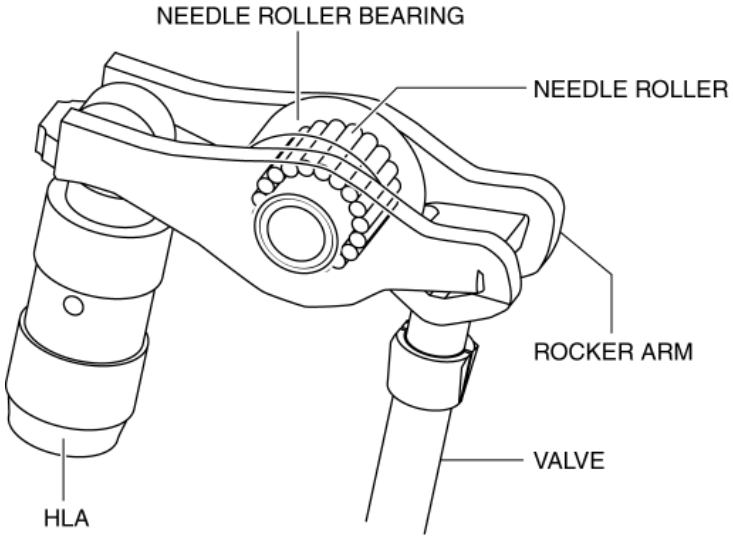

Operation

Before valve opening

1. The plunger presses up the rocker arm by the spring force of the plunger spring to maintain the valve clearance at 0 mm.

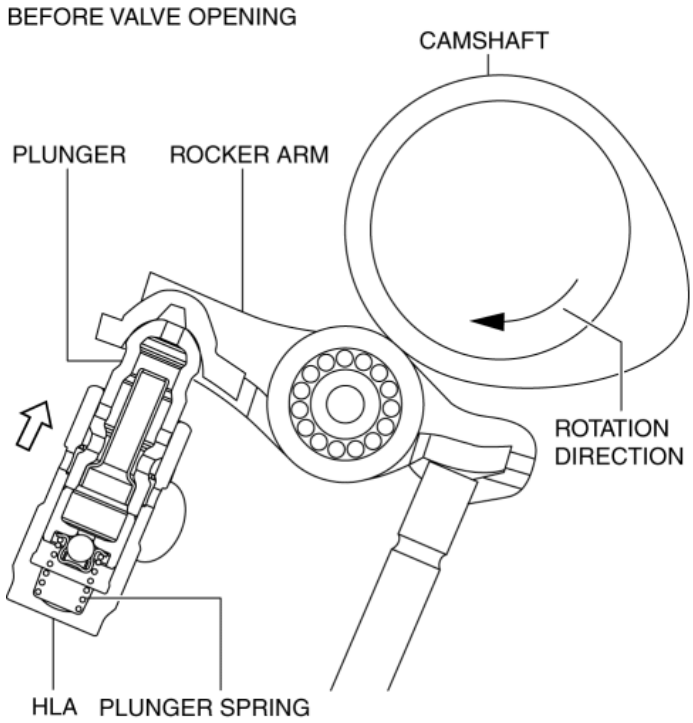

During valve opening

1. If the cam presses down the rocker arm, load is applied to the plunger and valve.

2. If load is applied to the plunger, the hydraulic pressure in the high pressure chamber (A chamber) increases and the check ball closes the hydraulic passage.

3. If the hydraulic passage is closed, the plunger is fixed becoming the rocker arm pivot point because the volume of the engine oil in the high pressure chamber is not changed.

4. The rocker arm presses down the valve.

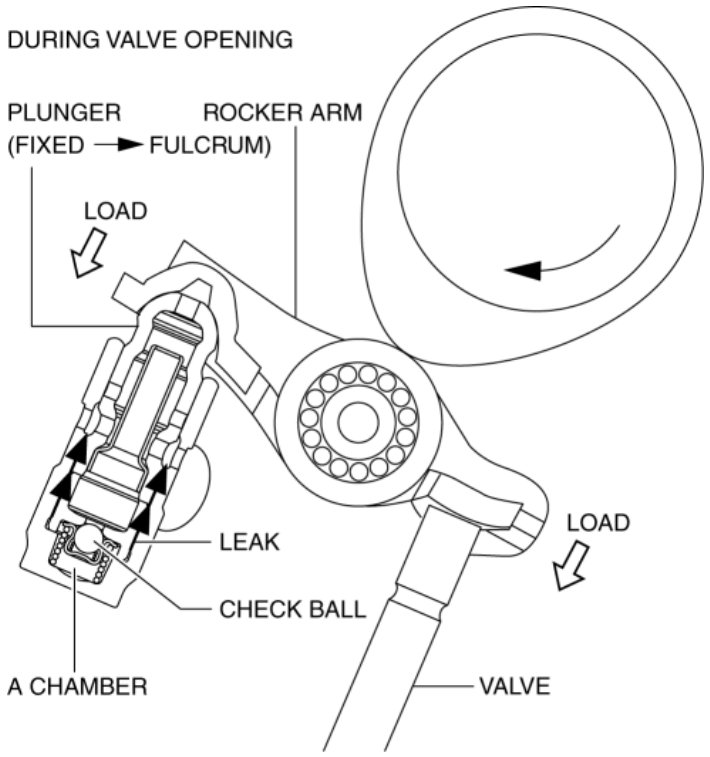

After valve opening

1. If load is not applied to the plunger, the plunger spring presses up the plunger (maintains valve clearance at 0 mm).

2. Because the capacity of the high pressure chamber (A chamber) increases in Step 1, the check ball is opened and engine oil flows from the reserve chamber (B chamber) to the high pressure chamber (A chamber) to prepare for the next step.

3. The oil in the reserve chamber (B chamber) which is decreased by supplying it to the high pressure chamber (A chamber), is supplied from the oil passage of the cylinder head.

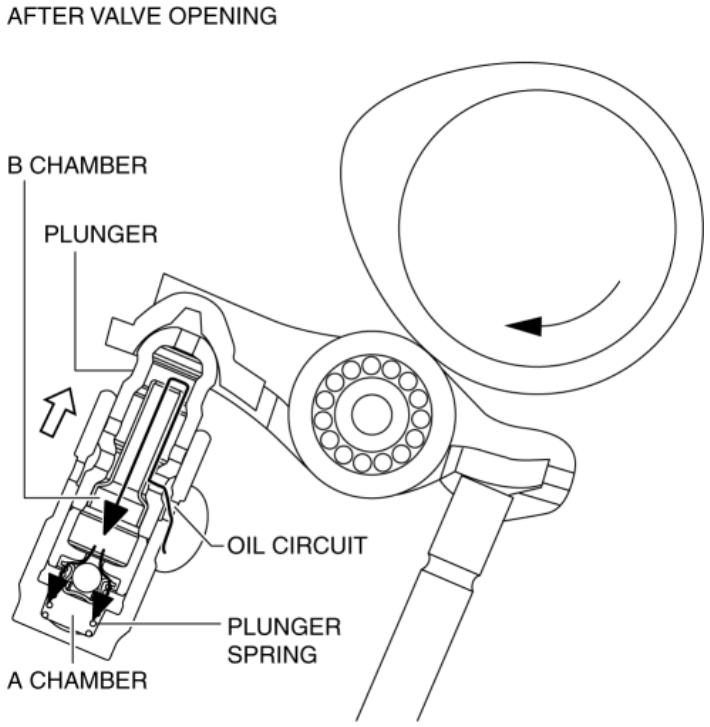

2014 - Mazda3 - Engine

VARIABLE VALVE TIMING MECHANISM [SKYACTIV-G 2.0, SKYACTIV-G 2.5]

Outline

- Achieves optimum valve timing according to the driving conditions by the variable valve timing mechanism changing the phases of the camshaft.
- An electric type variable valve timing mechanism on the intake side and a hydraulic pressure type on the exhaust side has been adopted. The expansion of the valve opening angle and the accuracy of the intake and exhaust controls have been improved.
- The electric variable valve timing mechanism obtains higher response than the hydraulic variable valve timing mechanism. As a result, expansion of overlap and the closing timing of the intake valve are achieved.

Structural View

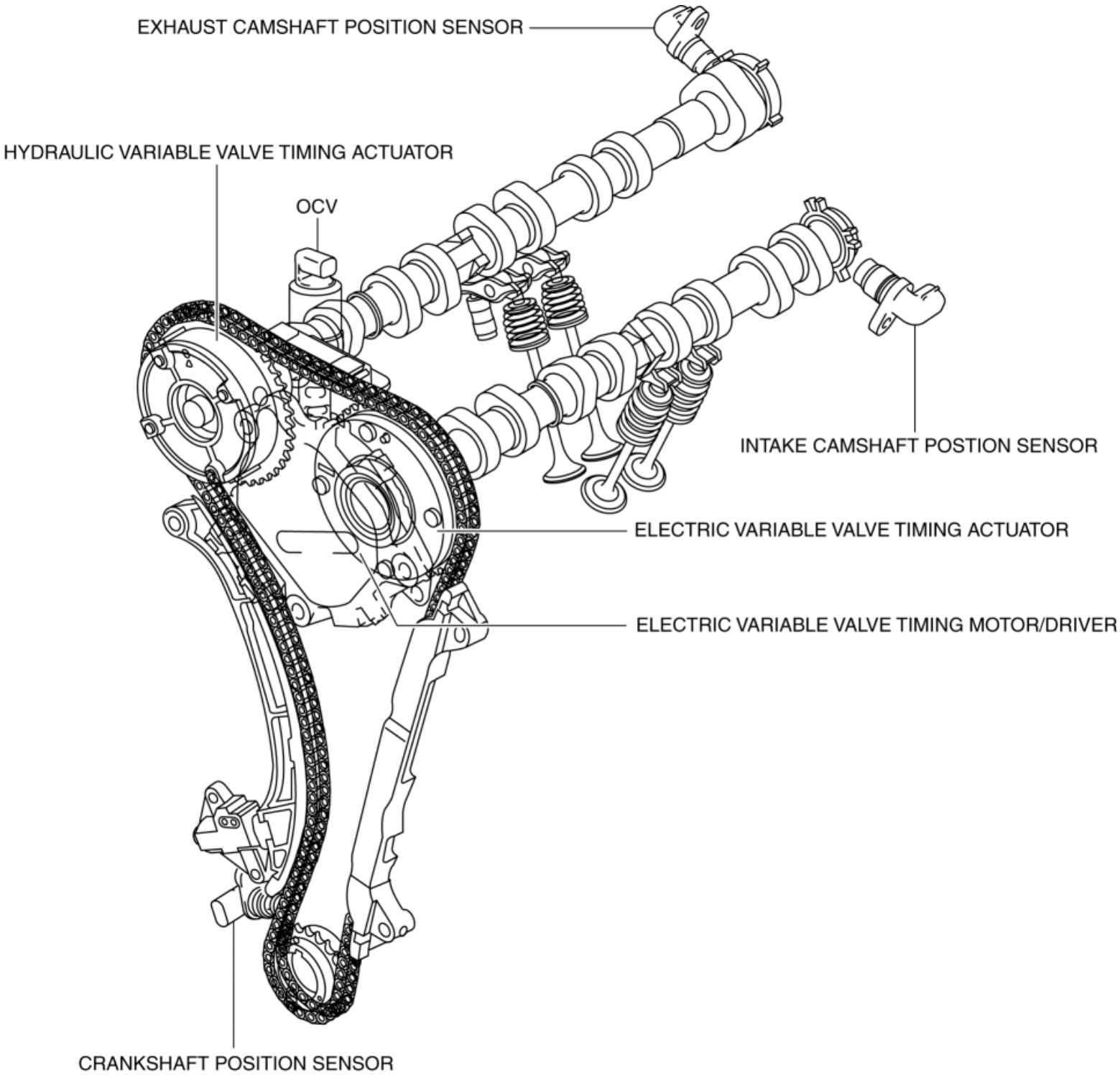

Structure

Part name	Function
Hydraulic variable valve timing actuator	The hydraulic variable valve timing actuator operates according to the hydraulic pressure and changes the phases of the exhaust camshaft.
Electric variable valve timing actuator	The electric variable valve timing actuator changes the phases of the intake camshaft.

Electric variable valve timing motor/driver	Operates the electric variable valve timing actuator based on the signals from the PCM.
OCV	Operated by current (duty signal) from the PCM. Controls the hydraulic oil passages to the variable valve timing actuator.
Intake camshaft position sensor	Sends the intake camshaft position signal to the PCM.
Exhaust camshaft position sensor	Sends the exhaust camshaft position signal to the PCM.
Crankshaft position sensor	Sends the crankshaft position signal to the PCM.

Operation

At engine start

- Engine startability has been improved by utilizing the features of the operable electric VVT even under the engine stop condition and controlling the optimal timing according to engine conditions.

Light/medium load range

- Pumping loss* is reduced by properly controlling the timing of intake and exhaust, improving the fuel consumption rate.

*
Energy loss which occurs from each type of resistance corresponding to intake and exhaust is called pumping loss.

High load range

- By properly controlling the timing of the intake and exhaust and using the effect of scavenging residual gas in the cylinder and the inertia charging effect, the volumetric efficiency and the output are improved.

2014 - Mazda3 - Engine

ENGINE MOUNT [SKYACTIV-G 2.0, SKYACTIV-G 2.5]

Purpose, Function

- The engine mount secures the engine and transaxle to the vehicle body, reducing vibration and noise.

Construction

- The three points at the engine front (No.3 engine mount), one side of the transaxle (No.1 engine mount), and the rear upper part of the transaxle (No.4 engine mount) are supported.

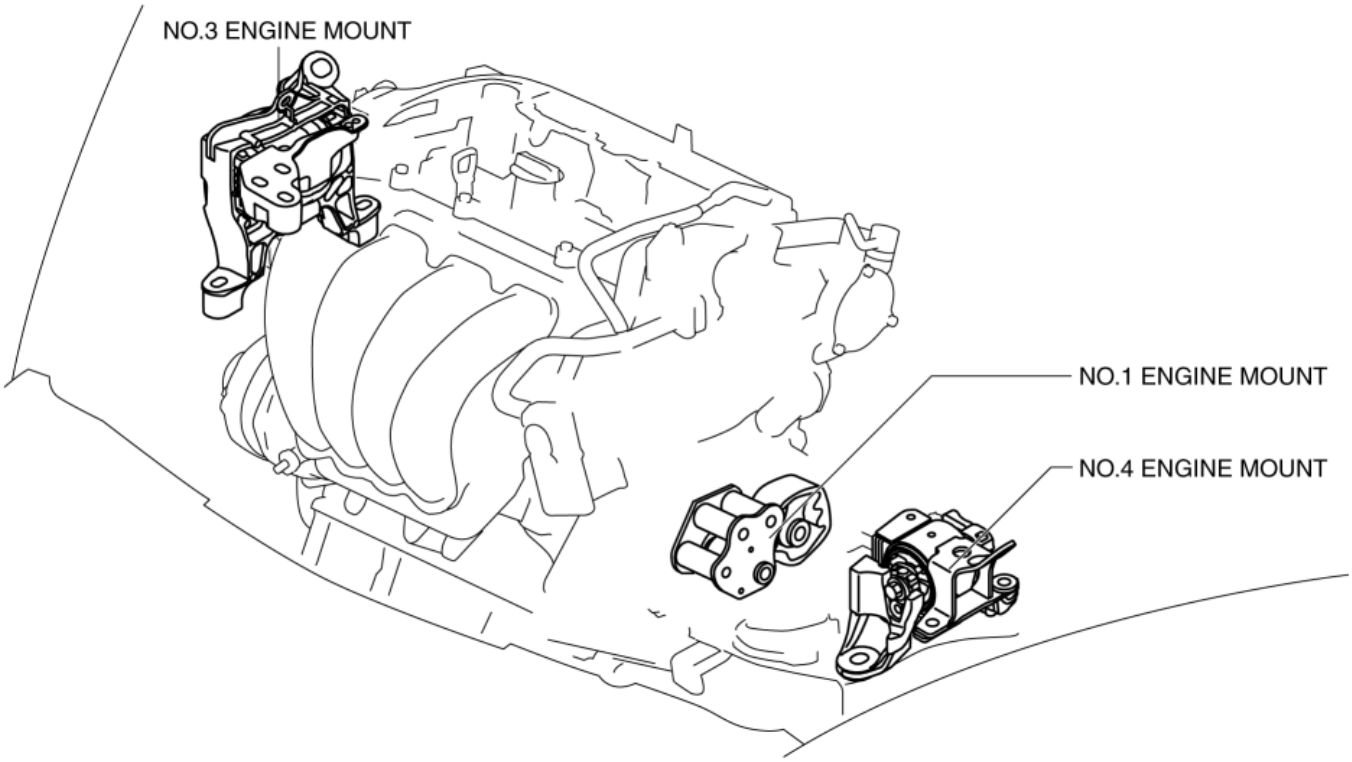

- With the adoption of the oil-filled bushing type for the No.3 engine mount and No.4 engine mount rubber, the damper effect has been improved.

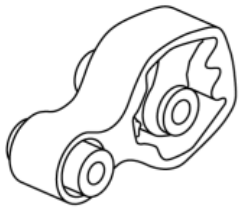

NO.1 ENGINE MOUNT RUBBER

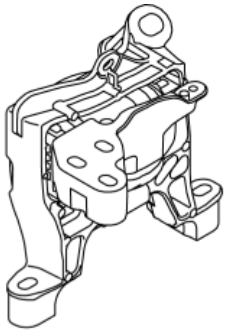

NO.3 ENGINE MOUNT

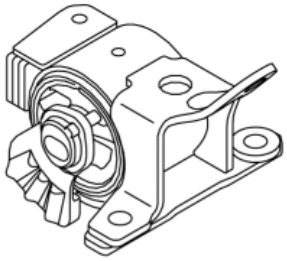

NO.4 ENGINE MOUNT RUBBER

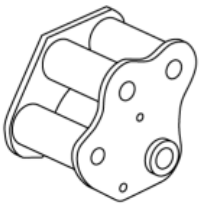

NO.1 ENGINE MOUNT BRACKET

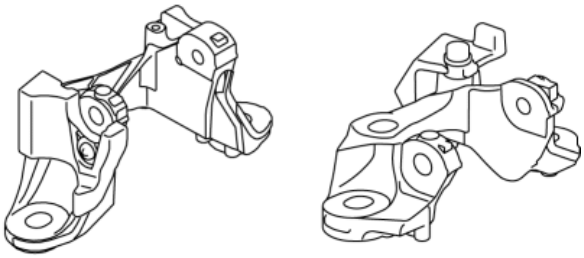

NO.4 ENGINE MOUNT BRACKET

Operation

- By locating the one side of the transaxle (No.1 engine mount) to the transaxle lower end, the No.1 engine mount absorbs the rotation force to the powertrain generated during engine torque fluctuation. The layout is designed to disperse the rotation force to the front/back directions of the engine.

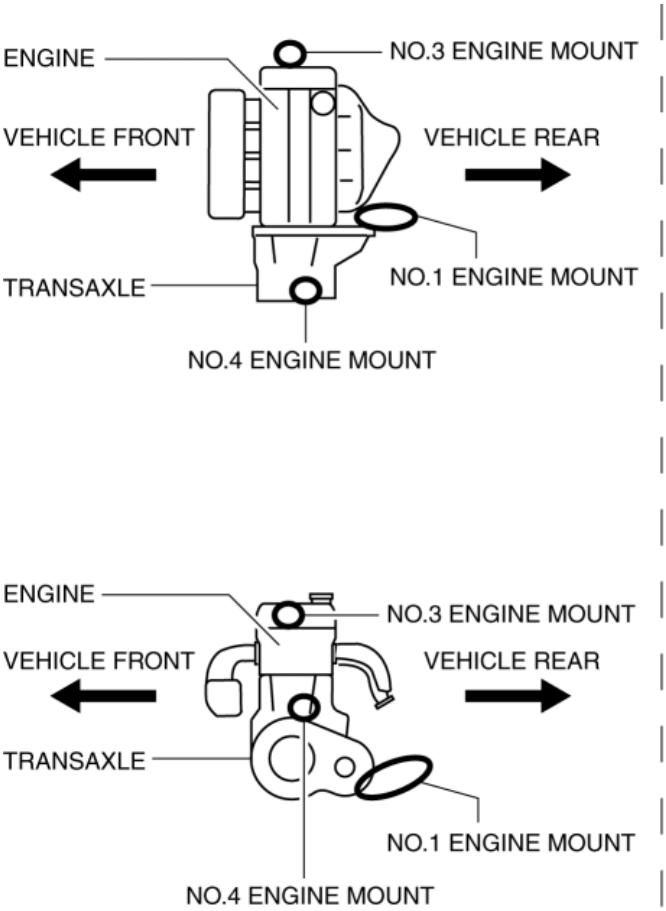

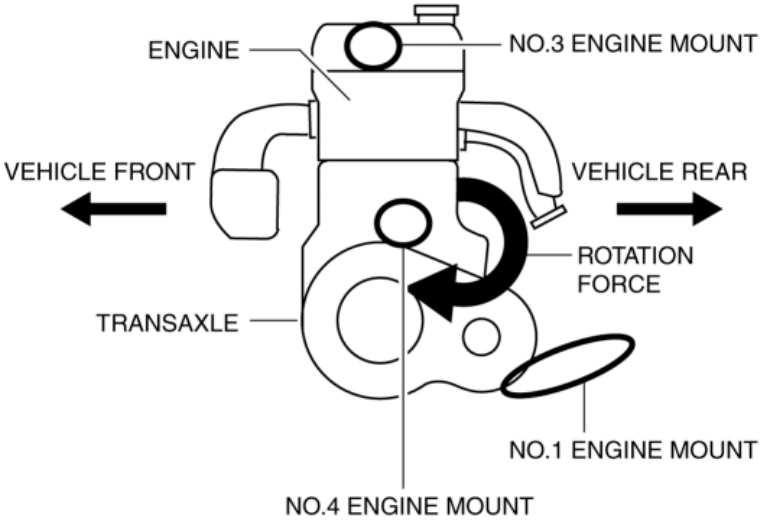

2014 - Mazda3 - Engine

OIL CONTROL VALVE (OCV) [SKYACTIV-G 2.0, SKYACTIV-G 2.5]

Purpose, Function

- The OCV switches the oil passage to the hydraulic variable valve timing actuator to control the opening/closing period of the exhaust valve.

Construction

- The OCV is installed to the exhaust camshaft cap (No.1).
- The OCV consists of a spool valve which switches the engine oil passage and a plunger, coil, and return spring which operate the spool valve.

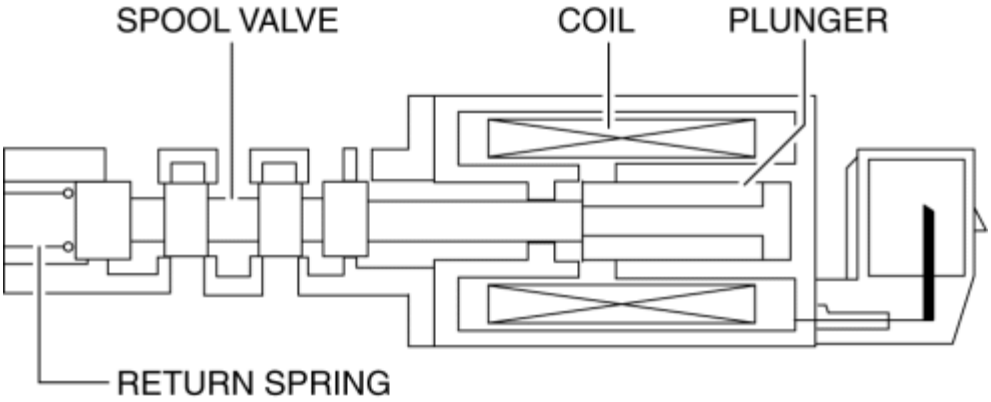

Operation

At retard

- The spool valve is moved to the retard side by the signal from the PCM and engine oil is lead to the retard oil passage of the exhaust camshaft.

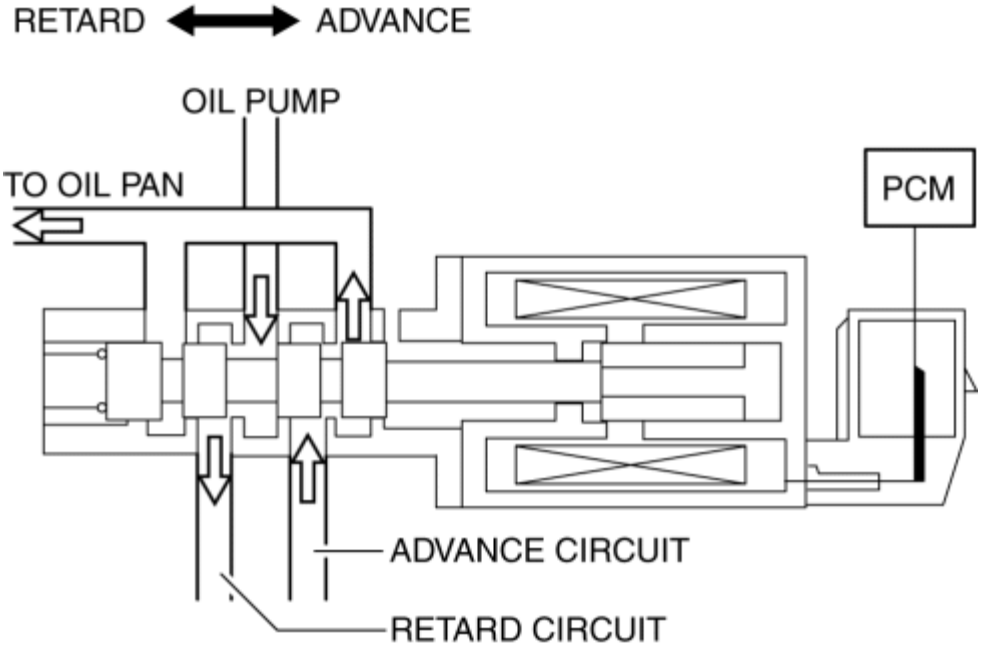

At advance

- The spool valve is moved to the advance side by the signal from the PCM and engine oil is lead to the advance oil passage of the exhaust camshaft.

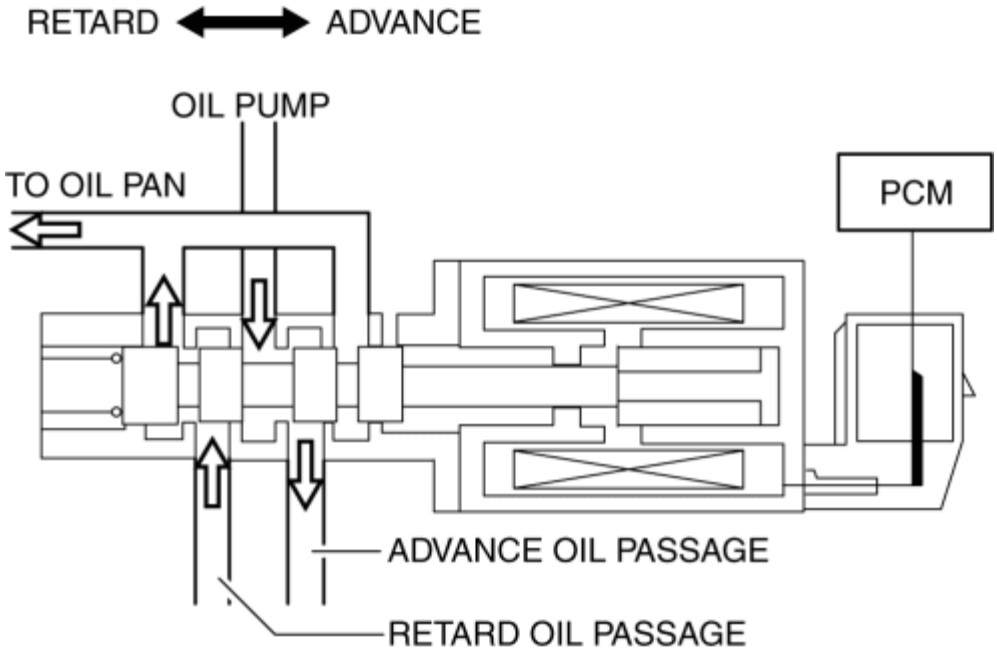

Middle point maintenance

- The spool valve is moved to the closed position of the oil passage to the exhaust camshaft by the signal from the PCM.
- The construction is designed to supply a small amount of oil to the advance and retard oil passages even while the middle point is maintained, improving holding stability while at low oil pressure.

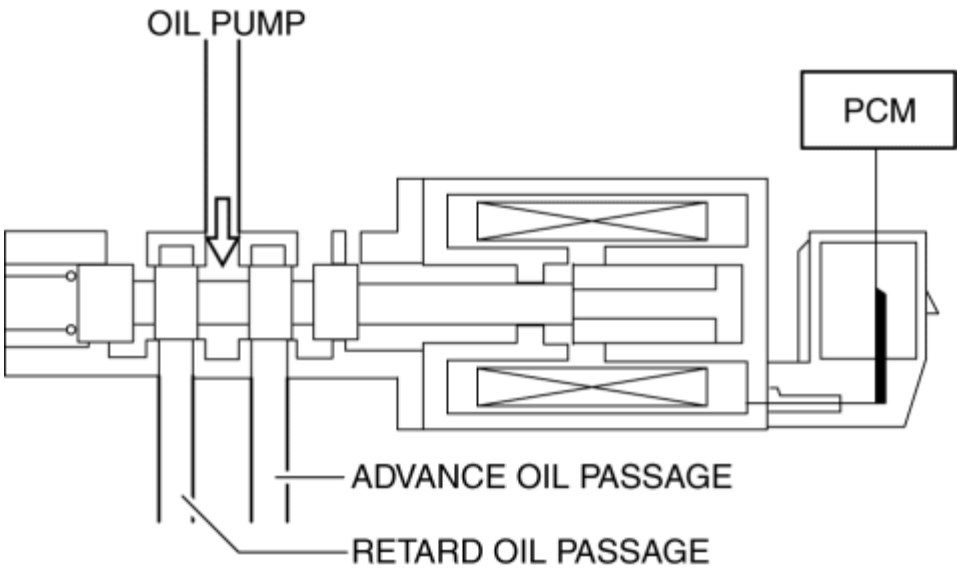

Fail-safe

DTC	Fail-safe
P0014:00	• Performs the exhaust variable valve timing control with a maximum cam advance request.
P0015:00	
P2090:00	
P2091:00	

2014 - Mazda3 - Engine

HYDRAULIC VARIABLE VALVE TIMING ACTUATOR [SKYACTIV-G 2.0, SKYACTIV-G 2.5]

Purpose, Function

- The hydraulic variable valve timing actuator operates according to the hydraulic pressure and changes the phases of the exhaust camshaft. As a result, the open/close period of the exhaust valve is changed, optimized valve timing in accordance with driving conditions is archived, and the output and combustion efficiency is improved.

Construction

- The hydraulic variable valve timing actuator is installed to the exhaust camshaft.
- The hydraulic variable valve timing actuator has an assist spring to move the rotor in the advance direction while the engine is stopped.

Operation

At engine start

- Because the stopper pin in the hydraulic variable valve timing actuator is engaged with the rotor at the maximum advance position by the spring force, the camshaft sprocket and camshaft are rotated as a single unit.

Retarding valve timing

- Engine oil is lead to the retard oil passage by the OCV to apply oil pressure to the stopper pin and retard chamber. As a result, the engagement of the stopper pin is released, the rotor connected to the camshaft rotates in the retard direction against the camshaft sprocket driven by the crankshaft, and the valve timing is retarded.

Advancing valve timing

- Engine oil is lead to the advance oil passage by the OCV to apply oil pressure to the advance chamber. As a result, the rotor connected to the camshaft rotates in the advance direction against the camshaft sprocket driven by the crankshaft, and the valve timing is advanced.

Maintaining intermediate valve timing

- The retard and advance oil passages is closed by the OCV. As a result, the relative angle of the rotor and camshaft sprocket is maintained at a constant to hold the valve timing.

2014 - Mazda3 - Engine

ELECTRIC VARIABLE VALVE TIMING ACTUATOR [SKYACTIV-G 2.0, SKYACTIV-G 2.5]

Purpose, Function

- The electric variable valve timing actuator changes the phases of the intake camshaft relative to the crankshaft. As a result, the open/close period of the intake valve is changed, optimized valve timing in accordance with driving conditions is archived, output is improved, and emission reduction is archived.

Construction

- The electric variable valve timing actuator is installed to the intake camshaft.

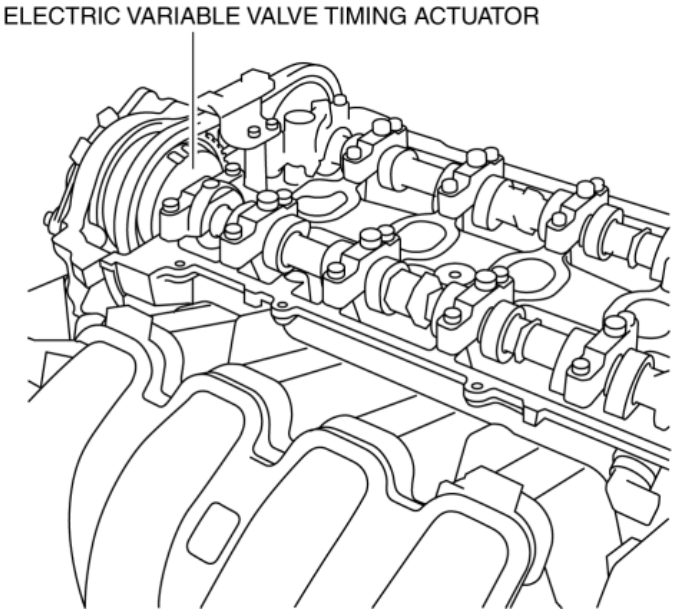

- The electric variable valve timing actuator consists of the following parts:

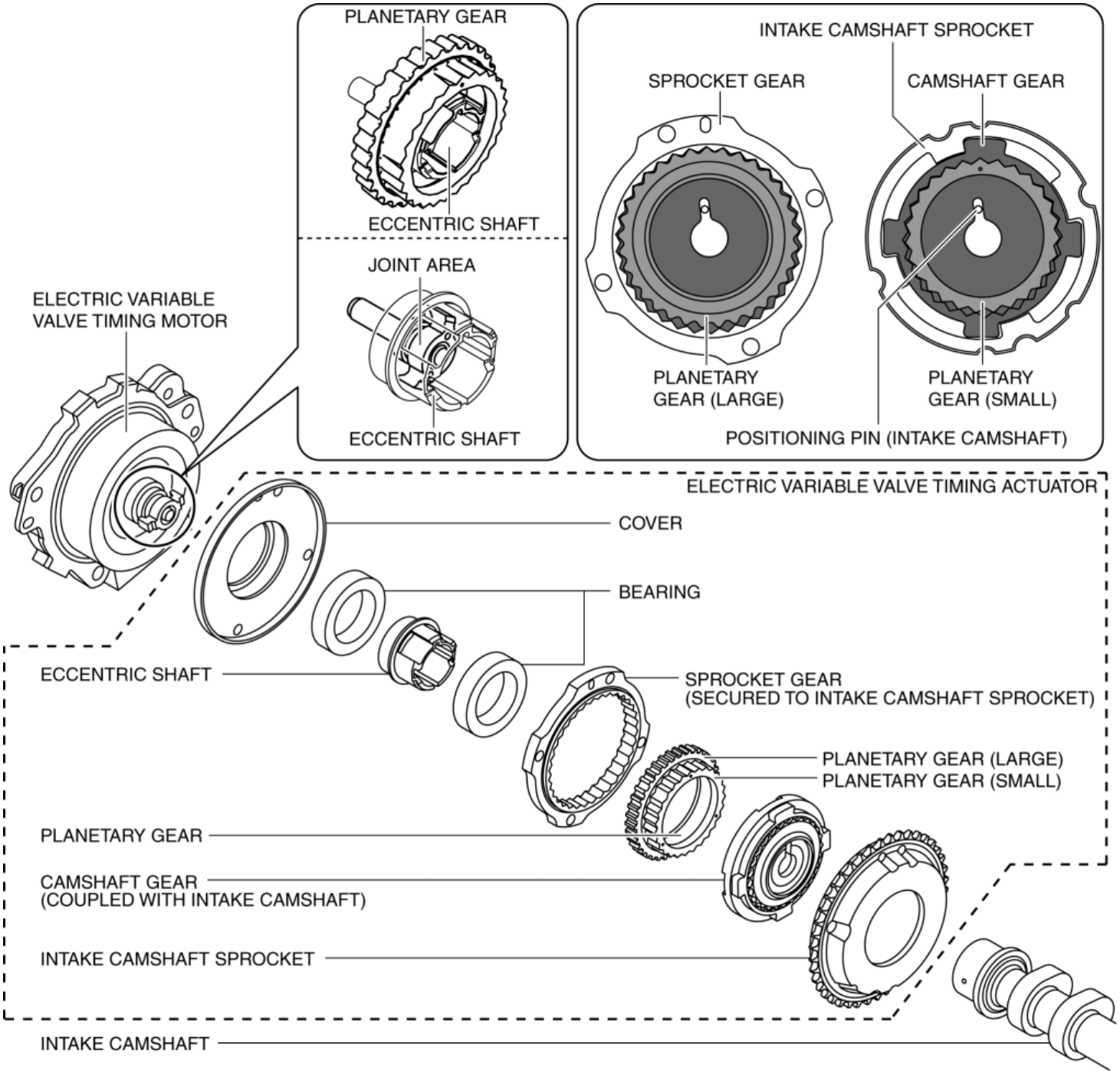

- The sprocket gear rotates together with the intake camshaft sprocket.
- The camshaft gear rotates together with the intake camshaft.
- The eccentric shaft is an eccentric shape relative to the rotation axis of the intake camshaft.
- The planetary gear is engaged with the eccentric shaft. In addition, the planetary gear is engaged with the sprocket gear and the camshaft gear.
- The number of teeth for the planetary gear (large) is one tooth fewer than the number of teeth for the sprocket gear.
- The number of teeth for the planetary gear (small) is one tooth fewer than the number of teeth for the camshaft gear.
- The planetary gear rotates by receiving the rotation force from the eccentric shaft.
- The camshaft gear rotates by receiving the rotation force from the planetary gear.

Operation

Advancing valve timing

- The electric variable valve timing motor rotation speed is faster than the intake camshaft sprocket rotation speed. As a result, the camshaft gear rotates in the advance direction relative to the intake camshaft sprocket, and the valve timing is advanced.

Retarding valve timing

- The electric variable valve timing motor rotation speed is slower than the intake camshaft sprocket rotation speed. As a result, the camshaft gear rotates in the retard direction relative to the intake camshaft sprocket, and the valve timing is retarded. (If engine rotation speed is slow, the electric variable valve timing motor may be rotating in reverse and the camshaft gear may be rotating in the retard direction.)

Maintaining intermediate valve timing

- The electric variable valve timing motor rotation speed is the same as the intake camshaft sprocket rotation speed. As a result, the phase difference of the camshaft gear relative to the intake camshaft sprocket is maintained, the camshaft gear rotation speed is the same as the intake camshaft sprocket rotation speed, and the valve timing is maintained.

Fail-safe

DTC	Fail-safe
P0011:00	• Stops activation of the electric variable valve timing driver.
P0012:00	
P1380:00	

2014 - Mazda3 - Engine

ELECTRIC VARIABLE VALVE TIMING RELAY [SKYACTIV-G 2.0, SKYACTIV-G 2.5]

Purpose, Function

- The electric variable valve timing actuator relay supplies power to the electric variable valve timing motor/driver after receiving the signal from the PCM.

Construction

- The electric variable valve timing actuator relay is installed to the relay block. (See **RELAY AND FUSE BLOCK**.)

Operation

1. When current flows between A—B shown in the figure, electromagnetic power is generated, the switch between C—D is turned on, and the current flows between C—D.

2. Current flows between C—D and power is supplied to the electric variable valve timing motor/driver.

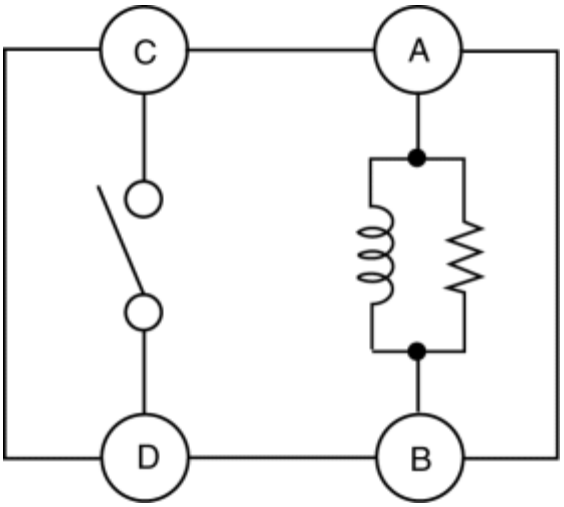

Fail-safe

- Function not equipped.

ELECTRIC VARIABLE VALVE TIMING RELAY [SKYACTIV-G 2.0, SKYACTIV-G 2.5]

2014 - Mazda3 - Engine

BALANCER UNIT [SKYACTIV-G 2.5]

Purpose, Function

- The balancer unit eliminates the secondary inertia force occurring in the in-line 4-cylinder engine which reduces engine vibration. As a result, booming noise (low frequency noise which causes the feeling of ear compression) is suppressed and a high-level quietness has been archived.

Construction

- The balancer unit is installed on the lower part of the cylinder block.

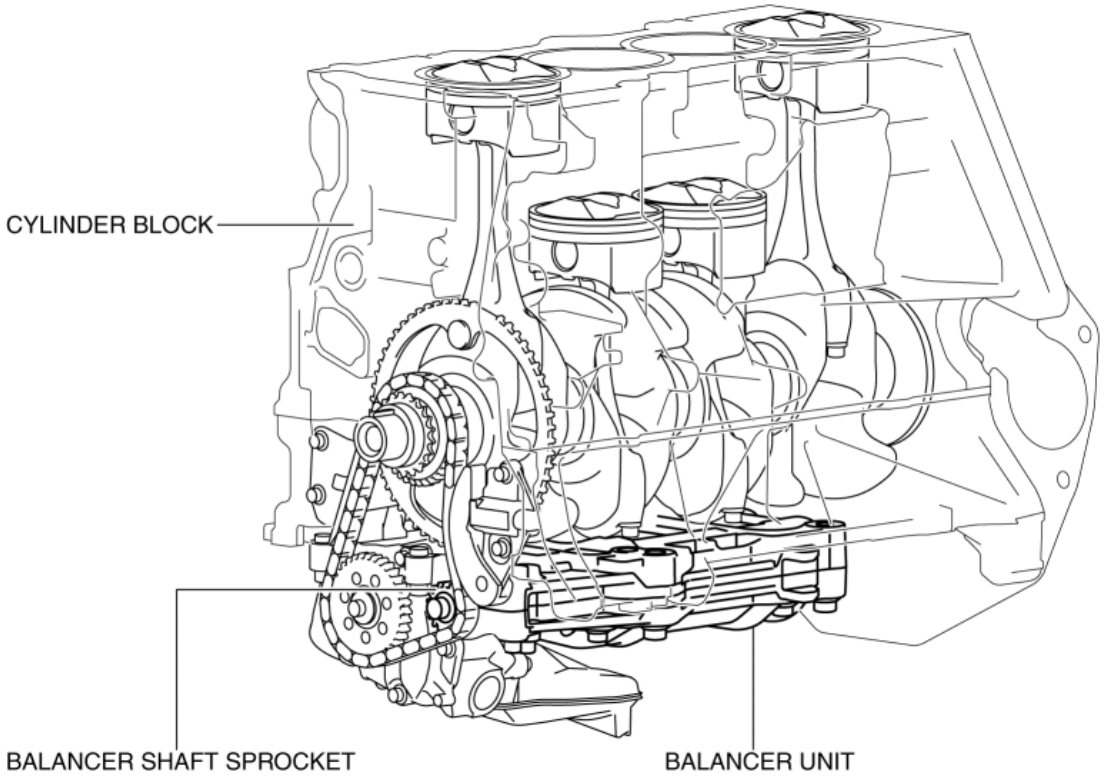

- The balancer unit consists of two balancer shafts with weights (No.1 and No.2) and the balancer unit case.
- Agitation resistance has been reduced by covering the balancer shafts and gears with the balancer unit case.

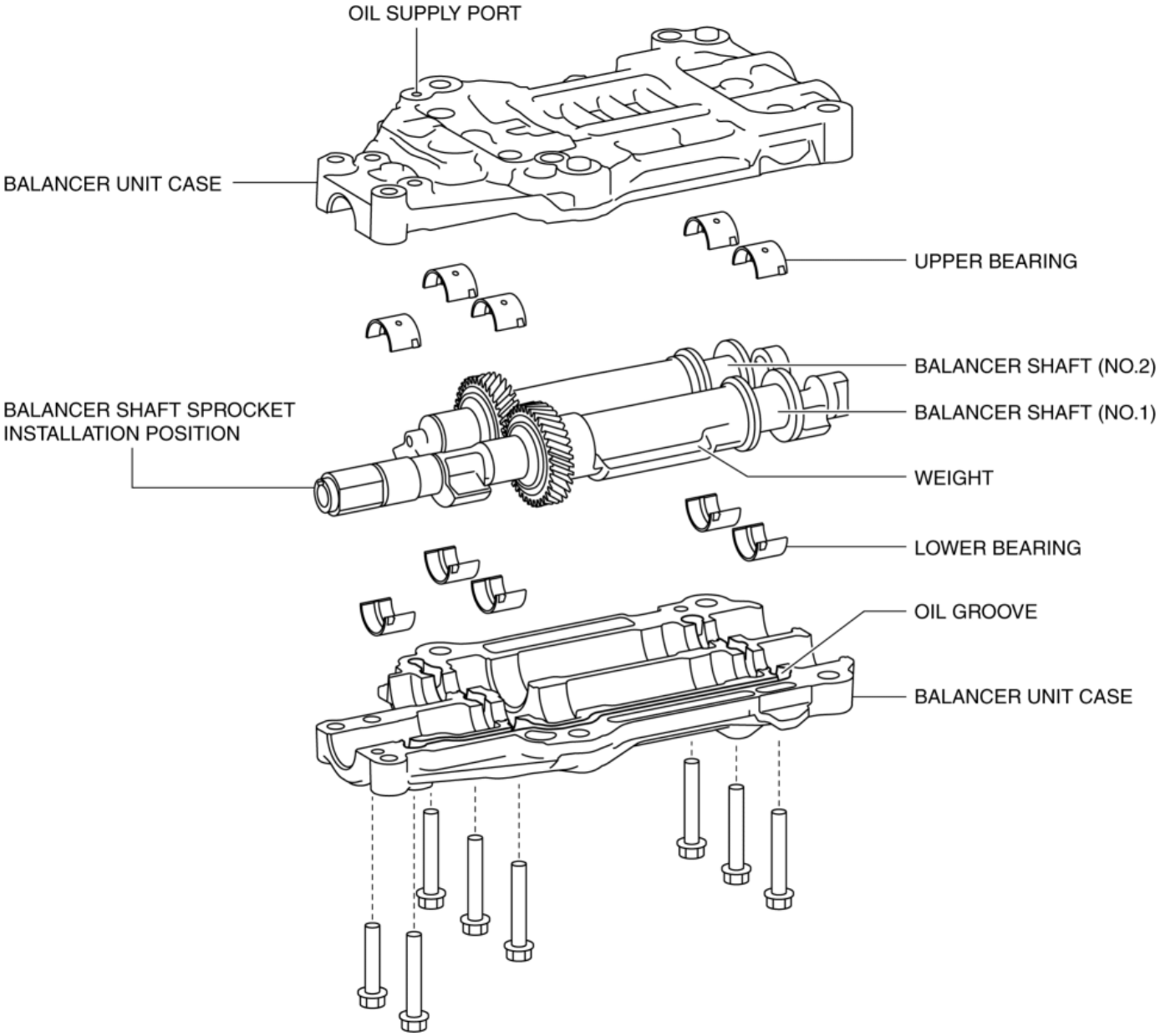

Operation

- The balancer shaft rotates by receiving the crankshaft rotation force via the balancer shaft sprocket.
- The balancer shaft rotation speed is twice the rotation speed of the crankshaft. As a result, the balancer shaft can generate inertia force (eliminates secondary inertia force) in the opposite direction in response to the occurrence of secondary inertia force.

2014 - Mazda3 - Engine

LUBRICATION SYSTEM [SKYACTIV-G 2.0, SKYACTIV-G 2.5]

Outline

- Pressure loss is reduced by optimizing the oil passage.
- With the adoption of the chain drive type oil pump, oil pump drive force has been reduced.
- With the adoption of the oil shower pipe, sliding resistance has been reduced.
- With the adoption of the engine oil solenoid valve, oil pump discharge pressure can be controlled (hydraulic two-step control).

Structural View

- SKYACTIV-G 2.0

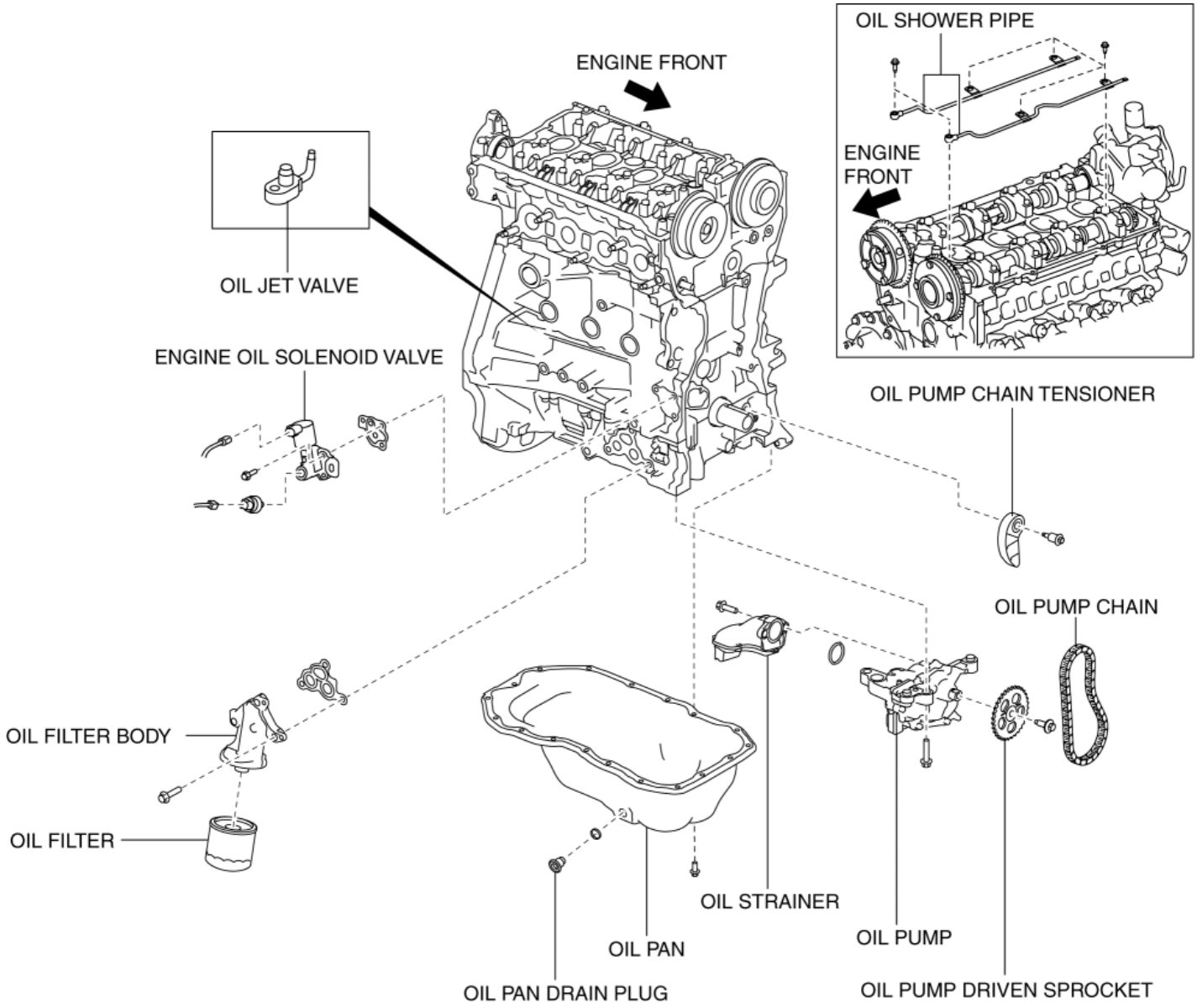

SKYACTIV-G 2.5

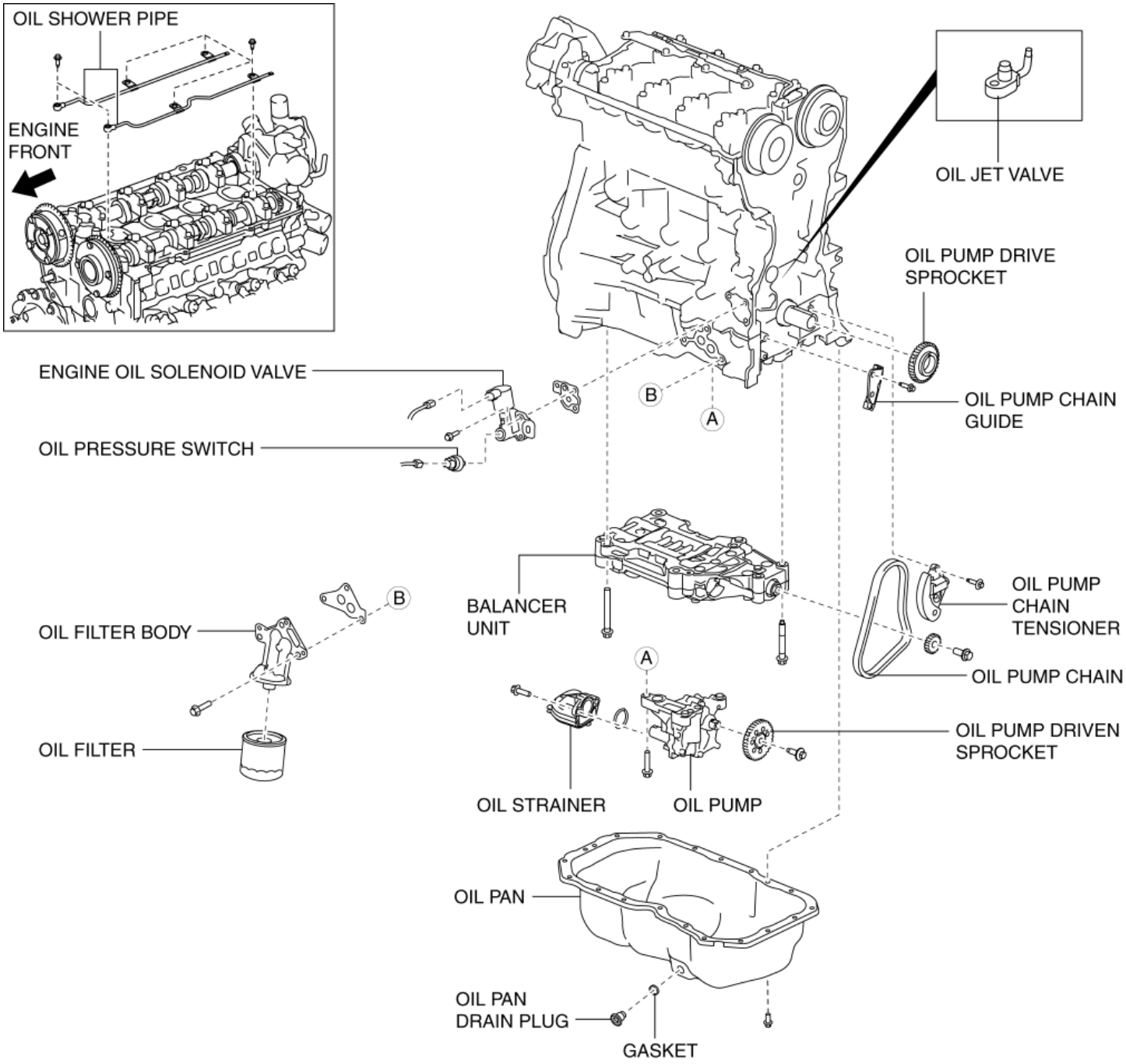
OIL SHOWER PIPE
ENGINE FRONT
OIL JET VALVE
OIL PUMP DRIVE SPROCKET
ENGINE OIL SOLENOID VALVE
OIL PRESSURE SWITCH
B
A
OIL PUMP CHAIN GUIDE
BALANCER UNIT
OIL PUMP CHAIN TENSIONER
OIL FILTER BODY
B
A
OIL PUMP CHAIN
OIL FILTER
OIL PUMP DRIVEN SPROCKET
OIL STRAINER
OIL PUMP
OIL PAN
OIL PAN DRAIN PLUG
GASKET

Flow View

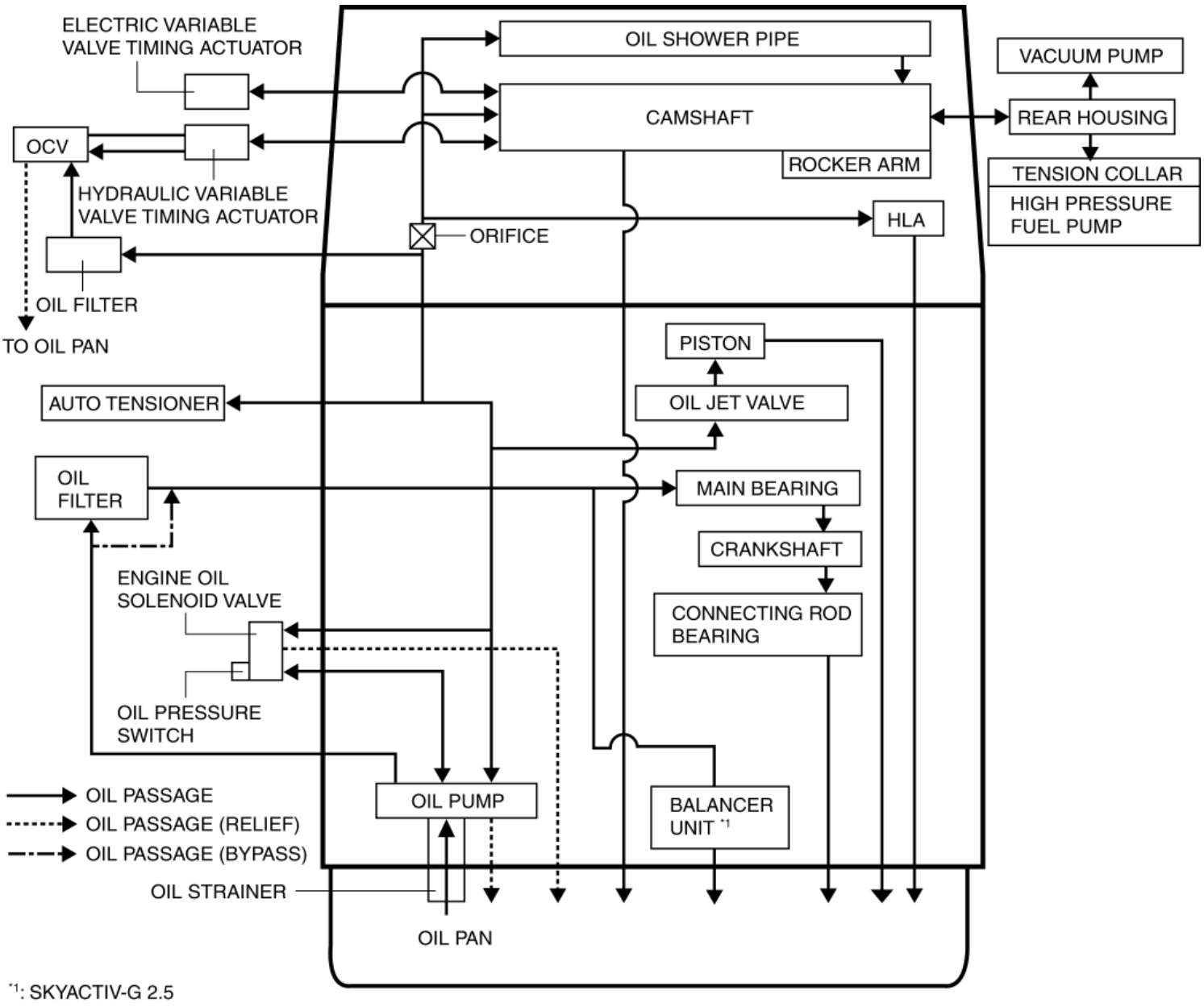

Structure

- Consists of the following parts:

Oil filter	• (See **OIL FILTER [SKYACTIV-G 2.0, SKYACTIV-G 2.5]**.)
Oil pan	• (See **OIL PAN [SKYACTIV-G 2.0, SKYACTIV-G 2.5]**.)
Oil strainer	• (See **OIL STRAINER [SKYACTIV-G 2.0, SKYACTIV-G 2.5]**.)
Oil pump	• (See **OIL PUMP [SKYACTIV-G 2.0, SKYACTIV-G 2.5]**.)
Oil jet valve	• (See **OIL JET VALVE [SKYACTIV-G 2.0, SKYACTIV-G 2.5]**.)
Engine oil solenoid valve	• (See **ENGINE OIL SOLENOID VALVE [SKYACTIV-G 2.0, SKYACTIV-G 2.5]**.)
Oil shower pipe	• (See **OIL SHOWER PIPE [SKYACTIV-G 2.0, SKYACTIV-G 2.5]**.)

2014 - Mazda3 - Engine

OIL FILTER [SKYACTIV-G 2.0, SKYACTIV-G 2.5]

Purpose, Function

- Engine oil is filtered by passing engine oil through the oil filter element.

Construction

- The oil filter is installed on the right side surface of the cylinder block.
- A spin-on type (full-flow type) oil filter has been adopted.

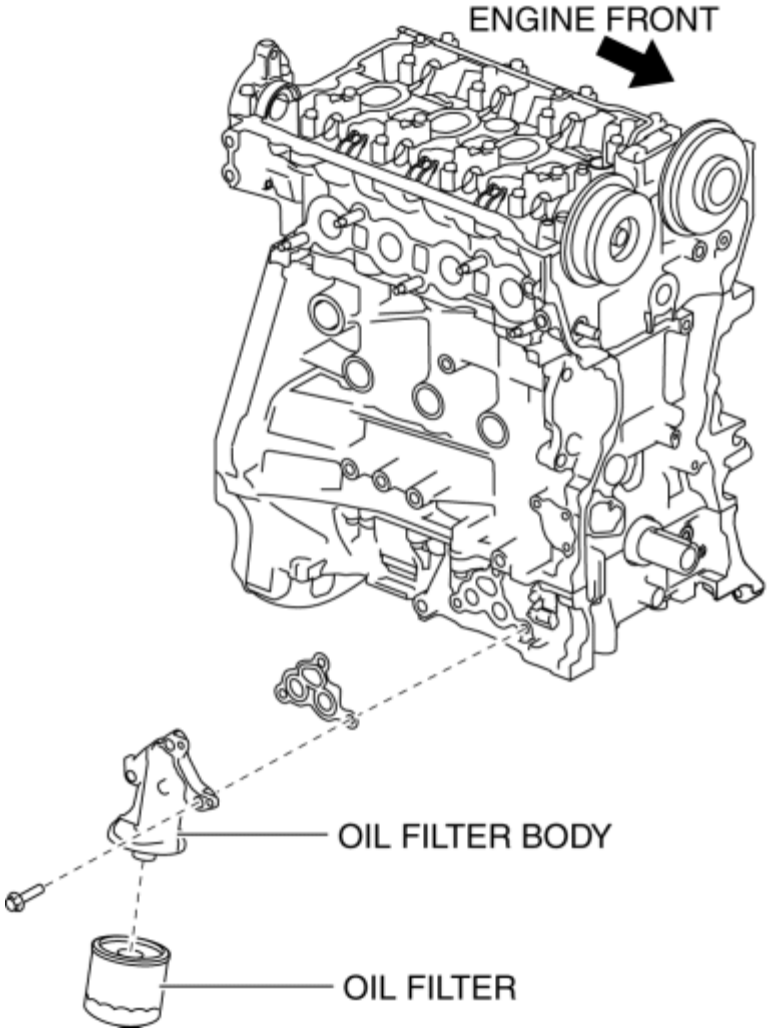

- The bypass valve is equipped as a detour if the oil filter element becomes clogged.

OIL FILTER [SKYACTIV-G 2.0, SKYACTIV-G 2.5]

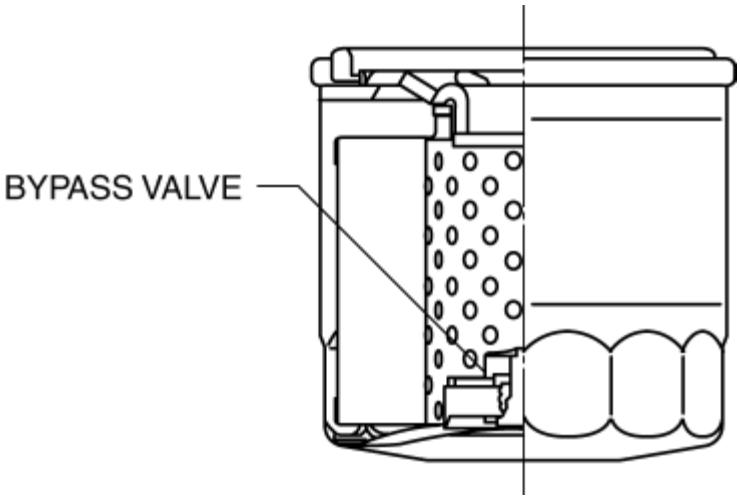

2014 - Mazda3 - Engine

OIL PAN [SKYACTIV-G 2.0, SKYACTIV-G 2.5]

Purpose, Function

- The engine oil required for lubrication in the engine accumulates in the oil pan.

Construction

- The oil pan is installed on the lower part of the cylinder block.

SKYACTIV-G 2.0

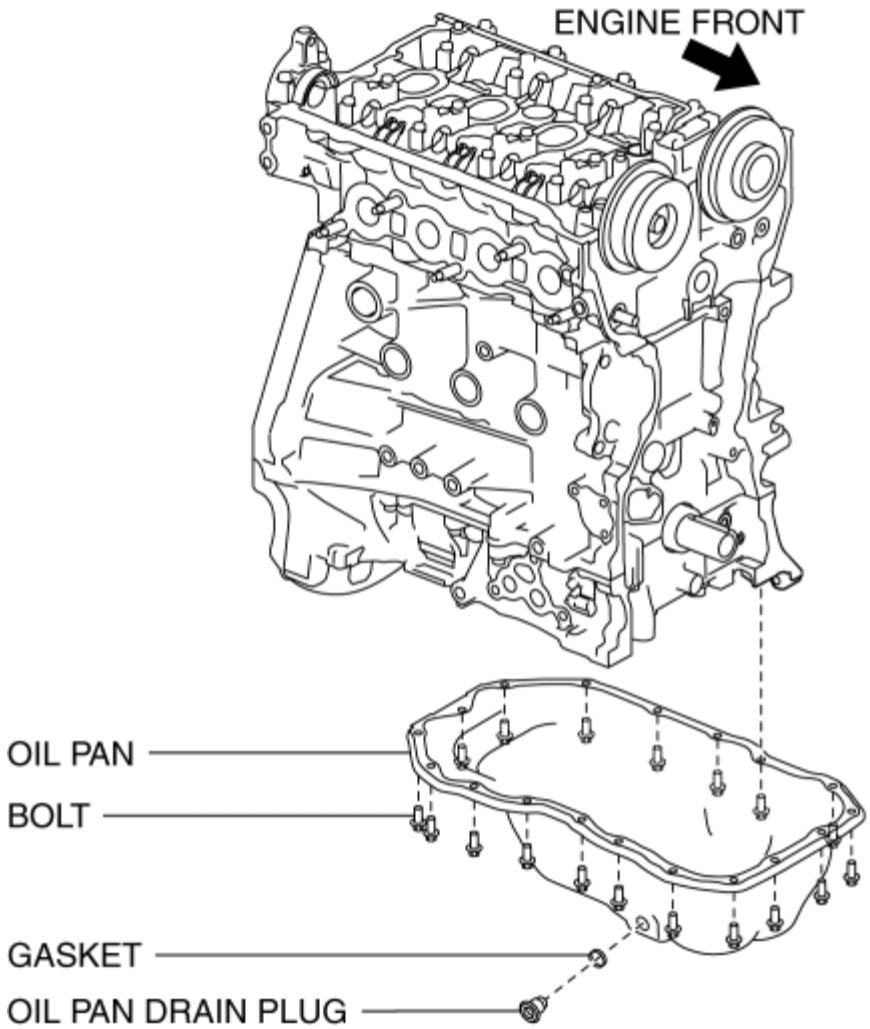

SKYACTIV-G 2.5

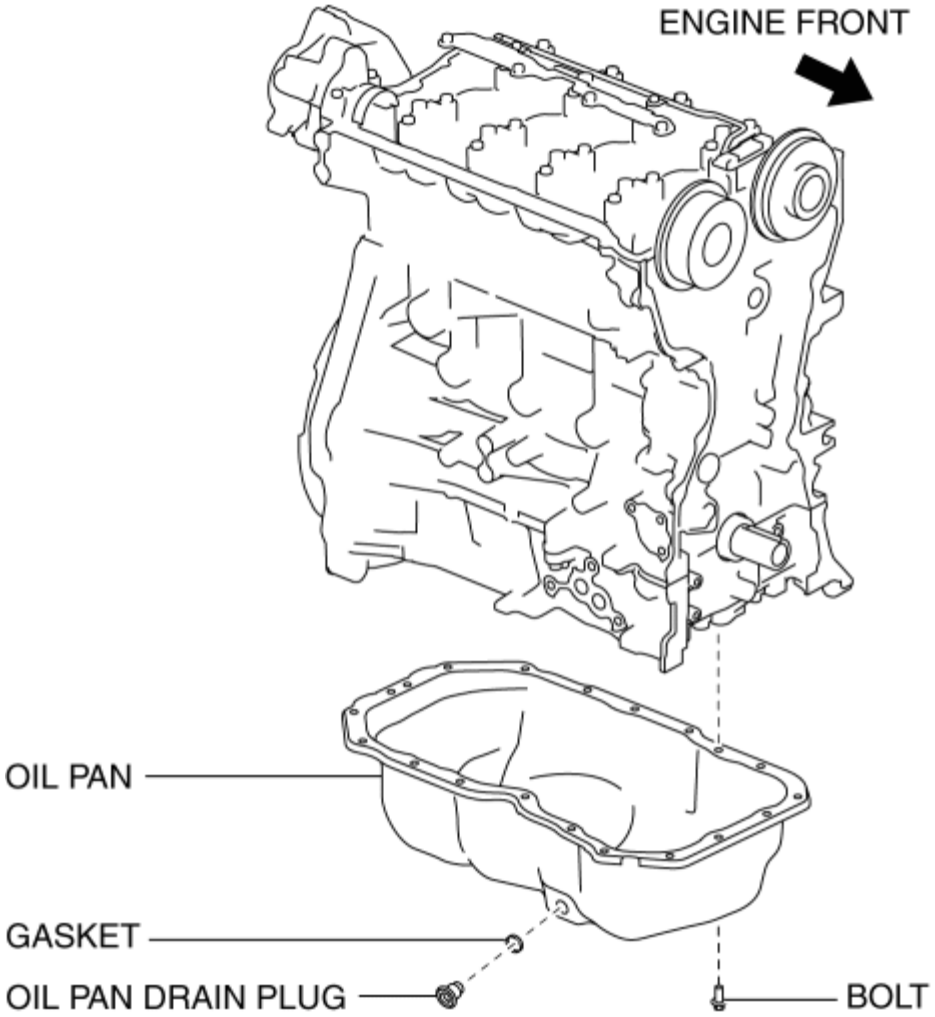

- Silicone sealant with excellent sealing has been adopted for the oil pan gasket.

2014 - Mazda3 - Engine

OIL STRAINER [SKYACTIV-G 2.0, SKYACTIV-G 2.5]

Purpose, Function

- The oil strainer suctions the engine oil in the oil pan using the oil pump vacuum. The engine oil is filtered by the internal filter at that time.

Construction

- The oil strainer is installed on the suction port of the oil pump.

SKYACTIV-G 2.0

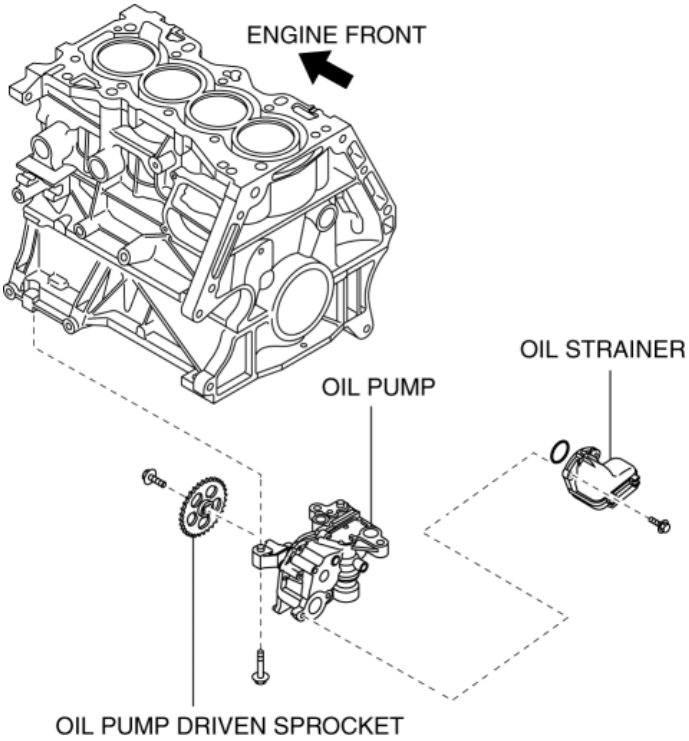

SKYACTIV-G 2.5

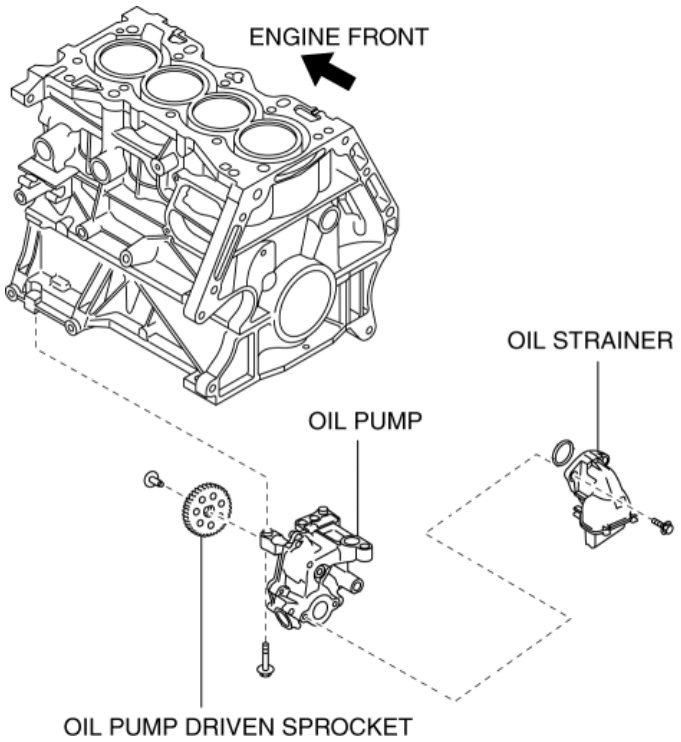

- The oil strainer has a filter in the inside.

SKYACTIV-G 2.0

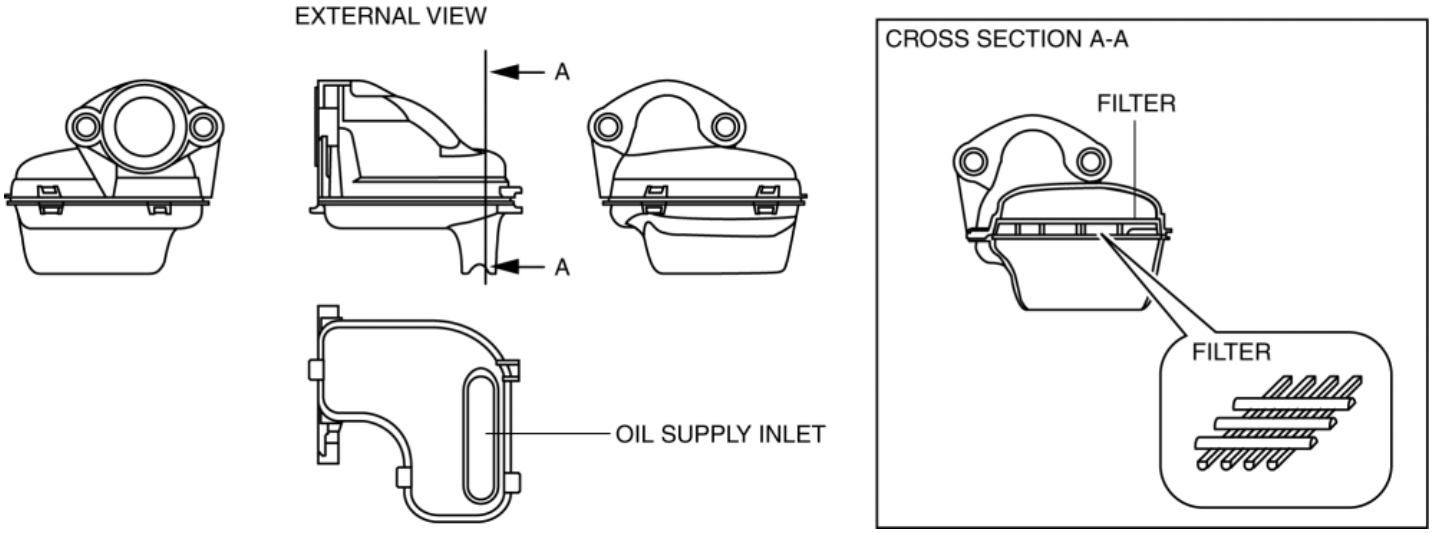

SKYACTIV-G 2.5

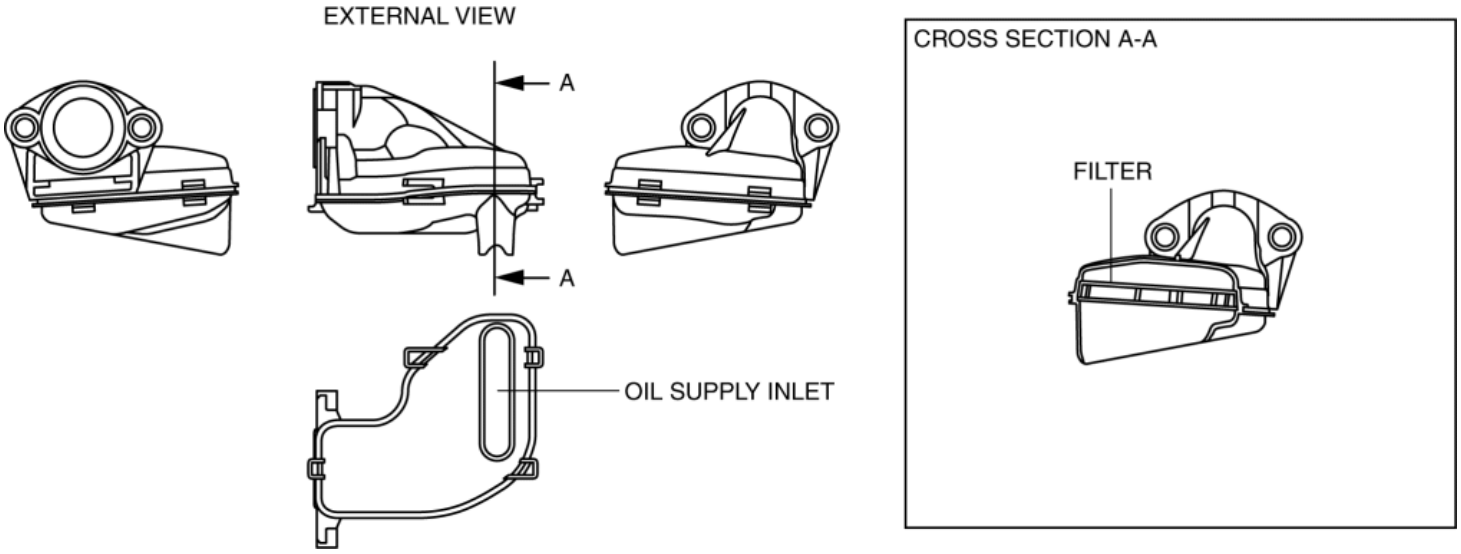
EXTERNAL VIEW
A
A
OIL SUPPLY INLET
CROSS SECTION A-A
FILTER

2014 - Mazda3 - Engine

OIL PUMP [SKYACTIV-G 2.0, SKYACTIV-G 2.5]

Outline

- The oil pump has a mechanism for feedback control of oil pressure. As a result, an oil pressure increase of more than the set pressure is suppressed and oil pump drive resistance is reduced. In addition, because the set pressure can be changed (oil pressure two-step control) by operating the engine oil solenoid valve, the oil pump drive resistance is reduced even during low speed/low to medium loads.

Purpose, Function

- The oil pump suctions the engine oil in the oil pan through the oil strainer and pumps engine oil into the engine.

Construction

- The oil pump is installed on the lower part of the cylinder block (in oil pan).

SKYACTIV-G 2.0

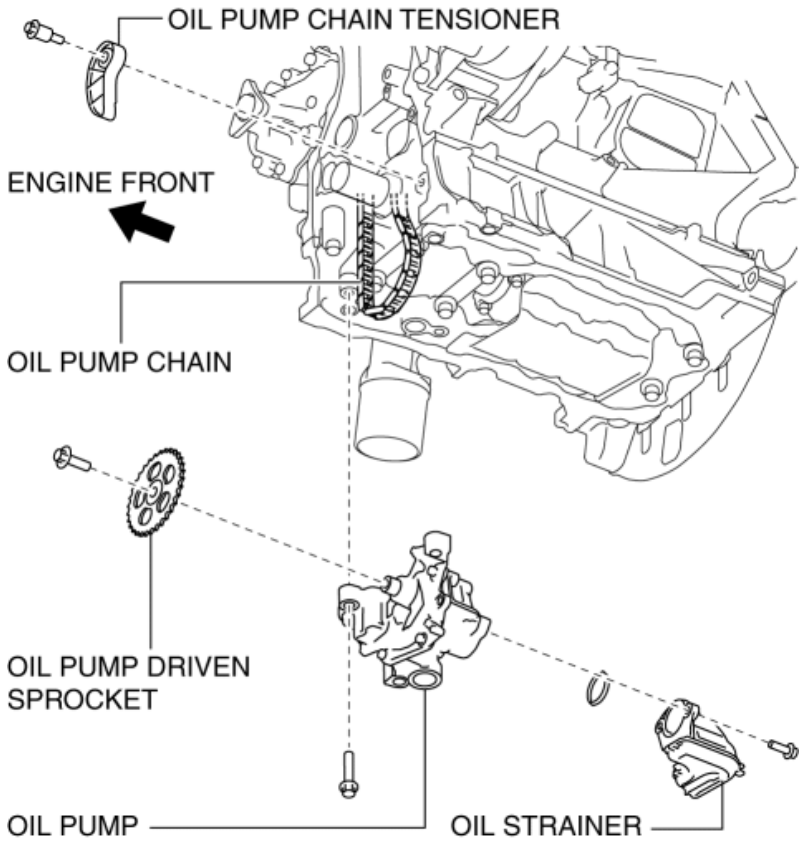

SKYACTIV-G 2.5

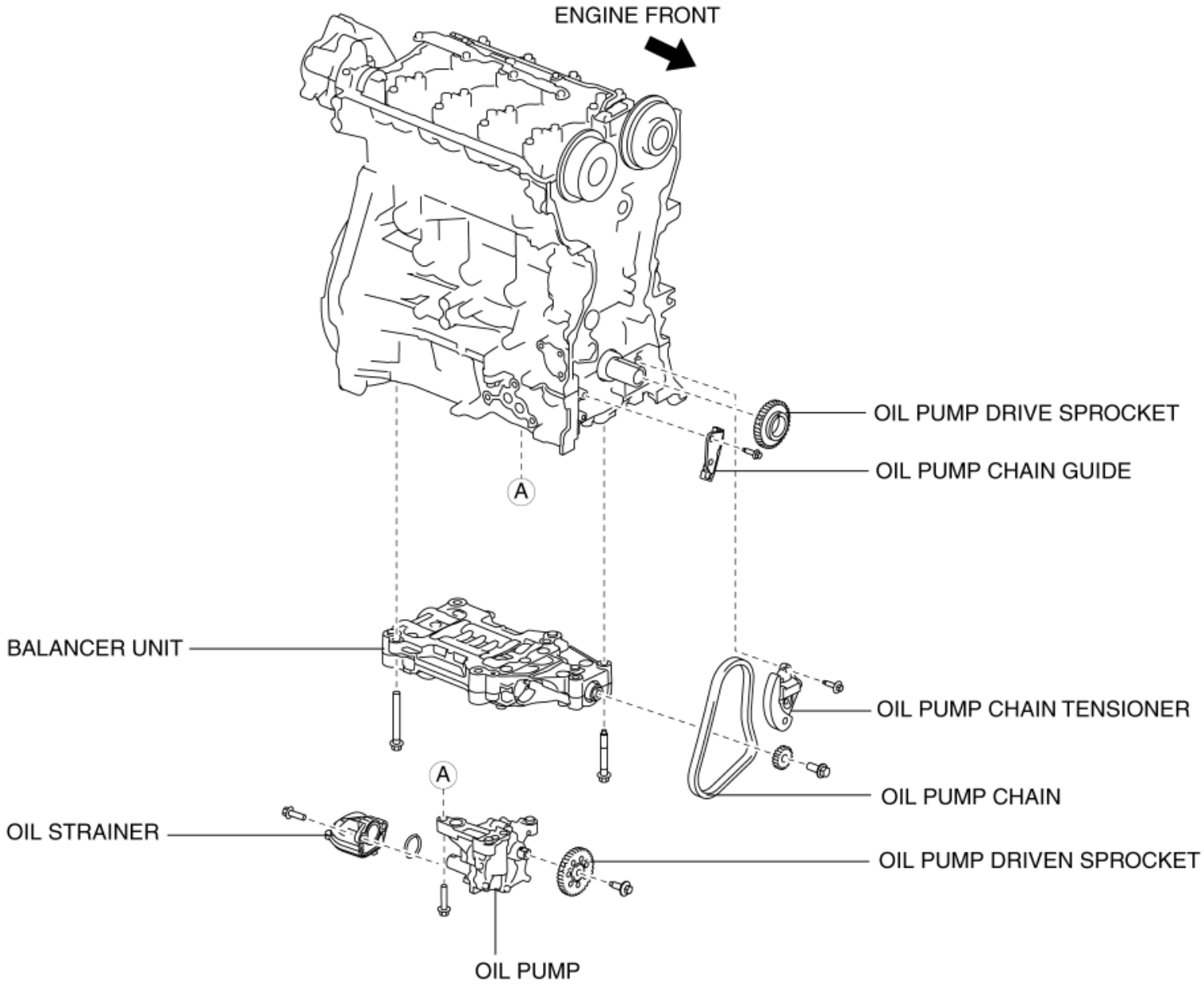

- With the adoption of the chain drive type oil pump, the diameter of the rotor is reduced. As a result, the oil pump drive resistance has been reduced.
- The oil pump consists of the following parts:

SKYACTIV-G 2.0

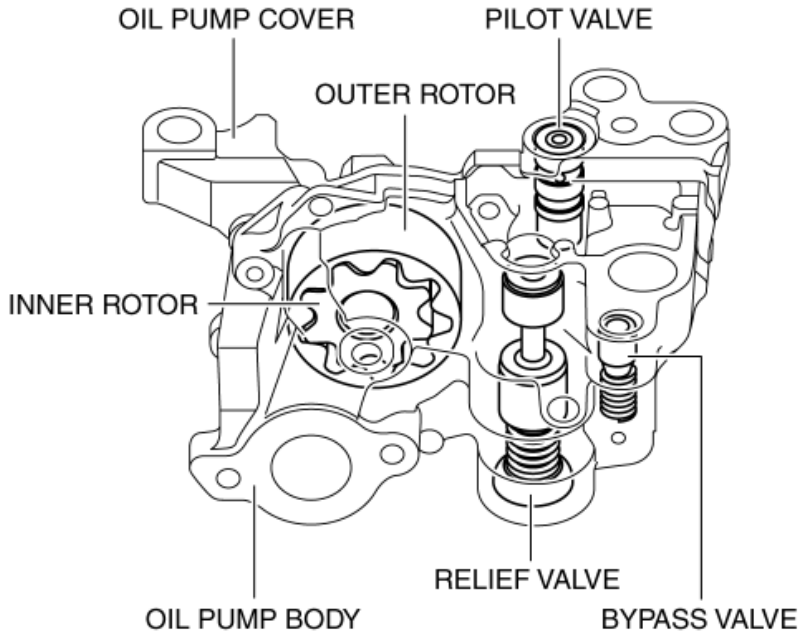

SKYACTIV-G 2.5

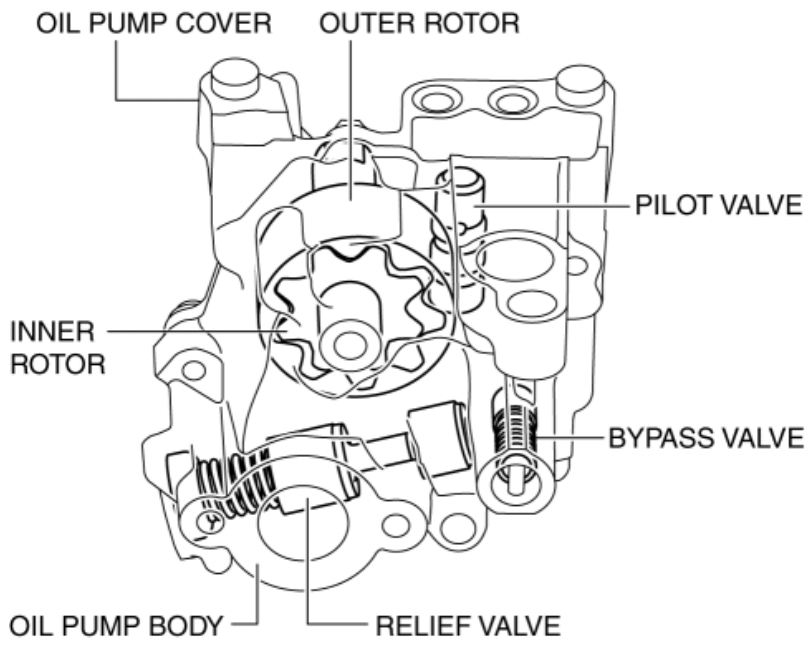

- The relief valve and bypass valve is pushed and opened if oil pressure increases excessively when starting an extremely cold engine. As a result, the engine oil flows and excessive oil pressure increase is suppressed.
- When the relief valve is pushed and opened, engine oil flows. As a result, the oil pressure decreases and the oil pump drive resistance is reduced.

SKYACTIV-G 2.0

OIL PUMP CROSS SECTION

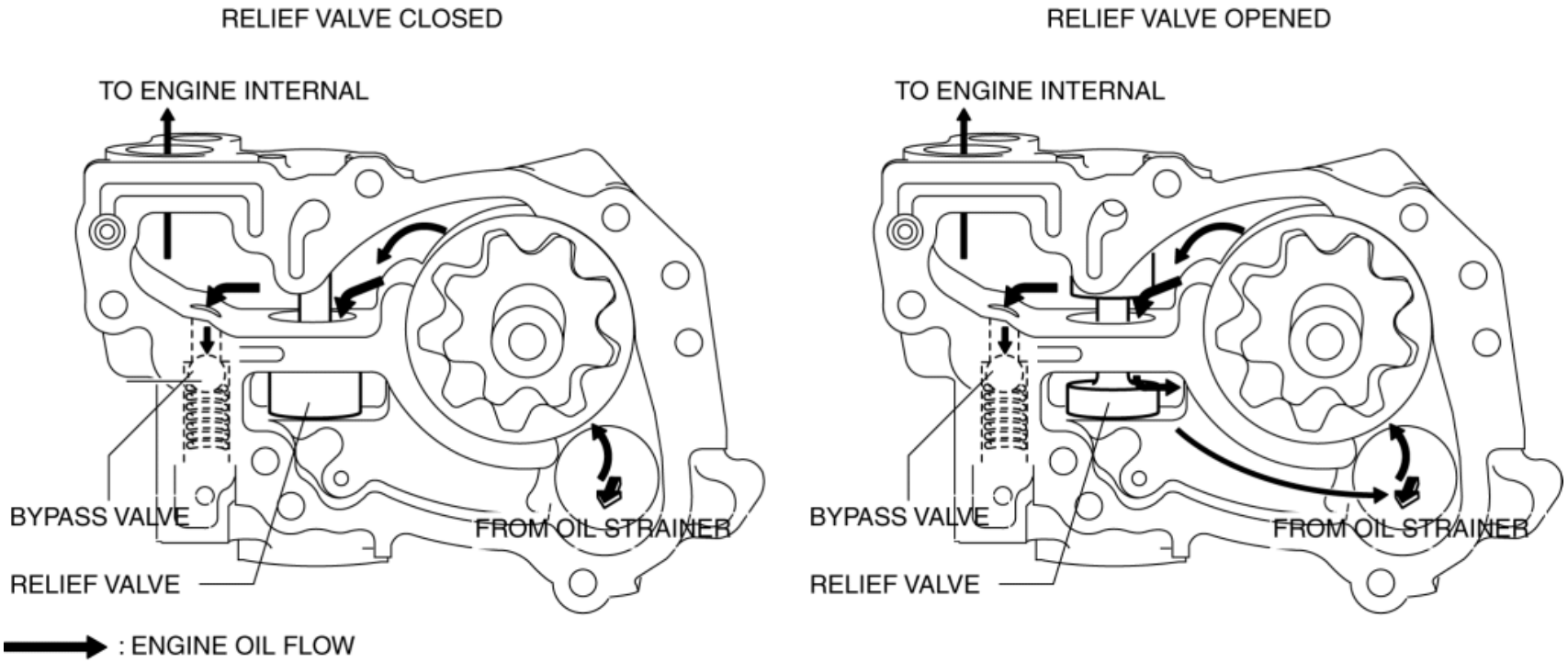

SKYACTIV-G 2.5

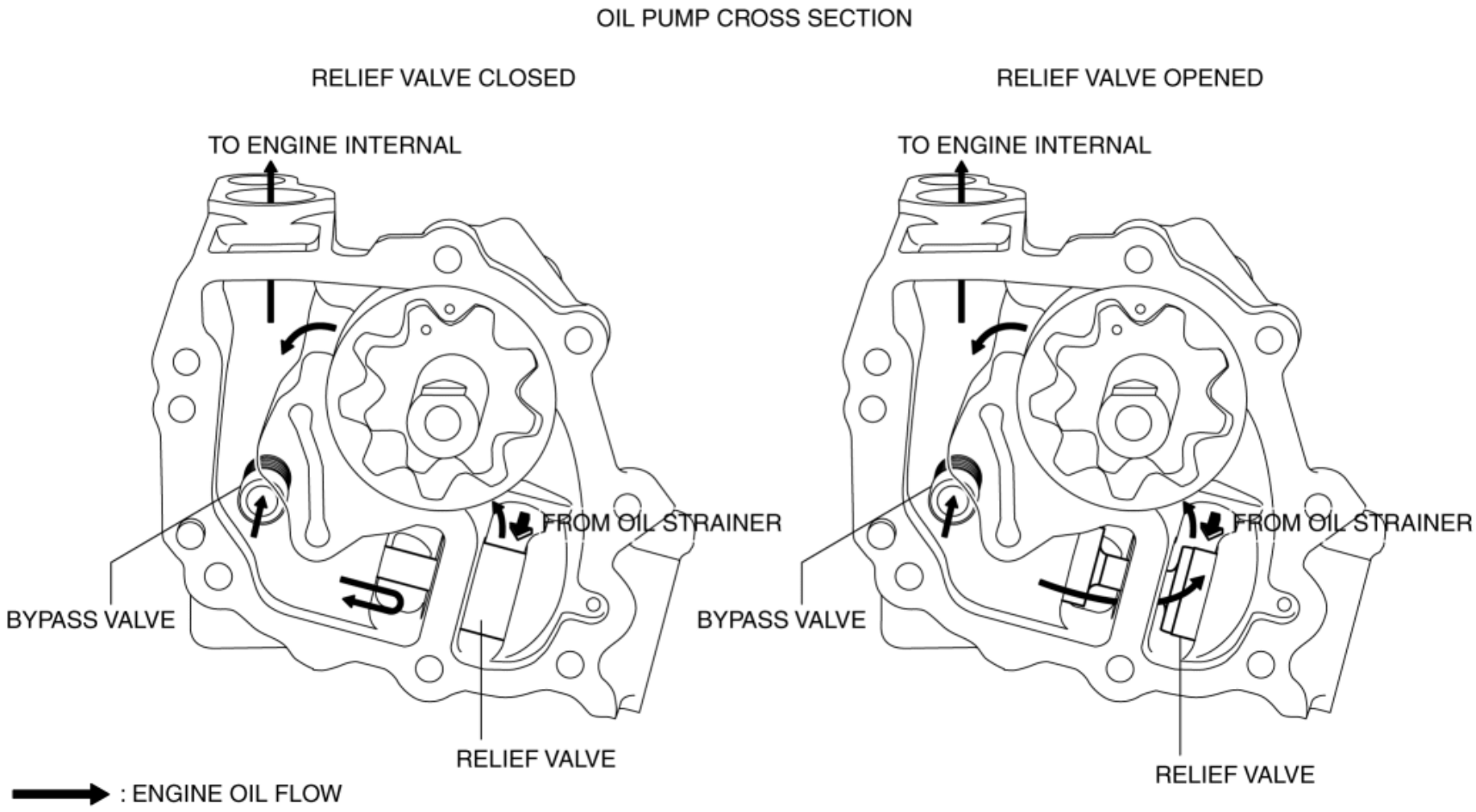

Operation

- The oil pump adjusts oil pressure in two steps (low oil pressure setting, high oil pressure setting) by switching the oil passage with the operation of the engine oil solenoid valve. For the operation condition of the engine oil solenoid valve, refer to CONTROL SYSTEM. (See **ENGINE OIL CONTROL [SKYACTIV-G 2.0, SKYACTIV-G 2.5]**.)

  Engine oil flow when setting low oil pressure (engine oil solenoid valve ON)

  - When the engine oil solenoid valve is turned ON, oil pressure is also applied to the upper part of the pilot valve. Because the oil pressure applied to the upper and lower parts of the pilot valve is almost the same, the pilot valve is pressed up by the spring force.
  - Oil pressure is applied to the upper part of the relief valve.
  - When the oil pressure exceeds the relief valve opening pressure, the relief valve is pressed down and engine oil flow stops (oil pressure decrease).
  - When the oil pressure is less than the relief valve opening pressure, the relief valve closes. As a result, engine oil flow stops (oil pressure increase).

- Oil pressure is adjusted by repeating Step (c) to (d).

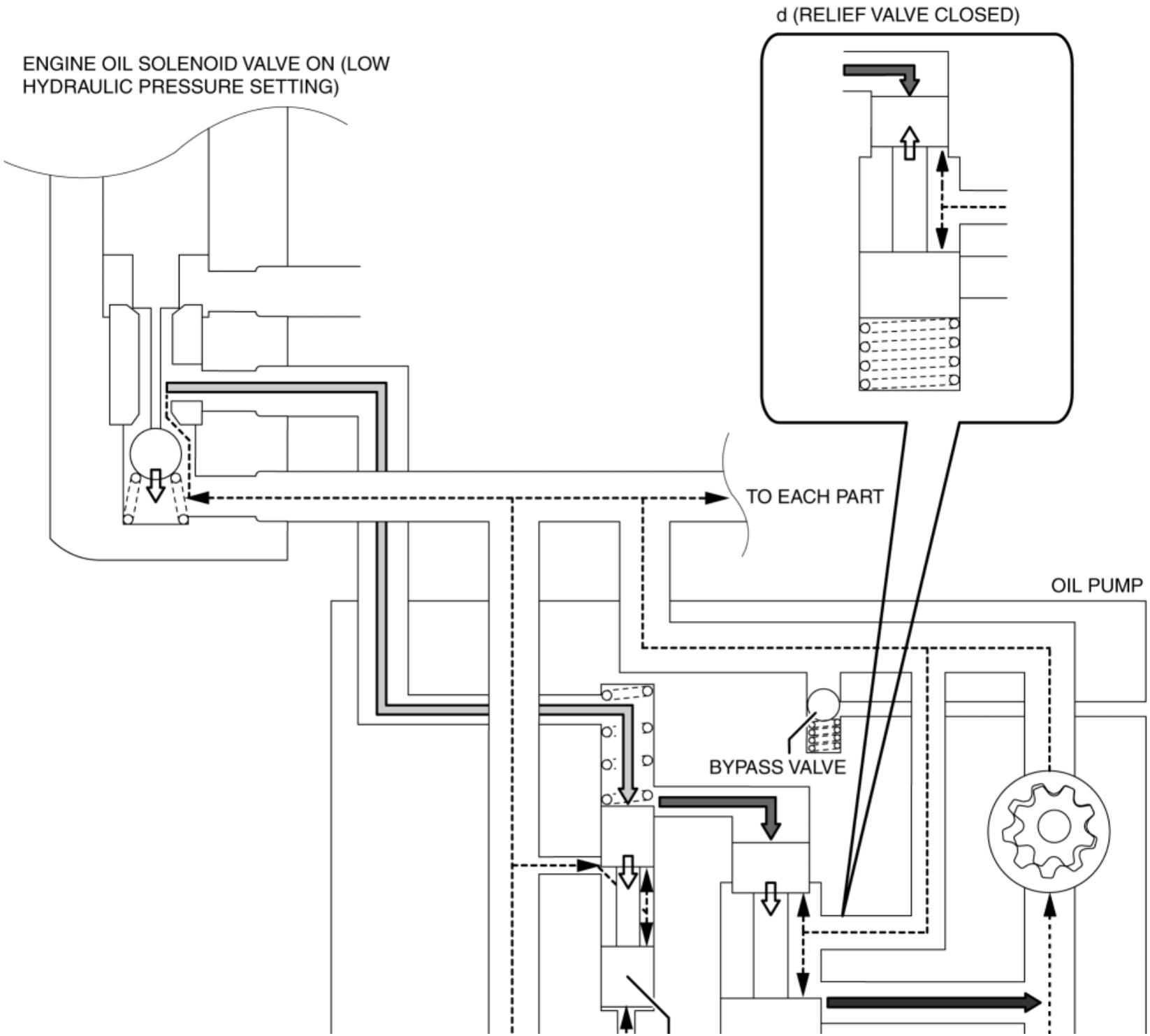

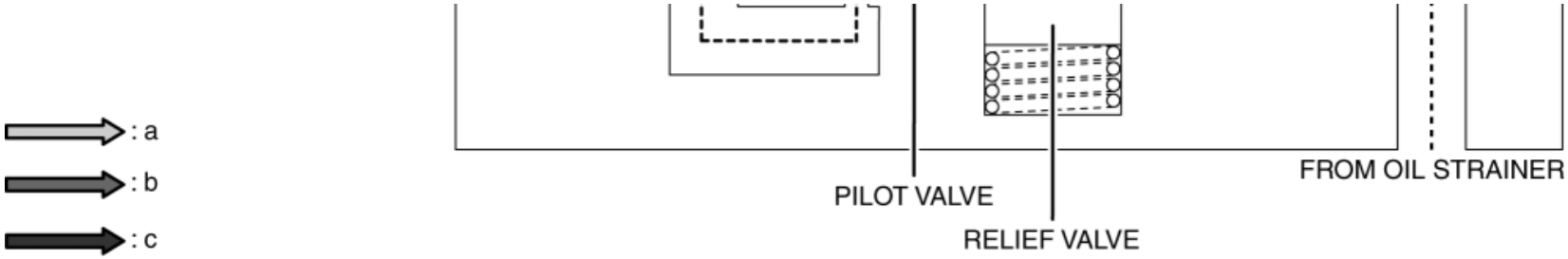

Engine oil flow when setting high oil pressure (engine oil solenoid valve OFF)

- When oil pressure exceeds the pilot valve opening pressure, the pilot valve is pressed up and oil pressure is applied to the upper part of the relief valve.
- Because the relief valve opening pressure is exceeded by applying oil pressure to the upper part of the relief valve, the relief valve is pressed down and engine oil flows (oil pressure decrease).
- When the oil pressure is less than the pilot valve opening pressure, the pilot valve closes. As a result, the relief valve closes and engine oil flow stops (oil pressure increase).
- Oil pressure is adjusted by repeating Step (b) to (c).

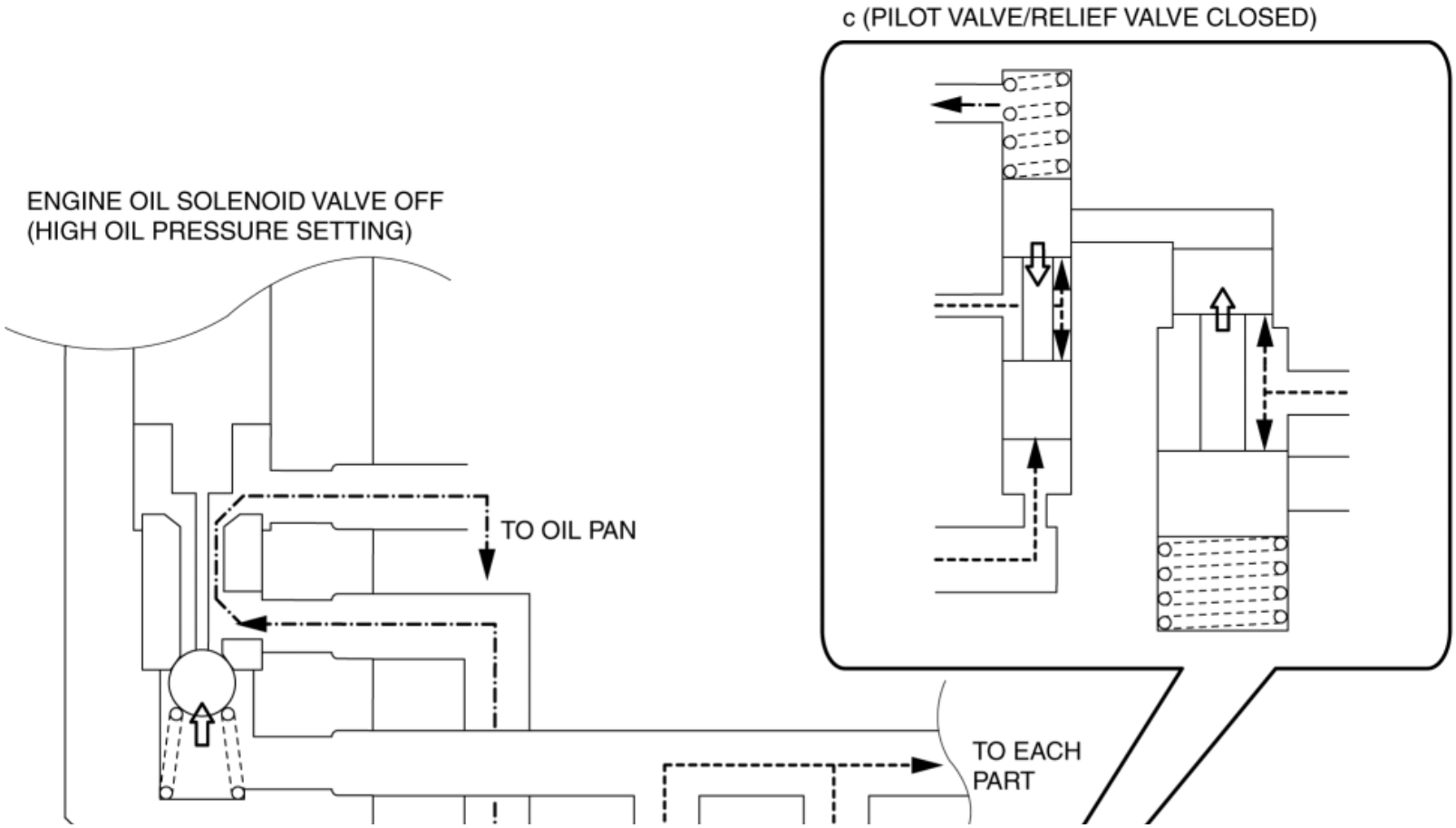

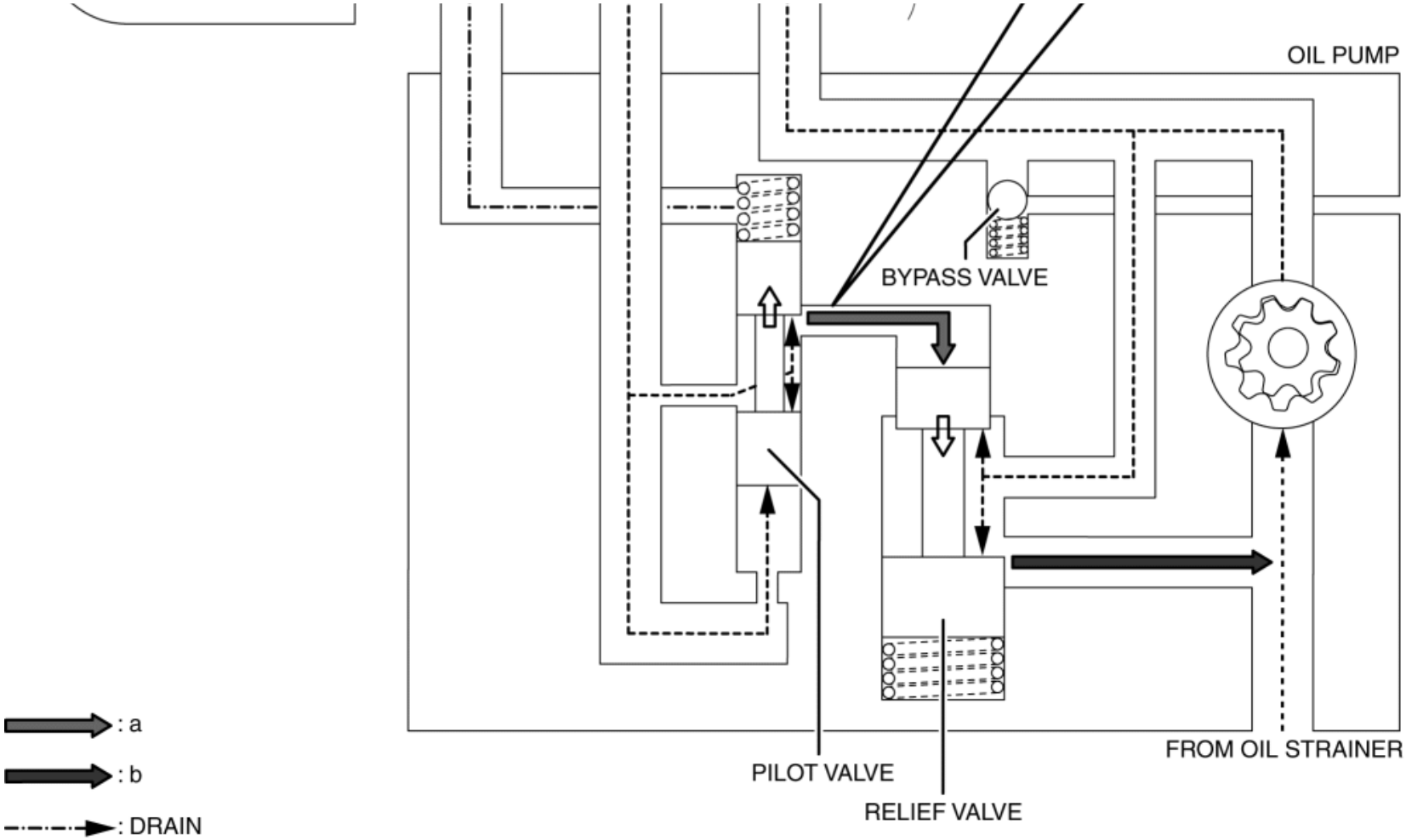
OIL PUMP
BYPASS VALVE
PILOT VALVE
RELIEF VALVE
FROM OIL STRAINER
: a
: b
: DRAIN

2014 - Mazda3 - Engine

OIL JET VALVE [SKYACTIV-G 2.0, SKYACTIV-G 2.5]

Purpose, Function

- The oil jet valve injects engine oil on the back of the piston to cool the piston.

Construction

- The oil jet valve is installed into the cylinder block.

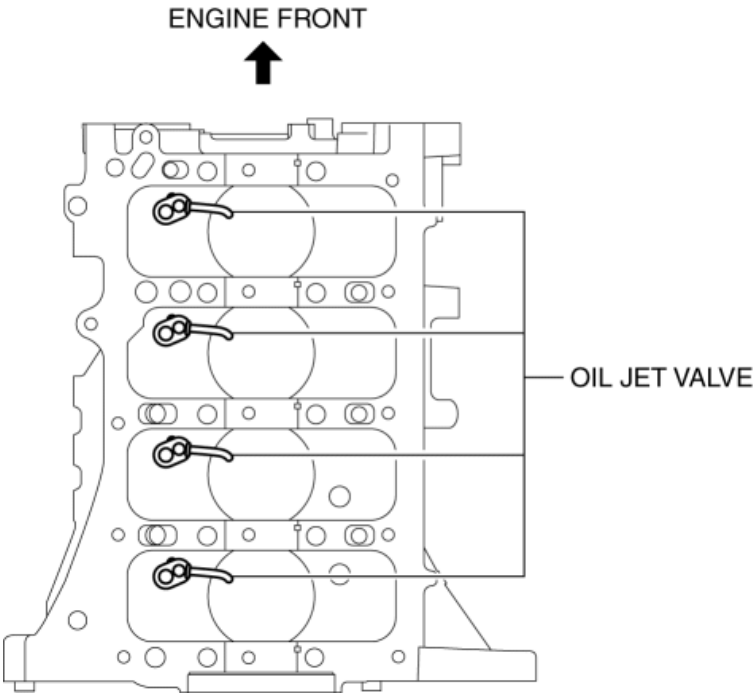

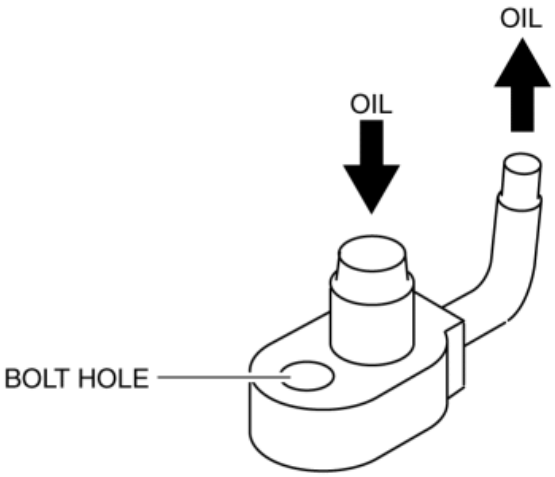

- The oil jet valve is built into the check ball and spring.

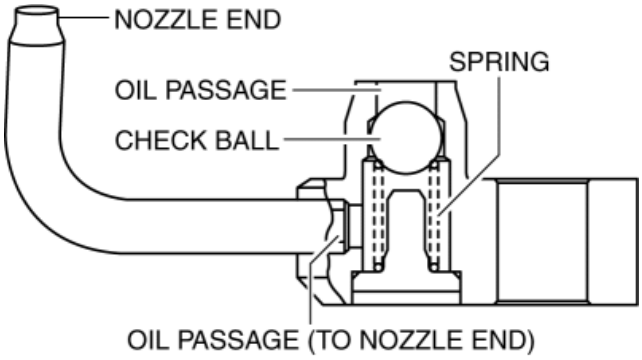

Operation

1. When the oil pressure applied to the check ball exceeds the spring force, the check ball and spring are pressed down.
2. The oil passage is opened to the nozzle and engine oil is injected to the back side of the piston.

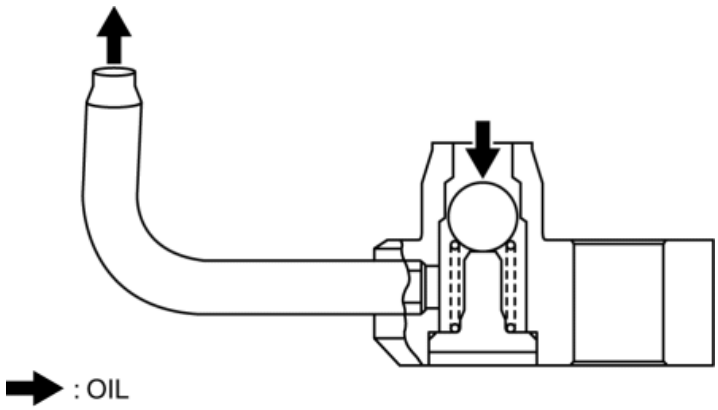

3. When the oil pressure applied to the check ball is lower than the spring force, the spring presses up the check ball.
4. The oil passage to the nozzle is closed and the injection of engine oil stops.

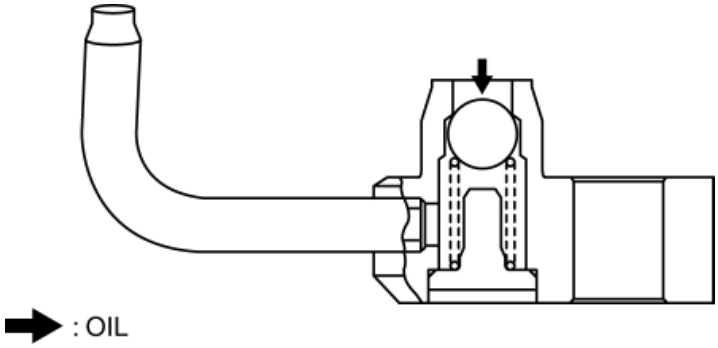

2014 - Mazda3 - Engine

ENGINE OIL SOLENOID VALVE [SKYACTIV-G 2.0, SKYACTIV-G 2.5]

Purpose, Function

- The engine oil solenoid valve switches the hydraulic transmission passage in accordance with the driving conditions and the oil pump drive resistance is reduced by controlling oil pump discharging pressure in two steps.

Construction

- The engine oil solenoid valve is installed on the right side of the cylinder block.

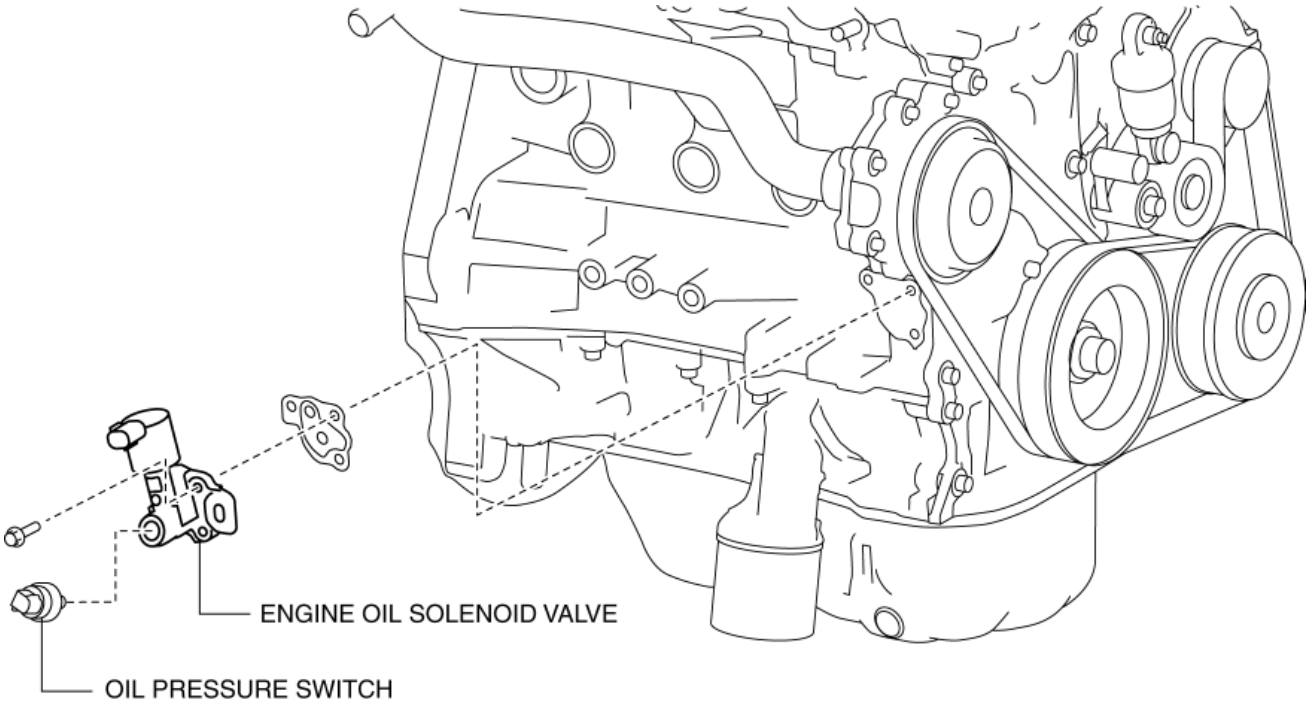

- The engine oil solenoid valve has the following parts:

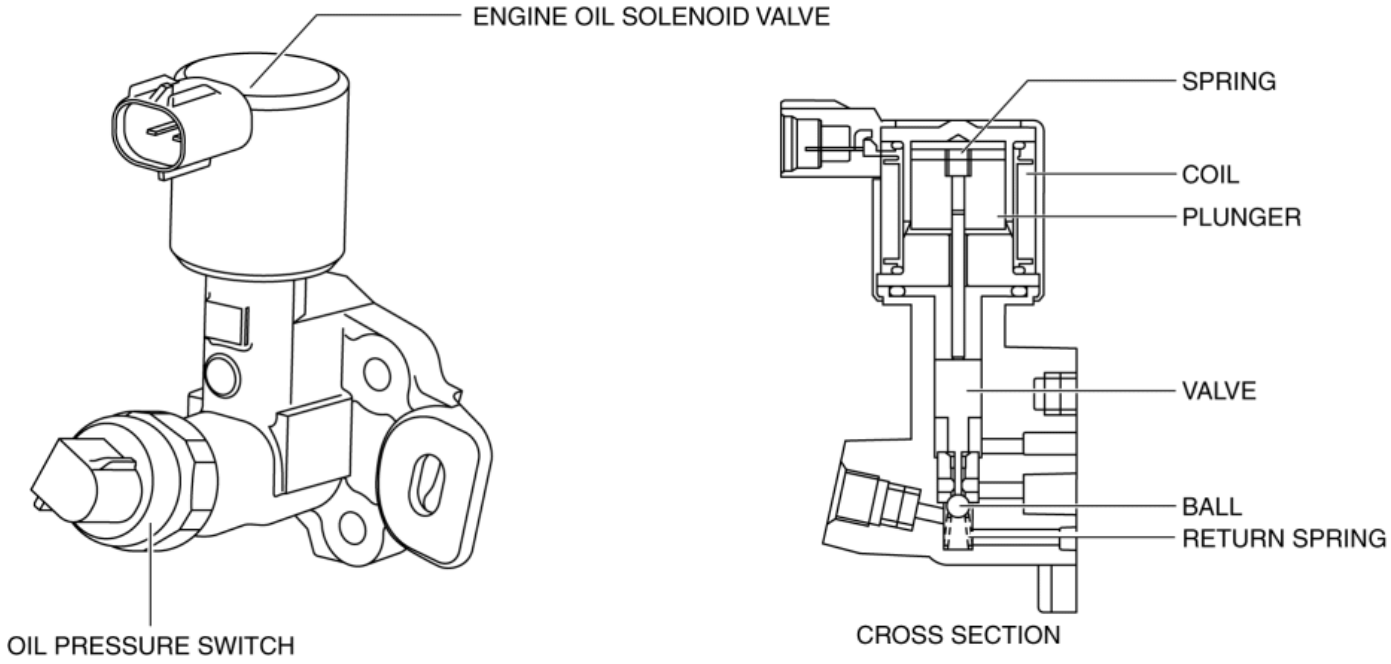

- A duty drive type has been adopted.

Operation

- The oil passage in the solenoid valve is switched according to the control signal (duty signal) from the PCM.

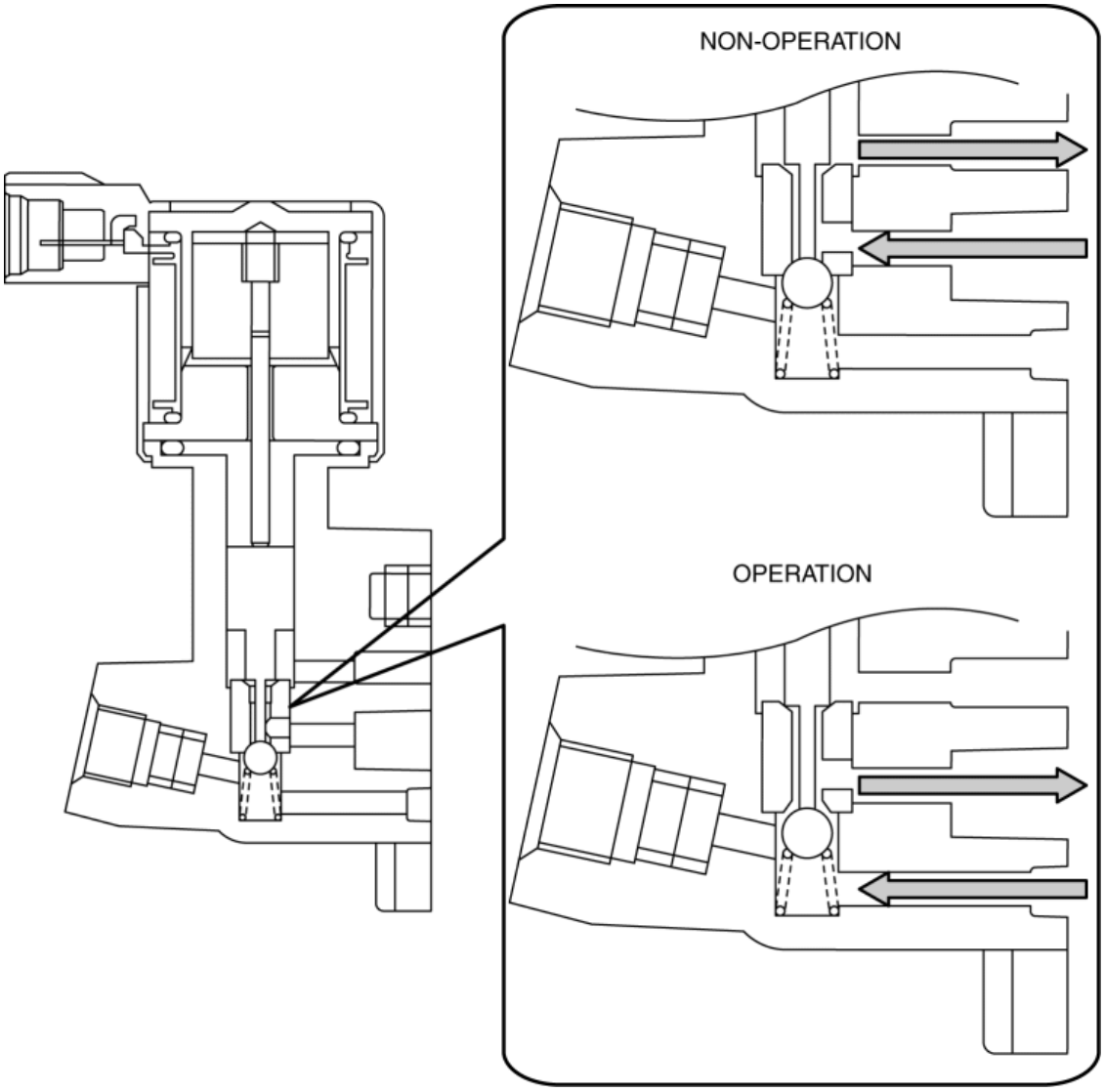

Fail-safe

- Function not equipped.

2014 - Mazda3 - Engine

OIL SHOWER PIPE [SKYACTIV-G 2.0, SKYACTIV-G 2.5]

Outline

- Mechanical resistance loss has been reduced through structural changes to achieve optimum fuel economy. An oil shower pipe has been adopted as a part of this structural change.

Purpose, Function

- The oil shower pipe injects engine oil to lubricate the contact points of the cam and rocker arm. As a result, wear resistance of sliding part is reduced.

Construction

- The oil shower pipe is installed to the camshaft cap.

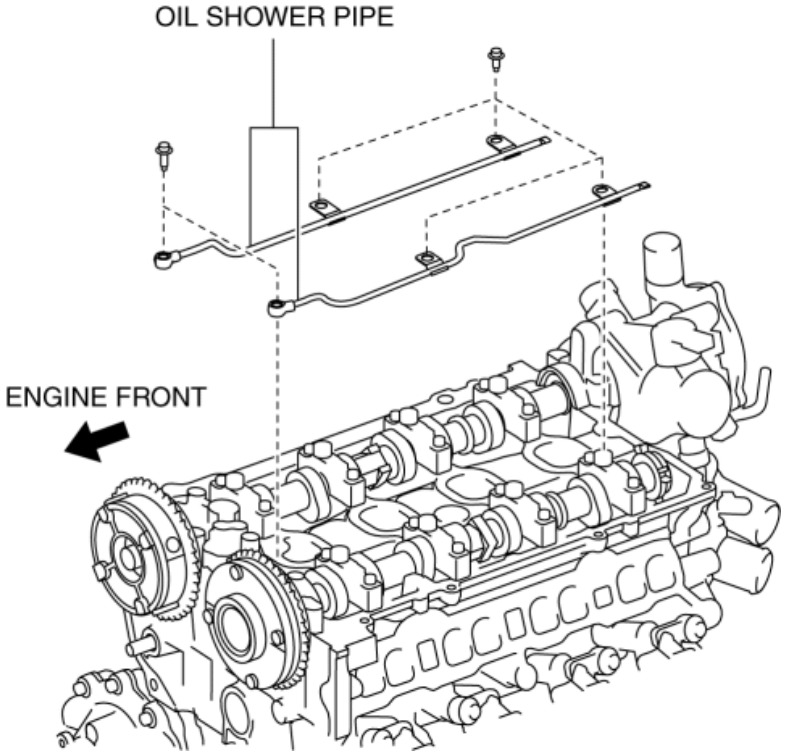

- The oil shower pipe utilizes the engine oil injection holes at the top of the camshaft.

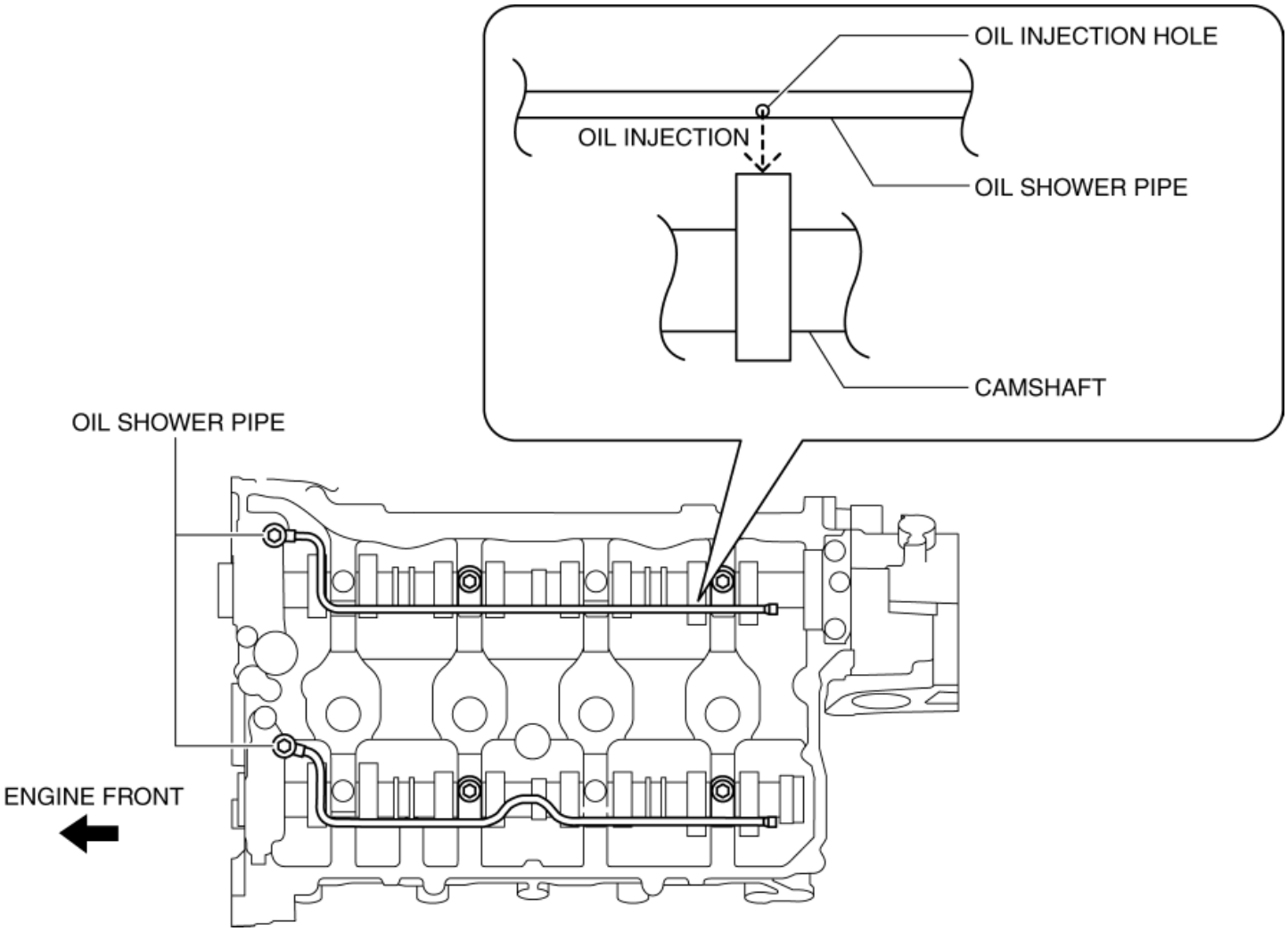

Operation

- The oil shower pipe injects engine oil from the engine oil injection holes using hydraulic pressure.

OIL SHOWER PIPE [SKYACTIV-G 2.0, SKYACTIV-G 2.5]

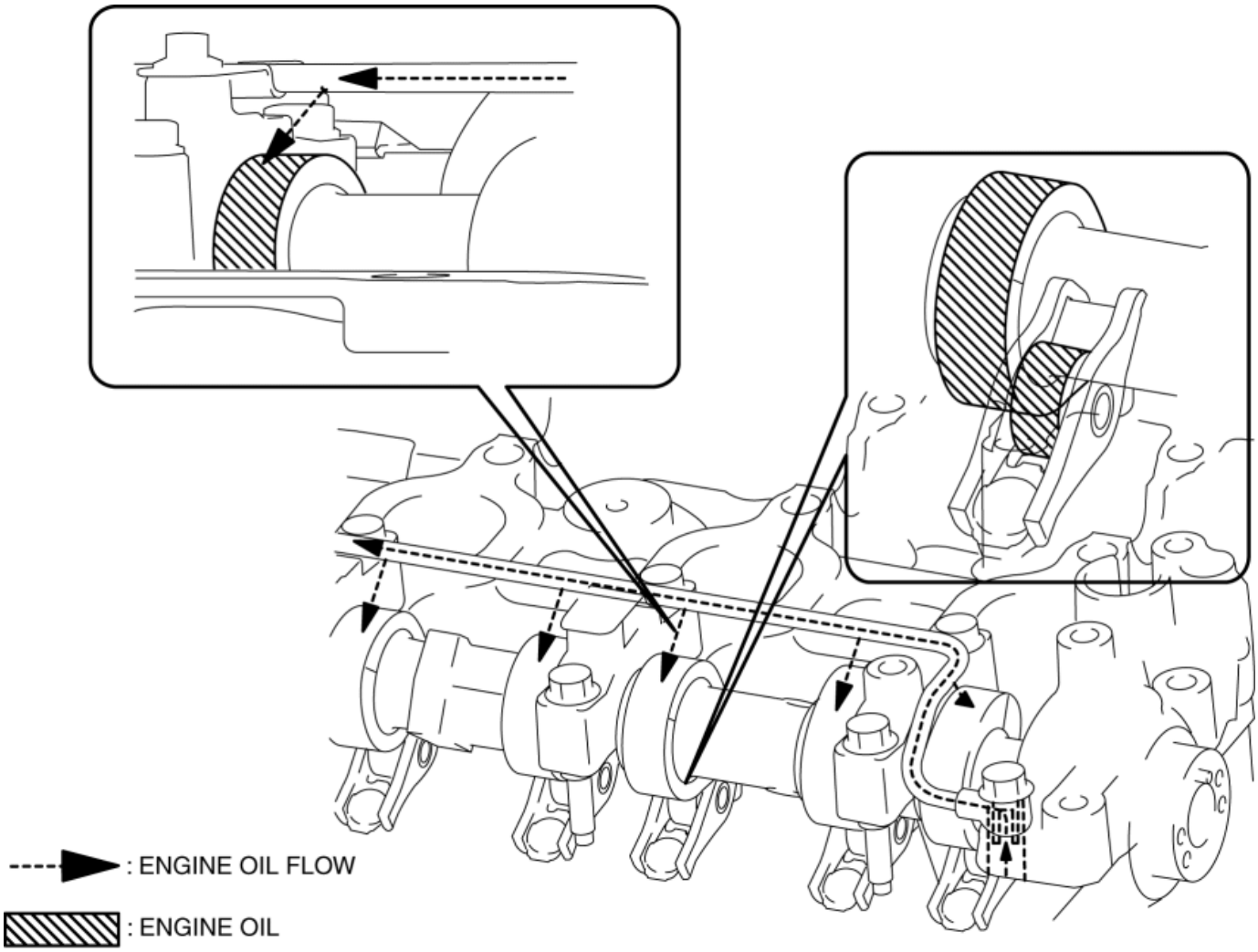

2014 - Mazda3 - Engine

COOLING SYSTEM [SKYACTIV-G 2.0, SKYACTIV-G 2.5]

Outline

- Passing water resistance is reduced by improvement of the engine coolant passage shape.
- Pump efficiency has been improved by changing the water pump impeller to a closed impeller.

Structural View

-

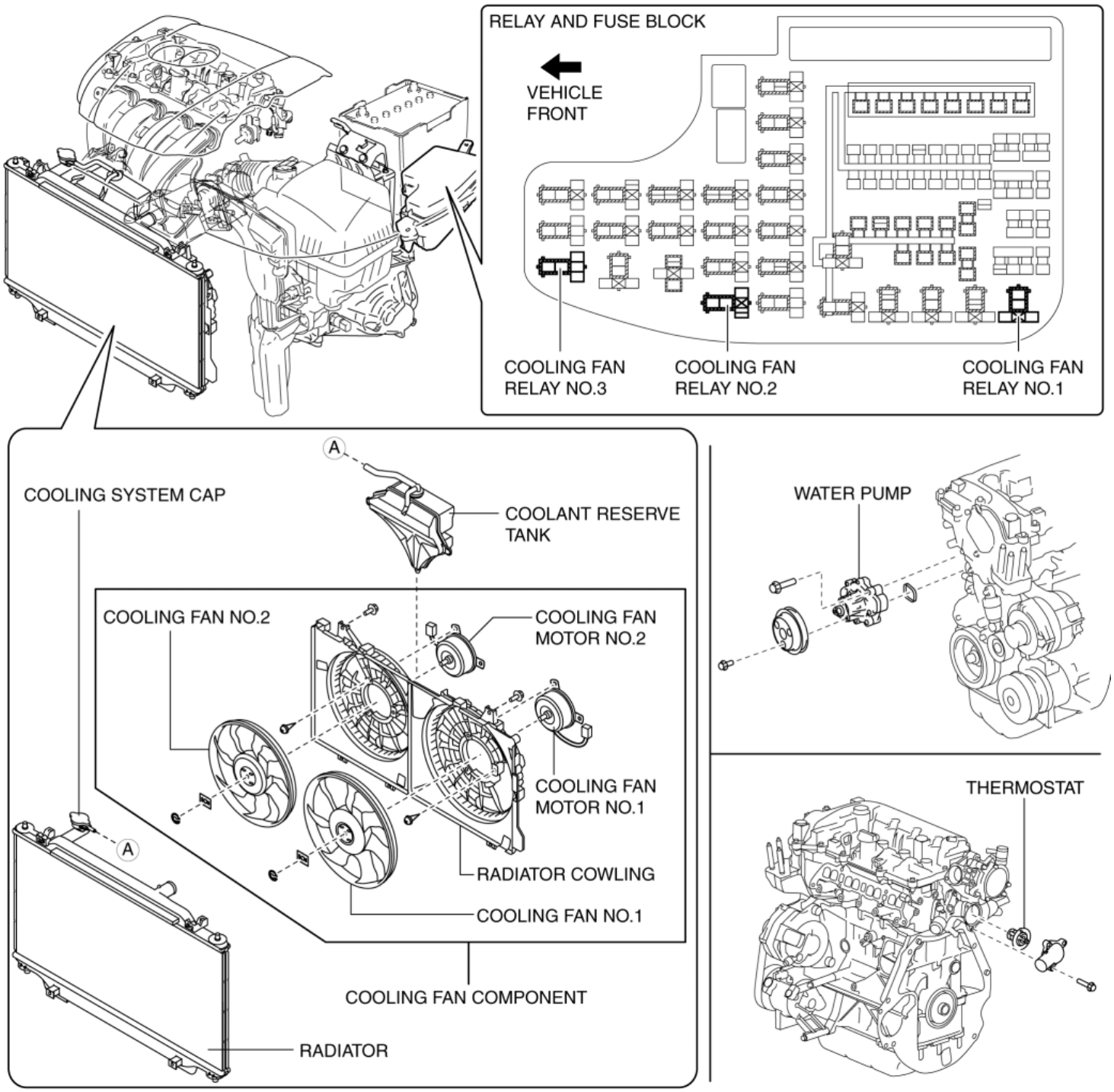
RELAY AND FUSE BLOCK
VEHICLE FRONT
COOLING FAN RELAY NO.3
COOLING FAN RELAY NO.2
COOLING FAN RELAY NO.1
A
COOLING SYSTEM CAP
COOLANT RESERVE TANK
COOLING FAN NO.2
COOLING FAN MOTOR NO.2
COOLING FAN MOTOR NO.1
RADIATOR COWLING
COOLING FAN NO.1
COOLING FAN COMPONENT
RADIATOR
WATER PUMP
THERMOSTAT

Flow Chart

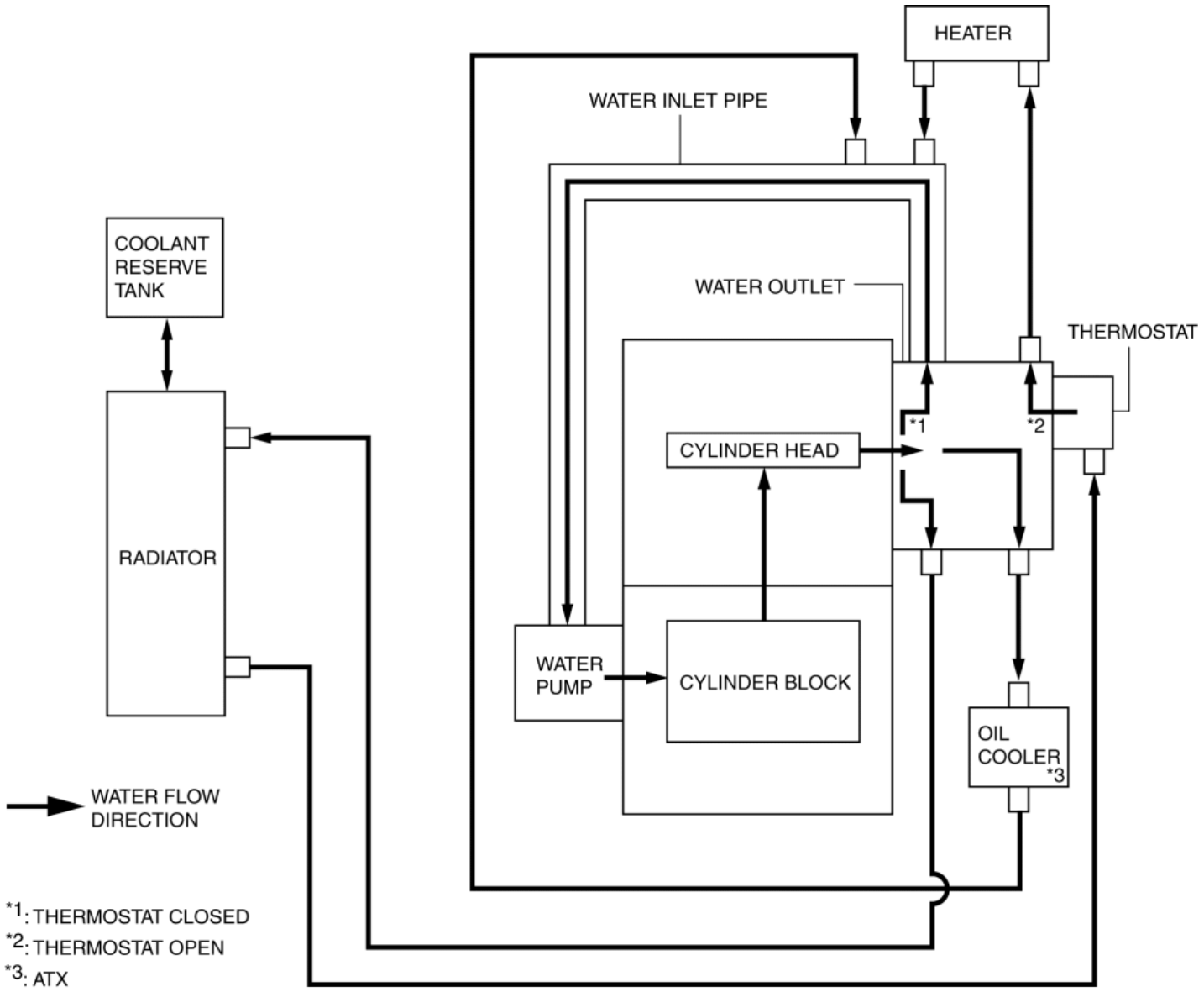

Structure

- Consists of the following parts:

Radiator	• (See **RADIATOR [SKYACTIV-G 2.0, SKYACTIV-G 2.5]**.)
Cooling system cap	• (See **COOLING SYSTEM CAP [SKYACTIV-G 2.0, SKYACTIV-G 2.5]**.)
Thermostat	• (See **THERMOSTAT [SKYACTIV-G 2.0, SKYACTIV-G 2.5]**.)
Water pump	• (See **WATER PUMP [SKYACTIV-G 2.0, SKYACTIV-G 2.5]**.)
Cooling fan component	• (See **COOLING FAN COMPONENT [SKYACTIV-G 2.0, SKYACTIV-G 2.5]**.)
Cooling fan relay	• (See **COOLING FAN RELAY [SKYACTIV-G 2.0, SKYACTIV-G 2.5]**.)

2014 - Mazda3 - Engine

RADIATOR [SKYACTIV-G 2.0, SKYACTIV-G 2.5]

Purpose, Function

- The radiator disperses the engine coolant heat flowing internally by receiving the air flow against the vehicle while it is driven or the air flow produced by the cooling fan.

Construction

- The radiator is installed to the front of the engine compartment.
- Four mounting rubbers are utilized to decrease vibration.

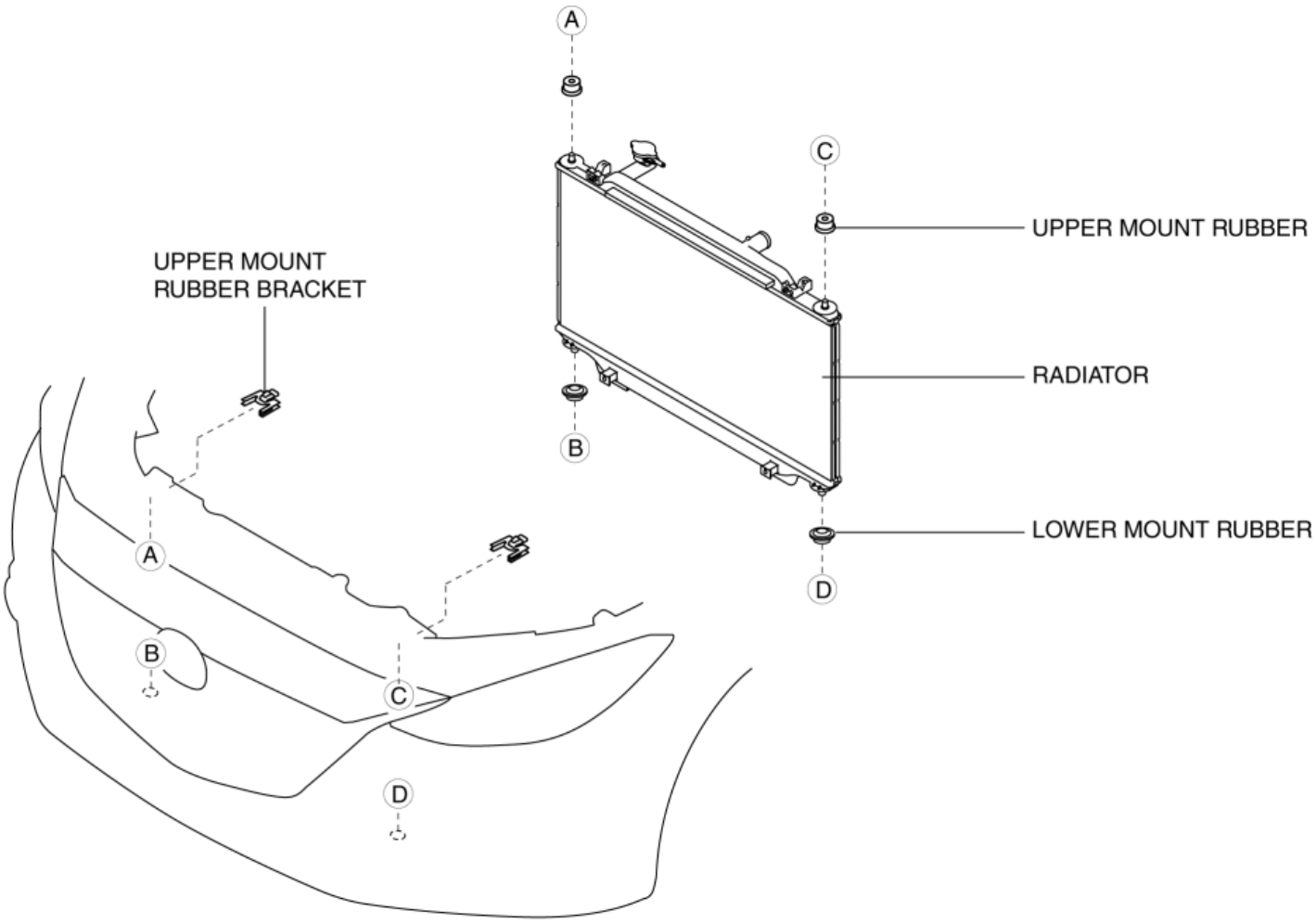

- A down-flow radiator with corrugated fins has been adopted.
- The radiator tanks are made of plastic and the core is made of aluminum for weight reduction.

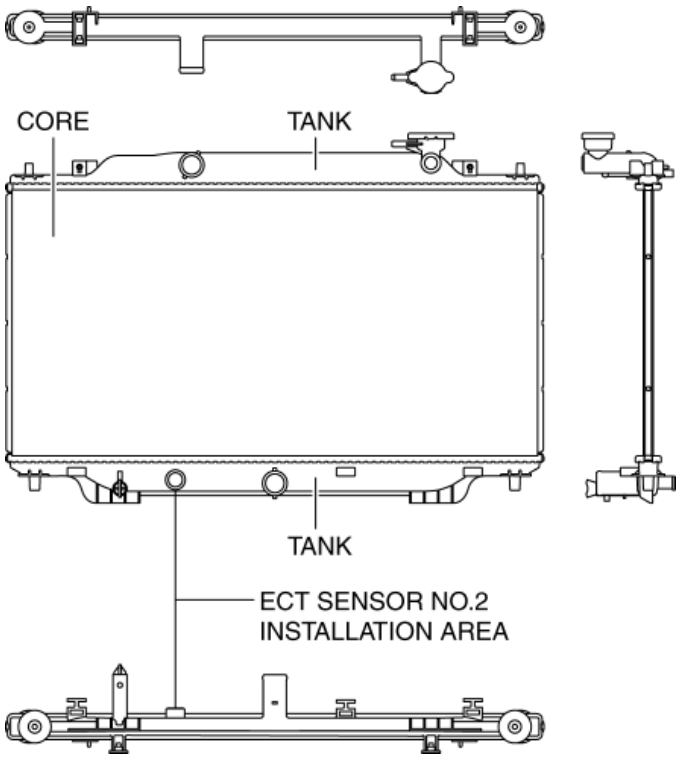
CORE
TANK
TANK
ECT SENSOR NO.2
INSTALLATION AREA

2014 - Mazda3 - Engine

COOLING SYSTEM CAP [SKYACTIV-G 2.0, SKYACTIV-G 2.5]

Purpose, Function

- The cooling system cap maintains appropriate pressure in the engine coolant passage. In addition, cooling efficiency has been improved by increasing the engine coolant boiling point.

Construction

- The cooling system cap is installed to the upper part of the radiator.

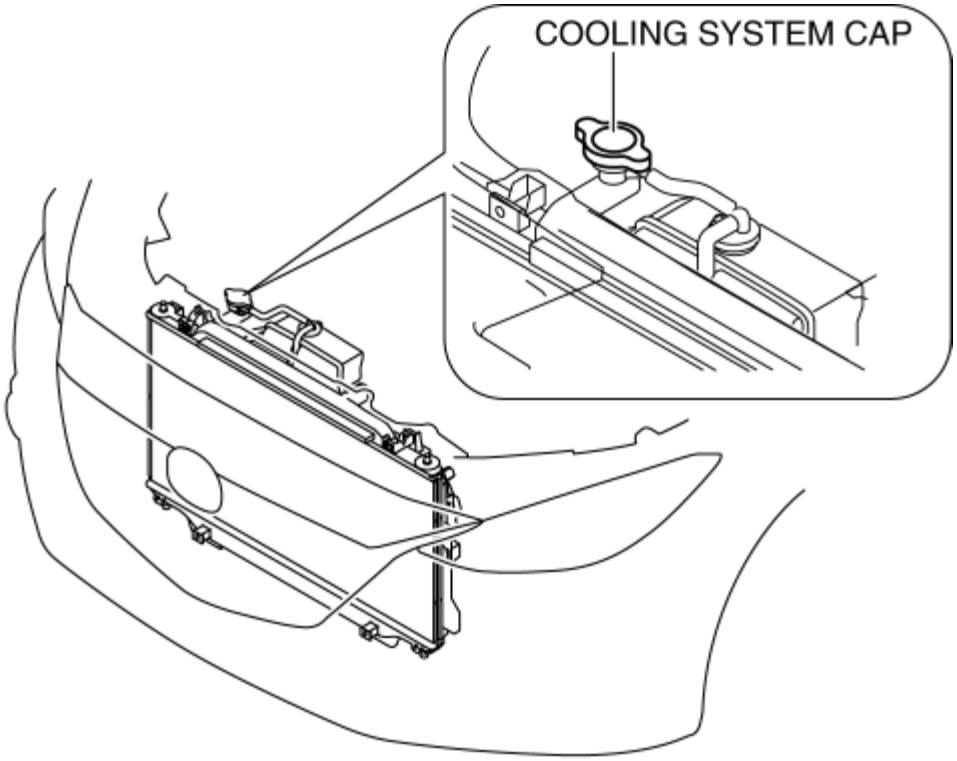

Operation

When engine coolant temperature is high

1. When the engine coolant temperature is high, the pressure in the engine coolant passage increases and the pressure valve is pressed and opened.

2. Engine coolant flows into the coolant reserve tank when the pressure valve is open.

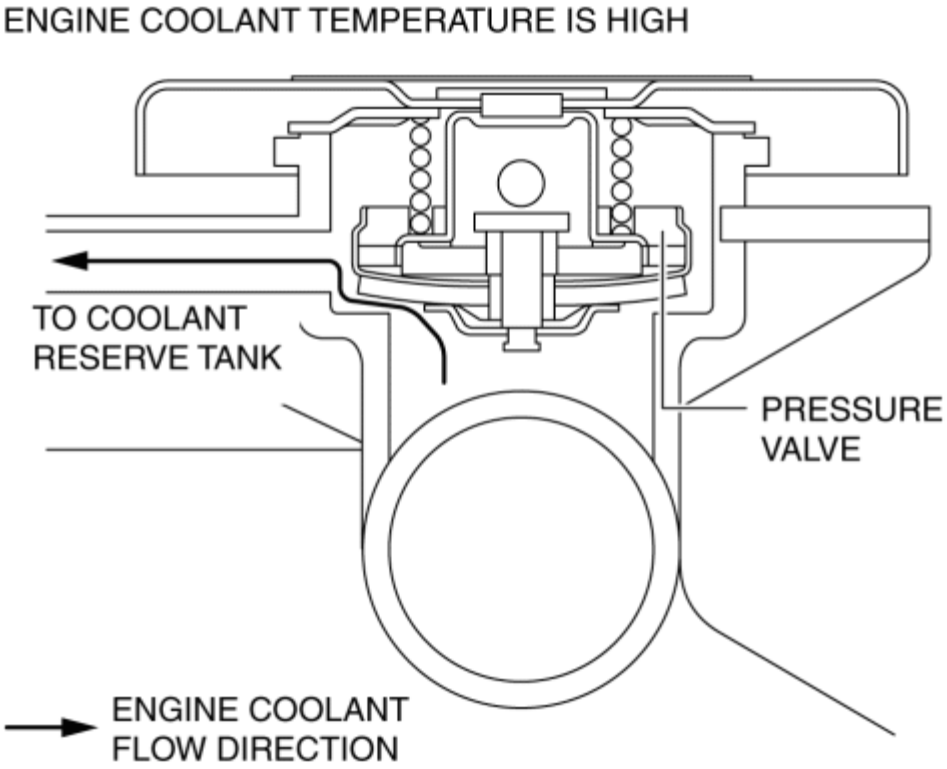

When engine coolant temperature is low

1. When the engine coolant temperature is low, the pressure in the engine coolant passage decreases and the vacuum valve is opened.

2. Engine coolant in the coolant reserve tank flows into the engine coolant passage when the vacuum valve is open.

ENGINE COOLANT TEMPERATURE IS LOW

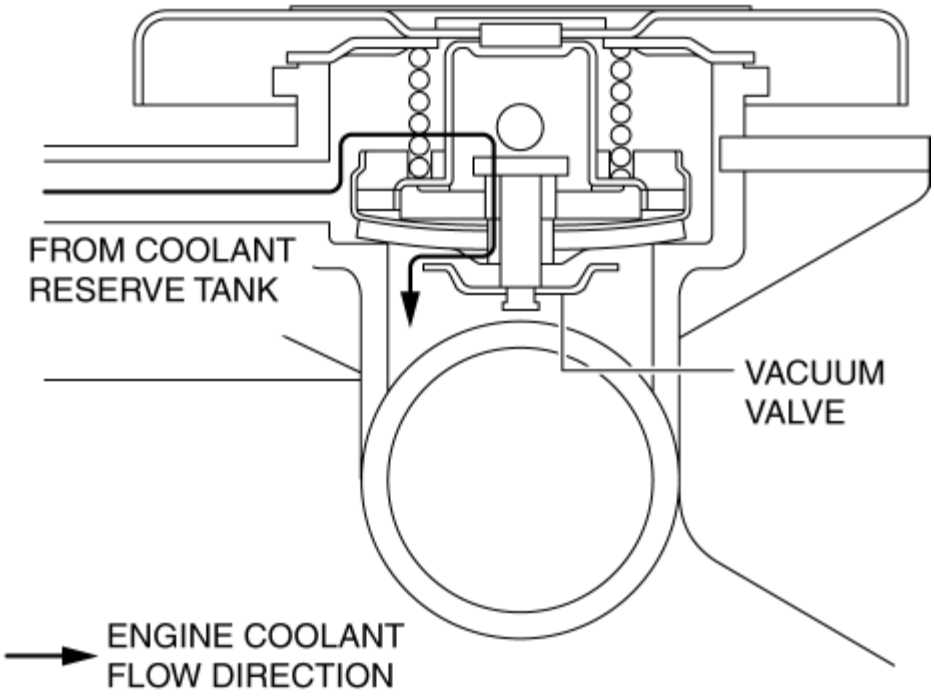

2014 - Mazda3 - Engine

THERMOSTAT [SKYACTIV-G 2.0, SKYACTIV-G 2.5]

Purpose, Function

- When the engine coolant temperature is low, the thermostat blocks the engine coolant passage between the radiator and engine. As a result, because engine coolant cycles without passing through the radiator, faster warming is promoted.

Construction

- The thermostat is installed to the rear part of the cylinder head.

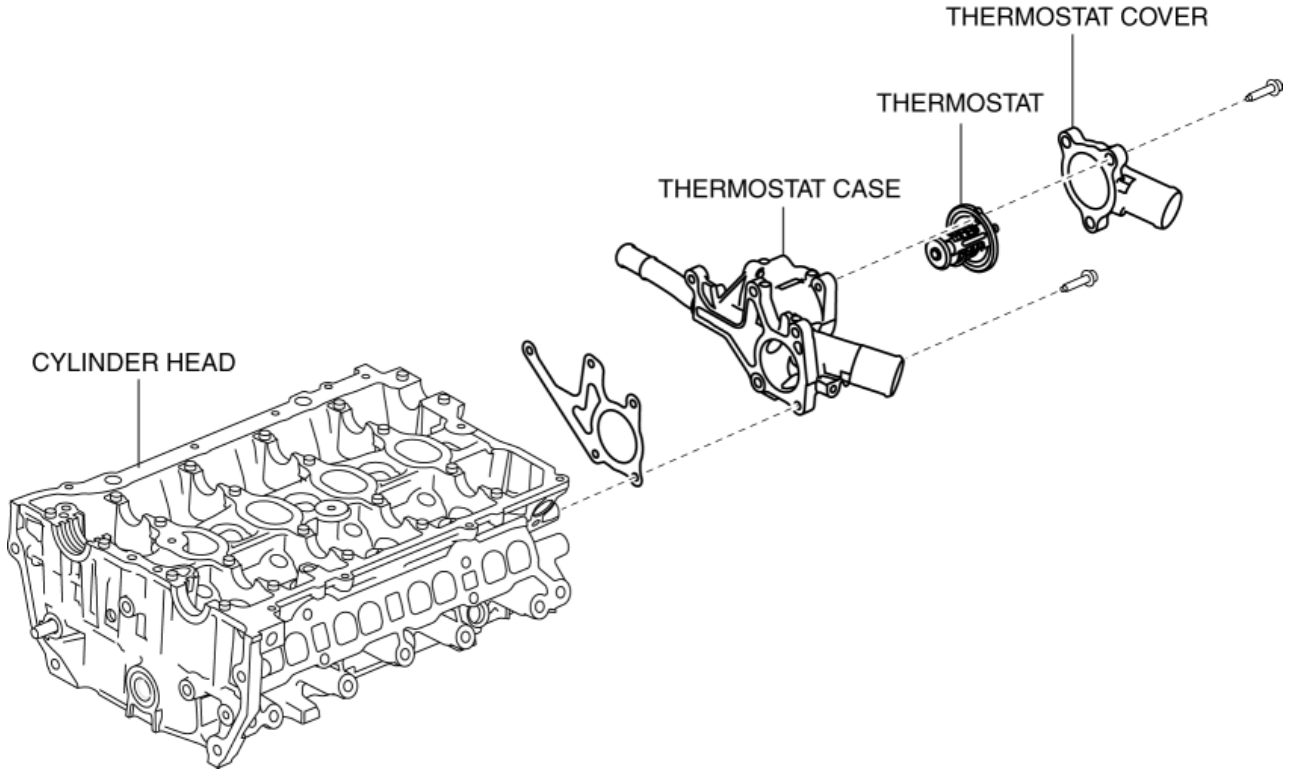

- The thermostat has the following parts:

U.S.A. and Canada

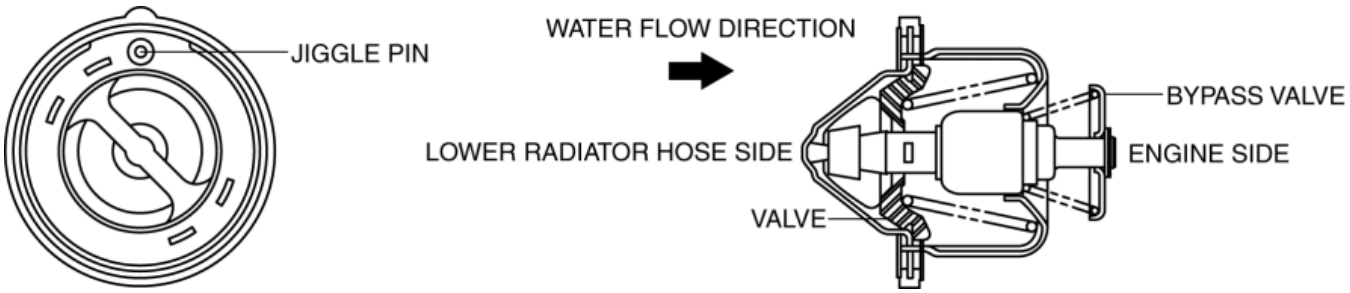

Except U.S.A. and Canada

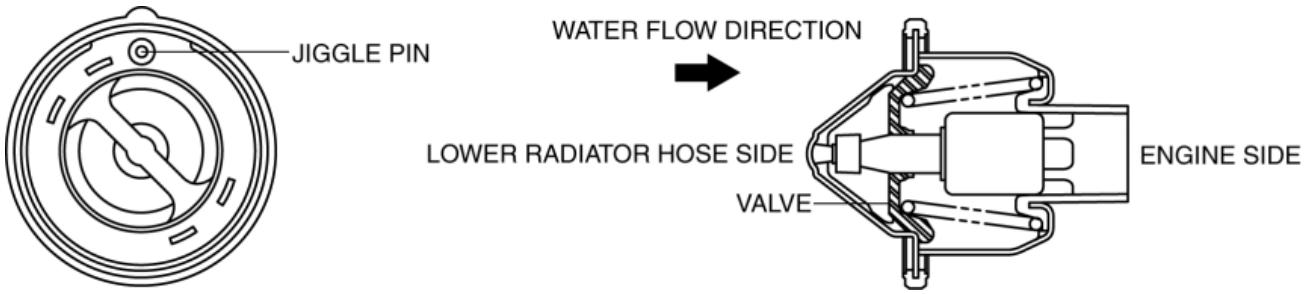

Operation

1. When the engine coolant temperature decreases, the thermostat valve closes and engine coolant circulates without passing through the radiator.

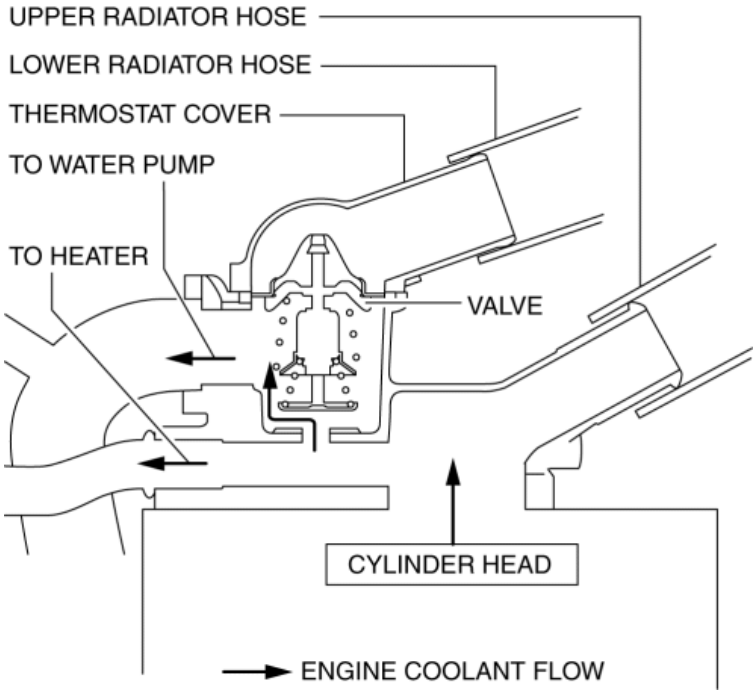

2. When the engine coolant temperature reaches one of the following temperature ranges, the thermostat valve starts to open and the engine coolant passed through the radiator flows to the engine.

- U.S.A. and Canada: 80.5—83.5 °C {145—150 °F}
- Except U.S.A. and Canada: 86.5—89.5 °C {156—161 °F}

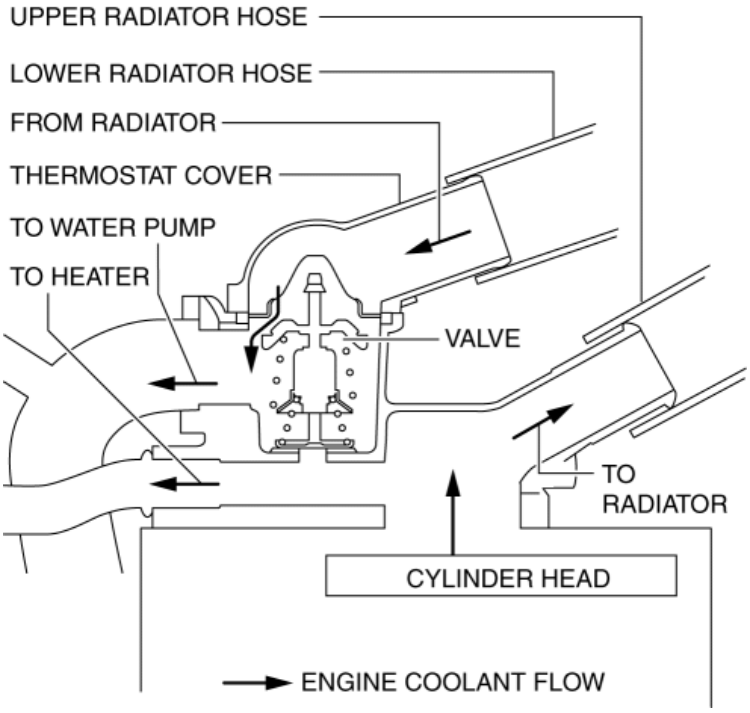
UPPER RADIATOR HOSE
LOWER RADIATOR HOSE
FROM RADIATOR
THERMOSTAT COVER
TO WATER PUMP
TO HEATER
VALVE
TO
RADIATOR
CYLINDER HEAD
ENGINE COOLANT FLOW

2014 - Mazda3 - Engine

WATER PUMP [SKYACTIV-G 2.0, SKYACTIV-G 2.5]

Purpose, Function

- The water pump operates by obtaining drive force from the engine via the drive belt to pump engine coolant.

Construction

- The water pump is installed to the engine front.

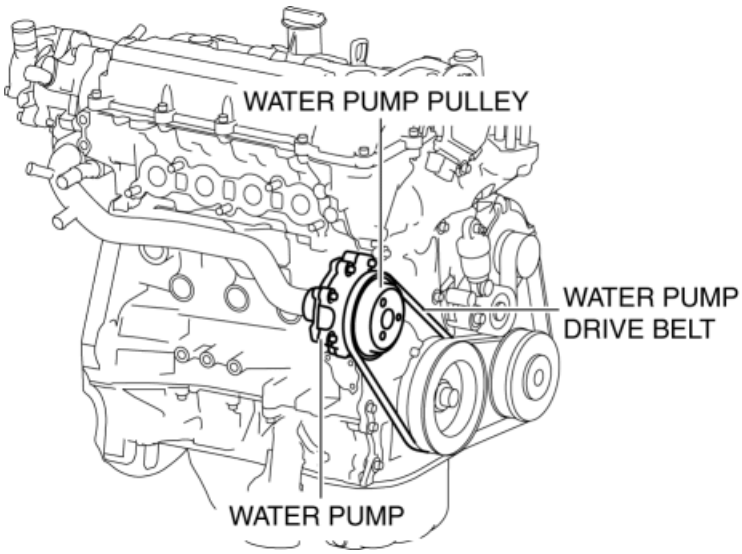

- The water pump consists of the following parts:

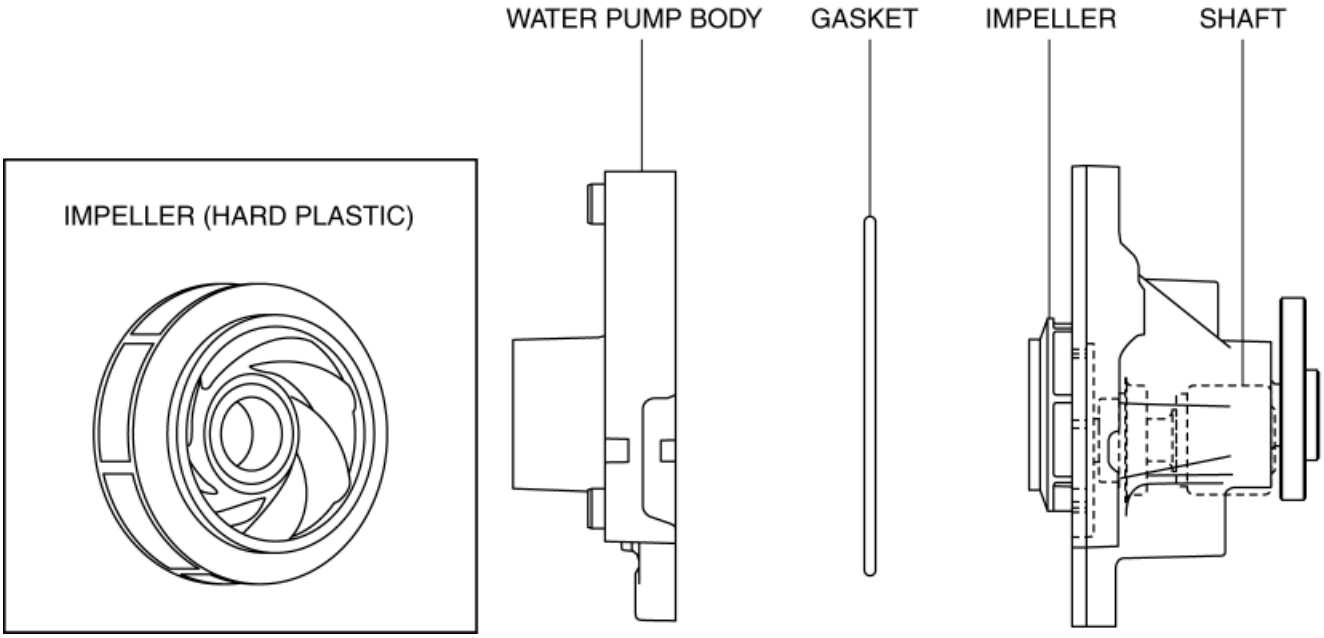

- A hard plastic shroud impeller has been adopted to the impeller. As a result, leakage loss from the front and back surfaces of the impeller is reduced and the pump efficiency is improved.

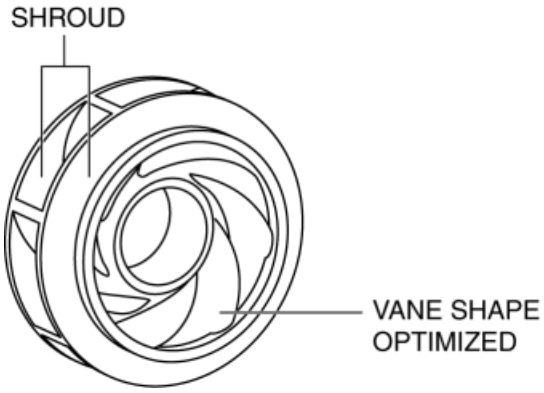

Operation

1. The water pump pulley rotates by obtaining drive force from the engine via the drive belt.
2. The impeller with the water pump pulley and shaft connected rotates to pump engine coolant.

2014 - Mazda3 - Engine

COOLING FAN COMPONENT [SKYACTIV-G 2.0, SKYACTIV-G 2.5]

Purpose, Function

- The cooling fan rotates according to vehicle conditions and enhances the cooling efficiency of the radiator.

Structural View

- 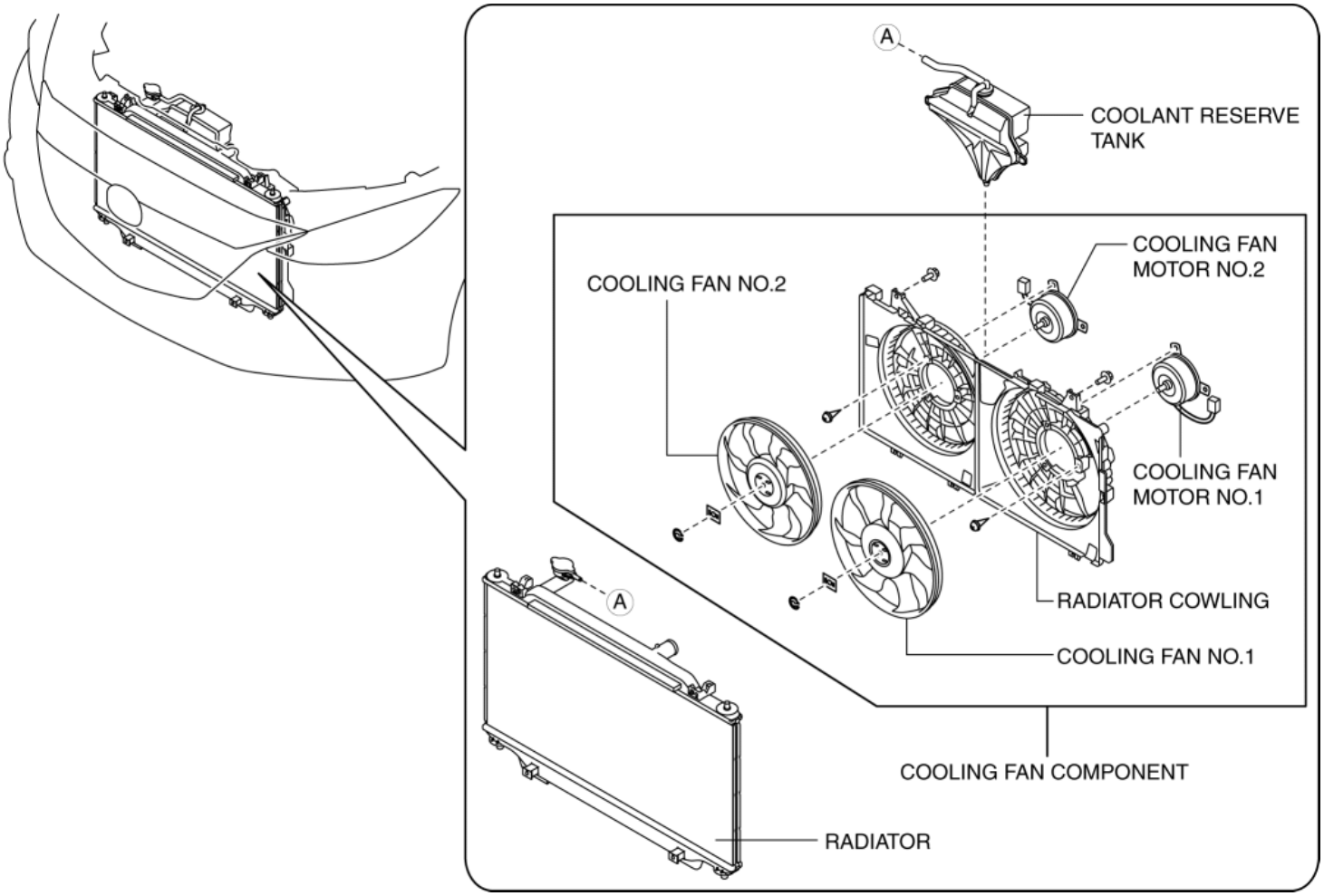

Operation

- For electrical fan control details, refer to CONTROL SYSTEM. (See **ELECTRICAL FAN CONTROL [SKYACTIV-G 2.0, SKYACTIV-G 2.5]**.)

Fail-safe

- Function not equipped.

2014 - Mazda3 - Engine

COOLING FAN RELAY [SKYACTIV-G 2.0, SKYACTIV-G 2.5]

Purpose, Function

- The cooling fan relay operates by receiving the signal from the PCM to supply power to the cooling fan motor.

Construction

- The cooling fan relay is installed on the relay and fuse block.

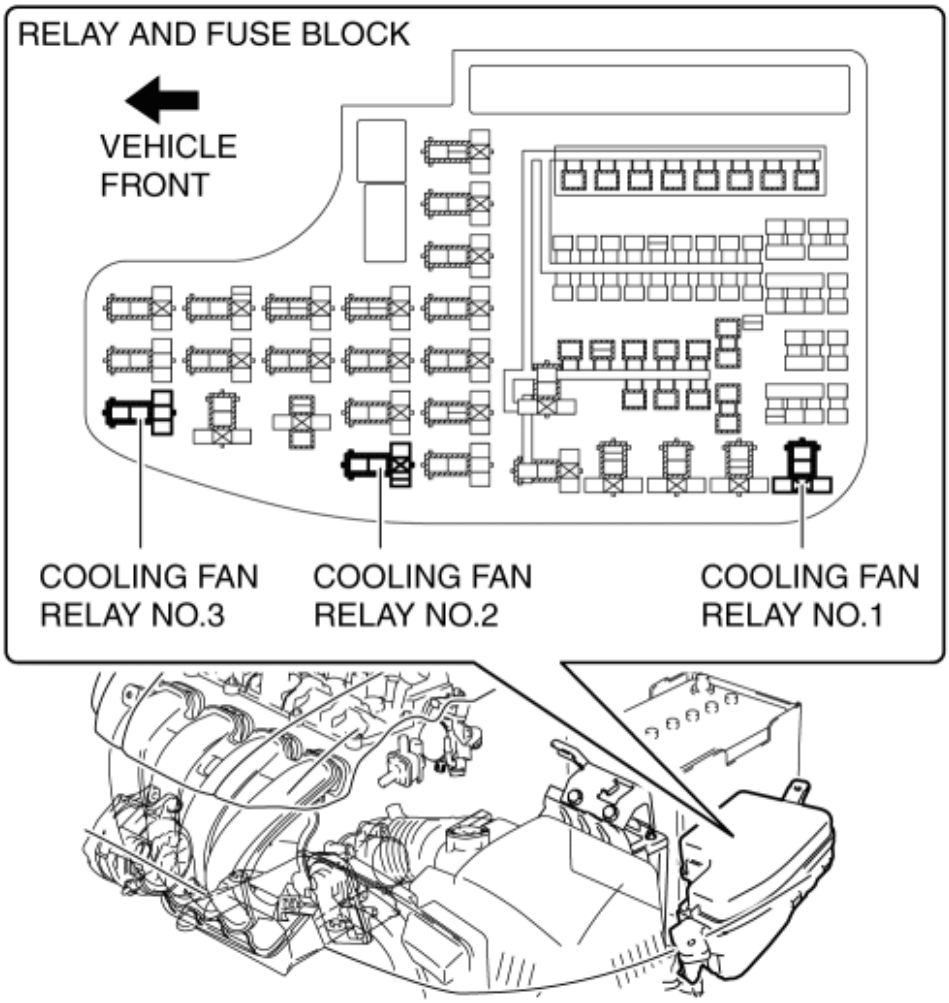

Operation

- The contact point is on when the battery voltage is supplied to the coil based on the signal

from the PCM, and the battery voltage is supplied to the cooling fan motor.

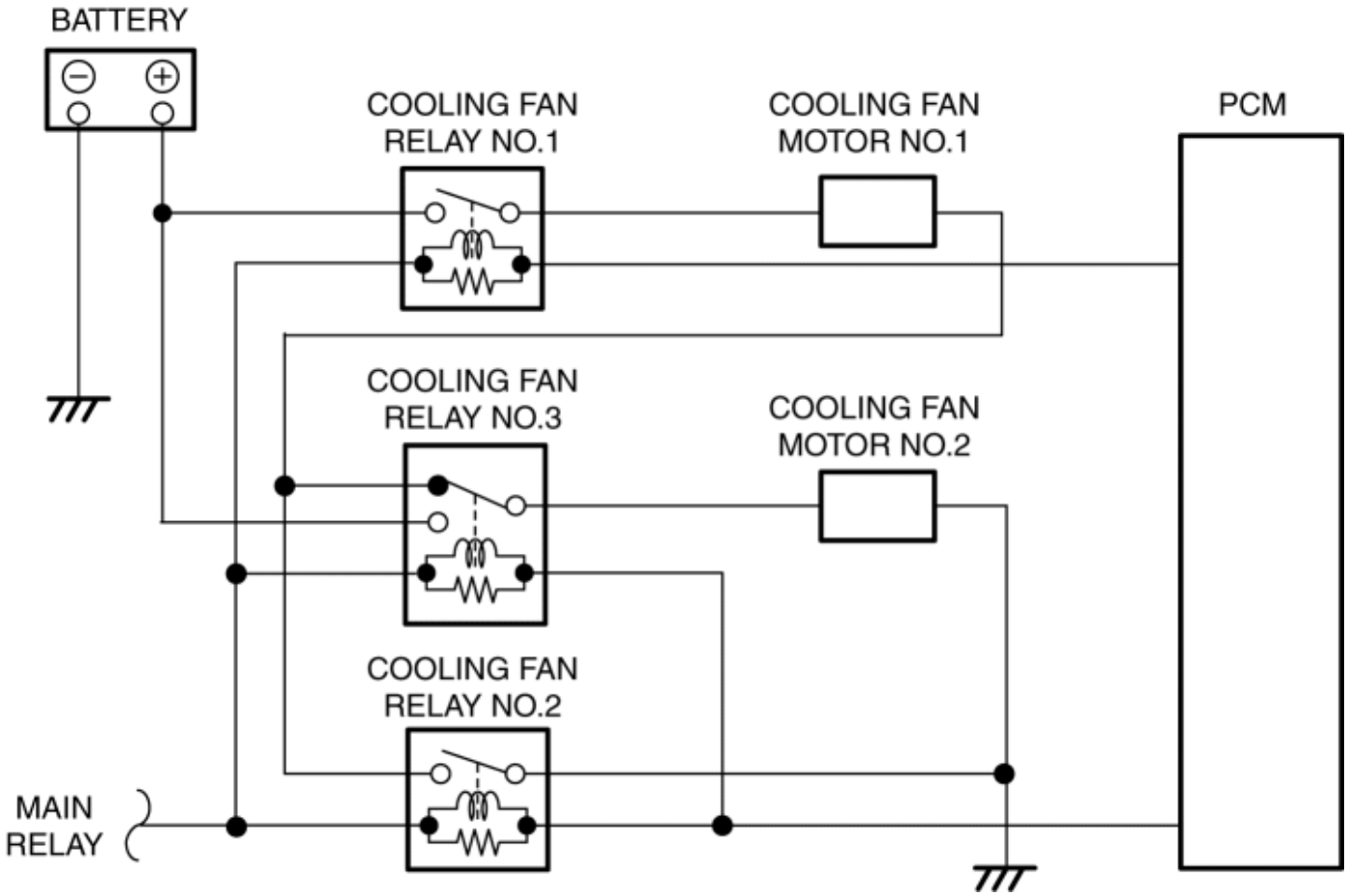

Fail-safe

- Function not equipped.

2014 - Mazda3 - Engine

INTAKE-AIR SYSTEM [SKYACTIV-G 2.0, SKYACTIV-G 2.5]

Purpose, Outline

- A vacuum pump has been adopted which supplies stable vacuum to the power brake unit.

Structural View

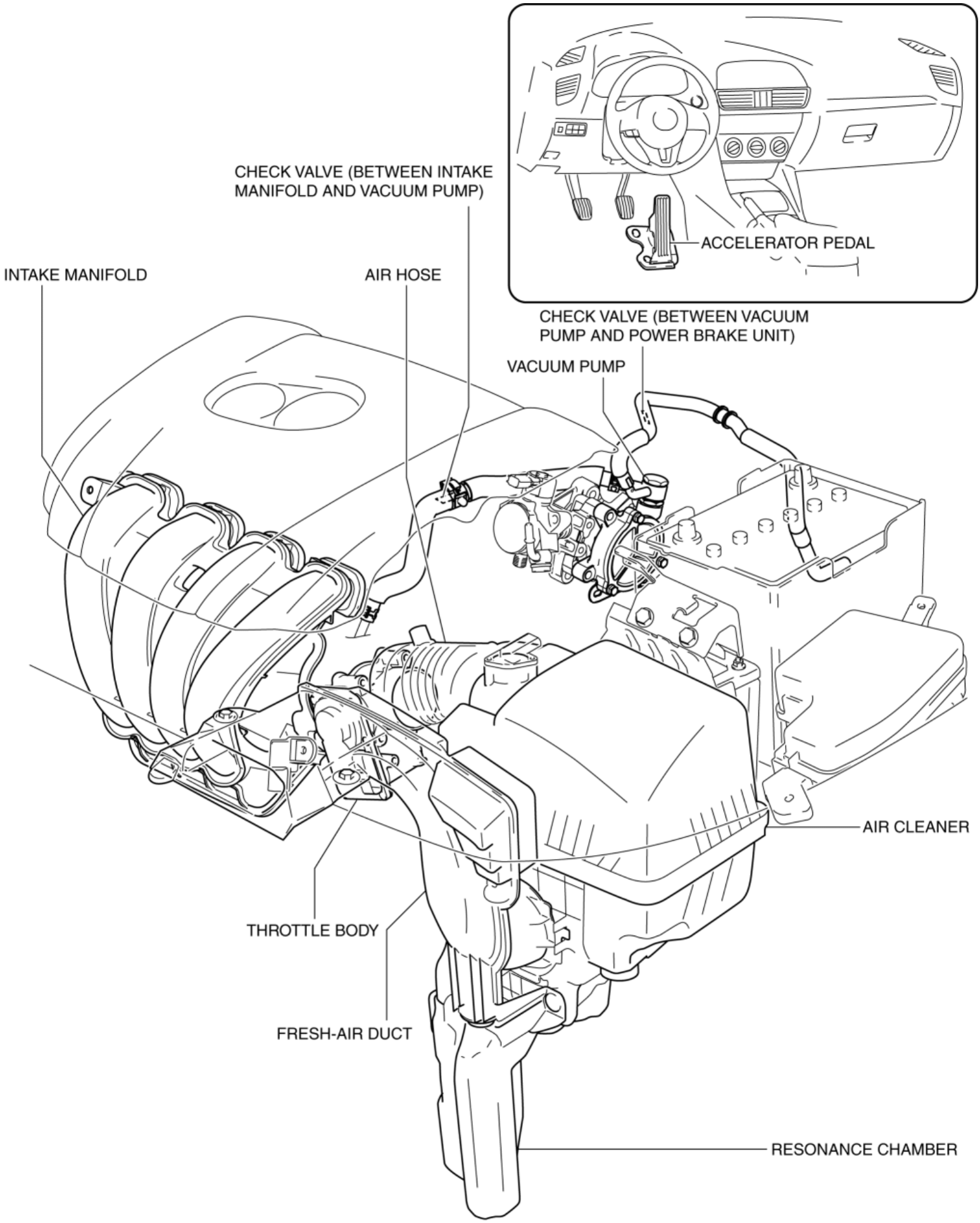
CHECK VALVE (BETWEEN INTAKE MANIFOLD AND VACUUM PUMP)
ACCELERATOR PEDAL
INTAKE MANIFOLD
AIR HOSE
CHECK VALVE (BETWEEN VACUUM PUMP AND POWER BRAKE UNIT)
VACUUM PUMP
AIR CLEANER
THROTTLE BODY
FRESH-AIR DUCT
RESONANCE CHAMBER

System Diagram

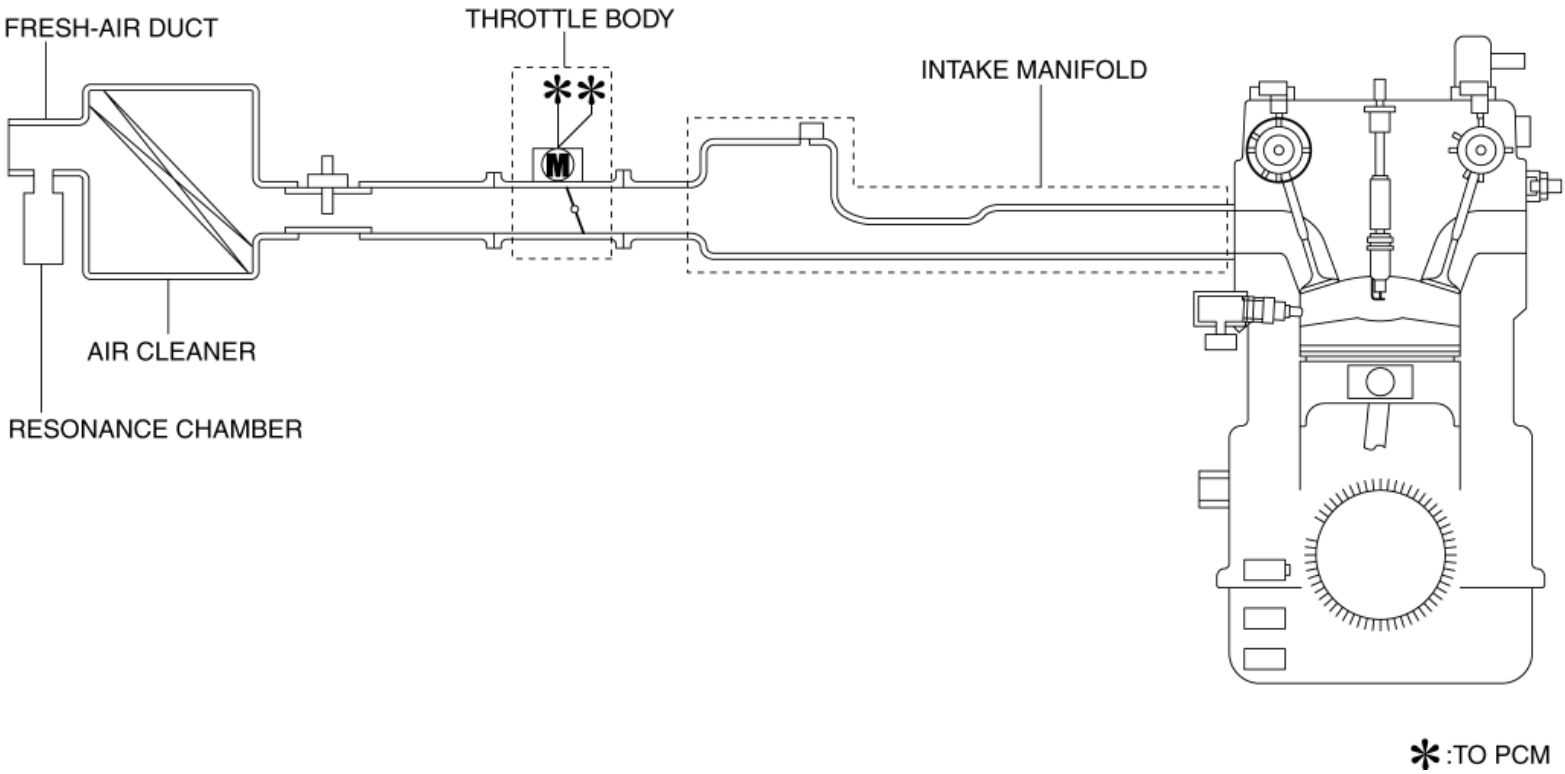

Vacuum Hose Routing Diagram

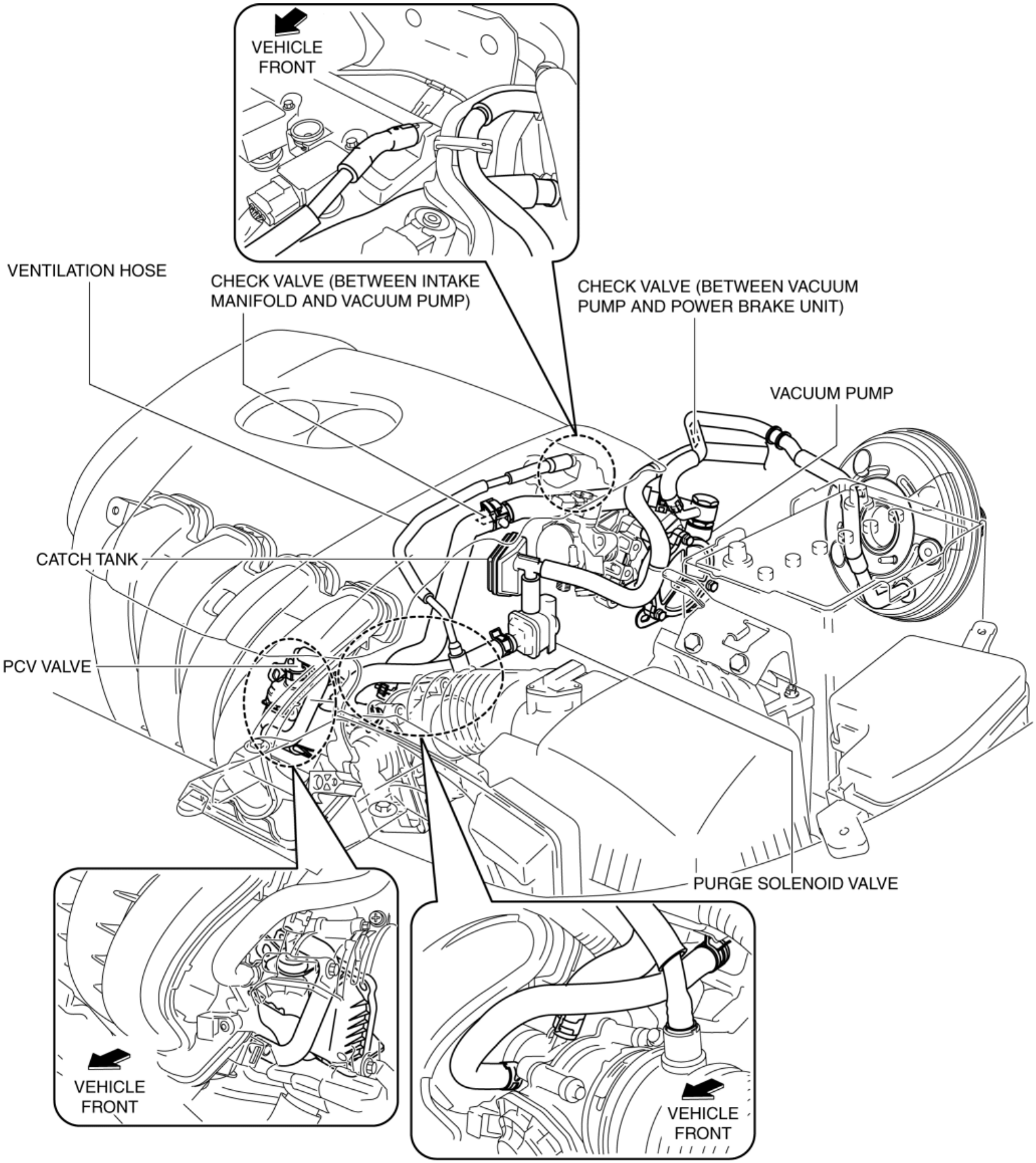

Structure

- The intake air system consists of the following parts:

Part name	Reference
Fresh-air duct	(See **FRESH-AIR DUCT [SKYACTIV-G 2.0, SKYACTIV-G 2.5]**.)
Resonance chamber	(See **RESONANCE CHAMBER [SKYACTIV-G 2.0, SKYACTIV-G 2.5]**.)
Air cleaner	(See **AIR CLEANER [SKYACTIV-G 2.0, SKYACTIV-G 2.5]**.)
Throttle body	(See **THROTTLE BODY [SKYACTIV-G 2.0, SKYACTIV-G 2.5]**.)
Vacuum pump	(See **VACUUM PUMP [SKYACTIV-G 2.0, SKYACTIV-G 2.5]**.)
Intake manifold	(See **INTAKE MANIFOLD [SKYACTIV-G 2.0, SKYACTIV-G 2.5]**.)
Accelerator pedal	(See **ACCELERATOR PEDAL, KICKDOWN SWITCH [SKYACTIV-G 2.0, SKYACTIV-G 2.5]**.)

2014 - Mazda3 - Engine

FRESH-AIR DUCT [SKYACTIV-G 2.0, SKYACTIV-G 2.5]

Purpose, Function

- Conducts fresh air from outside the engine compartment.
- Increases air density by taking fresh air, which is cooler than the engine compartment, to enhance the charging efficiency, ensuring the combustion stability.

Construction

- The fresh-air duct is installed to the air cleaner.

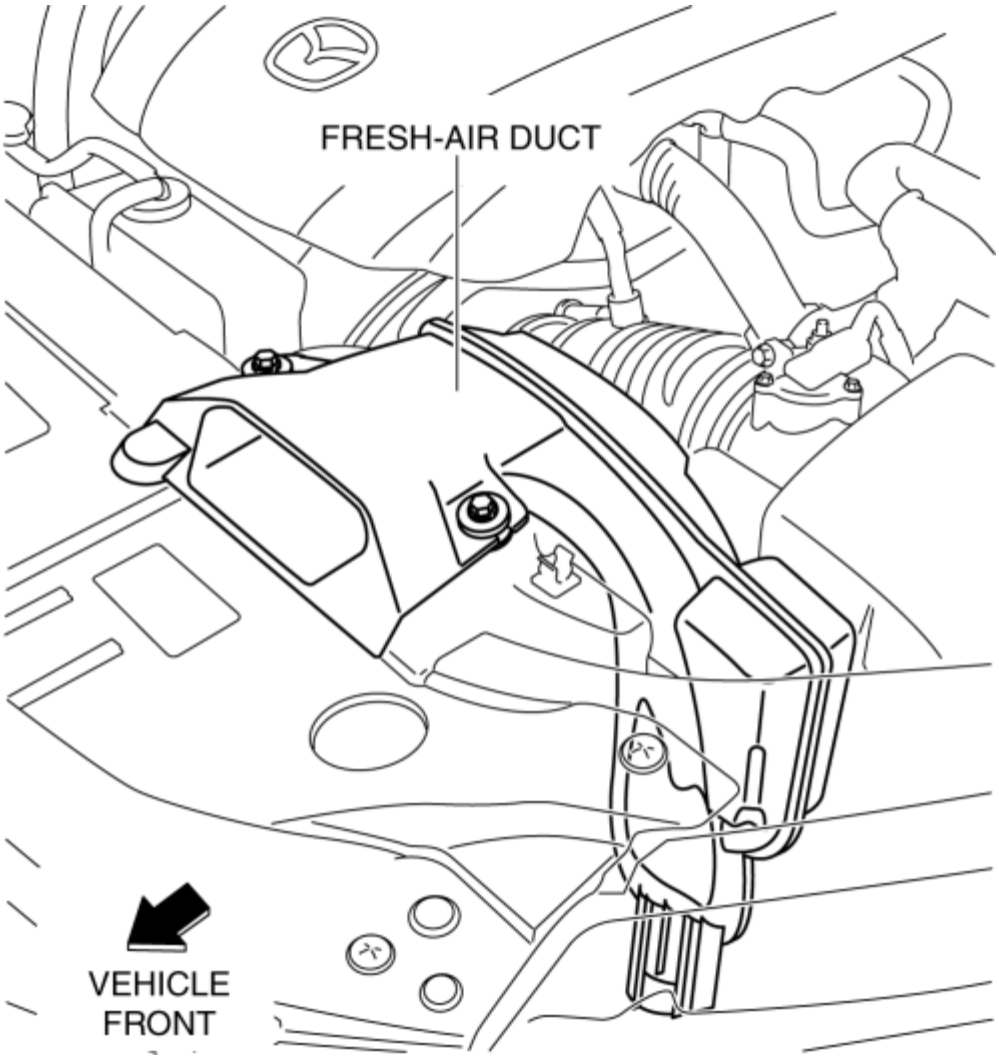

FRESH-AIR DUCT [SKYACTIV-G 2.0, SKYACTIV-G 2.5]

2014 - Mazda3 - Engine

RESONANCE CHAMBER [SKYACTIV-G 2.0, SKYACTIV-G 2.5]

Purpose, Function

- Pulsation of intake air is controlled and intake air noise is reduced by adding an intake air passage.

Construction

- The resonance chamber is installed to fresh-air duct.

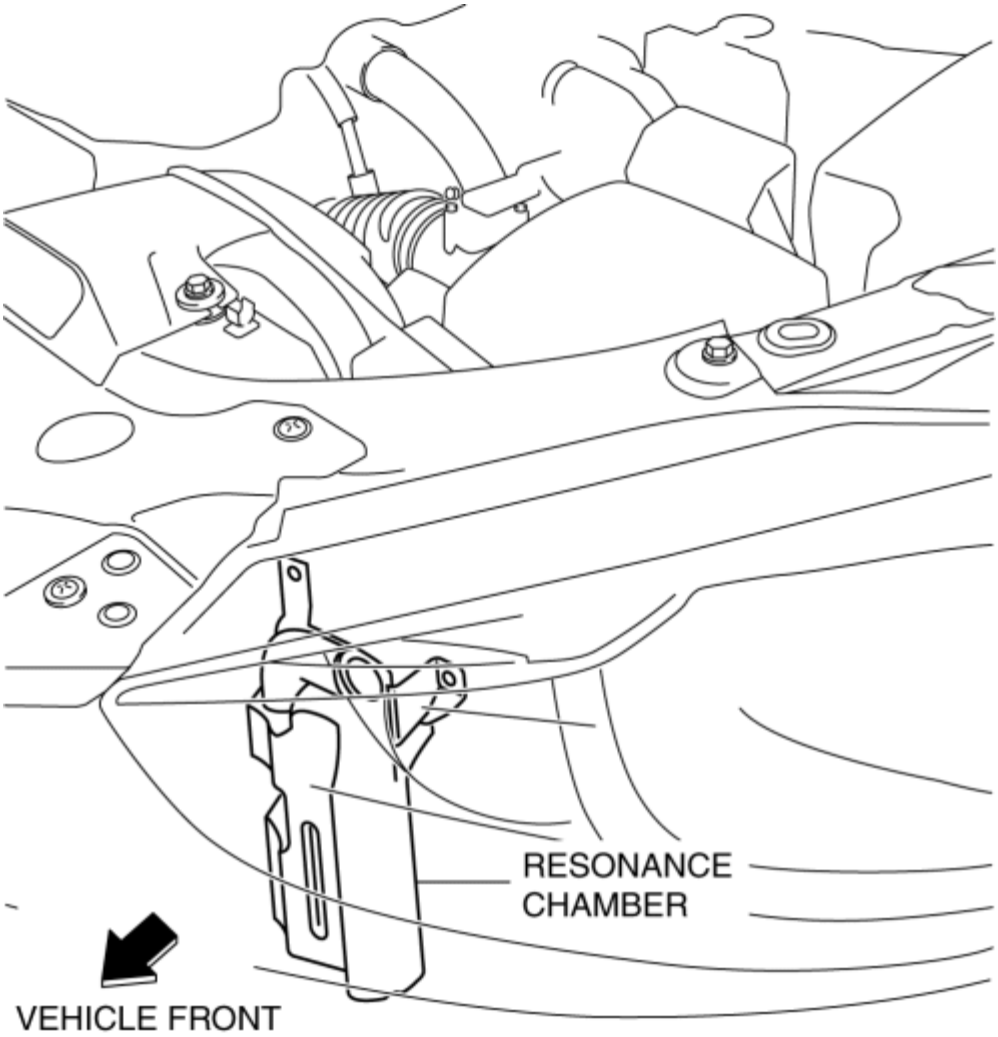

RESONANCE CHAMBER [SKYACTIV-G 2.0, SKYACTIV-G 2.5]

2014 - Mazda3 - Engine

AIR CLEANER [SKYACTIV-G 2.0, SKYACTIV-G 2.5]

Purpose, Function

- Prevents engine internal damage caused by penetration of dust or foreign material.

Construction

- The air cleaner is installed in front of the battery.

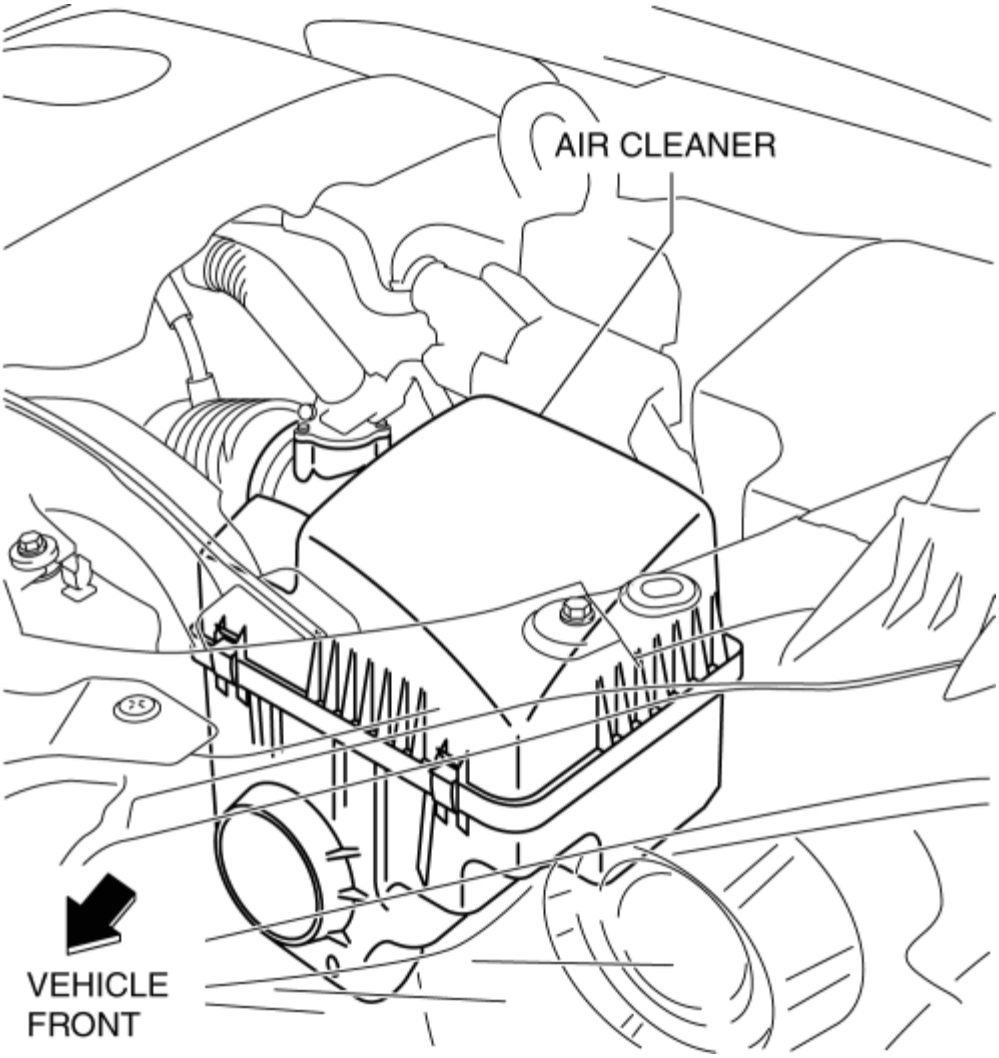

- The air cleaner consists of the air cleaner case, air cleaner cover, and air cleaner element.

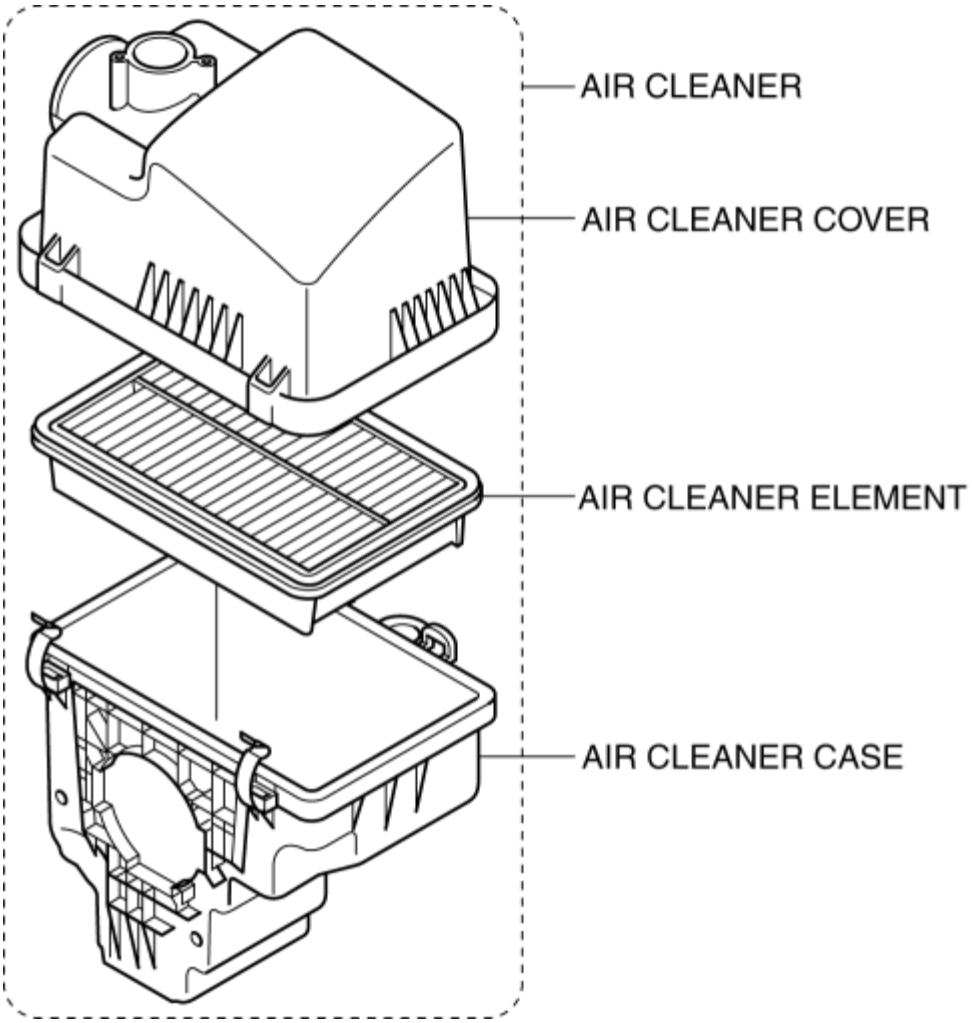

- Non-woven fabric (dry type) air cleaner element has been adopted to remove dust and foreign material in the intake air.

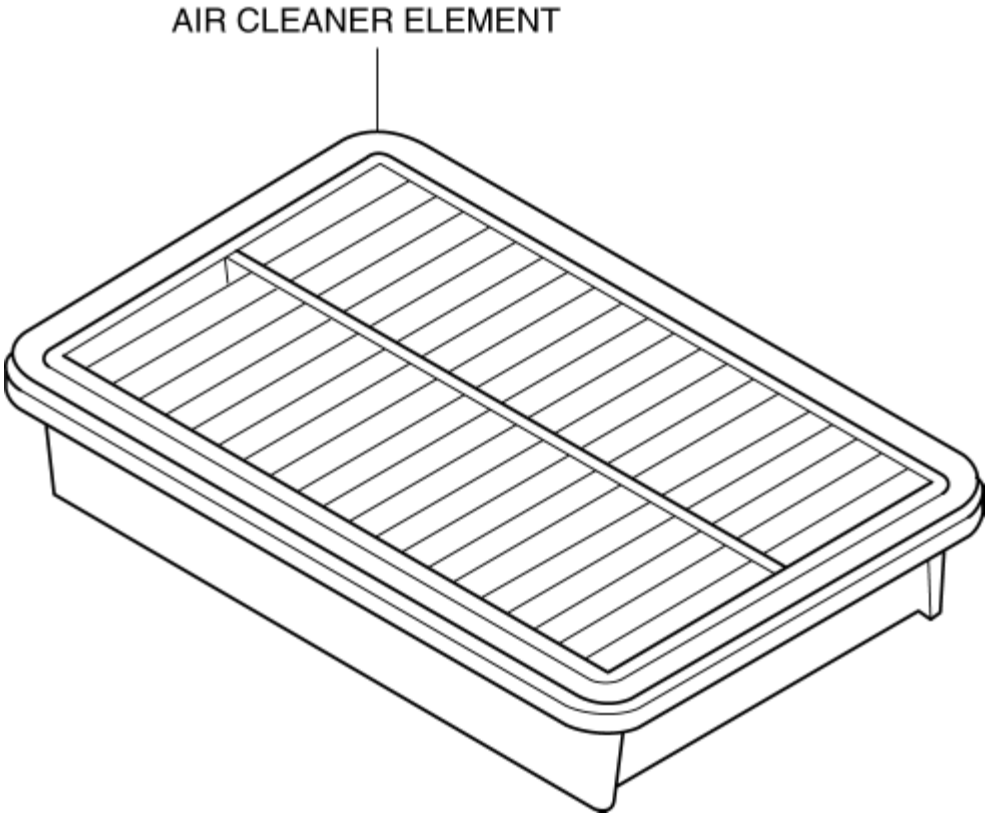
AIR CLEANER ELEMENT

2014 - Mazda3 - Engine

THROTTLE BODY [SKYACTIV-G 2.0, SKYACTIV-G 2.5]

Purpose, Function

- Opens/closes the throttle valve to adjust the amount of air supplied to the cylinder.
- Opens/closes the throttle valve according to the control signal from the PCM.

Construction

- The throttle body is installed to the intake manifold.

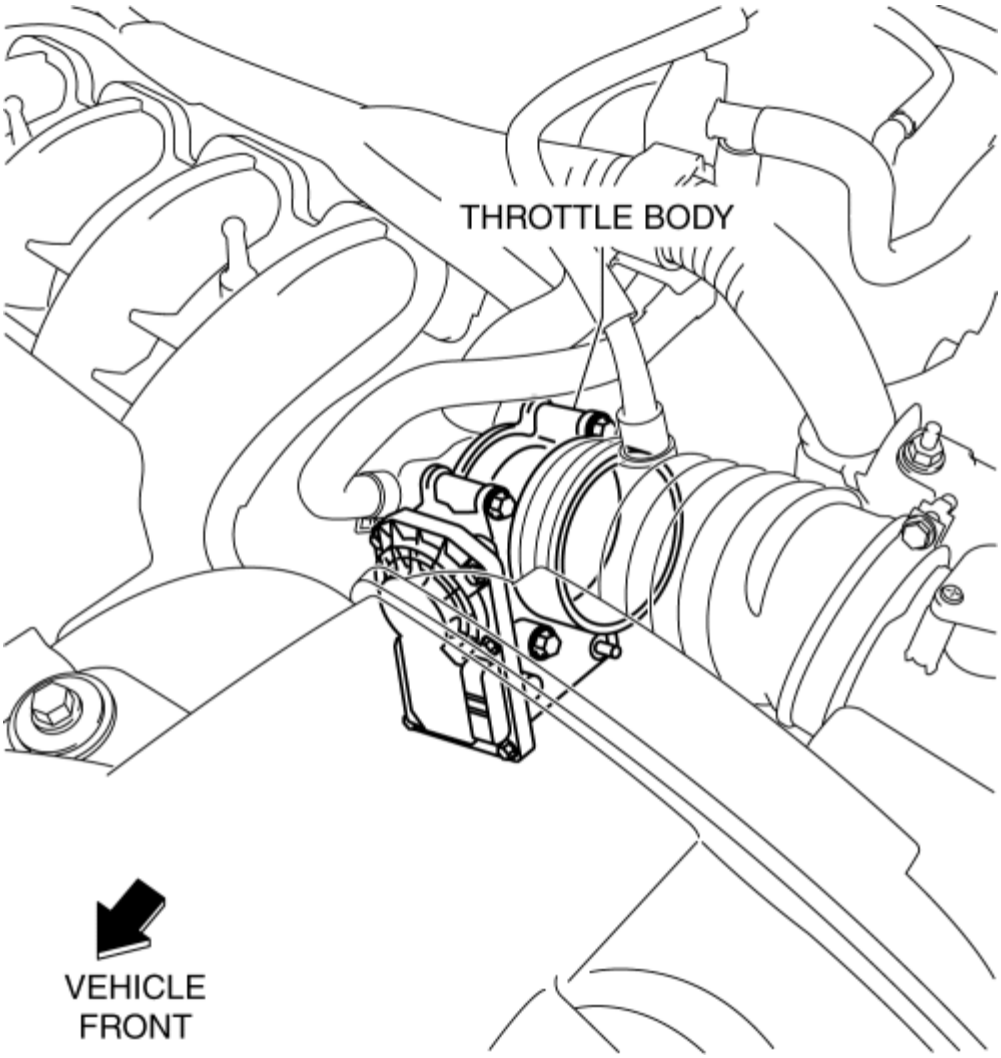

- The throttle body consists of a throttle valve, throttle valve actuator, TP sensor, and return spring.

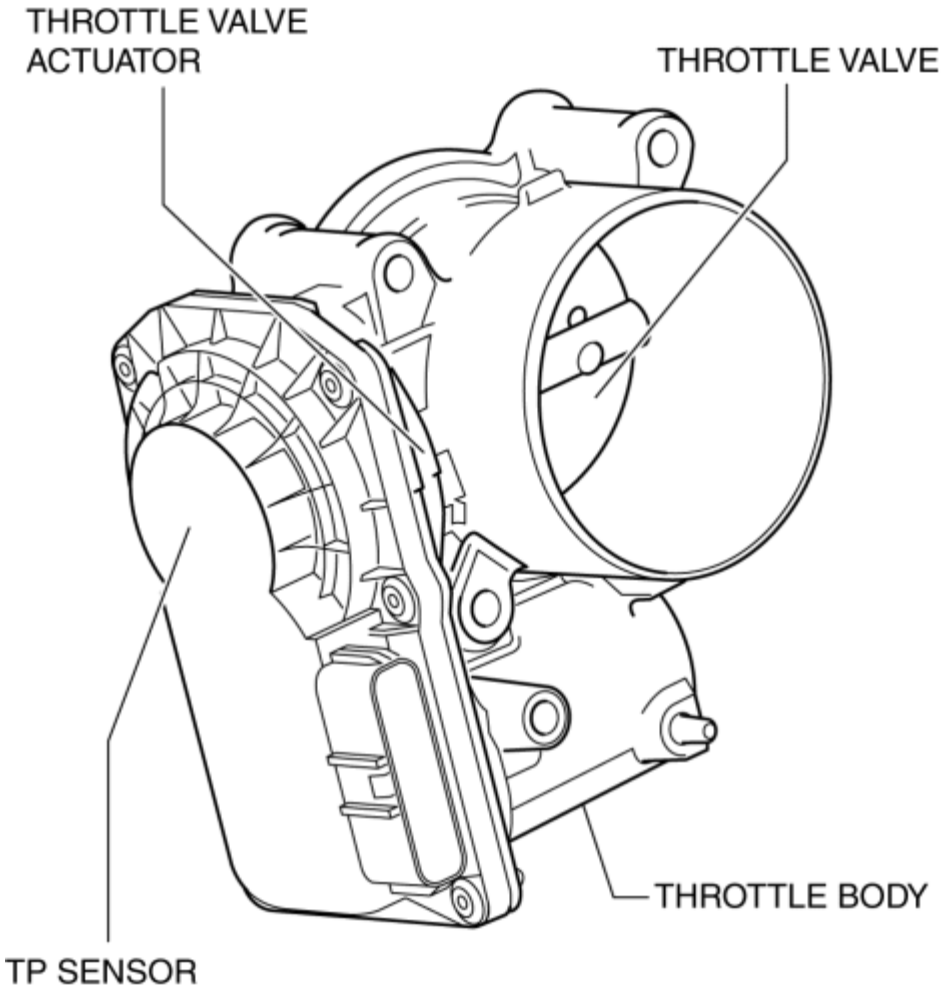

- For the throttle position sensor, refer to CONTROL SYSTEM. (See **THROTTLE POSITION (TP) SENSOR [SKYACTIV-G 2.0, SKYACTIV-G 2.5]**.)

Operation

- The throttle valve actuator opens/closes the throttle valve according to the control signal from the PCM. If there is a malfunction in the throttle valve actuator, the throttle valve is closed by the return spring in the throttle body.

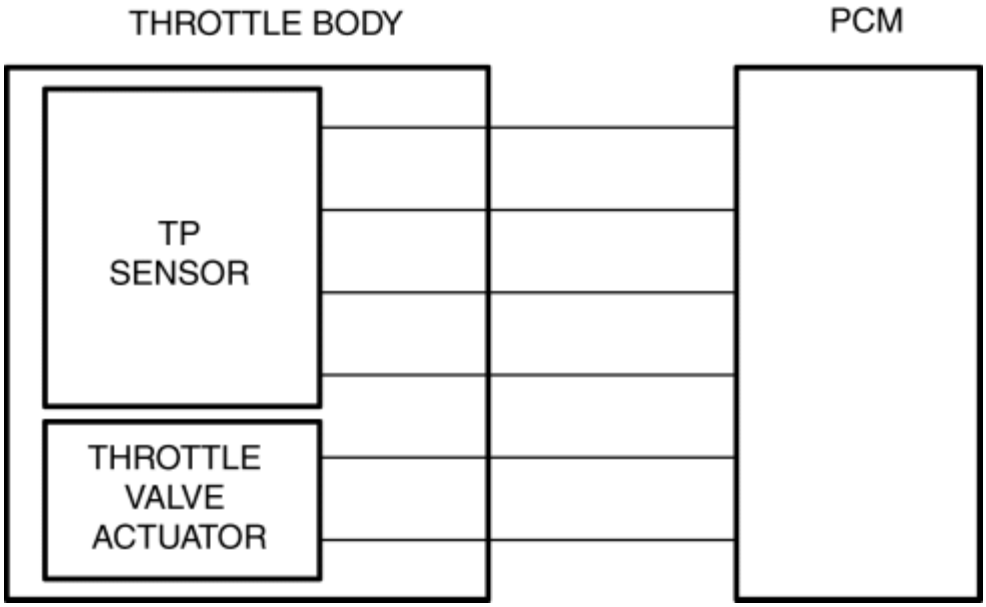

- For the drive-by-wire control, refer to CONTROL SYSTEM. (See **DRIVE-BY-WIRE CONTROL [SKYACTIV-G 2.0, SKYACTIV-G 2.5]**.)

Fail-safe

DTC	Fail-safe
P2101:00	• Stops the idle air control. • Stops the drive-by-wire control and sets to a throttle valve opening angle necessary for minimum driveability.
P2107:00	
P2110:00	
P2112:00	
P2119:00	• Restricts the upper limit of the engine speed.

2014 - Mazda3 - Engine

VACUUM PUMP [SKYACTIV-G 2.0, SKYACTIV-G 2.5]

Purpose, Function

- Ensures vacuum required for braking force to compensate for the decrease in intake manifold vacuum applied to the power brake unit caused by the retard intake valve closing.

Construction

- The vacuum pump is installed to the rear housing.

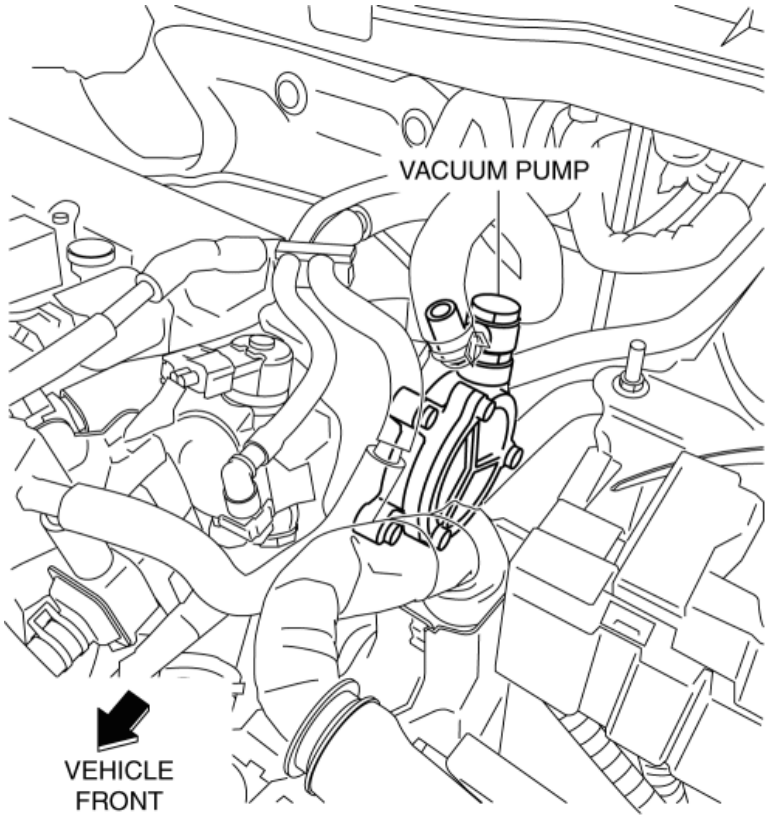

- For smooth vane rotation, a single-vane type vacuum pump has been adopted which is equipped with an engine oil lubrication passage.

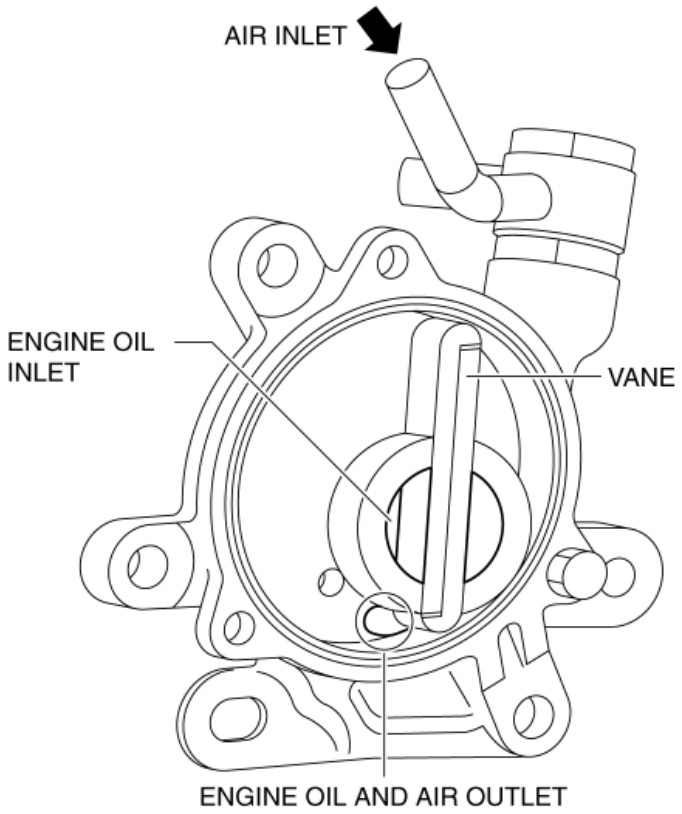

Operation

- Because the vacuum pump is directly engaged with the exhaust camshaft, the vane in the vacuum pump rotates together with the exhaust camshaft, and the vacuum chamber is expanded and vacuum is generated.

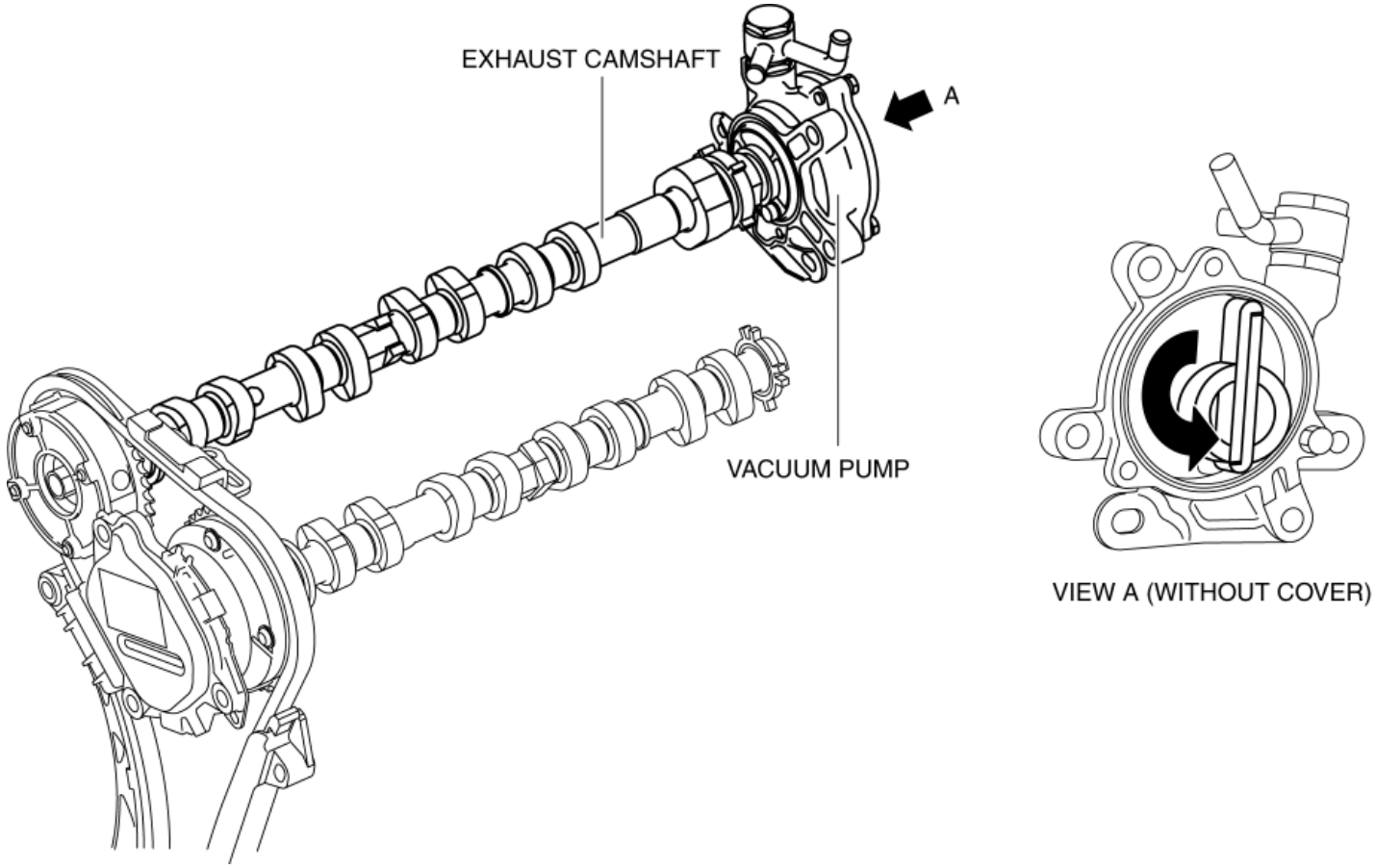

Vacuum generation mechanism

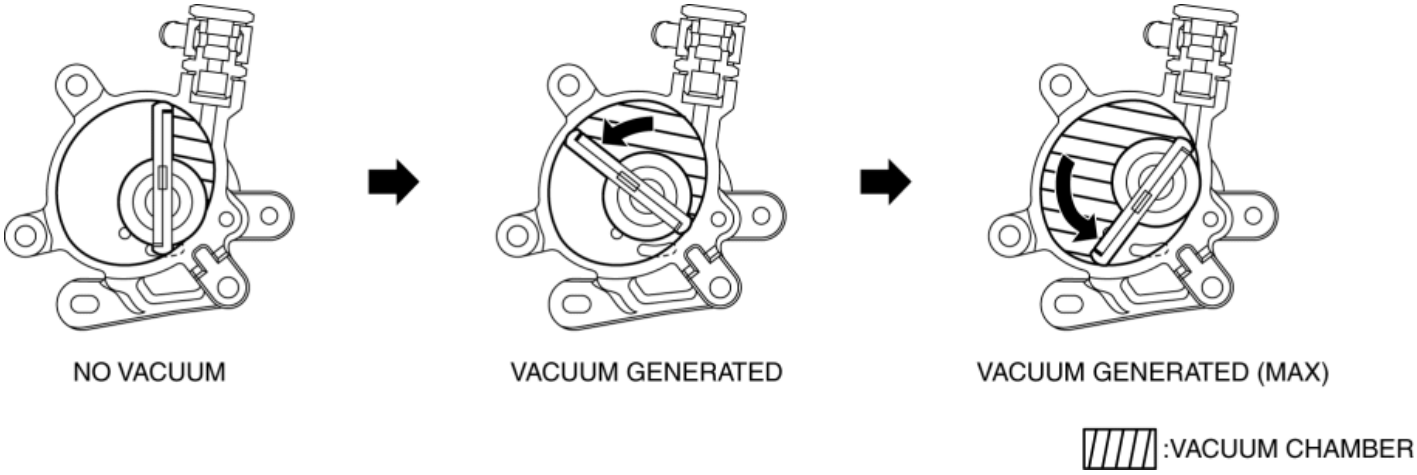

2014 - Mazda3 - Engine

INTAKE MANIFOLD [SKYACTIV-G 2.0, SKYACTIV-G 2.5]

Purpose, Function

- Distributes intake air to each cylinder evenly.
- Optimizes the combustion efficiency and performance of the engine by distributing intake air to each cylinder.

Construction

- The intake manifold is installed to the cylinder head.

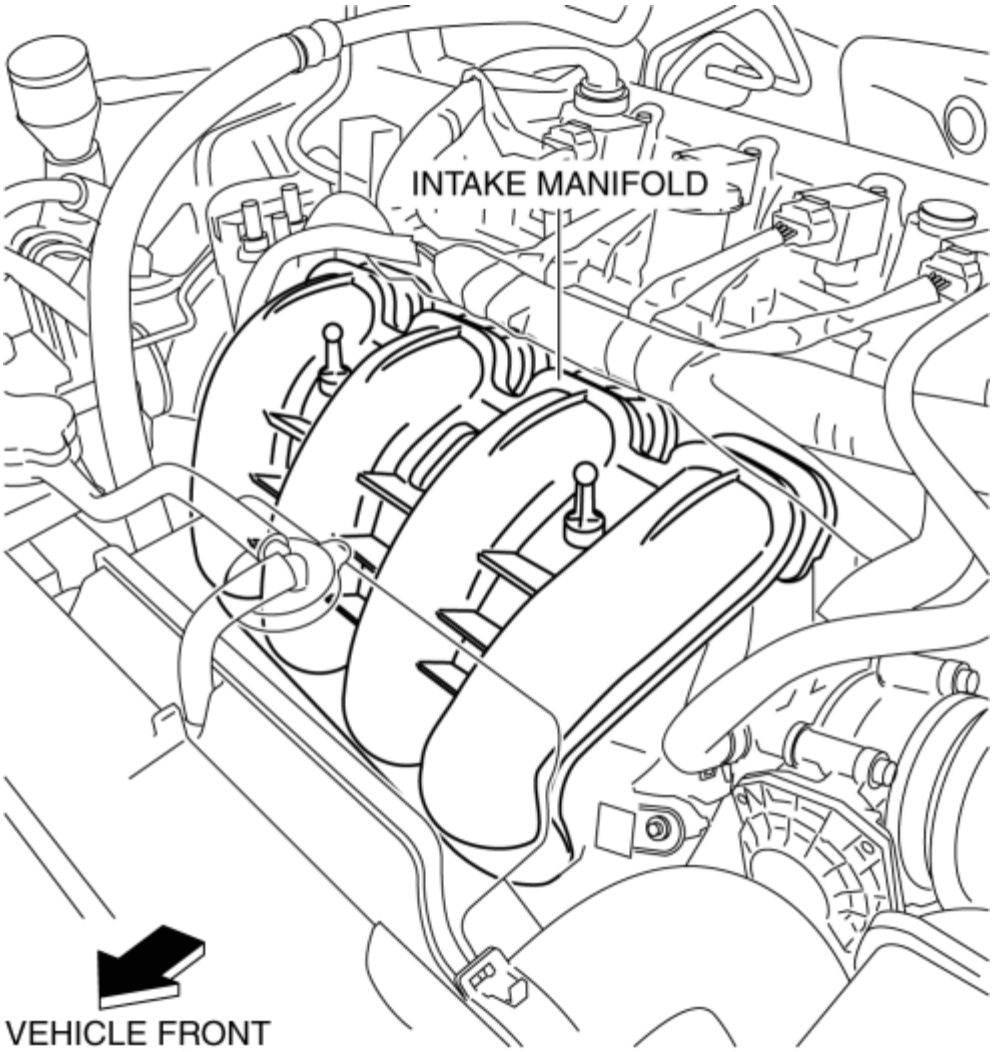

INTAKE MANIFOLD [SKYACTIV-G 2.0, SKYACTIV-G 2.5]

2014 - Mazda3 - Engine

ACCELERATOR PEDAL, KICKDOWN SWITCH [SKYACTIV-G 2.0, SKYACTIV-G 2.5]

Purpose, Function

- The driver's intentions are transmitted to the PCM via the accelerator pedal.

  Kickdown switch (ATX)

- If the accelerator pedal is depressed carelessly, kickdown control will be implemented based on the accelerator pedal being determined as fully open, and vehicle shock will occur. A kickdown switch has been adopted so that it can be determined that the accelerator pedal is fully open based on the driver's intention of depressing the accelerator pedal for kickdown.

Construction

- The accelerator pedal has a built-in APP sensor and kickdown switch (ATX).

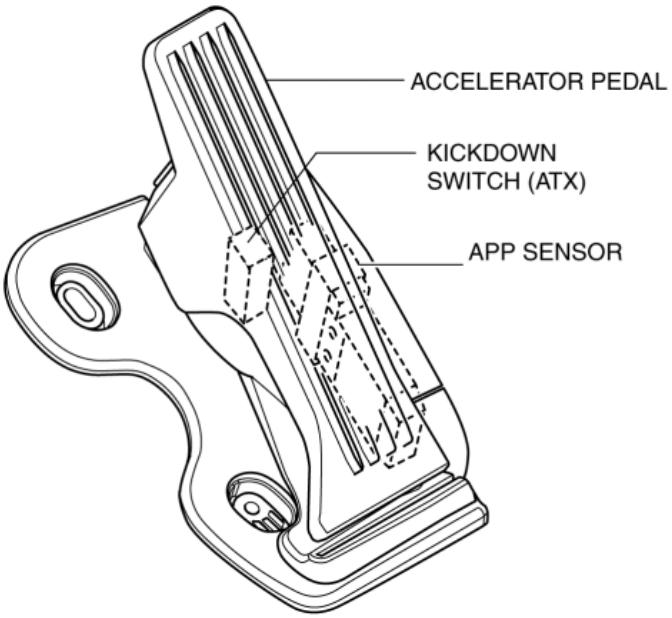

- For the APP sensor, refer to CONTROL SYSTEM. (See **ACCELERATOR PEDAL POSITION (APP) SENSOR [SKYACTIV-G 2.0, SKYACTIV-G 2.5]**.)

Kickdown Switch (ATX)

- A load can be felt while the accelerator pedal is being depressed and when it is further depressed the kickdown switch turns on.

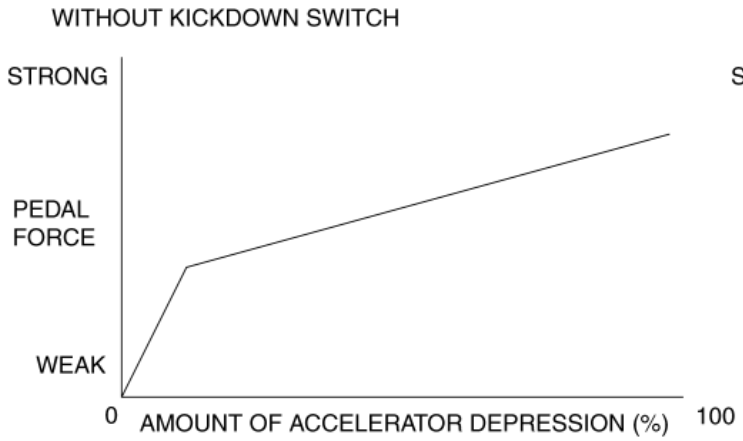

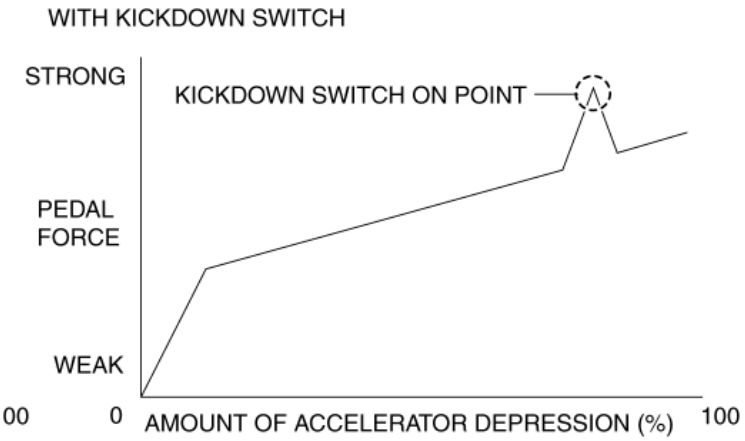

The driver can control the kickdown by knowing the amount of accelerator depression.

- The kickdown switch is only a measure of the kickdown. An electrical signal is not transmitted by the kickdown switch turning on/off, and vehicle control is not affected.

2014 - Mazda3 - Engine

FUEL SYSTEM [SKYACTIV-G 2.0, SKYACTIV-G 2.5]

Purpose, Outline

- A multiple hole type fuel injector has been adopted which provides higher fuel injection accuracy for improved fuel efficiency and output.
- Piston movement-compression by the 4-head cam inside the high pressure fuel pump heightens the fuel pressure, achieving improved fuel efficiency and output.

Structural View

Engine compartment side

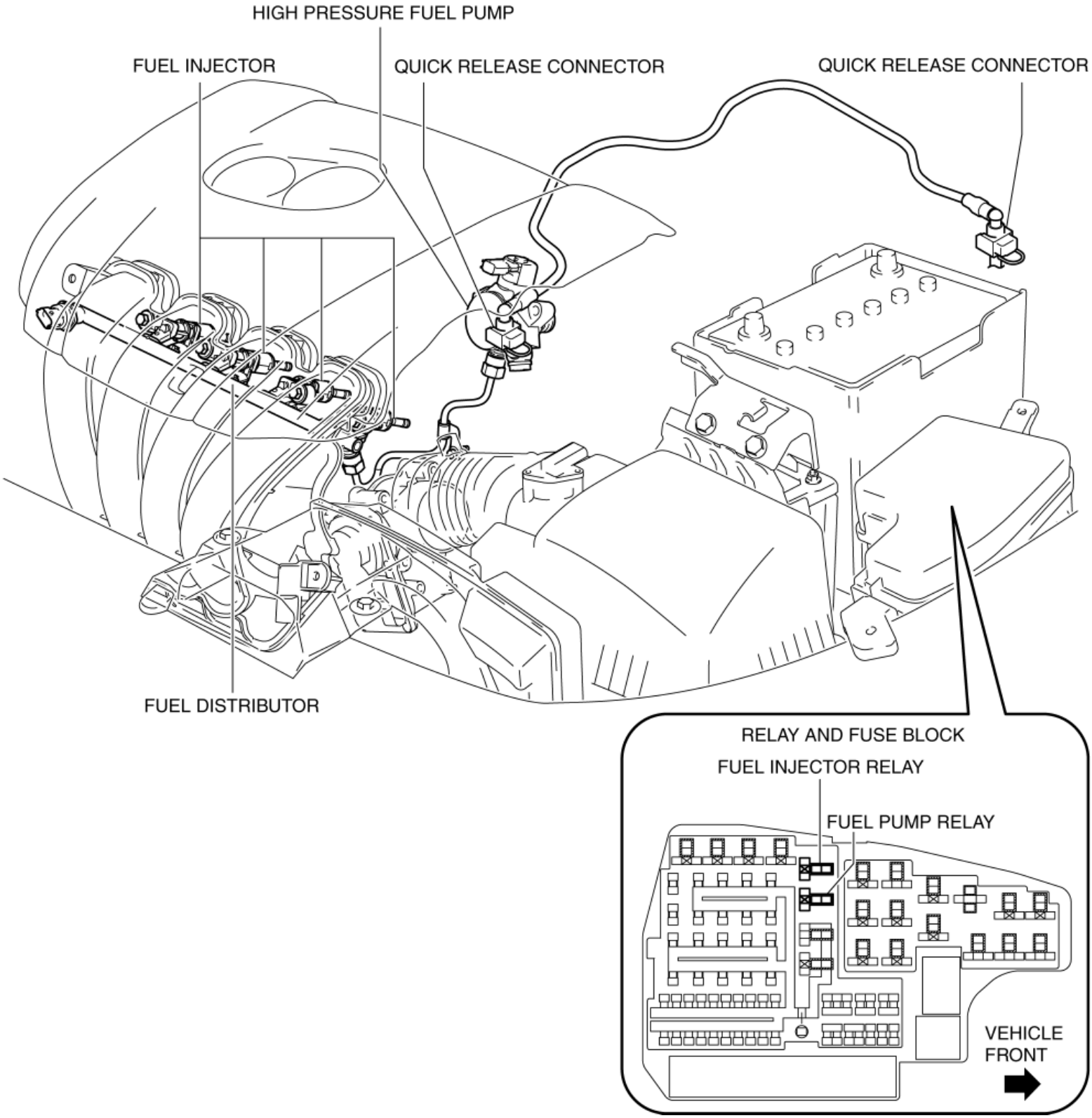

Fuel tank side

U.S.A. and CANADA

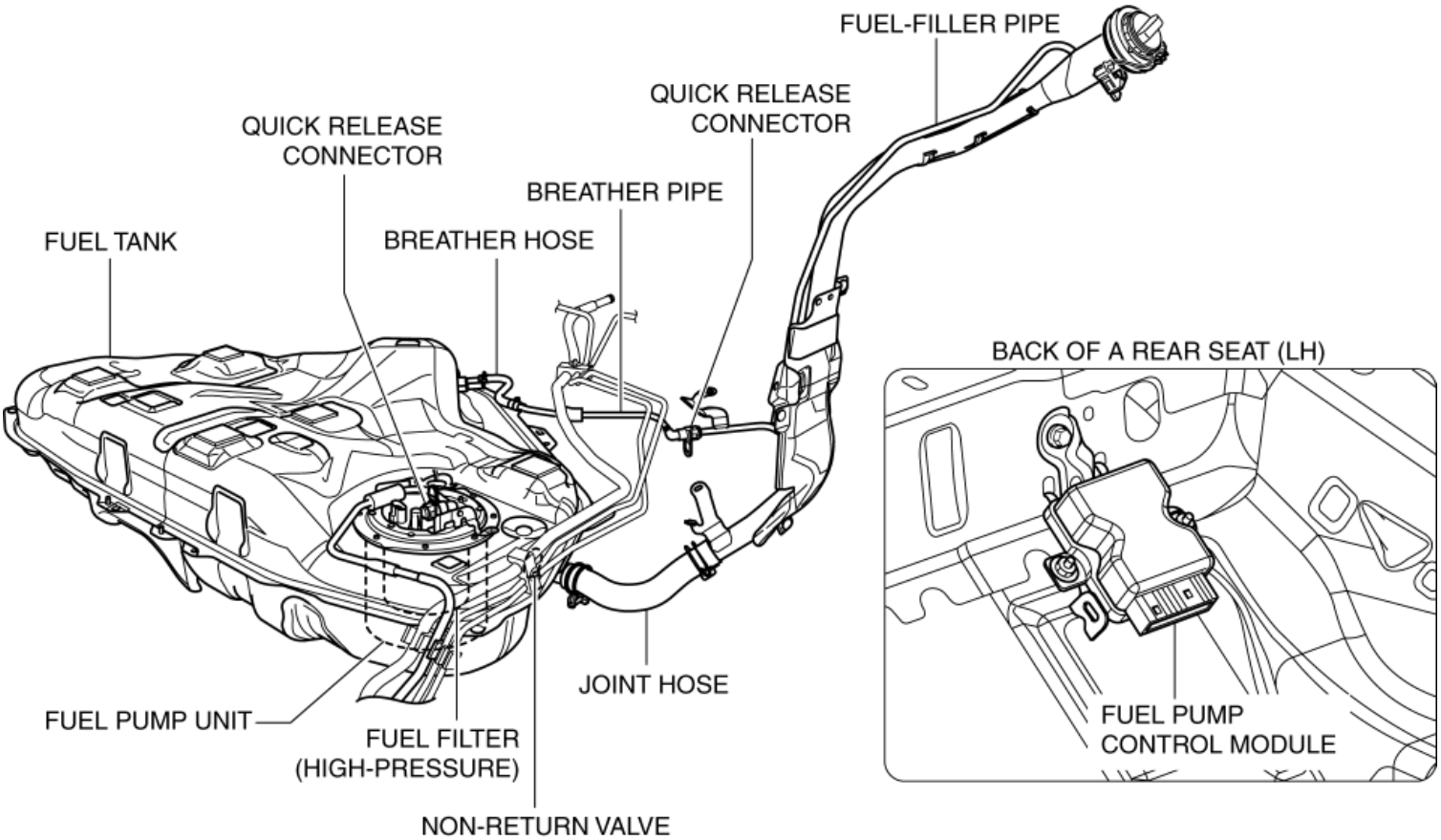

Except U.S.A. and CANADA

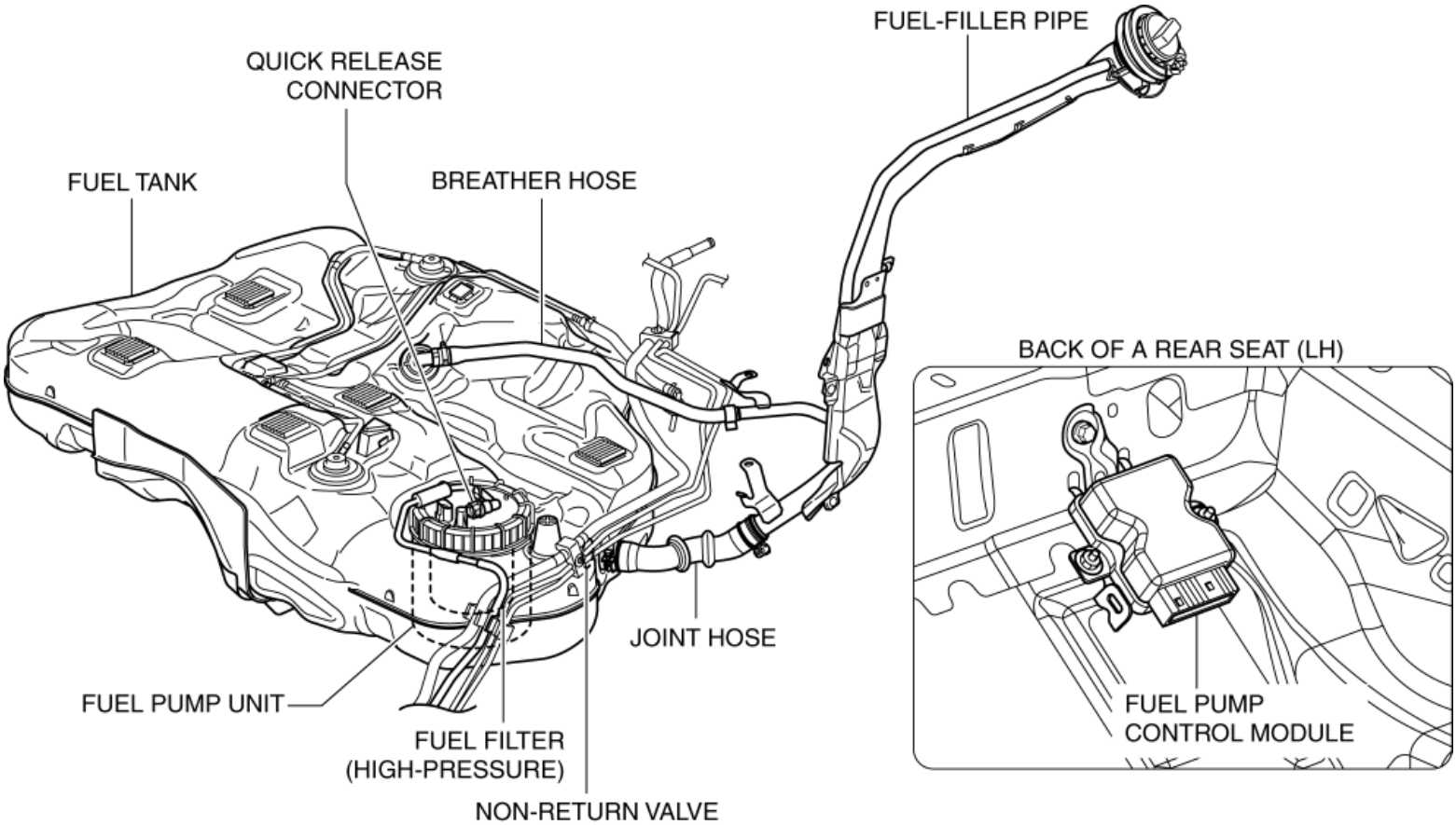

System Diagram

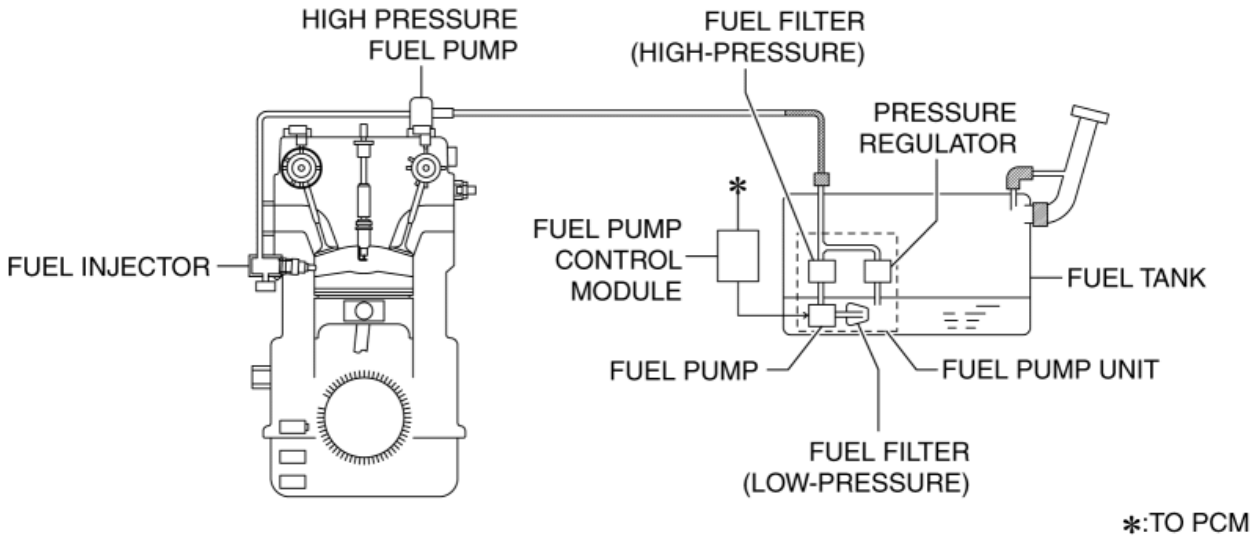

Structure

- The fuel system consists of the following parts:

Part/System name		Reference
Returnless fuel system (See **RETURNLESS FUEL SYSTEM [SKYACTIV-G 2.0, SKYACTIV-G 2.5]**.)	Fuel pump unit	(See **FUEL PUMP UNIT [SKYACTIV-G 2.0, SKYACTIV-G 2.5]**.)
Direct fuel injection system (See **DIRECT FUEL INJECTION SYSTEM [SKYACTIV-G 2.0, SKYACTIV-G 2.5]**.)	High pressure fuel pump	(See **HIGH PRESSURE FUEL PUMP [SKYACTIV-G 2.0, SKYACTIV-G 2.5]**.)
	Fuel distributor	(See **FUEL DISTRIBUTOR [SKYACTIV-G 2.0, SKYACTIV-G 2.5]**.)
	Fuel injector	(See **FUEL INJECTOR [SKYACTIV-G 2.0, SKYACTIV-G 2.5]**.)
Fuel tank		(See **FUEL TANK [SKYACTIV-G 2.0, SKYACTIV-G 2.5]**.)
Non-return valve		(See **NON-RETURN VALVE [SKYACTIV-G 2.0, SKYACTIV-G 2.5]**.)
Fuel pump relay		(See **FUEL PUMP RELAY [SKYACTIV-G 2.0, SKYACTIV-G 2.5]**.)
Fuel injector relay		(See **FUEL INJECTOR RELAY [SKYACTIV-G 2.0, SKYACTIV-G 2.5]**.)
Fuel pump control module		(See **FUEL PUMP CONTROL MODULE [SKYACTIV-G 2.0, SKYACTIV-G 2.5]**.)
Quick release connector (fuel system)		(See **QUICK RELEASE (FUEL SYSTEM) CONNECTOR [SKYACTIV-G 2.0, SKYACTIV-G 2.5]**.)

Specification

Item	Specification

Fuel injector	Type	High resistance
	Fuel supply method	Top-feed
	Drive types	Electronic
Pressure regulator control pressure	(kPa {kgf/cm^2, psi})	Approx. 430 {4.38, 62.4}
Fuel pump type		Electric
Fuel tank capacity	(L {US gal, Imp gal})	50.0 {13.2, 11.0}

Fuel type

Fuel	Octane Rating* (Anti-knock index)
Regular unleaded fuel	87 [(R+M)/2 method] or above (91 RON or above)

* **U.S. federal law requires that octane ratings be posted on gasoline station pumps.**

2014 - Mazda3 - Engine

RETURNLESS FUEL SYSTEM [SKYACTIV-G 2.0, SKYACTIV-G 2.5]

Purpose, Outline

- Fuel evaporation in the fuel tank is reduced by adjusting the fuel amount (fuel pressure) ejected from the fuel pump and preventing fuel warmed in the engine compartment from returning.

System Diagram

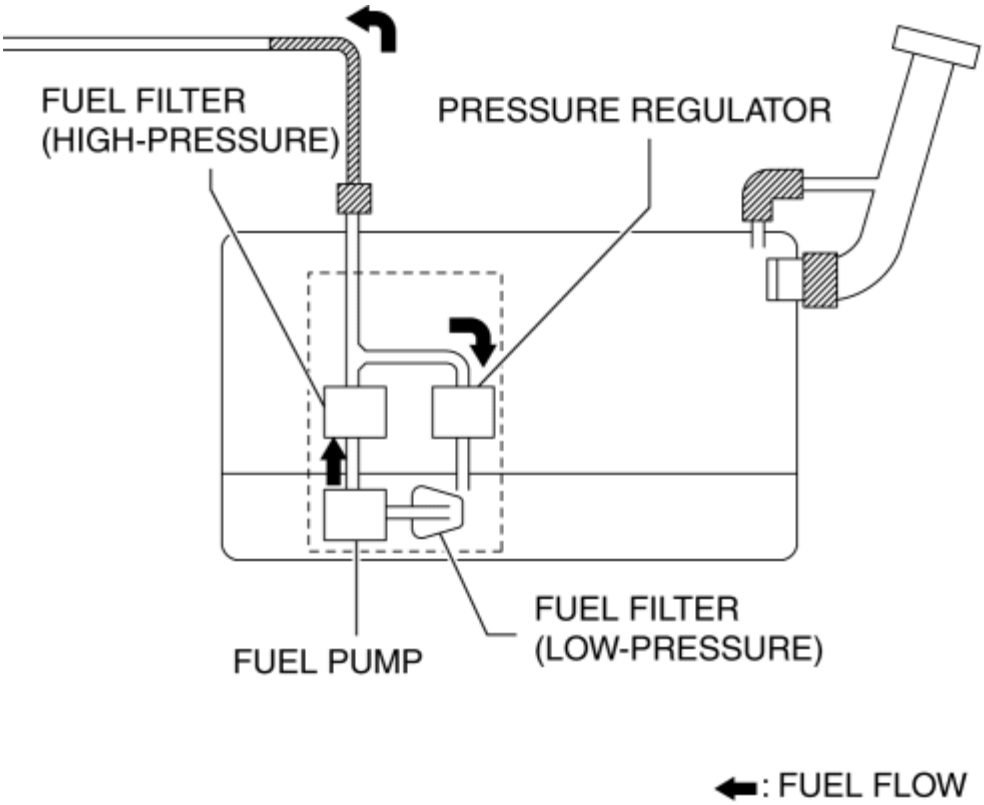

Structure

- The returnless fuel system consists of the following parts:

Part name	Reference

Fuel filter (low-pressure)	(See **FUEL PUMP UNIT [SKYACTIV-G 2.0, SKYACTIV-G 2.5]**.)
Fuel filter (high-pressure)	
Pressure regulator	
Fuel pump	

Operation

- Fuel in the fuel tank is pumped out through the fuel filter (low-pressure) by the fuel pump, filtered by the fuel filter (high-pressure), and then regulated to a specified pressure by the pressure regulator. The regulated fuel is sent to the high pressure fuel pump, and unnecessary regulated fuel is returned from the pressure regulator to the fuel tank.

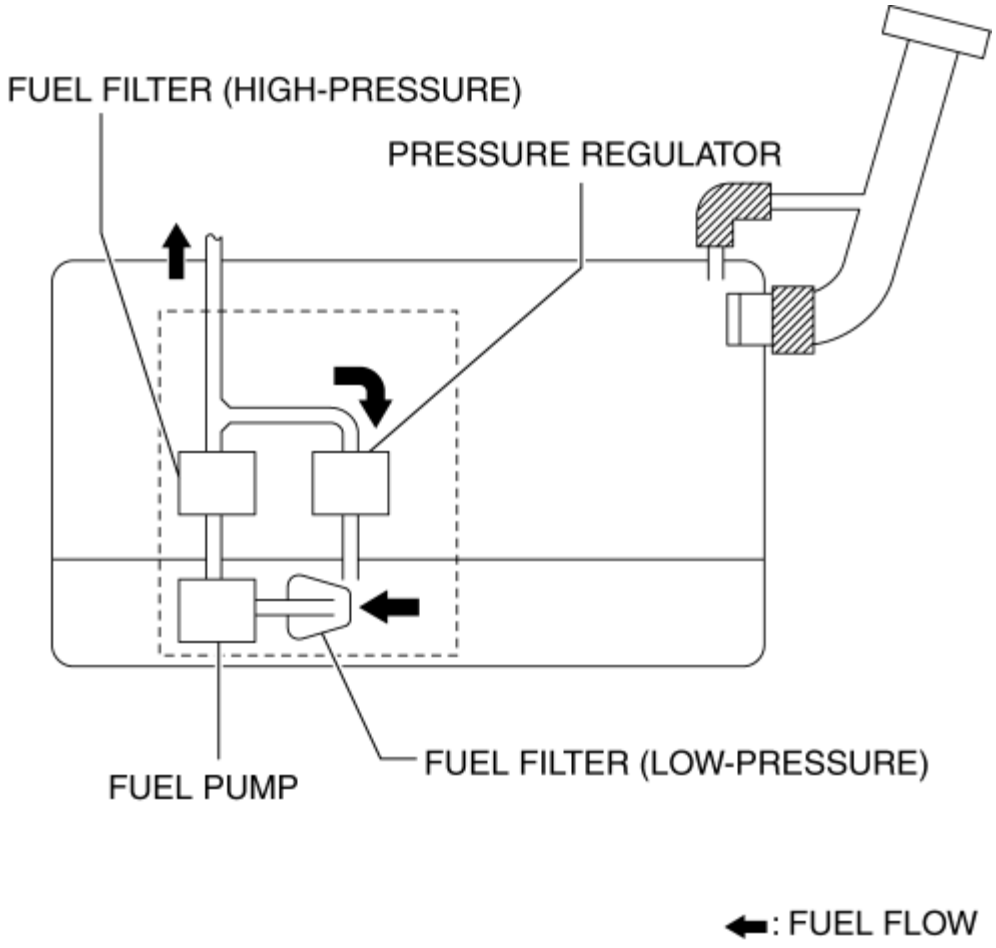

2014 - Mazda3 - Engine

FUEL TANK [SKYACTIV-G 2.0, SKYACTIV-G 2.5]

Purpose, Function

- Store fuel safely and supply fuel to the engine.

Construction

- The fuel tank is installed below the rear seat.

U.S.A. and CANADA

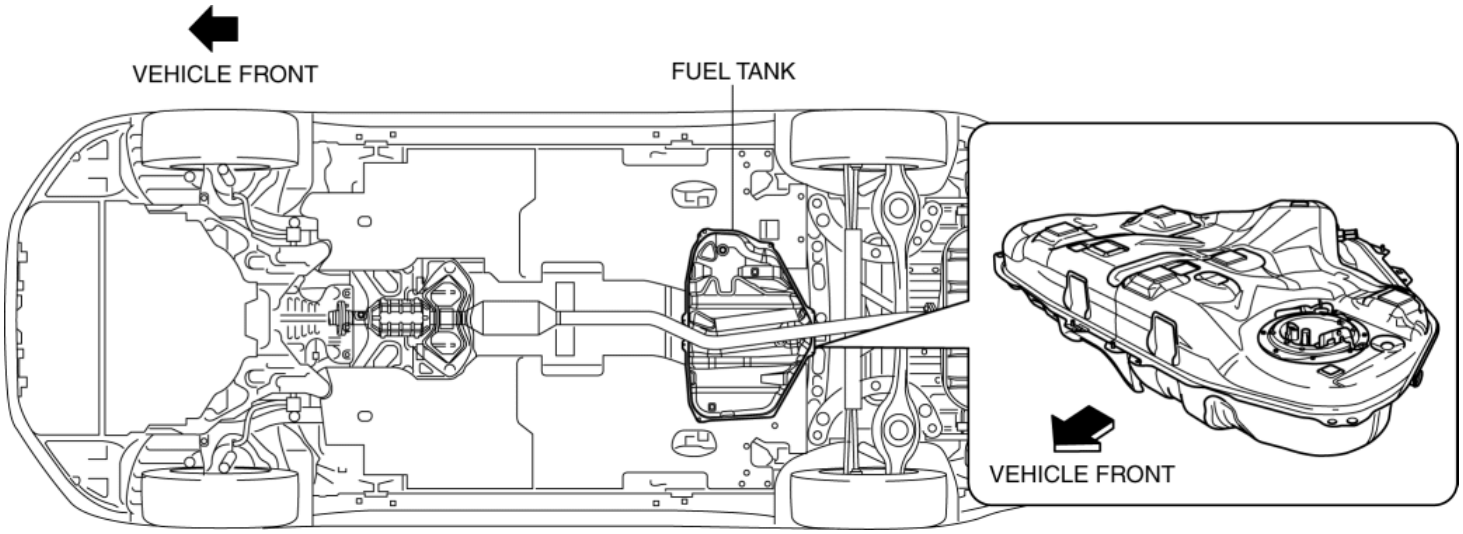

Except U.S.A. and CANADA

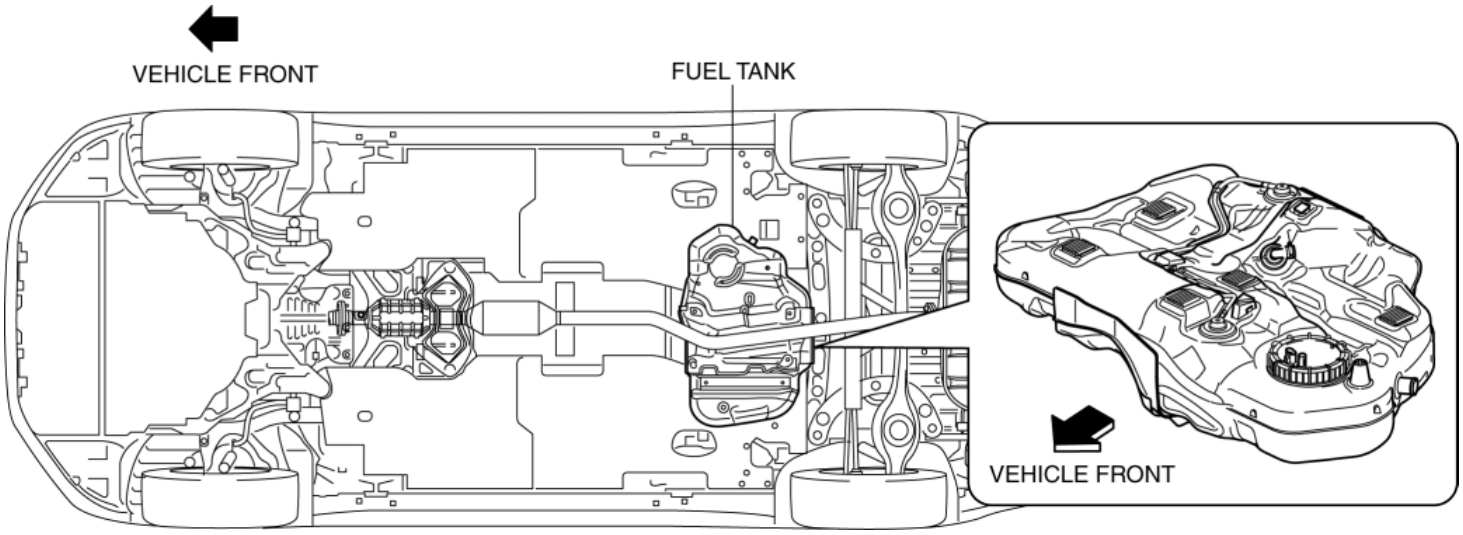

- The fuel tank is made of steel.
- The following parts are integrated in the fuel tank.

  U.S.A. and CANADA

  - Non-return valve

    (See **NON-RETURN VALVE [SKYACTIV-G 2.0, SKYACTIV-G 2.5]**.)
  - Rollover valve

(See **ROLLOVER VALVE [SKYACTIV-G 2.0, SKYACTIV-G 2.5]**.)

- Fuel shut-off valve

  (See **FUEL SHUT-OFF VALVE [SKYACTIV-G 2.0, SKYACTIV-G 2.5]**.)

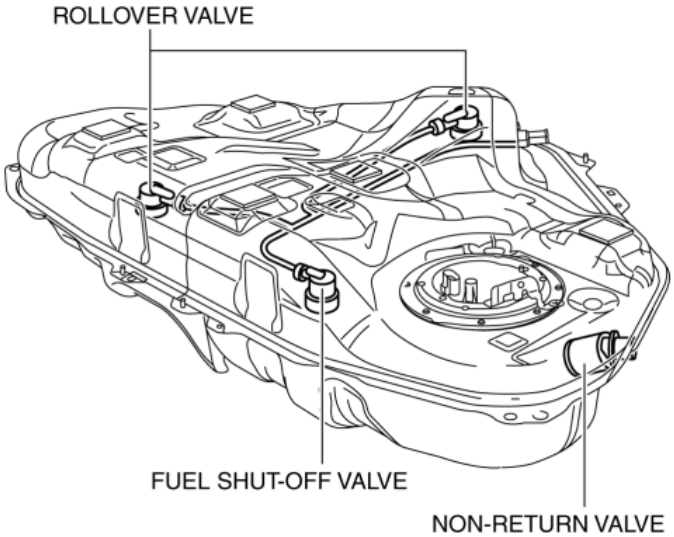

Except U.S.A. and CANADA

- Non-return valve

  (See **NON-RETURN VALVE [SKYACTIV-G 2.0, SKYACTIV-G 2.5]**.)

- Rollover valve

  (See **ROLLOVER VALVE [SKYACTIV-G 2.0, SKYACTIV-G 2.5]**.)

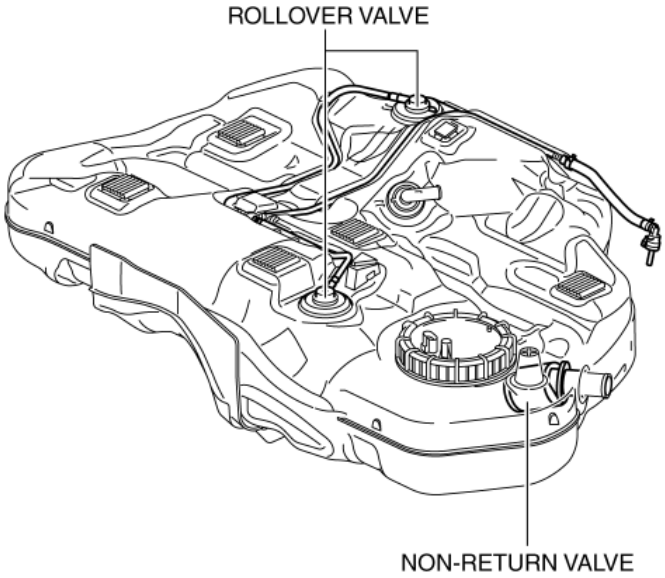

2014 - Mazda3 - Engine

NON-RETURN VALVE [SKYACTIV-G 2.0, SKYACTIV-G 2.5]

Purpose, Function

- Assures safety by preventing fuel from returning to the fuel filler opening.

Construction

- The non-return valve cannot be removed as it is installed inside the fuel tank.

U.S.A. and CANADA

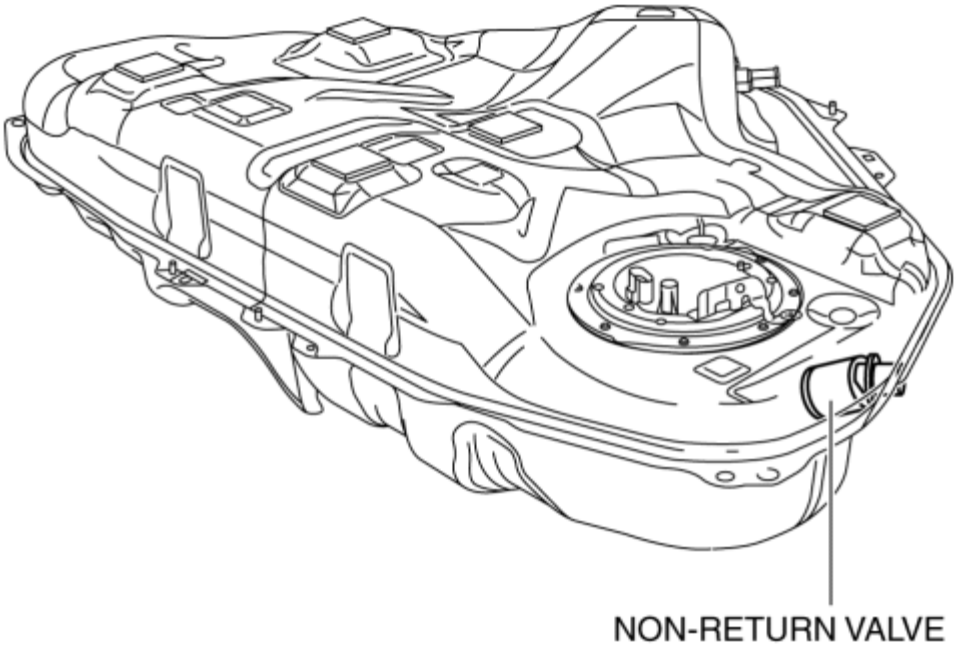

Except U.S.A. and CANADA

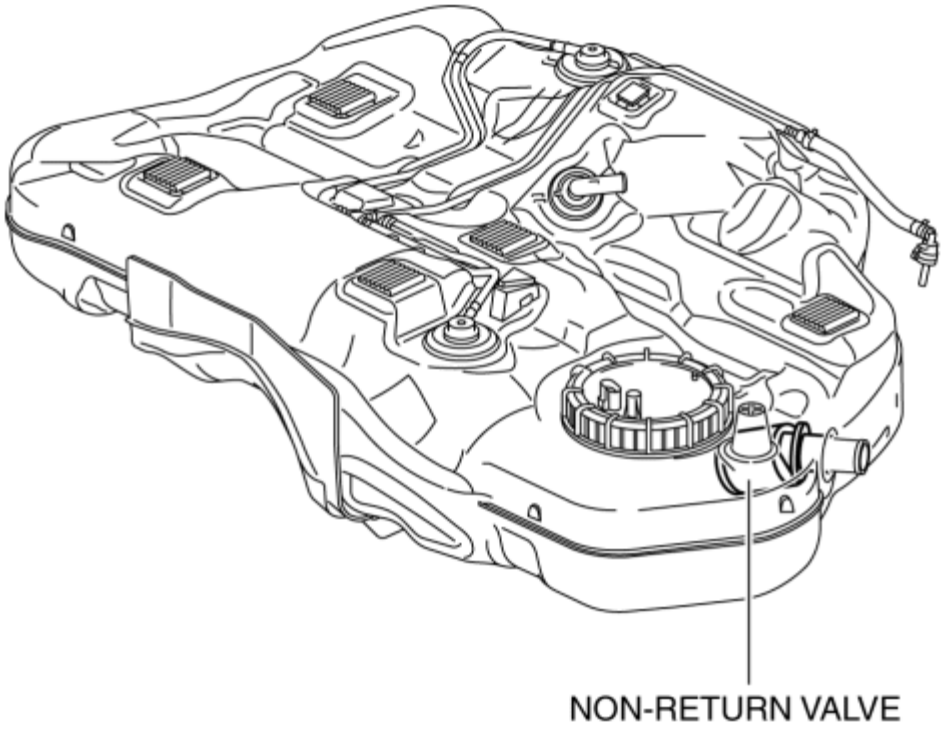

- A single valve type has been adopted for the non-return valve.

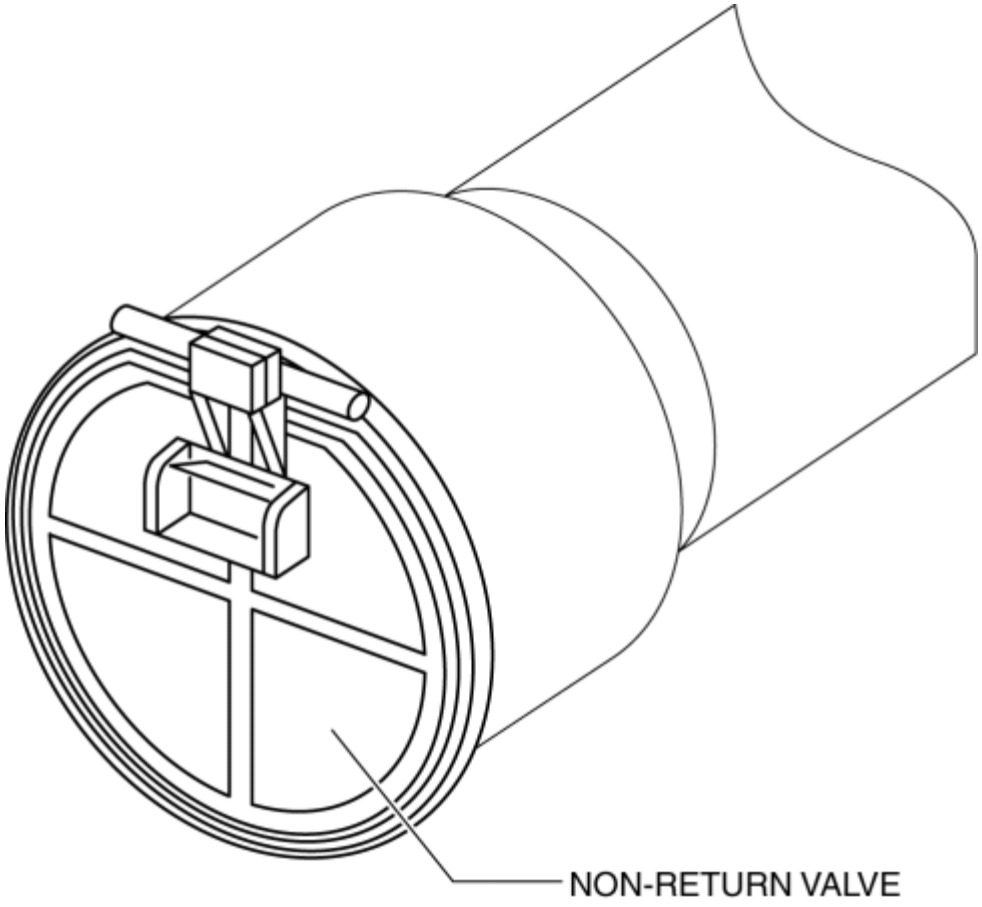

Operation

- Normally, the valve is closed as shown by the dotted line in the figure. When refueling, it opens as shown by the solid line due to the force caused by the flow of fuel. When

refueling is finished, the valve returns to the normal valve position by spring force.

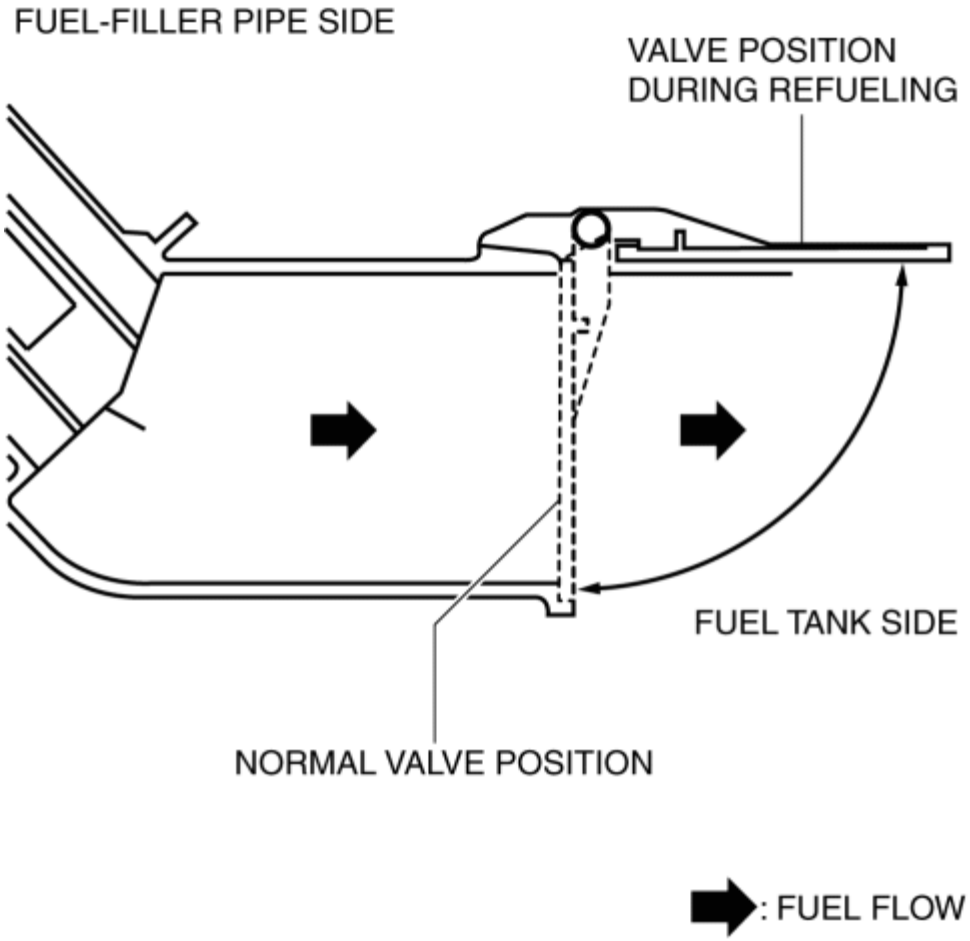

2014 - Mazda3 - Engine

FUEL PUMP UNIT [SKYACTIV-G 2.0, SKYACTIV-G 2.5]

Purpose, Function

- Supplies fuel in the fuel tank to the high pressure fuel pump.
- Based on the control signal from the PCM, the fuel pump operates by the operation of the fuel pump relay and the fuel pump control module.

Construction

- The fuel pump unit is installed to the fuel tank.

U.S.A. and CANADA

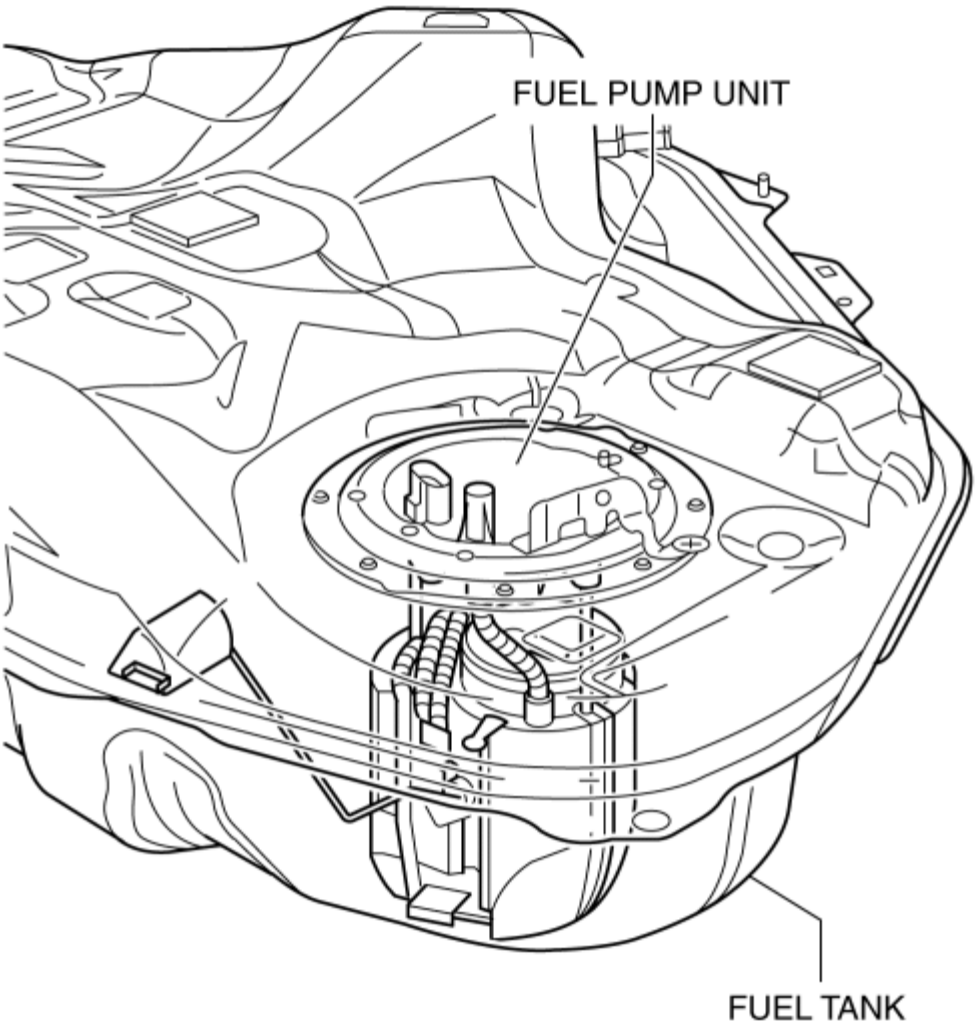

Except U.S.A. and CANADA

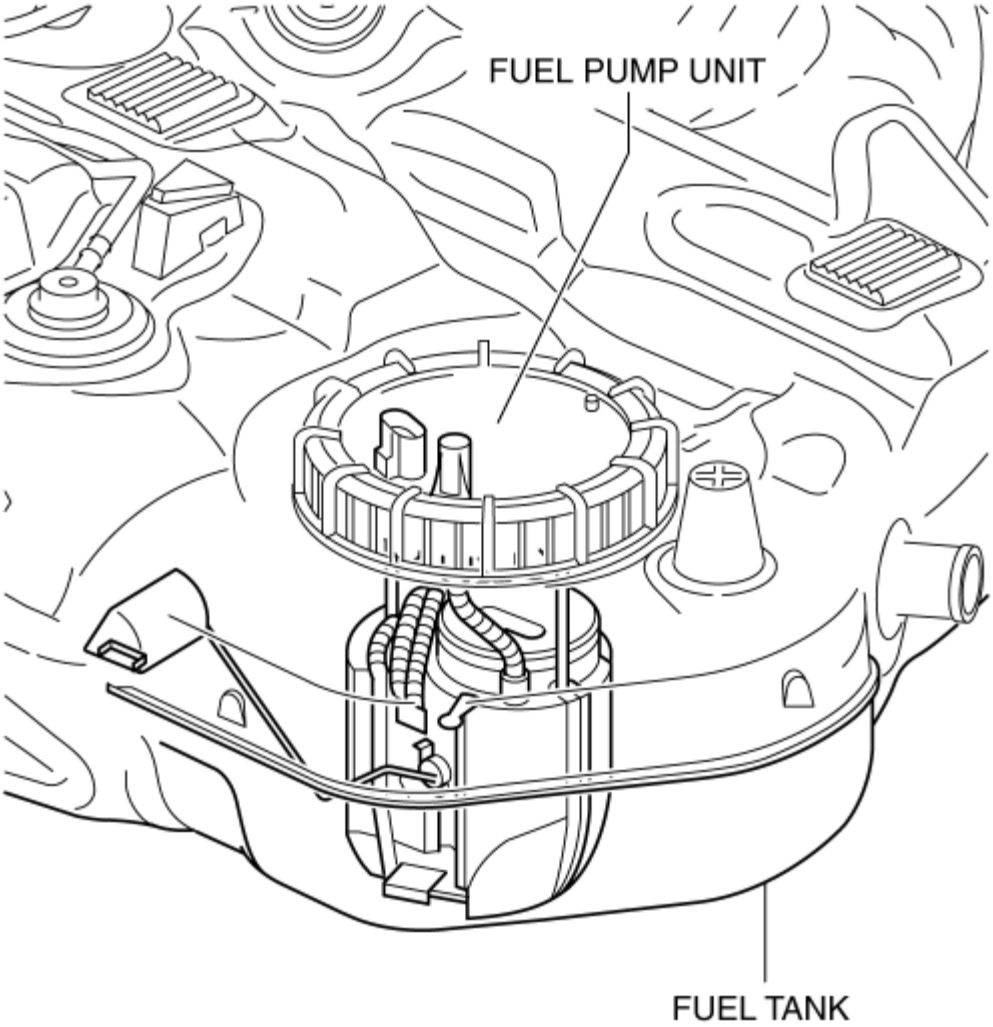

- The fuel pump unit consists of a fuel pump, fuel filter (low-pressure) fuel filter (high-pressure), pressure regulator, and lower cover.

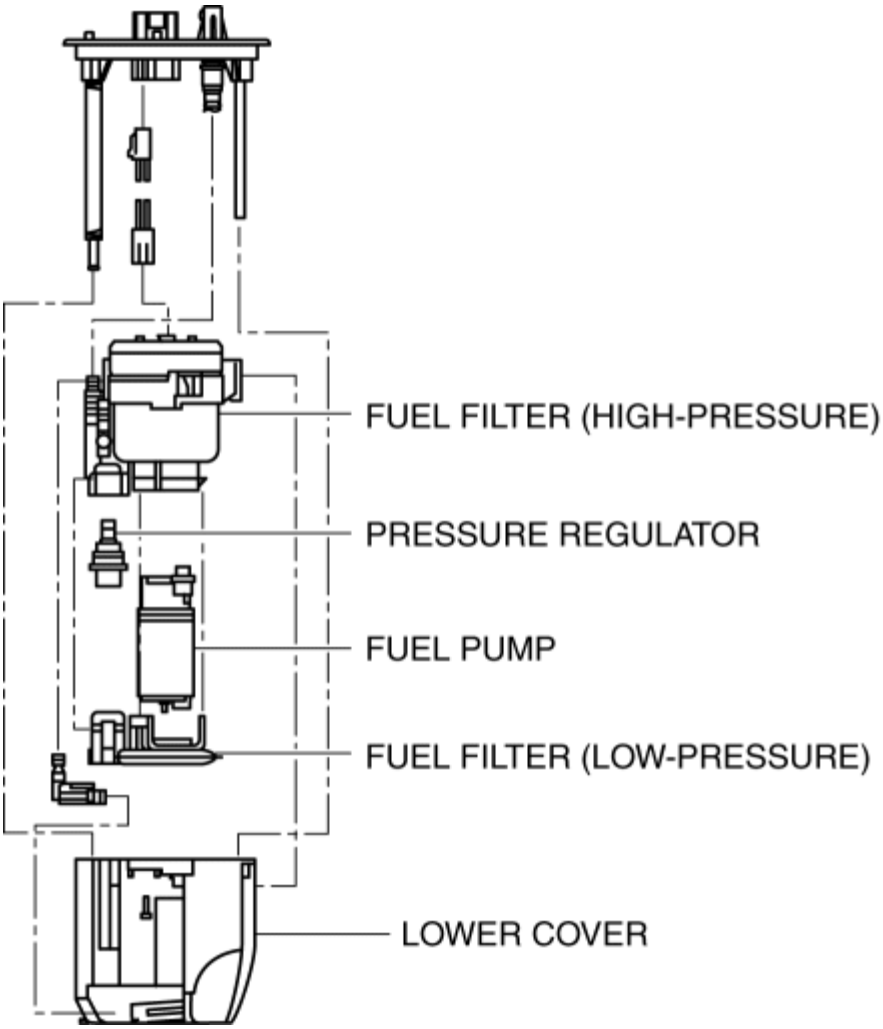

Operation

- Based on the control signal from the PCM, the fuel pump suctions fuel in the lower cover and pumps it to the high pressure fuel pump. After fuel is sufficiently filtered through the fuel filter (low-pressure) and fuel filter (high-pressure), fuel pressure is adjusted to **approx. 430 kPa {4.38 kgf/cm^2, 62.4 psi}** by the pressure regulator.

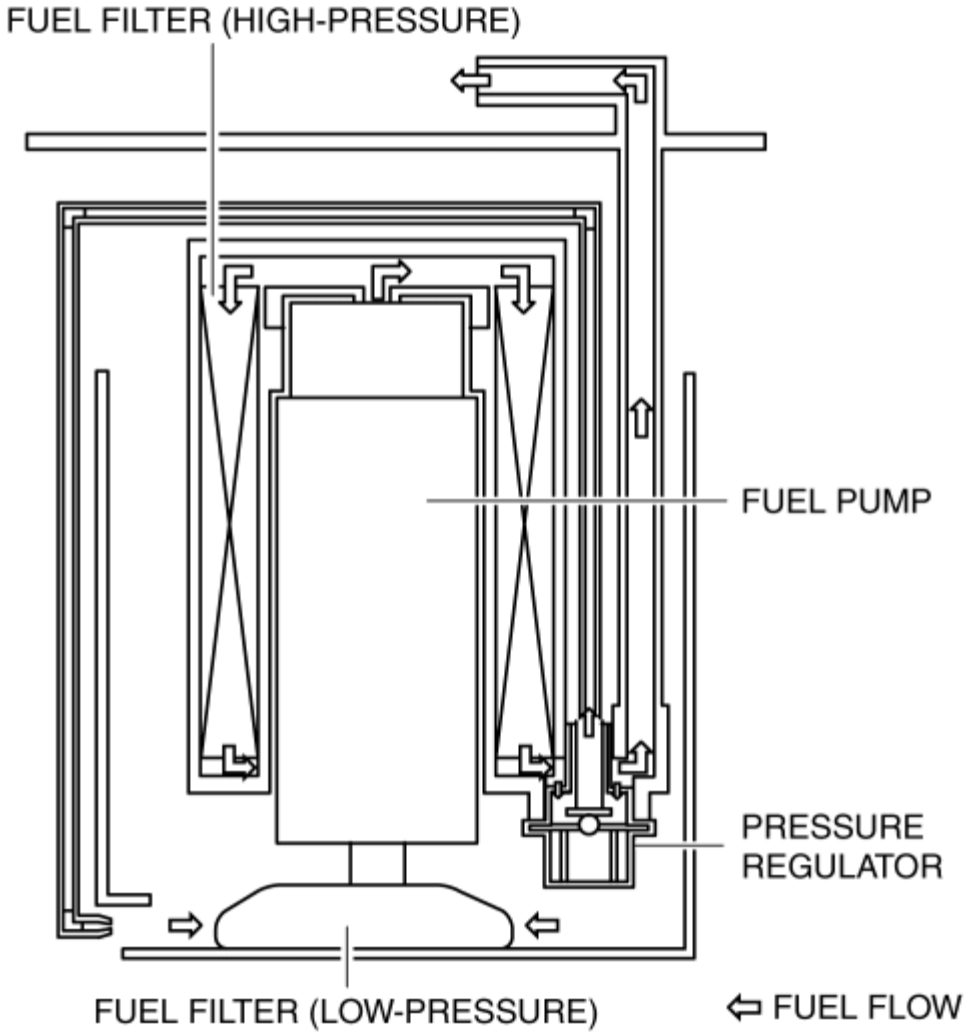

Fail-safe

- Function not equipped.

2014 - Mazda3 - Engine

FUEL DISTRIBUTOR [SKYACTIV-G 2.0, SKYACTIV-G 2.5]

Purpose, Function

- Distributes fuel pumped from the high pressure fuel pump to each fuel injector.

Construction

- The fuel distributor is installed to the cylinder head.

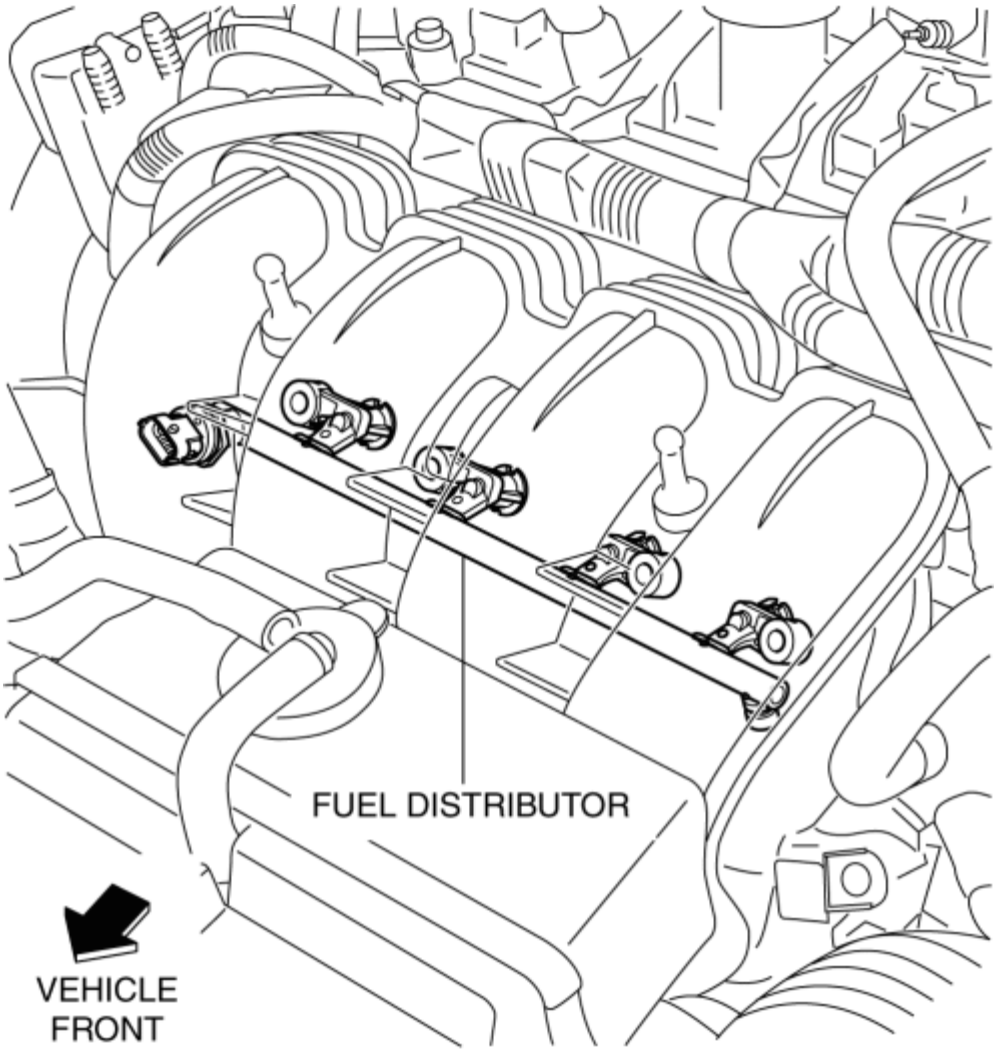

- The fuel distributor is integrated with the fuel pressure sensor.

FUEL DISTRIBUTOR [SKYACTIV-G 2.0, SKYACTIV-G 2.5]

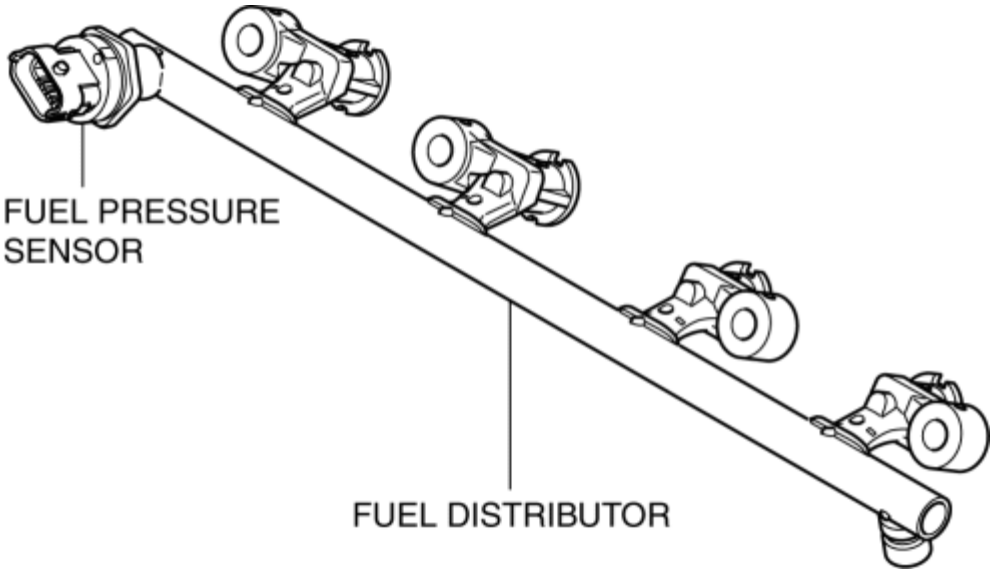

2014 - Mazda3 - Engine

FUEL INJECTOR [SKYACTIV-G 2.0, SKYACTIV-G 2.5]

Purpose, Function

- Promotes atomization of fuel by injecting it from the multiple holes.
- Injects fuel according to the control signal from the PCM.

Construction

- The fuel injector is installed to the cylinder head.

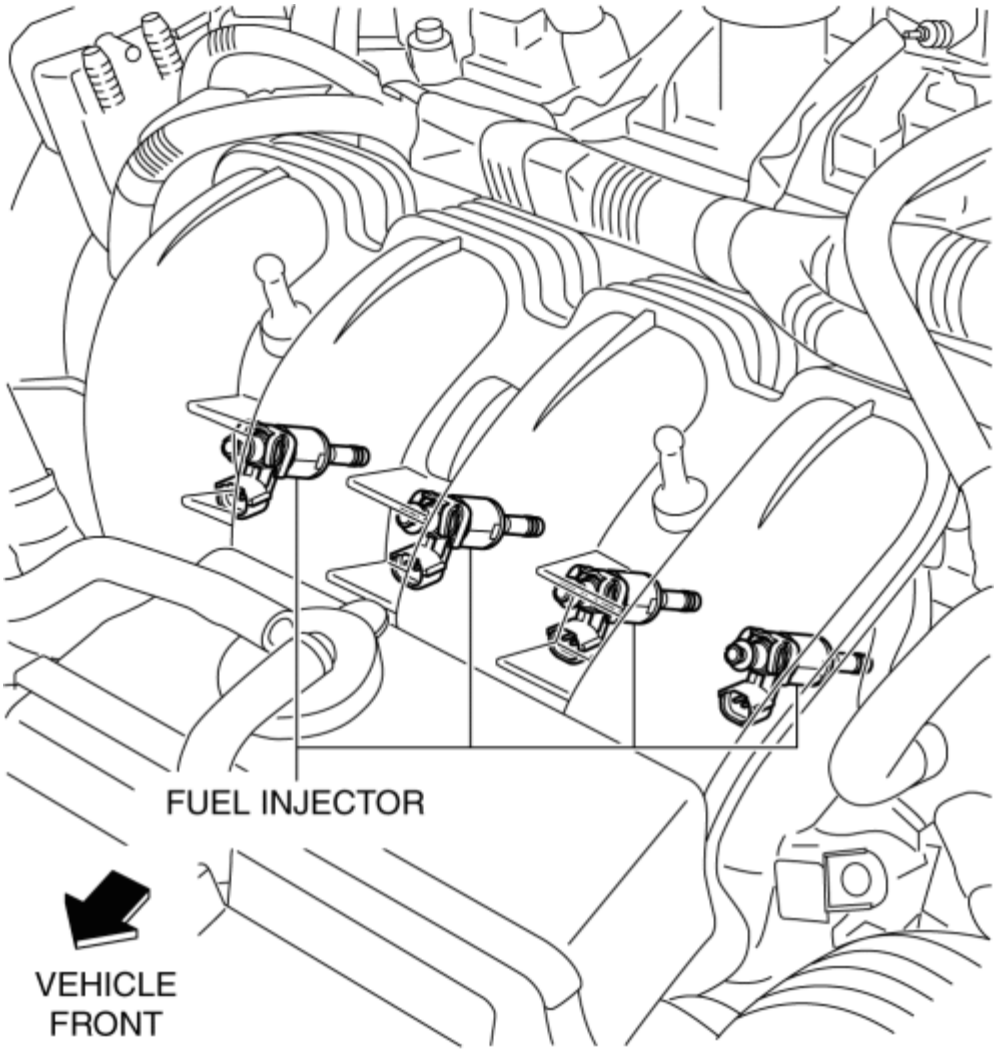

- The fuel injector has multiple injection holes in area A shown in the figure.

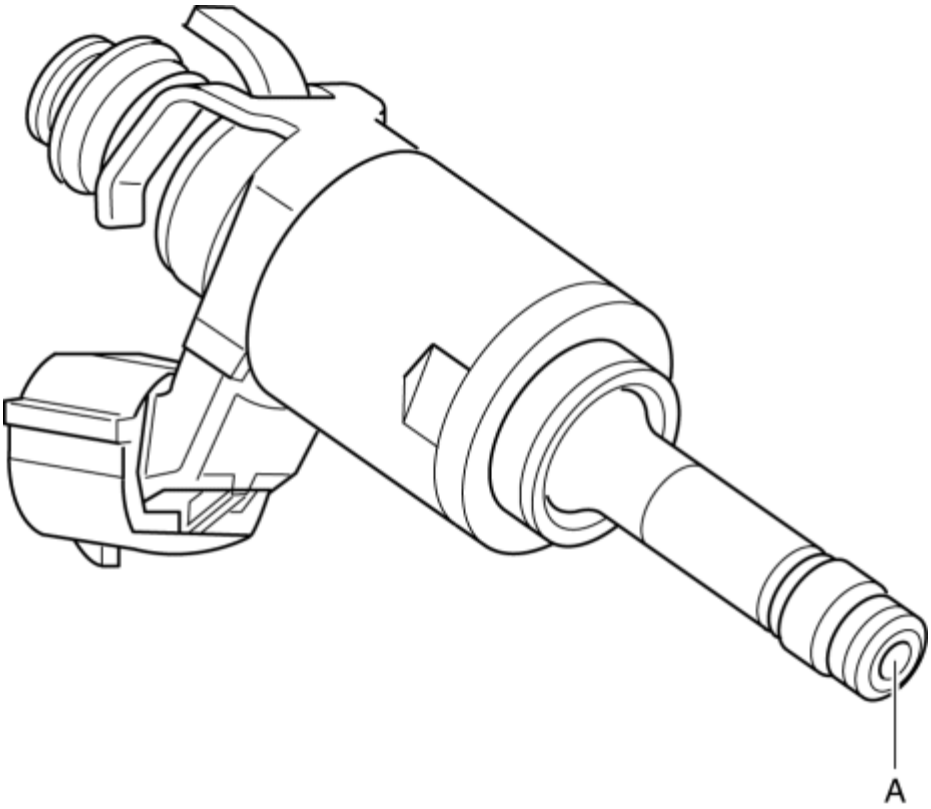

Operation

- Injects fuel according to the signal from the PCM. The fuel injection time is determined by the energization time of the coil.

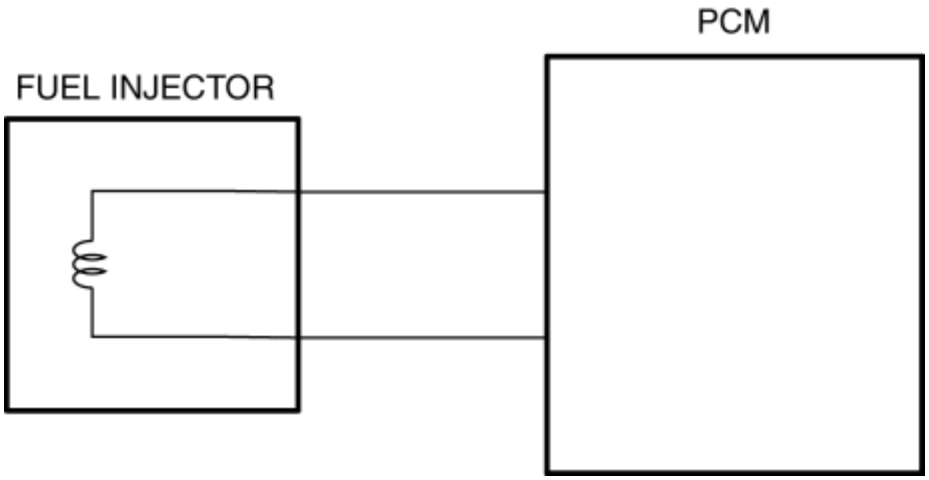

- For fuel injection control details, refer to CONTROL SYSTEM. (See **FUEL INJECTION CONTROL SYSTEM [SKYACTIV-G 2.0, SKYACTIV-G 2.5]**.)

Fail-safe

- Function not equipped.

FUEL INJECTOR [SKYACTIV-G 2.0, SKYACTIV-G 2.5]

2014 - Mazda3 - Engine

QUICK RELEASE (FUEL SYSTEM) CONNECTOR [SKYACTIV-G 2.0, SKYACTIV-G 2.5]

Purpose, Function

- Serviceability has been improved by the easy disconnection/connection.

Construction

- The following types of the quick release connectors are used.

U.S.A. and CANADA

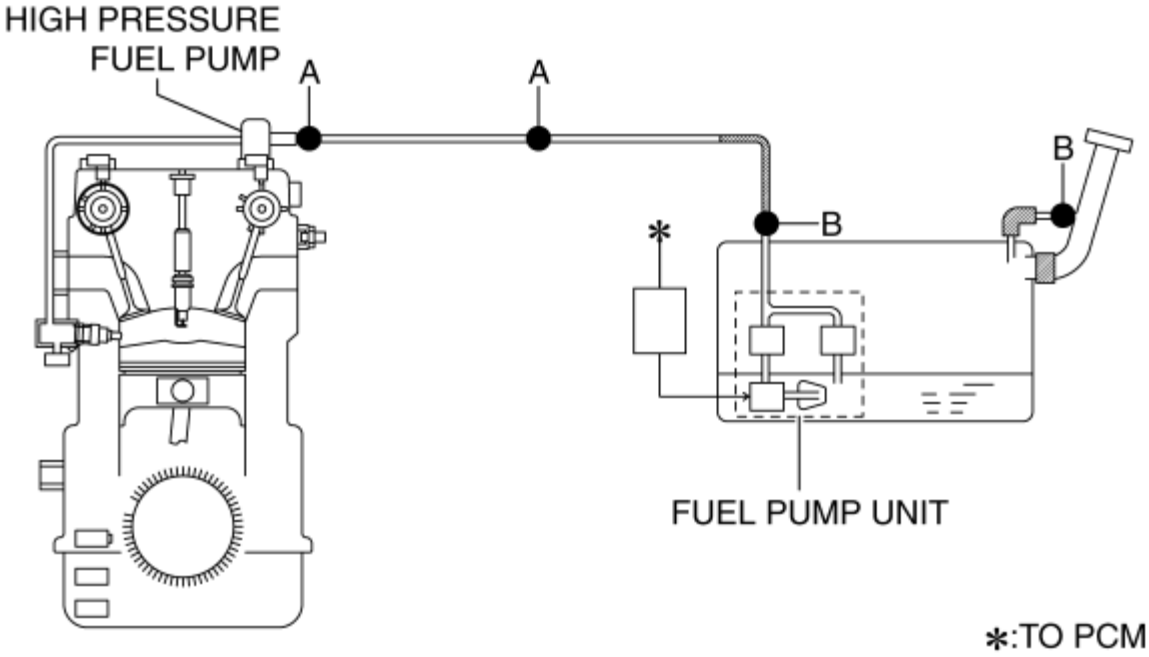

Except U.S.A. and CANADA

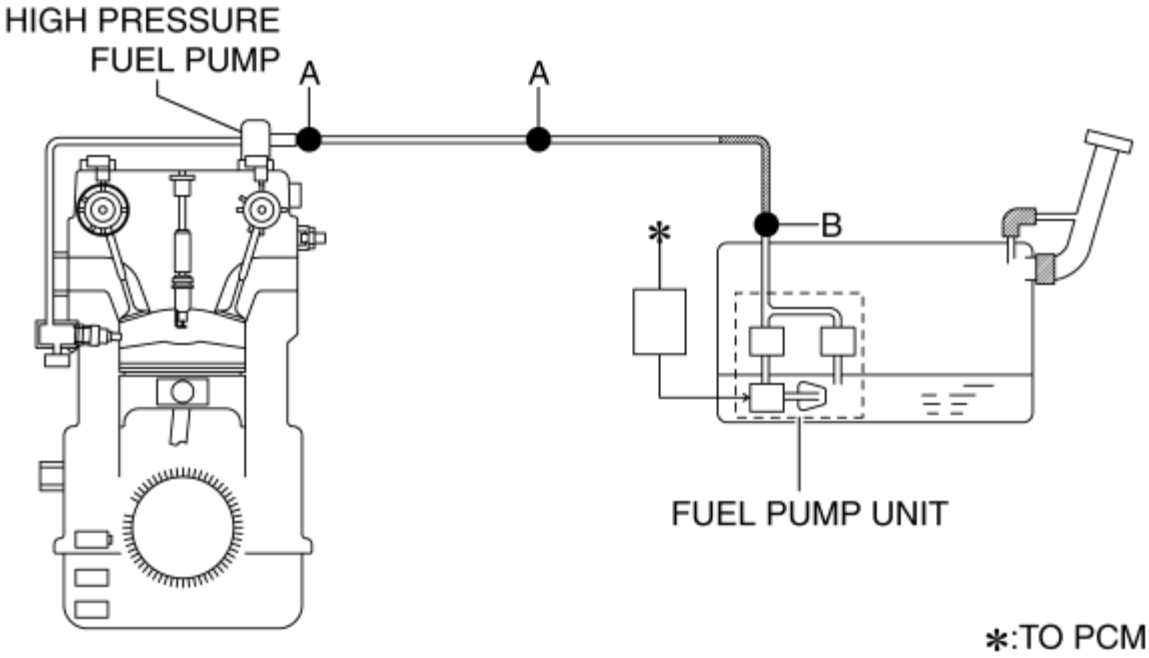

Type A

- An SST is not used with this type.
- Mainly consists of a retainer and O-ring. The quick release connector is integrated with the fuel hose and therefore cannot be disassembled.
- When the quick release connector is connected, the fuel pipe projection is locked at the clamp lock point. To release the quick connector lock for each type, follow the procedure in the order shown in each figure.

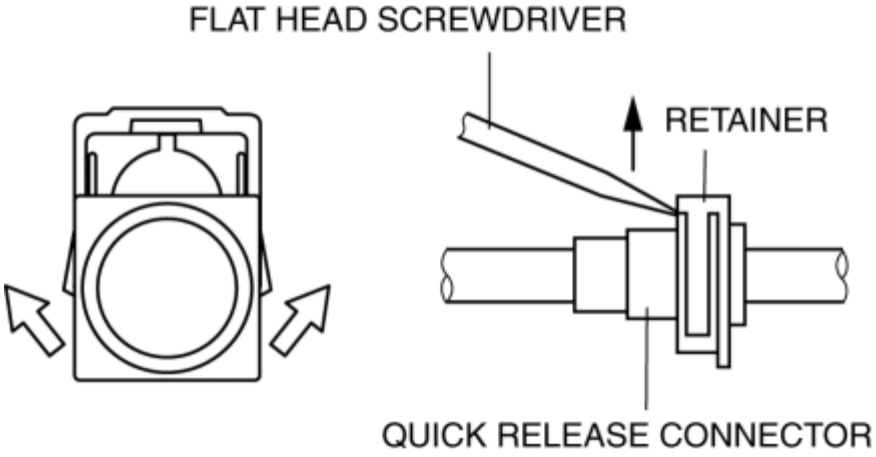

Type B

- An SST is used with this type.

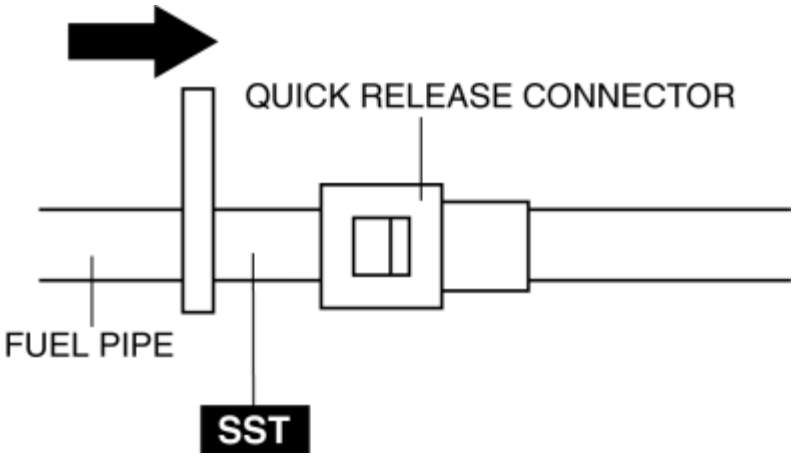

- Consists of a retainer and O-ring. The quick release connector is integrated with the fuel hose and therefore cannot be disassembled.
- To connect the quick release connector properly, push it into the fuel pipe until a click sound is heard.
- New quick release connectors are fitted with a checker tab that prevent improper installation. This checker tab cannot normally be removed. When the quick release connector is properly connected to the fuel pipe, the lock is released and the checker tab comes off. Due to this, it can be verified that the quick release connector is completely connected.

2014 - Mazda3 - Engine

FUEL PUMP RELAY [SKYACTIV-G 2.0, SKYACTIV-G 2.5]

Purpose, Function

- Controls the fuel pump on/off according to control signals from the PCM.
- The fuel pump is operated only at engine start or when the engine is running to improve safety.

Construction

- The fuel pump relay is installed in the relay and fuse block.

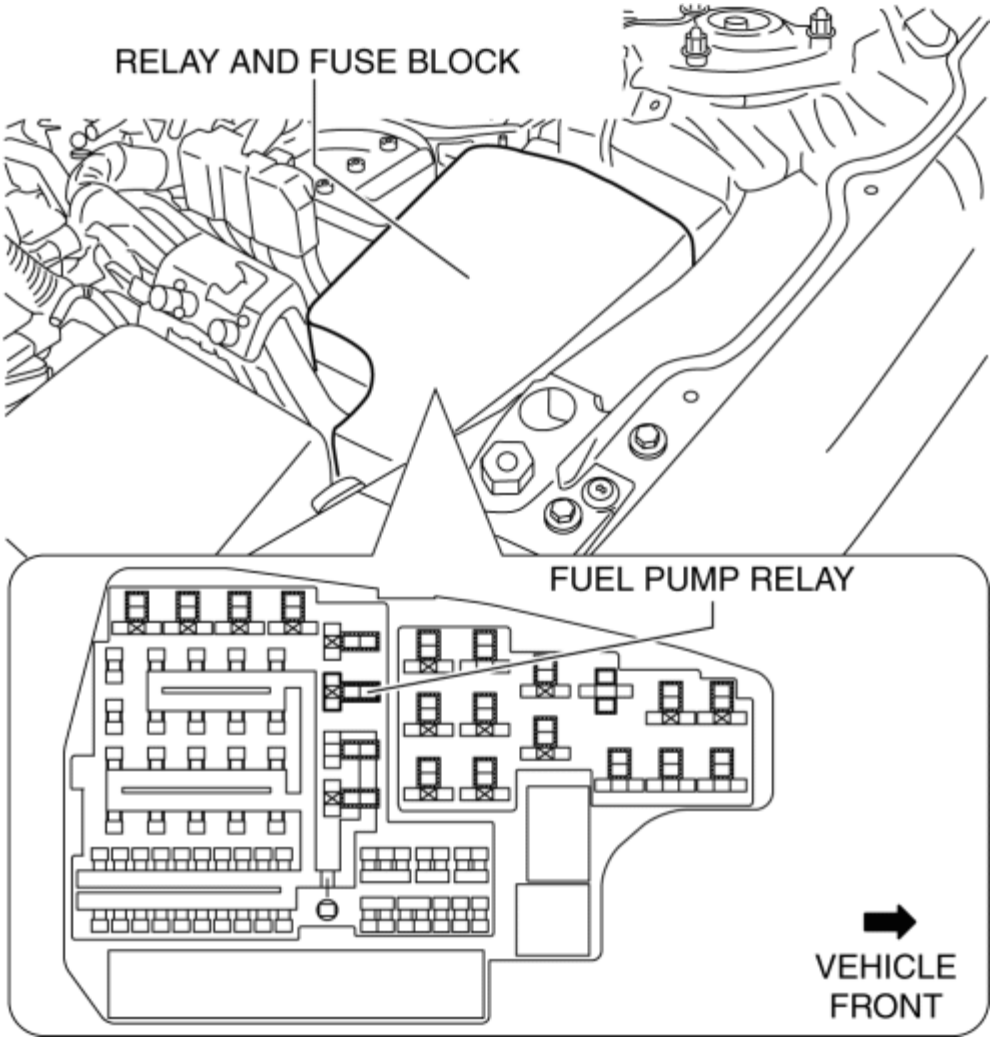

Operation

- The contact point is on when the battery voltage is supplied to the coil based on the signal from the PCM, and the battery voltage is supplied to the fuel pump control module.

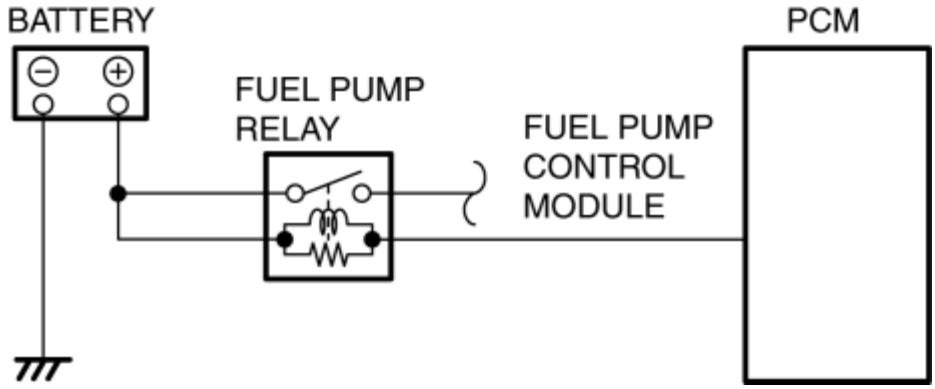

Fail-safe

- Function not equipped.

2014 - Mazda3 - Engine

FUEL INJECTOR RELAY [SKYACTIV-G 2.0, SKYACTIV-G 2.5]

Purpose, Function

- Supplies power to the PCM for the fuel injector and spill valve control solenoid valve operation.

Construction

- The fuel injector relay is installed in the relay and fuse block.

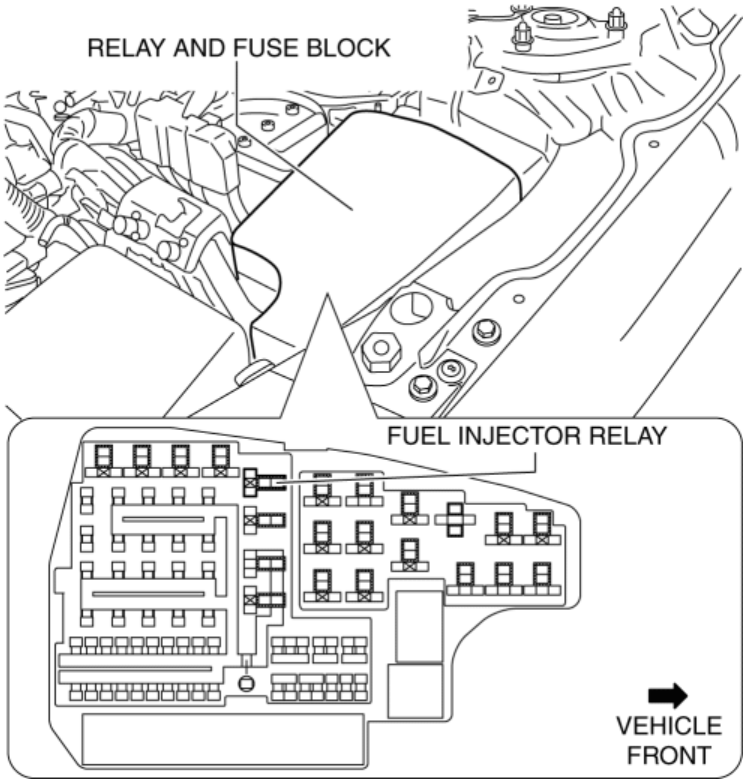

Operation

- When the ignition is switched ON, the battery voltage is supplied to the coil and the contact point is on, thus the battery voltage is supplied to the PCM.

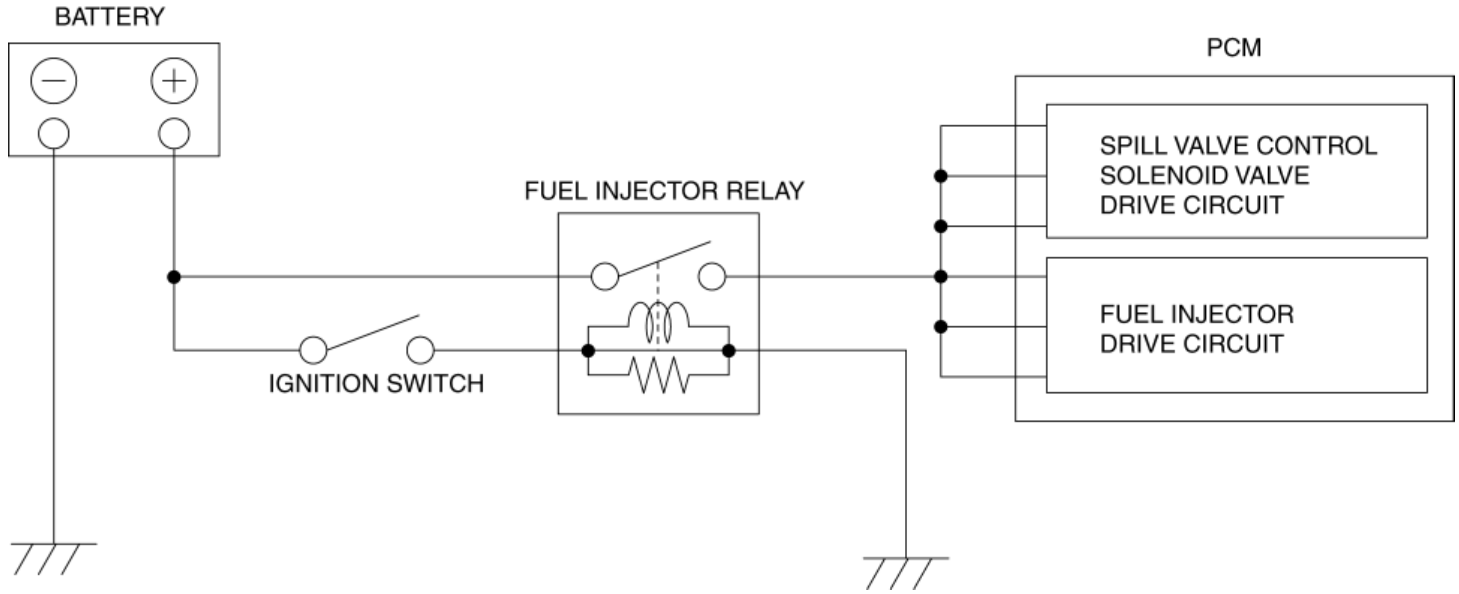

Fail-safe

- Function not equipped.

2014 - Mazda3 - Engine

DIRECT FUEL INJECTION SYSTEM [SKYACTIV-G 2.0, SKYACTIV-G 2.5]

Purpose, Outline

- Engine output has been improved through the direct injection of fuel into the combustion chamber.
- High response can be achieved because there is no time lag from when the fuel injection starts until the fuel is provided to the combustion chamber.

Structure

- The direct fuel injection system consists of the following parts.

Part name	Reference
High pressure fuel pump	(See **HIGH PRESSURE FUEL PUMP [SKYACTIV-G 2.0, SKYACTIV-G 2.5]**.)
Fuel injector	(See **FUEL INJECTOR [SKYACTIV-G 2.0, SKYACTIV-G 2.5]**.)
Fuel distributor	(See **FUEL DISTRIBUTOR [SKYACTIV-G 2.0, SKYACTIV-G 2.5]**.)
Fuel pressure sensor	(See **FUEL PRESSURE SENSOR [SKYACTIV-G 2.0, SKYACTIV-G 2.5]**.)
Relief valve	—

Operation

- Fuel is supplied from the high pressure fuel pump into the fuel distributor, and the fuel injector injects the fuel into the cylinder. Fuel is injected during the intake stroke and diffused uniformly in the combustion chamber by the flow of intake air. For the fuel injection control, refer to the CONTROL SYSTEM. (See **FUEL INJECTION CONTROL SYSTEM [SKYACTIV-G 2.0, SKYACTIV-G 2.5]**.)
- The fuel pressure sensor detects the fuel pressure in the fuel distributor and sends a fuel pressure signal to the PCM. Based on the signal from the fuel pressure sensor, the PCM controls the high pressure fuel pump so that the fuel pressure is in accordance with the driving conditions. For the high pressure fuel pump control, refer to CONTROL SYSTEM. (See **HIGH PRESSURE FUEL PUMP CONTROL [SKYACTIV-G 2.0, SKYACTIV-G 2.5]**.)
- Fuel pressure is adjusted by the spill valve control solenoid valve, and a relief valve is equipped to ensure safety in case of a malfunction. If the fuel pressure in the high pressure fuel pump reaches the set pressure, the relief valve is mechanically opened and fuel is returned to the fuel tank side.

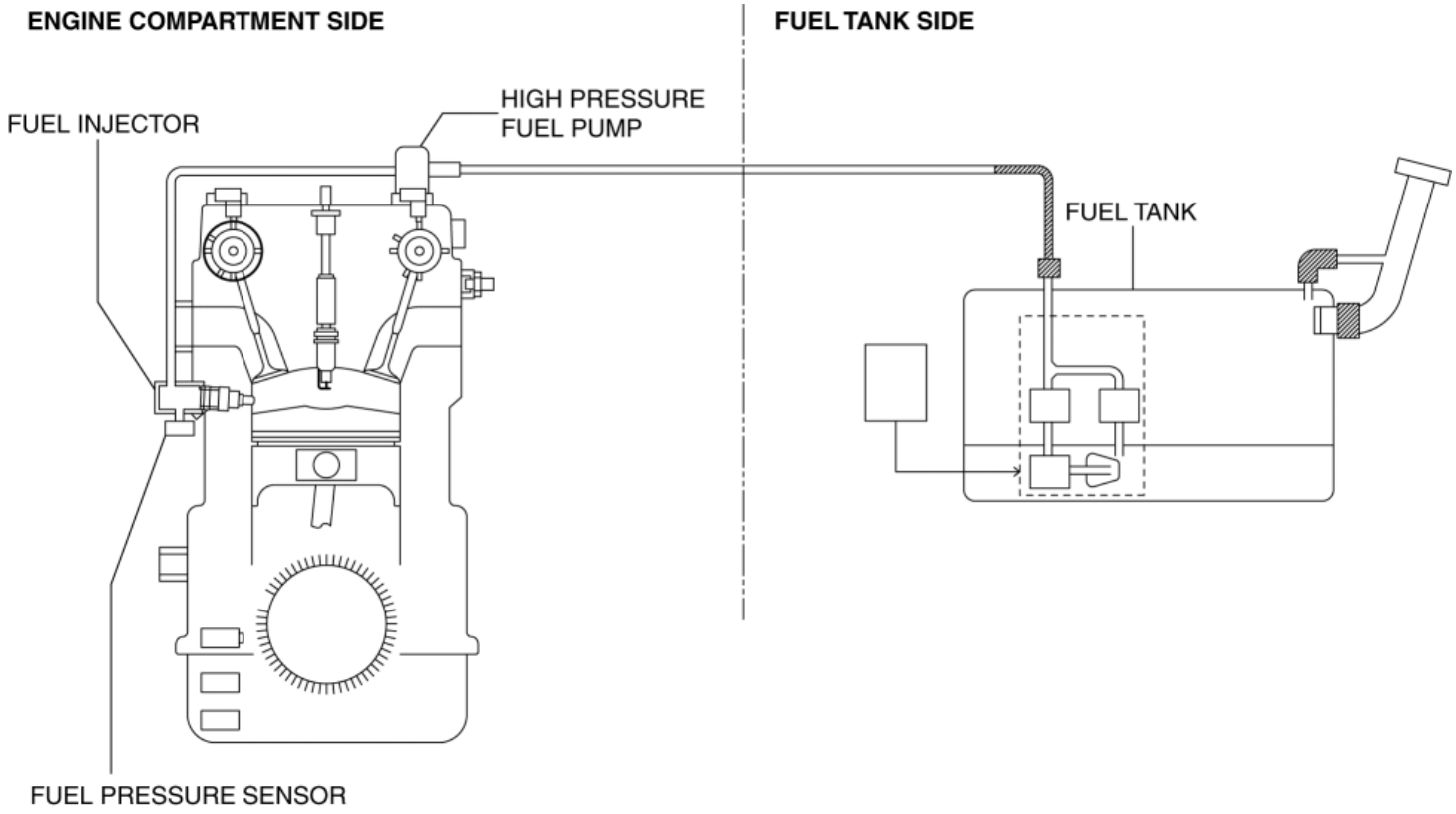
ENGINE COMPARTMENT SIDE
FUEL TANK SIDE
FUEL INJECTOR
HIGH PRESSURE
FUEL PUMP
FUEL TANK
FUEL PRESSURE SENSOR

2014 - Mazda3 - Engine

HIGH PRESSURE FUEL PUMP [SKYACTIV-G 2.0, SKYACTIV-G 2.5]

Purpose, Function

- Applies pressure to fuel sent from the fuel pump equipped on the fuel tank, and then pumps it to the fuel delivery pipe.
- Fuel is sectioned and pumped by the up and down movement of the piston caused by the rotation of the cam installed to the rear end of the exhaust camshaft.

Construction

- The high pressure fuel pump is installed to the exhaust camshaft with the vacuum pump.

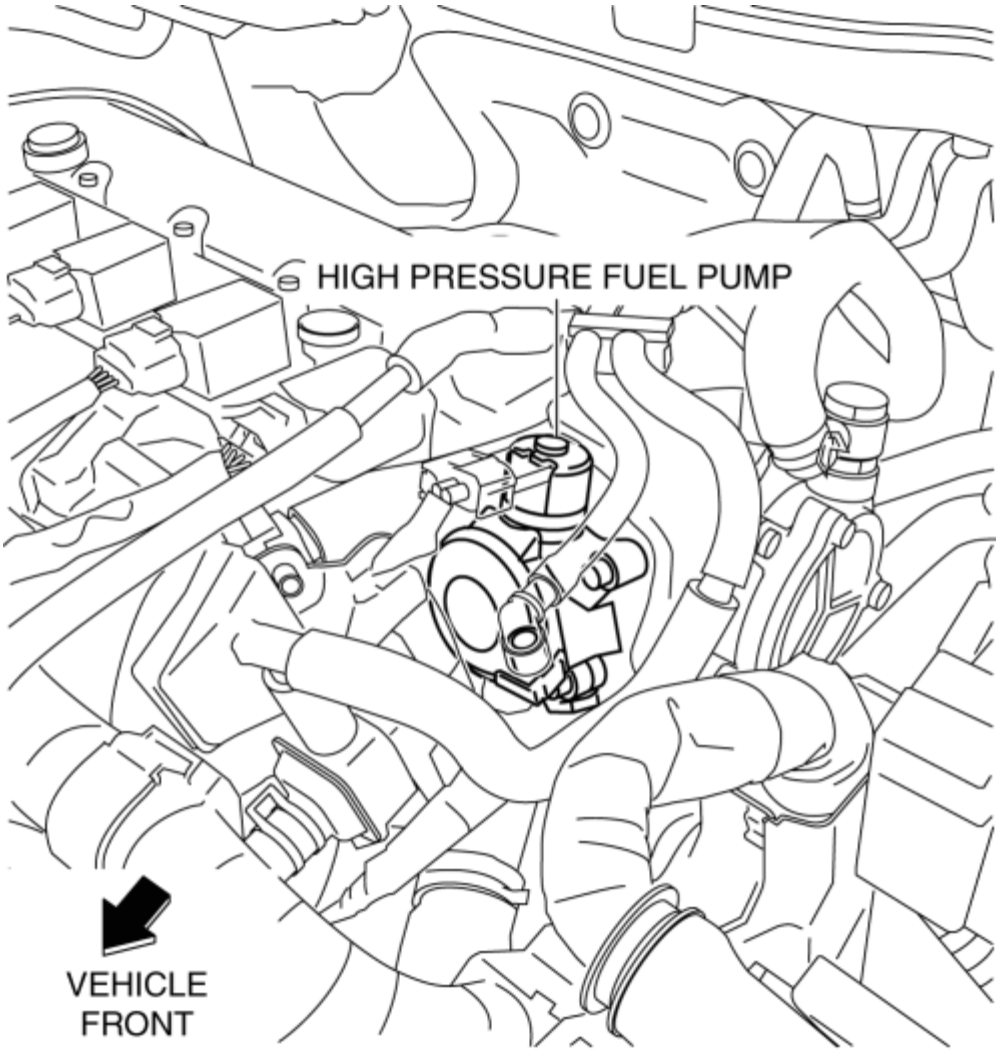

- The high pressure fuel pump consists of a spill valve control solenoid valve, spill valve, piston, and spring.

Operation

- Based on the control signal from the PCM, the spill valve solenoid valve opens and closes in the high pressure fuel pump.
- For the high pressure fuel pump control details, refer to CONTROL SYSTEM. (See **HIGH PRESSURE FUEL PUMP CONTROL [SKYACTIV-G 2.0, SKYACTIV-G 2.5]**.)

Fail-safe

DTC	Fail-safe
P0089:00	• Limits the intake air amount. • Stops the high pressure fuel pump control. • The upper limit of the engine speed is 2,500 rpm.
P0091:00	• Limits the intake air amount. • Stops the high pressure fuel pump control.
P0092:00	

2014 - Mazda3 - Engine

FUEL PUMP CONTROL MODULE [SKYACTIV-G 2.0, SKYACTIV-G 2.5]

Purpose, Function

- Controls the voltage applied to the fuel pump for reducing fuel pump load and improving fuel economy.
- Controls the voltage applied to the fuel pump based on the control signal from the PCM.

Construction

- The fuel pump control module is installed below the rear seat.

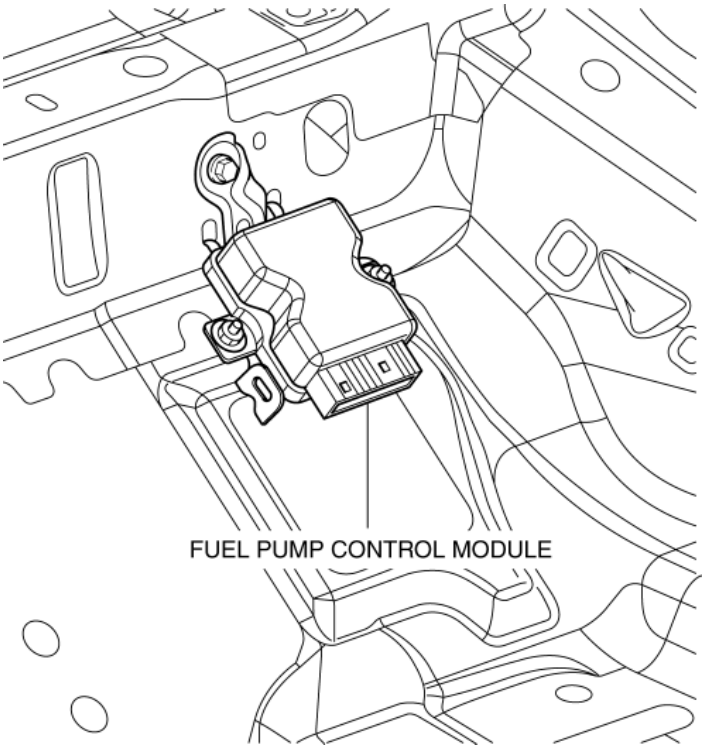

Operation

- Controls the voltage applied to the fuel pump based on the control signal from the PCM. In addition, the on-board diagnostic function is equipped and if there is a malfunction in the fuel pump control module, a diagnostic signal is sent to the PCM. The PCM stores a DTC if necessary according to the received diagnostic signal.

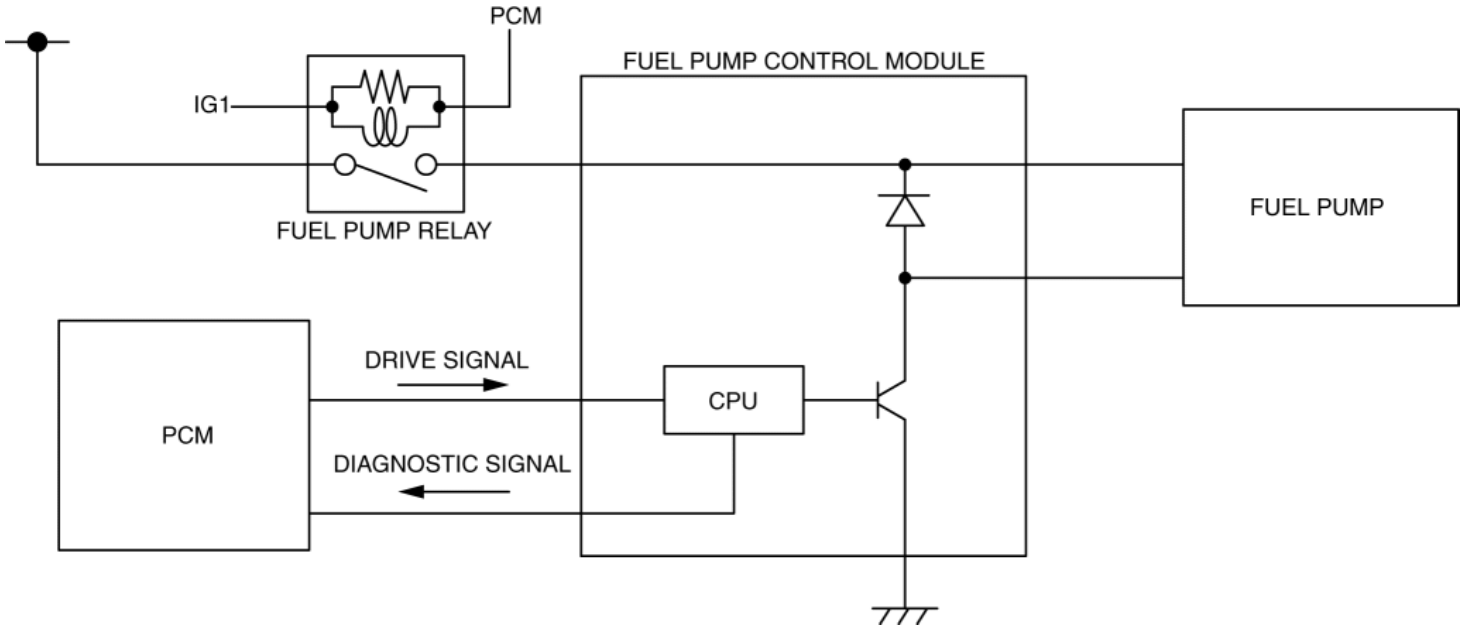

- For the fuel pump control module, refer to CONTROL SYSTEM. (See **FUEL PUMP CONTROL [SKYACTIV-G 2.0, SKYACTIV-G 2.5]**.)

Fail-safe

P025B:00	• Stops the fuel pump control (when overheating is detected).
P0629:00	• Stops the fuel pump control.

2014 - Mazda3 - Engine

EXHAUST SYSTEM [SKYACTIV-G 2.0, SKYACTIV-G 2.5]

Purpose, Outline

- A high compression ratio has been realized by adopting 4-2-1 exhaust pipes and reducing residual gas in the cylinders.
- The loop structure of the exhaust pipes for the 4-2-1 system takes up less space.

Structural View

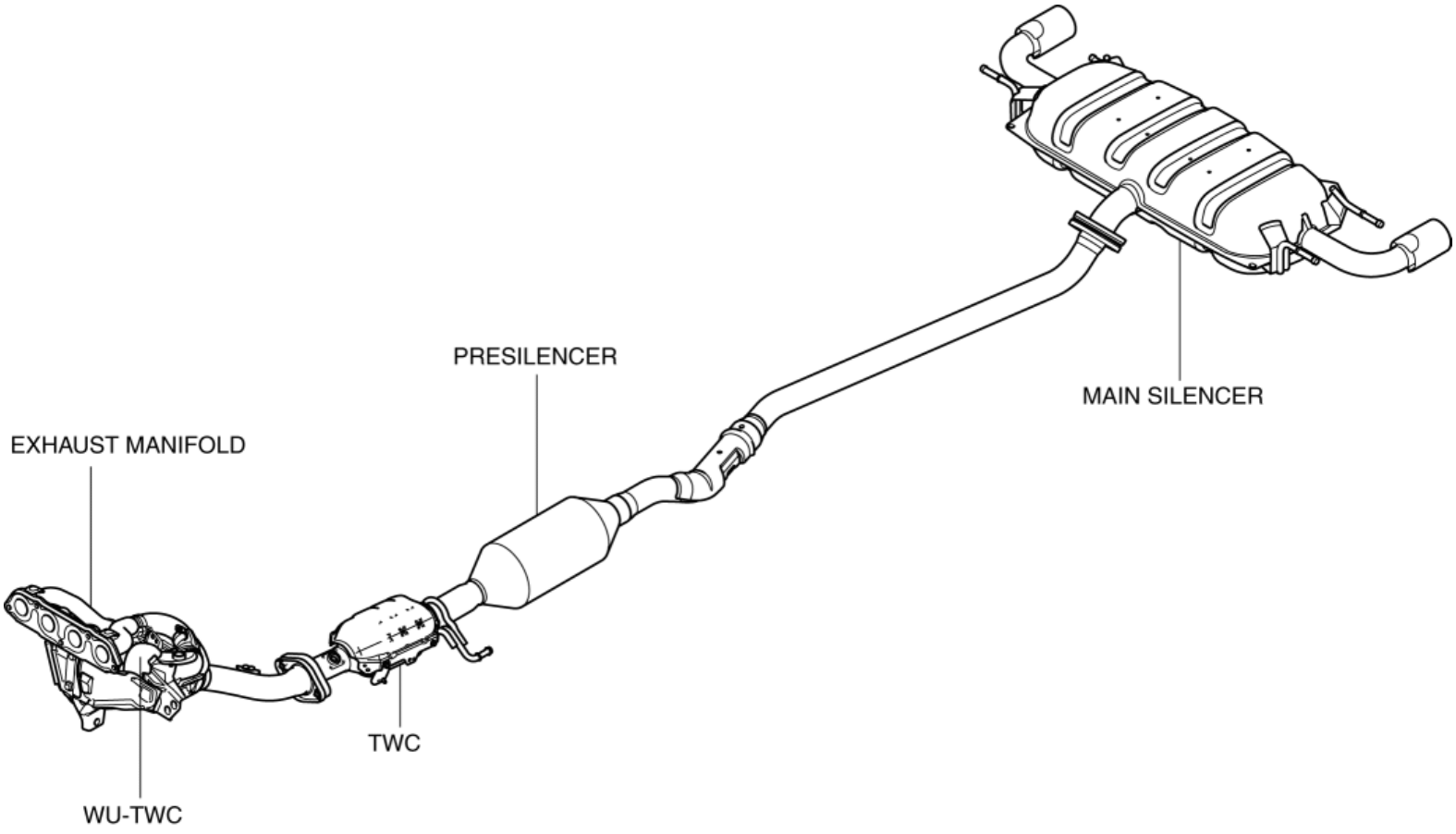

System Diagram

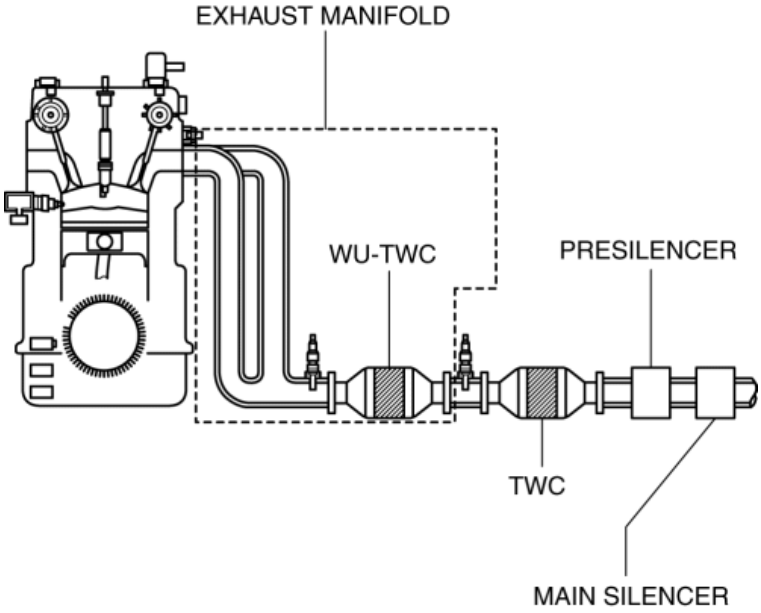

Structure

- The exhaust system consists of the following parts:

Part name	Reference
Main silencer	(See **MAIN SILENCER [SKYACTIV-G 2.0, SKYACTIV-G 2.5]**.)
Presilencer	(See **PRESILENCER [SKYACTIV-G 2.0, SKYACTIV-G 2.5]**.)
TWC	(See **CATALYTIC CONVERTER [SKYACTIV-G 2.0, SKYACTIV-G 2.5]**.)
WU-TWC	
Exhaust manifold	(See **EXHAUST MANIFOLD [SKYACTIV-G 2.0, SKYACTIV-G 2.5]**.)

2014 - Mazda3 - Engine

EXHAUST MANIFOLD [SKYACTIV-G 2.0, SKYACTIV-G 2.5]

Purpose, Function

- By lengthening the exhaust passage, the transmission of exhaust pressure waves to other cylinders can be delayed, therefore the amount of exhaust gas forced back into the combustion chamber is reduced. By reducing the residual gas, the temperature inside the combustion chamber is lowered and the occurrence of knocking is suppressed even at a high compression ratio.

Construction

- The exhaust manifold is installed to the rear of the engine. In addition, the catalytic converter (WU-TWC) is integrated (WU-TWC).

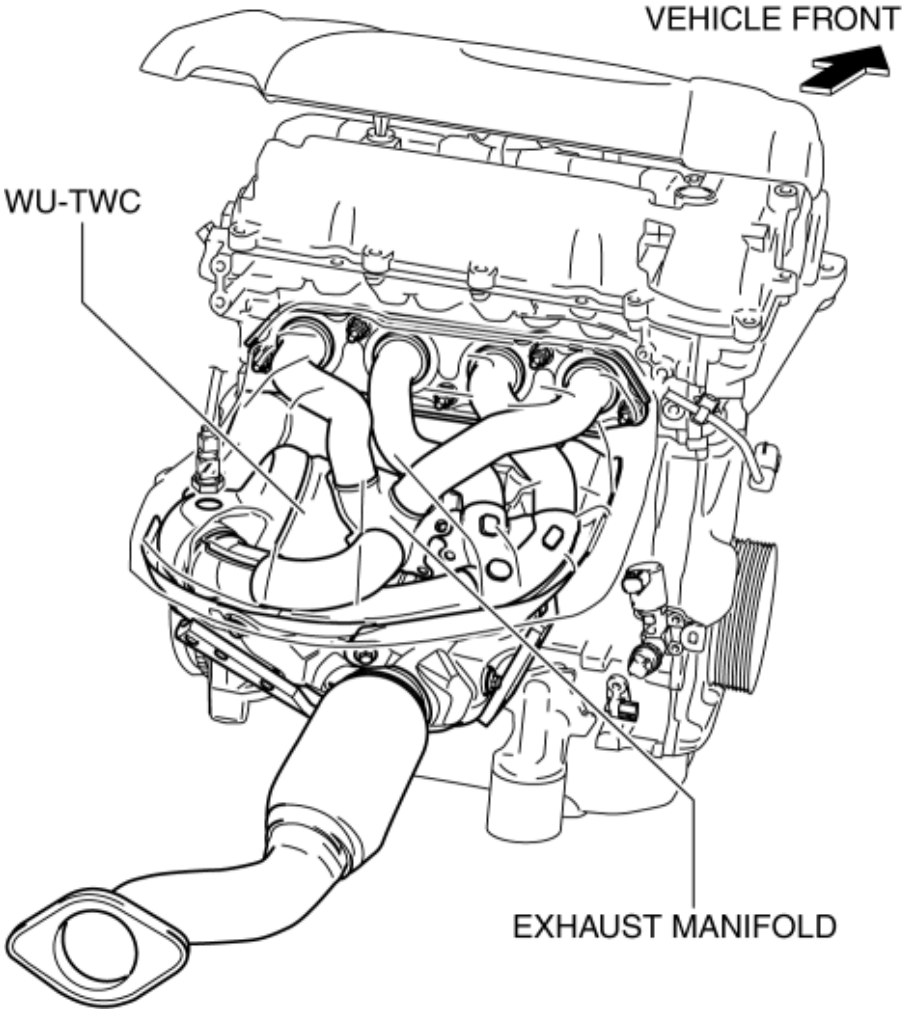

Residual gas occurrence mechanism

1. When exhaust gas is exhausted from the cylinder, a pressure wave occurs inside the exhaust pipe.

2. The pressure wave reaches each cylinder and the high-temperature exhaust gas in the exhaust manifold is pushed back into the cylinder, which is in overlap.

3. The exhaust valve closes and the exhaust gas pushed back into the cylinder remains in the cylinder (Residual gas increases the temperature inside the cylinder and causes engine knocking).

Advantages of 4-2-1 exhaust pipes

- Suppresses engine knocking by reducing the residual gas and preventing the temperature inside the cylinder from increasing. A high compression ratio has been realized by suppressing engine knocking.
- With conventional short exhaust pipes, the pressure wave which occurs during the exhaust stroke of the No. 3 cylinder reaches the No.1 cylinder, which is in overlap. Because the exhaust valve of the No.1 cylinder is open while in overlap, high-temperature exhaust gas in the exhaust manifold is pushed back into the No.1 cylinder. With the 4-2-1 exhaust pipes, because the length of the pipes is long, it takes time for the pressure wave to reach each cylinder. When the pressure wave occurring from the No.3 cylinder reaches the No.1 cylinder, the exhaust valve has already been closed, therefore the amount of exhaust gas which is pushed backed at almost all engine speeds is reduced.

SHORT EXHAUST PIPES

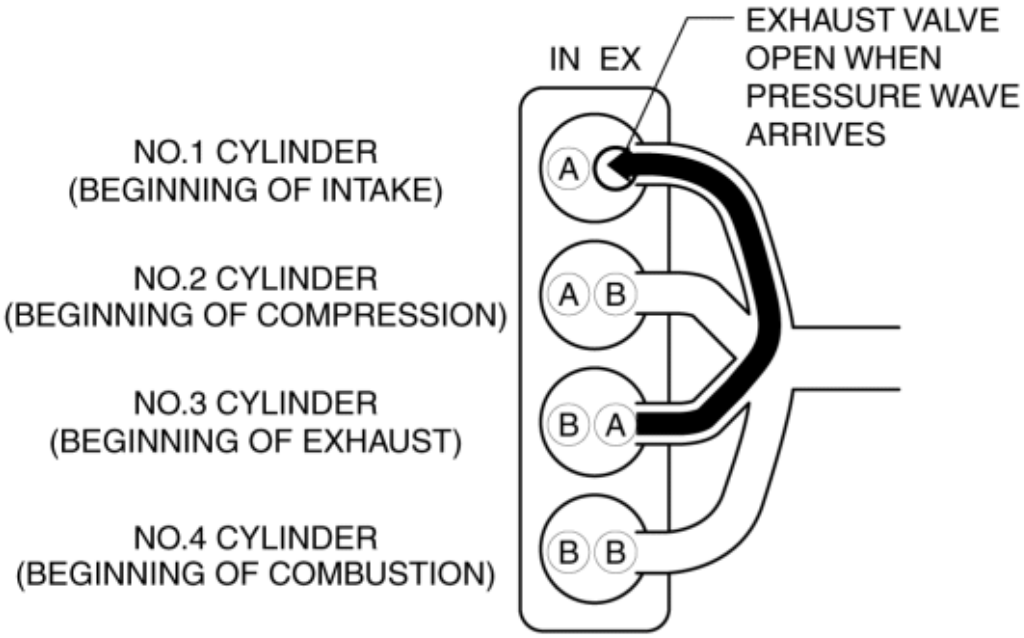

LONG EXHAUST PIPES (4-2-1 TYPE)

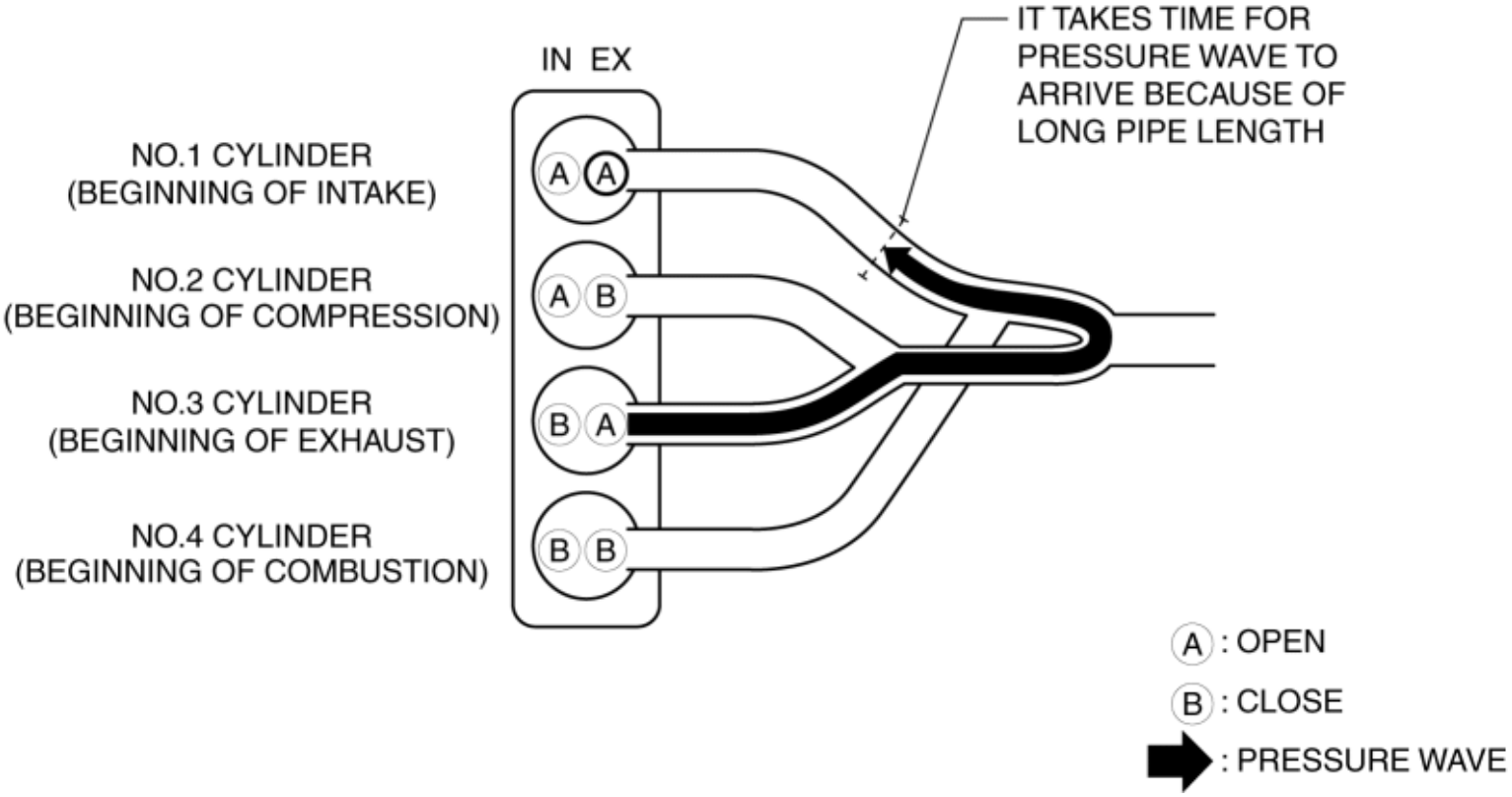

2014 - Mazda3 - Engine

MAIN SILENCER [SKYACTIV-G 2.0, SKYACTIV-G 2.5]

Purpose, Function

- Reduces the exhaust noise.

Construction

- The main silencer is installed to the vehicle rear, under the trunk compartment.

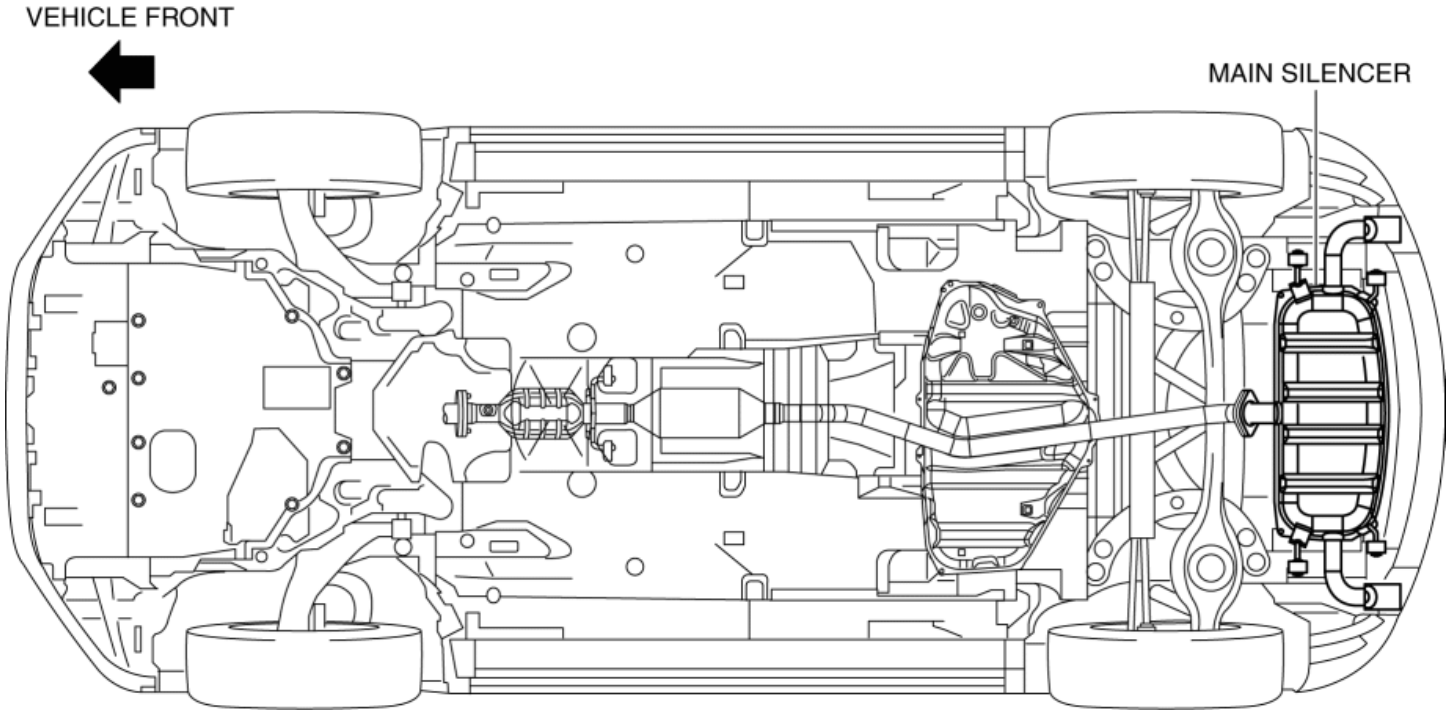

- The main silencer consists of the filters, holder, set plates and stiffener.

MAIN SILENCER [SKYACTIV-G 2.0, SKYACTIV-G 2.5]

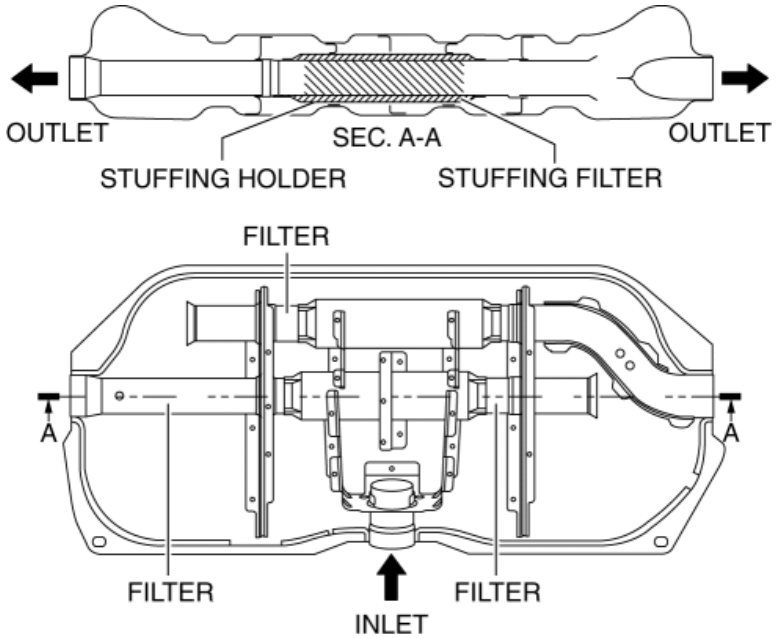

2014 - Mazda3 - Engine

PRESILENCER [SKYACTIV-G 2.0, SKYACTIV-G 2.5]

Purpose, Function

- Reduces the exhaust noise.

Construction

- The presilencer is installed to the rear of the TWC.

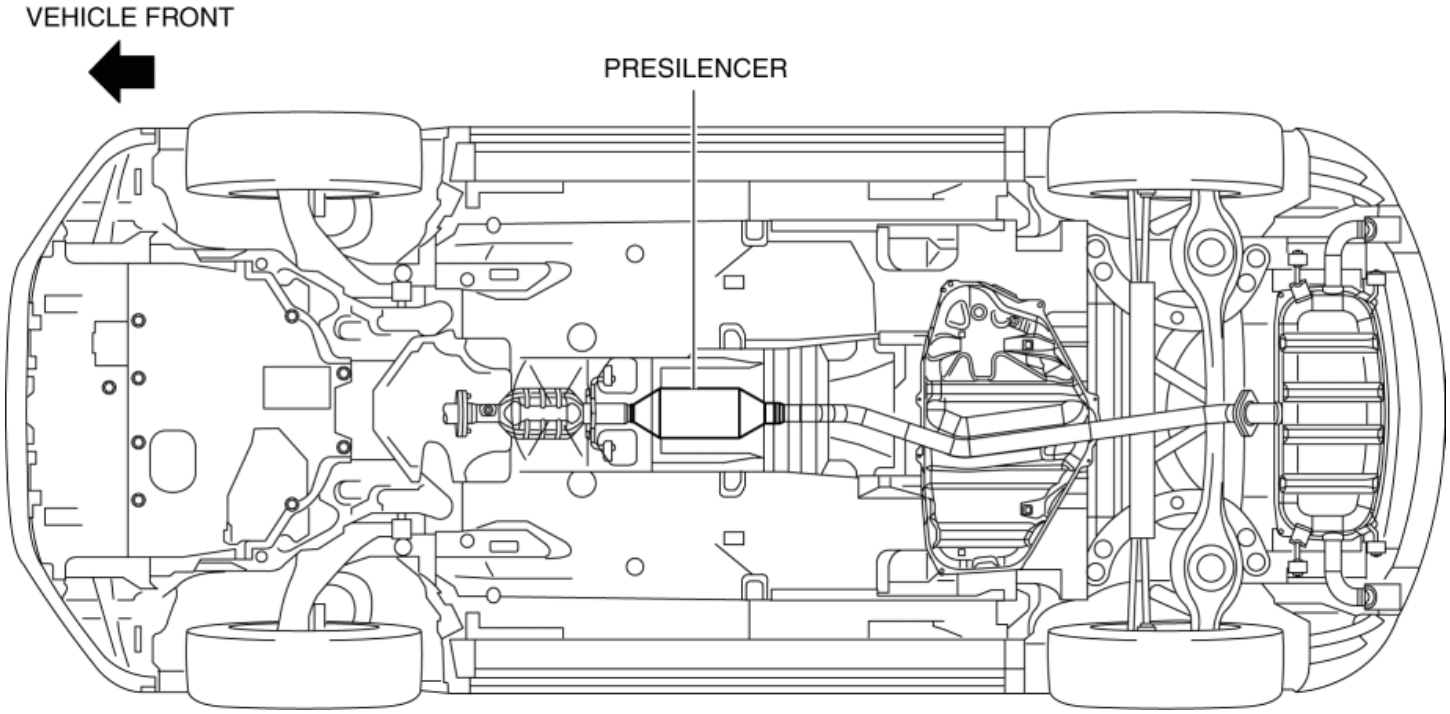

- The presilencer consists of the filters, stuffing and wool-stainless.

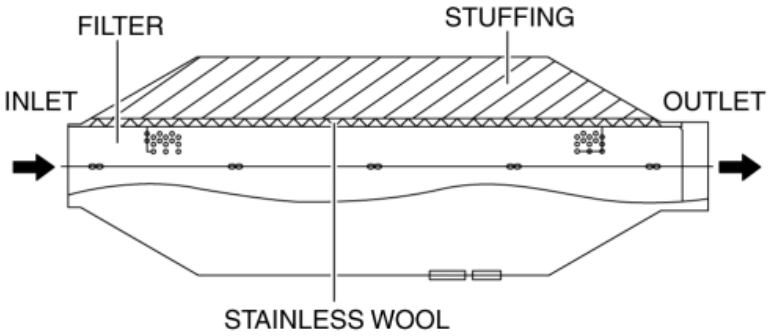

2014 - Mazda3 - Engine

EMISSION SYSTEM [SKYACTIV-G 2.0, SKYACTIV-G 2.5]

Purpose, Outline

- A single-nano catalyst has been adopted for the under-floor, three-way catalyst to improve emission gas purification efficiency.

Structural View

Engine compartment side

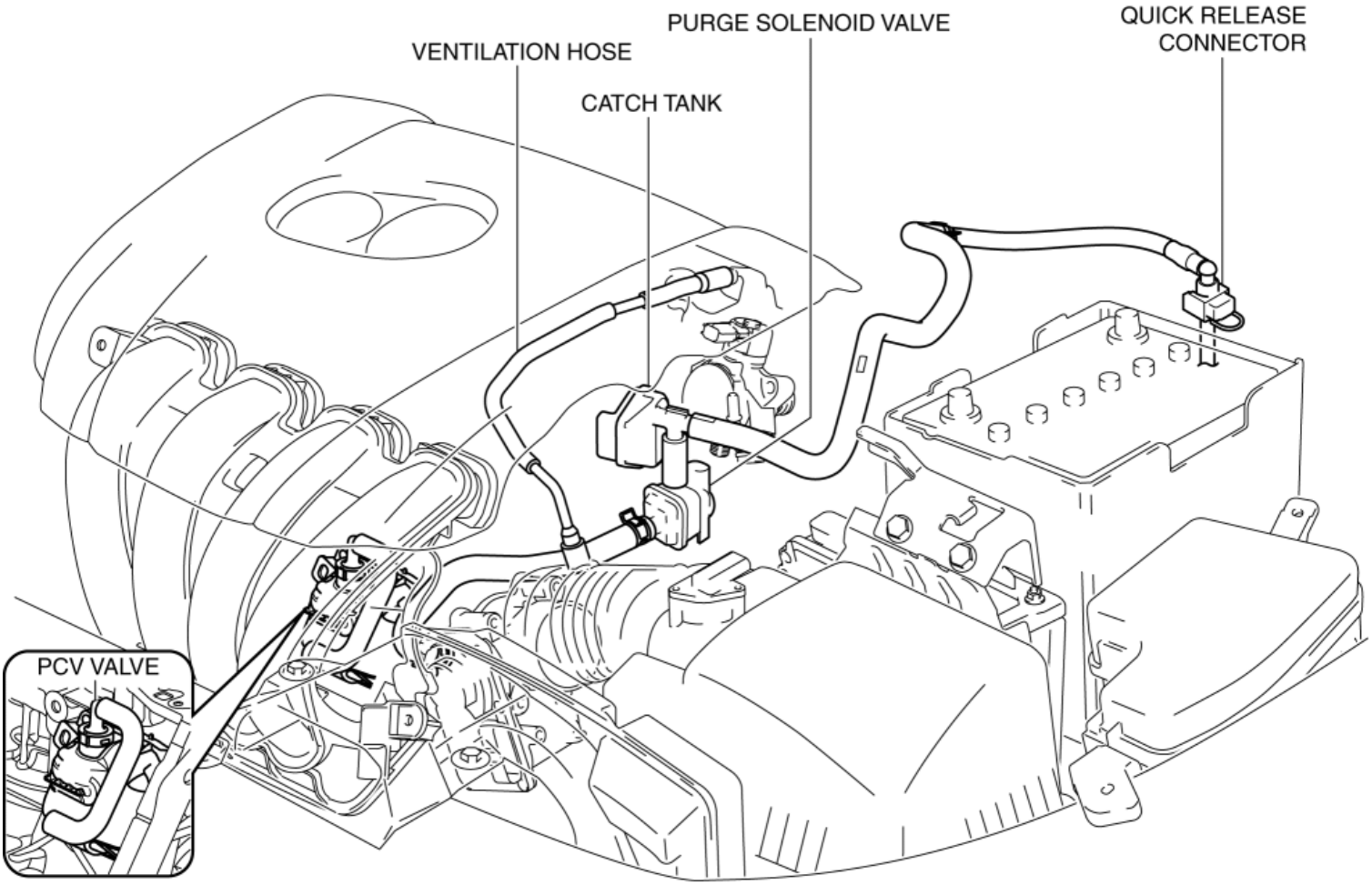

Exhaust system side

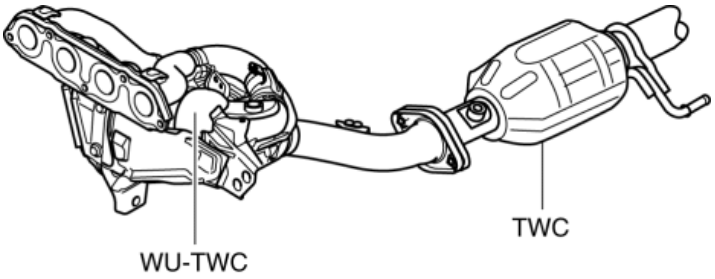

Fuel tank side

U.S.A. and CANADA (4SD)

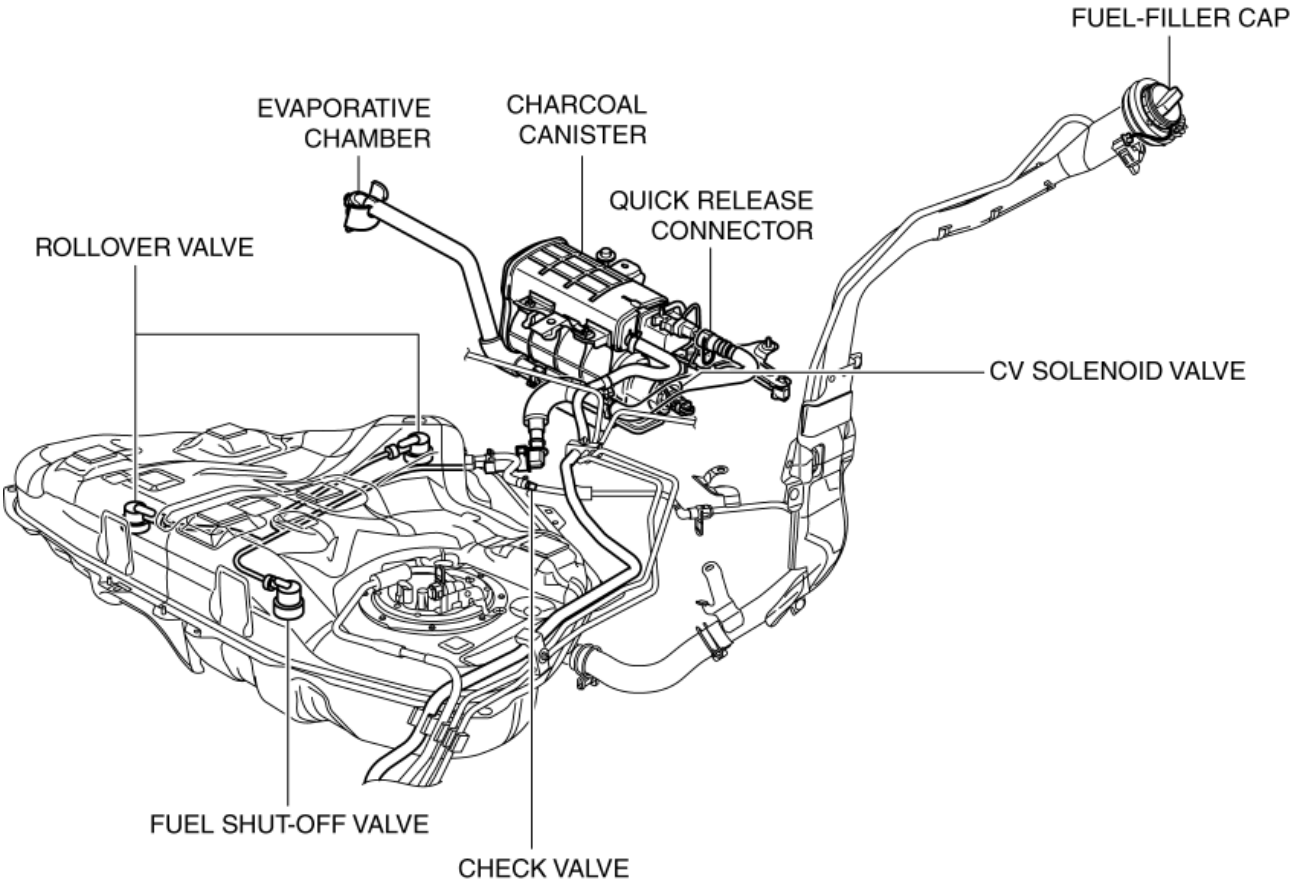

U.S.A. and CANADA (5HB)

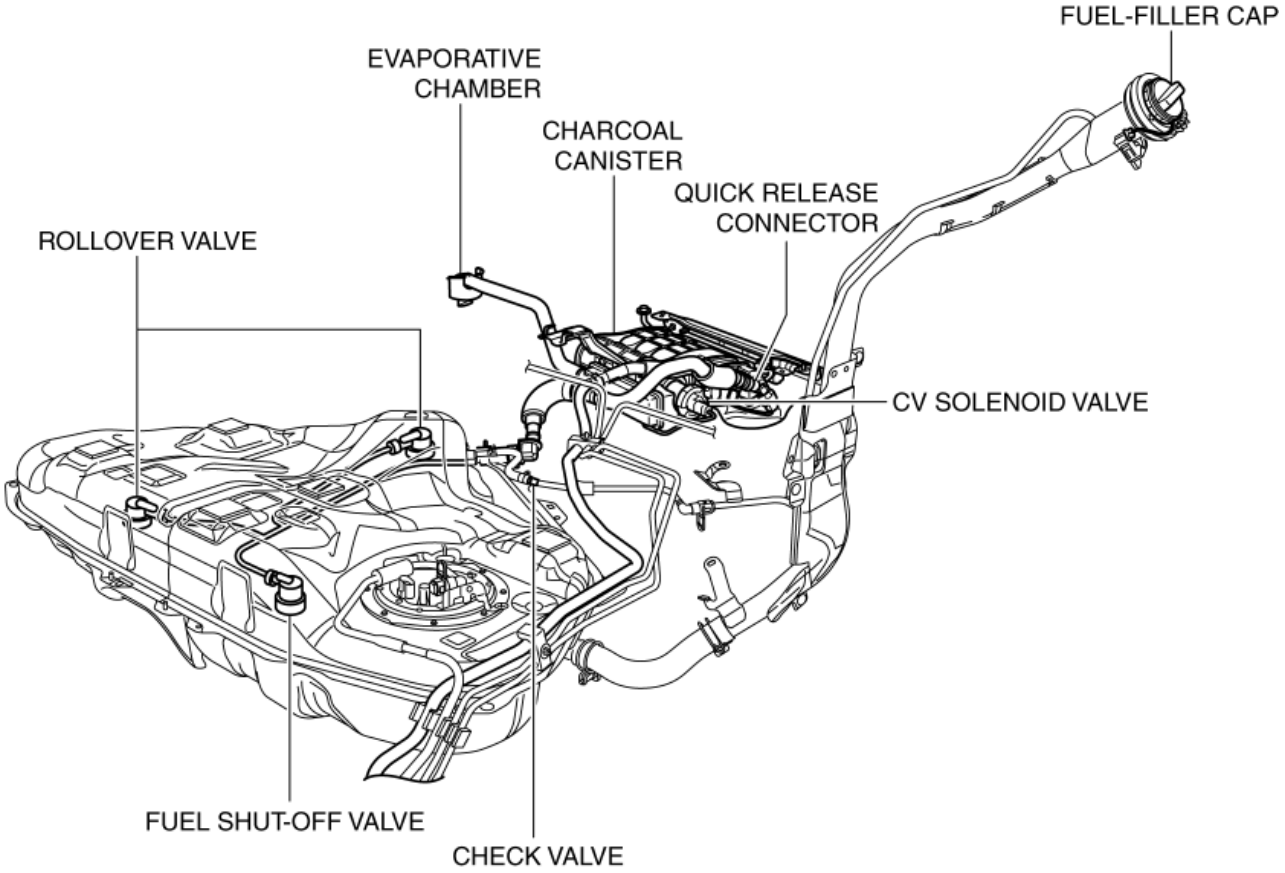

Except U.S.A. and CANADA

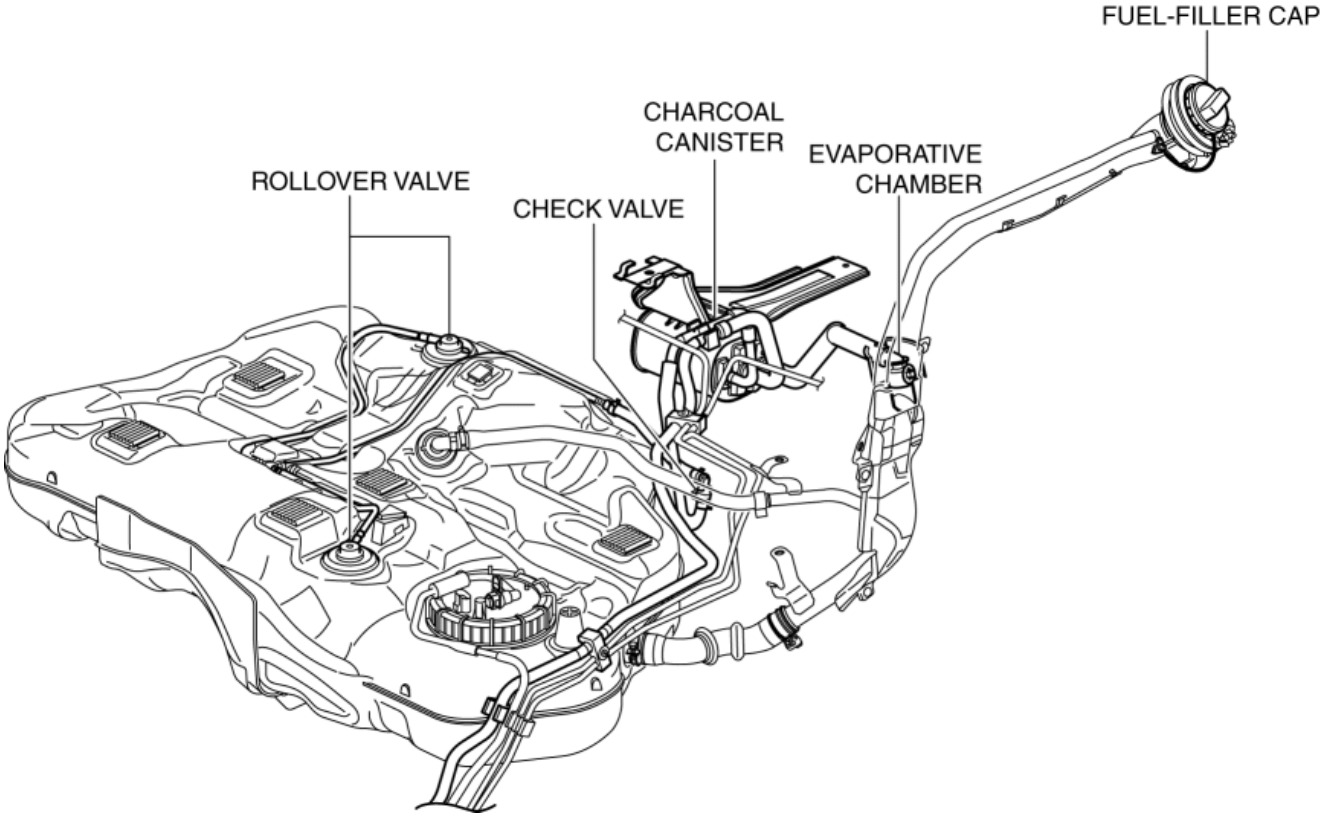

System Diagram

U.S.A. and CANADA

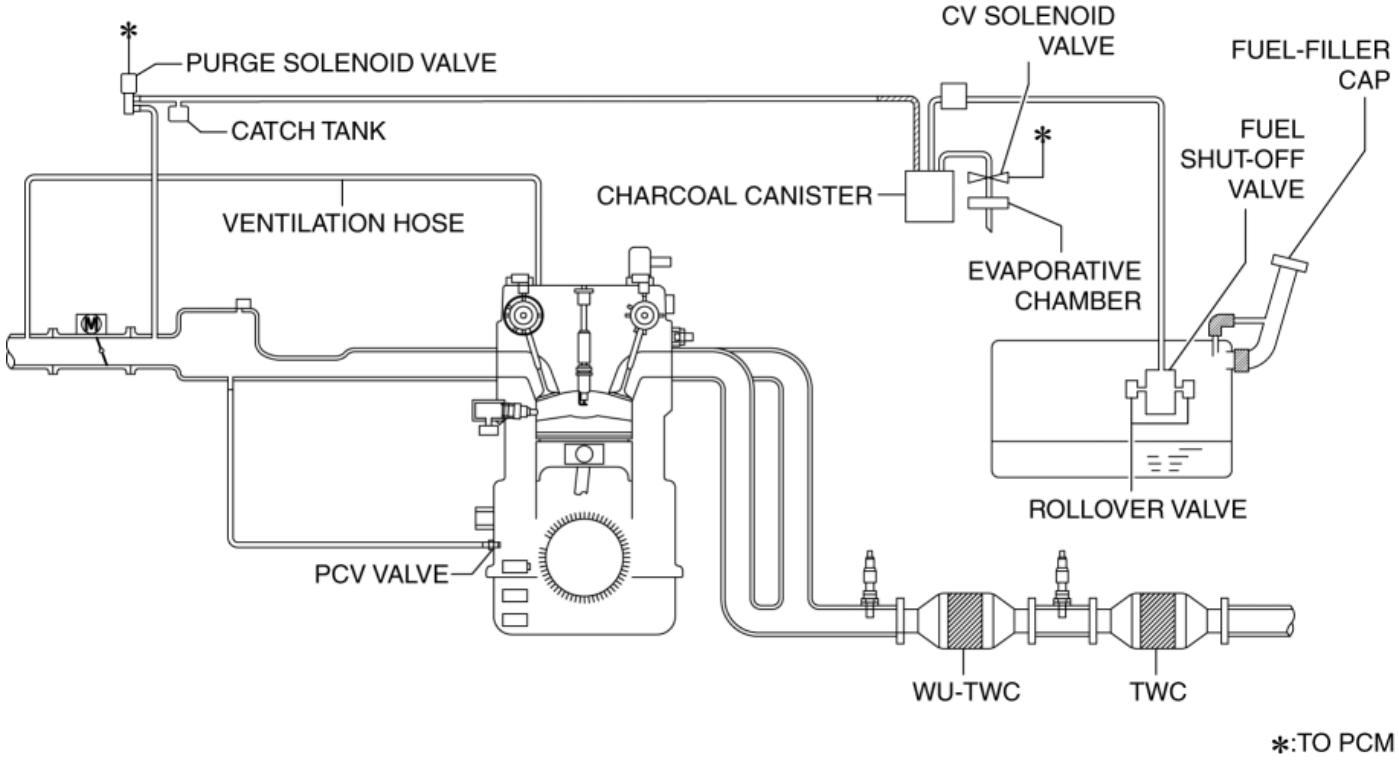

Except U.S.A. and CANADA

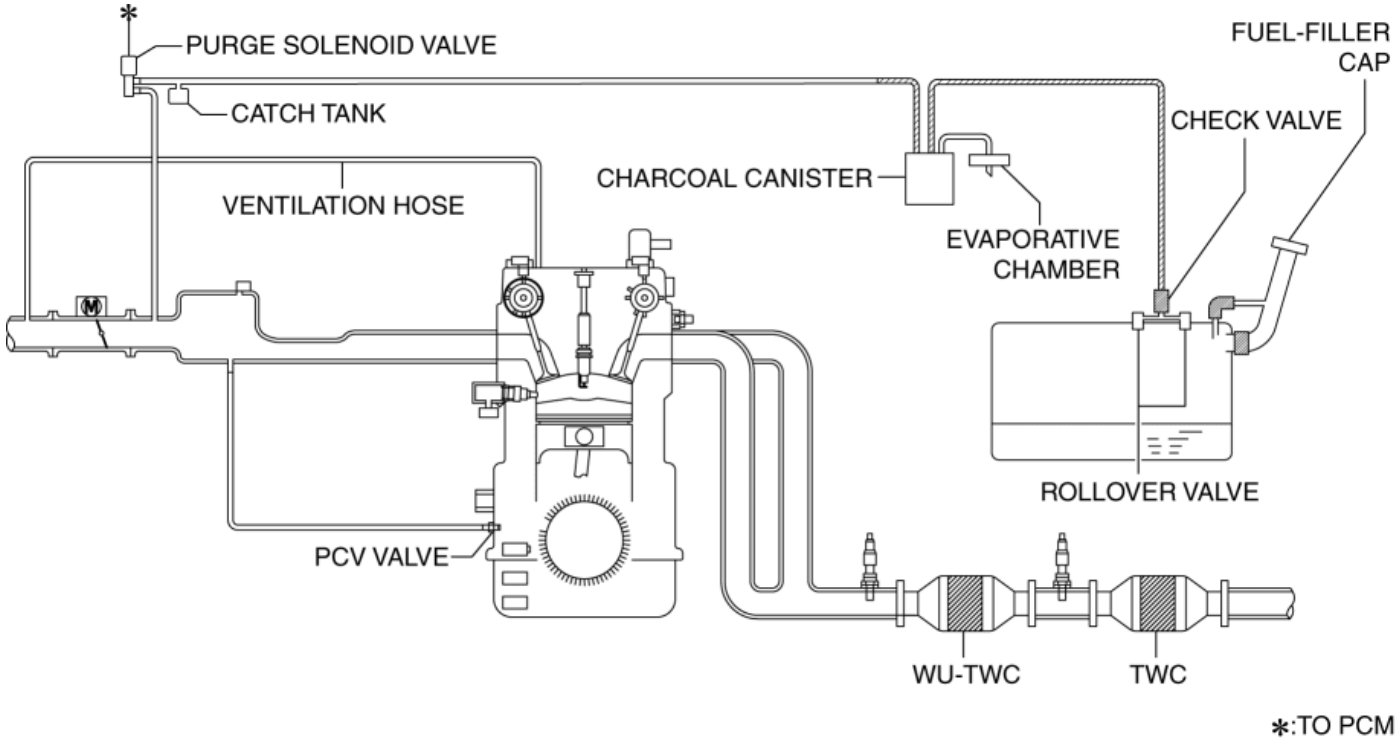

Vacuum Hose Routing Diagram

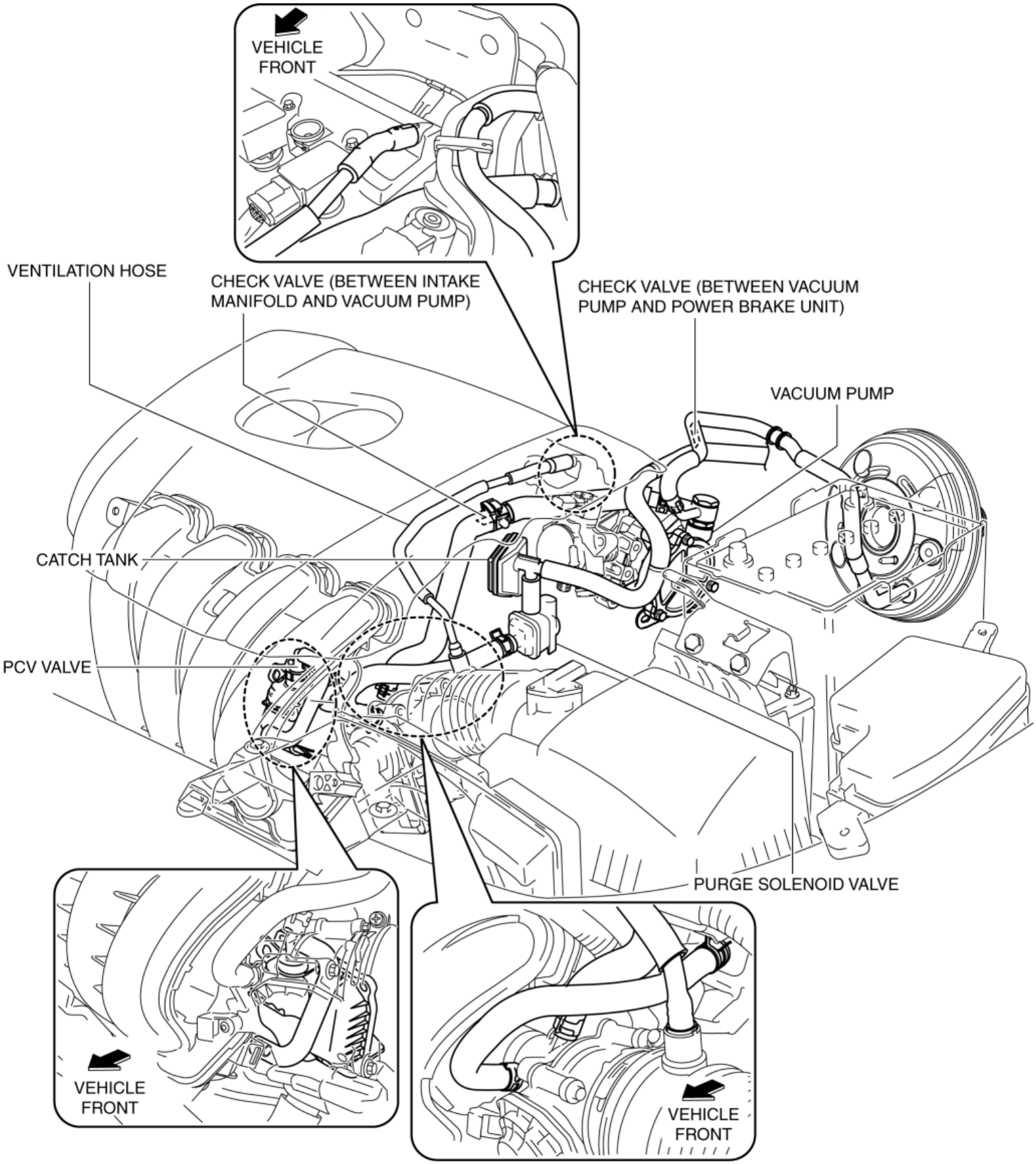

Structure

- The emission system consists of the following parts:

U.S.A. and CANADA

Part/System name		Reference
Exhaust gas purification system (See **EXHAUST GAS PURIFICATION SYSTEM [SKYACTIV-G 2.0, SKYACTIV-G 2.5]**.)	Catalytic converter	(See **CATALYTIC CONVERTER [SKYACTIV-G 2.0, SKYACTIV-G 2.5]**.)
Positive crankcase ventilation system (See **POSITIVE CRANKCASE VENTILATION (PCV) SYSTEM [SKYACTIV-G 2.0, SKYACTIV-G 2.5]**.)	PCV valve	(See **POSITIVE CRANKCASE VENTILATION (PCV) VALVE [SKYACTIV-G 2.0, SKYACTIV-G 2.5]**.)
Evaporative emission control system (See **EVAPORATIVE EMISSION (EVAP) CONTROL SYSTEM [SKYACTIV-G 2.0, SKYACTIV-G 2.5]**.)	Purge solenoid valve	(See **PURGE SOLENOID VALVE [SKYACTIV-G 2.0, SKYACTIV-G 2.5]**.)
	Catch tank	(See **CATCH TANK [SKYACTIV-G 2.0, SKYACTIV-G 2.5]**.)
	Charcoal canister	(See **CHARCOAL CANISTER [SKYACTIV-G 2.0, SKYACTIV-G 2.5]**.)
	Fuel shut-off valve	(See **FUEL SHUT-OFF VALVE [SKYACTIV-G 2.0, SKYACTIV-G 2.5]**.)
	Rollover valve	(See **ROLLOVER VALVE [SKYACTIV-G 2.0, SKYACTIV-G 2.5]**.)
	Fuel-filler cap	(See **FUEL-FILLER CAP [SKYACTIV-G 2.0, SKYACTIV-G 2.5]**.)
	CV solenoid valve	(See **CANISTER VENT (CV) SOLENOID VALVE [SKYACTIV-G 2.0, SKYACTIV-G 2.5]**.)
	Evaporative chamber	(See **EVAPORATIVE CHAMBER [SKYACTIV-G 2.0, SKYACTIV-G 2.5]**.)
	Check valve	(See **CHECK VALVE [SKYACTIV-G 2.0, SKYACTIV-G 2.5]**.)
Quick release connector (emission system)		(See **QUICK RELEASE CONNECTOR (EMISSION SYSTEM) [SKYACTIV-G 2.0, SKYACTIV-G 2.5]**.)

Except U.S.A. and CANADA

Part/System name		Reference
Exhaust gas purification system (See **EXHAUST GAS PURIFICATION SYSTEM [SKYACTIV-G 2.0, SKYACTIV-G 2.5]**.)	Catalytic converter	(See **CATALYTIC CONVERTER [SKYACTIV-G 2.0, SKYACTIV-G 2.5]**.)
Positive crankcase ventilation system (See **POSITIVE CRANKCASE VENTILATION (PCV) SYSTEM [SKYACTIV-G 2.0, SKYACTIV-G 2.5]**.)	PCV valve	(See **POSITIVE CRANKCASE VENTILATION (PCV) VALVE [SKYACTIV-G 2.0, SKYACTIV-G 2.5]**.)
Evaporative emission control system **EVAPORATIVE EMISSION (EVAP) CONTROL SYSTEM**	Purge solenoid valve	(See **PURGE SOLENOID VALVE [SKYACTIV-G 2.0, SKYACTIV-G 2.5]**.)
	Catch tank	(See **CATCH TANK [SKYACTIV-G 2.0, SKYACTIV-G 2.5]**.)
	Charcoal canister	(See **CHARCOAL CANISTER [SKYACTIV-G 2.0, SKYACTIV-G 2.5]**.)

(See **[SKYACTIV-G 2.0, SKYACTIV-G 2.5]**.)	Check valve	(See **CHECK VALVE [SKYACTIV-G 2.0, SKYACTIV-G 2.5]**.)
	Rollover valve	(See **ROLLOVER VALVE [SKYACTIV-G 2.0, SKYACTIV-G 2.5]**.)
	Fuel-filler cap	(See **FUEL-FILLER CAP [SKYACTIV-G 2.0, SKYACTIV-G 2.5]**.)
	Evaporative chamber	(See **EVAPORATIVE CHAMBER [SKYACTIV-G 2.0, SKYACTIV-G 2.5]**.)
Quick release connector (emission system)		(See **QUICK RELEASE CONNECTOR (EMISSION SYSTEM) [SKYACTIV-G 2.0, SKYACTIV-G 2.5]**.)

Specification

Item	Specification
Catalyst form	WU-TWC (monolith) TWC (monolith)
EVAP control system	Charcoal canister type
PCV system	Closed type

2014 - Mazda3 - Engine

EXHAUST GAS PURIFICATION SYSTEM [SKYACTIV-G 2.0, SKYACTIV-G 2.5]

Purpose, Outline

- Purifies contaminants (HC, CO, NOx) in the exhaust gas by utilizing the chemical reactions of the three-way catalytic converter.

System Diagram

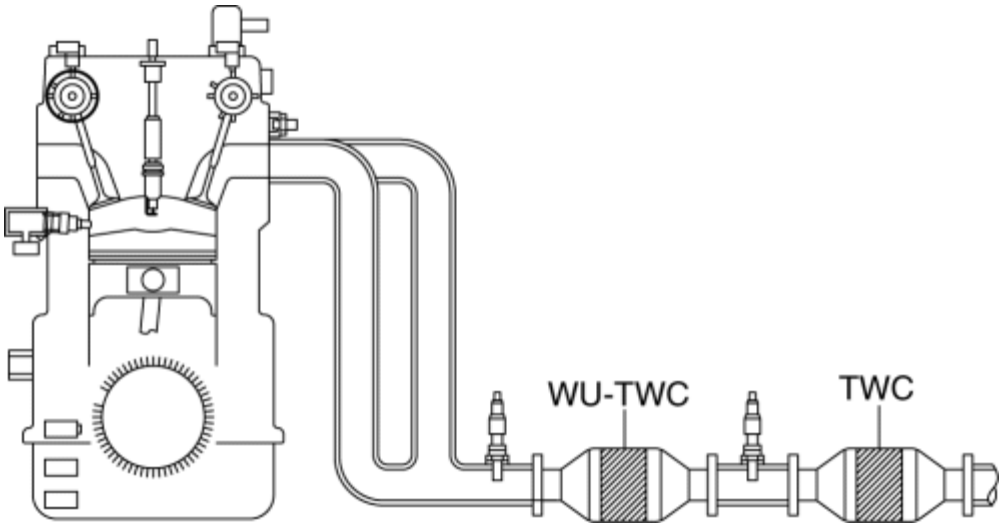

Structure

- The exhaust gas purification system consists of the following parts:

Part name	Reference
WU-TWC	(See **CATALYTIC CONVERTER [SKYACTIV-G 2.0, SKYACTIV-G 2.5]**.)
TWC	

2014 - Mazda3 - Engine

CATALYTIC CONVERTER [SKYACTIV-G 2.0, SKYACTIV-G 2.5]

Purpose, Function

- Purifies contaminants in the exhaust gas by utilizing the chemical reactions of the three-way catalytic converter.
- A WU-TWC and a TWC have been adopted.

  WU-TWC

  - The warm up three-way catalyst is integrated with the exhaust manifold.
  - Because the catalyst receives the high temperature exhaust gas just after the gas is exhausted, it activates quickly and achieves an improved purification performance.

  TWC

  - A single-nano catalyst has been adopted in which the purification performance can be maintained using less precious metal materials than conventional catalysts.

Construction

WU-TWC

- The WU-TWC is installed to the rear of the engine.

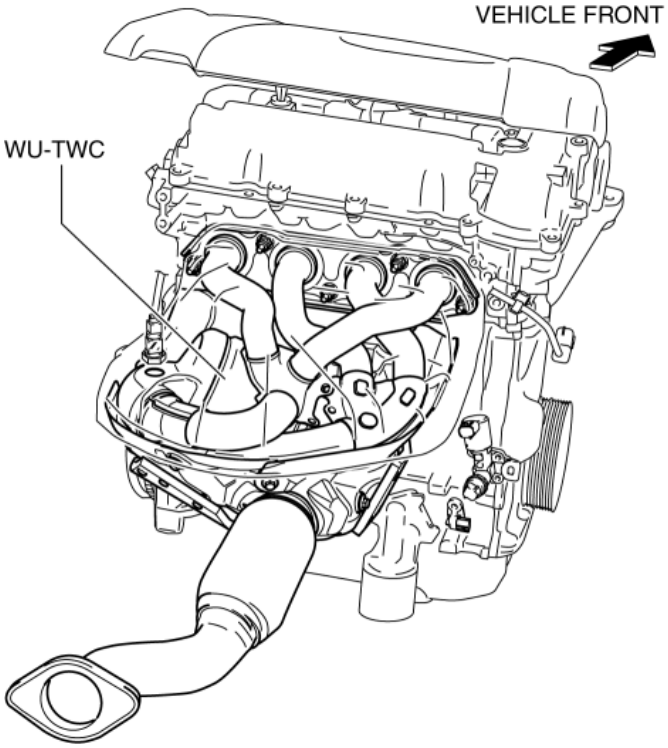

- The WU-TWC is integrated with the exhaust manifold.

TWC

- The TWC is installed to the rear of the WU-TWC.

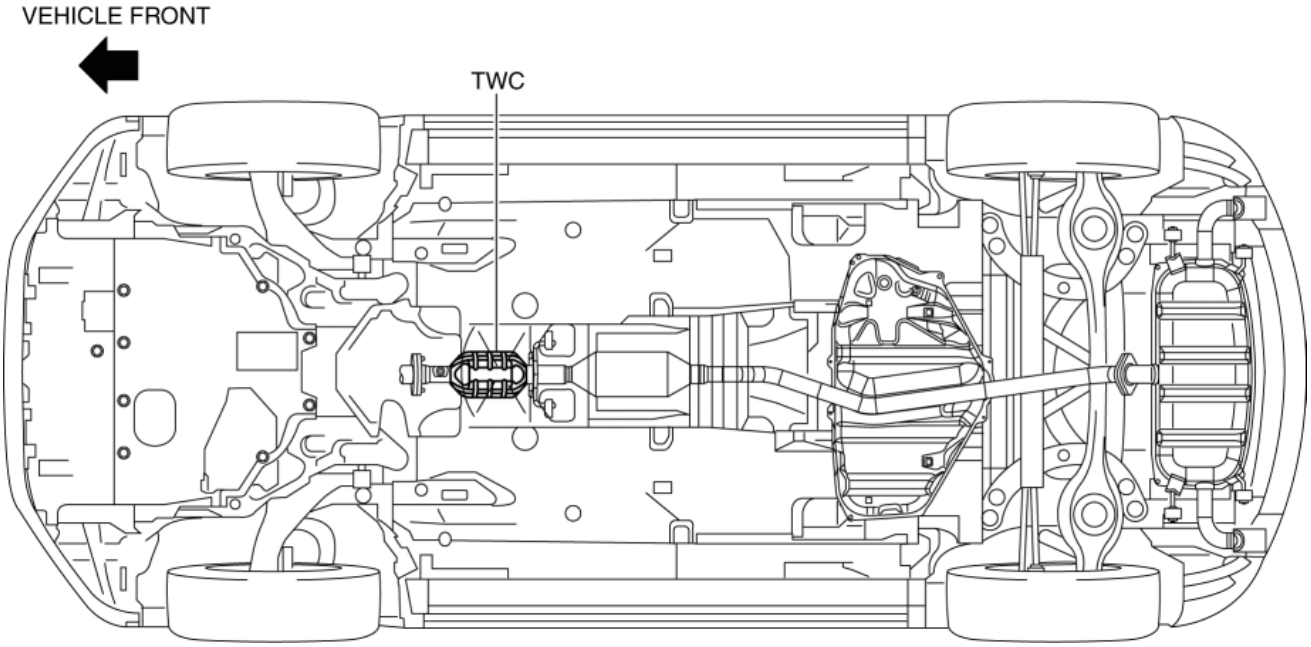

- A single-nano catalyst has been adopted for the under-floor three-way catalyst. With a conventional three-way catalyst, the precious metals move and agglutinate to each other by the heat of the exhaust gas because they are structured such that they adhere on catalyst material. Therefore, it was necessary to use a large amount of precious metal because it is estimated that the purification performance lowers due to the decrease in the surface area of the precious metals. The single-nano catalyst is structured such that it embeds small precious metal particles into the catalyst material. Because the precious metal particles do not agglutinate on the surface of the three-way catalyst, it can maintain superior purification performance using less precious metal than the conventional system.

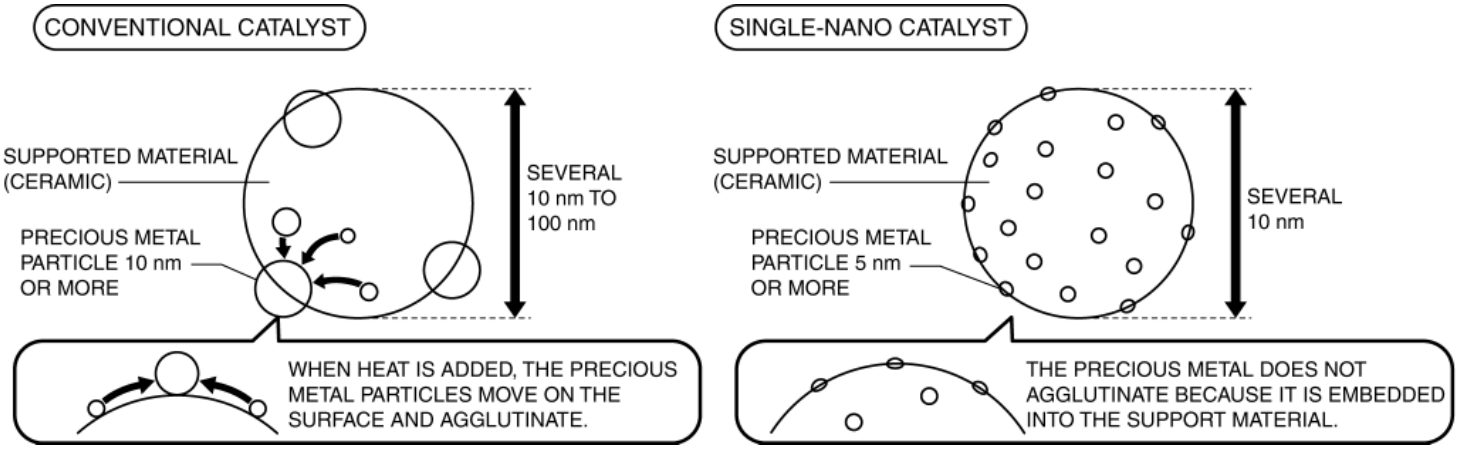

Operation

- Contaminants in the exhaust gas (HC, CO, NOx) are purified by oxidization and deoxidization while they are passing through the catalytic converter.
  - Oxidization process
    - Noxious hydrocarbon (HC) and carbon monoxide (CO) are bound with oxygen and converted to non-noxious carbon dioxide and water.

      $O_2+HC+CO \rightarrow CO_2+H_2O$
  - Deoxidization process
    - Noxious nitrogen oxide (NOx) is converted to non-noxious nitrogen and oxygen. A part of the oxygen generated in this process is used in the oxidization process.

      $NOx \rightarrow N_2+O_2$

2014 - Mazda3 - Engine

POSITIVE CRANKCASE VENTILATION (PCV) SYSTEM [SKYACTIV-G 2.0, SKYACTIV-G 2.5]

Purpose, Outline

- Prevents release of blow-by gas (unburnt gas) into the atmosphere.
- The intake manifold vacuum introduces blow-by gas to the intake manifold via the PCV valve and the ventilation hose.

System Diagram

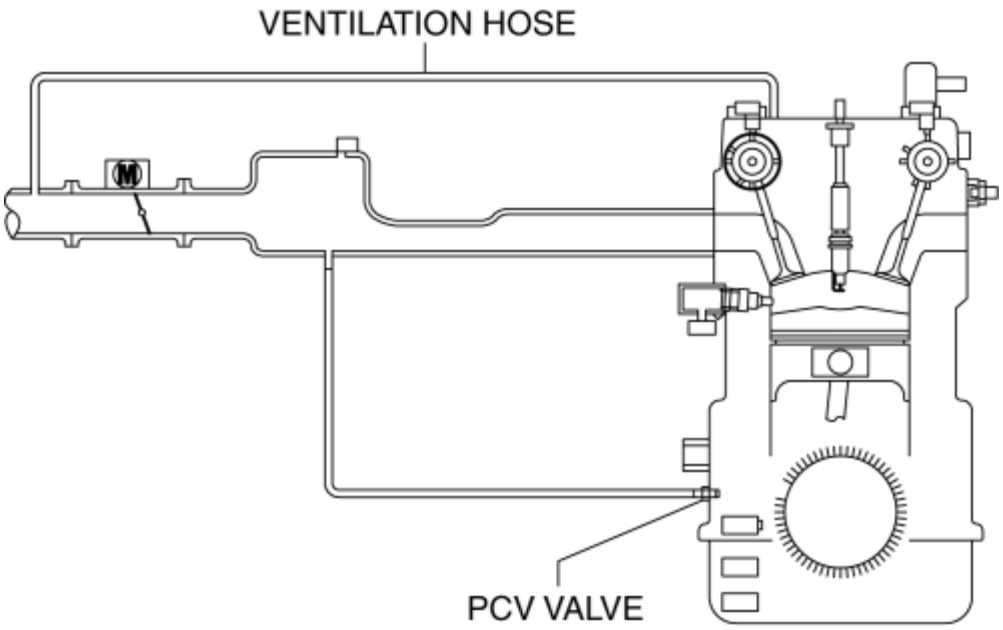

Structure

- The positive crankcase ventilation system consists of the following parts:

Part name	Reference
PCV valve	(See **POSITIVE CRANKCASE VENTILATION (PCV) VALVE [SKYACTIV-G 2.0, SKYACTIV-G 2.5]**.)
Ventilation hose	—

2014 - Mazda3 - Engine

POSITIVE CRANKCASE VENTILATION (PCV) VALVE [SKYACTIV-G 2.0, SKYACTIV-G 2.5]

Purpose, Function

- Prevents release of blow-by gas (unburnt gas) into the atmosphere.
- The PCV valve is open/closed by the intake manifold vacuum.

Construction

- The PCV valve is installed to the oil separator.

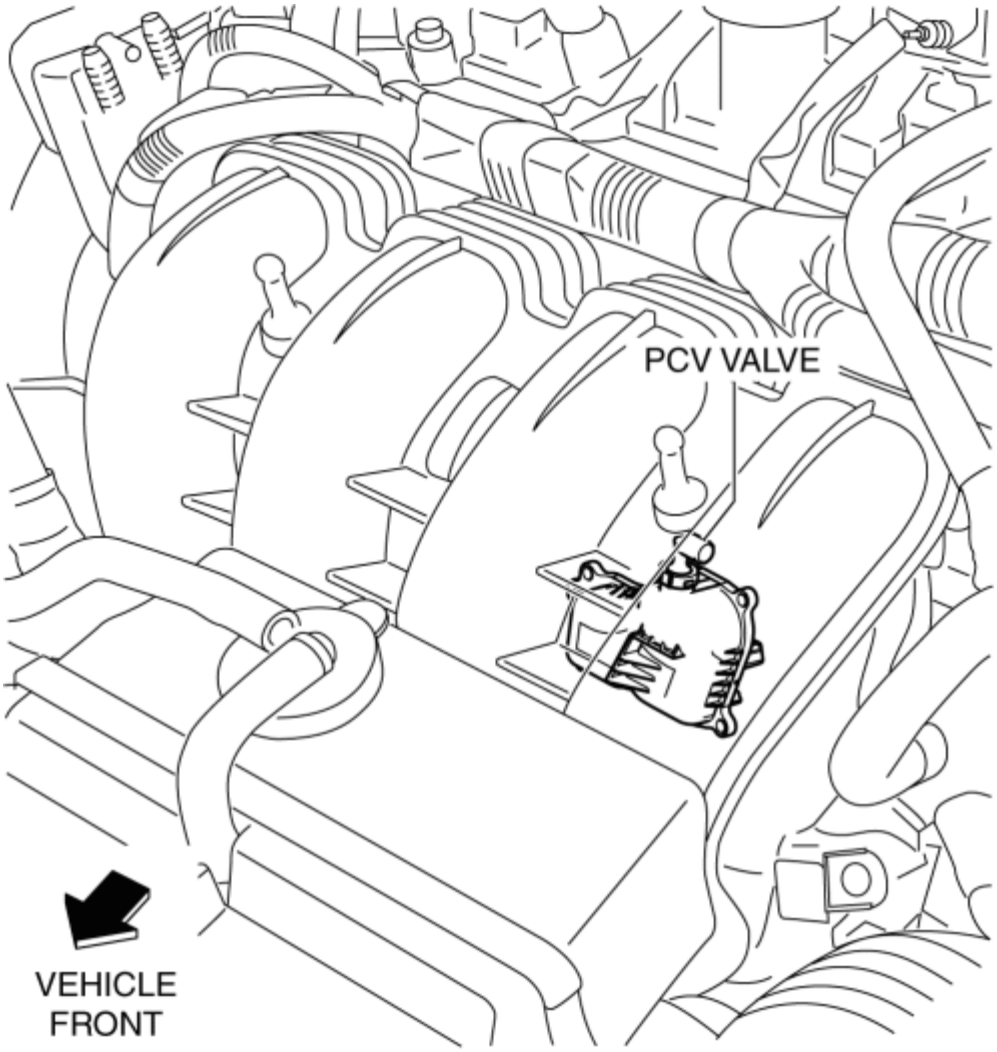

- The PCV valve consists of a spring and valve.

SKYACTIV-G 2.0

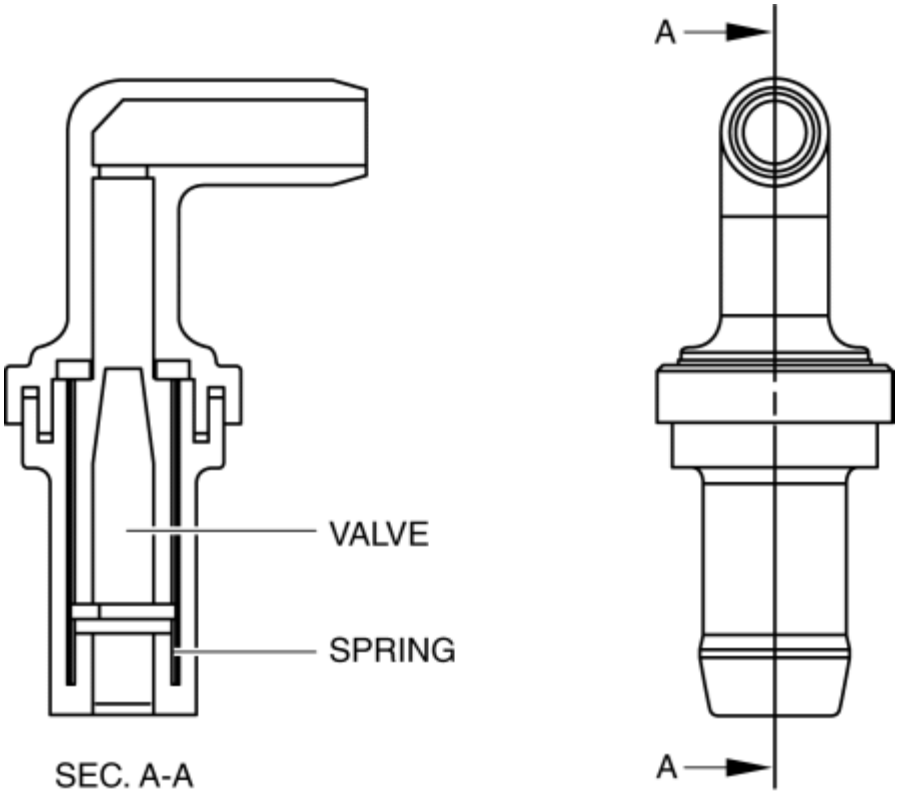

SKYACTIV-G 2.5

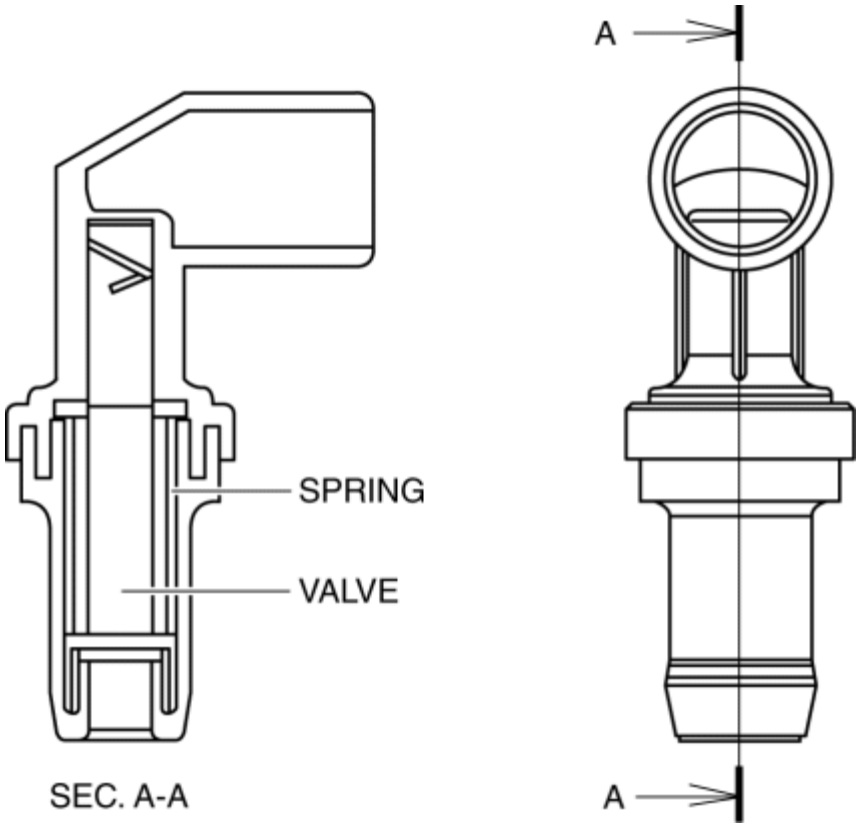

Operation

When the valve is pulled by the intake manifold vacuum, blow-by gas flows to the intake manifold.

SKYACTIV-G 2.0

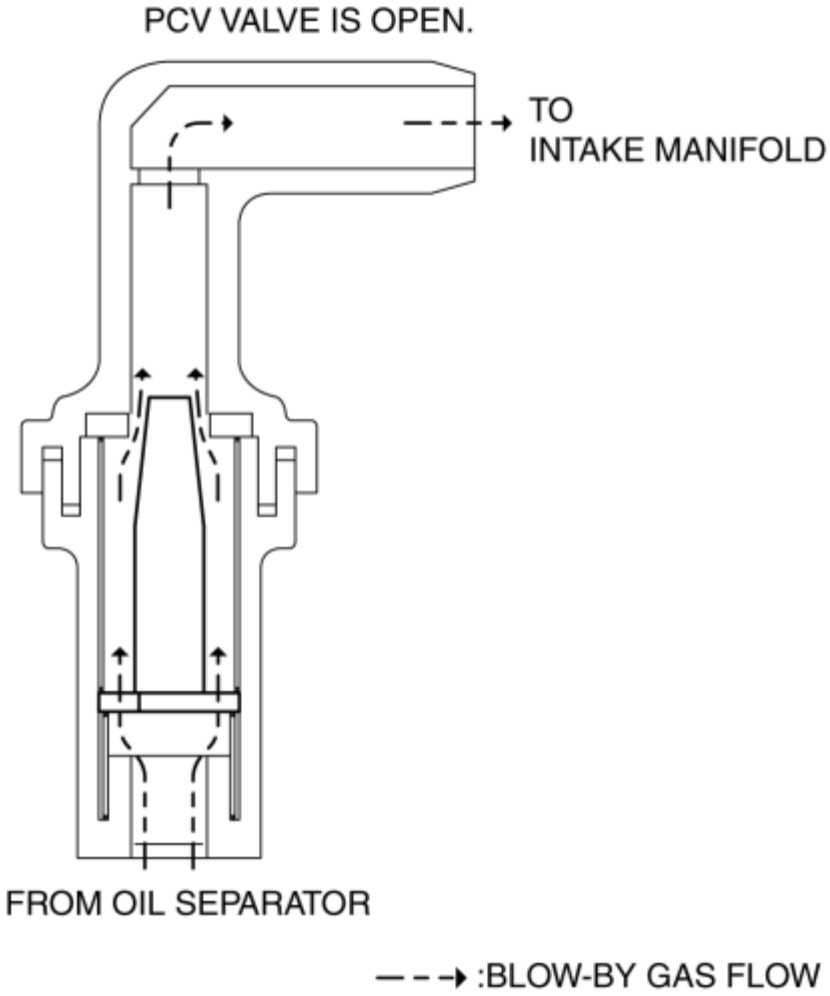

SKYACTIV-G 2.5

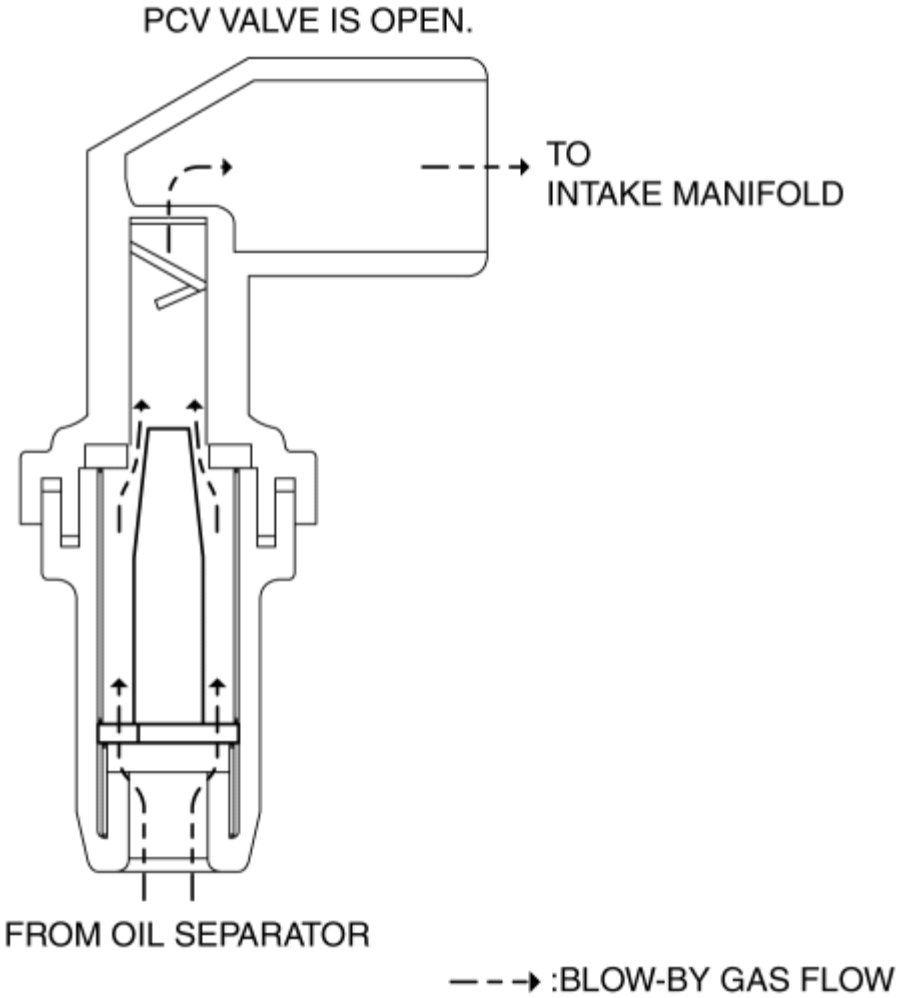

- Blow-by gas flow amount is adjusted by the spring according to the intake manifold vacuum.

2014 - Mazda3 - Engine

EVAPORATIVE EMISSION (EVAP) CONTROL SYSTEM [SKYACTIV-G 2.0, SKYACTIV-G 2.5]

Purpose, Outline

- Prevents release of evaporative gas into the atmosphere.
- The intake manifold vacuum introduces evaporative gas to the intake manifold via the charcoal canister and the purge solenoid valve.

System Diagram

U.S.A. and CANADA

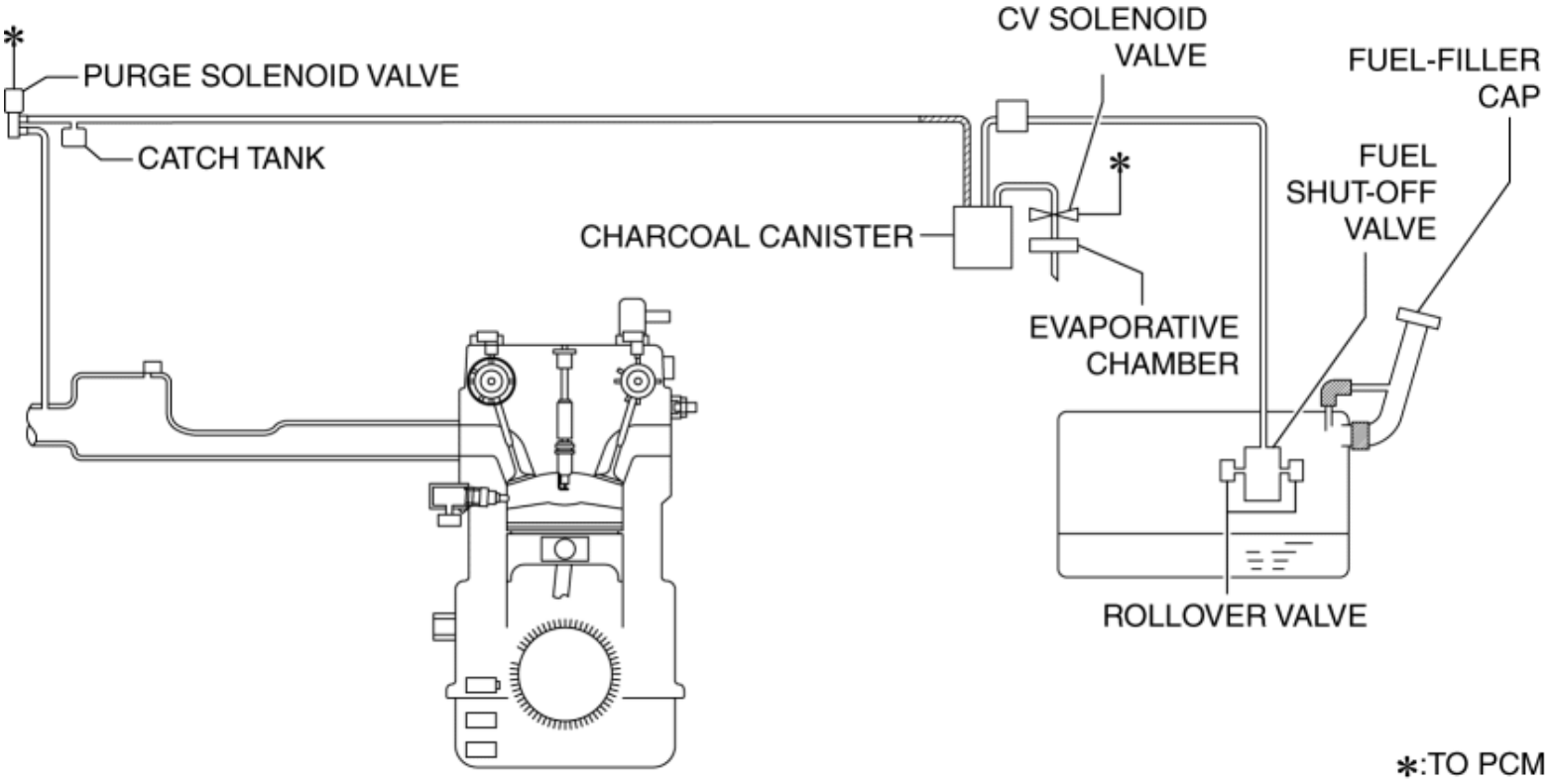

Except U.S.A. and CANADA

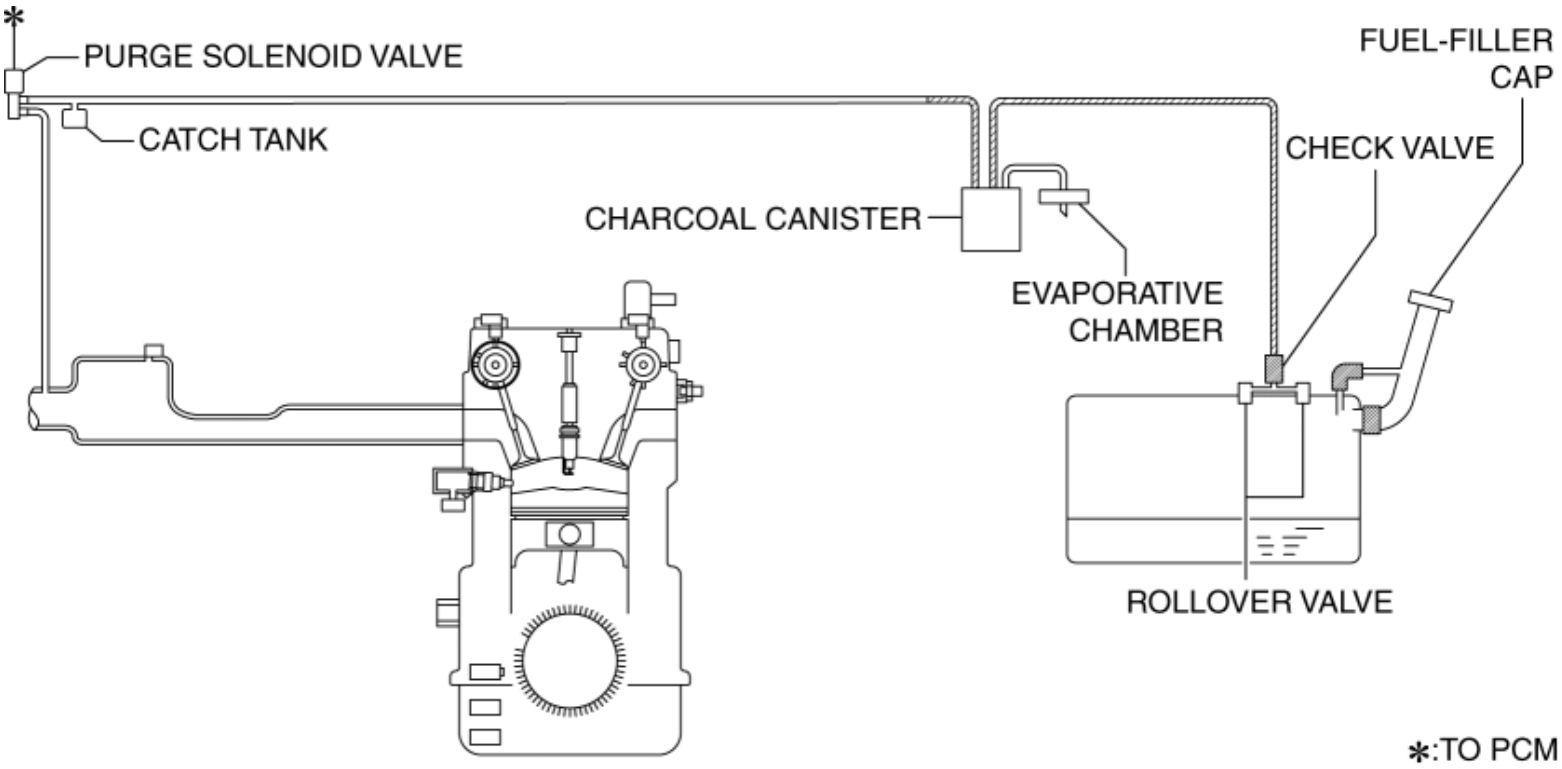

Structure

- The evaporative emission control system consists of the following parts:

U.S.A. and CANADA

Part name	Reference
Purge solenoid valve	(See **PURGE SOLENOID VALVE [SKYACTIV-G 2.0, SKYACTIV-G 2.5]**.)
Catch tank	(See **CATCH TANK [SKYACTIV-G 2.0, SKYACTIV-G 2.5]**.)
Charcoal canister	(See **CHARCOAL CANISTER [SKYACTIV-G 2.0, SKYACTIV-G 2.5]**.)
Evaporative chamber	(See **EVAPORATIVE CHAMBER [SKYACTIV-G 2.0, SKYACTIV-G 2.5]**.)
Fuel shut-off valve	(See **FUEL SHUT-OFF VALVE [SKYACTIV-G 2.0, SKYACTIV-G 2.5]**.)
Rollover valve	(See **ROLLOVER VALVE [SKYACTIV-G 2.0, SKYACTIV-G 2.5]**.)
Fuel-filler cap	(See **FUEL-FILLER CAP [SKYACTIV-G 2.0, SKYACTIV-G 2.5]**.)
CV solenoid valve	(See **CANISTER VENT (CV) SOLENOID VALVE [SKYACTIV-G 2.0, SKYACTIV-G 2.5]**.)
Check valve	(See **CHECK VALVE [SKYACTIV-G 2.0, SKYACTIV-G 2.5]**.)

Except U.S.A. and CANADA

Part name	Reference
Purge solenoid valve	(See **PURGE SOLENOID VALVE [SKYACTIV-G 2.0, SKYACTIV-G 2.5]**.)
Catch tank	(See **CATCH TANK [SKYACTIV-G 2.0, SKYACTIV-G 2.5]**.)
Charcoal canister	(See **CHARCOAL CANISTER [SKYACTIV-G 2.0, SKYACTIV-G 2.5]**.)
Evaporative chamber	(See **EVAPORATIVE CHAMBER [SKYACTIV-G 2.0, SKYACTIV-G 2.5]**.)
Check valve	(See **CHECK VALVE [SKYACTIV-G 2.0, SKYACTIV-G 2.5]**.)
Rollover valve	(See **ROLLOVER VALVE [SKYACTIV-G 2.0, SKYACTIV-G 2.5]**.)
Fuel-filler cap	(See **FUEL-FILLER CAP [SKYACTIV-G 2.0, SKYACTIV-G 2.5]**.)

2014 - Mazda3 - Engine

PURGE SOLENOID VALVE [SKYACTIV-G 2.0, SKYACTIV-G 2.5]

Purpose, Function

- Introduces evaporative gas absorbed by the charcoal canister to the intake manifold.
- The purge solenoid valve opens according to the control signal from the PCM.

Construction

- The purge solenoid valve is installed in the engine compartment.

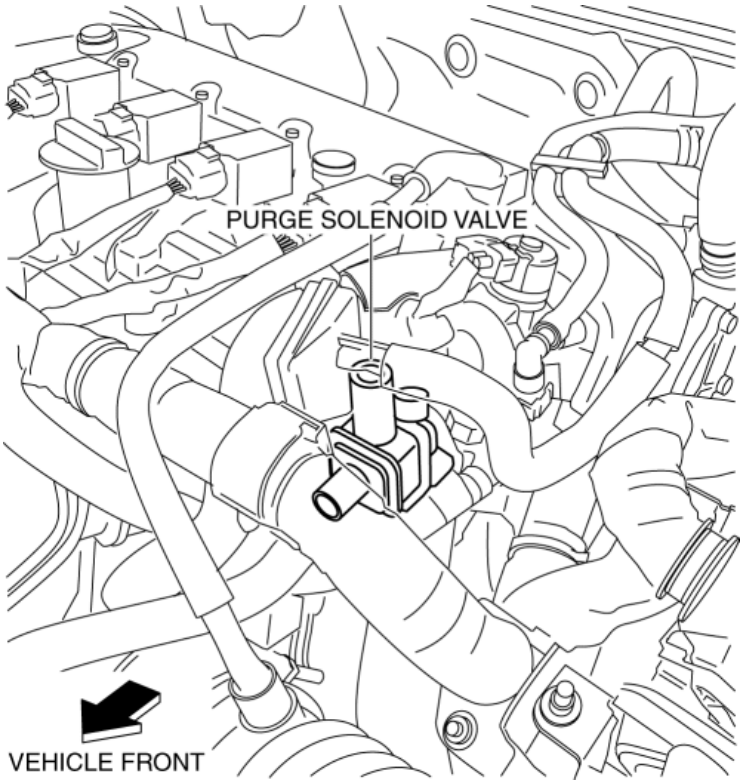

- The purge solenoid valve consists of a coil, spring, and plunger.

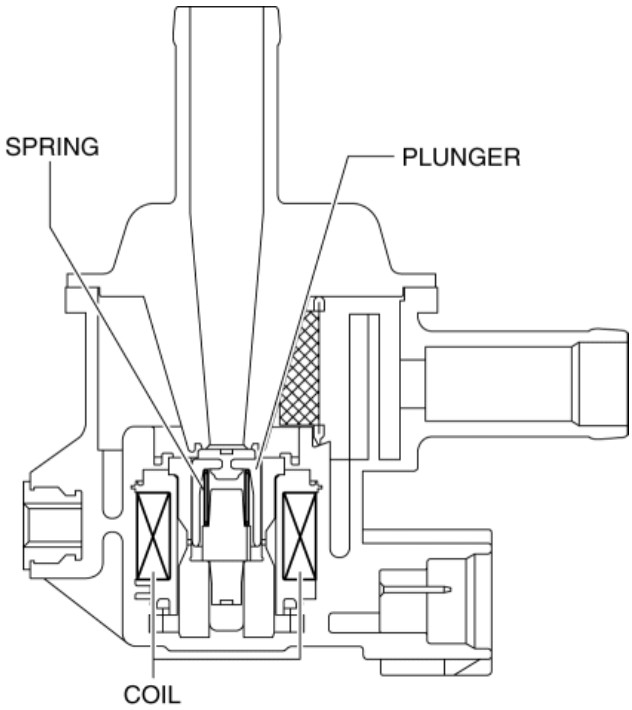

Operation

- According to the control signal from the PCM, the coil is energized and the plunger is operated to open/close the purge solenoid valve.

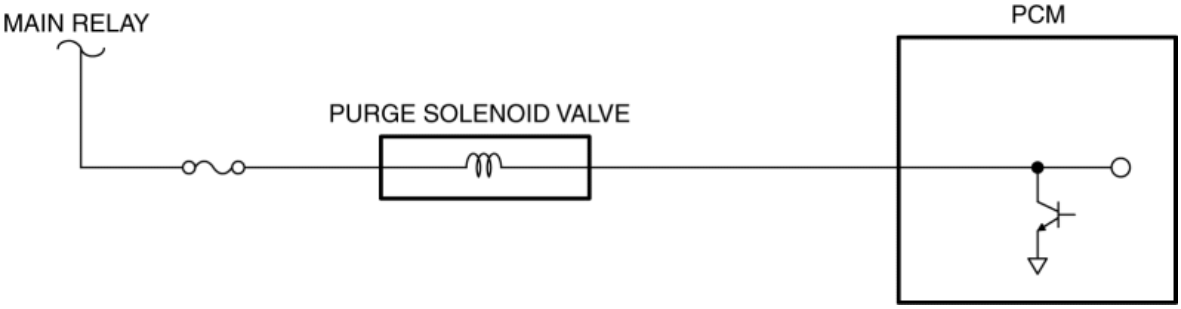

- When the purge solenoid valve is open, evaporative gas flows from the charcoal canister to the intake manifold side.

Purge solenoid valve open/closed view

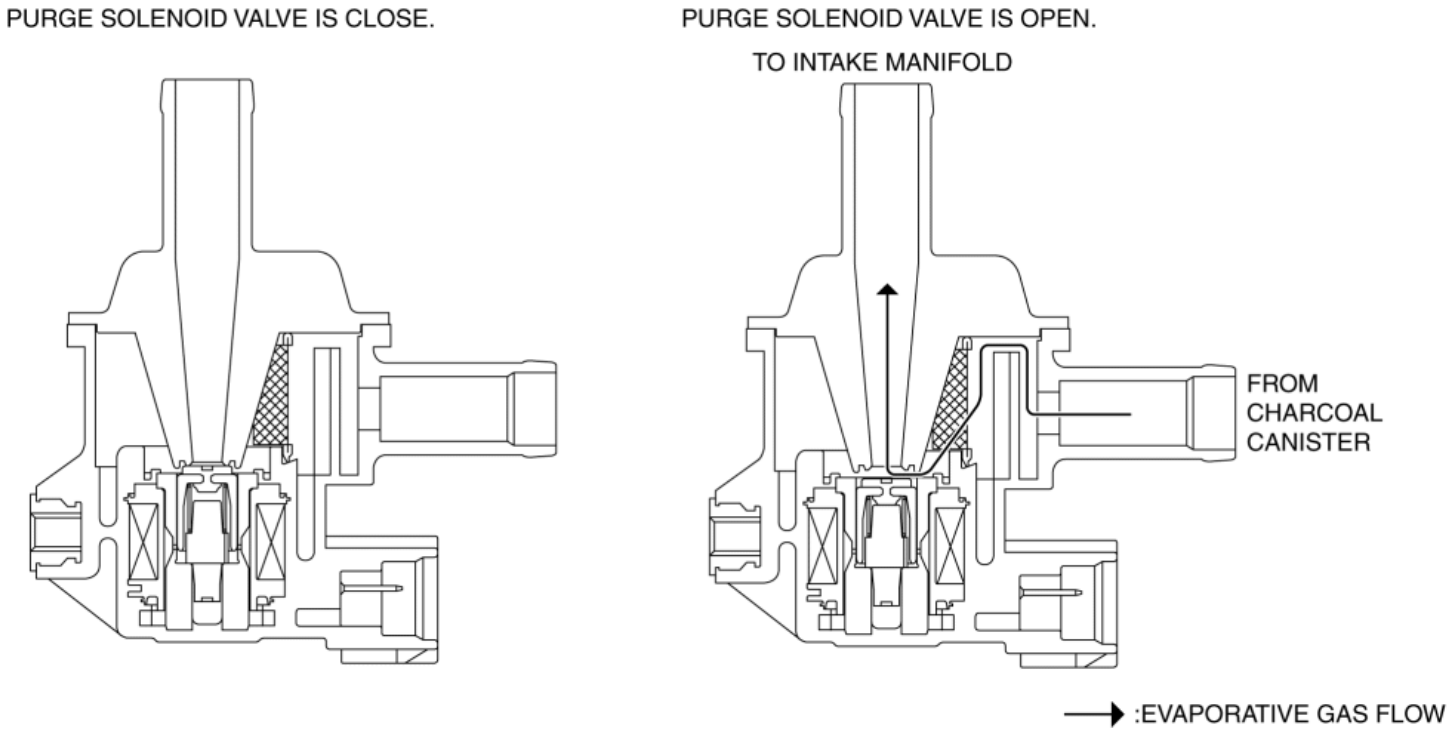

- For evaporative purge control details, refer to CONTROL SYSTEM. (See **PURGE CONTROL [SKYACTIV-G 2.0, SKYACTIV-G 2.5]**.)

Fail-safe

- Function not equipped.

2014 - Mazda3 - Engine

CATCH TANK [SKYACTIV-G 2.0, SKYACTIV-G 2.5]

Purpose, Function

- Suppresses pulsation occurring before evaporative gas is inducted into the intake manifold.

Construction

- The catch tank is installed in the engine compartment.

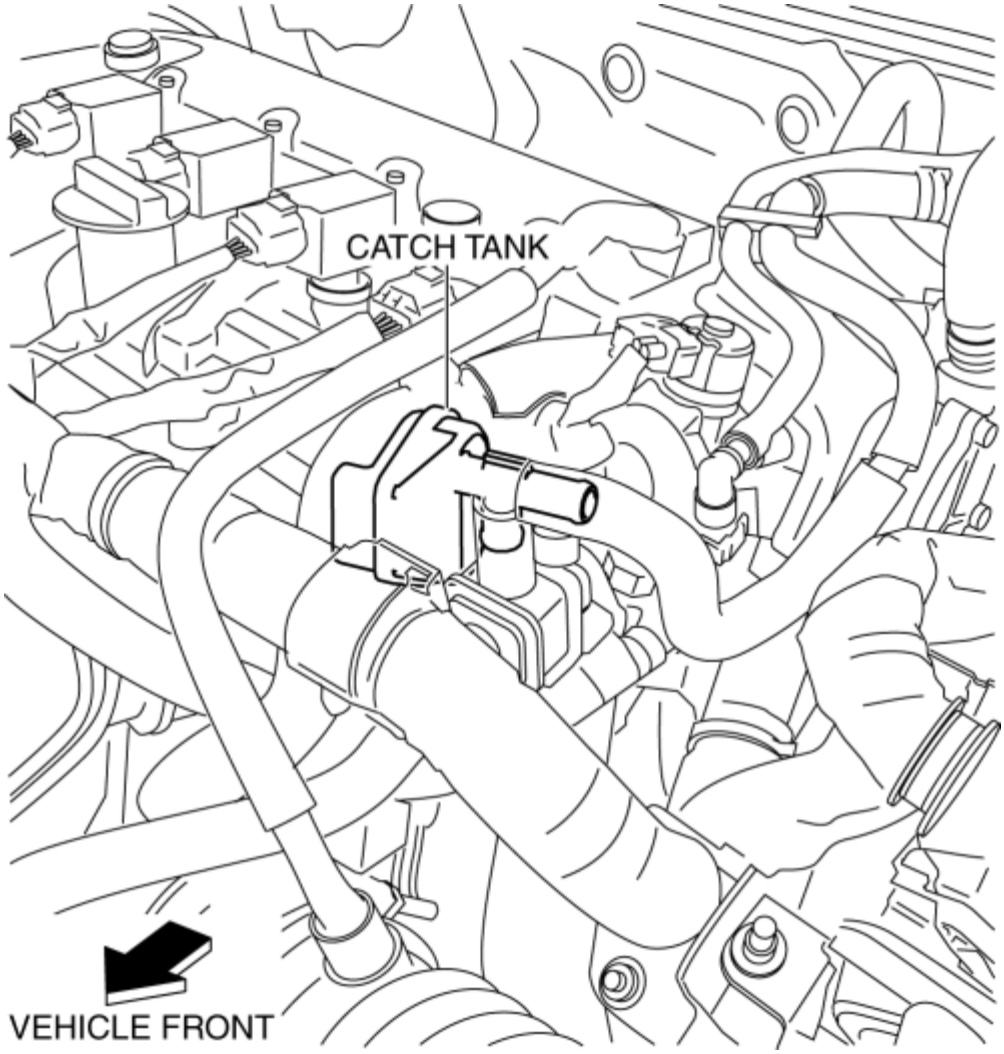

Operation

- When evaporative gas flows from the charcoal canister to the purge solenoid valve, pulsation is suppressed by passing the evaporative gas through the hollowing of the catch tank.

SKYACTIV-G 2.0

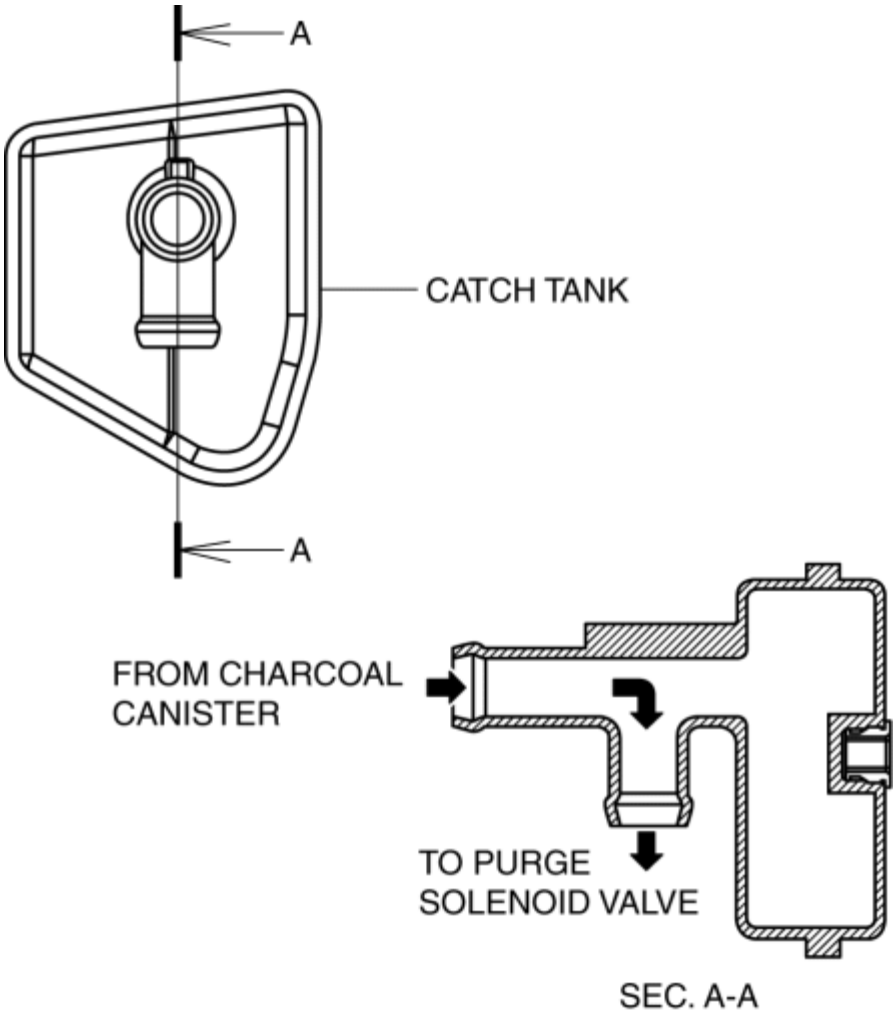

SKYACTIV-G 2.5

CATCH TANK [SKYACTIV-G 2.0, SKYACTIV-G 2.5]

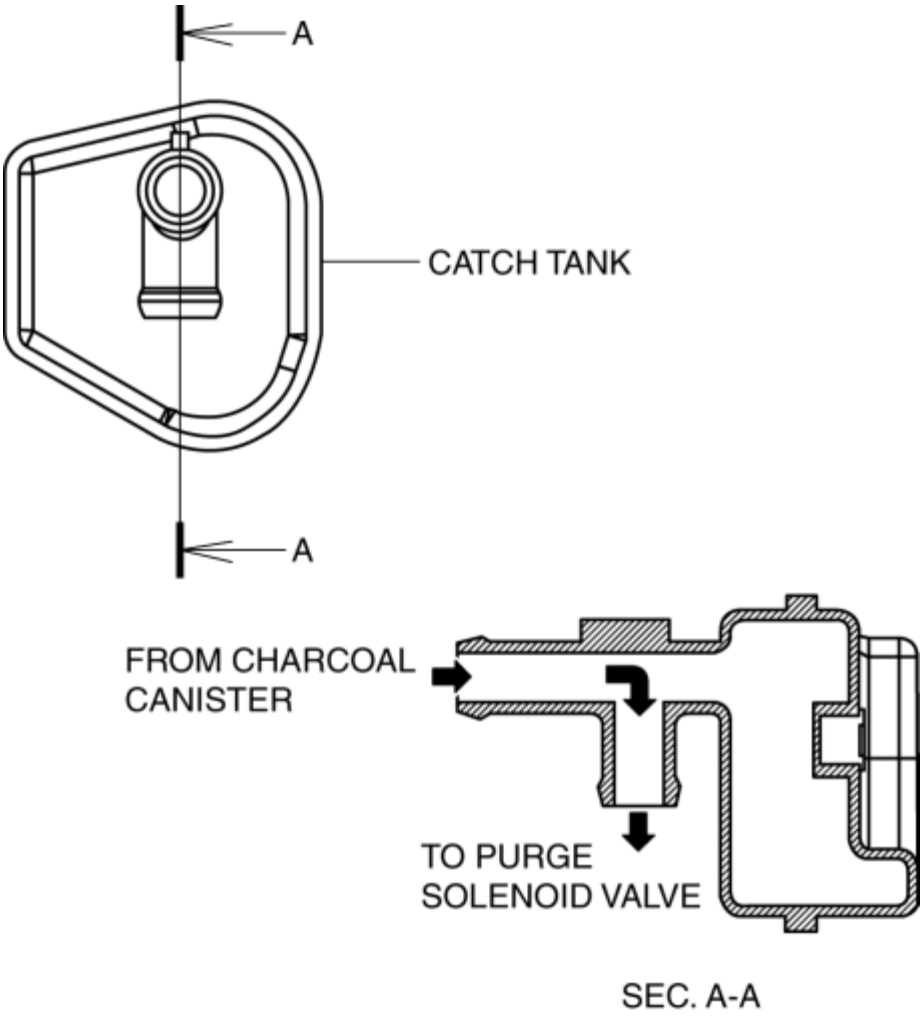

2014 - Mazda3 - Engine

FUEL-FILLER CAP [SKYACTIV-G 2.0, SKYACTIV-G 2.5]

Purpose, Function

- Releases evaporative gas from the fuel tank if there is a malfunction in the evaporative gas passage between the fuel tank and the intake manifold. As a result, deformation of the fuel tank caused by evaporative gas pressure is prevented.

Construction

- The fuel-filler cap is installed to the fuel filler opening.

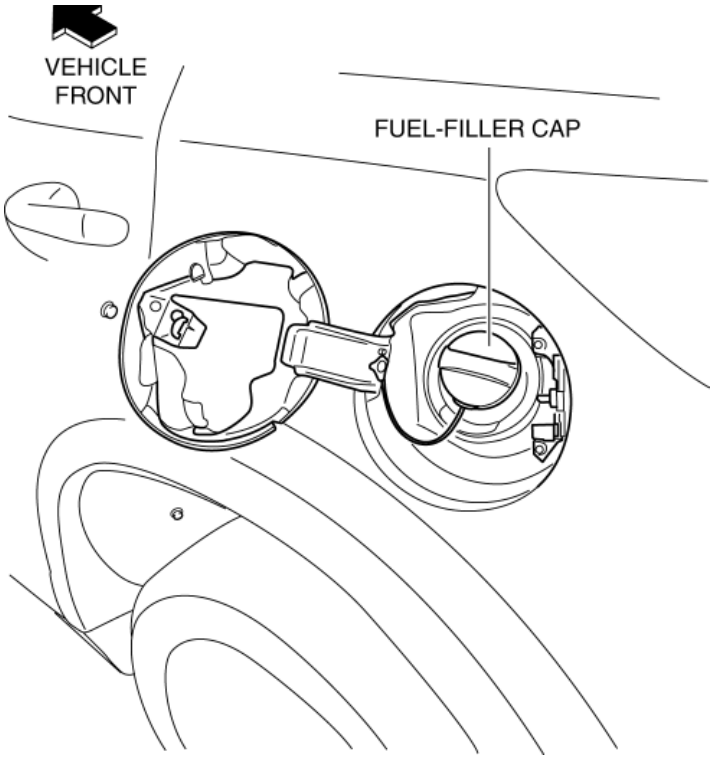

- The fuel-filler cap consists of a valves, retainer, and springs.

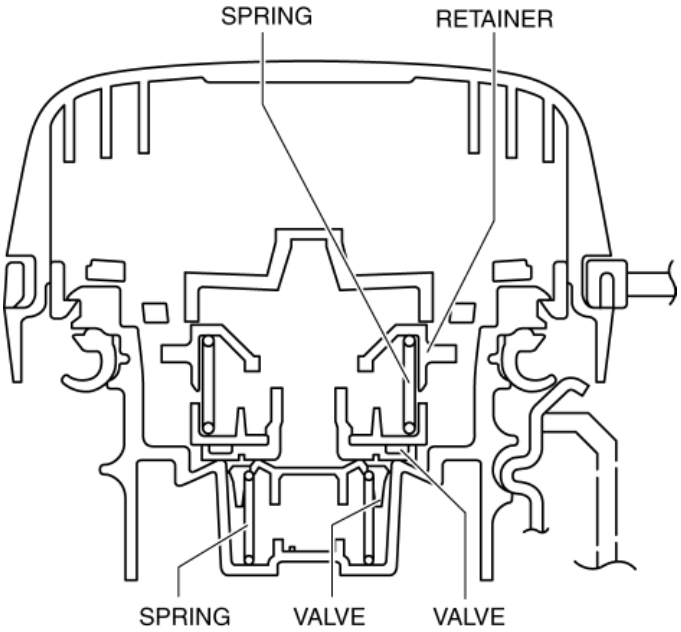

Operation

- When there is positive pressure in the fuel tank due to evaporative gas, evaporative gas is released into the atmosphere. When there is negative pressure, air is introduced to the fuel tank.

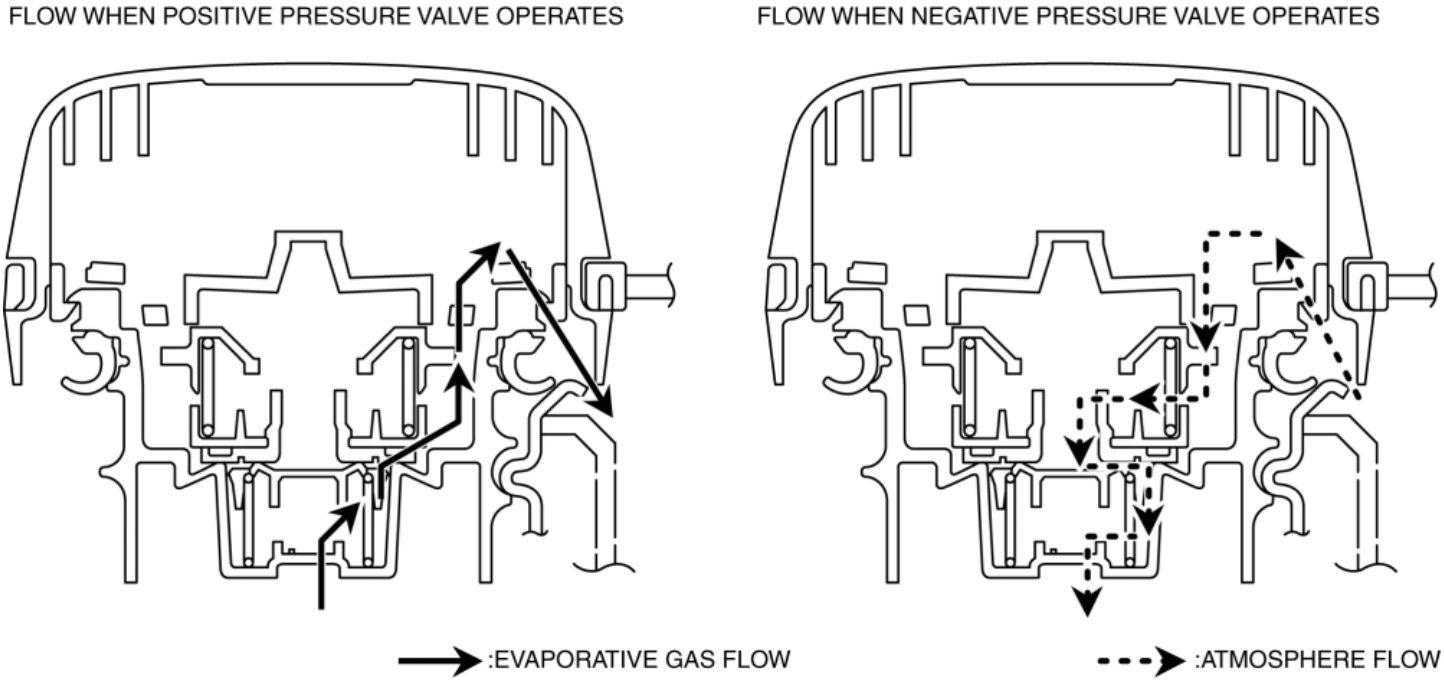

2014 - Mazda3 - Engine

CHARCOAL CANISTER [SKYACTIV-G 2.0, SKYACTIV-G 2.5]

Purpose, Function

- Absorbs evaporative gas flowing from the fuel tank to prevent release of the gas into the atmosphere.

Construction

- The charcoal canister is installed near the fuel tank.

U.S.A. and CANADA

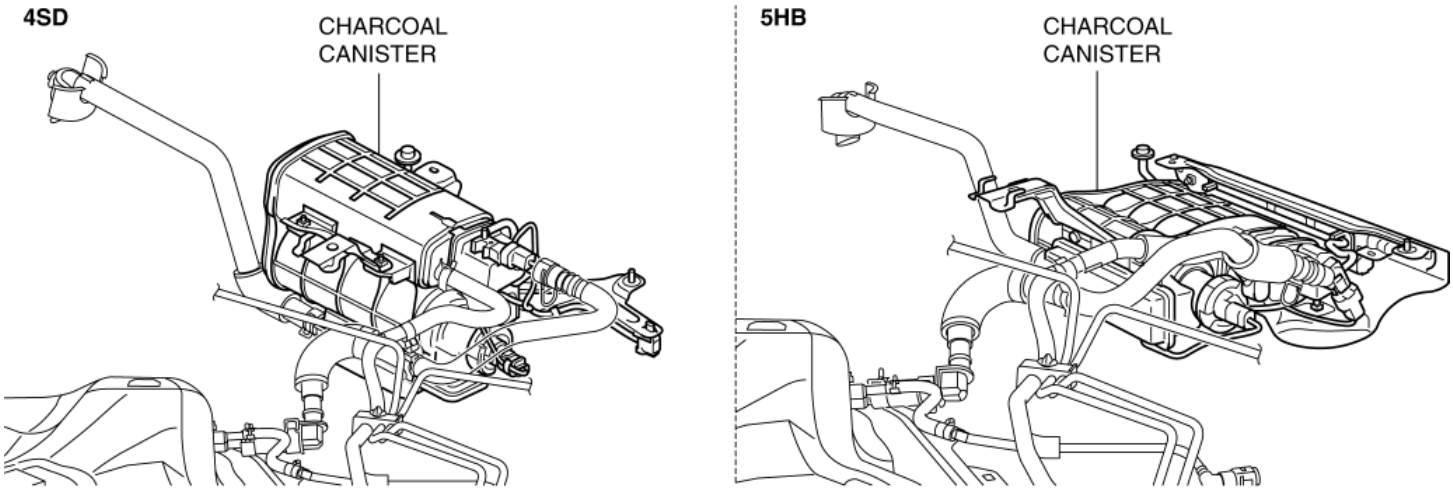

Except U.S.A. and CANADA

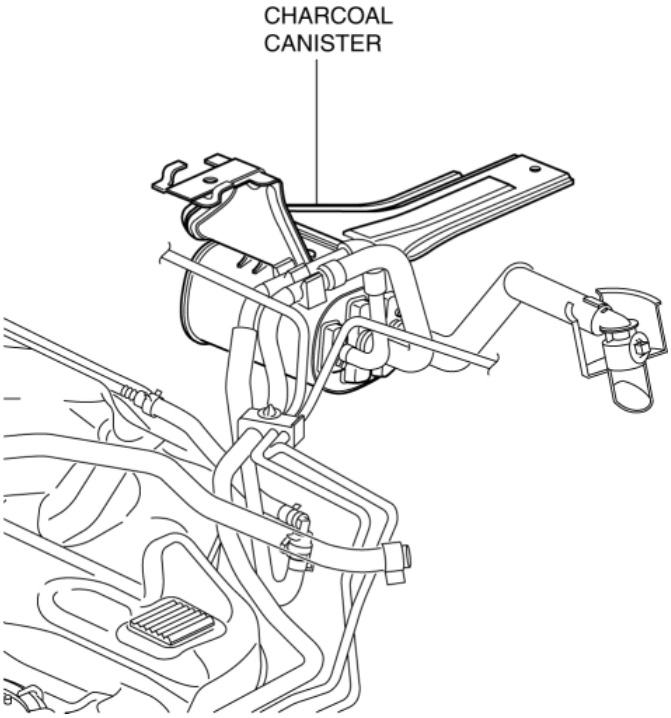

- The charcoal canister has activated charcoal to absorb evaporative gas.

Operation

- When the purge solenoid valve is open, evaporative gas, which is absorbed by the activated charcoal, is released by the intake manifold vacuum and the gas flows to the intake manifold.

U.S.A. and CANADA

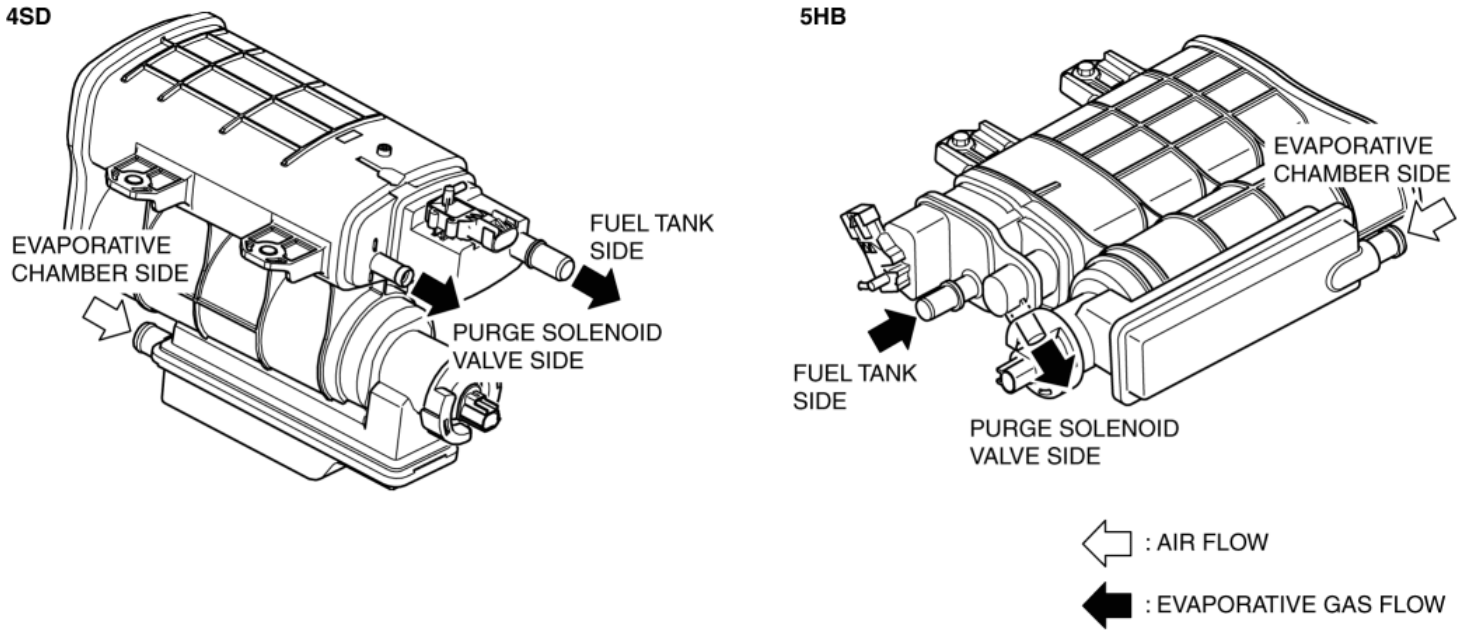

Except U.S.A. and CANADA

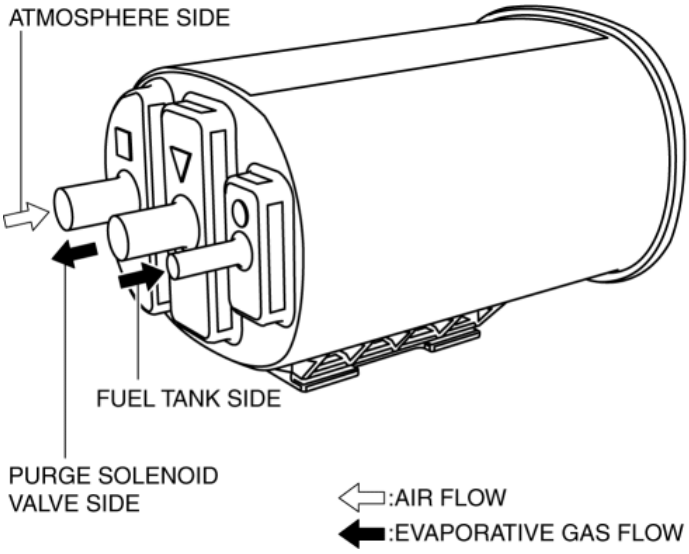

2014 - Mazda3 - Engine

CANISTER VENT (CV) SOLENOID VALVE [SKYACTIV-G 2.0, SKYACTIV-G 2.5]

U.S.A. and CANADA

Purpose, function

- Seals the atmosphere side of the charcoal canister during EVAP leak check monitoring.

Construction

- Included in the charcoal canister.

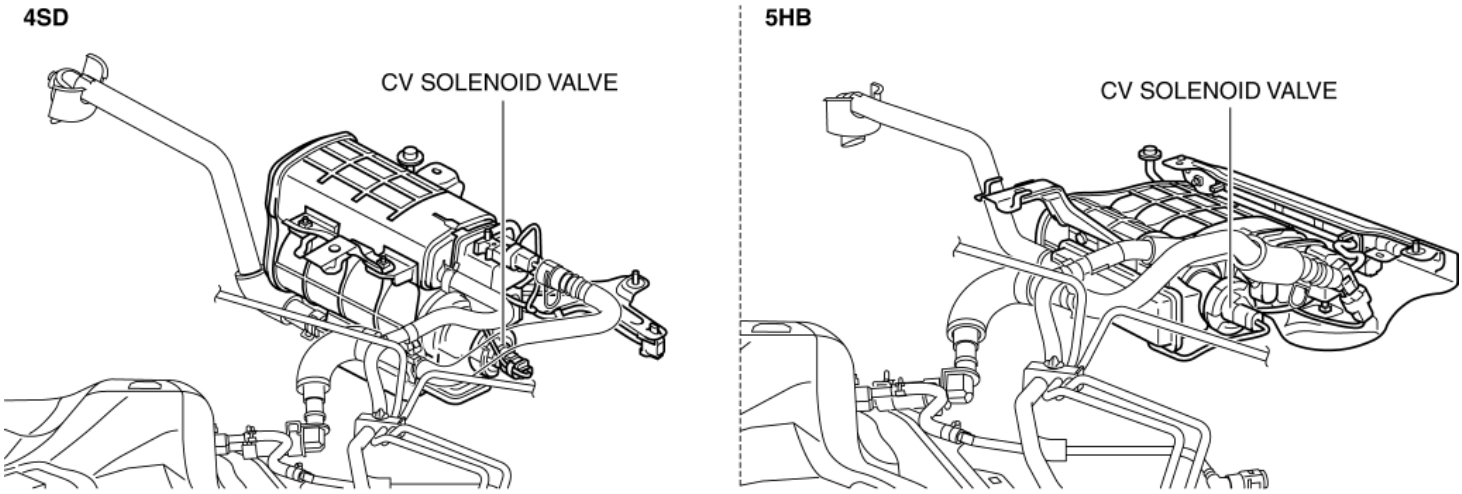

- The CV solenoid valve is consists of O-rings.

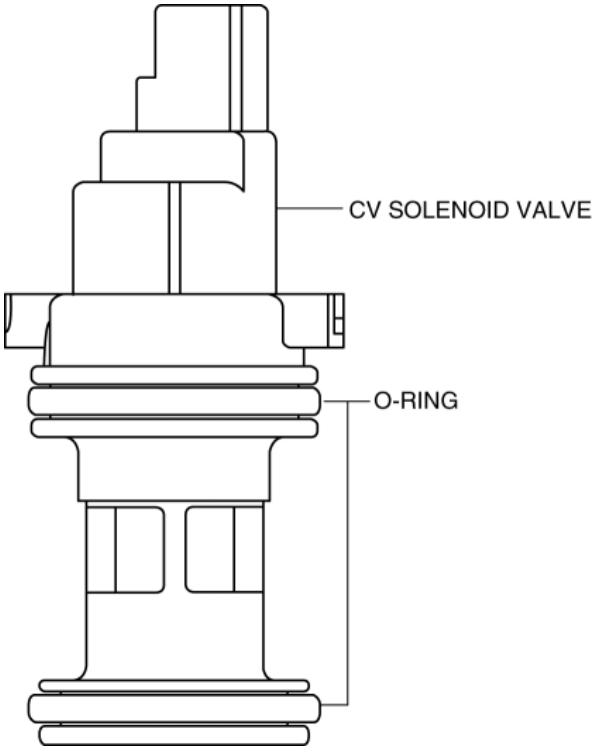

Operation

- According to the control signal from the PCM, the coil is energized and the plunger opens/closes the CV solenoid valve.

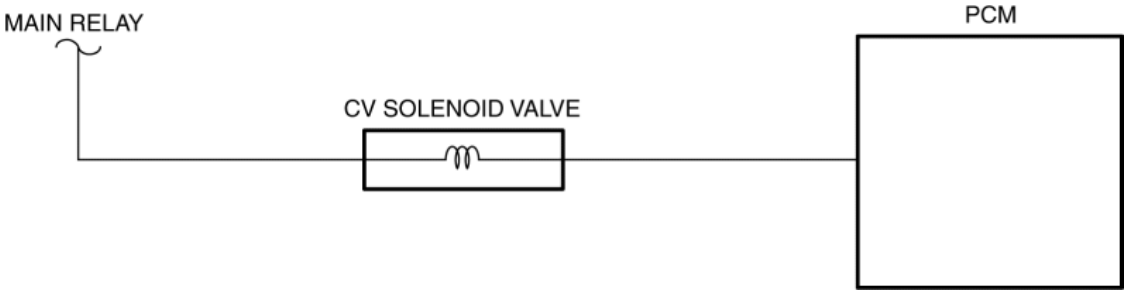

Fail-safe

- Function not equipped.

2014 - Mazda3 - Engine

FUEL SHUT-OFF VALVE [SKYACTIV-G 2.0, SKYACTIV-G 2.5]

U.S.A. And CANADA

Purpose, function

- Prevents fuel from flowing to the charcoal canister during tight turns or vehicle rollover.
- Releases evaporative gas to the charcoal canister.
- While refueling, the fuel shut-off valve closes to prevent a fuel overflow.

Construction

- The fuel shut-off valve is built into the fuel tank.

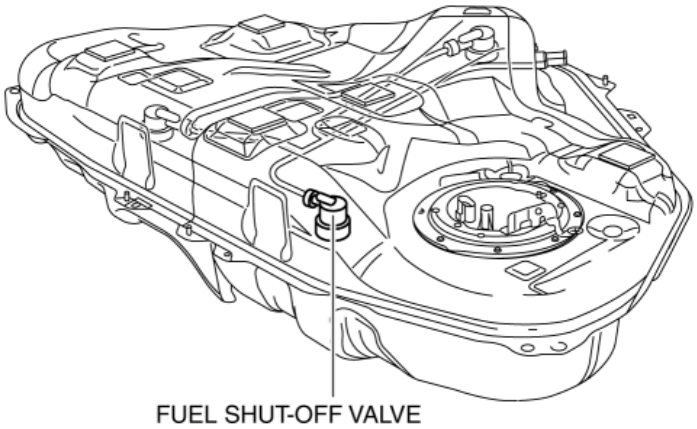

- The fuel shut-off valve consists of float and spring.

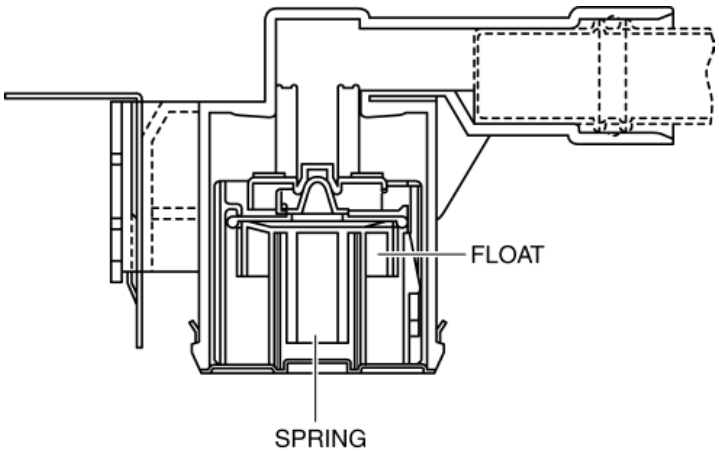

Operation

- While refueling or due to fuel sloshing, the float is flooded with fuel and the floating force causes the valve to close. Also, during a vehicle rollover, the valve closes due to balance between the float gravity and spring.

FUEL SHUT-OFF VALVE [SKYACTIV-G 2.0, SKYACTIV-G 2.5]

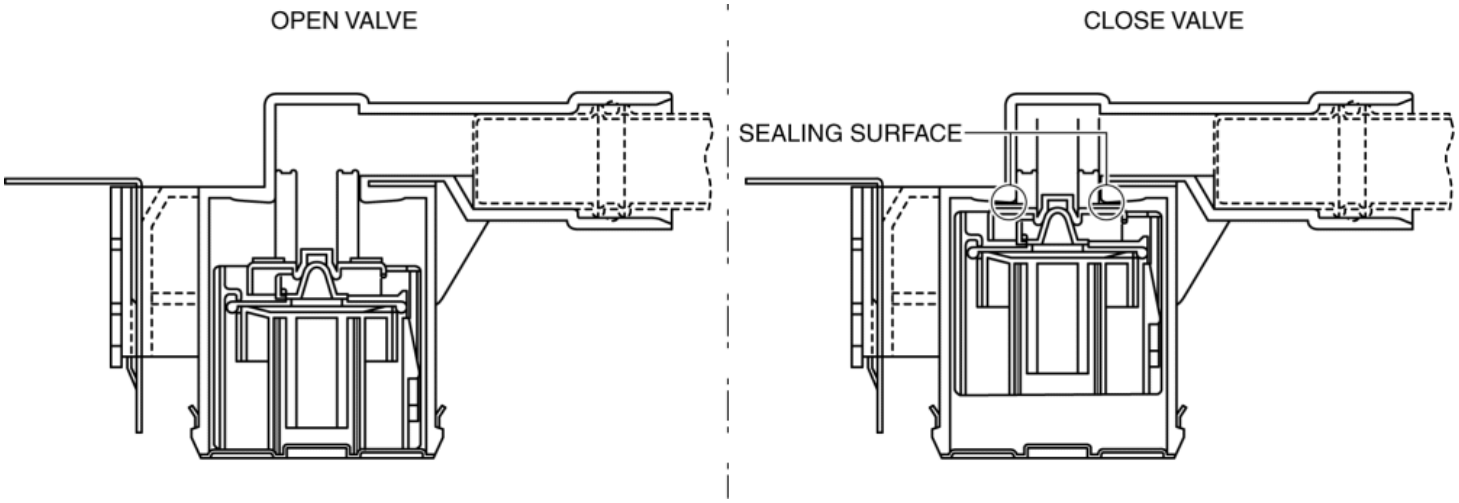

2014 - Mazda3 - Engine

ROLLOVER VALVE [SKYACTIV-G 2.0, SKYACTIV-G 2.5]

Purpose, Function

- Prevents fuel from flowing into the evaporative gas passage during sudden cornering or vehicle rollover.

Construction

- The rollover valve is built into the fuel tank.

U.S.A. and CANADA

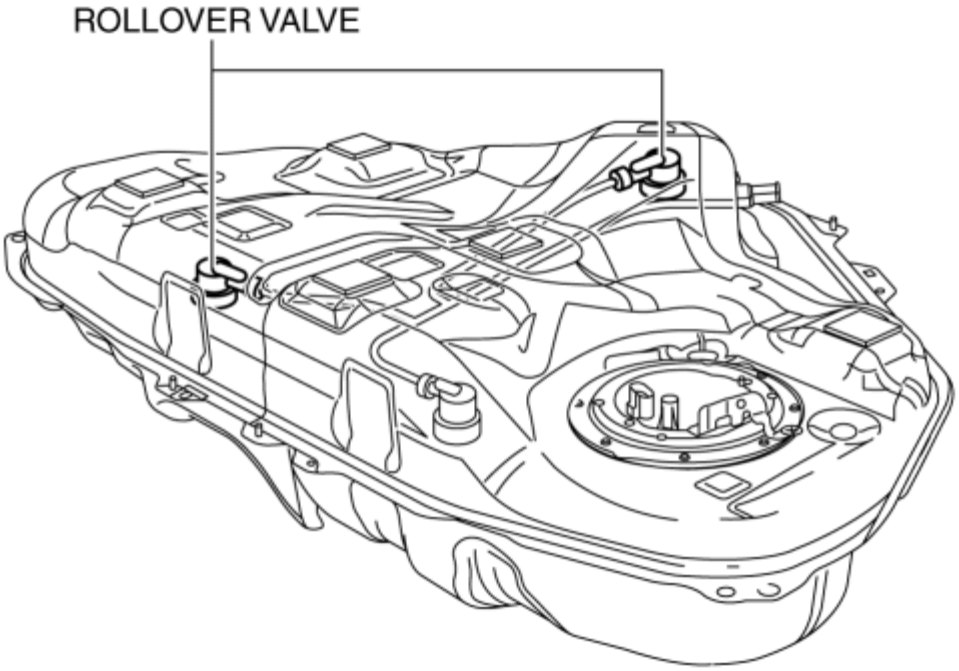

Except U.S.A. and CANADA

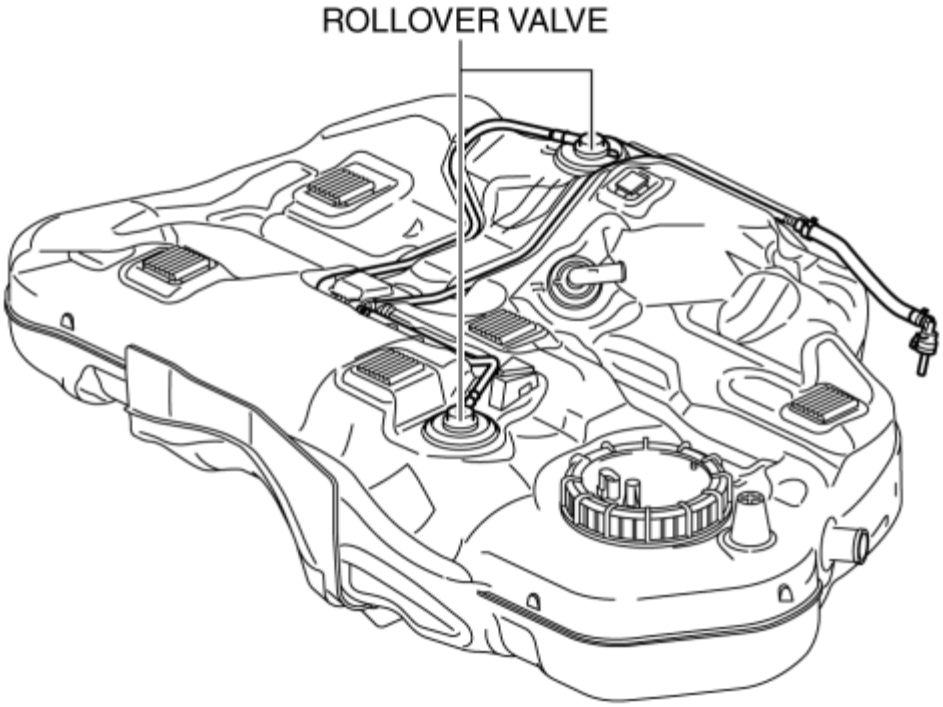

- The rollover valve consists of a float, O-ring and spring.

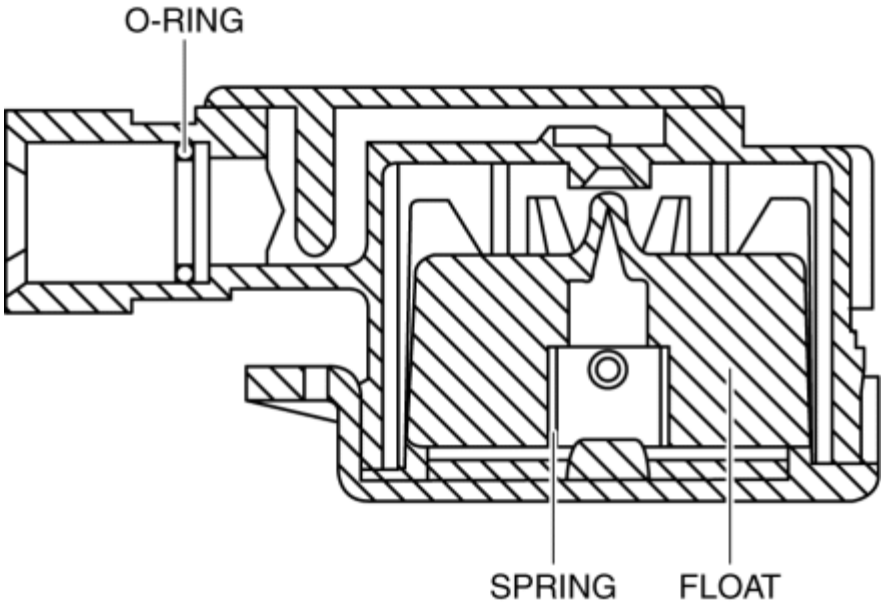

Operation

- The rollover valve utilizes a combination of float weight, spring force, and buoyancy. When the float is immersed in the fuel, the float (valve) closes to block the sealing surface of the passage.

ROLLOVER VALVE [SKYACTIV-G 2.0, SKYACTIV-G 2.5]

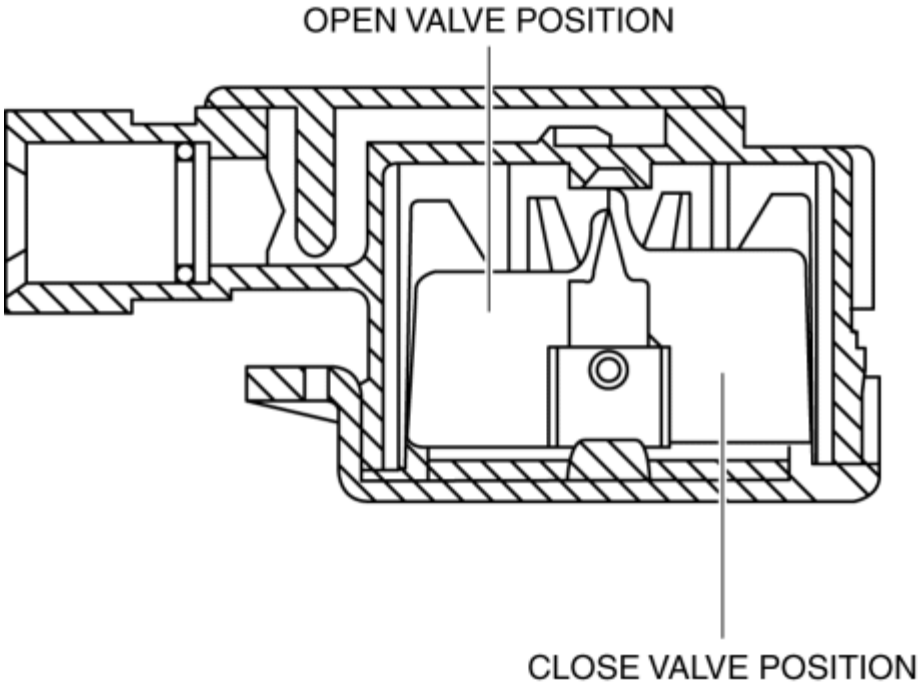

2014 - Mazda3 - Engine

CHECK VALVE [SKYACTIV-G 2.0, SKYACTIV-G 2.5]

Purpose, Function

- The check valve maintains constant pressure in the fuel tank.

Construction

- The check valve is installed to the side of the charcoal canister.

U.S.A. and CANADA

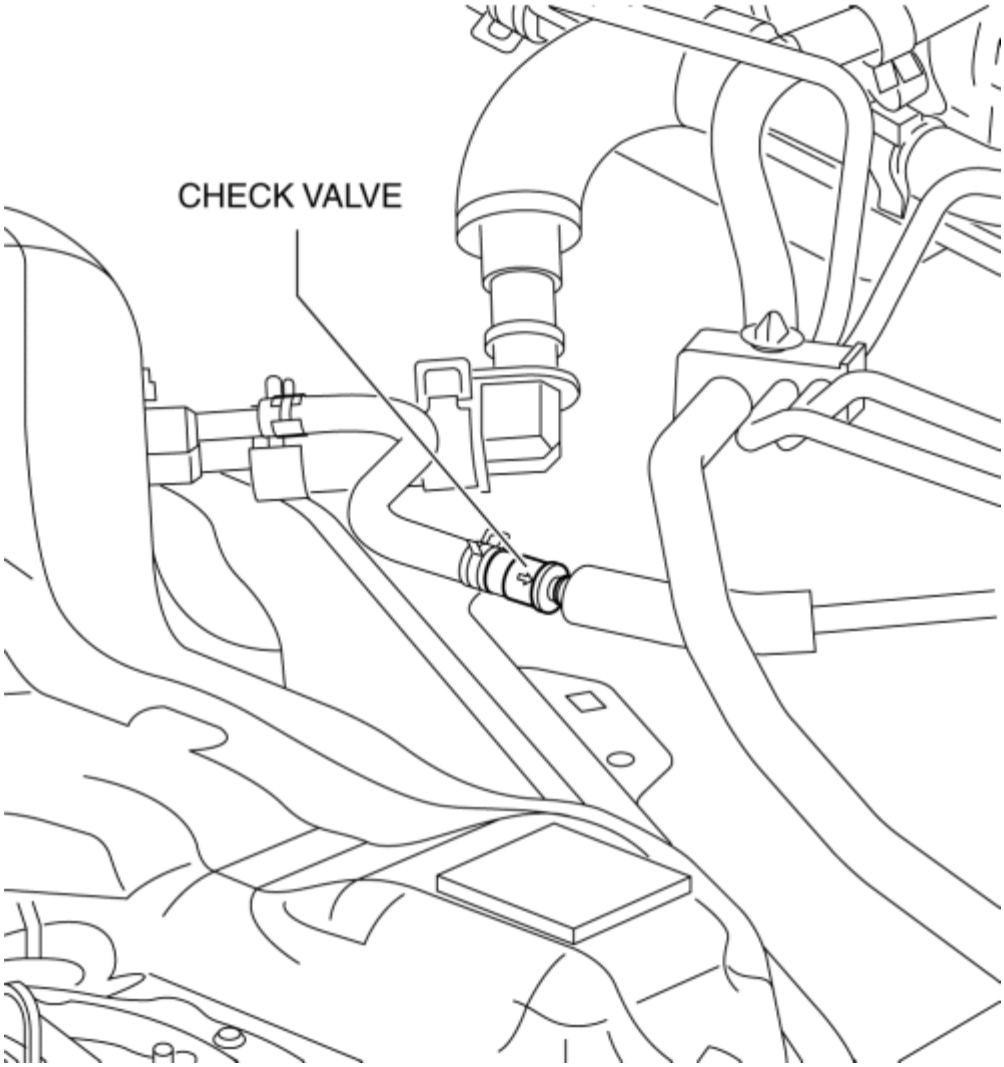

Except U.S.A. and CANADA

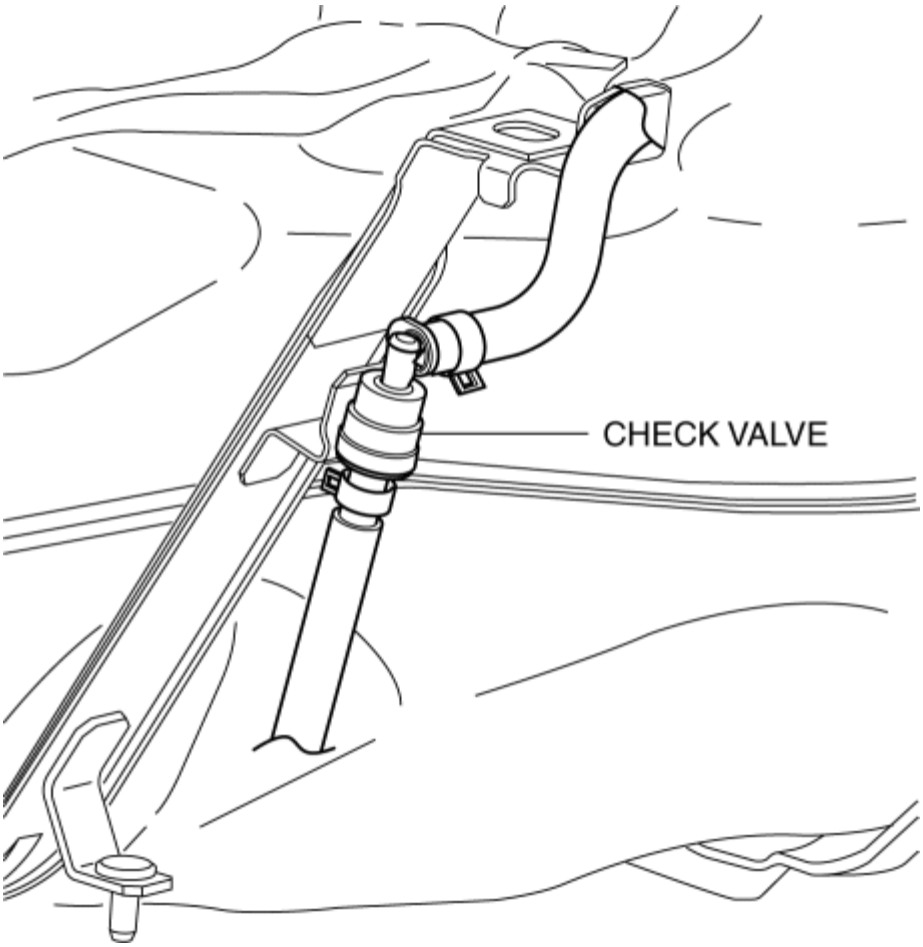

- Mainly consists of valve, umbrella, and spring.

U.S.A. and CANADA

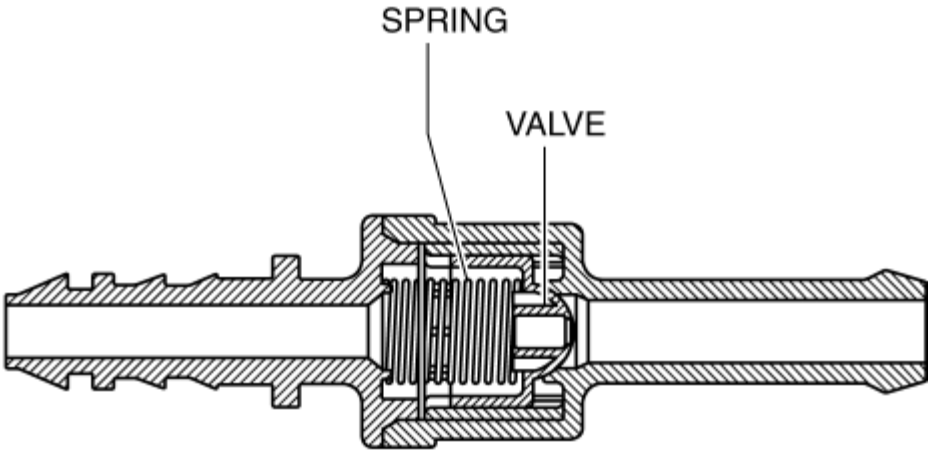

Except U.S.A. and CANADA

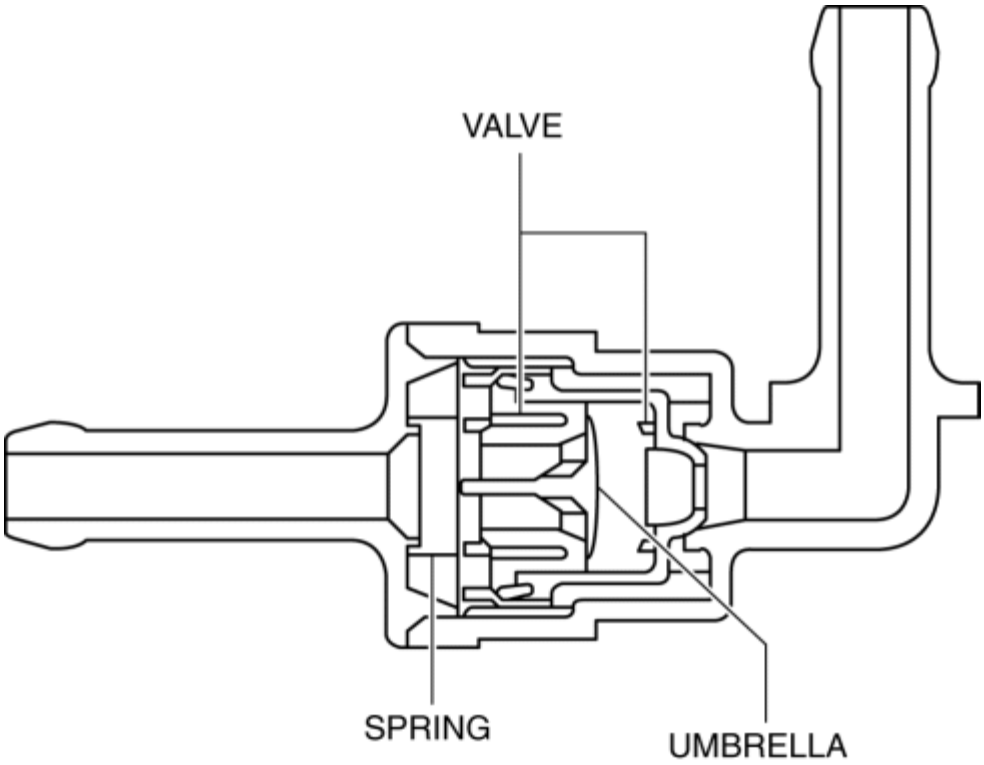

Operation

- The valve moves in response to the difference in air pressure between the fuel tank side and the atmospheric side, thereby changing the path of airflow.
- When the pressure in the fuel tank becomes negative due to fuel consumption or other factors, the path opens, drawing atmospheric air into the fuel tank.

2014 - Mazda3 - Engine

EVAPORATIVE CHAMBER [SKYACTIV-G 2.0, SKYACTIV-G 2.5]

Purpose, Function

- The evaporative chamber prevents penetration of water and dust in the charcoal canister.

Construction

- The evaporative chamber is installed to the side of the charcoal canister.

U.S.A. and CANADA (4SD)

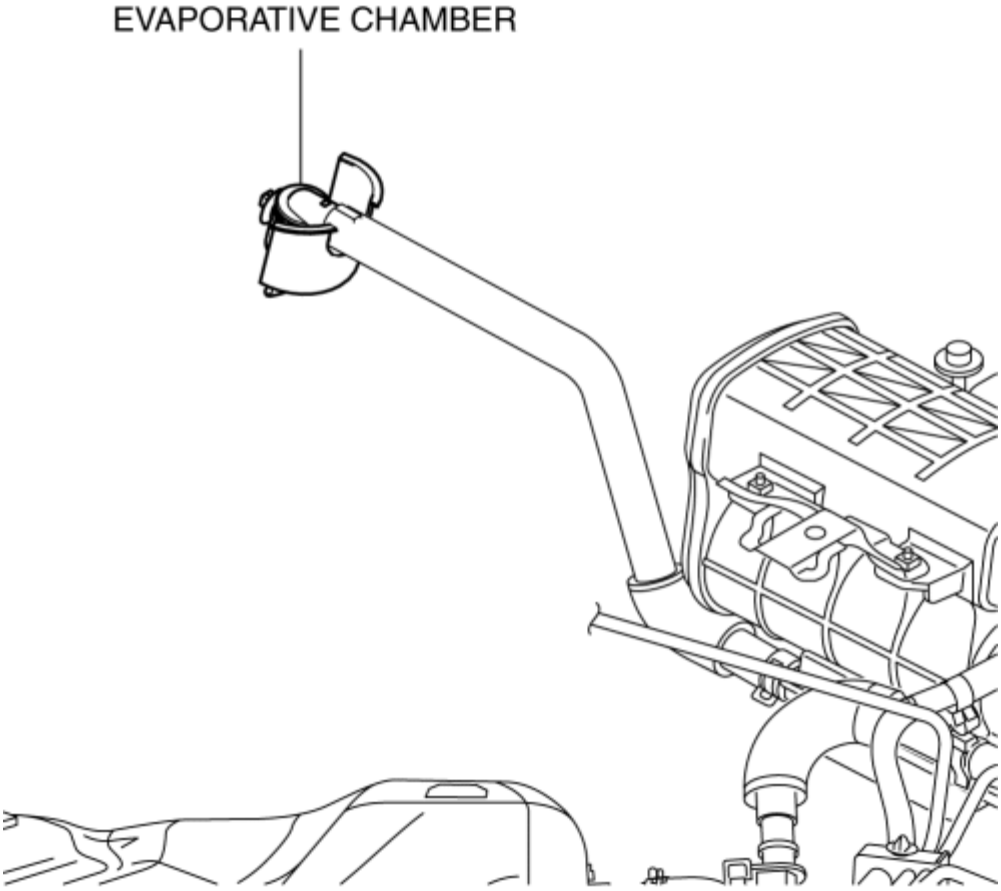

U.S.A. and CANADA (5HB)

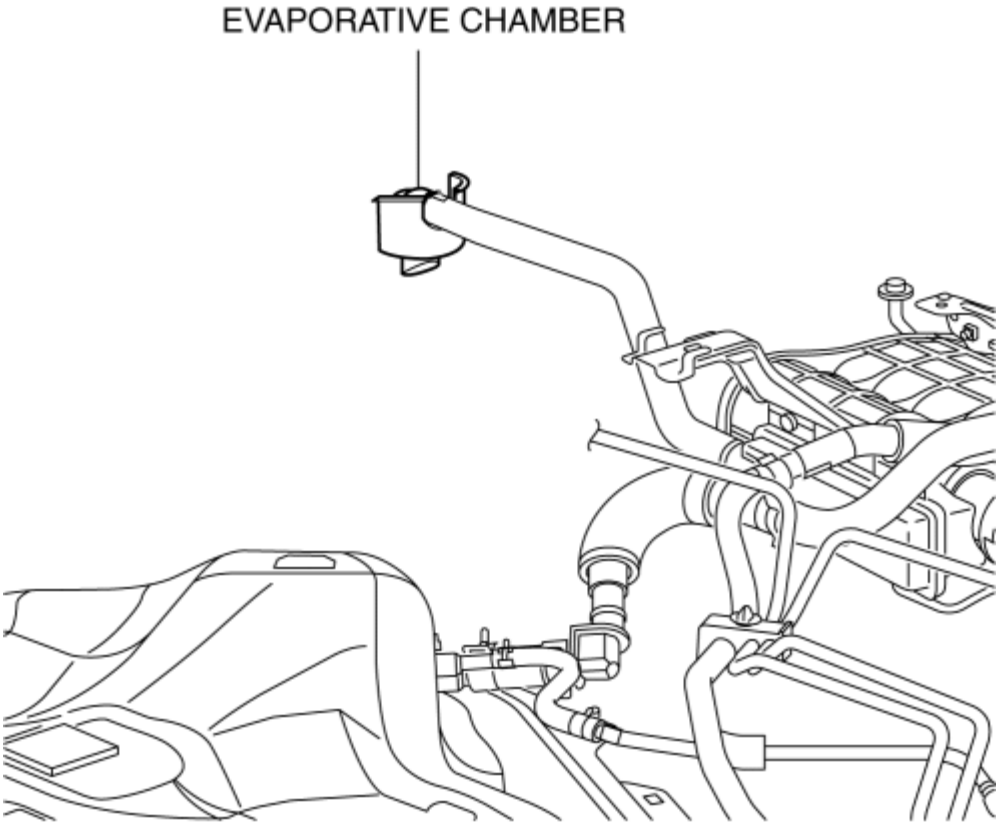

Except U.S.A. and CANADA

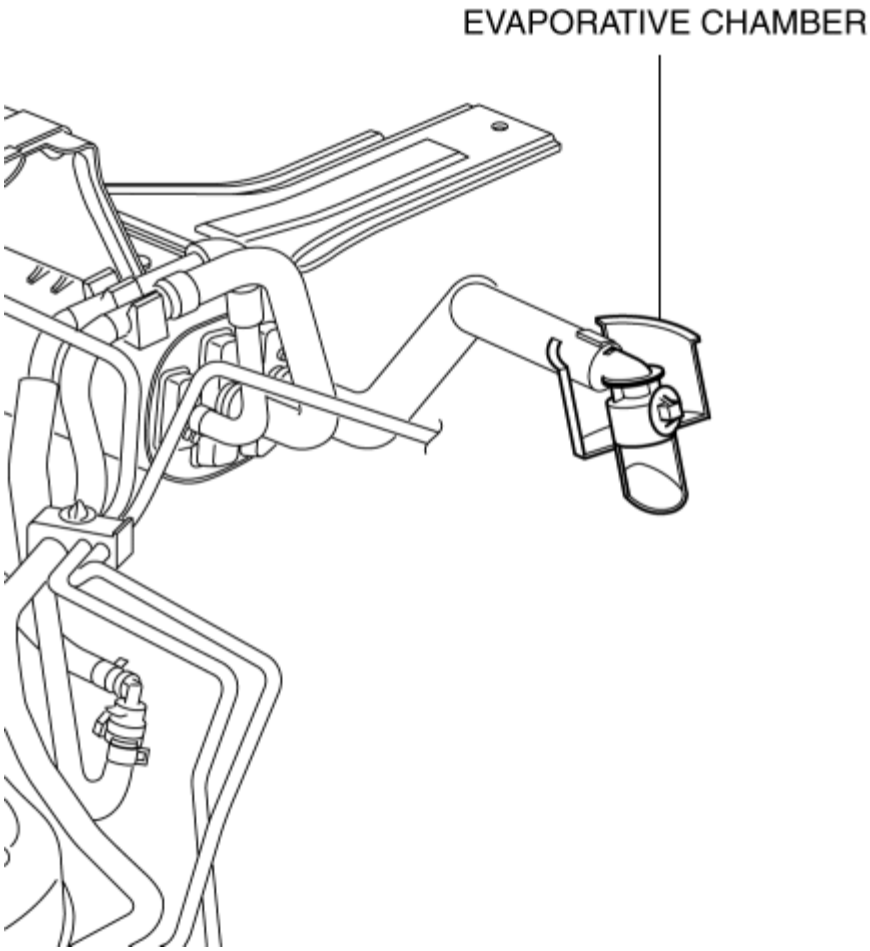

- A small section with partitions is located in the evaporative chamber.

Operation

- There partitions protect the charcoal canister by preventing flooding as atmospheric air enters from the airflow holes.

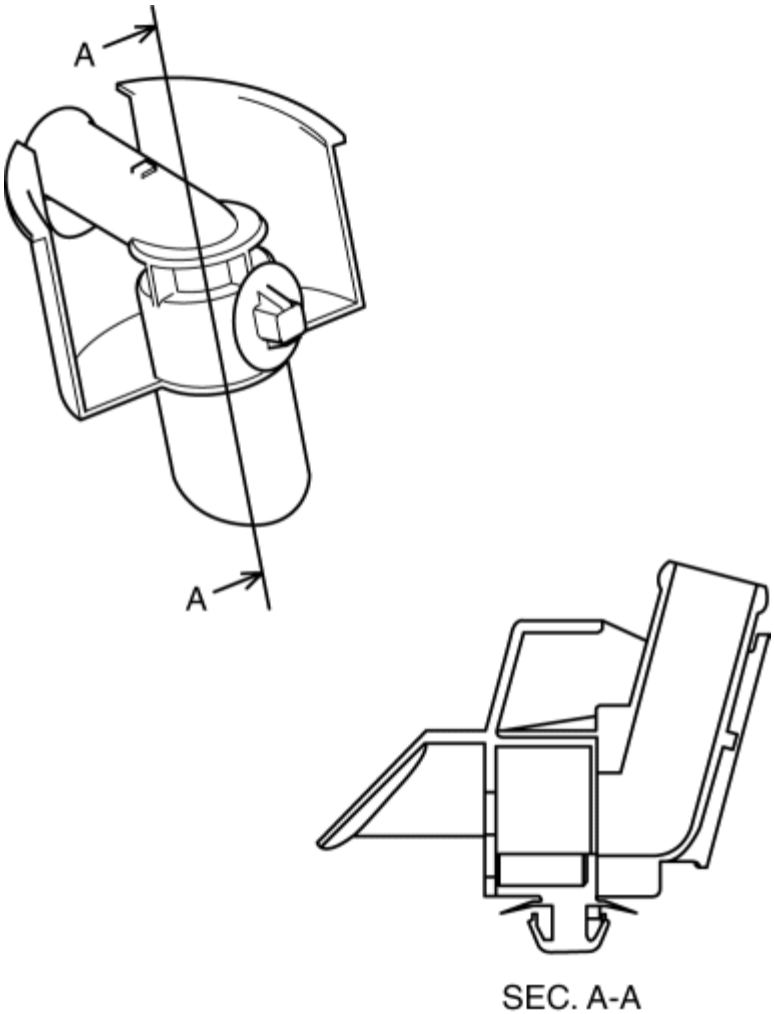

2014 - Mazda3 - Engine

QUICK RELEASE CONNECTOR (EMISSION SYSTEM) [SKYACTIV-G 2.0, SKYACTIV-G 2.5]

Purpose, Function

- Serviceability has been improved by the easy disconnection/connection.

Construction

- The following types of quick release connectors are used.

U.S.A. and CANADA

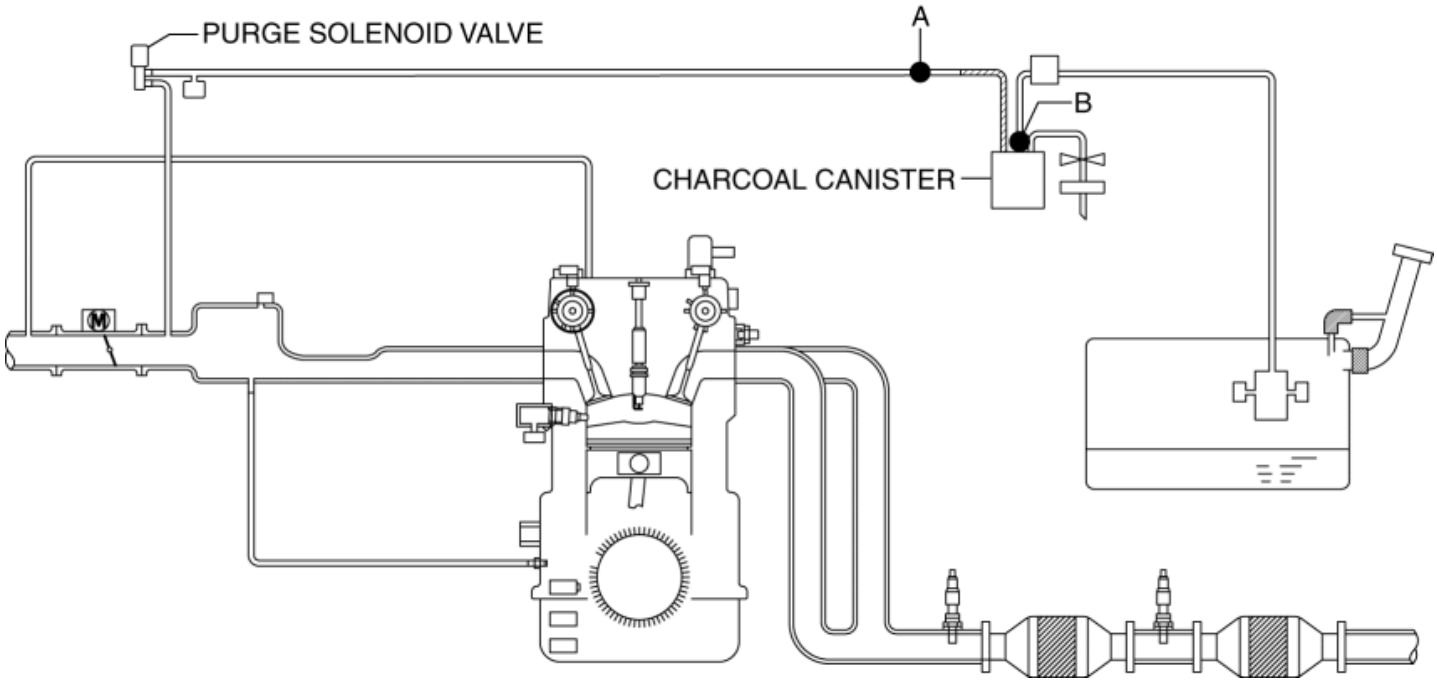

Except U.S.A and CANADA

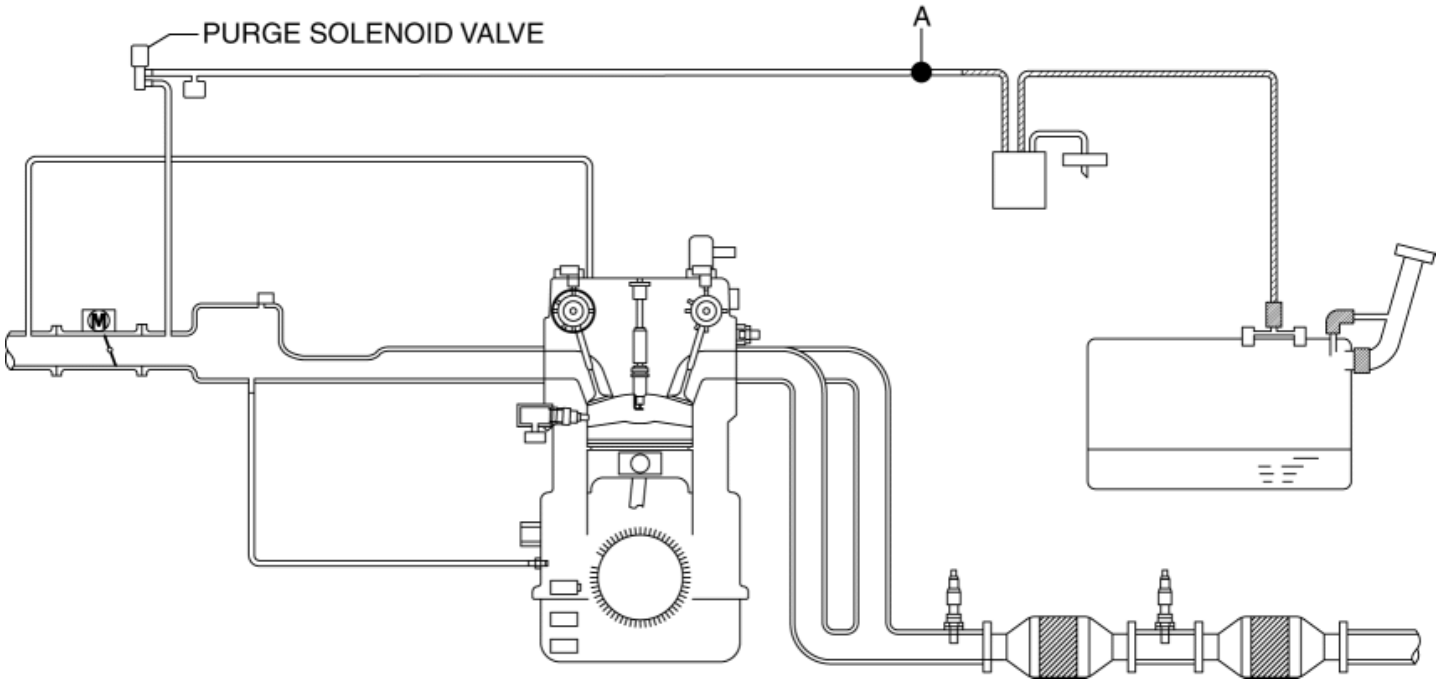

Type A

- An SST is not used with this type.
- Mainly consists of a retainer and O-ring. The quick release connector is integrated with the evaporative hose and therefore cannot be disassembled.
- When the quick release connector is connected, the evaporative pipe projection is locked at the clamp lock point. To release the quick connector lock for each type, follow the procedure in the order shown in each figure.

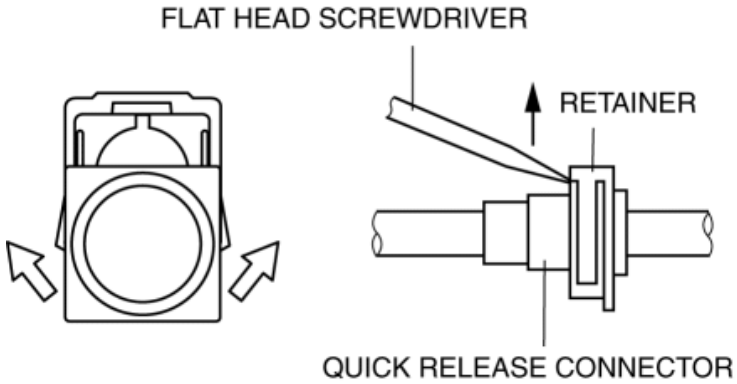

Type B

- An SST is used with this type.

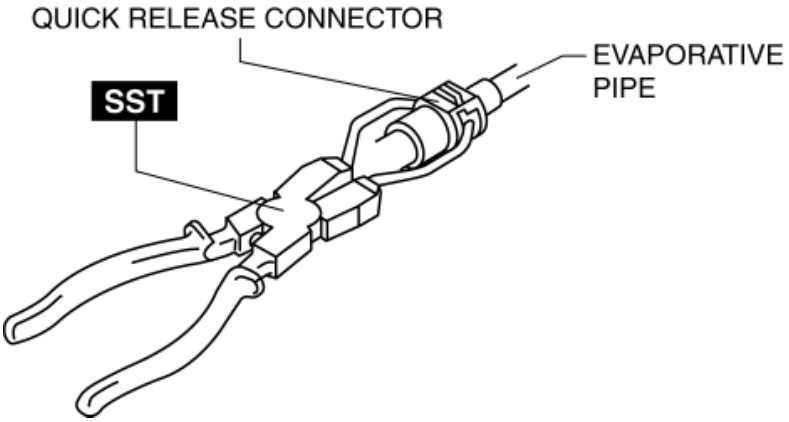

- Consists of a retainer and O-ring. The quick release connector is integrated with the evaporative hose and therefore cannot be disassembled.
- To connect the quick release connector properly, push it into the evaporative pipe until a click sound is heard.
- New quick release connectors are fitted with a checker tab that prevent improper installation. This checker tab cannot normally be removed. When the quick release connector is properly connected to the evaporative pipe, the lock is released and the checker tab comes off. Due to this, it can be verified that the quick release connector is completely connected.

2014 - Mazda3 - Engine

CHARGING SYSTEM [SKYACTIV-G 2.0, SKYACTIV-G 2.5 (WITHOUT i-ELOOP)]

Outline

- Regulator-less generator (built-in power transistor) has been adopted.
- A generator using two delta connection type stator coils has been adopted.

Structural View

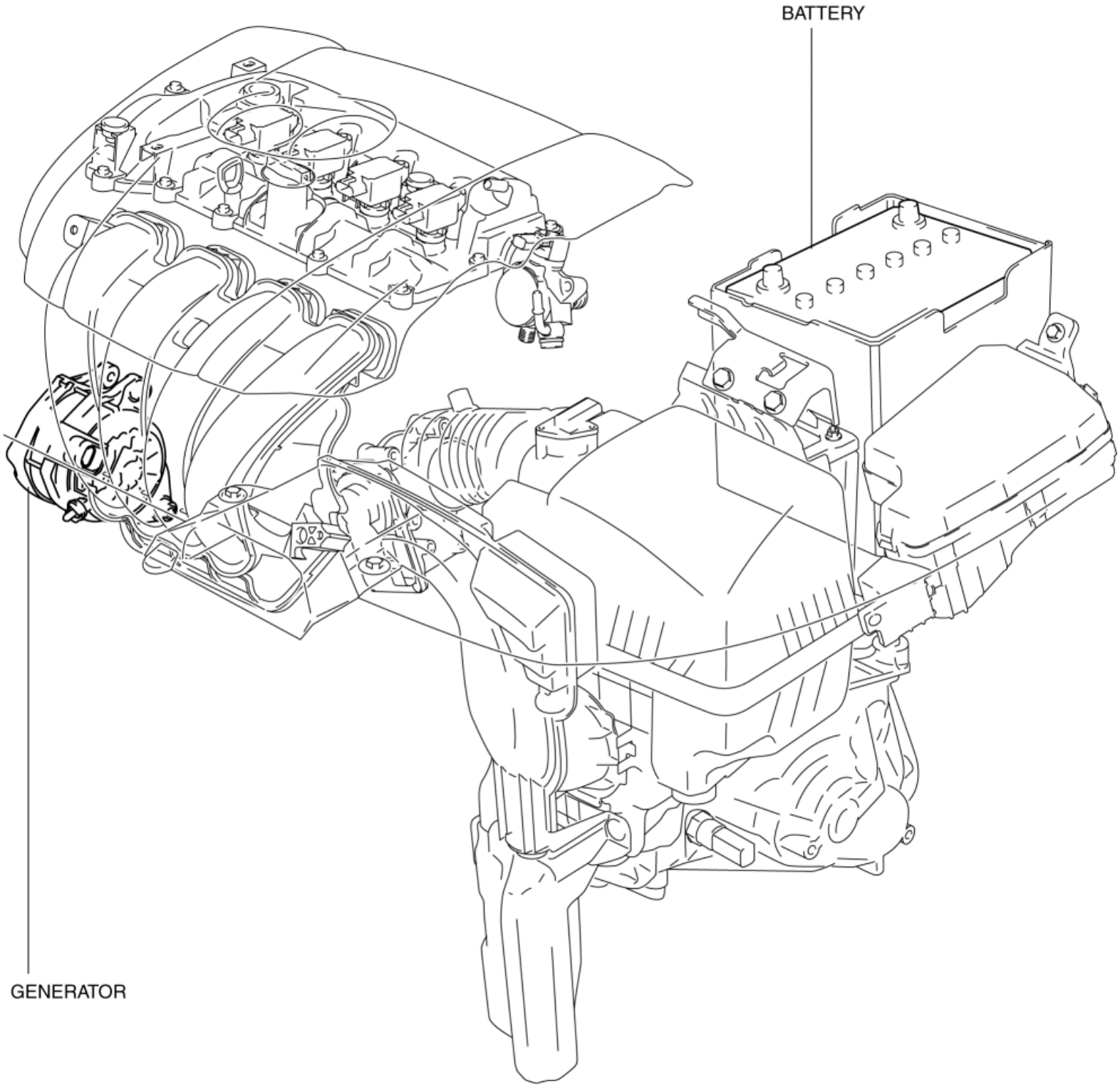

Structure

- Consists of the following parts:

Battery	• (See **BATTERY [SKYACTIV-G 2.0, SKYACTIV-G 2.5]**.)
Generator	• (See **GENERATOR [SKYACTIV-G 2.0, SKYACTIV-G 2.5 (WITHOUT i-ELOOP)]**.)
Charging system warning light	• (See **CHARGING SYSTEM WARNING LIGHT [SKYACTIV-G 2.0, SKYACTIV-G 2.5]**.)

2014 - Mazda3 - Engine

BATTERY [SKYACTIV-G 2.0, SKYACTIV-G 2.5]

Purpose, Function

- The battery stores electricity generated by the generator. In addition, it supplies power to electronic devices if necessary.

Construction

- The battery is installed in the engine compartment. (vehicle left)

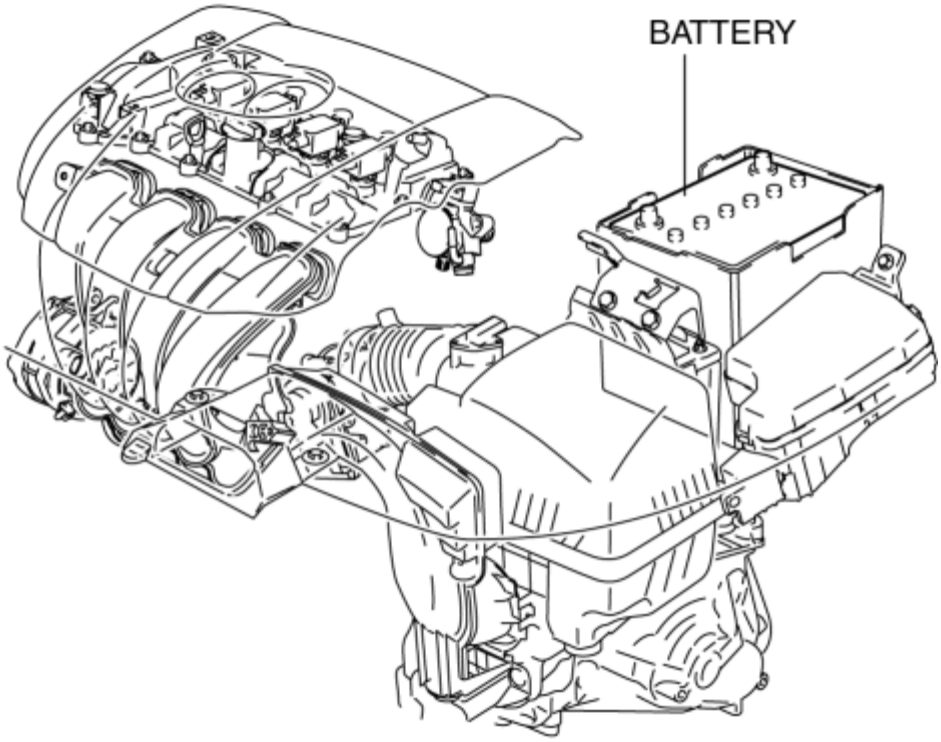

Fail-safe

DTC	Fail-safe
P057F:00	• Inhibits a part of the generator output control.

BATTERY [SKYACTIV-G 2.0, SKYACTIV-G 2.5]

2014 - Mazda3 - Engine

GENERATOR [SKYACTIV-G 2.0, SKYACTIV-G 2.5 (WITHOUT i-ELOOP)]

Purpose, Function

- The generator operates by obtaining drive force from the engine via the drive belt and generates the required electricity for electronic devices.

Construction

- The generator is installed on the engine left front side.

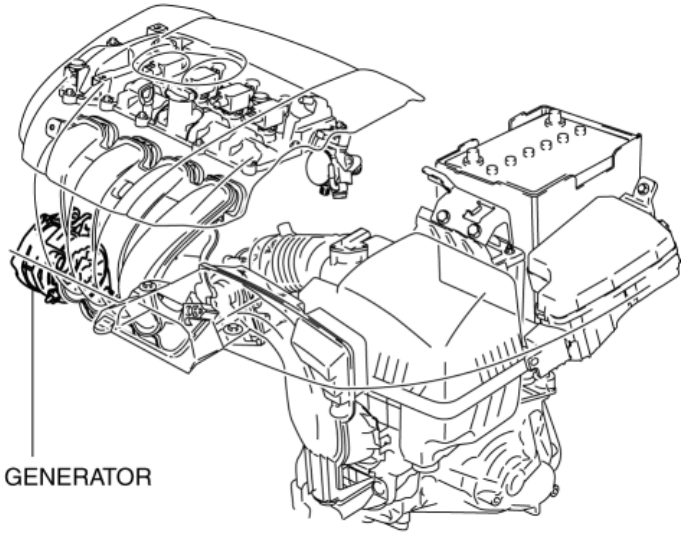

- Output control is performed by the PCM resulting in the elimination of the IC regulator and the simplification of the construction.
- Two delta connection type stator coils have been adopted.

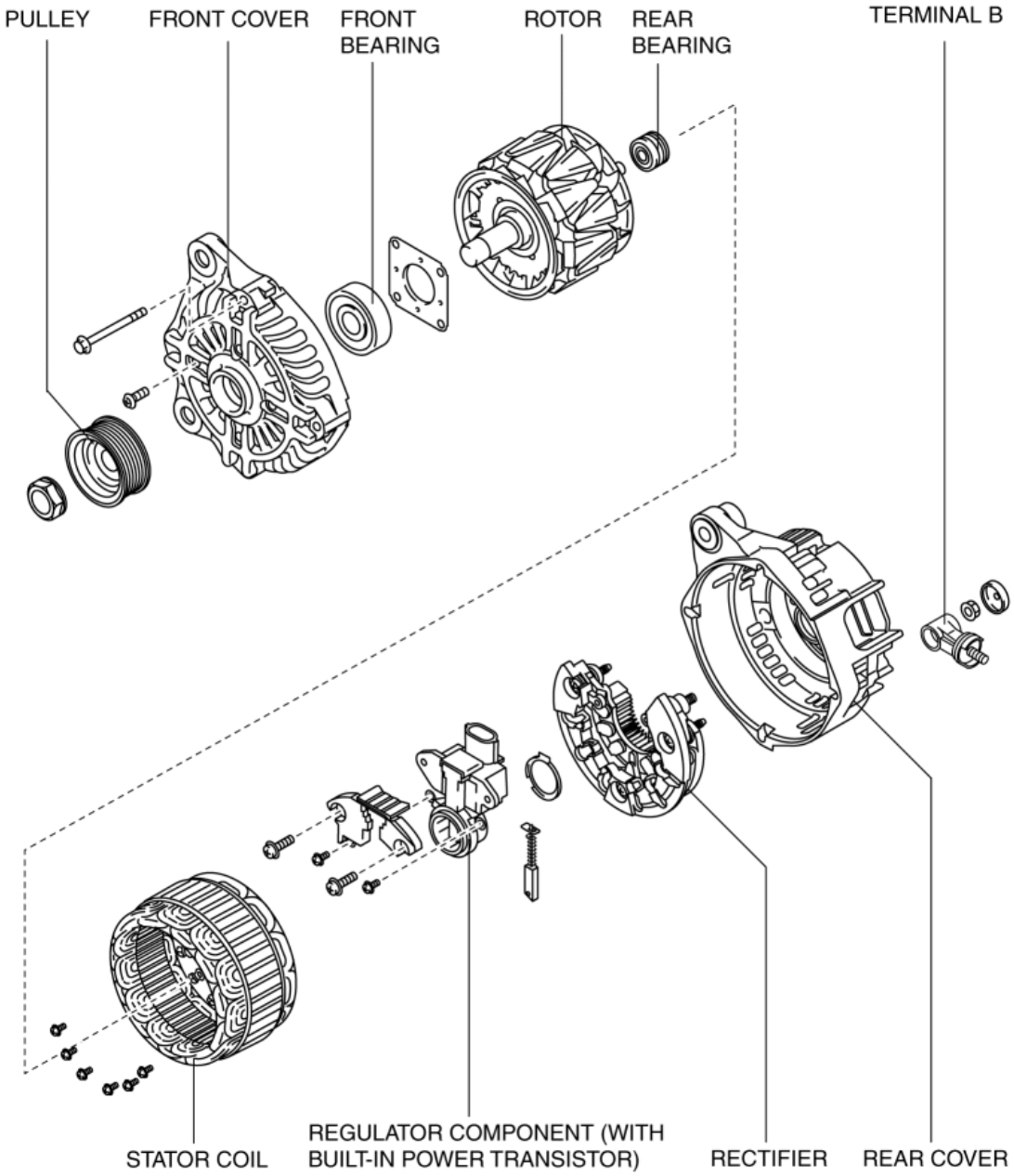

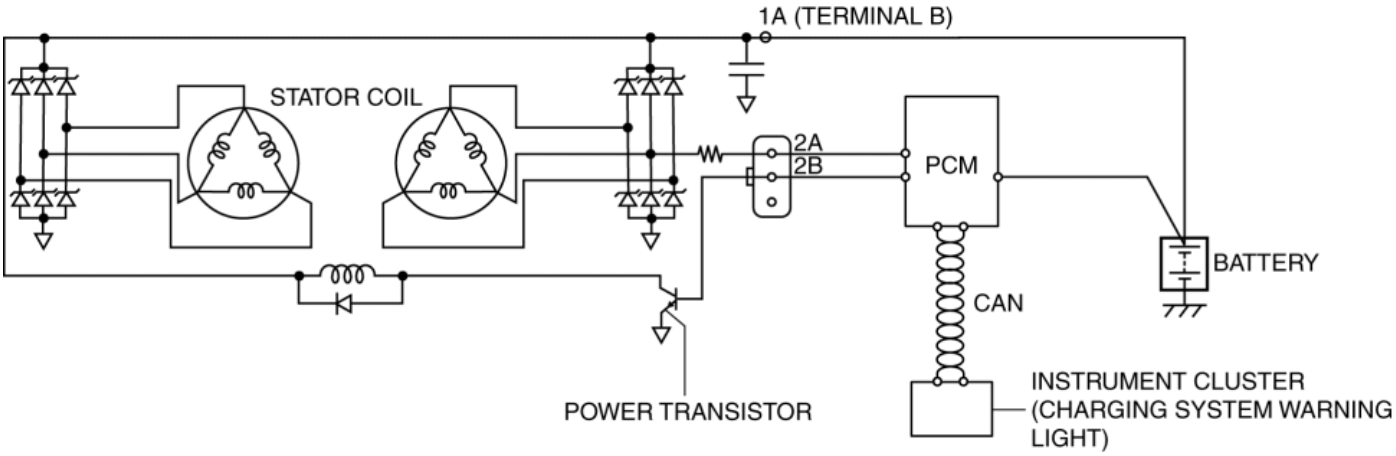

- The two stator coils form the circuit having a phase difference, and magnetic pull, which operates between the rotor and stator coil by the phase difference, is theoretically eliminated. Due to this, electromagnetic vibration and generator operation noise (electromagnetic noise) have been reduced.

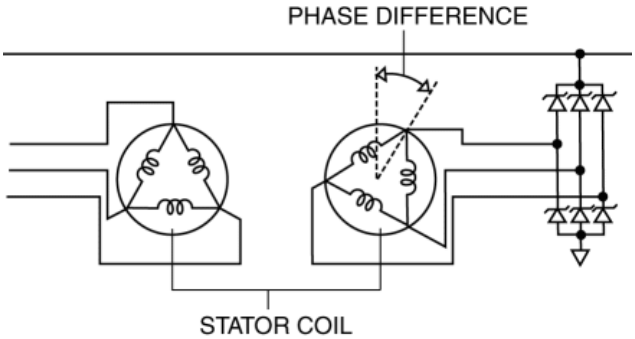

- Pulsation occurring through voltage rectifying using two stator coils having a phase difference is minimized and stable voltage output is supplied.

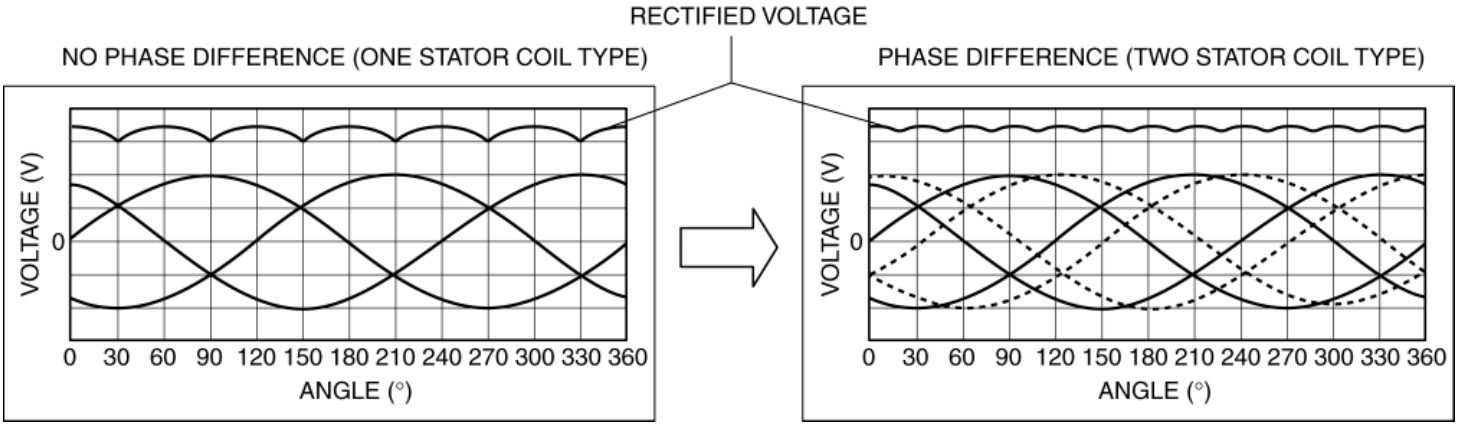

Operation

- For generator control details, refer to CONTROL SYSTEM. (See **GENERATOR CONTROL [SKYACTIV-G 2.0, SKYACTIV-G 2.5]**.)

Fail-safe

- Function not equipped.

2014 - Mazda3 - Engine

CHARGING SYSTEM WARNING LIGHT [SKYACTIV-G 2.0, SKYACTIV-G 2.5]

Purpose, Function

- Warns the driver of a charging system malfunction.
    - For details on DTCs which illuminate the charging system warning light, refer to ON-BOARD DIAGNOSTIC SYSTEM. (See **ON-BOARD DIAGNOSTIC SYSTEM TEST MODE [SKYACTIV-G 2.0, SKYACTIV-G 2.5]**.)

Construction

- The charging system warning light is built into the instrument cluster. (See **INSTRUMENT CLUSTER**.)

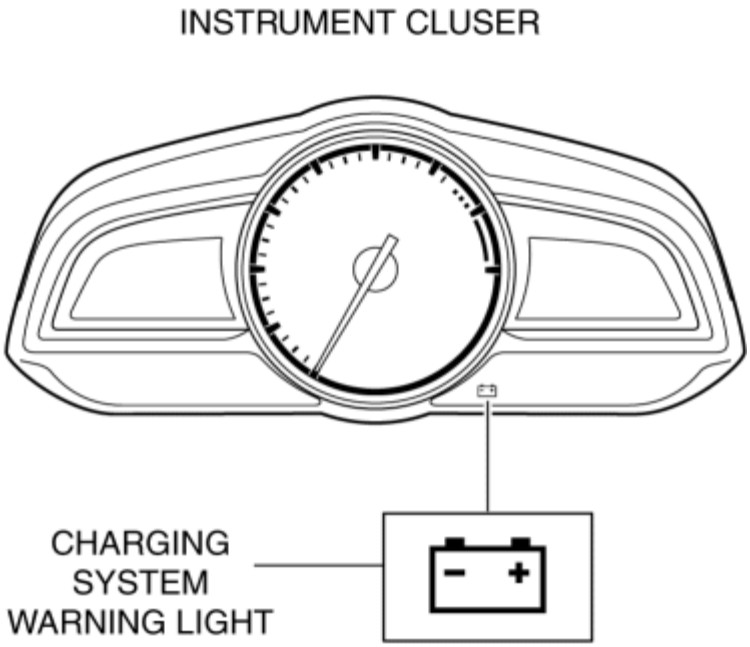

Operation

- Illuminates when a malfunction occurs in the charging system and a DTC is stored in the PCM.
- For vehicles with center display, a warning message in the center display is displayed when the charging system warning light is turned on. For the message content and verification method, refer to the CENTER DISPLAY. (See **CENTER DISPLAY [WITH CENTER**

DISPLAY].)

2014 - Mazda3 - Engine

IGNITION SYSTEM [SKYACTIV-G 2.0, SKYACTIV-G 2.5]

Outline

- A direct ignition coil for independent ignition control has been adopted.
- An ignition coil built-into the ion sensor has been adopted.
- An iridium spark plug has been adopted.

Structural View

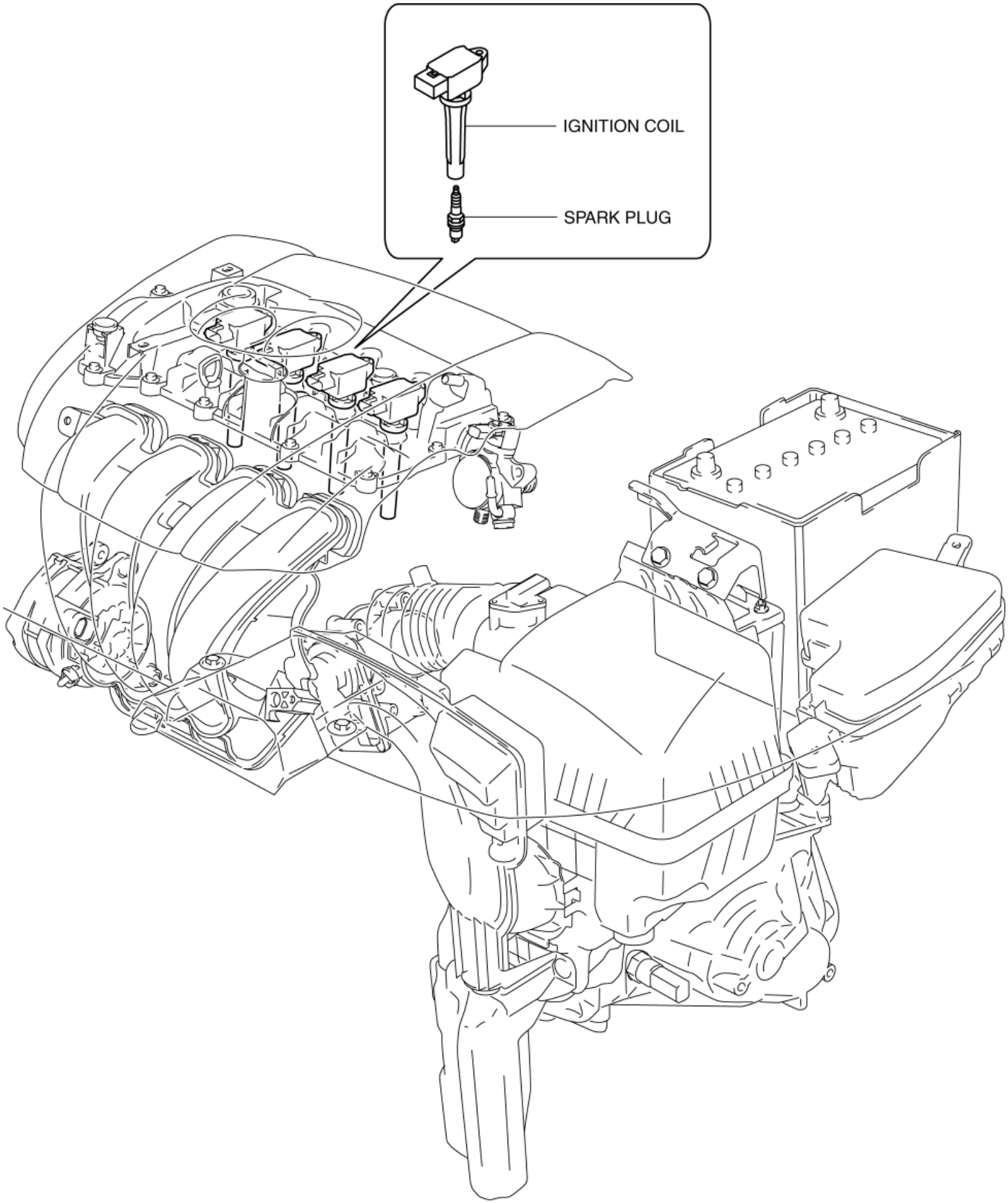
IGNITION COIL
SPARK PLUG

Structure

- Consists of the following parts:

Spark plug	• (See **SPARK PLUG [SKYACTIV-G 2.0, SKYACTIV-G 2.5]**.)
Ignition coil	• (See **IGNITION COIL [SKYACTIV-G 2.0, SKYACTIV-G 2.5]**.)

2014 - Mazda3 - Engine

SPARK PLUG [SKYACTIV-G 2.0, SKYACTIV-G 2.5]

Purpose, Function

- The spark plug generates spark, ignition of the air-fuel mixture occurs, and combustion of the air-fuel mixture is triggered.

Construction

- The spark plug is installed to the cylinder head.

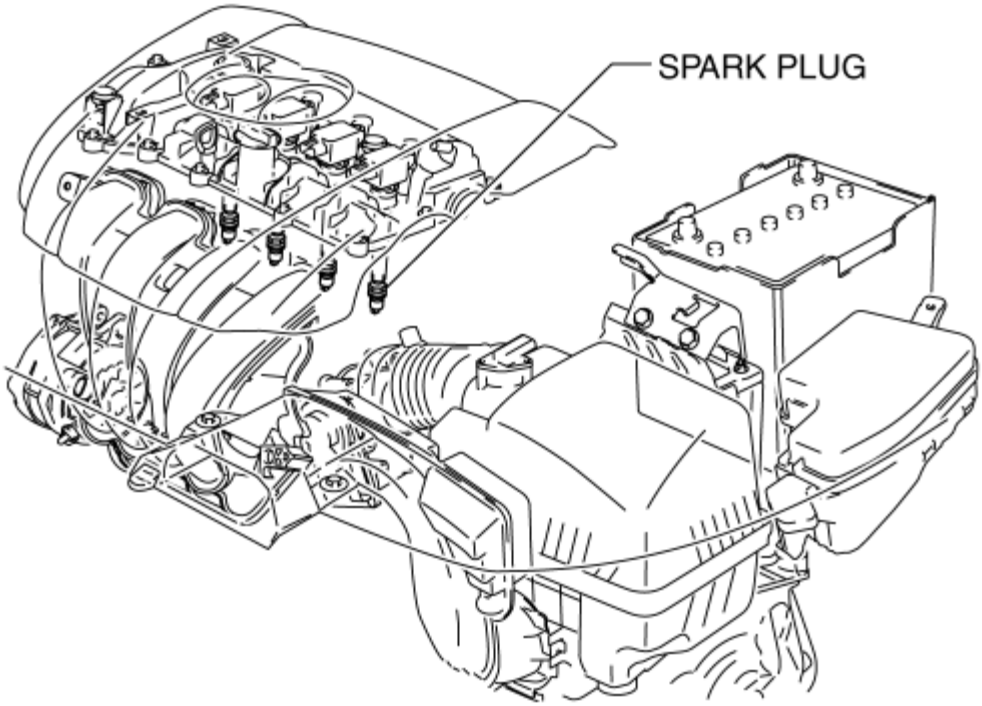

- Iridium on the center electrode and platinum on the ground electrode are used (iridium spark plug).

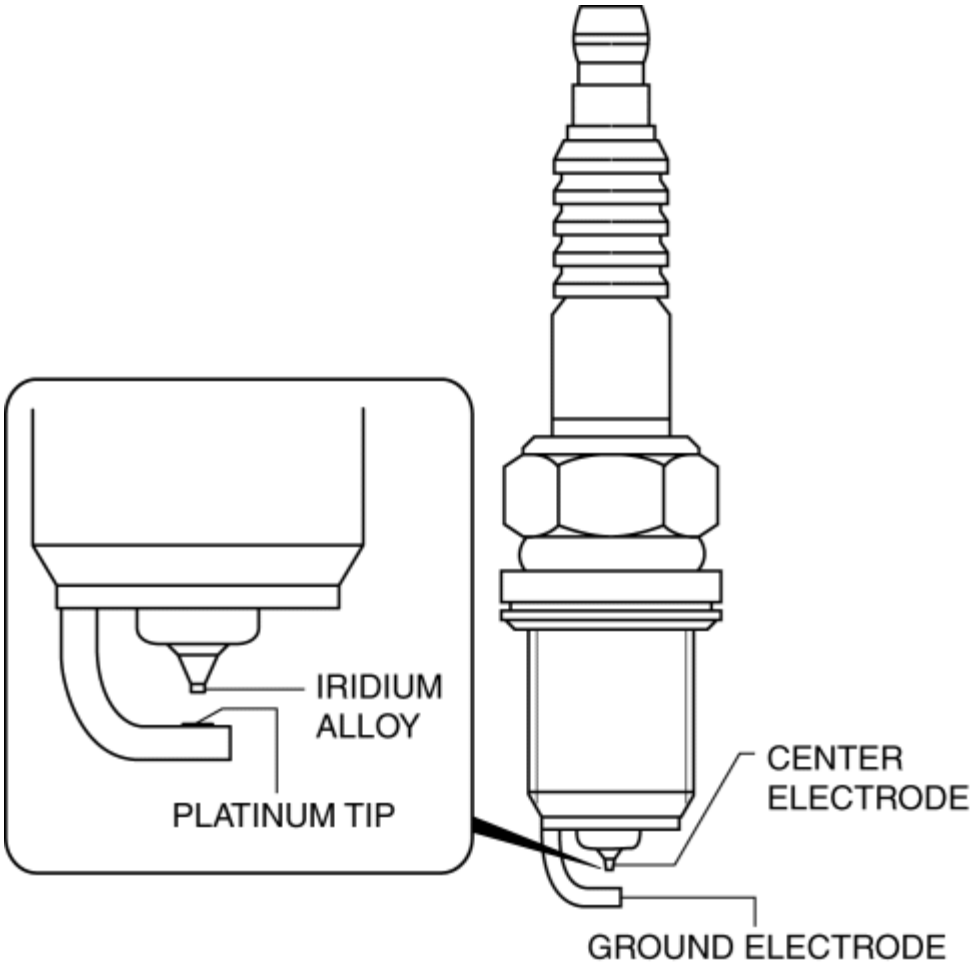

- Because iridium has excellent durability, extreme thinning on the center electrode is achieved.

2014 - Mazda3 - Engine

IGNITION COIL [SKYACTIV-G 2.0, SKYACTIV-G 2.5]

Purpose, Function

- The ignition coil generates high voltage by electromagnetic induction to discharge the spark plug.

Construction

- The ignition coil is installed to the upper part of the spark plug (direct ignition coil).
- With the adoption of the direct ignition coil, the ignition system parts have been simplified. As a result, voltage decrease is suppressed and ignition performance for the spark plug is stabilized.

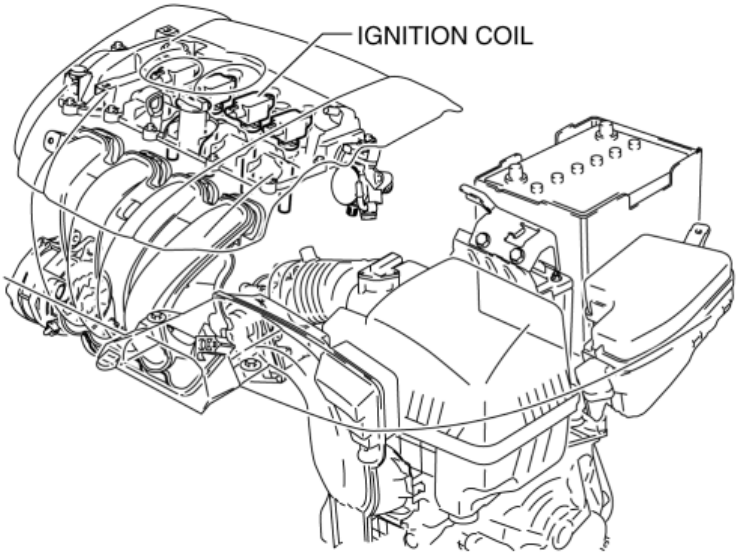

- The ignition coil is built into the igniter and ion sensor. For the ion sensor, refer to CONTROL SYSTEM. (See **ION SENSOR [SKYACTIV-G 2.0, SKYACTIV-G 2.5]**.)

Operation

- Optimum ignition timing is performed according to the driving conditions by integrating the ignition control function into the PCM.

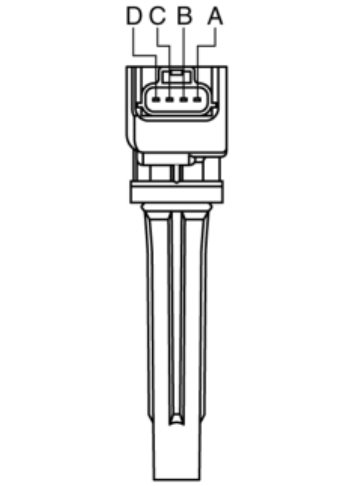

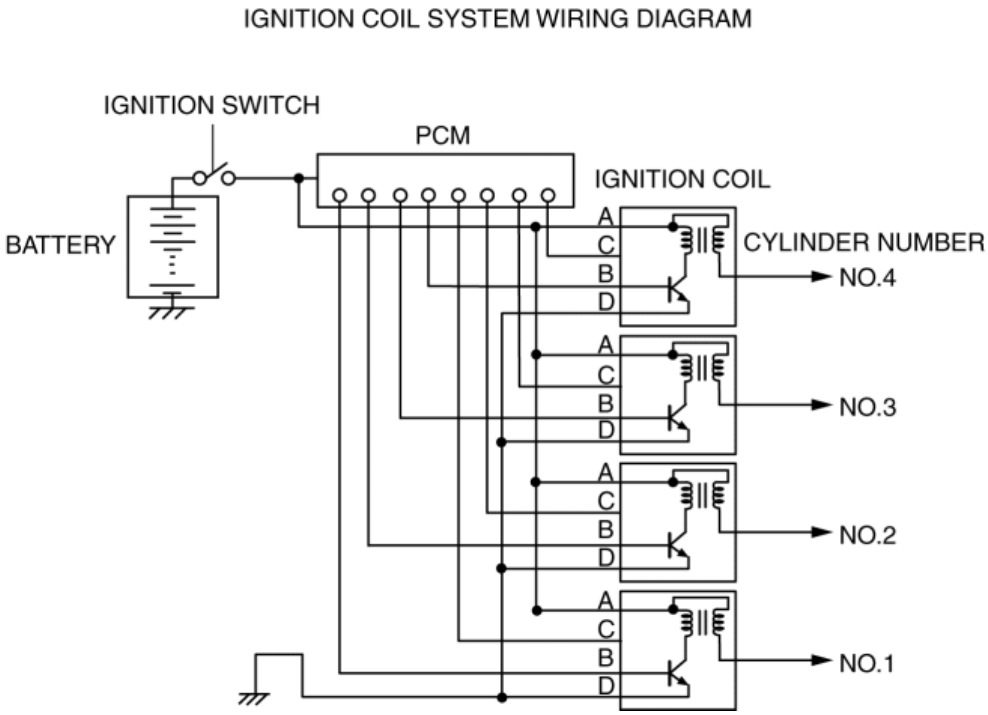

Fail-safe

DTC	Fail-safe
P0300:00	• Limits the intake air amount.
P0301:00 P0302:00 P0303:00 P0304:00	• Stops the fuel injection to the misfiring cylinder. • Limits the intake air amount.

2014 - Mazda3 - Engine

STARTING SYSTEM [SKYACTIV-G 2.0, SKYACTIV-G 2.5]

Outline

- A coaxial reduction type starter has been adopted.

Structural View

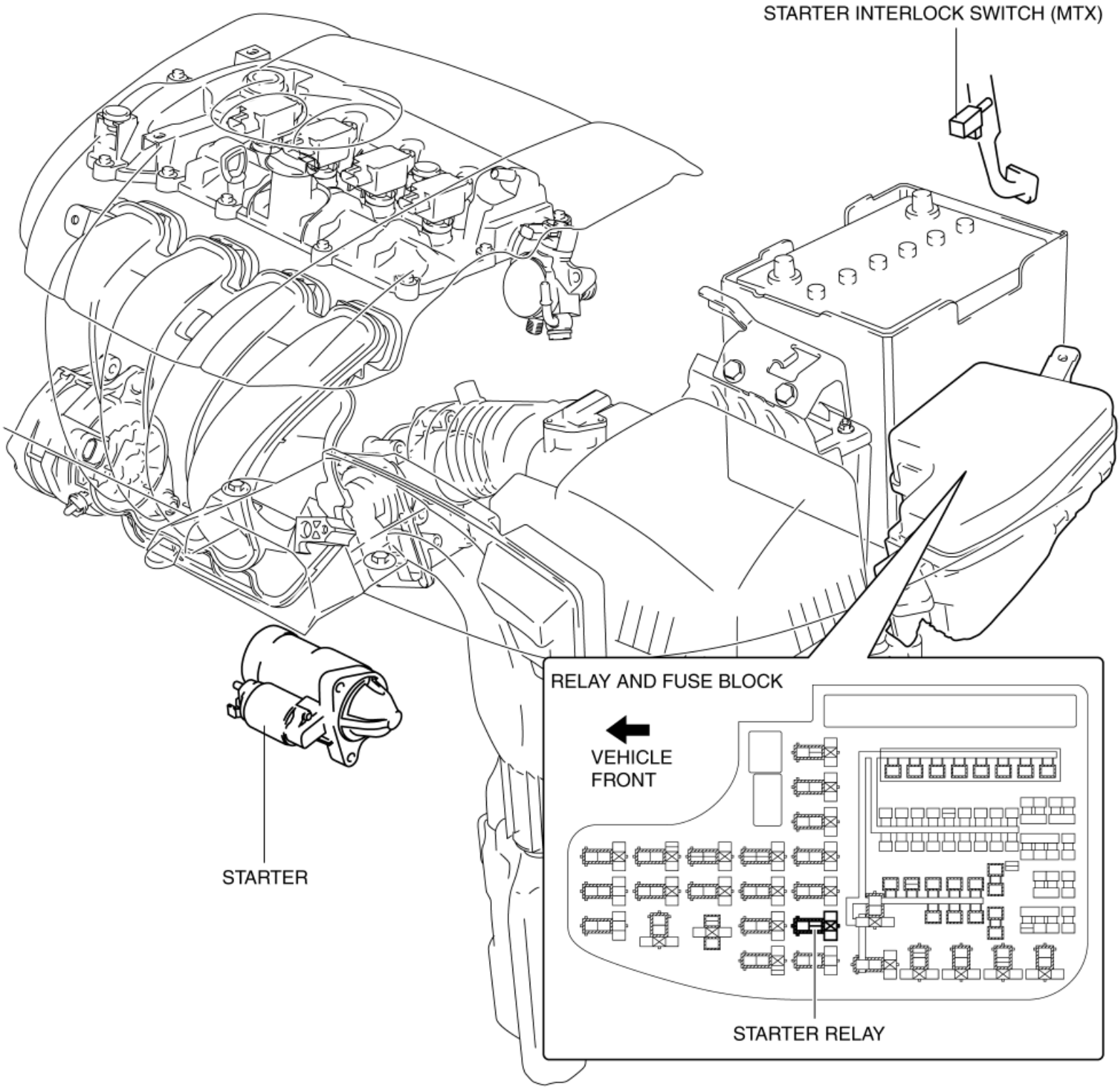

Structure

- Consists of the following parts:

Starter	• (See **STARTER [SKYACTIV-G 2.0, SKYACTIV-G 2.5]**.)
Starter relay	• (See **STARTER RELAY [SKYACTIV-G 2.0, SKYACTIV-G 2.5]**.)
	STARTER INTERLOCK SWITCH [SKYACTIV-G 2.0, SKYACTIV-G 2.5]

Starter interlock switch (MTX)	(See .)

2014 - Mazda3 - Engine

STARTER [SKYACTIV-G 2.0, SKYACTIV-G 2.5]

Purpose, Function

- The starter rotates the crankshaft via the ring gear and it serves as a trigger to start the engine.

Construction

- The starter is installed to the rear part of the engine on the left side.

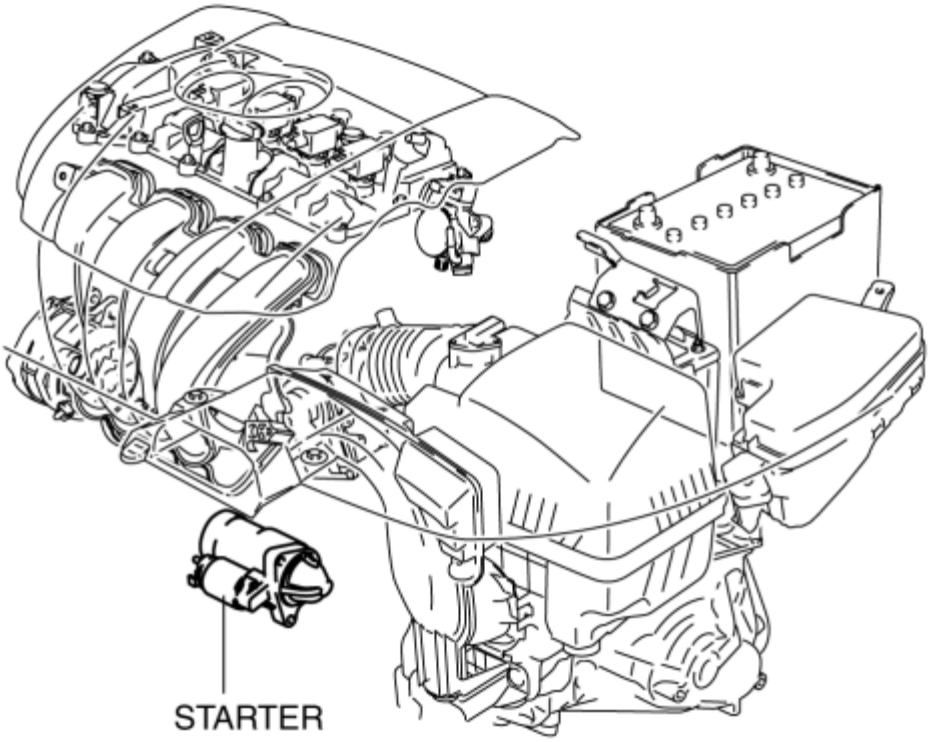

- The starter is a coaxial reduction type which can obtain high torque.

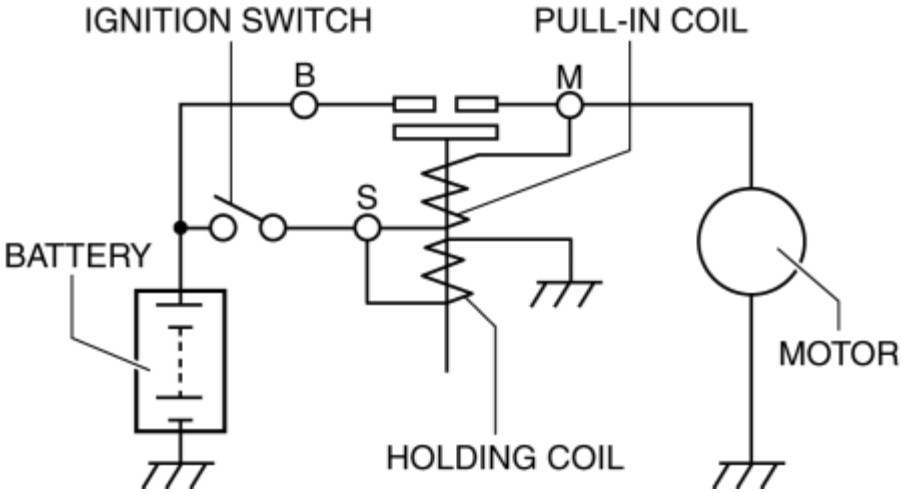

Operation

- For starter cut-off control details, refer to CONTROL SYSTEM. (See **STARTER CUT-OFF CONTROL [SKYACTIV-G 2.0, SKYACTIV-G 2.5]**.)

Fail-safe

- Function not equipped.

2014 - Mazda3 - Engine

STARTER RELAY [SKYACTIV-G 2.0, SKYACTIV-G 2.5]

Purpose, Function

- The starter relay supplies power to the starter by receiving the signal from the PCM.

Construction

- The starter relay is installed to the relay and fuse block.

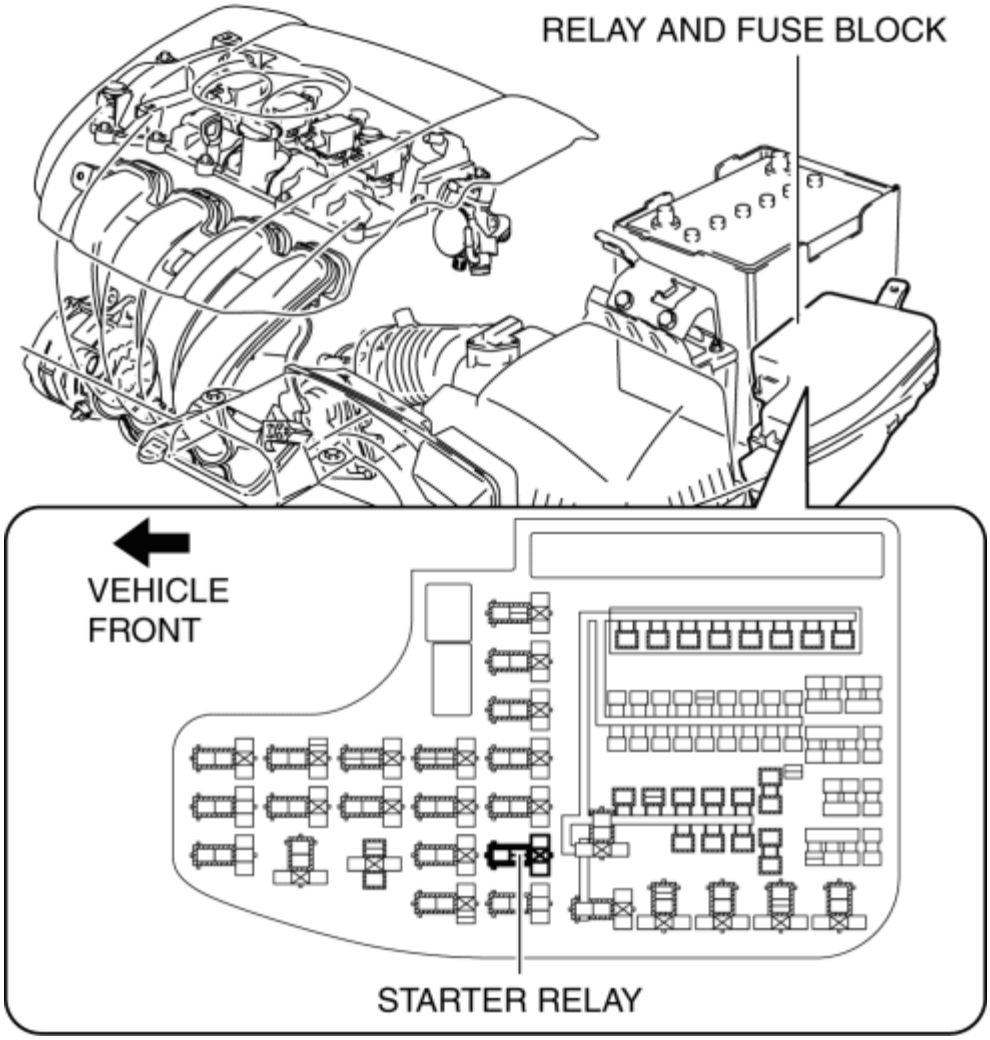

Operation

- The contact point is on when the voltage is supplied to the coil based on the signal from the start stop unit, and the battery voltage is supplied to the starter.

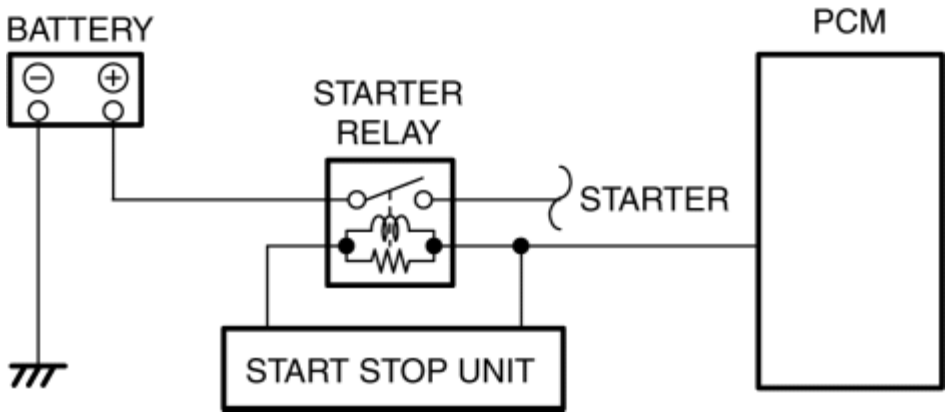

Fail-safe

- Function not equipped.

2014 - Mazda3 - Engine

STARTER INTERLOCK SWITCH [SKYACTIV-G 2.0, SKYACTIV-G 2.5]

Purpose, Function

- The starter interlock switch mechanism prevents vehicle surge when the engine is started, enhancing safety. The engine cannot be started unless the clutch is depressed.

Construction

- The mechanism is provided with a starter interlock switch on the circuit under the START STOP UNIT and the PCM.

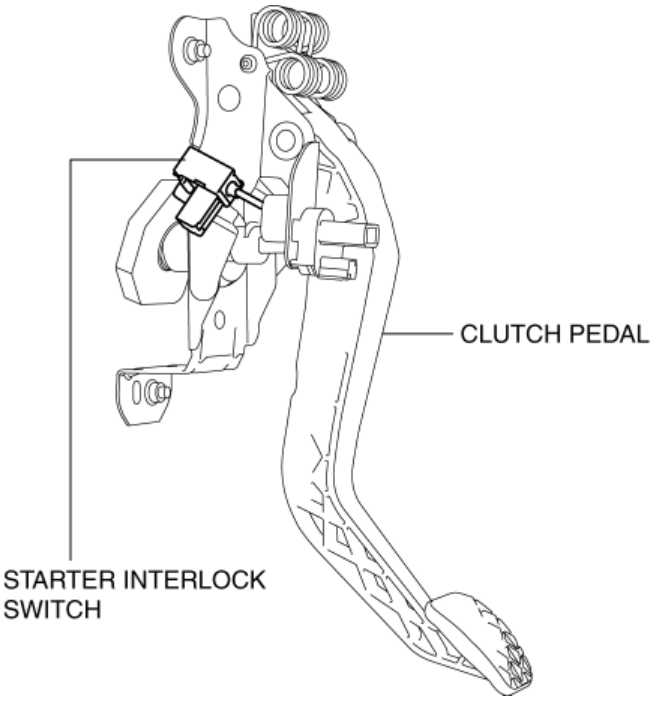

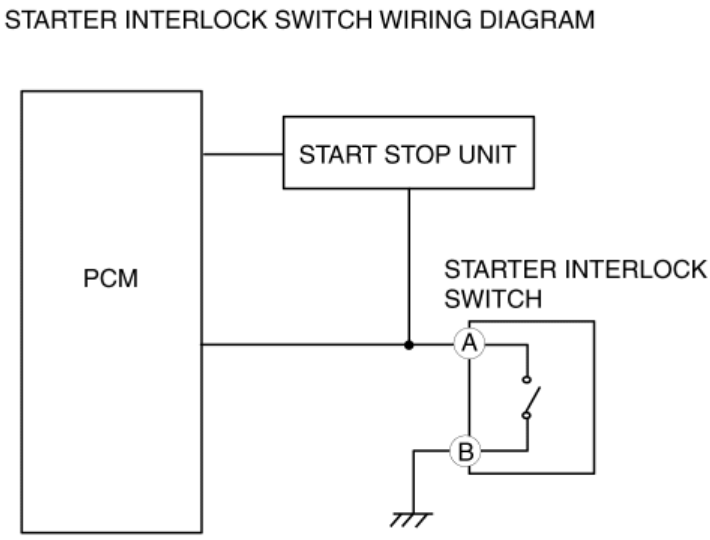

Operation

- Depressing the clutch pedal presses the starter interlock switch rod. At this time, the starter interlock switch is on, and the power circuit to the starter closes. Accordingly, the starter operates only when the clutch is depressed and the engine can be started.

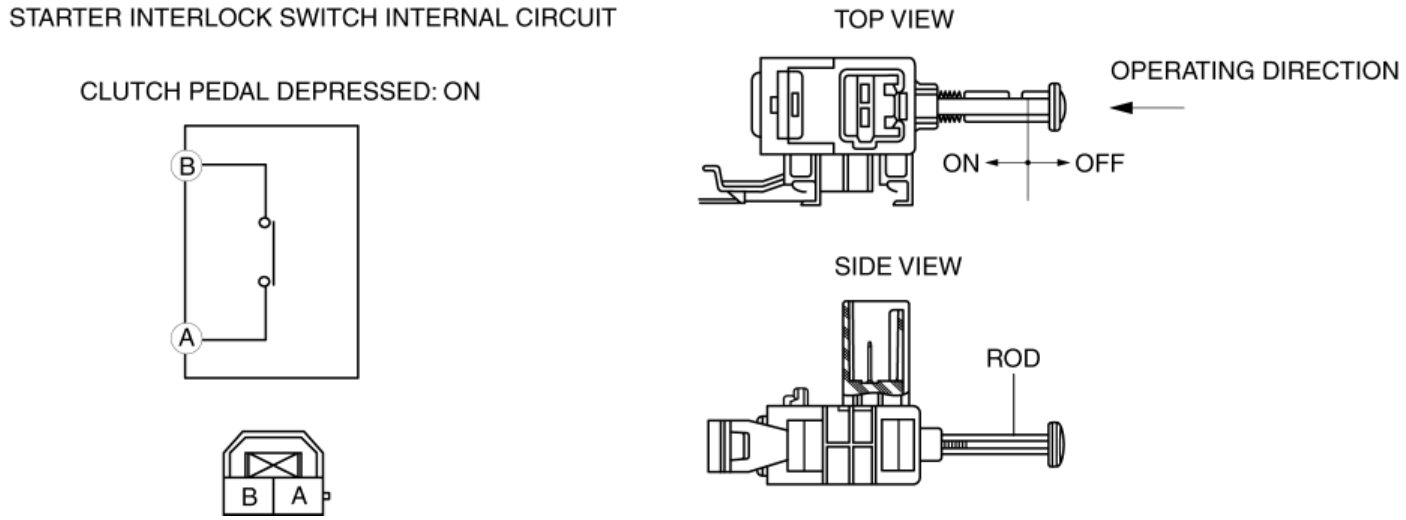

Fail-safe

- Function not equipped.

2014 - Mazda3 - Engine

CRUISE CONTROL SYSTEM [SKYACTIV-G 2.0, SKYACTIV-G 2.5]

Outline

- Enables driving at a constant speed by setting the vehicle speed with the cruise control switch instead of operating the accelerator pedal.
- The PCM controls the throttle valve actuator to maintain the vehicle at a constant speed.

Component and function

Component		Function
DSC HU/CM (CAN communication: Vehicle speed signal)		The vehicle speed signal is sent to the PCM from the DSC HU/CM.
Cruise control switch	ON	The cruise control system main switch. The cruise control system goes on standby with the operation of the switch.
	OFF	The cruise control system main switch. The cruise control system is turned off with the operation of the switch.
	SET (+)	• If the switch is pressed when the vehicle speed **exceeds 25 km/h {16 mph}** with the system on standby, the vehicle speed at the point when the switch is pressed is stored in the PCM and the system initiates the cruise control. • The PCM controls acceleration by the pressing of the switch or when the switch is continuously pressed during cruise control.
	SET (−)	• If the switch is pressed when the vehicle speed **exceeds 25 km/h {16 mph}** with the system on standby, the vehicle speed at the point when the switch is pressed is stored in the PCM and the system initiates the cruise control. • The PCM controls deceleration by the pressing of the switch or when the switch is continuously pressed during cruise control.
	RESUME	If the switch is pressed when the vehicle speed **exceeds 25 km/h {16 mph}** with the system on standby and the previous pre-set vehicle speed is stored in the PCM, the system initiates the cruise control so that the vehicle speed is the pre-set vehicle speed stored in the PCM.
	CANCEL	If the switch is pressed during cruise control, the cruise control system goes on standby (pre-set vehicle speed is stored).
Brake switch		Depressing the brake pedal during cruise control switches the cruise control system to standby mode (pre-set vehicle speed is stored).
CPP switch (MTX)		Depressing the clutch pedal during cruise control switches the cruise control system to standby mode (pre-set vehicle speed is stored).
Neutral switch (MTX)		Shifting to neutral during cruise control switches the cruise control system to standby mode (pre-set vehicle speed is stored).
TCM (ATX) (CAN communication: gear signal)		If the following operation is performed during cruise control, the cruise control system goes on standby mode (pre-set vehicle speed is stored). • The selector lever is shifted from D position to N position.
DSC HU/CM		If the brake pressure **exceeds 0.3 MPa {3 kgf/cm^2, 44 psi}**, the cruise control system goes on standby mode (pre-

(CAN communication: Brake pressure)	set vehicle speed is stored).
Parking brake switch	If the parking brake is applied, the cruise control system goes on standby mode (pre-set vehicle speed is stored).
TCM (ATX) (CAN communication: diagnostic signal)	If there is a malfunction with the ATX, the cruise control system goes on standby mode (pre-set vehicle speed is stored).
PCM	The cruise control system is executed or stopped according to the cruise control switch signals. The throttle valve actuator is operated so that the vehicle speed is the pre-set vehicle speed during cruise control.
Throttle valve actuator	The duty signal sent from the PCM adjusts the throttle valve opening angle.
Cruise main indicator light (Amber)	(See **CRUISE MAIN INDICATOR LIGHT (AMBER), CRUISE SET INDICATOR LIGHT (GREEN) [SKYACTIV-G 2.0, SKYACTIV-G 2.5]**.)
Cruise set indicator light (Green)	

Structural View

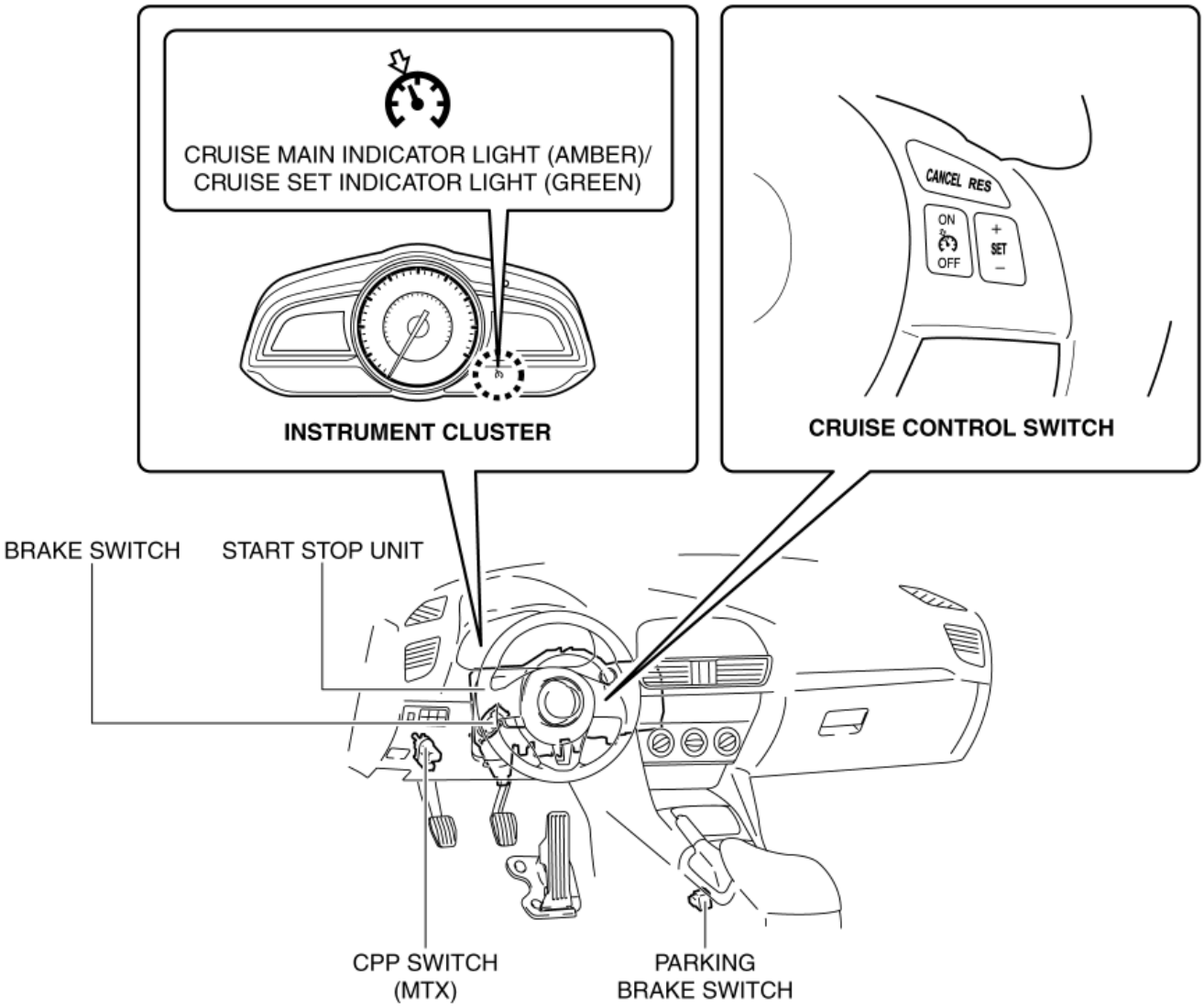

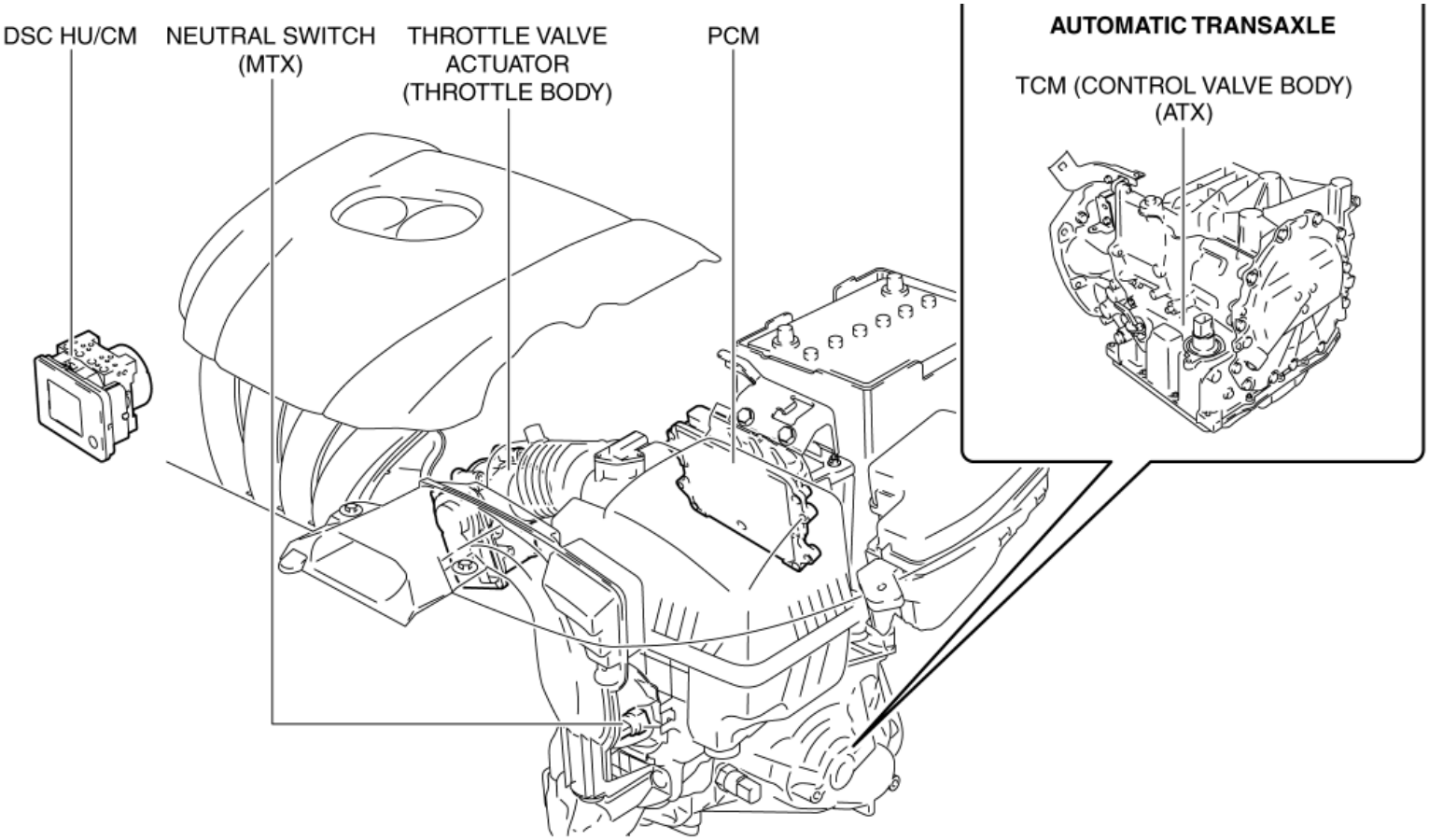

Block Diagram

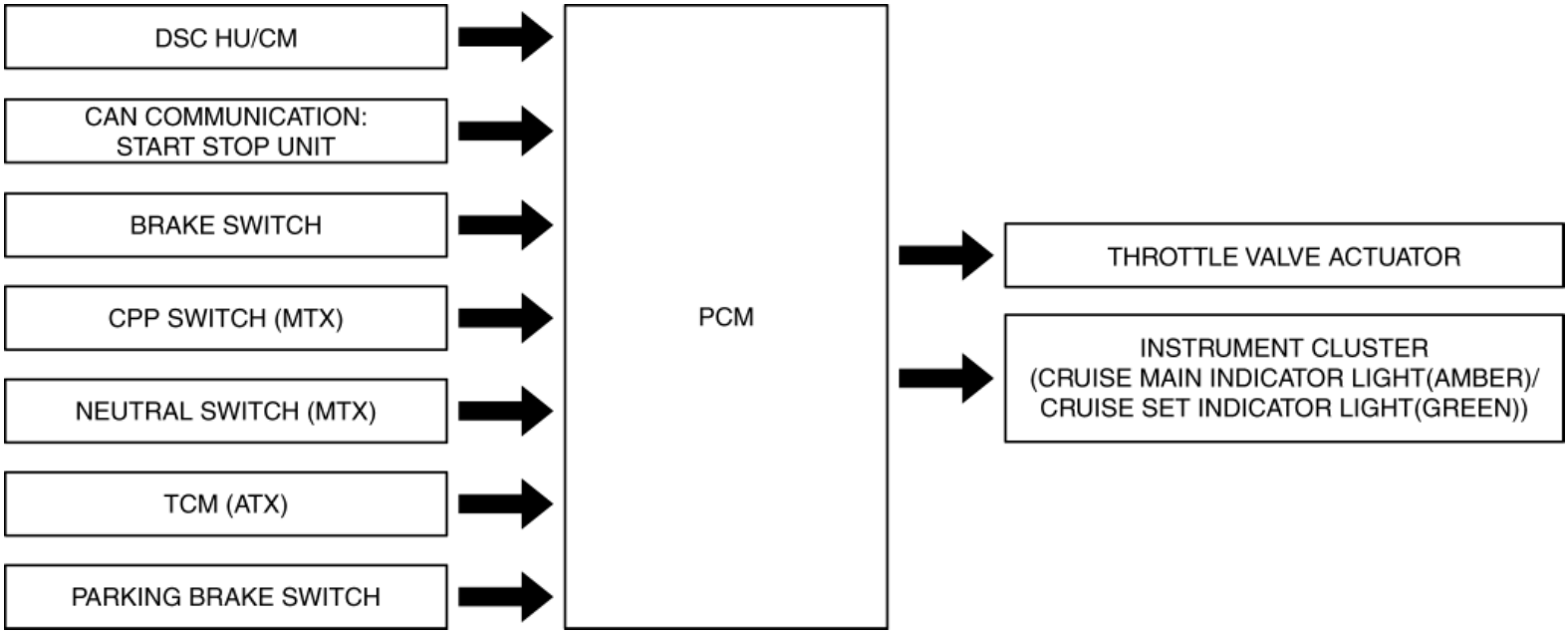

2014 - Mazda3 - Engine

CRUISE MAIN INDICATOR LIGHT (AMBER), CRUISE SET INDICATOR LIGHT (GREEN) [SKYACTIV-G 2.0, SKYACTIV-G 2.5]

Purpose/Function

Cruise main indicator light (amber)

- Illuminates while the cruise control system is in standby mode to inform the driver that the cruise control system is on standby.

Cruise set indicator light (green)

- Illuminates during the cruise control system operation to inform the driver that the cruise control system is operating.

Construction

- Built into the instrument cluster.

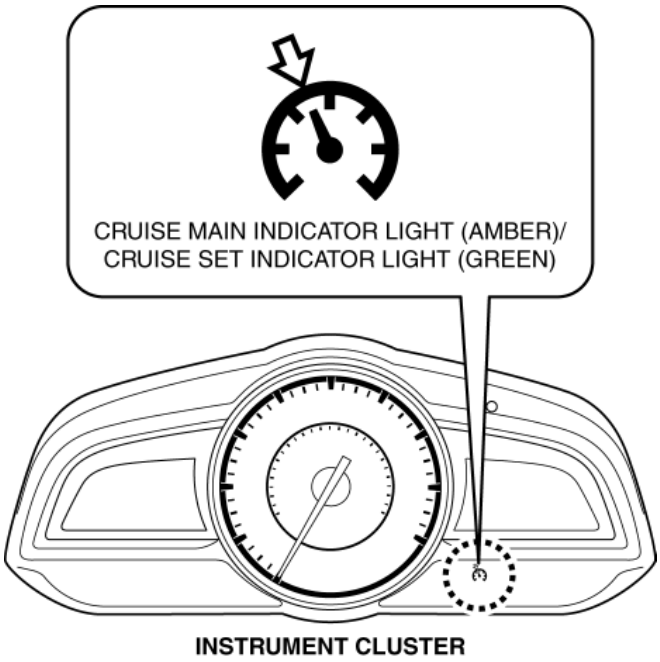

Operation

- The illumination conditions for the cruise main indicator light (amber) and cruise set indicator light (green) are as follows:

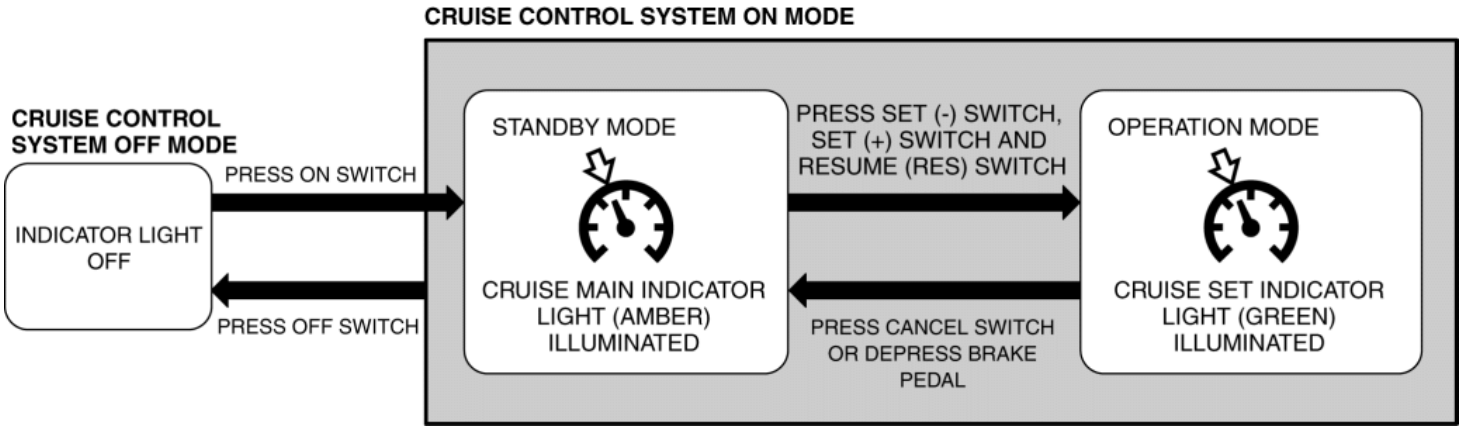

- The PCM sends a cruise main indicator light (amber) or cruise set indicator light (green) illumination request signal to the instrument

cluster via CAN communication through the front body control module (FBCM).

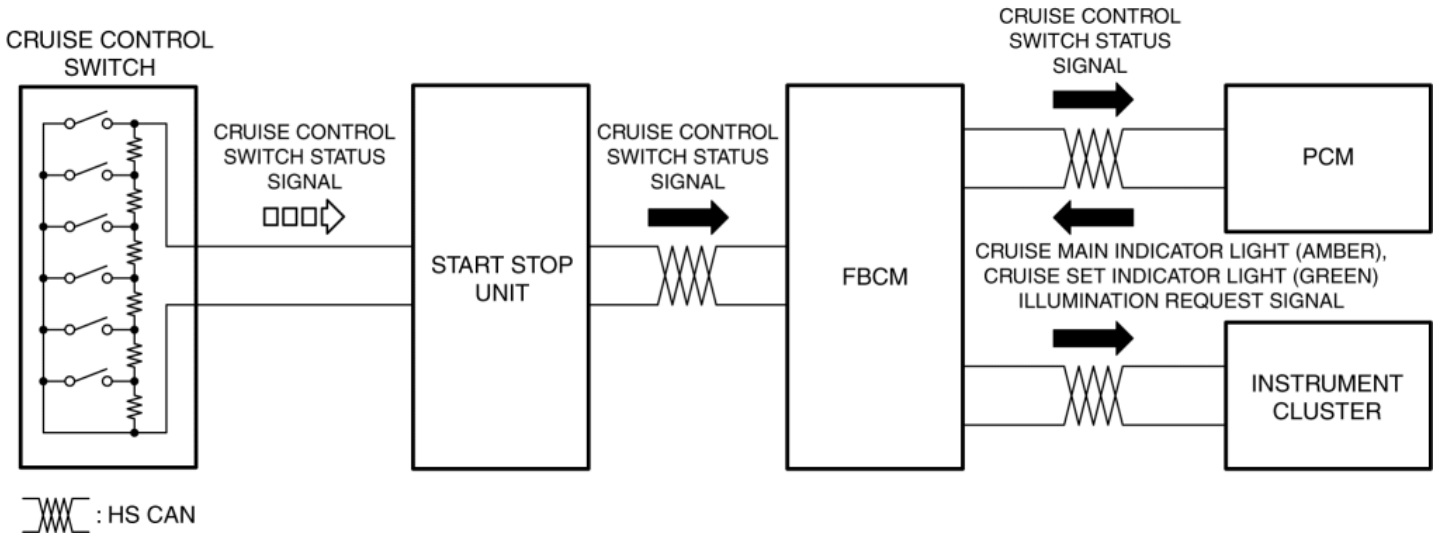

Fail-safe

- Function not equipped.

2014 - Mazda3 - Engine

ENGINE CONTROL SYSTEM [SKYACTIV-G 2.0, SKYACTIV-G 2.5]

Outline

- L-jetronic*1 and D-jetronic*2 type detectors have been combined for intake air amount detection, improving the accuracy of the intake air amount measurement.
    - MAF sensor adopted
    - MAP sensor adopted
    - IAT sensor No.1 and No.2 adopted
- Valve timing control has been adopted on both sides of the intake and exhaust, improving fuel economy and emission performance.

    Intake side: Electric variable valve timing control

    - Intake CMP sensor adopted
    - Electric variable valve timing motor/driver adopted
    - Electric variable valve timing relay adopted

    Exhaust side: Hydraulic variable valve timing control

    - Exhaust CMP sensor adopted
- Engine oil control has been adopted reducing engine load.
    - Engine oil solenoid valve adopted
- With the adoption of fuel pump control, fuel pump power consumption has been reduced, improving fuel economy.
    - Fuel pump control module adopted
- Generator output control adopted, fuel economy/idling stability improved.
    - Current sensor adopted
- With the adoption of the ion sensor, which detects pre-ignition, engine reliability has been improved.
- LIN communication has been adopted to the current sensor and active air shutter for simplified wiring harnesses. (with i-ELOOP)
- With the adoption of the i-ELOOP, charging efficiency during deceleration is improved. Because loss of engine force does not occur when the battery is recharged during deceleration, fuel economy is improved. (with i-ELOOP)

*1

Measures the intake air amount directly using the MAF sensor.

*2

Measures the intake air pressure introduced into the cylinder using the MAP sensor and calculates the intake air amount indirectly.

Structural View

Input device

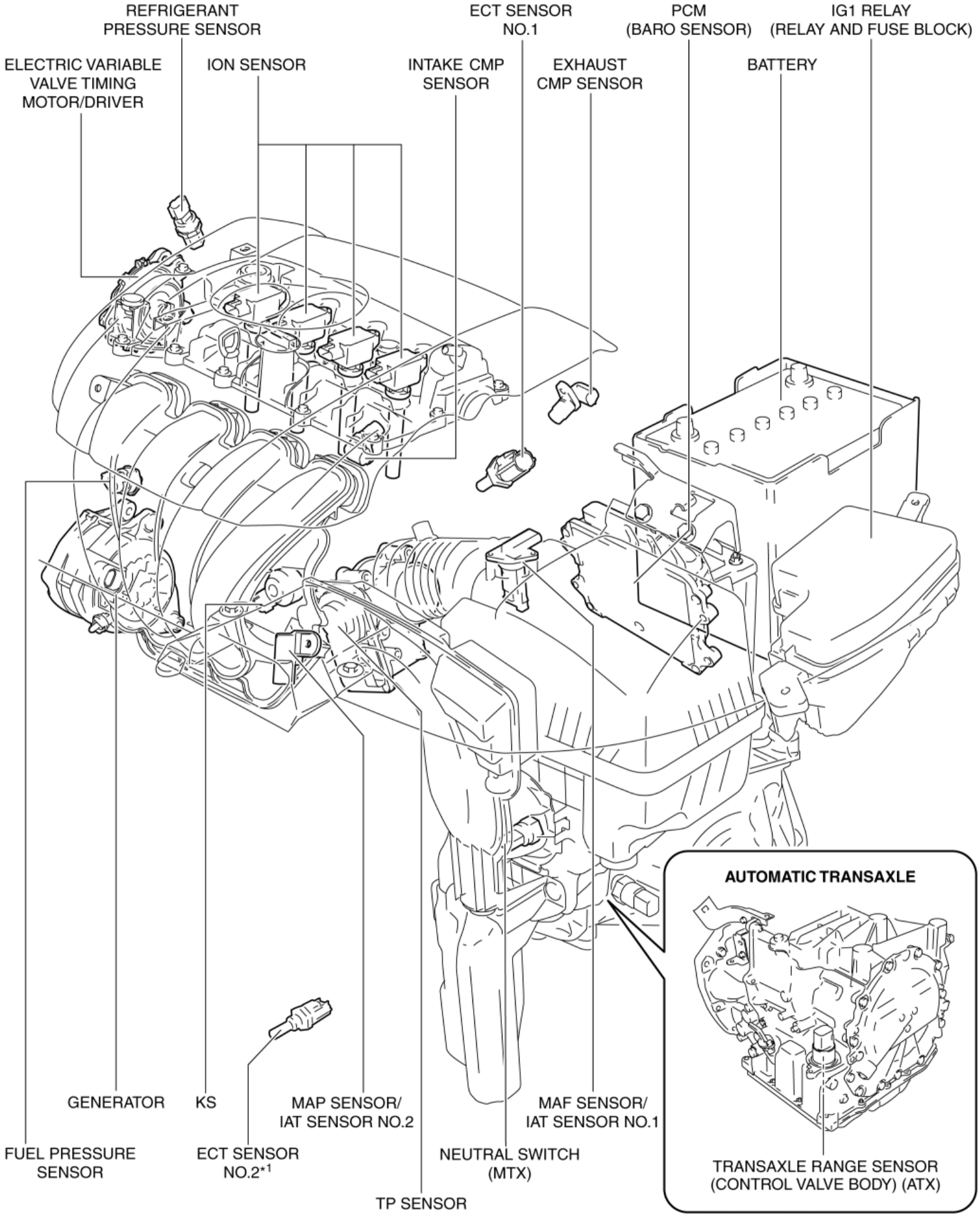
REFRIGERANT PRESSURE SENSOR
ECT SENSOR NO.1
PCM (BARO SENSOR)
IG1 RELAY (RELAY AND FUSE BLOCK)
ELECTRIC VARIABLE VALVE TIMING MOTOR/DRIVER
ION SENSOR
INTAKE CMP SENSOR
EXHAUST CMP SENSOR
BATTERY
GENERATOR
KS
MAP SENSOR/ IAT SENSOR NO.2
MAF SENSOR/ IAT SENSOR NO.1
FUEL PRESSURE SENSOR
ECT SENSOR NO.2*1
NEUTRAL SWITCH (MTX)
TP SENSOR
AUTOMATIC TRANSAXLE
TRANSAXLE RANGE SENSOR (CONTROL VALVE BODY) (ATX)

*1

U.S.A. and CANADA

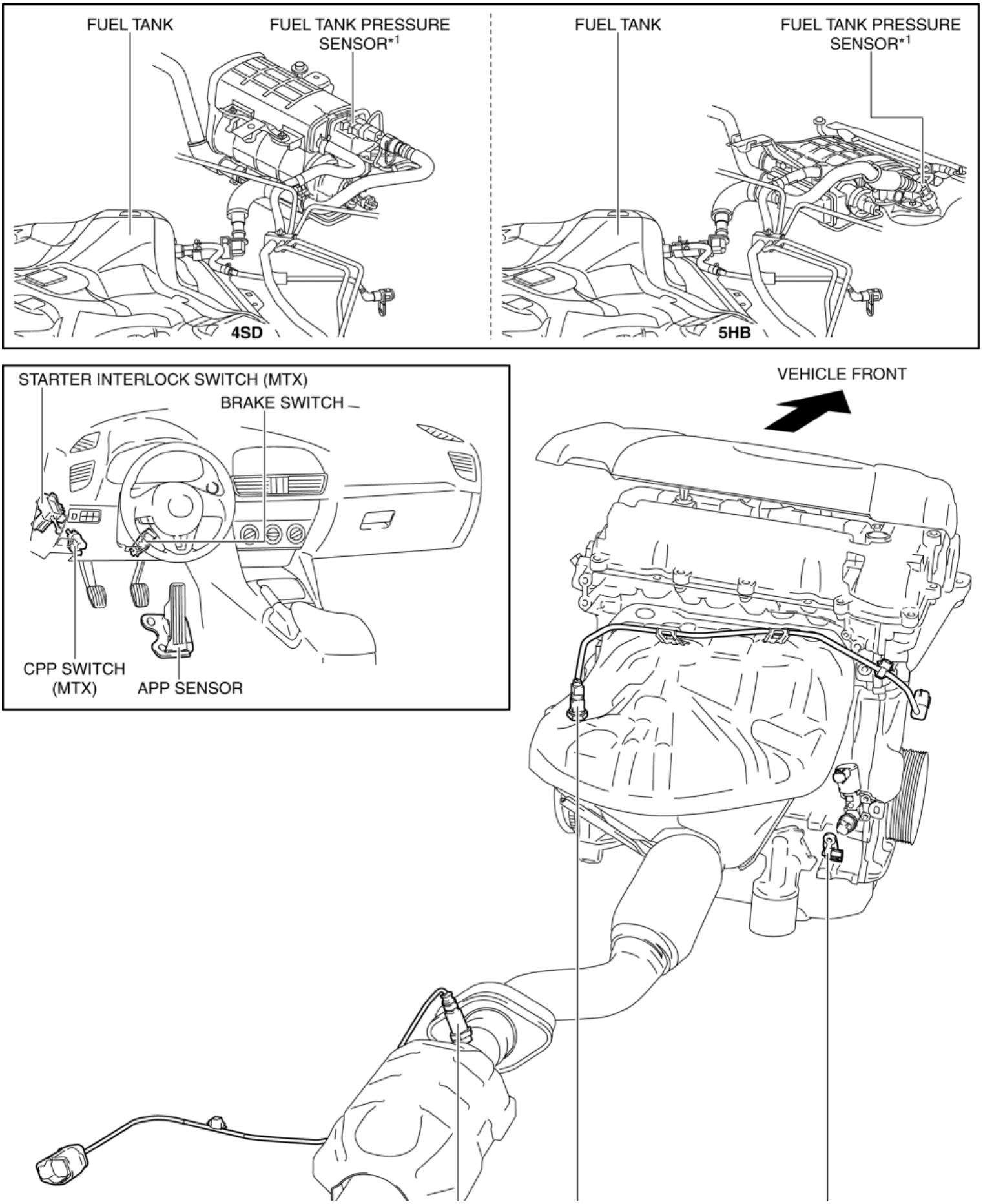

*1

U.S.A. and CANADA

Output device

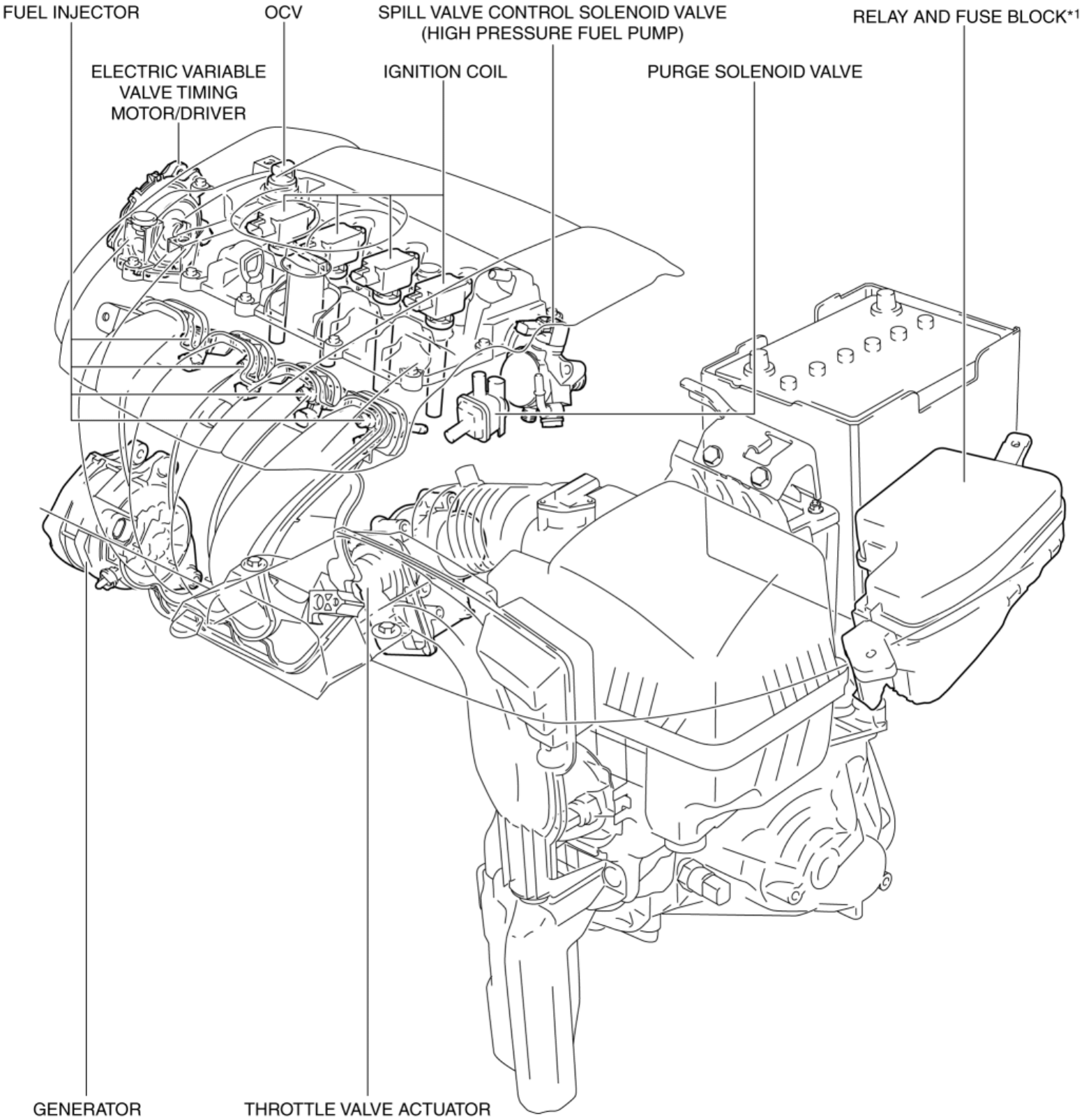

*1

Fuel pump relay, starter relay, electric variable valve timing relay, fuel injector relay, main relay, A/C relay, cooling fan relay No.1, cooling fan relay No.2, cooling fan relay No.3

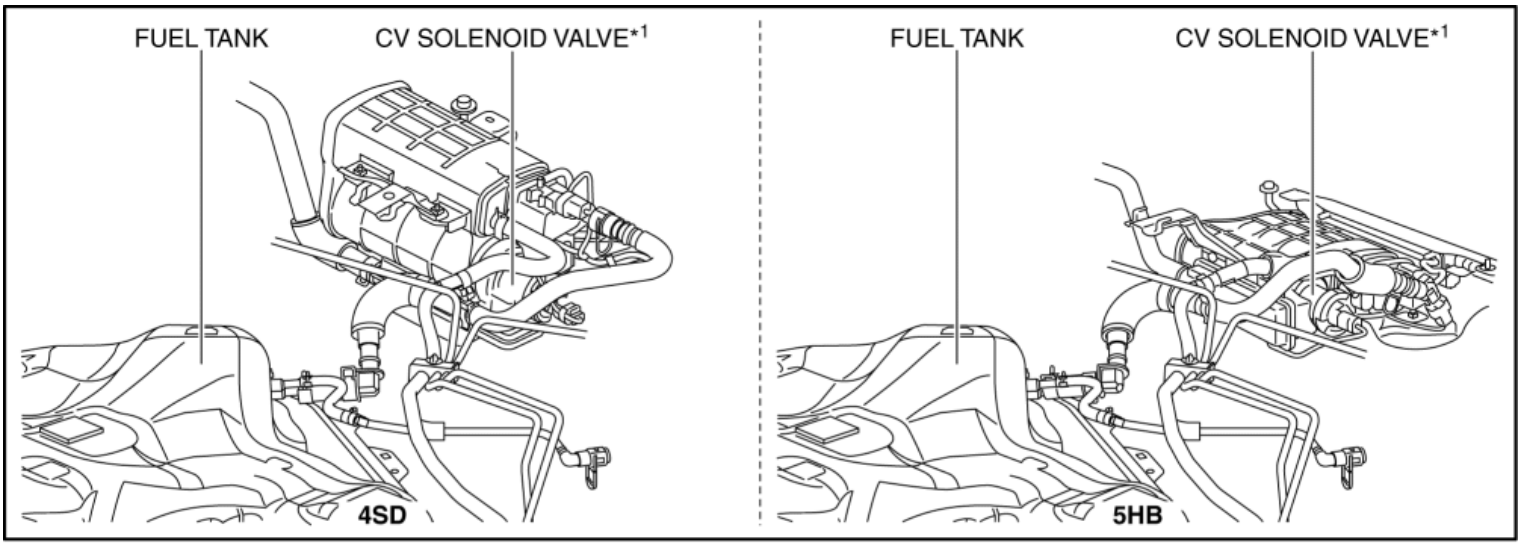

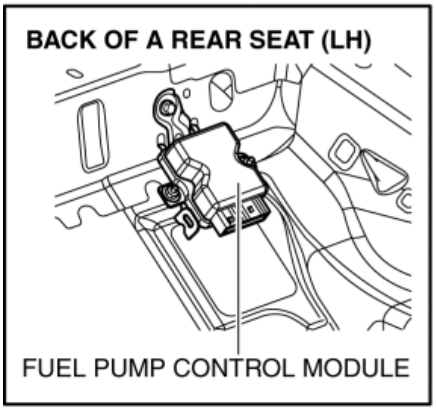

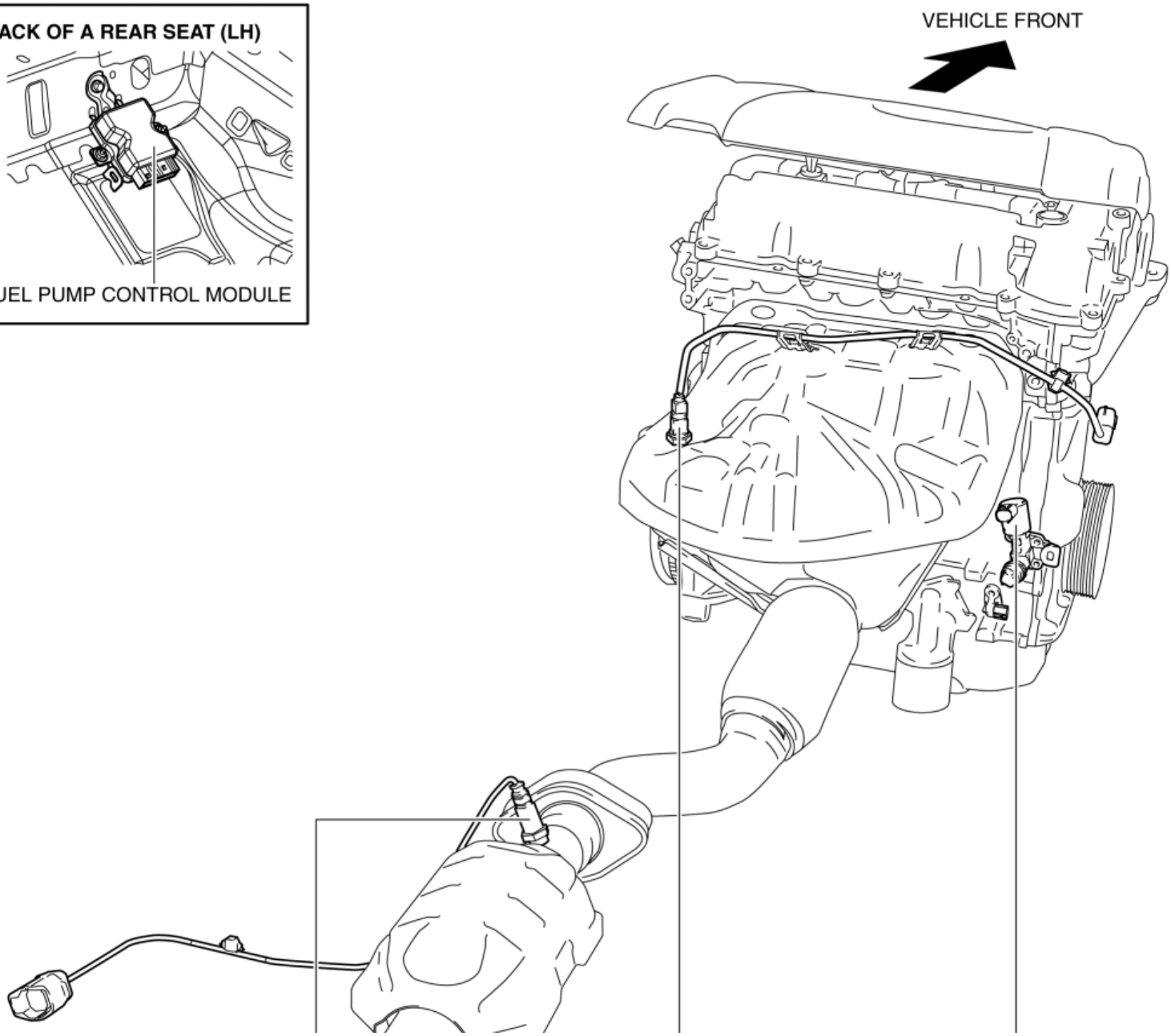

*1

U.S.A. and CANADA

System Diagram

Input device

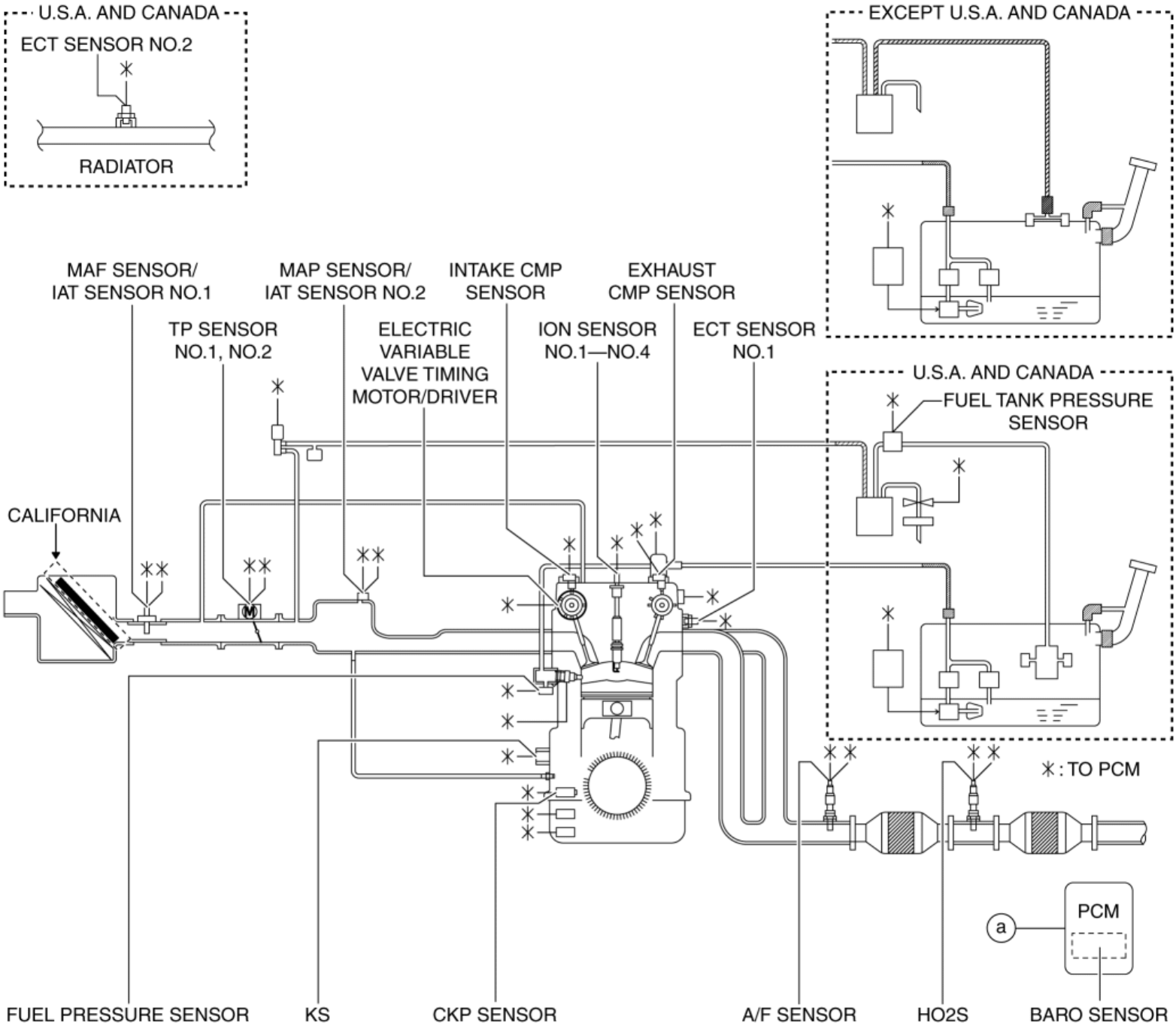

(a) : APP SENSOR NO.1, NO.2, IG1 RELAY, GENERATOR (STATOR COIL), BRAKE SWITCH (NO.1 SIGNAL), (NO.2 SIGNAL), BATTERY, REFRIGERANT PRESSURE SENSOR, TRANSAXLE RANGE SENSOR (ATX), STARTER INTERLOCK SWITCH (MTX), NEUTRAL SWITCH (MTX), CPP SWITCH (MTX), CAN

Output device

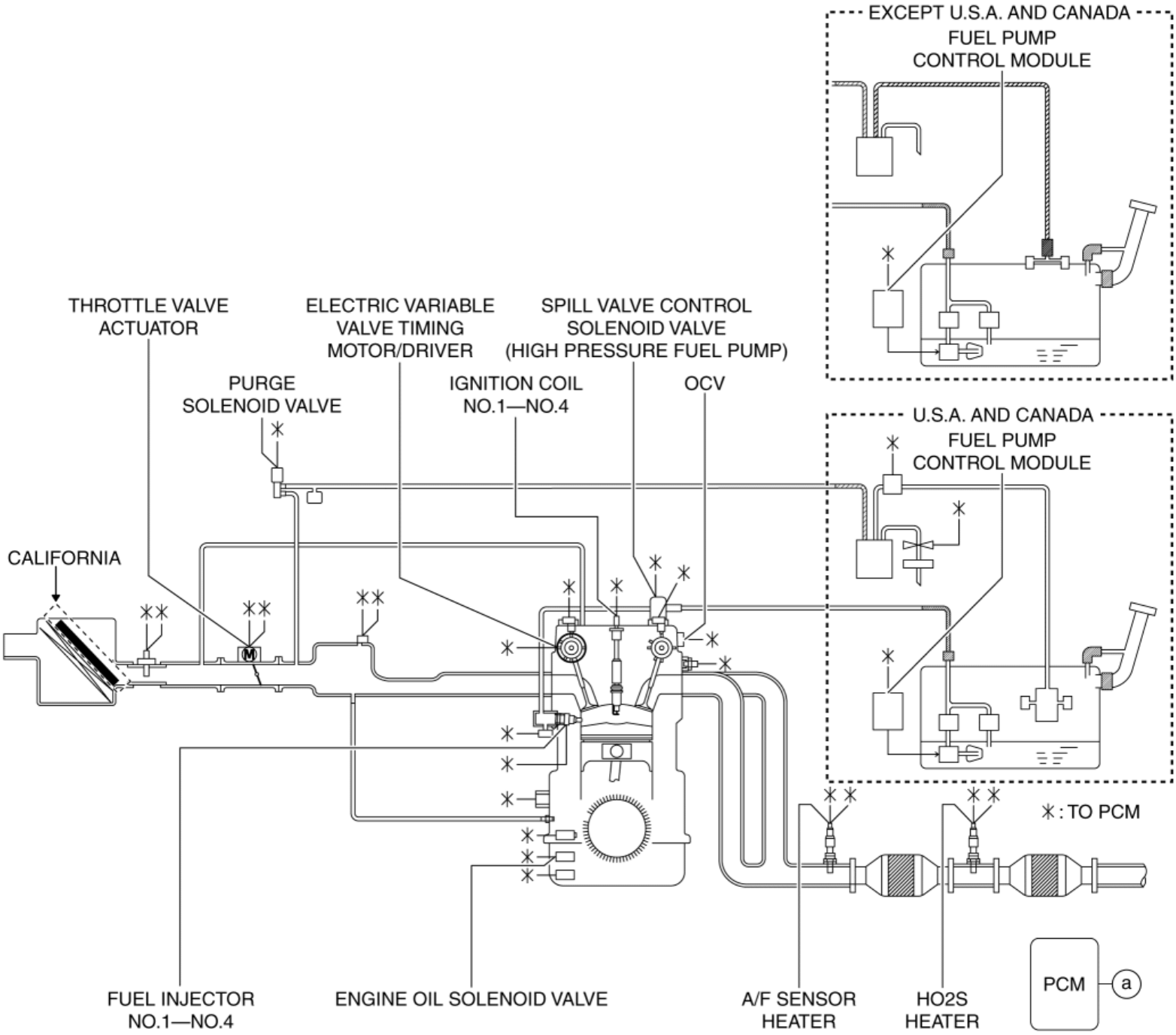

(a) : GENERATOR (FIELD COIL), CV SOLENOID VALVE, COOLING FAN RELAY NO.1, NO.2, NO.3, FUEL PUMP RELAY, STARTER RELAY, ELECTRIC VARIABLE VALVE TIMING RELAY, FUEL INJECTOR RELAY, MAIN RELAY, A/C RELAY, CAN

System Wiring Diagram

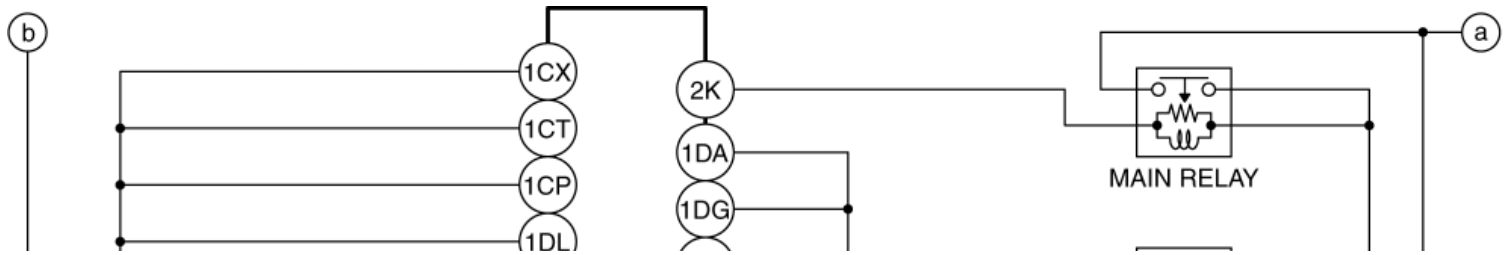

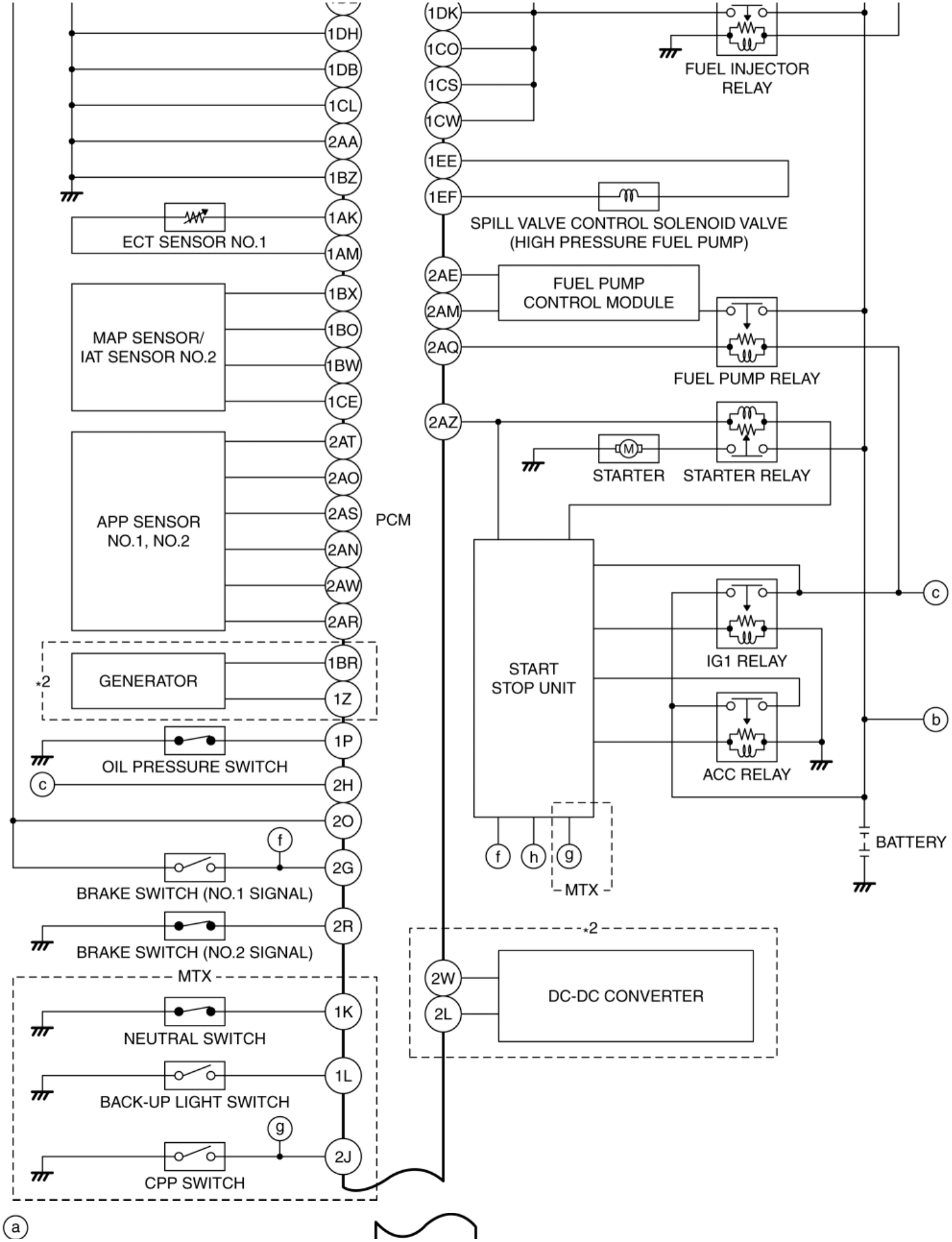
1DH
1DB
1CL
2AA
1BZ
1AK
ECT SENSOR NO.1
1AM
1BX
MAP SENSOR/
IAT SENSOR NO.2
1BO
1BW
1CE
2AT
2AO
APP SENSOR
NO.1, NO.2
2AS
PCM
2AN
2AW
2AR
*2
GENERATOR
1BR
1Z
1P
OIL PRESSURE SWITCH
c
2H
2O
f
2G
BRAKE SWITCH (NO.1 SIGNAL)
2R
BRAKE SWITCH (NO.2 SIGNAL)
MTX
1K
NEUTRAL SWITCH
1L
BACK-UP LIGHT SWITCH
g
2J
CPP SWITCH
a
1DK
1CO
1CS
1CW
FUEL INJECTOR
RELAY
1EE
1EF
SPILL VALVE CONTROL SOLENOID VALVE
(HIGH PRESSURE FUEL PUMP)
2AE
2AM
FUEL PUMP
CONTROL MODULE
2AQ
FUEL PUMP RELAY
2AZ
M
STARTER
STARTER RELAY
START
STOP UNIT
c
IG1 RELAY
b
ACC RELAY
BATTERY
f
h
g
MTX
*2
2W
2L
DC-DC CONVERTER

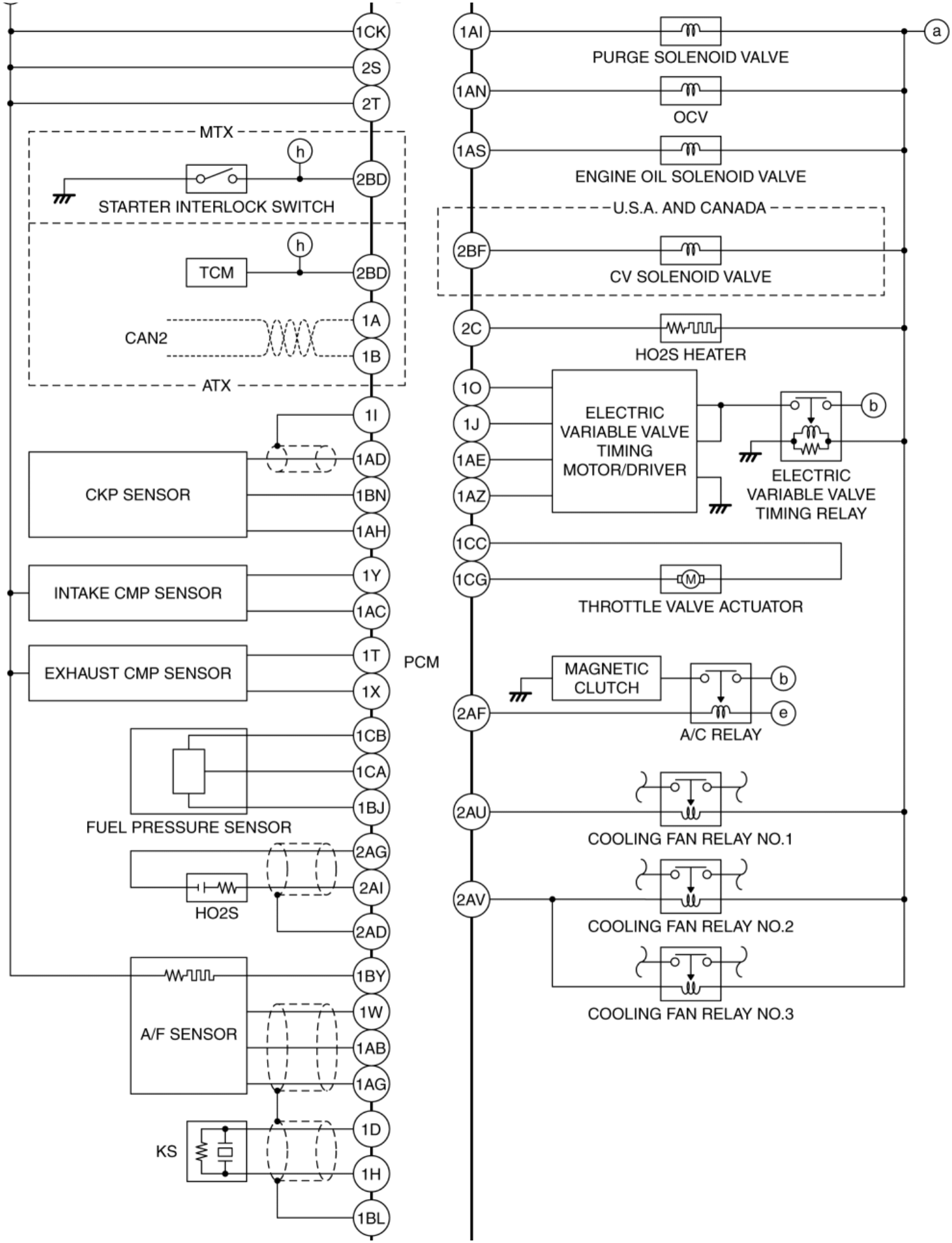
1CK
2S
2T
MTX
h
2BD
STARTER INTERLOCK SWITCH
h
TCM
2BD
1A
CAN2
1B
ATX
1I
1AD
CKP SENSOR
1BN
1AH
1Y
INTAKE CMP SENSOR
1AC
1T
EXHAUST CMP SENSOR
1X
PCM
1CB
1CA
1BJ
FUEL PRESSURE SENSOR
2AG
2AI
HO2S
2AD
1BY
1W
A/F SENSOR
1AB
1AG
1D
KS
1H
1BL
1AI
PURGE SOLENOID VALVE
a
1AN
OCV
1AS
ENGINE OIL SOLENOID VALVE
U.S.A. AND CANADA
2BF
CV SOLENOID VALVE
2C
HO2S HEATER
1O
1J
1AE
1AZ
ELECTRIC VARIABLE VALVE TIMING MOTOR/DRIVER
b
ELECTRIC VARIABLE VALVE TIMING RELAY
1CC
1CG
M
THROTTLE VALVE ACTUATOR
MAGNETIC CLUTCH
b
2AF
e
A/C RELAY
2AU
COOLING FAN RELAY NO.1
2AV
COOLING FAN RELAY NO.2
COOLING FAN RELAY NO.3

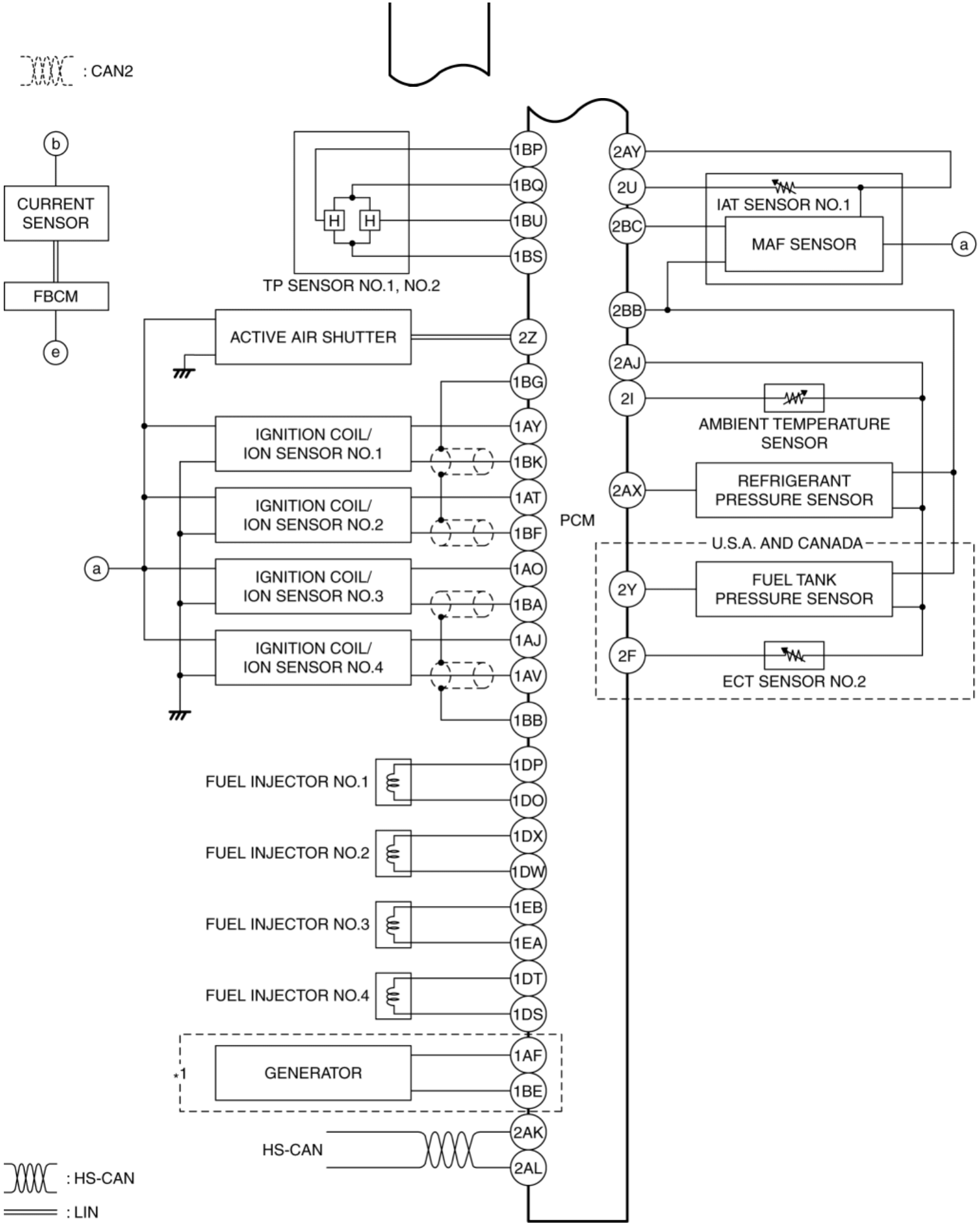
: CAN2
b
CURRENT SENSOR
FBCM
e
TP SENSOR NO.1, NO.2
H
H
1BP
1BQ
1BU
1BS
ACTIVE AIR SHUTTER
2Z
1BG
IGNITION COIL/ ION SENSOR NO.1
1AY
1BK
IGNITION COIL/ ION SENSOR NO.2
1AT
1BF
a
IGNITION COIL/ ION SENSOR NO.3
1AO
1BA
IGNITION COIL/ ION SENSOR NO.4
1AJ
1AV
1BB
FUEL INJECTOR NO.1
1DP
1DO
FUEL INJECTOR NO.2
1DX
1DW
FUEL INJECTOR NO.3
1EB
1EA
FUEL INJECTOR NO.4
1DT
1DS
*1
GENERATOR
1AF
1BE
HS-CAN
2AK
2AL
PCM
2AY
2U
IAT SENSOR NO.1
2BC
MAF SENSOR
a
2BB
2AJ
2I
AMBIENT TEMPERATURE SENSOR
2AX
REFRIGERANT PRESSURE SENSOR
U.S.A. AND CANADA
2Y
FUEL TANK PRESSURE SENSOR
2F
ECT SENSOR NO.2
: HS-CAN
: LIN

*1

Vehicles without i-ELOOP

*2

Vehicles with i-ELOOP

Block Diagram

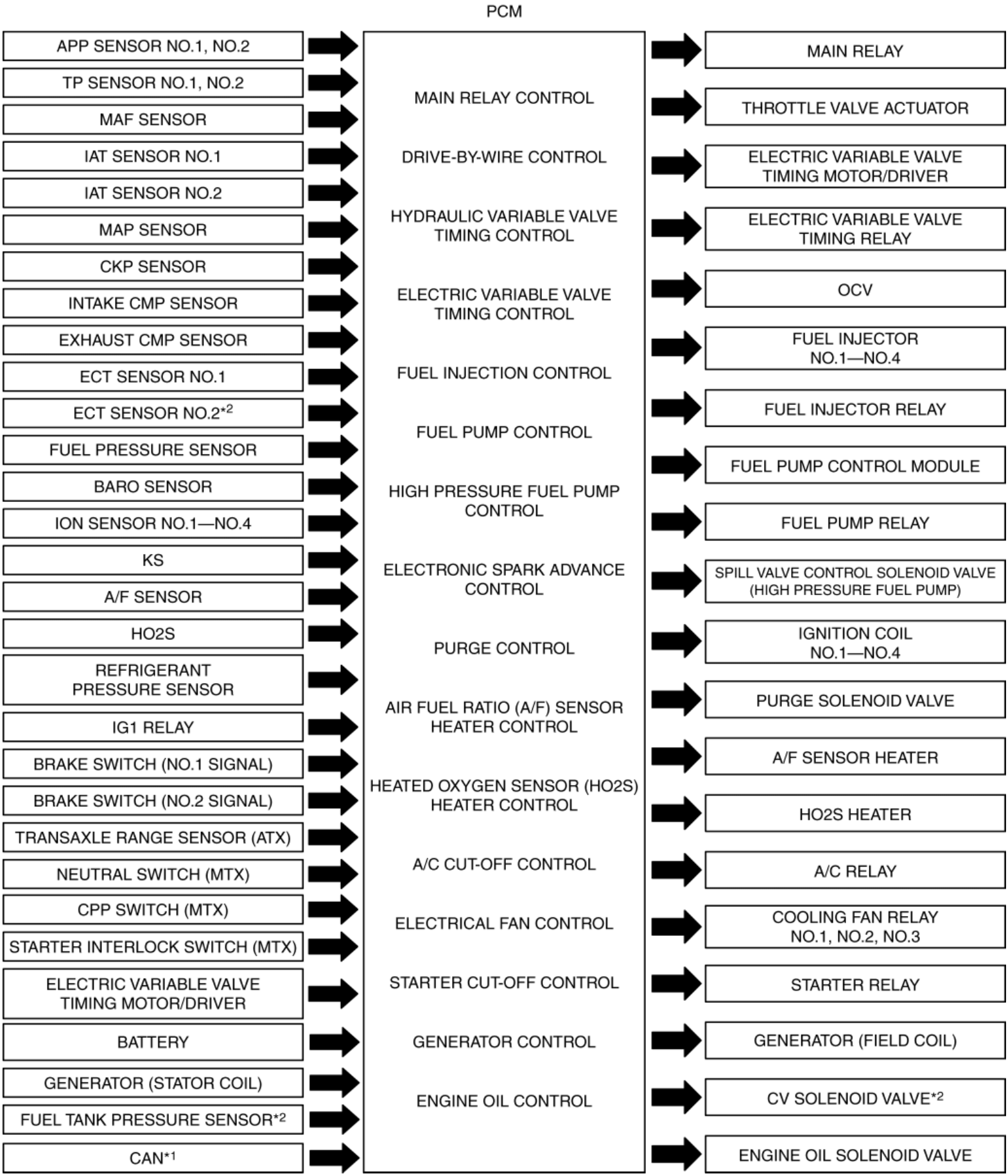

*1 **TCM (ATX), DSC HU/CM, instrument cluster, start stop unit**

*2

Only used for OBD.

Relation Chart

- Each control system and their related input and output parts are as follows.

×: Applicable

Item	MAIN RELAY CONTROL	DRIVE-BY-WIRE CONTROL	HYDRAULIC VARIABLE VALVE TIMING CONTROL	ELECTRIC VARIABLE VALVE TIMING CONTROL	FUEL INJECTION CONTROL	FUEL PUMP CONTROL	HIGH PRESSURE FUEL PUMP CONTROL	ELECTRONIC SPARK ADVANCE CONTROL	PURGE CONTROL	A/F SENSOR HEATER CONTROL	HO2S HEATER CONTROL	A/C CUT-OFF CONTROL	ELECTRICAL FAN CONTROL	STARTER CUT-OFF CONTROL	GENERATOR CONTROL	ENGINE OIL CONTROL
Input device																
APP sensor No.1, No.2		×	×		×			×	×			×	×			
TP sensor No.1, No.2		×			×							×				
MAF sensor		×	×	×	×		×	×	×	×			×			×
IAT sensor No.1		×		×	×			×	×				×		×	
IAT sensor No.2		×		×	×			×								
MAP sensor		×		×	×			×	×							×
CKP sensor		×	×	×	×	×	×	×	×	×	×	×	×	×	×	×
Intake CMP sensor		×		×	×			×								
Exhaust CMP sensor		×	×		×		×	×								
ECT sensor No.1		×	×	×	×		×	×	×	×	×	×	×	×	×	×
Fuel pressure sensor		×			×	×	×									
BARO sensor		×		×	×				×				×			
Ion sensor No.1—No.4				×	×											
KS								×								
A/F sensor					×				×							
HO2S					×											
Refrigerant pressure sensor												×	×			

IG1 relay	×		×		×	×		×		×		×	×		
Brake switch (No.1 signal)		×													
Brake switch (No.2 signal)		×													
Transaxle range sensor (ATX)		×			×								×		
Neutral switch (MTX)		×			×			×			×				
CPP switch (MTX)		×			×			×			×				
Starter interlock switch (MTX)													×		
Electric variable valve timing motor/driver				×											
Battery			×			×	×	×	×					×	
Generator (Stator coil)		×													
CAN*1		×			×	×		×			×	×	×		
ECT sensor No.2	Only used for OBD.														
Fuel tank pressure sensor	Only used for OBD.														
Output device															
Main relay	×														
Throttle valve actuator		×													
Electric variable valve timing motor/driver				×	×										
Electric variable valve timing relay				×											
OCV			×												
Fuel injector No.1—No.4					×										
Fuel injector relay					×										
Fuel pump control module						×									
Fuel pump relay						×									
Spill valve control solenoid valve (High pressure fuel pump)							×								
Ignition coil No.1—No.4								×							
Purge solenoid valve									×						
A/F sensor heater										×					
HO2S heater										×					
A/C relay											×				

Cooling fan relay No.1, No.2, No.3												×			
Starter relay													×		
Generator (Field coil)														×	
Engine oil solenoid valve															×
CV solenoid valve	Only used for OBD.														

*1

TCM (ATX), DSC HU/CM, instrument cluster, start stop unit

2014 - Mazda3 - Engine

MAIN RELAY CONTROL [SKYACTIV-G 2.0, SKYACTIV-G 2.5]

Outline

- Supplies power to each part by switching the main relay on/off at the optimal timing according to the vehicle conditions.

Block Diagram

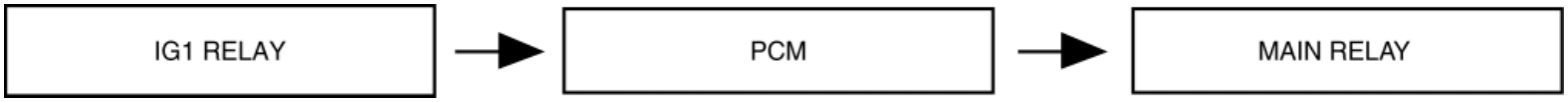

Operation

- When the ignition is switched ON, the main relay turns on and electrical power is supplied to each sensor and device.
- When the ignition is switched off from ON, an on-request signal is received from each control (such as drive-by-wire control, electric variable valve timing control) and the main relay turns on for a specified period.

2014 - Mazda3 - Engine

DRIVE-BY-WIRE CONTROL [SKYACTIV-G 2.0, SKYACTIV-G 2.5]

Outline

- Calculates the optimum target throttle valve opening angle and controls the throttle valve actuator, which allows the driver to drive the vehicle at will.
- The drive-by-wire control is composed of the idle air control, accelerator control, traction control, excess engine speed control, overspeed control, electric variable valve timing cooperation control, engine oil temperature control, cruise control system, and the brake override system.

Control Table

Control name	Control outline
Idle air control	• While idling, the throttle valve opening is controlled so that the idle speed is at the target idle speed.
Accelerator control	• The throttle valve opening angle is controlled according to the amount the accelerator pedal is depressed. In addition, there is a fully closed learning function for learning deterioration over time and constant correction of the optimum throttle opening angle.
Traction control	• The throttle valve opening angle is controlled by the torque up/reduction request signal from the DSC HU/CM.
Excess engine speed control	• If the engine reaches a high engine speed, the throttle valve opening angle is controlled to protect the engine.
Overspeed control	• If the vehicle reaches a high speed, the throttle valve is closed to keep the vehicle speed below the speed limit.
Electric variable valve timing cooperation control	• Pumping loss is reduced by controlling the throttle valve opening angle according to the phase of the intake valve timing.
Engine oil temperature control	• If the PCM determines that the engine oil temperature is too high, the throttle valve opening angle is decreased and the engine speed is reduced.
Cruise control system (with cruise control system)	• Sets the vehicle speed by operation of the cruise control switch and controls the throttle valve opening angle so that it becomes close to the set vehicle speed.
Brake override system	• If the brake pedal is depressed with the accelerator pedal depressed, the vehicle can be stopped safely by closing the throttle valve. As a result, the brake operation takes priority over the accelerator pedal operation.

Block Diagram

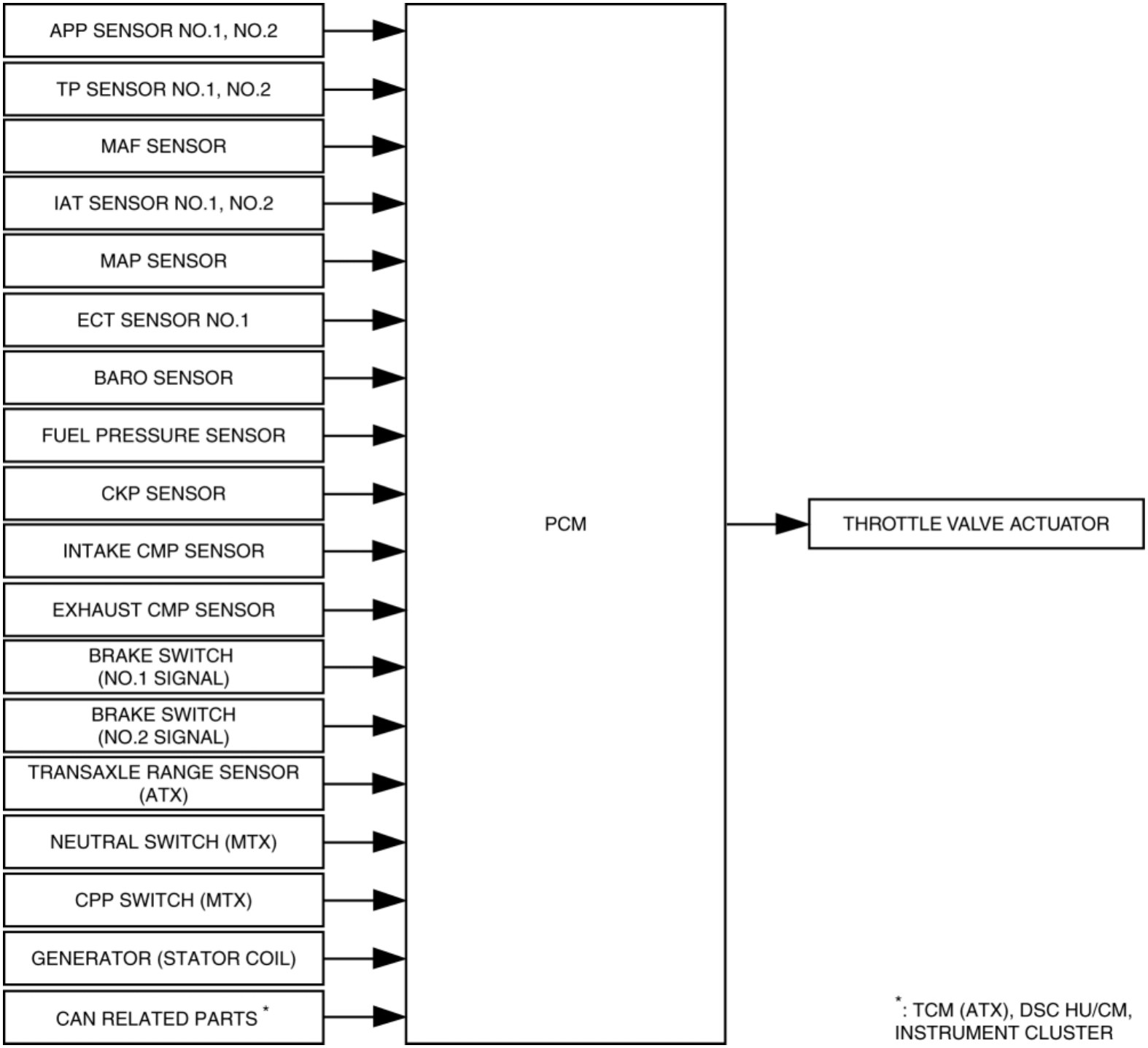

Operation

Idle air control

- The idle speed control controls the throttle valve opening angle according to the engine torque to achieve the target idle speed.
- The PCM drives the throttle valve actuator so that the actual idle speed approaches the target idle speed.

  Target idle speed calculation

- Calculates the target idle speed according to the purpose of use such as the basic idle speed and fast idle up*.
  - *: The catalytic converter is activated quickly after cold-engine starts. (Engine speed increases up to **approx. 2,000 rpm**)

Engine torque calculation to realize target idle speed

- The engine torque is controlled in consideration of the following factors to realize the target idle speed.
  - Feedback: The torque difference is added so that the actual idle speed approaches the target idle speed.
  - Engine mechanical resistance: Changes according to the engine coolant temperature.
  - Pumping loss: Changes based on the valve timing and intake air pressure.
  - External electric load: Changes depending on the A/C ON/OFF, generator power generation amount.
  - D position torque: Adds load torque from torque converter. (ATX)

Accelerator control

- The accelerator control controls the throttle valve opening angle according to the accelerator pedal depression amount.
- The PCM controls the throttle valve actuator so that the actual throttle valve opening angle approaches the final target throttle valve opening angle.
- The target throttle valve opening angle is determined by the transmission gear position, accelerator pedal depression amount, and vehicle speed.
- Because deviation in the throttle valve opening angle due to deterioration over time is corrected when the ignition is switched off, the PCM operates the fully-closed learning function. The fully-closed learning function is a function for learning the fully-closed throttle valve position.

Traction control

- The PCM calculates the target throttle valve opening angle based on torque up/reduction request signal and engine speed from the DSC HU/CM.

Excess engine speed control

- If the engine reaches high-speed rotation*, the throttle valve is closed to maintain the engine speed at the limit speed or less to protect the engine.

*

Value fluctuates depending on various conditions.

Overspeed control

- If the vehicle reaches a high speed, the throttle valve is closed to keep the vehicle speed below the speed limit.

Electric variable valve timing cooperation control

- The PCM calculates the target throttle valve opening angle according to change in the phase of the intake valve timing due to electric variable valve timing control.

Engine oil temperature control

- If **6 minutes** have elapsed with the following condition met, the engine speed is reduced by decreasing the throttle valve opening angle to protect the engine (determination of engine oil temperature is high). DTC P117A:00 is recorded simultaneously.
  - Transmission in 5th
  - Engine speed: **6,100 rpm or more** (SKYACTIV-G 2.0)
  - Engine speed: **5,800 rpm or more** (SKYACTIV-G 2.5)
  - ECT: **88.5 °C {191 °F} or more**

Cruise Control

- Calculates the throttle valve opening angle based on the deviation of the actual vehicle speed from the set vehicle speed which was set with the cruise control switch and the throttle valve actuator.
- The PCM controls the actual vehicle speed so that it is close to the set vehicle speed.
- The cruise control includes the cruise control operation condition and the cruise control stop condition.

Cruise control operation condition

- When all of the following conditions are met, execution of the cruise control system is enabled (cruise control standby status).
    - ON switch: ON
    - Vehicle speed: **Exceeds 25 km/h {16 mph}**

Cruise control stop condition

- When any of the following conditions are met even while in cruise control, the PCM stops the cruise control and clears the set vehicle speed.
    - Ignition: OFF
    - ON switch: OFF
    - Cruise control related DTCs (P0504:00) detected
- When any of the following conditions are met even while in cruise control, the PCM stops the cruise control while storing the set vehicle speed.
    - CANCEL switch: ON
    - Transaxle range sensor: P/N position (ATX)
    - CPP switch: ON (clutch pedal depressed) (MTX)
    - Neutral switch: ON (neutral position) (MTX)
    - Vehicle speed: **Less than 20.5 km/h {12.7 mph}**
    - Brake switch: ON (brake pedal depressed)
    - Brake fluid pressure: **0.3 MPa {3 kgf/cm^2, 44 psi} or more**
    - ATX malfunction (ATX)

Cruise control function

- The cruise control includes accelerating, coasting, resume, tap-down, tap-up and downshift functions.

Function List

Function	Contents
Accelerating	• When any of the following conditions are met while driving in cruise control and when the SET+ switch is continuously pressed, the PCM gradually increases the set vehicle speed. ▪ The SET+ switch is on one time or more during resume operation.
Coasting	• When the SET− switch is continuously pressed, the PCM gradually decreases the set vehicle speed.
Resume	• When the RESUME (RES) switch signal is send to the PCM during regular driving (cruise control is stopped) and the previously set vehicle speed is stored in the PCM, the PCM sets the set vehicle speed to the previously set vehicle speed and begins control.
Tap down	• When all of the following conditions are met while driving in cruise control, the PCM decreases the set vehicle speed by **1 km/h {0.6 mph}**. ▪ SET+ switch off ▪ The SET− switch switches from off to on ▪ When actual vehicle speed is lower (set vehicle speed +2 km/h {+1 mph})

Tap-up	• When all of the following conditions are met, the PCM increases the set vehicle speed by 1 km/h {0.6 mph}. ▪ During cruise control ▪ The SET+ switch switches from off to on ▪ When actual vehicle speed is lower (set vehicle speed +2 km/h {+1 mph})
Downshift	• When the following conditions are met, a downshift signal is sent to the TCM (ATX) via CAN. ▪ SET+ switch on ▪ Target vehicle acceleration is not reached • If the increase in vehicle speed on the down slope is high, the PCM sends a down shift signal to the TCM (ATX).

Brake override system

Brake override system operation conditions

- It gives priority to the brake operation if a malfunction occurs with the accelerator pedal such as if the accelerator pedal is depressed and does not return. The throttle valve is closed if the brake pedal is depressed while the accelerator pedal is in a depressed condition until the vehicle is safely decelerated and comes to a complete stop.

Operation start conditions	• If either one of the following conditions is met with the brake pedal depressed for the specified time*1 or more while the accelerator pedal is depressed, the PCM adjusts the throttle valve opening angle so that the engine speed is at specification*2. **While driving vehicle** ▪ Accelerator pedal opening angle: **5% or more** from full-close ▪ Vehicle speed: **10 km/h {6.2 mph} or more** ▪ Engine speed: **875 rpm or more** **While vehicle stopped** ▪ Accelerator pedal opening angle: **5% or more** from full-close ▪ Shift position: neutral (MTX) ▪ Selector lever position: N position (ATX) ▪ Engine speed: **875 rpm or more**
Operation complete conditions	• If the following conditions are met while operating the brake override system, the PCM stops the operation of the brake override system and controls the throttle valve opening angle in accordance with the accelerator pedal opening angle. ▪ Accelerator pedal not depressed ▪ Brake pedal not depressed **NOTE:** • The brake override system operation stops by switching the ignition off.

*1 **Specified time is 0.6 to 10 s according to braking force calculated in PCM.**

*2 **Specification is 1,200 rpm while vehicle is stopped and 1,100 rpm while vehicle is driven.**

Prevention of brake override system unnecessary operation

- If a servicing procedure requiring the brake pedal and the accelerator pedal to be depressed simultaneously is performed, unnecessary operation of the brake override system can be prevented, if necessary.

Cancel conditions	• If the releasing procedure is implemented with the following conditions met within **30 s** after switching the ignition ON (KOEO), the brake override system does not operate until the recovery condition is met. ▪ Shift position: neutral (MTX) ▪ Selector lever position: N position (ATX) ▪ Vehicle speed: **0 km/h {0 mph}** **Releasing procedure** ▪ Depress the brake pedal for **10 s** with the accelerator pedal released. ▪ Repeatedly depress and release the accelerator pedal fully three times with the brake pedal depressed. ▪ Release the brake pedal.
Recovery condition	• The cancel conditions are reset when the ignition is switched off while the brake override system is canceled. As a result, the brake override system can operate.

Master warning light illumination request

- If any of the following conditions is met, the PCM sends the master warning light illumination request signal to the instrument cluster. The master warning light illuminates to alert the driver that there is a malfunction in the brake system.
  - Brake switch (No.1 signal) has a malfunction
  - Brake switch (No.2 signal) has a malfunction

Master warning light flash request

- If the cancel condition for preventing unnecessary operation of the brake override system is implemented, the PCM sends a brake override system cancel execution signal to the instrument cluster. The master warning light flashes to alert the driver that the brake override system is released.

2014 - Mazda3 - Engine

HYDRAULIC VARIABLE VALVE TIMING CONTROL [SKYACTIV-G 2.0, SKYACTIV-G 2.5]

Outline

- Changes the exhaust valve timing according to engine operation conditions to improve engine output, fuel economy, and emission performance.
- Based on each input signal, the PCM determines the optimum exhaust valve timing according to the engine operation conditions. The PCM drives the OCV, and switches the oil passages of the hydraulic variable valve timing actuator to control the exhaust valve timing at optimum.
- Based on the coordination with the electric variable valve timing control and by increasing the amount of overlap during high engine loads, nitrogen oxide (NOx) occurring largely at high temperatures is reduced by re-circulating exhaust gas into the combustion chamber, which also reduces combustion temperature.

Block Diagram

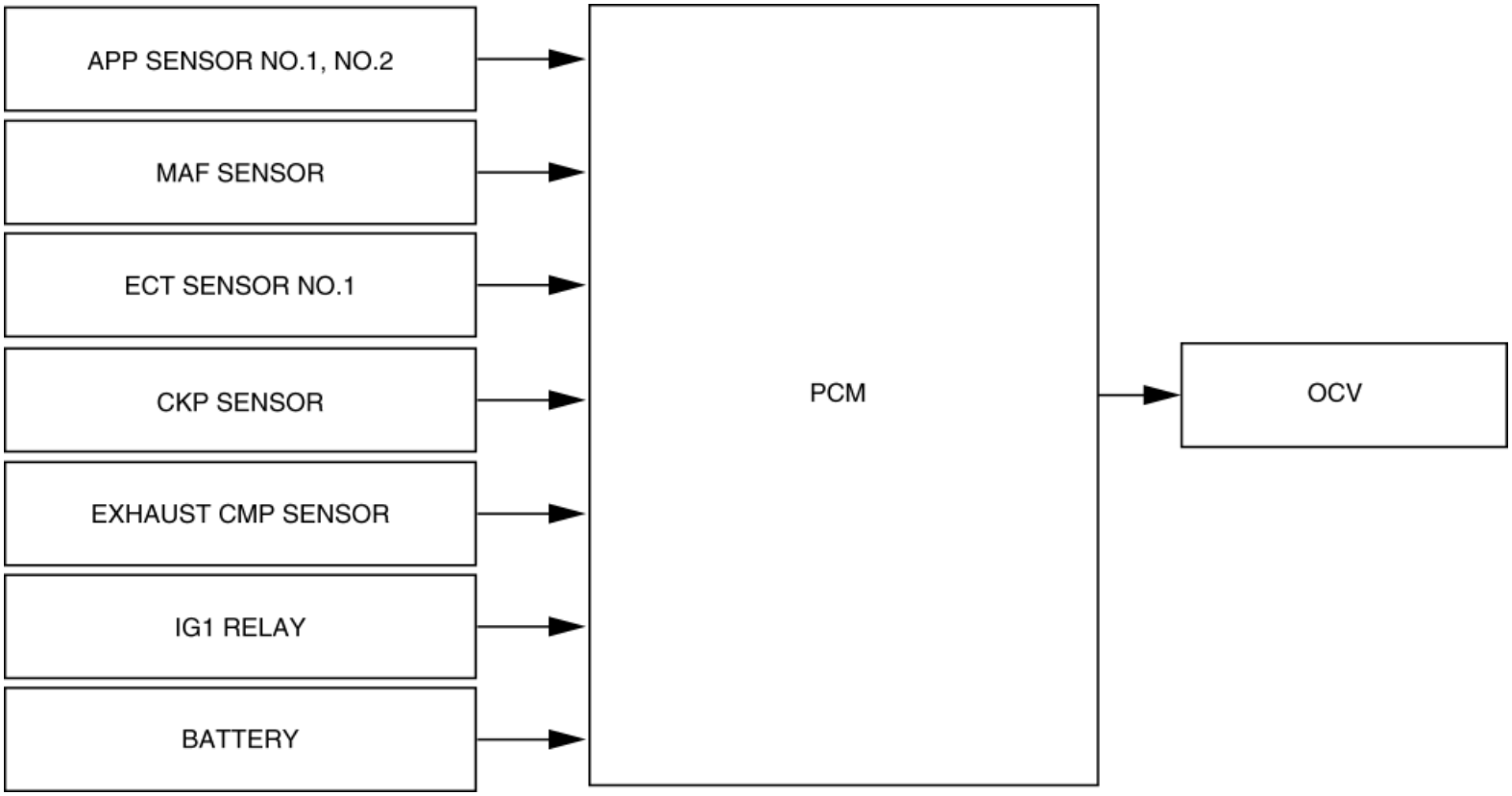

Operation

Exhaust valve timing determination

- The PCM controls current to the OCV to obtain optimum exhaust valve timing according to the engine operation conditions (target exhaust valve timing).
- In addition to controlling the OCV drive current value to obtain the target exhaust valve timing, the PCM compares the

value with the actual exhaust valve timing to correct the OCV drive current value if necessary.

Target exhaust valve timing

- The target exhaust valve timing is determined by the engine speed and the charging efficiency.

Actual exhaust valve timing

- The actual exhaust valve timing is calculated by subtracting the cam maximum advance learning value from the value (retard amount) detected by the exhaust CMP sensor and CKP sensor.

Cam maximum advance learning value

- Though the exhaust camshaft valve timing (including maximum advance position) is detected based on the difference in the rise between the exhaust CMP sensor and the CKP sensor signals, variation in signals from the assembly of each sensor occurs. As a result, the PCM stores the difference in the rise of the exhaust CMP sensor and crankshaft position signals to prevent detection of variations in the exhaust valve timing.

OCV drive current determination

- The PCM divides the oil control valve OCV drive range into three modes according to engine operation conditions. The OCV drive current is determined based on the target current calculated in each mode.

Range mode table

Mode name	Control description
Feedback mode	• The feedback mode constantly monitors whether the target exhaust valve timing is the determined value according to the engine operation conditions and controls the OCV drive current based on the results. **Mode execution condition** ▪ Except cleaning mode, cam maximum retard mode
Cleaning mode	• Cleaning mode is to remove foreign matter in the OCV oil passages. **Mode execution condition** ▪ During deceleration fuel cut ▪ Engine speed: **2,250—3,500 rpm** ▪ Engine coolant temperature: **80 °C {176 °F} or more**
Cam advance mode	• If the cam advance is appropriate according to engine operation conditions such as while in torque down execution during idling, the cam advance mode advances the exhaust valve timing and stabilizes the engine speed. **Mode execution condition** • When any of the following conditions is met: ▪ During engine cranking ▪ Engine speed: **Less than 875 rpm** ▪ Engine coolant temperature: **Less than 35 °C {95 °F}** ▪ Other conditions such as when maximum advance is appropriate according to engine rotation and load conditions

2014 - Mazda3 - Engine

ELECTRIC VARIABLE VALVE TIMING CONTROL [SKYACTIV-G 2.0, SKYACTIV-G 2.5]

Outline

- The PCM determines the optimum intake valve timing according to the engine operation conditions, and sends the motor drive signals to the electric variable valve timing driver. With the adoption of the electric drive system, variable intake valve timing can be controlled without any influence from the engine conditions, thus the fuel economy has been improved and pumping loss has been decreased.
- Based on the coordination with the hydraulic variable valve timing control and by increasing the amount of overlap during high engine loads, nitrogen oxide (NOx) occurring largely at high temperatures is reduced by re-circulating exhaust gas into the combustion chamber which reduces combustion temperature.

Block Diagram

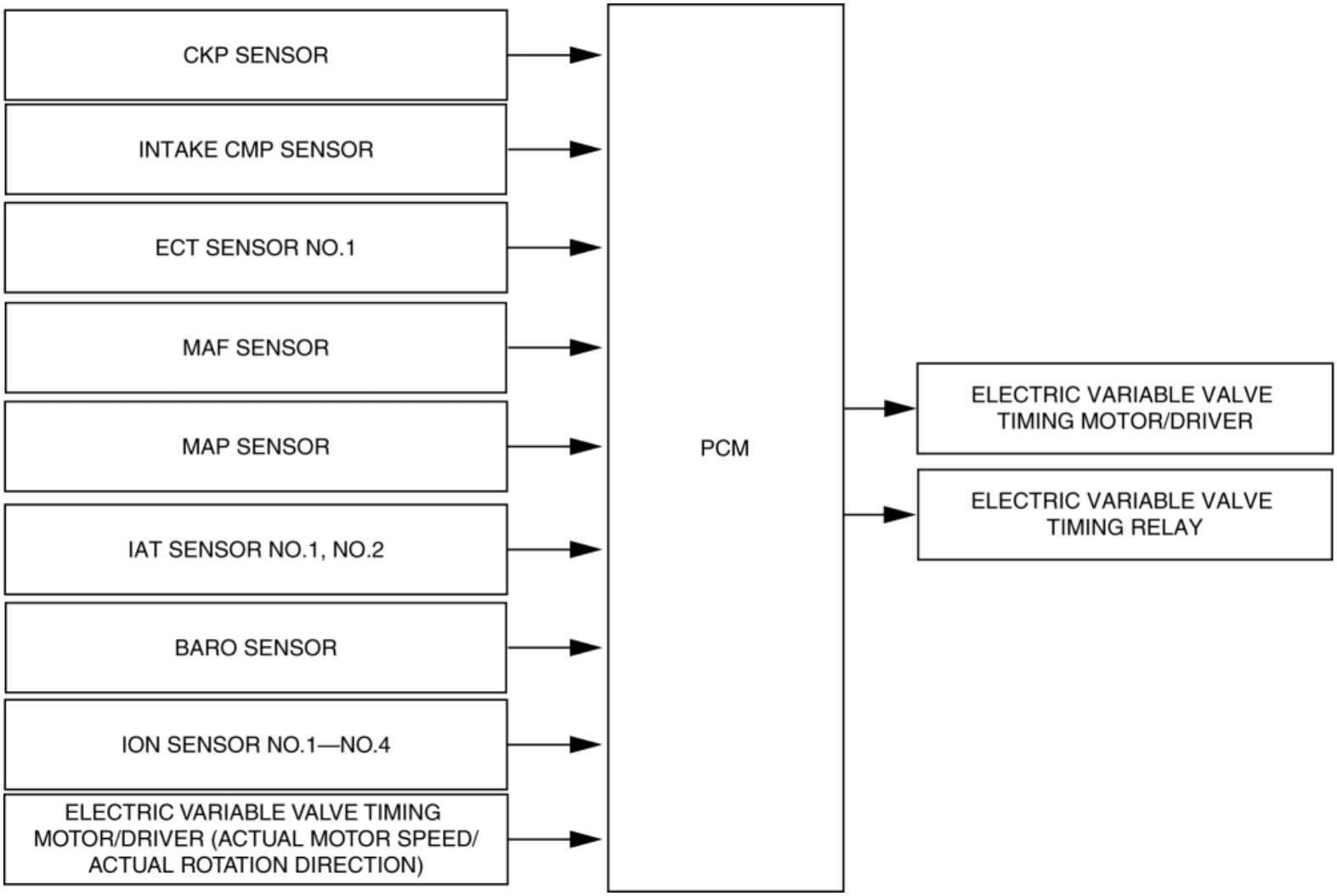

Operation

Intake valve timing determination

- The PCM determines the optimum target intake valve timing according to the engine operation conditions, and controls the output duty ratio to the electric variable valve timing driver so that the actual intake valve timing approaches close to the target intake valve timing.

Target valve timing

- The target intake valve timing is determined according to the engine speed, charging efficiency, and engine coolant temperature.

Actual valve timing

- The actual intake valve timing is calculated by adding a correction, which is based on the electric variable valve timing actuator signal value, to the value calculated by subtracting the cam maximum retard learning value from the standard intake valve timing.
- The standard intake valve timing is calculated based on the signals from the CKP and CMP sensors.

Cam maximum retard learning value

- The cam maximum retard learning value is determined by the maximum retard indication output from the PCM and the standard intake valve timing when the standard intake valve timing is stabilized.

Output duty ratio determination

- The PCM divides the electric variable valve timing motor drive range modes according to the engine operation conditions, and determines the output duty ratio to the electric variable valve timing actuator in each mode.

Mode name	Control description	Control conditions
Feedback mode	• Continuously monitors the intake valve timing if it matches the target intake valve timing determined according to the engine operation condition, and controls the output duty ratio based on the result.	• Except for energization cut mode and phase holding mode
Energization cut mode	• If there is any malfunction in the electric variable valve timing driver, the intake valve timing is held at the maximum retard position to stabilize the engine speed.	• Electric variable valve timing driver malfunction
Phase holding mode	• To improve the startability, the phase of the electric variable valve timing actuator is held at the intermediate position after the engine is stopped.	• After the engine is stopped (Depending on the engine coolant temperature, operates after a certain period has elapsed from when the engine was stopped to suppress heating of the electric variable valve timing motor.)

2014 - Mazda3 - Engine

FUEL INJECTION CONTROL SYSTEM [SKYACTIV-G 2.0, SKYACTIV-G 2.5]

Outline

- Performs optimum fuel injection according to engine operation conditions.
- The PCM determines the engine operation conditions based on the signals from each input device and drives the fuel injectors at the optimal fuel injection time (fuel injection amount) and the fuel injection timing to inject fuel.
- Optimally controls combustion based on fuel injection amount, fuel injection timing, number of fuel injections, and the fuel pressure to achieve emission performance improvement and higher engine output.

Block Diagram

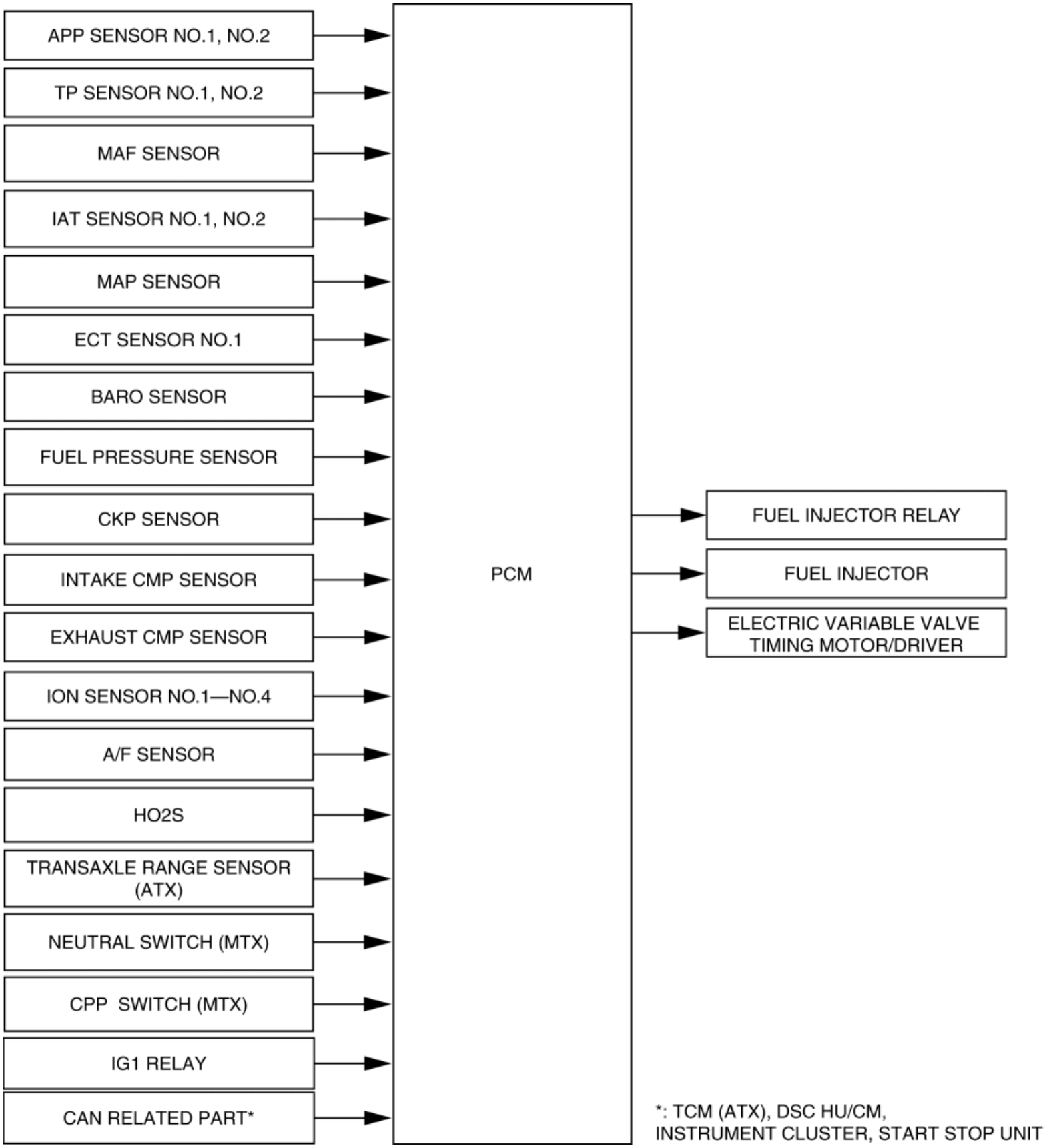

Operation

Injection timing

- Fuel injection timing is switched according to the engine operation conditions.
- Fuel injection is performed at the appropriate injection timing and amount based on the following sensor input signals synchronized with the crankshaft rotation during the intake or compression stroke at each cylinder.
    - MAF sensor
    - MAP sensor
    - IAT sensor No.1
    - IAT sensor No.2
    - BARO sensor
    - CKP sensor
    - ECT sensor No.1

Injection time

- The PCM calculates the fuel injection amount according to the engine operation conditions as the fuel injection time and energizes the fuel injectors.

  Fuel injector energization time and operation conditions

- The fuel injectors cause an operation delay with the start of energization from the PCM. The PCM calculates the fuel injection time by adding the non-injection time (ineffective injection time) due to the operation delay to the actual injection time (effective injection time), and energizes the fuel injectors for this time.

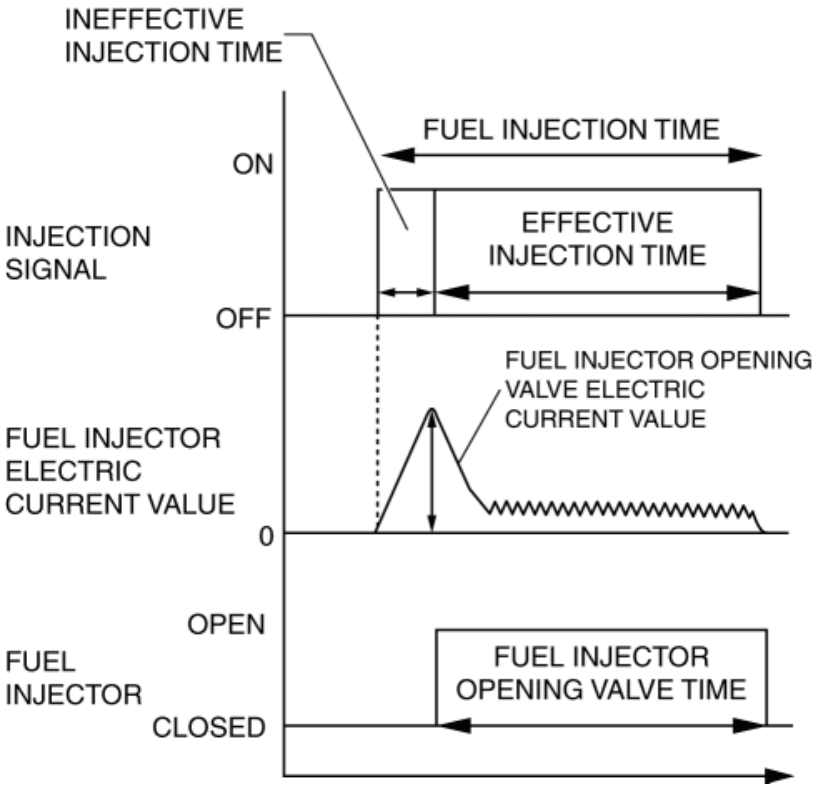

- The fuel injection time is based on the following formula:

  Fuel injection time = effective injection time + ineffective injection time

  Ineffective injection time

  - The fuel injectors cause an operation delay with the start of energization due to a delay in the rise of operation current by coil inductance, mass of the needle valve and plunger, and spring resistance. This delay is the ineffective injection time.
  - The non-injection time is affected by the change in fuel pressure and the battery voltage.

Accordingly, the PCM sets the non-injection time according to the fuel pressure and the battery voltage.

Effective injection time

- The time when the fuel injector valve is open, which is the actual fuel injection time, is called the effective injection time.

Determination of effective injection time

- The PCM divides the engine operation conditions into control zones according to engine speed and intake air amount, and determines the effective injection time at each control zone to perform optimum air/fuel ratio control in all engine driving ranges.

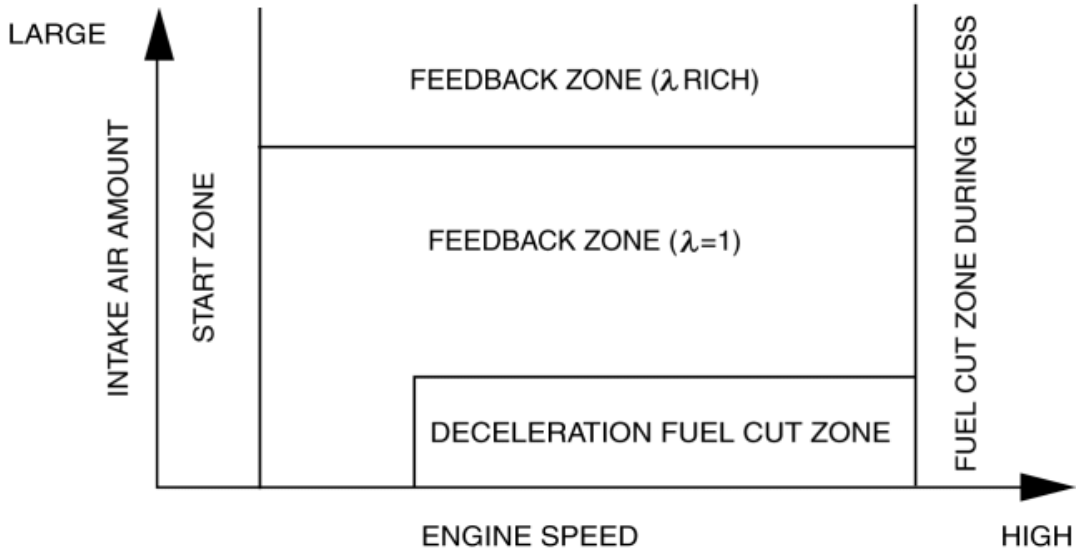

Control zone table

Control name	Control outline
Start zone	**Purpose** • Improved startability **Control condition** • When engine speed is **less than 500 rpm**
Feedback zone (λ = 1)	**Purpose** • Improved fuel economy • Improved exhaust gas purification **Control condition** • During engine operation condition except for engine start zone and feedback zone (λ rich) and fuel cut zone
Feedback zone (λ rich)	**Purpose** • Improved driveability **Control condition** • The accelerator pedal opening angle is the specified value or more
	Purpose

	• Protection of catalytic converter and exhaust system components (suppression of gas temperature) **Control condition** • The estimated exhaust temperature and estimated catalytic converter temperature are the specified value or more.
Excessive speed fuel cut zone	**Purpose** • Engine protection **Control condition** • When engine speed is **6,800 rpm or more*** (SKYACTIV-G 2.0) • When engine speed is **6,500 rpm or more*** (SKYACTIV-G 2.5) ○ *: If the PCM stores DTC P0089:00, an engine speed of **2,500 rpm or more** becomes the control condition.

Deceleration fuel cut zone	**Purpose**
	• Improved fuel economy
	Control condition
	• If all of the following conditions are met while the vehicle is decelerating
	  ▪ Accelerator pedal is fully closed
	  ▪ Engine speed is specified value or more
	  ▪ Vehicle speed is specified value or more

Fuel injection time calculation method table

(A: Fuel injection time base, B: Correction for fuel injection time)

Contents **(Calculation or determination method for fuel injection time and correction)**			**Control zone**				
			START ENGINE	FEEDBACK (λ=1)	FEEDBACK (λ RICH)	ENGINE SPEED AT EXCESSIVE FUEL CUT	DECELERATION FUEL CUT
Ineffective injection time		Set time according to fuel injector performance	A	A	A		
Effective injection time	Injection time at engine start	Set value according to engine coolant temperature (low engine coolant temperature→long injection time)	A				
	Basic injection time	Basic injection time = charging efficiency*1 × fuel flow coefficient*2 × target equivalent		A	A		

Fuel cut		Fuel injection time = 0				A	A
Correction	Volume increase correction at engine start	Purpose: Ensures engine speed stability just after engine start **Correction condition** • Specified time according to engine coolant temperature directly after engine start **Correction amount** • Low engine coolant temperature→large correction • Low intake air temperature→large correction	B	B			
	Feedback correction (A/F sensor)	Purpose: Controls air/fuel ratio to theoretical air/fuel ratio **Correction amount** • A/F sensor output current is **0 mA or less**→volume decrease correction • A/F sensor output current is **0 mA or more**→volume increase correction		B	B		
	Feedback correction (HO2S)	Purpose: Controls air/fuel ratio to theoretical air/fuel ratio **Correction amount** • HO2S output voltage is **approx. 0.7 V or more**→volume decrease correction • HO2S output voltage is **approx. 0.7 V or less**→volume increase correction		B			
	Warm-up volume increase correction	Purpose: Ensures combustion stability when engine coolant temperature is low **Correction condition** • When engine coolant temperature is at set value **Correction amount** • High charging efficiency, low engine coolant temperature→large correction		B	B		
	Learning correction	Purpose: Corrects deviation in air/fuel ratio from deterioration over time of mechanical devices **Correction amount** • Learned value based on average value of A/F deviation amount (feedback amount)		B	B		
	Heavy load volume increase correction	Purpose: Improved engine output, decrease of exhaust gas temperature **Correction condition** • Based on the fixed value when the accelerator pedal opening angle is a certain value or more, otherwise, based on engine speed and charging efficiency. **Correction amount** • High engine speed, high charging efficiency→large correction			B		

*1

Charging efficiency is the ratio of the actual amount of intake air to the maximum air charging amount (mass

volume) of the cylinder. The value increases as the engine load increases.

*2 **Fuel flow coefficient is a coefficient to calculate a fuel injection time from a fuel injection amount required for an intake air amount.**

Fuel cut

- Includes fuel cut under the following conditions, except fuel cut at excessive engine speed and deceleration fuel cut according to engine operation.

Fuel cut table

Control name	Control outline
Fuel cut during selector lever shifting in D position (ATX)	**Purpose** • ATX protection **Control conditions** • When shifting while vehicle is stopped and engine raced
Sensor malfunction fuel cut	**Purpose** • To prevent engine damage from abnormal ignition due to a malfunction input of a cylinder identification or the engine speed signal. **Control conditions** • When a malfunction in the CKP sensor or exhaust CMP sensor is detected
Dechoke control	**Purpose** • To improve engine startability when spark plugs are flooded (scavenging) **Control conditions** • When cranking close to fully-open throttle valve
Theft prevention	**Purpose** • To prevent theft **Control conditions** • Immobilizer system related information (engine start prohibited) received from start stop unit
Fuel-cut at time of collision	**Purpose** • For safety assurance **Control conditions** • Collision signal from SAS control module is received

Boost Circuit

- The battery positive voltage input via the fuel injector relay is boosted up to **40 V**.

Output Circuit

To improve fuel injection response, the plunger pulling force is strengthened by providing high current (over excitation current) when the fuel injector is open.

- To reduce fuel injector heat generation, the opening of the fuel injector is kept open using low current after it opens.

Fuel injector status	PCM operation
Opening starts	1. Provides specified value, boosted by the boost circuit, to the opening transistor. 2. Voltage is provided to the fuel injector, the ground transistor is turned on and grounded, and the fuel injector opens. 3. After the fuel injector is opened, the opening transistor is turned off.
Opening held	• Controls the on/off of the holding transistor (**12 V** output) so that the hold current of the fuel injector is constant.
Closing	• Turns off the holding and ground transistors at the same time the fuel injection signal from the PCM is stopped, and cuts the current.

2014 - Mazda3 - Engine

FUEL PUMP CONTROL [SKYACTIV-G 2.0, SKYACTIV-G 2.5]

Outline

- By switching the fuel pump discharge amount, reduced power consumption and improved fuel economy have been achieved.
- The PCM determines the optimum fuel pump discharge amount according to the engine operation conditions, and sends the fuel pump drive signal to the fuel pump control module.

Block Diagram

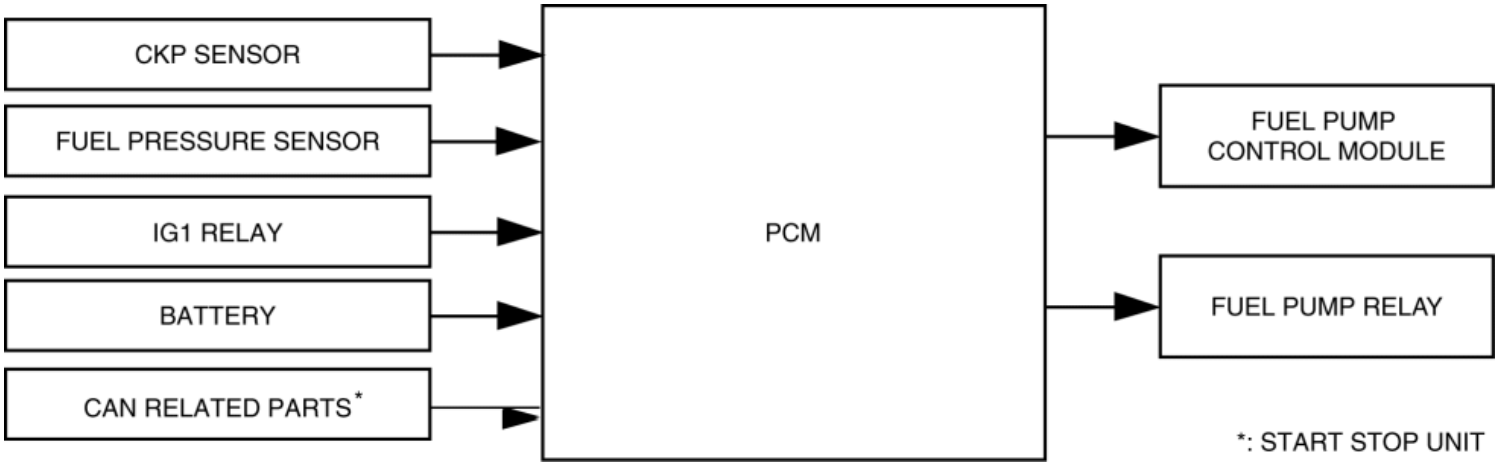

Operation

Fuel pump relay

- The PCM switches the fuel pump relay on/off according to the engine operation conditions.

Relay ON/OFF	Control conditions
ON	• When any of the following conditions is met: ▪ When ignition is switched ON (**for approx. 1 s**) ▪ During engine cranking ▪ While engine is running
OFF	• When engine is stopped • Immobilizer system related information (engine start prohibited) received from start stop unit • Collision signal from SAS control module is received

Fuel pump control module

The PCM determines the fuel pump discharge amount according to the engine operation conditions, and controls the output duty ratio to the fuel pump control module according to the discharge amount.

Output duty ratio	Control conditions
95%	• When any of the following conditions is met: ▪ At engine start ▪ Fuel pump control module malfunction (if request voltage is unobtainable)
10—90%	• Except for control conditions with output duty ratio of 5% or 95%
5%	• When engine is stopped

Fuel pump operation circuit diagram

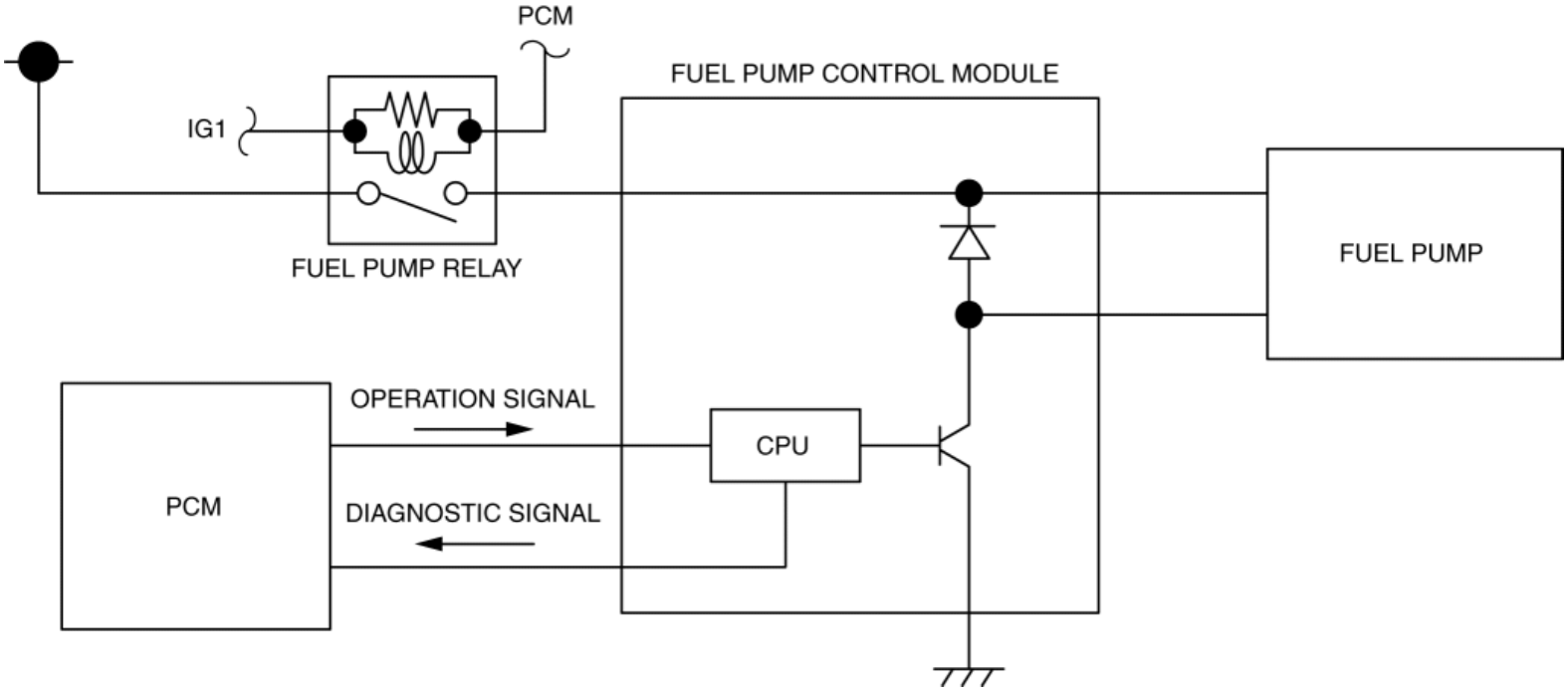

2014 - Mazda3 - Engine

HIGH PRESSURE FUEL PUMP CONTROL [SKYACTIV-G 2.0, SKYACTIV-G 2.5]

Outline

- Changes the fuel pressure applied to the fuel injector (according to engine operation conditions) to improve engine output and startability.
- The PCM determines the fuel pressure value corresponding to the engine operation conditions based on each input signal, and drives the spill valve control solenoid valve for optimum control of fuel pressure.

Block Diagram

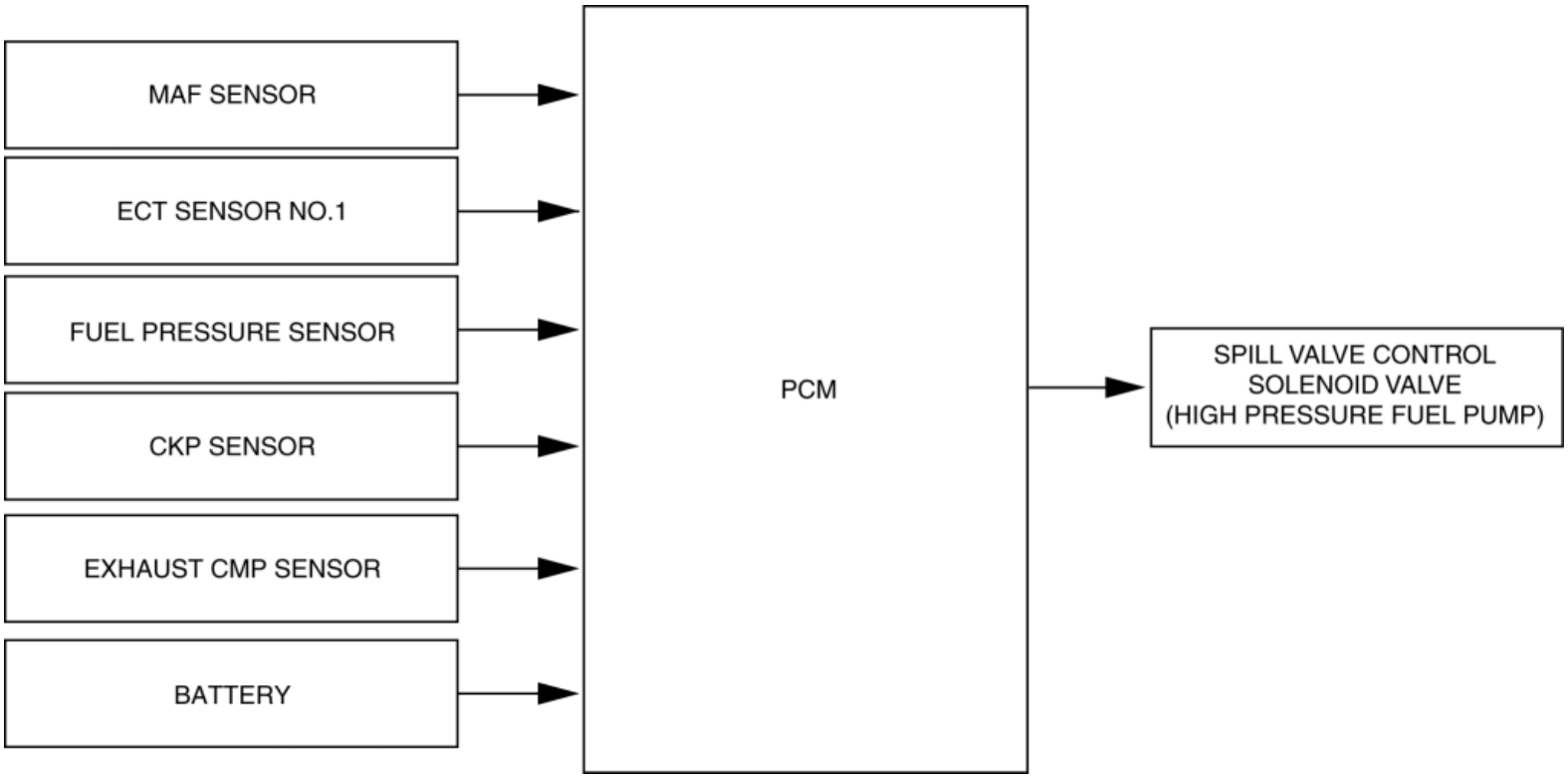

OPERATION

Directly after engine start

- During a cold engine start, the fuel pressure is raised to promote fuel atomization.

Basic Control

- The PCM determines the target fuel pressure according to charging efficiency and performs feedback control by monitoring the fuel pressure in the fuel distributor using the fuel pressure sensor.
  - When idling after engine warm up: **Approx. 3 MPa {31 kgf/cm^2, 435 psi}**
  - After engine warm up, engine speed is **3,000 rpm or more**, charging efficiency is **60 % or more**: **Approx. 15.0 MPa {153 kgf/cm^2, 2,176 psi}**

2014 - Mazda3 - Engine

ELECTRONIC SPARK ADVANCE CONTROL [SKYACTIV-G 2.0, SKYACTIV-G 2.5]

Outline

- Controls ignition for optimum timing (according to engine operation conditions).
- Serviceability has been improved by eliminating the necessity of ignition timing adjustment.
- The PCM determines the engine operation conditions (based on input signals from each sensor) and blocks current to the ignition coils at the calculated ignition timing. This causes the spark plugs to discharge (ignite) by the effect of electromagnetic mutual induction.

Block Diagram

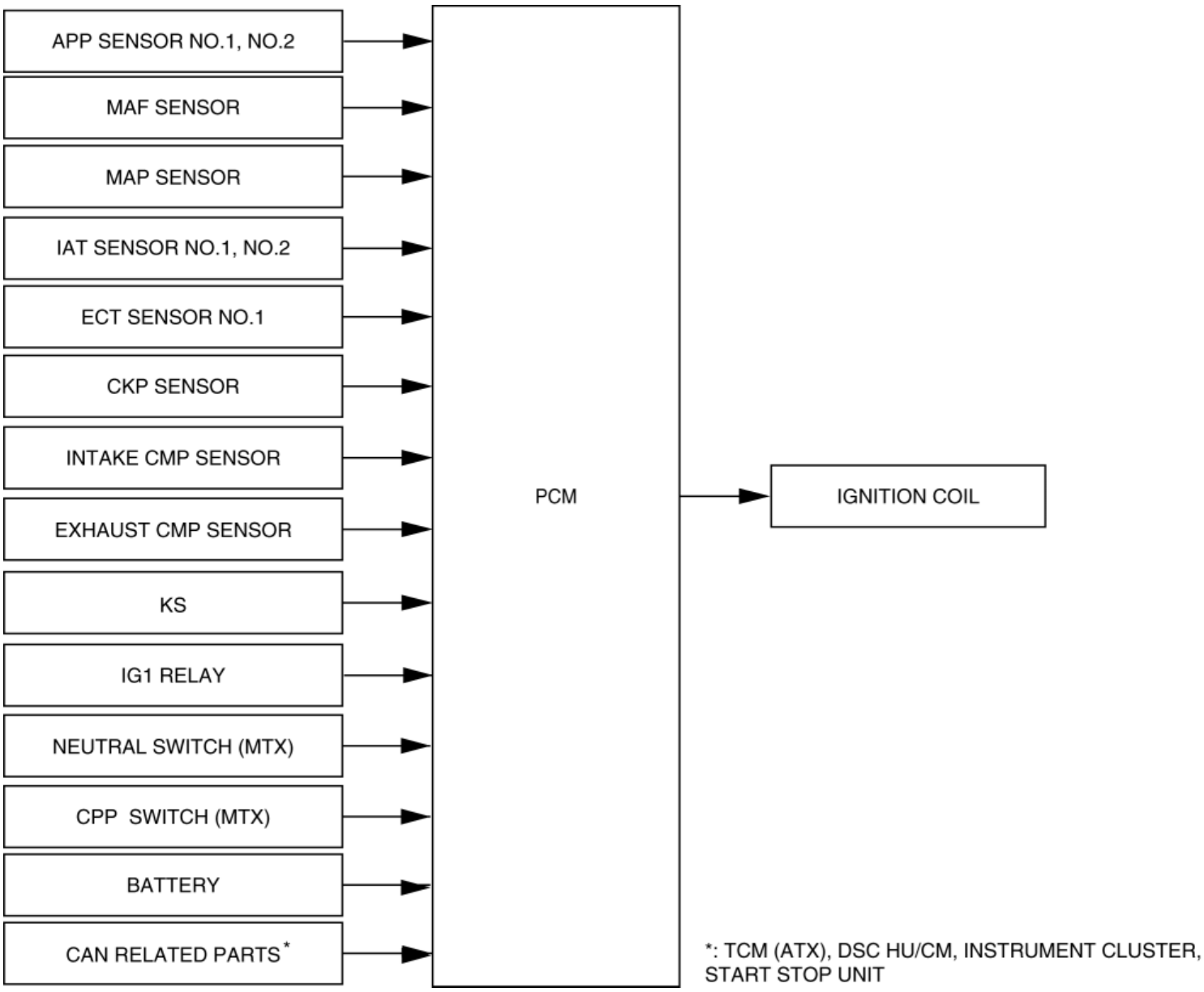

Operation

Ignition method

- The PCM energizes the ignition coils according to the ignition timing calculated from the engine operation conditions and the igniter energization time.
- The igniter energization time (ignition coil energization time) is determined according to battery voltage and engine speed.

Timing chart

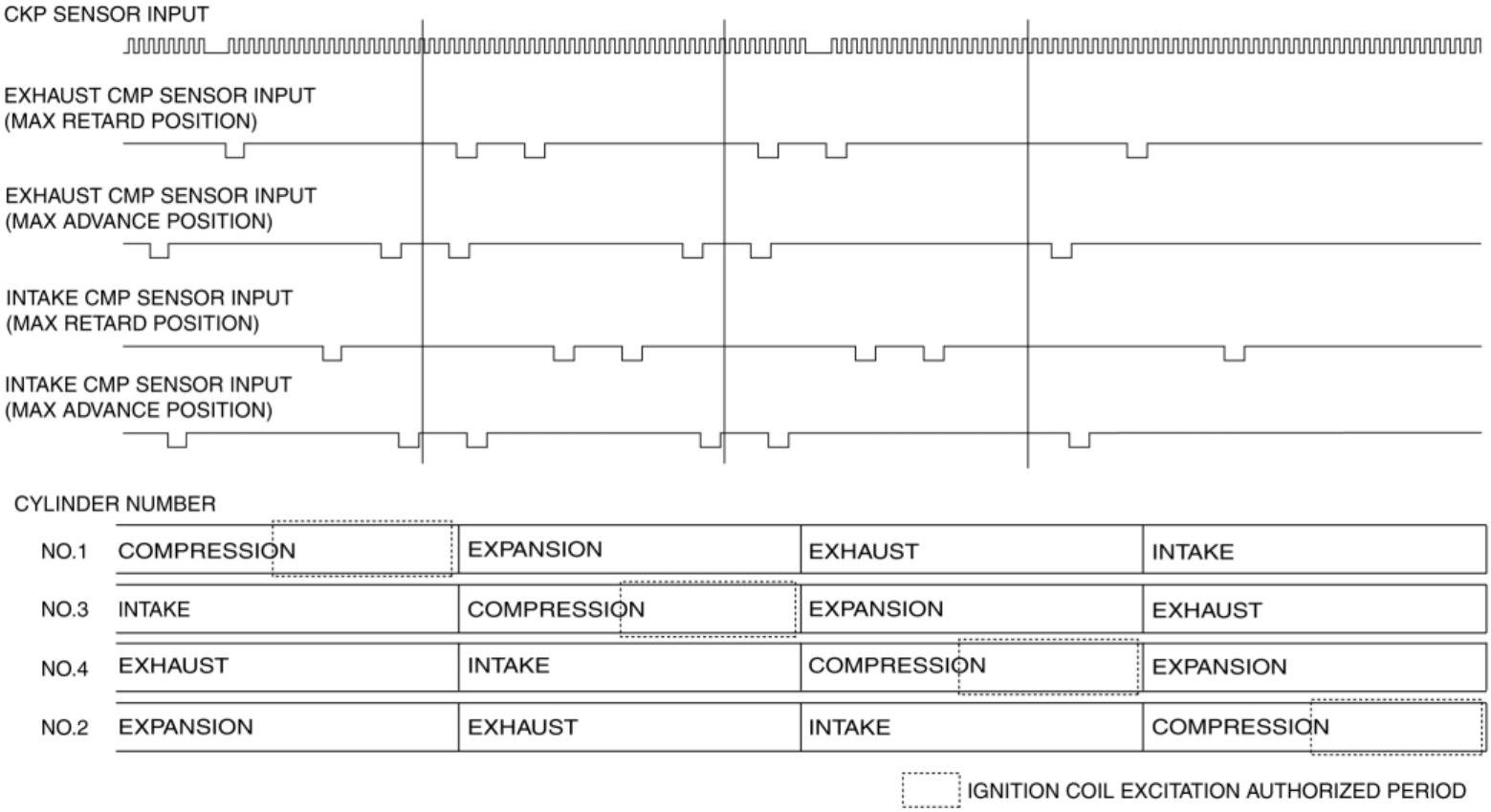

Determination of Ignition Timing

Division of control zones

- The PCM performs different ignition controls for engine starting and those other than engine starting to stabilize the engine starting.

Control zone	Control condition	Ignition method
Engine start zone	Engine speed is **less than 500 rpm**	Engine starting
Normal zone	Engine operation except start and idling zones	Cycle estimated ignition (Determines ignition timing adding each correction to basic spark advance)

Ignition timing calculation method tableA: Ignition timing base, B: Correction for ignition timing

		Control zone	

Contents		Calculation method or determination method for ignition timing, spark advance, and correction	ENGINE START ZONE	NORMAL ZONE
Starting ignition		Determination based on engine coolant temperature	A	
Cycle estimated ignition	Basic spark advance	Set value according to engine speed and charging efficiency*		A
Correction	Engine coolant temperature spark advance correction	Purpose: Ensures combustion stability when engine coolant temperature is low **According to engine coolant temperature** • High charging efficiency*, low engine coolant temperature→large correction		B
	Intake air temperature correction	Purpose: Suppresses knocking when engine intake air temperature is high **According to engine intake air temperature and engine coolant temperature** • High engine intake air temperature, high engine intake air temperature→large correction		B
	Warm-up promotion spark retard correction	Purpose: Activates the catalytic converter earlier **Maximum 50 s after engine start** • According to engine coolant temperature→correction		B
	Torque reduction correction	Purpose: Such as reduction of shift shock, traction control, or suppression of vehicle vibration **According to torque reduction request from TCM, or DSC HU/CM** • Large torque reduction request→large correction		B
	Knocking spark retard correction	Purpose: Knocking suppression **Acceleration when charging efficiency* volume increase (acceleration amount) is given value or more** • Large acceleration amount→large correction		B
	Valve timing correction	Purpose: Ensures combustion stability **When phase difference changes due to electric variable valve timing control and hydraulic variable valve timing control** • Correction according to change in phase difference		B

*

Charging efficiency is the ratio of the actual amount of intake air to the maximum air charging amount (mass volume) of the cylinder. This value increases proportionately to the increase in engine load.

- If immobilizer system related information (engine start prohibited) is received from the start stop unit, the PCM stops ignition.
- When a collision signal is received from the SAS control module, the PCM stops the ignition.

2014 - Mazda3 - Engine

PURGE CONTROL [SKYACTIV-G 2.0, SKYACTIV-G 2.5]

Outline

- An appropriate amount of evaporative gas is fed into the intake manifold by the purge solenoid valve operation (according to the engine operation conditions). This ensures driveability and prevents release of evaporative gas into the atmosphere.
- The PCM drives the purge solenoid valve based on the signal from each control part.

Block Diagram

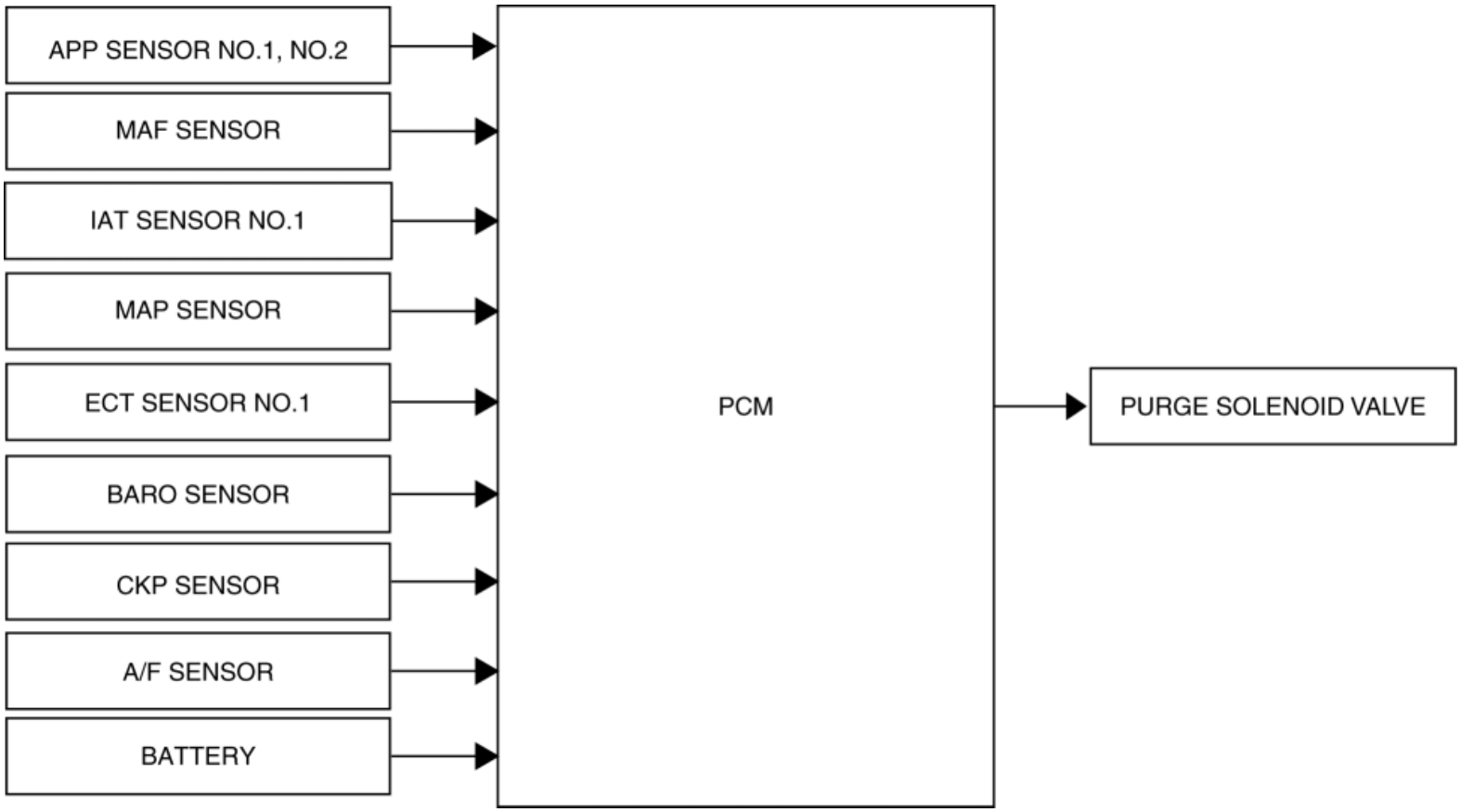

Operation

Calculation method for purge flow amount

- The PCM calculates the purge flow amount in which the intake airflow amount and the amount of fuel vapor gas passing through the purge solenoid value are a certain ratio. The purge flow amount is corrected by the fuel vapor gas concentration and the intake air temperature.

Determination of purge solenoid valve energization time

- The PCM determines the drive duty of the purge solenoid valve through which the purge flow amount passes. The drive duty value is corrected by the battery voltage.

Operation condition

- In evaporative purge control during normal driving, the PCM sends a duty signal to the purge solenoid valve when all of the following conditions are met.
    - Fuel injection control is in feedback zone (λ=1)
    - Engine coolant temperature **60 °C {140 °F} or more**

2014 - Mazda3 - Engine

AIR FUEL RATIO (A/F) SENSOR HEATER CONTROL [SKYACTIV-G 2.0, SKYACTIV-G 2.5]

Outline

- Based on the control of the A/F sensor heater, a stabilized oxygen concentration is detected (even at low exhaust temperatures), and feedback control of fuel injection (even at cold engine start) is made possible for improved cold temperature exhaust emission performance.
- Both emission performance and sensor protection have been improved by duty control of the heater (according to engine operation conditions (exhaust gas temperature)).
- A pre-heat has been adopted to prevent water, (produced from the exhaust system when the engine is started), from adhering to the sensor and damaging it.

Block Diagram

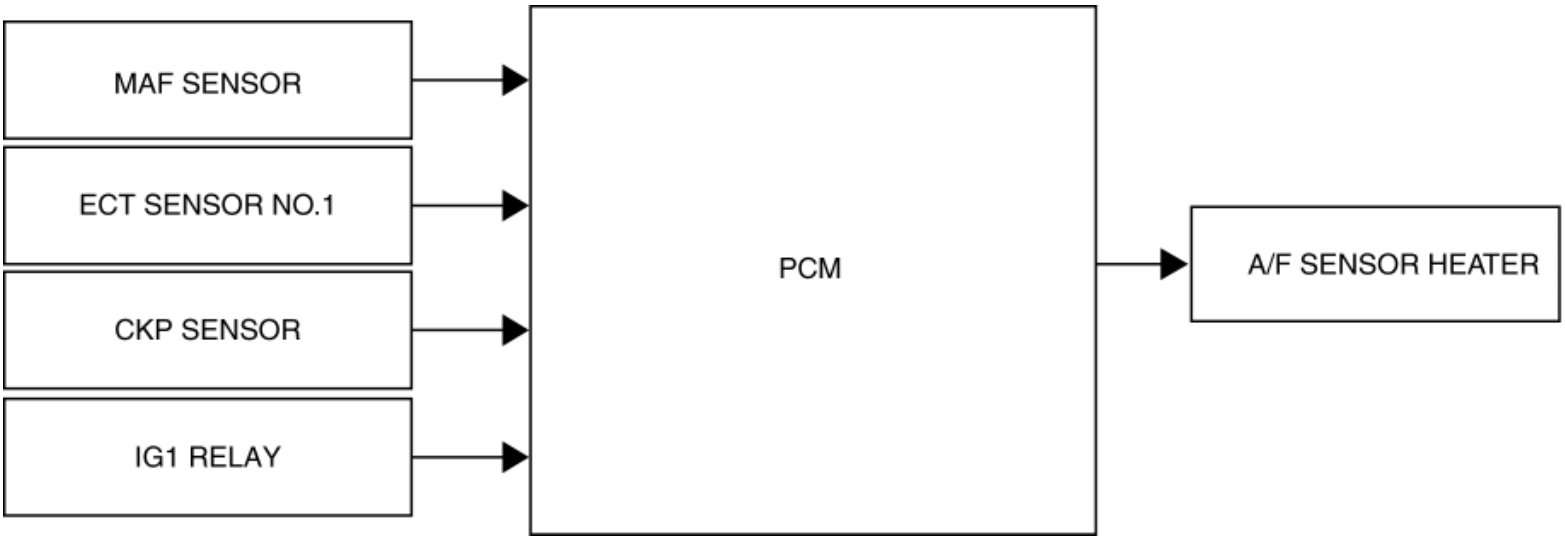

Operation

Pre-heat control

- The A/F sensor heater is operated at a duty ratio of approx. 15% within the specified time directly after the engine is started.

Normal control

- The PCM operates the A/F sensor heater based on the following control conditions:

Output duty ratio	Control condition

0%	• Ignition switched off • Engine stopped • Engine start (cranking)
0—100% (Duty ratio determined by measuring the element temperature by the A/F sensor heater element impedance)	• After engine warm-up (such as value fluctuates by battery condition)

2014 - Mazda3 - Engine

HEATED OXYGEN SENSOR (HO2S) HEATER CONTROL [SKYACTIV-G 2.0, SKYACTIV-G 2.5]

Outline

- Based on the control of the HO2S heater, a stabilized oxygen concentration is detected (even at low exhaust temperatures), and feedback control of fuel injection (even at cold engine start) is made possible for improved cold temperature exhaust emission performance.
- Both emission performance and sensor protection have been improved by duty control of the heater (according to engine operation conditions (exhaust gas temperature)).

Block Diagram

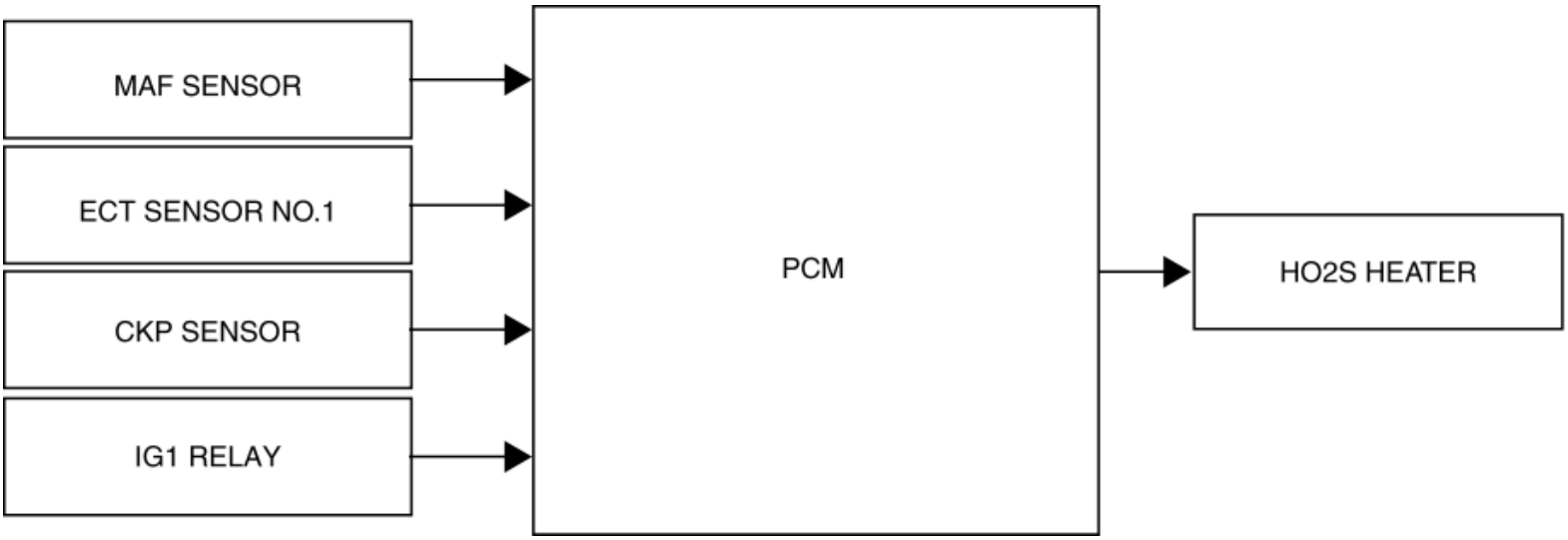

Operation

- The PCM operates the HO2S heater based on the following control conditions.

Output duty ratio	Control condition
0%	• Engine stopped • Fuel cut injection control is in engine start zone • Engine coolant temperature is **−10 °C {14 °F} or less** • Other than battery voltage of **10—16 V** • Within a fixed period of time after engine start (varies according to engine coolant temperature)
30—50%	• HO2S not activated

0—100% (Determined by engine speed and charging efficiency)	• Other than the above

2014 - Mazda3 - Engine

A/C CUT-OFF CONTROL [SKYACTIV-G 2.0, SKYACTIV-G 2.5]

Outline

- To improve drive performance and A/C compressor reliability, the A/C relay is turned off at the appropriate timing (according to the engine operation conditions), and the A/C operation is controlled.

Block Diagram

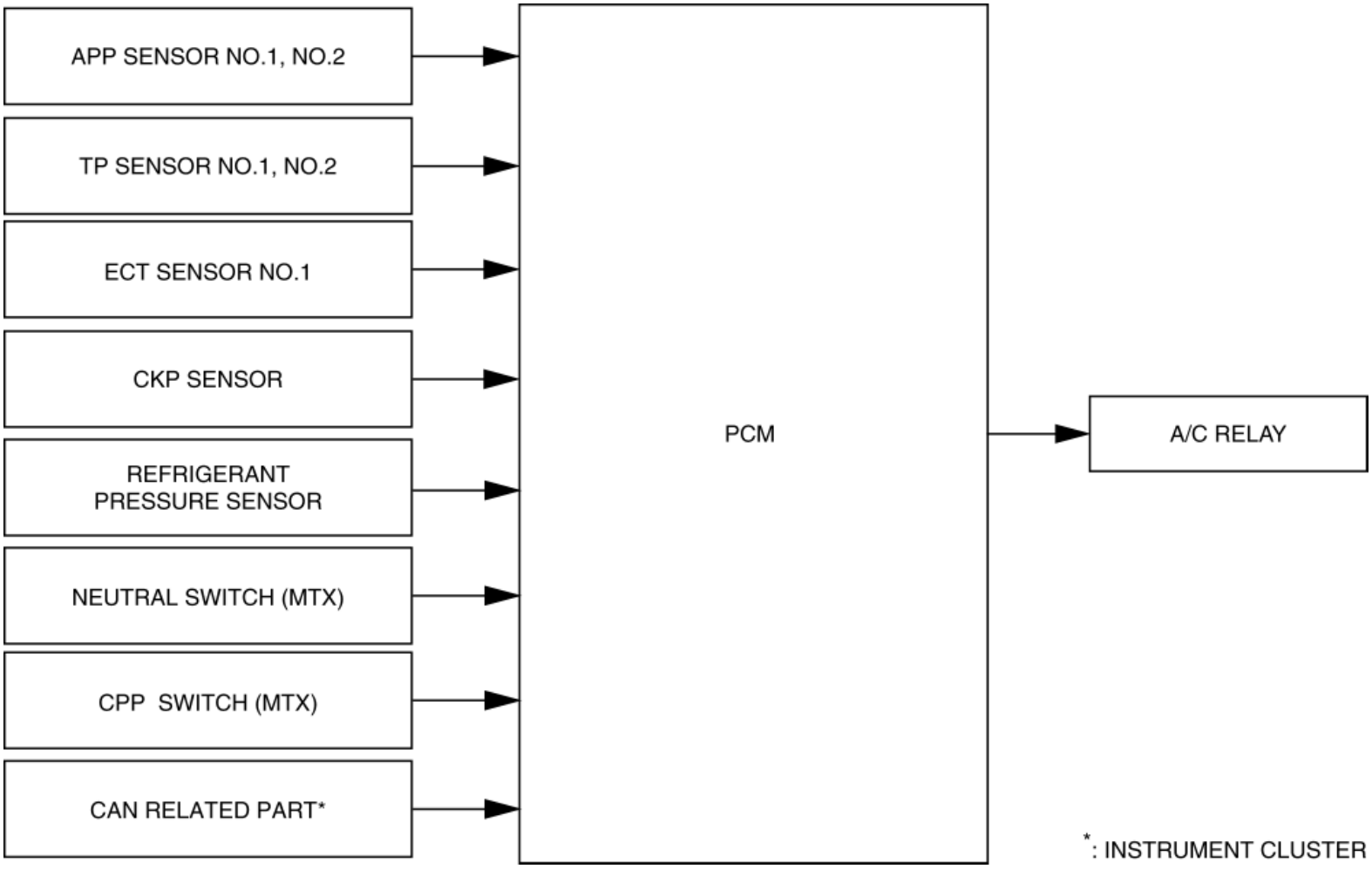

Operation

- The PCM stops current to the A/C relay when any of the following conditions are met:

A/C cut-off control operation conditions—: Not applicable

Operation condition	While A/C relay not energized	Purpose
At engine start	**Approx. 4 s**	Improved startability

When high engine speed (**approx. 6,700 rpm or more**)	—	A/C compressor reliability assurance
Accelerated	**Approx. 5 s**	Acceleration from standstill/acceleration performance improvement
Refrigerant pressure **3.14 MPa {32.0 kgf/cm^2, 455 psi} or more**	—	A/C compressor reliability assurance
Refrigerant pressure of **0.196 MPa {2.00 kgf/cm^2, 28.4 psi} or less** continues for **5 s or more**	—	A/C compressor reliability assurance
Drive-by-wire control malfunction	—	Reverse driving performance assurance
Panic braking determined	—	Load performance assurance
ECT sensor No.1 malfunction	—	Engine protection
When high engine coolant temperature (**approx. 113 °C {235 °F} or more**)	Cuts off the A/C intermittently, and if the engine coolant temperature does not decrease, cuts off the A/C continuously.	Engine protection
Travel on ascending road	—	Ascent performance improvement

2014 - Mazda3 - Engine

ELECTRICAL FAN CONTROL [SKYACTIV-G 2.0, SKYACTIV-G 2.5]

Outline

- Through cooling of the radiator and condenser by operation of the cooling fan (according to vehicle conditions), engine reliability and cooling performance have been improved.
- The PCM determines the engine operation conditions (based on the signals from each sensor), and turns cooling fan relays No.1, No.2, and No.3 on/off to control the rotation speed of the cooling fan motor.

Block Diagram

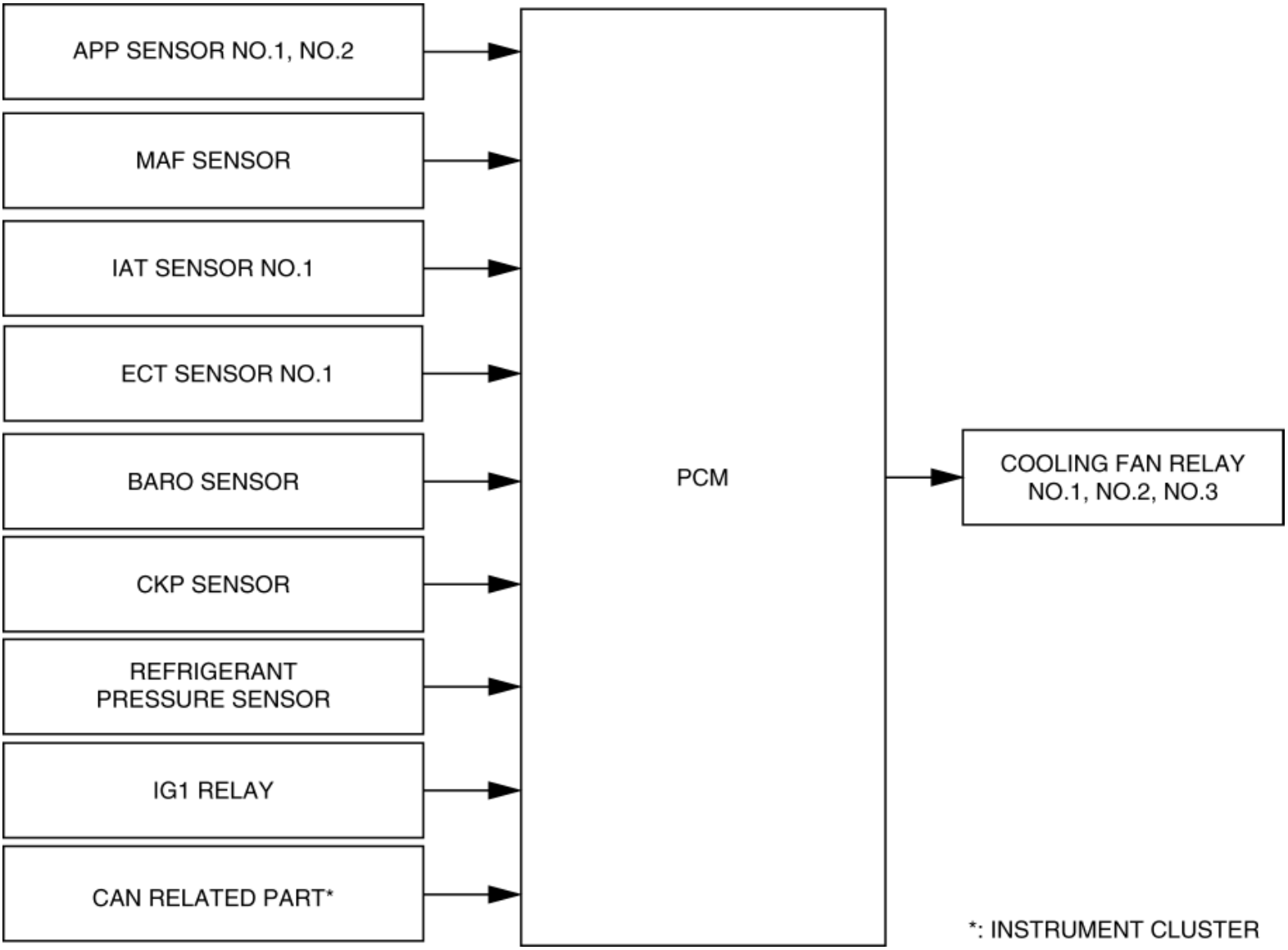

Operation

- The PCM controls the cooling fan motor rotation speed by turning cooling fan relays No.1, No.2, and No.3 on/off based on each demand airflow volume.

Operation Pattern

Demand airflow volume	Cooling fan relay		Cooling fan motor	
	No.1	No.2/No.3	No.1	No.2
No airflow	OFF	OFF	Stop	Stop
Small	ON	OFF	Low-speed	Low-speed
Large	ON	ON	High-speed	High-speed

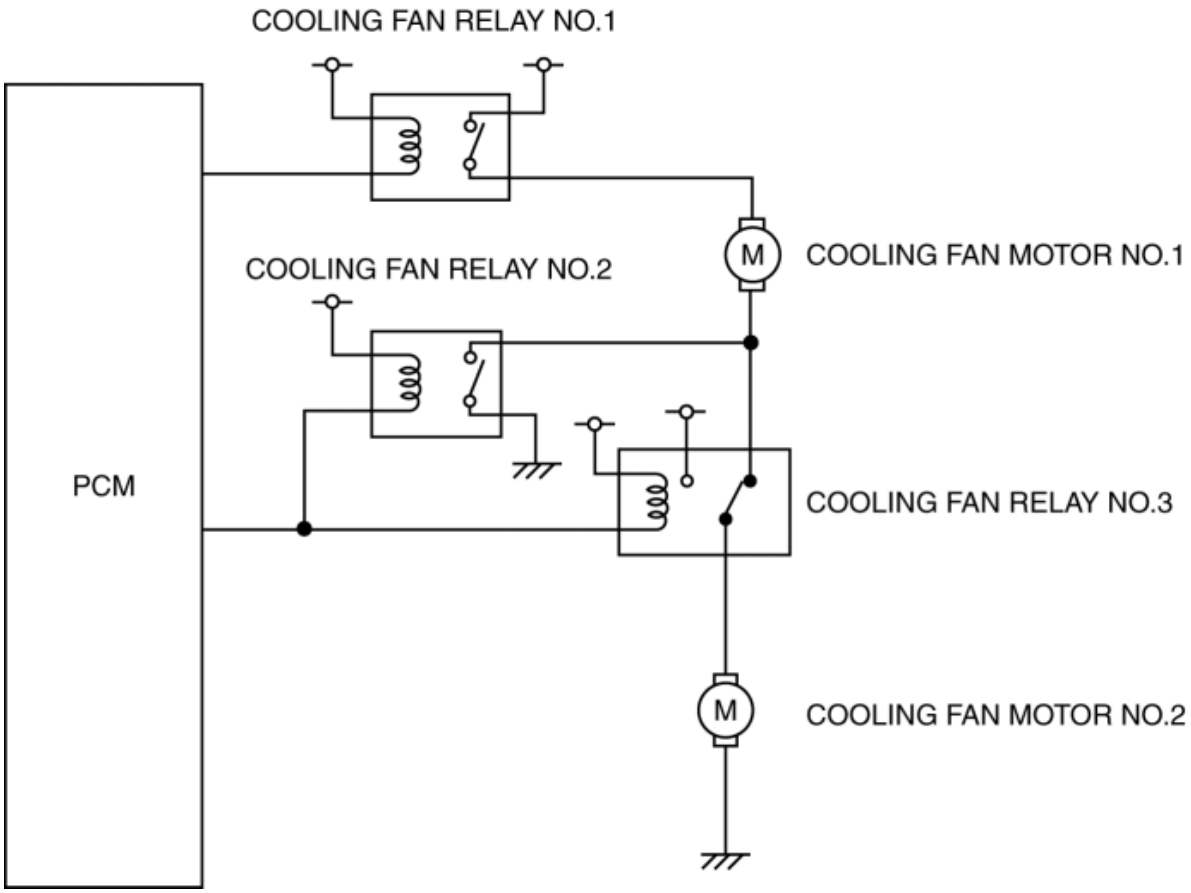

Engine coolant temperature condition

- Changes the demand airflow volume according to the engine coolant temperature.
- To suppress overheating, the cooling fan is operated when the engine coolant temperature is high. The demand airflow volume is large or small depending on the engine coolant temperature.

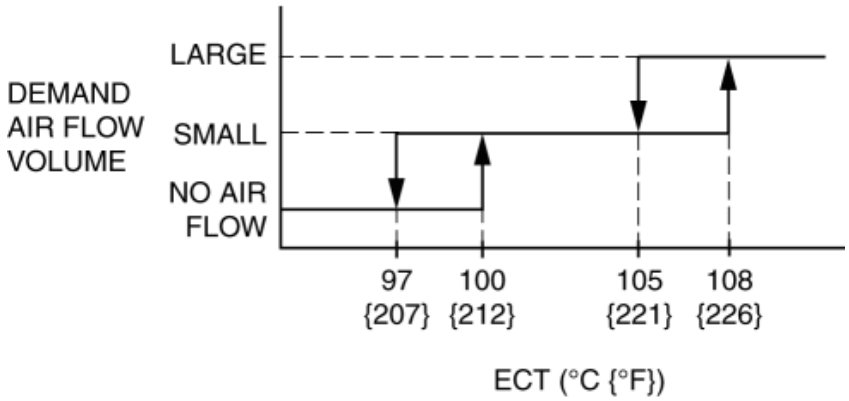

A/C operation condition

- Controls the demand airflow volume depending on the refrigerant pressure and vehicle speed when the A/C switch is on.

Operation condition	Demand airflow volume
• When all of the following conditions are met. ▪ Refrigerant pressure: **1.3 MPa {13 kgf/cm^2, 189 psi} or less**, vehicle speed: **45 km/h {28 mph} or more** ▪ Refrigerant pressure: **2.2 MPa {22 kgf/cm^2, 319 psi} or less**, vehicle speed: **85 km/h {53 mph} or more**	No airflow
• When all of the following conditions are met. ▪ Refrigerant pressure: **1.3 MPa {13 kgf/cm^2, 189 psi} or less**, vehicle speed: **45 km/h {28 mph} or less** ▪ Refrigerant pressure: **1.3—1.5 MPa {14—15 kgf/cm^2, 189—217 psi}**, vehicle speed: **85 km/h {53 mph} or less** ▪ Refrigerant pressure: **1.5—2.2 MPa {16—22 kgf/cm^2, 218—319 psi}**, vehicle speed: **65—85 km/h {41—52 mph}**	Small
• When all of the following conditions are met. ▪ Refrigerant pressure: **1.5—2.2 MPa {16—22 kgf/cm^2, 218—319 psi}**, vehicle speed: **65 km/h {40 mph} or less** ▪ Refrigerant pressure: **2.2 MPa {22 kgf/cm^2, 319 psi} or more**	Large

After Cooling Control

- After continuous, high-load driving, the cooling fan operates (demand airflow volume: small) for up to **9 min** under the following conditions to suppress temperature increase inside the engine compartment.
  - Driving on ascending roads or after continuing to drive under high-load conditions
  - After continuous, sudden acceleration from standstill and repeated, sudden acceleration

- Engine coolant temperature: **80 °C {176 °F} or more**

Conditions during collision

- If a collision signal from the SAS control module is received, the PCM stops the engine cooling fan to avoid use of battery voltage.

2014 - Mazda3 - Engine

STARTER CUT-OFF CONTROL [SKYACTIV-G 2.0, SKYACTIV-G 2.5]

Outline

- The PCM controls energization to the starter relay (according to an immobilizer system request) to improve security.
- While not in P or N position, the starter relay energization by the push button start is inhibited. (ATX)
- When the clutch pedal is not depressed, starter relay energization using the push button start is inhibited. (MTX)

Block Diagram

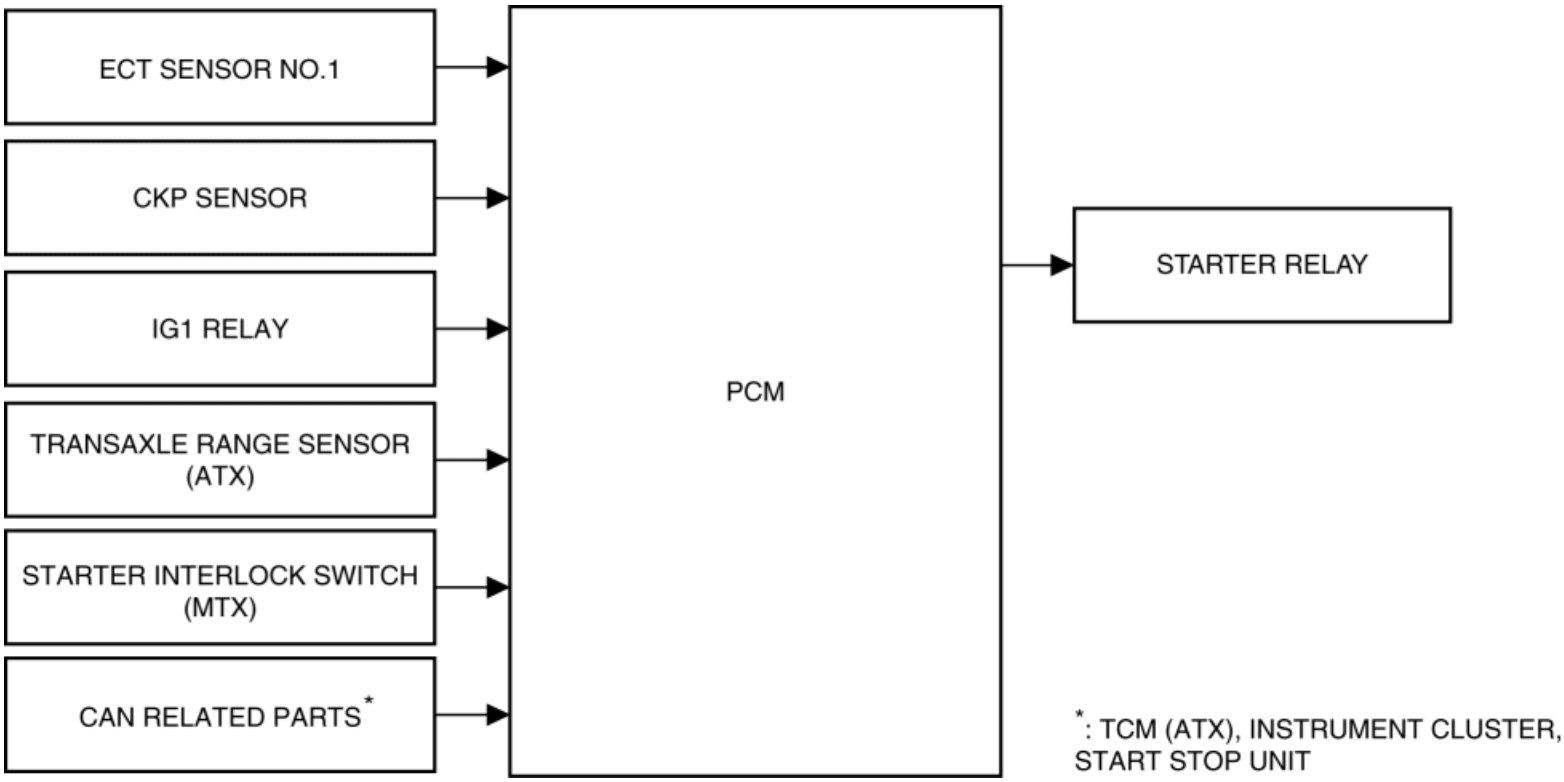

Operation

When engine stop request signal is not received

- The PCM establishes a ground to the starter circuit. Therefore when the ignition is switched to START, the starter relay is energized and the starter motor rotates. As a result, the engine starts normally.

When engine stop request signal is received.

- The PCM does not establish a ground to the starter circuit. Therefore, even if the ignition is switched to START, the starter motor does not rotate because the starter relay does not energize, and the engine does not start.

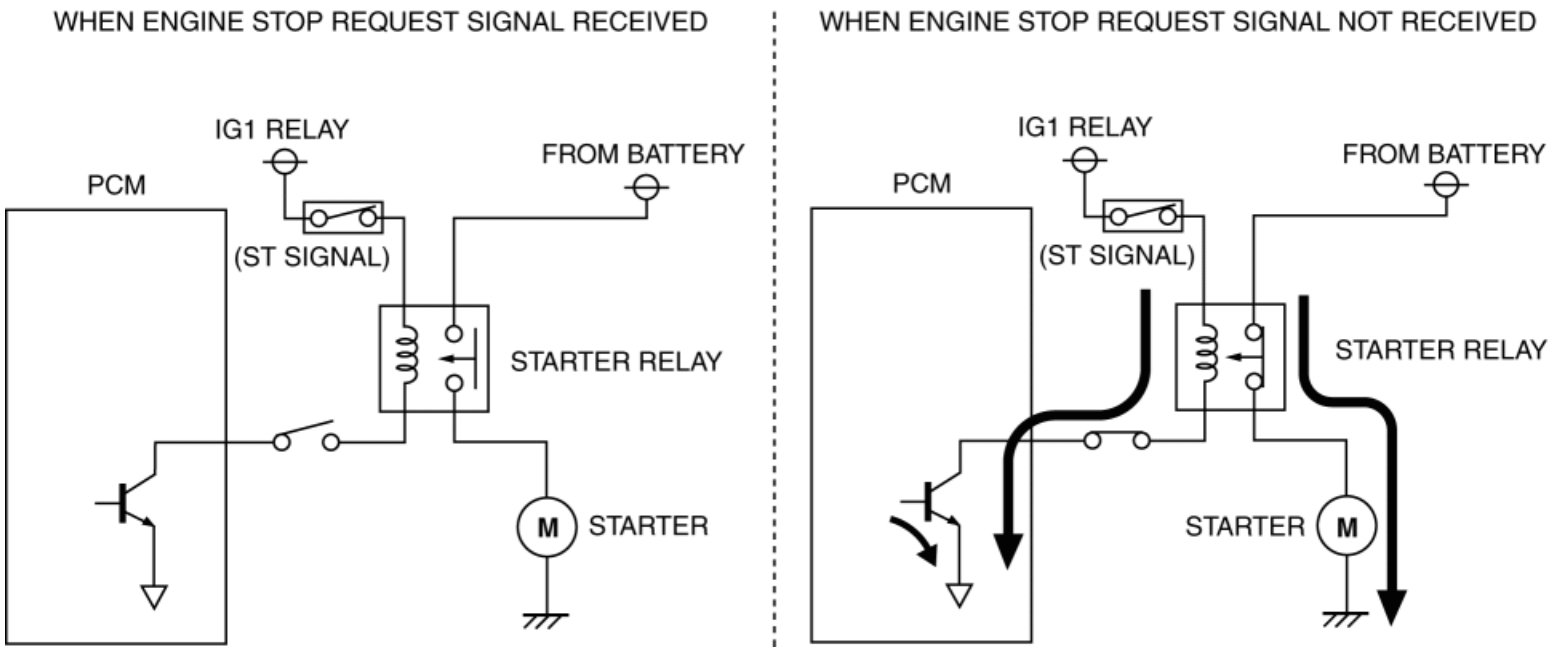

- The PCM turns the starter relay off with the engine speed at the set value or more (value varies depending on the engine coolant temperature).

2014 - Mazda3 - Engine

GENERATOR CONTROL [SKYACTIV-G 2.0, SKYACTIV-G 2.5]

Outline

- Idling stability has been improved by optimum control of generator voltage (according to engine operation and electrical load conditions).
- The PCM determines the engine operation and electrical load conditions based on the input signals from each control part. It then uses this information to control the energization time of the generator field coils.

Block Diagram

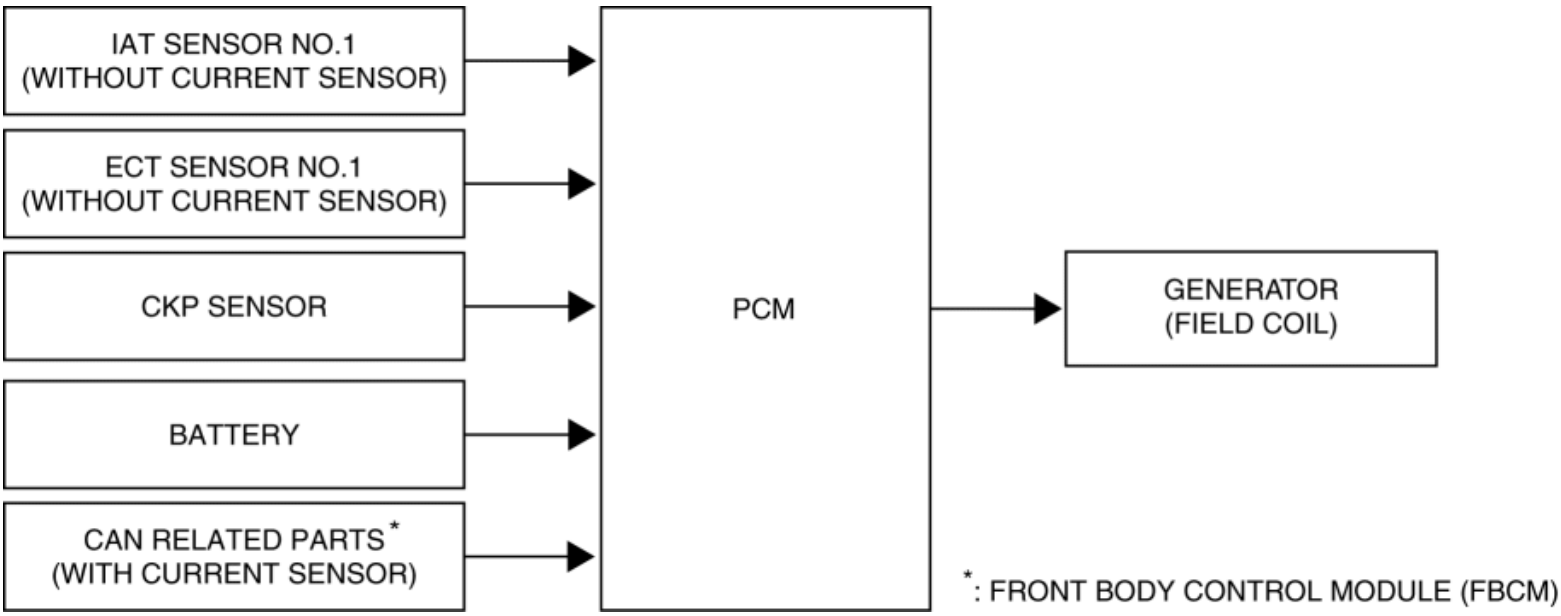

Operation

Determination method for target excitation current

- The battery condition is determined based on the current sensor signal and the target excitation current is calculated according to the battery condition. If the current sensor is malfunctioning, the target excitation current is calculated from the generator target output amount (determined by battery fluid temperature, engine speed, and vehicle speed) and the actual generator rotation speed.

Determination method for field coil excitation time

- The PCM increases or decreases the field coil excitation current by sending a duty signal to the power transistor built into the generator.
- The field coil energization current changes according to changes in the power transistor excitation time. This is accomplished by changing the duty signal duty ratio. For example, when the battery positive voltage drops,

the duty ratio of the duty signal sent to the power transistor is larger, increasing the field coil excitation current.

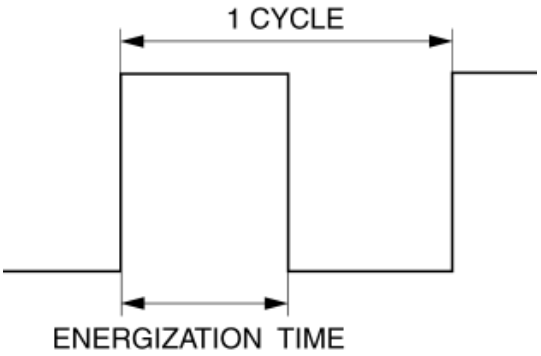

- During deceleration fuel-cut, the PCM increases the generator voltage and stores electricity in the battery. In conditions other than deceleration fuel-cut, only the required amount of electricity is charged (according to the battery status) to lower the load to the generator. (with i-ELOOP)

2014 - Mazda3 - Engine

ENGINE OIL CONTROL [SKYACTIV-G 2.0, SKYACTIV-G 2.5]

Outline

- The PCM reduces the oil pump load applied to the engine by controlling the appropriate engine hydraulic pressure (according to the engine operation conditions).
- The engine hydraulic pressure switches in two steps. When hydraulic pressure is not needed, the oil pump discharge amount is reduced by the operation of the engine oil solenoid valve.

Block Diagram

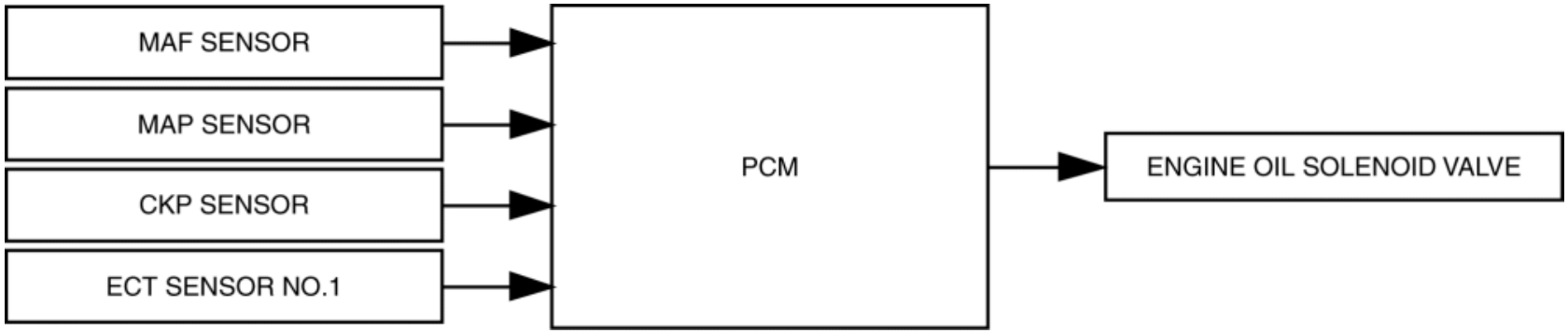

Operation

- The PCM switches the engine oil pressure (which lubricates the engine) in two steps. It does this by driving the engine oil solenoid valve according to the engine operation conditions.

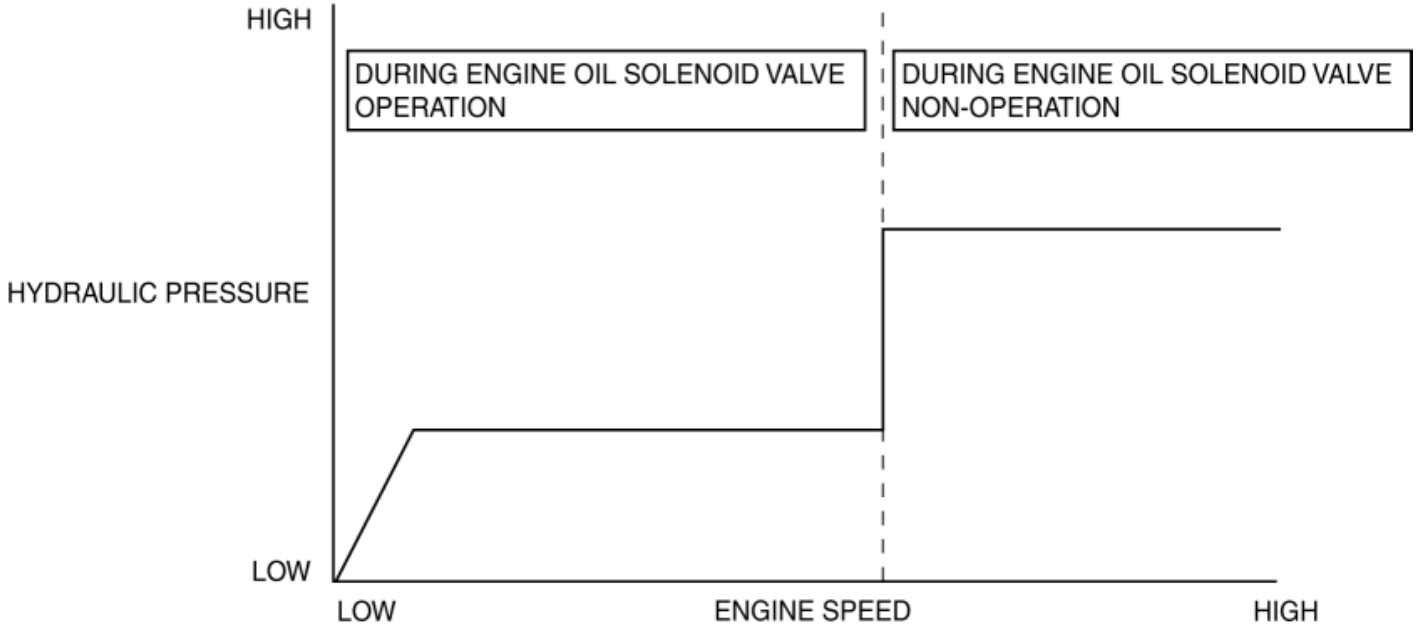

Output duty value determination

- The PCM controls the operational voltage energized to the engine oil solenoid according to the duty signal. After opening the engine oil solenoid valve at the output duty ratio of 100%, load applied to the parts is reduced by lowering the duty value to the output duty value at which the open valve condition can be maintained. The output duty value for maintaining the opening value changes according to the battery voltage.

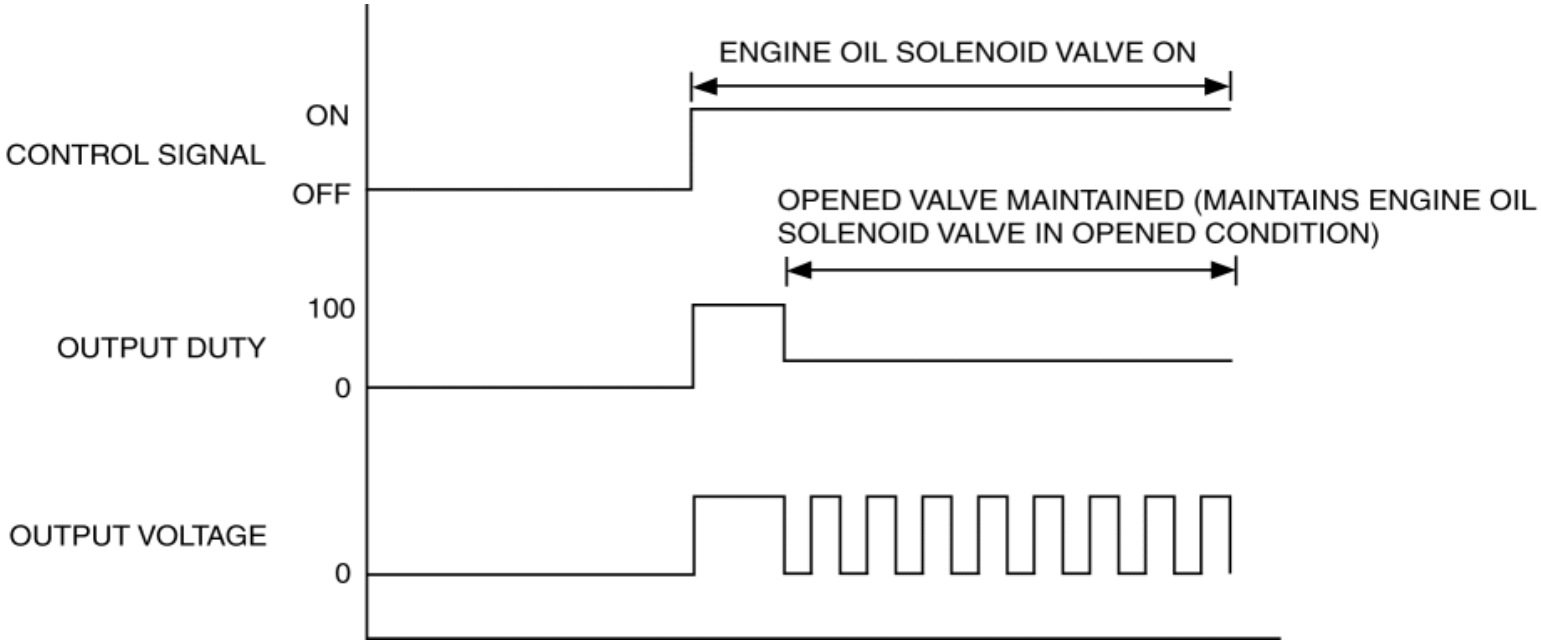

Engine oil solenoid valve operation conditions

- The operation conditions for the engine hydraulic pressure switching control vary according to the vehicle conditions.

  Normal control

  - The PCM operates the engine oil solenoid valve when all of the following conditions are met:
    - Engine speed: **Less than 4,000 rpm**
    - Engine coolant temperature: **Less than 98 °C {208 °F}**
    - Charging efficiency: Less than specification (varies according to engine speed.)

  Air bleeding control

  - If all of the following conditions are met, the PCM operates the engine oil solenoid valve several times to bleed air from inside the hydraulic circuit. (Engine oil solenoid operation amount varies depending on engine speed and engine coolant temperature.)
    - Engine speed: **500—900 rpm**
    - Engine coolant temperature: **50—70 °C {122—158 °F}**
- For details on the engine oil solenoid valve, refer to the LUBRICATION SYSTEM. (See **ENGINE OIL SOLENOID VALVE [SKYACTIV-G 2.0, SKYACTIV-G 2.5]**.)

Hydraulic pressure switching mechanism

- When the engine oil solenoid valve operates, the hydraulic circuit changes according to the following. The engine oil supply amount is controlled by changing the hydraulic circuit.

  Engine oil flow during low hydraulic pressure setting (engine oil solenoid valve ON)

  - When the engine oil solenoid valve turns on, hydraulic pressure is also applied to the top of the pilot valve. The pilot valve presses downward by spring force because the hydraulic pressure applied to the top and bottom of the pilot valve is nearly equal.
  - Hydraulic pressure is applied to the top of the relief valve.
  - When the hydraulic pressure exceeds the relief valve opening pressure, the relief valve is pressed downward and engine oil flows out (hydraulic pressure decrease).
  - When the hydraulic pressure is less than the relief valve opening pressure, the relief valve closes. As a result, engine oil outflow stops (hydraulic pressure increase).
  - (c)-(d) is performed repeatedly to adjust the hydraulic pressure.

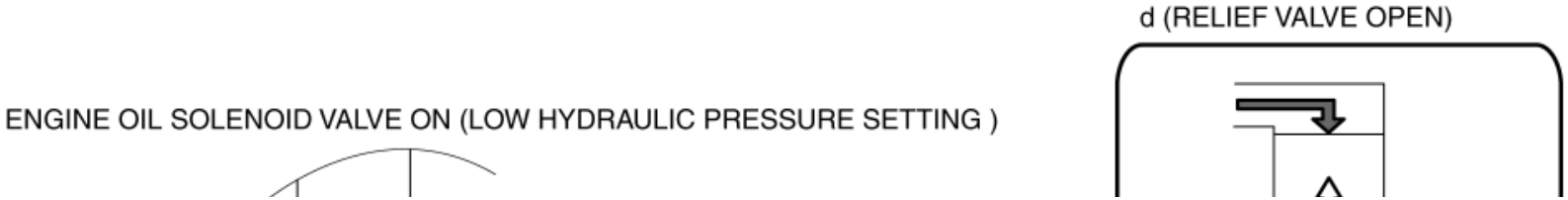

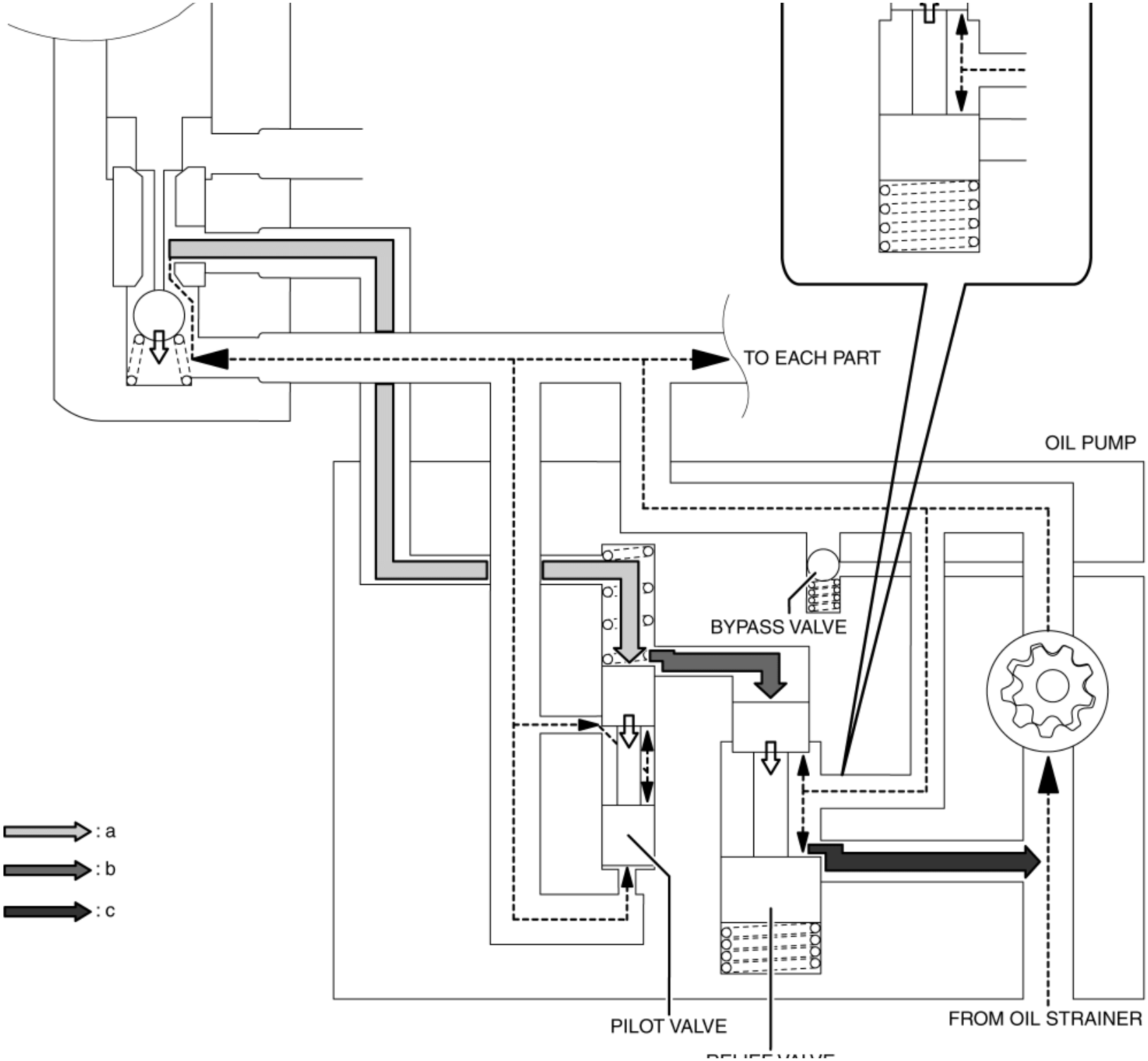
TO EACH PART
OIL PUMP
BYPASS VALVE
: a
: b
: c
PILOT VALVE
FROM OIL STRAINER

RELIEF VALVE

Engine oil flow during high hydraulic pressure setting (engine oil solenoid valve OFF)

- When the hydraulic pressure exceeds the pilot valve opening pressure, the pilot valve is pressed upward and hydraulic pressure is applied.
- Because the hydraulic pressure exceeds the relief valve opening pressure by the hydraulic pressure applied to the top of the relief valve, the relief valve is pressed downward and engine oil flows out (hydraulic pressure decrease).
- When the hydraulic pressure is less than the pilot valve opening pressure, the pilot valve closes. As a result, the relief valve is closed and engine oil outflow stops (hydraulic pressure increase).
- (a)-(c) is performed repeatedly to adjust the hydraulic pressure.

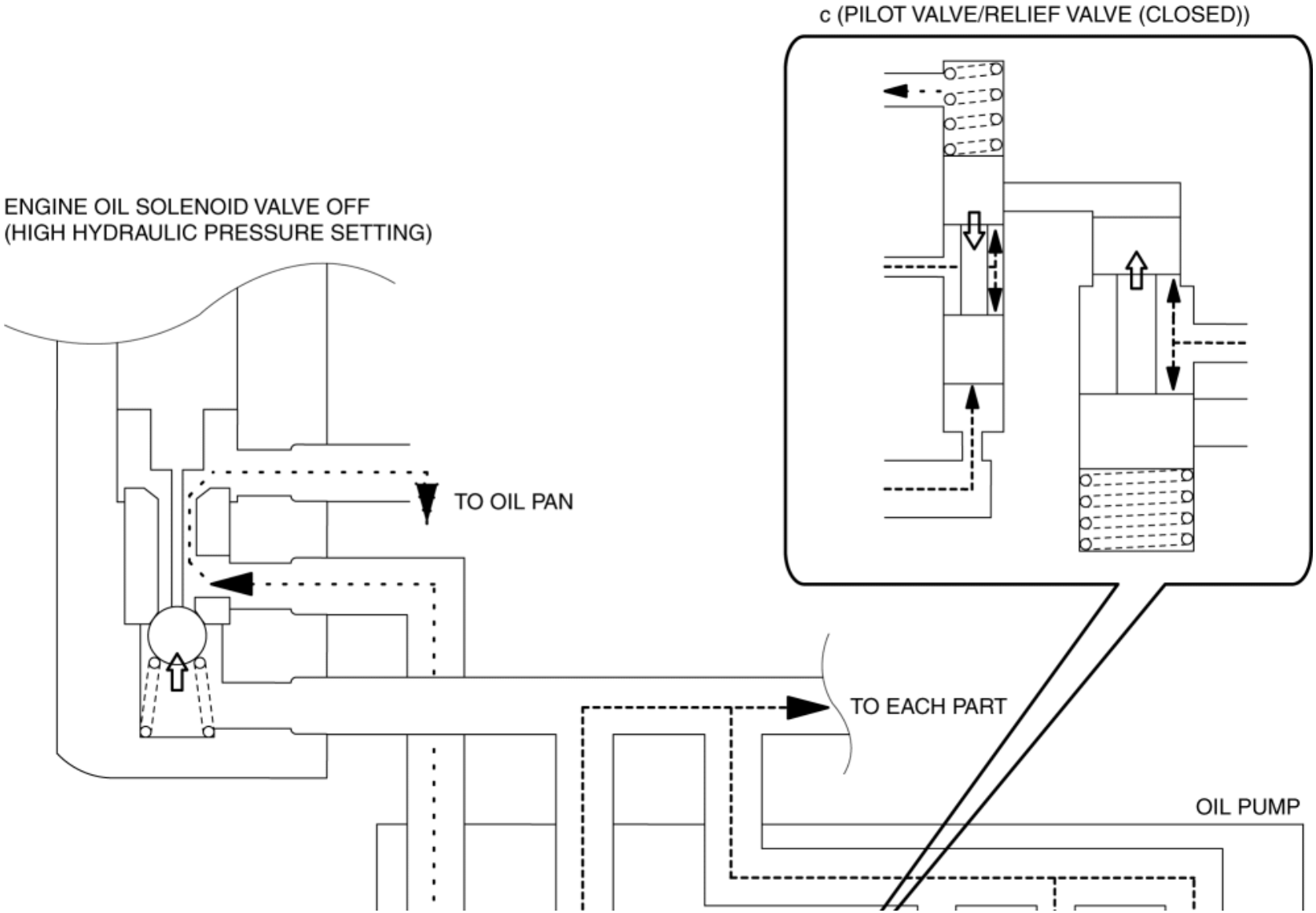

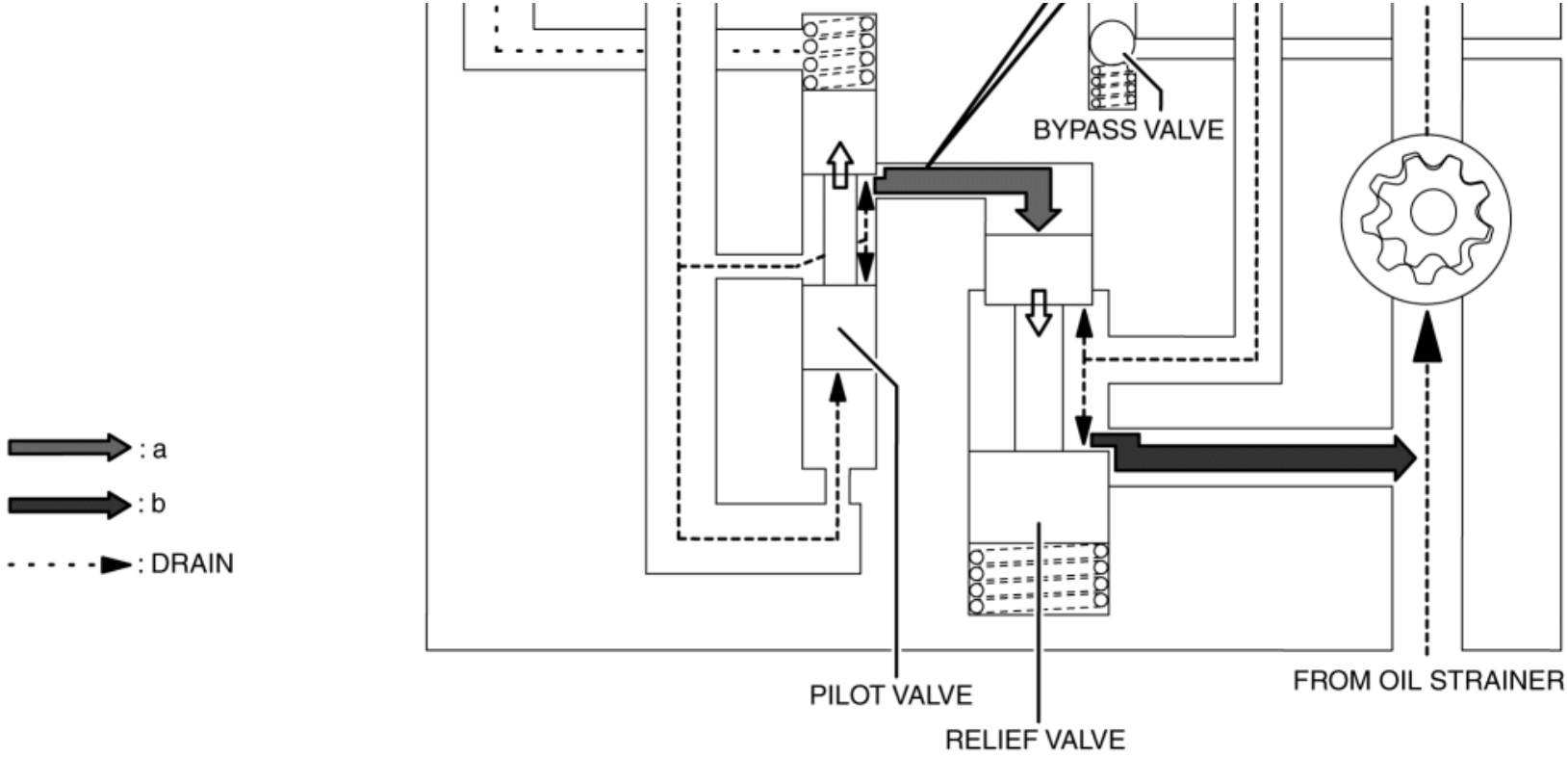
: a
: b
: DRAIN
BYPASS VALVE
PILOT VALVE
RELIEF VALVE
FROM OIL STRAINER

2014 - Mazda3 - Engine

ENGINE OIL WARNING LIGHT [SKYACTIV-G 2.0, SKYACTIV-G 2.5]

Purpose / Function

- The engine oil warning light warns the driver that the engine oil level is insufficient.
- When the instrument cluster receives the engine oil warning light request signal sent from the PCM via the CAN signal, it illuminates the engine oil warning light.

Construction

- The instrument cluster controls illumination on/off of the engine oil warning light using the instrument cluster microcomputer based on the engine oil warning light request signal from the PCM.
- The engine oil warning light is set in the instrument cluster.

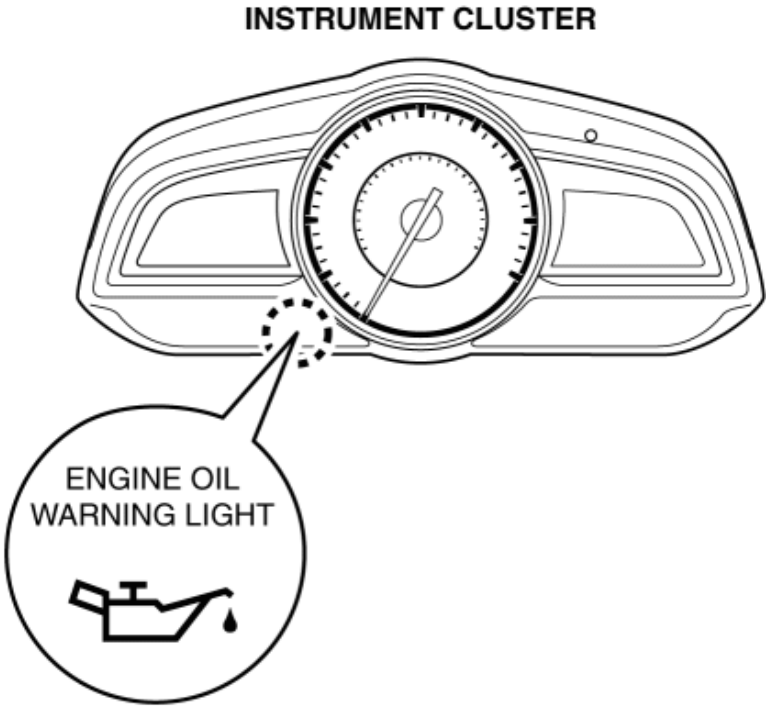

Operation

- If the engine oil pressure is low, the PCM sends an engine oil pressure warning light on request to the instrument cluster.

Type A instrument cluster

1. The instrument cluster receives (1) the engine oil warning light request signal from the PCM.

2. The instrument cluster microcomputer displays (2) the engine oil warning light in the LCD screen.

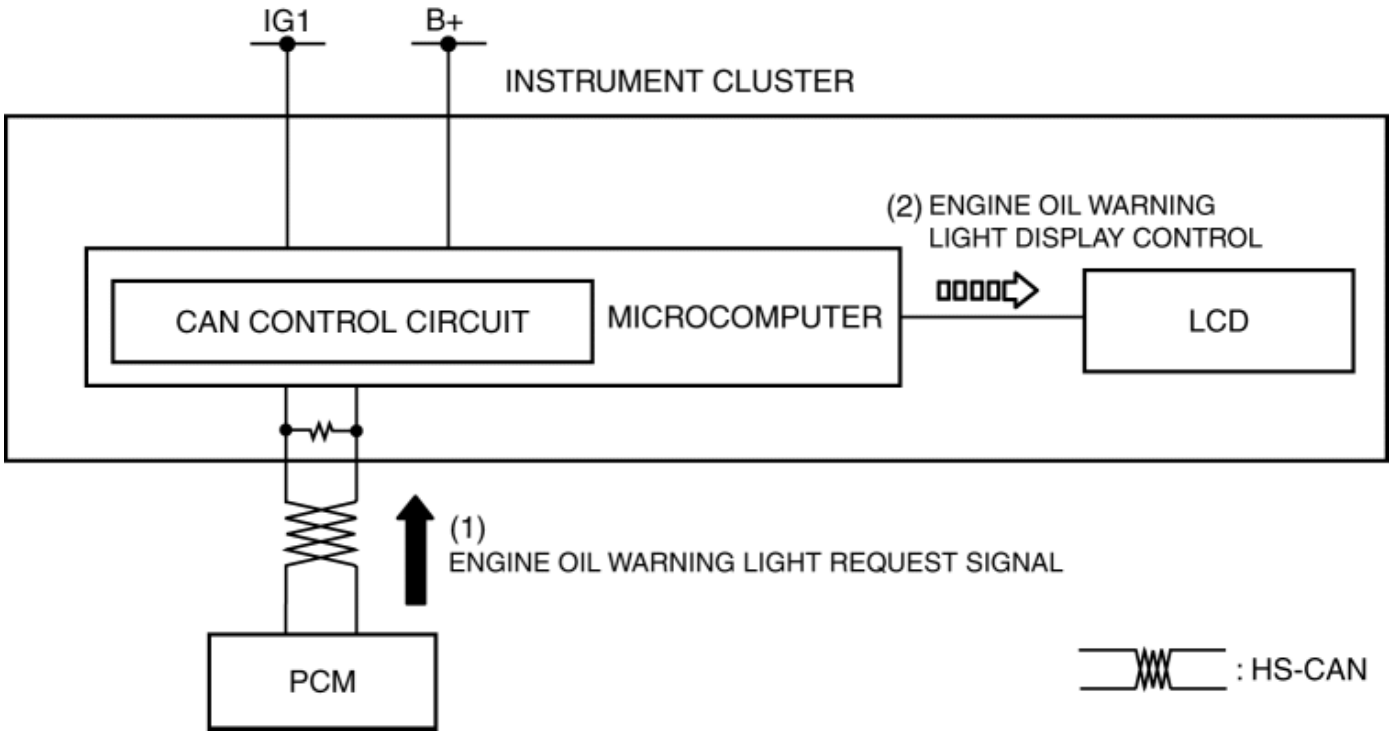

Type B or type C instrument cluster

1. The instrument cluster receives (1) the engine oil warning light request signal from the PCM.

2. The instrument cluster microcomputer turns the transistor on (2) based on the engine oil warning light request signal.

3. When the transistor turns on, a ground circuit with the engine oil warning light is established and the engine oil warning light illuminates (3).

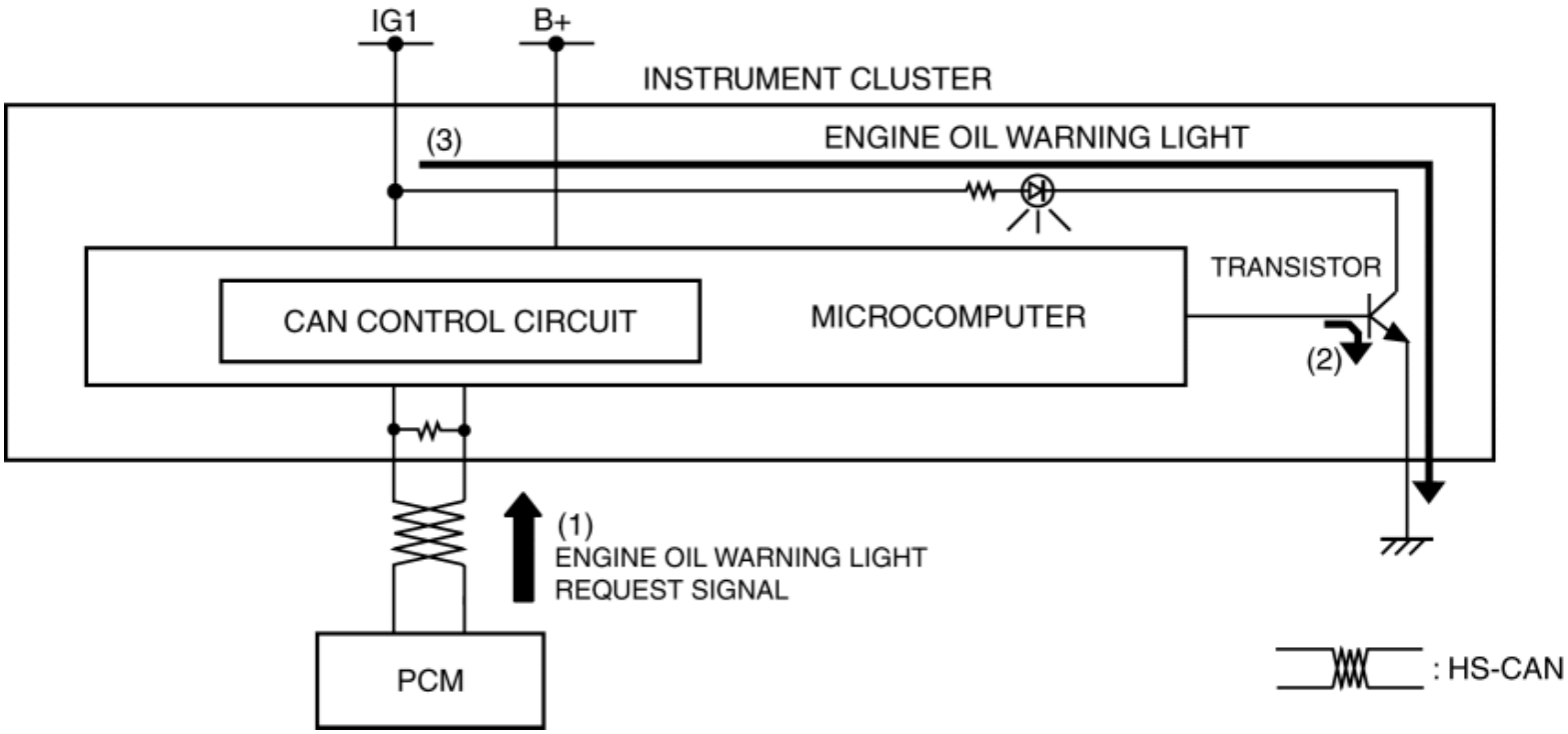

Fail-safe

- Function not equipped.

2014 - Mazda3 - Engine

WRENCH WARNING INDICATOR LIGHT [SKYACTIV-G 2.0, SKYACTIV-G 2.5]

Purpose / Function

- The wrench warning indicator light illumination is indicated together with a message in the LCD when the engine oil replacement period is reached.

Construction

- The wrench warning indicator light is built into the instrument cluster.

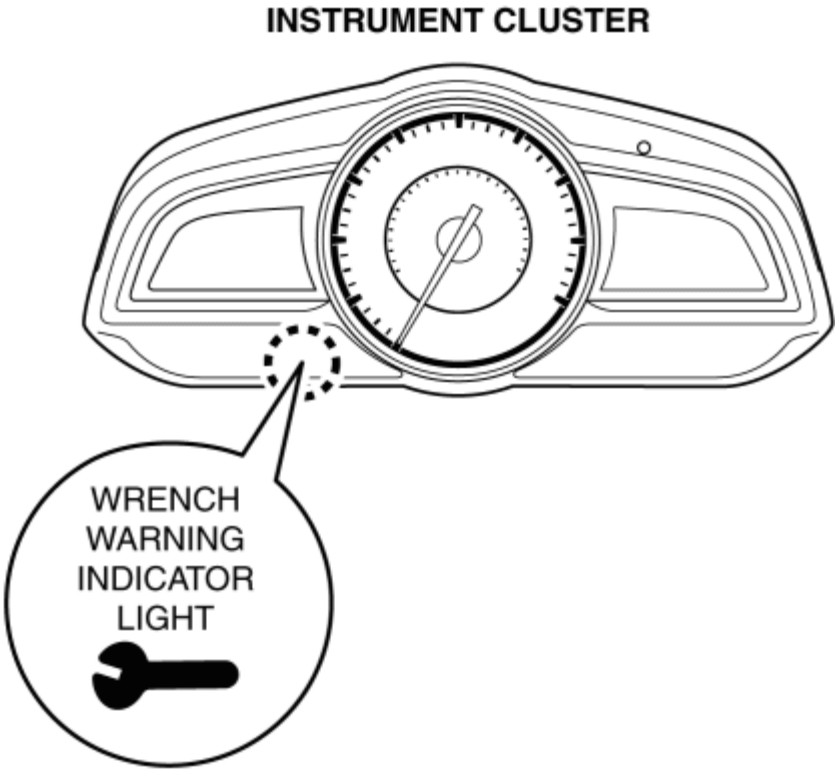

Operation

- The wrench warning indicator light illumination conditions are as follows:

  Wrench warning indicator light illumination conditions

  - Ignition switch ON (turns off after several second)

  Wrench warning indicator light flash conditions

    - PCM determines engine oil replacement period reached. (See **ENGINE OIL MAINTENANCE MONITOR [SKYACTIV-G 2.0, SKYACTIV-G 2.5]**.)

- The PCM sends a wrench warning indicator light illumination or flash request to the instrument cluster via CAN communication.

2014 - Mazda3 - Engine

GEAR SHIFT INDICATOR [SKYACTIV-G 2.0, SKYACTIV-G 2.5]

Purpose / Function

- The gear shift indicator, built into the instrument cluster, informs the driver that a gear position or shift up/down operation is recommended according to the driving conditions.
- The PCM sends a gear shift indicator illumination request to the instrument cluster via CAN communication.

Construction

- The gear shift indicator is built into the instrument cluster. (See **INSTRUMENT CLUSTER**.)

Operation

- The PCM compares the target gear speed (calculated from each signal) and the actual gear speed to determine a gear shift indicator illumination request.

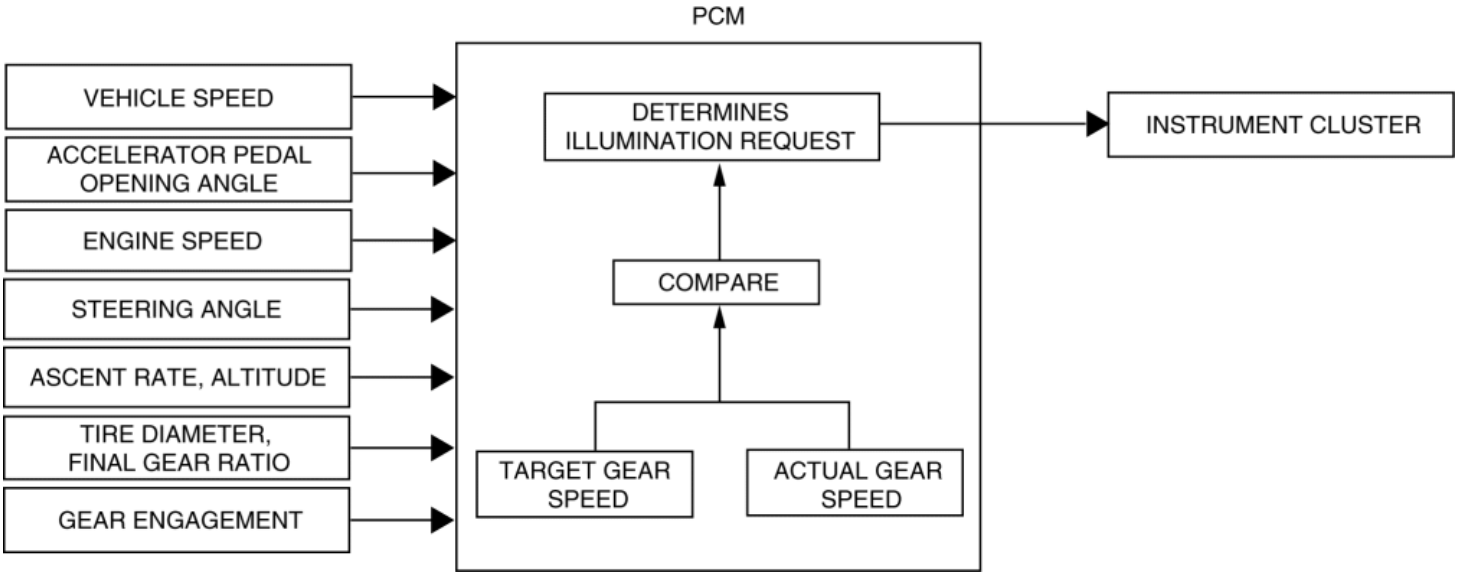

Target gear speed (recommended gear position)

- The target gear speed is determined by the vehicle speed, accelerator pedal opening angle, ascent rate, altitude, and steering angle.

Actual gear speed (current gear position)

- The actual gear speed is determined by the vehicle speed, engine speed, tire diameter, final gear ratio, and gear engagement.

- The gear shift indicator illumination/off conditions are as follows:

Gear Shift Indicator Illumination Condition

- There are three gear shift indicator illumination patterns; normal operation, shift-down recommended operation, and shift-up recommended operation.

Normal operation

- When the following condition is met, the currently selected gear position is indicated.
  - Target gear speed and actual gear speed are equal
  - Example: the following figure indicates that the currently selected gear position is 5th gear.

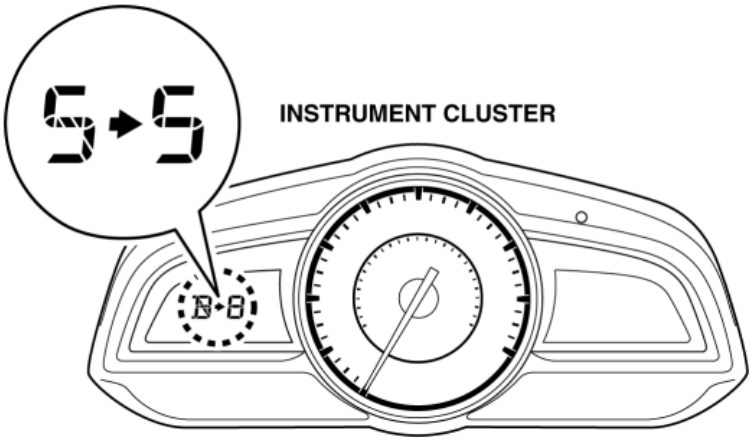

Shift-down recommended operation

- If a shift-down operation is performed when the following condition is met (determines smooth driveability is difficult), the recommended gear position is indicated at the same time.
    - Target gear speed is lower than actual gear speed
    - Example: The following figure indicates that a shift-down operation to 4th gear is recommended.

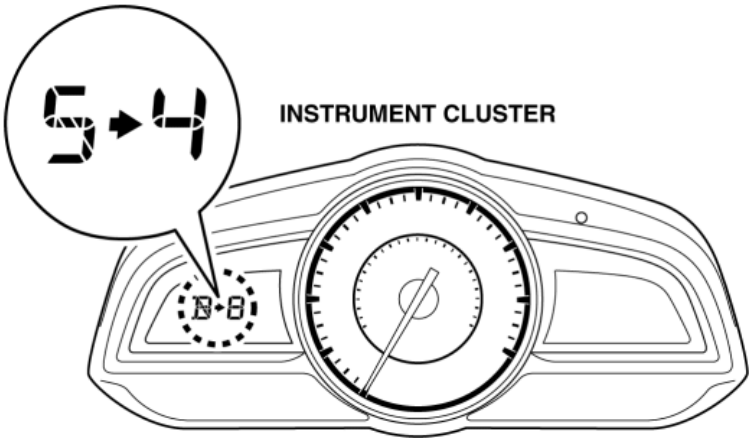

Shift-up recommended operation

- If a shift-up operation is performed when the following condition is met (determines fuel economy worsens), the recommended gear position is indicated at the same time.
    - Target gear speed is higher than actual gear speed
    - Example: The following figure indicates that a shift-up operation to 6th gear is recommended.

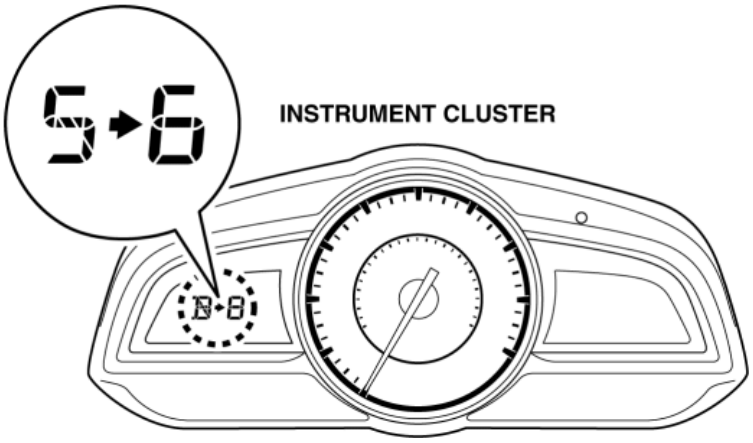

Gear Shift Indicator Off Condition

- When any one of the following conditions is met, the gear shift indicator turns off.
    - Vehicle is stopped

    - Gear is in neutral position or reverse position
    - Until clutch is completely engaged when vehicle is started
    - Clutch pedal is depressed for **2 s or more** while driving
- If the vehicle is driven with the gear not changed when a shift-down/up operation is recommended, the gear shift indicator may temporarily turn off

2014 - Mazda3 - Engine

CHECK FUEL CAP WARNING LIGHT [SKYACTIV-G 2.0, SKYACTIV-G 2.5]

Purpose / Function

- The check fuel cap warning light is built into the instrument cluster.
- If the PCM detects that the fuel cap is open, the light illuminates to warn the driver that the fuel cap is open.

Construction

- The check fuel cap warning light is built into the instrument cluster.

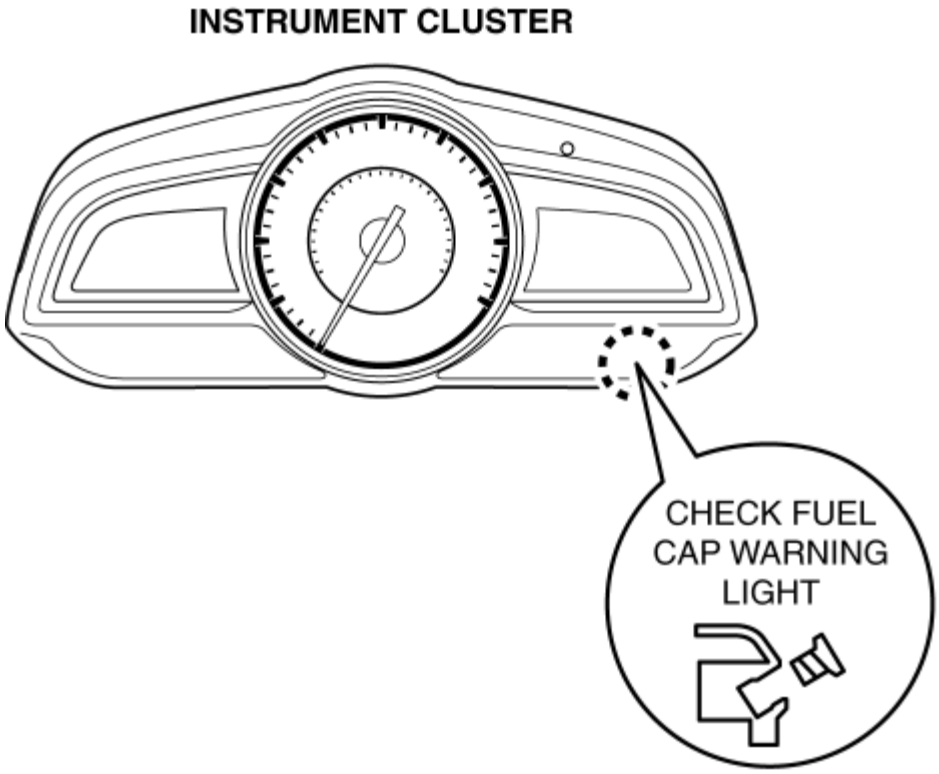

Operation

- The illumination condition of the check fuel cap warning light is as follows:

Check fuel cap warning light illumination condition

- DTC P0457:00 is stored (PCM detects that fuel cap is open)

- The PCM sends a check fuel cap warning light illumination request to the instrument cluster via CAN communication.

2014 - Mazda3 - Engine

ENGINE OIL MAINTENANCE MONITOR [SKYACTIV-G 2.0, SKYACTIV-G 2.5]

Outline

- Calculates the engine oil replacement period as an appropriate target period for replacing the engine oil.

Block Diagram

Flexible

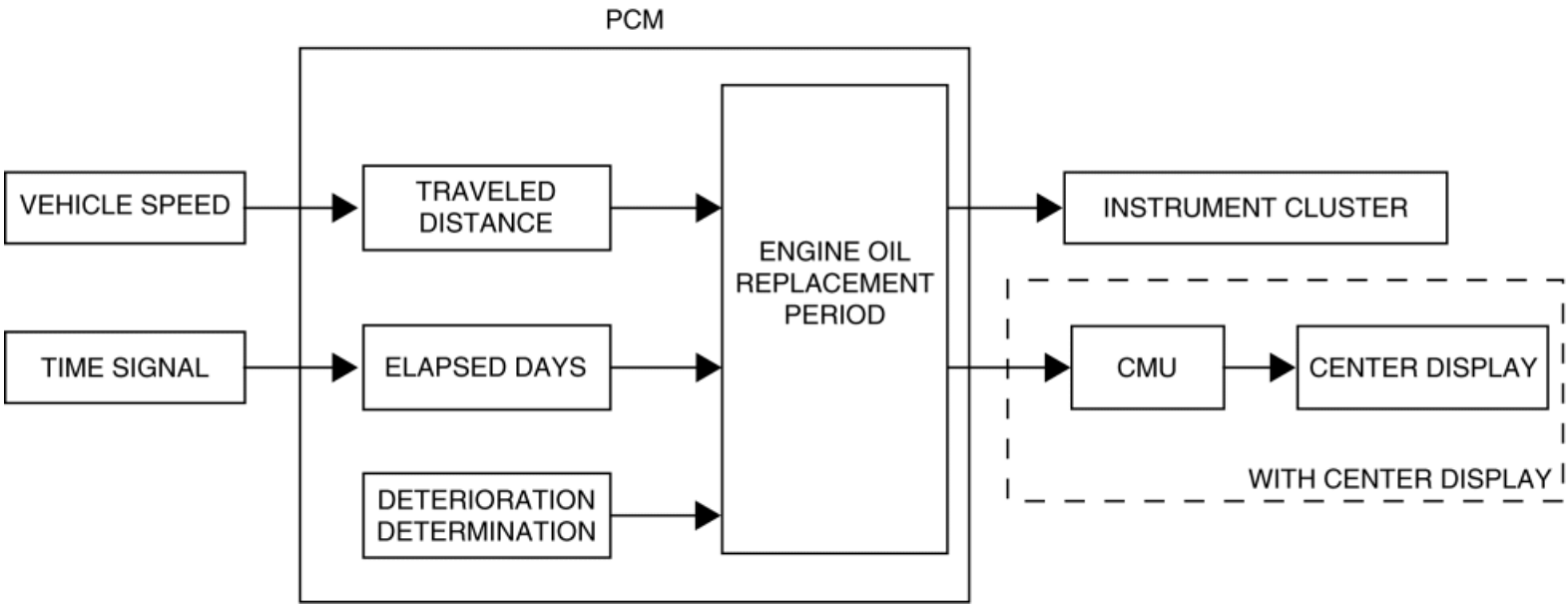

Fixed

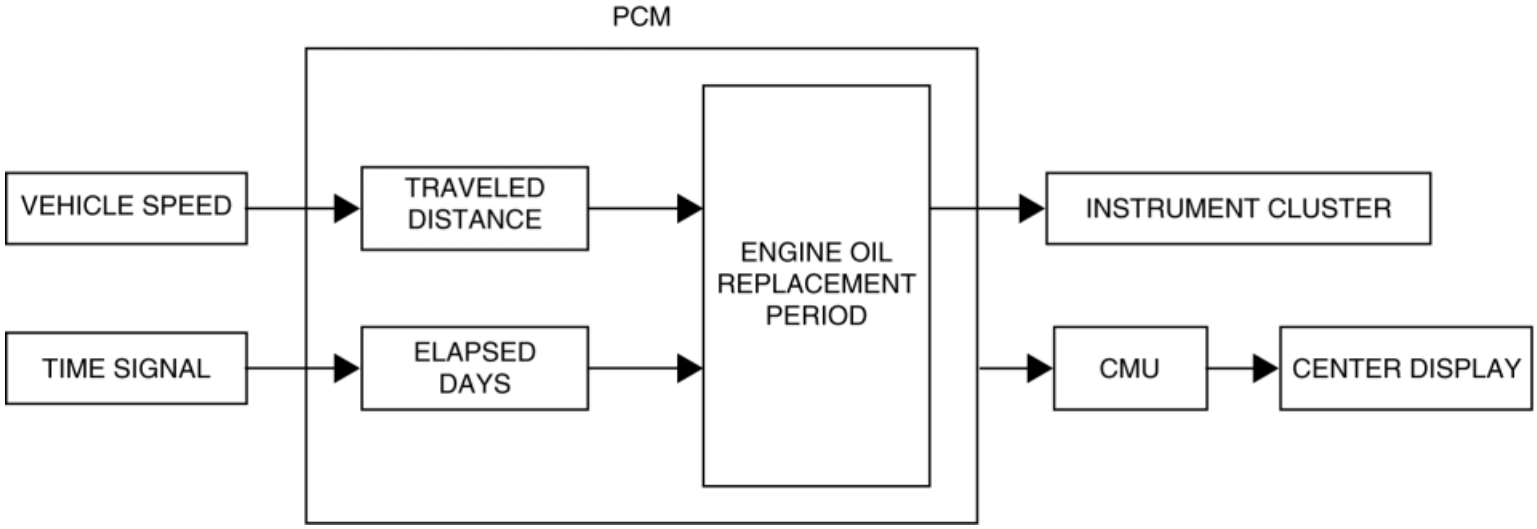

Operation

NOTE:

- During shipment, the engine oil maintenance monitor function is stopped.
- The engine oil maintenance monitor function can be operated using the Mazda Modular Diagnostic System (M-MDS) or center display (with center diplay).

Flexible

- The PCM calculates the traveled distance and the number of elapsed days since the engine oil maintenance monitor function was activated, and if the traveled distance and number of elapsed days exceeds the specified value, it determines that engine oil replacement period is reached.
- The PCM determines engine oil deterioration using information other than the distance travelled and the number of elapsed days. When the PCM determines engine oil deterioration, it determines that the engine oil replacement period has been reached.

Fixed

- The PCM calculates the traveled distance and the number of elapsed days since the engine oil maintenance monitor function was activated, and if the traveled distance and number of elapsed days exceeds the specified value, it determines that engine oil replacement period is reached.
- When the PCM determines that the engine oil replacement period has been reached, the wrench warning indicator light illumination request signal is sent to the instrument cluster.

2014 - Mazda3 - Engine

OVER REV. WARNING ALARM [SKYACTIV-G 2.0, SKYACTIV-G 2.5]

Purpose

- The over-rev warning alarm notifies the user that the engine speed is too high.

Function

- The Over rev. warning alarm sound pattern is as shown in the figure.

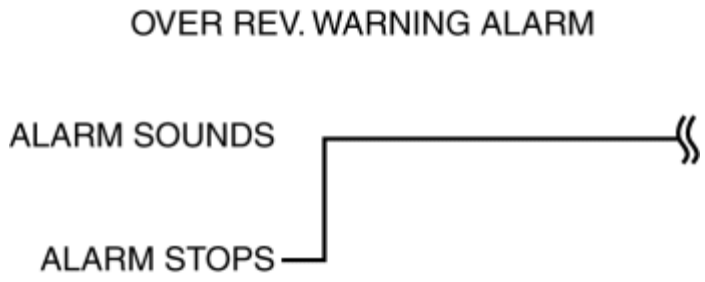

Construction

- The Over rev. warning alarm sounds using the buzzer built into the instrument cluster.

Operation

1. The instrument cluster receives (1) the Over rev. warning alarm request signal from the PCM.

2. The instrument cluster microcomputer turns the transistor on (2) based on the Over rev. warning alarm request signal.

3. When the transistor turns on, a ground circuit with the alarm is established and the alarm sounds (3).

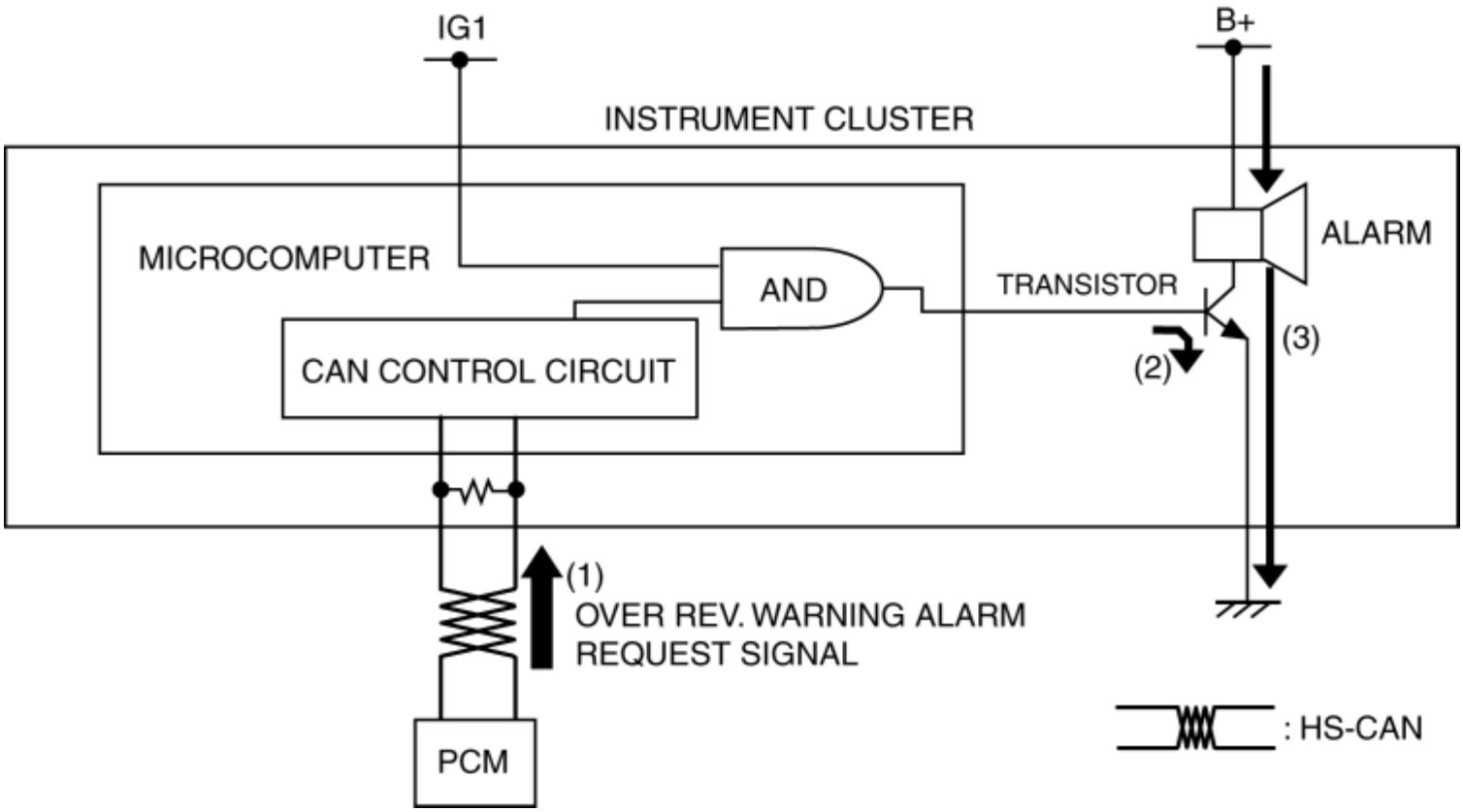

Fail-safe

- Function not equipped.

2014 - Mazda3 - Engine

PCM [SKYACTIV-G 2.0, SKYACTIV-G 2.5]

Purpose / Function

- High-level driveability and lower fuel consumption have been achieved by controlling the appropriate engine conditions (fuel injection/ignition timing) according to operation conditions.
- Controls each output part based on the signal from each input part.
- The control descriptions are as shown below.

Function	Description
Main relay control	• Supplies power to each part by switching the main relay on/off at the optimal timing according to the vehicle conditions.
Drive-by-wire control	• Calculates the optimum target throttle valve opening angle and controls the throttle valve actuator, which allows the driver to drive the vehicle at will. • The drive-by-wire control is composed of the idle air control, accelerator control, traction control, excess engine speed control, overspeed control, electric variable valve timing cooperation control, engine oil temperature control, cruise control system, and the brake override system.
Hydraulic variable valve timing control	• Changes the exhaust valve timing according to engine operation conditions to improve engine output, fuel economy, and emission performance. • Based on each input signal, the PCM determines the optimum exhaust valve timing according to the engine operation conditions. The PCM drives the OCV, and switches the oil passages of the hydraulic variable valve timing actuator to control the exhaust valve timing at optimum. • Based on the coordination with the electric variable valve timing control and by increasing the amount of overlap during high engine loads, nitrogen oxide (NOx) occurring largely at high temperatures is reduced by re-circulating exhaust gas into the combustion chamber, which also reduces combustion temperature.
Electric variable valve timing control	• The PCM determines the optimum intake valve timing according to the engine operation conditions, and sends the motor drive signals to the electric variable valve timing driver. With the adoption of the electric drive system, variable intake valve timing can be controlled without any influence from the engine conditions, thus the fuel economy has been improved and pumping loss has been decreased. • Based on the coordination with the hydraulic variable valve timing control and by increasing the amount of overlap during high engine loads, nitrogen oxide (NOx) occurring largely at high temperatures is reduced by re-circulating exhaust gas into the combustion chamber which reduces combustion temperature.
Fuel injection control	• Performs optimum fuel injection according to engine operation conditions. • The PCM determines the engine operation conditions based on the signals from each input device and drives the fuel injectors at the optimal fuel injection time (fuel injection amount) and the fuel injection timing to inject fuel. • Optimally controls combustion based on fuel injection amount, fuel injection timing, number of fuel injections, and the fuel pressure to achieve emission performance improvement and higher engine output.
Fuel pump control	• By switching the fuel pump discharge amount, reduced power consumption and improved fuel economy have been achieved. • The PCM determines the optimum fuel pump discharge amount according to the engine operation conditions, and sends the fuel pump drive signal to the fuel pump control module.
High pressure fuel pump control	• Changes the fuel pressure applied to the fuel injector (according to engine operation conditions) to improve engine output and startability. • The PCM determines the fuel pressure value corresponding to the engine operation conditions based on each input signal, and drives the spill valve control solenoid valve for optimum control of fuel pressure.

Electronic spark advance control	• Controls ignition for optimum timing (according to engine operation conditions). • Serviceability has been improved by eliminating the necessity of ignition timing adjustment. • The PCM determines the engine operation conditions (based on input signals from each sensor) and blocks current to the ignition coils at the calculated ignition timing. This causes the spark plugs to discharge (ignite) by the effect of electromagnetic mutual induction.
Purge control	• An appropriate amount of evaporative gas is fed into the intake manifold by the purge solenoid valve operation (according to the engine operation conditions). This ensures driveability and prevents release of evaporative gas into the atmosphere. • The PCM drives the purge solenoid valve based on the signal from each control part.
A/F sensor heater control	• Based on the control of the A/F sensor heater, a stabilized oxygen concentration is detected (even at low exhaust temperatures), and feedback control of fuel injection (even at cold engine start) is made possible for improved cold temperature exhaust emission performance. • Both emission performance and sensor protection have been improved by duty control of the heater (according to engine operation conditions (exhaust gas temperature)). • A pre-heat has been adopted to prevent water, (produced from the exhaust system when the engine is started), from adhering to the sensor and damaging it.
HO2S heater control	• Based on the control of the HO2S heater, a stabilized oxygen concentration is detected (even at low exhaust temperatures), and feedback control of fuel injection (even at cold engine start) is made possible for improved cold temperature exhaust emission performance. • Both emission performance and sensor protection have been improved by duty control of the heater (according to engine operation conditions (exhaust gas temperature)).
A/C cut-off control	• To improve drive performance and A/C compressor reliability, the A/C relay is turned off at the appropriate timing (according to the engine operation conditions), and the A/C operation is controlled.
Electrical fan control	• Through cooling of the radiator and condenser by operation of the cooling fan (according to vehicle conditions), engine reliability and cooling performance have been improved. • The PCM determines the engine operation conditions (based on the signals from each sensor), and turns cooling fan relays No.1, No.2, and No.3 on/off to control the rotation speed of the cooling fan motor.
Starter cut-off control	• The PCM controls energization to the starter relay (according to an immobilizer system request) to improve security. • While not in P or N position, the starter relay energization by the push button start is inhibited. (ATX) • When the clutch pedal is not depressed, starter relay energization using the push button start is inhibited. (MTX)
Generator control	• Idling stability has been improved by optimum control of generator voltage (according to engine operation and electrical load conditions). • The PCM determines the engine operation and electrical load conditions based on the input signals from each control part. It then uses this information to control the energization time of the generator field coils.
Immobilizer system	• The immobilizer system is a vehicle theft prevention device that only allows remote transmitters that have been previously programmed to the vehicle to start the engine.
Engine oil control	• The PCM reduces the oil pump load applied to the engine by controlling the appropriate engine hydraulic pressure (according to the engine operation conditions). • The engine hydraulic pressure switches in two steps. When hydraulic pressure is not needed, the oil pump discharge amount is reduced by the operation of the engine oil solenoid valve.
Active air shutter control	• In the active air shutter control, the PCM controls the active air shutter actuator to open/close the shutter.

Construction

- Installed on the battery tray.

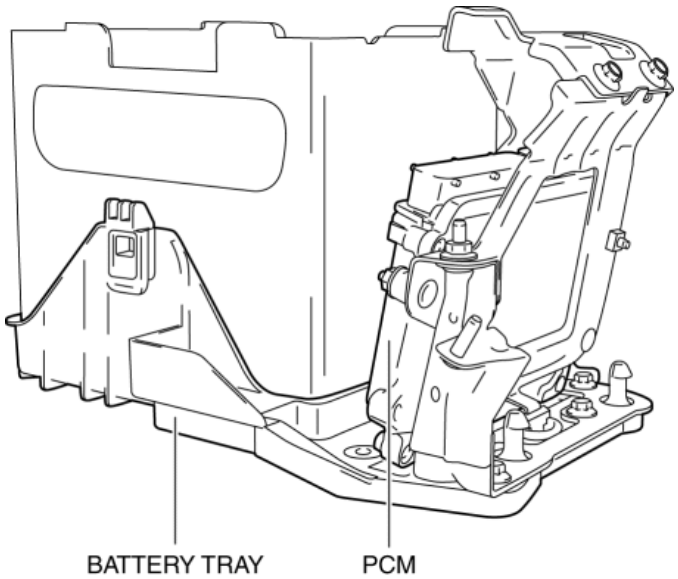

- A 200-pin (two-block) connector has been adopted.

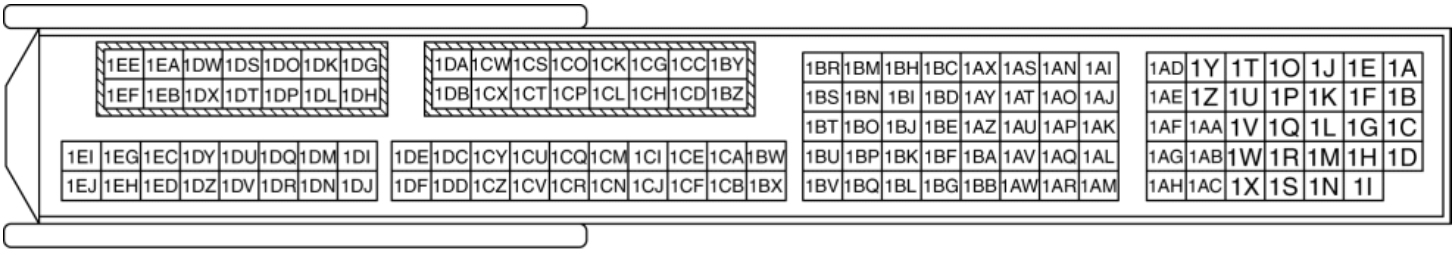

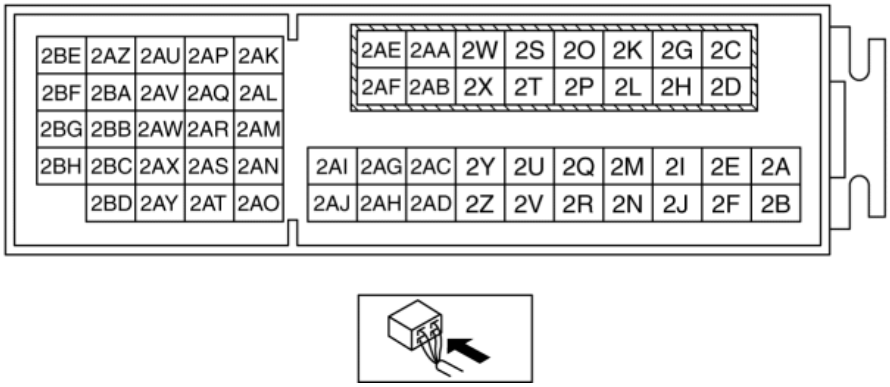

- BARO sensor is integrated.

Operation

- For operation content, refer to the following references:

Function	Page
Main relay control	(See **MAIN RELAY CONTROL [SKYACTIV-G 2.0, SKYACTIV-G 2.5]**.)
Drive-by-wire control	(See **DRIVE-BY-WIRE CONTROL [SKYACTIV-G 2.0, SKYACTIV-G 2.5]**.)
Hydraulic variable valve timing control	(See **HYDRAULIC VARIABLE VALVE TIMING CONTROL [SKYACTIV-G 2.0, SKYACTIV-G 2.5]**.)
Electric variable valve timing control	(See **ELECTRIC VARIABLE VALVE TIMING CONTROL [SKYACTIV-G 2.0, SKYACTIV-G 2.5]**.)
Fuel injection control	(See **FUEL INJECTION CONTROL SYSTEM [SKYACTIV-G 2.0, SKYACTIV-G 2.5]**.)

Fuel pump control	(See **FUEL PUMP CONTROL [SKYACTIV-G 2.0, SKYACTIV-G 2.5]**.)
High pressure fuel pump control	(See **HIGH PRESSURE FUEL PUMP CONTROL [SKYACTIV-G 2.0, SKYACTIV-G 2.5]**.)
Electronic spark advance control	(See **ELECTRONIC SPARK ADVANCE CONTROL [SKYACTIV-G 2.0, SKYACTIV-G 2.5]**.)
Purge control	(See **PURGE CONTROL [SKYACTIV-G 2.0, SKYACTIV-G 2.5]**.)
A/F sensor heater control	(See **AIR FUEL RATIO (A/F) SENSOR HEATER CONTROL [SKYACTIV-G 2.0, SKYACTIV-G 2.5]**.)
HO2S heater control	(See **HEATED OXYGEN SENSOR (HO2S) HEATER CONTROL [SKYACTIV-G 2.0, SKYACTIV-G 2.5]**.)
A/C cut-off control	(See **A/C CUT-OFF CONTROL [SKYACTIV-G 2.0, SKYACTIV-G 2.5]**.)
Electrical fan control	(See **ELECTRICAL FAN CONTROL [SKYACTIV-G 2.0, SKYACTIV-G 2.5]**.)
Starter cut-off control	(See **STARTER CUT-OFF CONTROL [SKYACTIV-G 2.0, SKYACTIV-G 2.5]**.)
Generator control	(See **GENERATOR CONTROL [SKYACTIV-G 2.0, SKYACTIV-G 2.5]**.)
Immobilizer system	(See **IMMOBILIZER SYSTEM**.)
Engine oil control	(See **ENGINE OIL CONTROL [SKYACTIV-G 2.0, SKYACTIV-G 2.5]**.)
Active air shutter control	(See **ACTIVE AIR SHUTTER CONTROL**.)

Fail-safe

DTC No.	Fail-safe function
P0601:00	• Restricts the upper limit of the engine speed. • Stops the drive-by-wire control (throttle valve is open at approx. 8° by return spring force).
P0606:00	• Restricts the upper limit of the engine speed. • Stops the drive-by-wire control (throttle valve is open at approx. 8° by return spring force).
P061B:00	• Restricts the upper limit of the engine speed.
P061D:00	• Restricts the upper limit of the engine speed.
P2107:00	• Restricts the upper limit of the engine speed. • Stops the drive-by-wire control (throttle valve is open at approx. 8° by return spring force).
P2110:00	• Restricts the upper limit of the engine speed. • Stops the drive-by-wire control (throttle valve is open at approx. 8° by return spring force).

2014 - Mazda3 - Engine

MAIN RELAY [SKYACTIV-G 2.0, SKYACTIV-G 2.5]

Purpose / Function

- Supplies power to each part.
- Supplies battery voltage to each part based on the signals from the PCM even though the ignition is switched on or off.

Construction

- Installed in the relay and fuse block.

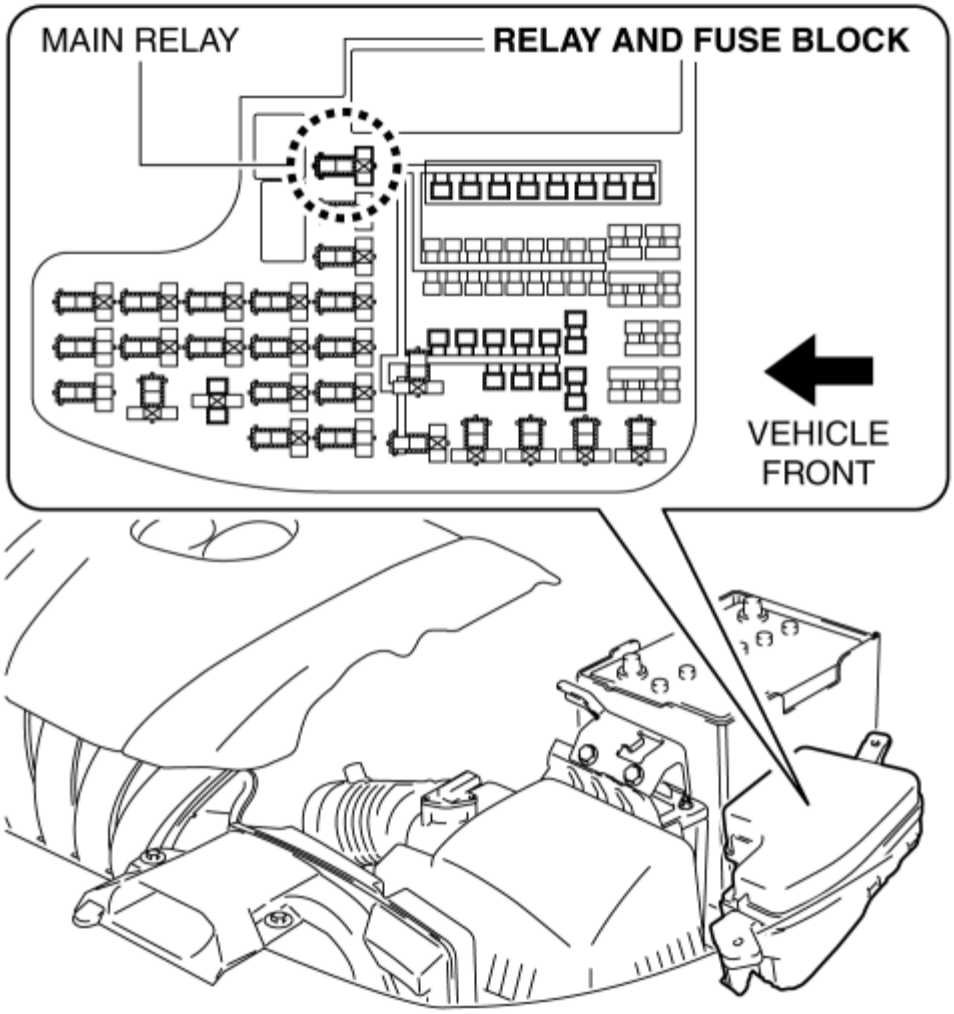

Operation

- After the contact point is on battery voltage is supplied to the coil based on the signals from the PCM.

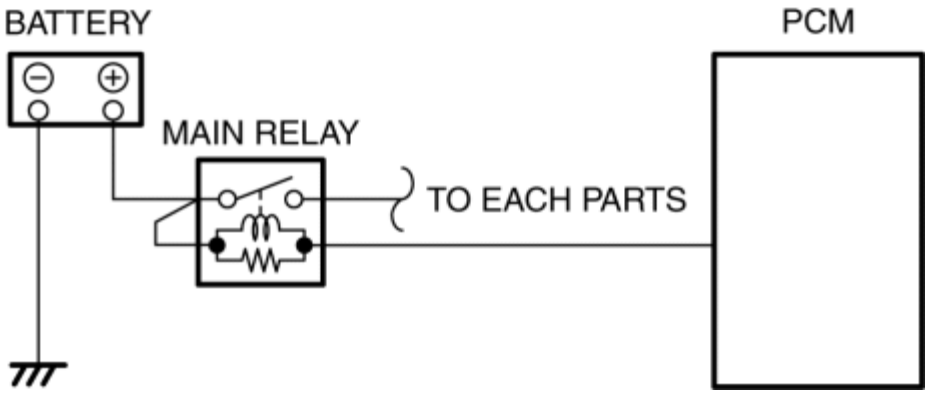

Fail-safe

- Function not equipped.

2014 - Mazda3 - Engine

NEUTRAL SWITCH [SKYACTIV-G 2.0, SKYACTIV-G 2.5]

Purpose / Function

- Detects the neutral position of the shift lever.

Construction

- Installed to the manual transaxle.

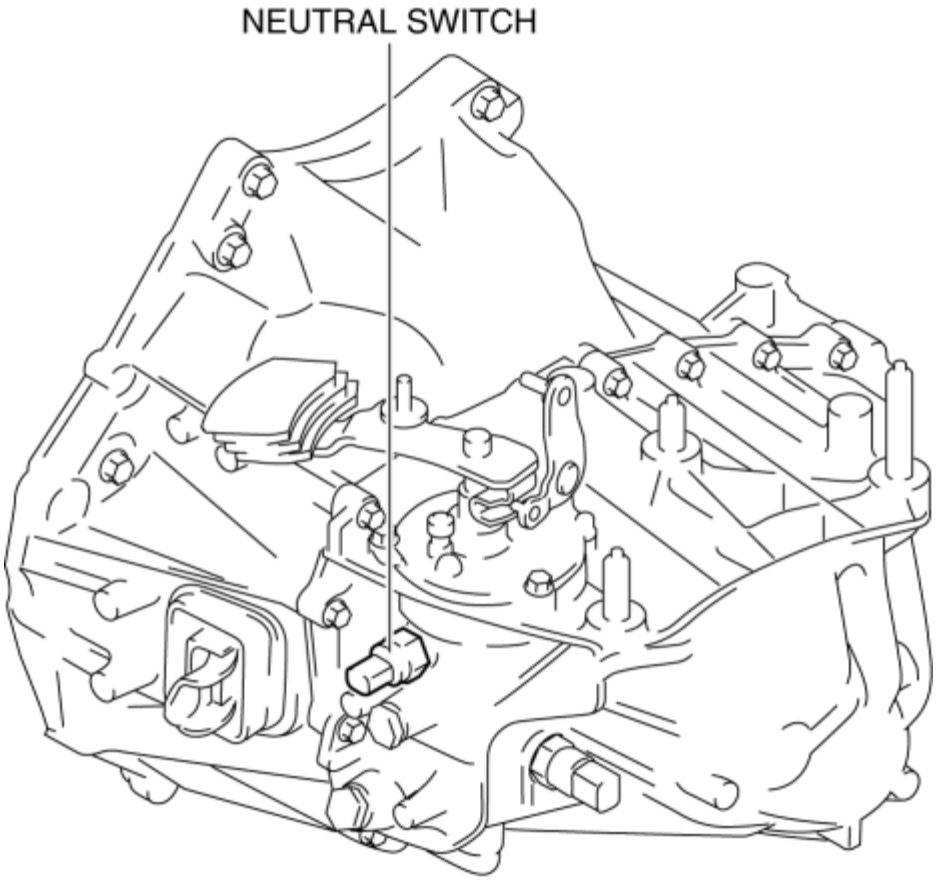

MANUAL TRANSAXLE

- An ON/OFF type switch has been adopted.

Operation

Sends the neutral switch on/off signal to the PCM.

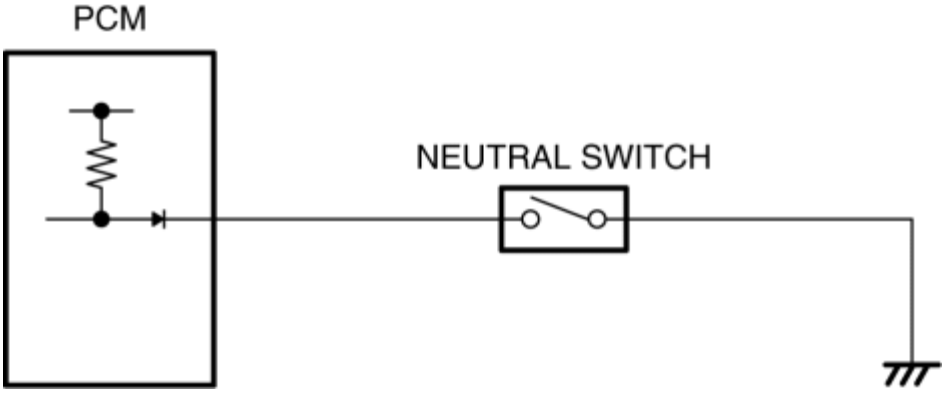

- The contact point is on when in neutral (to output voltage) and off when not in neutral.

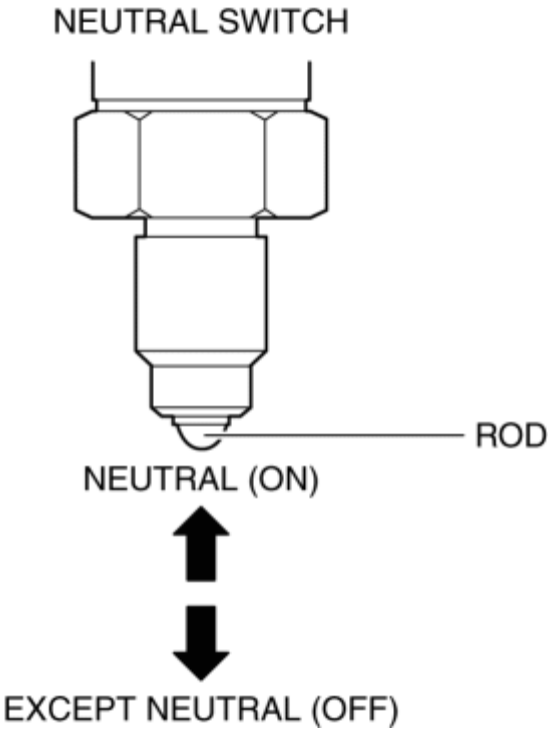

Fail-safe

- Function not equipped.

2014 - Mazda3 - Engine

CLUTCH PEDAL POSITION (CPP) SWITCH [SKYACTIV-G 2.0, SKYACTIV-G 2.5]

Purpose / Function

- Detects the connection status of the clutch.

Construction

- Installed on the clutch pedal.

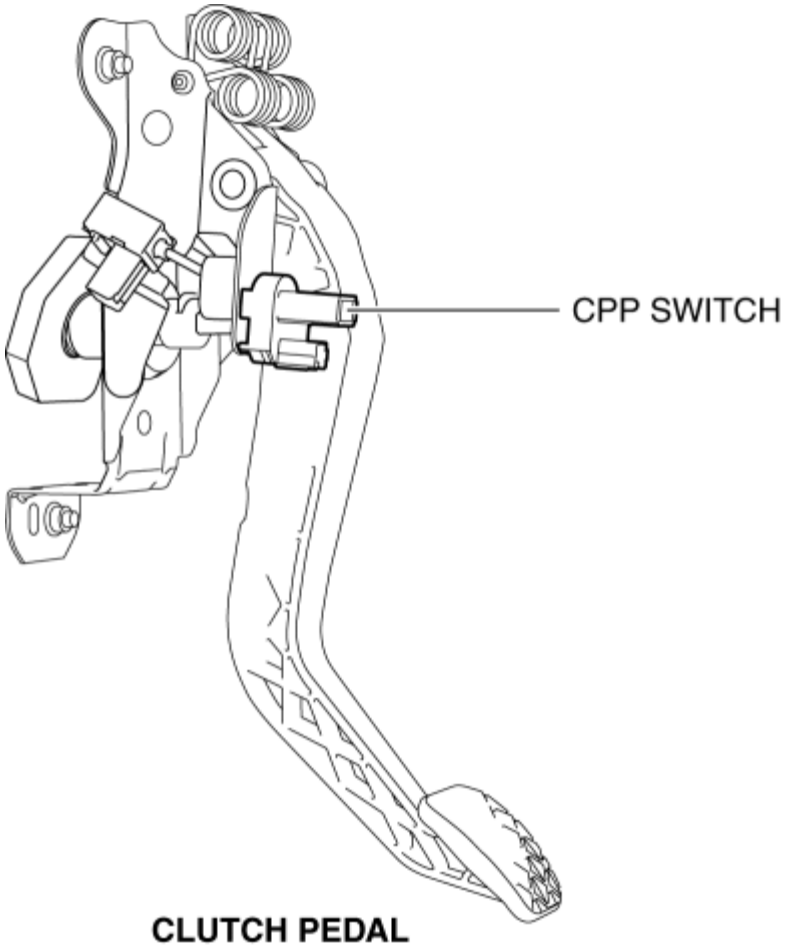

CLUTCH PEDAL

- An ON/OFF type switch has been adopted.

Operation

- Sends the CPP switch on/off signal to the PCM.

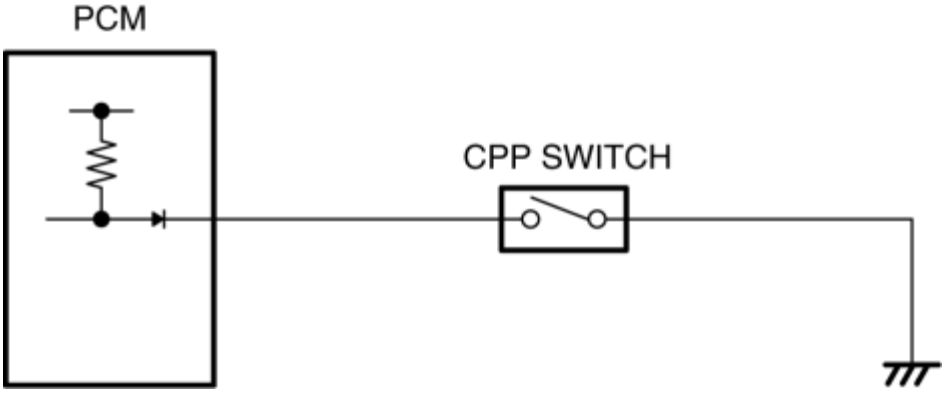

- The contact point is on when the clutch pedal is engaged (voltage is output) and off when the clutch pedal is not engaged.

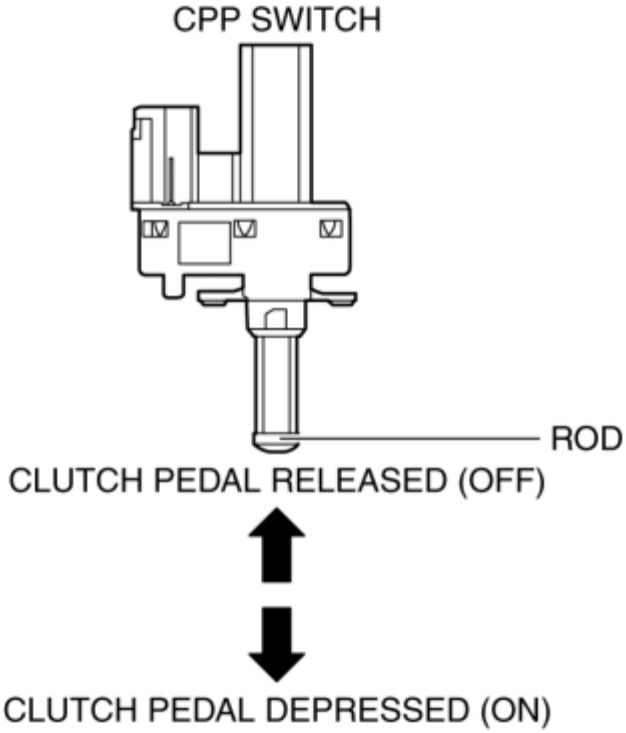

Fail-safe

- Function not equipped.

2014 - Mazda3 - Engine

MASS AIR FLOW (MAF) SENSOR [SKYACTIV-G 2.0, SKYACTIV-G 2.5]

Purpose / Function

- Detects the intake airflow amount introduced into the cylinder as basic information (mainly used to determine the fuel injection amount) and sends it to the PCM as an intake airflow amount signal.

Construction

- Installed on the air cleaner.

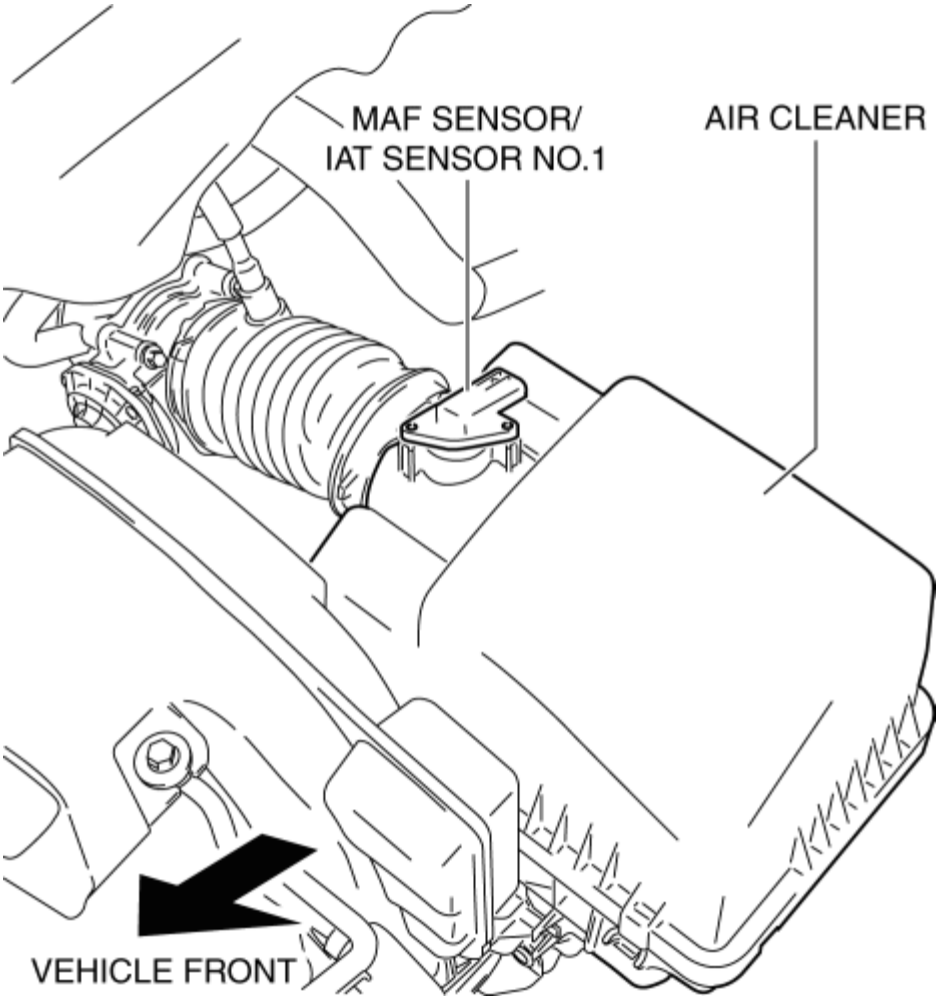

- A hot film has been adopted as the detecting element for detecting the intake airflow amount.

IAT sensor No.1 is integrated.

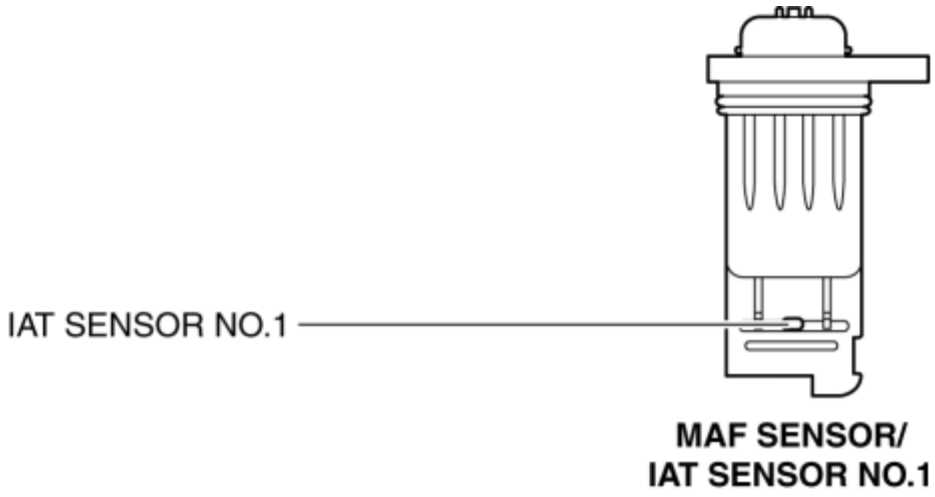

Operation

- Sends the signal, which fluctuates according to the intake airflow amount, to the PCM.

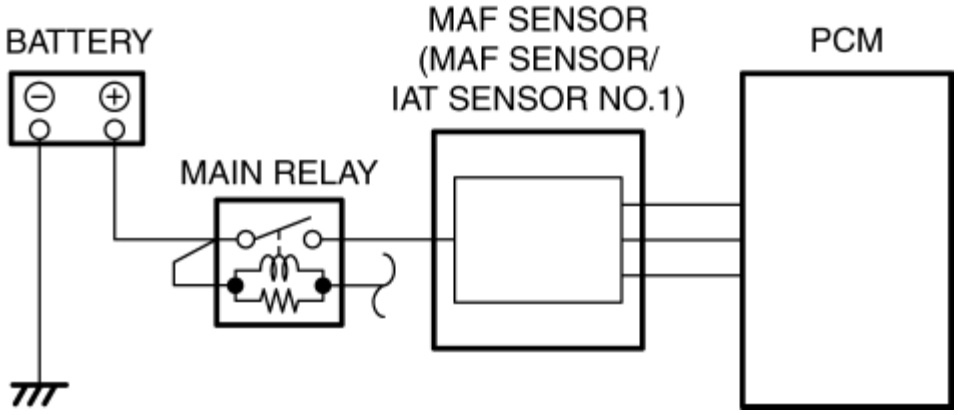

MAF sensor characteristic

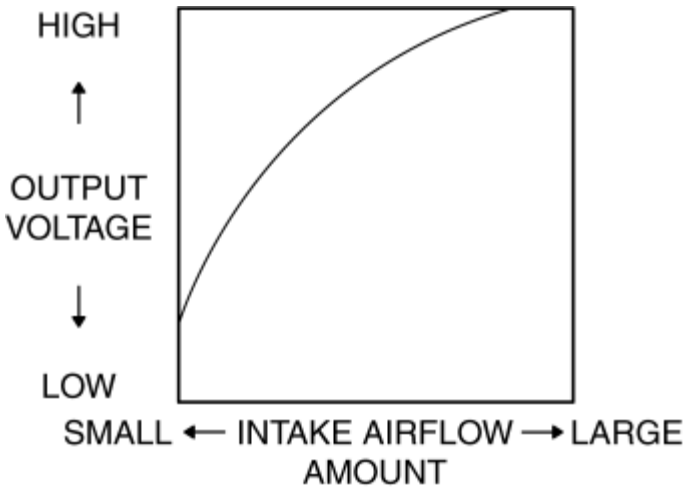

Fail-safe

DTC No.	Fail-safe function
P0102:00	• Restricts the upper limit of the engine speed. • Inhibits the evaporative purge control.
P0103:00	• Restricts the upper limit of the engine speed. • Inhibits the evaporative purge control.

2014 - Mazda3 - Engine

INTAKE AIR TEMPERATURE (IAT) SENSOR [SKYACTIV-G 2.0, SKYACTIV-G 2.5]

IAT Sensor No.1

Purpose/Function

- Detects the IAT before it passes through the throttle body as basic information (mainly used to determine the fuel injection amount) and sends it to the PCM as an IAT signal.

Construction

- Built into the MAF sensor.

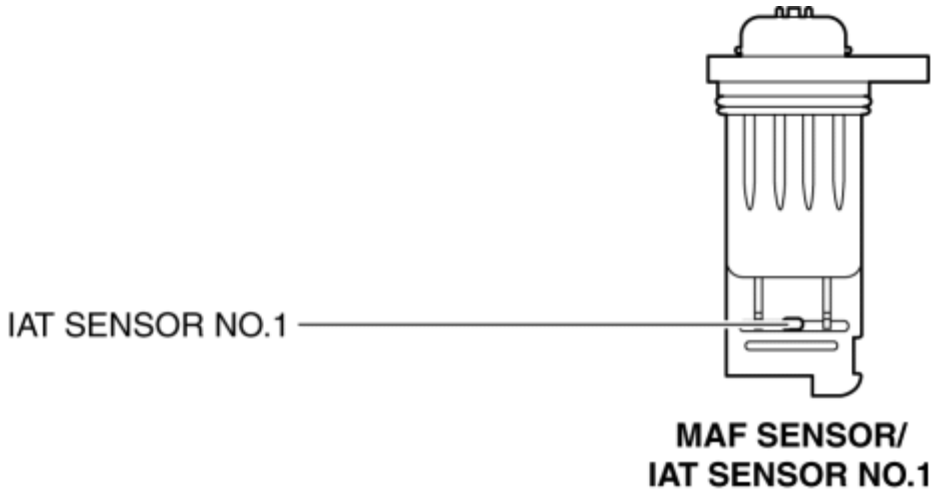

- A cold resistor has been adopted (as the detecting element) for detecting the IAT.

Operation

- Sends the signal, which fluctuates according to the IAT (after passing through the air cleaner), to the PCM.

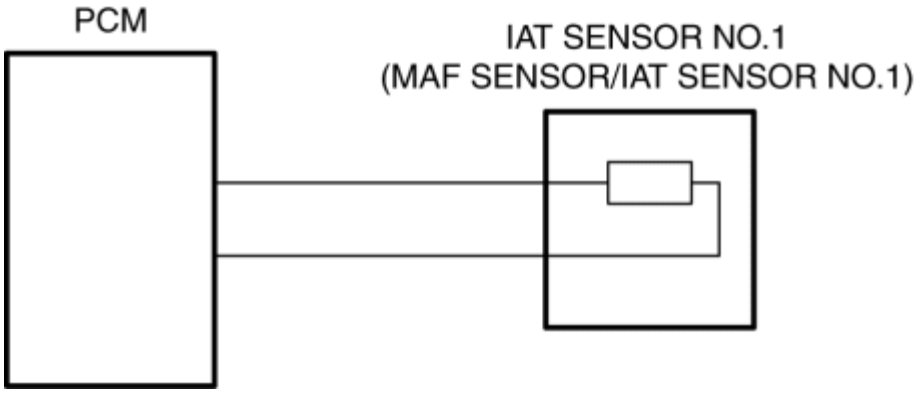

IAT sensor No.1 characteristic

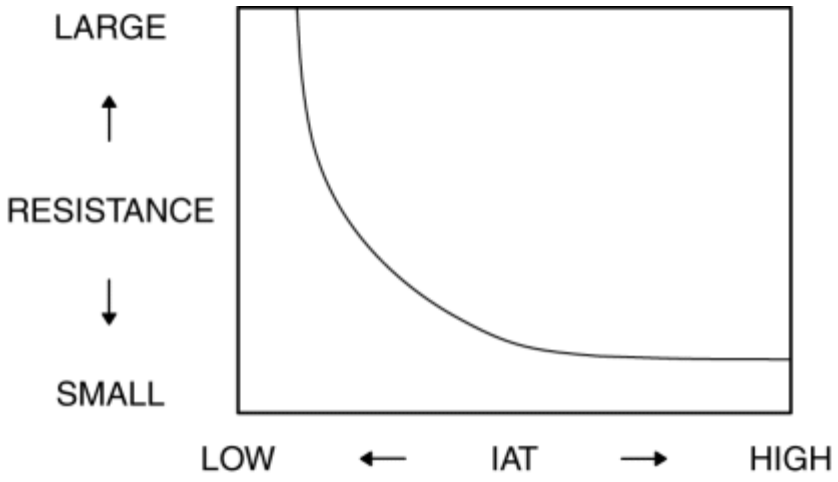

Fail-safe

DTC No.	Fail-safe function
P0112:00	• Fixes the intake air temperature (for engine control) at 20 °C {68 °F}. • Inhibits the fuel cut control during shift change.
P0113:00	• Fixes the intake air temperature (for engine control) at 20 °C {68 °F}. • Inhibits the fuel cut control during shift change.

IAT Sensor No.2

Purpose / Function

- Detects the IAT (in intake manifold) after it passes through the throttle body as basic information (mainly used to determine the fuel injection amount) and sends it to the PCM

as an intake air temperature signal.

Construction

- Built into the MAP sensor.

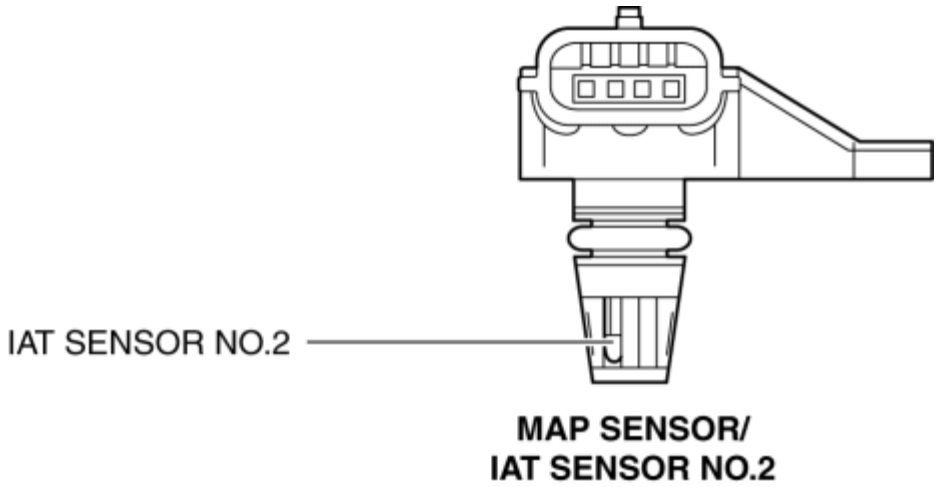

- A cold resistor has been adopted (as the detecting element) for detecting the IAT.

Operation

- Sends the signal, which fluctuates according to the IAT (in the intake manifold), to the PCM.

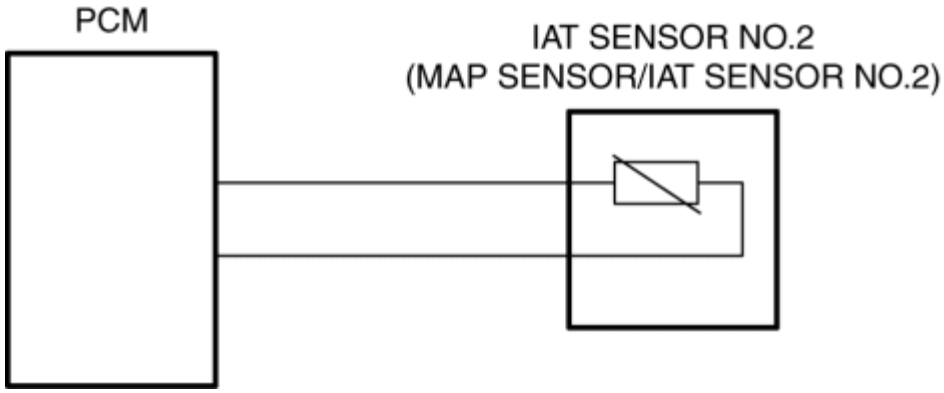

IAT sensor No.2 characteristic

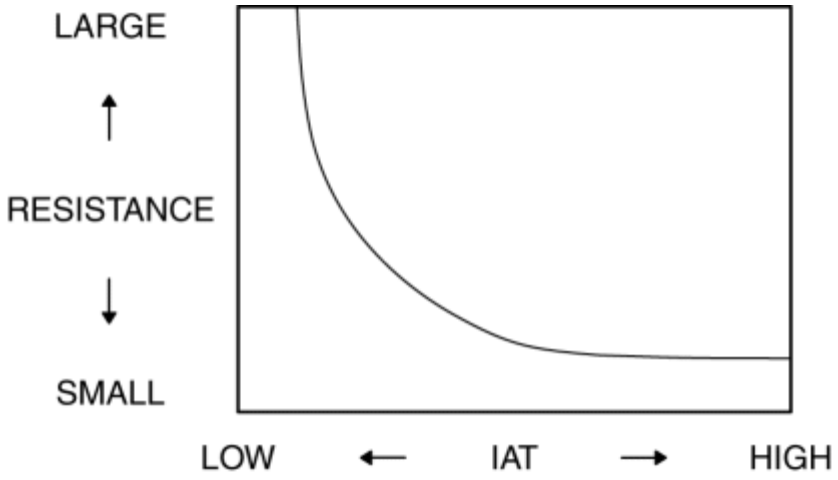

Fail-safe

- Function not equipped.

2014 - Mazda3 - Engine

MANIFOLD ABSOLUTE PRESSURE (MAP) SENSOR [SKYACTIV-G 2.0, SKYACTIV-G 2.5]

Purpose/Function

- Detects the intake air pressure introduced into the cylinder as basic information (mainly used to determine the fuel injection amount) and sends it to the PCM as an intake air pressure signal.

Construction

- Installed on the intake manifold.

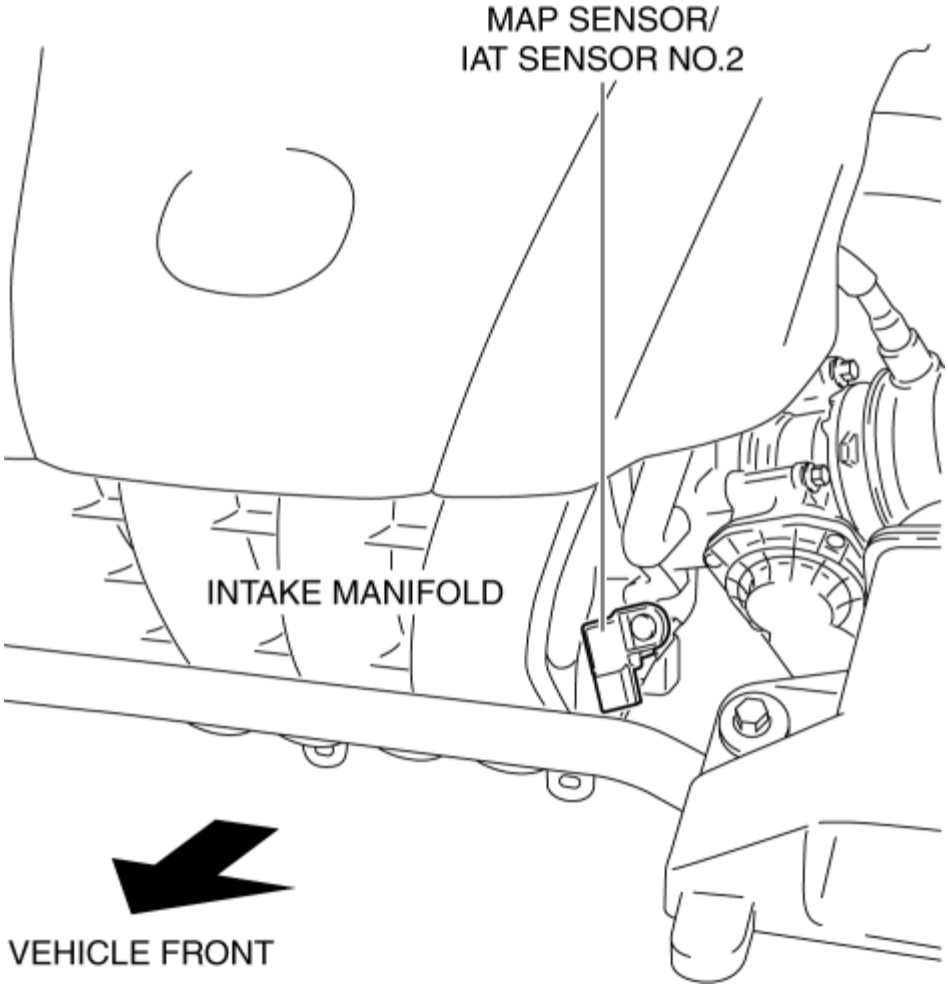

- A sealant diaphragm has been adopted as the detecting element for detecting the intake air pressure.
- IAT sensor No.2 is integrated.

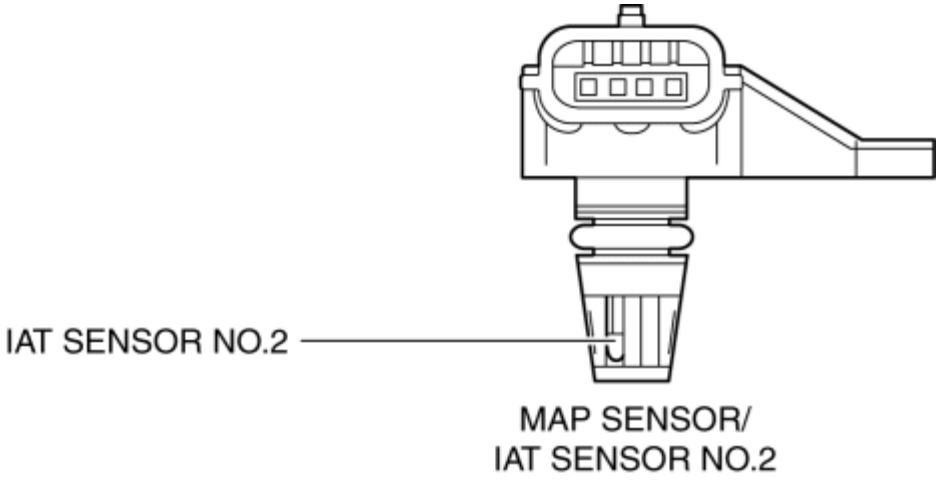

Operation

- Sends the signal, which fluctuates according to the intake air pressure, to the PCM.

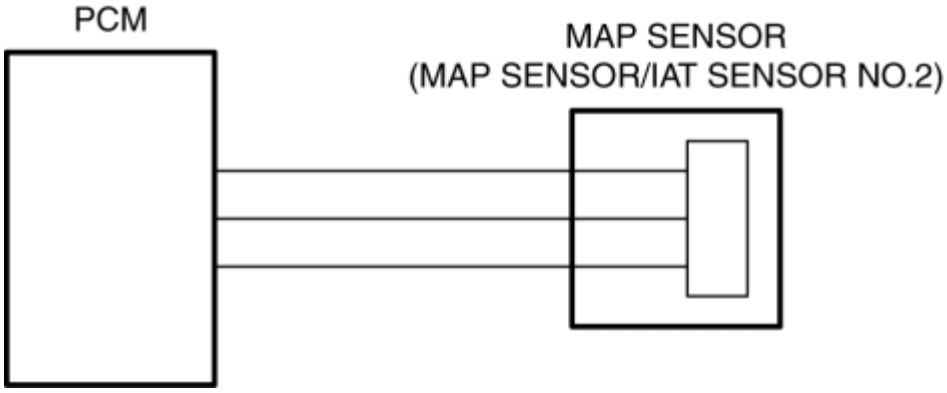

MAP sensor characteristic

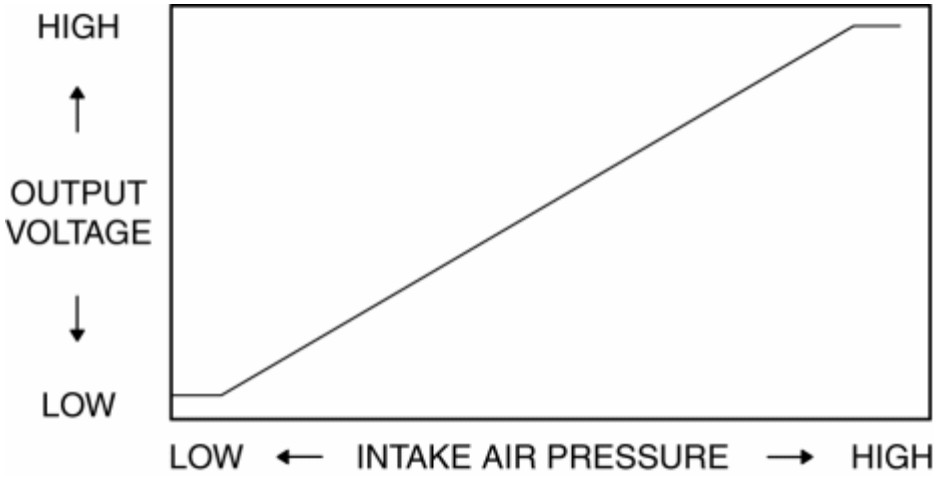

Fail-safe

DTC No.	Fail-safe function
P0107:00	• Estimates the MAP using the MAF sensor and the engine speed. • Restricts the upper limit of the engine speed. • Inhibits the evaporative purge control.
P0108:00	• Estimates the MAP using the MAF sensor and the engine speed. • Restricts the upper limit of the engine speed. • Inhibits the evaporative purge control.

2014 - Mazda3 - Engine

THROTTLE POSITION (TP) SENSOR [SKYACTIV-G 2.0, SKYACTIV-G 2.5]

Purpose / Function

- Detects the throttle valve opening/closing condition, which operates in accordance with the accelerator pedal operation, as basic information (mainly used to determine the fuel injection amount) and sends it to the PCM as the throttle valve opening angle signal.

Construction

- Built into the throttle body.

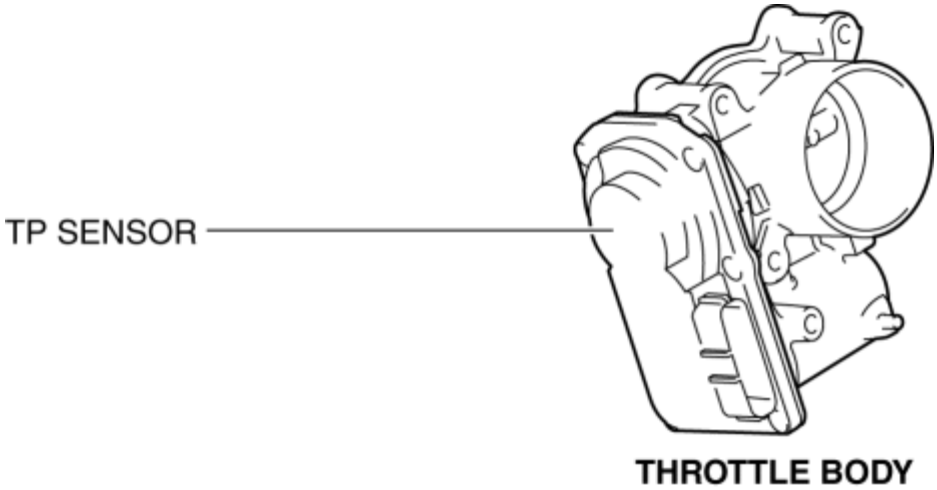

- A Hall element has been adopted (as the detecting element) for detecting the throttle valve opening/closing condition.
- The TP sensor has a main sensor (No.1) and a sub sensor (No.2) for improved detection accuracy.

Operation

- Sends the signal, which fluctuates according to the throttle valve opening/closing, to the PCM.

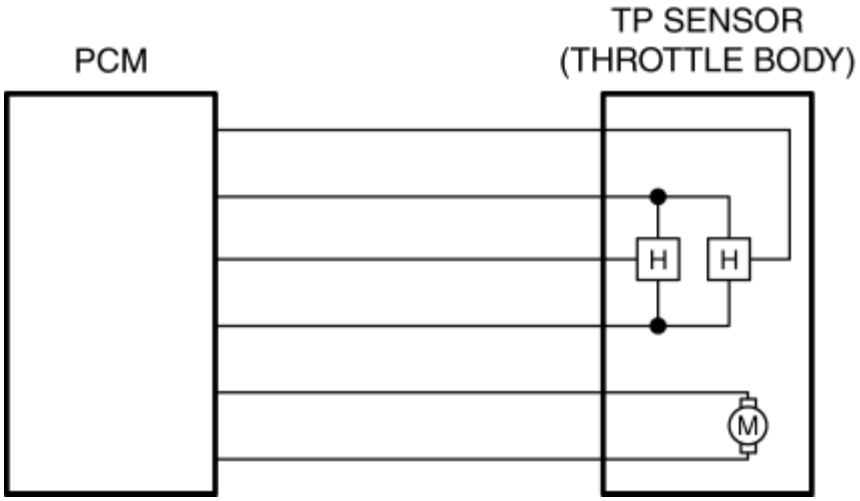

TP sensor characteristic

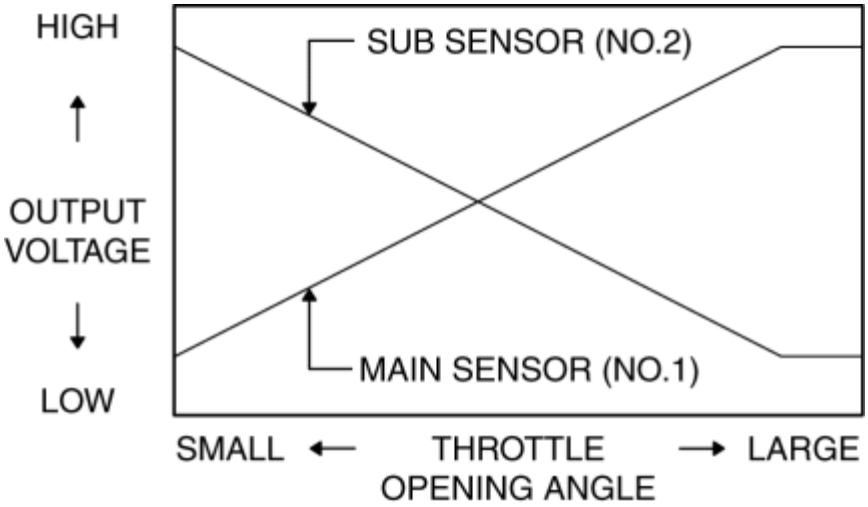

Fail-safe

DTC No.	Fail-safe function
P0122:00	• Restricts the upper limit of the engine speed.
P0123:00	• Restricts the upper limit of the engine speed.
P0222:00	• Restricts the upper limit of the engine speed.
P0223:00	• Restricts the upper limit of the engine speed.
P2101:00	• Restricts the upper limit of the engine speed. • Stops the drive-by-wire control (throttle valve is open at approx. 8° by return spring force).

P2109:00	• Restricts the upper limit of the engine speed. • Stops the drive-by-wire control (throttle valve is open at approx. 8° by return spring force).
P2135:00	• Restricts the upper limit of the engine speed. • Stops the drive-by-wire control (throttle valve is open at approx. 8° by return spring force).

2014 - Mazda3 - Engine

ACCELERATOR PEDAL POSITION (APP) SENSOR [SKYACTIV-G 2.0, SKYACTIV-G 2.5]

Purpose / Function

- Detects the accelerator pedal depression amount as basic information (mainly used to determine the throttle valve opening) and sends it to the PCM as an accelerator pedal opening angle signal.

Construction

- Built into the accelerator pedal.

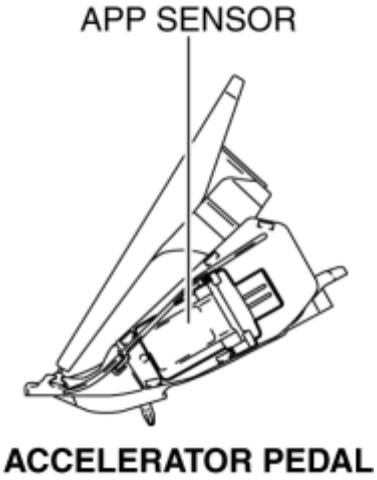

- A Hall element has been adopted (as the detecting element) for detecting the accelerator pedal depression amount.
- The APP sensor has a main sensor (No.1) and a sub sensor (No.2) for improved detection accuracy.

Operation

- Sends the signal, which fluctuates according to the accelerator pedal depression amount, to the PCM.

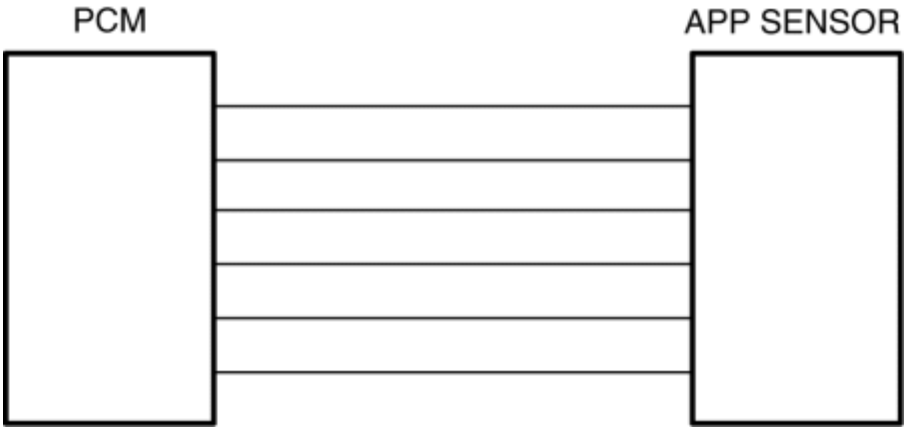

APP sensor characteristic

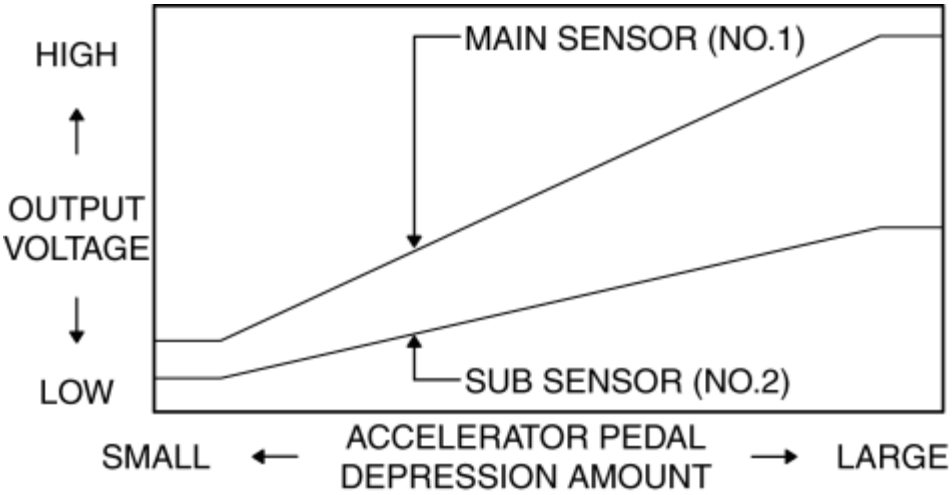

Fail-safe

DTC No.	Fail-safe function
P2122:00	• Regulates the upper limit of the APP sensor output.
P2123:00	• Regulates the upper limit of the APP sensor output.
P2127:00	• Regulates the upper limit of the APP sensor output.
P2128:00	• Regulates the upper limit of the APP sensor output.
P2138:00	• Restricts the upper limit of the engine speed. • Stops the drive-by-wire control (throttle valve is open at **approx. 8 °** by return spring force).

ACCELERATOR PEDAL POSITION (APP) SENSOR [SKYACTIV-G 2.0, SKYACTIV-G 2.5]

2014 - Mazda3 - Engine

CRANKSHAFT POSITION (CKP) SENSOR [SKYACTIV-G 2.0, SKYACTIV-G 2.5]

Purpose / Function

- Detects the crankshaft speed as basic information (mainly used to determine the fuel injection timing and ignition timing) and sends it to the PCM as a CKP signal.

Construction

- Installed on the side of the cylinder block (right side).

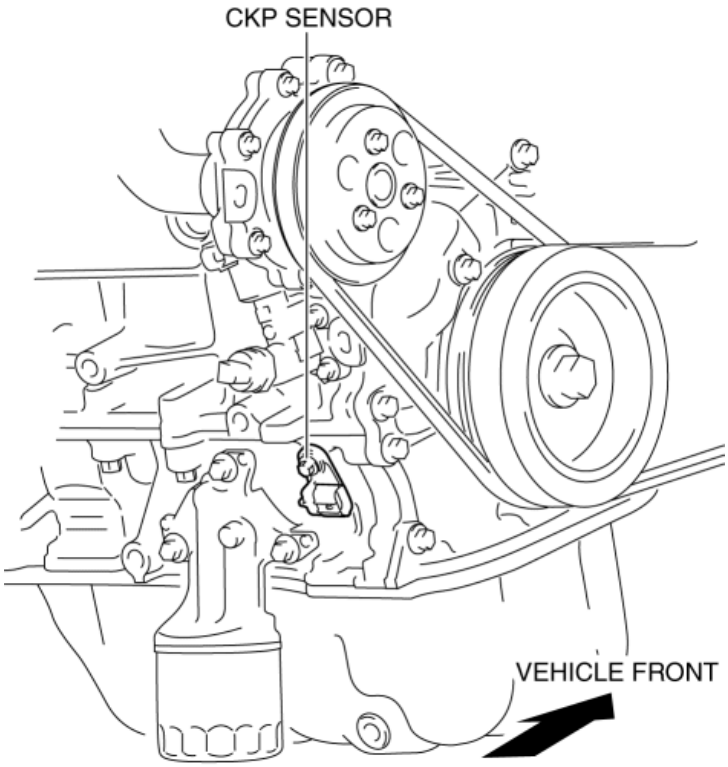

- A MR (Magnetic Resistance) element has been adopted (as the detecting element) for detecting the crankshaft speed.

Operation

- Sends the signal, which fluctuates according to the crankshaft speed, to the PCM.

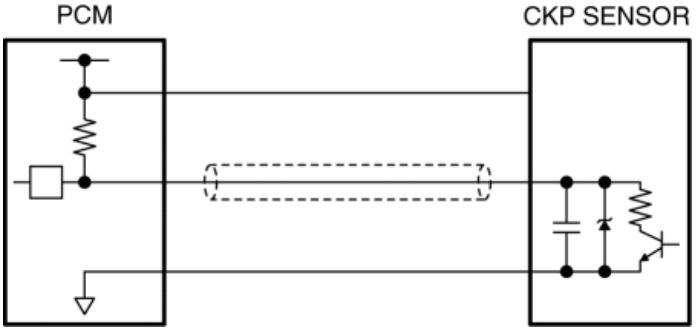

CKP sensor characteristic

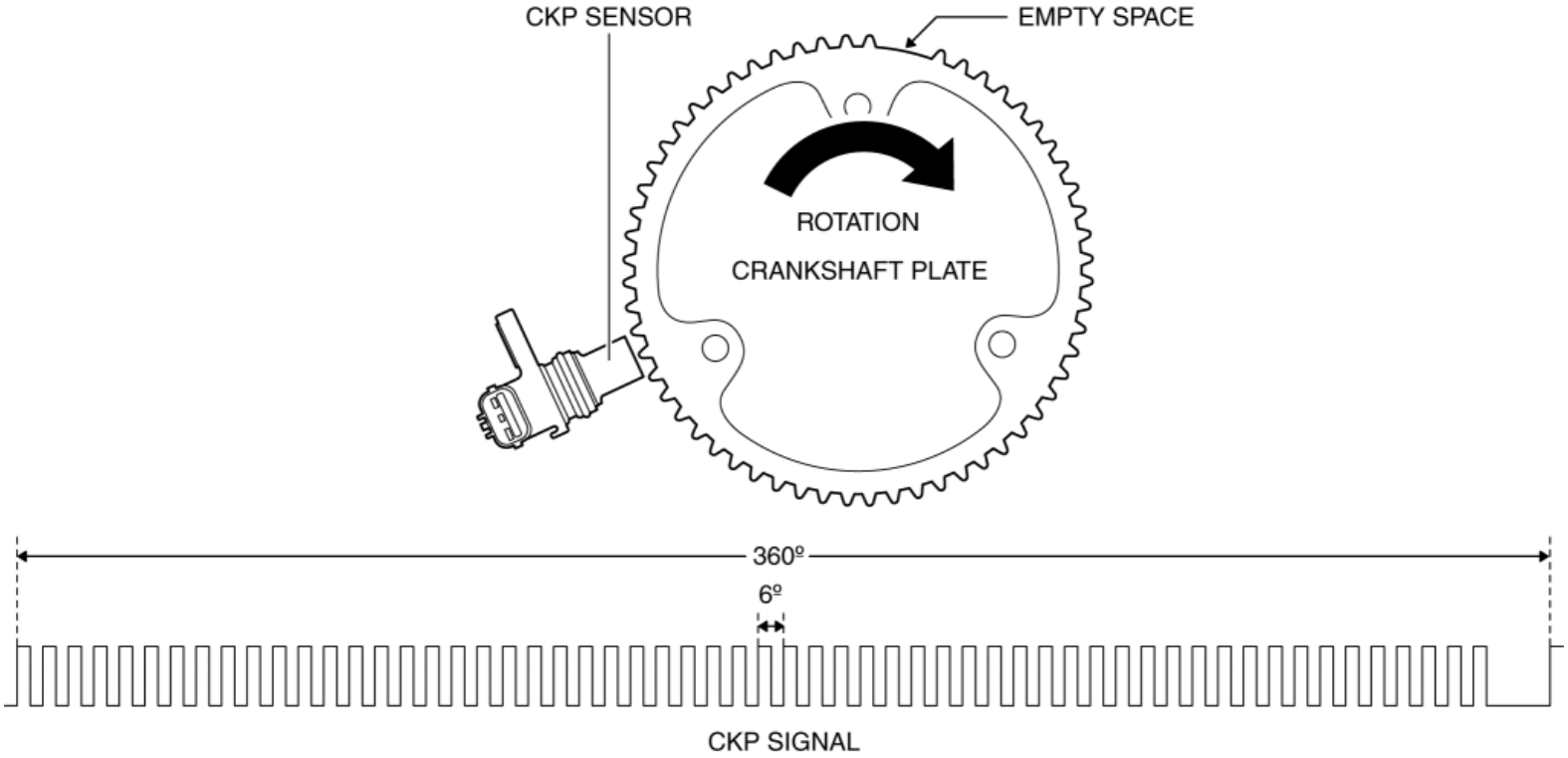

Fail-safe

DTC No.	Fail-safe function
P0335:00	• Stops fuel injection • Stops ignition

2014 - Mazda3 - Engine

CAMSHAFT POSITION (CMP) SENSOR [SKYACTIV-G 2.0, SKYACTIV-G 2.5]

Purpose / Function

- Detects the camshaft speed as basic information (mainly used to determine the fuel injection timing and ignition timing) and sends it to the PCM as a CMP signal.

Construction

Intake CMP sensor

- Installed on the cylinder head.

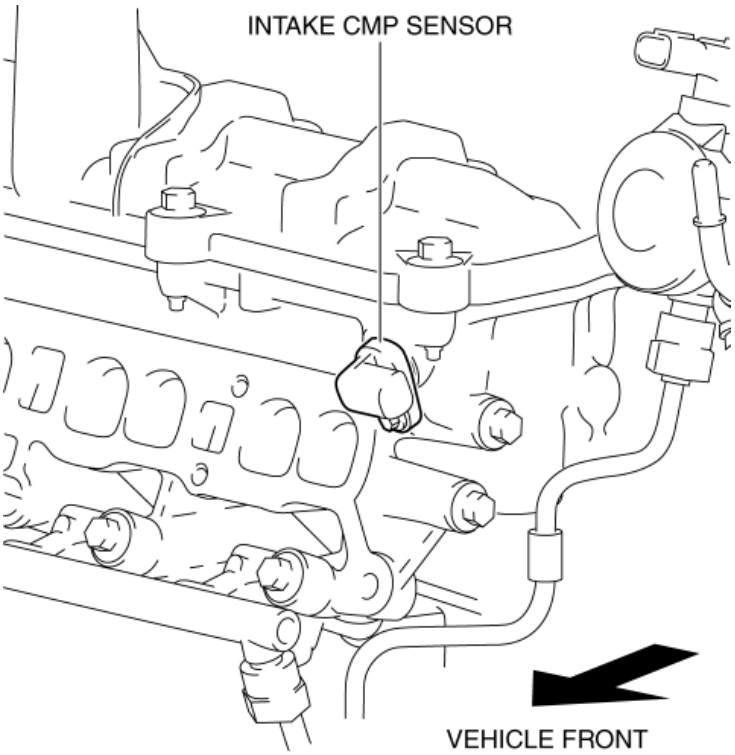

- A GMR element has been adopted (as the detecting element) for detecting the intake camshaft speed.

Exhaust CMP sensor

- Installed on the rear housing.

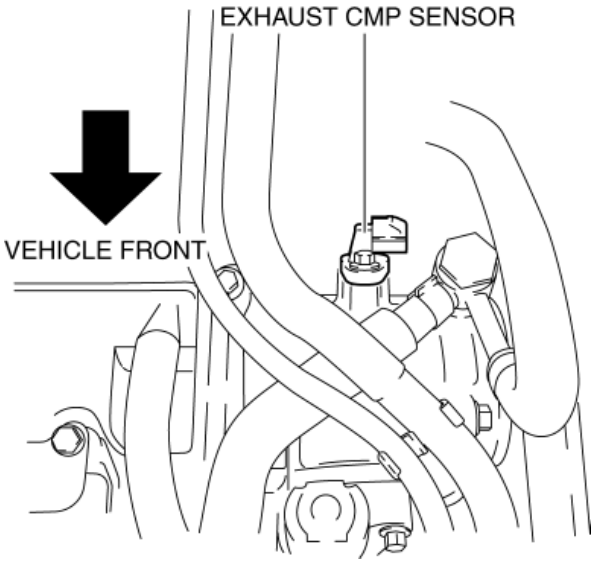

- A GMR element has been adopted (as the detecting element) for detecting the exhaust camshaft speed.

Operation

- Sends the signal, which fluctuates according to the camshaft speed, to the PCM.

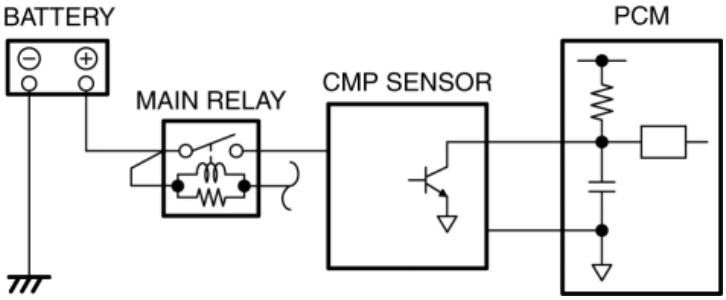

CMP sensor characteristic

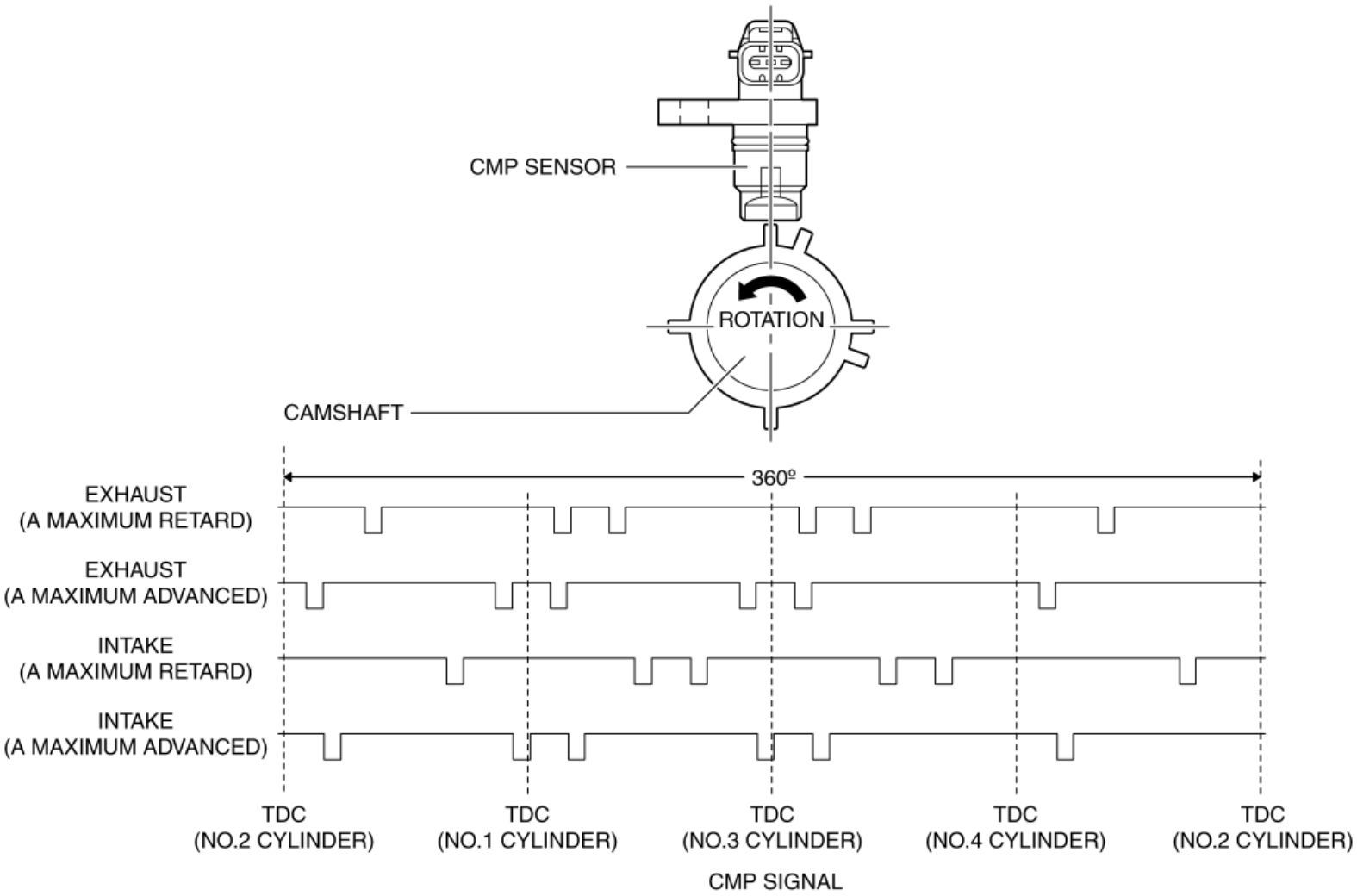

Fail-safe

Intake CMP sensor

DTC No.	Fail-safe function
P0340:00	• Set the electric variable valve timing control to the maximum cam retard mode.

Exhaust CMP sensor

DTC No.	Fail-safe function
P0365:00	• Stops fuel injection • Stops ignition

2014 - Mazda3 - Engine

ENGINE COOLANT TEMPERATURE (ECT) SENSOR [SKYACTIV-G 2.0, SKYACTIV-G 2.5]

Purpose / Function

- Detects the ECT as basic information (mainly used to determine the fuel injection amount) and sends it to the PCM as an ECT signal.
- The ECT sensor No.2 is only used for OBD.

Construction

ECT sensor No.1

- Installed to the water outlet case.

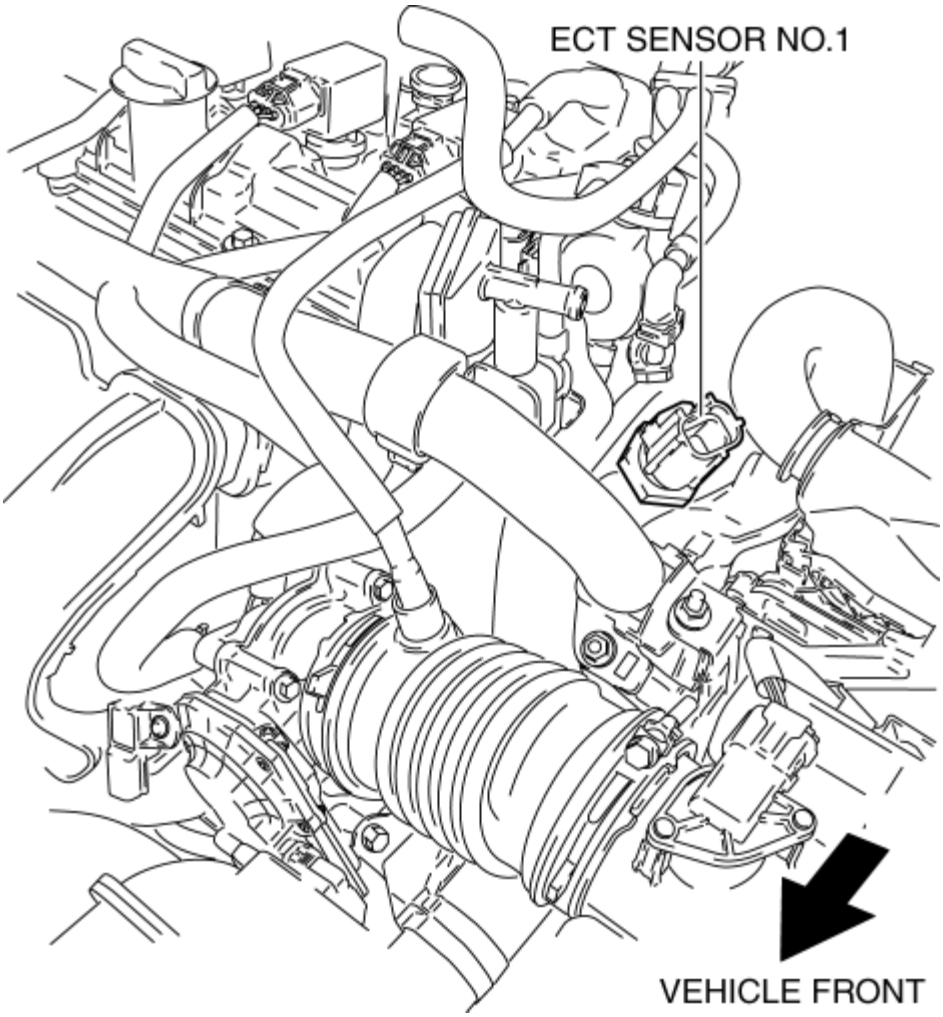

- A thermistor has been adopted (as the detecting element) for detecting the ECT.

ECT sensor No.2

- Installed to the radiator.

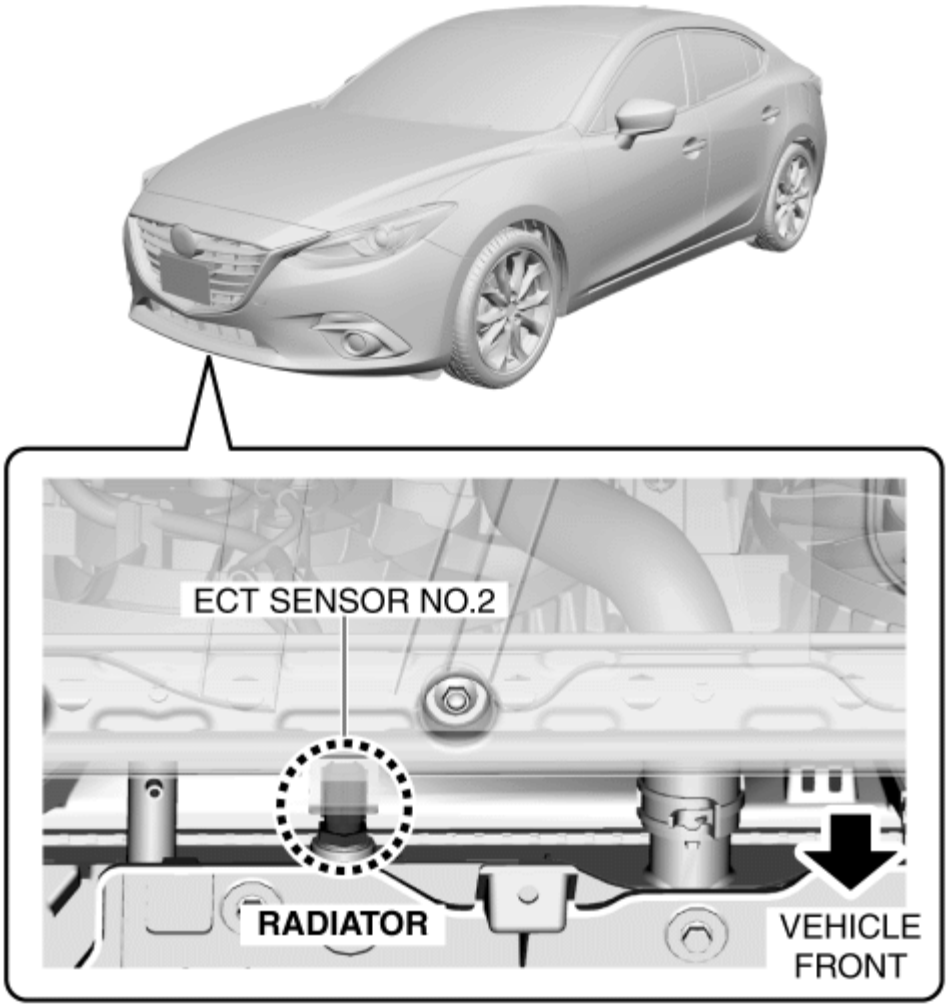

- A thermistor has been adopted (as the detecting element) for detecting the ECT.

Operation

- Sends the signal, which fluctuates according to the ECT, to the PCM.

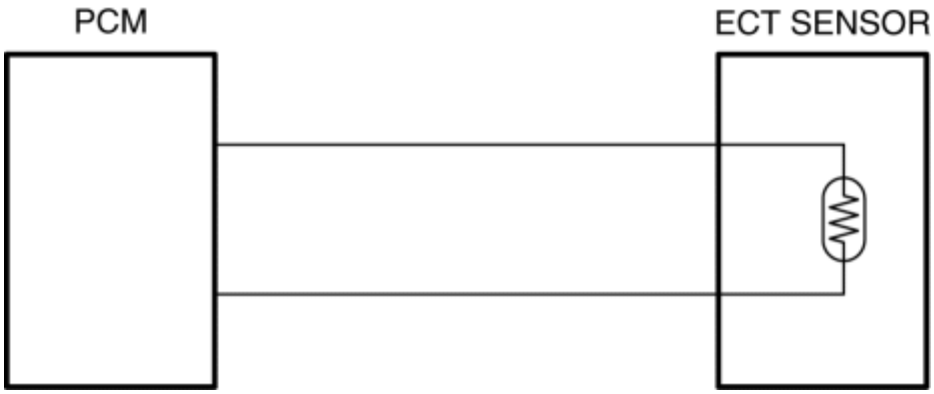

ECT sensor characteristic

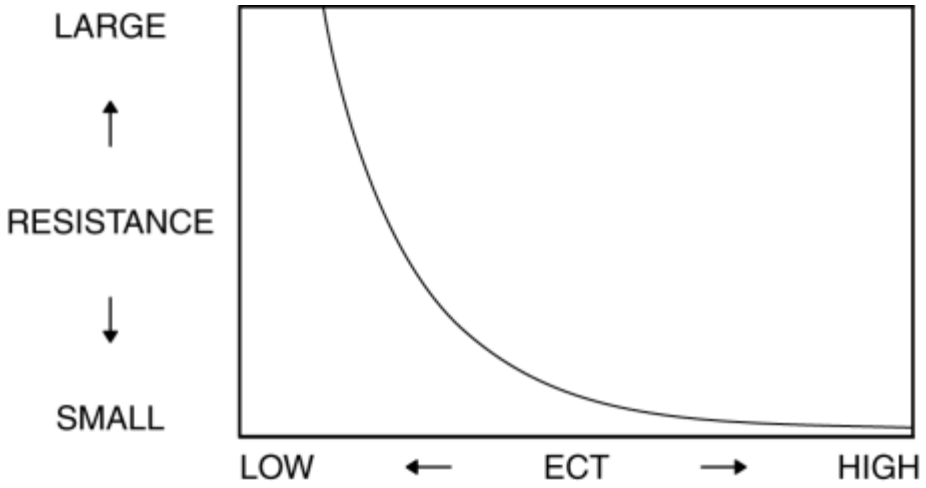

Fail-safe

ECT sensor No.1

DTC No.	Fail-safe function
P0117:00	• Fixes the water temperature for the engine control at 40 °C {104 °F}, and for the idle air control at 80 °C {176 °F}. • Operates the cooling fan (high speed rotation). • Inhibits the fuel cut control during shift change.
P0118:00	• Fixes the water temperature for the engine control at 40 °C {104 °F}, and for the idle air control at 80 °C {176 °F}. • Operates the cooling fan (high speed rotation). • Inhibits the fuel cut control during shift change.

ECT sensor No.2

- Function not equipped.

2014 - Mazda3 - Engine

BAROMETRIC PRESSURE (BARO) SENSOR [SKYACTIV-G 2.0, SKYACTIV-G 2.5]

Purpose / Function

- Detects the BARO as basic information (mainly used to determine the fuel injection amount) and sends it to the PCM as a BARO signal.

Construction

- Built into the PCM.

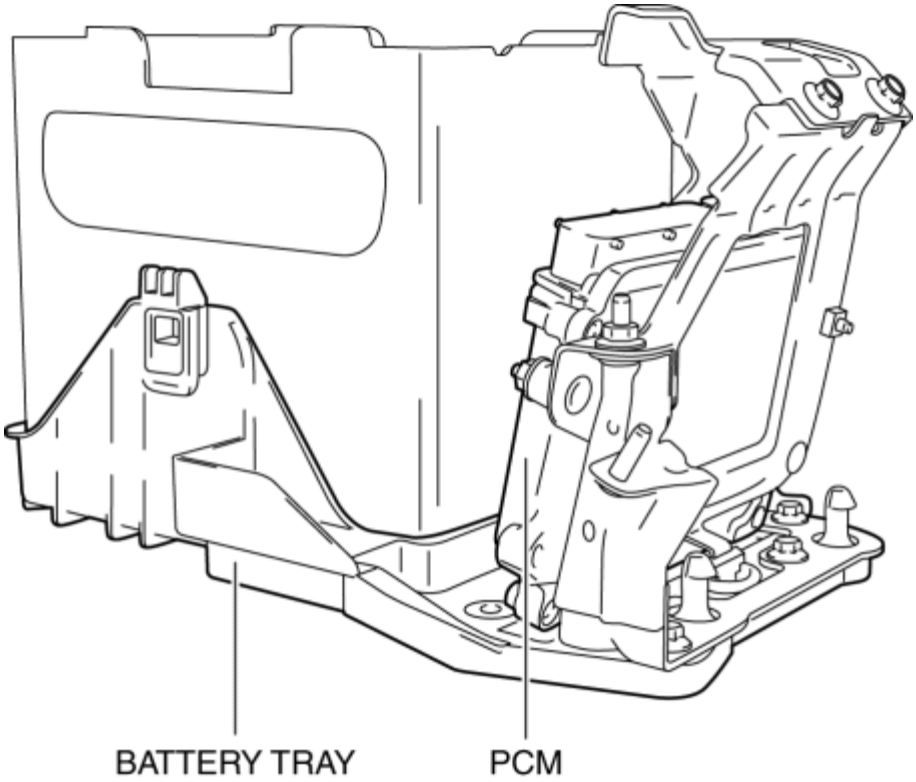

- A piezoelectric element has been adopted for detecting the BARO.

Operation

- Sends the signal, which fluctuates according to the BARO, to the PCM.

BARO sensor characteristic

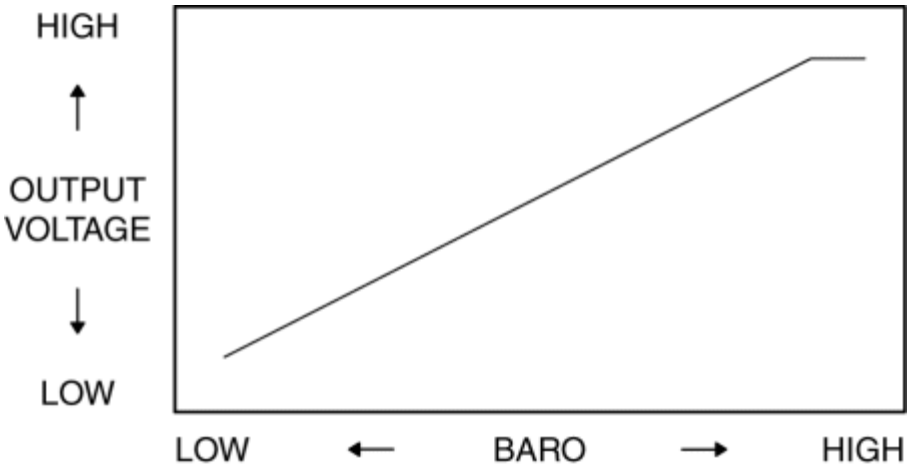

Fail-safe

DTC No.	Fail-safe function
P2228:00	• Fixes the barometric pressure for the engine control at 101.32 kPa {1.0332 kgf/cm^2, 14.695 psi}.
P2229:00	• Fixes the barometric pressure for the engine control at 101.32 kPa {1.0332 kgf/cm^2, 14.695 psi}.

2014 - Mazda3 - Engine

FUEL PRESSURE SENSOR [SKYACTIV-G 2.0, SKYACTIV-G 2.5]

Purpose / Function

- Detects the fuel pressure in the fuel distributor as basic information (mainly used to determine the fuel injection amount) and sends it to the PCM as a fuel pressure signal.

Construction

- Installed on the fuel distributor.

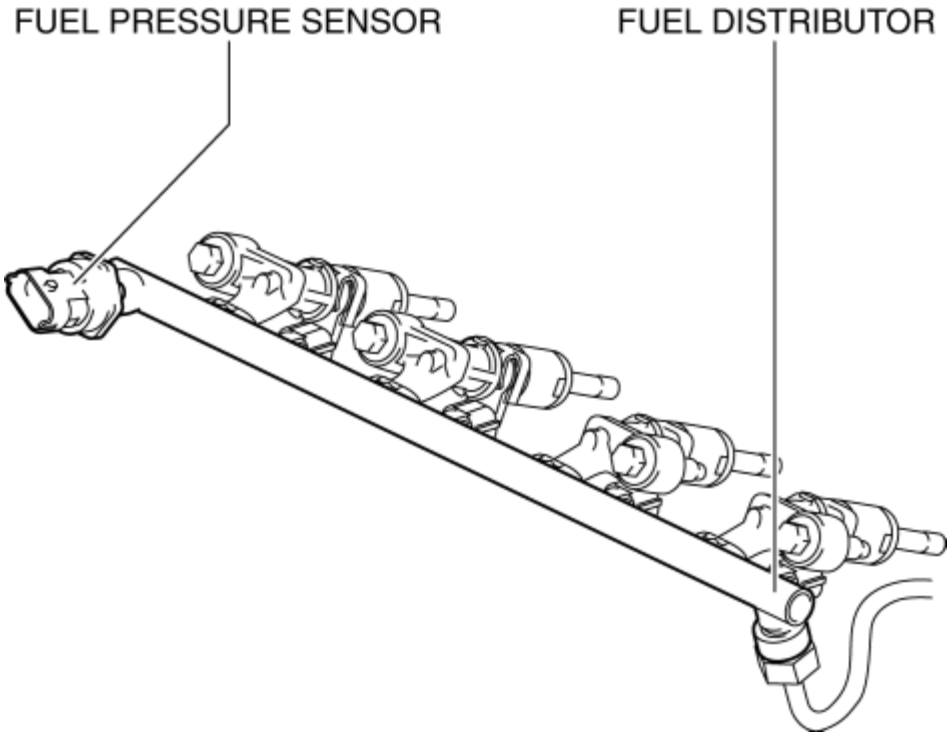

- A metal diaphragm thin film distortion gauge has been adopted (as the detecting element) for detecting the fuel pressure.

Operation

- Sends the signal, which fluctuates according to the fuel pressure, to the PCM.

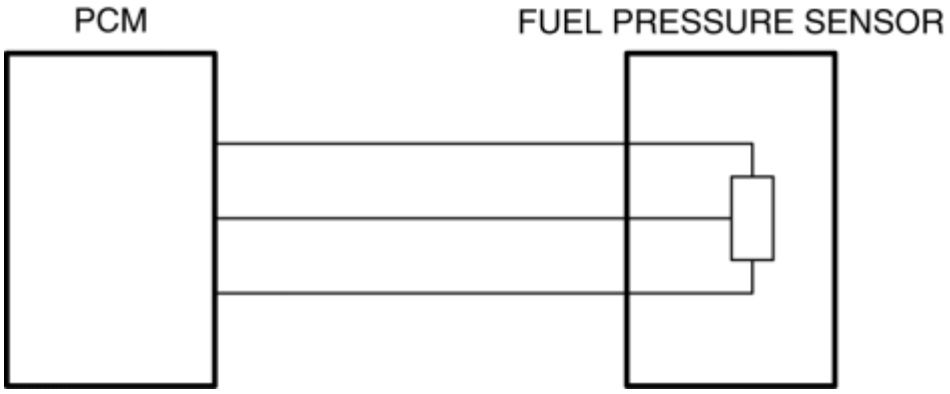

Fuel pressure sensor characteristic

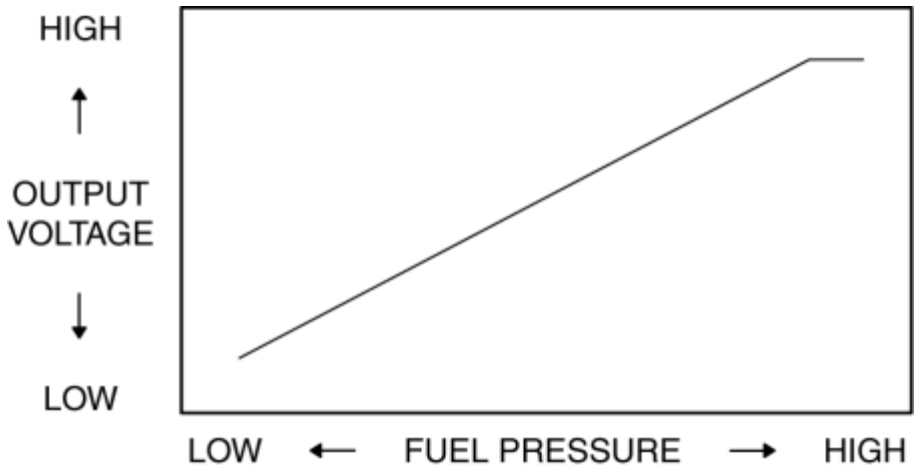

Fail-safe

DTC No.	Fail-safe function
P0088:00	• Stops high pressure fuel pump control • Limits intake air amount
P0192:00	• Stops high pressure fuel pump control • Limits intake air amount
P0193:00	• Stops high pressure fuel pump control • Limits intake air amount

2014 - Mazda3 - Engine

KNOCK SENSOR (KS) [SKYACTIV-G 2.0, SKYACTIV-G 2.5]

Purpose / Function

- Detects abnormal combustion in the cylinder as basic information (mainly used to determine the ignition timing) and sends it to the PCM as a knocking signal.

Construction

- Installed on the cylinder block.

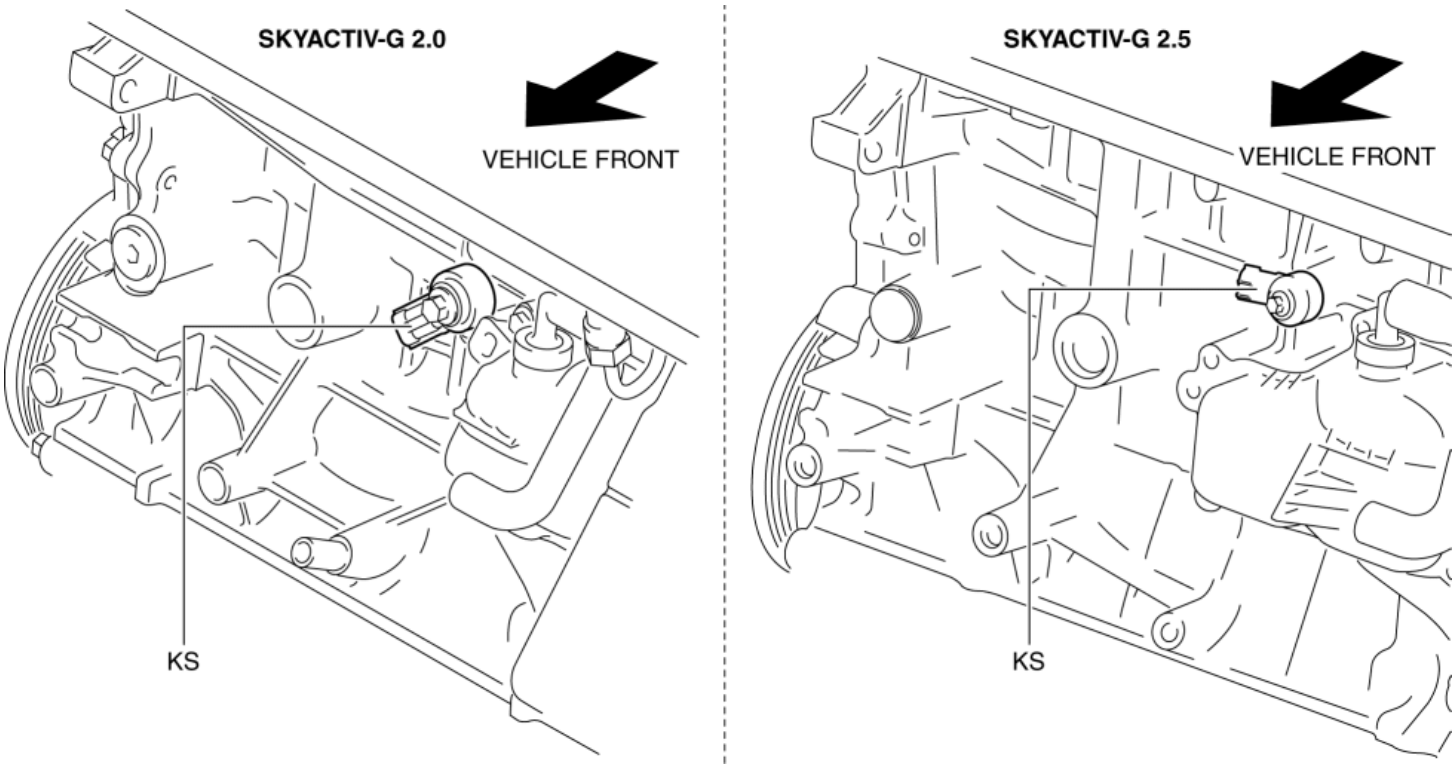

- A piezoelectric element has been adopted (as the detecting element) for detecting abnormal combustion.

Operation

- Sends the signal, which fluctuates according to abnormal combustion, to the PCM.

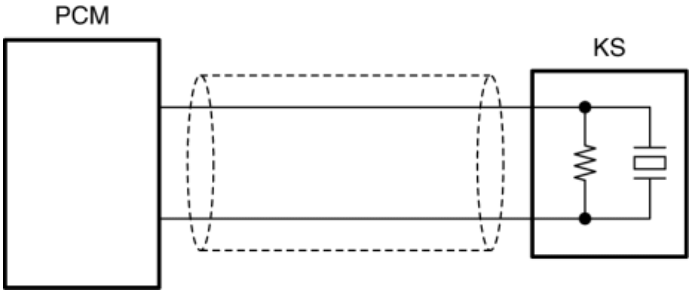

KS characteristic

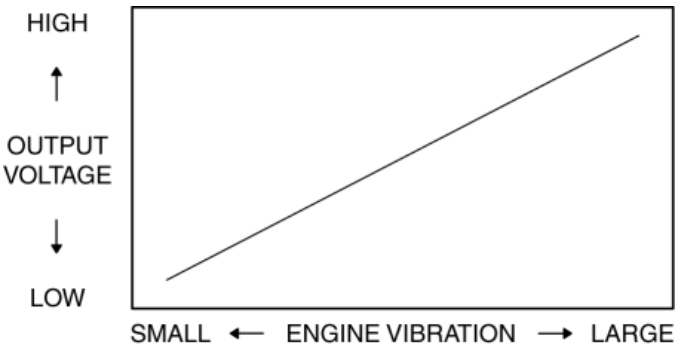

Fail-safe

DTC No.	Fail-safe function
P0327:00	• Sets the knocking spark retard correction value of the ignition control to the fixed value.
P0328:00	• Sets the knocking spark retard correction value of the ignition control to the fixed value.

2014 - Mazda3 - Engine

CURRENT SENSOR [SKYACTIV-G 2.0, SKYACTIV-G 2.5]

Purpose/Function

- The battery conditions are monitored as basic information (to determine the generator output current) and sent to the PCM by LIN communication via the front body control module (FBCM).

Construction

- Installed to the negative battery cable.

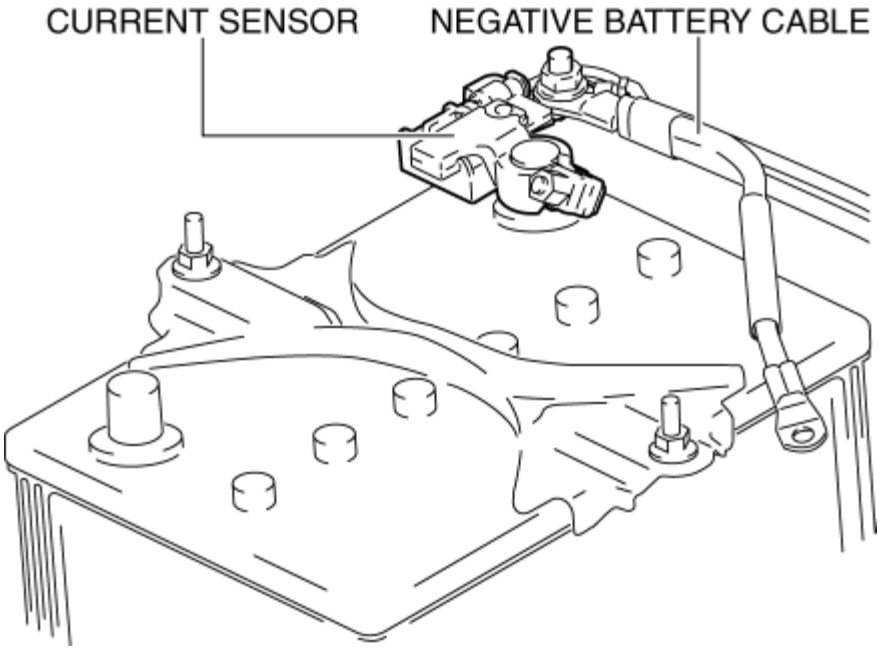

- The current sensor has adopted shunt resistance on the detection area and a thermistor for detecting the battery condition.

Operation

- The battery charge/discharge flow, battery voltage, and the battery terminal temperature are send to the PCM by LIN communication.

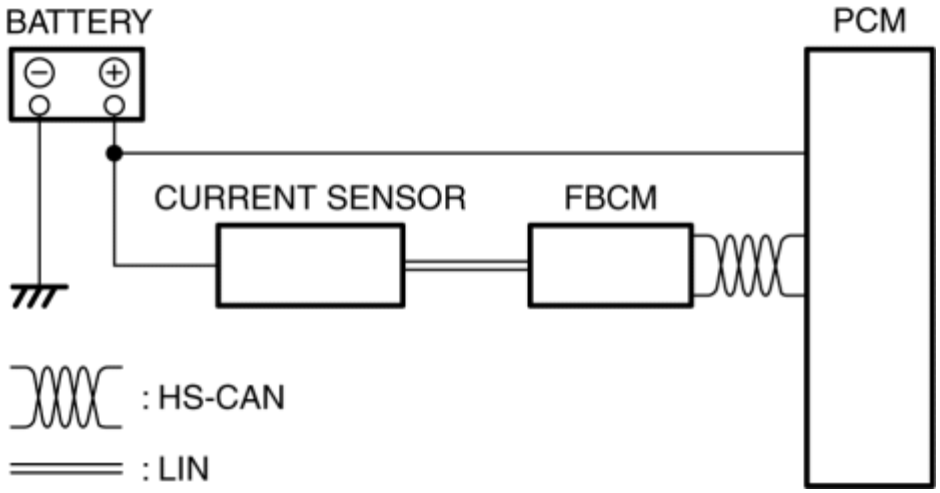

Fail-safe

DTC No.	Fail-safe function
P058A:00	• Inhibits the i-ELOOP control.
U1007:00	• Inhibits a part of the generator output control.

2014 - Mazda3 - Engine

AIR FUEL RATIO (A/F) SENSOR [SKYACTIV-G 2.0, SKYACTIV-G 2.5]

Purpose/Function

- Detects the oxygen concentration (all-range air/fuel ratio) in the exhaust gas as basic information (mainly used to determine the fuel injection amount) and sends it to the PCM as an oxygen concentration (all-range air/fuel ratio) signal.
- Because the A/F sensor has an output characteristics proportional to the actual air/fuel ratio, a detailed air/fuel ratio can be detected and compared using the HO2S, which detects the rich/lean of the oxygen concentration in relation to the theoretical air/fuel ratio.

Construction

- Installed to the exhaust manifold.

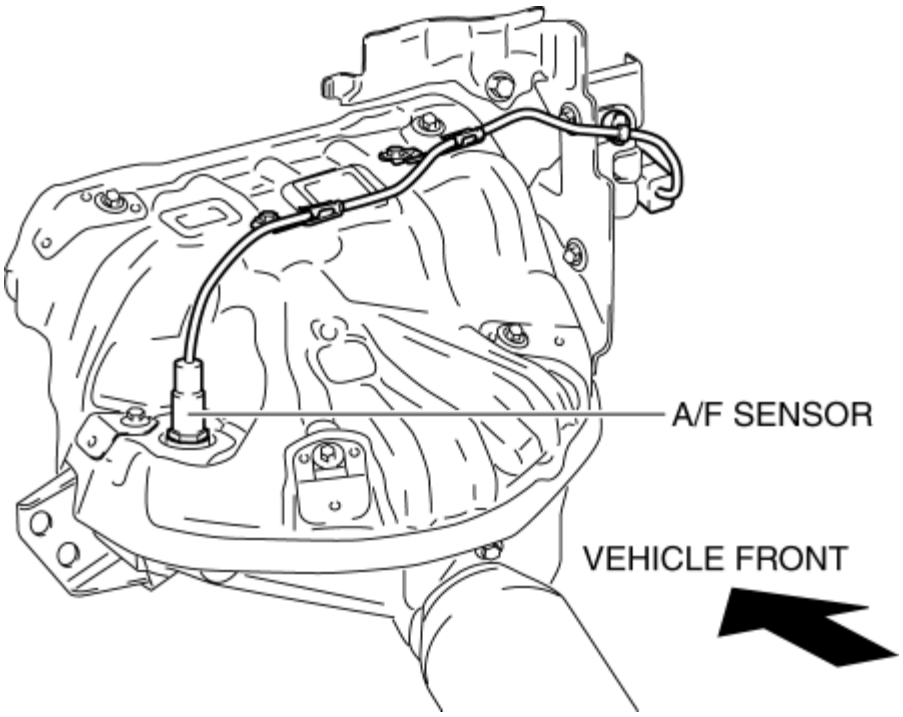

- A zirconia element has been adopted (as the detecting element) for detecting the oxygen concentration (all-range air/fuel ratio).

Operation

- The A/F sensor has an oxygen standard chamber, which is always kept at **100%** of oxygen concentration, and an oxygen concentration detection chamber, where the oxygen concentration in the exhaust gas is detected.
- A zirconia element has the characteristic of moving oxygen when electrical current flows. The oxygen standard chamber is kept at **100%** oxygen concentration using this characteristic, and by comparing it with the oxygen concentration inside the oxygen concentration detection chamber, the oxygen concentration in the exhaust gas can be detected.

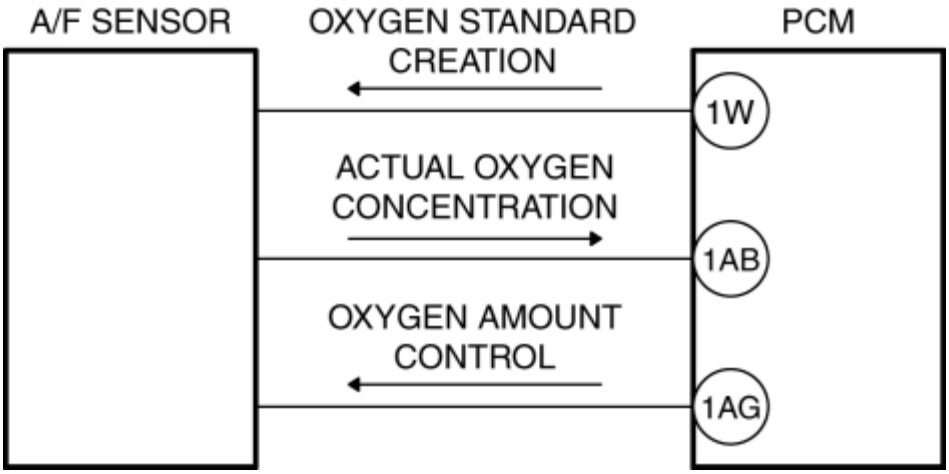

A/F sensor characteristic

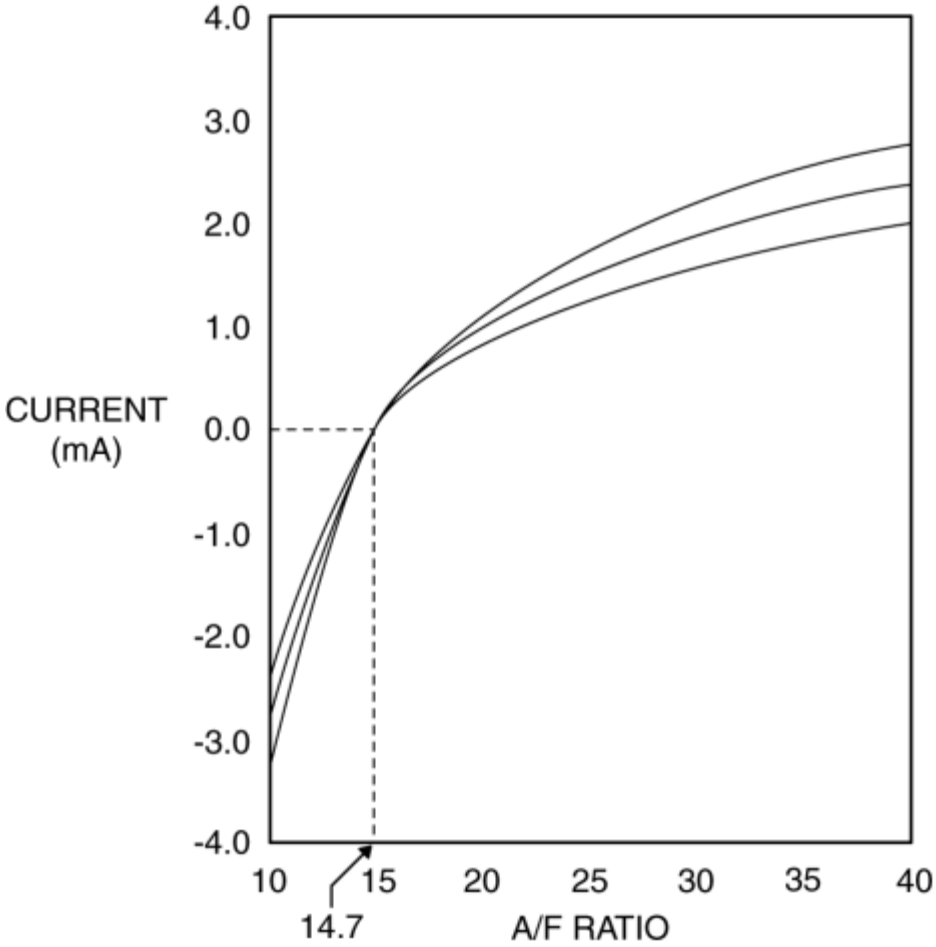

Fail-safe

DTC No.	Fail-safe function
P0031:00	• Stops fuel feedback control
P0032:00	• Stops fuel feedback control
P0130:00	• Fixes duty value of A/F sensor heater • Stops fuel feedback control of A/F sensor
P0131:00	• Fixes duty value of A/F sensor heater • Stops fuel feedback control of A/F sensor
P0132:00	• Fixes duty value of A/F sensor heater • Stops fuel feedback control of A/F sensor
P0133:00	• Fixes duty value of A/F sensor heater • Stops fuel feedback control of A/F sensor
P0134:00	• Fixes duty value of A/F sensor heater • Stops fuel feedback control of A/F sensor
P2237:00	• Fixes duty value of A/F sensor heater • Stops fuel feedback control of A/F sensor

2014 - Mazda3 - Engine

HEATED OXYGEN SENSOR (HO2S) [SKYACTIV-G 2.0, SKYACTIV-G 2.5]

Purpose / Function

- Detects the oxygen concentration (theoretical air/fuel ratio) in the exhaust gas as basic information (mainly used to determine the fuel injection amount and the deterioration of catalytic converter) and sends it to the PCM as an oxygen concentration (theoretical air/fuel ratio) signal.

Construction

- Installed on the rear side of the exhaust manifold.

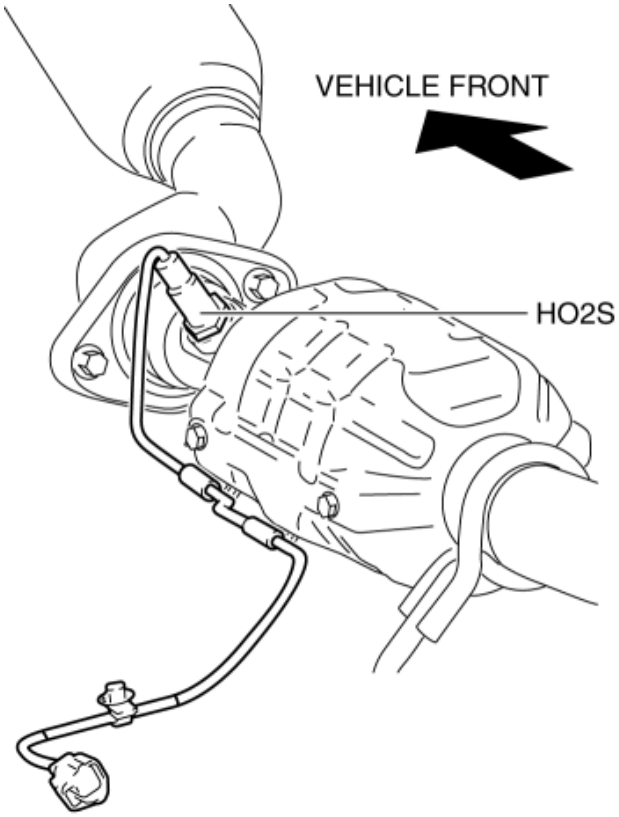

- A zirconia element has been adopted (as the detecting element) for detecting the oxygen concentration (theoretical air/fuel ratio).

Operation

- Sends the signal, which fluctuates according to the oxygen concentration (theoretical air/fuel ratio), to the PCM.
- The PCM applies **approx. 1.5 V** to the HO2S input voltage to prevent incorrect diagnosis of the HO2S input voltage.

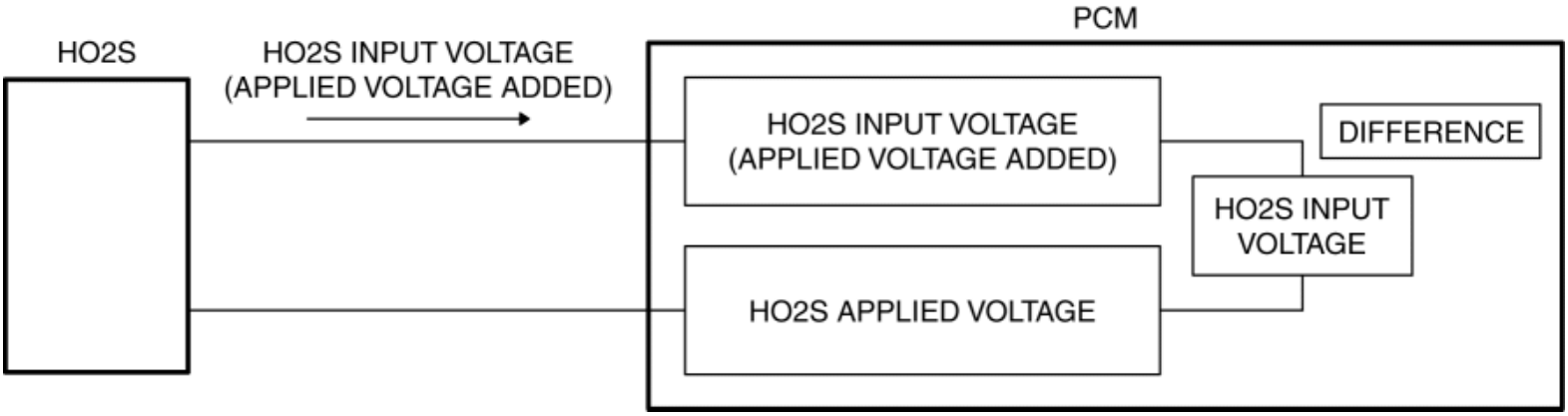

HO2S characteristic

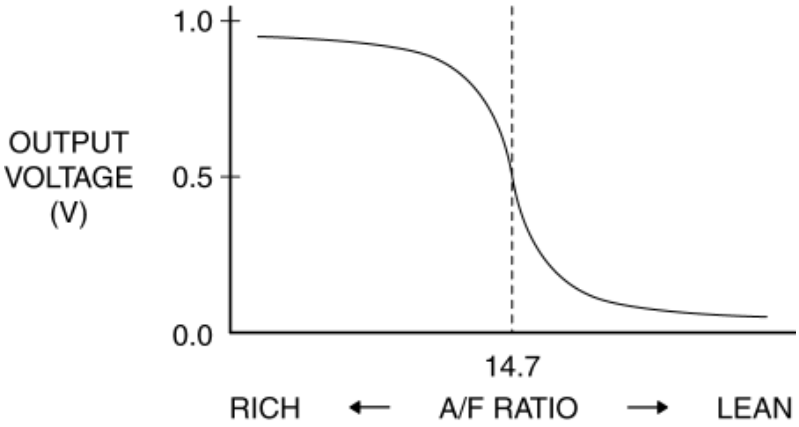

Fail-safe

DTC No.	Fail-safe function
P0037:00	• Stops fuel feedback control
P0038:00	• Stops fuel feedback control
P0137:00	• Fixes duty value of A/F sensor heater • Stops fuel feedback control of A/F sensor

2014 - Mazda3 - Engine

FUEL TANK PRESSURE SENSOR [SKYACTIV-G 2.0, SKYACTIV-G 2.5]

Purpose / Function

- Detects the fuel tank pressure.
- Only used for OBD.

Construction

- The fuel tank pressure sensor is equipped to the charcoal canister.

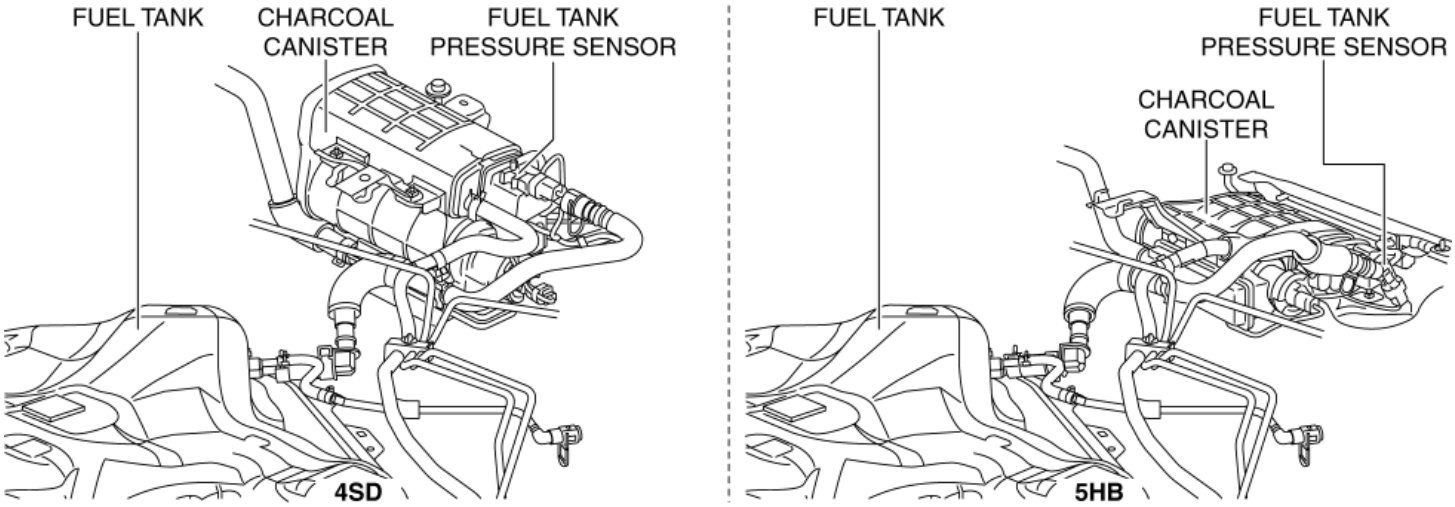

- A piezoelectric-type sensor has been adopted.

Operation

- Sends the pressure in the fuel tank to the PCM.

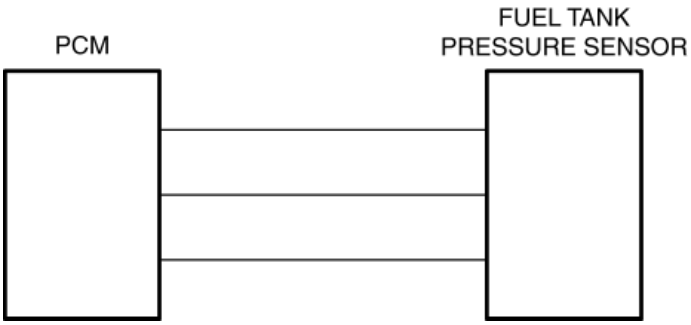

Fuel tank pressure sensor characteristic

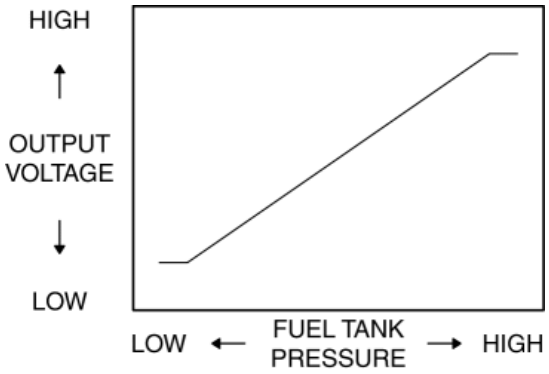

Fail-safe

- Function not equipped.

2014 - Mazda3 - Engine

ION SENSOR [SKYACTIV-G 2.0, SKYACTIV-G 2.5]

Purpose/Function

- Detects ion generation in the combustion chamber for detecting pre-ignition.
- Detects ions, which occur due to fuel combustion as current, by applying bias voltage to the spark plug, which is amplified in the ignition coil internal circuit and sent to the PCM.

Construction

- Built into the ignition coil.

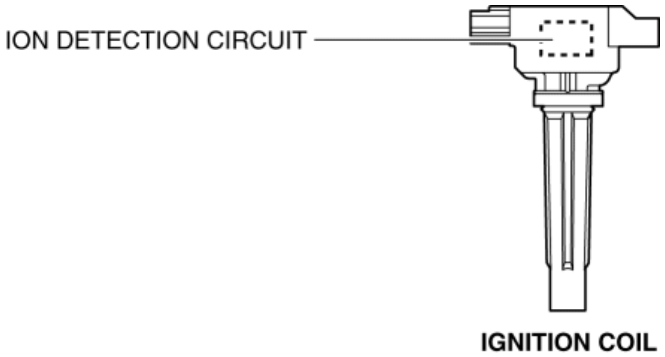

Operation

- Accumulates the secondary current of the ignition coil in bias condenser (1), and detects ion current (2) by applying the bias voltage to the spark plug.
- Pulls in current (4), increased by current amplification circuit (3), to the ignition coil from the PCM.
- The PCM measures/converts the current sent to the ignition coil and monitors.

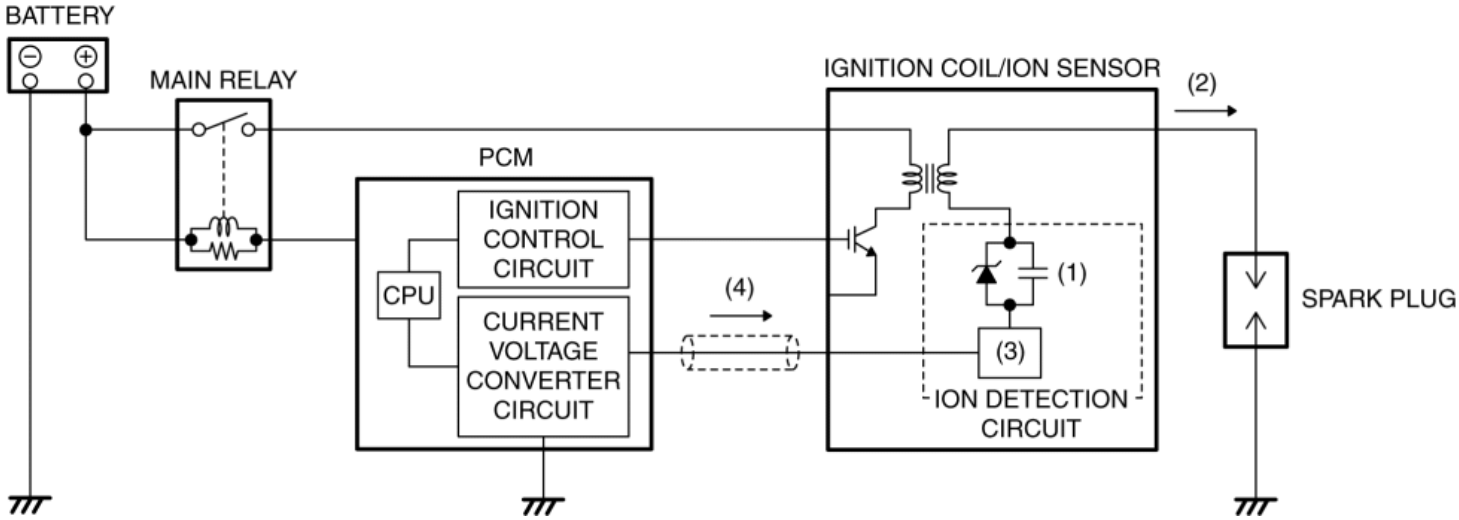

Ion generation mechanism

- Ions are generated based on: fuel combustion = chemical reaction / disassociation. The generated negative ions move to the center electrode of the spark plug to which bias voltage is applied, and positive ions move to the grounded engine wall surface,

then current flows from the spark plug to the ignition coil.

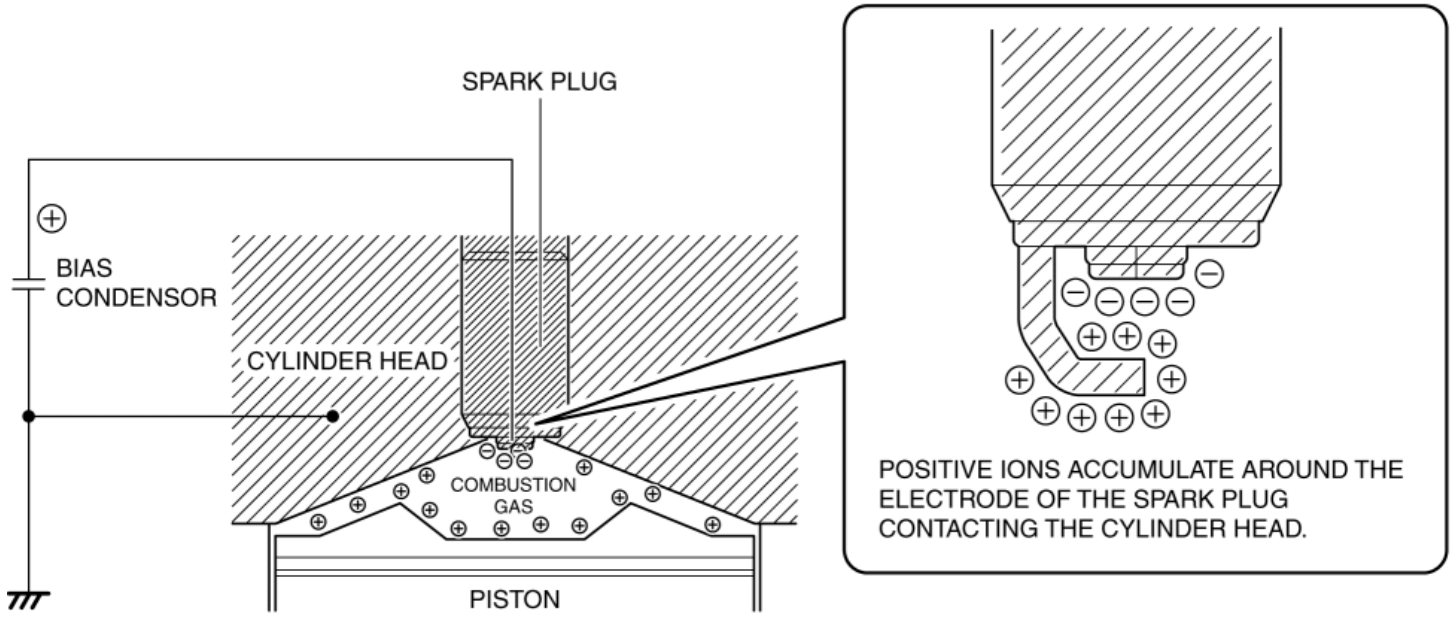

Fail-safe

- Function not equipped.

2014 - Mazda3 - Engine

DRIVE SELECTION SYSTEM [SKYACTIV-G 2.0, SKYACTIV-G 2.5]

Outline

- Switching between sport mode and normal mode is possible depending on how the drive selection switch is operated. When sport mode is selected, the operating force relative to the throttle opening angle is greater than normal mode.

Block Diagram

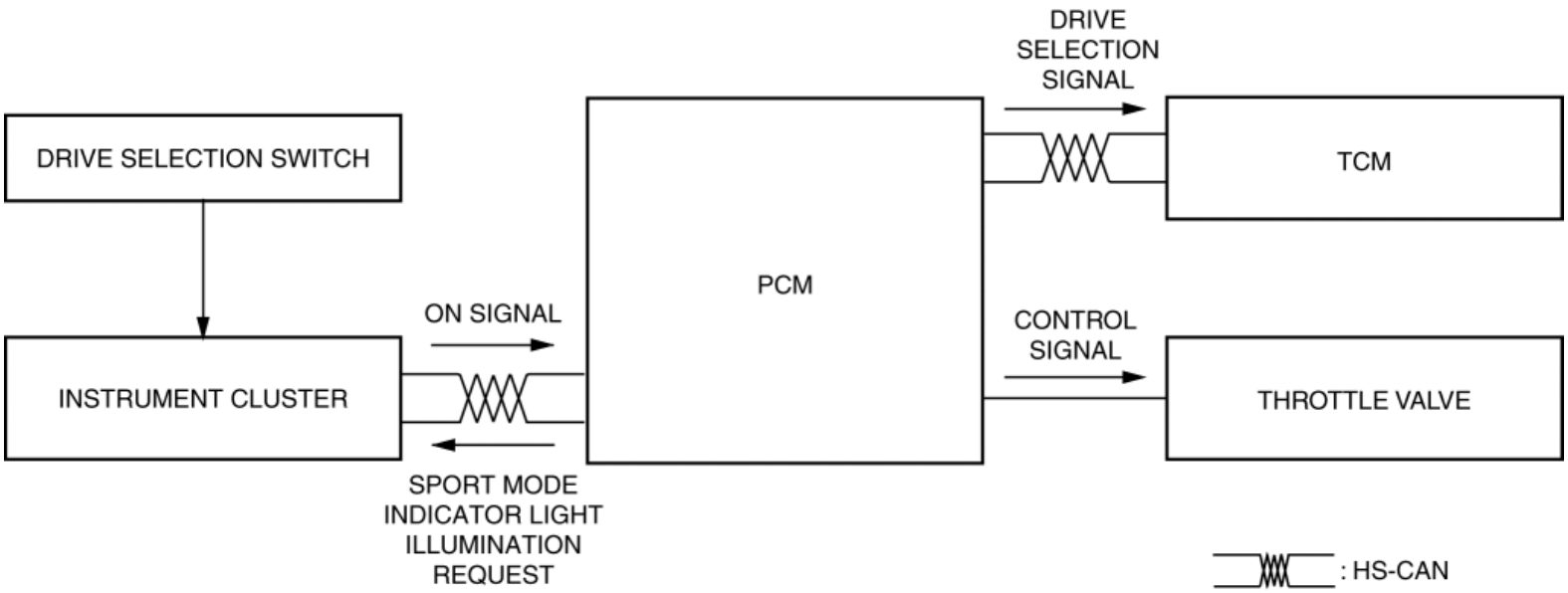

Operation

- Switching between sport mode and normal mode is possible depending on how the drive selection switch is operated.
- When normal mode is selected and the drive selection switch is pressed, the drive mode is switched to sport mode. When sport mode is selected and the drive selection switch is pressed, the drive mode is switched to normal mode.

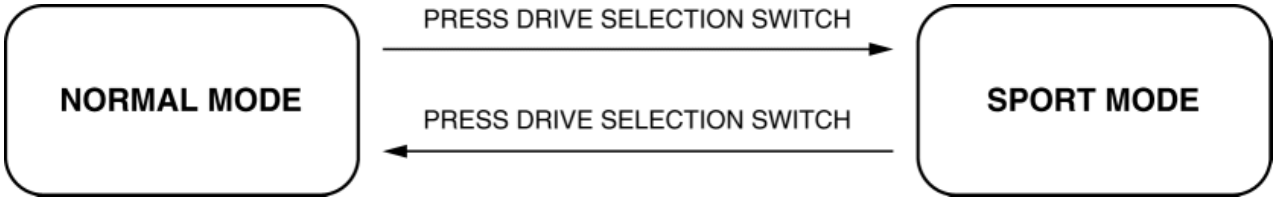

- When sport mode is selected, the operating force relative to the throttle opening angle is greater than normal mode.
- When sport mode is selected, the PCM sends the following signals to each unit.

  Drive selection signal

  - When the PCM sends a drive selection signal to the TCM, the TCM will change the shift points.

  Sport mode indicator light illumination request signal

  - The PCM sends a sport mode indicator light illumination request signal to the instrument cluster. The instrument cluster turns on the sport mode indicator light to notify the driver that the drive selection control condition has been switched to sport mode.

Drive selection switch inhibition conditions

- If any of the following conditions is met, the mode is not switched even if the drive selection switch is operated.
    - During sudden maneuvering
    - During DSC control
    - During ABS control
    - During TCS control
- If the drive selection switch has been operated with a drive selection switching inhibition condition being met, the PCM sends a sport mode indicator light flash request signal to the instrument cluster.
- The instrument cluster flashes the sport lamp to notify the driver that drive selection is currently prohibited.

Drive selection stop conditions

- If any of the following conditions is met while in sport mode, the drive mode is switched to normal mode.
    - Ignition is switched off
    - During cruise control operation
    - Malfunction with PCM control-related part

2014 - Mazda3 - Engine

DRIVE SELECTION SWITCH [SKYACTIV-G 2.0, SKYACTIV-G 2.5]

Purpose / Function

- The drive selection switch detects the drive selection switching operation.
- The drive selection switch signal is sent to the instrument cluster.

Construction

- The drive selection switch is installed to the shift panel.
- The drive selection switch is a momentary type.

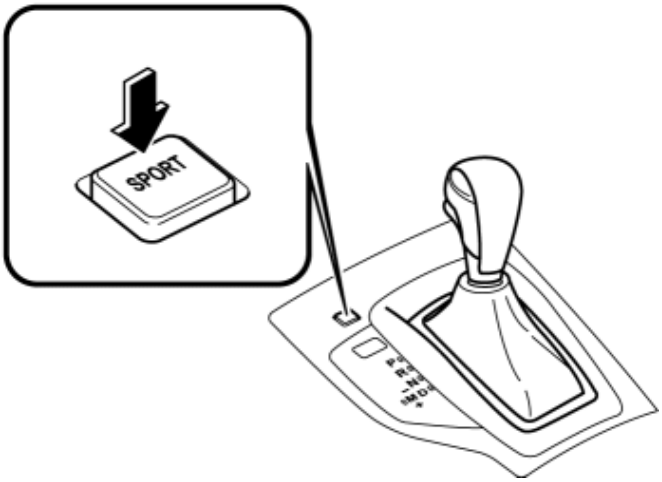

Operation

- When the driver presses the drive selection switch, the drive selection switch contact point closes.
- By opening/closing the contact point of the drive selection switch, SPORT mode is selected or canceled.

DRIVE SELECTION SWITCH [SKYACTIV-G 2.0, SKYACTIV-G 2.5]

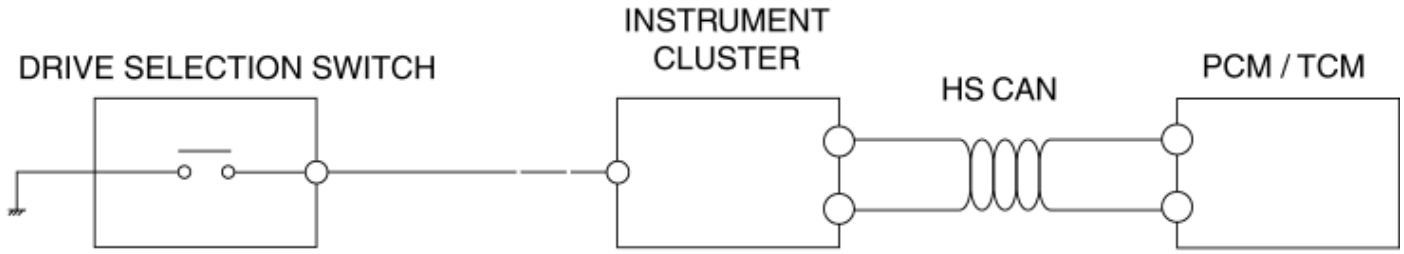

< Previous

2014 - Mazda3 - Engine

SPORT MODE INDICATOR LIGHT [SKYACTIV-G 2.0, SKYACTIV-G 2.5]

Purpose / Function

- The SPORT mode indicator light illuminates when SPORT mode is selected using the drive selection switch.

Construction

- The sport mode indicator light is built-into the instrument cluster.

TYPE A (DIGITAL SPEED METER TYPE)

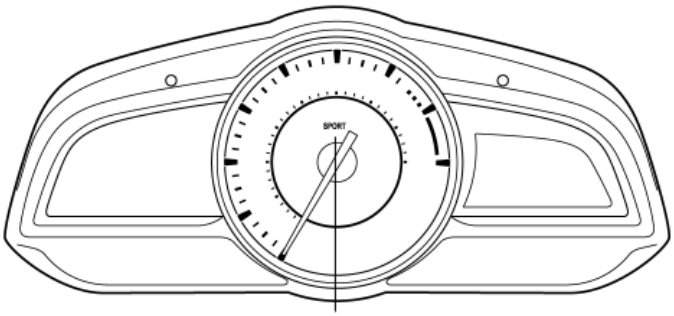

SPORT MODE
INDICATOR LIGHT

TYPE B (ANALOG SPEED METER TYPE (WITH TACHOMETER))

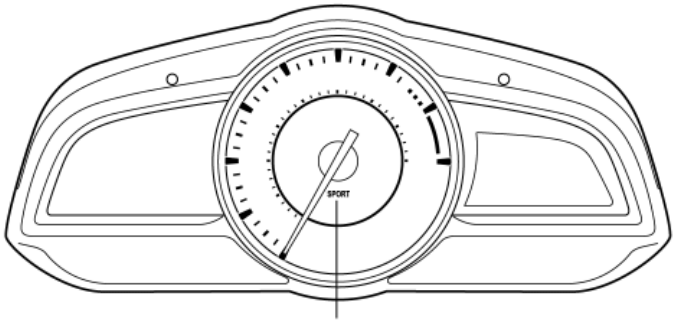

SPORT MODE
INDICATOR LIGHT

Operation

- The SPORT mode indicator light illuminates when SPORT mode is selected using the drive selection switch.

SPORT MODE INDICATOR LIGHT [SKYACTIV-G 2.0, SKYACTIV-G 2.5]

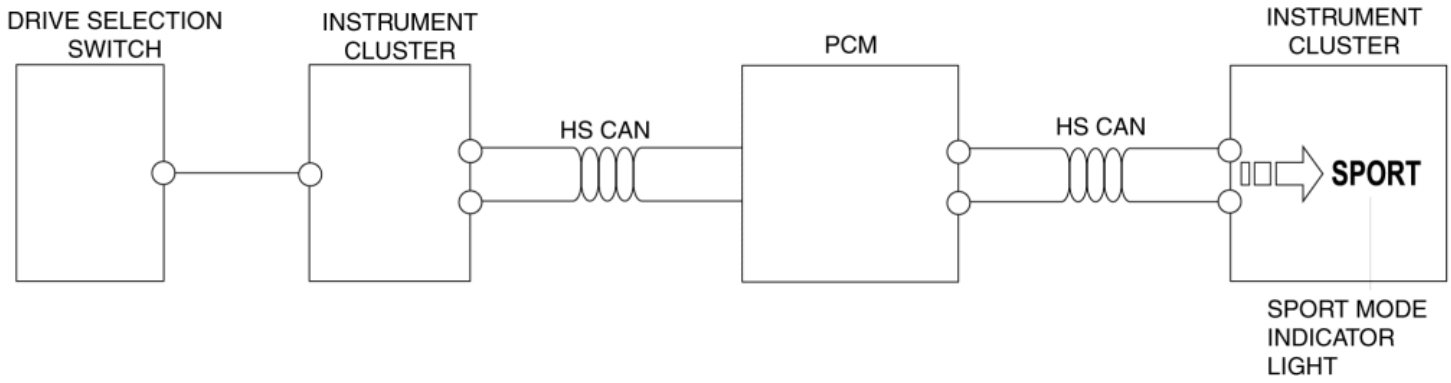

< Previous

Next >

2014 - Mazda3 - Suspension

SUSPENSION

Abbreviations

AAS	Active Adaptive Shift
ABS	Antilock Brake System
ABDC	After Bottom Dead Center
ACC	Accessories
AFS	Adaptive Front Lighting System
ALC	Auto Level Control
ALR	Automatic Locking Retractor
ATDC	After Top Dead Center
ATF	Automatic Transaxle Fluid
ATX	Automatic Transaxle
AWD	All-Wheel Drive
BBDC	Before Bottom Dead Center
BDC	Bottom Dead Center
BSM	Blind Spot Monitoring
BTDC	Before Top Dead Center
CAN	Controller Area Network

CCM	Comprehensive Component Monitor
CV	Canister Vent
CM	Control Module
CMU	Connectivity master unit
CPU	Central Processing Unit
DC	Drive Cycle
DRL	Daytime Running Light
DSC	Dynamic Stability Control
EBD	Electronic Brakeforce Distribution
EEPROM	Electrically Erasable Programmable Read-Only Memory
EHPAS	Electro Hydraulic Power Assist Steering
ELR	Emergency Locking Retractor
EPS	Electric Power Steering
ESA	Electronic Spark Advance
FBCM	Front Body Control Module
FET	Field Effect Transistor
FOW	Forward Obstruction Warning
GPS	Global Positioning System
HBC	High Beam Control
HF/TEL	Hands-Free Telephone
HI	High
HLA	Hydraulic Lash Adjuster

HS	High Speed
HU	Hydraulic Unit
IDS	Integrated Diagnostic Software
IG	Ignition
INT	Intermittent
KOEO	Key On Engine Off
KOER	Key On Engine Running
LCD	Liquid Crystal Display
LDWS	Lane Departure Warning System
LED	Light Emitting Diode
LF	Left Front
LH	Left Hand
LO	Low
LR	Left Rear
M	Motor
MAX	Maximum
MIN	Minimum
MOS	Metal Oxide Semiconductor
MRCC	Mazda Radar Cruise Control
MS	Middle Speed
MTX	Manual Transaxle
OCV	Oil Control Valve

OFF	Switch Off
ON	Switch On
PAD	Passenger Air Bag Deactivation
PCV	Positive Crankcase Ventilation
PID	Parameter Identification
P/W CM	Power Window Control Module
PTC	Positive Temperature Coefficient
RBCM	Rear Body Control Module
RCTA	Rear Crossing Traffic Alert
REC	Recirculate
RF	Right Front
RH	Right Hand
RR	Right Rear
SAS	Sophisticated Air Bag Sensor
SST	Special Service Tool
SW	Switch
TAU	Tuner and Amp Unit
TCS	Traction Control System
TDC	Top Dead Center
TFT	Transaxle Fluid Temperature
TNS	Tail Number Side Lights
TPMS	Tire Pressure Monitoring System

USB	Universal Serial Bus
VENT	Ventilation
1GR	First Gear
2GR	Second Gear
2WD	2-Wheel Drive
3GR	Third Gear
4GR	Fourth Gear
4SD	4 Door Sedan
5GR	Fifth Gear
5HB	5 Door Hatchback
6GR	Sixth Gear

Features

Improved rigidity and handling stability	• Strut type front suspension adopted. • E-type multi-link rear suspension adopted • For the front/rear crossmembers, the welded flange has been eliminated (flange-less), the cross-section expanded and the connection rigidity of the welded parts improved to achieve both rigidity and light weight. • By adopting a 6-point rigid mount-type front crossmember, the force generated from the tires is transmitted directly, and an agile vehicle response in low-to-mid speed range has been achieved. • The caster angle and caster trail was increased on the front suspension. • The cross-section on the center member of the front crossmember has been expanded and the longitudinal offset of the front lower arm installation position reduced to achieve an optimized framework. • The longitudinal span of the rear crossmember has been expanded and the longitudinal offset of the rear lateral link installation position reduced to achieve an optimized framework.

Improved handling stability and ride comfort	• By raising the installation position of the rear trailing link, the longitudinal input has been reduced, ride comfort improved, and the sense of safety during braking improved. • Positions of the links and rigidity of the bushes were reviewed to increase toe-in for the lateral force input to the tires. • Grip of the rear tires was increased by the increased toe-in, and a mild vehicle response in high-speed range has been achieved.
Improved marketability	• Tire pressure monitoring system adopted • Adhesive-type balance weights adopted
Environmental consideration	• Tires with optimized characteristics and low rolling resistance have been adopted.

Specifications

Suspension

Item					Specification
Front suspension	Type				Strut type
	Spring type				Coil spring
	Shock absorber type				Low-pressure gas charged, cylindrical, double-acting
	Stabilizer	Type			Torsion bar
		Diameter		(mm {in})	22.2 mm {0.874 in}
	Maximum steering angle [Tolerance ±3°]			Inner	39°24′
				Outer	32°12′
	Wheel alignment (Unloaded*1)	Total toe-in	Tire [Tolerance ±4 {0.2}]	(mm {in})	2.0 {0.079}
			Rim inner [Tolerance		Vehicle equipped with 16 inch wheel: 1.3 {0.051} Vehicle equipped with 18 inch wheel: 1.4

			±3 {0.1}]		{0.055}
		(Degree)			0°11′±0°20′
	Caster angle (Reference) [Tolerance ±1°]				6°29′
	Camber angle (Reference) [Tolerance ±1°]				-0°12′
	Steering axis inclination (Reference)				14°00′
Rear suspension	Type				Multi-link
	Spring type				Coil spring
	Shock absorber type				Low-pressure gas charged, cylindrical, double-acting
	Stabilizer	Type			Torsion bar
		Diameter		(mm {in})	U.S.A. and Canada: 18.0 {0.709} Except U.S.A. and Canada (vehicle equipped with 16 inch wheel): 18.0 {0.709} Except U.S.A. and Canada (vehicle equipped with 18 inch wheel): 17.0 {0.669}
	Wheel alignment (Unloaded*1)	Total toe-in [Tolerance ±4 {0.2}]	Tire [Tolerance ±4 {0.2}]	(mm {in})	1.9 {0.075}
			Rim inner [Tolerance ±3 {0.1}]		Vehicle equipped with 16 inch wheel: 1.2 {0.047} Vehicle equipped with 18 inch wheel: 1.3 {0.051}
		(degree)			0°10′±0°20′
	Camber angle (Reference) [Tolerance ±1°]				-0°59′
	Thrust angle [Tolerance ±0°48′]				0°00′

*1

Unloaded: Fuel tank is full. Engine coolant and engine oil are at specified level. Spare tire, jack and tools are in designated position.

Standard tire

Item			Specification	
Tire	Size		P205/60R16 91H	215/45R18 89W
Wheel	Size		16 × 6 1/2J	18 × 7J
	Inset	(mm {in})	50 {2.0}	
	Pitch circle diameter	(mm {in})	114.3 {4.50}	
	Material		Steel	Aluminum alloy

Temporary spare tire

Item			Specification
Tire	Size		T125/70D16 96M
Wheel	Size		16 × 4T
	Inset	(mm {in})	35 {1.4}
	Pitch circle diameter	(mm {in})	114.3 {4.50}
	Material		Steel

Next >

2014 - Mazda3 - Suspension

TIRE PRESSURE MONITORING SYSTEM (TPMS) WIRING DIAGRAM

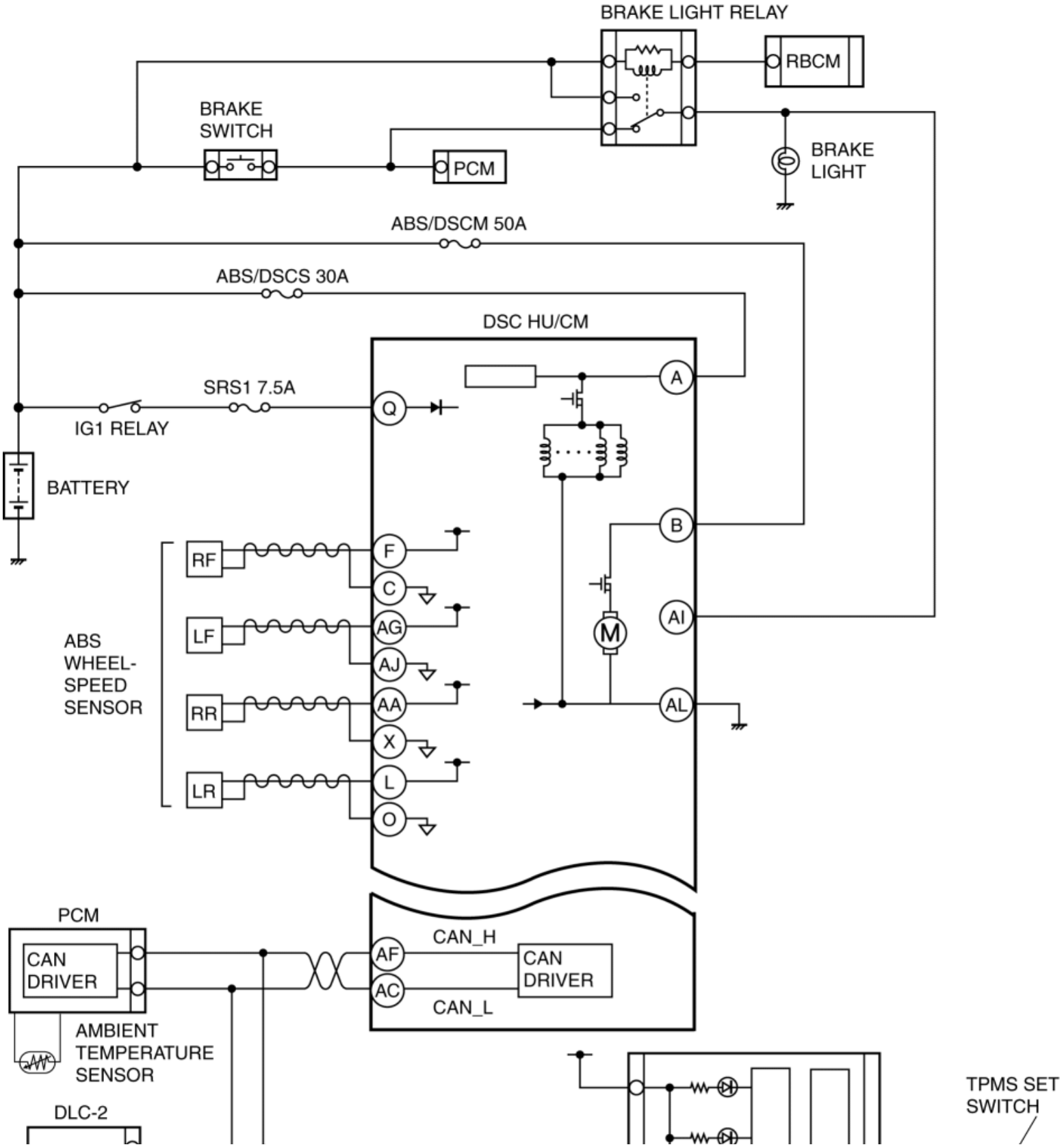

TIRE PRESSURE MONITORING SYSTEM (TPMS) WIRING DIAGRAM

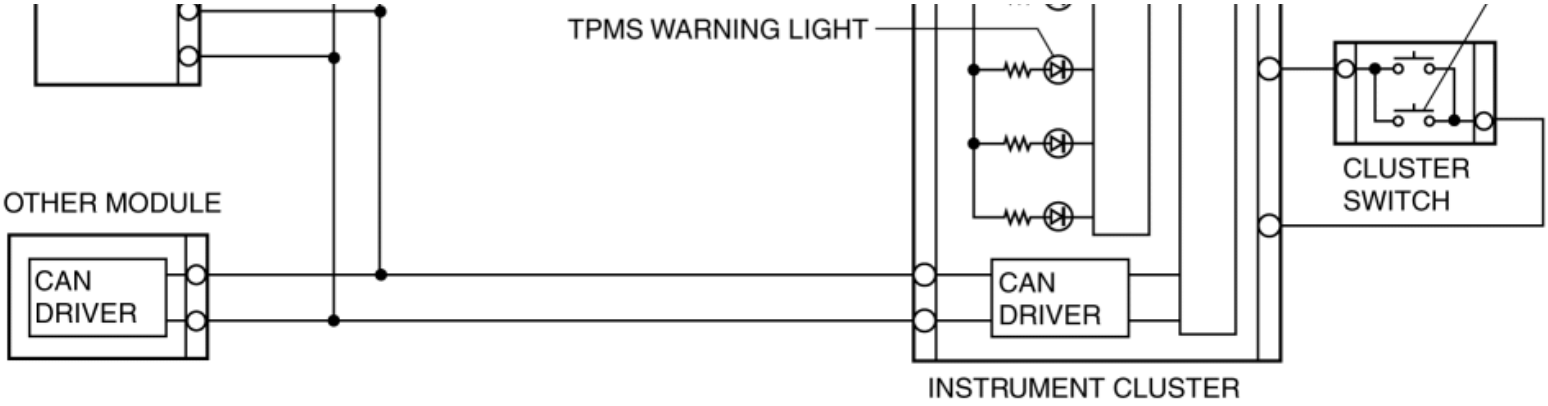

2014 - Mazda3 - Suspension

ON-BOARD DIAGNOSTIC SYSTEM (TIRE PRESSURE MONITORING SYSTEM)

- For the tire pressure monitoring system on-board diagnostic system, refer to Sec 04 as it is controlled by the DSC CM. (See **ON-BOARD DIAGNOSTIC SYSTEM [DYNAMIC STABILITY CONTROL (DSC)]**.)

2014 - Mazda3 - Suspension

WHEELS AND TIRES

Outline

- Adhesive-type balance weights have been adopted to the outer side of the aluminum alloy wheels. Due to this, a stylish wheel design is realized.
- In consideration of the environment, steel balance weights have been adopted to reduce the use of lead in the vehicle.
- Tires with optimized characteristics and low rolling resistance have been adopted.

Structural view

16-INCH
STEEL WHEEL

16-INCH
FULL WHEEL CAP

16-INCH
ALUMINUM ALLOY WHEEL

18-INCH
ALUMINUM ALLOY WHEEL

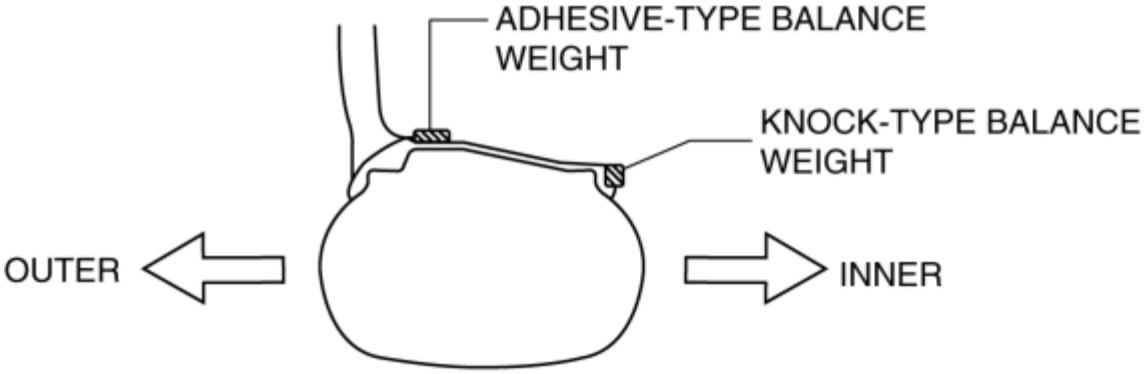

CROSS-SECTIONAL VIEW
(ALUMINUM ALLOY WHEELS)

2014 - Mazda3 - Suspension

TIRE PRESSURE MONITORING SYSTEM (TPMS)

Purpose, Outline

- The tire pressure monitoring system monitors the tire pressure of all 4 tires. If the tire pressure of 1 tire or more becomes excessively low, the driver is notified.
- A tire pressure monitoring system has been adopted which indirectly inspects the tire pressures and warns the driver.
- A switch for initializing the tire pressure monitoring system after the tire pressures have been adjusted is installed to the dashboard. (See **TIRE PRESSURE MONITORING SYSTEM SET SWITCH**.)

System structural view

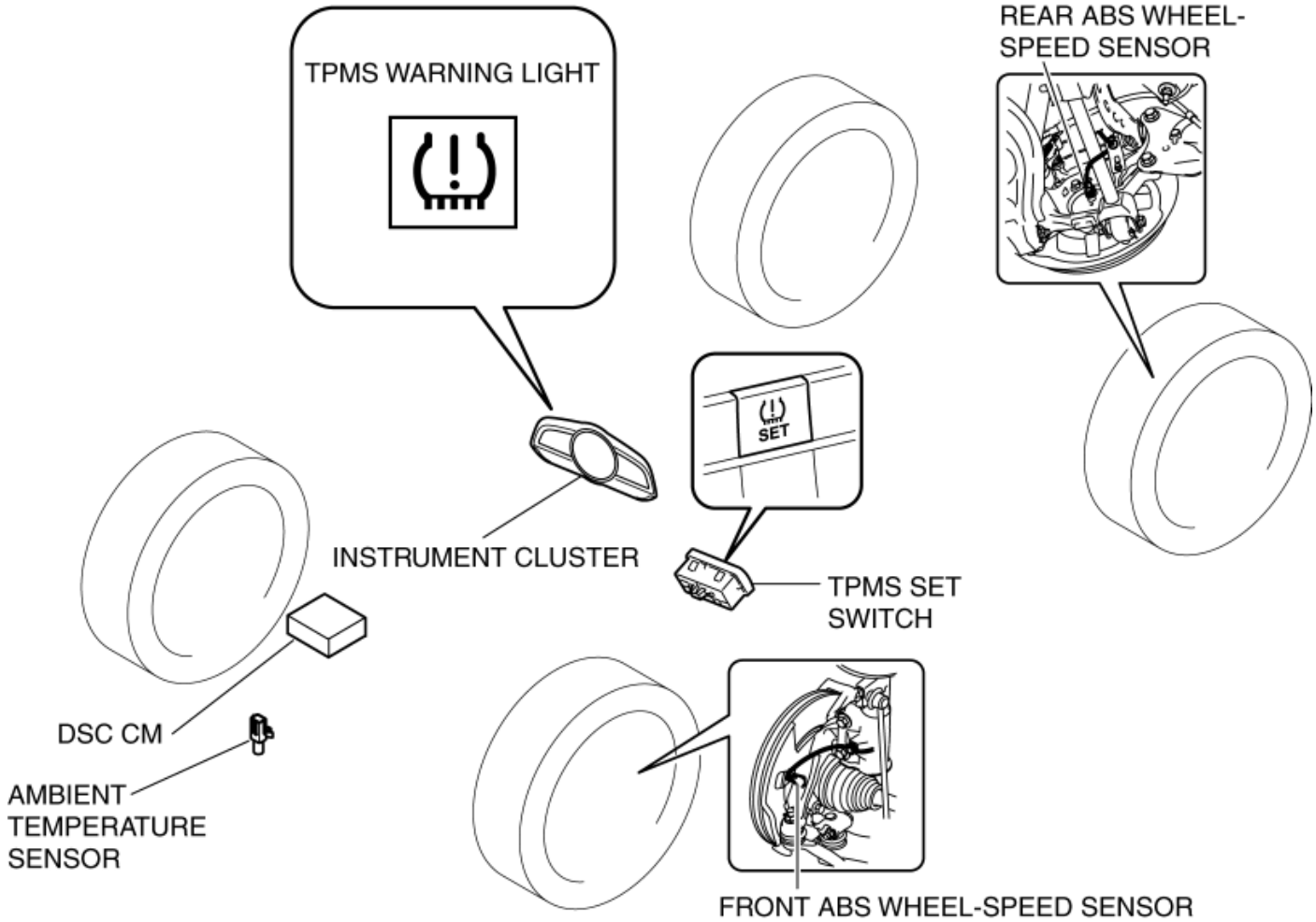

System wiring diagram

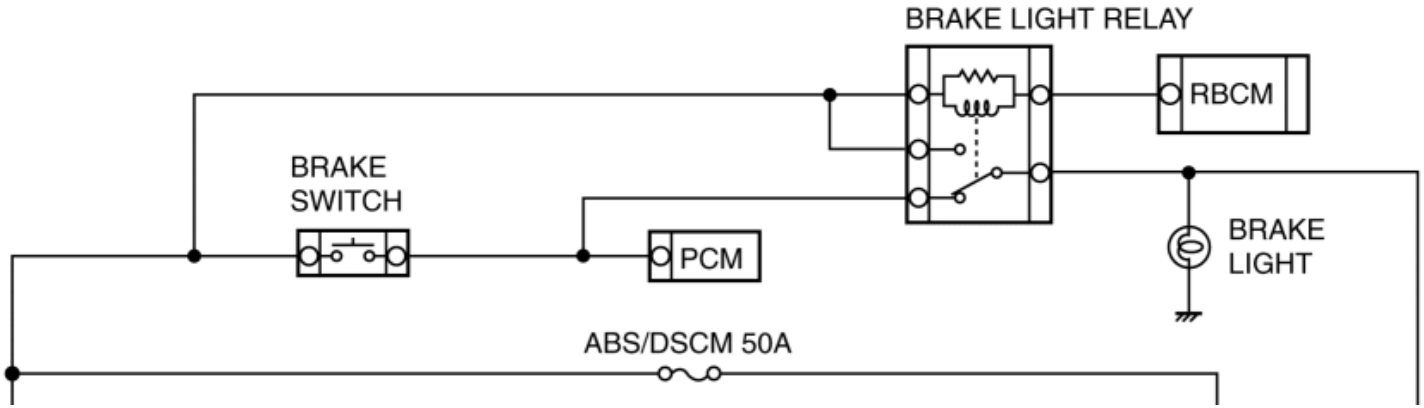

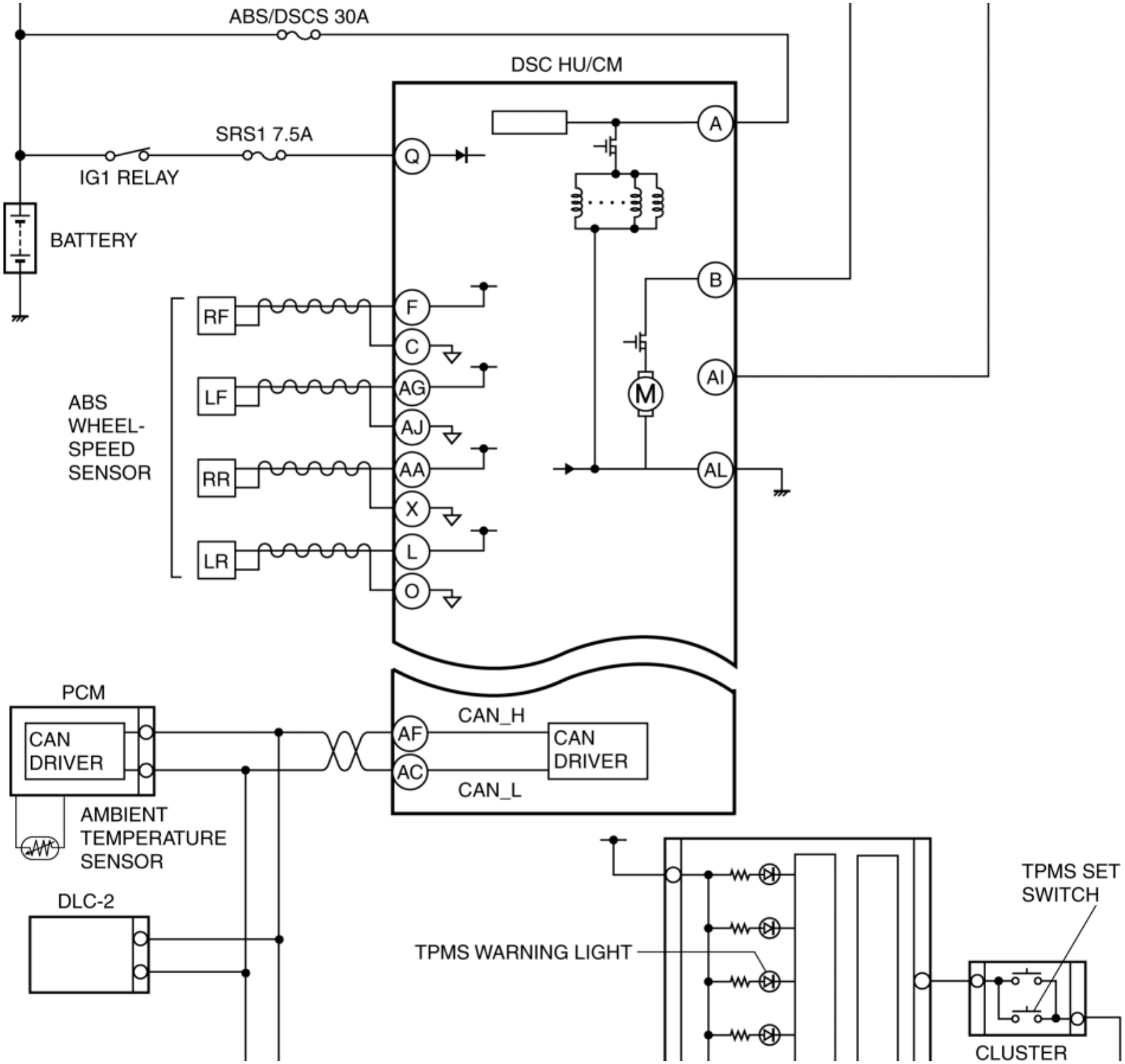
ABS/DSCS 30A
DSC HU/CM
SRS1 7.5A
IG1 RELAY
BATTERY
Q
A
B
AI
AL
M
RF
LF
RR
LR
F
C
AG
AJ
AA
X
L
O
ABS
WHEEL-
SPEED
SENSOR
PCM
CAN
DRIVER
AMBIENT
TEMPERATURE
SENSOR
DLC-2
AF
AC
CAN_H
CAN_L
CAN
DRIVER
TPMS WARNING LIGHT
TPMS SET
SWITCH
CLUSTER

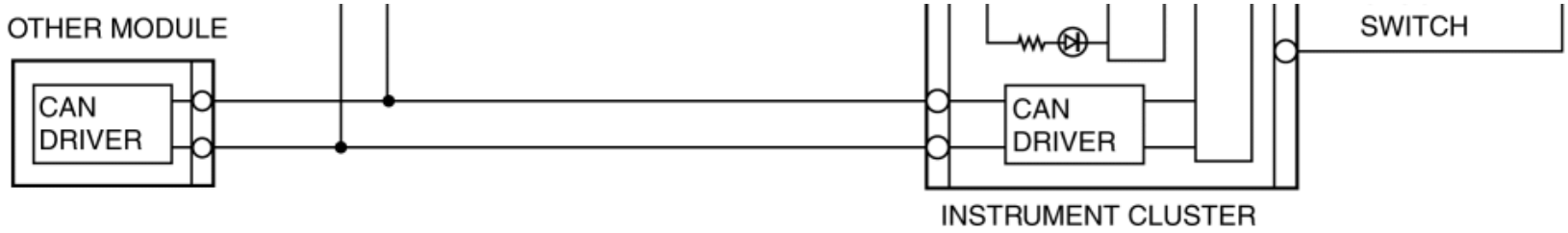

Detection method

Detection of the tire air pressure is performed by combining the following two methods.

- Dynamic loaded radius detection

  Detects the tire rotation speed using the ABS wheel speed sensor. The rotation speed of each of the wheels is compared to detect decreases in air pressure. Normally, the rotation speed of the 4 wheels is nearly the same, however, if a decrease in air pressure occurs in one tire, the dynamic loaded radius of the tire becomes smaller, the rotation speed of that tire increases, and a difference in rotation speed occurs. This method of detection is dynamic loaded radius detection. With the dynamic loaded radius detection method, if the tire pressure of all 4 tires decreases at the same level, a difference in tire rotation speed for each wheel does not occur and, therefore, detection is not possible.

- Torsion resonant frequency detection

  With torsion resonant frequency detection, detection of differences in tire air pressure is possible even if the tire pressure of all 4 tires decreases at the same level. This detection method uses the ABS wheel speed sensor signal the same as the dynamic loaded radius detection method. With resonant frequency detection, the signal from the ABS wheel speed sensor is analyzed in single pulse units and various wave frequencies are detected. Among these wave frequencies, the wave frequency synchronized to the air pressure is the torsion resonant frequency. Therefore, by monitoring the torsion resonant frequency, decreases in air pressure can be detected indirectly.

Function

- The tire pressure monitoring system consists of the following parts.

Part name	Function
DSC HU/CM	• Calculates the change in tire pressure for each wheel based on the tire rotation speed signal from the ABS wheel-speed sensor and monitors the fluctuation value. • If the fluctuation value of the tire pressure decreases to the specified value, the system determines that a tire pressure has decreased and turns on the tire pressure monitoring system warning light. • The tire pressure monitoring system warning light illumination signal is sent to the instrument cluster via a CAN signal. • If a malfunction occurs in the tire pressure monitoring system, determination is made to flash the

		tire pressure monitoring system warning light. • The tire pressure monitoring system warning light flash signal is sent to the instrument cluster via a CAN signal.
ABS wheel-speed sensor		• The wheel speed is sent to the DSC HU/CM.
Ambient temperature sensor		• The ambient temperature is sent to the PCM.
PCM		• The ambient temperature is sent to the DSC HU/CM via a CAN signal.
Instrument cluster	Tire pressure monitoring system warning light	• The tire pressure monitoring system warning light illuminates by the illumination signal from the DSC HU/CM. • The tire pressure monitoring system warning light flashes for approx. 1 min by the flash signal from the DSC HU/CM, and then it illuminates.
	Tire pressure monitoring system warning alarm	• The tire pressure monitoring system warning alarm sound is triggered by the warning alarm request signal from the DSC HU/CM.
Tire pressure monitoring system set switch		• The initialization signal is sent to the instrument cluster.
Instrument cluster		• The initialization signal is sent to the DSC HU/CM via a CAN signal.

Operation

The tire pressure monitoring system operates as shown in the following figure.

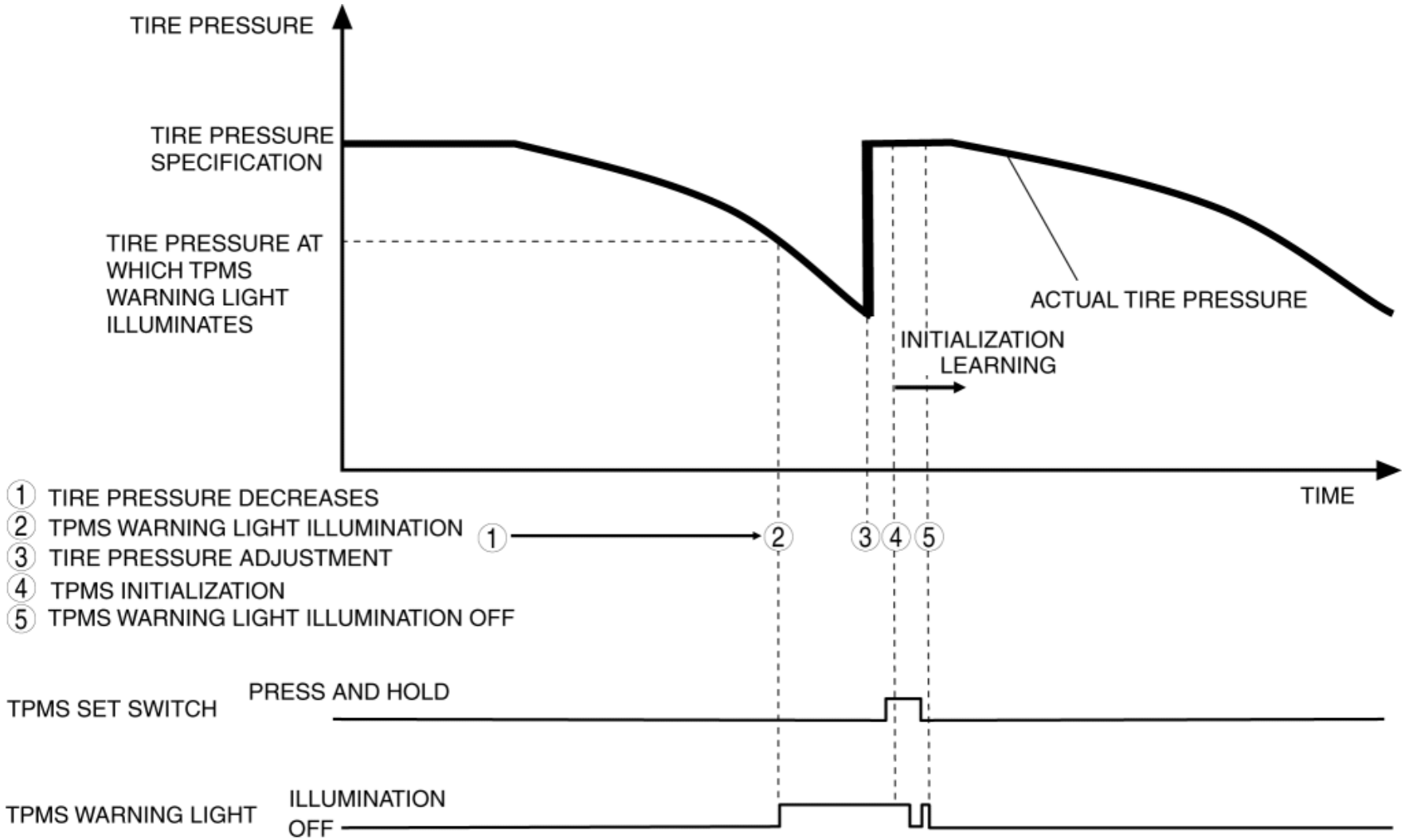

Mis-use prevention logic

- The tire pressure monitoring system has a mis-use prevention logic which illuminates the tire pressure monitoring system warning light if the tire pressure monitoring system initialization is performed two times without adjusting the tire pressures even though the tire pressure monitoring system warning light was illuminated.

  The data at the point in time that the tire pressure monitoring system warning light was illuminated is compared with the data at the point in time that the tire pressure monitoring system was initialized, and if the difference is within the specified value, the mis-use prevention logic detects and counts the number of detections.

  If the detection is the first time, the tire pressure monitoring system warning light is not illuminated.

  If the detection is the second time, the tire pressure monitoring system warning light is illuminated.

- If the M-MDS is used to initialize the tire pressure monitoring system, the mis-use prevention logic is disabled.
- The mis-use prevention logic operates as shown in the following figure.

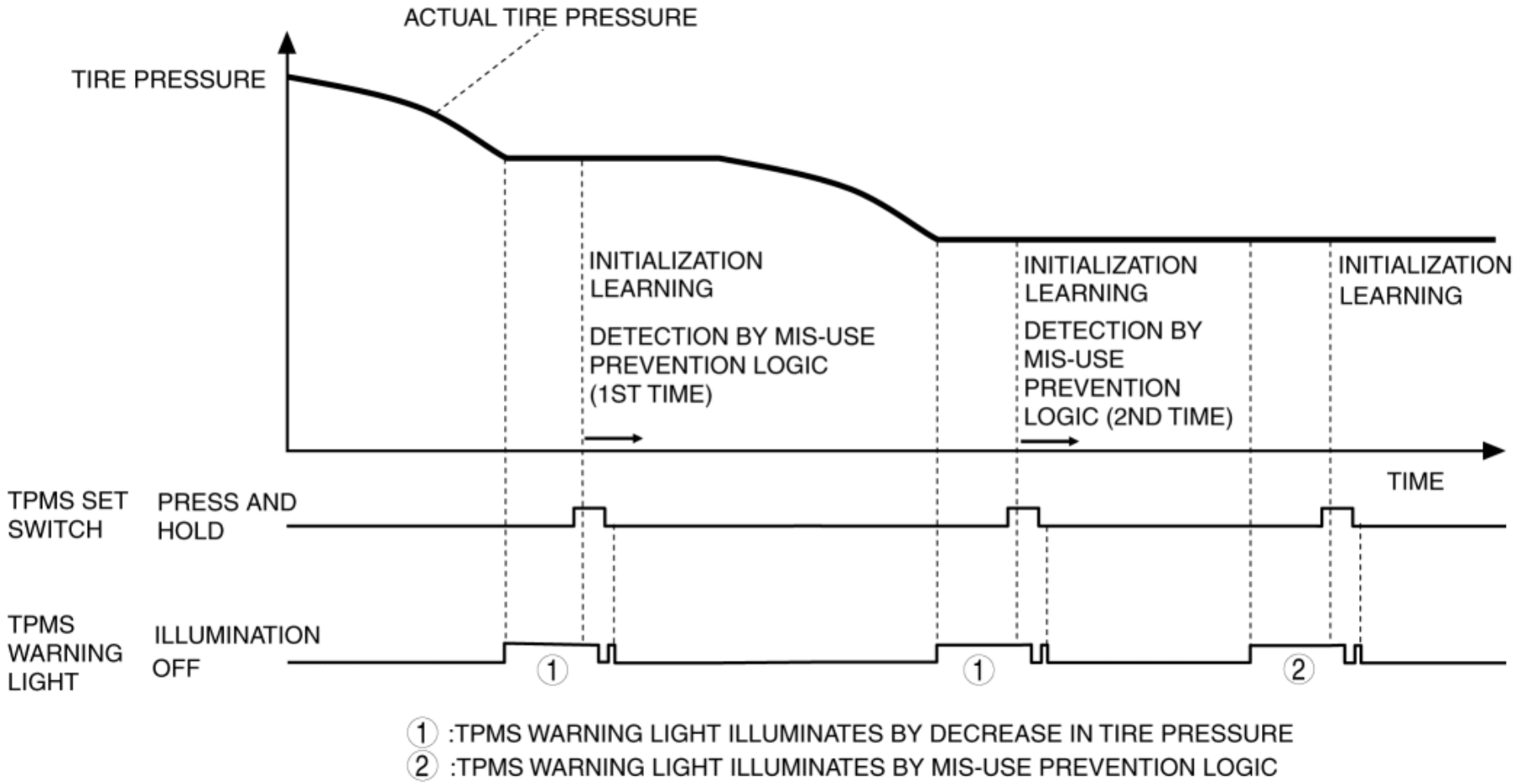

Tire pressure monitoring system warning light does not illuminate

- Even if the tire pressure monitoring system is normal, if the following items apply, the tire pressure monitoring system warning light may not illuminate.
  - Brake pedal is depressed
  - DSC is operating
  - Sudden steering wheel maneuvering
  - Sudden acceleration/deceleration
  - When vehicle is parked, stopped

Tire pressure monitoring system does not operate normally

- If the following items apply, the tire pressure monitoring system may not operate correctly.
    - Initialized using tire pressure outside of tire pressure specification
    - Tire pressure suddenly decreases (Ex. tire burst)
    - During tire pressure monitoring system learning

2014 - Mazda3 - Suspension

TIRE PRESSURE MONITORING SYSTEM WARNING LIGHT

Purpose, Function

- The tire pressure monitoring system warning light notifies the driver that it was determined that a tire pressure has decreased below the specified value based on the initialization.
- The tire pressure monitoring system warning light notifies the driver that a malfunction has occurred in the tire pressure monitoring system.
- For vehicles with center display, a warning message in the center display is displayed when the tire pressure monitoring system warning light is illuminated or flashes. For the message content and verification method, refer to the CENTER DISPLAY. (See **CENTER DISPLAY [WITH CENTER DISPLAY]**.)

Construction, Operation

- The tire pressure monitoring system warning light is built into the instrument cluster.

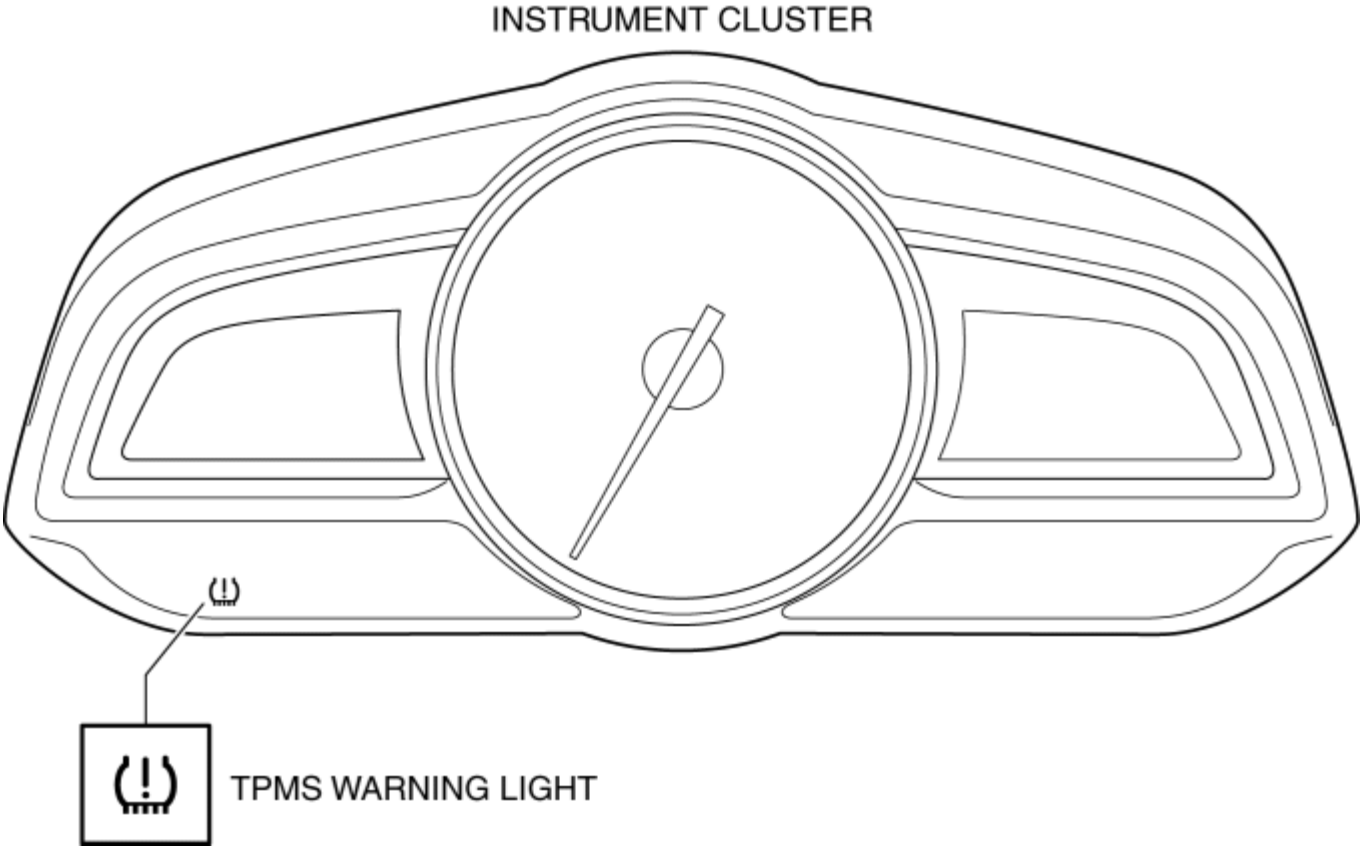

- The tire pressure monitoring system warning light illuminates/flashes based on the DSC HU/CM command.
- The tire pressure monitoring system warning light illuminates if a tire pressure decreases below the specified value based on the initialization.
- The tire pressure monitoring system warning light flashes for 1 min if a malfunction is detected in the tire pressure monitoring system, and then it illuminates.
- If the tire pressure monitoring system warning light has illuminated, it will turn off by performing the initialization. If the initialization is not performed, the light will illuminate again when the ignition is switched from off to ON.

Fail-safe

- Function not equipped.

2014 - Mazda3 - Suspension

TIRE PRESSURE MONITORING SYSTEM WARNING ALARM

Purpose

- The tire pressure monitoring system warning alarm warns the user that a tire pressure has decreased or notifies the user that the tire pressure monitoring alarm has been reset.

Function

- If the instrument cluster receives a tire pressure monitoring alarm request signal sent from the DSC HU/CM via the CAN signal, the tire pressure monitoring alarm is sounded.
- The tire pressure monitoring alarm sound pattern is as shown in the figure: For the conditions in which each alarm pattern sounds. (See **TIRE PRESSURE MONITORING SYSTEM (TPMS)**.)

Tire pressure monitoring system operating

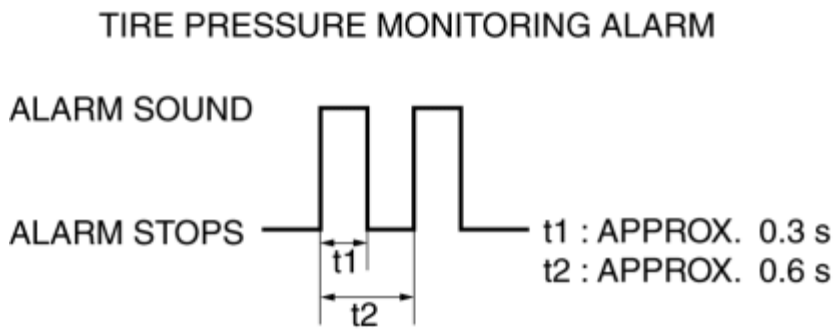

Tire pressure monitoring system initialization

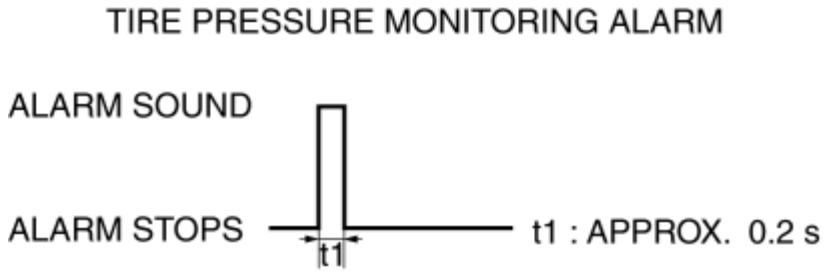

Construction

- The tire pressure monitoring alarm sounds using the buzzer built into the instrument cluster.

Operation

1. The instrument cluster receives (1) the tire pressure monitoring alarm request signal from the DSC HU/CM.

2. The instrument cluster microcomputer turns the transistor on (2) based on the tire pressure monitoring alarm request signal.

3. When the transistor turns on, the ground circuit of the alarm is established and the alarm sounds (3).

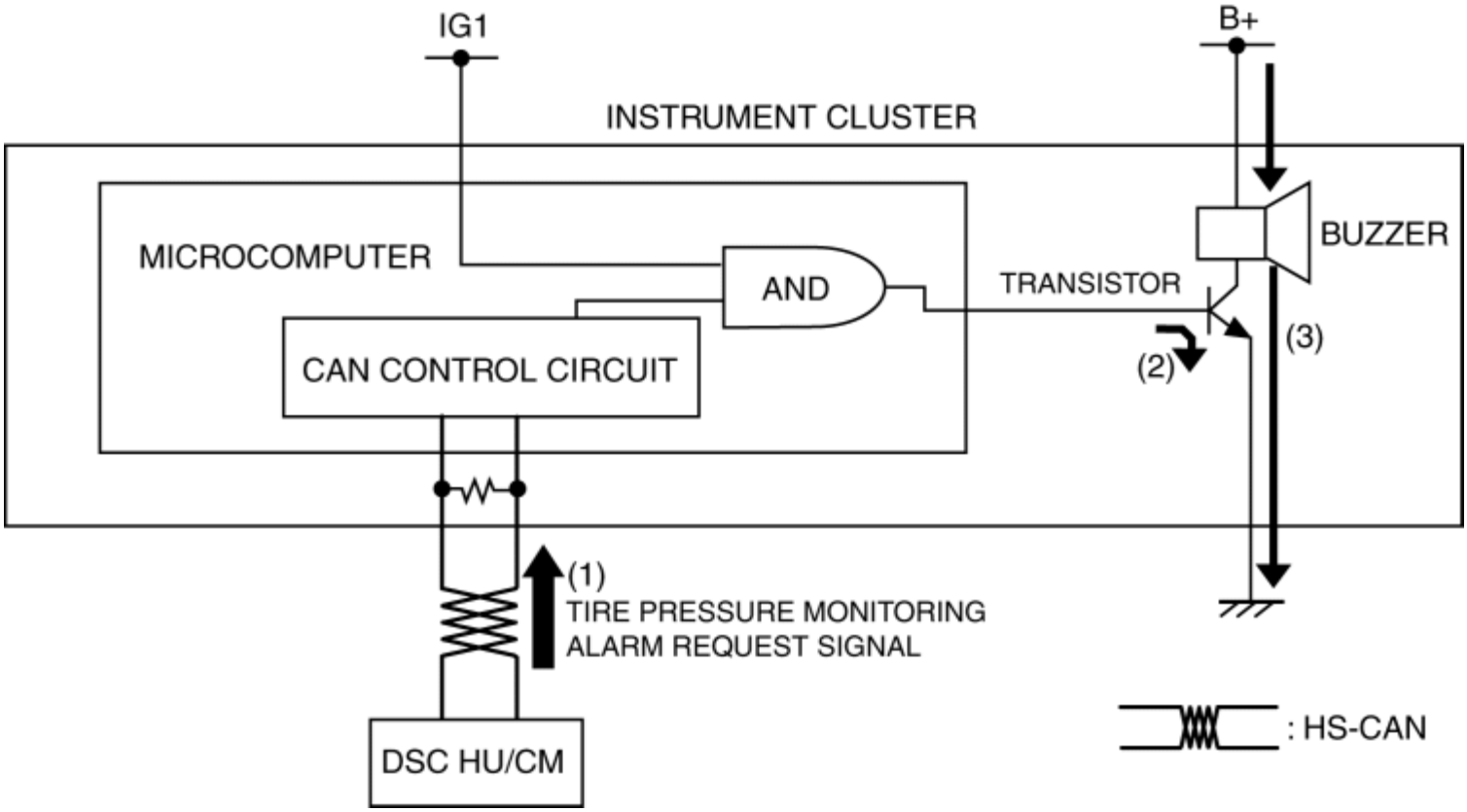

Fail-safe

- Function not equipped.

2014 - Mazda3 - Suspension

TIRE PRESSURE MONITORING SYSTEM SET SWITCH

Purpose

- The tire pressure monitoring system set switch is used to initialize the tire pressure monitoring system.

Construction, Operation

- The tire pressure monitoring system set switch is installed to the dashboard.

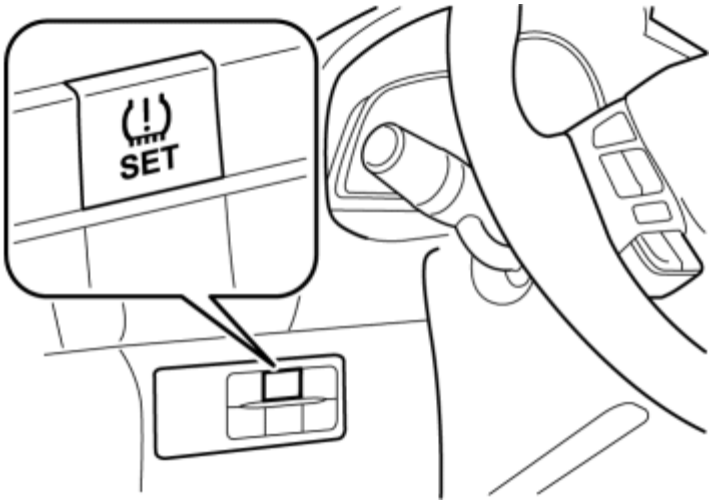

- The tire pressure monitoring system set switch has adopted a monitoring type switch.
- The tire pressure monitoring system set switch sends a tire pressure monitoring system initialization signal to the instrument cluster.

Fail-safe

DTC	Fail-safe
C1031:35	• Illuminates the tire pressure monitoring system warning light. • Inhibits the TPMS control.

TIRE PRESSURE MONITORING SYSTEM SET SWITCH

2014 - Mazda3 - Suspension

TIRE PRESSURE MONITORING SYSTEM OPERATION RECORD

Purpose

- Customers can verify if they know how to correctly use the tire pressure monitoring system set switch by verifying the tire pressure monitoring system operation record.

Function, Display

- The DSC HU/CM stores the operation records and the Mazda Modular Diagnostic System (M-MDS) reads out the operation records and indicates them as shown in the figure below:

MAZDA MODULAR DIAGNOSTIC SYSTEM (M-MDS) DISPLAY

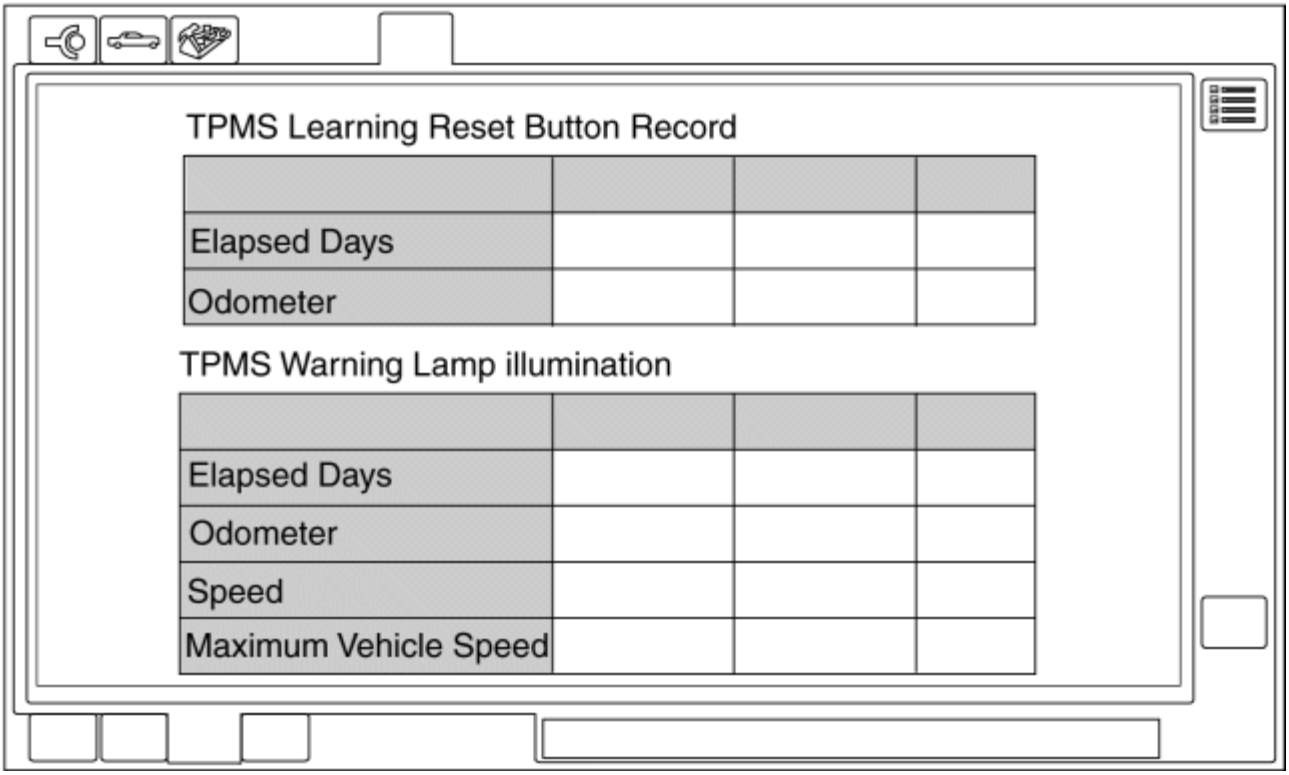

NOTE:

- M-MDS indication is indicated in brackets

Tire pressure monitoring system set switch operation record (TPMS Learning Reset Button Record)

- The DSC HU/CM implements the tire pressure monitoring system initialization by pressing

the tire pressure monitoring system set switch, and it simultaneously records the following items for a maximum 3 times from the current record as the operation record.

- Elapsed days (Elapsed days)

  NOTE:

  - The M-MDS displays the elapsed days from the start of initialization until the operation record verification with the M-MDS.
  - If the operation record has not been recorded, 65,535 days is displayed however this does not indicate a malfunction.

- Total traveled distance (Odometer)

Tire pressure monitoring system warning light illumination operation record (TPMS Warning Lamp illumination)

- If the DSC HU/CM detects a low tire pressure, it outputs a tire pressure monitoring system warning light illumination signal, and it simultaneously records the following items for a maximum 3 times from the current record as the operation record.

  - Elapsed days (Elapsed days)

    NOTE:

    - The M-MDS displays the elapsed days from when the low tire pressure was detected until the operation record verification with the M-MDS.
    - If the operation record has not been recorded, 65,535 days is displayed however this does not indicate a malfunction.

  - Total traveled distance (Odometer)
  - Vehicle speed (Speed)
  - Maximum vehicle speed (Maximum vehicle speed)

    NOTE:

    - Vehicle speed until the tire pressure monitoring system set switch is pressed from the illumination of the tire pressure monitoring warning light due to a low tire pressure
    - For the Mazda6, the maximum vehicle speed is not supported, therefore Not Supported is displayed, however this does not indicated a malfunction.

2014 - Mazda3 - Suspension

FRONT SUSPENSION

Outline

- A strut type front suspension has been adopted.
- The connection area of the front crossmember and body is a 6-point rigid mount type.

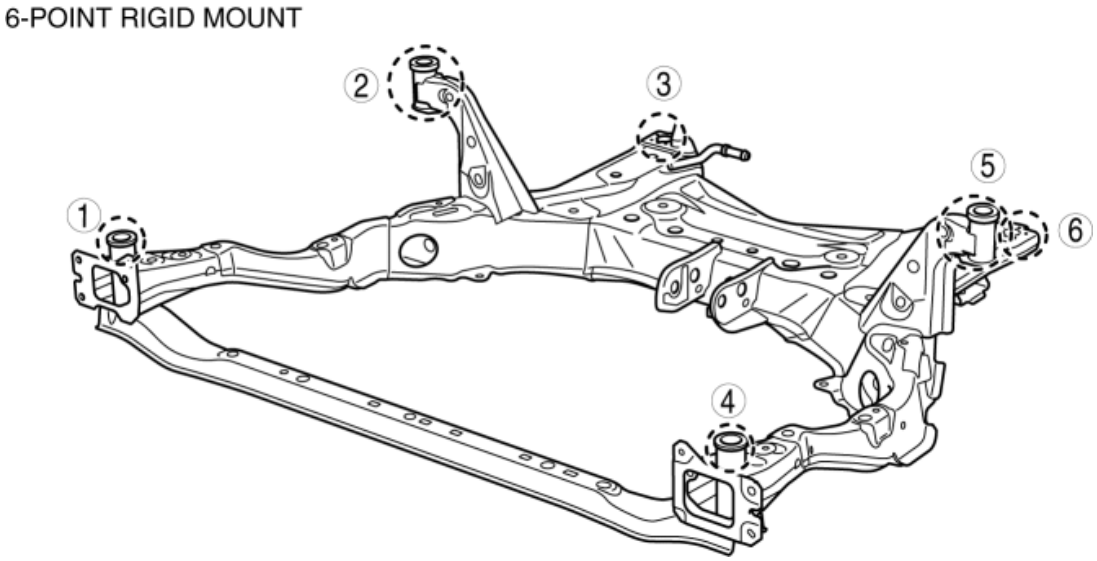

- The cross-section on the center member of the front crossmember has been expanded and the longitudinal offset of the front lower arm installation position reduced to realize an optimized framework.

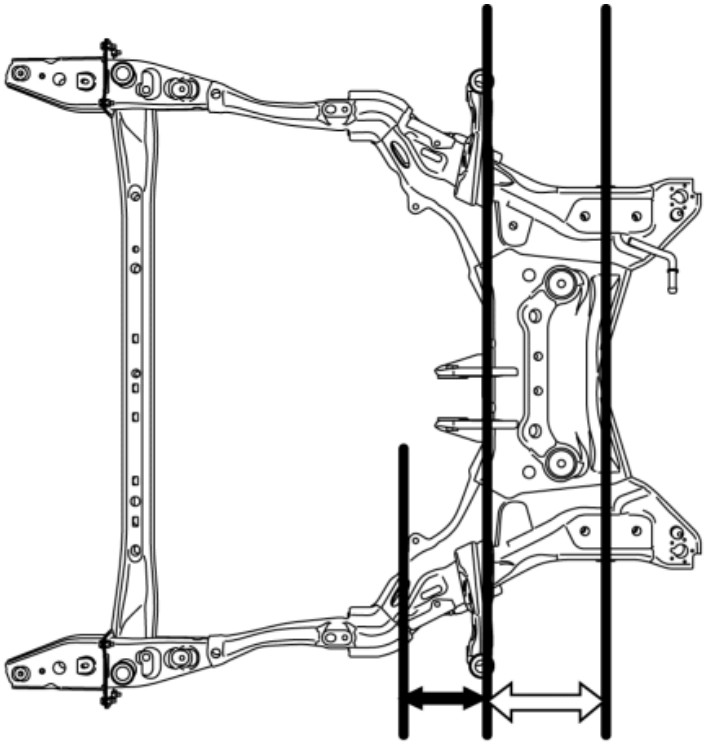

: BETWEEN FRONT LOWER ARM ATTACHMENT POSITION AND FRONT CROSSMEMBER (CENTER MEMBER)

: FRONT CROSSMEMBER (CENTER MEMBER) WIDTH

- For the front crossmember, the welded part of the flange has been eliminated (flange-less), the cross-section expanded and the connection rigidity of the welded parts improved to achieve both rigidity and light weight.

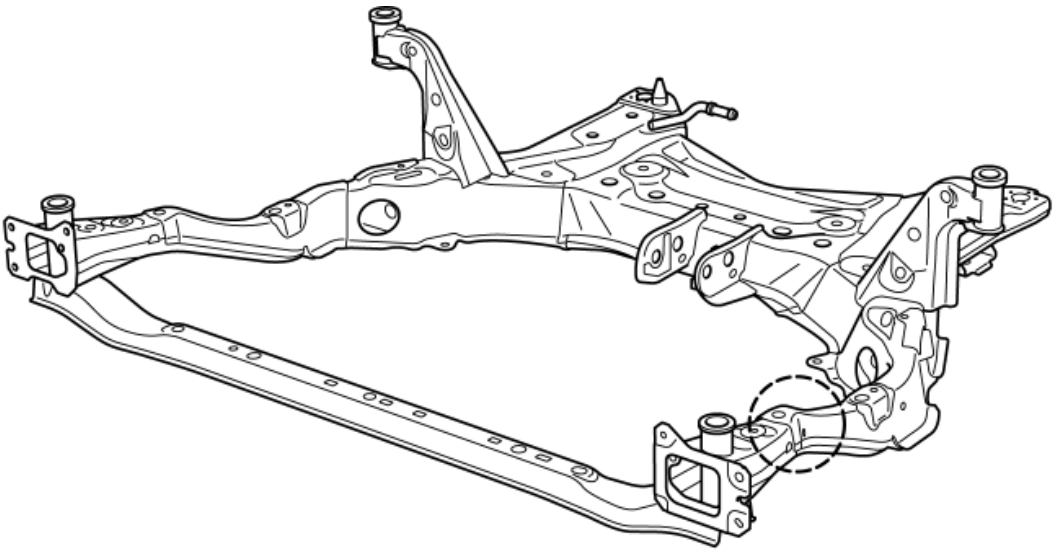

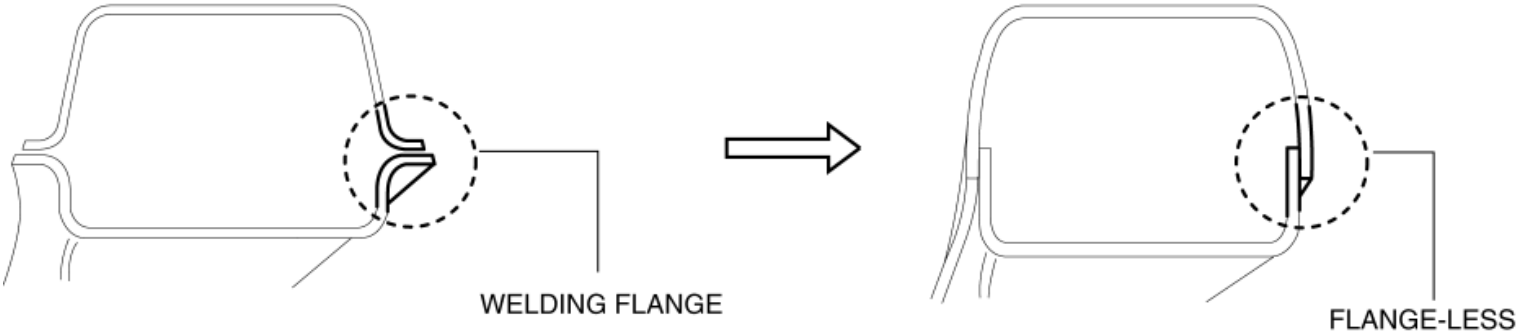

- The caster angle and caster trail of the front suspension have been increased.

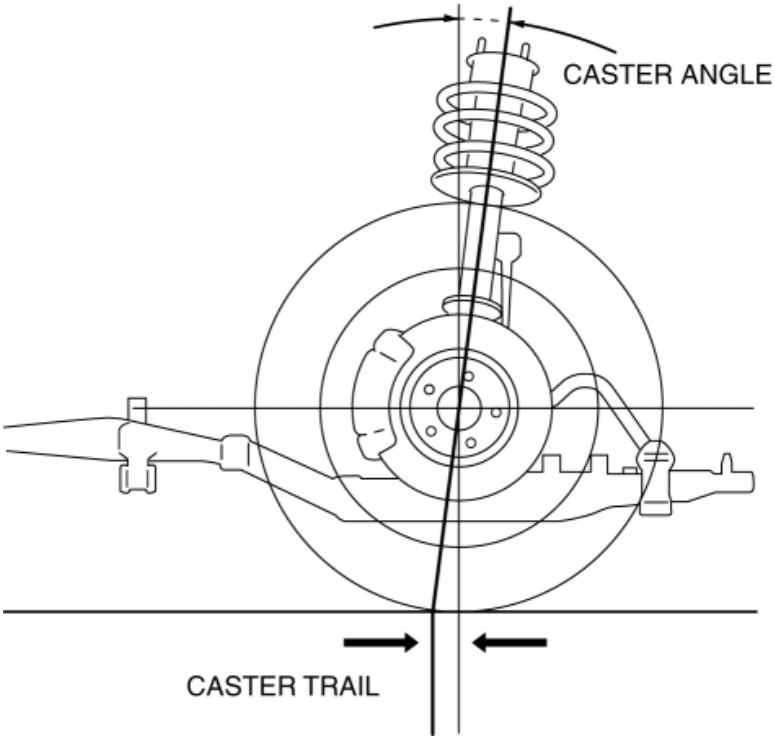

Structural view

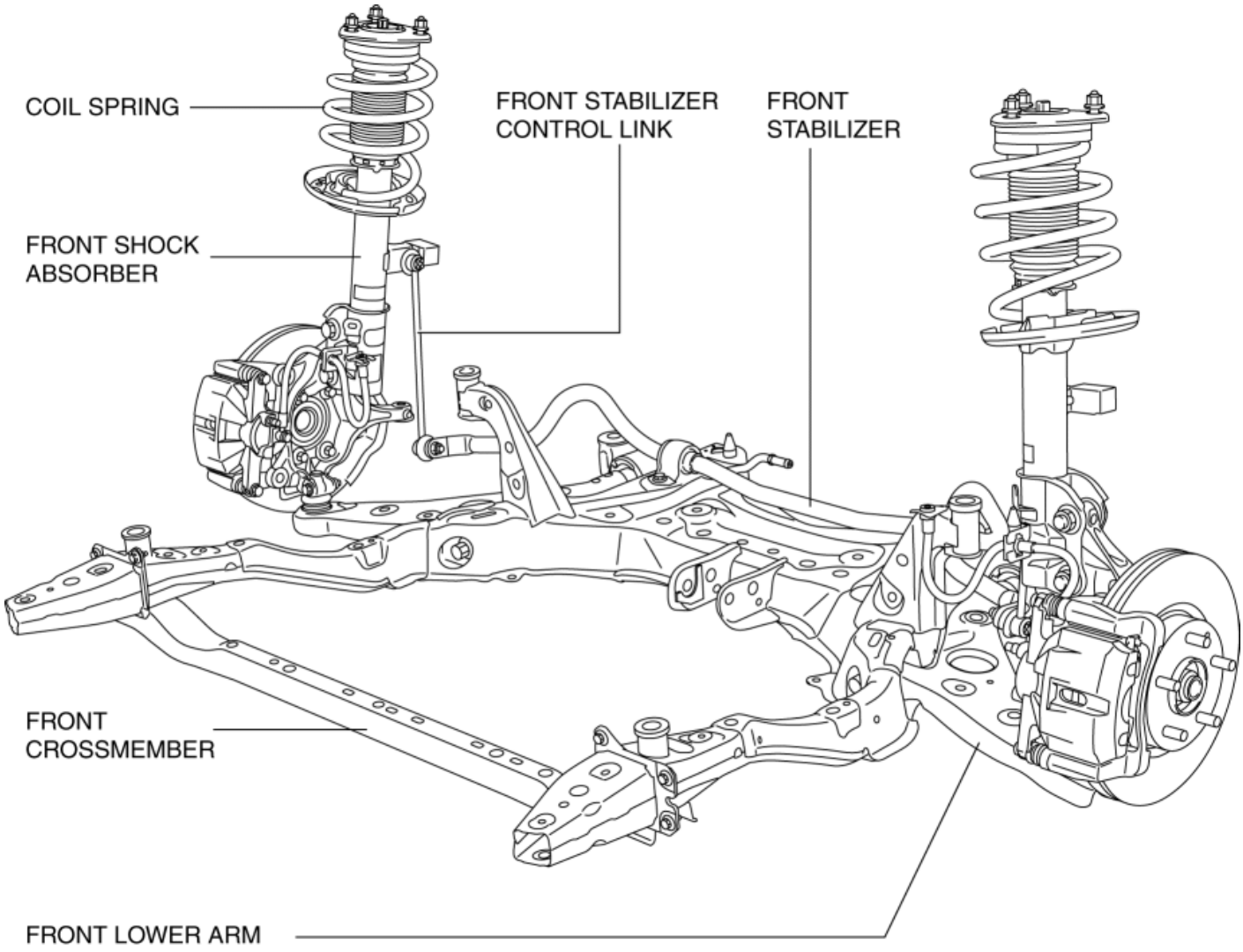
COIL SPRING
FRONT STABILIZER CONTROL LINK
FRONT STABILIZER
FRONT SHOCK ABSORBER
FRONT CROSSMEMBER
FRONT LOWER ARM

< Previous

2014 - Mazda3 - Suspension

REAR SUSPENSION

Outline

- E-type multi-link rear suspension has been adopted.
- The longitudinal span of the rear crossmember has been expanded and the longitudinal offset of the rear lateral link installation position reduced to realize an optimized framework.

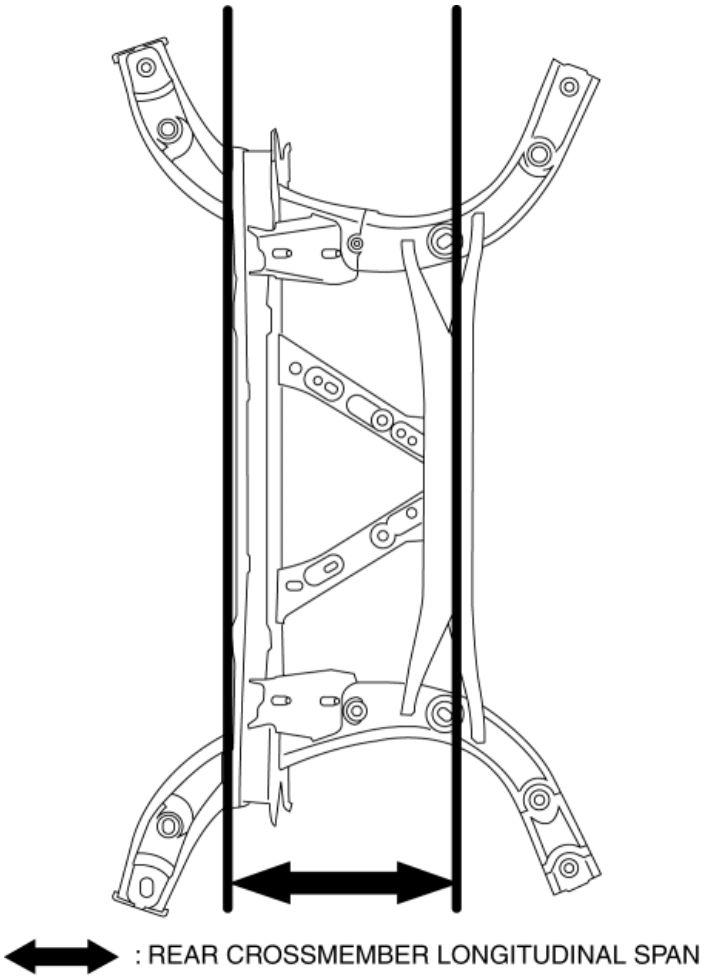

- Welding flanges were removed from the rear crossmember to enhance the coupling rigidity of the welded sections and reduce the weight.

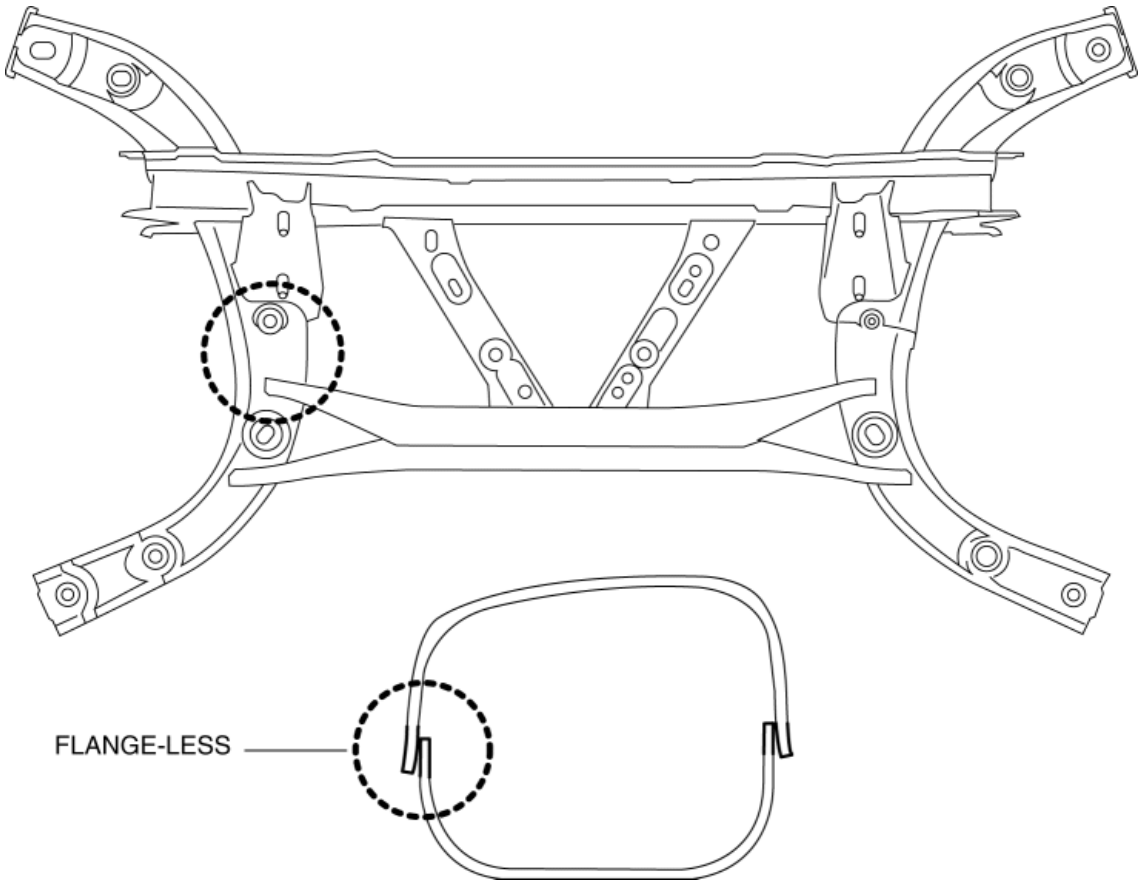

- The installation position of the rear trailing link was moved upward so that the longitudinal impact from the road is more easily absorbed in the vertical movement of the rear trailing link. This reduces the longitudinal force input to the rear trailing link bush, improving the ride comfort.

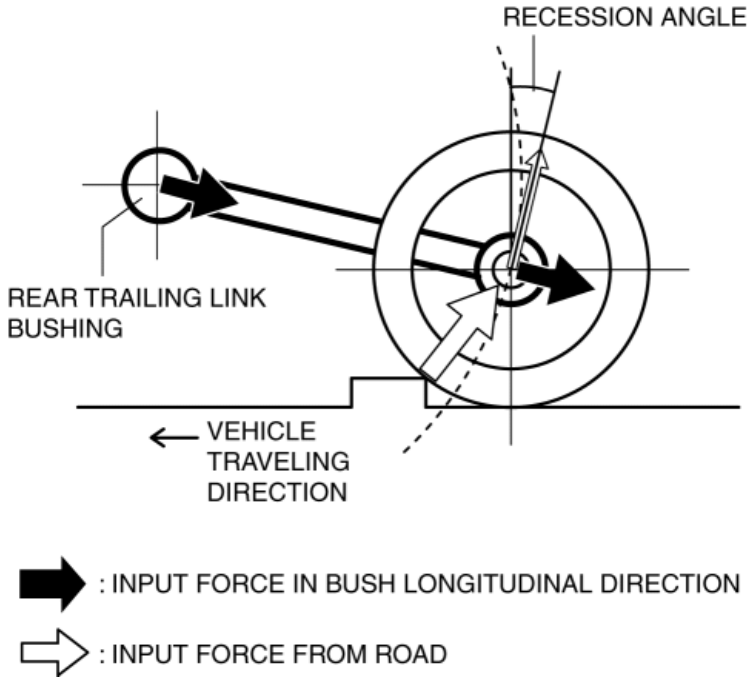

Structural view

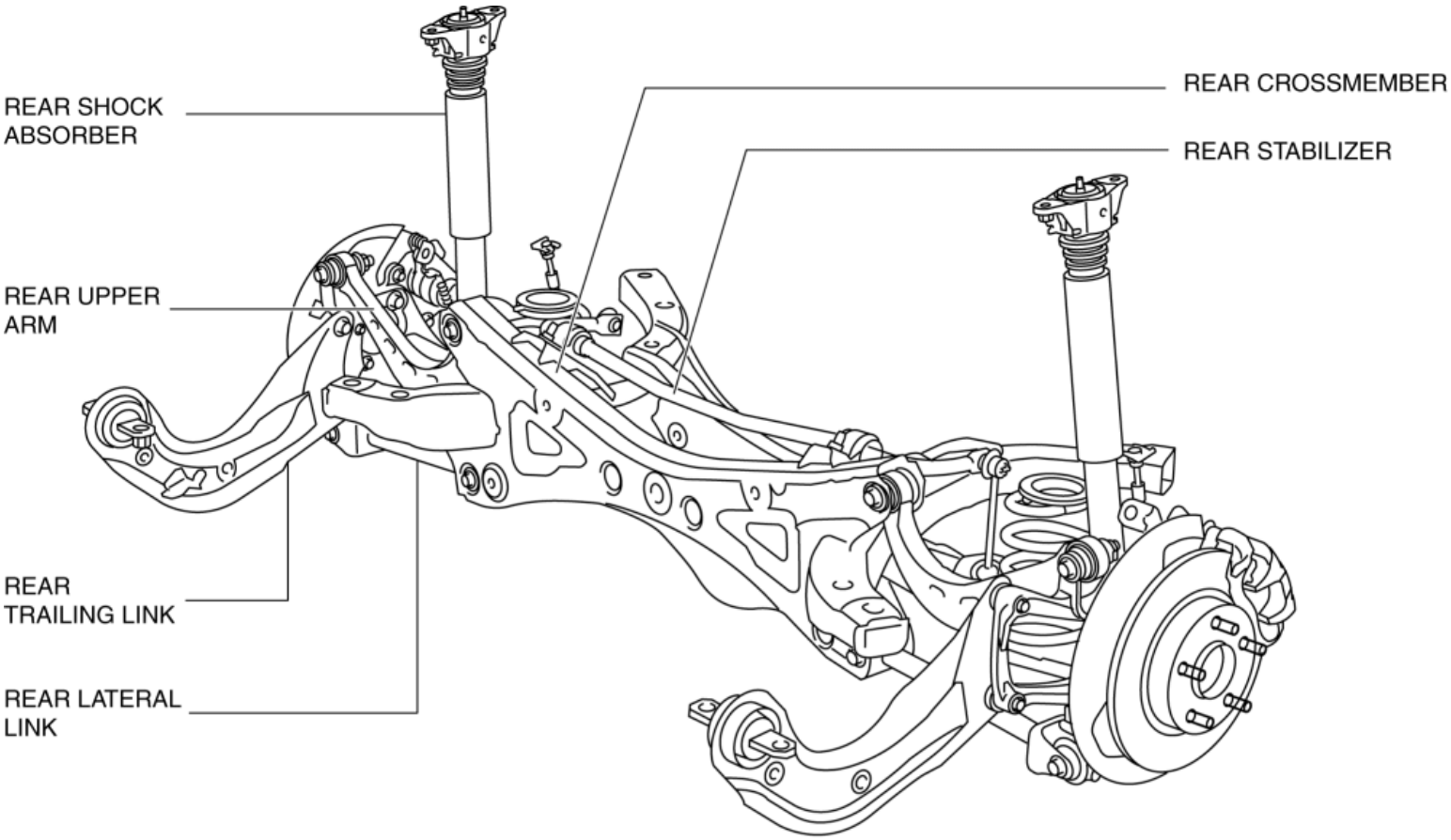
REAR SHOCK ABSORBER
REAR CROSSMEMBER
REAR STABILIZER
REAR UPPER ARM
REAR TRAILING LINK
REAR LATERAL LINK

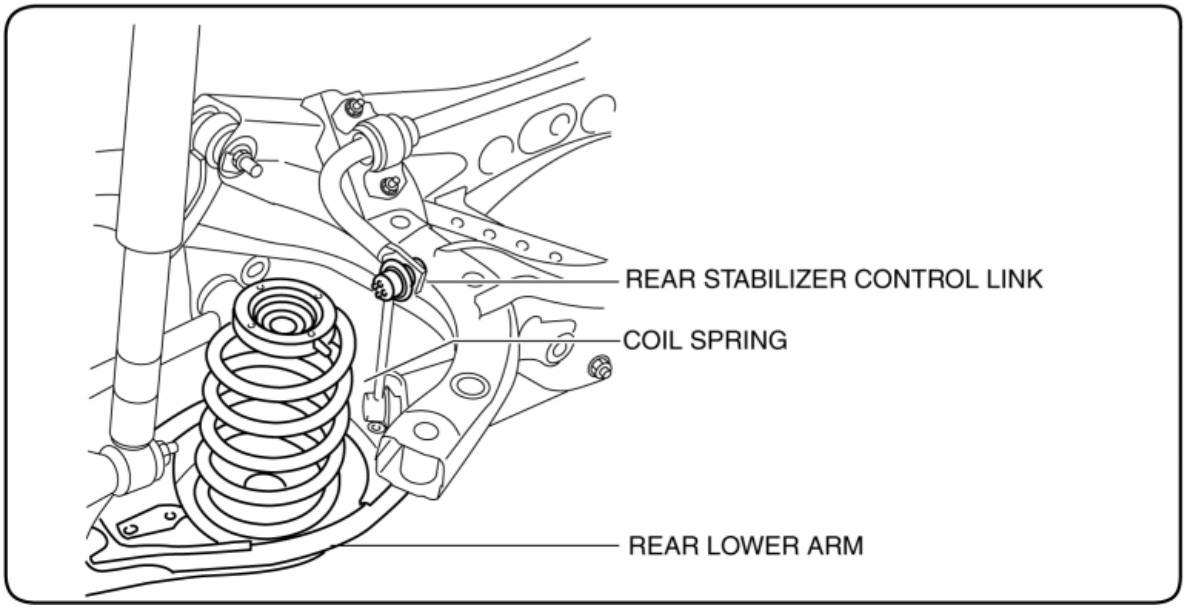
REAR STABILIZER CONTROL LINK
COIL SPRING
REAR LOWER ARM

< Previous

Next >

2014 - Mazda3 - DriveLine/Axle

DRIVELINE/AXLE

Abbreviations

AAS	Active Adaptive Shift
ABS	Antilock Brake System
ABDC	After Bottom Dead Center
ACC	Accessories
AFS	Adaptive Front Lighting System
ALC	Auto Level Control
ALR	Automatic Locking Retractor
ATDC	After Top Dead Center
ATF	Automatic Transaxle Fluid
ATX	Automatic Transaxle
AWD	All-Wheel Drive
BBDC	Before Bottom Dead Center
BDC	Bottom Dead Center
BSM	Blind Spot Monitoring
BTDC	Before Top Dead Center
CAN	Controller Area Network

CCM	Comprehensive Component Monitor
CV	Canister Vent
CM	Control Module
CMU	Connectivity master unit
CPU	Central Processing Unit
DC	Drive Cycle
DRL	Daytime Running Light
DSC	Dynamic Stability Control
EBD	Electronic Brakeforce Distribution
EEPROM	Electrically Erasable Programmable Read-Only Memory
EHPAS	Electro Hydraulic Power Assist Steering
ELR	Emergency Locking Retractor
EPS	Electric Power Steering
ESA	Electronic Spark Advance
FBCM	Front Body Control Module
FET	Field Effect Transistor
FOW	Forward Obstruction Warning
GPS	Global Positioning System
HBC	High Beam Control
HF/TEL	Hands-Free Telephone
HI	High
HLA	Hydraulic Lash Adjuster

HS	High Speed
HU	Hydraulic Unit
IDS	Integrated Diagnostic Software
IG	Ignition
INT	Intermittent
KOEO	Key On Engine Off
KOER	Key On Engine Running
LCD	Liquid Crystal Display
LDWS	Lane Departure Warning System
LED	Light Emitting Diode
LF	Left Front
LH	Left Hand
LO	Low
LR	Left Rear
M	Motor
MAX	Maximum
MIN	Minimum
MOS	Metal Oxide Semiconductor
MRCC	Mazda Radar Cruise Control
MS	Middle Speed
MTX	Manual Transaxle
OCV	Oil Control Valve

OFF	Switch Off
ON	Switch On
PAD	Passenger Air Bag Deactivation
PCV	Positive Crankcase Ventilation
PID	Parameter Identification
P/W CM	Power Window Control Module
PTC	Positive Temperature Coefficient
RBCM	Rear Body Control Module
RCTA	Rear Crossing Traffic Alert
REC	Recirculate
RF	Right Front
RH	Right Hand
RR	Right Rear
SAS	Sophisticated Air Bag Sensor
SST	Special Service Tool
SW	Switch
TAU	Tuner and Amp Unit
TCS	Traction Control System
TDC	Top Dead Center
TFT	Transaxle Fluid Temperature
TNS	Tail Number Side Lights
TPMS	Tire Pressure Monitoring System

USB	Universal Serial Bus
VENT	Ventilation
1GR	First Gear
2GR	Second Gear
2WD	2-Wheel Drive
3GR	Third Gear
4GR	Fourth Gear
4SD	4 Door Sedan
5GR	Fifth Gear
5HB	5 Door Hatchback
6GR	Sixth Gear

Features

Improved driveability	• Unit-design, double angular ball bearings with low rotational resistance adopted for front and rear axles • Bell-shaped constant velocity joint adopted for wheel-side joint of front drive shaft • Tripod-shaped constant velocity joint adopted for differential-side joint of front drive shaft (ATX) and rear drive shaft • Double offset-shaped constant velocity joint adopted for differential-side joint of front drive shaft (MTX)
Improved rigidity, reduced noise and vibration	• By integrating the right-side front drive shaft and joint shaft, vibration and noise occurrence while the vehicle is driven, due to the conventional spline-engaging structure, has been reduced
Improved serviceability	• Unit bearings that require no preload adjustment adopted for the front and rear wheels

Specifications

ATX

Item		Specification	
		SKYACTIV-G 2.0	SKYACTIV-G 2.5
Front axle			
Bearing type		Angular ball bearing	
Rear axle			
Bearing type		Angular ball bearing	
Front drive shaft			
Front drive shaft joint type	Wheel side	Bell joint	
	Differential side	Tripod joint	
Front drive shaft diameter	(mm {in})	24.0 {0.945}	LH: 24.5 {0.965} RH: 26.0 {1.02}

MTX

Item	Specification
Front axle	
Bearing type	Angular ball bearing
Rear axle	
Bearing type	Angular ball bearing

Front drive shaft		
Front drive shaft joint type	Wheel side	Bell joint
	Differential side	Double offset joint
Front drive shaft diameter	(mm {in})	28.0 {1.10}

Next >

2014 - Mazda3 - DriveLine/Axle

FRONT AXLE

Purpose, Function

- An angular ball bearing, with a low rotational resistance, has been adopted, improving driveability.
- A unit bearing that does not require pre-load setting has been adopted, improving serviceability.

Cross-Sectional View

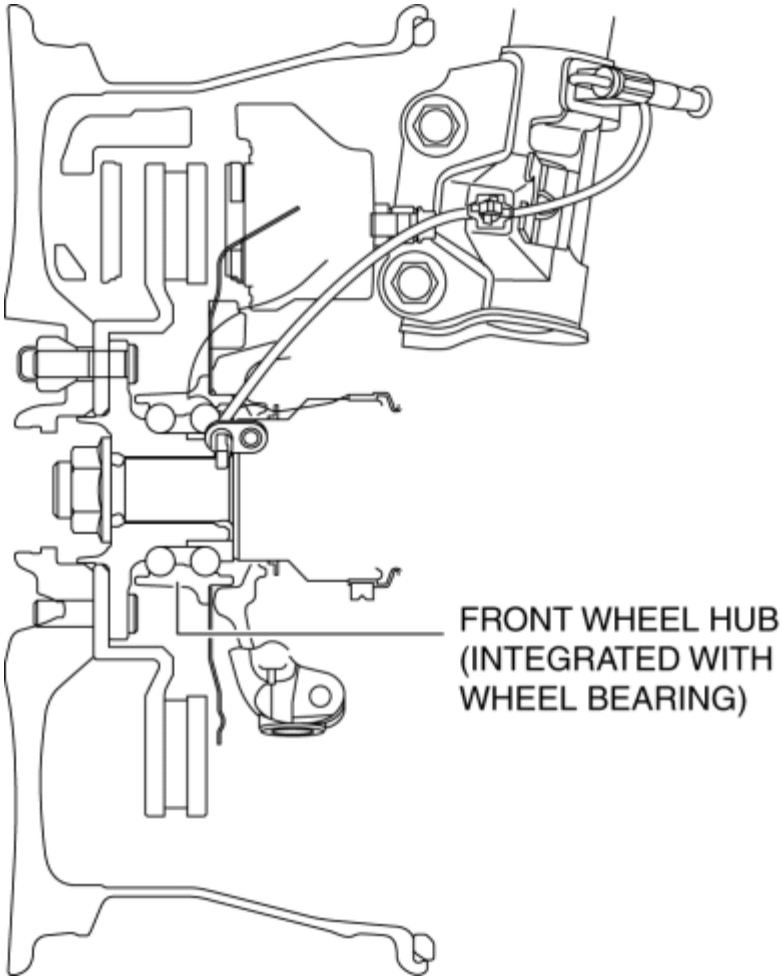

FRONT AXLE

2014 - Mazda3 - DriveLine/Axle

REAR AXLE

Purpose, Function

- An angular ball bearing, with a low rotational resistance, has been adopted, improving driveability.
- A unit bearing that does not require pre-load setting has been adopted, improving serviceability.

Cross-Sectional View

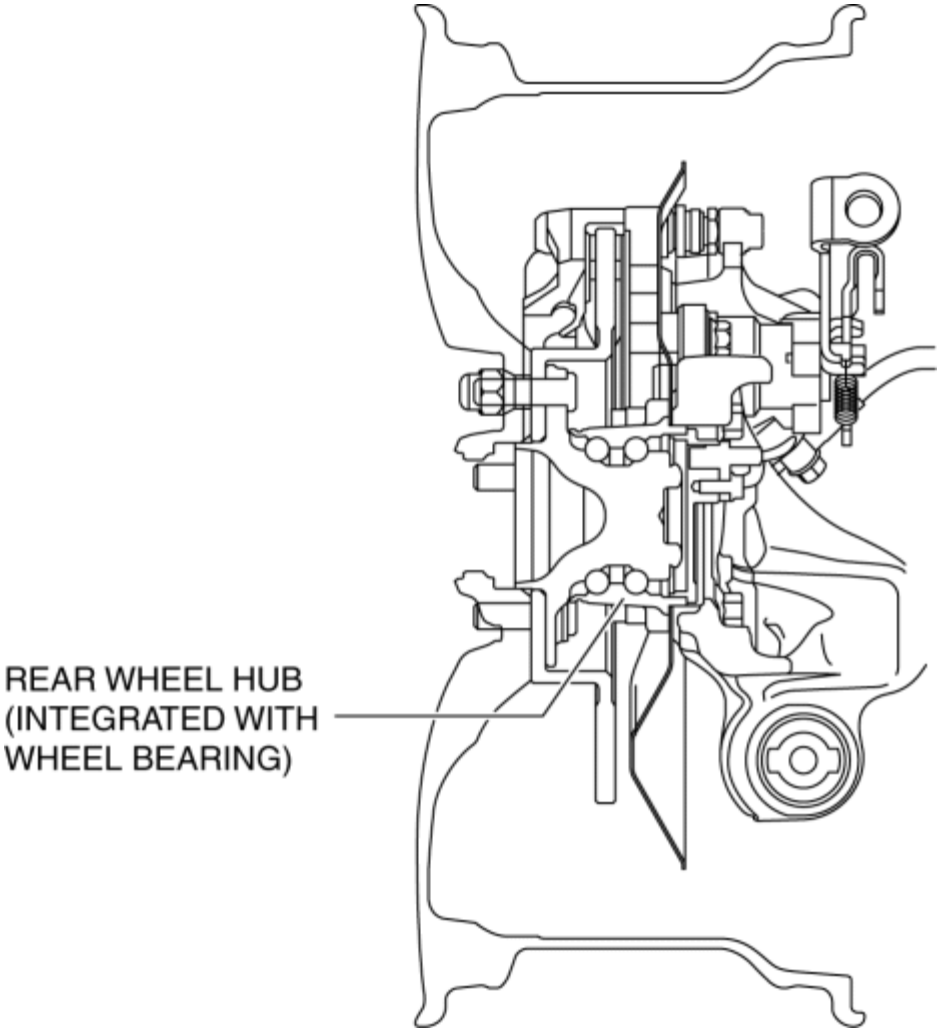

< Previous

2014 - Mazda3 - DriveLine/Axle

FRONT DRIVE SHAFT

Purpose, Function

- A bell joint has been adopted for the wheel-side constant velocity joint, reducing vibration and noise.
- A tripod joint has been adopted for the differential side constant velocity joint to reduce booming noise during high-speed driving and vibration when idling (ATX).
- A low noise and vibration double offset joint with low slide resistance has been adopted for the differential side of the constant velocity joint (MTX). Due to this booming resonance at high speed is reduced.
- An extremely durable plastic has been adopted for the wheel side boot.
- By integrating the drive shaft on the right side with the joint shaft, vibration and noise during driving, which occurred from the previous spline connection construction, has been reduced.

Structural View

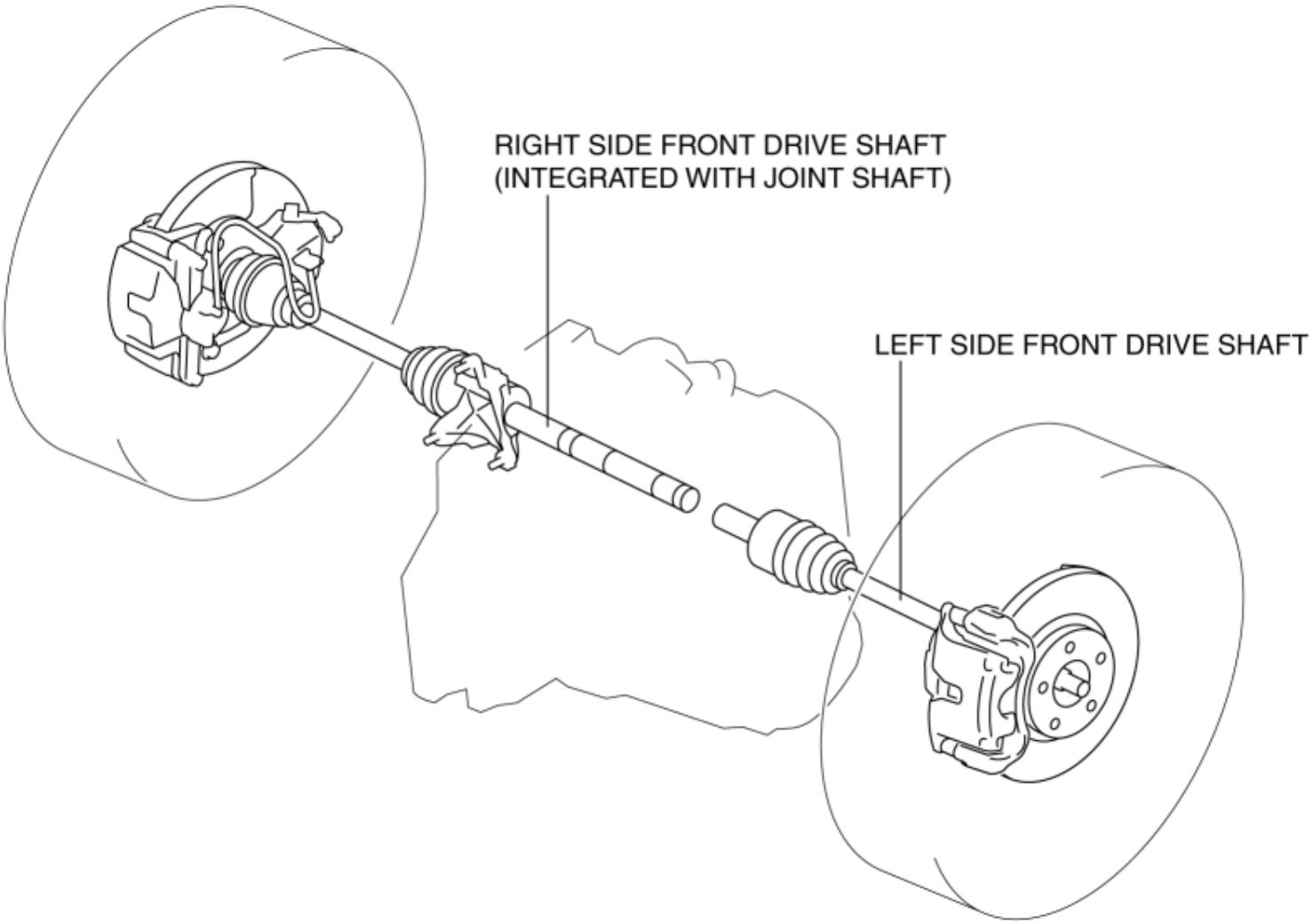
RIGHT SIDE FRONT DRIVE SHAFT
(INTEGRATED WITH JOINT SHAFT)
LEFT SIDE FRONT DRIVE SHAFT

< Previous

Next >

2014 - Mazda3 - Brakes

BRAKES

Abbreviations

AAS	Active Adaptive Shift
ABS	Antilock Brake System
ABDC	After Bottom Dead Center
ACC	Accessories
AFS	Adaptive Front Lighting System
ALC	Auto Level Control
ALR	Automatic Locking Retractor
ATDC	After Top Dead Center
ATF	Automatic Transaxle Fluid
ATX	Automatic Transaxle
AWD	All-Wheel Drive
BBDC	Before Bottom Dead Center
BDC	Bottom Dead Center
BSM	Blind Spot Monitoring
BTDC	Before Top Dead Center
CAN	Controller Area Network

CCM	Comprehensive Component Monitor
CV	Canister Vent
CM	Control Module
CMU	Connectivity master unit
CPU	Central Processing Unit
DC	Drive Cycle
DRL	Daytime Running Light
DSC	Dynamic Stability Control
EBD	Electronic Brakeforce Distribution
EEPROM	Electrically Erasable Programmable Read-Only Memory
EHPAS	Electro Hydraulic Power Assist Steering
ELR	Emergency Locking Retractor
EPS	Electric Power Steering
ESA	Electronic Spark Advance
FBCM	Front Body Control Module
FET	Field Effect Transistor
FOW	Forward Obstruction Warning
GPS	Global Positioning System
HBC	High Beam Control
HF/TEL	Hands-Free Telephone
HI	High
HLA	Hydraulic Lash Adjuster

HS	High Speed
HU	Hydraulic Unit
IDS	Integrated Diagnostic Software
IG	Ignition
INT	Intermittent
KOEO	Key On Engine Off
KOER	Key On Engine Running
LCD	Liquid Crystal Display
LDWS	Lane Departure Warning System
LED	Light Emitting Diode
LF	Left Front
LH	Left Hand
LO	Low
LR	Left Rear
M	Motor
MAX	Maximum
MIN	Minimum
MOS	Metal Oxide Semiconductor
MRCC	Mazda Radar Cruise Control
MS	Middle Speed
MTX	Manual Transaxle
OCV	Oil Control Valve

OFF	Switch Off
ON	Switch On
PAD	Passenger Air Bag Deactivation
PCV	Positive Crankcase Ventilation
PID	Parameter Identification
P/W CM	Power Window Control Module
PTC	Positive Temperature Coefficient
RBCM	Rear Body Control Module
RCTA	Rear Crossing Traffic Alert
REC	Recirculate
RF	Right Front
RH	Right Hand
RR	Right Rear
SAS	Sophisticated Air Bag Sensor
SST	Special Service Tool
SW	Switch
TAU	Tuner and Amp Unit
TCS	Traction Control System
TDC	Top Dead Center
TFT	Transaxle Fluid Temperature
TNS	Tail Number Side Lights
TPMS	Tire Pressure Monitoring System

USB	Universal Serial Bus
VENT	Ventilation
1GR	First Gear
2GR	Second Gear
2WD	2-Wheel Drive
3GR	Third Gear
4GR	Fourth Gear
4SD	4 Door Sedan
5GR	Fifth Gear
5HB	5 Door Hatchback
6GR	Sixth Gear

Features

Improved safety	• Intrusion minimizing brake pedal adopted • Antilock Brake System (ABS) adopted • Electronic Brakeforce Distribution (EBD) control adopted • Traction Control System (TCS) adopted • Dynamic Stability Control (DSC) adopted • Electrical brake assist control adopted • Hill Launch Assist (HLA) adopted • Tire Pressure Monitoring System (TPMS) adopted (vehicles with tire pressure monitoring system (TPMS)) • Smart City Brake Support (SCBS) adopted (vehicles with Smart City Brake Support (SCBS))
Improved braking force	• Large diameter front disc brakes adopted • Large diameter rear disc brakes adopted

	• Vacuum pump adopted
Improved serviceability	• Enhanced malfunction diagnosis system for use with Mazda Modular Diagnostic System (M-MDS) • Center lever type parking brake, adjustable from vehicle interior, adopted
Size and weight reduction	• Integrated construction of the Hydraulic Unit (HU) and Control Module (CM) adopted for the DSC HU/CM
Improved reliability	• Semi-conductor element type ABS wheel-speed sensor adopted • Magnetic encoder type ABS sensor rotor adopted • DSC HU/CM with built-in brake fluid pressure sensor

Specifications

Item			Specification
Brake pedal	Type		Suspended design
	Pedal lever ratio		2.7
	Max. stroke	(mm {in})	128.7 {5.067}
Master cylinder	Type		Tandem
	Cylinder bore	(mm {in})	20.64 {0.8126}
Front brake (disc)	Type		Ventilated disc
	Cylinder bore	(mm {in})	54 {2.1}
	Pad dimensions (area x thickness)		5,350 × 10 {8.293 × 0.39}
		(mm^2 x mm {in^2 x in})	
	Disc plate dimensions	(mm {in})	SKYACTIV-G 2.0: 280 × 25 {11.0 × 0.98} SKYACTIV-G 2.5: 295 × 25 {11.6 ×

			0.98}
Rear brake (disc)	Type		Solid disc
	Cylinder bore	(mm {in})	36 {1.4}
	Pad dimensions (area x thickness)		2,650 × 9.0 {4.108 × 0.35}
	(mm^2 x mm {in^2 x in})		
	Disc plate dimensions	(mm {in})	265 × 9.0 {10.4 × 0.35}
Power brake unit	Type		Vacuum multiplier, single diaphragm
	Outer diameter	(mm {in})	248.5 {9.783}
Rear wheel braking force control device	Type		Electronic Brakeforce Distribution (EBD)
Brake piping	Piping layout		X pattern
Parking brake	Type		Mechanical design, rear two-wheel braking
	Operating method (application/release)		Manually operated lever design
	Play adjustment method		Auto-adjusting
Brake fluid	Type		SAE J1703 or FMVSS116 DOT-3

Next >

2014 - Mazda3 - Brakes

ON-BOARD DIAGNOSTIC SYSTEM [DYNAMIC STABILITY CONTROL (DSC)]

OUTLINE

- The on-board diagnostic system consists of a malfunction detection system that detects malfunctions in input/output signals when the ignition is switched ON, a PID/data monitor function that reads out specified input/output signals, and an active command mode function that allows for override operation of output parts (such as solenoid valves).
- The data link connector 2 (DLC-2), which groups together all the connectors used for malfunction diagnosis and detecting/repair into a single location, has been adopted, thereby improving serviceability. Diagnosis is performed by connecting the Mazda modular diagnostic system (M-MDS) to the DLC-2.
- In addition to DTC read-out, the Mazda modular diagnostic system (M-MDS) is used to clear DTCs using the display screen of the diagnostic tester, and to access the PID/data monitor and active command modes functions, providing enhanced malfunction diagnosis and improved serviceability.

Block diagram

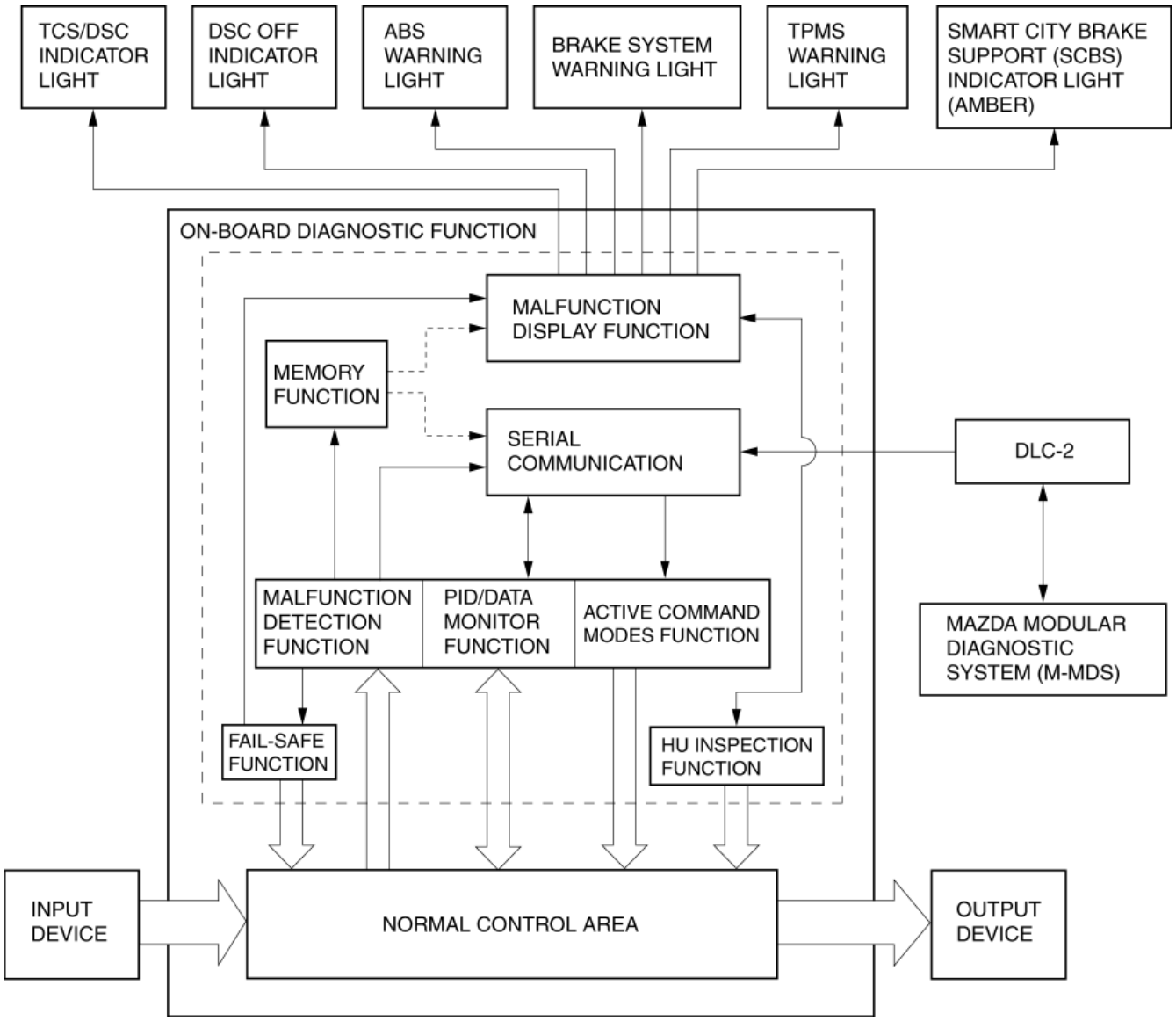

FUNCTION

Malfunction detection function

- The malfunction detection function detects and displays malfunctions in the input/output signal system of the DSC HU/CM when the ignition is switched ON.
- When the DSC HU/CM is activated, the following malfunction detection is performed.
  - The ABS warning light, brake system warning light, TCS/DSC indicator light, DSC OFF indicator light, and tire pressure monitoring system warning light illuminate for **approx. 3.0 s** when the ignition is switched ON to inspect for open circuits in the lights. At the same time, the input/output signals of each part are monitored for malfunction diagnosis. After starting to drive, the first time the vehicle speed is **approx. 10 km/h {6.2 mph} or more** the pump motor is operated and malfunction diagnosis is performed again. The input/output signals of each part are then constantly monitored and malfunctions are diagnosed.

    NOTE:

    - The sound of the pump motor operation can be heard.
- If the above malfunctions are detected, the corresponding lights are illuminated to alert the driver. DTCs can be output through the CAN_H and CAN_L of the DLC-2 using the external tester communication function. At the same time, malfunction detection results are sent to the memory and fail-safe functions.

Memory function

- The memory function stores DTCs of malfunctions in input/output signal systems. With this function, once a DTC is stored it is not cleared after the ignition has been switched off, even if the malfunctioning signal system has returned to normal.
- Since the DSC HU/CM has a built-in non-volatile memory, DTCs are not cleared even if the battery is removed. Therefore, it is necessary to clear the memory after performing repairs. Refer to the Workshop Manual for the DTC clearing procedure.

DTC 7-digit code definition

- When related systems or components have failed, the CM stores the DTC of the malfunctioning part in the CM memory, and allows for the retrieval of the stored data using the scanning tool when necessary. The DTCs are indicated using seven digits. Each digit indicates the following.

C 0 0 0 1 : 0 1

- Specify the area failure sub type

00: No sub type information
01: General electrical malfunction
07: Mechanical malfunctions
08: Bus signal/message malfunctions
09: Component malfunctions
11: Circuit short to ground
12: Circuit short to battery
13: Open circuit
15: Circuit short to battery or open circuit
16: Circuit voltage below threshold
17: Circuit voltage above threshold
1C: Circuit voltage out of range
28: Signal bias level out of range/zero adjustment malfunction
29: Signal signal invalid
2F: Signal erratic
35: Signal high time > maximum
41: General checksum malfunction
46: Calibration/parameter memory malfunction
47: Watchdog/safety μC malfunction
49: Internal electronic
51: Not programmed
52: Not activated
54: Missing calibration
55: Not configured
56-5F: ISO/SAE reserved
62: Signal compare malfunction
64: Signal plausibility malfunction
67: Signal incorrect after event
68: Event information
71: Actuator stuck
76: Wrong mounting position
85: Signal above allowable range
86: Signal invalid
88: Bus off
8F: Erratic

- Manufacturer controlled

- Indicates subgroup

Network Electrical (U code)	Body (B code)	Chassis (C code)
0: Network Electrical	Manufacturer controlled	Manufacturer controlled
1: Network communication		
2: Network communication		
3: Network software		
4: Network data		

- Indicates who was responsible for DTC definition

0: ISO/SAE controlled
1: Manufacturer controlled
2: There are ISO/SAE controlled just for powertrain, all others are manufacturer controlled.
3: For P3000 to P3399 is manufacturer controlled, all others are ISO/SAE controlled.

- Indicates DTC function

P: Powertrain
B: Body
C: Chassis
U: Network Electrical

Fail-safe function

- When the malfunction detection function determines a malfunction, the warning indicator light illuminates to alert the driver. At this time, the fail-safe function controls as indicated in the fail-safe function malfunction contents table.

WARNING:

- If EBD control is prohibited, the rear wheels could lock-up before the front wheels. If this occurs, the vehicle could yaw and become unstable. Therefore, always inspect the system immediately if EBD control is prohibited.

×: Applicable

DTC No.	ABS warning light	Brake system warning light (when parking brake is released)	TCS/DSC indicator light	DSC OFF indicator light	Tire pressure monitoring system warning light*1	Smart city brake support (SCBS) indicator light (amber)*2	Malfunction location	Fail-safe	Drive cycle	Self test type*3	Memory function

B10DF:46	Not illuminated	Not illuminated	Illuminated	Not illuminated	Not illuminated	Illuminated	DSC HU/CM (internal malfunction)	×	Not applicable	C, D	×
B11D4:08	Not illuminated	Not illuminated	Not illuminated	Not illuminated	Not illuminated	Illuminated	Laser sensor	×	Not applicable	C, D	×
C0001:01	Illuminated	Illuminated	Illuminated	Not illuminated	Not illuminated	Illuminated	DSC HU/CM internal malfunction (solenoid valve system)	×	Not applicable	C, D	×
C0002:01											
C0003:01											
C0004:01											
C0010:01											
C0011:01											
C0014:01											
C0015:01											
C0018:01											
C0019:01											
C001C:01											
C001D:01											
C0020:11	Illuminated	Not illuminated	Illuminated	Not illuminated	Not illuminated	Illuminated	Pump motor, motor relay	×	Not applicable	C, D	×
C0020:12											
C0020:13											
C0020:71											
C0023:62	Not illuminated	Not illuminated	Not illuminated	Not illuminated	Not illuminated	Illuminated	Brake switch	×	Not applicable	C, D	×
C0030:07	Illuminated	Not illuminated*4	Illuminated	Not illuminated	Flashes*5	Illuminated	LF ABS sensor rotor	×	Not applicable	C, D	×
C0031:07							LF ABS wheel-speed sensor/ABS sensor rotor				
C0031:11	Illuminated	Not illuminated*4	Illuminated	Not illuminated	Flashes*5	Illuminated	LF ABS wheel-speed sensor	×	Not applicable	C, D	×
C0031:15											
C0031:29	Illuminated	Not illuminated*4	Illuminated	Not illuminated	Flashes*5	Illuminated	LF ABS wheel-speed sensor/ABS sensor rotor	×	Not applicable	C, D	×
C0031:2F											
C0031:64											
C0033:07	Illuminated	Not illuminated*4	Illuminated	Not illuminated	Flashes*5	Illuminated	RF ABS sensor rotor	×	Not applicable	C, D	×
C0034:07							RF ABS wheel-speed sensor/ABS sensor rotor				

C0034:11 C0034:15	Illuminated	Not illuminated*4	Illuminated	Not illuminated	Flashes*5	Illuminated	RF ABS wheel-speed sensor	×	Not applicable	C, D	×
C0034:29 C0034:2F C0034:64	Illuminated	Not illuminated*4	Illuminated	Not illuminated	Flashes*5	Illuminated	RF ABS wheel-speed sensor/ABS sensor rotor	×	Not applicable	C, D	×
C0036:07 C0037:07	Illuminated	Not illuminated*4	Illuminated	Not illuminated	Flashes*5	Illuminated	LR ABS sensor rotor LR ABS wheel-speed sensor/ABS sensor rotor	×	Not applicable	C, D	×
C0037:11 C0037:15	Illuminated	Not illuminated*4	Illuminated	Not illuminated	Flashes*5	Illuminated	LR ABS wheel-speed sensor	×	Not applicable	C, D	×
C0037:29 C0037:2F C0037:64	Illuminated	Not illuminated*4	Illuminated	Not illuminated	Flashes*5	Illuminated	LR ABS wheel-speed sensor/ABS sensor rotor	×	Not applicable	C, D	×
C0039:07 C003A:07	Illuminated	Not illuminated*4	Illuminated	Not illuminated	Flashes*5	Illuminated	RR ABS sensor rotor RR ABS wheel-speed sensor/ABS sensor rotor	×	Not applicable	C, D	×
C003A:11 C003A:15	Illuminated	Not illuminated*4	Illuminated	Not illuminated	Flashes*5	Illuminated	RR ABS wheel-speed sensor	×	Not applicable	C, D	×
C003A:29 C003A:2F C003A:64	Illuminated	Not illuminated*4	Illuminated	Not illuminated	Flashes*5	Illuminated	RR ABS wheel-speed sensor/ABS sensor rotor	×	Not applicable	C, D	×
C0040:64	Not illuminated	Not illuminated	Illuminated	Not illuminated	Flashes*5	Illuminated	Brake switch	×	Not applicable	C, D	×
C0044:28 C0044:47 C0044:49 C0044:51	Not illuminated	Not illuminated	Illuminated	Not illuminated	Flashes*5	Illuminated	Brake fluid pressure sensor	×	Not applicable	C, D	×
C0044:54	Not illuminated	Not illuminated	Illuminated	Not illuminated	Flashes*5*6	Illuminated					
C0044:64 C0044:8F	Not illuminated	Not illuminated	Illuminated	Not illuminated	Flashes*5	Illuminated					
C0051:62 C0051:64	Not illuminated	Not illuminated	Illuminated	Not illuminated	Flashes*5	Illuminated	Steering angle sensor		Not		

C0051:67	Not illuminated	Not illuminated	Illuminated	Not illuminated	Not illuminated	Illuminated	DSC HU/CM system	×	applicable	C, D	×
C0051:85	Not illuminated	Not illuminated	Illuminated	Not illuminated	Flashes*5	Illuminated	Steering angle sensor				
C0061:28	Not illuminated	Not illuminated	Illuminated	Not illuminated	Flashes*5	Illuminated	SAS control module system	×	Not applicable	C, D	×
C0061:54	Not illuminated	Not illuminated	Illuminated	Not illuminated	Flashes*5*6	Illuminated	DSC HU/CM system (unperformed initialization procedure)	×	Not applicable	C, D	×
C0061:64	Not illuminated	Not illuminated	Illuminated	Not illuminated	Flashes*5	Illuminated	SAS control module system	×	Not applicable	C, D	×
C0062:28	Not illuminated	Not illuminated	Illuminated	Not illuminated	Not illuminated	Not illuminated					
C0062:54	Not illuminated	Not illuminated	Illuminated	Not illuminated	Not illuminated	Not illuminated	DSC HU/CM system (unperformed initialization procedure)	×	Not applicable	C, D	×
C0062:64	Not illuminated	Not illuminated	Illuminated	Not illuminated	Not illuminated	Not illuminated	SAS control module system	×	Not applicable	C, D	×
C0062:76	Not illuminated	Not illuminated	Illuminated	Not illuminated	Not illuminated	Not illuminated	SAS control module system	×	Not applicable	C, D	×
C0063:28	Not illuminated	Not illuminated	Illuminated	Not illuminated	Flashes*5	Illuminated	SAS control module system	×	Not applicable	C, D	×
C0063:54	Not illuminated	Not illuminated	Illuminated	Not illuminated	Flashes*5*6	Illuminated	DSC HU/CM system (unperformed initialization procedure)	×	Not applicable	C, D	×
C0063:64	Not illuminated	Not illuminated	Illuminated	Not illuminated	Flashes*5	Illuminated	SAS control module system	×	Not applicable	C, D	×
C006B:00	Not illuminated	Not illuminated	Illuminated	Not illuminated	Flashes*5	Illuminated	TCS/DSC control system	×	Not applicable	C, D	×
C0072:68			Not illuminated		Not illuminated	Not illuminated					
C1031:35	Not illuminated	Not illuminated	Not illuminated	Not illuminated	Flashes*5	Not illuminated	Tire pressure monitoring system (TPMS) set switch	×	Not applicable	C, D	×
C1031:41	Not illuminated	Not illuminated	Not illuminated	Not illuminated	Flashes*5	Not illuminated	Tire pressure monitoring system (TPMS) system	×	Not applicable	C, D	×
C1031:54											
C1031:68											
C1109:64	Not illuminated	Not illuminated	Not illuminated	Not illuminated	Not illuminated	Not illuminated	DSC OFF switch	-	Not applicable	C, D	×
C1A08:1C	Not illuminated	Not illuminated	Illuminated	Not illuminated	Flashes*5	Illuminated	DSC HU/CM (internal malfunction)	×	Not applicable	C, D	×
P0942:46	Not illuminated	Not illuminated	Illuminated	Not illuminated	Flashes*5	Illuminated	DSC unit mismatched installation	×	Not applicable	C, D	×
P0942:49	Illuminated*7	Illuminated*7	Illuminated	Not illuminated	Flashes*5	Illuminated					

U0001:88	Illuminated	Not illuminated	Illuminated	Not illuminated	Flashes*5	Illuminated	CAN line	×	Not applicable	C, D	×
U0100:00	Illuminated*7	Not illuminated	Illuminated*7	Not illuminated	Flashes*5*6	Illuminated*7					
U0101:00	Not illuminated	Not illuminated	Illuminated	Not illuminated	Flashes*5	Illuminated					
U0131:00	Not illuminated	Not illuminated	Illuminated	Not illuminated	Flashes*5	Illuminated					
U0151:00	Not illuminated	Not illuminated	Illuminated	Not illuminated	Flashes*5*6	Illuminated*7					
U0155:00	Illuminated*7	Not illuminated	Illuminated*7	Not illuminated	Flashes*5*6	Illuminated*7					
U0235:00	Not illuminated	Not illuminated	Not illuminated	Not illuminated	Not illuminated	Illuminated					
U0301:09	Not illuminated	Not illuminated	Not illuminated	Not illuminated	Not illuminated	Not illuminated	Abnormal message from PCM	×	Not applicable	C, D	×
U0401:00	Not illuminated	Not illuminated	Illuminated*7	Not illuminated	Flashes*5*6	Illuminated*7					
U0402:00	Not illuminated	Not illuminated	Illuminated	Not illuminated	Flashes*5	Illuminated	Abnormal message from transmission/transaxle	×	Not applicable	C, D	×
U0420:00	Not illuminated	Not illuminated	Illuminated	Not illuminated	Flashes*5	Illuminated	Abnormal message from EPS CM	×	Not applicable	C, D	×
U0423:00	Not illuminated	Not illuminated	Not illuminated	Not illuminated	Flashes*5	Illuminated	Abnormal message from instrument cluster	×	Not applicable	C, D	×
U0433:00	Not illuminated	Not illuminated	Not illuminated	Not illuminated	Not illuminated	Illuminated	Abnormal message from laser sensor	×	Not applicable	C, D	×
U0443:00	Not illuminated	Not illuminated	Not illuminated	Not illuminated	Not illuminated	Illuminated	Abnormal message from instrument cluster	×	Not applicable	C, D	×
U0452:86	Not illuminated	Not illuminated	Illuminated	Not illuminated	Flashes*5*6	Illuminated*7	Abnormal message from SAS control module	×	Not applicable	C, D	×
U2007:46	Not illuminated	Not illuminated	Illuminated	Not illuminated	Not illuminated	Illuminated	DSC HU/CM (internal malfunction)	×	Not applicable	C, D	×
U2007:62	Illuminated	Illuminated	Illuminated	Not illuminated	Not illuminated	Illuminated	DSC HU/CM (internal malfunction)	×	Not applicable	C, D	×
U2101:00	Illuminated	Not illuminated	Illuminated	Not illuminated	Flashes*5	Illuminated	Configuration data not recorded	×	Not applicable	C, D	×
U2300:52											
U2300:54											
U2300:55											
U2300:56											
U2300:64											

U3000:49	Illuminated	Illuminated*7	Illuminated	Not illuminated	Flashes*5*6	Illuminated	DSC HU/CM (internal malfunction)	×	Not applicable	C, D	×
U3003:08	Not illuminated	Not illuminated	Not illuminated	Not illuminated	Not illuminated	Not illuminated	Power supply system	-	Not applicable	C, D	×
U3003:16	Illuminated	Not illuminated*8	Illuminated	Not illuminated	Flashes*5	Illuminated		×			
		Illuminated*9*10									
U3003:17	Illuminated	Illuminated	Illuminated	Not illuminated	Flashes*5	Illuminated					

*1 **Vehicles with TPMS**

*2 **Vehicles with smart city brake support (SCBS)**

*3 **C: CMDTC self-test, D: ODDTC self-test**

*4 **Illuminates when two wheels or more have a malfunction.**

*5 **Tire pressure monitoring system warning light illuminates after flashes.**

*6 **Not illuminated/flashed depending on malfunction content.**

*7 **Not illuminated depending on malfunction content.**

*8 **When power supply voltage is 7.9—9.6 V for 700 ms or more.**

*9 **When power supply voltage is 6.0—7.9 V for 780 ms or more.**

*10 **When power supply voltage is less than 6 V for 50 ms or more.**

Fail-safe Function Malfunction Contents

DTC No.	Fail-safe function								
	Control status								
	ABS control	EBD control	TCS Control		DSC Control	Brake assist control	Hill launch assist (HLA)	Tire pressure monitoring system (TPMS)*1	Smart city brake support (SCBS)*2
			Brake control	Engine control					
B10DF:46	Control enabled	Control enabled	Control disabled		Control disabled	Control disabled	Control disabled	Control enabled	Control disabled
B11D4:08	Control enabled	Control enabled	Control enabled		Control enabled	Control enabled	Control enabled	Control enabled	Control disabled
C0001:01	Control disabled	Control disabled	Control disabled		Control disabled	Control disabled	Control disabled	Control enabled	Control disabled
C0002:01									
C0003:01									
C0004:01									
C0010:01									
C0011:01									
C0014:01									
C0015:01									

C0018:01								
C0019:01								
C001C:01								
C001D:01								
C0020:11	Control disabled	Control enabled	Control disabled	Control disabled	Control disabled	Control disabled	Control enabled	Control disabled
C0020:12								
C0020:13								
C0020:71								
C0023:62	Control enabled	Control enabled	Control enabled	Control enabled	Control enabled	Control enabled	Control enabled	Control disabled
C0030:07	Control disabled	Control enabled *3	Control disabled	Control disabled	Control disabled	Control disabled	Control disabled	Control disabled
C0031:07								
C0031:11								
C0031:15								
C0031:29								
C0031:2F								
C0031:64								
C0033:07	Control disabled	Control enabled *3	Control disabled	Control disabled	Control disabled	Control disabled	Control disabled	Control disabled
C0034:07								
C0034:11								
C0034:15								
C0034:29								
C0034:2F								
C0034:64								
C0036:07	Control disabled	Control enabled *3	Control disabled	Control disabled	Control disabled	Control disabled	Control disabled	Control disabled
C0037:07								
C0037:11								
C0037:15								
C0037:29								
C0037:2F								
C0037:64								
C0039:07								

C003A:07	Control disabled	Control enabled *3	Control disabled	Control disabled	Control disabled	Control disabled	Control disabled	Control disabled
C003A:11								
C003A:15								
C003A:29								
C003A:2F								
C003A:64								
C0040:64	Control enabled	Control enabled	Control enabled	Control enabled	Control disabled	Control disabled	Control disabled	Control disabled
C0044:28	Control enabled	Control enabled	Control disabled	Control disabled	Control disabled	Control disabled	Control disabled	Control disabled
C0044:47								
C0044:49								
C0044:51								
C0044:54								
C0044:64								
C0044:8F								
C0051:62	Control enabled	Control enabled	Control disabled	Control disabled	Control enabled	Control enabled	Control disabled	Control disabled
C0051:64								
C0051:67	Control enabled	Control enabled	Control disabled	Control disabled	Control enabled	Control enabled	Control enabled	Control disabled
C0051:85	Control enabled	Control enabled	Control disabled	Control disabled	Control enabled	Control enabled	Control disabled	Control disabled
C0061:28	Control enabled	Control enabled	Control disabled	Control disabled	Control enabled	Control enabled	Control disabled	Control disabled
C0061:54								
C0061:64								
C0062:28	Control enabled	Control enabled	Control enabled	Control enabled	Control enabled	Control disabled	Control enabled	Control enabled
C0062:54								
C0062:64								
C0062:76								
C0063:28	Control enabled	Control enabled	Control disabled	Control disabled	Control enabled	Control enabled	Control disabled	Control disabled
C0063:54								
C0063:64								
C006B:00	Control enabled	Control enabled	Control disabled	Control disabled	Control enabled	Control enabled	Control disabled	Control disabled
C0072:68	Control	Control	Control	Control	Control	Control	Control enabled	Control enabled	Control enabled

	enabled	enabled	disabled	enabled	enabled	enabled		
C1031:35 C1031:41 C1031:54 C1031:68	Control enabled						Control disabled	Control enabled
C1109:64	Control enabled							
C1A08:1C	Control enabled	Control enabled	Control disabled		Control disabled	Control disabled	Control disabled	Control disabled
P0942:46	Control enabled	Control enabled	Control disabled		Control disabled	Control disabled	Control disabled	Control disabled
P0942:49	Control disabled*4	Control disabled*4	Control disabled		Control disabled	Control disabled	Control disabled	Control disabled
U0001:88	Control disabled	Control enabled	Control disabled		Control disabled	Control disabled	Control disabled	Control disabled
U0100:00	Control disabled*4	Control enabled	Control disabled*4		Control disabled*4	Control disabled*4	Control disabled*4	Control disabled*4
U0101:00	Control enabled	Control enabled	Control disabled		Control disabled	Control enabled	Control disabled*4	Control disabled	Control disabled
U0131:00	Control enabled	Control enabled	Control disabled		Control disabled	Control enabled	Control enabled	Control disabled	Control disabled
U0151:00	Control enabled	Control enabled	Control disabled*4		Control disabled*4	Control disabled*4	Control disabled*4	Control disabled*4	Control disabled*4
U0155:00	Control disabled*4	Control enabled	Control disabled*4		Control disabled*4	Control disabled*4	Control disabled*4	Control disabled*4	Control disabled*4
U0235:00	Control enabled	Control enabled	Control enabled		Control enabled	Control enabled	Control enabled	Control enabled	Control disabled
U0301:09	Control enabled							
U0401:00	Control enabled	Control enabled	Control disabled*4		Control disabled*4	Control enabled	Control disabled*4	Control disabled*4	Control disabled*4
U0402:00	Control enabled	Control enabled	Control disabled		Control disabled	Control enabled	Control disabled	Control disabled	Control disabled
U0420:00	Control enabled	Control enabled	Control disabled		Control disabled	Control enabled	Control enabled	Control disabled	Control disabled
U0423:00	Control enabled	Control enabled	Control enabled		Control enabled	Control enabled	Control enabled	Control disabled	Control disabled
U0433:00	Control enabled	Control enabled	Control enabled		Control enabled	Control enabled	Control enabled	Control enabled	Control disabled
U0443:00	Control enabled	Control enabled	Control enabled		Control enabled	Control enabled	Control enabled	Control enabled	Control disabled
U0452:86	Control enabled	Control enabled	Control disabled*4		Control disabled*4	Control enabled	Control disabled*4	Control disabled*4	Control disabled*4
	Control	Control			Control	Control			

U2007:46	enabled	enabled	Control disabled	disabled	disabled*4	Control disabled	Control enabled	Control disabled
U2007:62	Control disabled	Control disabled	Control disabled	Control disabled	Control disabled	Control disabled	Control enabled	Control disabled
U2101:00 U2300:52 U2300:54 U2300:55 U2300:56 U2300:64	Control disabled	Control enabled	Control disabled	Control disabled	Control disabled	Control disabled	Control disabled	Control disabled
U3000:49	Control disabled	Control disabled*4	Control disabled	Control disabled	Control disabled	Control disabled	Control disabled*4	Control disabled
U3003:08	Control enabled							
U3003:16	Control disabled	Control enabled*5 Control disabled*6*7	Control disabled	Control disabled	Control disabled	Control disabled	Control disabled	Control disabled
U3003:17	Control disabled	Control disabled	Control disabled	Control disabled	Control disabled	Control disabled	Control disabled	Control disabled

*1 **Vehicles with TPMS**

*2 **Vehicles with smart city brake support (SCBS)**

*3 **Control disabled when two wheels or more have a malfunction.**

*4 **Enabled depending on malfunction content.**

*5 **When power supply voltage is 7.9—9.6 V for 700 ms or more.**

*6 **When power supply voltage is 6.0—7.9 V for 780 ms or more.**

*7 **When power supply voltage is less than 6 V for 50 ms or more.**

Status byte for DTC

- The status byte is the two-digit code (two digits after hyphen (-)) after the DTC.

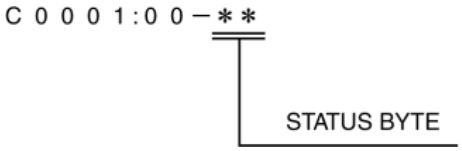

- The status byte is a code which indicates the pending code, current/past malfunction status, or warning illumination status.
- The status byte can be read by performing a CMDTC self test using the Mazda Modular Diagnostic System (M-MDS).
- For details on the status byte, refer to the explanation on the Mazda Modular Diagnostic System (M-MDS) when reading the DTC.

Snapshot data

NOTE:

- The EPS CM stores the following two types of information when a DTC is detected and displays snap shot data in the M-MDS.

- Vehicle information detected by EPS CM
- Vehicle information detected by instrument cluster and received by start stop unit via CAN signal

- The snapshot data stores the currently detected DTC data

Snapshot data item	Unit	Data contents	Data read/use method	Corresponding data monitor items
AAT	°C, °F	Ambient air temperature	Not applicable.	Not applicable.
ABS	Inactive/ Active	Antilock braking system	Not applicable.	Not applicable.
APP_STATUS	Accelerator Pedal Off/ Under 20%/ Over 20%/ FAIL	Accelerator pedal position	Not applicable.	Not applicable.
AYC	Inactive/ Active	Active yaw control	Not applicable.	Not applicable.
BRK_F_P_R	Pa, psi	Brake fluid line hydraulic pressure (Raw Value)	BRK_F_P_R	BRK_F_P_R
BTCS	Inactive/ Active	Brake traction control system	Not applicable.	Not applicable.
CFG_STATUS	Config Complete/ Not Configured/ Config Error	Instrument cluster configuration status	Not applicable.	Not applicable.
ECT_STATUS	Under 0 degrees C/ 0 - Under 80 degrees C/ Over 80 degrees C/ FAIL	Engine coolant temperature status	Not applicable.	Not applicable.
EDC	Inactive/ Active	Engine drag control	Not applicable.	Not applicable.
IC_VPWR	V	Instrument cluster power supply	• The DSC HU/CM constantly receives the power supply voltage value of the instrument cluster sent via CAN signal from the instrument cluster. • If a DTC is detected, the DSC HU/CM records the power supply voltage of the instrument cluster when the DTC was detected, and it is displayed in the M-MDS.	VRWR*2
IG-ON_TIMER	hh:mm:ss*1	Elapsed time since ignition was switched ON **NOTE:**	• The DSC HU/CM constantly receives the elapsed time since the ignition was switched ON sent via CAN signal from the instrument cluster.	Not

		• The instrument cluster records the elapsed time since the ignition was switched ON.	If a DTC is detected, the DSC HU/CM records the elapsed time since the ignition was switched ON when the DTC was detected, and it is displayed in the M-MDS.	applicable.
LAT_ACCL_R	G	Lateral acceleration (Raw Value)	LAT_ACCL_R	LAT_ACCL_R
LON_ACCL_R	G	Longitudinal acceleration (Raw Value)	LON_ACCL_R	LON_ACCL_R
PMP_MT	Off/On	Pump motor	PMP_MT	PMP_MT
PWR_MODE_KEY	Key Out/Key Recently Out (Position 0)/Accessory (Position 1)/Post Ignition (Position 2)/Ignition On (Position 2)/Running (Position 2)/Running - Starting	• Key Out: Ignition switched off • Key Recently Out (Position 0): Elapsed time **within 3 s** since ignition was switched off • Accessory (Position 1): Ignition is switched to ACC • Post Ignition (Position 2): Elapsed time **within 3 s** since ignition was switched ON • Ignition On (Position 2): Ignition switched ON (engine off) • Running (Position 2): Ignition switched ON (engine on) • Running - Starting: Cranking condition	• The DSC HU/CM constantly receives the ignition switch status sent via CAN signal from the instrument cluster. • If a DTC is detected, the DSC HU/CM records the ignition switch status when the DTC was detected, and it is displayed in the M-MDS.	Not applicable.
RPM_STATUS	Engine Stop/ Under 1500rpm/ Over 1500rpm/ FAIL	Engine RPM status	• The DSC HU/CM constantly receives the ignition switch status sent via CAN signal from the instrument cluster. • If a DTC is detected, the DSC HU/CM records the ignition switch status when the DTC was detected, and it is displayed in the M-MDS.	TACHOMTR*2
SHIFT_STATUS	P/N D/ R/ FAIL	Shift position status	• The DSC HU/CM constantly receives the selector lever position sent via CAN signal from the instrument cluster. • If a DTC is detected, the DSC HU/CM records the selector lever position when the DTC was detected, and it is displayed in the M-MDS.	Not applicable.
STR_ANG_C	°	Steering wheel angle (Calculated Value)	STR_ANG_C	STR_ANG_C
TCS	Inactive/ Active	Traction control system	Not applicable.	Not applicable.
			The distance traveled when the DSC HU/CM detected a DTC can be calculated by performing the following procedure.	

TOTAL_DIST	km, ft, mi	Accumulated total traveled distance from completion of vehicle until DSC HU/CM detects DTC (Odometer value in instrument cluster)	• Verify the odometer value in the instrument cluster. • Verify the snap shot data item TOTAL_DIST. • Subtract 2 from 1.	Not applicable.
TOTAL_TIME	hh:mm:ss*1	Accumulated total elapsed time since vehicle completion until DSC HU/CM detects a DTC **NOTE:** • When the ROOM fuse is removed, and the ignition is switched off, the time is not included in the elapsed time.	The elapsed time when the DSC HU/CM detected a DTC can be calculated by performing the following procedure. • Verify the PID item TOTAL_TIME of the instrument cluster. • Verify the snap shot data item TOTAL_TIME. • Subtract 2 from 1.	Not applicable.
VPWR	V	Power supply	VPWR_B_SOL	VPWR_B_SOL
VSPD	KPH, MPH	Vehicle speed	VSPD	VSPD
VSPD_STATUS	Stop/ 0 - 10km/h/ Over 10km/h/ FAIL	When a DTC is detected, the DSC HU/CM receives the vehicle speed being detected by the instrument cluster via CAN signals and displays it in the M-MDS.	• The DSC HU/CM constantly receives the vehicle speed sent via CAN signal from the instrument cluster. • If a DTC is detected, the DSC HU/CM records the vehicle speed when the DTC was detected, and it is displayed in the M-MDS.	SPEEDOMTR*2
YAW_RATE_R	°/S	Yaw Rate (Raw Value)	YAW_RATE_R	YAW_RATE_R

*1 **Fractions of seconds may be indicated after the decimal point.**

*2 **Instrument cluster PID.**

PID/data monitor function

- The PID/data monitor function is used for optionally selecting input/output signal monitor items preset in the DSC HU/CM and reading them out in real-time.

PID/data monitor table

Mazda Modular Diagnostic System (M-MDS) display	Data contents	Unit/Operation (Mazda Modular Diagnostic System (M-MDS) display)
BRAKE_SW	Brake switch signal	Off/On
BRK_F_P_C	Brake fluid pressure sensor signal (calculated value)	Pa, psi
BRK_F_P_R	Brake fluid pressure sensor signal (raw value)	
DDS_MODE	Deflation detection system mode	Not_Learned/Learning/Learned
DSC_OFF_SW	DSC OFF switch condition	Off/On
DSC_ST	DSC system status	Off/On
LAT_ACCL_C	lateral-G value (calculated Value)	G
LAT_ACCL_R	lateral-G value (raw Value)	

LON_ACCL_C	longitudinal-G value (calculated Value)	G
LON_ACCL_R	longitudinal-G value (raw Value)	
P_BRAKE_SW	Parking brake switch signal	Off/On
PMP_MT	Pump motor condition	Off/On
PMP_MT_SP	Pump motor supply condition	
R_GEAR_SW	Shift/selector lever at R position signal	Off/On
STR_ANG_C	Steering wheel angle (Calculated Value)	°
STR_ANG_R	Steering wheel angle (Raw Value)	
TPMS_TYPE	TPMS type	No_DDS/DDS+TOM_EU/DDS+TOM_US
V_INLET_LF	LF inlet solenoid valve condition	Off/On
V_INLET_LR	LR inlet solenoid valve condition	
V_INLET_RF	RF inlet solenoid valve condition	
V_INLET_RR	RR inlet solenoid valve condition	
V_OUTLET_LF	LF outlet solenoid valve condition	
V_OUTLET_LR	LR outlet solenoid valve condition	
V_OUTLET_RF	RF outlet solenoid valve condition	
V_OUTLET_RR	RR outlet solenoid valve condition	
V_STB_LF/RR	Stability control solenoid valve condition (LF/RR)	Off/On
V_STB_RF/LR	Stability control solenoid valve condition (RF/LR)	
V_TRC_LF/RR	Traction control solenoid valve condition (LF/RR)	Off/On
V_TRC_RF/LR	Traction control solenoid valve condition (RF/LR)	
VPWR_B_SOL	Module supply voltage	V
VSPD	Vehicle speed	KPH, MPH
WSPD_SEN_LF	LF ABS wheel-speed sensor signal	KPH, MPH
WSPD_SEN_LR	LR ABS wheel-speed sensor signal	
WSPD_SEN_RF	RF ABS wheel-speed sensor signal	
WSPD_SEN_RR	RR ABS wheel-speed sensor signal	
YAW_RATE_C	Yaw rate value (calculated Value)	°/s
YAW_RATE_R	Yaw rate value (raw Value)	

Active command modes function

- The active command modes function is used for optionally selecting simulation items of input/output parts preset in the DSC HU/CM, and to operate them regardless of CM control.
- To protect the hydraulic unit interior, operate output related parts for only **2 s or less** when using the active command modes function.

Active command mode table

Command name	Output part	Operation	Operating condition
PMP_MT_SP	Pump motor	Off/On	Switch the ignition ON
V_INLET_LF	LF inlet solenoid valve		
V_INLET_LR	LR inlet solenoid valve		
V_INLET_RF	RF inlet solenoid valve		
V_INLET_RR	RR inlet solenoid valve		
V_OUTLET_LF	LF outlet solenoid valve		
V_OUTLET_LR	LR outlet solenoid valve		
V_OUTLET_RF	RF outlet solenoid valve		
V_OUTLET_RR	RR outlet solenoid valve		
V_STB_LF/RR	LF/RR stability control solenoid valve	Off/On	Switch the ignition ON
V_STB_RF/LR	RF/LR stability control solenoid valve		
V_TRC_LF/RR	LF/RR linear control solenoid valve	Off/On	Switch the ignition ON
V_TRC_RF/LR	RF/LR linear control solenoid valve		

External tester communication function

- The external tester communication function enables communication of diagnostic data (DTC read-outs, input/output signal read-outs, operation of input/output parts) between the DSC HU/CM and an external tester.

Connections/communication contents

	External tester	
	Mazda Modular Diagnostic System (M-MDS)	
	Connection	Communication method
On-board diagnostic (malfunction detection) function	Input/output: CAN_H (HS), CAN_L (HS) terminals	Serial communication
PID/data monitor function	Input/output: CAN_H (HS), CAN_L (HS) terminals	Serial communication
Active command modes function	Input/output: CAN_H (HS), CAN_L (HS) terminals	Serial communication

Serial communication

- Serial communication (two-way communication) allows for multiple data to be sent and received instantly along the same line.
- By connecting the Mazda Modular Diagnostic System (M-MDS) to the DLC-2, diagnostic data can be sent and received between the Mazda Modular Diagnostic System (M-MDS) and the DSC HU/CM using the CAN_H and CAN_L terminals (within the DLC-2).
- The DSC HU/CM receives the command signals of the malfunction detection function, PID/data monitor function, and the active command modes function based on the Mazda Modular Diagnostic System (M-MDS), and sends DTCs and data regarding the operating condition

and status of each input/output part to the Mazda Modular Diagnostic System (M-MDS).

Diagnostic function name	Signal received	Signal sent
Malfunction detection function	DTC verification signal	DTC
PID/data monitor function	Command signal to read selected monitor item	Monitored data for requested monitor item
Active command modes function	Operation command signal for selected active command modes item	Output part drive signal

2014 - Mazda3 - Brakes

DLC-2 [DYNAMIC STABILITY CONTROL (DSC)]

OUTLINE

- A connector (DLC-2) conforming to International Organization for Standardization (ISO) standards has been added.

CONSTRUCTION

- Shape and terminal arrangement as stipulated by the ISO 15031-3 (SAE J1962) international standard has been adopted for this connector. The 16-pin connector consists of a CAN_H (HS) terminal, CAN_L (HS) terminal, CAN_H (MS) terminal, CAN_L (MS) terminal, GND1 terminal, GND2 terminal, and B+ terminal.

DLC-2

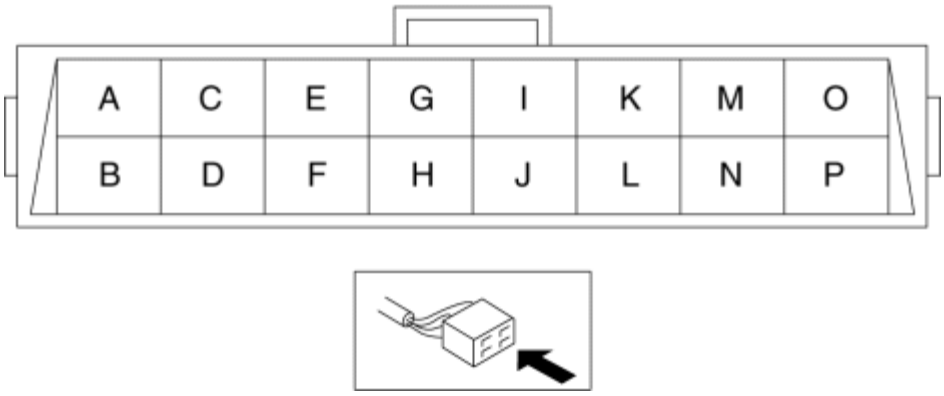

Terminal	Function
A	Battery power supply terminal
B	-
C	-
D	-
E	Serial communication Lo terminal (HS)

F	Serial communication Hi terminal (HS)
G	-
H	Serial communication ground terminal
I	-
J	Body ground terminal
K	Serial communication Lo terminal (MS)
L	Serial communication Hi terminal (MS)
N	-
M	-
O	-
P	-

2014 - Mazda3 - Brakes

ON-BOARD DIAGNOSTIC SYSTEM [LASER SENSOR]

OUTLINE

- The on-board diagnostic system consists of a malfunction detection system that detects malfunctions in input/output signals when the ignition is switched ON, a PID/data monitor function that reads out specified input/output signals, and an active command mode function that allows for override operation of output parts (such as solenoid valves).
- The Data Link Connector 2 (DLC-2), which groups together all the connectors used for malfunction diagnosis and detecting/repair into a single location, has been adopted, thereby improving serviceability. Diagnosis is performed by connecting the Mazda Modular Diagnostic System (M-MDS) to the DLC-2.
- In addition to DTC read-out, the Mazda Modular Diagnostic System (M-MDS) is used to clear DTCs using the display screen of the diagnostic tester, and to access the PID/data monitor and active command modes functions, providing enhanced malfunction diagnosis and improved serviceability.

Block diagram

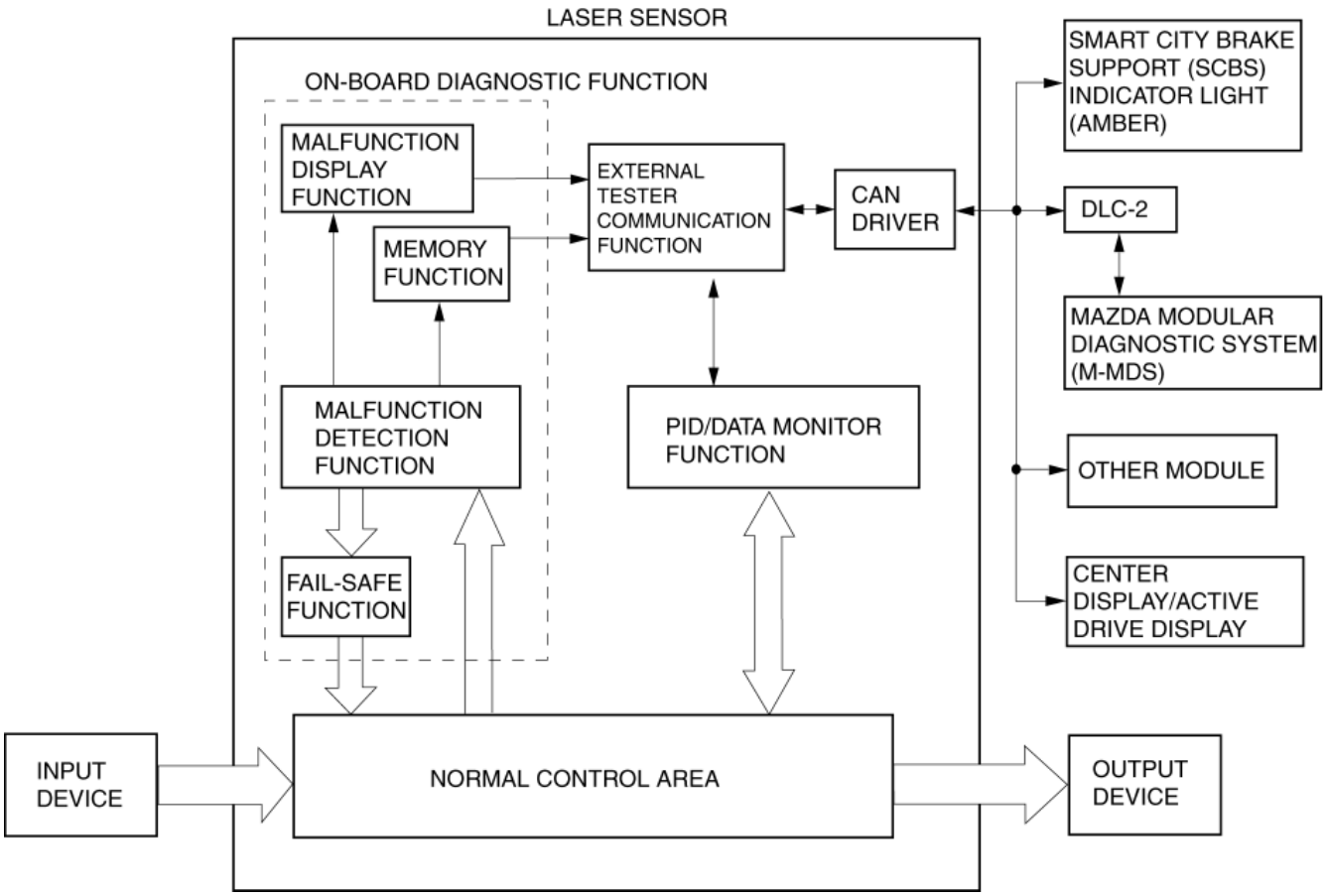

FUNCTION

Malfunction detection function

- The malfunction detection function detects and displays malfunctions in the input/output signal system of the laser sensor when the ignition is switched ON.
- If the laser sensor malfunction is detected, the Smart City Brake Support (SCBS) indicator light (amber) is illuminated. DTCs can be output through the CAN_H and CAN_L of the DLC-2 using the external tester communication function. At the same time, malfunction detection results are sent to the memory and fail-safe functions.

Memory function

- The memory function stores DTCs of malfunctions in input/output signal systems. With this function, once a DTC is stored it is not cleared after the ignition has been switched off, even if the malfunctioning signal system has returned to normal.
- Since the laser sensor has a built-in non-volatile memory, DTCs are not cleared even if the battery is removed. Therefore, it is necessary to clear the memory after performing repairs. Refer to the Workshop Manual for the DTC clearing procedure.

DTC 7-digit code definition

- When related systems or components have failed, the sensor stores the DTC of the malfunctioning part in the sensor memory, and allows for the retrieval of the stored data using the scanning tool when necessary. The DTCs are indicated using seven digits. Each digit indicates the following.

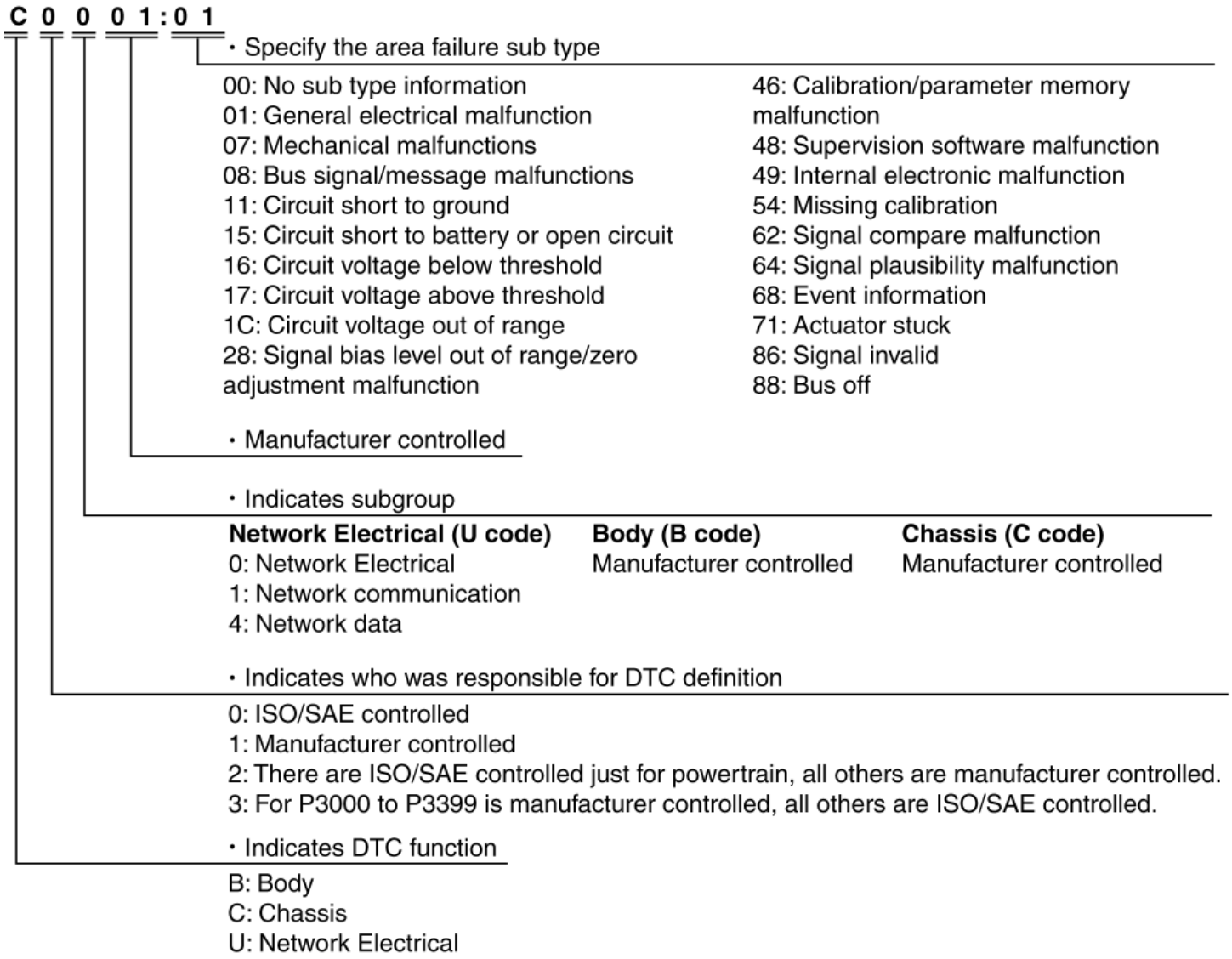

Fail-safe function

- When the malfunction detection function determines a malfunction, the Smart City Brake Support (SCBS) indicator light (amber) illuminates to alert the driver. At this time, the Smart City Brake Support (SCBS) is inhibited.

NOTE:

- A warning message in the center display is displayed with the Smart City Brake Support (SCBS) indicator light (amber) turned on or flashed. For the message content and verification method, refer to the CENTER DISPLAY.

DTC table ×: Applicable -: Not applicable

DTC No.	Smart City Brake Support (SCBS) indicator light (amber)	Fail-safe function	Malfunction location	Drive cycle	Self test type*1	Memory function

U0001:00	Illuminated	Smart City Brake Support (SCBS) control disabled	CAN line	-	C	×
U0100:00						
U0121:00						
U0131:00						
U0155:00						
U0401:68	Illuminated	Smart City Brake Support (SCBS) control disabled	Abnormal message from PCM	-	C	×
U0415:68	Illuminated	Smart City Brake Support (SCBS) control disabled	Abnormal message from DSC HU/CM	-	C	×
U0420:68	Illuminated	Smart City Brake Support (SCBS) control disabled	Abnormal message from EPS CM	-	C	×
U0423:68	Illuminated	Smart City Brake Support (SCBS) control disabled	Abnormal message from instrument cluster	-	C	×
U1A14:49	Illuminated	Smart City Brake Support (SCBS) control disabled	Laser sensor	-	C	×
U2300:55	Illuminated	Smart City Brake Support (SCBS) control disabled	Configuration data not recorded or data error	-	C	×
U2300:56		Smart City Brake Support (SCBS) control disabled		-	C	×
U3000:00	Illuminated	Smart City Brake Support (SCBS) control disabled	Laser sensor (internal malfunction)	-	C	×
U3000:64		Smart City Brake Support (SCBS) control disabled		-	C	×
U3000:66	Illuminated	Smart City Brake Support (SCBS) control disabled	Laser sensor	-	C	×

*1
C: CMDTC self-test

Status byte for DTC

- The status byte is the two-digit code (two digits after hyphen (-)) after the DTC.

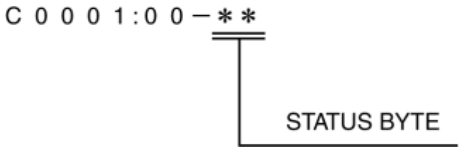

- The status byte is a code which indicates the pending code, current/past malfunction status, or warning illumination status.
- The status byte can be read by performing a CMDTC self test using the Mazda Modular Diagnostic System (M-MDS).
- For details on the status byte, refer to the explanation on the Mazda Modular Diagnostic System (M-MDS) when reading the DTC.

Snapshot data

- The snapshot data stores the currently detected DTC data

Snapshot data item	Unit	Definition	Corresponding data monitor items

DSC_R_BRK	OK/Error	DSC response against brake request from SCBS module	—
DSC_R_BRK_C	OK/Error	DSC response against brake assist threshold change from SCBS module	—
DSC_R_NOREQ	OK/Error	DSC response while no request from SCBS module	—
DSC_R_PRECH	OK/Error	DSC response against pre-charge request from SCBS module	—
DSC_SYSTEM	OK/Error	DSC system condition	—
ECU_IN_TEMP	°C	ECU internal temperature	—
PCM_R_NOREQ	OK/Error	PCM response while no request from SCBS module	—
PCM_R_REQ	OK/Error	PCM response against request from SCBS module	—
PCM_SYSTEM	OK/Error	PCM system condition	—
TOTAL_DIST	km, ft, mi	Total distance	—
TOTAL_TIME	hh:mm:ss	Total time	—
VPWR	V	Power supply	—
VSPD	KPH, MPH	Vehicle speed	—

PID/data monitor function

- The PID/data monitor function is used for optionally selecting input/output signal monitor items preset in the laser sensor and reading them out in real-time.

PID/data monitor table

Mazda Modular Diagnostic System (M-MDS) display	Data contents	Unit/Operation (Mazda Modular Diagnostic System (M-MDS) display)
DIST_BMP_TGT	Distance from bumper to target that sensor has detected	m
VPWR_IG1	Module supply voltage (IG1)	V
VSPD	Vehicle speed	KPH, MPH

External tester communication function

- The external tester communication function enables communication of diagnostic data (DTC read-outs, input/output signal read-outs, operation of input/output parts) between the laser sensor and an external tester.

Connections/communication contents

	External tester	
	Mazda Modular Diagnostic System (M-MDS)	
	Connection	Communication method
On-board diagnostic (malfunction detection) function	Input/output: CAN_H (HS), CAN_L (HS) terminals	Serial communication
PID/data monitor function	Input/output: CAN_H (HS), CAN_L (HS) terminals	Serial communication

Serial communication

- Serial communication (two-way communication) allows for multiple data to be sent and received instantly along the same line.
- By connecting the Mazda Modular Diagnostic System (M-MDS) to the DLC-2, diagnostic data can be sent and received between the Mazda Modular Diagnostic System (M-MDS) and the laser sensor using the CAN_H and CAN_L terminals (within the DLC-2).
- The laser sensor receives the command signals of the malfunction detection function and PID/data monitor function based on the Mazda Modular Diagnostic System (M-MDS), and sends DTCs and data regarding the operating condition and status of each input/output part to the Mazda Modular Diagnostic System (M-MDS).

Diagnostic function name	Signal received	Signal sent
Malfunction detection function	DTC verification signal	DTC
PID/data monitor function	Command signal to read selected monitor item	Monitored data for requested monitor item

2014 - Mazda3 - Brakes

DLC-2 CONSTRUCTION [LASER SENSOR]

- A connector (DLC-2) conforming to International Organization for Standardization (ISO) standards has been added.
- Shape and terminal arrangement as stipulated by the ISO 15031-3 (SAE J1962) international standard has been adopted for this connector. The 16-pin connector consists of a CAN_H (HS) terminal, CAN_L (HS) terminal, CAN_H (MS) terminal, CAN_L (MS) terminal, GND1 terminal, GND2 terminal, and B+ terminal.

DLC-2

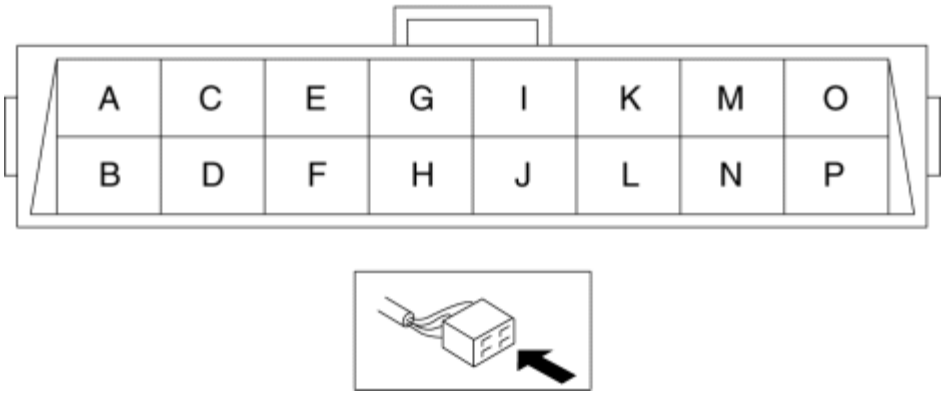

Terminal	Function
A	Battery power supply terminal
B	-
C	-
D	-
E	Serial communication Lo terminal (HS)
F	Serial communication Hi terminal (HS)
G	-
H	Serial communication ground terminal

I	-
J	Body ground terminal
K	Serial communication Lo terminal (MS)
L	Serial communication Hi terminal (MS)
N	-
M	-
O	-
P	-

2014 - Mazda3 - Brakes

CONVENTIONAL BRAKE SYSTEM

Outline

- A brake pedal with an intrusion minimizing mechanism has been adopted. As a result, driver safety has been improved.
- A vacuum pump has been adopted, improving braking force.
- A large diameter, ventilated disc-type front brake has been adopted, improving braking force.
- A large diameter, solid disc-type rear brake has been adopted, improving braking force.

Structural View

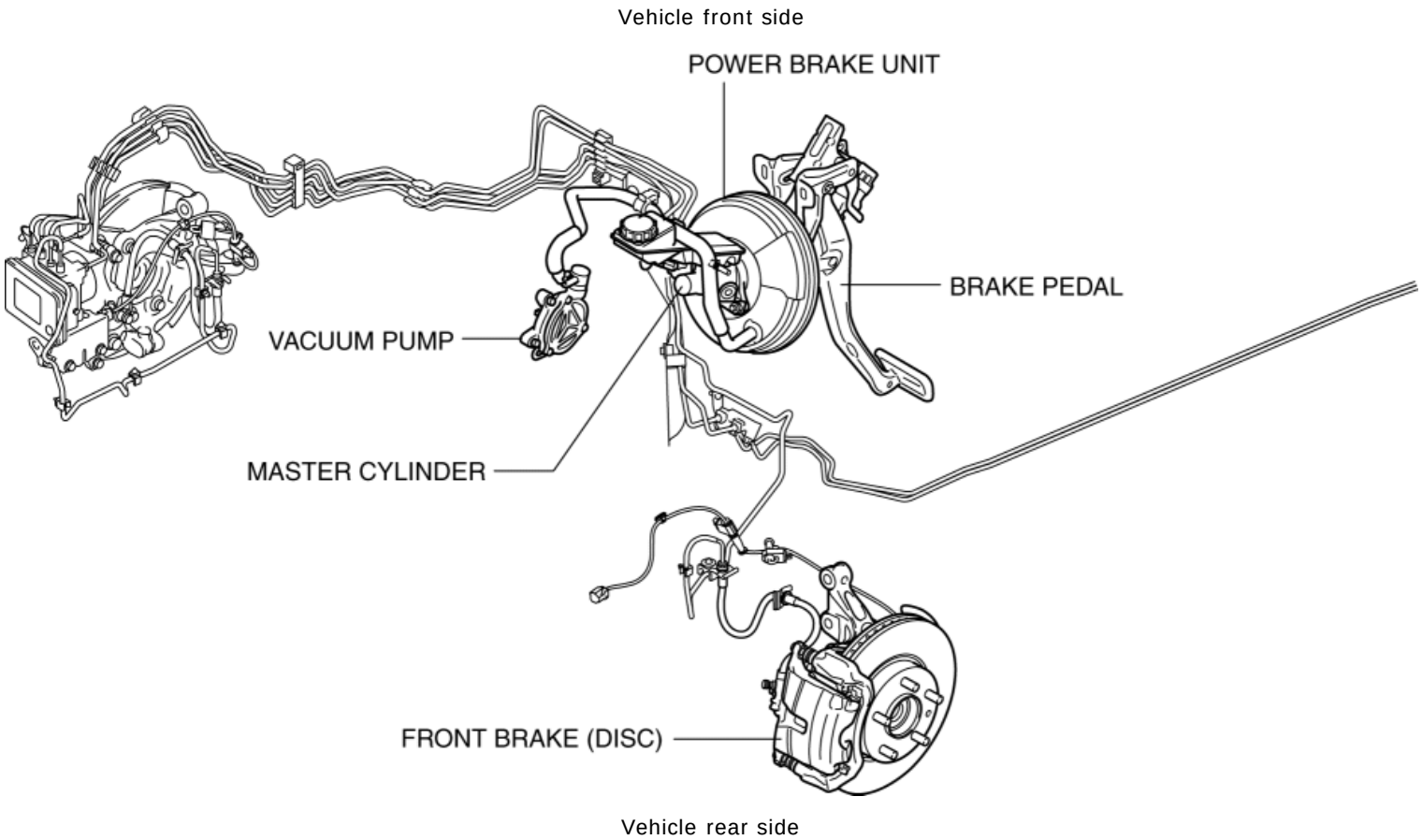

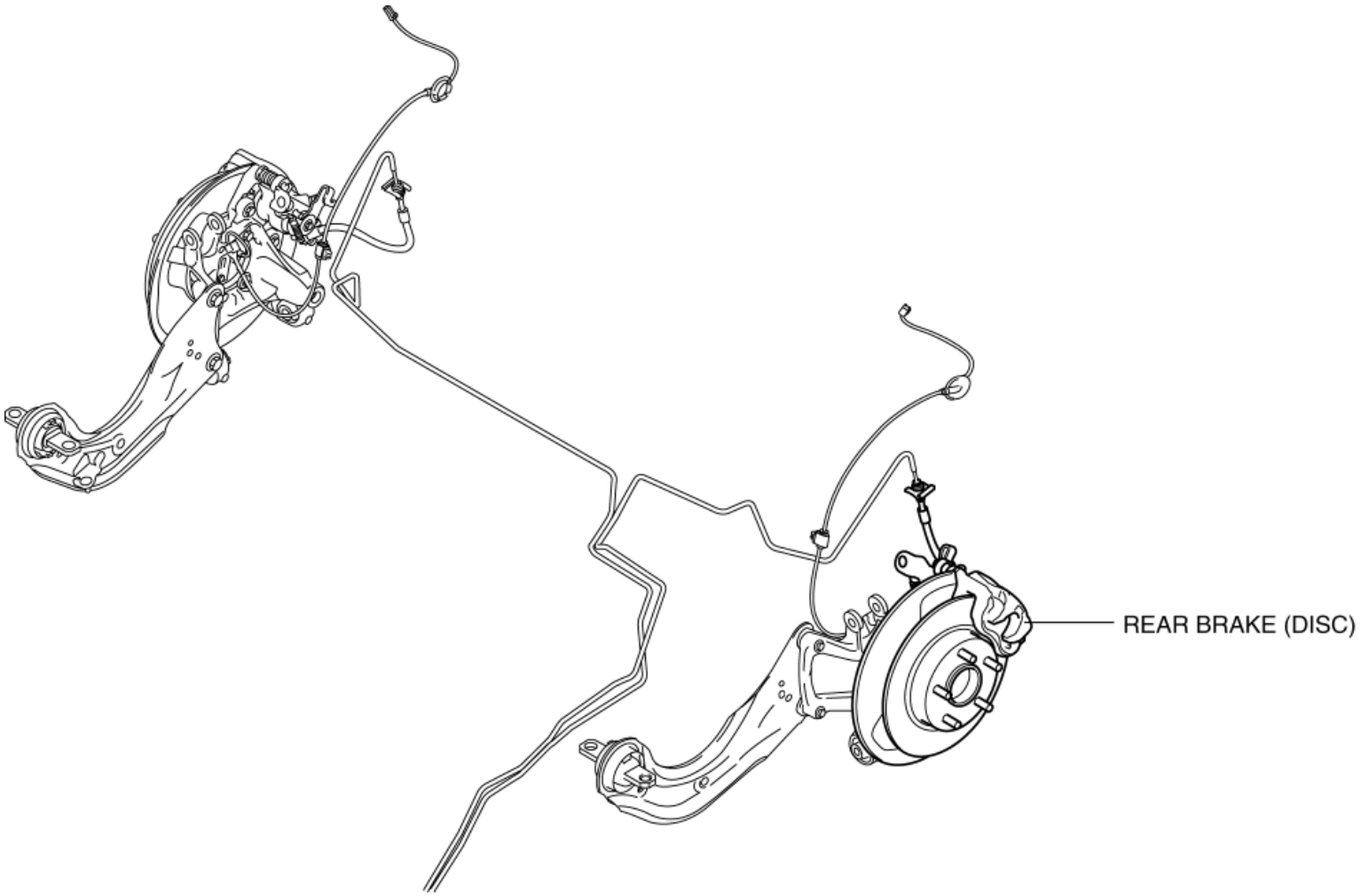
REAR BRAKE (DISC)

2014 - Mazda3 - Brakes

BRAKE PEDAL

Purpose / Function

- An intrusion-minimizing brake pedal has been adopted to the brake pedal to provide for a measure of safety in the event of an accident.
- The intrusion-minimizing brake pedal mechanism reduces impact to the lower extremities of the driver by minimizing the amount of rearward brake pedal thrust in a frontal collision.

Construction

- The intrusion minimizing brake pedal mechanism is structured on the brake pedal and consists of the following parts.
    - Pedal arm
    - Lever
    - Pin A
    - Pin B
    - Pin C
    - Bracket

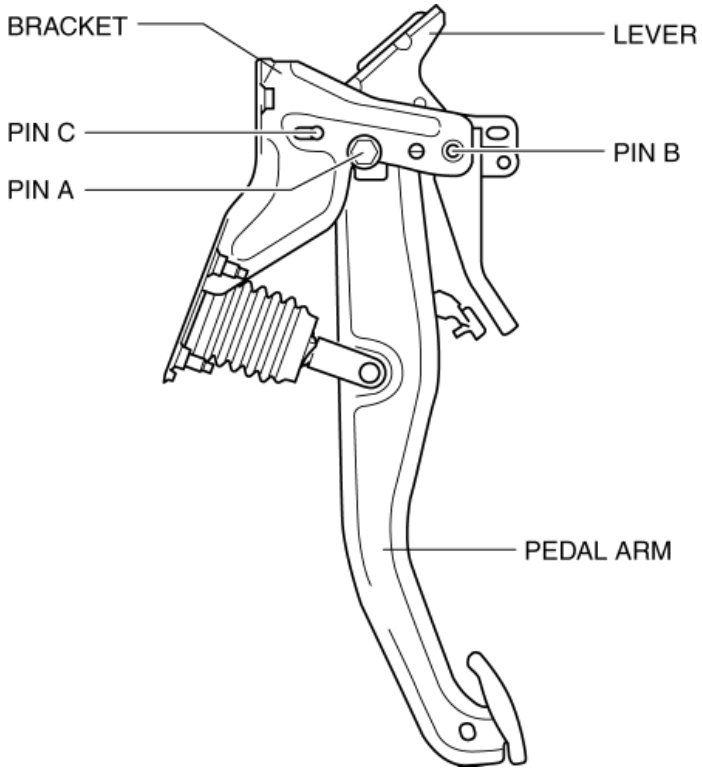

Operation

During normal braking

- When the brake pedal is depressed, the pedal arm rotates at the pin A fulcrum point, and the pedal depression force is transmitted to the fork of the power brake unit.
- This pedal depression force pushes in the fork to operate the brakes.

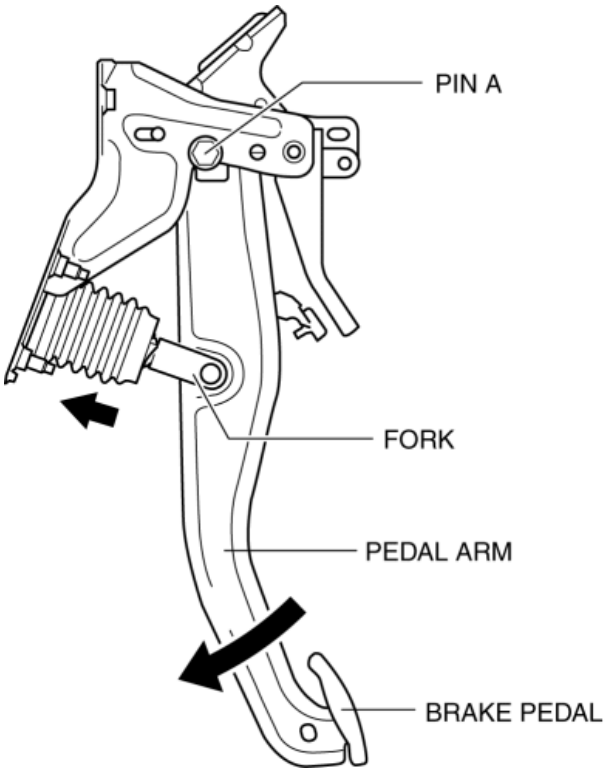

Intrusion-minimizing operation

- In a frontal collision, the brake pedal is forced rearward by the movement of the dashboard.
- In response to this, force in the direction of X is applied to the brake pedal lever because the dashboard member and brake pedal lever interfere.
- With the addition of force in the direction of X, pin C releases from the lever, and the lever rotates around the pin B fulcrum point.
- When the lever rotates, it obstructs pin A at the fulcrum point of the pedal arm.
- If the pedal rotates further, pin A separates from the bracket (notch), and the pedal is freed.
- By freeing the pedal arm, the force applied to the lower extremities is reduced.

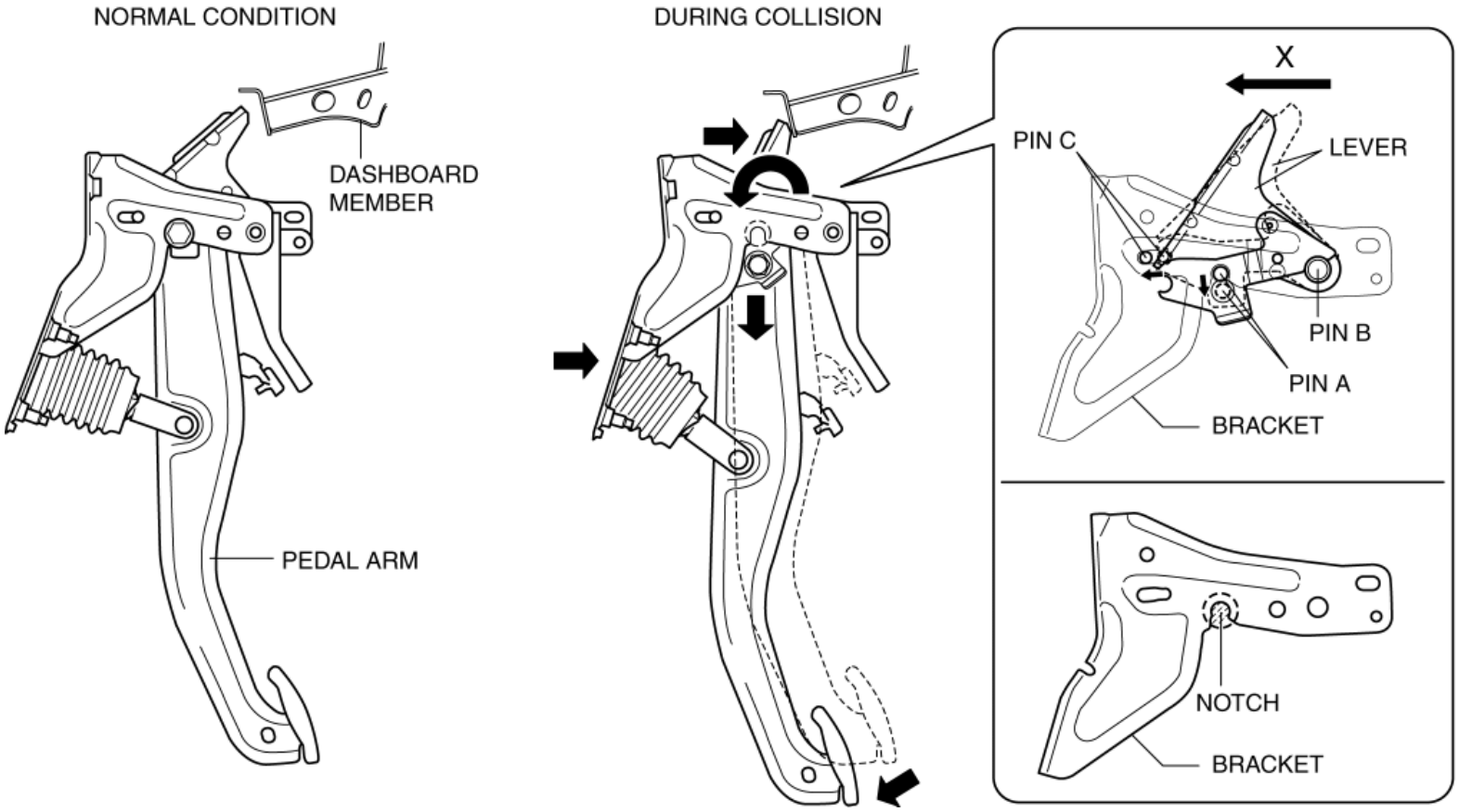
NORMAL CONDITION
DASHBOARD MEMBER
PEDAL ARM
DURING COLLISION
X
PIN C
LEVER
PIN B
PIN A
BRACKET
NOTCH
BRACKET

2014 - Mazda3 - Brakes

MASTER CYLINDER

Purpose/Function

- With the adoption of the master cylinder having an enlarged diameter (20.64 mm {0.8126 in}), brake pedal operability has been improved.
- The diameter of the pipe between the master cylinder and the DSC HU/CM has been increased, improving response during DSC operation.

Construction

- Except for the cap and brake fluid reserve tank, the master cylinder cannot be disassembled. Therefore, if there is any malfunction in the interior of the master cylinder, replace the cylinder component without disassembling.

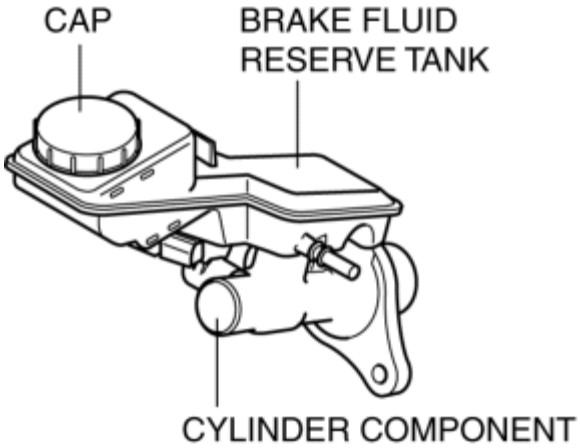

Operation

- When the brake pedal is depressed, the push rod of the power brake unit presses in the master cylinder piston. By pressing in the piston, pressure is applied to the brake fluid to operate the brakes.

2014 - Mazda3 - Brakes

POWER BRAKE UNIT

Purpose / Function

- A 9.8-inch, single diaphragm type power brake unit has been adopted, achieving compatibility between high braking performance and excellent brake feeling.

Construction

- The power brake unit cannot be disassembled. Therefore, if there is any malfunction in the power brake unit, replace the power brake unit without disassembling.

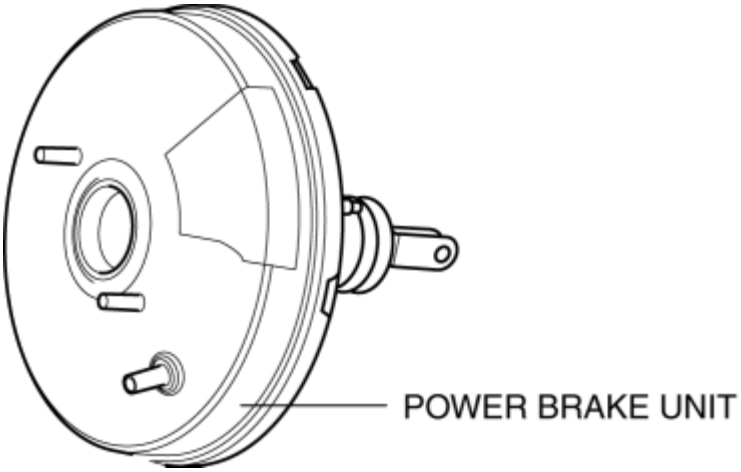

Operation

- The depression force of the brake pedal is increased using the vacuum from the vacuum pump, and the force is transmitted to the master cylinder.

2014 - Mazda3 - Brakes

FRONT BRAKE (DISC)

Purpose / Function

- Large diameter, ventilated disc type front brakes with a 280 mm {11.0 in} diameter and 25 mm {0.98 in} thickness have been adopted, improving braking force and fade resistance. (SKYACTIV-G 2.0)
- Large diameter, ventilated disc type front brakes with a 295 mm {11.6 in} diameter and 25 mm {0.98 in} thickness have been adopted, improving braking force and fade resistance. (SKYACTIV-G 2.5)

Construction

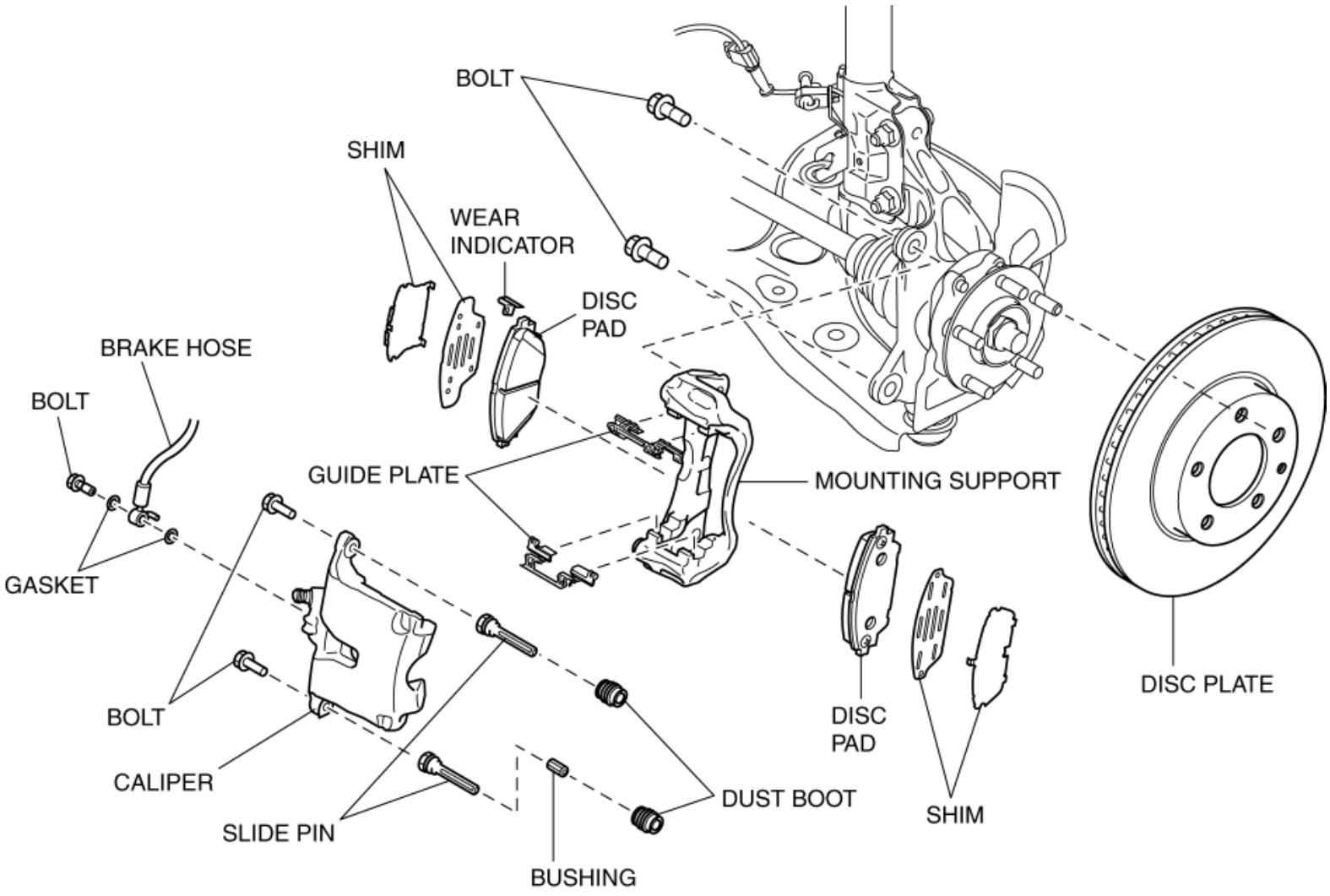

Operation

- When brake fluid is applied, the piston equipped on one side of the caliper is pushed out and the brake pad is pushed against the disc plate. At the same time, the caliper body moves in the direction opposite of the direction

in which the piston is pushed out so as to push the brake pad on the other side and generate brake force.

2014 - Mazda3 - Brakes

REAR BRAKE (DISC)

Purpose / Function

- Large diameter, solid-disc type front brakes with a 265 mm {10.4 in} diameter and 9.0 mm {0.35 in} thickness have been adopted, improving braking force and fade resistance.

Construction

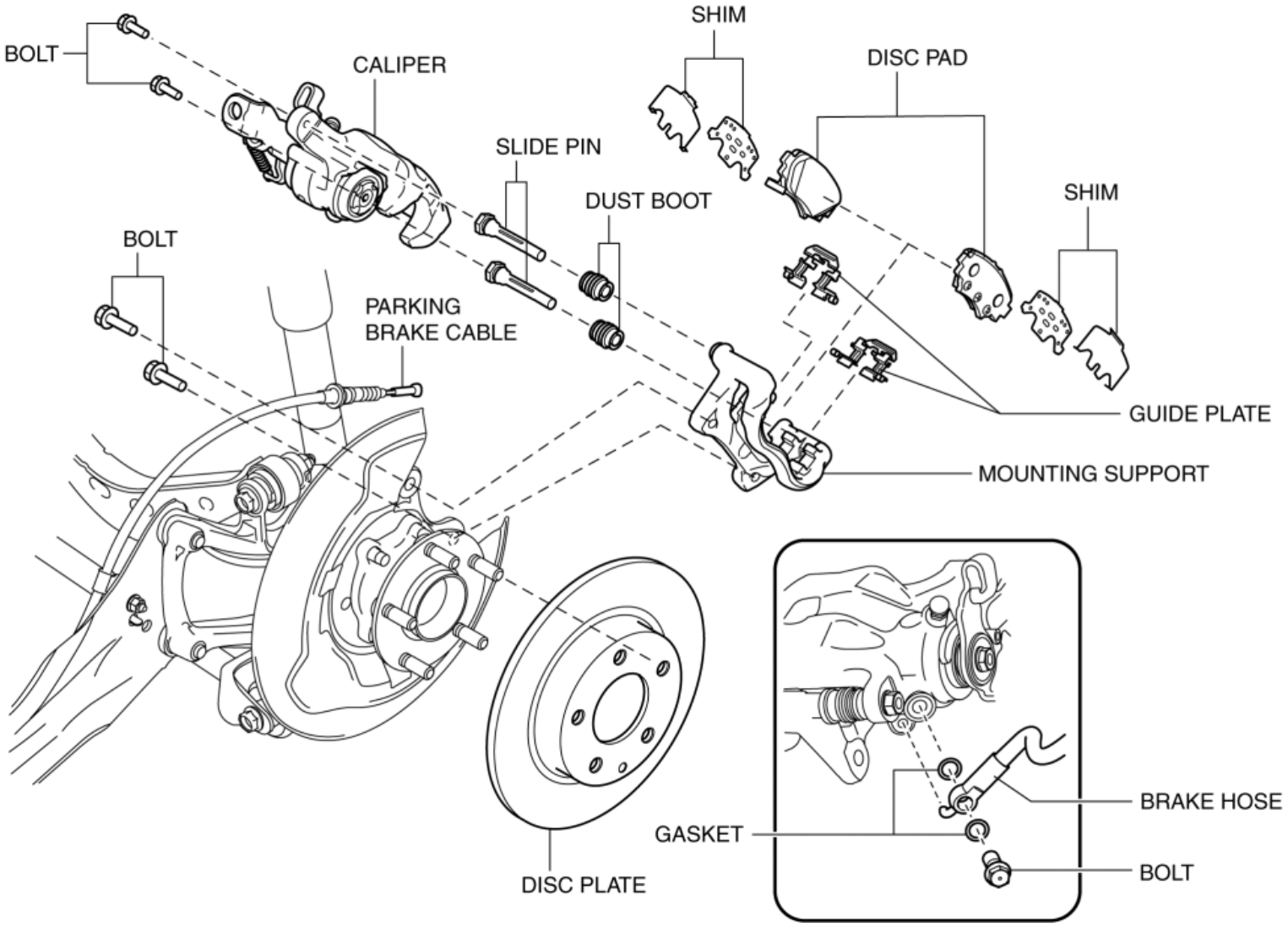

Operation

- When brake fluid is applied, the piston equipped on one side of the caliper is pushed out and the brake pad is pushed against the disc plate. At the same time, the caliper body moves in the direction opposite of the direction in which the piston is pushed out so as to push the brake pad on the other side and generate brake force.

2014 - Mazda3 - Brakes

PARKING BRAKE SYSTEM

Outline

- A center lever type parking brake has been adopted, improving operability.
- Serviceability has been improved by enabling adjustment of the parking brake lever from the vehicle interior.

Structural View

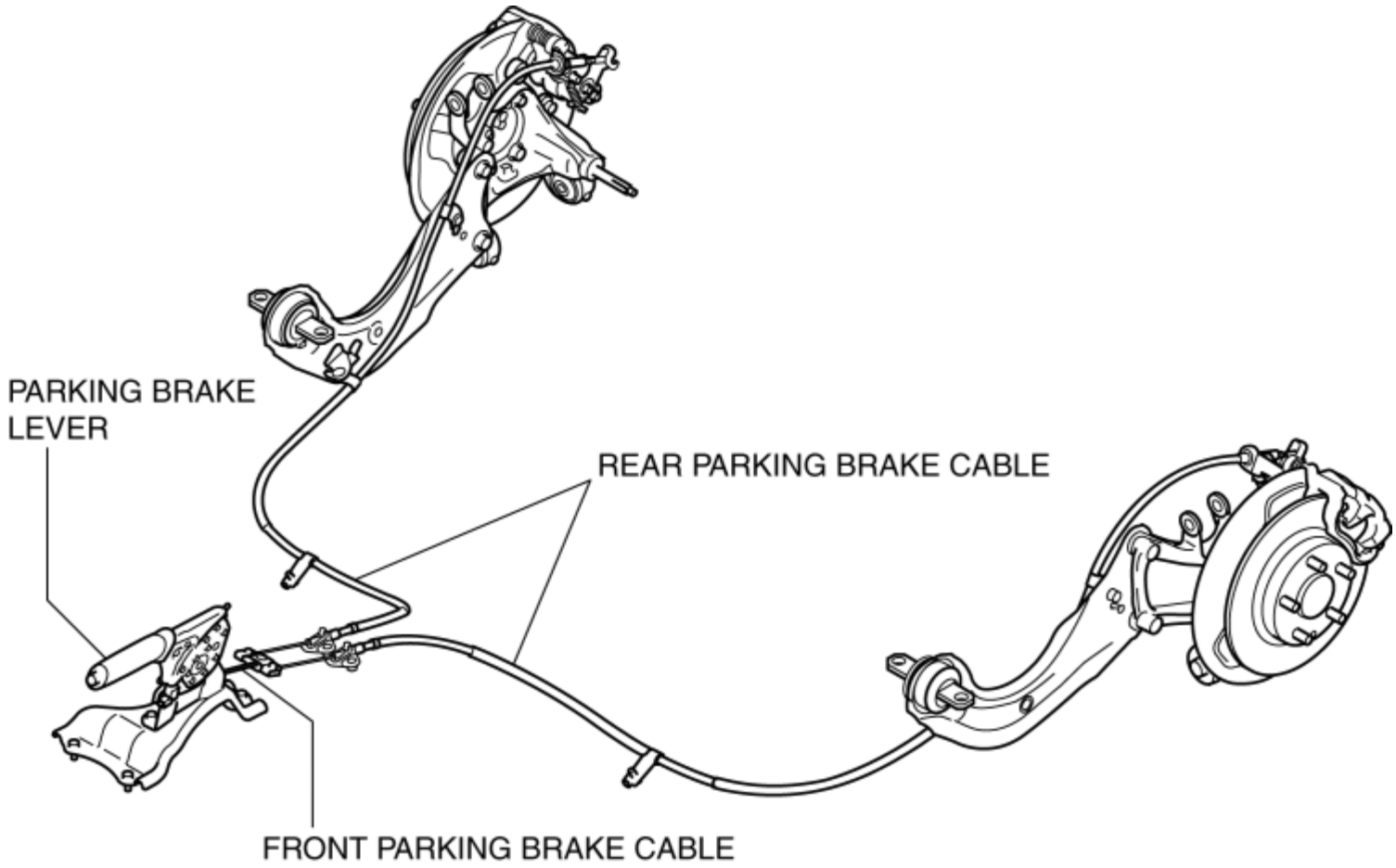

2014 - Mazda3 - Brakes

DYNAMIC STABILITY CONTROL (DSC)

Outline

- Electrical brake assist control has been adopted, improving safety.
- The DSC HU/CM, integrating both the Hydraulic Unit (HU) and Control Module (CM), has been adopted, resulting in a size and weight reduction.
- An enhanced malfunction diagnosis system, used with the Mazda Modular Diagnostic System (M-MDS), has been adopted, improving serviceability.
- Serviceability improved by the automatic configuration function.
- The Hill Launch Assist (HLA), Tire Pressure Monitoring System (TPMS)*1, and Smart City Brake Support (SCBS)*2 have been adopted, improving safety.

*1 **Vehicles with Tire Pressure Monitoring System (TPMS)**

*2 **Vehicles with Smart City Brake Support (SCBS)**

DSC operation outline

- The ABS prevents wheel lock-up during braking. The TCS detects drive wheel spin due to the accelerator pedal being pressed too hard or similar causes and controls engine speed to suppress wheel spin. With these systems, safety is assured when driving or stopping.
- Additionally, sudden changes in vehicle attitude, due to evasive steering or road conditions, are controlled by the DSC. The DSC suppresses vehicle sideslip when driving due to vehicle spin (oversteer) or drift-out (understeer) by controlling braking and engine speed. At this time, the TCS/DSC indicator light illuminates to alert the driver that the DSC is operating due to a dangerous situation. As a result, the driver can calmly react and is provided leeway for the next maneuver, resulting in safe driving conditions.
- In this way the combination of DSC + ABS + TCS ensures driving, stopping and turning safety in all aspects.

Results of DSC operation

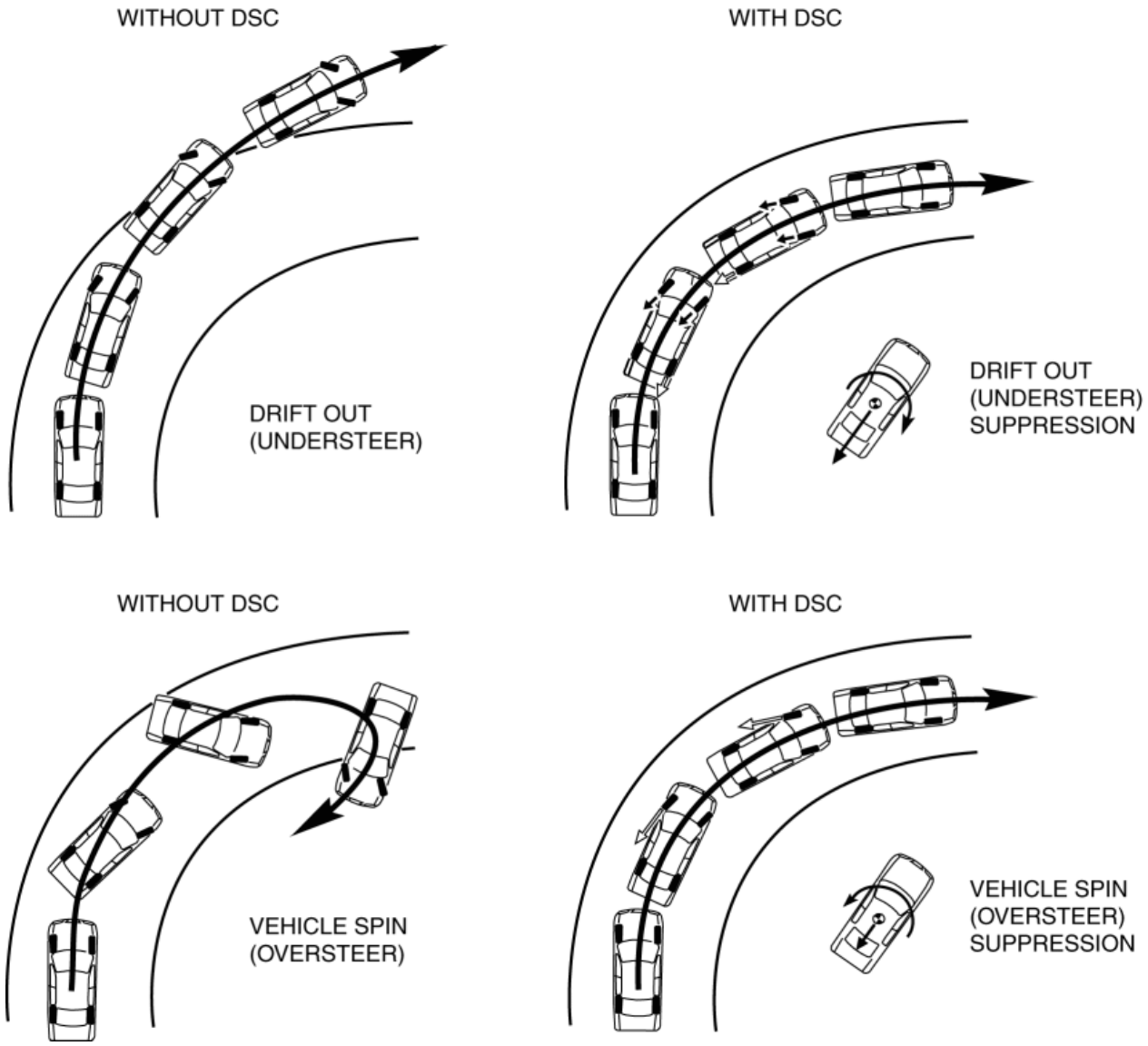

CAUTION:

- While the DSC is a steering safety system, it does not improve normal steering function. Therefore, always drive carefully, even if the vehicle has DSC, and do not overestimate the DSC capability.
- If the initialization procedures for the brake fluid pressure, low-G, and yaw rate sensors are not performed correctly, an incorrectly determined initial point may cause a discrepancy between the actual driving conditions of the vehicle and the signals from the sensors, resulting in improper DSC operation. Therefore, after replacing the following parts, make sure to perform the DSC HU/CM initialization procedures of the sensors with the vehicle stopped on a level ground to insure proper DSC operation. For the initialization procedures of the sensors, refer to the Workshop Manual.
    - DSC HU/CM
    - SAS control module
- The DSC and ABS will not operate normally under the following conditions:
    - With tires that are not of the specified size, manufacturer or tread pattern, or not inflated according to specification
    - With tires that have significant comparative wear variation
    - With tire chains
    - With an emergency spare tire

Structural View

Vehicle front side

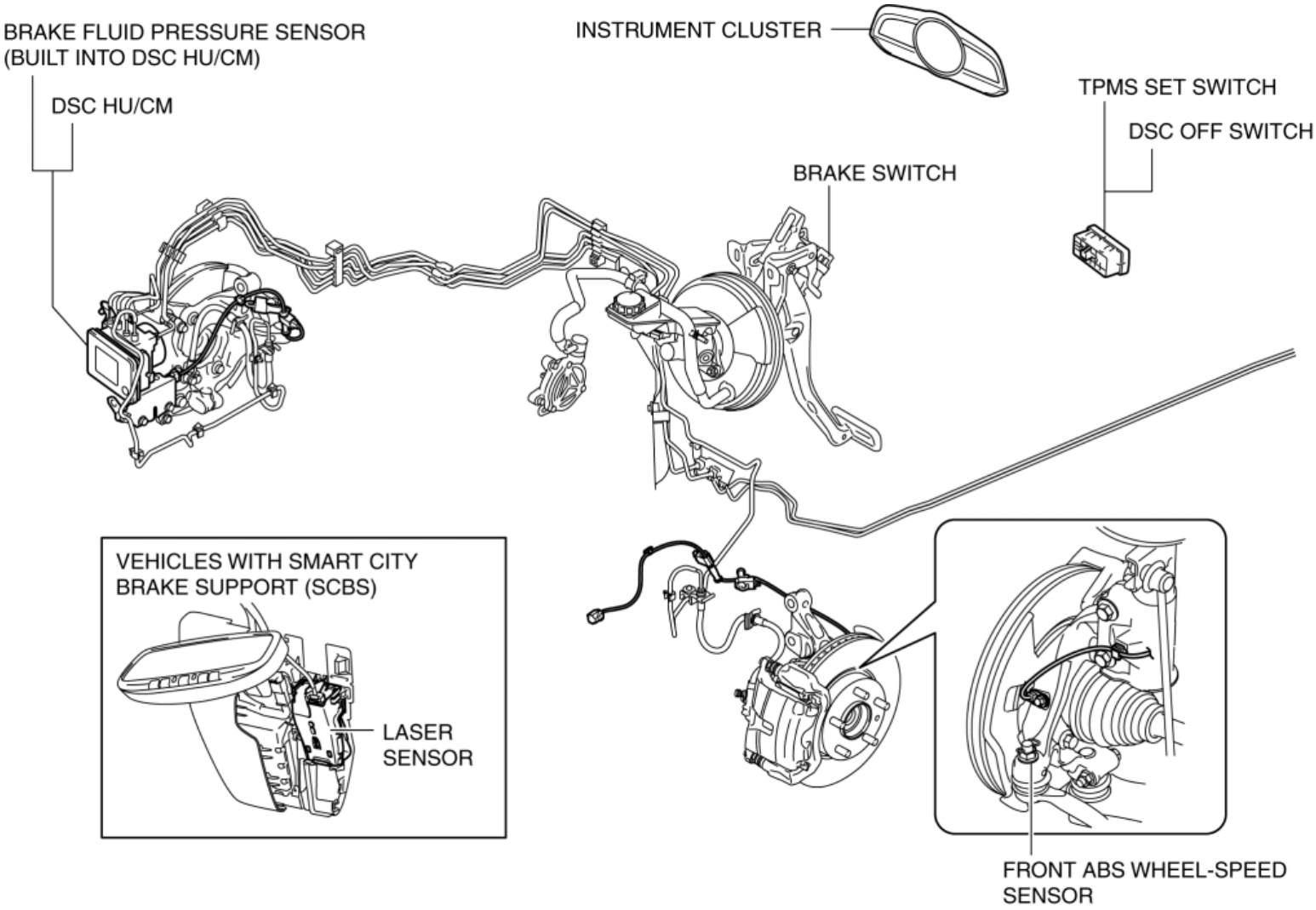

Vehicle rear side

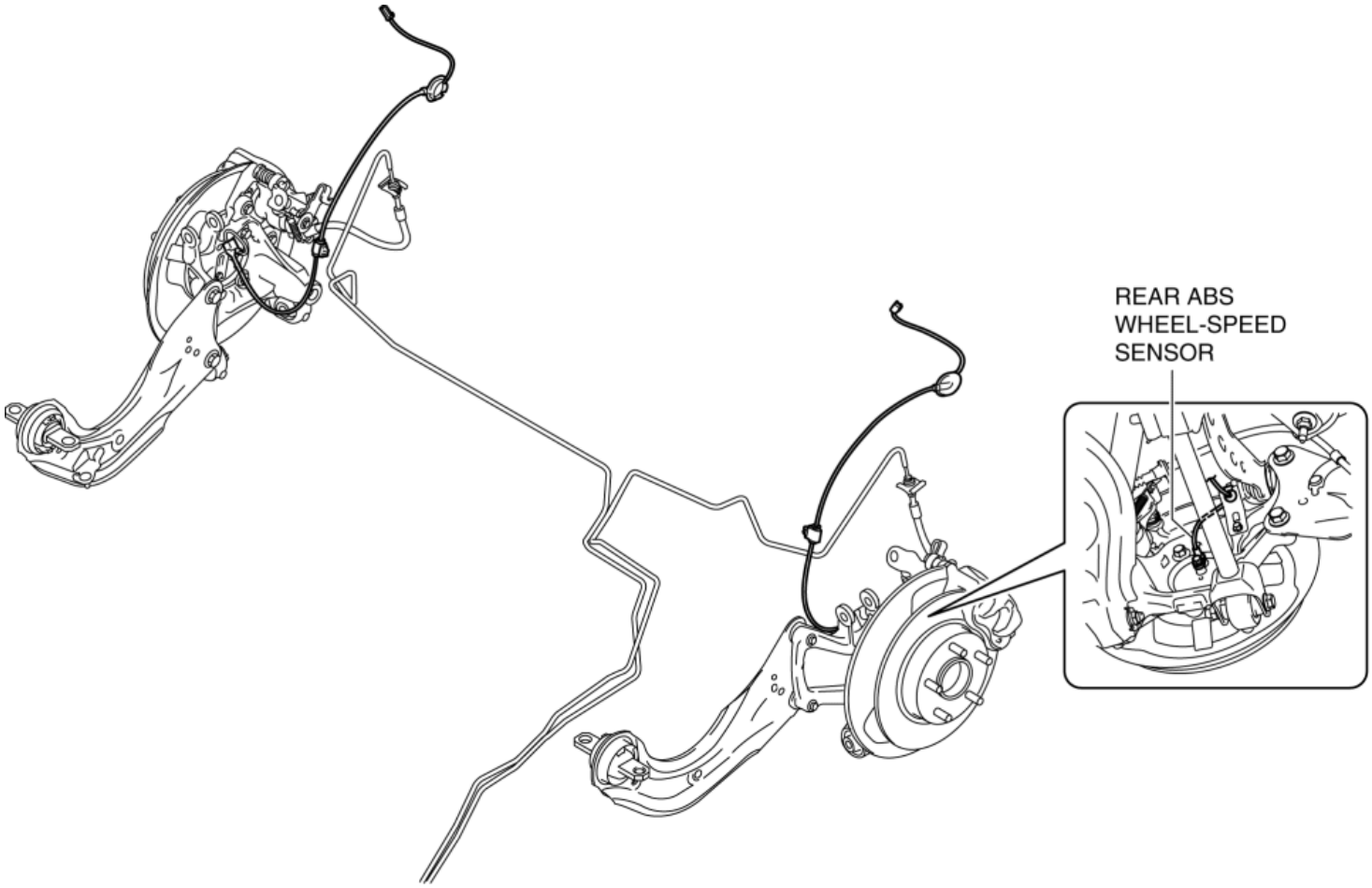

Warning light and indicator light

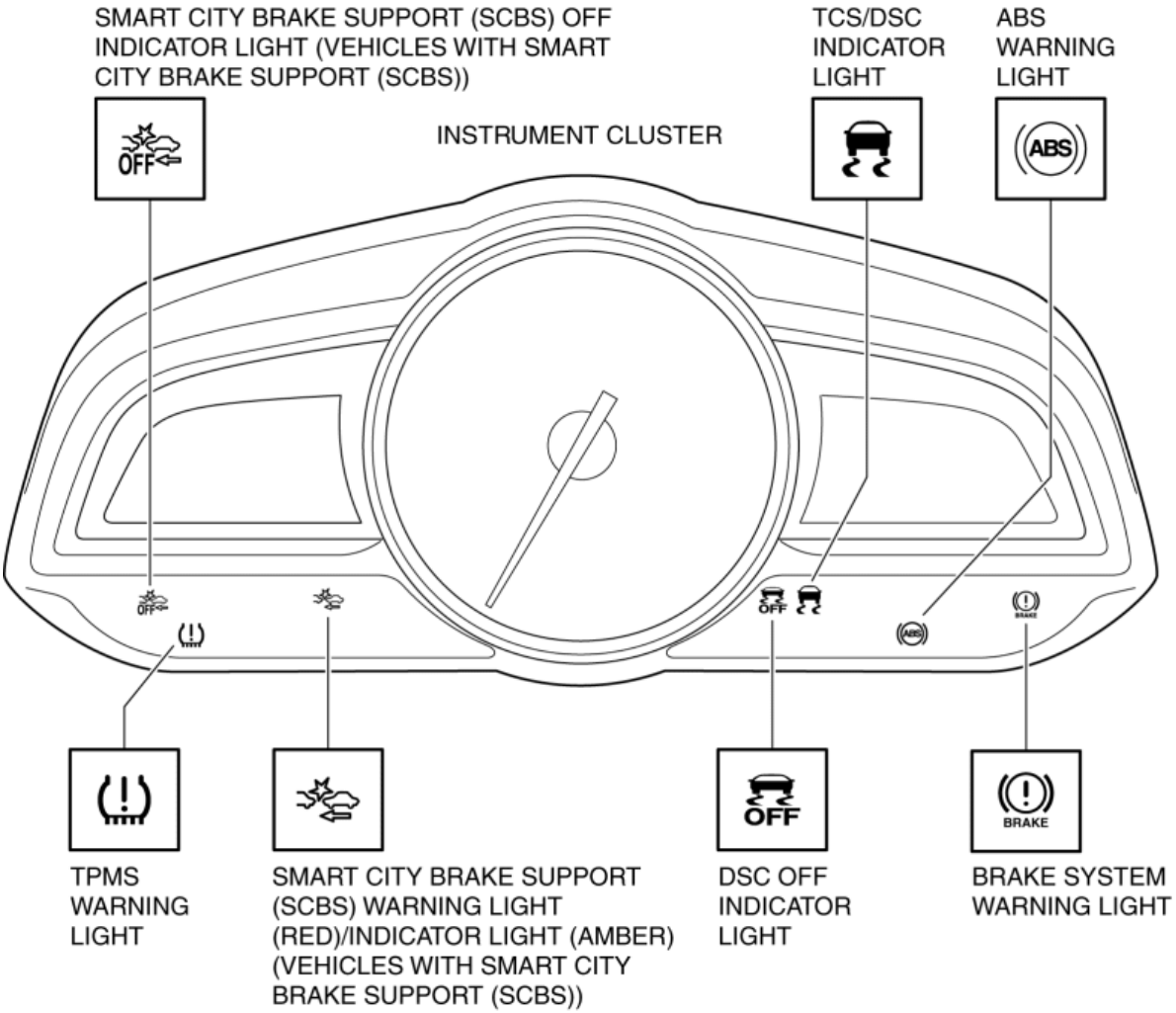

System Wiring Diagram

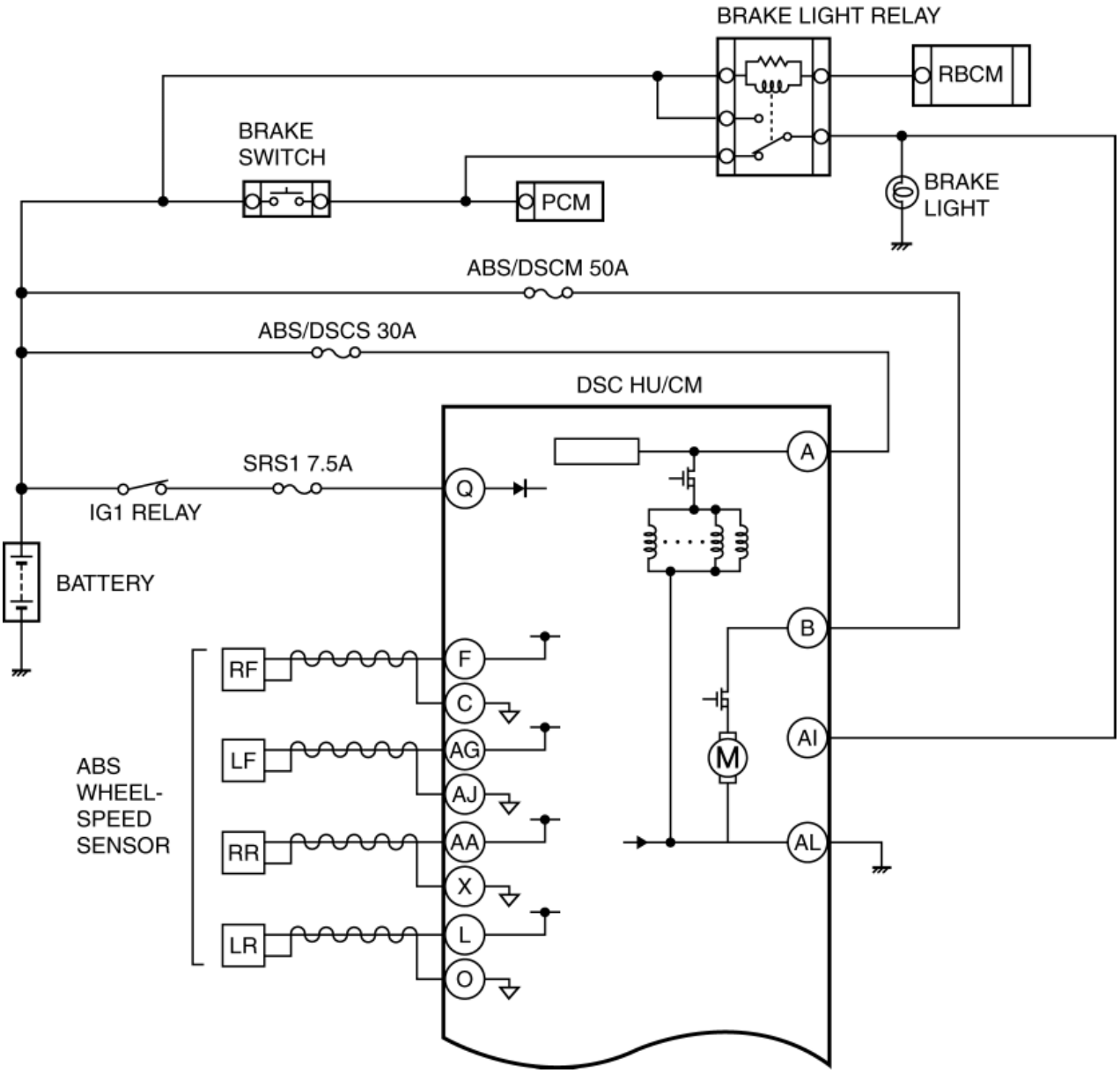
BRAKE LIGHT RELAY
RBCM
BRAKE SWITCH
PCM
BRAKE LIGHT
ABS/DSCM 50A
ABS/DSCS 30A
DSC HU/CM
SRS1 7.5A
IG1 RELAY
BATTERY
A
Q
B
F
C
AG
AJ
AA
X
L
O
AI
AL
M
RF
LF
RR
LR
ABS WHEEL-SPEED SENSOR

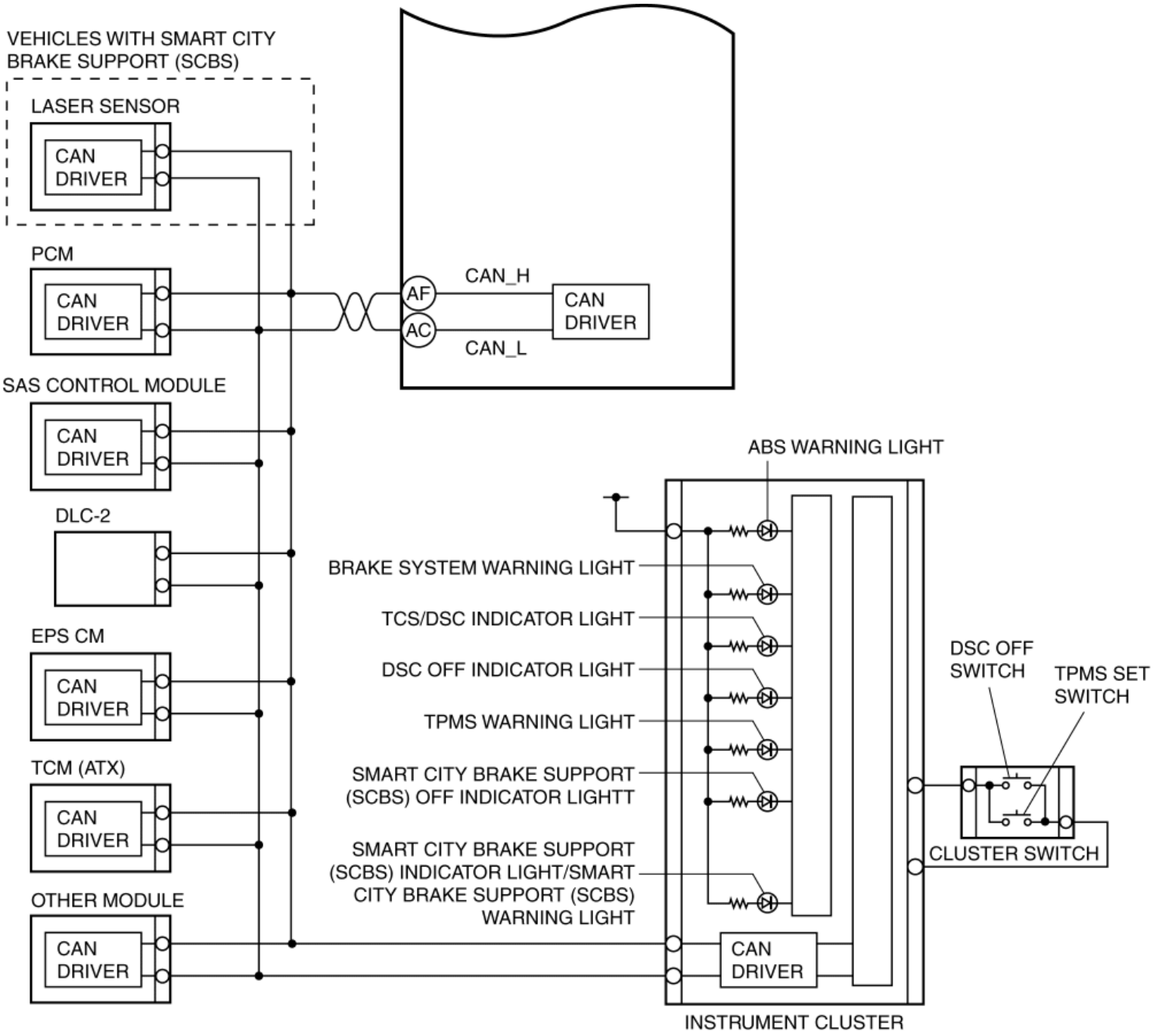

Construction

- The DSC system consists of the following parts. While each part has a regular function in other systems, only the function during DSC control is listed.

Part name	Function
DSC HU/CM	• Makes calculations using input signals from each sensor, controls brake fluid pressure to each wheel, and actuates function (ABS, EBD, TCS, DSC, brake assist control, Hill Launch Assist (HLA), TPMS*1, and Smart City Brake Support (SCBS)*2) of the DSC system. • Outputs the torque reduction request signal, wheel speed signal, and DSC system warning control data via CAN lines. • Controls the on-board diagnostic system and fail-safe function when there is a malfunction in the DSC system.

PCM	• Controls engine output based on signals from the DSC HU/CM. • Transmits engine speed, engine torque, brake switch status, and accelerator pedal position data via CAN communication to the DSC HU/CM. • Transmits gear/shift lever position data via CAN communication to the DSC HU/CM. (MTX)
TCM (ATX)	• Transmits gear/selector lever position data via CAN communication to the DSC HU/CM.
EPS CM	• Transmits steering angle data via CAN communication to the DSC HU/CM.
SAS control module	• Detects the lateral-G (vehicle lateral acceleration speed), the yaw rate (vehicle turning angle speed), and the longitudinal-G (vehicle longitudinal acceleration speed) via CAN communication to the DSC HU/CM.
Brake system warning light	• Notifies the driver that the parking brake is applied. • Notifies the driver of an ABS or EBD malfunction.
ABS warning light	• Notifies the driver of an ABS malfunction.
TCS/DSC indicator light	• Informs the driver that the TCS is operating (drive wheel is spinning). • Informs the driver that the DSC is operating (vehicle sideslip occurring). • Informs the driver of DSC system malfunction.
DSC OFF switch	• Transmits driver intention to release TCS/DSC control to the DSC HU/CM.
DSC OFF indicator light	• Informs driver that TCS/DSC control has been released due to DSC OFF switch operation.
TPMS set switch*1	• Data initialization after adjusting the tire pressures can be done.
TPMS warning light*1	• Notifies the driver that the tire pressure is not normal. • Notifies the driver of an TPMS malfunction.
ABS wheel-speed sensor	• Detects the rotation condition of each wheel and transmits it to the DSC HU/CM.
Brake fluid pressure sensor (Built into DSC HU/CM)	• Detects the fluid pressure from the master cylinder.
Smart City Brake Support (SCBS) indicator light*2	• Informs the driver of Smart City Brake Support (SCBS) system malfunction.
Smart City Brake Support (SCBS) warning light*2	• Informs the driver that the Smart City Brake Support (SCBS) is operating.
Smart City Brake Support (SCBS) OFF indicator light*2	• Notifies driver that Smart City Brake Support (SCBS) system control inhibited.
Laser sensor*2	• Emits near-infrared laser and detects the distance between the vehicle and a vehicle or an obstruction ahead based on the reflection.

*1 **Vehicles with Tire Pressure Monitoring System (TPMS)**

*2 **Vehicles with Smart City Brake Support (SCBS)**

2014 - Mazda3 - Brakes

DSC HU/CM

Outline

- A high reliability, reduced size and weight DSC HU/CM, integrating both the DSC HU and the DSC CM, has been adopted.

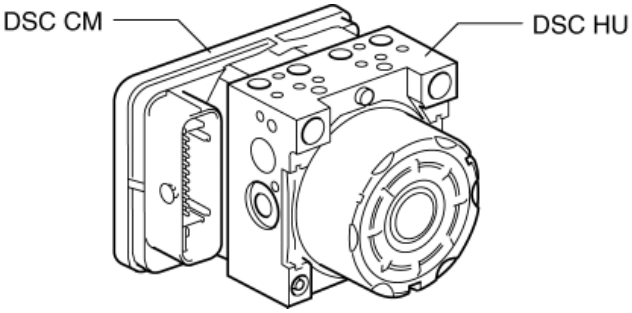

DSC HU Part Purpose/Function

- According to DSC CM signals, the DSC HU controls (on/off) each solenoid valve and the pump motor, adjusts fluid pressure in each caliper piston, and actuates each function (ABS, EBD, TCS, DSC, brake assist control, Hill Launch Assist (HLA), Tire Pressure Monitoring System (TPMS)*1, and Smart City Brake Support (SCBS)*2) of the DSC system.

*1 **Vehicles with Tire Pressure Monitoring System (TPMS)**

*2 **Vehicles with Smart City Brake Support (SCBS)**

DSC HU Part Construction

- The DSC HU mainly consists of the inlet/outlet solenoid valves, pump motor (pump), traction control solenoid valves, and stability control solenoid valves.

Function of main component parts

Part name	Function
Inlet solenoid valve	• Adjusts the fluid pressure in each brake system according to DSC HU/CM signals.
Outlet solenoid valve	• Adjusts the fluid pressure in each brake system according to DSC HU/CM signals.
Stability control solenoid valve	• Switches the brake hydraulic circuits during and according to normal braking, ABS and EBD control, TCS control, DSC control, and brake assist control.
Traction control solenoid valve	• Switches the brake hydraulic circuits during and according to normal braking, ABS and EBD control, TCS control, DSC control, and brake assist control.
Reservoir	• Temporarily stores brake fluid from the caliper piston to ensure smooth pressure reduction during ABS and EBD control, TCS control, and DSC control.
Pump	• Returns the brake fluid stored in the reservoir to the master cylinder during ABS and EBD control. • Increases brake fluid pressure and sends brake fluid to each caliper piston during TCS control and DSC control.

Pump motor	• Operates the pump according to DSC HU/CM signals.

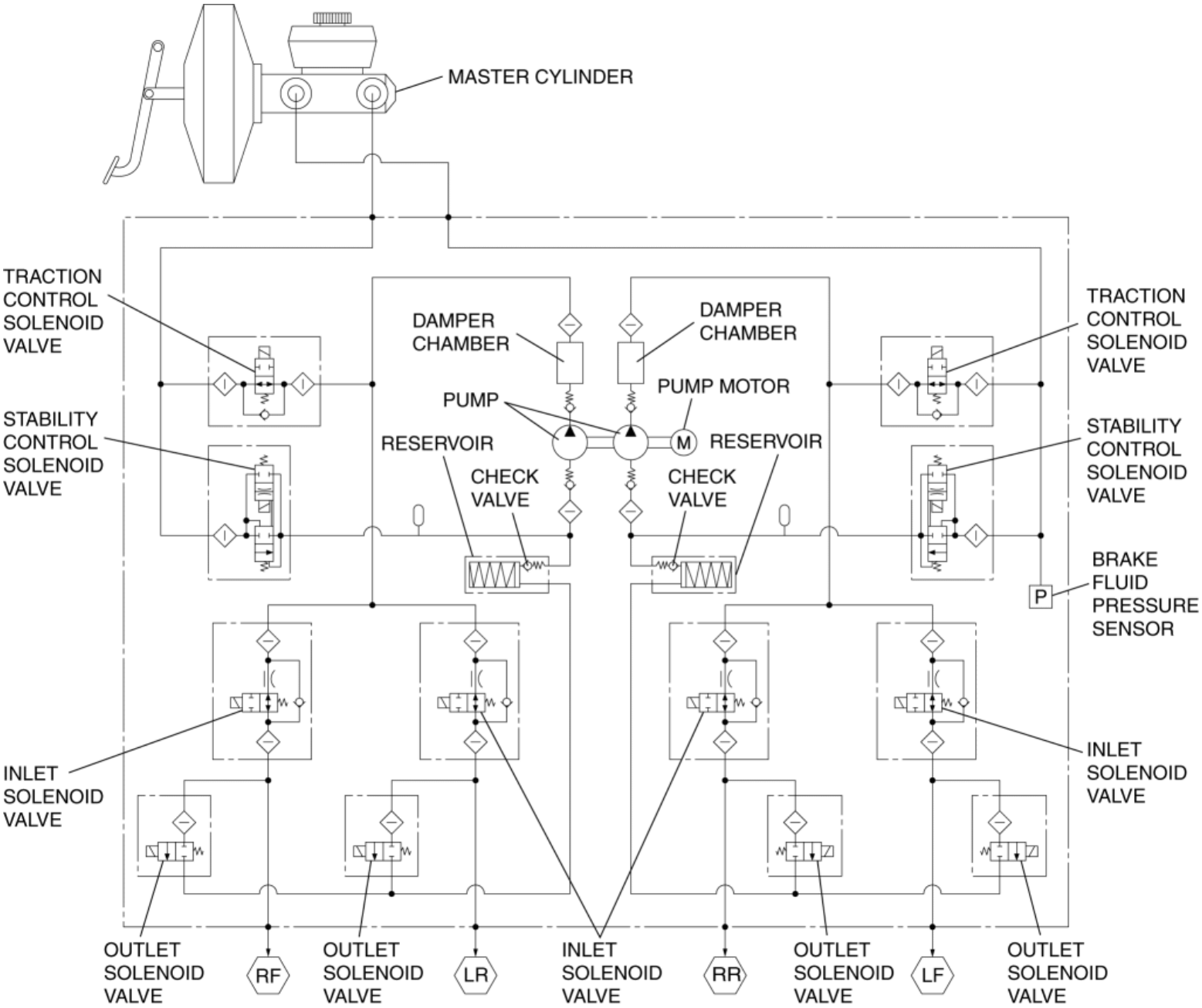

DSC HU Part Operation

During normal braking

- During normal braking, the solenoid valves are not energized and all of them are off. When the brake pedal is depressed, brake fluid pressure is transmitted from the master cylinder, through the traction control solenoid and inlet solenoid valves, and then to the caliper piston.

Solenoid valve operation table

Traction control solenoid valve		Stability control solenoid valve		Inlet solenoid valve				Outlet solenoid valve				Pump motor and pump
LF—RR	RF—LR	LF—RR	RF—LR	LF	RF	LR	RR	LF	RF	LR	RR	

OFF (open)	OFF (closed)	OFF (open)	OFF (closed)	Stopped

Hydraulic Circuit Diagram

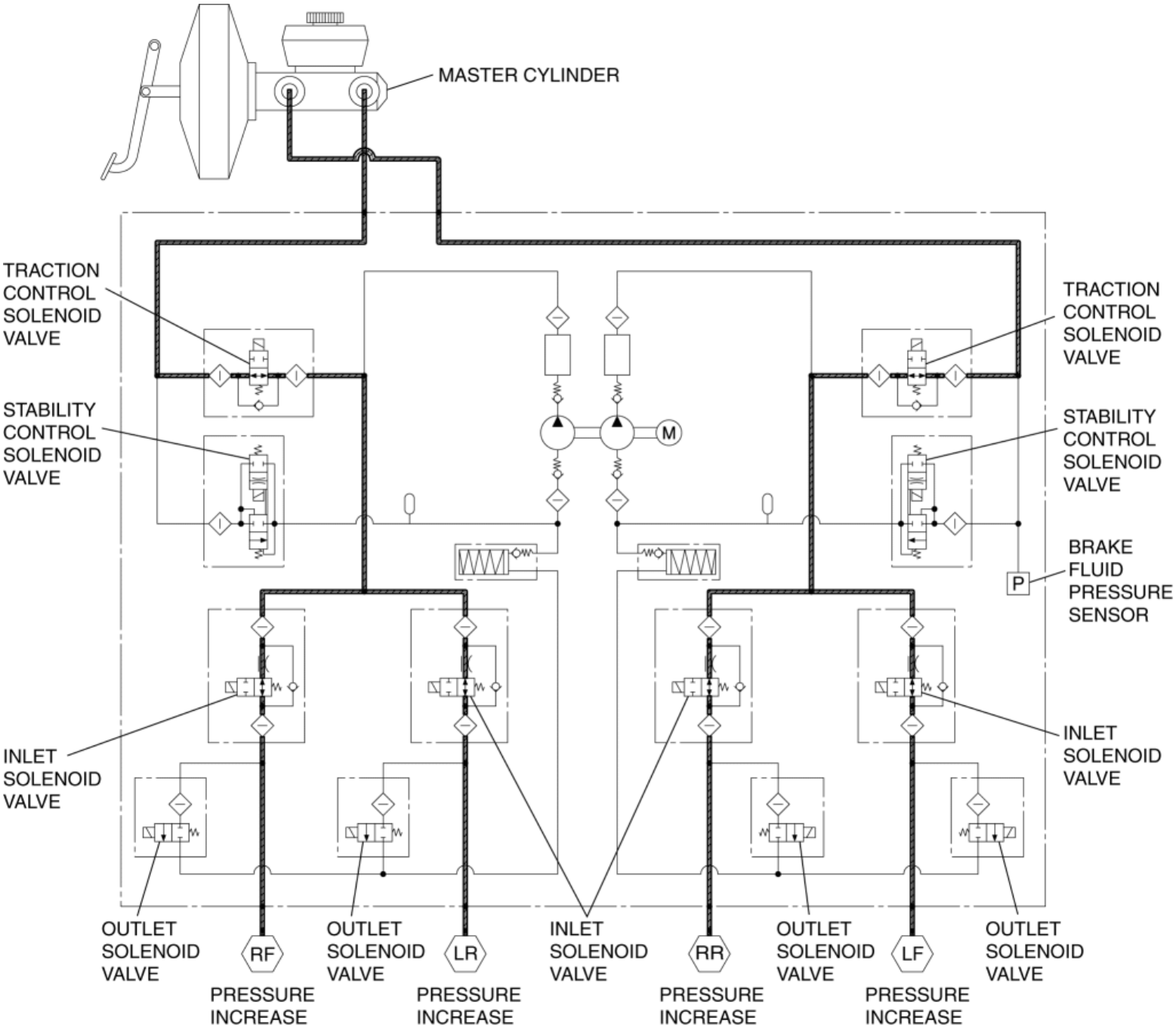

During ABS and EBD control

- During ABS and EBD control when wheel lock-up is about to occur, the traction control solenoid and stability control solenoid valves are not energized, and the inlet and outlet solenoid valves are energized and controlled in three pressure modes (increase, reduction or maintain), thereby adjusting brake fluid pressure. Brake fluid during pressure reduction is temporarily stored in the reservoir and afterwards the pump motor operates the pump to return the fluid to the master cylinder. (The following figure shows these conditions: right front wheel pressure increased, left front wheel pressure maintained, and both rear wheels pressure decreased.)

Solenoid valve operation table

	Traction control solenoid valve	Stability control solenoid valve	Inlet solenoid valve	Outlet solenoid valve	Pump motor and

	LF—RR	RF—LR	LF—RR	RF—LR	LF	RF	LR	RR	LF	RF	LR	RR	pump
During pressure increase mode	OFF (open)		OFF (closed)		OFF (open)				OFF (closed)				Stopped
During pressure maintain mode	OFF (open)		OFF (closed)		ON (closed)				OFF (closed)				Stopped
During pressure reduction mode	OFF (open)		OFF (closed)		ON (closed)				ON (open)				Operating

Hydraulic Circuit Diagram

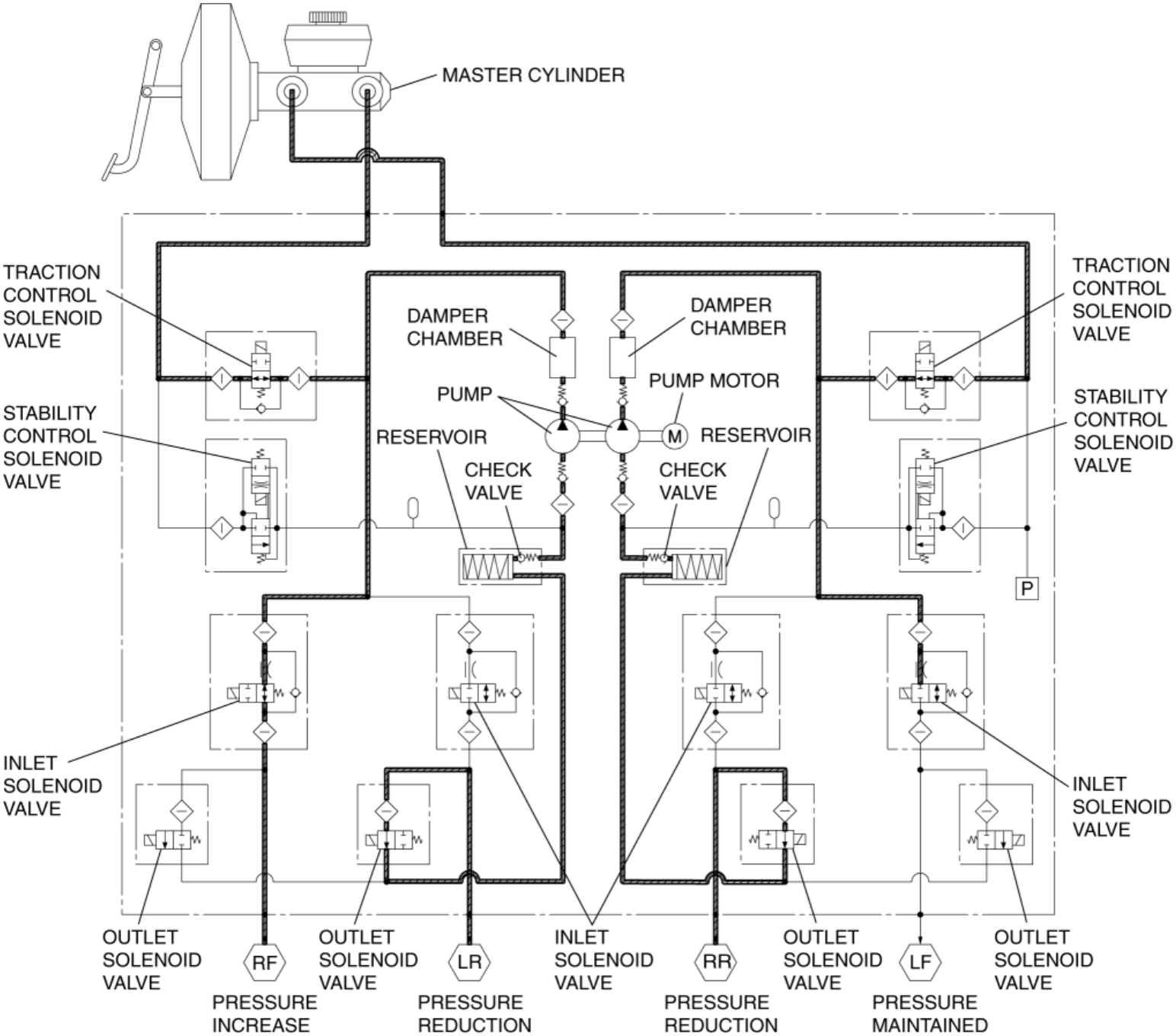

During DSC control (to suppress oversteer tendency) and TCS control

- When a large oversteer tendency or driving wheel spin is determined, the traction control solenoid and stability control solenoid valves are energized, switching the hydraulic circuits. At the same time, the pump motor is actuated to operate the pump, thereby increasing pressure by supplying brake fluid pressure to the caliper piston of the outer front wheel or the slipping driving wheel. Also at this time, the inlet solenoid valve of the inner rear wheel is energized and the hydraulic circuit of this wheel is closed.
- After a pressure increase, brake fluid pressure is adjusted using the three pressure modes (reduction, maintain, increase) so that the target wheel speed is obtained. (The following figure shows a left turn, or control of right front wheel spin (during pressure increase mode).)

Solenoid valve operation table

<table>
<tr><th rowspan="2"></th><th colspan="2">Traction control solenoid valve</th><th colspan="2">Stability control solenoid valve</th><th colspan="4">Inlet solenoid valve</th><th colspan="4">Outlet solenoid valve</th><th rowspan="2">Pump motor and pump</th></tr>
<tr><th>LF—RR</th><th>RF—LR</th><th>LF—RR</th><th>RF—LR</th><th>LF</th><th>RF</th><th>LR</th><th>RR</th><th>LF</th><th>RF</th><th>LR</th><th>RR</th></tr>
<tr><td>During pressure increase mode</td><td>OFF (open)</td><td>ON (closed)</td><td colspan="2">OFF (closed)</td><td>ON (open)</td><td colspan="2">OFF (open)</td><td>ON (closed)</td><td>OFF (open)</td><td colspan="4">OFF (closed)</td><td>Operating</td></tr>
<tr><td>During pressure maintain mode</td><td>OFF (open)</td><td>ON (closed)</td><td colspan="4">OFF (closed)</td><td colspan="2">OFF (open)</td><td colspan="2">ON (closed)</td><td>OFF (open)</td><td colspan="4">OFF (closed)</td><td>Stopped</td></tr>
<tr><td>During pressure reduction mode</td><td>OFF (open)</td><td>ON (closed)</td><td colspan="4">OFF (closed)</td><td colspan="2">OFF (open)</td><td colspan="2">ON (closed)</td><td>OFF (open)</td><td>OFF (closed)</td><td>ON (open)</td><td colspan="2">OFF (closed)</td><td>Operating</td></tr>
</table>

Hydraulic Circuit Diagram

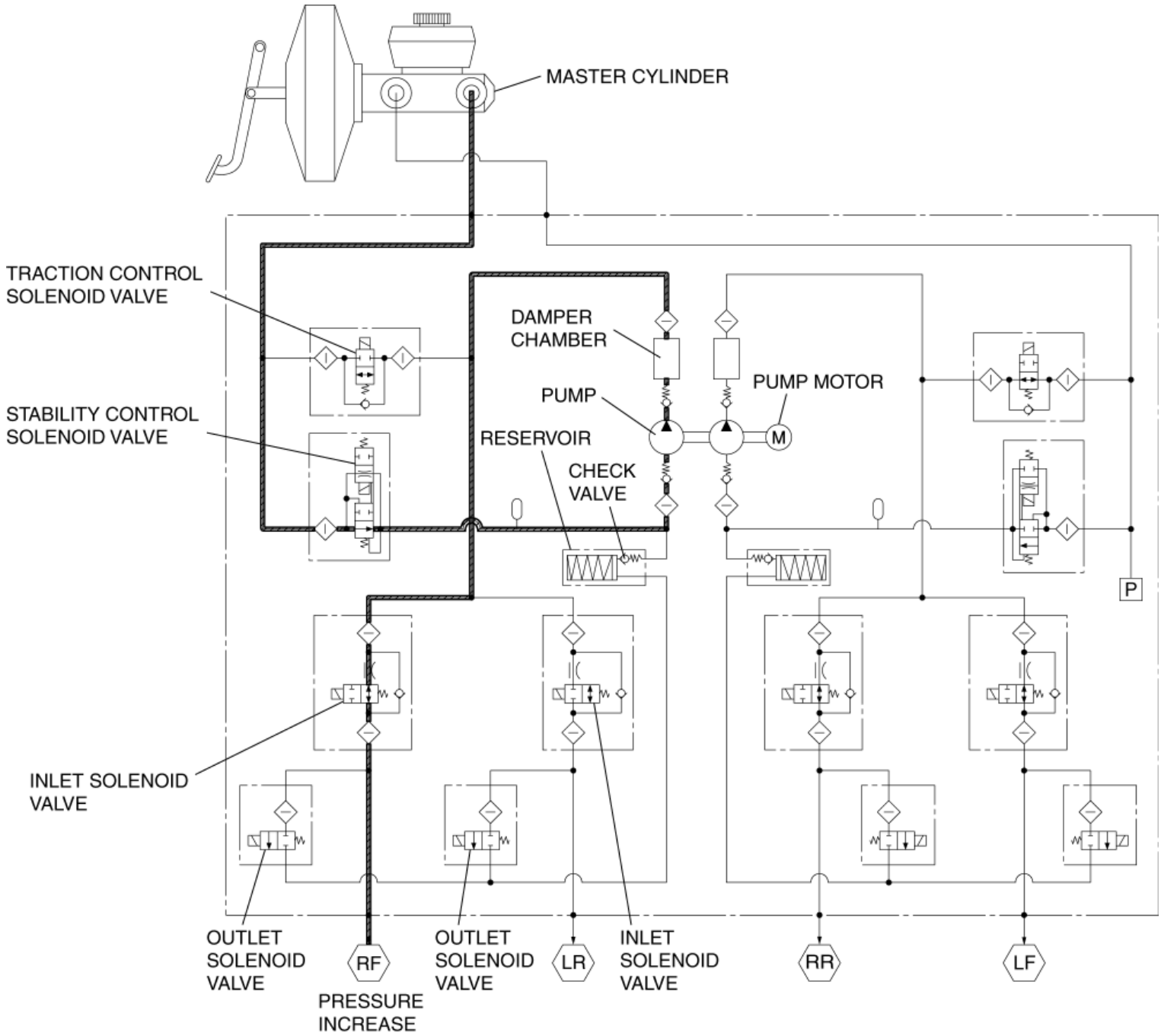

During DSC control (to suppress understeer tendency)

- When a large understeer tendency is determined, the traction control solenoid and stability control solenoid valves are energized, switching the hydraulic circuits. At the same time, the pump motor is actuated to operate the pump, supplying brake fluid pressure from the reservoir to the inner rear caliper piston. Also at this time, the inlet solenoid valve of the outer front wheel is energized and the hydraulic circuit of this wheel is closed.
- After a pressure increase, brake fluid pressure is adjusted using the three pressure modes (reduction, maintain, increase) so that the target wheel speed is obtained. (The following figure shows control during a left turn during pressure increase mode.)

Solenoid valve operation table

	Traction control solenoid valve		Stability control solenoid valve		Inlet solenoid valve				Outlet solenoid valve				Pump motor and pump
	LF—RR	RF—LR	LF—RR	RF—LR	LF	RF	LR	RR	LF	RF	LR	RR	
	OFF	ON	OFF	ON	OFF	ON	OFF						

During pressure increase mode	(open)	(closed)	(closed)	(open)	(open)	(closed)	(open)	OFF (closed)			Operating
During pressure maintain mode	OFF (open)	ON (closed)	OFF (closed)		OFF (open)	ON (closed)	OFF (open)	OFF (closed)			Stopped
During pressure reduction mode	OFF (open)	ON (closed)	OFF (closed)		OFF (open)	ON (closed)	OFF (open)	OFF (closed)	ON (open)	OFF (closed)	Operating

Hydraulic Circuit Diagram

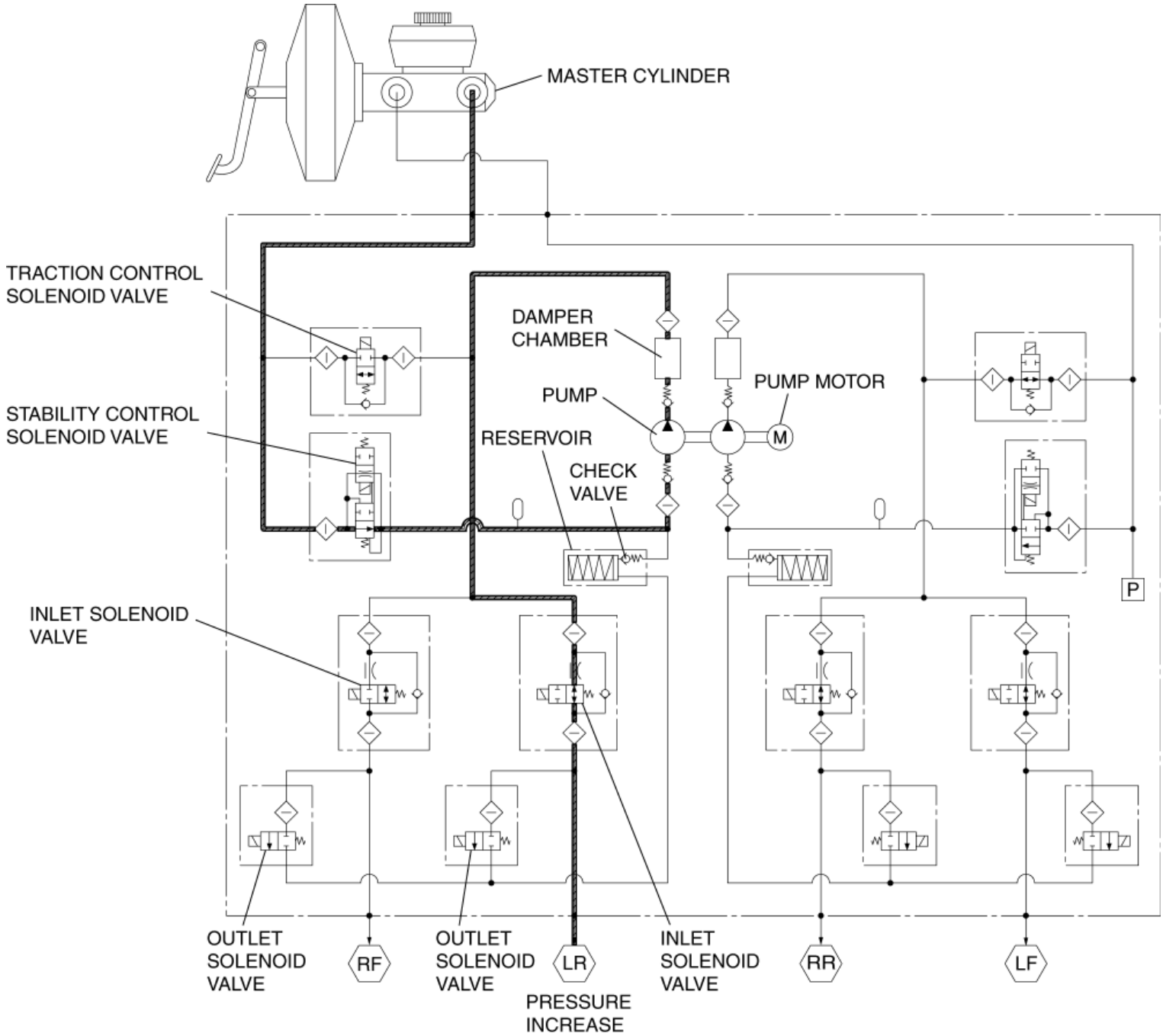

DSC CM Part Function

- The DSC CM makes calculations using signals input from each sensor, and outputs a brake fluid pressure control signal to the DSC HU to actuate DSC system functions. It also outputs an engine output control signal to the PCM.

- The DSC HU/CM controls the following functions:

Function table

Function name	Contents
ABS control function	• Controls brake fluid pressure when braking to maintain directional stability, ensure steerability, and reduce stopping distance.
Electronic brakeforce distribution (EBD) control function	• Constantly controls proper distribution of brake fluid pressure to the front and rear wheels according to vehicle load, road surface, and vehicle speed conditions to prevent early lock-up of the rear wheels.
TCS control function	• Controls traction to within the road surface friction limit and according to road and driving conditions to improve starting and acceleration performance, and safety.
DSC control function	• Suppresses strong over-steer and under-steer tendencies when turning by controlling engine output and braking of each wheel to assure driving safety.
Brake assist control function	• The brake pedal depression speed and force is calculated from the brake fluid pressure sensor signal. If it exceeds the specification, an emergency braking situation is determined and a higher amount of hydraulic pressure than the normal specified amount is generated in the hydraulic unit and supplied to each wheel based on the activation of each solenoid valve, pump motor, and pump. • If a condition is detected in which emergency braking is anticipated by the change in speed of the accelerator pedal position, the gap between the brake pad and disc plate is reduced to enhance the response when braking.
Hill Launch Assist (HLA) control function	• For detailed information on the Hill Launch Assist (HLA), refer to HILL LAUNCH ASSIST (HLA). (See **HILL LAUNCH ASSIST (HLA)**.)
Tire Pressure Monitoring System (TPMS) control function*1	• For detailed information on the TPMS, refer to TIRE PRESSURE MONITORING SYSTEM (TPMS). (See **TIRE PRESSURE MONITORING SYSTEM (TPMS)**.)
Smart City Brake Support (SCBS) control function*2	• For detailed information on the Smart City Brake Support (SCBS), refer to SMART CITY BRAKE SUPPORT (SCBS). (See **SMART CITY BRAKE SUPPORT (SCBS)**.)
CAN communication function	• Outputs the vehicle speed signal and DSC system warning control data via CAN lines.
On-board diagnostic system	• A function that allows important parts of the DSC control system to perform self-diagnosis. In case a malfunction occurs, the warning lights illuminate to alert the driver, and at the same time a DTC is stored in the DSC HU/CM. • When a malfunction is determined as a result of the on-board diagnostic test, system control is suspended or limited to prevent any dangerous situation while driving.
Automatic configuration function	• When the ignition is switched ON or the engine is started after the DSC HU/CM have been replaced, the DSC CM reads data from the instrument cluster via CAN communication to perform automatic configuration.

*1 **Vehicles with Tire Pressure Monitoring System (TPMS)**

*2 **Vehicles with Smart City Brake Support (SCBS)**

Block diagram

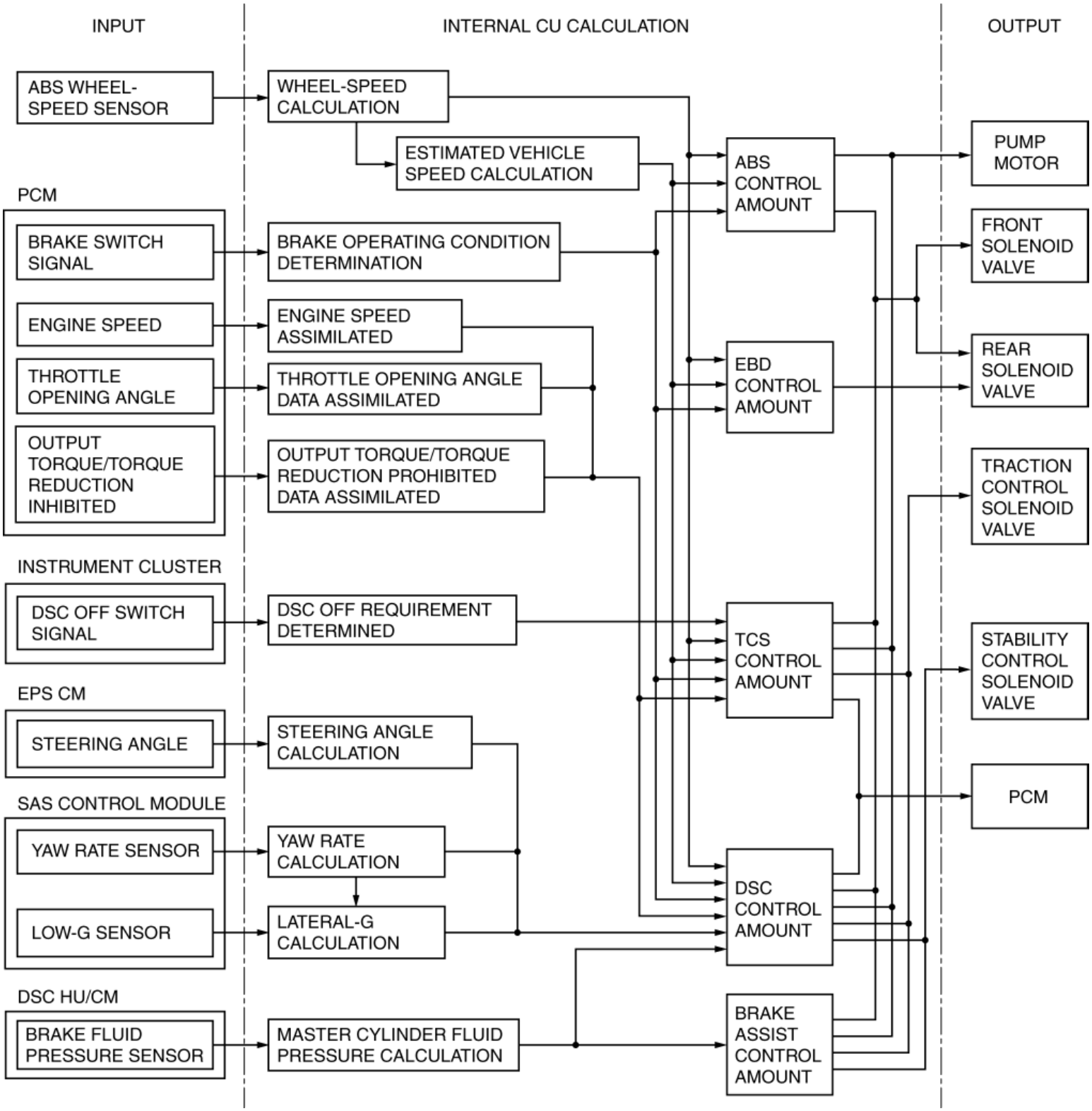

2014 - Mazda3 - Brakes

ABS CONTROL

Outline

- ABS control occurs when wheel slip is determined by the DSC CM (based on the four ABS wheel-speed sensors). Then, the DSC HU inlet and outlet solenoid valves are operated and brake fluid pressure is controlled accordingly to prevent wheel lock-up.

Feature

- Use of ABS control during emergency braking or on slippery road surfaces allows directional stability to be maintained, steerability ensured, and stopping distance to be reduced.
- The ABS control system has independent front wheel control and unified control (select low) for the rear wheels.

  NOTE:

  - Select low control: A control system in which the left and right vehicle wheel speeds are compared and brake fluid pressure is controlled according to the wheel most likely to lock-up.

Construction

Block Diagram

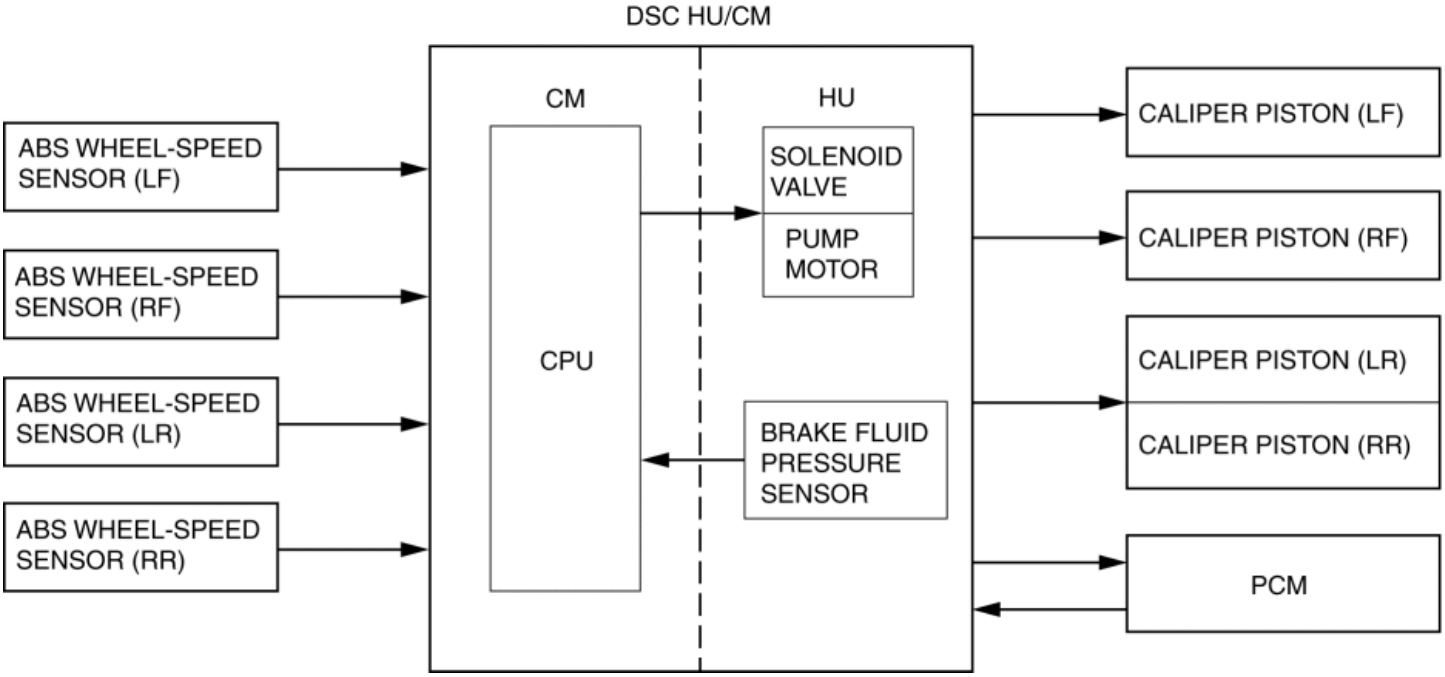

Operation

- When the DSC CM determines wheel slip conditions based on the signals from the ABS wheel-speed sensors during braking, the DSC CM operates the DSC HU inlet and outlet solenoid valves, reducing and maintaining brake fluid pressure in accordance with the wheel slip factors. Then, when the wheel slip condition has passed, brake fluid pressure is increased and maintained, ensuring braking with a constantly stable brake force.

Control condition transition diagram

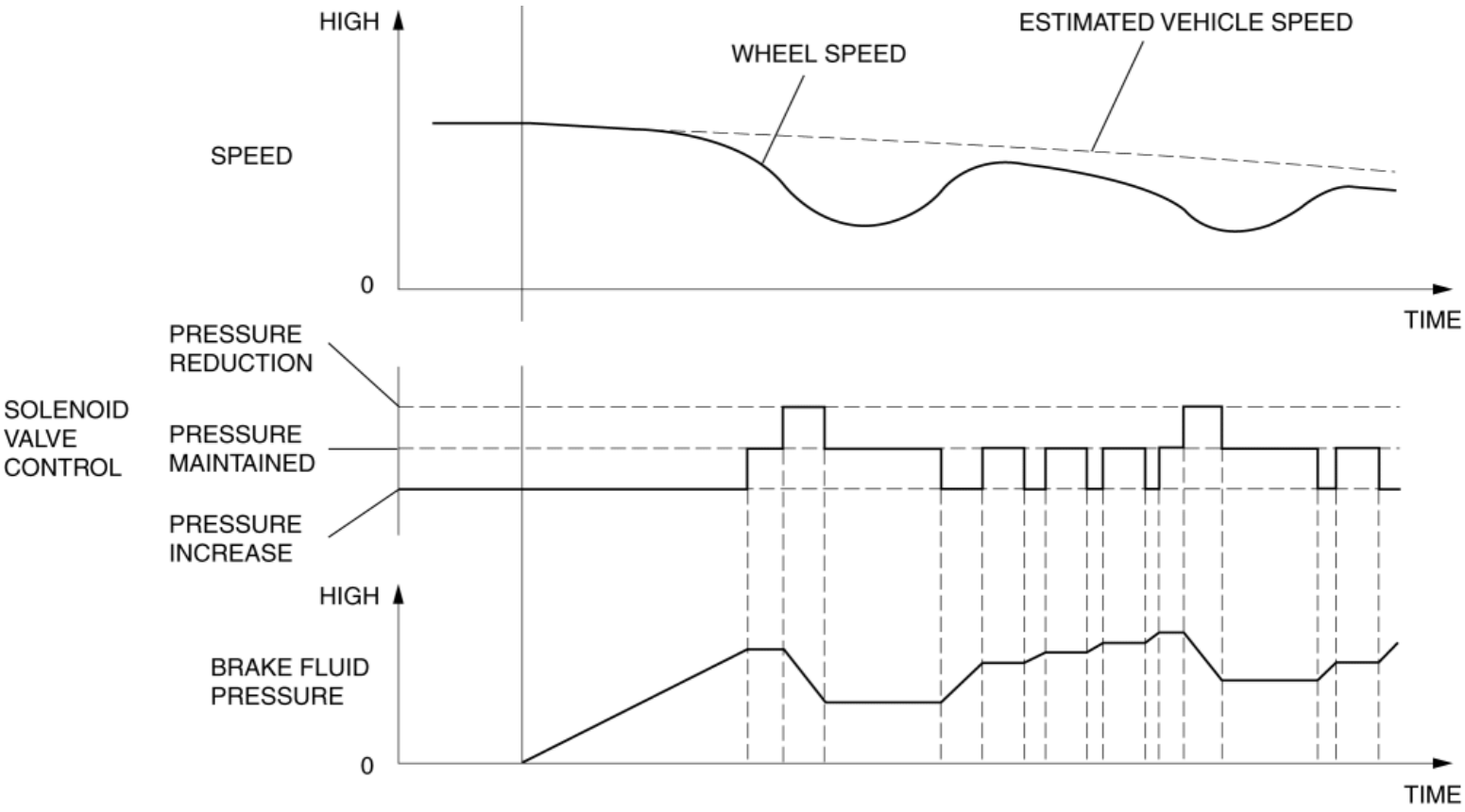
HIGH
ESTIMATED VEHICLE SPEED
WHEEL SPEED
SPEED
0
TIME
PRESSURE
REDUCTION
SOLENOID
VALVE
CONTROL
PRESSURE
MAINTAINED
PRESSURE
INCREASE
HIGH
BRAKE FLUID
PRESSURE
0
TIME

2014 - Mazda3 - Brakes

EBD CONTROL

Outline

- EBD control uses the ABS system to control brake fluid pressure distribution to the rear wheels so that they do not lock-up prior to the front wheels during braking, thereby preventing the loss of handling stability.

Feature

- EBD control has independent control systems for both the front and rear wheels.
- EBD control constantly and properly distributes brake fluid pressure regardless of vehicle weight.

Construction

Block Diagram

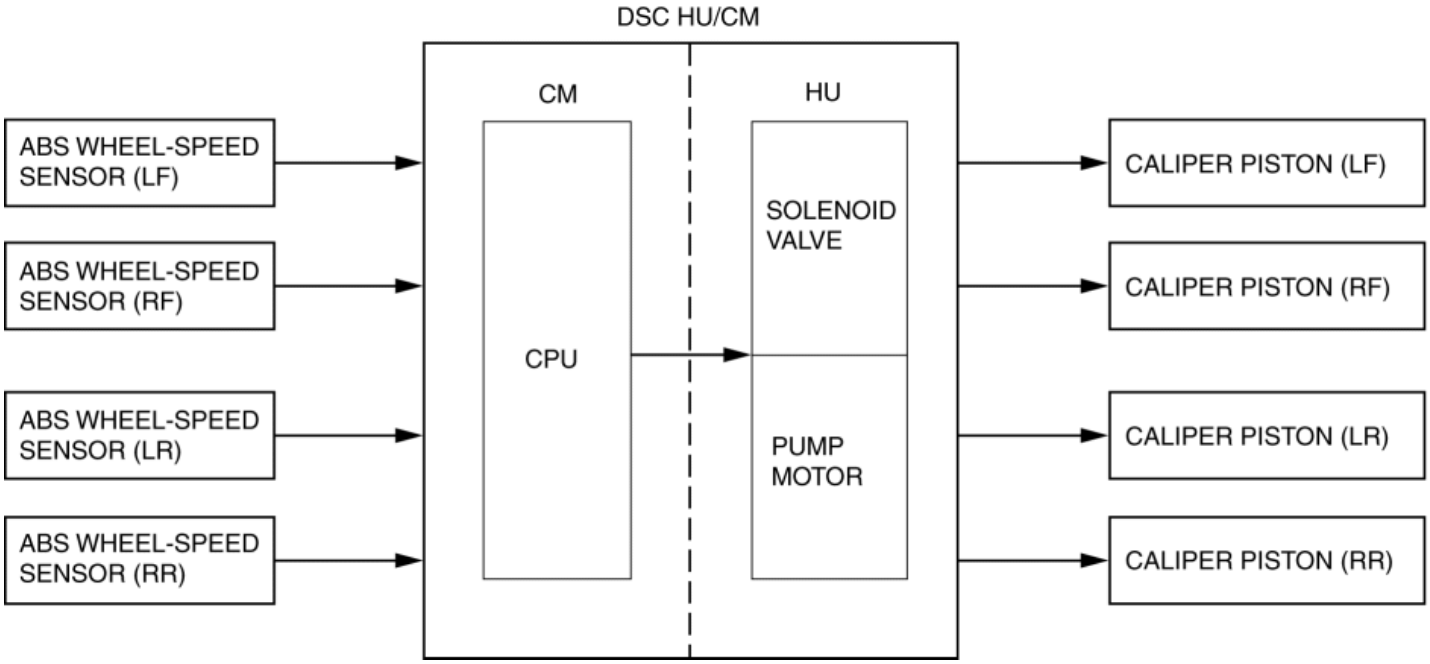

Operation

- EBD control detects the slip ratio between the estimated vehicle speed and rear wheels from the ABS wheel-speed sensor signals. If the slip ratio of the rear wheels as compared to the front wheels is larger than the fixed limit, the DSC HU/CM reduces brake pressure being distributed to the rear wheels. Due to this, brake pressure distribution is constantly controlled in the proper proportion and in relation to vehicle load, road surface conditions, and vehicle speed.
- Determination of the rear wheel slip ratio, based on a comparison of the lowest front wheel speed and the estimated vehicle speed with the rear wheel speeds, is divided into conditions 0-3 shown in the table below.
- The DSC HU outlet and inlet solenoid valves are operated and the brake fluid pressure controlled according to these conditions.
- If ABS control conditions are met during EBD control, EBD control is stopped and ABS control is given priority.

Status	Rear wheel slip ratio determination	EBD control	Solenoid valve	Comment
0	No slip	No control	Pressure increase	—
1	α%—β%	Control	Pressure maintained	—
2	After EBD control, slip ratio is γ%	Control	Increase/maintain	—
3	Front wheel slip ratio is δ% or more	Control	Pressure reduction/maintained/increase	ABS control operates

α—δ

Specified value

Operating Condition Transition Diagram

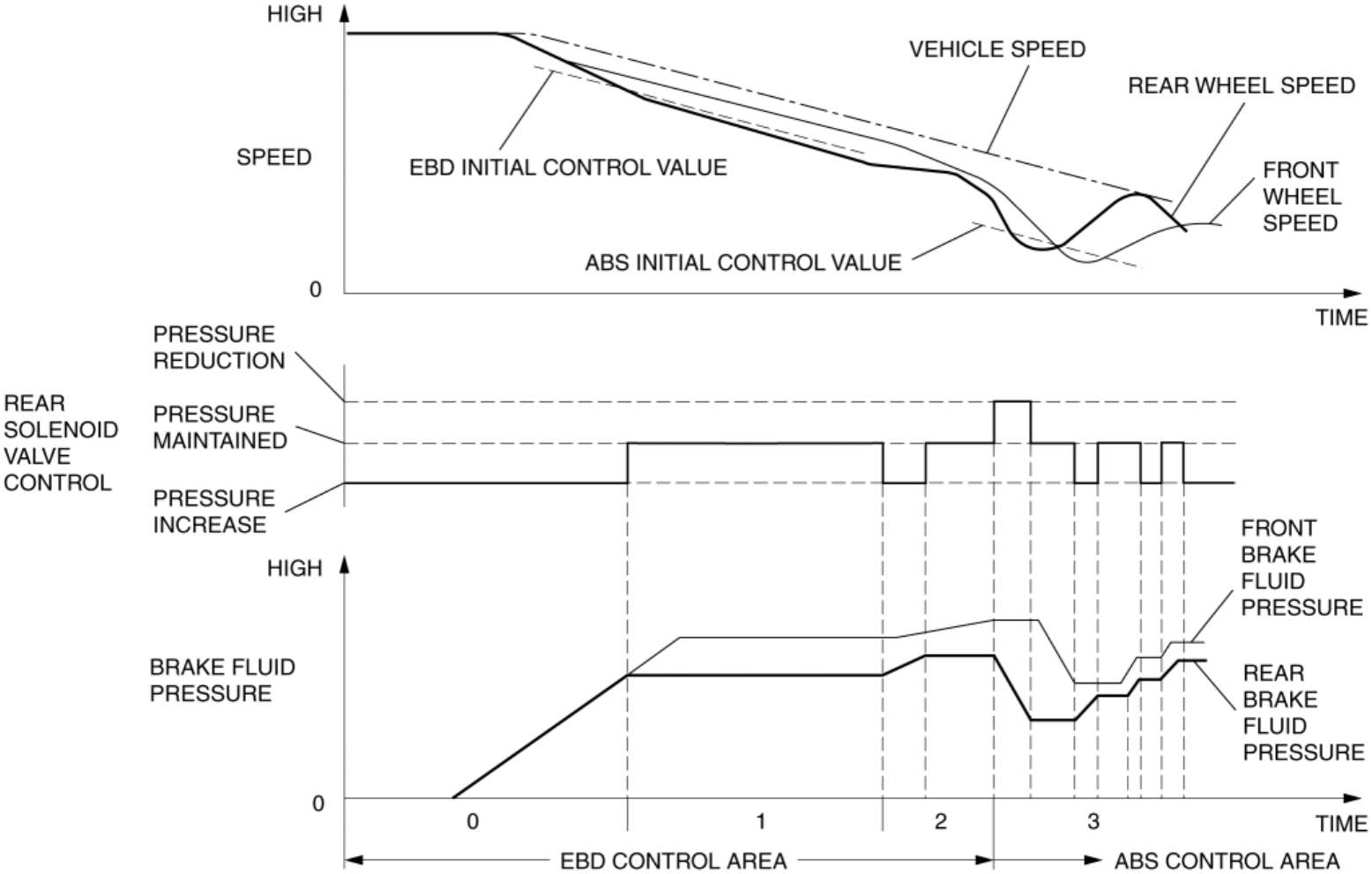

2014 - Mazda3 - Brakes

TCS CONTROL

Outline

- The TCS control actuates torque reduction through engine control, as well as using brake control to control traction.

NOTE:

- Engine control: Engine output is lowered by fuel cut and ignition timing control to reduce the traction, preventing driving wheel slip.
- Brake control: Brake fluid pressure from the Hydraulic Unit (HU) to the driving wheel that is slipping is increased, operating the brake and preventing driving wheel slip.

Features

- The left and right wheels are controlled at the same time by engine control. Therefore, when the road surface friction coefficients differ between the left and right wheels, proper torque reduction cannot be performed separately for each wheel. When this occurs, torque reduction is performed by independent left and right wheel brake control, providing more stable vehicle control.
- The DSC OFF switch allows the driver to optionally enable/disable the TCS control at the driver's discretion.
    - When both driving wheels are stuck, traction control according to the driver's operation can be performed by inhibiting the TCS control.
    - The TCS control returns to normal operation automatically at the next ignition cycle.

Construction

Block Diagram

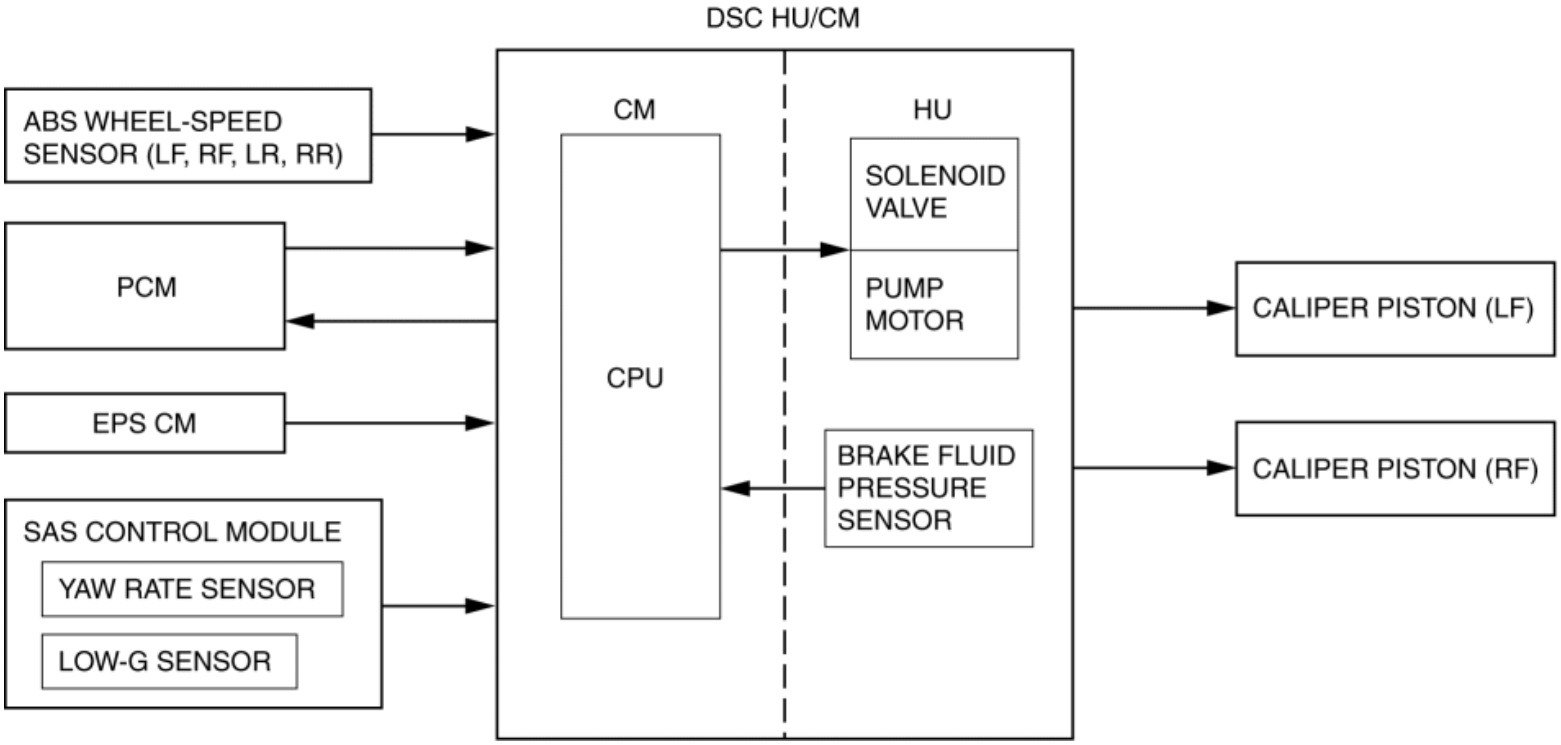

Operation

- TCS control detects driving wheel spin based on the signals listed below, sends torque reduction request signals to the PCM, and also controls the solenoid valves and pump motor in the DSC HU/CM.
    - Vehicle wheel speed signals from the front and rear ABS wheel-speed sensors
    - Engine torque signal from the PCM
    - Steering angle signal from the EPS CM
    - Yaw rate and lateral-G signals from the SAS control module
    - Fluid pressure signal from the brake fluid pressure sensor (built into the DSC HU/CM)

2014 - Mazda3 - Brakes

DSC CONTROL

Outline

- While a vehicle normally turns safely in response to steering operation, there are instances when the limits of tire lateral grip is surpassed due to road surface conditions or vehicle speed, and the influence of evasive steering to avoid an accident or similar situations.
- Tires surpassing lateral grip exhibit one of the following conditions: Strong oversteer tendency (rear wheel grip is less than front wheels) and strong understeer tendency (front wheel grip is less than rear wheels)
- DSC operates at vehicle speeds of approx. 15 km/h {9.3 mph} or more in the conditions described above, controlling engine output and wheel braking to suppress oversteer and understeer tendencies.

Function

Vehicle condition determination

- The vehicle speed, steering angle, lateral-G, and yaw rate are detected by the sensors and used in calculations by the DSC HU/CM to determine the vehicle condition. Then, depending on the difference between the target yaw rate, calculated with the values input from each sensor and the value detected by the yaw rate sensor, an oversteer or understeer tendency can be determined.

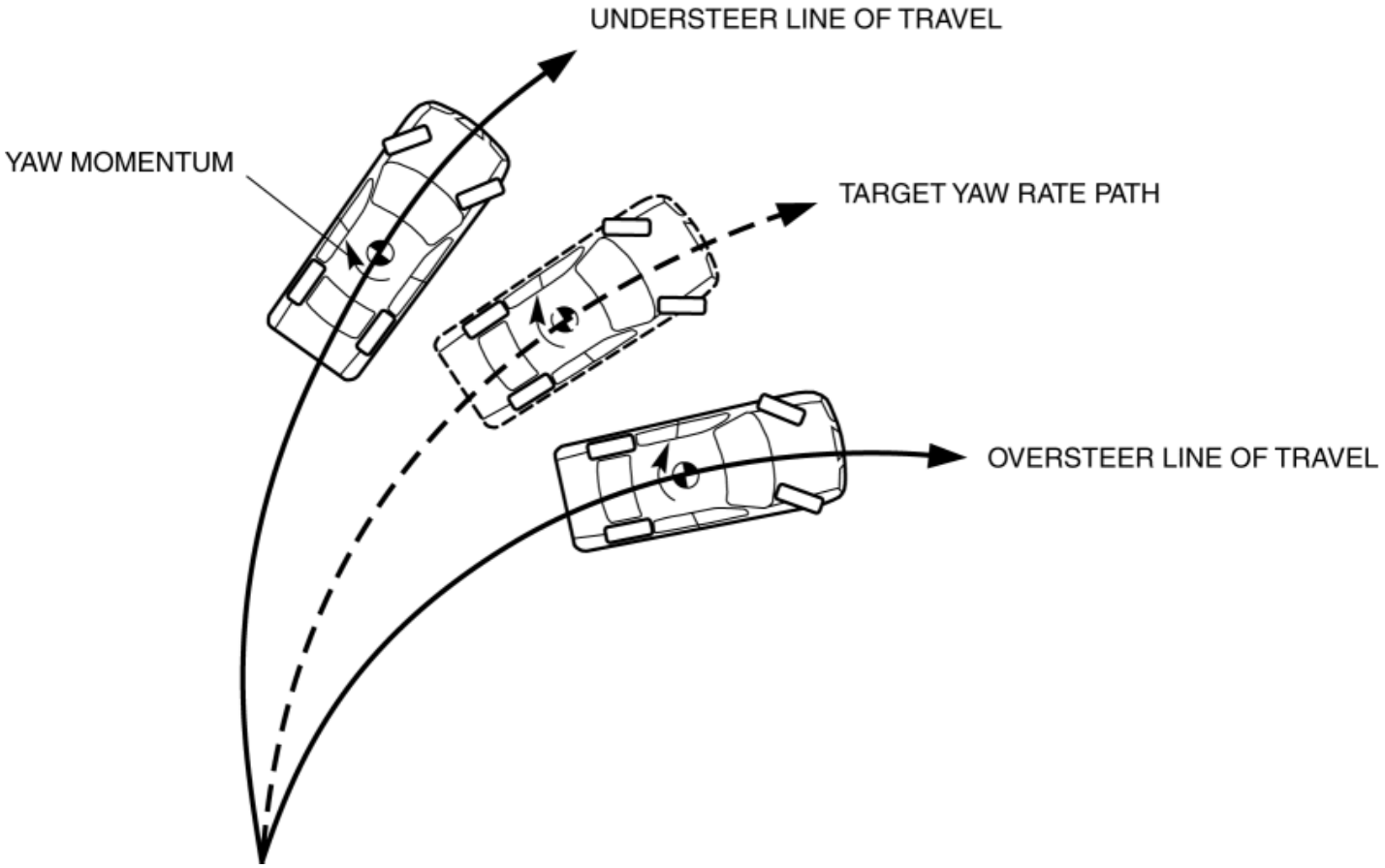

Oversteer tendency determination

- When turning, if the actual vehicle yaw rate is larger than the target yaw rate (the yaw rate that should normally be formed as determined by the steering angle and vehicle speed), it means that the vehicle is in or about to be in a spin. Therefore the vehicle is determined to have an oversteer tendency.

Understeer tendency determination

- When turning, if the actual vehicle yaw rate is less than the target yaw rate (the yaw rate that should normally be formed as determined by the steering angle and vehicle speed), it means that the vehicle is not properly turning. Therefore the vehicle is determined to have an understeer tendency.

Construction

Block diagram

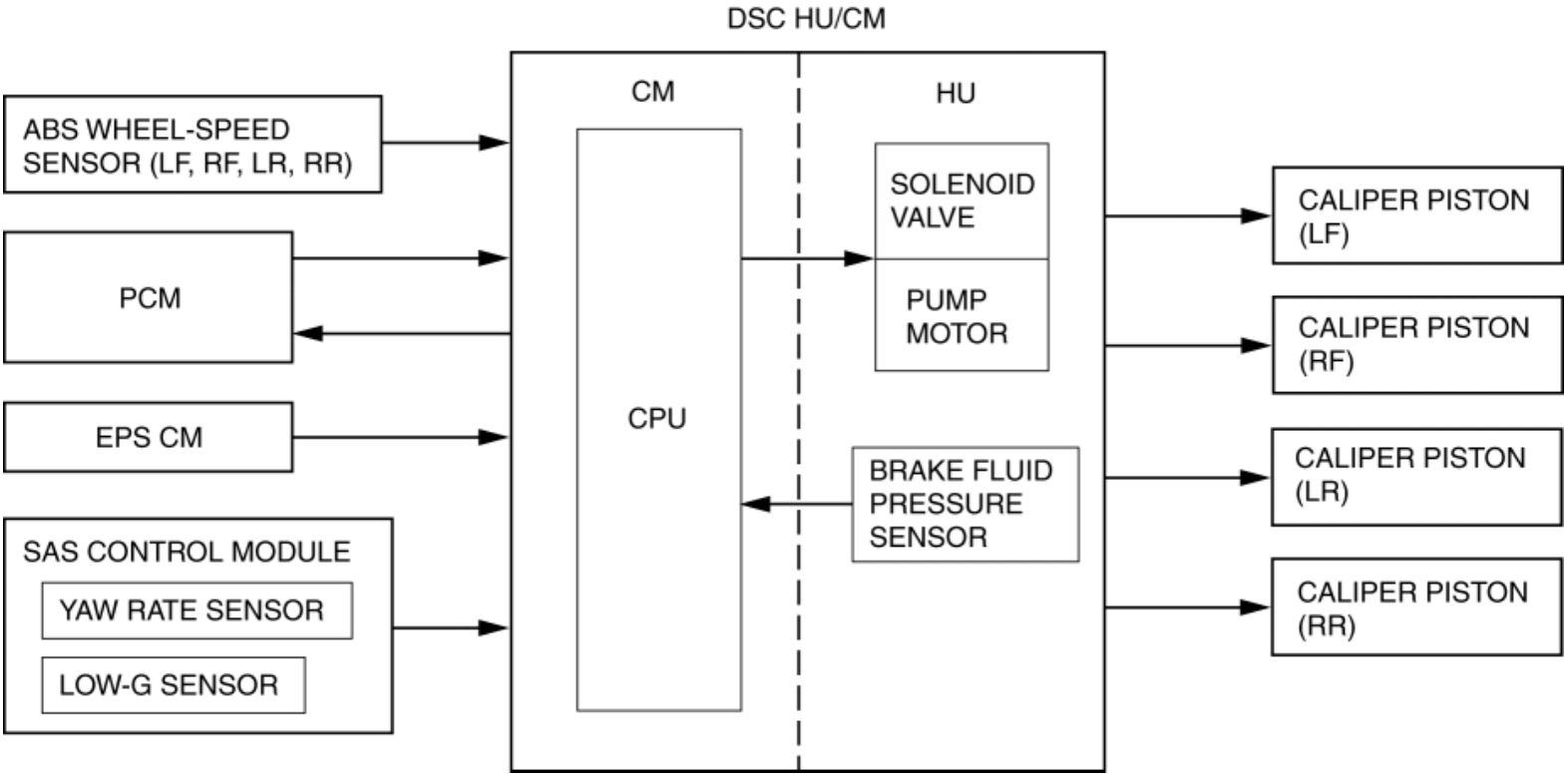

Operation

- When the DSC HU/CM determines that the vehicle has a strong oversteer or understeer tendency, engine output is lowered and, at the same time, it suppresses the yaw moment by affecting the braking of the front or rear wheels to inhibit the oversteer or understeer tendency.

Oversteer tendency suppression

- When a large oversteer tendency is determined, braking is applied to the outer front wheel according to the degree of the tendency. As a result, a yaw moment is formed towards the outer side of the vehicle and the oversteer tendency is suppressed.

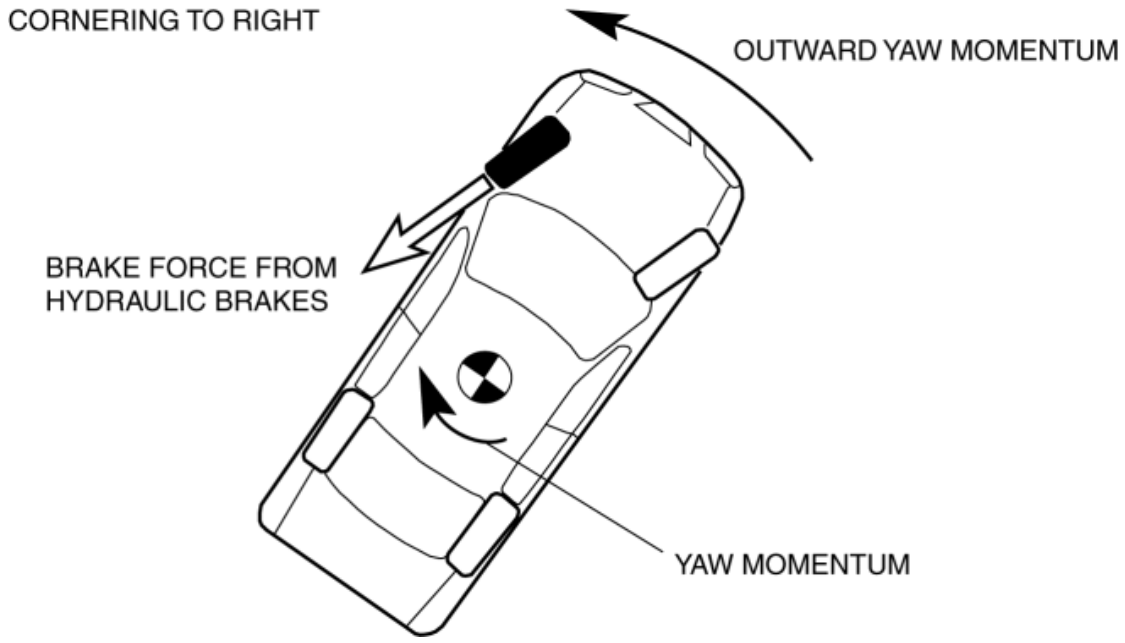

Understeer tendency suppression

- When a large understeer tendency is determined, engine output is controlled and braking is applied to the inner rear wheel according to the degree of the tendency. As a result, a yaw moment is formed towards the inner side of the vehicle and the understeer tendency is suppressed.

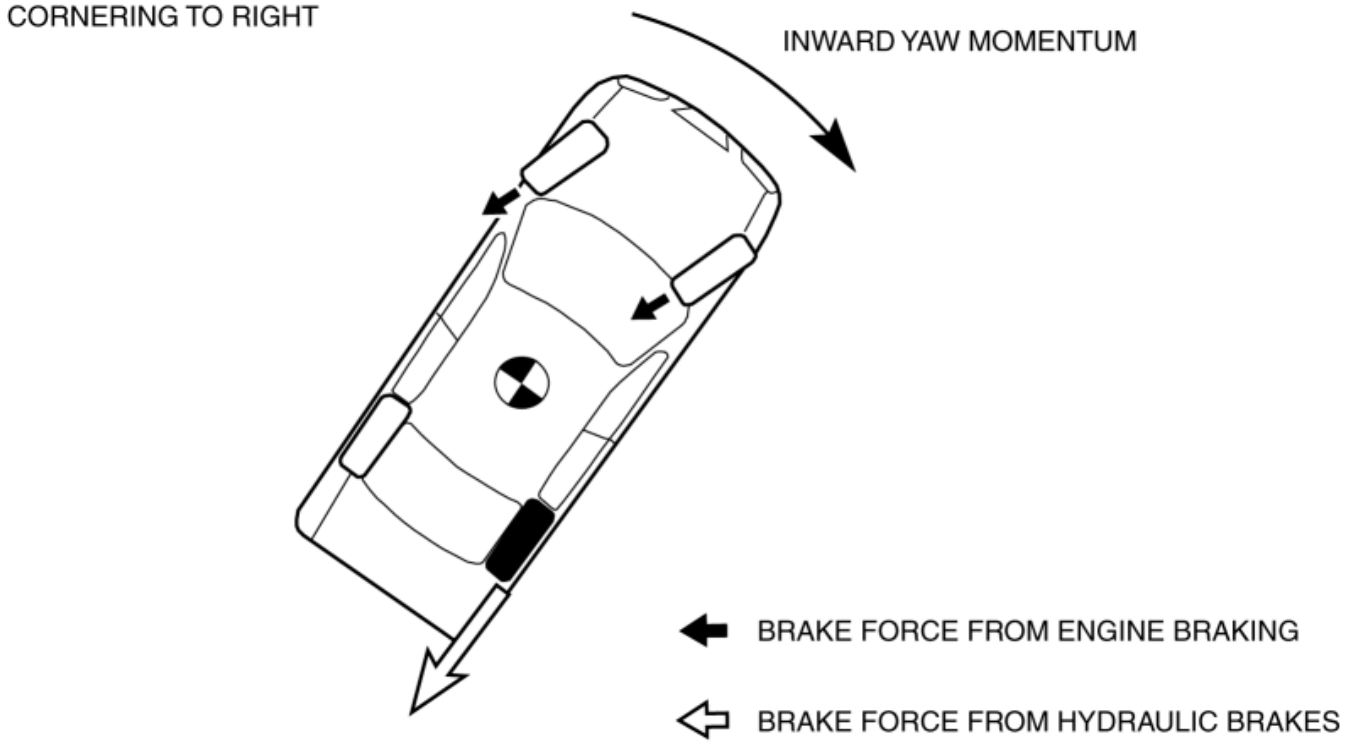

2014 - Mazda3 - Brakes

HILL LAUNCH ASSIST (HLA)

Purpose / Function

- Hill Launch Assist (HLA) functions to assist in accelerating the vehicle from a stop on uphill slopes. When the vehicle is held at a stop by depressing the brake pedal on a slope with a grade of 3 % (MTX vehicle), or 6 % or more (ATX vehicle), the brake fluid pressure is maintained to prevent the vehicle from rolling backwards even after the driver's foot is released from the brake pedal.
- Hill Launch Assist (HLA) operates when the selector lever is in the D/M position and the R position. For MTX vehicles, it operates when the shift lever is in a forward drive position and the R position.

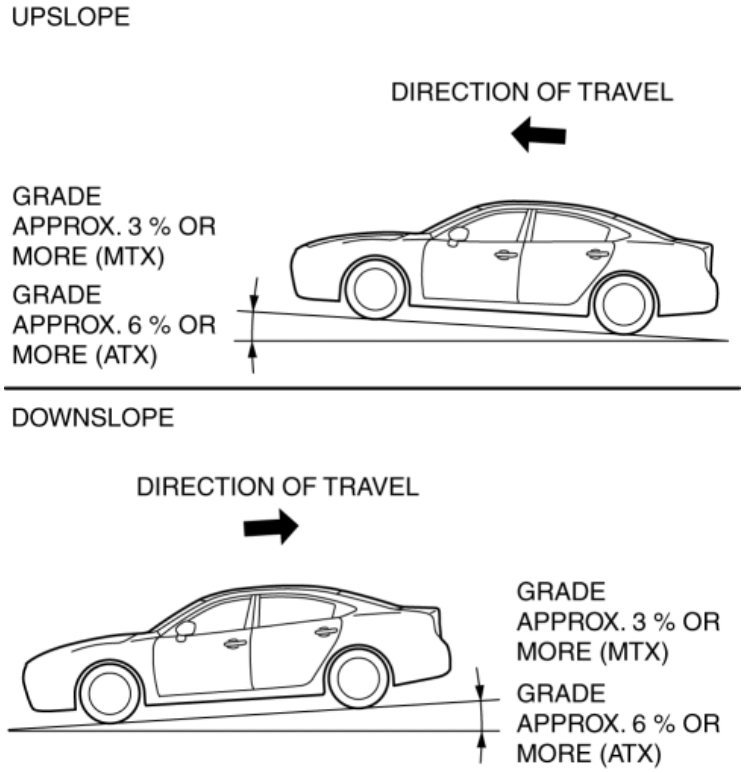

Structure

Block diagram

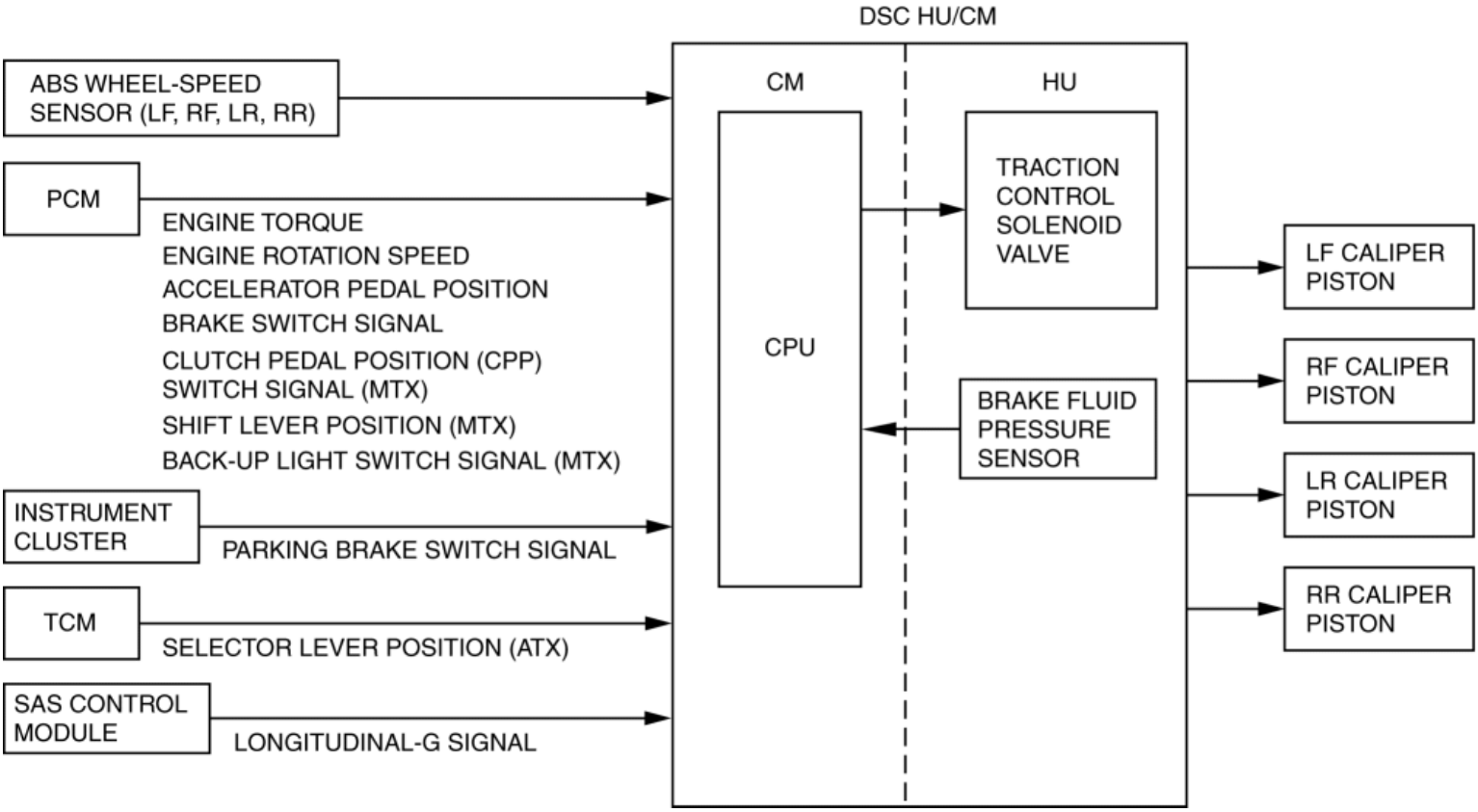

Hydraulic circuit diagram

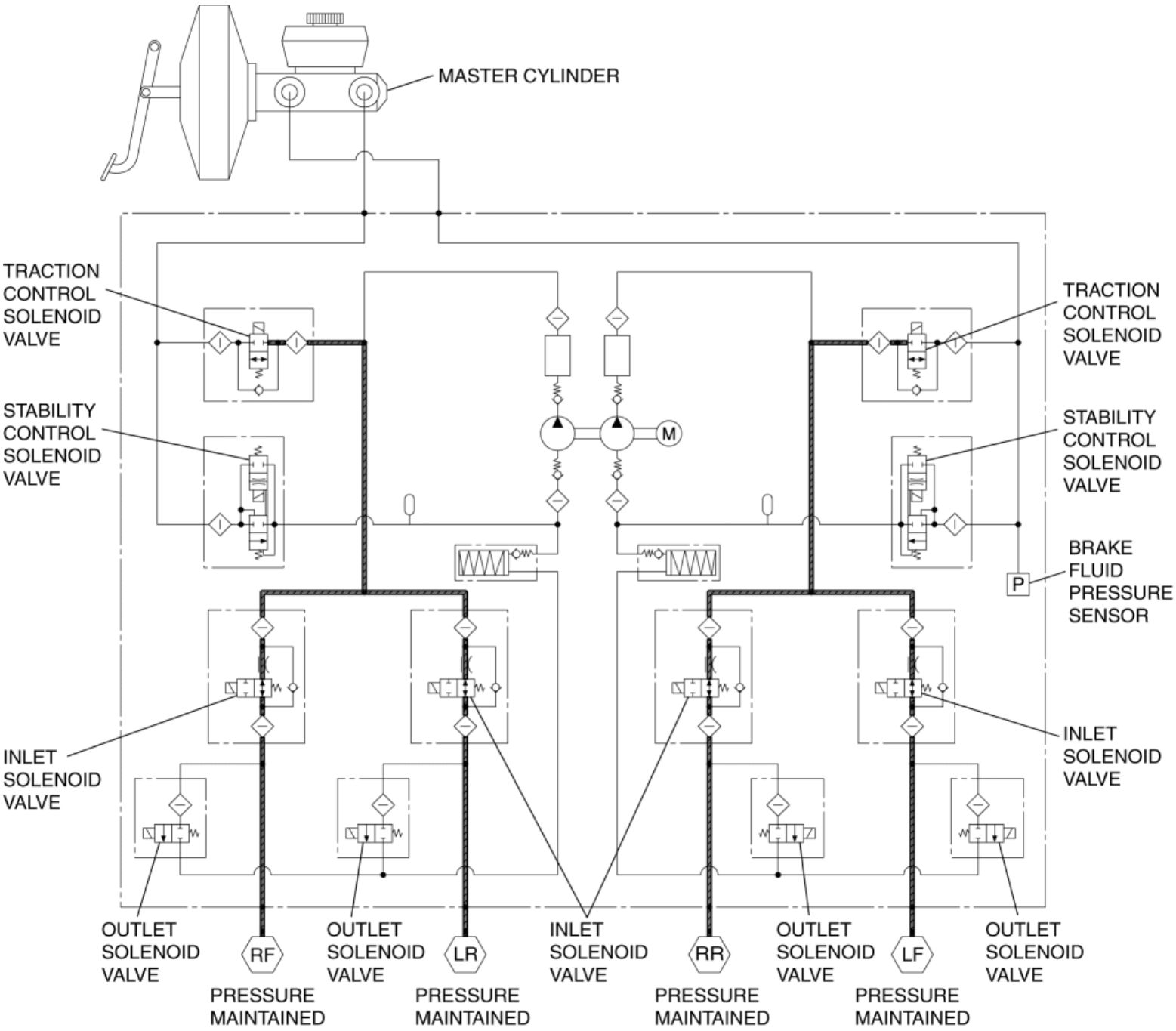

Operation

- Hill Launch Assist (HLA) is controlled by the DSC HU/CM. When the input signals from each module meet the operation conditions, the DSC HU/CM maintains the brake fluid pressure when the driver depressed the brake pedal (hold control). When the engine torque increases to the point of enabling the vehicle to move forward by depressing the accelerator pedal (ATX vehicles) or depressing the clutch (MTX vehicles), the brake fluid pressure is released (release control) according to the engine torque value.
- In the event that a malfunction occurs in the DSC system during hold control, the DSC HU/CM releases the brake fluid pressure. When the brake fluid is released due to a DSC system malfunction, slow release control or fast release control is performed according to the nature of the malfunction.

NOTE:

- Hill Launch Assist (HLA) operates during forward and reverse travel (grade on which system operates changes slightly depending on vehicle conditions such as load, tire wear, tire air pressure).
- Hill Launch Assist (HLA) operates continuously regardless of the DSC OFF switch operation effect.
- If a malfunction occurs in the parking brake switch or there is an error in the parking brake signal from the instrument cluster, Hill Launch Assist (HLA) does not operate. In this case, the TCS/DSC indicator light are illuminated simultaneously.

- If a malfunction occurs in the DSC system, Hill Launch Assist (HLA) does not operate.

Hold control

- Control conditions (all of the following conditions met):
  - Slope of approx. 3 % or more (MTX)
  - Slope of approx. 6 % or more (ATX)
  - Wheel speed is 0 km/h {0 mph}
  - Parking brake not operated
  - Accelerator pedal not depressed
  - No fail-safe mode is present
  - Upslope: The selector lever position is in the D/M position (ATX)
  - Upslope: The shift lever position is in the position other than R (MTX)
  - Downslope: The selector/shift lever position is in the R position
  - Brake pedal is depressed
  - Clutch pedal depressed (MTX)

NOTE:

- If the parking brake is operated during hold control, slow release control is executed and the brake fluid pressure is released. After this, if the brake pedal is depressed again and the parking brake is released, the system transitions to hold control again.
- Control description
  - If all of the control conditions are met, the DSC HU/CM controls the traction control solenoid valves and maintains brake fluid pressure (driver can depress brake pedal more at this time).

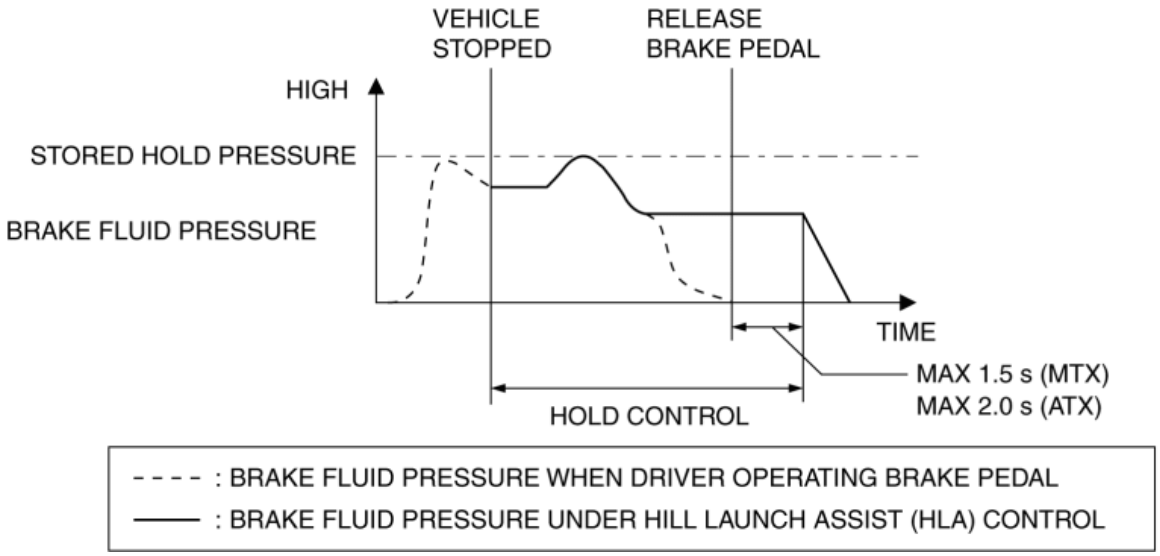

  - If the brake pedal is released, brake fluid pressure (hold-pressure stored in memory) is maintained for a maximum of 1.5 s (MTX) or 2.0 s (ATX).

Release control

- Control condition
  - After the accelerator pedal is depressed, the required engine torque for accelerating the vehicle on a slope is produced
- Control description
  - Brake fluid pressure being maintained is lowered depending on produced engine torque.

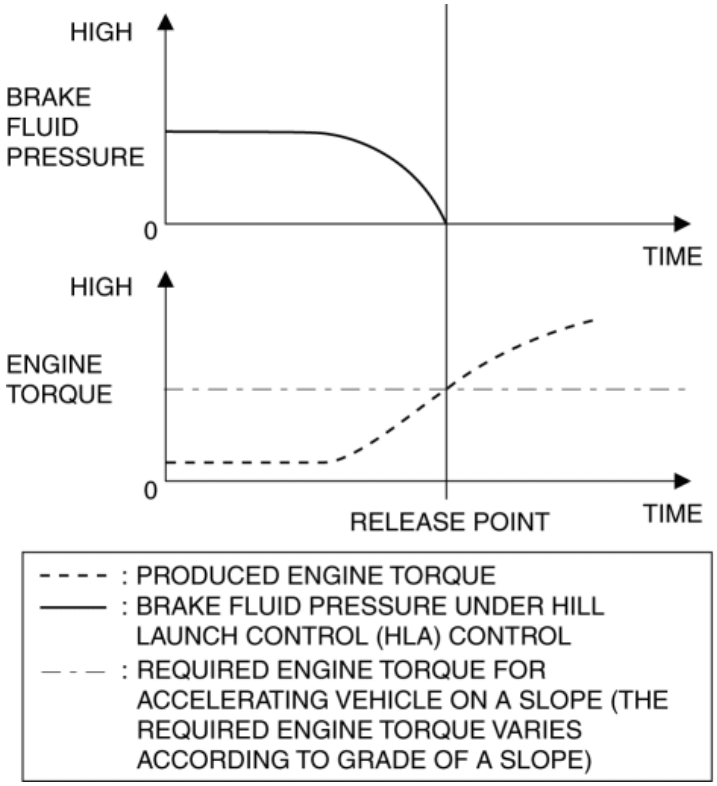

Slow release control

- Control condition (one or more of following conditions are met):
  - Parking brake applied
  - Clutch pedal released (MTX)
  - DSC HU/CM has malfunction (performs slow release control only if solenoid valve control is available)
  - 1.5 s have elapsed with brake pedal released (MTX)
  - 2.0 s have elapsed with brake pedal released (ATX)
- Control description
  - Brake fluid pressure being maintained is lowered within 1.5 s

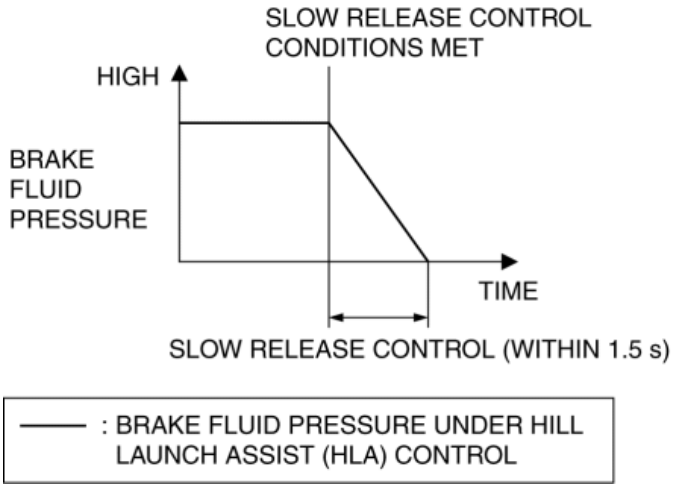

Fast release control

- Control condition
  - DSC HU/CM has malfunction and solenoid valve control is not available

- Control description
    - Brake fluid pressure being maintained is reduced to 0 kPa {0 mmHg, 0 inHg} immediately

2014 - Mazda3 - Brakes

SMART CITY BRAKE SUPPORT (SCBS)

Purpose

- The Smart City Brake Support (SCBS) operates the automatic brakes (brake control (SCBS brake)) when the vehicle approaches a vehicle ahead at a vehicle speed between **approx. 4 km/h {2 mph}** to **30 km/h {19 mph}** to reduce collision impact.

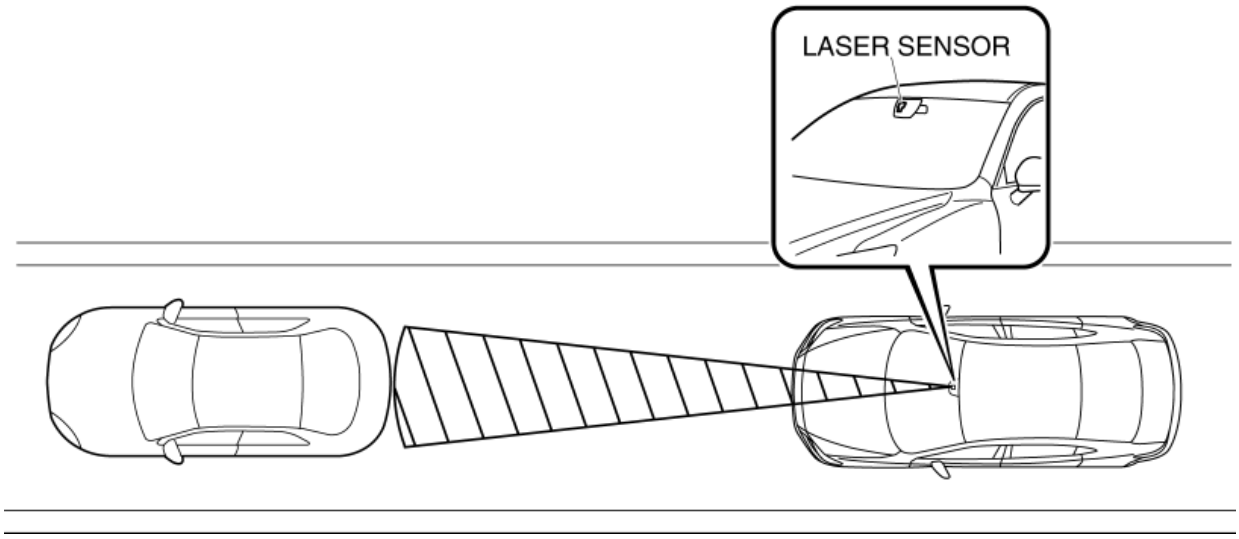

WARNING:

- The Smart City Brake Support (SCBS) performs the brake control (SCBS brake), however, it is not a system which guarantees collision prevention under all conditions. Because deceleration by the brake control (SCBS brake) is limited, always verify the safety of the surrounding area and keep a safe distance from a vehicle ahead.
- The Smart City Brake Support (SCBS) does not operate when the vehicle speed is less than approx. 4 km {2 mph} or approx. 30 km/h {19 mph} or more. It also does not operate when the vehicle is in reverse.
- Do not apply stickers to the surface of the windshield near the laser sensor (including transparent stickers). Otherwise, the laser sensor may not be able to detect vehicles or obstructions ahead which could result in an accident.

CAUTION:

- Always use tires for all wheels that are of the specified size, and the same manufacture, brand, and tread pattern. In addition, do not use tires with significantly different wear patterns on the same vehicle. If such improper tires are used, the Smart City Brake Support (SCBS) system may not operate normally.

NOTE:

- The Smart City Brake Support (SCBS) is a system for assisting driver operations. Accordingly, if the conditions for the Smart City Brake Support (SCBS) are met, or even when the Smart City Brake Support (SCBS) is operating, if the driver operates the steering wheel, accelerator pedal, and the brake pedal, the driver's operations take precedence and the Smart City Brake Support (SCBS) operation is canceled.
- Turn off the Smart City Brake Support (SCBS) system to prevent mistaken operation when the vehicle is running on a chassis roller.

Function

- The Smart City Brake Support (SCBS) functions are categorized as follows:
    - Brake prefill which reduces the clearance between the brake pads and the disc plate when the laser sensor detects the vehicle approaching a vehicle ahead to enable brake force generation immediately when the brake is operated.

Brake control (SCBS brake) which operates the automatic brakes when the laser sensor detects the risk of a collision.

- When the laser sensor detects that the vehicle is approaching a vehicle ahead, the system operates the brake prefill. When the driver depresses the brake pedal, the brakes are applied firmly and quickly to assist, and if the driver does not perform an avoidance maneuver, it operates the brake control (SCBS brake).
- The laser sensor installed on the upper area of the windshield detects a vehicle running ahead within **approx. 6 m {20 ft}** from the laser sensor.

Smart City Brake Support (SCBS) display

- The Smart City Brake Support (SCBS) display which displays in the Active Drive Display is as follows:

  NOTE:

  - A warning message in the center display is displayed with the Smart City Brake Support (SCBS) indicator light (amber) turned on or flashed. For the message content and verification method, refer to the CENTER DISPLAY. (See **CENTER DISPLAY [WITH CENTER DISPLAY]**.)
  - When the Smart City Brake Support (SCBS) system operates, the user is notified by the flashing warning light and the Active Driving Display.

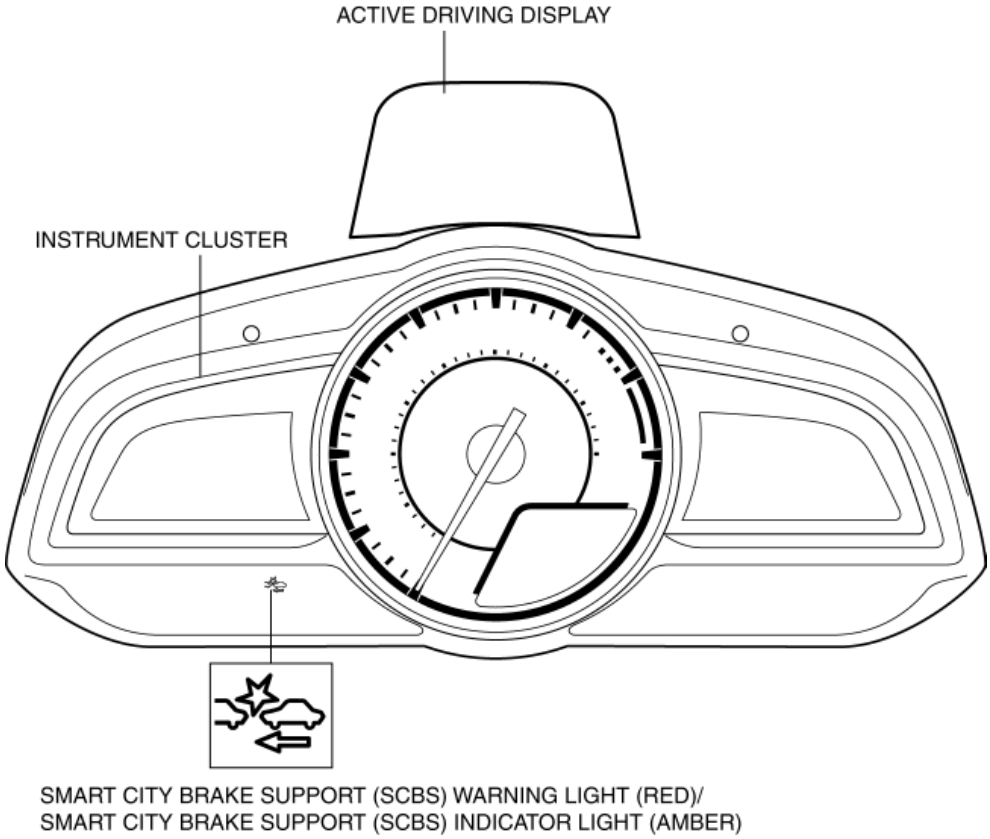

Smart City Brake Support (SCBS) operating condition		Content	Smart City Brake Support (SCBS) warning light (red)	Smart City Brake Support (SCBS) indicator light (amber)	Active driving display
ON	When there is the possibility of a collision with a vehicle ahead or an obstruction	Brake control (SCBS brake) is in operation	Flashes	Not illuminated/Not flashed	Smart City Brake Support Activated
	When a malfunction occurred in the Smart City Brake Support (SCBS) system	The Smart City Brake Support (SCBS) system malfunction is occurred	Not illuminated/Not flashed	Illuminated	No display
		The laser sensor capability is impaired			

		by rainfall, snowfall, dirty windshield and so forth.	Not illuminated/Not flashed	Illuminated	No display

Construction / Operation

- The Smart City Brake Support (SCBS) system will operate under the following conditions:
  - The engine is running.
  - The center display in the instrument cluster does not indicate that the system requires inspection.
  - The vehicle speed is between **approx. 4 km/h {2 mph}** to **30 km/h {19 mph}**.
  - The Smart City Brake Support (SCBS) system is not turned off.
  - The DSC operation is not turned off using the DSC OFF switch.
  - The DSC is not malfunctioning.
  - The driver is not deliberately performing driving operations (accelerator pedal, steering wheel, and braking operations).

NOTE:

- The Smart City Brake Support (SCBS) detects a vehicle ahead by emitting a near infrared laser beam and receiving the beam reflected off the reflector or the vehicle ahead, and then using it for the measurement. Consequently, the Smart City Brake Support (SCBS) may not operate under the following conditions:
  - Reflection of laser sensor is poor due to the shape of the vehicle ahead.
  - The vehicle ahead is significantly dirty.
  - Under bad weather condition such as rain, fog, and snow.
  - When the window washer is being used or the windshield wipers are not used when it is raining.
  - The windshield is dirty.
  - The steering wheel is turned completely left or right, or the vehicle is accelerated rapidly and comes close to the vehicle ahead.
  - Trucks with low loading platforms, vehicles traveling at extremely low speeds, and vehicles with high profile.
  - Vehicles with certain shapes such as a vehicle carrier.
- Under the following conditions, the Smart City Brake Support (SCBS) system may not operate normally:
  - Heavy luggage is loaded in the luggage compartment or on the rear seat.
  - When there is the possibility of a partial contact with a vehicle or obstruction ahead.
  - When driving on continuously curving roads, entering and existing curves, and unstable driving due to a vehicle accident or breakdown in a driving lane.
  - Elongated luggage or cargo is loaded onto installed roof rails and covers the laser sensor.
  - Exhaust gas from the vehicle ahead, sand, snow, and water vapor rising from manholes and grating, and water splashed into the air.
- In the following cases, if the laser sensor determines that there is a vehicle ahead and the Smart City Brake Support (SCBS) system may operate:
  - Object on the road at the entrance to a curve.
  - Vehicles passing in the opposite lane while making a curve.
  - Metal objects, bumps, or protruding objects on the road.
  - When passing through a toll gate.
  - When passing under a vinyl curtain or flag.
  - Plastic objects such as pylons.
  - Two-wheeled vehicles, pedestrians, animals or standing trees.

Brake prefill operation

Solenoid valve operation table

Traction control solenoid valve		Stability control solenoid valve		Inlet solenoid valve				Outlet solenoid valve				Pump motor, pump
LF—RR	RF—LR	LF—RR	RF—LR	LF	RF	LR	RR	LF	RF	LR	RR	
OFF (open)		OFF (close)		OFF (open)				OFF (close)				Operating

Hydraulic circuit diagram

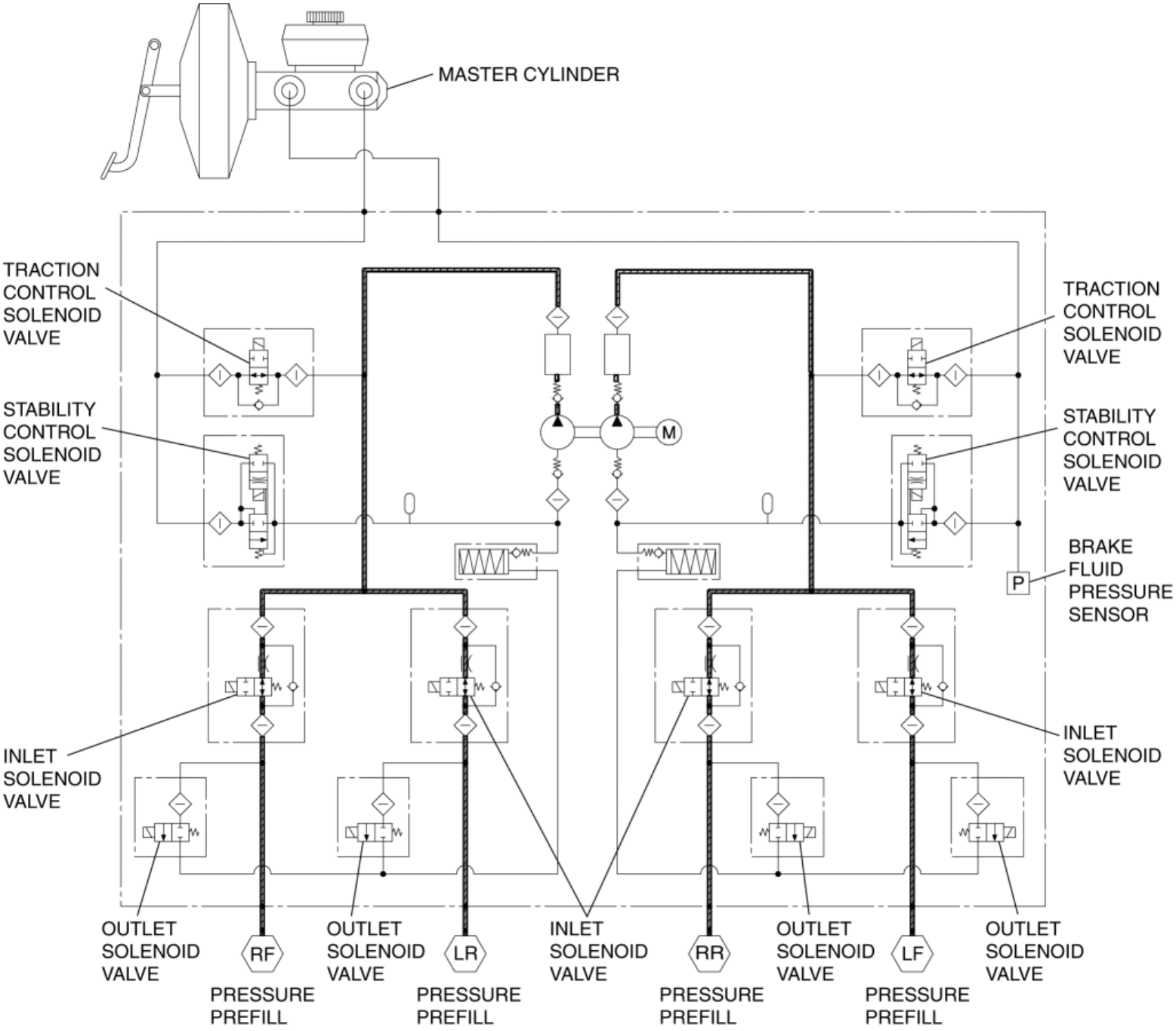

Block diagram

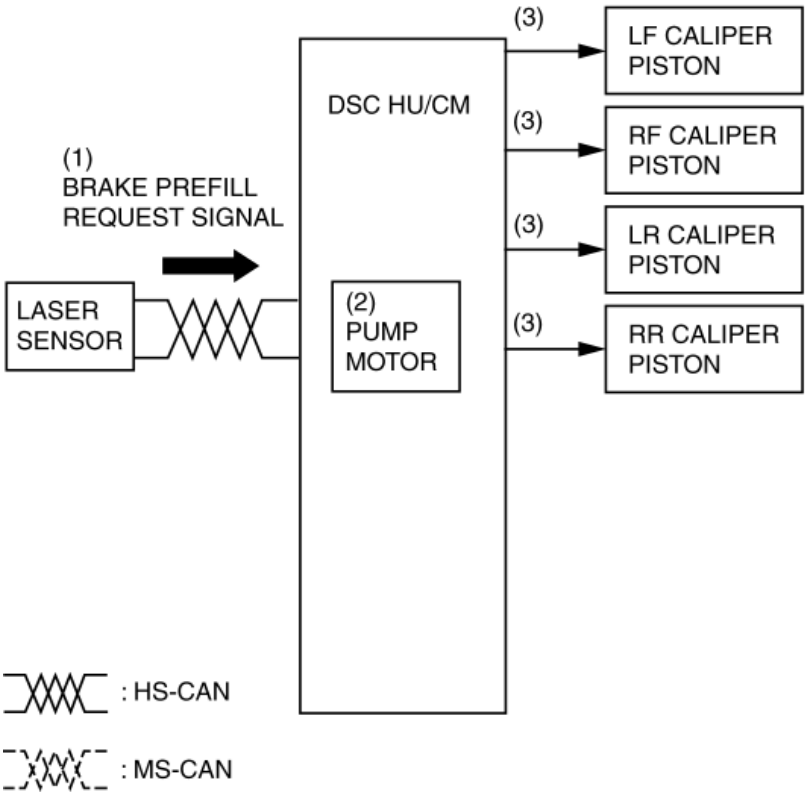

- When the laser sensor detects that the vehicle is approaching a vehicle ahead, it outputs a brake prefill request signal (1) to the DSC HU/CM.
- The DSC HU/CM operates the pump motor (2) to activate the pump so that the brake fluid pressure is lead to the caliper piston (3) and the brake pads are kept near the disc plate.
- As a result, if the driver realizes that he/she is approaching a vehicle ahead and depresses the brake pedal, or if the driver does not perform an avoidance maneuver and the automatic brakes are operated, the brake force is generated immediately and the braking distance is reduced.

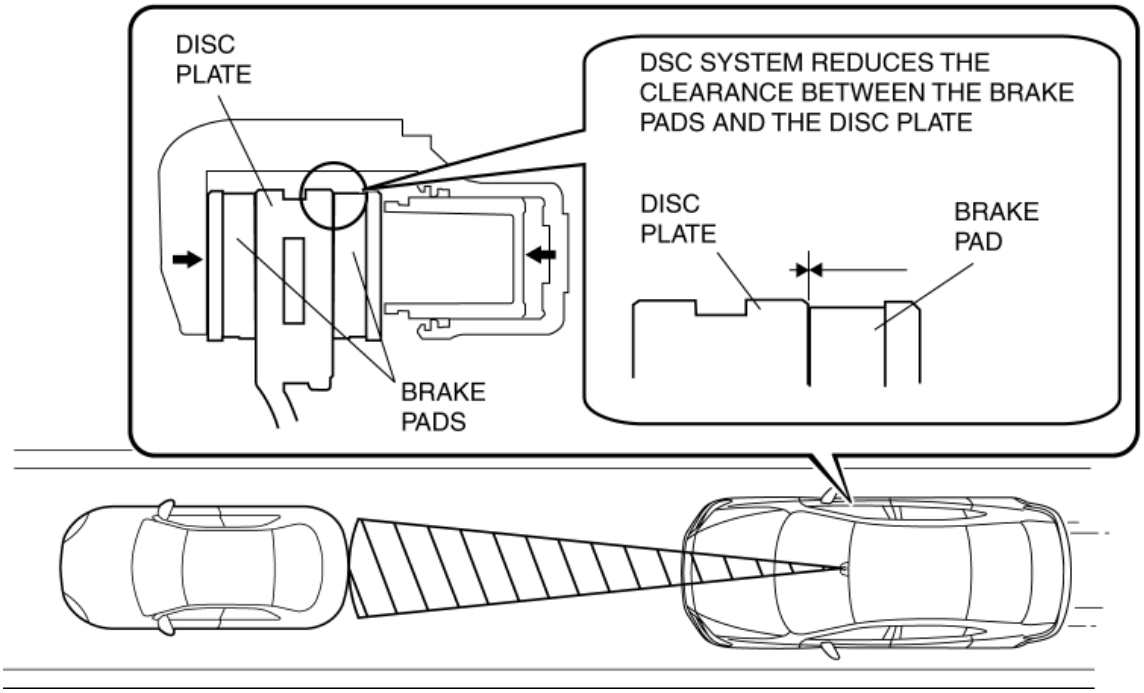

Brake control (SCBS brake) operation

Solenoid valve operation table

Traction control solenoid valve		Stability control solenoid valve		Inlet solenoid valve				Outlet solenoid valve				Pump motor, pump
LF—RR	RF—LR	LF—RR	RF—LR	LF	RF	LR	RR	LF	RF	LR	RR	
ON (close)		ON (open)		OFF (open)				OFF (close)				Operating

Hydraulic circuit

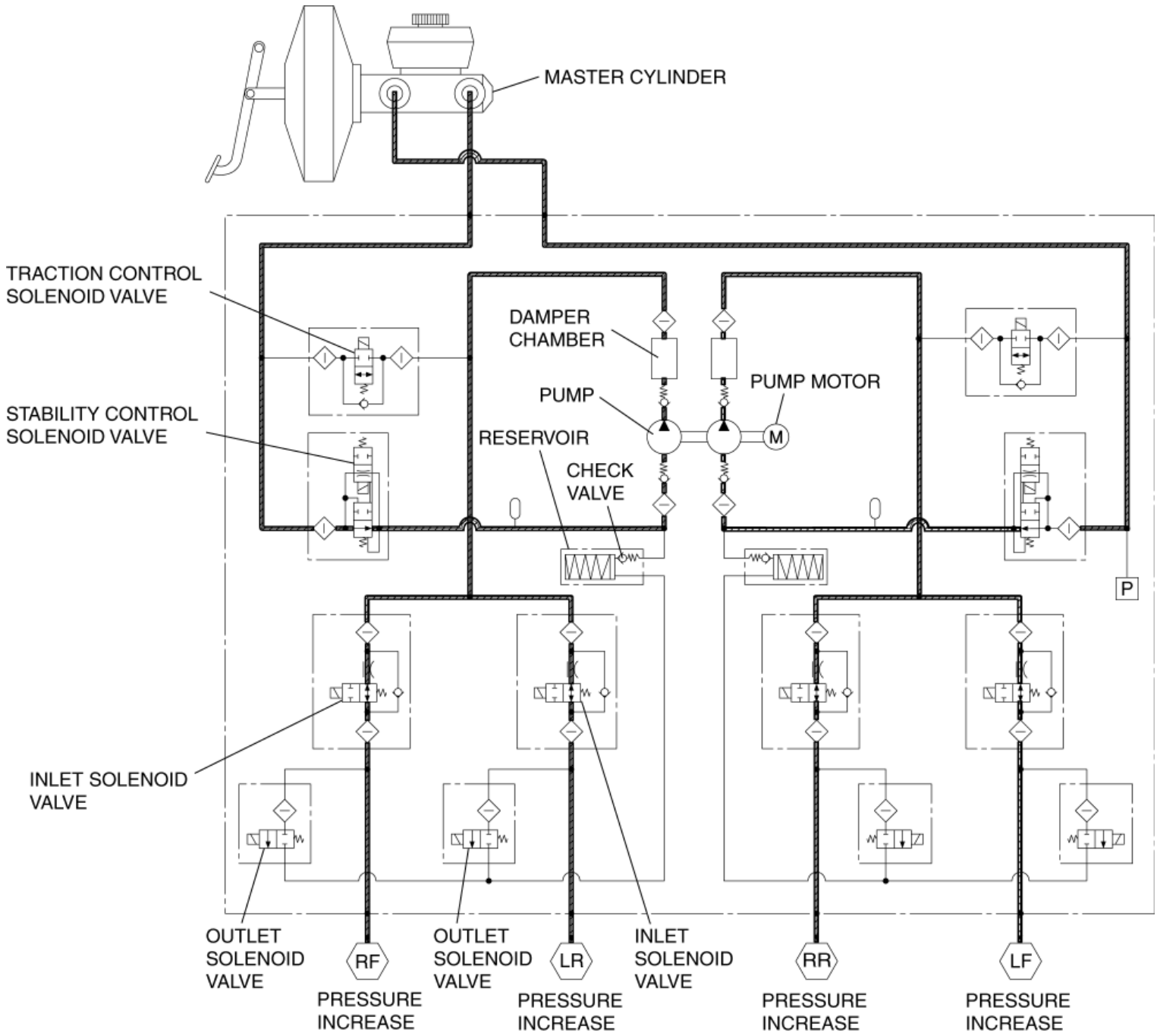

Block diagram

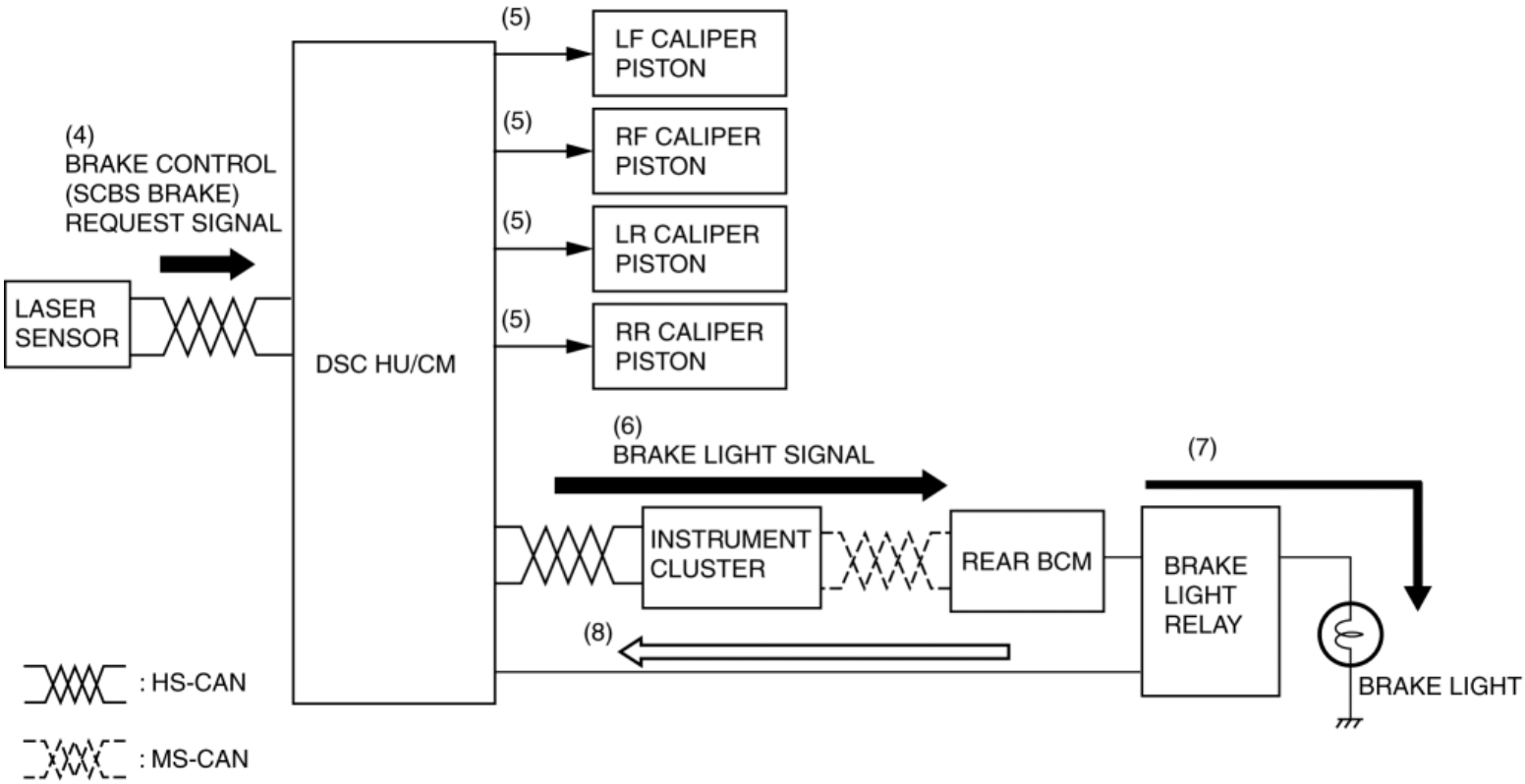

- After the brake prefill operates, if the driver does not perform an avoidance maneuver and the laser sensor determines that a collision may occur, it outputs a brake control (SCBS brake) request signal (4) to the DSC HU/CM.
- The DSC HU/CM energizes the linear control solenoid valve to switch the hydraulic circuits and to increase the brake fluid pressure. Therefore the brake is operated automatically (5). At this time, the DSC HU/CM outputs a brake light signal to the Rear Body Control Module (RBCM) (6). While the brake control (SCBS brake) is operating, turns on the brake lights automatically (7), and at the same time the brake light unit outputs a brake light operation signal to the DSC HU/CM (8).
- When the Smart City Brake Support (SCBS) operates and the brakes are applied, the Smart City Brake Support (SCBS) warning light (red) is flashed and the message “Smart City Brake Support Activated” is indicated in the Active Drive Display.
- The brake control (SCBS brake) is kept operated for **2 s.** To keep the vehicle stopped after the brake control (SCBS brake) operation ends, the brake pedal has to be depressed to operate the brake.

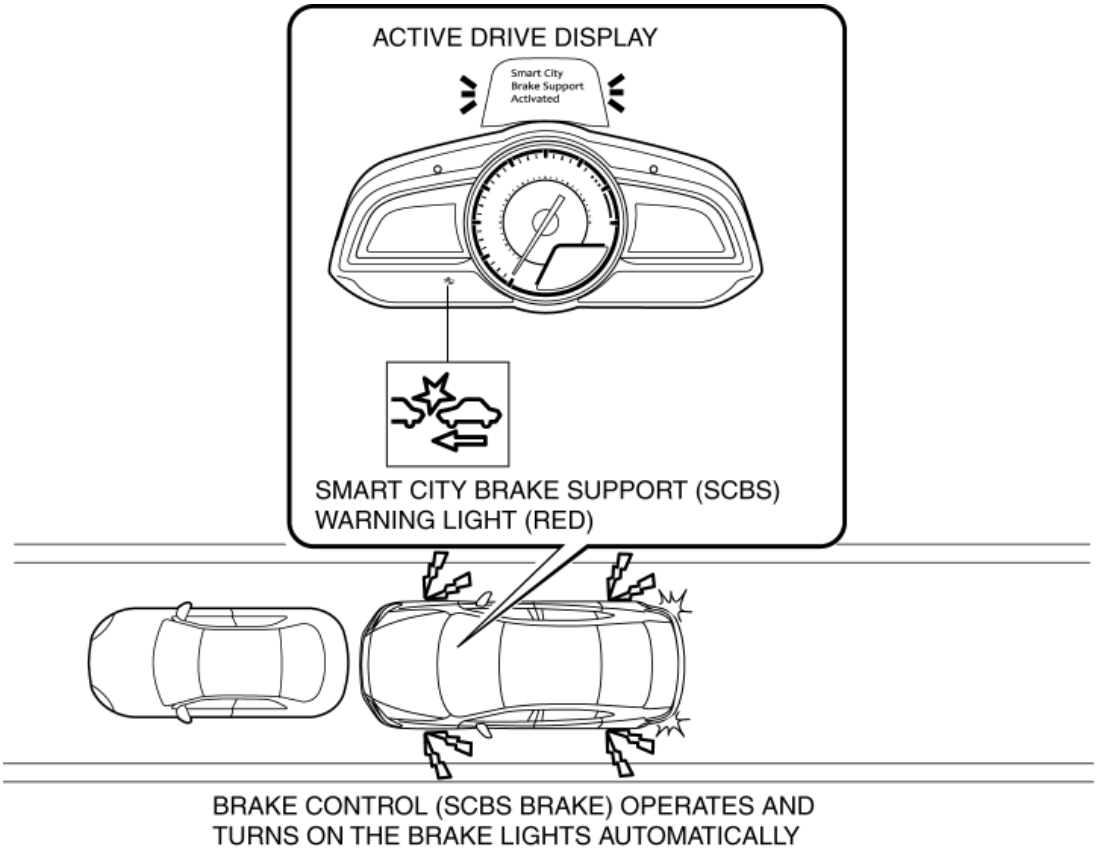

CAUTION:

- If the DSC system has a malfunction and the DSC control is inhibited, or if the DSC OFF switch is operated and the DSC control is disabled, the Smart City Brake Support (SCBS) does not operate.
- When the laser sensor malfunction is determined as a result of the on-board diagnostic test, the Smart City Brake Support (SCBS) is suspended while driving.
- When the DTC is stored in the PCM, DSC HU/CM, and/or instrument cluster, the Smart City Brake Support (SCBS) is suspended depending on the malfunctioning situation.

2014 - Mazda3 - Brakes

SMART CITY BRAKE SUPPORT (SCBS) PERSONALIZATION

- A personalization function has been adopted with which setting for the Smart City Brake Support (SCBS) can be changed by operation of the steering switch.

Smart City Brake Support (SCBS) setting

Display	Function	Initial setting	Setting contents	Smart City Brake Support (SCBS) OFF indicator light	Control unit
SCBS	The operation of Smart City Brake Support (SCBS) can be turned off.	ON	ON/OFF	ON: Not illuminate OFF: illuminate	Instrument cluster

2014 - Mazda3 - Brakes

CONTROLLER AREA NETWORK (CAN)

Outline

- The DSC HU/CM sends and receives data to and from other modules via the CAN system. Refer to MULTIPLEX COMMUNICATION SYSTEM for a detailed explanation of the CAN system. (See **MULTIPLEX COMMUNICATION SYSTEM**.)

Data sent

- Cruise control system-related information
- DSC system-related information
- Vehicle speed
- Wheel speed (LF, RF, LR, RR)
- Yaw rate

Data received

- Acceleration signal status
- Accelerator pedal opening angle
- Air bag system warning light on request
- Ambient temperature
- Back-up light on request
- Back-up light switch
- Battery charge status
- Brake light status
- Brake switch (No.1 signal)
- Clutch pedal stroke sensor
- Collision detection (front, side, roll over)
- Collision detection (rear)
- Cruise control control status

- Cruise control set speed
- Cruise control switch
- Cruise control switch signal
- Cruise control system-related information
- Driving condition
- DSC OFF switch status
- Engine displacement
- Engine speed
- Engine torque
- Fuel cut request
- Ignition key status
- Ignition off timer
- Manual shift control
- Parking brake status
- Rolling counter
- Selector lever position
- Shift range position
- Steering angle (relative steering angle) signal
- Target gear position
- Tire size
- TPMS OFF switch status
- Traveled distance
- Vehicle speed
- Yaw rate

2014 - Mazda3 - Brakes

ABS WHEEL-SPEED SENSOR AND ABS SENSOR ROTOR

Purpose / Function

- The ABS wheel-speed sensor and ABS sensor rotor detect the rotation condition of each wheel and transmit this information to the DSC HU/CM.
- The signal from the ABS wheel-speed sensor is the primary signal that the DSC HU/CM uses when carrying out control.

Construction

- The ABS wheel-speed sensor utilizes a semi-conductor element that contains an active drive circuit (MR element*). The front sensor is installed on the steering knuckle and the rear sensor is installed on the wheel hub.
- The front ABS sensor rotor utilizes a magnetic encoder system that functions with magnetic rubber, and is integrated into the front wheel hub. Therefore, if there is any malfunction of the front ABS sensor rotor, replace the front wheel hub.
- The rear ABS sensor rotor utilizes a magnetic encoder system that functions with magnetic rubber, and is integrated into the rear wheel hub. Therefore, if there is any malfunction of the rear ABS sensor rotor, replace the rear wheel hub.

*

A magneto-resistive force means that an exterior magnetic field acts on the element, changing the resistance of the element.

CAUTION:

- When inspecting the ABS wheel-speed sensor, do not use a tester to inspect resistance. It is possible that the voltage from the tester could damage the semiconductor inside the ABS wheel-speed sensor. Inspect using the PID data monitor of the Mazda Modular Diagnostic System (M-MDS).

NOTE:

- Magnetic encoder: A plate that has positive and negative poles (marked out) in a continuous, alternating line.

Front ABS wheel-speed sensor and sensor rotor

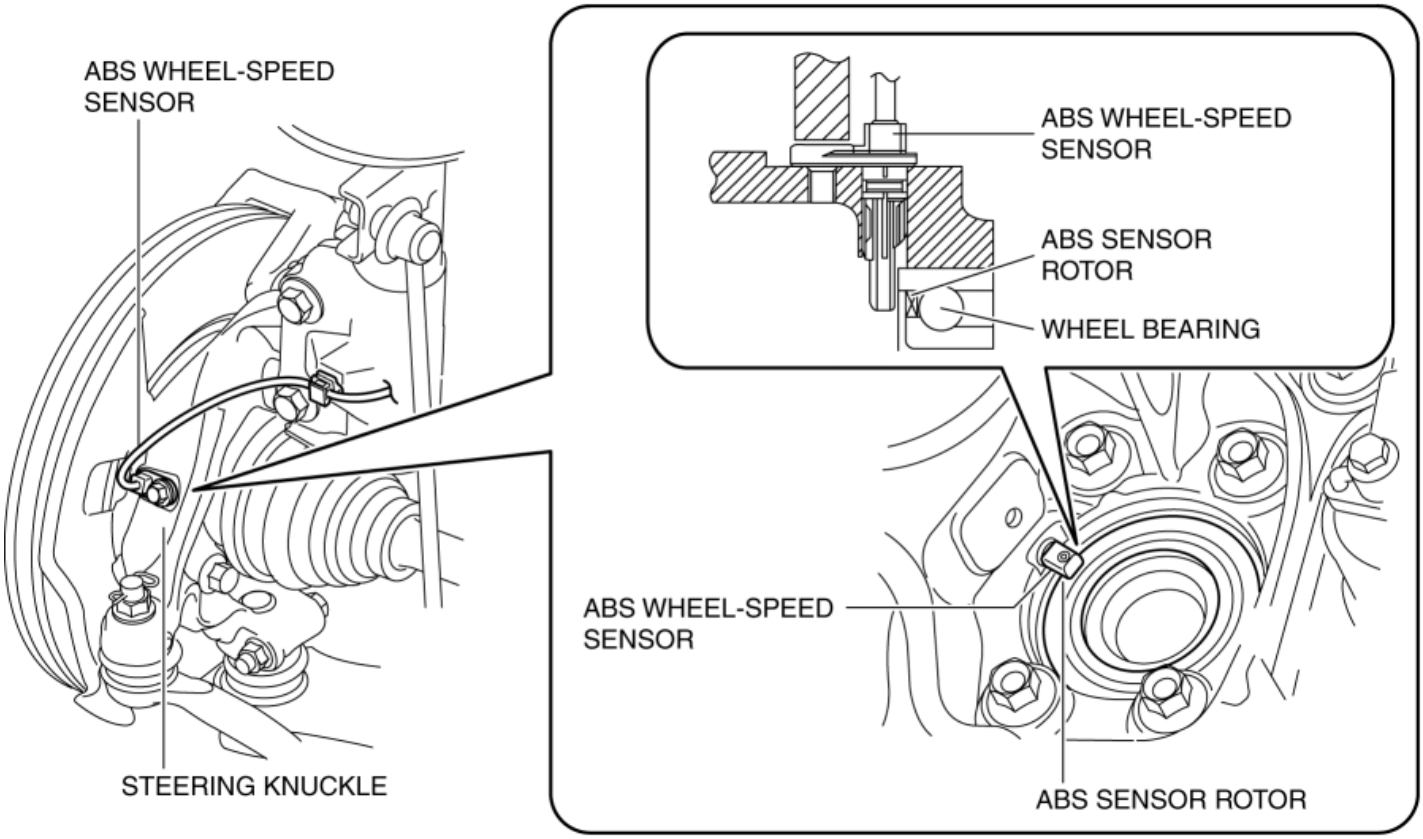

Rear ABS wheel-speed sensor and sensor rotor

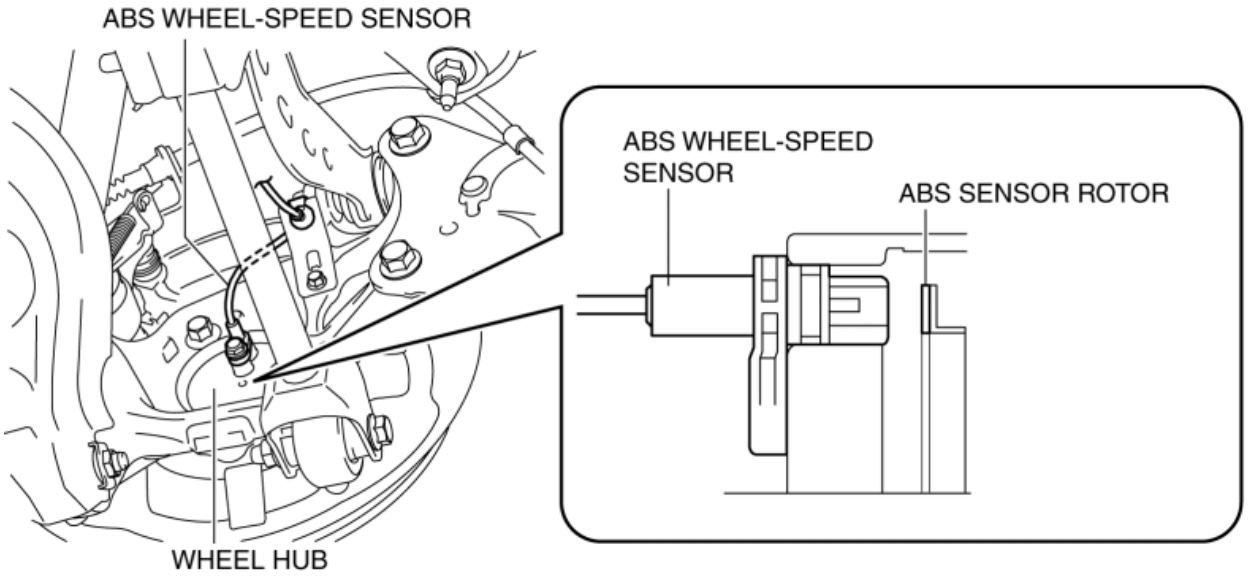

Operation

- As the ABS sensor rotor rotates, the magnetic flux between the ABS wheel-speed sensor and the ABS sensor rotor change periodically. This periodic change is in proportion to the rotation speed.
- The semiconductor element in the wheel speed sensor detects the change in magnetic flux, and the active drive circuit converts it to a rectangular wave signal for the current, which is transmitted to the DSC HU/CM.
- For every single rotation of the ABS sensor rotor, 48 rectangular wave pulse signals are output. The CM in the DSC HU/CM calculates the wheel speed from the periodicity of these pulses.

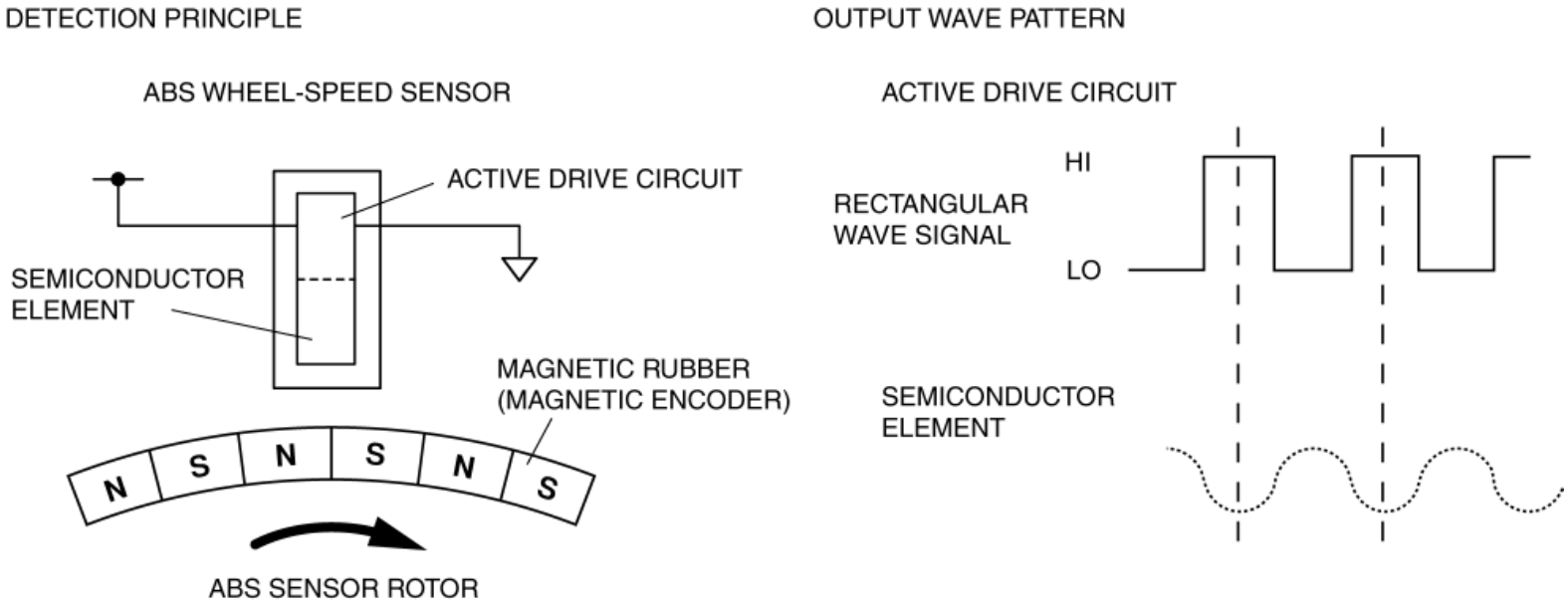

Fail-safe

DTC No.	Fail-safe function
C0030:07	• Illuminates the ABS warning light, TCS/DSC indicator light, and smart city brake support (SCBS) indicator light (amber)*1. • Tire pressure monitoring system warning light illuminates after flashes. • Inhibits the ABS, TCS, DSC, brake assist control, hill launch assist (HLA), TPMS, and smart city brake support (SCBS)*1 controls. (Additionally, when any malfunction is detected in two wheels or more, EBD control is inhibited and the brake system warning light is illuminated.)
C0031:07	
C0031:11	
C0031:15	
C0031:29	
C0031:2F	
C0031:64	
C0033:07	
C0034:07	
C0034:11	
C0034:15	
C0034:29	
C0034:2F	
C0034:64	
C0036:07	

C0037:07	• *1: If equipped.
C0037:11	
C0037:15	
C0037:29	
C0037:2F	
C0037:64	
C0039:07	
C003A:07	
C003A:11	
C003A:15	
C003A:29	
C003A:2F	
C003A:64	

2014 - Mazda3 - Brakes

BRAKE FLUID PRESSURE SENSOR

Purpose/Function

- The brake fluid pressure sensor detects the fluid pressure from the master cylinder and transmits it to the DSC HU/CM.

Construction

- The brake fluid pressure sensor is built into the DSC HU/CM. Therefore, if there is any malfunction of the brake fluid pressure sensor, replace the DSC HU/CM.

Fail-safe

DTC No.	Fail-safe function
C0044:28 C0044:47 C0044:49 C0044:51	• Illuminates the TCS/DSC indicator light and smart city brake support (SCBS) indicator light (amber)*1. • Tire pressure monitoring system warning light*1 illuminates after flashes. • Inhibits the TCS, DSC, brake assist control, hill launch assist (HLA), TPMS*1, and smart city brake support (SCBS)*1 controls. • *1: If equipped.
C0044:54	• Illuminates the TCS/DSC indicator light and smart city brake support (SCBS) indicator light (amber)*1. • Tire pressure monitoring system warning light*1 illuminates after flashes. (Not illuminated/flashed depending on malfunction content.) • Inhibits the TCS, DSC, brake assist control, hill launch assist (HLA), TPMS*1, and smart city brake support (SCBS)*1 controls. • *1: If equipped.
C0044:64	• Illuminates the TCS/DSC indicator light and smart city brake support (SCBS)*1

C0044:8F	indicator light (amber) . • Tire pressure monitoring system warning light*1 illuminates after flashes. • Inhibits the TCS, DSC, brake assist control, hill launch assist (HLA), TPMS*1, and smart city brake support (SCBS)*1 controls. • *1: If equipped.

2014 - Mazda3 - Brakes

BRAKE SYSTEM / ABS WARNING LIGHT

Purpose / Function

- The brake system/ABS warning light is built into the instrument cluster. If a malfunction is detected in the system with the parking brake released, the warning light illuminates to notify the driver.

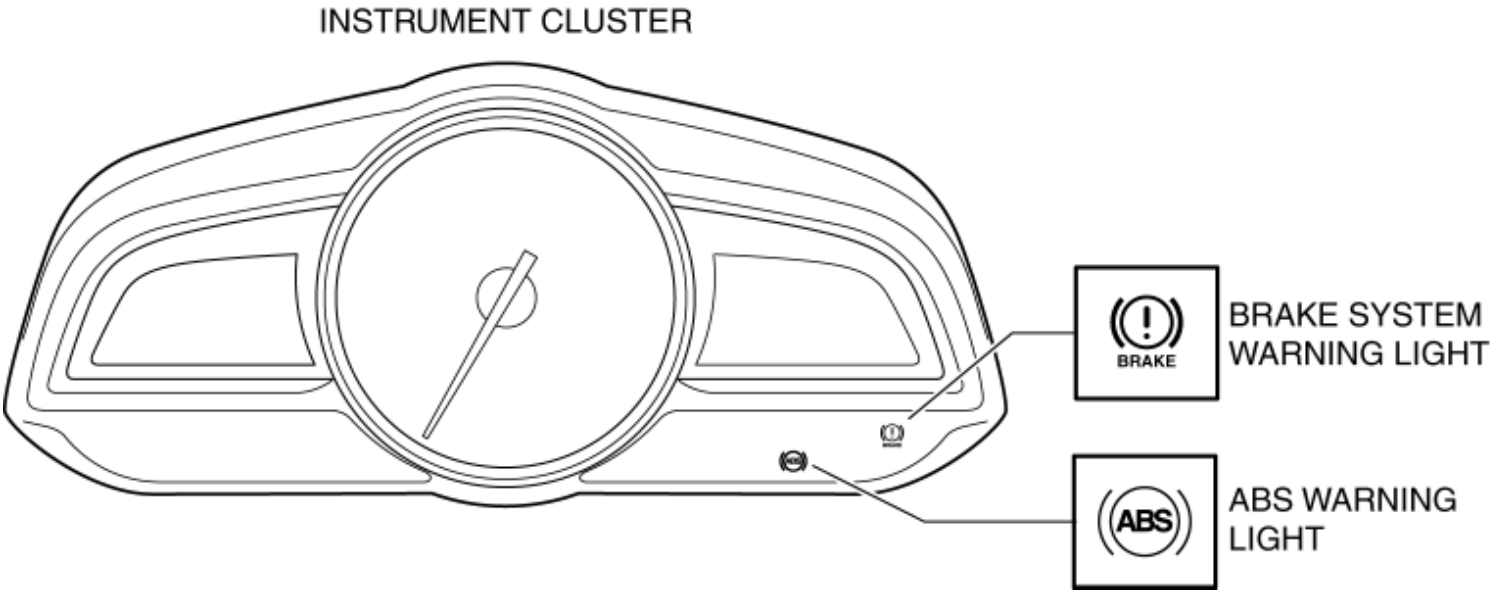

Construction / Operation

- When the DSC system and CAN lines are functioning normally, the brake system/ABS warning light illuminates when the ignition is switched ON to check for a burned-out bulb, and then turns off after approx. 3 s. At this time, while the parking brake is activated, the brake system warning light remains illuminated, however, it turns off after the parking brake is released.
- The brake system/ABS warning light illuminates during a system malfunction, and the control is as follows:

  ABS warning light illuminated:

  - ABS control disabled.

  ABS warning light and brake system warning light illuminated:

  - ABS and EBD controls disabled.
- For vehicles with center display, a warning message in the center display is displayed when the ABS warning light is turned on. For the message content and verification method, refer

to the CENTER DISPLAY. (See **CENTER DISPLAY [WITH CENTER DISPLAY]**.)

- For vehicles with center display, a warning message in the center display is displayed when the brake system warning light is turned on. For the message content and verification method, refer to the CENTER DISPLAY. (See **CENTER DISPLAY [WITH CENTER DISPLAY]**.)

Fail-safe

- Function not equipped.

2014 - Mazda3 - Brakes

TCS/DSC INDICATOR LIGHT

Purpose/Function

- The TCS/DSC indicator light, built into the instrument cluster, informs the driver of the following vehicle conditions.
    - TCS is operating. (Drive wheel is slipping.)
    - DSC is operating. (Vehicle side-slip condition.)
    - DSC system malfunction.

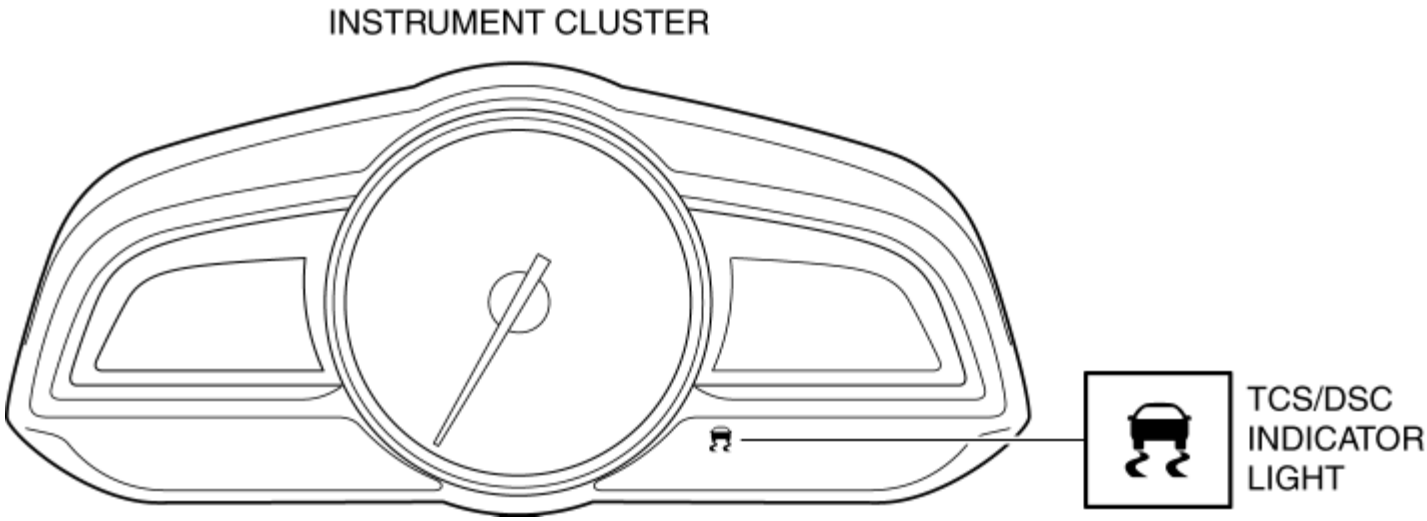

Operation

- When the DSC system and CAN lines are normal, the TCS/DSC indicator light illuminates for approx. 3.0 s when the ignition is switched ON to check the light function. When the system is malfunctioning, the TCS/DSC indicator light remains illuminated.
- When the TCS or DSC are non-operational, operational and malfunctioning, the TCS/DSC indicator light operates according to the following table.

TCS/DSC indicator light operation

Item	TCS/DSC indicator light

TCS and DSC not operating	Not illuminated
TCS operating	Flashes (0.5 s intervals)
DSC operating	
DSC system malfunction	Illuminated

- For vehicles with center display, a warning message in the center display is displayed when the TCS/DSC indicator light is turned on. For the message content and verification method, refer to the CENTER DISPLAY. (See **CENTER DISPLAY [WITH CENTER DISPLAY]**.)

Fail-safe

- Function not equipped.

2014 - Mazda3 - Brakes

DSC OFF SWITCH, DSC OFF INDICATOR LIGHT

Purpose/Function

- The DSC OFF switch, located on the dashboard, allows for optionally enabling/disabling the TCS/DSC control at driver discretion.

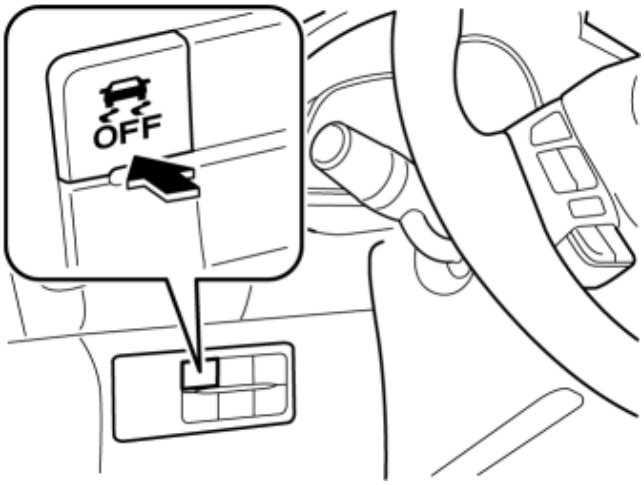

- The DSC OFF indicator light, built into the instrument cluster, informs the driver that TCS/DSC control has been disabled by operation of the DSC OFF switch.

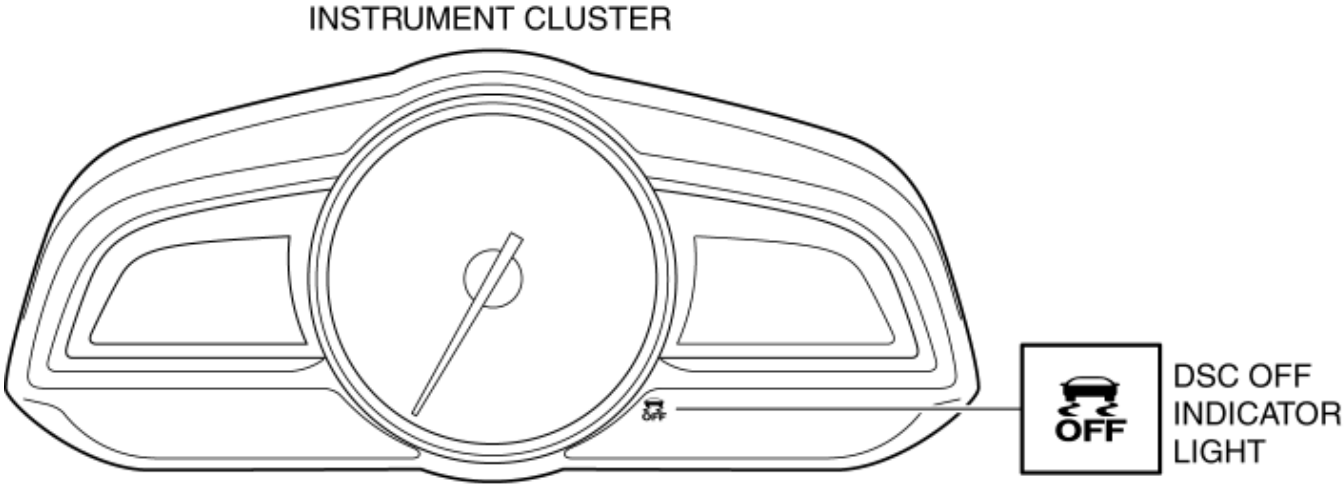

Operation

- When the DSC system and CAN lines are functionally normally, the DSC OFF indicator light illuminates for approx. 3.0 s when the ignition is switched ON to check the light function.
- When the DSC OFF switch is pressed to disable TCS/DSC control, the DSC OFF indicator light illuminates.

- The DSC OFF indicator light illumination and TCS/DSC control conditions while operating the DSC OFF switch are as indicated in the table.

Mode	DSC OFF indicator light illumination conditions	TCS control conditions		DSC control conditions	
		Brake control	Engine control	Brake control	Engine control
TCS/DSC ON	Not illuminated	Permitted	Permitted	Permitted	Permitted
TCS/DSC OFF	Illuminated	Inhibited*1*2/permitted*3	Inhibited	Inhibited	Inhibited

*1

No difference in wheel speed on front left/right wheels

*2

Difference in wheel speed on front left/right wheels (vehicle speed 35 km/h {22 mph} or more)

*3

Difference in wheel speed on front left/right wheels (vehicle speed less than 35 km/h {22 mph})

Fail-safe

DTC No.	Fail-safe function
C1109:64	• Permits the control and does not illuminate each warning/indicator light.

2014 - Mazda3 - Brakes

SMART CITY BRAKE SUPPORT (SCBS) INDICATOR LIGHT/SMART CITY BRAKE SUPPORT (SCBS) WARNING LIGHT

Purpose/Function

- The Smart City Brake Support (SCBS) warning light (red)/Smart City Brake Support (SCBS) indicator light (amber), built into the instrument cluster, informs the driver of the following vehicle conditions:
    - Smart City Brake Support (SCBS) warning light (red)
        - Smart City Brake Support (SCBS) is operating (brake control (SCBS brake) is operating).
    - Smart City Brake Support (SCBS) indicator light (amber)
        - Smart City Brake Support (SCBS) system malfunction.

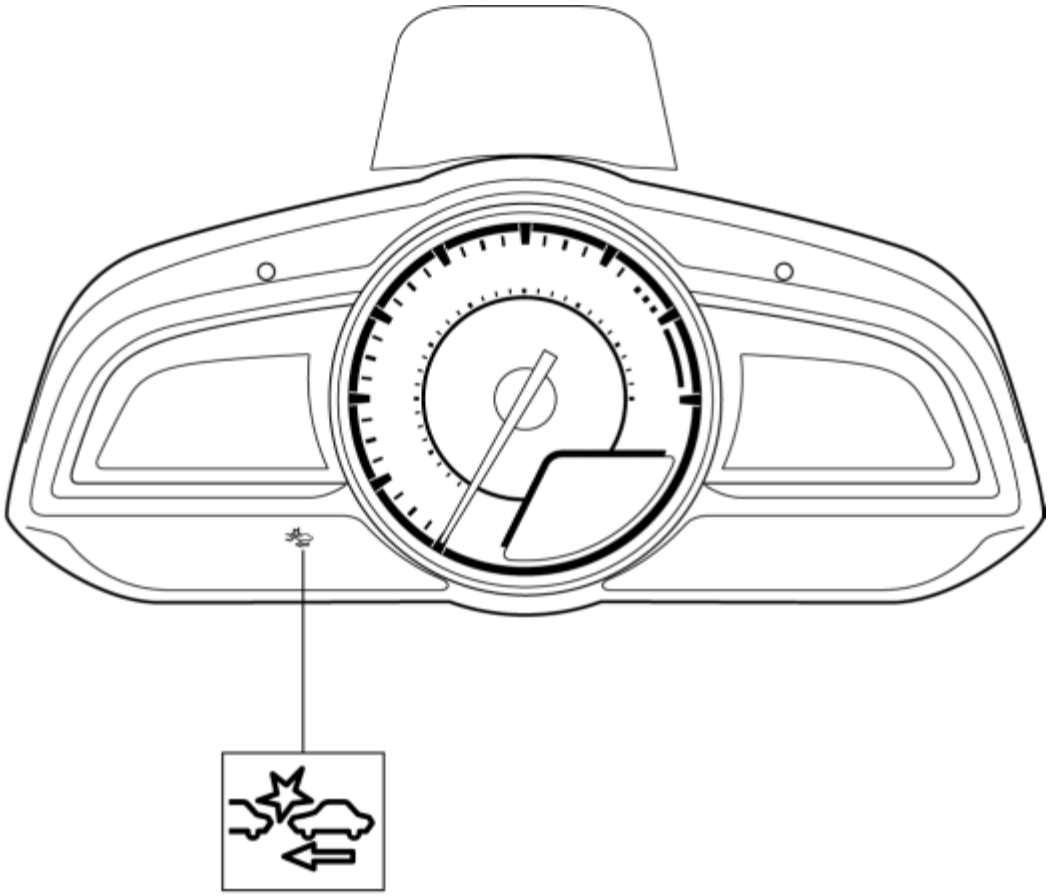

SMART CITY BRAKE SUPPORT (SCBS) WARNING LIGHT (RED)/
SMART CITY BRAKE SUPPORT (SCBS) INDICATOR LIGHT (AMBER)

Construction / Operation

- When the Smart City Brake Support (SCBS) is non-operational, operational, and malfunctioning

NOTE:

- A warning message in the center display is displayed with the Smart City Brake Support (SCBS) indicator light (amber) turned on or flashed. For the message content and verification method, refer to the CENTER DISPLAY. (See **CENTER DISPLAY [WITH CENTER DISPLAY]**.)
- When the Smart City Brake Support (SCBS) system operates, the user is notified by the flashing warning light and the Active Driving Display.

Item	Smart City Brake Support (SCBS) indicator light (amber)	Smart City Brake Support (SCBS) warning light (red)
Not operating/Normal condition	Not illuminated/Not flashed	Not illuminated/Not flashed
Operating	Not illuminated/Not flashed	Flashes
Malfunction	Illuminated	Not illuminated/Not flashed

Fail-safe

- Function not equipped.

2014 - Mazda3 - Brakes

SMART CITY BRAKE SUPPORT (SCBS) OFF INDICATOR LIGHT

Purpose/Function

- The Smart City Brake Support (SCBS) OFF indicator light, built into the instrument cluster, informs the driver that Smart City Brake Support system has been disabled by operation of the steering switch.

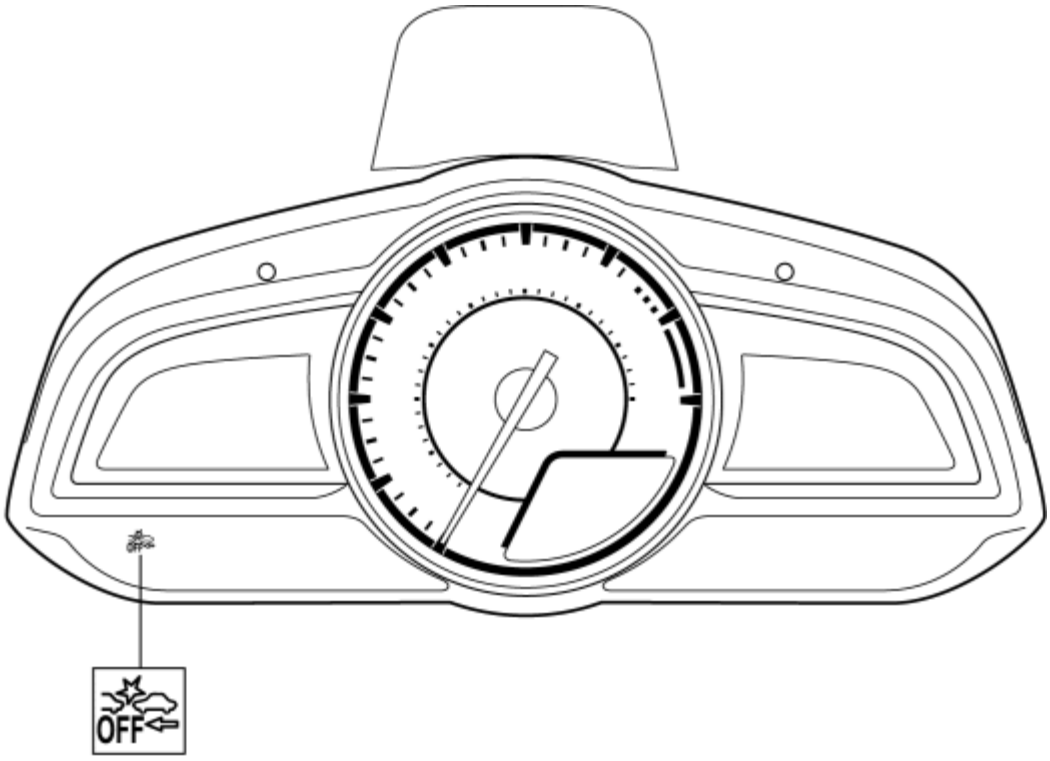

SMART CITY BRAKE SUPPORT (SCBS) OFF INDICATOR LIGHT

Operation

- When turn off the Smart City Brake Support (SCBS) by operation of the steering switch, the Smart City Brake Support (SCBS) OFF indicator light illuminates.
- If the DSC OFF switch is operated and the DSC control is disabled, the Smart City Brake Support (SCBS) does not operate. At this time, the Smart City Brake Support (SCBS) OFF indicator light illuminates.

Smart City Brake Support (SCBS) Conditions	Smart City Brake Support (SCBS) OFF indicator light illumination conditions
Enable the Smart City Brake Support (SCBS)	Not illuminated
Disable the Smart City Brake Support (SCBS)	Illuminated

Fail-safe

- Function not equipped.

< Previous

2014 - Mazda3 - Brakes

LASER SENSOR

Purpose / Function

WARNING:

- As there is the possibility of eye damage occurring from the laser, always heed the following precautions:
  - Do not peer directly into the laser sensor using optical instruments with a magnification such as magnifying glasses, microscopic and objective lens within a distance of 100 mm {3.94 in} from the sensor.
  - Do not disassemble the laser sensor (including the lens). A disassembled sensor will not meet the conditions for a class 1M laser under the IEC 60825-1 specification and therefore eye safety cannot be assured.
- Installed to the upper area of the windshield and detects a vehicle or an obstruction ahead.

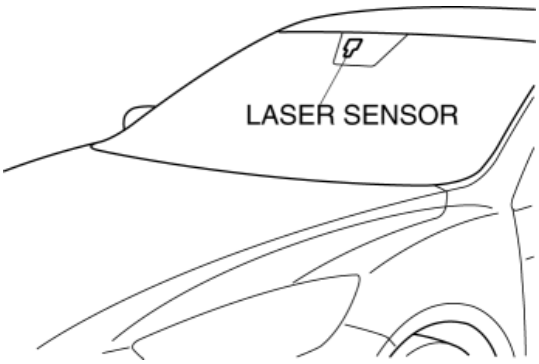

- The laser sensor specification is as follows.
  - Maximum average power: 45 mW
  - Pulse duration: 33 ns
  - Wavelength: 905 nm
  - Divergence angle (horizontal × vertical): 28°×12°

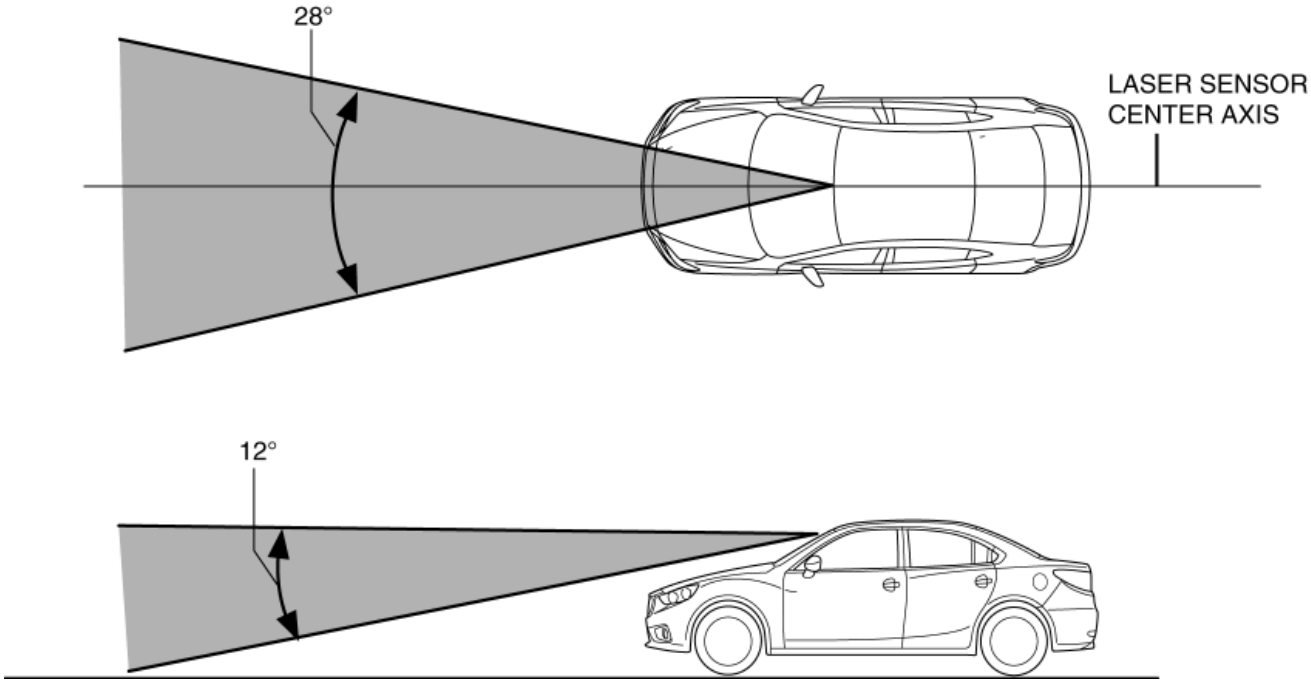

Automatic configuration function

- When the ignition is switched to ON or the engine is started, the laser sensor reads data from the instrument cluster via CAN communication each time to perform automatic configuration.

On-board diagnostic system

- A function that allows the laser sensor to perform self-diagnosis.
- In case a malfunction occurs, the Smart City Brake Support (SCBS) indicator light (amber) is illuminated, and at the same time a DTC is stored in the laser sensor.

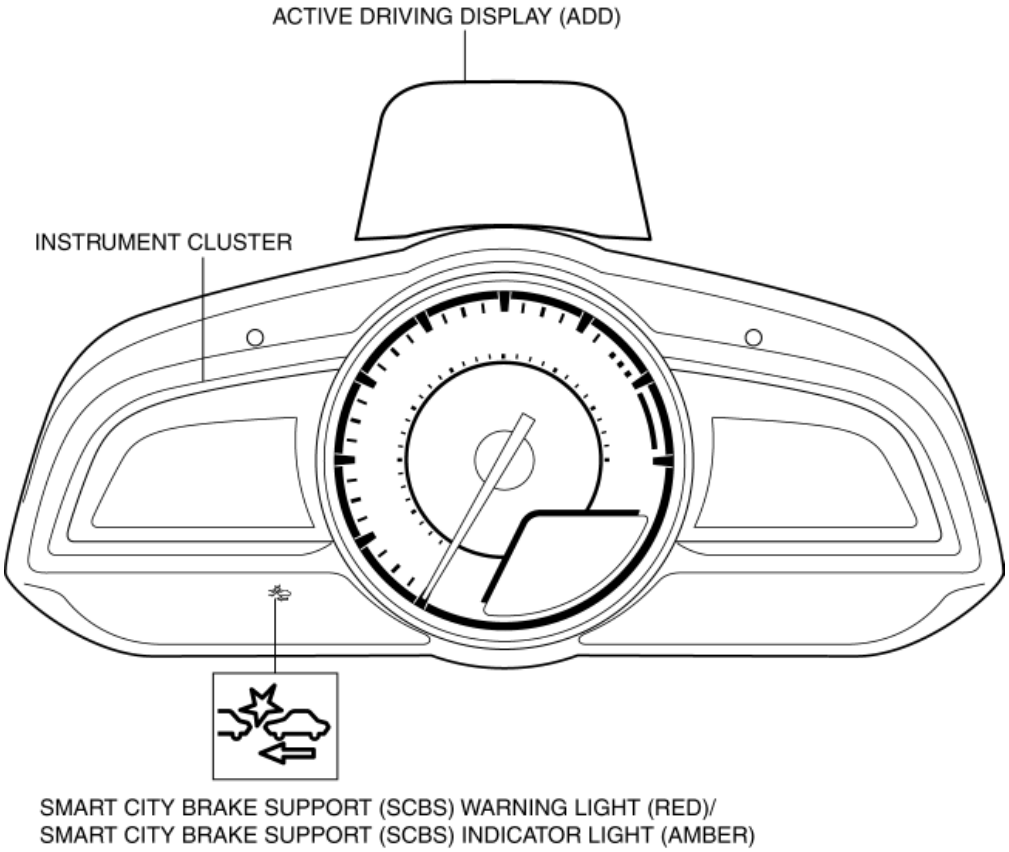

- When a malfunction is determined as a result of the on-board diagnostic test, the Smart City Brake Support (SCBS) is suspended while driving

Construction / Operation

- Emits near-infrared laser and detects the distance between the vehicle and a vehicle or an obstruction ahead based on the reflection.
- A vehicle or an obstruction within approx. 6 m {20 ft} from the laser sensor can be detected.
- Adjustment such as aiming adjustment is not required even if the laser sensor is removed and reinstalled or replaced.

Fail-safe

DTC No.	Fail-safe function
U0001:00	
U0100:00	
U0121:00	
U0131:00	
U0155:00	
U0401:68	

U0415:68	
U0420:68	• Illuminates the Smart City Brake Support (SCBS) indicator light (amber). • Inhibits the Smart City Brake Support (SCBS) control.
U0423:68	
U1A14:49	
U2300:55	
U2300:56	
U3000:00	
U3000:64	
U3000:66	

< Previous

Next >

2014 - Mazda3 - Transmission/Transaxle

TRANSMISSION/TRANSAXLE ABBREVIATIONS

AAS	Active Adaptive Shift
ABS	Antilock Brake System
ABDC	After Bottom Dead Center
ACC	Accessories
AFS	Adaptive Front Lighting System
ALC	Auto Level Control
ALR	Automatic Locking Retractor
ATDC	After Top Dead Center
ATF	Automatic Transaxle Fluid
ATX	Automatic Transaxle
AWD	All-Wheel Drive
BBDC	Before Bottom Dead Center
BDC	Bottom Dead Center
BSM	Blind Spot Monitoring
BTDC	Before Top Dead Center
CAN	Controller Area Network
CCM	Comprehensive Component Monitor

CV	Canister Vent
CM	Control Module
CMU	Connectivity master unit
CPU	Central Processing Unit
DC	Drive Cycle
DRL	Daytime Running Light
DSC	Dynamic Stability Control
EBD	Electronic Brakeforce Distribution
EEPROM	Electrically Erasable Programmable Read-Only Memory
EHPAS	Electro Hydraulic Power Assist Steering
ELR	Emergency Locking Retractor
EPS	Electric Power Steering
ESA	Electronic Spark Advance
FBCM	Front Body Control Module
FET	Field Effect Transistor
FOW	Forward Obstruction Warning
GPS	Global Positioning System
HBC	High Beam Control
HF/TEL	Hands-Free Telephone
HI	High
HLA	Hydraulic Lash Adjuster
HS	High Speed

HU	Hydraulic Unit
IDS	Integrated Diagnostic Software
IG	Ignition
INT	Intermittent
KOEO	Key On Engine Off
KOER	Key On Engine Running
LCD	Liquid Crystal Display
LDWS	Lane Departure Warning System
LED	Light Emitting Diode
LF	Left Front
LH	Left Hand
LO	Low
LR	Left Rear
M	Motor
MAX	Maximum
MIN	Minimum
MOS	Metal Oxide Semiconductor
MRCC	Mazda Radar Cruise Control
MS	Middle Speed
MTX	Manual Transaxle
OCV	Oil Control Valve
OFF	Switch Off

ON	Switch On
PAD	Passenger Air Bag Deactivation
PCV	Positive Crankcase Ventilation
PID	Parameter Identification
P/W CM	Power Window Control Module
PTC	Positive Temperature Coefficient
RBCM	Rear Body Control Module
RCTA	Rear Crossing Traffic Alert
REC	Recirculate
RF	Right Front
RH	Right Hand
RR	Right Rear
SAS	Sophisticated Air Bag Sensor
SST	Special Service Tool
SW	Switch
TAU	Tuner and Amp Unit
TCS	Traction Control System
TDC	Top Dead Center
TFT	Transaxle Fluid Temperature
TNS	Tail Number Side Lights
TPMS	Tire Pressure Monitoring System
USB	Universal Serial Bus

VENT	Ventilation
1GR	First Gear
2GR	Second Gear
2WD	2-Wheel Drive
3GR	Third Gear
4GR	Fourth Gear
4SD	4 Door Sedan
5GR	Fifth Gear
5HB	5 Door Hatchback
6GR	Sixth Gear

Next >

2014 - Mazda3 - Transmission/Transaxle

TRANSMISSION/TRANSAXLE FEATURES

Clutch and Manual Transaxle [C66M-R]

- A newly developed, C66M-R-type manual transaxle (SKYACTIV-MT) with 6 forward gears and 1 reverse gear has been adopted.

Automatic Transaxle [FW6A-EL]

- A newly developed, FW6A-EL-type electronically controlled automatic transaxle (SKYACTIV-DRIVE) with 6 forward gears, 1 reverse gear, and a TCC mechanism has been adopted.
- Using the existing automatic transaxle as a base, fuel economy improvement, direct feel, and smooth shifting have been thoroughly pursued to make one of the most optimized automatic transaxles.

Main features

- With the adoption of a full range TCC mechanism, a contribution to low fuel consumption and the direct feel of a manual transaxle have been achieved.
- A control valve body has been adopted with an integrated TCM and improved responsiveness to achieve smooth and precise shifting.

2014 - Mazda3 - Transmission/Transaxle

TRANSMISSION/TRANSAXLE SPECIFICATIONS

Clutch [C66M-R]

Item			Specifications
Engine type			SKYACTIV-G 2.0
Clutch control			Hydraulic
Clutch pedal	Type		Suspended
	Pedal ratio		4.7
	Full stroke (reference value)	(mm {in})	141 {5.55}
Clutch master cylinder inner diameter		(mm {in})	15.87 {0.6248}
Clutch release cylinder inner diameter		(mm {in})	20.64 {0.8126}
Clutch cover	Spring type		Diaphragm
	Set load	(N {kgf, lbf})	6400 {652.6, 1439}
Clutch disc	Outer diameter	(mm {in})	240 {9.45}
	Inner diameter	(mm {in})	155 {6.10}
Clutch fluid type			SAE J1703 or FMVSS116 DOT-3

Manual Transaxle [C66M-R]

Item			Specifications
Engine type			SKYACTIV-G 2.0
Transaxle control			Floor-shift
Operation system			Cable
Shift assist	Forward		Synchromesh
	Reverse		Synchromesh
Gear ratio	1GR		3.363
	2GR		1.947
	3GR		1.300
	4GR		1.029
	5GR		0.837
	6GR		0.680
	Reverse		3.385
Final gear ratio			U.S.A. and Canada: 3.850 Except U.S.A. and Canada: 4.105
Manual transaxle oil	Grade		API service GL-4
	Viscosity	All season	SAE 75W-80
	Capacity (approx. quantity)	(L {US qt, Imp qt})	1.70 {1.80, 1.50}

Automatic Transaxle [FW6A-EL]

Item	Specifications

TRANSMISSION/TRANSAXLE SPECIFICATIONS

Engine type			SKYACTIV-G 2.0	SKYACTIV-G 2.5
Gear ratio		1GR	3.552	
		2GR	2.022	
		3GR	1.452	
		4GR	1.000	
		5GR	0.708	
		6GR	0.599	
		Reverse	3.893	
Final gear ratio			U.S.A. and Canada: 3.591 Except U.S.A. and Canada: 3.812	U.S.A. and Canada: 3.389 Except U.S.A. and Canada: 3.812
ATF	Type		ATF FZ	
	Capacity (Approx. quantity)	(L {US qt, Imp qt})	7.8 {8.2, 6.9}	
Torque converter stall torque ratio			1.82	1.74
Hydraulic system (Number of drive/driven gear plates)	Low clutch		5/5	
	High clutch		5/5	
	Low and reverse brake		4/4	
	2-6 brake		4/4	
	R-3-5 brake		3/3	
Front planetary gear (Number of teeth)	Front sun gear		38	
	Front pinion gear		29	

	Front internal gear	97	
Rear planetary gear (Number of teeth)	Rear sun gear	40	
	Rear pinion gear	27	
	Rear internal gear	95	
Reduction planetary gear (Number of teeth)	Reduction sun gear	68	
	Reduction pinion gear	21	
	Reduction internal gear	109	
Primary gear (number of teeth)		56	
Secondary gear (number of teeth)		59	
Output gear (number of teeth)		U.S.A. and Canada: 22 Except U.S.A. and Canada: 21	U.S.A. and Canada: 23 Except U.S.A. and Canada: 21
Ring gear (number of teeth)		U.S.A. and Canada: 75 Except U.S.A. and Canada: 76	U.S.A. and Canada: 74 Except U.S.A. and Canada: 76

2014 - Mazda3 - Transmission/Transaxle

TRANSMISSION/TRANSAXLE IDENTIFICATION

- Each transmission/transaxle is assigned a specific Mazda type code. The code can be broken down as follows:

Manual Transaxle

C66M-R

- Shift control type
  R: Remote shift control
- Transmission/transaxle type
  M: Manual transmission/transaxle
- Transmission/transaxle speed
  6: 6-speed
- Transmission/transaxle model
  C6: C6-type

Automatic Transaxle

FW6A-EL

- Converter type
  L: With lockup clutch
- Shift control type
  E: Electronic shift control
- Transmission/transaxle type
  A: Automatic transmission/transaxle
- Transmission/transaxle speed
  6: 6-speed
- Transmission/transaxle model
  FW: FW-type

TRANSMISSION/TRANSAXLE IDENTIFICATION

2014 - Mazda3 - Transmission/Transaxle

ON-BOARD DIAGNOSTIC SYSTEM OUTLINE [FW6A-EL]

Purpose/Function

- An on-board diagnostic system has been adopted to improve serviceability.
- An on-board diagnostic system has been adopted consisting of the following functions:
    - Malfunction detection function
    - Fail-safe function
    - Diagnostic data memory function
    - Malfunction indication function
        - Check engine light
        - Automatic transaxle warning light
    - External tester communication function
        - DLC-2
        - CAN
    - PID/DATA monitor function
    - Simulation function

Construction/Operation

Block Diagram

ON-BOARD DIAGNOSTIC SYSTEM OUTLINE [FW6A-EL]

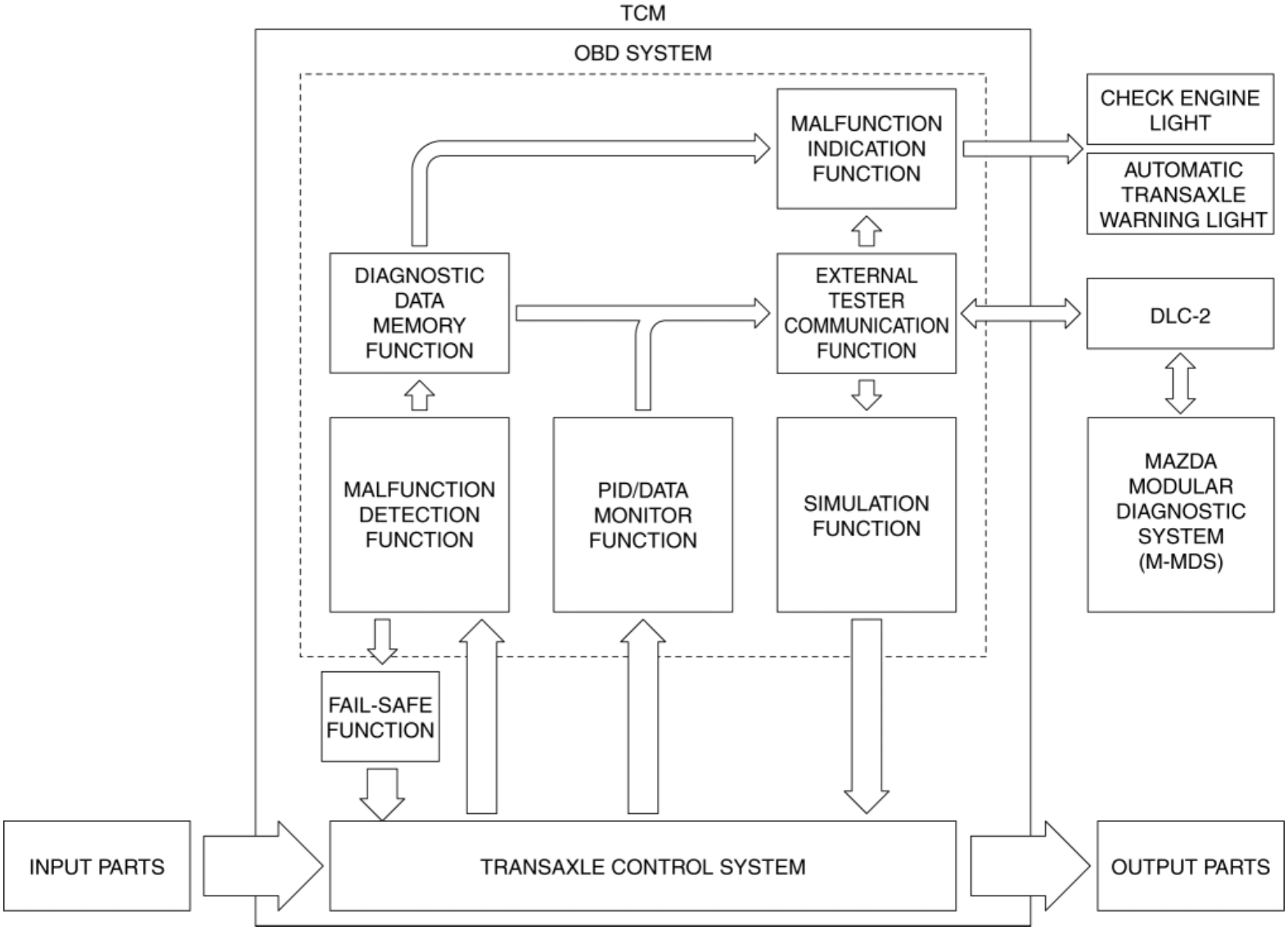

2014 - Mazda3 - Transmission / Transaxle

ON-BOARD DIAGNOSTIC SYSTEM MALFUNCTION DETECTION FUNCTION [FW6A-EL]

Purpose / Function

- The malfunction diagnostic function detects transaxle malfunctions.
- Accurate and quick repair/service can be performed to facilitate malfunction cause determination using the malfunction detection function.

Construction / Operation

- If a malfunction occurs in the transaxle, it is recorded as a DTC. A DTC can be read by the Mazda Modular Diagnostic System (M-MDS).

DTC 7-digit code definition

- When related systems or components have failed, the CM stores the DTC of the malfunctioning part in the CM memory, and allows for the retrieval of the stored data using the scanning tool when necessary. The DTCs are indicated using seven digits. Each digit indicates the following.

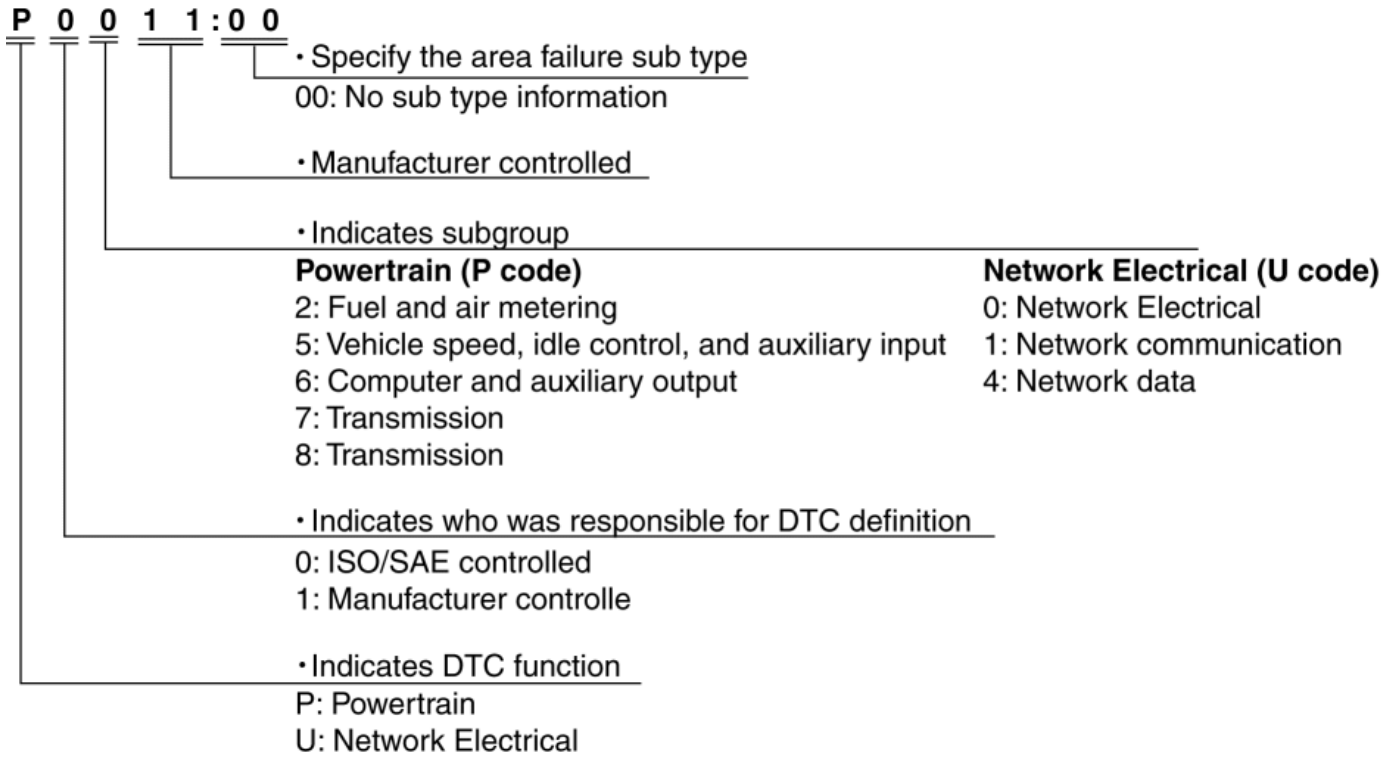

DTC table

×: Applicable—: Not applicable

DTC No.	Check engine light	Automatic transaxle warning light	Description	Fail-safe function	Drive cycle	Self test type*1	Memory function
P0218:00	Illuminated	Illuminated	Automatic transaxle protection control	×	1	C	×

P0500:00	Illuminated	—	Vehicle speed signal circuit malfunction	×	1	C	×
P0666:00	Illuminated	Illuminated	ECU internal temperature sensor circuit malfunction	×	1	C	×
P0667:00	Illuminated	Illuminated	ECU internal temperature sensor/performance problem	×	2	C	×
P06B8:00	Illuminated	—	NVRAM malfunction	—	1	C, O	×
P0706:00	Illuminated	Illuminated	Transaxle range sensor range/performance problem	×	1	C	×
P0707:00	Illuminated	Illuminated	Transaxle range sensor circuit low input	×	1	C, O	×
P0708:00	Illuminated	Illuminated	Transaxle range sensor circuit high input	×	1	C, O	×
P0711:00	Illuminated	Illuminated	TFT sensor range/performance problem	×	2	C	×
P0712:00	Illuminated	Illuminated	TFT sensor circuit low input	×	1	C, O	×
P0713:00	Illuminated	Illuminated	TFT sensor circuit high input	×	2	C	×
P0715:00	Illuminated	Illuminated	Turbine/input shaft speed sensor/sensor output range malfunction	×	1	C	×
P0716:00	Illuminated	Illuminated	Turbine/input shaft speed sensor range/performance problem	×	1	C	×
P0717:00	Illuminated	Illuminated	Open circuit in turbine/input shaft speed sensor circuit	×	1	C	×
P0720:00	Illuminated	Illuminated	Output shaft speed sensor range/performance problem	×	1	C	×
P0721:00	Illuminated	Illuminated	Output shaft speed sensor/sensor output range malfunction	×	1	C	×
P0722:00	Illuminated	Illuminated	Open circuit in output shaft speed sensor circuit	×	1	C	×
P0729:00	—	—	6GR incorrect ratio	×	2	C	×
P0731:00	—	—	1GR incorrect ratio	×	2	C	×
P0732:00	—	—	2GR incorrect ratio	×	2	C	×
P0733:00	—	—	3GR incorrect ratio	×	2	C	×
P0734:00	—	—	4GR incorrect ratio	×	2	C	×
P0735:00	—	—	5GR incorrect ratio	×	2	C	×
P0736:00	—	Illuminated	Gear reverse incorrect ratio	×	2	C	×
P073D:00	—	—	Neutral incorrect ratio	—	2	C	×
P0741:00	Illuminated	Illuminated	TCC control solenoid stuck off	×	2	C	×
P0743:00	Illuminated	Illuminated	TCC control solenoid circuit malfunction	×	1	C, O	×
P0746:00	Illuminated	Illuminated	Pressure control solenoid stuck off	×	2	C	×
P0748:00	Illuminated	Illuminated	Pressure control solenoid circuit malfunction	×	1	C, O	×

P0751:00	Illuminated	Illuminated	Shift solenoid No.1 stuck off	×	2	C	×
P0752:00	Illuminated	Illuminated	Shift solenoid No.1 stuck on	×	2	C	×
P0753:00	Illuminated	Illuminated	Shift solenoid No.1 circuit malfunction	×	1	C, O	×
P0756:00	Illuminated	Illuminated	Shift solenoid No.2 stuck off	×	2	C	×
P0757:00	Illuminated	Illuminated	Shift solenoid No.2 stuck on	×	2	C	×
P0758:00	Illuminated	Illuminated	Shift solenoid No.2 circuit malfunction	×	1	C, O	×
P0761:00	Illuminated	Illuminated	Shift solenoid No.3 stuck off	×	2	C	×
P0762:00	Illuminated	Illuminated	Shift solenoid No.3 stuck on	×	2	C	×
P0763:00	Illuminated	Illuminated	Shift solenoid No.3 circuit malfunction	×	1	C, O	×
P0766:00	Illuminated	Illuminated	Shift solenoid No.4 stuck off	×	2	C	×
P0767:00	Illuminated	Illuminated	Shift solenoid No.4 stuck on	×	2	C	×
P0768:00	Illuminated	Illuminated	Shift solenoid No.4 circuit malfunction	×	1	C, O	×
P0771:00	Illuminated	Illuminated	On/off solenoid stuck off	×	2	C	×
P0772:00	Illuminated	Illuminated	On/off solenoid stuck on	×	2	C	×
P0773:00	Illuminated	Illuminated	On/off solenoid circuit malfunction	×	1	C, O	×
P0780:00	Illuminated	Illuminated	Gear shifting malfunction	×	2	C	×
P0819:00	—	—	M position switch/Up switch/Down switch signal error	×	1	C	×
P0842:00	Illuminated	Illuminated	Oil pressure switch No.1 stuck on	×	2	C	×
P0843:00	Illuminated	Illuminated	Oil pressure switch No.1 stuck off	×	2	C	×
P0847:00	Illuminated	Illuminated	Oil pressure switch No.2 stuck on	×	2	C	×
P0848:00	Illuminated	Illuminated	Oil pressure switch No.2 stuck off	×	2	C	×
P0872:00	Illuminated	Illuminated	Oil pressure switch No.3 stuck on	×	2	C	×
P0873:00	Illuminated	Illuminated	Oil pressure switch No.3 stuck off	×	2	C	×
P0877:00	Illuminated	Illuminated	Oil pressure switch No.4 stuck on	×	2	C	×
P0878:00	Illuminated	Illuminated	Oil pressure switch No.4 stuck off	×	2	C	×
P0882:00	Illuminated	—	TCM power supply voltage low	×	1	C	×
P0883:00	Illuminated	—	TCM power supply voltage high	×	1	C, O	×
P1728:00	—	—	Clutch slippage	×	2	C	×
P1738:00	—	Illuminated	Automatic transaxle internal malfunction	×	2	C	×
P1784:00	—	Illuminated	Hi cut valve stuck off/R-3-5 cut valve stuck on	×	2	C	×

P2530:00	—	—	Ignition switch stuck off	—	1	C	×
P2855:00	—	—	Low clutch hydraulic circuit/sealing malfunction	—	2	C	×
U0073:00	—	—	CAN system communication error (HS CAN)	×	1	C, O	×
U0074:00	—	—	CAN system communication error (local CAN between TCM and PCM)	×	1	C, O	×
U0100:00	Illuminated	—	Communication error to PCM (HS CAN)	×	1	C, O	×
U0115:00	Illuminated	—	Communication error to PCM (local CAN between TCM and PCM)	×	1	C, O	×
U0121:00	Illuminated	—	Communication error to DSC HU/CM	×	1	C, O	×
U0131:00	—	—	Communication error to EPS control module	×	1	C, O	×
U0155:00	Illuminated	—	Communication error to instrument cluster	×	1	C, O	×
U0442:00	—	—	Invalid data received from PCM (local CAN between TCM and PCM)	×	1	C, O	×

*1

C: CMDTC self test, O: KOEO self test

DTC separate detection condition

DTC No.	Description	Detection condition
P0218:00	Automatic transaxle protection control	• Under the following conditions, the ATF temperature is **135 °C {275 °F} or more** for **10 s**: ▪ Engine is running. ▪ TFT sensor related DTC is not recorded.
P0500:00	Vehicle speed signal circuit malfunction	• Under the following conditions, the vehicle speed signal input from DSC HU/CM is incorrect for **10 s**: ▪ Engine is running. ▪ The vehicle is driven in D position or R position. ▪ Output shaft speed sensor related DTC is not recorded ▪ There is no difference between vehicle speed signal from DSC HU/CM and turbine/input shaft speed sensor signal.
P0666:00	ECU internal temperature sensor circuit malfunction	• Under the following condition, there is malfunction in circuit of ECU internal temperature sensor: ▪ Battery voltage is **8 V or more**.
P0667:00	ECU internal temperature sensor/performance problem	• Under the following conditions, the difference between ECU internal temperatures of three ECU internal temperature sensors are **15 °C {27 °F} or more**: ▪ Engine is running. ▪ Soaked for **6 hours or more**. ▪ No malfunction in ECU internal temperature sensor circuit
		• Under the following condition, TCM internal NVRAM data retention/read/write disabled:

P06B8:00	NVRAM malfunction	▪ Battery voltage is **8 V or more**.
P0706:00	Transaxle range sensor range/performance problem	• Under the following condition, pattern identification error in switch condition of transaxle range sensors 1 to 4: ▪ Battery voltage is **8 V or more**.
P0707:00	Transaxle range sensor circuit low input	• Under the following condition, incorrect voltage in any one of transaxle range sensors 1 to 4: ▪ Battery voltage is **8 V or more**.
P0708:00	Transaxle range sensor circuit high input	• Under the following condition, incorrect voltage in any one of transaxle range sensors 1 to 4: ▪ Battery voltage is **8 V or more**.
P0711:00	TFT sensor range/performance problem	• Under the following conditions, the ATF temperature is **40 °C {104 °F} or less**: ▪ Certain period has elapsed since engine start. ▪ ECU internal temperature sensor related DTC is not recorded. ▪ Soaked for **6 hours or more**. ▪ ECU internal temperature is **60 °C {140 °F} or more**. • Under the following conditions, the ATF temperature is **120 °C {248 °F} or more**: ▪ Certain period has elapsed since engine start. ▪ ECU internal temperature sensor related DTC is not recorded. ▪ Soaked for **6 hours or more**. ▪ ECU internal temperature is **95 °C {203 °F} or less**.
P0712:00	TFT sensor circuit low input	• Under the following condition, the TFT sensor voltage is **0.12 V or less** for **5 s**: ▪ Battery voltage is **8 V or more**.
P0713:00	TFT sensor circuit high input	• Under the following conditions, the ATF temperature is **−40 °C {−40 °F} or less** for **5 s**: ▪ Battery voltage is **8 V or more**. ▪ IAT is **−25 °C {−13 °F} or more**. ▪ IAT sensor related DTC is not recorded.
P0715:00	Turbine/input shaft speed sensor/sensor output range malfunction	• Under the following conditions, the difference between engine speed signal and turbine/input shaft speed signal is **400 rpm or more** for **1 s**: ▪ Engine is running. ▪ Turbine/input shaft speed sensor is **9,000 rpm or less**. ▪ The gear shift position is in the neutral condition.
P0716:00	Turbine/input shaft speed sensor range/performance problem	• Under the following condition, the turbine/input shaft speed is **9,000 rpm or more** for **1 s**: ▪ Battery voltage is **8 V or more**.
P0717:00	Open circuit in turbine/input shaft speed sensor circuit	• Under the following conditions, the turbine/input shaft speed sensor signal is not input for **1 s**: ▪ Engine is running. ▪ Vehicle speed signal related DTC is not recorded. ▪ Vehicle speed is **16 km/h {9.9 mph} or more**. ▪ There is no difference between vehicle speed signal from DSC HU/CM and output shaft speed sensor signal. ▪ DTC U0121:00 is not recorded.

P0720:00	Output shaft speed sensor range/performance problem	• Under the following conditions, there is difference between vehicle speed signal from DSC HU/CM and output shaft speed sensor signal for **1 s**: ▪ Engine is running. ▪ The vehicle is driven in D position or R position. ▪ Vehicle speed signal related DTC is not recorded. ▪ There is no difference between vehicle speed signal from DSC HU/CM and turbine/input shaft speed sensor signal. ▪ Output shaft speed sensor signal is input. ▪ Forward: Output shaft speed is **13,560rpm or less**. ▪ Reverse: Output shaft speed is **2,000 rpm or less**.
P0721:00	Output shaft speed sensor/sensor output range malfunction	• Under the following condition, the output shaft speed is **13,560 rpm or more** in forward or **2,000 rpm or more** in reverse for a continuous **1 s**: ▪ Battery voltage is **8 V or more**.
P0722:00	Open circuit in output shaft speed sensor circuit	• Under the following conditions, the output shaft speed sensor signal is not input for **1 s**: ▪ Engine is running. ▪ Vehicle speed signal related DTC is not recorded. ▪ Vehicle speed is **16 km/h {9.9 mph} or more**. ▪ There is no difference between vehicle speed signal from DSC HU/CM and output shaft speed sensor signal. ▪ DTC U0121:00 is not recorded.
P0729:00	6GR incorrect ratio	• In D position, 6GR, the following phenomenon occurs: ▪ There is difference between turbine/input shaft speed and output shaft speed sensor speed for **230 to 1,980 ms** (varies with ATF temperature and ECT) during shift-up. ▪ There is difference between turbine/input shaft speed and output shaft speed sensor speed for **1,500 to 3,900 ms** (varies with ATF temperature) while driving without shifting.
P0731:00	1GR incorrect ratio	• In D position, 1GR, the following phenomenon occurs: ▪ Speed ratio is **0.75 to 1.2** for **2,000 ms** while vehicle is stopped in D position. ▪ There is difference between turbine/input shaft speed and output shaft speed sensor speed for **230 to 1,980 ms** (varies with ATF temperature and ECT) during shift-up. ▪ There is difference between turbine/input shaft speed and output shaft speed sensor speed for **1,500 to 3,900 ms** (varies with ATF temperature) while driving without shifting.
P0732:00	2GR incorrect ratio	• In D position, 2GR, the following phenomenon occurs: ▪ There is difference between turbine/input shaft speed and output shaft speed sensor speed for **230 to 1,980 ms** (varies with ATF temperature and ECT) during shift-up. ▪ There is difference between turbine/input shaft speed and output shaft speed sensor speed for **1,500 to 3,900 ms** (varies with ATF temperature) while driving without shifting.
P0733:00	3GR incorrect ratio	• In D position, 3GR, the following phenomenon occurs: ▪ There is difference between turbine/input shaft speed and output shaft speed sensor speed for **230 to 1,980 ms** (varies with ATF temperature and ECT) during shift-up. ▪ There is difference between turbine/input shaft speed and output shaft speed sensor speed for **1,500 to 3,900 ms** (varies with ATF temperature) while driving without shifting.

P0734:00	4GR incorrect ratio	• In D position, 4GR, the following phenomenon occurs: ▪ There is difference between turbine/input shaft speed and output shaft speed sensor speed for **230 to 1,980 ms** (varies with ATF temperature and ECT) during shift-up. ▪ There is difference between turbine/input shaft speed and output shaft speed sensor speed for **1,500 to 3,900 ms** (varies with ATF temperature) while driving without shifting.
P0735:00	5GR incorrect ratio	• In D position, 5GR, the following phenomenon occurs: ▪ There is difference between turbine/input shaft speed and output shaft speed sensor speed for **230 to 1,980 ms** (varies with ATF temperature and ECT) during shift-up. ▪ There is difference between turbine/input shaft speed and output shaft speed sensor speed for **1,500 to 3,900 ms** (varies with ATF temperature) while driving without shifting.
P0736:00	Gear reverse incorrect ratio	• Speed ratio is **0.75 to 1.2** for **2,000 ms** while vehicle is stopped in R position.
P073D:00	Neutral incorrect ratio	• In P or N position, the following phenomenon occurs: ▪ Speed ratio is **0.5 or less** for **2 s** while vehicle is stopped in P or N position.
P0741:00	TCC control solenoid stuck off	• Under the following conditions, difference in slip amount **over 5 s** compared to target slip amount is **200 rpm or more**, and TCC feedback hydraulic pressure is **200 kPa {2.04 kgf/cm^2, 29.0 psi} or more** occurs: ▪ Selector lever position is D position. ▪ No electrical malfunction in TCC control solenoid ▪ During TCC or TCC feedback ▪ There is no difference between vehicle speed signal from DSC HU/CM and output shaft speed sensor signal. ▪ Engine is running. ▪ ATF temperature is **−25 °C {−13 °F} or more**. ▪ Turbine/input shaft speed sensor and output shaft speed sensor DTC is not recorded.
P0743:00	TCC control solenoid circuit malfunction	• Under the following condition, the TCM detects the TCC control solenoid circuit malfunction: ▪ Battery voltage is **10.5 V or more**.
P0746:00	Pressure control solenoid stuck off	• Under the following conditions, pressure control solenoid stuck-off detected by combination of gear ratio malfunction and oil pressure switch pattern malfunction: ▪ Engine is running. ▪ ATF temperature is **20 °C {68 °F} or more**. ▪ There is no difference between vehicle speed signal from DSC HU/CM and output shaft speed sensor signal. ▪ Turbine/input shaft speed sensor and output shaft speed sensor DTC is not recorded.
P0748:00	Pressure control solenoid circuit malfunction	• Under the following condition, the TCM detects the pressure control solenoid circuit malfunction: ▪ Battery voltage is **10.5 V or more**.
		• Under the following conditions, shift solenoid No.1 stuck-off detected by combination of gear ratio malfunction and oil pressure switch pattern malfunction: ▪ Engine is running. ▪ ATF temperature is **20 °C {68 °F} or more**.

P0751:00	Shift solenoid No.1 stuck off	▪ There is no difference between vehicle speed signal from DSC HU/CM and output shaft speed sensor signal. ▪ Turbine/input shaft speed sensor and output shaft speed sensor DTC is not recorded.
P0752:00	Shift solenoid No.1 stuck on	• Under the following conditions, shift solenoid No.1 stuck-on detected by combination of gear ratio malfunction and oil pressure switch pattern malfunction: ▪ Engine is running. ▪ ATF temperature is **20 °C {68 °F} or more**. ▪ There is no difference between vehicle speed signal from DSC HU/CM and output shaft speed sensor signal. ▪ Turbine/input shaft speed sensor and output shaft speed sensor DTC is not recorded.
P0753:00	Shift solenoid No.1 circuit malfunction	• Under the following condition, the TCM detects the shift solenoid No.1 circuit malfunction: ▪ Battery voltage is **10.5 V or more**.
P0756:00	Shift solenoid No.2 stuck off	• Under the following conditions, shift solenoid No.2 stuck-off detected by combination of gear ratio malfunction and oil pressure switch pattern malfunction: ▪ Engine is running. ▪ ATF temperature is **20 °C {68 °F} or more**. ▪ There is no difference between vehicle speed signal from DSC HU/CM and output shaft speed sensor signal. ▪ Turbine/input shaft speed sensor and output shaft speed sensor DTC is not recorded.
P0757:00	Shift solenoid No.2 stuck on	• Under the following conditions, shift solenoid No.2 stuck-on detected by combination of gear ratio malfunction and oil pressure switch pattern malfunction: ▪ Engine is running. ▪ ATF temperature is **20 °C {68 °F} or more**. ▪ There is no difference between vehicle speed signal from DSC HU/CM and output shaft speed sensor signal. ▪ Turbine/input shaft speed sensor and output shaft speed sensor DTC is not recorded.
P0758:00	Shift solenoid No.2 circuit malfunction	• Under the following condition, the TCM detects the shift solenoid No.2 circuit malfunction: ▪ Battery voltage is **10.5 V or more**.
P0761:00	Shift solenoid No.3 stuck off	• Under the following conditions, shift solenoid No.3 stuck-off detected by combination of gear ratio malfunction and oil pressure switch pattern malfunction: ▪ Engine is running. ▪ ATF temperature is **20 °C {68 °F} or more**. ▪ There is no difference between vehicle speed signal from DSC HU/CM and output shaft speed sensor signal. ▪ Turbine/input shaft speed sensor and output shaft speed sensor DTC is not recorded.
P0762:00	Shift solenoid No.3 stuck on	• Under the following conditions, shift solenoid No.3 stuck-on detected by combination of gear ratio malfunction and oil pressure switch pattern malfunction: ▪ Engine is running. ▪ ATF temperature is **20 °C {68 °F} or more**. ▪ There is no difference between vehicle speed signal from DSC HU/CM and output shaft speed sensor signal.

		▪ Turbine/input shaft speed sensor and output shaft speed sensor DTC is not recorded.
P0763:00	Shift solenoid No.3 circuit malfunction	• Under the following condition, the TCM detects the shift solenoid No.3 circuit malfunction: ▪ Battery voltage is **10.5 V or more**.
P0766:00	Shift solenoid No.4 stuck off	• Under the following conditions, shift solenoid No.4 stuck-off detected by combination of gear ratio malfunction and oil pressure switch pattern malfunction: ▪ Engine is running. ▪ ATF temperature is **20 °C {68 °F} or more**. ▪ There is no difference between vehicle speed signal from DSC HU/CM and output shaft speed sensor signal. ▪ Turbine/input shaft speed sensor and output shaft speed sensor DTC is not recorded.
P0767:00	Shift solenoid No.4 stuck on	• Under the following conditions, shift solenoid No.4 stuck-on detected by combination of gear ratio malfunction and oil pressure switch pattern malfunction: ▪ Engine is running. ▪ ATF temperature is **20 °C {68 °F} or more**. ▪ There is no difference between vehicle speed signal from DSC HU/CM and output shaft speed sensor signal. ▪ Turbine/input shaft speed sensor and output shaft speed sensor DTC is not recorded.
P0768:00	Shift solenoid No.4 circuit malfunction	• Under the following condition, the TCM detects the shift solenoid No.4 circuit malfunction: ▪ Battery voltage is **10.5 V or more**.
P0771:00	On/off solenoid stuck off	• Under the following conditions, on/off solenoid stuck-off detected by combination of gear ratio malfunction and oil pressure switch pattern malfunction: ▪ Engine is running. ▪ ATF temperature is **20 °C {68 °F} or more**. ▪ There is no difference between vehicle speed signal from DSC HU/CM and output shaft speed sensor signal. ▪ Turbine/input shaft speed sensor and output shaft speed sensor DTC is not recorded.
P0772:00	On/off solenoid stuck on	• Under the following conditions, on/off solenoid stuck-on detected by combination of gear ratio malfunction and oil pressure switch pattern malfunction: ▪ Engine is running. ▪ ATF temperature is **20 °C {68 °F} or more**. ▪ There is no difference between vehicle speed signal from DSC HU/CM and output shaft speed sensor signal. ▪ Turbine/input shaft speed sensor and output shaft speed sensor DTC is not recorded.
P0773:00	On/off solenoid circuit malfunction	• Under the following condition, the TCM detects the on/off solenoid circuit malfunction: ▪ Battery voltage is **10.5 V or more**.
P0780:00	Gear shifting malfunction	• Under the following condition, the gear shifting inhibited: ▪ Engine is running.
		• Under the following conditions, any of (1) to (4) conditions occurs for **1 s**: ▪ Engine is running.

P0819:00	M position switch/Up switch/Down switch signal error	▪ Battery voltage is **8 V or more**. ▪ Transaxle range sensor related DTC is not recorded. ▪ (1) M position switch signal is on even though forward oil pressure switch is on in any position other than D position. ▪ (2) M position switch signal is off even though up or down switch signal is on in D position. ▪ (3) Up switch signal is on even though M position switch signal is off in any position other than D position. ▪ (4) Down switch signal is on even though M position switch signal is off in any position other than D position.
P0842:00	Oil pressure switch No.1 stuck on	• Under the following conditions, oil pressure switch No.1 stuck-on detected by combination of gear ratio malfunction and oil pressure switch pattern malfunction: ▪ Engine is running. ▪ ATF temperature is **20 °C {68 °F} or more**. ▪ There is no difference between vehicle speed signal from DSC HU/CM and output shaft speed sensor signal. ▪ Turbine/input shaft speed sensor and output shaft speed sensor DTC is not recorded.
P0843:00	Oil pressure switch No.1 stuck off	• Under the following conditions, oil pressure switch No.1 stuck-off detected by combination of gear ratio malfunction and oil pressure switch pattern malfunction: ▪ Engine is running. ▪ ATF temperature is **20 °C {68 °F} or more**. ▪ There is no difference between vehicle speed signal from DSC HU/CM and output shaft speed sensor signal. ▪ Turbine/input shaft speed sensor and output shaft speed sensor DTC is not recorded.
P0847:00	Oil pressure switch No.2 stuck on	• Under the following conditions, oil pressure switch No.2 stuck-on detected by combination of gear ratio malfunction and oil pressure switch pattern malfunction: ▪ Engine is running. ▪ ATF temperature is **20 °C {68 °F} or more**. ▪ There is no difference between vehicle speed signal from DSC HU/CM and output shaft speed sensor signal. ▪ Turbine/input shaft speed sensor and output shaft speed sensor DTC is not recorded.
P0848:00	Oil pressure switch No.2 stuck off	• Under the following conditions, oil pressure switch No.2 stuck-off detected by combination of gear ratio malfunction and oil pressure switch pattern malfunction: ▪ Engine is running. ▪ ATF temperature is **20 °C {68 °F} or more**. ▪ There is no difference between vehicle speed signal from DSC HU/CM and output shaft speed sensor signal. ▪ Turbine/input shaft speed sensor and output shaft speed sensor DTC is not recorded.
P0872:00	Oil pressure switch No.3 stuck on	• Under the following conditions, oil pressure switch No.3 stuck-on detected by combination of gear ratio malfunction and oil pressure switch pattern malfunction: ▪ Engine is running. ▪ ATF temperature is **20 °C {68 °F} or more**. ▪ There is no difference between vehicle speed signal from DSC HU/CM and output shaft speed sensor signal.

		▪ Turbine/input shaft speed sensor and output shaft speed sensor DTC is not recorded.
P0873:00	Oil pressure switch No.3 stuck off	• Under the following conditions, oil pressure switch No.3 stuck-off detected by combination of gear ratio malfunction and oil pressure switch pattern malfunction: ▪ Engine is running. ▪ ATF temperature is **20 °C {68 °F} or more**. ▪ There is no difference between vehicle speed signal from DSC HU/CM and output shaft speed sensor signal. ▪ Turbine/input shaft speed sensor and output shaft speed sensor DTC is not recorded.
P0877:00	Oil pressure switch No.4 stuck on	• Under the following conditions, oil pressure switch No.4 stuck-on detected by combination of gear ratio malfunction and oil pressure switch pattern malfunction: ▪ Engine is running. ▪ ATF temperature is **20 °C {68 °F} or more**. ▪ There is no difference between vehicle speed signal from DSC HU/CM and output shaft speed sensor signal. ▪ Turbine/input shaft speed sensor and output shaft speed sensor DTC is not recorded.
P0878:00	Oil pressure switch No.4 stuck off	• Under the following conditions, oil pressure switch No.4 stuck-off detected by combination of gear ratio malfunction and oil pressure switch pattern malfunction: ▪ Engine is running. ▪ ATF temperature is **20 °C {68 °F} or more**. ▪ There is no difference between vehicle speed signal from DSC HU/CM and output shaft speed sensor signal. ▪ Turbine/input shaft speed sensor and output shaft speed sensor DTC is not recorded.
P0882:00	TCM power supply voltage low	• Under the following conditions, the TCM power supply voltage is **8—10.5 V or less** (varies with ATF temperature): ▪ **5 s or more** has elapsed or battery voltage exceeds **11 V or more** for **0.2 s** since engine speed increases **−200 rpm or more** of target idle speed. ▪ Selector lever position is D or R position.
P0883:00	TCM power supply voltage high	• TCM power supply voltage is **18 V or more** for **5 s**.
P1728:00	Clutch slippage	• Under the following conditions, turbine/input shaft speed suddenly increases **300 rpm or more** for **1,450 ms**: ▪ Engine is running. ▪ Vehicle speed is **5 km/h {3 mph} or more**. ▪ There is no difference between vehicle speed signal from DSC HU/CM and output shaft speed sensor signal. ▪ Not shifting ▪ Selector lever position is D position. ▪ Turbine/input shaft speed is **1,200 rpm or more**. ▪ Oil pressure switch pattern (1st—6th) is normal.
P1738:00	Automatic transaxle internal malfunction	• Malfunction location cannot be determined based on combination of gear ratio malfunction and oil pressure switch pattern malfunction.
		• Under the following conditions, hi cut valve stuck-off or R-3-5 cut valve stuck-on detected by combination of gear ratio malfunction and oil pressure switch pattern

P1784:00	Hi cut valve stuck off/R-3-5 cut valve stuck on	malfunction: ▪ Engine is running. ▪ ATF temperature is **20 °C {68 °F} or more**. ▪ There is no difference between vehicle speed signal from DSC HU/CM and output shaft speed sensor signal. ▪ Turbine/input shaft speed sensor and output shaft speed sensor DTC is not recorded.
P2530:00	Ignition switch stuck off	• If the IG ON time count of the instrument cluster proceeds **5 s** under the following condition: ▪ Ignition switch signal off
P2855:00	Low clutch hydraulic circuit/sealing malfunction	• Slow engaging after operating selector lever from N to D position.
U0073:00	CAN system communication error (HS CAN)	• Under the following condition, a communication error (HS CAN) occurs: ▪ Battery voltage is **10 V or more**.
U0074:00	CAN system communication error (local CAN between TCM and PCM)	• Under the following condition, a communication error (local CAN between TCM and PCM) occurs: ▪ Battery voltage is **10 V or more**.
U0100:00	Communication error to PCM (HS CAN)	• Under the following condition, the TCM cannot receive the signal from PCM (HS CAN): ▪ Battery voltage is **10 V or more**.
U0115:00	Communication error to PCM (local CAN between TCM and PCM)	• Under the following condition, the TCM cannot receive the signal from PCM (local CAN between TCM and PCM): ▪ Battery voltage is **10 V or more**.
U0121:00	Communication error to DSC HU/CM	• Under the following condition, the TCM cannot receive the signal from DSC HU/CM: ▪ Battery voltage is **10 V or more**.
U0131:00	Communication error to EPS control module	• Under the following condition, the TCM cannot receive the signal from EPS control module: ▪ Battery voltage is **10 V or more**.
U0155:00	Communication error to instrument cluster	• Under the following condition, the TCM cannot receive the signal from instrument cluster: ▪ Battery voltage is **10 V or more**.
U0442:00	Invalid data received from PCM (local CAN between TCM and PCM)	• Under the following condition, the TCM detects the invalid PCM signal for **0.5 s**: ▪ Battery voltage is **10 V or more**.

Drive cycle

- The drive cycle is the period of time from when the engine is started to the next time the engine is started.
- One drive cycle, as shown in the figure, indicates the period from the time engine is started to the next time the engine is started. If this period is repeated twice it then becomes two drive cycles.

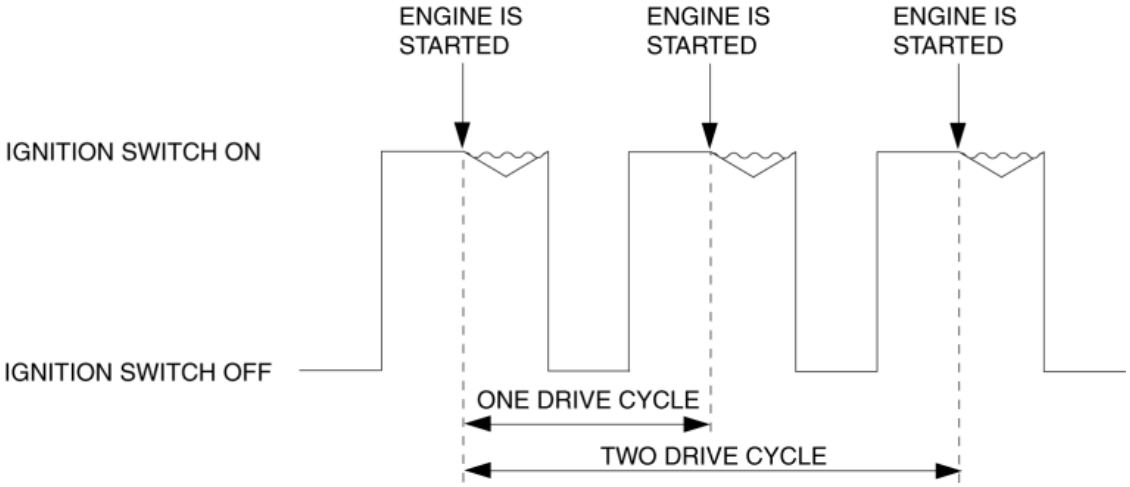

- To detect DTCs, a required number of drive cycles for pre-detection has been set. For the number of drive cycles required for detection, refer to the DTC table.

Pending code

- The pending code is temporary malfunction code which differs from DTCs which are recorded when the TCM detects a transaxle malfunction.
- DTCs are recorded in the TCM according to the number of drive cycles when the TCM detects a transaxle malfunction. At the same time, pending code is recorded in the TCM regardless of the number of drive cycles.
- Pending code recorded in the TCM is erased from the TCM, from the next drive cycle, when the TCM determines that the transaxle is normal.

Status byte for DTC

- The status byte is the two-digit code (two digits after hyphen (-)) after the DTC.

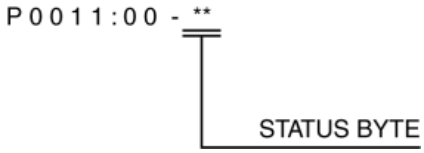

- The status byte is a code which indicates the pending code, current/past malfunction status, or warning illumination status.
- The status byte can be read by performing a CMDTC self test using the Mazda Modular Diagnostic System (M-MDS).
- For details on the status byte, refer to the explanation on the Mazda Modular Diagnostic System (M-MDS) when reading the DTC.

Self test function

- When the self test is implemented, the TCM performs diagnosis of the transaxle control system. If a malfunction is detected with the results of the diagnosis, an applicable DTC is recorded. A recorded DTC can be read by the Mazda Modular Diagnostic System (M-MDS).
- By implementing the self test function, verification of the current malfunction and verification after repair is facilitated.

CMDTC (Continuous Memory Diagnostic Trouble Code) self test

- The CMDTC self test is a function which reads all DTCs recorded in the TCM after the previous DTCs are erased no matter whether they are past malfunctions or current malfunctions.

KOEO (Key On Engine Off) self test

- The KOEO self test can perform malfunction diagnosis of DTCs corresponding to this self test function when the ignition is switched ON and the engine is stopped. This self test implements based on the test implementation command signal sent to the TCM from the Mazda Modular Diagnostic System (M-MDS).

Freeze frame data/Snapshot data

Freeze frame data

- The freeze frame data consists of data for vehicle and transaxle control system operation conditions when malfunctions in the transaxle control system are detected and stored in the TCM.
- Freeze frame data is stored at the instant the malfunction indicator lamp illuminates, and only a part of the DTC data is stored.

  Snapshot data

- The data for all DTCs currently detected is stored.

  Recorded DTC timing

  - For DTCs with one drive cycle, data is recorded during the malfunction determination period.
  - For DTCs with two drive cycles, data is recorded during non-determination (1st diagnosis) periods.

Freeze frame data item table—: Not applicable

Freeze frame data item	Unit	Description	Corresponding PID/DATA monitor item
LOAD	%	Calculated engine load	—
ECT	°C {°F}	Engine coolant temperature	ECT
RPM	RPM	Engine speed	RPM
VS	KPH {MPH}	Vehicle speed	VSS
IAT	°C {°F}	Intake air temperature	—
TP	%	Throttle valve position No.1	—
RUNTM	hh:mm:ss	Time from engine start	—
VPWR	V	Module supply voltage	VPWR
APP_D	%	Accelerator pedal position No.1	APP1

Snapshot data item table—: Not applicable

Snapshot data item	Unit	Description	Corresponding PID/DATA monitor item
LOAD	%	Calculated engine load	—
ECT	°C {°F}	Engine coolant temperature	ECT
RPM	RPM	Engine speed	RPM
VSS	KPH {MPH}	Vehicle speed	VSS
IAT	°C {°F}	Intake air temperature	—
EG_RUN_TIME	—	Time from engine start	—
VPWR	V	Module supply voltage	VPWR
APP1	%	Accelerator pedal position No.1	APP1
GEAR_SEL	1/2/3/4/5/6	Gear shift position	GEAR_SEL
TSS	RPM	Turbine/input shaft speed	TSS
TFT	°C {°F}	ATF temperature	TFT

OSS	RPM	Output shaft speed	OSS
LOCK_UP	Off/SLIP/On	Torque converter (TCC condition)	LOCK_UP
OIL_PRES_SW2	Off/On	Oil pressure switch No.2 condition	OP_SW2
OIL_PRES_SW1	Off/On	Oil pressure switch No.1 condition	OP_SW1
SS_ON_OFF	Off/On	On/off solenoid condition	SS_ON-OFF
TORQUE_DES	Nm	Desired engine torque	TORQUE_DES
APP	%	Accelerator pedal position No.1	APP
G_INHIBIT_6	Off/On	6GR is inhibited due to malfunction.	—
G_INHIBIT_5	Off/On	5GR is inhibited due to malfunction.	—
G_INHIBIT_4	Off/On	4GR is inhibited due to malfunction.	—
G_INHIBIT_3	Off/On	3GR is inhibited due to malfunction.	—
G_INHIBIT_2	Off/On	2GR is inhibited due to malfunction.	—
G_INHIBIT_1	Off/On	1GR is inhibited due to malfunction.	—
G_INHIBIT_R	Off/On	R position is inhibited due to malfunction.	—
G_INHIBIT_N	Off/On	N position is inhibited due to malfunction.	—
OIL_PRES_SW4	Off/On	Oil pressure switch No.4 condition	OP_SW4
OIL_PRES_SW3	Off/On	Oil pressure switch No.3 condition	OP_SW3
SHIFT_CTRL	DEFAULT/MANUAL/C_CONTROL/HIGH_TEMP/D_MANUAL/FAIL_SAFE	Shift control mode	SHIFT_CTRL
SLIP_VALUE	RPM	Actual slip value between TSS and OSS	—
HTM_DIS	km {mile}	Travel distance since determination of ATF high temperature mode	HTM_DIS
MST_REC_SFT	—	The gear shift position before shifting gears is displayed.	SE_TYPE
SFT_CTL_STS	—	The shift control execution condition is displayed.	SC_STATE
SERIAL_DTC	—	DTC	—
TR	—	Transaxle range sensor position.	TR
PADDLE_UP	Off/On	Shift up operation using steering shift switch.	PADDLE_UP
PADDLE_DOWN	Off/On	Shift down operation using steering shift switch.	PADDLE_DOWN

2014 - Mazda3 - Transmission / Transaxle

ON-BOARD DIAGNOSTIC SYSTEM FAIL-SAFE FUNCTION [FW6A-EL]

Purpose / Function

- If a transaxle malfunction is detected by the malfunction detection function, the fail-safe function limits the transaxle control.
- Even if the transaxle has a malfunction, the fail-safe function assures the minimum vehicle driveability.

Construction / Operation

DTC separate fail-safe function

DTC No.	Description	Fail-safe function
P0218:00	Automatic transaxle protection control	• Inhibits learning control. • Inhibits manual mode. • Inhibits neutral idle control. • Inhibits AAS.
P0500:00	Vehicle speed signal circuit malfunction	• Inhibits learning control. • Inhibits neutral idle control. • Inhibits AAS.
P0666:00	ECU internal temperature sensor circuit malfunction	• Inhibits learning control. • Inhibits neutral idle control.
P0667:00	ECU internal temperature sensor/performance problem	• Inhibits learning control. • Inhibits neutral idle control.
P06B8:00	NVRAM malfunction	Not applicable
		• Inhibits learning control. • Inhibits manual mode.

P0706:00	Transaxle range sensor range/performance problem	• Inhibits neutral idle control. • Inhibits AAS.
P0707:00	Transaxle range sensor circuit low input	• Inhibits learning control. • Inhibits manual mode. • Inhibits neutral idle control. • Inhibits AAS.
P0708:00	Transaxle range sensor circuit high input	• Inhibits learning control. • Inhibits manual mode. • Inhibits neutral idle control. • Inhibits AAS.
P0711:00	TFT sensor range/performance problem	• Inhibits learning control. • Inhibits neutral idle control.
P0712:00	TFT sensor circuit low input	• Inhibits learning control. • Inhibits neutral idle control.
P0713:00	TFT sensor circuit high input	• Inhibits learning control. • Inhibits neutral idle control.
P0715:00	Turbine/input shaft speed sensor/sensor output range malfunction	• Set to TCC control. • Inhibits learning control. • Inhibits manual mode. • Inhibits neutral idle control. • Inhibits AAS. • Inhibits 5GR and 6GR. • Inhibits shift down when the accelerator pedal is depressed.
P0716:00	Turbine/input shaft speed sensor range/performance problem	• Set to TCC control. • Inhibits learning control. • Inhibits manual mode. • Inhibits neutral idle control. • Inhibits AAS.

		• Inhibits 5GR and 6GR. • Inhibits shift down when the accelerator pedal is depressed.
P0717:00	Open circuit in turbine/input shaft speed sensor circuit	• Set to TCC control. • Inhibits learning control. • Inhibits manual mode. • Inhibits neutral idle control. • Inhibits AAS. • Inhibits 5GR and 6GR. • Inhibits shift down when the accelerator pedal is depressed.
P0720:00	Output shaft speed sensor range/performance problem	• Inhibits learning control. • Inhibits manual mode. • Inhibits neutral idle control. • Inhibits AAS.
P0721:00	Output shaft speed sensor/sensor output range malfunction	• Inhibits learning control. • Inhibits manual mode. • Inhibits neutral idle control. • Inhibits AAS.
P0722:00	Open circuit in output shaft speed sensor circuit	• Inhibits learning control. • Inhibits manual mode. • Inhibits neutral idle control. • Inhibits AAS.
P0729:00	6GR incorrect ratio	• Inhibits malfunctioning gear. • Limits engine torque. • Inhibits learning control. • Inhibits manual mode. • Inhibits neutral idle control. • Inhibits AAS.
		• Inhibits malfunctioning gear.

P0731:00	1GR incorrect ratio	• Limits engine torque. • Inhibits learning control. • Inhibits manual mode. • Inhibits neutral idle control. • Inhibits AAS.
P0732:00	2GR incorrect ratio	• Inhibits malfunctioning gear. • Limits engine torque. • Inhibits learning control. • Inhibits manual mode. • Inhibits neutral idle control. • Inhibits AAS.
P0733:00	3GR incorrect ratio	• Inhibits malfunctioning gear. • Limits engine torque. • Inhibits learning control. • Inhibits manual mode. • Inhibits neutral idle control. • Inhibits AAS.
P0734:00	4GR incorrect ratio	• Inhibits malfunctioning gear. • Limits engine torque. • Inhibits learning control. • Inhibits manual mode. • Inhibits neutral idle control. • Inhibits AAS.
P0735:00	5GR incorrect ratio	• Inhibits malfunctioning gear. • Limits engine torque. • Inhibits learning control. • Inhibits manual mode. • Inhibits neutral idle control. • Inhibits AAS.
P0736:00	Gear reverse incorrect ratio	• Inhibits learning control.

		• Inhibits neutral idle control.
P073D:00	Neutral incorrect ratio	Not applicable
P0741:00	TCC control solenoid stuck off	• Inhibits TCC control. • Inhibits learning control. • Inhibits manual mode. • Inhibits neutral idle control. • Inhibits AAS.
P0743:00	TCC control solenoid circuit malfunction	• Set to emergency mode. • Inhibits learning control. • Inhibits manual mode. • Inhibits neutral idle control. • Inhibits AAS.
P0746:00	Pressure control solenoid stuck off	• Inhibits malfunctioning gear. • Limits engine torque. • Inhibits learning control. • Inhibits manual mode. • Inhibits neutral idle control. • Inhibits AAS.
P0748:00	Pressure control solenoid circuit malfunction	• Set to emergency mode. • Inhibits learning control. • Inhibits manual mode. • Inhibits neutral idle control. • Inhibits AAS.
P0751:00	Shift solenoid No.1 stuck off	• Inhibits malfunctioning gear. • Limits engine torque. • Inhibits learning control. • Inhibits manual mode. • Inhibits neutral idle control. • Inhibits AAS.

P0752:00	Shift solenoid No.1 stuck on	• Inhibits malfunctioning gear. • Limits engine torque. • Inhibits learning control. • Inhibits manual mode. • Inhibits neutral idle control. • Inhibits AAS.
P0753:00	Shift solenoid No.1 circuit malfunction	• Set to emergency mode. • Inhibits learning control. • Inhibits manual mode. • Inhibits neutral idle control. • Inhibits AAS.
P0756:00	Shift solenoid No.2 stuck off	• Inhibits malfunctioning gear. • Limits engine torque. • Inhibits learning control. • Inhibits manual mode. • Inhibits neutral idle control. • Inhibits AAS.
P0757:00	Shift solenoid No.2 stuck on	• Inhibits malfunctioning gear. • Limits engine torque. • Inhibits learning control. • Inhibits manual mode. • Inhibits neutral idle control. • Inhibits AAS.
P0758:00	Shift solenoid No.2 circuit malfunction	• Set to emergency mode. • Inhibits learning control. • Inhibits manual mode. • Inhibits neutral idle control. • Inhibits AAS.
		• Inhibits malfunctioning gear. • Limits engine torque.

P0761:00	Shift solenoid No.3 stuck off	• Inhibits learning control. • Inhibits manual mode. • Inhibits neutral idle control. • Inhibits AAS.
P0762:00	Shift solenoid No.3 stuck on	• Inhibits malfunctioning gear. • Limits engine torque. • Inhibits learning control. • Inhibits manual mode. • Inhibits neutral idle control. • Inhibits AAS.
P0763:00	Shift solenoid No.3 circuit malfunction	• Set to emergency mode. • Inhibits learning control. • Inhibits manual mode. • Inhibits neutral idle control. • Inhibits AAS.
P0766:00	Shift solenoid No.4 stuck off	• Inhibits malfunctioning gear. • Limits engine torque. • Inhibits learning control. • Inhibits manual mode. • Inhibits neutral idle control. • Inhibits AAS.
P0767:00	Shift solenoid No.4 stuck on	• Inhibits malfunctioning gear. • Limits engine torque. • Inhibits learning control. • Inhibits manual mode. • Inhibits neutral idle control. • Inhibits AAS.
P0768:00	Shift solenoid No.4 circuit malfunction	• Set to emergency mode. • Inhibits learning control. • Inhibits manual mode.

		• Inhibits neutral idle control. • Inhibits AAS.
P0771:00	On/off solenoid stuck off	• Inhibits malfunctioning gear. • Limits engine torque. • Inhibits learning control. • Inhibits manual mode. • Inhibits neutral idle control. • Inhibits AAS.
P0772:00	On/off solenoid stuck on	• Inhibits malfunctioning gear. • Limits engine torque. • Inhibits learning control. • Inhibits manual mode. • Inhibits neutral idle control. • Inhibits AAS.
P0773:00	On/off solenoid circuit malfunction	• Set to emergency mode. • Inhibits learning control. • Inhibits manual mode. • Inhibits neutral idle control. • Inhibits AAS.
P0780:00	Gear shifting malfunction	• Inhibits learning control. • Inhibits manual mode. • Inhibits neutral idle control. • Inhibits AAS.
P0819:00	M position switch/Up switch/Down switch signal error	• Inhibits manual mode.
P0842:00	Oil pressure switch No.1 stuck on	• Limits engine torque. • Inhibits learning control. • Inhibits manual mode. • Inhibits neutral idle control. • Inhibits AAS.

P0843:00	Oil pressure switch No.1 stuck off	• Inhibits malfunctioning gear. • Limits engine torque. • Inhibits learning control. • Inhibits manual mode. • Inhibits neutral idle control. • Inhibits AAS.
P0847:00	Oil pressure switch No.2 stuck on	• Limits engine torque. • Inhibits learning control. • Inhibits manual mode. • Inhibits neutral idle control. • Inhibits AAS.
P0848:00	Oil pressure switch No.2 stuck off	• Inhibits malfunctioning gear. • Limits engine torque. • Inhibits learning control. • Inhibits manual mode. • Inhibits neutral idle control. • Inhibits AAS.
P0872:00	Oil pressure switch No.3 stuck on	• Limits engine torque. • Inhibits learning control. • Inhibits manual mode. • Inhibits neutral idle control. • Inhibits AAS.
P0873:00	Oil pressure switch No.3 stuck off	• Inhibits malfunctioning gear. • Limits engine torque. • Inhibits learning control. • Inhibits manual mode. • Inhibits neutral idle control. • Inhibits AAS.
		• Limits engine torque. • Inhibits learning control.

P0877:00	Oil pressure switch No.4 stuck on	• Inhibits manual mode. • Inhibits neutral idle control. • Inhibits AAS.
P0878:00	Oil pressure switch No.4 stuck off	• Inhibits malfunctioning gear. • Limits engine torque. • Inhibits learning control. • Inhibits manual mode. • Inhibits neutral idle control. • Inhibits AAS.
P0882:00	TCM power supply voltage low	• Set to emergency mode. • Inhibits learning control. • Inhibits manual mode. • Inhibits neutral idle control. • Inhibits AAS.
P0883:00	TCM power supply voltage high	• Set to emergency mode. • Inhibits learning control. • Inhibits manual mode. • Inhibits neutral idle control. • Inhibits AAS.
P1728:00	Clutch slippage	• Inhibits malfunctioning gear. • Limits engine torque. • Maximizes the line pressure. • Inhibits learning control. • Inhibits manual mode. • Inhibits neutral idle control. • Inhibits AAS.
P1738:00	Automatic transaxle internal malfunction	• Inhibits learning control. • Inhibits manual mode. • Inhibits neutral idle control. • Inhibits AAS.

P1784:00	Hi cut valve stuck off/R-3-5 cut valve stuck on	• Inhibits malfunctioning gear. • Limits engine torque. • Inhibits learning control. • Inhibits neutral idle control.
P2530:00	Ignition switch stuck off	Not applicable
P2855:00	Low clutch hydraulic circuit/sealing malfunction	Not applicable
U0073:00	CAN system communication error (HS CAN)	• Inhibits learning control. • Inhibits neutral idle control. • Inhibits AAS.
U0074:00	CAN system communication error (local CAN between TCM and PCM)	• Set to TCC control. • Inhibits learning control. • Inhibits manual mode. • Inhibits neutral idle control. • Inhibits AAS. • Inhibits 5GR and 6GR. • Inhibits shift down when the accelerator pedal is depressed.
U0100:00	Communication error to PCM (HS CAN)	• Inhibits learning control. • Inhibits neutral idle control. • Inhibits AAS.
U0115:00	Communication error to PCM (local CAN between TCM and PCM)	• Set to TCC control. • Inhibits learning control. • Inhibits manual mode. • Inhibits neutral idle control. • Inhibits AAS. • Inhibits 5GR and 6GR. • Inhibits shift down when the accelerator pedal is depressed.
		• Inhibits learning control.

U0121:00	Communication error to DSC HU/CM	• Inhibits neutral idle control. • Inhibits AAS.
U0131:00	Communication error to EPS control module	• Inhibits learning control. • Inhibits neutral idle control.
U0155:00	Communication error to instrument cluster	• Inhibits learning control. • Inhibits manual mode. • Inhibits neutral idle control.
U0442:00	Invalid data received from PCM (local CAN between TCM and PCM)	• Set to TCC control. • Inhibits learning control. • Inhibits manual mode. • Inhibits neutral idle control. • Inhibits 5GR and 6GR. • Inhibits shift down when the accelerator pedal is depressed.

Emergency mode

- The emergency mode is a control for preventing transaxle damage or vehicle inoperability.
- If these modes are set, the TCM output is inhibited. Therefore, all solenoids are turned off and the following conditions occur:
    - When the accelerator pedal is depressed, the engine speed is higher than normal.
    - When N to D position and N to R position are selected, the shift shock is greater than during normal shifting.

Neutral idle control

- System which automatically switches the transaxle to neutral internally while the vehicle is stopped in the D position.

2014 - Mazda3 - Transmission / Transaxle

ON-BOARD DIAGNOSTIC SYSTEM DIAGNOSTIC DATA MEMORY FUNCTION [FW6A-EL]

Purpose / Function

- The on-board diagnostic system diagnostic data memory function records/erases the following diagnostic data:
    - Number of DTCs
    - DTCs
    - Pending code
- Determination of a malfunction cause is facilitated by the on-board diagnostic system data memory function. Therefore, accurate and quick repair/service can be performed.

Construction / Operation

- The conditions for recording/erasing diagnostic data are determined by the number of drive cycles set for each DTC.
- Using the memory deletion function of the Mazda Modular Diagnostic System (M-MDS), diagnostic data can be deleted.

2014 - Mazda3 - Transmission / Transaxle

ON-BOARD DIAGNOSTIC SYSTEM MALFUNCTION INDICATION FUNCTION [FW6A-EL]

Purpose / Function

- The on-board diagnostic system malfunction indication function notifies the driver of a transaxle malfunction.
- The malfunction indication function notifies the driver of a transaxle malfunction by illuminating the check engine light and automatic transaxle warning light.

Construction / Operation

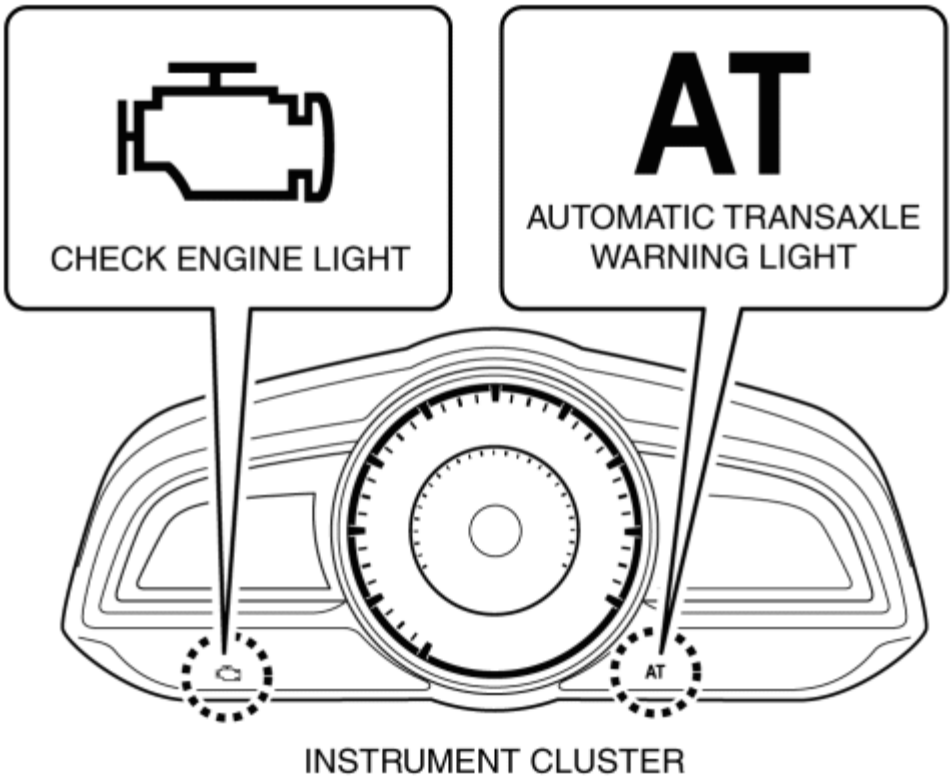

2014 - Mazda3 - Transmission / Transaxle

ON-BOARD DIAGNOSTIC SYSTEM EXTERNAL TESTER COMMUNICATION FUNCTION [FW6A-EL]

Purpose / Function

- The on-board diagnostic system external tester communication function transmits data between an external tester and each control module of the vehicle.
- Because the DTCs recorded in the vehicle can be read by an external tester, determination of a malfunction location is facilitated.

Construction / Operation

- A connector (DLC-2) conforming to International Organization for Standardization (ISO) standards has been adopted.
- A connector shape and 16-pin terminal arrangement as stipulated by the ISO 15031-3 (SAE J1962) international standard has been adopted for this DLC-2.

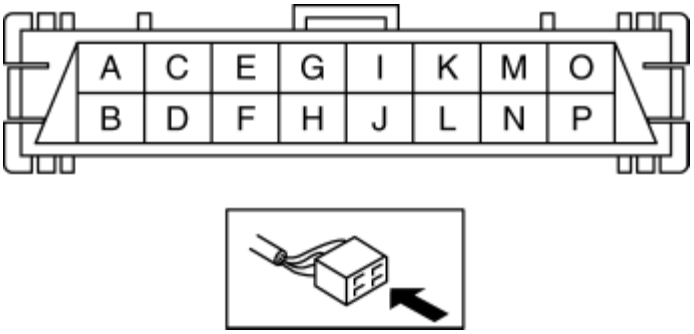

Terminal	Function
A	Battery positive voltage
B	AFS control module (With headlight auto leveling system)
C	SAS control module
D	—
E	HS CAN communication line Lo

F	HS CAN communication line Hi
G	—
H	Serial communication ground
I	—
J	Body ground
K	MS CAN communication line Lo
L	MS CAN communication line Hi
M	—
N	—
O	—
P	—

2014 - Mazda3 - Transmission/Transaxle

ON-BOARD DIAGNOSTIC SYSTEM PID/DATA MONITOR FUNCTION [FW6A-EL]

Purpose/Function

- The PID/DATA monitor function can monitor control data such as input signals/internal calculation values/output signals using the Mazda Modular Diagnostic System (M-MDS).
- The module control condition can be verified in real-time by the PID/DATA monitor function.

Construction/Operation

PID/DATA monitor item table—: Not applicable

Item	Unit/Condition	Definition
APP	%	Accelerator pedal position
APP1	%	APP sensor No.1
DGP_DIS_1	km {mile}	Traveled distance after differential protection control operated
DGP_DIS_2	km {mile}	Traveled distance after DGP_MAX_DIF updated
DGP_MAX_DIF	RPM	Maximum rotation difference after differential protection control operated due to excessive rotation difference between left/right drive wheels
		Vehicle speed with trailing wheels after

DGP_SPD	KPH {MPH}	differential protection control operated due to excessive rotation difference between left/right drive wheels
ECT	°C {°F}	Engine coolant temperature
ECU_A	°C {°F}	ECU internal temperature A
ECU_B	°C {°F}	ECU internal temperature B
ECU_C	°C {°F}	ECU internal temperature C
GEAR_RA	Ratio	Gear ratio
GEAR_SEL	1/2/3/4/5/6	Gear shift position
HI_TEMP	—	ATF high temperature mode determination amount
HTM_CNT	—	ATF high temperature mode counter
HTM_DIS	km {mile}	Travel distance since determination of ATF high temperature mode
LINEDES	kPa {kgf/cm^2, psi}	Target modifier pressure/Target pressure control solenoid pressure
LN_C_CLUTCH	kPa {kgf/cm^2, psi}	Hydraulic control learning value (engaged)
LN_O_CLUTCH	kPa {kgf/cm^2, psi}	Hydraulic control learning value (released)
		Hydraulic control

LN_OV_SCOPE	—	learning value (mis-learning)
LN_T_CLUTCH	kPa {kgf/cm^2, psi}	Hydraulic control learning value (torque converter)
LOCK_UP	OFF/SLIP/ON	Torque converter (TCC condition)
LONGI_ACCEL	—	Longitudinal acceleration
OP_SW1	Off/On	Oil pressure switch No.1 condition
OP_SW1_OFF	kPa {kgf/cm^2, psi}	After performing on-board diagnostic test mode
OP_SW1_ON	kPa {kgf/cm^2, psi}	After performing on-board diagnostic test mode
OP_SW2	Off/On	Oil pressure switch No.2 condition
OP_SW2_OFF	kPa {kgf/cm^2, psi}	After performing on-board diagnostic test mode
OP_SW2_ON	kPa {kgf/cm^2, psi}	After performing on-board diagnostic test mode
OP_SW3	Off/On	Oil pressure switch No.3 condition
OP_SW3_OFF	kPa {kgf/cm^2, psi}	After performing on-board diagnostic test mode
OP_SW3_ON	kPa {kgf/cm^2, psi}	After performing on-board diagnostic test mode
OP_SW4	Off/On	Oil pressure switch No.4 condition

OP_SW4_OFF	kPa {kgf/cm^2, psi}	After performing on-board diagnostic test mode
OP_SW4_ON	kPa {kgf/cm^2, psi}	After performing on-board diagnostic test mode
OSS	RPM	Output shaft speed
PADDLE_DOWN*1	Off/On	Down switch condition (steering shift switch)
PADDLE_UP*1	Off/On	Up switch condition (steering shift switch)
RPM	RPM	Engine speed/min
SC_STATE	Not Active/Active	Shift control execution condition
SE_TYPE	No valid data/Bf_1st Af_2nd/Bf_1st Af_3rd/Bf_1st Af_4th/Bf_1st Af_5th/Bf_1st Af_6th/Bf_2nd Af_1st/Bf_2nd Af_3rd/Bf_2nd Af_4th/Bf_2nd Af_5th/Bf_2nd Af_6th/Bf_3rd Af_1st/Bf_3rd Af_2nd/Bf_3rd Af_4th/Bf_3rd Af_5th/Bf_3rd Af_6th/Bf_4th Af_1st/Bf_4th Af_2nd/Bf_4th Af_3rd/Bf_4th Af_5th/Bf_4th Af_6th/Bf_5th Af_1st/Bf_5th Af_2nd/Bf_5th Af_3rd/Bf_5th Af_4th/Bf_5th Af_6th/Bf_6th Af_1st/Bf_6th Af_2nd/Bf_6th Af_3rd/Bf_6th Af_4th/Bf_6th Af_5th	Gear shift position before shifting gears
SHIFT_CTRL	DEFAULT/MANUAL/C_CONTROL/HIGH_TEMP/D_MANUAL/FAIL_SAFE	Shift control mode
SS_ON-OFF	Off/On	On/off solenoid condition
SS1	A	Shift solenoid No.1 actual current
SS1_C	A	Shift solenoid No.1 target current
SS2	A	Shift solenoid No.2 actual current
SS2_C	A	Shift solenoid No.2 target current
		Shift solenoid No.3

SS3	A	actual current
SS3_C	A	Shift solenoid No.3 target current
SS4	A	Shift solenoid No.4 actual current
SS4_C	A	Shift solenoid No.4 target current
SSLU	A	TCC control solenoid actual current
SSLU_C	A	TCC control solenoid target current
SSLU_PRES	kPa {kgf/cm^2, psi}	TCC control solenoid target pressure
SSP	A	Pressure control solenoid actual current
SSP_C	A	Pressure control solenoid target current
SSP_PRES	kPa {kgf/cm^2, psi}	Pressure control solenoid target pressure
TFT	°C {°F}	ATF temperature
THOP	%	Throttle opening angle
TORQUE_ACT	Nm	Actual engine torque
TORQUE_DES	Nm	Desired engine torque
TR	P/SHIFT_DOWN/SHIFT_UP/M/D/N/R	Range position
TSS	RPM	Turbine/input shaft speed

UPSHIFT_REV	Off/On	Shift-up record due to engine request
VPWR	V	TCM power supply voltage
VSS	KPH {MPH}	Vehicle speed

*1

With steering shift switch

2014 - Mazda3 - Transmission / Transaxle

ON-BOARD DIAGNOSTIC SYSTEM SIMULATION FUNCTION [FW6A-EL]

Purpose / Function

- The simulation function can drive output parts based on use of the Mazda Modular Diagnostic System (M-MDS).
- Inspection of an individual output part is facilitated by the simulation function because the output part is driven forcibly.

Construction / Operation

Simulation item table

Item	Output part name	Unit/Condition	Operation condition
SS_ON-OFF	On/off solenoid condition	Off/On	Under the following conditions: • Vehicle stopped • Idling at P or N position
SS1_C	Shift solenoid No.1 target current	A	Under the following conditions: • Vehicle stopped • Idling at P or N position
SS2_C	Shift solenoid No.2 target current	A	Under the following conditions: • Vehicle stopped • Idling at P or N position
SS3_C	Shift solenoid No.3 target current	A	Under the following conditions: • Vehicle stopped • Idling at P or N position
SS4_C	Shift solenoid No.4 target current	A	Under the following conditions: • Vehicle stopped

			• Idling at P or N position
SSLU_C	TCC control solenoid target current	A	Under the following conditions: • ATF temperature (PID: TFT) is 20 °C {68 °F} or more. • Output shaft rotation speed (PID: OSS) is 10 rpm or more. • Turbine shaft rotation speed (PID: TSS) is 1,000 rpm or more. • Brake pedal released
SSP_C	Pressure control solenoid target current	A	Idling at P or N position

2014 - Mazda3 - Transmission / Transaxle

CLUTCH [C66M-R]

Purpose, Function

- The clutch unit transmits or cuts the drive force between the engine and MTX according to the clutch pedal operation.

Construction / Operation

- The construction/operation of the clutch unit is the same as the original MTX (ex: G66M-R).

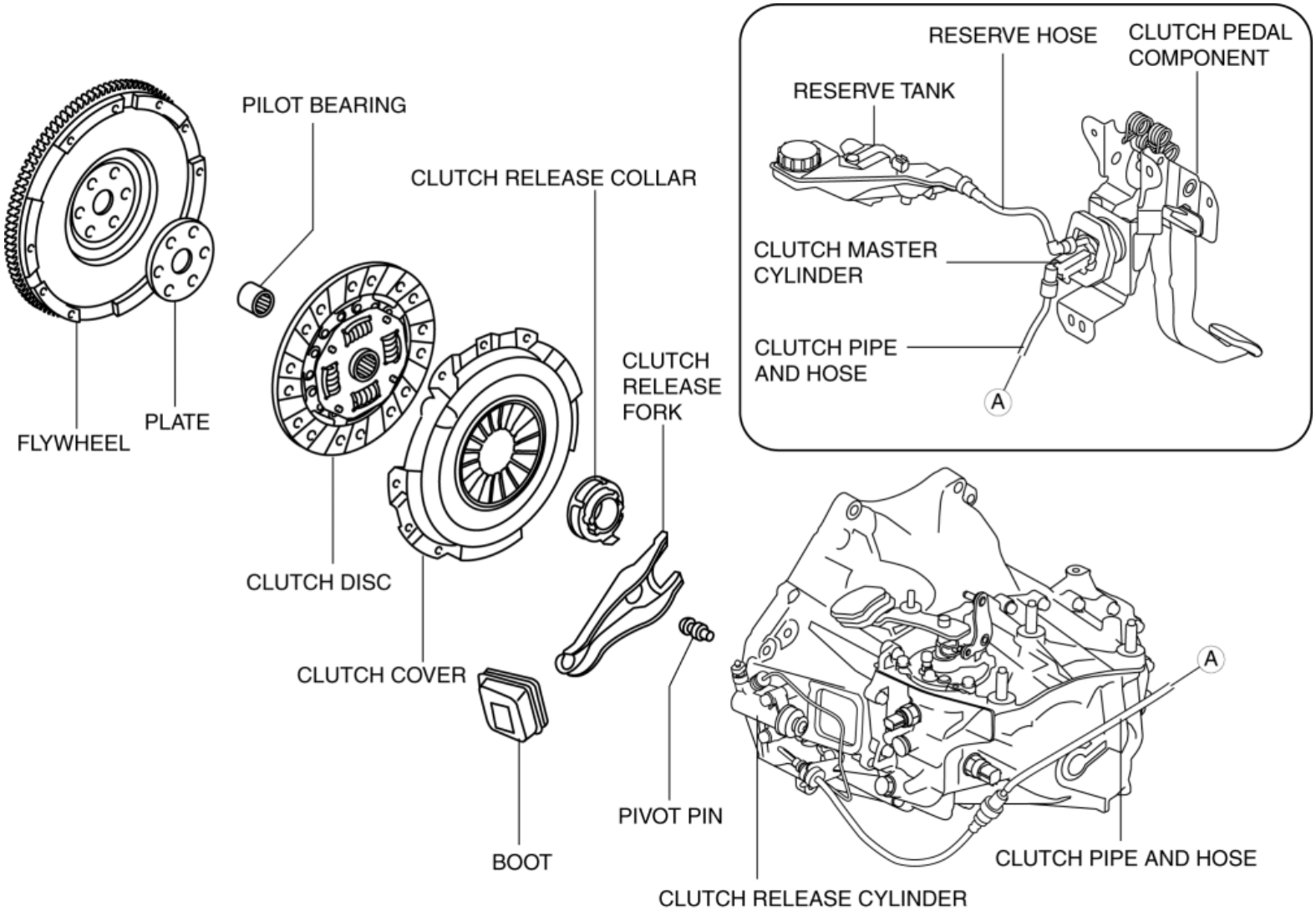

2014 - Mazda3 - Transmission / Transaxle

MANUAL TRANSAXLE [C66M-R]

Purpose, Function

- The MTX converts the drive force (speed, torque, rotation direction) input from the engine according to the shift lever operation inside the vehicle.

Construction

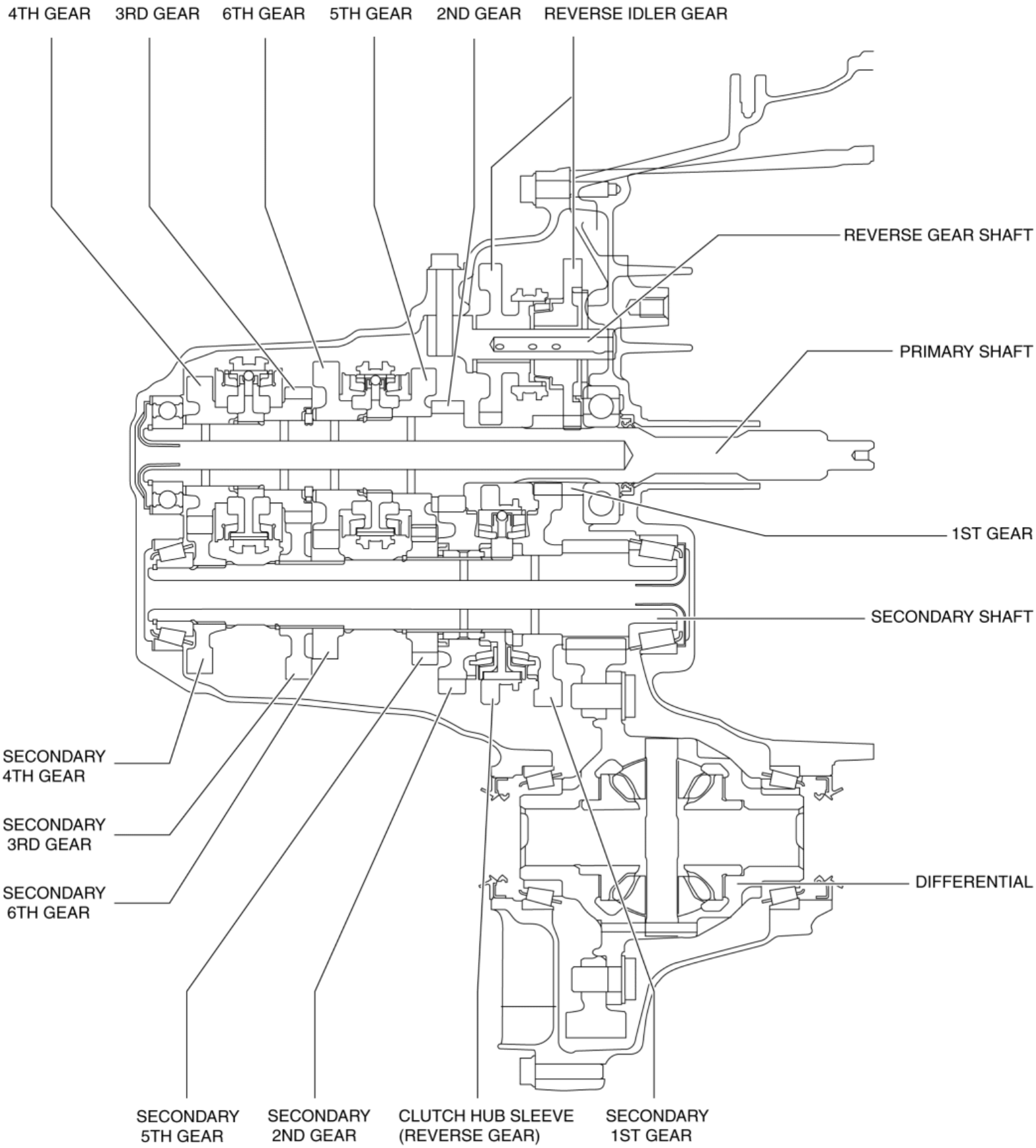
4TH GEAR
3RD GEAR
6TH GEAR
5TH GEAR
2ND GEAR
REVERSE IDLER GEAR
REVERSE GEAR SHAFT
PRIMARY SHAFT
1ST GEAR
SECONDARY SHAFT
SECONDARY 4TH GEAR
SECONDARY 3RD GEAR
SECONDARY 6TH GEAR
DIFFERENTIAL
SECONDARY 5TH GEAR
SECONDARY 2ND GEAR
CLUTCH HUB SLEEVE (REVERSE GEAR)
SECONDARY 1ST GEAR

Operation

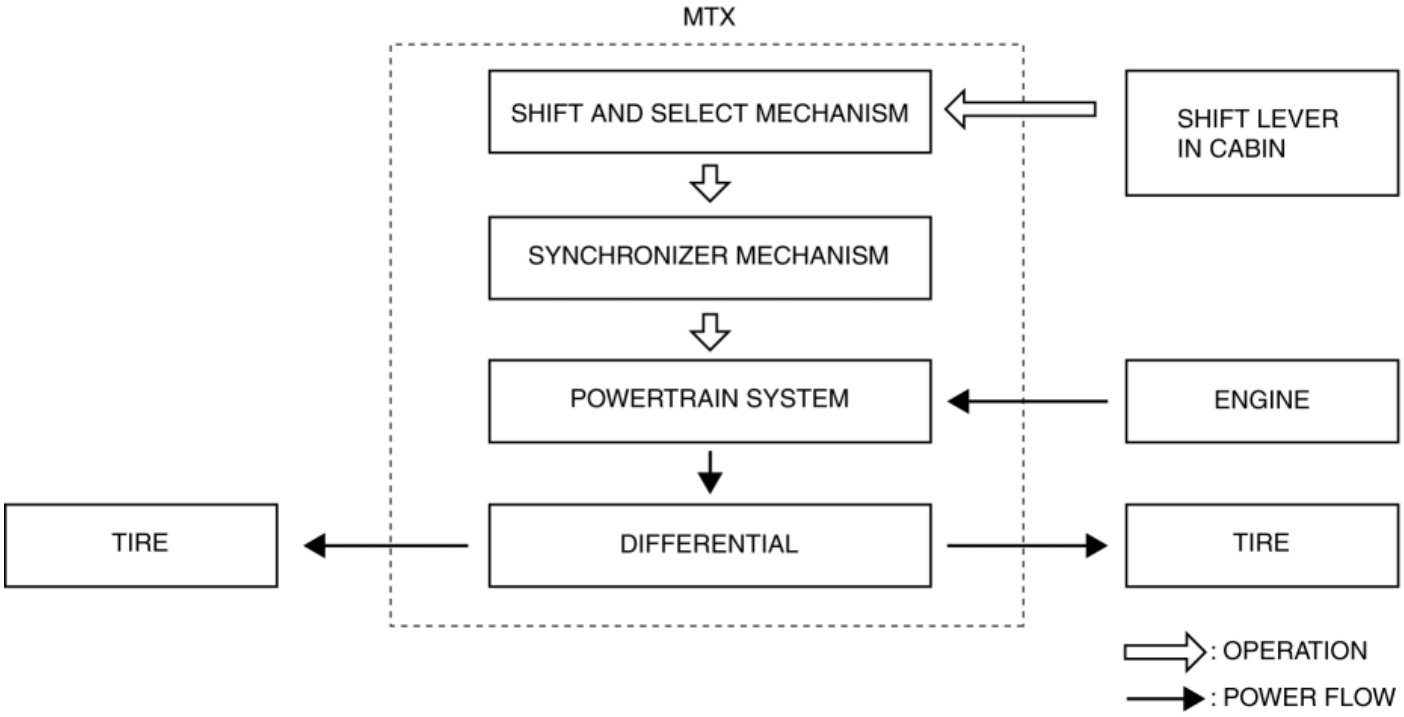
MTX
SHIFT AND SELECT MECHANISM
SHIFT LEVER IN CABIN
SYNCHRONIZER MECHANISM
POWERTRAIN SYSTEM
ENGINE
TIRE
DIFFERENTIAL
TIRE
: OPERATION
: POWER FLOW

2014 - Mazda3 - Transmission/Transaxle

SHIFT AND SELECT MECHANISM [C66M-R]

Purpose, Function

- The shift and select mechanism moves the shift fork to change gears according to the operation of the shift lever in the cabin.

Construction

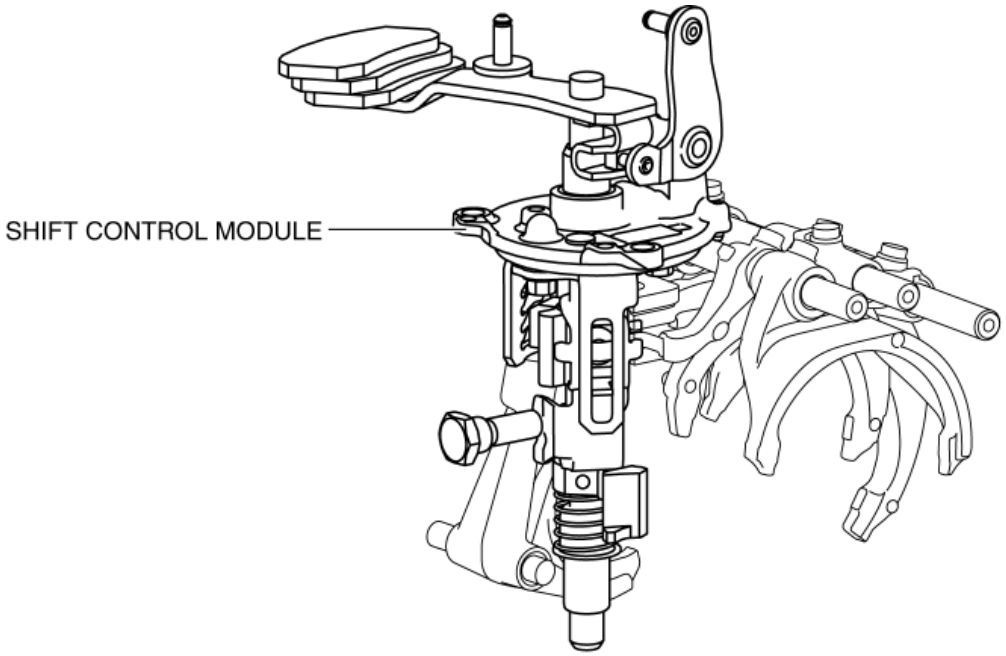

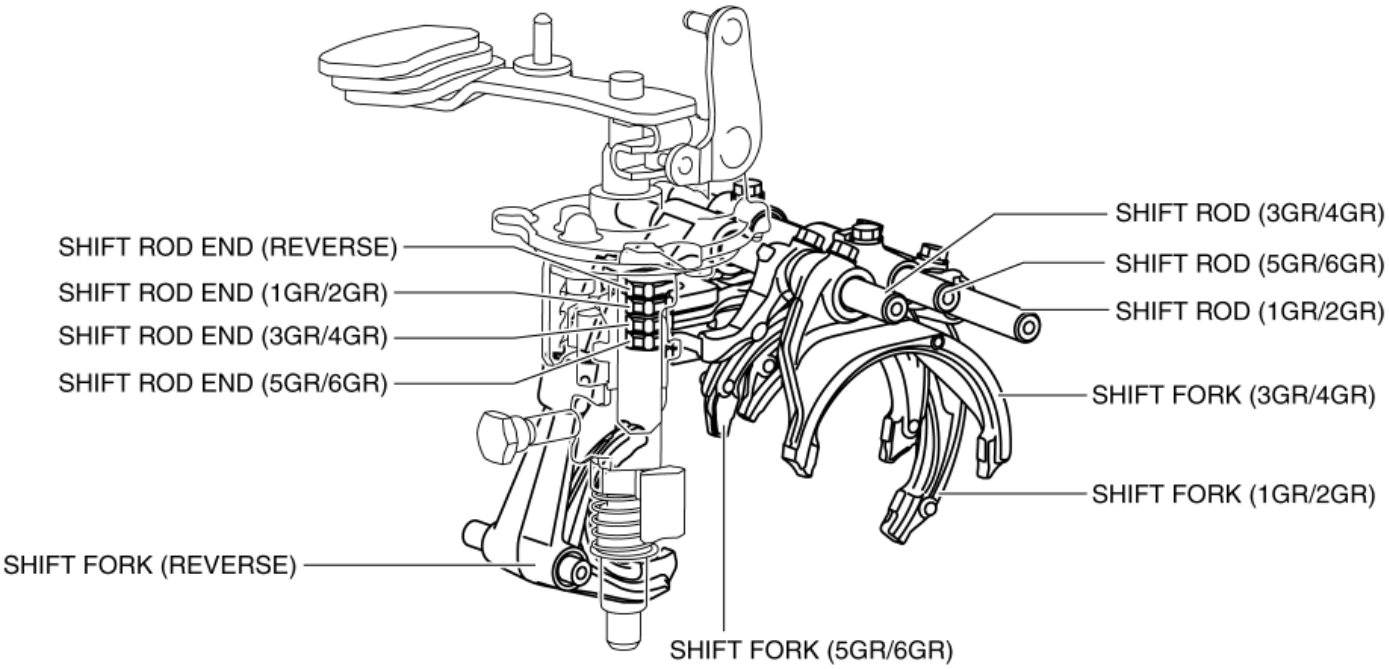

Shift control module

- The moving parts of the shift control module are vertically positioned.

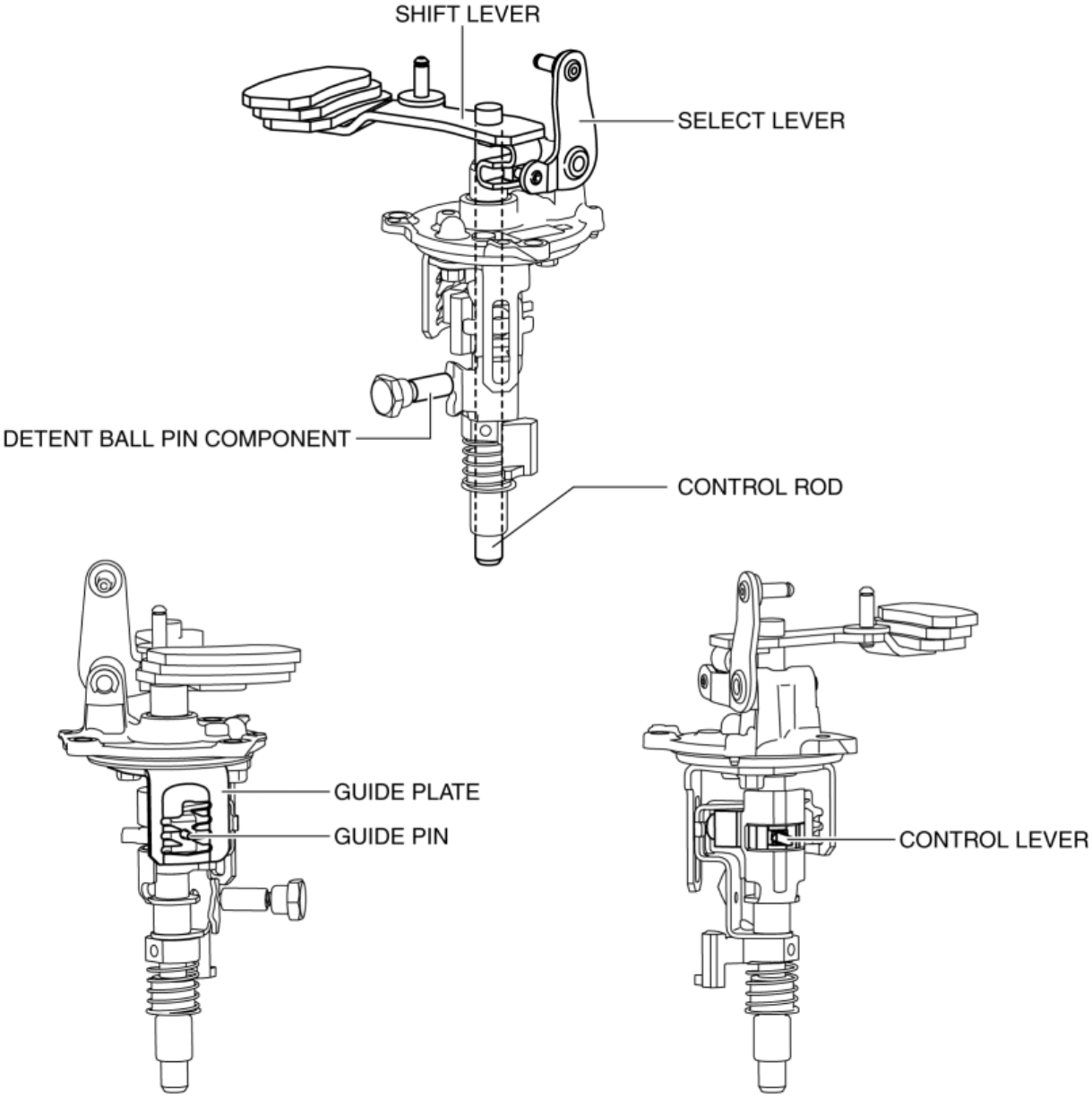

- In this module, the control lever which moves the shift rod end is directly assembled to the control rod. In addition, because the control rod moves up and down, the weight of the control rod is utilized when the control rod moves down.

Slide ball bearing

- A slide ball bearing has been adopted to the sliding area between the control rod and the transaxle case, and between the control rod and the control case.

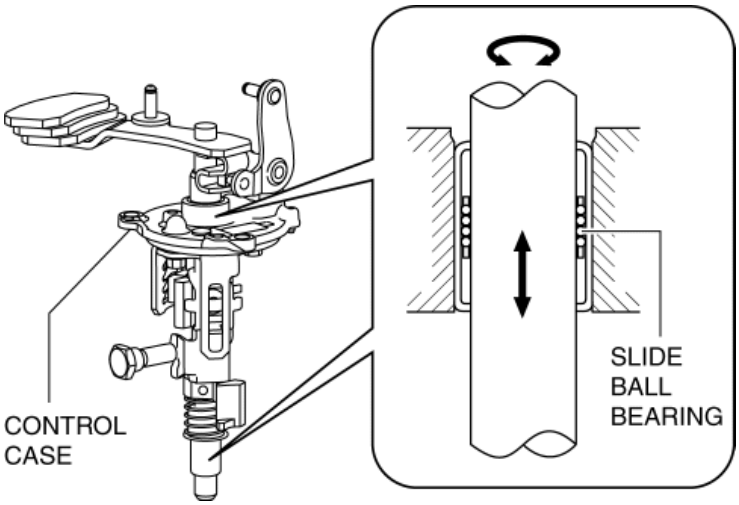

- In this part, the bearing case moves in the drive and thrust directions.
- Compared to the conventional bushing, sliding resistance between the control rod and the transaxle case, and between the control rod and the control case has been reduced.

Operation

NOTE:

- Shifting operations from neutral to each gear are explained in this section.

1GR

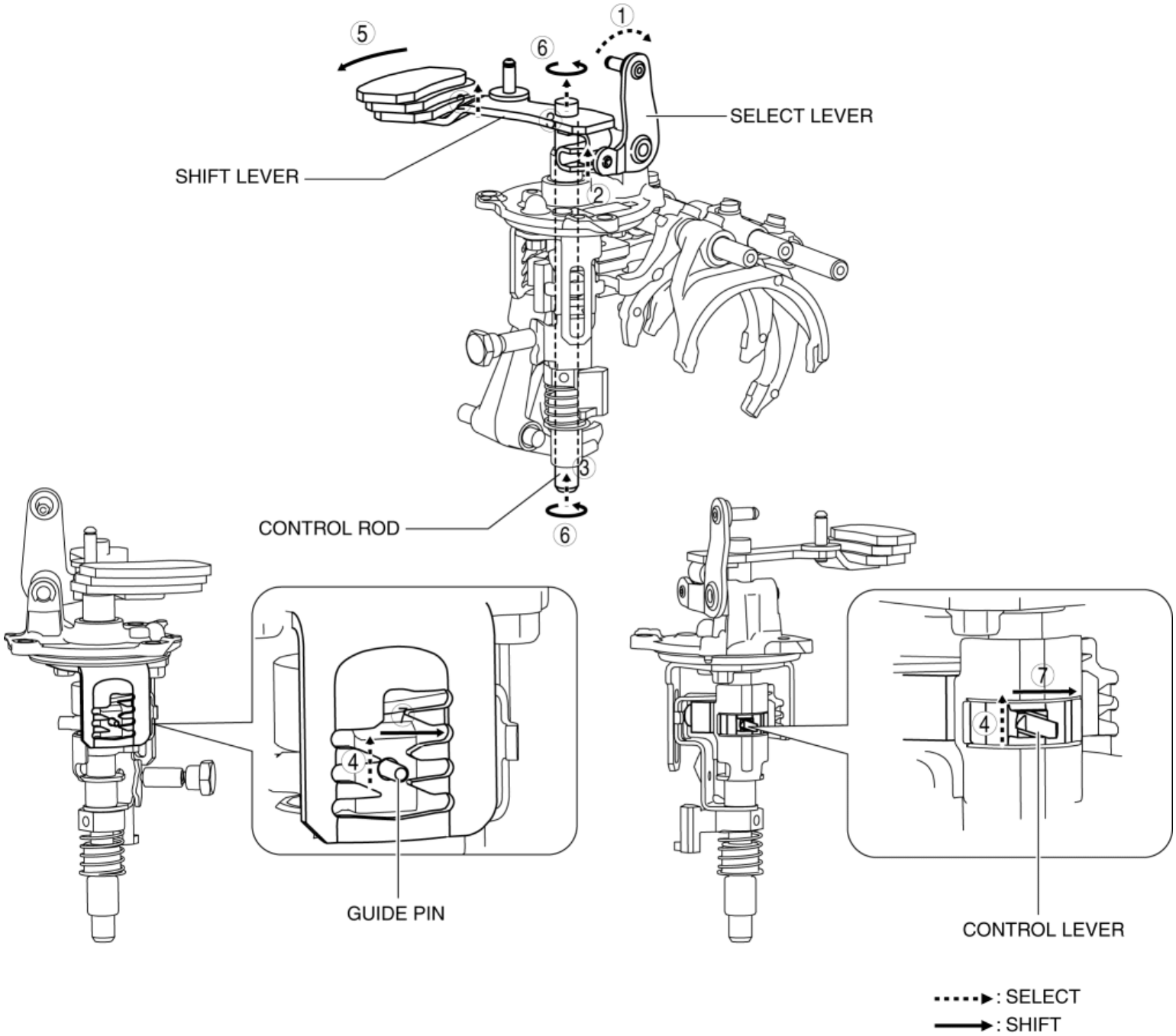

1. When the shift lever in the cabin is tilted to the left to shift to 1GR, the select lever moves in the direction of arrow 1 shown in the figure.

2. Following the movement of the select lever, the shift lever moves in the direction of arrow 2 shown in the figure.

3. Following the movement of the select lever, the shift lever moves in the direction of arrow 3 shown in the figure.

4. Following the movement of the select lever, the control lever and the guide pin move in the direction of arrow 4 shown in the figure.

5. When the shift lever in the cabin is tilted forward to shift to 1GR, the shift lever in the engine compartment moves in the direction of arrow 5 shown in the figure.

6. Following the movement of the shift lever in the engine compartment, the control rod moves in the direction of arrow 6 shown in the figure.

7. Following the movement of the shift lever in the engine compartment, the control lever and the guide pin move in the direction of arrow 7 shown in the figure.

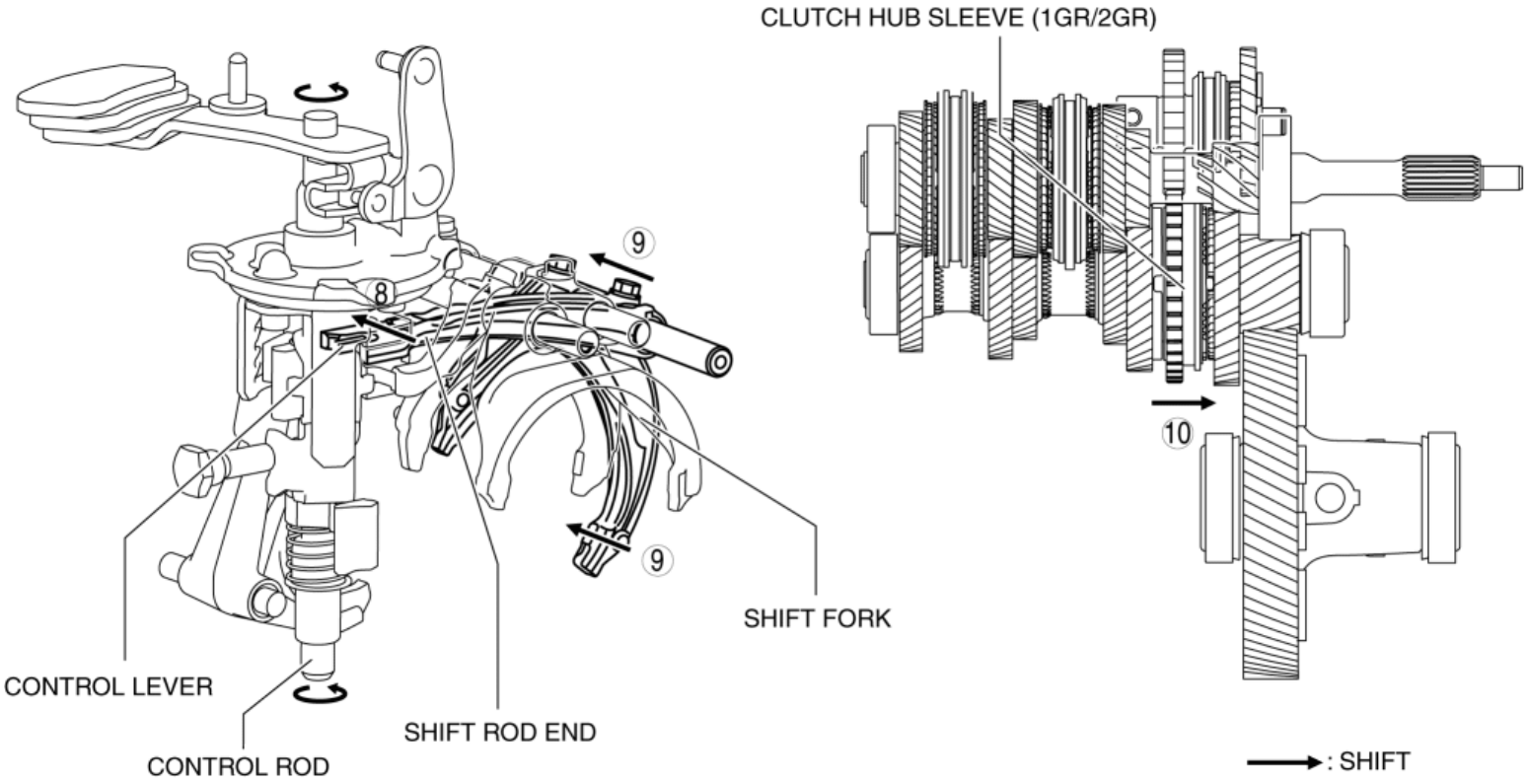

8. Because the control rod turns with the control lever, the control lever pushes the shift rod end and moves it in the direction of arrow 8 shown in the figure.

9. The shift rod end and the shift fork are integrated with the shift rod. Therefore, the movement of the shift rod end is transmitted to the shift fork via the shift rod, and the shift fork moves in the direction of arrow 9.

10. The shift fork moves the clutch hub sleeve in the direction of arrow 10 shown in the figure.

11. The shift change to 1GR is completed.

2GR

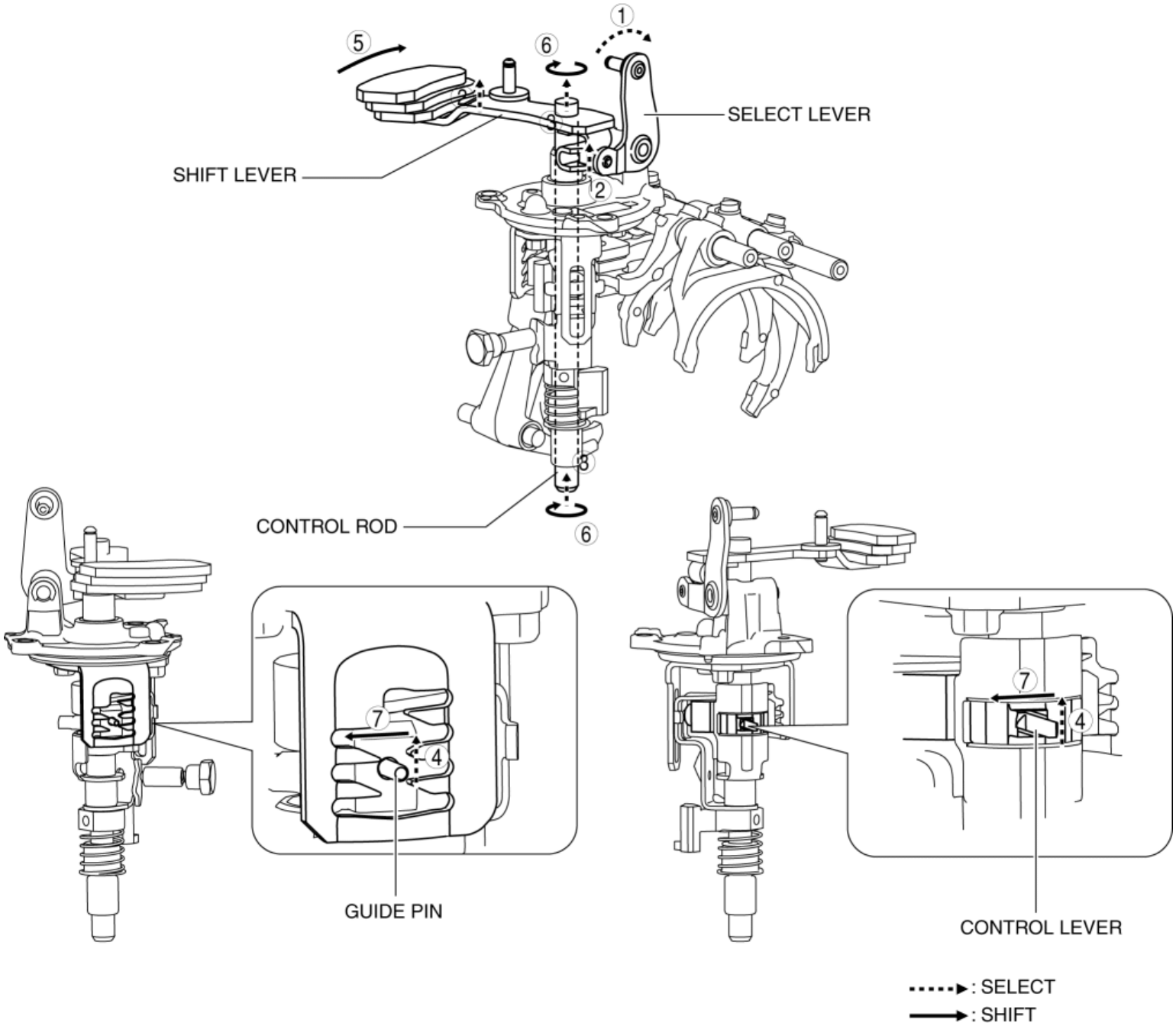

1. When the shift lever in the cabin is tilted to the left to shift to 2GR, the select lever moves in the direction of arrow 1 shown in the figure.

2. Following the movement of the select lever, the shift lever moves in the direction of arrow 2 shown in the figure.

3. Following the movement of the select lever, the shift lever moves in the direction of arrow 3 shown in the figure.

4. Following the movement of the select lever, the control lever and the guide pin move in the direction of arrow 4 shown in the figure.

5. When the shift lever in the cabin is tilted rearward to shift to 2GR, the shift lever in the engine compartment moves in the direction of arrow 5 shown in the figure.

6. Following the movement of the shift lever in the engine compartment, the control rod moves in the direction of arrow 6 shown in the figure.

7. Following the movement of the shift lever in the engine compartment, the control lever and the guide pin move in the direction of arrow 7 shown in the figure.

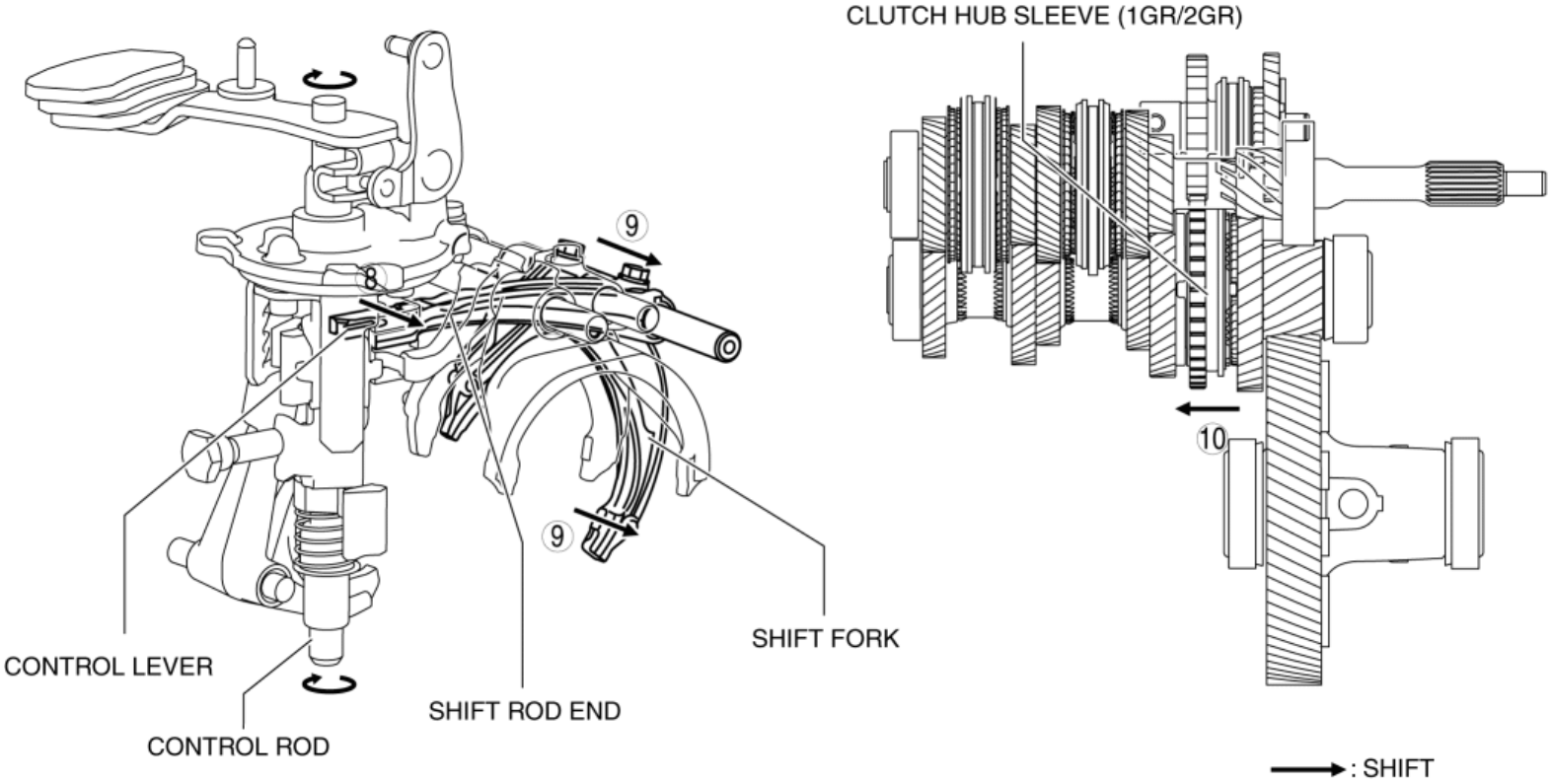

8. Because the control rod turns with the control lever, the control lever pushes the shift rod end and moves it in the direction of arrow 8 shown in the figure.

9. The shift rod end and the shift fork are integrated with the shift rod. Therefore, the movement of the shift rod end is transmitted to the shift fork via the shift rod, and the shift fork moves in the direction of arrow 9.

10. The shift fork moves the clutch hub sleeve in the direction of arrow 10 shown in the figure.

11. The shift change to 2GR is completed.

3GR

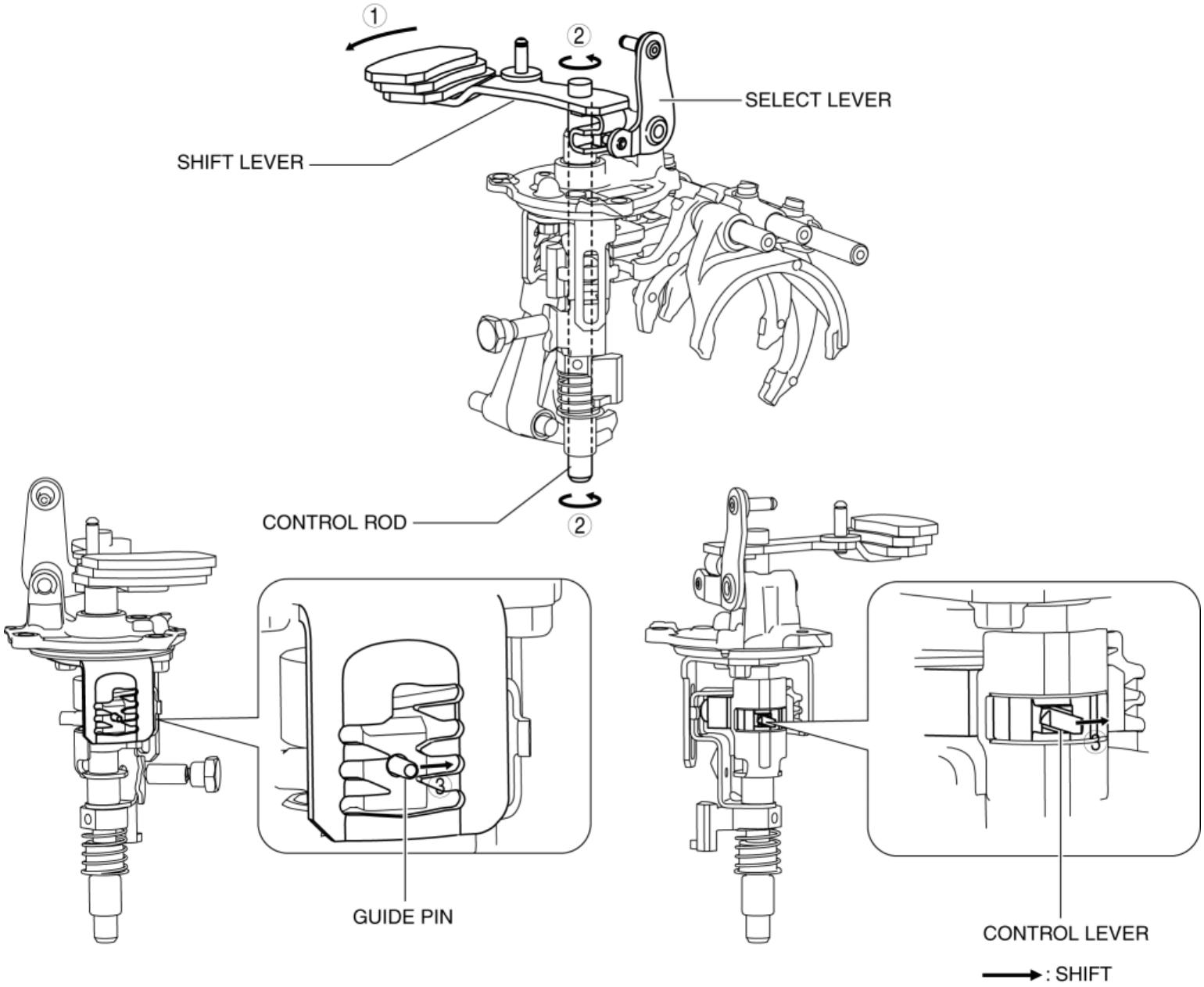

1. When the shift lever in the cabin is tilted forward to shift to 3GR, the shift lever in the engine compartment moves in the direction of arrow 1 shown in the figure.

2. Following the movement of the shift lever in the engine compartment, the control rod moves in the direction of arrow 2 shown in the figure.

3. Following the movement of the shift lever in the engine compartment, the control lever and the guide pin move in the direction of arrow 3 shown in the figure.

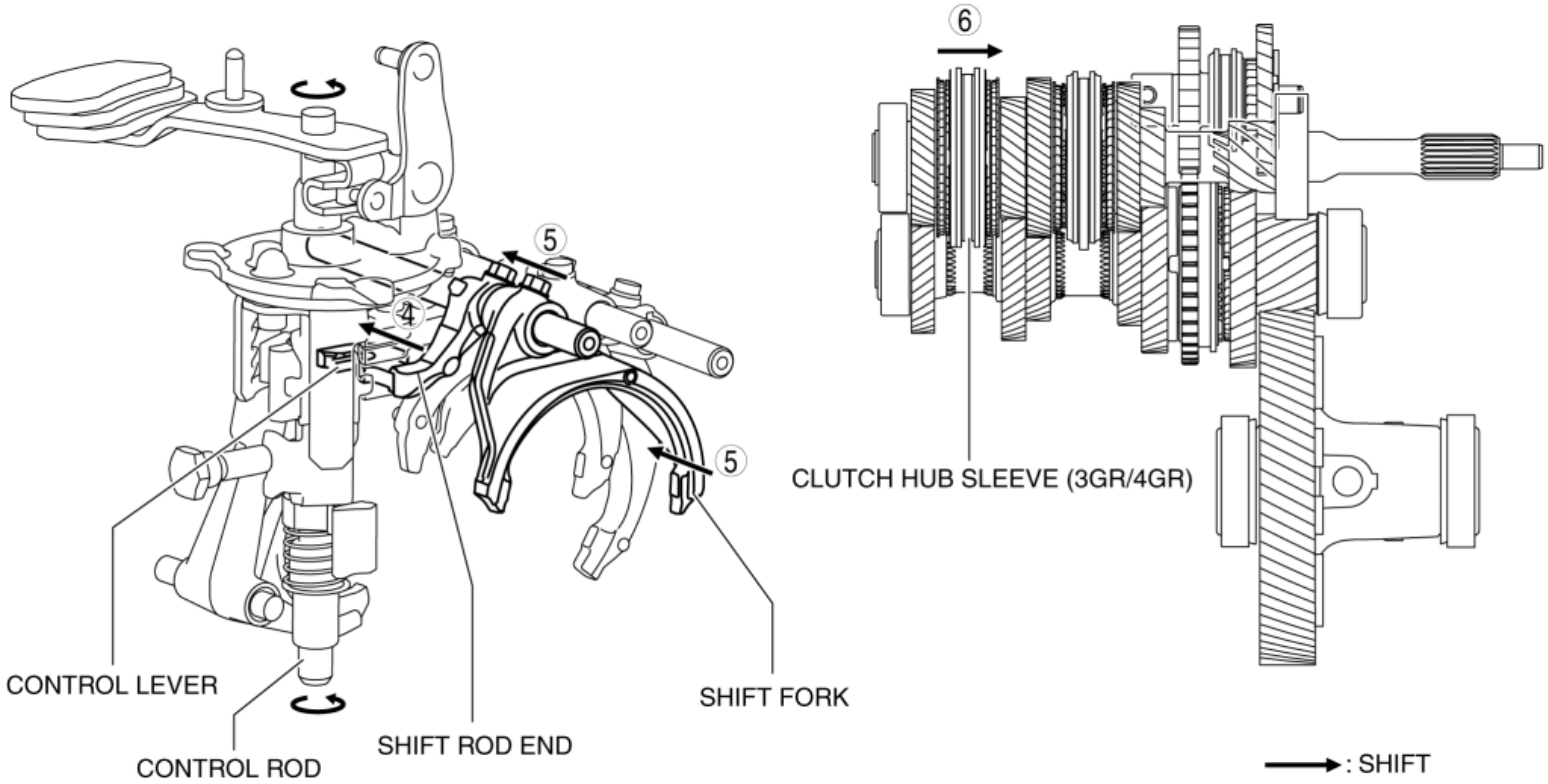

4. Because the control rod turns with the control lever, the control lever pushes the shift rod end and moves it in the direction of arrow 4 shown in the figure.

5. The shift rod end and the shift fork are integrated with the shift rod. Therefore, the movement of the shift rod end is transmitted to the shift fork via the shift rod, and the shift fork moves in the direction of arrow 5.

6. The shift fork moves the clutch hub sleeve in the direction of arrow 6 shown in the figure.

7. The shift change to 3GR is completed.

4GR

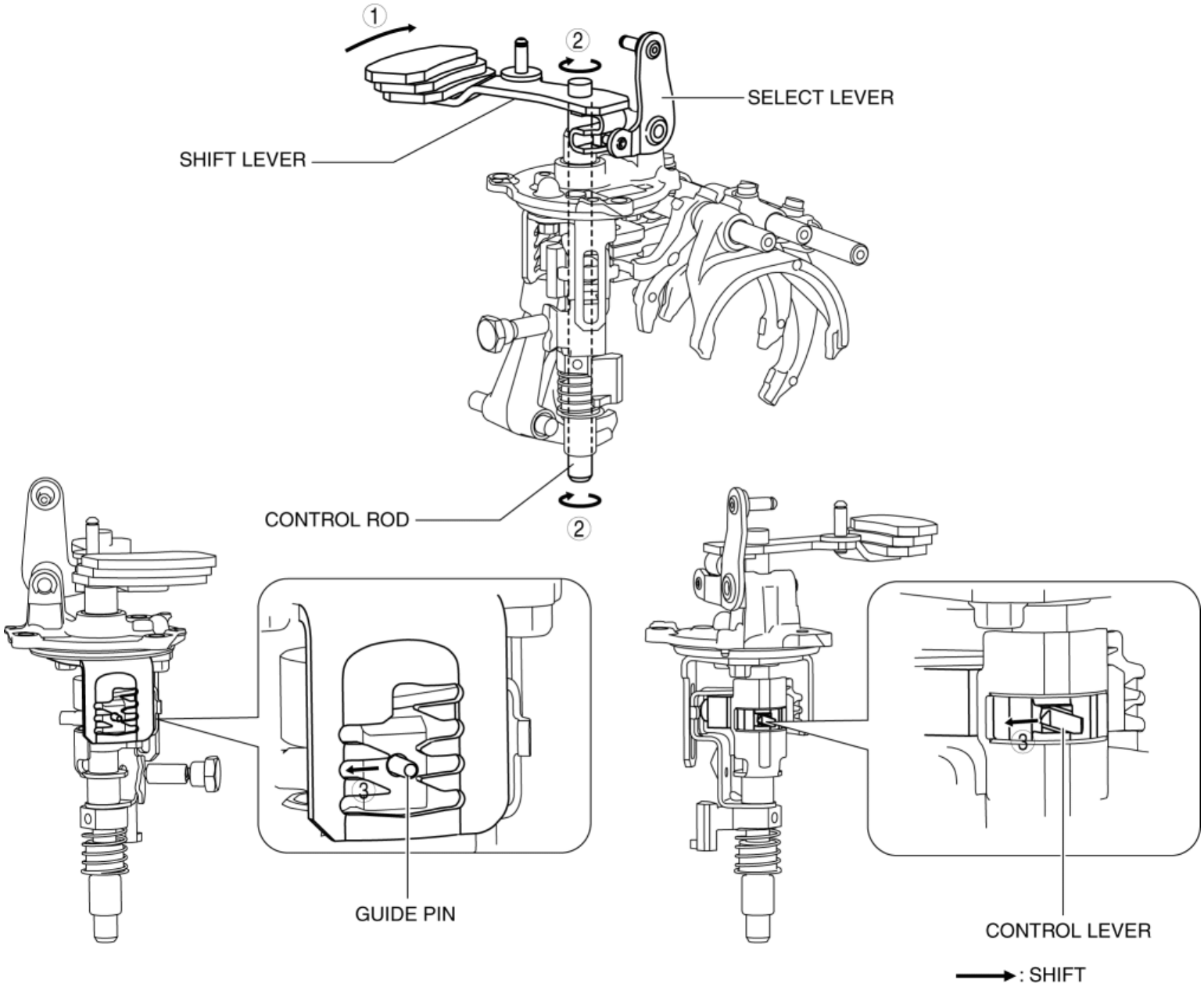

1. When the shift lever in the cabin is tilted rearward to shift to 4GR, the shift lever in the engine compartment moves in the direction of arrow 1 shown in the figure.

2. Following the movement of the shift lever in the engine compartment, the control rod moves in the direction of arrow 2 shown in the figure.

3. Following the movement of the shift lever in the engine compartment, the control lever and the guide pin move in the direction of arrow 3 shown in the figure.

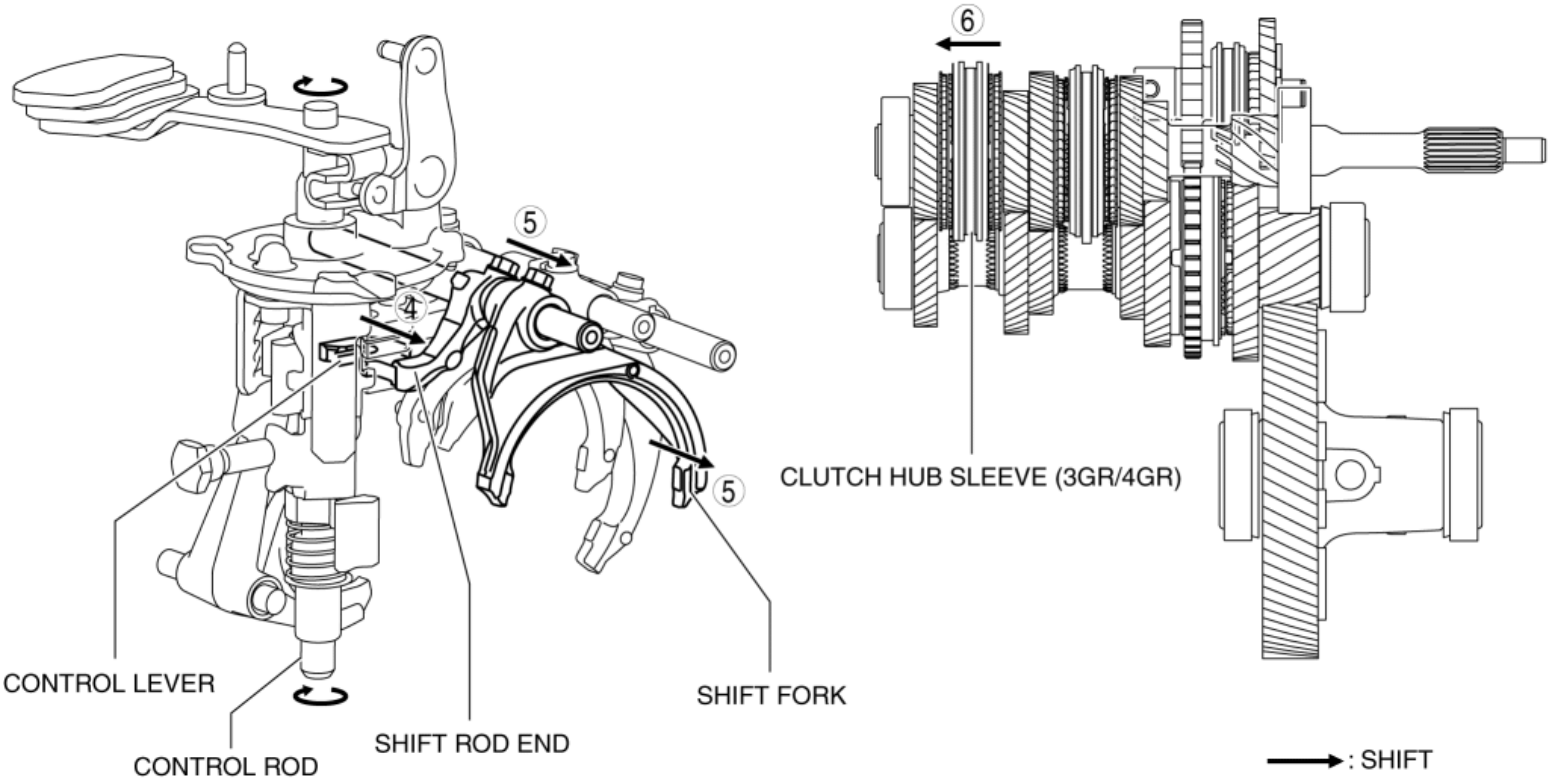

4. Because the control rod turns with the control lever, the control lever pushes the shift rod end and moves it in the direction of arrow 4 shown in the figure.

5. The shift rod end and the shift fork are integrated with the shift rod. Therefore, the movement of the shift rod end is transmitted to the shift fork via the shift rod, and the shift fork moves in the direction of arrow 5.

6. The shift fork moves the clutch hub sleeve in the direction of arrow 6 shown in the figure.

7. The shift change to 4GR is completed.

5GR

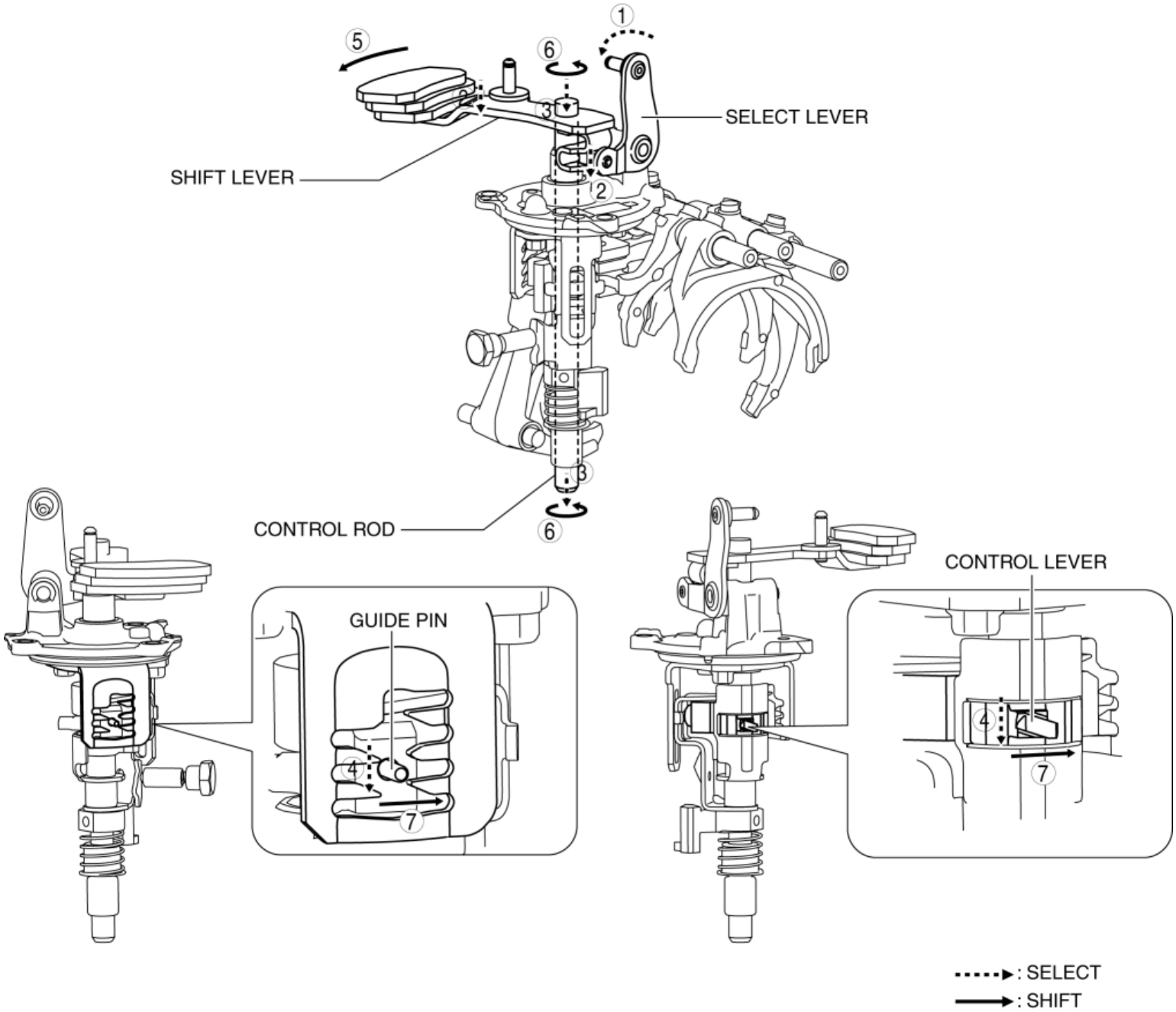

1. When the shift lever in the cabin is tilted to the right to shift to 5GR, the select lever moves in the direction of arrow 1 shown in the figure.

2. Following the movement of the select lever, the shift lever moves in the direction of arrow 2 shown in the figure.

3. Following the movement of the select lever, the shift lever moves in the direction of arrow 3 shown in the figure.

4. Following the movement of the select lever, the control lever and the guide pin move in the direction of arrow 4 shown in the figure.

5. When the shift lever in the cabin is tilted forward to shift to 5GR, the shift lever in the engine compartment moves in the direction of arrow 5 shown in the figure.

6. Following the movement of the shift lever in the engine compartment, the control rod moves in the direction of arrow 6 shown in the figure.

7. Following the movement of the shift lever in the engine compartment, the control lever and the guide pin move in the direction of arrow 7 shown in the figure.

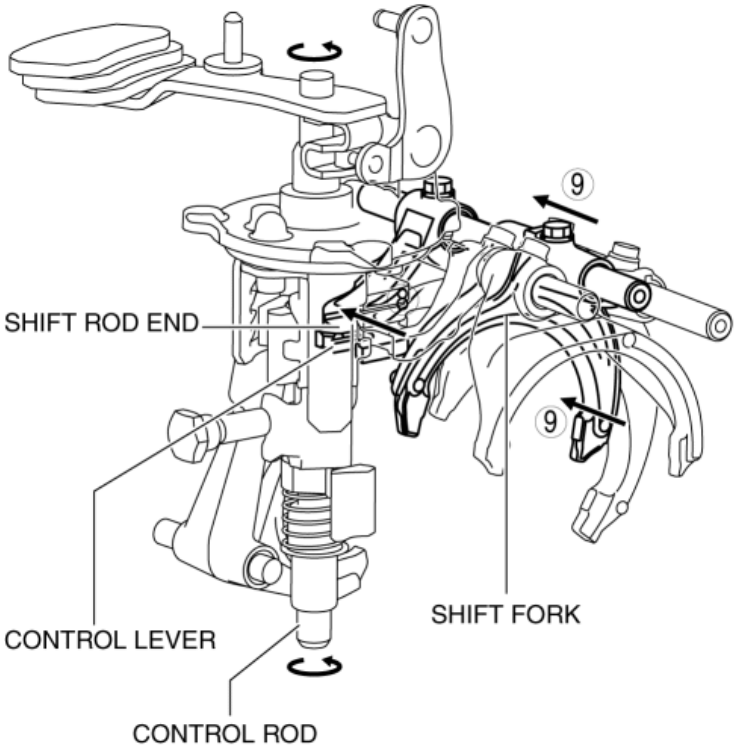

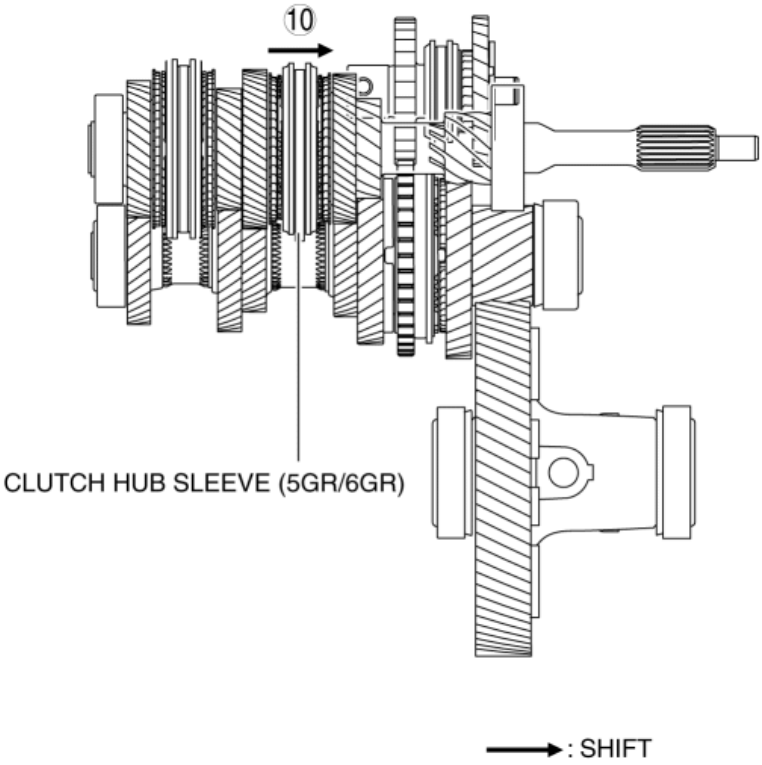

8. Because the control rod turns with the control lever, the control lever pushes the shift rod end and moves it in the direction of arrow 8 shown in the figure.

9. The shift rod end and the shift fork are integrated with the shift rod. Therefore, the movement of the shift rod end is transmitted to the shift fork via the shift rod, and the shift fork moves in the direction of arrow 9.

10. The shift fork moves the clutch hub sleeve in the direction of arrow 10 shown in the figure.

11. The shift change to 5GR is completed.

6GR

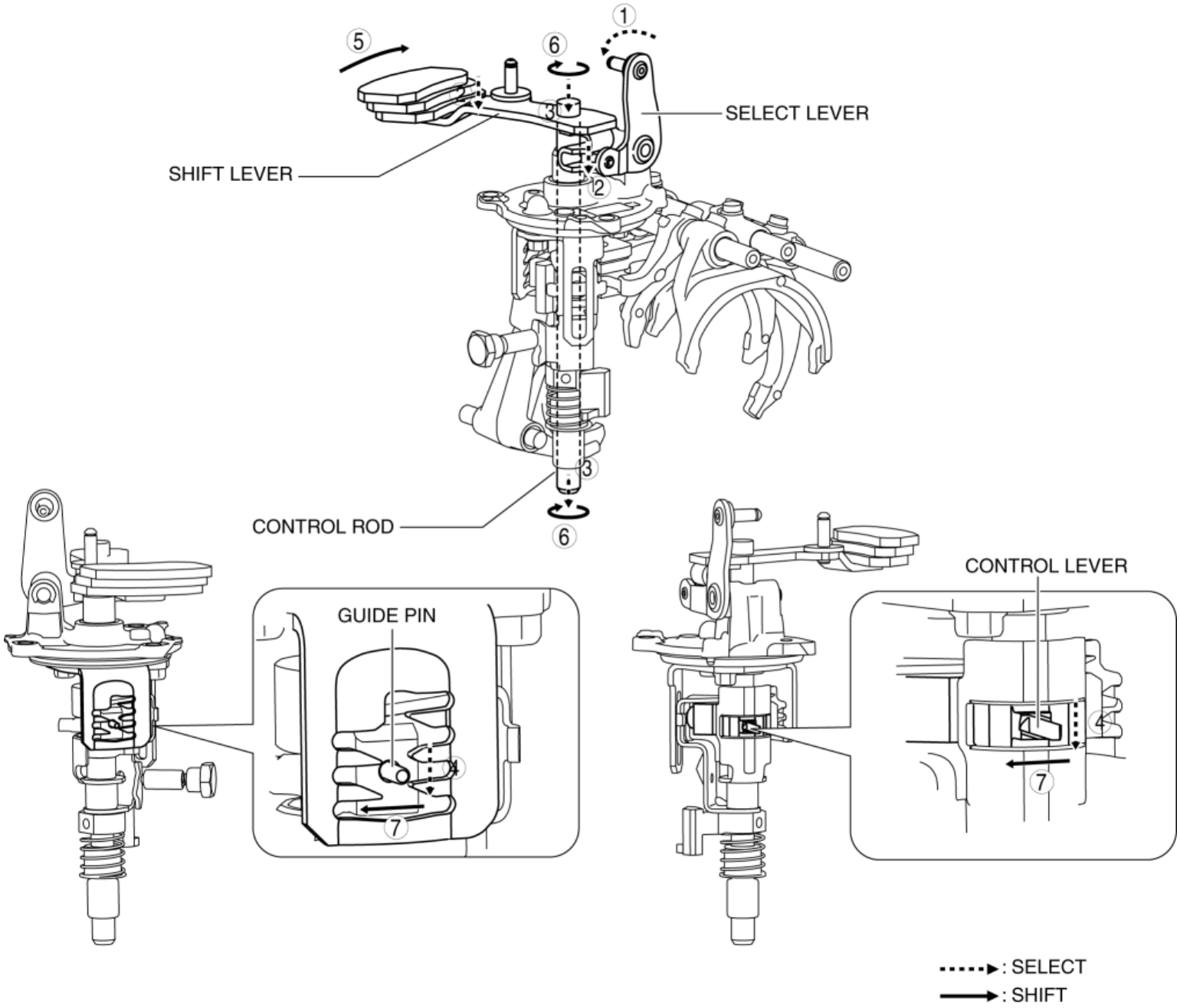

1. When the shift lever in the cabin is tilted to the right to shift to 6GR, the select lever moves in the direction of arrow 1 shown in the figure.

2. Following the movement of the select lever, the shift lever moves in the direction of arrow 2 shown in the figure.

3. Following the movement of the select lever, the shift lever moves in the direction of arrow 3 shown in the figure.

4. Following the movement of the select lever, the control lever and the guide pin move in the direction of arrow 4 shown in the figure.

5. When the shift lever in the cabin is tilted rearward to shift to 6GR, the shift lever in the engine compartment moves in the direction of arrow 5 shown in the figure.

6. Following the movement of the shift lever in the engine compartment, the control rod moves in the direction of arrow 6 shown in the figure.

7. Following the movement of the shift lever in the engine compartment, the control lever and the guide pin move in the direction of arrow 7 shown in the figure.

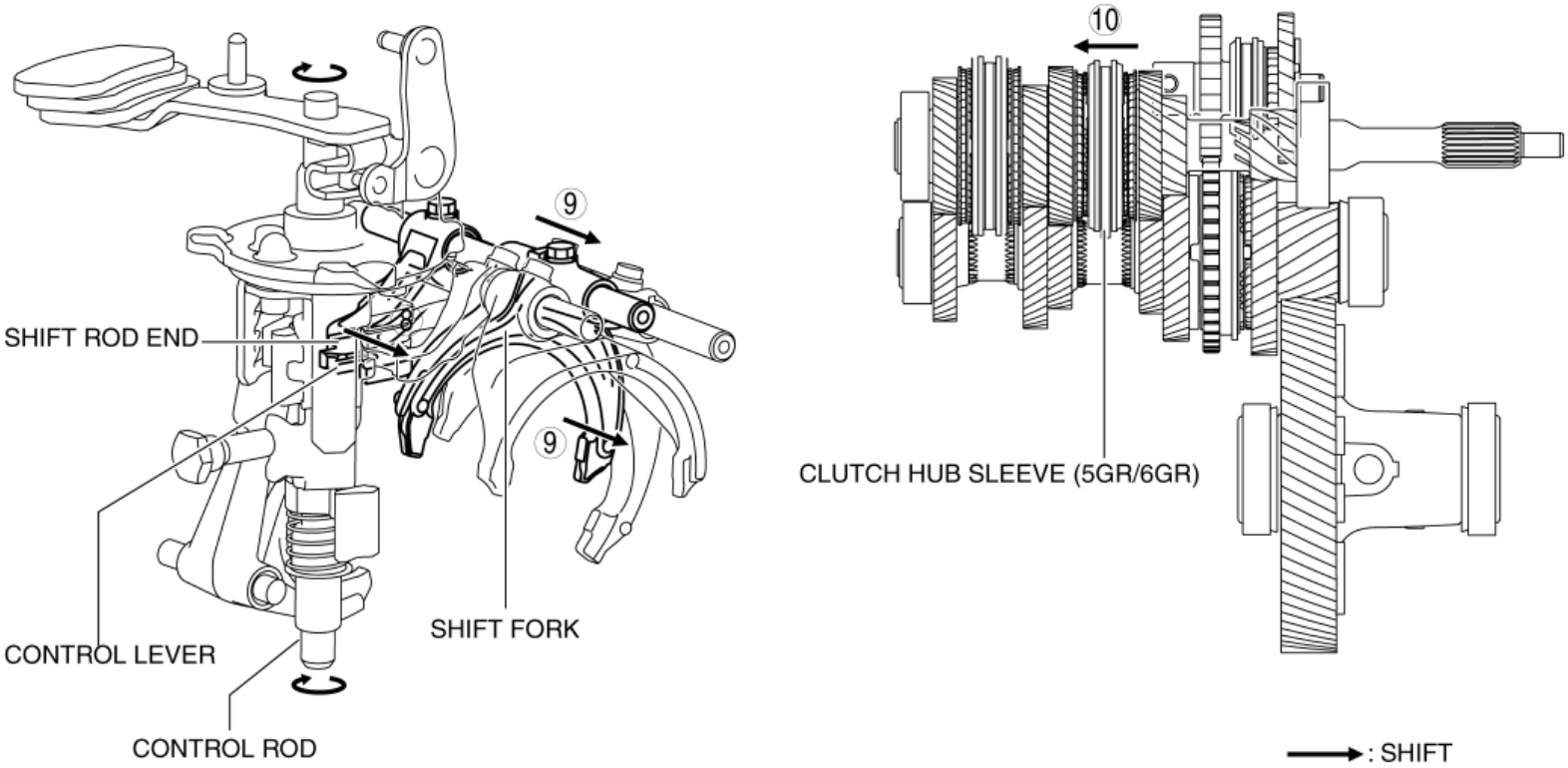

8. Because the control rod turns with the control lever, the control lever pushes the shift rod end and moves it in the direction of arrow 8 shown in the figure.

9. The shift rod end and the shift fork are integrated with the shift rod. Therefore, the movement of the shift rod end is transmitted to the shift fork via the shift rod, and the shift fork moves in the direction of arrow 9.

10. The shift fork moves the clutch hub sleeve in the direction of arrow 10 shown in the figure.

11. The shift change to 6GR is completed.

Reverse

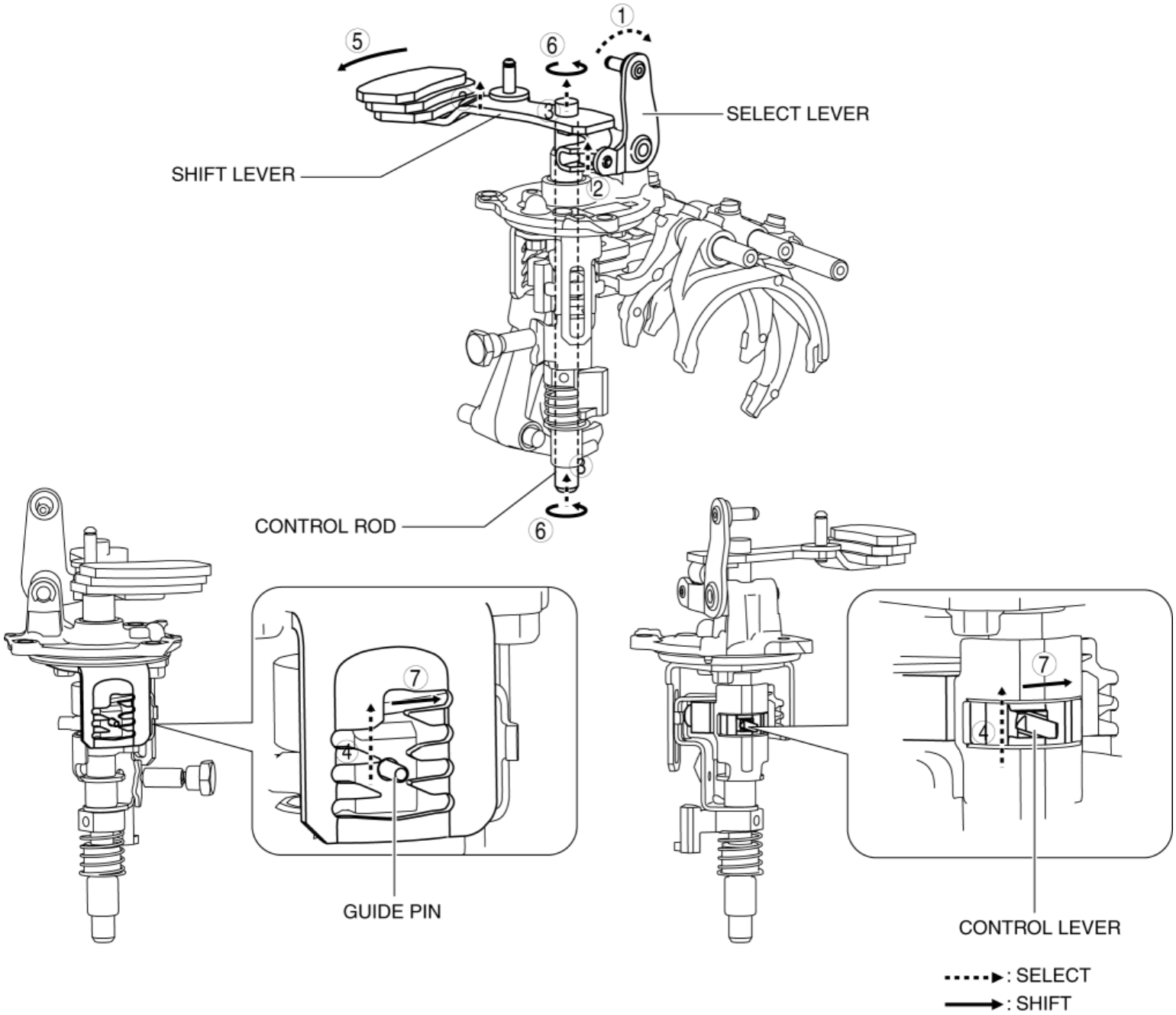

1. When the shift lever in the cabin is tilted to the left to shift to the reverse gear, the select lever moves in the direction of arrow 1 shown in the figure.

2. Following the movement of the select lever, the shift lever moves in the direction of arrow 2 shown in the figure.

3. Following the movement of the select lever, the shift lever moves in the direction of arrow 3 shown in the figure.

4. Following the movement of the select lever, the control lever and the guide pin move in the direction of arrow 4 shown in the figure.

5. When the shift lever in the cabin is tilted forward to shift to the reverse gear, the shift lever in the engine compartment moves in the direction of arrow 5 shown in the figure.

6. Following the movement of the shift lever in the engine compartment, the control rod moves in the direction of arrow 6 shown in the figure.

7. Following the movement of the shift lever in the engine compartment, the control lever and the guide pin move in the direction of arrow 7 shown in the figure.

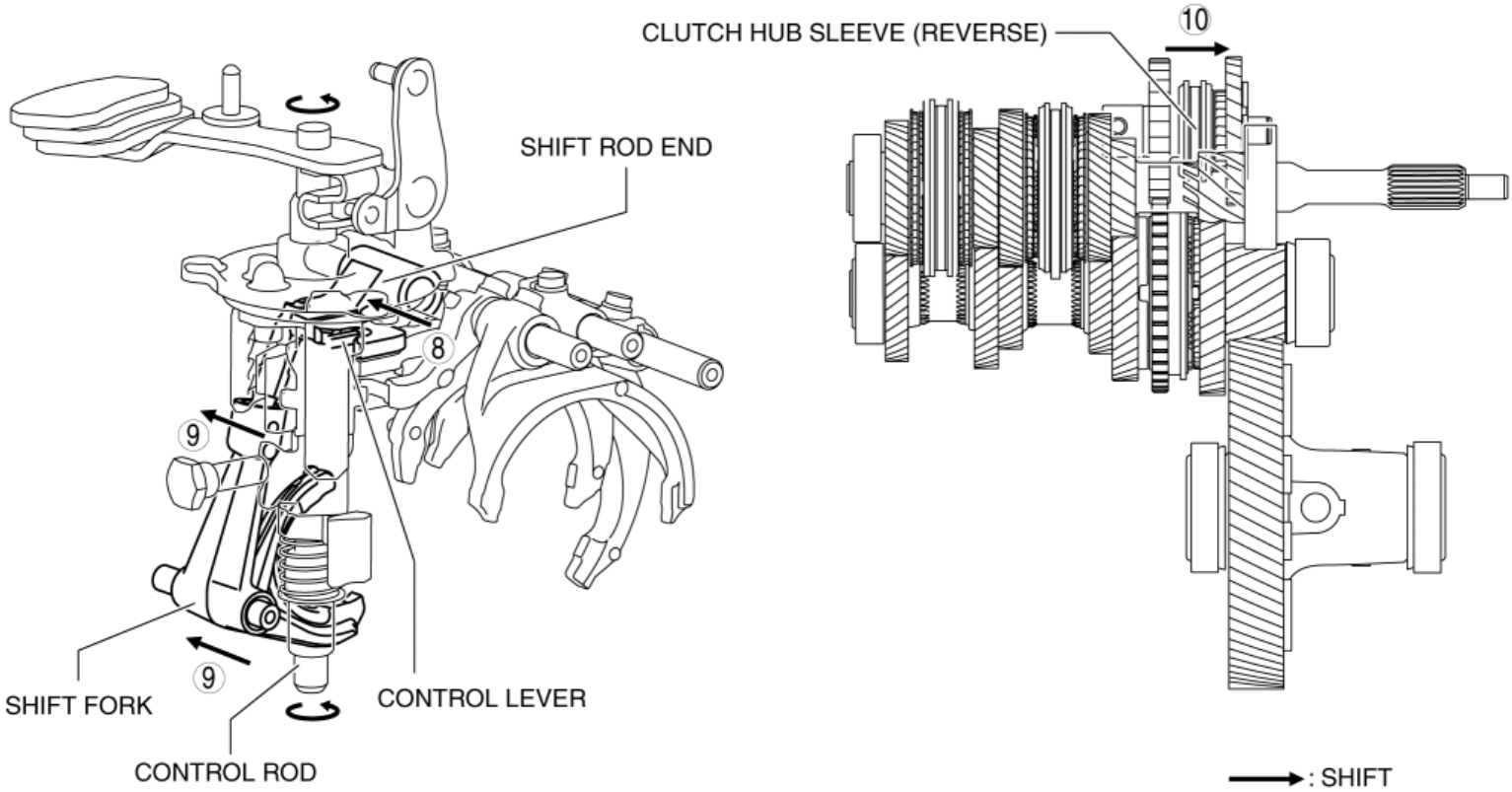

8. Because the control rod turns with the control lever, the control lever pushes the shift rod end and moves it in the direction of arrow 8 shown in the figure.

9. The shift rod end and the shift fork are integrated with the shift rod. Therefore, the movement of the shift rod end is transmitted to the shift fork via the shift rod, and the shift fork moves in the direction of arrow 9.

10. The shift fork moves the clutch hub sleeve in the direction of arrow 10 shown in the figure.

11. The shift change to the reverse gear is completed.

2014 - Mazda3 - Transmission/Transaxle

SYNCHRONIZER MECHANISM [C66M-R]

Purpose, Function

- For smooth gear changes, the synchronizer mechanism synchronizes the rotation of the engaging area and engages gears.

Construction

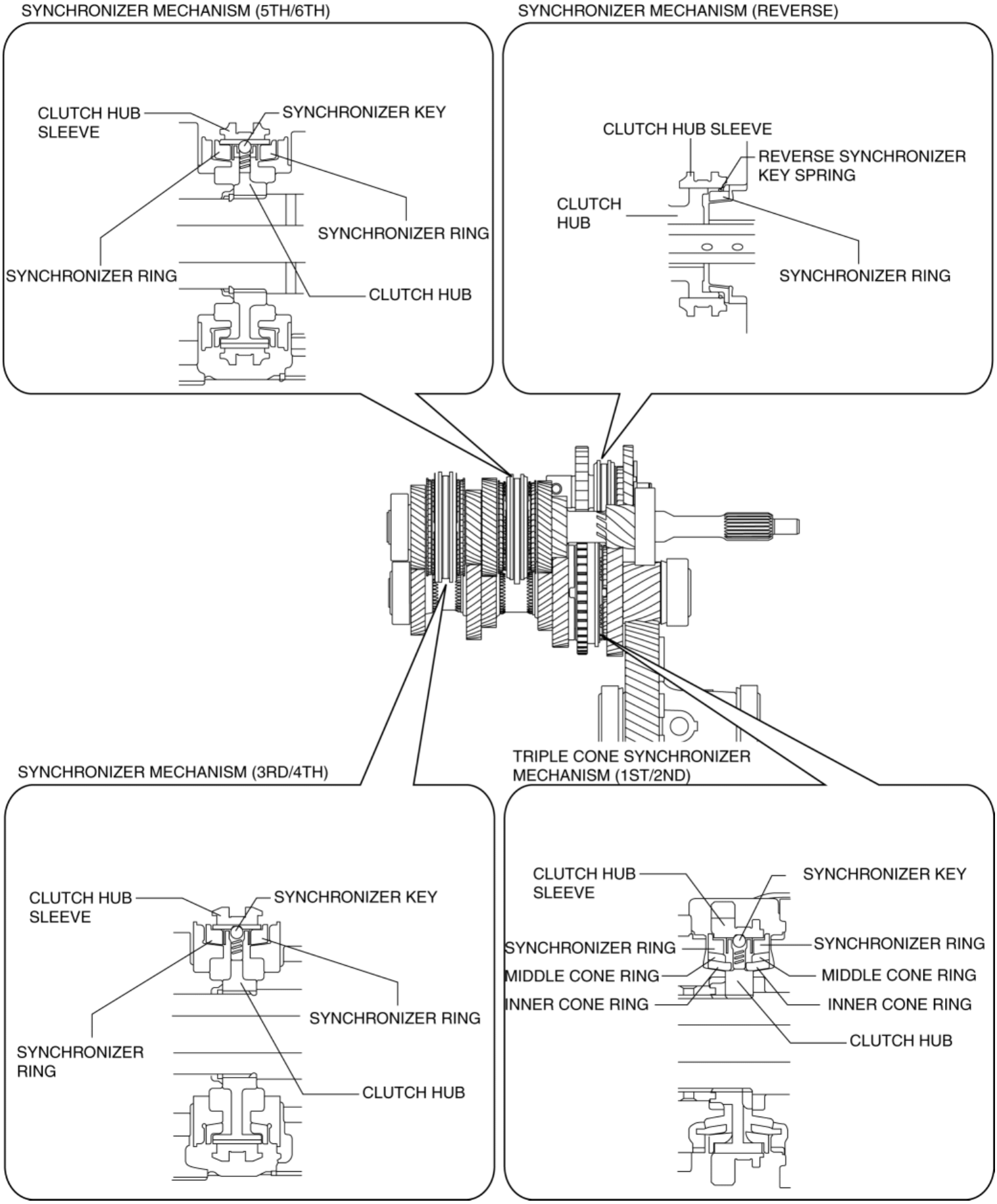

Detent ball-type synchronizer key

- A detent ball-type synchronizer key has been adopted for the synchronizer mechanism except for the reverse gear.

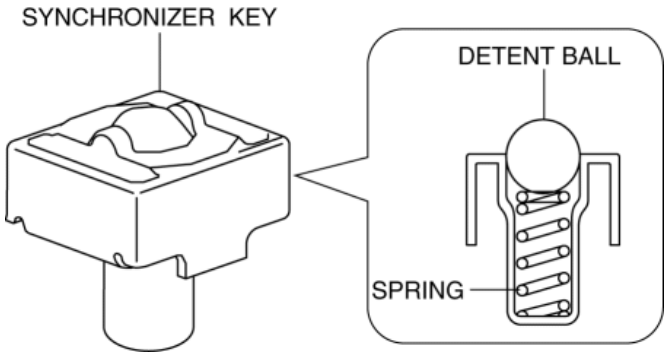

- The detent ball of this part provides the driver a crisp feel which the driver can realize completed gear changes.
- Because this part is smaller compared to the conventional synchronizer key, it has contributed to the size reduction of the synchronizer mechanism, and also to the shortened length of the primary and secondary shafts.
- Because the smaller synchronizer mechanism has reduced the stroke amount of the clutch hub sleeve, the stroke of the shift lever in the cabin has been shortened.

Operation

1GR, 2GR operation

NOTE:

- For 1st and 2nd gears, a triple-cone synchronizer mechanism has been adopted with which a stronger synchronizing force is provided to synchronize the rotation of the clutch hub and the gear.
- Here, operation during 2GR operation is described as an example.

1. When the clutch hub sleeve moves toward the 2nd gear side, the synchronizer key follows, and the synchronizer key contacts the end surface of the synchronizer ring.

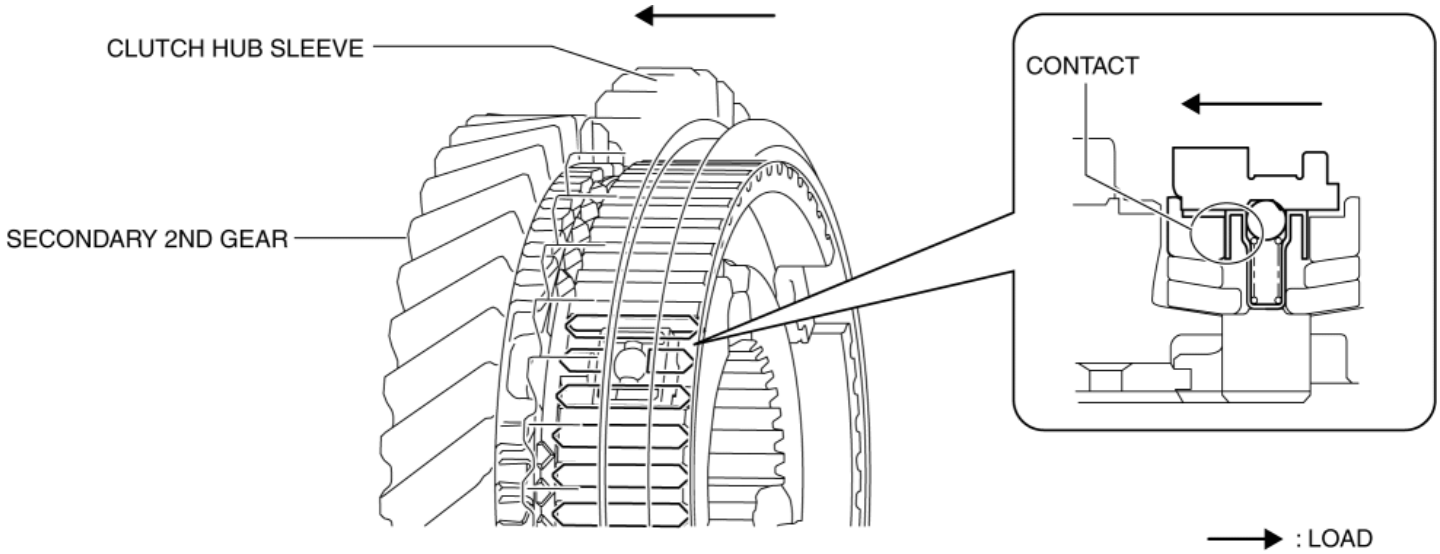

2. When the clutch hub sleeve moves toward the 2nd gear side, the synchronizer key which follows applies load to the synchronizer ring, and the load is transmitted from the synchronizer ring to the middle cone ring, inner cone ring, and the gear.

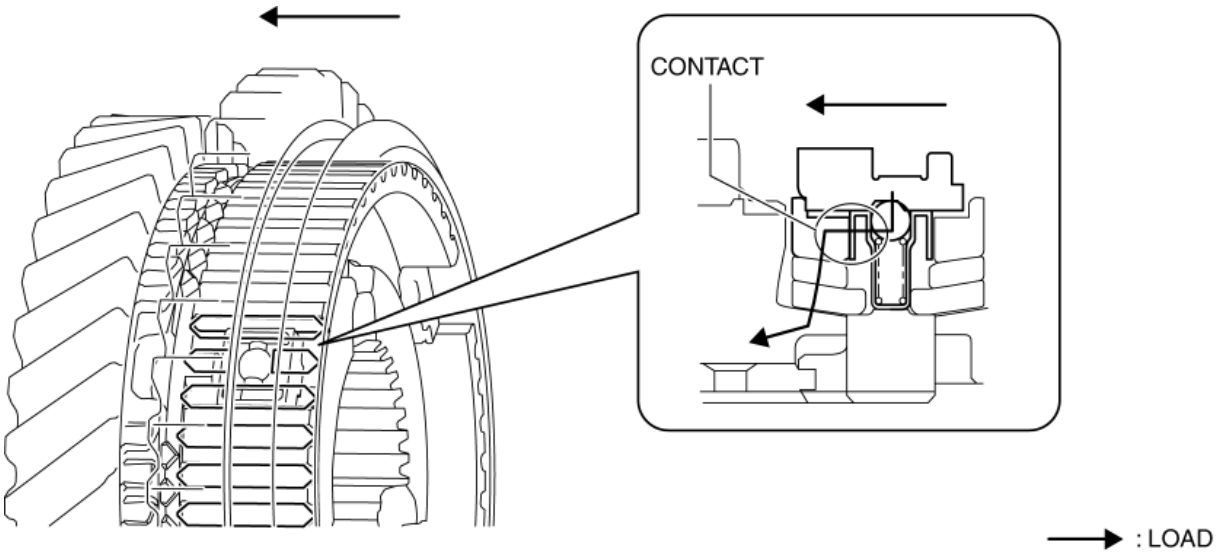

3. The friction force on the contacting surface of the parts is generated by applying load to the parts between the synchronizer ring and the gear.

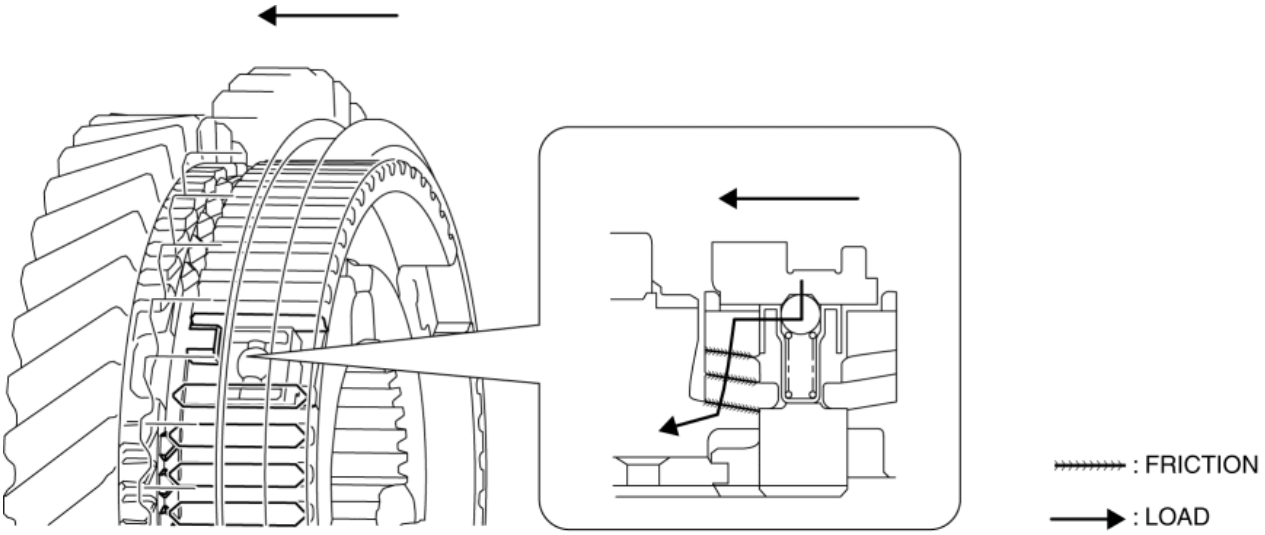

4. For the friction force for the parts, the synchronizer ring rotates only the round groove gap of the clutch hub.

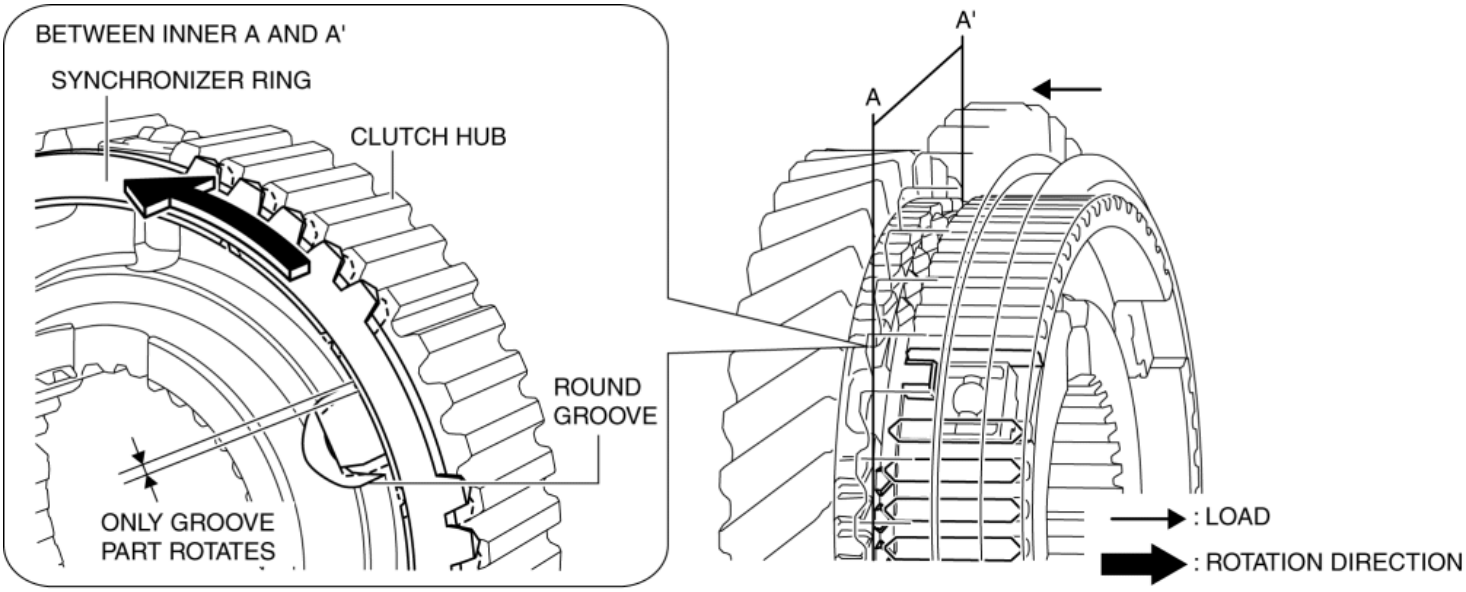

5. Because the synchronizer ring rotates, the spline of the clutch hub sleeve which moves toward the secondary 2nd gear side and the chamfer of the synchronizer ring are opposed to each other.

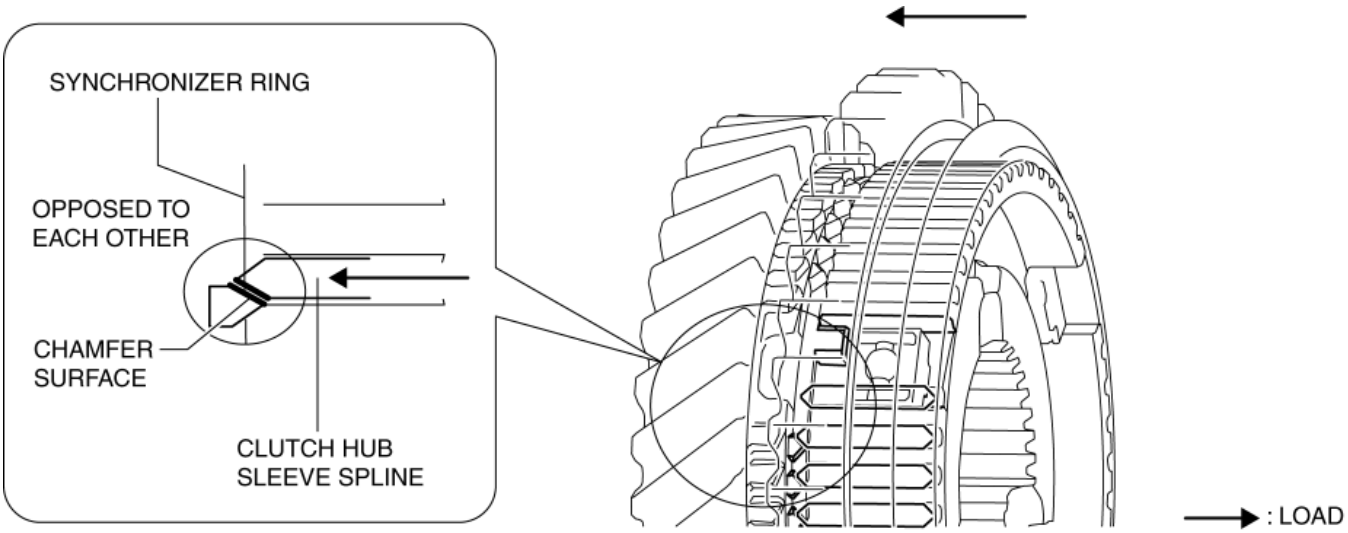

6. When the clutch hub sleeve moves toward the secondary 2nd gear side, the transmitted load to the gear from the clutch hub sleeve increases because the spline of the clutch hub sleeve pushes the chamfer of the synchronizer ring.

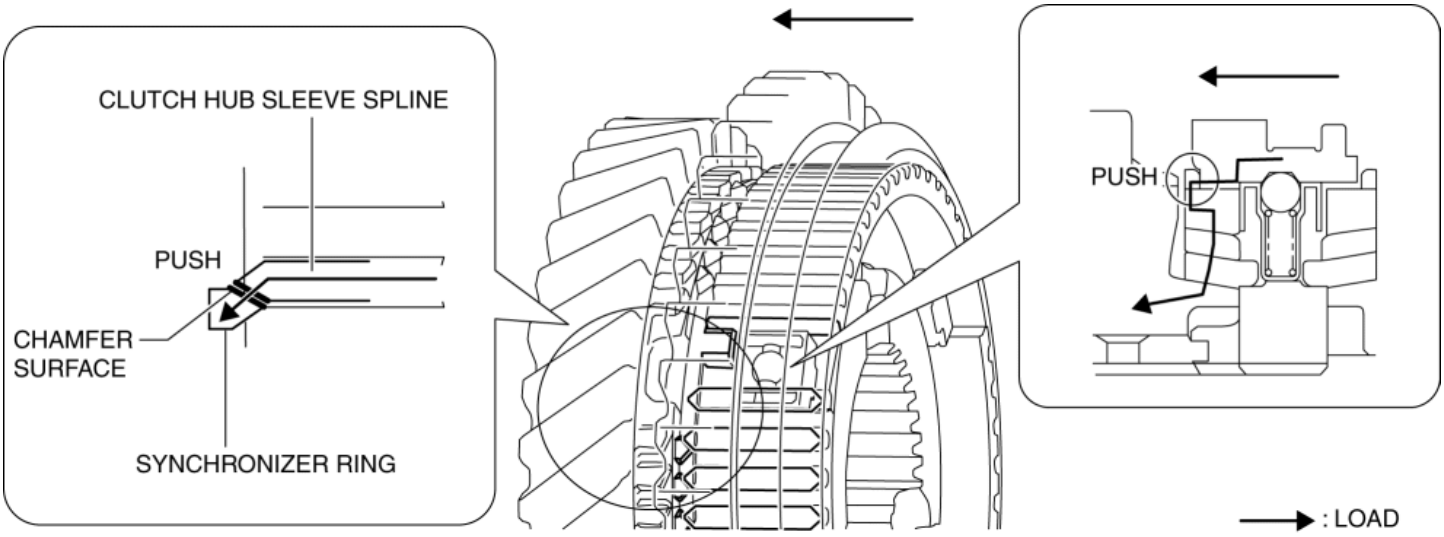

7. The friction force on the contacting surface of the parts is increased by increasing the load transmitted from the clutch hub sleeve to the gear.

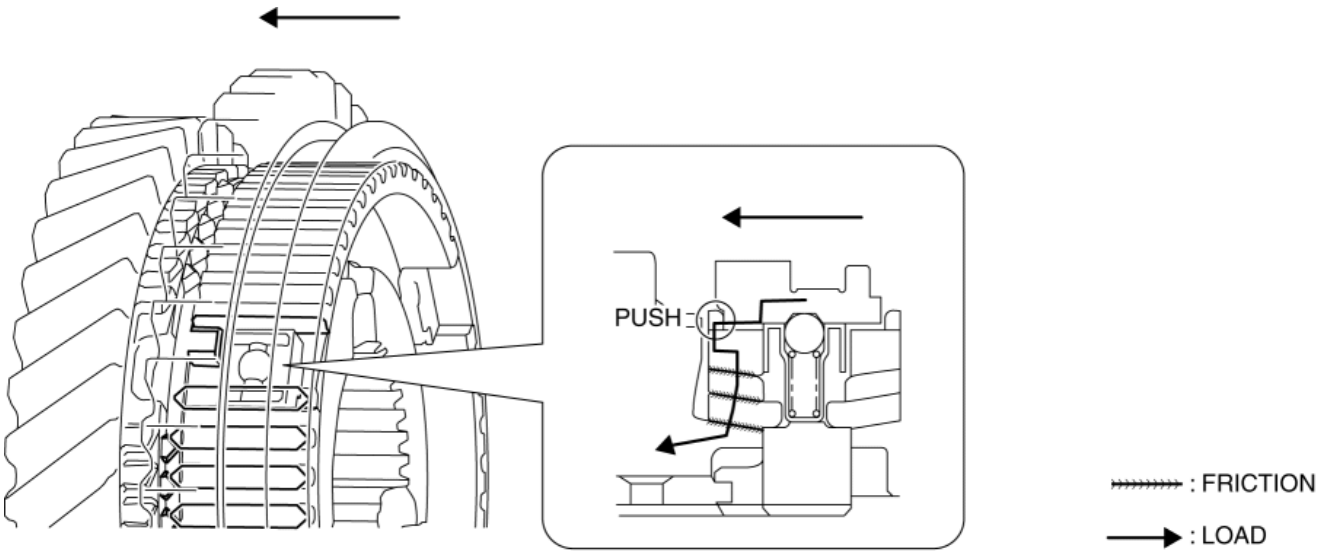

8. The increased friction force decreases the difference in rotation speed between the synchronizer ring, middle cone ring, inner cone ring, and the gear and the rotation speed for the parts is synchronized.

9. When synchronization in rotation speed of the gear and the clutch hub sleeve is performed, the spline of the clutch hub sleeve passes through the synchronizer ring.

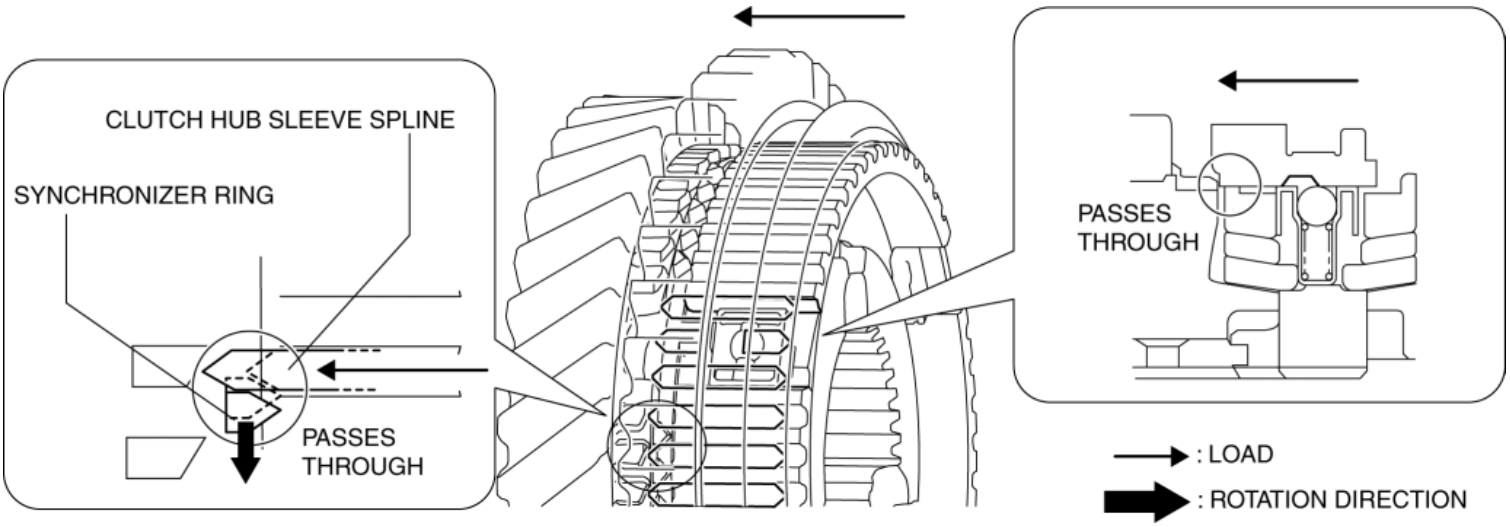

10. When the spline of the clutch hub sleeve passes through the synchronizer ring, the clutch hub sleeve presses down the detent ball and the detent ball is removed from the positioning groove of the clutch hub sleeve because the clutch hub sleeve moves toward the secondary 2nd gear side.

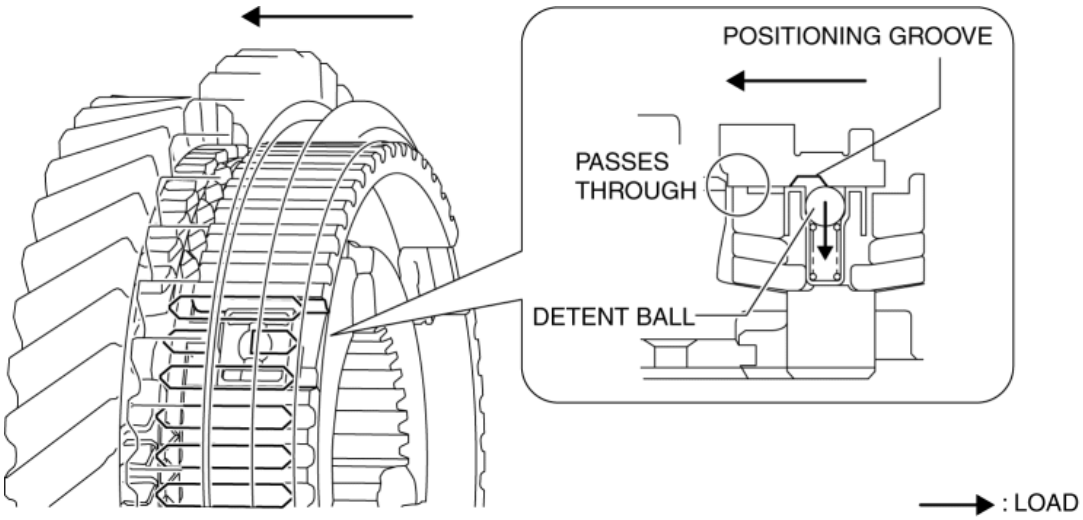

11. When the clutch hub sleeve moves toward the secondary 2nd gear side, the spline of the clutch hub sleeve and the spline of the gear are engaged, and the shifting operation is completed.

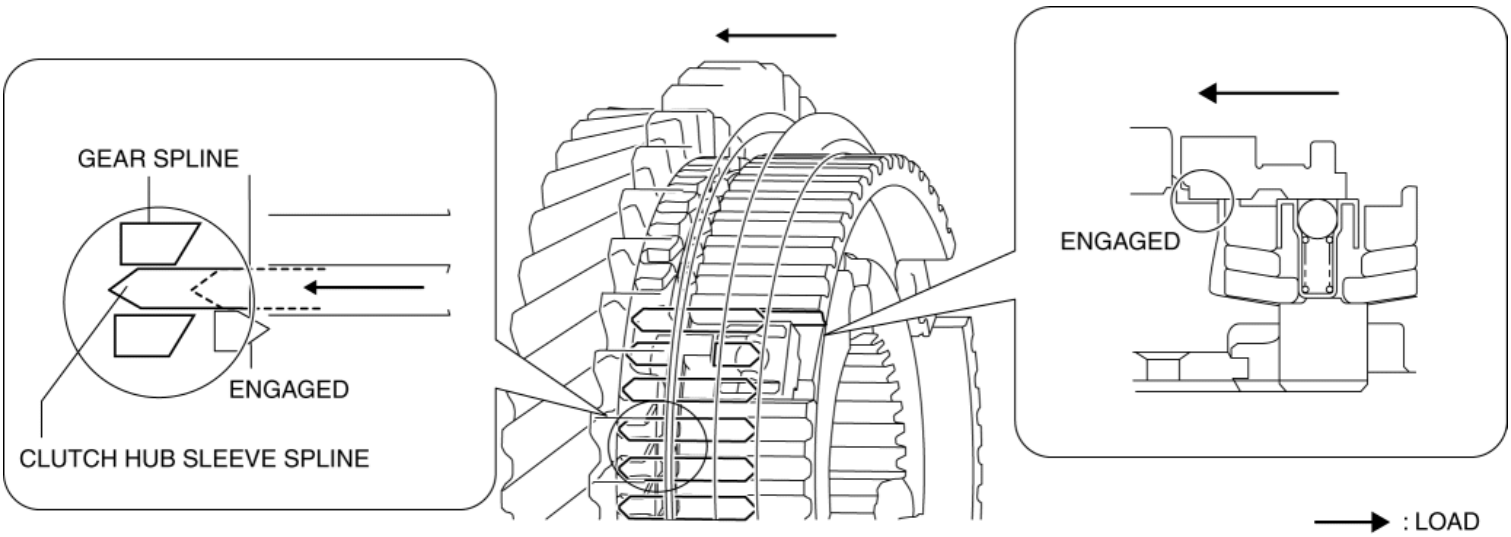

3GR, 4GR, 5GR, 6GR, reverse operation

NOTE:

Here, operation during 4GR operation is described as an example.

1. When the clutch hub sleeve moves toward the 4th gear side, the synchronizer key follows, and the synchronizer key contacts the end surface of the synchronizer ring.

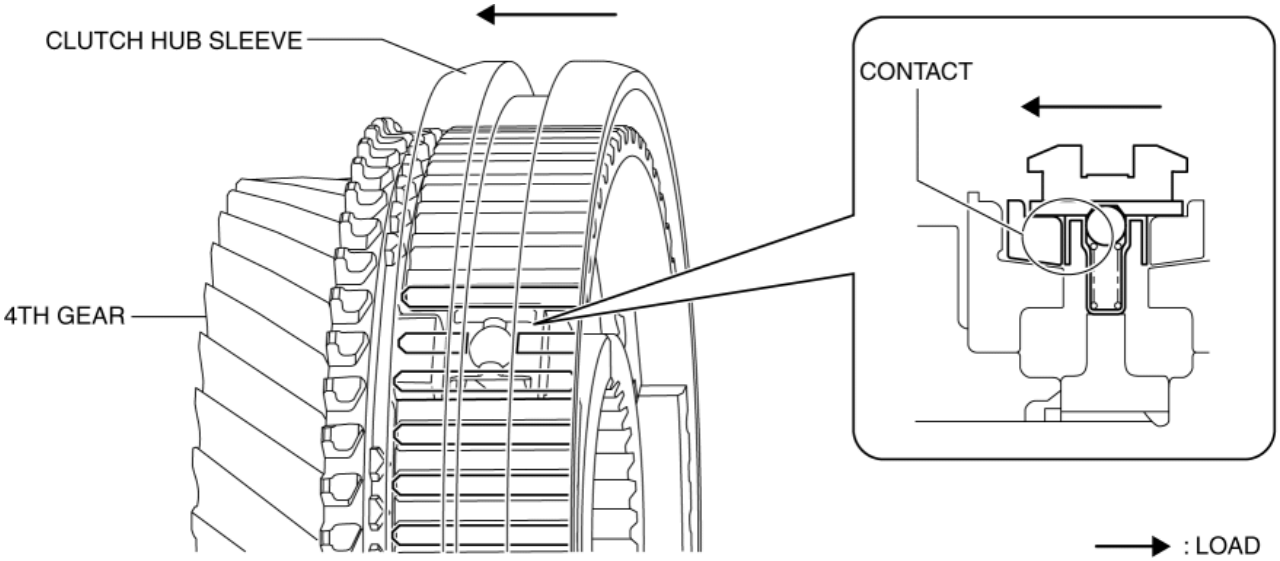

2. When the clutch hub sleeve moves toward the 4th gear side, the following synchronizer key applies load to the synchronizer ring, and the load is transmitted from the synchronizer ring to the gear.

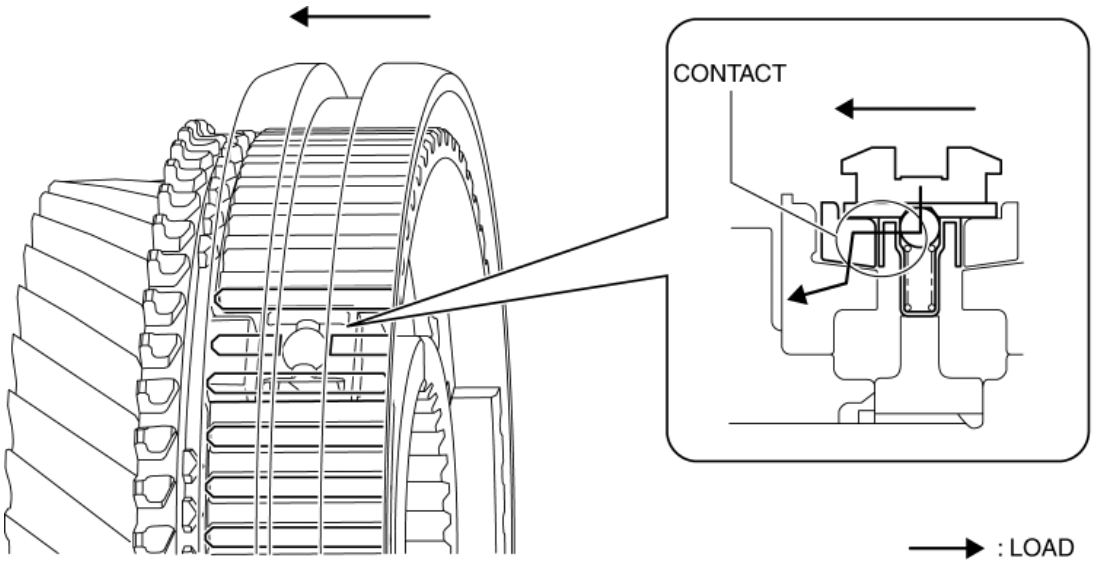

3. The friction force on the contacting surface of the synchronizer ring and the gear is generated by applying load to the parts between the synchronizer ring and the gear.

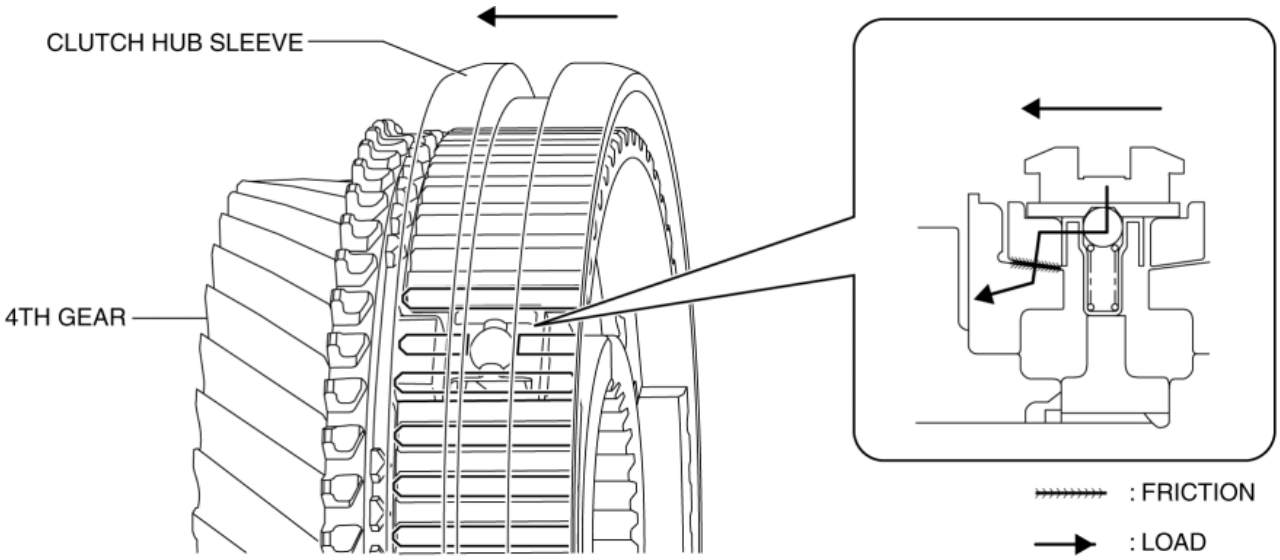

4. For the friction force of the synchronizer ring and the gear, synchronizer ring rotates only the key groove gap of the clutch hub.

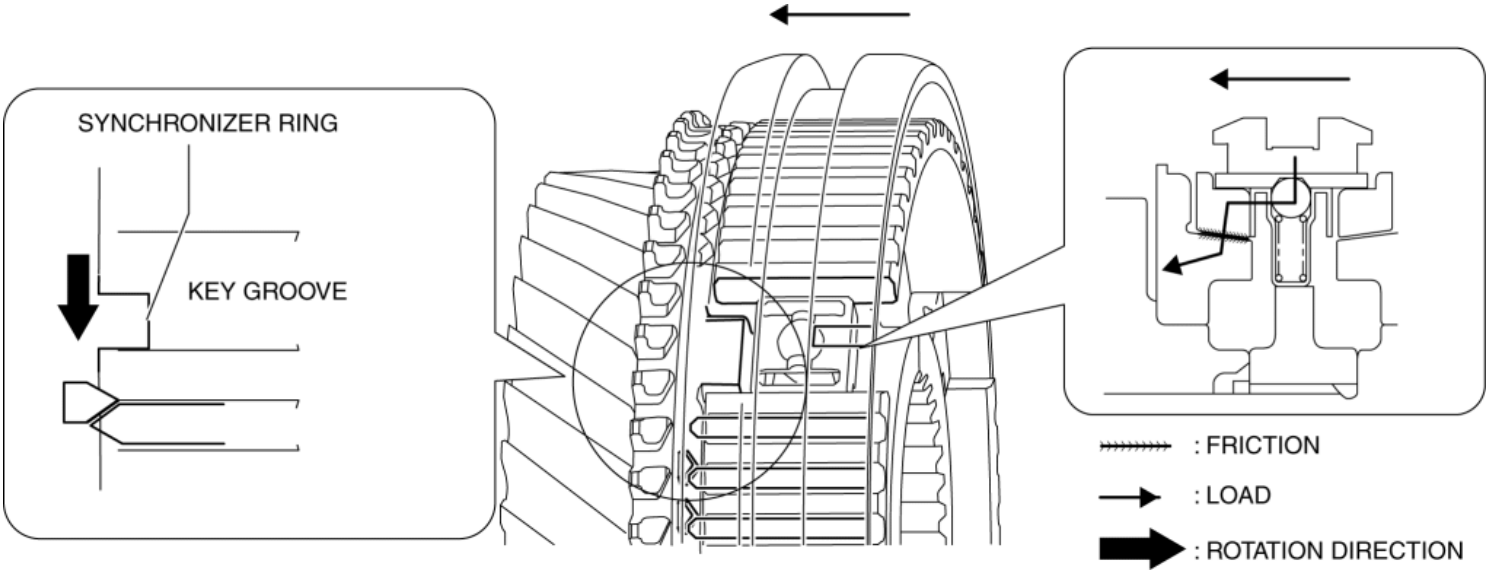

5. Because the synchronizer ring rotates, the spline of the clutch hub sleeve which moves toward the 4th gear side and the chamfer of the synchronizer ring are opposed to each other.

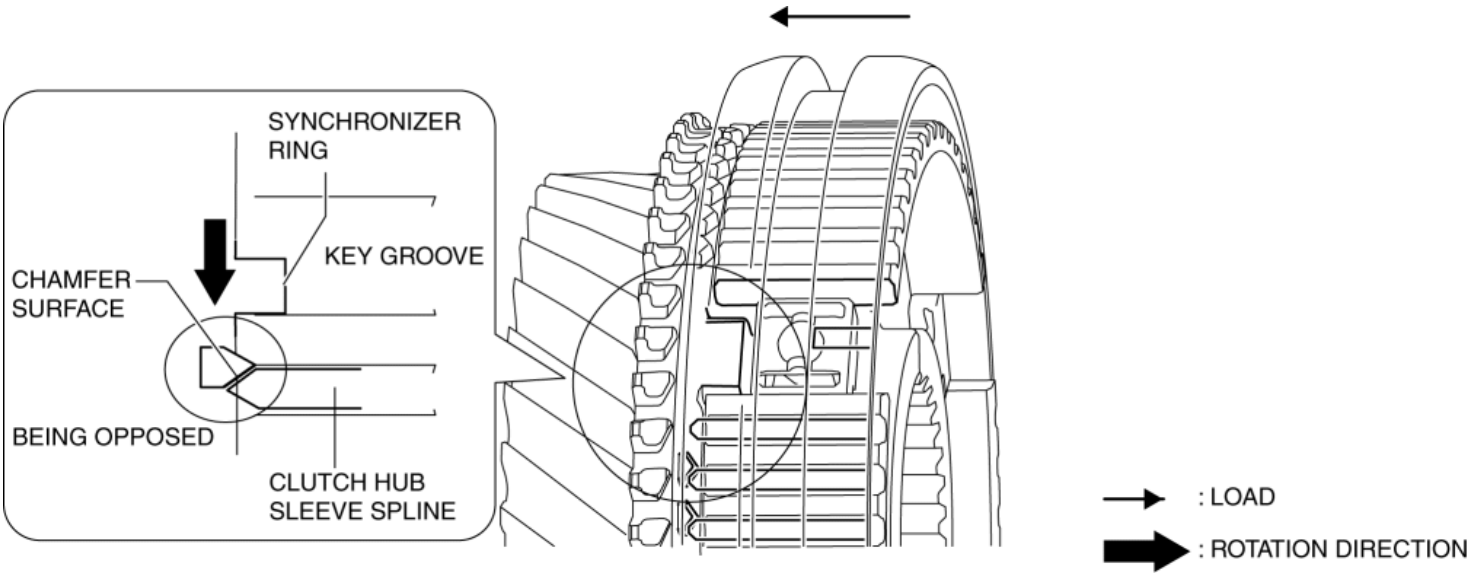

6. When the clutch hub sleeve moves toward the 4th gear, the load transmitted from the clutch hub sleeve to the gear increases because the spline of the clutch hub sleeve pushes the chamfer of the synchronizer ring.

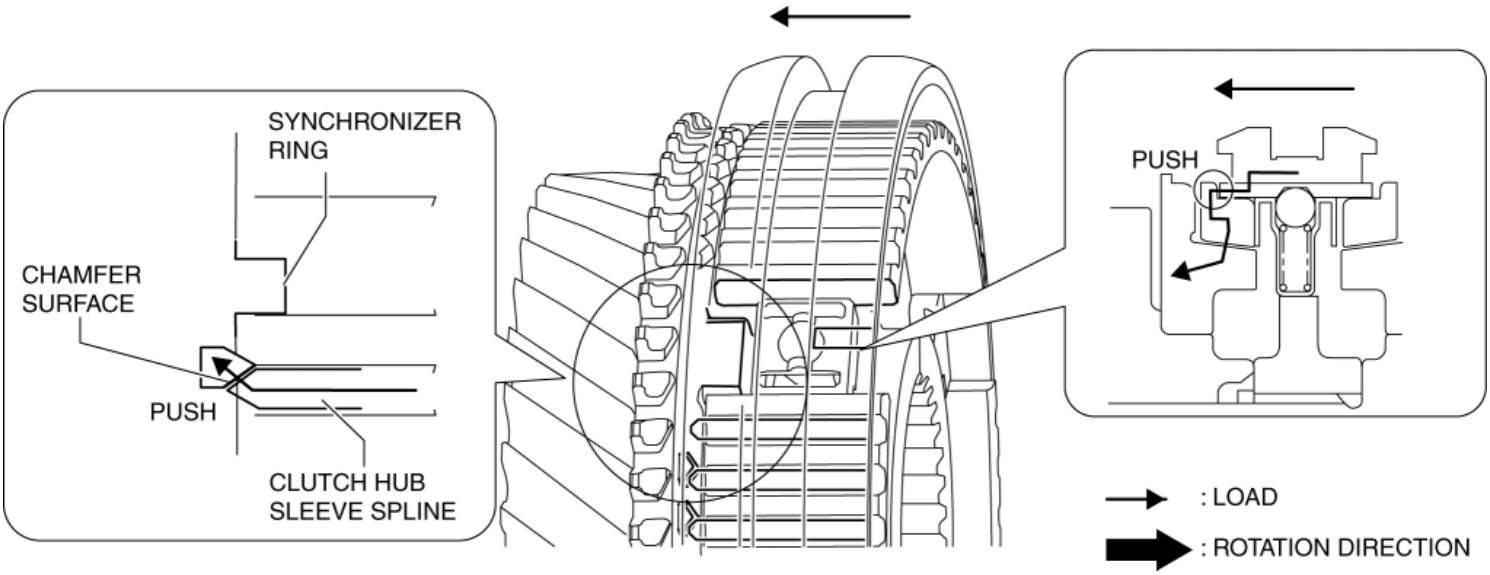

7. The friction force on the contacting surface of the parts is increased by increasing the load transmitted from the clutch hub sleeve to the gear.

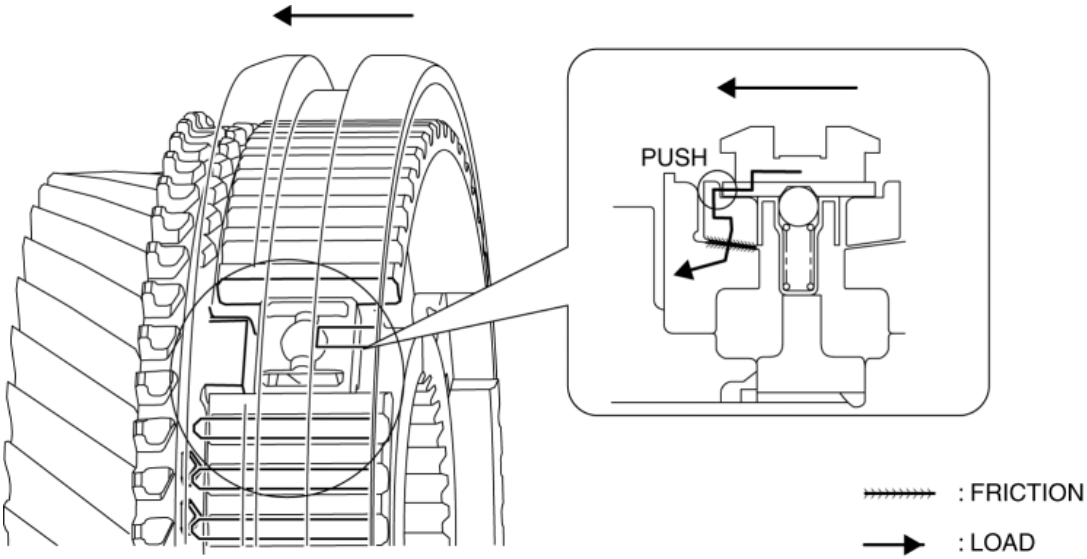

8. The increased friction force disappears the difference in the rotation speed between the synchronizer ring and the gear, and the rotation is synchronized.

9. When synchronization in rotation speed of the gear and the clutch hub sleeve is performed, the spline of the clutch hub sleeve passes through the synchronizer ring.

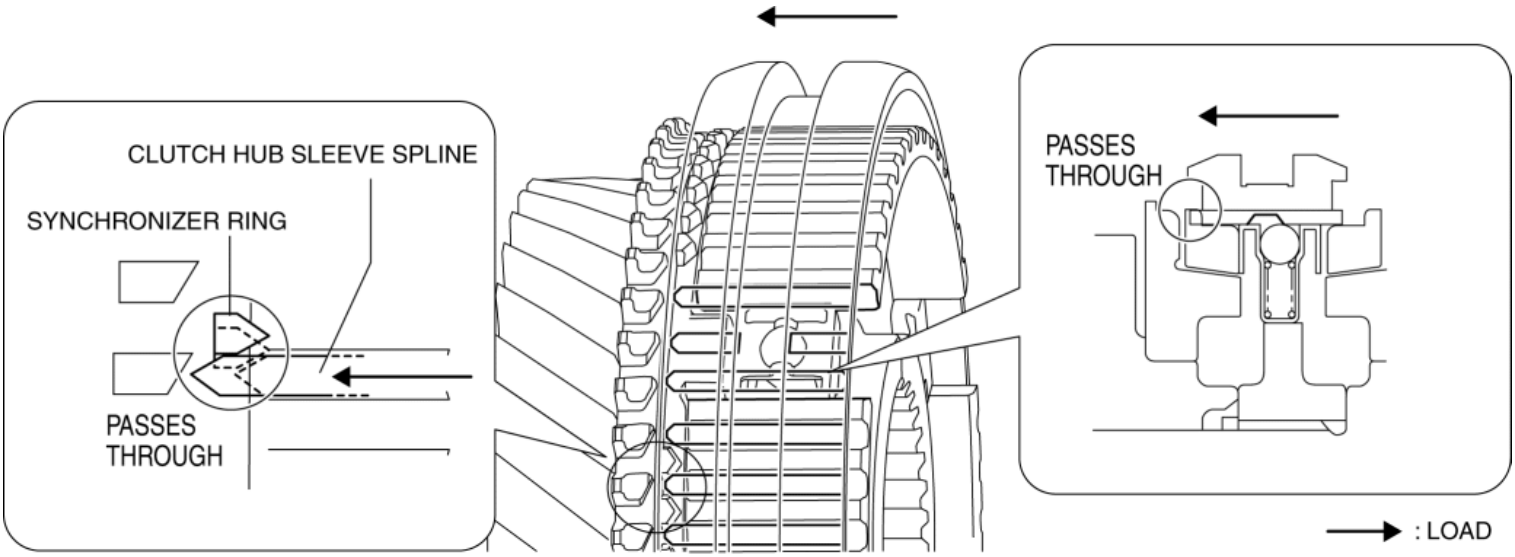

10. When the spline of the clutch hub sleeve passes through the synchronizer ring, the clutch hub sleeve presses down the ball and the ball is removed from the positioning groove of the clutch hub sleeve because the clutch hub sleeve moves toward the secondary 4th gear side.

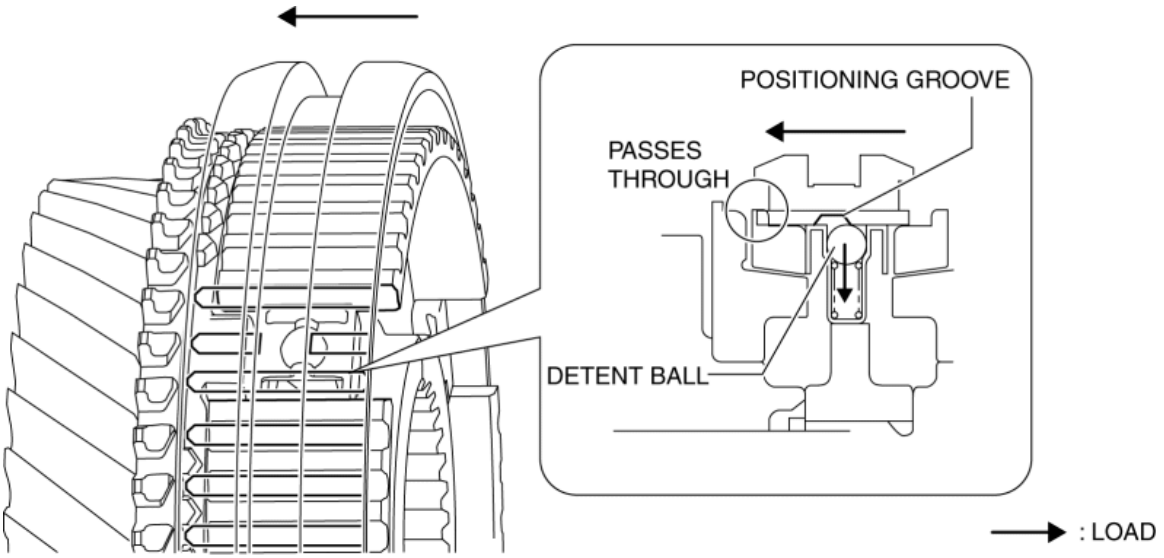

11. When the clutch hub sleeve moves toward the secondary 4th gear side, the spline of the clutch hub sleeve and the spline of the gear are engaged, and the shifting operation is completed.

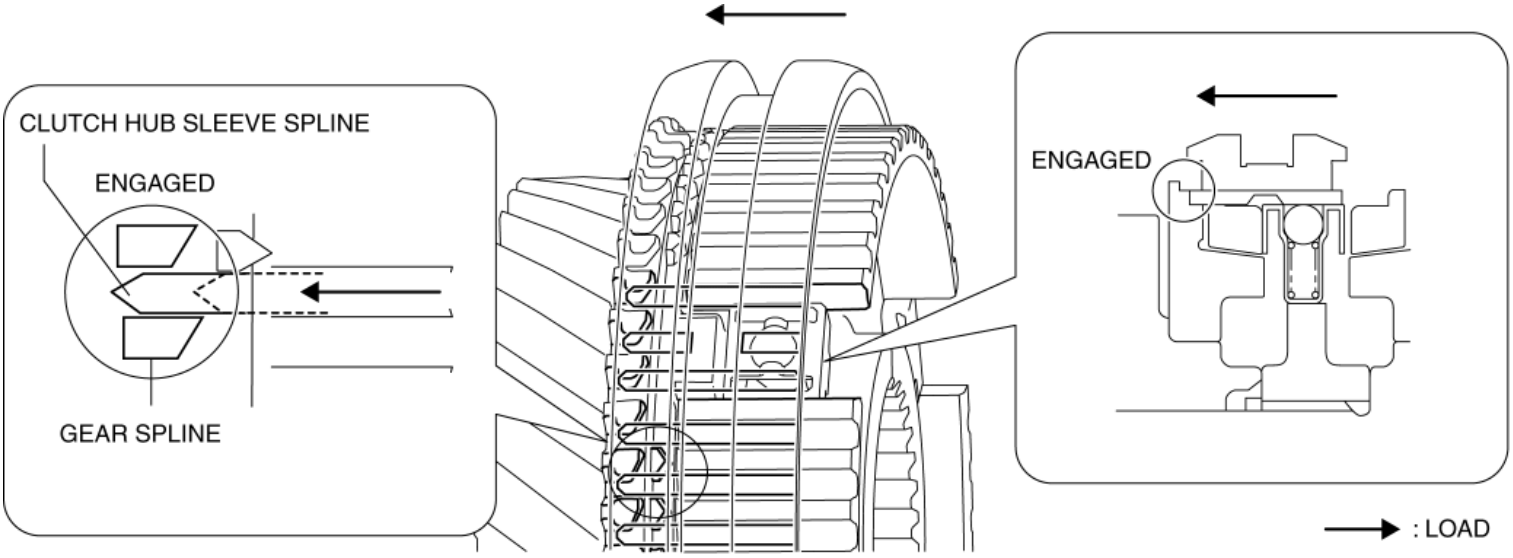

2014 - Mazda3 - Transmission/Transaxle

POWERTRAIN SYSTEM [C66M-R]

Purpose, Function

- The powertrain mechanism changes the gear combination by engaging or releasing the clutch hub and gear, and changes the power transmission route. Because of the change in the power transmission route, the drive force (speed, torque, rotation direction) input from the engine is converted.

Construction

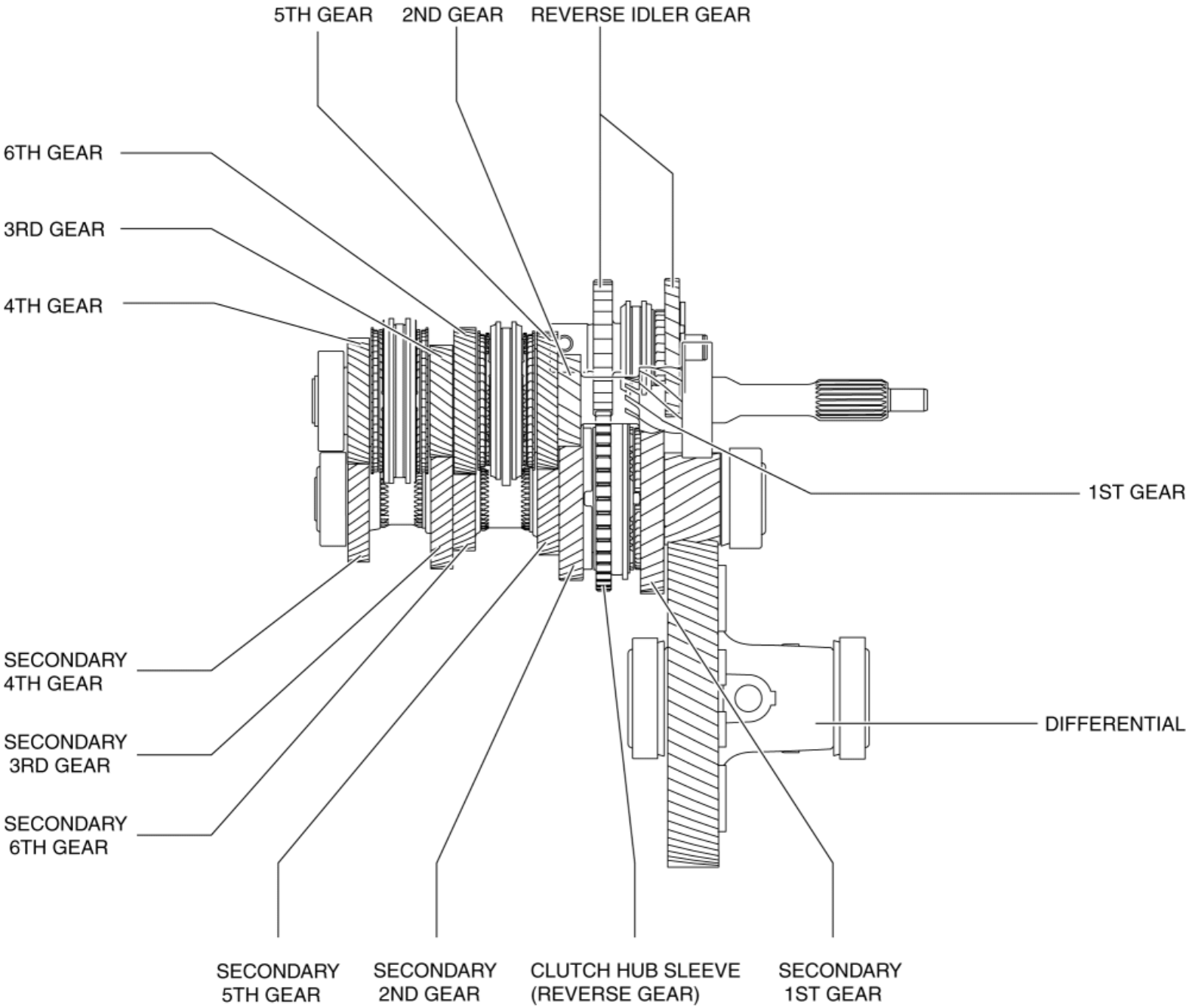

Operation

1GR

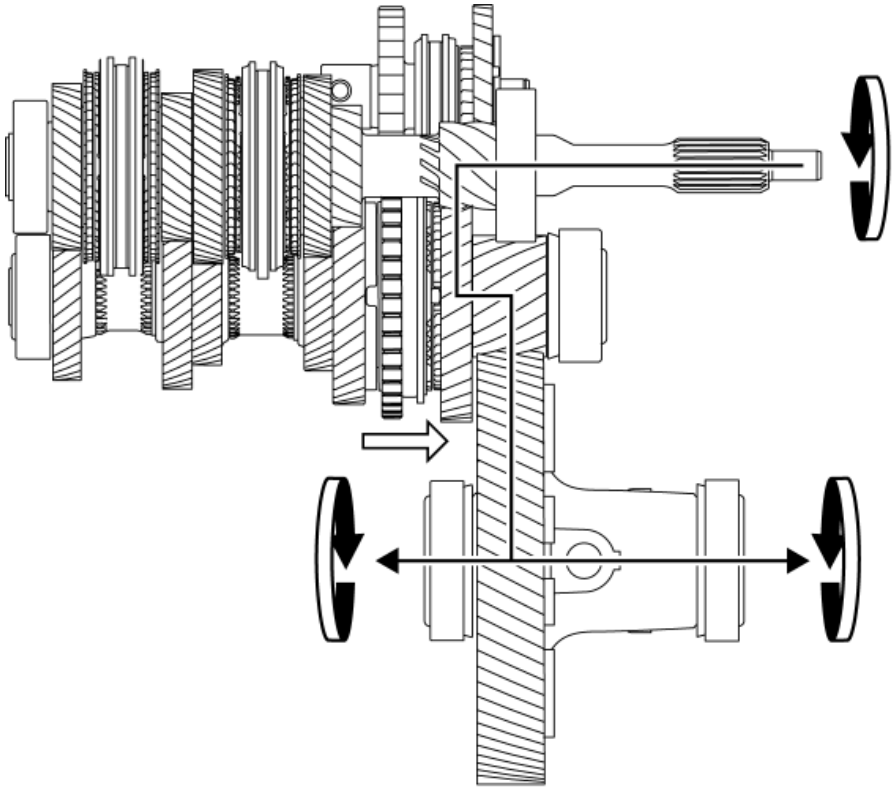

: OPERATION

: ROTATION DIRECTION

: POWER FLOW

2GR

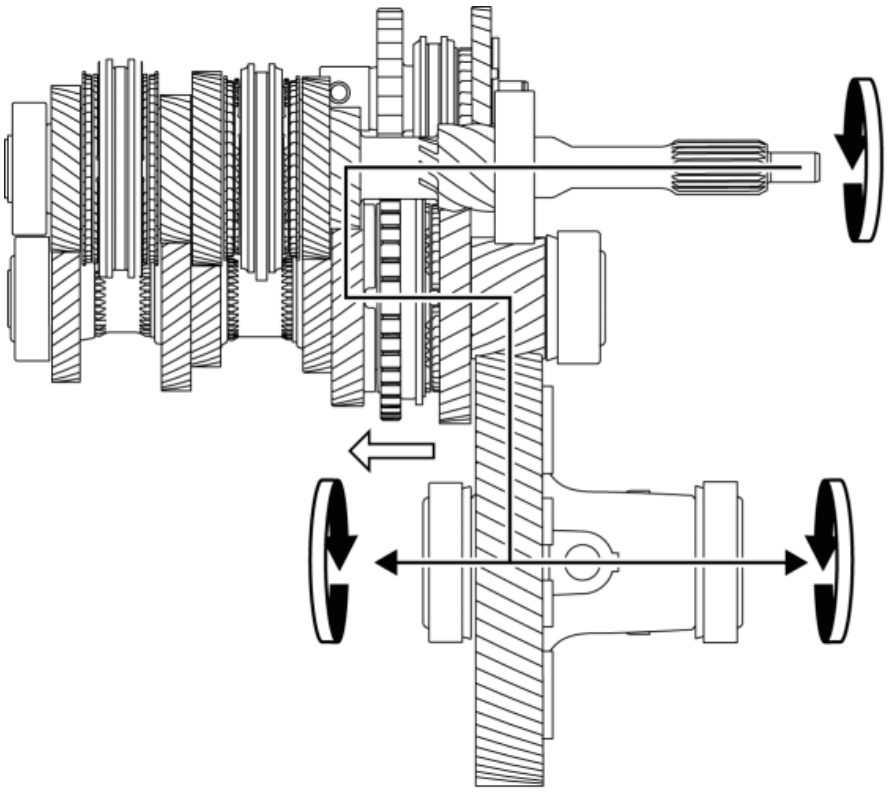

: OPERATION

: ROTATION DIRECTION

: POWER FLOW

3GR

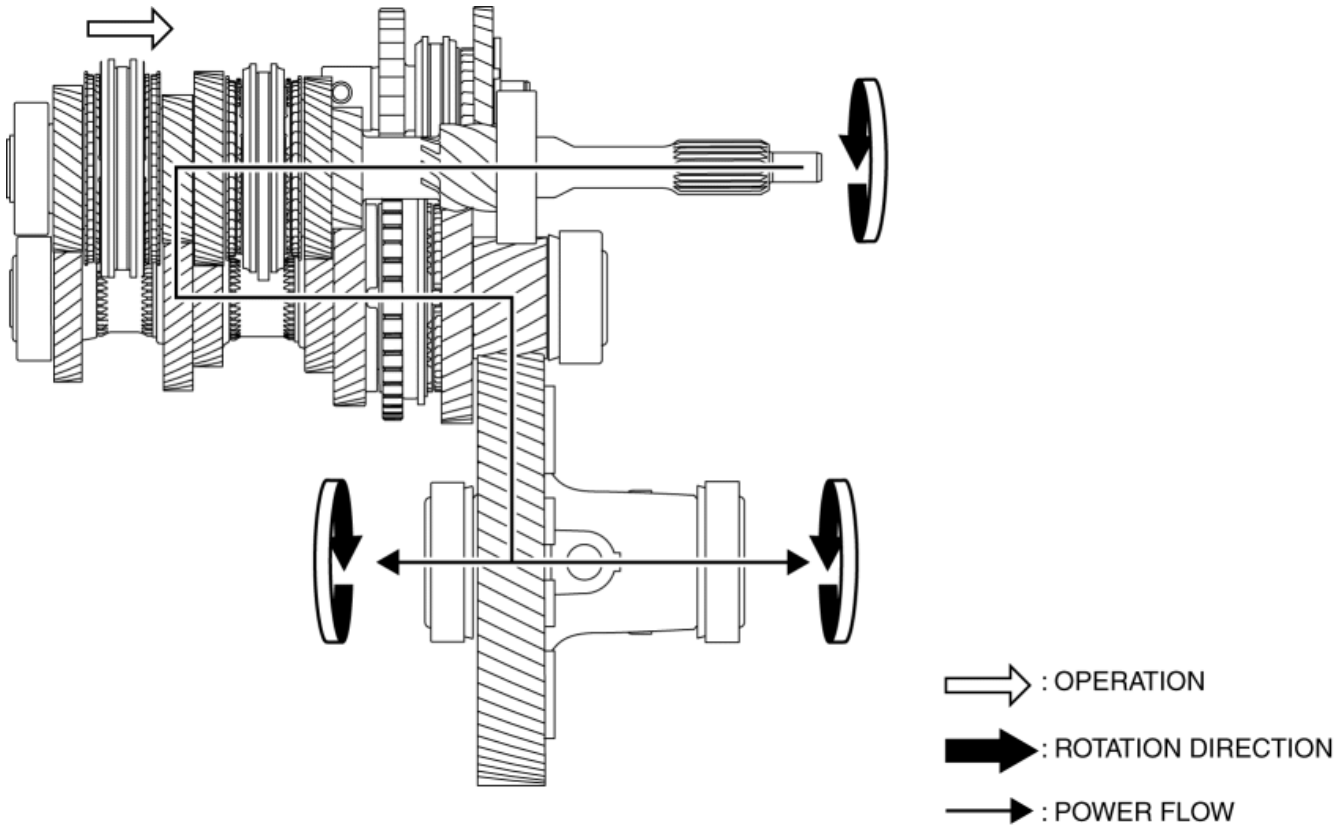
: OPERATION
: ROTATION DIRECTION
: POWER FLOW

4GR

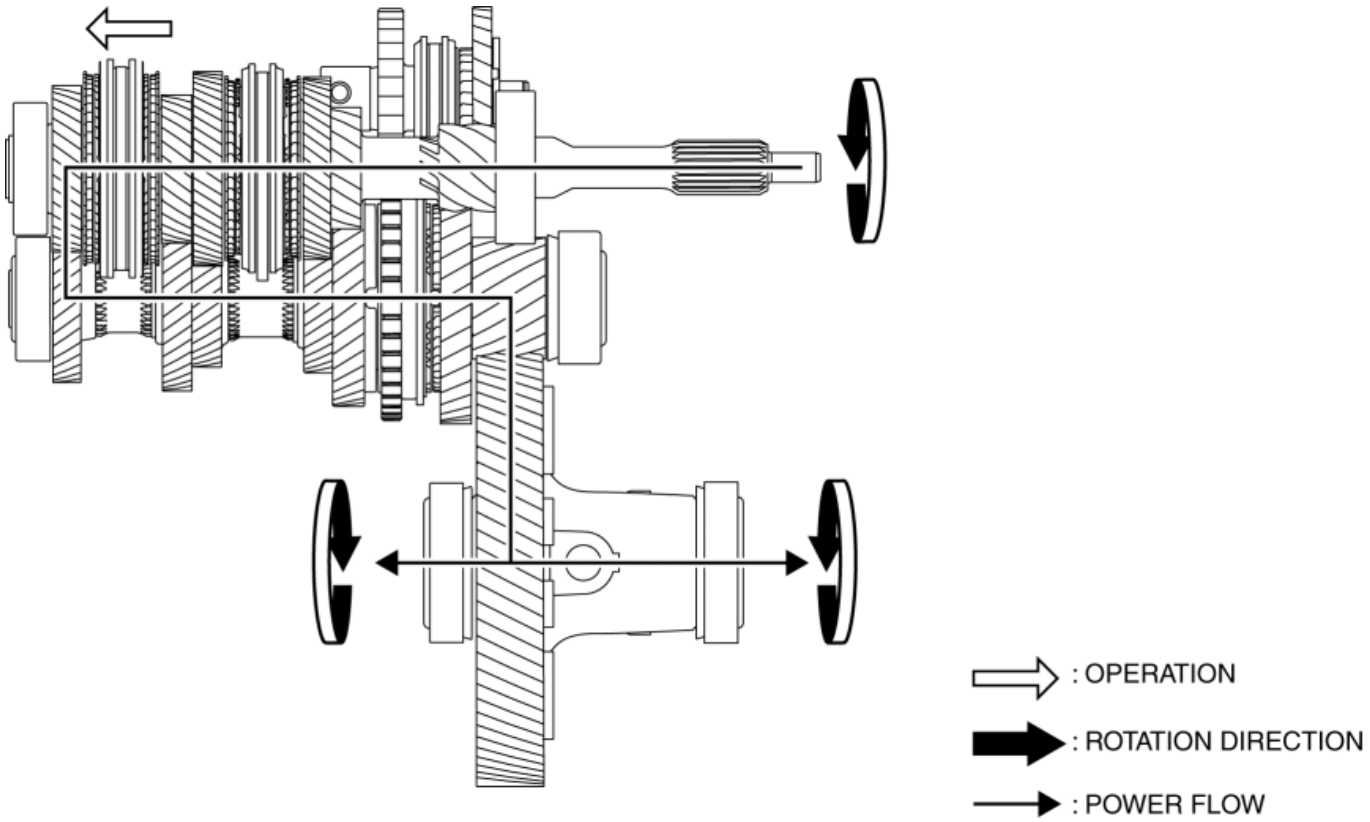
: OPERATION
: ROTATION DIRECTION
: POWER FLOW

5GR

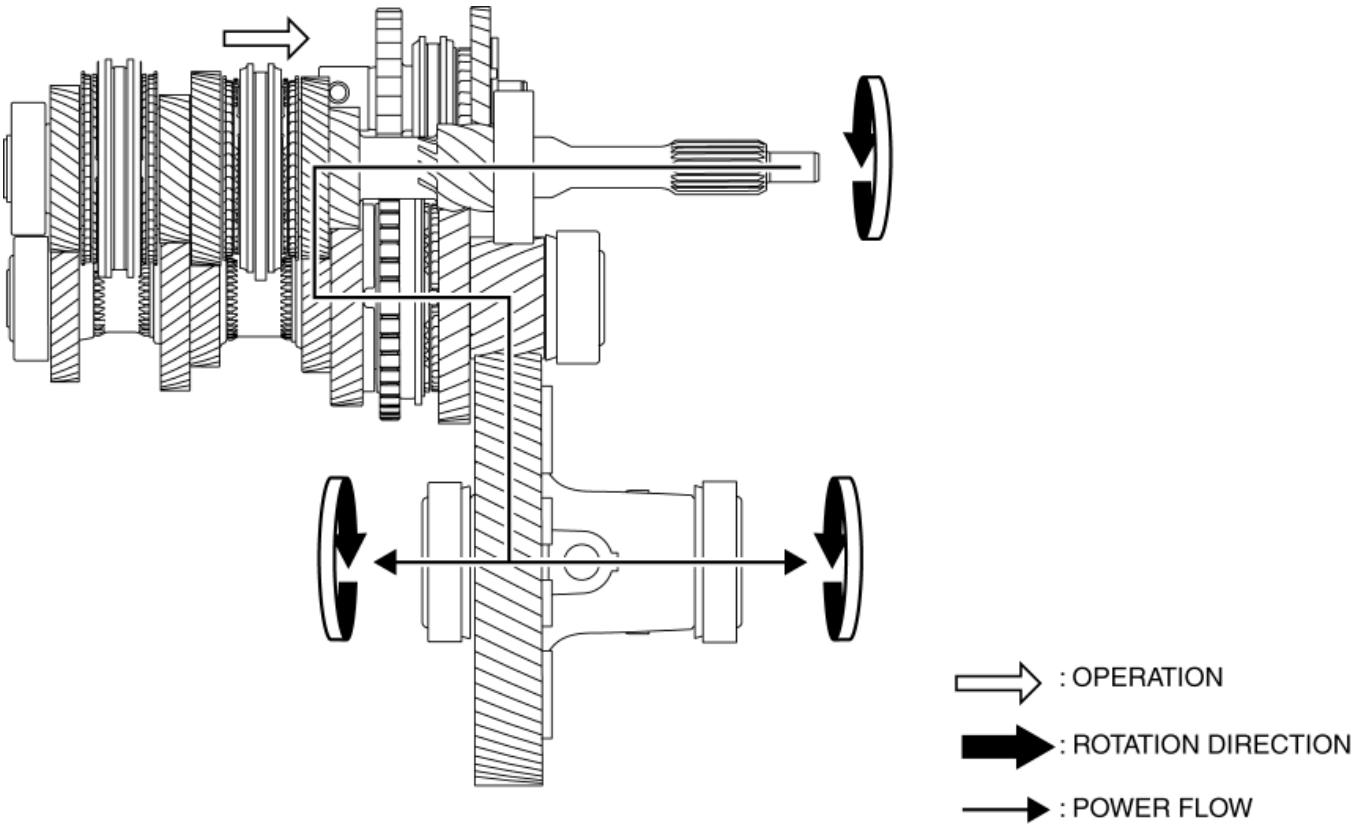
: OPERATION
: ROTATION DIRECTION
: POWER FLOW

6GR

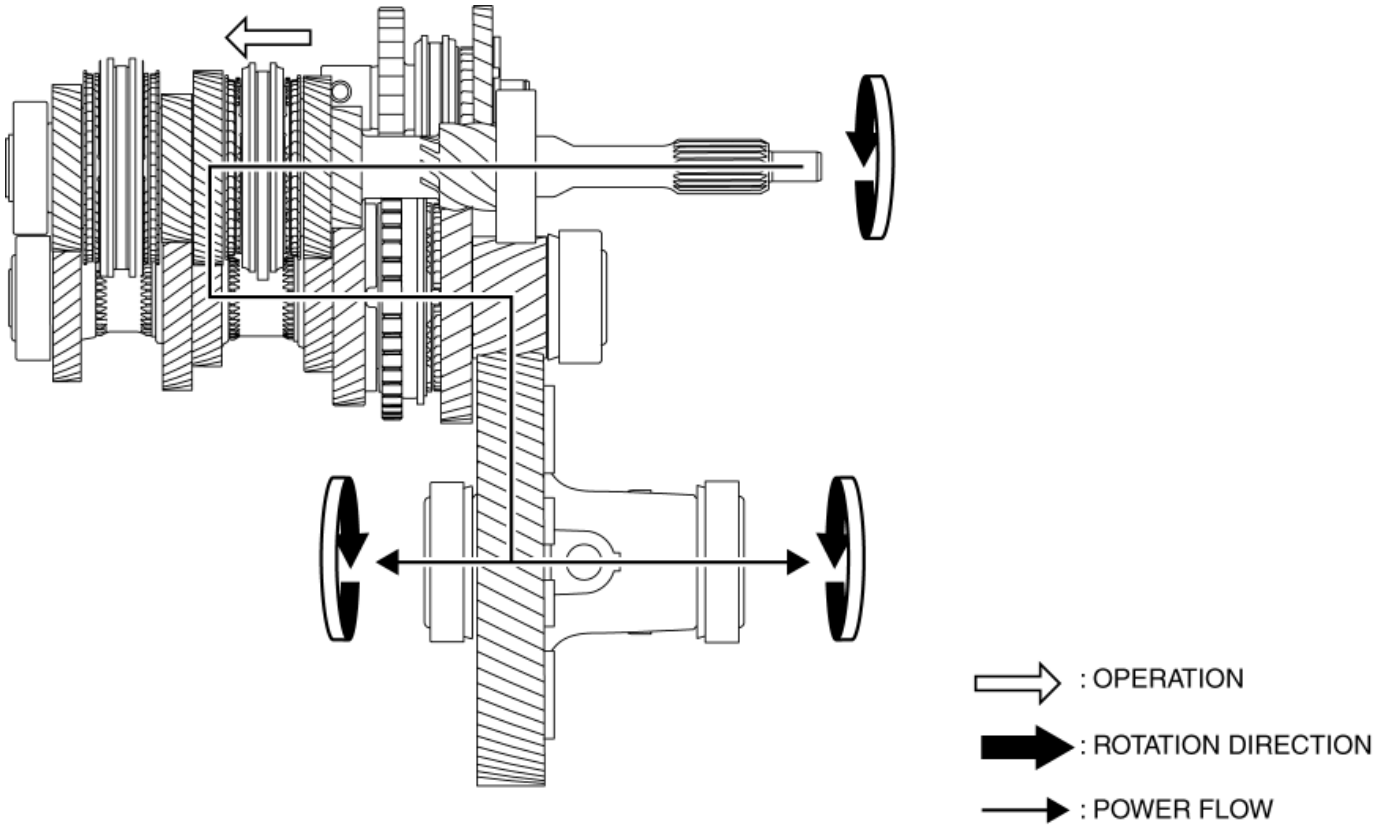
: OPERATION
: ROTATION DIRECTION
: POWER FLOW

Reverse

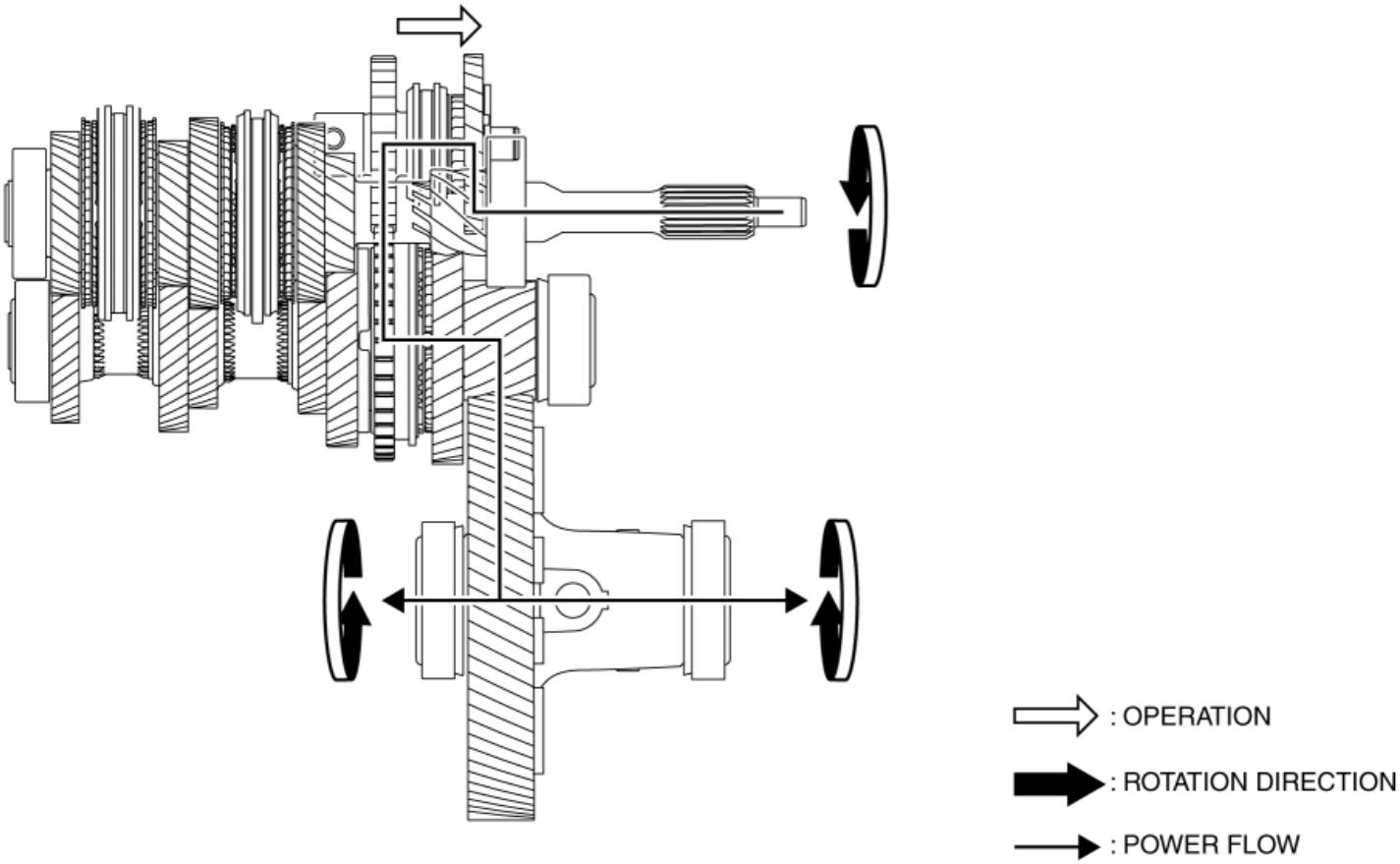
: OPERATION
: ROTATION DIRECTION
: POWER FLOW

2014 - Mazda3 - Transmission/Transaxle

DIFFERENTIAL [C66M-R]

Purpose, Function

- The differential absorbs the rotation speed of the inside and outside wheel of a wheel set when the vehicle is cornering.

Construction

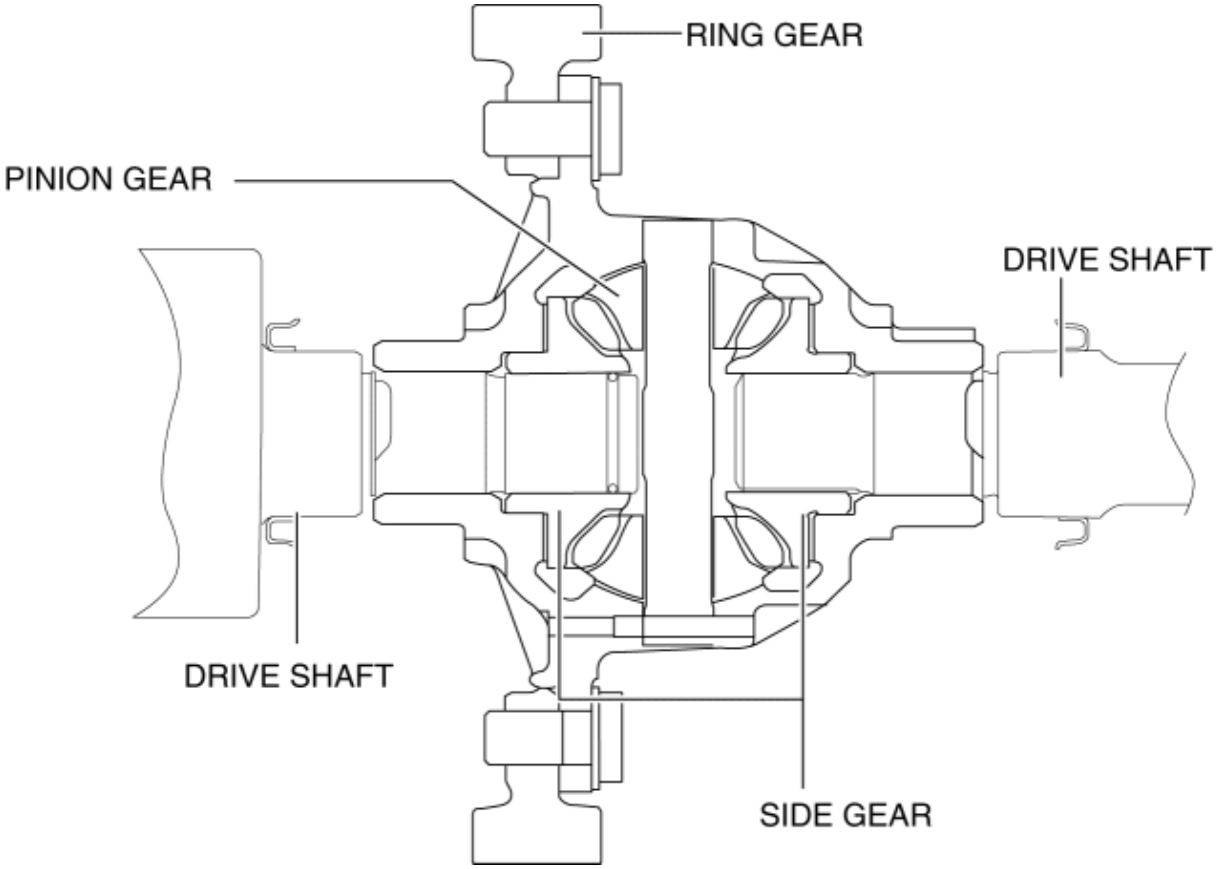

Operation

Driving in a straight line

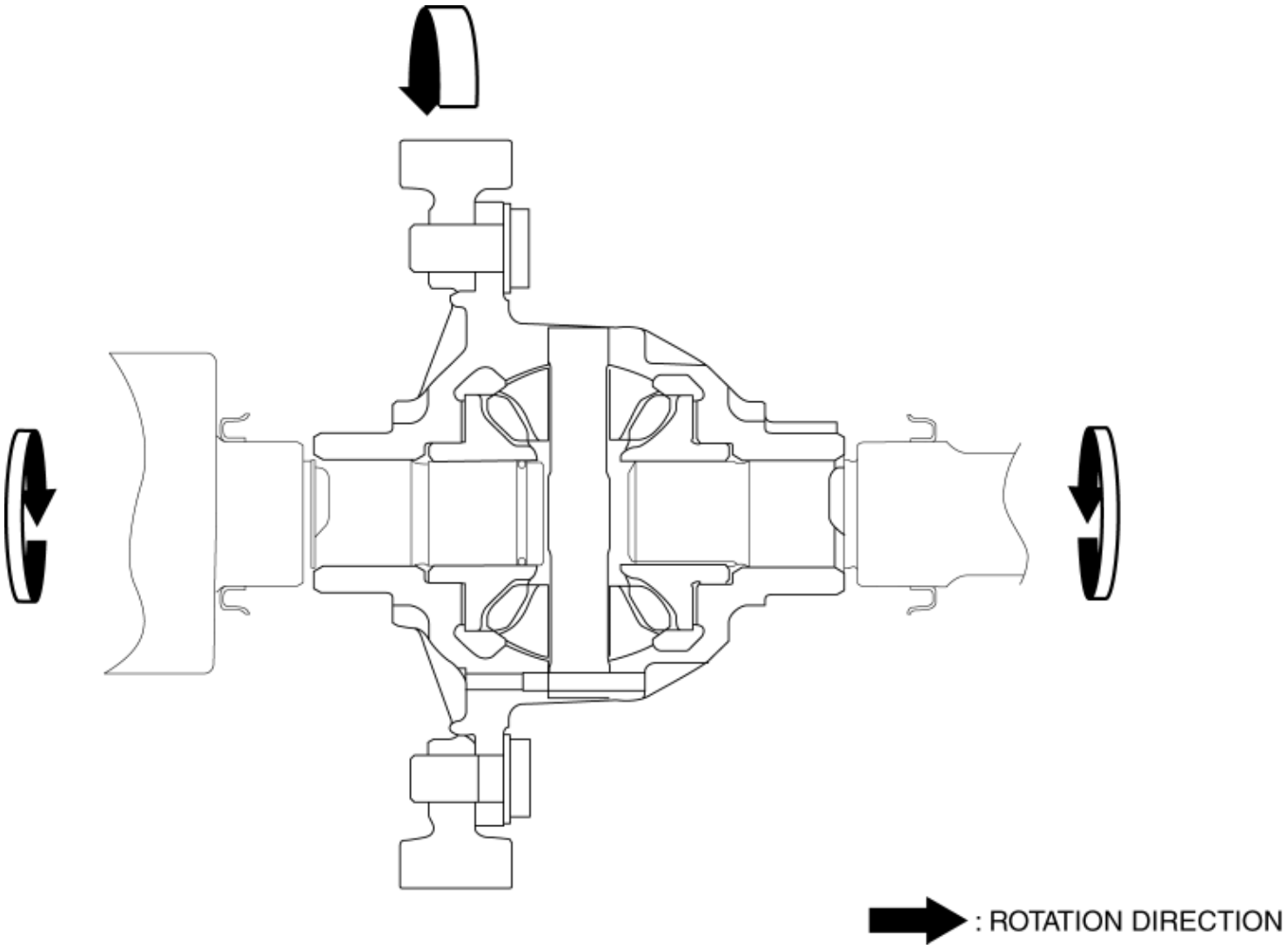

Cornering

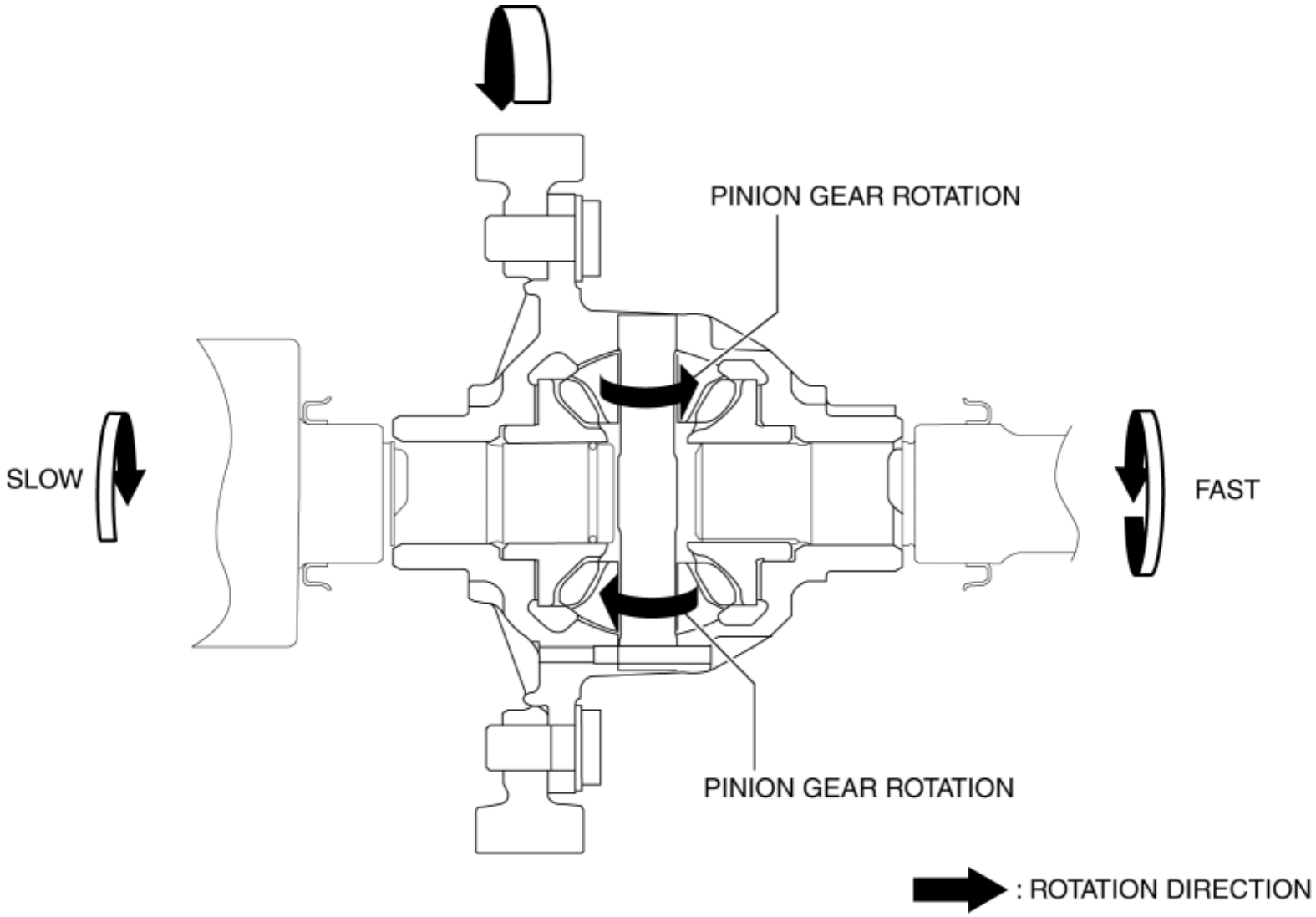
PINION GEAR ROTATION
SLOW
FAST
PINION GEAR ROTATION
: ROTATION DIRECTION

2014 - Mazda3 - Transmission/Transaxle

SHIFT LEVER [C66M-R]

Purpose, Function

- The shift lever operates the MTX via the control cable.

Construction

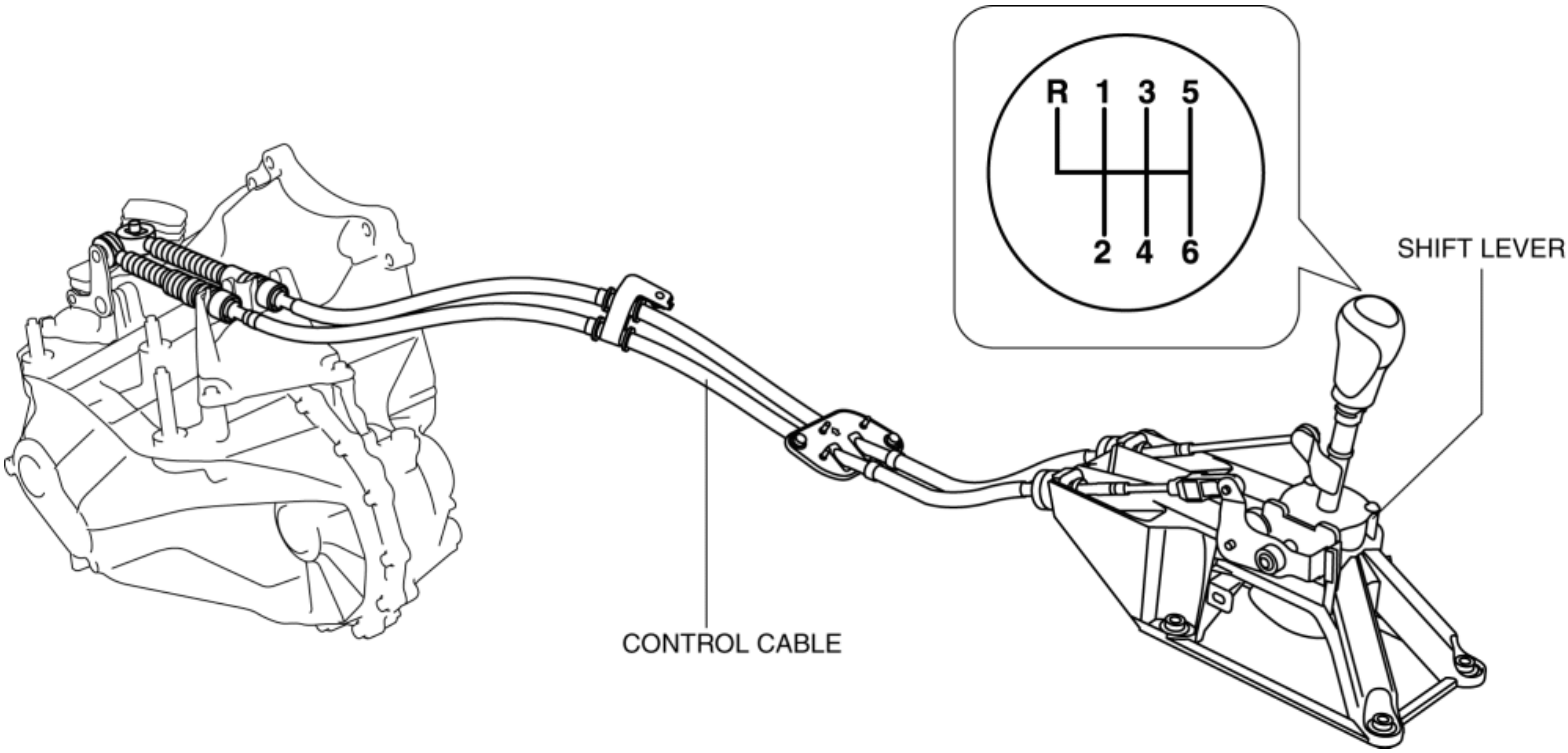

Shift lever

- The shift lever is designed to prevent improper shifting to 1st gear and reverse.

Operation

1GR shifting

- A guide plate, attached to the shift lever assembly, prevents accidental shifting into reverse when shifting into 1st gear by restricting the movement of the shift lever.

SHIFTING WHEN THE SHIFT LEVER
IS NOT PRESSED DOWN

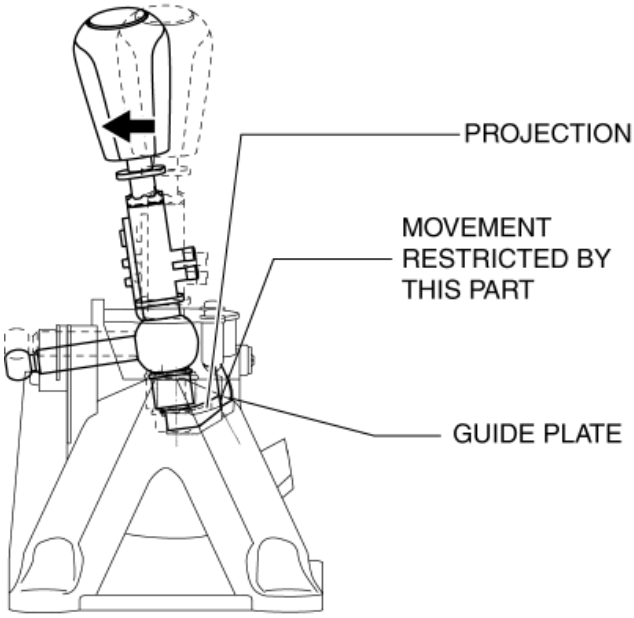

GUIDE PLATE FUNCTION

Reverse shifting

- When shifting into reverse, once the shift lever is pressed down and moved towards the reverse position.

SHIFTING WHEN THE SHIFT LEVER
IS PRESSED DOWN

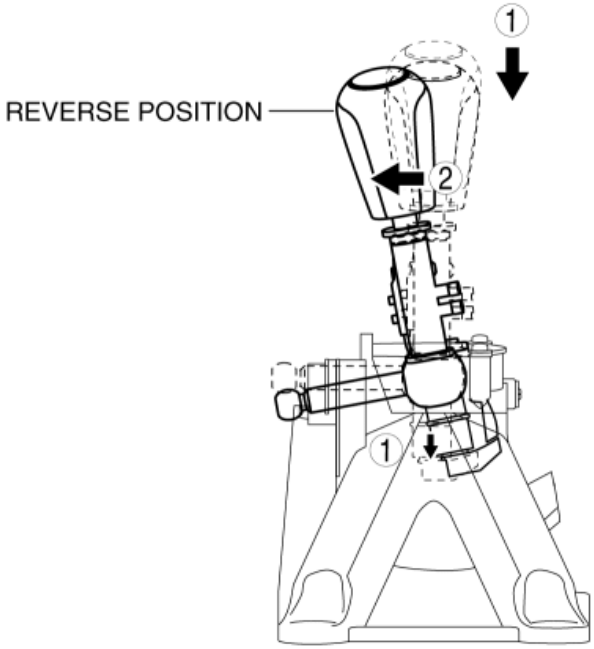

GUIDE PLATE FUNCTION

- The projection on the lever goes under the guide plate, releasing the reverse shift restriction and allowing for shifting into reverse.

2014 - Mazda3 - Transmission/Transaxle

AUTOMATIC TRANSAXLE OUTLINE [FW6A-EL]

Outline

Contribution to low fuel economy	• Wide TCC range • Clutch/brake resistance reduction
Realized direct feel and quick shifting	• Oil passage resistance reduction and improved clutch/brake response by optimizing clutch rigidity • Improved solenoid valve response
Smooth and powerful start-up	• Torque converter characteristics when accelerating and optimized range
Smooth shifting	• Control valve body integrated with TCM adopted • Direct linear solenoid valve has been adopted to improve shift accuracy

Construction

Cross-sectional view

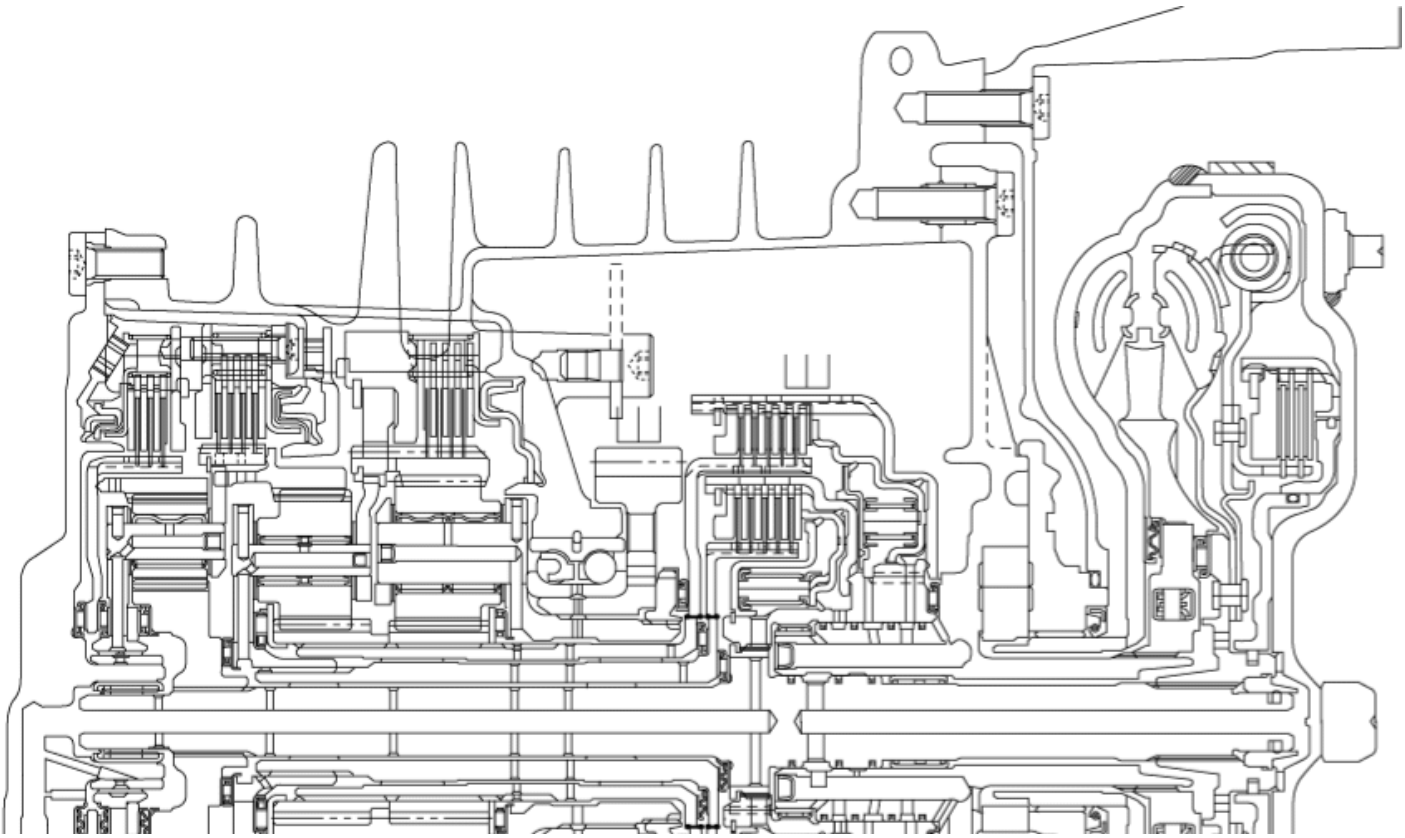

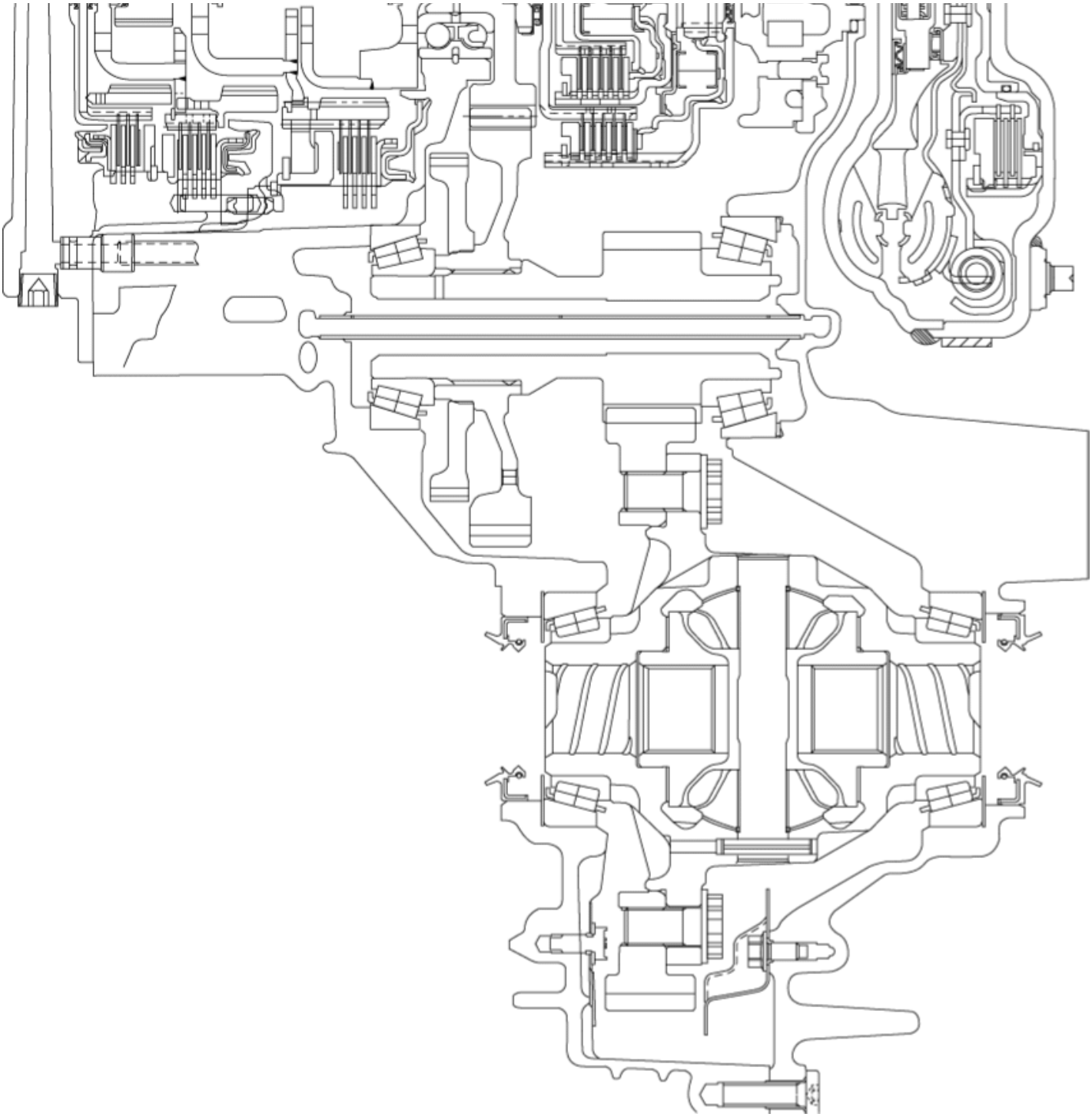

- The electronic control automatic transaxle consists of three systems which are divided into the powertrain with a torque converter, the hydraulic control mechanism, and the electronic control mechanism.

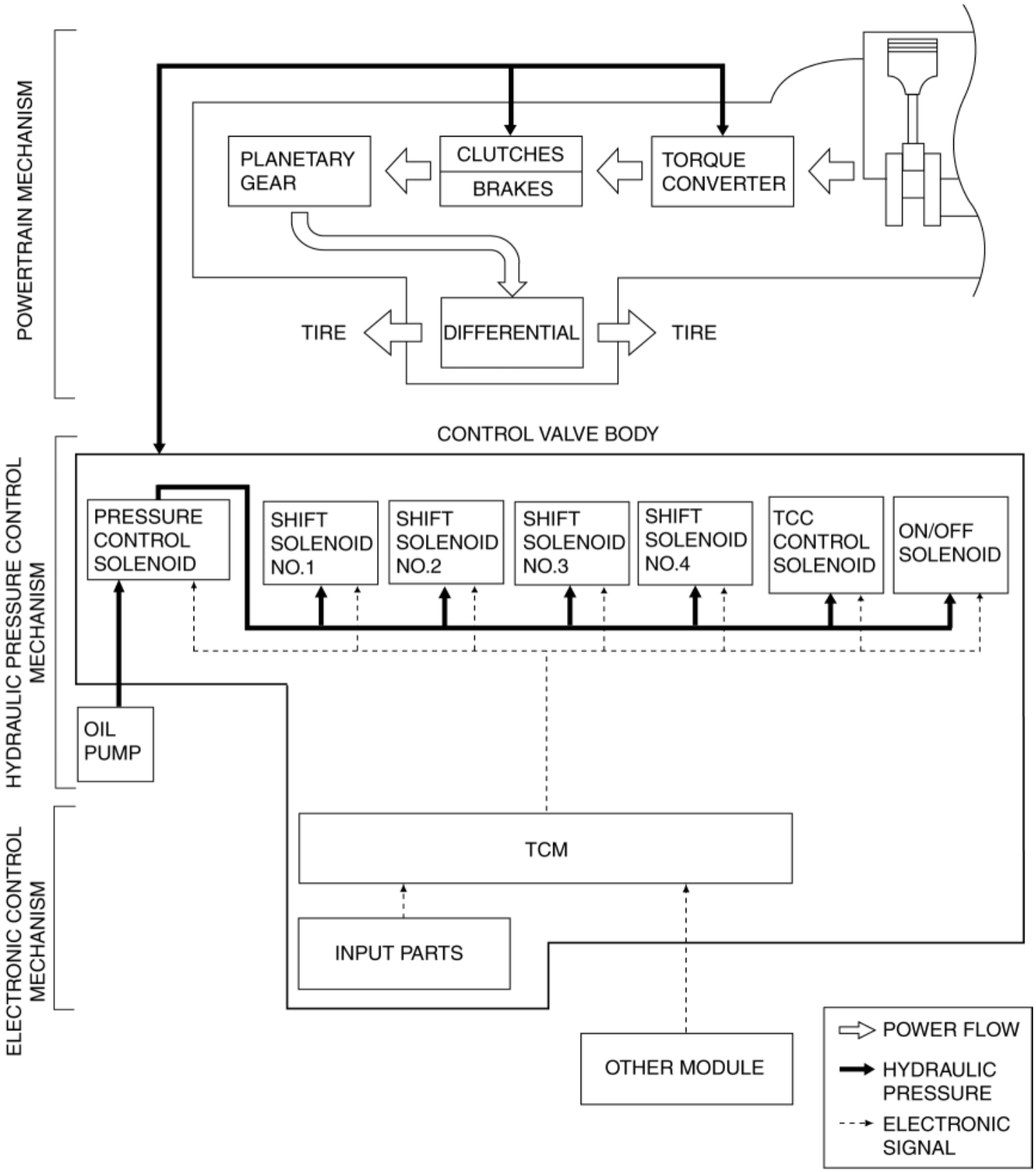

Operation

Automatic transaxle operation chart

Position	Mode	Gear position	Gear ratio	TCC	Operation of powertrain parts						Operation of shift solenoid					
					Low clutch	High clutch	Low and reverse brake	2-6 brake	R-3-5 brake	One-way clutch	Shift solenoid No.1	Shift solenoid No.2	Shift solenoid No.3	Shift solenoid No.4	TCC control solenoid	ON/OFF solenoid
P	-	-	-				×				CLOSE	CLOSE	CLOSE	OPEN	CLOSE	OFF
R	-	Reverse	3.893				×		×		CLOSE	CLOSE	OPEN	OPEN	CLOSE	OFF
N		-	-				×				CLOSE	CLOSE	CLOSE	OPEN	CLOSE	OFF
D/M	NORMAL	1GR	3.552	×	×		×			⊗	OPEN	CLOSE	CLOSE	OPEN	OPEN	OFF
		2GR	2.022	×	×			×			OPEN	OPEN	CLOSE	CLOSE	OPEN	ON
		3GR	1.452	×	×				×		OPEN	CLOSE	OPEN	CLOSE	OPEN	ON
		4GR	1.000	×	×	×					OPEN	CLOSE	CLOSE	OPEN	OPEN	ON
		5GR	0.708	×		×			×		CLOSE	CLOSE	OPEN	OPEN	OPEN	ON
		6GR	0.599	×		×		×			CLOSE	OPEN	CLOSE	OPEN	OPEN	ON

× : Operating

⊗ : Transmits torque only during driving operation

OPEN: Engages the line pressure to the clutch pressure
CLOSE: Drains the clutch pressure
ON: Engages the output port and the supply port
OFF: Engages the output port and the drain port (Drains the output port)

2014 - Mazda3 - Transmission/Transaxle

POWERTRAIN SYSTEM OUTLINE [FW6A-EL]

Outline

- The powertrain consists of a 2-piece multi-plate clutch, 3-piece multi-plate brake, a one-way clutch, and a 3-piece single-type planetary gear.

Construction

Component parts list

Component parts		Movement
Multi-plate clutch	Low clutch	Transmits drive force from turbine shaft to front and rear sun gears
	High clutch	Transmits drive force from turbine shaft to rear planetary carrier
Multi-plate brake	R-3-5 brake	Locks reduction internal gear against rotation
	2-6 brake	Locks rear internal gear and reduction planetary gear against rotation
	Low and reverse brake	Locks front internal gear and rear planetary gear against rotation
One-way clutch		Restricts counterclockwise rotation (when viewed from torque converter side) of front internal gear
Single type planetary gear	Front planetary gear	Converts drive force transmitted from engine by operation of each clutch and brake, and transmits it to primary gear. (Operates transaxle.)
	Rear planetary gear	
	Reduction planetary gear	

Cross-sectional view

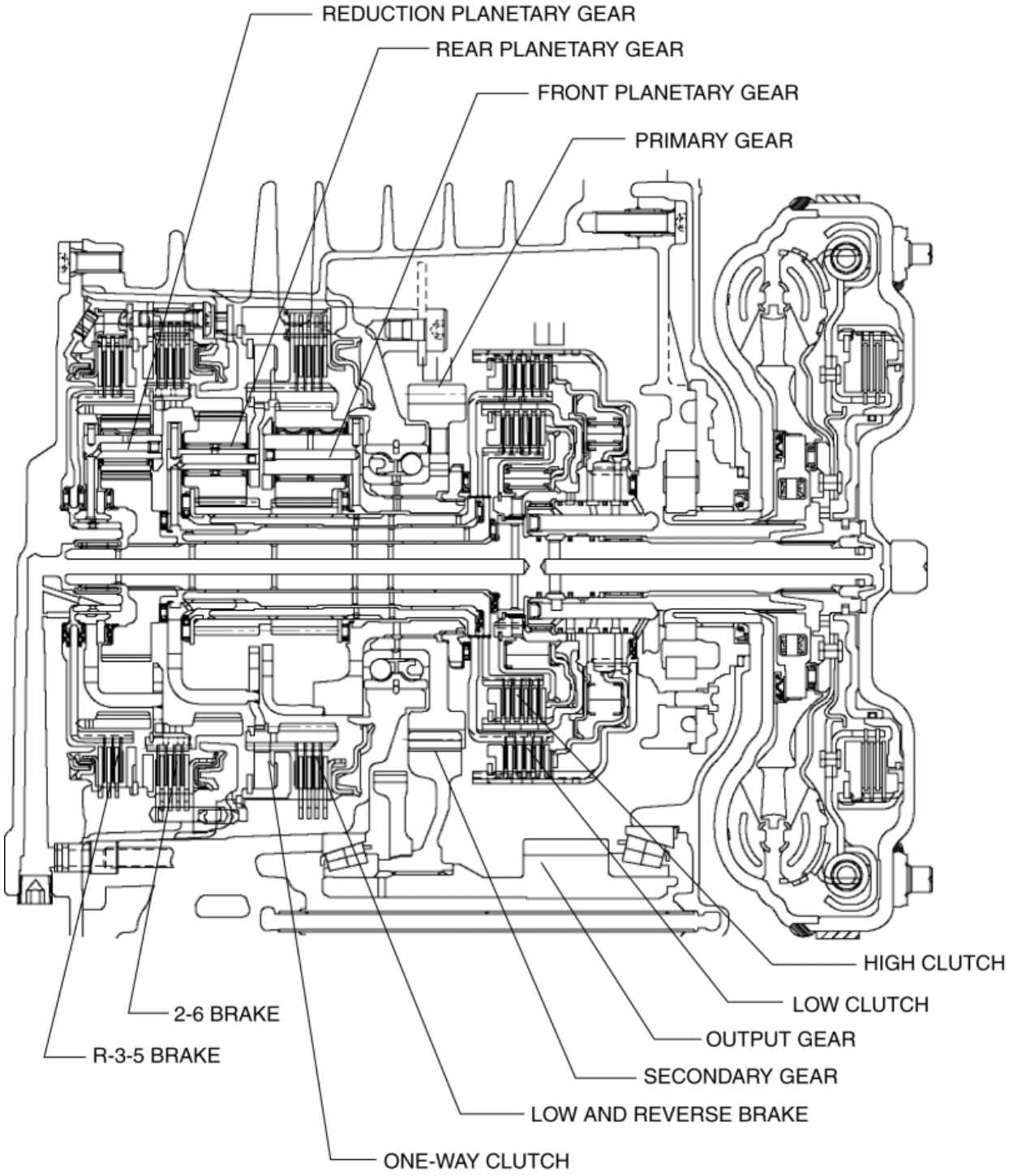

Skeleton diagram

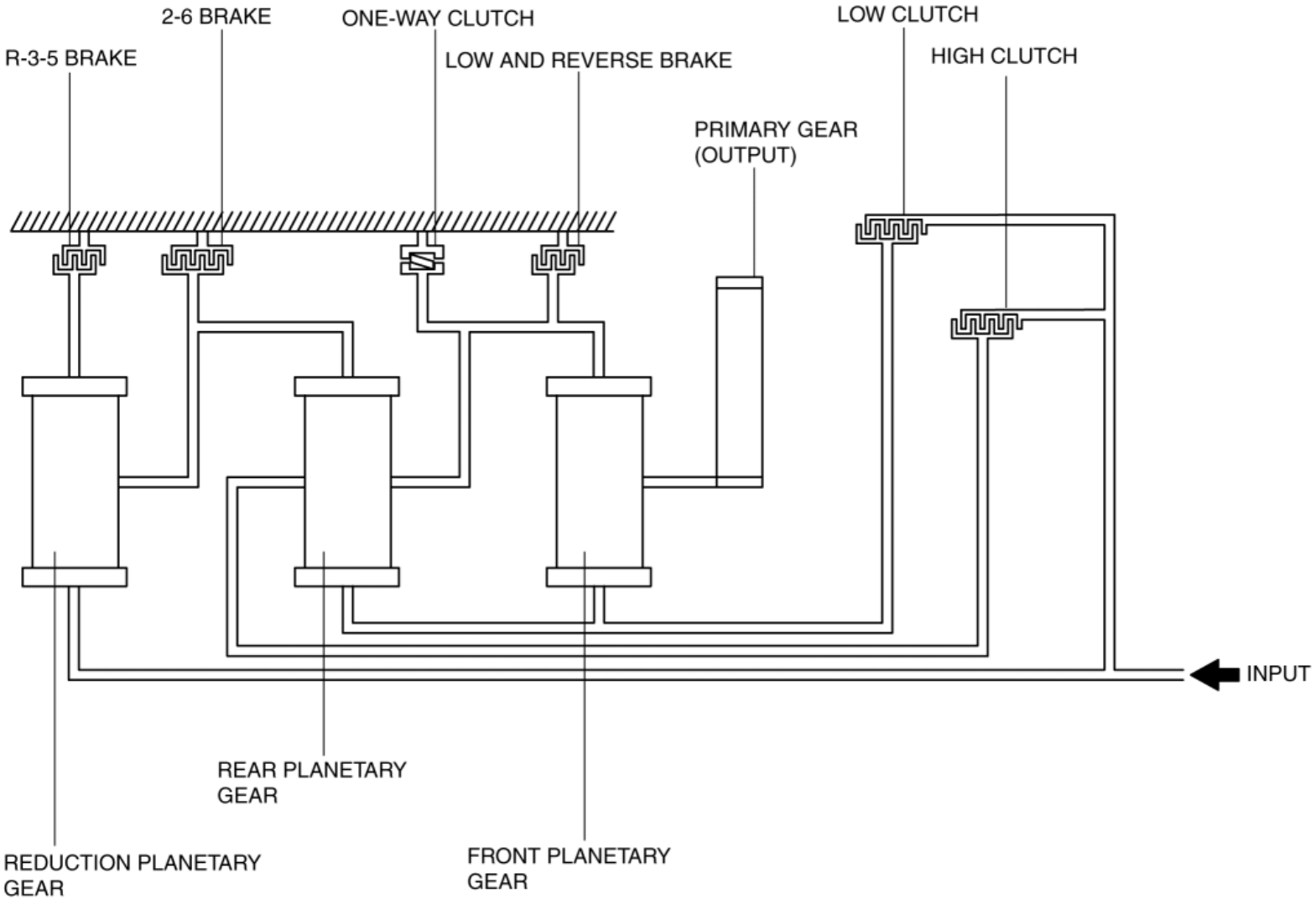
2-6 BRAKE
ONE-WAY CLUTCH
LOW CLUTCH
R-3-5 BRAKE
LOW AND REVERSE BRAKE
HIGH CLUTCH
PRIMARY GEAR
(OUTPUT)
INPUT
REAR PLANETARY
GEAR
REDUCTION PLANETARY
GEAR
FRONT PLANETARY
GEAR

2014 - Mazda3 - Transmission / Transaxle

TORQUE CONVERTER [FW6A-EL]

Purpose / Function

- By use of an optimized torus shape (wing) matching the output characteristics of the engine, the torque converter achieves efficient force transmission and reduced fuel consumption.

Construction / Operation

- A three-member, single-stage two-phase type torque converter with a torque converter clutch (TCC) mechanism has been adopted.
    - Three-member: Indicates that the torque converter consists of a pump impeller, turbine runner, and stator.
    - Single stage: Indicates the number of turbine runners.
    - Two-phase: Indicates that there are two conditions; torque converter range and fluid coupling range.

TCC mechanism

- A TCC piston built into the torque converter operates during TCC control. When hydraulic pressure is applied to the TCC piston, the TCC clutch engages to mechanically connect the pump impeller to the turbine runner. The TCC mechanism achieves excellent fuel economy as a result of no loss in drive force transmission due to torque converter slippage. In addition, precise hydraulic control is made possible by a multi-plate clutch equipped with an independent piston housing. With the adoption of this mechanism, the achievable range of TCC control has widened dramatically.

TORQUE CONVERTER [FW6A-EL]

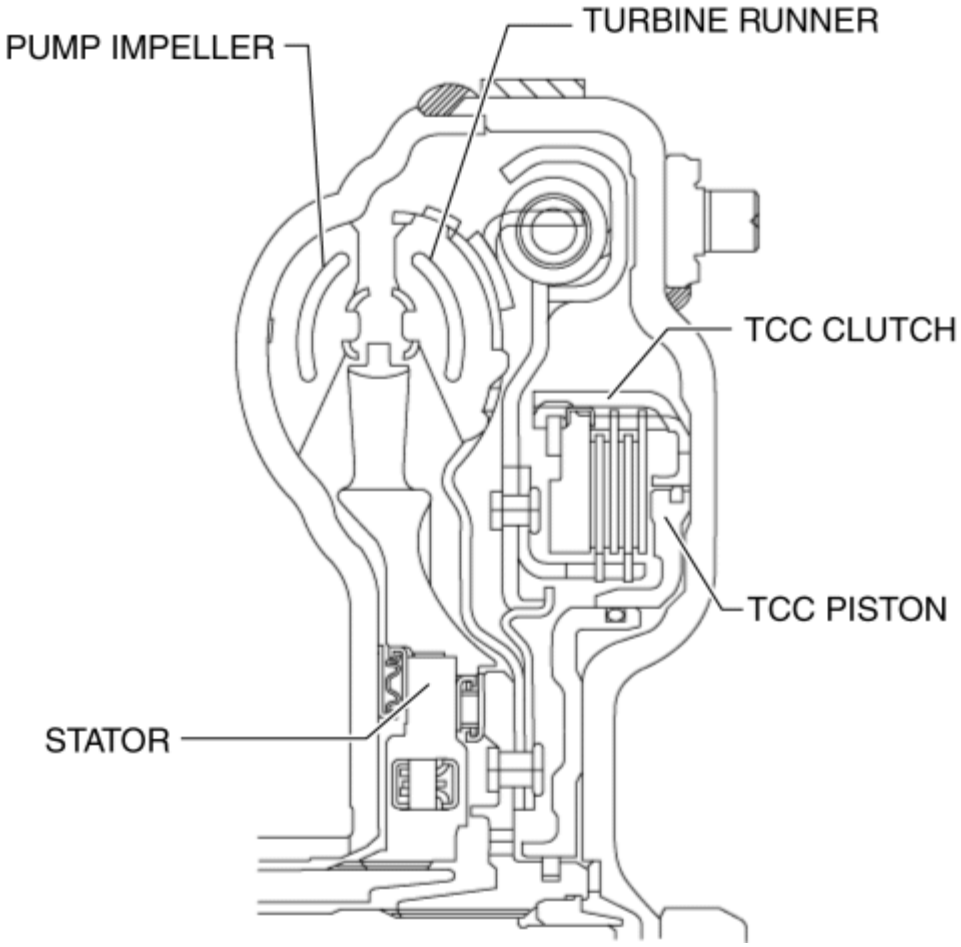

2014 - Mazda3 - Transmission / Transaxle

LOW CLUTCH [FW6A-EL]

Purpose / Function

- The low clutch operates in 1GR, 2GR, 3GR and 4GR and intermittently operates the sun gear by drive force from the turbine shaft.
- For the low clutch, a centrifugal balance clutch has been adopted to prevent clutch drag and to assure stabilized piston thrust in all engine speed ranges.

Construction

- The low clutch consists of the following parts shown in the figure.

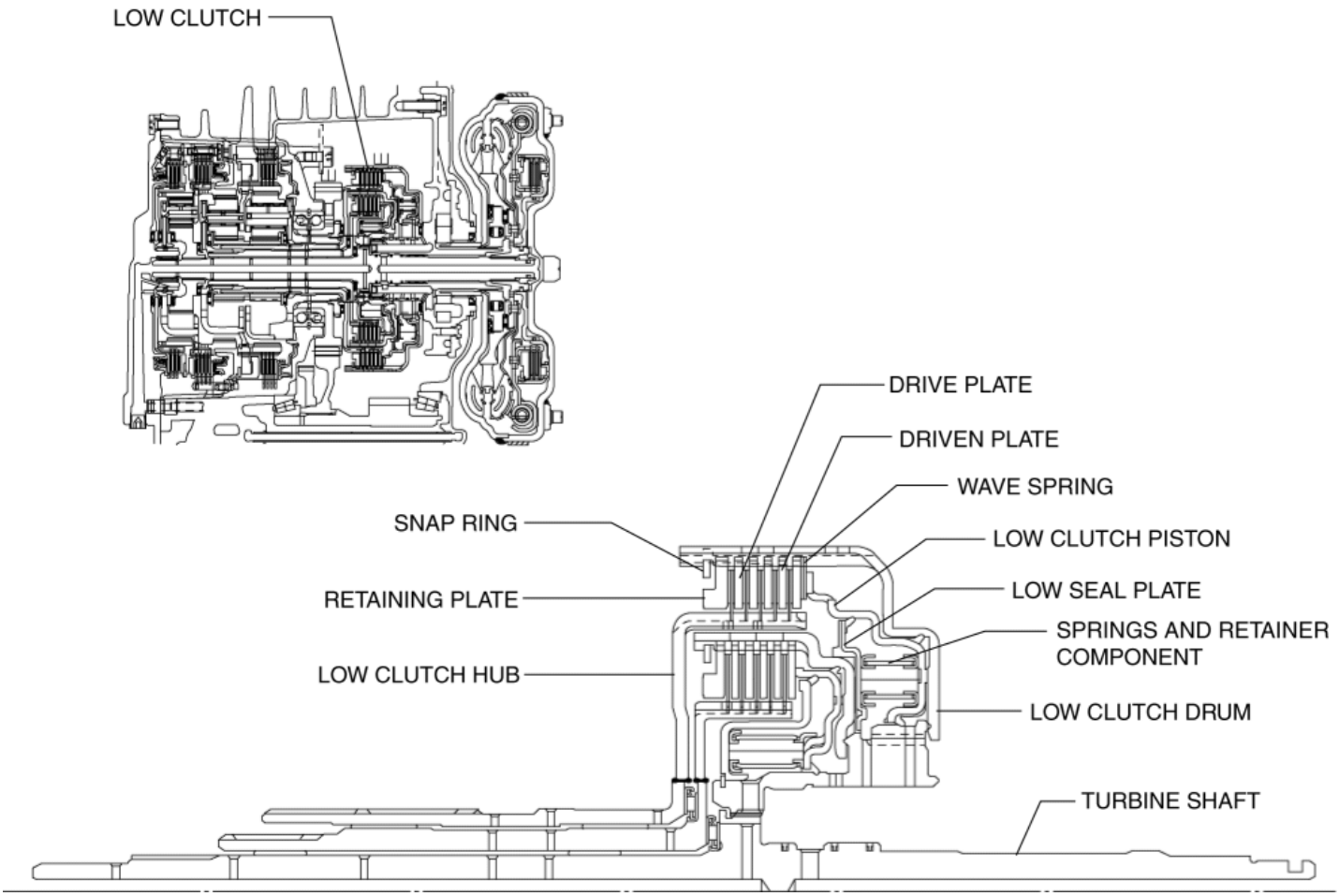

- The driven plate of the low clutch is engaged with the low clutch drum. The low clutch drum is engaged with the turbine shaft and spline, and when the turbine shaft rotates, the low clutch drum and driven plate rotate as a single unit.

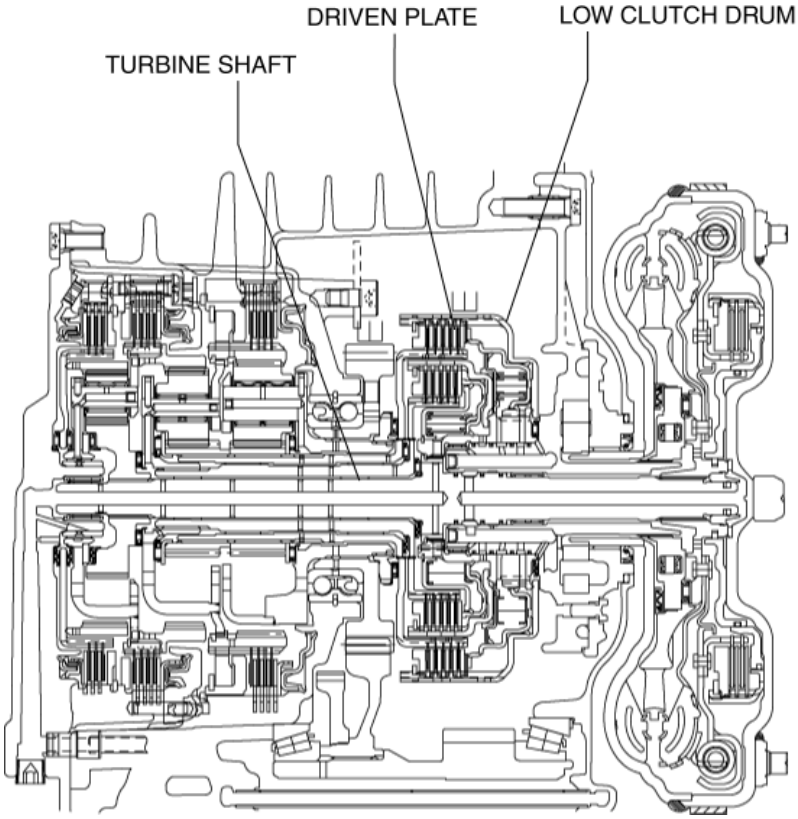

- The low clutch drive plate is engaged with the low clutch hub. The low clutch hub is engaged with the front and rear sun gears, and the drive plate, low clutch hub, front sun gear and rear sun gear rotate as a single unit.

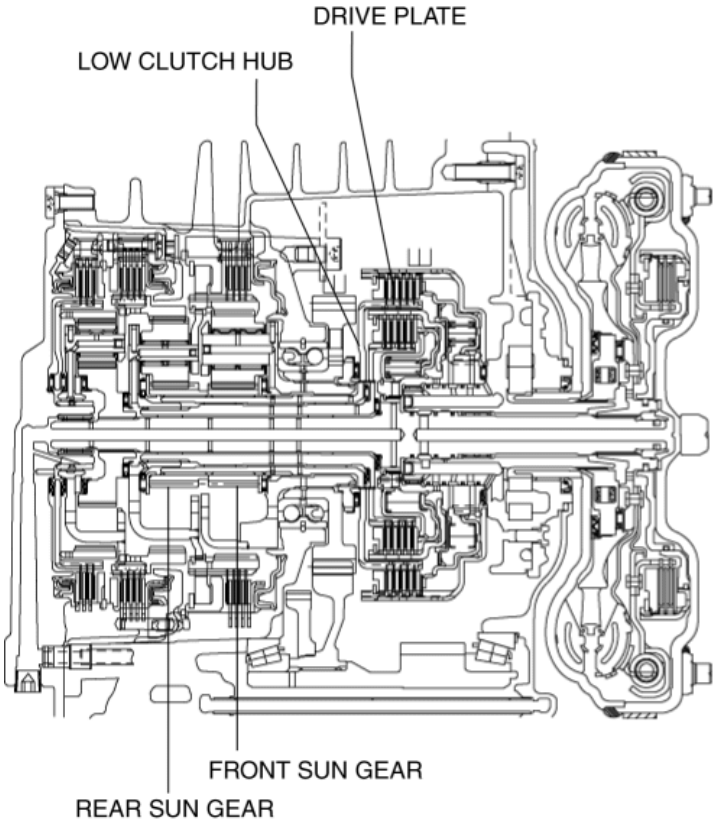

- For the low clutch piston, a compact and highly reliable bonded seal piston has been adopted in which the piston and seal are molded together.

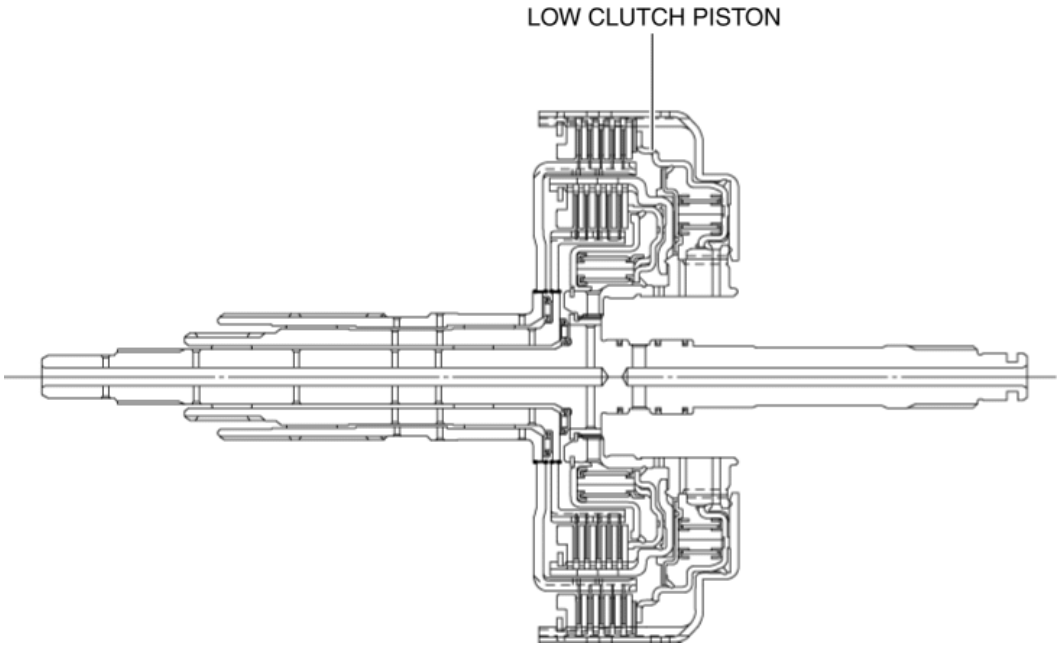

Centrifugal balance clutch

- The centrifugal balance clutch is built into the low clutch.The centrifugal balance chamber is positioned opposing the clutch chamber for the low clutch.
- In the centrifugal balance chamber, ATF is constantly charged through a specialized hydraulic circuit.

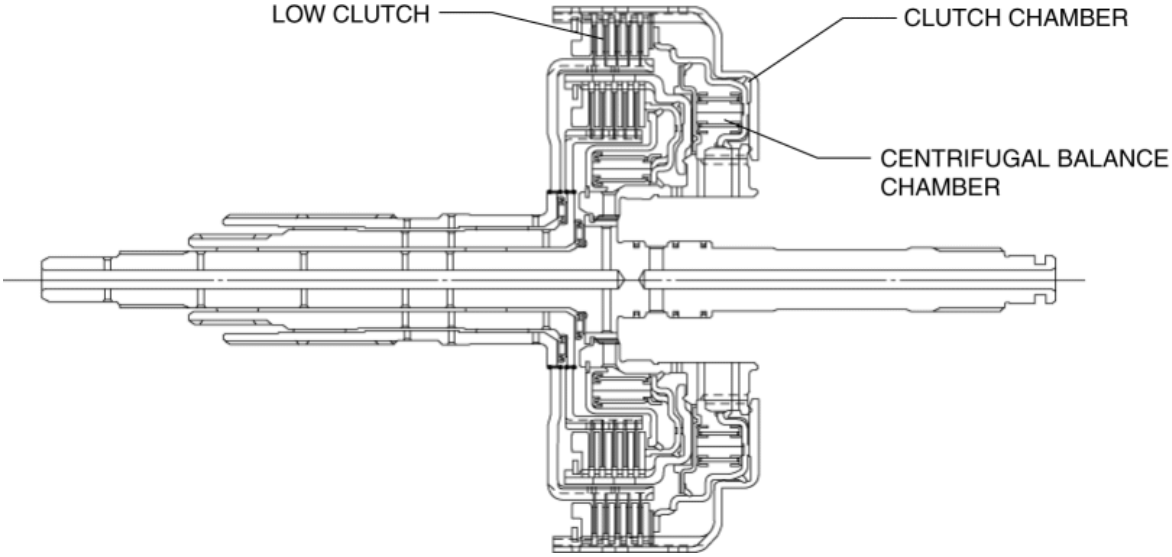

Operation

- If hydraulic pressure is applied to the low clutch piston, the drive plate and driven plate are pressure bonded and drive force from the turbine shaft is transmitted to the front and rear sun gears.
- Therefore, the following gears become the input shafts:
    - 1GR by operation of the front sun gear
    - 2GR by operation of the front and rear sun gears
    - 3GR by operation of the front and rear sun gears and the reduction planetary carrier
- In 4GR, the rear planetary carrier also becomes the input shaft by the operation of the high clutch together with both the front and rear sun gears.

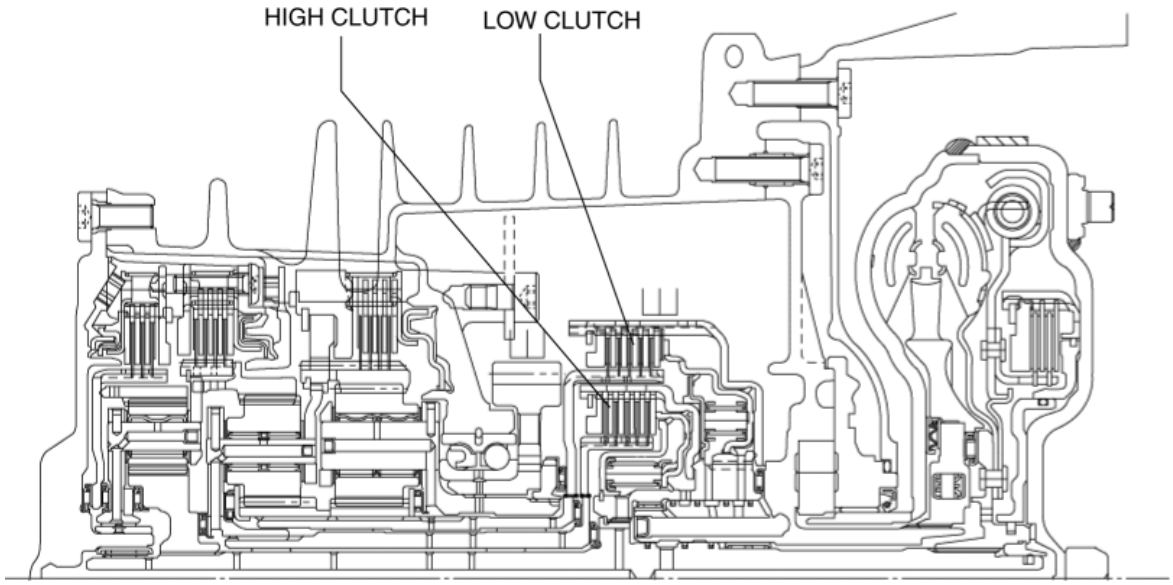

Centrifugal balance clutch

Clutch pressure not applied

- When the clutch drum rotates, centrifugal force is applied to the remaining ATF in the clutch chamber to push the piston, but centrifugal force is also applied to the ATF in the centrifugal balance chamber to force the piston to move back. As a result, the opposing forces of the clutch and balance chambers are offset and the piston does not move, preventing clutch drag.

Clutch pressure applied

- When clutch pressure is applied to the clutch chamber, the piston, which overcomes the opposing centrifugal hydraulic pressure from the balance chamber and the spring force, is pushed in the direction of clutch engagement and the clutch is engaged. At this time, because the centrifugal hydraulic pressure applied to the clutch pressure in the clutch chamber is offset by the centrifugal hydraulic pressure applied to the balance chamber, the effect of piston thrust by the centrifugal force from the clutch drum rotation is eliminated. As a result, stabilized piston force in all engine speed ranges is assured, thus reducing shift shock.

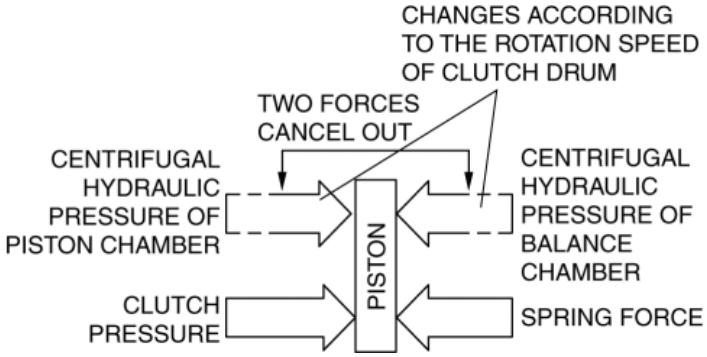

2014 - Mazda3 - Transmission/Transaxle

HIGH CLUTCH [FW6A-EL]

Purpose/Function

- The high clutch operates in 4GR, 5GR, and 6GR and intermittently operates the rear carrier by drive force from the turbine shaft.
- For the high clutch, a centrifugal balance clutch has been adopted to prevent clutch drag and to assure stabilized piston thrust in all engine speed ranges.

Construction

- The high clutch consists of the following parts shown in the figure.

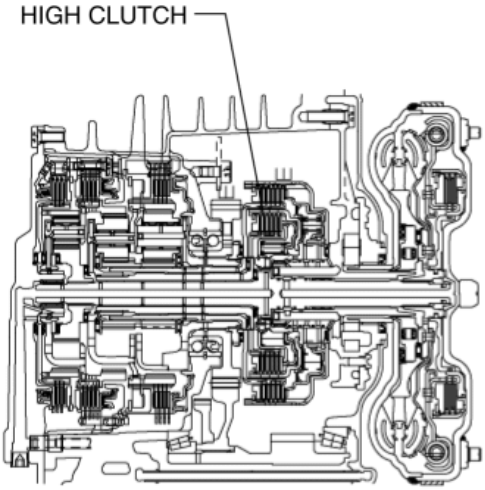

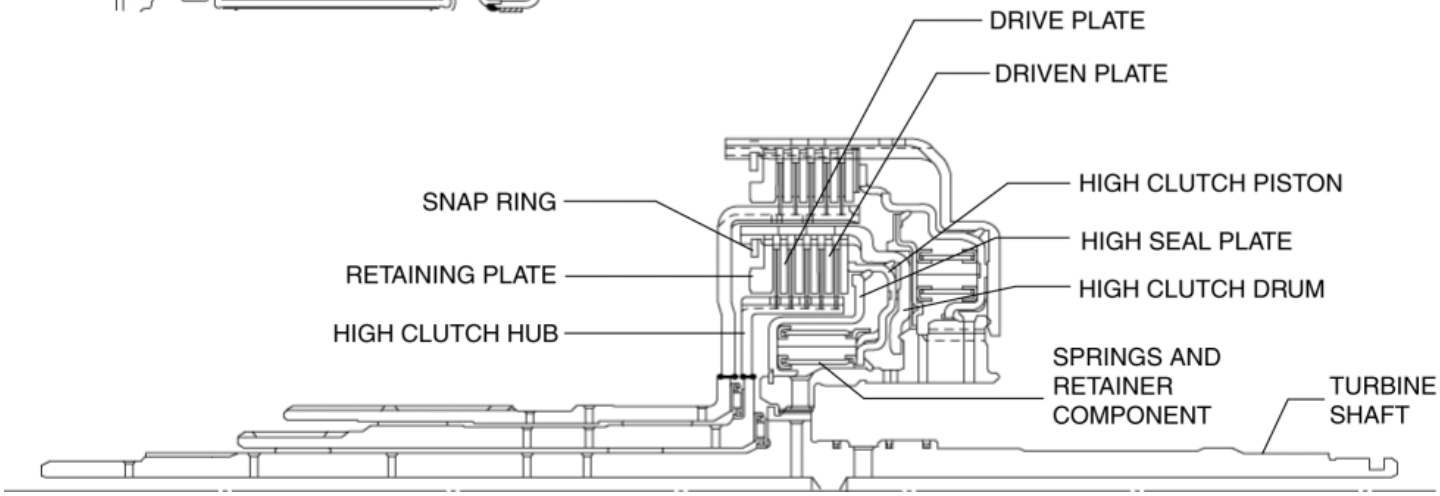

- The driven plate of the high clutch is engaged with the high clutch drum. The high clutch drum is engaged with the turbine shaft and spline, and when the turbine shaft rotates, the high clutch drum and driven plate rotate as a single unit.

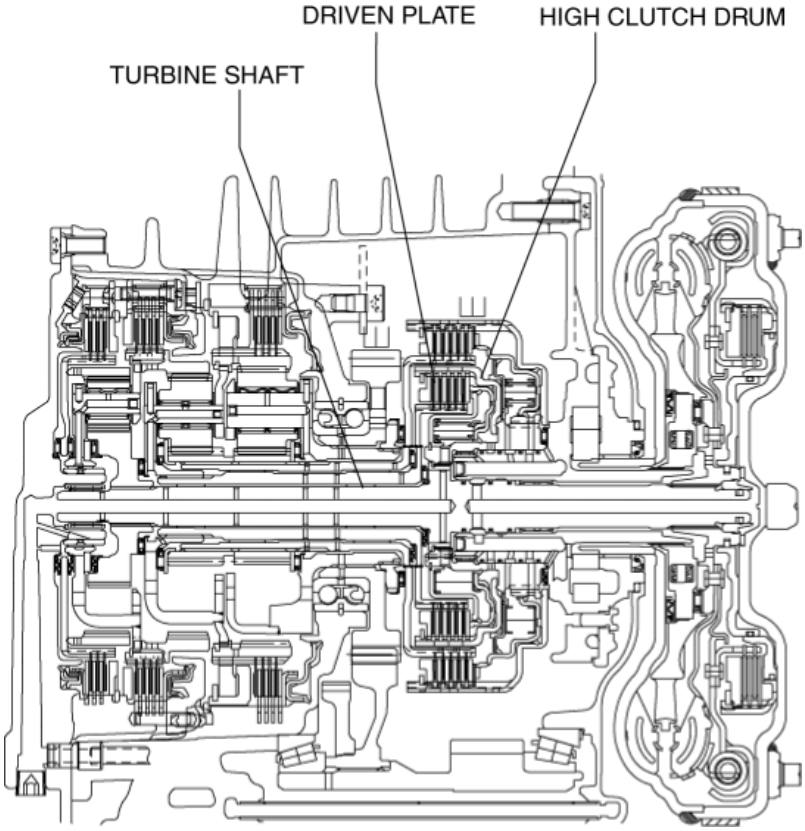

- The drive plate of the high clutch is engaged with the high clutch hub. The high clutch hub is engaged with the rear carrier, and the drive plate, high clutch hub, and rear carrier rotate as a single unit.

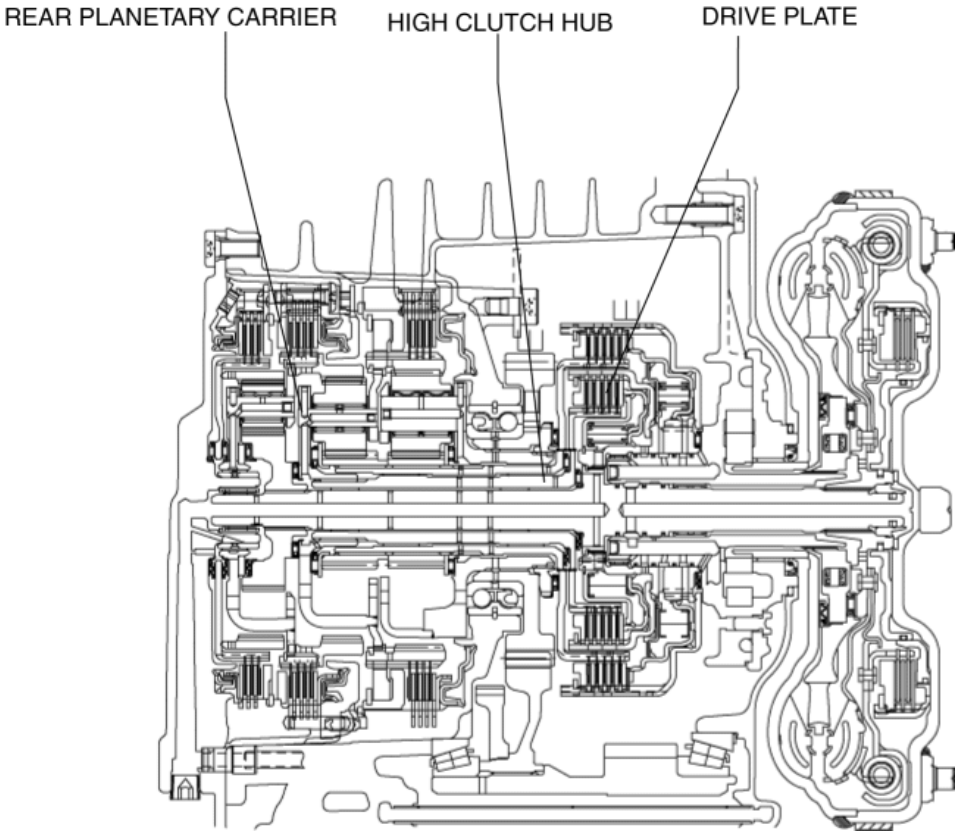

- For the high clutch piston, a compact and highly reliable bonded seal piston has been adopted in which the piston and seal are molded together.

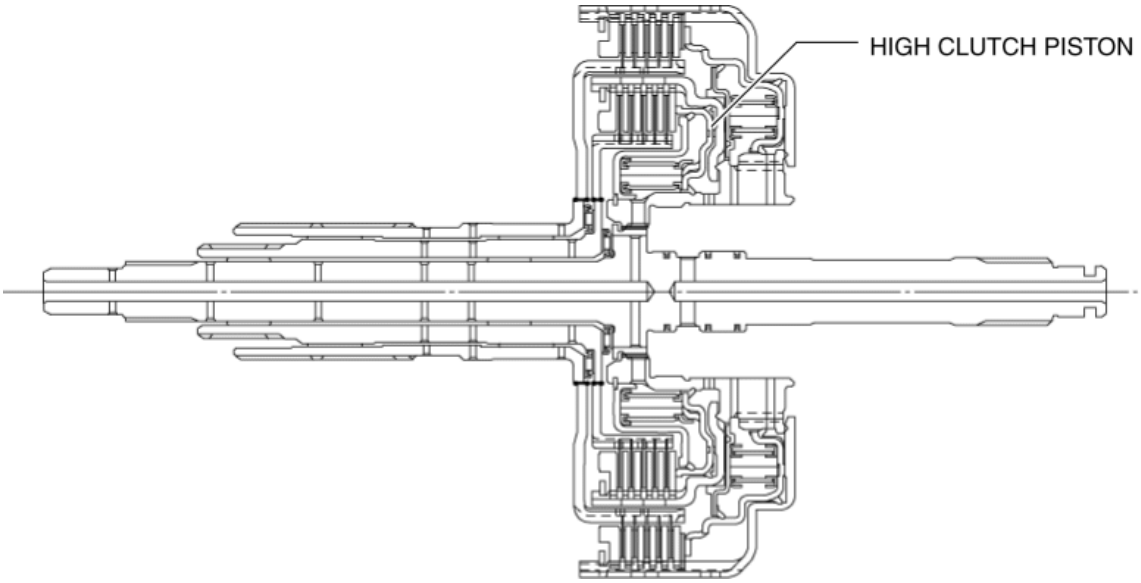

Centrifugal balance clutch

- The centrifugal balance clutch is built into the high clutch.
- The centrifugal balance chamber is positioned opposing the clutch chamber for the high clutch. In the centrifugal balance chamber, ATF is constantly charged through a specialized hydraulic circuit.

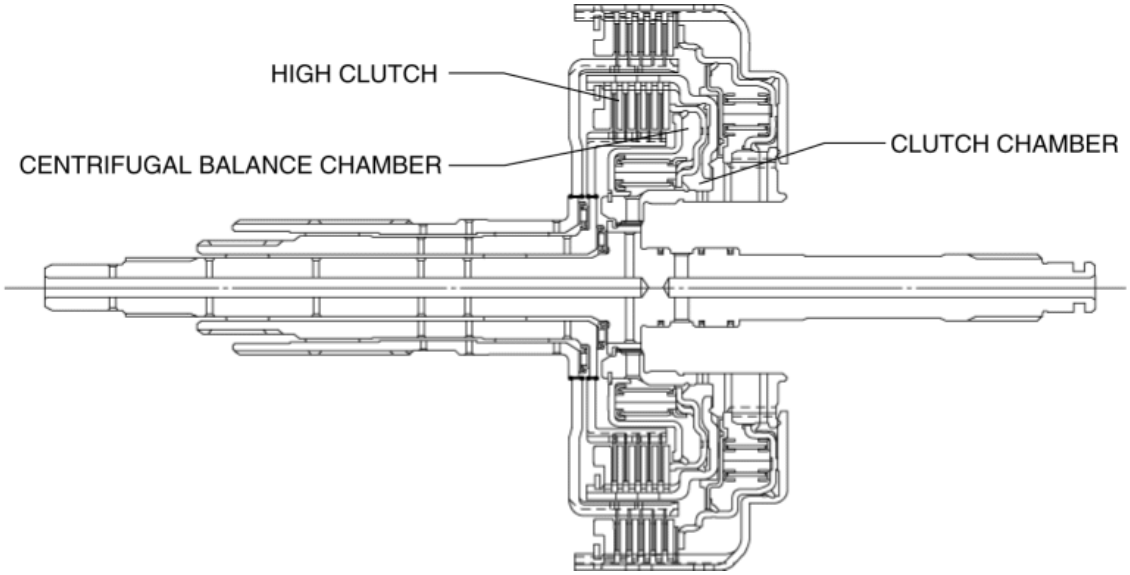

Operation

- If hydraulic pressure is applied to the high clutch piston, the drive plate and driven plate are pressure coupled and drive force from the turbine shaft is transmitted to the rear planetary carrier. In addition, drive force is also transmitted to the front internal gear through the rear planetary gear.

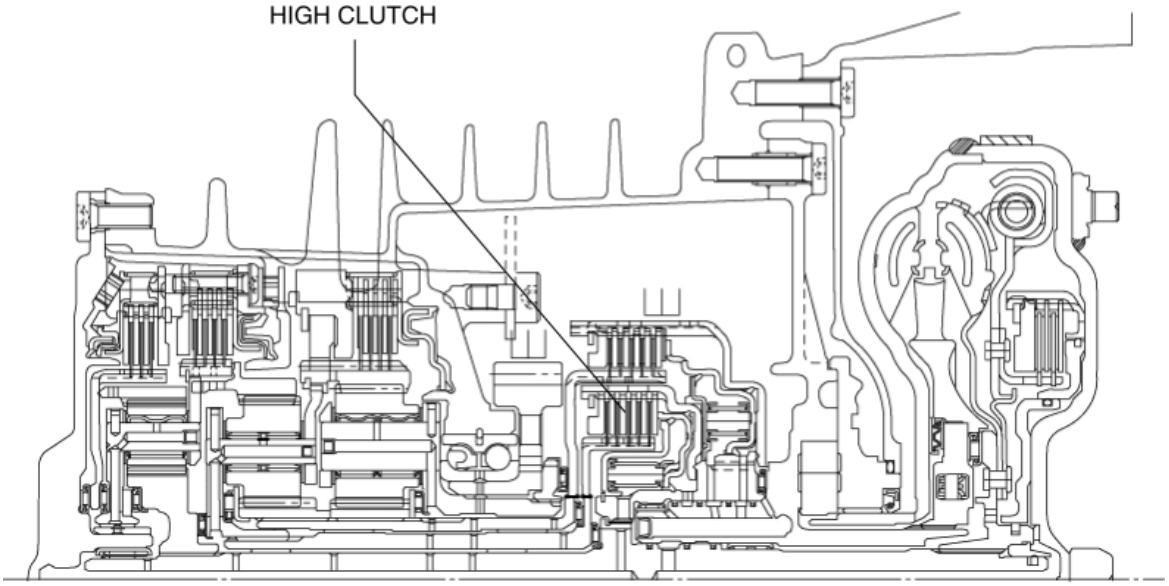

Centrifugal balance clutch

Clutch pressure not applied

- When the clutch drum rotates, centrifugal force is applied to the remaining ATF in the clutch chamber to push the piston, but centrifugal force is also applied to the ATF in the centrifugal balance chamber to force the piston to move back. As a result, the opposing forces of the clutch and balance chambers are offset and the piston does not move, preventing clutch drag.

Clutch pressure applied

- When clutch pressure is applied to the clutch chamber, the piston, which overcomes the opposing centrifugal hydraulic pressure from the balance chamber and the spring force, is pushed in the direction of clutch engagement and the clutch is engaged. At this time, because the centrifugal hydraulic pressure applied to the clutch pressure in the clutch chamber is offset by the centrifugal hydraulic pressure applied to the balance chamber, the effect of piston thrust by the centrifugal force from the clutch drum rotation is eliminated. As a result, stabilized piston force in all engine speed ranges is assured, thus reducing shift shock.

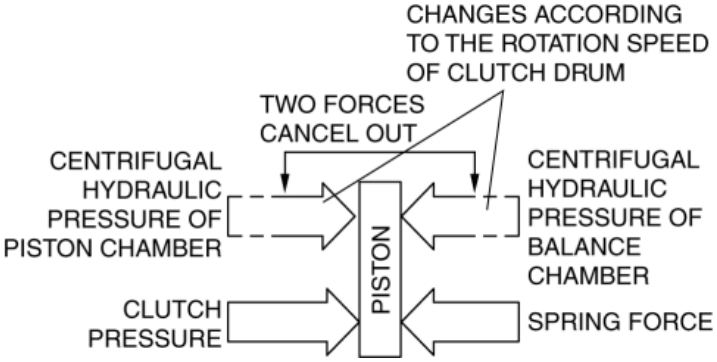

2014 - Mazda3 - Transmission / Transaxle

R-3-5 BRAKE [FW6A-EL]

Purpose / Function

- The R-3-5 brake operates in 3GR, 5GR and in reverse to lock the reduction internal gear against rotation.

Construction

- The R-3-5 brake consists of the following parts shown in the figure.

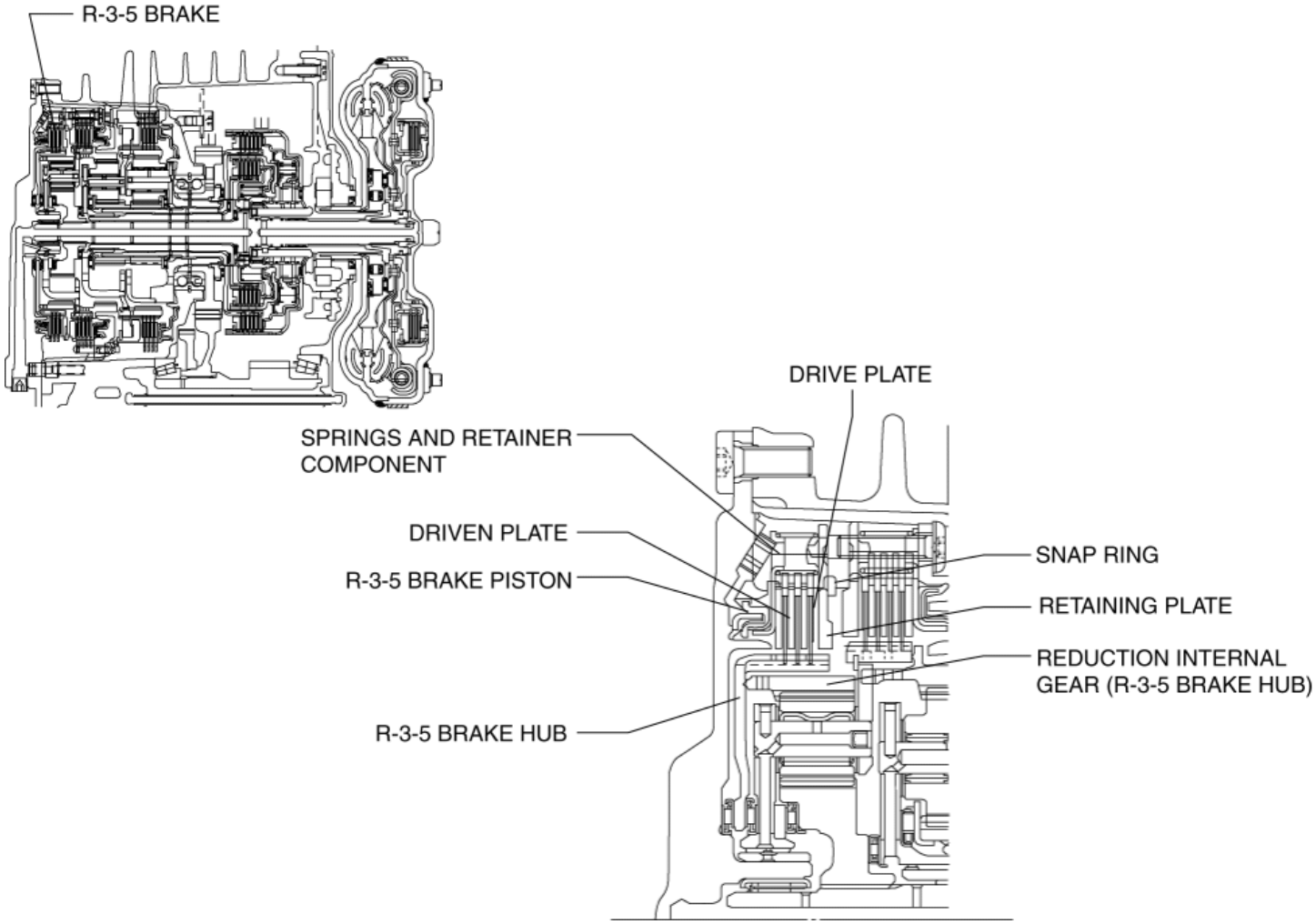

- The driven plate of the R-3-5 brake does not rotate because it is connected to the end cover component.

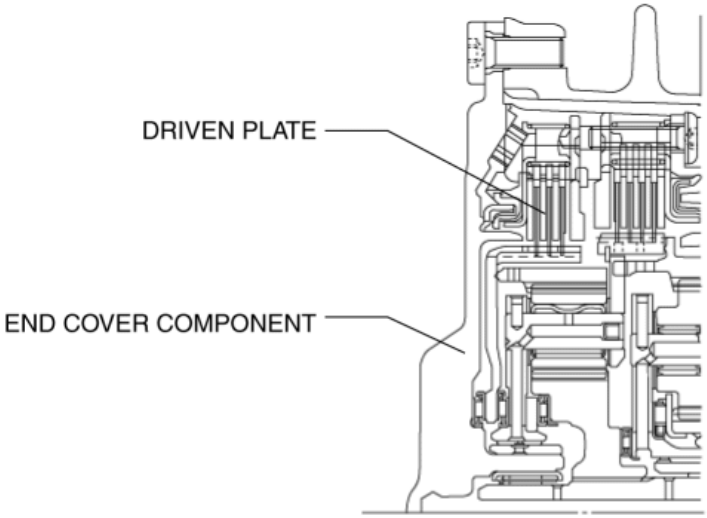

- The R-3-5 brake drive plate is engaged with the R-3-5 brake hub and reduction internal gear, and locks the reduction internal gear.

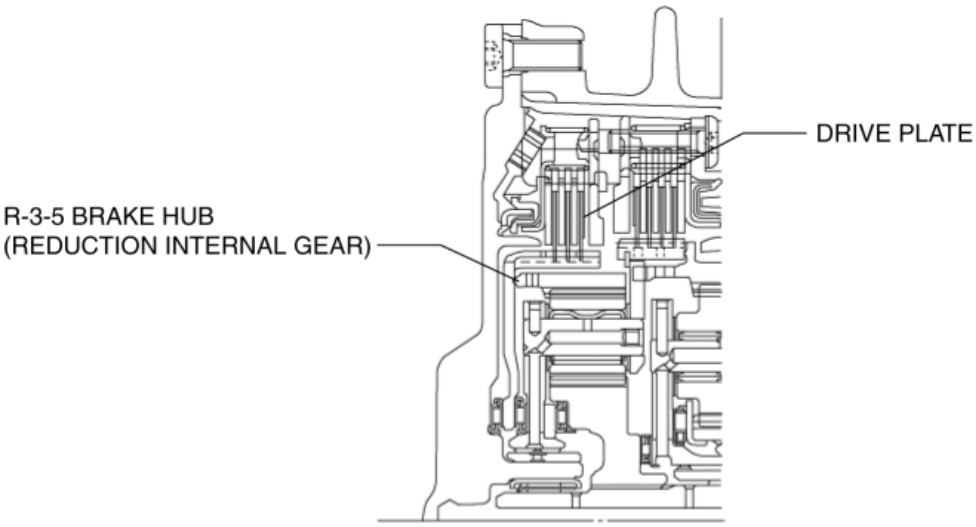

- For the R-3-5 brake piston, a compact and highly reliable bonded seal piston has been adopted in which the piston and seal are molded together.

Operation

- When hydraulic pressure is applied to the R-3-5 brake piston, the drive plate and driven plate are pressure bonded to lock the reduction internal gear.

R-3-5 BRAKE [FW6A-EL]

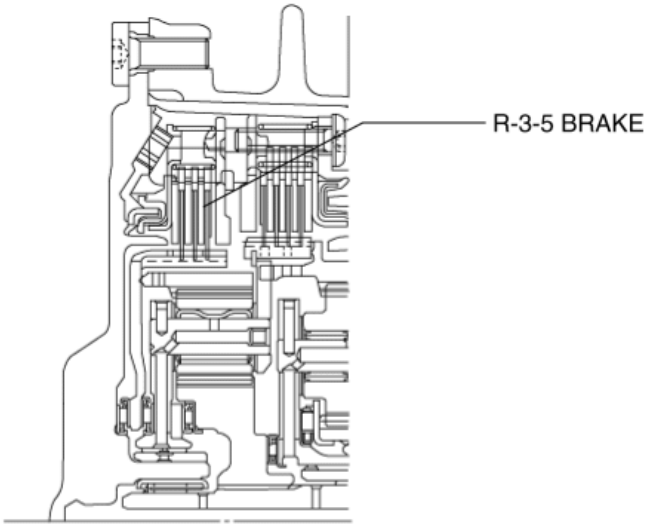

2014 - Mazda3 - Transmission/Transaxle

2-6 BRAKE [FW6A-EL]

Purpose/Function

- The 2-6 brake locks the rear internal gear and reduction planetary carrier while in 2GR and 6GR.

Construction

- The 2-6 brake consists of the following parts shown in the figure.

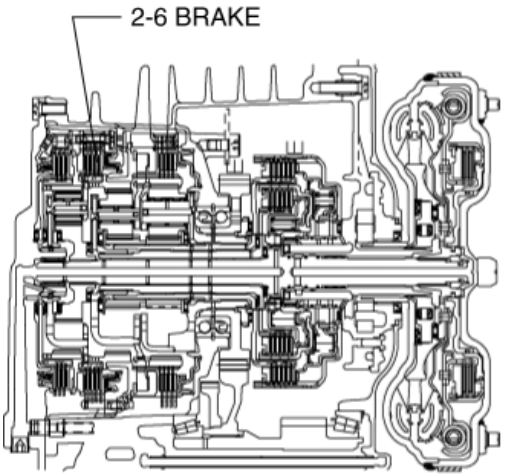

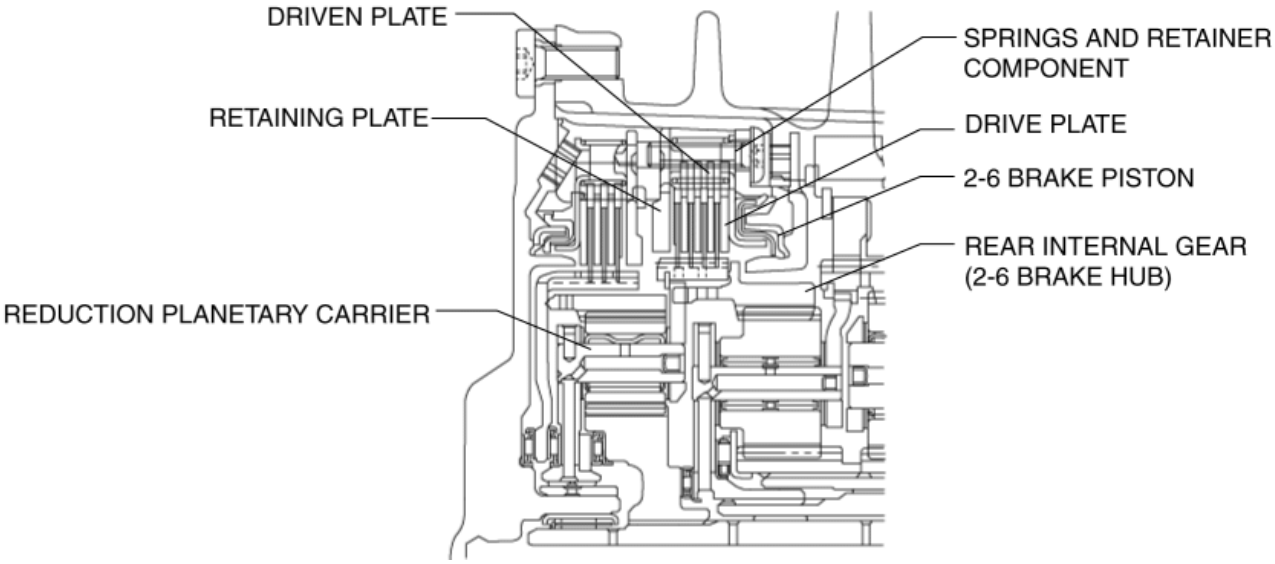

- The driven plate of the 2-6 brake does not rotate because it is connected to the end cover component.

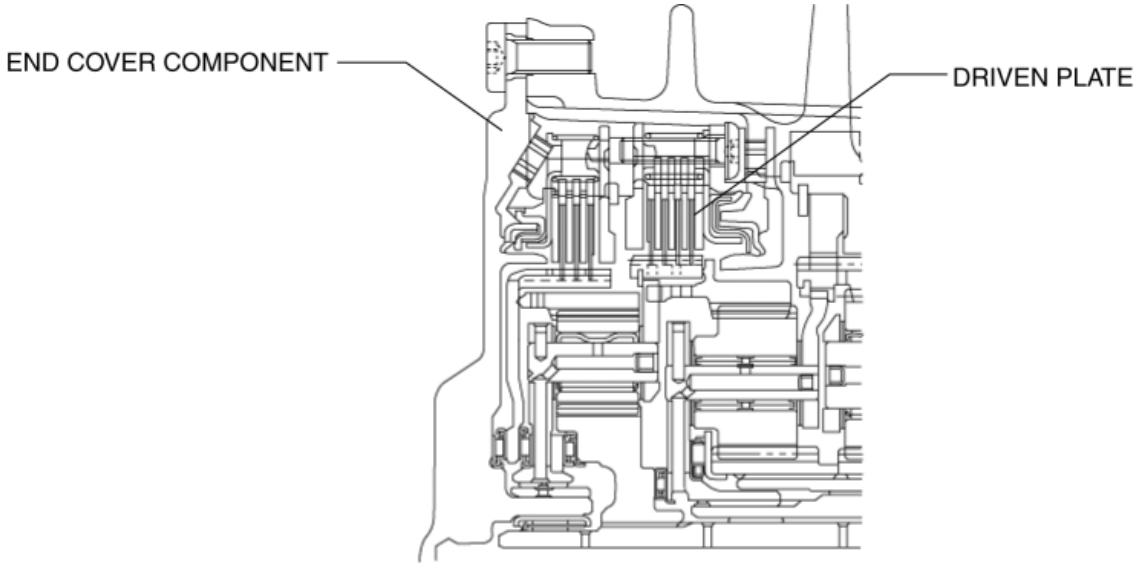

- The driven plate of the 2-6 brake is engaged with the 2-6 brake hub and rear internal carrier, and the rear internal carrier is engaged with the reduction planetary carrier through the rear internal gear. Therefore, the rear internal gear and reduction planetary gear are locked by the 2-6 brake.

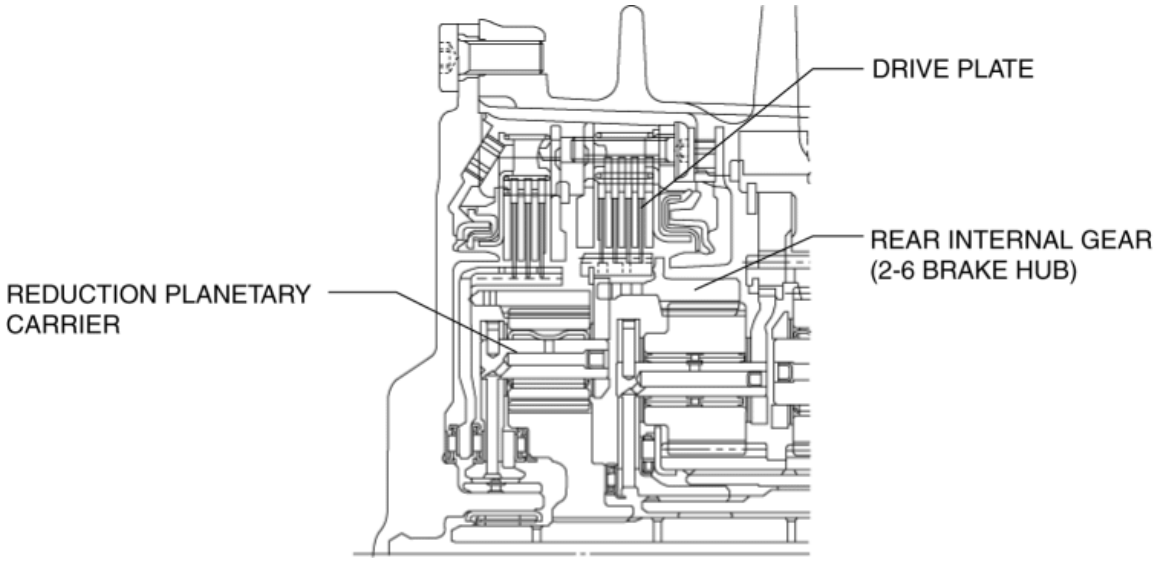

- For the 2-6 brake piston, a compact and highly reliable bonded seal piston has been adopted in which the piston and seal are molded together.

Operation

- When hydraulic pressure is applied to the 2-6 brake piston, the drive plate and driven plate are pressure bonded to lock the rear internal gear and reduction planetary carrier.

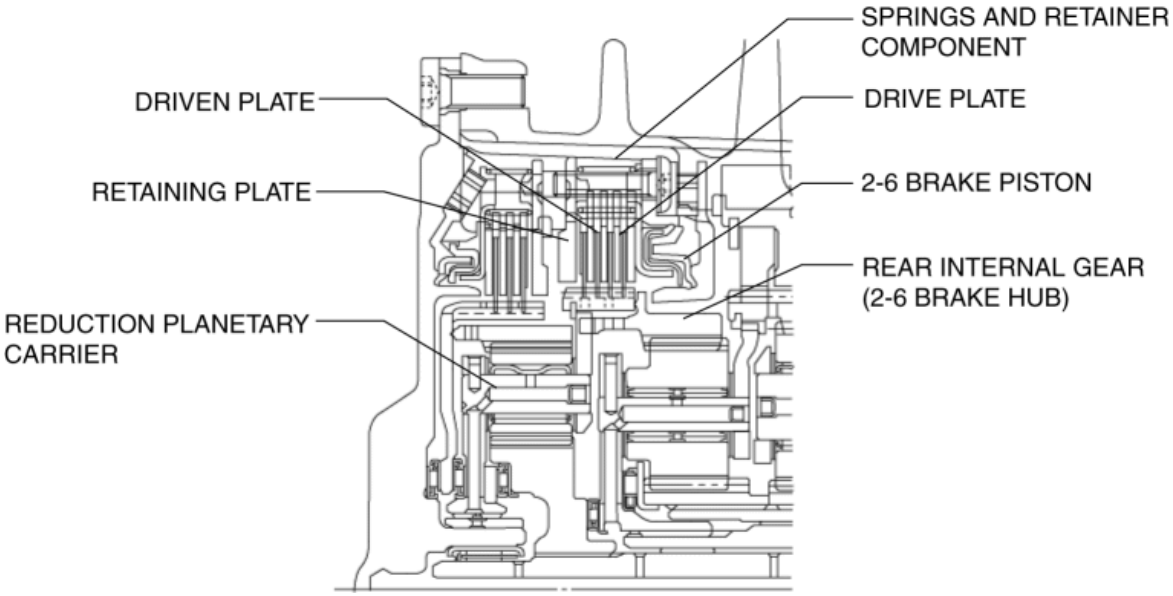
SPRINGS AND RETAINER COMPONENT
DRIVEN PLATE
DRIVE PLATE
RETAINING PLATE
2-6 BRAKE PISTON
REAR INTERNAL GEAR (2-6 BRAKE HUB)
REDUCTION PLANETARY CARRIER

2014 - Mazda3 - Transmission / Transaxle

LOW AND REVERSE BRAKE [FW6A-EL]

Purpose / Function

- The low and reverse brake stops the rotation of the front internal gear and rear planetary carrier while in 1GR and in reverse, locking them to the transaxle case.

Construction

- The low and reverse brake consist of the following parts shown in the figure.

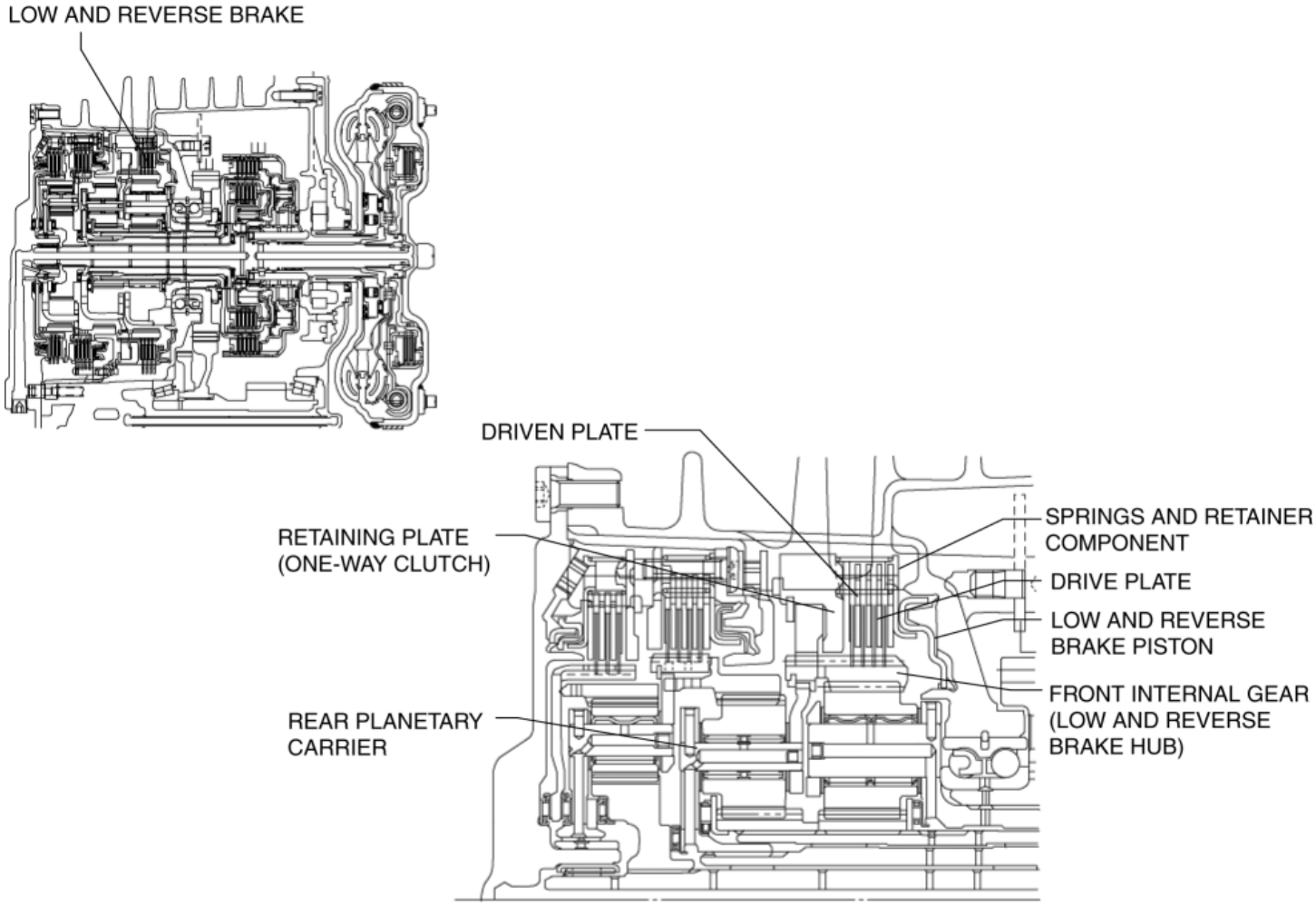

- The driven plate of the low and reverse brake does not rotate because it is connected to the transaxle case.

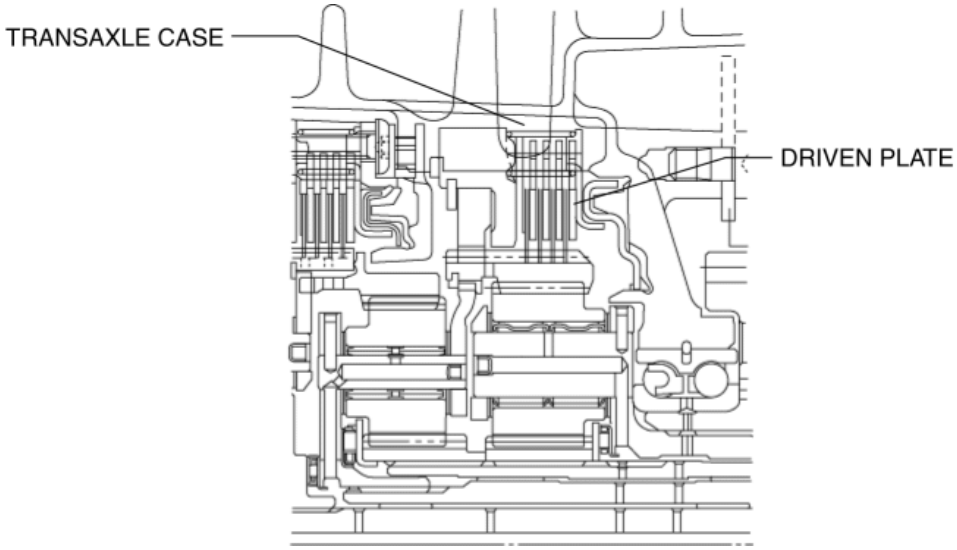

- The drive plate of the low and reverse brake is engaged with the low and reverse brake hub and front internal gear. Therefore, the rear planetary carrier is locked via the front internal gear.

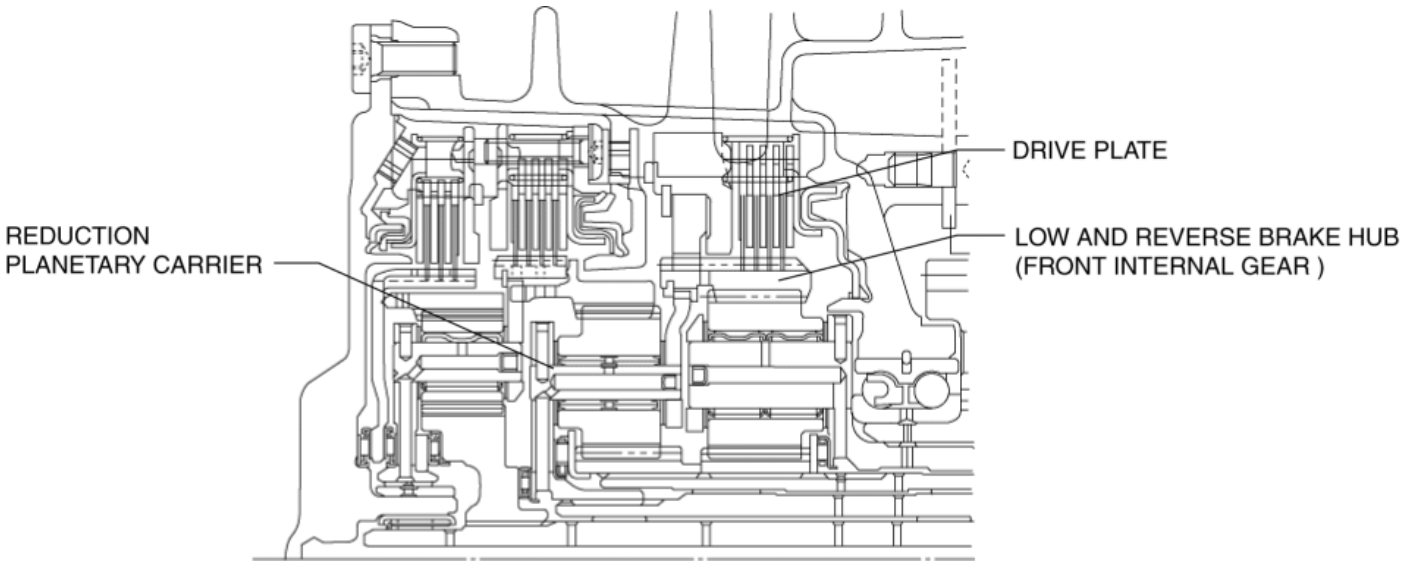

- For the low and reverse brake piston, a compact and highly reliable bonded seal piston has been adopted in which the piston and seal are molded together.

Operation

- When hydraulic pressure is applied to the low and reverse brake piston, the drive plate and driven plate are pressure bonded to lock the front internal gear and rear planetary gear to the transaxle case.

LOW AND REVERSE BRAKE [FW6A-EL]

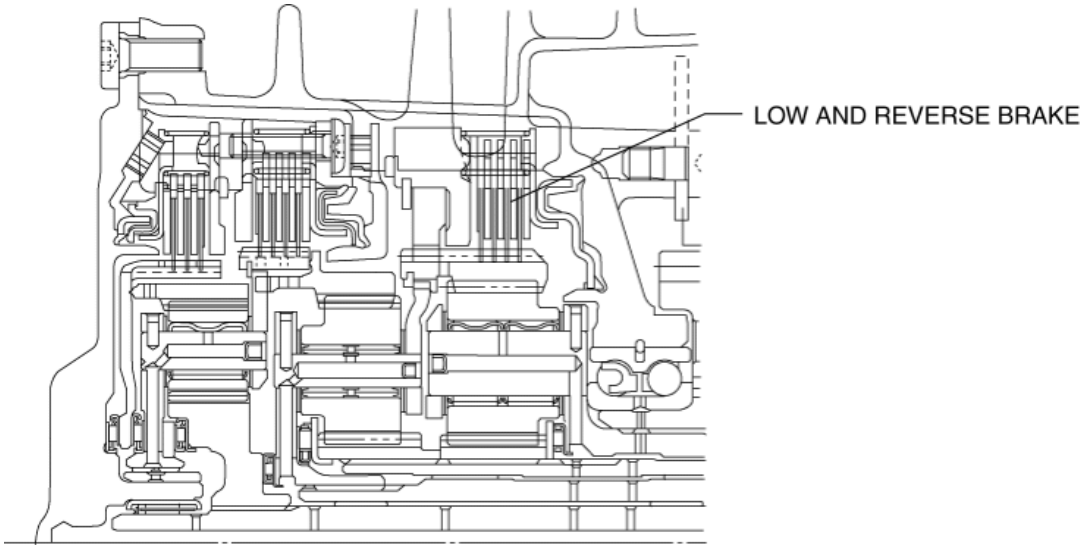

2014 - Mazda3 - Transmission / Transaxle

ONE-WAY CLUTCH [FW6A-EL]

Purpose / Function

- The one-way clutch operates in 1GR and suppresses the counterclockwise rotation of the front internal gear (as viewed from torque converter side).

Construction

- The one-way clutch consists of a mechanical diode-type one-way clutch, inner plate, and outer plate.
- The inner plate for the one-way clutch is connected to the front internal gear and the outer plate is connected to the transaxle.

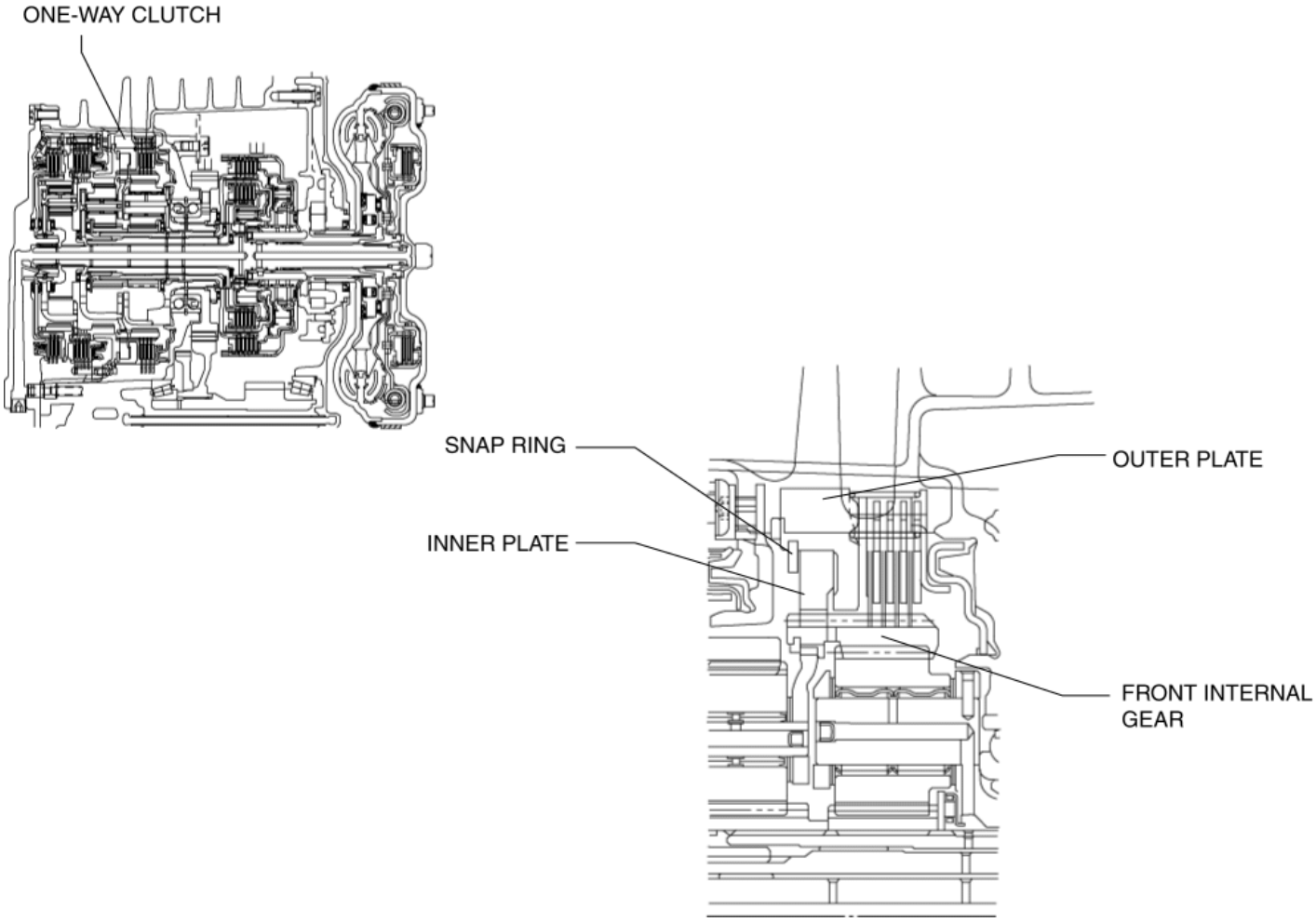

Operation

- The connected inner plate also rotates clockwise during the clockwise rotation of the front internal gear. Therefore, the rotation is not regulated and the inner plate spins because the strut installed to the inner plate is pressed toward the inner plate along the slope of the outer plate.
- The strut engages the notch of the outer plate by the rotation of the inner plate which also rotates counterclockwise during the counterclockwise rotation of the front internal gear. Due to this, the rotation of the inner plate is regulated and the rotation of the front internal gear is suppressed.
- As a result, the front internal gear suppresses the counterclockwise rotation of the rear pinion gear via the rear planetary carrier.

FREE SPIN (CLOCKWISE ROTATION)

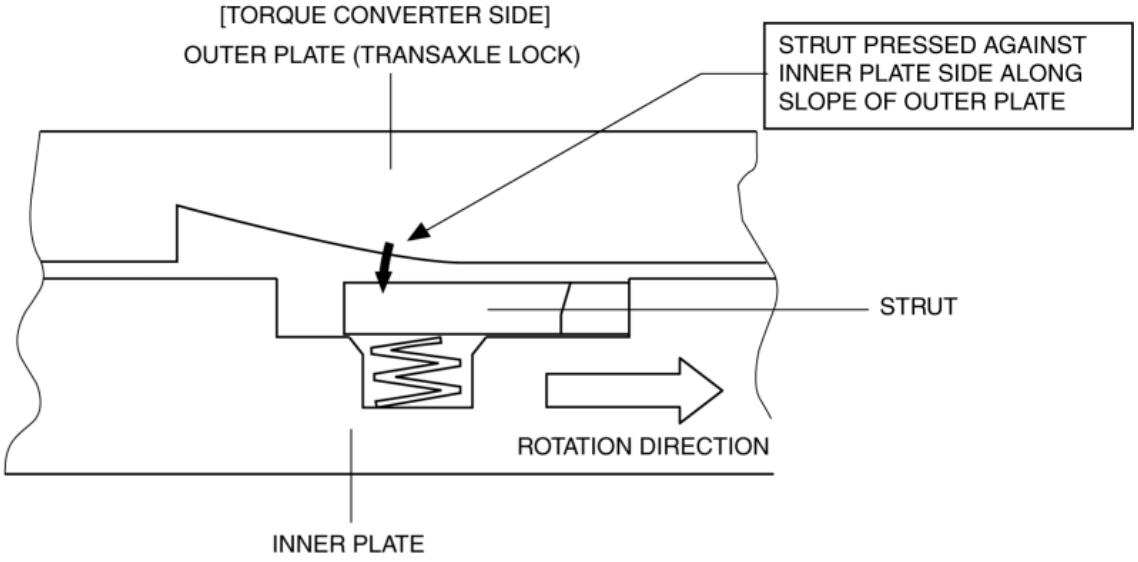

LOCK (COUNTERCLOCKWISE ROTATION)

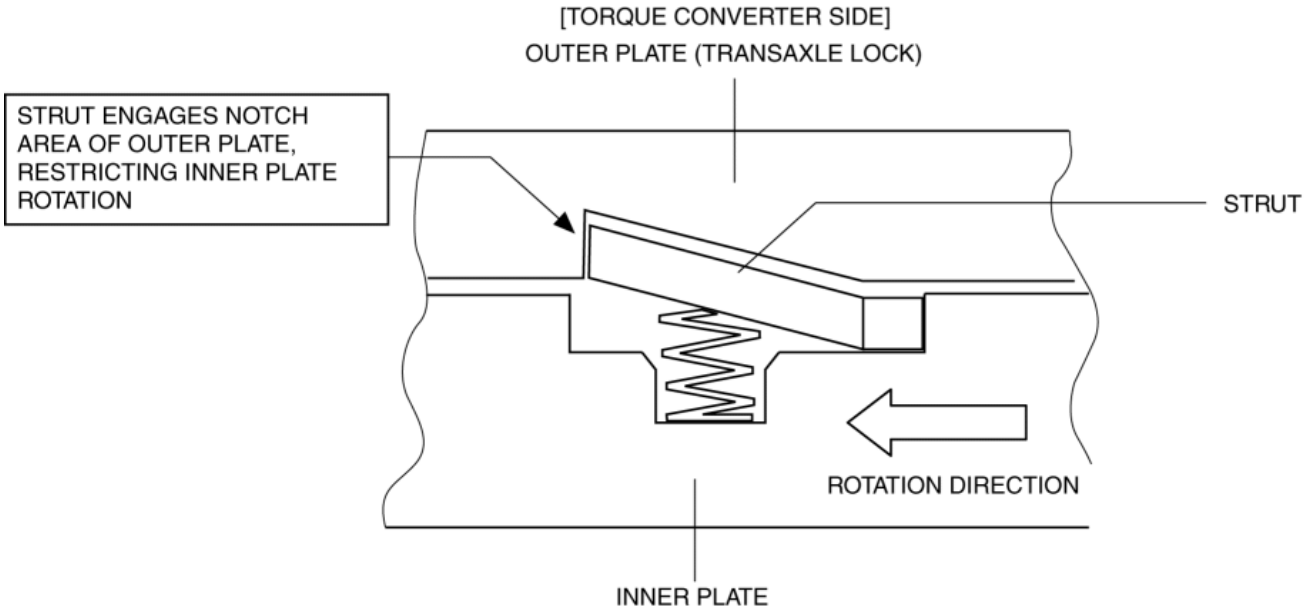

2014 - Mazda3 - Transmission / Transaxle

PLANETARY GEAR [FW6A-EL]

Purpose / Function

- The planetary gear is a mechanism which shifts the drive force from the engine. The planetary gear consists of multiple gears which rotate individually while revolving. By controlling the individual rotation and revolving of the gears, the transaxle performs gear shifting at the optimum gear speed according to the driving conditions.

Construction

- The planetary gear is positioned in the order of the front planetary gear, rear planetary gear, and reduction planetary gear from the torque converter side. The planetary gear is a single planetary gear type. For the component parts of each planetary gear, refer to the following figure.

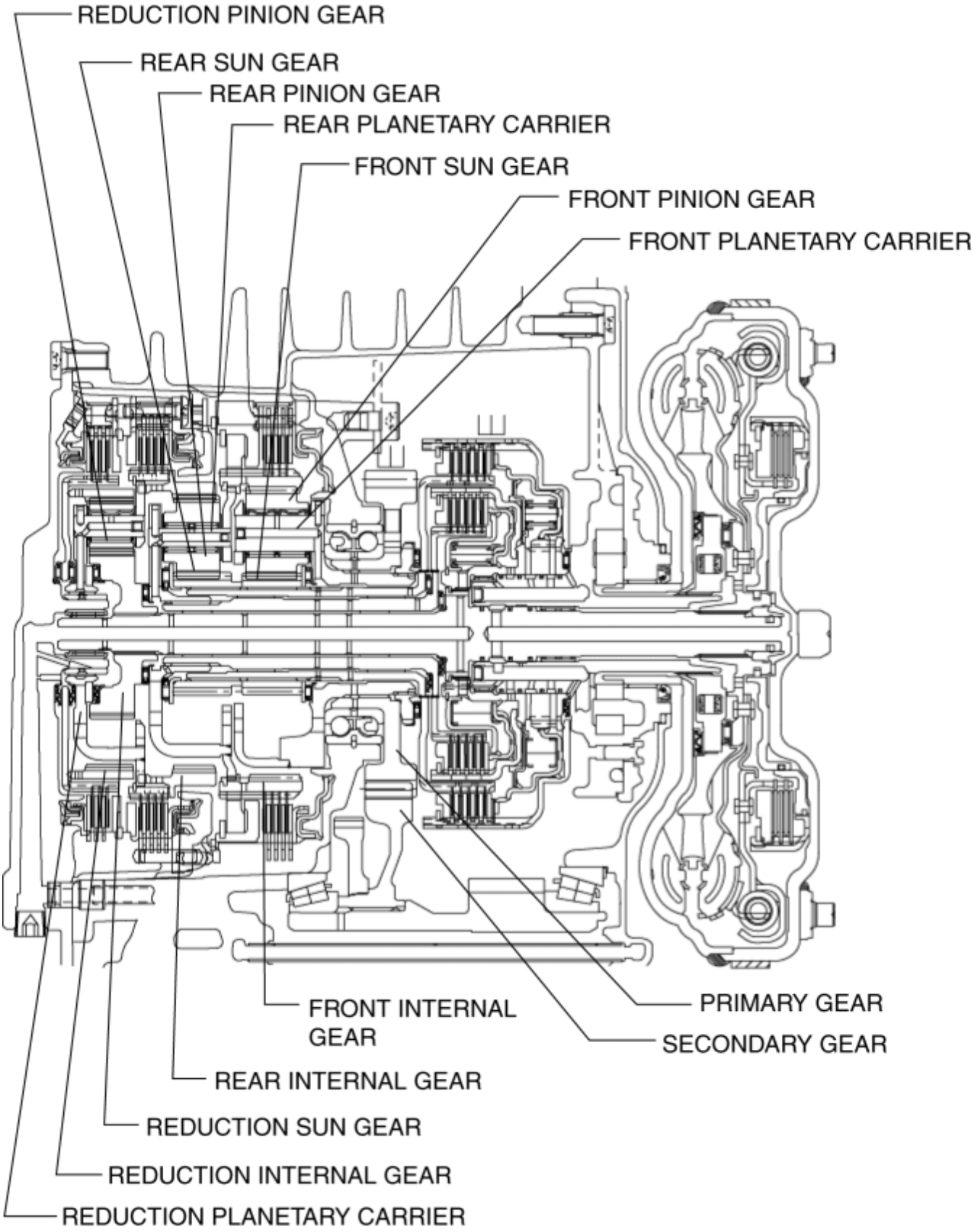

- The planetary gear is composed of the sun gear, pinion gear, planetary carrier, and internal gear as shown in the figure.

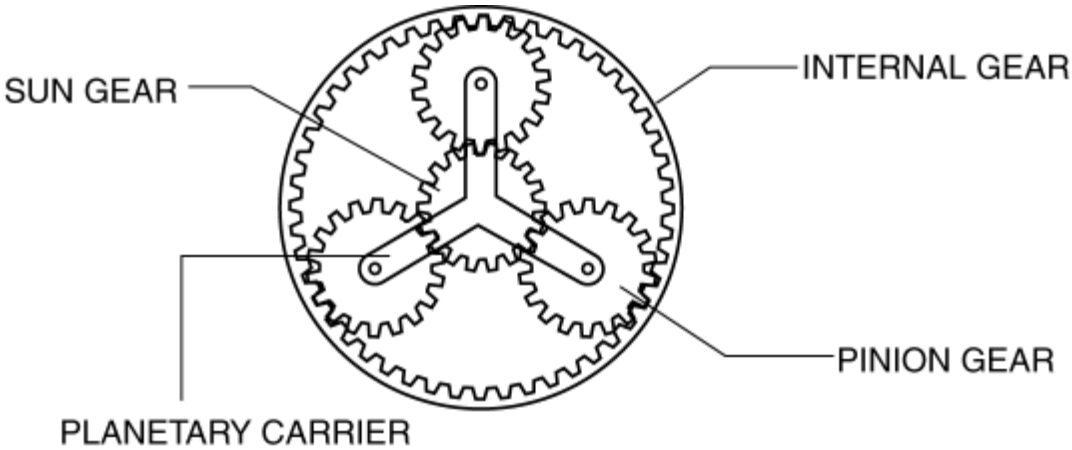

- There are two types of pinion gear rotation, rotation (rotation) on an axis of the center for each pinion gear and rotation (revolution) on an axis of center for the planetary carrier. The planetary gear operates shifting function by switching the input, fixed, or output of the internal gear, pinion gear, and planetary carrier.

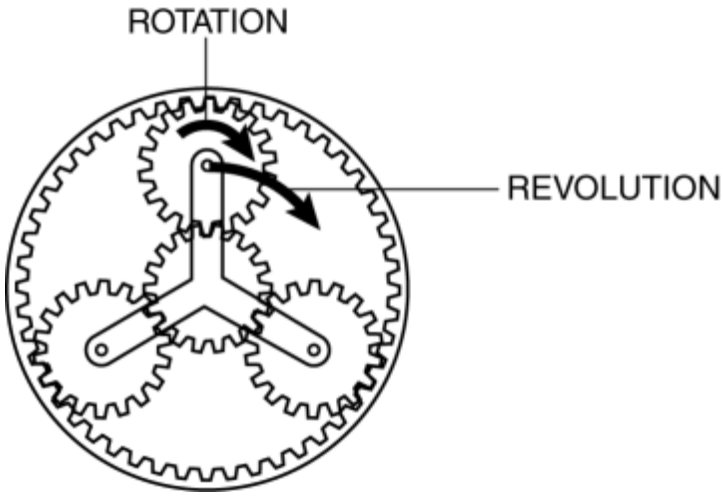

- The relation of rotation speed of each element for the planetary gear set is generally indicated as follows:

  $(Z_R + Z_S)\ N_C = Z_R\ N_R + Z_S\ N_S$: (1)

  Meaning of symbols

  - Z: Number of teeth
  - N: Rotation speed
  - Additional character R: Internal gear
  - Additional character S: Sun gear
  - Additional character C: Planetary carrier (pinion gear)

Number of teeth and symbols for each gear

Planetary gear unit		Number of teeth	Symbols
	Internal gear	97	Z_{RFr}

Front	Planetary carrier (part of pinion gear)	29	Z_{CFr}
	Sun gear	38	Z_{SFr}
Rear	Internal gear	95	Z_{RRr}
	Planetary carrier (part of pinion gear)	27	Z_{CRr}
	Sun gear	40	Z_{SRr}
Reduction	Internal gear	109	Z_{RRed}
	Planetary carrier (part of pinion gear)	21	Z_{CRed}
	Sun gear	68	Z_{SRed}

Meaning of symbols

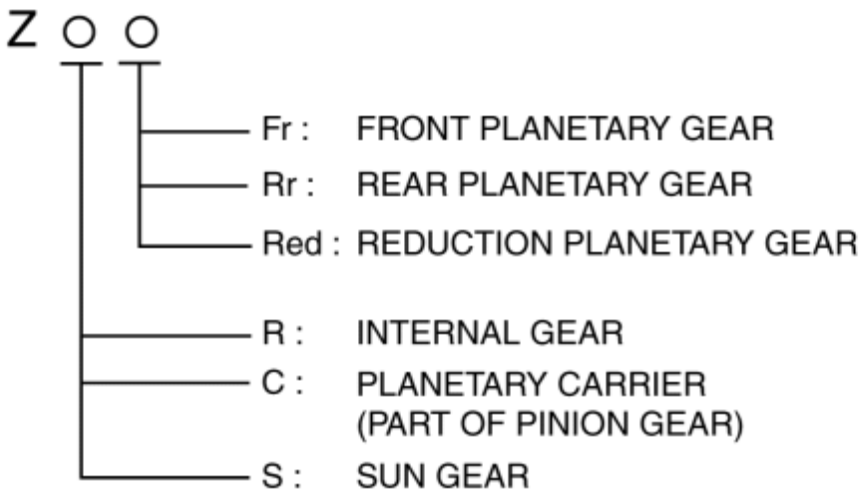

Operation

1GR

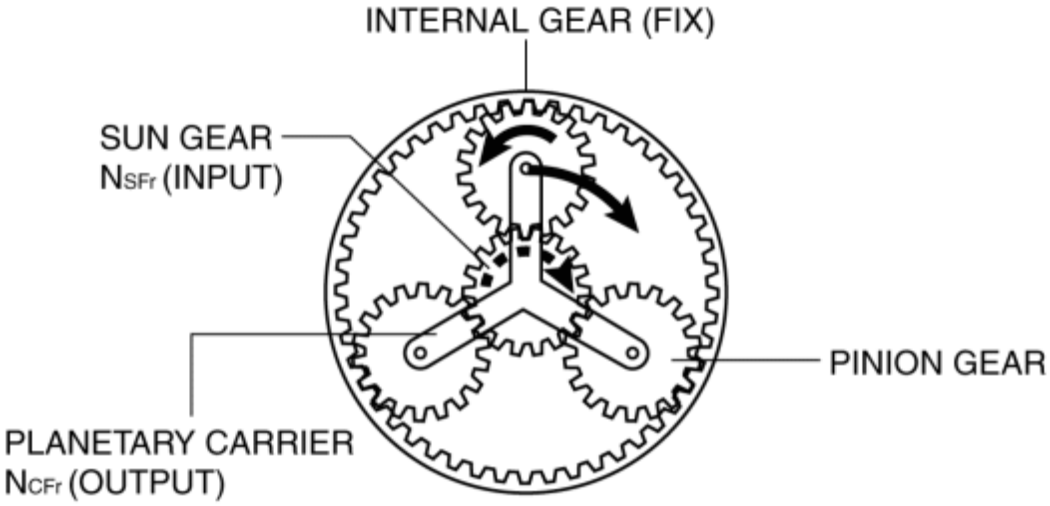

FRONT PLANETARY GEAR

Rotation speed for each gear

Planetary gear unit	Front planetary gear
Internal gear	0 (Fix)
Planetary carrier (part of pinion gear)	N_{CFr} (Output)
Sun gear	N_{SFr} (Input)

2GR

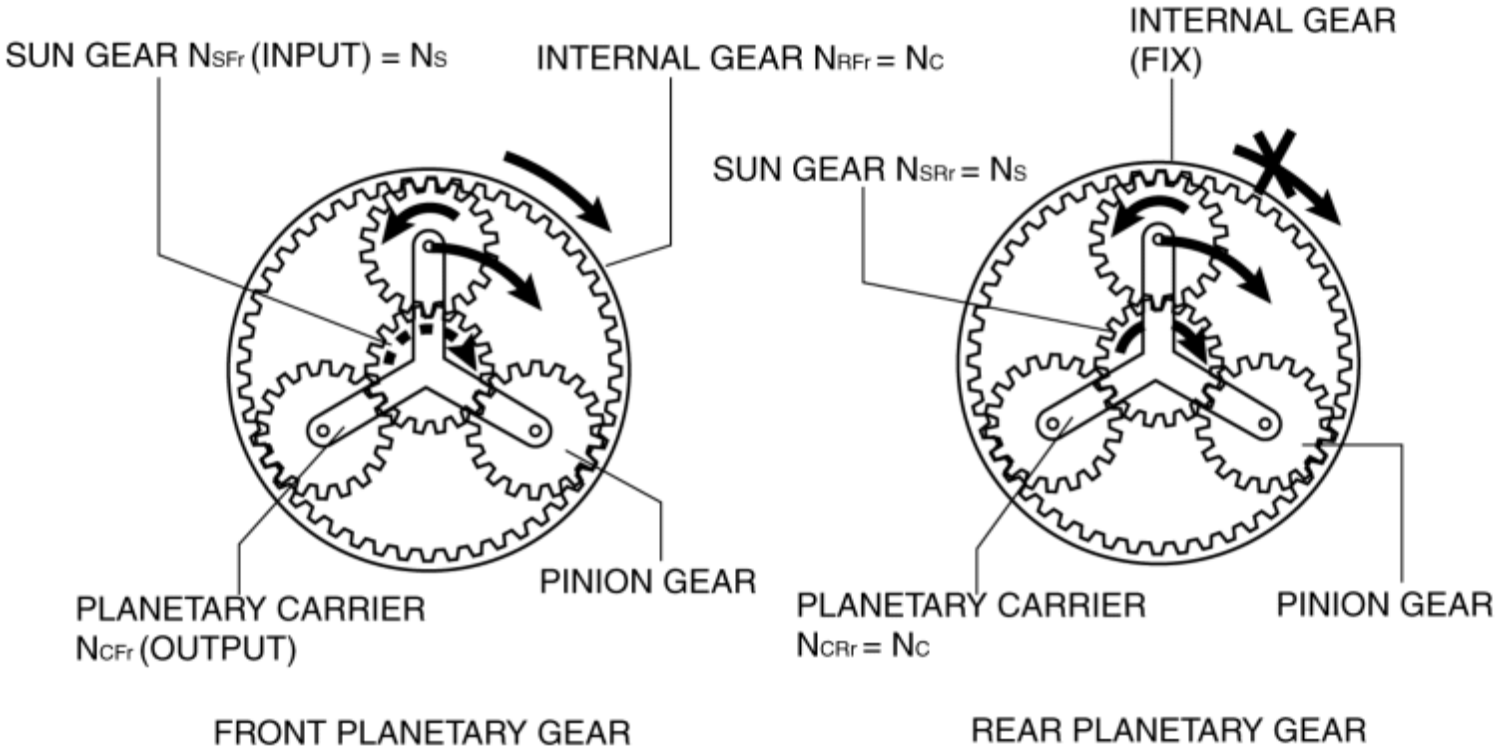

Rotation speed for each gear

Planetary gear unit	Front planetary gear	Rear planetary gear
Internal gear	$N_{RFr}=N_C$	0 (Fix)
Planetary carrier (part of pinion gear)	N_{CFr} (Output)	$N_{CRr}=N_c$
Sun gear	N_{SFr} (Input)$=N_S$	$N_{SRr}=N_S$

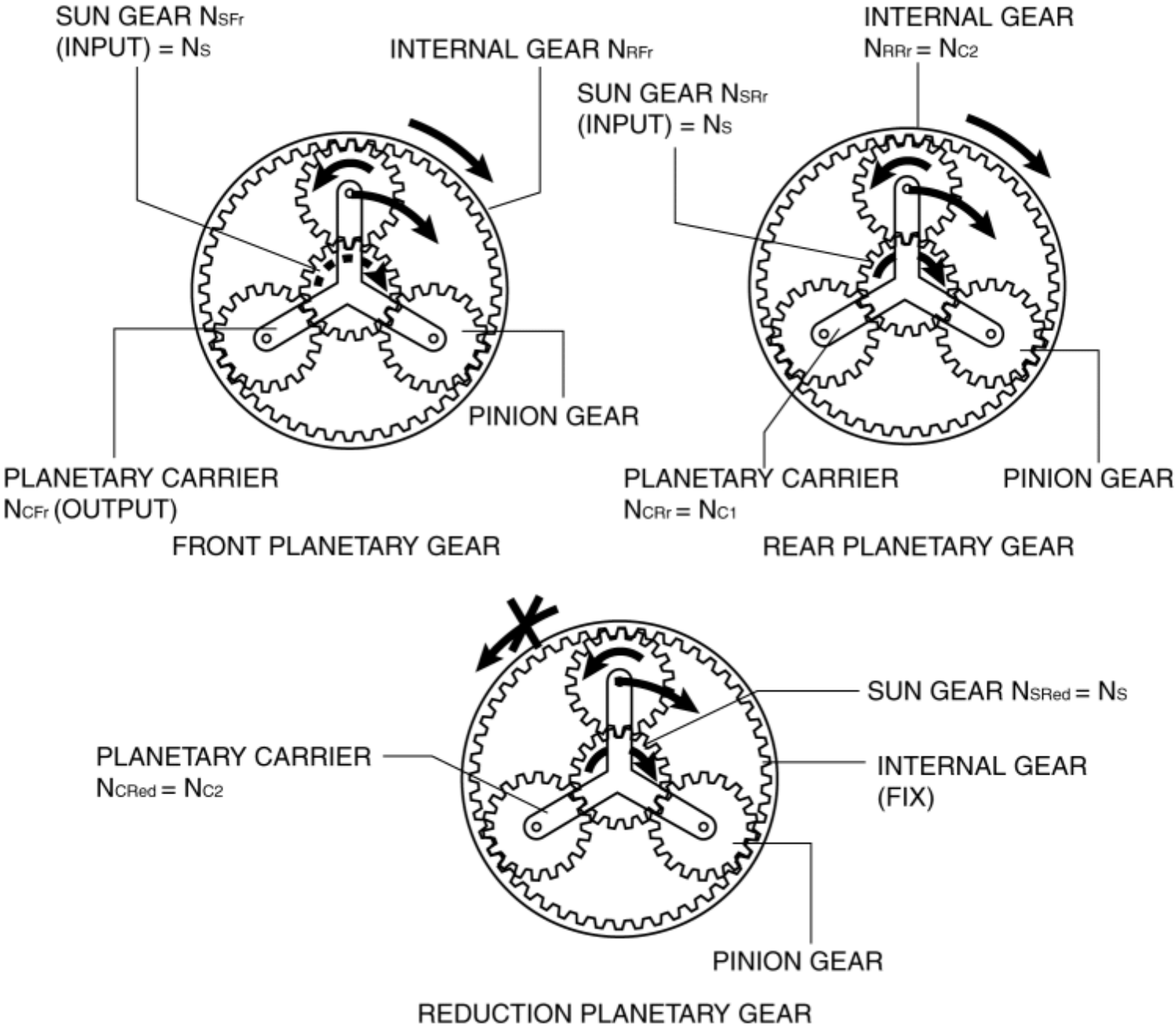

Rotation speed for each gear

Planetary gear unit	Front planetary gear	Rear planetary gear	Reduction
Internal gear	$N_{RFr} = N_{C1}$	$N_{RRr} = N_{c2}$	0 (Fix)
Planetary carrier (part of pinion gear)	N_{CFr} (Output)	$N_{CRr} = N_{c1}$	$N_{CRed} = N_{c2}$
Sun gear	N_{SFr} (Input) $= N_S$	$N_{SRr} = N_S$	$N_{SRed} = N_S$

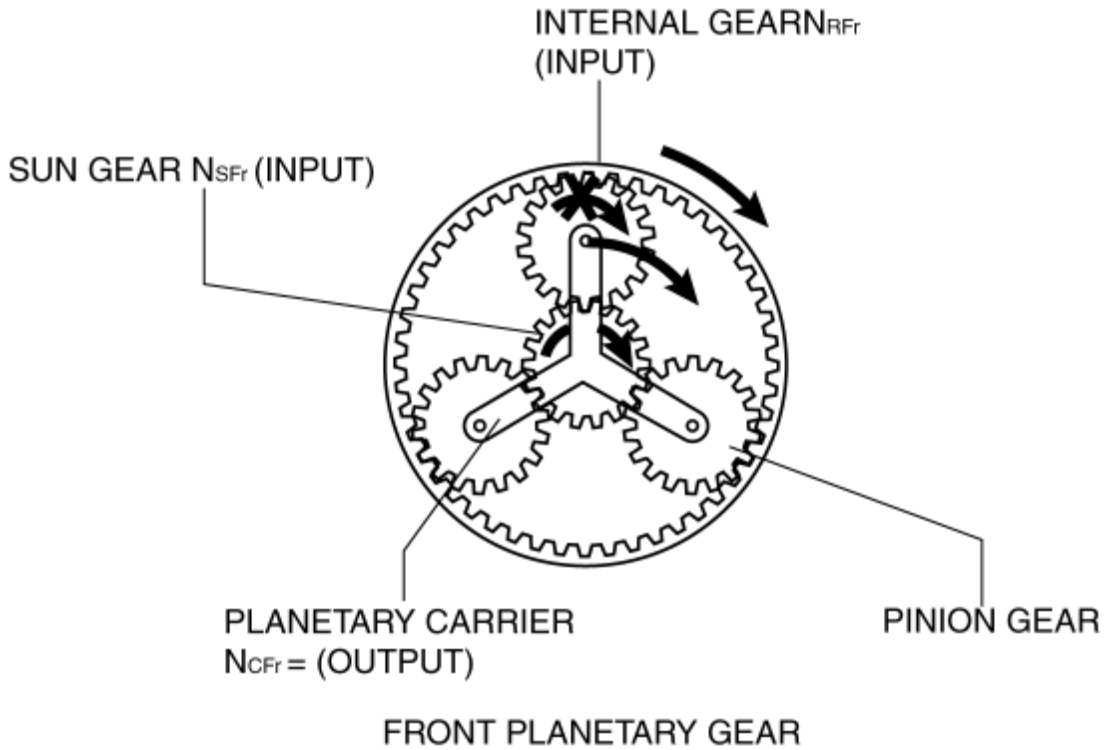

Rotation speed for each gear

Planetary gear unit	Front planetary gear
Internal gear	N_{RFr} (Input)
Planetary carrier (part of pinion gear)	N_{CFr} (Output)
Sun gear	N_{SFr} (Input)

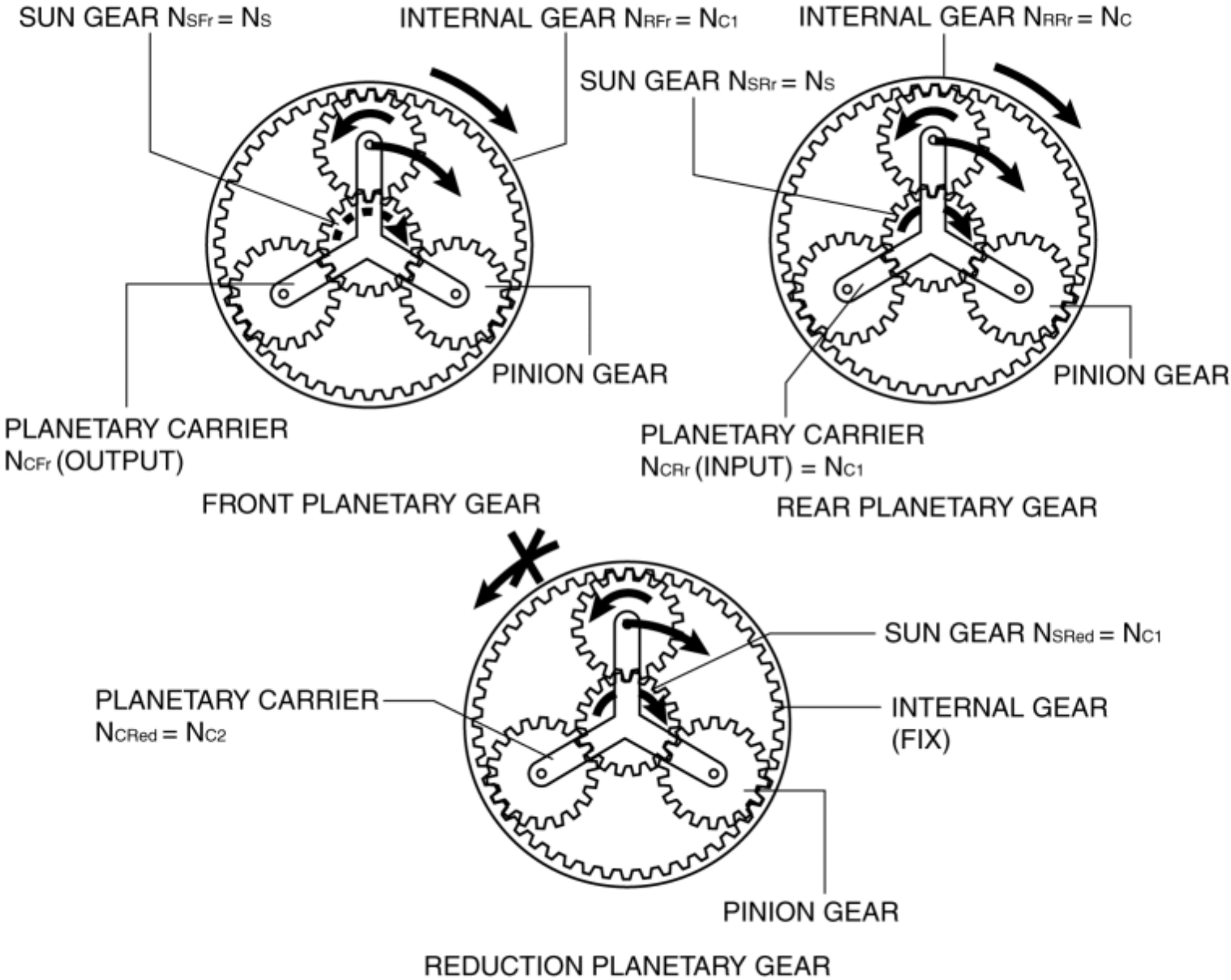

Rotation speed for each gear

Planetary gear unit	Front planetary gear	Rear planetary gear	Reduction
Internal gear	$N_{RFr}=N_{C1}$	$N_{RRr}=N_{c2}$	0 (Fix)
Planetary carrier (part of pinion gear)	N_{CFr} (Output)	N_{CRr} (Input)$=N_{c1}$	$N_{CRed}=N_{c2}$
Sun gear	$N_{SFr}=N_S$	$N_{SRr}=N_S$	$N_{SRed}=N_{c1}$

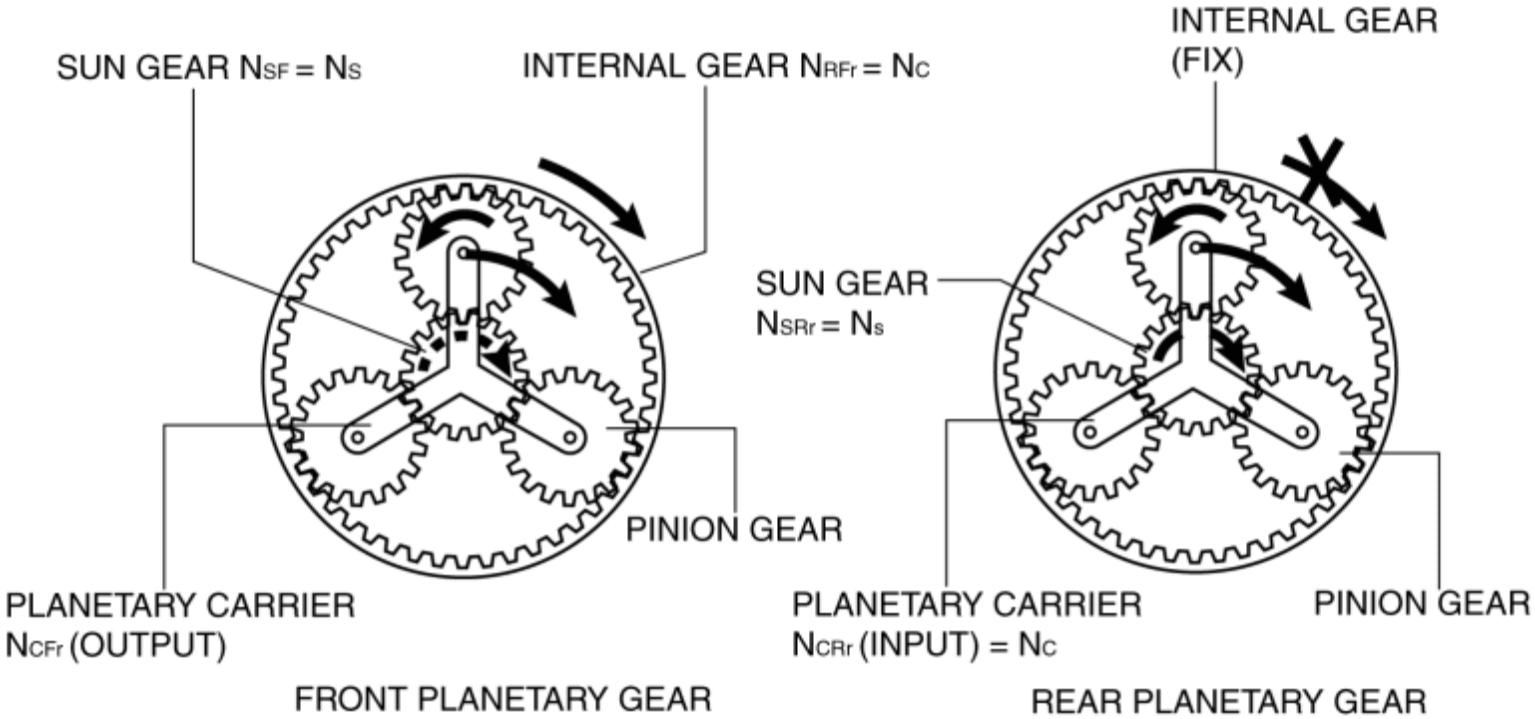

Rotation speed for each gear

Planetary gear unit	Front planetary gear	Rear planetary gear
Internal gear	$N_{RFr}=N_C$	0 (Fix)
Planetary carrier (part of pinion gear)	N_{CFr} (Output)	N_{CRr} (Input)$=N_c$
Sun gear	$N_{SFr}=N_S$	$N_{SRr}=N_S$

Reverse

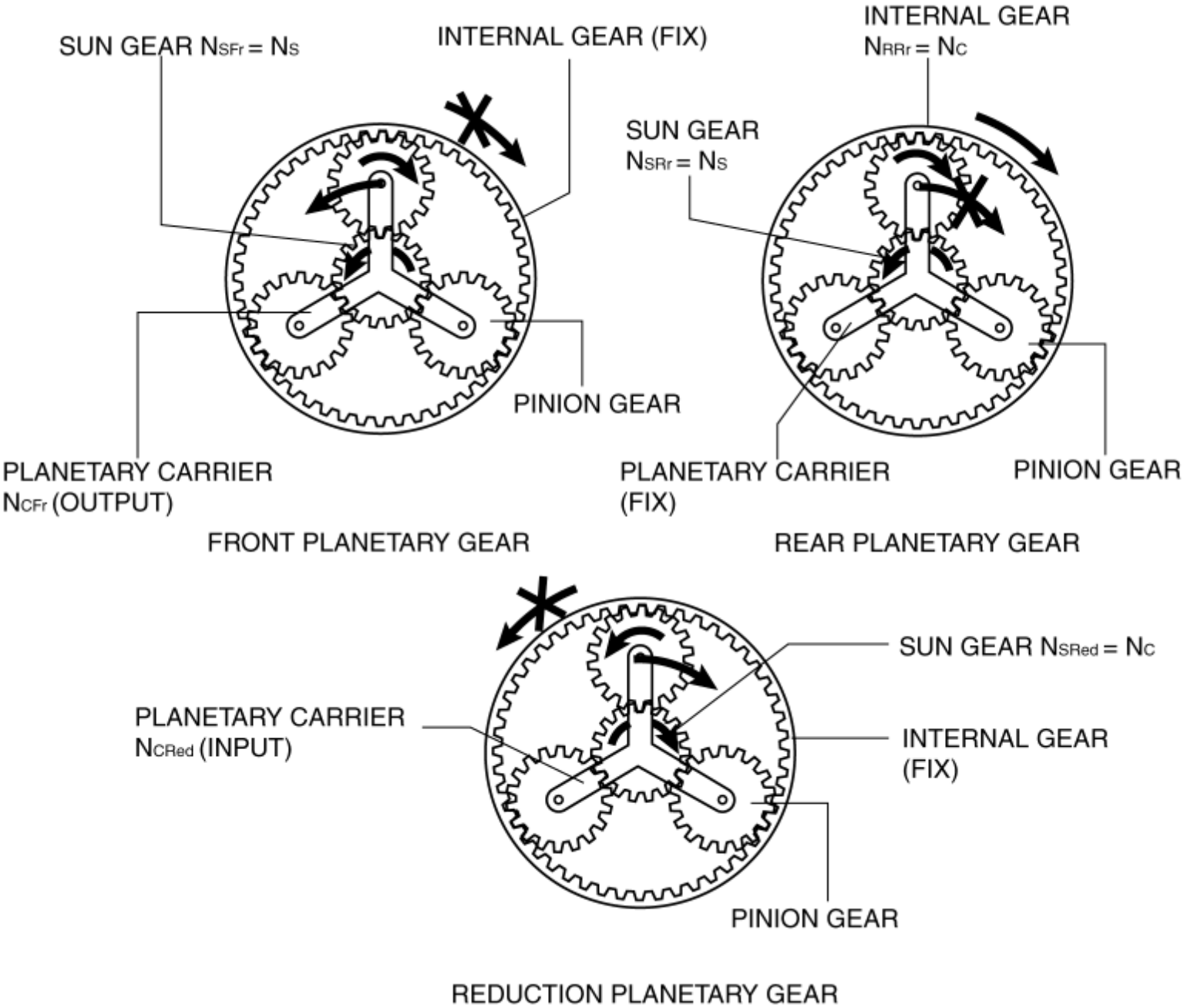

Rotation speed for each gear

Planetary gear unit	Front planetary gear	Rear planetary gear	Reduction
Internal gear	N_{RFr} (Fix)	$N_{RRr}=N_c$	0 (Fix)
Planetary carrier (part of pinion gear)	N_{CFr} (Output)	N_{CRr} (Fix)	$N_{CRed}=N_c$
Sun gear	$N_{SFr}=N_S$	$N_{SRr}=N_S$	N_{SRed} (Input)

2014 - Mazda3 - Transmission/Transaxle

PRIMARY GEAR [FW6A-EL]

Purpose/Function

- The primary gear transmits the drive force converted by the 3-piece planetary gear to the secondary gear.

Construction

- The primary gear is engaged with the front planetary carrier and rotates as a single unit.

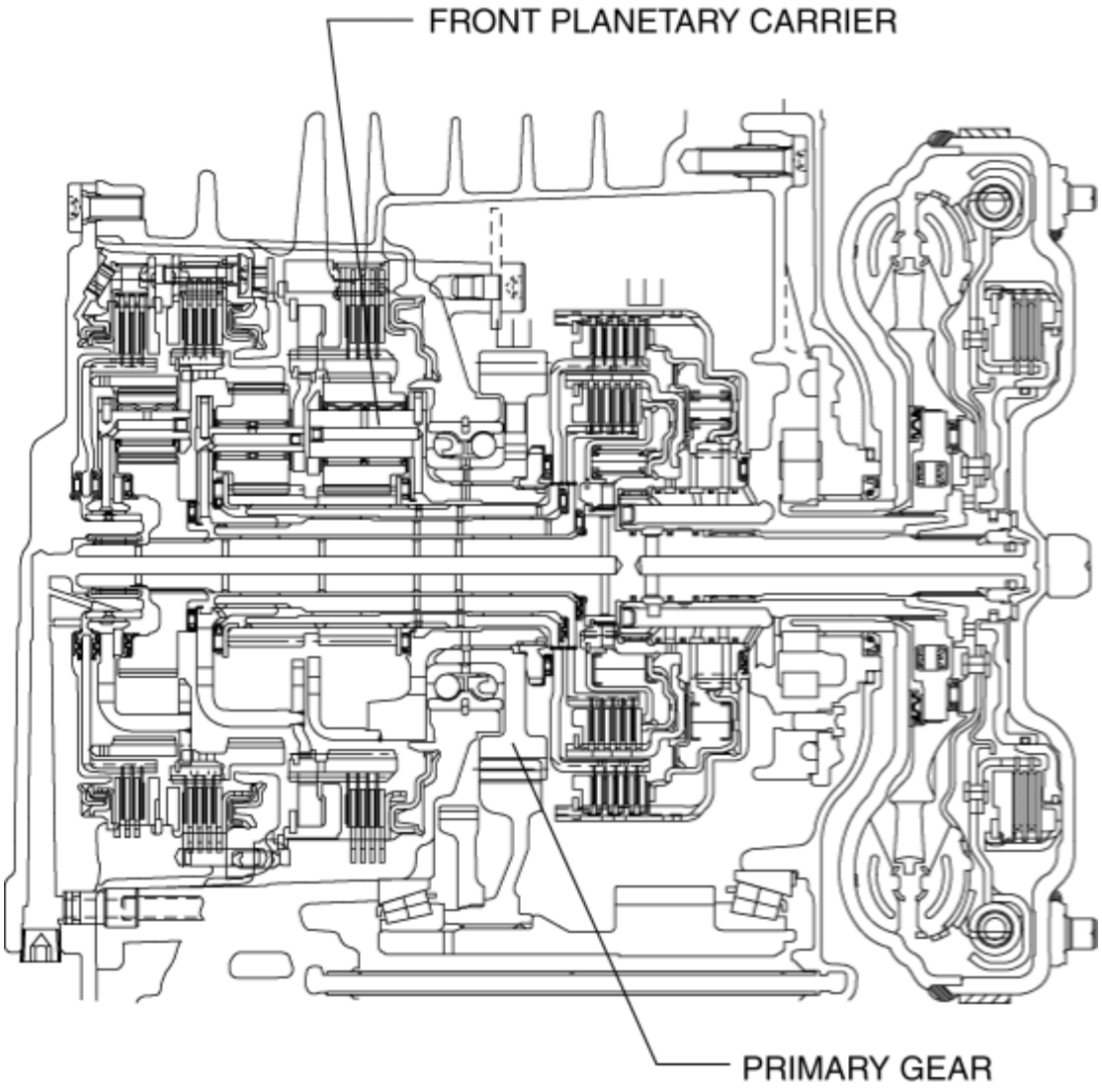

PRIMARY GEAR [FW6A-EL]

2014 - Mazda3 - Transmission/Transaxle

SECONDARY GEAR [FW6A-EL]

Purpose/Function

- The secondary gear transmits the drive force from the primary gear to the output gear.

Construction

- The secondary gear is engaged with the output gear and rotates as a single unit.

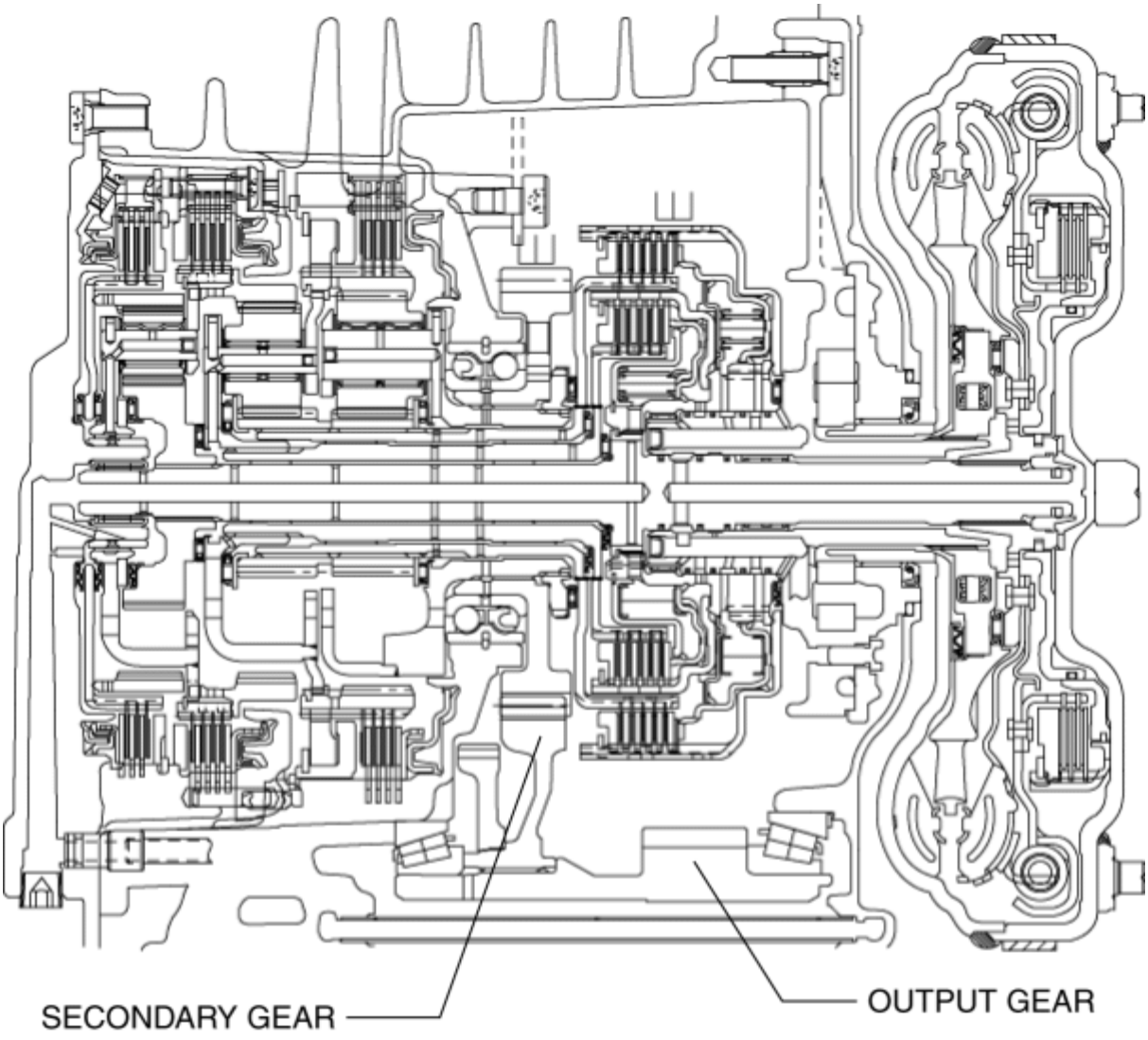

SECONDARY GEAR [FW6A-EL]

2014 - Mazda3 - Transmission / Transaxle

OUTPUT GEAR [FW6A-EL]

Purpose / Function

- The output gear transmits the drive force transmitted from the primary gear and secondary gear to the differential.

Construction

- The output gear is engaged with the secondary gear and rotates as a single unit.

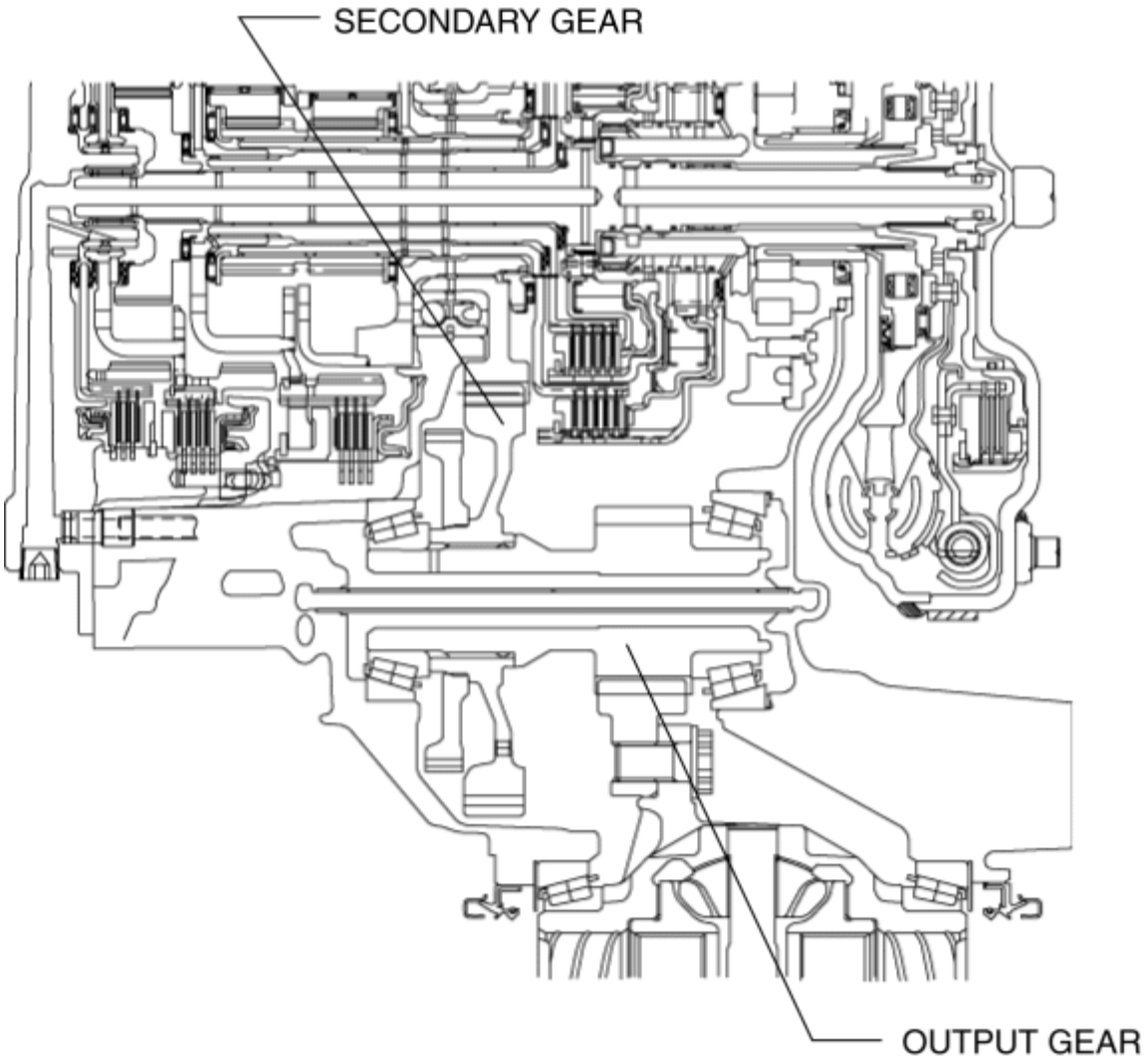

OUTPUT GEAR [FW6A-EL]

2014 - Mazda3 - Transmission / Transaxle

DIFFERENTIAL [FW6A-EL]

Purpose / Function

- The differential absorbs the difference in the rotation speed between the left and right driving wheels so that the vehicle drives smoothly when differences occur due to cornering or driving on rough roads.

Construction

- The differential consists of the ring gear, differential gear case, side gears, pinion gears, and pinion shaft.
- The differential gear case is engaged with the ring gear and rotates as a single unit.
- The side gears are engaged with the drive shaft (LH) and drive shaft (RH) and rotates as a single unit for each.

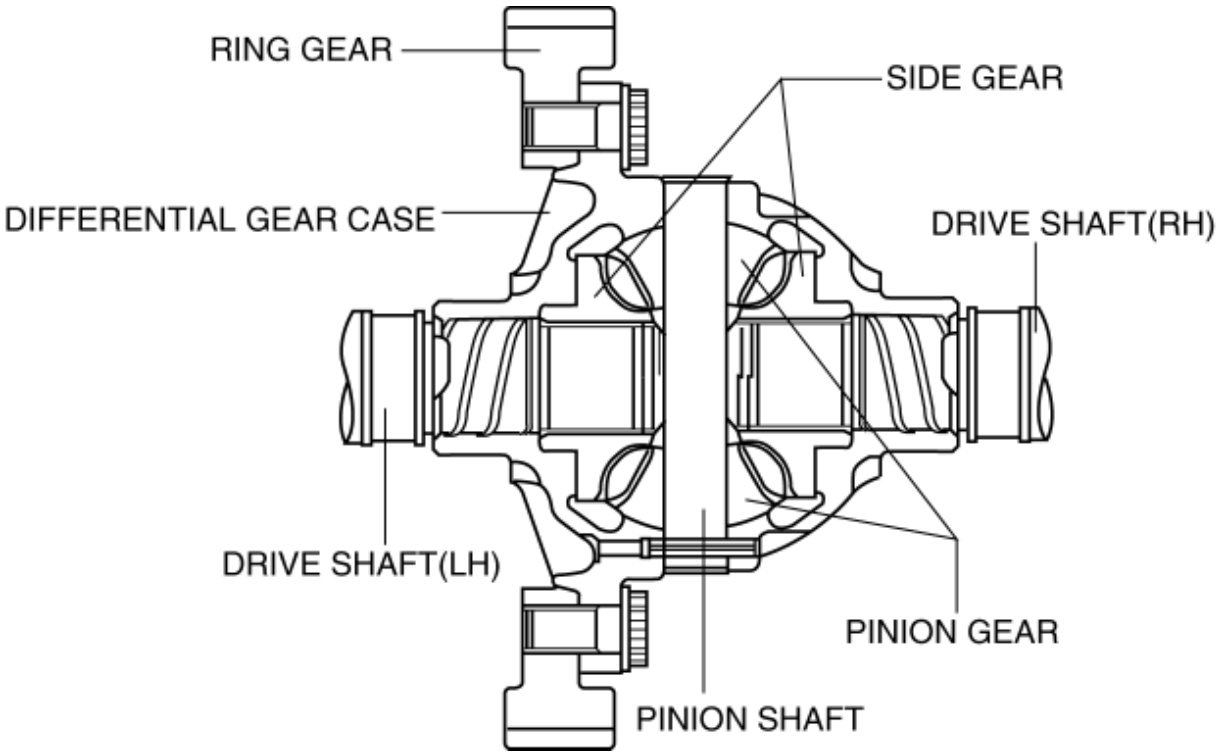

Operation

- If there is no difference in rotation speed between the left and right driving wheels, the left and right side gears rotate together with the differential gear case and pinion gears.

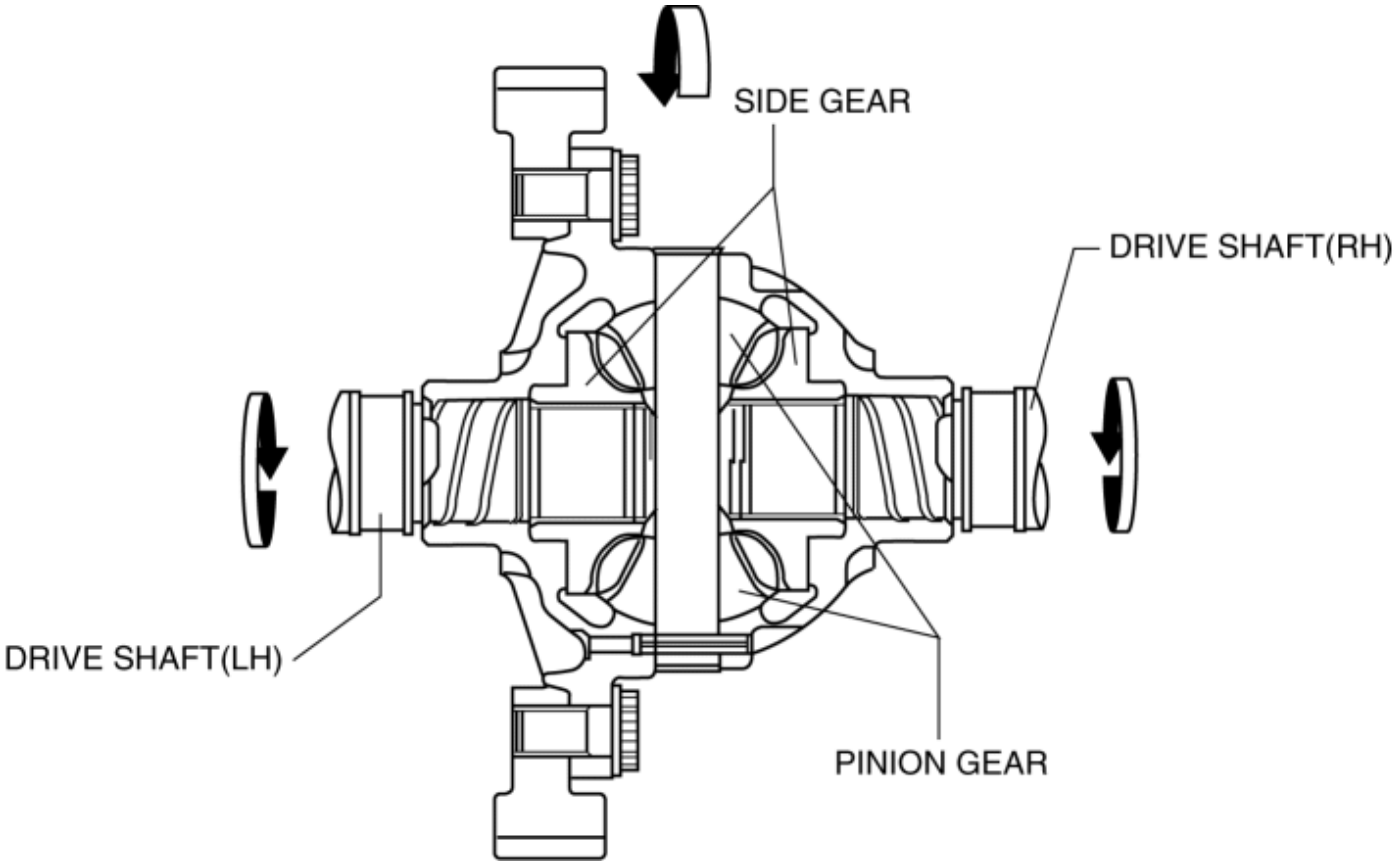

- If there is a difference in the rotation speed between the left and right driving wheels, the difference in the rotation speed between the left and right side gears is absorbed by the pinion gears rotating around the pinion shaft.

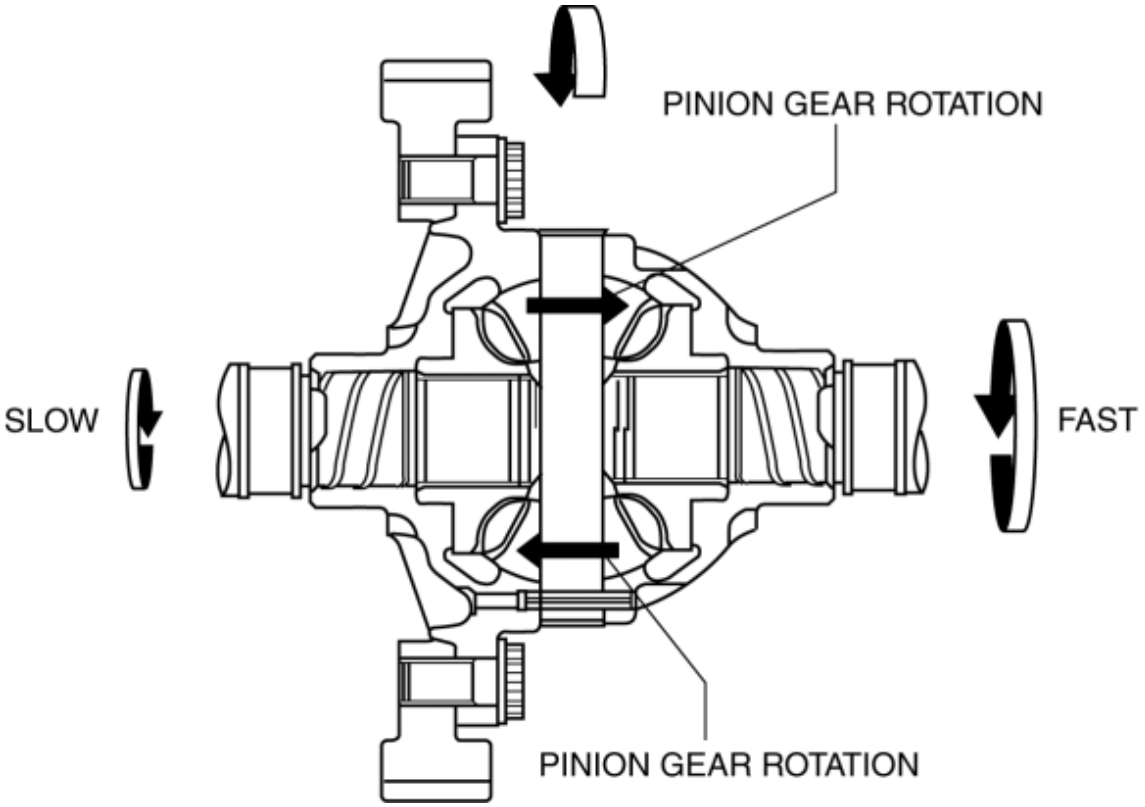

2014 - Mazda3 - Transmission / Transaxle

POWER FLOW [FW6A-EL]

Power flow

1 GR

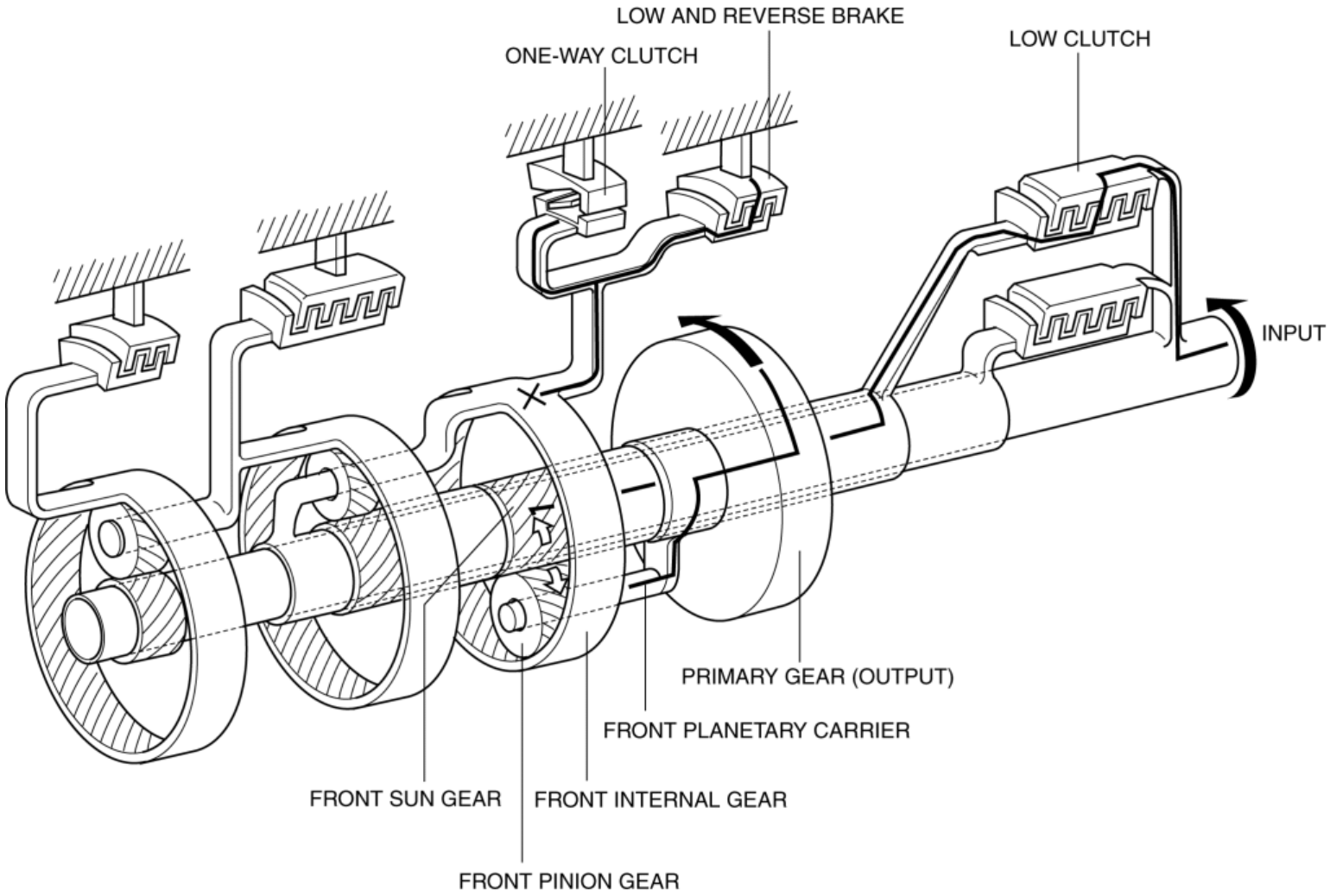

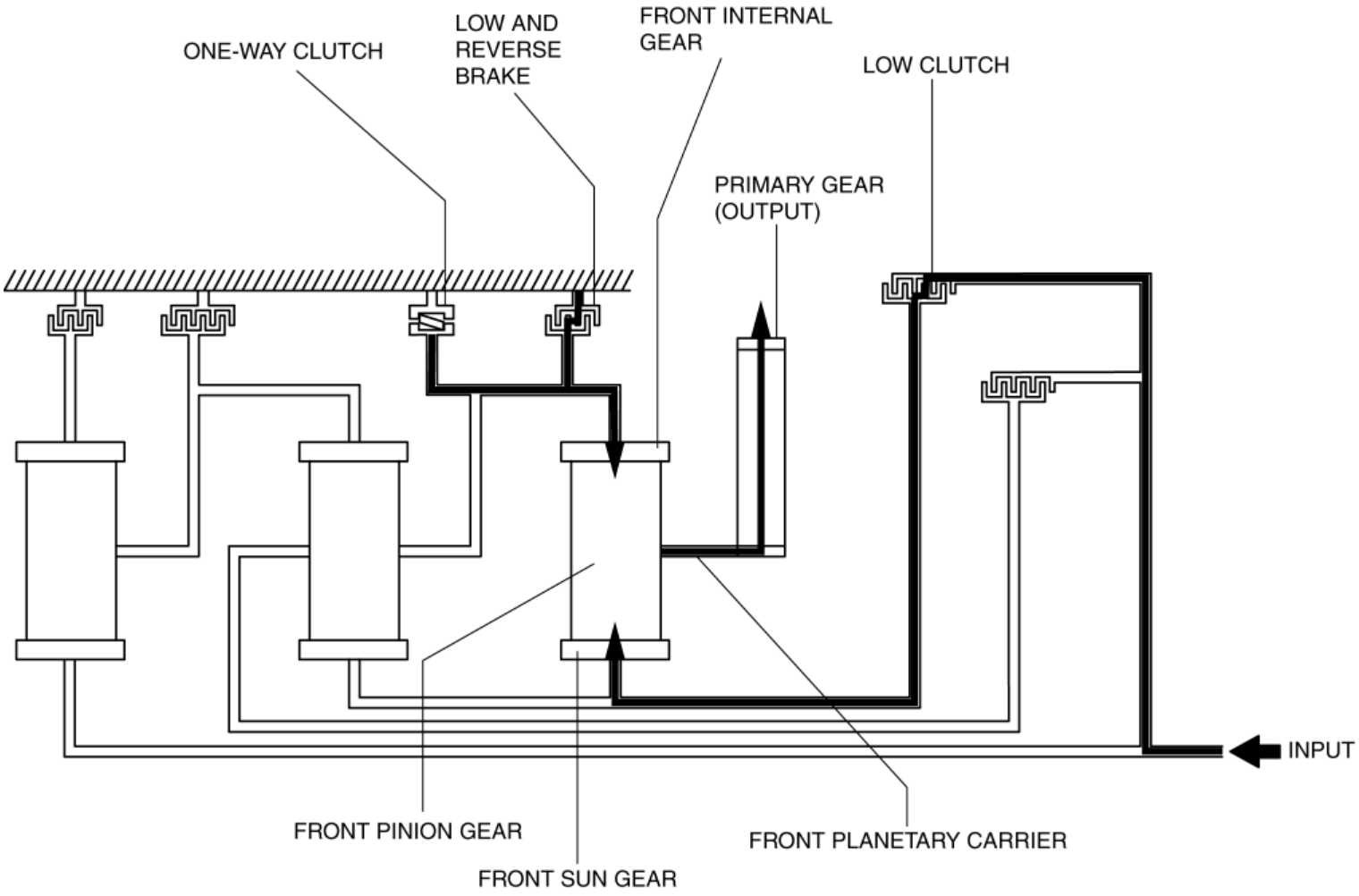
ONE-WAY CLUTCH
LOW AND REVERSE BRAKE
FRONT INTERNAL GEAR
LOW CLUTCH
PRIMARY GEAR (OUTPUT)
INPUT
FRONT PINION GEAR
FRONT SUN GEAR
FRONT PLANETARY CARRIER

2 GR

POWER FLOW [FW6A-EL]

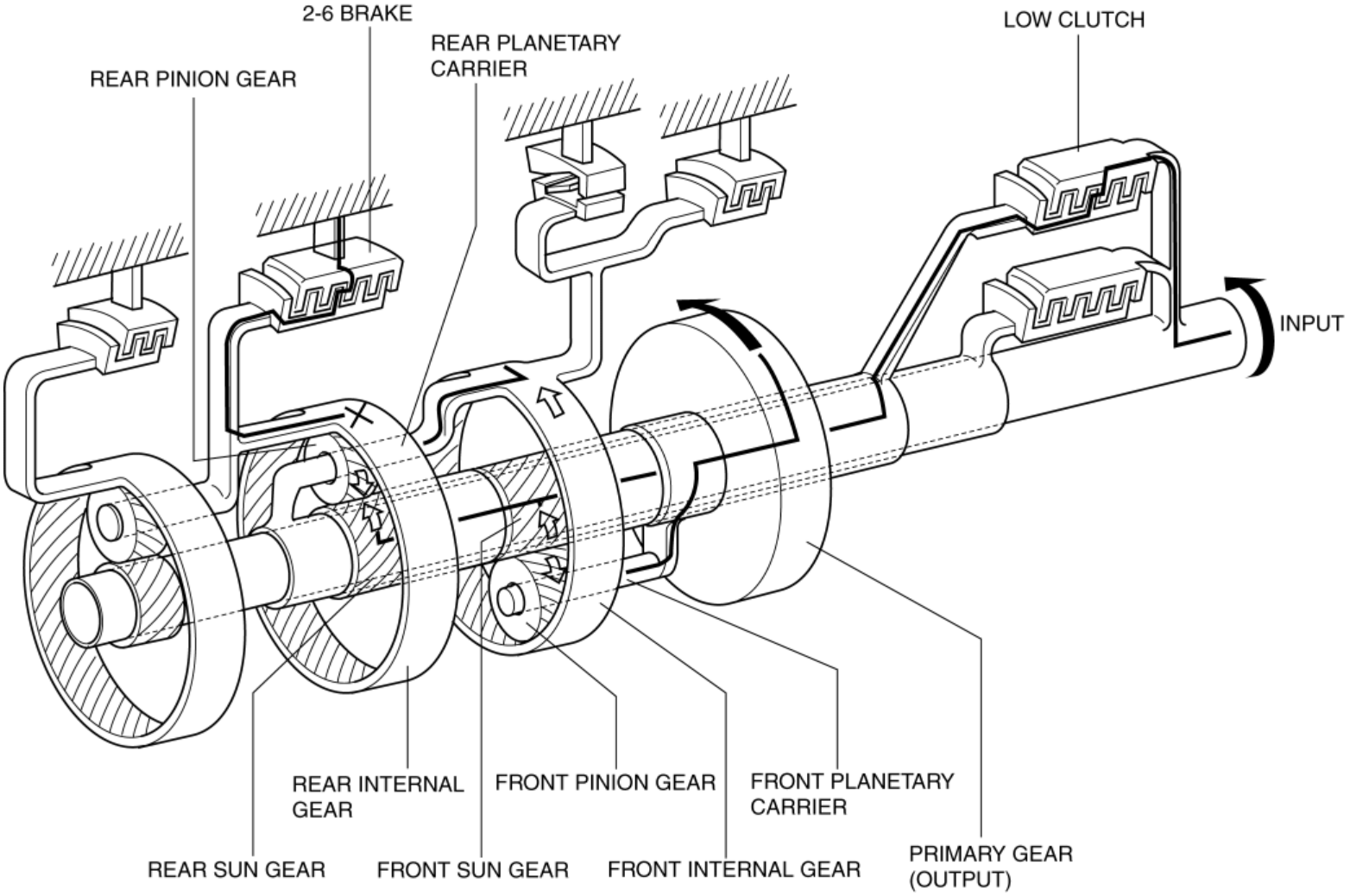

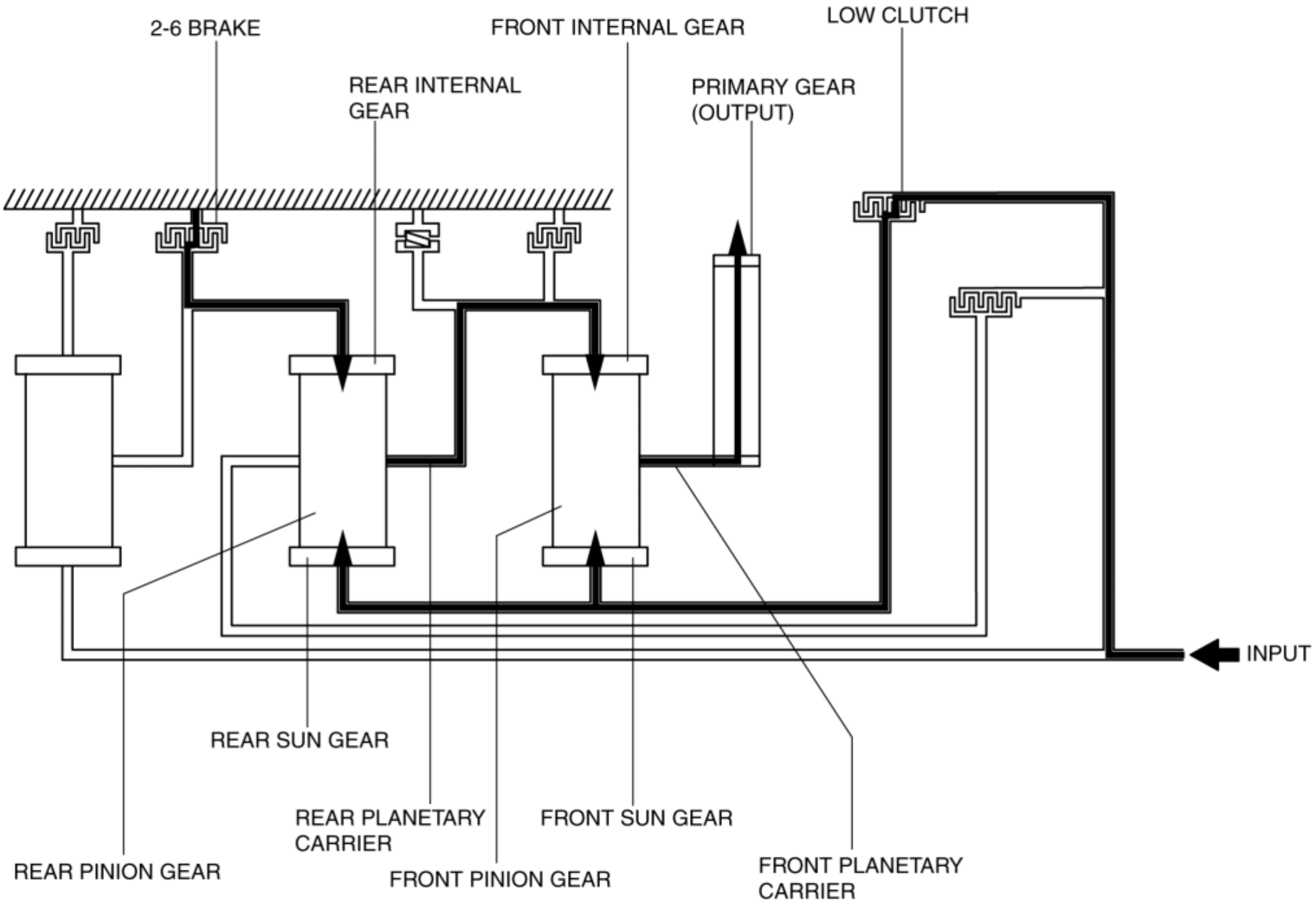
2-6 BRAKE
FRONT INTERNAL GEAR
LOW CLUTCH
REAR INTERNAL GEAR
PRIMARY GEAR (OUTPUT)
INPUT
REAR SUN GEAR
REAR PLANETARY CARRIER
FRONT SUN GEAR
REAR PINION GEAR
FRONT PINION GEAR
FRONT PLANETARY CARRIER

3 GR

POWER FLOW [FW6A-EL]

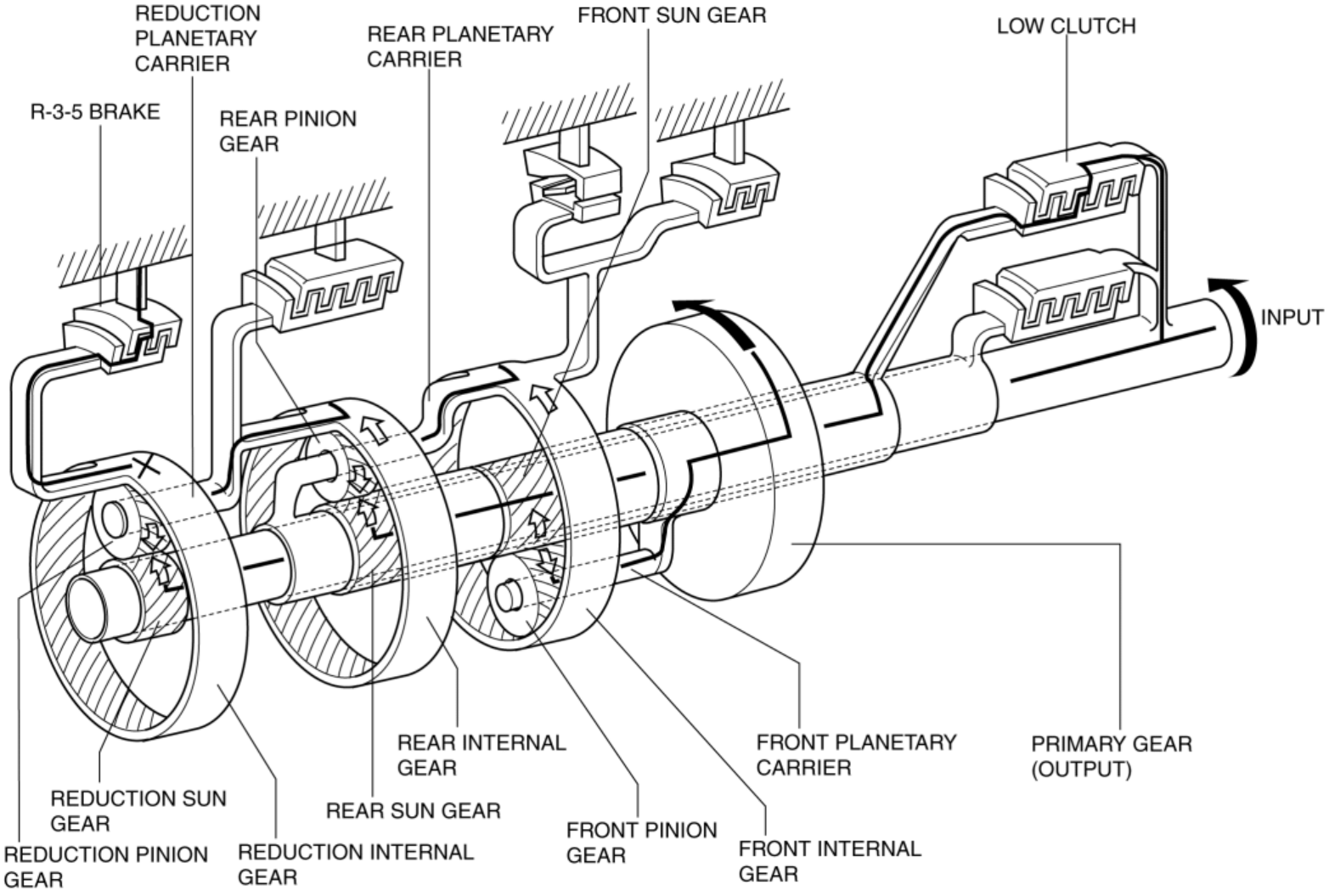

POWER FLOW [FW6A-EL]

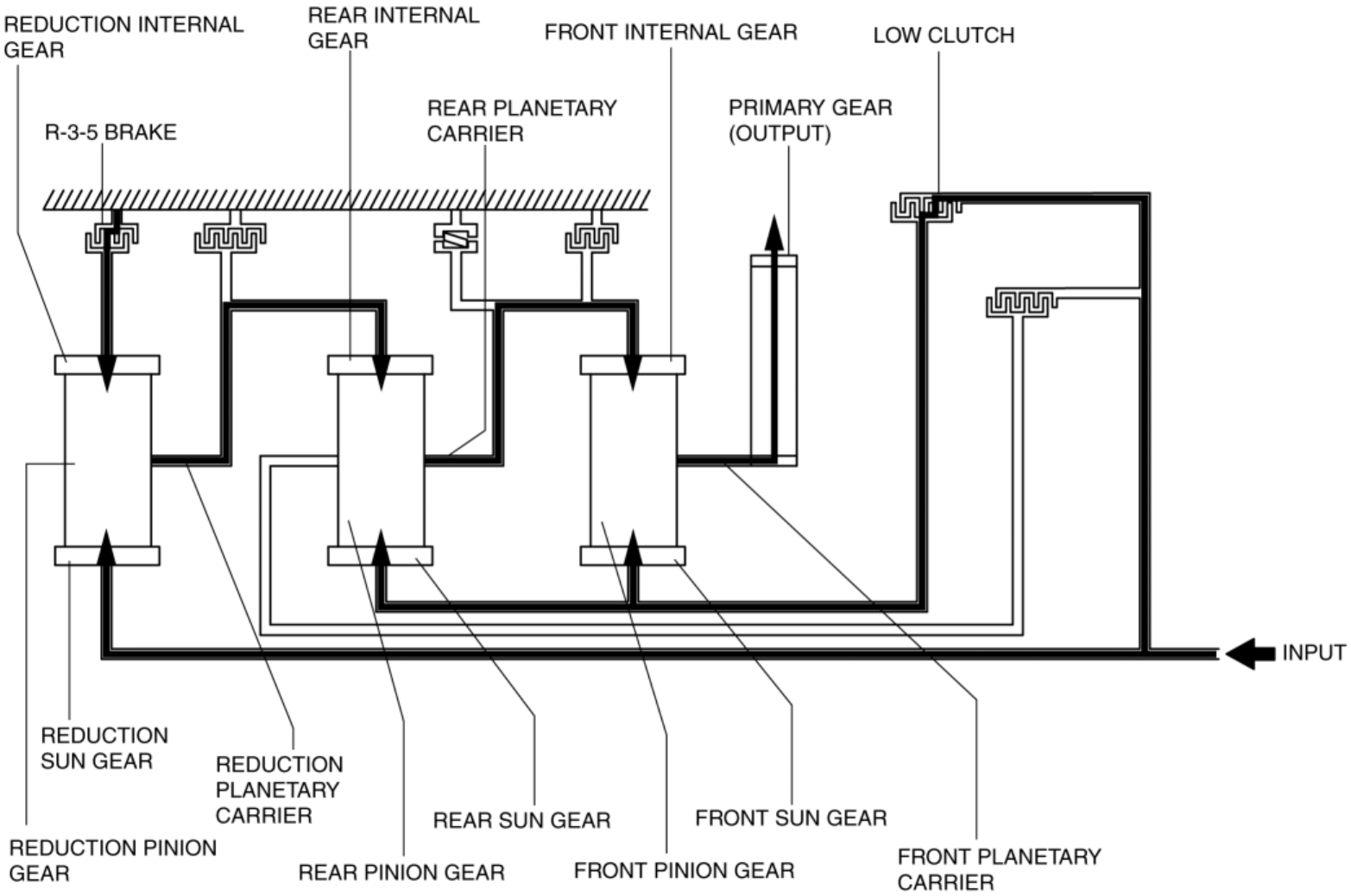

4 GR

POWER FLOW [FW6A-EL]

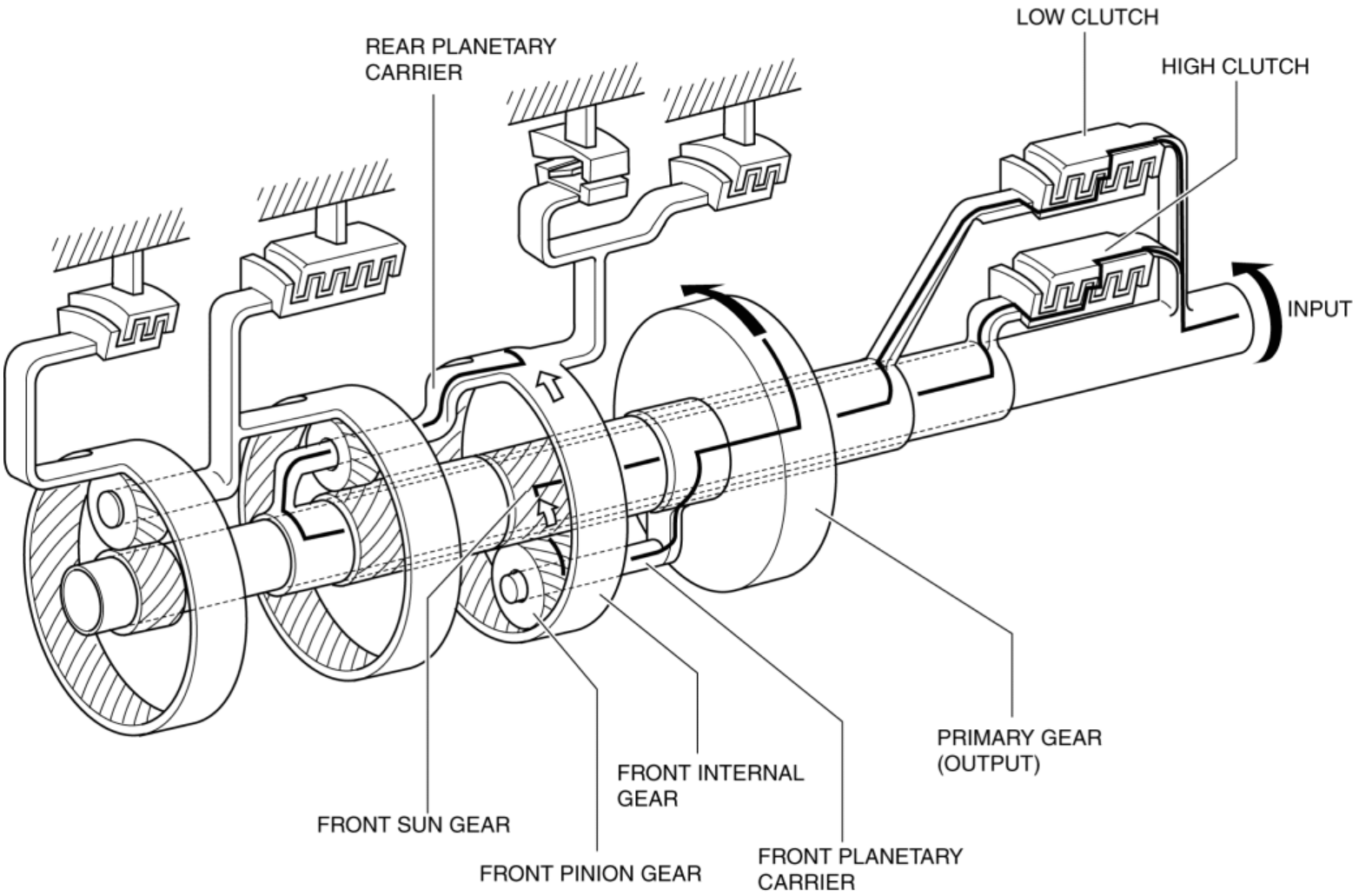

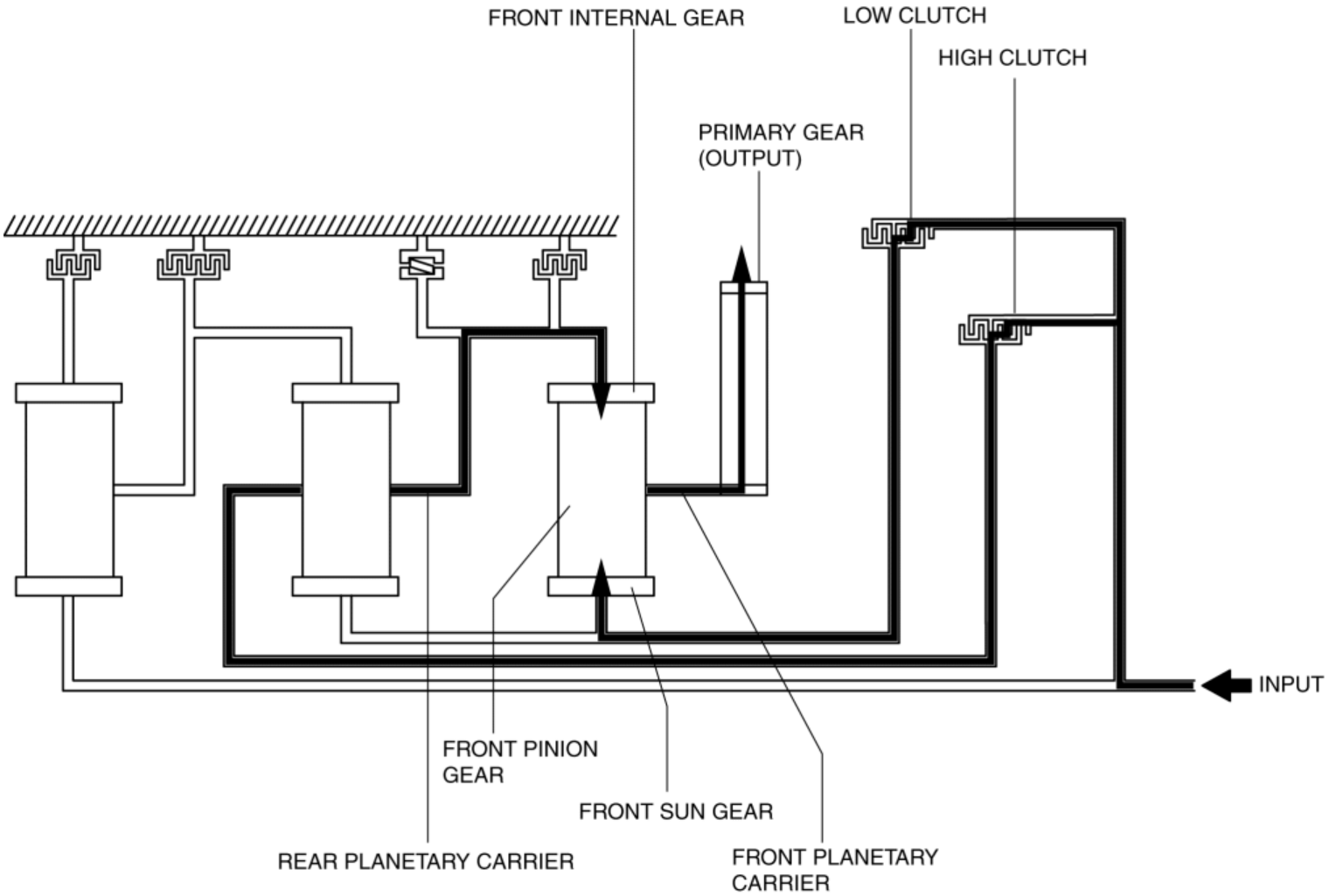
FRONT INTERNAL GEAR
LOW CLUTCH
HIGH CLUTCH
PRIMARY GEAR
(OUTPUT)
INPUT
FRONT PINION
GEAR
FRONT SUN GEAR
REAR PLANETARY CARRIER
FRONT PLANETARY
CARRIER

5 GR

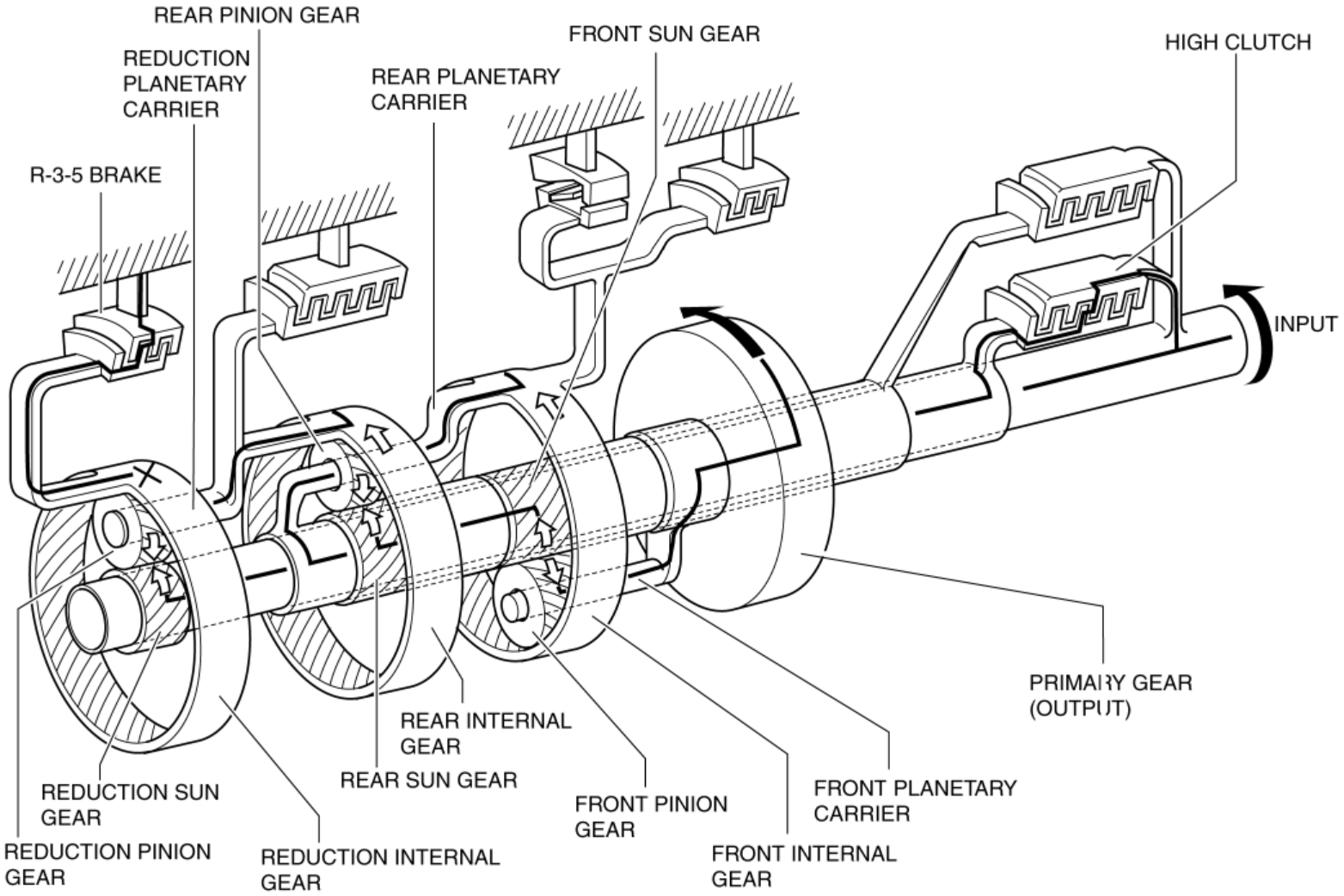
REAR PINION GEAR
REDUCTION PLANETARY CARRIER
R-3-5 BRAKE
REAR PLANETARY CARRIER
FRONT SUN GEAR
HIGH CLUTCH
INPUT
PRIMARY GEAR (OUTPUT)
REAR INTERNAL GEAR
REAR SUN GEAR
REDUCTION SUN GEAR
REDUCTION PINION GEAR
REDUCTION INTERNAL GEAR
FRONT PINION GEAR
FRONT PLANETARY CARRIER
FRONT INTERNAL GEAR

POWER FLOW [FW6A-EL]

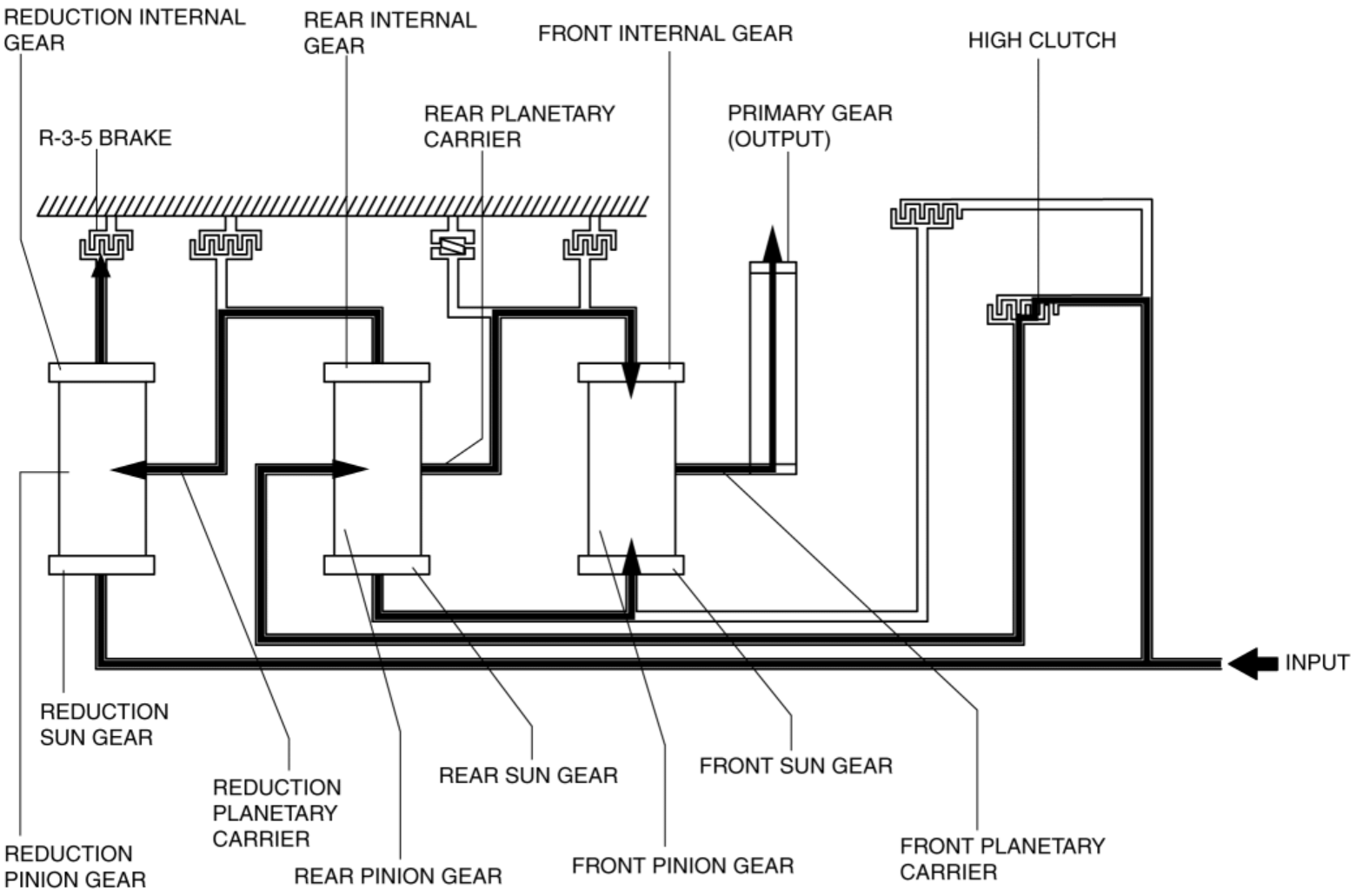

6 GR

POWER FLOW [FW6A-EL]

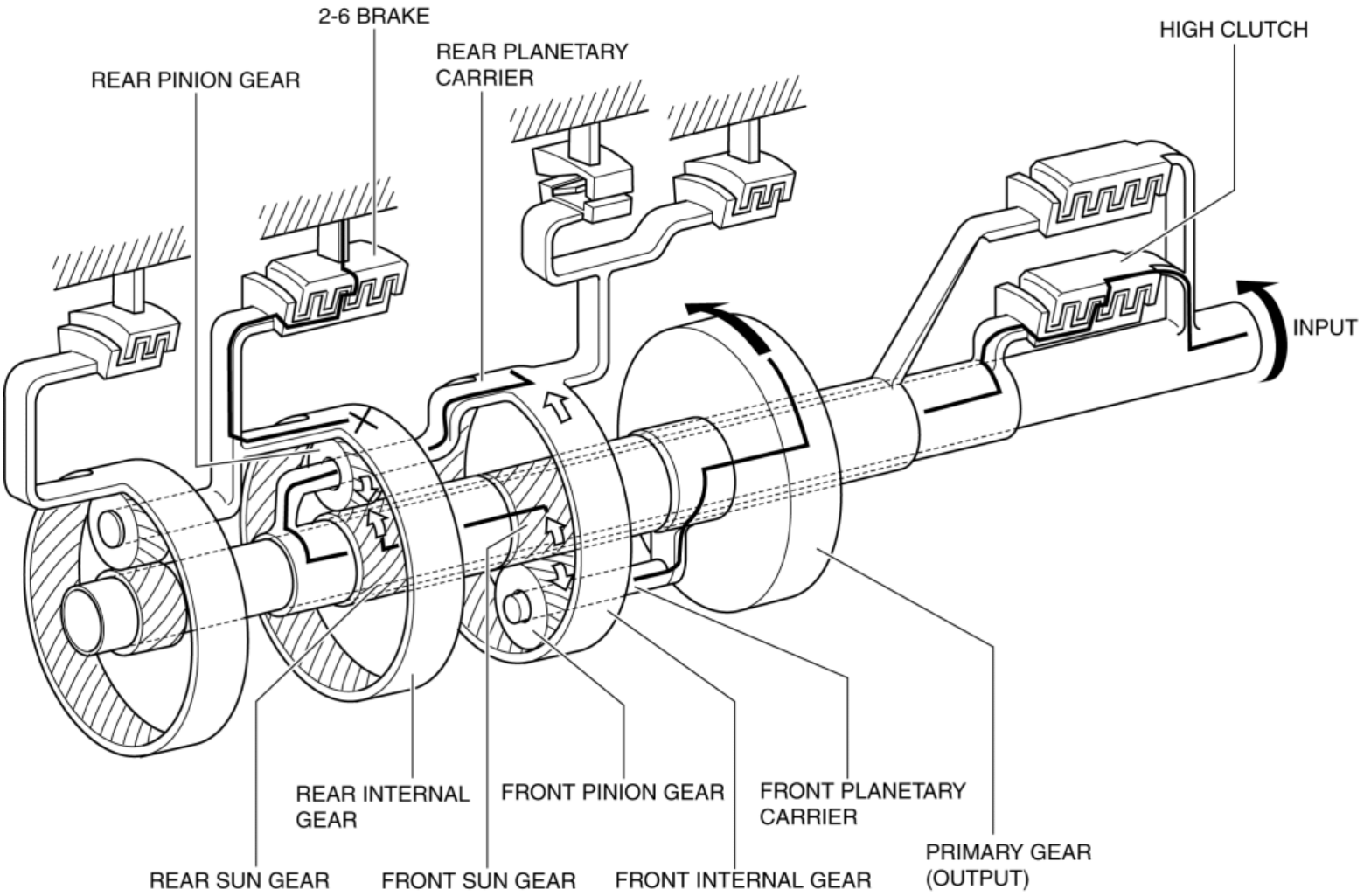

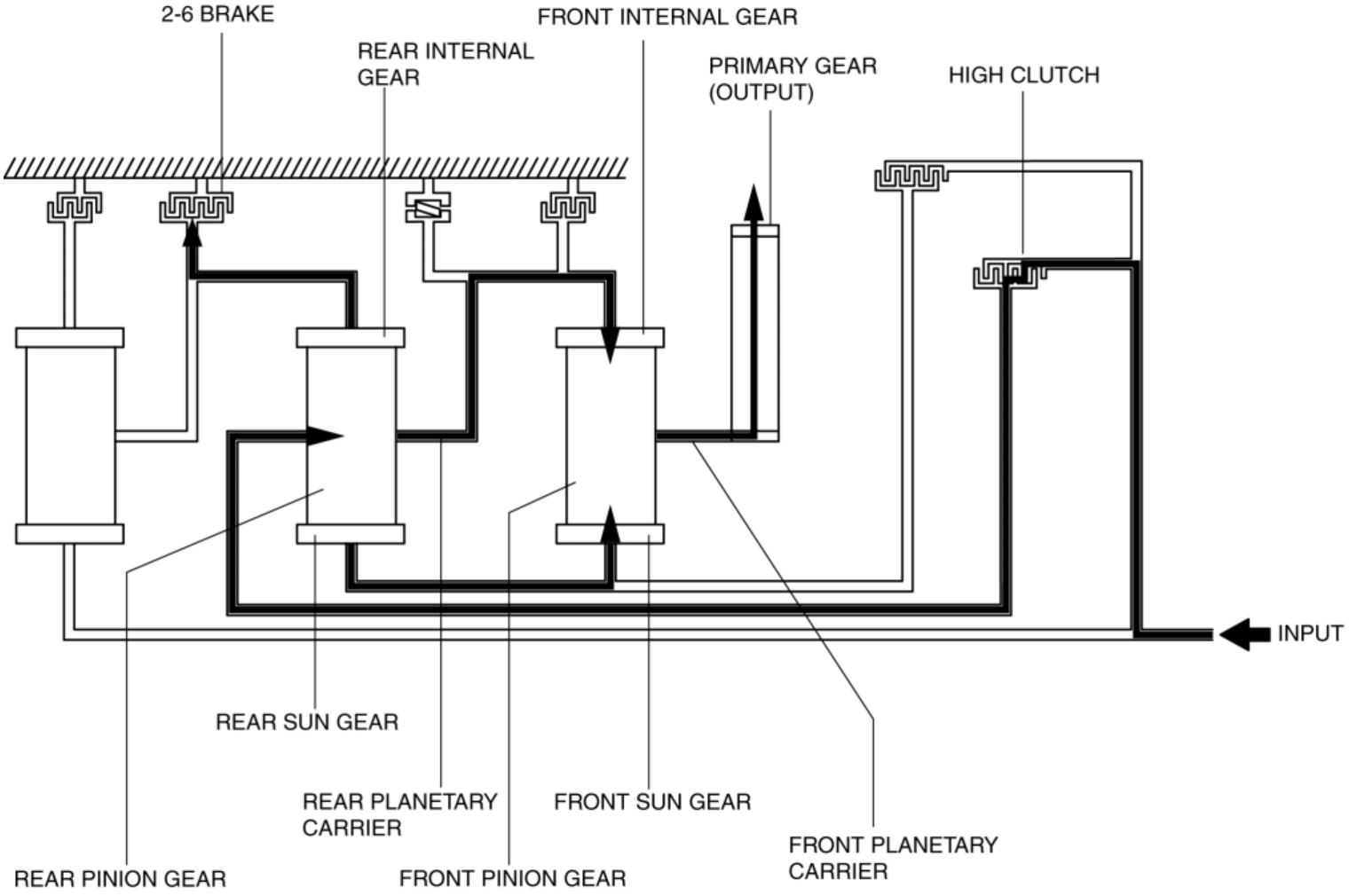
2-6 BRAKE
REAR INTERNAL GEAR
FRONT INTERNAL GEAR
PRIMARY GEAR (OUTPUT)
HIGH CLUTCH
INPUT
REAR SUN GEAR
REAR PLANETARY CARRIER
FRONT SUN GEAR
FRONT PLANETARY CARRIER
REAR PINION GEAR
FRONT PINION GEAR

REVERSE

POWER FLOW [FW6A-EL]

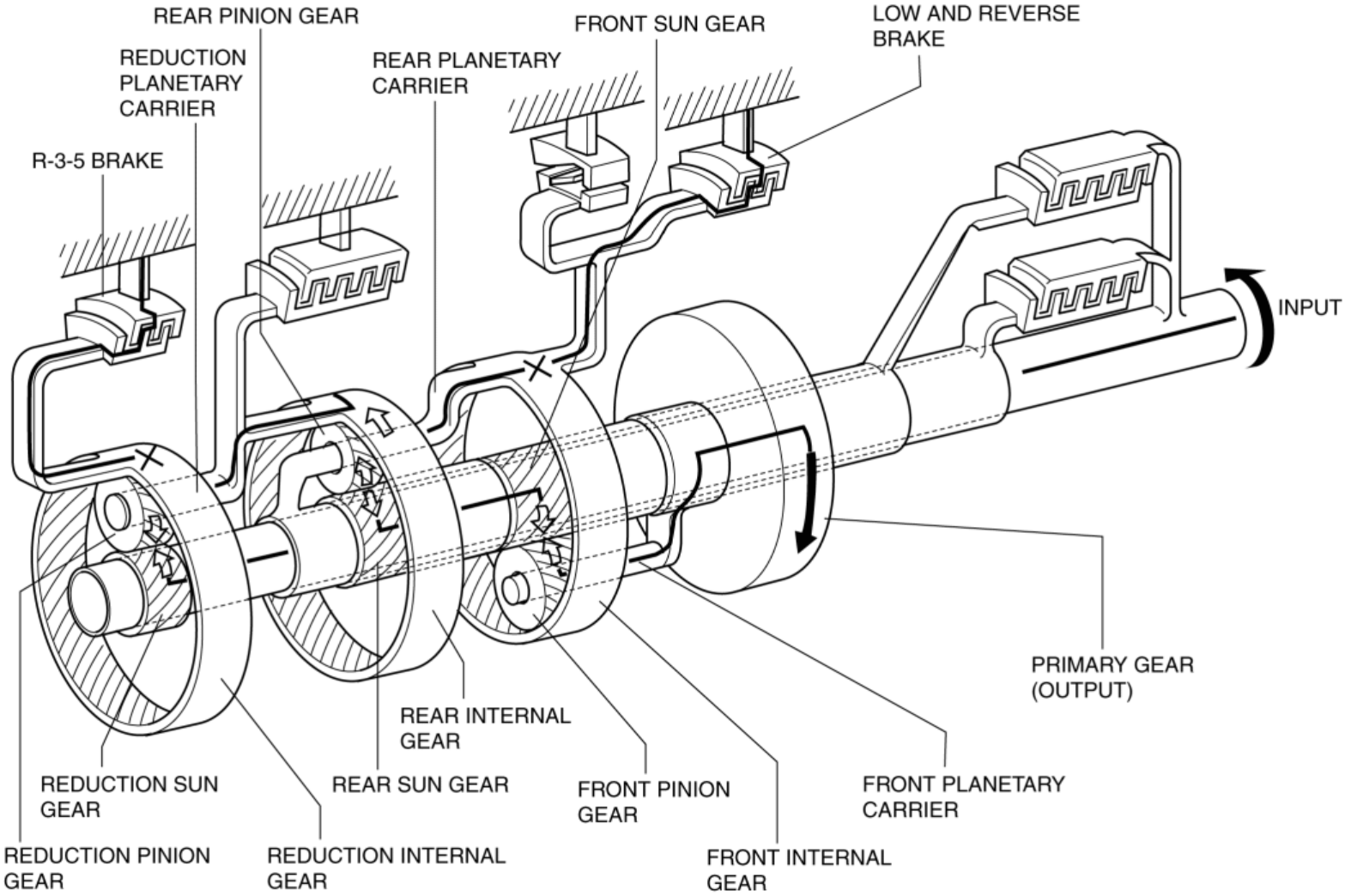

POWER FLOW [FW6A-EL]

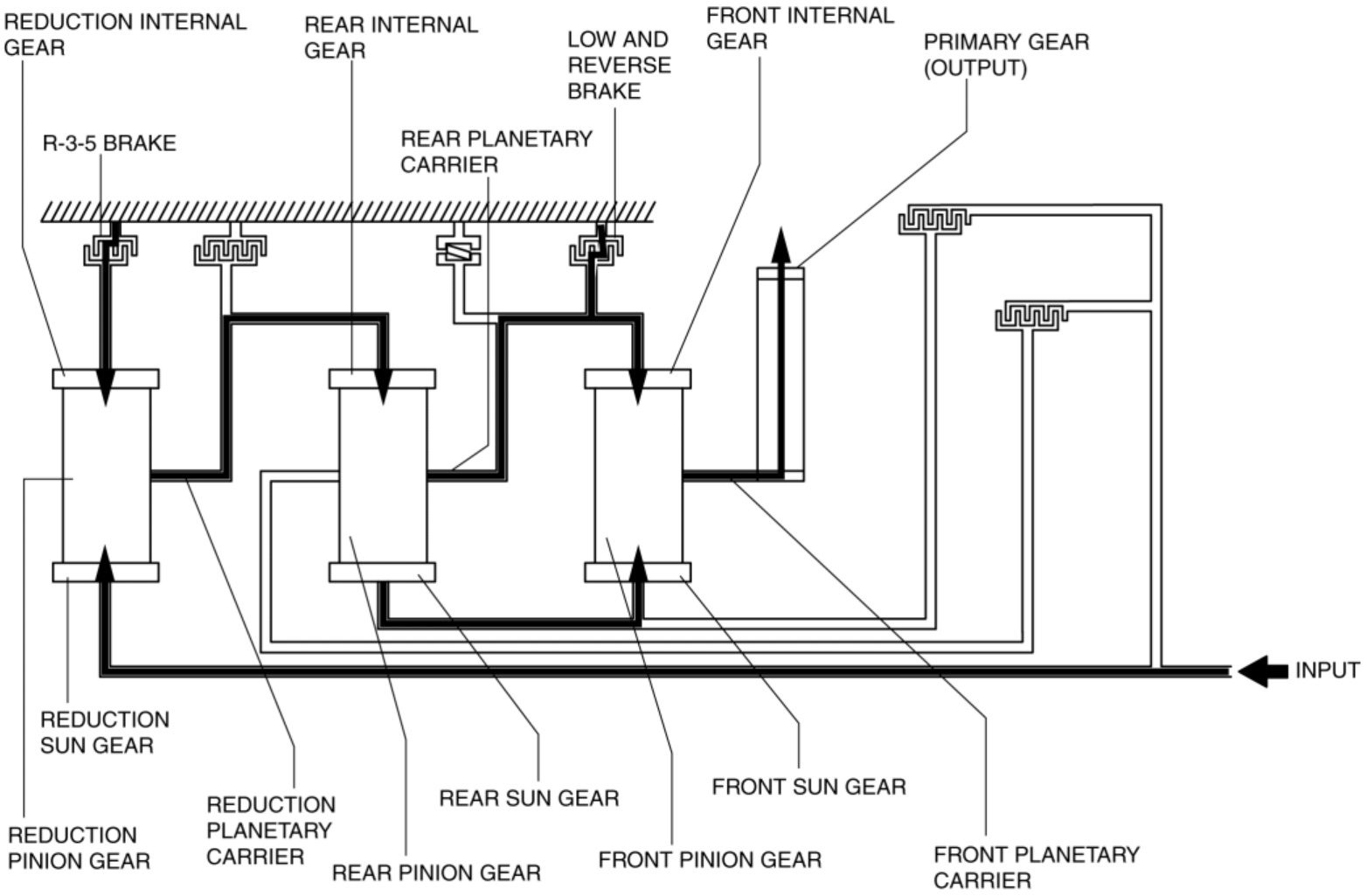

2014 - Mazda3 - Transmission / Transaxle

PARKING MECHANISM [FW6A-EL]

Purpose / Function

- The parking mechanism locks the output gear when the selector lever is shifted to the P position which locks the driving wheels against rotation to prevent coasting when parking the vehicle.

Construction / Operation

- For component parts related to the parking mechanism, refer to the following figure.
- When the selector lever is shifted to the P position, the manual plate is rotated in the direction of arrow A via the manual shaft. As a result, the parking rod component moves in the direction of arrow B. As a result, the cam on the end of the parking rod component presses the parking pawl against the parking gear, the parking pawl and parking gear are engaged, and the rotation of the output gear is locked. Even if the parking pawl is positioned at the projection of the parking gear and cannot be engaged, the driving wheels together with the parking gear are rotated by moving the vehicle slightly so that the parking pawl and parking gear engage.

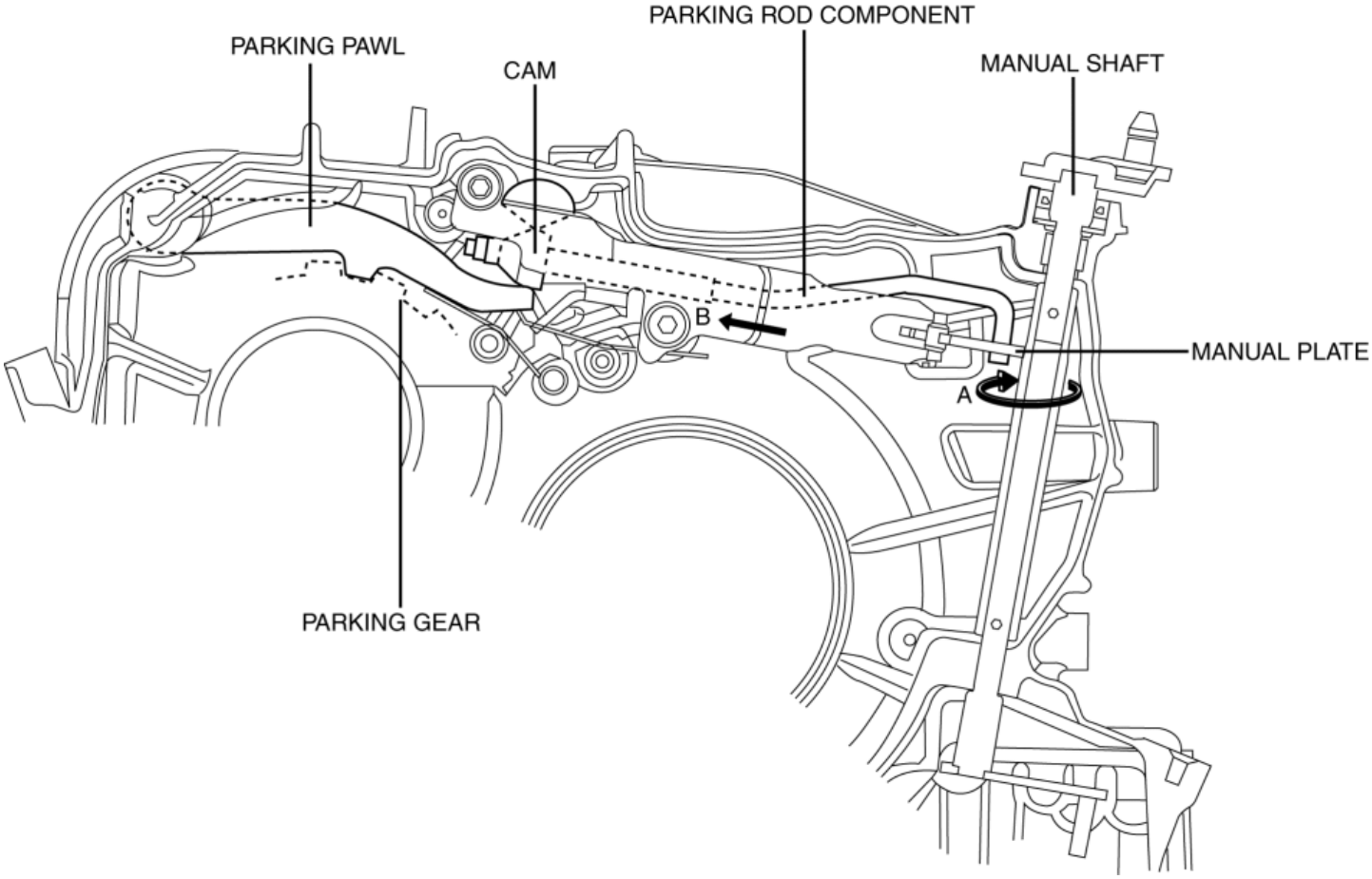

2014 - Mazda3 - Transmission/Transaxle

HYDRAULIC PRESSURE CONTROL SYSTEM OUTLINE [FW6A-EL]

Outline

- The hydraulic control mechanism consists of an oil cooler which maintains the hydraulic pressure at the optimum temperature, a control valve body and each shift valve which perform adjustment and circuit switching of the hydraulic pressure based on the control content calculated by the TCM, and the oil pump which generates the hydraulic pressure of each clutch and brake.

Construction

Structural view

HYDRAULIC PRESSURE CONTROL SYSTEM OUTLINE [FW6A-EL]

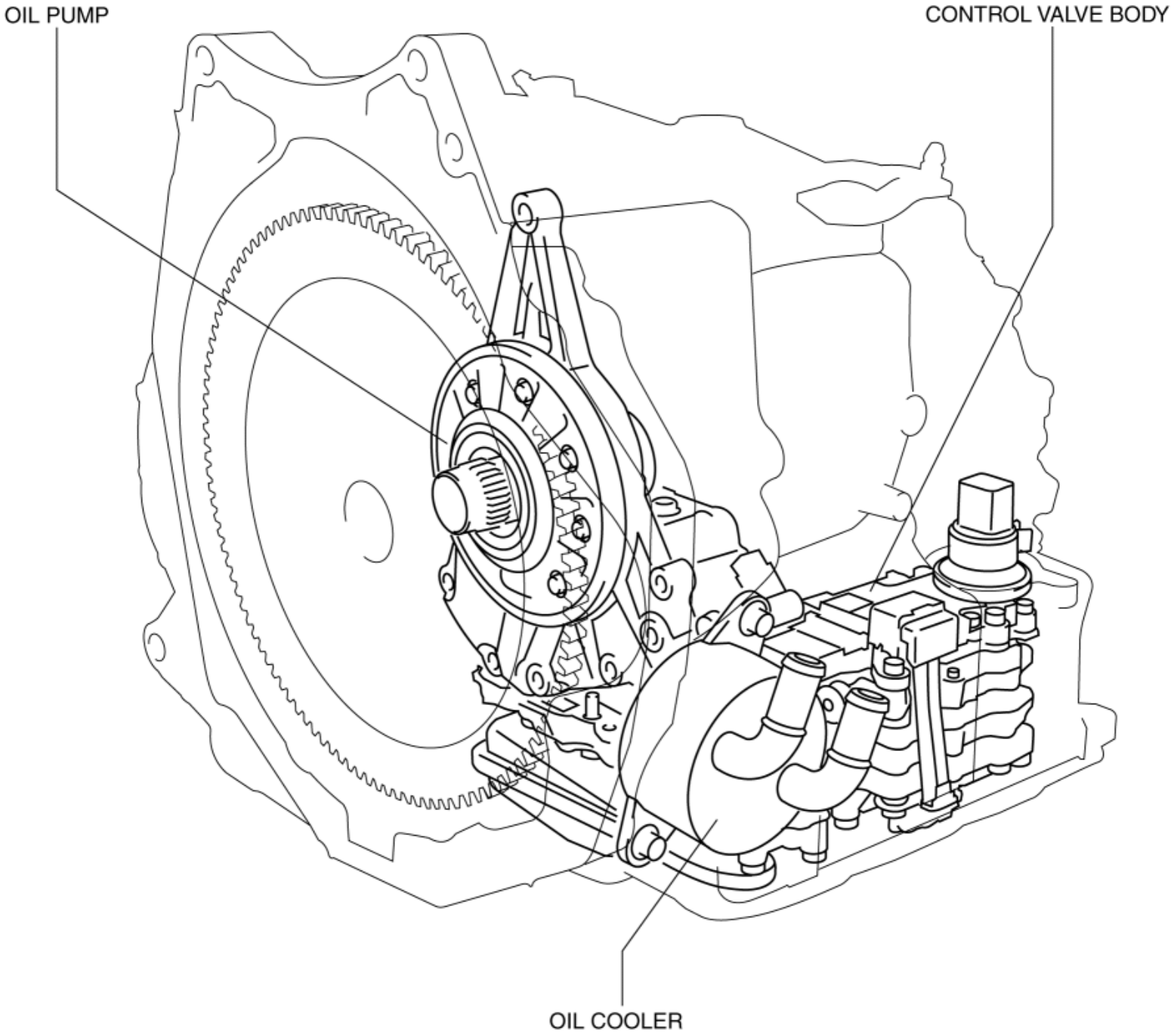

2014 - Mazda3 - Transmission / Transaxle

OIL PUMP [FW6A-EL]

Purpose / Function

- The oil pump generates hydraulic pressure in the oil line of the automatic transaxle together with supplying lubrication to powertrain related parts.

Construction

- The oil pump has adopted a gear type with built-in outer and inner rotors.
- The inner rotor engages with the torque converter and rotates in conjunction with the rotation of the torque converter.

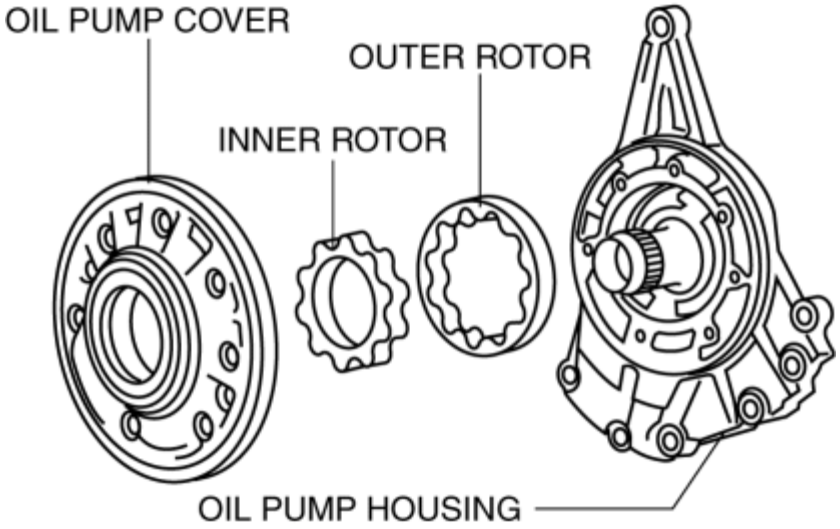

Operation

- When the inner rotor in the oil pump rotates, vacuum is generated in the outer rotor. As a result, ATF in the oil pan is suctioned to the oil pump. Further rotation of the inner rotor causes the inner rotor blades to push the ATF and discharge it from the oil pump.
- The ATF discharge flow amount increases or decreases in proportion to the rotation speed of the inner rotor.

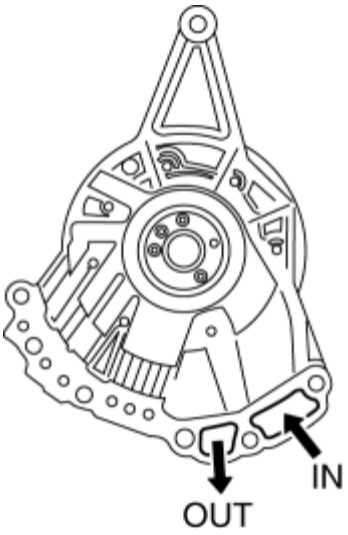
IN
OUT

2014 - Mazda3 - Transmission/Transaxle

OIL STRAINER [FW6A-EL]

Purpose/Function

- The oil strainer filters particulate matter in the ATF by passing it through the built-in filter.

Construction

- The oil strainer is a built-in, non-woven fabric filter installed to the position shown in the following figure.

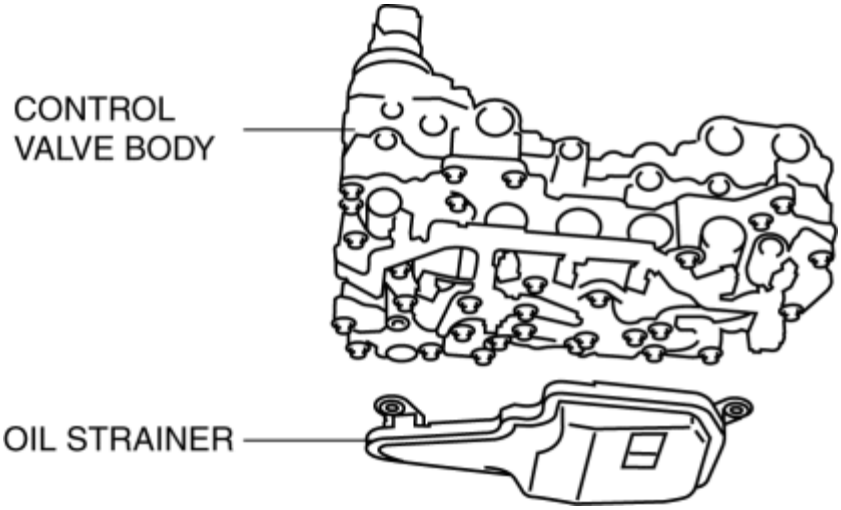

2014 - Mazda3 - Transmission / Transaxle

CONTROL VALVE BODY [FW6A-EL]

Purpose / Function

- The control valve body controls the hydraulic pressure generated by the oil pump by each solenoid valve. In addition, the oil passages which introduce hydraulic pressure to the pistons for each clutch and brake is formed by the switching of each built-in shift valve.

Construction

- The control valve body consists of integrated hydraulic control related parts and electronic control related parts.
- The hydraulic control related parts basically consist of the upper control valve body and main control valve body each with built-in shift valves, and the solenoid control valve body with built-in solenoid valves.

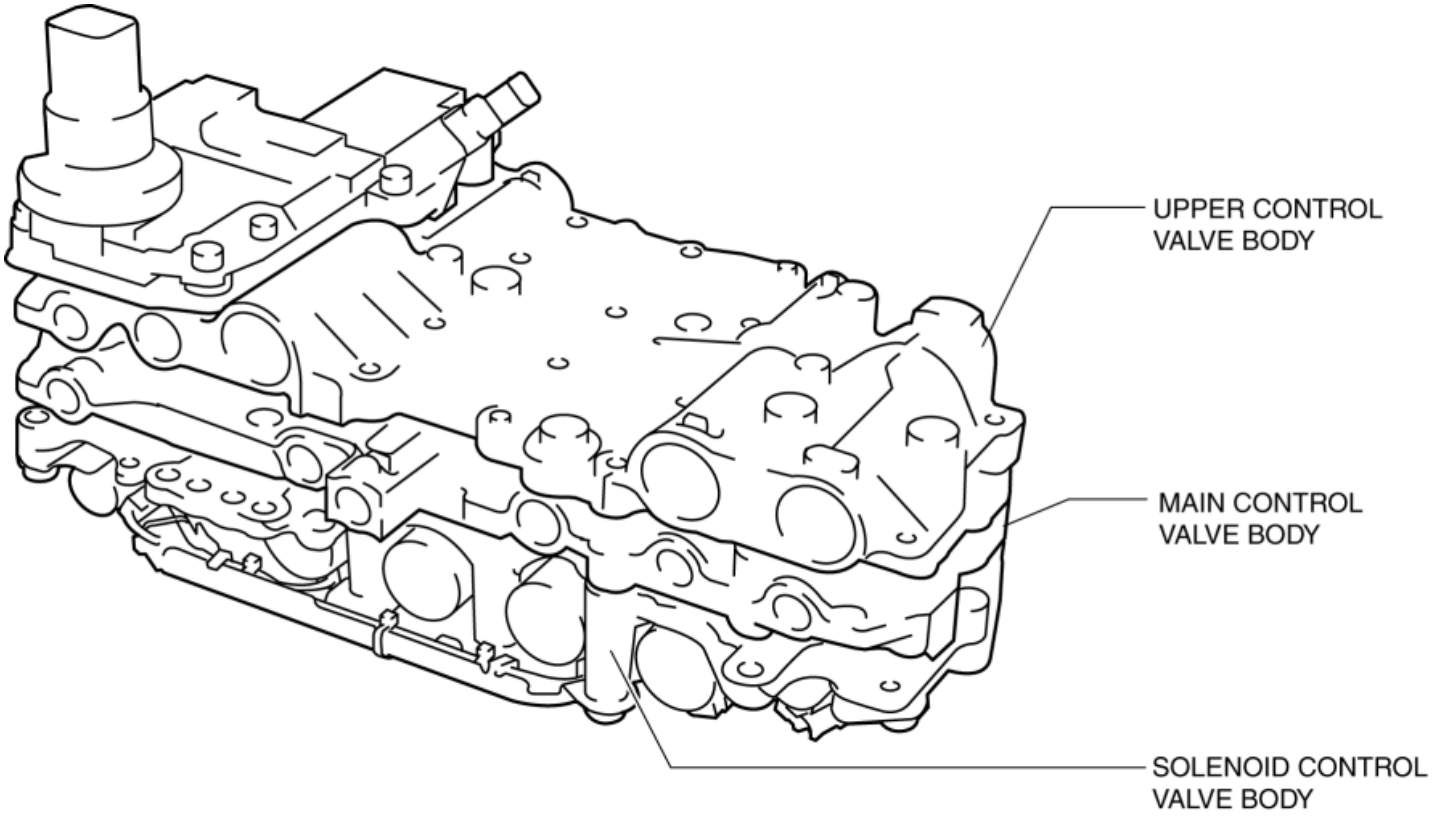

2014 - Mazda3 - Transmission / Transaxle

OIL COOLER [FW6A-EL]

Purpose / Function

- The oil cooler constantly maintains maximum ATF performance in the transaxle by maintaining an optimum ATF temperature which has the effect of achieving reduced fuel consumption.

Construction / Operation

- The oil cooler performs the following operations according to the ATF temperature condition:
    - Heating function: Warms the ATF using the radiator coolant to promote an earlier increase in the ATF temperature when its temperature is low. As a result of the earlier temperature increase, the ATF viscosity decreases which reduces drag in the transaxle.
    - Cooling function: Cools the ATF using the radiator coolant to maintain optimum conditions and prevent ATF expansion and deterioration.

OIL COOLER [FW6A-EL]

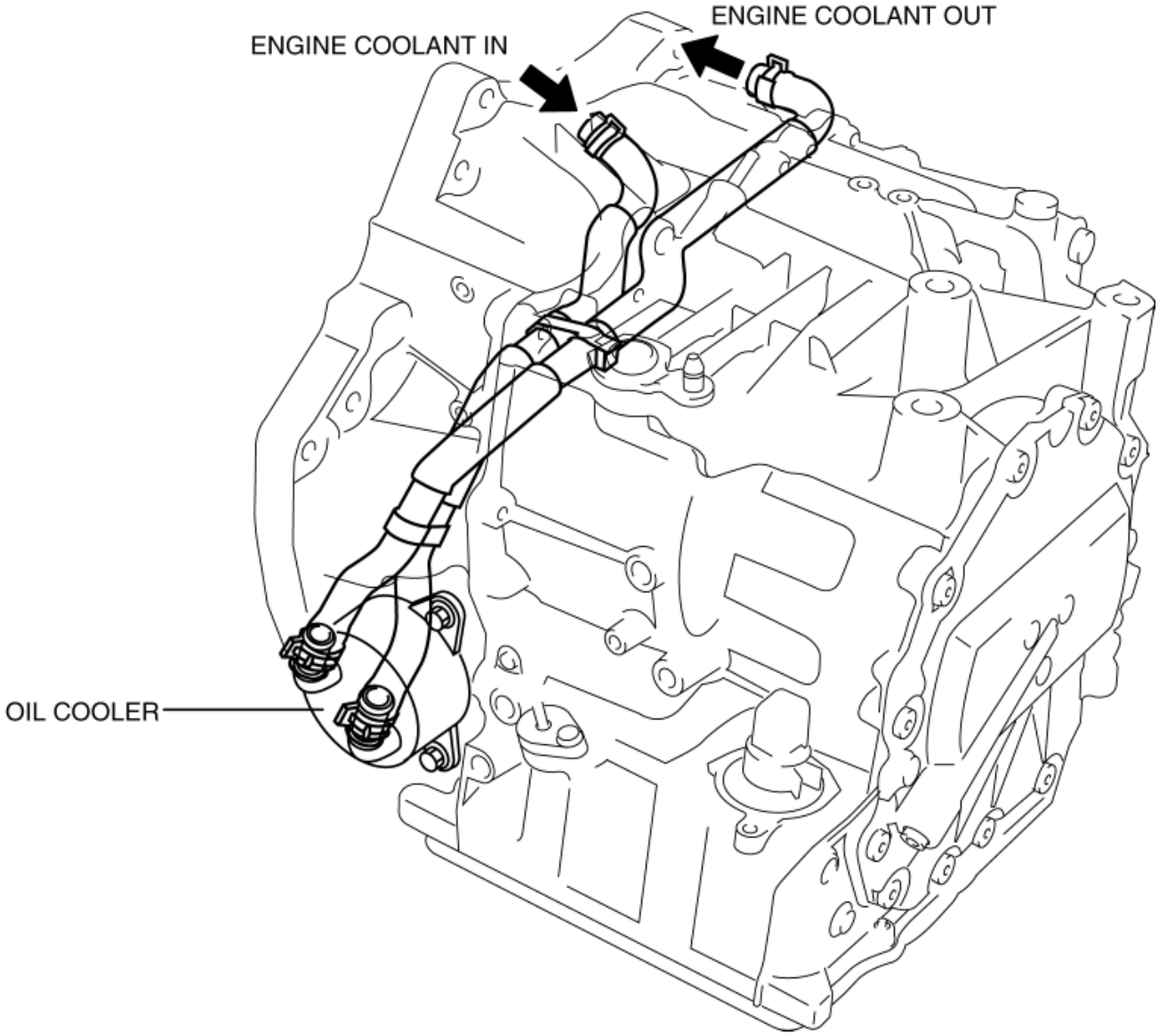

2014 - Mazda3 - Transmission/Transaxle

ELECTRONIC CONTROL SYSTEM OUTLINE [FW6A-EL]

Outline

- In the electronic control system, the TCM calculates the control content based on signals from each type of sensor and switch to operate output parts such as each solenoid. In consideration of suppressed shift shock, smooth driving, and improved fuel economy, the TCM performs controls so as to maintain the optimum driving performance in response to the vehicles driving scenario.

Construction

Block diagram

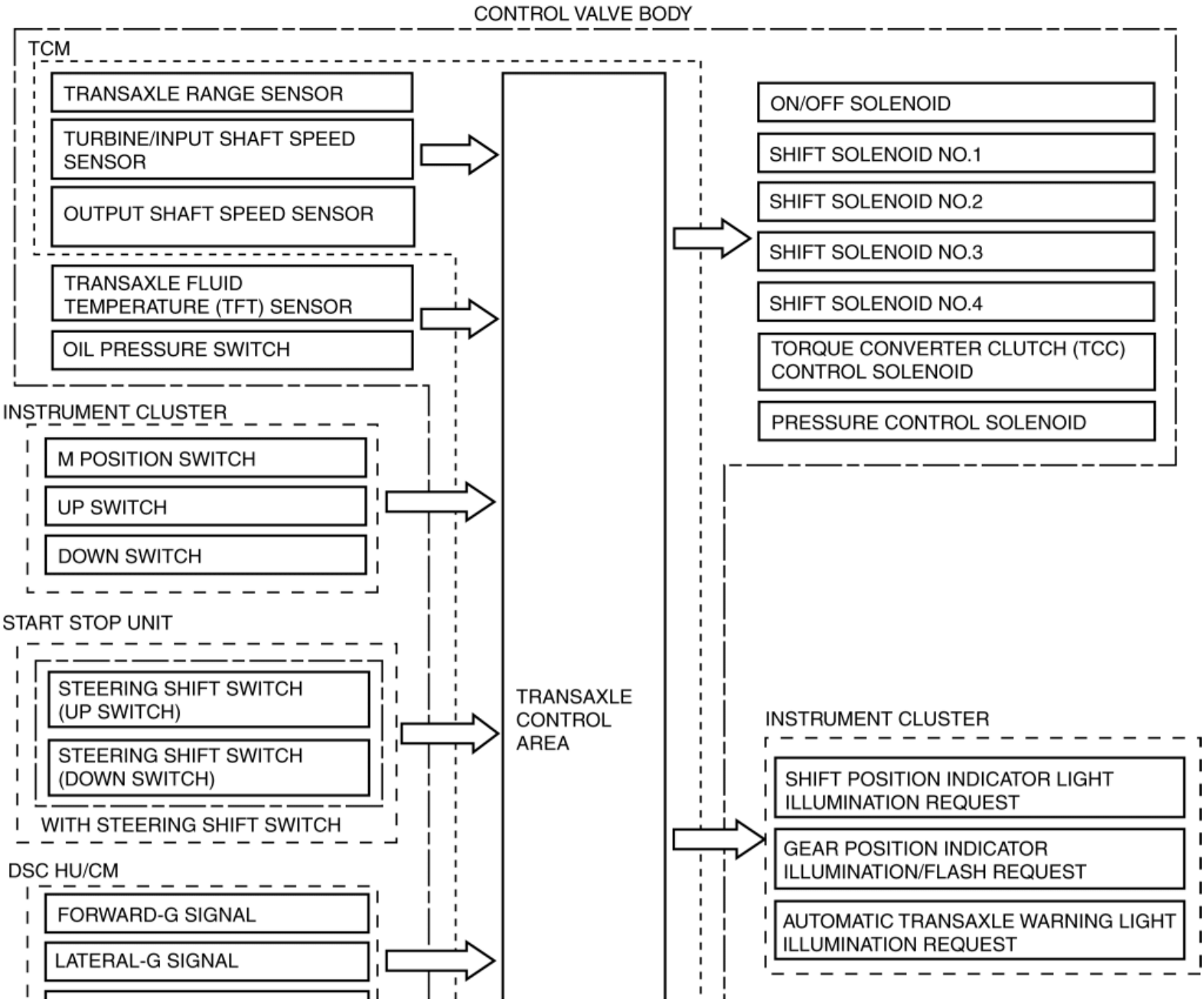

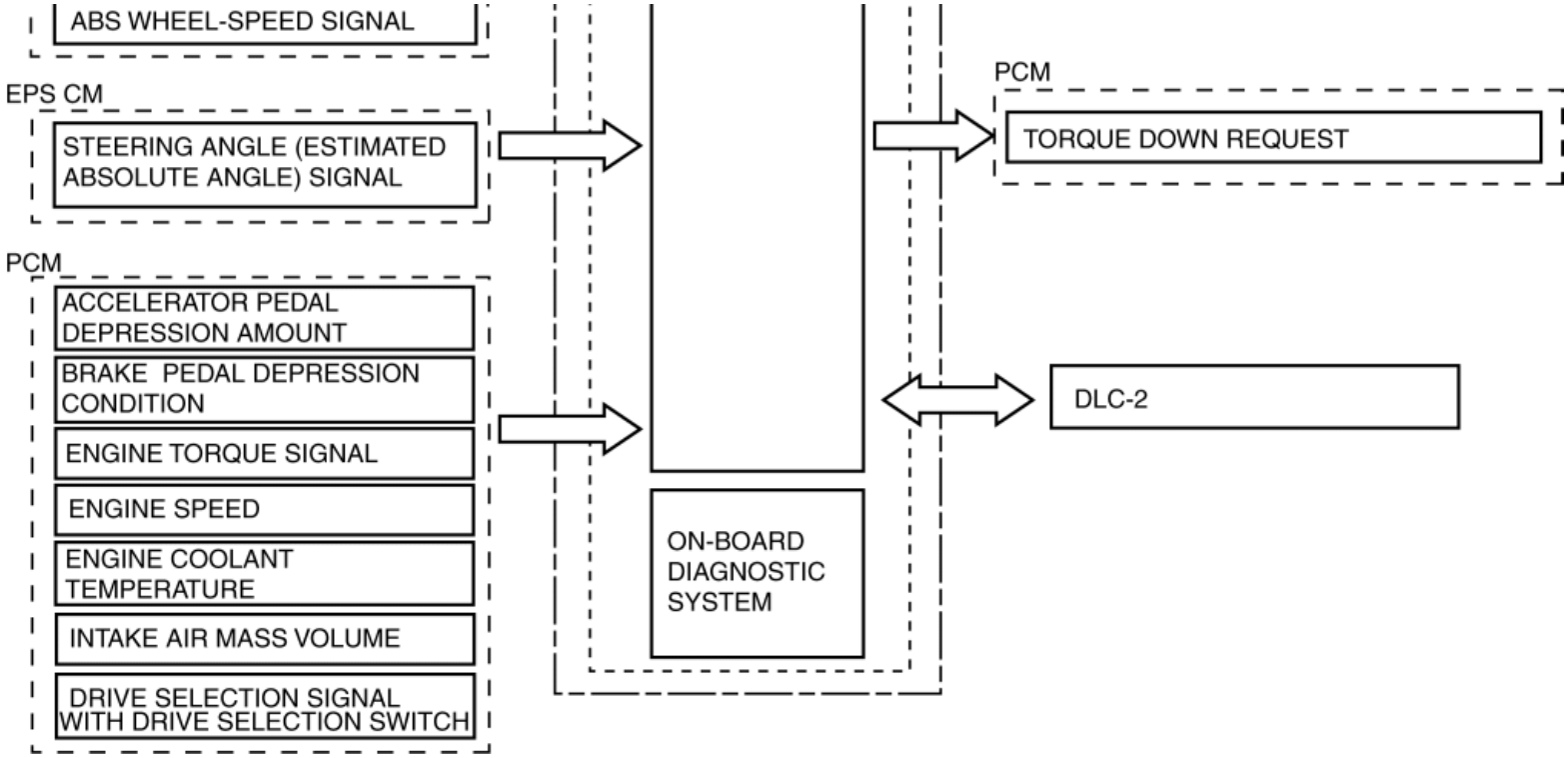
ABS WHEEL-SPEED SIGNAL
EPS CM
STEERING ANGLE (ESTIMATED ABSOLUTE ANGLE) SIGNAL
PCM
ACCELERATOR PEDAL DEPRESSION AMOUNT
BRAKE PEDAL DEPRESSION CONDITION
ENGINE TORQUE SIGNAL
ENGINE SPEED
ENGINE COOLANT TEMPERATURE
INTAKE AIR MASS VOLUME
DRIVE SELECTION SIGNAL WITH DRIVE SELECTION SWITCH
ON-BOARD DIAGNOSTIC SYSTEM
PCM
TORQUE DOWN REQUEST
DLC-2

2014 - Mazda3 - Transmission / Transaxle

CONTROL VALVE BODY [FW6A-EL]

Purpose / Function

- A direct linear solenoid has been adopted for the solenoid valve which contributes to improved shift response, drive feel and reduced shift shock by the improved precision of the hydraulic pressure control.

Construction

- The control valve body consists of integrated hydraulic control related parts and electronic control related parts.
    - The transaxle range sensor, output shaft speed sensor, turbine/input shaft speed sensor, and the control valve body connector are built into the TCM and integrated with the automatic transaxle.
    - The transaxle fluid temperature (TFT) sensor, wiring harness, and the wiring harness cover bracket are built into the coupler component.
- If any of the component parts of the control valve body has a malfunction, the control valve body must be replaced because the replacement of a single part is not possible except for the following parts:
    - On/off solenoid
    - Oil pressure switch A, oil pressure switch B
    - Coupler component (built into transaxle fluid temperature (TFT) sensor)

CONTROL VALVE BODY [FW6A-EL]

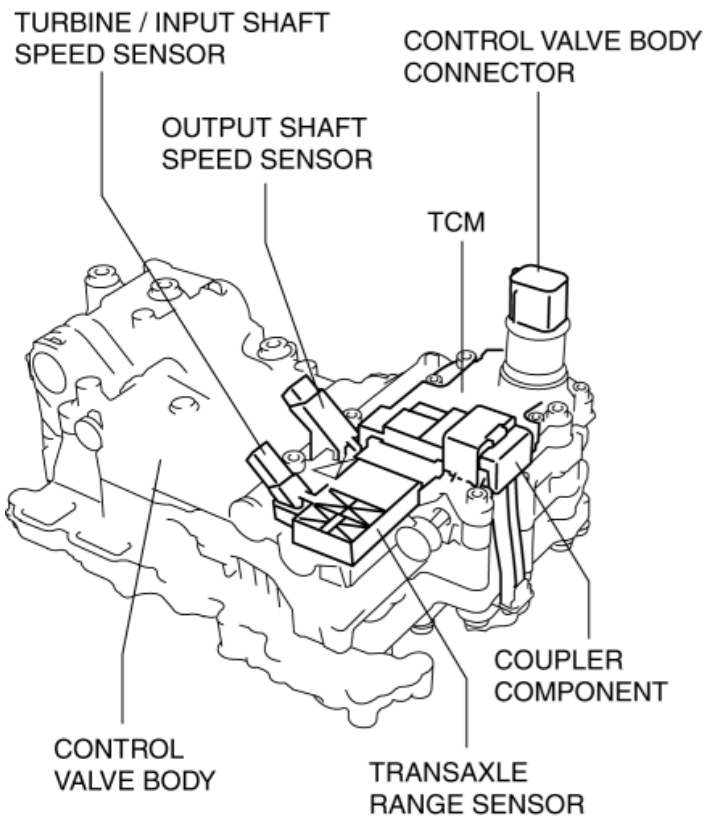

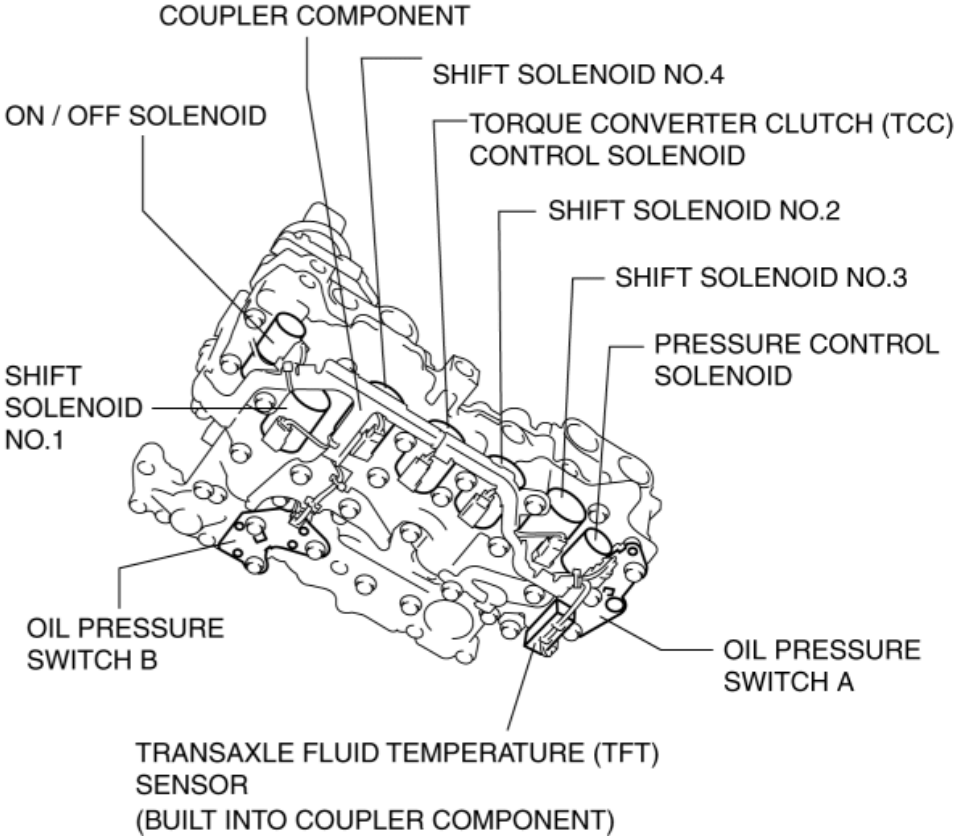

2014 - Mazda3 - Transmission / Transaxle

TRANSAXLE RANGE SENSOR [FW6A-EL]

Purpose / Function

- The transaxle range sensor detects the position of the manual valve and selector lever.
- The transaxle range sensor signal is used for automatic shift control, manual shift control, TCC control, line pressure control, direct electric shift control, learning control, engine-transaxle integration control, and the on-board diagnostic system.

Construction

- The transaxle range sensor consists of a housing and slider which are installed to the control valve body as a part of the TCM.
- The slider is assembled to the housing and the pin which projects from the slider and is connected to the manual valve.

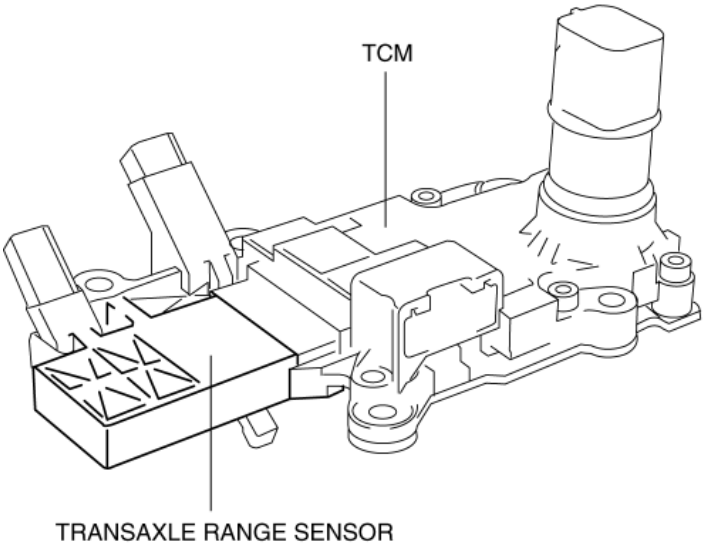

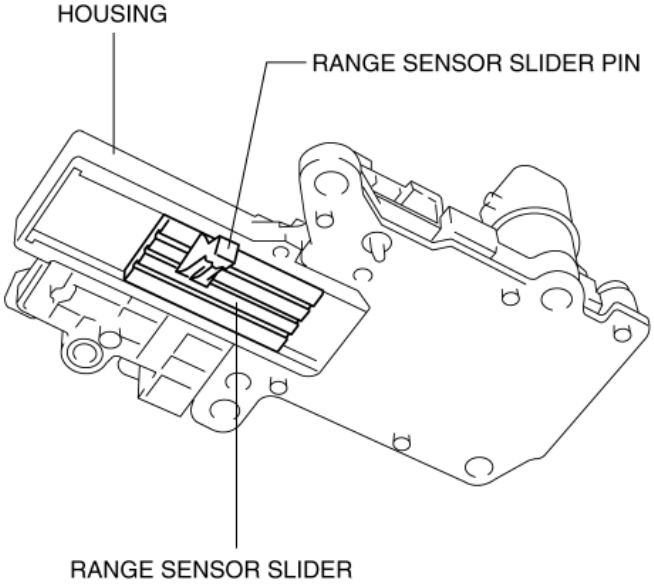

Operation

- When the selector lever is operated, the manual valve strokes via the manual shaft while the slider strokes via the slider pin.
- The transaxle range sensor detects the signal corresponding to the manual valve position according to the slider stroke. This signal is calculated in the TCM and detected as a range position.

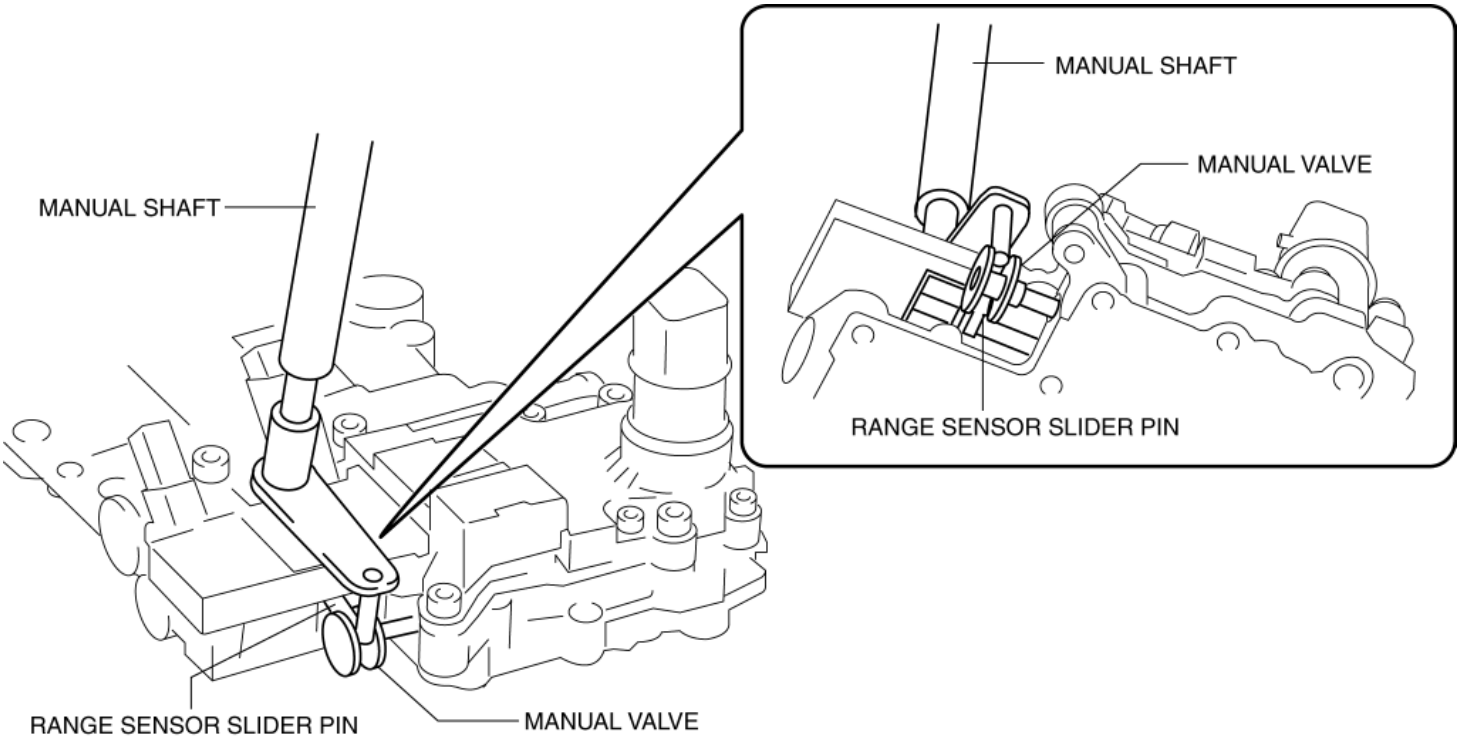
MANUAL SHAFT
MANUAL VALVE
RANGE SENSOR SLIDER PIN
MANUAL SHAFT
RANGE SENSOR SLIDER PIN
MANUAL VALVE

2014 - Mazda3 - Transmission/Transaxle

M POSITION SWITCH [FW6A-EL]

Purpose/Function

- The M position switch detects that the selector lever is in the M position.
- The M position switch signal is sent to the TCM via CAN, and is used for manual shift control and engine-transaxle integration control.

Construction

- The M position switch is installed to the selector lever.
- The M position switch is an on/off type switch.

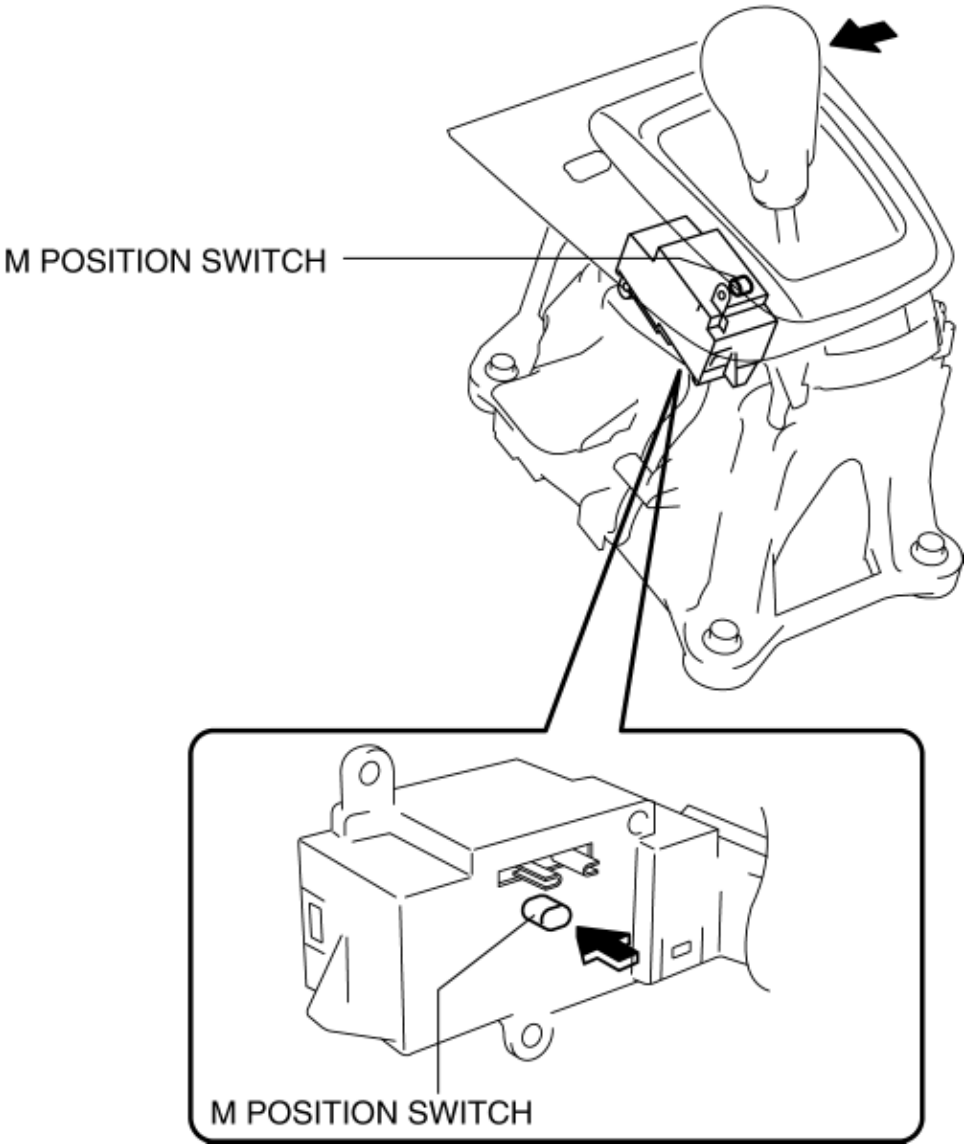

Operation

- When the selector lever is in the M position, the M position switch contact point closes.
- By opening and closing the M position switch contact point, the TCM detects that the selector lever is in the M position.

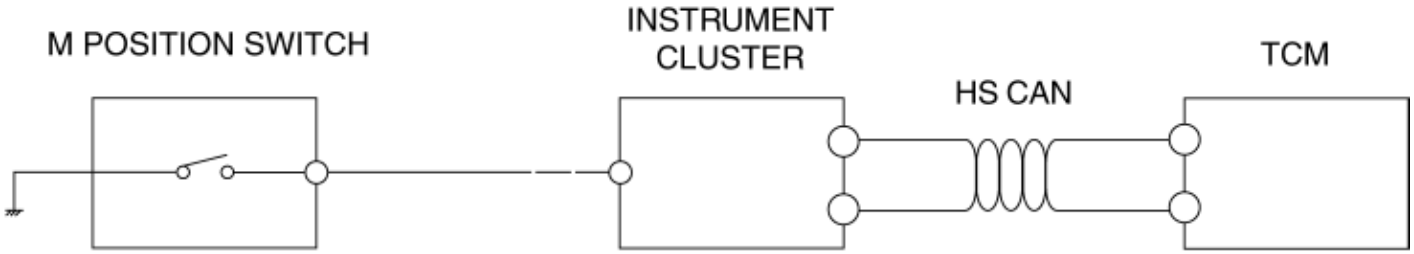

2014 - Mazda3 - Transmission/Transaxle

UP SWITCH [FW6A-EL]

Purpose/Function

- The up switch detects the shift up operation of the selector lever.
- The up switch signal is sent to the TCM via CAN and is used for manual shift control and engine-transaxle integration control.

Construction

- The up switch is installed to the selector lever.
- The up switch is an on/off type switch.

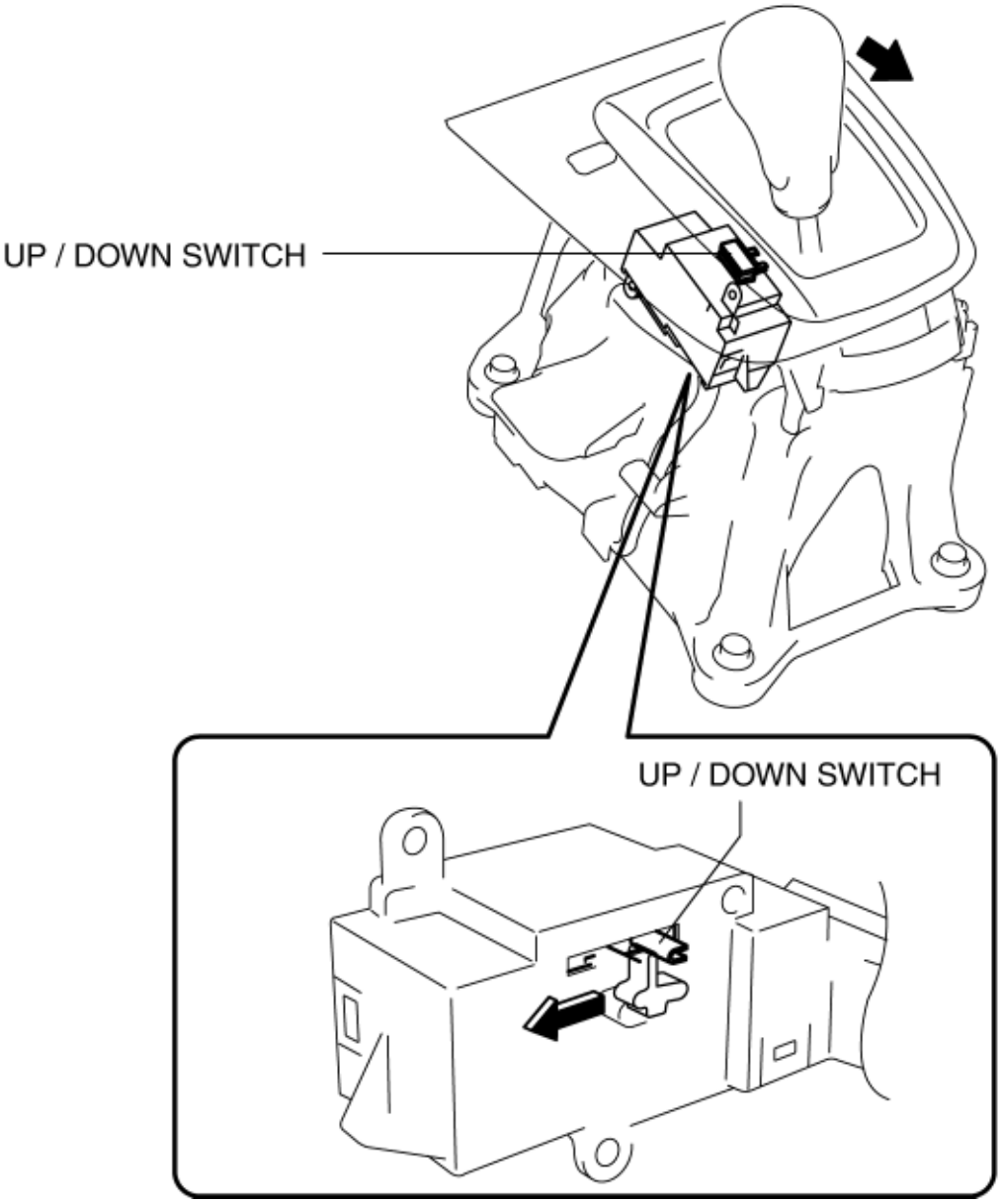

Operation

- When the selector lever is in the shift up position (+), the up switch contact point closes.
- Based on the opening and closing of the up switch contact point, the TCM detects that the shift up has been operated.

UP SWITCH [FW6A-EL]

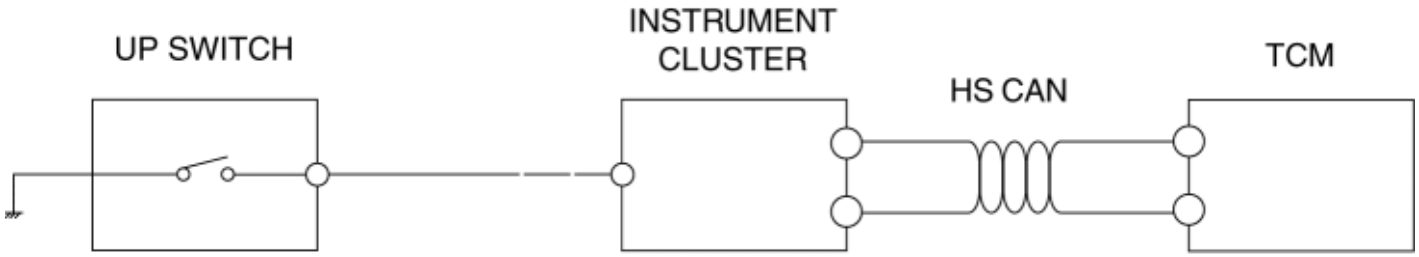

2014 - Mazda3 - Transmission / Transaxle

DOWN SWITCH [FW6A-EL]

Purpose / Function

- The down switch detects the shift down operation of the selector lever.
- The down switch signal is sent to the TCM via CAN and is used for manual shift control and engine-transaxle integration control.

Construction

- The down switch is installed to the selector lever.
- The down switch is an on/off type switch.

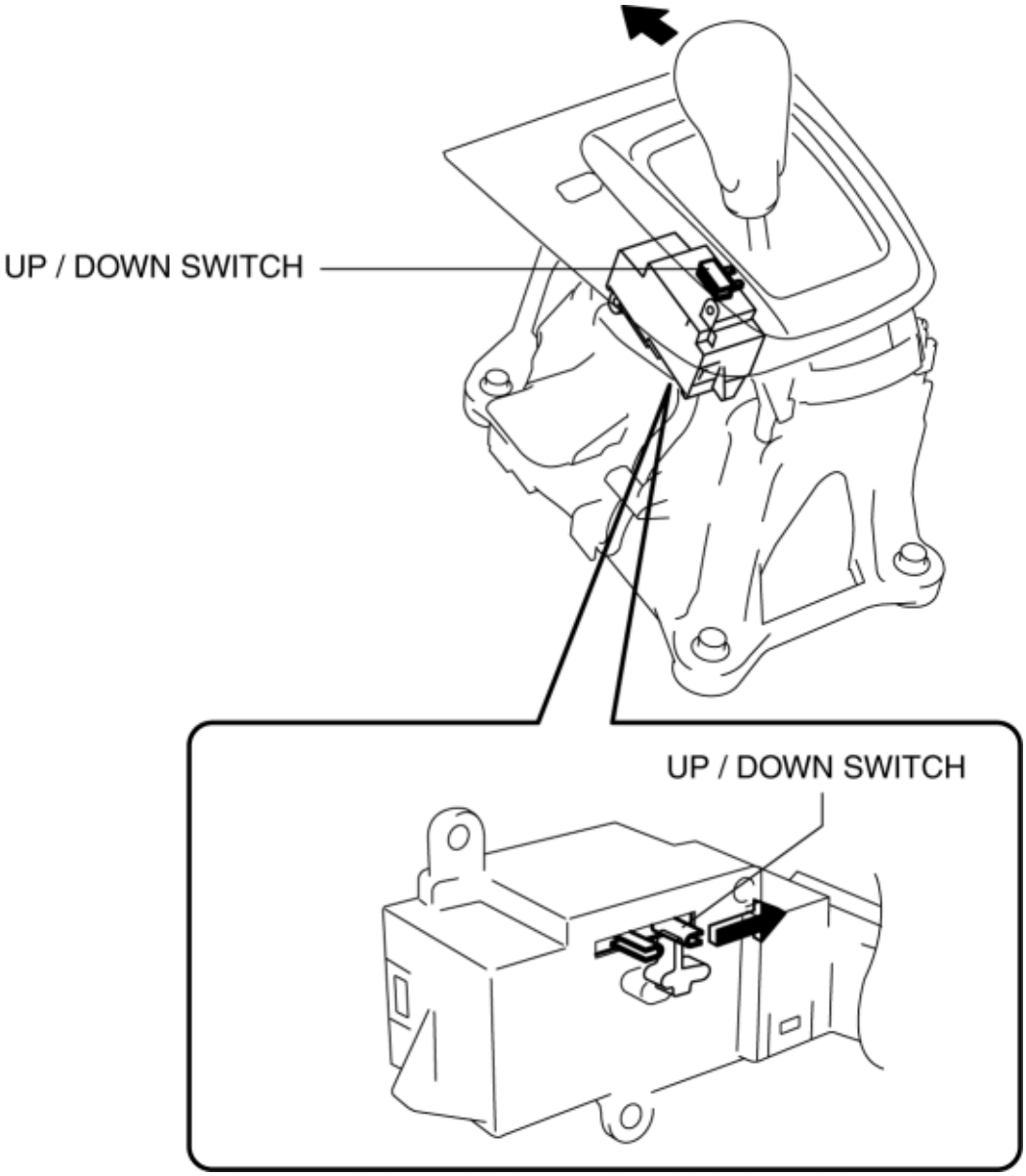

Operation

- When the selector lever is in the shift down position (-), the down switch contact point closes.
- Based on the opening and closing of the down switch contact point, the TCM detects that the shift down has been operated.

DOWN SWITCH [FW6A-EL]

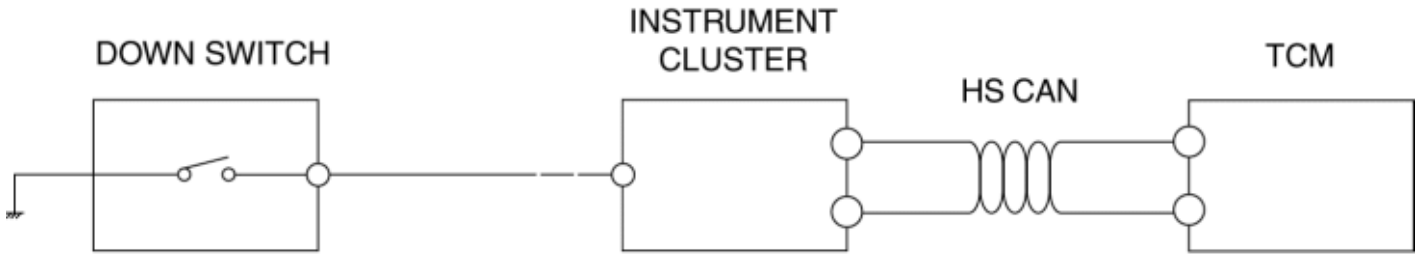

2014 - Mazda3 - Transmission/Transaxle

STEERING SHIFT SWITCH [FW6A-EL]

Purpose, Function

- The steering shift switch detects the shift-up and shift-down operations of the steering shift.
- Steering shift switch signal sends to the TCM via the CAN and is used for the manual shift control and engine transaxle total control.

Construction

- The steering shift switches are installed on the back side of the steering wheel; the up switch on the right side and the down switch on the left side.

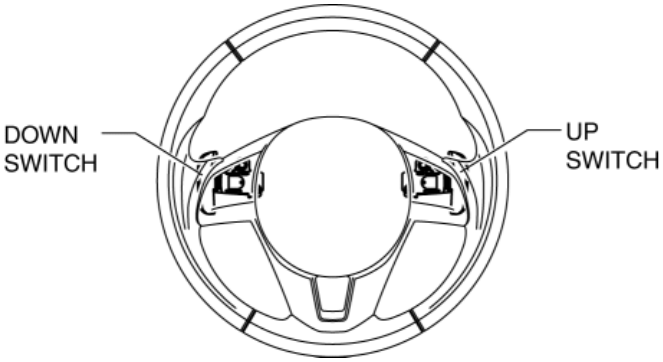

- By positioning the steering shift switches optimally for ease of driver operations, operability of the switches has been improved while ensuring an easy-to-grip steering wheel.

Operation

- The steering shift switches are a momentary-type switch, thus the contact point closes only when a switch is operated (pulled).
- The TCM detects the steering shift switch operation condition by opening/closing the up or down switch contact point for the steering shift switch.

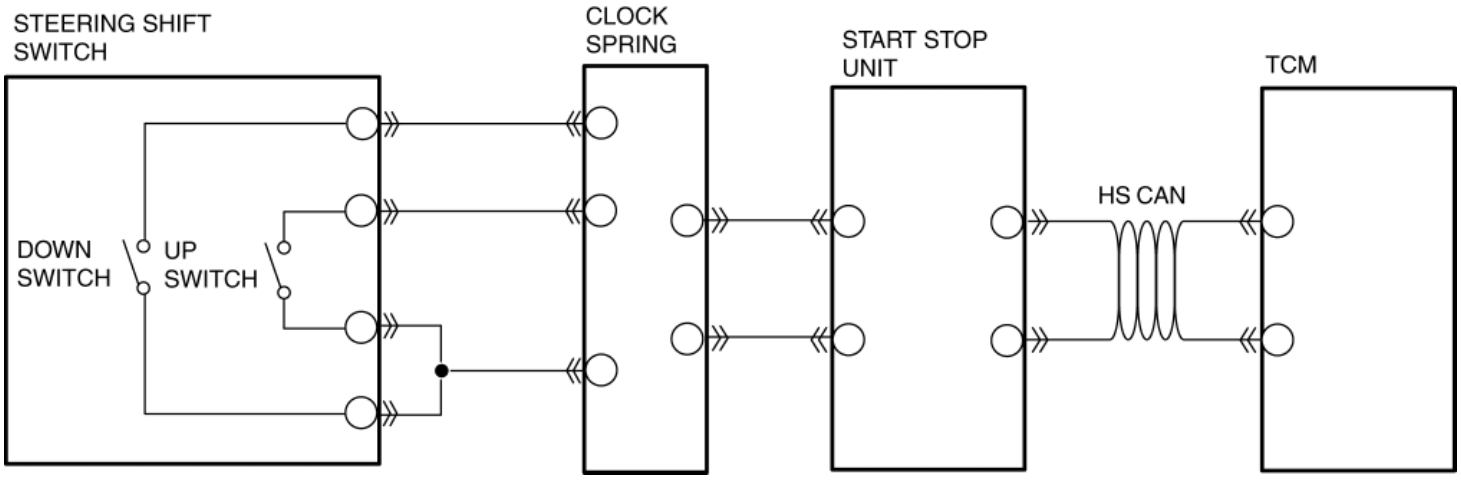

2014 - Mazda3 - Transmission / Transaxle

TRANSAXLE FLUID TEMPERATURE (TFT) SENSOR [FW6A-EL]

Purpose / Function

- The transaxle fluid temperature (TFT) sensor detects the ATF temperature in the oil pan.
- The transaxle fluid temperature (TFT) sensor signal is used for automatic shift control, TCC control, line pressure control, direct electric shift control, learning control, and the on-board diagnostic system.

Construction

- The transaxle fluid temperature (TFT) sensor is integrated with the coupler component and installed to the control valve body.

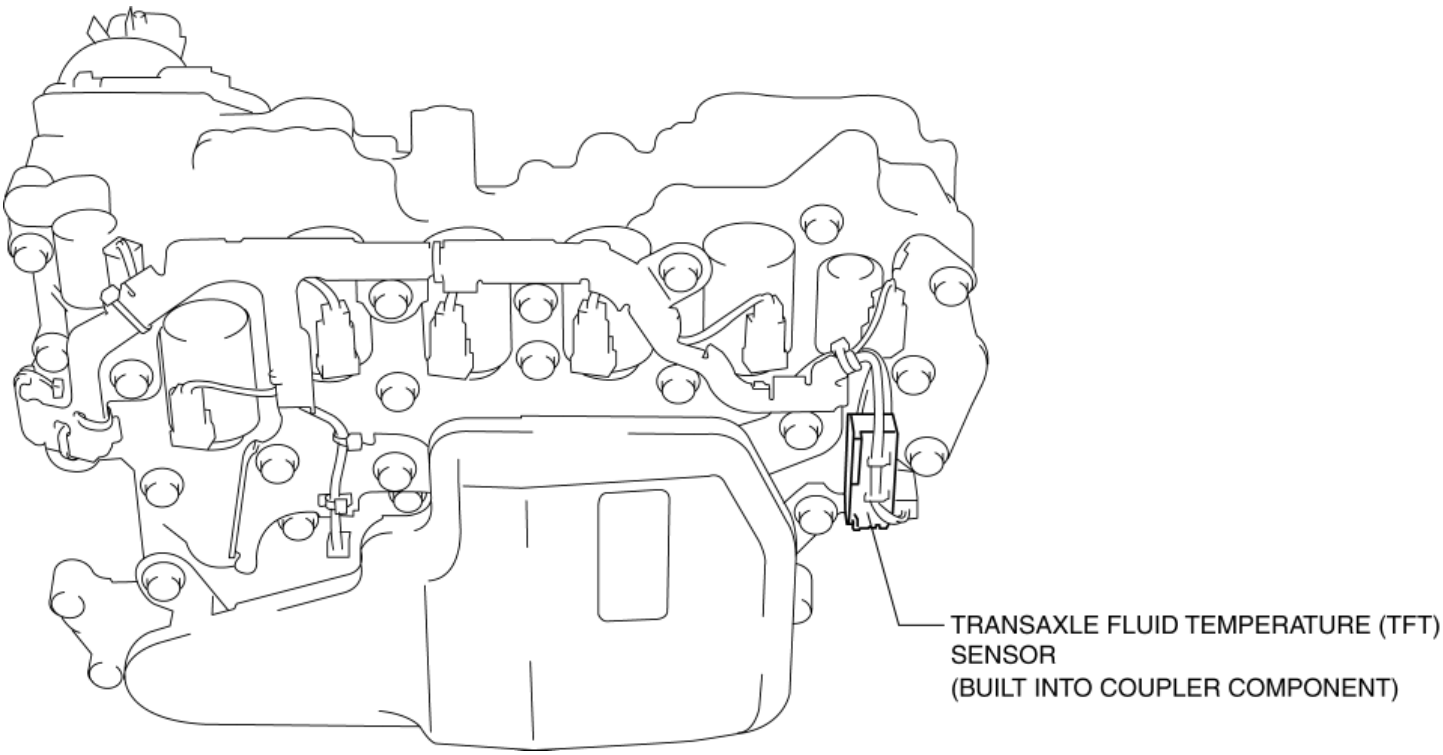

Operation

- The transaxle fluid temperature (TFT) sensor outputs the signal corresponding to the ATF temperature in the oil pan to the TCM.

2014 - Mazda3 - Transmission / Transaxle

OIL PRESSURE SWITCH [FW6A-EL]

Purpose / Function

- The oil pressure switch detects the engagement pressures of the low clutch, 2-6 brake, R-3-5 brake, and the high clutch.
- The oil pressure switch signal is used for automatic shift control, manual shift control, TCC control, line pressure control, direct electric shift control, and the on-board diagnostic system.

Construction

- The oil pressure switch contacts the oil passages of the low clutch, 2-6 brake, R-3-5 brake, and the high clutch and is installed to the control valve body.
- The oil pressure switch is an on/off type switch.

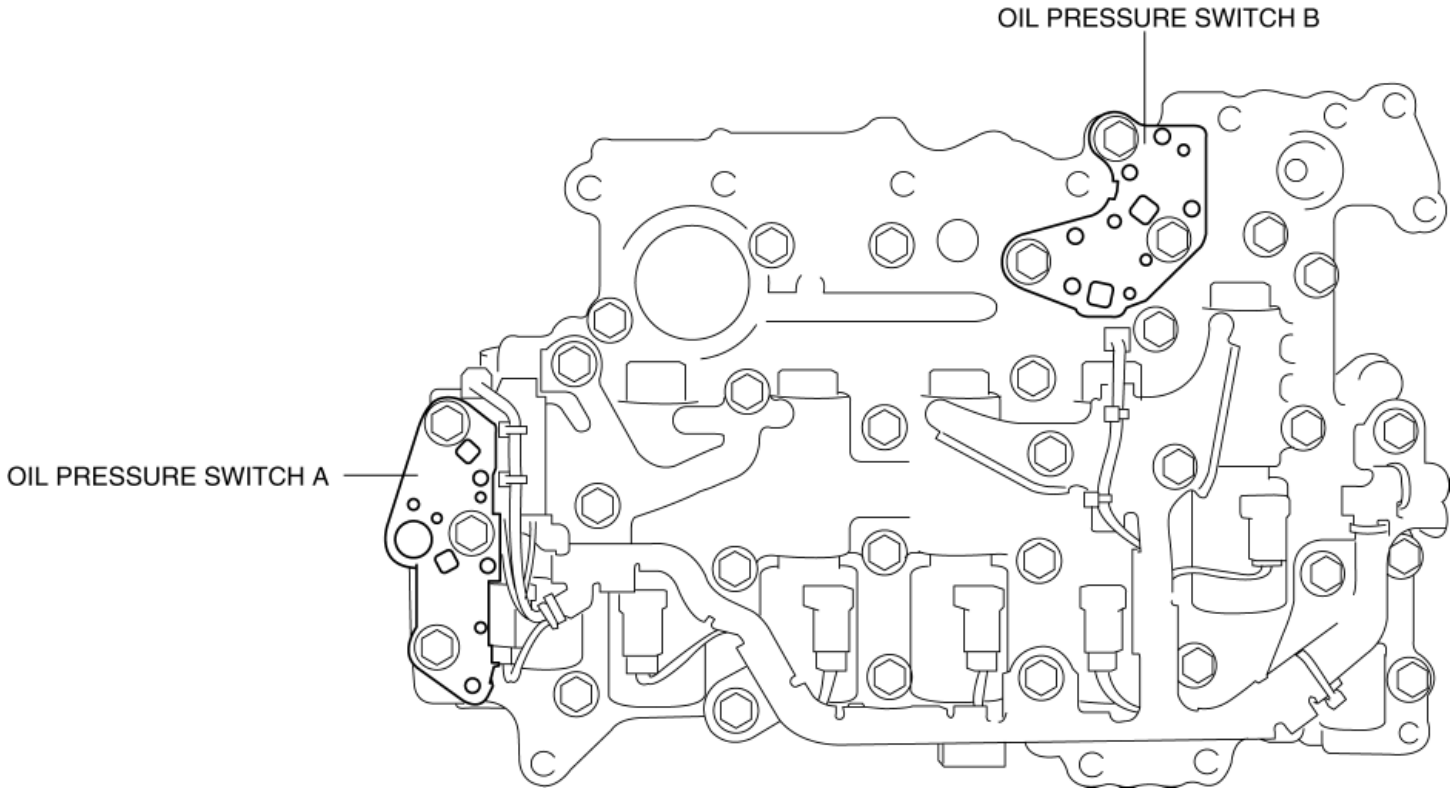

Relation of oil pressure switch and engagement pressure detection targets

Oil pressure switch		Clutch/brake
Oil pressure switch A	Oil pressure switch No.2	2-6 brake
	Oil pressure switch No.3	R-3-5 brake
Oil pressure switch B	Oil pressure switch No.1	Low clutch
	Oil pressure switch No.4	High clutch

Oil pressure switch A consists of oil pressure switch No.2 and No.3. If there is a malfunction in oil pressure switch No.2 and No.3, replace oil pressure switch A.

Oil pressure switch B consists of oil pressure switch No.1 and No.4. If there is a malfunction in oil pressure switch No.1 and No.4, replace oil pressure switch B.

Operation

- When engagement pressure is supplied to the applicable clutch and brake, the oil pressure switch contact point closes.
- The TCM detects that clutch engagement pressure is supplied to the applicable clutch/brake by opening/closing the oil pressure switch contact point.

X: Contact point is closed

Oil pressure switch	1GR	2GR	3GR	4GR	5GR	6GR
Oil pressure switch No.1	X	X	X	X		
Oil pressure switch No.2		X				X
Oil pressure switch No.3			X		X	
Oil pressure switch No.4				X	X	X

2014 - Mazda3 - Transmission/Transaxle

TURBINE/INPUT SHAFT SPEED SENSOR, OUTPUT SHAFT SPEED SENSOR [FW6A-EL]

Purpose/Function

- The turbine/input shaft speed sensor detects the rotation speed of the input shaft (low clutch drum).
- The output shaft speed sensor detects the rotation speed of the output shaft (primary gear).
- The turbine/input shaft speed sensor and output shaft speed sensor signals are used for automatic shift control, manual shift control, and the on-board diagnostic system.

Construction

- The turbine/input shaft speed sensor and output shaft speed sensor are both integrated with the TCM and built-into the control valve body.

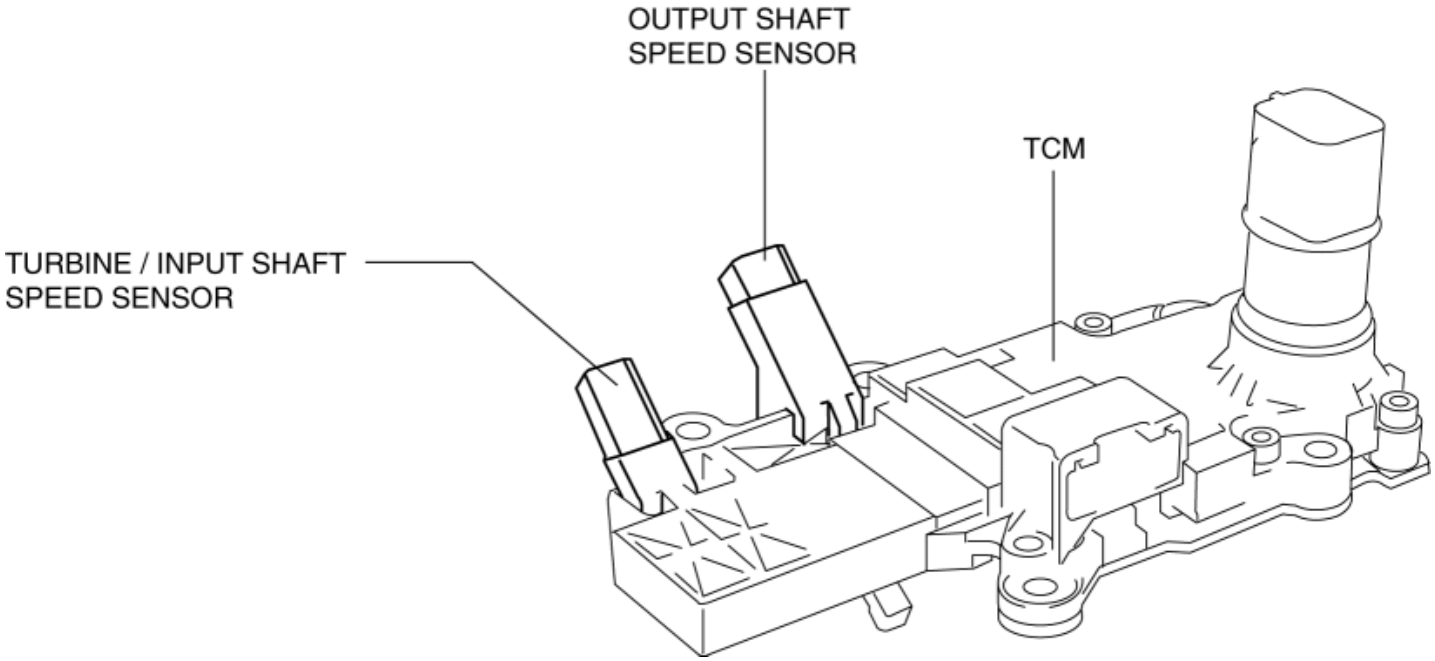

Operation

- The turbine/input shaft speed sensor changes the output signal according to the rotation speed of the low clutch drum.
- The output shaft speed sensor changes the output signal according to the rotation speed of the primary gear.

2014 - Mazda3 - Transmission/Transaxle

PRESSURE CONTROL SOLENOID [FW6A-EL]

Purpose/Function

- The pressure control solenoid adjusts the pressure control solenoid pressure and controls the line pressure based on the control signal from the TCM.

Construction

- The pressure control solenoid is installed to the solenoid control valve body.
- The pressure control solenoid is a normal open-type linear solenoid.

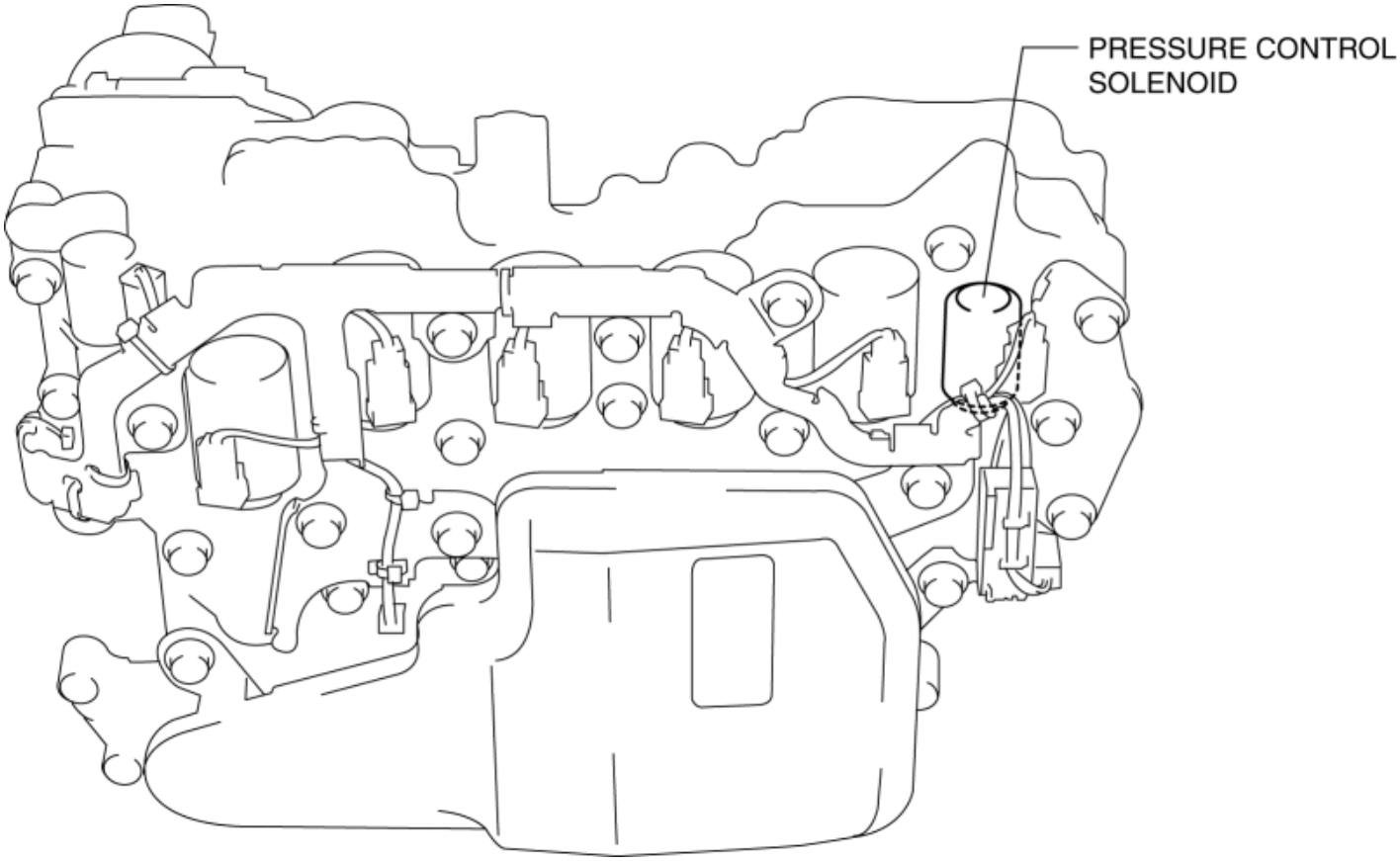

Operation

- Adjusts the pressure control solenoid pressure by increasing/decreasing the energization current to the pressure control solenoid according to the signal from the TCM.

PRESSURE CONTROL SOLENOID [FW6A-EL]

2014 - Mazda3 - Transmission/Transaxle

SHIFT SOLENOID NO.1 [FW6A-EL]

Purpose/Function

- Shift solenoid No.1 adjusts the hydraulic pressure in the low clutch circuit based on the current demand from the TCM according to the vehicle conditions.

Construction

- Shift solenoid No.1 is installed to the solenoid control valve body.
- Shift solenoid No.1 is a normal closed-type linear solenoid.

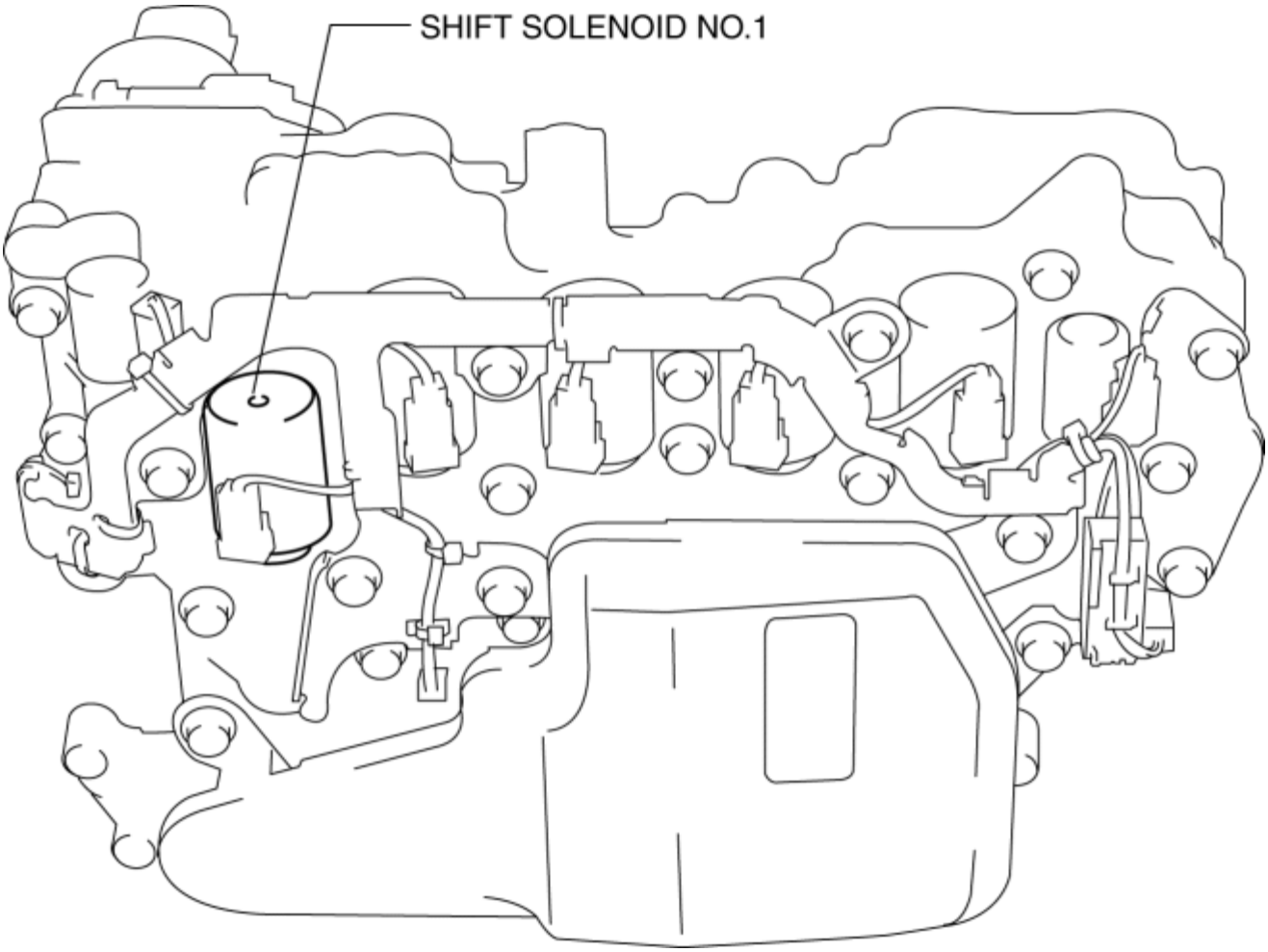

Operation

- Adjusts the low clutch pressure by increasing/decreasing the energization current to shift solenoid No.1 according to the signal from the TCM.

2014 - Mazda3 - Transmission/Transaxle

SHIFT SOLENOID NO.2 [FW6A-EL]

Purpose/Function

- Shift solenoid No.2 adjusts the hydraulic pressure in the 2-6 brake circuit based on the current demand from the TCM according to the vehicle conditions.

Construction

- Shift solenoid No.2 is installed to the solenoid control valve body.
- Shift solenoid No.2 is a normal closed-type linear solenoid.

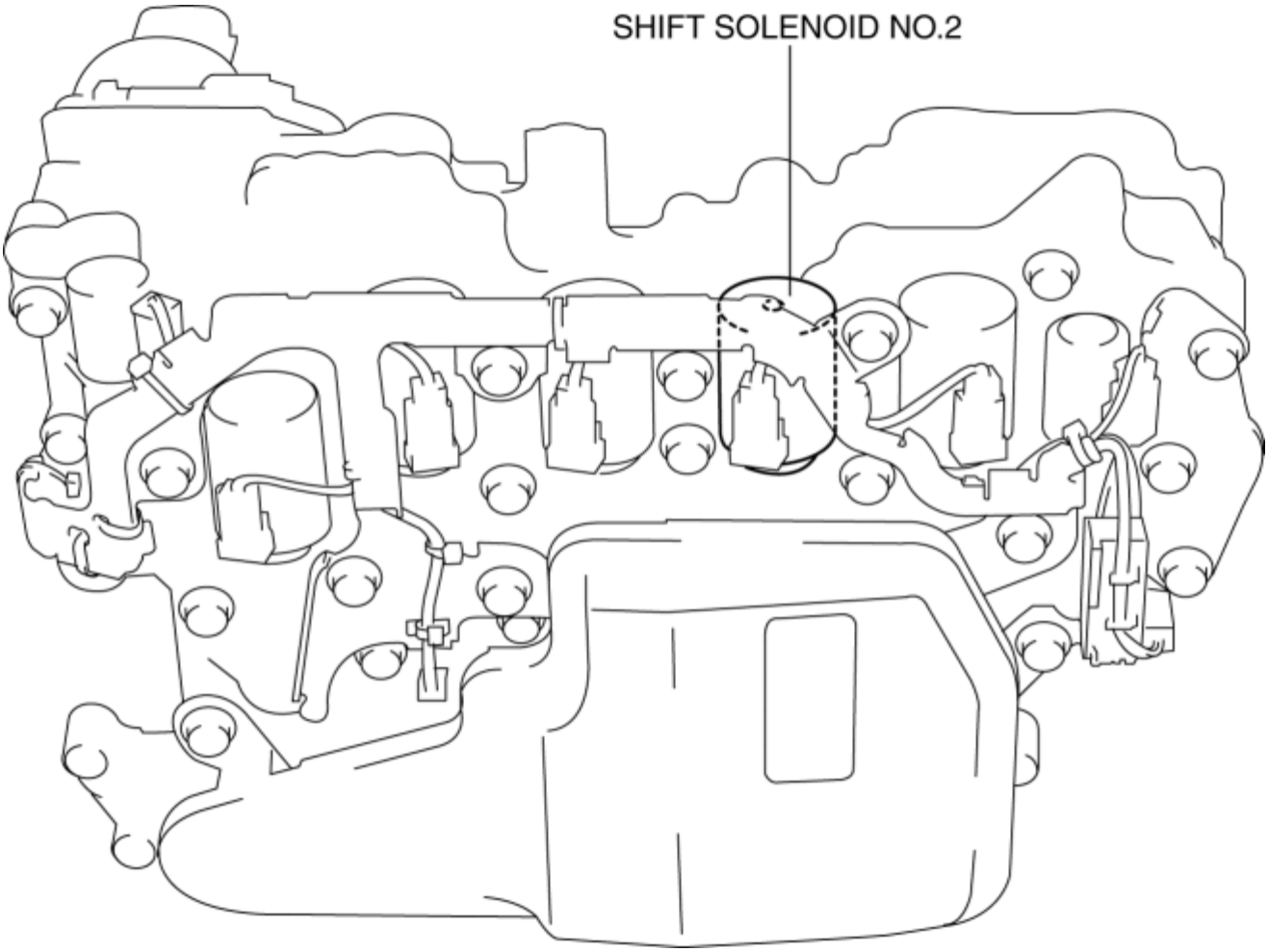

Operation

- Adjusts the 2-6 brake pressure by increasing/decreasing the energization current to shift solenoid No.2 according to the signal from the TCM.

2014 - Mazda3 - Transmission/Transaxle

SHIFT SOLENOID NO.3 [FW6A-EL]

Purpose/Function

- Shift solenoid No.3 adjusts the hydraulic pressure in the R-3-5 brake circuit based on the current demand from the TCM according to the vehicle conditions.

Construction

- Shift solenoid No.3 is installed to the solenoid control valve body.
- Shift solenoid No.3 is a normal open-type linear solenoid.

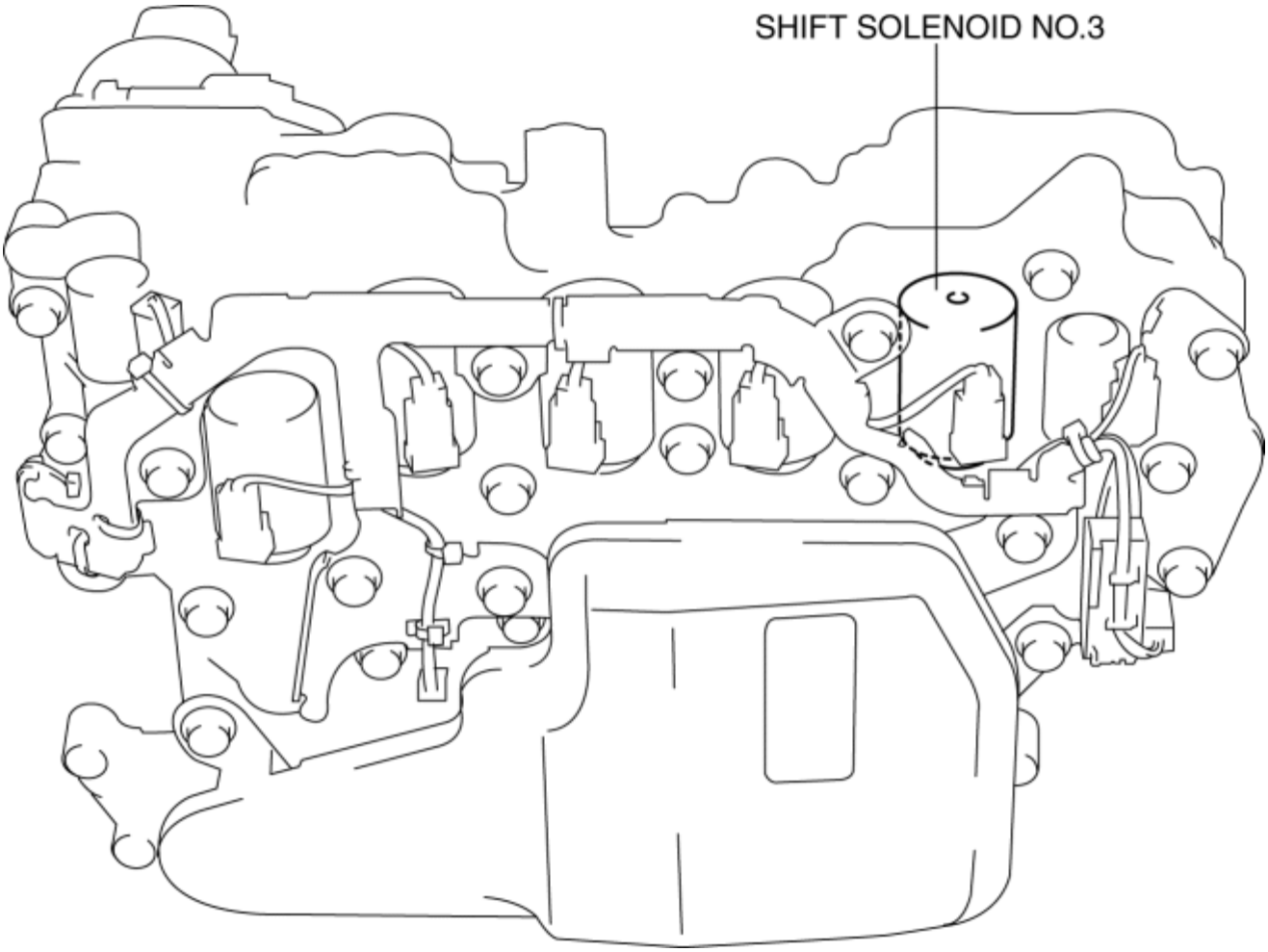

Operation

- Adjusts the R-3-5 brake pressure by increasing/decreasing the energization current to shift solenoid No.3 according to the signal from the TCM.

2014 - Mazda3 - Transmission/Transaxle

SHIFT SOLENOID NO.4 [FW6A-EL]

Purpose/Function

- Shift solenoid No.4 adjusts the hydraulic pressure in the high clutch circuit and the low and reverse brake circuit based on the current demand from the TCM according to the vehicle conditions.

Construction

- Shift solenoid No.4 is installed to the solenoid control valve body.
- Shift solenoid No.4 is a normal open-type linear solenoid.

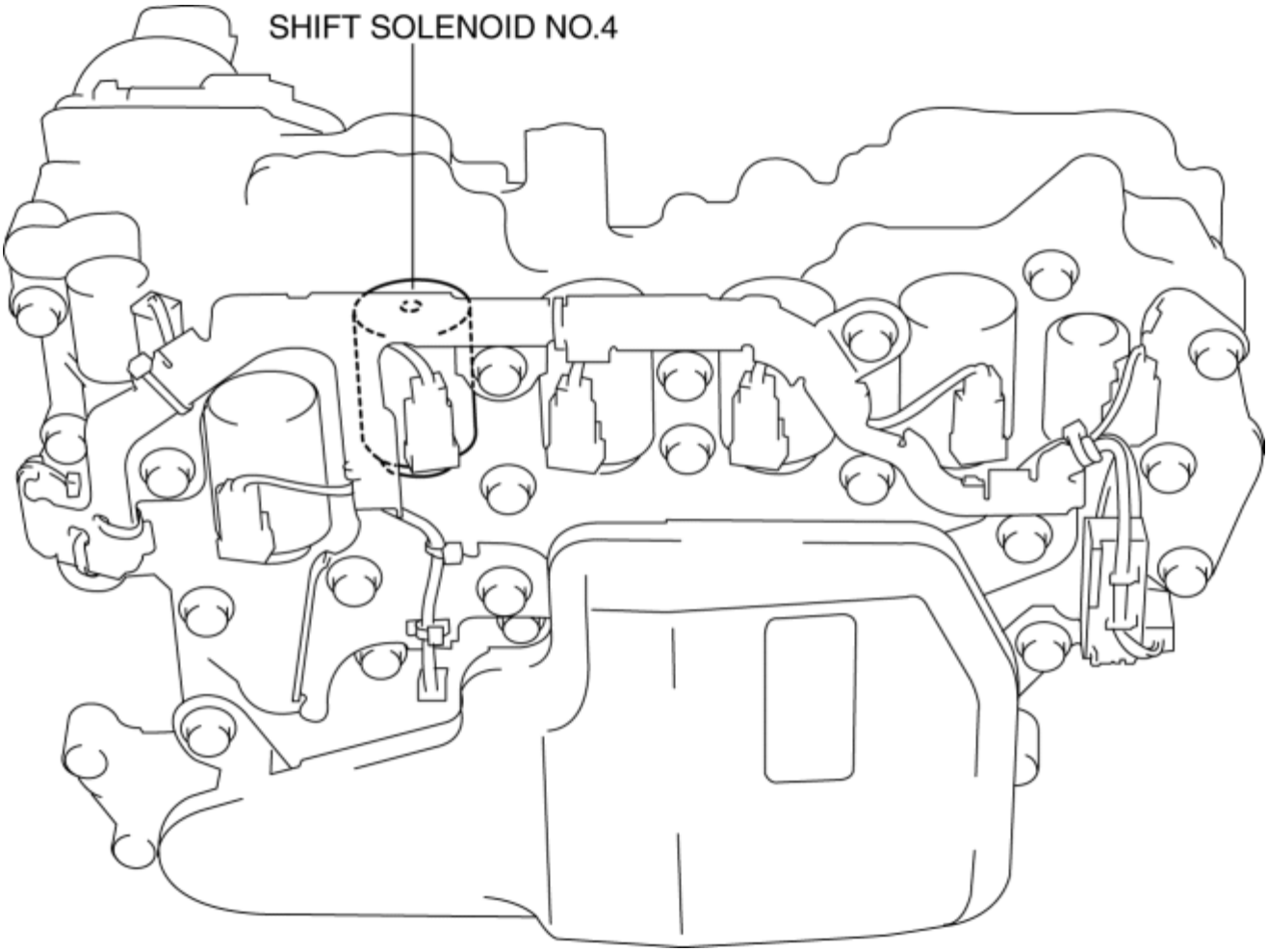

Operation

- Adjusts the high clutch pressure and the low and reverse brake pressure by increasing/decreasing the energization current to shift solenoid No.4 according to the signal from the TCM.

2014 - Mazda3 - Transmission/Transaxle

TORQUE CONVERTER CLUTCH (TCC) CONTROL SOLENOID [FW6A-EL]

Purpose/Function

- The torque converter clutch (TCC) control solenoid adjusts the hydraulic pressure in the TCC control circuit based on the current demand from the TCM according to the vehicle conditions.

Construction

- The TCC control solenoid is installed to the solenoid control body.
- The TCC control solenoid is a normal closed-type linear solenoid.

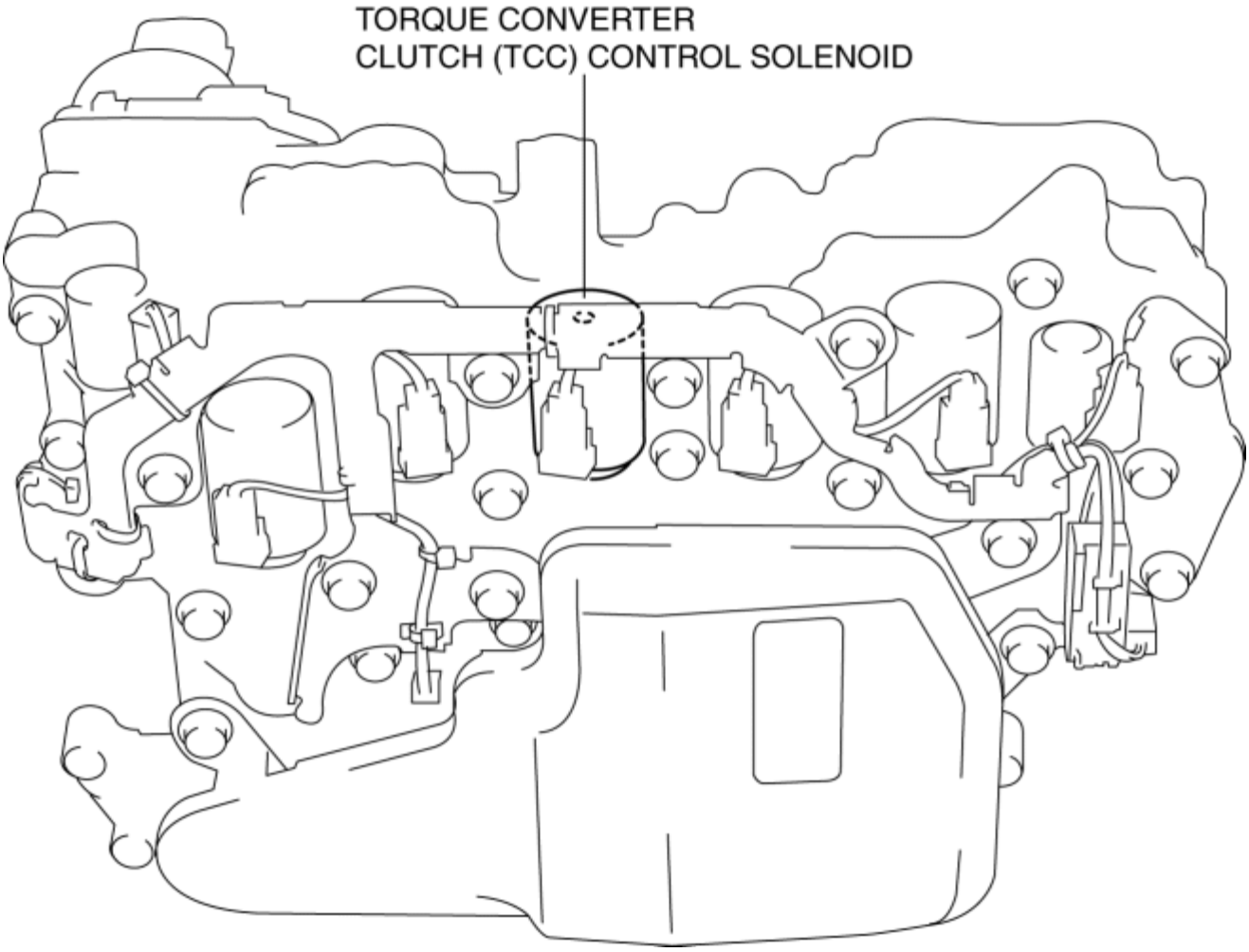

Operation

- Adjusts the TCC control clutch pressure by increasing/decreasing the energization current to the TCC control solenoid according to the signal from the TCM.

2014 - Mazda3 - Transmission/Transaxle

ON/OFF SOLENOID [FW6A-EL]

Purpose/Function

- The on/off solenoid performs switching of the shift valve in the control valve body according to the vehicle conditions.

Construction

- The on/off solenoid is installed to the solenoid control valve body.
- The on/off solenoid is a normal open-type on/off solenoid.

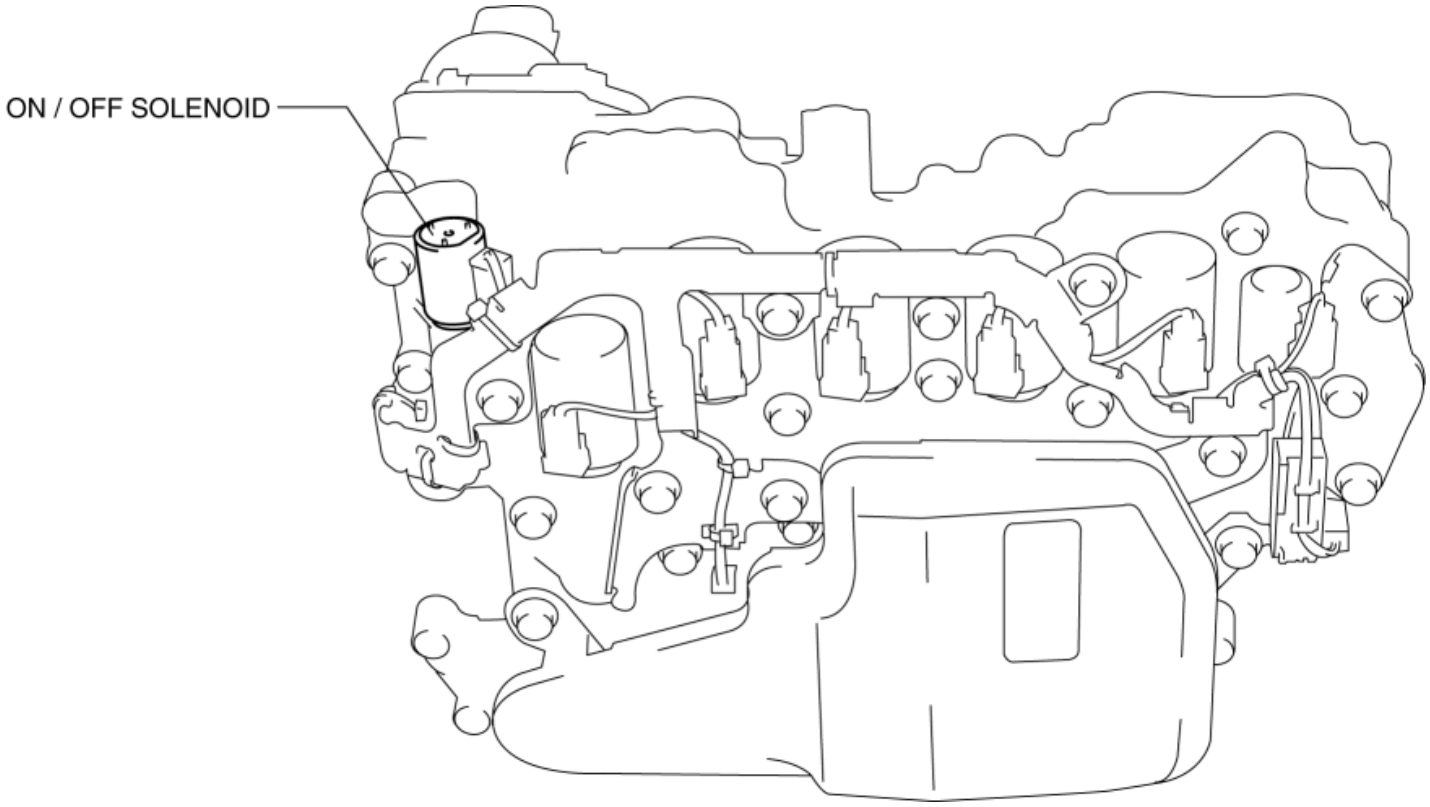

Operation

Non-energization (OFF)

- When the on/off solenoid is off, the supply port in the solenoid opens. As a result, hydraulic pressure is supplied to operate the shift valve.

Energized (ON)

- When the on/off solenoid is on, the drain port in the solenoid opens. As a result, hydraulic pressure which operates

the shift valve is drained.

2014 - Mazda3 - Transmission/Transaxle

SHIFT POSITION INDICATOR LIGHT [FW6A-EL]

Purpose/Function

- The shift position indicator light indicates the selector lever position.

Construction

- The shift position indicator light is built into the instrument cluster.

TYPE A (DIGITAL SPEED METER TYPE) OR TYPE B
(ANALOG SPEED METER TYPE (WITH TACHOMETER))

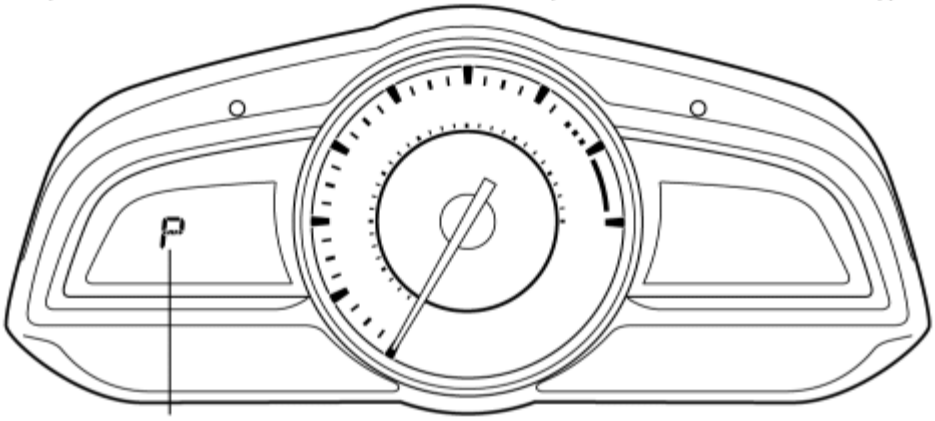

SHIFT POSITION
INDICATOR LIGHT

TYPE C (ANALOG SPEED METER TYPE (WITHOUT TACHOMETER))

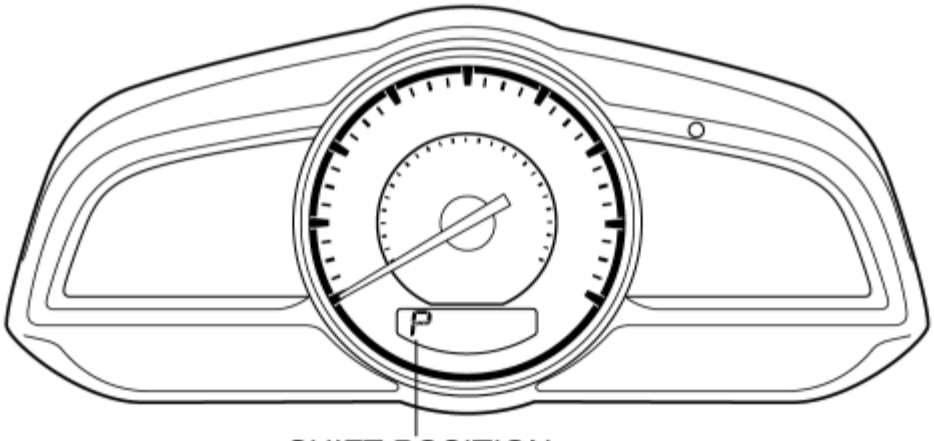

SHIFT POSITION
INDICATOR LIGHT

Operation

- The TCM sends a shift position indicator light illumination request signal to the instrument cluster via CAN based on the signal from the integrated transaxle range sensor signal received via CAN.

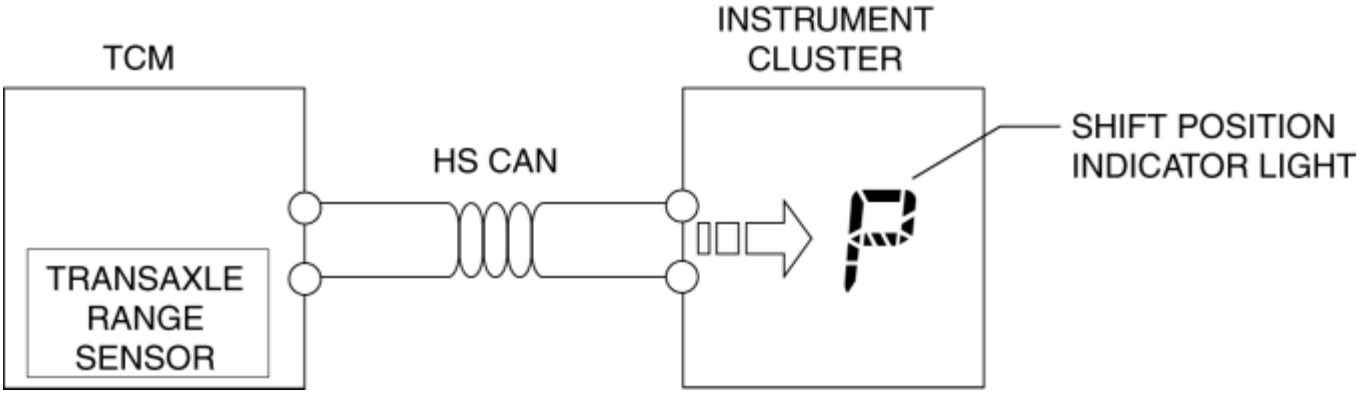

2014 - Mazda3 - Transmission/Transaxle

GEAR POSITION INDICATOR [FW6A-EL]

Purpose/Function

- The gear position indicator illuminates while under manual shift control and displays the gear number while driving.

Construction

- The gear position indicator is built into the instrument cluster.

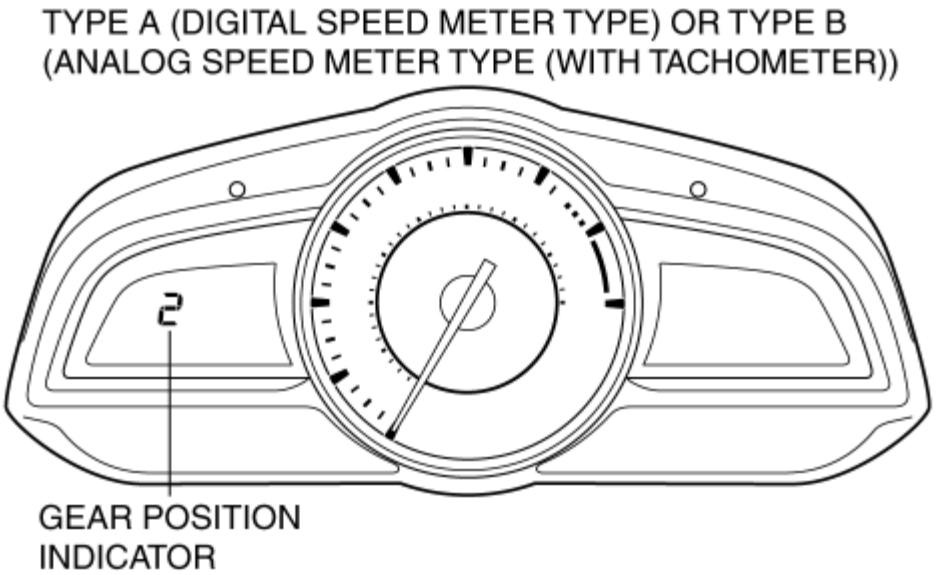

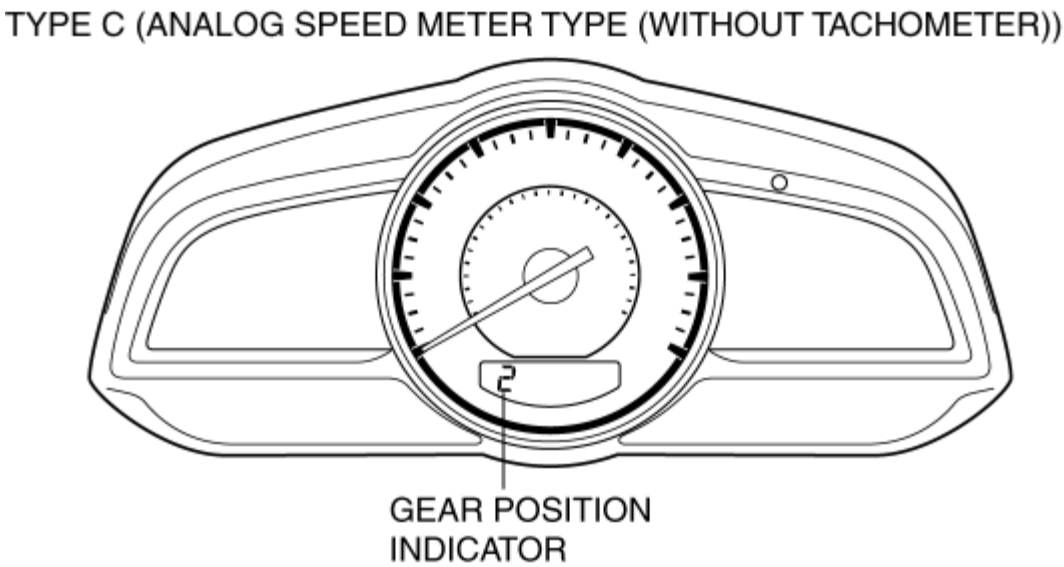

Operation

- The TCM sends a gear position indicator illumination/flash request signal to the instrument cluster based on the signal from the M position switch, the up switch and the down switch via the CAN.

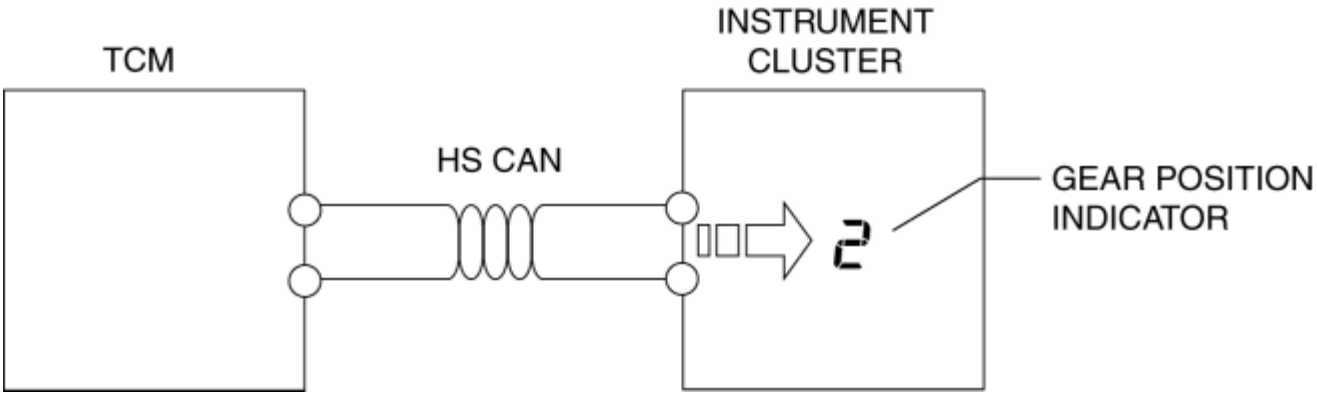

- If the shift down operation is inhibited during manual shift control, the TCM flashes the

gear position indicator 2 times. As a result, the driver is notified that the shift down operation has been canceled.

- If the ATF temperature is 132 °C {270 °F} or more while in manual shift control, the TCM turns the gear position indicator off and switches to automatic shift control to reduce the transaxle load. When the ATF temperature is 122 °C {252 °F} or less for a specified time, manual shift control is enabled and the gear position indicator is re-illuminated.

2014 - Mazda3 - Transmission/Transaxle

AUTOMATIC TRANSAXLE WARNING LIGHT [FW6A-EL]

Purpose/Function

- The automatic transaxle warning light illuminates when the transaxle has malfunction.
- For vehicles with center display, a warning message in the center display is displayed when the automatic transaxle warning light is turned on. For the message content and verification method, refer to the CENTER DISPLAY. (See **CENTER DISPLAY [WITH CENTER DISPLAY]**.)

Construction

- The automatic transaxle warning light is built into the instrument cluster.

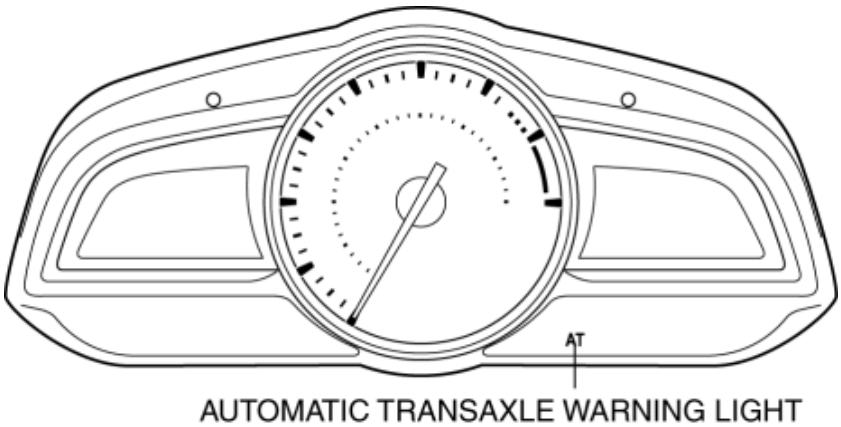

Operation

- If the transmission has a malfunction, the TCM sends an automatic transaxle warning light illumination request signal to the instrument cluster.

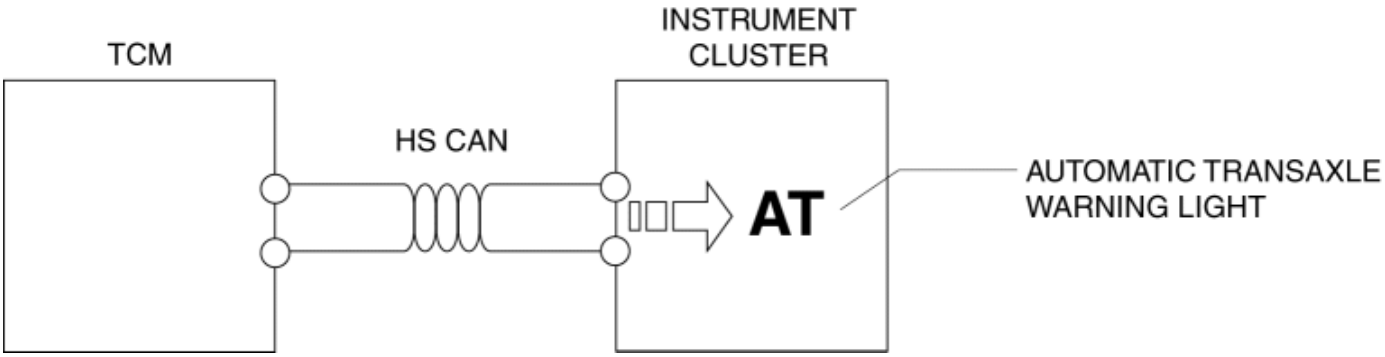

- The TCM illuminates the automatic transaxle warning light for **approx. 2 s** after the ignition is switched ON to perform a bulb check of the automatic transaxle warning light.

2014 - Mazda3 - Transmission / Transaxle

TCM [FW6A-EL]

Purpose / Function

- The TCM detects the vehicle conditions and performs calculations and processing based on input information from each type of sensor and switch.
- Outputs control signals to each solenoid valve so that each type of control is optimally implemented according to the vehicle conditions.

Function Table

Control item				Main control content
Shift point control	Automatic shift control (D position)	Driving mode	Normal mode	• Mode selection during normal driving (without drive selection switch) • Normal mode selected using drive selection (with drive selection switch) • Performs automatic shift corresponding to vehicle speed and accelerator pedal depression amount
			SPORT mode (with drive selection switch)	• SPORT mode selected using drive selection • Performs automatic shifting corresponding to vehicle speed and accelerator pedal depression amount • Lower gear is selected than while in the Normal mode
			Active Adaptive Shift (AAS) mode	• Unnecessary shift up is suppressed for several seconds by maintaining the gear corresponding to the operation speed at which the accelerator pedal is released • The optimum gear on the low vehicle-speed side is selected and shift down is executed corresponding to the operation force at which the brake pedal is depressed • During cornering, shift up is suppressed in preparation for acceleration after cornering • In regions of high elevation, the optimum gear is selected corresponding to the environment • The slope is estimated in the TCM to select the appropriate gear for ascent and descent • When SPORT mode is selected, the AAS selects a lower gear compared to when normal mode is selected, and maintains it for a longer period of time (with drive selection switch)
			High ATF temperature mode	• Controls engine torque when the ATF temperature is high
	Manual shift control (M position)			• When M position is selected, manual shifting is prioritized according to the driver's shift up/shift down operation.
Shift	Line pressure control			• Controls line pressure with high accuracy and fine control corresponding to engine load conditions and vehicle driving conditions
				• Performs direct, electronic control of clutch engagement pressure appropriate to

pressure control	Direct electric shift control	engine load conditions and vehicle driving conditions
	Learning control	• Learns engine performance changes and transaxle deterioration over time to optimally correct clutch engagement pressure
Torque converter clutch (TCC) control		• Based on adoption of full range TCC control, active TCC control directly after acceleration from stop • By gradually engaging/disengaging TCC piston, shock during operation is reduced • Implements TCC control when accelerator pedal is fully closed for improved fuel economy and emission performance
Engine-transaxle integration control		• Optimally controls engine output torque when shifting • Calculates optimum clutch engagement pressure according to engine output torque
On-board diagnostic system		• Main part of transaxle control includes self-diagnosis function. In case of malfunction, automatic transmission warning light illuminates to alert driver, and DTC is stored in TCM • When transaxle malfunction is determined resulting from on-board diagnostic test, system control is switched to prevent any dangerous situation while driving

Construction

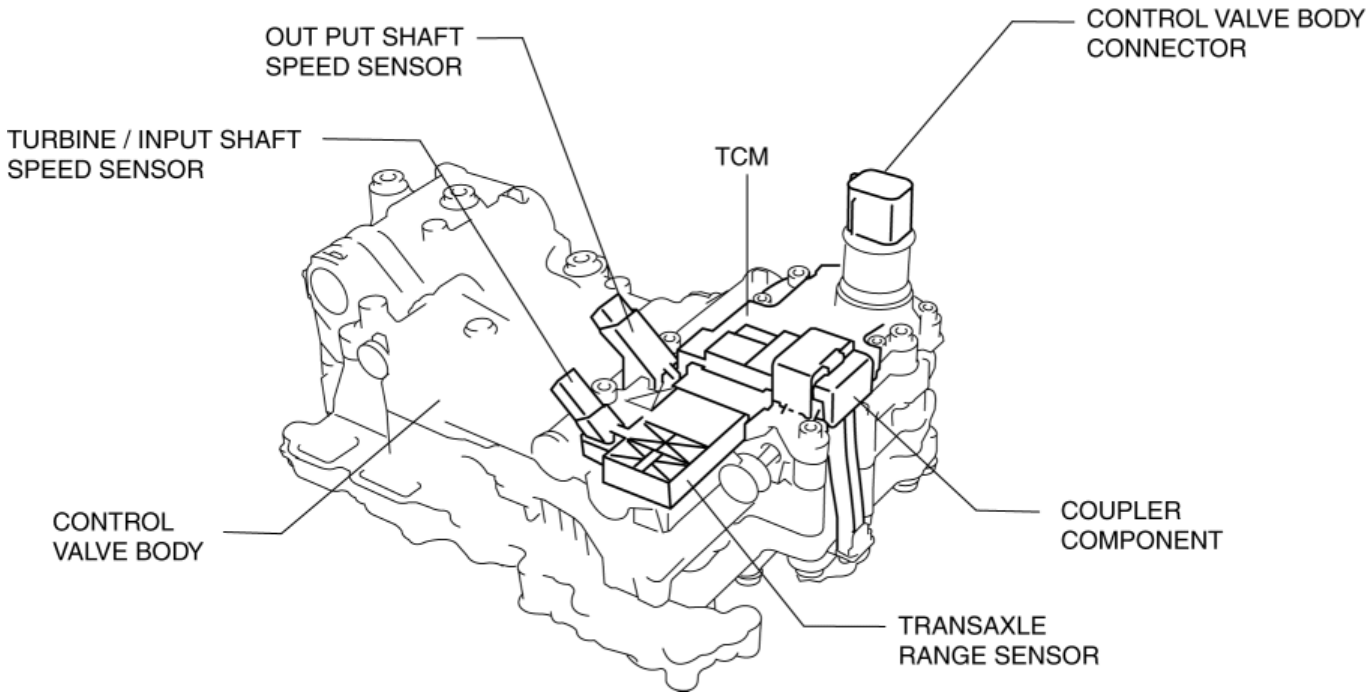

Block diagram

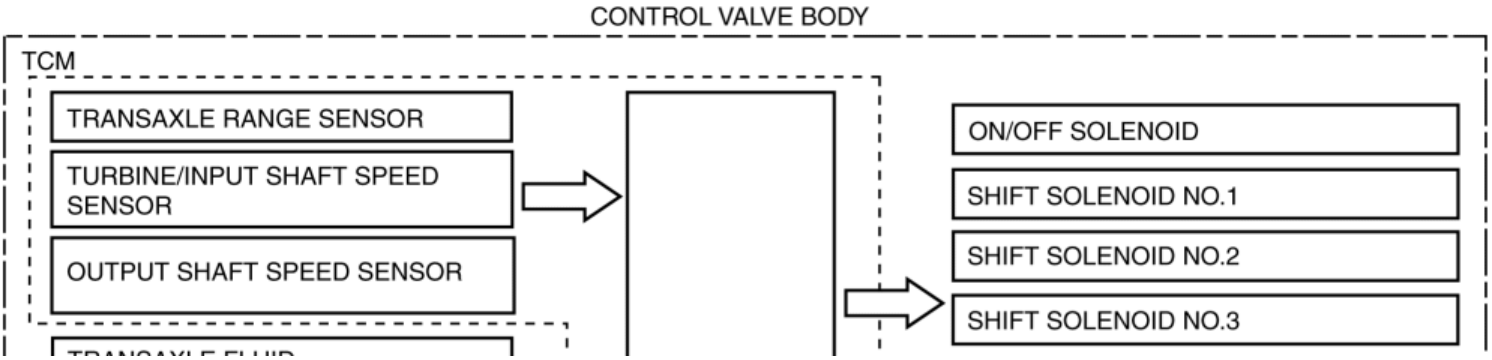

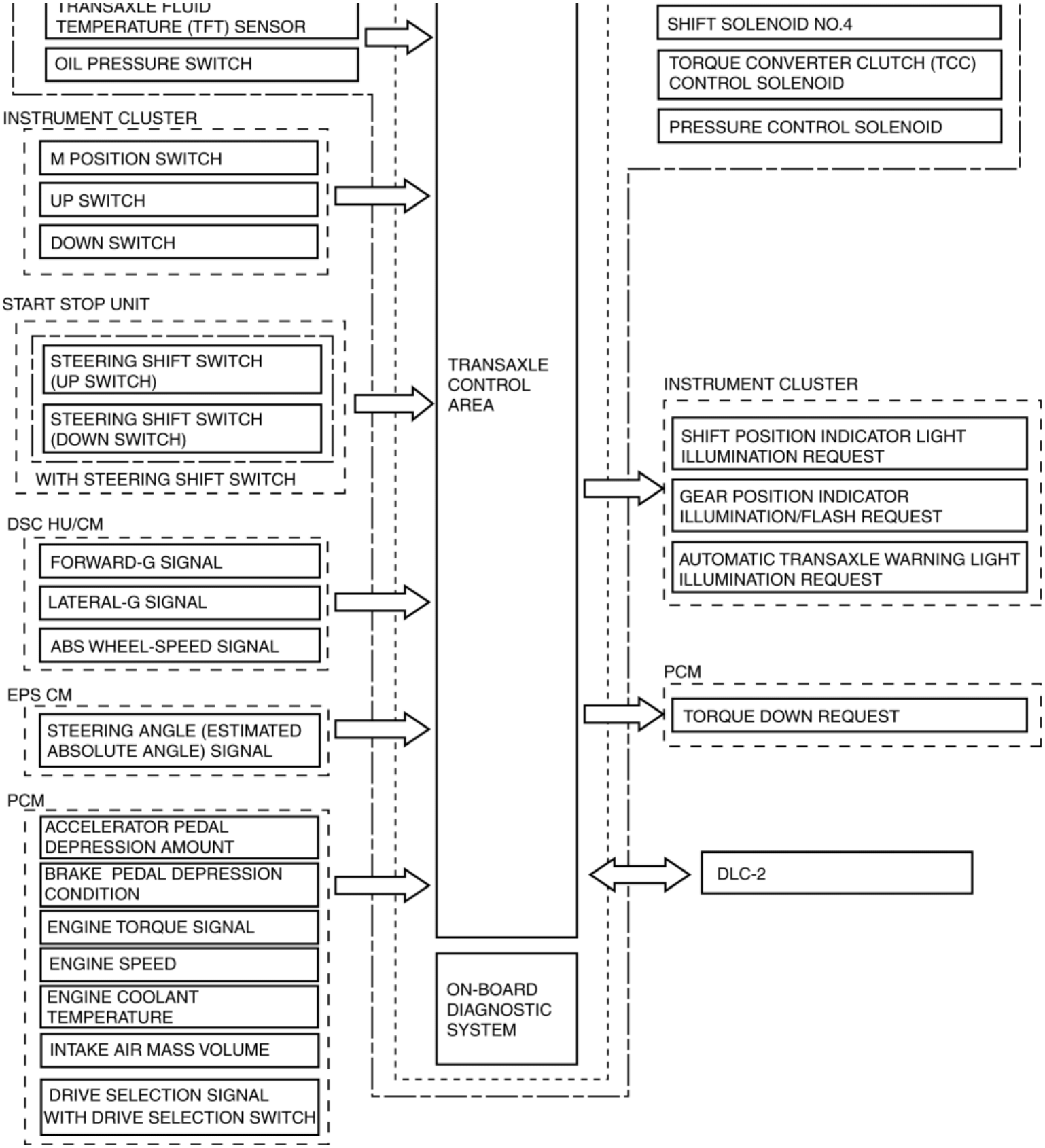

Operation

Correlation between control and input/output parts

x : AVAILABLE

CONTROL ITEM	SHIFT POINT CONTROL	SHIFT PRESSURE CONTROL			

INPUT/OUTPUT PART			AUTOMATIC SHIFT CONTROL (D POSITION)										
			NORMAL MODE	SPORT MODE	ACTIVE ADAPTIVE SHIFT (AAS) MODE	HIGH ATF TEMPERATURE MODE	MANUAL SHIFT CONTROL (M POSITION)	LINE PRESSURE CONTROL	DIRECT ELECTRIC SHIFT CONTROL	LEARNING CONTROL	TORQUE CONVERTER CLUTCH (TCC) CONTROL	ENGINE-TRANSAXLE INTEGRATION CONTROL	ON-BOARD DIAGNOSTIC SYSTEM
INPUT	TCM	TANSAXLE RANGE SENSOR	x	x	x	x	x	x	x	x	x	x	x
		TURBINE/INPUT SHAFT SPEED SENSOR	x	x	x		x	x	x	x	x		x
		OUTPUT SHAFT SPEED SENSOR	x	x	x		x	x	x		x		x
		TRANSAXLE FLUID TEMPERATURE (TFT) SENSOR				x		x	x	x	x		x
		OIL PRESSURE SWITCH	x	x	x	x	x	x	x		x		x
	PCM	ACCELERATOR PEDAL DEPRESSION AMOUNT	x	x	x		x	x	x		x		x
		BRAKE PEDAL DEPRESSION CONDITION	x	x	x						x		x
		ENGINE TORQUE SIGNAL			x		x	x	x	x	x	x	x
		ENGINE SPEED			x			x	x	x	x	x	x
		ENGINE COOLANT TEMPERATURE									x		x
		INTAKE AIR MASS VOLUME											x
		DRIVE SELECTION SIGNAL (WITH DRIVE SELECTION SWITCH)	x	x	x								
	INSTRUMENT CLUSTER	M POSITION SWITCH					x					x	
		UP SWITCH					x					x	
		DOWN SWITCH					x					x	
	START STOP UNIT	STEERING SHIFT SWITCH (WITH STEERING SHIFT SWITCH)					x					x	
	DSC HU/CM	FORWARD-G SIGNAL			x								
		LATERAL-G SIGNAL			x								
		ABS WHEEL-SPEED SIGNAL			x								x
	EPS CM	STEERING ANGLE (ESTIMATED ABSOLUTE ANGLE) SIGNAL			x								
OUTPUT	AUTOMATIC TRANSAXLE	ON/OFF SOLENOID	x	x	x	x	x			x			x
		SHIFT SOLENOID NO.1	x	x	x	x	x		x	x			x
		SHIFT SOLENOID NO.2	x	x	x	x	x		x	x			x
		SHIFT SOLENOID NO.3	x	x	x	x	x		x	x			x
		SHIFT SOLENOID NO.4	x	x	x	x	x		x	x			x
		TORQUE CONVERTER CLUTCH (TCC) CONTROL SOLENOID	x	x	x	x	x		x	x	x		x
		PRESSURE CONTROL SOLENOID	x	x	x	x	x	x	x	x	x		x
	INSTRUMENT CLUSTER	SHIFT POSITION INDICATOR LIGHT ILLUMINATION REQUEST	x	x	x	x	x						
		GEAR POSITION INDICATOR ILLUMINATION/FLASH REQUEST					x						
		AUTOMATIC TRANSAXLE WARNING LIGHT ILLUMINATION REQUEST				x							x
INPUT/OUTPUT (CAN)			x	x	x	x	x	x	x		x	x	x

2014 - Mazda3 - Transmission/Transaxle

SHIFT POINT CONTROL (AUTOMATIC SHIFT CONTROL) [FW6A-EL]

Outline

- The TCM implements auto shift control according to the vehicle speed and accelerator pedal depression amount while in D position.
- When the vehicle is stopped with the selector lever is in the D position and the brake pedal depressed, the neutral idle control is performed which internally controls the automatic transaxle to be in the neutral condition while the selector lever is in the D position. When the brake pedal is being released, the clutch is engaged immediately and the automatic transaxle returns to the normal D position condition.
- When SPORT mode is selected using the drive selection switch, a lower gear relative to normal mode is selected, and control is performed so that a higher operating force can be assured. (with drive selection switch)
- When implementing the automatic shift control, the TCM determines the driving conditions based on each input signal and selects the drive mode appropriate to the driving conditions. In addition, information such as torque and gear changes is exchanged via PCM and CAN communication and control is performed so as to achieve optimum drive force according to the driving scenario.

Construction

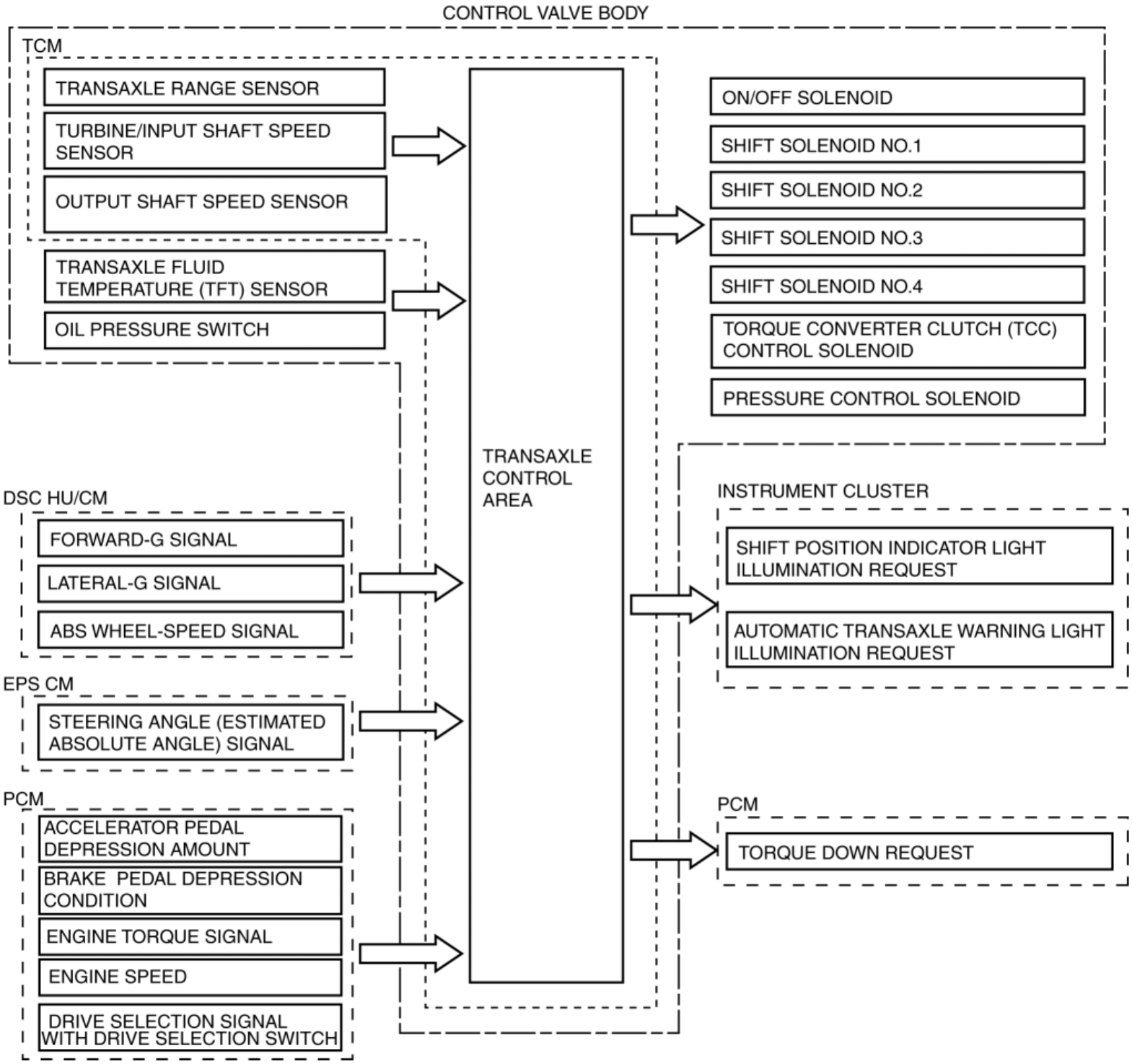

Operation

Driving range determination

- If a D position signal is input and an M position signal is not input, the TCM implements auto shift control.

Driving mode determination

- For the auto shift control, NORMAL mode is usually selected, however it automatically switches to driving mode depending on the driving conditions. (without drive selection switch)
    - AAS (Active Adaptive Shift) mode: Automatically controls the optimum shift point according to the road

conditions and the driver operation.

- High ATF temperature mode: When the ATF temperature rises to a high temperature, the engine torque is restricted so that the increase in ATF temperature is suppressed to protect the transaxle.

- Normal mode and SPORT mode can be selected using the drive selection switch and the following modes are switched automatically based on the driving conditions in conjunction with normal mode/SPORT mode. (with drive selection switch)
  - AAS (Active Adaptive Shift) mode: Automatically controls the optimum shift point according to the road conditions and the driver operation.
  - High ATF temperature mode: When the ATF temperature rises to a high temperature, the engine torque is restricted so that the increase in ATF temperature is suppressed to protect the transaxle.

AAS (Active Adaptive Shift) mode operation

- When SPORT mode is selected, the AAS selects a lower gear compared to when normal mode is selected, and maintains it for a longer period of time. (with drive selection switch)
- Accelerator pedal fully closed suddenly and returned
  - When the accelerator pedal is fully closed and returned at a certain speed or more, shift-up is inhibited for specified time to improve speed control and reacceleration performance.
- Brake is strongly depressed
  - When decelerating at a certain speed or more, a lower gear is selected so that re-acceleration is performed smoothly.
  - During a shift change with the brake pedal depressed firmly, blipping control (synchronization to engine speed) is performed to shorten the shifting time.
  - When the ambient temperature is approx. 15 degrees C or less, shift down control using the brakes cannot be performed for a while after beginning to drive the vehicle.
  - When driving on slippery roads such as snow covered roads, the shift down control using the brakes may not operate.
- When cornering
  - While cornering at a turn with a radius of less than a specified value, shift up is suppressed to improve vehicle speed performance while cornering and reacceleration performance after cornering.
- During high degree of vehicle ascent/descent
  - During a certain level of vehicle ascent/descent, gears are selected appropriate to the driving conditions for driving comfort.
- During ascent
  - While ascending a slope of a certain grade or more, slope mode control prevents unnecessary shift-up by maintaining the appropriate gear.
- During descent
  - While descending a slope of a certain grade or more and depressing the brake pedal, the gears are appropriately shifted down according to the estimated slope angle for effective use of engine braking. As a result, frequent brake pedal operation is reduced.

AAS (active adaptive shift) operation scenario and effect

- The AAS (active adaptive shift) is a mode which estimates the driving environment and driver's intentions according to the vehicle driving conditions and the driver's operations, and selects the optimum gear for driving.

Ex.1: Cornering

- During cornering, shift up is suppressed to improve acceleration performance after cornering.

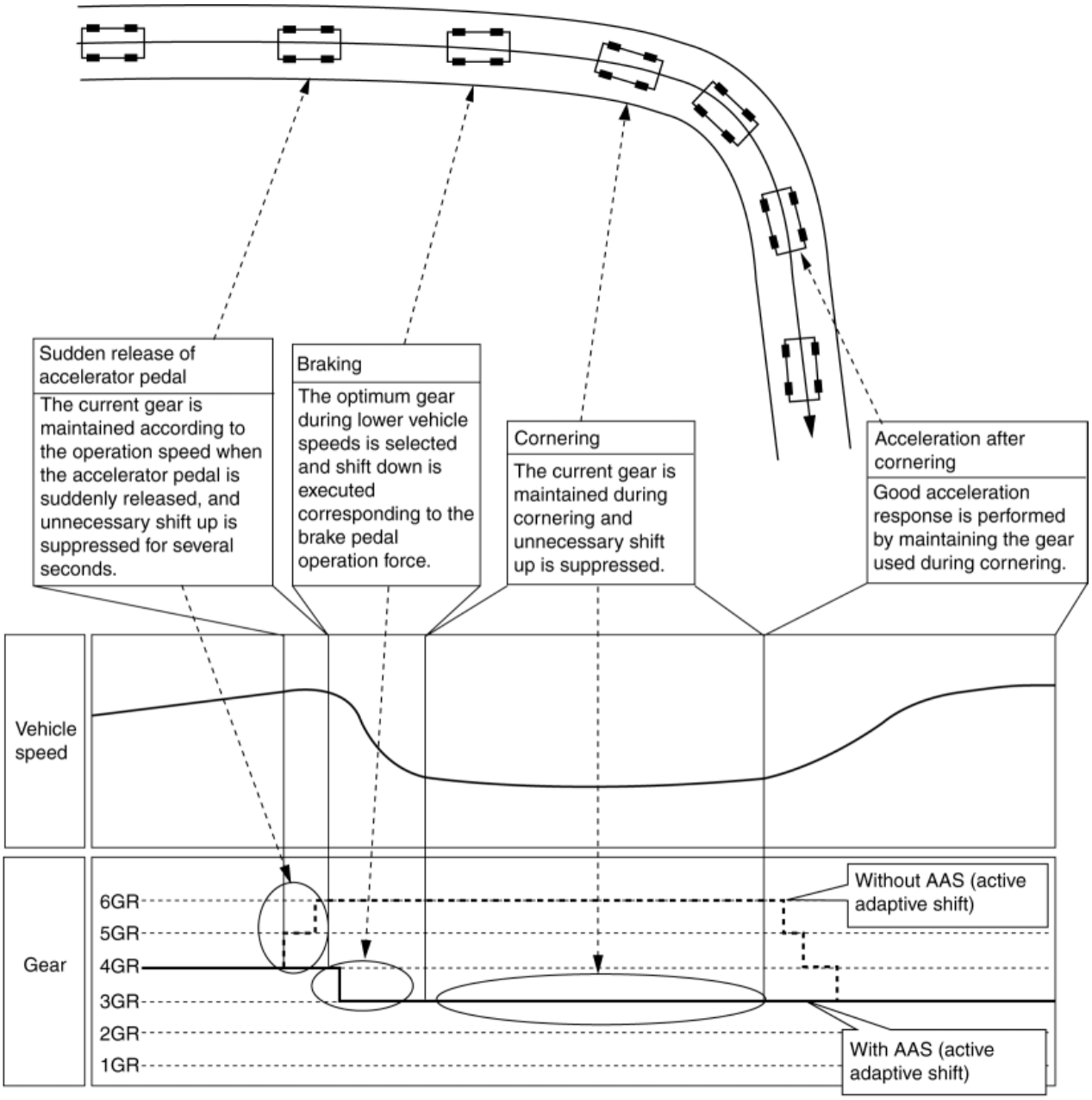

The selected gear is an example of normal mode.

Ex. 2) Merging onto high speed expressways

- In a scenario such as temporarily decelerating while merging onto a high speed expressway, shift up is suppressed directly afterwards to improve re-acceleration performance.

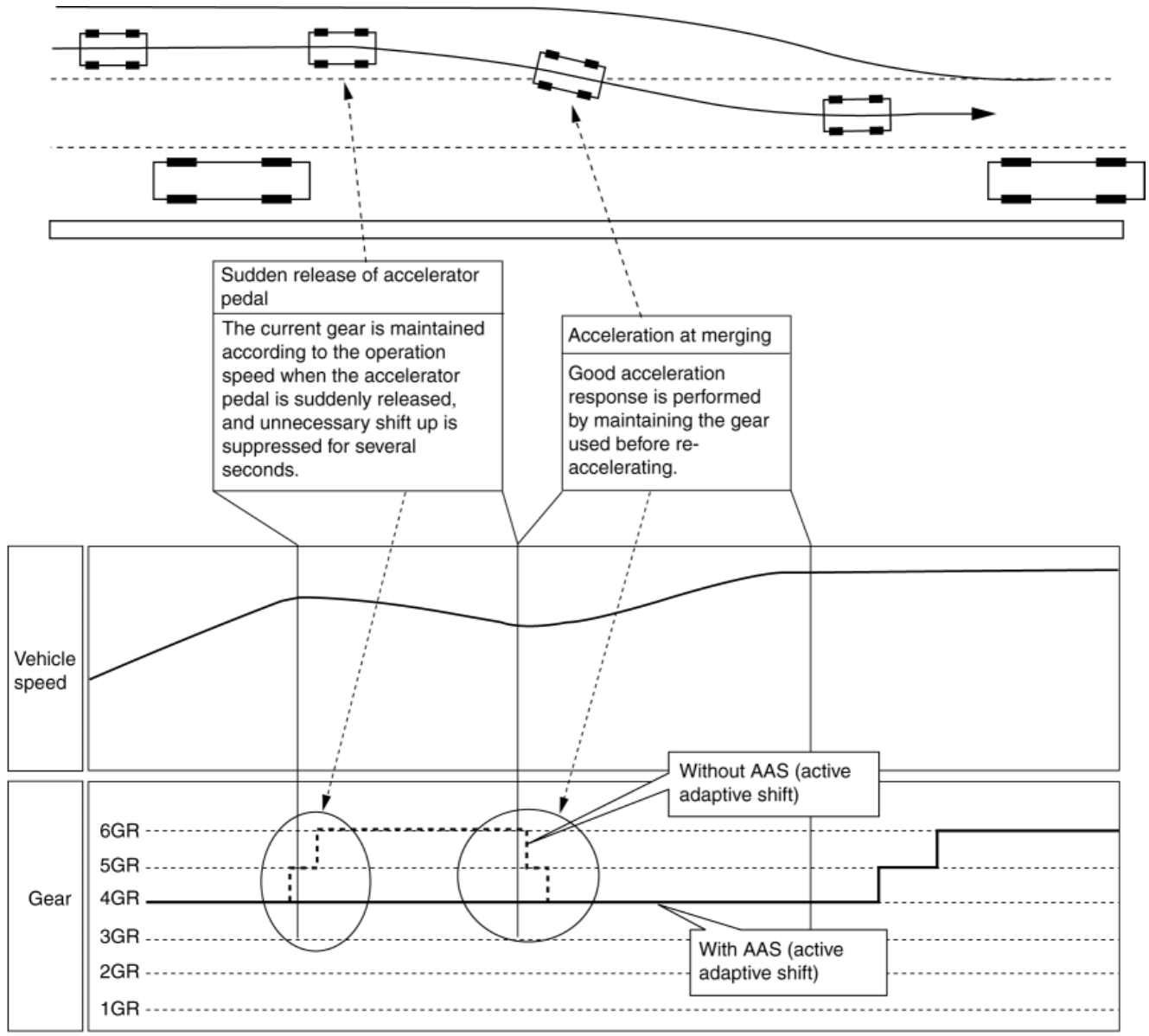

The selected gear is an example of normal mode.

Automatic transaxle operation chart

Position	Mode	Gear position	Gear ratio	TCC	Operation of powertrain parts						Operation of shift solenoid					
					Low clutch	High clutch	Low and reverse brake	2-6 brake	R-3-5 brake	One-way clutch	Shift solenoid No.1	Shift solenoid No.2	Shift solenoid No.3	Shift solenoid No.4	TCC control solenoid	ON/OFF solenoid
P	-	-	-				×				CLOSE	CLOSE	CLOSE	OPEN	CLOSE	OFF
R	-	Reverse	3.893				×		×		CLOSE	CLOSE	OPEN	OPEN	CLOSE	OFF
N		-	-				×				CLOSE	CLOSE	CLOSE	OPEN	CLOSE	OFF
D/M	NORMAL	1GR	3.552	×	×		×			⊗	OPEN	CLOSE	CLOSE	OPEN	OPEN	OFF
		2GR	2.022	×	×			×			OPEN	OPEN	CLOSE	CLOSE	OPEN	ON
		3GR	1.452	×	×				×		OPEN	CLOSE	OPEN	CLOSE	OPEN	ON
		4GR	1.000	×	×	×					OPEN	CLOSE	CLOSE	OPEN	OPEN	ON
		5GR	0.708	×		×			×		CLOSE	CLOSE	OPEN	OPEN	OPEN	ON
		6GR	0.599	×		×		×			CLOSE	OPEN	CLOSE	OPEN	OPEN	ON

× : Operating

⊗ : Transmits torque only during driving operation

OPEN: Engages the line pressure to the clutch pressure
CLOSE: Drains the clutch pressure
ON: Engages the output port and the supply port
OFF: Engages the output port and the drain port (Drains the output port)

2014 - Mazda3 - Transmission/Transaxle

SHIFT POINT CONTROL (MANUAL SHIFT CONTROL) [FW6A-EL]

Outline

- The TCM operates the manual shift control when the M position is selected.
- If the M position is selected, manual shifting is prioritized according to the driver's shift up/shift down operation. However, to assure driving safety and protect the ATX, minimum automatic shifting may occur.

Construction

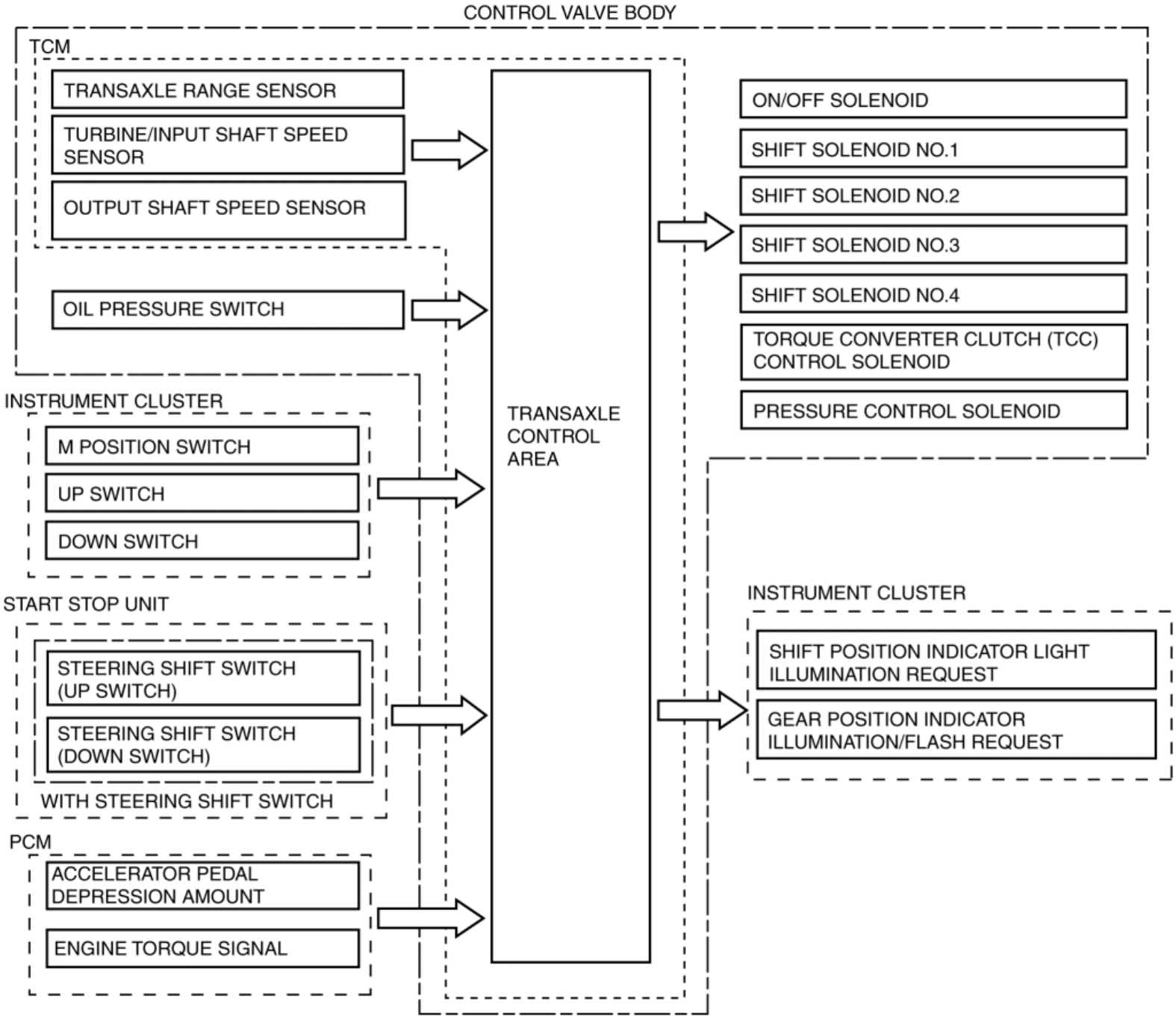

Operation

- Gears can be selected by moving the selector lever back and forth while driving in the M position.
- When shifting the selector lever from the D to M position while driving, the gear being used while driving in the D position is maintained. For driving in D position 6th gear, however, when shifting the selector lever from the D to M position with the accelerator pedal not depressed, the gear shifts from 6th to 5th gear. For driving in 5th gear, when shifting the selector lever from the D to M position with the accelerator pedal not depressed, the gear shifts from 5th to 4th gear.
- When a shift down is performed using the selector lever with the accelerator pedal not depressed and the selector lever in the M position, blipping control (synchronization to engine speed) is performed.
- When the accelerator pedal is fully depressed while driving in the M position, kickdown shifting is performed.
- If the ATF temperature exceeds the specified temperature while in manual mode, the TCM switches control to automatic shift control and turns the gear position indicator off to reduce the transaxle load. When the ATF temperature decreases to the appropriate temperature, the TCM enables driving in manual mode and re-illuminates the gear position indicator.
- During manual shift control, in every gear speed, engine brake force can be obtained corresponding to the gear ratio. In addition, if the vehicle speed reaches a constant speed or less, shift-down is performed automatically.

Shifting operation and manual transmission

Shift operation		Gear	Gear shift enabled/disabled
Shift-up operation	Operates once	1GR to 2GR	Enabled when both driving and stopped
		2GR to 3GR	Enabled when driving at specified vehicle speed or more
		3GR to 4GR	
		4GR to 5GR	
		5GR to 6GR	
	Operates 2 times consecutively	1GR to 3GR	
		2GR to 4GR	
		3GR to 5GR	
		4GR to 6GR	
	Operates 3 times consecutively	1GR to 4GR	
		2GR to 5GR	
		3GR to 6GR	
	Operates 4 times consecutively	1GR to 5GR	
		2GR to 6GR	
Shift-down operation	Operates once	6GR to 5GR	Enabled when driving at specified vehicle speed or less
		5GR to 4GR	
		4GR to 3GR	
		3GR to 2GR	
		2GR to 1GR	
	Operates 2 times consecutively	6GR to 4GR	
		5GR to 3GR	
		4GR to 2GR	
		3GR to 1GR	
	Operates 3 times consecutively	6GR to 3GR	
		5GR to 2GR	
		4GR to 1GR	
		6GR to 2GR	

	Operates 4 times consecutively	5GR to 1GR	

- The gear shifting operation may cancel depending on the vehicle speed. If a shift-down operation is canceled, the gear position indicator illuminates to alert the driver.
- If the engine reaches a high engine speed, the following controls are performed to protect the engine:
    - The throttle valve is squeezed so that the engine speed does not exceed the excess speed range and the engine speed is stabilized at a lower speed than the excess speed range.
    - If the high engine speed condition continues, the engine speed is lowered by a forced shift-up of the gears.

2nd gear fixed mode

- When the vehicle is stopped or the vehicle speed is extremely low, the selector lever is moved to the + side and the transaxle is in 2nd gear.
- On slippery surfaces such as snow-bound roads, forward acceleration and driving is facilitated. While in 2nd gear fixed mode and the selector lever is shifted to gears other than 2nd gear, the 2nd gear fixed mode is canceled.
- If the accelerator pedal is fully depressed in 2nd gear fixed mode, kickdown shifting is performed and the 2nd gear fixed mode is cancelled.

Direct mode (with steering shift switch)

- When the steering shift switch is operated while driving with the selector lever in the D position, the gear position may temporarily switch. While in the direct mode, D and M illuminate in the indicator light and the operating gear position is displayed. The direct mode is canceled under the following conditions:
    - Specified time has elapsed while driving at constant speed
    - Vehicle stopped or driving at low speed
    - Up switch for steering shift switch is pulled for certain period of time or more

2014 - Mazda3 - Transmission/Transaxle

TORQUE CONVERTER CLUTCH (TCC) CONTROL [FW6A-EL]

Outline

- For TCC control, a newly developed, full range TCC control has been adopted. The TCC range has been significantly widened by having the smoothness unique to the torque converter during acceleration from a stop take precedence and actively controlling TCC directly after acceleration from a stop. Therefore, a contribution to low fuel consumption and vehicle operability with a direct feel have been achieved.
- Lower fuel consumption and improved emission performance have been achieved by performing the TCC control during deceleration with the accelerator pedal fully closed and by fuel-cut during TCC.

Construction

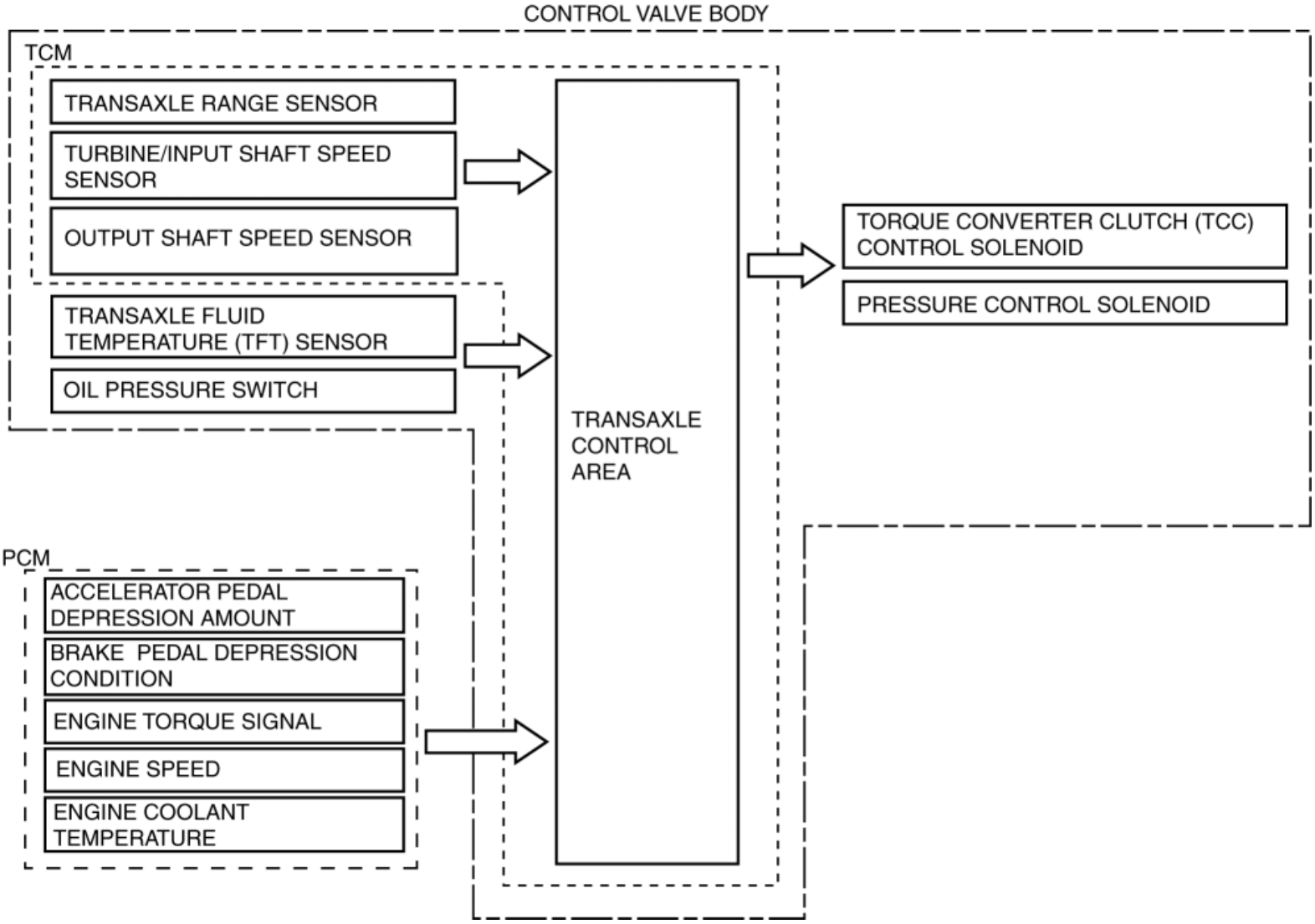

- The TCC mechanism consists of a torque converter clutch, TCC piston, and a damper which are installed inside the torque converter.
- A multi-plate type torque converter clutch has been adopted for improved durability. Also, by reducing the size of the clutch diameter, improved handling is achieved by the ability to respond to the precise control by the full range TCC.

- Vibration during TCC engagement is suppressed by the improved damper performance.

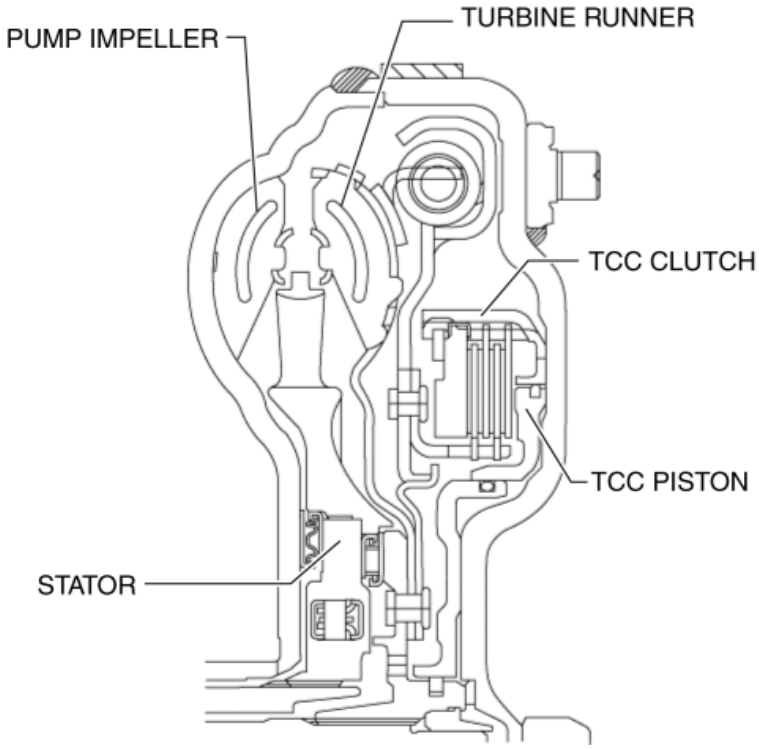

Operation

TCC engagement

- A current signal is sent from the TCM to the TCC control solenoid during TCC engagement. At the same time, the TCC piston engagement pressure is gradually increased.
- As a result, the TCC piston is pressure-bonded to the TCC clutch slowly to perform smooth TCC engagement.

TCC release

- A current signal is sent from the TCM to the TCC control solenoid during TCC release. At the same time, the TCC piston engagement pressure is gradually drained.
- As a result, the TCC piston releases the TCC clutch slowly to release the TCC smoothly.

Inhibition of TCC control

- If any one of the following conditions is met, the torque converter clutch control is inhibited.
    - TCC solenoid malfunction
    - ATF temperature is specified value or less
    - Engine speed signal is specified value or less
    - Turbine shaft speed is specified value or less
    - Other than D/M position

2014 - Mazda3 - Transmission/Transaxle

SHIFT PRESSURE CONTROL (LINE PRESSURE CONTROL) [FW6A-EL]

Outline

- The TCM drives the pressure control solenoid and adjusts the pressure based on the accelerator pedal depression amount, vehicle speed, ATF temperature, and gear shift signal. As a result, line pressure is controlled finely and with high accuracy according to the engine load condition and vehicle driving conditions.

Construction

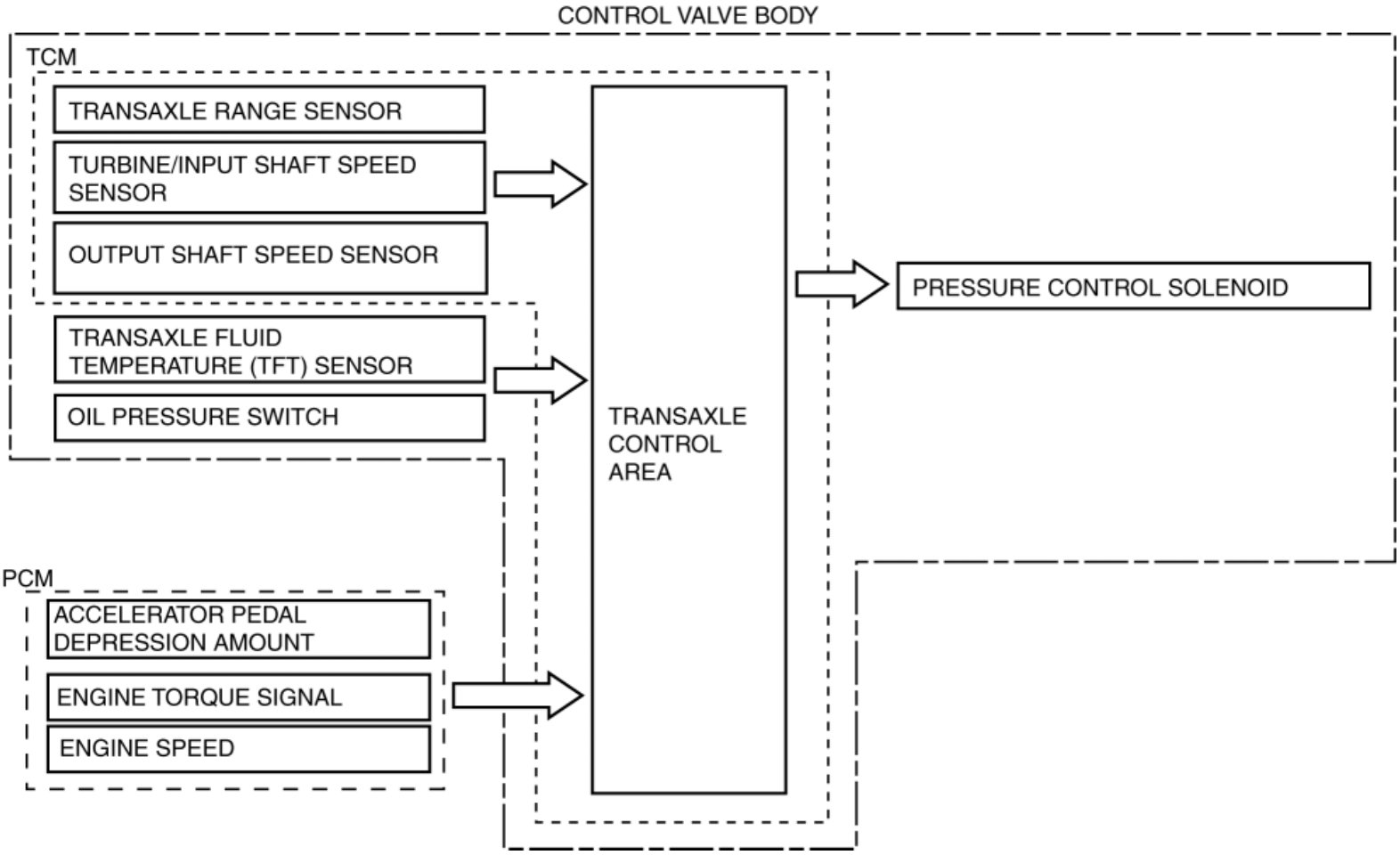

Operation

- The TCM adjusts the pressure control solenoid pressure applied to the pressure regulator valve by increasing/decreasing the energization current to the pressure control solenoid. As a result, the ATF amount passing through the pressure regulator valve is adjusted and the line pressure is adjusted.

2014 - Mazda3 - Transmission/Transaxle

SHIFT PRESSURE CONTROL (DIRECT ELECTRIC SHIFT CONTROL) [FW6A-EL]

Outline

- The TCM drives shift solenoids No.1, 2, 3, 4, the pressure control solenoid, and the on/off solenoid based on inputs signals from each switch and sensor, and performs direct electronic control of the clutch engagement pressure. As a result, precise hydraulic pressure control of the clutch engagement, not possible using a conventional accumulator, is achieved.

Construction

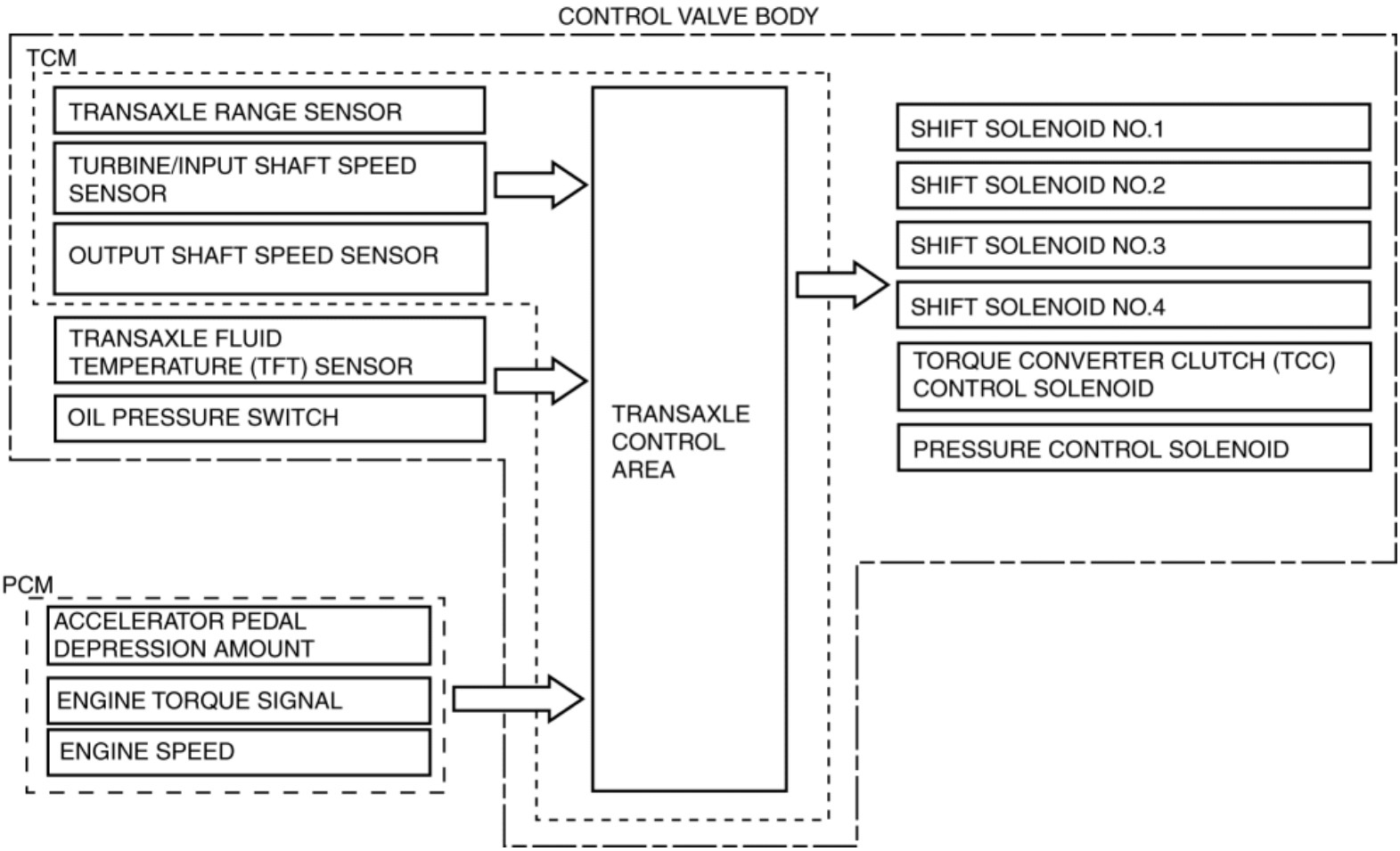

Operation

N to D, and N to R selected

- When N to D, and N to R are selected, the TCM drives the pressure control solenoid and shift solenoids No. 1 and 3 for optimum clutch engagement pressure control.

Shifting

- During shifting, the TCM drives shift solenoids No.1, 2, 3, and 4 to directly control the clutch engagement pressure for optimum clutch engagement pressure control.
- During each gear shift, the engagement side clutch pressure and release side clutch pressure are controlled simultaneously. As a result, the torque capacities of both clutches can be controlled in connection to each other when switching clutches, engine over-speed during shifting and interlock among clutches is prevented, and smooth and responsive shifting is achieved.

2014 - Mazda3 - Transmission/Transaxle

SHIFT PRESSURE CONTROL (LEARNING CONTROL) [FW6A-EL]

Outline

- The TCM optimizes the hydraulic pressure for clutch engagement and disengagement through learning correction of the clutch engagement pressure.

NOTE:

- The clutch engagement learning value is not recorded in the TCM installed to the control valve body for the replacement. If the clutch engagement learning value is not recorded in the TCM, engine racing may occur or shift shock may increase. Therefore, when the control valve body is replaced, always perform the initial learning.

Construction

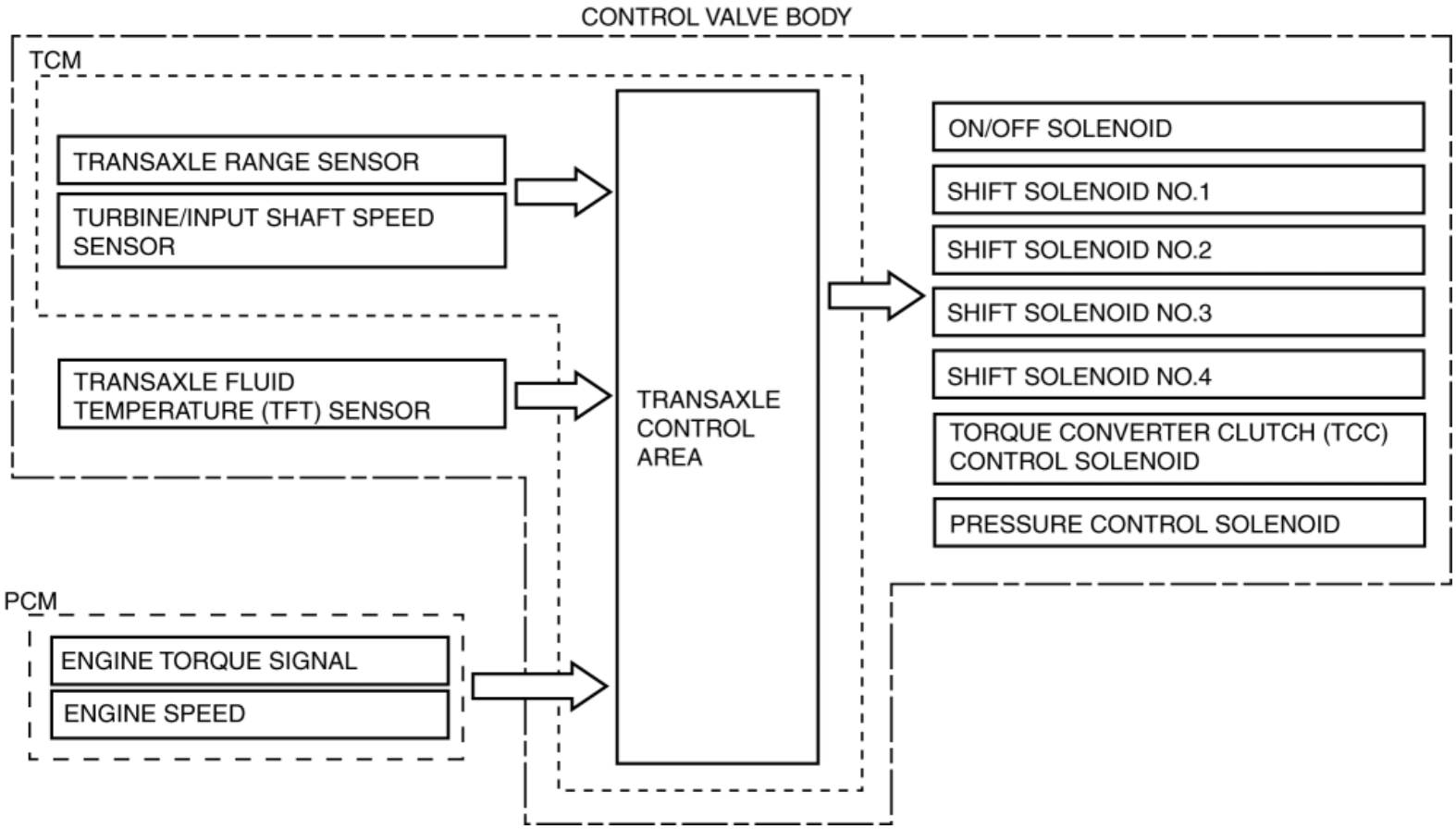

Operation

- The TCM learns engine performance changes resulting from past shifting and deterioration over time of the transaxle and performs learning correction for optimum clutch engagement pressure during initial shifting.

2014 - Mazda3 - Transmission/Transaxle

ENGINE-TRANSAXLE INTEGRATION CONTROL [FW6A-EL]

Outline

- The TCM controls engine output torque and reduces transaxle output shaft torque fluctuation during auto shifting, and reduces shock occurring from the vehicle during shifting.

Construction

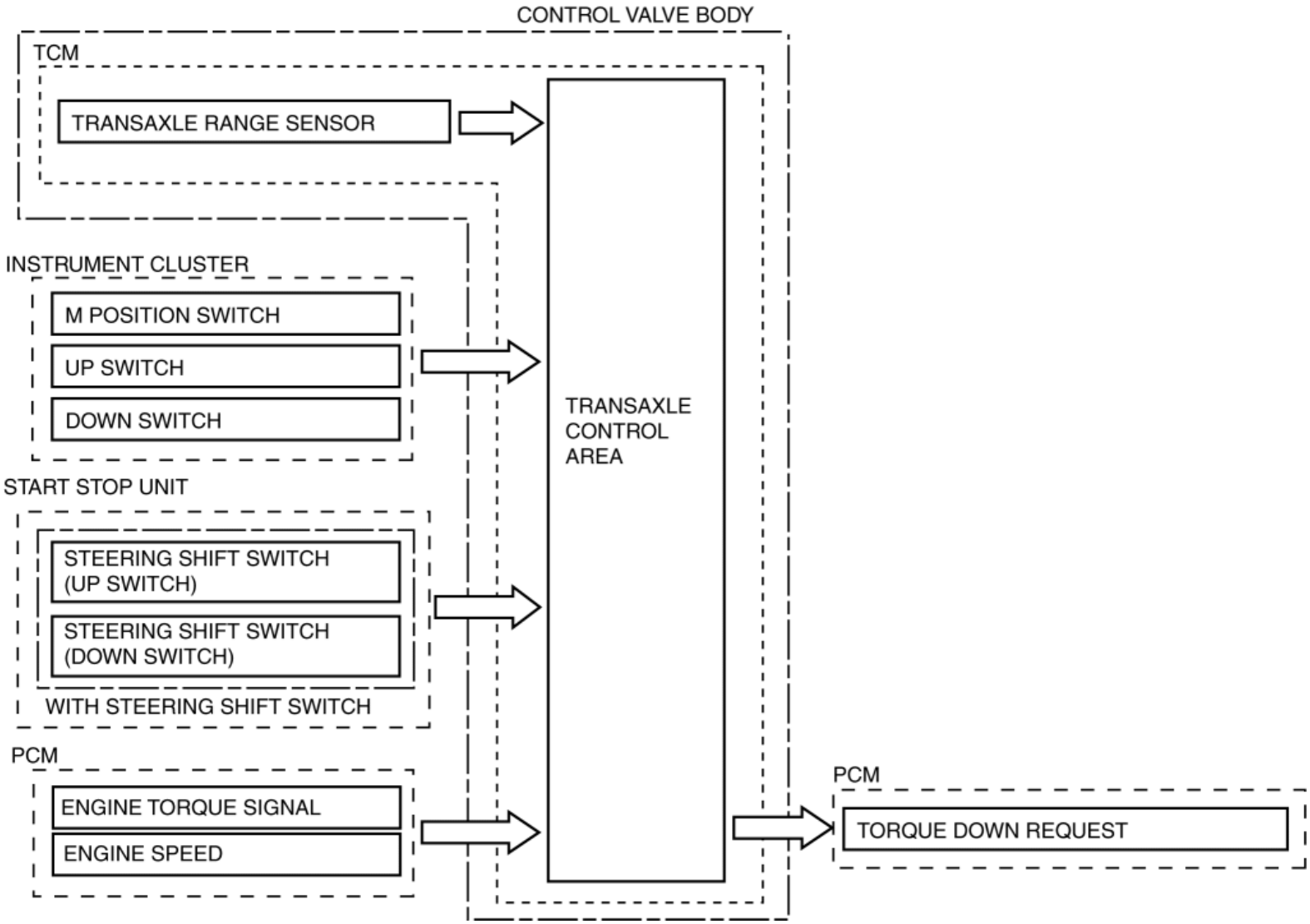

Operation

- During auto shifting, the TCM sends the torque reduction request signal using the CAN system and temporarily reduces the engine output torque by the engine ignition timing retard control. As a result, transaxle output shaft torque fluctuation is reduced during auto shifting by smooth engagement of the clutch.

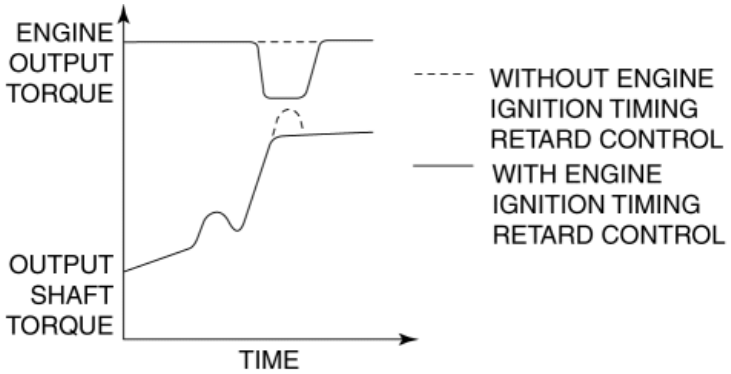

- In addition, the TCM receives the engine output torque from the PCM via the CAN signal to determine the clutch engagement pressure according to the engine output torque. As a result, the clutch hydraulic control setting accuracy is increased and smooth shift performance is achieved.

2014 - Mazda3 - Transmission/Transaxle

AUTOMATIC TRANSAXLE SHIFT MECHANISM

Outline

- A sport AT-type shift mechanism has been adopted for all models.
- An electric shift-lock system has been adopted to prevent driver mis-operation.
- An emergency manual shift-lock release system has been adopted to ensure emergency bypass if shifting operations cannot be performed.

Structural view

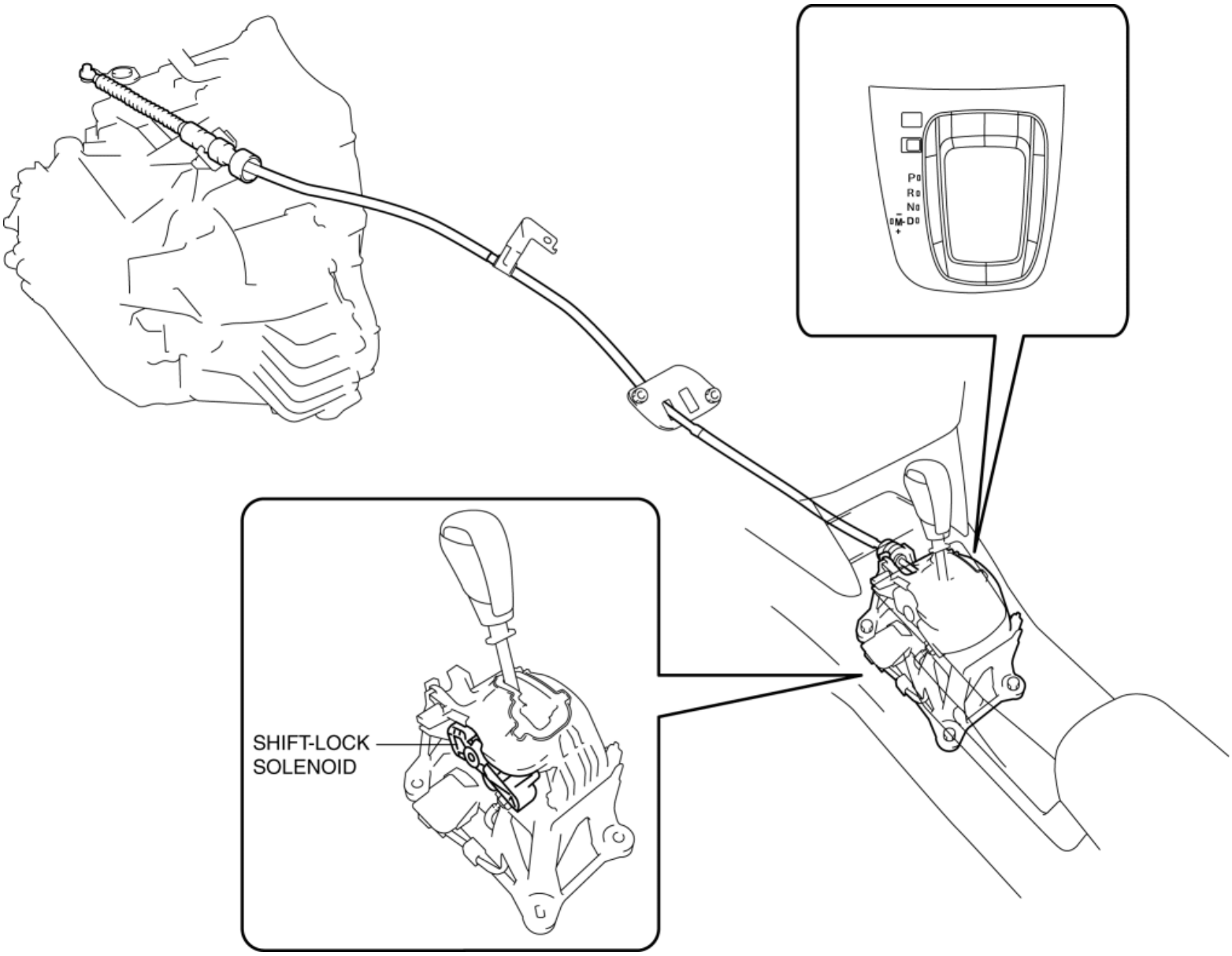

< Previous

2014 - Mazda3 - Transmission/Transaxle

SHIFT-LOCK SYSTEM

Purpose, Function

- The shift-lock system operates when the ignition is switched ON and the brake pedal is not depressed, and inhibits the selector lever from being shifted from the P position to other positions.
- If the shift-lock cannot be released by the normal operation, it can be released manually by inserting a flathead screwdriver into the shift-lock release hole (emergency manual shift-lock release system).

Construction

Wiring diagram

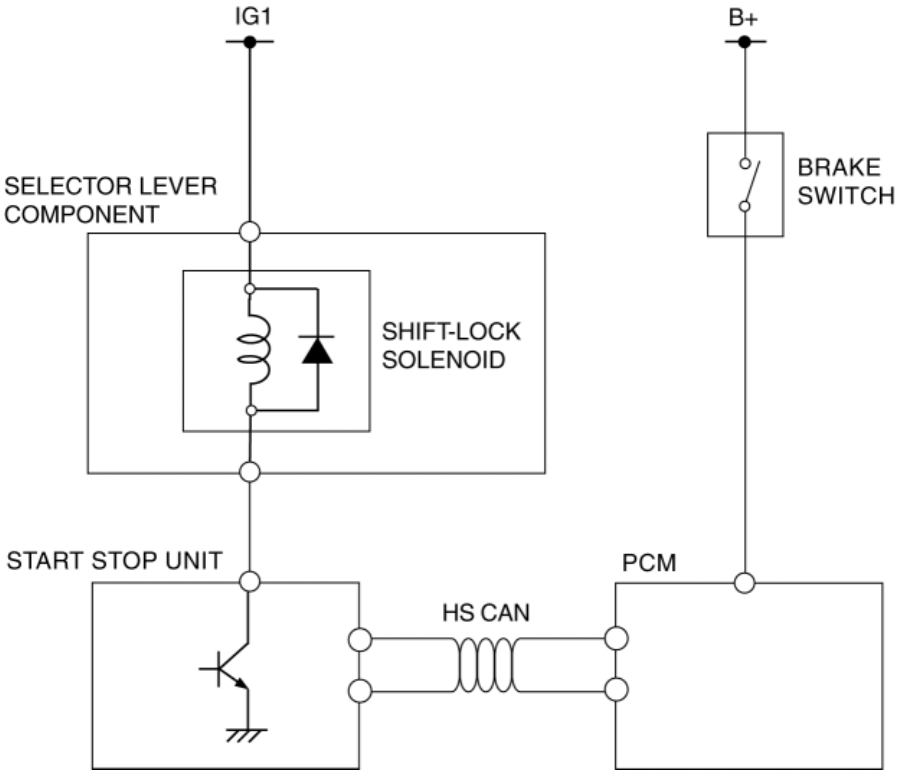

Structural view

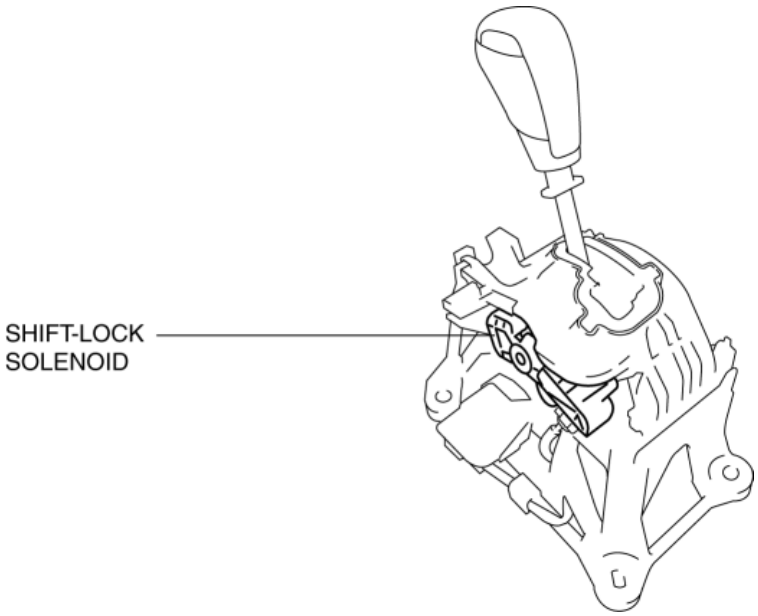

Operation

Shift-lock Release Conditions

- The shift-lock is released when all of the following conditions are met (except emergency manual shift-lock release system is operated).
    - Selector lever is in P position
    - Ignition is switched to ON
    - Brake pedal is depressed (brake light switch is on)

Shift-lock operation conditions (shift-lock release conditions not satisfied)

- When the shift-lock release conditions are not met, the shift-lock operates (The selector lever cannot be moved to any position other than P).
- Because there is no energization to the shift-lock solenoid at this time, the shift-lock solenoid is not energized.
- As a result, the lock slider is in the position shown in the figure and the movement of the guide pin in the downward direction is controlled by the lock slider.
- For selector levers in which movement is controlled by the guide pin, the selector lever cannot be moved to a position other than the P position.

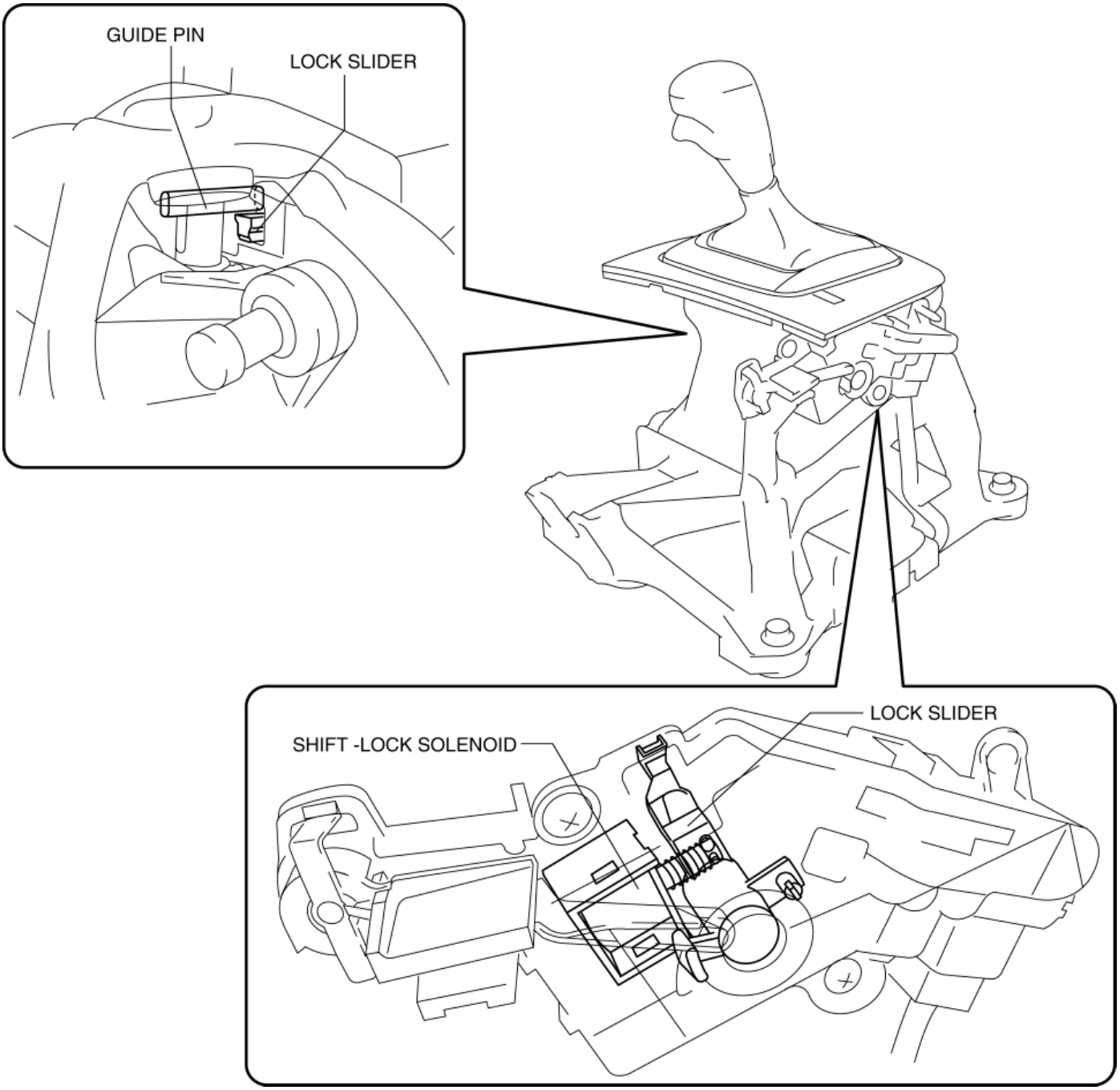

Shift-lock release (Shift-lock release conditions are satisfied)

- When the shift-lock release conditions are met, the shift-lock does not operate (The selector lever can be moved out of P).
- At this time, the shift-lock solenoid is energized because there is energization to the shift-lock solenoid.
- As a result, the lock slider moves in the direction shown by arrow (1) in the figure. Then, the guide pin can move in the direction of arrow (2) shown in the figure.
- For selector levers in which movement is not controlled by the guide pin, the selector lever can be moved to any position.

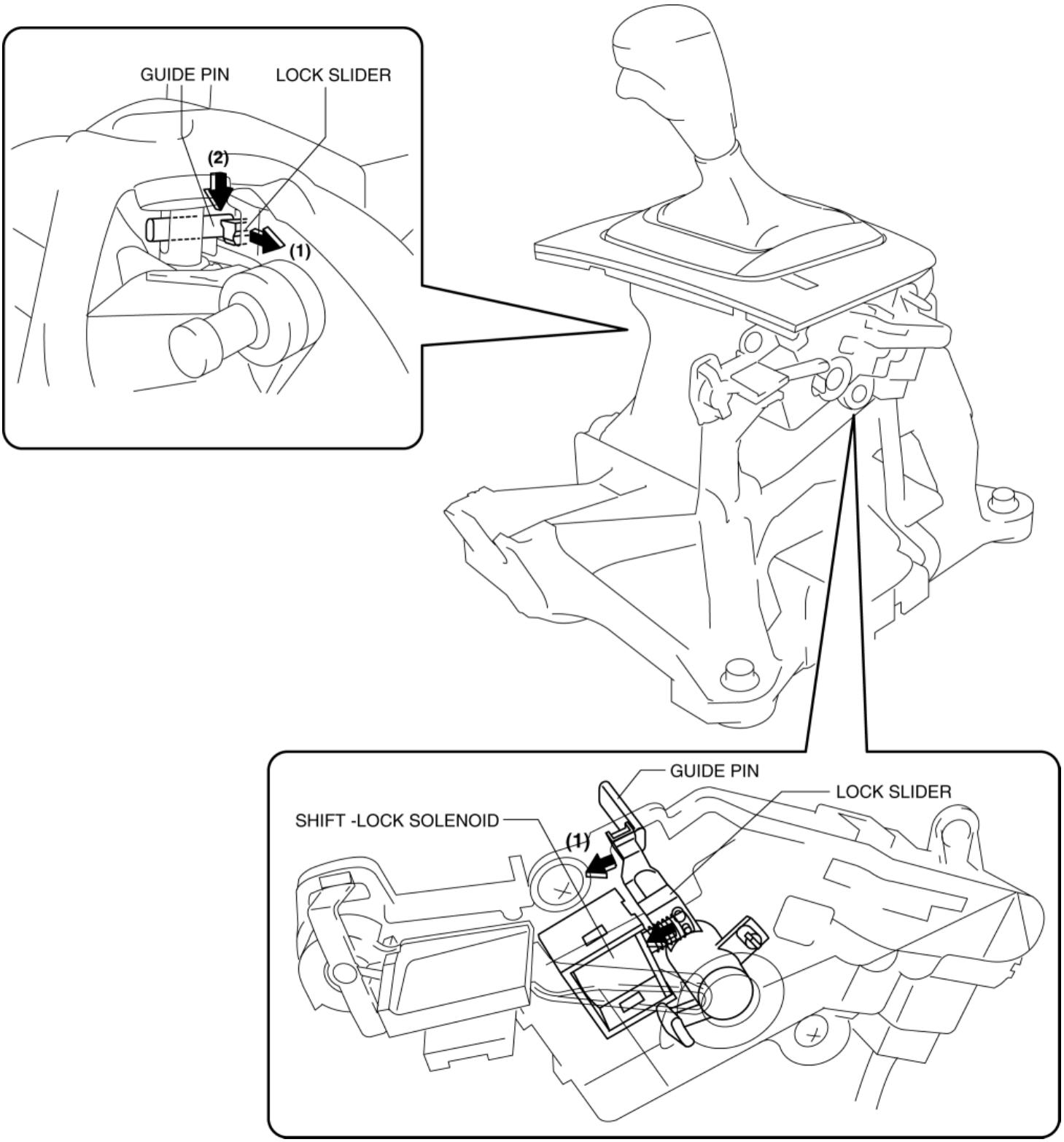

Emergency manual shift-lock release system operation

- The emergency manual shift-lock release system can be released manually even if the shift-lock release conditions are not met.
- The guide pin restriction can be cancelled forcibly by pressing in the shift-lock override button using a flathead screwdriver, and moving the lock slider.
- As a result, the selector lever can be moved to any position.

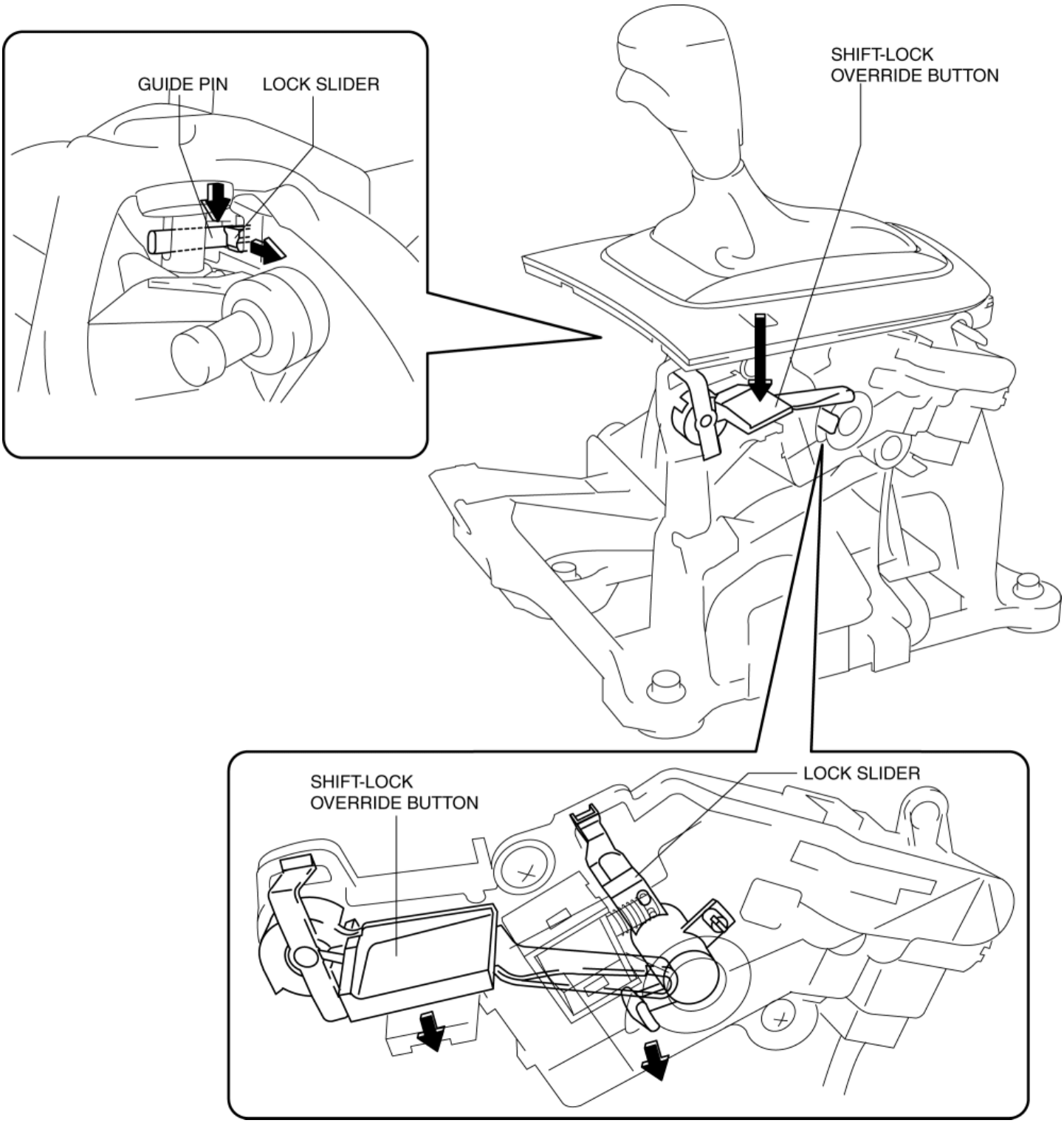
GUIDE PIN
LOCK SLIDER
SHIFT-LOCK
OVERRIDE BUTTON
SHIFT-LOCK
OVERRIDE BUTTON
LOCK SLIDER

< Previous

Next >

2014 - Mazda3 - Steering

STEERING

Abbreviations

AAS	Active Adaptive Shift
ABS	Antilock Brake System
ABDC	After Bottom Dead Center
ACC	Accessories
AFS	Adaptive Front Lighting System
ALC	Auto Level Control
ALR	Automatic Locking Retractor
ATDC	After Top Dead Center
ATF	Automatic Transaxle Fluid
ATX	Automatic Transaxle
AWD	All-Wheel Drive
BBDC	Before Bottom Dead Center
BDC	Bottom Dead Center
BSM	Blind Spot Monitoring
BTDC	Before Top Dead Center
CAN	Controller Area Network

CCM	Comprehensive Component Monitor
CV	Canister Vent
CM	Control Module
CMU	Connectivity master unit
CPU	Central Processing Unit
DC	Drive Cycle
DRL	Daytime Running Light
DSC	Dynamic Stability Control
EBD	Electronic Brakeforce Distribution
EEPROM	Electrically Erasable Programmable Read-Only Memory
EHPAS	Electro Hydraulic Power Assist Steering
ELR	Emergency Locking Retractor
EPS	Electric Power Steering
ESA	Electronic Spark Advance
FBCM	Front Body Control Module
FET	Field Effect Transistor
FOW	Forward Obstruction Warning
GPS	Global Positioning System
HBC	High Beam Control
HF/TEL	Hands-Free Telephone
HI	High
HLA	Hydraulic Lash Adjuster

HS	High Speed
HU	Hydraulic Unit
IDS	Integrated Diagnostic Software
IG	Ignition
INT	Intermittent
KOEO	Key On Engine Off
KOER	Key On Engine Running
LCD	Liquid Crystal Display
LDWS	Lane Departure Warning System
LED	Light Emitting Diode
LF	Left Front
LH	Left Hand
LO	Low
LR	Left Rear
M	Motor
MAX	Maximum
MIN	Minimum
MOS	Metal Oxide Semiconductor
MRCC	Mazda Radar Cruise Control
MS	Middle Speed
MTX	Manual Transaxle
OCV	Oil Control Valve

OFF	Switch Off
ON	Switch On
PAD	Passenger Air Bag Deactivation
PCV	Positive Crankcase Ventilation
PID	Parameter Identification
P/W CM	Power Window Control Module
PTC	Positive Temperature Coefficient
RBCM	Rear Body Control Module
RCTA	Rear Crossing Traffic Alert
REC	Recirculate
RF	Right Front
RH	Right Hand
RR	Right Rear
SAS	Sophisticated Air Bag Sensor
SST	Special Service Tool
SW	Switch
TAU	Tuner and Amp Unit
TCS	Traction Control System
TDC	Top Dead Center
TFT	Transaxle Fluid Temperature
TNS	Tail Number Side Lights
TPMS	Tire Pressure Monitoring System

USB	Universal Serial Bus
VENT	Ventilation
1GR	First Gear
2GR	Second Gear
2WD	2-Wheel Drive
3GR	Third Gear
4GR	Fourth Gear
4SD	4 Door Sedan
5GR	Fifth Gear
5HB	5 Door Hatchback
6GR	Sixth Gear

Features

Improved handling, fuel economy, marketability	• Column assist-type Electric Power Steering (EPS) adopted
Improved handling	• By using a higher steering gear ratio (14.1), the steerability has been improved
Improved operability	• Steering column with tilt/telescope mechanism adopted
Improved safety	• Steering column and shaft with energy absorbing mechanism adopted
Improved serviceability	• Enhanced malfunction diagnosis system for use with Mazda modular diagnostic system (M-MDS)

Specifications

Item			Specification
Steering wheel	Outer diameter	(mm {in})	372 {14.6}
	Lock to lock	(turns)	2.57
Steering column and shaft	Shaft type		Collapsible
	Joint type		Cross-shaped joint
	Tilt amount	(mm {in})	45 {1.8}
	Telescope amount	(mm {in})	50 {2.0}
Steering gear and linkage	Type		Rack-and-pinion
	Rack stroke	(mm {in})	158 {6.22}
Power steering system	Power assist type		Electric motor assist (Column assist type)

Next >

2014 - Mazda3 - Steering

ON-BOARD DIAGNOSTIC SYSTEM [ELECTRIC POWER STEERING (EPS)]

Outline

- The on-board diagnostic system consists of a malfunction detection system that detects abnormalities in input/output signals when the ignition switch is at the ON position, a data monitor function that reads out specified input/output signals.
- The data link connector 2 (DLC-2), which groups together all the connectors used for malfunction diagnosis into a single location, has been adopted, thereby improving serviceability. Diagnosis is performed by connecting the Mazda Modular Diagnostic System (M-MDS) to the DLC-2.
- In addition to DTC read-out, the Mazda Modular Diagnostic System (M-MDS) is used to clear DTCs using the display screen of the diagnostic tester, and to access the PID/data monitor, providing enhanced malfunction diagnosis and improved serviceability.

Block diagram

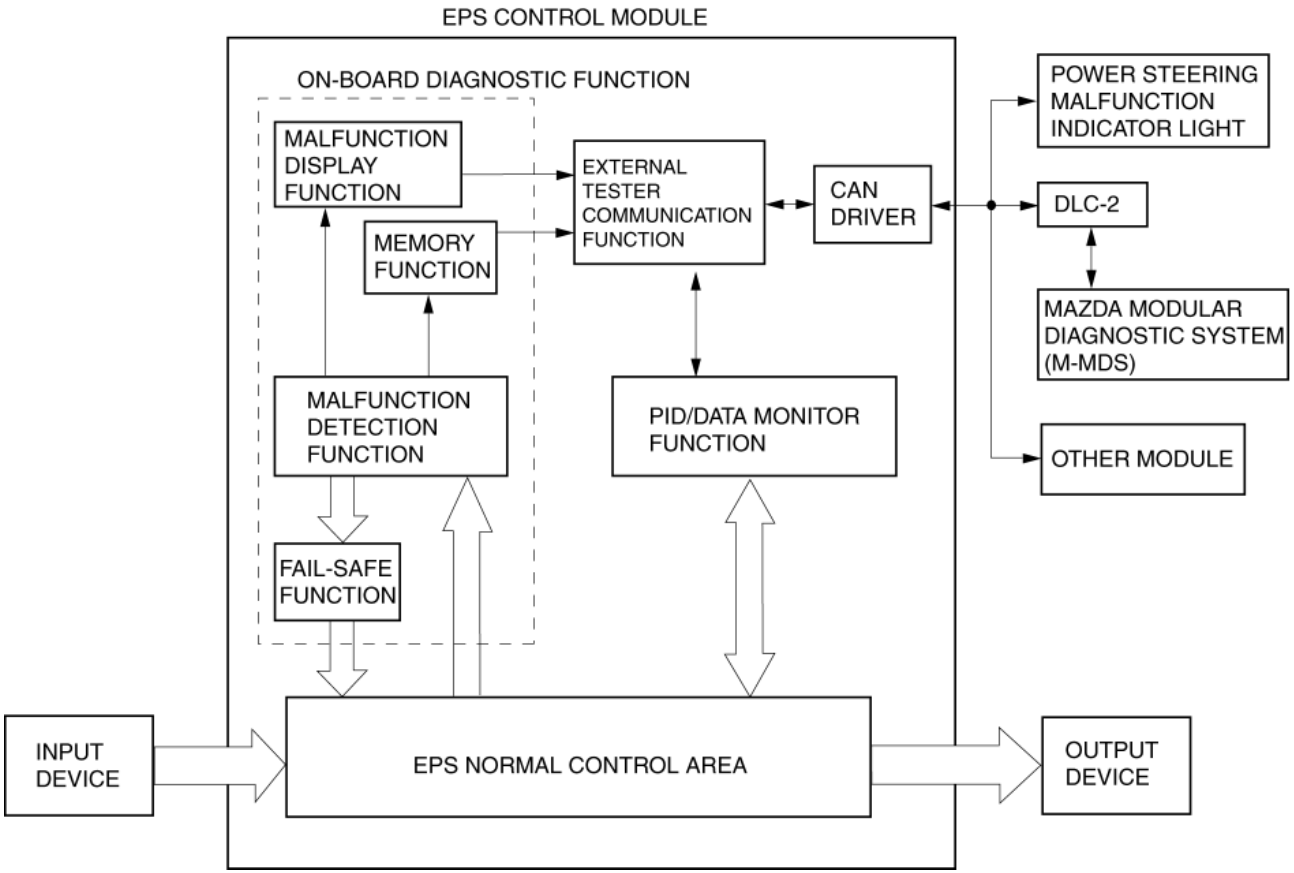

Function

Malfunction detection function

- The malfunction detection function detects malfunctions in the input/output signal system of the EPS control module when the ignition switched ON or driving the vehicle.

Malfunction display function

- When the malfunction detection function detects a malfunction, the power steering malfunction indicator light illuminates or flashes to advise the driver. Using the external tester communication function, DTCs can be output to the DLC-2 via the CAN line. At the same time, malfunction detection results are sent to the memory and fail-safe functions.
- The power steering malfunction indicator light may not illuminate depending on the detected malfunction.

Memory function

- The memory function stores DTCs of malfunctions in input/output signal systems. With this function, once a DTC is stored it is not cleared after the ignition switch has been switched OFF, even if the malfunctioning signal system has returned to normal.
- Since the EPS control module has a built-in non-volatile memory, DTCs are not cleared even if the battery is removed. Therefore, it is necessary to clear the memory after performing repairs. Refer to the Workshop Manual for the DTC clearing procedure.

DTC table ×: Applicable—: Not applicable

DTC M-MDS	Power steering malfunction indicator light illumination status	Diagnosis system component	Fail-safe	Drive cycle	Self test type*1	Memory function
C200B:02	Illuminated	Torque sensor	×	—	C, D	×
C200B:16	Illuminated	Torque sensor	×	—	C, D	×
C200B:1C	Illuminated	Torque sensor	×	—	C, D	×
C200B:62	Illuminated	Torque sensor	×	—	C, D	×
C200B:64	Illuminated	Torque sensor	×	—	C, D	×
C200B:85	Illuminated	Torque sensor	×	—	C, D	×
C200C:1C	Illuminated	Torque sensor	×	—	C, D	×
C200D:1C	Flashes/Illuminated*2	Resolver sensor	×	—	C, D	×
C200D:64	Illuminated	Resolver sensor	×	—	C, D	×
U0001:88	Illuminated	CAN system communication error	×	—	C, D	×
U0100:00	Illuminated	Communication error to PCM	×	—	C, D	×
U0121:00	—	Communication error to DSC CM	×	—	C, D	×
U0155:00	—	Communication error to instrument cluster	×	—	C, D	×

U0214:00	—	Communication error to start stop unit	×	—	C, D	×
U0338:00	—	Signal error from start stop unit	×	—	C, D	×
U0401:00	Illuminated	Signal (vehicle speed) error from PCM	×	—	C, D	×
	—	Signal (engine speed) error from PCM	×	—	C, D	×
U0415:00	—	Signal error from DSC CM	×	—	C, D	×
U0423:00	—*3	Signal (engine switch status) error from instrument cluster	×	—	C, D	×
U0515:00	—	Signal error from start stop unit	×	—	C, D	×
U2011:19	Illuminated	EPS motor	×	—	C, D	×
U2011:1C	Illuminated	EPS motor	×	—	C, D	×
U2011:62	Illuminated	EPS motor	×	—	C, D	×
U2011:72	Illuminated	EPS motor	×	—	C, D	×
U2011:92	Illuminated	EPS motor	×	—	C, D	×
U2300:54	—	EPS configuration	×	—	C, D	×
U2300:55	Illuminated	EPS configuration	×	—	C, D	×
U2300:56	—	EPS configuration	×	—	C, D	×
U3000:16	Illuminated	EPS CM	×	—	C, D	×
U3000:1C	Illuminated	EPS CM	×	—	C, D	×
U3000:28	Illuminated	EPS CM	×	—	C, D	×
U3000:41	Illuminated	EPS CM	×	—	C, D	×
U3000:46	—	EPS CM	×	—	C, D	×
U3000:47	Illuminated	EPS CM	×	—	C, D	×
U3000:49	Illuminated	EPS CM	×	—	C, D	×
U3000:4B	—	EPS CM	×	—	C, D	×
U3000:61	Illuminated	EPS CM	×	—	C, D	×
U3000:73	Illuminated	EPS CM	×	—	C, D	×
U3000:96	Illuminated	EPS CM	×	—	C, D	×

U3003:16	Illuminated	Battery power supply	×	—	C, D	×
U3003:17	Illuminated	Battery power supply	×	—	C, D	×

*1

C: CMDTC self test, D: ODDTC self test

*2

If the EPS CM detects an internal circuit malfunction in the resolver sensor, it flashes the power steering malfunction indicator light. At this time, if EPS system internal temperature increases, the assist force gradually weakens. Then if assist force decreases above the specified value, the power steering malfunction indicator light switches from flashing to illumination.

*3

If the EPS CM detects the signal that a engine speed is below the specified value, it illuminates the power steering malfunction indicator light.

Status byte for DTC

- The status byte is the two-digit code (two digits after hyphen (-)) after the DTC.

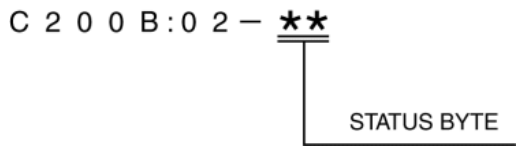

- The status byte is a code which indicates the pending code, current/past malfunction status, or warning illumination status.
- The status byte can be read by performing a CMDTC self test using the Mazda Modular Diagnostic System (M-MDS).
- For details on the status byte, refer to the explanation on the M-MDS when reading the DTC.

DTC 7-digit code definition

- When related systems or components have failed, the CM stores the DTC of the malfunctioning part in the CM memory, and allows for the retrieval of the store data using scanning tool when necessary. The DTCs are indicated using seven digits. Each digit indicates the following.

C 2 0 0 B : 0 2

Specify the area failure sub type

00: No sub type information	61: Signal calculation malfunction
01: General electrical malfunction	62: Signal compare malfunction
16: Circuit voltage below threshold	64: Signal plausibility malfunction
17: Circuit voltage above threshold	88: Bus off
1C: Circuit voltage out of range	96: Component internal malfunction
28: Signal bias level out of range /zero adjustment malfunction	
54: Missing calibration	

Manufacturer controlled

Indicates subgroup

Network Electrical (U code)	**Chassis (C code)**
0: Network Electrical	Manufacturer controlled
1: Network communication	
3: Network data	
4: Network data	
5: Network data	

Indicates who was responsible for DTC definition

0: ISO/SAE controlled
2: There are ISO/SAE controlled just for powertrain, all others are manufacturer controlled.
3: For P3000 to P3399 is manufacturer controlled, all others are ISO/SAE controlled.

Indicates DTC function

C: Chassis
U: Network Electrical

Fail-safe function

- When the malfunction detection function determines a malfunction, the power steering malfunction indicator light illuminates to advise the driver. At this time, the fail-safe function disables system control or gradually reduces the assist power.

Fail-safe Function Table

DTC M-MDS	Fail-safe control status
C200B:02	Control disabled
C200B:16	Control disabled
C200B:1C	Control disabled

C200B:62	Control disabled
C200B:64	Control is maintained in the backup control
C200B:85	Control disabled
C200C:1C	Control disabled
C200D:1C	Control is maintained in the backup control and EPS warning alarm is sounded ▪ If EPS system internal temperature increases above the specified value, the EPS CM disables assistance and stops the EPS warning alarm
C200D:64	Control disabled
U0001:88	Control enabled
U0100:00	Control is maintained by gradually changing the controlled vehicle speed and setting it to **100 km/h {62.1 mph}**
U0121:00	Control enabled
U0155:00	Control enabled
U0214:00	Control enabled
U0338:00	Control enabled
U0401:00	• Vehicle speed signal malfunction ▪ Control is maintained by gradually changing the controlled vehicle speed and setting it to **100 km/h {62.1 mph}** • Engine speed signal malfunction ▪ Control enabled
U0415:00	Control enabled
U0423:00	Control enabled ▪ If the EPS CM detects the signal that a engine speed is below the specified value, it disables assistance
U0515:00	Control enabled
U2011:19	Control disabled
U2011:1C	Control disabled
U2011:62	Control disabled
U2011:72	• An open circuit malfunction is detected in one phase of the three-phase stator in the EPS motor ▪ Control is maintained in the backup control • Other malfunction detected in EPS motor internal circuit ▪ Control disabled

U2011:92	Control disabled
U2300:54	Control enabled
U2300:55	Control enabled
U2300:56	Control enabled
U3000:16	Control disabled
U3000:1C	Control disabled
U3000:28	Control disabled
U3000:41	Control disabled
U3000:46	Control is maintained in fail mode
U3000:47	Control disabled
U3000:49	Control disabled
U3000:4B	Control is maintained in fail mode
U3000:61	Control disabled
U3000:73	Control disabled
U3000:96	Control disabled
U3003:16	Control is maintained by gradually decreasing the motor control current However, control is inhibited if the power supply voltage is the specified value of less.
U3003:17	Control disabled

Snapshot data

- The snapshot data stores the currently detected DTC data.

Snapshot data item	Unit	Definition	Corresponding data monitor items
AAT	°C, °F	Ambient air temperature	—
APP_STATUS	Accelerator Pedal Off/ Under 20%/ Over 20%/ FAIL	Accelerator pedal position	—

CEN_TRQ_S	Nm	Center value of torque sensor	CEN_TRQ_S
CFG_STATUS	Config Complete/ Not Configured/ Config Error	Configuration status	—
ECT_STATUS	Under 0 degrees C/ 0 - Under 80 degrees C/ Over 80 degrees C/ FAIL	Engine coolant temperature status	—
ECU_IN_TMP	°C, °F	ECU internal temperature	ECU_IN_TMP
ENG_RPM	RPM	Engine speed	ENG_RPM
IC_VPWR	V	Instrument cluster power supply	—
IG-ON_TIMER	hh:mm:ss	Times since ignition switch ON	—
MT_CURRENT	A	Motor current	MT_CURRENT
OH_CR_C	No/Yes	Current complete overheat protection	OH_CR_C
OH_CR_M	No/Yes	Current middle overheat protection	OH_CR_M
OH_HIST_C	No/Yes	History of complete overheat protection	OH_HIST_C
OH_HIST_M	No/Yes	History of middle overheat protection	OH_HIST_M
OH_IG_CNT_C	—	IG ON counter after complete overheat protection	OH_IG_CNT_C
OH_IG_CNT_M	—	IG ON counter after middle overheat protection	OH_IG_CNT_M
PWR_MODE_KEY	Key Out/Key Recently Out (Position 0)/Accessory (Position 1)/Post Ignition (Position 2)/Ignition On (Position 2)/Running (Position 2)/Running - Starting	Power mode key state	—
RPM_STATUS	Engine Stop/ Under 1500 rpm/ Over 1500 rpm/ FAIL	Engine RPM status	—
SHIFT_STATUS	P/N D/ R/	Shift position status	—

	FAIL		
STR_AB_EST	°	Steering wheel estimated absolute angle	STR_AB_EST
STR_ANG	°	Steering wheel angle	STR_ANG
STR_ROT_SPD	°/s	Steering wheel rotation speed	STR_ROT_SPD
STR_TRQ_S_M	Nm	Steering shaft torque (Main)	STR_TRQ_S_M
STR_TRQ_S_S	Nm	Steering shaft torque (Sub)	STR_TRQ_S_S
TOTAL_DIST	km, ft, mi	Total distance	—
TOTAL_TIME	hh:mm:ss	Total time	—
VPWR	V	Power supply	VPWR
VSPD	KPH, MPH	Vehicle speed	VSPD
VSPD_STATUS	Stop/ 0 - 10 km/h/ Over 10 km/h/ FAIL	Vehicle speed status	—

PID/Data Monitor Function

- The PID/data monitor function is used for optionally selecting input/output signal monitor items preset in the EPS control module (CM) and reading them out in real-time.

Monitor item (Mazda Modular Diagnostic System (M-MDS) display)	Data contents	Unit/operation
CEN_TRQ_S	• Torque sensor neutral position: Near 0 Nm	Nm
ECU_IN_TMP	• Displays temperature of board in EPS control module: -40°C—+215°C {-40°F—419°F}	°C, °F
ENG_RPM	• Engine stopped: 0 RPM • Engine rotating at **3,000 RPM**: 3,000 RPM	RPM
MT_CURRENT	• When not steered: Near 0 A • Steered: Changes to positive or negative	A
OH_CR_C	• Is the overheating prevention control (Complete) operating?	Yes/No
OH_CR_M	• Is the overheating prevention control (Middle) operating?	Yes/No

OH_HIST_C	• Has the overheating prevention control (Complete) operated before?	Yes/No
OH_HIST_M	• Has the overheating prevention control (Middle) operated before?	Yes/No
OH_IG_CNT_C	• History of overheating prevention control (Complete) • Number of times vehicle is driven (ignition switched ON (engine off or on)) after overheating prevention control operates	—
OH_IG_CNT_M	• History of overheating prevention control (Middle) • Number of times vehicle is driven (ignition switched ON (engine off or on)) after overheating prevention control operates	—
STR_AB_EST	• Steering wheel in neutral position (not turned): 0° • Steered left: Changes to 0°—Positive • Steered right: Changes to 0°—Negative **NOTE:** • The signal displayed in this item is a estimated absolute steering angle signal output.	°
STR_ANG	• Steering wheel position when ignition is switched ON (engine off or on): 0° • Steered left: Changes to 0°—Positive • Steered right: Changes to 0°—Negative **NOTE:** • The signal displayed in this item is a steering angle (relative angle) signal output.	°
STR_ROT_SPD	• Not steered: Near 0 °/s • Steered: Changes according to steering speed	°/s
STR_TRQ_S_M	• Not steered: Near 0 Nm • Steered left: Changes to 0 Nm—Positive • Steered right: Changes to 0 Nm—Negative	Nm
STR_TRQ_S_S	• Not steered: Near 0 Nm • Steered left: Changes to 0 Nm—Positive • Steered right: Changes to 0 Nm—Negative	Nm
VPWR	• Engine stopped: Approx. **12 V** • Idling: Approx. **14 V**	V
VSPD	• Vehicle stopped: 0 KPH, 0 MPH • Vehicle speed **20 km/h {12 mph}**: 20 KPH, 12 MPH	KPH, MPH

External Tester Communication Function

Outline

- The external tester communication function enables communication of diagnostic data (DTC read-outs, input/output signal read-outs) between the EPS control module (CM) and an external tester.

Connections/Communication Contents

	External tester	
	Mazda modular diagnostic system (M-MDS)	
	Connection	Communication method
On-board diagnostic (malfunction detection) function	Input/output: CAN_H (HS), CAN_L (HS)	Serial communication
PID/DATA monitor function	Input/output: CAN_H (HS), CAN_L (HS)	Serial communication

Serial communication

- Serial communication (two-way communication) allows for multiple data to be sent and received instantly along the same line.
- By connecting the Mazda modular diagnostic system (M-MDS) to the DLC-2, diagnostic data can be sent and received between the Mazda modular diagnostic system (M-MDS) and the EPS CM via CAN lines.
- The EPS CM receives the command signals of the malfunction detection function and PID/data monitor function from the Mazda modular diagnostic system (M-MDS), and sends DTCs and data regarding the operating status of each input/output part to the Mazda modular diagnostic system (M-MDS).

Diagnostic function name	Signal received	Signal sent
Malfunction detection function	DTC verification signal	Diagnostic trouble code
PID/DATA monitor function	Command signal to read selected monitor item	Monitored data for requested monitor item

2014 - Mazda3 - Steering

DLC-2 [ELECTRIC POWER STEERING (EPS)]

Outline

- A connector (DLC-2) conforming to International Organization for Standardization (ISO) standards has been added.

Construction

- Shape and terminal arrangement as stipulated by the ISO 15031-3 (SAE J1962) international standard has been adopted for this connector. The connector has a 16-pin construction that includes the CAN_H (HS), CAN_L (HS), CAN_H (MS), CAN_L (MS), GND1, GND2 and B+ terminals.

DLC-2

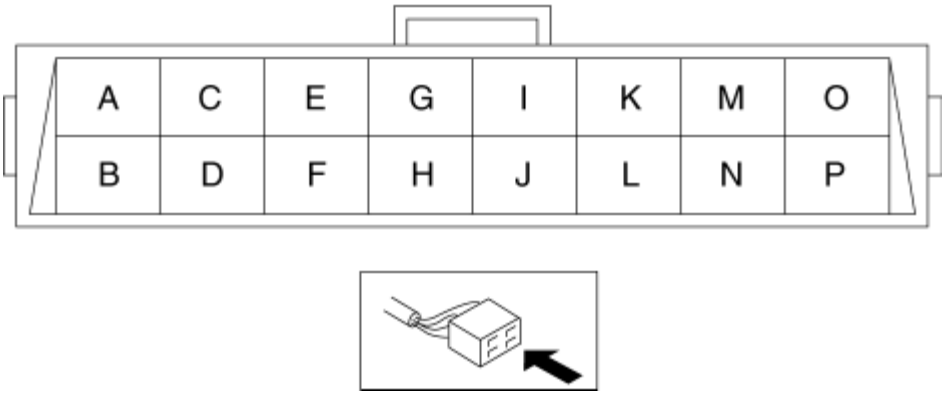

Terminal	Function
A	Battery power supply terminal
B	—
C	—
D	—
E	Serial communication Lo terminal (HS)

F	Serial communication Hi terminal (HS)
G	—
H	Serial communication GND terminal
I	—
J	Body GND terminal
K	Serial communication Lo terminal (MS)
L	Serial communication Hi terminal (MS)
M	—
N	—
O	—
P	—

2014 - Mazda3 - Steering

ELECTRIC POWER STEERING SYSTEM

Outline

- A column assist type EPS has been adopted for all models.
- EPS provides smooth handling from low to high speeds as a result of the excellent steering feel provided by the electronic control and the vehicle-speed responsive control.
- EPS does not require a power steering oil pump and generates assist force only when the steering wheel is steered. As a result, engine load is lowered and fuel efficiency is improved.
- A high output efficiency motor has been adopted, improving responsiveness to steering operation.
- The EPS CM has been integrated with the EPS motor, resulting in a size and weight reduction.
- Serviceability improved by the automatic configuration function and the steering wheel angle neutral position auto-learning function.

Structural View

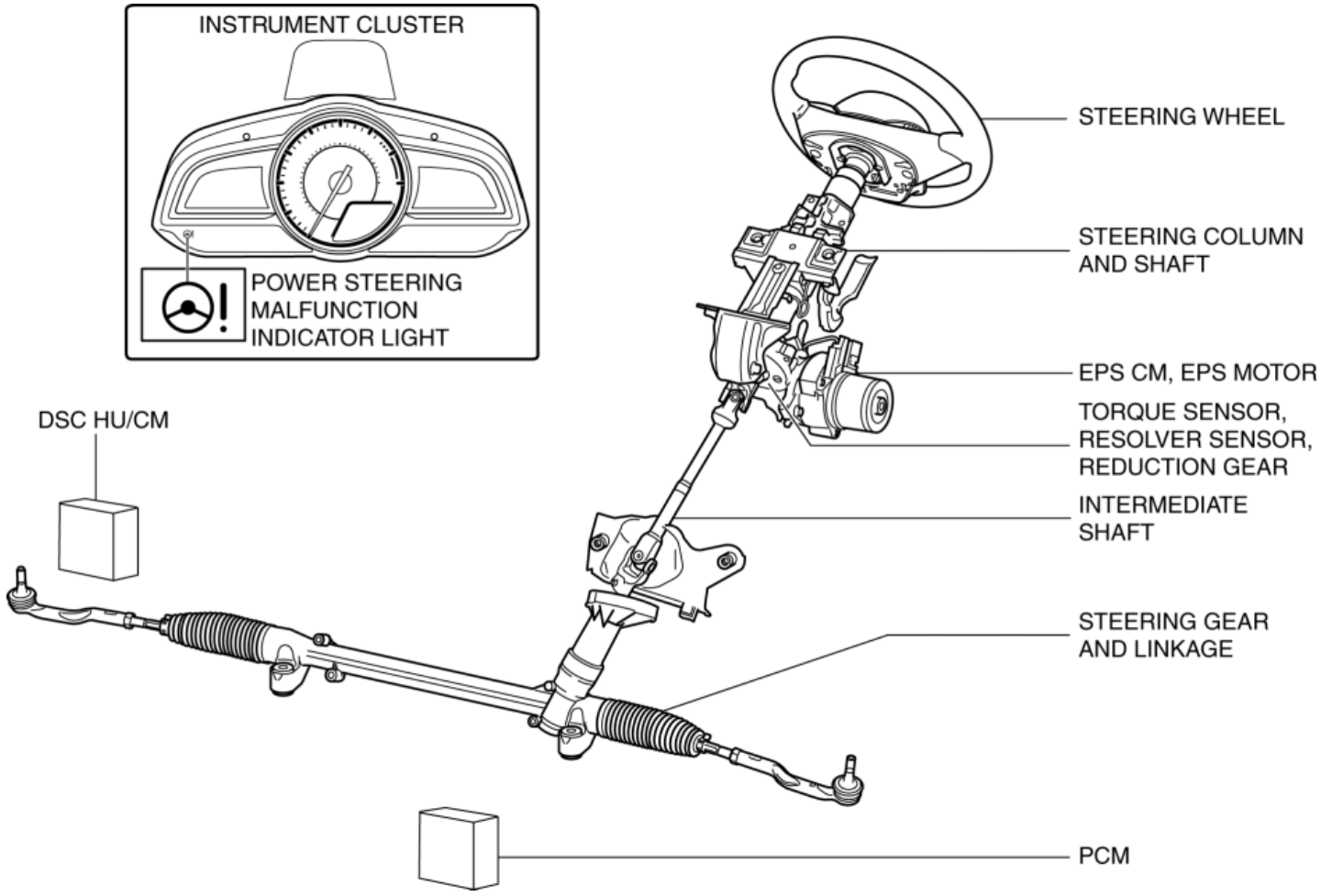

System Wiring Diagram

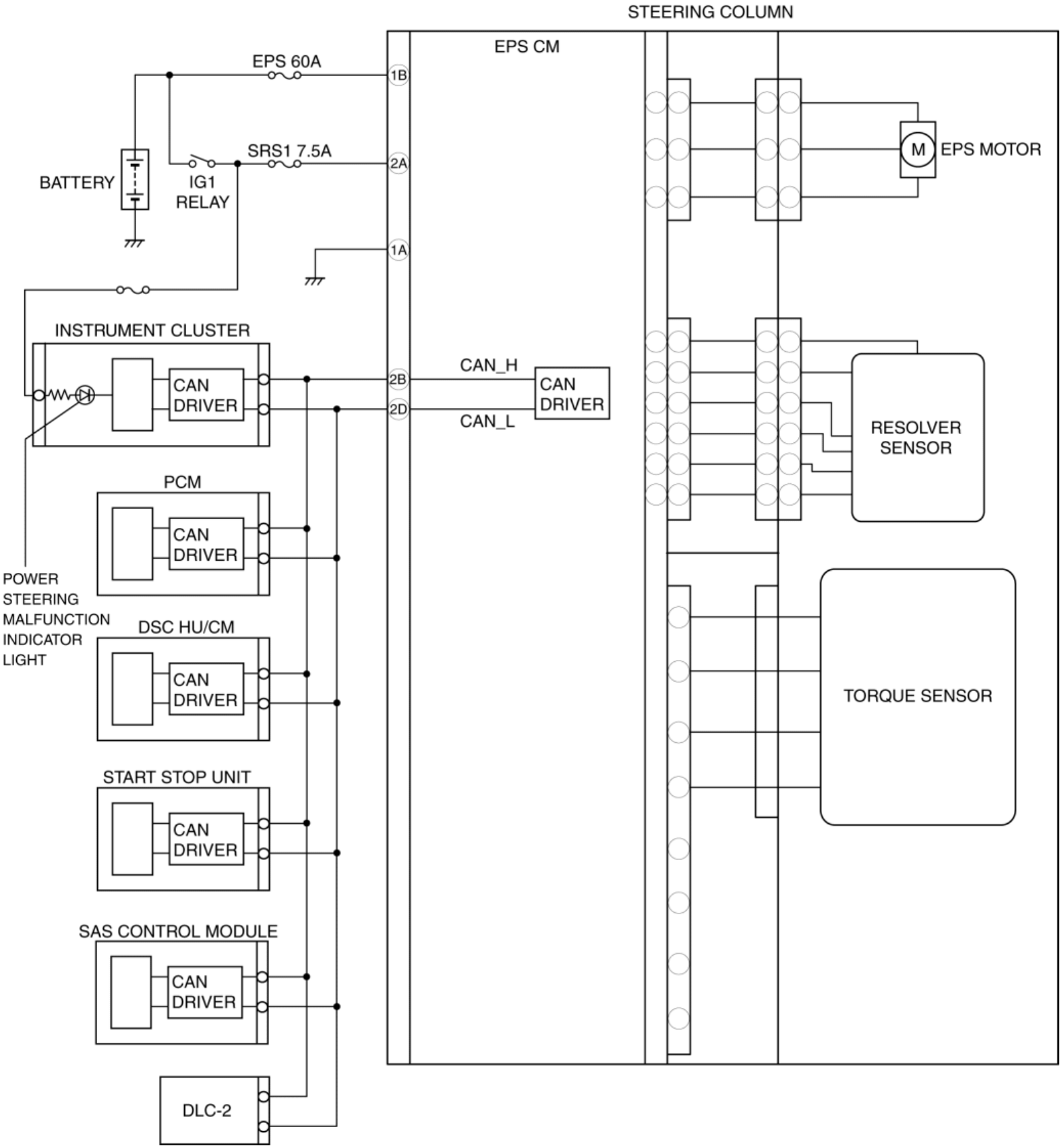

Purpose / Function

- The EPS assists the manual steering mechanism operation using the EPS motor to provide supplemental manual power during steering operation, reducing the load on the driver.

Construction

- The EPS consists of the following parts:
  - Manual steering mechanism
    - Consists of the steering wheel, steering column and shaft, steering gear and linkage.
  - Electric assist mechanism
    - Consists of the EPS CM (control module) built in the steering column, torque sensor, reduction gear, and EPS motor integrated in the EPS CM.
  - Control system
    - Controls based on the EPS CM, torque sensor, reduction gear, EPS motor, and vehicle speed and engine speed signals input from the PCM.

Operation

1. Steering force generated by the driver's steering wheel operation is detected by the torque sensor which is built in the steering column and shaft, and is output to the EPS CM as a steering torque signal.

2. The EPS CM calculates optimum assist force based on the steering torque signal from the torque sensor and the vehicle speed and engine speed signals from the PCM, and outputs electric current to drive the EPS motor.

3. The EPS motor is driven by the current from the EPS CM and the force is transmitted to the intermediate shaft via the reduction gears, thus assisting steering operation of the driver.

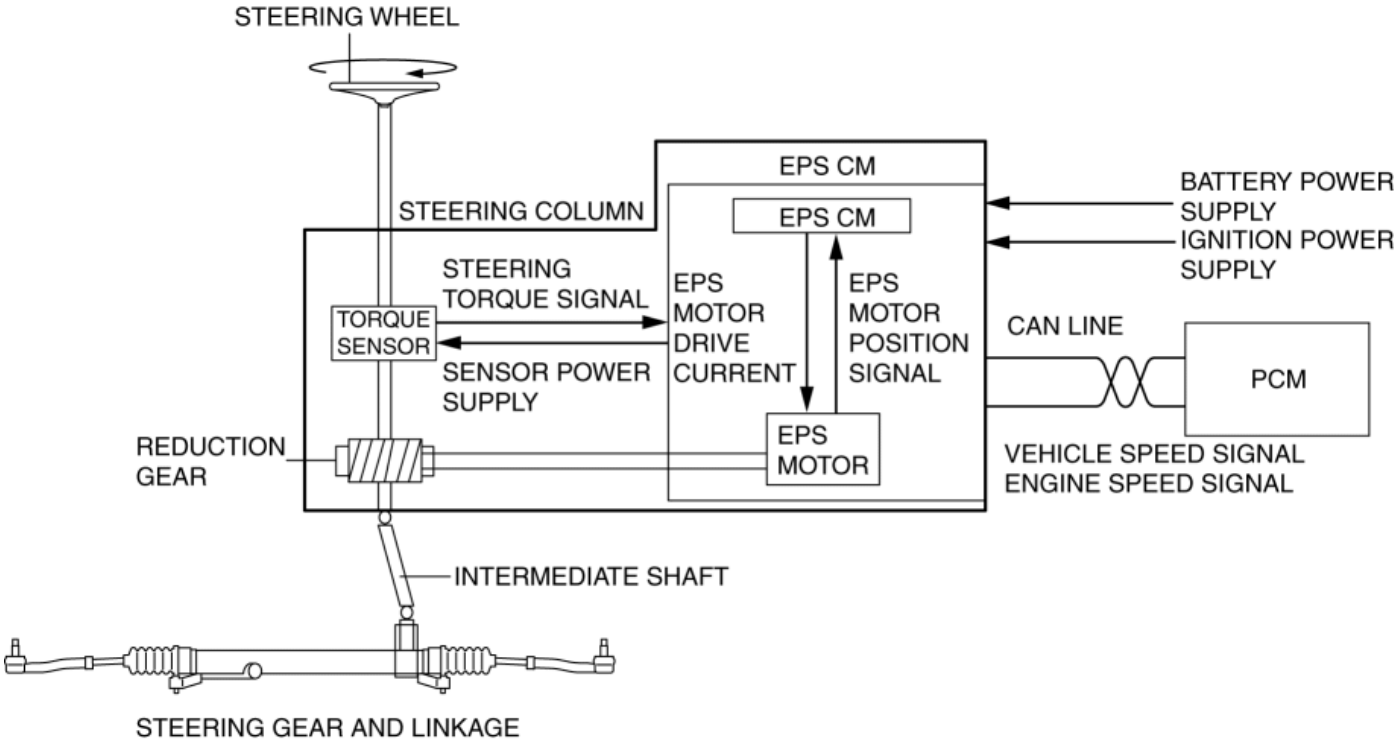

2014 - Mazda3 - Steering

STEERING COLUMN AND SHAFT

Purpose / Function

- The steering input force, generated when the driver operates the steering wheel, is transmitted to the steering gear.

Construction

- The steering column and shaft consists of the steering column with a built-in EPS mechanism and the intermediate shaft.
- As a result of impact absorbing mechanisms on the steering column and intermediate shaft, when a collision occurs, the steering shaft effectively absorbs the impact energy that would be transmitted to the driver, thereby reducing injury.
- Due to the adoption of a tilt/telescope mechanism for the steering shaft on all vehicles, operability has been improved.

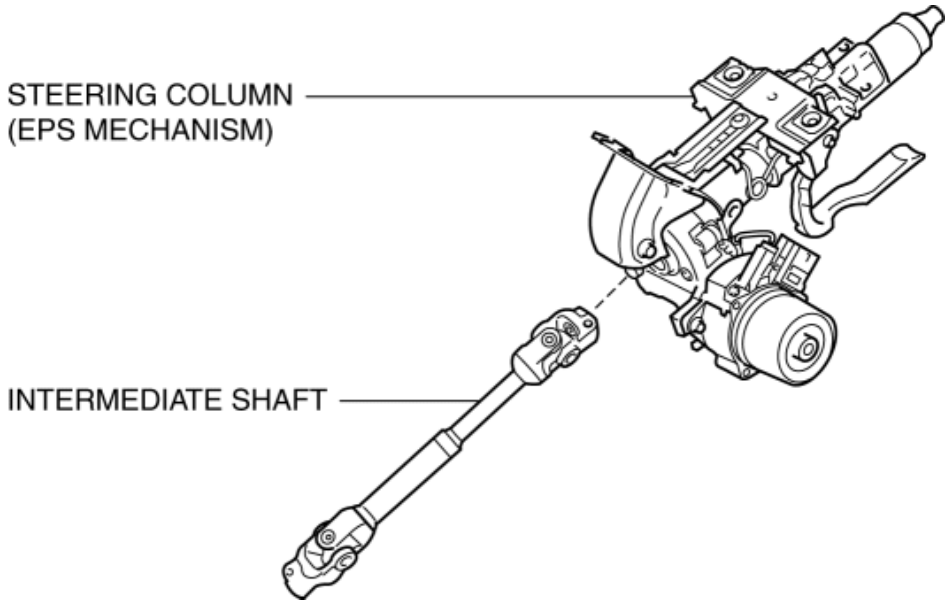

Operation

EPS mechanism

- Based on the steering torque signal from the torque sensor and the vehicle speed and engine speed signals from the PCM, the EPS CM drives the EPS motor and transmits the assist torque to the intermediate shaft via the deceleration mechanism.

Energy absorbing system

- At the moment of a collision, when impact energy (first stage impact) is input from the vehicle front due to the rearward collapse of the steering gear, the intermediate shaft contracts to absorb the impact from

the vehicle front. (Section X in the figure)

- When the body of the driver contacts the steering wheel (second stage impact), the fixing bracket comes off the dashboard member, and the upper shaft and the outer column slide forward. At this time, the impact absorption plate (one part secured to instrument panel member, another part to fixing bracket) deforms (area A shown in figure cracks) to absorb the impact to the driver. (Section Y in the figure)

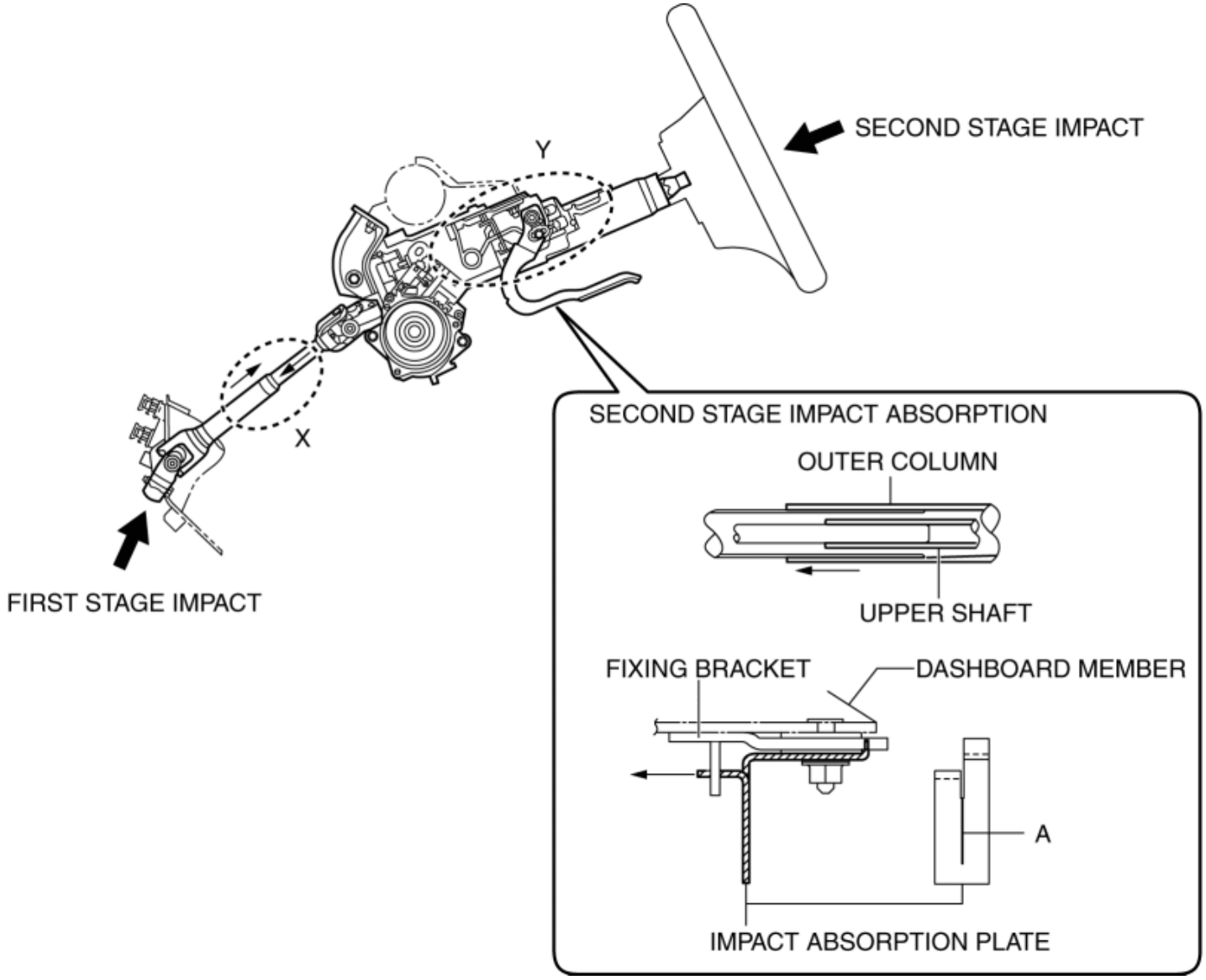

Tilt/telescope mechanism

- The steering wheel can be moved in the up/down and forward/backward direction when the adjusting lever is pressed towards the front of the vehicle to release the lock of the tilt/telescope system.
- The tilt/telescope mechanism has a movement range of **45 mm {1.8 in}** (tilt)/ **50 mm {2.0 in}** (telescope) and can be adjusted, without steps, to anywhere in this range.

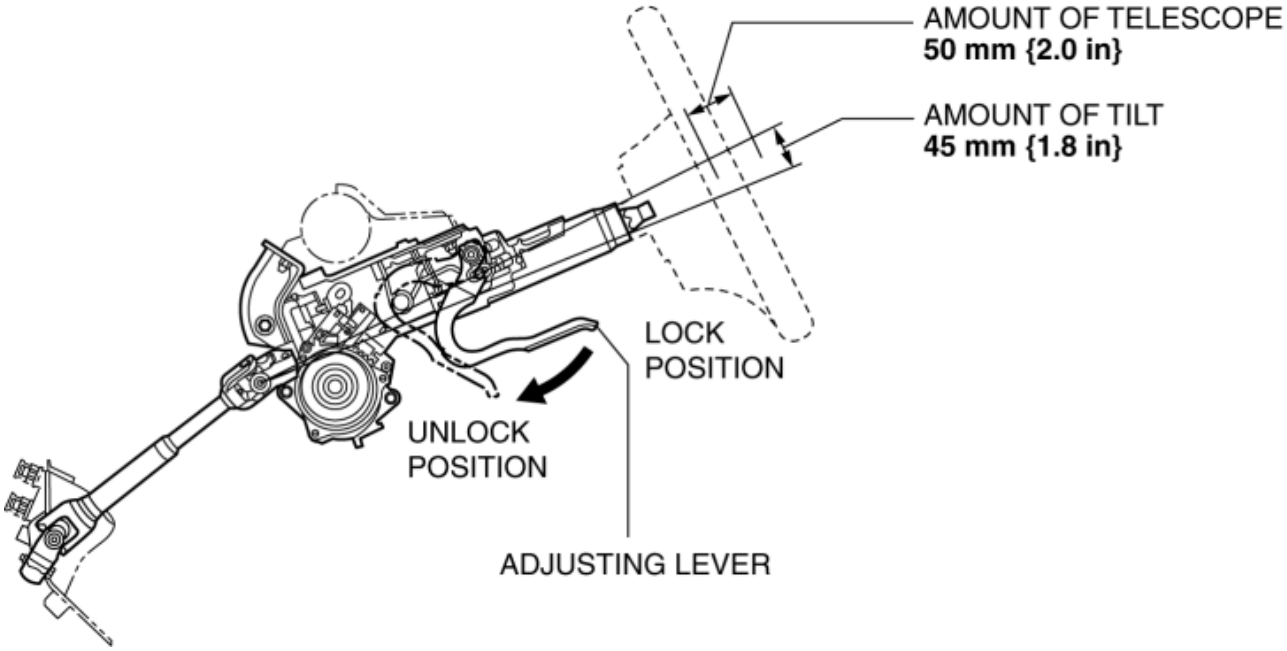

Fail-safe

- Function not equipped.

2014 - Mazda3 - Steering

STEERING GEAR AND LINKAGE

Purpose / Function

- The rotational movement input from the intermediate shaft is converted to a linear movement in the horizontal direction of the steering rack by the rack and pinion mechanism, and then transmitted to the tires and wheels.

Construction

- A size and weight-reduced rack and pinion system steering gear has been adopted.
- Response and handling stability have been improved by the heightened support rigidity due to the integration of the steering gear mounts (three locations) and gear housing.
- By using a higher steering gear ratio (14.1), the steerability has been improved.
- By using O-rings on the support yoke and rack bushing, quietness has been improved.

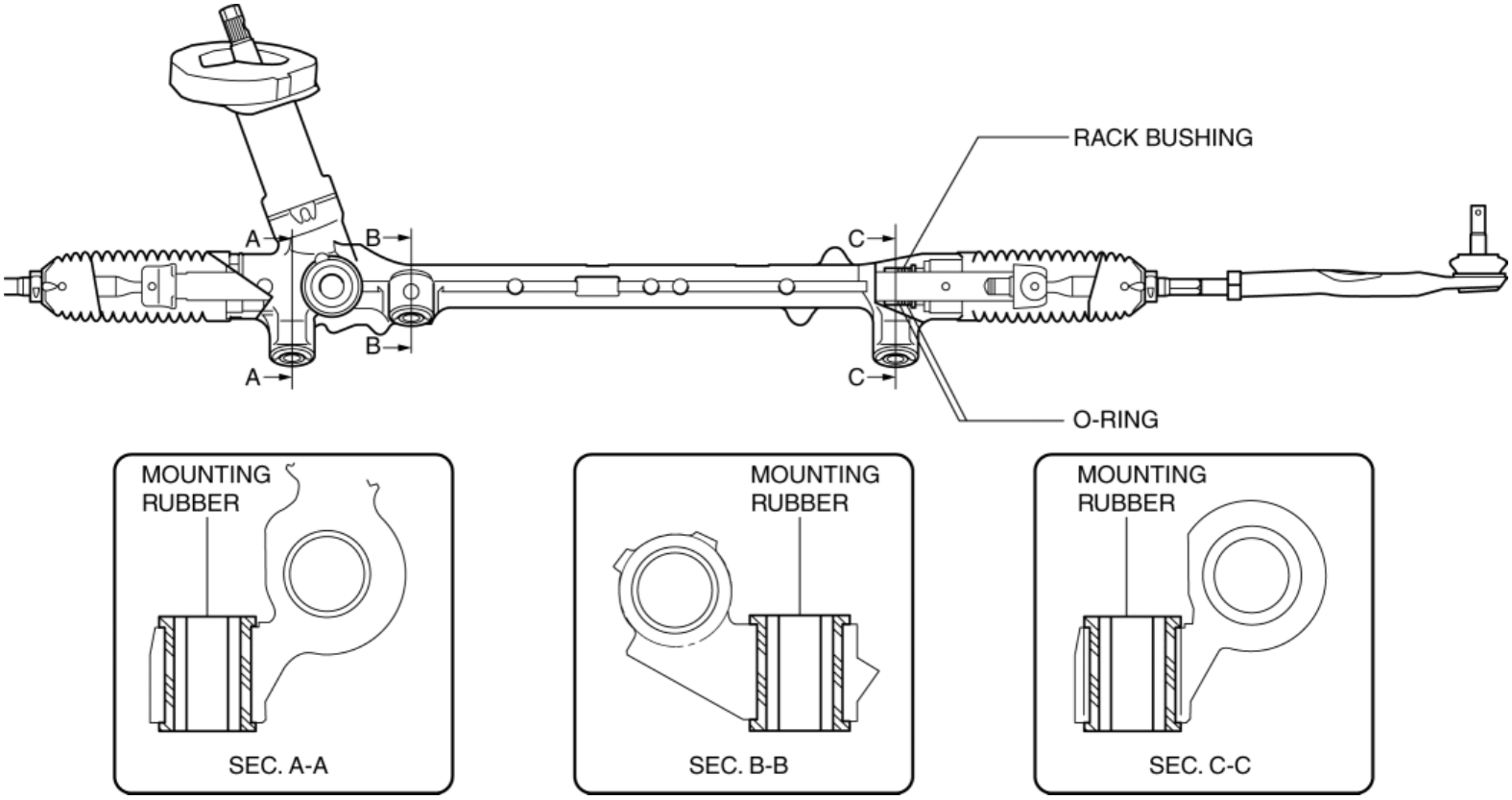

Operation

- The rotational movement input from the steering shaft is converted to a linear movement in the horizontal direction of the steering rack by engaging the pinion shaft connected to the steering shaft and teeth of the steering rack. This linear movement is transmitted via the inner and outer ball joints to the steering knuckle to steer the tires left or right.

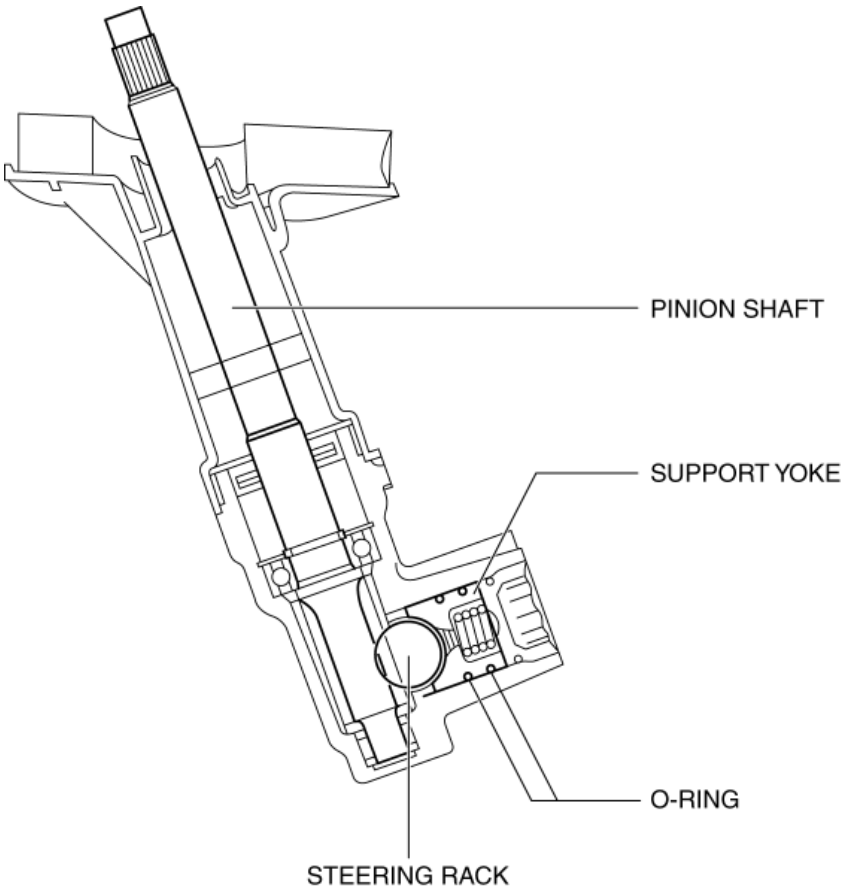

Fail-safe

- Function not equipped.

2014 - Mazda3 - Steering

ELECTRIC POWER STEERING (EPS) CONTROL MODULE

Purpose / Function

- The EPS control module (CM) calculates the optimum assist current based on the steering torque signal from the torque sensor installed to the steering column and the vehicle speed signal sent via CAN transmission from the PCM.
- The following steering angle signals are output via CAN communication.
  - Steering angle (relative angle) signal
    - Set the steering position to 0 degrees when the ignition is switched ON (engine off or on) to output the steering angle when steering from that position.
  - Steering angle (estimated absolute angle) signal
    - The EPS CM outputs the calculated steering angle value to the CAN as a steering angle (estimated absolute angle) signal for other systems requiring steering angle information.
    - The EPS CM performs the steering wheel angle neutral position determination using the steering wheel angle neutral position automatic learning function based on the wheel speed signal, lateral-G signal, and yaw rate signal while driving.
    - Set the angle to 0 degrees during the steering wheel angle neutral position determination and the EPS CM calculates the steering angle, and outputs it.

      NOTE:

      - The steering angle sensor signal is not used for the steering angle (estimated absolute angle) signal calculation.
      - Before the steering wheel angle neutral position auto learning is completed, the EPS CM receives a steering angle (absolute angle) signal from the steering angle sensor via the start stop unit and outputs the signal to the other modules through the CAN communication (with adaptive front lighting system (AFS), and/or Smart City Brake Support (SCBS)).
      - After the steering angle neutral position auto learning is completed, the EPS CM outputs an EPS status signal, which is calculated by EPS CM itself, through the CAN communication.
      - The steering wheel angle neutral position is cleared when **1 min or more** has elapsed after the ignition is switched off.
- The EPS CM controls the following functions:

Function Table

Control item	Function

EPS motor current control	• Normal control
	  ▪ Calculates the proper assist current based on the steering torque, and the vehicle and engine speeds, and outputs a target current to the EPS motor.
	• System overheating protection control
	  ▪ Monitors the temperature of the motherboard in the EPS CM and controls the motor current gradually to prevent overheating of the system.
	• EPS motor backup control
	  ▪ Even if a phase 1 open circuit malfunction in the EPS motor occurs, output current to the EPS motor is controlled so that steering assist is maintained.
	• Torque sensor backup control
	  ▪ Even if an error occurs in the torque sensor signal, the torque sensor backup

	control performs control to maintain steering assist to the extent possible. • Resolver sensor backup control ▪ Even if an open circuit malfunction occurs in the resolver sensor, the resolver sensor backup control performs control to maintain steering assist to the extent possible. ▪ Monitors the temperature of the motherboard in the EPS CM and controls the motor current in steps to prevent overheating of the system.
On-board diagnostic function	• The main part of the system control includes the self-diagnosis function. In case a malfunction occurs, the power steering malfunction indicator light/master warning light illuminates to alert the driver, and a DTC is stored in the EPS CM at the same time. • As a result of the on-board diagnosis, when a malfunction is determined, system control is suspended or limited to assure safety while driving.
CAN communication function	• Outputs the EPS status signal and the power steering malfunction indicator light illuminates on request via CAN lines. • Outputs the steering angle (absolute angle) signal, steering angle (relative angle) signal and steering angle (estimated absolute angle) signal
Automatic configuration function	• When the ignition is switched to ON or the engine is started after the EPS CM have been replaced, the EPS CM reads data from the instrument cluster via CAN communication to perform automatic configuration.
Steering wheel angle neutral position automatic learning function	• When the ignition is switched from OFF to ON (engine on) and the vehicle is driven normally, the steering wheel angle neutral position is learned automatically based on the wheel speed signal, lateral-G signal, and yaw rate signal.

Block Diagram

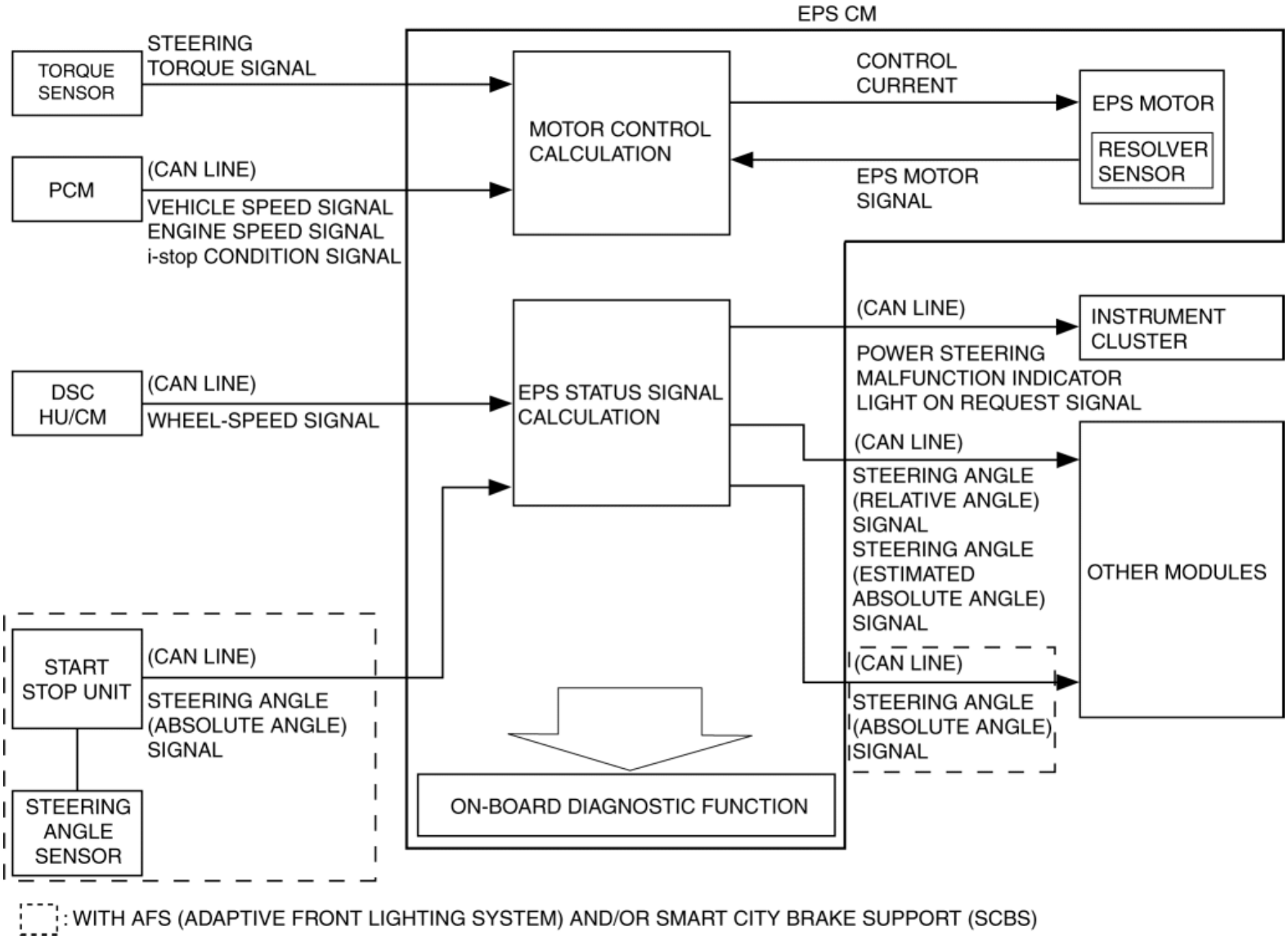

Construction

- The EPS CM is installed to the steering column and integrated with the EPS motor.
- For vehicles equipped with a system requiring steering angle information directly after the vehicle starts to be driven, a steering angle sensor is equipped.

Operation

- The EPS CM calculates the required assist torque based on the steering torque signal from the torque sensor. When the vehicle starts to be driven, the required assist torque is calculated based on the vehicle speed signal sent from the PCM via CAN in addition to the steering torque signal.
- When the required assist torque is determined, the EPS CM outputs the control current to the EPS motor and the EPS motor generates the assist torque.
- The EPS system control uses the steering angle (estimated absolute angle) signal.

Ignition is switched ON (engine off or on)

- For vehicle equipped with a system requiring steering angle information directly after the vehicle starts to be driven, a steering angle sensor is equipped.
- For vehicles with a steering angle sensor, the EPS CM receives the steering angle sensor signal via the start stop unit. The EPS CM outputs the steering angle value as a steering angle (absolute angle) signal.

- The following systems perform control using a steering angle (absolute angle) signal until the EPS CM completes steering wheel angle neutral position determination after the vehicle starts to be driven.
    - AFS (Adaptive Front lighting System)
    - Smart City Brake Support (SCBS)

    NOTE:

    - Because the accuracy of the steering angle (absolute angle) signal is lower than the steering angle (estimated absolute angle) signal, if the EPS CM completes steering wheel angle neutral position determination, each system requiring steering angle information performs control using a steering angle (estimated absolute angle) signal instead of a steering angle (absolute angle) signal.
- The EPS CM regards the steering position when the ignition is switched ON (engine off or on) as 0 degrees, and outputs the steering angle value steered from that position as a steering angle (relative angle) signal.

Vehicle driving

- When the vehicle starts to be driven, the EPS CM performs steering wheel angle neutral position determination based on the following signals:
    - Wheel speed signal: Determines straight-driving if there is no rotation speed difference between the left/right wheels.
    - Lateral-G signal: Determines straight-driving if lateral-G is not produced.
    - Yaw rate signal: Determines straight-driving if yaw momentum is not produced.
- If the EPS CM completes steering wheel angle neutral position determination, the steering angle neutral position is set. The EPS CM regards the steering wheel angle neutral position as 0 degrees, calculates the estimated absolute steering angle, and outputs the steering angle (estimated absolute angle) signal to CAN.

Ignition is switched off

- The steering wheel angle neutral position is cleared when **1 min or more** has elapsed after the ignition is switched off.

EPS Motor Current Control

Normal control

- The optimum assist current is calculated based on the steering force signal from the torque sensor and the vehicle and the engine speed signal from the PCM, and then the control current is output to the EPS motor.

System overheating protection control

- The system overheating protection control lowers the current output to the EPS motor if the steering mechanism is turned from lock to lock continuously or the steering rack turning limit is reached repeatedly.

  NOTE:

  - During system overheating protection control, the assist force will feel weaker due to a decrease in the control current. This is normal for the EPS CM to prevent the EPS motor from burning or seizure, and it does not indicate a malfunction.
  - While the assist force weakens during this period of time, steering operation can be performed.
- The system overheating protection control has middle and complete steps, and it can verify current conditions and the history using the PID/data monitor function and snap shot data.
    - System overheating protection control (middle): Motor output is 40 % or less (reference)
    - System overheating protection control (complete): Motor output is 20 % or less (reference)
- The current output returns to normal if the temperature in the system decreases to the normal operation temperature.

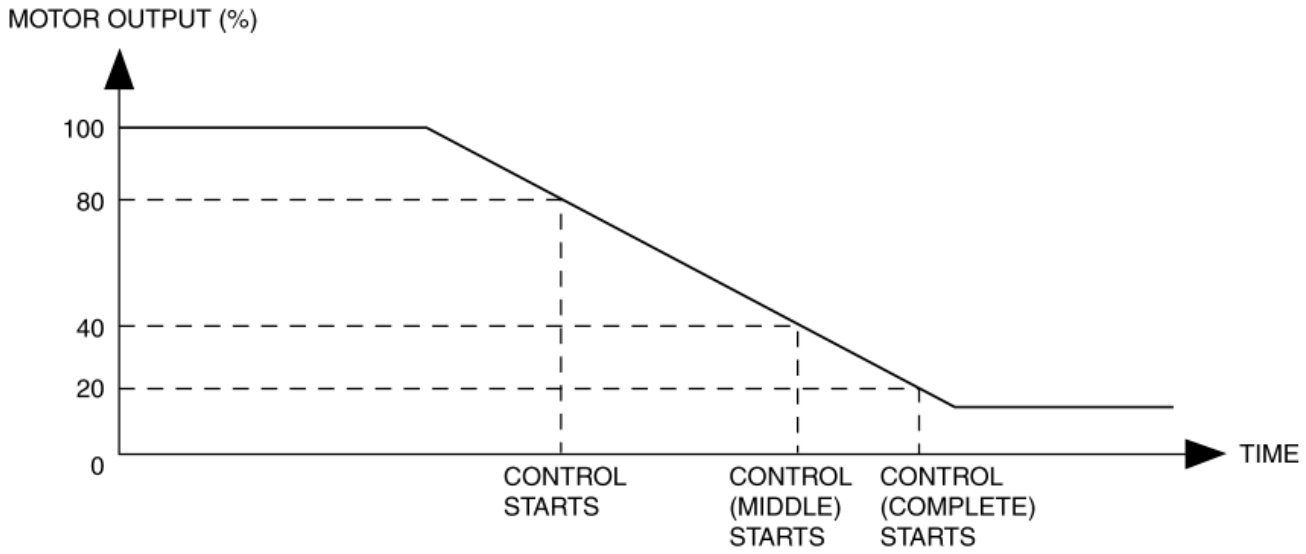

EPS motor backup control

- Even if an open circuit malfunction occurs in 1 out of the 3 phases in the EPS motor line, the EPS motor backup control performs control to maintain steering assist.
- If the EPS CM detects a phase 1 open circuit malfunction in the EPS motor, the EPS CM controls output current to the EPS motor using a calculation method different than during normal EPS CM control. As a result, even with a phase 1 open circuit malfunction, the steering assist can be maintained.

NOTE:

  - If a phase 1 open circuit malfunction is detected in the EPS motor, the EPS CM stores DTC U2011:72 and illuminates the electric power steering malfunction indicator light.
  - If the steering wheel is operated during EPS motor backup control, the steering wheel operation may feel heavier (resistance).

Torque sensor backup control

- Even if an error is detected in the torque sensor signal, the torque sensor backup control performs control to maintain steering assist.
- If the EPS CM detects a torque sensor signal error, the EPS CM controls output current to the EPS motor using a calculation method different from that during normal EPS CM control, and maintains steering assist.
- A steering wheel vibrates when steering wheel is operated during torque sensor backup control.

NOTE:

- When the torque sensor backup control is performed, the EPS CM stores DTC C200B:64 and turns the power steering malfunction indicator light on.
- If the steering wheel is operated during torque sensor backup control, normal assist force may not be generated.

Resolver sensor backup control

- Even if an open circuit malfunction occurs in the resolver sensor, the resolver sensor backup control performs control to maintain steering assist.
- If the EPS CM detects an open circuit malfunction in the resolver sensor, the EPS CM controls output current to the EPS motor using a calculation method different from that during normal EPS CM control. As a result, even with an open circuit in the resolver sensor, the steering assist can be maintained.
- A steering wheel vibrates when steering wheel is operated during resolver sensor backup control.
- The EPS CM flashes the power steering malfunction indicator light and the EPS warning alarm sounds intermittently to alert the driver.

NOTE:

  - If an open circuit malfunction is detected in the resolver sensor, the EPS CM stores DTC C200D:1C.

- The EPS CM cannot calculate the optimum output current to the EPS motor during the resolver sensor backup control. Therefore, the temperature in the EPS system may increase only by operating the normal steering wheel repeatedly.
- If the temperature in the EPS system increases, the EPS CM controls the output current to the EPS motor and lowers output to the EPS motor to prevent the EPS motor from burning or seizure. Although the assist force weakens when output to the EPS motor is lowered, steering operation can be performed.

- If output to the EPS motor decreases below the specified value, the flashing interval for the power steering malfunction indicator light and the EPS warning alarm sound interval are shortened to warn the driver.
- If output to the EPS motor decreases further, the power steering malfunction indicator light switches from flashing to illumination and the EPS warning alarm sounds continuously.
- If EPS system overheating continues, the EPS CM stops the output current to the EPS motor and cancels assistance. At this time, the power steering malfunction indicator light remains illuminated, however, the warning beep sound stops.

Fail-safe

DTC No.	Fail-safe function
U2300:54	• Control enabled • Power steering malfunction indicator light: Not illuminated
U2300:55	• Control enabled • Power steering malfunction indicator light: Illuminated
U2300:56	• Control enabled • Power steering malfunction indicator light: Not illuminated
U3000:16	• Control disabled • Power steering malfunction indicator light: Illuminated
U3000:1C	
U3000:28	
U3000:41	
U3000:46	• Control is maintained in fail mode • Power steering malfunction indicator light: Not illuminated
U3000:47	• Control disabled • Power steering malfunction indicator light: Illuminated
U3000:49	
U3000:4B	• Control is maintained in fail mode • Power steering malfunction indicator light: Not illuminated
U3000:61	• Control disabled • Power steering malfunction indicator light: Illuminated
U3000:73	
U3000:96	
U3003:16	• Control is maintained by gradually decreasing the motor control current ▪ However, control is inhibited if the power supply voltage is the specified value of less • Power steering malfunction indicator light: Illuminated
U3003:17	• Control disabled • Power steering malfunction indicator light: Illuminated

2014 - Mazda3 - Steering

ELECTRIC POWER STEERING (EPS) MOTOR

Purpose, Function

- The EPS motor is driven by the control current from the EPS CM (control module) and generates assist torque to manual steering mechanism.

Construction

- The EPS motor is installed to the steering column with an integrated EPS CM.
- The EPS motor is a brushless motor which consists of a three-phase star-connected stator, a permanent magnet rotor, and resolver sensor.

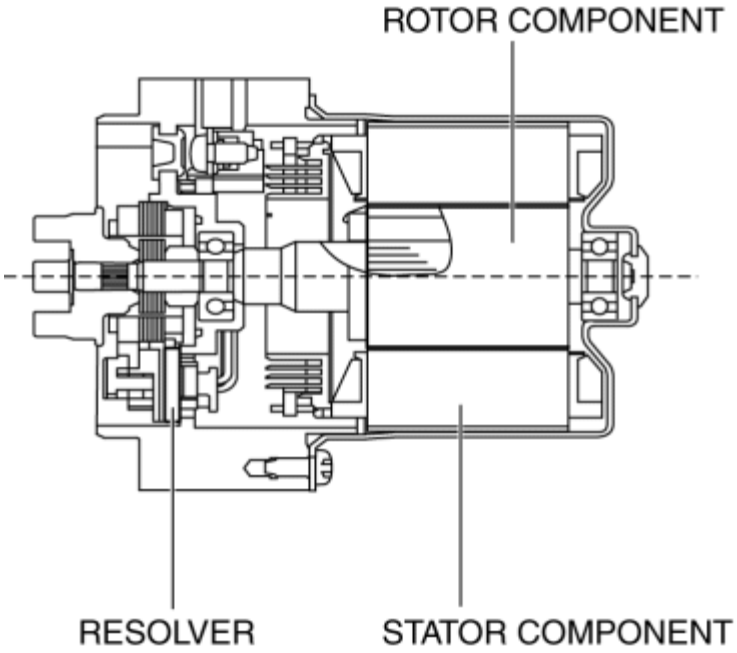

Operation

- Current flows from the EPS CM to the stator to rotate the motor axis which is integrated with the rotor.
- A resolver sensor for detecting rotation angle is built into the EPS motor and outputs a motor rotation angle signal to the EPS CM.
- The EPS CM switches the current flowing to each stator based on the rotation angle signal from the resolver sensor.

Fail-safe

DTC No.	Fail-safe function
C200D:1C	• Control is maintained in the backup control and EPS warning alarm is sounded ▪ If EPS system internal temperature increases above the specified value, the EPS CM disables assistance and stops the EPS warning alarm • Power steering malfunction indicator light: Flashes/Illuminated
C200D:64	• Control is maintained in the backup control • Power steering malfunction indicator light: Illuminated
U2011:19	• Control disabled • Power steering malfunction indicator light: Illuminated
U2011:1C	
U2011:62	

U2011:72	• An open circuit malfunction is detected in the one phase of the three-phase stator in the EPS motor
	  ▪ Control is maintained in the backup control
	• Other malfunction detected in EPS motor internal circuit
	  ▪ Control disabled
	• Power steering malfunction indicator light: Illuminated

U2011:92	• Control disabled • Power steering malfunction indicator light: Illuminated

2014 - Mazda3 - Steering

TORQUE SENSOR

Purpose / Function

- The torque sensor detects the steering torque and the steering direction, and outputs the signal to the Electric Power Steering (EPS) control module (CM).

Construction, Operation

- The Hall IC-type torque sensor is installed to the top of the steering column and consists of the following parts.
    - Magnet: Assembled in a ring shape to the input shaft, it generates magnetic flux.
    - Magnetic yoke: Assembled to the lower shaft, it converts magnetic flux transmitted to the flux concentration ring according to the position of the tooth area and the magnet.
    - Flux concentration ring: Equipped with 2 Hall ICs at the front edge, it reads the change in magnetic flux.

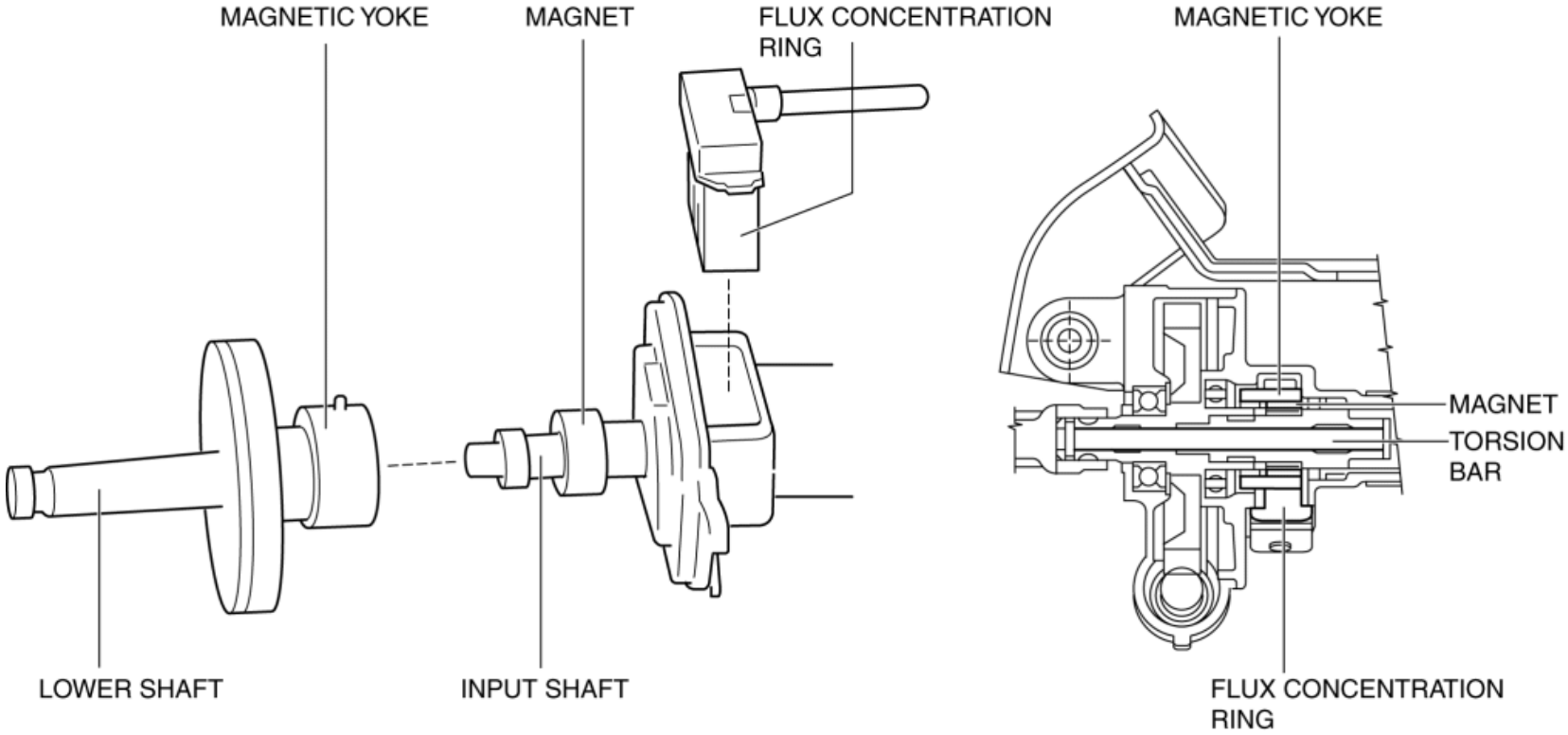

- When the steering wheel is centered (not steered), magnetic flux is not transmitted to the Hall ICs because the tooth area of the magnetic yoke shunts the magnetic flux of the magnet.
- Magnetic flux is transmitted to the Hall ICs when the steering wheel is operated because the positions of the magnet and the tooth area of the magnetic yoke change as the torsion bar connected to the input shaft and lower shaft twists.

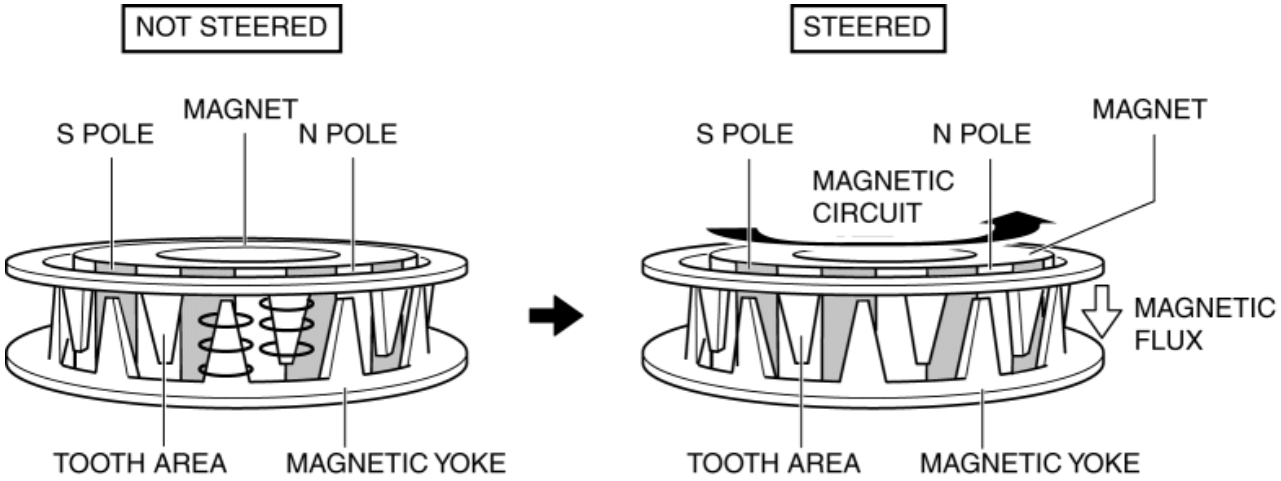

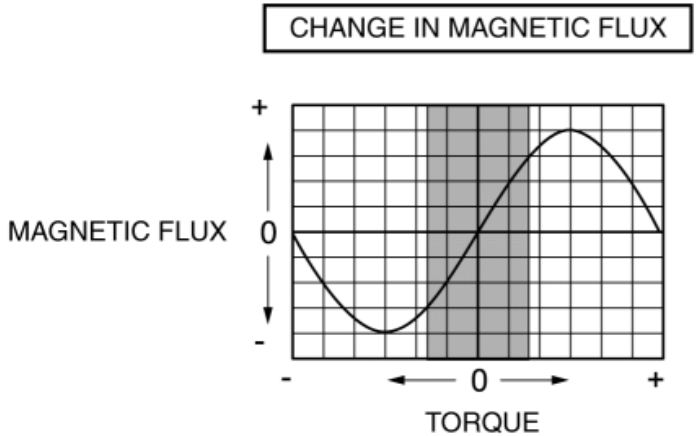

- The Hall ICs convert the change in magnetic flux to an electric signal and output it to the EPS CM.
- Electrical signals from each of the two Hall ICs in the torque sensor are calculated in the EPS CM and used for each type of control as steering torque signals.
- By the detection of two signals, the reliability of the steering torque calculated by the EPS CM and the malfunction detection performance of the torque sensor have been improved.

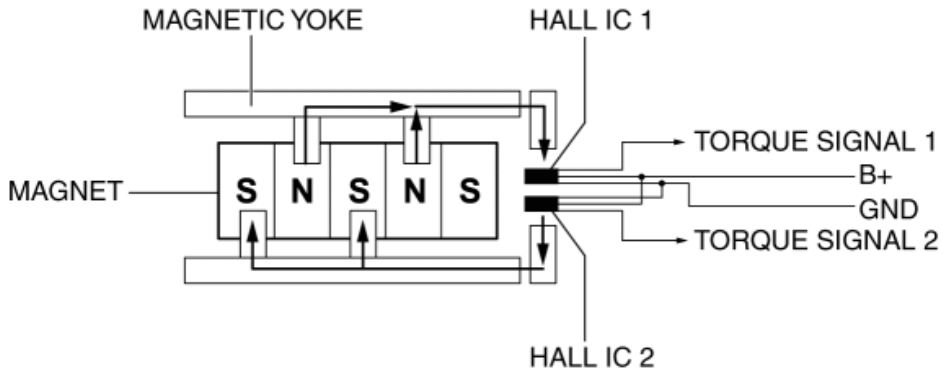

Fail-safe

DTC No.	Fail-safe function
C200B:02	• Control disabled • Power steering malfunction indicator light: Illuminated
C200B:16	
C200B:1C	
C200B:62	
C200B:64	• Control is maintained in the backup control • Power steering malfunction indicator light: Illuminated
C200B:85	• Control disabled • Power steering malfunction indicator light: Illuminated
C200C:1C	• Control disabled • Power steering malfunction indicator light: Illuminated

2014 - Mazda3 - Steering

REDUCTION GEAR

Purpose / Function

- The reduction gear transmits the rotation input from the EPS motor, decreasing the rotation speed and increasing the torque simultaneously.

Construction

- The reduction gear consists of the worm wheel located on the steering column main shaft and the worm shaft connected to the EPS motor, and is integrated with the steering column.

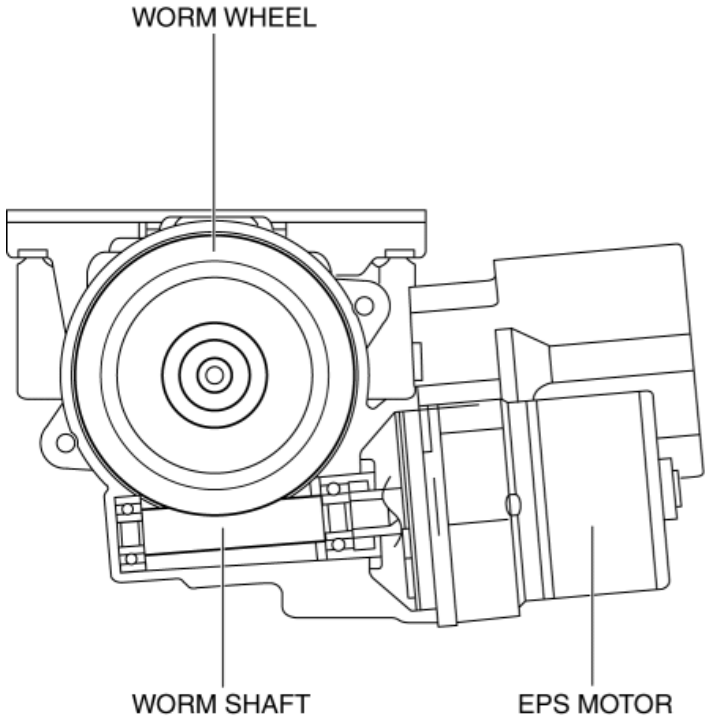

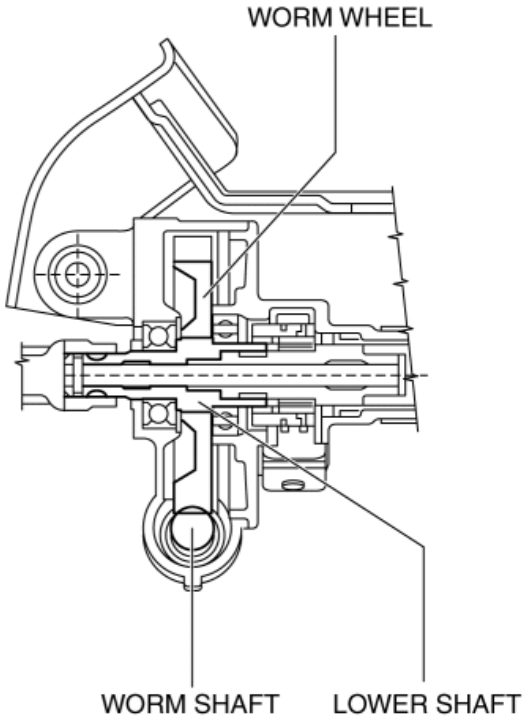

Operation

- The assist torque generated by the EPS motor is transmitted to the worm wheel via the worm shaft drives the steering column main shaft.
- The assist torque from the EPS motor is amplified by the reduction ratio (20.33:1) between the worm shaft and worm wheel, and is transmitted to the steering column main shaft.

2014 - Mazda3 - Steering

CONTROLLER AREA NETWORK (CAN) OUTLINE

- The Electric Power Steering (EPS) control module sends and receives data to and from other modules via the CAN. (See **MULTIPLEX COMMUNICATION SYSTEM**.)

Data sent

- EPS status
- Power steering malfunction indicator light on request
- Steering angle
- Steering torque
- Motor current
- Power consumption

Data received

- Vehicle speed
- Engine speed
- Lateral-G
- Yaw rate
- Wheel-speed
- Steering angle
- Central configuration data

2014 - Mazda3 - Steering

POWER STEERING WARNING BUZZER

Purpose

- The power steering warning buzzer warns the driver that EPS system is overheating and the EPS assist force is weakening during the resolver sensor backup control. (See **ELECTRIC POWER STEERING (EPS) CONTROL MODULE**.)

Function

- If the EPS CM detects an internal circuit malfunction in the resolver sensor, it sends the power steering warning buzzer request signal to the instrument cluster via CAN.
- The instrument cluster sounds the power steering warning buzzer intermittently when it receives the power steering warning buzzer request signal (pattern A).
- If the EPS assist force weakens below the specified value, the power steering warning buzzer sound interval is shortened to warn the driver (pattern B).

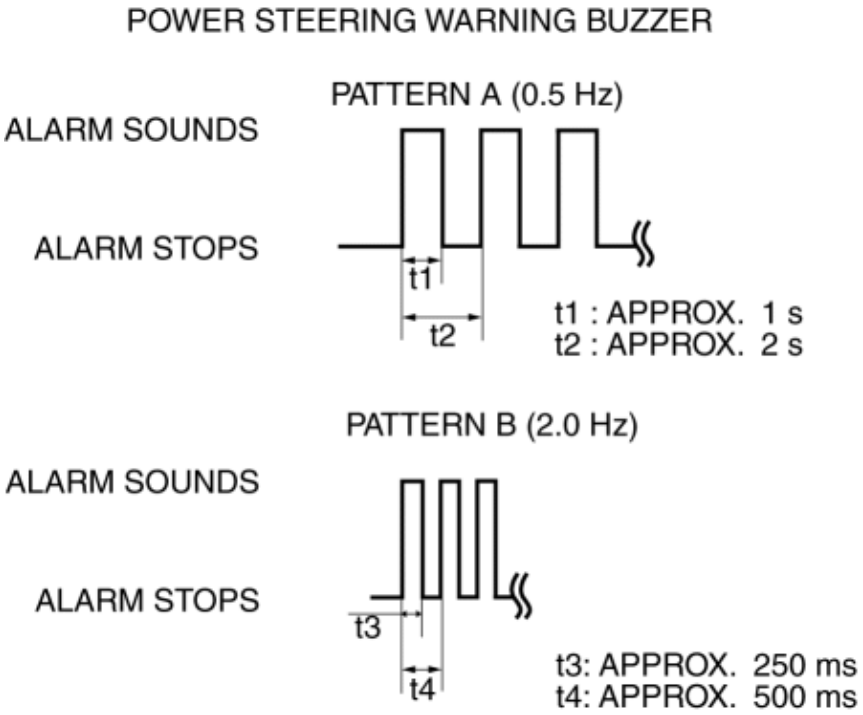

- If the EPS assist force weakens further, the power steering warning buzzer sounds continuously.
- If EPS system stops assistance for steering, the power steering warning buzzer stops.

Construction

- The power steering warning buzzer sounds using the buzzer built into the instrument cluster.

Operation

1. The instrument cluster received (1) the power steering warning buzzer request signal from the EPS CM.

2. The instrument cluster microcomputer turns the transistor on (2) based on power steering warning buzzer request signal.

3. When the transistor turns on, a ground circuit with the alarm is established and the alarm sounds (3).

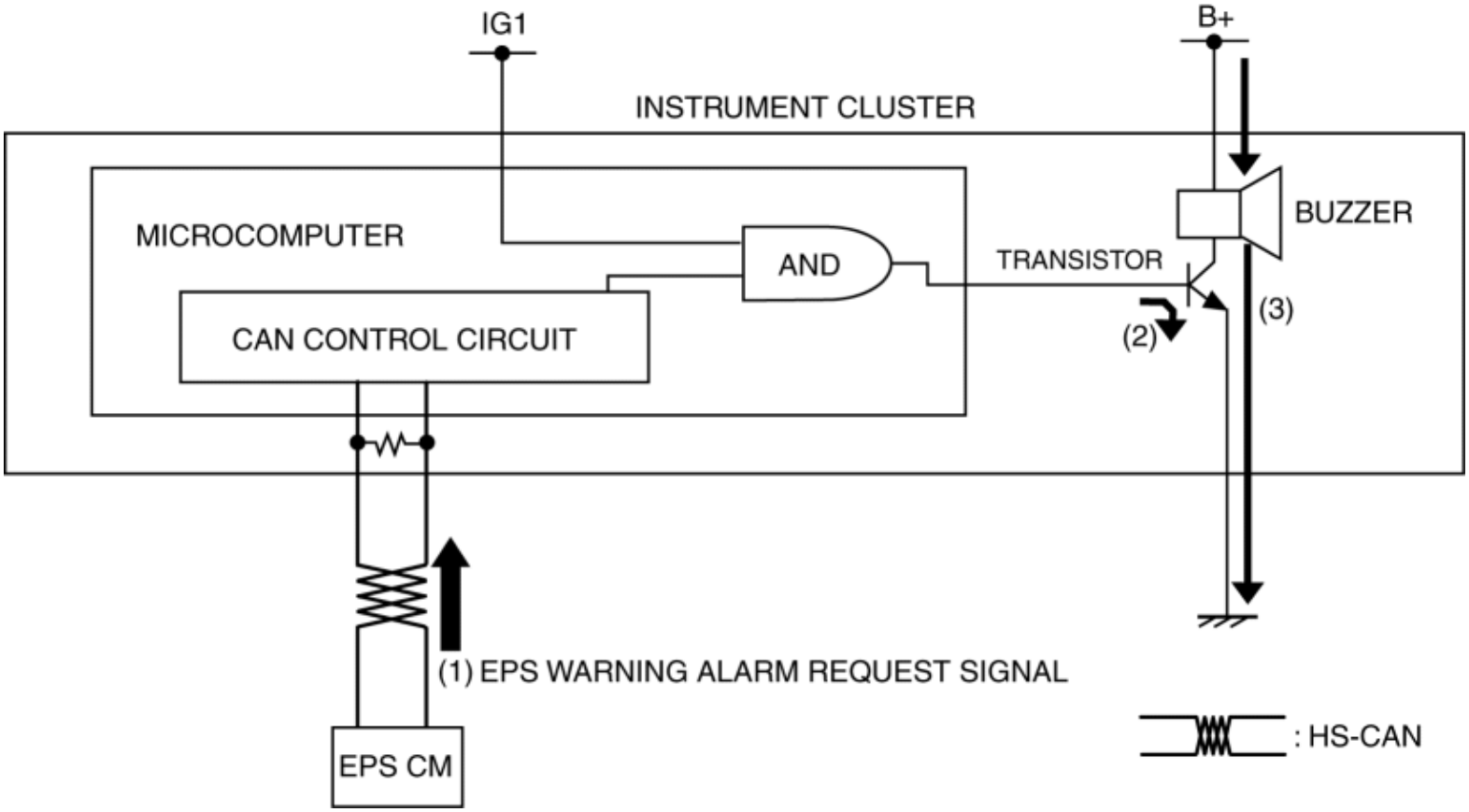

Fail-safe

- Function not equipped.

< Previous

2014 - Mazda3 - Steering

POWER STEERING MALFUNCTION INDICATOR LIGHT

Purpose

- The power steering malfunction indicator light warns the driver that there is a malfunction with the electric power steering (EPS) system.

Function

- If there is a malfunction in the EPS system, the power steering malfunction indicator light illuminates.
- If the EPS system and CAN lines are normal, it illuminates when the ignition is switched ON (engine off), and turns off after the engine is started.
- If there is an internal circuit malfunction in the resolver sensor, the power steering malfunction indicator light flashes to warn the driver that EPS assist force is weakening. (See **ELECTRIC POWER STEERING (EPS) CONTROL MODULE**.)

Construction

- The power steering malfunction indicator light is built into the instrument cluster.

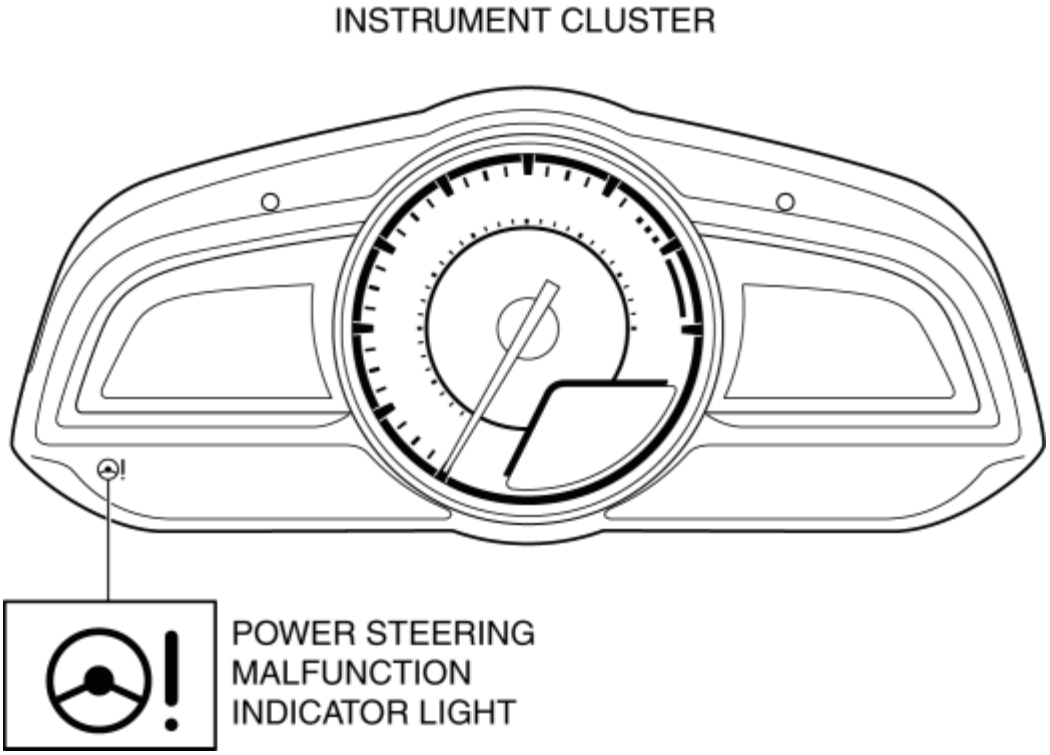

Operation

EPS system malfunction detection

- If the EPS control module (CM) detects a system malfunction, it sends a power steering malfunction indicator light illumination on request signal to the instrument cluster via CAN.
- The instrument cluster illuminates the power steering malfunction indicator light when it receives a power steering malfunction indicator light illumination on request signal.

NOTE:

- A warning message in the center display is displayed with the power steering malfunction indicator light turned on or flashed. For the message content and verification method, refer to the CENTER DISPLAY.

Resolver sensor backup control

- If the EPS CM detects an internal circuit malfunction in the resolver sensor, it sends the power steering malfunction indicator light flashing on request signal to the instrument cluster via CAN.
- To warn the driver that the EPS assist force is weakening, the instrument cluster flashes the power steering malfunction indicator light when it receives the power steering malfunction indicator light flashing on request signal.
    - If the temperature in the EPS system increases above the specified value, the flashing interval for the power steering malfunction indicator light is shortened to warm the driver.

- If the temperature in the EPS system increases further, the power steering malfunction indicator light switches from flashing to illumination.

Initial check

- If the EPS system and CAN lines are normal, it illuminates when the ignition is switched ON (engine off), and turns off after the engine is started. If there is a system malfunction, the power steering malfunction indicator light illuminates.

Fail-safe

- Function not equipped.

< Previous

Next >

2014 - Mazda3 - HVAC

HEATER, VENTILATION AND AIR CONDITIONING

Abbreviation

AAS	Active Adaptive Shift
ABS	Antilock Brake System
ABDC	After Bottom Dead Center
ACC	Accessories
AFS	Adaptive Front Lighting System
ALC	Auto Level Control
ALR	Automatic Locking Retractor
ATDC	After Top Dead Center
ATF	Automatic Transaxle Fluid
ATX	Automatic Transaxle
AWD	All-Wheel Drive
BBDC	Before Bottom Dead Center
BDC	Bottom Dead Center
BSM	Blind Spot Monitoring
BTDC	Before Top Dead Center
CAN	Controller Area Network

CCM	Comprehensive Component Monitor
CV	Canister Vent
CM	Control Module
CMU	Connectivity master unit
CPU	Central Processing Unit
DC	Drive Cycle
DRL	Daytime Running Light
DSC	Dynamic Stability Control
EBD	Electronic Brakeforce Distribution
EEPROM	Electrically Erasable Programmable Read-Only Memory
EHPAS	Electro Hydraulic Power Assist Steering
ELR	Emergency Locking Retractor
EPS	Electric Power Steering
ESA	Electronic Spark Advance
FBCM	Front Body Control Module
FET	Field Effect Transistor
FOW	Forward Obstruction Warning
GPS	Global Positioning System
HBC	High Beam Control
HF/TEL	Hands-Free Telephone
HI	High
HLA	Hydraulic Lash Adjuster

HS	High Speed
HU	Hydraulic Unit
IDS	Integrated Diagnostic Software
IG	Ignition
INT	Intermittent
KOEO	Key On Engine Off
KOER	Key On Engine Running
LCD	Liquid Crystal Display
LDWS	Lane Departure Warning System
LED	Light Emitting Diode
LF	Left Front
LH	Left Hand
LO	Low
LR	Left Rear
M	Motor
MAX	Maximum
MIN	Minimum
MOS	Metal Oxide Semiconductor
MRCC	Mazda Radar Cruise Control
MS	Middle Speed
MTX	Manual Transaxle
OCV	Oil Control Valve

OFF	Switch Off
ON	Switch On
PAD	Passenger Air Bag Deactivation
PCV	Positive Crankcase Ventilation
PID	Parameter Identification
P/W CM	Power Window Control Module
PTC	Positive Temperature Coefficient
RBCM	Rear Body Control Module
RCTA	Rear Crossing Traffic Alert
REC	Recirculate
RF	Right Front
RH	Right Hand
RR	Right Rear
SAS	Sophisticated Air Bag Sensor
SST	Special Service Tool
SW	Switch
TAU	Tuner and Amp Unit
TCS	Traction Control System
TDC	Top Dead Center
TFT	Transaxle Fluid Temperature
TNS	Tail Number Side Lights
TPMS	Tire Pressure Monitoring System

USB	Universal Serial Bus
VENT	Ventilation
1GR	First Gear
2GR	Second Gear
2WD	2-Wheel Drive
3GR	Third Gear
4GR	Fourth Gear
4SD	4 Door Sedan
5GR	Fifth Gear
5HB	5 Door Hatchback
6GR	Sixth Gear

Outline

- Sub-cooling system to multi-flow condenser adopted.
- Refrigerant pressure sensor adopted in which refrigerant pressure is changed into a linear electric signal and precise information is transmitted.
- A climate control unit with a built-in display panel has been adopted. (with dual type climate control unit)

Specifications

Basic system

Item		Specification
Heating capacity	(kW {kcal/h})	5.530 {4,755}

Cooling capacity			(kW {kcal/h})	5.000 {4,299}
Refrigerant	Type			HFC 134a (R-134a)
	Regular amount (approx. quantity)		(g {oz})	465—515 {16.5—18.1}
A/C compressor	Type			Swash plate
	Discharge capacity		(ml {cc, fl oz})	135 {135, 4.56}
	Max. allowable speed		(rpm)	8,500
	Lube oil	Type		FD46XG
		Sealed volume (approx. quantity)	(ml {cc, fl oz})	100 {100, 3.38}
Condenser	Type			Multi-flow (sub-cooling type)
	Radiated heat		(kW {kcal/h})	7.350 {6,320}
	Receiver/drier capacity		(ml {cc, fl oz})	170 {170, 5.75}
	Desiccant			Synthetic zeolite
Expansion valve	Type			External equalizing type
Evaporator	Type			Multi-flow type
Temperature control				Reheat full air mix type

Control system (full-auto air conditioner)

Item			Specification
Airflow volume (during heater operation)	Blower motor	(m^3/h)	310

Electricity consumption (during heater operation)	Blower motor	(W)	150
Airflow volume (during air conditioner operation)	Blower motor	(m^3/h)	475
Electricity consumption (during air conditioner operation)	Blower motor	(W)	200
	Magnetic clutch	(W)	40
Magnetic clutch clearance		(mm {in})	0.35—0.65 {0.014—0.025}
Fan type	Blower motor		Sirocco fan
Refrigerant pressure sensor	Type		Capacitance type
	Sensor operation		(See **REFRIGERANT PRESSURE SENSOR [FULL-AUTO AIR CONDITIONER]**.)
Sensor	Solar radiation sensor		Photodiode
	Ambient temperature sensor		Thermistor
	Passenger compartment temperature sensor		
	Evaporator temperature sensor		
Actuator	Air intake actuator		Mechanical lock type
	Air mix actuator		Potentiometer type
	Airflow mode actuator		

Control system (manual air conditioner)

Item			Specification
Airflow volume (during heater operation)	Blower motor	(m^3/h)	310

Electricity consumption (during heater operation)	Blower motor	(W)	150
Airflow volume (during air conditioner operation)	Blower motor	(m^3/h)	475
Electricity consumption (during air conditioner operation)	Blower motor	(W)	200
	Magnetic clutch	(W)	40
Magnetic clutch clearance		(mm {in})	0.35—0.65 {0.014—0.025}
Fan type	Blower motor		Sirocco fan
Refrigerant pressure sensor	Type		Capacitance type
	Sensor operation		(See **REFRIGERANT PRESSURE SENSOR [MANUAL AIR CONDITIONER]**.)
Sensor	Ambient temperature sensor		Thermistor
	Evaporator temperature sensor		
Actuator	Air intake actuator		Mechanical lock type

Next >

2014 - Mazda3 - HVAC

ON-BOARD DIAGNOSTIC

Outline

- The on-board diagnostic system has on-board diagnostic, PID/data monitor, and A/C operation check functions.
- The on-board diagnostic function has the following functions:
  - Malfunction detection function
    - Detects errors in input and output signals
  - Memory function
    - Stores detected malfunctions
  - Malfunction indication function
    - Displays detected malfunctions
- The malfunction indication function, PID/data monitor, and A/C operation check functions can be performed by connecting the Mazda Modular Diagnostic System (M-MDS) to the DLC-2.

Block Diagram

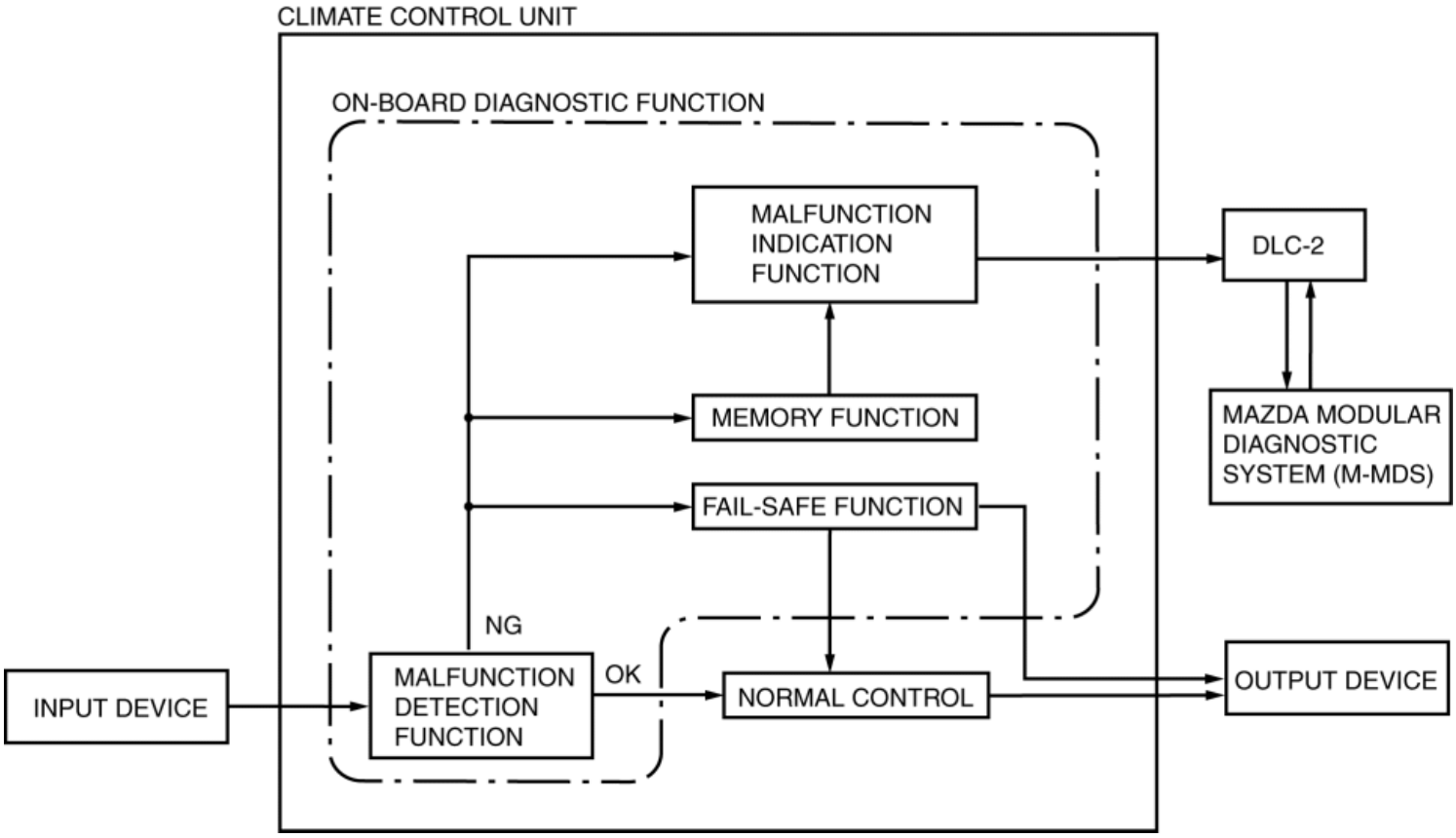

Function

Malfunction detection function

- The malfunction detection function detects errors in the input and output signals. (Ignition is switched ON (engine off or on))
- If a malfunction is detected, a DTC is output to the DLC-2 through the malfunction indication function.
- At the same time, malfunction detection results are sent to the fail-safe and memory functions.

Memory function

- The memory function stores malfunctioning signal systems which are detected to be malfunctioning by the malfunction detection function.
- The stored malfunction information is not cleared even when the ignition is switched off (LOCK) or the malfunction is repaired.
- The stored malfunction information can be cleared by connecting the Mazda Modular Diagnostic System (M-MDS) to the DLC-2 and operating it.

Malfunction indication function

- The malfunction indication function outputs present or past malfunctions to the DLC-2 as DTCs.
- The DTCs can be read by connecting the Mazda Modular Diagnostic System (M-MDS) to the DLC-2 and operating it.

Malfunction display mode

- The climate control unit detects present and past malfunctions in the control system circuits (open/short circuits) and indicates the DTCs shown in the table on the Mazda Modular Diagnostic System (M-MDS).
- Clear past malfunctions after completing repairs because once a past malfunction is stored, it will remain stored even after the malfunction has been repaired.
- The stored past malfunction can be cleared by connecting the Mazda Modular Diagnostic System (M-MDS) to the DLC-2 and operating it.

DTC tableX: Applicable—: Not applicable

DTC No.	Warning/indicator light	System malfunction location	Fail-safe function	Drive cycle	Self test type*1	Memory function
B1081:71*2	—	Driver-side air mix actuator motor lock	X	—	C	X
B1082:71*2	—	Passenger-side air mix actuator motor lock	X	—	C	X
B1086:71	—	Airflow mode actuator motor lock	X	—	C	X
B13AA:71*3	—	Air mix actuator motor lock	X	—	C	X
B13AB:12*3	—	Air mix actuator (potentiometer) circuit short to power supply	X	—	C, D	X
B13AB:13*3	—	Air mix actuator (potentiometer) circuit short to power supply	X	—	C, D	X
B1A61:11	—	Passenger compartment temperature sensor circuit short to ground	X	—	C, D	X
B1A61:13	—	Passenger compartment temperature sensor circuit open	X	—	C, D	X
B1A63:12	—	Solar radiation sensor (RH) circuit shot to power supply	X	—	C, D	X
B1A63:13	—	Solar radiation sensor (RH) circuit open	X	—	D	X
B1A64:12	—	Solar radiation sensor (LH) circuit shot to power supply	X	—	C, D	X

B1A64:13	—	Solar radiation sensor (LH) circuit open	X	—	D	X
B1B71:11	—	Evaporator temperature sensor circuit short to ground	X	—	C, D	X
B1B71:13	—	Evaporator temperature sensor circuit open	X	—	C, D	X
B1C1A:11 *2	—	Driver-side air mix actuator (potentiometer) circuit short to ground	X	—	C, D	X
B1C1A:13 *2	—	Driver-side air mix actuator (potentiometer) circuit open	X	—	C, D	X
B1C1B:11 *2	—	Passenger-side air mix actuator (potentiometer) circuit short to ground	X	—	C, D	X
B1C1B:13 *2	—	Passenger-side air mix actuator (potentiometer) circuit open	X	—	C, D	X
B1C1C:11 *2	—	Airflow mode actuator (potentiometer) circuit short to ground	X	—	C, D	X
B1C1C:12 *3	—	Airflow mode actuator (potentiometer) circuit short to power supply	X	—	C, D	X
B1C1C:13	—	Airflow mode actuator (potentiometer) circuit open	X	—	C, D	X
U0010:88	—	Unit communication error (MS-CAN)	X	—	C, D *2 C *3	X
U0155:00	—	Communication error with instrument cluster	X	—	C *2 C, D *3	X
U0423:68	—	Invalid date received from Instrument cluster	X	—	C, D	X
U200D:11	—	Climate control unit circuit voltage (+5V) circuit short to ground	—	—	C, D	X
U2300:54	—	Configuration error (data not received)	X	—	C, D	X
U2300:55	—	Configuration error (not configured)	X	—	C, D	—
U2300:56	—	Configuration error (ineffective/non-interchangeable data read)	X	—	C, D	X
U2300:64	—	Configuration error (error value read)	X	—	C, D	X
U3003:16	—	Climate control unit power supply circuit voltage below threshold (**9.98 V or less**) *2 (**10.00 V or less**) *3	—	—	C, D	X
U3003:17	—	Climate control unit power supply circuit voltage above threshold (**16.21 V or more**) *2 (**17.30 V or more**) *3	—	—	C, D	X
U300E:13	—	Climate control unit power supply circuit open (IG1 or IG2) *2 (IG2) *3	—	—	C, D	X

*1 **C: CMDTC self test, D: ODDTC self test**

*2 **With dual type climate control unit**

*3 **With single type climate control unit**

DTC 7-digit code definition

- When related systems or components have failed, the CM stores the DTC of the malfunctioning part in the CM memory, and

allows for the retrieval of the stored data using the scanning tool when necessary. The DTCs are indicated using seven digits. Each digit indicates the following.

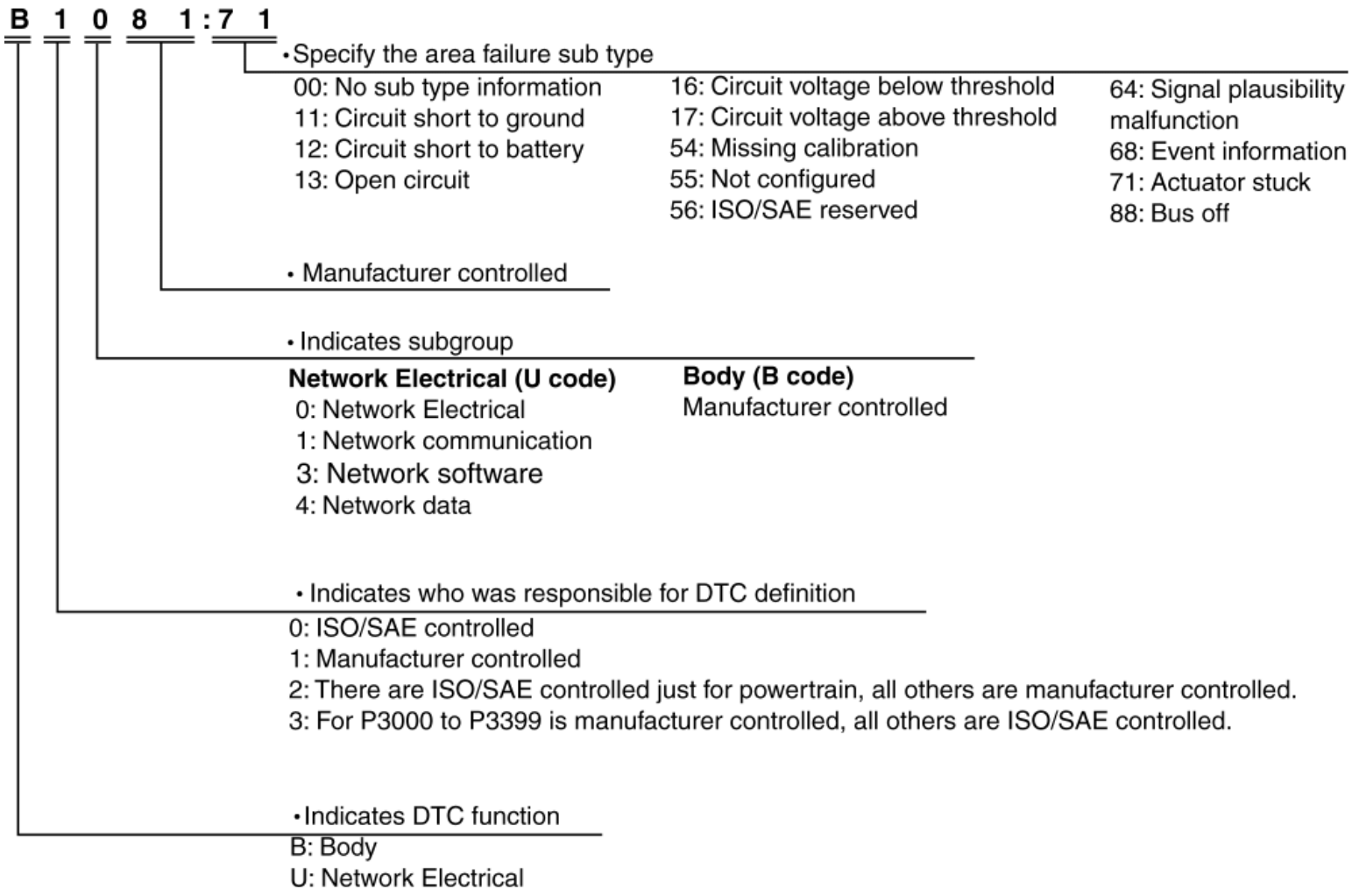

Status byte for DTC

- The two digits (after hyphen) after the 7-digit DTC.

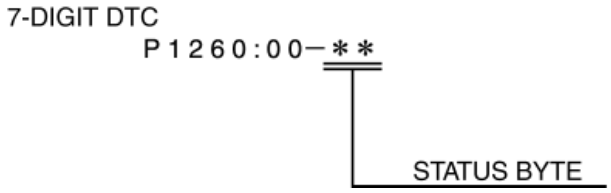

- A code which indicates the pending code, current/past malfunction status, or warning illumination status.
- Can be read by performing a CMDTC self-test using the Mazda Modular Diagnostic System (M-MDS).
- For details on the status byte, refer to the explanation on the Mazda Modular Diagnostic System (M-MDS) when reading the DTC.

PID/data monitor

- The PID/data monitor function is used for optionally selecting input signal monitor items preset in the climate control unit and reading them out in real-time.

PID/data monitor table (with dual type climate control unit)

PID	Unit/Condition	Data contents	Climate control unit terminal
A/C_SW	Off/On	• Off: A/C switch is off.	—

		• On: A/C switch is on.	
AUTO_SW	Off/On	• Off: AUTO switch is off. • On: AUTO switch is on.	—
B_MT_RLY_CS	Off/On	• Off: Blower relay is off. • On: Blower relay is on.	1S, 1U (CAN)
DEF_SW	Off/On	• Off: DEFROSTER switch is off. • On: DEFROSTER switch is on.	1S, 1U (CAN)
DUAL_SW	Off/On	• Off: DUAL switch is off. • On: DUAL switch is on.	—
ENG_C_TMP	°C, °F	Engine coolant temperature is displayed.	1S, 1U (CAN)
EVA_TMP_SEN	°C, °F	Evaporator temperature is displayed.	1L
F_REC_CS	Off/On	• Off: Forced recirculate control is off. • On: Forced recirculate control is on.	—
FRE_SW	Off/On	• Off: FRESH switch is off. • On: FRESH switch is on.	—
INC_TMP_SEN	°C, °F	Cabin temperature is displayed.	1H
M_DOWN_SW	Off/On	• Off: MODE switch (DOWN) is off. • On: MODE switch (DOWN) is on.	—
M_UP_SW	Off/On	• Off: MODE switch (UP) is off. • On: MODE switch (UP) is on.	—
OFF_SW	Off/On	• Off: OFF switch is off. • On: OFF switch is on.	—
OUT_CAR_TMP	°C, °F	Ambient temperature is displayed.	—
R/DEF_CS	Off/On	• Off: Rear window defroster is turned off. • On: Rear window defroster is turned on.	—
R/DEF_SW	Off/On	• Off: Rear window defroster switch is off. • On: Rear window defroster switch is on.	—
REC_SW	Off/On	• Off: RECIRCULATE switch is off. • On: RECIRCULATE switch is on.	—
SLR_R_SEN_L	W/m^2	Solar radiation amount is displayed.	1M
SLR_R_SEN_R			1O
UNIT_TMP	deg_C/deg_F	• deg_C: Centigrade • deg_F: Fahrenheit	—

PID/data monitor table (with single type climate control unit)

PID	Unit/Condition	Data contents	Climate control unit terminal
A/C_SW	Off/On	• Off: A/C switch is off. • On: A/C switch is on.	—
B_MT_RLY_CS	Off/On	• Off: Blower relay is off. • On: Blower relay is on.	D, B (CAN)
ENG_C_TMP	°C, °F	Engine coolant temperature is displayed.	D, B (CAN)
EVA_TMP_SEN	°C, °F	Evaporator temperature is displayed.	J
F_REC_CS	Off/On	• Off: Forced recirculate control is off. • On: Forced recirculate control is on.	—
INC_TMP_SEN	°C, °F	Cabin temperature is displayed.	F
OUT_CAR_TMP	°C, °F	Ambient temperature is displayed.	—
R/DEF_CS	Off/On	• Off: Rear window defroster is turned off. • On: Rear window defroster is turned on.	—
R/DEF_SW	Off/On	• Off: Rear window defroster switch is off. • On: Rear window defroster switch is on.	—
REC_SW	Off/On	• Off: RECIRCULATE switch is off. • On: RECIRCULATE switch is on.	—
SLR_R_SEN_L	W/m^2	Solar radiation amount is displayed.	M
SLR_R_SEN_R			K

A/C Operation Check Mode (With Dual Type Climate Control Unit)

- The A/C operation check mode forcibly operates the output devices as shown in the operation check table regardless of the signals input to the climate control unit.
- During an A/C operation check mode operation, indication in the display panel and the illumination of the indicator light on the switches are automatically controlled.
- Determine the malfunctioning part by visual inspection, listening to the operation sound, placing a hand on the air vents, or checking that each transition is as indicated in the operation check table.

Mazda Modular Diagnostic System (M-MDS) display	Target part	Reference
Air Mix Actuator	Air mix actuator Air mix door	(See .)
Air conditioning compressor	A/C compressor	(See .)
	Air intake actuator	

Air Intake Actuator	Air intake door	(See .)
Blower Motor Speed	Blower motor	(See .)
Airflow Mode Actuator	Airflow mode actuator Airflow mode door	(See .)
Illumination Of All Indicator Lights	Climate control unit	(See .)

Air mix actuator

Operation

Step	Air mix actuator	Airflow mode actuator	Blower speed	Magnet clutch	Air intake actuator
1	**0 %**	VENT	3rd	ON	FRESH
2	**50 %**				
3	**100 %**				
4	**50 %**				

Display

Step	Temperature (°C {°F})	Airflow mode	Blower volume	A/C	Recirculate switch indicator light	Fresh switch indicator light
1	**20.0 {68}**			Displayed	Not illuminated	Illuminated
2	**20.5 {68.9}**					
3	**21.0 {70}**					
4	**20.5 {68.9}**					

NOTE:

- After **approx. 4 s** have elapsed the operation step moves to the next step.
- When the last step is finished, the operation is repeated from Step 1.
- To prevent super-cooling, the magnetic clutch turns off despite the A/C forced override.

A/C compressor

Operation

Step	Air mix actuator	Airflow mode actuator	Blower speed	Magnet clutch	Air intake actuator
1	**0 %**	VENT	5th	ON	FRESH
2				OFF	

Display

Step	Temperature (°C {°F})	Airflow mode	Blower volume	A/C	Recirculate switch indicator light	Fresh switch indicator light
1	**8 {46}**			Displayed	Not illuminated	Illuminated
2				Not displayed		

NOTE:

- After the following times have elapsed, the operation step moves to the next step.
  - Step 1: **Approx. 5 s**
  - Step 2: **Approx. 25 s**
- When the last step is finished, the operation is repeated from Step 1.

Air intake actuator

Operation

Step	Air mix actuator	Airflow mode actuator	Blower speed	Magnet clutch	Air intake actuator
1	**0 %**	VENT	3rd	ON	FRESH
2					RECIRCULATE
3				OFF	FRESH
4					RECIRCULATE

Display

Step	Temperature (°C {°F})	Airflow mode	Blower volume	A/C	Recirculate switch indicator light	Fresh switch indicator light
1	**4 {39}**			Displayed	Not illuminated	Illuminated
2					Illuminated	Not illuminated
3				Not displayed	Not illuminated	Illuminated
4					Illuminated	Not illuminated

NOTE:

- After **approx. 4 s** have elapsed the operation step moves to the next step.
- When the last step is finished, the operation is repeated from Step 1.
- To prevent super-cooling, the magnetic clutch turns off despite the A/C forced override.

Blower motor

Operation

Step	Air mix actuator	Airflow mode actuator	Blower speed	Magnet clutch	Air intake actuator
1			OFF	OFF	

2	**50 %**	VENT	1st	ON	FRESH
3			3rd		
4			5th		
5			7th		

Display

Step	Temperature (°C {°F})	Airflow mode	Blower volume	A/C	Recirculate switch indicator light	Fresh switch indicator light
1	**1 {34}**		Not displayed	Not displayed	Not illuminated	Illuminated
2				Displayed		
3						
4						
5						

NOTE:

- After **approx. 4 s** have elapsed the operation step moves to the next step.
- When the last step is finished, the operation is repeated from Step 1.
- To prevent super-cooling, the magnetic clutch turns off despite the A/C forced override.

Airflow mode actuator

Operation

Step	Air mix actuator	Airflow mode actuator	Blower speed	Magnet clutch	Air intake actuator
1	**50 %**	VENT	3rd	ON	FRESH
2		BI-LEVEL			
3		HEAT			
4		DEF/HEAT			
5		DEFROSTER			

Display

Step	Temperature (°C {°F})	Airflow mode	Blower volume	A/C	Recirculate switch indicator light	Fresh switch indicator light
1	**3 {37}**			Displayed	Not illuminated	Illuminated
2						
3						

4						
5						

NOTE:

- After **approx. 4 s** have elapsed the operation step moves to the next step.
- When the last step is finished, the operation is repeated from Step 1.
- To prevent super-cooling, the magnetic clutch turns off despite the A/C forced override.

Indicator light

Operation

Step	Air mix actuator	Airflow mode actuator	Blower speed	Magnet clutch	Air intake actuator
—	**50 %**	VENT	OFF	OFF	FRESH

Display

Step	Temperature (°C {°F})	Airflow mode	Blower volume	A/C	Recirculate switch indicator light	Fresh switch indicator light
—	All indicator displayed				Illuminated	Illuminated

A/C operation check stop

NOTE:

- If "Stop" is selected while the A/C operation check is operating, the A/C stops at the conditions shown in the table.

Operation

Step	Air mix actuator	Airflow mode actuator	Blower speed	Magnet clutch	Air intake actuator
—	50 %	VENT	OFF	OFF	FRESH

Display

Step	Temperature (°C {°F})	Airflow mode	Blower volume	A/C	Recirculate switch indicator light	Fresh switch indicator light
—	0 {32}		Not displayed	Not displayed	Not illuminated	Illuminated

A/C Operation Check Mode (With Single Type Climate Control Unit)

- The A/C operation check mode forcibly operates the output devices as shown in the operation check table regardless of the signals input to the climate control unit.
- During an A/C operation check mode operation, indication in the display panel and the illumination of the indicator light on the switches are automatically controlled.
- Determine the malfunctioning part by visual inspection, listening to the operation sound, placing a hand on the air vents, or checking that each transition is as indicated in the operation check table.

Mazda Modular Diagnostic System (M-MDS) display	Target part	Reference
Air Mix Actuator	Air mix actuator Air mix door	(See .)
Air conditioning compressor	A/C compressor	(See .)
Air Intake Actuator	Air intake actuator Air intake door	(See .)
Blower Motor Speed	Blower motor	(See .)
Airflow Mode Actuator	Airflow mode actuator Airflow mode door	(See .)
Illumination Of All Indicator Lights	Climate control unit	(See .)

Air mix actuator

Operation

Step	Air mix actuator	Airflow mode actuator	Blower speed	Magnet clutch	Air intake actuator
1	**0 %**	VENT	5th	ON	FRESH
2	**100 %**				

Indicator light

Step	Recirculate switch indicator light	Rear window defroster switch indicator light	A/C switch indicator light
1	Illuminated	Not illuminated	Illuminated
2			

NOTE:

- After **approx. 22 s** have elapsed, the operation step moves to the next step.
- When the last step is finished, the operation is repeated from Step 1.
- To prevent super-cooling, the magnetic clutch turns off despite the A/C forced override.

A/C compressor

Operation

Step	Air mix actuator	Airflow mode actuator	Blower speed	Magnet clutch	Air intake actuator
1	**0 %**	VENT	5th	ON	FRESH
2				OFF	

Indicator light

Step	Recirculate switch indicator light	Rear window defroster switch indicator light	A/C switch indicator light
1	Not illuminated	Not illuminated	Illuminated
2			Not illuminated

NOTE:

- After the following times have elapsed, the operation step moves to the next step.
  - Step 1: **Approx. 5 s**
  - Step 2: **Approx. 25 s**
- When the last step is finished, the operation is repeated from Step 1.

Air intake actuator

Operation

Step	Air mix actuator	Airflow mode actuator	Blower speed	Magnet clutch	Air intake actuator
1	**0 %**	VENT	5th	ON	FRESH
2					RECIRCULATE
3				OFF	FRESH
4					RECIRCULATE

Indicator light

Step	Recirculate switch indicator light	Rear window defroster switch indicator light	A/C switch indicator light
1	Not illuminated	Not illuminated	Illuminated
2	Illuminated		
3	Not illuminated		Not illuminated
4	Illuminated		

NOTE:

- After **approx. 11 s** have elapsed, the operation step moves to the next step.
- When the last step is finished, the operation is repeated from Step 1.
- To prevent super-cooling, the magnetic clutch turns off despite the A/C forced override.

Blower motor

Operation

Step	Air mix actuator	Airflow mode actuator	Blower speed	Magnet clutch	Air intake actuator

1	**50 %**	VENT	OFF	OFF	FRESH
2			1st	ON	
3			3rd		
4			5th		
5			7th		

Indicator light

Step	Recirculate switch indicator light	Rear window defroster switch indicator light	A/C switch indicator light
1	Not illuminated	Not illuminated	Not illuminated
2			Illuminated
3			
4			
5			

NOTE:

- After **approx. 4 s** have elapsed, the operation step moves to the next step.
- When the last step is finished, the operation is repeated from Step 1.
- To prevent super-cooling, the magnetic clutch turns off despite the A/C forced override.

Airflow mode actuator

Operation

Step	Air mix actuator	Airflow mode actuator	Blower speed	Magnet clutch	Air intake actuator
1	**50 %**	VENT	5th	ON	FRESH
2		BI-LEVEL			
3		HEAT			
4		DEF/HEAT			
5		DEFROSTER			

Indicator light

Step	Recirculate switch indicator light	Rear window defroster switch indicator light	A/C switch indicator light
1	Not illuminated	Not illuminated	Illuminated
2			
3			

4			
5			

NOTE:

- After **approx. 11 s** have elapsed, the operation step moves to the next step.
- When the last step is finished, the operation is repeated from Step 1.
- To prevent super-cooling, the magnetic clutch turns off despite the A/C forced override.

Indicator light

Operation

Step	Air mix actuator	Airflow mode actuator	Blower speed	Magnet clutch	Air intake actuator
—	**50 %**	VENT	OFF	OFF	FRESH

Indicator light

Step	Recirculate switch indicator light	Rear window defroster switch indicator light	A/C switch indicator light
—	Illuminated	Illuminated	Illuminated

A/C operation check stop

NOTE:

- If "Stop" is selected while the A/C operation check is operating, the A/C stops at the conditions shown in the table.

Operation

Step	Air mix actuator	Airflow mode actuator	Blower speed	Magnet clutch	Air intake actuator
—	**50 %**	VENT	OFF	OFF	FRESH

Indicator light

Step	Recirculate switch indicator light	Rear window defroster switch indicator light	A/C switch indicator light
—	Not illuminated	Not illuminated	Not illuminated

2014 - Mazda3 - HVAC

VENTILATION SYSTEM

Outline

- The ventilation system adjusts the airflow temperature sent from the blower unit or the air vent mode.

Function

- The ventilation system adjusts the airflow temperature based on the position of the air mix door.
- The ventilation system adjusts the airflow mode based on the position of the airflow mode door.

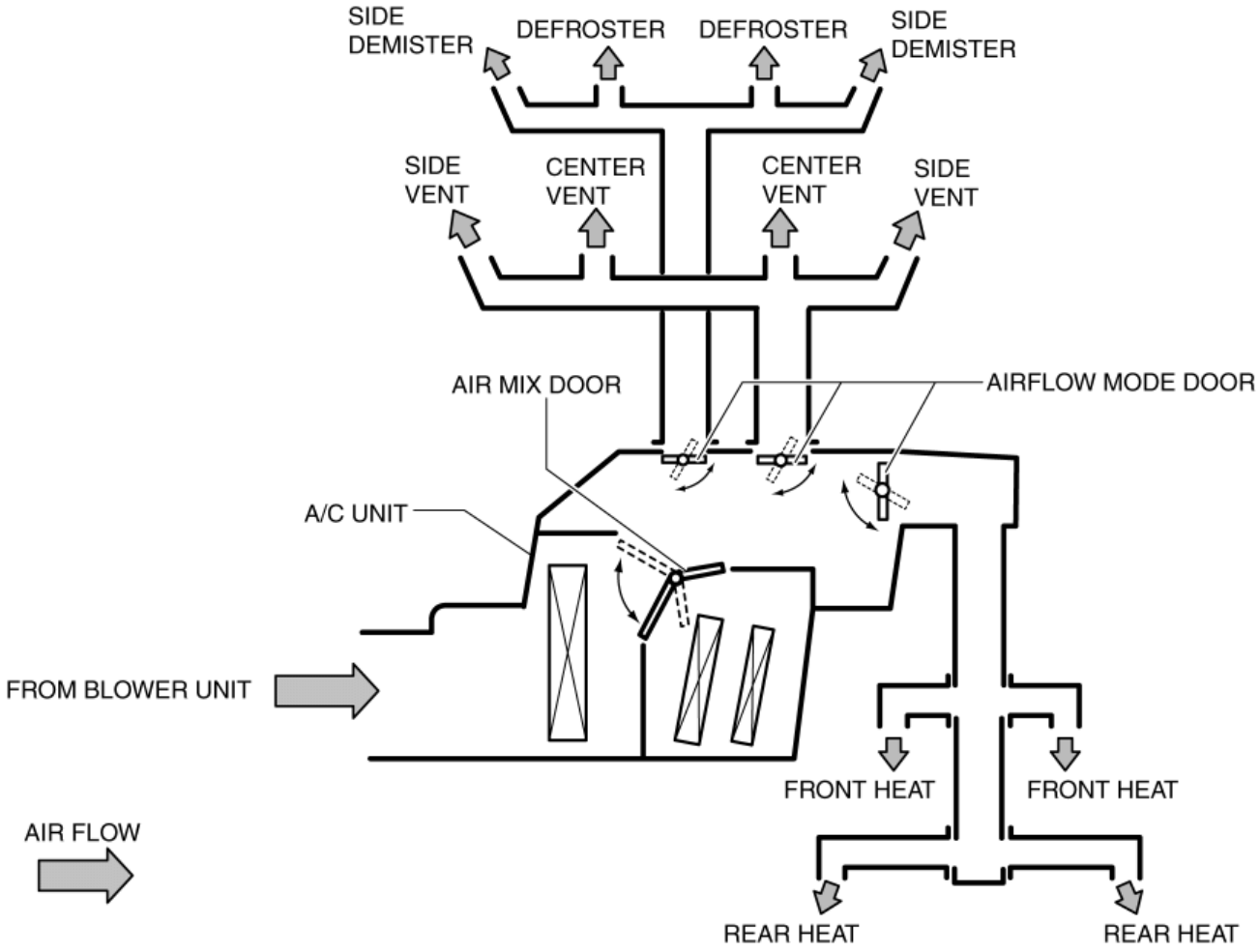

Structural View

- The ventilation system consists of the following parts.

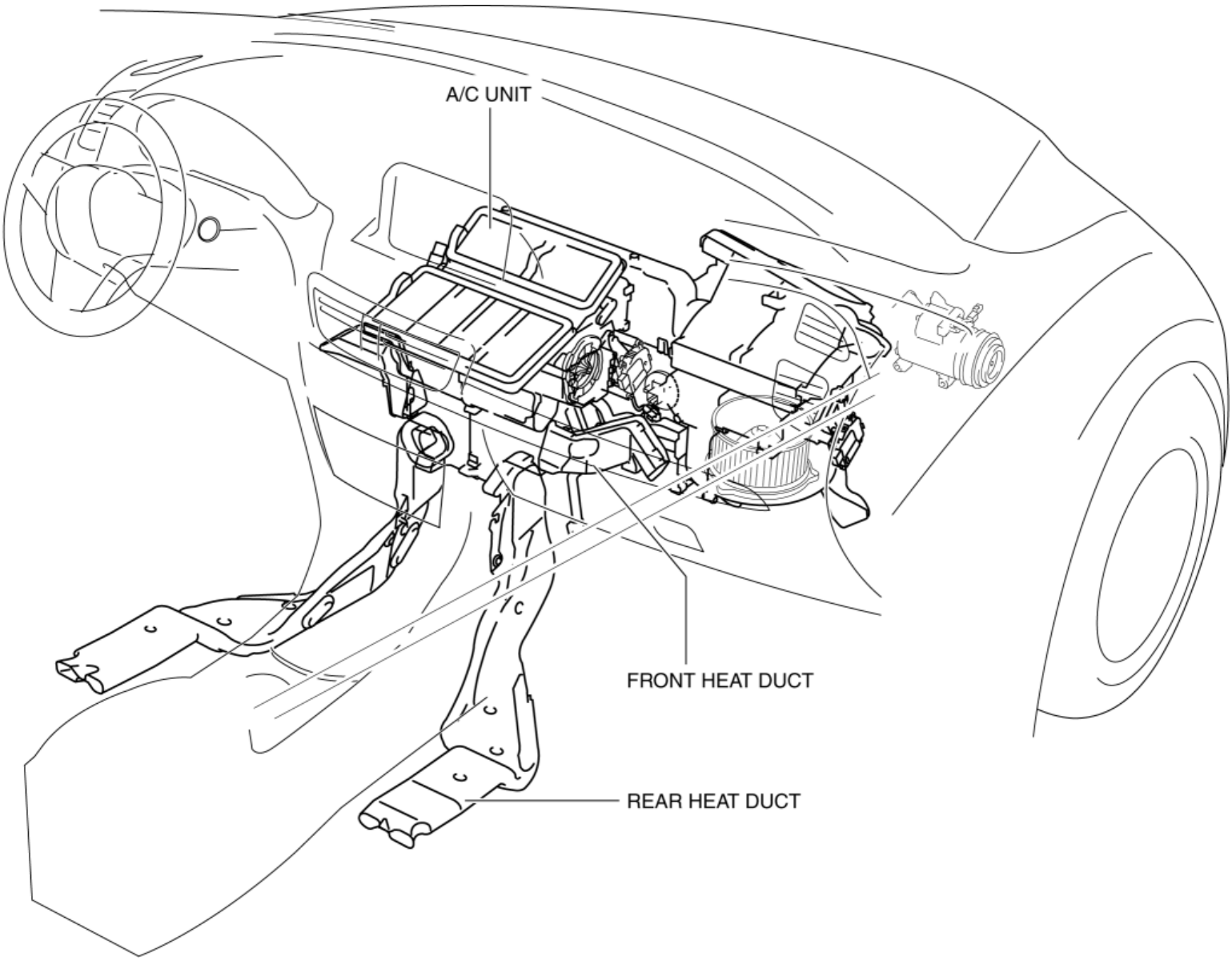

Operation

Air mix door

Full-auto air conditioner

- The air mix actuator operates according to the temperature control dial operation or the automatic control of the climate control unit.
- The air mix door moves in the COLD or HOT direction according to the operation of the air mix actuator.
- The airflow volume blowing from the evaporator to the heater core changes by the movement of the air mix door, and the temperature of the air which passes is adjusted.

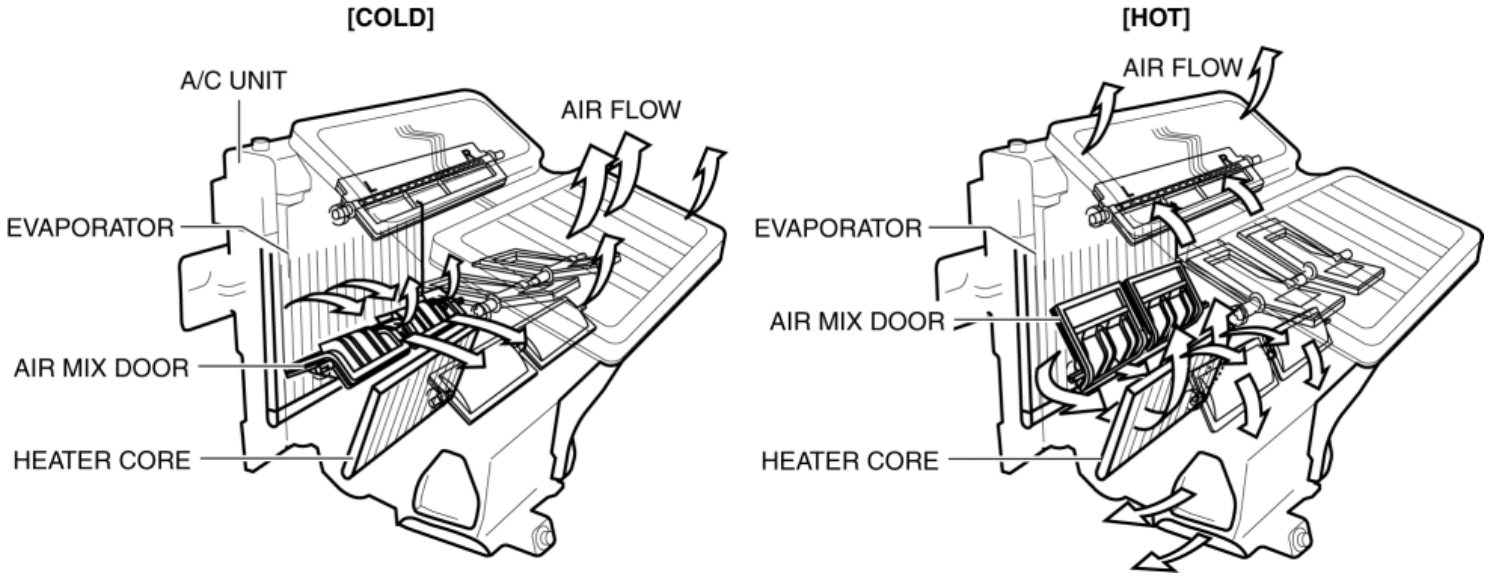

Dual mode (with dual type climate control unit)

- When the DUAL mode is ON, the driver and passenger-side air mix actuators operate independently according to the temperature control dial operation or the automatic control of the climate control unit.
- The driver and passenger-side air mix doors move independently according to the air mix actuator operation.

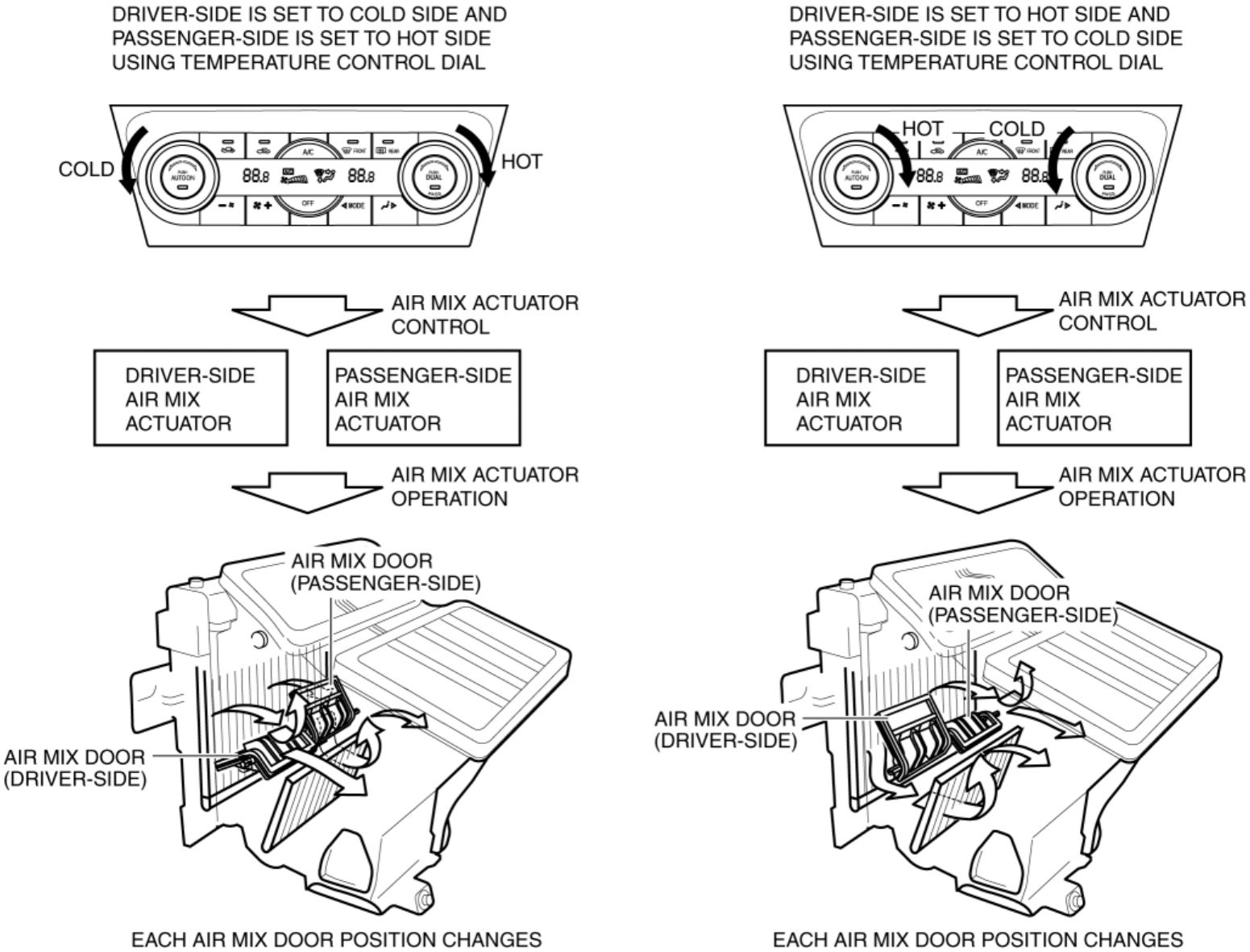

- For the DUAL mode, refer to the CLIMATE CONTROL UNIT. (See **CLIMATE CONTROL UNIT [FULL-AUTO AIR CONDITIONER]**.)

Manual air conditioner

- The air mix wire operates by operating the temperature control dial of the climate control unit.
- The air mix door moves in the COLD or HOT direction according to the operation of the air mix wire.
- The airflow volume blowing from the evaporator to the heater core changes by the movement of the air mix door, and the temperature of the air which passes is adjusted.

Airflow mode door

Full-auto air conditioner

- The airflow mode actuator operates according to the mode switch operation and the automatic control of the climate control unit.
- The airflow mode main link operates according to the airflow mode actuator operation.
- The airflow mode door moves in the VENT, BI-LEVEL, HEAT, DEF/HEAT, or DEFROSTER direction according to the airflow mode main link. The air vent changes by the movement of the airflow mode door.

Manual air conditioner

- The mode wire operates by operating the mode dial of the climate control unit.
- The airflow mode main link operates according to the mode wire operation.
- The airflow mode door moves in the VENT, BI-LEVEL, HEAT, DEF/HEAT, or DEFROSTER direction according to the airflow mode main link. The air vent changes by the movement of the airflow mode door.

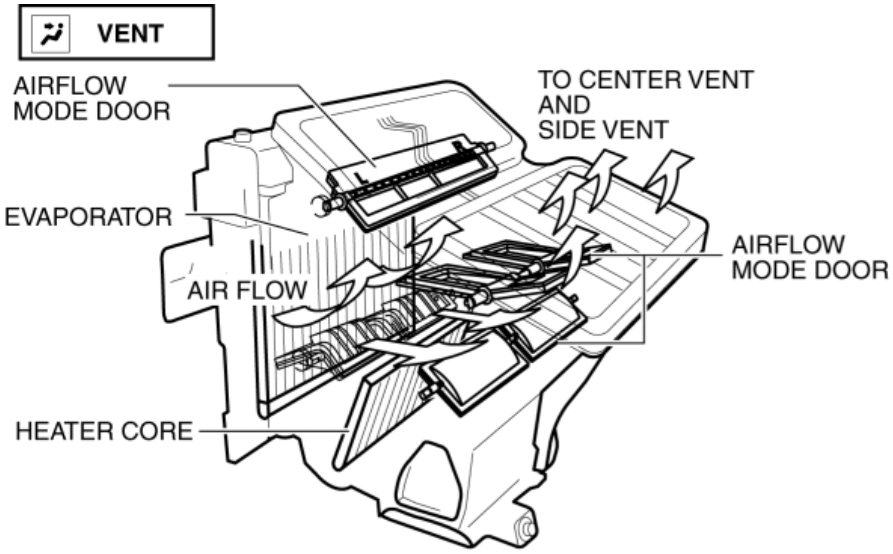

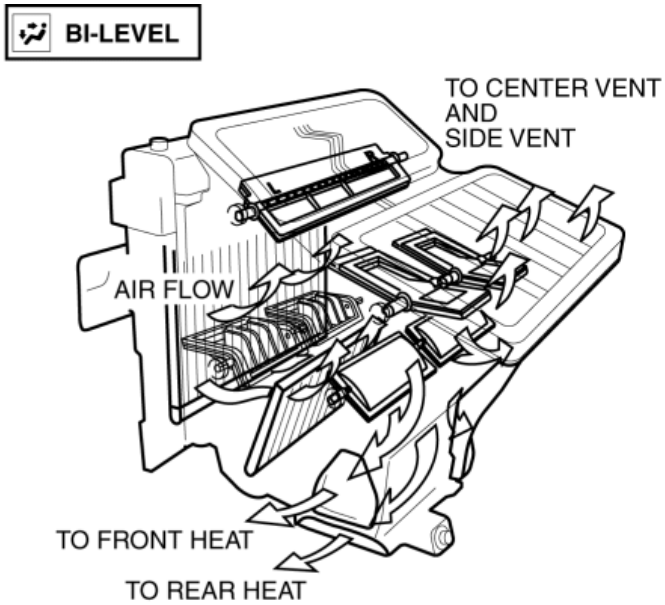

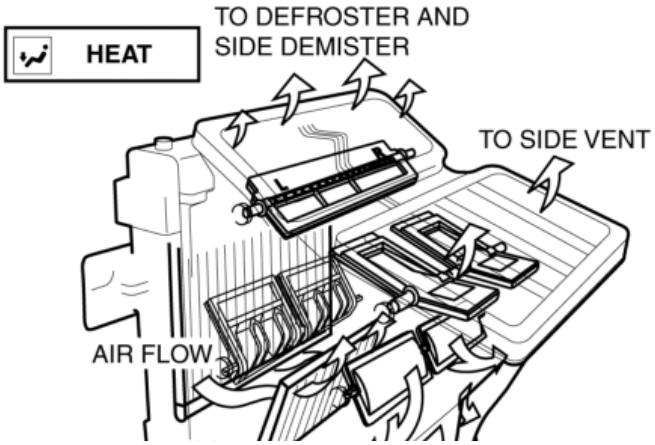

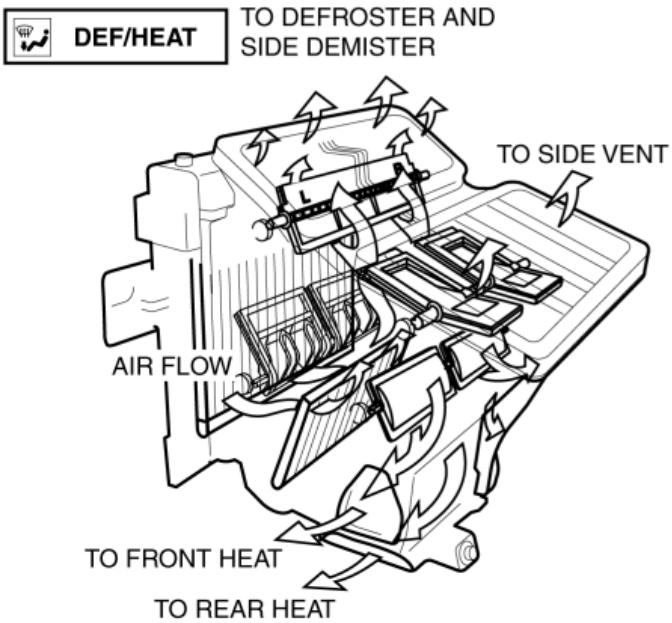

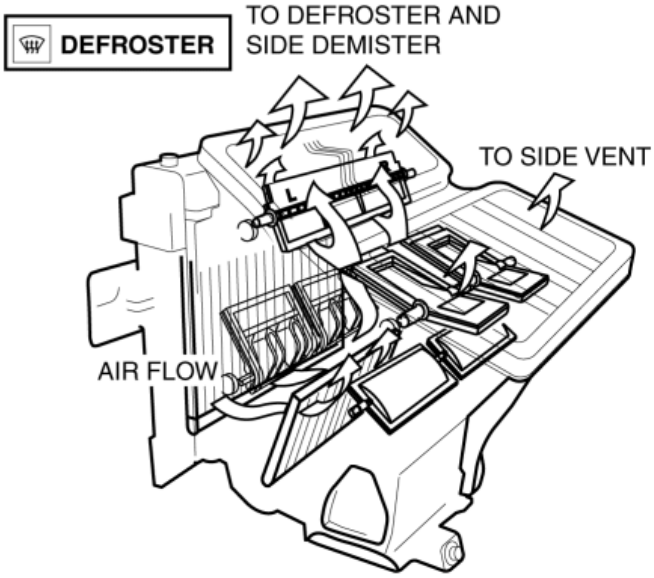

- The airflow distributed by the mode door passes through the duct and the air is blown from each air vent shown in the figure to the cabin.

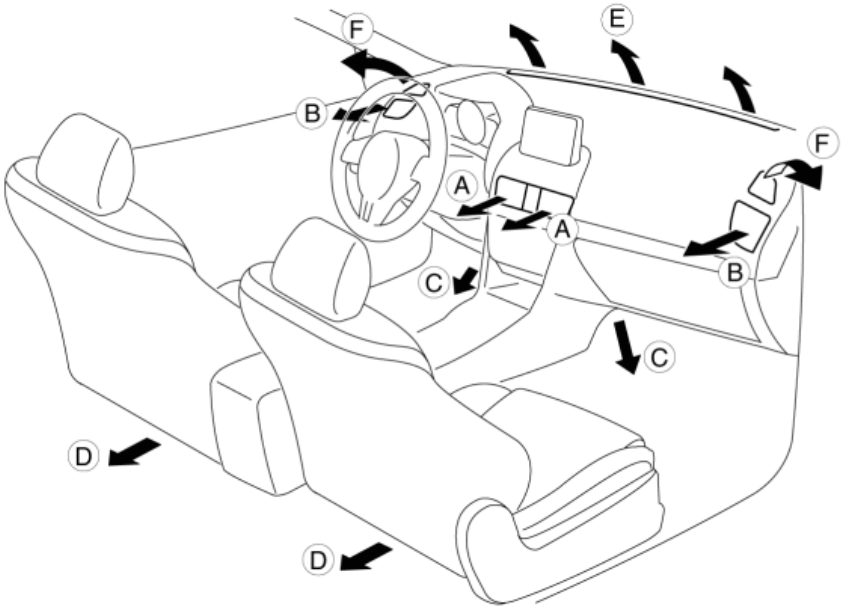

MARK	AIR FLOW VOLUME
○	LOW
◯	MIDDLE
◯	HIGH

Display	CENTER VENT	SIDE VENT	FLOOR VENT		FRONT DEFROSTER	SIDE DEMISTER
			Front	Rear		
	A	B	C	D	E	F
			—	—	—	—

VENT	◯	◯				
BI-LEVEL	◯	◯	◯	○	—	—
HEAT	—	○	◯	◯	○	○
DEF/HEAT	—	○	◯	○	◯	○
DEFROSTER	—	○	—	—	◯	◯

2014 - Mazda3 - HVAC

A/C UNIT

Purpose, Function

- The A/C unit opens/closes the air mix door and the mode door.

Construction

- The A/C unit which integrates the cooling and heater units.
- The A/C unit consists of the following parts.

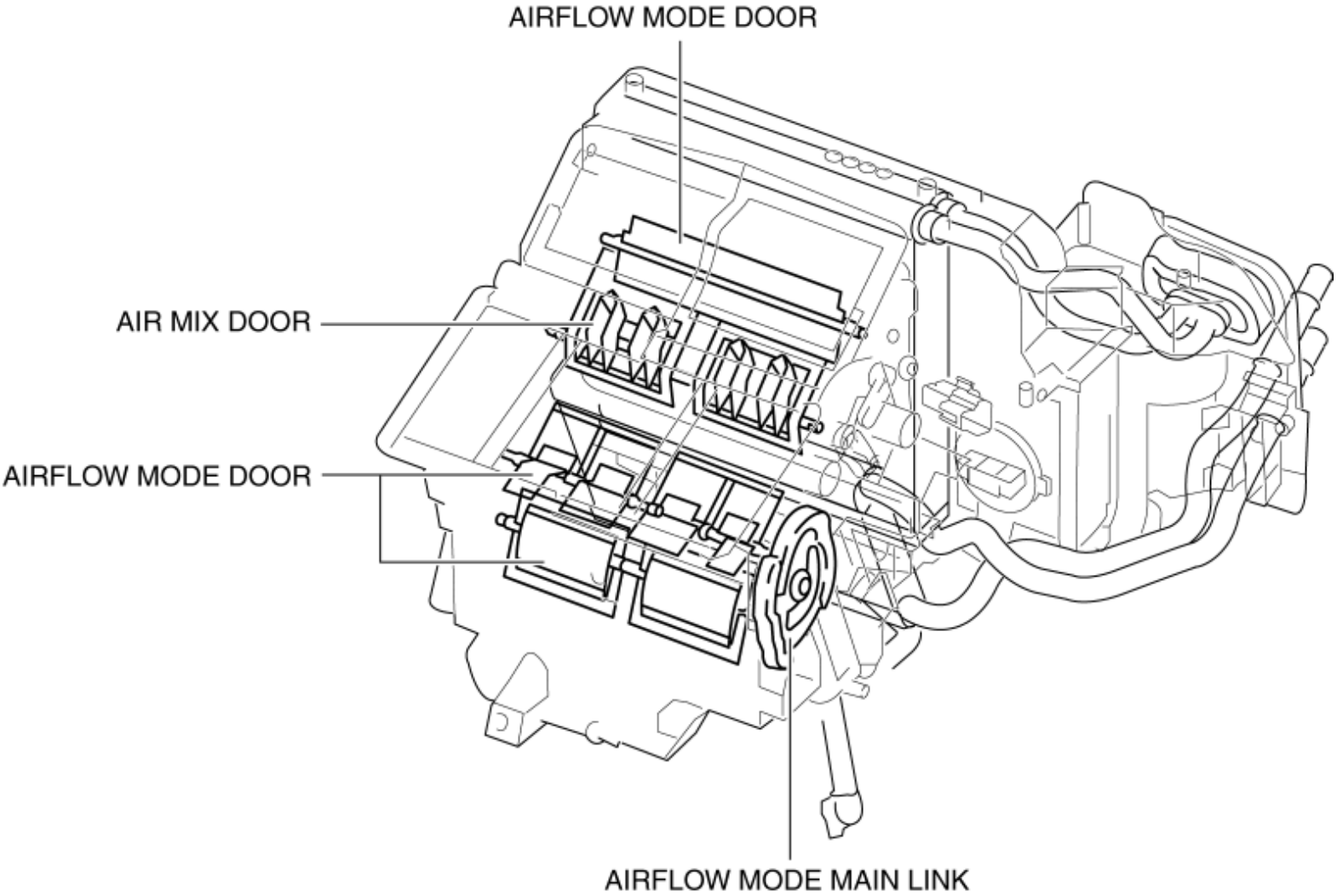

Operation

- For the operation, refer to VENTILATION SYSTEM (See **VENTILATION SYSTEM**.)

Fail-safe

- Function not equipped.

2014 - Mazda3 - HVAC

BLOWER SYSTEM

Outline

- The blower system intakes air outside of the vehicle or the cabin, and sends the air passing through the air filter to the A/C unit.

Function

- Air is blown by the blower motor in the blower system.
- The blower system switches the air intake port to FRESH or REC based on the position of the air intake door.

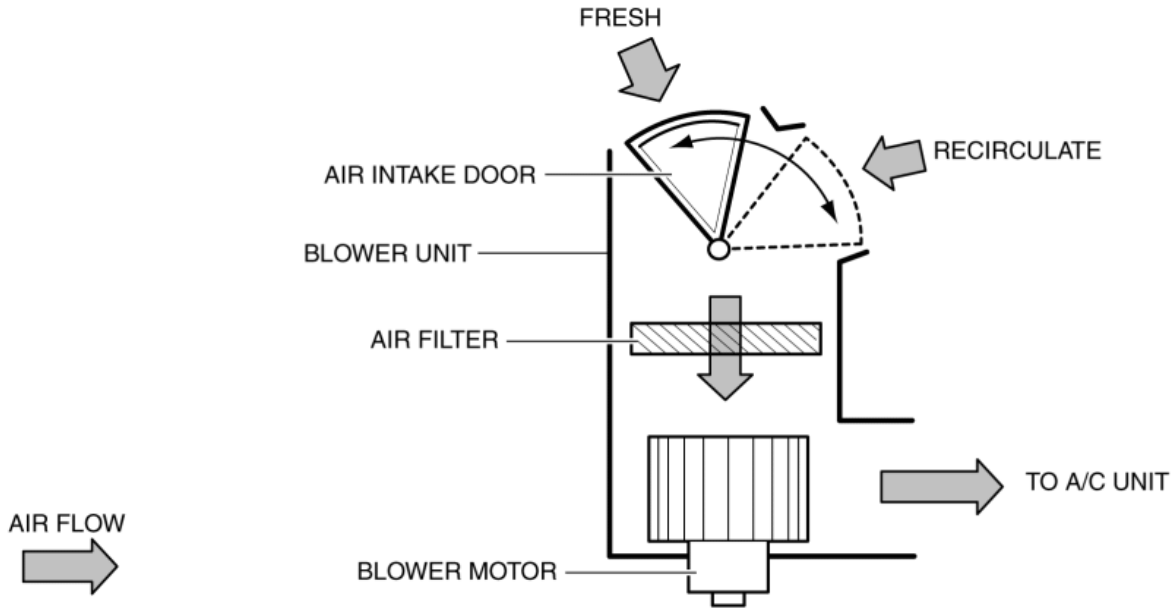

Structural View

- The blower system consists of the following parts.

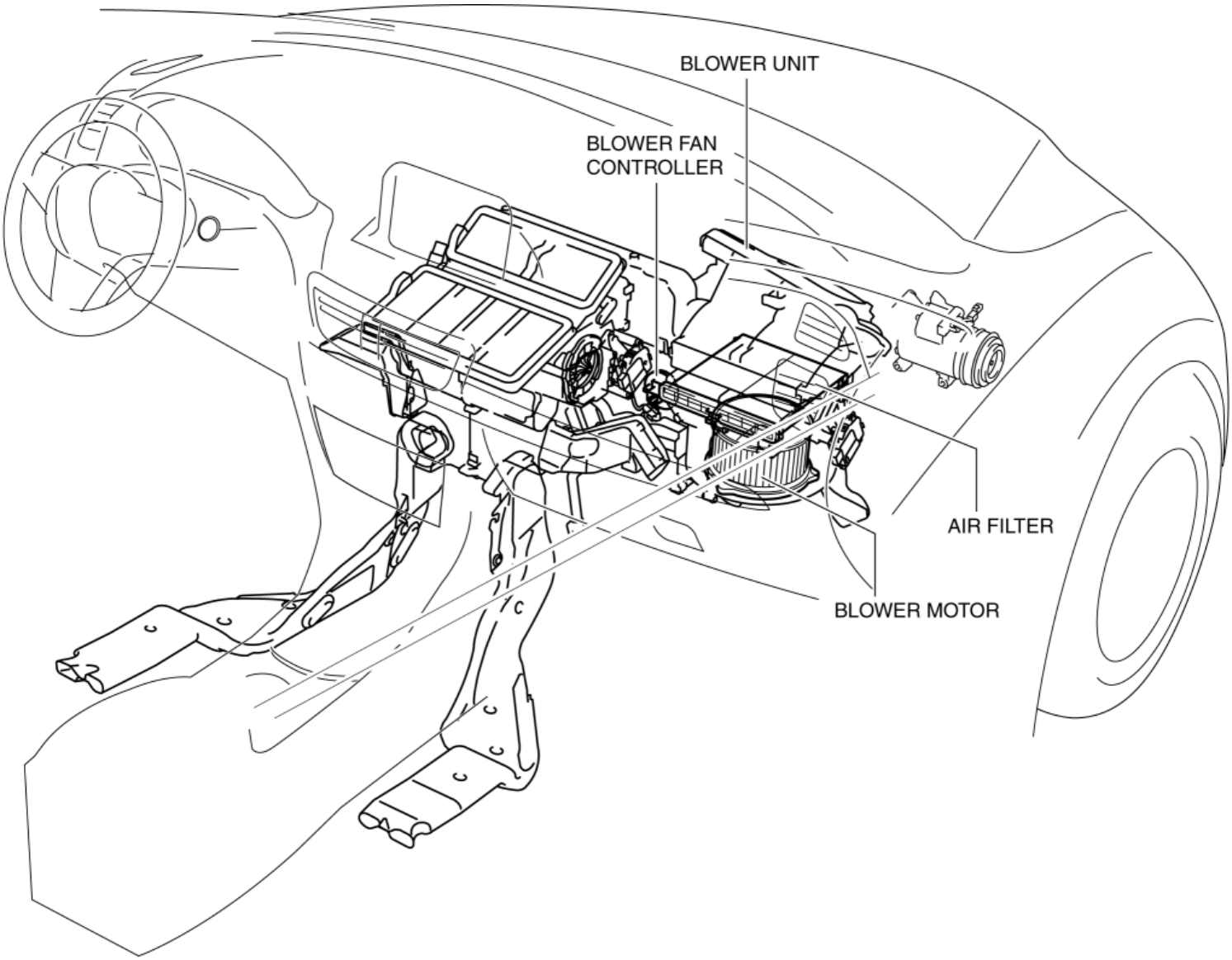

Operation

1. When the ignition is switched ON (engine off or on), the front body control module (FBCM) turns the blower relay on.

NOTE:

- The front body control module (FBCM) may stop the air conditioner system forcibly after turning the blower relay off due to the battery discharge suppression function.

2. When the blower motor operation is requested by the airflow volume control switch operation or the automatic control, the climate control unit (full-auto air conditioner) sends a blower speed signal to the blower fan controller.

3. When the blower motor operation is requested by the airflow volume control dial operation, the climate control unit (manual air conditioner) sends a blower speed signal to the blower fan controller.

4. When a blower speed signal is received, the blower fan controller rotates the blower motor.

5. The rotation speed of the blower fan is determined by the transistor in the blower fan controller. If the current value flowing through the blower fan controller is high, the rotation speed increases, if the current value is low, the speed decreases.

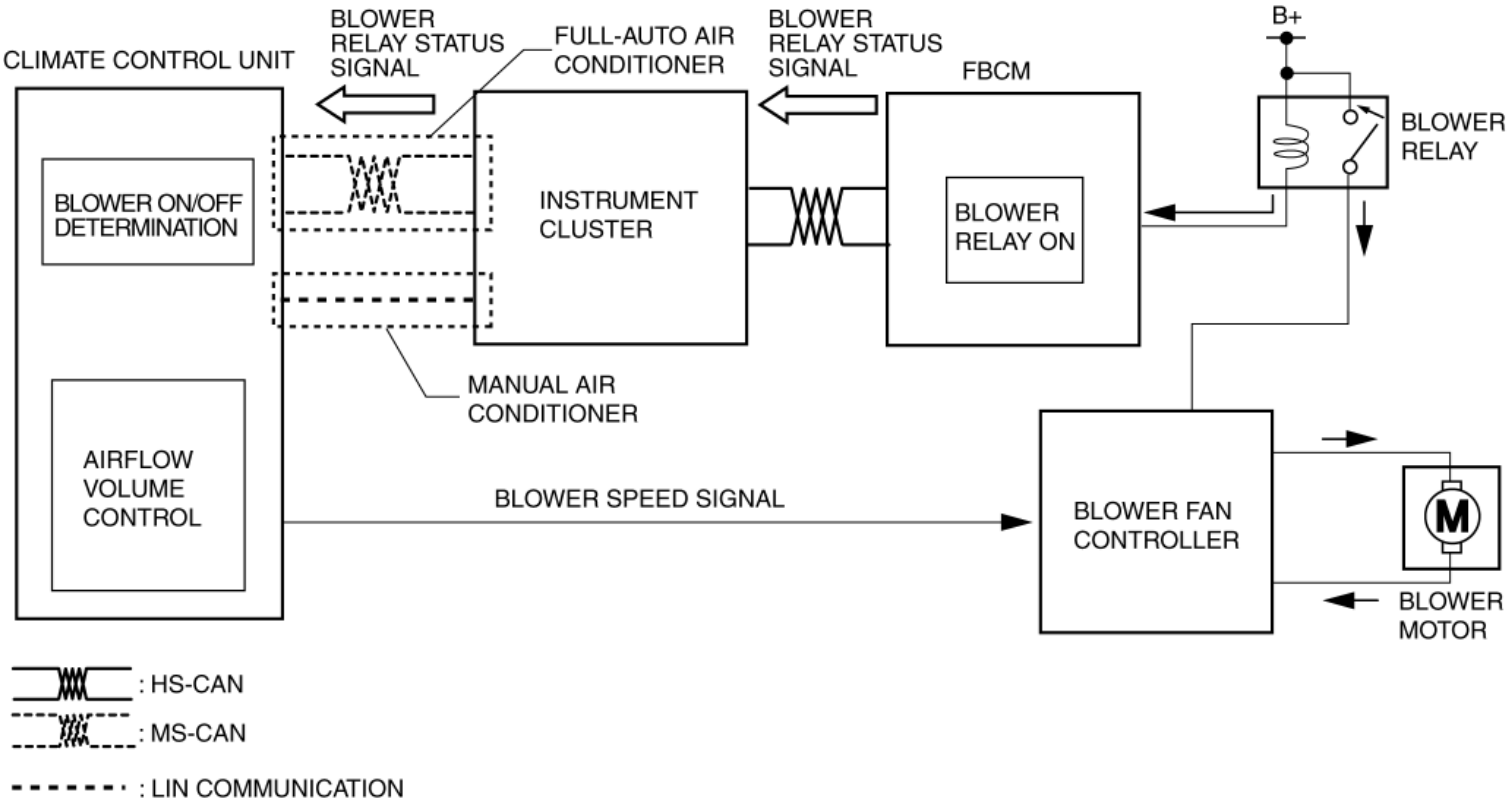

6. When the blower motor rotates, air is taken in from the outside of the vehicle or the cabin.

7. The air taken in flows in the fresh air direction or recirculate direction according to the operation of the air intake link. The air intake port changes by the movement of the air intake door.

RECIRCULATE

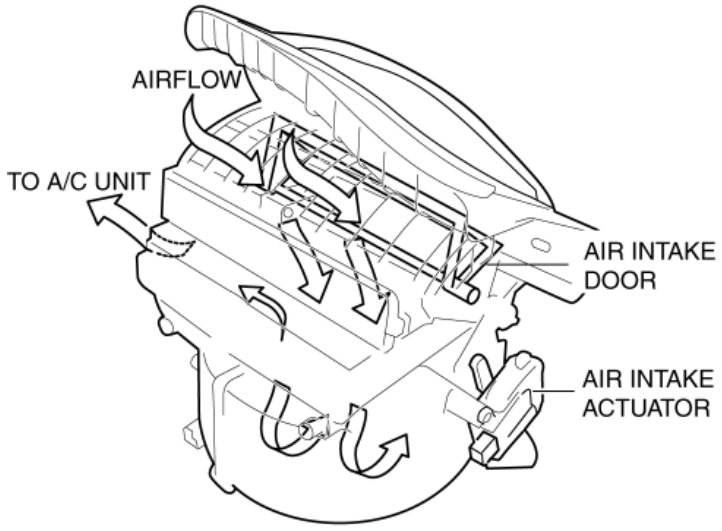

FRESH

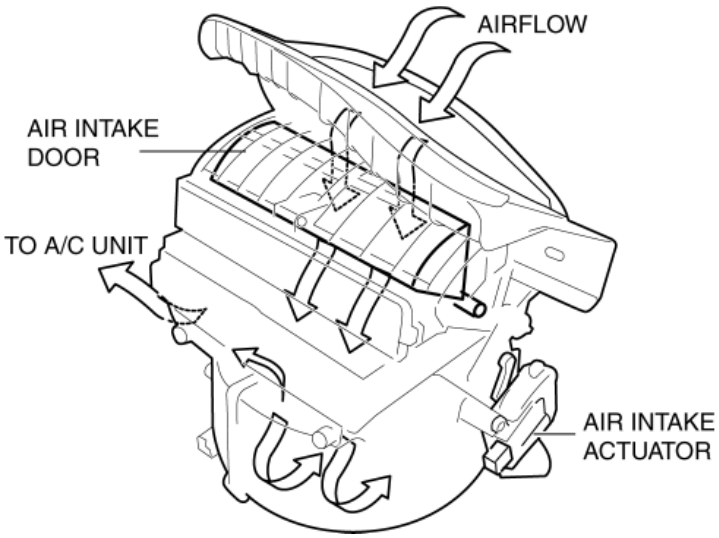

2014 - Mazda3 - HVAC

BLOWER UNIT

Purpose, Function

- The blower unit switches between fresh air and recirculated air (FRESH/REC) and sends airflow into the cabin.

Construction

- The blower motor consists of the following parts:
  - Blower motor
  - Air intake door
  - Air intake actuator
  - Air filter

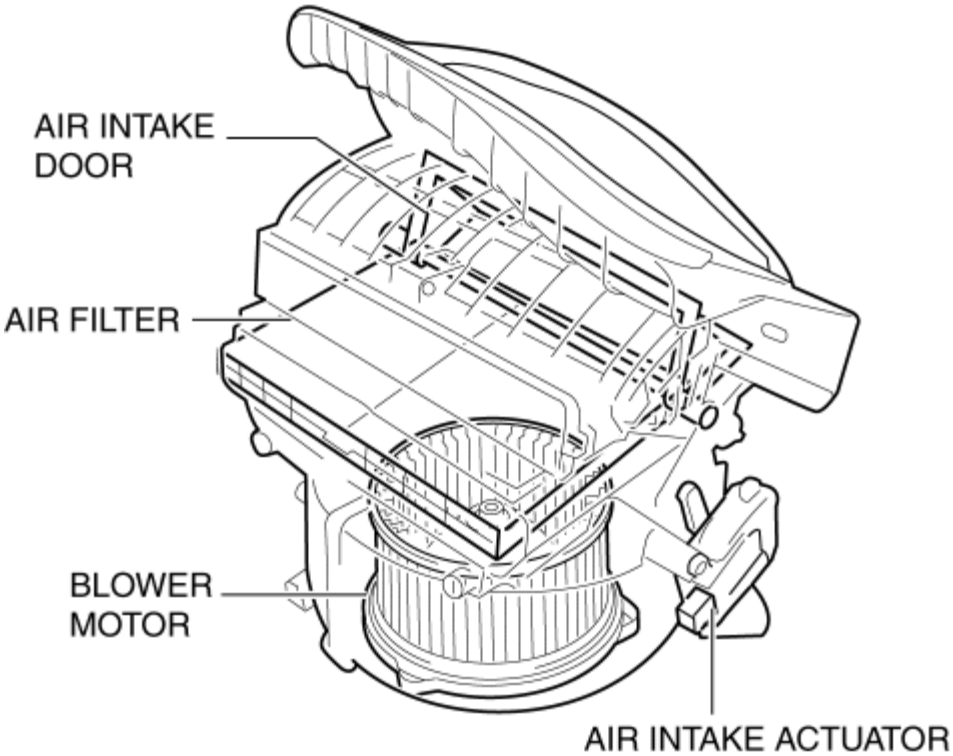

Operation

- For the operation, refer to BLOWER SYSTEM. (See **BLOWER SYSTEM**.)

Fail-safe

- Function not equipped.

2014 - Mazda3 - HVAC

BLOWER MOTOR

Purpose, Function

- The blower motor rotates the blower fan to create airflow.

Construction

- The blower motor is installed to the blower unit.
- The blower motor consists of the blower fan and motor.
- A sirocco fan has been adopted for the blower fan.

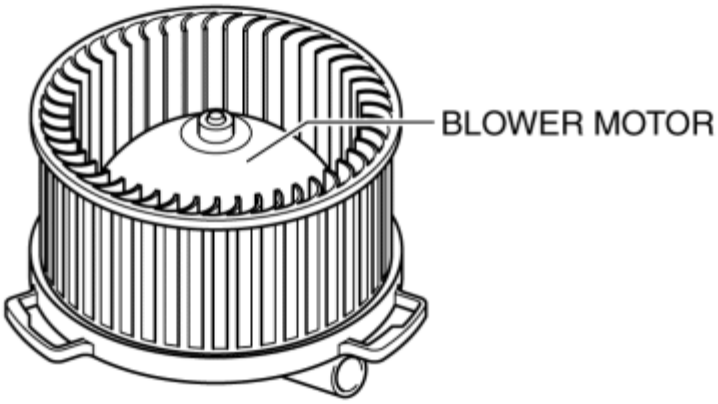

Operation

- For the operation, refer to BLOWER SYSTEM. (See **BLOWER SYSTEM**.)

Fail-safe

- Function not equipped.

2014 - Mazda3 - HVAC

BLOWER FAN CONTROLLER

Purpose

- The blower fan controller controls the blower motor rotation speed.

Function

- The blower fan controller controls the built-in power MOS FET using pulse signals and changes the blower motor operational voltage.
- Temperature increase is suppressed by installing the fin to the upper part of the blower fan controller.
- The blower fan controller is equipped with a fail-safe function for the purpose of protecting the internal circuits.

Construction

- The blower fan controller is installed to the A/C unit.
- The blower fan controller is built into the PWM circuit.

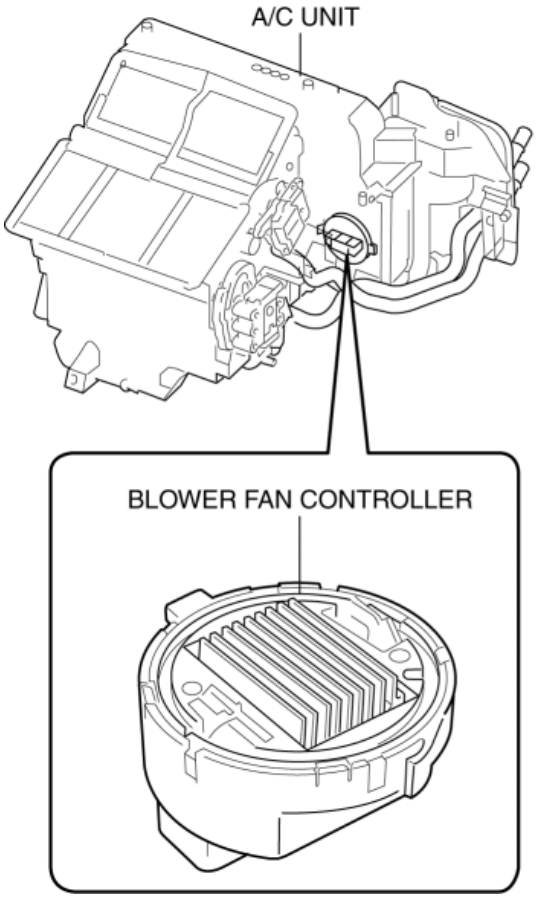

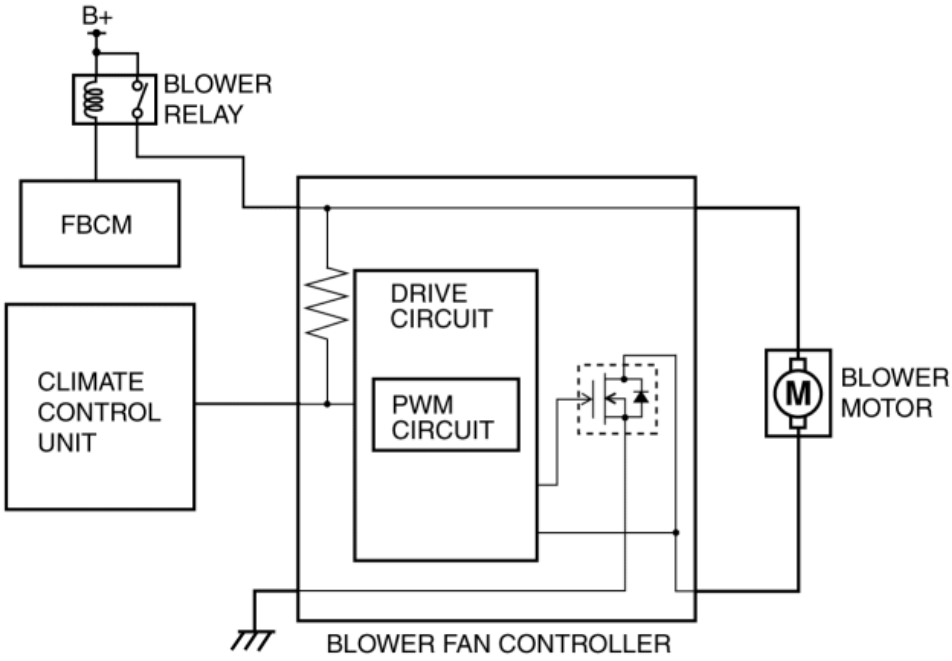

PWM (Pulse Width Modulation) circuit

- The PWM circuit controls the blower motor rotation speed using pulse.

- The PWM circuit decides duty ratio (pulse ON time) based on the signals from the climate control unit and turns the power MOS FET on/off at high speed.
- With the power MOS FET turned on, current flows between the drain and source while current is flowing to the gate.

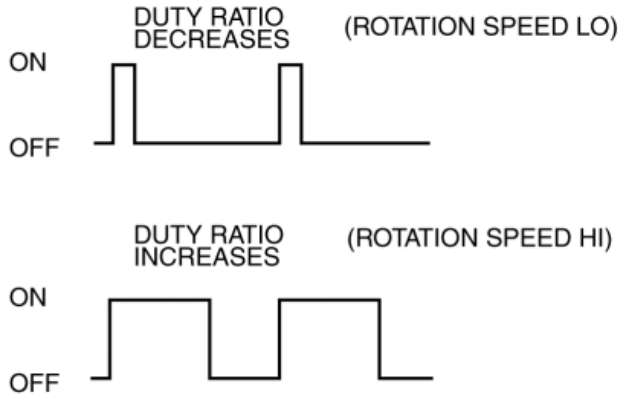

- The rotation of the blower motor is fast when the power MOS FET ON period is long (duty ratio is high), and it is slow when the period is short (duty ratio is low).

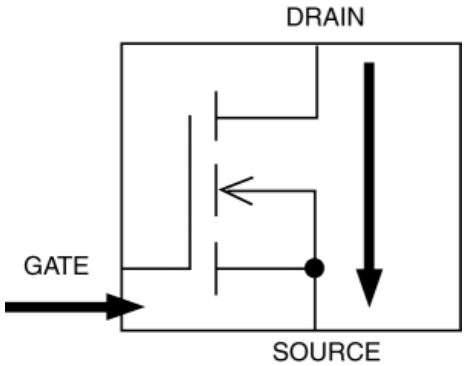

- The PWM circuit lowers the electric power loss to suppress heat generation in the circuit by performing duty control which uses power MOS FET ON/OFF operation.

Operation

1. When the blower fan controller receives a blower speed request signal from the climate control unit, it controls the drive circuit to determine the duty ratio for the blower motor rotation.

2. The power MOS FET is turned on or off based on the duty ratio determined by the drive circuit.

3. When the power MOS FET is turned on, the blower motor circuit is established and the motor rotates.

4. The power MOS FET is turned on or off at high speed repeatedly to control the blower motor rotation. Therefore the motor rotation speed is controlled.

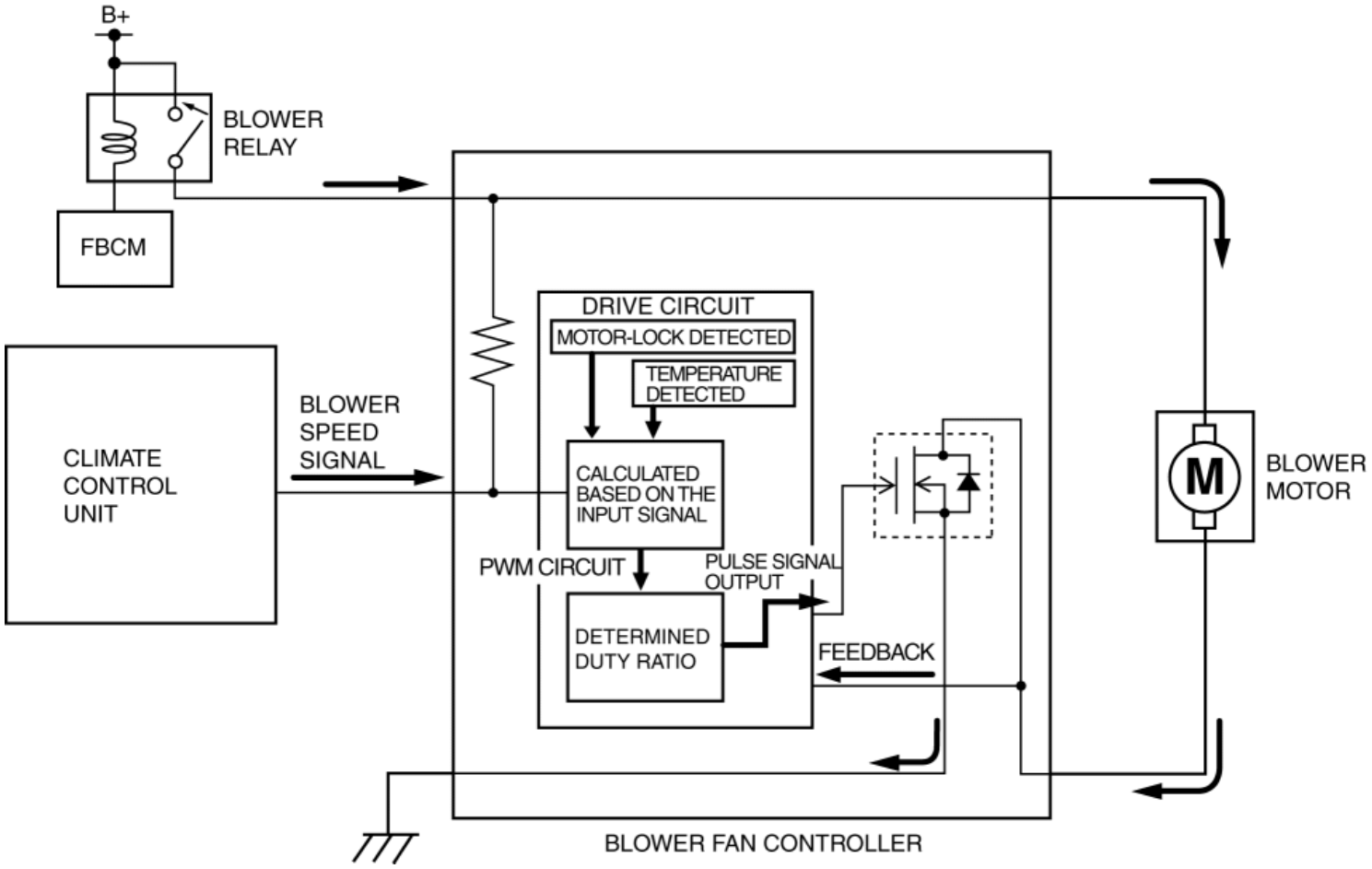

Fail-safe

- The blower fan controller stops output when the following conditions are detected:
  - Motor lock
    - The blower motor locks and over-current flows.
  - Abnormal temperature
    - The power MOS FET increases abnormal temperature due to half-lock (over-current such as motor-lock is not detected) of the blower motor.

2014 - Mazda3 - HVAC

AIR FILTER

Purpose

- The air filter removes pollen and dust in the intake air and purifies air flowing into the cabin.

Function

- The air filter removes pollen and dust using a dust collecting filter.

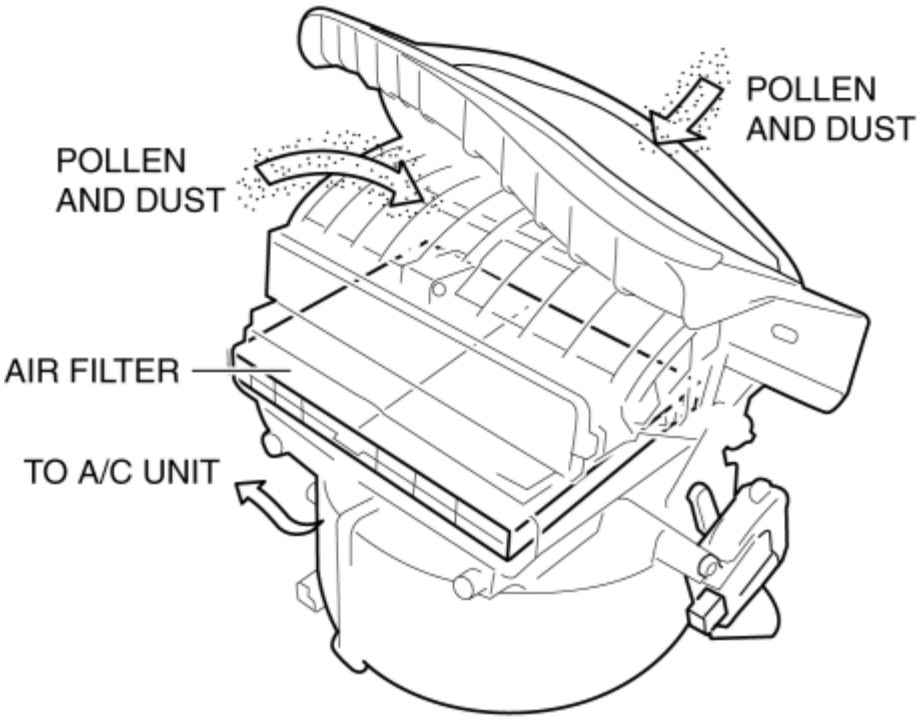

Construction

- The air filter is installed to the blower unit.
- It is necessary to periodically replace the air filter because it cannot be reused by cleaning.

Fail-safe

- Function not equipped.

2014 - Mazda3 - HVAC

REFRIGERANT SYSTEM

Outline

- The refrigerant system circulates the refrigerant to cool the evaporator.

Function

- The refrigerant system has the following functions:

	Function	Related parts
1	Connects each part of refrigerant system	Refrigerant line
2	Engages or disengages magnetic clutch to control A/C compressor operation	Magnetic clutch
3	• Compresses gaseous refrigerant • Circulates refrigerant	A/C compressor
4	Cools compressed gaseous refrigerant to change it to liquid refrigerant	Condenser
5	Purifies refrigerant and eliminates moisture	Receiver/drier
6	Atomizes highly pressurized liquid refrigerant	Expansion valve
7	Vaporizes atomized refrigerant	Evaporator

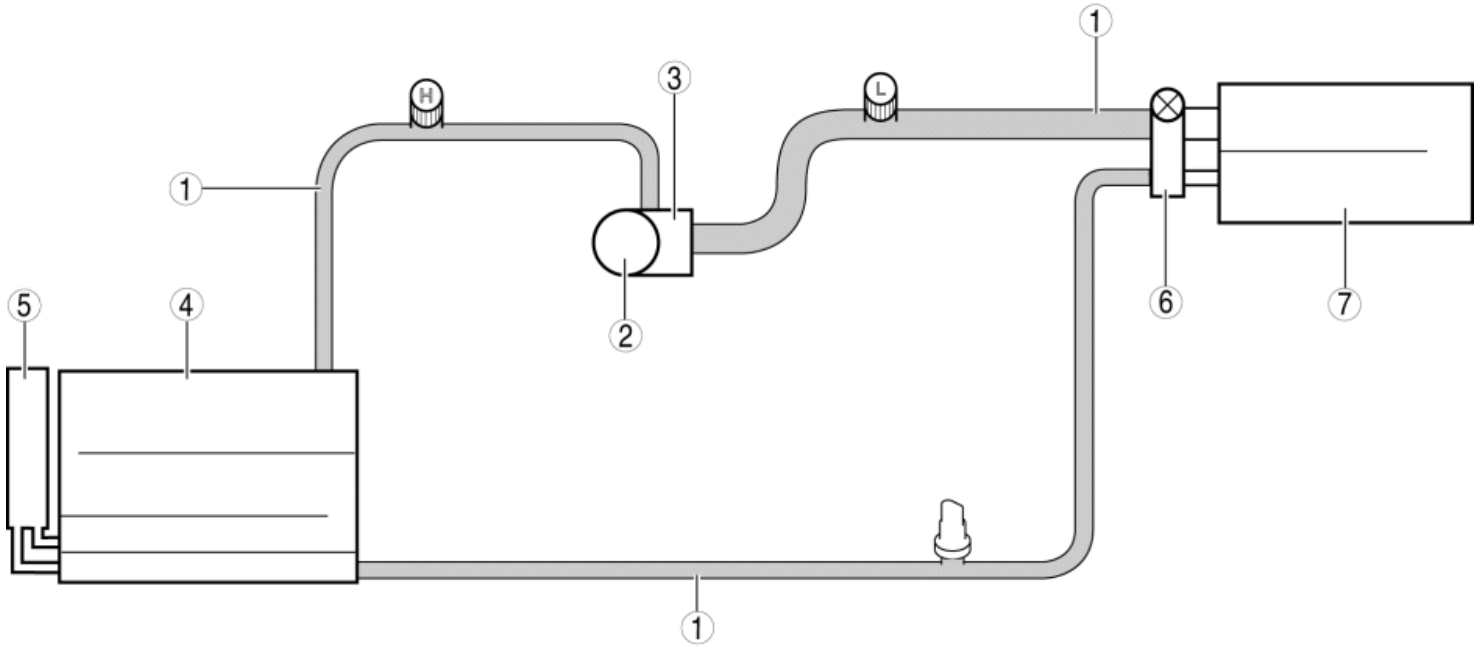

Construction

- The refrigerant system consists of the following parts.

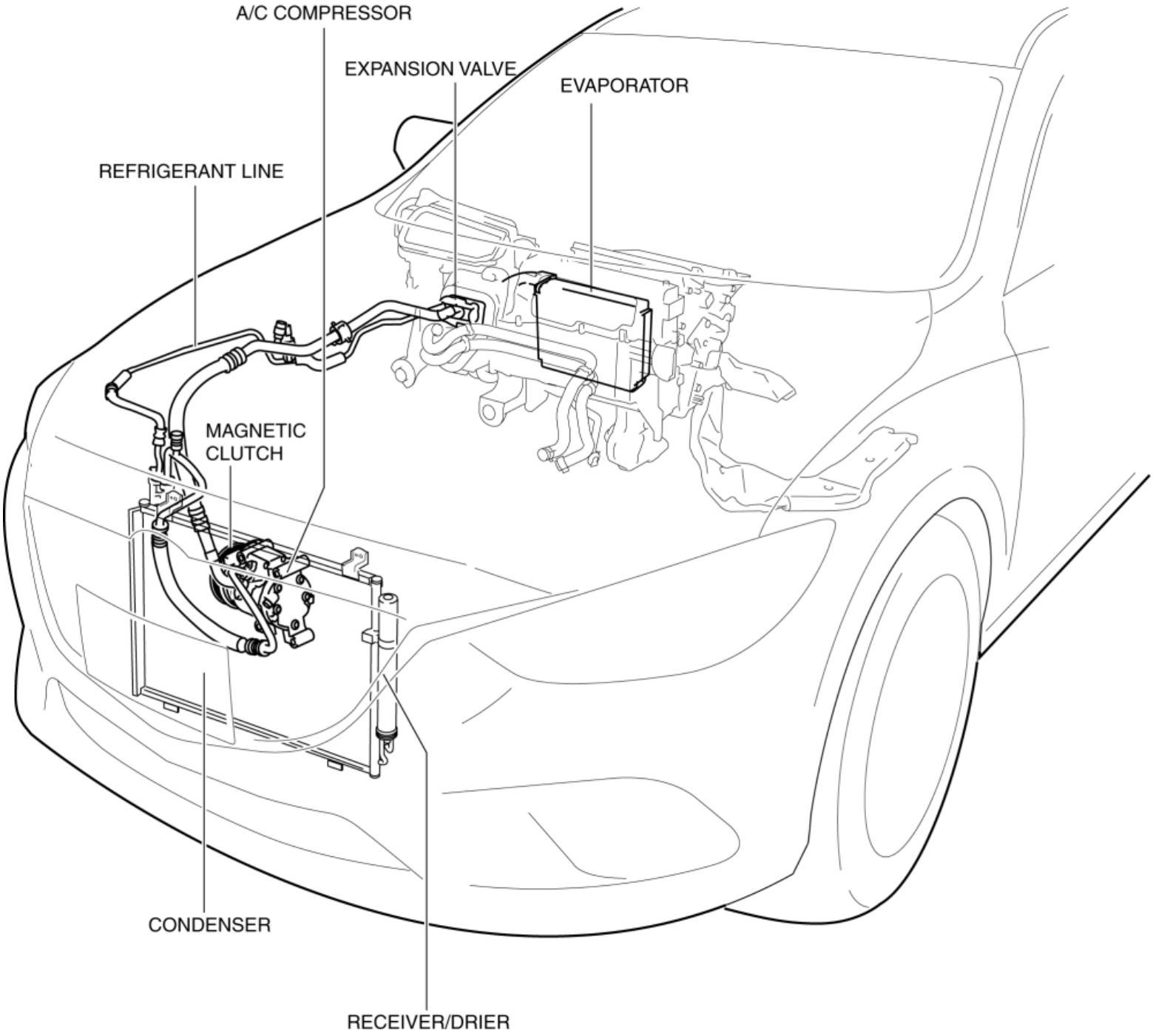

Operation

- The refrigerant system circulates the refrigerant in conjunction with the function of each part as follows:

	Operation	Related parts
1	When A/C relay turns on, magnetic clutch engages to operate A/C compressor	Magnetic clutch

2	• A/C compressor operates to compress gaseous refrigerant • Sends compressed gaseous refrigerant to condenser	A/C compressor
3	Gaseous refrigerant is cooled to change it to liquid refrigerant and then sent to receiver/drier	Condenser
4	Liquid refrigerant is purified and moisture is eliminated, and then sent to expansion valve	Receiver/drier
5	Atomizes liquid refrigerant and sends it to evaporator	Expansion valve
6	Atomized refrigerant is vaporized and sent to A/C compressor	Evaporator

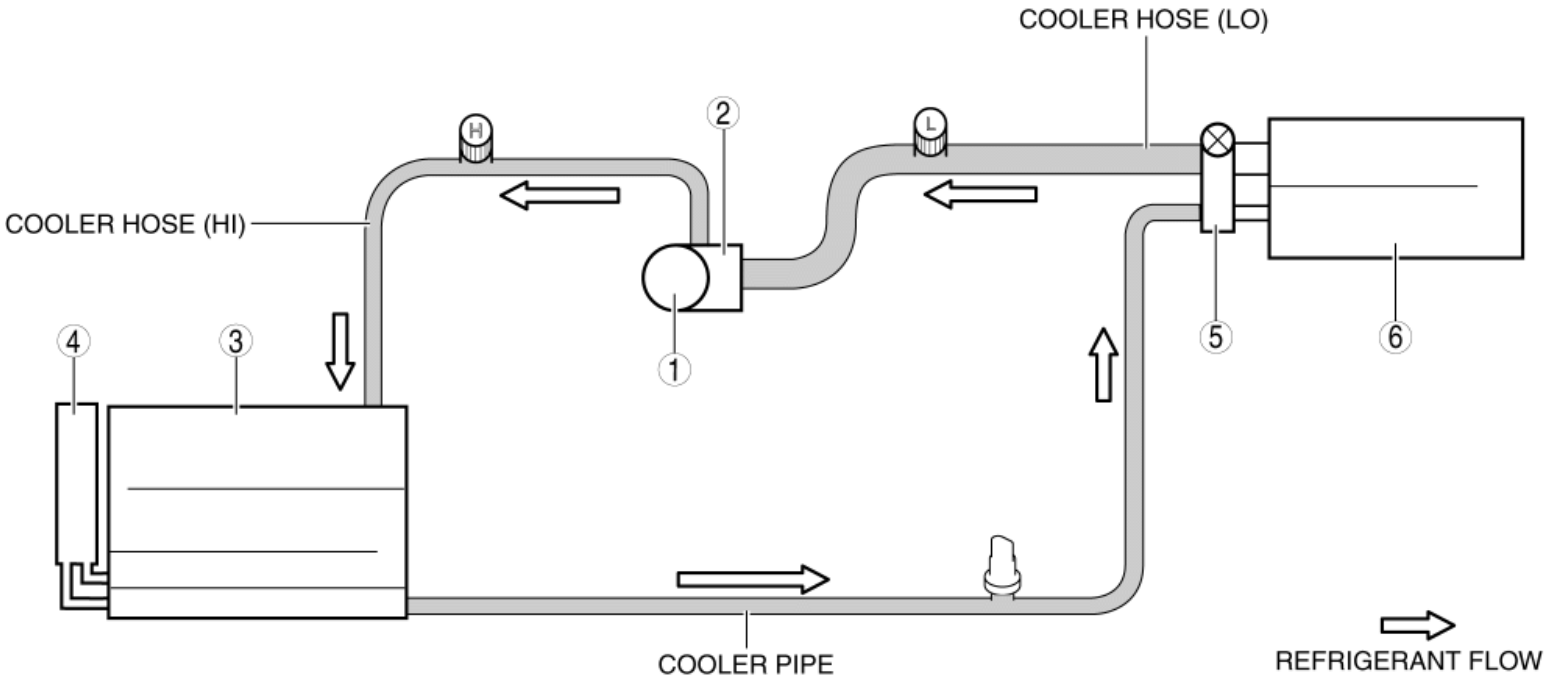

2014 - Mazda3 - HVAC

A/C COMPRESSOR

Purpose

- The A/C compressor circulates the refrigerant in the refrigerant cycle.
- The A/C compressor compresses the gaseous refrigerant atomized by the evaporator, and by pressurizing the gaseous refrigerant, liquefaction by the condenser is facilitated.

Function

- The A/C compressor compresses the gaseous refrigerant by driving the piston in the compressor using the drive force from the engine. In addition, it sends the compressed refrigerant to the condenser.

Construction

- The A/C compressor has adopted a swash plate type compressor.
- The A/C compressor consists of the following parts:

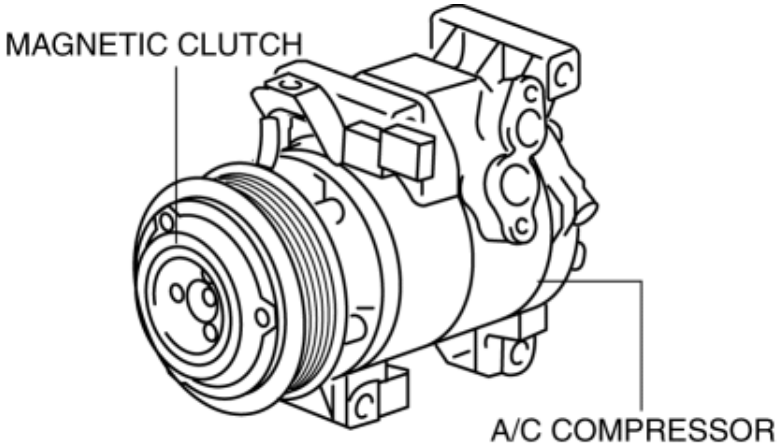

  - Shaft
  - Swash plate
  - Cylinder
  - Piston

Operation

- When the drive force from the engine is transmitted to the compressor shaft by the operation of

the magnetic clutch, the A/C compressor rotates the swash plate in the compressor. The rotation of the swash plate generates compression in the cylinder by the reciprocating movement of the piston.

1. When the piston moves downward, the suction valve opens and the refrigerant is discharged to the cylinder.

2. When the piston reaches the BDC, refrigerant charging is completed and the suction valve is closed.

3. When the piston moves upward, the refrigerant in the cylinder is compressed.

4. The compressed refrigerant presses open the discharge valve, and the high-temperature, highly pressurized refrigerant from the cylinder is discharged.

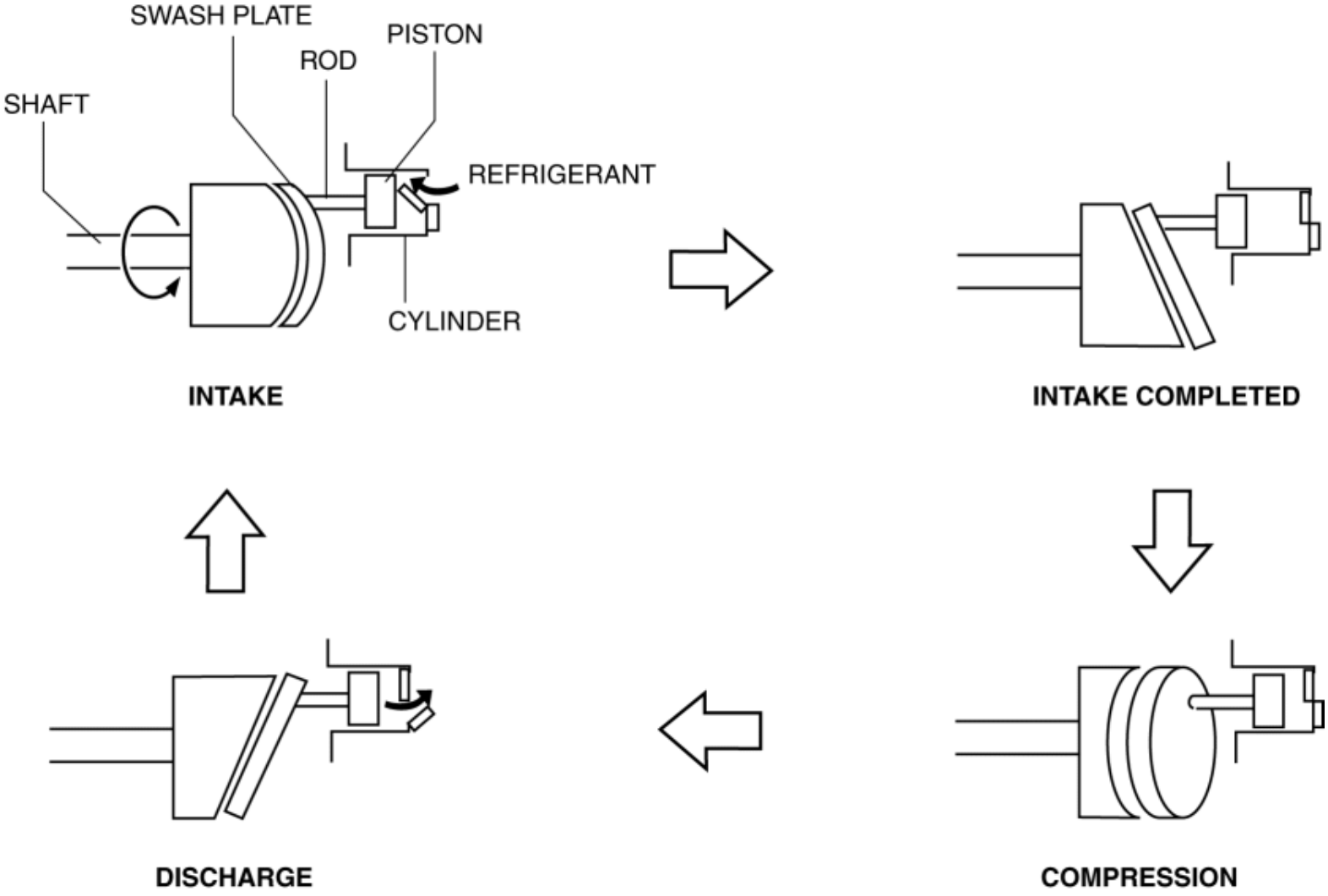

Fail-safe

- Function not equipped.

2014 - Mazda3 - HVAC

MAGNET CLUTCH

Purpose

- The magnetic clutch transmits the rotation force from the engine to the shaft in the A/C compressor.

Function

- The magnetic clutch engages or disengages the magnetic clutch and the A/C turns on or off by switching the power transmission from the engine.

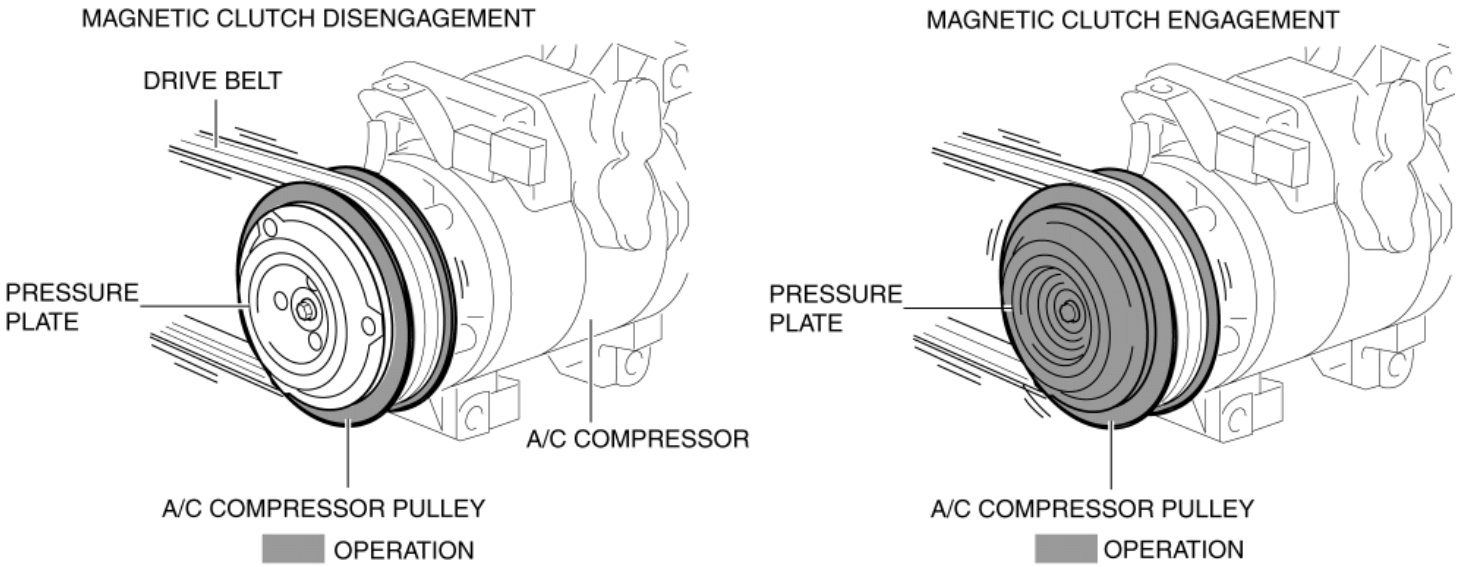

Construction

- The magnetic clutch is installed to the A/C compressor.
- The magnetic clutch consists of the following parts:

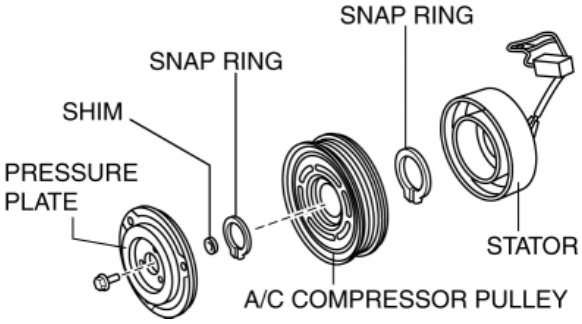

  - Pressure plate
  - A/C compressor pulley
  - Stator
  - Snap ring
  - Shim

Operation

Magnetic clutch disengagement

1. If there is no energization in the magnetic clutch stator from the A/C relay, the pressure plate cannot be engaged with the A/C compressor pulley because the magnetic clutch stator does not operate.

MAGNETIC CLUTCH DISENGAGEMENT

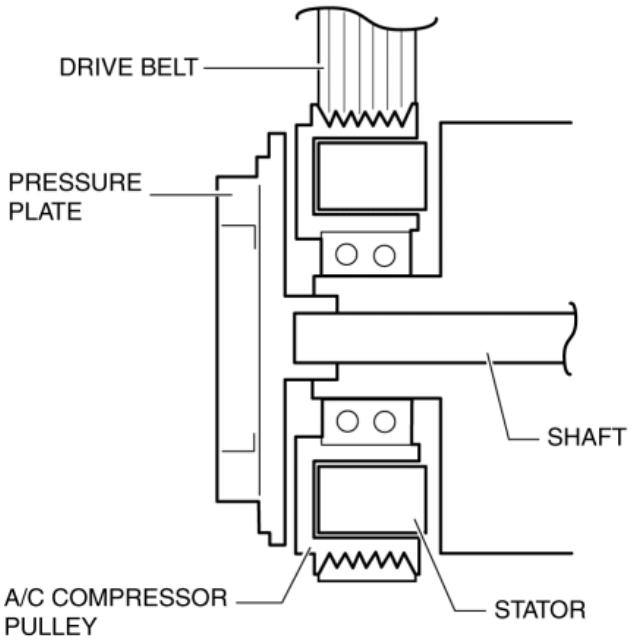

2. The rotation force from the drive belt is only transmitted to the A/C compressor pulley and the pulley spins.

Magnetic clutch engagement

1. If there is energization in the magnetic clutch stator from the A/C relay, the magnetic clutch stator operates and the pressure plate is engaged with the A/C compressor pulley.

MAGNETIC CLUTCH ENGAGEMENT

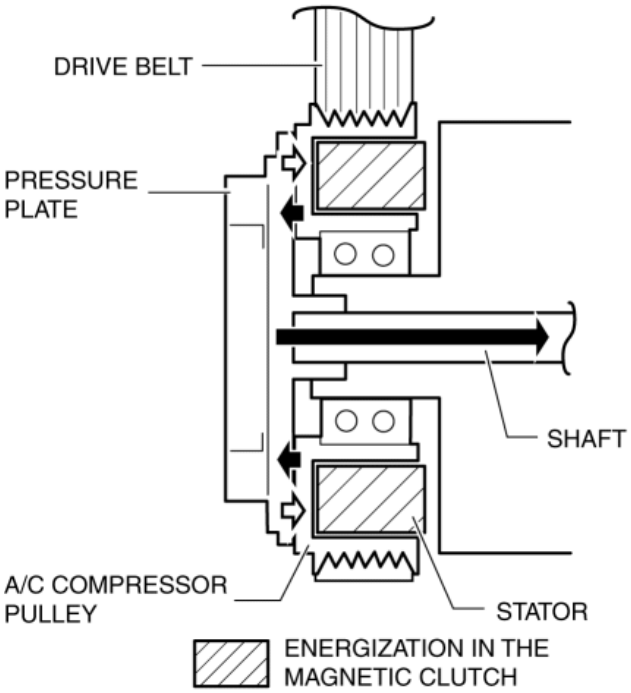

2. The rotation force from the drive belt is transmitted to the compressor shaft through the pressure plate from the A/C compressor

pulley.

Fail-safe

- Function not equipped.

2014 - Mazda3 - HVAC

EXPANSION VALVE

Purpose

- The expansion valve atomizes liquid refrigerant to facilitate cooling of the evaporator.

Function

- The expansion valve reduces the pressure of liquid refrigerant rapidly to facilitate vaporization of the atomized refrigerant at the evaporator, and adjusts the refrigerant amount sent into the evaporator.

Construction

- The expansion valve consists of the following parts:
    - Diaphragm
    - Temperature sensor
    - Shaft
    - Expansion valve body
    - Ball valve
    - Spring

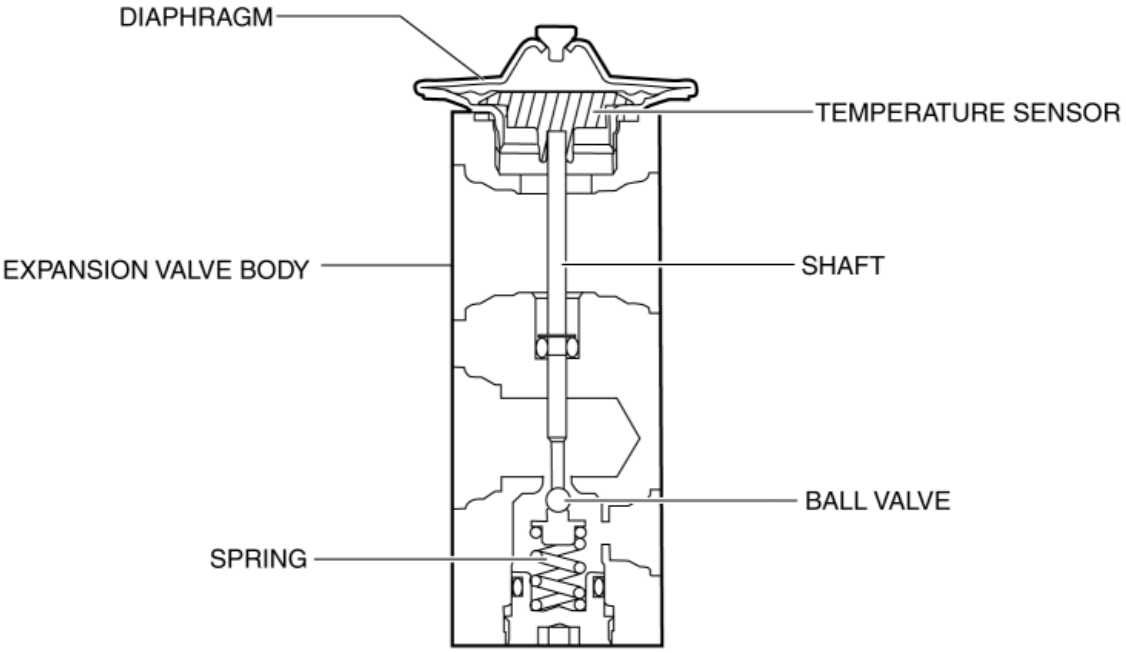

Operation

- Adjustment of the refrigerant amount supplied to the evaporator is performed by the ball valve opening angle in the expansion valve.
- The opening angle adjustment is performed according to the balance of the following forces:

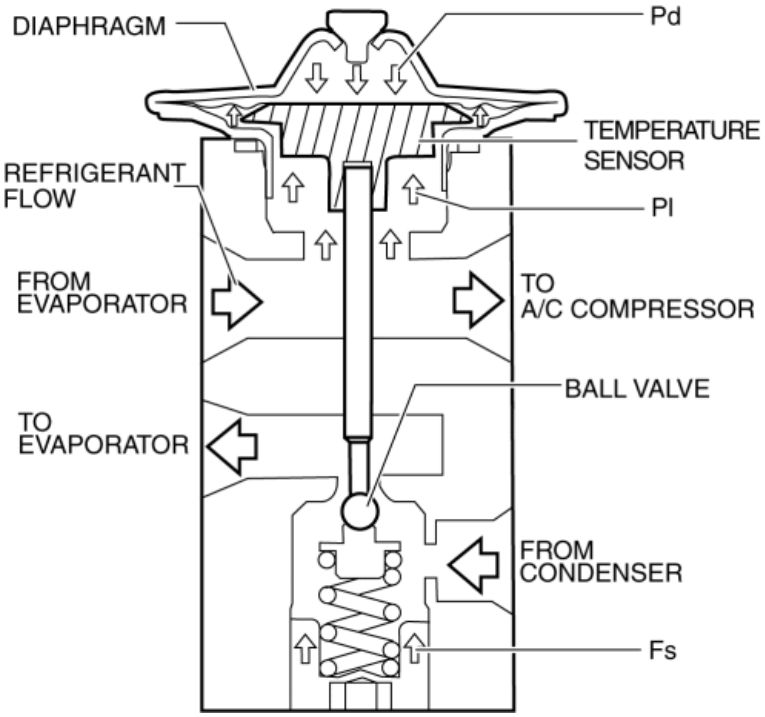

- Refrigerant pressure (Pd) in diaphragm
- Refrigerant gas pressure (PI) of evaporator under diaphragm
- Spring force (Fs) pushing up ball valve

- If the refrigerant gas temperature from the evaporator increases, the expansion valve increases the amount of refrigerant according to the following operations:

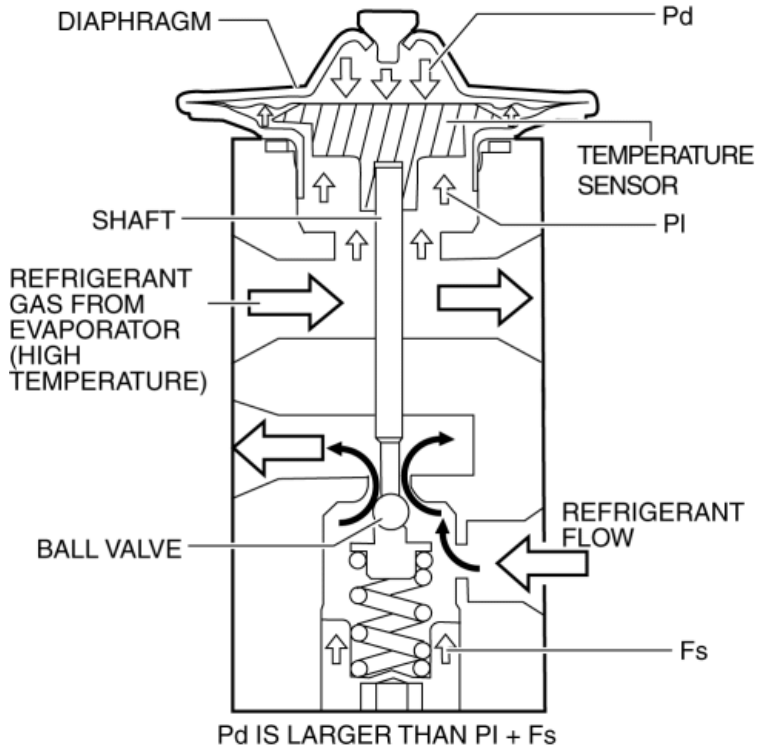

  - The temperature of the temperature sensor tightly sealed against the diaphragm increases.
  - The refrigerant in the diaphragm warms and the Pd increases.
  - If this Pd increases more than PI + Fs, the diaphragm is pressed down.
  - The shaft installed to the temperature sensor end presses down the ball valve.
  - The amount of refrigerant is increased.

- If the refrigerant gas temperature from the evaporator decreases, the expansion valve decreases the amount of refrigerant flow according to the following operation:

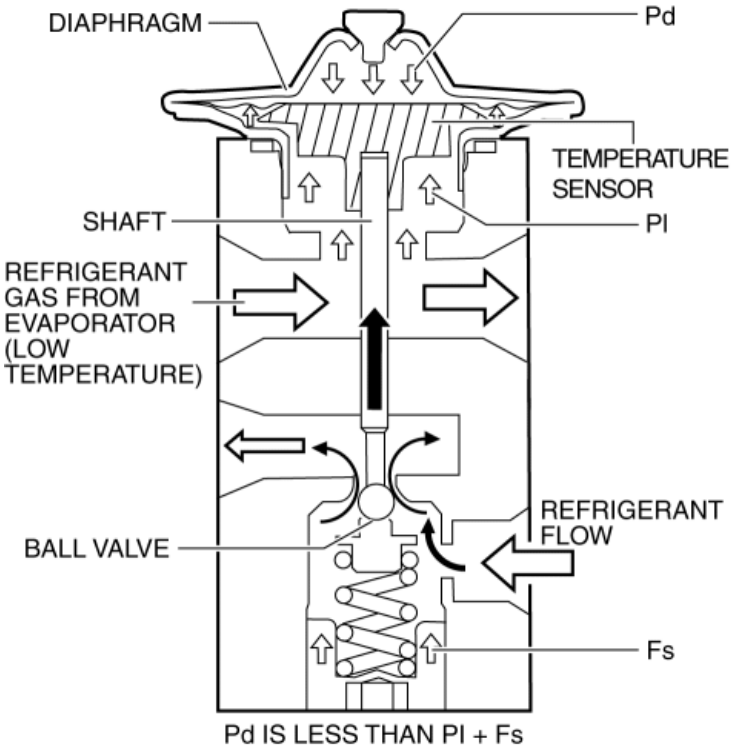

  - The temperature of the temperature sensor tightly sealed against the diaphragm decreases.
  - The refrigerant temperature in the diaphragm decreases and the Pd decreases.
  - The Pd decreases less than PI + Fs.
  - The ball valve installed to the temperature sensor end is pressed up.
  - The amount of refrigerant is decreased.

Fail-safe

- Function not equipped.

2014 - Mazda3 - HVAC

EVAPORATOR

Purpose

- The evaporator cools the passing air.

Function

- The evaporator vaporizes the atomized refrigerant flowing internally, and the air passing through the evaporator is cooled by the release of latent heat. The moisture in the air is condensed at this time and dehumidified air is blown into the cabin.

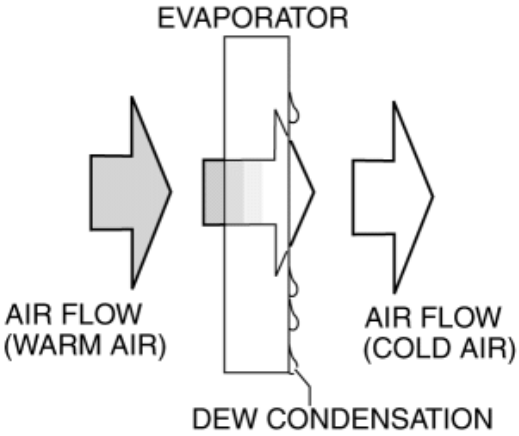

Construction

- The evaporator consists of the tube which passes refrigerant, and the heat radiation fin.

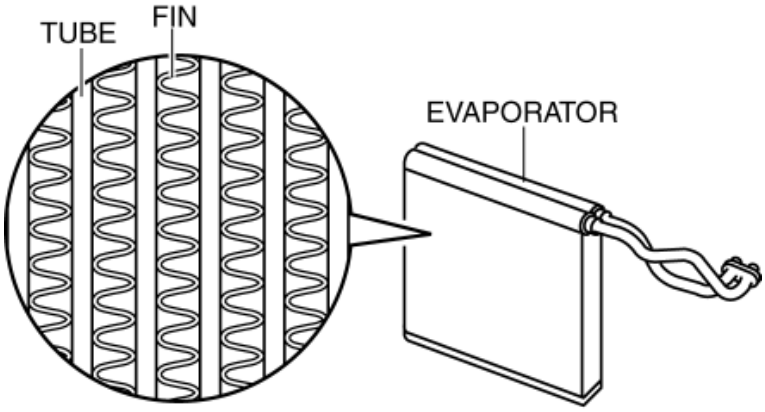

- The cooling medium flow pattern shown in the figure has been adopted for the evaporator.

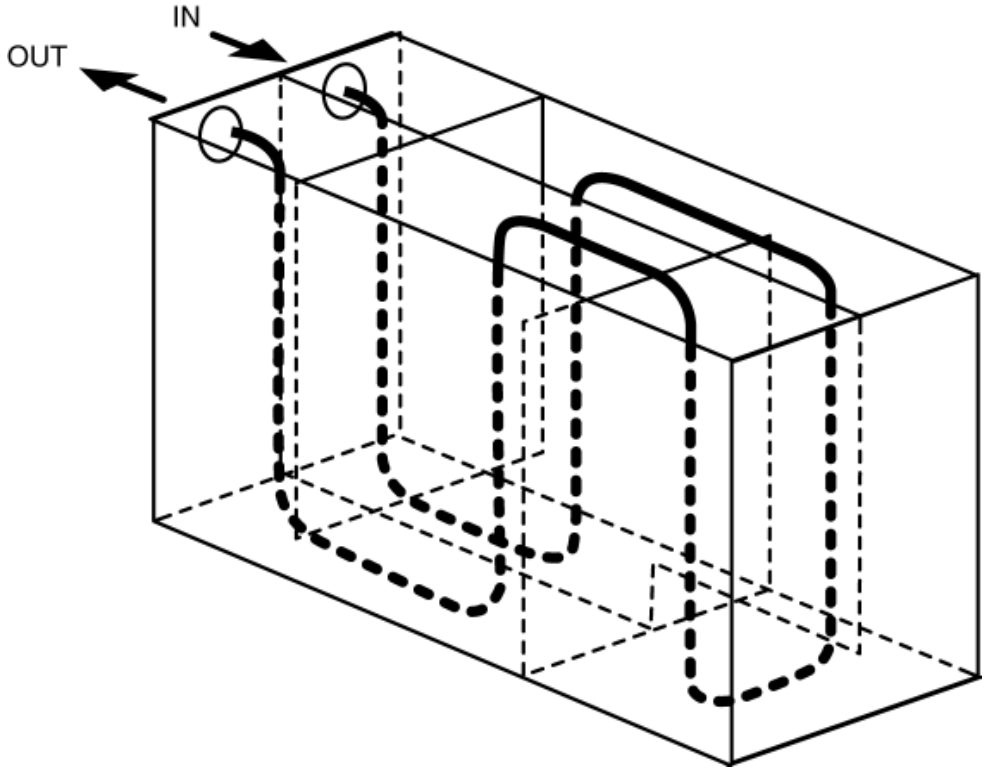

Operation

- The atomized refrigerant sent from the expansion valve is captured by heat from the outside. As a result, the evaporator is cooled.
- The air blown by the blower motor is cooled by heat exchange when it passes the heat radiation fin of the heater core.

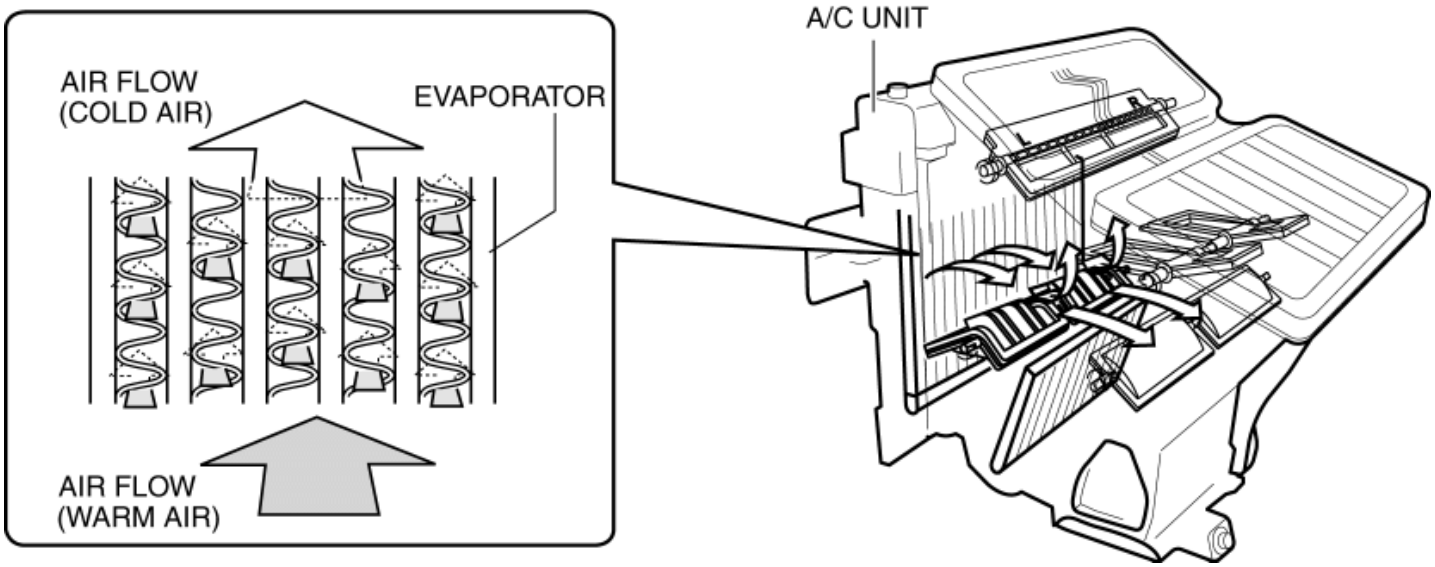

Fail-safe

- Function not equipped.

EVAPORATOR

2014 - Mazda3 - HVAC

CONDENSER

Purpose

- The condenser cools the high-temperature, highly pressurized refrigerant.

Function

- The condenser cools the high-temperature, highly pressurized gaseous refrigerant compressed by the A/C compressor using the outside air, and changes it to liquid refrigerant.

Construction

- The condenser is installed to the front of the radiator.
- The condenser consists of the tube which passes refrigerant, and the heat radiation fin.

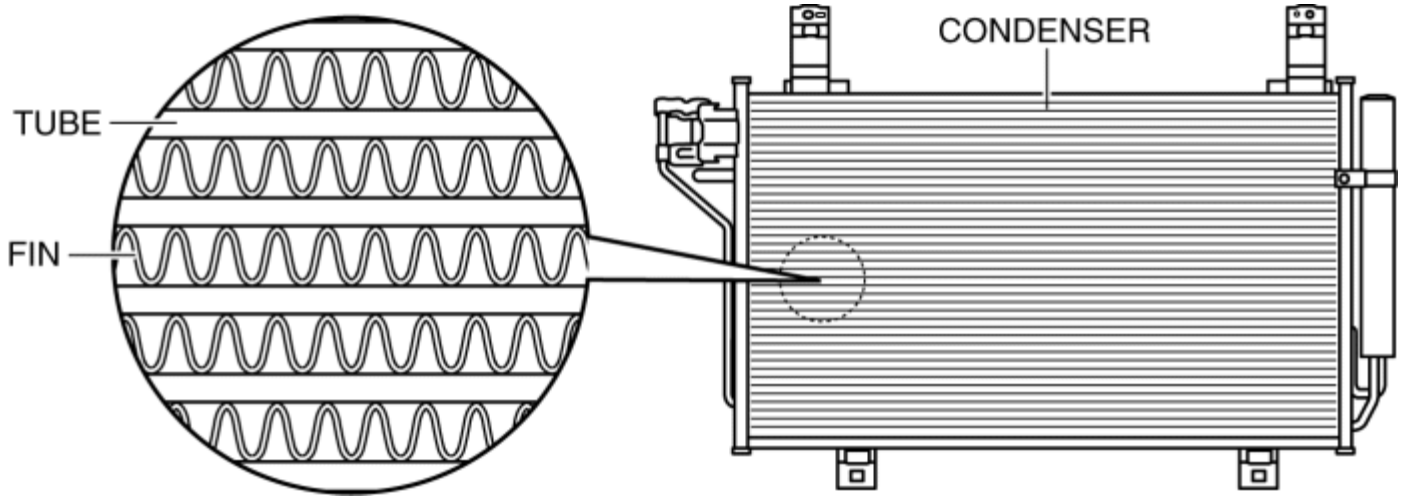

- A sub-cooling condenser has been adopted.

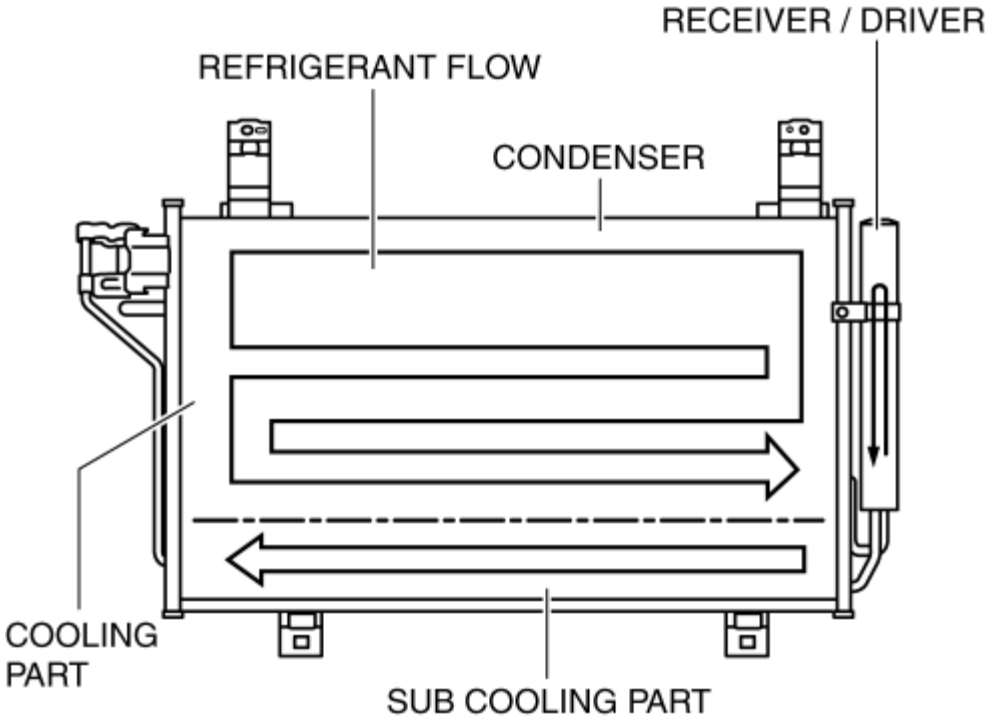

- The sub-cooling condenser is integrated with the multi-flow condenser and the receiver driver.
- The sub-cooling condenser separates the refrigerant, cooled once by the condenser, into vapor and liquid using the receiver/drier, and by returning it to the sub-cooling part of the condenser again to cool.
- As a result, liquefaction of the refrigerant is promoted and cooling performance is improved.

Operation

- The high-temperature, highly pressurized gaseous refrigerant sent from the A/C compressor passes through the tube in the condenser.
- When the air blown from the outside is exposed to the heat radiation fin, the heat of the refrigerant is captured by heat exchange, and the refrigerant changes from a gas to a liquid.
- The liquid refrigerant is sent to the expansion valve via the receiver/drier.

Fail-safe

- Function not equipped.

2014 - Mazda3 - HVAC

RECEIVER/DRIER

Purpose

- The receiver/drier supplies a stable amount of purified, complete liquid refrigerant to the expansion valve.

Function

- The receiver/drier temporarily stores refrigerant and extracts only liquid refrigerant. As a result, outflow to the expansion valve of refrigerant, which could not be liquefied completely by the condenser, is prevented, and the discharge pulsation of the A/C compressor is stopped.

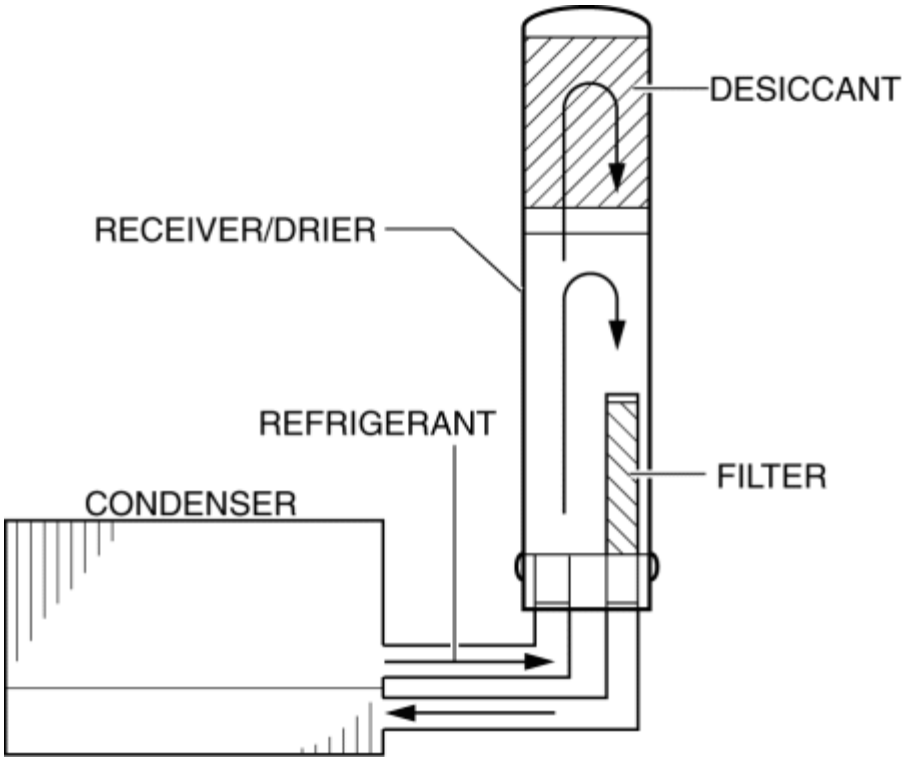

- The refrigerant is purified and moisture is eliminated by desiccant in the receiver/drier and strainer.

Fail-safe

- Function not equipped.

RECEIVER/DRIER

2014 - Mazda3 - HVAC

REFRIGERANT LINE

Purpose

- The system piping connects each related part of the refrigerant system.

Construction

- Block-type piping has been adopted to the pipe connection, improving the efficiency of piping related servicing.
- The pipes in the piping system consist of the following parts:
    - Cooler hose (HI)
    - Cooler hose (LO)
    - Cooler pipe
- The pipes in the piping system are made of aluminum alloy and the hoses are made of rubber (flexible hose).
- A high-pressure charging valve is located on the cooler pipe (HI) and a low-pressure charging valve is located on the cooler pipe (LO).

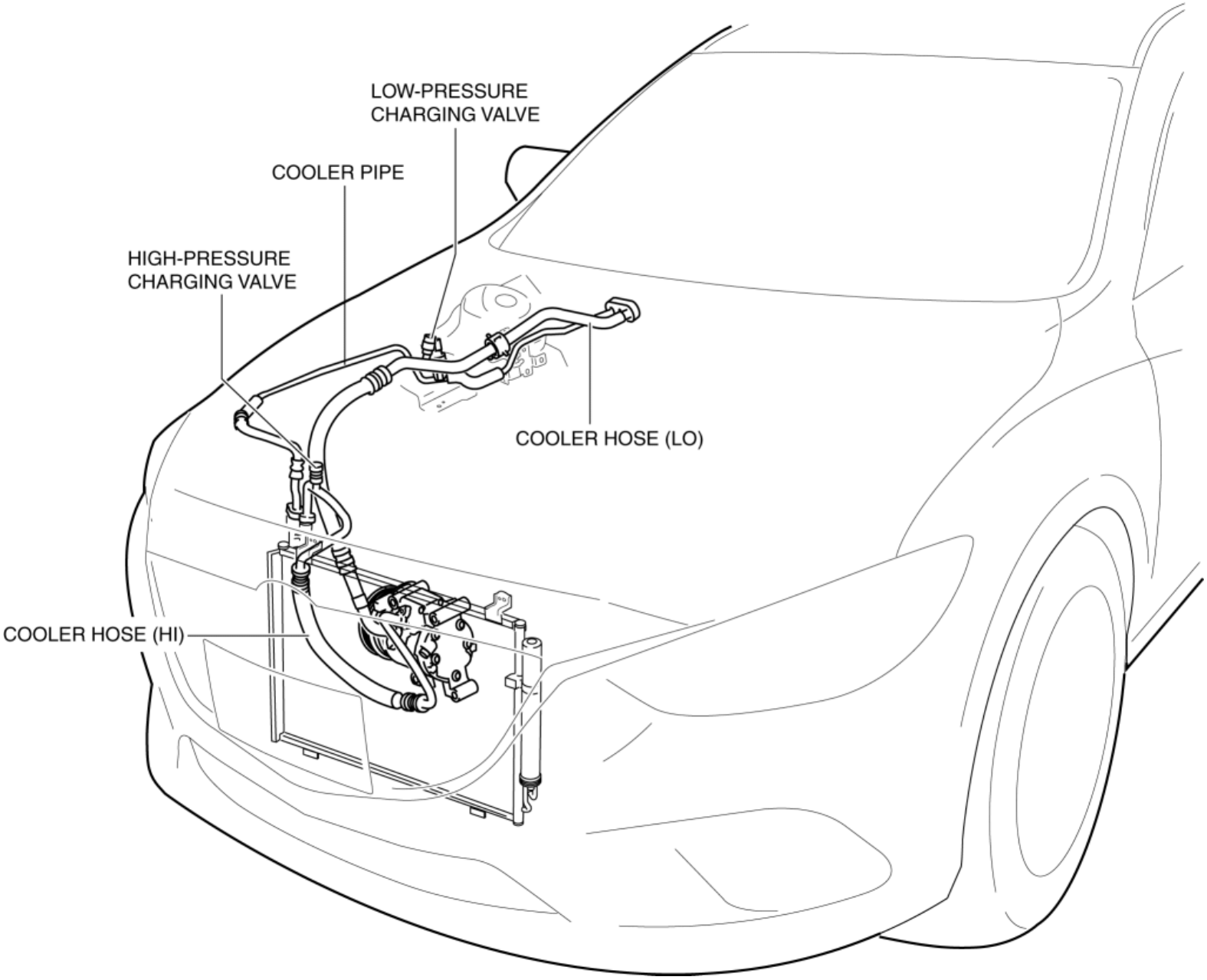

Fail-safe

- Function not equipped.

2014 - Mazda3 - HVAC

HEATER SYSTEM

Outline

- The heater system warms the heater core using the engine coolant warmed by the engine operation.

Construction

- The heater system consists of the following parts.

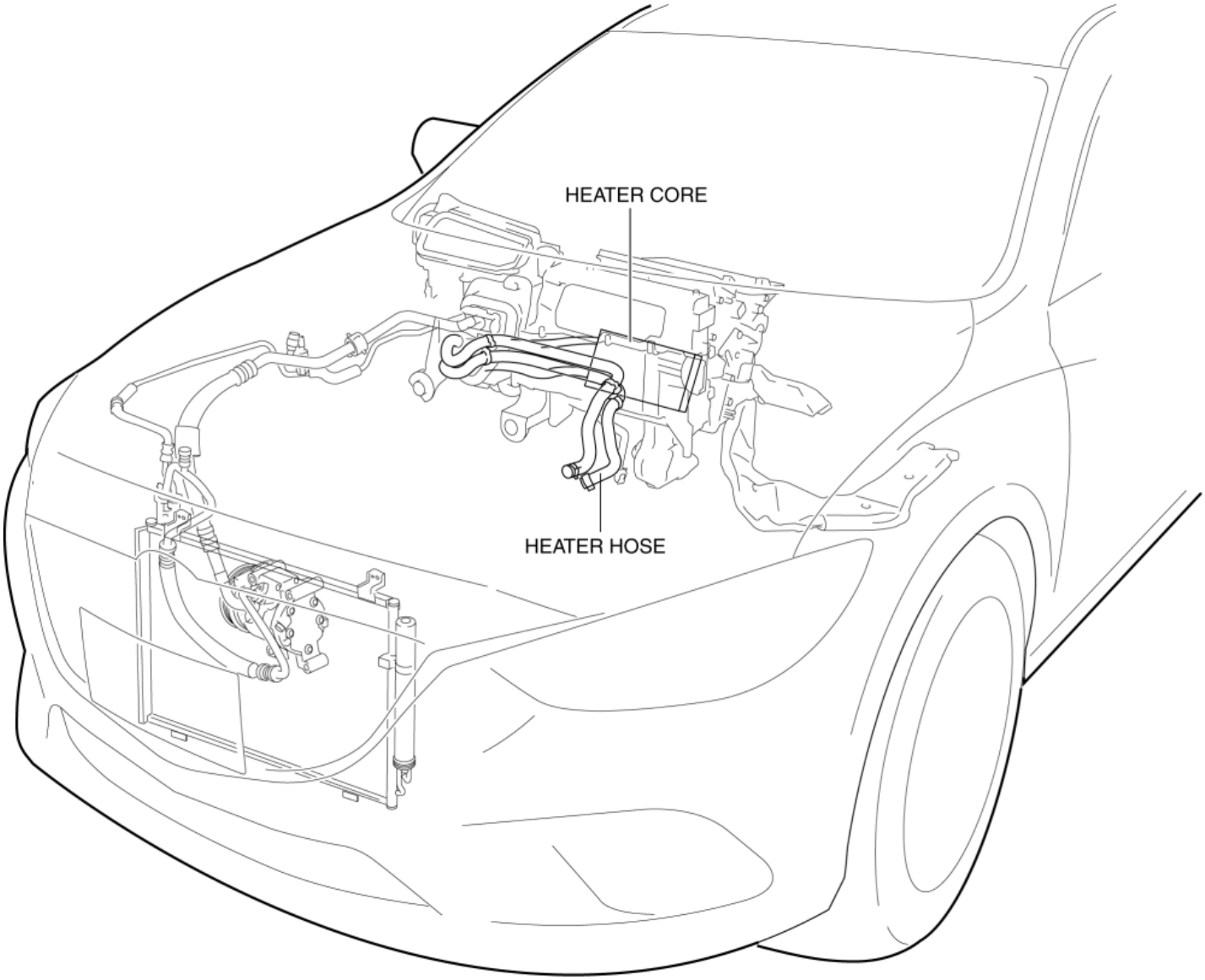

Function

- The heater system shuttles a portion of the engine coolant into the heater core.

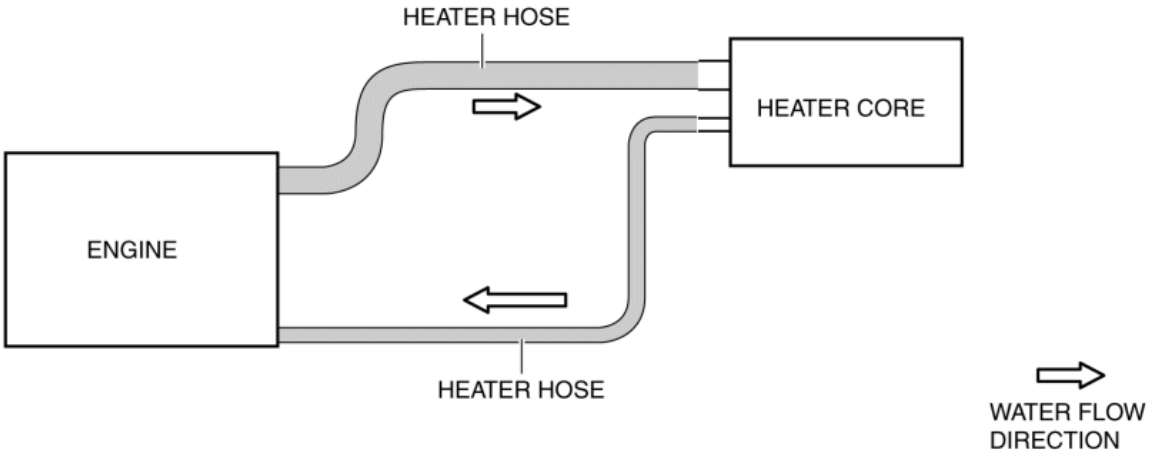

- For the engine coolant flow, refer to the COOLING SYSTEM. (See **COOLING SYSTEM [SKYACTIV-G 2.0, SKYACTIV-G 2.5]**.)

Operation

- The engine coolant warmed by the engine heat is sent to the heater core.
- The air blown by the blower motor is warmed up by heat exchange when it passes through the heat radiation fin of the heater core.

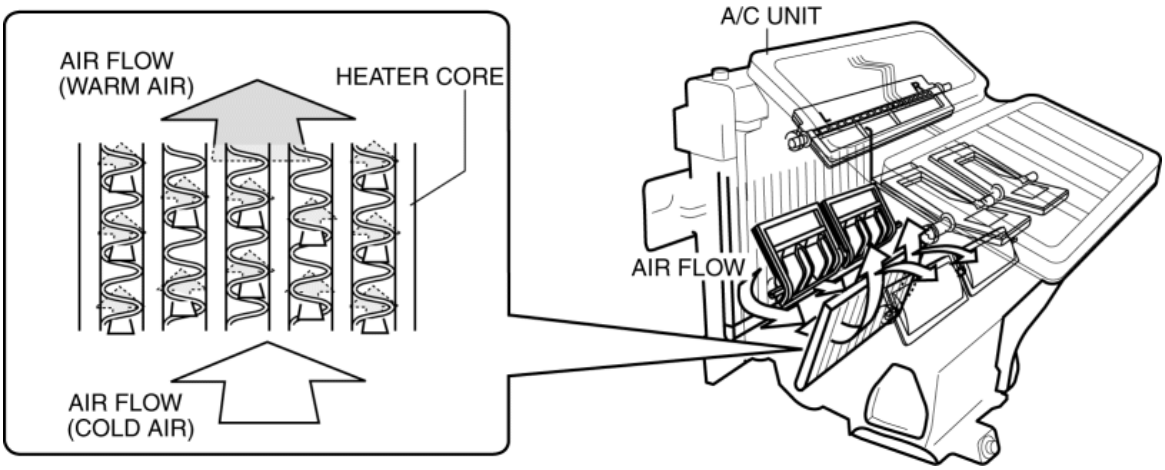

2014 - Mazda3 - HVAC

HEATER CORE

Purpose, Function

- A portion of the engine coolant is taken into the heater core to heat the air passing through the heater core.

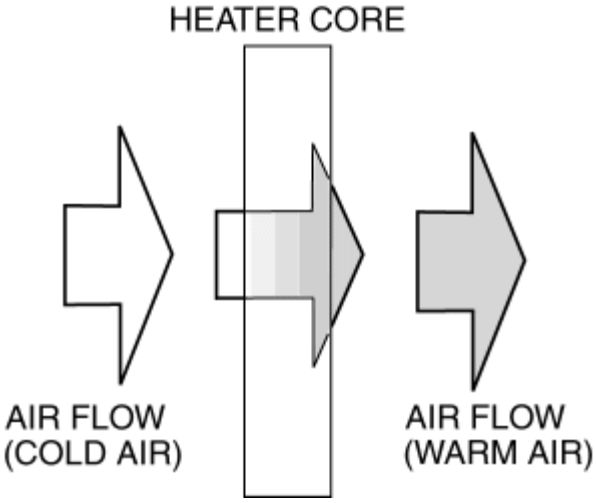

Construction

- The heater core consists of a tube which passes engine coolant, and the heat radiation fin.

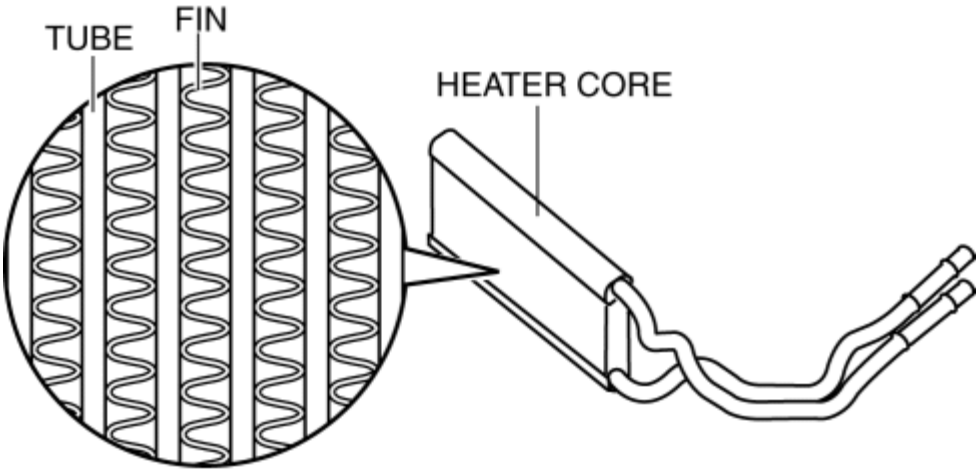

Operation

- For the operation, refer to HEATER SYSTEM. (See **HEATER SYSTEM**.)

Fail-safe

- Function not equipped.

2014 - Mazda3 - HVAC

FULL-AUTO AIR CONDITIONER SYSTEM [FULL-AUTO AIR CONDITIONER]

Outline

- The climate control unit performs the following controls based on the signals from each switch/dial and the sensor.

Basic control	Control description	Correction control
Airflow temperature control	Airflow temperature automatic control	• MAX HOT and MAX COLD correction • Engine coolant temperature correction
Airflow volume control	Airflow volume automatic control	• Engine coolant temperature correction (warm-up correction) • Mild start correction • MAX HOT and MAX COLD correction • Defroster correction • Start-up window fogging prevention correction • Starting compensation correction • Start-up burnt-out prevention function
	Airflow volume manual control	• Defroster correction • Starting burnt-out prevention function
Airflow mode control	Airflow mode automatic control	• Engine coolant temperature correction (warm-up correction)
	Airflow mode manual control	—
Air intake control	Air intake automatic control	• Defroster correction • Ambient temperature correction
	Air intake manual control	• Defroster correction
A/C compressor control	A/C compressor automatic control	• Defroster correction
	A/C compressor manual control	
	A/C cut-off control	

Supplementary function
Fail-safe function
Sensor signal delay function
On-board diagnostic function (See **ON-BOARD DIAGNOSTIC**.)

Function

Airflow temperature control

- The air mix actuator is driven and the air mix door position is changed according to the set temperature and the vehicle environment.
- The climate control unit calculates the air mix actuator opening angle characteristic based on the set temperature, solar radiation amount, and airflow mode.
- The air mix actuator opening angle characteristic is set lower as the sunlight intensity increases.

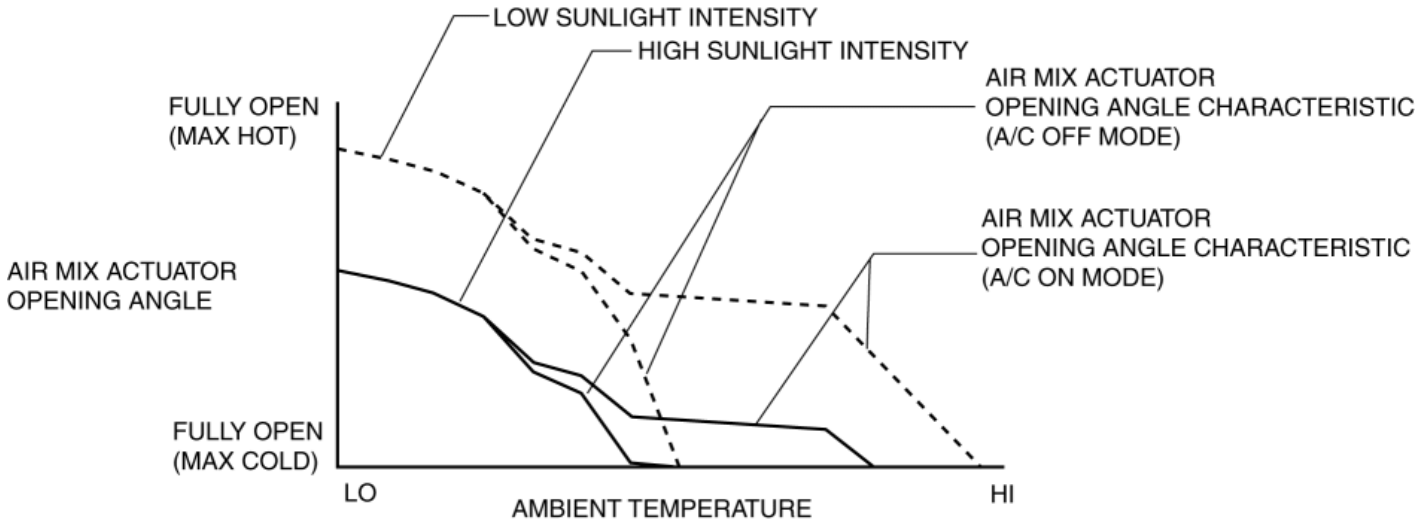

- The airflow temperature is automatically controlled continuously.
- The airflow temperature control performs the following corrections:
  - MAX HOT and MAX COLD correction
  - Engine coolant temperature correction

MAX HOT and MAX COLD correction

- Under the MAX HOT and MAX COLD correction, the air mix actuator opening angle is fixed at fully open when the temperature is set to **29.0/84**, and fixed at fully closed when the temperature is set to **15.0/60**.

Engine coolant temperature correction

- The engine coolant temperature correction prevents cold air from passing through the air vents after the engine is started in winter.
- When the engine coolant temperature is lower than the specified value, the air mix actuator opening angle is corrected to the HOT side.
- The engine coolant temperature correction is not performed when the ambient temperature is **15 °C {59 °F}** or more.

Airflow volume control

- The airflow volume control changes the operation of the blower motor according to the operations of the airflow volume control dial or temperature control dial and the vehicle environment to change the airflow volume.
- The airflow volume control has automatic and manual controls.
- The airflow volume automatic control performs the following correction:
  - Engine coolant temperature correction (warm-up correction)
  - Mild start correction
  - MAX HOT and MAX COLD correction
  - Start-up window fogging prevention correction
  - Starting compensation correction

Defroster correction

- Start-up burn-out prevention function

Airflow Volume Automatic Control

- The climate control unit calculates the blower motor applied voltage characteristic based on the set temperature, ambient temperature, and solar radiation amount.
- The climate control unit compares the blower motor applied voltage characteristic with the target temperature (calculated control value T3) and then determines the blower motor applied voltage (AUTO voltage).
- Calculated control value T3 is the target cabin temperature as set by the climate control unit based on differences between the set temperatures and temperatures input from the sensors.
- Calculated control value T3 is constantly calculated according to the changes in the set temperature and the signals input from the sensors.

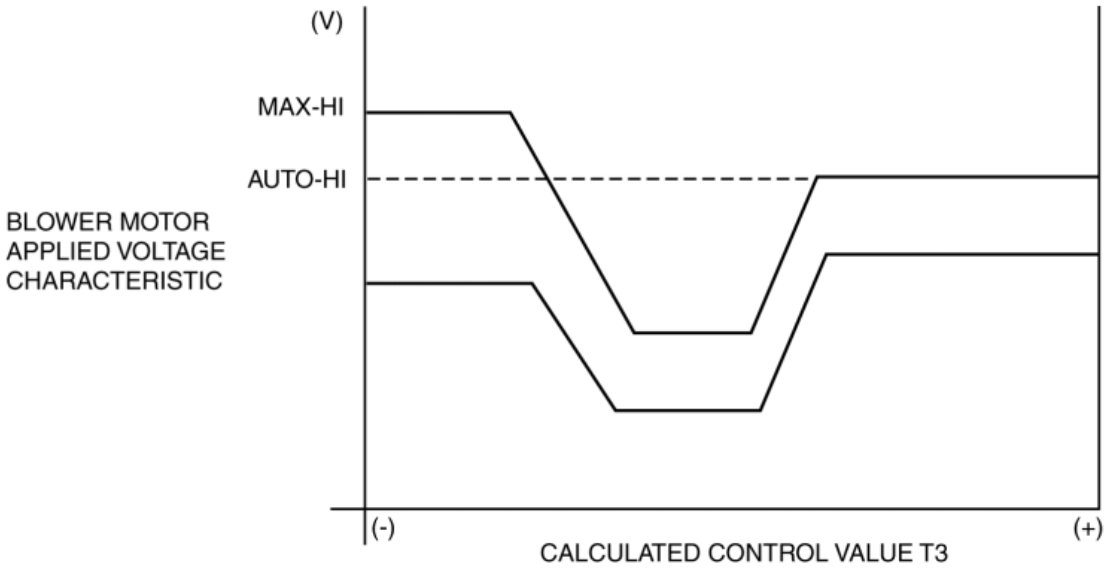

Airflow Volume Manual Control

- The climate control unit changes the blower fan motor applied voltage in seven steps according to the operation of the airflow volume control switch or dial.

Airflow volume control dial	Blower motor applied voltage
1st	3.2 V
2nd	4.8 V
3rd	6.4 V
4th	7.9 V
5th	10.1 V
6th	11.2 V
7th	12.5 V

Engine coolant temperature correction (warm-up correction)

- The engine coolant temperature correction (warm-up correction) prevents high volume of cold air from passing through the air vents after engine start in winter.
- The engine coolant temperature correction (warm-up correction) controls the blower motor applied voltage according to the increase in the engine coolant temperature.

The engine coolant temperature correction is not performed during defroster correction, or when the cabin temperature is **20 °C {68 °F}** or more and the airflow mode is in VENT mode.

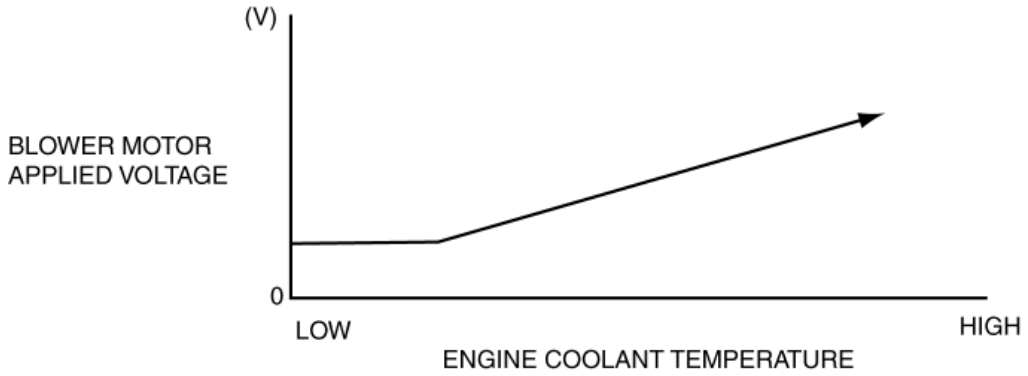

Mild start correction

- The mild start correction prevents a high volume of warm air from coming out of the air vents when the blower motor is started in summer.
- The mild start correction limits the blower motor applied voltage for **3 s** after the blower motor is started.
- The mild start correction is not performed when the cabin temperature is **20 °C {68 °F}** or less or the airflow is in any mode other than VENT.

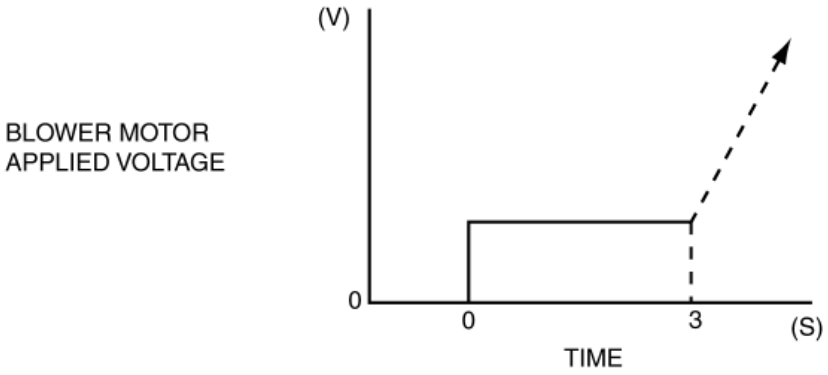

MAX HOT and MAX COLD correction

- The MAX HOT and MAX COLD correction fixes the blower motor applied voltage as indicated in the table when the temperature is set to MAX HOT or MAX COLD.
- The MAX HOT correction is not performed during engine coolant temperature correction.

Correction name	Set temperature	Blower motor applied voltage
MAX HOT correction	29.0/84	12.1 (V): AUTO-HI
MAX COLD correction	15.0/60	14.6 (V): MAX-HI

Start-up window fogging prevention correction

- The start-up window fogging prevention correction prevents the windows from easily fogging when the following conditions are all met:
  - Right after engine start
  - Heater is operated
  - Air is blowing from vents for defrosting
- The start-up window fogging prevention correction fixes the blower motor applied voltage at **0 V** for **6 s** after the ignition is switched ON.
- The start-up window fogging prevention correction is not performed when the airflow mode is in any mode other than HEAT, DEF/HEAT and defroster.

Starting compensation correction

- When the blower motor is started-up from the stopped status at the lowest speed (**3.2 V**), the starting compensation correction fixes the blower motor applied voltage at **4.4 V** for **2 s** to stabilize blower motor start-up operation.

Defroster correction

- When the defroster switch is turned on, the defroster correction adds a correction (**+2 V**) to the blower motor applied voltage to increase airflow volume.

Start-up burn-out prevention function

- The start-up burn-out prevention function prevents the blower motor from being burnt out because of excess current.
- When the blower motor is started-up from the stopped status with a blower motor applied voltage of **4.4 V** or more, the blower motor applied voltage is fixed at **4.4 V** for **1 s**.

Airflow mode control

- The airflow mode control drives the airflow mode actuator according to the mode switch, defroster switch, and the vehicle environment and switches the position of the airflow mode door.
- The airflow mode control has automatic and manual controls.
- The airflow mode automatic control performs the following correction:
    - Engine coolant temperature correction (warm-up correction)

Airflow mode automatic control

- The climate control unit determines the airflow mode based on the current air mix actuator opening angle and solar radiation amount.

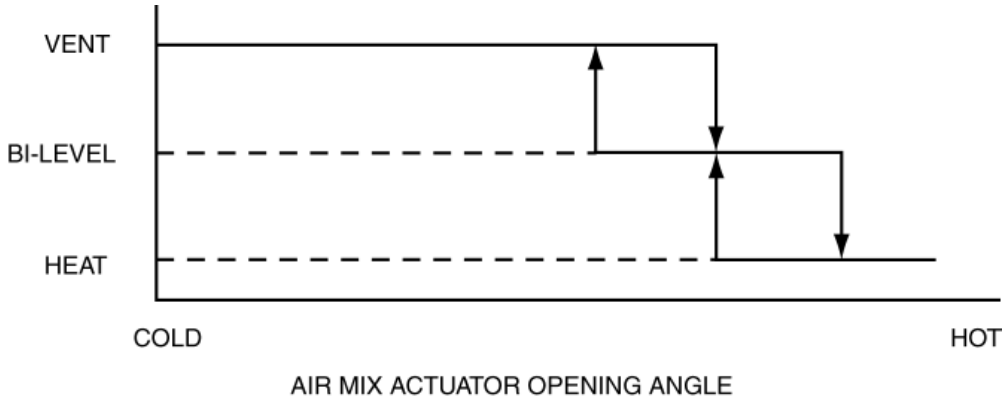

- Determined value used for the airflow mode is changed according to the signal from the solar radiation sensor.

Airflow mode manual control

- The climate control unit switches the airflow mode based on the MODE switch operation.

Airflow mode	Operation switch	Air vent
VENT	Mode switch	CENTER VENT, SIDE VENT
BI-LEVEL		CENTER VENT, SIDE VENT, FRONT HEAT, REAR HEAT
HEAT		FRONT HEAT, REAR HEAT, SIDE DEMISTER (low volume), DEFROSTER (low volume), SIDE VENT (low volume)
DEF/HEAT		FRONT HEAT, REAR HEAT, SIDE DEMISTER, DEFROSTER, SIDE VENT (low volume)
DEFROSTER	DEFROSTER switch	SIDE DEMISTER, DEFROSTER, SIDE VENT (low volume)

Engine coolant temperature correction (warm-up correction)

- The engine coolant temperature correction (warm-up correction) prevents cold air from passing through the lower vents after

engine start in winter.

- The engine coolant temperature correction (warm-up correction) switches the airflow mode according to the increase in the engine coolant temperature.

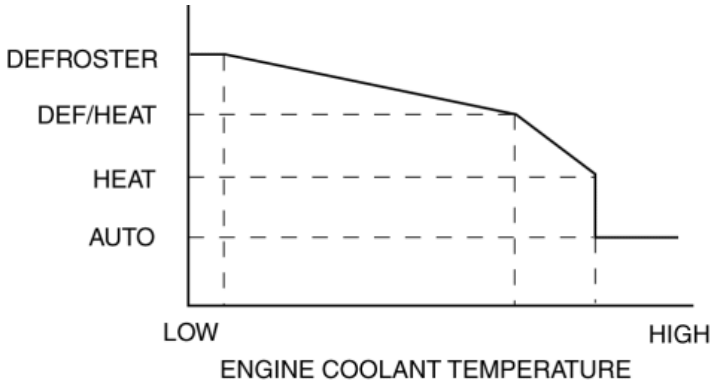

Air intake control

- The air intake control drives the air intake actuator and switches the air intake door position according to the operations of the REC, FRESH and defroster switches and the vehicle environment.
- The air intake control has automatic and manual controls.
- The air intake automatic control performs the following correction:
  - Defroster correction
  - Ambient temperature correction

Air intake automatic control

- The climate control unit performs the control as follows so that the cabin temperature lowers quickly according to the cooling conditions.

1. Calculates the cabin temperature value based on the ambient temperature and sunlight intensity.
2. Compares the calculated cabin temperature value and current cabin temperature.
3. Determines the air intake mode.

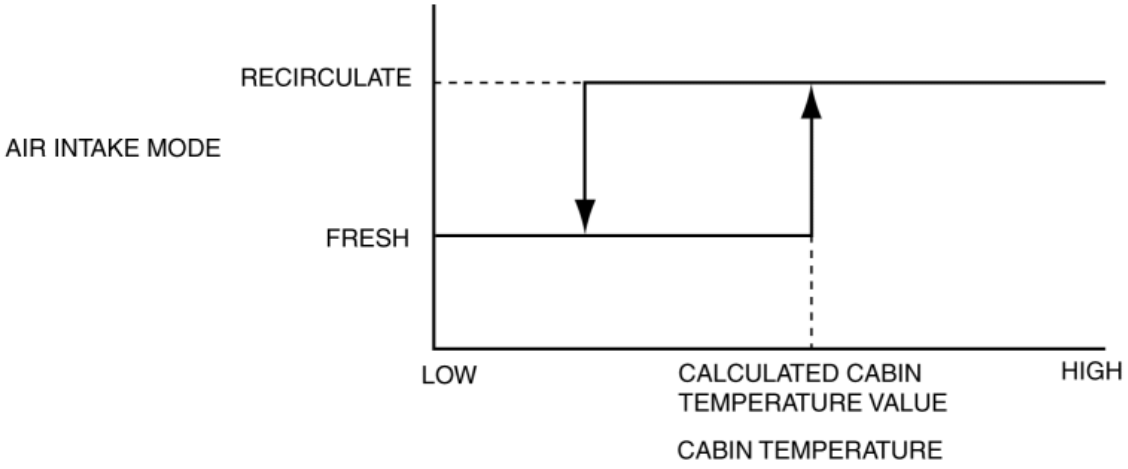

Air intake manual control

- The climate control unit switches the air intake mode based on the REC/FRESH switch operation.

Air intake mode	REC switch operation
FRESH	Fixed to FRESH when the FRESH switch is turned on during REC mode
REC	Fixed to REC when the RECIRCULATE switch is turned on during FRESH mode

REC mode control under severe heat

- When the vehicle is driven at a very low speed with the A/C on under a severe heat condition, the climate control unit may change the air intake mode from FRESH to REC automatically.
- Due to this, load to the A/C compressor is reduced.
- When the air intake mode is switched to REC, the indicator on the REC switch illuminates.

Defroster correction

- The defroster correction improves the effect of defrosting.
- The air intake is fixed at FRESH when the defroster switch is turned on.
- The air intake is fixed at FRESH even if it has been set to REC manually.

Ambient temperature correction

- When the ambient temperature is **15 °C {59 °F}** or less, the air intake is fixed at FRESH to prevent window fogging.

A/C compressor control

- The A/C compressor control turns the A/C compressor on/off based on the climate control unit operation and signals from each sensor.
- The A/C compressor control has automatic and manual controls.
- The A/C compressor automatic control performs the following correction:
  - Defroster correction

A/C compressor automatic control

- The climate control unit determines the A/C ON/OFF mode based on the ambient temperature.

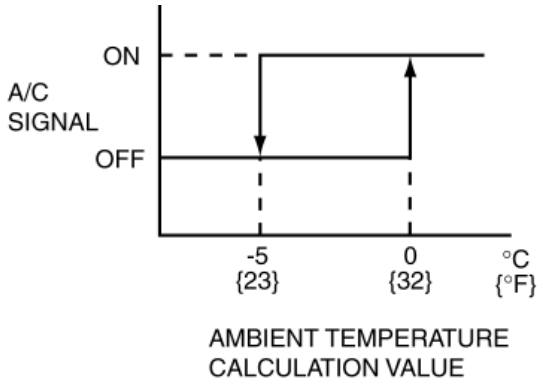

- The climate control unit determines the A/C signal on/off according to the air conditioner operation such as A/C ON mode (A/C switch ON) or AUTO mode (AUTO switch ON).
- In A/C ON mode, the A/C signal (magnetic clutch) on/off is determined based on the ambient temperature and the temperature of the air passing through the evaporator.

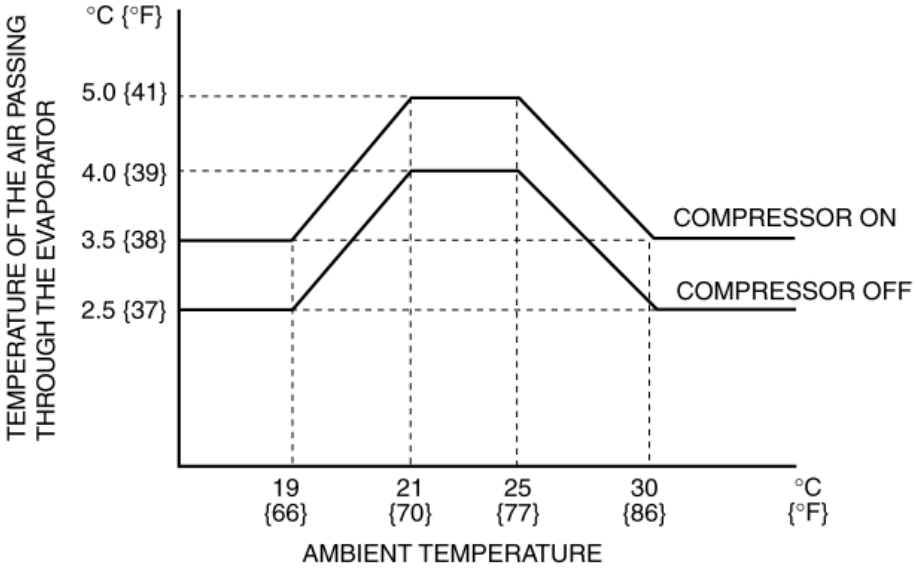

- In AUTO mode, the A/C signal (magnetic clutch) on/off is determined based on the ambient temperature calculation value and the temperature of the air passing through the evaporator.

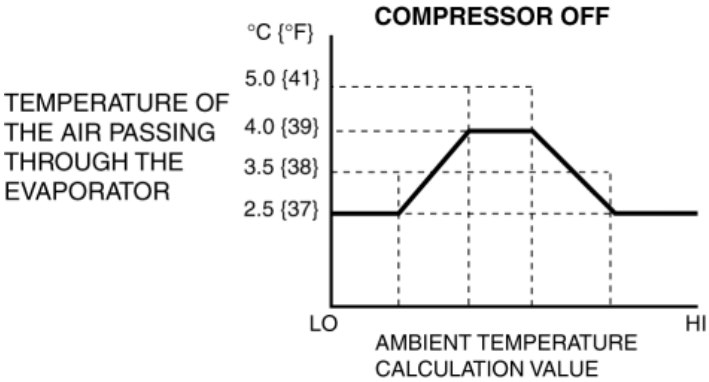

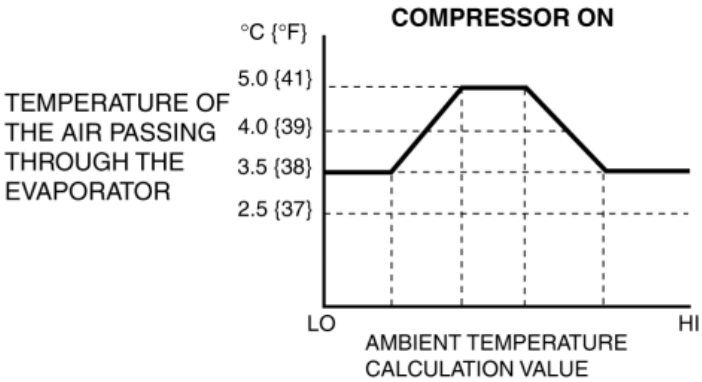

- The ambient temperature calculation value is calculated based on the ambient temperature, set temperature, cabin temperature, and sunlight intensity.
- When the ambient temperature is low, the A/C signal (magnetic clutch) OFF temperature is set lower to prevent window fogging.

A/C compressor manual control

- The climate control unit switches the A/C ON/OFF mode according to the A/C switch operation.

A/C mode	Operation condition
A/C ON mode (A/C display)	Fixed in A/C mode.
A/C OFF mode (No display)	Fixed in A/C OFF mode.

Defroster correction

- When the defroster switch is turned on, the system is switched to A/C ON mode to improve defogging.

A/C cut-off control

- Controls the A/C operation by switching the A/C relay on/off at the optimal timing according to engine operation conditions. (See **A/C CUT-OFF CONTROL [SKYACTIV-G 2.0, SKYACTIV-G 2.5]**.)

Sensor Signal Delay Function

- The amount of solar radiation, and the ambient and cabin temperatures may change due to factors such as direct and intermittent sunlight (traveling through a city or a highway tunnel), or radiant heat from the ground under parked vehicles as

well as the opening and closing of doors.

- If control was performed based exactly on these variations, the air conditioning function would be negatively affected and smooth control could not occur.
- In order to prevent this, the climate control unit delays and smooths the input signals for solar radiation, and the ambient and cabin temperature as shown in the following figure, realizing stable control.

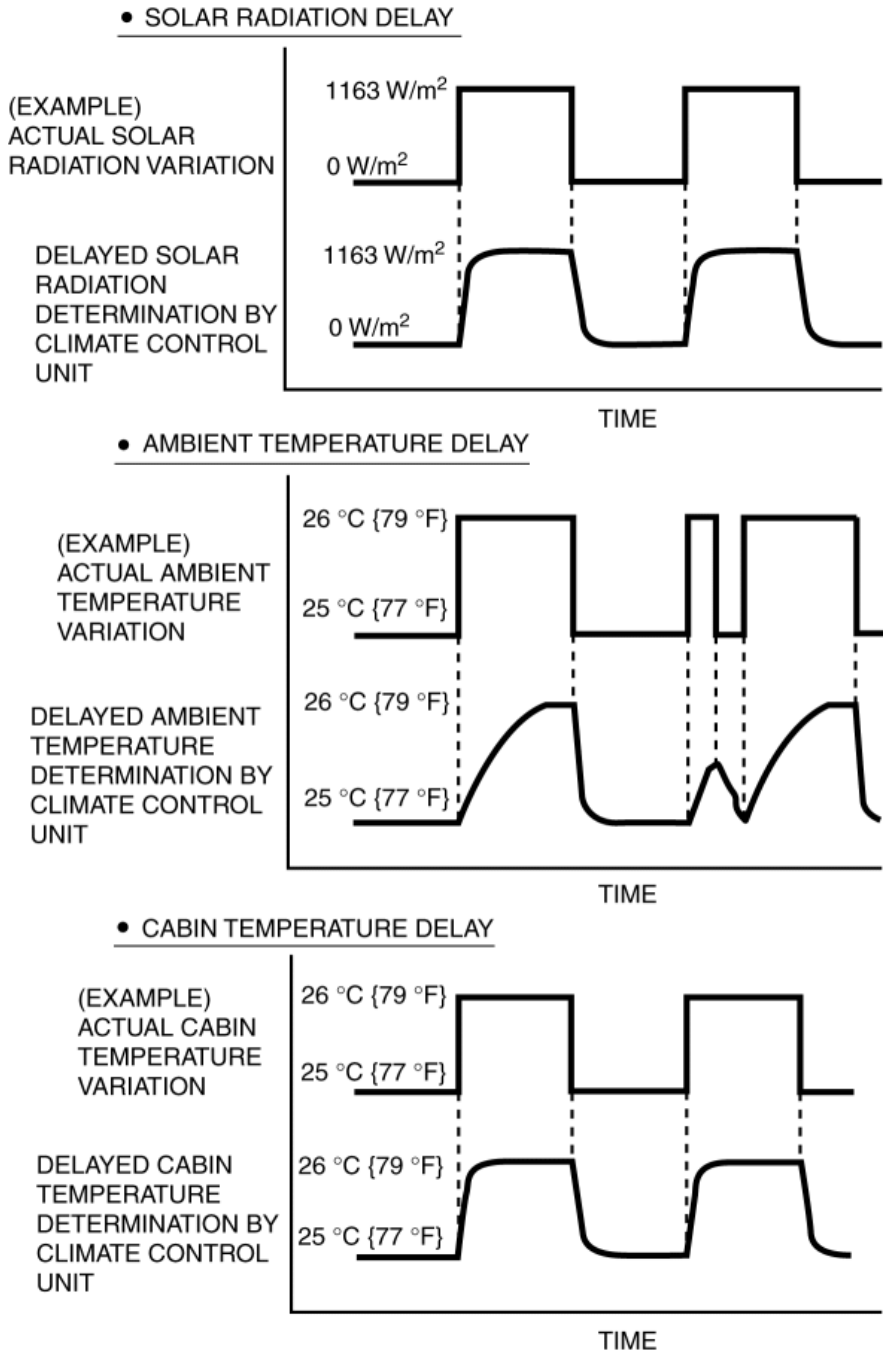

- When the engine is restarted after being temporarily stopped, the ambient temperature sensor may detect a temperature higher than the actual ambient temperature.
- To prevent this, if the engine coolant temperature exceeds **55 °C {131 °F}**, control of each system is performed based on the ambient temperature data before the engine was stopped, which is stored in the climate control unit.

Fail-safe

- If a malfunction is detected by the malfunction detection function, the fail-safe function performs the following controls to prevent an operation malfunction of the full-auto air conditioner and malfunction of output devices.

Fail-safe function table

Part where malfunction is determined	Malfunction determined when ignition switched ON	Malfunction already exists when ignition switched ON
Ambient temperature sensor	Ambient temperature sensor input value is fixed at the value right before the malfunction.	Ambient temperature sensor input value is fixed at **15 °C {59 °F}.**
Passenger compartment temperature sensor	Passenger compartment temperature sensor input value is fixed at the value right before the malfunction.	Passenger compartment temperature sensor input value is fixed at **25 °C {77 °F}.**
Evaporator temperature sensor	A/C output OFF is controlled when the evaporator temperature sensor input value is at **0 °C {32 °F}**.	←
Solar radiation sensor	The solar radiation sensor input value is fixed at the value directly before the malfunction only when the valve is **1,450 W/m^2 or more**.	Solar radiation sensor value is fixed at **0 W/m^2**.
Engine coolant temperature sensor	Engine coolant temperature sensor input value is fixed at **85 °C {185 °F}**.	←
Air mix actuator (potentiometer)	Air mix actuator drive signal is stopped right when the malfunction is determined. However, it is fixed at MAX COLD when the manually set temperature is at **15 °C {60 °F}** and fixed at MAX HOT when the manually set temperature is at **29 °C {84 °F}**.	Control based on ambient temperature. (See Graph 1.) However, it is fixed at MAX COLD when the manually set temperature is at **15 {60 °F}** and fixed at MAX HOT when the manually set temperature is at **29 °C {84 °F}**.
Airflow mode actuator (potentiometer)	Airflow mode actuator drive signal is stopped right when the malfunction is determined. • However, the operation is change to VENT or DEF when the manual operation is set to VENT or DEF.	Control based on ambient temperature. (See Graph 2.) • However, the operation is change to VENT or DEF when the manual operation is set to VENT or DEF.
Air mix actuator (motor lock)	• Air mix actuator drive signal is stopped right when the malfunction is determined.	• Twenty seconds after ignition is switched ON, the air mix actuator drive signal is output normally again. Afterwards, motor output is stopped during malfunction determination.
Airflow mode actuator (motor lock)	• Airflow mode actuator drive signal is stopped right when the malfunction is determined.	• Nine seconds after ignition is switched ON, the airflow mode actuator drive signal is output normally again. Afterwards, motor output is stopped during malfunction determination.

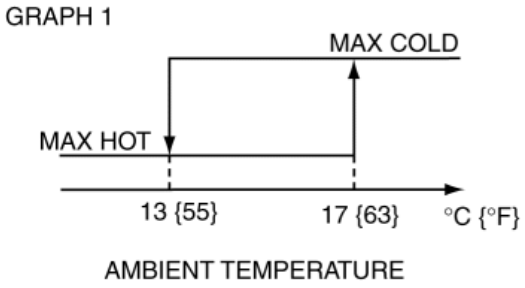

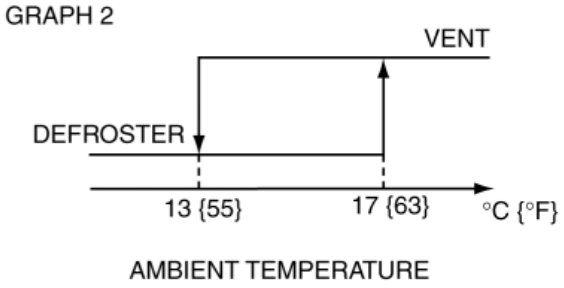

Construction

Block diagram

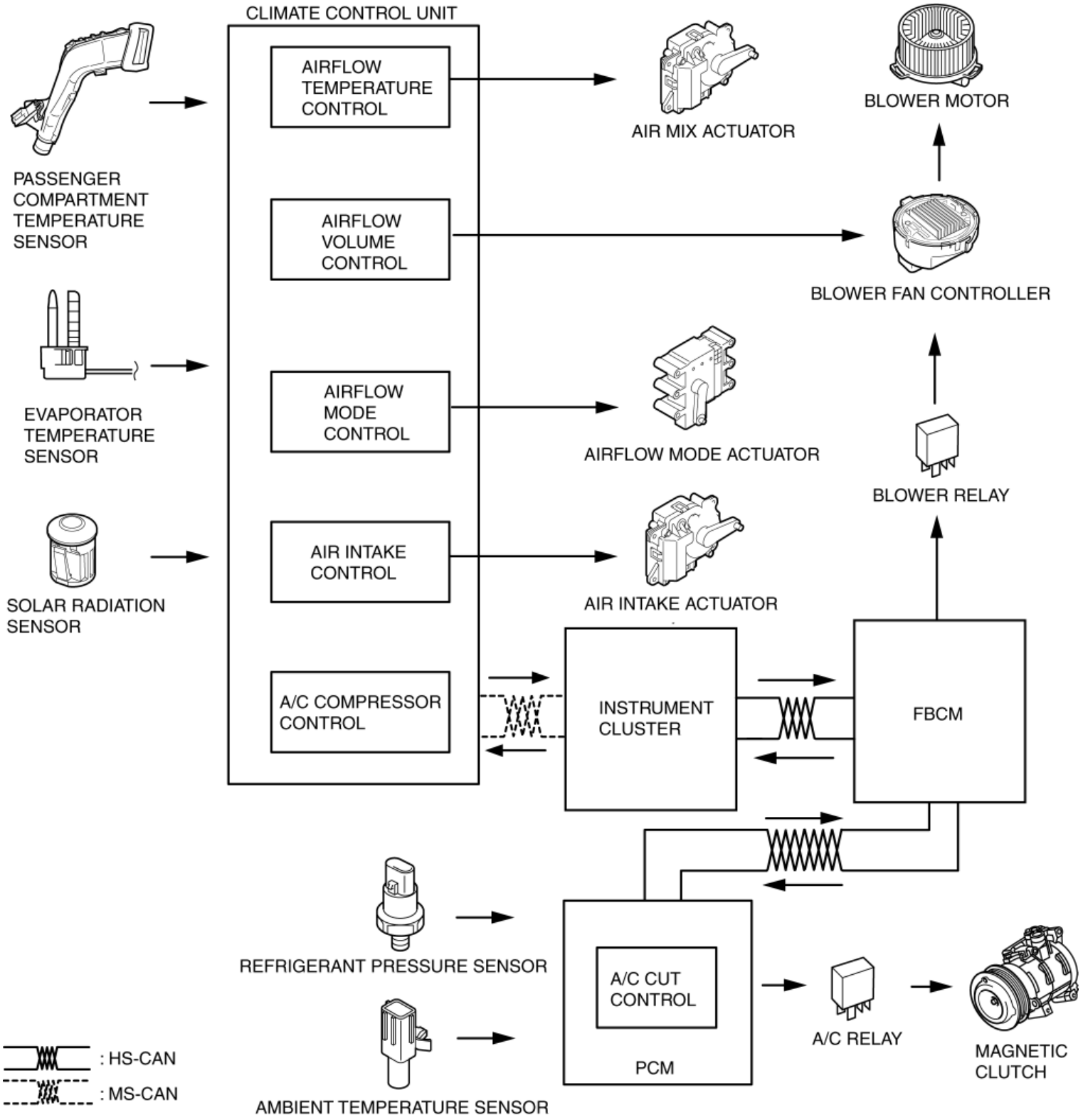

Structural view

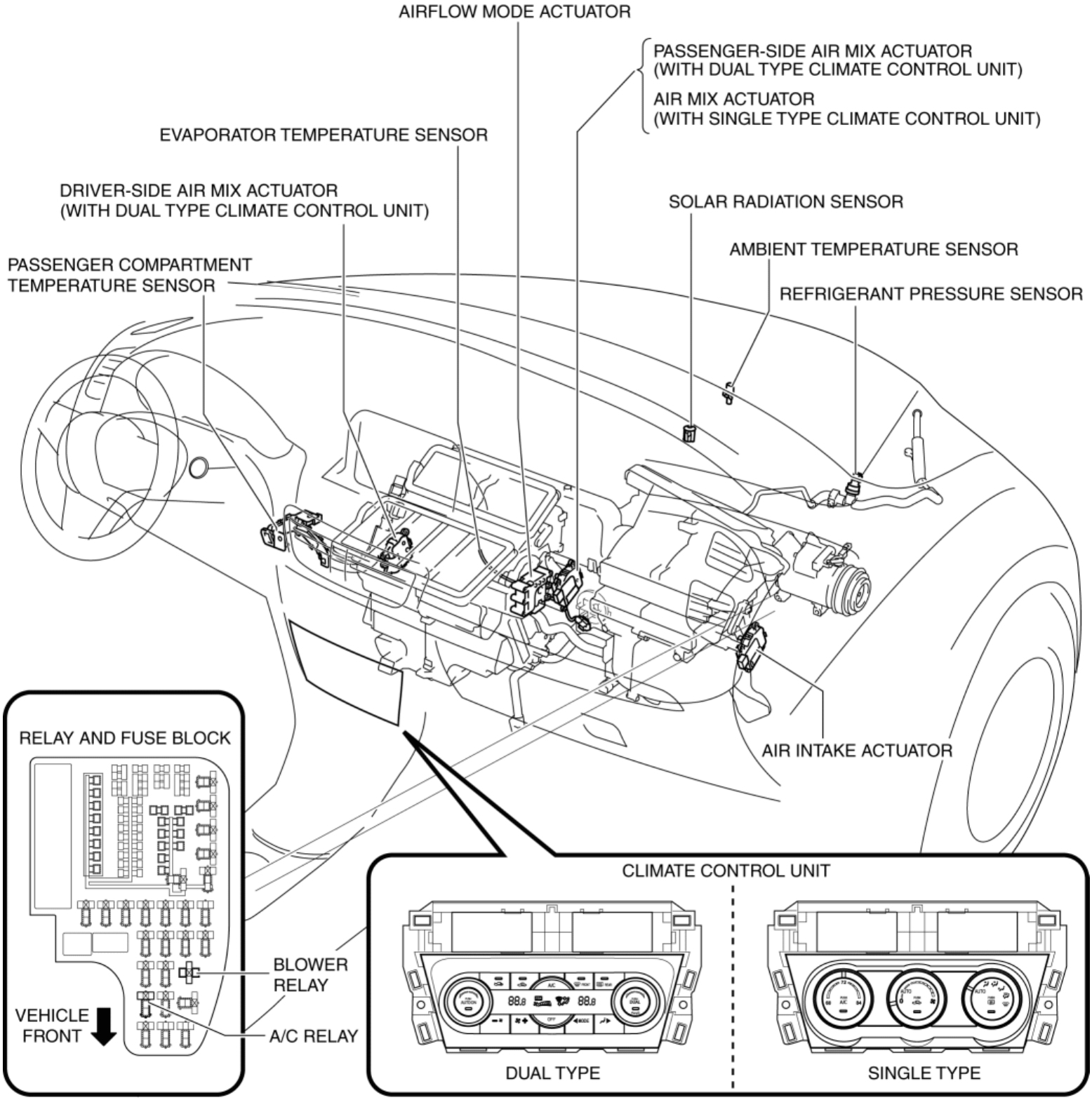

Operation

Airflow temperature control

1. The climate control unit determines the airflow temperature based on the temperature control dial operation and signals from each sensor which changes according to the vehicle environment.

2. The climate control unit drives the air mix actuator according to the results of the airflow temperature determination and corrections.

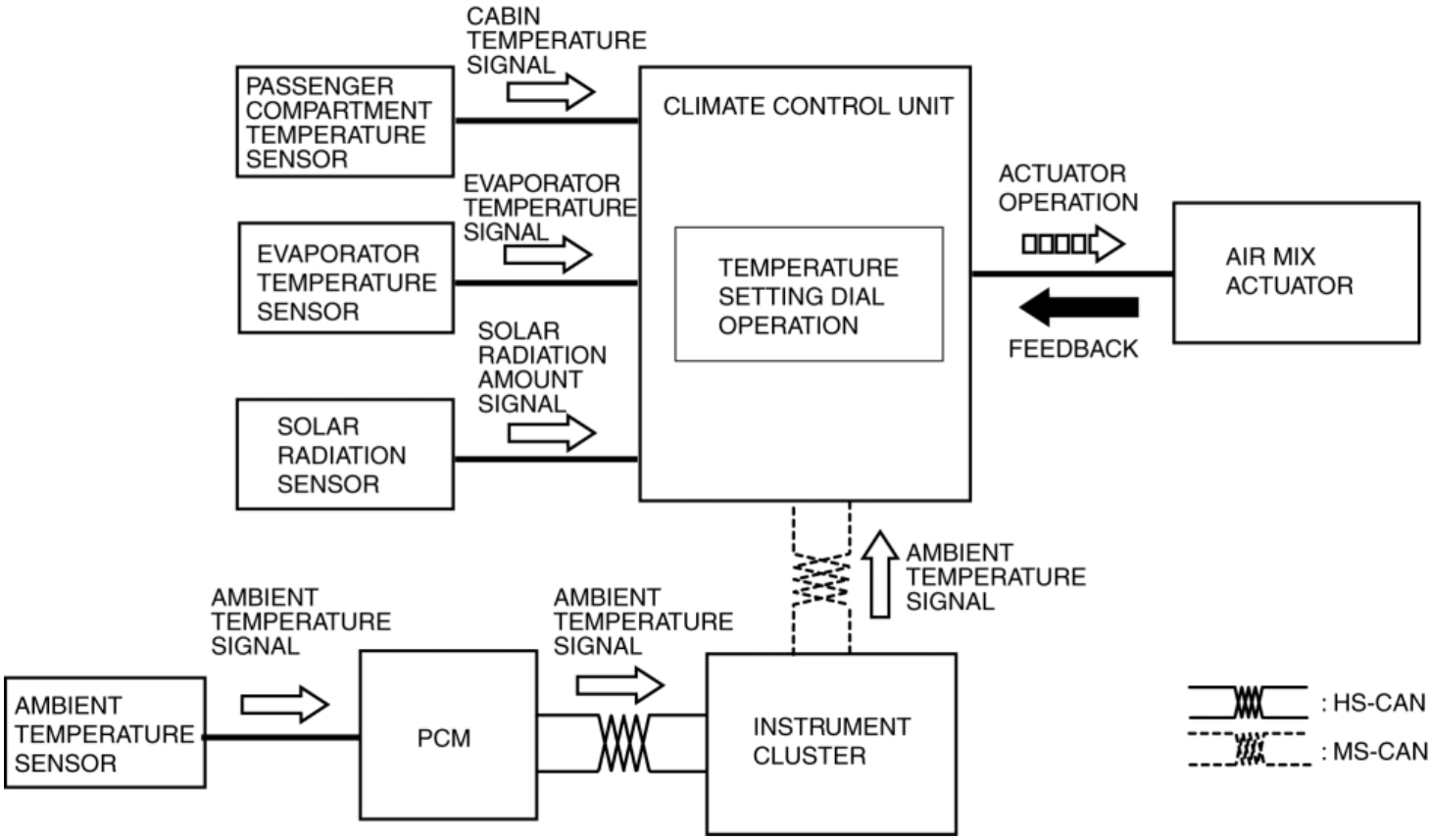

Airflow volume control

1. When the ignition is switched ON (engine off or on), the front body control module (FBCM) turns the blower relay on.

2. When the airflow volume control dial on the climate control unit is turned on, the blower motor rotates.

3. The climate control determines the airflow volume based on the operations of the airflow volume control dial and the temperature setting dial, airflow mode condition, and signals from each sensor.

4. Based on the result of the airflow volume determination and correction, the climate control unit control the blower fan controller and changes the airflow volume (blower motor applied voltage).

5. The rotation speed of the blower motor changes according to the applied voltage from the blower fan controller.

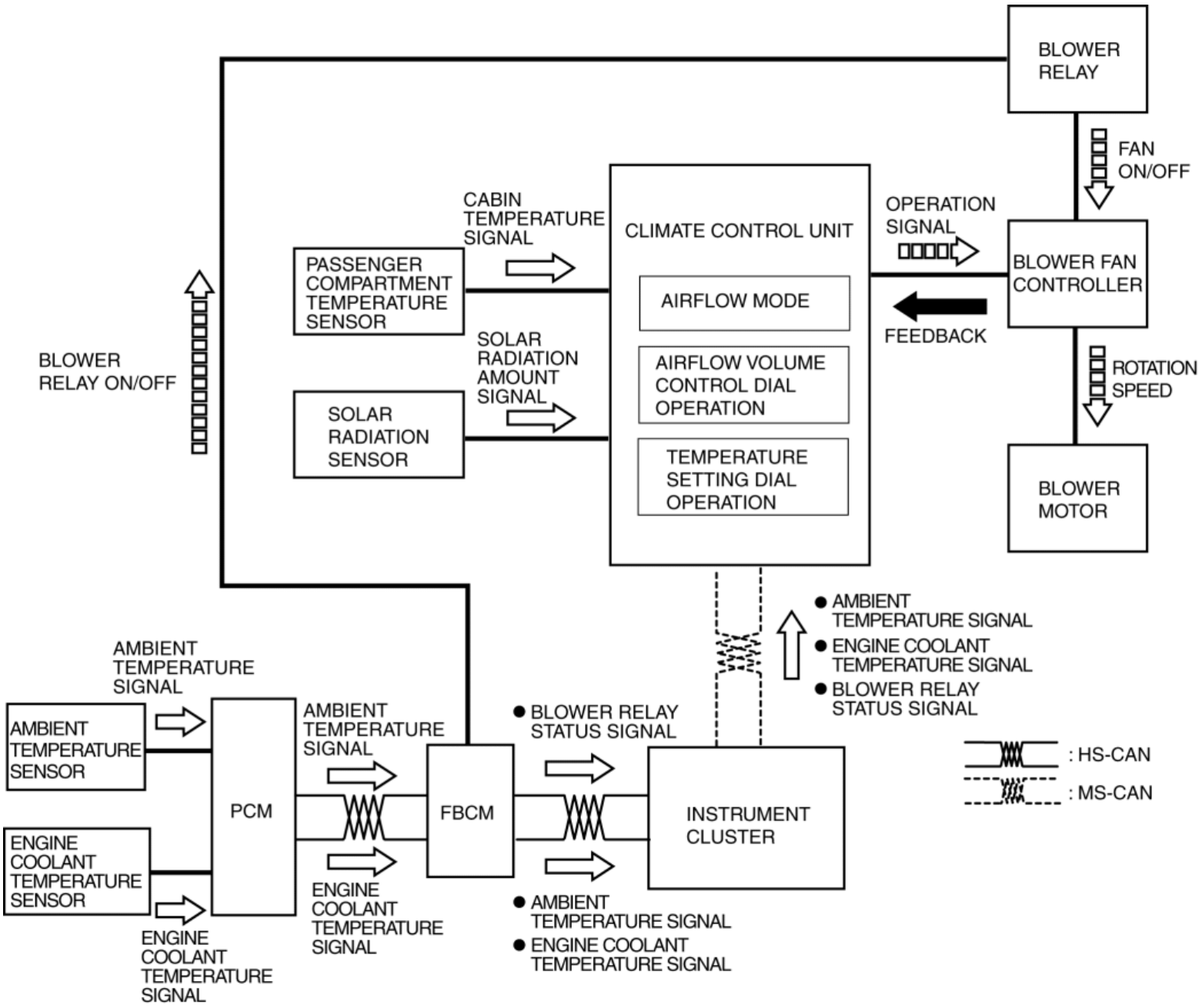

Airflow mode control

1. The climate control unit determines the airflow mode based on the operations of the mode and defroster switches and signals from each sensor which changes according to the vehicle environment.

2. The climate control unit drives the airflow mode actuator according to the results of the airflow mode determination and corrections.

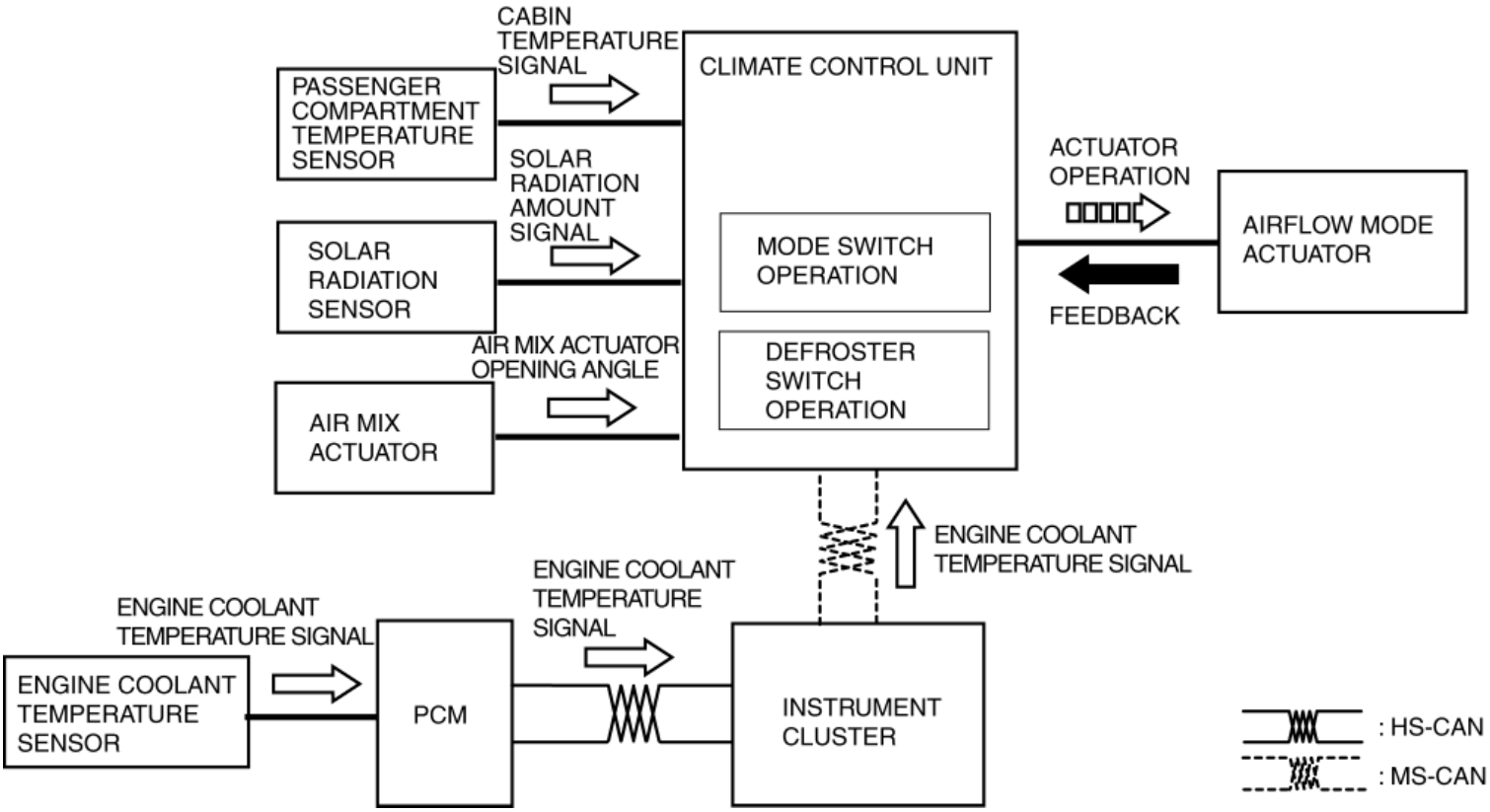

Air intake control

1. The climate control determines the air intake mode based on the operations of the REC, FRESH, defroster switches and signals from each sensor which changes according to the vehicle environment.

2. The climate control unit drives the air intake actuator according to the result of the air intake mode determination and corrections.

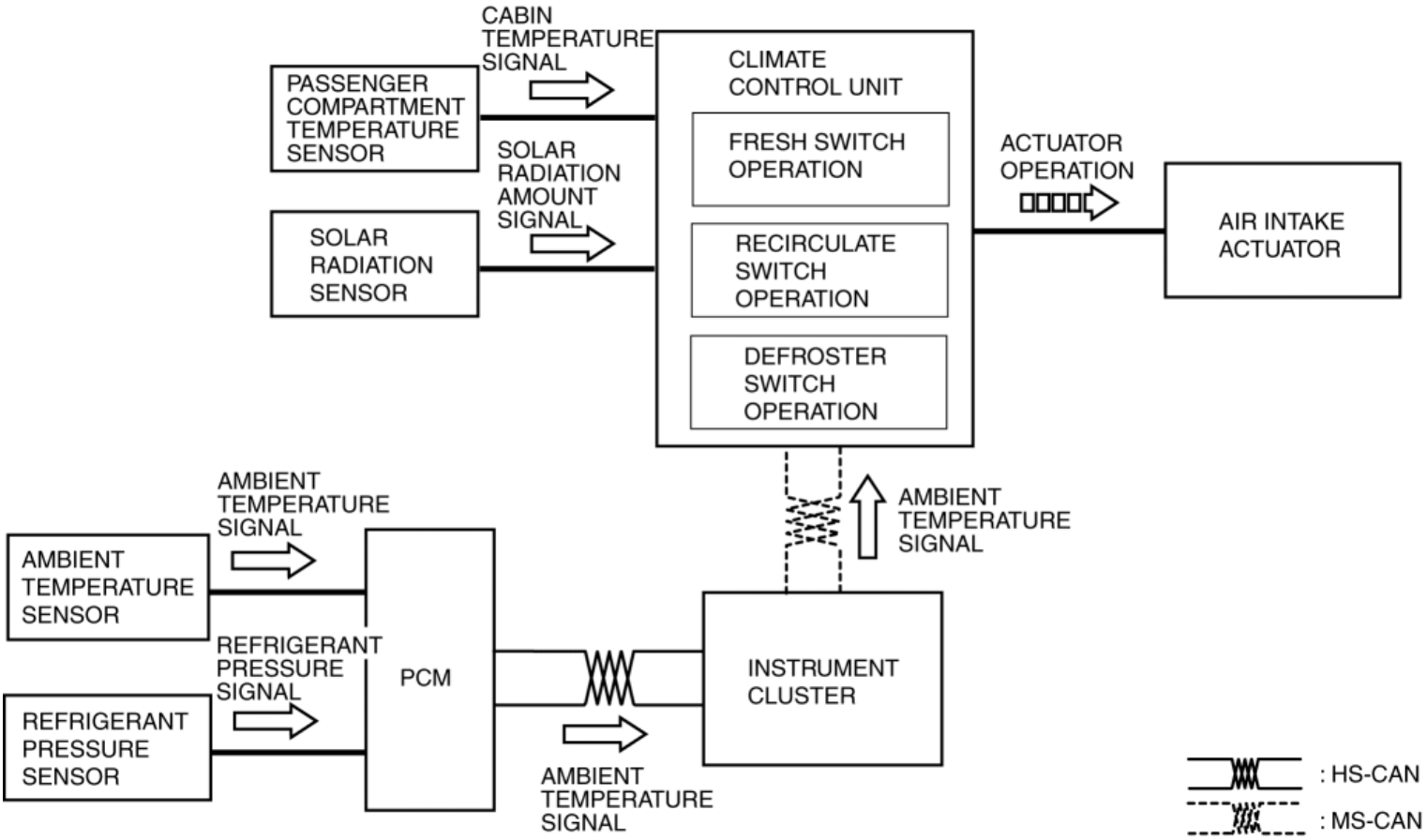

A/C compressor control

1. The climate control determines the A/C ON/OFF based on the operations of each switch/dial and signals from each sensor which changes according to the vehicle environment.

2. The climate control unit sends the A/C signal to the PCM according to the result of the A/C ON/OFF determination and corrections.

3. When the PCM turns the A/C relay on based on the A/C signal, the magnetic clutch of the A/C compressor turns on.

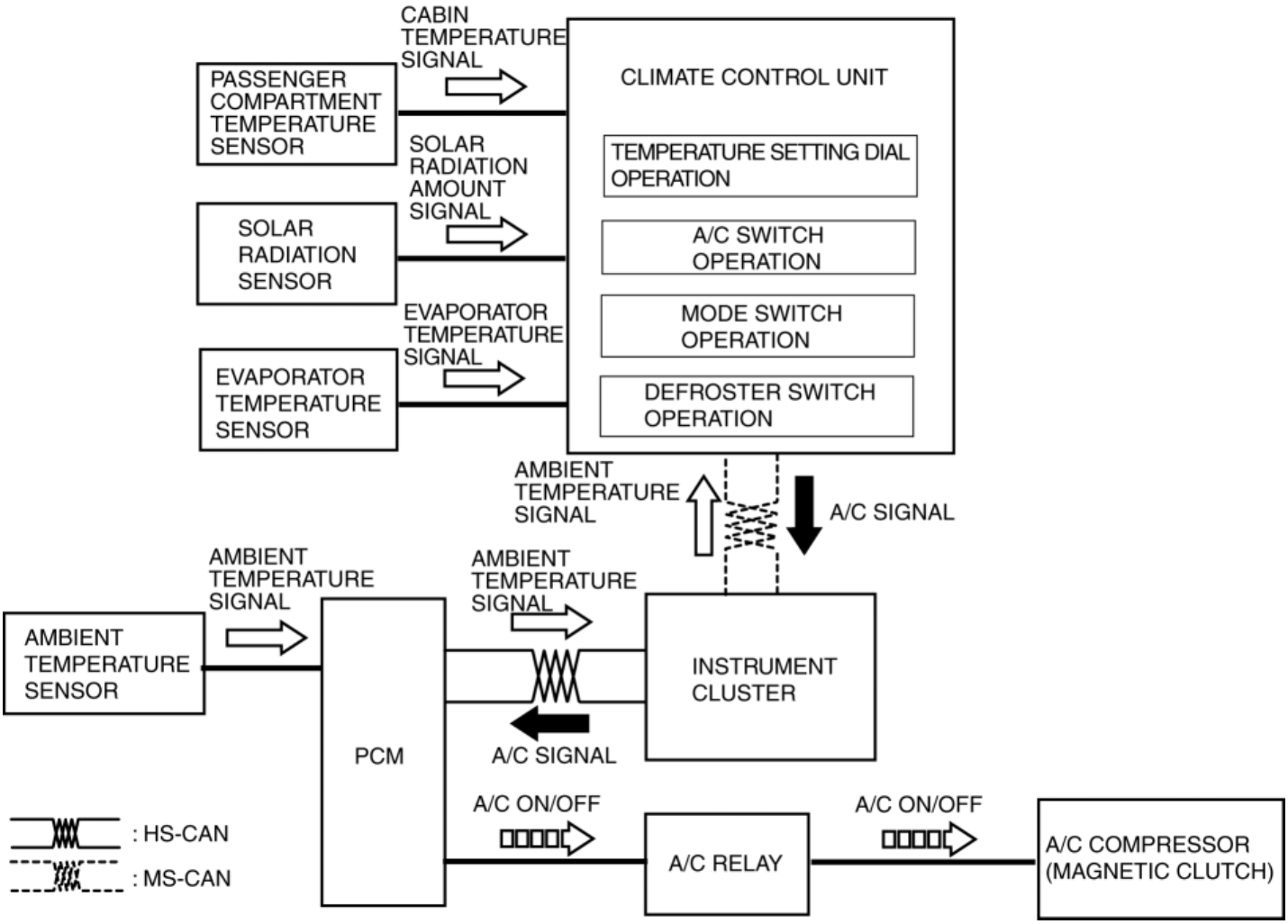
CABIN TEMPERATURE SIGNAL
PASSENGER COMPARTMENT TEMPERATURE SENSOR
CLIMATE CONTROL UNIT
TEMPERATURE SETTING DIAL OPERATION
SOLAR RADIATION AMOUNT SIGNAL
SOLAR RADIATION SENSOR
A/C SWITCH OPERATION
EVAPORATOR TEMPERATURE SIGNAL
MODE SWITCH OPERATION
EVAPORATOR TEMPERATURE SENSOR
DEFROSTER SWITCH OPERATION
AMBIENT TEMPERATURE SIGNAL
A/C SIGNAL
AMBIENT TEMPERATURE SIGNAL
AMBIENT TEMPERATURE SIGNAL
AMBIENT TEMPERATURE SENSOR
INSTRUMENT CLUSTER
PCM
A/C SIGNAL
A/C ON/OFF
A/C ON/OFF
: HS-CAN
: MS-CAN
A/C RELAY
A/C COMPRESSOR (MAGNETIC CLUTCH)

2014 - Mazda3 - HVAC

CLIMATE CONTROL UNIT [FULL-AUTO AIR CONDITIONER]

Purpose

- The climate control unit performs air conditioning according to the operation by the users and the driving conditions of the vehicle.

Function

- The climate control unit determines optimum air-conditioning based on the input signals from each sensor and the control module and the operation signals from the control panel, and controls each actuator, A/C compressor, and the blower motor. (See **FULL-AUTO AIR CONDITIONER SYSTEM [FULL-AUTO AIR CONDITIONER]**.)

Set temperature display switching function (dual type)

- When the ambient temperature display in the instrument cluster is switched between Centigrade and Fahrenheit, the set temperature display in the climate control unit is switched between Centigrade and Fahrenheit. (See **INSTRUMENTATION/DRIVER INFO. PERSONALIZATION**.)

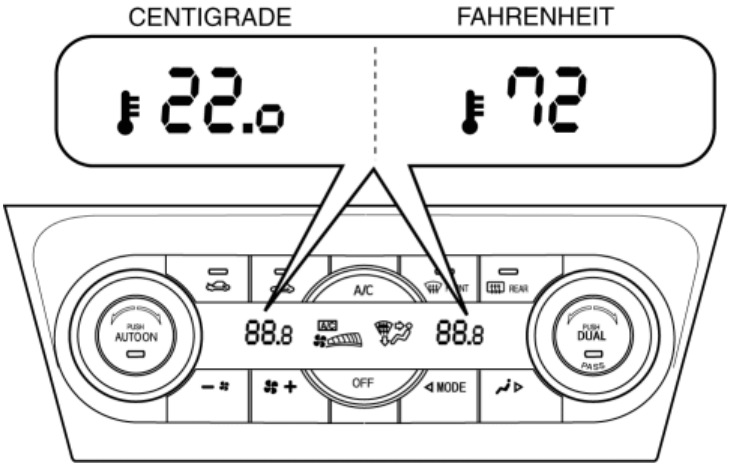

Automatic configuration function

- When the ignition is switched ON after the climate control unit is replaced, the climate control unit reads the vehicle specification information sent via CAN transmission from the instrument cluster using the automatic configuration function, and stores it.

Dual mode (dual type)

- When the DUAL switch of the climate control unit is pressed or the RH-side temperature setting dial is operated, the DUAL mode turns on (DUAL switch indicator turns on).
- When the DUAL mode turns on, the driver and passenger-side temperature settings can be performed independently by operating the RH and LH-side temperature setting dial.
- When the DUAL mode turns on, the temperature setting display in the display panel is displayed independently according to each setting temperature for the driver and passenger sides.

Construction

Dual type

- A logic-type climate control unit has been adopted.
- The climate control unit consists of a control panel, display panel, and a control unit.
- The switches and dials shown in the figure are positioned on the control panel.
- The air conditioner setting is displayed in the display panel.

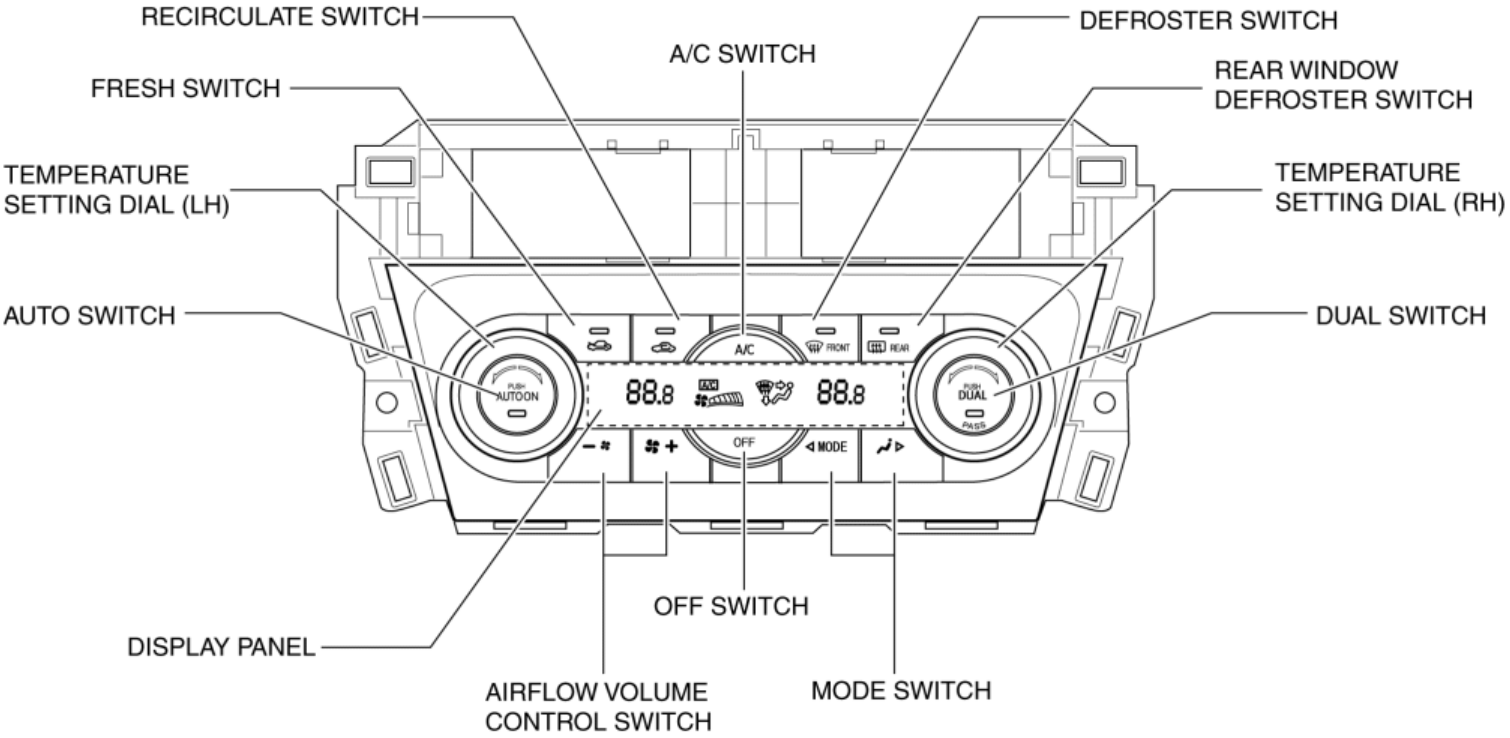

Single type

- A logic-type climate control unit has been adopted.
- The climate control unit consists of a control panel and a control unit.
- The switches and dials shown in the figure are positioned on the control panel.

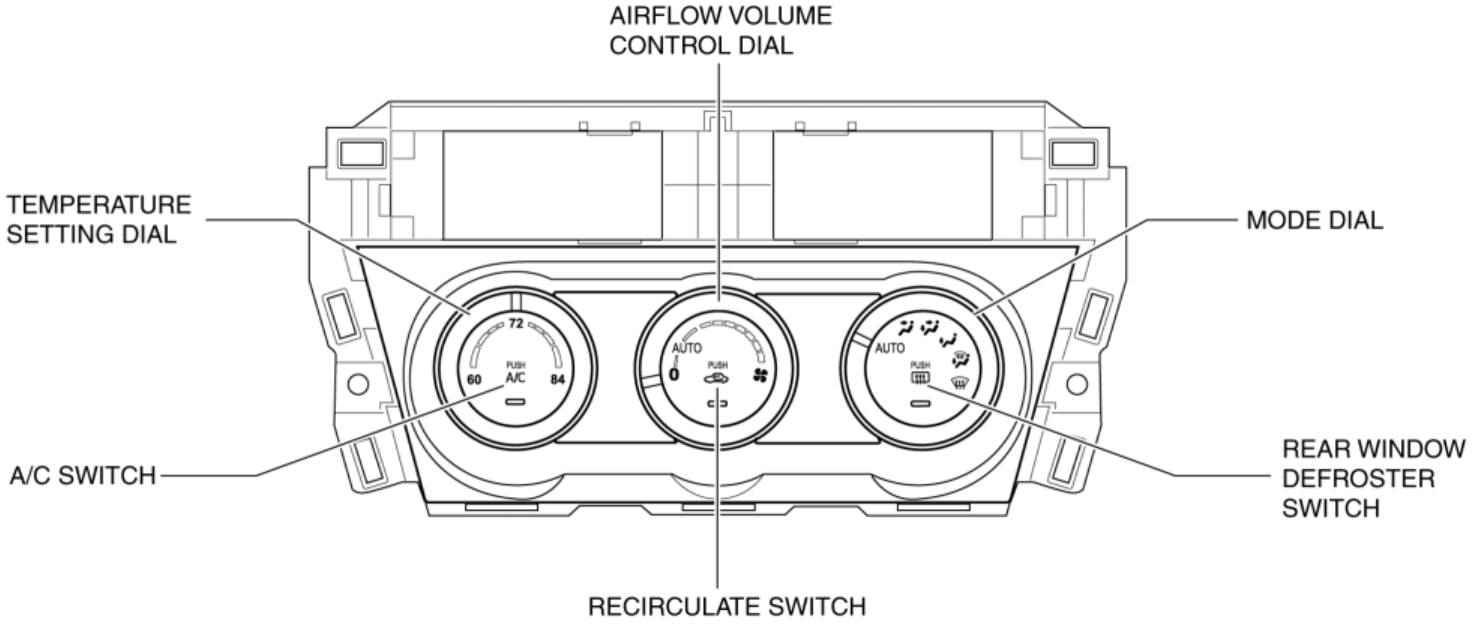

System Wiring Diagram

Dual type

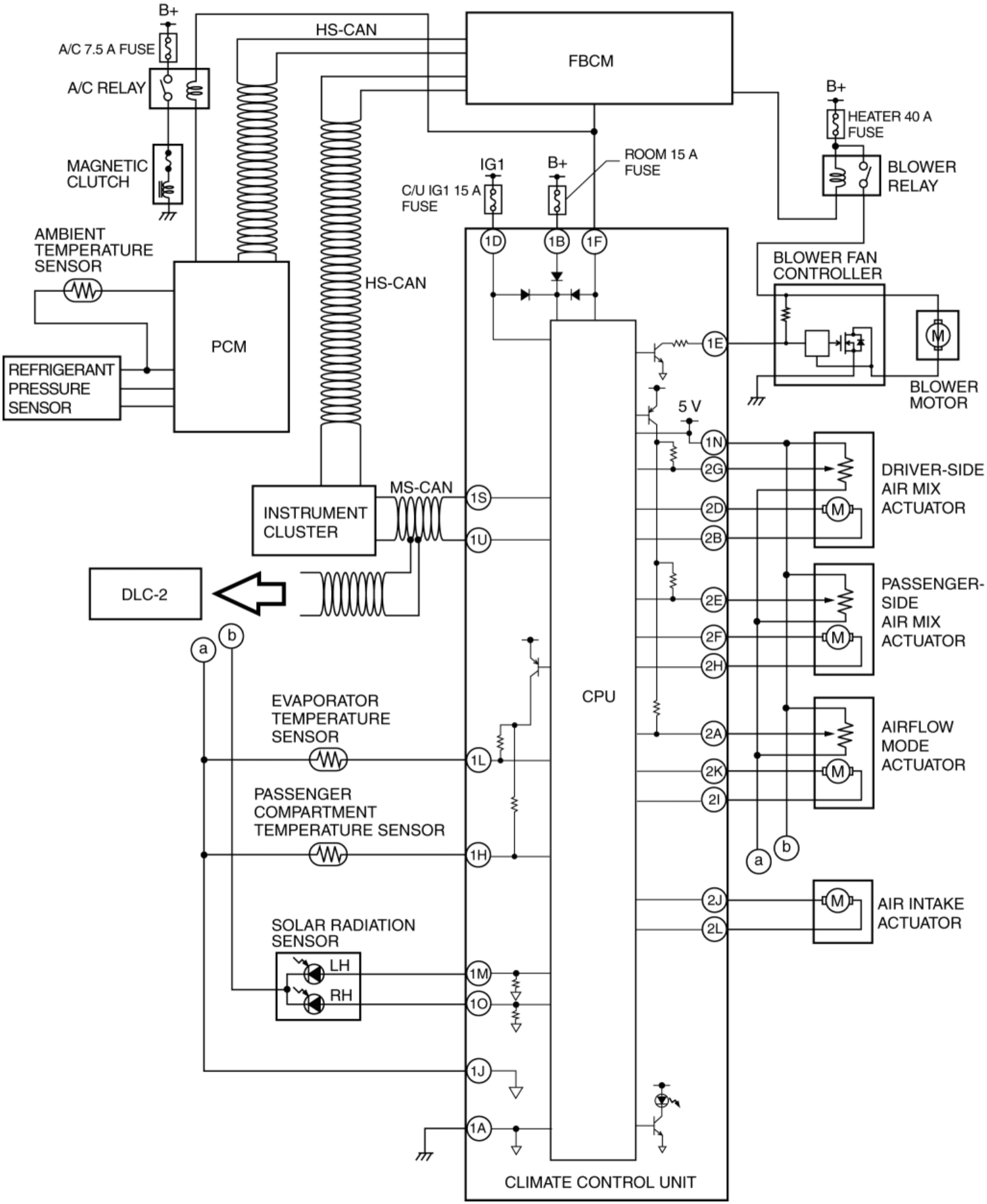
B+
A/C 7.5 A FUSE
A/C RELAY
MAGNETIC CLUTCH
HS-CAN
FBCM
B+
HEATER 40 A FUSE
BLOWER RELAY
IG1
B+
ROOM 15 A FUSE
C/U IG1 15 A FUSE
AMBIENT TEMPERATURE SENSOR
PCM
HS-CAN
1D
1B
1F
BLOWER FAN CONTROLLER
1E
BLOWER MOTOR
REFRIGERANT PRESSURE SENSOR
5 V
1N
2G
DRIVER-SIDE AIR MIX ACTUATOR
MS-CAN
1S
INSTRUMENT CLUSTER
1U
2D
2B
DLC-2
2E
PASSENGER-SIDE AIR MIX ACTUATOR
2F
2H
a
b
CPU
EVAPORATOR TEMPERATURE SENSOR
1L
2A
AIRFLOW MODE ACTUATOR
2K
2I
PASSENGER COMPARTMENT TEMPERATURE SENSOR
1H
a
b
2J
AIR INTAKE ACTUATOR
2L
SOLAR RADIATION SENSOR
LH
RH
1M
1O
1J
1A
CLIMATE CONTROL UNIT

Single type

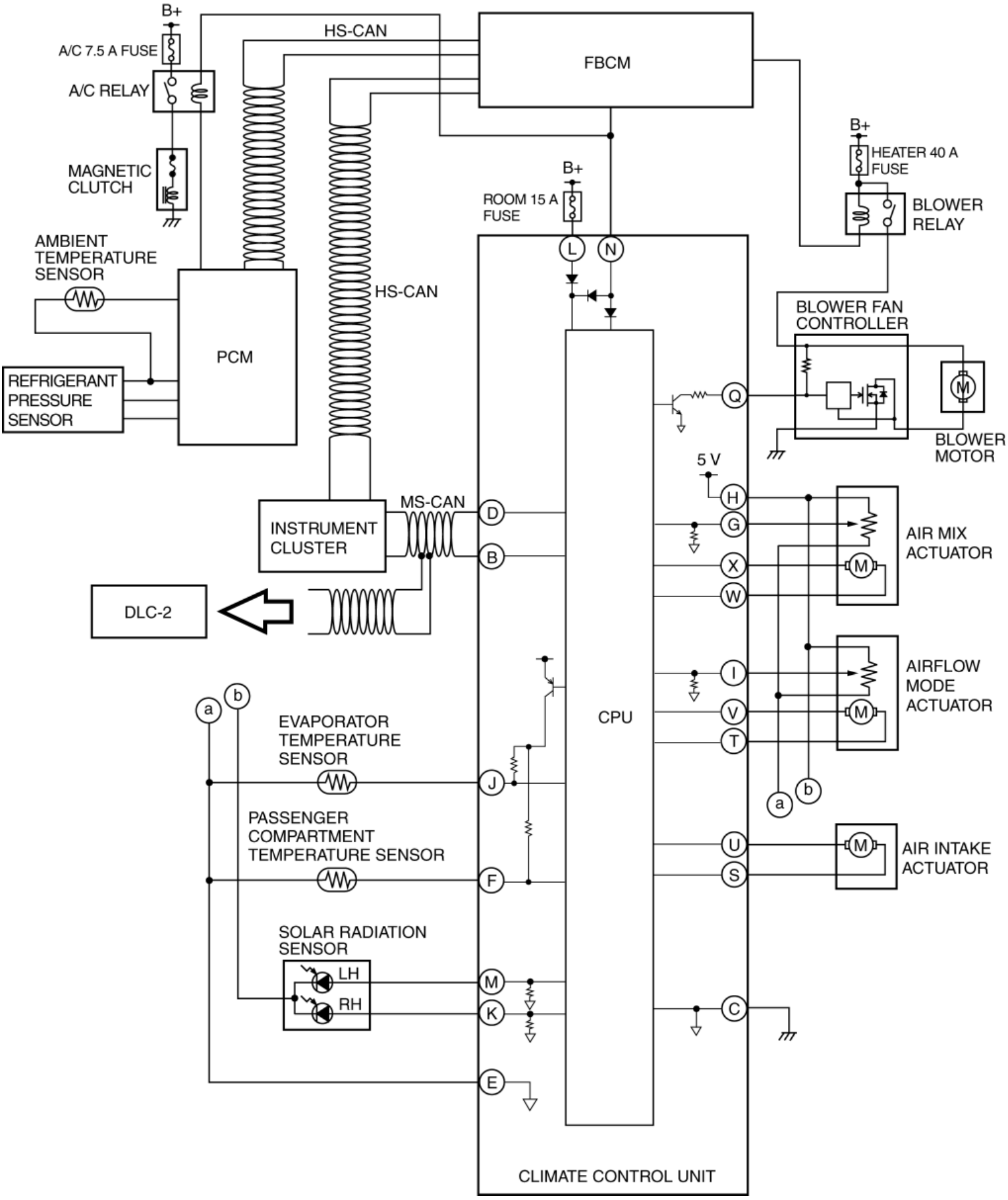
B+
A/C 7.5 A FUSE
A/C RELAY
MAGNETIC CLUTCH
HS-CAN
FBCM
B+
HEATER 40 A FUSE
BLOWER RELAY
B+
ROOM 15 A FUSE
AMBIENT TEMPERATURE SENSOR
PCM
HS-CAN
REFRIGERANT PRESSURE SENSOR
L
N
BLOWER FAN CONTROLLER
Q
BLOWER MOTOR
5 V
H
G
AIR MIX ACTUATOR
X
W
MS-CAN
D
B
INSTRUMENT CLUSTER
DLC-2
I
V
T
AIRFLOW MODE ACTUATOR
a
b
CPU
EVAPORATOR TEMPERATURE SENSOR
J
PASSENGER COMPARTMENT TEMPERATURE SENSOR
F
U
S
AIR INTAKE ACTUATOR
SOLAR RADIATION SENSOR
LH
RH
M
K
C
E
CLIMATE CONTROL UNIT

Control Type Transition by Switch Operation

Dual type

Airflow temperature control, airflow volume control

Operation switch		Airflow temperature control	Airflow volume control								
		Control prior to switch operation	Control prior to switch operation								
		Automatic control	Automatic control	Defroster control	Manual control						
					OFF	1	2	3	4	5	6	7
OFF switch		No change	OFF	OFF	OFF							
AUTO switch		No change	No change	Automatic control	Automatic control							
Airflow volume control switch	UP	No change	Manual control*2	Manual control*2	1	2	3	4	5	6	7	7
	DOWN	No change	Manual control*3	Manual control*3	1	1	1	2	3	4	5	6
MODE switch		No change	No change	Automatic control*4	No change							
DEFROSTER switch		No change	Defroster control	Automatic control*4	Defroster control							
A/C switch		No change	No change	No change	*5	No change						
RECIRCULATE switch		No change	No change	No change	No change							
FRESH switch		No change	No change	No change	No change							
Driver-side temperature setting dial*1	15.0/60	MAX control	MAX control	MAX HI	No change							
	15.5—28.5/61—83	Automatic control	Automatic control	No change	No change							
	29.0/84	MAX control	MAX control	AUTO HI	No change							
Passenger-side temperature setting dial*1	15.0/60	MAX control	MAX control	MAX HI	No change							
	15.5—28.5/61—83	Automatic control	Automatic control	No change	No change							
	29.0/84	MAX control	MAX control	AUTO HI	No change							
Dual switch		Automatic control	No change	No change	No change							
Rear window defroster switch		No change	No change	No change	No change							

*1 **Adjusted up or down in increments of 0.5 with a range of 15.0—29.0 or 1 with a range of 60—84.**

*2 **Increases to the manual voltage that is closest to the auto or defroster control voltage.**

*3

*4 **Decreases to the manual voltage that is closest to the auto or defroster control voltage.**

*5 **Returns to condition prior to defroster operation. However, if it had been off prior to defroster operation, it switches to automatic control.**

Returns to fan condition before fan off. However, if it was defroster control (manual control), it returns to condition as follows:

- The condition before fan off defroster control, the fan condition returns to the condition before defroster control.
- The condition before fan off defroster control and furthermore the condition before defroster control is fan off, the fan condition changes to automatic control. (It has higher priority than 1)
- The condition before fan off defroster control and fan is manually operated during that defroster control, the fan condition return to manually operated condition. (It has higher priority than 1 and 2)

Airflow mode control, air intake control, A/C compressor control

Operation switch		Airflow mode control		Air intake control		A/C compressor control	
		Control prior to switch operation		Control prior to switch operation		Control prior to switch operation	
		Automatic control	Manual control	Automatic control	Manual control	Automatic control	Manual control
OFF switch		Fixed at mode before turned OFF	No change	Fixed at mode before turned OFF	No change	OFF	OFF
AUTO switch		No change	Automatic control	No change	Automatic control	No change	Automatic control
Airflow volume control switch	UP	No change	No change	No change	No change	No change	No change
	DOWN	No change	No change	No change	No change	No change	No change
MODE switch	UP	VENT → BI-LEVEL BI-LEVEL → HEAT HEAT → DEF/HEAT DEF/HEAT → VENT	VENT → BI-LEVEL BI-LEVEL → HEAT HEAT → DEF/HEAT DEF/HEAT → VENT	No change	No change	No change	No change
	DOWN	VENT → DEF/HEAT DEF/HEAT → HEAT HEAT → BI-LEVEL BI-LEVEL → VENT DEFROSTER (warm-up) → HEAT	VENT → DEF/HEAT DEF/HEAT → HEAT HEAT → BI-LEVEL BI-LEVEL → VENT DEFROSTER (warm-up) → HEAT	No change	No change	No change	No change
DEFROSTER switch		Defroster control	Defroster control	Defroster control	Defroster control	Defroster control	Defroster control
A/C switch		No change	No change	No change	No change	Manual control	Manual control
RECIRCULATE switch		No change	No change	Manual control	Manual control	No change	No change
FRESH switch		No change	No change	Manual control	Manual control	No change	No change
	15.0/60	No change	No change	No change	No change	No change	No change

Driver-side temperature setting dial*1	15.5—28.5/61—83	No change	No change	No change	No change	No change	No change
	29.0/84	No change	No change	No change	No change	No change	No change
Passenger-side temperature setting dial*1	15.0/60	No change	No change	No change	No change	No change	No change
	15.5—28.5/61—83	No change	No change	No change	No change	No change	No change
	29.0/84	No change	No change	No change	No change	No change	No change
Dual switch		No change	No change	No change	Automatic control	No change	No change
Rear window defroster switch		No change	No change	No change	No change	No change	No change

*1 **Adjusted up or down in increments of 0.5 with a range of 15.0—29.0 or 1 with a range of 60—84.**

Control Type Transition by Switch Operation

Single type

Airflow temperature control, airflow volume control

Operation switch		Airflow temperature control	Airflow volume control			Airflow volume control		
		Control prior to switch operation	Control prior to switch operation			Control prior to switch operation		
		Automatic control	Automatic control	Manual control	Defroster control	Automatic control	Manual control	Defroster control
Airflow volume control dial	OFF	No change	OFF	OFF	OFF	Fixed at mode before turned OFF	No change	No change
	AUTO	No change	No change	Automatic control	No change	No change	No change	No change
	1—7	No change	Manual control	Manual control	Manual control	No change	No change	Manual control
MODE dial	AUTO	No change	No change	No change	Automatic control	No change	Automatic control	Automatic control
	VENT	No change	No change	No change	Automatic control	Manual control	Manual control	Manual control
	BI-LEVEL	No change	No change	No change	Automatic control	Manual control	Manual control	Manual control
	HEAT	No change	No change	No change	Automatic control	Manual control	Manual control	Manual control
	DEF/HEAT	No change	No change	No change	Automatic control	Manual control	Manual control	Manual control

	DEFROSTER	No change	Defroster control	No change	No change	Manual control	Manual control	Manual control
Temperature setting dial	15.0/60	Automatic control	MAX control	No change	MAX control	No change	No change	No change
	15.5—28.5/61—83	Automatic control	No change	No change	No change	No change	No change	No change
	29.0/84	Automatic control	MAX control	No change	MAX control	No change	No change	No change
RECIRCULATE switch		No change	No change	No change	No change	No change	No change	No change
A/C switch		No change	No change	No change	No change	No change	No change	No change
Rear window defroster switch		No change	No change	No change	No change	No change	No change	No change

Air intake control, A/C compressor control

Operation switch		Air intake control		A/C compressor control	
		Control prior to switch operation		Control prior to switch operation	
		Automatic control	Manual control	Automatic control	Manual control
Airflow volume control dial	OFF	No change	No change	OFF	OFF
	AUTO	No change	No change	No change	No change
	1—7	No change	No change	No change	No change
MODE dial	AUTO	Automatic control	No change	No change	Automatic control
	VENT	Automatic control	No change	No change	Automatic control
	BI-LEVEL	Automatic control	No change	No change	Automatic control
	HEAT	Automatic control	No change	No change	Automatic control
	DEF/HEAT	Defroster control	Defroster control	Defroster control	Automatic control
	DEFROSTER	Defroster control	Defroster control	Defroster control	Automatic control
Temperature setting dial	15.0/60	Automatic control	No change	No change	No change
	15.5—28.5/61—83	Automatic control	No change	No change	No change
	29.0/84	Automatic control	No change	No change	No change
RECIRCULATE switch		Manual control	Manual control	No change	No change
A/C switch		No change	No change	Manual control	Manual control
Rear window defroster switch		No change	No change	No change	No change

2014 - Mazda3 - HVAC

AMBIENT TEMPERATURE SENSOR [FULL-AUTO AIR CONDITIONER]

Purpose

- The ambient temperature sensor detects the ambient temperature.

Function

- The ambient temperature sensor converts the detected temperature to an electric signal.

Construction

- A thermistor-type ambient temperature sensor has been adopted.
- The ambient temperature sensor is installed to the shroud panel on the back side of the front bumper.

Operation

- The thermistor changes the resistance according to the surrounding temperature.
- The resistance decreases if the temperature increases, and conversely increases if the temperature decreases as shown in the figure.

AMBIENT TEMPERATURE SENSOR

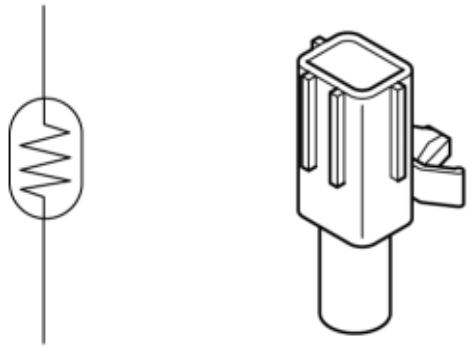

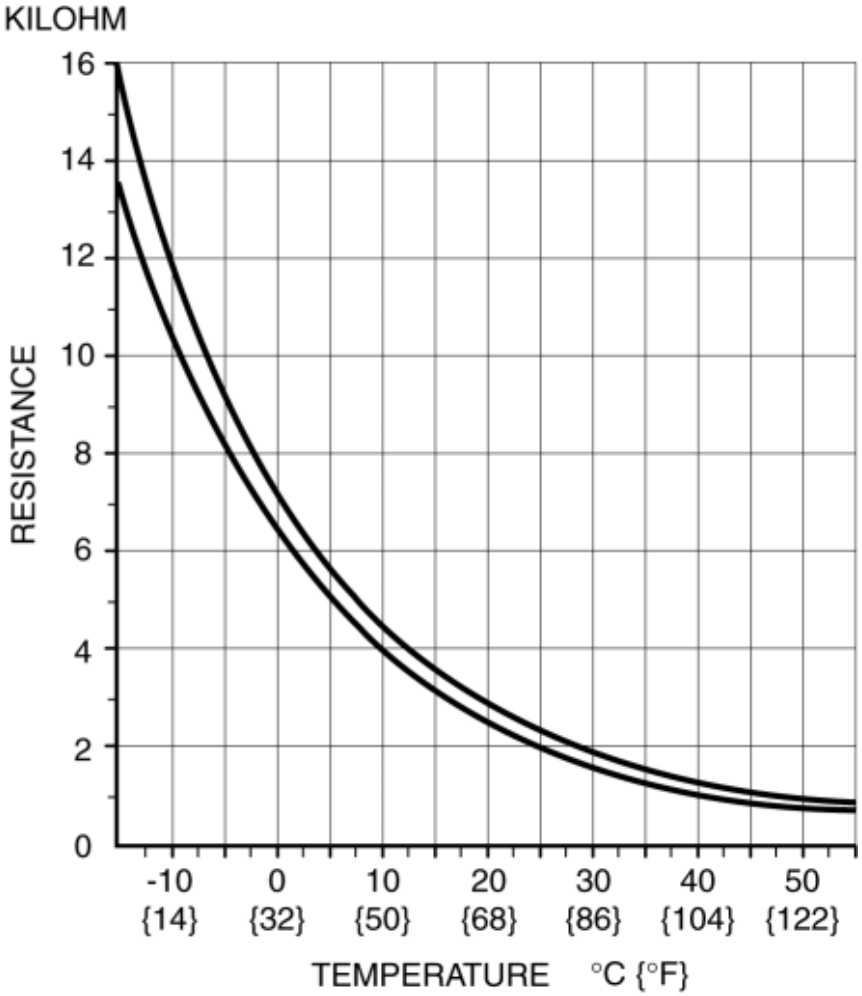

Fail-safe

- Function not equipped.

2014 - Mazda3 - HVAC

PASSENGER COMPARTMENT TEMPERATURE SENSOR [FULL-AUTO AIR CONDITIONER]

Purpose

- The passenger compartment temperature sensor detects the cabin temperature.

Function

- The passenger compartment temperature sensor converts the detected temperature to an electric signal.

Construction

- A thermistor-type passenger compartment temperature sensor has been adopted.
- The passenger compartment temperature sensor is installed to the lower panel (driver's side).

Construction / operation

- The thermistor changes the resistance according to the surrounding temperature.
- The resistance decreases if the temperature increases, and conversely increases if the temperature decreases as shown in the figure.

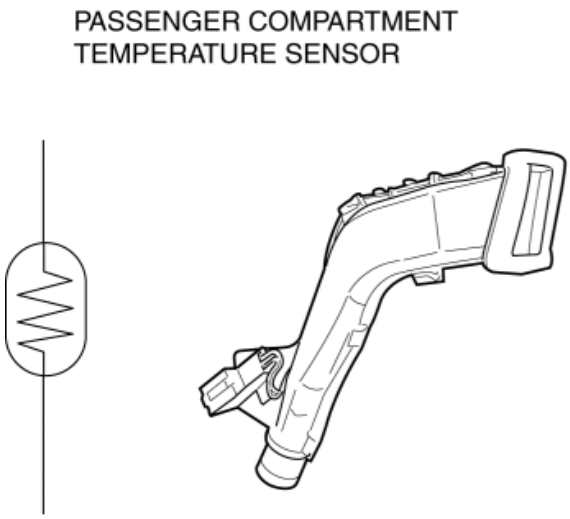

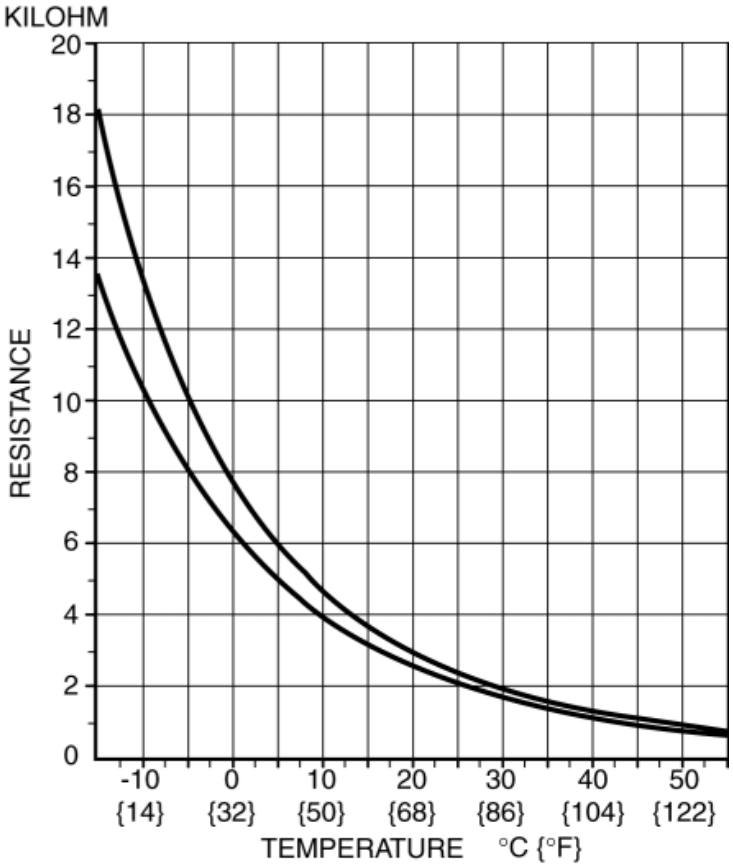

Fail-safe

- Function not equipped.

2014 - Mazda3 - HVAC

EVAPORATOR TEMPERATURE SENSOR [FULL-AUTO AIR CONDITIONER]

Purpose

- The evaporator temperature sensor detects the airflow temperature passing through the evaporator.

Function

- The evaporator temperature sensor converts the detected temperature to an electric signal.

Construction

- A thermistor-type evaporator temperature sensor has been adopted.
- A fin-thermo-type sensor has been adopted to the sensor area of the evaporator temperature sensor which inserts between the evaporator fins.
- The evaporator temperature sensor is installed to the A/C unit.

Operation

- The thermistor changes the resistance according to the surrounding temperature.
- The resistance decreases if the temperature increases, and conversely increases if the temperature decreases as shown in the figure.

EVAPORATOR TEMPERATURE SENSOR

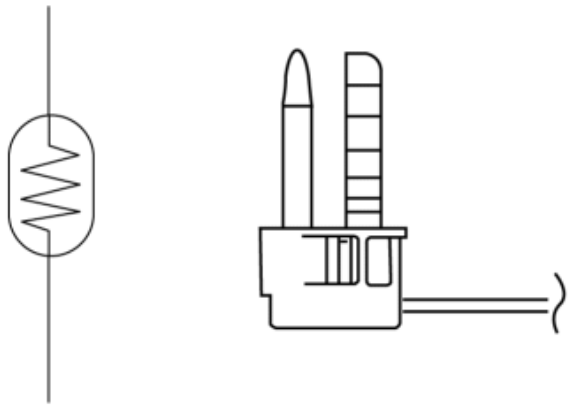

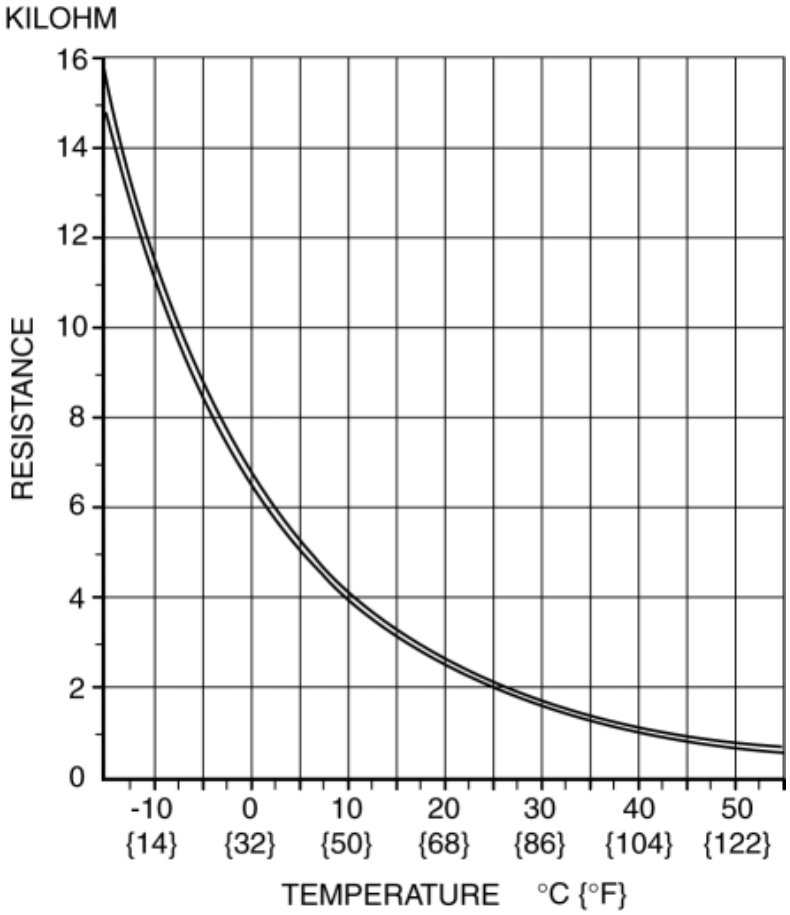

Fail-safe

- Function not equipped.

2014 - Mazda3 - HVAC

SOLAR RADIATION SENSOR [FULL-AUTO AIR CONDITIONER]

Purpose

- The solar radiation sensor detects the sunlight intensity emitted to the cabin.

Function

- The solar radiation sensor converts the detected solar radiation amount to an electric signal.

Construction

- A photodiode (light receiving diode) has been adopted for the solar radiation sensor.

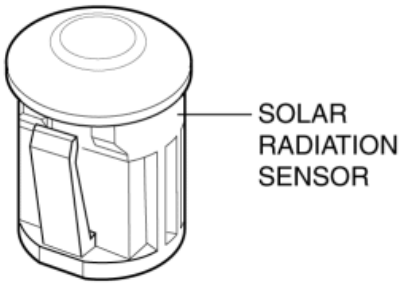

- The solar radiation sensor is installed to the passenger's side in the dashboard.

Operation

- The photodiode (light receiving diode) generates electrical current when light shines on the connecting area of the semiconductor. The generated electrical current increases if the sunlight intensity increases, and conversely decreases if the sunlight intensity decreases.
- The climate control unit determines the sunlight intensity according to the amount of electrical current sent from the solar radiation sensor.

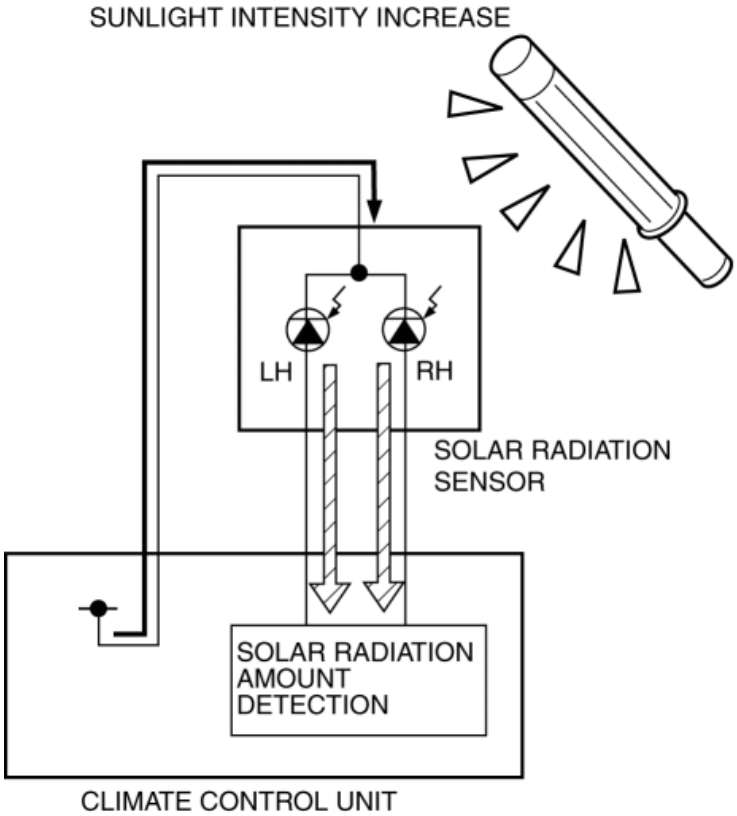

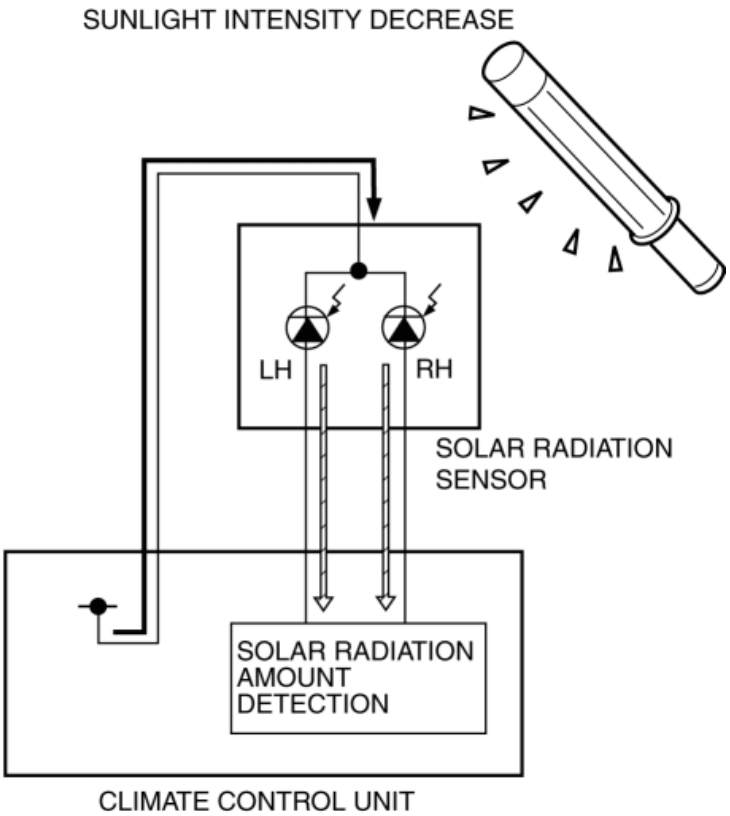

Fail-safe

- Function not equipped.

2014 - Mazda3 - HVAC

REFRIGERANT PRESSURE SENSOR [FULL-AUTO AIR CONDITIONER]

Purpose

- The refrigerant pressure sensor detects the refrigerant pressure in the refrigerant cycle.

Function

- The refrigerant pressure sensor converts the detected refrigerant pressure to an electric signal and sends it to the PCM.

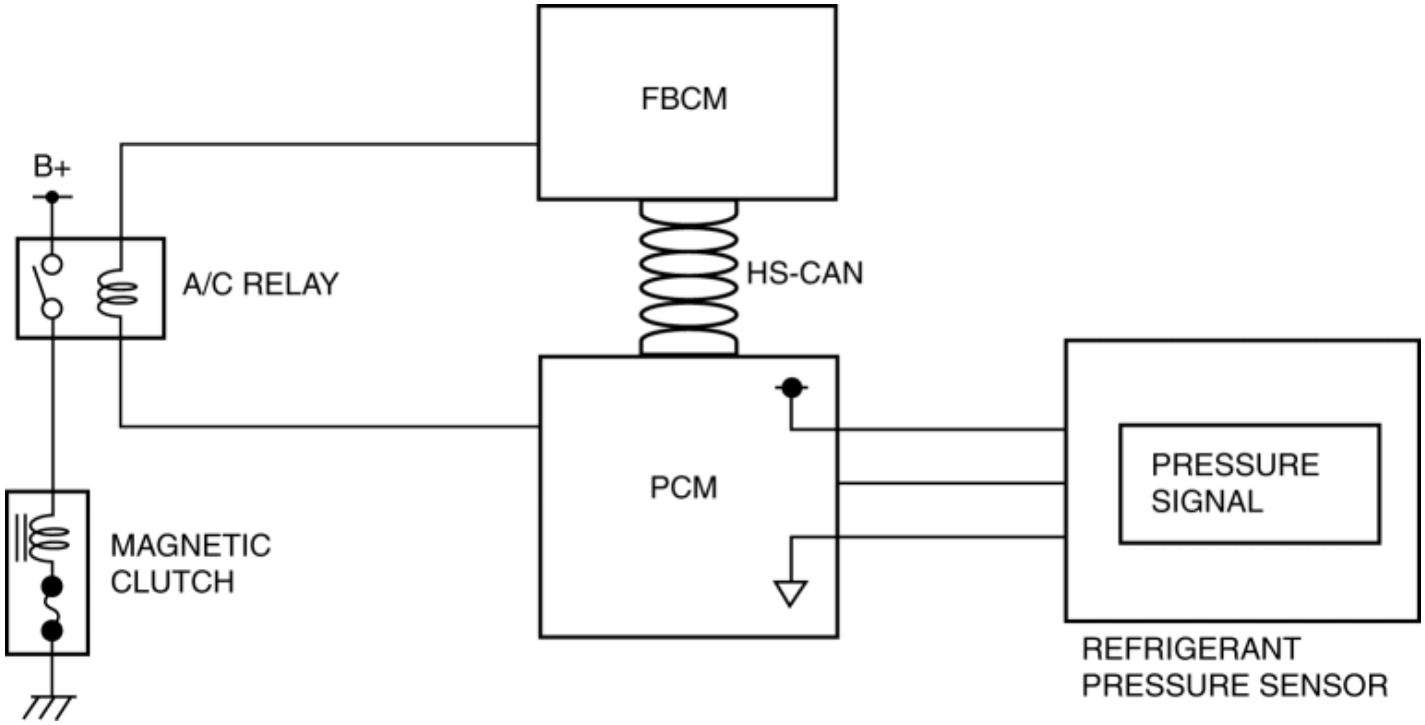

Construction

- The refrigerant pressure sensor is installed on the cooler pipe.

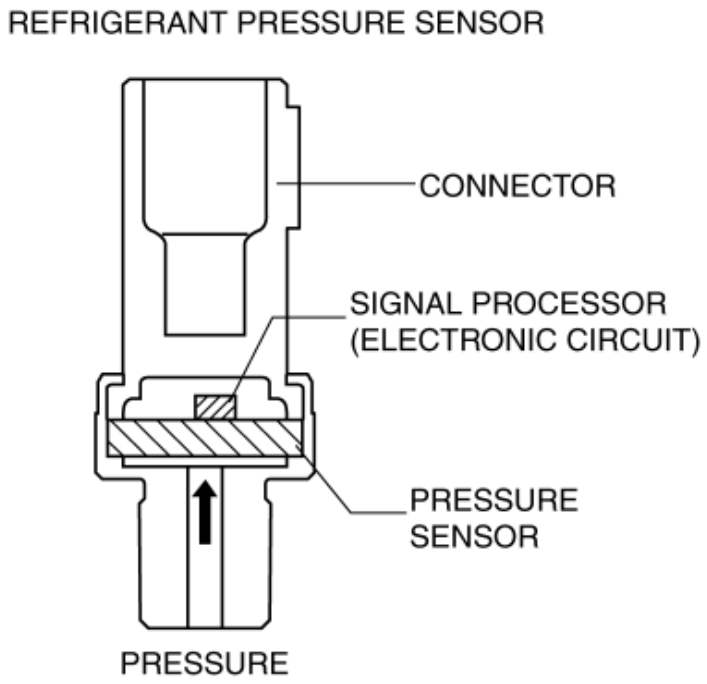

- A capacitance type refrigerant pressure sensor, which converts refrigerant pressure into a linear electric signal, has been adopted.
- Consists of a pressure detecting part and signal processing part.
- The pressure detecting part is a variable capacity condenser, which changes capacitance according to the pressure.
- The signal processing part detects the capacitance of the pressure detecting part, converts it to voltage, then outputs it to the climate control unit.

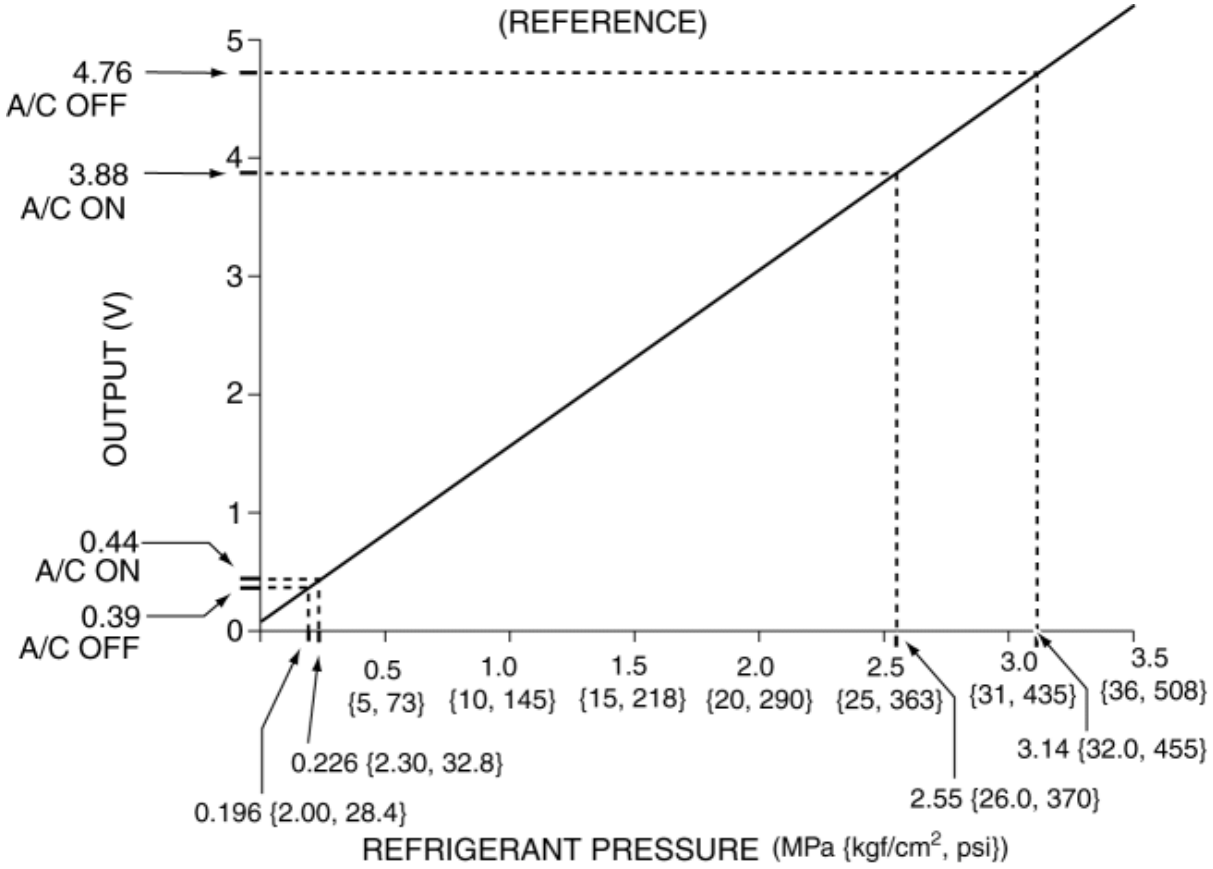

Operation

Capacitance type

- There is a clearance between the movable ceramic diaphragm and the ceramic base, and each side has an electrode.
- When pressure is applied from the ceramic diaphragm side, the ceramic diaphragm deforms, and the clearance between the electrodes changes. As a result, capacitance is changed and pressure is detected.

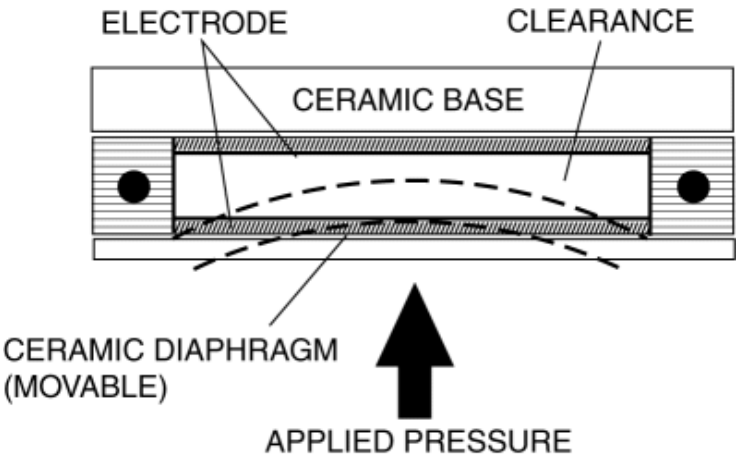

Fail-safe

- Function not equipped.

2014 - Mazda3 - HVAC

AIR MIX ACTUATOR [FULL-AUTO AIR CONDITIONER]

Purpose

- The air mix actuator moves the air mix door in the A/C unit to adjust the temperature of the air blown from the air vent.

Function

Door open/close function

- The air mix actuator drives the motor based on the signals from the climate control unit and moves the air mix door in the HOT or COLD direction.

Door position detection function

- The air mix actuator detects the change in the air mix door position using the potentiometer in conjunction with the motor drive, and gives feedback to the climate control unit based on electric signals.

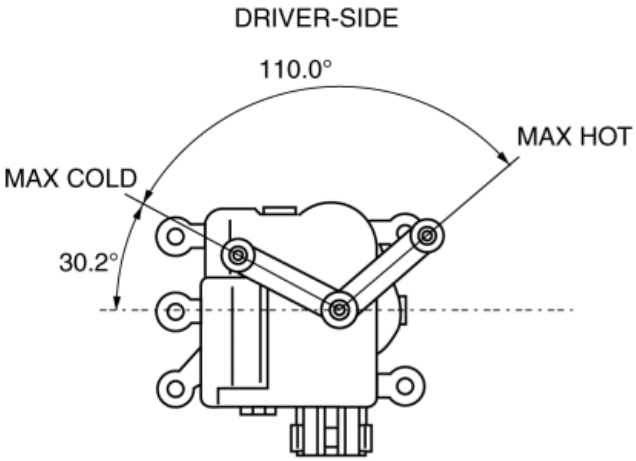

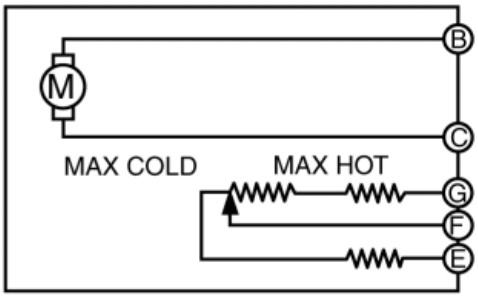

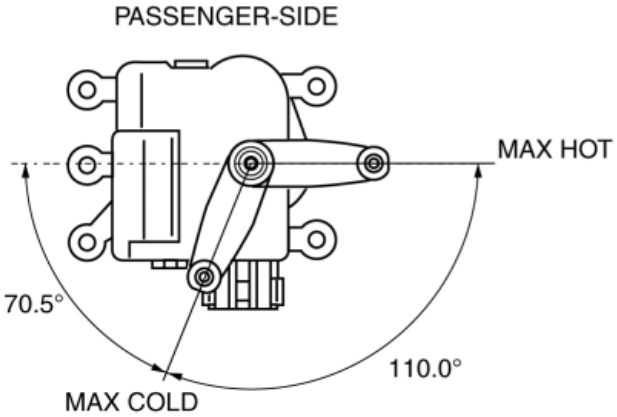

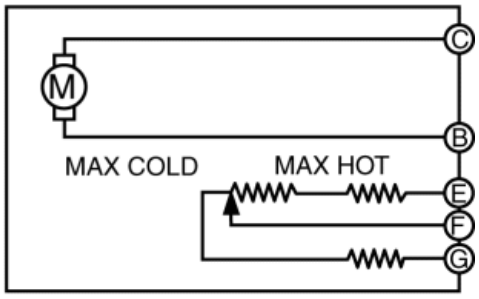

Construction

- A potentiometer-type air mix actuator has been adopted.
- The air mix actuator is installed to both the driver and front passenger sides in the A/C unit.

Operation

1. The climate control unit calculates the target air mix actuator opening angle (target actuator opening angle) according to the airflow temperature control.

2. The climate control unit detects the current air mix actuator opening angle based on the voltage detected by the potentiometer in the air mix actuator.

3. The climate control unit compares the target actuator opening angle with the voltage from the potentiometer.

4. When the voltage detected by the potentiometer differs from the target actuator opening angle, the climate control unit outputs a motor drive signal to the air mix actuator.

5. When the voltage detected by the potentiometer is equal to the target actuator opening angle, the climate control unit stops the motor drive signal to the air mix actuator.

TEMPERATURE SETTING DIAL SET TO HOT SIDE

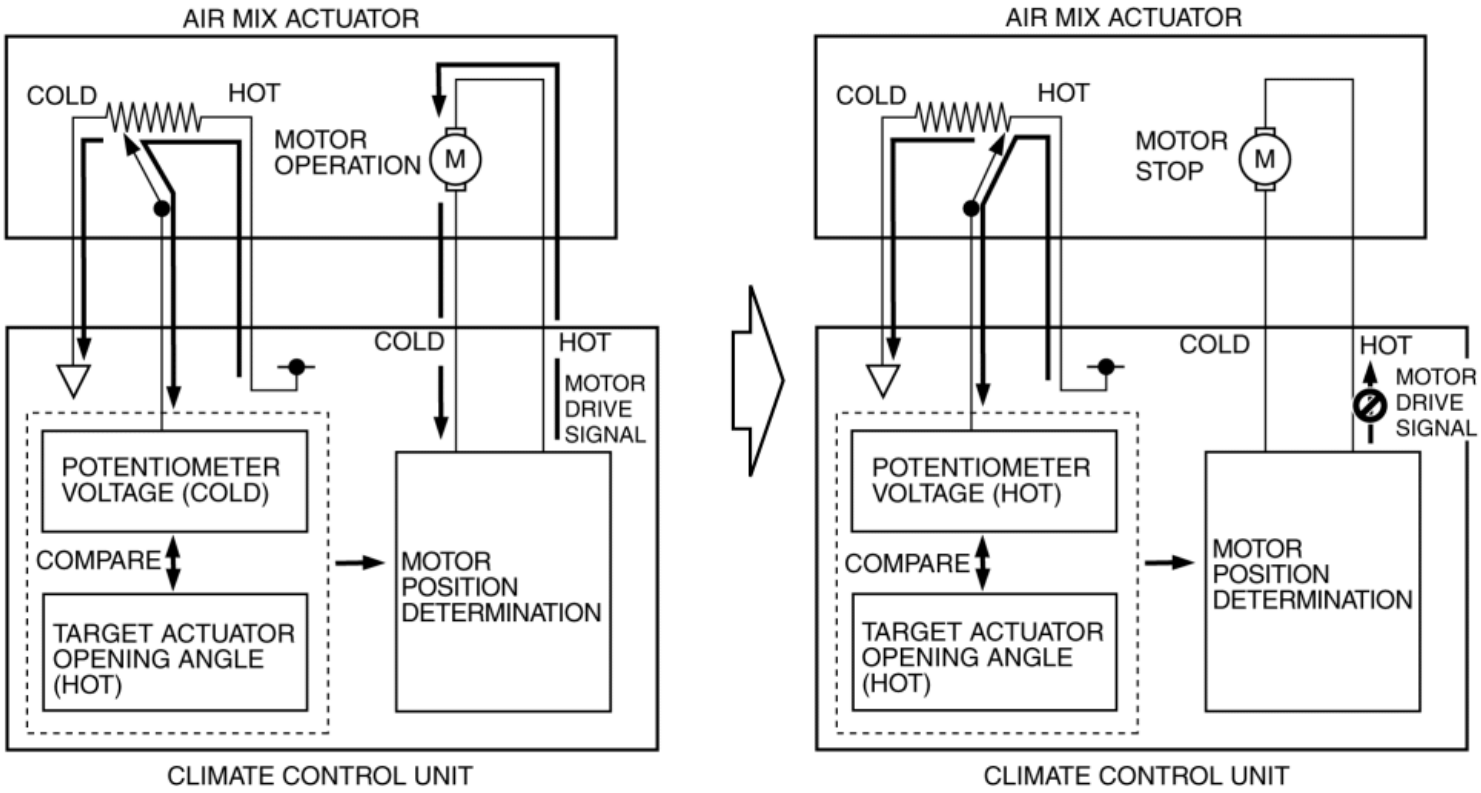

Fail-safe

- Function not equipped.

2014 - Mazda3 - HVAC

AIR INTAKE ACTUATOR [FULL-AUTO AIR CONDITIONER]

Purpose

- The air intake actuator moves the air intake door in the blower unit to switch the air intake port.

Function

- The air intake actuator drives the motor based on the signal from the climate control unit and moves the air intake door to the FRESH or REC position.

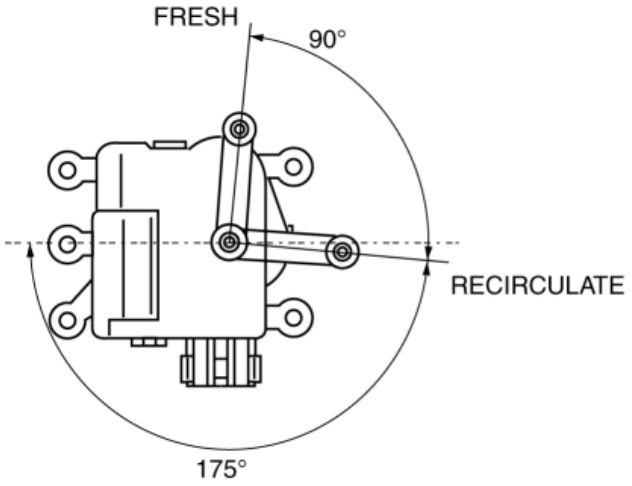

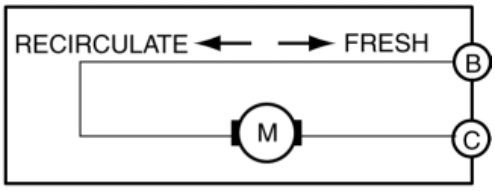

Construction

- A mechanical lock type air intake actuator has been adopted.
- The air intake actuator is installed to the blower unit.

Operation

1. The climate control unit outputs a motor drive signal to the air intake actuator based on the air intake mode determined by the air intake control.

2. When the air intake actuator moves to FRESH or REC, the motor locks.

3. When the motor locks and is under excessive load, the current value flowing from the climate control unit increases more than the specification (lock current).

4. When the lock current is detected, the climate control unit stops the motor drive signal to the air intake actuator.

SWITCHING FROM FRESH TO RECIRCULATE

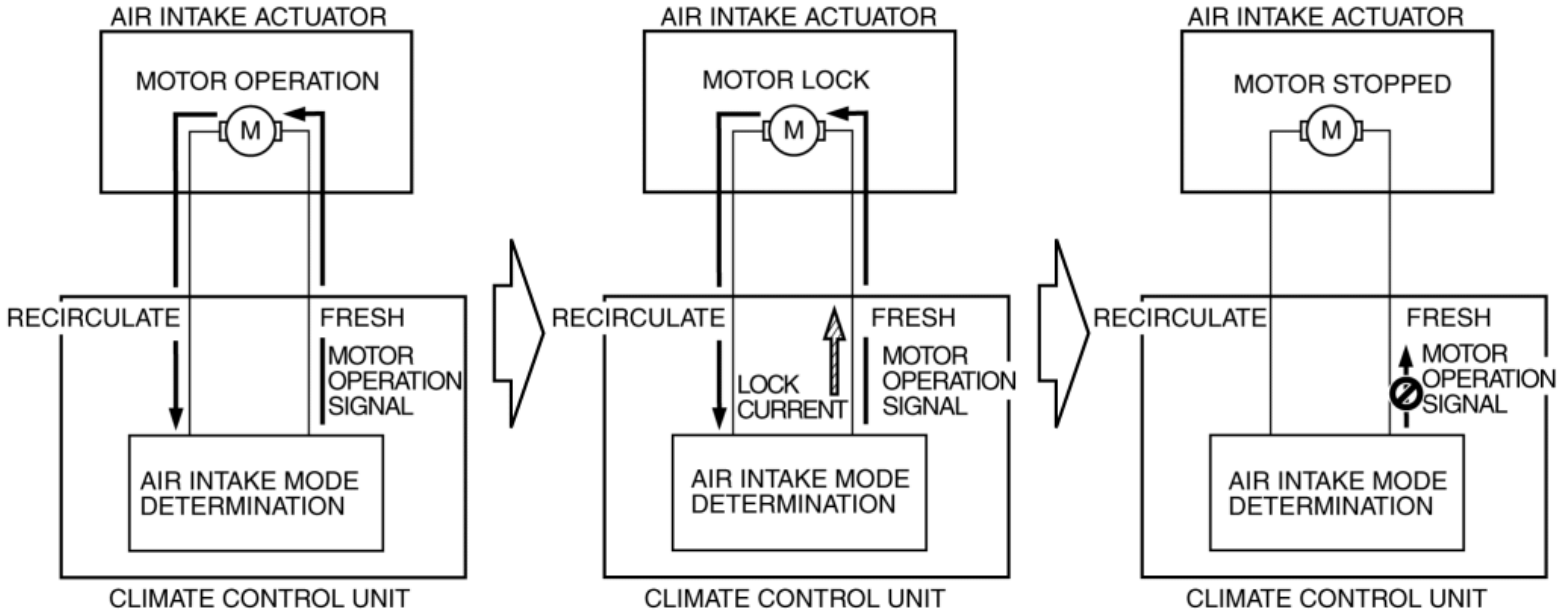

Fail-safe

- Function not equipped.

2014 - Mazda3 - HVAC

AIRFLOW MODE ACTUATOR [FULL-AUTO AIR CONDITIONER]

Purpose

- The airflow mode actuator moves the mode door in the A/C unit to switch the air vent.

Function

Door open/close function

- The airflow mode actuator drives the motor based on the signal from the climate control unit and moves the mode door to the VENT, BI-LEVEL, HEAT, DEF/HEAT, or DEFROSTER position.

Door position detection function

- The airflow mode actuator detects the changes in the mode door position using the potentiometer in conjunction with the motor drive and gives feedback to the climate control unit based on the electric signals.

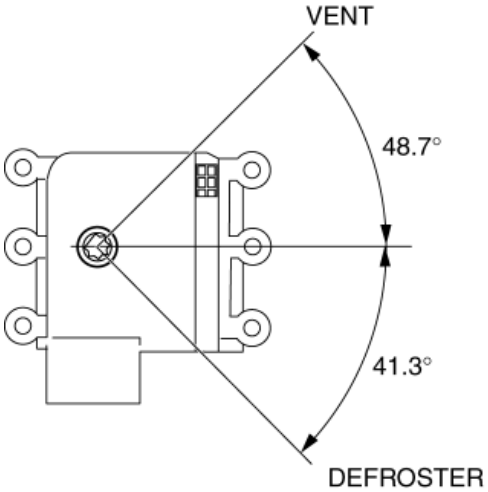

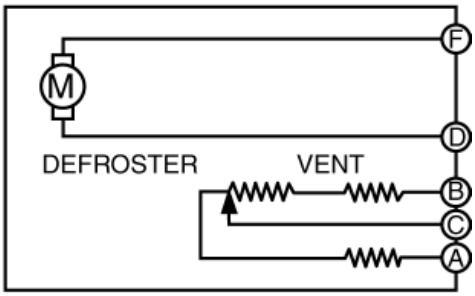

Construction

- A potentiometer-type airflow mode actuator has been adopted.
- The airflow mode actuator is installed to the passenger's side in the A/C unit.

Operation

1. The climate control unit determines the airflow mode actuator target voltage based on the mode position determined by the airflow mode control.

2. The climate control unit compares the voltage detected by the potentiometer in the airflow mode actuator with the target voltage.

3. When the voltage detected by the potentiometer differs from the target voltage, the climate control unit outputs a motor drive signal.

4. When the voltage detected by the potentiometer is equal to the target voltage, the climate control unit stops the motor drive signal to the airflow mode actuator.

MODE SWITCH SET TO VENT

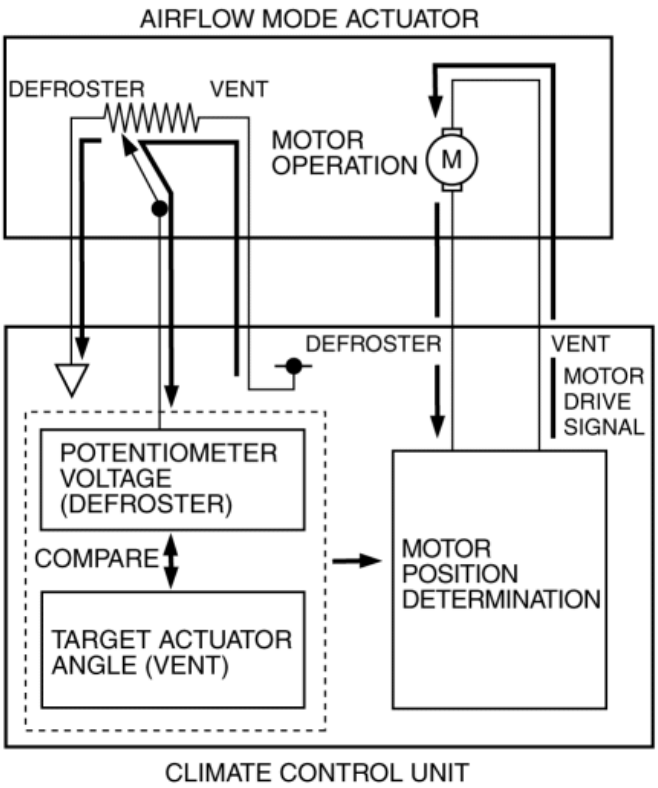

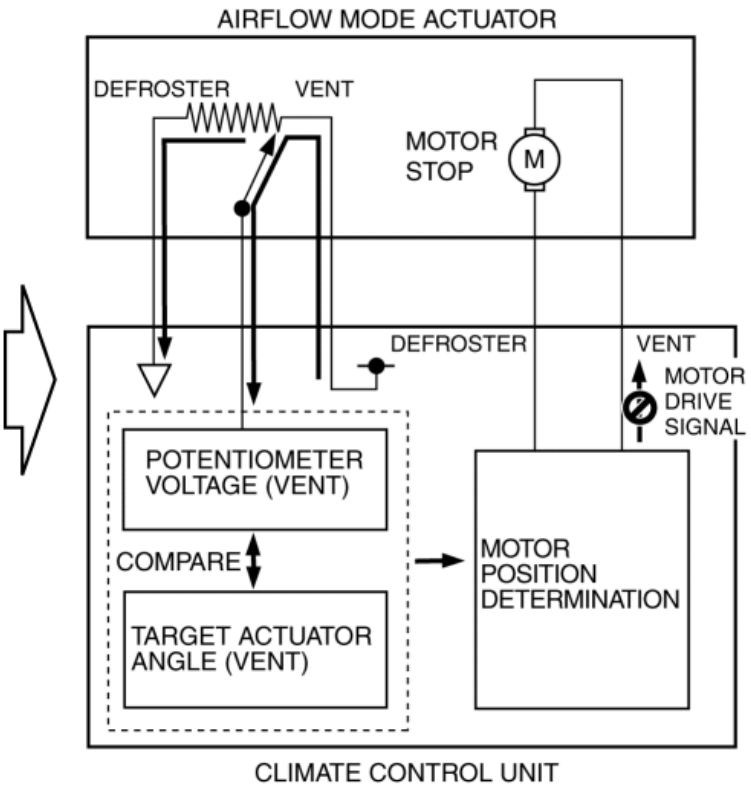

Fail-safe

- Function not equipped.

2014 - Mazda3 - HVAC

MANUAL AIR CONDITIONER SYSTEM [MANUAL AIR CONDITIONER]

Outline

- The climate control unit performs the following controls based on the signals from each switch/dial and the sensor.

Basic control	Control description
Airflow volume control	• Start-up burnt-out prevention function • Delay control
Air intake control	• Defroster control • REC mode control under severe heat
A/C compressor control	• A/C signal on/off control • MAX A/C control • A/C cut-off control

Supplementary function
Fail-safe function

Function

Airflow volume control

- The climate control unit changes the blower motor applied voltage in seven steps according to the operation of the airflow volume control dial.

Airflow volume control dial	Blower motor applied voltage
1st	3.2 V
2nd	4.8 V
3rd	6.4 V
4th	7.9 V
5th	10.1 V
6th	11.2 V
7th	12.5 V

Start-up burn-out prevention function

- The start-up burn-out prevention function prevents the blower motor from being burnt out because of excess current.
- When the blower motor is started-up from the stopped status, the blower motor applied voltage is fixed at **3.1 V** for **1 s**.

Delay control

- When the blower motor rotation exceeds and rises above the blower motor applied voltage from a low speed condition, the delay control delays the blower motor applied voltage and stabilizes the motor operation.

Air intake control

- The climate control unit switches the air intake mode based on the REC/FRESH switch operation.

Air intake mode	REC switch operation
FRESH	Fixed to FRESH when the FRESH switch is turned on during REC mode
REC	Fixed to REC when the RECIRCULATE switch is turned on during FRESH mode

Defroster control

- The defroster control improves the defrosting effect.
- When the defroster switch turns on, the climate control unit fixes the air intake mode to FRESH.
- The defroster correction fixes the air intake mode to FRESH when the airflow mode is DEFROSTER.
- The air intake is fixed at FRESH even if it has been set to REC manually.

REC mode control under severe heat

- When the vehicle is driven at a very low speed with the A/C on under a severe heat condition, the climate control unit may change the air intake mode from FRESH to REC automatically.
- Due to this, load to the A/C compressor is reduced.
- When the air intake mode is switched to REC, the indicator on the REC switch illuminates.

A/C compressor control

A/C signal on/off control

- When the A/C switch and fan switch are turned on, the climate control unit turns the A/C signal (magnetic clutch) on/off based on the temperature of the air passing through the evaporator.

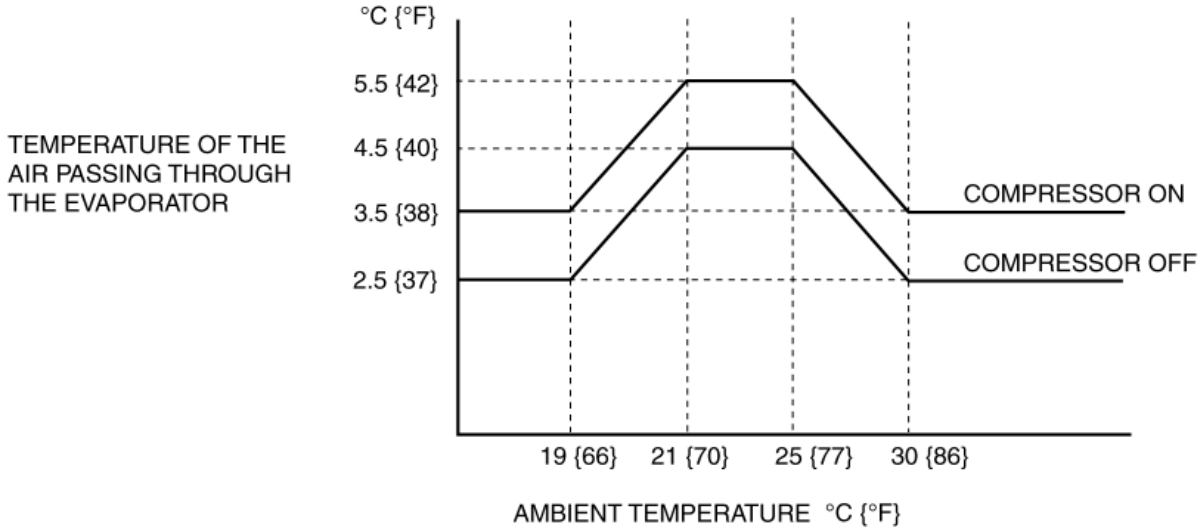

- When the fan switch and A/C switch are turned on, the climate control unit controls the surface temperature of the evaporator so that it is within a certain range to prevent the evaporator from freezing.
- When the ambient temperature is low, the climate control unit sets the A/C signal (magnetic clutch) off-temperature to low to prevent window fogging.

MAX A/C control

- When the temperature control dial is set to the MAX COLD position, the climate control unit performs the MAX A/C control (when the airflow mode is VENT or BI-LEVEL).
- The MAX A/C control controls the air conditioner as follows:
  - Sets the intake mode to REC.
  - Turns on the A/C compressor.

A/C cut-off control

- Controls the A/C operation by switching the A/C relay on/off at the optimal timing according to engine operation conditions. (See **A/C CUT-OFF CONTROL [SKYACTIV-G 2.0, SKYACTIV-G 2.5]**.)

Fail-safe

- If a malfunction is detected by the malfunction detection function, the fail-safe function performs the following controls to prevent an operation malfunction of the air conditioner and malfunction of output devices.

Fail-safe function table

Part where malfunction is determined	Malfunction determined when ignition switched ON	Malfunction already exists when ignition switched ON
Ambient temperature sensor	Ambient temperature sensor input value is fixed at the value right before the malfunction.	Ambient temperature sensor input value is fixed at **15 °C {59 °F}.**
Evaporator temperature sensor	A/C output OFF is controlled when the evaporator temperature sensor input value is at **0 °C {32 °F}**.	←
Engine coolant temperature sensor	Engine coolant temperature sensor input value is fixed at **85 °C {185 °F}**.	←

Construction

Block diagram

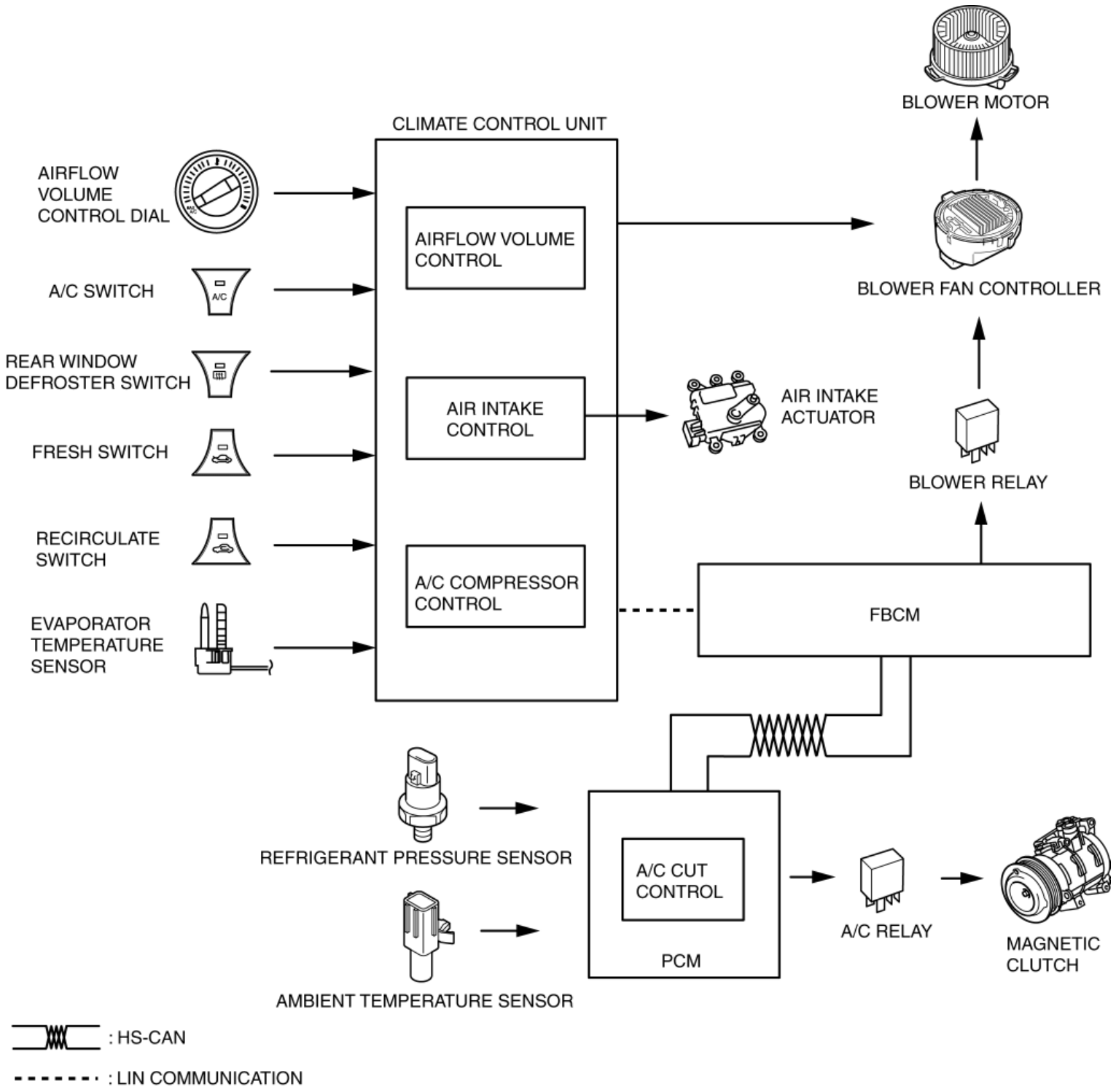

Structural view

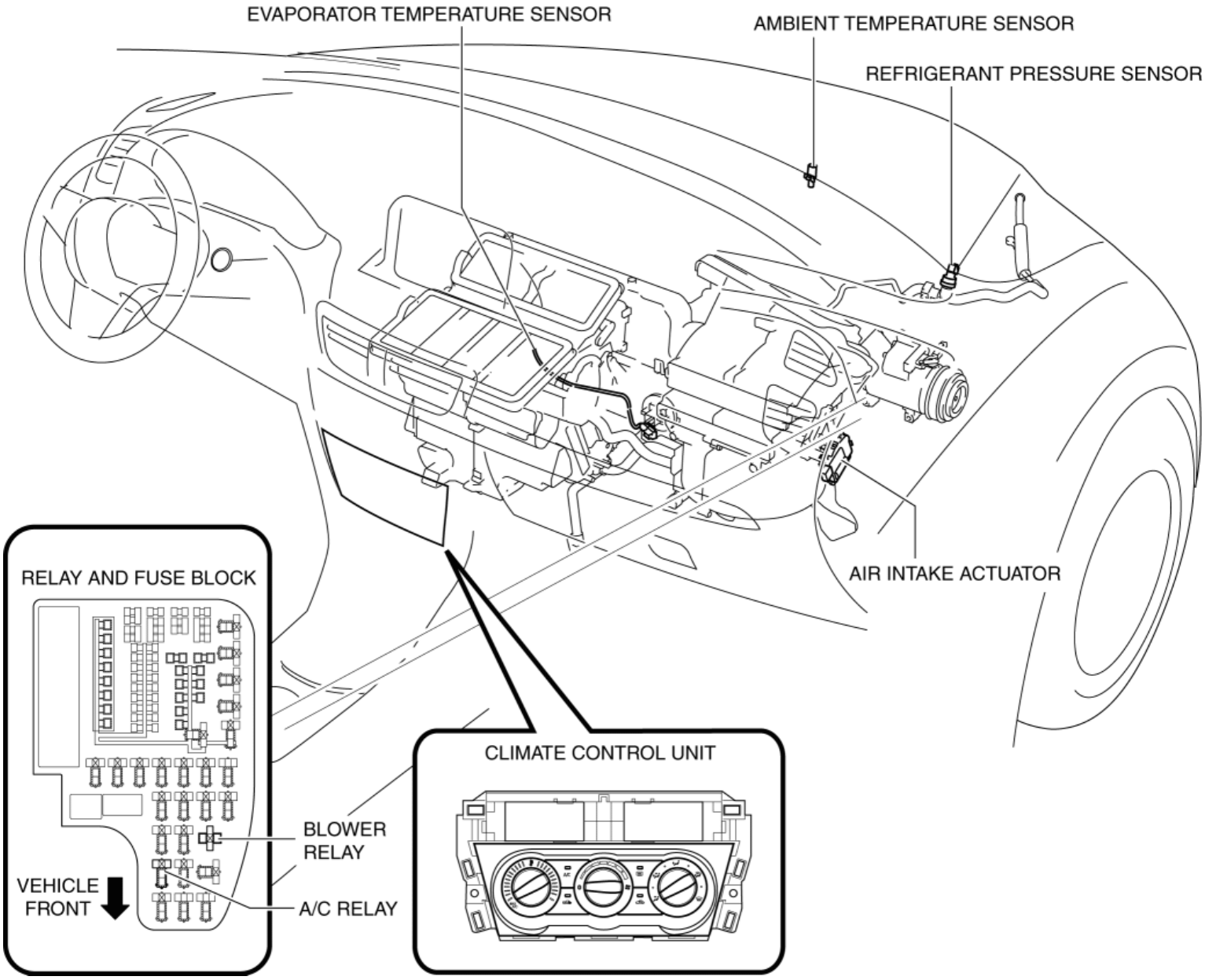

Operation

Airflow volume control

1. When the ignition is switched ON (engine off or on), the front body control module (FBCM) turns the blower relay on.

2. When the airflow volume control dial on the climate control unit is turned on, the blower motor rotates.

3. The climate control determines the airflow volume based on the operations of the airflow volume control dial and the temperature setting dial, airflow mode condition, and signals from each sensor.

4. Based on the result of the airflow volume determination and correction, the climate control unit control the blower fan controller and changes the airflow volume (blower motor applied voltage).

5. The rotation speed of the blower motor changes according to the applied voltage from the blower fan controller.

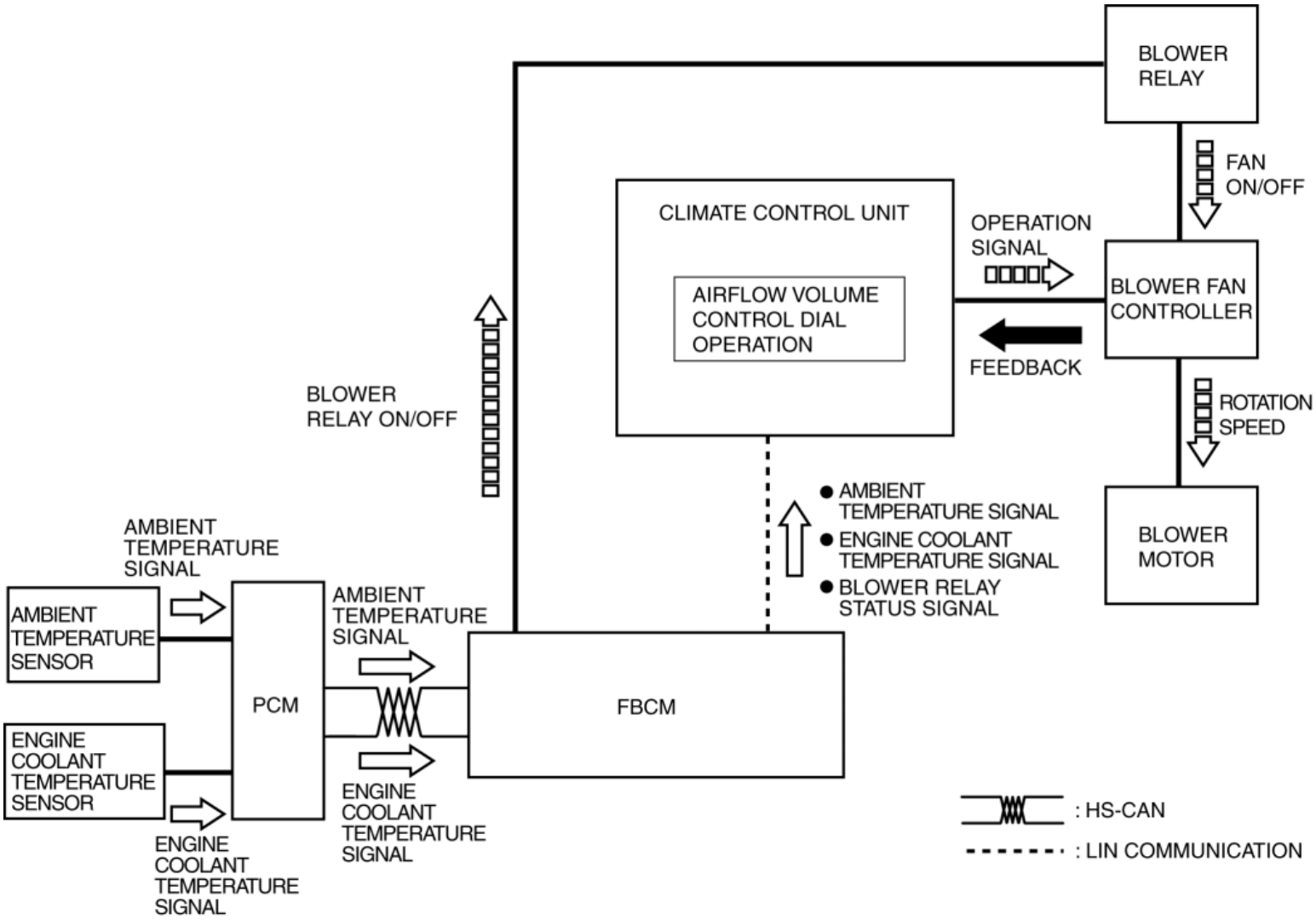

Air intake control

1. The climate control determines the air intake mode based on the operations of the FRESH switch, RECIRCULATE switch, mode dial and signals from each sensor which changes according to the vehicle environment.

2. The climate control unit drives the air intake actuator according to the result of the air intake mode determination and corrections.

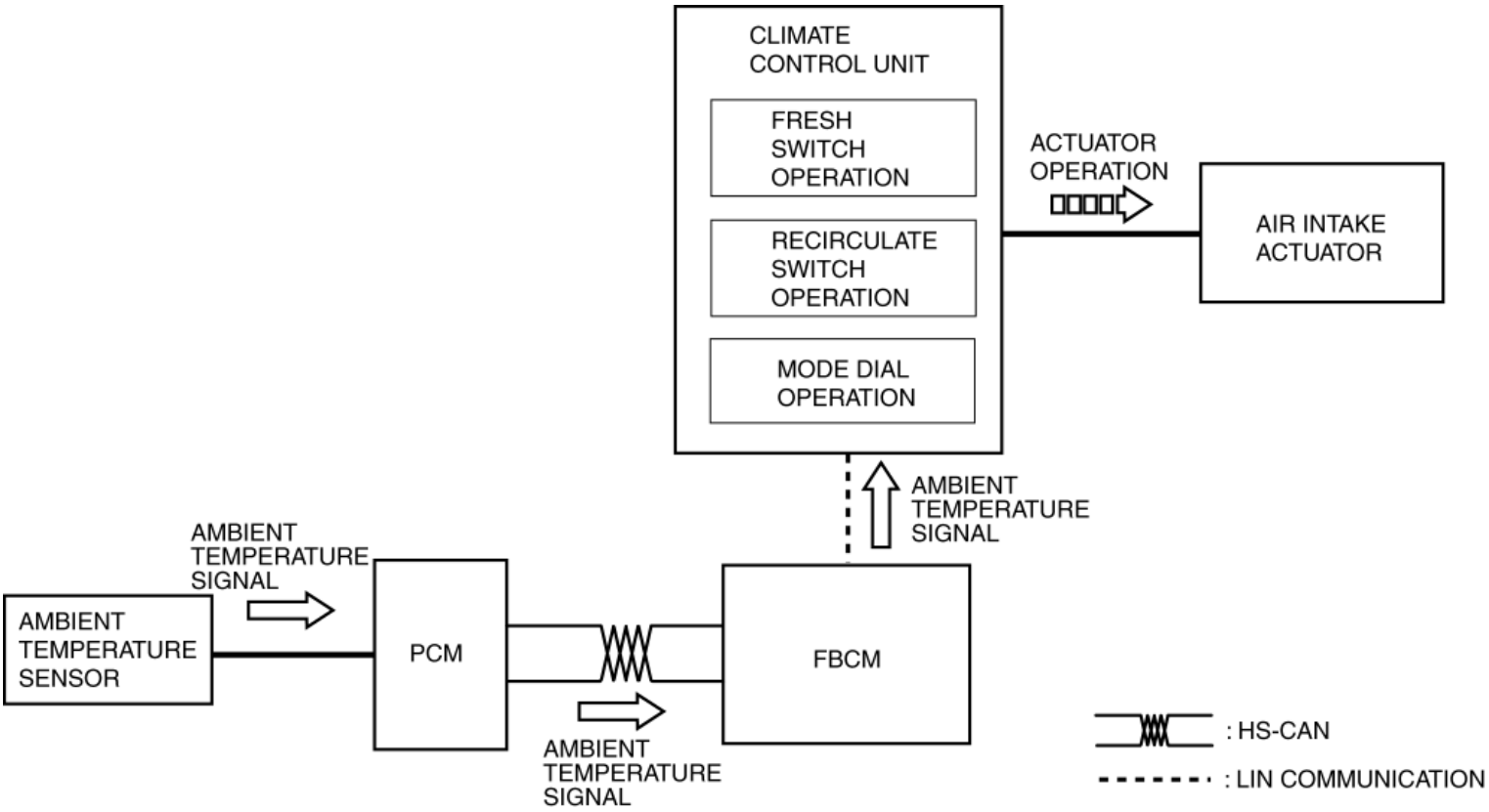

A/C compressor control

- The climate control unit sends the A/C signal to the PCM based on the signals sent from the A/C switch, airflow volume control dial, and evaporator temperature sensor.
- The PCM turns the A/C relay on/off based on the input signals from the A/C signal and A/C pressure sensor and controls the A/C compressor (magnetic clutch) operation.

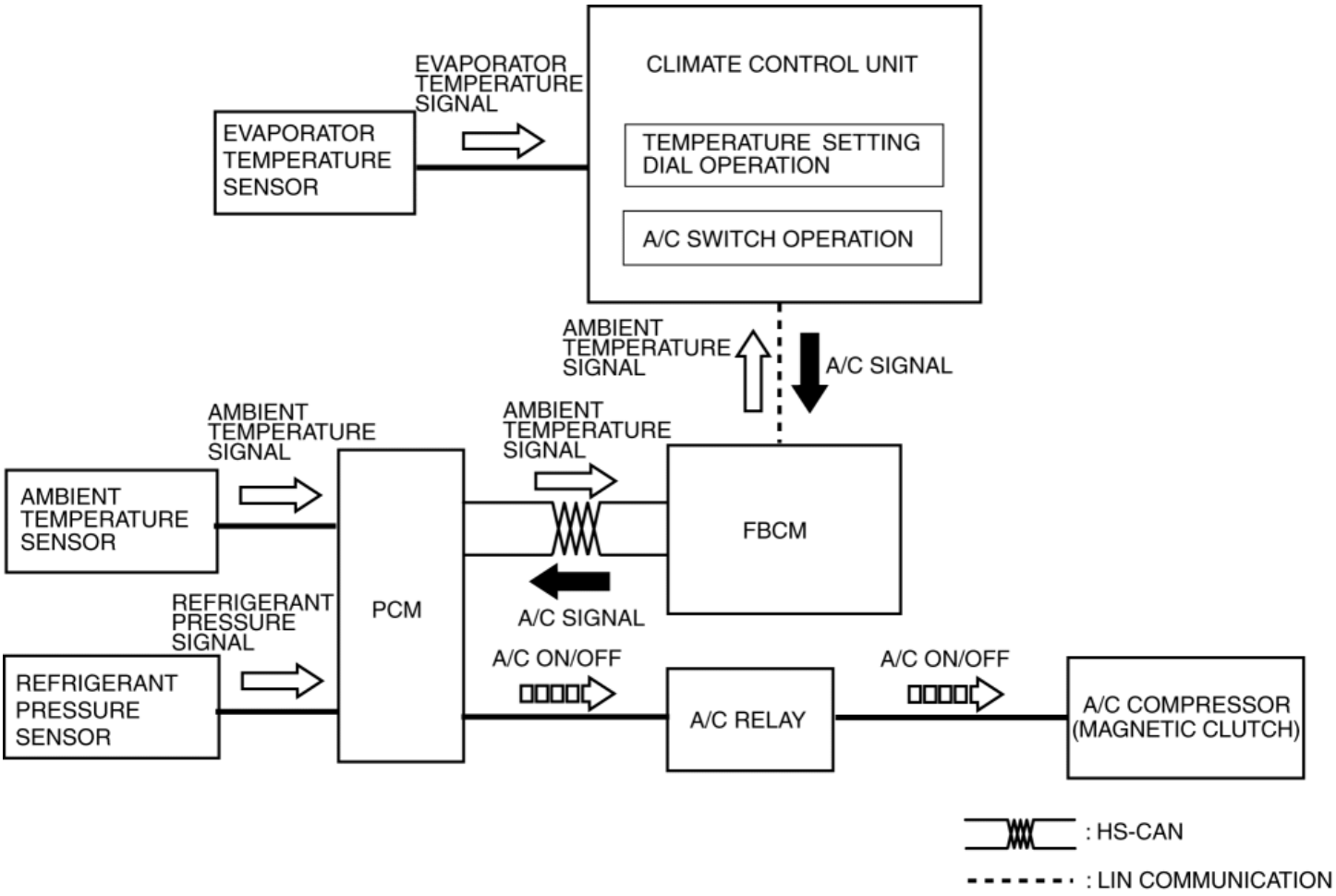
EVAPORATOR TEMPERATURE SIGNAL
CLIMATE CONTROL UNIT
EVAPORATOR TEMPERATURE SENSOR
TEMPERATURE SETTING DIAL OPERATION
A/C SWITCH OPERATION
AMBIENT TEMPERATURE SIGNAL
A/C SIGNAL
AMBIENT TEMPERATURE SIGNAL
AMBIENT TEMPERATURE SIGNAL
AMBIENT TEMPERATURE SENSOR
FBCM
PCM
A/C SIGNAL
REFRIGERANT PRESSURE SIGNAL
A/C ON/OFF
A/C ON/OFF
REFRIGERANT PRESSURE SENSOR
A/C RELAY
A/C COMPRESSOR (MAGNETIC CLUTCH)
: HS-CAN
: LIN COMMUNICATION

2014 - Mazda3 - HVAC

CLIMATE CONTROL UNIT [MANUAL AIR CONDITIONER]

Purpose

- The climate control unit performs air conditioning according to the operation by the users and the driving conditions of the vehicle.

Function

- The climate control unit determines optimum air-conditioning based on the input signals from each sensor and the control module and the operation signals from the control panel, and controls each actuator, A/C compressor, and the blower motor. (See **MANUAL AIR CONDITIONER SYSTEM [MANUAL AIR CONDITIONER]**.)

Construction

- A wire-type climate control unit has been adopted.
- The climate control unit consists of a control panel and a control unit.
- The switches and dials shown in the figure are positioned on the control panel.

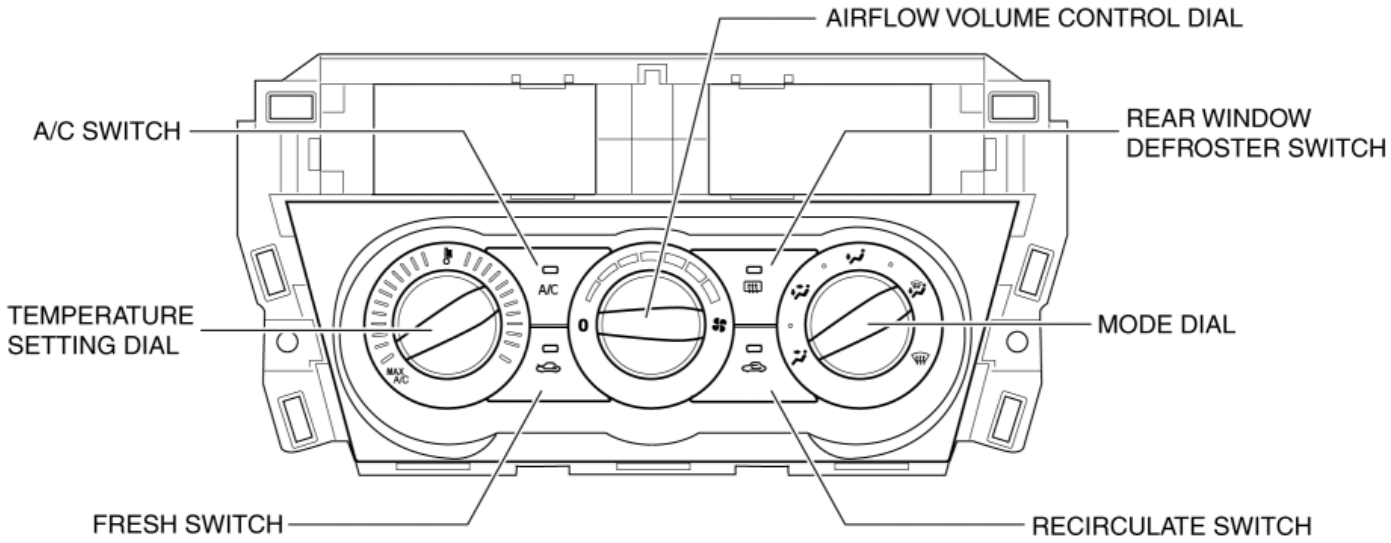

System Wiring Diagram

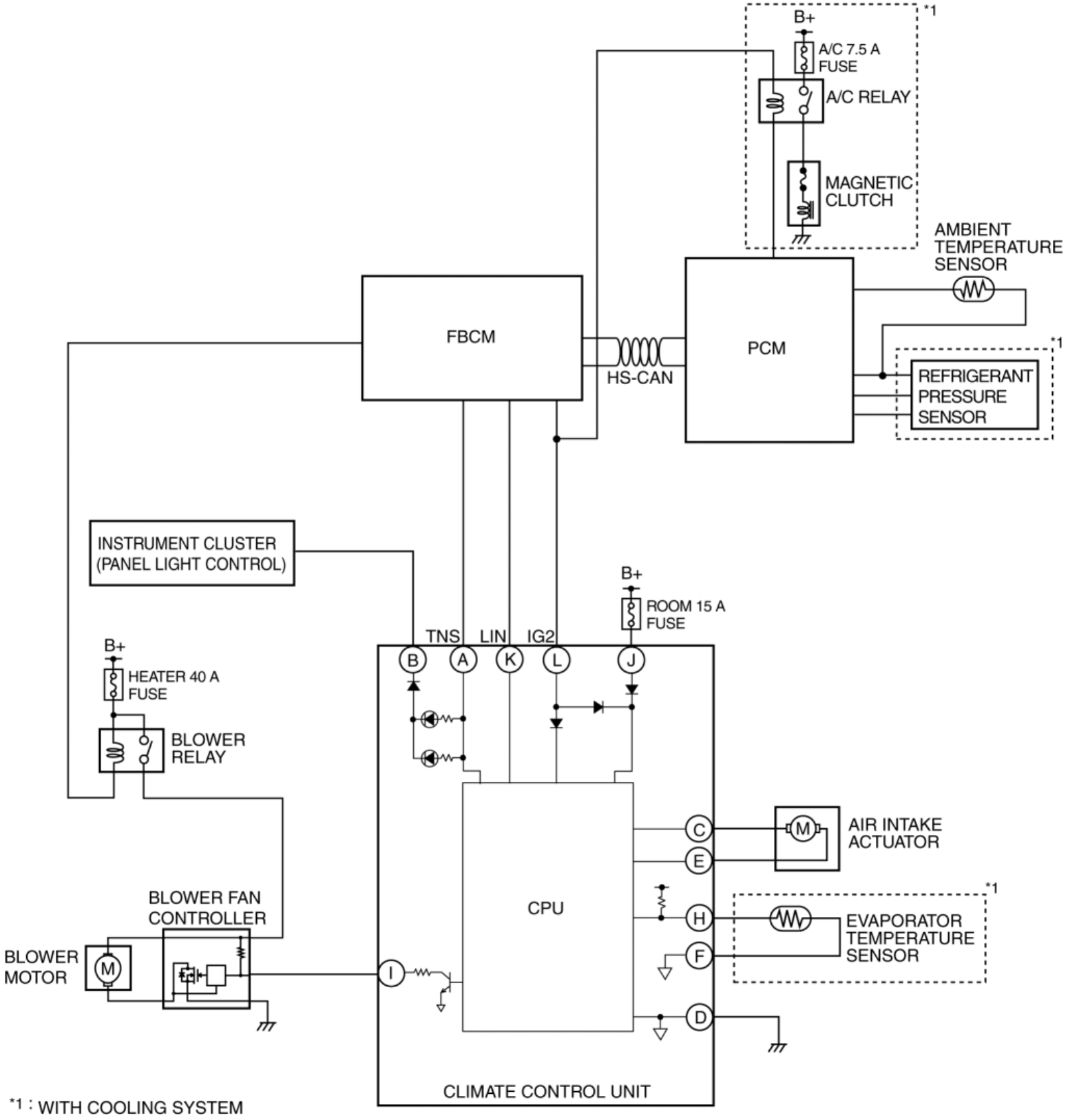

Operation

Control type transition by switch operation

Airflow temperature control, airflow volume control, airflow mode control

	Airflow temperature control	Airflow volume control	Airflow mode control

Operation switch					
		Control prior to switch operation	Control prior to switch operation	Control prior to switch operation	
		Automatic control	Manual control	Manual control	Defroster control
Airflow volume control dial	OFF	No change	OFF	No change	No change
	1—7	No change	Manual control	No change	No change
MODE dial	VENT	No change	No change	Manual control	No change
	BI-LEVEL				
	HEAT				
	DEF/HEAT				
	DEFROSTER				
Temperature setting dial	MAX COLD	No change	No change	No change	No change
	Except MAX COLD				
A/C switch		No change	No change	No change	No change
RECIRCULATE switch		No change	No change	No change	No change
FRESH switch		No change	No change	No change	No change
Rear window defroster switch		No change	No change	No change	No change

A/C compressor control, air intake control

Operation switch		A/C compressor control		Air intake control		
		Control prior to switch operation		Control prior to switch operation		
		Manual control	MAX A/C control	Manual control	Defroster control	MAX A/C control
Airflow volume control dial	OFF	OFF	OFF	No change	No change	No change
	1—7	No change	No change	No change	No change	No change
MODE dial	VENT	No change*	No change	No change*	Defroster control	No change
	BI-LEVEL	No change*	No change	No change*	Defroster control	No change
	HEAT	No change	Manual control	No change	Defroster control	Manual control
	DEF/HEAT	Defroster control	Defroster control	Defroster control	Manual control	Defroster control
	DEFROSTER	Defroster control	Defroster control	Defroster control	Defroster control	Defroster control
Temperature setting dial	MAX COLD	No change*	Manual control	No change*	MAX HI	No change
	Except MAX COLD	No change	Manual control	No change	No change	Manual control

A/C switch	Manual control	Manual control	No change	No change	No change
RECIRCULATE switch	No change	No change	Manual control	Manual control	Manual control
FRESH switch	No change	No change	Manual control	Manual control	Manual control
Rear window defroster switch	No change	No change	No change	No change	No change

*

If the MAX A/C control conditions are met, it switches to MAX A/C control.

2014 - Mazda3 - HVAC

AMBIENT TEMPERATURE SENSOR [MANUAL AIR CONDITIONER]

Purpose

- The ambient temperature sensor detects the ambient temperature.

Function

- The ambient temperature sensor converts the detected temperature to an electric signal.

Construction

- A thermistor-type ambient temperature sensor has been adopted.
- The ambient temperature sensor is installed to the shroud panel on the back side of the front bumper.

Operation

- The thermistor changes the resistance according to the surrounding temperature.
- The resistance decreases if the temperature increases, and conversely increases if the temperature decreases as shown in the figure.

AMBIENT TEMPERATURE SENSOR

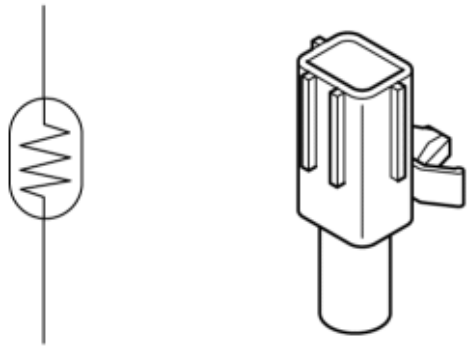

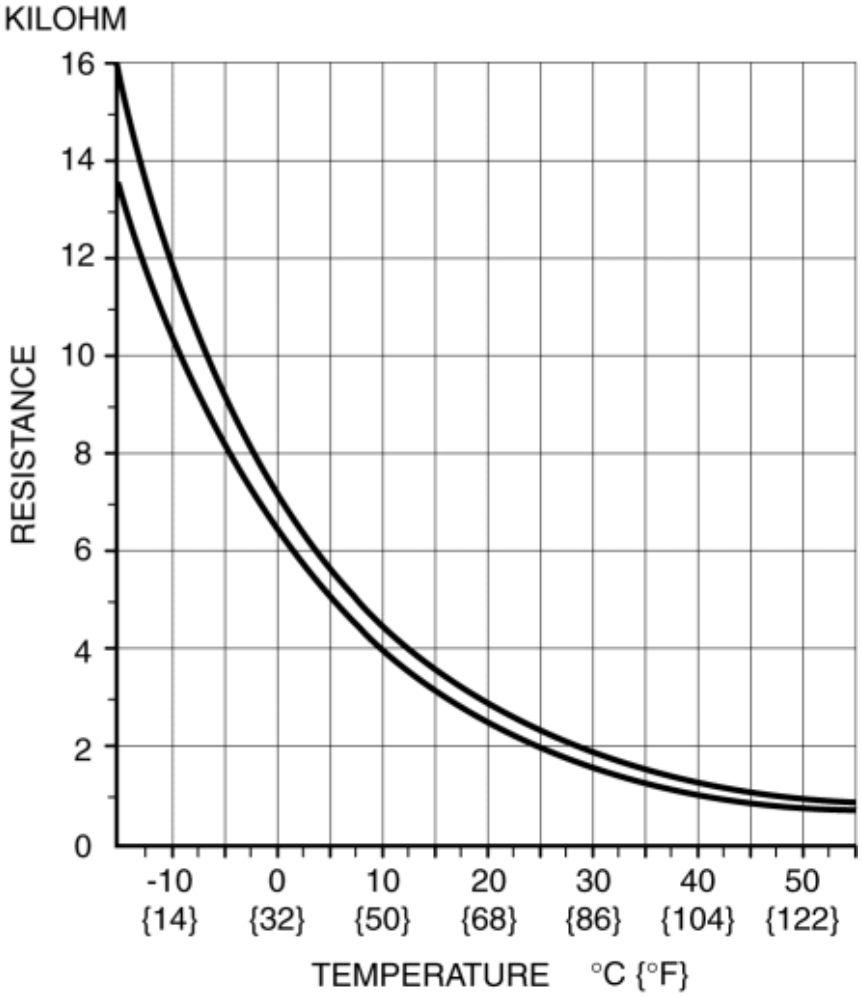

Fail-safe

- Function not equipped.

2014 - Mazda3 - HVAC

EVAPORATOR TEMPERATURE SENSOR [MANUAL AIR CONDITIONER]

Purpose

- The evaporator temperature sensor detects the airflow temperature passing through the evaporator.

Function

- The evaporator temperature sensor converts the detected temperature to an electric signal.

Construction

- A thermistor-type evaporator temperature sensor has been adopted.
- A fin-thermo-type sensor has been adopted to the sensor area of the evaporator temperature sensor which inserts between the evaporator fins.
- The evaporator temperature sensor is installed to the A/C unit.

Operation

- The thermistor changes the resistance according to the surrounding temperature.
- The resistance decreases if the temperature increases, and conversely increases if the temperature decreases as shown in the figure.

EVAPORATOR TEMPERATURE SENSOR

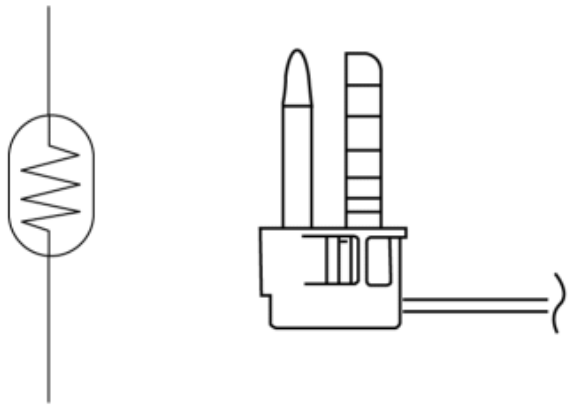

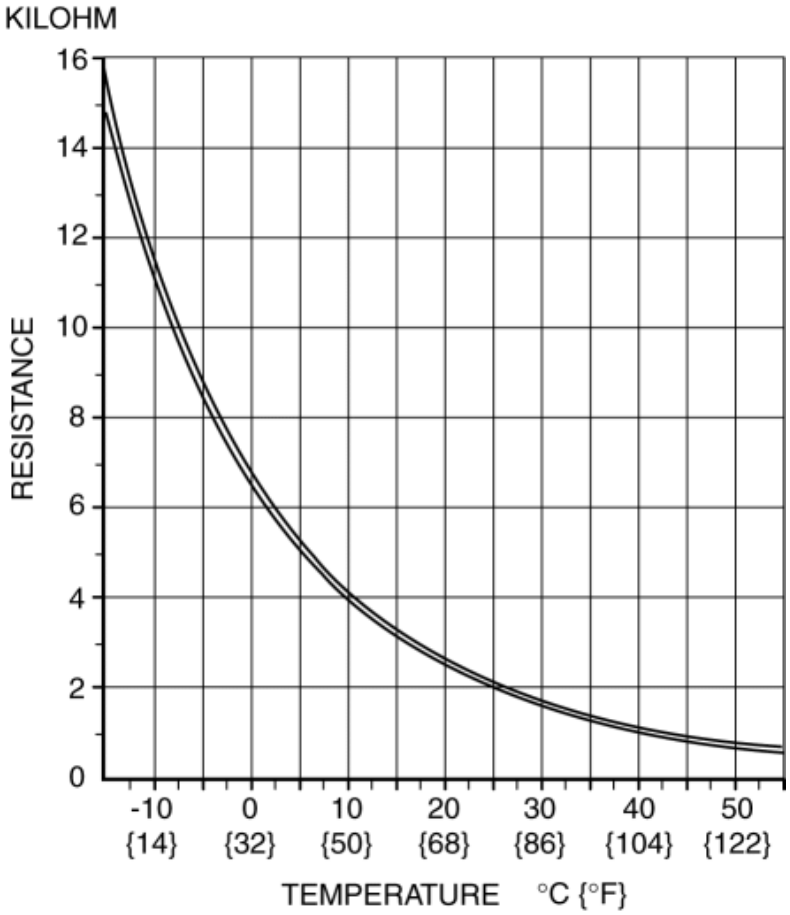

Fail-safe

- Function not equipped.

2014 - Mazda3 - HVAC

REFRIGERANT PRESSURE SENSOR [MANUAL AIR CONDITIONER]

Purpose

- The refrigerant pressure sensor detects the refrigerant pressure in the refrigerant cycle.

Function

- The refrigerant pressure sensor converts the detected refrigerant pressure to an electric signal and sends it to the PCM.

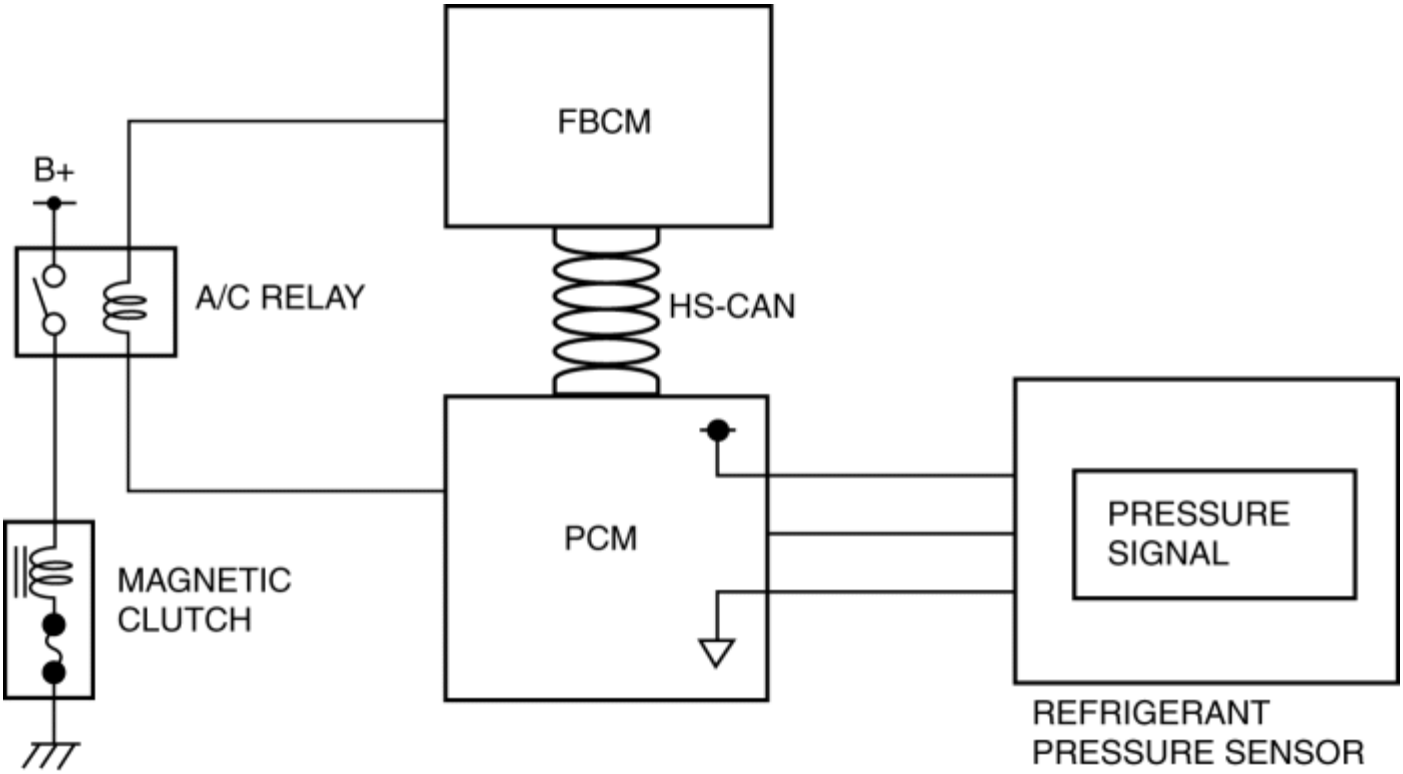

Construction

- The refrigerant pressure sensor is installed on the cooler pipe.

REFRIGERANT PRESSURE SENSOR

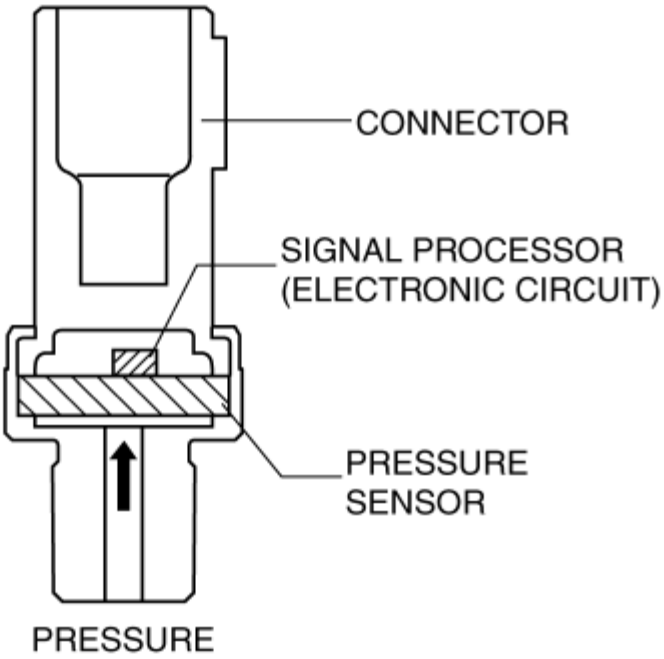

- A capacitance type refrigerant pressure sensor, which converts refrigerant pressure into a linear electric signal, has been adopted.
- Consists of a pressure detecting part and signal processing part.
- The pressure detecting part is a variable capacity condenser, which changes capacitance according to the pressure.
- The signal processing part detects the capacitance of the pressure detecting part, converts it to voltage, then outputs it to the climate control unit.

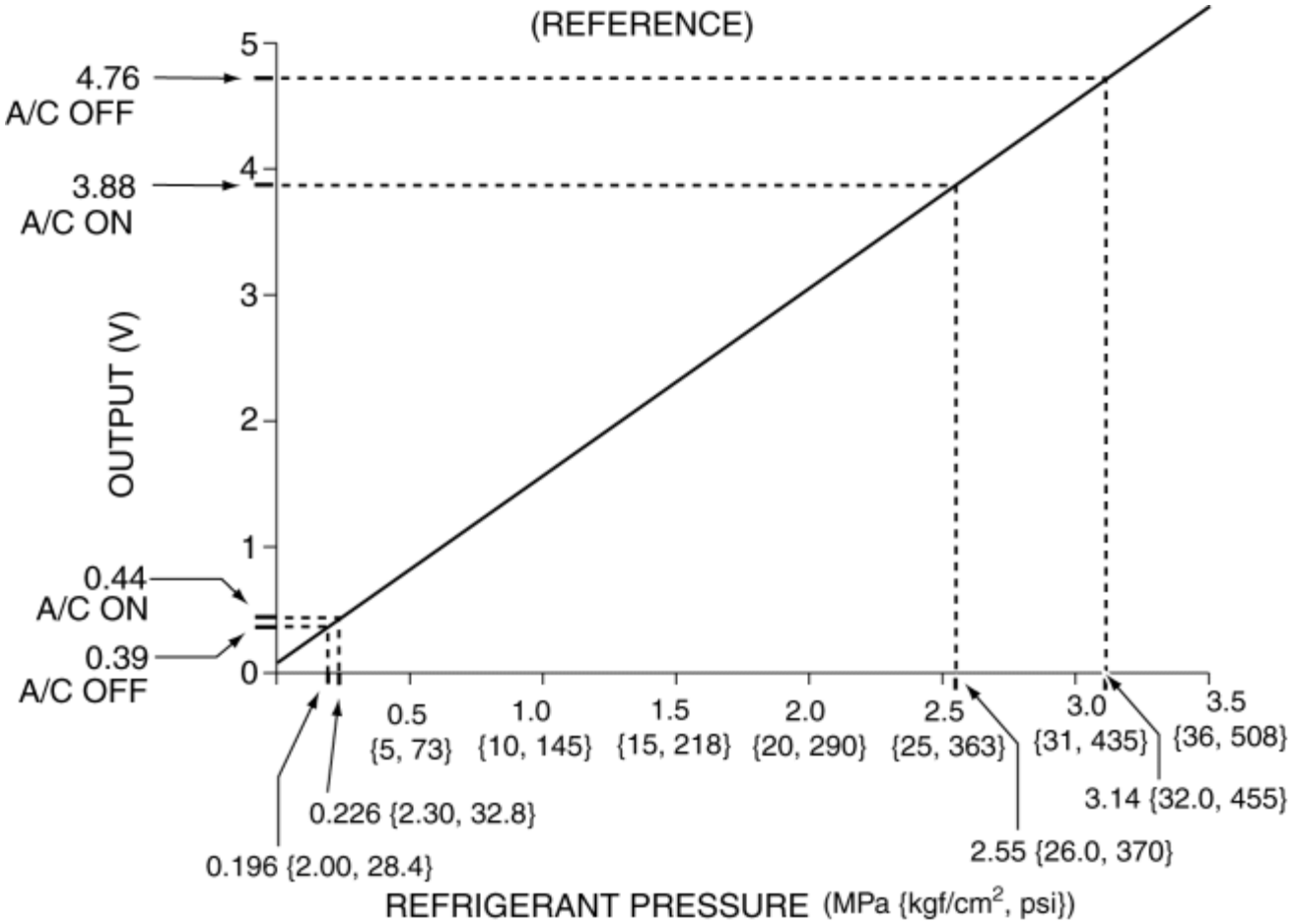

Operation

Capacitance type

- There is a clearance between the movable ceramic diaphragm and the ceramic base, and each side has an electrode.
- When pressure is applied from the ceramic diaphragm side, the ceramic diaphragm deforms, and the clearance between the electrodes changes. As a result, capacitance is changed and pressure is detected.

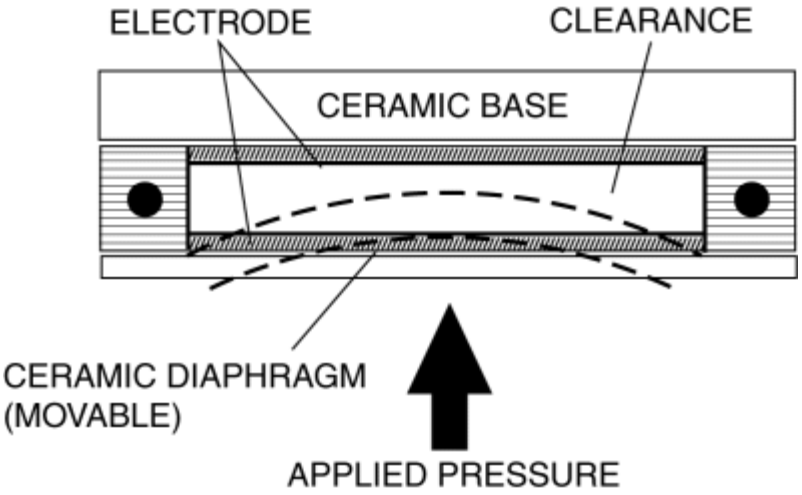

Fail-safe

- Function not equipped.

< Previous

2014 - Mazda3 - HVAC

AIR INTAKE ACTUATOR [MANUAL AIR CONDITIONER]

Purpose

- The air intake actuator moves the air intake door in the blower unit to switch the air intake port.

Function

- The air intake actuator drives the motor based on the signal from the climate control unit and moves the air intake door to the FRESH or REC position.

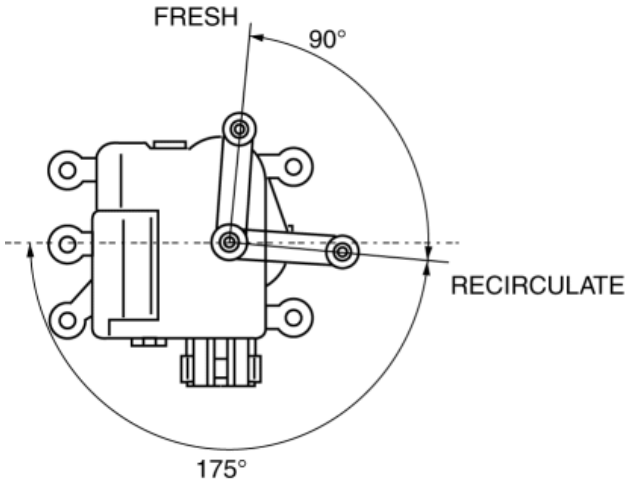

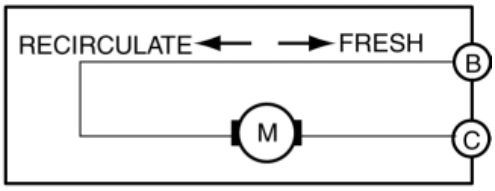

Construction

- A mechanical lock-type air intake actuator has been adopted.
- The air intake actuator is installed to the blower unit.

Operation

1. The climate control unit outputs a motor drive signal to the air intake actuator based on the air intake mode determined by the air intake control.

2. When the air intake actuator moves to FRESH or REC, the motor locks.

3. When the motor locks and is under excessive load, the current value flowing from the climate control unit increases more than the specification (lock current).

4. When the lock current is detected, the climate control unit stops the motor drive signal to the air intake actuator.

SWITCHING FROM FRESH TO RECIRCULATE

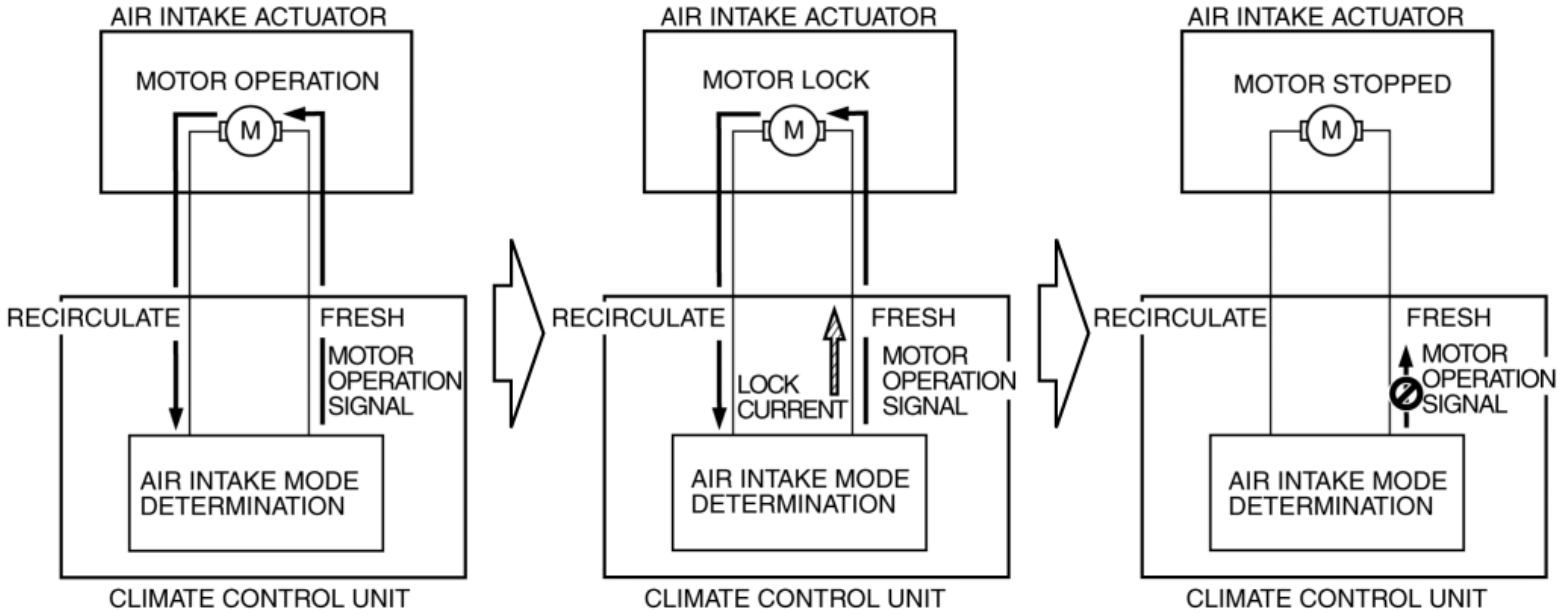

Fail-safe

- Function not equipped.

< Previous

Next >

2014 - Mazda3 - Restraints

RESTRAINTS

Abbreviations

AAS	Active Adaptive Shift
ABS	Antilock Brake System
ABDC	After Bottom Dead Center
ACC	Accessories
AFS	Adaptive Front Lighting System
ALC	Auto Level Control
ALR	Automatic Locking Retractor
ATDC	After Top Dead Center
ATF	Automatic Transaxle Fluid
ATX	Automatic Transaxle
AWD	All-Wheel Drive
BBDC	Before Bottom Dead Center
BDC	Bottom Dead Center
BSM	Blind Spot Monitoring
BTDC	Before Top Dead Center
CAN	Controller Area Network

CCM	Comprehensive Component Monitor
CV	Canister Vent
CM	Control Module
CMU	Connectivity master unit
CPU	Central Processing Unit
DC	Drive Cycle
DRL	Daytime Running Light
DSC	Dynamic Stability Control
EBD	Electronic Brakeforce Distribution
EEPROM	Electrically Erasable Programmable Read-Only Memory
EHPAS	Electro Hydraulic Power Assist Steering
ELR	Emergency Locking Retractor
EPS	Electric Power Steering
ESA	Electronic Spark Advance
FBCM	Front Body Control Module
FET	Field Effect Transistor
FOW	Forward Obstruction Warning
GPS	Global Positioning System
HBC	High Beam Control
HF/TEL	Hands-Free Telephone
HI	High
HLA	Hydraulic Lash Adjuster

HS	High Speed
HU	Hydraulic Unit
IDS	Integrated Diagnostic Software
IG	Ignition
INT	Intermittent
KOEO	Key On Engine Off
KOER	Key On Engine Running
LCD	Liquid Crystal Display
LDWS	Lane Departure Warning System
LED	Light Emitting Diode
LF	Left Front
LH	Left Hand
LO	Low
LR	Left Rear
M	Motor
MAX	Maximum
MIN	Minimum
MOS	Metal Oxide Semiconductor
MRCC	Mazda Radar Cruise Control
MS	Middle Speed
MTX	Manual Transaxle
OCV	Oil Control Valve

OFF	Switch Off
ON	Switch On
PAD	Passenger Air Bag Deactivation
PCV	Positive Crankcase Ventilation
PID	Parameter Identification
P/W CM	Power Window Control Module
PTC	Positive Temperature Coefficient
RBCM	Rear Body Control Module
RCTA	Rear Crossing Traffic Alert
REC	Recirculate
RF	Right Front
RH	Right Hand
RR	Right Rear
SAS	Sophisticated Air Bag Sensor
SST	Special Service Tool
SW	Switch
TAU	Tuner and Amp Unit
TCS	Traction Control System
TDC	Top Dead Center
TFT	Transaxle Fluid Temperature
TNS	Tail Number Side Lights
TPMS	Tire Pressure Monitoring System

USB	Universal Serial Bus
VENT	Ventilation
1GR	First Gear
2GR	Second Gear
2WD	2-Wheel Drive
3GR	Third Gear
4GR	Fourth Gear
4SD	4 Door Sedan
5GR	Fifth Gear
5HB	5 Door Hatchback
6GR	Sixth Gear

Features

Two-step deployment control system

- A driver-side air bag module has been adopted.
- A passenger-side air bag module has been adopted.
- A side air bag module has been adopted.
- A curtain air bag module has been adopted.
- Three-point front seat belts with the following functions for front seat passengers have been adopted.
    - ELR (Emergency Locking Retractor: emergency locking mechanism)
    - ALR (Automatic Locking Retractor: child-restraint seat locking mechanism) (passenger-side)
    - Load limiter
    - Pre-tensioner seat belt (See **PRE-TENSIONER SEAT BELT [TWO-STEP DEPLOYMENT CONTROL SYSTEM]**.)
    - Lap pre-tensioner seat belt (See **LAP PRE-TENSIONER SEAT BELT [TWO-**

STEP DEPLOYMENT CONTROL SYSTEM].)

- Three-point seat belts with the following functions for rear seat passengers have been adopted.
    - ELR
    - ALR

Standard deployment control system

- A driver-side air bag module has been adopted.
- A passenger-side air bag module has been adopted.
- A side air bag module has been adopted. (with side air bag system)
- A curtain air bag module has been adopted. (with side air bag system)
- Three-point front seat belts with the following functions for front seat passengers have been adopted.
    - ELR (Emergency Locking Retractor: emergency locking mechanism)
    - Load limiter
    - Pre-tensioner seat belt (See **PRE-TENSIONER SEAT BELT [STANDARD DEPLOYMENT CONTROL SYSTEM]**.)
- Three-point rear seat belts with the following functions for rear seat (left and right seats) passengers adopted.
    - ELR
- Two-point seat belt for rear seat passenger (center seat) adopted.

Next >

2014 - Mazda3 - Restraints

ON-BOARD DIAGNOSTIC [STANDARD DEPLOYMENT CONTROL SYSTEM]

Outline

- The air bag system has an on-board diagnostic function to facilitate the system diagnosis.
- The on-board diagnostic function consists of the following functions:
  - A malfunction detection function, which detects overall malfunctions in the air bag system-related parts.
  - A memory function, which stores detected DTCs.
  - A display function, which indicates malfunction locations and status via DTC output.
  - A PID/data monitoring function, which reads out specific input/output signals and verifies the input/output condition.
- Using the Mazda Modular Diagnostic System (M-MDS), DTCs can be read out and deleted, and the PID/data monitoring function can be activated.
- The system has a fail-safe function to prevent the accidental activation of the air bags in case of an air bag system malfunction.

Function

Self-diagnostic function

Memory function

- Stores malfunctions detected in the air bag system-related parts using the malfunction detection function, and the stored malfunction contents are not cleared even if the ignition is switched off or the negative battery cable is disconnected.

Display function

- When the malfunction detection function detects a malfunction, the air bag system warning light illuminates to advise the driver. Using the external tester communication function, DTCs can be output to the DLC-2 via the CAN.

X: Applicable –: Not applicable

DTC				System malfunction location	Fail safe	Drive cycle	Self test type*1	Memory function
Mazda Modular Diagnostic System (M-MDS) display	Air bag system warning light							
	Flashing pattern		Priority ranking					
B0001:11	19		14	Driver-side air bag module circuit short to body ground	—	—	C, D	×
B0001:12				Driver-side air bag module circuit short to power supply	—	—	C, D	×
B0001:13				Driver-side air bag module circuit open circuit or resistance high	—	—	C, D	×
B0001:19				Short circuit to driver-side air bag module and other air bag module circuits	—	—	C, D	×

B0001:1A				Driver-side air bag module circuit resistance low	—	—	C, D	×
B0001:55				Configuration setting error (driver-side air bag module structural malfunction)	—	—	C, D	×
B0003:53	—	Flashing	4	Operation (deployment) inhibited due to configuration setting	—	—	C, D	×
B0010:11	21		13	Passenger-side air bag module circuit short to body ground	—	—	C, D	×
B0010:12				Passenger-side air bag module circuit short to power supply	—	—	C, D	×
B0010:13				Passenger-side air bag module circuit open circuit or resistance high	—	—	C, D	×
B0010:19				Short circuit to passenger-side air bag module and other air bag module circuits	—	—	C, D	×
B0010:1A				Passenger-side air bag module circuit resistance low	—	—	C, D	×
B0010:55				Configuration setting error (passenger-side air bag module structural malfunction)	—	—	C, D	×
B0094:11	42		8	Crash zone sensor circuit short to body ground	—	—	C, D	×
B0094:13				Crash zone sensor circuit open circuit or short to power supply	—	—	C, D	×
B0094:87				Signal reception error from crash zone sensor	—	—	C, D	×
B0094:96				Crash zone sensor internal malfunction	—	—	C, D	×
B0094:55				Configuration setting error (crash zone sensor structural malfunction)	—	—	C, D	×
B00D2:01	14		5	Air bag system warning light malfunction	—	—	C, D	×
B00D2:29				Invalid signal to air bag system warning light	—	—	C, D	×
B1011:95	58		7	SAS control module connectors are poorly connected	—	—	C, D	×
B10FD:11				Driver-side side air bag sensor circuit short to body ground or power supply	—	—	C, D	×
B10FD:13				Driver-side side air bag sensor circuit open circuit or resistance	—	—	C, D	×

				high				
B10FD:87	43		10	Signal reception error from driver-side side air bag sensor	—	—	C, D	×
B10FD:96				Driver-side side air bag sensor internal malfunction	—	—	C, D	×
B10FD:55				Configuration setting error (driver-side side air bag sensor structural malfunction)	—	—	C, D	×
B10FE:11				Passenger-side side air bag sensor circuit short to body ground or power supply	—	—	C, D	×
B10FE:13				Passenger-side side air bag sensor circuit open circuit or resistance high	—	—	C, D	×
B10FE:87	44		9	Signal reception error from passenger-side side air bag sensor	—	—	C, D	×
B10FE:96				Passenger-side side air bag sensor internal malfunction	—	—	C, D	×
B10FE:55				Configuration setting error (passenger-side side air bag sensor structural malfunction)	—	—	C, D	×
B1126:11				Driver-side side air bag module circuit short to body ground	—	—	C, D	×
B1126:12				Driver-side side air bag module circuit short to power supply	—	—	C, D	×
B1126:13				Driver-side side air bag module circuit open circuit or resistance high	—	—	C, D	×
B1126:19	22		18	Short circuit to driver-side side air bag module and other air bag module circuits	—	—	C, D	×
B1126:1A				Driver-side side air bag module circuit resistance low	—	—	C, D	×
B1126:55				Configuration setting error (driver-side side air bag module structural malfunction)	—	—	C, D	×
B1127:11				Passenger-side side air bag module circuit short to body ground	—	—	C, D	×
B1127:12				Passenger-side side air bag module circuit short to power supply	—	—	C, D	×
B1127:13	23		17	Passenger-side side air bag module circuit open circuit or resistance high	—	—	C, D	×

B1127:19				Short circuit to passenger-side side air bag module and other air bag module circuits	—	—	C, D	×
B1127:1A				Passenger-side side air bag module circuit resistance low	—	—	C, D	×
B1127:55				Configuration setting error (passenger-side side air bag module structural malfunction)	—	—	C, D	×
B1128:11				Driver-side curtain air bag module circuit short to body ground	—	—	C, D	×
B1128:12				Driver-side curtain air bag module circuit short to power supply	—	—	C, D	×
B1128:13	24		20	Driver-side curtain air bag module circuit open circuit or resistance high	—	—	C, D	×
B1128:19				Short circuit to driver-side curtain air bag module and other air bag module circuits	—	—	C, D	×
B1128:1A				Driver-side curtain air bag module circuit resistance low	—	—	C, D	×
B1128:55				Configuration setting error (driver-side curtain air bag module structural malfunction)	—	—	C, D	×
B1129:11				Passenger-side curtain air bag module circuit short to body ground	—	—	C, D	×
B1129:12				Passenger-side curtain air bag module circuit short to power supply	—	—	C, D	×
B1129:13	25		19	Passenger-side curtain air bag module circuit open circuit or resistance high	—	—	C, D	×
B1129:19				Short circuit to passenger-side curtain air bag module and other air bag module circuits	—	—	C, D	×
B1129:1A				Passenger-side curtain air bag module circuit resistance low	—	—	C, D	×
B1129:55				Configuration setting error (passenger-side curtain air bag module structural malfunction)	—	—	C, D	×
B1193:00	13		3	SAS control module operation (deployment)	—	—	C, D	×
B1206:00	—	—	—	SAS control module operation (deployment) (fuel cut signal output)	—	—	C, D	×

B1211:11	38		16	Driver-side pre-tensioner seat belt circuit short to body ground	—	—	C, D	×
B1211:12				Driver-side pre-tensioner seat belt circuit short to power supply	—	—	C, D	×
B1211:13				Driver-side pre-tensioner seat belt circuit open circuit or resistance high	—	—	C, D	×
B1211:19				Short circuit to driver-side pre-tensioner seat belt and other air bag module circuits	—	—	C, D	×
B1211:1A				Driver-side pre-tensioner seat belt circuit resistance low	—	—	C, D	×
B1211:55				Configuration setting error (driver-side pre-tensioner seat belt structural malfunction)	—	—	C, D	×
B1214:11	39		15	Passenger-side pre-tensioner seat belt circuit short to body ground	—	—	C, D	×
B1214:12				Passenger-side pre-tensioner seat belt circuit short to power supply	—	—	C, D	×
B1214:13				Passenger-side pre-tensioner seat belt circuit open circuit or resistance high	—	—	C, D	×
B1214:19				Short circuit to passenger-side pre-tensioner seat belt and other air bag module circuits	—	—	C, D	×
B1214:1A				Passenger-side pre-tensioner seat belt circuit resistance low	—	—	C, D	×
B1214:55				Configuration setting error (passenger-side pre-tensioner seat belt structural malfunction)	—	—	C, D	×
C0061:29	—	—	—	Low-G sensor (lateral-G) in SAS control module (internal circuit disabled)	—	—	C, D	×
C0062:29				Low-G sensor (forward-G) in SAS control module (internal circuit disabled)	—	—	C, D	×
C0063:29				Yaw rate sensor in SAS control module (internal circuit disabled)	—	—	C, D	×
P0666:29				Temperature sensor in SAS control module (internal circuit disabled)	—	—	C, D	×
U0001:88	14		5	Module communication error (HS-CAN)	—	—	C, D	×

U0155:00	14		5	Communication error with instrument cluster	—	—	C, D	×
U2005:68				PCM communication error (vehicle speed signal)	—	—	C, D	×
U0300:00	54		6	Configuration setting invalid	—	—	C, D	×
U2100:00	—	Flashing	4	Configuration not set	—	—	C, D	×
U2107:00	—	—	—	SAS control module operation (deployment) signal output	—	—	C, D	×
U3000:49	12		2	SAS control module internal malfunction	—	—	C, D	×
U3003:16	—	Continuously illuminated	1	SAS control module power supply voltage decreases (**less than 8 V**)	—	—	C, D	×
U3003:17				SAS control module power supply voltage increases (**18 V or more**)	—	—	C, D	×

*1

C: CMDTC self test, D: ODDTC self test

DTC 7-digit code definition

- When related systems or components have failed, the CM stores the DTC of the malfunctioning part in the CM memory, and allows for the retrieval of the stored data using the scanning tool when necessary. The DTCs are indicated using seven digits. Each digit indicates the following.

B 1 0 8 1:7 1

• Specify the area failure sub type

00: No sub type information
01: General electrical malfunction
11: Circuit short to ground
12: Circuit short to battery
13: Open circuit
16: Circuit voltage below threshold
17: Circuit voltage above threshold
19: Circuit current above threshold
1A: Circuit resistance below threshold
29: Signal signal invalid
49: Internal electronic malfunction
53: Deactivated
55: Not configured
68: Event information
87: Missing message
88: Bus off
95: Incorrect assembly
96: Component internal failure

• Manufacturer controlled

• Indicates subgroup

Network Electrical (U code)
0: Network Electrical
1: Network communication
3: Network software

Body (B code)
Manufacturer controlled

Chassis (C code)
Manufacturer controlled

Powertrain (P code)
6: Computer and auxiliary output

• Indicates who was responsible for DTC definition

0: ISO/SAE controlled
1: Manufacturer controlled
2: There are ISO/SAE controlled just for powertrain, all others are manufacturer controlled.
3: For P3000 to P3399 is manufacturer controlled, all others are ISO/SAE controlled.

• Indicates DTC function

B: Body
C: Chassis
P: Powertrain
U: Network Electrical

Status byte for DTC

- The two digits (after hyphen) after the 7-digit DTC.

7-DIGIT DTC
P1260:00−**
STATUS BYTE

- A code which indicates the pending code, current/past malfunction status, or warning illumination status.
- Can be read by performing a CMDTC self-test using the Mazda Modular Diagnostic System (M-MDS).
- For details on the status byte, refer to the explanation on the Mazda Modular Diagnostic System (M-MDS) when reading the DTC.

Snapshot data

NOTE:

- The SAS control module stores the following two types of information when a DTC is detected and displays snap shot data in the Mazda Modular Diagnostic System (M-MDS).

- Vehicle information detected by SAS control module
- Vehicle information detected by instrument cluster and received by SAS control module via CAN signal

- The data for all DTCs currently detected is stored.

Snapshot data item	Unit		Definition	Data read/use method	Corresponding PID data monitor item
AAT	°C	°F	Ambient temperature	—	—
APP_STATUS	Accelerator Pedal Off/ Under20%/ Over20%/ FAIL		Accelerator pedal position status	—	—
CFG_STATUS	Config Complete/ Not Configured/ Config Error		Instrument cluster configuration status	—	—
ECT_STATUS	Under 0 degrees C/ 0-Under 80 degrees C/ Over 80 degrees C/ FAIL		Engine coolant temperature status	—	—
FAULT_CNT	—		Number of malfunction detections	—	—
FIRST_DET_IG	hh:mm:ss*1		Time when initial malfunction occurs (IG-ON counter) • Elapsed time from when ignition is switched ON (engine off or on) until SAS control module detects first malfunction*3	—	—
IC_VPWR	V		Instrument cluster power supply voltage	• The SAS control module constantly receives the power supply voltage value of the instrument cluster sent via CAN signal from the instrument cluster. • If a DTC is detected, the SAS control module records the power supply voltage of the instrument cluster when the DTC was detected, and it is displayed in the Mazda Modular Diagnostic System (M-MDS).	VPWR*2
			Elapsed time since ignition was switched ON (engine off or on) **NOTE:**	• The SAS control module constantly receives the elapsed time since the ignition was switched ON (engine off or on) sent via CAN signal from the instrument cluster.	

IG-ON_TIMER	hh:mm:ss*1	The instrument cluster records the elapsed time since the ignition was switched ON (engine off or on).	• If a DTC is detected, the SAS control module records the elapsed time since the ignition was switched ON (engine off or on) when the DTC was detected, and it is displayed in the Mazda Modular Diagnostic System (M-MDS).	—
LAST_CLR	hh:mm:ss*1	Repair time for last malfunction (B+ counter) • Elapsed time from when battery is connected until SAS control module detects that last malfunction is repaired*3	—	—
LAST_CLR_IG	hh:mm:ss*1	Repair time for last malfunction (IG-ON counter) • Elapsed time from when ignition is switched ON (engine off or on) until SAS control module detects that last malfunction is repaired*3	—	—
LAST_DET	hh:mm:ss*1	Time when last malfunction occurs (B+ counter) • Elapsed time from when battery is connected until SAS control module detects last malfunction*3	—	—
LAST_DET_IG	hh:mm:ss*1	Time when last malfunction occurs (IG-ON counter) • Elapsed time from when ignition is switched ON (engine off or on) until SAS control module detects last malfunction*3	—	—
PWR_MODE_KEY	Key Out/ Key Recently Out (Position 0)/ Accessory (Position 1)/ Post Ignition (Position 2)/ Ignition On (Position 2)/ Running	• Key Out: Ignition switched off • Key Recently Out (Position 0): Elapsed time **within 3 s** since ignition was switched off • Accessory (Position 1): Ignition is switched to ACC • Post Ignition (Position 2): Elapsed time **within 3 s** since ignition was switched ON (engine off or on) • Ignition On (Position 2): Ignition	• The SAS control module constantly receives the ignition switch status sent via CAN signal from the instrument cluster. • If a DTC is detected, the SAS control module records the ignition switch status when the DTC was detected, and it is displayed in the Mazda Modular Diagnostic System (M-MDS).	—

	(Position 2)/ Running - Starting		switched ON (engine off) • Running (Position 2): Ignition switched ON (engine on) • Running - Starting: Cranking condition		
RPM_STATUS	Engine Stop/ Under1500rpm/ Over1500rpm/ FAIL		Engine speed status	• The SAS control module constantly receives the engine speed sent via CAN signal from the instrument cluster. • If a DTC is detected, the SAS control module records the engine speed when the DTC was detected, and it is displayed in the Mazda Modular Diagnostic System (M-MDS).	TACHOMTR*2
SHIFT_STATUS	P/N/ D/ R/ FAIL		Selector lever position status	• The SAS control module constantly receives the selector lever position sent via CAN signal from the instrument cluster. • If a DTC is detected, the SAS control module records the selector lever position when the DTC was detected, and it is displayed in the Mazda Modular Diagnostic System (M-MDS).	—
TOTAL_DIST	km	miles	Accumulated total traveled distance from completion of vehicle until SAS control module detects DTC (Odometer value in instrument cluster)	The total traveled distance from which the SAS control module detects DTCs to the present can be calculated by performing the following procedure. • Verify the odometer value in the instrument cluster. • Verify the snapshot data item TOTAL_DIST. • Subtract 2 from 1.	—
TOTAL_TIME	hh:mm:ss*1		Accumulated total elapsed time since vehicle completion until SAS control module detects a DTC*3 **NOTE:** • When the ROOM fuse is removed, and the ignition is switched off, the time is not included in the elapsed time.	The elapsed time from which the SAS control module detects DTCs to the present can be calculated by performing the following procedure. • Verify the instrument cluster PID item TOTAL_TIME. • Verify the snapshot data item TOTAL_TIME. • Subtract 2 from 1.	TOTAL_TIME*2
VPWR	V		SAS control module power supply malfunction	—	VPWR_IGA
VSPD_STATUS	Stop/ 0-10km/h/ Over10km/h/ FAIL		Vehicle speed status	• The SAS control module constantly receives the vehicle speed sent via CAN signal from the instrument cluster. • If a DTC is detected, the SAS control module records the vehicle speed when the DTC was detected, and it is displayed in the Mazda Modular Diagnostic System (M-MDS).	SPEEDOMTR*2

*1
The seconds may be indicated after the decimal point.

*2

Instrument cluster PID (See ON-BOARD DIAGNOSTIC [INSTRUMENT CLUSTER].)

*3

The snap shot data of the number of stored malfunction detections, B+ counters, or IG ON counters is combined with the DTC detection conditions of the SAS control module, and the point-in-time data in the following table is stored.

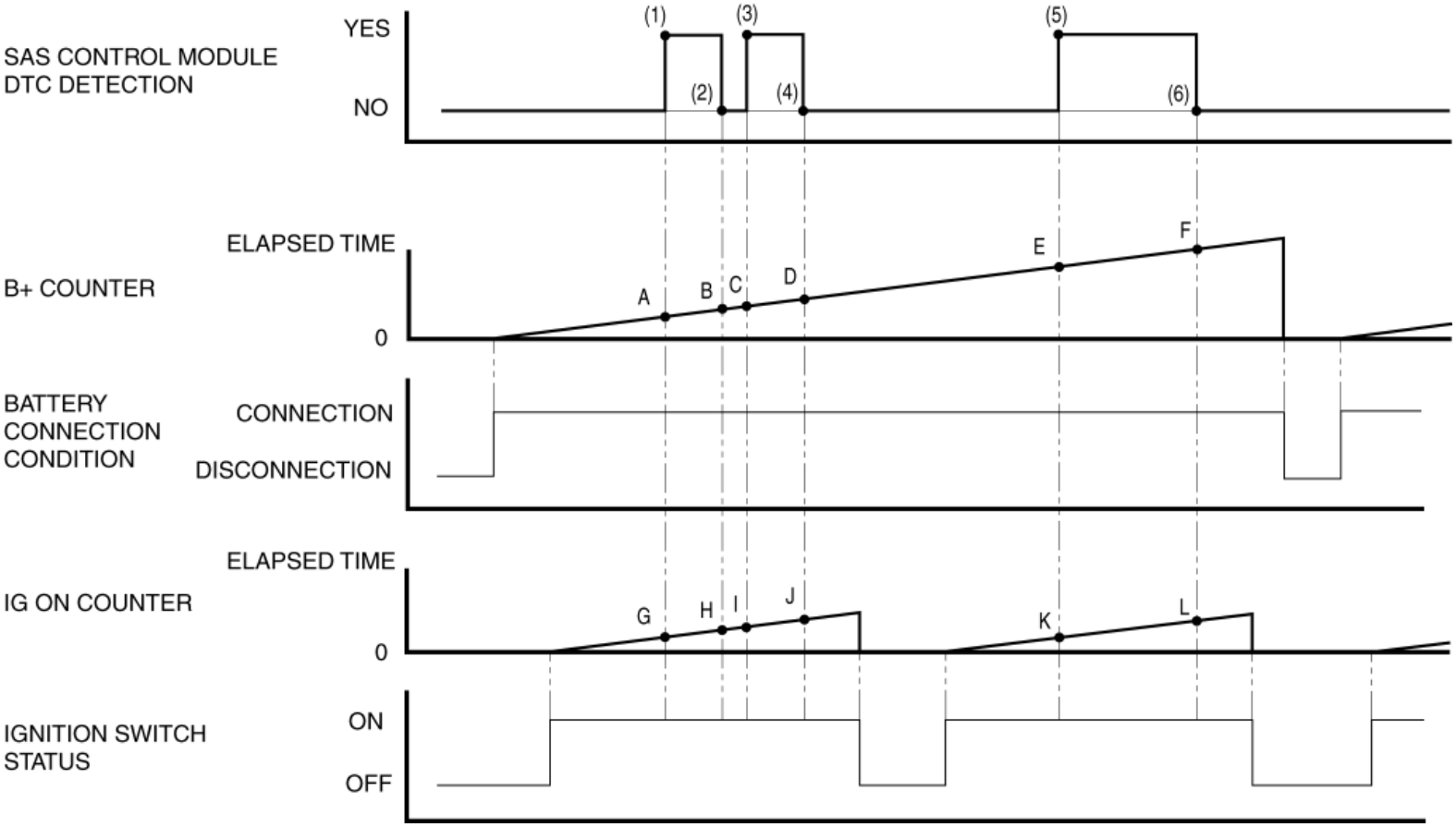

SAS control module DTC detection period	Snapshot data						
	FAULT_CNT (Number of malfunction detections)	TOTAL_TIME	FIRST_DET_IG	LAST_DET	LAST_DET_IG	LAST_CLR	LAST_CLR_IG
	Number of malfunction detections	Time when first malfunction occurs (B+ counter)	Time when initial malfunction occurs (IG-ON counter)	Time when last malfunction occurs (B+ counter)	Time when last malfunction occurs (IG-ON counter)	Repair time for last malfunction (B+ counter)	Repair time for last malfunction (IG-ON counter)
(1)	1	A	G	A	G	-	-
(2)	1	A	G	A	G	B	H
(3)	2	A	G	C	I	B	H
(4)	2	A	G	C	I	D	J
(5)	3	A	G	E	K	D	J
(6)	3	A	G	E	K	F	L

PID/Data monitoring function

1. By using the PID/data monitoring function, the monitored item of the input/output signal, as set on the SAS control module, can be freely selected and read out in real-time.
2. The Mazda Modular Diagnostic System (M-MDS) is used to read out PID/data monitor information.

PID/data monitor table

PID	Unit/Condition	Data contents	SAS control module terminal
AB_WL (Air bag system warning light status)	Lamp_Off/Lamp_On/Plant_Mode/Unknown	• Air bag system warning light off: Lamp_Off • Air bag system warning light on: Lamp_On • Air bag system warning light status: Plant_Mode • Air bag system warning light status: Unknown	3K, 3L
B_SW_P_FLT (Passenger-side buckle switch malfunction status)	**NOTE:** • Displays in the M-MDS but it does not operate.		
OCS_DTC_CLR (Seat weight sensor DTC cleared status)	**NOTE:** • Displays in the M-MDS but it does not operate.		
P_OCS_ST (Seat weight sensor status)	**NOTE:** • Displays in the M-MDS but it does not operate.		
P_WEIGHT (Seat weight sensor measured weight of passenger)	**NOTE:** • Displays in the M-MDS but it does not operate.		
RES_C_AB_D (Driver-side curtain air bag module resistance nominal)	ohm	Continuous: 0.81–6.42 ohms	1S, 1V
RES_C_AB_P (Passenger-side curtain air bag module resistance nominal)	ohm	Continuous: 0.81–6.42 ohms	1W, 1T
RES_F_AB1_D (Driver-side air bag module (inflatorNo.1) resistance nominal)	ohm	Continuous: 0.99–6.42 ohms	3A, 3D
RES_F_AB1_P (Passenger-side air bag module (inflatorNo.1) resistance nominal)	ohm	Continuous: 0.81–6.42 ohms	3G, 3J
RES_F_AB2_D (Driver-side air bag module (inflatorNo.2) resistance nominal)	**NOTE:** • Displays in the M-MDS but it does not operate.		

RES_F_AB2_P (Passenger-side air bag module (inflator No.2) resistance nominal)	**NOTE:** • Displays in the M-MDS but it does not operate.		
RES_PCD_BAR (Poorly connected detector bar terminals resistance nominal (all of SAS control module connectors))	ohm	• Normal connected: 100 ohm or less • Poor connected: 20 kilohm or more	1a, 1b, 2a, 2b, 3a, 3b
RES_S_AB_D (Driver-side side air bag module resistance nominal)	ohm	Continuous: 0.81–9.85 ohms	1A, 1D
RES_S_AB_P (Passenger-side side air bag module resistance nominal)	ohm	Continuous: 0.81–9.85 ohms	1J, 1G
RES_SB_LP_D (Driver-side lap pre-tensioner seat belt resistance nominal)	**NOTE:** • Displays in the M-MDS but it does not operate.		
RES_SB_LP_P (Passenger-side lap pre-tensioner seat belt resistance nominal)	**NOTE:** • Displays in the M-MDS but it does not operate.		
RES_SB_P_D (Driver-side pre-tensioner seat belt resistance nominal)	ohm	Continuous: 0.81–6.42 ohms	2D, 2A
RES_SB_P_P (Passenger-side pre-tensioner seat belt resistance nominal)	ohm	Continuous: 0.81–6.42 ohms	2G, 2J
SEAT_B_D (Driver-side buckle switch status)	Unbuckled/Buckled	• Driver-side front seat belt fastened (Driver-side buckle switch off): Buckled • Driver-side front seat belt not fastened (Driver-side buckle switch on): Unbuckled	2U
SEAT_B_P (Passenger-side buckle switch status)	**NOTE:** • Displays in the M-MDS but it does not operate.		
VPWR_IGA (SAS control module power voltage)	V	Ignition is switched ON: IG1 voltage	3C

2014 - Mazda3 - Restraints

ON-BOARD DIAGNOSTIC [TWO-STEP DEPLOYMENT CONTROL SYSTEM]

Outline

- The air bag system has an on-board diagnostic function to facilitate the system diagnosis.
- The on-board diagnostic function consists of the following functions:
  - A malfunction detection function, which detects overall malfunctions in the air bag system-related parts.
  - A memory function, which stores detected DTCs.
  - A display function, which indicates malfunction locations and status via DTC output.
  - A PID/data monitoring function, which reads out specific input/output signals and verifies the input/output condition.
- Using the Mazda Modular Diagnostic System (M-MDS), DTCs can be read out and deleted, and the PID/data monitoring function can be activated.
- The system has a fail-safe function to prevent the accidental activation of the air bags in case of an air bag system malfunction.

Function

Self-diagnostic function

Memory function

- Stores malfunctions detected in the air bag system-related parts using the malfunction detection function, and the stored malfunction contents are not cleared even if the ignition is switched off or the negative battery cable is disconnected.

Display function

- When the malfunction detection function detects a malfunction, the air bag system warning light illuminates to advise the driver. Using the external tester communication function, DTCs can be output to the DLC-2 via the CAN.

X: Applicable –: Not applicable

DTC				System malfunction location	Fail safe	Drive cycle	Self test type*1	Memory function
Mazda Modular Diagnostic System (M-MDS) display	Air bag system warning light							
	Flashing pattern		Priority ranking					
B0001:11	19		18	Driver-side air bag module (inflator No.1) circuit short to body ground	—	—	C, D	×
B0001:12				Driver-side air bag module (inflator No.1) circuit short to power supply	—	—	C, D	×
B0001:13				Driver-side air bag module (inflator No.1) circuit open circuit or resistance high	—	—	C, D	×
				Short circuit to driver-side air				

B0001:19				bag module (inflator No.1) and other air bag module circuits	—	—	C, D	×
B0001:1A				Driver-side air bag module (inflator No.1) circuit resistance low	—	—	C, D	×
B0001:55				Configuration setting error (driver-side air bag module (inflator No.1) structural malfunction)	—	—	C, D	×
B0002:11				Driver-side air bag module (inflator No.2) circuit short to body ground	—	—	C, D	×
B0002:12				Driver-side air bag module (inflator No.2) circuit short to power supply	—	—	C, D	×
B0002:13				Driver-side air bag module (inflator No.2) circuit open circuit or resistance high	—	—	C, D	×
B0002:19	19		18	Short circuit to driver-side air bag module (inflator No.2) and other air bag module circuits	—	—	C, D	×
B0002:1A				Driver-side air bag module (inflator No.2) circuit resistance low	—	—	C, D	×
B0002:55				Configuration setting error (driver-side air bag module (inflator No.2) structural malfunction)	—	—	C, D	×
B0003:53	—	Flashing	4	Operation (deployment) inhibited due to configuration setting	—	—	C, D	×
B0010:11				Passenger-side air bag module (inflator No.1) circuit short to body ground	—	—	C, D	×
B0010:12				Passenger-side air bag module (inflator No.1) circuit short to power supply	—	—	C, D	×
B0010:13				Passenger-side air bag module (inflator No.1) circuit open circuit or resistance high	—	—	C, D	×
B0010:19	21		17	Short circuit to passenger-side air bag module (inflator No.1) and other air bag module circuits	—	—	C, D	×
B0010:1A				Passenger-side air bag module (inflator No.1) circuit resistance low	—	—	C, D	×
B0010:55				Configuration setting error (passenger-side air bag module (inflator No.1) structural malfunction)	—	—	C, D	×

B0011:11	21		17	Passenger-side air bag module (inflator No.2) circuit short to body ground	—	—	C, D	×
B0011:12				Passenger-side air bag module (inflator No.2) circuit short to power supply	—	—	C, D	×
B0011:13				Passenger-side air bag module (inflator No.2) circuit open circuit or resistance high	—	—	C, D	×
B0011:19				Short circuit to passenger-side air bag module (inflator No.2) and other air bag module circuits	—	—	C, D	×
B0011:1A				Passenger-side air bag module (inflator No.2) circuit resistance low	—	—	C, D	×
B0011:55				Configuration setting error (passenger-side air bag module (inflator No.2) structural malfunction)	—	—	C, D	×
B0052:09	52		27	Passenger-side buckle switch undefined	—	—	C, D	×
B0052:11				Passenger-side buckle switch circuit open or short to power supply	—	—	C, D	×
B0052:14				Passenger-side buckle switch circuit short to body ground	—	—	C, D	×
B0072:11	34		19	Passenger-side lap pre-tensioner seat belt circuit short to body ground	—	—	C, D	×
B0072:12				Passenger-side lap pre-tensioner seat belt circuit short to power supply	—	—	C, D	×
B0072:13				Passenger-side lap pre-tensioner seat belt circuit open circuit or resistance high	—	—	C, D	×
B0072:19				Short circuit to passenger-side lap pre-tensioner seat belt and other air bag module circuits	—	—	C, D	×
B0072:1A				Passenger-side lap pre-tensioner seat belt circuit resistance low	—	—	C, D	×
B0072:55				Configuration setting error (passenger-side lap pre-tensioner seat belt structural malfunction)	—	—	C, D	×
B0094:11				Driver-side crash zone sensor circuit short to body ground	—	—	C, D	×
B0094:13				Driver-side crash zone sensor circuit open circuit or short to power supply	—	—	C, D	×

B0094:87	42		10	Signal reception error from driver-side crash zone sensor	—	—	C, D	×
B0094:96				Driver-side crash zone sensor internal malfunction	—	—	C, D	×
B0094:55				Configuration setting error (driver-side crash zone sensor structural malfunction)	—	—	C, D	×
B00A0:07	16		28	Seat weight sensor collision detection	—	—	C, D	×
B00A0:09				Seat weight sensor control module internal malfunction	—	—	C, D	×
B00A0:1C				Seat weight sensor control module circuit open to power supply	—	—	C, D	×
B00A0:28				Seat weight sensor calibration setting invalid	—	—	D	×
B00A0:4A	15		6	Seat weight sensor ID mismatch	—	—	C, D	×
B00A0:54	16		28	Seat weight sensor calibration setting not set	—	—	C, D	×
B00A0:81				Invalid signal to SAS control module	—	—	C, D	×
B00A0:87				Error signal from seat weight sensor control module	—	—	C, D	×
B00A0:8F				Seat weight sensor communication error	—	—	C, D	×
B00C0:93	16		28	Seat weight sensor (LF) communication error	—	—	C, D	×
B00C1:93				Seat weight sensor (LR) communication error	—	—	C, D	×
B00C2:93				Seat weight sensor (RF) communication error	—	—	C, D	×
B00C3:93				Seat weight sensor (RR) communication error	—	—	C, D	×
B00D2:01	14		5	Air bag system warning light malfunction	—	—	C, D	×
B00D2:29				Invalid signal to air bag system warning light	—	—	C, D	×
B00D5:01	18		29	PAD indicator circuit open circuit or short to power supply	—	—	C, D	×
B00D5:29				PAD indicator communication error	—	—	C, D	×

B1011:95	58		8	SAS control module connectors are poorly connected	—	—	C, D	×
B1126:11	22		24	Driver-side side air bag module circuit short to body ground	—	—	C, D	×
B1126:12				Driver-side side air bag module circuit short to power supply	—	—	C, D	×
B1126:13				Driver-side side air bag module circuit open circuit or resistance high	—	—	C, D	×
B1126:19				Short circuit to driver-side side air bag module and other air bag module circuits	—	—	C, D	×
B1126:1A				Driver-side side air bag module circuit resistance low	—	—	C, D	×
B1126:55				Configuration setting error (driver-side side air bag module structural malfunction)	—	—	C, D	×
B1127:11	23		23	Passenger-side side air bag module circuit short to body ground	—	—	C, D	×
B1127:12				Passenger-side side air bag module circuit short to power supply	—	—	C, D	×
B1127:13				Passenger-side side air bag module circuit open circuit or resistance high	—	—	C, D	×
B1127:19				Short circuit to passenger-side side air bag module and other air bag module circuits	—	—	C, D	×
B1127:1A				Passenger-side side air bag module circuit resistance low	—	—	C, D	×
B1127:55				Configuration setting error (passenger-side side air bag module structural malfunction)	—	—	C, D	×
B1128:11	24		26	Driver-side curtain air bag module circuit short to body ground	—	—	C, D	×
B1128:12				Driver-side curtain air bag module circuit short to power supply	—	—	C, D	×
B1128:13				Driver-side curtain air bag module circuit open circuit or resistance high	—	—	C, D	×
B1128:19				Short circuit to driver-side curtain air bag module and other air bag module circuits	—	—	C, D	×
B1128:1A				Driver-side curtain air bag	—	—	C, D	×

				module circuit resistance low				
B1128:55				Configuration setting error (driver-side curtain air bag module structural malfunction)	—	—	C, D	×
B1129:11				Passenger-side curtain air bag module circuit short to body ground	—	—	C, D	×
B1129:12				Passenger-side curtain air bag module circuit short to power supply	—	—	C, D	×
B1129:13	25		25	Passenger-side curtain air bag module circuit open circuit or resistance high	—	—	C, D	×
B1129:19				Short circuit to passenger-side curtain air bag module and other air bag module circuits	—	—	C, D	×
B1129:1A				Passenger-side curtain air bag module circuit resistance low	—	—	C, D	×
B1129:55				Configuration setting error (passenger-side curtain air bag module structural malfunction)	—	—	C, D	×
B1193:00	13		3	SAS control module operation (deployment)	—	—	C, D	×
B1196:11				Driver-side side air bag sensor short to body ground	—	—	C, D	×
B1196:13				Driver-side side air bag sensor circuit open circuit or short to power supply	—	—	C, D	×
B1196:87	45		16	Signal reception error from driver-side side air bag sensor	—	—	C, D	×
B1196:96				Driver-side side air bag sensor internal malfunction	—	—	C, D	×
B1196:55				Configuration setting error (driver-side side air bag sensor structural malfunction)	—	—	C, D	×
B1197:11				Passenger-side side air bag sensor circuit short to body ground	—	—	C, D	×
B1197:13				Passenger-side side air bag sensor circuit open circuit or short to power supply	—	—	C, D	×
B1197:87	46		15	Signal reception error from passenger-side side air bag sensor	—	—	C, D	×
B1197:96				Passenger-side side air bag sensor internal malfunction	—	—	C, D	×

B1197:55				Configuration setting error (passenger-side side air bag sensor structural malfunction)	—	—	C, D	×
B1206:00	—	—	—	SAS control module operation (deployment) (fuel cut signal output)	—	—	C, D	×
B1211:11	38		22	Driver-side pre-tensioner seat belt circuit short to body ground	—	—	C, D	×
B1211:12				Driver-side pre-tensioner seat belt circuit short to power supply	—	—	C, D	×
B1211:13				Driver-side pre-tensioner seat belt circuit open circuit or resistance high	—	—	C, D	×
B1211:19				Short circuit to driver-side pre-tensioner seat belt and other air bag module circuits	—	—	C, D	×
B1211:1A				Driver-side pre-tensioner seat belt circuit resistance low	—	—	C, D	×
B1211:55				Configuration setting error (driver-side pre-tensioner seat belt structural malfunction)	—	—	C, D	×
B1214:11	39		21	Passenger-side pre-tensioner seat belt circuit short to body ground	—	—	C, D	×
B1214:12				Passenger-side pre-tensioner seat belt circuit short to power supply	—	—	C, D	×
B1214:13				Passenger-side pre-tensioner seat belt circuit open circuit or resistance high	—	—	C, D	×
B1214:19				Short circuit to passenger-side pre-tensioner seat belt and other air bag module circuits	—	—	C, D	×
B1214:1A				Passenger-side pre-tensioner seat belt circuit resistance low	—	—	C, D	×
B1214:55				Configuration setting error (passenger-side pre-tensioner seat belt structural malfunction)	—	—	C, D	×
B1226:11	36		12	Driver-side pressure sensor circuit short to body ground	—	—	C, D	×
B1226:13				Driver-side pressure sensor circuit open circuit or short to power supply	—	—	C, D	×
B1226:87				Signal reception error from driver-side pressure sensor	—	—	C, D	×
B1226:96				Driver-side pressure sensor internal malfunction	—	—	C, D	×

B1226:55				Configuration setting error (driver-side pressure sensor structural malfunction)	—	—	C, D	×
B1227:11	37		11	Passenger-side pressure sensor circuit short to body ground	—	—	C, D	×
B1227:13				Passenger-side pressure sensor circuit open circuit or short to power supply	—	—	C, D	×
B1227:87				Signal reception error from passenger-side pressure sensor	—	—	C, D	×
B1227:96				Passenger-side pressure sensor internal malfunction	—	—	C, D	×
B1227:55				Configuration setting error (passenger-side pressure sensor structural malfunction)	—	—	C, D	×
B1228:11	35		20	Driver-side lap pre-tensioner seat belt circuit short to body ground	—	—	C, D	×
B1228:12				Driver-side lap pre-tensioner seat belt circuit short to power supply	—	—	C, D	×
B1228:13				Driver-side lap pre-tensioner seat belt circuit open circuit or resistance high	—	—	C, D	×
B1228:19				Short circuit to driver-side lap pre-tensioner seat belt and other air bag module circuits	—	—	C, D	×
B1228:1A				Driver-side lap pre-tensioner seat belt circuit resistance low	—	—	C, D	×
B1228:55				Configuration setting error (driver-side lap pre-tensioner seat belt structural malfunction)	—	—	C, D	×
B1417:11	41		9	Passenger-side crash zone sensor circuit short to body ground	—	—	C, D	×
B1417:13				Passenger-side crash zone sensor circuit open circuit or short to power supply	—	—	C, D	×
B1417:87				Signal reception error from passenger-side crash zone sensor	—	—	C, D	×
B1417:96				Passenger-side crash zone sensor internal malfunction	—	—	C, D	×
B1417:55				Configuration setting error (passenger-side crash zone sensor structural malfunction)	—	—	C, D	×
				Low-G sensor (lateral-G) in SAS				

C0061:29	—	—	—	control module (internal circuit disabled)	—	—	C, D	×
C0062:29				Low-G sensor (forward-G) in SAS control module (internal circuit disabled)	—	—	C, D	×
C0063:29				Yaw rate sensor in SAS control module (internal circuit disabled)	—	—	C, D	×
P0666:29				Temperature sensor in SAS control module (internal circuit disabled)	—	—	C, D	×
U0001:88	14		5	Module communication error (HS-CAN)	—	—	C, D	×
U0155:00	14		5	Communication error with instrument cluster	—	—	C, D	×
U2005:68				PCM communication error (vehicle speed signal)	—	—	C, D	×
U0300:00	54		7	Configuration setting invalid	—	—	C, D	×
U2100:00	—	Flashing	4	Configuration not set	—	—	C, D	×
U2107:00	—	—	—	SAS control module operation (deployment) signal output	—	—	C, D	×
U3000:49	12		2	SAS control module internal malfunction	—	—	C, D	×
U3003:16	—	Continuously illuminated	1	SAS control module power supply voltage decreases (**less than 8 V**)	—	—	C, D	×
U3003:17				SAS control module power supply voltage increases (**18 V or more**)	—	—	C, D	×

*1

C: CMDTC self test, D: ODDTC self test

DTC 7-digit code definition

- When related systems or components have failed, the CM stores the DTC of the malfunctioning part in the CM memory, and allows for the retrieval of the stored data using the scanning tool when necessary. The DTCs are indicated using seven digits. Each digit indicates the following.

B 1 0 8 1:7 1

• Specify the area failure sub type

00: No sub type information
01: General electrical malfunction
07: Mechanical failures
09: Component failures
11: Circuit short to ground
12: Circuit short to battery
13: Open circuit
14: Circuit short to ground or open
16: Circuit voltage below threshold
17: Circuit voltage above threshold
19: Circuit current above threshold
1A: Circuit resistance below threshold
1C: Circuit voltage out of range
1D: Circuit current out of range
28: Signal bias level out of range / zero adjustment failure
29: Signal signal invalid
49: Internal electronic malfunction
4A: Incorrect component installed
53: Deactivated
54: Missing calibration
55: Not configured
68: Event information
81: Invalid serial data received
87: Missing message
88: Bus off
89-8E: ISO/SAE reserved
95: Incorrect assembly
96: Component internal failure
93: No operation

• Manufacturer controlled

• Indicates subgroup

Network Electrical (U code)
0: Network Electrical
1: Network communication
3: Network software

Body (B code)
Manufacturer controlled

Chassis (C code)
Manufacturer controlled

Powertrain (P code)
6: Computer and auxiliary output

• Indicates who was responsible for DTC definition

0: ISO/SAE controlled
1: Manufacturer controlled
2: There are ISO/SAE controlled just for powertrain, all others are manufacturer controlled.
3: For P3000 to P3399 is manufacturer controlled, all others are ISO/SAE controlled.

• Indicates DTC function

B: Body
C: Chassis
P: Powertrain
U: Network Electrical

Status byte for DTC

- The two digits (after hyphen) after the 7-digit DTC.

7-DIGIT DTC
P 1 2 6 0 : 0 0 − ＊＊
STATUS BYTE

- A code which indicates the pending code, current/past malfunction status, or warning illumination status.
- Can be read by performing a CMDTC self-test using the Mazda Modular Diagnostic System (M-MDS).
- For details on the status byte, refer to the explanation on the Mazda Modular Diagnostic System (M-MDS) when reading the DTC.

Snapshot data

NOTE:

- The SAS control module stores the following two types of information when a DTC is detected and displays snap shot data in the Mazda Modular Diagnostic System (M-MDS).
  - Vehicle information detected by SAS control module
  - Vehicle information detected by instrument cluster and received by SAS control module via CAN signal
- The data for all DTCs currently detected is stored.

Snapshot data item	Unit		Definition	Data read/use method	Corresponding PID data monitor item
AAT	°C	°F	Ambient temperature	—	—
APP_STATUS	Accelerator Pedal Off/ Under20%/ Over20%/ FAIL		Accelerator pedal position status	—	—
CFG_STATUS	Config Complete/ Not Configured/ Config Error		Instrument cluster configuration status	—	—
ECT_STATUS	Under 0 degrees C/ 0-Under 80 degrees C/ Over 80 degrees C/ FAIL		Engine coolant temperature status	—	—
FAULT_CNT	—		Number of malfunction detections	—	—
FIRST_DET_IG	hh:mm:ss*1		Time when initial malfunction occurs (IG-ON counter) • Elapsed time from when ignition is switched ON (engine off or on) until SAS control module detects first malfunction*3	—	—
IC_VPWR	V		Instrument cluster power supply voltage	• The SAS control module constantly receives the power supply voltage value of the instrument cluster sent via CAN signal from the instrument cluster. • If a DTC is detected, the SAS control module records the power supply voltage of the instrument cluster when the DTC was detected, and it is displayed in the Mazda Modular Diagnostic System (M-MDS).	VPWR*2

IG-ON_TIMER	hh:mm:ss*1	Elapsed time since ignition was switched ON (engine off or on) **NOTE:** • The instrument cluster records the elapsed time since the ignition was switched ON (engine off or on).	• The SAS control module constantly receives the elapsed time since the ignition was switched ON (engine off or on) sent via CAN signal from the instrument cluster. • If a DTC is detected, the SAS control module records the elapsed time since the ignition was switched ON (engine off or on) when the DTC was detected, and it is displayed in the Mazda Modular Diagnostic System (M-MDS).	—
LAST_CLR	hh:mm:ss*1	Repair time for last malfunction (B+ counter) • Elapsed time from when battery is connected until SAS control module detects that last malfunction is repaired*3	—	—
LAST_CLR_IG	hh:mm:ss*1	Repair time for last malfunction (IG-ON counter) • Elapsed time from when ignition is switched ON (engine off or on) until SAS control module detects that last malfunction is repaired*3	—	—
LAST_DET	hh:mm:ss*1	Time when last malfunction occurs (B+ counter) • Elapsed time from when battery is connected until SAS control module detects last malfunction*3	—	—
LAST_DET_IG	hh:mm:ss*1	Time when last malfunction occurs (IG-ON counter) • Elapsed time from when ignition is switched ON (engine off or on) until SAS control module detects last malfunction*3	—	—
	Key Out/ Key Recently Out (Position 0)/ Accessory (Position 1)/	• Key Out: Ignition switched off • Key Recently Out (Position 0): Elapsed time **within 3 s** since ignition was switched off • Accessory (Position 1): Ignition is switched to ACC • Post Ignition (Position 2):	• The SAS control module constantly receives the ignition switch status sent via CAN signal from the instrument cluster.	

PWR_MODE_KEY	Post Ignition (Position 2)/ Ignition On (Position 2)/ Running (Position 2)/ Running - Starting		Elapsed time **within 3 s** since ignition was switched ON (engine off or on) • Ignition On (Position 2): Ignition switched ON (engine off) • Running (Position 2): Ignition switched ON (engine on) • Running - Starting: Cranking condition	• If a DTC is detected, the SAS control module records the ignition switch status when the DTC was detected, and it is displayed in the Mazda Modular Diagnostic System (M-MDS).	—
RPM_STATUS	Engine Stop/ Under1500rpm/ Over1500rpm/ FAIL		Engine speed status	• The SAS control module constantly receives the engine speed sent via CAN signal from the instrument cluster. • If a DTC is detected, the SAS control module records the engine speed when the DTC was detected, and it is displayed in the Mazda Modular Diagnostic System (M-MDS).	TACHOMTR*2
SHIFT_STATUS	P/N/ D/ R/ FAIL		Selector lever position status	• The SAS control module constantly receives the selector lever position sent via CAN signal from the instrument cluster. • If a DTC is detected, the SAS control module records the selector lever position when the DTC was detected, and it is displayed in the Mazda Modular Diagnostic System (M-MDS).	—
TOTAL_DIST	km	miles	Accumulated total traveled distance from completion of vehicle until SAS control module detects DTC (Odometer value in instrument cluster)	The total traveled distance from which the SAS control module detects DTCs to the present can be calculated by performing the following procedure. • Verify the odometer value in the instrument cluster. • Verify the snapshot data item TOTAL_DIST. • Subtract 2 from 1.	—
TOTAL_TIME	hh:mm:ss*1		Accumulated total elapsed time since vehicle completion until SAS control module detects a DTC*3 **NOTE:** • When the ROOM fuse is removed, and the ignition is switched off, the time is not included in the elapsed time.	The elapsed time from which the SAS control module detects DTCs to the present can be calculated by performing the following procedure. • Verify the instrument cluster PID item TOTAL_TIME. • Verify the snapshot data item TOTAL_TIME. • Subtract 2 from 1.	TOTAL_TIME*2
VPWR	V		SAS control module power supply malfunction	—	VPWR_IGA
VSPD_STATUS	Stop/ 0-10km/h/ Over10km/h/		Vehicle speed status	• The SAS control module constantly receives the vehicle speed sent via CAN signal from the instrument cluster. • If a DTC is detected, the SAS control module records the vehicle speed when the DTC was detected, and it is	SPEEDOMTR*2

	FAIL		displayed in the Mazda Modular Diagnostic System (M-MDS).	

*1
The seconds may be indicated after the decimal point.

*2
Instrument cluster PID (See ON-BOARD DIAGNOSTIC [INSTRUMENT CLUSTER].)

*3
The snap shot data of the number of stored malfunction detections, B+ counters, or IG ON counters is combined with the DTC detection conditions of the SAS control module, and the point-in-time data in the following table is stored.

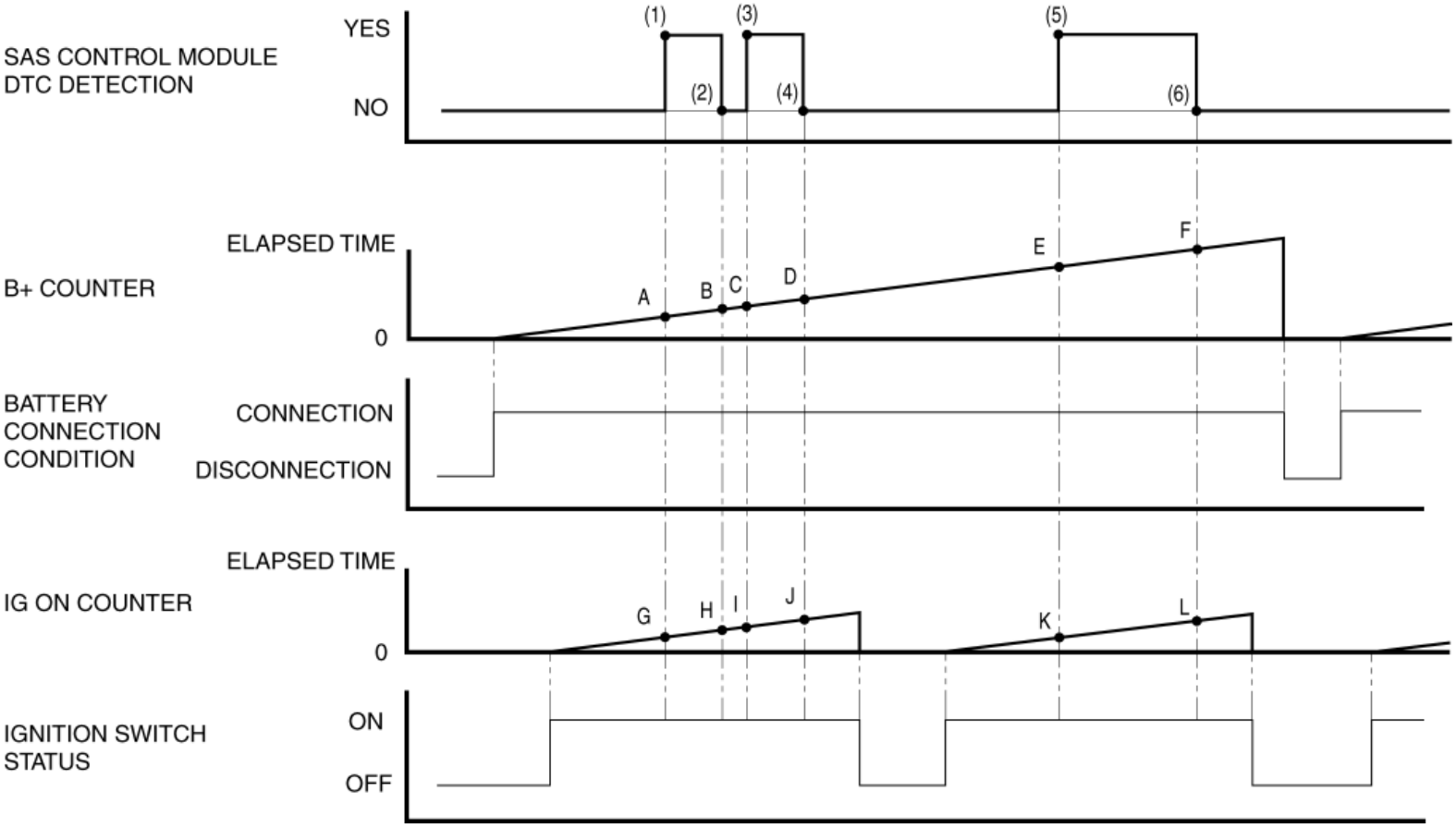

SAS control module DTC detection period	Snapshot data						
	FAULT_CNT (Number of malfunction detections)	TOTAL_TIME	FIRST_DET_IG	LAST_DET	LAST_DET_IG	LAST_CLR	LAST_CLR_IG
	Number of malfunction detections	Time when first malfunction occurs (B+ counter)	Time when initial malfunction occurs (IG-ON counter)	Time when last malfunction occurs (B+ counter)	Time when last malfunction occurs (IG-ON counter)	Repair time for last malfunction (B+ counter)	Repair time for last malfunction (IG-ON counter)
(1)	1	A	G	A	G	-	-
(2)	1	A	G	A	G	B	H
(3)	2	A	G	C	I	B	H
(4)	2	A	G	C	I	D	J

(5)	3	A	G	E	K	D	J
(6)	3	A	G	E	K	F	L

PID/Data monitoring function

1. By using the PID/data monitoring function, the monitored item of the input/output signal, as set on the SAS control module, can be freely selected and read out in real-time.
2. The Mazda Modular Diagnostic System (M-MDS) is used to read out PID/data monitor information.

PID/data monitor table

PID	Unit/Condition	Data contents	SAS control module terminal
AB_WL (Air bag system warning light status)	Lamp_Off/Lamp_On/Plant_Mode/Unknown	• Air bag system warning light off: Lamp_Off • Air bag system warning light on: Lamp_On • Air bag system warning light status: Plant_Mode • Air bag system warning light status: Unknown	3K, 3L
B_SW_P_FLT (Passenger-side buckle switch malfunction status)	O.K./FAULT	• Passenger-side buckle switch normal: O.K. • Passenger-side buckle switch abnormal: Fault	2B
OCS_DTC_CLR (Seat weight sensor DTC cleared status)	Starting/ Normal End/ In Process/ OCS Fault	Fault information cleared at seat weight sensor	2B
P_OCS_ST (Seat weight sensor status)	Empty/ SMALL/ Indeterminate/ LARGE	Occupant classification status determined by seat weight sensor	2B
P_WEIGHT (Seat weight sensor measured weight of passenger)	Kg	Display of load (body weight) on passenger-side seat	2B
RES_C_AB_D (Driver-side curtain air bag module resistance nominal)	ohm	Continuous: 0.81–6.42 ohms	1S, 1V
RES_C_AB_P (Passenger-side curtain air bag module resistance nominal)	ohm	Continuous: 0.81–6.42 ohms	1W, 1T
RES_F_AB1_D	ohm	Continuous: 0.99–6.42 ohms	3A, 3D

(Driver-side air bag module (inflatorNo.1) resistance nominal)				
RES_F_AB1_P (Passenger-side air bag module (inflatorNo.1) resistance nominal)	ohm	Continuous: 0.81–6.42 ohms		3G, 3J
RES_F_AB2_D (Driver-side air bag module (inflatorNo.2) resistance nominal)	ohm	Continuous: 0.99–6.42 ohms		3S, 3V
RES_F_AB2_P (Passenger-side air bag module (inflator No.2) resistance nominal)	ohm	Continuous: 0.81–6.42 ohms		3T, 3W
RES_PCD_BAR (Poorly connected detector bar terminals resistance nominal (all of SAS control module connectors))	ohm	• Normal connected: 100 ohm or less • Poor connected: 20 kilohm or more		1a, 1b, 2a, 2b, 3a, 3b
RES_S_AB_D (Driver-side side air bag module resistance nominal)	ohm	Continuous: 0.81–9.85 ohms		1A, 1D
RES_S_AB_P (Passenger-side side air bag module resistance nominal)	ohm	Continuous: 0.81–9.85 ohms		1J, 1G
RES_SB_LP_D (Driver-side lap pre-tensioner seat belt resistance nominal)	ohm	Continuous: 0.81–6.42 ohms		2V, 2S
RES_SB_LP_P (Passenger-side lap pre-tensioner seat belt resistance nominal)	ohm	Continuous: 0.81–6.42 ohms		2Y, 2AB
RES_SB_P_D (Driver-side pre-tensioner seat belt resistance nominal)	ohm	Continuous: 0.81–6.42 ohms		2D, 2A
RES_SB_P_P (Passenger-side pre-tensioner seat belt resistance nominal)	ohm	Continuous: 0.81–6.42 ohms		2G, 2J
SEAT_B_D (Driver-side buckle switch status)	Unbuckled/Buckled	• Driver-side front seat belt fastened (Driver-side buckle switch off): Buckled • Driver-side front seat belt not fastened (Driver-side buckle switch on): Unbuckled		2U
SEAT_B_P (Passenger-side buckle switch status)	Unbuckled/Buckled	Occupant seated in passenger-	• Passenger-side front seat belt fastened (Passenger-side buckle switch off): Buckled • Passenger-side	2B

		side front seat: On	front seat belt not fastened (Passenger-side buckle switch on): Unbuckled	
VPWR_IGA (SAS control module power voltage)	V	Ignition is switched ON: IG1 voltage		3C

2014 - Mazda3 - Restraints

AIR BAG SYSTEM [TWO-STEP DEPLOYMENT CONTROL SYSTEM]

Outline

- During a collision, the air bag system operates (deploys) the air bag to assist the occupant protection function for the seat belt.

  WARNING:

  - The air bag system assists the occupant protection function for the seat belt, the intended effect of the SRS air bag system cannot be obtained if the seat belt is not fastened correctly. When driving the vehicle, always fasten the seat belt correctly.

Function

- For the air bag system, the SAS control module calculates the degree of impact based on a collision detection signal from the following each sensor, and operates (deploys) the required parts.

Detection signal	Sensor				Operation (deployment) part					
	SAS control module (integrated sensor)	Crash zone sensor (driver/passenger-side)	Side air bag sensor (driver/passenger-side)	Pressure sensor (driver/passenger-side)	Driver-side air bag module	Passenger-side air bag module	Curtain air bag module (driver/passenger-side)	Side air bag module (driver/passenger-side)	Pre-tensioner seat belt (driver/passenger-side)	Lap pre-tensioner seat belts (driver/passenger-side)
Detects frontal or frontal offset collision	×	×	-	-	×	× *2	× *1	-	× *2	× *2
Detects lateral collision	×	-	×	×	-	-	× *1	× *1	× *1	× *1
Detects collision from rear of vehicle	×	×	-	-	-	-	-	-	-	-

Detects vehicle rollover	×	-	-	-	-	-	×	-	× *2	× *2

*1 **Operates (deploys) the air bag module on the side where the collision is detected.**

*2 **For the passenger-side, operates (deploys) when seated in passenger-side seat.**

Two-step deployment control function

- The two-step deployment control function switches between one-step deployment (high-output deployment) or two-step deployment (low-output deployment) of the driver-side and passenger-side air bag modules according to the degree of impact from a frontal or frontal offset collision and the front seat belt status.

Air bag module	Front seat belt status (buckle switch)	Degree of impact	
		Small	Large
Driver-side air bag module	Equipped	Two-step deployment	One-step deployment
	Not equipped	One-step deployment	One-step deployment
Passenger-side air bag module	Equipped	Two-step deployment	One-step deployment
	Not equipped	One-step deployment	One-step deployment

System conditions display function

- The air bag system detects each part condition and sends a system condition signal from the SAS control module to the instrument cluster.
- The instrument cluster displays the following warning lights and sounds alarm based on the system condition signal.

Warning light and alarm	Reference
Air bag system warning light	(See **AIR BAG SYSTEM WARNING LIGHT [TWO-STEP DEPLOYMENT CONTROL SYSTEM]**.)
Air bag system warning alarm	(See **AIR BAG SYSTEM WARNING ALARM [TWO-STEP DEPLOYMENT CONTROL SYSTEM]**.)
Seat belt warning light	(See **SEAT BELT WARNING ALARM**.)

	(See **INDICATOR UNIT**.)
Passenger air bag deactivation (PAD) indicator light	(See **PASSENGER SENSING SYSTEM [TWO-STEP DEPLOYMENT CONTROL SYSTEM]**.)

Structural View

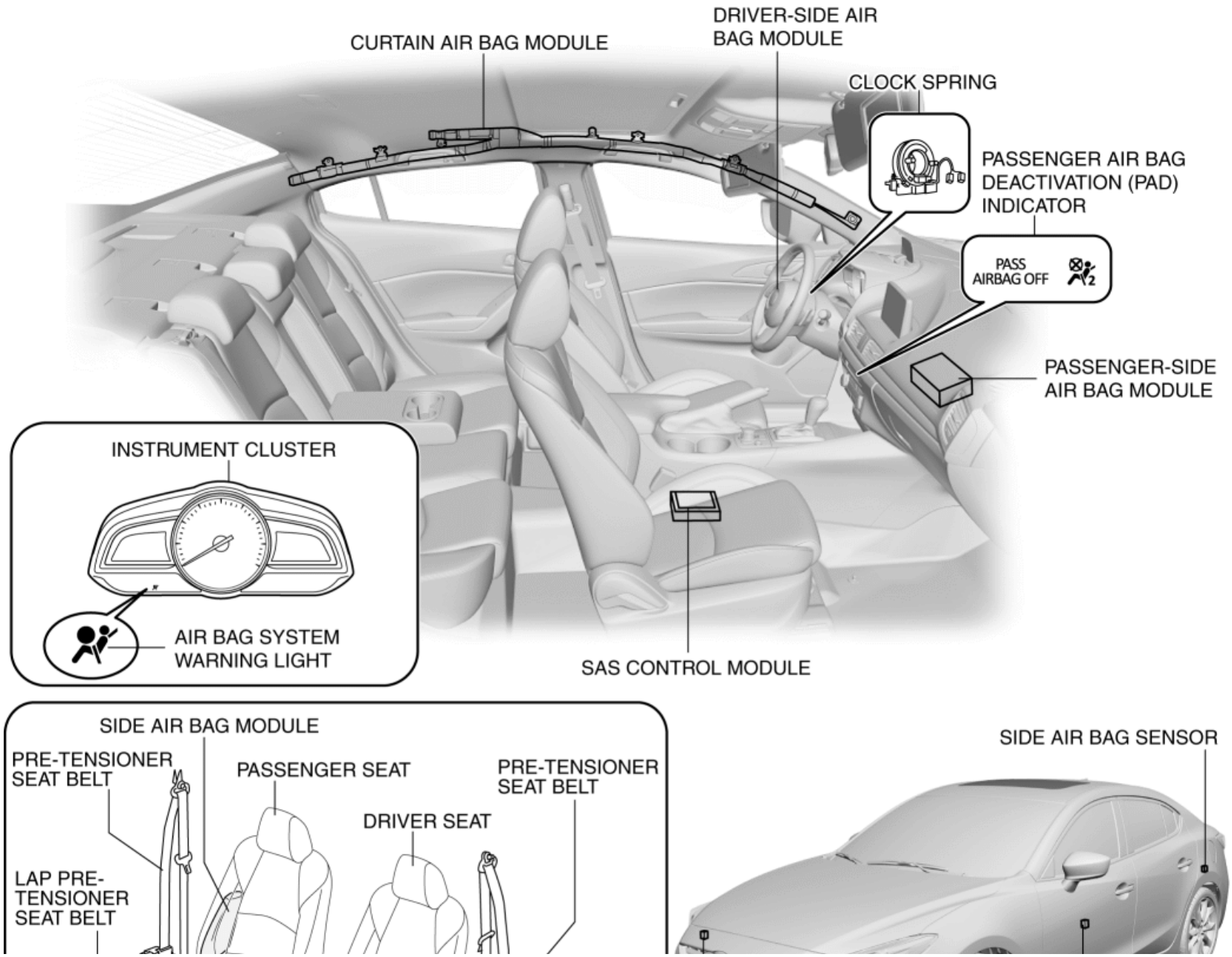

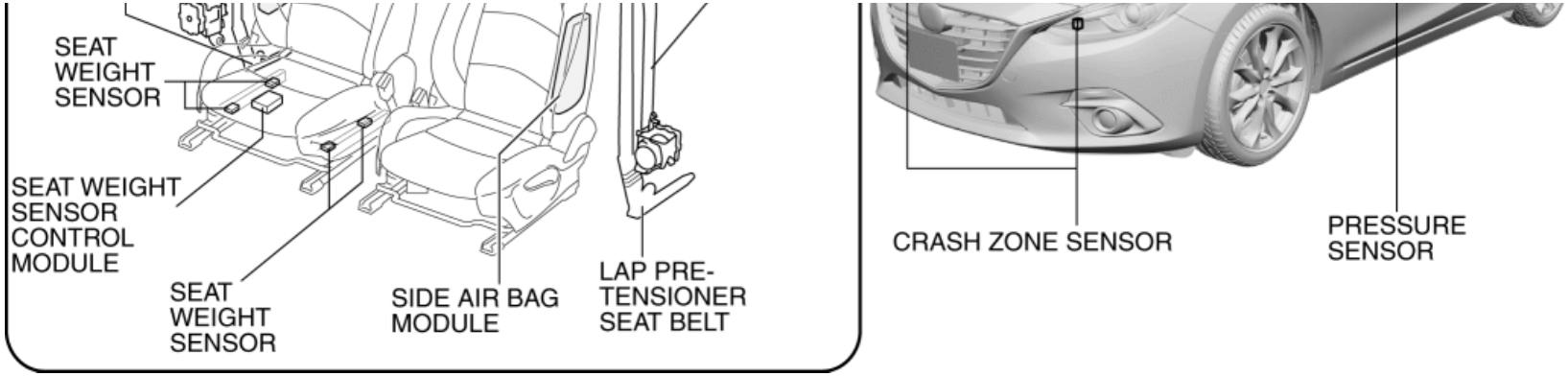

System Wiring Diagram

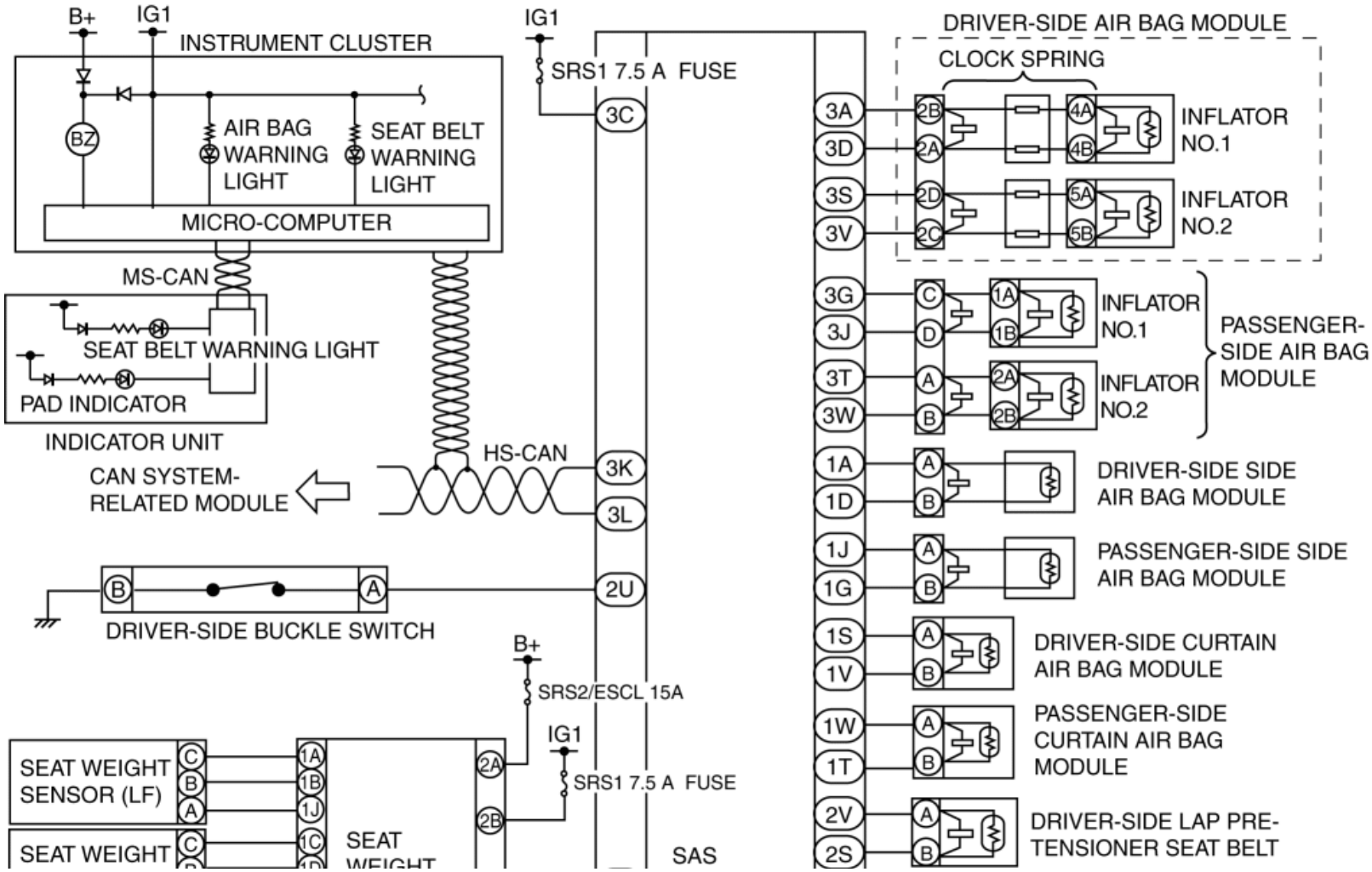

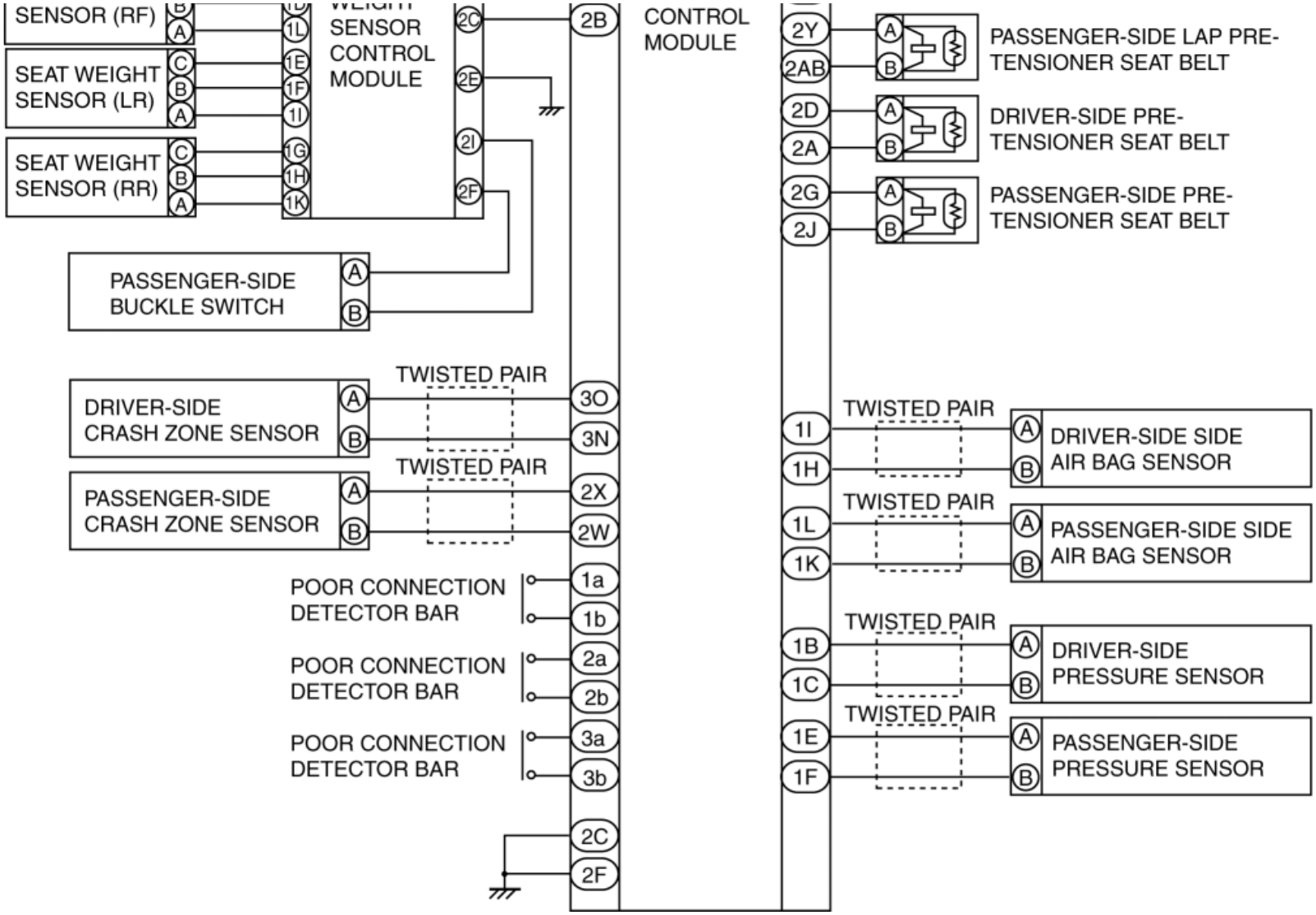

Operation

Operation (deployment) during a frontal or frontal offset collision

1. When the vehicle receives an impact from a frontal or frontal offset collision, the crash sensors built into the crash zone sensor, and the SAS control module detect the impact and convert the impact into an electrical signal at the signal processing circuit.

2. The crash zone sensor outputs the electrical signal to the SAS control module.

3. The SAS control module calculates the degree of impact at the determination and safing circuit based on the electrical signals from the crash zone sensor and the crash sensor.

4. If the calculated degree of impact exceeds the previously set threshold, the SAS control module outputs an operation (deployment) signal to each air bag module/pre-tensioner seat belt/lap pre-tensioner seat belt at the output control circuit.

5. Each air bag module/pre-tensioner seat belt/lap pre-tensioner seat belt operates (deploys) based on the operation (deployment) signal from the SAS control module.

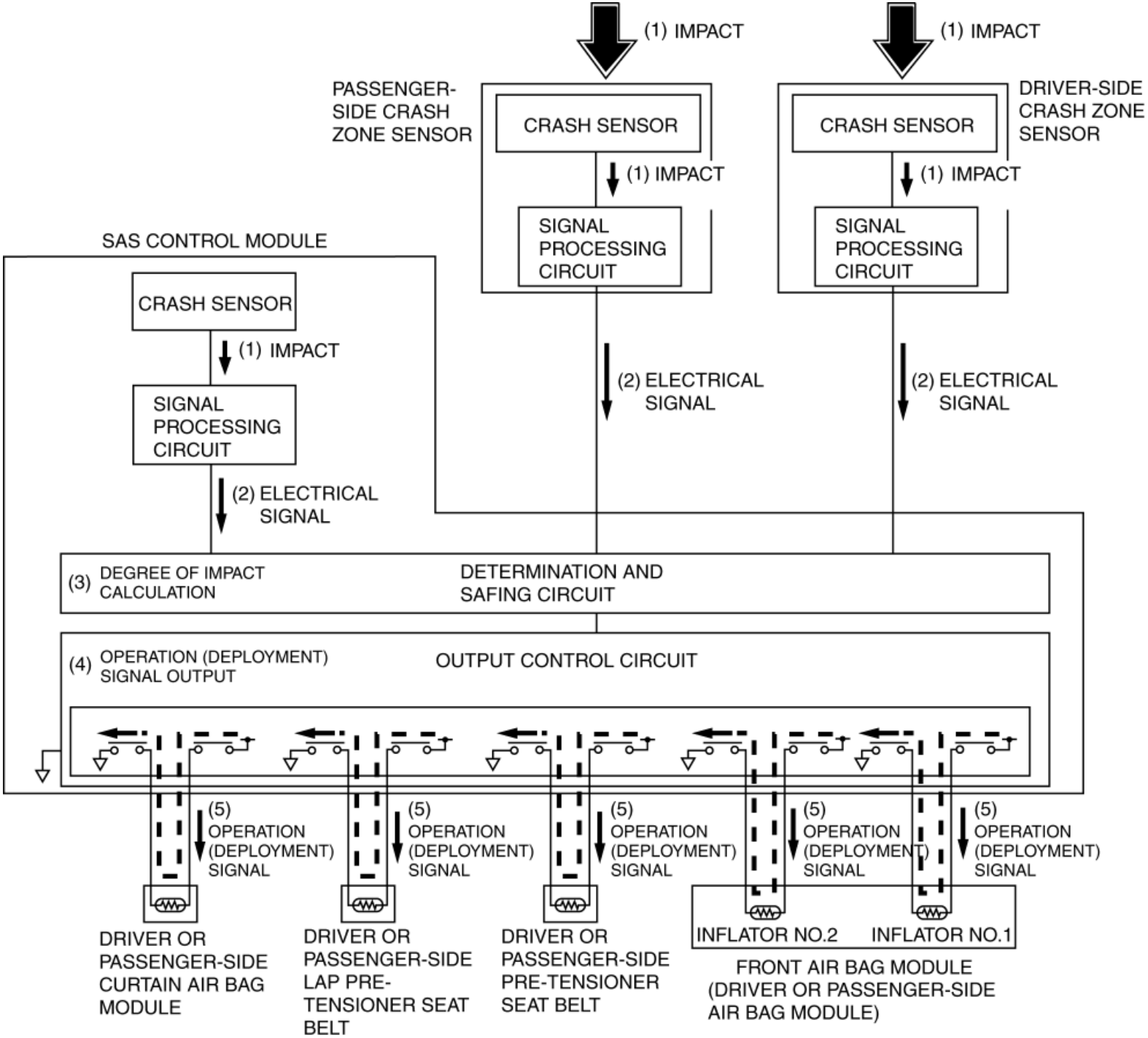
(1) IMPACT
(1) IMPACT
PASSENGER-SIDE CRASH ZONE SENSOR
CRASH SENSOR
(1) IMPACT
SIGNAL PROCESSING CIRCUIT
CRASH SENSOR
DRIVER-SIDE CRASH ZONE SENSOR
(1) IMPACT
SIGNAL PROCESSING CIRCUIT
SAS CONTROL MODULE
CRASH SENSOR
(1) IMPACT
SIGNAL PROCESSING CIRCUIT
(2) ELECTRICAL SIGNAL
(2) ELECTRICAL SIGNAL
(2) ELECTRICAL SIGNAL
(3) DEGREE OF IMPACT CALCULATION
DETERMINATION AND SAFING CIRCUIT
(4) OPERATION (DEPLOYMENT) SIGNAL OUTPUT
OUTPUT CONTROL CIRCUIT
(5) OPERATION (DEPLOYMENT) SIGNAL
(5) OPERATION (DEPLOYMENT) SIGNAL
(5) OPERATION (DEPLOYMENT) SIGNAL
(5) OPERATION (DEPLOYMENT) SIGNAL
(5) OPERATION (DEPLOYMENT) SIGNAL
DRIVER OR PASSENGER-SIDE CURTAIN AIR BAG MODULE
DRIVER OR PASSENGER-SIDE LAP PRE-TENSIONER SEAT BELT
DRIVER OR PASSENGER-SIDE PRE-TENSIONER SEAT BELT
INFLATOR NO.2
INFLATOR NO.1
FRONT AIR BAG MODULE (DRIVER OR PASSENGER-SIDE AIR BAG MODULE)

Operation (deployment) during a lateral collision

1. When the vehicle receives an impact from a lateral collision, the following sensors detect impact and convert the impact or the pressure into an electrical signal at the signal processing circuit.

- Crash sensor on side air bag sensor detects impact
- Crash sensor on SAS control module detects impact
- Pressure detection sensor on pressure sensor detects pressure

2. The side air bag sensor and the pressure sensor output an electrical signal to the SAS control module.

3. The SAS control module calculates the degree of impact at the determination/safing circuit based on the electrical signals from the side air bag sensor, crash sensor, and pressure sensor.

4. If the calculated degree of impact exceeds the previously set threshold, the SAS control module outputs an operation (deployment) signal at the output control circuit.

5. Each air bag module/pre-tensioner seat belt/lap pre-tensioner seat belt operates (deploys) based on the operation (deployment) signal from the SAS control module.

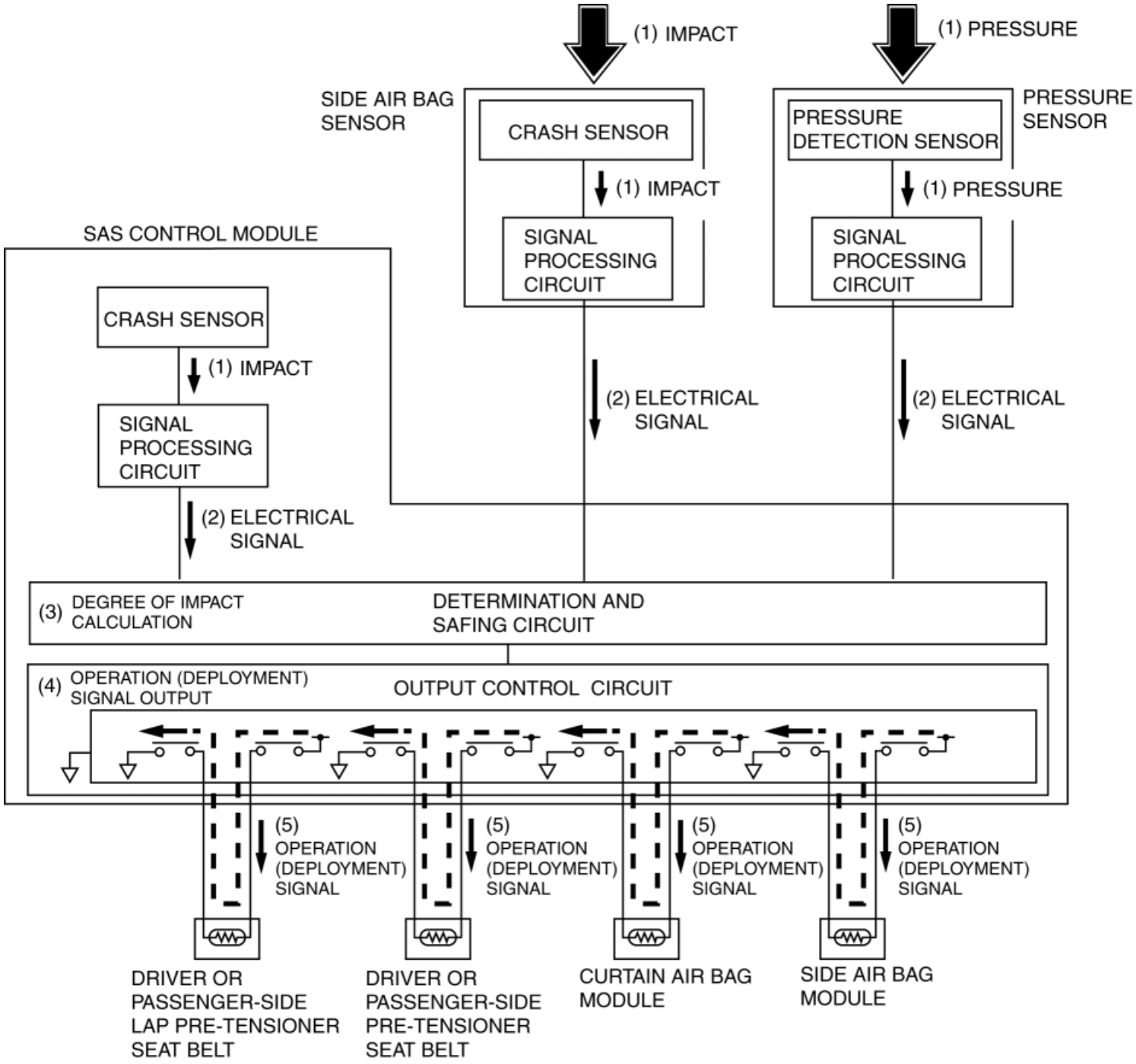

Roll over control

1. When the vehicle starts to rollover, the roll rate sensor in the SAS control module detects the vehicle rolling angle speed, and the low-G sensor in the SAS control module detects lateral and vertical accelerations.

2. When the angular speed detected by the roll rate sensor exceeds the specification, an initial rollover condition is determined and the operational circuit calculates the rolling angle based on the angular speed detected by the roll rate sensor.

3. When the rollover control operation conditions of angular speed and rolling angle are met and the vehicle is determined to be in a rollover condition based on the acceleration detected by the low-G sensor, an electronic signal is output to the output signal circuit.

4. The output signal circuit completes an ignition circuit, and an operation (deployment) signal is sent to the air bag module, pre-tensioner seat belts and lap pre-tensioner seat belts indicated in the table below.

×:Possible-:Not possible

Position	Front air bag module operation (deployment)	Side air bag module operation (deployment)	Curtain air bag module operation (deployment)	Pre-tensioner seat belt operation (deployment)	Lap pre-tensioner seat belt operation (deployment)
Driver side	-	-	×	×	×
Passenger side	-	-	×	×	×

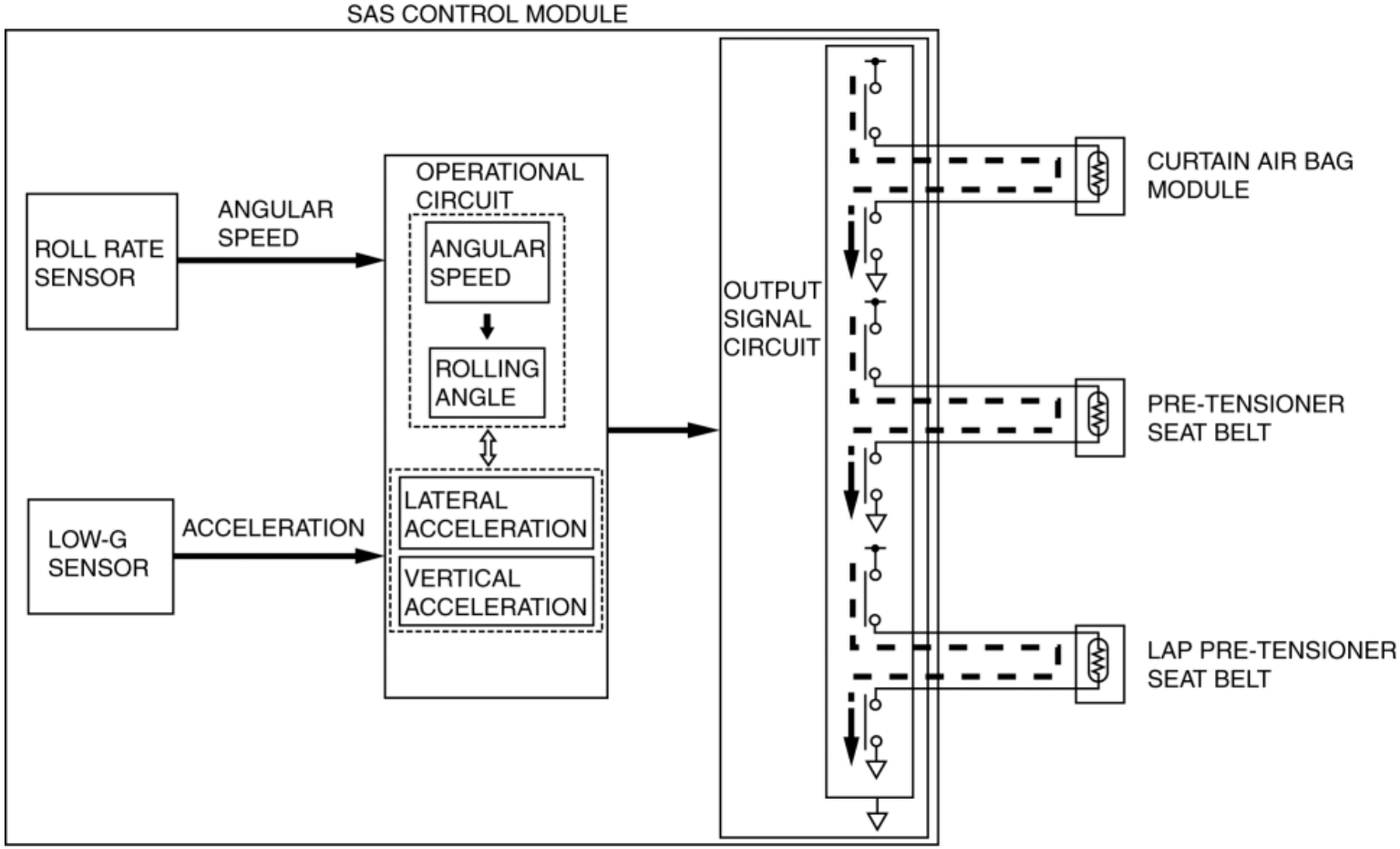
SAS CONTROL MODULE
ROLL RATE SENSOR
ANGULAR SPEED
OPERATIONAL CIRCUIT
ANGULAR SPEED
ROLLING ANGLE
LOW-G SENSOR
ACCELERATION
LATERAL ACCELERATION
VERTICAL ACCELERATION
OUTPUT SIGNAL CIRCUIT
CURTAIN AIR BAG MODULE
PRE-TENSIONER SEAT BELT
LAP PRE-TENSIONER SEAT BELT

2014 - Mazda3 - Restraints

SAS CONTROL MODULE [TWO-STEP DEPLOYMENT CONTROL SYSTEM]

Purpose

- The SAS control module controls the air bag system.

Function

Backup power supply function

- The backup power supply function enables the condenser to discharge and supply power to assure air bag system operation/deployment properly for a specified time even if the power supply to the SAS control module is cut due to a collision.

Vehicle travel condition detection function

- The SAS control module detects the vehicle travel conditions based on the signals from the following integrated sensors.
- The SAS control module sends the vehicle travel conditions detected by the following sensors to the DSC HU/CM via a CAN signal.

Sensor	Signal
Low-G sensor	• Vehicle longitudinal acceleration speed signal • Vehicle lateral acceleration speed signal
Yaw rate sensor	• Vehicle steering angle speed signal
Roll rate sensor	• Vehicle lateral roll speed signal

Collision detection signal output function

- The air bag system output signals to the following units when it determines that it

necessary for the SAS control module to operate (deploy) the air bag system.

- When each unit receives the signal, they perform controls to mediate damage from the vehicle collision.

Related unit	Signal	Reference
• Front body control module (FBCM) • Rear body control module (RBCM)	Secondary collision reduction signal	(See **POWER DOOR LOCK SYSTEM**.) (See **EXTERIOR LIGHTING SYSTEM**.)
• PCM • Instrument cluster • Center display	Fuel-cut request signal	(See **FUEL INJECTION CONTROL SYSTEM [SKYACTIV-G 2.0, SKYACTIV-G 2.5]**.) (See **ENTERTAINMENT SYSTEM [WITH CENTER DISPLAY]**.)

Construction

- SAS control module installed under the rear console.
- The following circuits are built into the SAS control module.
    - Determination and safing circuit
    - Output control circuit
- The following sensors are built into the SAS control module.
    - Crash sensor
    - Yaw rate sensor
    - Low-G sensor
    - Roll rate sensor

Operation

- For the operation, refer to AIR BAG SYSTEM (See **AIR BAG SYSTEM [TWO-STEP DEPLOYMENT CONTROL SYSTEM]**.)

Fail-safe

- If the SAS control module performance/function cannot be maintained due to any cause, the fail-safe function stops air bag system control and flashes the air bag system warning light to prevent the air bags from operating (deploying) accidentally.

2014 - Mazda3 - Restraints

AIR BAG SYSTEM WARNING LIGHT [TWO-STEP DEPLOYMENT CONTROL SYSTEM]

Purpose

- The air bag system warning light notifies the driver of a malfunction in the SRS air bag system.

Function

- If a malfunction occurs in the SRS air bag system, the air bag system warning light illuminates or flashes.

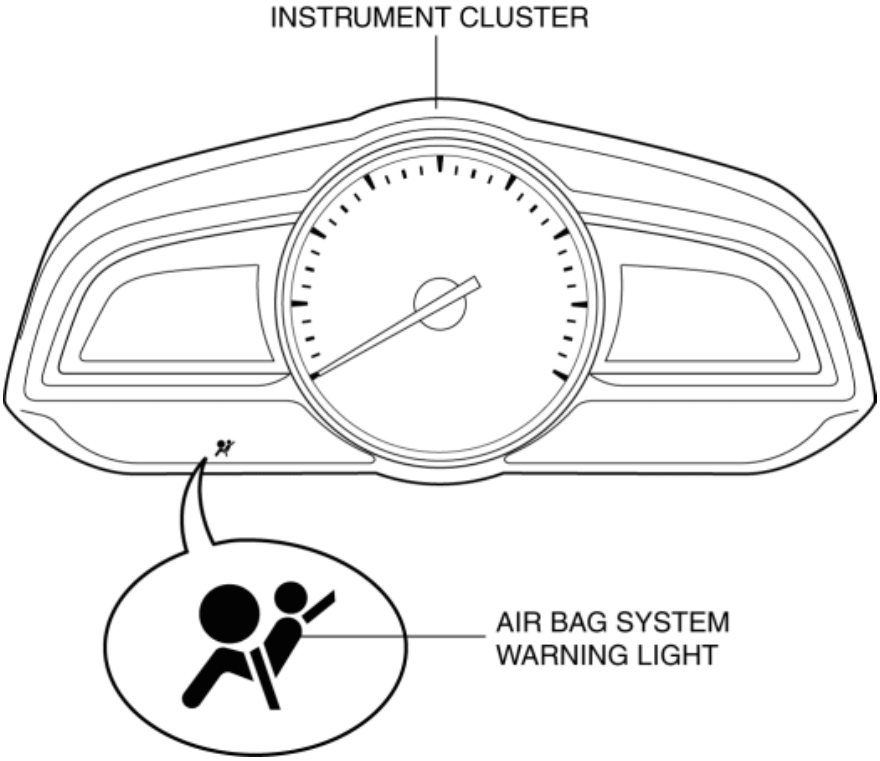

- For vehicles with center display, a warning message in the center display is displayed when the air bag system warning light is turned on or flashing. For the message content and verification method, refer to the CENTER DISPLAY. (See **CENTER DISPLAY [WITH CENTER DISPLAY]**.)

Construction

- LEDs (light-emitting diode) have been adopted for the air bag system warning light.
- The air bag system warning light is built into the instrument cluster.

Operation

- When the ignition is switched ON, the instrument cluster illuminates the air bag system warning light for a specified period to indicate that the SRS air bag system is performing initialization diagnostics. If there is no malfunction in the SRS air bag system, the indicator light turns off.

- If the SAS control module detects a malfunction in the SRS air bag system, it sends a warning signal to the instrument cluster via CAN communication. The instrument cluster illuminates or flashes the air bag system warning light based on the warning signal it receives to display the DTC.
- If there is a malfunction in the SRS air bag system, the air bag system warning light displays DTCs according to the following patterns:

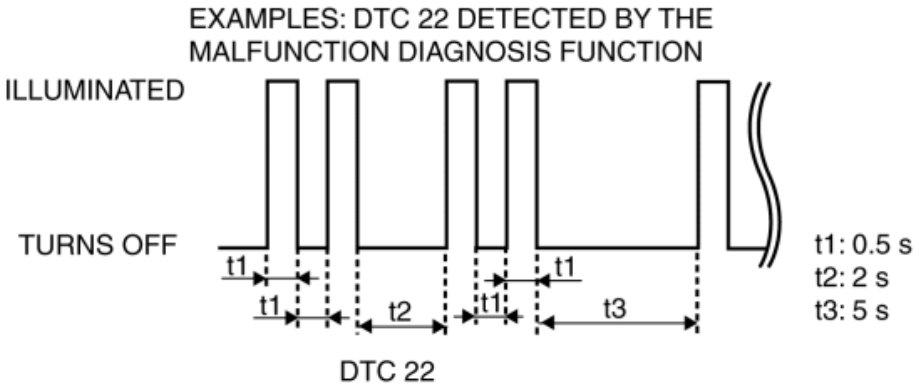

- If there are several malfunctions in the SRS air bag system, the DTC of the highest priority ranking is displayed first.

Fail-safe

- Function not equipped.

2014 - Mazda3 - Restraints

AIR BAG SYSTEM WARNING ALARM [TWO-STEP DEPLOYMENT CONTROL SYSTEM]

Purpose

- The air bag system warning alarm notifies the driver that a malfunction occurred in the air bag system instead of the air bag system warning light.

Function

- If a malfunction occurs in the air bag system while the air bag system warning light cannot illuminate, the air bag system warning alarm sounds.
- If all of the following conditions are met, the SAS control module sends the air bag system warning alarm request signal to the instrument cluster.
  - SAS control module detects DTC B00D2:29 (air bag system warning light (during communication related malfunction))
  - SAS control module detects DTCs other than DTC B00D2:29 (Except for air bag system warning light does not illuminate DTC)

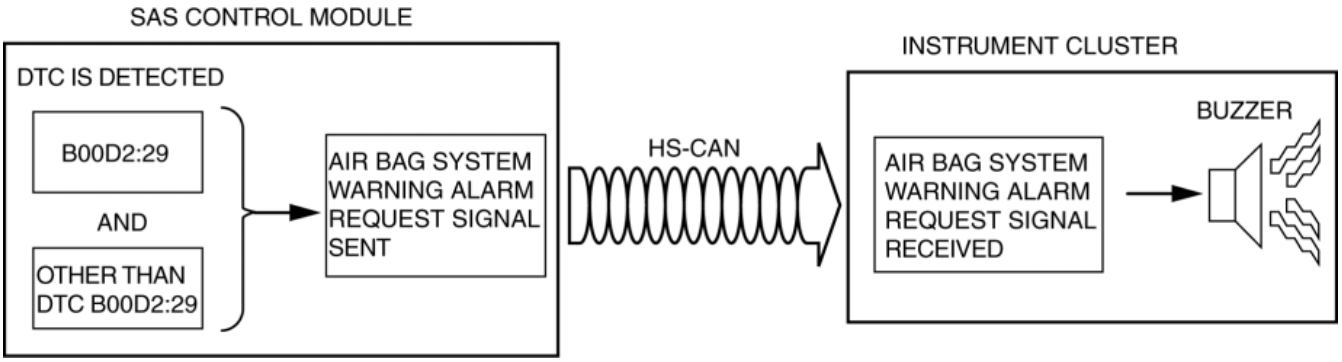

- When the instrument cluster receives the air bag system warning alarm request signal sent from the SAS control module via the CAN signal, the air bag system warning alarm sounds.
- The air bag system warning alarm sound pattern is as shown in the figure.

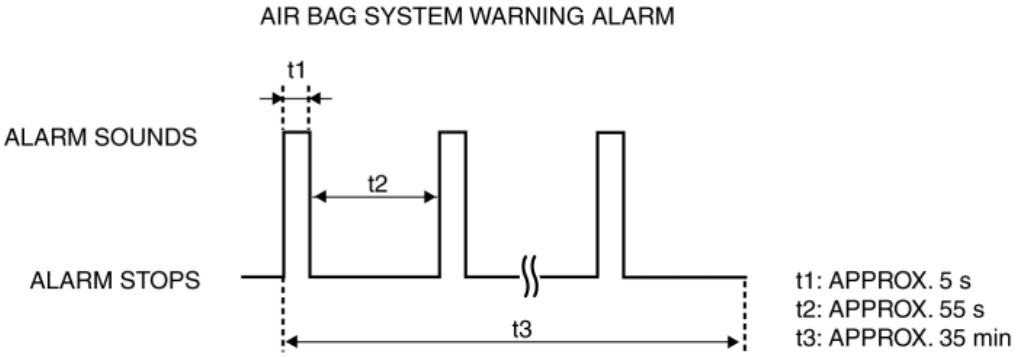

Construction

- The air bag system warning alarm sounds a buzzer in the instrument cluster.

Operation

1. When the ignition is switched ON (while engine is stopped or running), the instrument cluster receives (1) the air bag system warning alarm request signal from the SAS control module.

2. The instrument cluster microcomputer turns the transistor on (2) based on the air bag system warning alarm request signal.
3. When the transistor turns on, the ground circuit of the alarm is established and the alarm sounds (3).

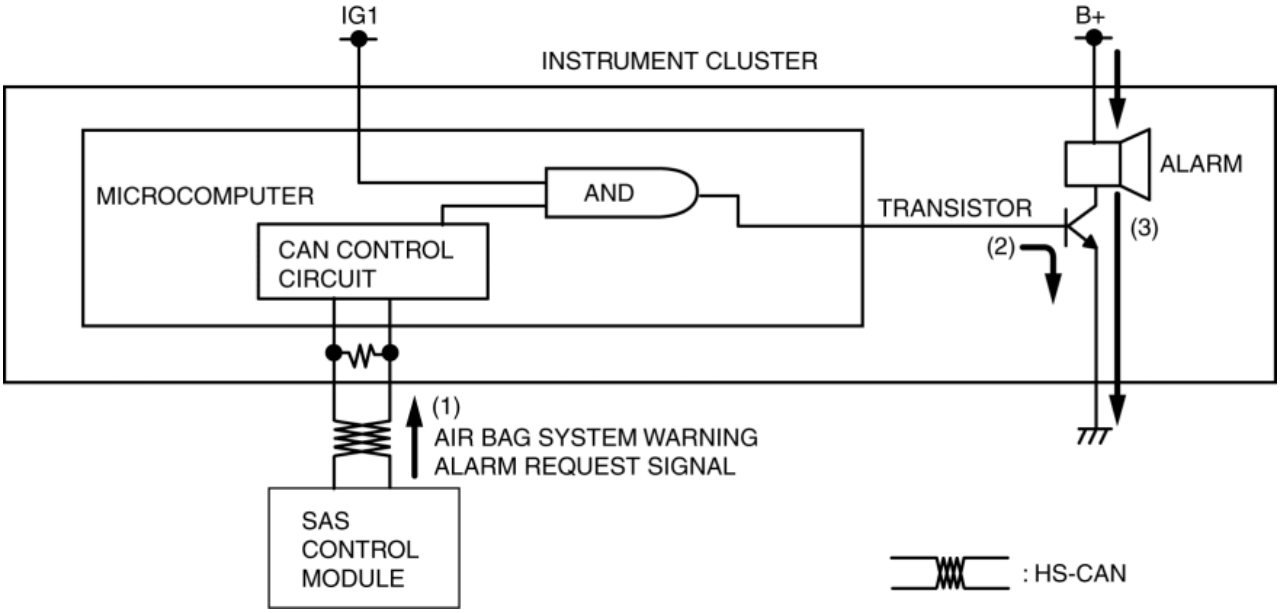

Fail-safe

- Function not equipped.

2014 - Mazda3 - Restraints

PASSENGER SENSING SYSTEM [TWO-STEP DEPLOYMENT CONTROL SYSTEM]

Purpose

- The passenger sensing system detects whether or not there is an occupant on the passenger seat to control the operation (deployment) of the passenger-side air bag system corresponding to the detected condition.

Function

- Measures the total seated weight on the passenger-side seat, determines whether there is an adult or child present (including a child-restraint seat), or that it is empty, and then controls operation (deployment) or non-operation (non-deployment) of the passenger-side air bag module, pre-tensioner seat belt and lap pre-tensioner seat belt.

Construction

- Consists of seat weight sensors installed above the passenger-side seat rails, a seat weight sensor control module installed on the back side of the passenger-side seat cushion, the PAD indicator (indicator unit), and SAS control module installed in the console.

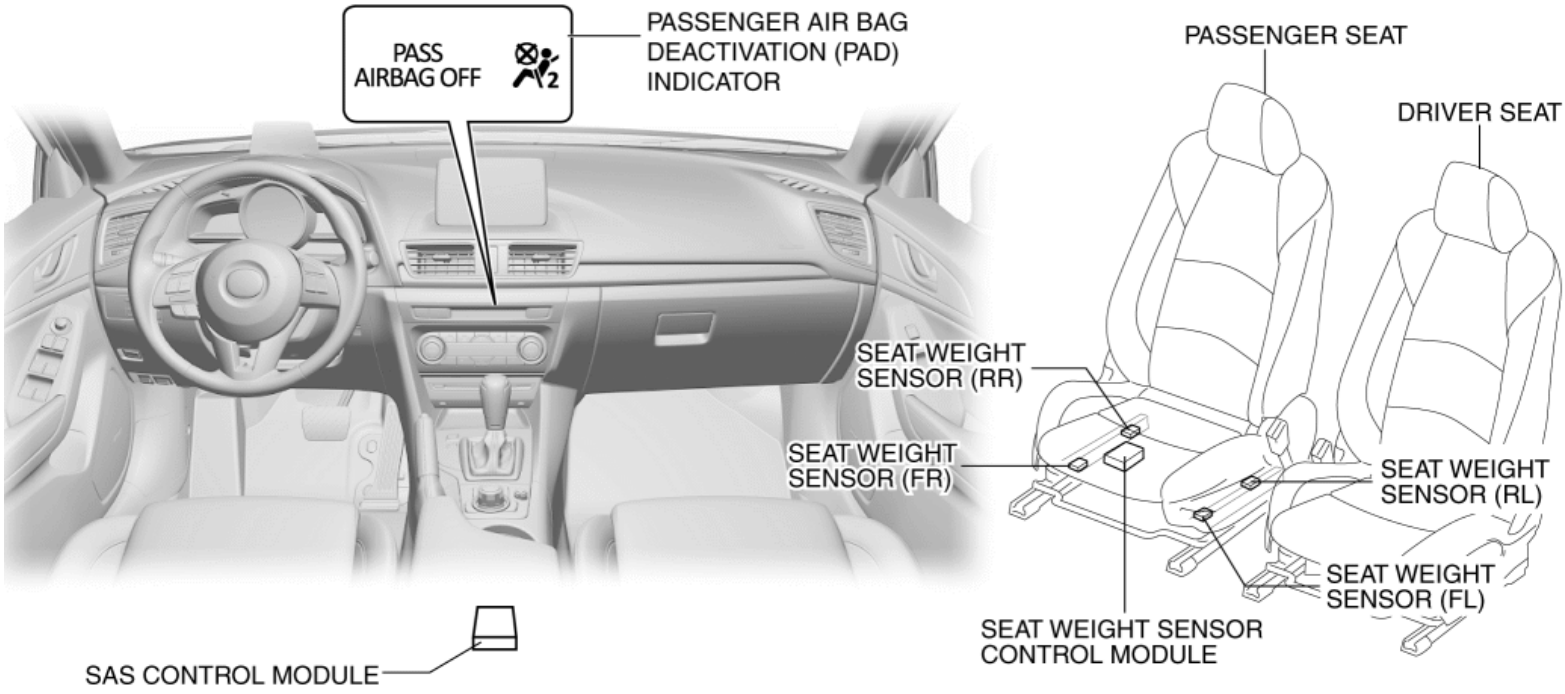

Operation

1. The load on the passenger-side front seat is converted into an electric signal by the strain gauge built into the seat weight sensor, and this signal is sent to the seat weight sensor control module.

2. The electronic signals from the four seat weight sensor are used for calculation by the seat weight sensor control module, which divides the result and then determines whether there is an adult or child (including a child-restraint seat) in the passenger-side seat, or that it is empty. The determined result is sent to the SAS control module.

3. The SAS control module performs control based on this determined result as shown in the following table when the module detects a level of impact requiring operation (deployment).

×: Possible-: Not possible

Determined result	Determined weight	Passenger-side air bag module operation (deployment)	Passenger-side side air bag module operation (deployment)	Passenger-side pre-tensioner seat belt operation (deployment)	Passenger-side lap pre-tensioner seat belt operation (deployment)	PAD indicator
Adult	Approx. **42 kg {93 lb}** or more*1	×	×	×	×	Not illuminated
Child (including child-restraint seat)	Approx. **30 kg {66 lb}** or less*1	-	-	-	-	Illuminated
Empty	Approx. **0 kg {0 lb}**	-	-	-	-	Illuminated

NOTE:

- The passenger-side air bag module, the passenger-side side air bag module and the passenger-side pre-tensioner seat belt system will be turned off as the total seated weight drops toward **30 kg {66 lb}** and they will be turned on again before the weight exceeds **42 kg {93 lb}**.

*1

Figure is the determination result when a weight is placed on the seat surface. It does not indicate the weight of a passenger. The amount of weight that the system determines differs depending on how the passenger is seated on the seat.

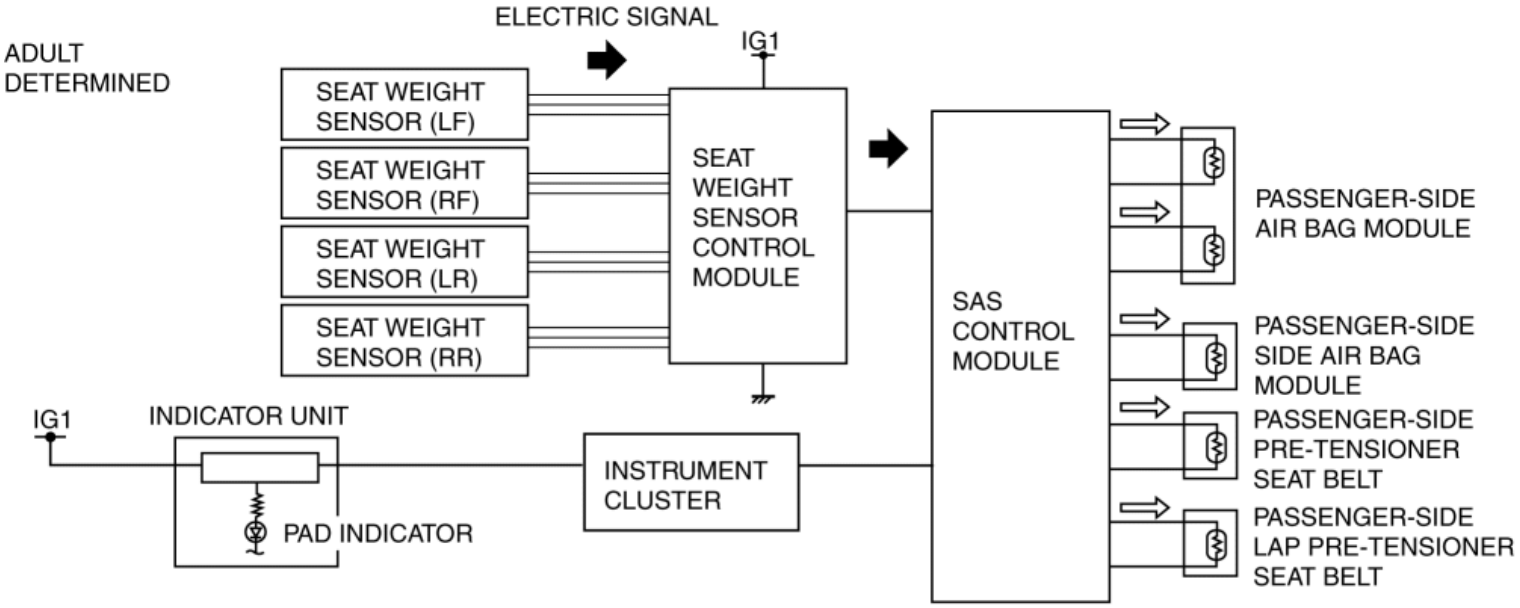
ADULT DETERMINED
ELECTRIC SIGNAL
IG1
SEAT WEIGHT SENSOR (LF)
SEAT WEIGHT SENSOR (RF)
SEAT WEIGHT SENSOR (LR)
SEAT WEIGHT SENSOR (RR)
SEAT WEIGHT SENSOR CONTROL MODULE
SAS CONTROL MODULE
PASSENGER-SIDE AIR BAG MODULE
PASSENGER-SIDE SIDE AIR BAG MODULE
PASSENGER-SIDE PRE-TENSIONER SEAT BELT
PASSENGER-SIDE LAP PRE-TENSIONER SEAT BELT
IG1
INDICATOR UNIT
PAD INDICATOR
INSTRUMENT CLUSTER

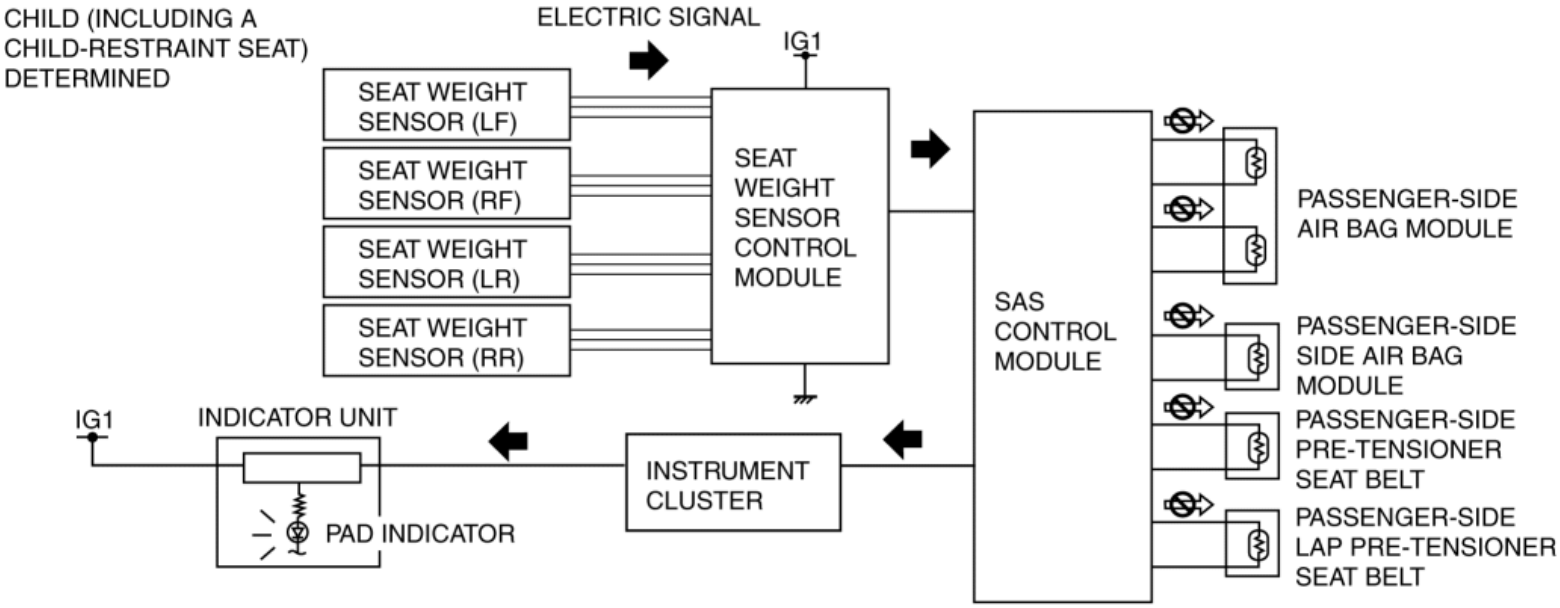
CHILD (INCLUDING A CHILD-RESTRAINT SEAT) DETERMINED
ELECTRIC SIGNAL
IG1
SEAT WEIGHT SENSOR (LF)
SEAT WEIGHT SENSOR (RF)
SEAT WEIGHT SENSOR (LR)
SEAT WEIGHT SENSOR (RR)
SEAT WEIGHT SENSOR CONTROL MODULE
SAS CONTROL MODULE
PASSENGER-SIDE AIR BAG MODULE
PASSENGER-SIDE SIDE AIR BAG MODULE
PASSENGER-SIDE PRE-TENSIONER SEAT BELT
PASSENGER-SIDE LAP PRE-TENSIONER SEAT BELT
IG1
INDICATOR UNIT
PAD INDICATOR
INSTRUMENT CLUSTER

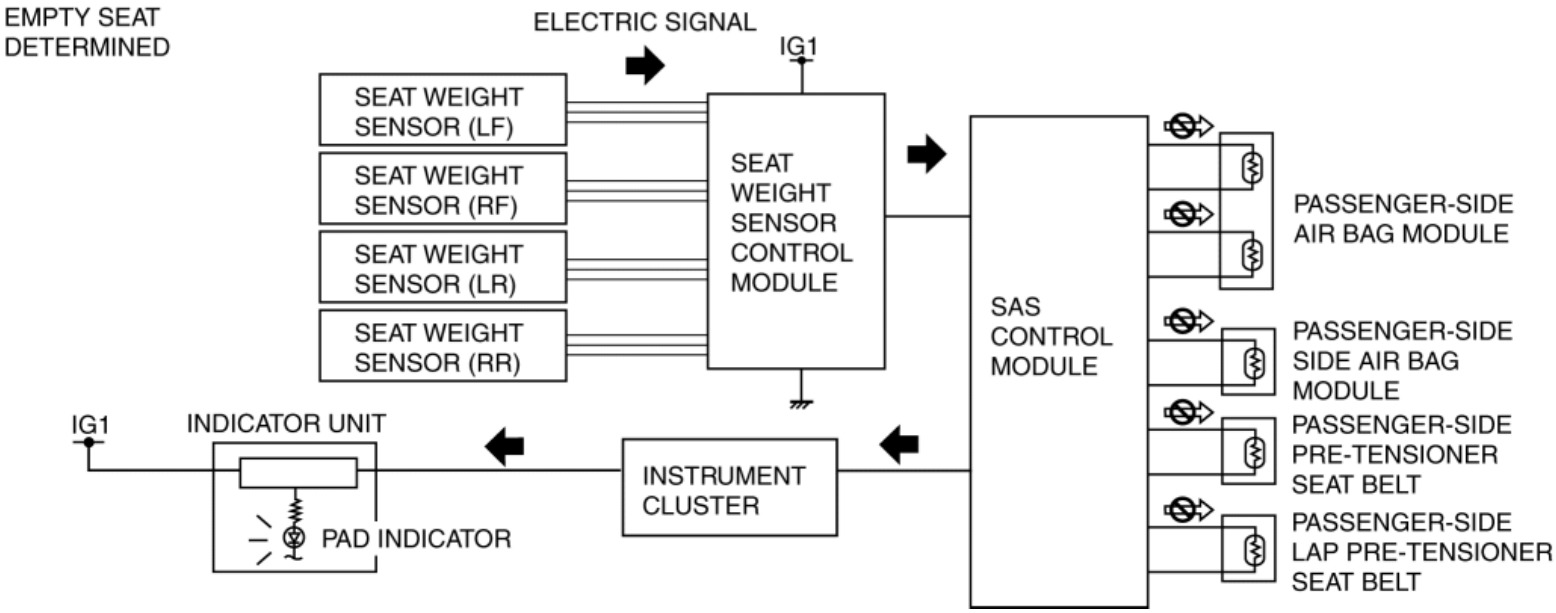
EMPTY SEAT DETERMINED
ELECTRIC SIGNAL
IG1
SEAT WEIGHT SENSOR (LF)
SEAT WEIGHT SENSOR (RF)
SEAT WEIGHT SENSOR (LR)
SEAT WEIGHT SENSOR (RR)
SEAT WEIGHT SENSOR CONTROL MODULE
SAS CONTROL MODULE
PASSENGER-SIDE AIR BAG MODULE
PASSENGER-SIDE SIDE AIR BAG MODULE
PASSENGER-SIDE PRE-TENSIONER SEAT BELT
PASSENGER-SIDE LAP PRE-TENSIONER SEAT BELT
IG1
INDICATOR UNIT
PAD INDICATOR
INSTRUMENT CLUSTER

CAUTION:

If any of the following work is performed, perform the seat weight sensor calibration using the Mazda Modular Diagnostic System (M-MDS).

- Replacement with a new seat weight sensor
- Replacement with a new seat weight sensor control module
- Replacement with new passenger-side seat parts
- Disassembly of the passenger-side seat

- If any of the following work is performed, perform the seat weight sensor inspection using the Mazda Modular Diagnostic System (M-MDS).
  - Removal of the passenger-side seat
  - Loosening and retightening of passenger-seat fixing bolts
  - Or, the vehicle is involved in a collision

2014 - Mazda3 - Restraints

DRIVER-SIDE AIR BAG MODULE [TWO-STEP DEPLOYMENT CONTROL SYSTEM]

Purpose

- When the driver-side air bag module receives an impact from a frontal or frontal offset collision, the operation (deployment) of the air bag mediates the impact to the head and face of the driver.

Function

- When the driver-side air bag module receives an impact from a frontal or frontal offset collision, the air bag is operated (deployed) by the operation signal sent from the SAS control module.

Construction

- The driver-side air bag module is installed to the center area of the steering wheel.
- The driver-side air bag module consists of the inflator and air bag.
- The inflator consists of the igniter, inflation agent, gas generating agent and filter.

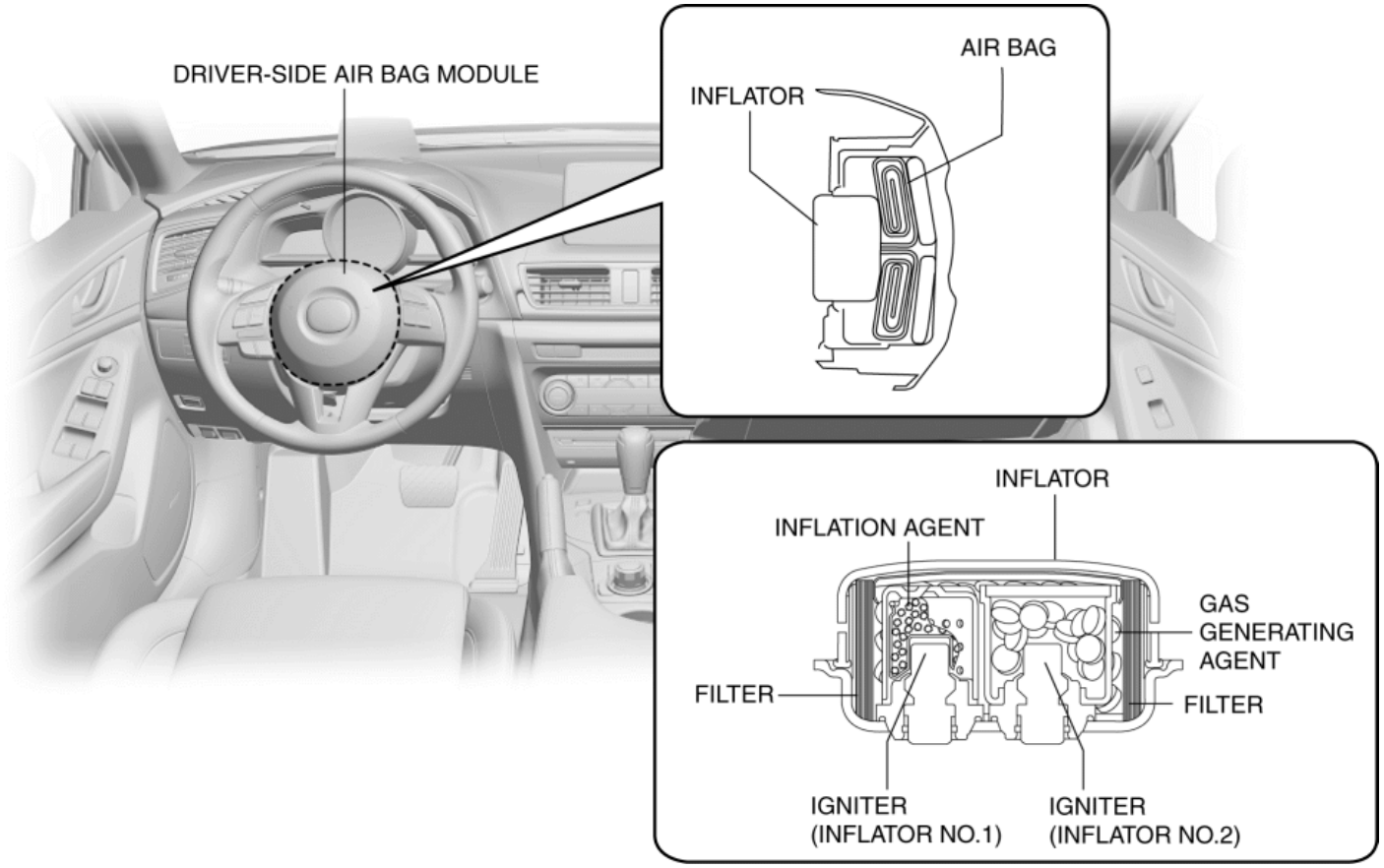

Operation

Inflator operation

- The driver-side air bag module operates (deploys) the air bag by activating the internal inflator.
- The inflator operates (deploys) in the following order:

Inflator No.1

1. When the driver-side air bag module receives an operation (deployment) signal from the SAS control module, the igniter built into inflator No.1 builds up heat and ignites the inflation agent.

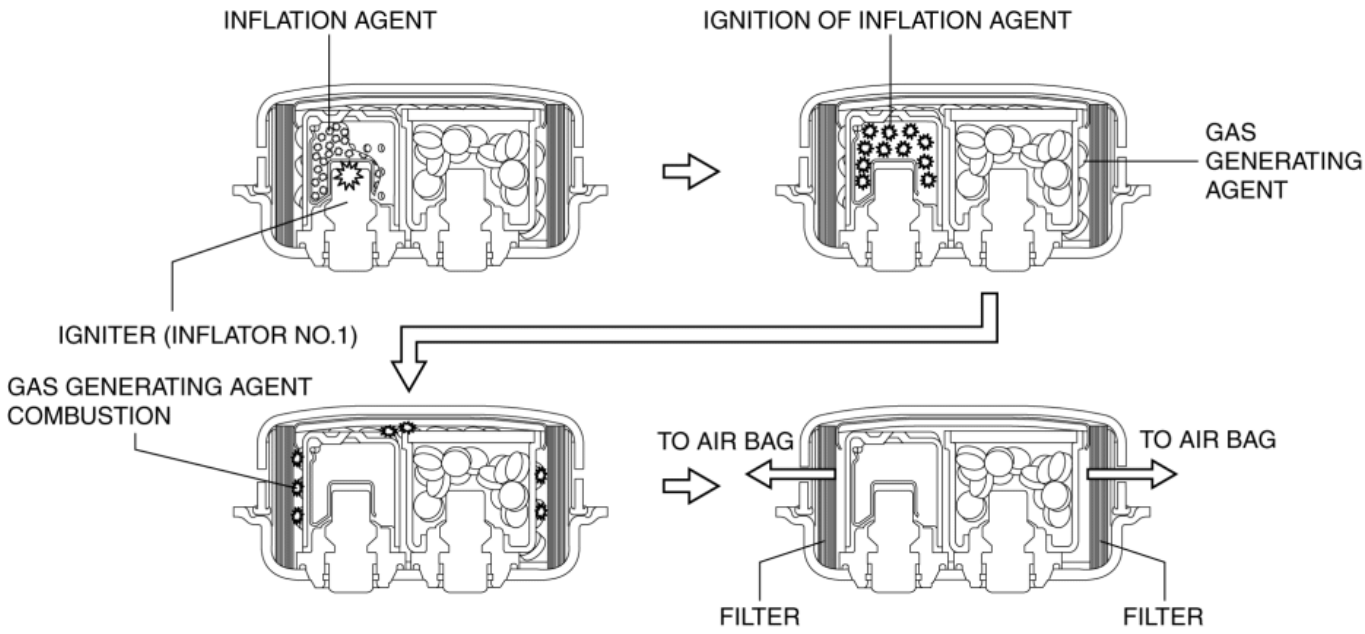

2. The ignition of the inflation agent causes the combustion of a gas-generating agent which releases nitrogen gas.

3. The nitrogen gas is cooled at the filter and the filtrate is injected into the air bag.

Inflator No.2

1. When the driver-side air bag module receives an operation (deployment) signal from the SAS control module, the igniter built into inflator No.2 builds up heat and ignites the inflation agent.

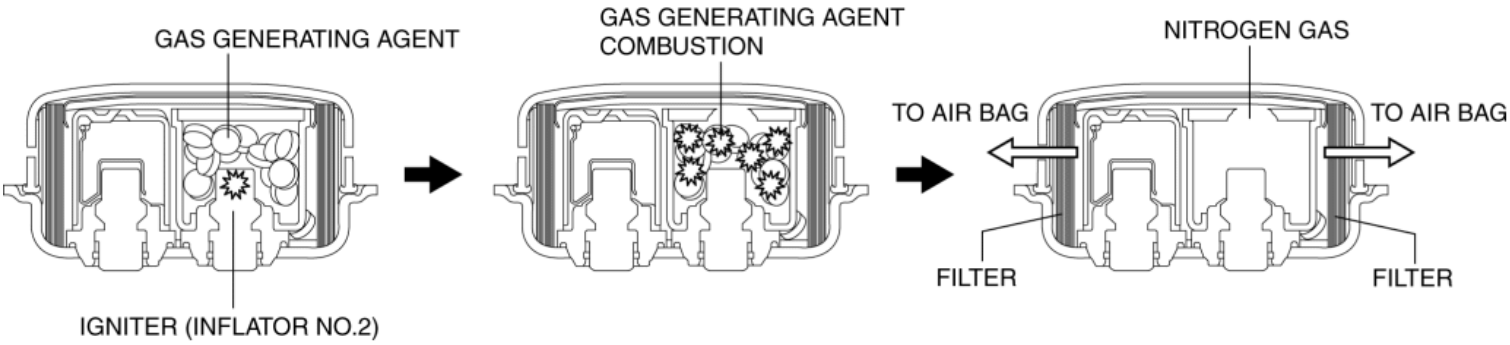

2. The ignition of the inflation agent causes the combustion of a gas-generating agent which releases nitrogen gas.

3. The nitrogen gas is cooled at the filter and the filtrate is injected into the air bag.

Fail-safe

- Function not equipped.

2014 - Mazda3 - Restraints

PASSENGER-SIDE AIR BAG MODULE [TWO-STEP DEPLOYMENT CONTROL SYSTEM]

Purpose

- When the passenger-side air bag module receives an impact from a frontal or frontal offset collision, the operation (deployment) of the air bag mediates the impact to the head and face of the front passenger.

Function

- When the passenger-side air bag module receives an impact from a frontal or frontal offset collision, the air bag is operated (deployed) by the operation signal sent from the SAS control module.

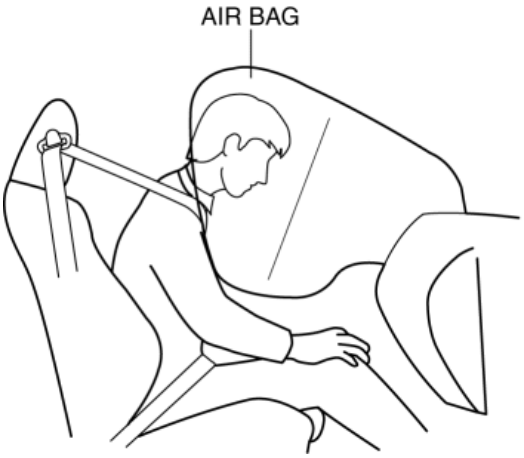

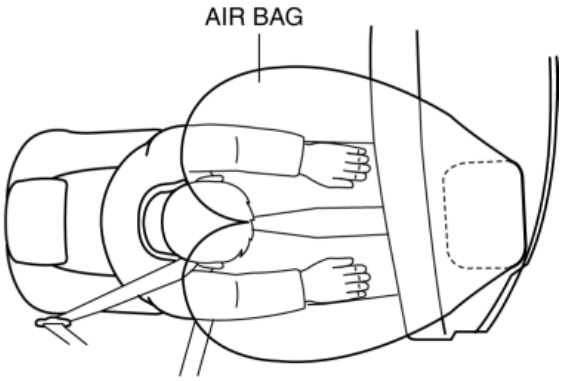

- A twin-bag type air bag has been adopted for the passenger-side air bag module.
- The twin bags protect occupants by the following operations:
  - The head goes between the bags to softly restrain the face as a result of the low reaction force.
  - Occupant shoulders are supported by the projection of the bag to restrain the upper body of the occupant.

Construction

- The passenger-side air bag module is installed to the instrument panel.
- The passenger-side air bag module consists of the inflator and air bag.
- The inflator consists of the igniter, inflation agent, gas generating agent and filter.

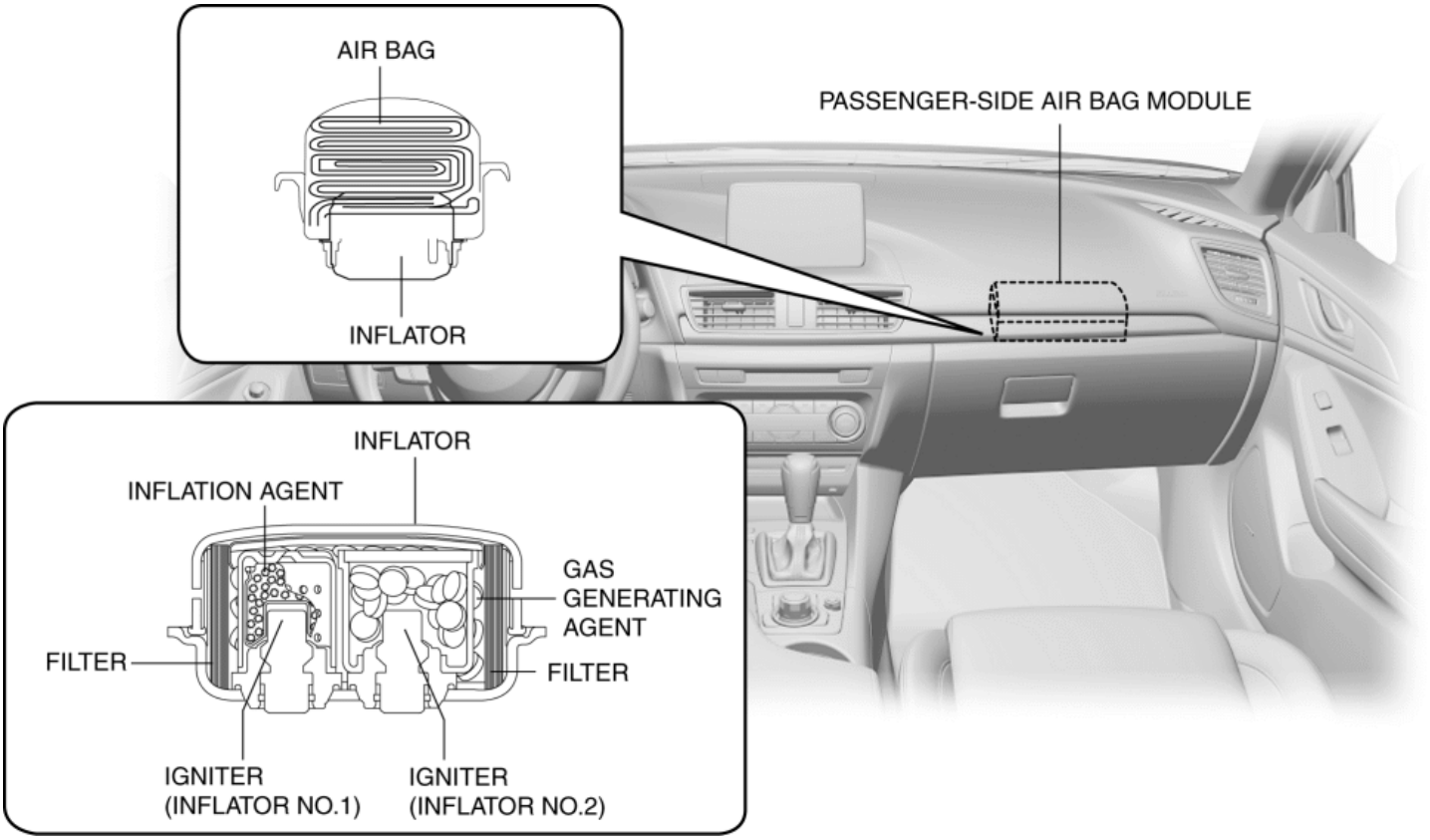

Operation

- The passenger-side air bag module operates (deploys) the air bag by activating the internal inflator.
- The inflator operates (deploys) in the following order:

Inflator No.1

1. When the driver-side air bag module receives an operation (deployment) signal from the SAS control module, the igniter built into inflator No.1 builds up heat and ignites the inflation agent.

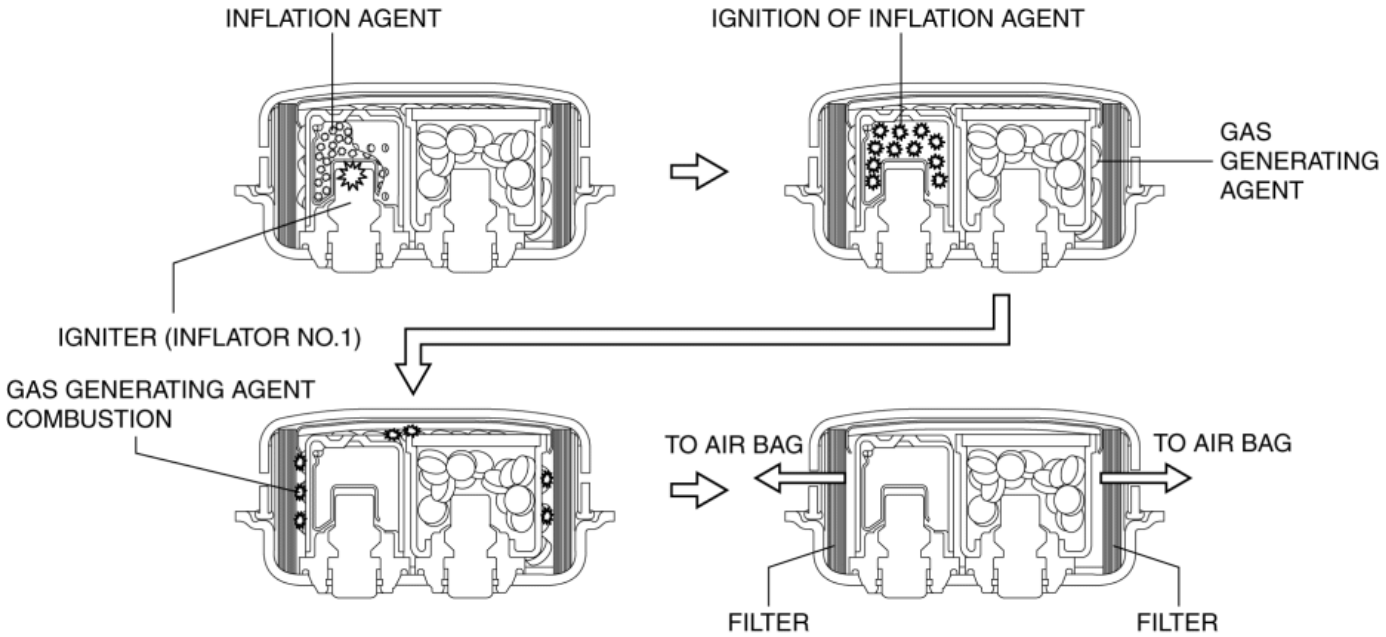

2. The ignition of the inflation agent causes the combustion of a gas-generating agent which releases nitrogen gas.

3. The nitrogen gas is cooled at the filter and the filtrate is injected into the air bag.

Inflator No.2

1. When the passenger-side air bag module receives an operation (deployment) signal from the SAS control module, the igniter built into inflator No.2 builds up heat and ignites the inflation agent.

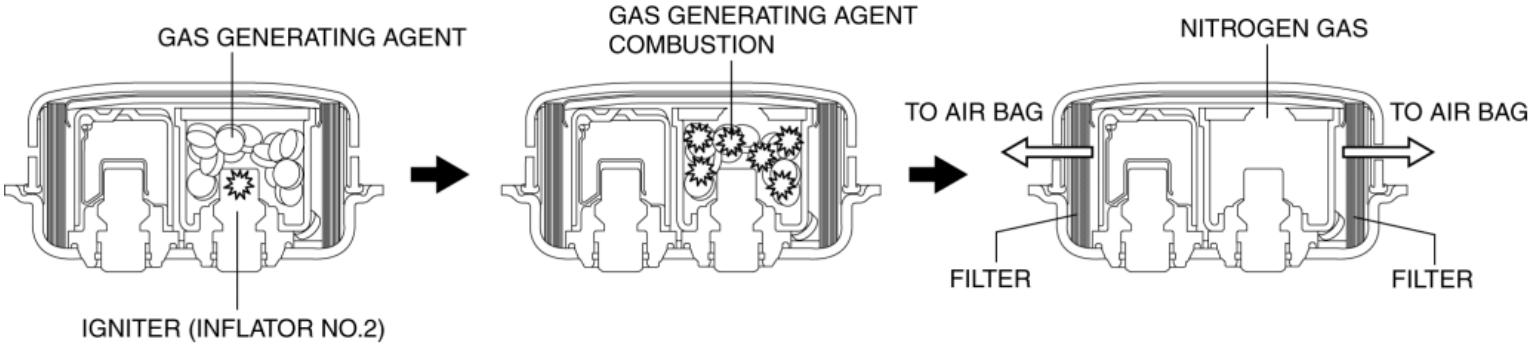

2. The ignition of the inflation agent causes the combustion of a gas-generating agent which releases nitrogen gas.

3. The nitrogen gas is cooled at the filter and the filtrate is injected into the air bag.

Fail-safe

- Function not equipped.

2014 - Mazda3 - Restraints

SIDE AIR BAG MODULE [TWO-STEP DEPLOYMENT CONTROL SYSTEM]

Purpose

- When a side air bag module receives an impact from a lateral collision, the operation (deployment) of the air bag mediates the impact to the chest, stomach, and waist of the driver and front passenger.

Function

- When a side air bag module receives an impact from a lateral collision, the air bag is operated (deployed) by the operation signal sent from the SAS control module.

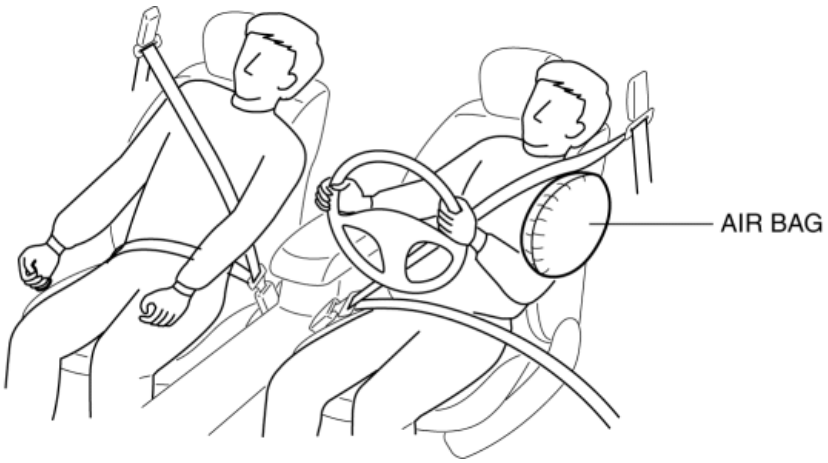

Construction

- The side air bag modules are installed on the door side of the front seat backs.
- The side air bag module consists of the inflator and air bag.
- The inflator consists of an initiator, ignition chamber, gas-generating agent, and filter.

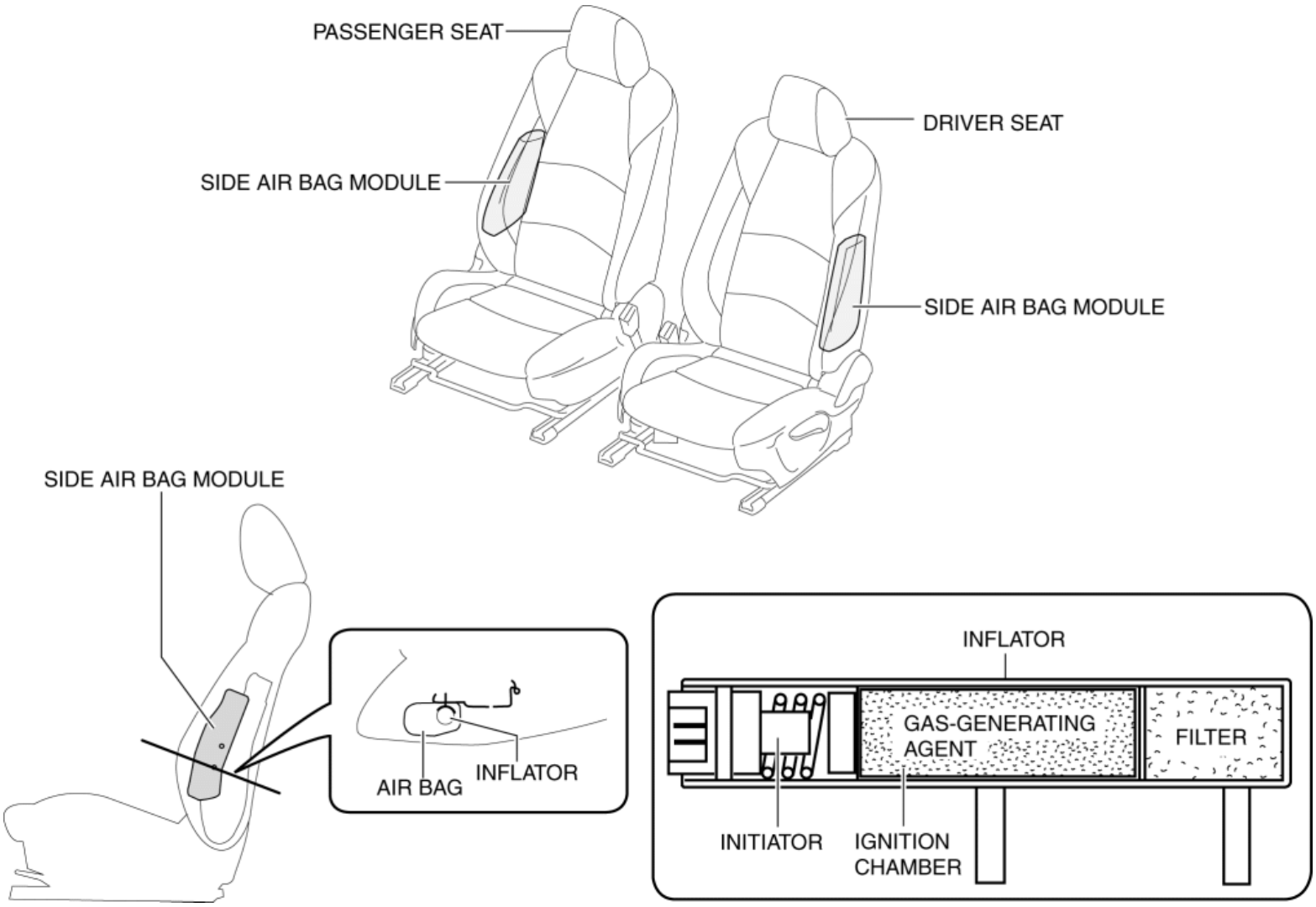

Operation

- The side air bag module operates (deploys) the air bag by activating the internal inflator.
- The inflator operates (deploys) in the following order:

1. When an operation (deployment) signal is received from the SAS control module, the initiator built into the inflator ignites.

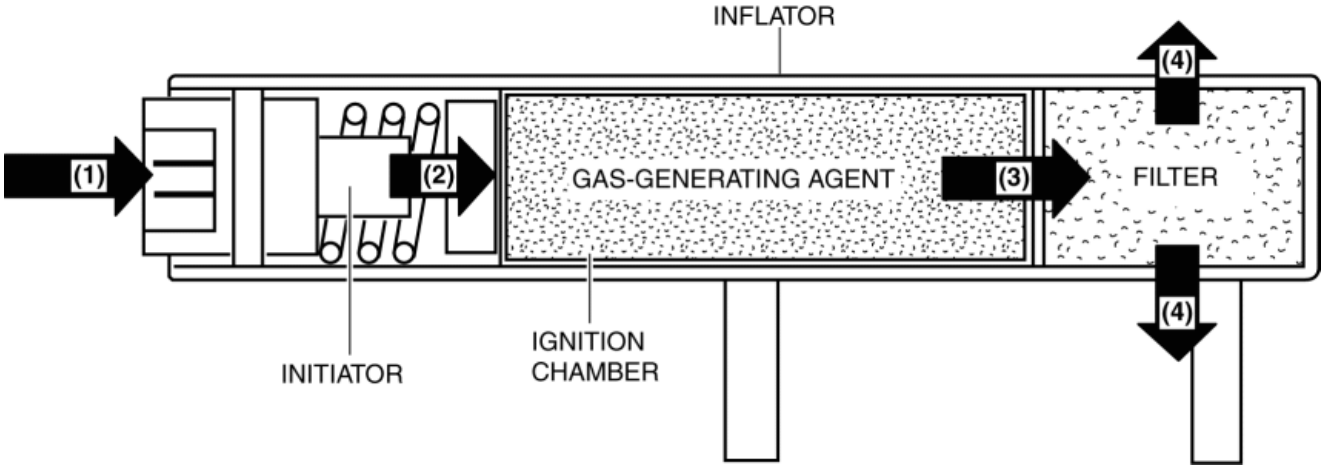

2. The ignition of the initiator causes the ignition of the gas-generating agent.
3. The end of the ignition chamber is broken by the combustion gas pressure, and the combustion gas is supplied into the filter.
4. The combustion gas, which is cooled by the filter, is sprayed to the air bag through the diffuser (diffusion devise).

5. When the side air bag module operates (deploys), the air bag operates (deploys) while breaking open the seat back trim by the force of the gas sprayed out of the inflator.

Fail-safe

- Function not equipped.

2014 - Mazda3 - Restraints

CURTAIN AIR BAG MODULE [TWO-STEP DEPLOYMENT CONTROL SYSTEM]

Purpose

- When a curtain air bag module receives an impact from a lateral collision or a rollover, the operation (deployment) of the air bag mediates the impact to the head of the driver and front passenger.

Function

- When a curtain air bag module receives an impact from a lateral collision, the air bag is operated (deployed) by the operation signal sent from the SAS control module.

Construction

- The curtain air bag module is installed along the roof edge between the A and C pillars.
- The curtain air bag module consists of the inflator and air bag.
- The inflator consists of an initiator, gas-generating agent, charged gas, and an orifice.

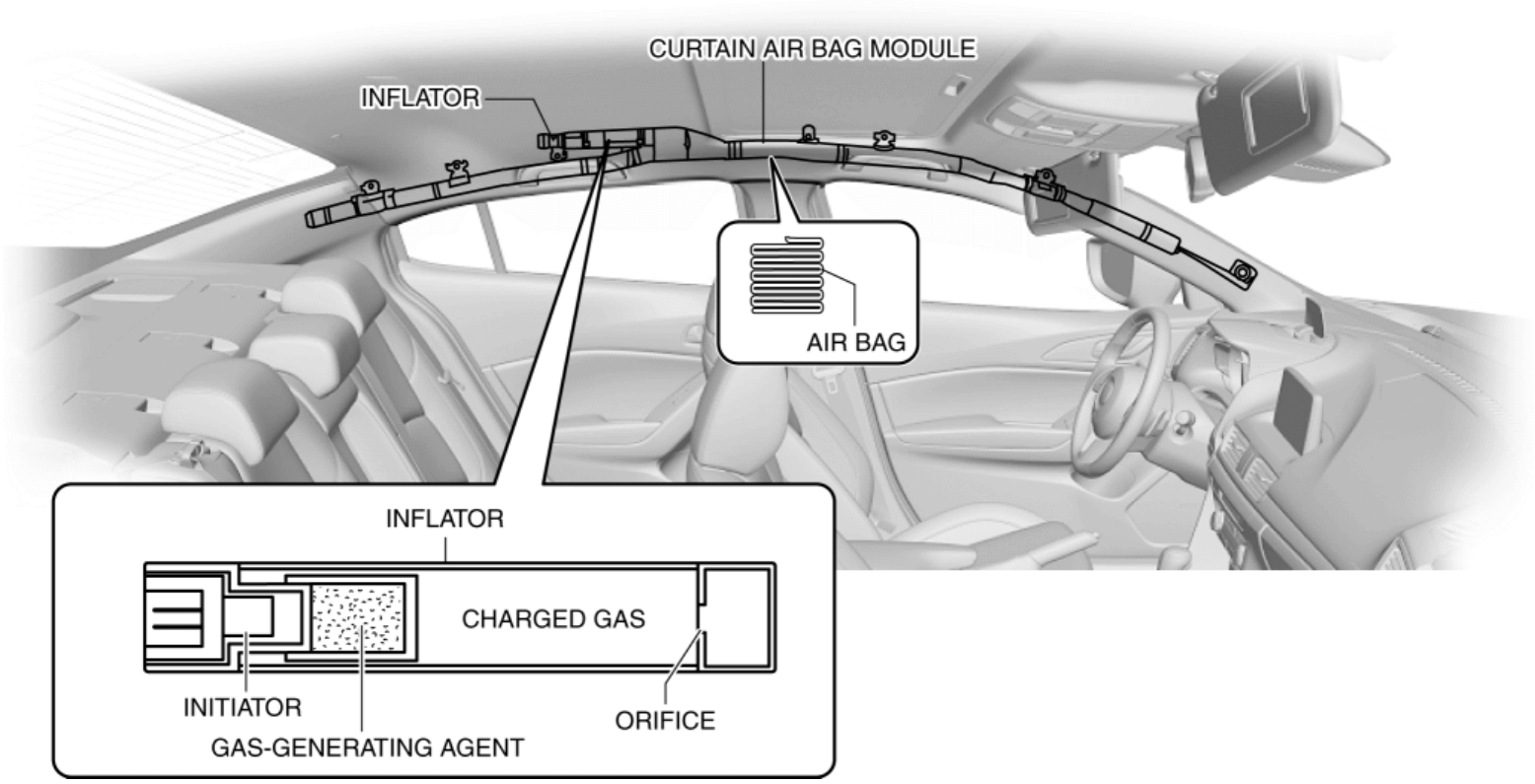

Operation

- The curtain air bag module operates (deploys) the air bag by activating the internal inflator.
- The inflator operates (deploys) in the following order:

1. When an operation (deployment) signal is received from the SAS control module, the initiator built into the inflator ignites.

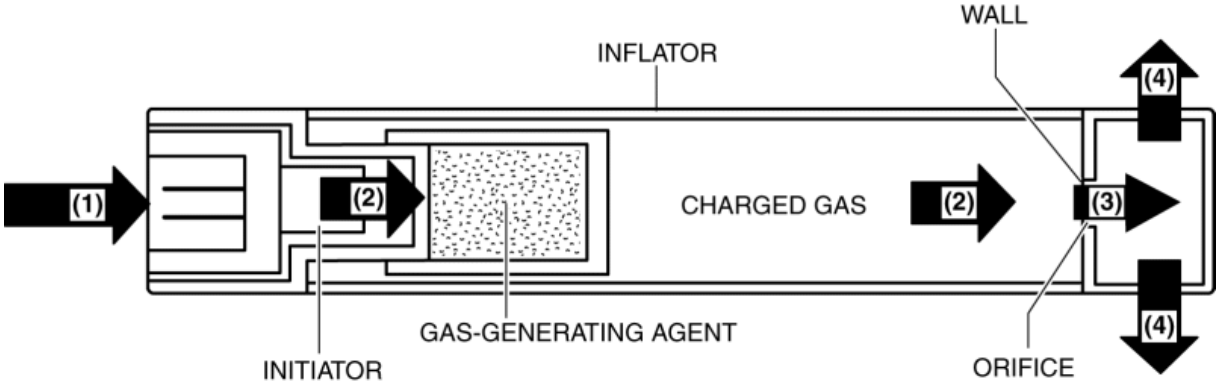

2. The ignition of the initiator causes the ignition of the gas-generating agent. The section of the wall from which the air bag deploys is broken by this impact wave.

3. The charged gas and the gas generated by the gas-generating agent mix and pass through the orifice.

4. The combined gas, which passed though the orifice, is sprayed into the air bag through the diffuser (diffusion devise).

5. When the curtain air bag module operates (deploys), the air bag operates (deploys) while breaking open the A-pillar trim and headliner by the force of the combined gas sprayed out of the inflator.

Fail-safe

- Function not equipped.

2014 - Mazda3 - Restraints

PRE-TENSIONER SEAT BELT [TWO-STEP DEPLOYMENT CONTROL SYSTEM]

Purpose

- The pre-tensioner seat belt retracts and tightens the seat belt webbing to protect the front passengers during a collision.

Function

- The pre-tensioner seat belts operate (deploy) based on the operation signal from the SAS control module to instantly retract and tighten the belt webbing, restraining the driver and front passenger.
- The pre-tensioner seat belts operate in conjunction with the lap pre-tensioner seat belts.

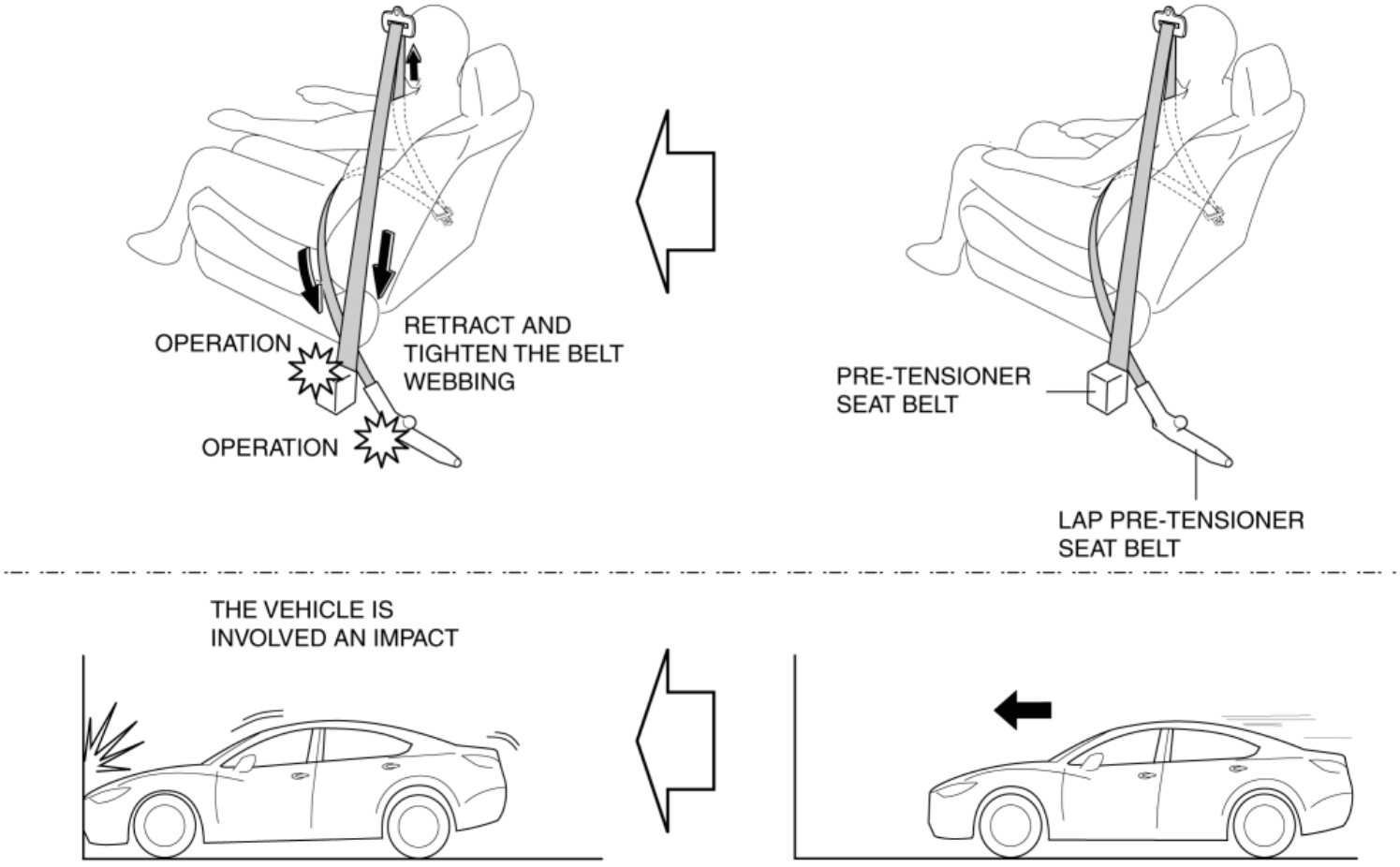

Construction

- The pre-tensioner seat belt is installed to the front seat belt retractor.

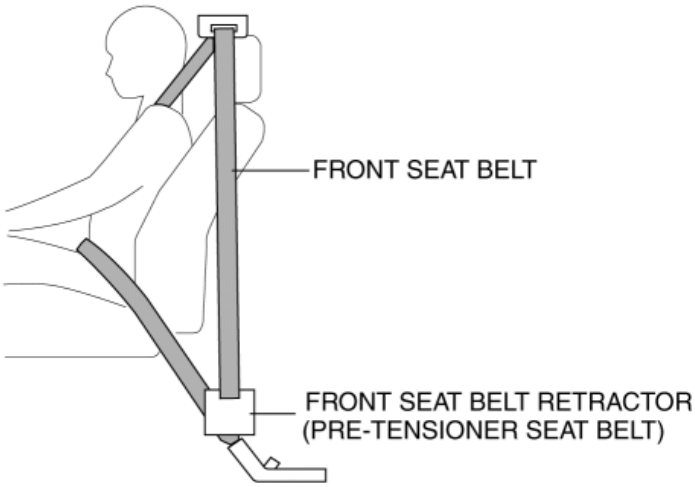

- The pre-tensioner seat belt consists of the following parts shown in the figure:

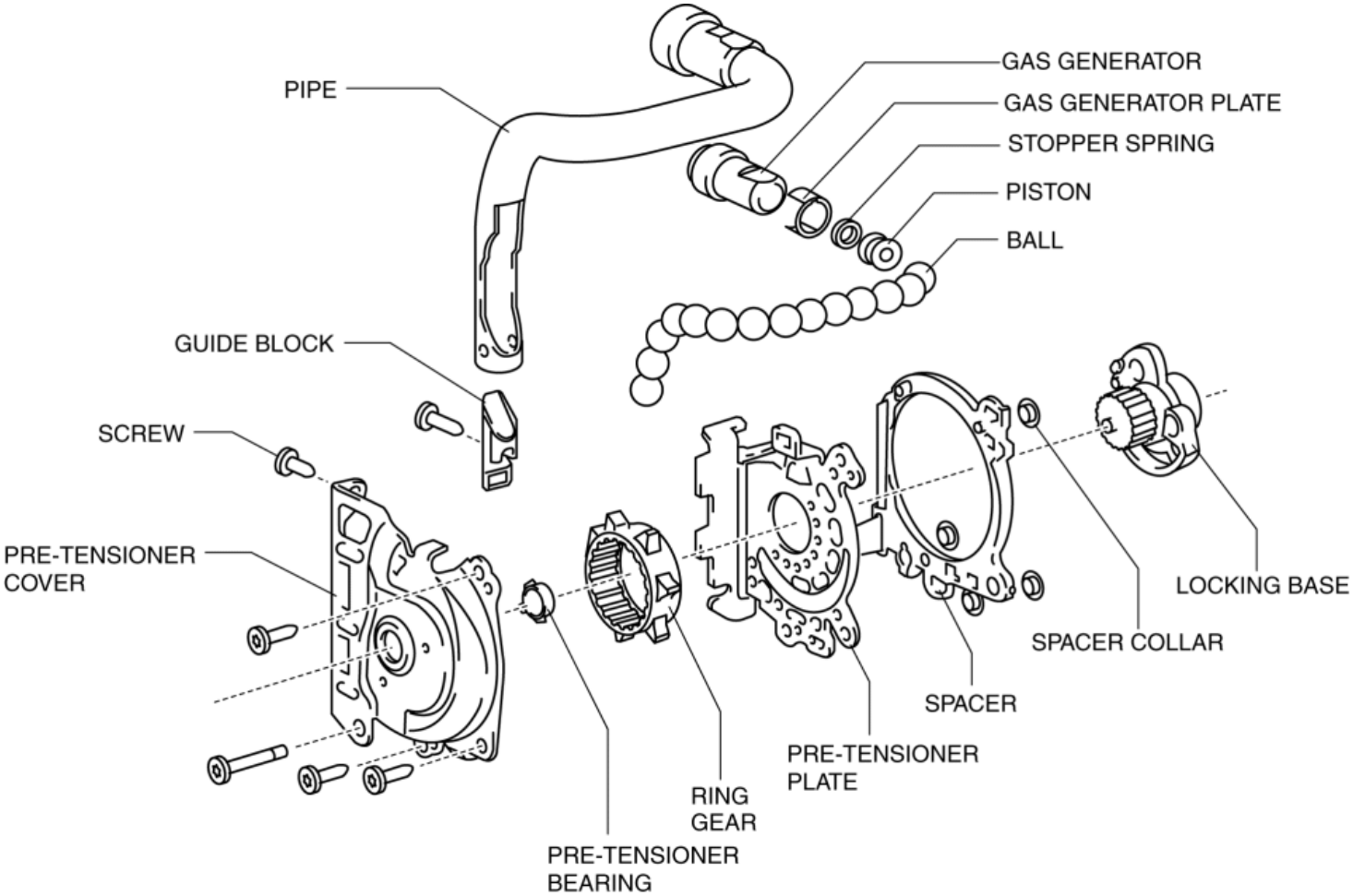

Operation

Normal operation (pre-tensioner non-operation)

- Normally, there is a gap between the locking base and the ring gear.
- The ring gear rotates in conjunction with the withdrawal and retraction of the front seat belts, however, in the pre-tensioner part it is kept separated.

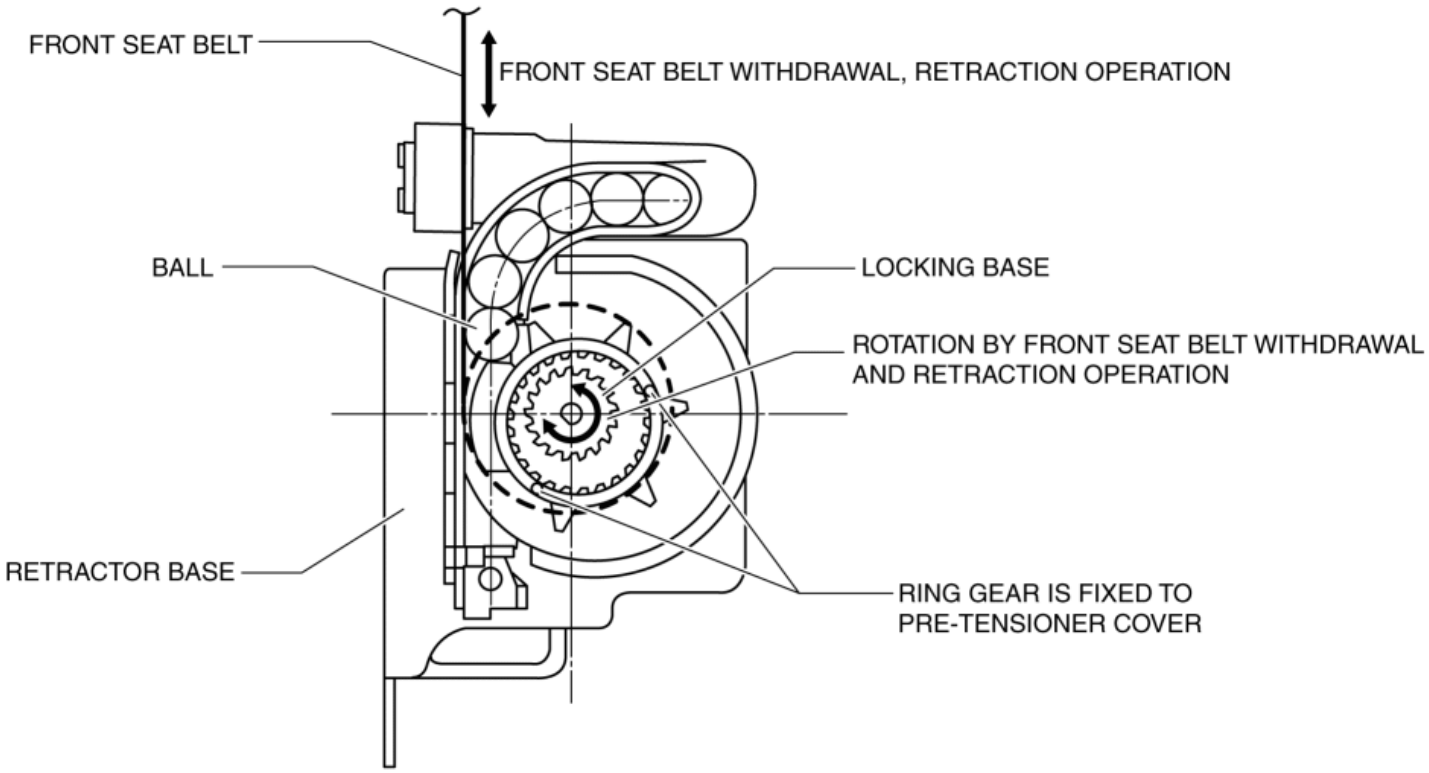

Pre-tensioner activation

1. The gas generator produces gas when it receives an operation signal from the SAS control module.
2. The ball in the cylinder is pressed by the gas pressure and the ring gear is removed from its securement.
3. The ring gear is engaged with the locking base and the force of the ball being pressed out is transmitted to the retraction shaft.
4. The front seat belt is retracted in conjunction with the rotation of the retraction shaft.

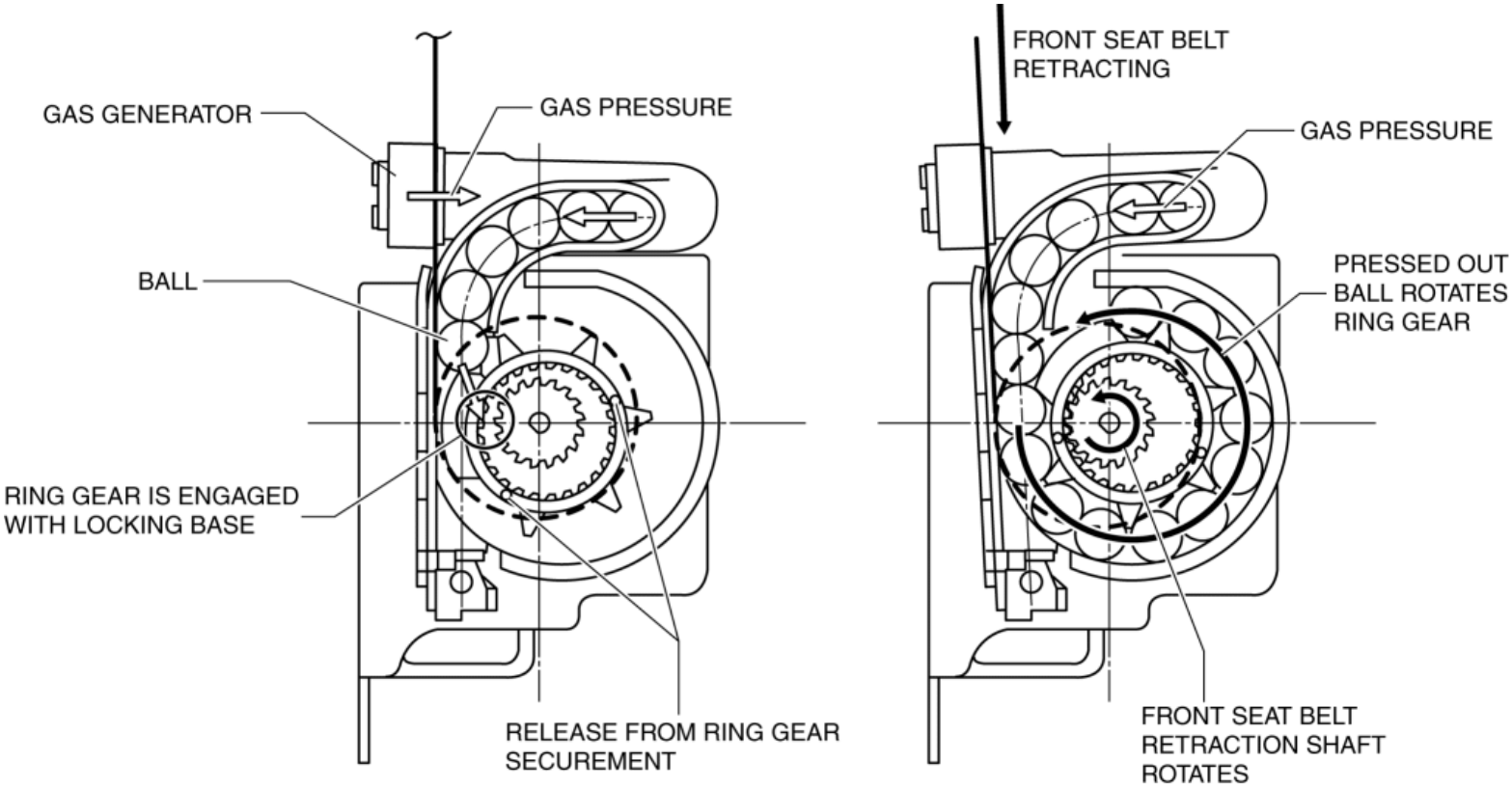

Fail-safe

- Function not equipped.

2014 - Mazda3 - Restraints

LAP PRE-TENSIONER SEAT BELT [TWO-STEP DEPLOYMENT CONTROL SYSTEM]

Purpose

- The lap pre-tensioner seat belts retract and tighten the seat belt webbing to protect the front passengers during a collision.

Function

- The lap pre-tensioner seat belts operate (deploy) based on the operation signal from the SAS control module to instantly retract and tighten the belt webbing, restraining the driver.
- The lap pre-tensioner seat belts operate in conjunction with the pre-tensioner seat belts.

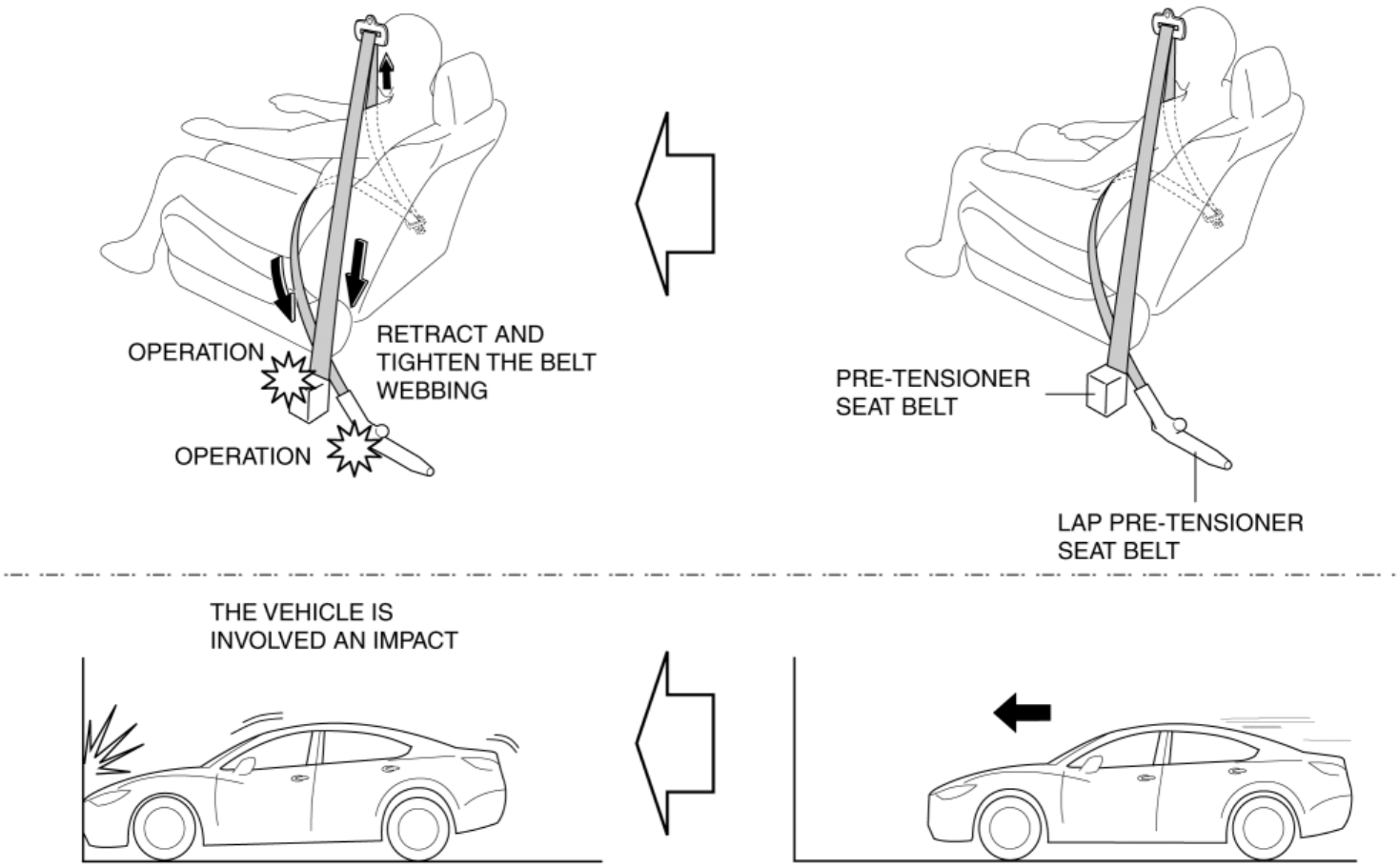

Construction

- The lap pre-tensioner seat belts are installed to the anchors of the front seat belts.

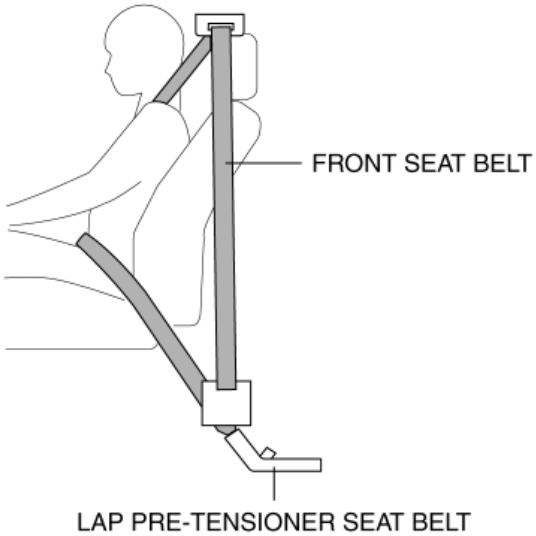

- The lap pre-tensioner seat belts consist of the following parts shown in the figure:

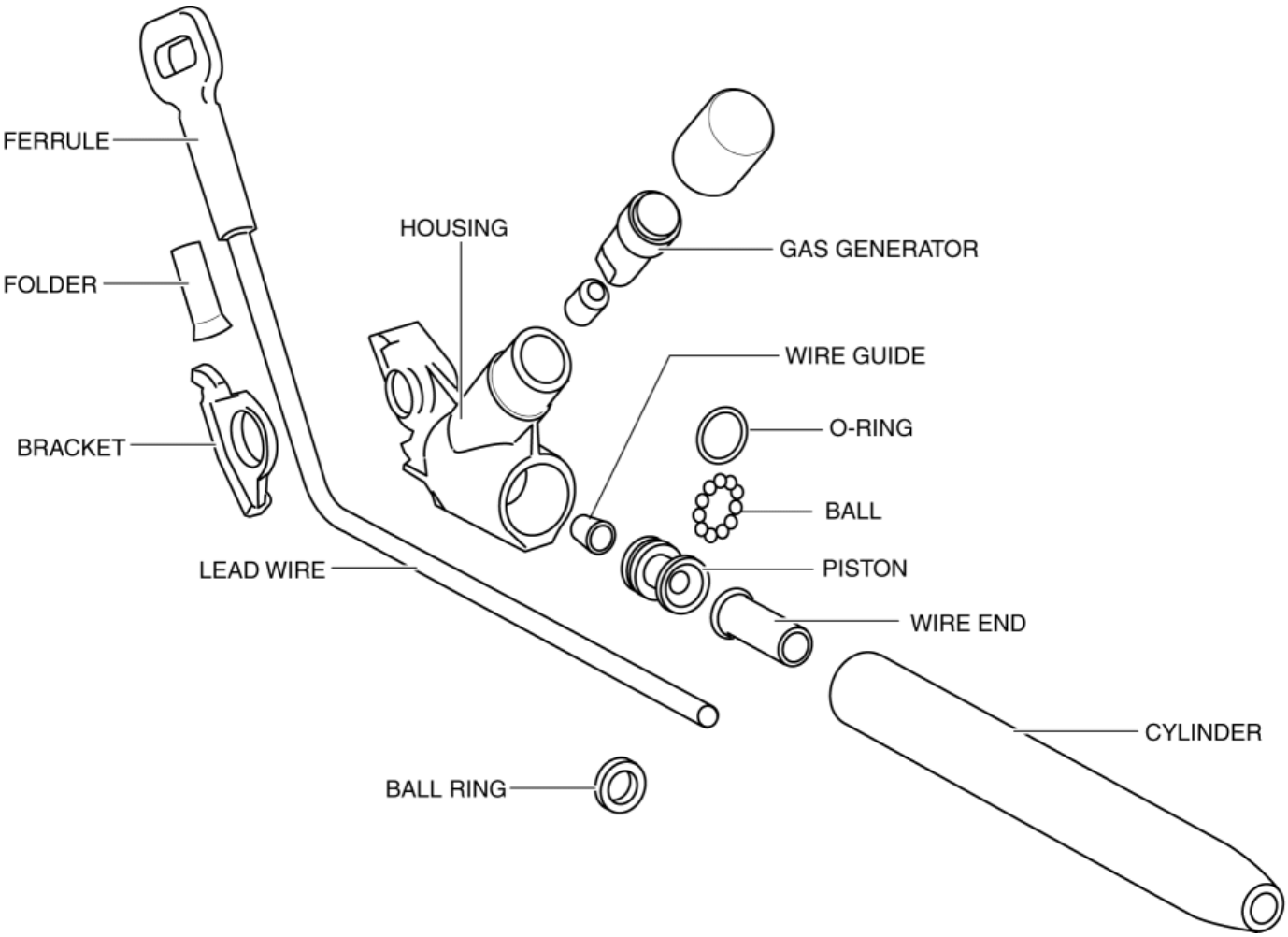

Operation

Lap pre-tensioner activation

1. The gas generator emits a spark when a signal is received from the SAS control module, causing gas to form.
2. The gas pressure pushes the piston inside the cylinder, pulling the lead wire.

3. As the lead wire is pulled, the part of the seat belt attached to the wire is also pulled.

4. The slack in the belt is tightened by the front seat belt being pulled by the lap pre-tensioner seat belt and the seat belt ELR mechanism, restraining the passengers.

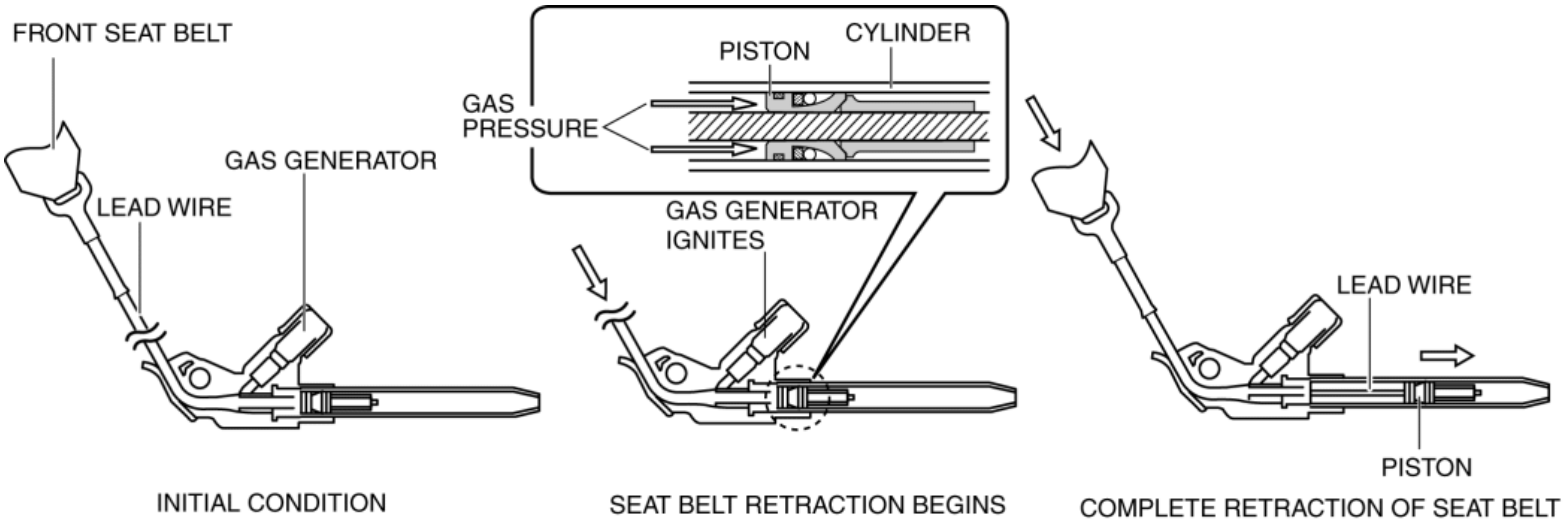

After activation

1. After operating (deploying) the pre-tensioner, the lead wire is pulled back. However the front seat belts are locked by activation of the stopper function so that the belt webbing is not released.

2. The restraint force of the seat belt is adjusted by the front seat belt load limiter mechanism, preventing injury to the driver and passenger from seat belt pressure.

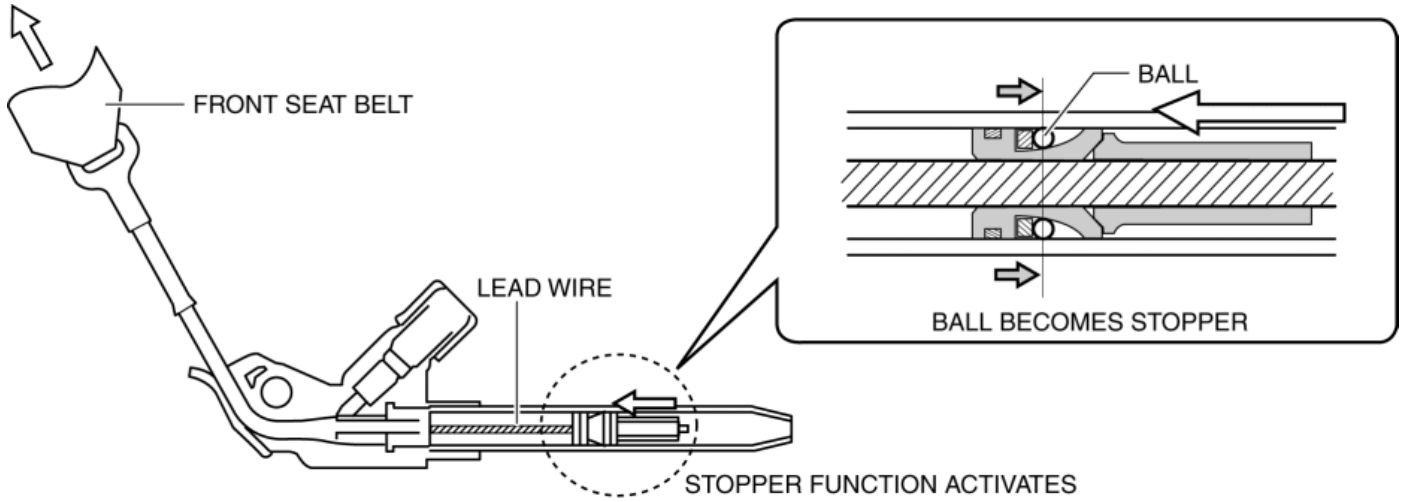

Fail-safe

- Function not equipped.

2014 - Mazda3 - Restraints

CRASH ZONE SENSOR [TWO-STEP DEPLOYMENT CONTROL SYSTEM]

Purpose

- The crash zone sensor detects an impact during a frontal or frontal offset collision to the vehicle.

Function

- The crash zone sensor converts the detected impact to an electrical signal.

Construction

- The crash zone sensor consists of the crash sensor and signal processing circuit.
- The crash zone sensor is installed to the shroud panel of the front bumper backside.
- Two crash zone sensors are installed for independent collision detection on the left and right due to a small over-lap collision.

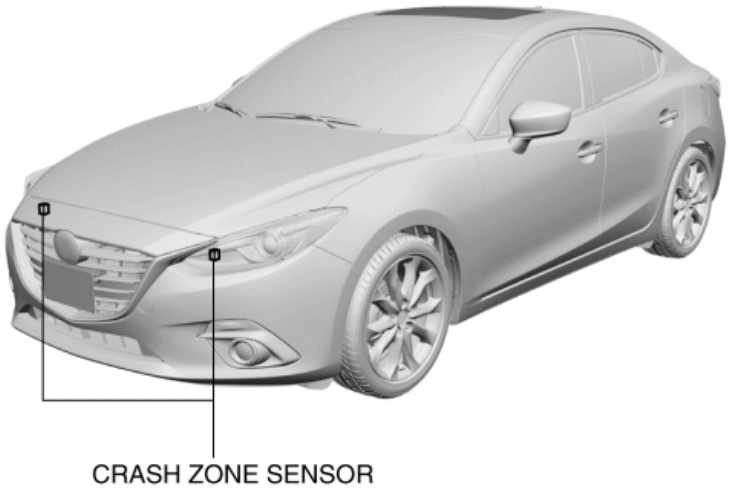

Operation

- For the operation, refer to AIR BAG SYSTEM (See **AIR BAG SYSTEM [TWO-STEP DEPLOYMENT CONTROL SYSTEM]**.)

Fail-safe

- Function not equipped.

2014 - Mazda3 - Restraints

SIDE AIR BAG SENSOR [TWO-STEP DEPLOYMENT CONTROL SYSTEM]

Purpose

- The side air bag sensor detects an impact during a lateral collision.

Function

- The side air bag sensor converts the detected impact to an electrical signal.

Construction

- The side air bag sensor consists of the crash sensor and signal processing circuit.
- Side air bag sensor is placed in the trunk side trim of the C-pillar.

Operation

- For the operation, refer to AIR BAG SYSTEM (See **AIR BAG SYSTEM [TWO-STEP DEPLOYMENT CONTROL SYSTEM]**.)

Fail-safe

- Function not equipped.

2014 - Mazda3 - Restraints

PRESSURE SENSOR [TWO-STEP DEPLOYMENT CONTROL SYSTEM]

Purpose

- The pressure sensor detects deformation of a front door by a collision to the vehicle side and shortens the time to operate (deploy) the air bag from the collision.

Function

- The pressure sensor converts the pressure of the air against the internal part of a front door to an electrical signal when the vehicle receives a side impact from a collision.

Construction

- The pressure sensor consists of the pressure detection sensor and signal processing circuit.
- Located inside the center of the front doors.

Operation

1. If the vehicle receives a side impact and a front door deforms, the pressure of the air inside the sealed front door is added and air flows into the opening of the pressure sensor.

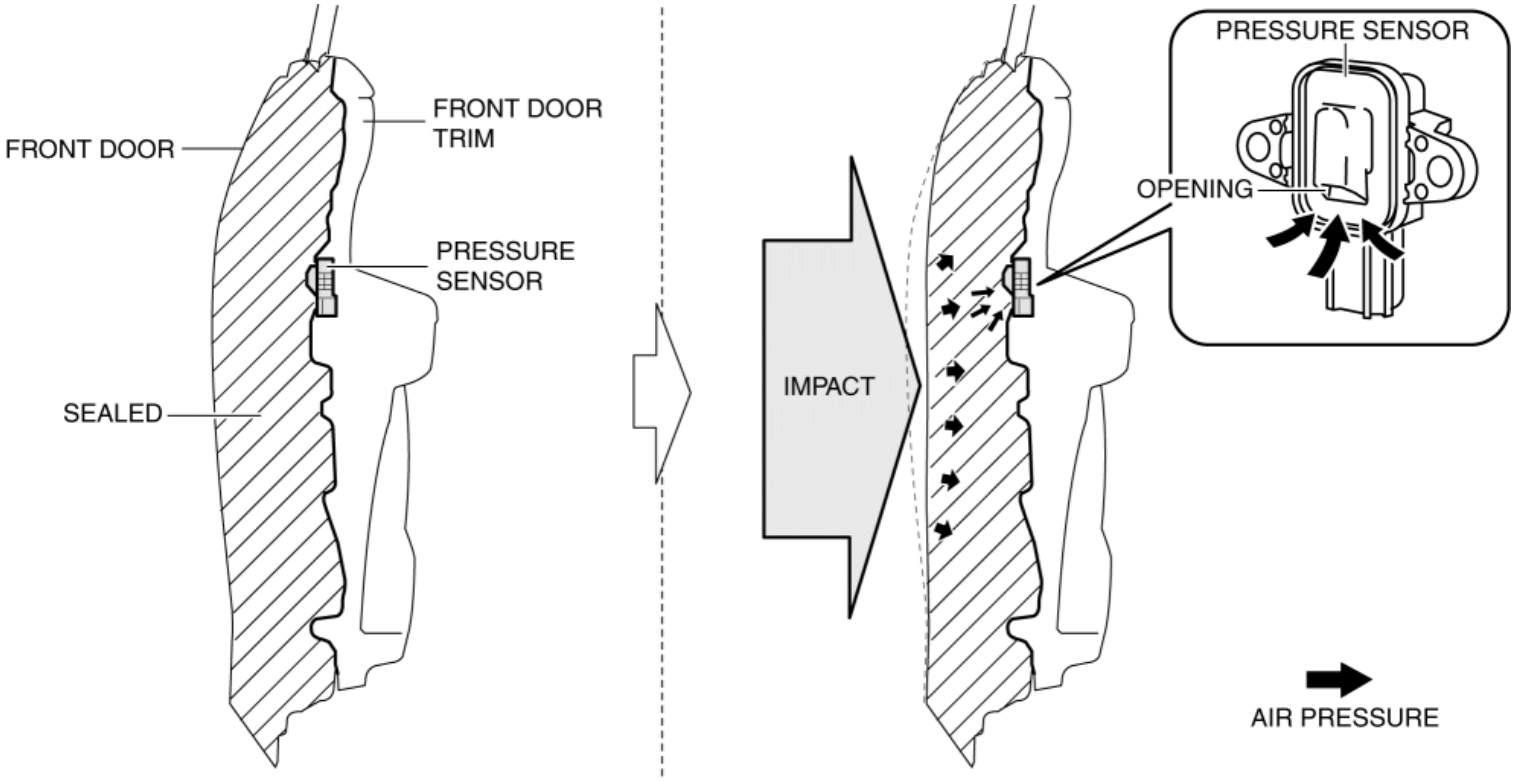

2. The amount of air flowing into the pressure sensor is detected by the pressure detection sensor and the pressure value at the signal processing circuit is converted to an electrical signal.

3. The pressure sensor sends the converted electrical signal to the SAS control module.

Fail-safe

- Function not equipped.

2014 - Mazda3 - Restraints

AIR BAG SYSTEM [STANDARD DEPLOYMENT CONTROL SYSTEM]

Outline

- During a collision, the air bag system operates (deploys) the air bag to assist the occupant protection function for the seat belt.

  WARNING:

  - The air bag system assists the occupant protection function for the seat belt, the intended effect of the SRS air bag system cannot be obtained if the seat belt is not fastened correctly. When driving the vehicle, always fasten the seat belt correctly.

Function

- For the air bag system, the SAS control module calculates the degree of impact based on a collision detection signal from the following each sensor, and operates (deploys) the required parts.

Detection signal	Sensor			Operation (deployment) part				
	SAS control module (integrated sensor)	Crash zone sensor	Side air bag sensor*1 (driver/passenger-side)	Driver-side air bag module	Passenger-side air bag module	Curtain air bag module*1 (driver/passenger-side)	Side air bag module*1 (driver/passenger-side)	Pre-tensioner seat belt (driver/passenger-side)
Detects frontal or frontal offset collision	×	×	-	×	×	-	-	×
Detects lateral collision	×	-	×	-	-	×*2	×*2	×
Detects collision from rear of vehicle	×	-	-	-	-	-	-	-

*1 **With side air bag system**

*2 **Operates (deploys) the air bag module on the side where the collision is detected.**

System conditions display function

- The air bag system detects each part condition and sends a system condition signal from the SAS control module to the instrument cluster.
- The instrument cluster displays the following warning lights and sounds alarm based on the system condition signal.

Warning light and alarm	Reference
Air bag system warning light	(See **AIR BAG SYSTEM WARNING LIGHT [STANDARD DEPLOYMENT CONTROL SYSTEM]**.)

Air bag system warning alarm	(See **AIR BAG SYSTEM WARNING ALARM [STANDARD DEPLOYMENT CONTROL SYSTEM]**.)
Seat belt warning light	(See **SEAT BELT WARNING ALARM**.) (See **INDICATOR UNIT**.)

Structural View

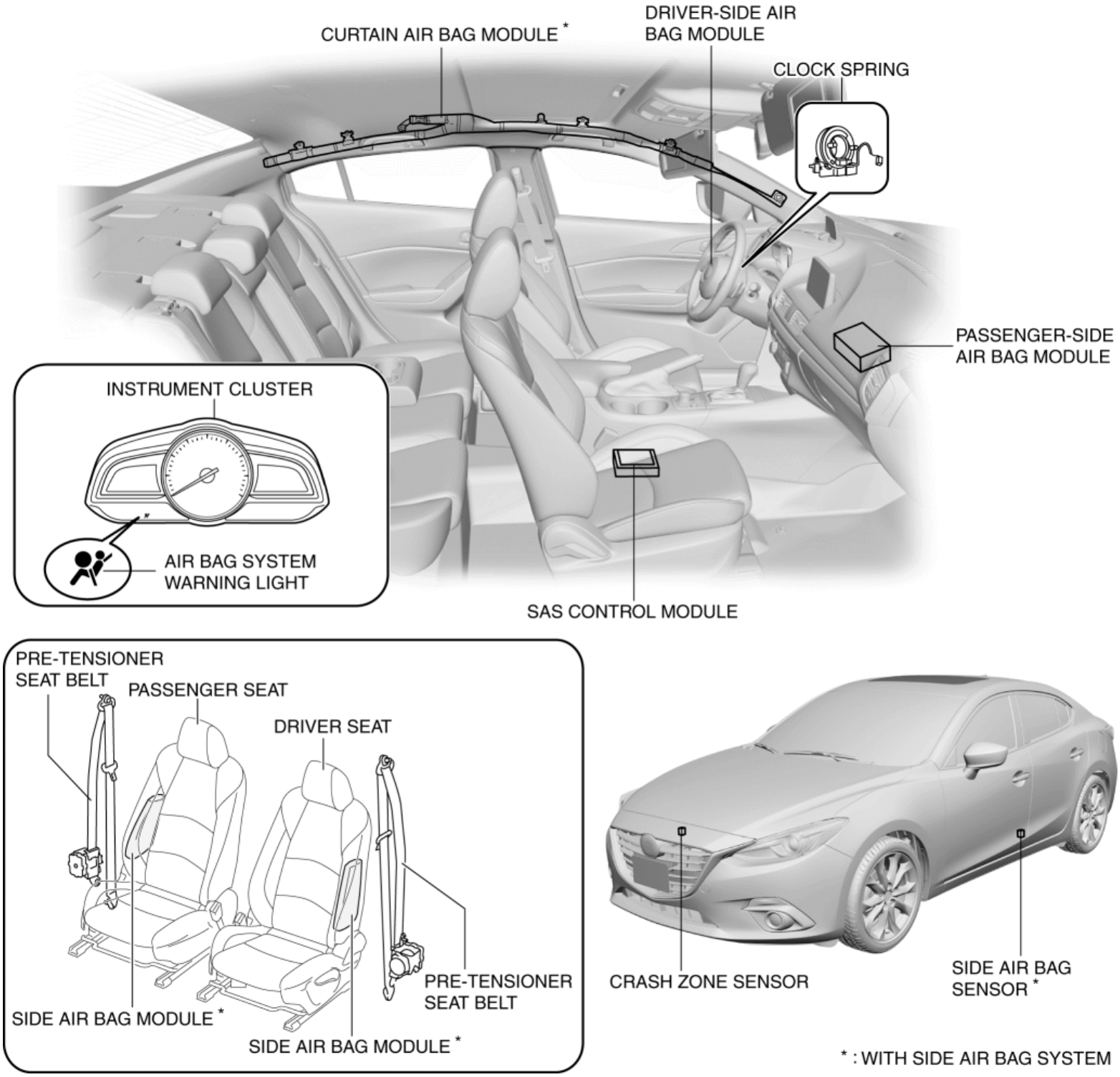

System Wiring Diagram

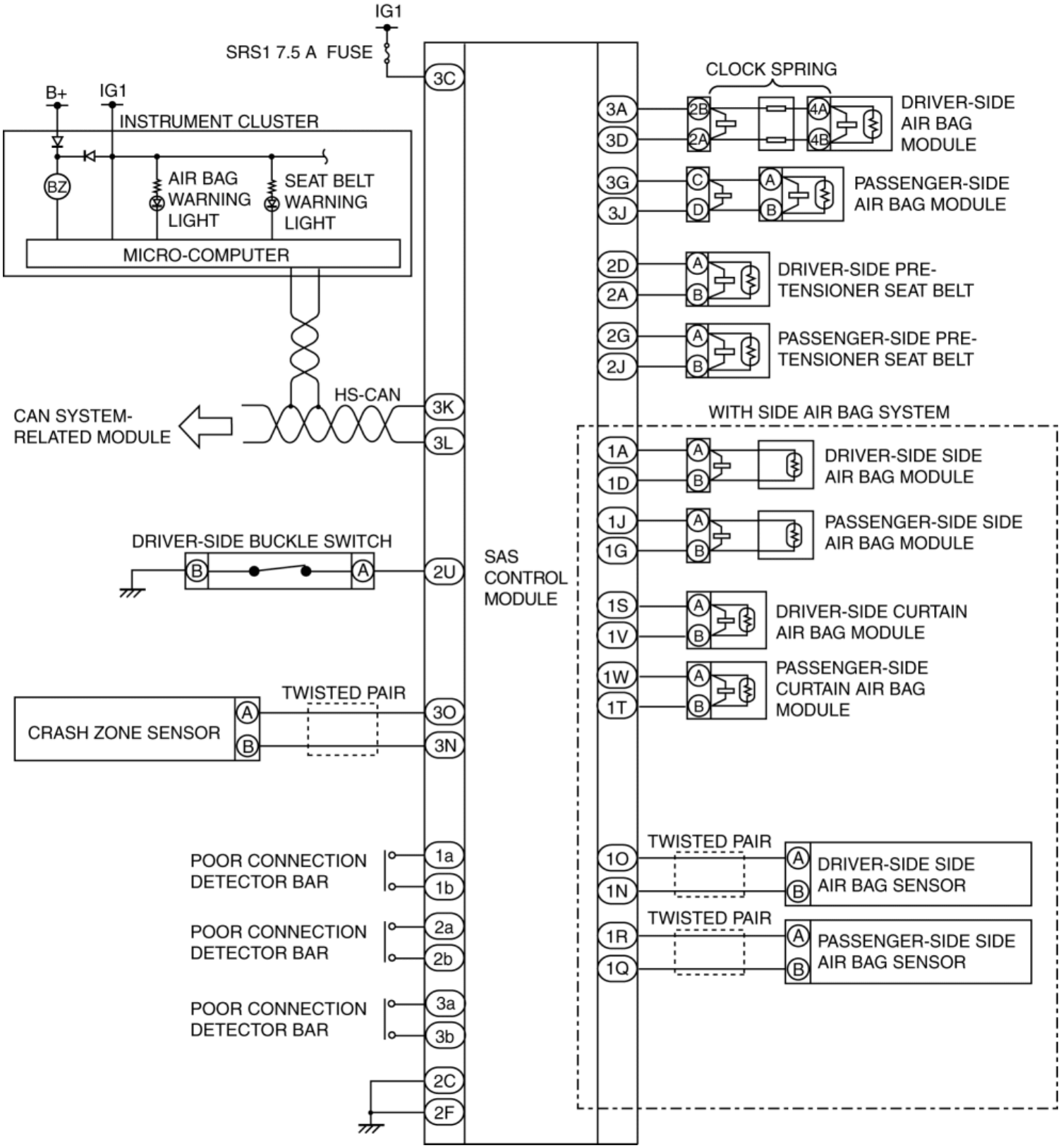

Operation

Operation (deployment) during a frontal or frontal offset collision

1. When the vehicle receives an impact from a frontal or frontal offset collision, the crash sensors built into the crash zone sensor, and the SAS control module detect the impact and convert the impact into an electrical signal at the signal processing circuit.

2. The crash zone sensor outputs the electrical signal to the SAS control module.

3. The SAS control module calculates the degree of impact at the determination and safing circuit based on the electrical signals from the crash zone sensor and the crash sensor.

4. If the calculated degree of impact exceeds the previously set threshold, the SAS control module outputs an operation (deployment) signal to each air bag module/pre-tensioner seat belt at the output control circuit.

5. Each air bag module/pre-tensioner seat belt operates (deploys) based on the operation (deployment) signal from the SAS control module.

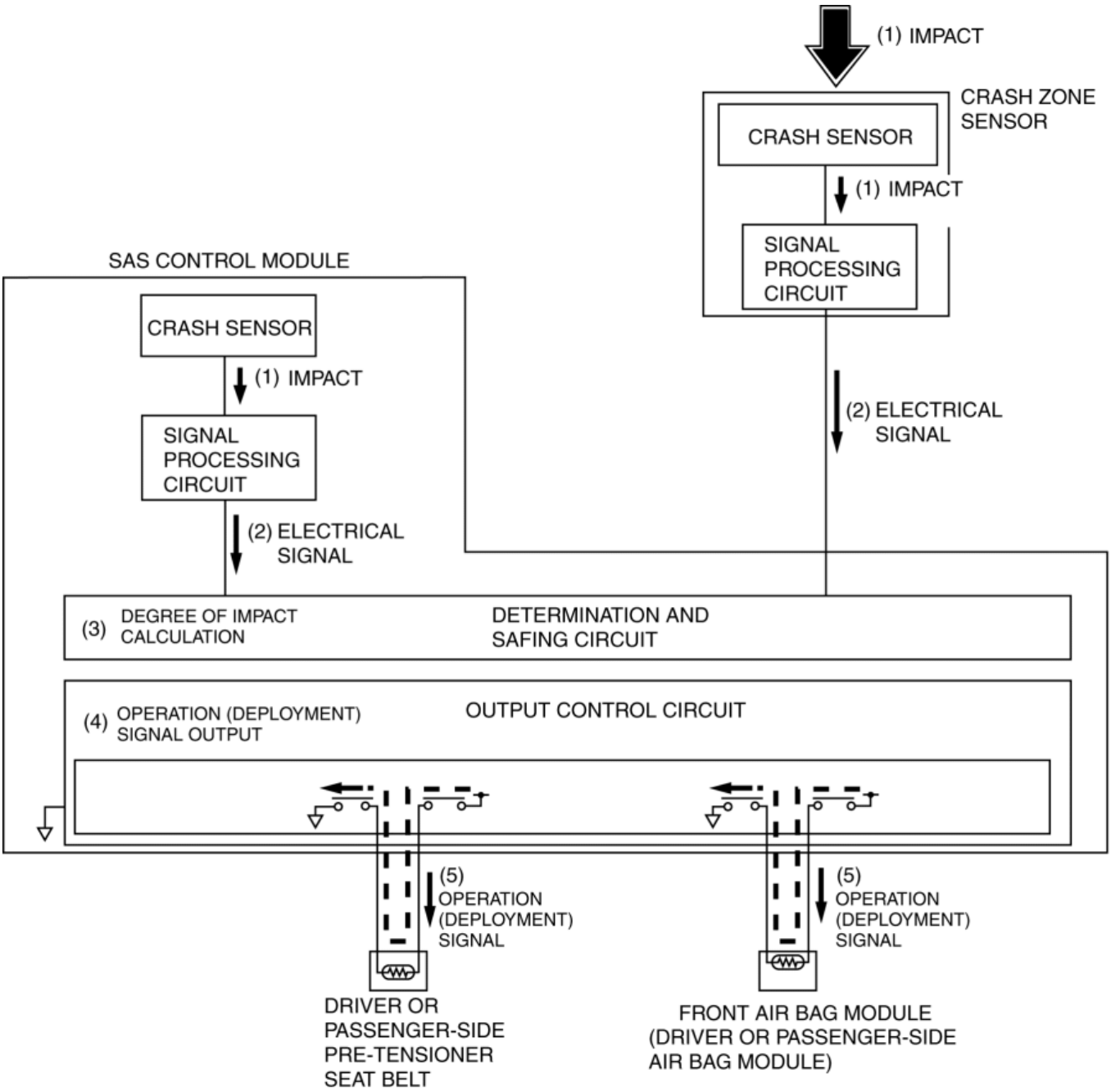

Operation (deployment) during a lateral collision (with side air bag system)

1. When the vehicle receives an impact from a lateral collision, the crash sensors built into the side air bag sensor, and the SAS control module detect the impact and convert the impact into an electrical signal at the signal processing circuit.

2. The side air bag sensor outputs the electrical signal to the SAS control module.

3. The SAS control module calculates the degree of impact at the determination and safing circuit based on the electrical signals from the side air bag sensor and the crash sensor.

4. If the calculated degree of impact exceeds the previously set threshold, the SAS control module outputs an operation (deployment) signal to each air bag module/pre-tensioner seat belt at the output control circuit.

5. Each air bag module/pre-tensioner seat belt operates (deploys) based on the operation (deployment) signal from the SAS control module.

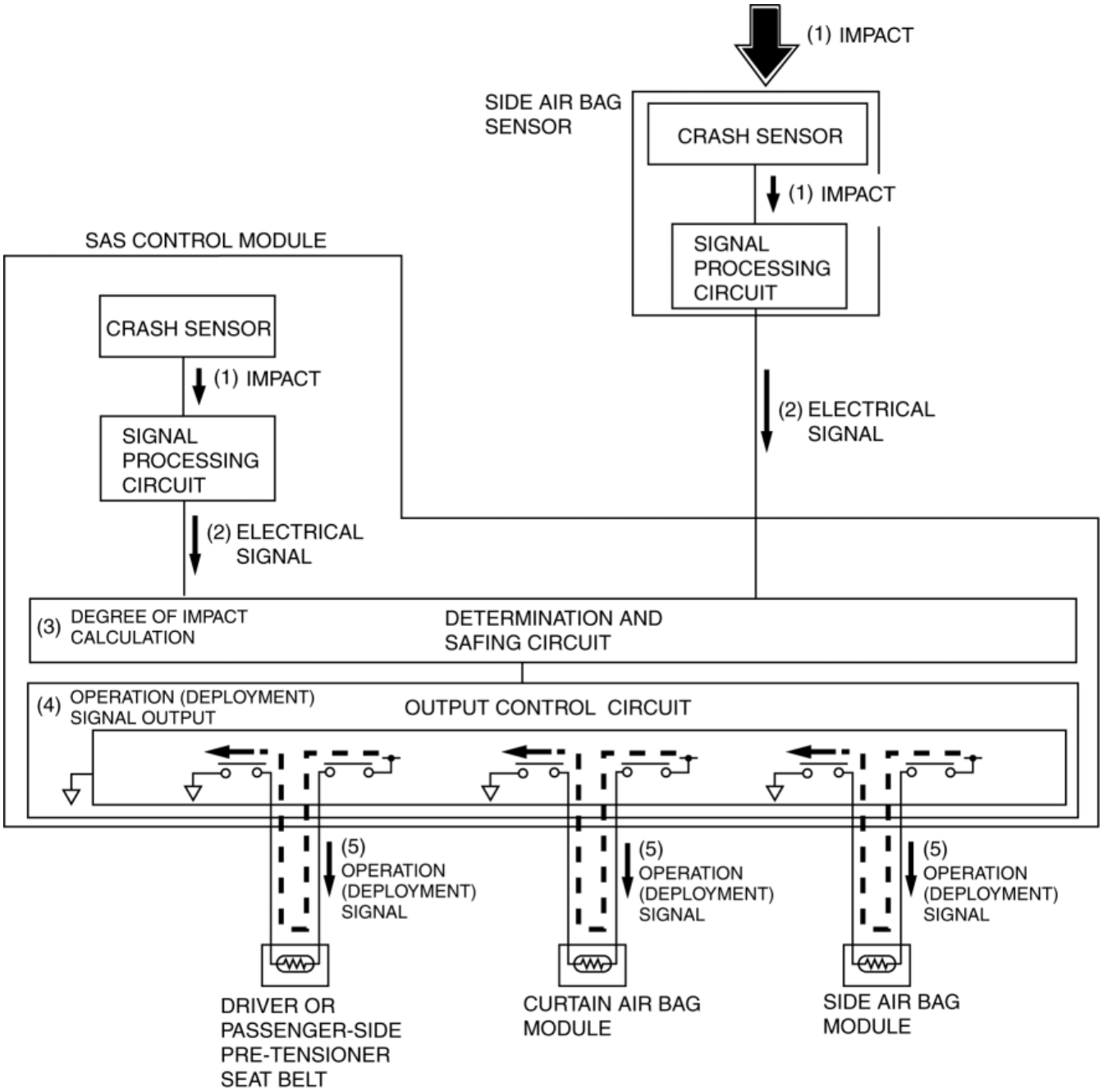

2014 - Mazda3 - Restraints

SAS CONTROL MODULE [STANDARD DEPLOYMENT CONTROL SYSTEM]

Purpose

- The SAS control module controls the air bag system.

Function

Backup power supply function

- The backup power supply function enables the condenser to discharge and supply power to assure air bag system operation/deployment properly for a specified time even if the power supply to the SAS control module is cut due to a collision.

Vehicle travel condition detection function

- The SAS control module detects the vehicle travel conditions based on the signals from the following integrated sensors.
- The SAS control module sends the vehicle travel conditions detected by the following sensors to the DSC HU/CM via a CAN signal.

Sensor	Signal
Low-G sensor	• Vehicle longitudinal acceleration speed signal • Vehicle lateral acceleration speed signal
Yaw rate sensor	• Vehicle steering angle speed signal

Collision detection signal output function

- The air bag system output signals to the following units when it determines that it necessary for the SAS control module to operate (deploy) the air bag system.
- When each unit receives the signal, they perform controls to mediate damage from the

vehicle collision.

Related unit	Signal	Reference
• Front body control module (FBCM) • Rear body control module (RBCM)	Secondary collision reduction signal	(See **POWER DOOR LOCK SYSTEM**.) (See **EXTERIOR LIGHTING SYSTEM**.)
• PCM • Instrument cluster • Center display	Fuel-cut request signal	(See **FUEL INJECTION CONTROL SYSTEM [SKYACTIV-G 2.0, SKYACTIV-G 2.5]**.) (See **ENTERTAINMENT SYSTEM [WITH CENTER DISPLAY]**.)

Construction

- SAS control module installed under the rear console.
- The following circuits are built into the SAS control module.
    - Determination and safing circuit
    - Output control circuit
- The following sensors are built into the SAS control module.
    - Crash sensor
    - Yaw rate sensor
    - Low-G sensor

Operation

- For the operation, refer to AIR BAG SYSTEM (See **AIR BAG SYSTEM [STANDARD DEPLOYMENT CONTROL SYSTEM]**.)

Fail-safe

- If the SAS control module performance/function cannot be maintained due to any cause, the fail-safe function stops air bag system control and flashes the air bag system warning light to prevent the air bags from operating (deploying) accidentally.

SAS CONTROL MODULE [STANDARD DEPLOYMENT CONTROL SYSTEM]

2014 - Mazda3 - Restraints

AIR BAG SYSTEM WARNING LIGHT [STANDARD DEPLOYMENT CONTROL SYSTEM]

Purpose

- The air bag system warning light notifies the driver of a malfunction in the SRS air bag system.

Function

- If a malfunction occurs in the SRS air bag system, the air bag system warning light illuminates or flashes.

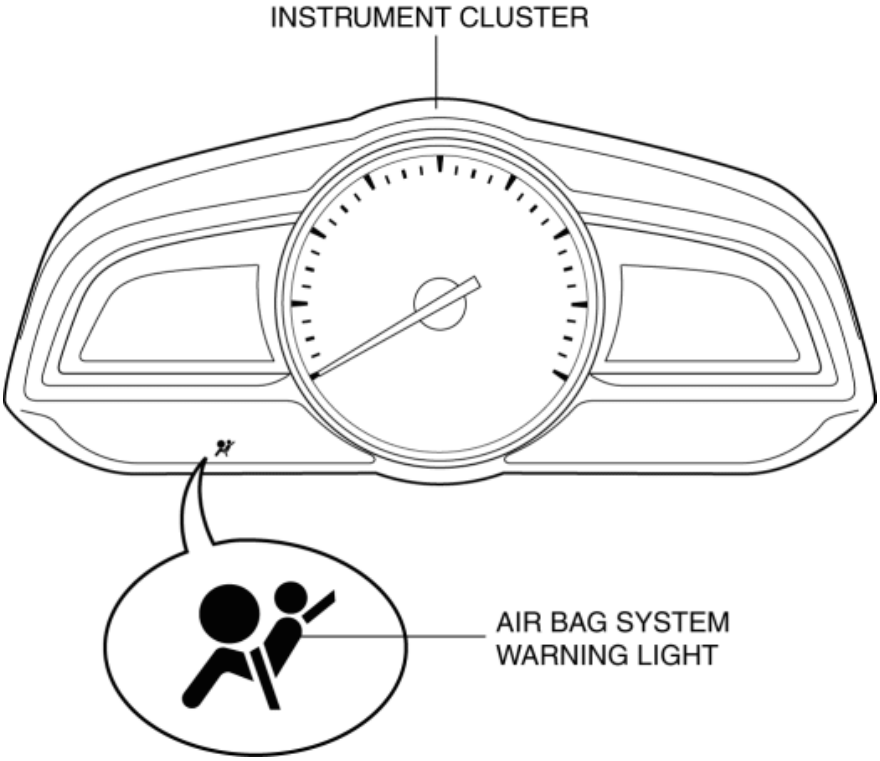

- For vehicles with center display, a warning message in the center display is displayed when the air bag system warning light is turned on or flashing. For the message content and verification method, refer to the CENTER DISPLAY. (See **CENTER DISPLAY [WITH CENTER DISPLAY]**.)

Construction

- LEDs (light-emitting diode) have been adopted for the air bag system warning light.
- The air bag system warning light is built into the instrument cluster.

Operation

- When the ignition is switched ON, the instrument cluster illuminates the air bag system warning light for a specified period to indicate that the SRS air bag system is performing initialization diagnostics. If there is no malfunction in the SRS air bag system, the indicator light turns off.

- If the SAS control module detects a malfunction in the SRS air bag system, it sends a warning signal to the instrument cluster via CAN communication. The instrument cluster illuminates or flashes the air bag system warning light based on the warning signal it receives to display the DTC.
- If there is a malfunction in the SRS air bag system, the air bag system warning light displays DTCs according to the following patterns:

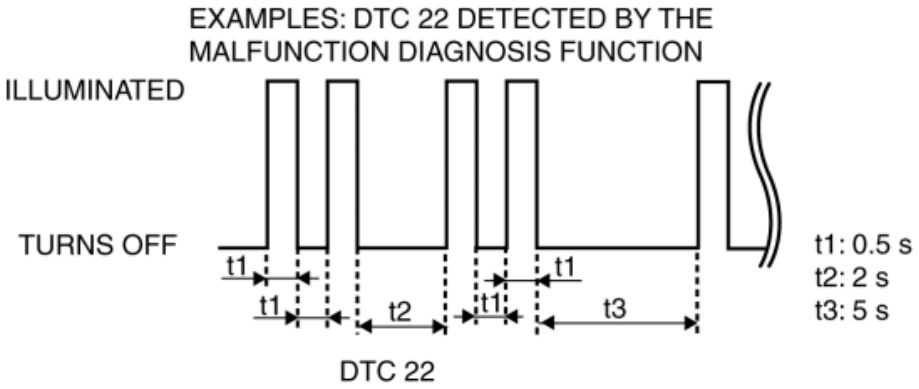

- If there are several malfunctions in the SRS air bag system, the DTC of the highest priority ranking is displayed first.

Fail-safe

- Function not equipped.

2014 - Mazda3 - Restraints

AIR BAG SYSTEM WARNING ALARM [STANDARD DEPLOYMENT CONTROL SYSTEM]

Purpose

- The air bag system warning alarm notifies the driver that a malfunction occurred in the air bag system instead of the air bag system warning light.

Function

- If a malfunction occurs in the air bag system while the air bag system warning light cannot illuminate, the air bag system warning alarm sounds.
- If all of the following conditions are met, the SAS control module sends the air bag system warning alarm request signal to the instrument cluster.
  - SAS control module detects DTC B00D2:29 (air bag system warning light (during communication related malfunction))
  - SAS control module detects DTCs other than DTC B00D2:29 (Except for air bag system warning light does not illuminate DTC)

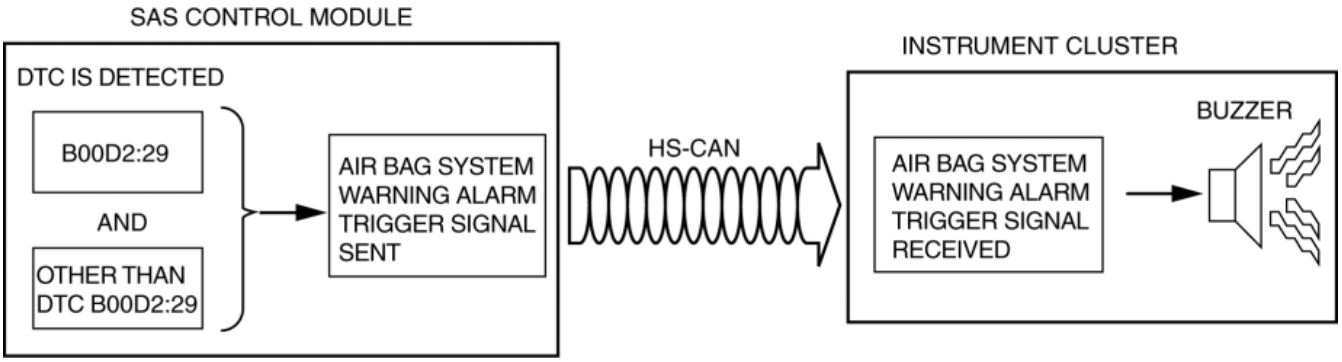

- When the instrument cluster receives the air bag system warning alarm request signal sent from the SAS control module via the CAN signal, the air bag system warning alarm sounds.
- The air bag system warning alarm sound pattern is as shown in the figure.

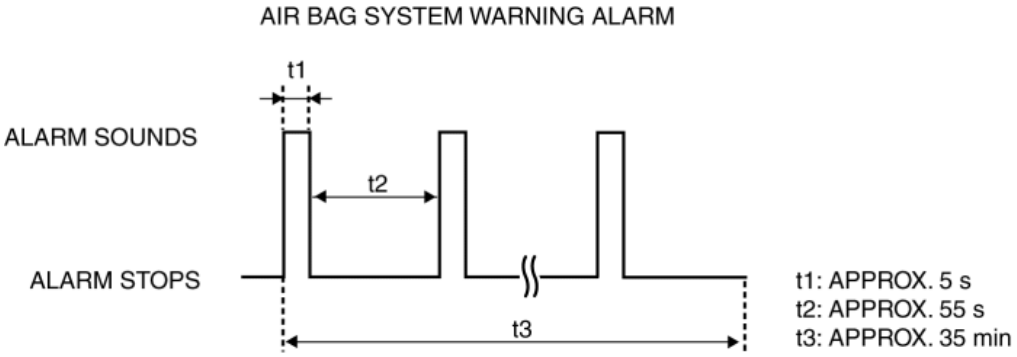

Construction

- The air bag system warning alarm sounds a buzzer in the instrument cluster.

Operation

1. When the ignition is switched ON (while engine is stopped or running), the instrument cluster receives (1) the air bag system warning alarm request signal from the SAS control module.

2. The instrument cluster microcomputer turns the transistor on (2) based on the air bag system warning alarm request signal.
3. When the transistor turns on, the ground circuit of the alarm is established and the alarm sounds (3).

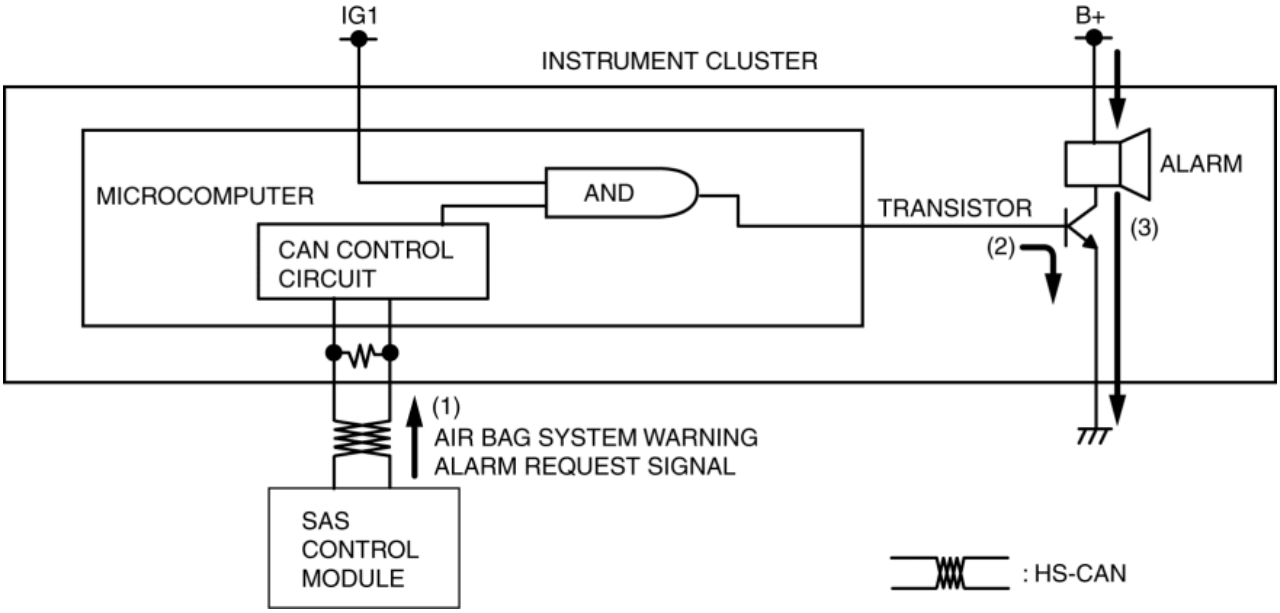

Fail-safe

- Function not equipped.

2014 - Mazda3 - Restraints

DRIVER-SIDE AIR BAG MODULE [STANDARD DEPLOYMENT CONTROL SYSTEM]

Purpose

- When the driver-side air bag module receives an impact from a frontal or frontal offset collision, the operation (deployment) of the air bag mediates the impact to the head and face of the driver.

Function

- When the driver-side air bag module receives an impact from a frontal or frontal offset collision, the air bag is operated (deployed) by the operation signal sent from the SAS control module.

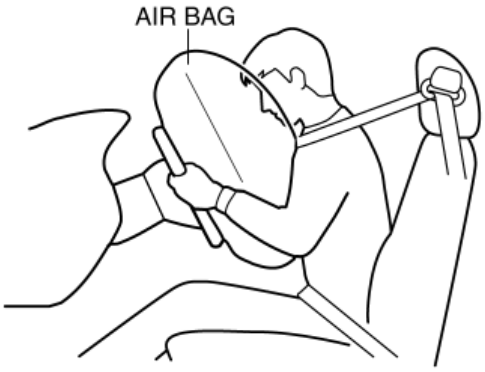

Construction

- The driver-side air bag module is installed to the center area of the steering wheel.
- The driver-side air bag module consists of the inflator and air bag.
- The inflator consists of the igniter, inflation agent and gas generating agent and filter.

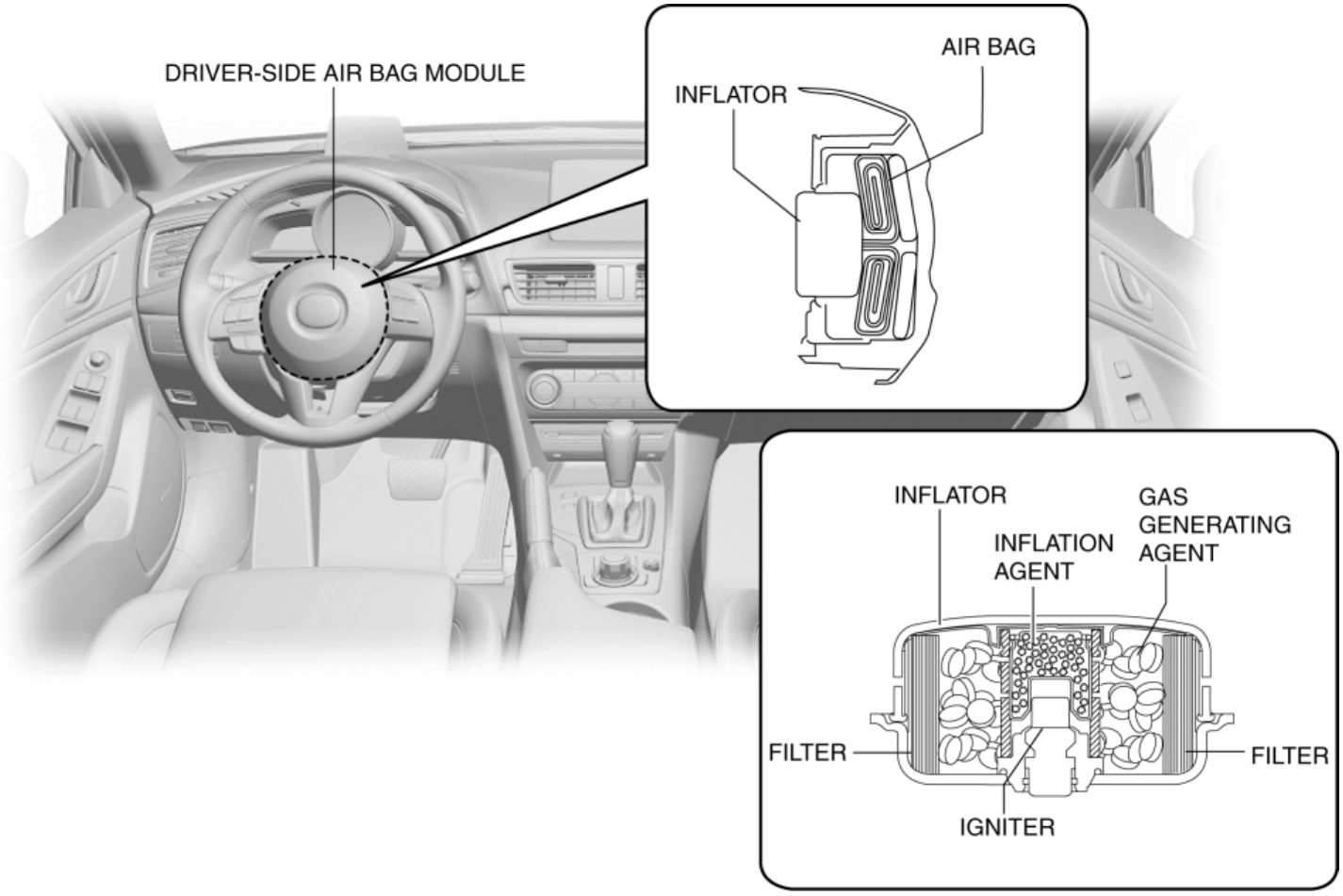

Operation

Inflator operation

- The driver-side air bag module operates (deploys) the air bag by activating the internal inflator.
- The inflator operates (deploys) in the following order:

1. When an operation (deployment) signal is received from the SAS control module, the igniter built into the inflator generates heat and ignites the inflation agent.

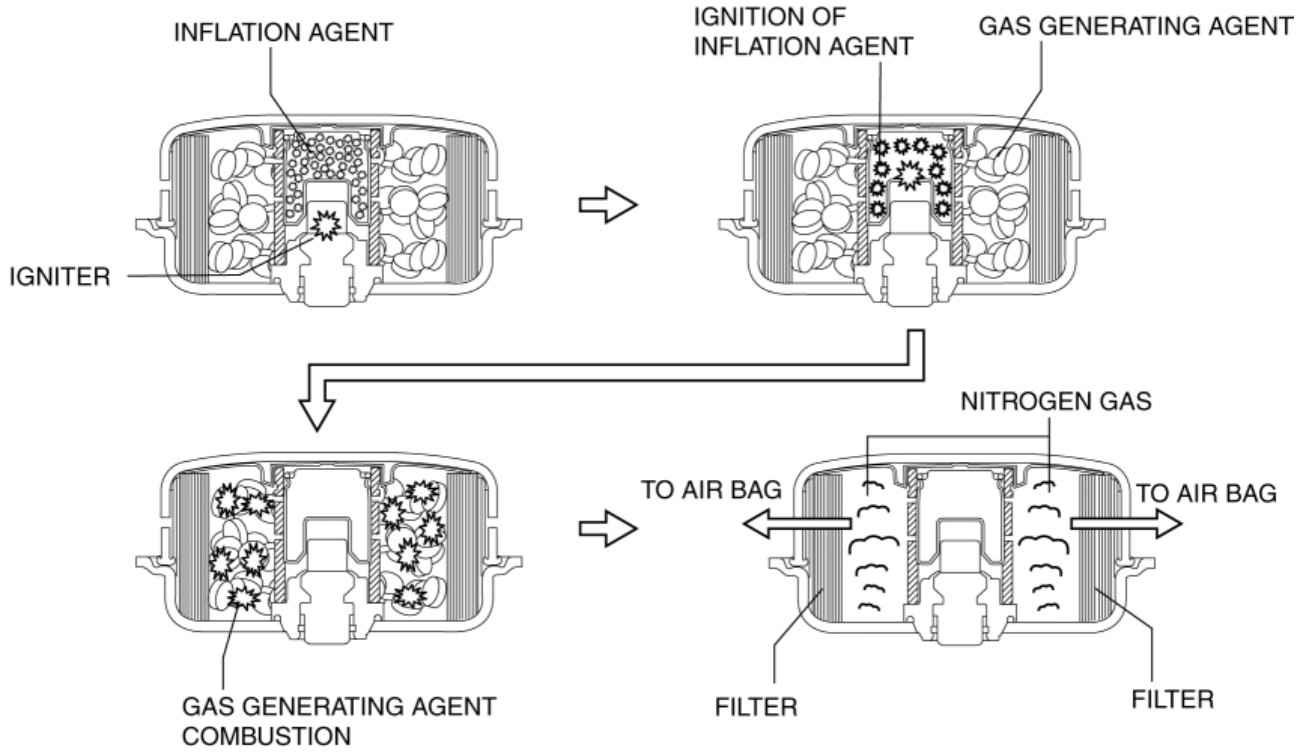

2. The ignition of the inflation agent causes the combustion of a gas generating agent which forms nitrogen gas.
3. The nitrogen gas is cooled at the filter and the filtrate is injected into the air bag.

Fail-safe

- Function not equipped.

2014 - Mazda3 - Restraints

PASSENGER-SIDE AIR BAG MODULE [STANDARD DEPLOYMENT CONTROL SYSTEM]

Purpose

- When the passenger-side air bag module receives an impact from a frontal or frontal offset collision, the operation (deployment) of the air bag mediates the impact to the head and face of the front passenger.

Function

- When the passenger-side air bag module receives an impact from a frontal or frontal offset collision, the air bag is operated (deployed) by the operation signal sent from the SAS control module.

Construction

- The passenger-side air bag module is installed to the instrument panel.
- The passenger-side air bag module consists of the inflator and air bag.
- The inflator consists of the igniter, inflation agent and gas generating agent and filter.

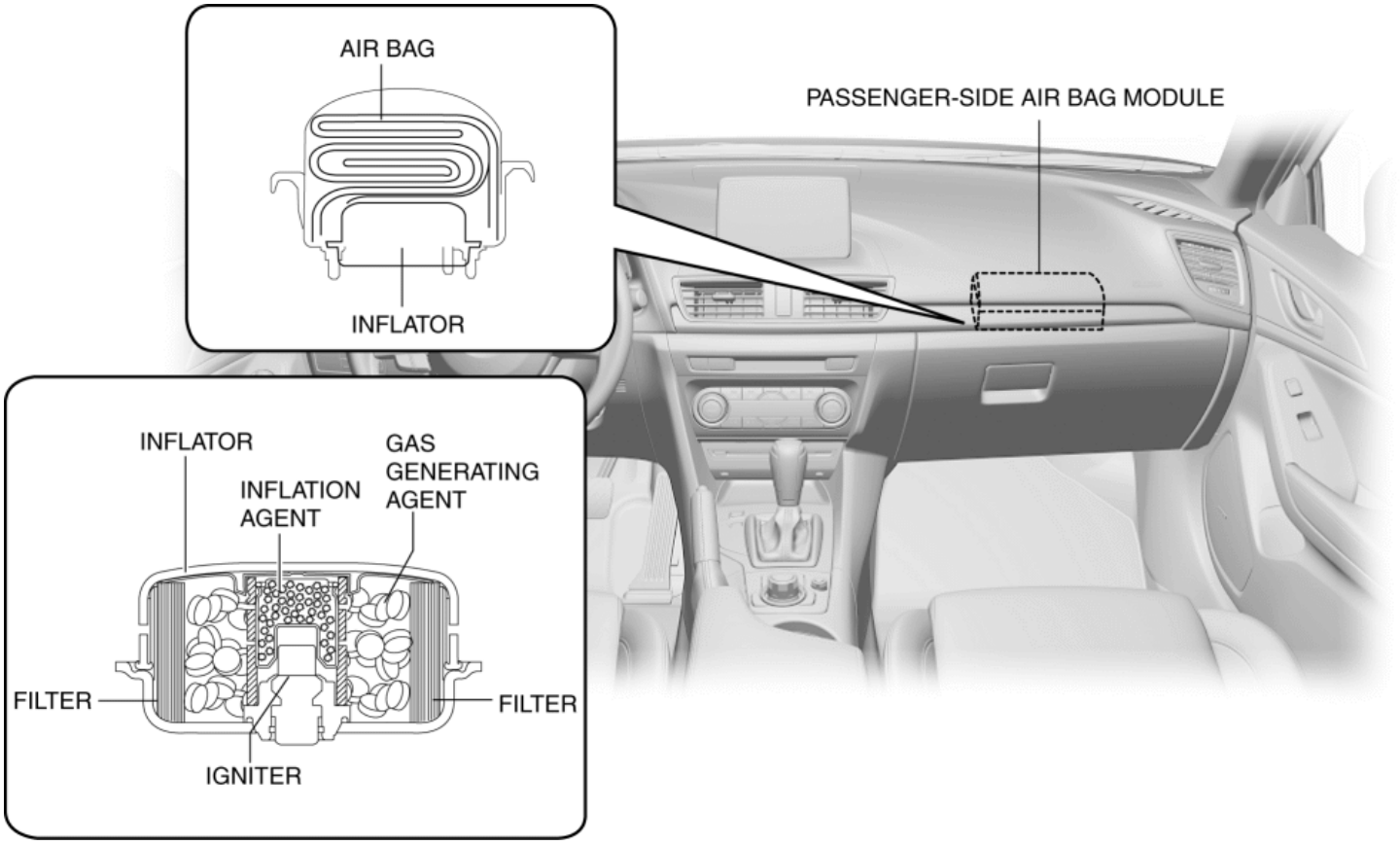

Operation

- The passenger-side air bag module operates (deploys) the air bag by activating the internal inflator.
- The inflator operates (deploys) in the following order:

1. When an operation (deployment) signal is received from the SAS control module, the igniter built into the inflator generates heat and ignites the inflation agent.

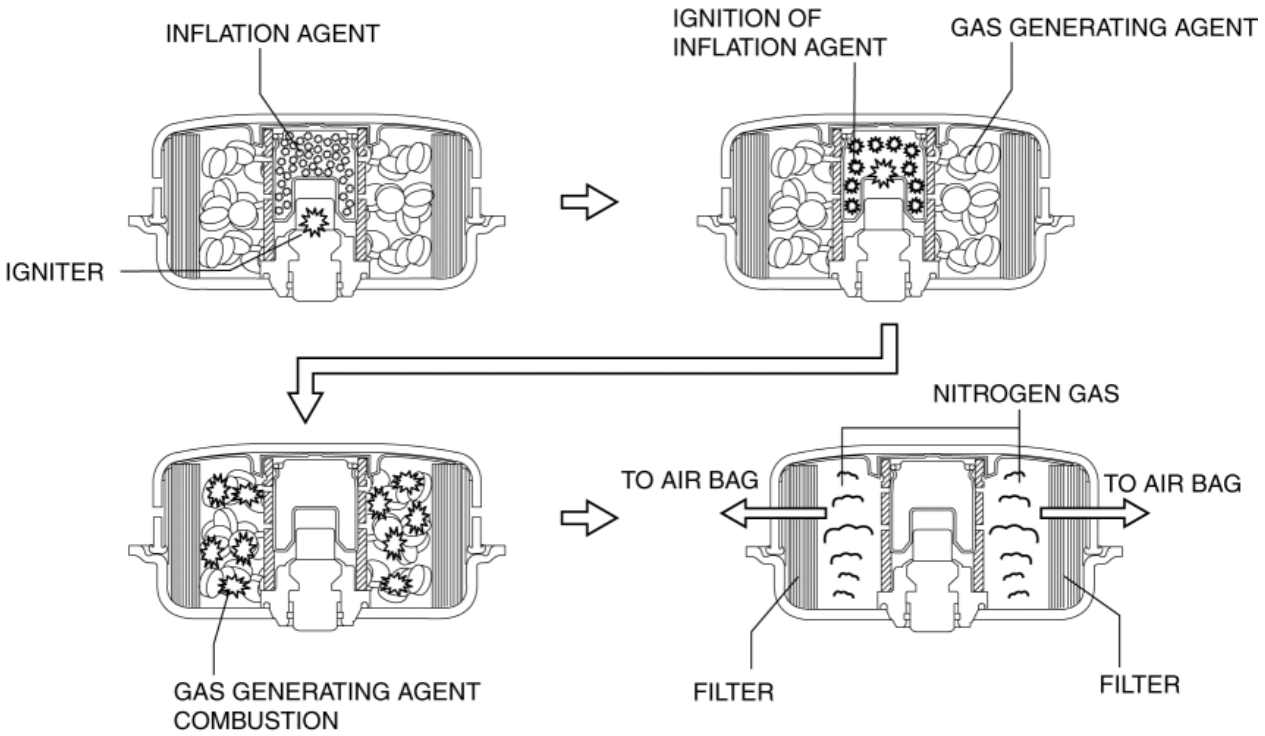

2. The ignition of the inflation agent causes the combustion of a gas generating agent which forms nitrogen gas.

3. The nitrogen gas is cooled at the filter and the filtrate is injected into the air bag.

Fail-safe

- Function not equipped.

2014 - Mazda3 - Restraints

SIDE AIR BAG MODULE [STANDARD DEPLOYMENT CONTROL SYSTEM]

Purpose

- When a side air bag module receives an impact from a lateral collision, the operation (deployment) of the air bag mediates the impact to the chest, stomach, and waist of the driver and front passenger.

Function

- When a side air bag module receives an impact from a lateral collision, the air bag is operated (deployed) by the operation signal sent from the SAS control module.

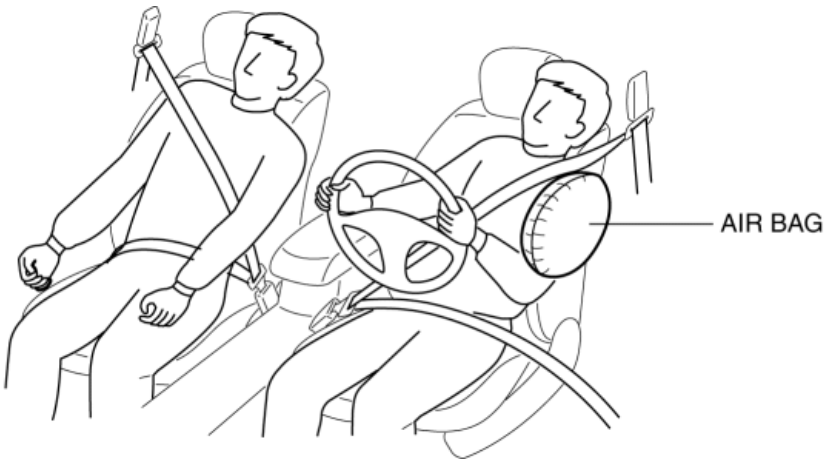

Construction

- The side air bag modules are installed on the door side of the front seat backs.
- The side air bag module consists of the inflator and air bag.
- The inflator consists of an initiator, ignition chamber, gas-generating agent, and filter.

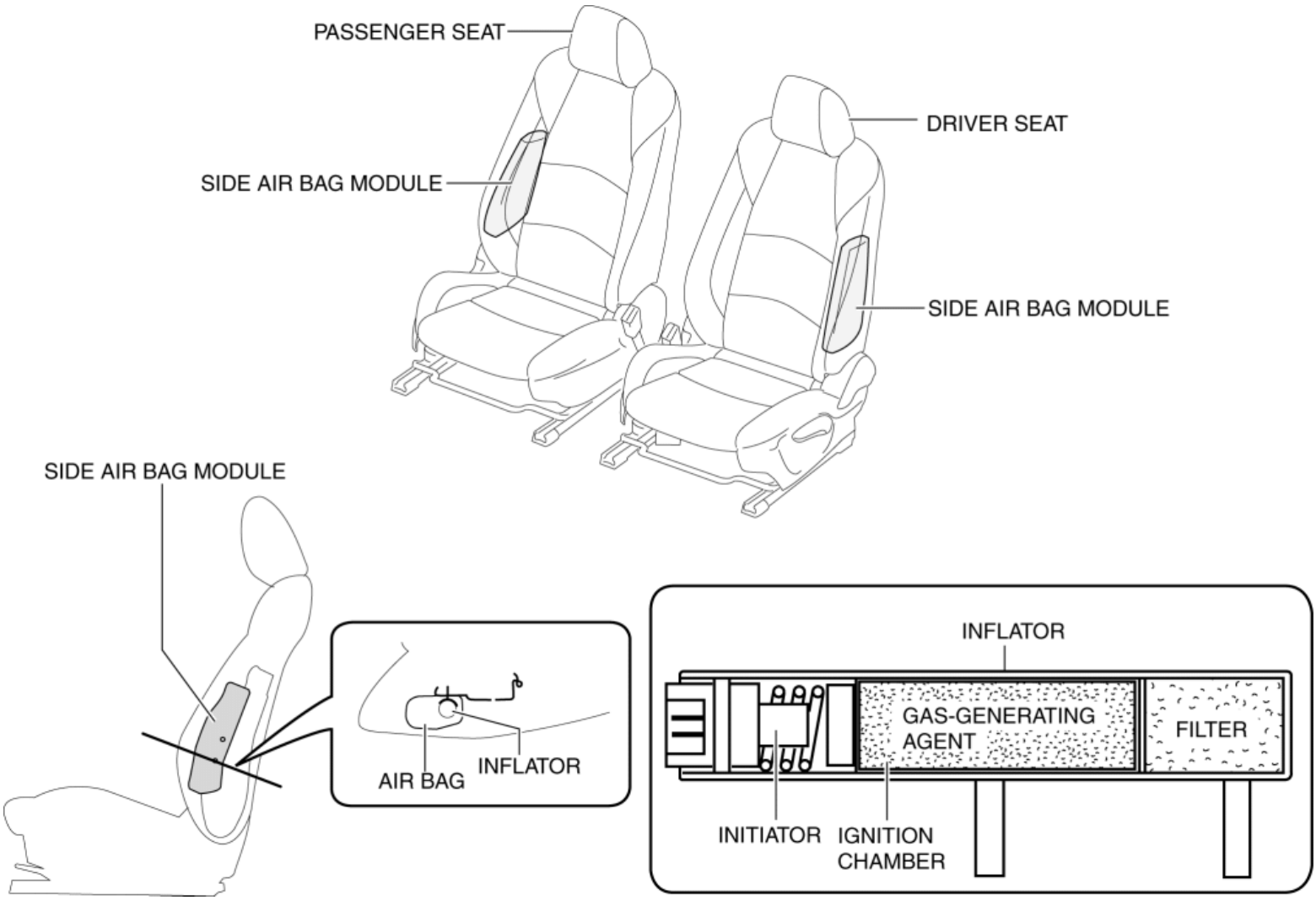

Operation

- The side air bag module operates (deploys) the air bag by activating the internal inflator.
- The inflator operates (deploys) in the following order:

1. When an operation (deployment) signal is received from the SAS control module, the initiator built into the inflator ignites.

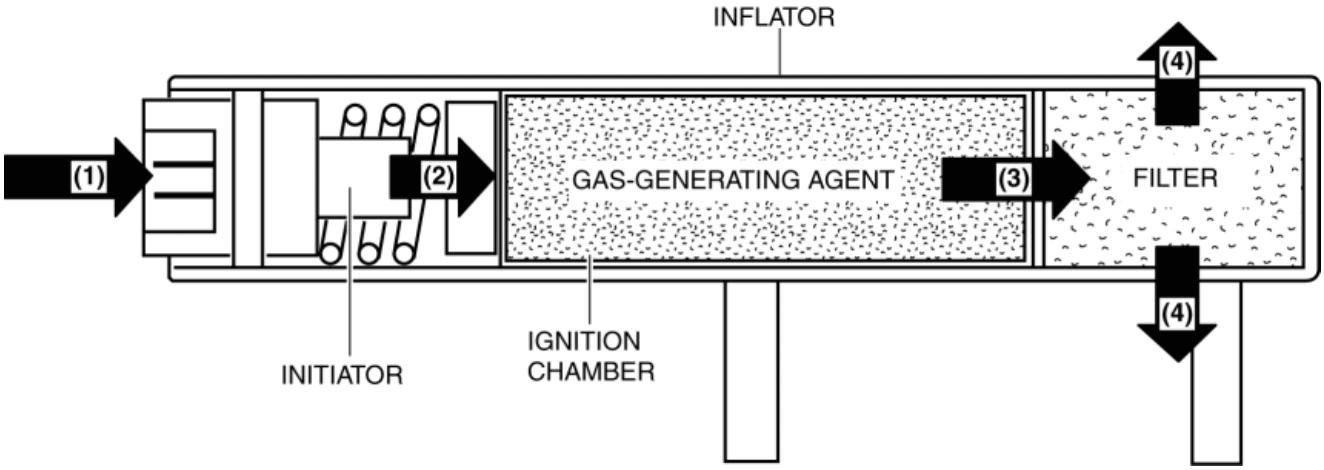

2. The ignition of the initiator causes the ignition of the gas-generating agent.
3. The end of the ignition chamber is broken by the combustion gas pressure, and the combustion gas is supplied into the filter.
4. The combustion gas, which is cooled by the filter, is sprayed to the air bag through the diffuser (diffusion devise).

5. When the side air bag module operates (deploys), the air bag operates (deploys) while breaking open the seat back trim by the force of the gas sprayed out of the inflator.

Fail-safe

- Function not equipped.

2014 - Mazda3 - Restraints

CURTAIN AIR BAG MODULE [STANDARD DEPLOYMENT CONTROL SYSTEM]

Purpose

- When a curtain air bag module receives an impact from a lateral collision, the operation (deployment) of the air bag mediates the impact to the head of the driver and front passenger.

Function

- When a curtain air bag module receives an impact from a lateral collision, the air bag is operated (deployed) by the operation signal sent from the SAS control module.

Construction

- The curtain air bag module is installed along the roof edge between the A and C pillars.
- The curtain air bag module consists of the inflator and air bag.
- The inflator consists of an initiator, gas-generating agent, charged gas, and an orifice.

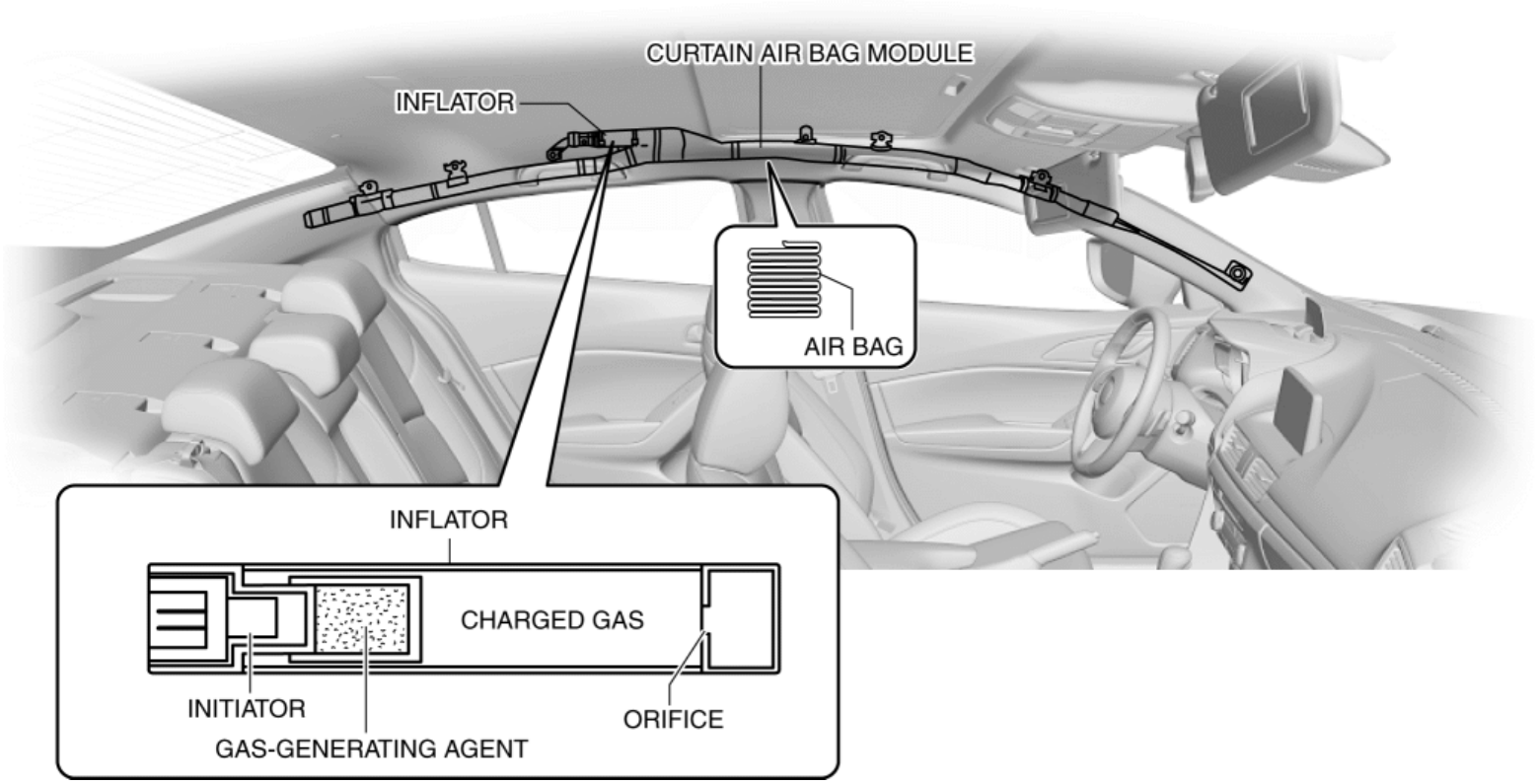

Operation

- The curtain air bag module operates (deploys) the air bag by activating the internal inflator.
- The inflator operates (deploys) in the following order:

1. When an operation (deployment) signal is received from the SAS control module, the initiator built into the inflator ignites.

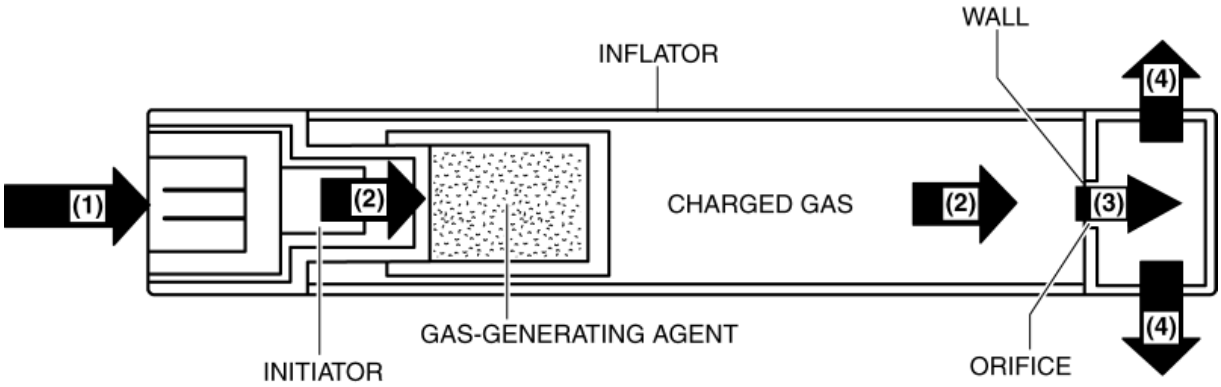

2. The ignition of the initiator causes the ignition of the gas-generating agent. The section of the wall from which the air bag deploys is broken by this impact wave.

3. The charged gas and the gas generated by the gas-generating agent mix and pass through the orifice.

4. The combined gas, which passed though the orifice, is sprayed into the air bag through the diffuser (diffusion devise).

5. When the curtain air bag module operates (deploys), the air bag operates (deploys) while breaking open the A-pillar trim and headliner by the force of the combined gas sprayed out of the inflator.

Fail-safe

- Function not equipped.

2014 - Mazda3 - Restraints

PRE-TENSIONER SEAT BELT [STANDARD DEPLOYMENT CONTROL SYSTEM]

Purpose

- The pre-tensioner seat belt retracts and tightens the seat belt webbing to protect the front passengers during a collision.

Function

- The pre-tensioner seat belts operate (deploy) based on the operation signal from the SAS control module to instantly retract and tighten the belt webbing, restraining the driver and front passenger.

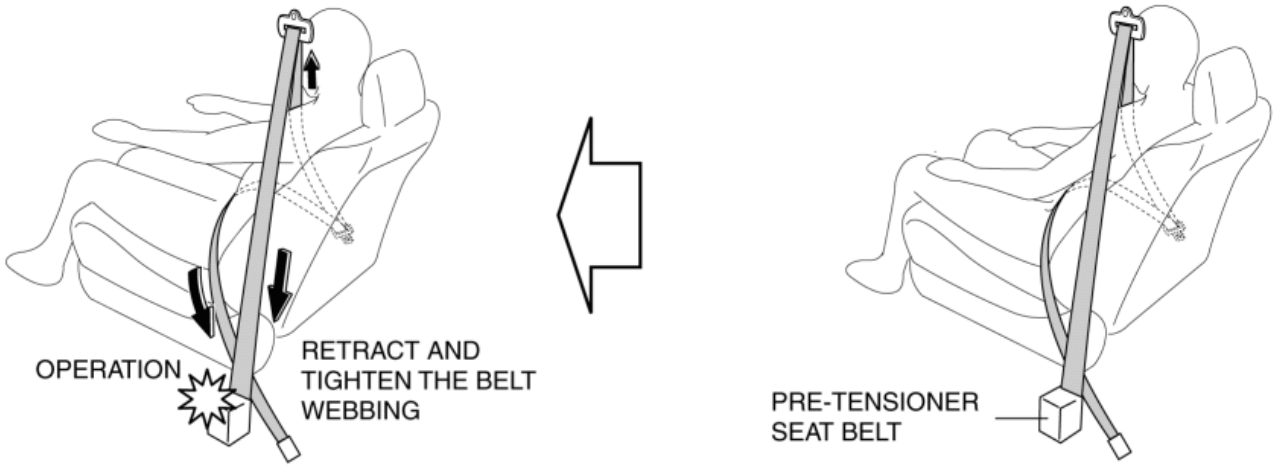

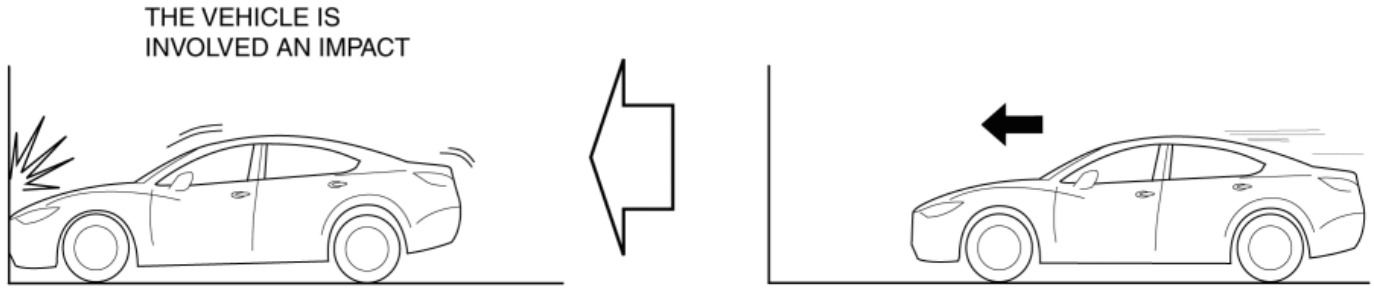

Construction

- The pre-tensioner seat belt is installed to the front seat belt retractor.

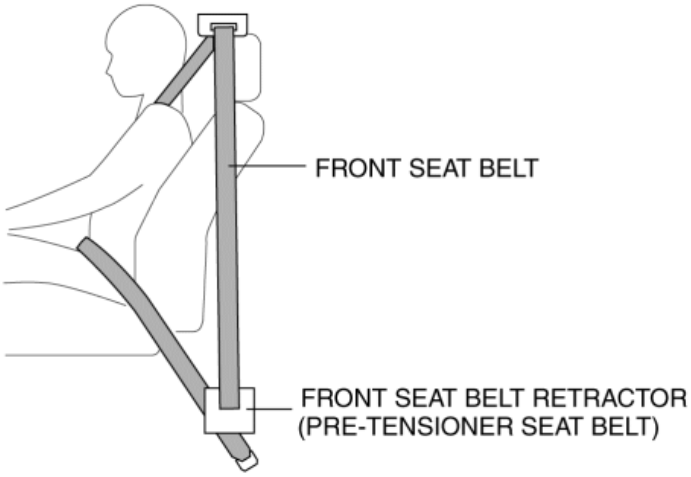

- The pre-tensioner seat belt consists of the following parts shown in the figure:

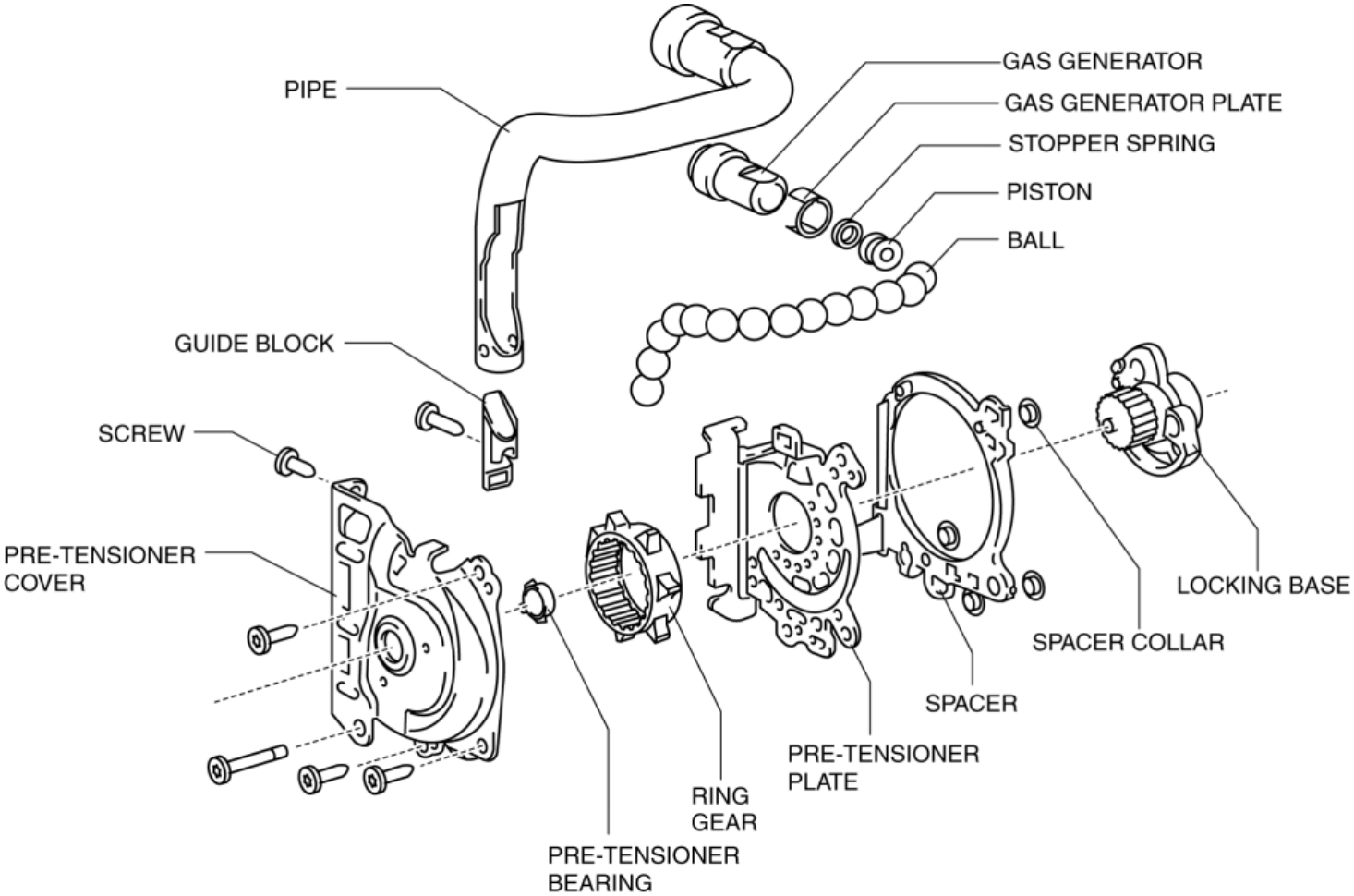

Operation

Normal operation (pre-tensioner non-operation)

- Normally, there is a gap between the locking base and the ring gear.
- The ring gear rotates in conjunction with the withdrawal and retraction of the front seat belts, however, in the pre-tensioner part it is kept separated.

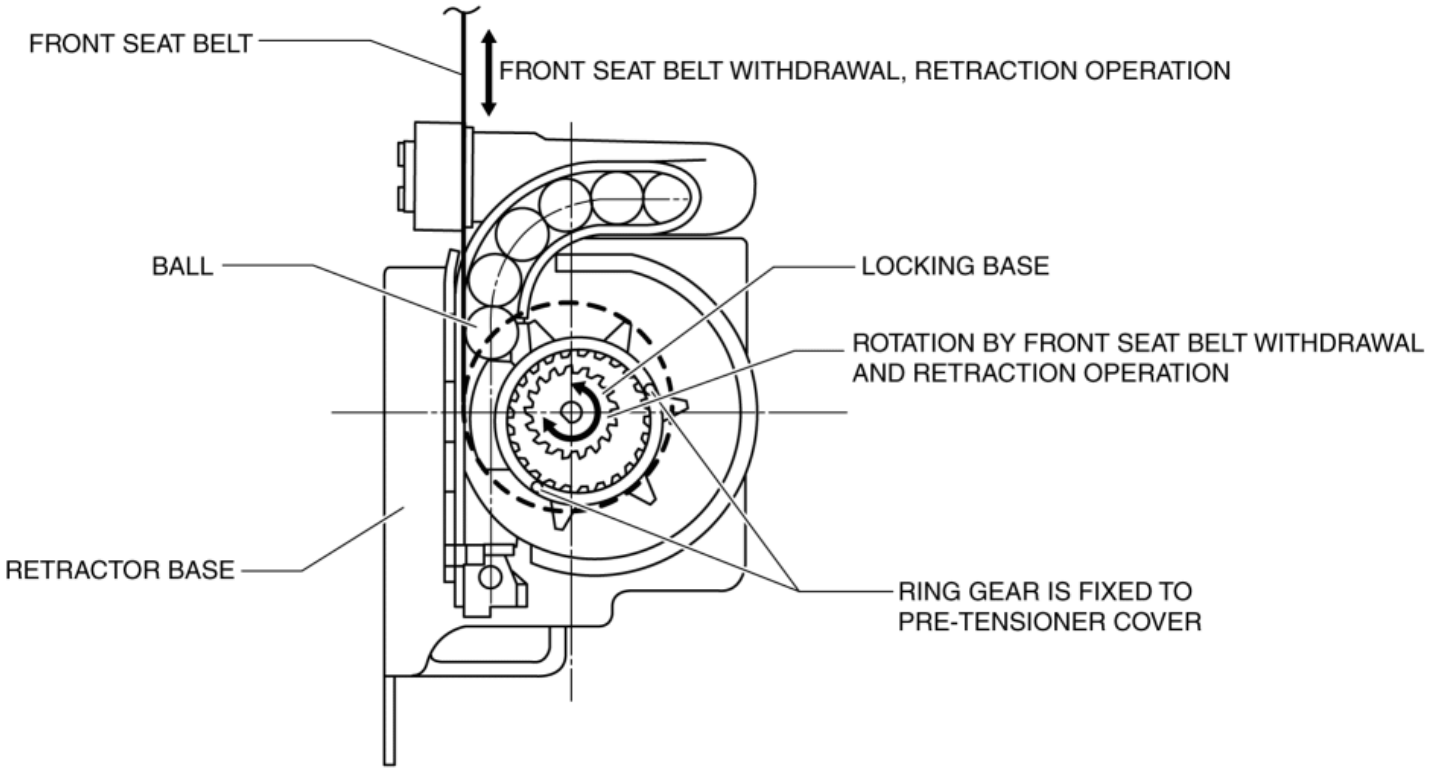

Pre-tensioner activation

1. The gas generator produces gas when it receives an operation signal from the SAS control module.
2. The ball in the cylinder is pressed by the gas pressure and the ring gear is removed from its securement.
3. The ring gear is engaged with the locking base and the force of the ball being pressed out is transmitted to the retraction shaft.
4. The front seat belt is retracted in conjunction with the rotation of the retraction shaft.

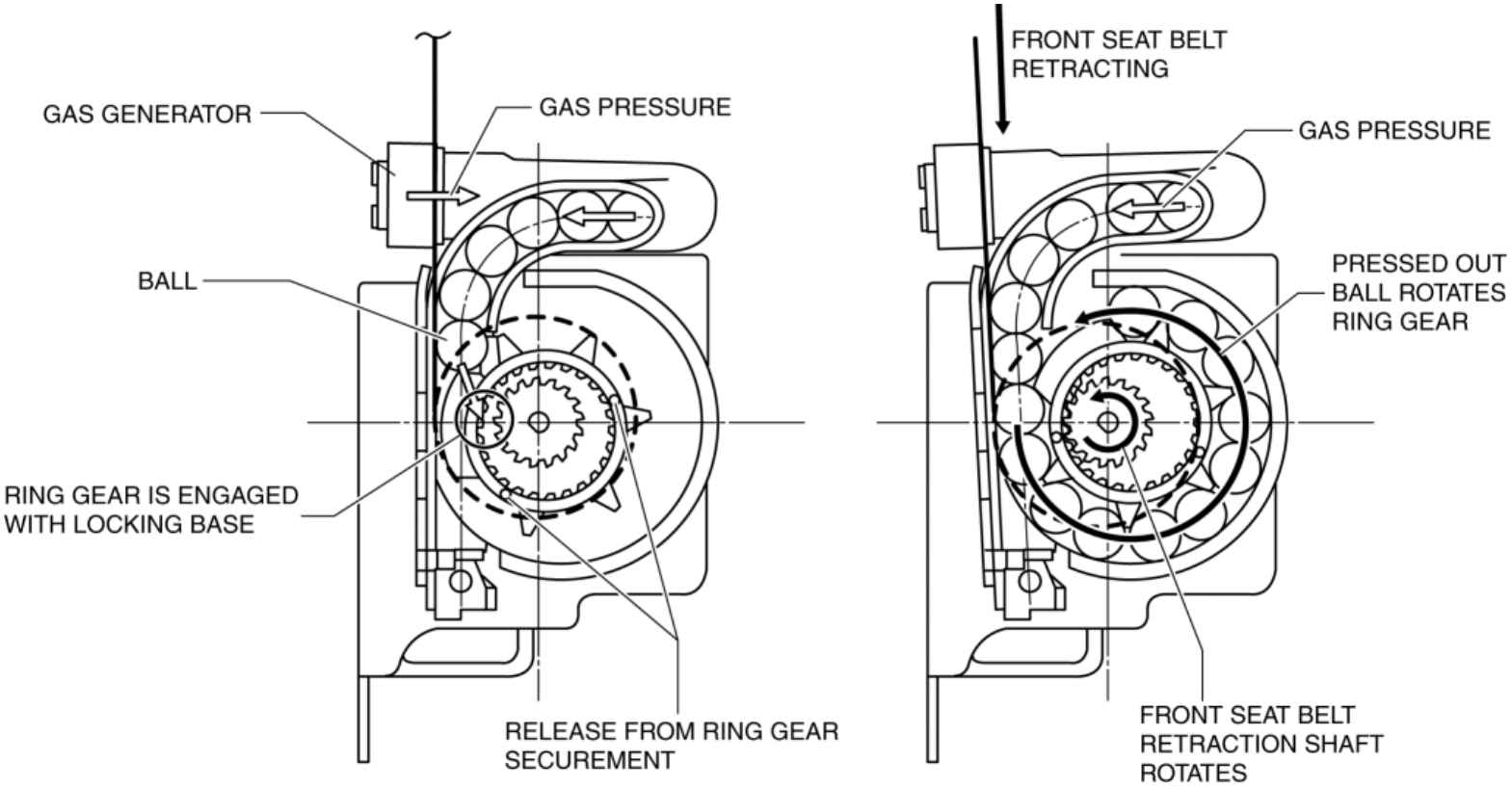

Fail-safe

- Function not equipped.

2014 - Mazda3 - Restraints

CRASH ZONE SENSOR [STANDARD DEPLOYMENT CONTROL SYSTEM]

Purpose

- The crash zone sensor detects an impact during a frontal or frontal offset collision to the vehicle.

Function

- The crash zone sensor converts the detected impact to an electrical signal.

Construction

- The crash zone sensor consists of the crash sensor and signal processing circuit.
- The crash zone sensor is installed to the shroud panel of the front bumper backside.

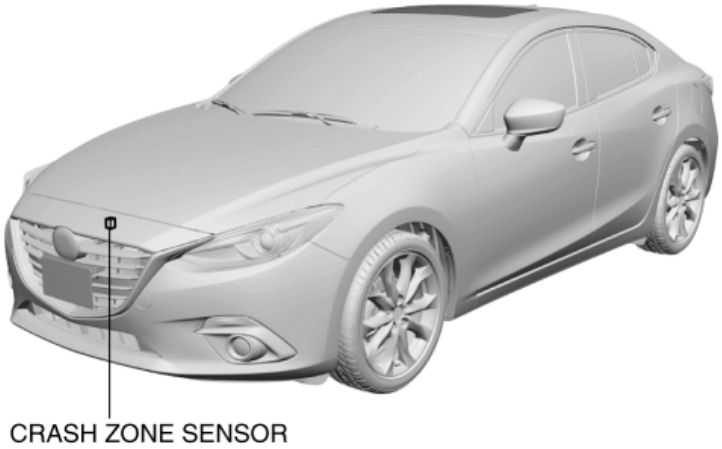

Operation

- For the operation, refer to AIR BAG SYSTEM (See **AIR BAG SYSTEM [STANDARD DEPLOYMENT CONTROL SYSTEM]**.)

Fail-safe

- Function not equipped.

2014 - Mazda3 - Restraints

SIDE AIR BAG SENSOR [STANDARD DEPLOYMENT CONTROL SYSTEM]

Purpose

- The side air bag sensor detects an impact during a lateral collision.

Function

- The side air bag sensor converts the detected impact to an electrical signal.

Construction

- The side air bag sensor consists of the crash sensor and signal processing circuit.
- Side air bag sensor is placed in the lower part of the B-pillar lower trim.

Operation

- For the operation, refer to AIR BAG SYSTEM (See **AIR BAG SYSTEM [STANDARD DEPLOYMENT CONTROL SYSTEM]**.)

Fail-safe

- Function not equipped.

< Previous

2014 - Mazda3 - Restraints

SEAT BELT

Outline (With Two-step Deployment Air Bag Control System)

- Three-point front seat belts with the following functions for front seat passengers have been adopted.
  - ELR (Emergency Locking Retractor: emergency locking mechanism)
  - ALR (Automatic Locking Retractor: child-restraint seat locking mechanism) (passenger-side)
  - Load limiter
  - Pre-tensioner seat belt (See **PRE-TENSIONER SEAT BELT [TWO-STEP DEPLOYMENT CONTROL SYSTEM]**.)
  - Lap pre-tensioner seat belt (See **LAP PRE-TENSIONER SEAT BELT [TWO-STEP DEPLOYMENT CONTROL SYSTEM]**.)
- Three-point seat belts with the following functions for rear seat passengers have been adopted.
  - ELR
  - ALR

Outline (With Standard Deployment Air Bag Control System)

- Three-point front seat belts with the following functions for front seat passengers have been adopted.
  - ELR
  - Load limiter
  - Pre-tensioner seat belt (See **PRE-TENSIONER SEAT BELT [STANDARD DEPLOYMENT CONTROL SYSTEM]**.)
- Three-point rear seat belts with the following functions for rear seat (left and right seats) passengers adopted.
  - ELR
- Two-point seat belt for rear seat passenger (center seat) adopted.

Structural View

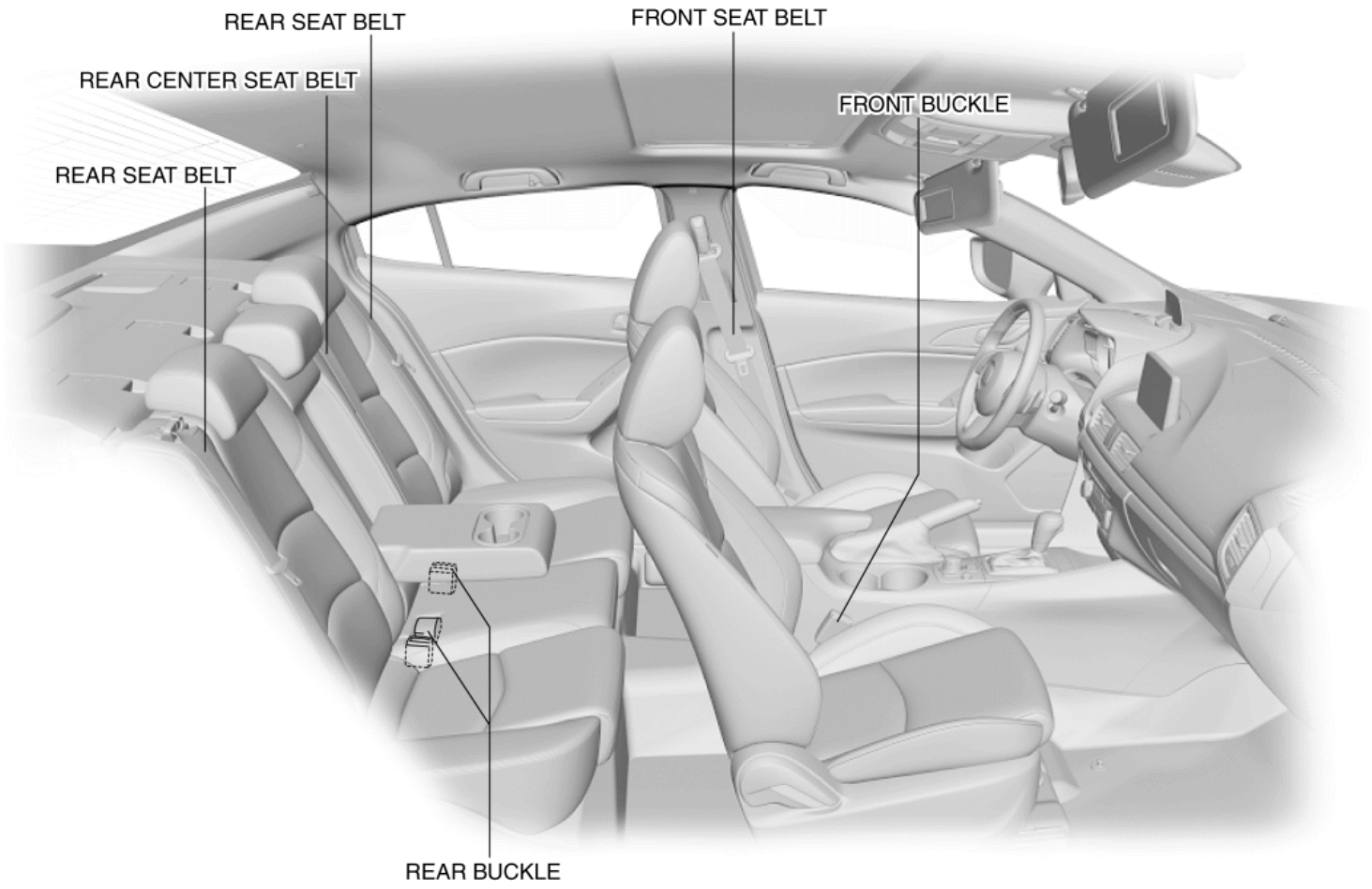

Purpose

- The seat belts prevent the driver and passengers from being thrown from their seats and injured due to an emergency vehicle stop or impact by being hit.

Function

- The seat belts are belt type safety devices which restrain the driver and passengers in their seats.
- The specifications for each seat belt are as indicated in the table.

With two-step deployment air bag control system

Seat belt	Type	Function
Front seat belt (Driver-side)	Three-point	• Load limiter • ELR • Pre-tensioner seat belt • Lap pre-tensioner seat belt
Front seat belt (Passenger-side)	Three-point	• Load limiter • ELR • ALR • Pre-tensioner seat belt • Lap pre-tensioner seat belt
Rear seat belt	Three-point	• ELR • ALR

With standard deployment air bag control system

Seat belt	Type	Function
Front seat belt (Driver-side, passenger-side)	Three-point	• Load limiter • ELR • Pre-tensioner seat belt
Rear seat belt (RH, LH)	Three-point	ELR
Rear center seat belt	Two-point	—

Load limiter

- The load limiter adjusts the restraint force of the seat belt by slightly loosening the seat belt tightened by the pre-tensioner operation, preventing injury to the driver and passenger from seat belt pressure.

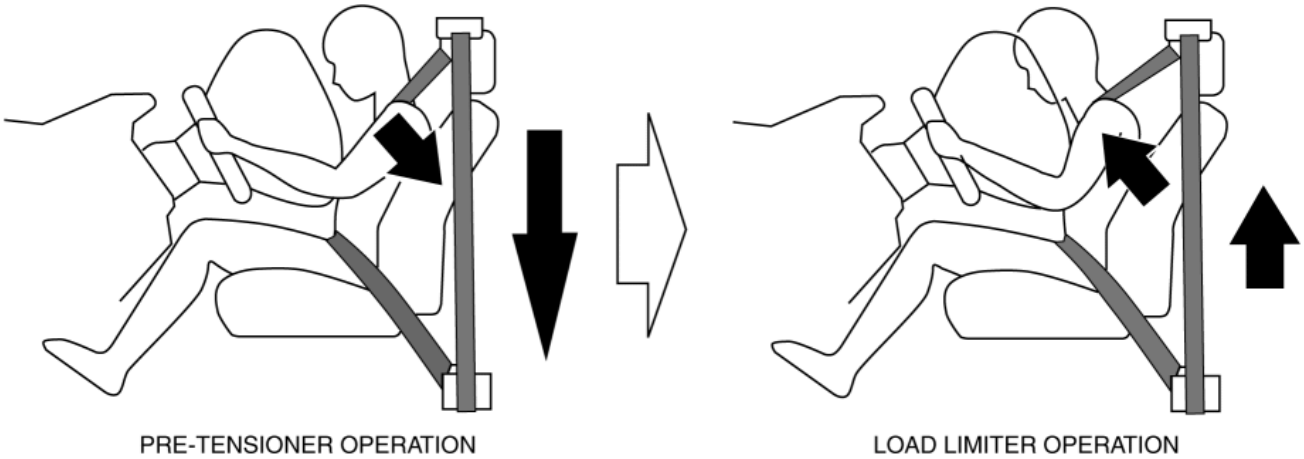

ELR

- If a sudden force is applied to the seat belt such as by a collision or emergency braking, the ELR locks the seat belt so that it cannot be pulled out any more.

ALR

- When the seat belt is pulled out and fastened, the ALR locks the seat belt at that length and it cannot be pulled out any more.
- The ALR is mainly used for installing a child-restraint.

Pre-tensioner seat belt

- Refer to PRE-TENSIONER SEAT BELT. (See **PRE-TENSIONER SEAT BELT [STANDARD DEPLOYMENT CONTROL SYSTEM]**.) (See **PRE-TENSIONER SEAT BELT [TWO-STEP DEPLOYMENT CONTROL SYSTEM]**.)

Lap pre-tensioner seat belt

- Refer to LAP PRE-TENSIONER SEAT BELT. (See **LAP PRE-TENSIONER SEAT BELT [TWO-STEP DEPLOYMENT CONTROL SYSTEM]**.)

Construction

- For the three-point seat belt, the seat belt is secured to the drum in the retractor and wrapped.

- The seat belt is pulled out or retrieved by the rotation of the drum to adjust the length of the seat belt.

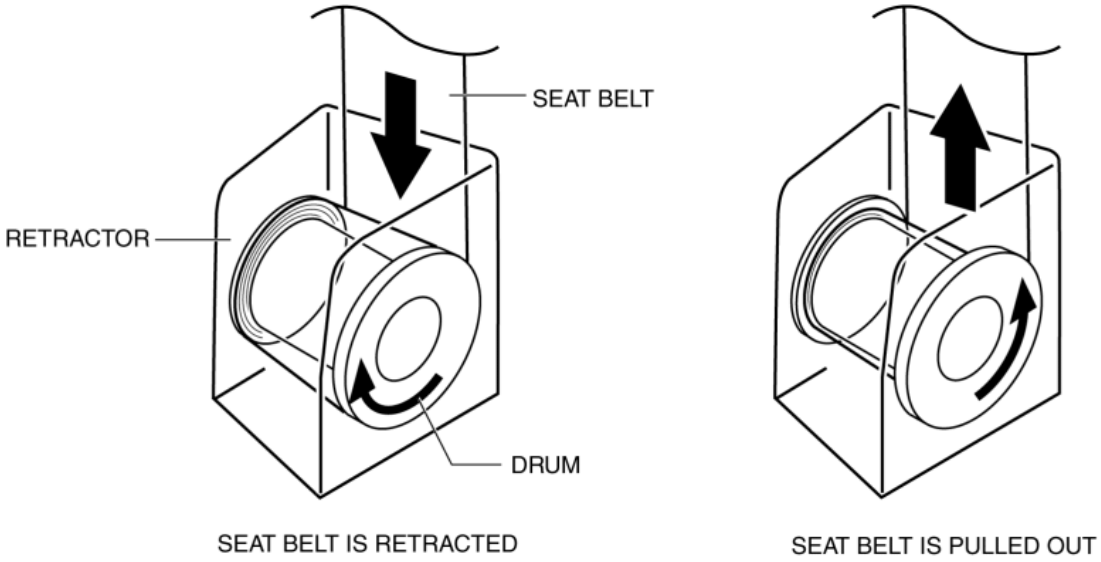

Fail-safe

- Function not equipped.

< Previous

Next >

2014 - Mazda3 - Body and Accessories

BODY AND ACCESSORIES

ABBREVIATIONS

AAS	Active Adaptive Shift
ABS	Antilock Brake System
ABDC	After Bottom Dead Center
ACC	Accessories
AFS	Adaptive Front Lighting System
ALC	Auto Level Control
ALR	Automatic Locking Retractor
ATDC	After Top Dead Center
ATF	Automatic Transaxle Fluid
ATX	Automatic Transaxle
AWD	All-Wheel Drive
BBDC	Before Bottom Dead Center
BDC	Bottom Dead Center
BSM	Blind Spot Monitoring
BTDC	Before Top Dead Center
CAN	Controller Area Network

CCM	Comprehensive Component Monitor
CV	Canister Vent
CM	Control Module
CMU	Connectivity master unit
CPU	Central Processing Unit
DC	Drive Cycle
DRL	Daytime Running Light
DSC	Dynamic Stability Control
EBD	Electronic Brakeforce Distribution
EEPROM	Electrically Erasable Programmable Read-Only Memory
EHPAS	Electro Hydraulic Power Assist Steering
ELR	Emergency Locking Retractor
EPS	Electric Power Steering
ESA	Electronic Spark Advance
FBCM	Front Body Control Module
FET	Field Effect Transistor
FOW	Forward Obstruction Warning
GPS	Global Positioning System
HBC	High Beam Control
HF/TEL	Hands-Free Telephone
HI	High
HLA	Hydraulic Lash Adjuster

HS	High Speed
HU	Hydraulic Unit
IDS	Integrated Diagnostic Software
IG	Ignition
INT	Intermittent
KOEO	Key On Engine Off
KOER	Key On Engine Running
LCD	Liquid Crystal Display
LDWS	Lane Departure Warning System
LED	Light Emitting Diode
LF	Left Front
LH	Left Hand
LO	Low
LR	Left Rear
M	Motor
MAX	Maximum
MIN	Minimum
MOS	Metal Oxide Semiconductor
MRCC	Mazda Radar Cruise Control
MS	Middle Speed
MTX	Manual Transaxle
OCV	Oil Control Valve

OFF	Switch Off
ON	Switch On
PAD	Passenger Air Bag Deactivation
PCV	Positive Crankcase Ventilation
PID	Parameter Identification
P/W CM	Power Window Control Module
PTC	Positive Temperature Coefficient
RBCM	Rear Body Control Module
RCTA	Rear Crossing Traffic Alert
REC	Recirculate
RF	Right Front
RH	Right Hand
RR	Right Rear
SAS	Sophisticated Air Bag Sensor
SST	Special Service Tool
SW	Switch
TAU	Tuner and Amp Unit
TCS	Traction Control System
TDC	Top Dead Center
TFT	Transaxle Fluid Temperature
TNS	Tail Number Side Lights
TPMS	Tire Pressure Monitoring System

USB	Universal Serial Bus
VENT	Ventilation
1GR	First Gear
2GR	Second Gear
2WD	2-Wheel Drive
3GR	Third Gear
4GR	Fourth Gear
4SD	4 Door Sedan
5GR	Fifth Gear
5HB	5 Door Hatchback
6GR	Sixth Gear

FEATURES

- The following window glass has been adopted.
    - Windshield
    - Front door glass
    - Rear door glass
    - Rear door quarter glass
    - Rear window glass
    - Outer mirror glass
- The following mirrors have been adopted.
    - Power outer mirror
    - Rearview mirror
    - Auto-dimming mirror (With auto-dimming mirror)
- Rear window defroster has been adopted on the rear window glass.
- Heated outer mirror has been adopted on the power outer mirrors. (With heated outer mirror system)

- UV protection glass has been adopted. (With UV protection glass)
- The following systems have been adopted to the front seats.
    - Power seat system (With power seat system)
    - Seat warmer system (With seat warmer system)
- A side air bag module is built into the front seats.
- The following two types of child restraint seat anchors have been adopted which enable securing of ISOFIX-applicable child restraint seats on the rear seat.
    - Top tether anchor
    - ISOFIX anchor
- The following security and locks system has been adopted.
    - Power door lock system
    - Liftgate opener system
    - Trunk lid opener system
    - Keyless entry system
    - Advanced keyless entry system
    - Push button start system
    - Immobilizer system
    - Theft-deterrent system
- An electric sunroof with tilt up mechanism has been adopted.
- A deflector has been added to reduce noise.
- A system control using pulse sensors (Hall effect switches) has been adopted for system simplification.
- A sunroof motor with an integrated CPU has been adopted.
- Front combination lights have been adopted with parts related to the front exterior lights grouped and housed together.
- The following systems have been adopted to the headlights.
    - Discharge headlight system (With discharge headlight system)
    - Auto light system (With auto light system)
    - Headlight manual leveling system (With headlight manual leveling system)
    - Headlight auto leveling system (With headlight auto leveling system)
    - Adaptive front lighting system (AFS) (With adaptive front lighting system (AFS))
    - High beam control (HBC) system (With high beam control (HBC) system)
    - Auto light-off system

- Front fog lights have been adopted. (With front fog lights)
- LED type parking lights have been adopted. (With discharge headlight system)
- LED type side turn lights have been adopted. (With side turn light)
- LED type brake lights/taillights have been adopted. (With LED type brake light/taillight)
- LED type high-mount brake light has been adopted.
- A room light control system has been adopted in which illumination time and illumination level of the room lights change.
- The following wiper/washer system has been adopted.
    - Windshield wiper/washer system
    - Rear wiper/washer system (5HB)
    - Auto wiper system (With auto wiper system)
    - Washer fluid-level warning system (With washer fluid-level sensor)
- The following entertainment system has been adopted.
    - Entertainment system (Without center display)
    - Entertainment system (With center display)
    - Car-navigation system (With car-navigation system)
    - Park assist system (With park assist system)
- An instrument cluster integrated with an active driving display has been adopted which displays the driving speed, warning screen, and direction of vehicle travel (With car-navigation system). (Type A instrument cluster)
- A blind spot monitoring (BSM) system has been adopted which notifies the driver of vehicles approaching from behind on the left or right adjacent lanes in the driver's blind spot, and warns the driver if the driver tries to change lanes to the side of the approaching vehicle. (With blind spot monitoring (BSM) system)
- A lane departure warning system (LDWS) has been adopted which recognizes vehicle lane lines on the road using the forward sensing camera (FSC) installed to the windshield and notifies the driver if the vehicle may depart from its lane unbeknownst to the driver. (With lane departure warning system (LDWS))
- An indicator unit has been adopted which displays the passenger seat belt warning light and PAD indicator light.
- Active air shutter system have been adopted.
- A front body control module (FBCM) has been adopted for the vehicle front which controls systems such as the headlights, windshield wipers, and turn lights.
- A rear body control module (RBCM) has been adopted for the vehicle rear which controls systems such as the power door lock, rear wiper, and interior light.

Next >

2014 - Mazda3 - Body and Accessories

BODY PANEL

Structural View

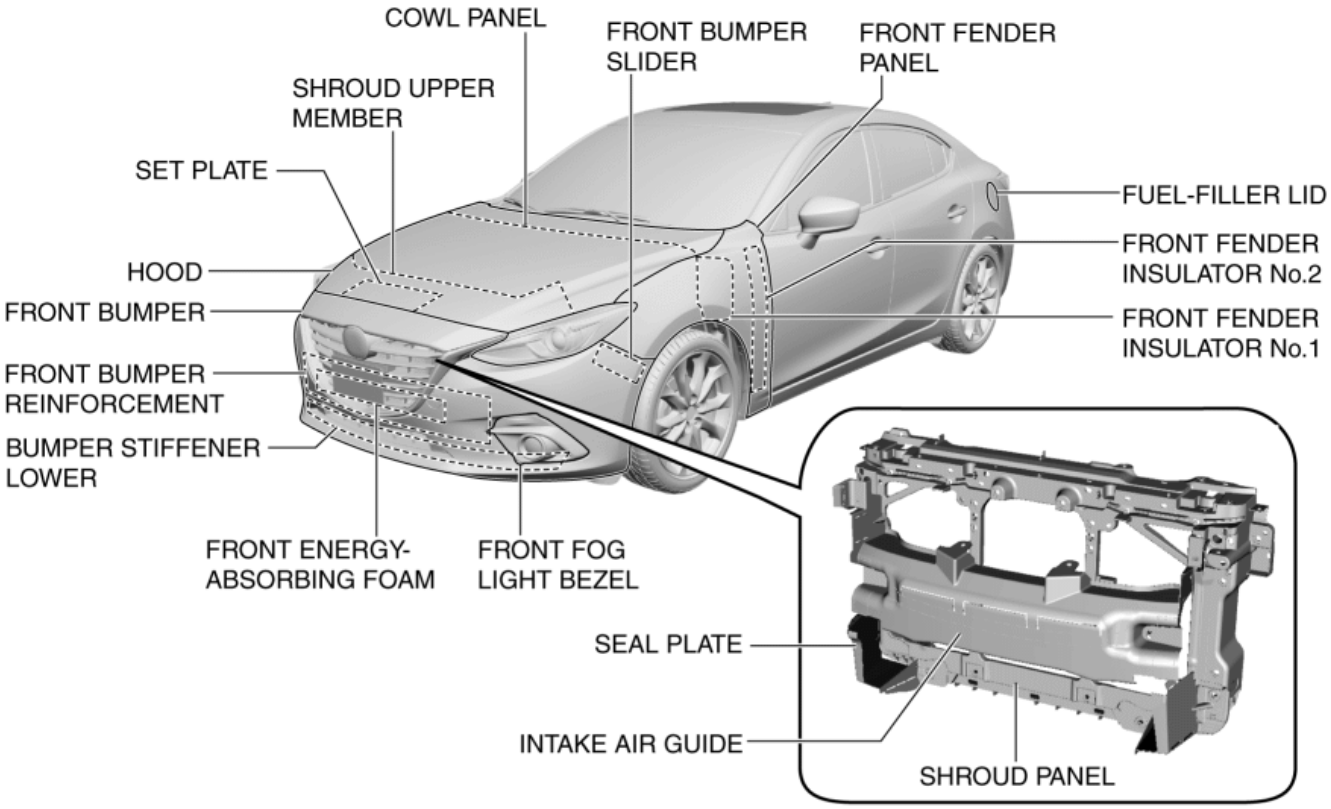

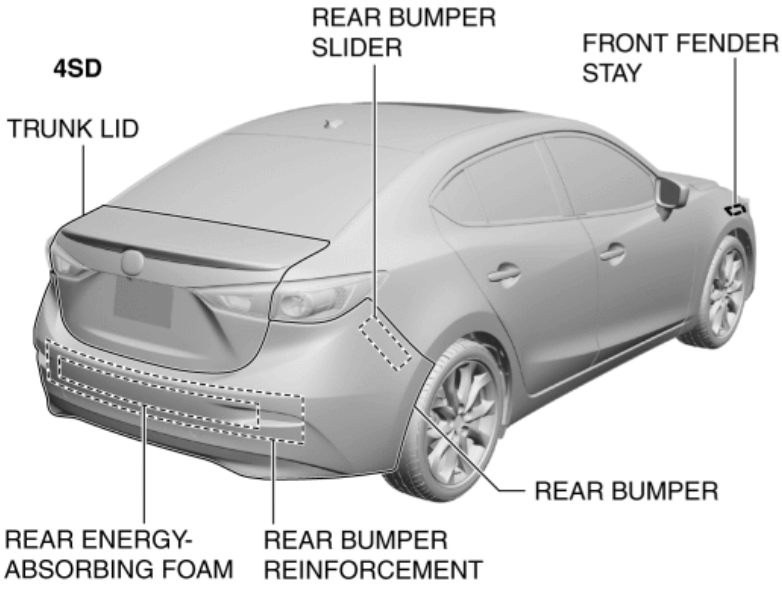

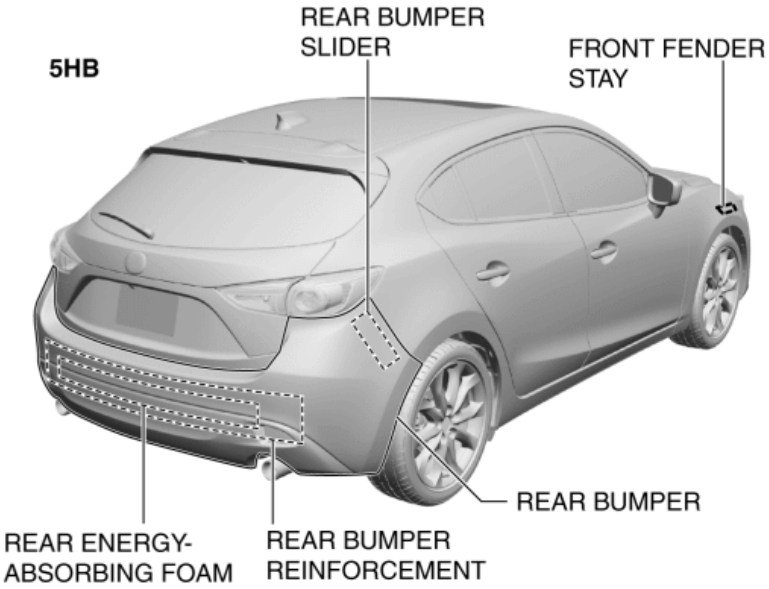

BODY PANEL

2014 - Mazda3 - Body and Accessories

BODY SHELL

Outline

- A straight structure has been adopted which is both highly rigid and light.
- A multi-load path structure has been adopted which assures a high level of impact safety.
- A ring structure has been adopted which improves the overall rigidity.

Structural View

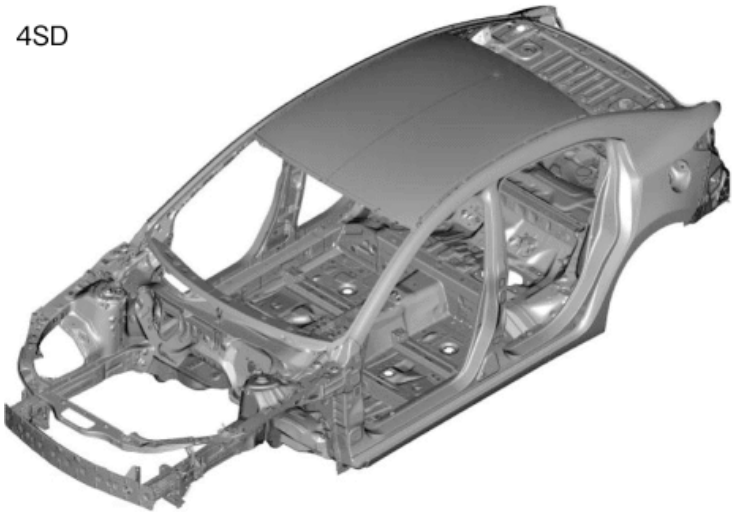

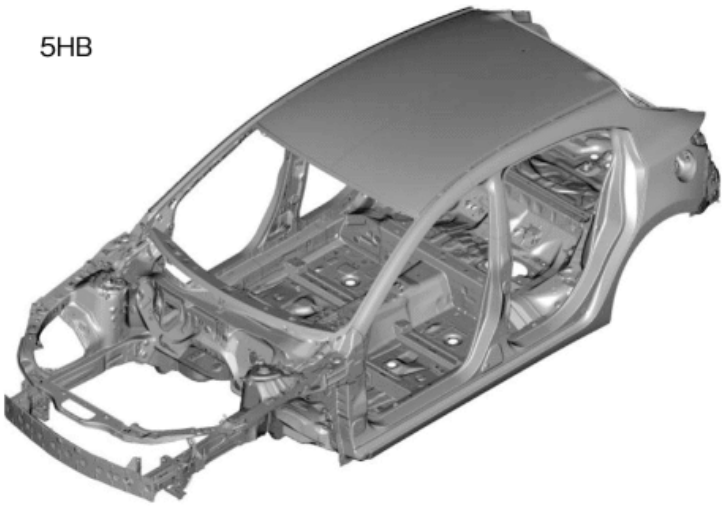

Construction

Straight construction

- The straight shape of the frame creates a continuous configuration from the front to the rear.
- For sections of the frame that still require some curvature, continuous bonding with the horizontal frame was implemented and a closed sectional structure was made to the maximum extent possible.

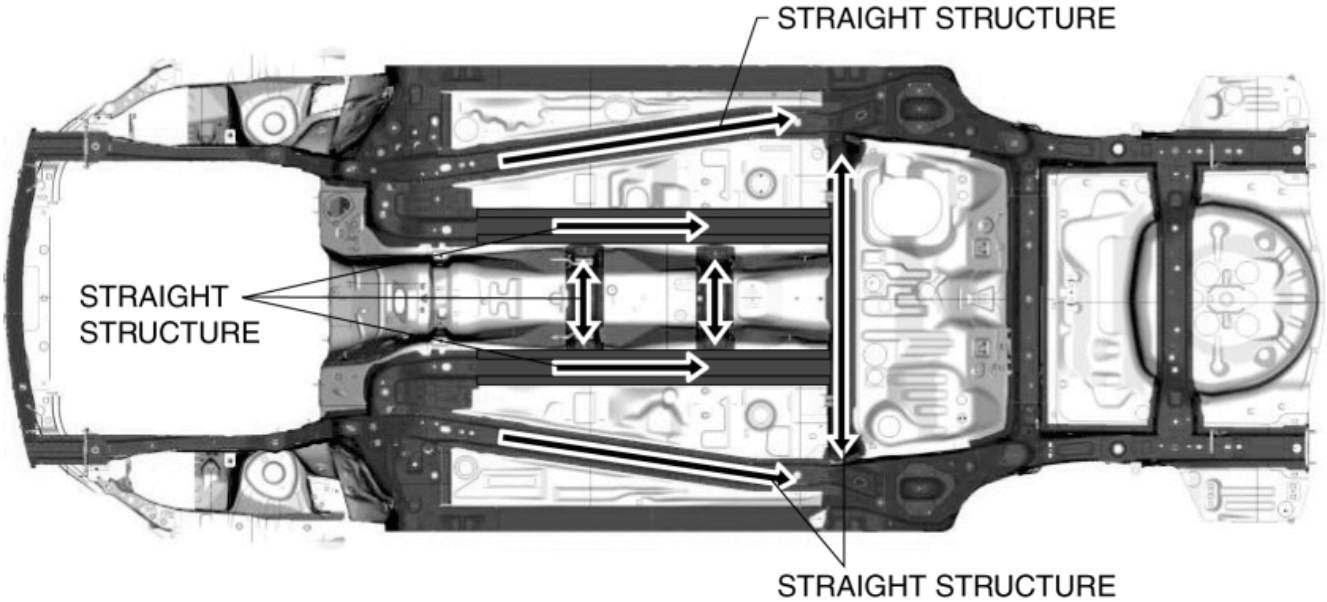

Multi-load path construction

- Collision impact is distributed in multiple directions and absorbed efficiently.

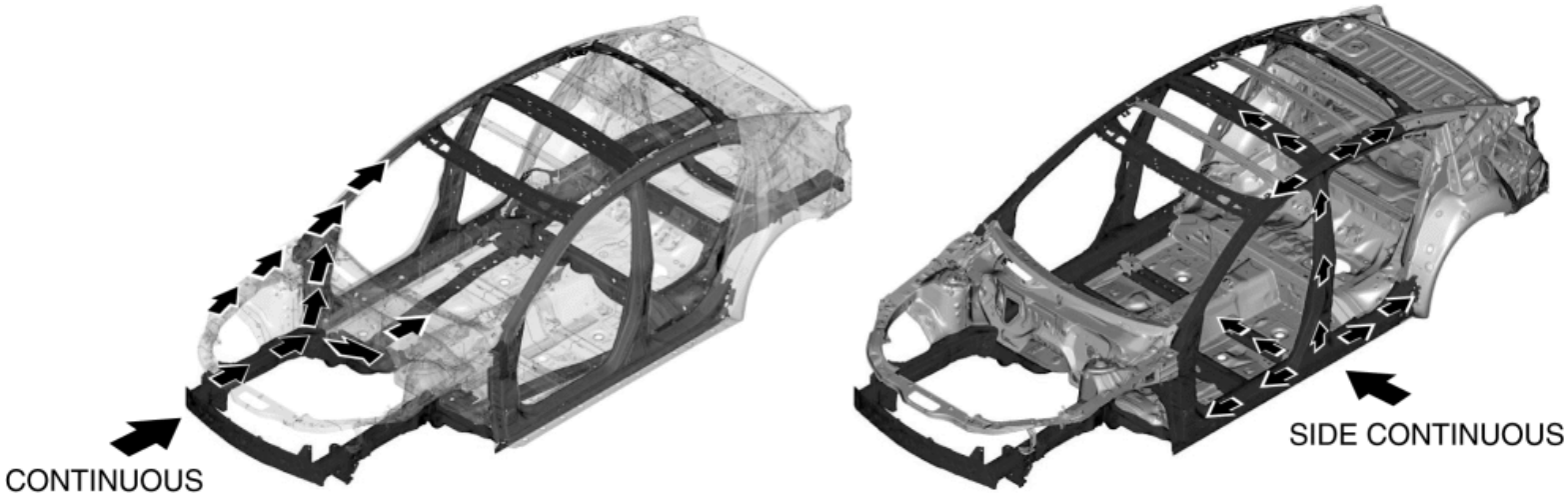

Ring shape construction

- Overall body rigidity has been improved using a four-ring structure created by the upper body including the roof rail and B-pillar combined with the entire underbody reinforcement.
- Cabin deformation in a collision is suppressed by creating a ring structure.

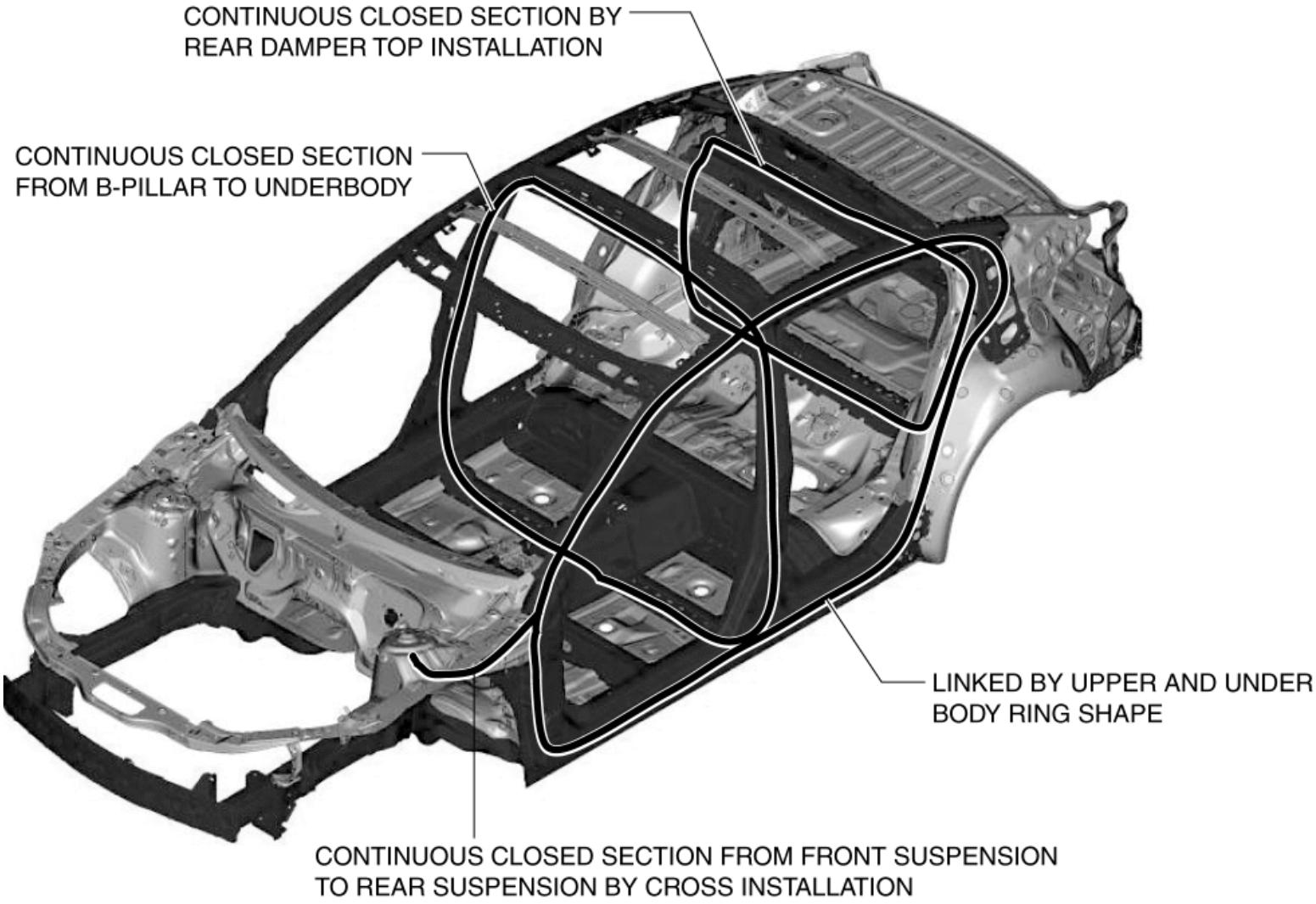

Fail-safe

- Not applicable

2014 - Mazda3 - Body and Accessories

FRONT BUMPER

Purpose

- A thinner front bumper has been adopted for weight reduction and improved fuel economy.

Construction

- High rigidity material has been adopted on the front bumper for ensuring high rigidity.

Fail-safe

- Not applicable

2014 - Mazda3 - Body and Accessories

REAR BUMPER

Purpose, Function

- A thinner rear bumper has been adopted for weight reduction and improved fuel economy.

Construction

- High rigidity material has been adopted on the rear bumper for ensuring high rigidity.

Fail-safe

- Not applicable

2014 - Mazda3 - Body and Accessories

DOORS AND LIFTGATE

Structural view

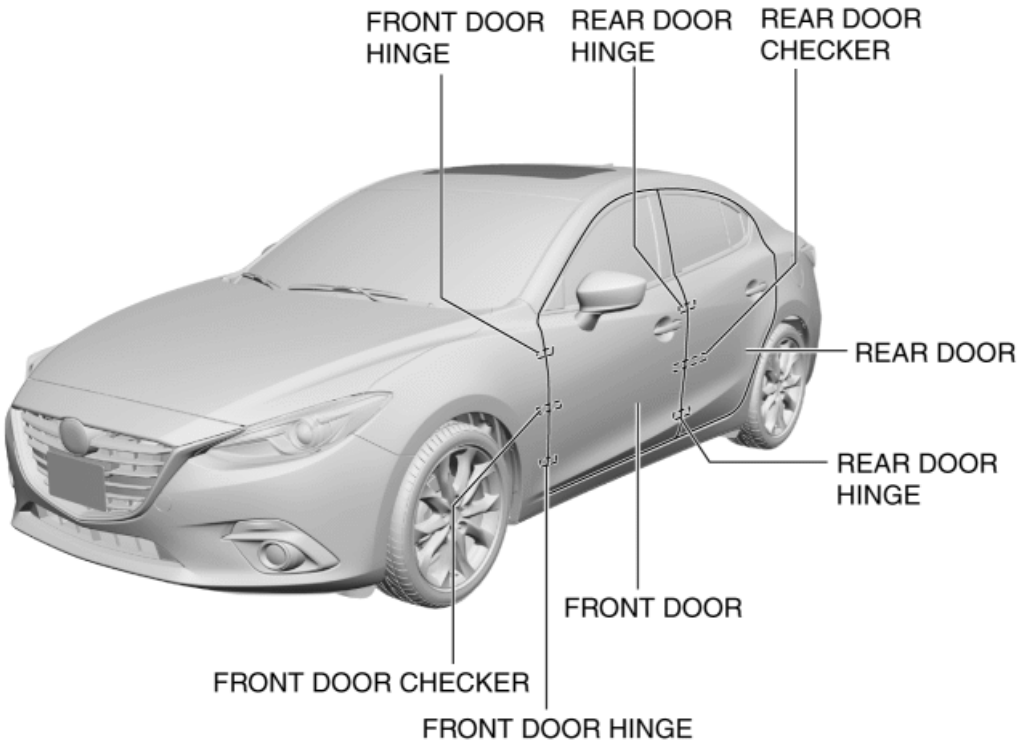

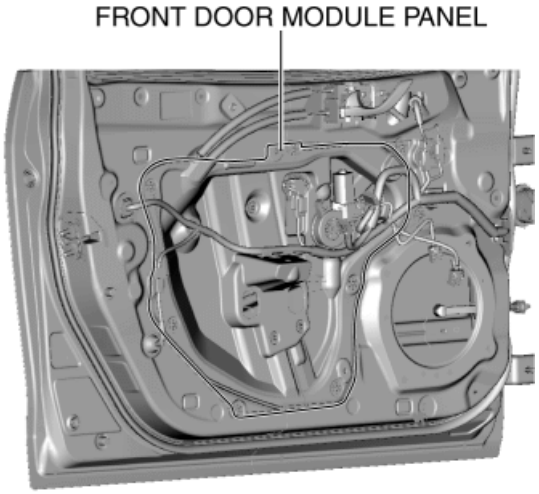

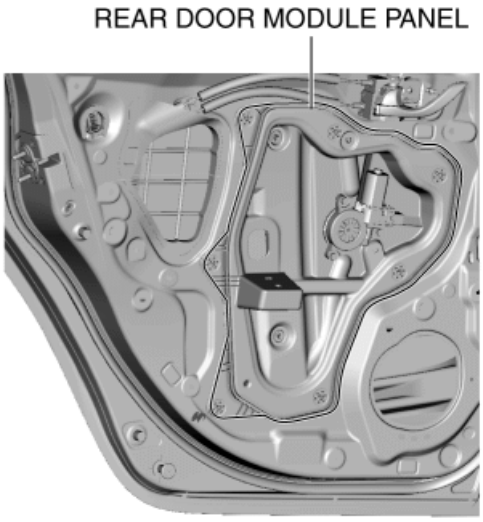

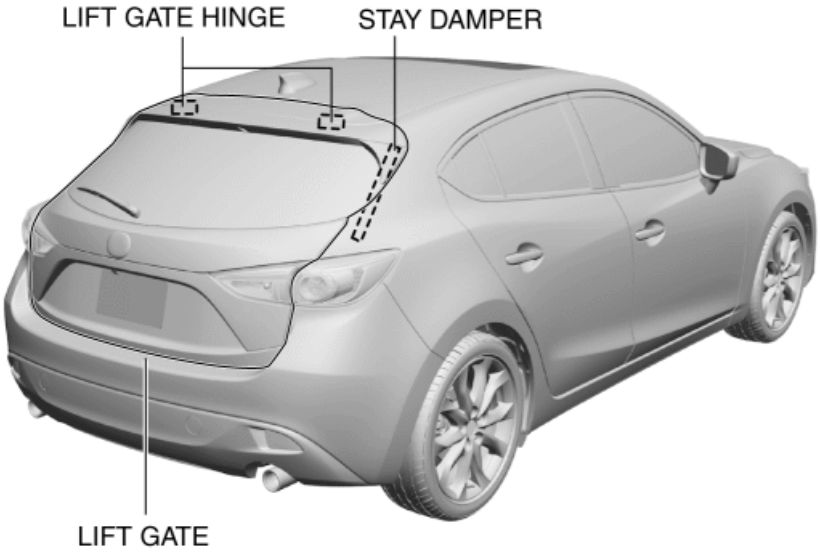

2014 - Mazda3 - Body and Accessories

SIDE IMPACT BAR

Purpose, Function

- The side-impact bars prevent the doors from deforming inwards during a side-impact collision.

Construction

- The front door side-impact bar lower and rear door side-impact bar upper are corrugated in shape to assure high rigidity.

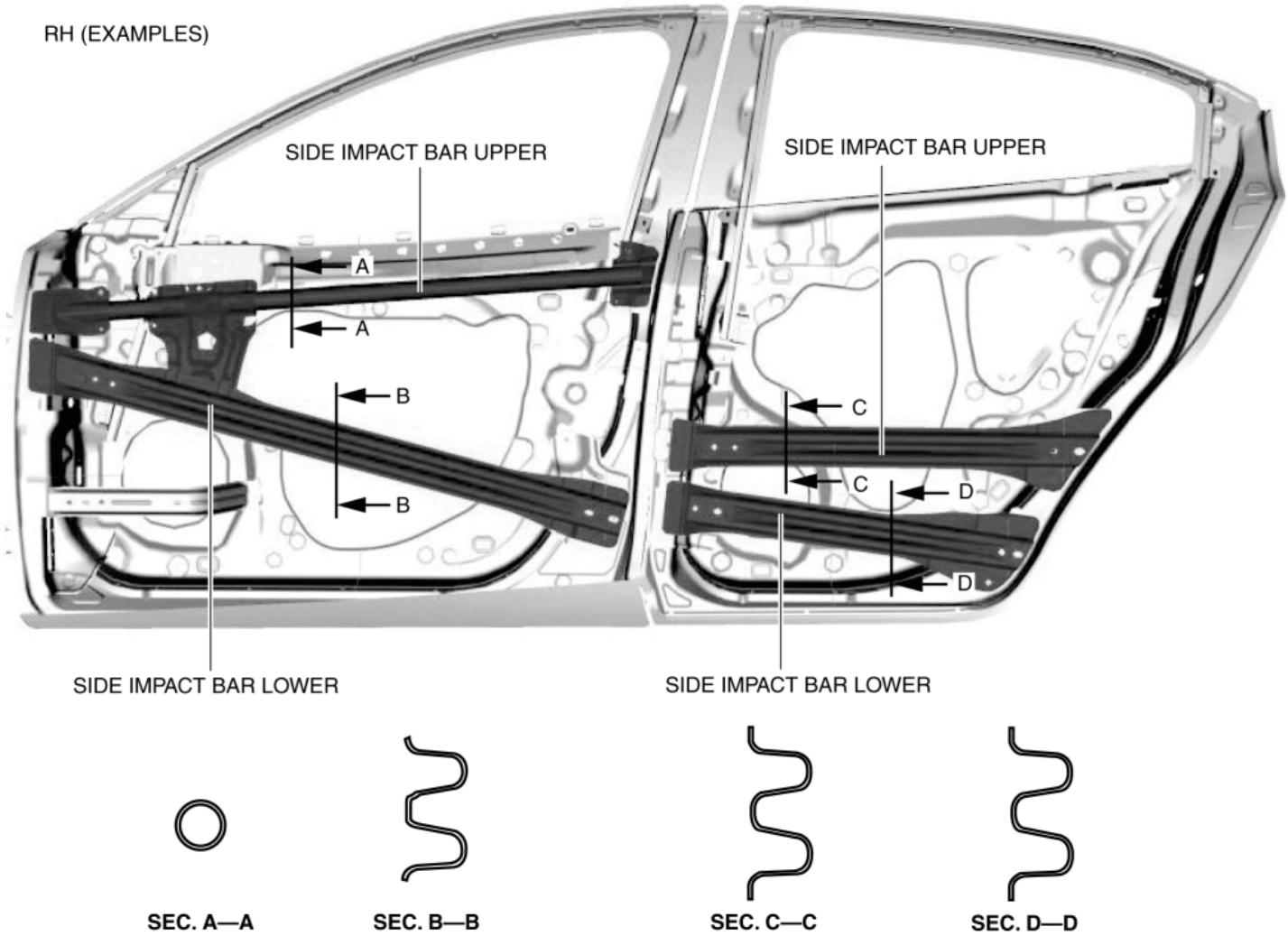

- The side-impact bars disperse the impact during a side-impact collision.

- Inward penetration of a front door during a side-impact collision is suppressed by positioning the upper and lower side-impact bars of the front door so that they overlap the hinge pillar and center pillar.
- Inward penetration of a rear door during a side-impact collision is suppressed by positioning the upper and lower side-impact bars of the rear door so that they overlap the center pillar and side sill.

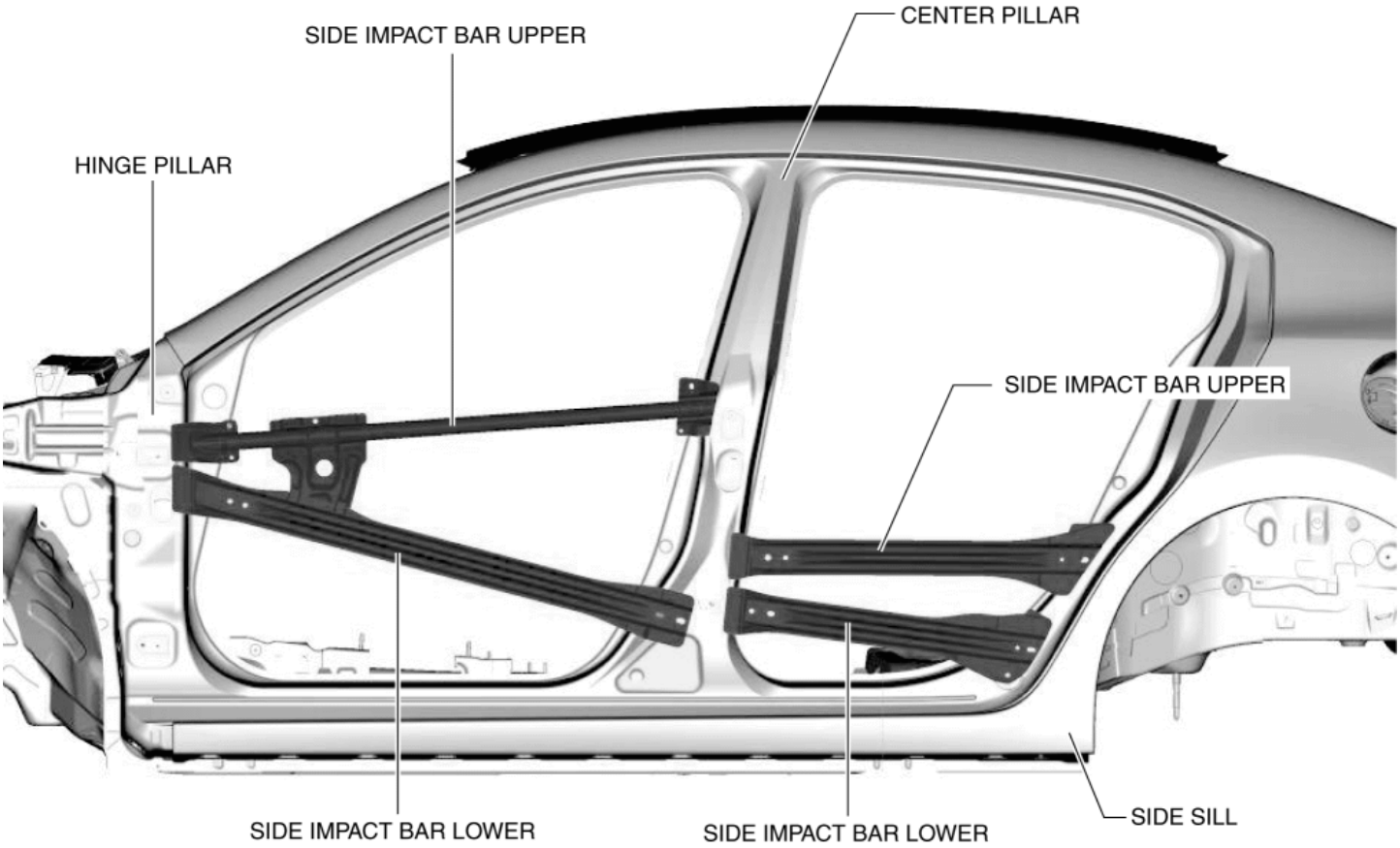

Fail-safe

- Function not equipped.

2014 - Mazda3 - Body and Accessories

DOOR MODULE PANEL

Purpose, Function

- The door module panels include parts integrated inside the doors and those belonging to the doors.

Construction

- Cellular plastic has been adopted in the hatch-marked areas of the door module panel for weight reduction.

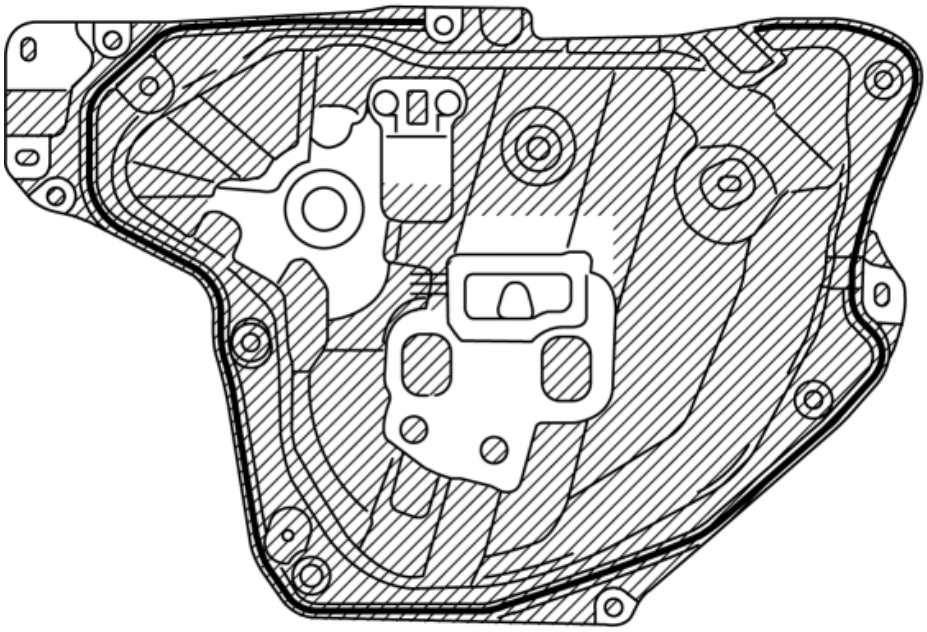

FRONT DOOR MODULE PANEL

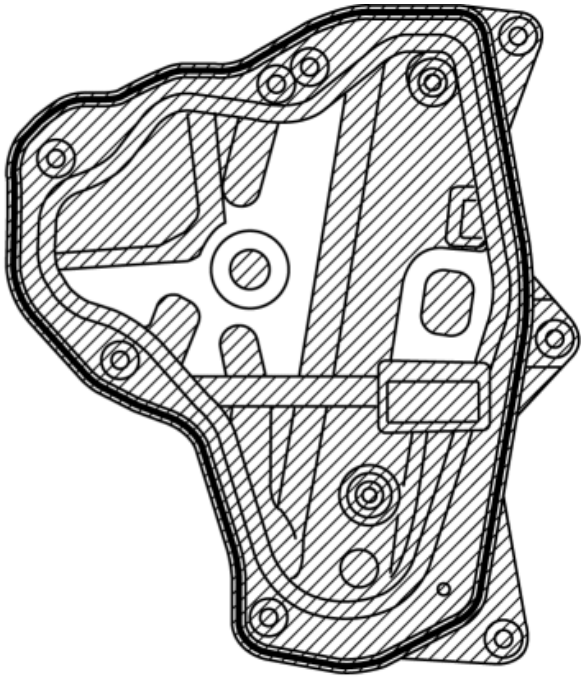

REAR DOOR MODULE PANEL

Fail-safe

- Function not equipped.

2014 - Mazda3 - Body and Accessories

DOOR PANEL

Outline

- High rigidity, lightweight, and quietness have been realized by creating an integrated press structure for the door inner panel.

Construction

LH (EXAMPLES)

Fail-safe

- Function not equipped.

2014 - Mazda3 - Body and Accessories

GLASS/WINDOWS/MIRRORS

Outline

- The following window glass has been adopted.
  - Windshield
  - Front door glass
  - Rear door glass
  - Rear door quarter glass
  - Rear window glass
  - Outer mirror glass
- The following mirrors have been adopted.
  - Power outer mirror
  - Rearview mirror
  - Auto-dimming mirror (with auto-dimming mirror)
- Rear window defroster has been adopted on the rear window glass.
- Heated outer mirror has been adopted on the power outer mirrors. (with heated outer mirror system)
- UV protection glass has been adopted. (with UV protection glass)

Structural View

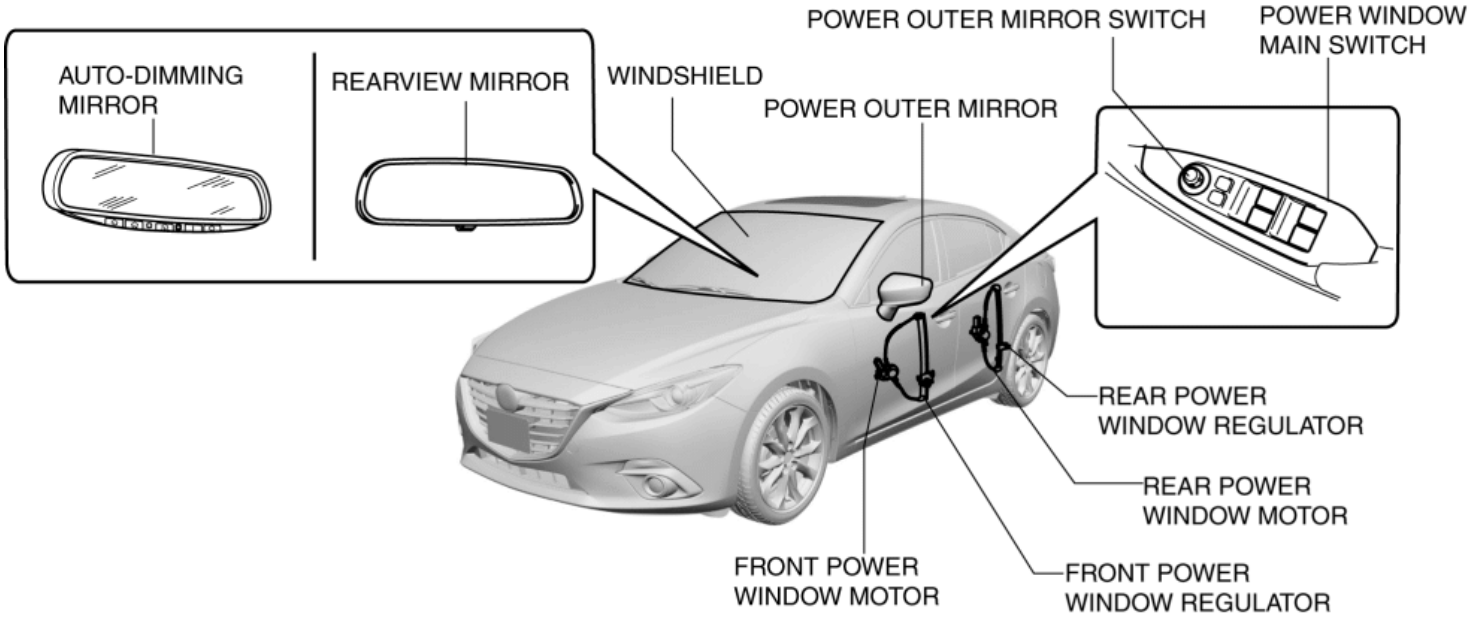
AUTO-DIMMING MIRROR
REARVIEW MIRROR
WINDSHIELD
POWER OUTER MIRROR SWITCH
POWER WINDOW MAIN SWITCH
POWER OUTER MIRROR
REAR POWER WINDOW REGULATOR
REAR POWER WINDOW MOTOR
FRONT POWER WINDOW MOTOR
FRONT POWER WINDOW REGULATOR

4SD

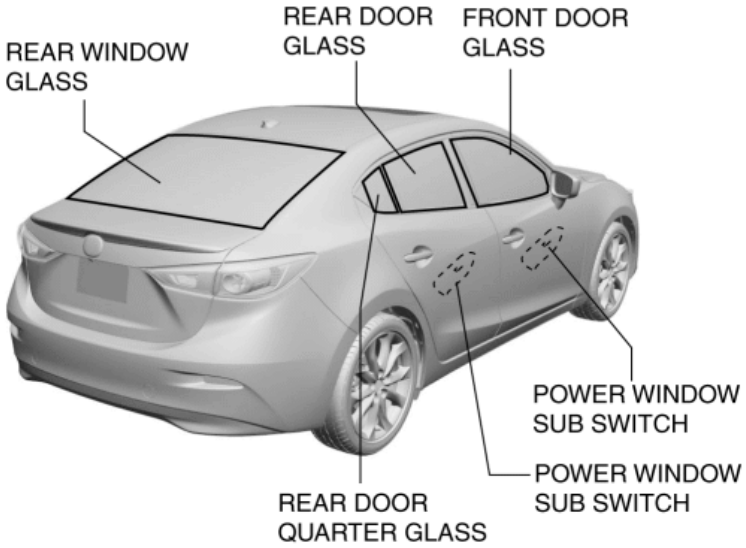
REAR WINDOW GLASS
REAR DOOR GLASS
FRONT DOOR GLASS
POWER WINDOW SUB SWITCH
POWER WINDOW SUB SWITCH
REAR DOOR QUARTER GLASS

5HB

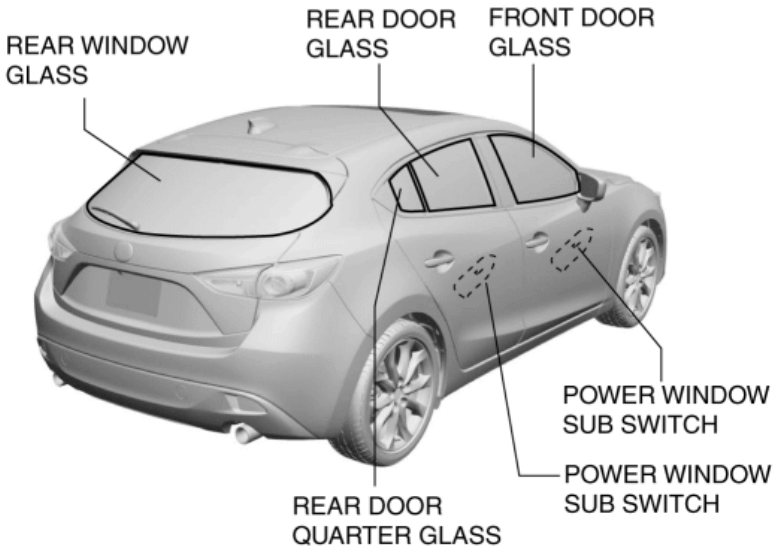
REAR WINDOW GLASS
REAR DOOR GLASS
FRONT DOOR GLASS
POWER WINDOW SUB SWITCH
POWER WINDOW SUB SWITCH
REAR DOOR QUARTER GLASS

2014 - Mazda3 - Body and Accessories

REAR WINDOW DEFROSTER/OUTER MIRROR HEATER

Outline

- Fogging is cleared from the rear window and outer mirror glass by heating of the filament.

Structural view

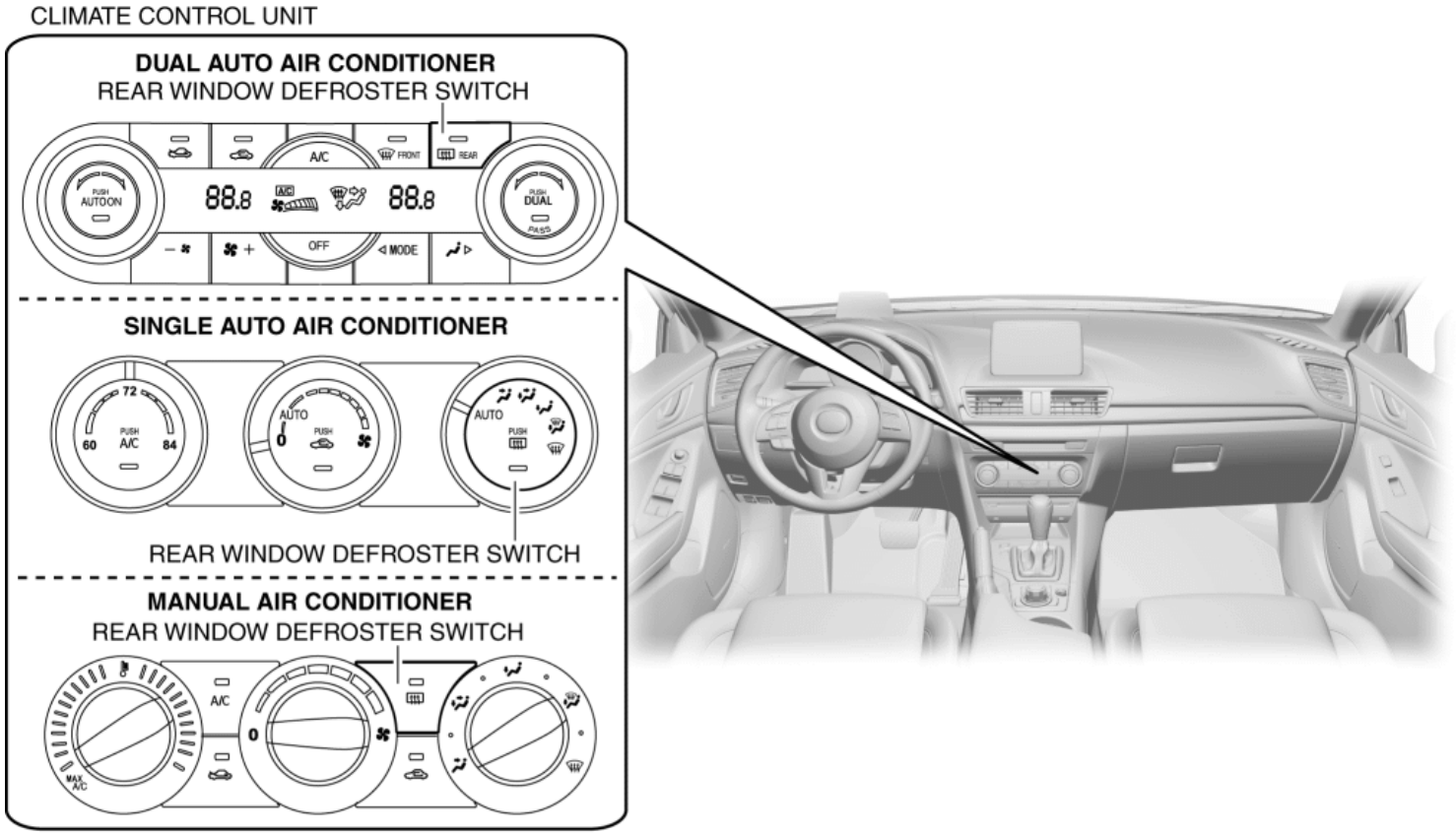

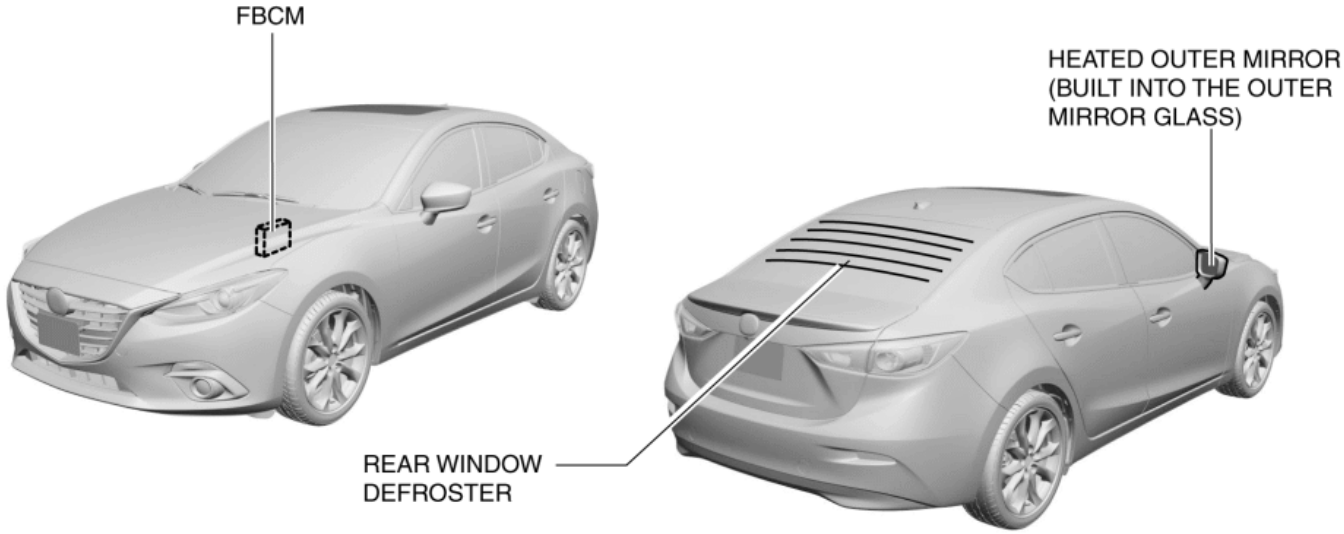

System wiring diagram

With full-auto air conditioner system

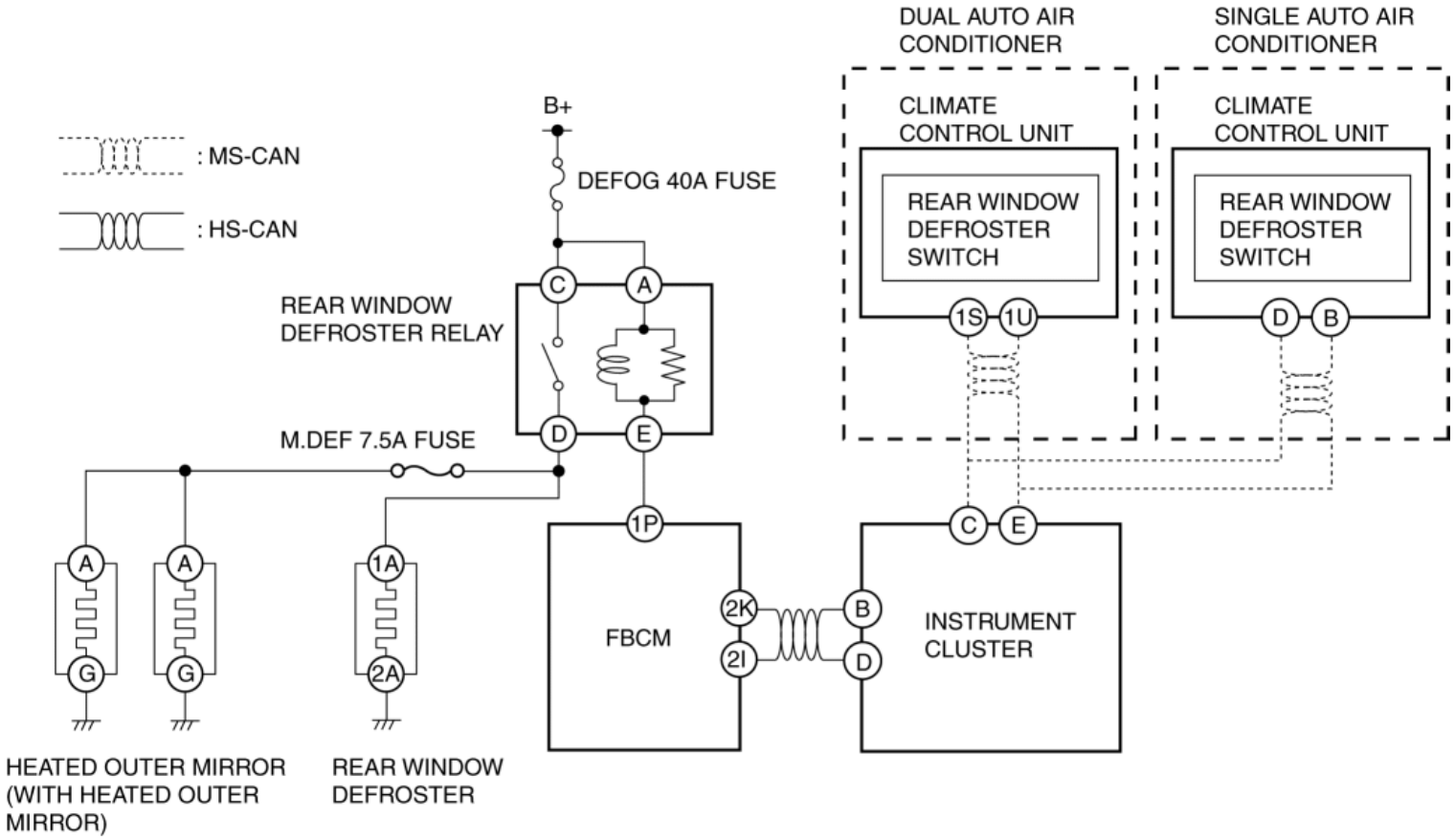

With manual air conditioner system

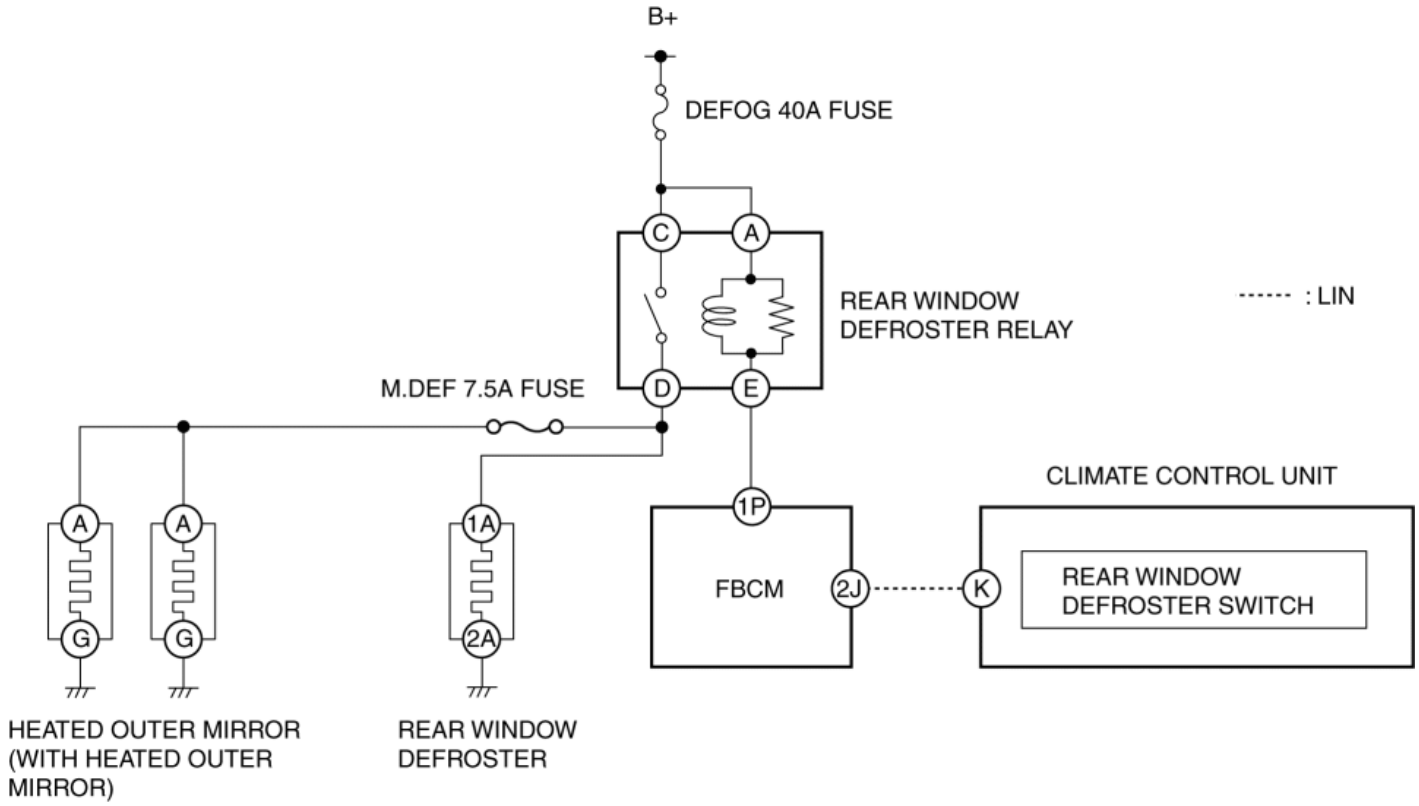

Construction

Rear window defroster

- The rear window defroster is inside the rear window glass.

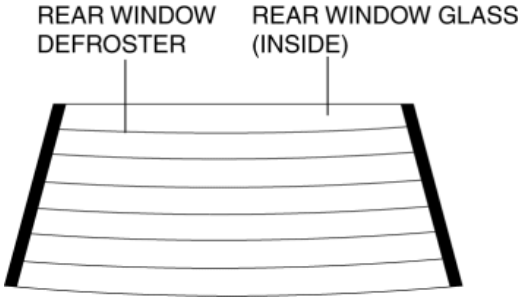

Heated outer mirror

- The heated outer mirror filament is integrated in the outer mirror glass.

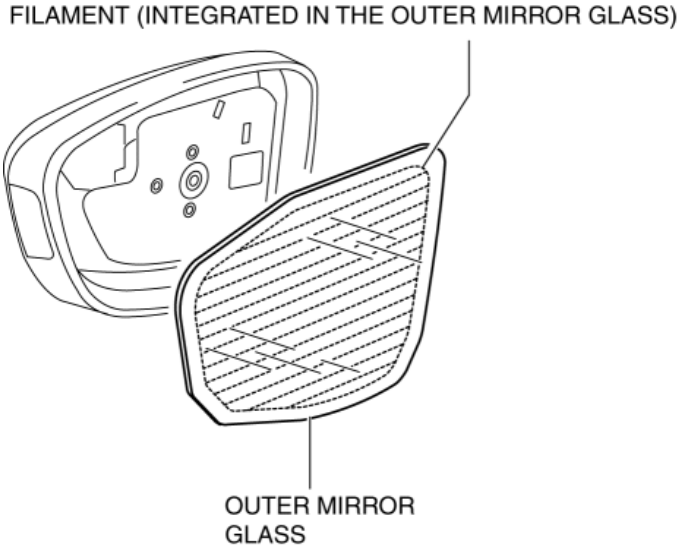

Operation

With full-auto air conditioner system

1. When the rear window defroster switch on the climate control unit is turned on, an ON/OFF control request signal is sent to the front body control module (FBCM) through the instrument cluster as a CAN signal.

2. When the front body control module (FBCM) receives the ON/OFF control request signal, it supplies the battery voltage to the rear window defroster relay.

3. When the battery voltage is supplied to the rear window defroster relay, a switch inside the rear window defroster relay is turned on.

4. When the switch inside the rear window defroster relay is turned on, the battery voltage is supplied to the rear window defroster/heated outer mirrors to operate them.

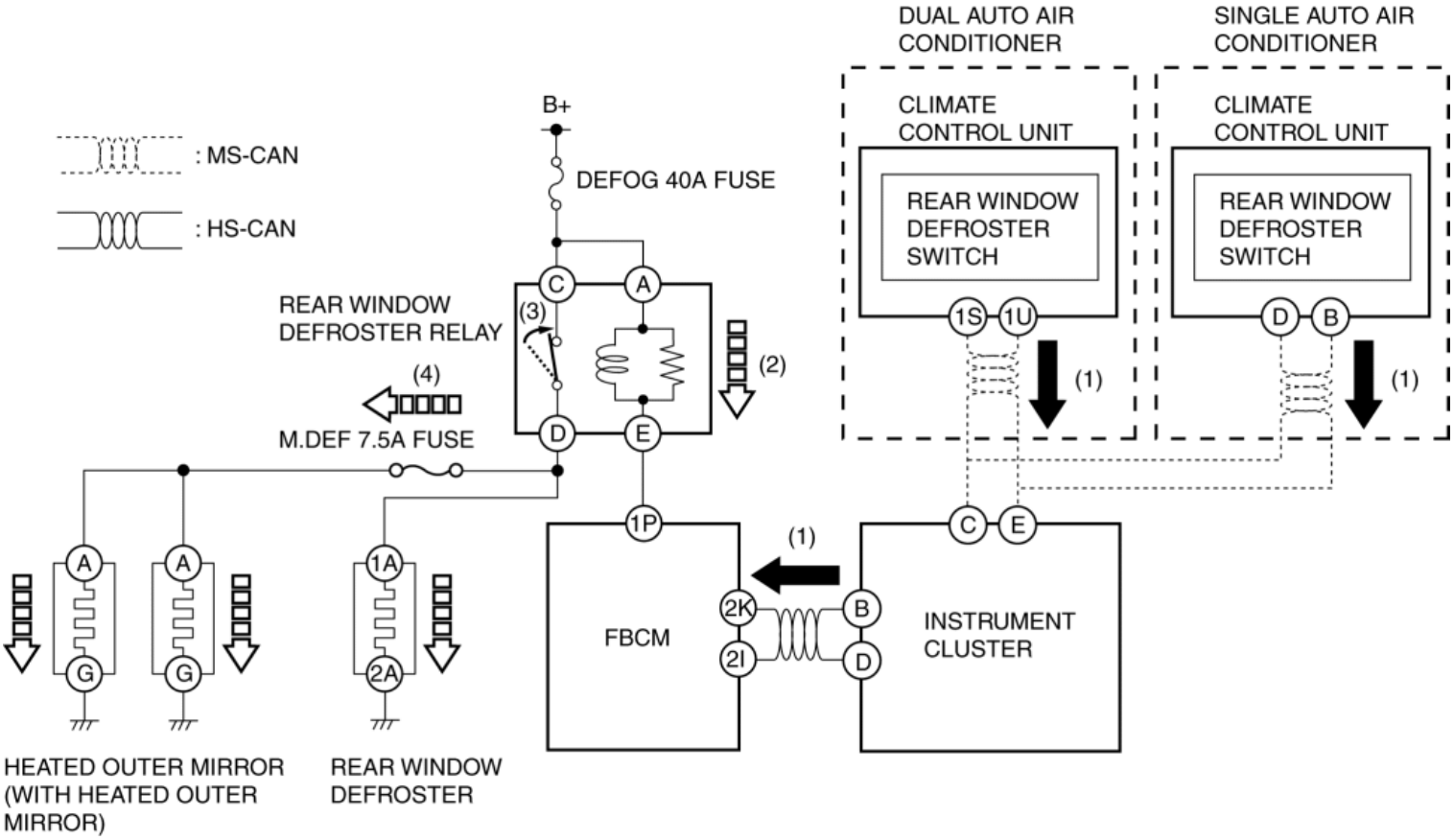

- When **approx. 15 min.** has elapsed after the rear window defroster switch was turned on, the timer control of the front body control module (FBCM) turns off the rear window defroster relay automatically to turn off the rear window defroster/heated outer mirror.
- When the rear window defroster switch is pressed while the rear window defroster/heated outer mirrors are operating, they stop operating.

With manual air conditioner system

1. When the rear window defroster switch on the climate control unit is turned on, a signal is sent from the climate control unit to the front body control module (FBCM) and the battery voltage is supplied to the rear window defroster relay.

2. When the battery voltage is supplied to the rear window defroster relay, a switch inside the rear window defroster relay is turned on.

3. When the switch inside the rear window defroster relay is turned on, the battery voltage is supplied to the rear window defroster/heated outer mirrors to operate them.

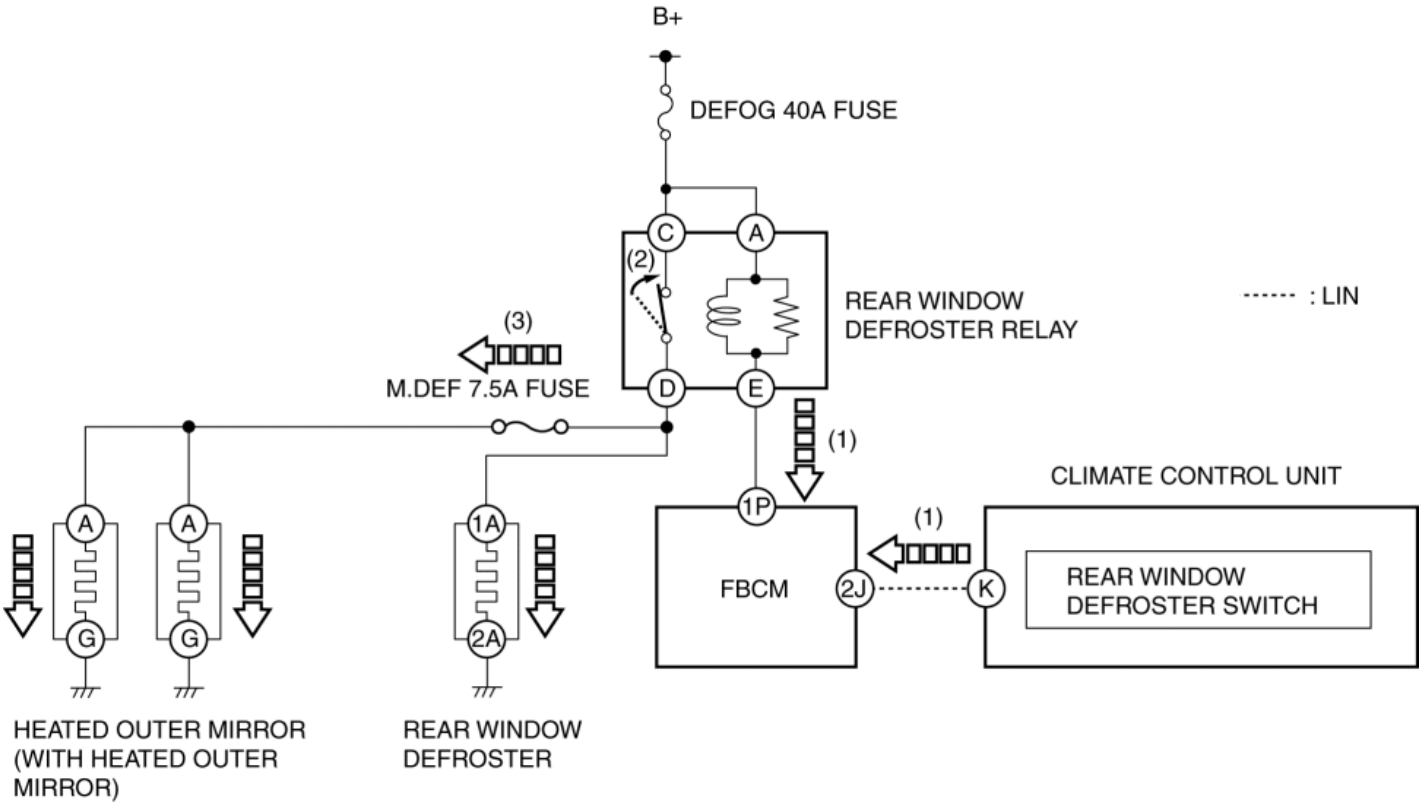

- When **approx. 15 min.** has elapsed after the rear window defroster switch was turned on, the timer control of the front body control module (FBCM) turns off the rear window defroster relay automatically to turn off the rear window defroster/heated outer mirror.
- When the rear window defroster switch is pressed while the rear window defroster/heated outer mirrors are operating, they stop operating.

Fail-safe

- Function not equipped.

2014 - Mazda3 - Body and Accessories

POWER WINDOW SYSTEM

Outline

- A power window system that enables automatic opening/closing of the door glass has been adopted.
- The driver's side door glass can be opened/closed automatically or manually by operating the power window main switch.
- Front and rear passenger door glass can be opened/closed manually by operating the power window main switch or the power window sub switches.

Structural View

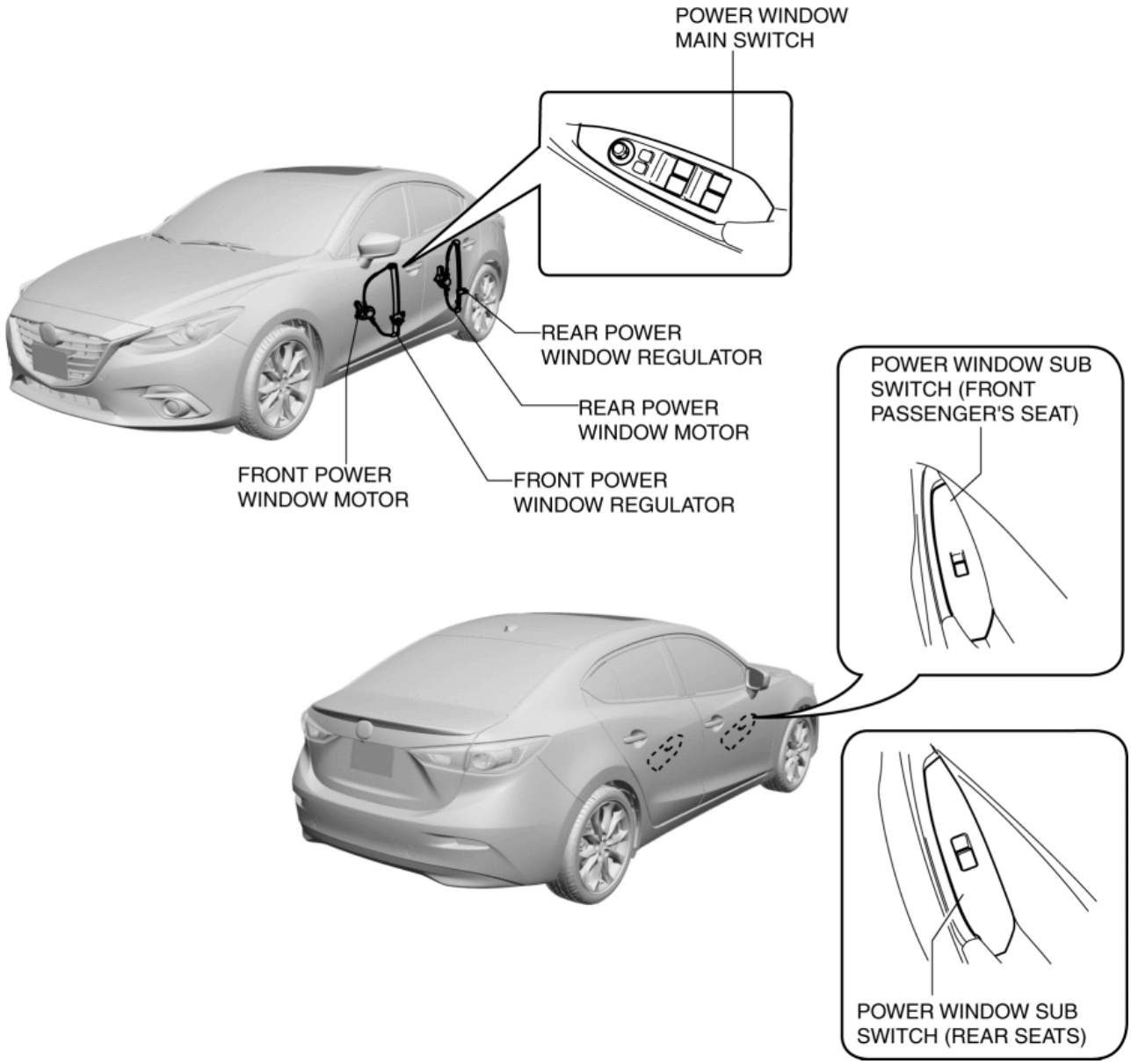

System Wiring Diagram

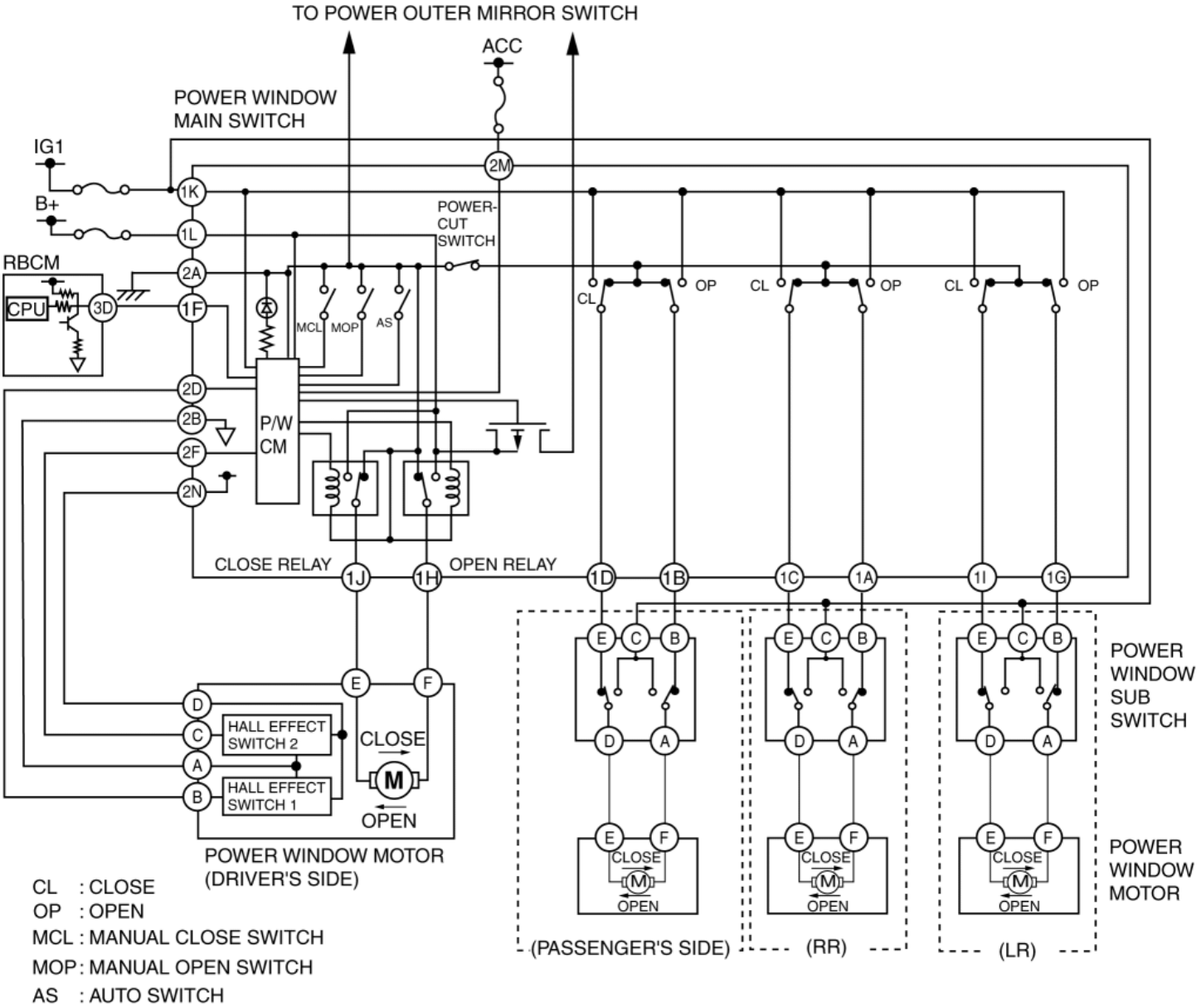

Function

Driver's seat

- Manual open/close
  - When the power window main switch is operated using the manual operation, the door glass opens/closes manually.
- Auto open/close
  - When the power window main switch is operated using the auto operation, the door glass opens/closes automatically.
- Power window system initial setting
  - Records the position of the driver's side door glass.
- Auto reverse pinch protection function
  - If an obstruction by a foreign object is detected during the auto close operation, the operation changes from close to open.
- IG OFF timer function
  - The driver's side power window can be operated using the power window main switch for **approx. 40 s** after the ignition is switched from ON (engine on or off) to ACC or OFF.
- IG OFF timer cancel
  - The IG OFF timer is canceled when a**pprox. 40 s** or more have elapsed since the ignition was switched to ACC or OFF or any door is opened during IG OFF timer operation.

Front passenger's seat and rear seats

- Manual open/close
  - When the power window main switch or power window subswitches is operated using the manual operation, the door glass opens/closes manually.
- IG OFF timer function
  - The front passenger's seat and rear seats power window can be operated using the power window subswitches for **approx. 40 s** after the ignition is switched from ON (engine on or off) to ACC or OFF.
- IG OFF timer cancel
  - The IG OFF timer is canceled when a**pprox. 40 s** or more have elapsed since the ignition was switched to ACC or OFF or any door is opened during IG OFF timer operation.

Construction

- A P/W CM is integrated in the power window main switch.
- The P/W CM controls the power window system based on the pulse signals from the power window motor.

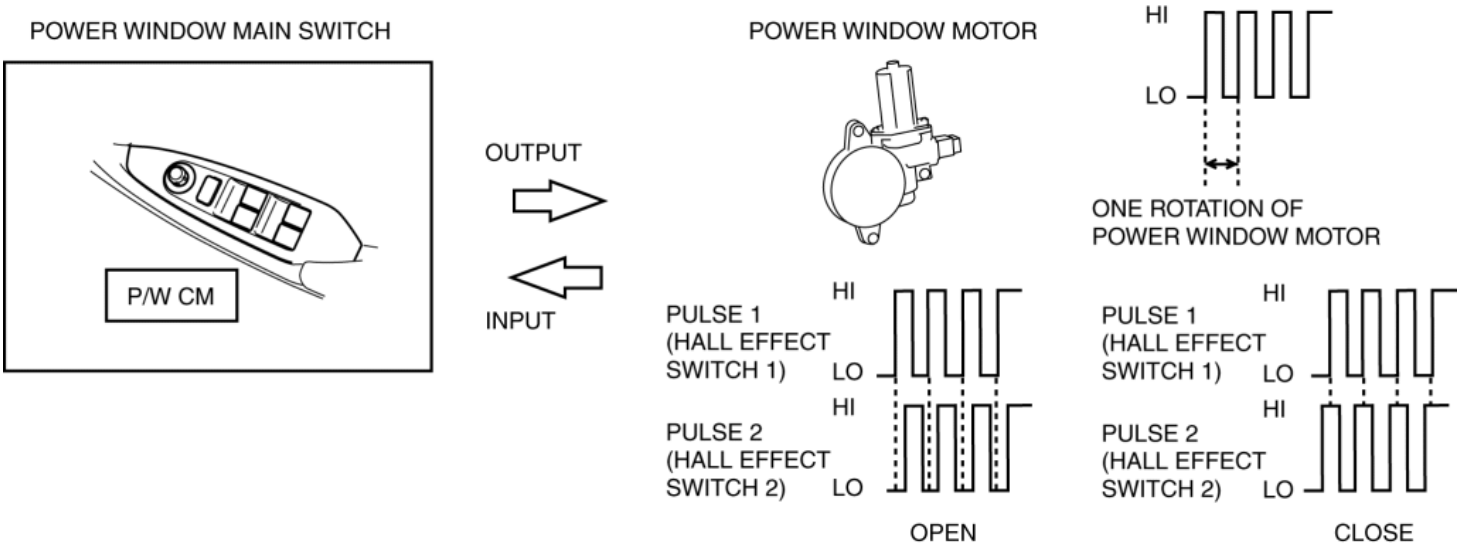

Operation

Driver's side manual open/close operation (Example: close operation)

1. When the power window main switch is operated for manual close operation, the P/W CM receives a manual close signal. (1)
2. When the P/W CM receives a manual close signal, it turns on the close relay. (2)
3. When the close relay is turned on, the power window motor (RF) starts manual close operation.(3)

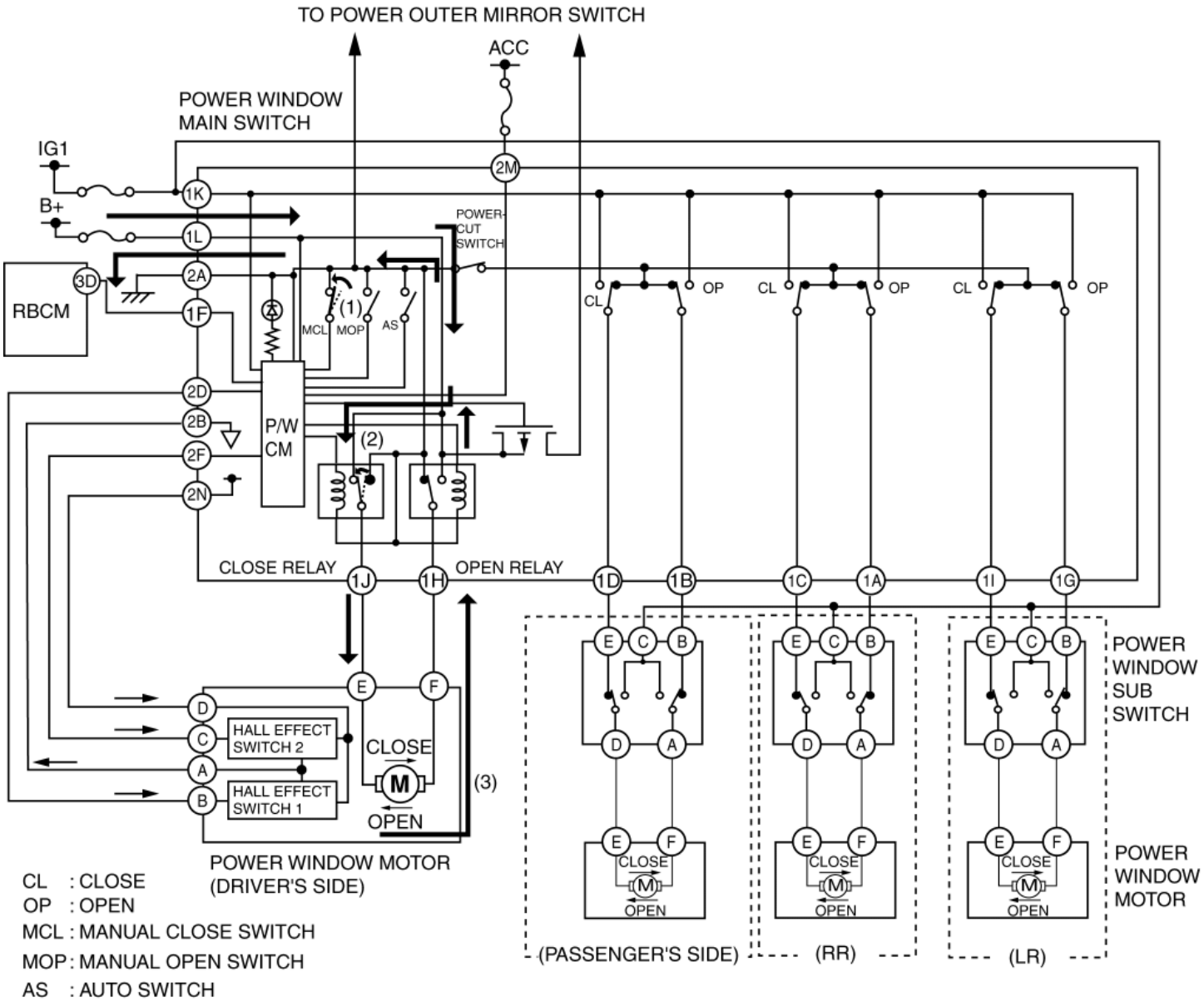

Driver's side auto open/close operation (Example: close operation)

1. When the power window main switch is operated for auto close operation, the P/W CM receives an auto close signal. (1)
2. When the P/W CM receives an auto close signal, it turns on the close relay. (2)
3. When the close relay is turned on, the power window motor (RF) starts auto close operation.(3)

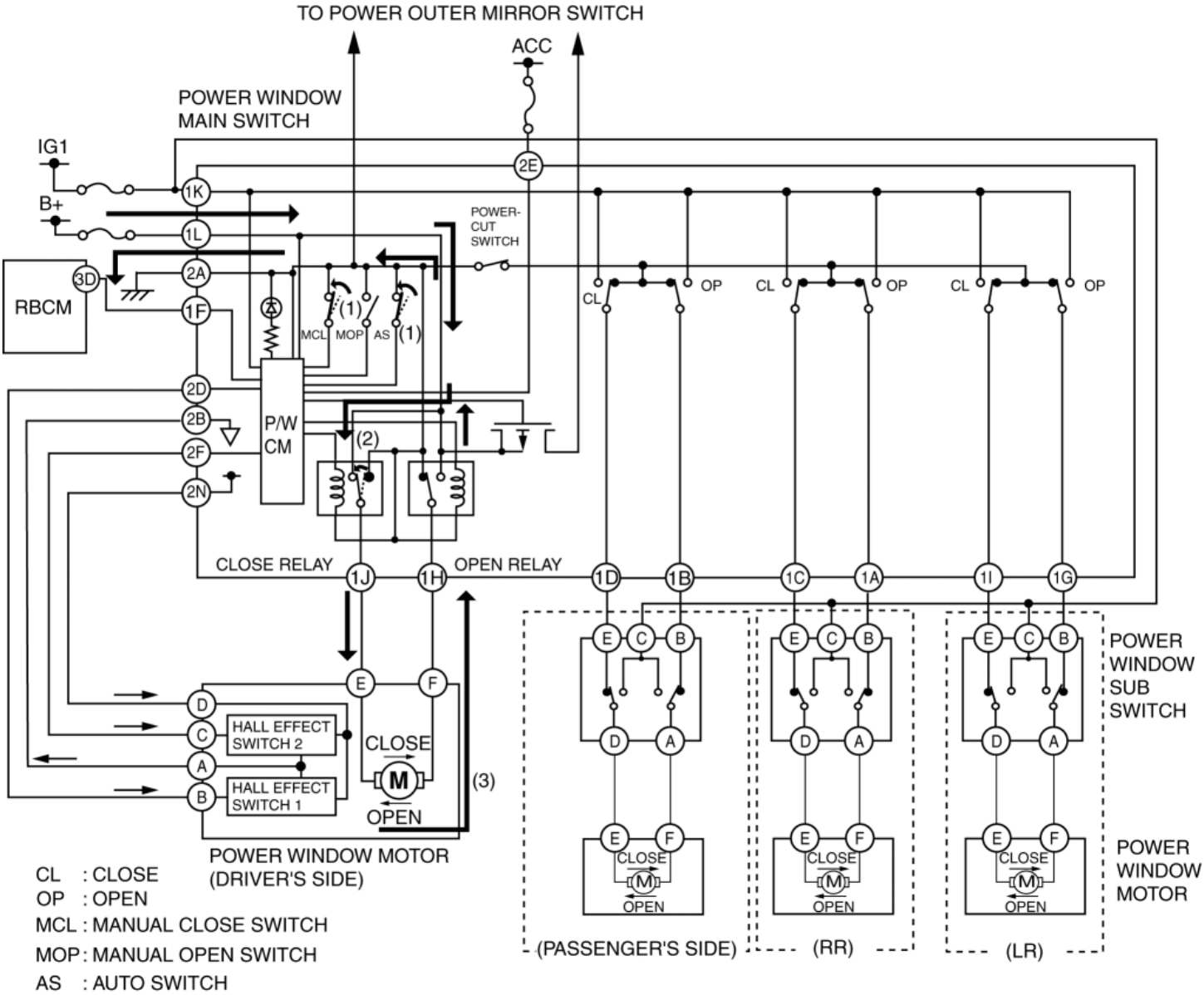

Passenger's side and rear side manual open/close operation (Example: Passenger's side close operation)

1. When the power window subswitch is operated for manual close operation (1), the power window motor (LF) starts manual close operation.(2)

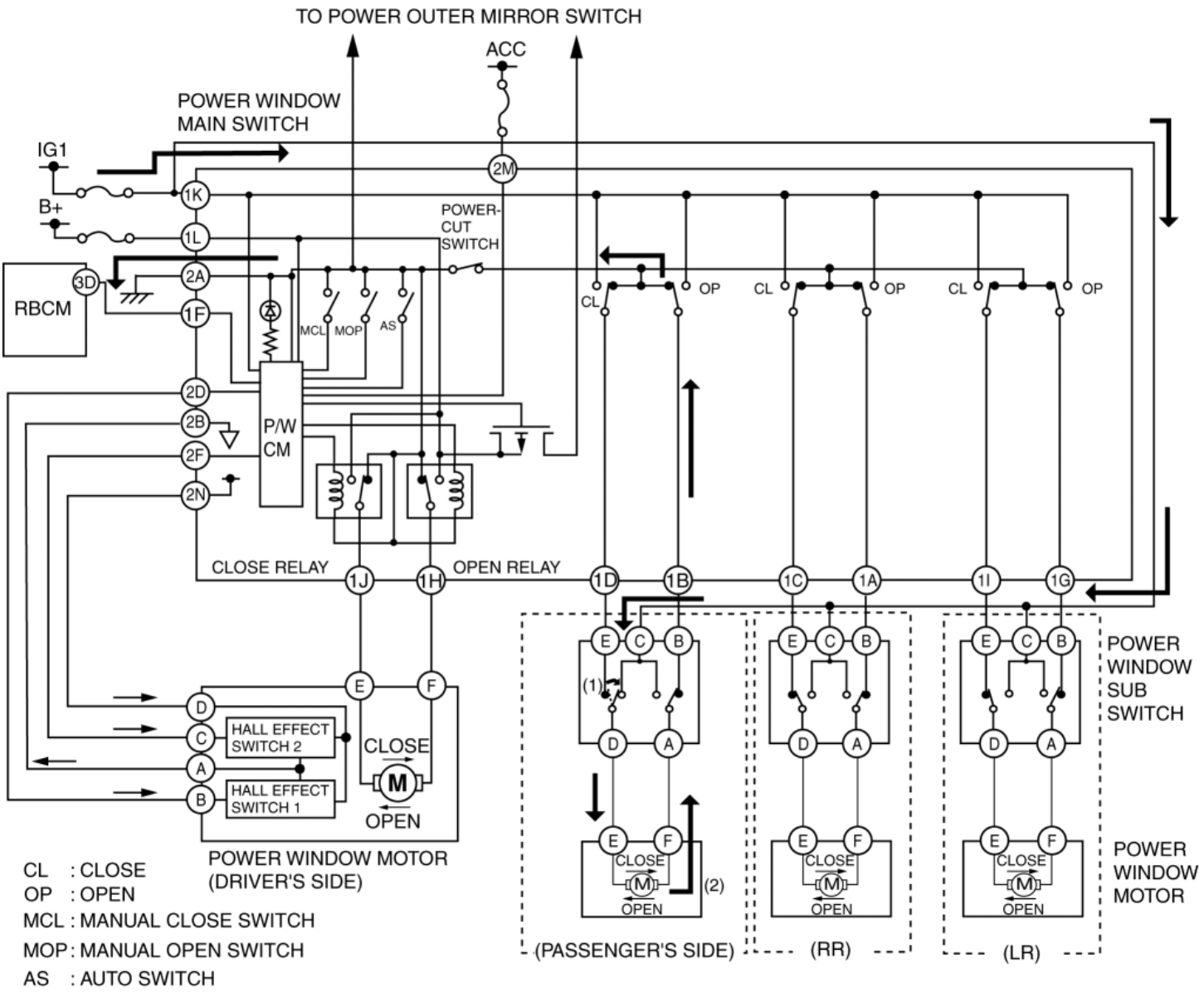

Power window system initial setting

1. The P/W CM records the driver's side door glass position when the switch is pulled and held **approx. 2 s** after the driver's side door glass is fully closed from the fully opened position with the ignition is switched ON (engine off or on).

- Performing the following procedures will reset the initial setting and disables auto operation. Re-perform the initial setting.
    - Negative battery cable is disconnected
    - Power window main switch connector is disconnected
    - Power window system power supply fuse is removed

Auto reverse pinch protection

1. When the P/W CM detects a change in the pulse signal from the power window motor for **0.3 s or more** during the auto close operation, it reverses the power window motor and the door glass opens **approx. 200 mm {7.87 in}** automatically.

IG OFF timer (Example: Manual close operation)

1. When the ignition is switched from ON (engine off or on) to ACC or OFF, the IG OFF timer function of the P/W CM is turned on and the power window main switch can be operated for **approx. 40 s** after IG OFF is detected.

2. When the power window main switch is operated for manual close operation while the IG OFF timer is on, the P/W CM receives a manual close signal.(1)

3. When the P/W CM receives a manual close signal, it turns on the close relay. (2)

4. When the close relay is turned on, the power window motor (RF) starts manual close operation.(3)

5. The P/W CM turns off the IG OFF timer function when **approx. 40 s** has elapsed since IG OFF is detected.

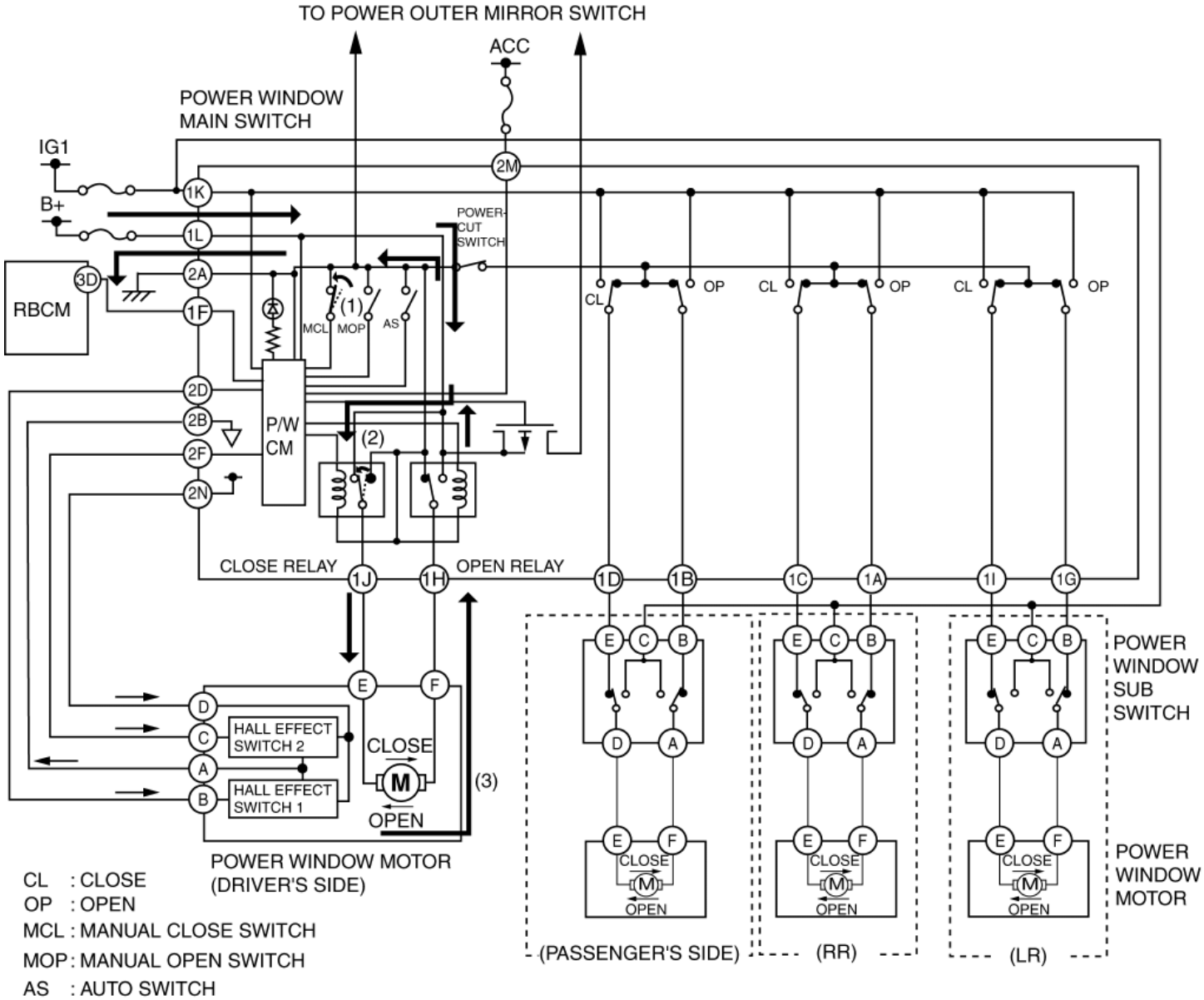

IG OFF timer cancel

1. The P/W CM detects the open/close conditions of all the doors based on the door open/close signal sent from the rear body control module (RBCM).

2. When a door open signal is sent from the rear body control module (RBCM) while the IG OFF timer is on, the IG OFF timer function is canceled.

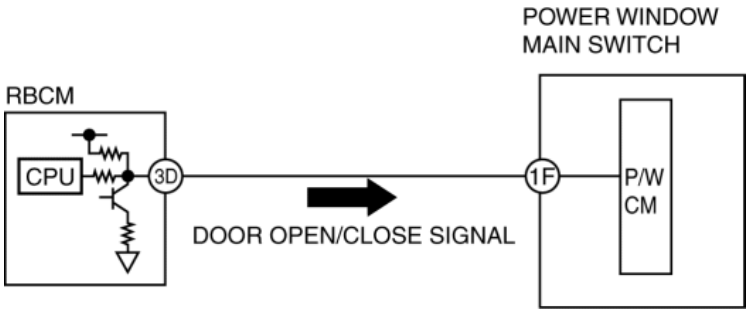

Fail-safe

- When the P/W CM detects an error in the pulse signal (Hall effect switch), it switches the power window system to fail-safe mode to prevent incorrect operation.

Malfunction condition	Ignition is switched ON (engine on or off)	Ignition switched OFF	Recovery condition
P/W CM detected pulse 1 error (for pinching and door glass position detection) stop malfunction • Pulse 2 detected but pulse 1 is not detected during close or open operation	Auto operation is prohibited (Manual operation is enabled) Operation of power window main switch except for the driver's seat is prohibited	Auto and manual operations are prohibited	Pulse signals 1 and 2 detected normally during close operation, and re-detection of fully-closed position return/non-return ranges
P/W CM detected pulse 2 error (for door glass direction detection) stop malfunction • Pulse 1 detected but pulse 2 is not detected during close or open operation			
P/W CM detected pulse signal error (inversion of pulse 1 and pulse 2 input signals or large phase deviation between pulses 1 and 2) • Difference detected between the direction detected by the signals of pulses 1 and 2, and the actual direction during close or open operation			
P/W CM detected pulse 1 error (Non-return range lowering malfunction) • During close operation, a pulse 1 signal from the power window motor is detected more than the number of set times even after the window reaches the fully-closed position recorded by the power window main switch.			
P/W CM detected pulse 1 and 2 stop malfunction • Pulse signals 1 and 2 are not detected for 1 s after the open operation is started from the fully closed position			

2014 - Mazda3 - Body and Accessories

POWER WINDOW MOTOR

Purpose

The power window motor transmits rotation force to the power window regulator to open/close the door glass.

Function

The power window motor rotates clockwise/counterclockwise when it receives an open/close signal from the power window main switch or the power window subswitch.

Construction

- The power window motor consists of the following parts:
  - Motor
  - Connector
  - Gear
- Two Hall effect switches are located in the driver's side connector.
  - The Hall effect switches output pulse to the P/W CM.

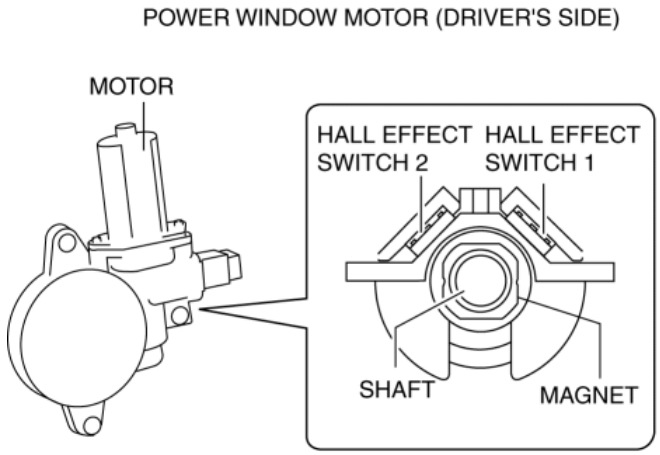

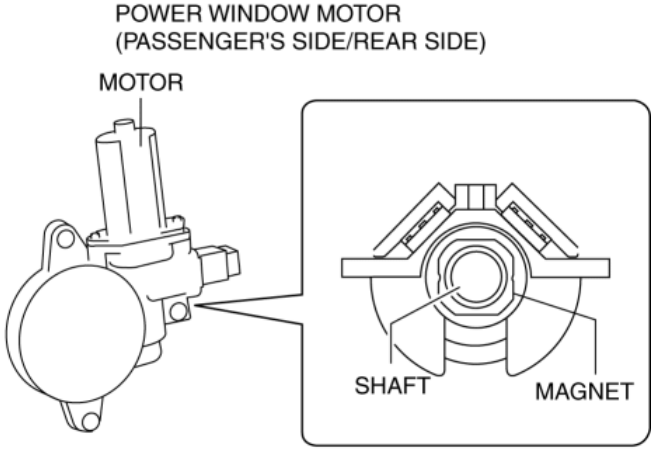

Operation

- The Hall effect switch utilizes magnets set on a rotating axis to detect the motor rotation, and outputs a synchronized pulse to the P/W CM.
- The Hall effect switch 1 outputs one pulse cycle for each rotation of the power window motor axle, and the P/W CM detects motor rotation speed.
- Hall effect switch 2 outputs pulse according to the motor rotation in the same manner as Hall effect switch 1. The high and low pulse points of Hall effect switches 1 and 2 are different during opening and closing because the phase difference shifts by 90°, allowing the power window main switch to detect the rotational direction of the power window motor.

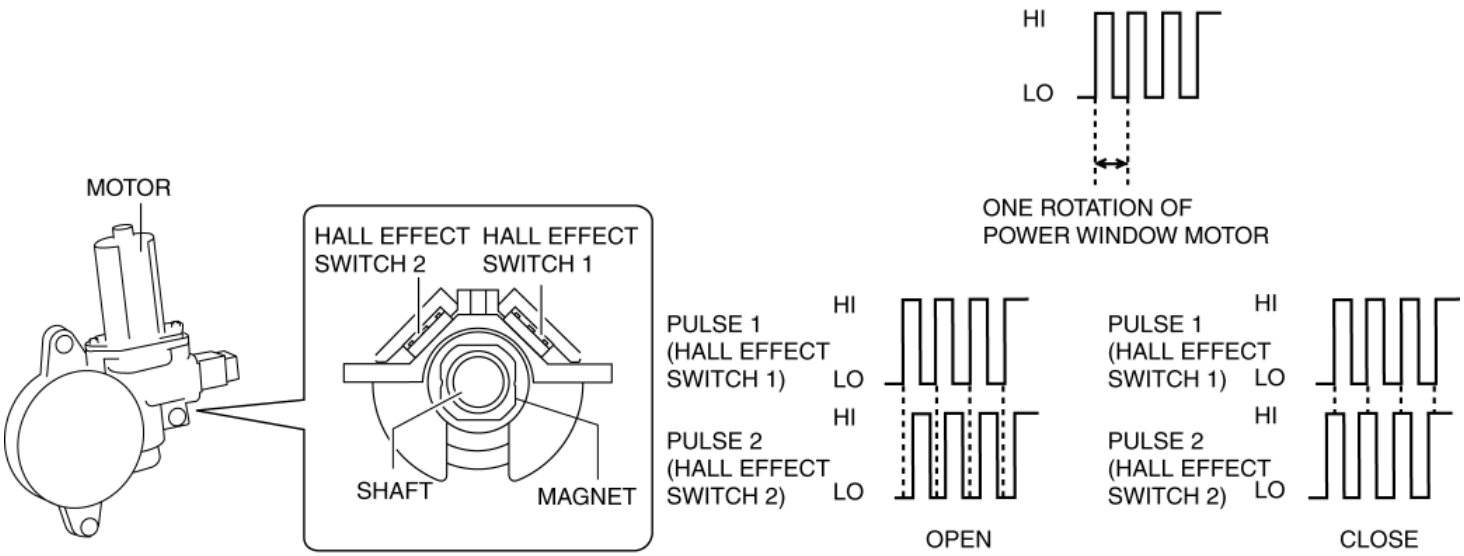

Fail-safe

- Function not equipped.

2014 - Mazda3 - Body and Accessories

POWER WINDOW REGULATOR

Purpose

- The power window regulator moves the carrier plate up and down to open/close the door glass using the rotation force transmitted from the power window motor.

Function

- The power window regulator transmits the rotation force from the power window motor to the inner wire and moves the carrier plate up and down.

Construction

- The power window regulator consists of the following parts:
    - Drum housing
    - Regulator guide
    - Carrier plate
    - Inner wire
- The inner wire is assembled to the inner side of the regulator guide and wrapped to the drum housing.
- The carrier plate is fixed to the inner wire.

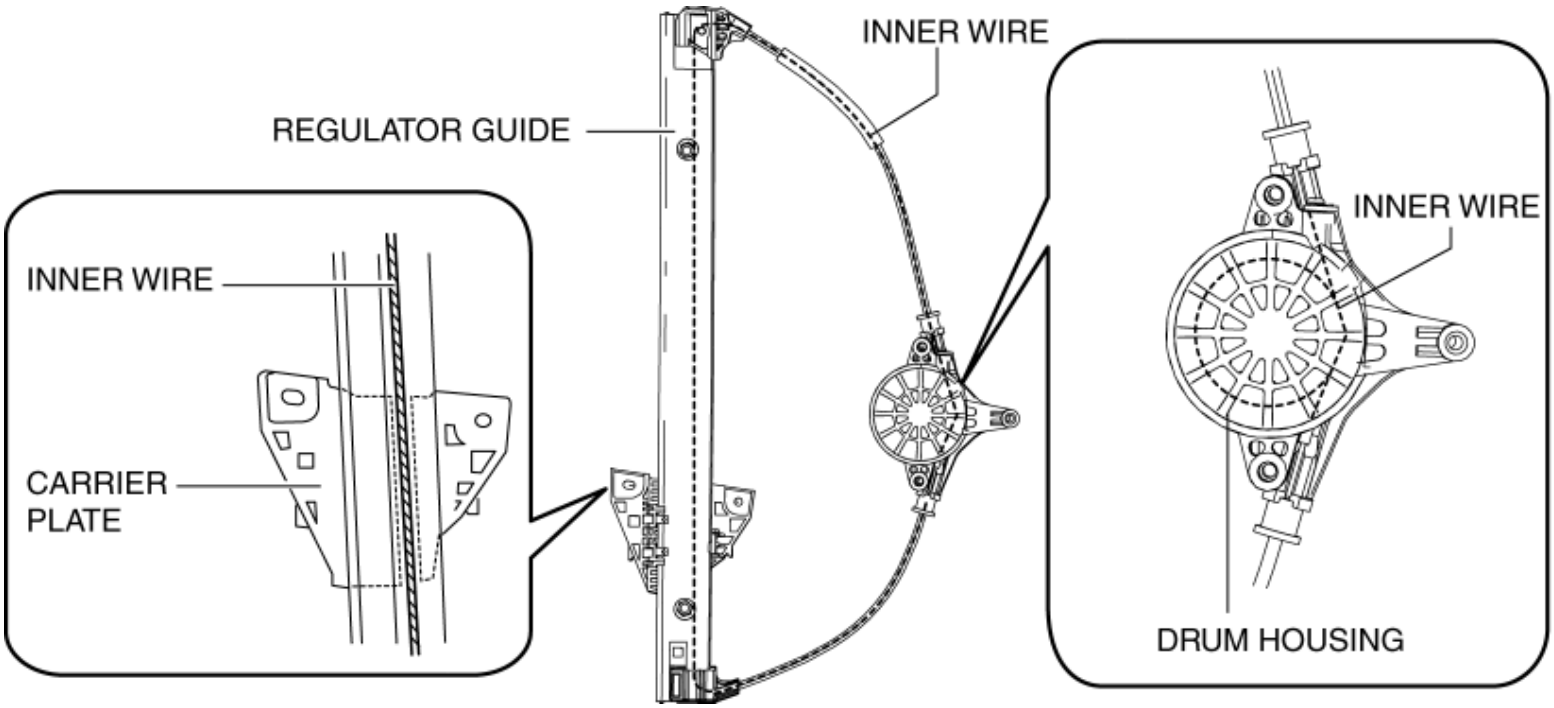

Operation

1. When the drum housing of the power window regulator receives the rotation force from the power window motor, it rotates in the same rotation direction as the power window motor.

2. When the drum housing rotates, the inner wire is pulled in the direction the drum housing rotates.

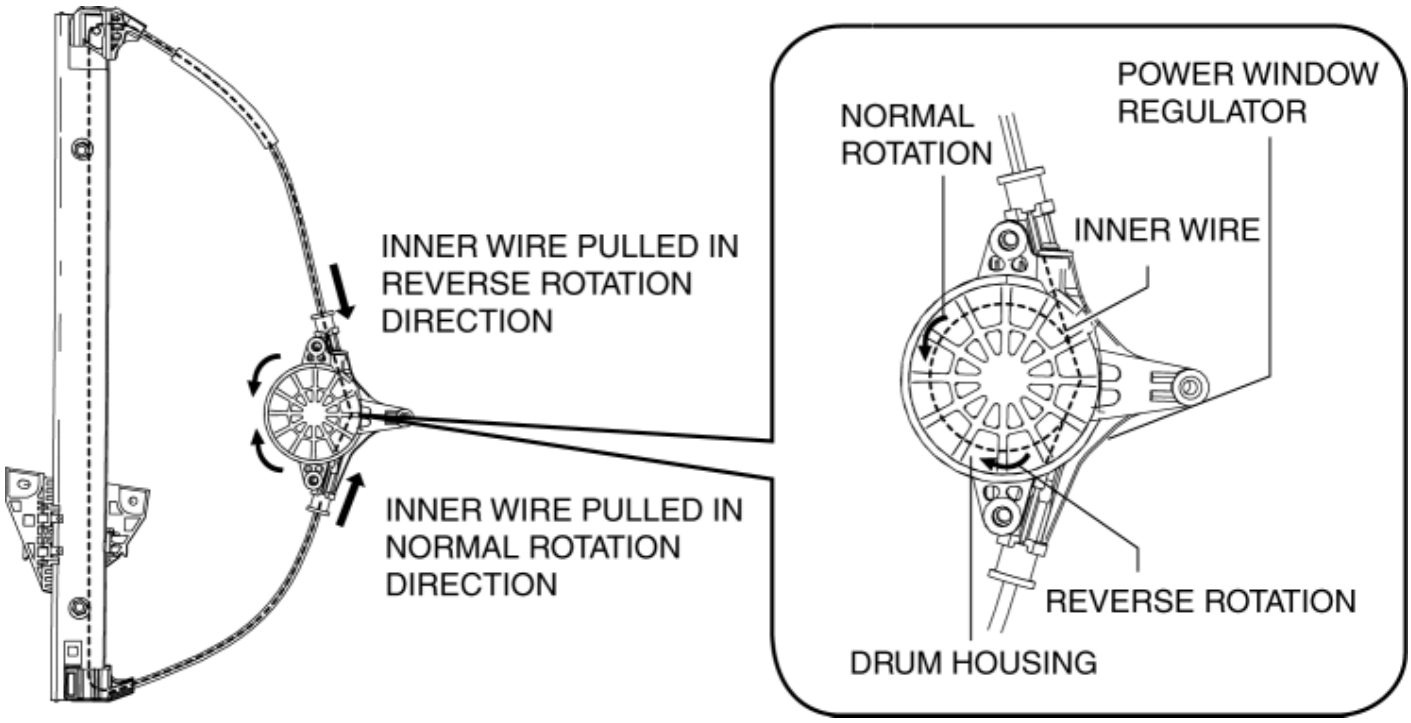

3. The carrier plate moves up and down according to the rotational direction of the inner wire.

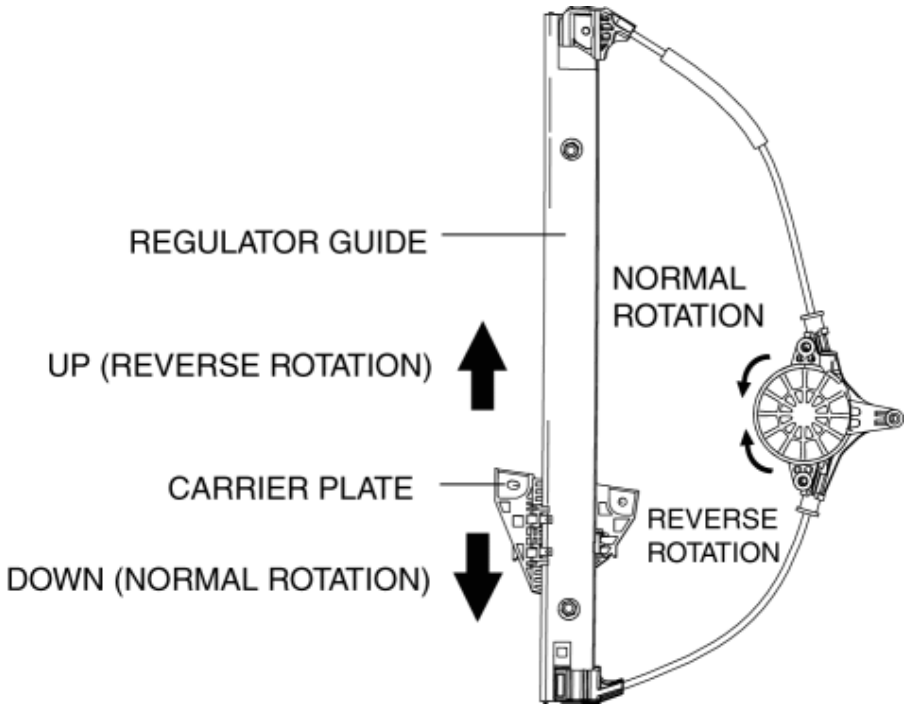

Fail-safe

- Function not equipped.

2014 - Mazda3 - Body and Accessories

POWER WINDOW MAIN SWITCH

Purpose

- Remote control of door glass open/close and power outer mirror adjustment are possible with occupant seated in the drivers seat.

Function

Power window main switch

- Manual
  - When the power window main switch is operated for manual open/close operation, it sends a manual open/close signal to the P/W CM (power window control module).
- Auto
  - When the power window main switch is operated for auto open/close operation, it sends an auto open/close signal to the P/W CM.
- Power cut
  - When the power-cut switch is pressed (contact point: Open), operation of the power window sub-switches for the front and rear passenger seats is disabled.

Power outer mirror switch

- Up-down/left-right adjustment
  - The power outer mirror switch switches the contact point according to the switch operation. As a result, the circuit to the up-down/left-right adjustment motor is switched.
- Left/right selection
  - The power outer mirror switch is used to select the side on which adjustment of the power outer mirror glass is desired.

Construction

- The power window main switch consists of the following parts:
  - Driver's side switch
  - Passenger's side switch
  - Rear side switch (LR)
  - Rear side switch (RR)
  - Power-cut switch
  - Power outer mirror switch
    - Up/down/left/right adjustment
    - Left/right selection
- The power window main switch has a built-in P/W CM, and controls the auto reverse pinch protection, IG OFF timer, and IG OFF timer cancel functions.

POWER WINDOW MAIN SWITCH

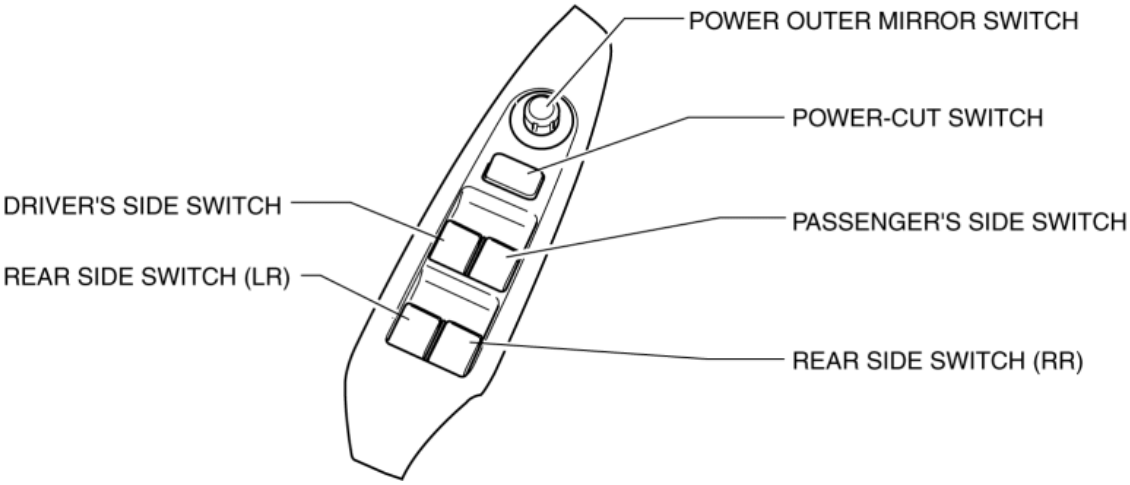

Operation

Power window main switch

1. Contact points for door glass opening/closing can be changed by operating the power window main switch. The P/W CM monitors the operation conditions of the driver's side switch and power window motor.

MANUAL CLOSE (EXAMPLES)

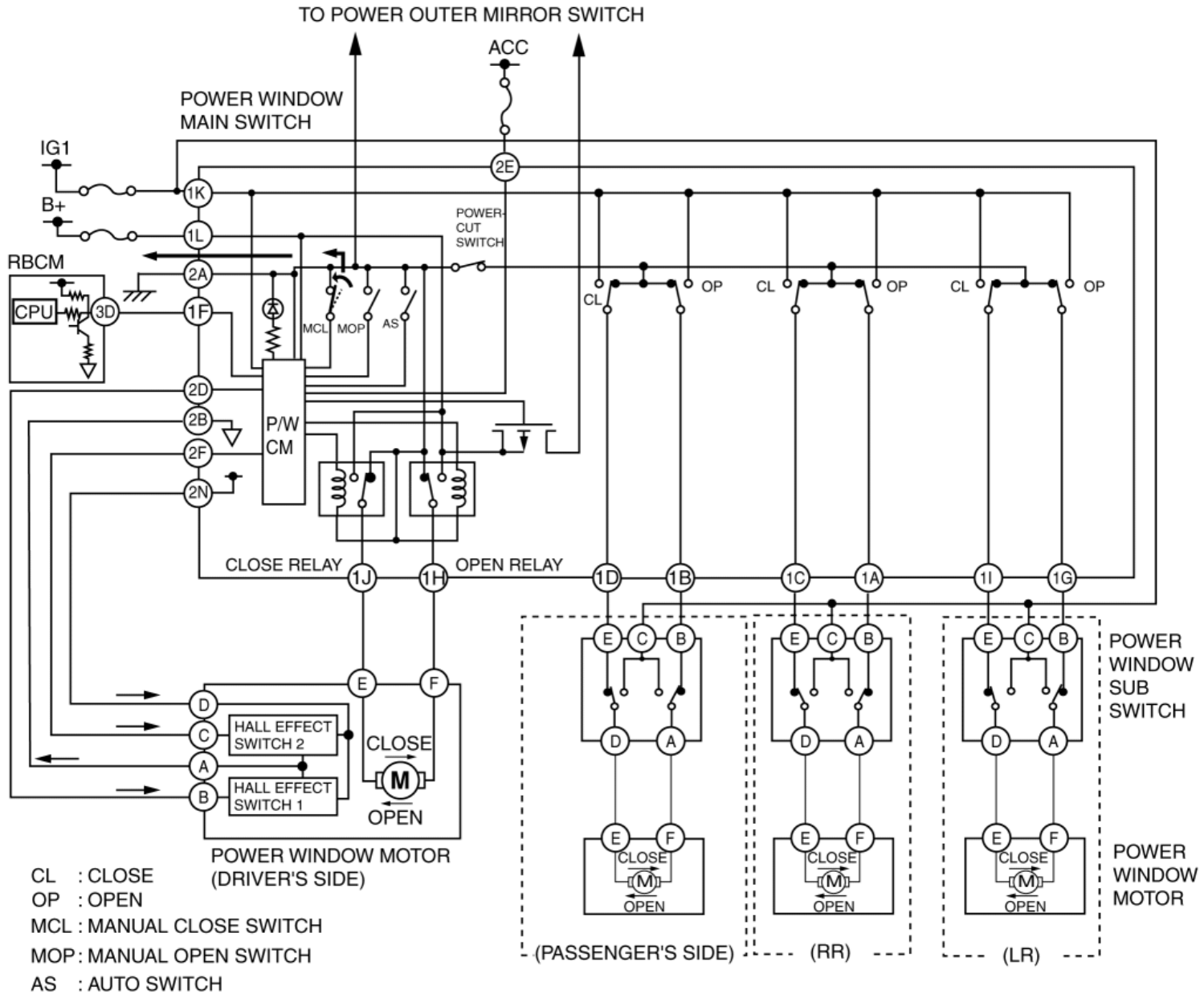

Power-cut switch

1. When the power-cut switch of the power window main switch is pressed (contact point: Open), current from each power window sub-switch is interrupted.

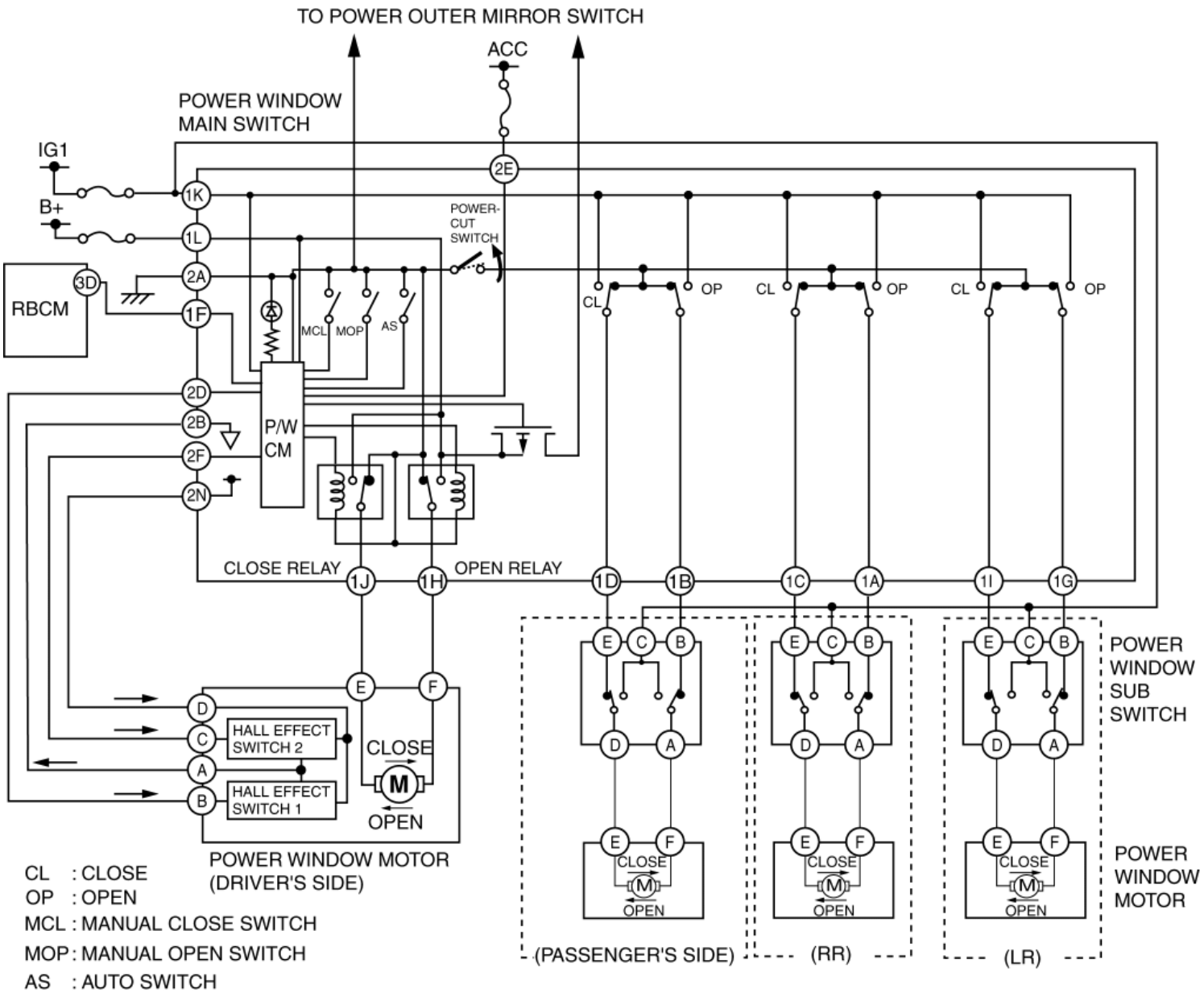

Power outer mirror switch

1. Up/down/left/right contact points for the power outer mirror can be switched by operating the power outer mirror switch.

POWER OUTER MIRROR SWITCH IS PRESSED IN THE UPWARD DIRECTION (EXAMPLE)

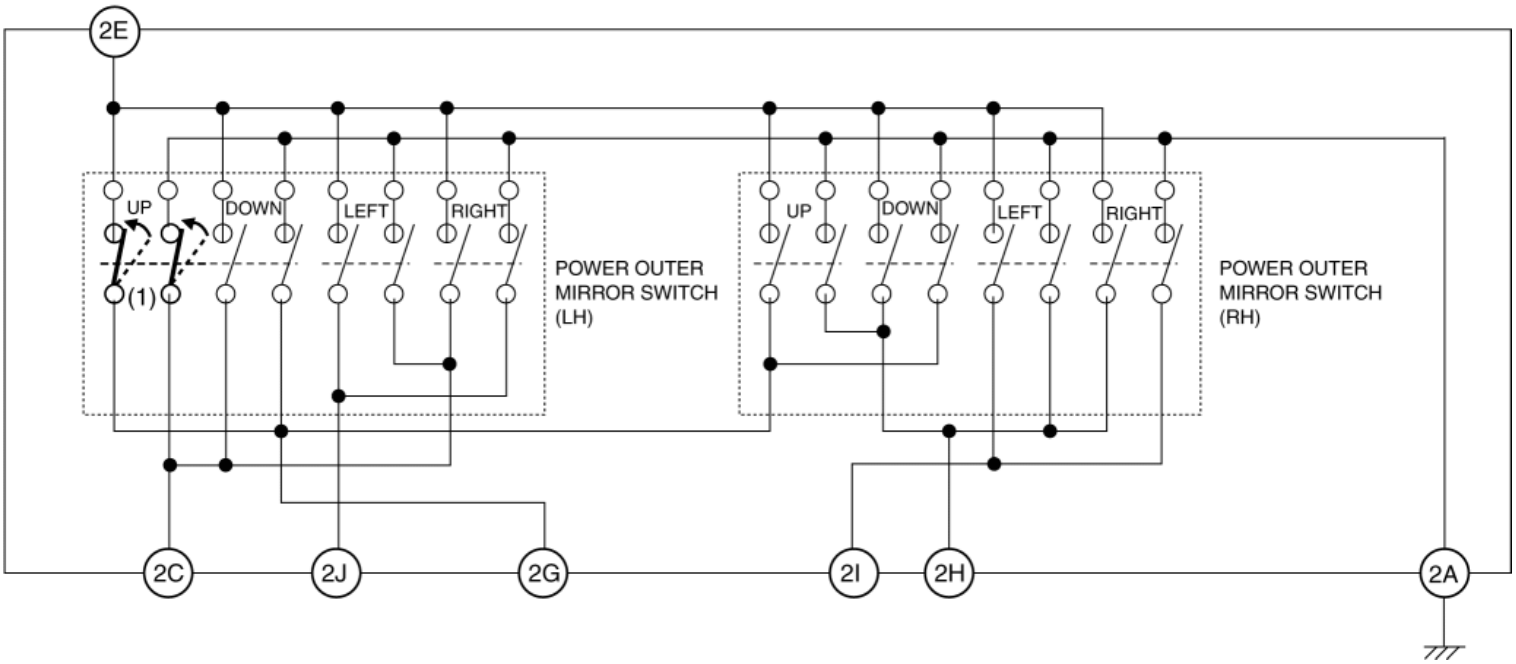

Fail-safe

- Function not equipped.

2014 - Mazda3 - Body and Accessories

POWER WINDOW SUBSWITCH

Purpose

- Each door glass except for the driver-side can be opened/closed with occupant seated in the cabin using the power window subswitch.

Function

Manual switch

- The power window subswitch switches the contact point according to the switch operation and switches the circuit to the power window motor.

Construction

- The power window subswitch is equipped on the front passenger side and the rear passenger sides.

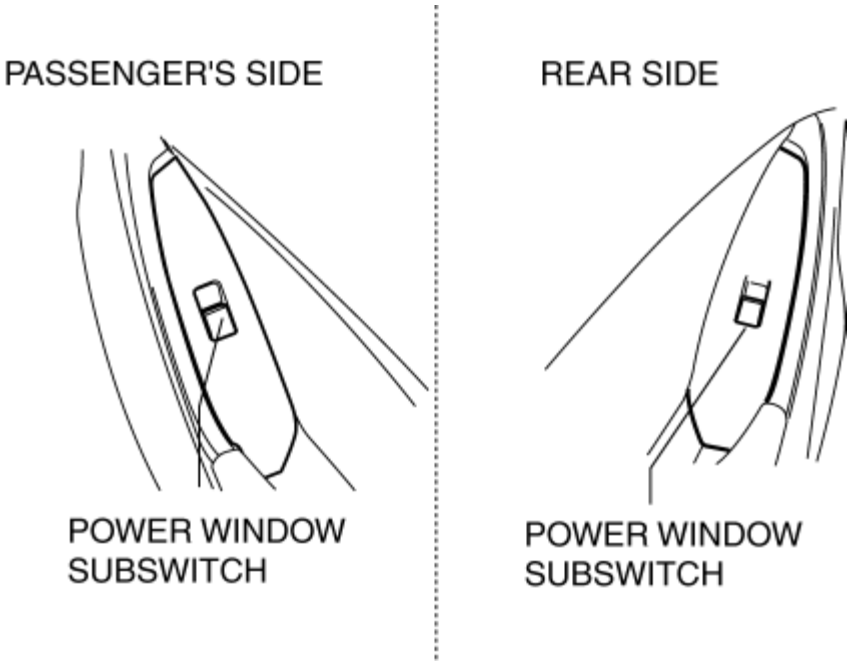

Operation

Manual operation (Example: close operation)

1. When the power window subswitch is turned to the manual close position (1), a manual close signal is sent to the power window motor.(2)

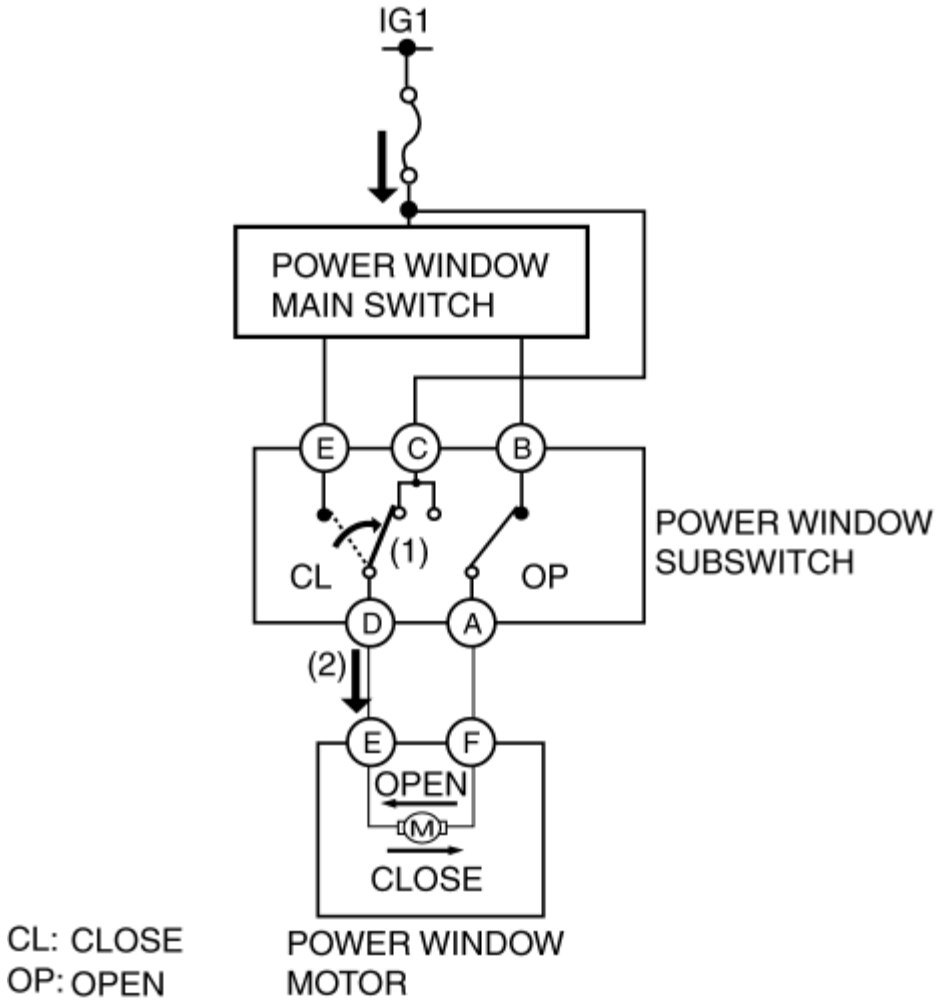

Fail-safe

- Function not equipped.

2014 - Mazda3 - Body and Accessories

POWER OUTER MIRROR SYSTEM

Outline

- Power outer mirrors which can be operated remotely have been adopted.

Structural View

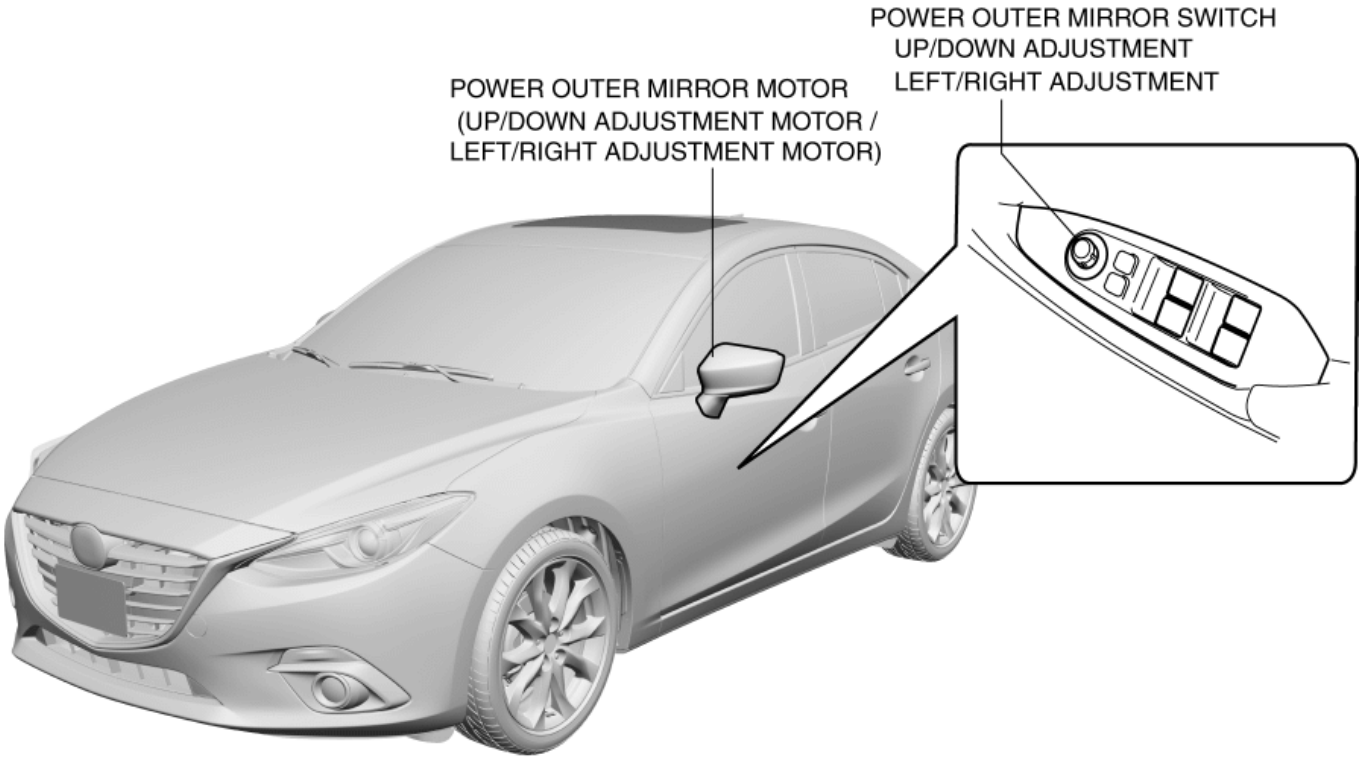

System Wiring Diagram

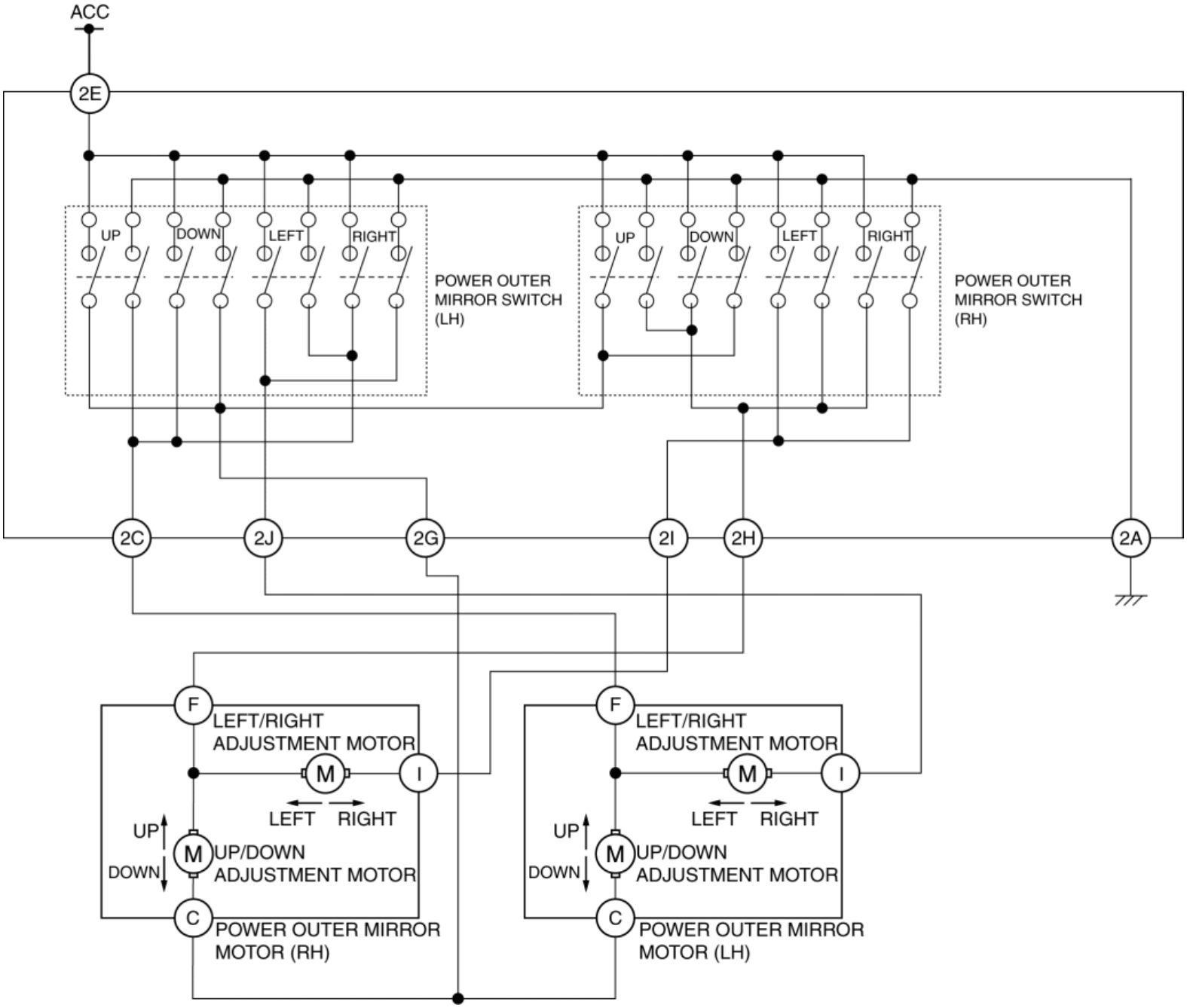

Function

Mirror glass adjustment function

- Outer mirror glass can be adjusted up/down and left/right electrically.

Operation

Mirror glass adjustment (Example: Left outer mirror is adjusted upward)

1. When the upward switch is turned on (1), the up/down adjustment motor operates upward.(2)

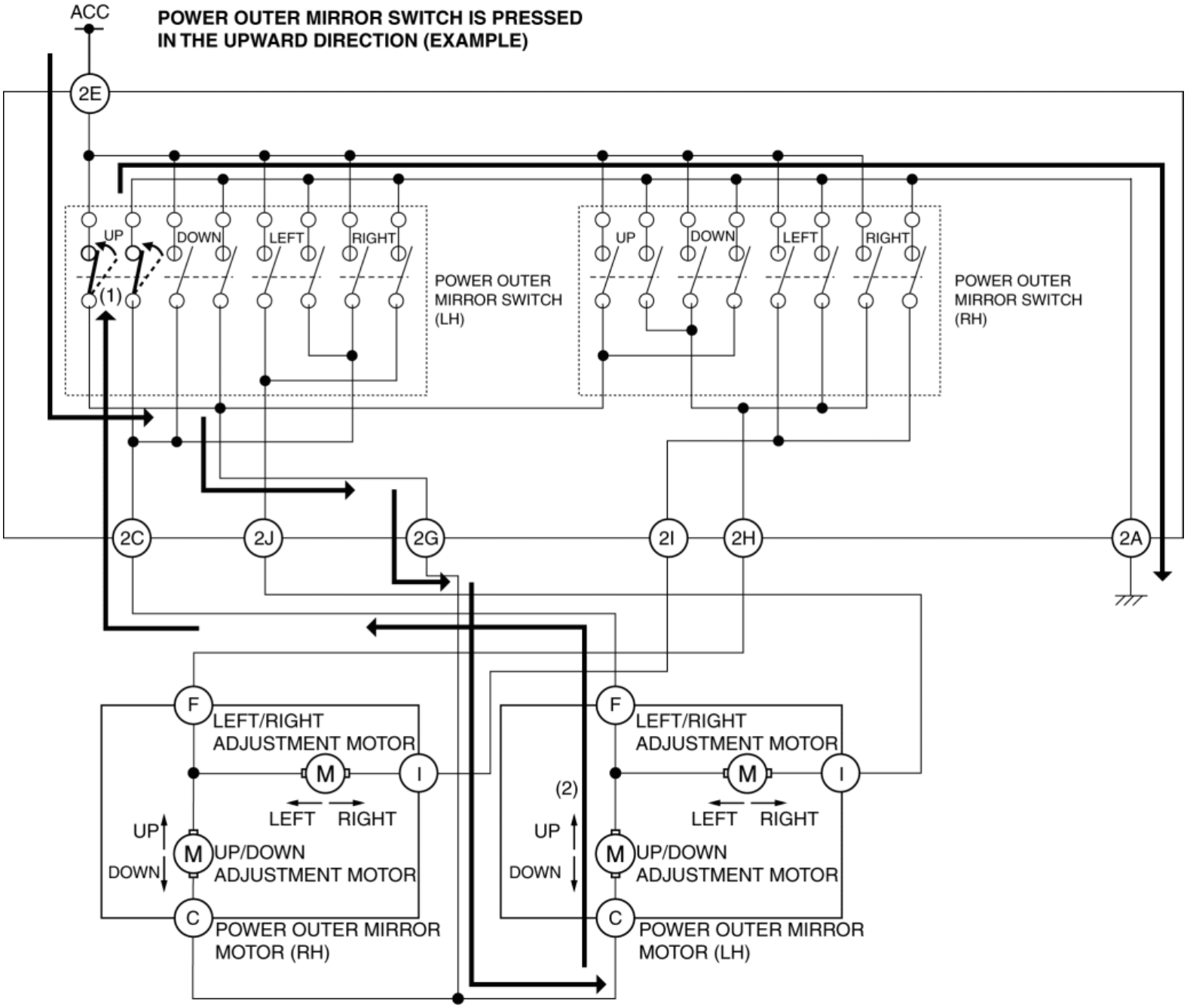

Fail-safe

- Function not equipped.

2014 - Mazda3 - Body and Accessories

POWER OUTER MIRROR

Outline

- The power outer mirror adjusts the outer mirror glass position up/down and left/right using the up/down adjustment motor and, left/right adjustment motor.
- The up/down adjustment motor and, left/right adjustment motor turns clockwise (down/right direction) or counterclockwise (up/left direction).

Function

Up/down adjustment

- When the up/down adjustment motor operates, the power outer mirror operates in the up/down directions.

Left/right adjustment

- When the left/right adjustment motor operates, the power outer mirror operates in the left/right directions.

Construction

- The up/down adjustment motor and left/right adjustment motor are equipped in the power outer mirror.

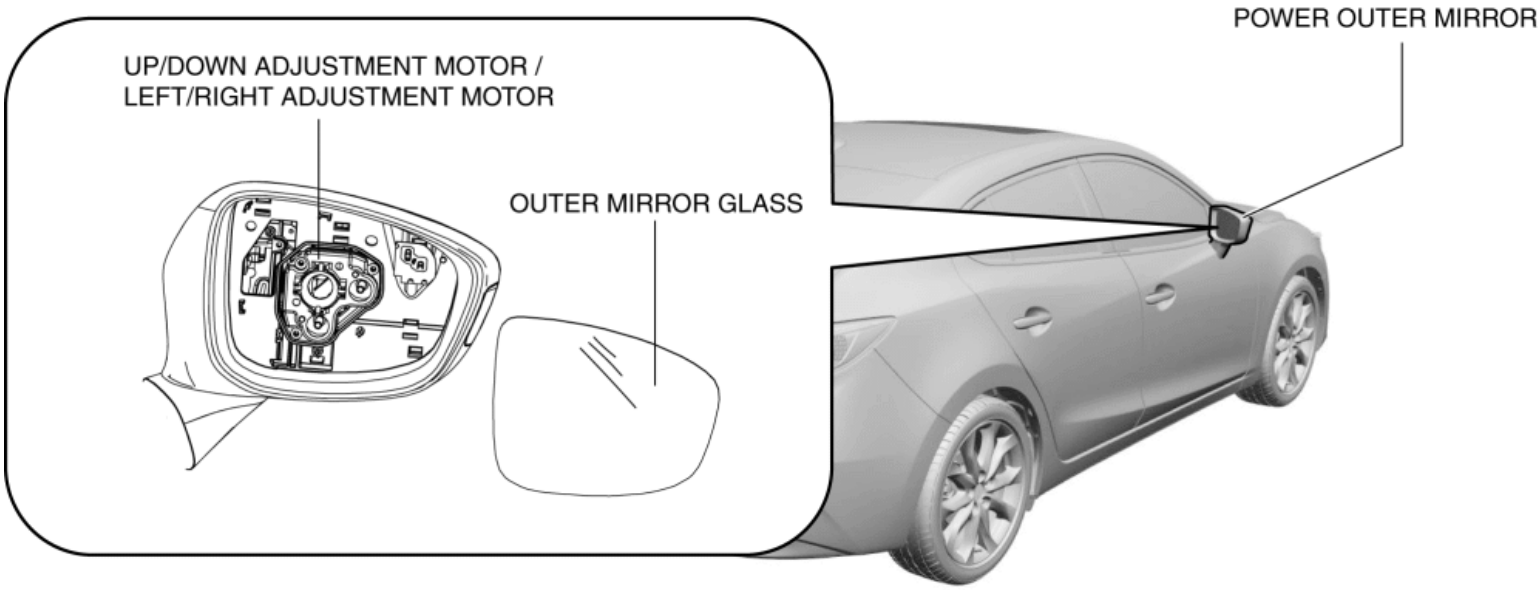

Operation

Up/down adjustment motor (Example: power outer mirror is operated upward)

1. The up/down adjustment motor receives an up signal from the power outer mirror switch, and when the up switch is turned

on, it rotates counterclockwise.

Left/right adjustment motor (Example: power outer mirror is operated in left direction)

1. The left/right adjustment motor receives a left signal from the power outer mirror switch, and when the left switch is turned on, it rotates counterclockwise.

Fail-safe

- Function not equipped.

2014 - Mazda3 - Body and Accessories

AUTO-DIMMING MIRROR

Purpose

- The automatic glare prevention rearview mirror prevents the driver from being dazzled by light from vehicles at the rear.

Structural View

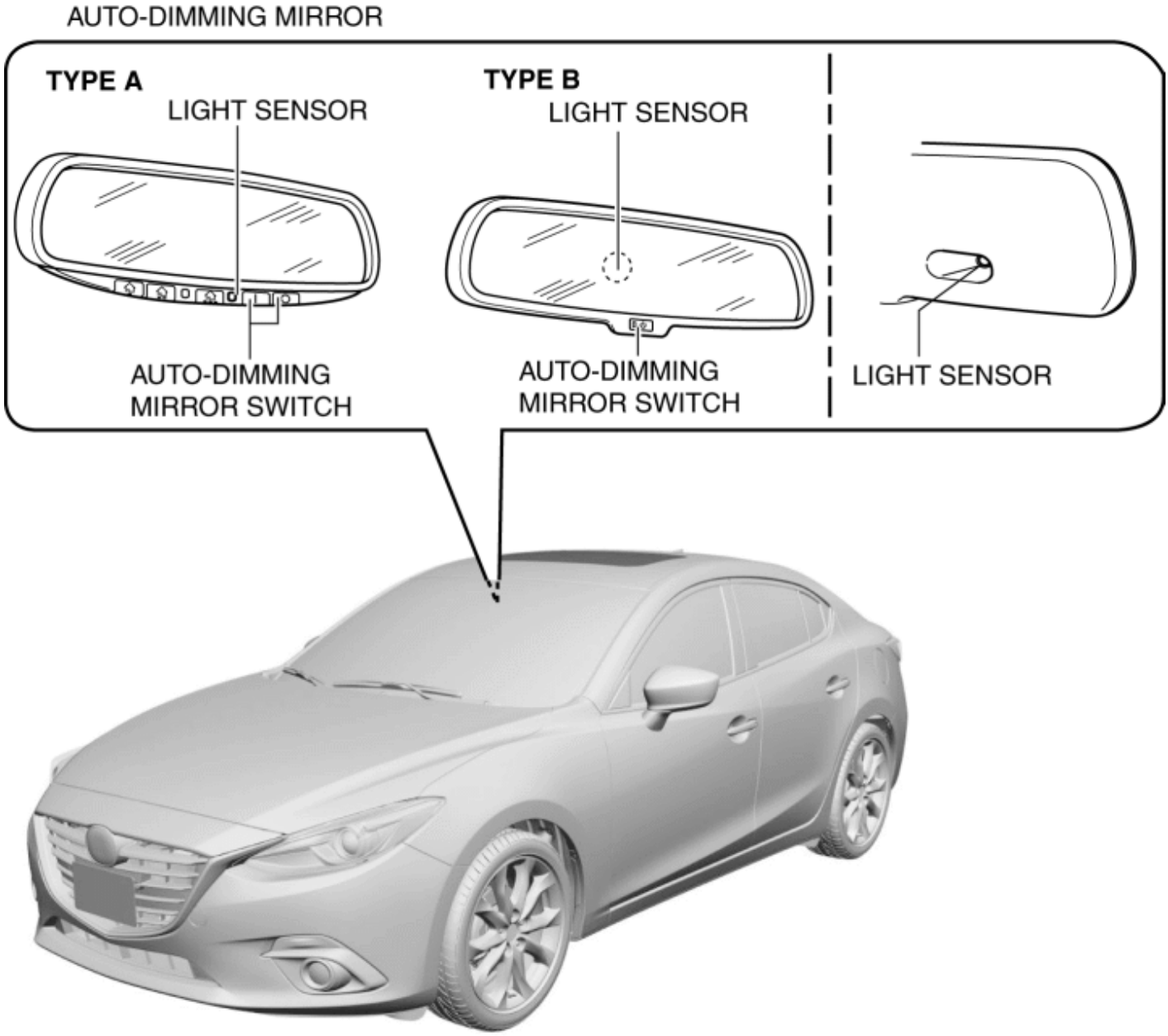

System Wiring Diagram

TYPE A

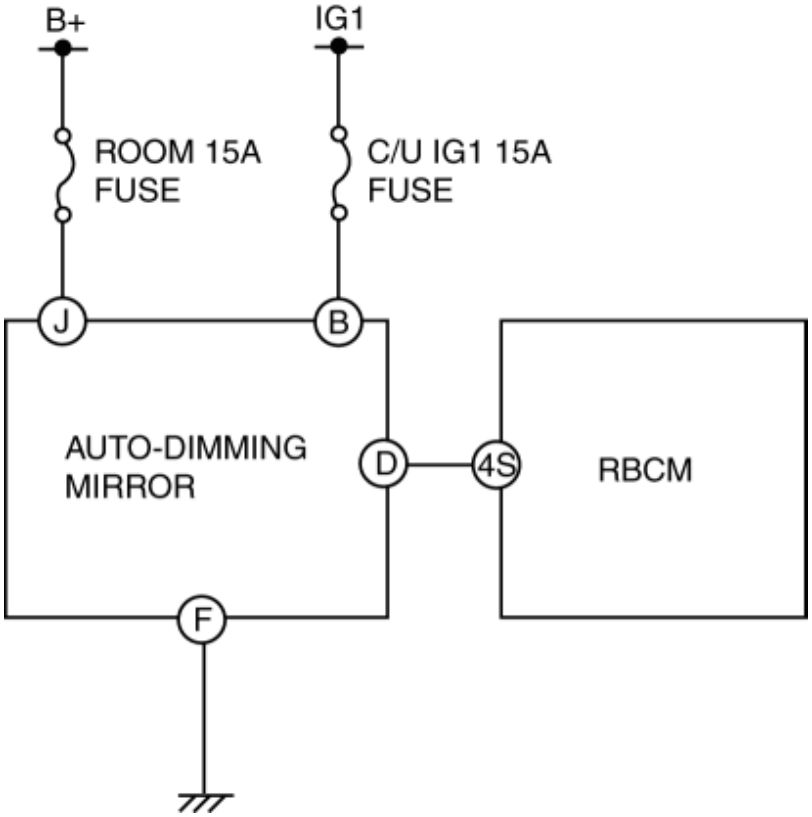

TYPE B

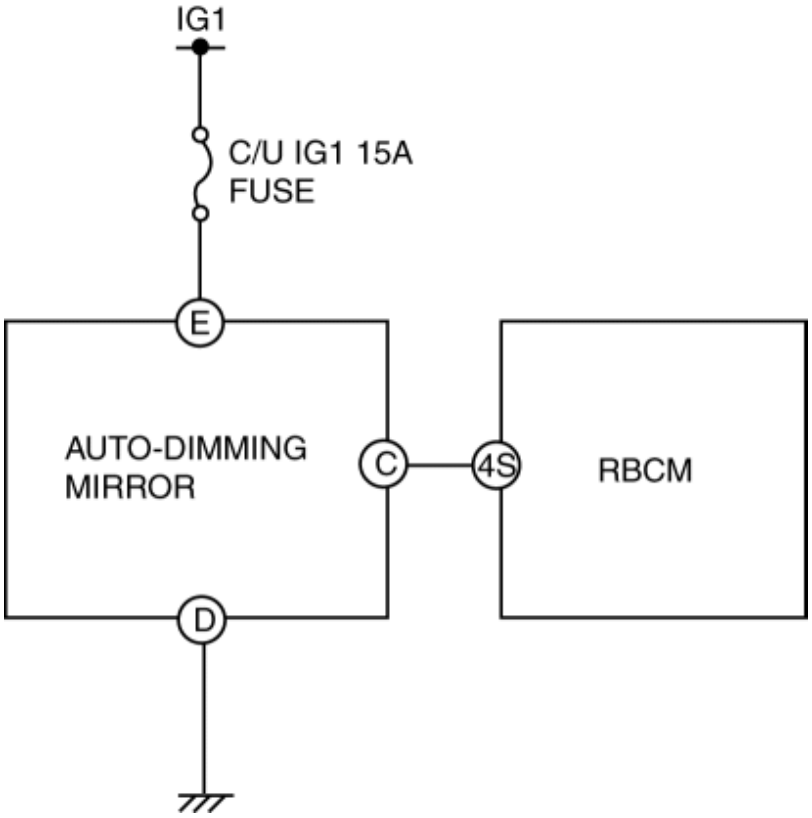

Function

- The automatic glare prevention rearview mirror detects the level of the surrounding light and glare from vehicles at the rear using the light sensor.

- The automatic glare prevention rearview mirror combines the level of the surrounding light and the glare from vehicles at the rear and changes the reflection rate of the mirror between 10% and 70%.
- When the automatic glare prevention rearview mirror receives a reverse signal from the rear body control module (RBCM), the reflection rate of the mirror is fixed at 70% or more.

Operation

- When the automatic glare prevention rearview mirror switch is turned on, the mirror switches to automatic glare prevention mode.
- While in automatic glare prevention mode, the light sensor detects the level of surrounding light and the glare from vehicles at the rear. (1)
- The automatic glare prevention rearview mirror changes the voltage applied to the mirror according to the level of the surrounding light and the glare from vehicles at the rear. (2)
- The mirror changes the reflection rate between 10% and 70% according to the voltage that is applied.
- However, if it receives a reverse signal from the rear body control module (RBCM) (3), the reflection rate of the mirror is fixed at 70% or more.

TYPE A

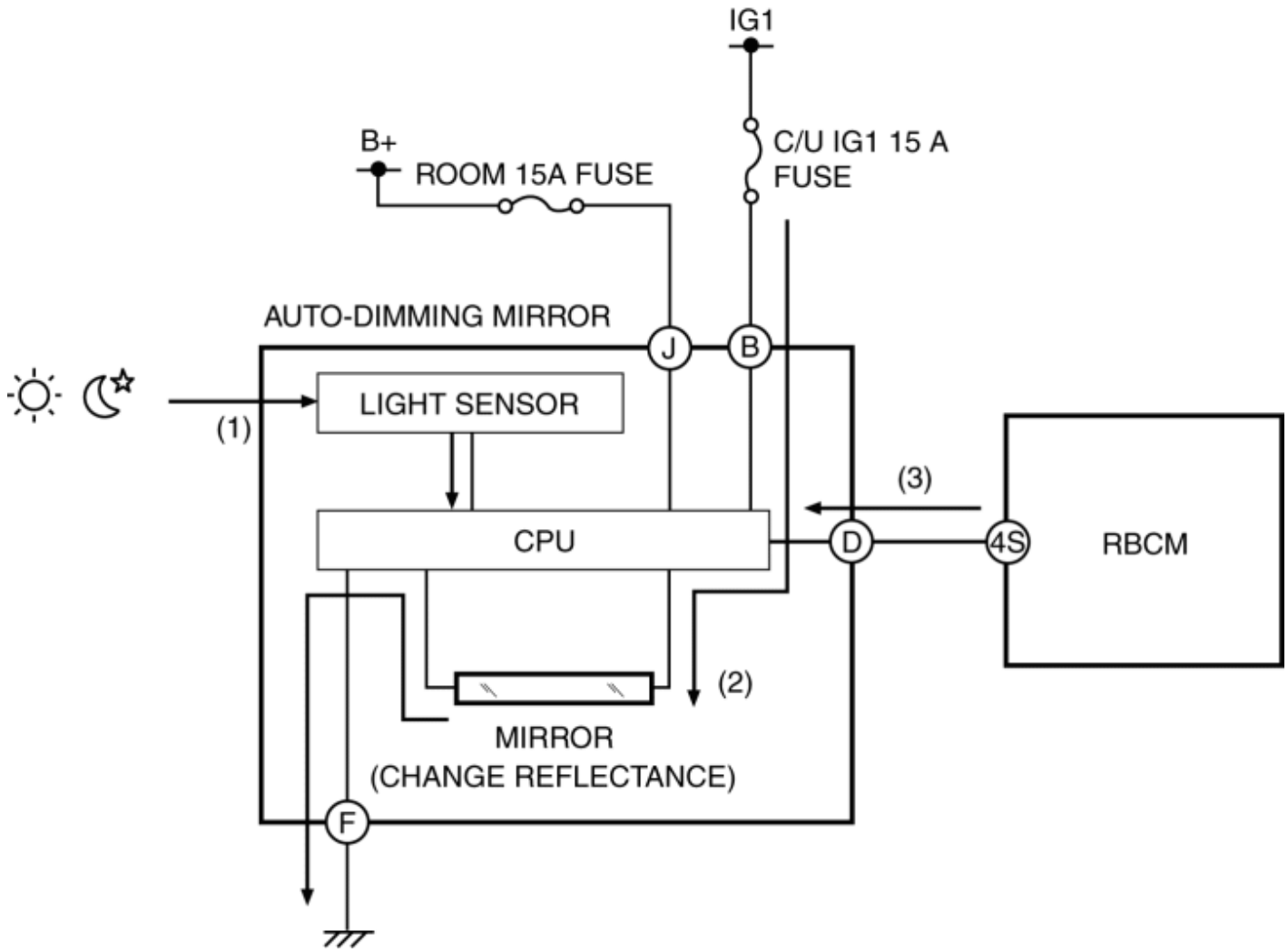

TYPE B

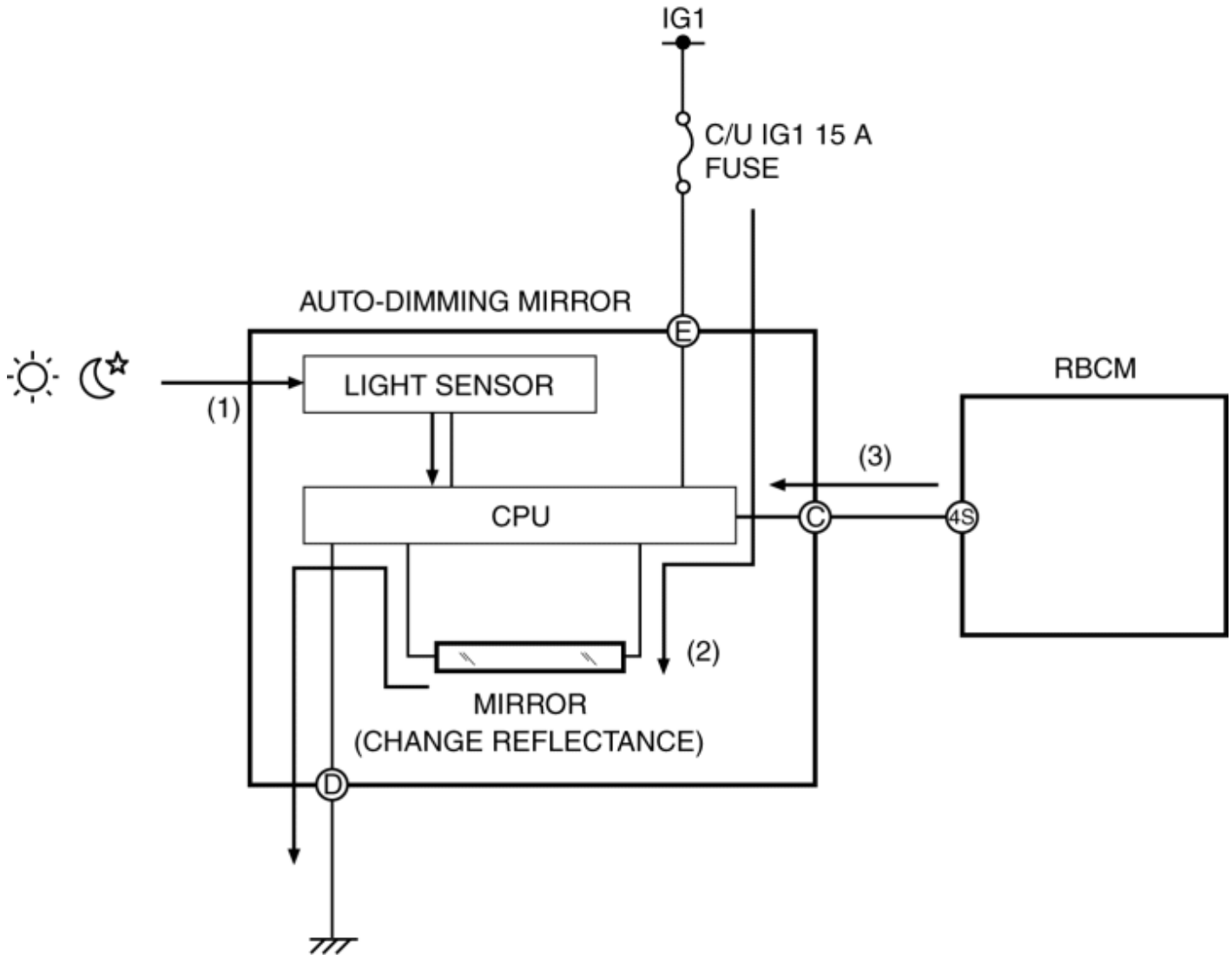

Fail-safe

- Function not equipped.

2014 - Mazda3 - Body and Accessories

SEAT

Outline

Front seat

- The following systems have been adopted for the front seats. (See **FRONT SEAT**.)
  - Power seat system (with power seat system) (See **POWER SEAT SYSTEM**.)
  - Seat warmer system (with seat warmer system) (See **SEAT WARMER SYSTEM**.)
  - Air bag system (side air bag module) (See **SIDE AIR BAG MODULE [STANDARD DEPLOYMENT CONTROL SYSTEM]**.) (See **SIDE AIR BAG MODULE [TWO-STEP DEPLOYMENT CONTROL SYSTEM]**.)

Rear seat

- The following 2 types of rear seat backs have been adopted. (See **REAR SEAT**.)
  - 6:4 split type
  - Single type
- A center armrest has been adopted on the 6:4 split-type rear seat.
- The following two types of child restraint seat anchors have been adopted which enable securing of ISOFIX-applicable child restraint seats on the rear seat.
  - Top tether anchor
  - ISOFIX anchor

Structural view

Front seat

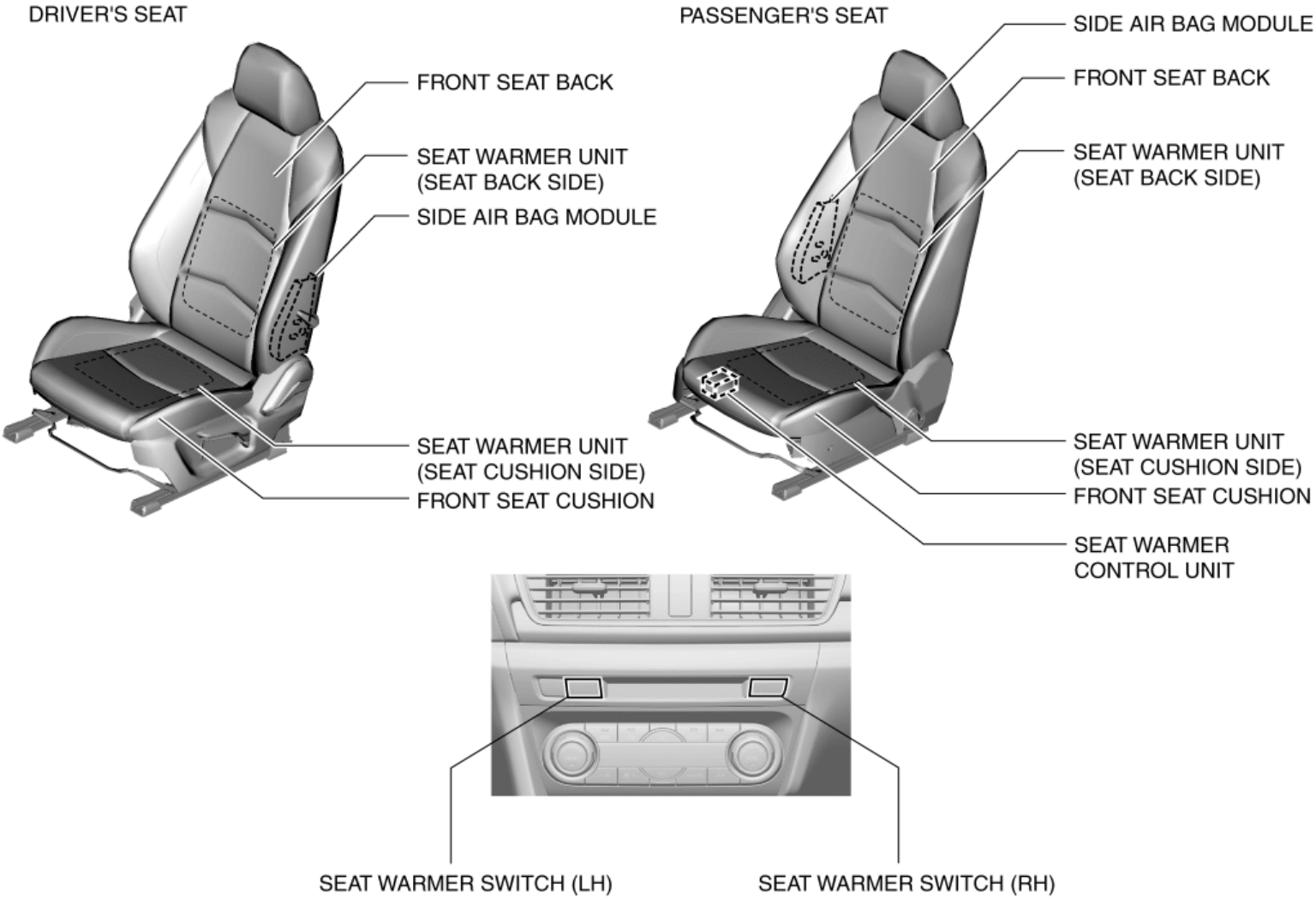
DRIVER'S SEAT
FRONT SEAT BACK
SEAT WARMER UNIT
(SEAT BACK SIDE)
SIDE AIR BAG MODULE
SEAT WARMER UNIT
(SEAT CUSHION SIDE)
FRONT SEAT CUSHION
PASSENGER'S SEAT
SIDE AIR BAG MODULE
FRONT SEAT BACK
SEAT WARMER UNIT
(SEAT BACK SIDE)
SEAT WARMER UNIT
(SEAT CUSHION SIDE)
FRONT SEAT CUSHION
SEAT WARMER
CONTROL UNIT
SEAT WARMER SWITCH (LH)
SEAT WARMER SWITCH (RH)

Rear seat

4SD

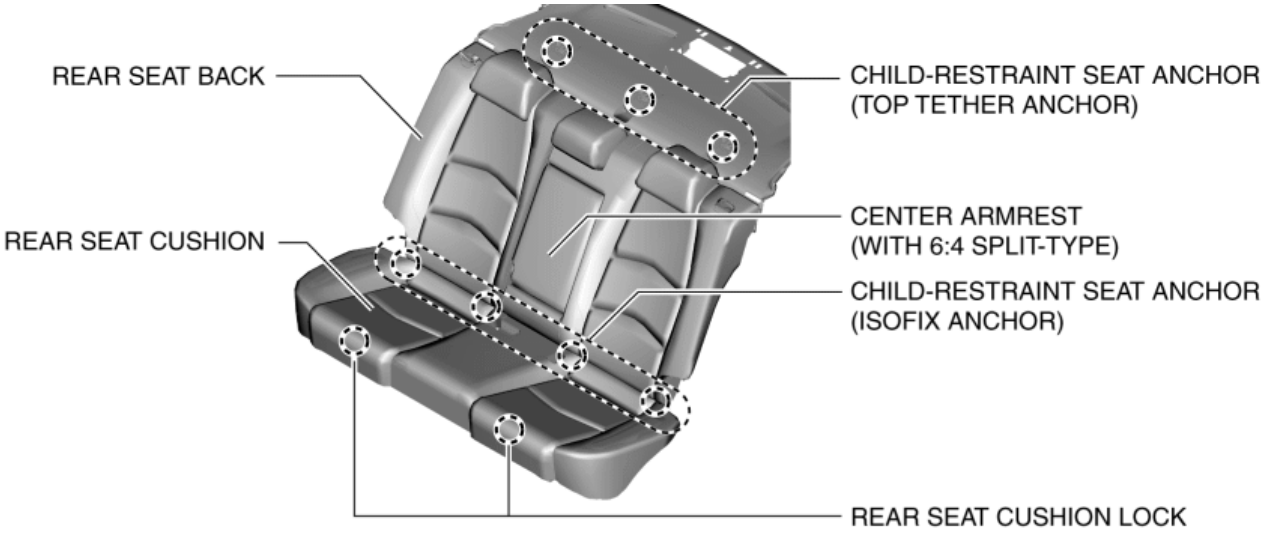
REAR SEAT BACK
REAR SEAT CUSHION
CHILD-RESTRAINT SEAT ANCHOR
(TOP TETHER ANCHOR)
CENTER ARMREST
(WITH 6:4 SPLIT-TYPE)
CHILD-RESTRAINT SEAT ANCHOR
(ISOFIX ANCHOR)
REAR SEAT CUSHION LOCK

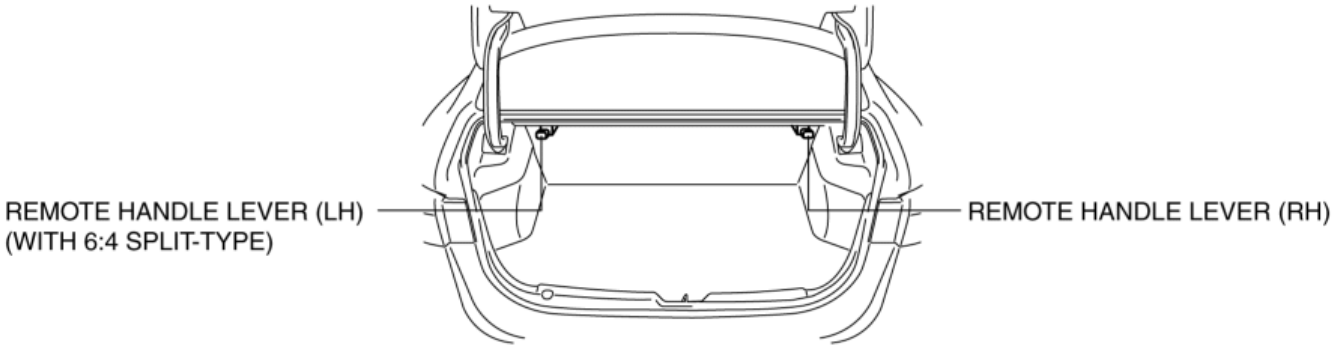
REMOTE HANDLE LEVER (LH)
(WITH 6:4 SPLIT-TYPE)
REMOTE HANDLE LEVER (RH)

5HB

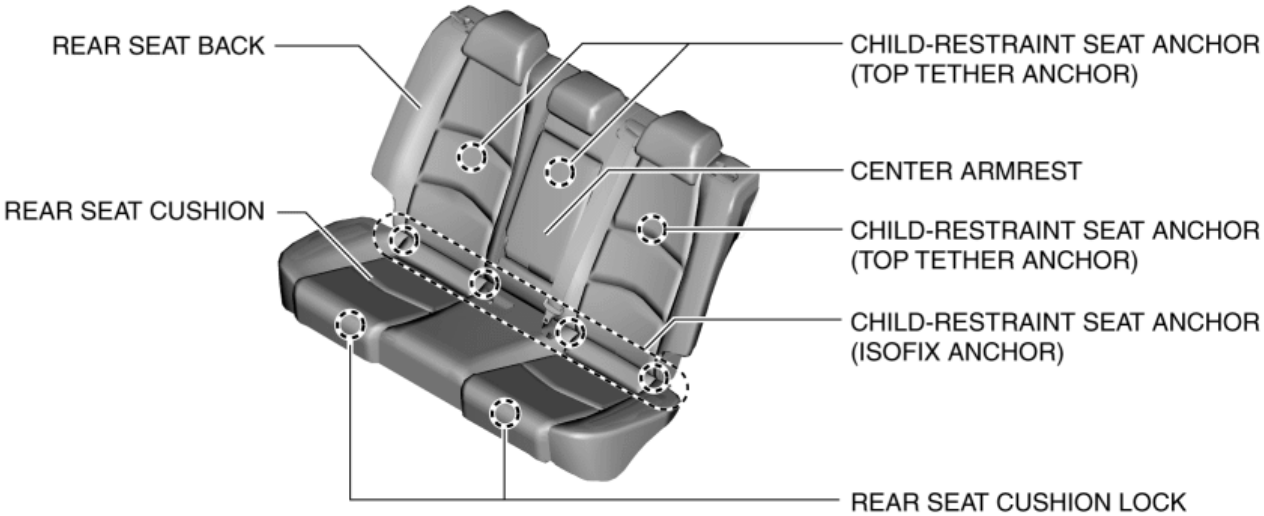
REAR SEAT BACK
REAR SEAT CUSHION
CHILD-RESTRAINT SEAT ANCHOR
(TOP TETHER ANCHOR)
CENTER ARMREST
CHILD-RESTRAINT SEAT ANCHOR
(TOP TETHER ANCHOR)
CHILD-RESTRAINT SEAT ANCHOR
(ISOFIX ANCHOR)
REAR SEAT CUSHION LOCK

2014 - Mazda3 - Body and Accessories

FRONT SEAT

Purpose, Function

- The front seats are structured to reduce impact force applied to the head of the occupant in a vehicle collision.
- 6-WAY power seats have been adopted on the driver's seat. (With power seat system) (See **POWER SEAT SYSTEM**.)
- A seat warmer system has been adopted on the front seat backs and front seat cushion. (With seat warmer system) (See **SEAT WARMER SYSTEM**.)

Construction, Operation

- The front seats reduce the impact force applied to the head of the occupant in a vehicle collision by:
    - Improving the rigidity of the pole guides.
    - Setting the head restraints so that they tilt forward.
- The front seat adjuster unit has improved rigidity by:
    - Locating the front seat recliner mechanism to the area around the connection part on both sides of the front seat back.
    - The front seat cushion.
- As a result, the backward lean of the front seat back when the occupant's body is pushed backward in a vehicle collision is controlled.

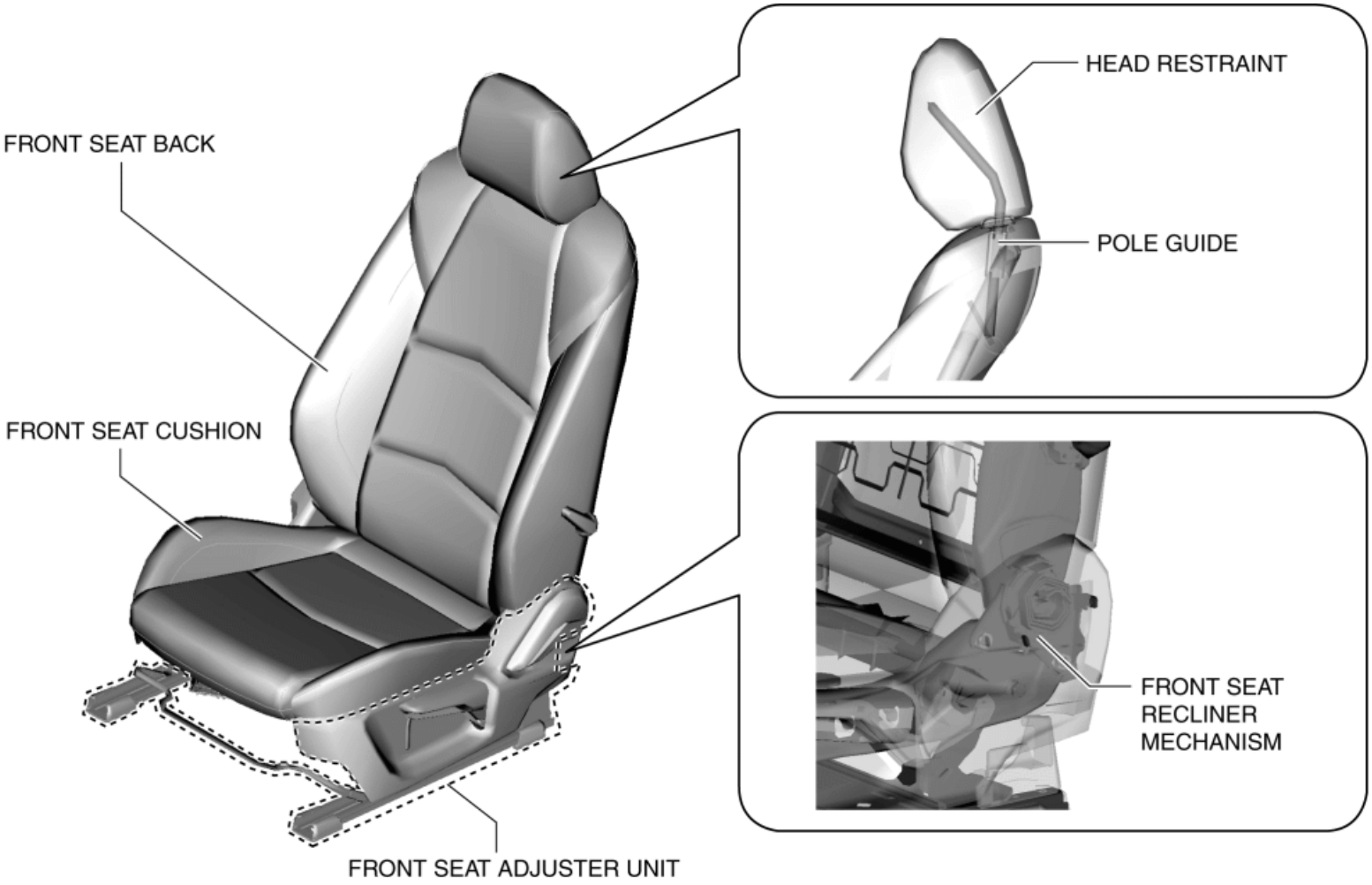

- Suspension mats built into the front seat backs support the occupant's back over a wide area.
- The suspension mat can be moved forward and rearward in conjunction with the lumbar support lever operation.

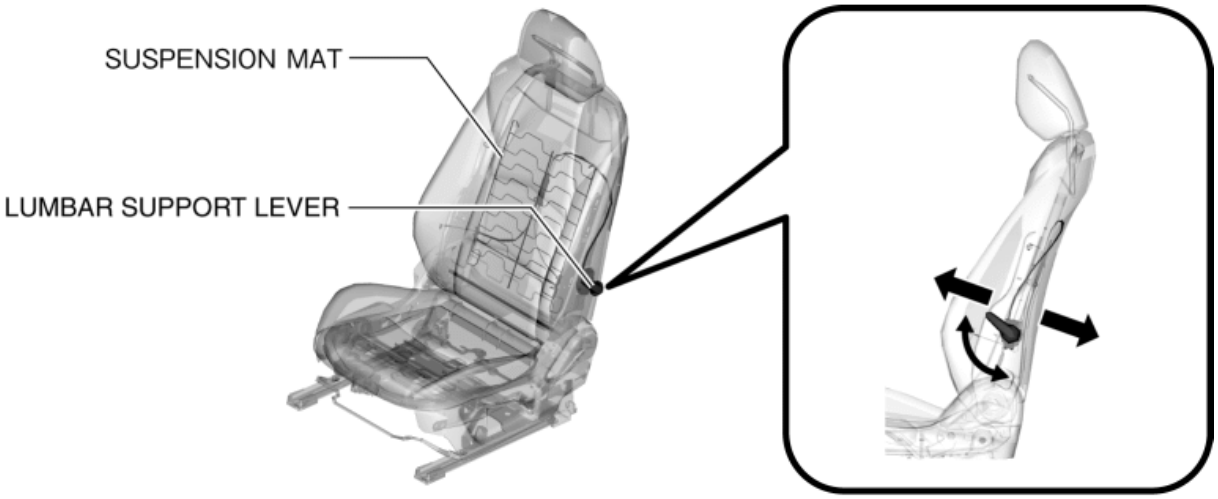

Fail-safe

- Function not equipped.

2014 - Mazda3 - Body and Accessories

REAR SEAT

Purpose, Function

- The following 2 types of rear seat backs have been adopted.
    - 6:4 split type
    - Single type
- A top tether anchor and ISO FIX anchor have been adopted to enable securing of child-restraint seats on the rear seat.
- A prevention of trunk compartment cargo from forward intrusion function has been adopted for the rear seat to protect passengers during a collision or emergency braking.

Construction, Operation

- The child-restraint seat anchors include a top tether anchor and ISO FIX anchor to secure the child-restrain seats and prevent them from deviating or falling off the rear seat.

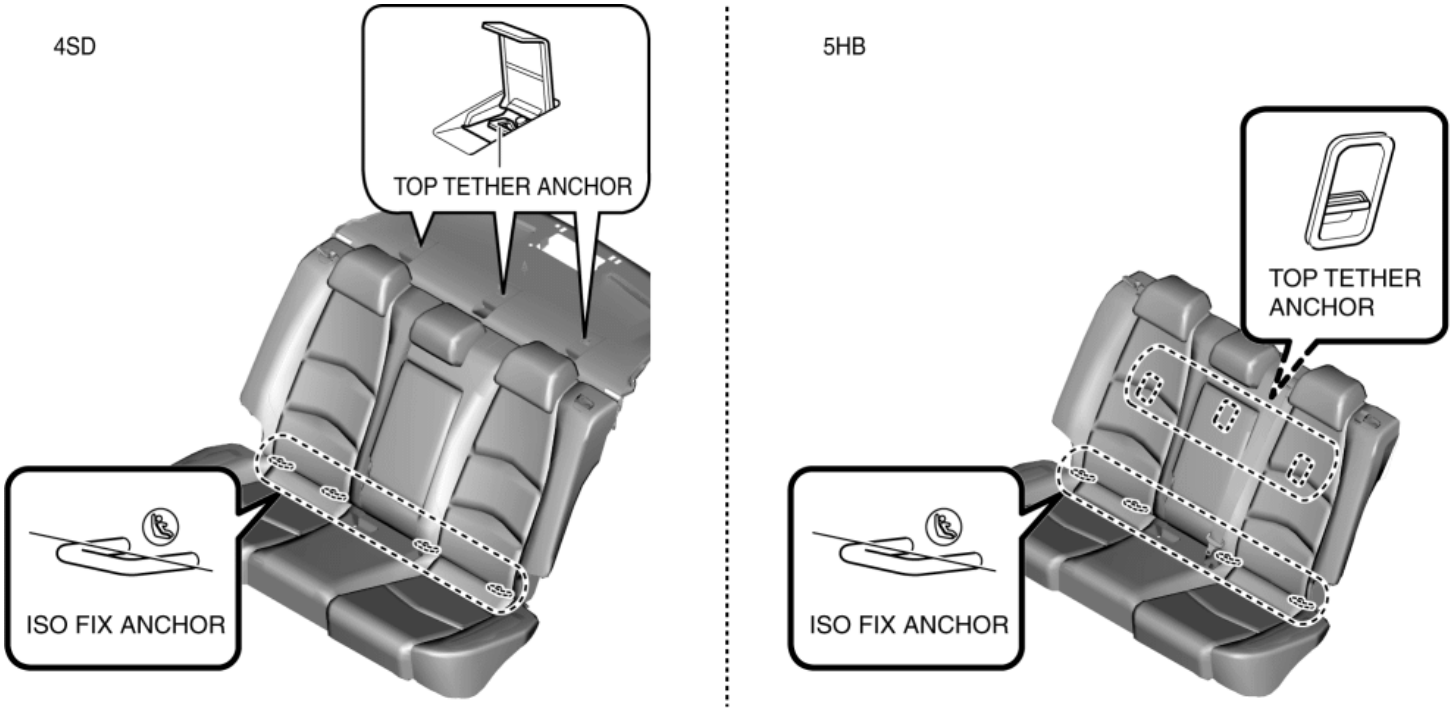

- During a collision, a moving load is stopped by the reinforced rear seat back frame and each support point to prevent the rear seat back from collapsing forward and the luggage intruding into the cabin.

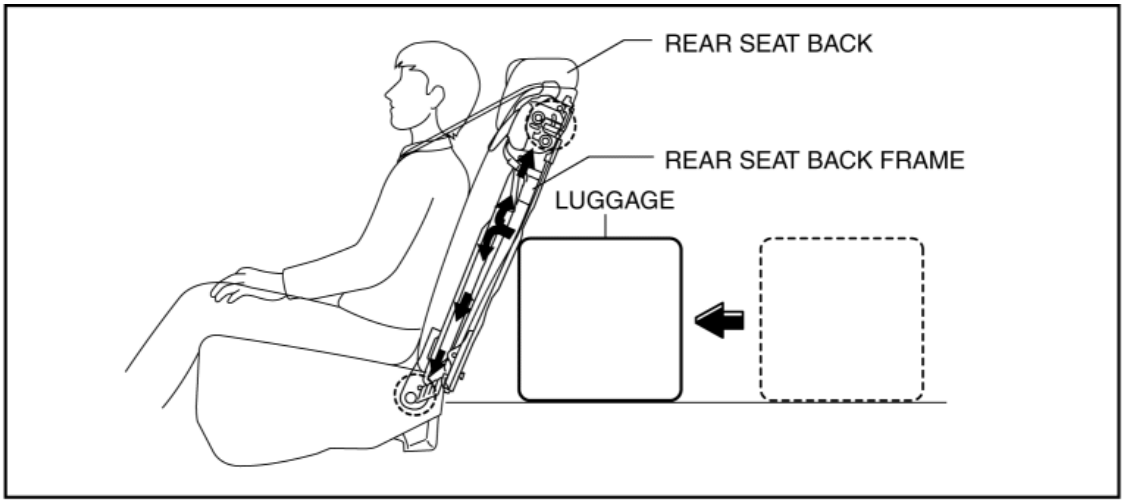

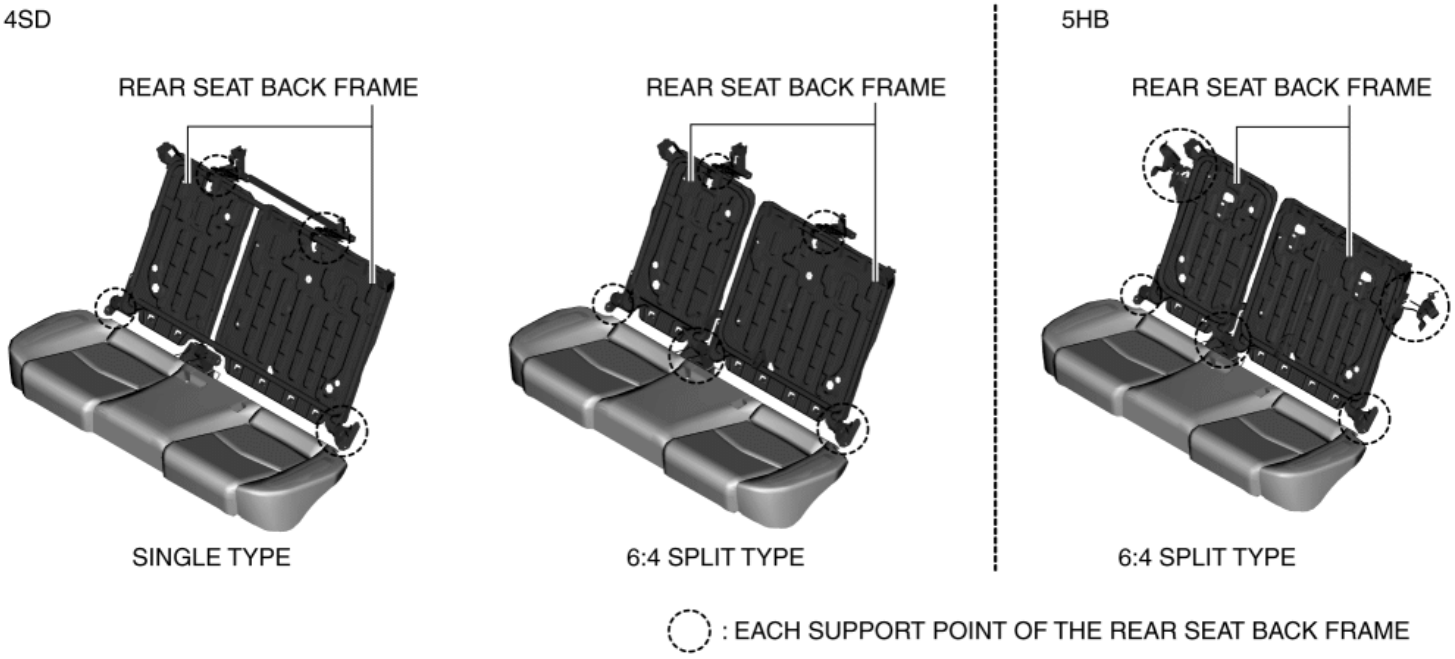

Fail-safe

- Function not equipped.

2014 - Mazda3 - Body and Accessories

SEAT WARMER SYSTEM

Purpose

- The seat warmer system warms the front seat cushion and front seat back using the seat warmer unit.

Function

- The seat warmer unit warms the seat cushion and seat back by supplying power to the built-in filaments.
- The seat warmer unit can adjust the temperature between 3 levels.
- The temperature level of the seat warmer unit changes each time the seat warmer switch is pressed.

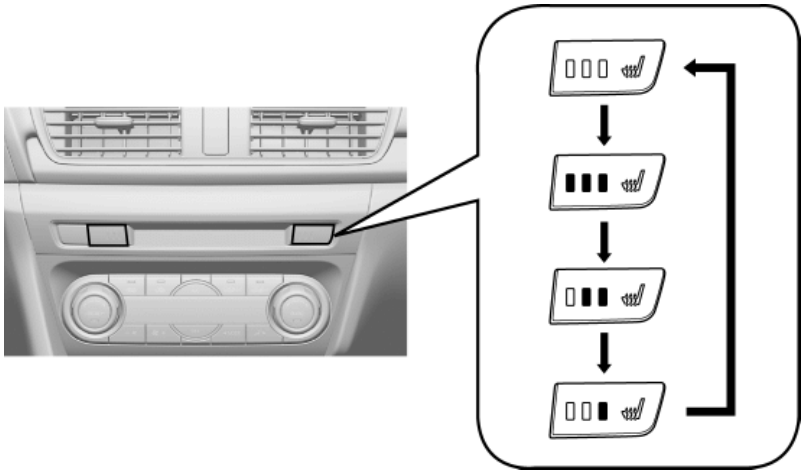

- The seat warmer control unit supplies power to the seat warmer unit and increases the temperature around the seat back and seat cushion up to the average temperature which is applied to the temperature level.

Switch display	Temperature level	Average temperature around seat warmer unit	
		Seat cushion side	Seat back side
	0	—	
	1	**Approx. 37 °C {99 °F}**	
	2	**Approx. 40 °C {104 °F}**	**Approx. 42 °C {108 °F}**
	3	**Approx. 42 °C {108 °F}**	**Approx. 47 °C {117 °F}**

- The seat warmer control unit detects:
  - The average temperature around the seat warmer unit (seat cushion side) based on a signal from the thermostat (seat cushion side) to prevent overheating.
  - Cuts off the power supply to the seat warmer unit when the temperature reaches the specification.

- Decreases the average temperature below the specified temperature.

- When the seat warmer control unit detects that the average temperature around the seat warmer unit (seat cushion side) has decreased below the specified temperature based on a signal from the thermostat, power is supplied to the seat warmer unit again to increase the temperature up to the specified temperature.

Temperature level	Average temperature around seat warmer unit (seat cushion side)			
	Cloth type		Leather type	
	Increase start temperature	Decrease start temperature	Increase start temperature	Decrease start temperature
0	—			
1	**Approx. 20 °C {68 °F}**	**Approx. 22 °C {72 °F}**	**Approx. 20 °C {68 °F}**	**Approx. 22 °C {72 °F}**
2	**Approx. 28 °C {82 °F}**	**Approx. 30 °C {86 °F}**	**Approx. 32 °C {90 °F}**	**Approx. 34 °C {93 °F}**
3	**Approx. 40 °C {104 °F}**	**Approx. 42 °C {108 °F}**	**Approx. 50 °C {122 °F}**	**Approx. 52 °C {126 °F}**

- The seat warmer control unit maintains a constant average temperature around the seat warmer unit by continuing to supply power to the seat warmer unit.

Ex.) Cloth-type temperature level is 3:

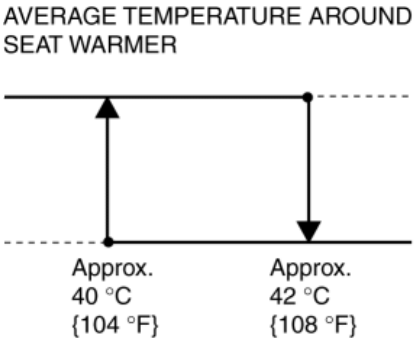

Structural view

- The seat warmer switch is built into the indicator unit.
- The seat warmer unit is sewed into the front seat back trim and the front seat cushion trim.
- The seat warmer control unit is located on the bottom of the passenger-side front seat.

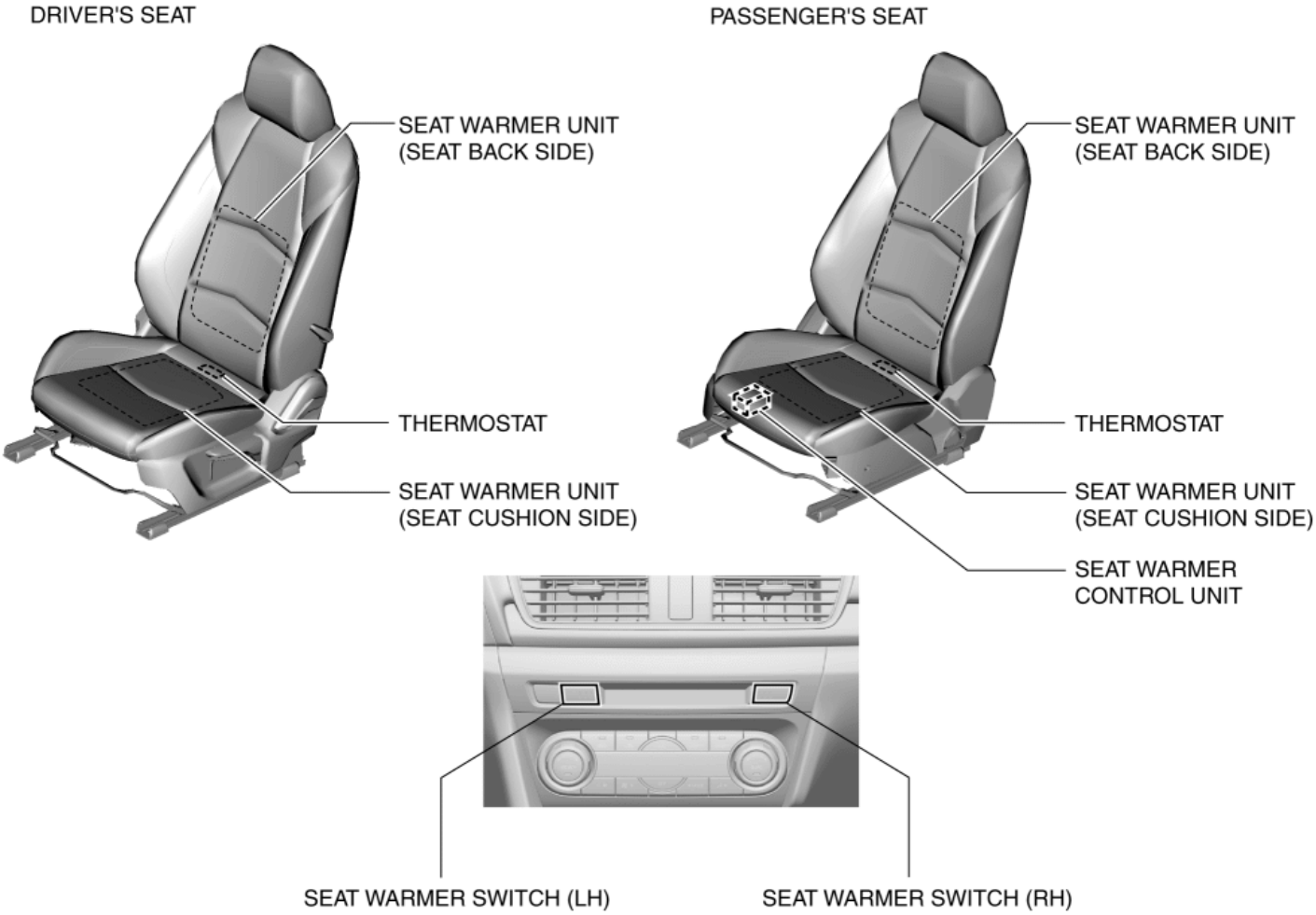

System wiring diagram

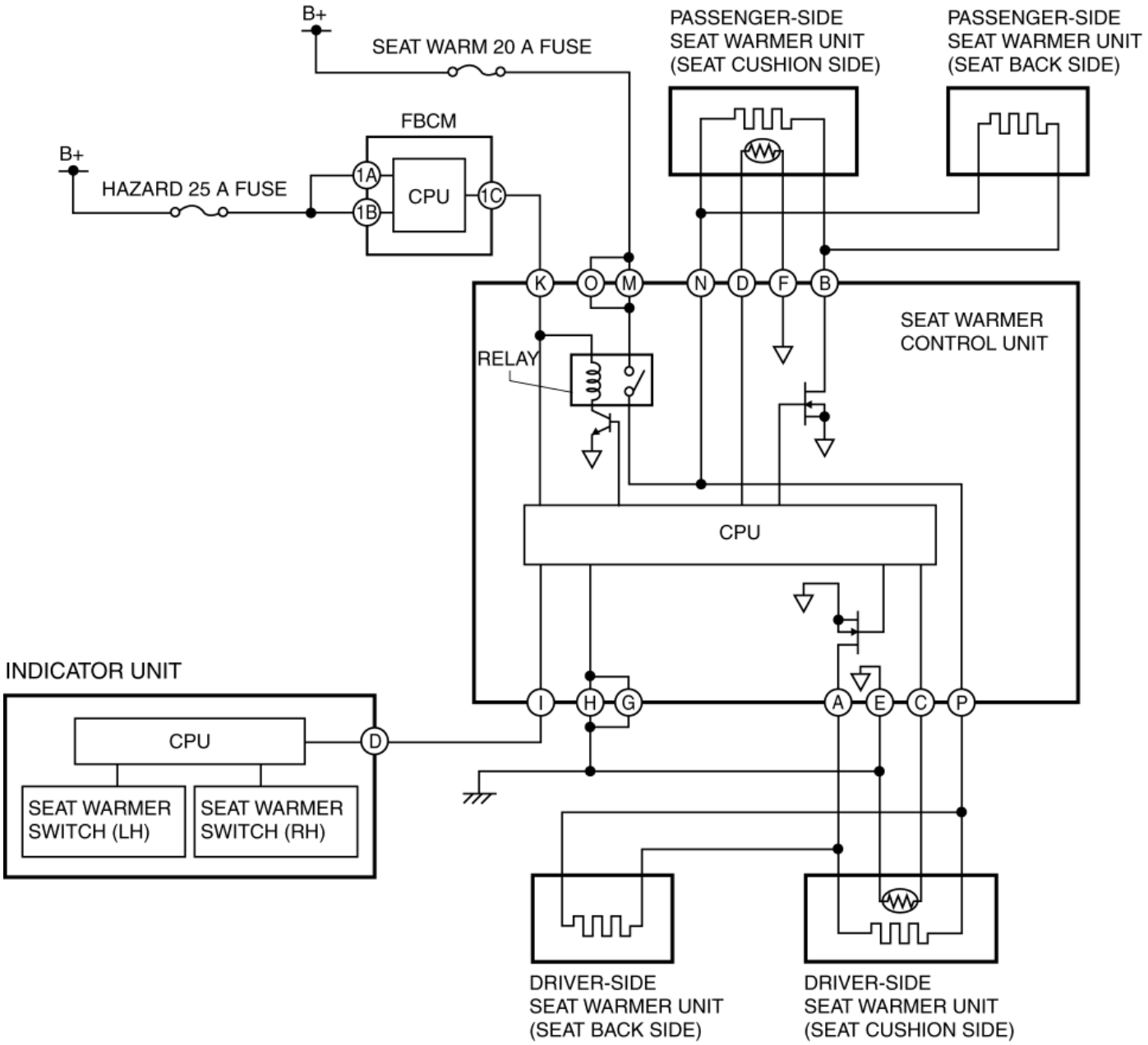

Operation

Ex.) Seat warmer temperature level on cloth-type driver's seat is set at 3

1. The indicator unit determines (1) the average increase temperature of the seat warmer unit by operating the seat warmer switch (driver-side).

2. The indicator unit sends (2) the temperature level "3" signal for the seat warmer unit to the CPU of the seat warmer control unit.

3. When the CPU of the seat warmer control unit receives the operation level "3" signal from the indicator unit, it supplies the base current to the transistor built into the seat warmer control unit (3), and the gate voltage is applied to the FET simultaneously (4).

4. If the base current is supplied, the transistor supplies collector current to the relay coil (5).

5. If collector current is supplied, the relay coil energizes and turns on the relay switch (6).

6. When the gate voltage is applied, the FET completes the circuit between seat warmer control unit terminal A and ground (7).

7. When the relay switch built into the seat warmer control unit turns on and the FET circuit is completed, the driver-side seat warmer unit circuit is completed (8) and the driver-side front seat cushion and seat back warm up.

- When the seat warmer control unit detects that the temperature around the seat reaches **approx. 42°C {108 °F}**, the power supply is cut off.

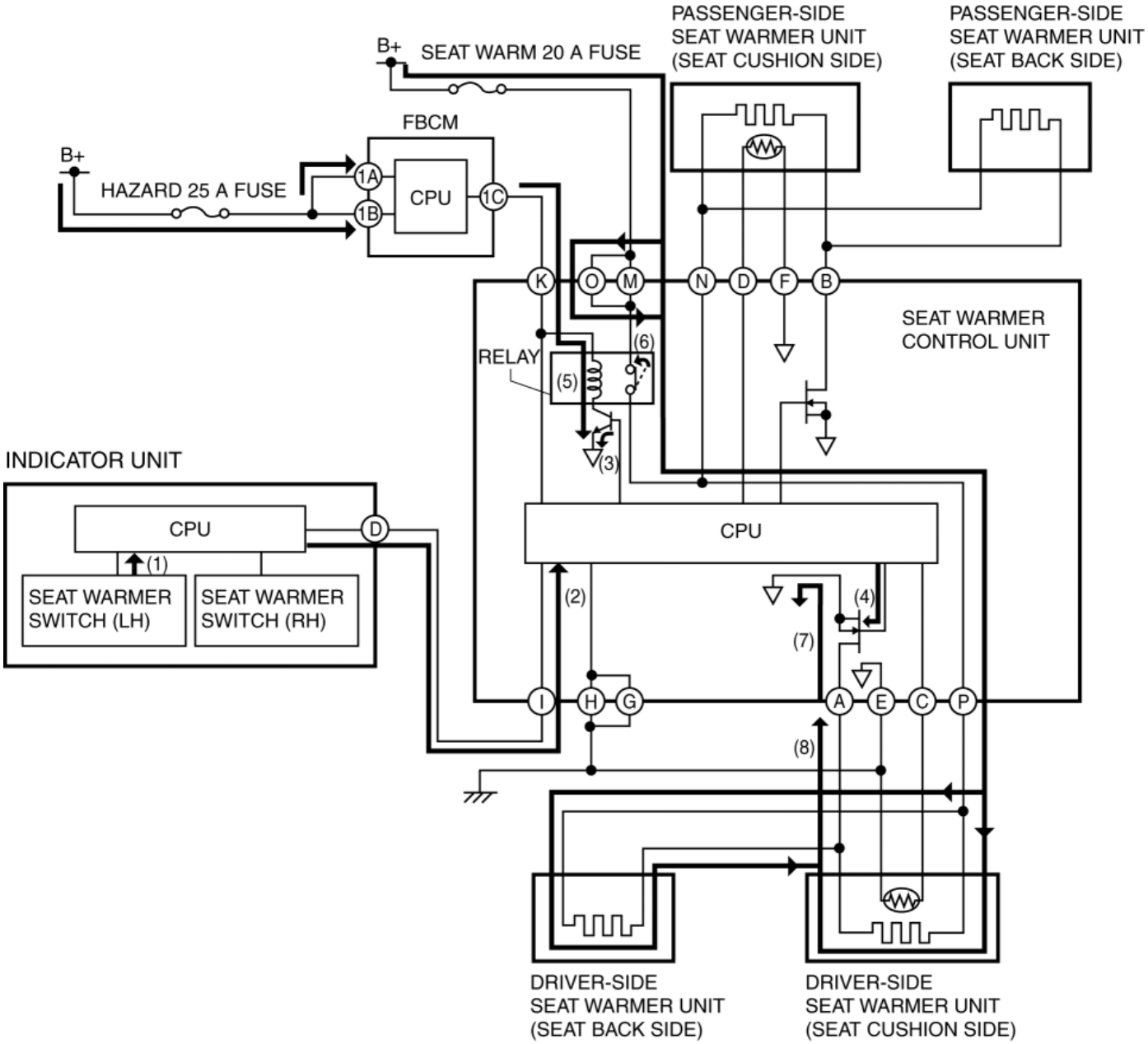

Fail-safe

- Function not equipped.

2014 - Mazda3 - Body and Accessories

POWER SEAT SYSTEM

Outline

- 6-WAY power seats have been adopted on the driver's seat.
- The power seat system:
  - Drives the electric motor
  - Operates the front seats safely
  - Changes the driving posture to suit the occupant by operating the power seat switch

Function

- The 6-WAY power seats are equipped with the following functions:
  - Slide mechanism
  - Recliner mechanism
  - Lift mechanism

Slide mechanism

- The sliding function adjusts the front and back positions of the front seats.

Recliner mechanism

- The recliner function adjusts the angle of the front seat backs.

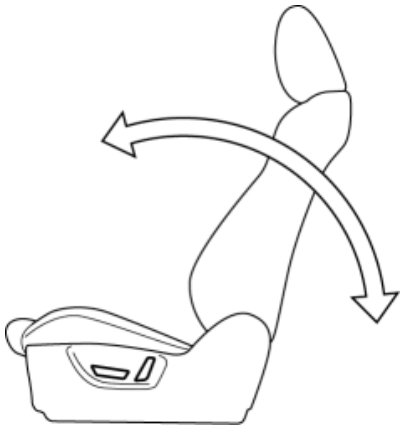

Lift mechanism

- The lift function adjusts the height of the front seats.

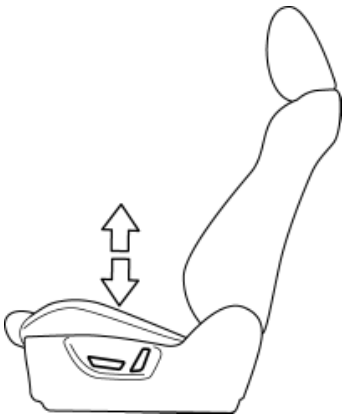

Structural View

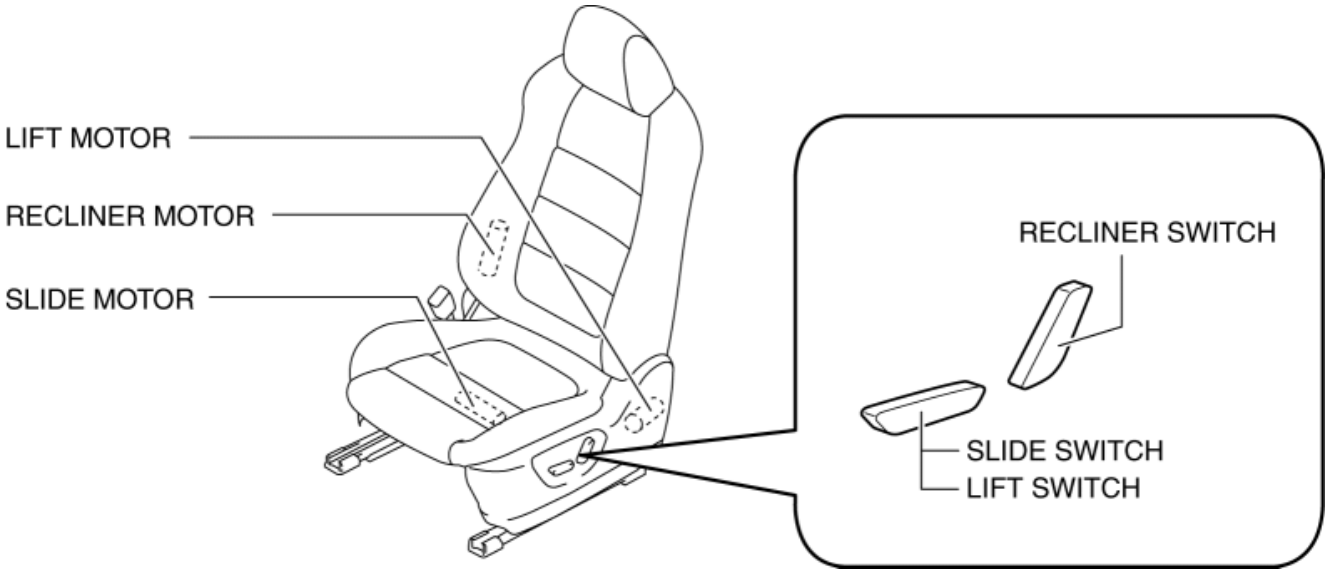

System Diagram

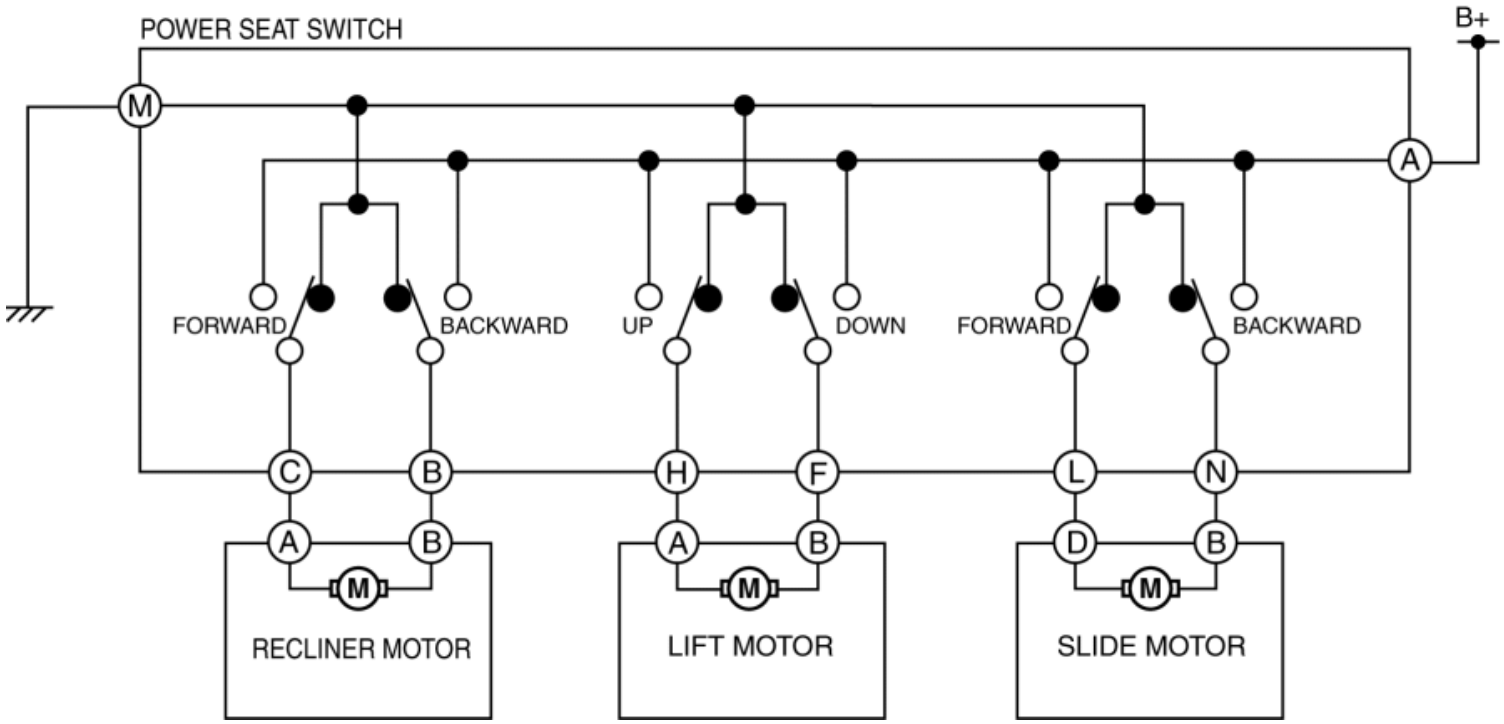

Operation

Recliner operation

1. When the recliner switch is operated forward or backward (1), current from the battery flows to the recliner motor (2).

2. When the current flows to the recliner motor, the motor operates to tilt the front seat back forward or backward.

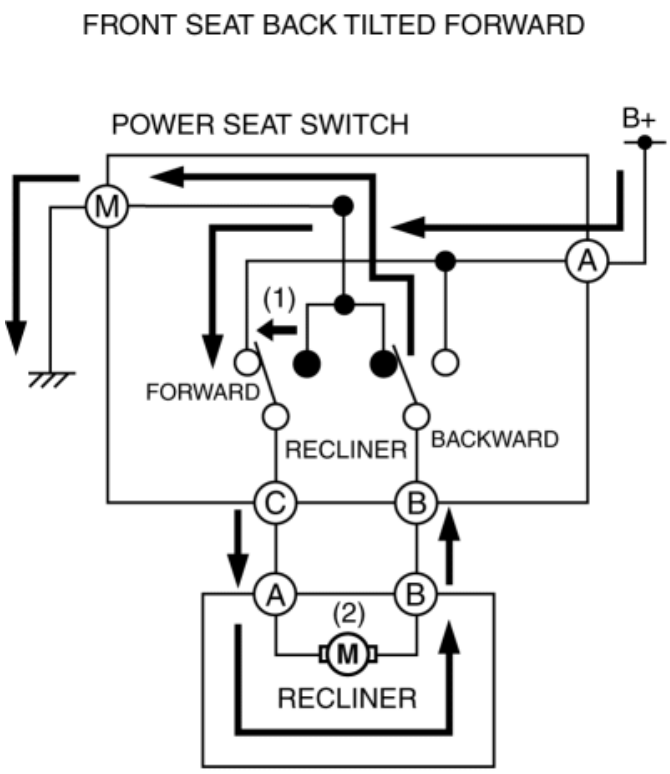

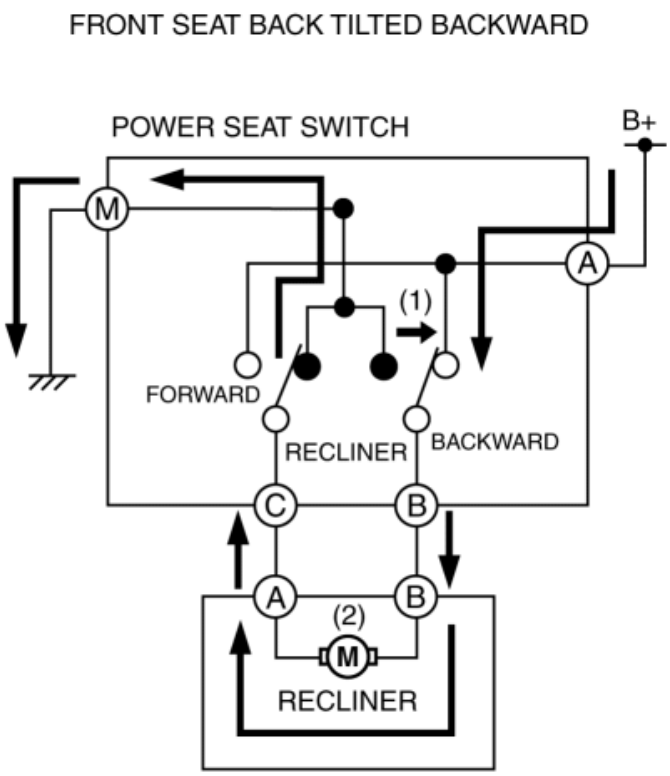

Lift operation

1. When the lift switch is operated upward or downward (1), current from the battery flows to the lift motor (2).
2. When the current flows to the lift motor, the motor operates to lift up or lower the front seat.

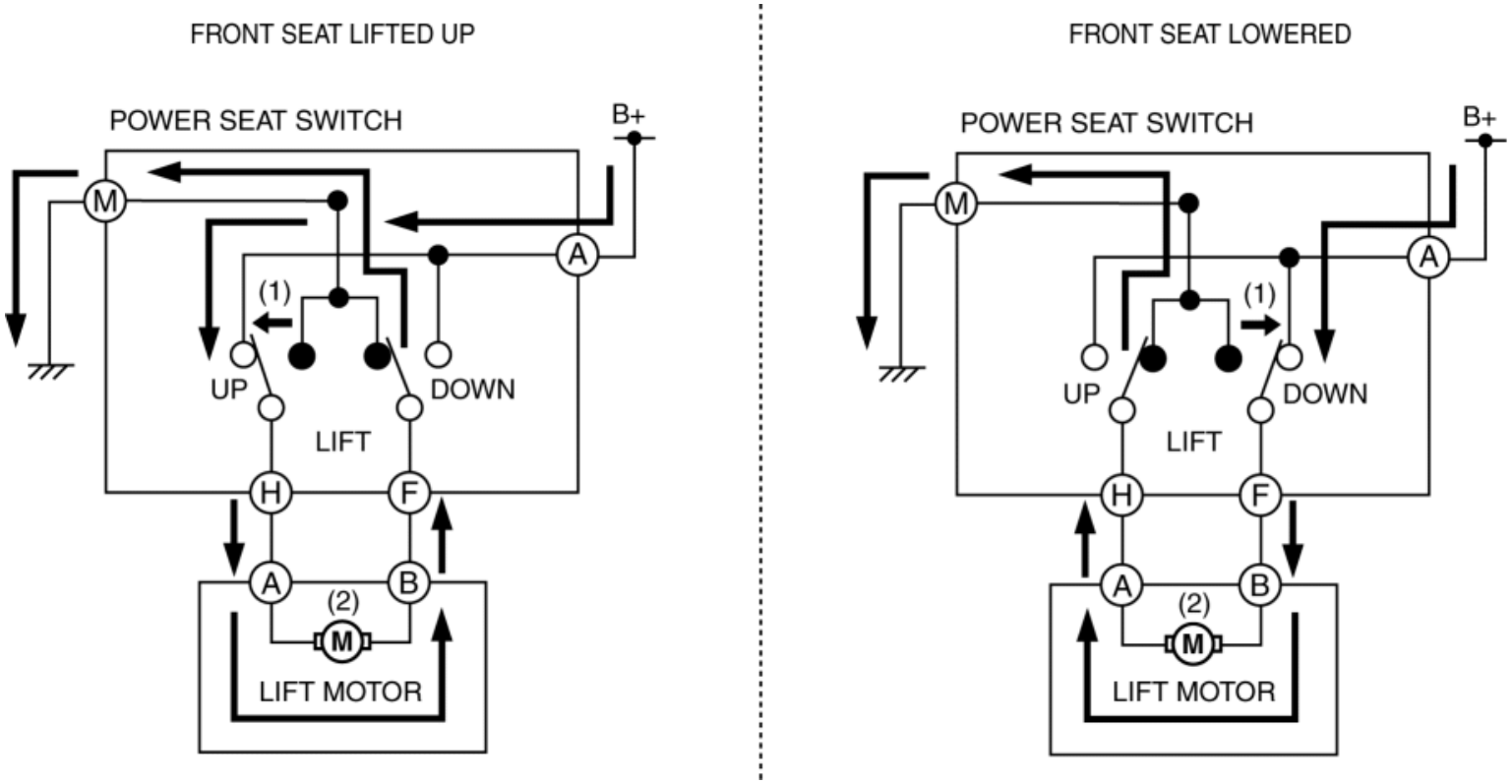

Slide operation

1. When the slide switch is operated forward or backward (1), current from the battery flows to the slide motor (2).
2. When the current flows to the slide motor, the motor operates to slide the front seat forward or backward.

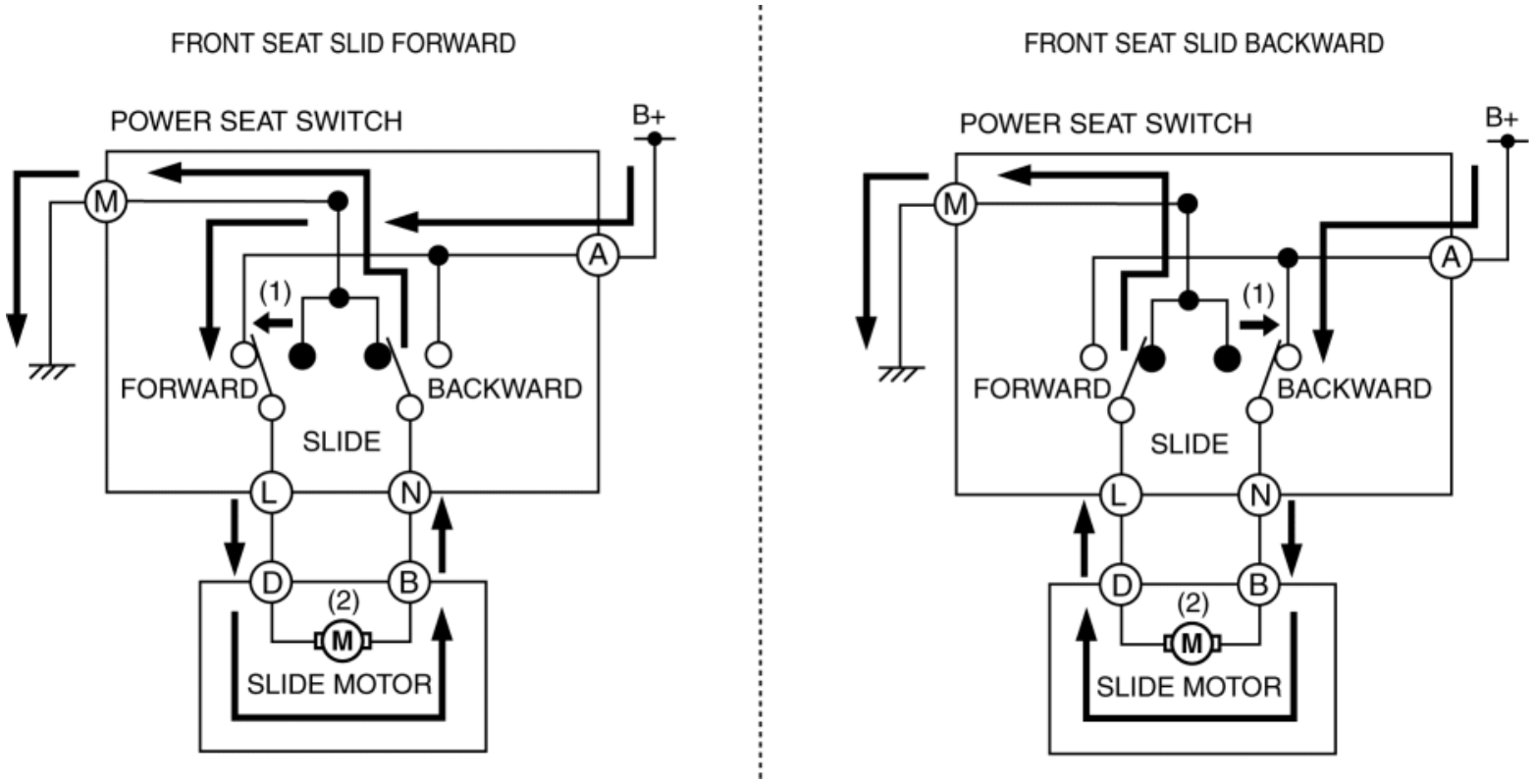

Fail-safe

- Function not equipped.

2014 - Mazda3 - Body and Accessories

SECURITY AND LOCKS

Outline

- Power door lock system adopted
- Liftgate opener system adopted
- Trunk lid opener system adopted
- Keyless entry system adopted
- Advanced keyless entry system adopted
- Push button start system adopted
- Immobilizer system adopted
- Theft-deterrent system adopted

Structural View

Power door lock system

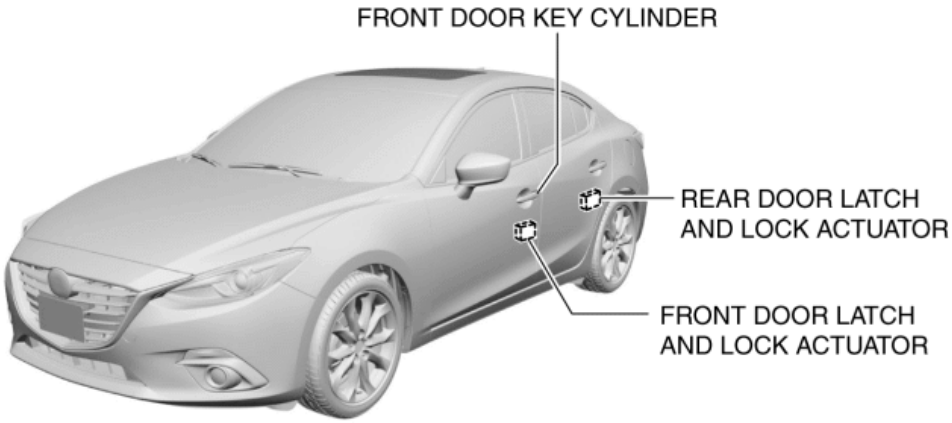

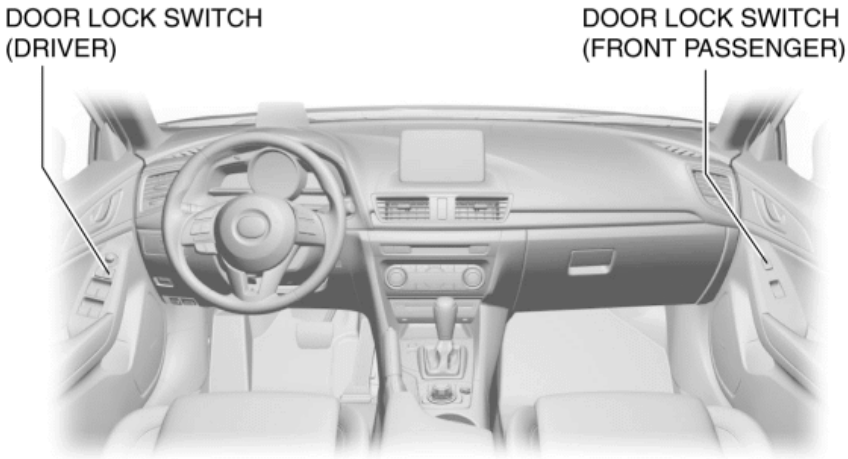

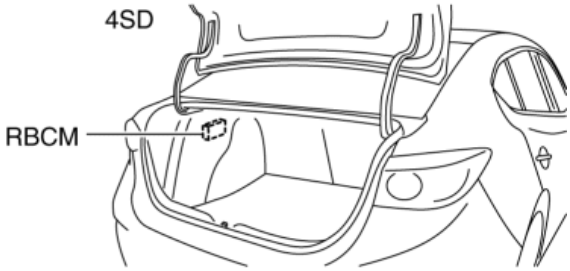

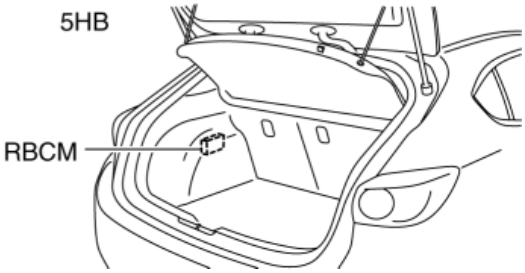

Trunk lid opener system

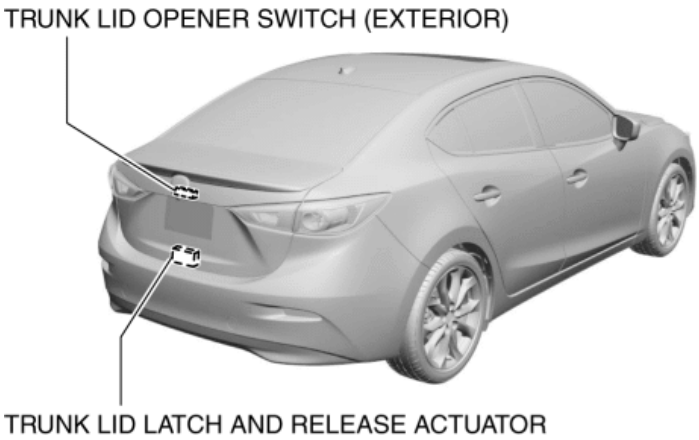

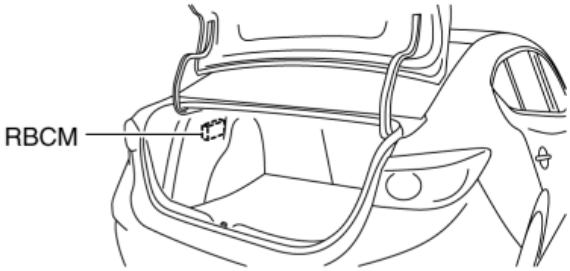

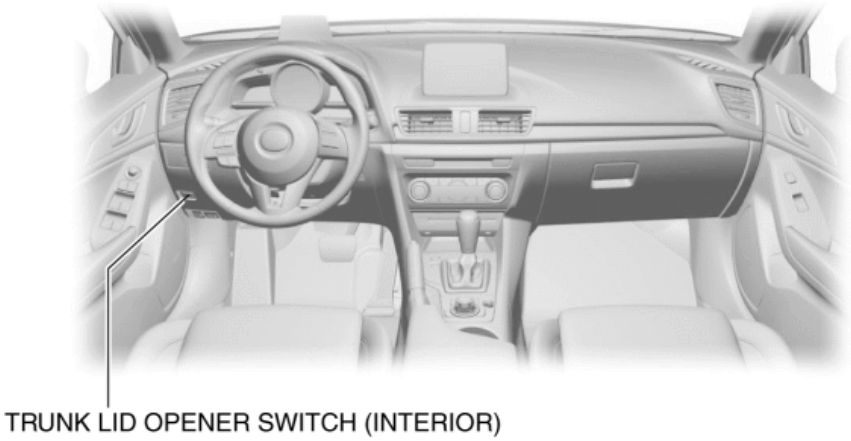

Liftgate opener system

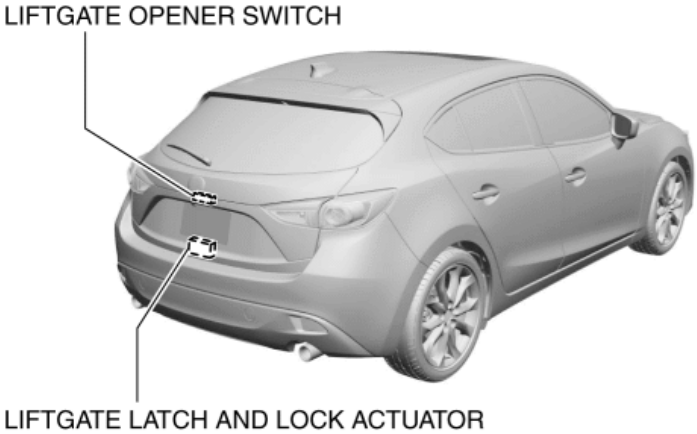

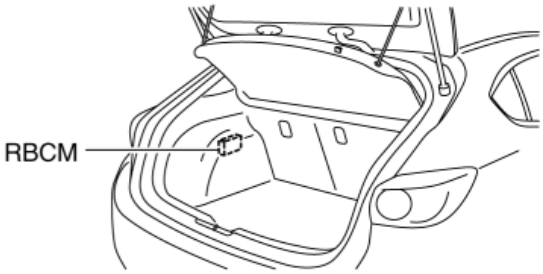

Advanced keyless entry system / Push button start system / Immobilizer system

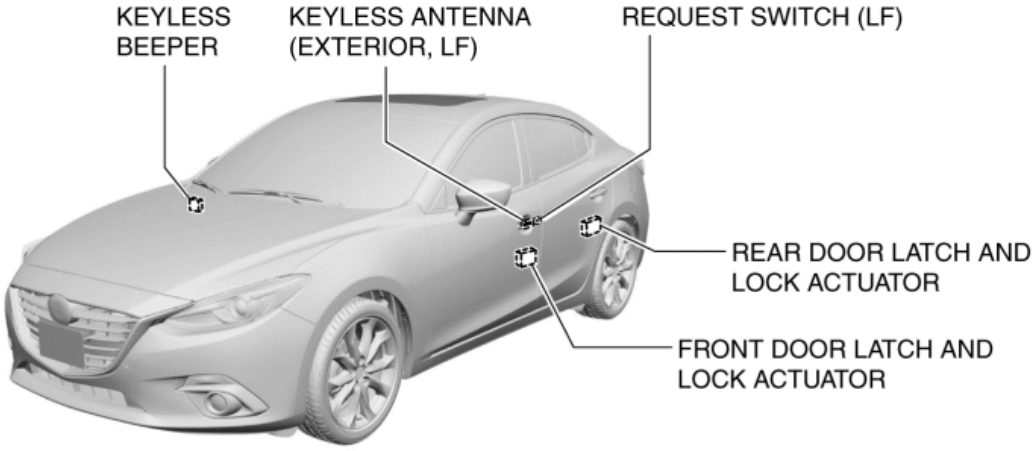
KEYLESS BEEPER
KEYLESS ANTENNA (EXTERIOR, LF)
REQUEST SWITCH (LF)
REAR DOOR LATCH AND LOCK ACTUATOR
FRONT DOOR LATCH AND LOCK ACTUATOR

4SD

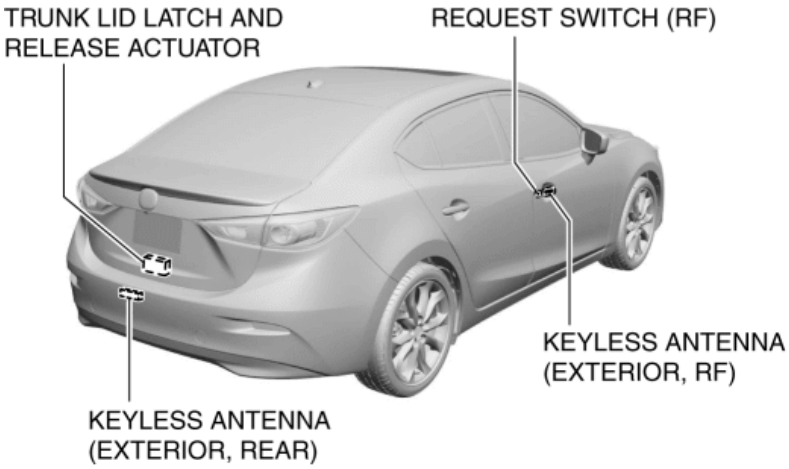
TRUNK LID LATCH AND RELEASE ACTUATOR
REQUEST SWITCH (RF)
KEYLESS ANTENNA (EXTERIOR, RF)
KEYLESS ANTENNA (EXTERIOR, REAR)

5HB

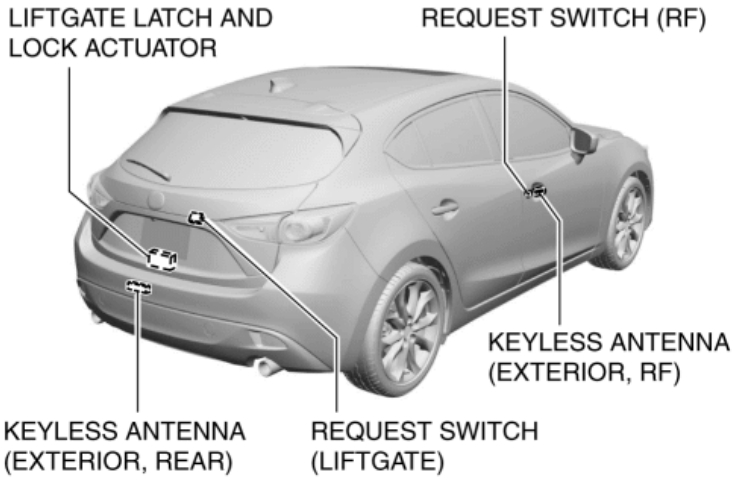
LIFTGATE LATCH AND LOCK ACTUATOR
REQUEST SWITCH (RF)
KEYLESS ANTENNA (EXTERIOR, RF)
KEYLESS ANTENNA (EXTERIOR, REAR)
REQUEST SWITCH (LIFTGATE)

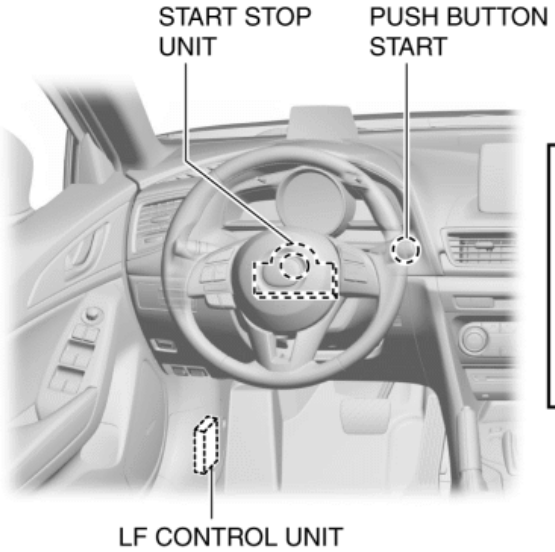

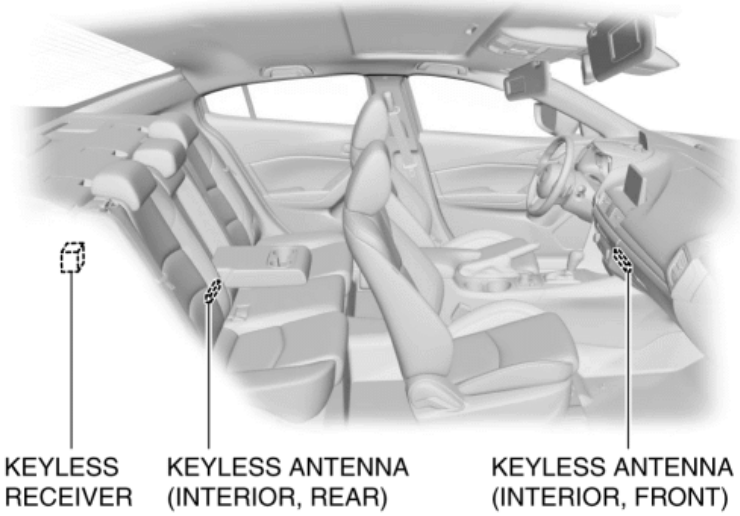

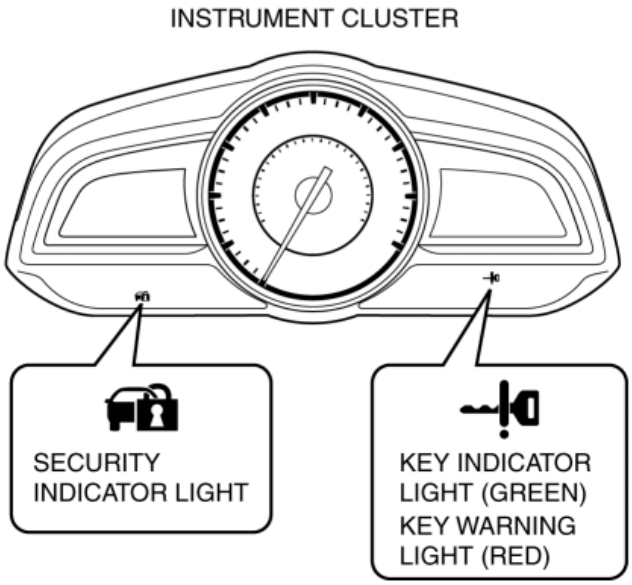

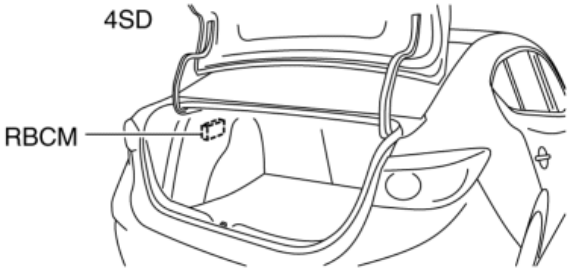

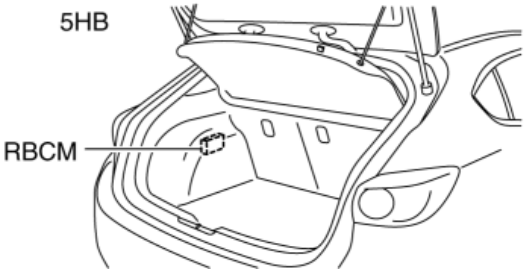

Keyless entry system / Push button start system / Immobilizer system

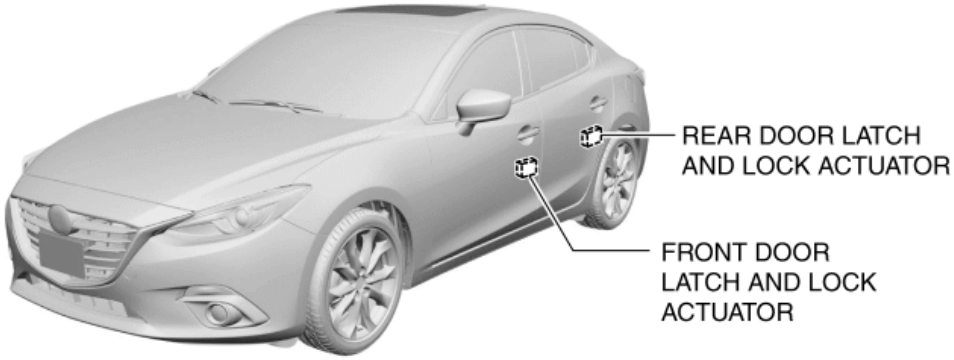
REAR DOOR LATCH
AND LOCK ACTUATOR
FRONT DOOR
LATCH AND LOCK
ACTUATOR

4SD

TRUNK LID LATCH AND
RELEASE ACTUATOR

5HB

LIFTGATE LATCH AND
LOCK ACTUATOR

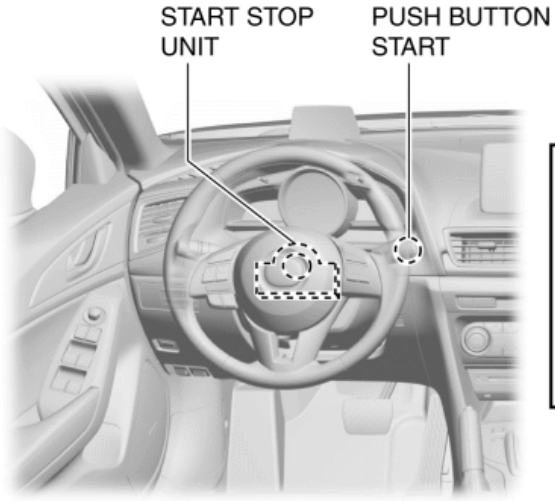

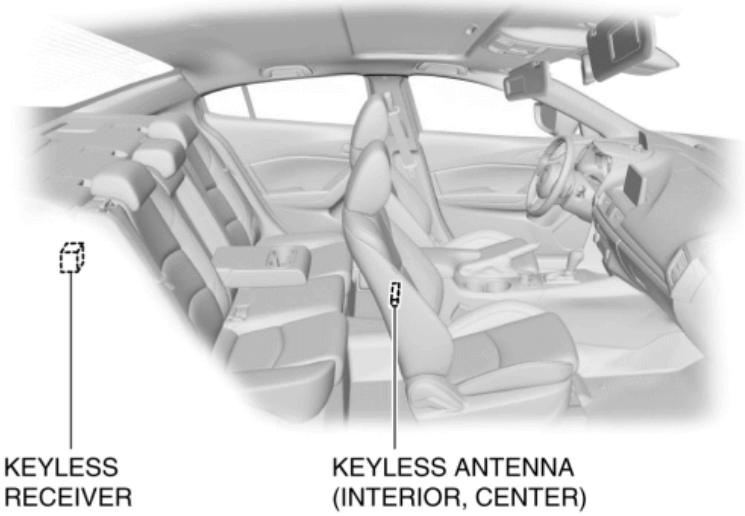

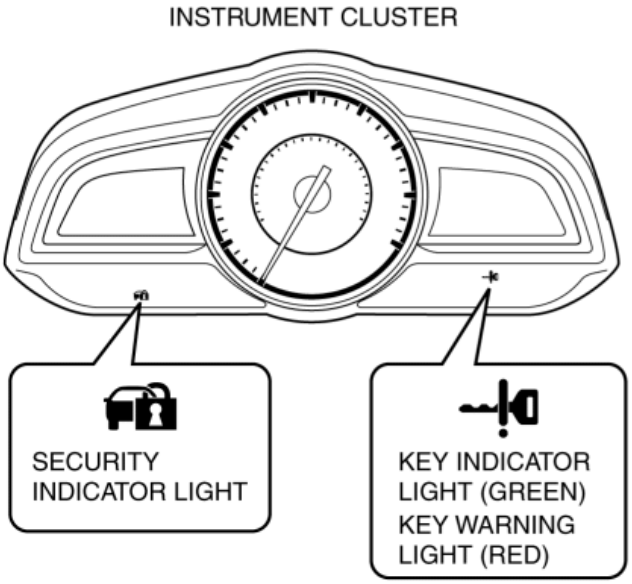

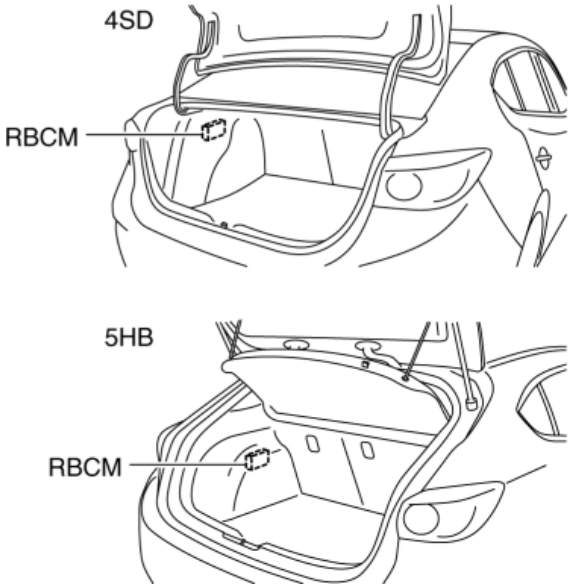

Theft-deterrent System

HOOD LATCH SWITCH
REAR DOOR LATCH AND LOCK ACTUATOR
FRONT DOOR LATCH AND LOCK ACTUATOR

4SD

TRUNK LID LATCH AND RELEASE ACTUATOR

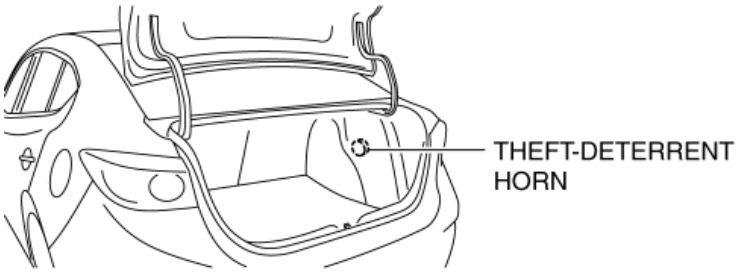
THEFT-DETERRENT HORN

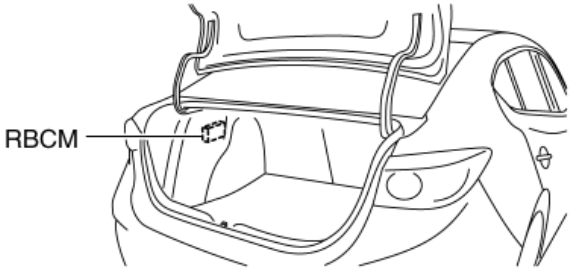
RBCM

5HB

LIFTGATE LATCH AND LOCK ACTUATOR

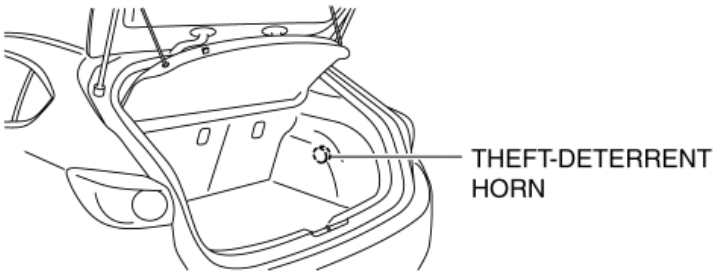
THEFT-DETERRENT HORN

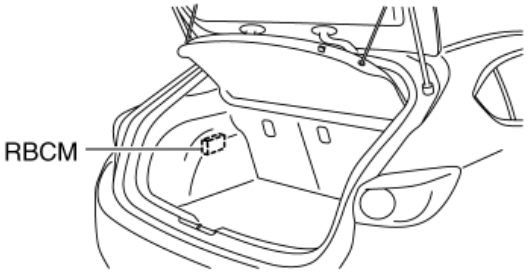
RBCM

2014 - Mazda3 - Body and Accessories

SECURITY AND LOCKS PERSONALIZATION

- Personalization features that switch the activation/deactivation of each function have been adopted.
- The setting of the following system functions, and warning and guidance functions can be turned on/off optionally.
- Refer to the Workshop Manual for the detailed setting procedure.

Advanced keyless entry system

Using Mazda Modular Diagnostic System (M-MDS)

Mazda Modular Diagnostic System (M-MDS) display	Function	Initial setting	Setting contents	Control unit
Advanced keyless function.*1	The advanced keyless entry system and push button start system functions can be disabled.	Enabled.	Enabled. / Disabled.	Start stop unit
Walk Away Lock.	The out-of-area (reception area) type auto lock function can be set.	OFF	Not Adopted. / OFF / ON	Start stop unit
Auto Re-lock Time.	The operation start time of the auto re-lock function can be changed.	60 seconds	Not Adopted. / 30 seconds / 60 seconds / 90 seconds	Start stop unit
Lock Beep Volume.	The keyless beeper volume can be adjusted.	Medium	Not Adopted. / Off / Low / Medium / High	Start stop unit

*1

Because the push button start system function has been disabled, to start the engine press the upper part of the remote transmitter against the center of the push button start.

Using center display

Display of center display	Function	Initial setting	Setting contents	Control unit
Keyless Lock Beep Volume	The keyless beeper volume can be adjusted.	Medium	Off / Low / Medium / High	Start stop unit
Auto Door Relock Time	The operation start time of the auto re-lock function can be changed.	60 seconds	30 seconds / 60 seconds / 90 seconds	Start stop unit
Walk Away Lock	The out-of-area (reception area) type auto lock function can be set.	Off	Off / On	Start stop unit
Reset	Returns the setting content of the door lock system to the initial setting.	NO	YES / NO	• Rear body control module (RBCM) • Start stop unit

Keyless entry system

Using Mazda Modular Diagnostic System (M-MDS)

Mazda Modular Diagnostic System (M-MDS) display	Function	Initial setting	Setting contents	Control unit
Advanced keyless function.*1	The keyless entry system and push button start system functions can be disabled.	Enabled.	Enabled. / Disabled.	Start stop unit
Auto Re-lock Time.	The operation start time of the auto re-lock function can be changed.	60 seconds	Not Adopted. / 30 seconds / 60 seconds / 90 seconds	Start stop unit

*1

Because the push button start system function has been disabled, to start the engine press the upper part of the remote transmitter against the center of the push button start.

Using center display

Display of center display	Function	Initial setting	Setting contents	Control unit
Auto Door Relock Time	The operation start time of the auto re-lock function can be changed.	60 seconds	30 seconds / 60 seconds / 90 seconds	Start stop unit
Reset	Returns the setting content of the door lock system to the initial setting.	NO	YES / NO	• Rear body control module (RBCM) • Start stop unit

Power door lock system

Using Mazda Modular Diagnostic System (M-MDS)

Mazda Modular Diagnostic System (M-MDS) display	Function	Initial setting	Setting contents	Control unit
Unlock Mode (Without Touch Sensor)	2-step unlocking system can be set.	Once: Driver's, Twice: All Doors.	Not Adopted. / Touch Once: All Doors. / Once: Driver's, Twice: All Doors.	Start stop unit
Auto Door Lock Mode	Auto door lock function can be changed.	Lock: Driving, Unlock: IGN Off.	Not Adopted. / OFF / Lock When Driving. / Lock: Driving, Unlock: IGN Off. / Lock When Shifting Out Of P. / Lock: Shift From P, Unlock: In P.	Rear body control module (RBCM)

Using center display

Display of center display	Function	Initial setting	Setting contents	Control unit
Auto Door Lock Mode	Auto door lock function can be changed.	Lock: When Driving, Unlock: IGN Off	Off / Lock: When Driving / Lock: When Driving, Unlock: IGN Off / Lock: Shifting from Park / Lock: Shifting from Park, Unlock: In Park	Rear body control module (RBCM)
Unlock Mode	2-step unlocking system can be set.	Once Driver's, Twice: All Doors	Once: ALL Doors / Once Driver's, Twice: All Doors	Start stop unit
Reset	Returns the setting content of the door lock system to the initial setting.	NO	YES / NO	• Rear body control module (RBCM) • Start stop unit

2014 - Mazda3 - Body and Accessories

POWER DOOR LOCK SYSTEM

Outline

- When the door lock switch or the front door key cylinder is operated to lock/unlock, all the doors lock/unlock.
- The rear body control module (RBCM) performs power door lock system fail-safe. (See **REAR BODY CONTROL MODULE (RBCM)**.)

Function

Door lock switch interlock function

- When the door lock switch is operated to lock/unlock, all the doors lock/unlock.

Door key interlock function

- When the front door key cylinder is operated to lock/unlock, all the doors lock/unlock.

2-step unlocking function

- When an unlock operation is performed using the door key cylinder or the keyless entry remote transmitter, only the door lock on the driver-side door unlocks. In addition, when an unlock operation is performed, the door locks on all the doors unlock.

Collision detection unlock function

- This function unlocks the doors in case of a collision to enhance rescue operation from outside the vehicle.

Auto door lock function

- All doors automatically lock/unlock in conjunction with the vehicle speed and the operation of the selector lever (ATX) and the ignition switch.

Structural view

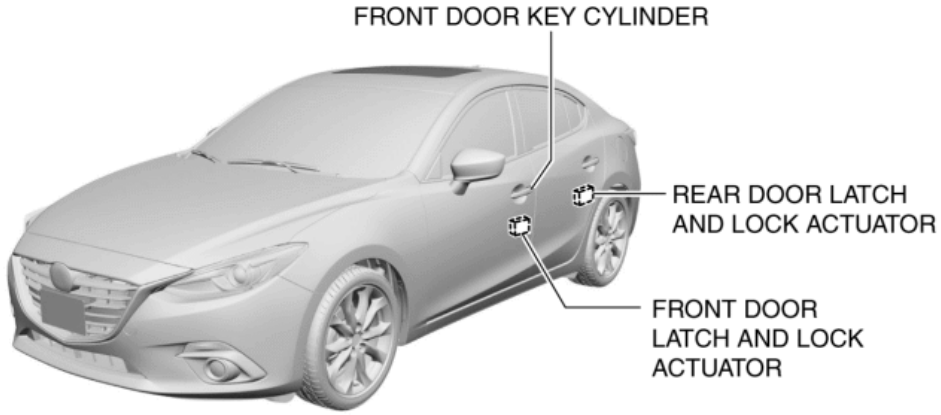

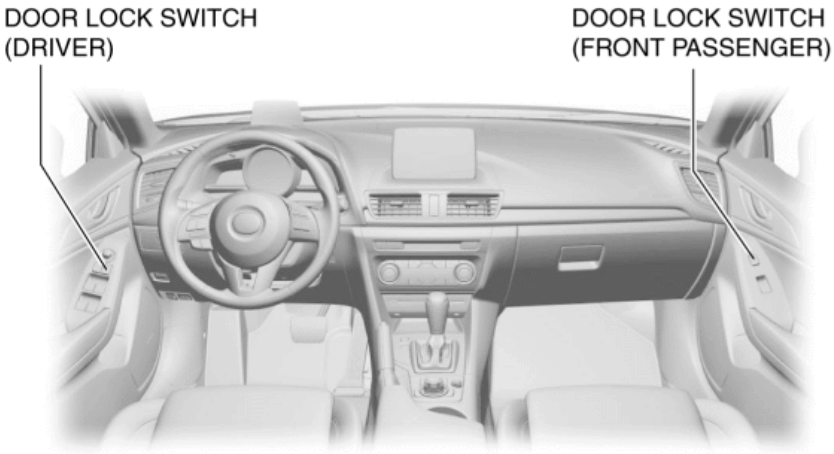

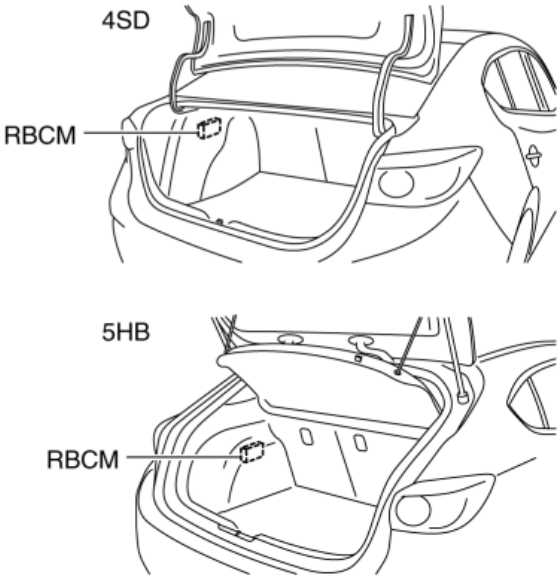

System wiring diagram

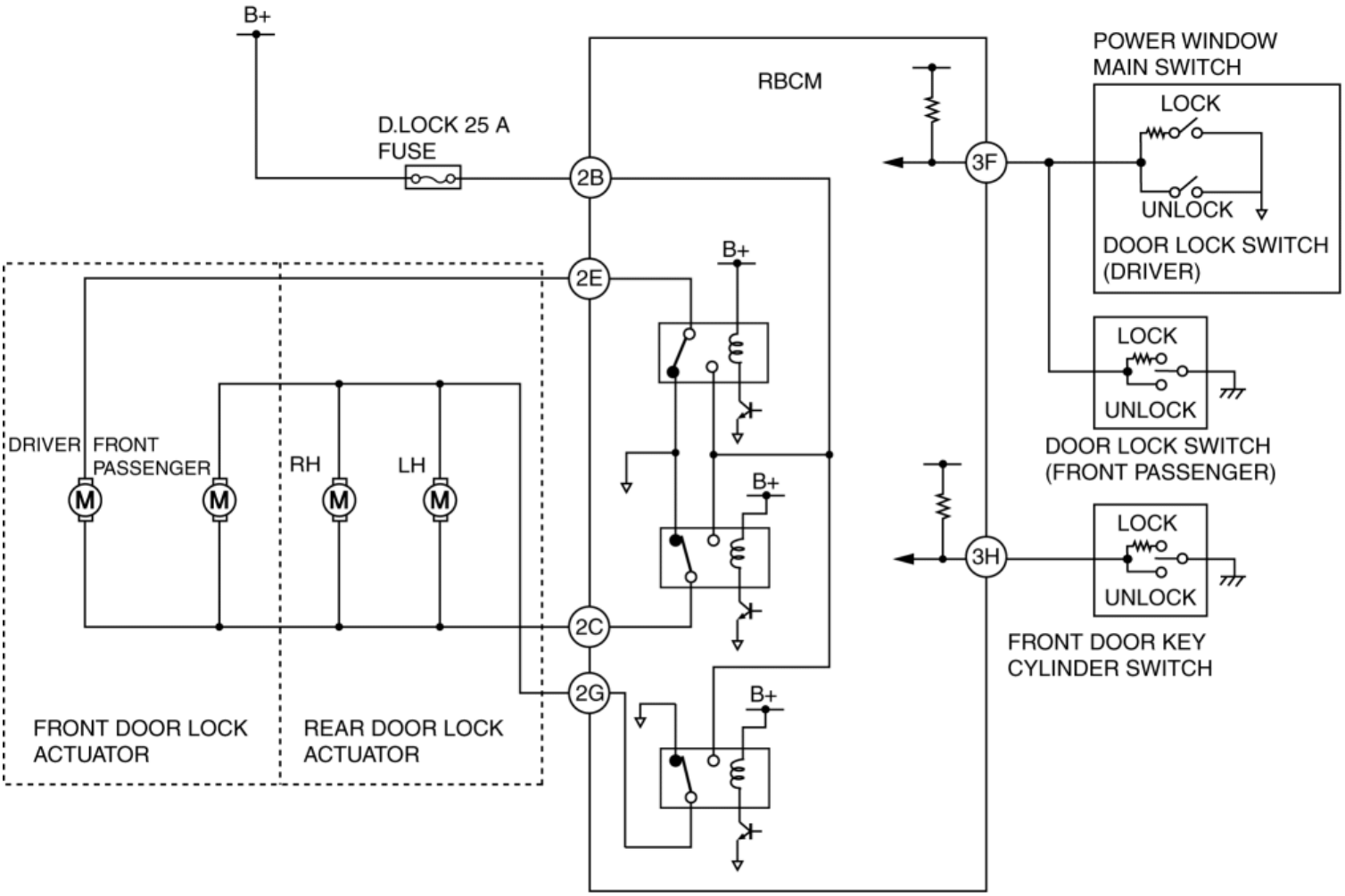

Operation

Lock operation using door key cylinder

1. When the key is inserted in the front door key cylinder and a lock operation is performed, the front door key cylinder switch switches to the lock side.

2. When the rear body control module (RBCM) detects a front door key cylinder switch lock signal (1), it turns the transistor on (2), and turns the door lock relay (lock side) on.

3. When the door lock relay (lock side) turns on (3), the front and rear door lock actuator motors perform a lock operation (4), and the front and rear doors lock.

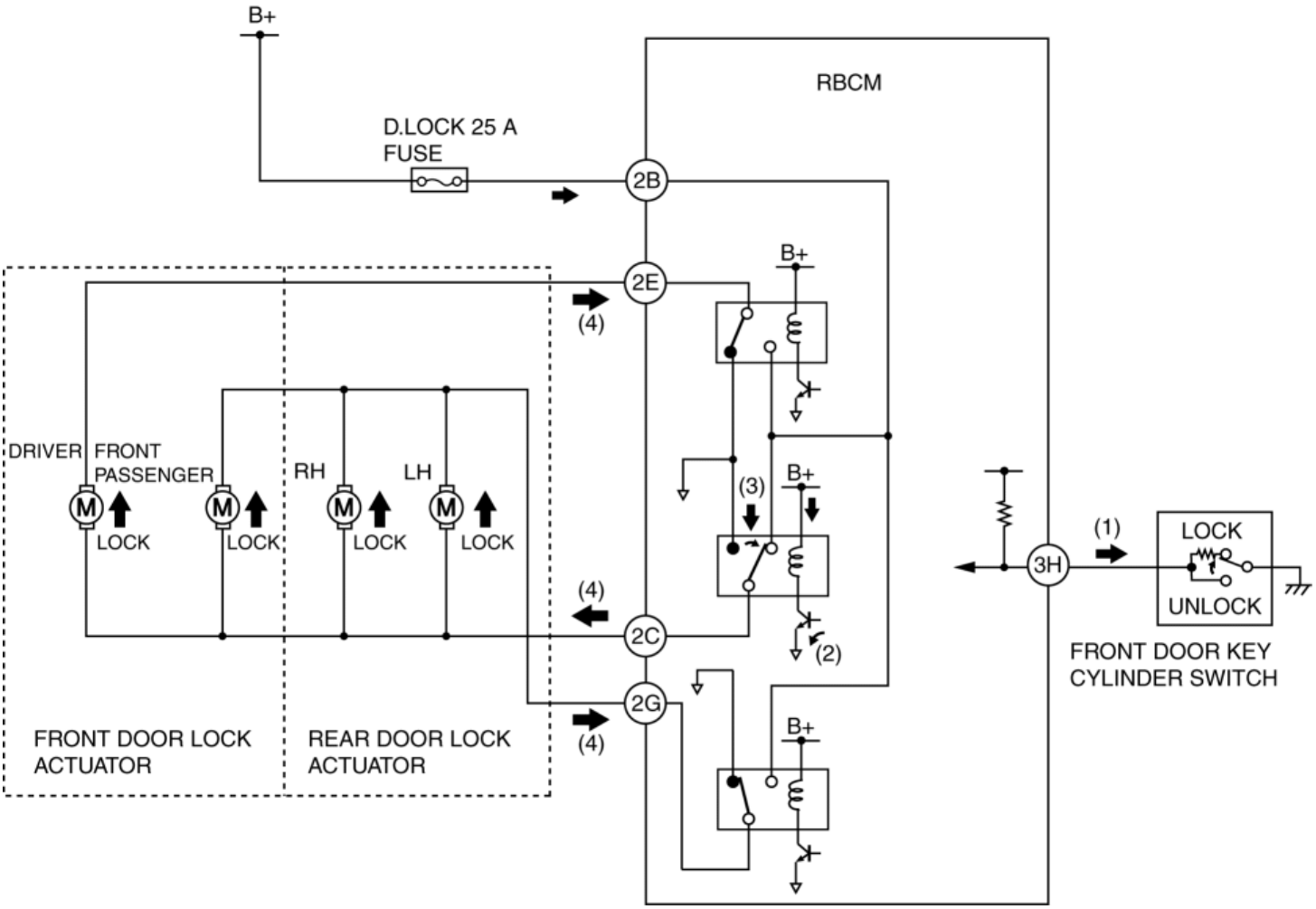

Lock operation using door lock switch

1. When the door lock switch is operated to lock, the door lock switch switches to the lock side.

2. When the rear body control module (RBCM) detects a door lock switch lock signal (1), it turns the transistor on (2), and turns the door lock relay (lock side) on.

3. When the door lock relay (lock side) turns on (3), the front and rear door lock actuator motors perform a lock operation (4), and the front and rear doors lock.

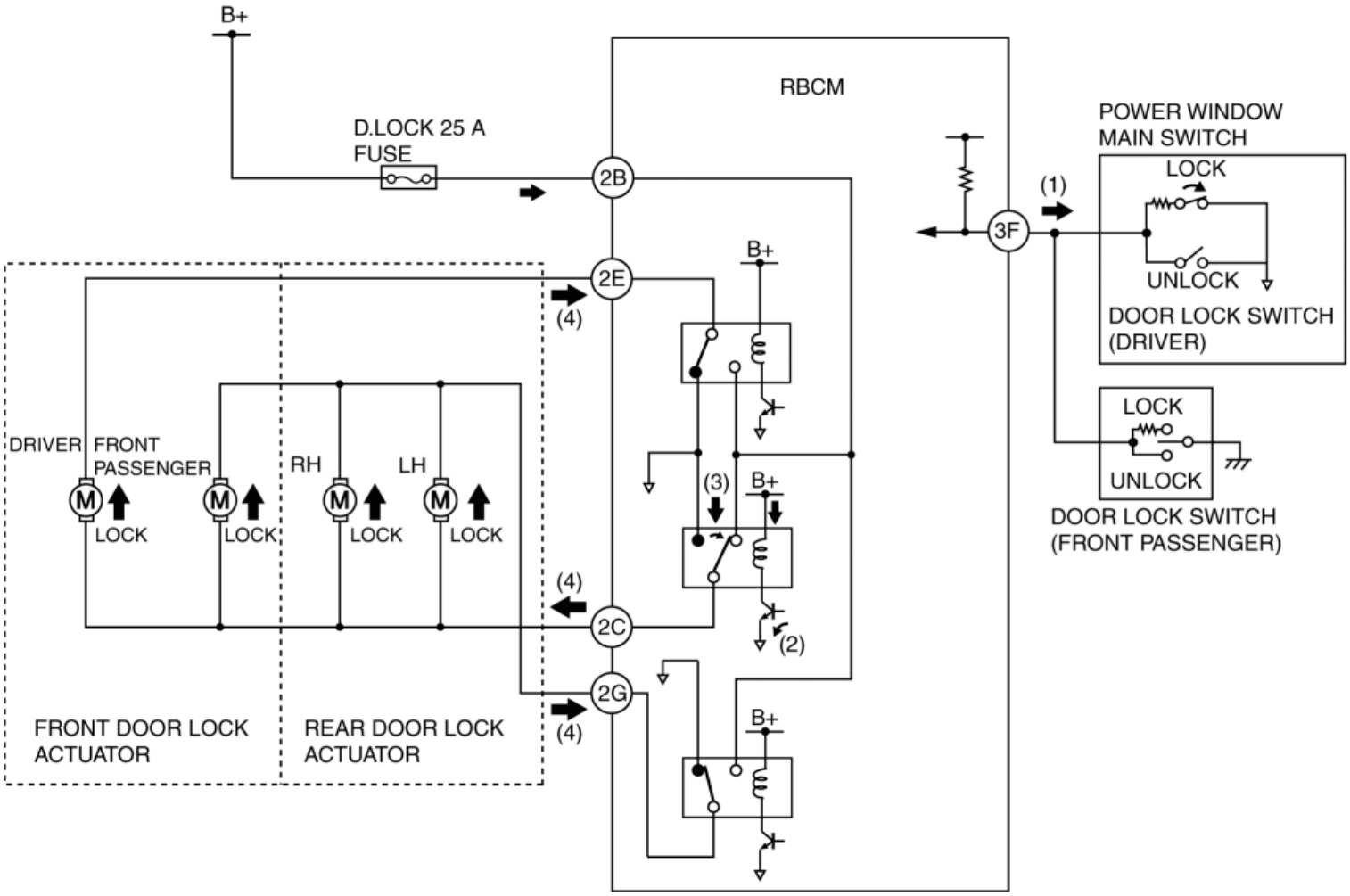

Unlock operation using the door lock switch

1. When the door lock switch is operated to unlock, the door lock switch switches to the unlock side.

2. When the rear body control module (RBCM) detects a door lock switch unlock signal (1), it turns the transistor on (2), and turns the door lock relay (unlock side) on.

3. When the door lock relay (unlock side) turns on (3), the front and rear door lock actuator motors perform an unlock operation (4), and the front and rear doors unlock.

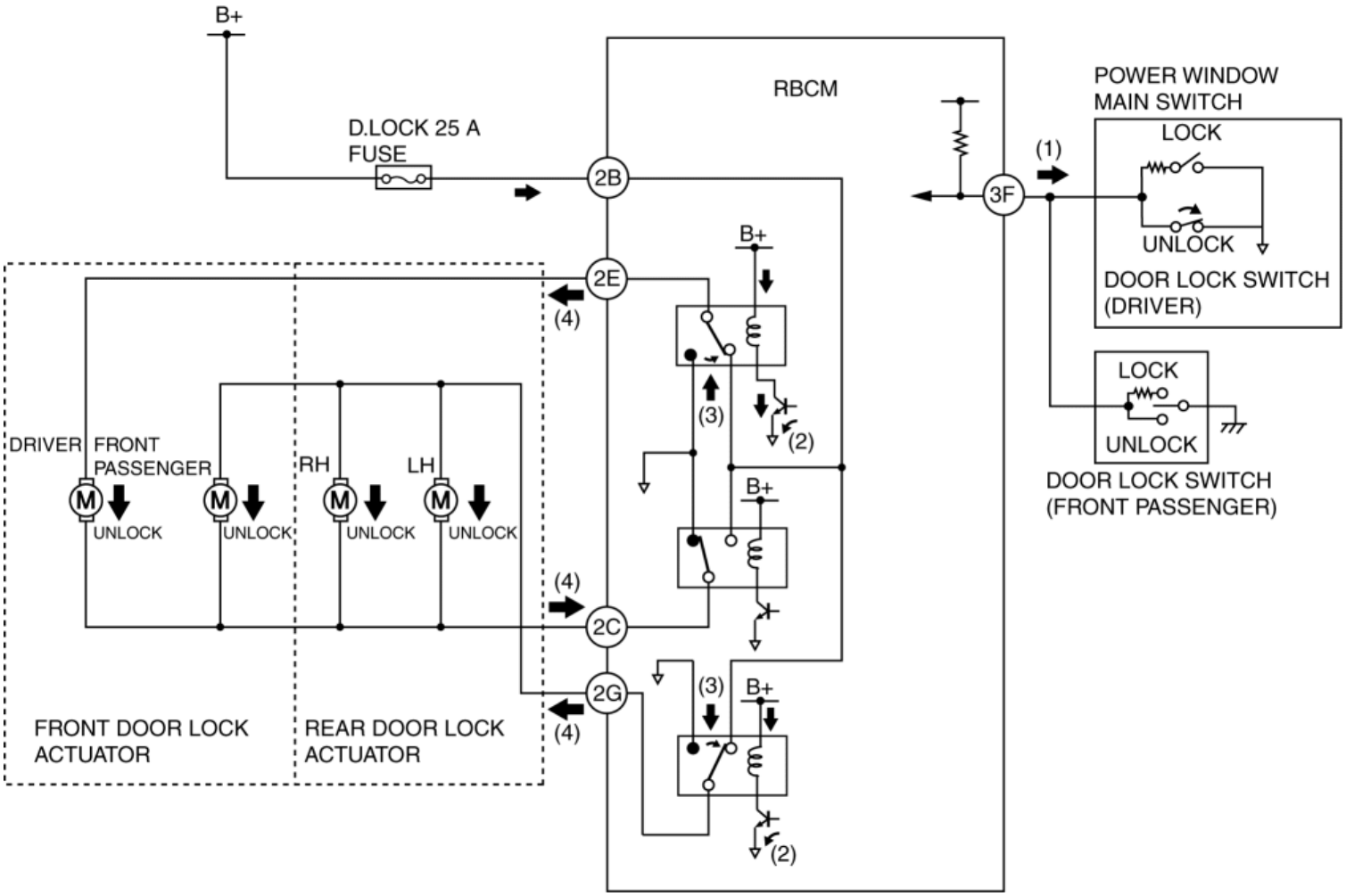

2-step Unlocking Function Operation Using Door Key Cylinder

Timing chart of 2-step unlocking function operation using door key cylinder

- If the driver's door key cylinder switch is held in the unlock position for approx. 2 s with all the doors locked, the 2-step unlocking function operates.

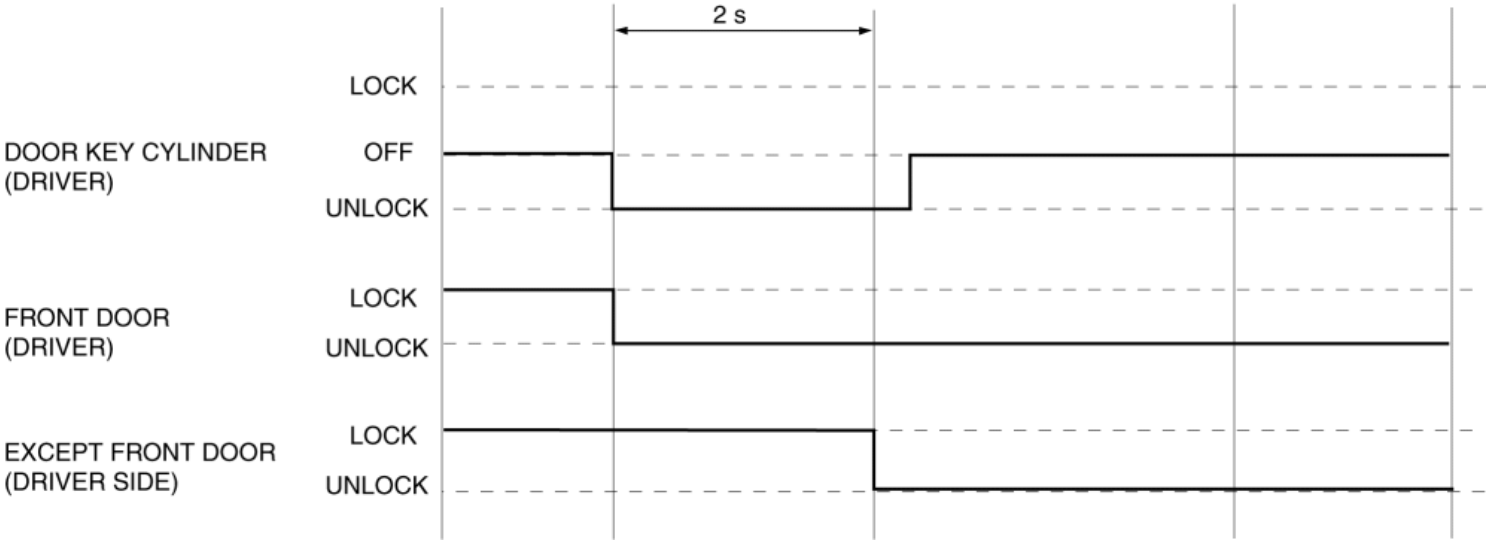

1. When the driver's key cylinder switch is unlocked (1), the rear body control module (RBCM) turns the transistor on (2).
2. When the transistor turns on, the door lock relay turns on (3), and the driver's door unlocks (4).

3. When the rear body control module (RBCM) receives an unlock signal for approx. 2 s, it turns the transistor on (5).

4. When the transistor turns on, the 2-step unlocking relay turns on (6), then all the doors unlock (7).

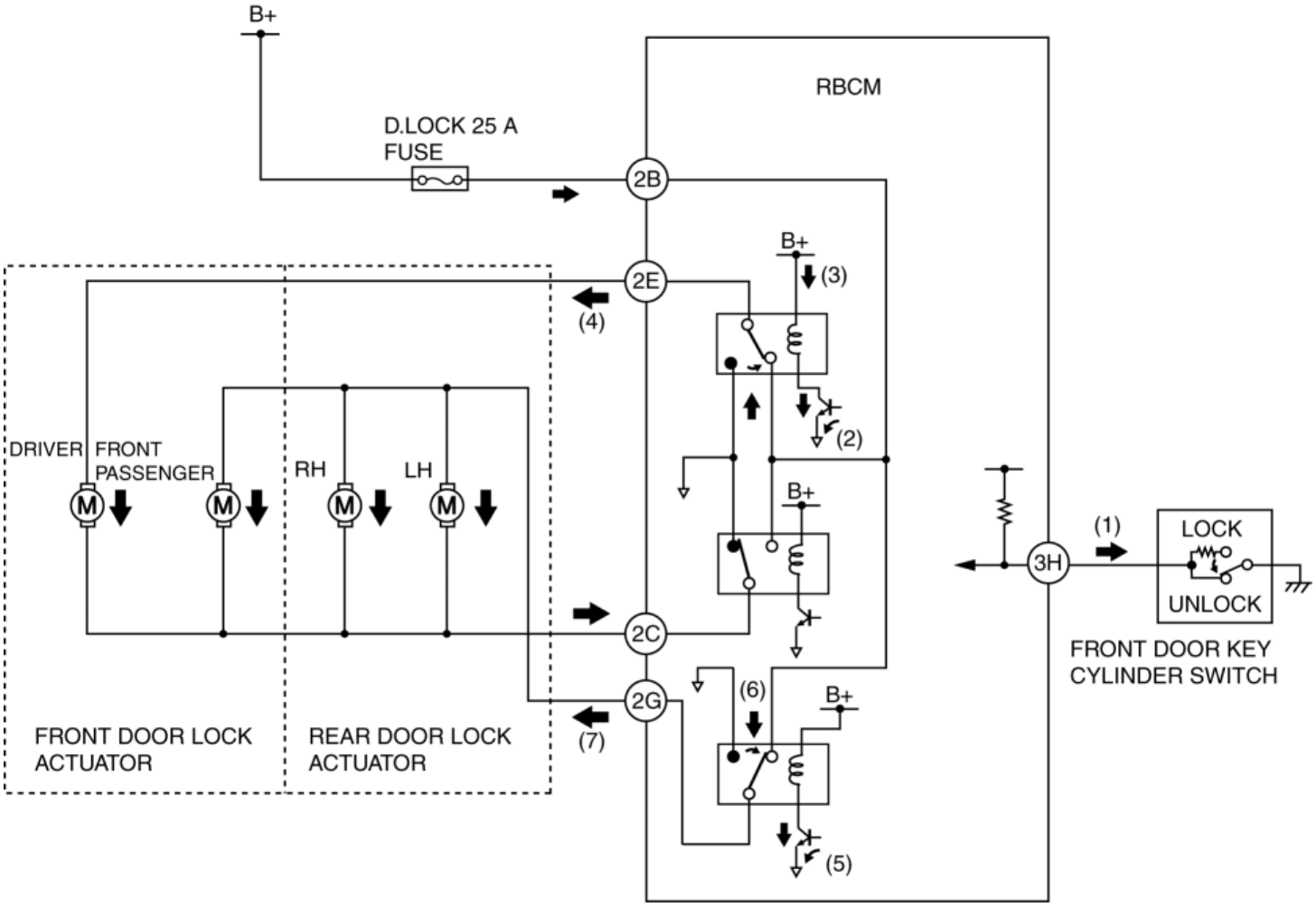

2-Step Unlocking Function Operation Using Keyless Entry Remote Transmitter

Timing chart of 2-step unlocking function operation using keyless entry remote transmitter

- If the following condition is met with all the doors locked, the 2-step unlocking function operates.
  - The rear body control module (RBCM) receives an unlock signal, and within 3 s it receives another unlock signal.

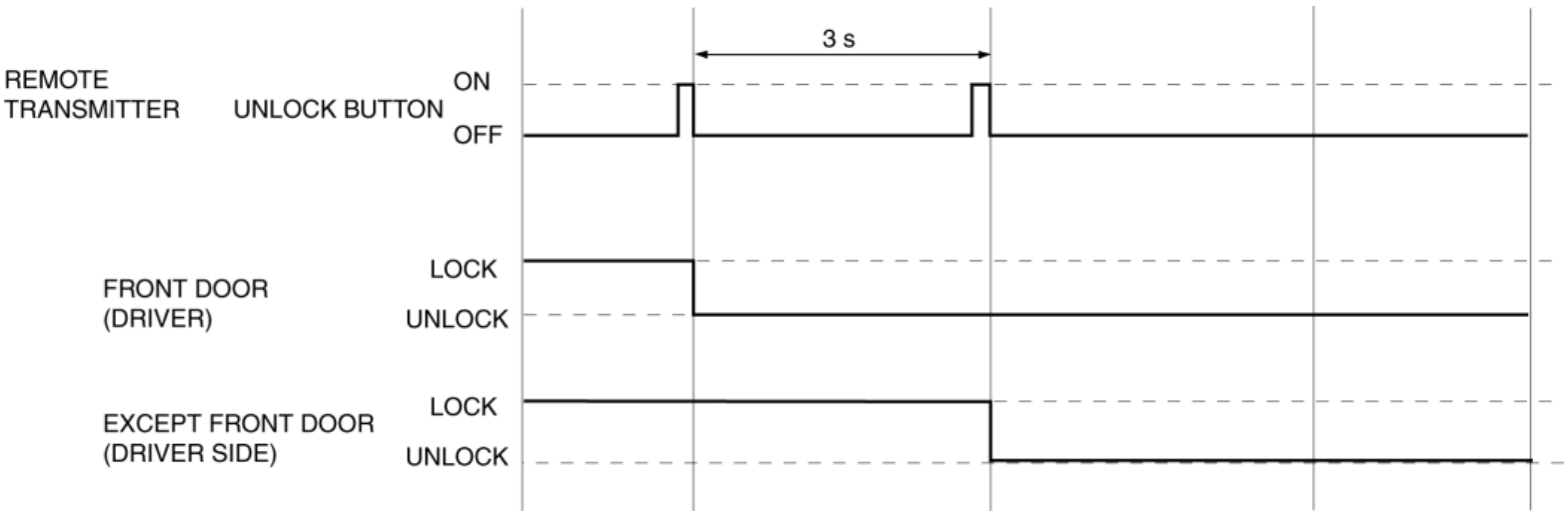

1. When the UNLOCK button on the keyless entry remote transmitter is operated, the keyless entry remote transmitter sends ID data and rolling code to the keyless receiver (1).

2. The keyless receiver sends an unlock signal to the start stop unit (2).

3. The start stop unit sends an unlock signal to the rear body control module (RBCM) (3).

4. When the rear body control module (RBCM) receives the unlock signal, it turns the transistor on (4).

5. When the transistor turns on, the door lock relay turns on (5) and the driver's door unlocks (6).

6. If the rear body control module (RBCM) receives another unlock signal within 5 s after it received the first unlock signal, it turns the transistor on (7).

7. When the transistor turns on, the 2-step unlocking relay turns on (8), then all the doors unlock (9).

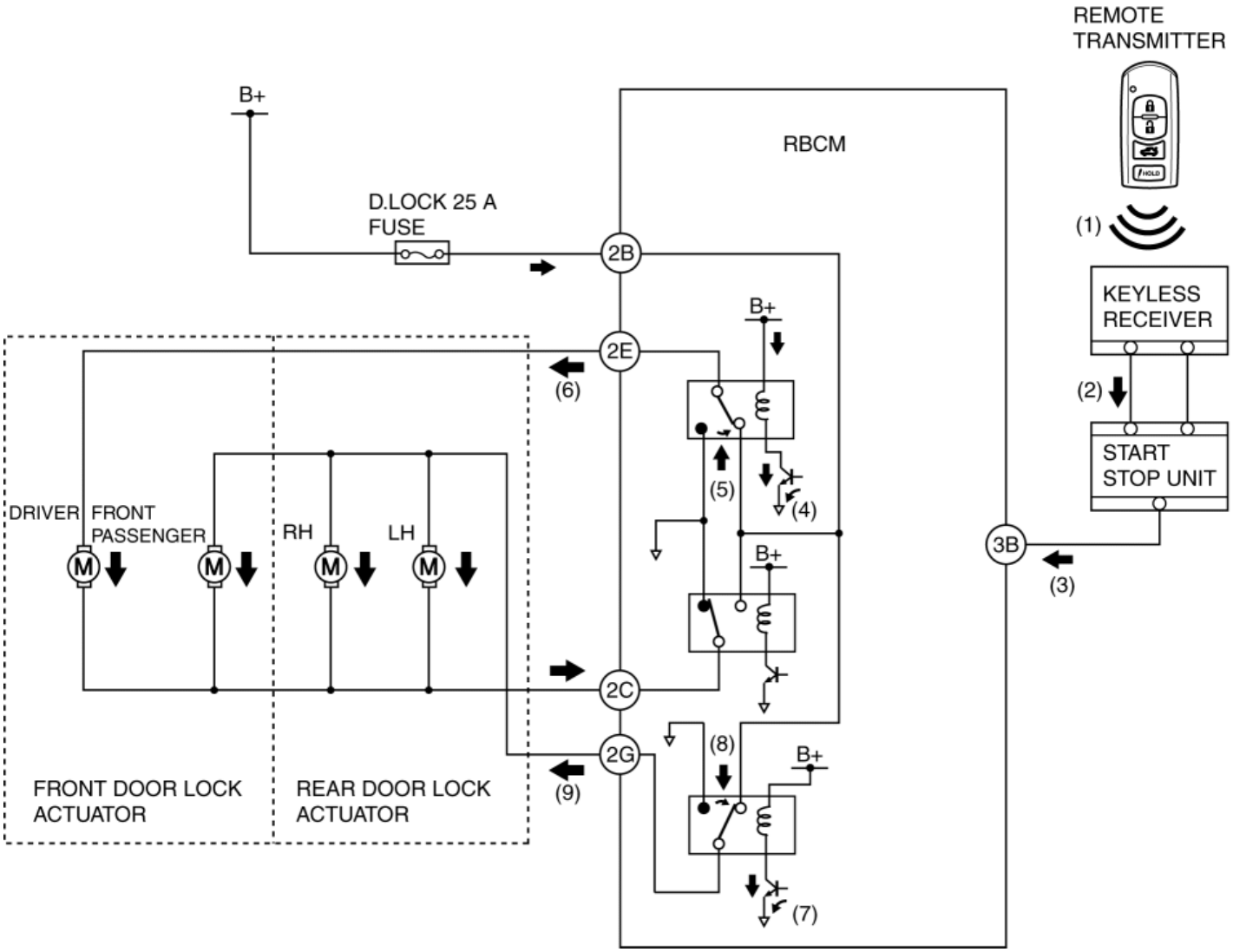

Collision detection unlock function operation

1. When an air bag deploys, the SAS control module sends an air bag deployment signal to the instrument cluster as a CAN signal.

2. The instrument cluster sends the air bag deployment signal to the rear body control module (RBCM) as a CAN signal.

3. The rear body control module (RBCM) receives the air bag deployment signal and after approx. 6 s, it operates the front and rear door lock actuator motors, and the front and rear doors unlock.

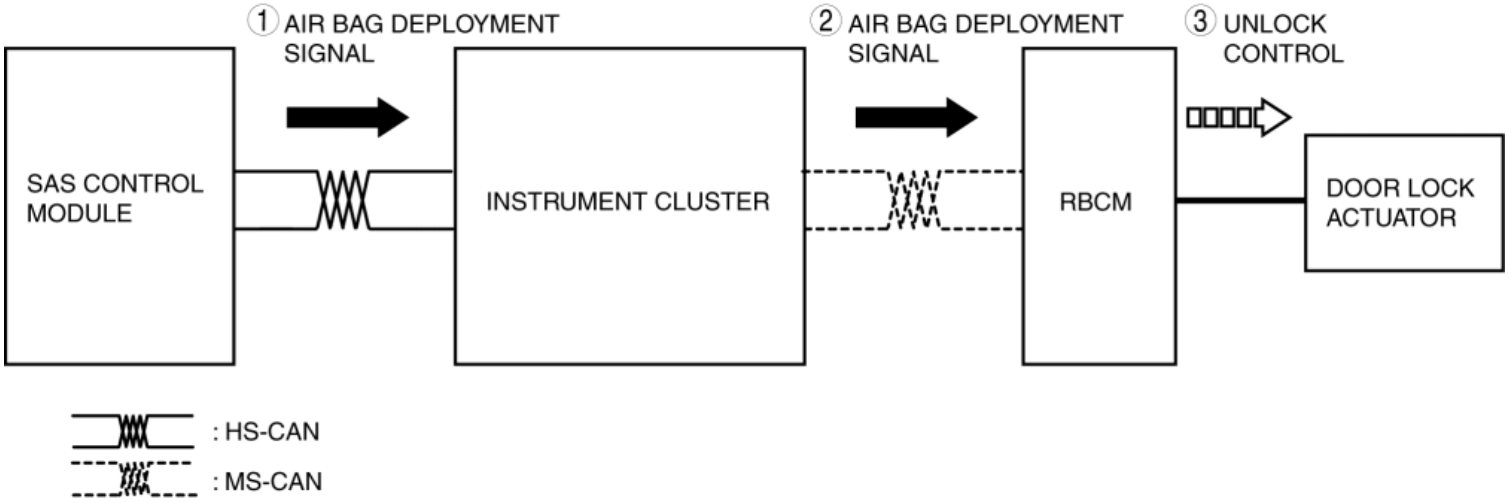

Auto Door Lock Operation

- The auto door lock system functions to automatically lock and unlock all the doors and the liftgate.
- The auto lock function automatically locks all the doors and the liftgate based on the vehicle speed or the selector lever range operation.
- The auto unlock function unlocks all the doors and the liftgate based on the selector lever range or the operation of the ignition switch.

NOTE:

- The auto door lock operation setting can be changed using the personalization function. (See **SECURITY AND LOCKS PERSONALIZATION**.)

  Auto door lock operation based on vehicle speed

- When the vehicle speed reaches approx. 20 km/h {12 mph}, the rear body control module (RBCM) turns on the door lock relay based on the vehicle speed signal from the PCM (CAN signal), and locks all the doors and the liftgate.

  Auto door lock operation based on shift position

- When the selector lever is shifted from the park (P) position to any other position, the rear body control module (RBCM) turns on the door lock relay based on the selector lever input signal from the TCM (CAN signal), and locks all the doors and the liftgate.

Auto Door Unlock Operation

Auto door unlock operation based on shift position

- When the selector lever is shifted from any position other than the park (P) position to the park (P) position, the rear body control module (RBCM) turns on the driver-side door unlock relay and the door unlock relay based on the selector lever input signal from the TCM (CAN signal), and unlocks all the doors.

Auto door unlock operation based on ignition switch position

- If the engine is being started or the ignition is switched from on to off, the rear body control module (RBCM) turns on the driver-side door unlock relay and the door unlock relay and unlocks all the doors.

2014 - Mazda3 - Body and Accessories

FRONT DOOR LOCK ACTUATOR

Purpose

- Performs lock/unlock switching of the front doors electrically based on the signal from the rear body control module (RBCM).

Function

Lock function

- The built-in motor is operated in the lock direction, and the latch lever will not release even if an outer handle is operated.

Unlock function

- The built-in motor is operated in the unlock direction and the latch lever releases when an inner/outer handle is operated.

Construction

- The front door lock actuator has a built-in motor, and the link installed to the motor moves in the lock/unlock direction in conjunction with the motor rotation.
- The link for the outer handle and latch lever can be disconnected by the movement of the link installed to the motor.
- When the door lock is unlocked, the link for the inner/outer handle and latch lever release is connected.
- When the door lock is locked, the link for the outer handle and latch lever release is disconnected.

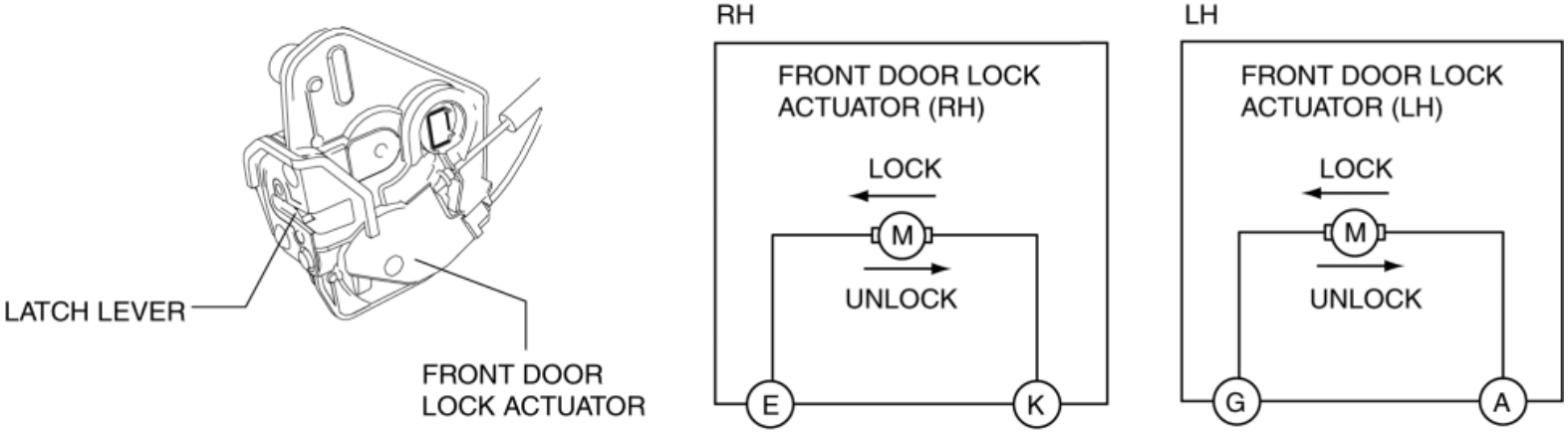

Operation

Lock operation

1. The front door lock actuator rotates the built-in motor to the lock side.

2. When the motor rotates to the lock side, the link installed to the motor moves in the lock direction, and the link for the outer handle and latch lever release disconnects.

3. When the link connection is disconnected, the latch lever cannot be released even if an outer handle is operated.

Unlock operation

1. The front door lock actuator rotates the built-in motor to the unlock side.

2. When the motor rotates to the unlock side, the link installed to the motor moves in the unlock direction, and the link for the outer handle and latch lever release connects.

3. When the link connects, the latch lever is released by the inner and outer handle operation.

Fail-safe

- Function not equipped.

2014 - Mazda3 - Body and Accessories

FRONT DOOR LATCH SWITCH

Purpose, Function

- Switches on/off in conjunction with the latch lever rotation, and detects the front door open/closed condition by the voltage which is changed by the rear body control module (RBCM).

Construction

- The switch is turned on/off by the rotation of the latch lever.
- When a front door is completely opened, the front door latch switch turns on (contact point: Closed).

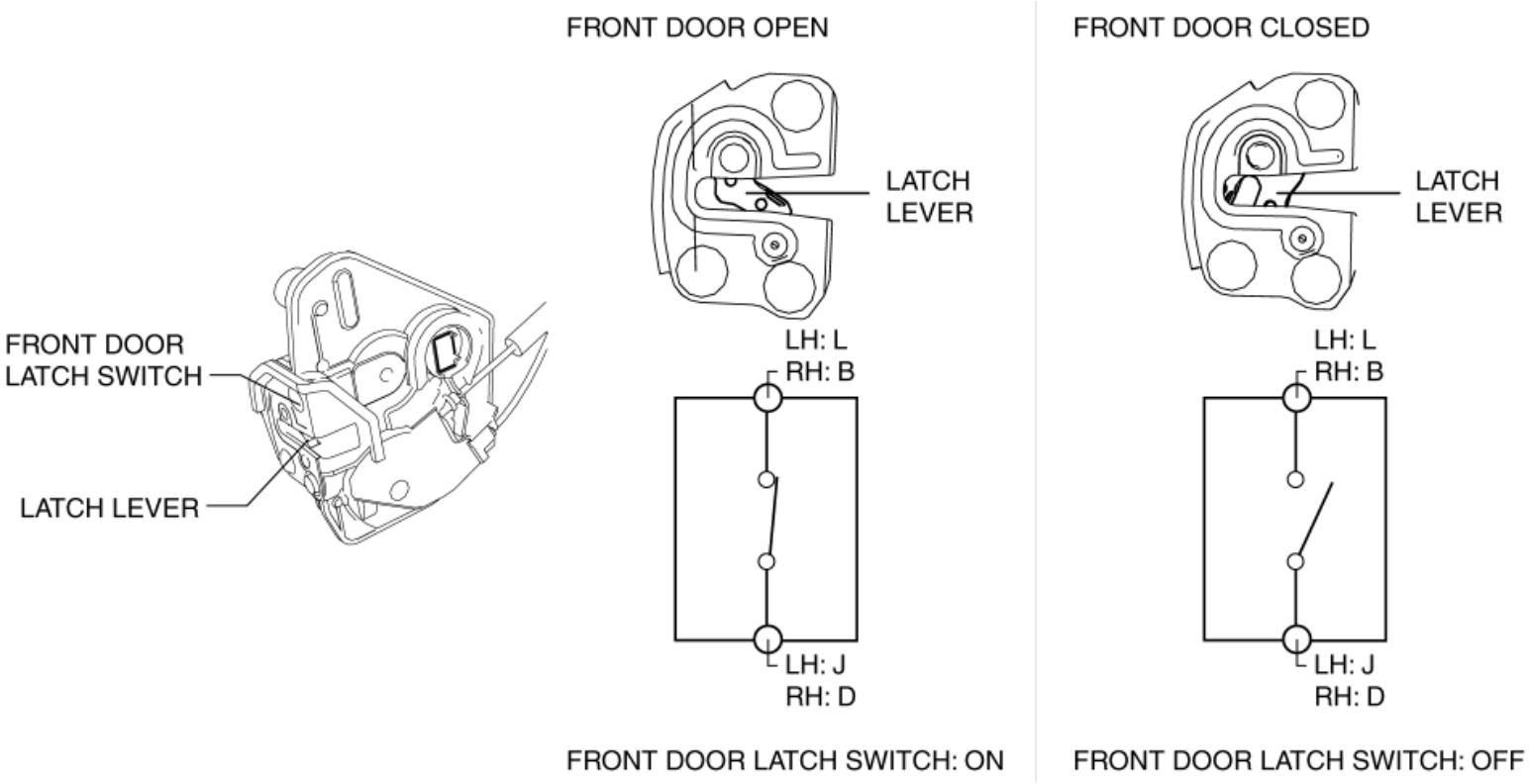

Operation

Door open (unlatch) operation

1. When the inner or outer handle is operated, the door opens, the latch lever is in an unlatched condition, and the front door latch switch turns on.

Door closed (latched) operation

1. When a door is closed, the front door lock striker enters the latch lever groove.

2. When the door is further closed, the latch lever is pressed by the front door lock striker and it rotates.
3. When the door is completely closed, the latch lever is in a latched condition, the front door latch switch turns off.

Fail-safe

- Function not equipped.

2014 - Mazda3 - Body and Accessories

FRONT DOOR LOCK-LINK SWITCH

Purpose

- Switches on/off in conjunction with a front door lock knob lock/unlock operation, and detects the front door lock/unlock condition by the voltage which is changed by the rear body control module (RBCM).

Function

- The door lock-link switch contact point changes in conjunction with the front door lock knob lock/unlock operation.

Construction

- The front door lock knob and door lock-link switch are connected by the door lock-link cable, and are built into the front door latch and lock actuator.

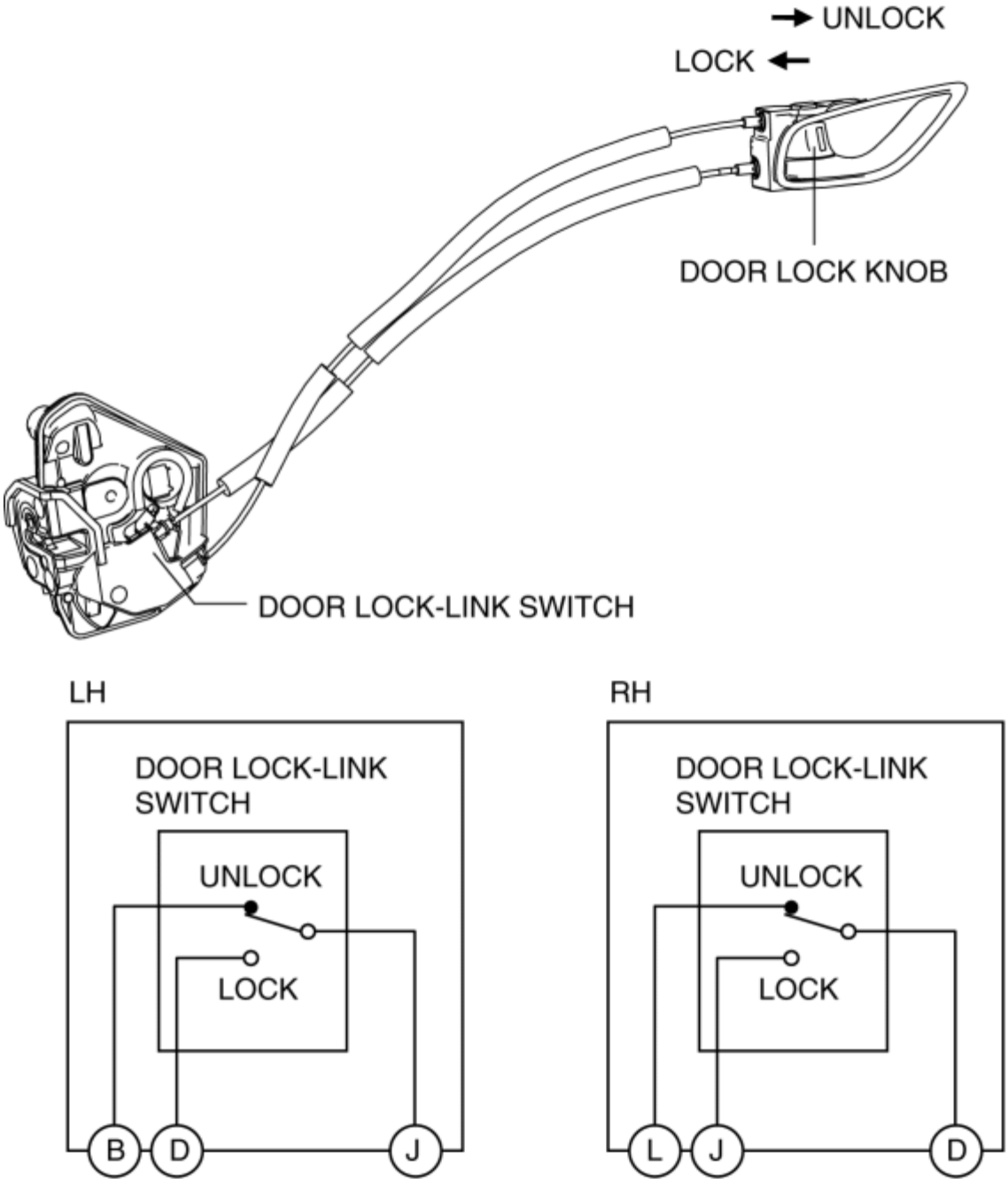

Operation

Lock operation

- When the front door lock knob is turned to the lock position, the door lock-link cable is pressed, and the door lock-link switch is switched to the lock side.

Unlock operation

- When the front door lock knob is turned to the unlock position, the door lock-link cable is pulled, and the door lock-link switch is switched to the unlock side.

Fail-safe

- Function not equipped.

2014 - Mazda3 - Body and Accessories

KEY CYLINDER SWITCH

Purpose

- The switch turns on/off in conjunction with a front door key cylinder lock/unlock operation and the rear body control module (RBCM) detects the key cylinder operation condition by the change in the voltage.

Function

- The key cylinder switch contact point changes in conjunction with the front door key cylinder lock/unlock operation.

Construction

- Built into the driver's front door latch and lock actuator.
- The front door key cylinder is connected to the front door latch and lock actuator, and the front door key cylinder is rotated to directly switch the key cylinder switch.
- When the front door key cylinder is not operated, the key cylinder switch is off (contact point: Open).

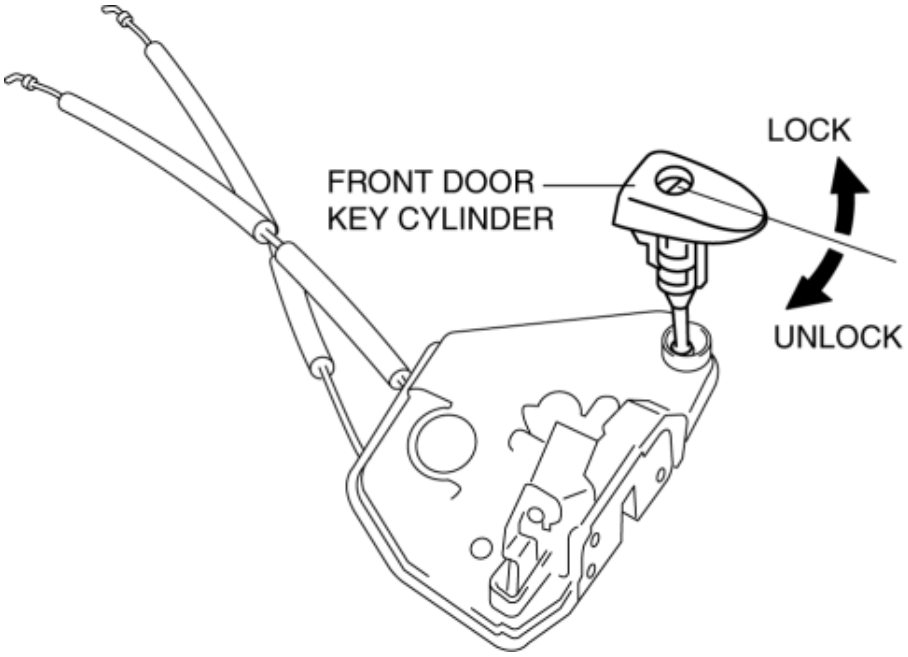

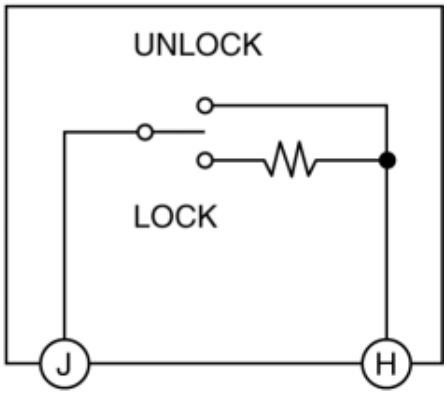

Operation

Lock operation

- When the key is inserted in a front door key cylinder and it is rotated in the lock direction, the key cylinder switch switches to the lock side, and the lock-side switch turns on (contact point: Closed).

Unlock operation

- When the key is inserted in a front door key cylinder and it is rotated in the unlock direction, the key cylinder switch switches to the unlock side, and the unlock-side switch turns on (contact point: Closed).

Fail-safe

- Function not equipped.

2014 - Mazda3 - Body and Accessories

REAR DOOR LOCK ACTUATOR

Purpose

- Performs lock/unlock switching of the rear doors electrically based on the signal from the rear body control module (RBCM).

Function

Lock function

- The built-in motor is operated in the lock direction, and the latch lever will not release even if an outer handle is operated.

Unlock function

- The built-in motor is operated in the unlock direction and the latch lever releases when an inner/outer handle is operated.

Construction

- The rear door lock actuator has a built-in motor, and the link installed to the motor moves in the lock/unlock direction in conjunction with the motor rotation.
- The link for the outer handle and latch lever can be disconnected by the movement of the link installed to the motor.
- When the door lock is unlocked, the link for the inner/outer handle and latch lever release is connected.
- When the door lock is locked, the link for the outer handle and latch lever release is disconnected.

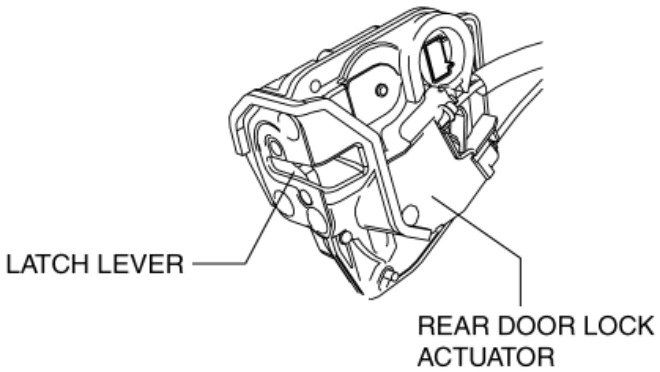

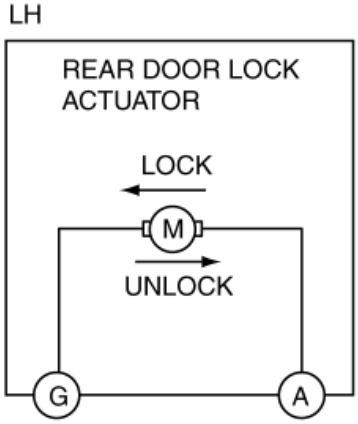

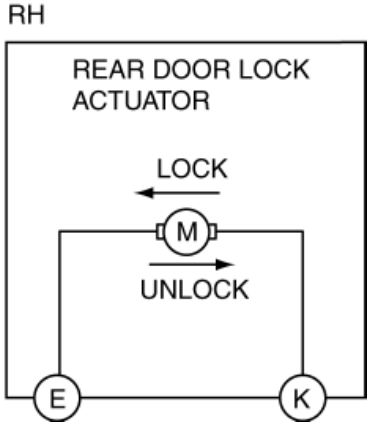

Operation

Lock operation

1. The rear door lock actuator rotates the built-in motor to the lock side.

2. When the motor rotates to the lock side, the link installed to the motor moves in the lock direction, and the link for the inner/outer handle and latch lever release disconnects.

3. When the link connection is disconnected, the latch lever cannot be released even if an outer handle is operated.

Unlock operation

1. The rear door lock actuator rotates the built-in motor to the unlock side.

2. When the motor rotates to the unlock side, the link installed to the motor moves in the unlock direction, and the link for the inner/outer handle and latch lever release connects.

3. When the link connects, the latch lever releases by the inner and outer handle operation.

Fail-safe

- Function not equipped.

2014 - Mazda3 - Body and Accessories

REAR DOOR LATCH SWITCH

Purpose, Function

- The switch turns on/off in conjunction with the rotation of the latch lever, and it detects the open/closed condition of a rear door by the voltage value which is changed by the rear body control module (RBCM).

Construction

- The switch is turned on/off by the rotation of the latch lever.
- When a rear door is completely opened, the rear door latch switch is on (contact point: Closed).

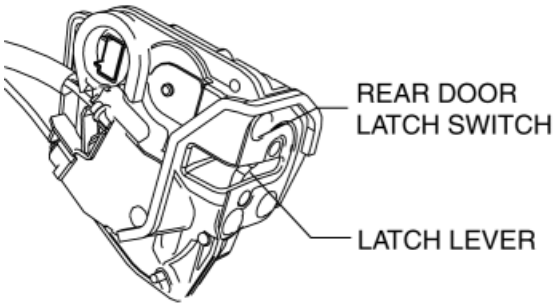

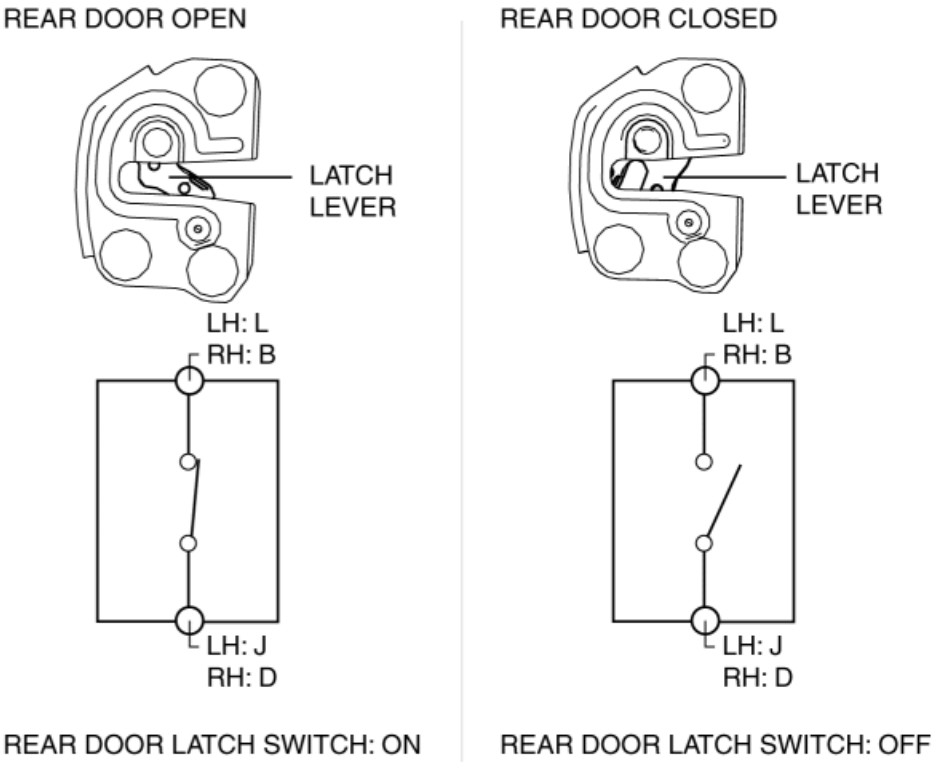

Operation

Door open (unlatch) operation

1. When the inner or outer handle is operated, the door opens, the latch lever is in an unlatched condition, and the rear door latch switch turns on.

Door closed (latched) operation

1. When a door is closed, the rear door lock striker enters the latch lever groove.
2. When the door is further closed, the latch lever is pressed by the rear door lock striker and it rotates.

3. When the door is completely closed, the latch lever is in a latched condition, the rear door latch switch turns off.

Fail-safe

- Function not equipped.

2014 - Mazda3 - Body and Accessories

REAR DOOR LOCK-LINK SWITCH

Purpose

- Switches on/off in conjunction with the rear door lock knob lock/unlock operation, and detects the rear door lock/unlock condition by the voltage which is changed by the rear body control module (RBCM).

Function

- The door lock-link switch contact point changes in conjunction with the rear door lock knob lock/unlock operation.

Construction

- The rear door lock knob and door lock-link switch are connected by the door lock-link cable, and are built into the rear door latch and lock actuator.

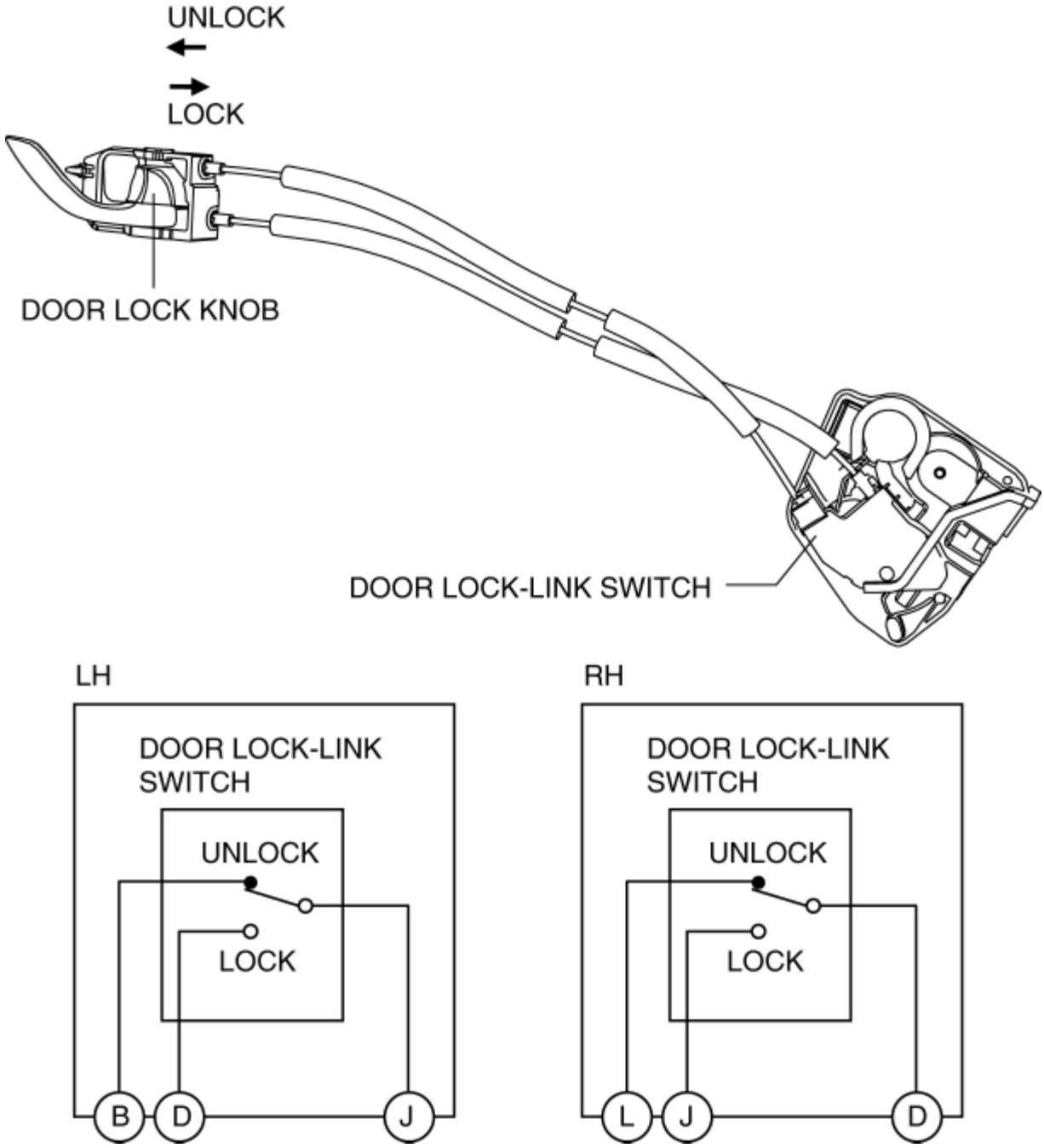

Operation

Lock operation

- When a rear door lock knob is turned to the lock position, the door lock-link cable is pressed, and the door lock-link switch is switched to the lock side.

Unlock operation

- When a rear door lock knob is turned to the unlock position, the door lock-link cable is pulled, and the door lock-link switch is switched to the unlock side.

Fail-safe

- Function not equipped.

2014 - Mazda3 - Body and Accessories

LIFTGATE OPENER SYSTEM

Outline

- A liftgate opener system has been adopted in which the liftgate can be opened just by pressing the liftgate opener switch.
- The rear body control module (RBCM) performs liftgate opener system fail-safe. (See **REAR BODY CONTROL MODULE (RBCM)**.)

Function

- When the liftgate opener switch is pressed, the liftgate lock actuator operates to open the liftgate.
- The liftgate opener system is controlled based on the following CAN signals:

CAN signal sending module	Signal name
Instrument cluster	Parking brake status signal (MTX)
Via instrument cluster from TCM	Shift range position signal (ATX)
Via instrument cluster from PCM	Vehicle speed signal

Structural view

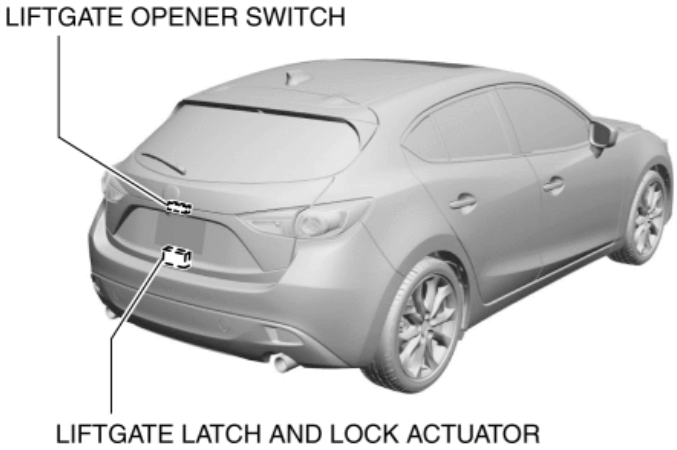

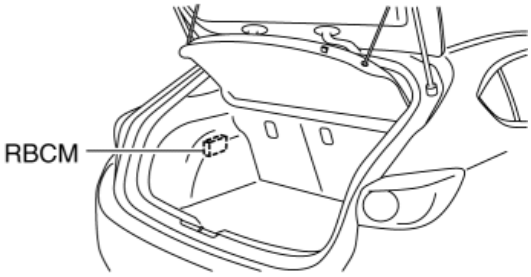

System wiring diagram

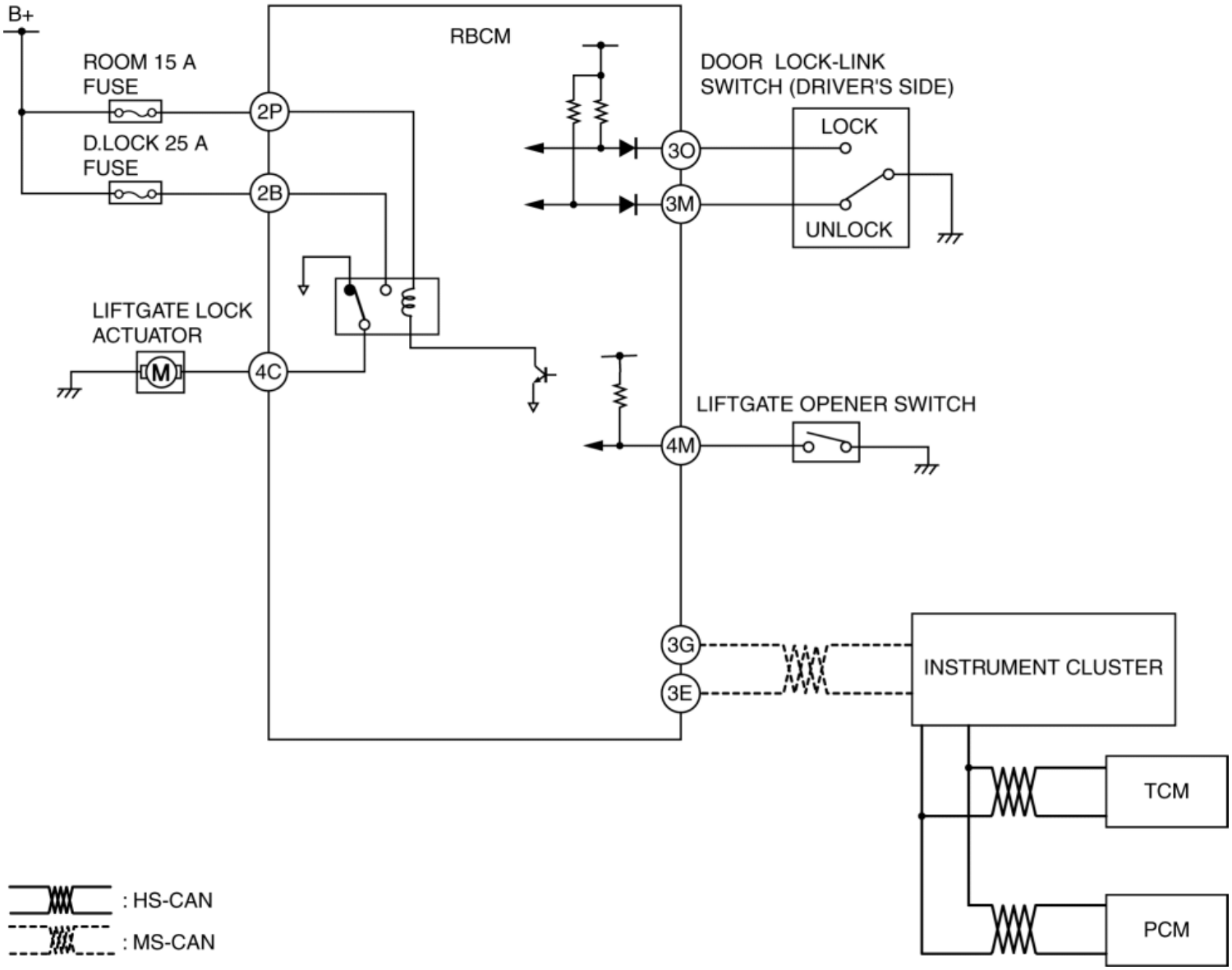

Operation

Operation condition

When all of the following conditions are met, the liftgate opener system operates.

- Ignition is switched ON (engine off or on)
  - Selector lever is in P position (ATX)
  - Parking brake lever is pulled (MTX)
  - Vehicle speed is 3 km/h {2 mph} or less
  - Driver's door is unlocked
- Ignition is switched off
  - Vehicle is stopped (no vehicle speed input)
  - Driver's door is unlocked

Open operation

1. When the liftgate opener switch is pressed, it turns on (1).

2. When the operation condition of the liftgate opener system is met, the rear body control module (RBCM) turns the transistor on for approx. 0.7 s (2) and turns on the liftgate release relay.

3. When the liftgate release relay turns on, the liftgate lock actuator operates (3).

4. When the liftgate lock actuator operates, the latch lever is freed and the liftgate lifts up simultaneously via the spring force of the liftgate weatherstrip and stopper rubber, and opens.

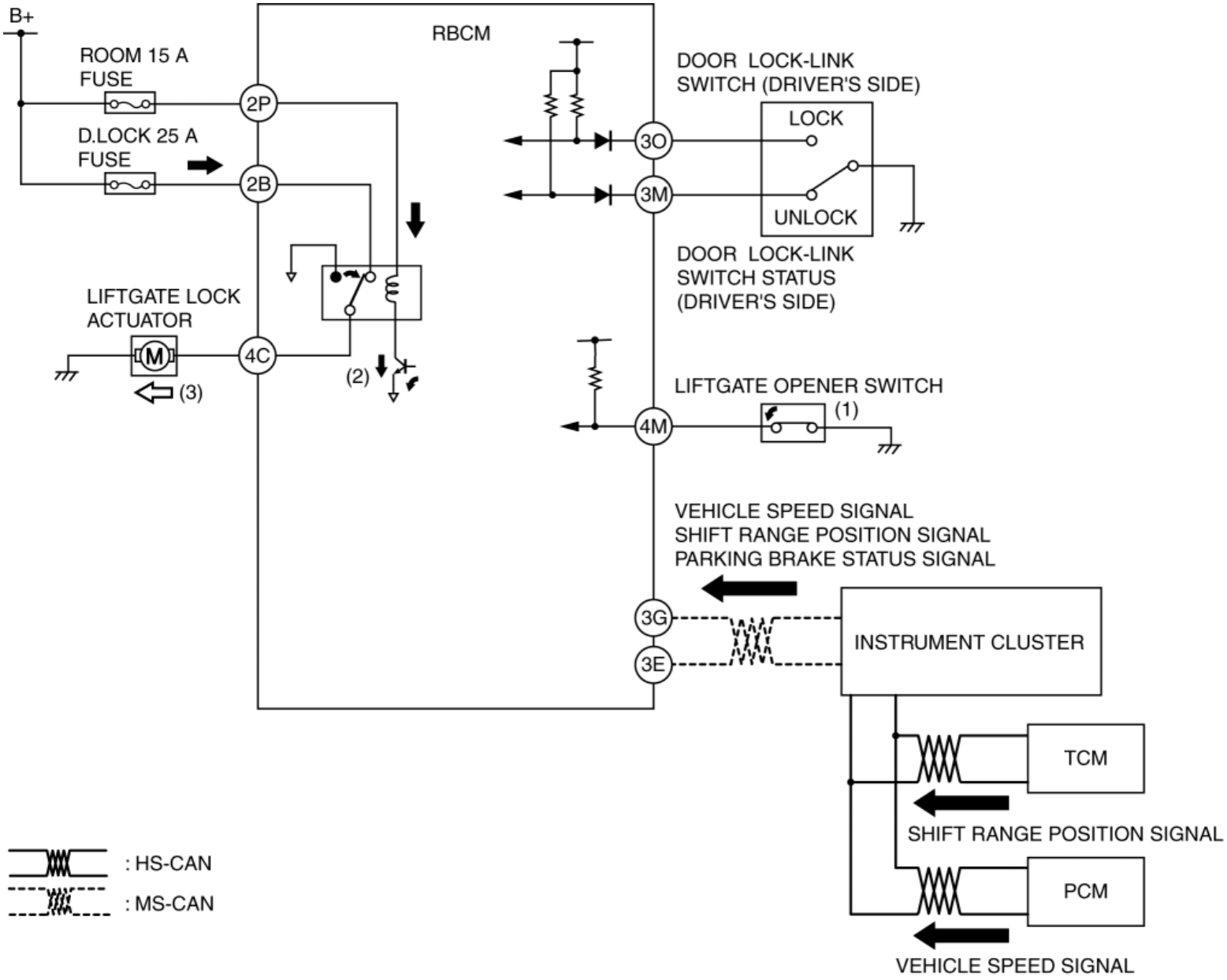

2014 - Mazda3 - Body and Accessories

LIFTGATE LOCK ACTUATOR

Purpose, Function

- The latch of the liftgate latch lever is released based on the signal from the rear body control module (RBCM).

Construction

- Motor is built-in.
- Installed to the liftgate latch and lock actuator.

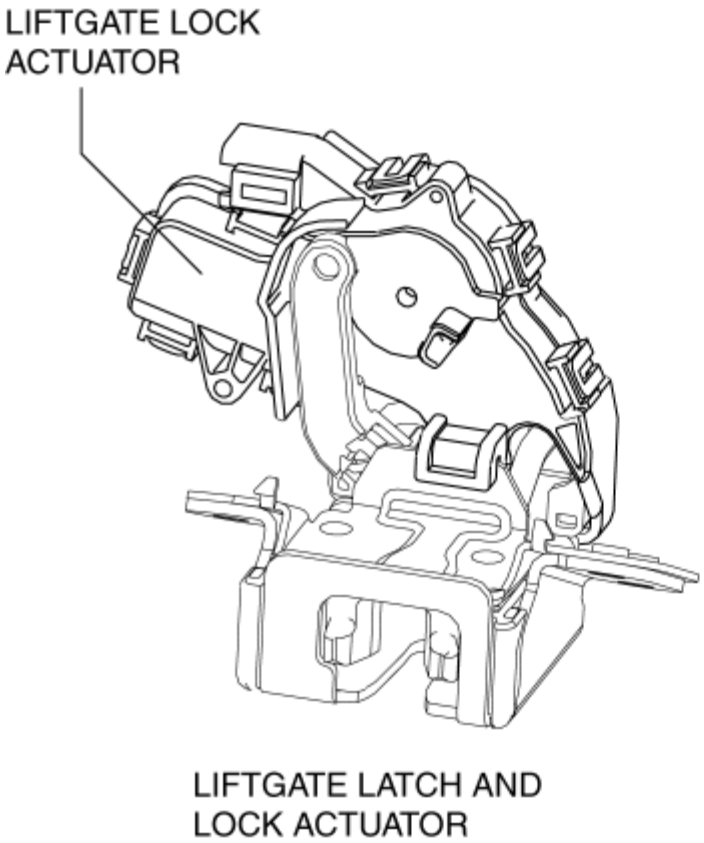

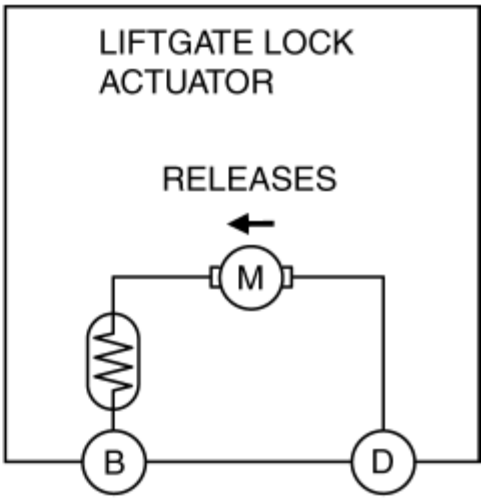

Operation

1. The liftgate lock actuator rotates the built-in motor based on the liftgate opener system operation signal from the rear body control module (RBCM), and releases the latch of the liftgate

latch lever.

Fail-safe

- Function not equipped.

2014 - Mazda3 - Body and Accessories

LIFTGATE LATCH SWITCH

Purpose, Function

- The switch turns on/off in conjunction with the rotation of the latch lever, and it detects the open/closed condition of the liftgate by the voltage value which is changed by the rear body control module (RBCM).

Construction

- The switch is turned on/off by the rotation of the latch lever.
- When the liftgate is completely closed, the switch turns off (contact point: Open)

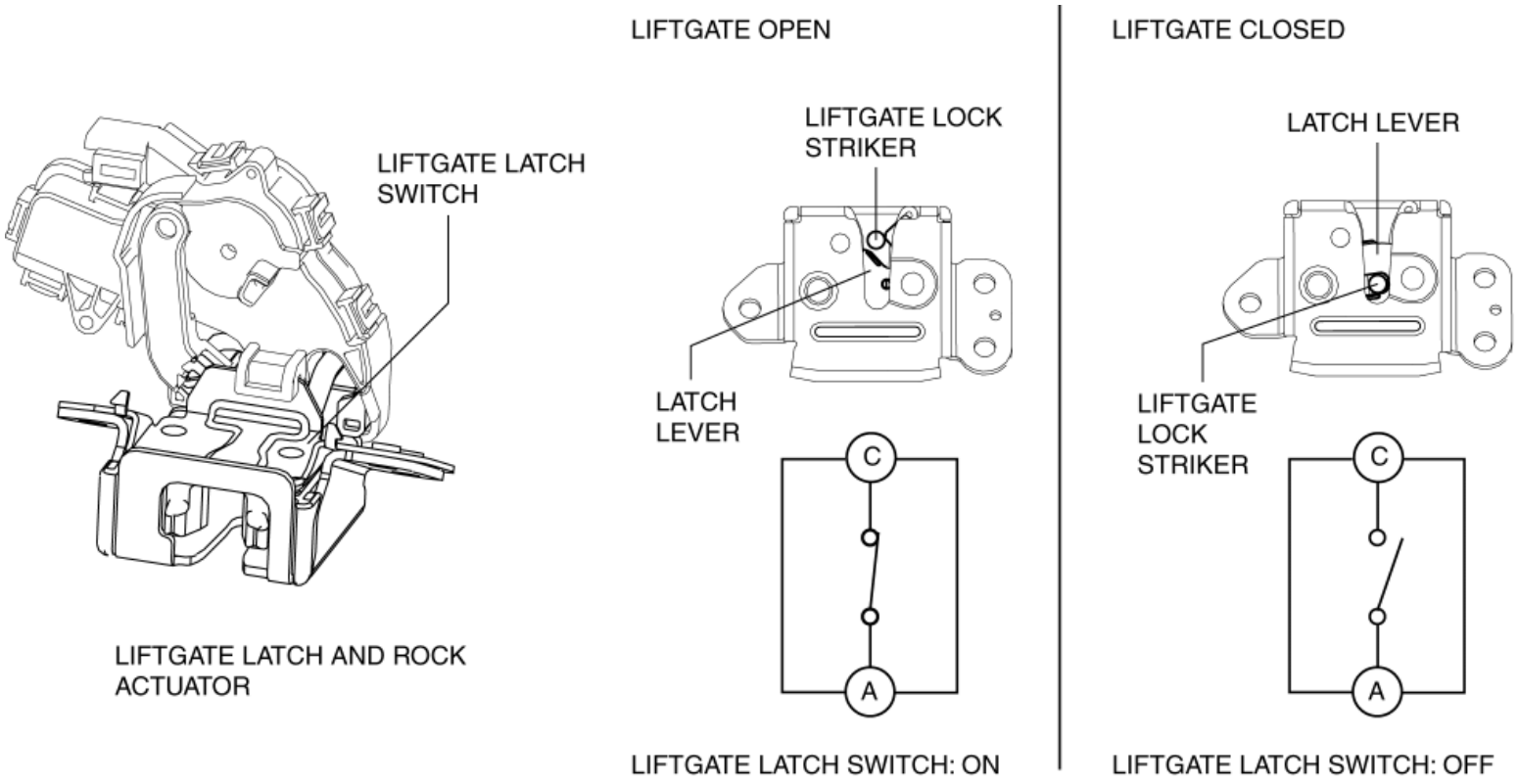

Operation

Liftgate closed (latched) operation

1. When the liftgate is closed, the liftgate lock striker enters the latch lever groove.
2. When the liftgate further closes, the latch lever is pressed by the liftgate lock striker and it rotates.
3. When the liftgate is completely closed, the latch lever is in the latched condition pressing the liftgate latch switch, which turns the switch off.

Liftgate open (unlatch) operation

1. When the liftgate lock actuator operates to open the liftgate, the latch lever is in an unlatched condition, and the liftgate latch switch turns on.

Fail-safe

- Function not equipped.

2014 - Mazda3 - Body and Accessories

LIFTGATE OPENER SWITCH

Purpose

- Transmits the liftgate opener switch operation of the user to the rear body control module (RBCM).

Function

- The liftgate opener switch ON signal is sent to the rear body control module (RBCM) by operating the liftgate opener switch.

Construction, Operation

- Installed on the liftgate.
- While the liftgate opener switch is pressed, the switch turns on (contact point: closed).

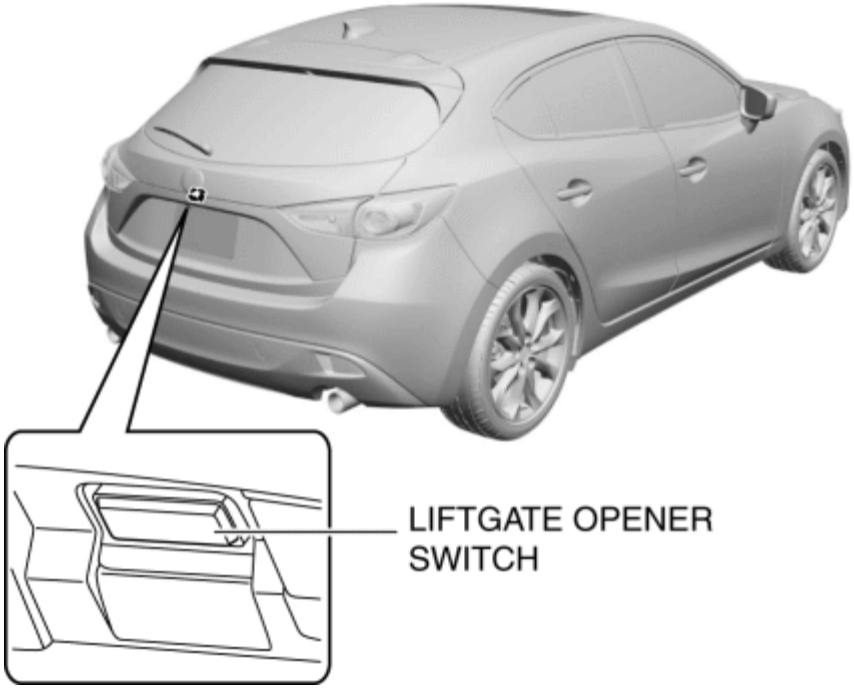

Fail-safe

- Function not equipped.

2014 - Mazda3 - Body and Accessories

TRUNK LID OPENER SYSTEM

Outline

- A trunk lid opener system has been adopted in which the trunk lid can be opened just by pressing the trunk lid opener switch.
- The rear body control module (RBCM) performs the trunk lid opener system fail-safe. (See **REAR BODY CONTROL MODULE (RBCM)**.)

Function

- When the trunk lid opener switch is pressed, the trunk lid release actuator operates to open the trunk lid.
- The trunk lid opener system is controlled based on the following CAN signal:

CAN signal sending module	Signal name
Via instrument cluster from PCM	Vehicle speed signal

Structural view

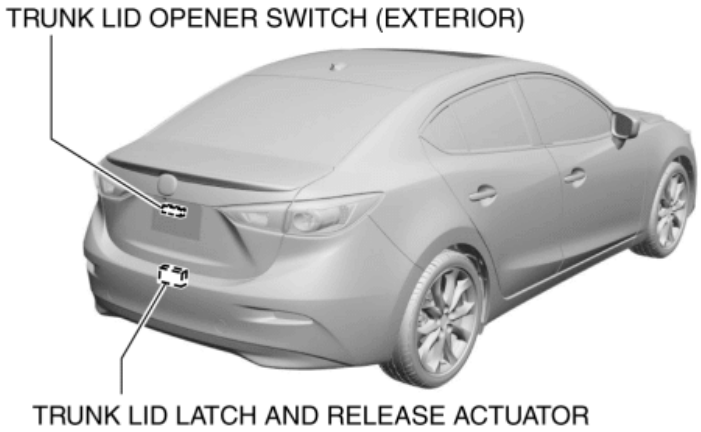

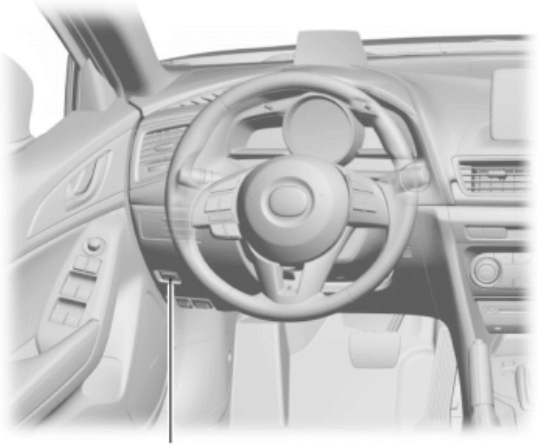

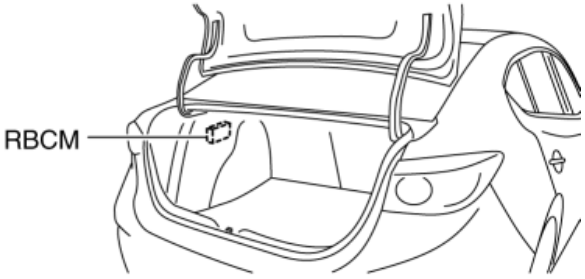

System wiring diagram

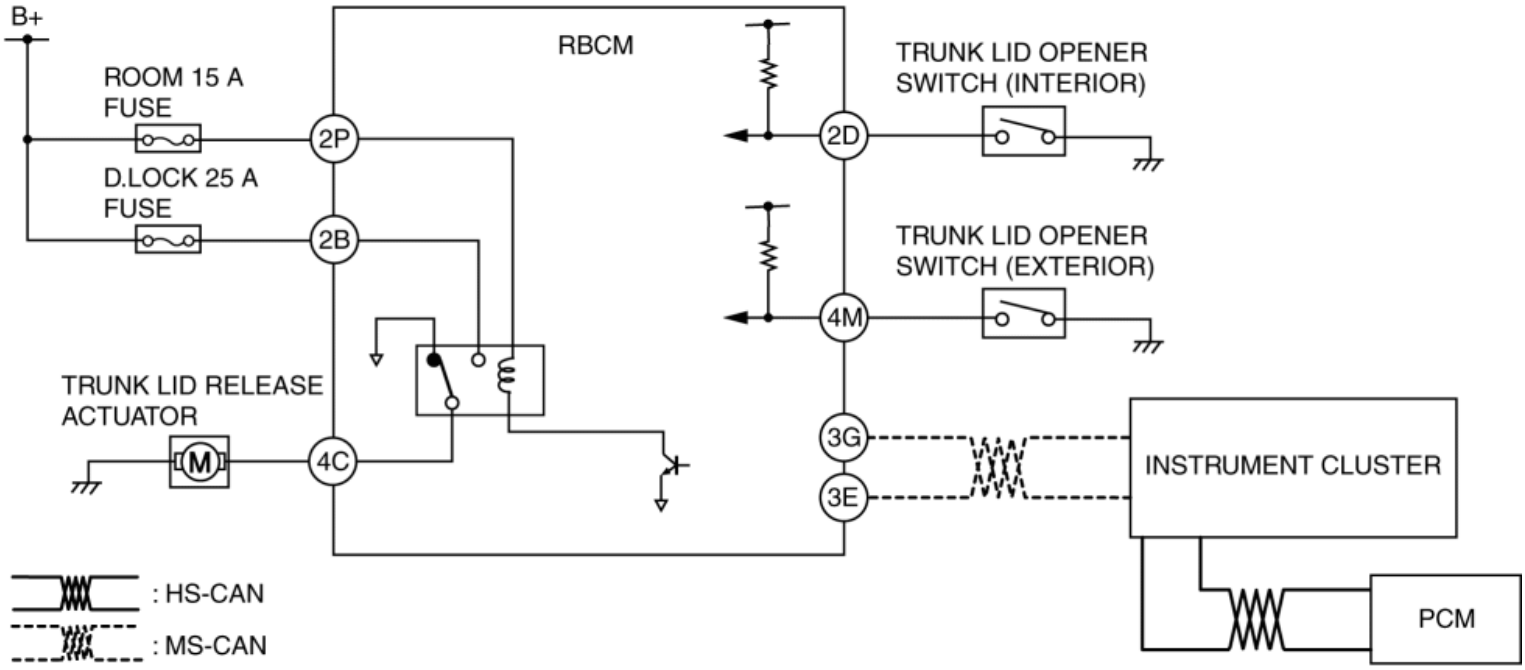

Operation

Operation condition

When all of the following conditions are met, the trunk lid opener system operates.

- Vehicle speed is **3 km/h {2 mph} or less**

Trunk lid opener switch (Interior) open operation

1. When the trunk lid opener switch is pressed, it turns on (1).

2. When the operation condition of the trunk lid opener system is met, the rear body control module (RBCM) turns the transistor on for **approx. 0.7 s** (2) and turns on the trunk lid release relay.

3. When the trunk lid release relay turns on, the trunk lid release actuator operates (3).

4. When the trunk lid release actuator operates, the latch lever is freed and the trunk lid lifts up simultaneously via the spring force of the trunk lid weatherstrip and stopper rubber, and opens.

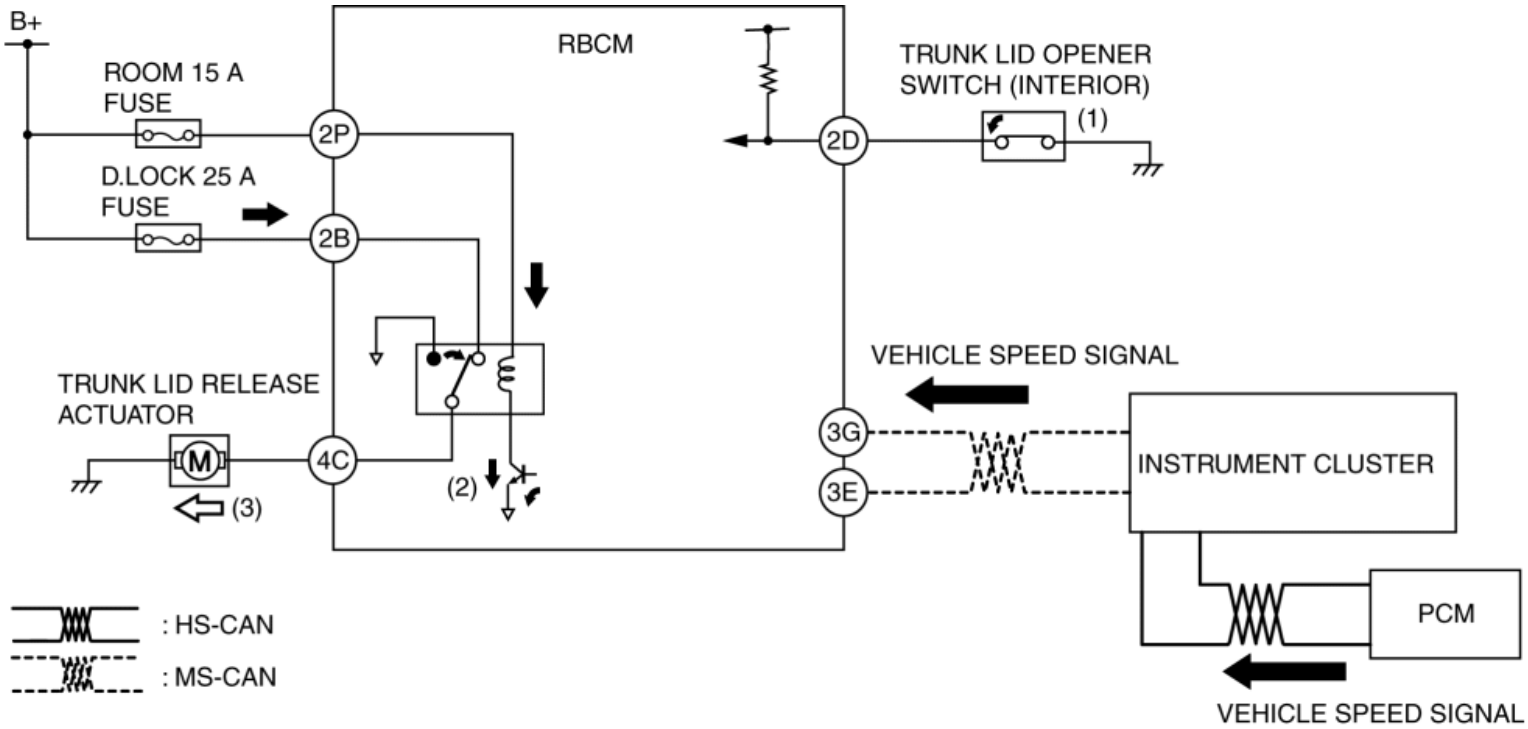

Trunk lid opener switch (exterior) open operation

1. When the trunk lid opener switch is pressed, it turns on (1).

2. When the operation condition of the trunk lid opener system is met, the rear body control module (RBCM) turns the transistor on for **approx. 0.7 s** (2) and turns on the trunk lid release relay.

3. When the trunk lid release relay turns on, the trunk lid release actuator operates (3).

4. When the trunk lid release actuator operates, the latch lever is freed and the trunk lid lifts up simultaneously via the spring force of the trunk lid weatherstrip and stopper rubber, and opens.

TRUNK LID OPENER SYSTEM

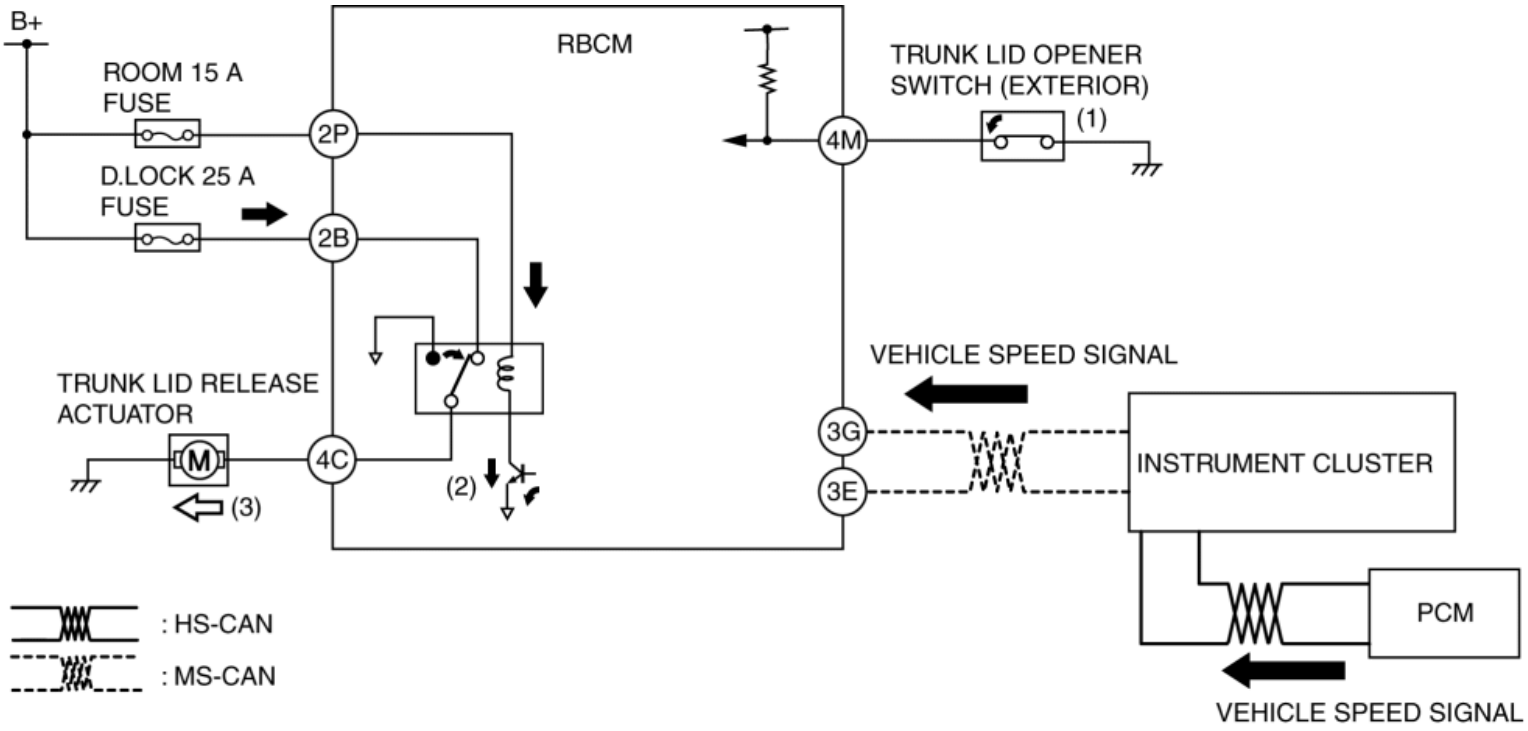

2014 - Mazda3 - Body and Accessories

TRUNK LID RELEASE ACTUATOR

Purpose, Function

- The latch of the trunk lid latch lever is released based on the signal from the rear body control module (RBCM).

Construction

- Motor is built-in.
- Installed to the trunk lid latch and release actuator.

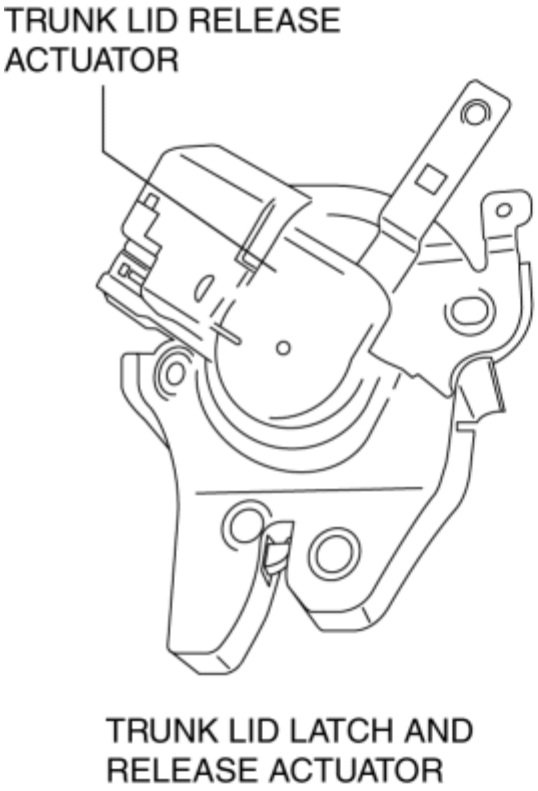

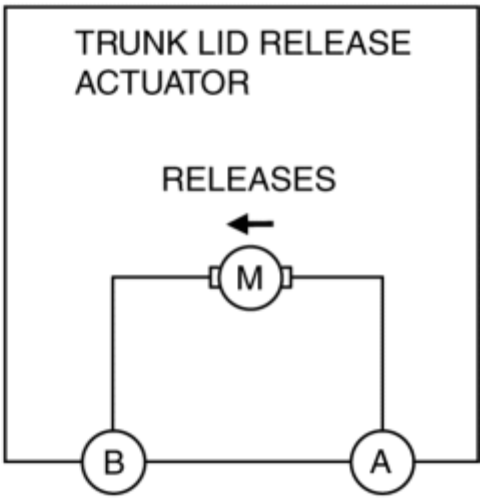

Operation

- The trunk lid release actuator rotates the built-in motor based on the trunk lid opener system operation signal from the rear body control module (RBCM), and releases the latch of the trunk lid latch lever.

Fail-safe

- Function not equipped.

2014 - Mazda3 - Body and Accessories

TRUNK LID LATCH SWITCH

Purpose, Function

- The switch turns on/off in conjunction with the rotation of the latch lever, and it detects the open/closed condition of the trunk lid by the voltage value which is changed by the rear body control module (RBCM).

Construction

- The switch is turned on/off by the rotation of the latch lever.
- When the trunk lid is completely closed, the switch turns off (contact point: Open)

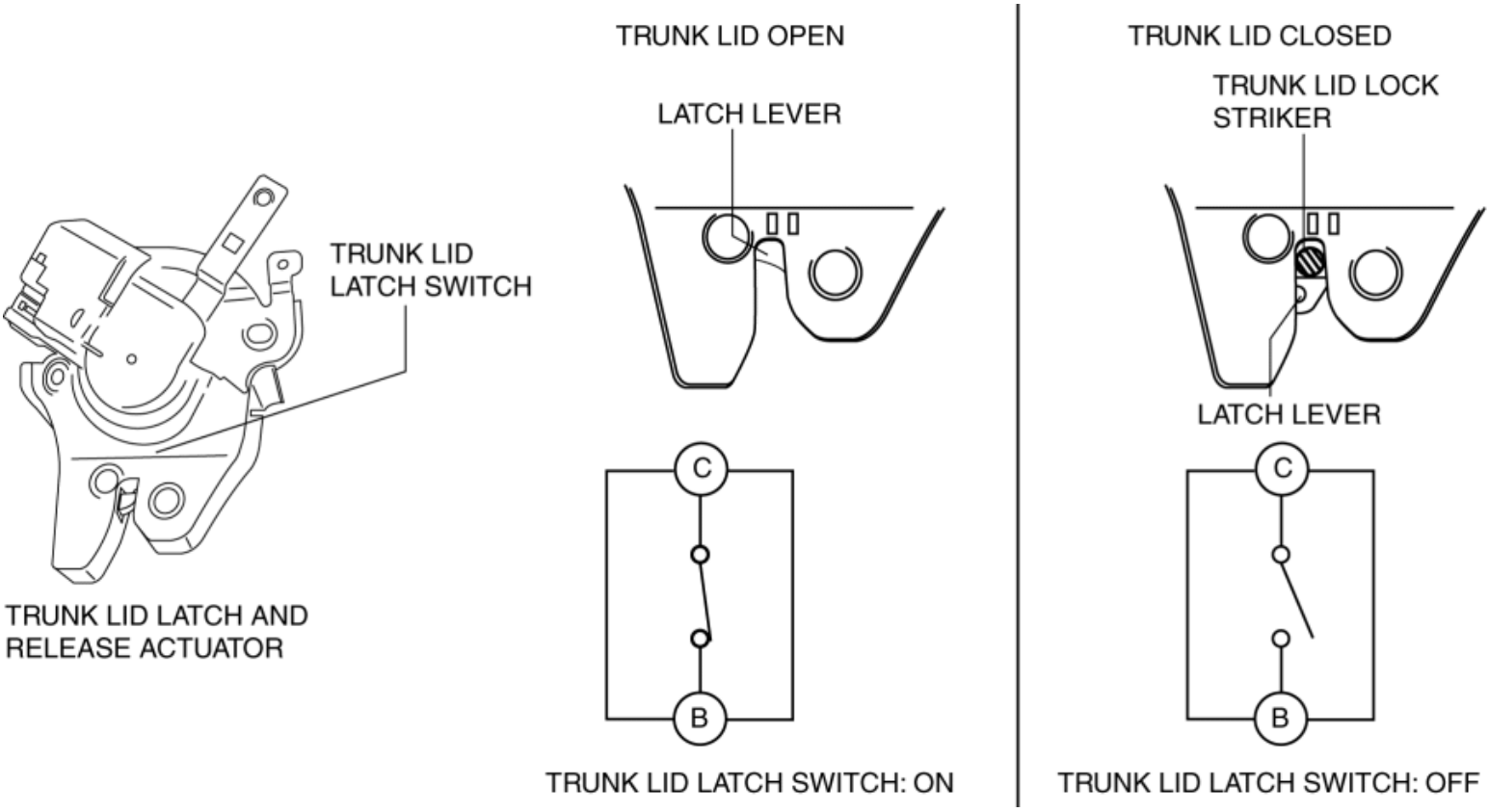

Operation

Trunk lid closed (latched) operation

1. When the trunk lid is closed, the trunk lid lock striker enters the latch lever groove.
2. When the trunk lid further closes, the latch lever is pressed by the trunk lid lock striker and it rotates.
3. When the trunk lid is completely closed, the latch lever is in the latched condition pressing the trunk lid latch

switch, which turns the switch off.

Trunk lid open (unlatch) operation

- When the trunk lid release actuator operates to open the trunk lid, the latch lever is in an unlatched condition, and the trunk lid latch switch turns on.

Fail-safe

- Function not equipped.

2014 - Mazda3 - Body and Accessories

TRUNK LID OPENER SWITCH

Purpose

- Transmits the trunk lid opener switch operation of the user to the rear body control module (RBCM).

Function

- The trunk lid opener switch ON signal is sent to the rear body control module (RBCM) by operating the trunk lid opener switch.

Construction, Operation

- Installed on the trunk lid.
- While the trunk lid opener switch is pressed, the switch turns on (contact point: closed).

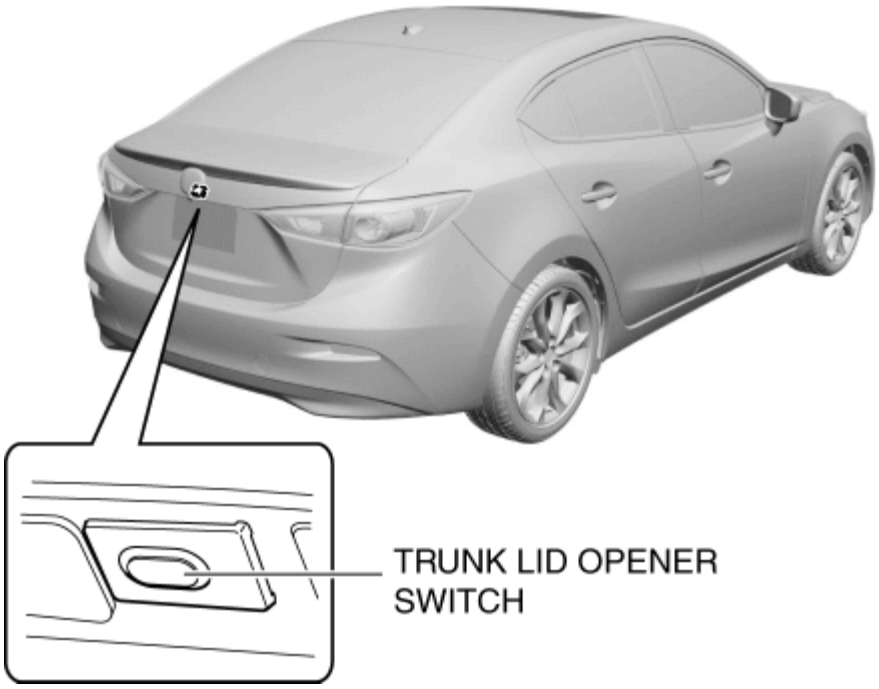

Fail-safe

- Function not equipped.

2014 - Mazda3 - Body and Accessories

KEYLESS ENTRY SYSTEM

Outline

- A keyless entry system has been adopted in which locking/locking is performed by operation of the remote transmitter button, even from a location away front the vehicle.
- The start stop unit performs keyless entry system fail-safe. (See **START STOP UNIT**.)

Function

- When the following operation is performed, the start stop unit verifies the remote transmitter ID data.
    - Locking/unlocking using a remote transmitter
    - Trunk lid opening using remote transmitter (4SD)
- The keyless entry system has the following functions in the event that the user operates the system incorrectly or to prevent the user from leaving the vehicle without locking.
    - Auto re-lock function: After unlocking, if any door or the liftgate/trunk lid is not opened and a period of time according to the personalization setting has elapsed, all doors are automatically locked.
    - Remote transmitter pause function: All the functions of the remote transmitter other than the remote transmitter used for the door lock are paused.
    - Warning function: Function which warns the user of a keyless entry system malfunction using the KEY warning light (red), KEY indicator light (green), keyless warning alarm in the instrument cluster.

Remote transmitter battery voltage low indication function

- This function notifies the user that the battery voltage of the remote transmitter is low.

Structural View

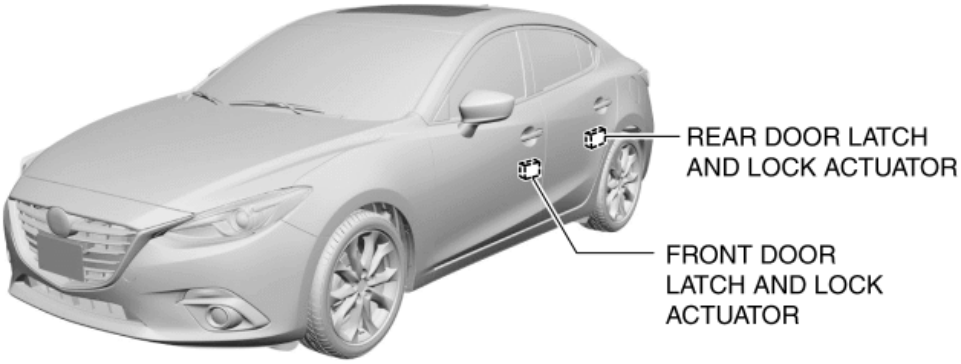
REAR DOOR LATCH
AND LOCK ACTUATOR
FRONT DOOR
LATCH AND LOCK
ACTUATOR

4SD

TRUNK LID LATCH AND
RELEASE ACTUATOR

5HB

LIFTGATE LATCH AND
LOCK ACTUATOR

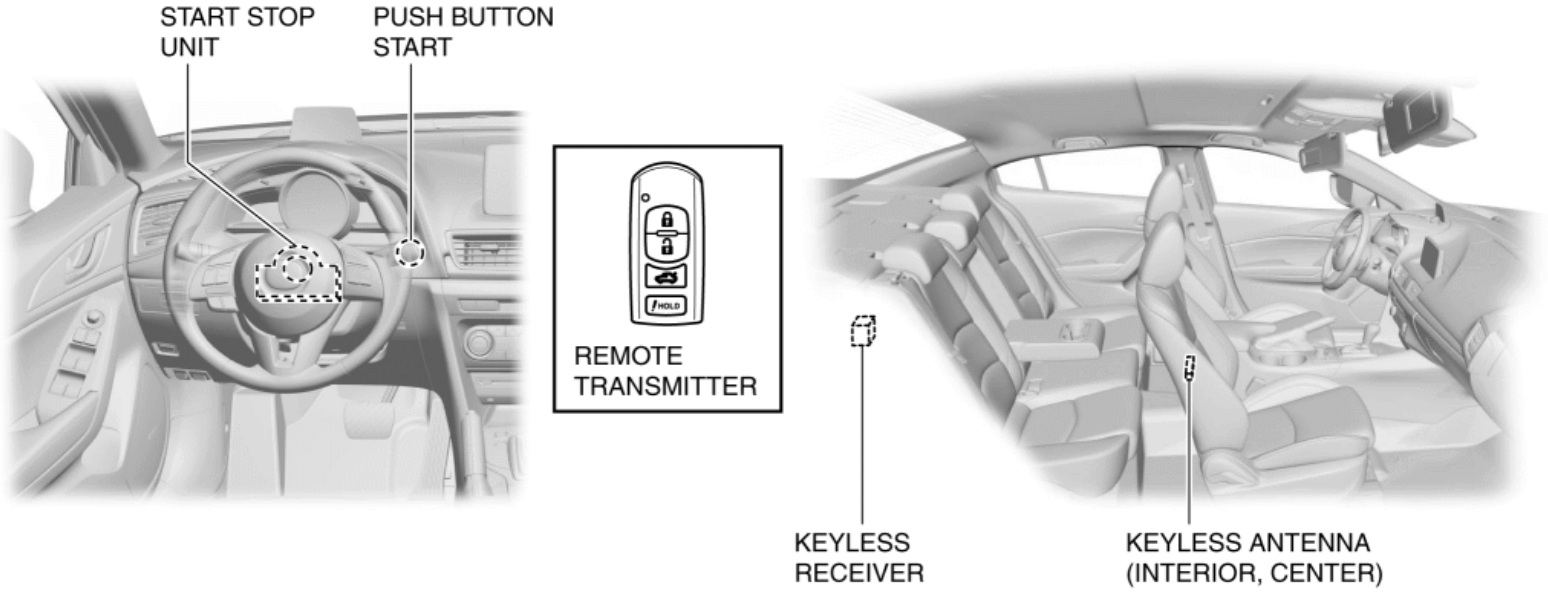

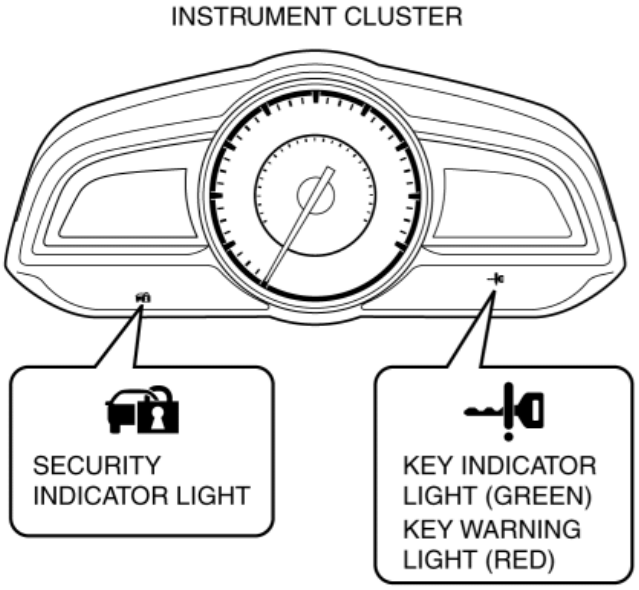

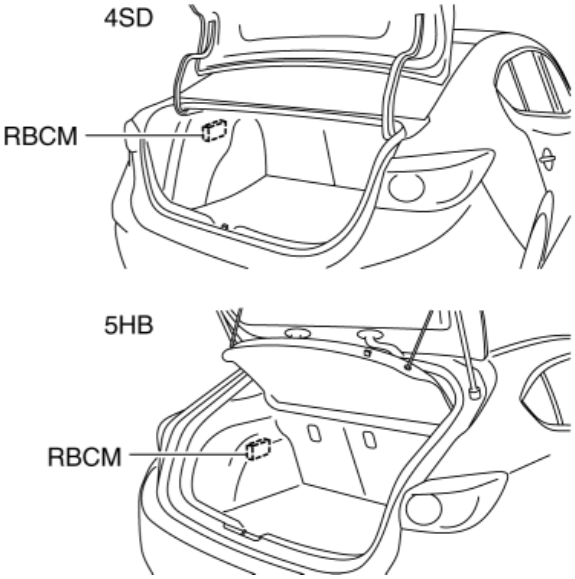

System Wiring Diagram

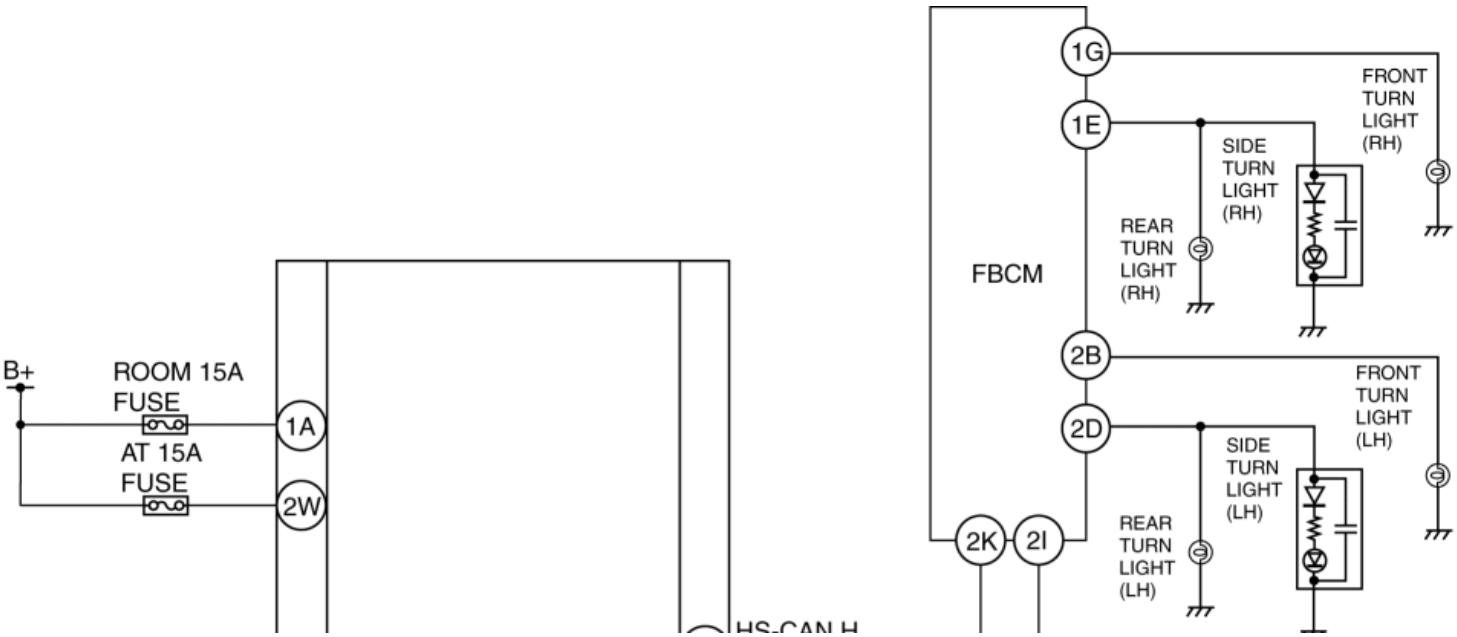

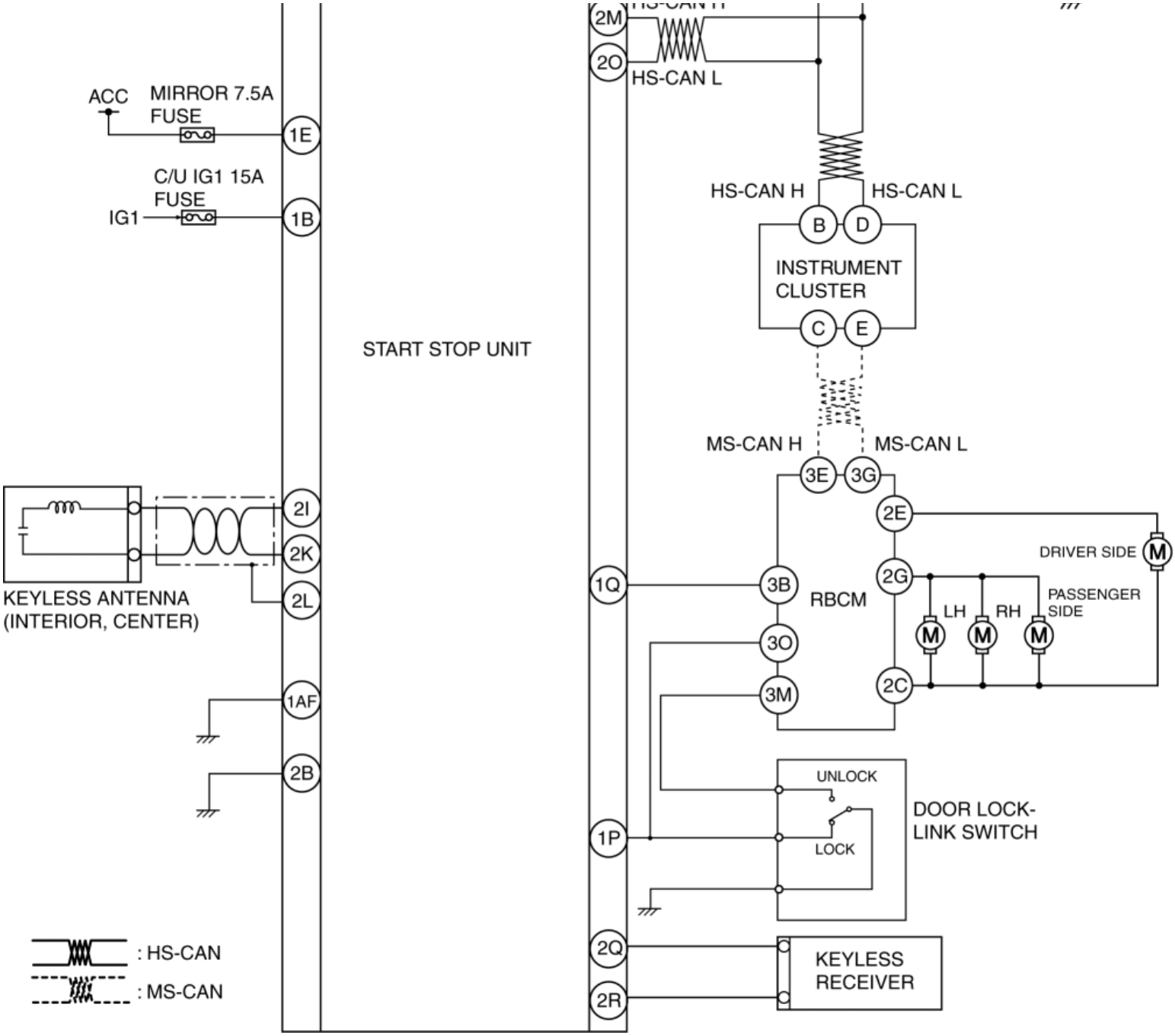

Operation

Lock / unlock operation using remote transmitter

NOTE:

- If the lock button of the remote transmitter is operated when all of the following conditions are met, all the doors and the liftgate are locked.
    - Ignition is switched off
    - All doors are closed
- If the unlock button of the remote transmitter is operated when all of the following conditions are met, all the doors and the liftgate are unlocked.
    - Ignition is switched off

1. When the lock or unlock button of the remote transmitter is pressed, the remote transmitter sends ID data.

2. The keyless receiver receives ID data and transmits the data to the start stop unit.

3. The start stop unit verifies the ID data, and if the ID data matches, it sends a lock/unlock request signal to the rear body control module (RBCM).

4. The rear body control module (RBCM) operates the front/rear door lock actuator motor to lock/unlock the front/rear doors.

5. At the same time as the door lock/unlock operation, it sends a hazard light flash request signal to the instrument cluster as a CAN signal.

6. The instrument cluster sends the hazard light flash request signal to the front body control module (FBCM) as a CAN signal.

7. The front body control module (FBCM) controls the hazard lights to flash for the following number of times to signal that the lock/unlock operation is completed.

- Lock: Flashed once
- Unlock: Flashed twice

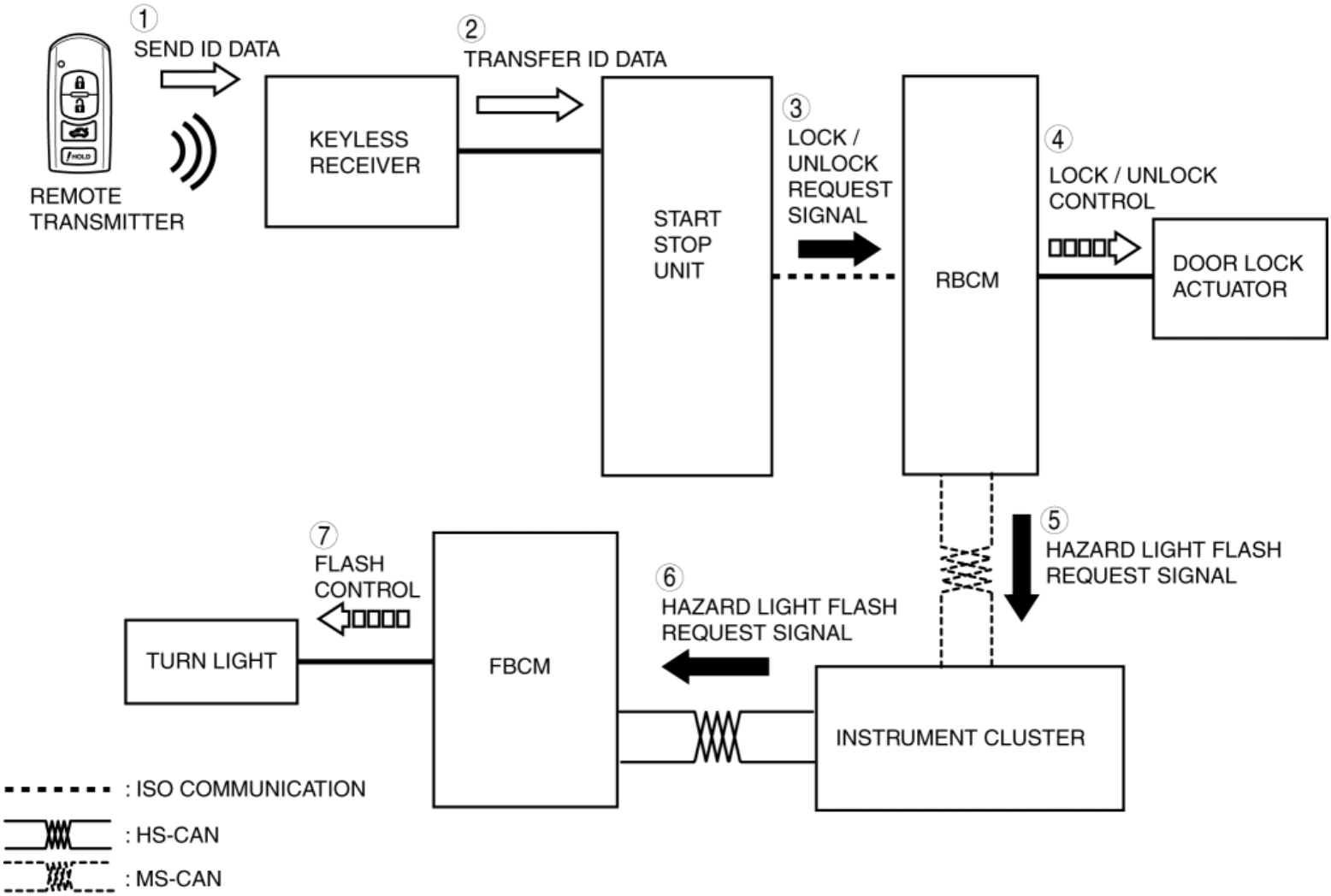

Trunk lid opening operation using remote transmitter

NOTE:

- The trunk lid opens when the trunk lid open button on the remote transmitter is pressed with the ignition switched off.

1. When the trunk lid open button is pressed for approx. 0.5 s, the remote transmitter sends ID data to the keyless receiver.

2. The keyless receiver receives ID data and transmits the data to the start stop unit.

3. The start stop unit verifies the ID data, and if the ID data matches, it sends a trunk lid release signal to the rear body control module (RBCM).

4. When the rear body control module (RBCM) receives the trunk lid release signal, it operates the trunk lid release actuator motor to release the trunk lid.

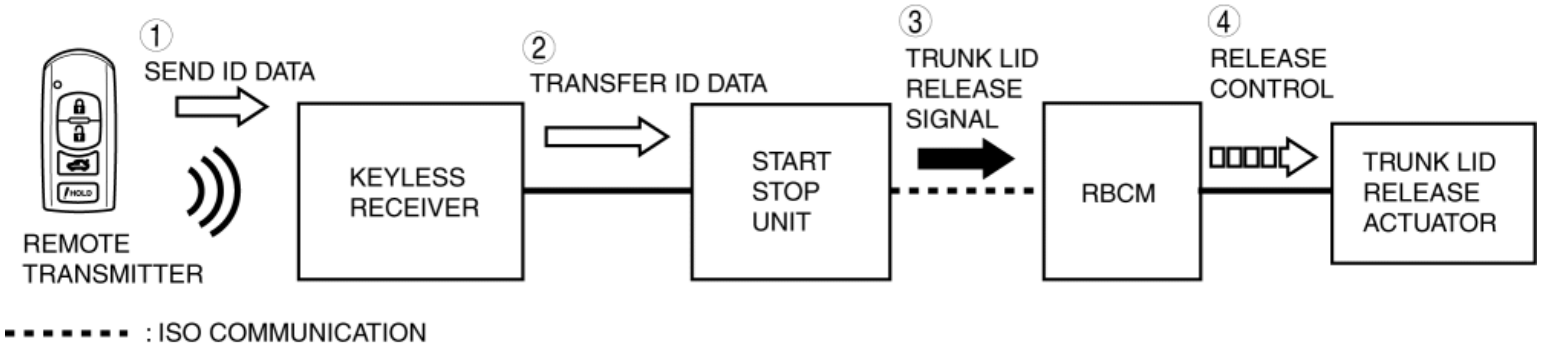

Auto re-lock function operation

- After the start stop unit sends an unlock request signal to the rear body control module (RBCM), if any of the following operations is not performed in 60 s *1, it sends a lock request signal to the rear body control module (RBCM) to lock the front/rear doors.
  - A door or the liftgate/trunk lid is opened
  - A lock/unlock operation is performed using the driver's side front door key cylinder.
  - A lock/unlock operation is performed using the driver's side front door lock knob.
  - A lock/unlock operation is performed using the remote transmitter.
  - The ignition is switched to ACC or ON (engine off).

*1
Personalization setting time

Remote transmitter pause function operation

When door locking is performed

- If a door is locked by the remote transmitter operation when all the following conditions are met, all the functions of the remote transmitter other than the remote transmitter used for the door lock operation are paused.
  - All doors and liftgate/trunk lid are closed
  - Ignition is switched off

Remote transmitter pause cancel operation

- The functions of the paused remote transmitter are restored when the following conditions are met:
  - A remote transmitter with which the engine can be started is brought inside the vehicle.
  - The lock/unlock button on the paused remote transmitter is pressed.

Alert function operation

- Under the following conditions, the start stop unit sends a warning request signal to the instrument cluster via CAN communication to illuminate the push button start indicator light (amber).
- The instrument cluster flashes the KEY warning light when it receives the warning request signal.

Condition	Instrument cluster		Push button start
	Keyless warning alarm	KEY warning light (red)	Indicator light (amber)
Keyless entry system malfunction*1	—	On	Flash
Driver's door is opened with ignition in ACC	Pattern A*2×Continuous	—	—

Remote transmitter cannot be detected inside vehicle when all doors are closed with ignition not switched off	Pattern B*2	Flash	—

*1 **For vehicles with center display, a warning message in the center display is displayed when the KEY warning light (red) is turned on. For the message content and verification method, refer to the CENTER DISPLAY. (See CENTER DISPLAY [WITH CENTER DISPLAY].)**

*2 **For the keyless warning alarm sound pattern, refer to the keyless warning alarm. (See KEYLESS WARNING ALARM.)**

Remote transmitter battery voltage low indication function operation

- When the ignition is switched from ON (engine off or on) to off under the condition indicated in the table, the start stop unit sends a battery voltage low indication request signal to the instrument cluster as a CAN signal.
- The instrument cluster flashes the KEY indicator light when it receives the battery voltage low indication request signal.

Condition	Instrument cluster
	KEY indicator light (green)
Start stop unit receives code for low remote transmitter battery voltage	Flash (for approx. 30 s after ignition switched off)

- For vehicles with center display, a warning message in the center display is displayed when the KEY indicator light (green) is flashing. For the message content and verification method, refer to the CENTER DISPLAY. (See **CENTER DISPLAY [WITH CENTER DISPLAY]**.)

2014 - Mazda3 - Body and Accessories

ADVANCED KEYLESS ENTRY SYSTEM

Outline

- An advanced keyless entry system has been adopted which performs automatic authorization of the remote transmitter that is carried and locking/unlocking of the doors.
- The start stop unit performs advanced keyless entry system fail-safe. (See **START STOP UNIT**.)

Function

- The advanced keyless entry system performs remote transmitter authorization when any of the following operations is performed.
    - Locking/unlocking using request switch on outer door
    - Locking using the request switch on the liftgate (5HB)
    - Locking/unlocking using remote transmitter
    - Trunk lid opening using remote transmitter (4SD)
    - Opening liftgate/trunk lid
- The advanced keyless entry system has the following functions in the event that the user operates the system incorrectly or to prevent the user from leaving the vehicle without locking it.
    - Auto re-lock function: After unlocking, if any door or the liftgate/trunk lid is not opened and a period of time according to the personalization setting has elapsed, all doors are automatically locked.
    - Out-of-area (reception area) type auto lock function: After closing all doors, when the remote transmitter is brought out of the reception area of the keyless antenna, all doors are automatically locked.
    - Remote transmitter pause function: If all doors are locked with a transmitter left in the vehicle, the functions of the remote transmitter inside the vehicle are paused.
    - Remote transmitter left-in-vehicle prevention function: If the liftgate/trunk lid is closed with a remote transmitter left in the vehicle, the liftgate/trunk lid can be opened by pressing the liftgate/trunk lid opener switch.
    - Warning function: If the system is operated incorrectly which results in a possible problem occurring, the system warns the user by using the indicator light, warning light, and buzzer in the instrument cluster, or by using the keyless beeper.

Remote transmitter battery voltage low indication function

- This function signals the user that the battery voltage of the remote transmitter is low.

Structural View

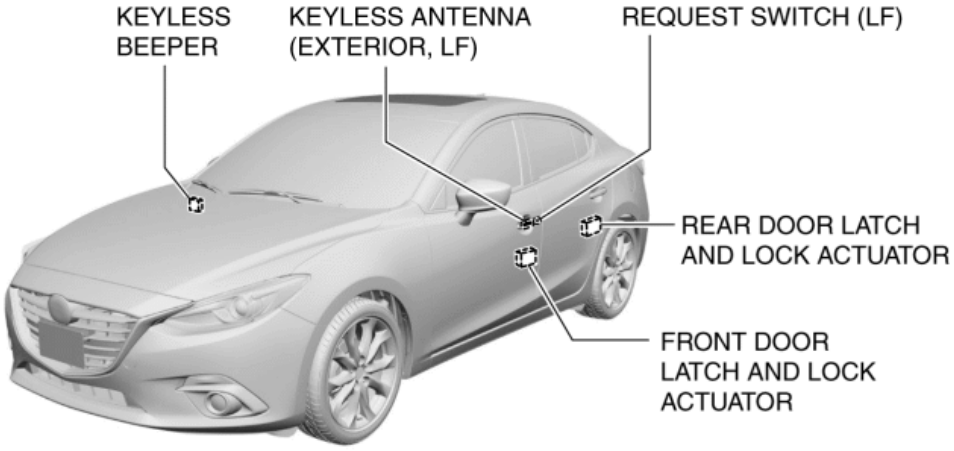
KEYLESS BEEPER
KEYLESS ANTENNA (EXTERIOR, LF)
REQUEST SWITCH (LF)
REAR DOOR LATCH AND LOCK ACTUATOR
FRONT DOOR LATCH AND LOCK ACTUATOR

4SD

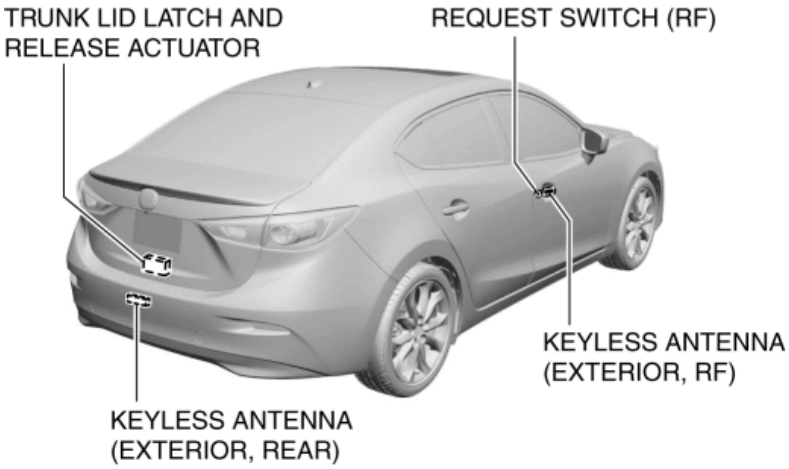
TRUNK LID LATCH AND RELEASE ACTUATOR
REQUEST SWITCH (RF)
KEYLESS ANTENNA (EXTERIOR, RF)
KEYLESS ANTENNA (EXTERIOR, REAR)

5HB

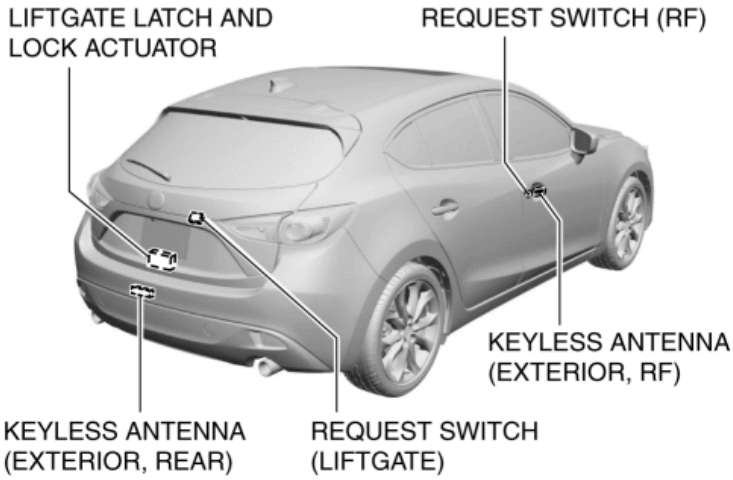
LIFTGATE LATCH AND LOCK ACTUATOR
REQUEST SWITCH (RF)
KEYLESS ANTENNA (EXTERIOR, RF)
KEYLESS ANTENNA (EXTERIOR, REAR)
REQUEST SWITCH (LIFTGATE)

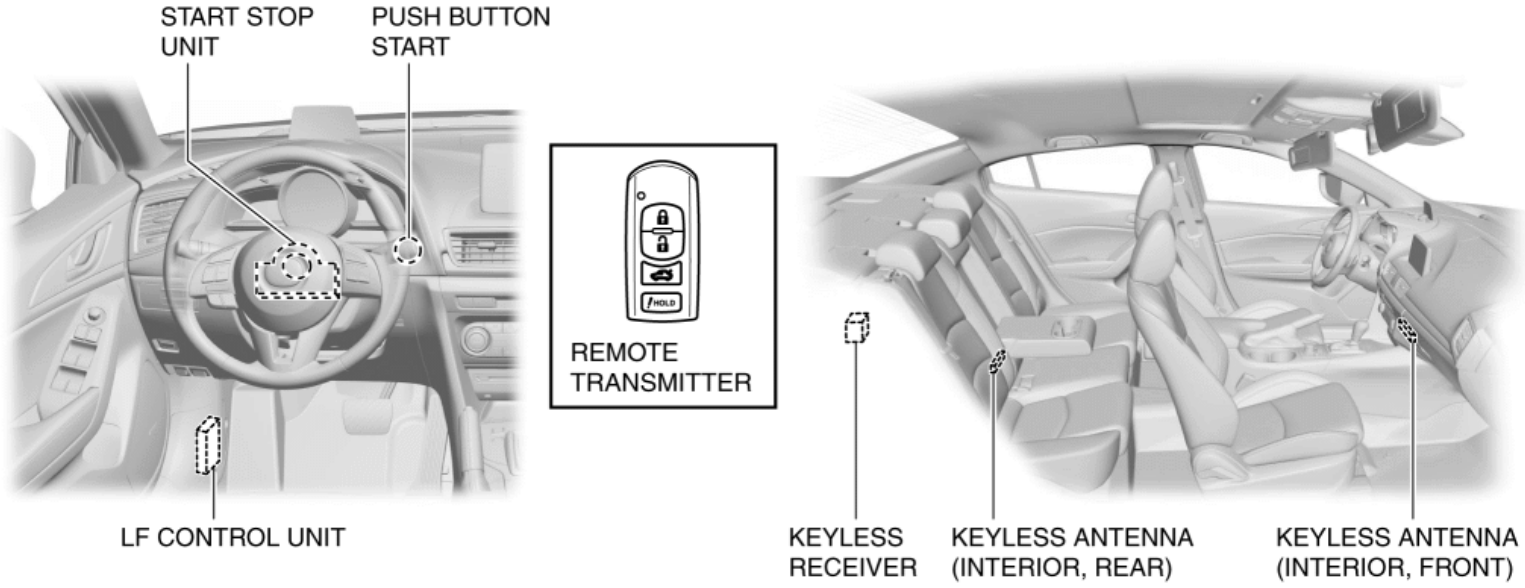

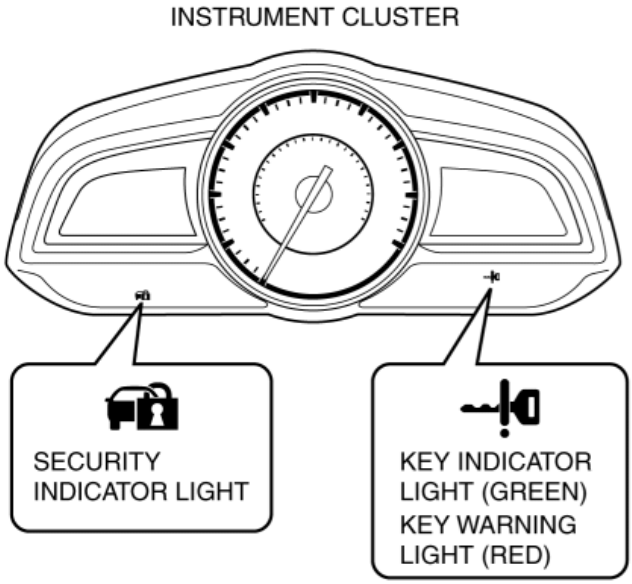

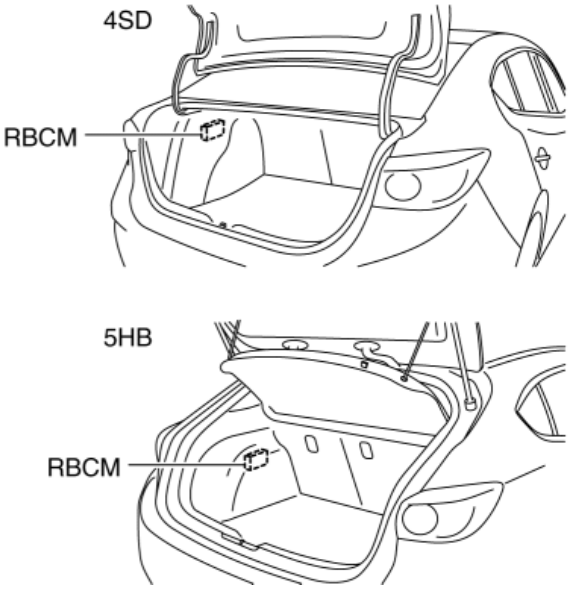

System Wiring Diagram

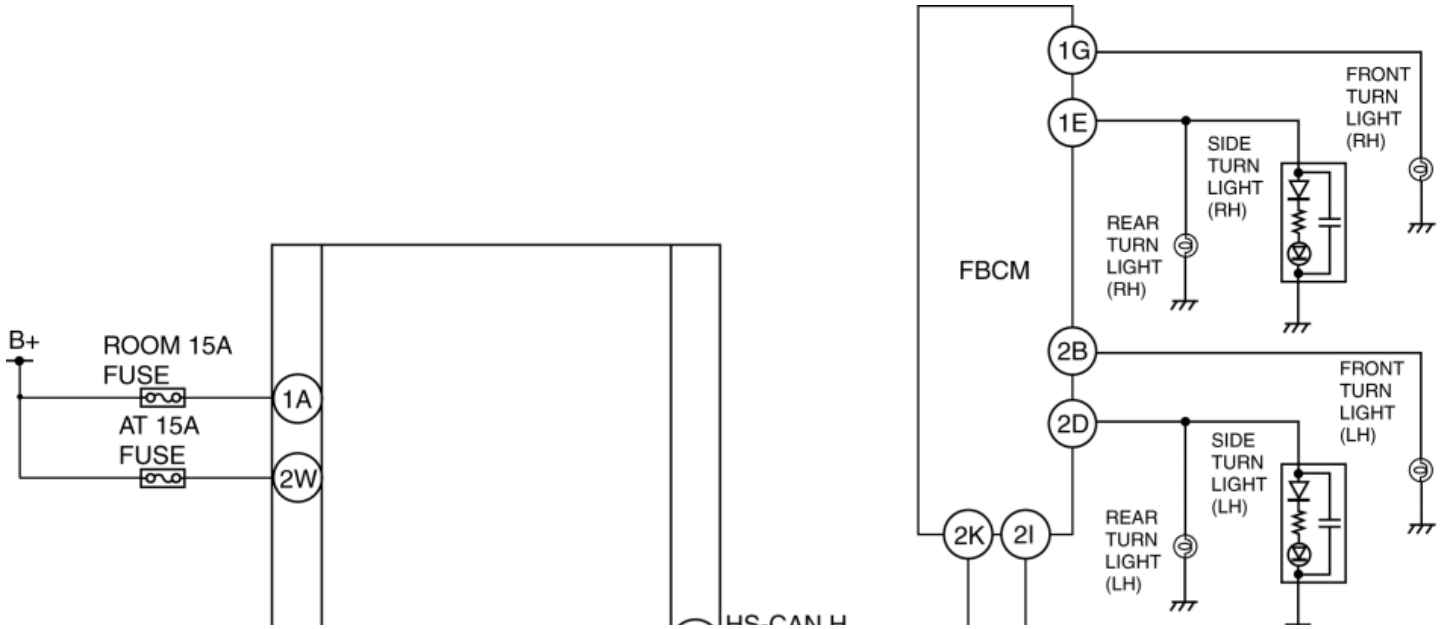

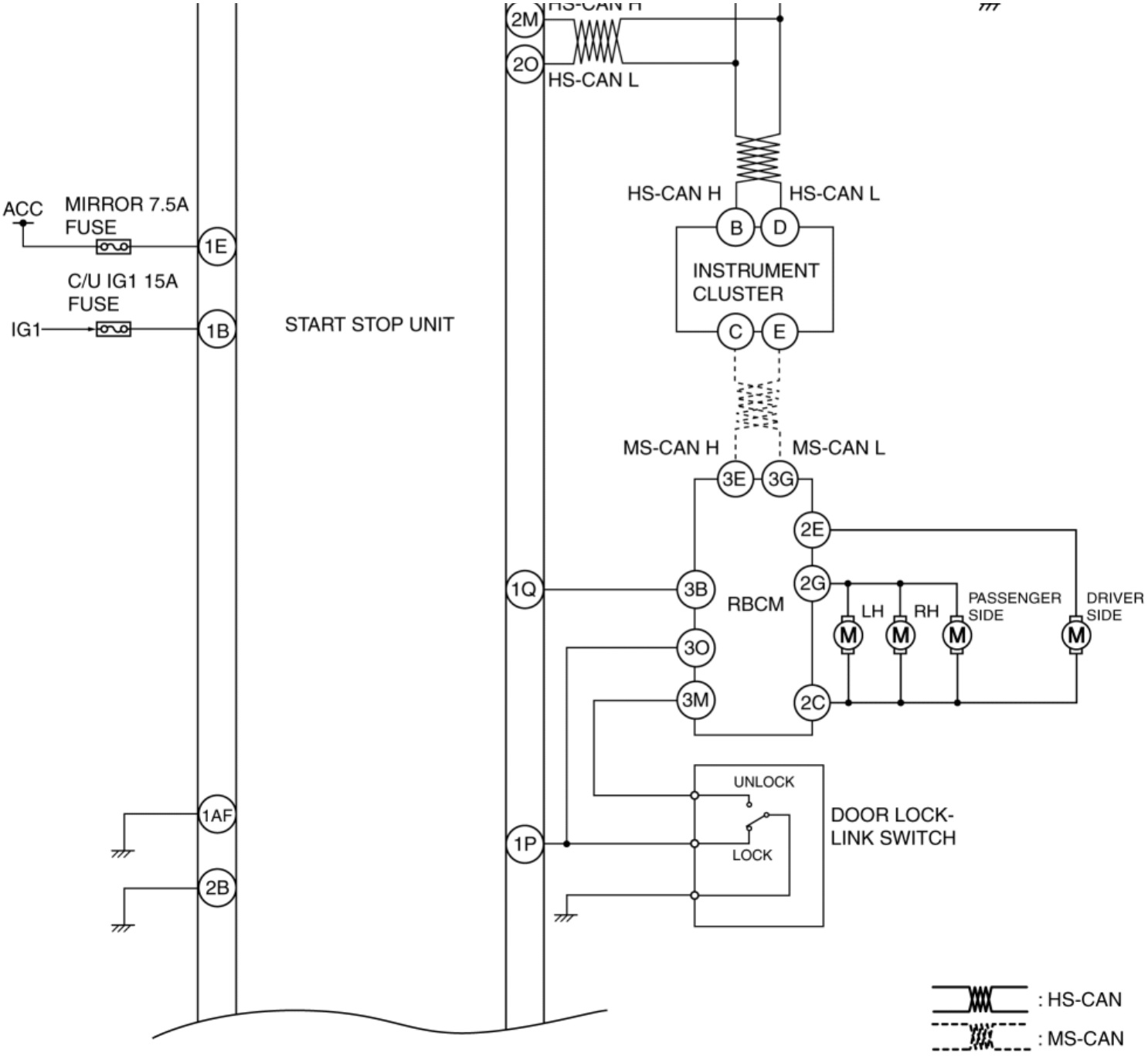
HS-CAN H
2M
2O
HS-CAN L
ACC
MIRROR 7.5A
FUSE
1E
C/U IG1 15A
FUSE
IG1
1B
START STOP UNIT
HS-CAN H
HS-CAN L
B
D
INSTRUMENT
CLUSTER
C
E
MS-CAN H
MS-CAN L
3E
3G
2E
1Q
3B
RBCM
2G
LH
RH
PASSENGER
SIDE
DRIVER
SIDE
M
M
M
M
3O
3M
2C
UNLOCK
1AF
DOOR LOCK-
LINK SWITCH
1P
LOCK
2B
: HS-CAN
: MS-CAN

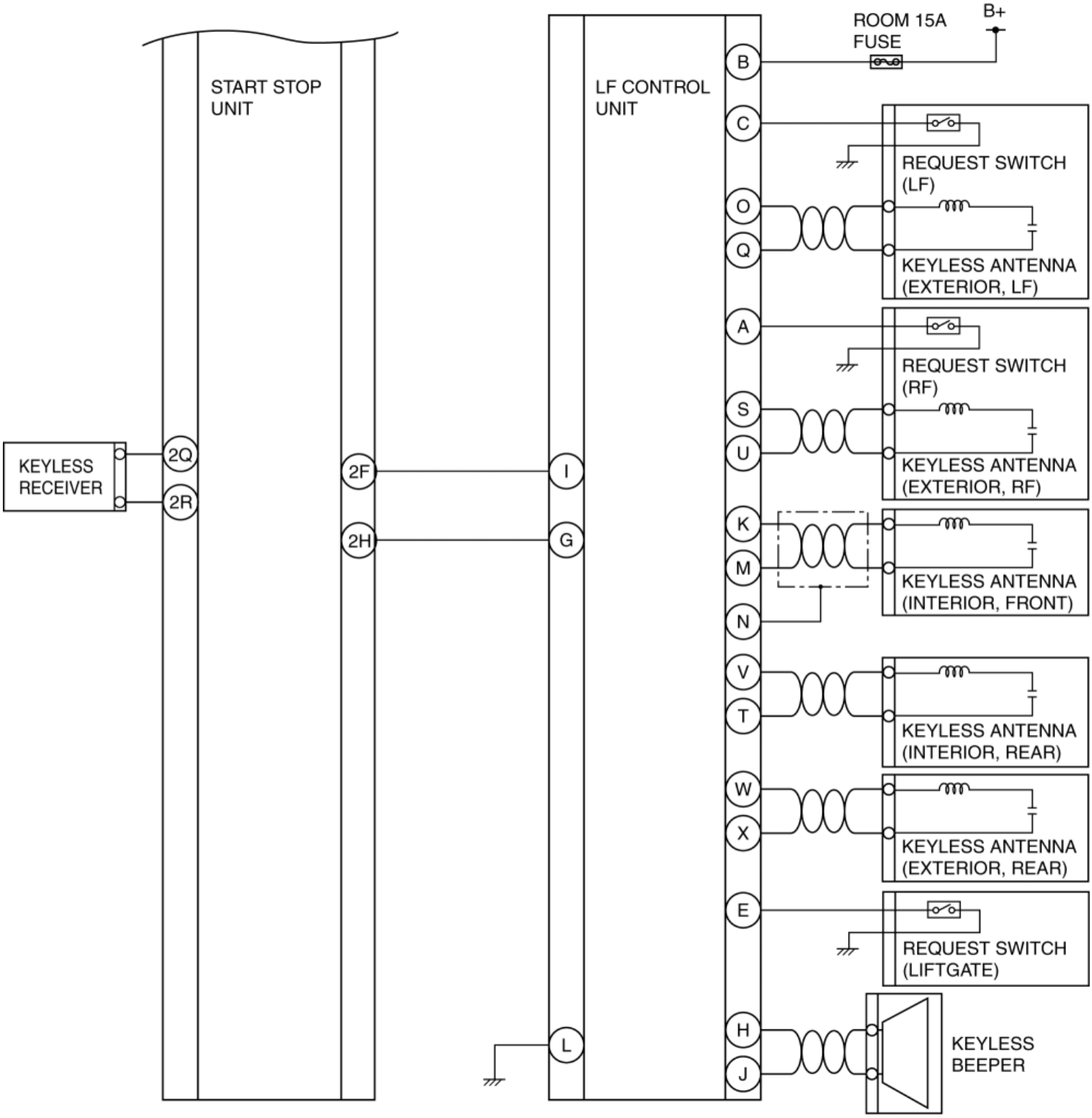

Operation

Lock/unlock operation using request switch on outer handle

NOTE:

- Lock/unlock operation is performed when a request switch on an outer handle is pressed with all the following conditions met.
  - Ignition is switched off
  - All doors are closed

- The remote transmitter is within the reception area outside the vehicle.

1. When the driver's or the front passenger's request switch is pressed, a request switch on signal is input to the start stop unit via the LF control unit.

2. Based on the request switch on signal, the start stop unit sends a request output signal to the LF control unit to verify that the remote transmitter is inside the reception area.

3. The LF control unit sends a request signal from the keyless antenna of the door in which the request switch was pressed and all keyless antennas for the vehicle interior.

4. The remote transmitter receives the request signal from the outside antenna, and sends ID data to the keyless receiver.

5. The keyless receiver transmits the received ID data to the start stop unit.

6. The start stop unit verifies the ID data, and if it determines a programmed remote transmitter is outside the vehicle, it sends a lock/unlock signal to the rear body control module (RBCM) and at the same time, it sends a beeper sound request signal to the LF control unit.

7. When the rear body control module (RBCM) receives the lock/unlock signal, it operates the front/rear door lock actuator motor to lock/unlock the front/rear doors.

NOTE:

- It takes approx. 1—2 s from when a request switch is pressed until the lock/unlock operation is completed.

8. At the same time as the door lock/unlock operation, it sends a hazard light flash request signal to the instrument cluster as a CAN signal.

9. When the LF control unit receives the beeper sound request signal, it operates the keyless beeper for the following number of times:

- When locking: Keyless beeper sounds once
- When unlocking: Keyless beeper sounds twice

10. The instrument cluster sends the hazard light flash request signal to the front body control module (FBCM) as a CAN signal.

11. When the front body control module (FBCM) receives the hazard light flash request signal, it controls the hazard light to flash for the following number of times to signal that the lock/unlock operation is completed.

- When locking: Hazard light flashes once
- When unlocking: Hazard light flashes twice

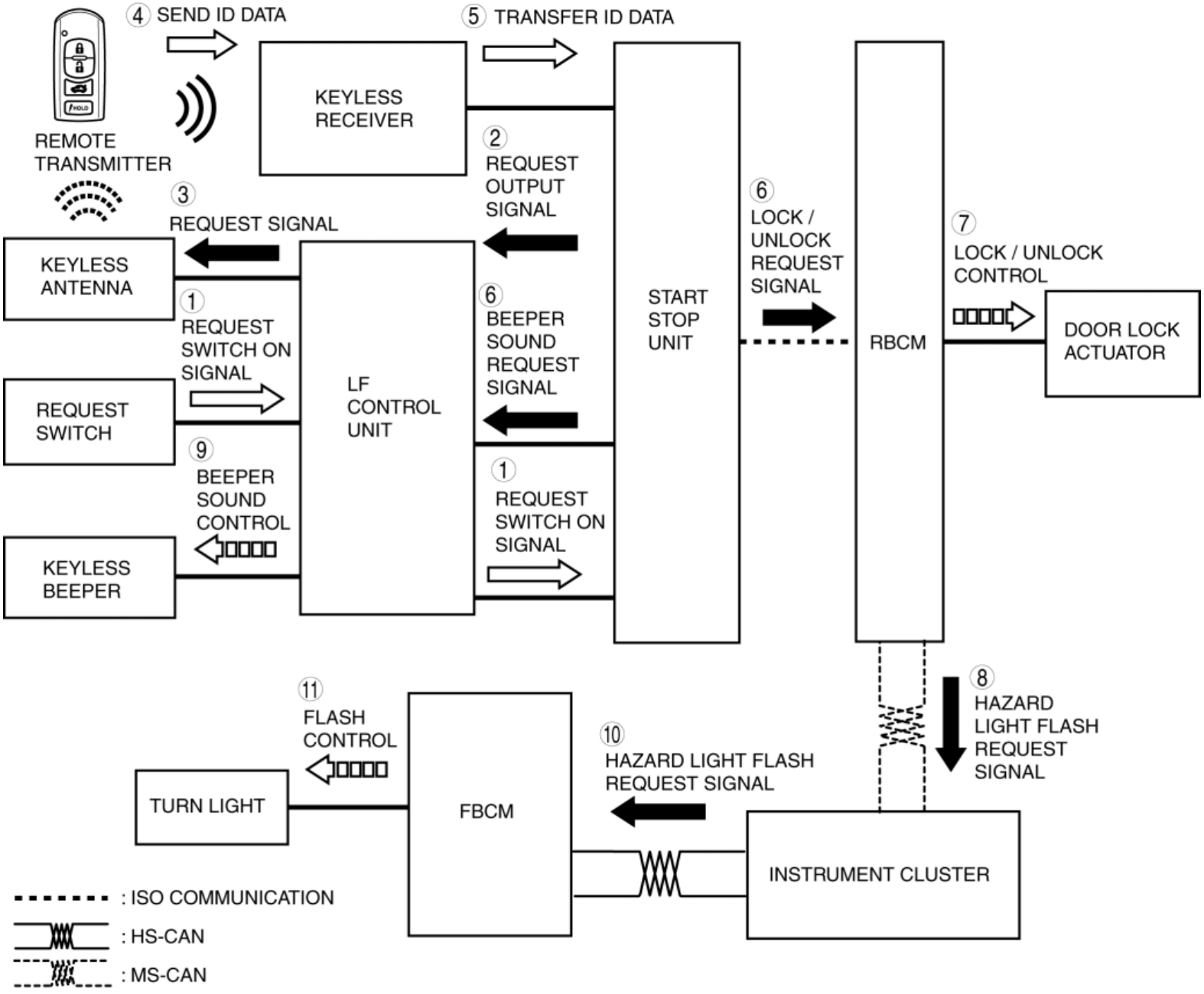

Lock operation using request switch on liftgate

NOTE:

- Lock operation is performed when the request switch on the liftgate is pressed with all the following conditions met.
  - Ignition is switched off
  - All doors and liftgate are closed
  - The remote transmitter is within the reception area outside the vehicle.

1. When the request switch is pressed, a request switch on signal is input to the start stop unit via the LF control unit.

2. Based on the request switch on signal, the start stop unit sends a request output signal to the LF control unit to verify that the remote transmitter is inside the reception area.

3. The LF control unit sends a request signal from the outside keyless antenna (rear) and all keyless antennas for the vehicle interior.

4. The remote transmitter receives the request signal from the outside antenna, and sends ID data to the keyless receiver.

5. The keyless receiver transmits the received ID data to the start stop unit.

6. The start stop unit verifies the ID data, and if it determines a programmed remote transmitter is outside the vehicle, it sends a lock signal to the rear body control module (RBCM) and at the same time, it sends a beeper sound request signal to the LF control unit.

7. When the rear body control module (RBCM) receives the lock signal, it operates the front/rear door lock actuator motor to lock the front/rear doors.

NOTE:

- It takes approx. 1—2 s from when the request switch is pressed until the lock operation is completed.

8. At the same time as the door lock/unlock operation, it sends a hazard light flash request signal to the instrument cluster as a CAN signal.

9. When the LF control unit receives the beeper sound request signal, it operates the keyless beeper once.

10. The instrument cluster sends the hazard light flash request signal to the front body control module (FBCM) as a CAN signal.

11. When the front body control module (FBCM) receives the hazard light flash request signal, it controls the hazard light to flash once to signal that the lock operation is completed.

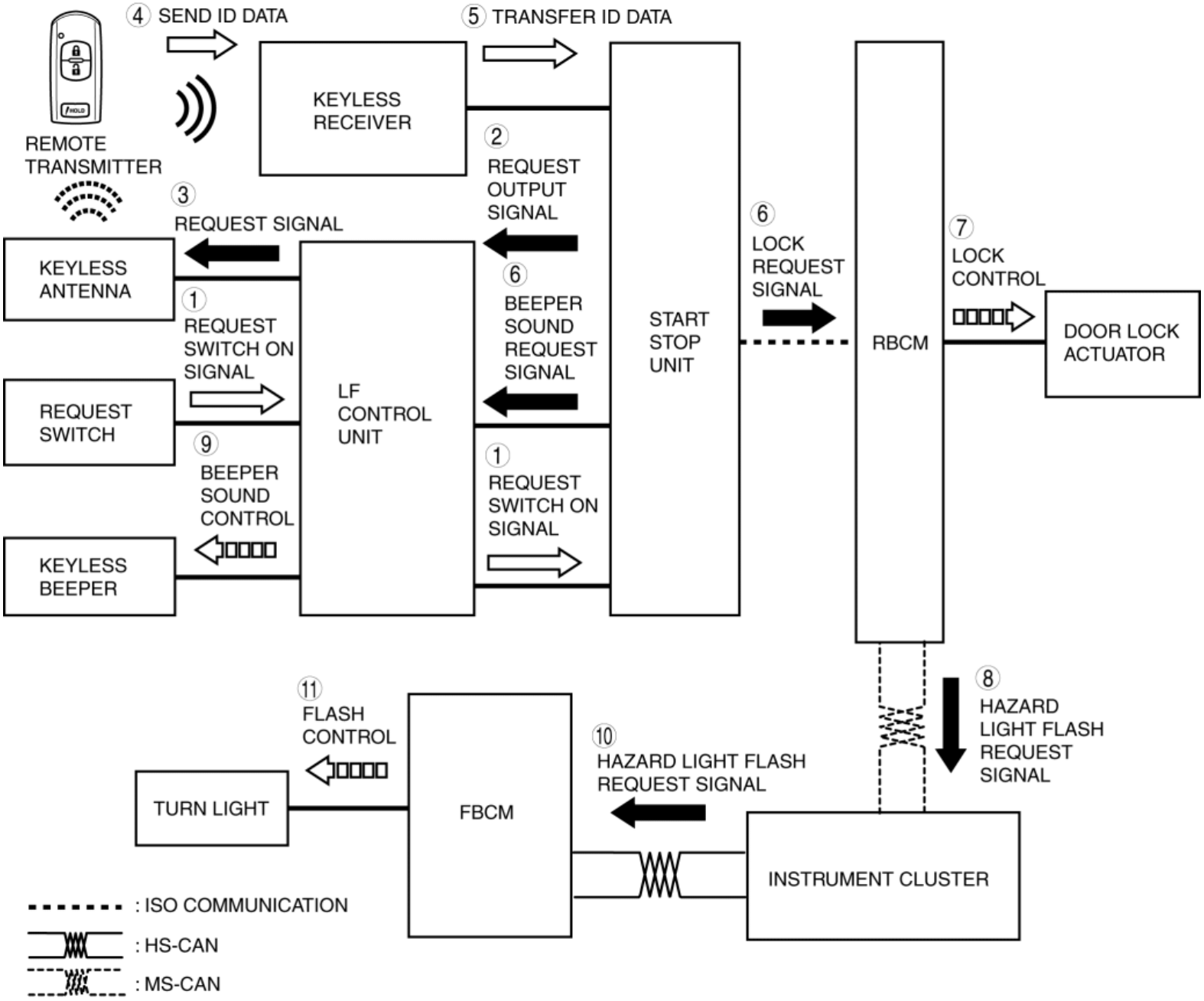

Lock/unlock operation using remote transmitter

NOTE:

- The lock/unlock operation is performed when the lock button of the remote transmitter is pressed with all the following conditions met.
    - Ignition is switched off
    - All doors are closed
    - The remote transmitter is within the operable range

1. When the lock or unlock button of the remote transmitter is pressed, the remote transmitter sends ID data.

2. When the keyless receiver receives ID data, it transmits the data to the start stop unit.

3. The start stop unit verifies the ID data, and if the ID data match, it sends a lock/unlock signal to the rear body control module (RBCM) and at the same time, it sends a beeper sound request signal to the LF control unit.

4. The rear body control module (RBCM) operates the front/rear door lock actuator motor to lock/unlock the front/rear doors.

5. At the same time as the door lock/unlock operation, it sends a hazard light flash request signal to the instrument cluster as a CAN signal.

6. The LF control unit operates the keyless beeper for the following number of times:

    - When locking: Keyless beeper sounds once
    - When unlocking: Keyless beeper sounds twice

7. The instrument cluster sends the hazard light flash request signal to the front body control module (FBCM) as a CAN signal.

8. The front body control module (FBCM) controls the hazard light to flash for the following number of times to signal that the lock/unlock operation is completed.

    - When locking: Hazard light flashes once
    - When unlocking: Hazard light flashes twice

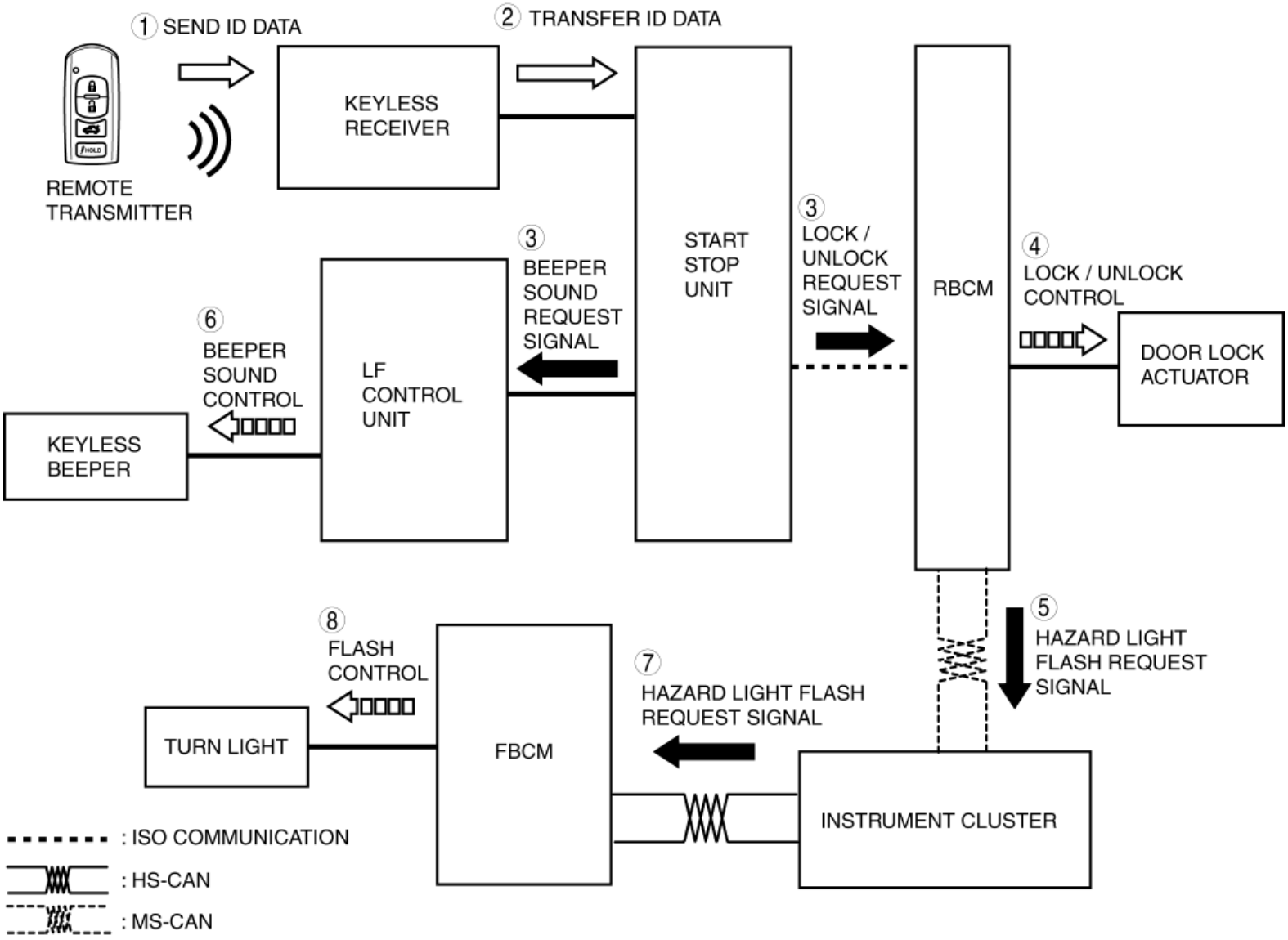

Trunk lid opening operation using remote transmitter

NOTE:

- The trunk lid opens when the trunk lid open button on the remote transmitter is pressed with the ignition switched off.

1. When the trunk lid open button is pressed for approx. 0.5 s, the remote transmitter sends ID data to the keyless receiver.

2. The keyless receiver receives ID data and transmits the data to the start stop unit.

3. The start stop unit verifies the ID data, and if the ID data matches, it sends a trunk lid release signal to the rear body control module (RBCM).

4. When the rear body control module (RBCM) receives the trunk lid release signal, it operates the trunk lid release actuator motor to release the trunk lid.

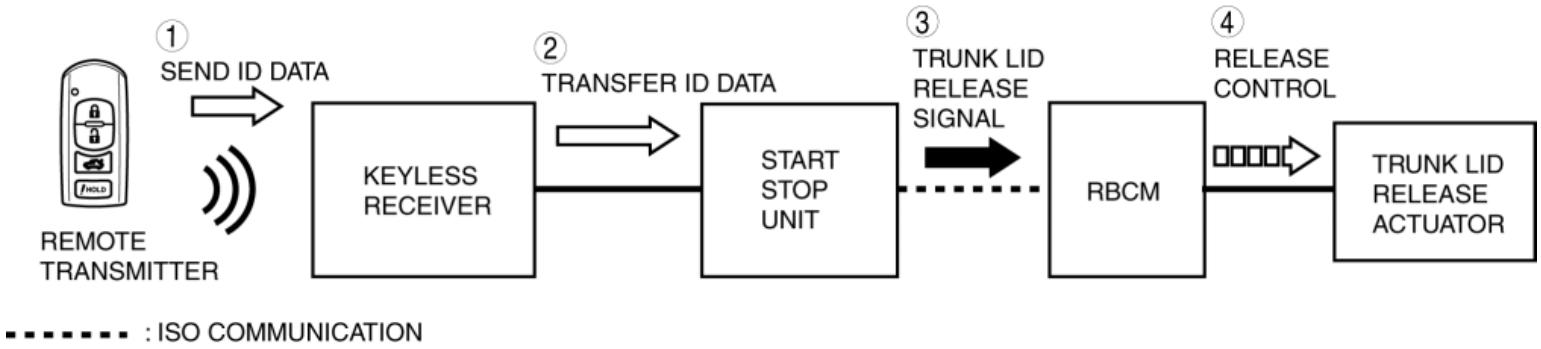

Liftgate/trunk lid open operation

1. When the liftgate/trunk lid opener switch is pressed, a liftgate/trunk lid open signal is input to the rear body control module (RBCM).

2. The rear body control module (RBCM) sends the liftgate/trunk lid open signal to the start stop unit.

3. Based on the liftgate/trunk lid open signal, the start stop unit sends a request output signal to the LF control unit to verify that the remote transmitter is inside the reception area.

4. Based on the request output signal from the start stop unit, the LF control unit outputs a request signal using the keyless antenna inside the rear bumper.

5. The remote transmitter receives the request signal from the antenna (outside, rear), and sends ID data to the keyless receiver.

6. The keyless receiver transmits the received ID data to the start stop unit.

7. The start stop unit verifies the ID data, and if the ID data matches, it sends a liftgate/trunk lid release signal to the rear body control module (RBCM).

8. When the rear body control module (RBCM) receives the liftgate/trunk lid release signal, it operates the liftgate lock actuator/trunk lid release actuator motor to release the liftgate/trunk lid.

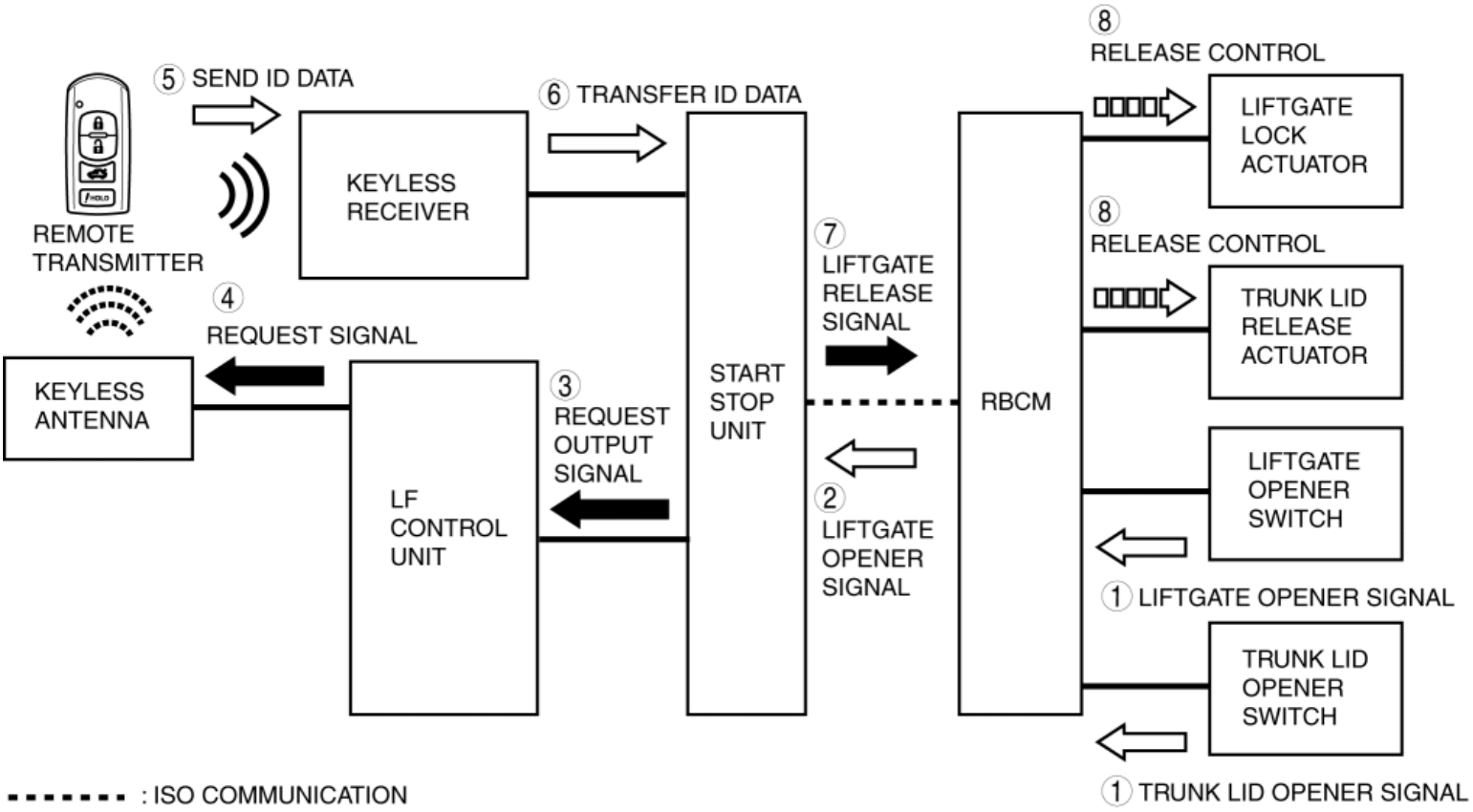

Auto re-lock function operation

- After the start stop unit sends an unlock request signal to the rear body control module (RBCM), if any of the following operations is not performed in 60 s *1, it sends a lock request signal to the rear body control module (RBCM) to lock the front/rear doors.
    - A door or the liftgate/trunk lid is opened
    - A lock/unlock operation is performed using the driver's side front door key cylinder.
    - A lock/unlock operation is performed using the driver's side front door lock knob.
    - A lock/unlock operation is performed using the remote transmitter.
    - The ignition is switched to ACC or ON (engine off).

*1

Personalization setting time

Out-of-area (reception area) type auto lock function operation

1. When all doors and the liftgate are closed after any door or the liftgate was opened, the start stop unit goes on auto lock standby if all the following conditions are met.

- There is no remote transmitter inside the vehicle.
- The remote transmitter is within the reception area outside the vehicle.
- The ignition is switched off.

2. After entering the standby status, if the remote transmitter is moved out of the keyless antenna reception area and the ID data cannot be received from the keyless receiver, the start stop unit operates all the lock actuators for a lock operation.

NOTE:

- The keyless beeper sounds once when switching to stand-by and the door is locked.

Remote transmitter pause function operation

When door locking is performed

- If a lock signal is input with a remote transmitter detected inside the vehicle, the start stop unit outputs a request signal using the outside/inside keyless antennas.
- When the remote transmitter inside the vehicle sends the ID data to the keyless receiver, the keyless receiver transmits the received ID data to the start stop unit.
- The start stop unit receives the ID data, and after approx. 32 s, it suspends the functions of the transmitter inside the vehicle. It also operates the keyless beeper for 10 s.

When the liftgate/trunk lid is closed

- When the liftgate/trunk lid is closed with all the following conditions met, the start stop unit outputs a request signal using the interior keyless antennas.
  - All doors are locked.
  - The liftgate/trunk lid is open.
  - The start stop unit identifies a remote transmitter inside the vehicle.
- When the remote transmitter inside the vehicle sends the ID data to the keyless receiver, the keyless receiver transmits the received ID data to the start stop unit.
- The start stop unit receives the ID data, and after approx. 32 s, it suspends the functions of the transmitter inside the vehicle.

Remote transmitter pause cancel operation

- The functions of the paused remote transmitter are restored when any one of the following conditions is met:
  - A remote transmitter with which the engine can be started is brought inside the vehicle.
  - The lock/unlock button on the paused remote transmitter is pressed.

Remote transmitter left-in-vehicle prevention function operation

- When the liftgate/trunk lid is closed with all the following conditions met, the start stop unit operates the keyless beeper (See **Alert function operation**) and puts the remote transmitter left-in-vehicle prevention function on standby.
  - The liftgate/trunk lid is open.
  - All doors are closed and locked.
- When the liftgate/trunk lid opener switch is pressed while the remote transmitter left-in-vehicle prevention function is on standby, the start stop unit verifies the remote transmitter ID data and if it determines that the transmitter is inside the vehicle, it operates the left-in-vehicle function and sends a latch lever release signal to the rear body control module (RBCM) to release the liftgate/trunk lid latch lever.
- When any of the following conditions is met while the remote transmitter left-in-vehicle prevention function is on standby, the remote transmitter left-in-vehicle prevention function is canceled.
  - The lock/unlock button of the remote transmitter is pressed.

A request switch is pressed.

- Any door is opened.
- The vehicle speed exceeds 10 km/h {6.2 mph}.
- The liftgate/trunk lid is opened and closed.

Alert function operation

- Under the following conditions, the start stop unit sends a security warning request signal to the instrument cluster via CAN communication to illuminate the push button start indicator light (amber).
- The instrument cluster flashes the KEY warning light when it receives the warning request signal.

Condition	Keyless beeper	Instrument cluster		Push button start
		Keyless warning alarm	KEY warning light (red)	Indicator light (amber)
The advanced keyless entry system has a malfunction.*1	—	—	On	Flash
The driver's door is opened with the ignition in ACC.	—	Pattern A*2×Continuous	—	—
The remote transmitter cannot be detected inside the vehicle when all doors are closed with the ignition not switched off.	Sounds 6 times	Pattern B*2	Flash	—
A door lock operation is performed using a request switch with any door or the liftgate is open.	Sounds 2 times	—	—	—
A door lock operation is performed using a request switch with ignition not switched off.	Sounds 2 times	—	—	—

*1
For vehicles with center display, a warning message in the center display is displayed when the KEY warning light (red) is turned on. For the message content and verification method, refer to the CENTER DISPLAY. (See CENTER DISPLAY [WITH CENTER DISPLAY].)

*2
For the keyless warning alarm sound pattern, refer to the keyless warning alarm. (See KEYLESS WARNING ALARM.)

Remote transmitter battery voltage low indication function operation

- When the ignition is switched from ON (engine off or on) to off under the condition indicated in the table, the start stop unit sends a battery voltage low indication request signal to the instrument cluster as a CAN signal.
- The instrument cluster flashes the KEY indicator light when it receives the battery voltage low indication request signal.

Condition	Instrument cluster
	KEY indicator light (green)
The start stop unit receives a code for remote transmitter battery voltage low.	Flash (for approx. 30 s after ignition switched off)

- For vehicles with center display, a warning message in the center display is displayed when the KEY indicator light (green) is flashing. For the message content and verification method, refer to the CENTER DISPLAY. (See **CENTER DISPLAY [WITH CENTER DISPLAY]**.)

2014 - Mazda3 - Body and Accessories

PUSH BUTTON START SYSTEM [ADVANCED KEYLESS ENTRY SYSTEM]

Outline

- A push button start system has been adopted that automatically performs authorization of the remote transmitter brought into the vehicle.
- The start stop unit performs push button start system fail-safe. (See **START STOP UNIT**.)

Function

- When the push button start is pressed, the push button start system performs authorization of the remote transmitter in the vehicle.
    - Engine start: When the remote transmitter authorization is performed while the engine starting conditions are met, the engine starts.
    - Power supply switching: When the remote transmitter authorization is performed, the ignition can be switched between OFF, ACC, and ON (engine on).
- The guidance function notifies the user of the push button start system conditions using the KEY indicator/warning lights in the instrument cluster to help the user's operation.

Structural View

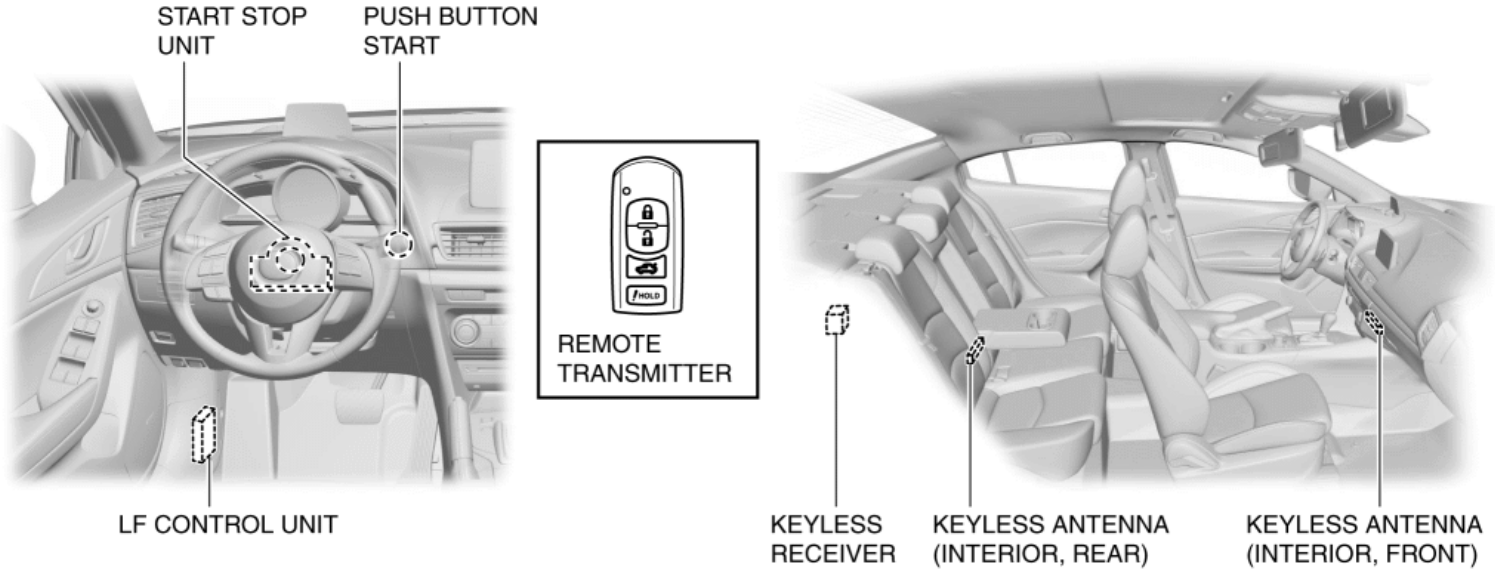

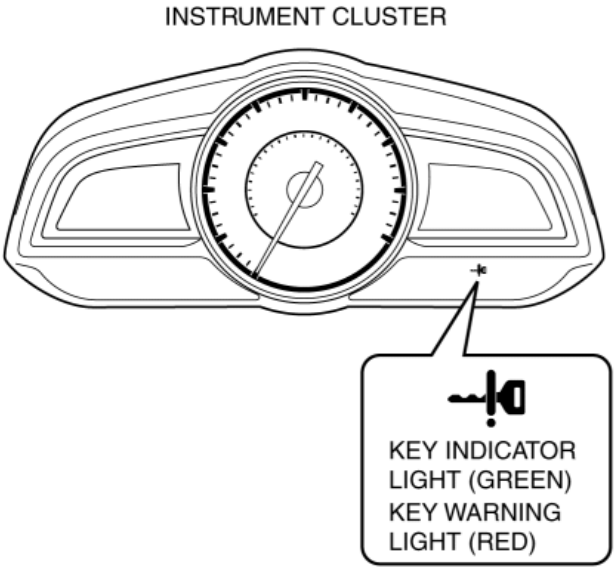

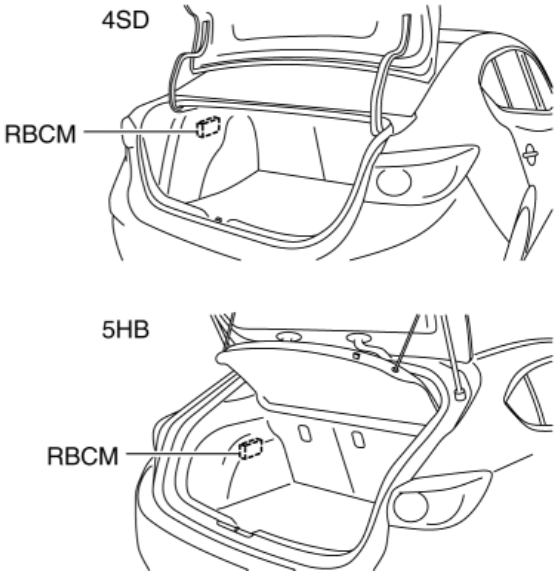

System Wiring Diagram

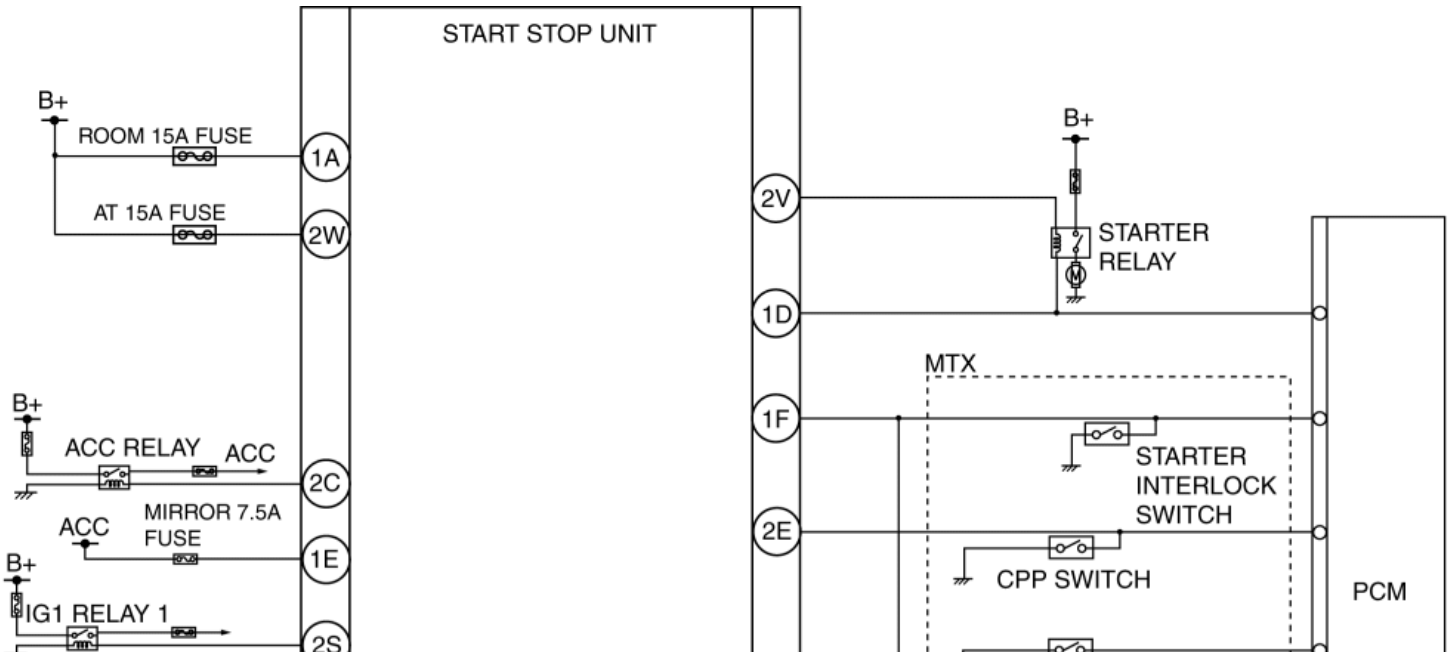

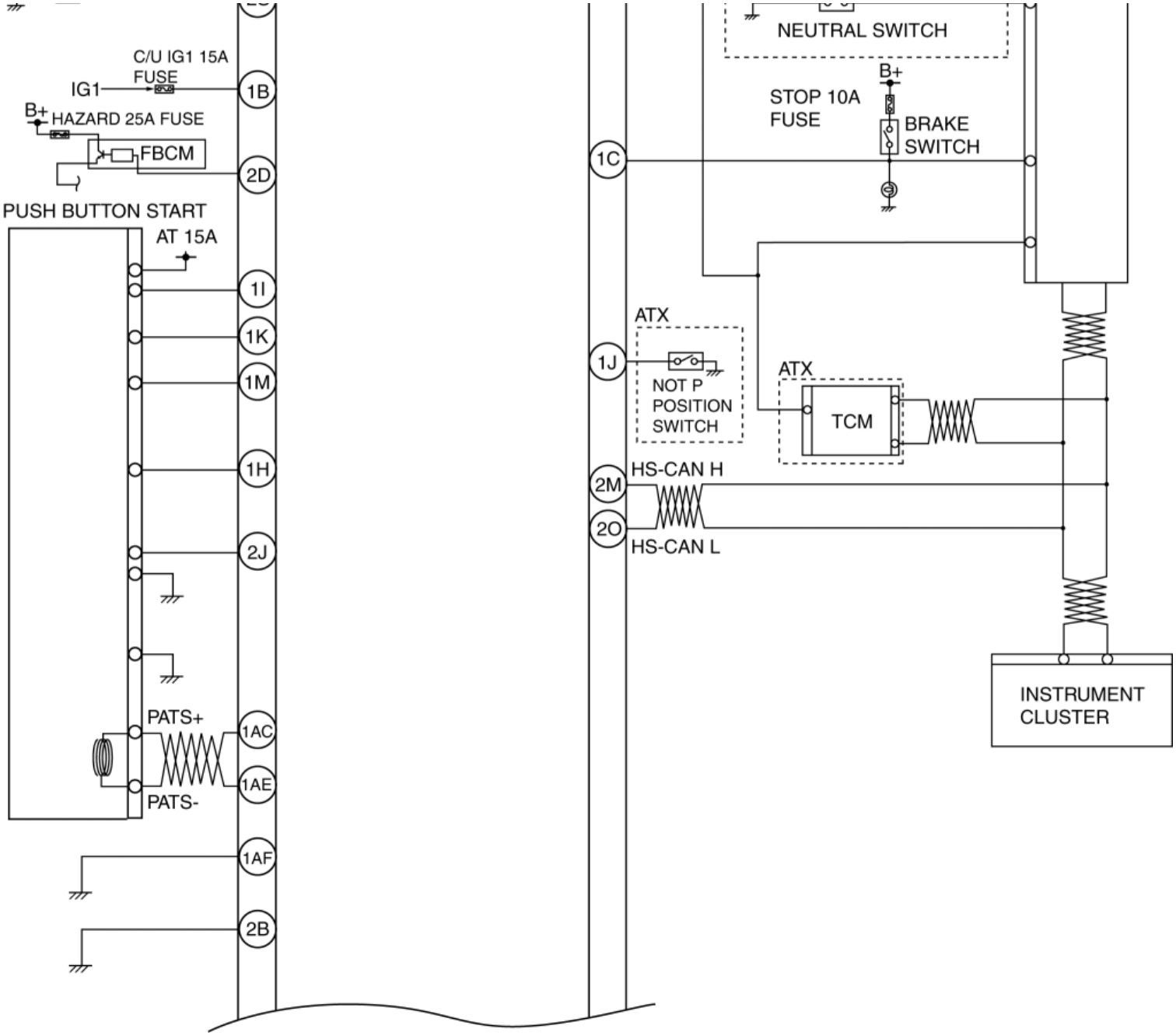
C/U IG1 15A
FUSE
IG1
1B
B+
HAZARD 25A FUSE
FBCM
2D
PUSH BUTTON START
AT 15A
1I
1K
1M
1H
2J
PATS+
1AC
1AE
PATS-
1AF
2B
NEUTRAL SWITCH
B+
STOP 10A
FUSE
BRAKE
SWITCH
1C
ATX
1J
NOT P
POSITION
SWITCH
ATX
TCM
HS-CAN H
2M
2O
HS-CAN L
INSTRUMENT
CLUSTER

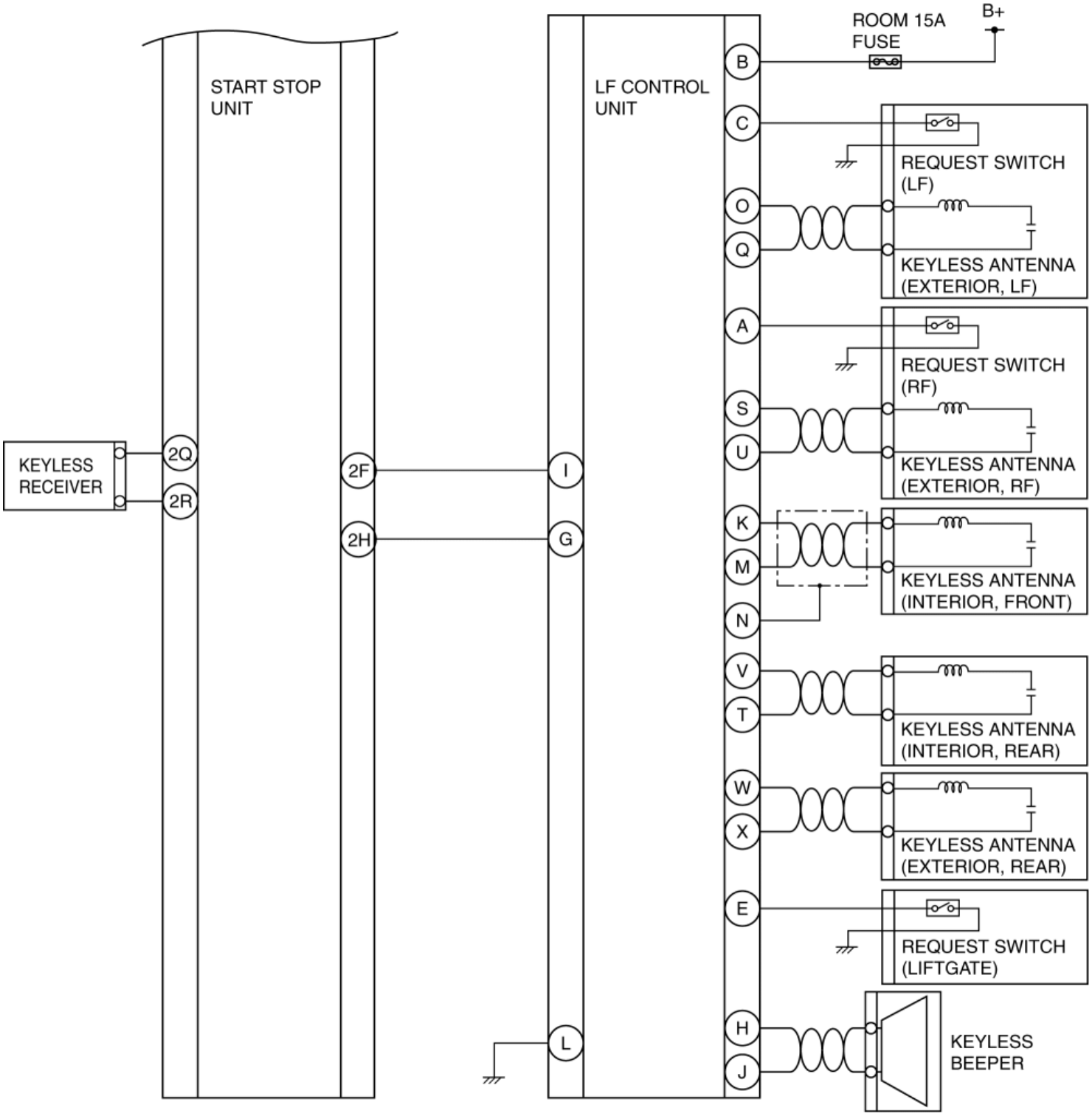

Operation

Remote transmitter verification

1. When the push button start is pressed, a push button start signal is input to the start stop unit.

2. When the start stop unit detects a push button start signal, it sends a request outgoing command signal to the LF control unit.

3. When the LF control unit detects the request outgoing command signal, it sends a request signal using all the keyless antennas in the vehicle interior.

4. The remote transmitter receives the request signal from the interior keyless antennas, and transmits ID data to the keyless receiver.

5. The keyless receiver transmits the received ID data to the start stop unit.

6. The start stop unit verifies the ID data and if it matches, the power supply is switched to turn the push button start indicator light (amber) on.

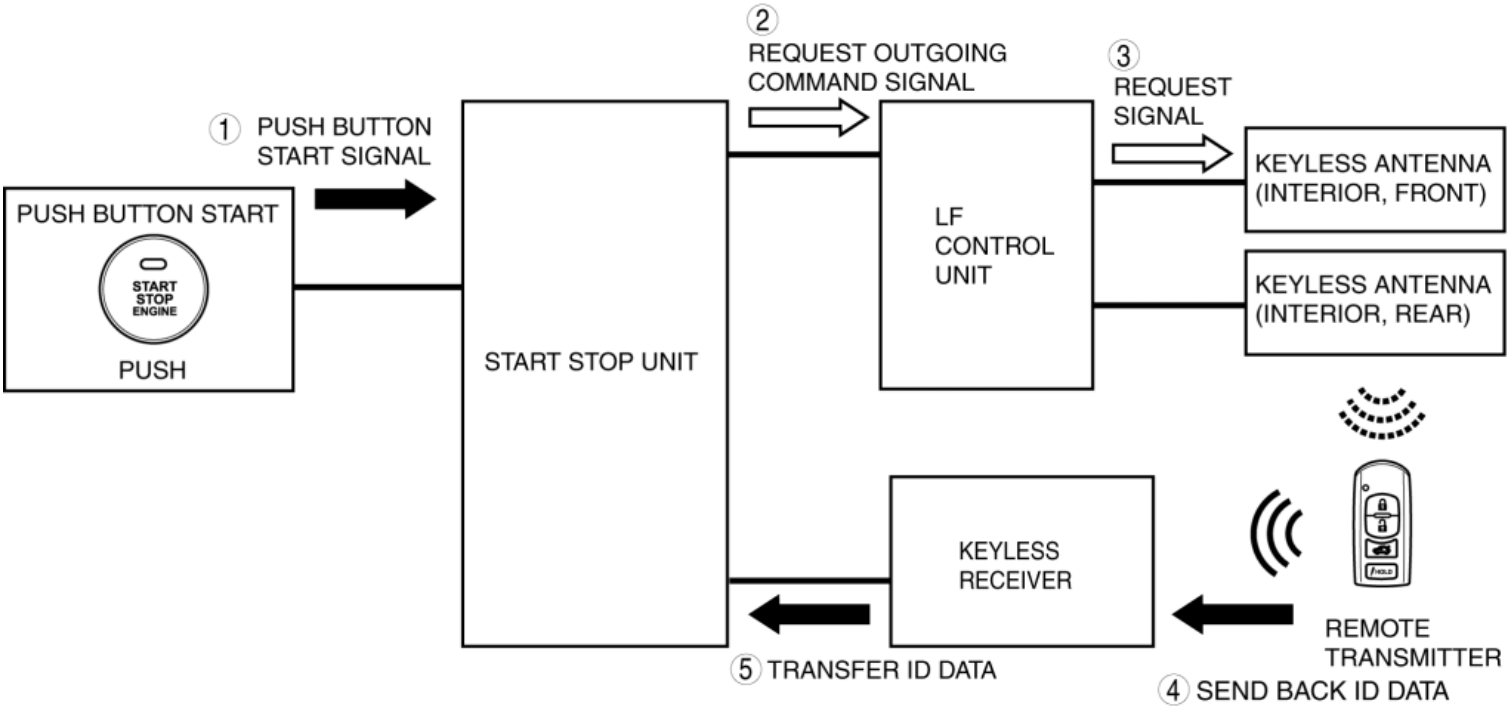

NOTE:

- The power supply switches according to the vehicle conditions such as the shift lever (MTX)/selector lever (ATX) position and the pedal depression/release.

MTX

IGNITION	SHIFT LEVER POSITION	
	ALL	
	CLUTCH PEDAL RELEASED	CLUTCH PEDAL DEPRESSED
OFF		
ACC		
ON (ENGINE OFF)		
ON (ENGINE ON)		

ATX

IGNITION	SELECTOR LEVER POSITION					
	P		N		OTHER THAN P AND N	
	BRAKE PEDAL RELEASED	BRAKE PEDAL DEPRESSED	BRAKE PEDAL RELEASED	BRAKE PEDAL DEPRESSED	BRAKE PEDAL RELEASED	BRAKE PEDAL DEPRESSED
OFF						
ACC						
ON (ENGINE OFF)						
ON (ENGINE ON)						

*

To switch the ignition to ACC or off from ON (engine on), a vehicle speed of 5 km/h {3 mph} or less is required.

Engine-start operation

- The remote transmitter authorization is performed and the engine starts by pressing the push button start when all the following conditions are met:

  Engine start conditions

  - Clutch pedal is depressed (MTX)
  - Brake pedal is depressed (ATX)
  - Selector lever is in P or N position (ATX)
  - Remote transmitter is within request output range of keyless antennas in vehicle interior

Automatic ignition switch off

- If the ignition has been switched to ACC for 25 min or more, the start stop unit automatically switches the ignition off.

Engine emergency stop

- If an ignition switch on signal is input for 3 s or more (ignition switch held pressed) with the engine running, or a push button start ON signal is input 3 times within 1.5 s, the start stop unit switches the ignition to ACC or off according to the position of the shift lever (MTX)/selector lever (ATX).

Back-up mode (MTX) for engine-start

- If the start stop unit determines that either the clutch pedal position switch or clutch cut switch is malfunctioning, the system switches to back-up mode.
- If the push button start is pressed when all the following conditions are met while in the back-up mode, the remote transmitter authorization is performed and the engine starts.
    - Start stop unit detects that either clutch pedal position switch or clutch cut switch is on
    - Neutral switch signal is received via CAN communication from PCM
    - Remote transmitter is within request signal output range of keyless antennas in vehicle interior

Guidance function

- Under the following conditions, the start stop unit sends a warning request signal via CAN transmission to the instrument cluster to flash the push button start indicator (green).
- The instrument cluster illuminates/flashes the KEY indicator light/KEY warning light when it receives the warning request signal.

Condition	Instrument cluster		Push button start
	KEY indicator light (green)	KEY warning light (red)	Indicator light (green)
Engine start conditions are met	On	—	On
ID data cannot be verified	—	Flashes	—

2014 - Mazda3 - Body and Accessories

PUSH BUTTON START SYSTEM [KEYLESS ENTRY SYSTEM]

Outline

- A push button start system has been adopted that automatically performs authorization of the remote transmitter being brought within the request signal output range of the keyless antennas.
- The start stop unit performs push button start system fail-safe. (See **START STOP UNIT**.)

Function

- When the push button start is pressed, the push button start system performs authorization of the remote transmitter that is within the request signal output range of the keyless antennas.
    - Engine start: When the remote transmitter authorization is performed while the engine starting conditions are met, the engine starts.
    - Power supply switching: When the remote transmitter authorization is performed, the ignition can be switched between OFF, ACC, and ON (engine on).
- The guidance function notifies the user of the push button start system conditions using the KEY indicator/warning lights in the instrument cluster to help the user's operation.

Structural View

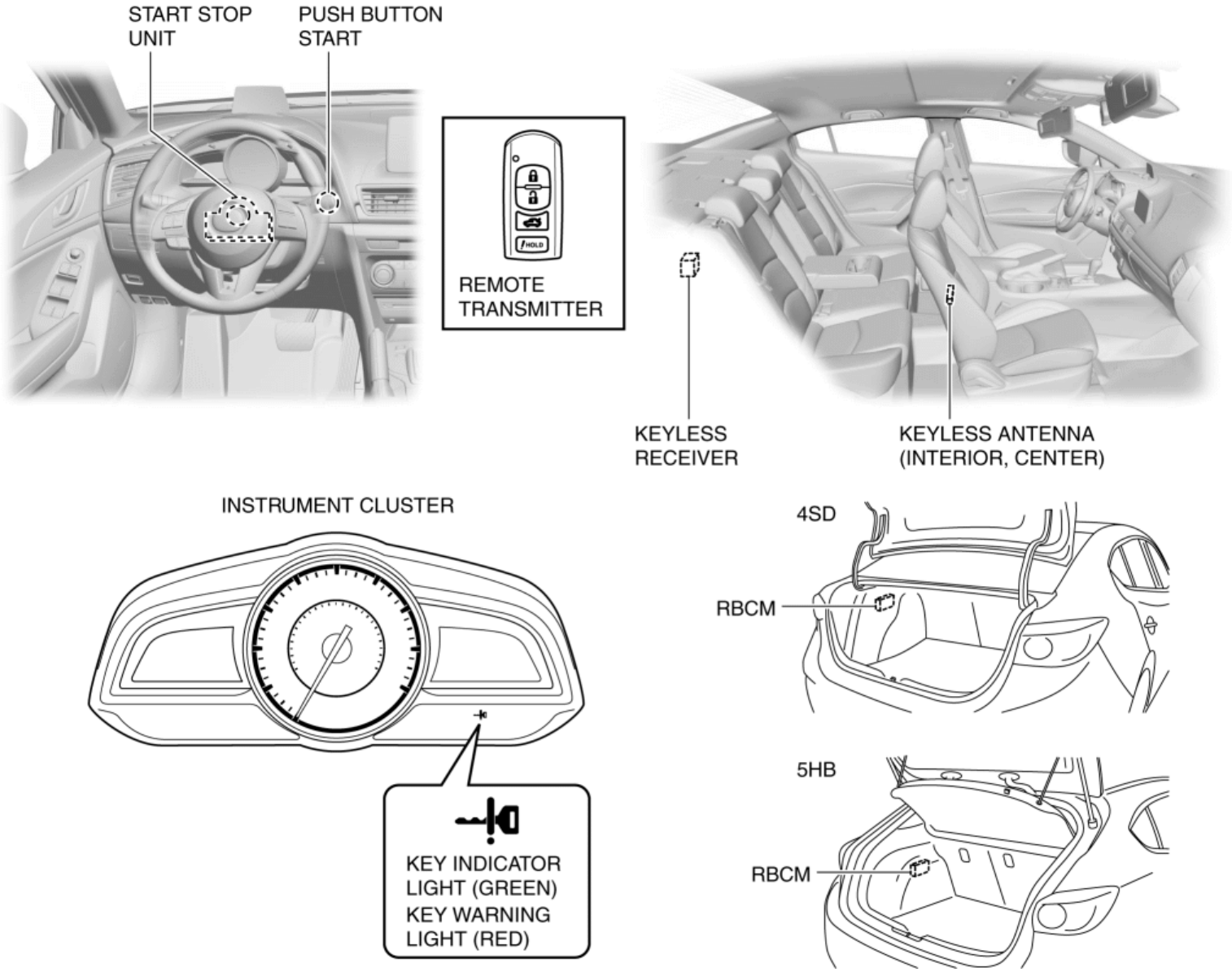

System Wiring Diagram

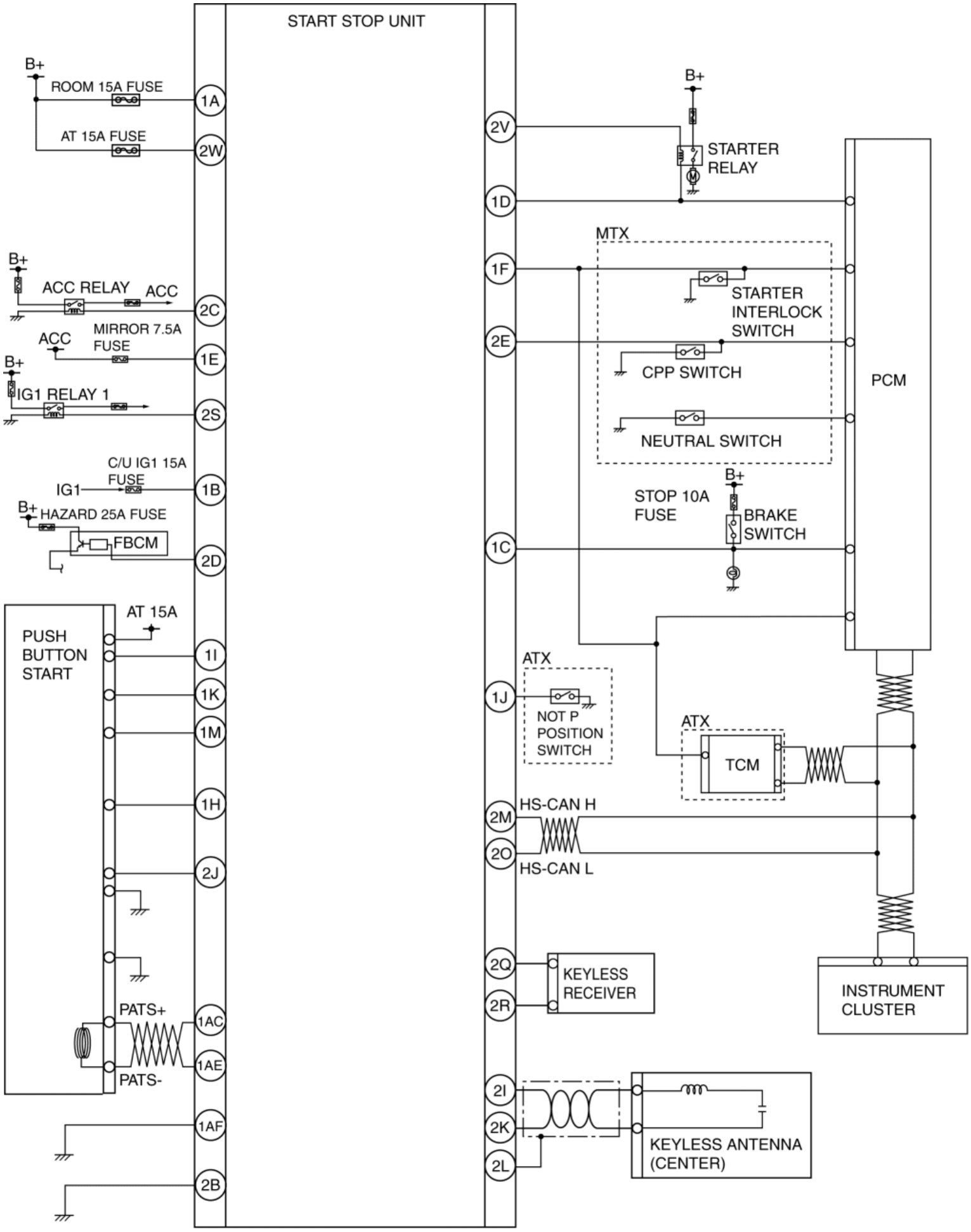
START STOP UNIT
B+
ROOM 15A FUSE
1A
AT 15A FUSE
2W
B+
ACC RELAY
ACC
2C
ACC
MIRROR 7.5A FUSE
1E
B+
IG1 RELAY 1
2S
C/U IG1 15A FUSE
IG1
1B
B+
HAZARD 25A FUSE
FBCM
2D
PUSH BUTTON START
AT 15A
1I
1K
1M
1H
2J
PATS+
1AC
1AE
PATS-
1AF
2B
2V
B+
STARTER RELAY
1D
MTX
1F
STARTER INTERLOCK SWITCH
2E
CPP SWITCH
NEUTRAL SWITCH
PCM
B+
STOP 10A FUSE
BRAKE SWITCH
1C
ATX
1J
NOT P POSITION SWITCH
ATX
TCM
2M
HS-CAN H
2O
HS-CAN L
2Q
KEYLESS RECEIVER
2R
INSTRUMENT CLUSTER
2I
2K
2L
KEYLESS ANTENNA (CENTER)

Operation

Remote transmitter verification

1. When the push button start is pressed, a push button start signal is input to the start stop unit.
2. When the start stop unit detects a push button start signal, it sends a request signal via the keyless antennas.
3. The remote transmitter receives the request signal from the keyless antennas, and transmits ID data to the keyless receiver.
4. The keyless receiver transmits the received ID data to the start stop unit.
5. The start stop unit verifies the ID data and if it matches, the power supply is switched to turn the push button start indicator light (amber) on.

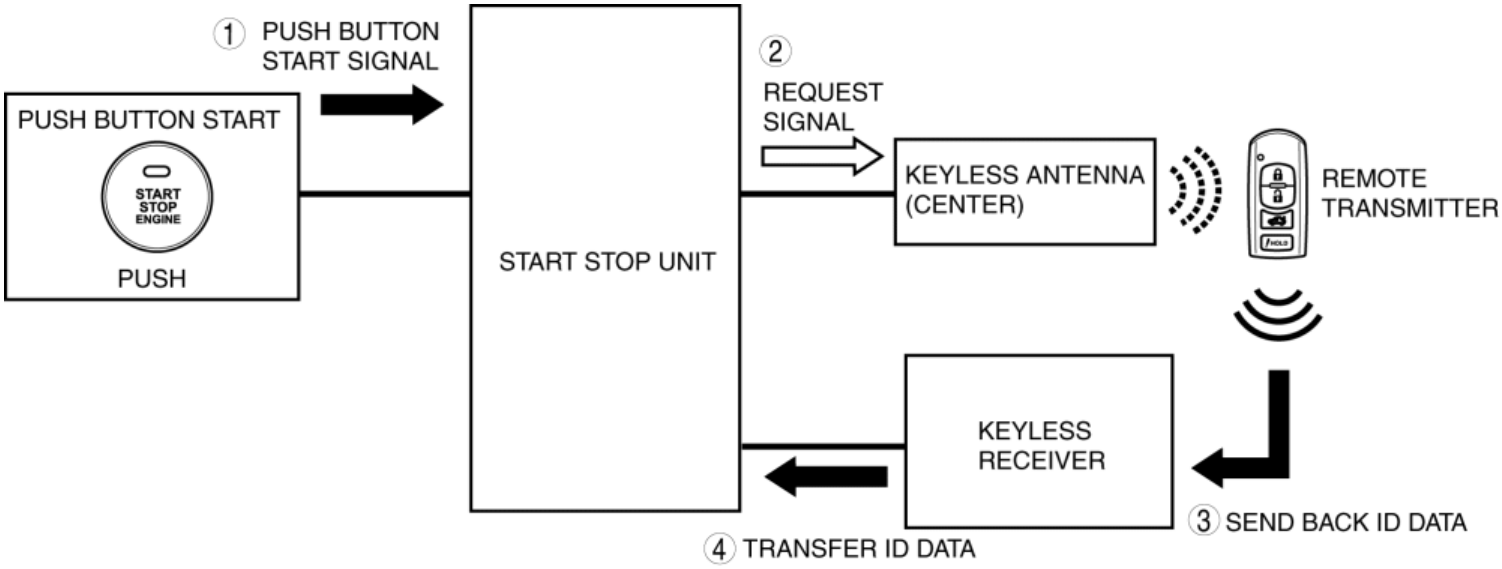

NOTE:

- The power supply switches according to the vehicle conditions such as the shift lever (MTX)/selector lever (ATX) position and the pedal depression/release.

MTX

IGNITION	SHIFT LEVER POSITION	
	ALL	
	CLUTCH PEDAL RELEASED	CLUTCH PEDAL DEPRESSED
OFF		
ACC		
ON (ENGINE OFF)		
ON (ENGINE ON)		

ATX

IGNITION	SELECTOR LEVER POSITION					
	P		N		OTHER THAN P AND N	
	BRAKE PEDAL RELEASED	BRAKE PEDAL DEPRESSED	BRAKE PEDAL RELEASED	BRAKE PEDAL DEPRESSED	BRAKE PEDAL RELEASED	BRAKE PEDAL DEPRESSED
OFF						
ACC						
ON (ENGINE OFF)						
ON (ENGINE ON)						

*

To switch the ignition to ACC or off from ON (engine on), a vehicle speed of 5 km/h {3 mph} or less is required.

Engine-start operation

- The remote transmitter authorization is performed and the engine starts by pressing the push button start when all the following conditions are met:

  Engine start conditions

  - Clutch pedal is depressed (MTX)
  - Brake pedal is depressed (ATX)
  - Selector lever is in P or N position (ATX)
  - Remote transmitter is within request signal output range of keyless antennas in vehicle interior

Automatic ignition switch off

- If the ignition has been switched to ACC for 25 min or more, the start stop unit automatically switches the ignition off.

Engine emergency stop

- If an ignition switch on signal is input for 3 s or more (ignition switch held pressed) with the engine running, or a push button start ON signal is input 3 times within 1.5 s, the start stop unit switches the ignition to ACC or off according to the position of the shift lever (MTX)/selector lever (ATX).

Back-up mode (MTX) for engine-start

- If the start stop unit determines that either the clutch pedal position switch or clutch cut switch is malfunctioning, the system switches to back-up mode.
- If the push button start is pressed when all the following conditions are met while in the back-up mode, the remote transmitter authorization is performed and the engine starts.
    - Start stop unit detects that either clutch pedal position switch or clutch cut switch is on
    - Neutral switch signal is received via CAN communication from PCM
    - Remote transmitter is within request signal output range of keyless antennas in vehicle interior

Guidance function

Display of methods for resolving issues

- Under the following conditions, the start stop unit sends a warning request signal via CAN transmission to the instrument cluster to flash the push button start indicator (green).
- The instrument cluster illuminates/flashes the KEY indicator light/KEY warning light when it receives the warning request signal.

Condition	Instrument cluster		Push button start
	KEY indicator light (green)	KEY warning light (red)	Indicator light (green)
Engine start conditions are met	On	—	On
ID data cannot be verified	—	Flashes	—

2014 - Mazda3 - Body and Accessories

START STOP UNIT

Purpose

- Performs control of several systems based on input/output signals from switches.

Function

- The start stop unit controls systems based on the input/output signals.
- The functions which are controlled are as follows:

Control Table

Control	Content	Reference
Advanced keyless entry system control	Authorization of the remote transmitter being carried is automatically performed using radio waves, and all the doors lock/unlock according to the switch operation.	(See **ADVANCED KEYLESS ENTRY SYSTEM**.)
Keyless entry system control	When the lock/unlock buttons on the transmitter are pressed at a distance away from the vehicle (within approx. 1 m {3 ft}), all the doors lock/unlock.	(See **KEYLESS ENTRY SYSTEM**.)
Push button start system control	When the push button start is pressed, authorization of the remote transmitter brought into the vehicle is automatically performed.	(See **PUSH BUTTON START SYSTEM [ADVANCED KEYLESS ENTRY SYSTEM]**.) (See **PUSH BUTTON START SYSTEM [KEYLESS ENTRY SYSTEM]**.)
Immobilizer system control	The immobilizer system is a vehicle theft prevention device that only allows a remote transmitter that has been previously programmed to the vehicle to start the engine.	(See **IMMOBILIZER SYSTEM**.)
On-board diagnostic system control	The start stop unit is equipped with an on-board diagnosis function which records DTCs in the event of a malfunction.	(See **ON-BOARD DIAGNOSIS SYSTEM [START STOP UNIT]**.) (See **ON-BOARD DIAGNOSIS SYSTEM [ADVANCED KEYLESS ENTRY SYSTEM]**.) (See **ON-BOARD DIAGNOSIS SYSTEM [IMMOBILIZER SYSTEM]**.)
CAN (Controller Area Network)	Sends and receives signals between CAN system-related modules using CAN system.	(See **MULTIPLEX COMMUNICATION SYSTEM**.)

Structural View

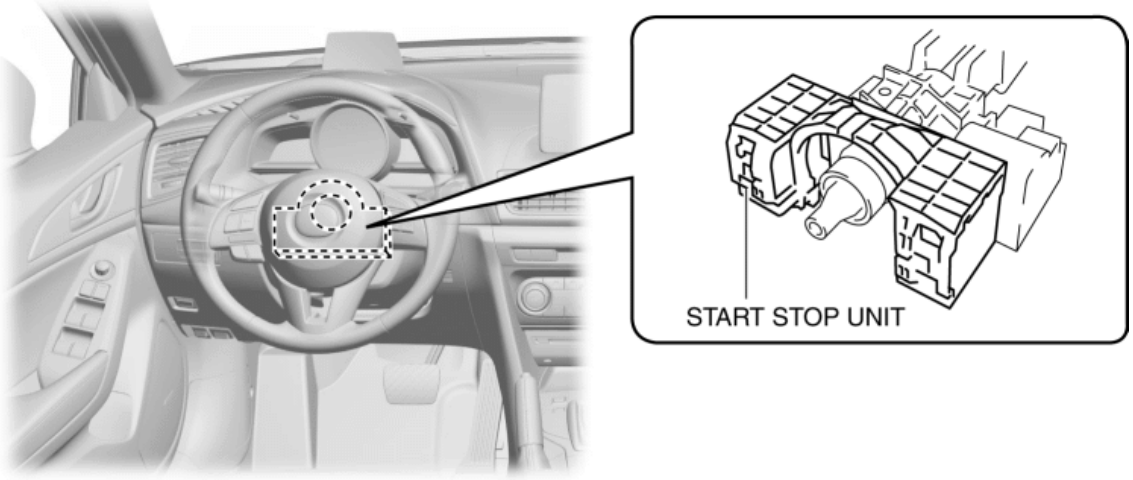

System Wiring Diagram

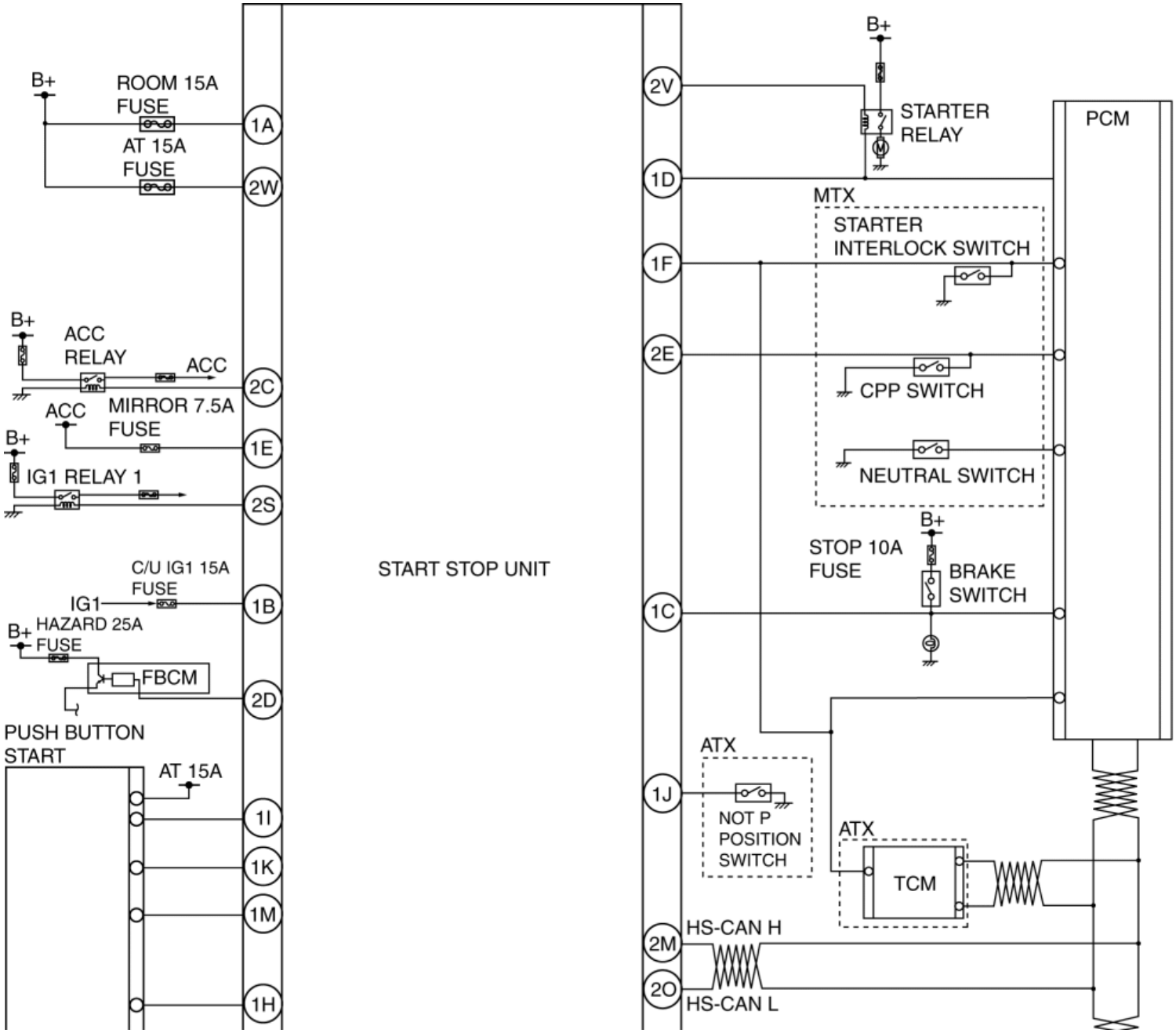

START STOP UNIT

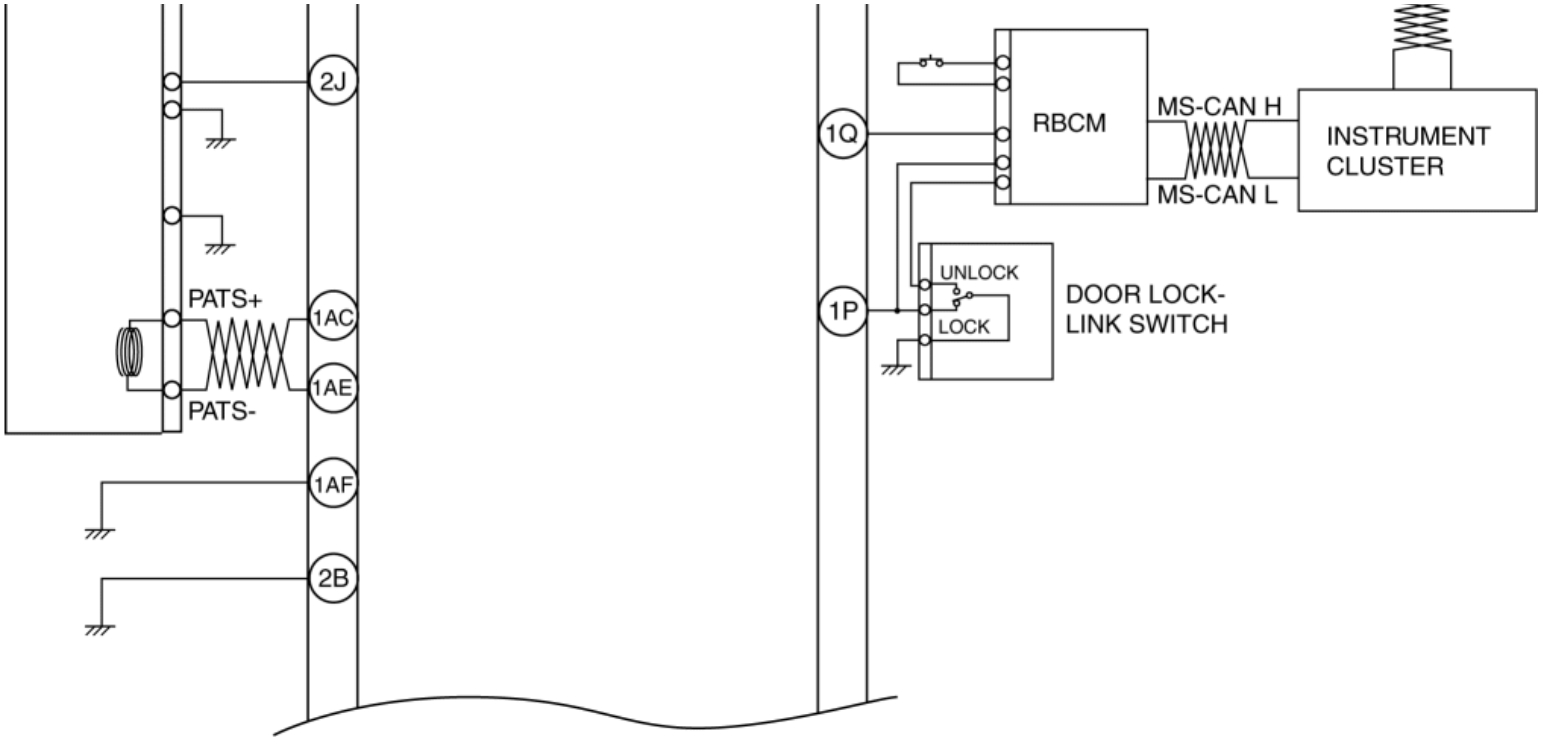

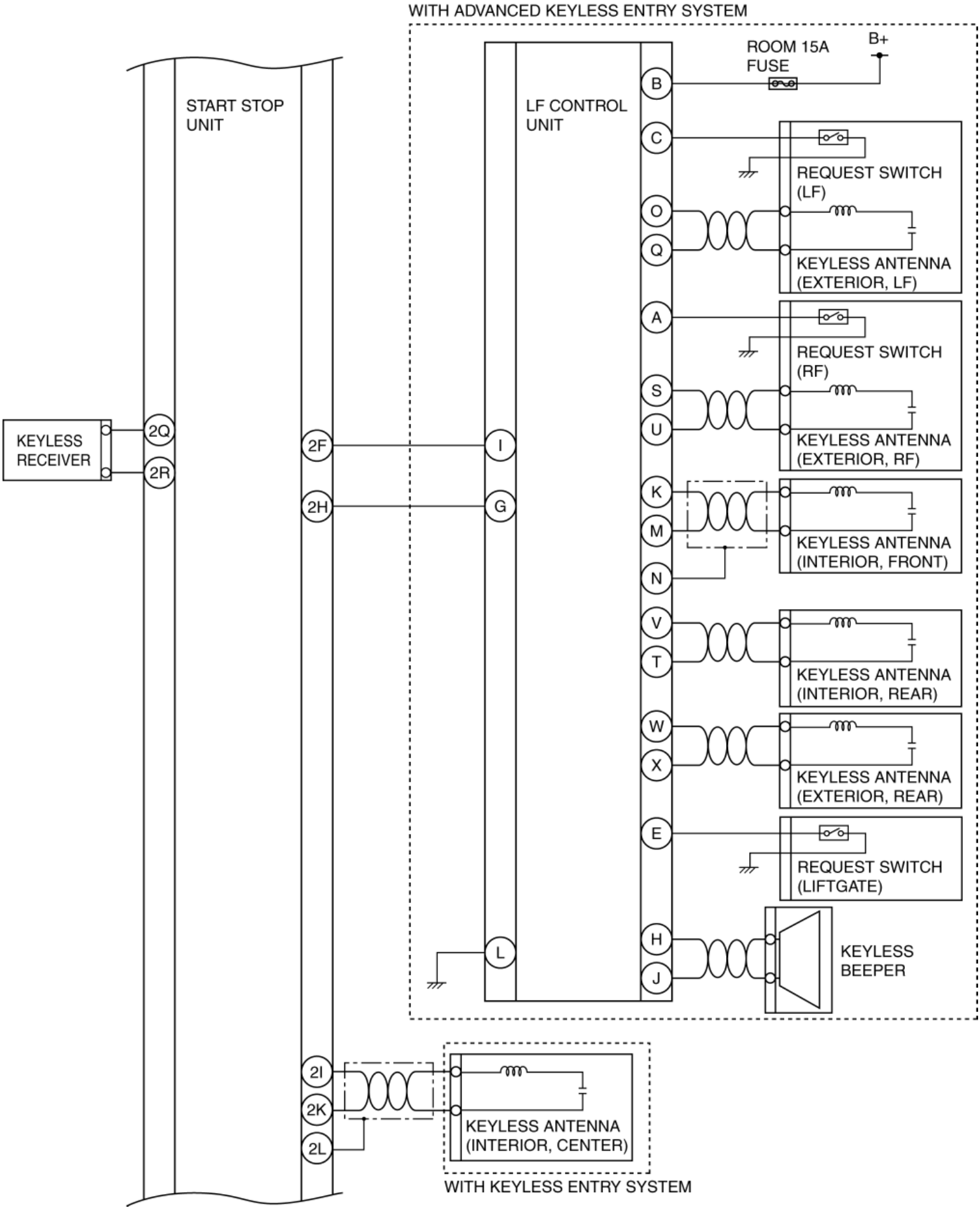
WITH ADVANCED KEYLESS ENTRY SYSTEM
START STOP UNIT
LF CONTROL UNIT
ROOM 15A FUSE
B+
B
C
O
Q
A
S
U
K
M
N
V
T
W
X
E
H
J
I
G
L
REQUEST SWITCH (LF)
KEYLESS ANTENNA (EXTERIOR, LF)
REQUEST SWITCH (RF)
KEYLESS ANTENNA (EXTERIOR, RF)
KEYLESS ANTENNA (INTERIOR, FRONT)
KEYLESS ANTENNA (INTERIOR, REAR)
KEYLESS ANTENNA (EXTERIOR, REAR)
REQUEST SWITCH (LIFTGATE)
KEYLESS BEEPER
KEYLESS RECEIVER
2Q
2R
2F
2H
2I
2K
2L
KEYLESS ANTENNA (INTERIOR, CENTER)
WITH KEYLESS ENTRY SYSTEM

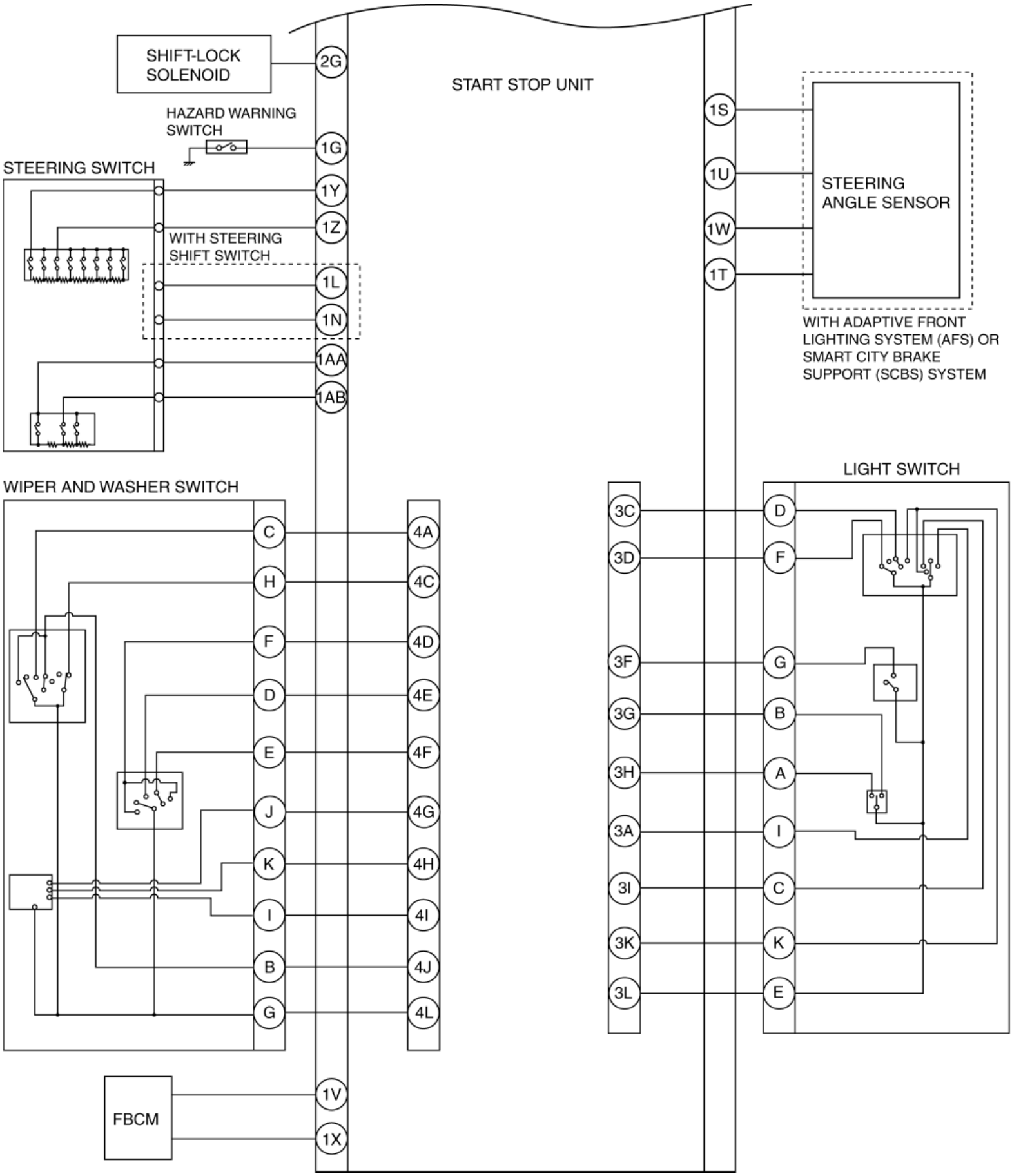
SHIFT-LOCK SOLENOID
2G
START STOP UNIT
HAZARD WARNING SWITCH
1G
STEERING SWITCH
1Y
1Z
WITH STEERING SHIFT SWITCH
1L
1N
1AA
1AB
1S
1U
1W
1T
STEERING ANGLE SENSOR
WITH ADAPTIVE FRONT LIGHTING SYSTEM (AFS) OR SMART CITY BRAKE SUPPORT (SCBS) SYSTEM
WIPER AND WASHER SWITCH
C
H
F
D
E
J
K
I
B
G
4A
4C
4D
4E
4F
4G
4H
4I
4J
4L
LIGHT SWITCH
3C
3D
3F
3G
3H
3A
3I
3K
3L
D
F
G
B
A
I
C
K
E
FBCM
1V
1X

Fail-safe

Keyless entry system

- KEY warning light (red) illuminates.

Advanced keyless entry system

- KEY warning light (red) illuminates.

Push button start system

- If a malfunction is detected in the push button start system, the engine can be started by pressing and holding the push button start. In addition, if the following conditions are met, engine starting is inhibited.
    - Certain period of time has elapsed since malfunction is detected in push button start
    - Engine is started a certain number of times by pressing and holding push button start
- Flashes the push button start indicator light (amber).

Immobilizer system

- Flashes the push button start indicator light (amber).

2014 - Mazda3 - Body and Accessories

LF CONTROL UNIT

Purpose

- The keyless beeper and keyless antenna are controlled by the input/output signals from the start stop unit.

Function

- The LF control unit controls the keyless beeper sound based on the signal from the start stop unit.
- The LF control unit sends the request signal from the keyless antenna based on the signal from the start stop unit.

Construction

- Installed inside the front side trim.

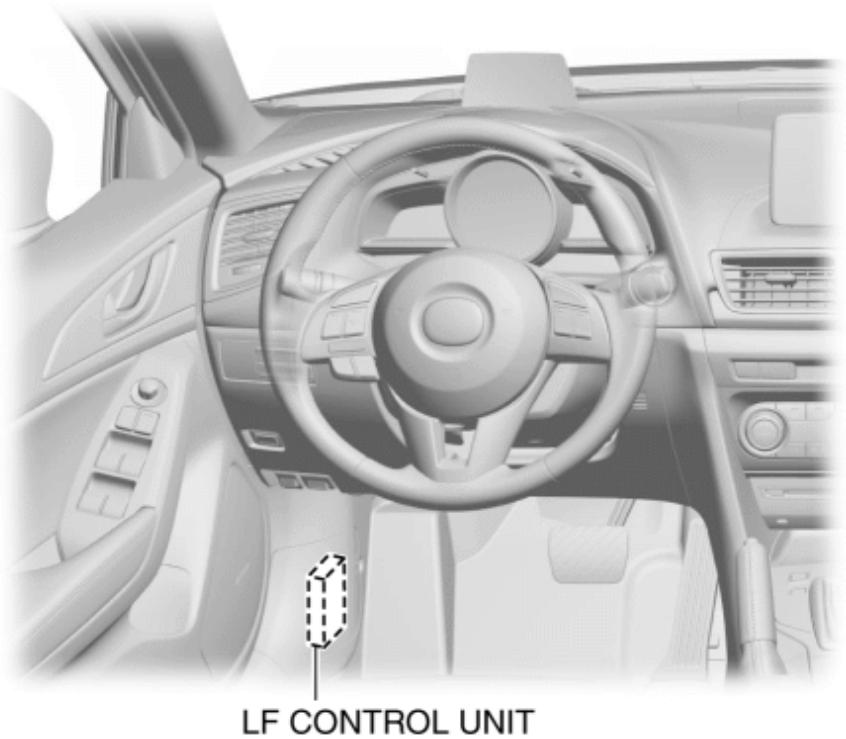

Operation

Keyless beeper control

1. The LF control unit sends the beeper sound request signal from the start stop unit.

2. The LF control unit sounds the keyless beeper when it receives the beeper sound request signal.

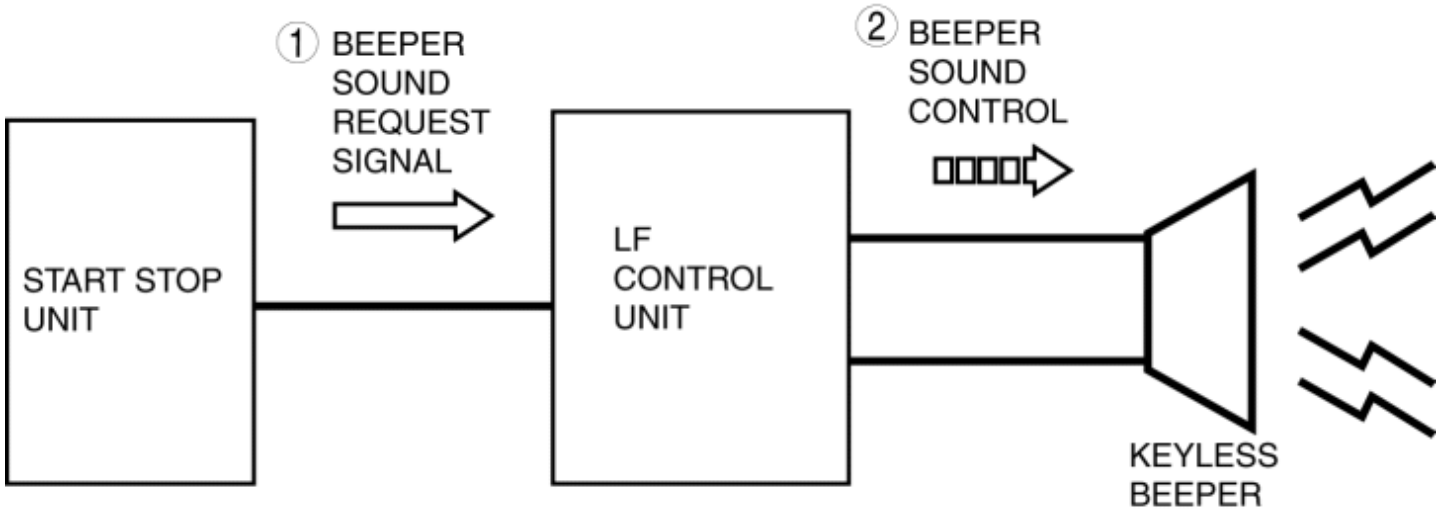

Keyless antenna control

1. The LF control unit sends the request send signal from the start stop unit.

2. The LF control unit sends the request signal from the keyless antenna when it receives the request send signal.

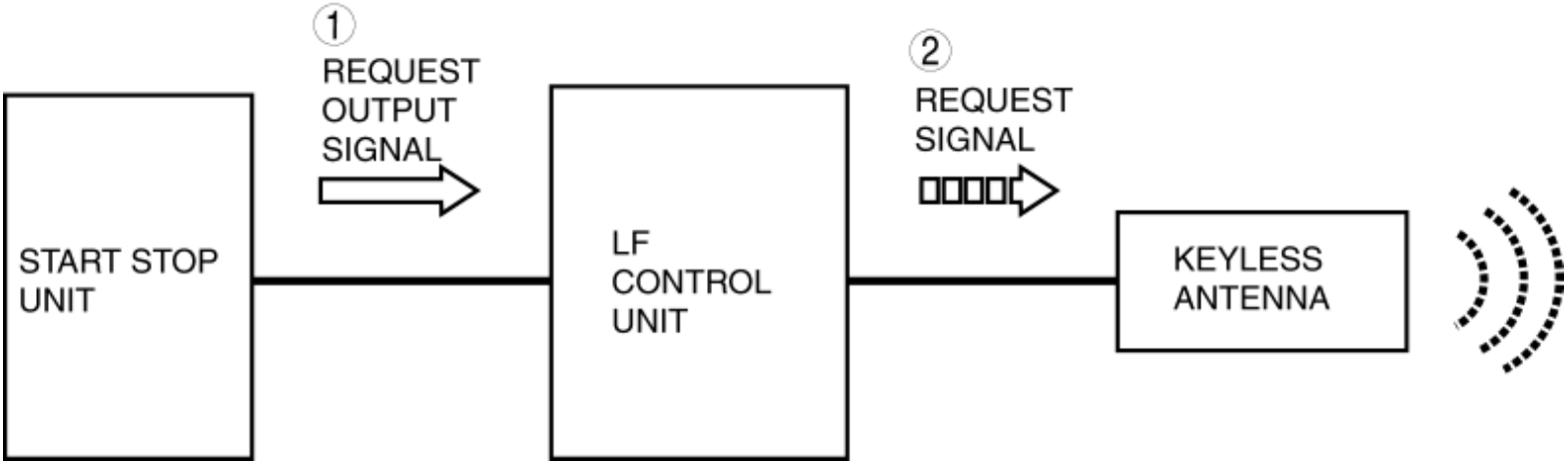

Fail-safe

- Function not equipped.

LF CONTROL UNIT

2014 - Mazda3 - Body and Accessories

KEYLESS ANTENNA [ADVANCED KEYLESS ENTRY SYSTEM]

Purpose

- Outputs a request signal and specifies the remote transmitter location.

Function

- The keyless antenna outputs request signals to the inside and outside of the vehicle based on the signals from the LF control unit.

Construction, Operation

- The antennas for request signal output form the request signal output range at 5 locations.

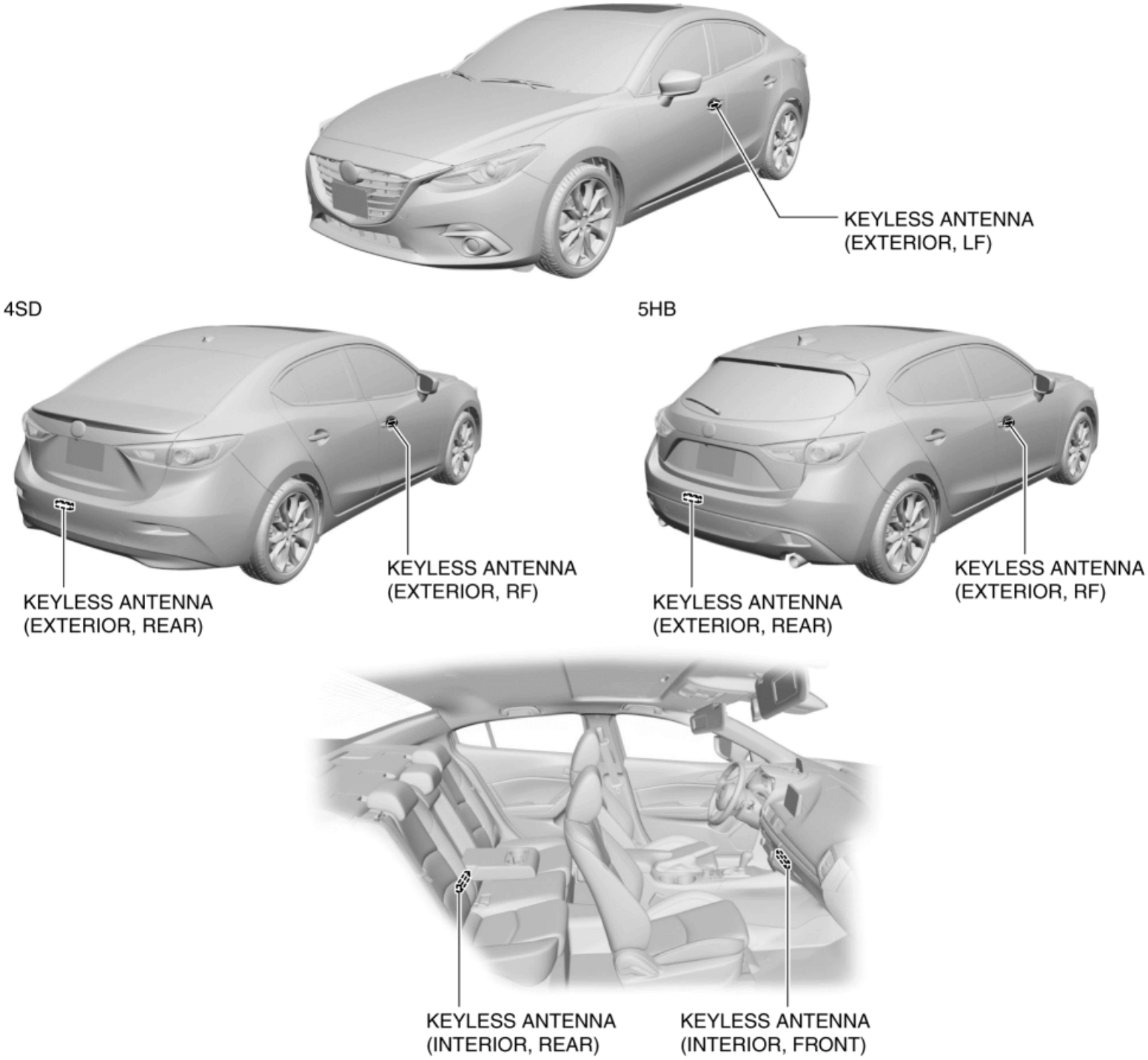

Request signal output range

- The keyless antennas for the vehicle exterior (driver-side, passenger-side, rear) form the request signal output area in the range of an **approx. 80 cm {31 in}** radius from each location and communicate with the advanced key.
- The keyless antennas for the vehicle interior (front, rear) form the output range inside the vehicle.

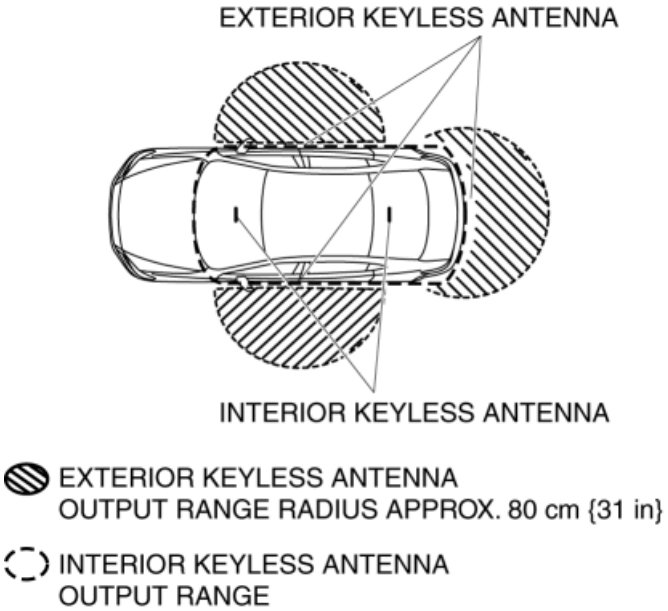

Fail-safe

- Function not equipped.

2014 - Mazda3 - Body and Accessories

KEYLESS ANTENNA [KEYLESS ENTRY SYSTEM]

Purpose

- Outputs a request signal and specifies the remote transmitter location.

Function

- The keyless antennas output request signals based on the signals from the start stop unit.

Construction, Operation

- Request signals are output by the keyless antenna installed in the rear console to produce the keyless antenna output range inside the vehicle.

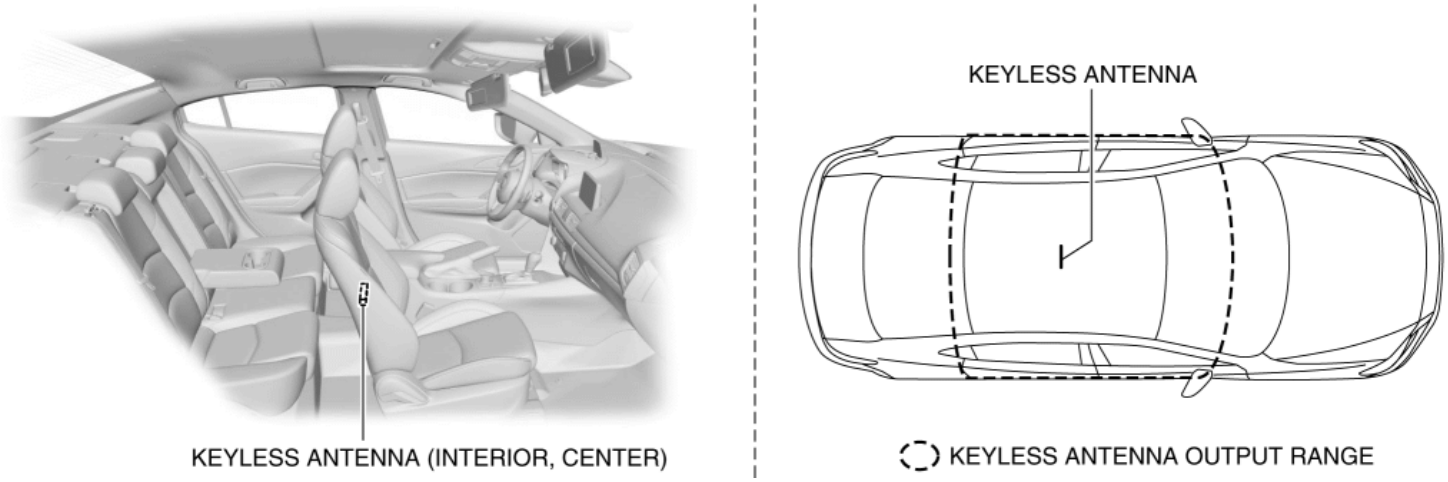

Fail-safe

- Function not equipped.

2014 - Mazda3 - Body and Accessories

REMOTE TRANSMITTER

Purpose

- When the lock button/unlock button of the remote transmitter is pressed, ID data is sent to the keyless receiver.

Function

- When the remote transmitter sends ID data, the operation indicator light illuminates.

Construction

- The remote transmitter is built into the operation indicator light.
- The remote transmitter secures specific electronic codes (key ID number) built into the electronic communication device (transponder).
- In case the transmitter is inoperable due to battery depletion, the doors can be locked/unlocked using the auxiliary key.

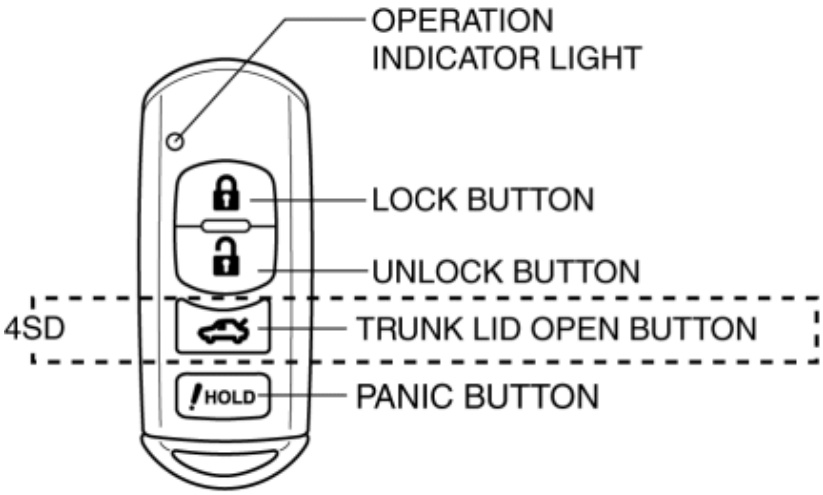

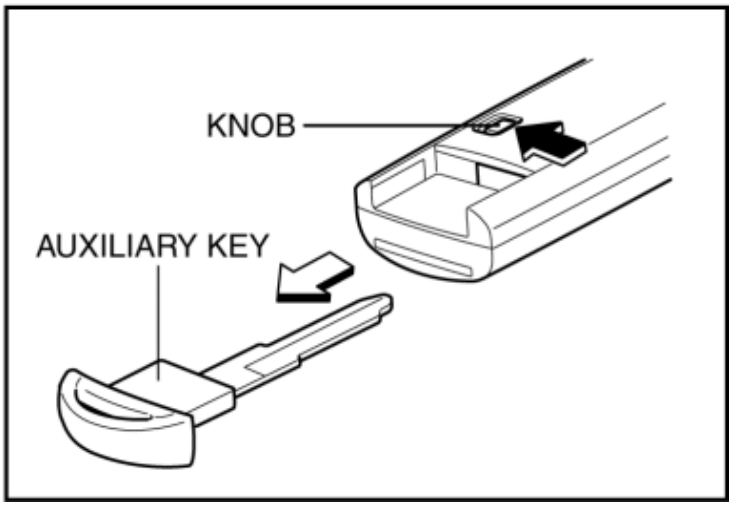

Operation

- When a remote transmitter button is pressed, ID data at a radio frequency of 315 MHz is sent to the keyless receiver.

Fail-safe

- Function not equipped.

2014 - Mazda3 - Body and Accessories

REQUEST SWITCH

Purpose

- Transmits the request switch operation of the user to the LF control unit.

Function

- The request switch ON signal is sent to the LF control unit by operating the request switch.

Construction, Operation

- Installed on the outer handle of the driver-side/passenger side front door and liftgate garnish (5HB).
- While the request switch is pressed, the switch turns on (contact point: closed).

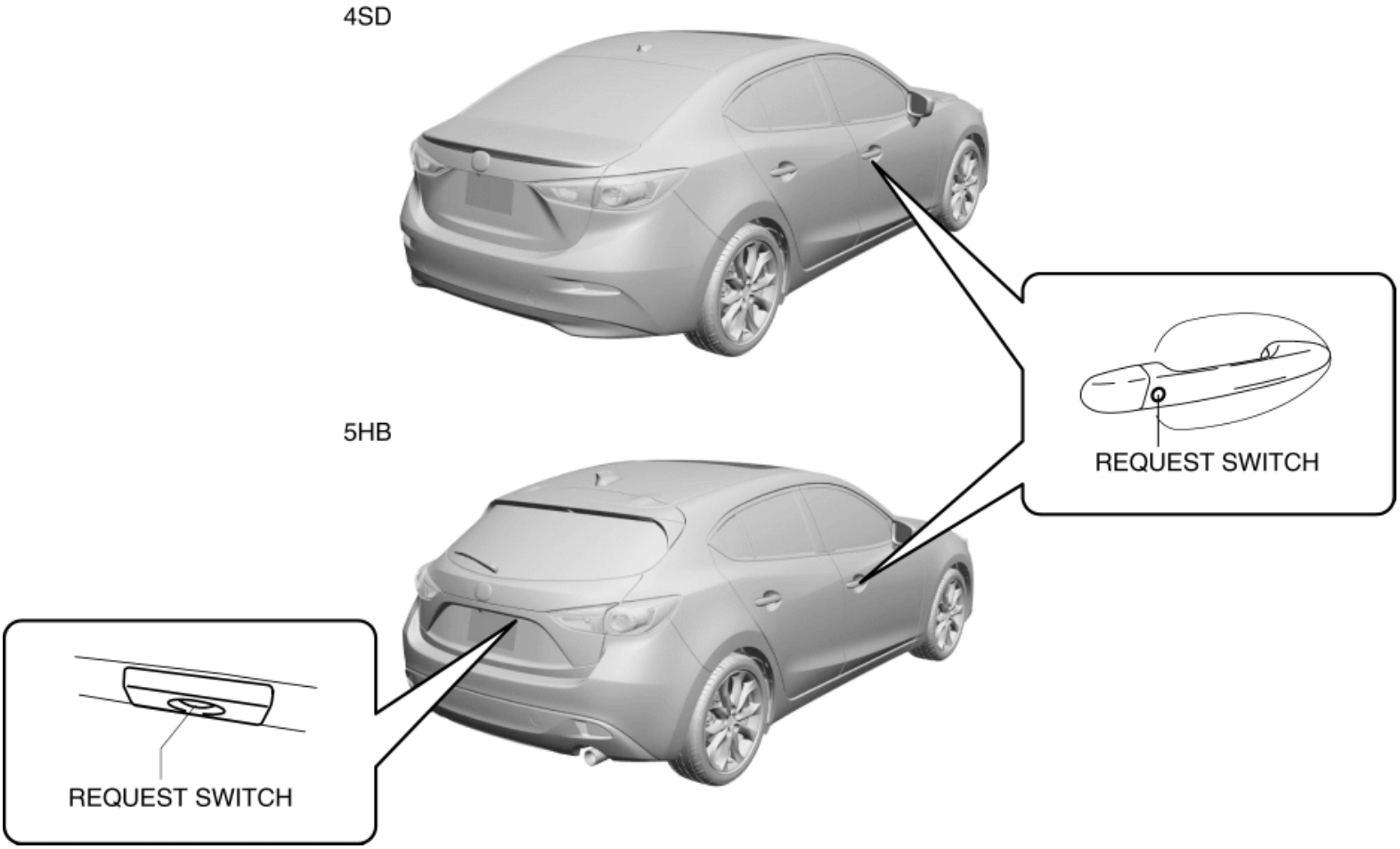

Fail-safe

Function not equipped.

2014 - Mazda3 - Body and Accessories

KEYLESS BEEPER

Purpose, Function

- Notifies the user that the lock/unlock operation of the advanced keyless entry system is completed, and warns if the system is operated incorrectly.

Construction, Operation

- Installed inside the cowl grille.
- The keyless beeper operates based on the LF control unit signals. For the details of the beeper operation, see [ALERT FUNCTION OPERATION] in **ADVANCED KEYLESS ENTRY SYSTEM**.

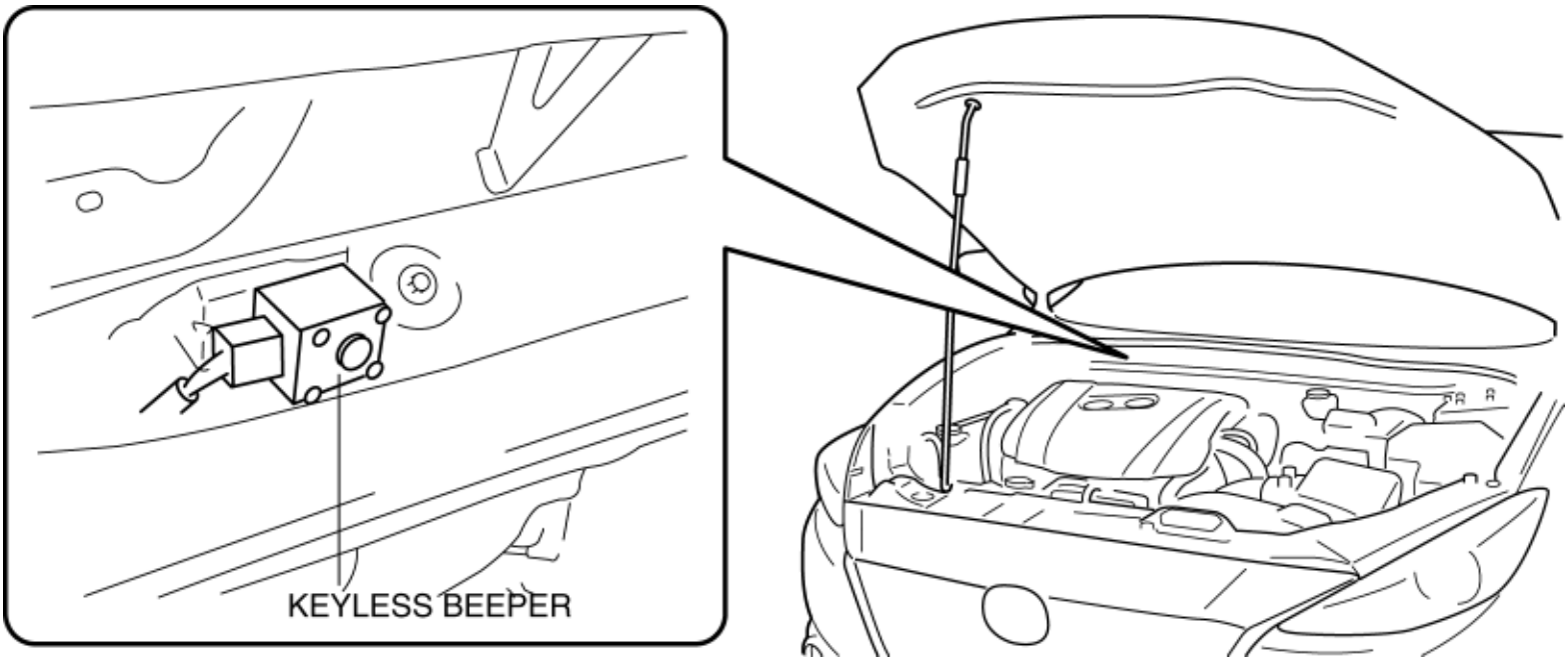

Fail-safe

- Function not equipped.

2014 - Mazda3 - Body and Accessories

KEYLESS RECEIVER

Purpose, Function

- Receives ID data from the remote transmitter and sends the received ID data to the start stop unit.

Construction

- Installed inside the tire house trim.

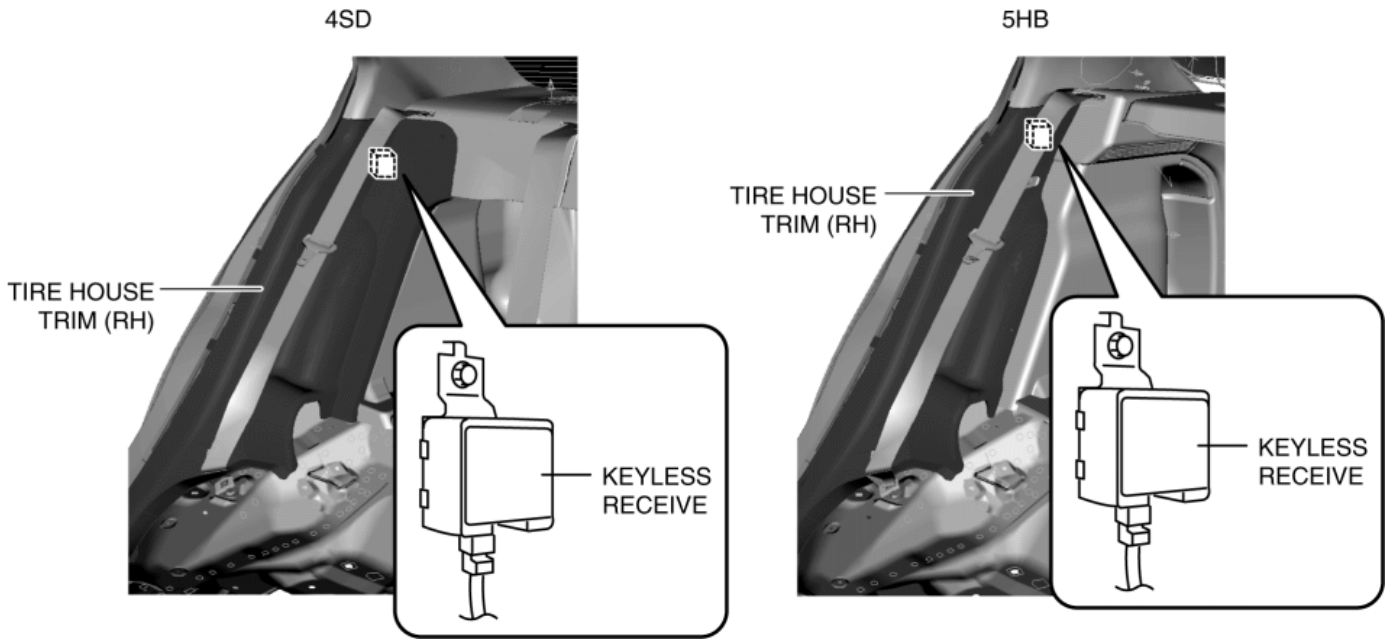

Operation

1. The ID data sent from the remote transmitter is received by the keyless receiver.
2. The keyless receiver transmits the received ID data to the start stop unit.

Fail-safe

- Function not equipped.

2014 - Mazda3 - Body and Accessories

PUSH BUTTON START

Purpose

- By pressing the switch ON/OFF, the push button start notifies the start stop unit of the user power supply switching operation.

Function

Push button start indicator light

- Illuminates the push button start indicator light to notify the driver of the power supply status.

START/STOP/ENGINE indicator light

- The characters in the push button start illuminate to notify the user of the button position.

Construction

- The push button start is installed in the meter hood.
- Two types of switches are integrated in the push button start.
- The push button start has the following integrated indicators. For the indicator inspection conditions, refer to the **PUSH BUTTON START SYSTEM [ADVANCED KEYLESS ENTRY SYSTEM]** or **PUSH BUTTON START SYSTEM [KEYLESS ENTRY SYSTEM]**.
    - ACC indicator
    - ON indicator
    - Indicator (green)
    - Indicator (amber)
- The push button start has an integrated coil antenna for the immobilizer system. (See **COIL ANTENNA**.)

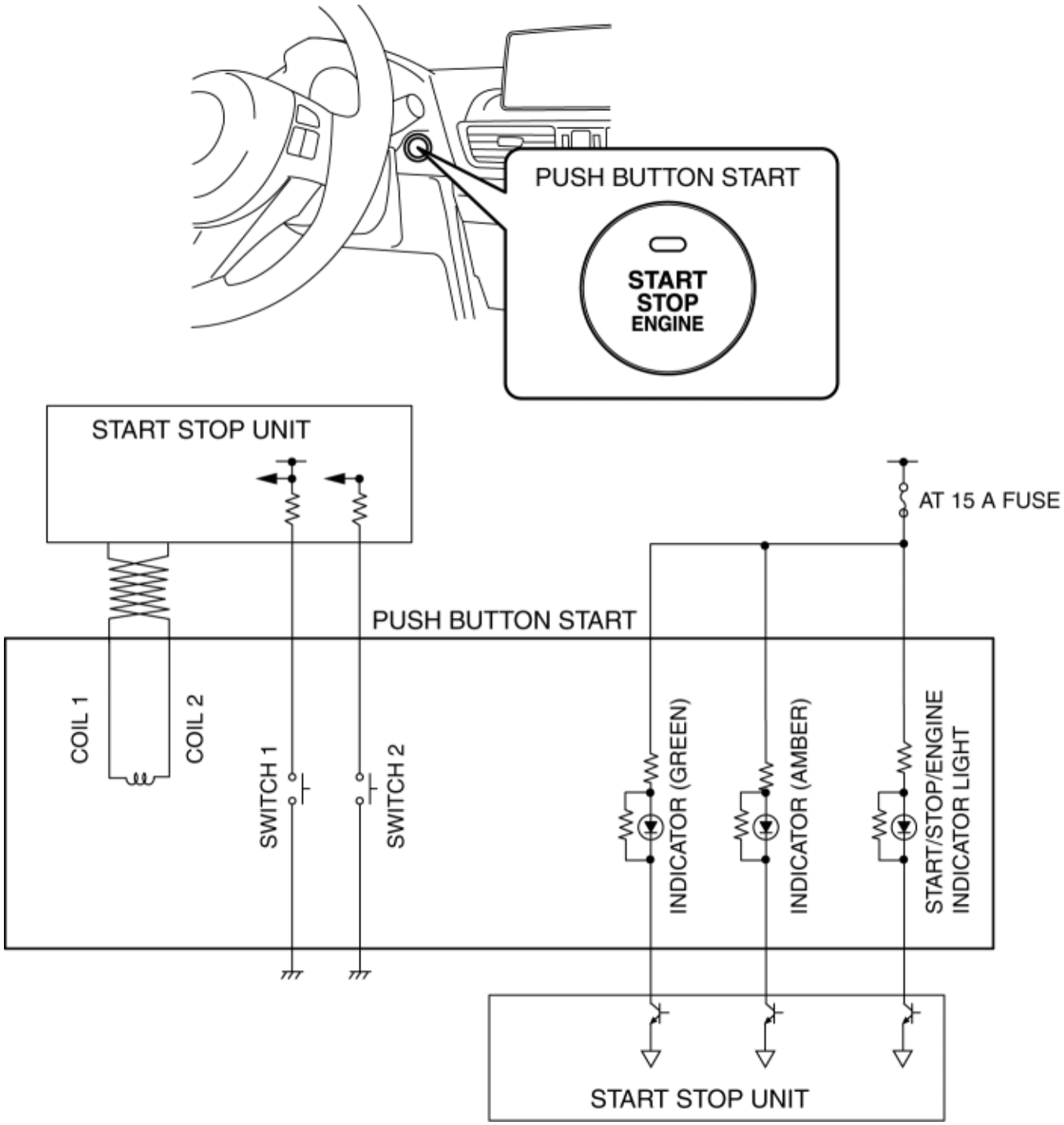

Operation

- When the push button start is pressed, switches 1 and 2 turn on (contact point: closed), and when released, it turns off (contact point: open).

Push button start indicator light

Green illumination

- Illuminates if the conditions necessary for engine-start are met.

Amber illumination

- It illuminates when a malfunction is detected.

  Amber flashing

- Flashes when a malfunction is detected.

START/STOP/ENGINE indicator light

- When a door is open/closed, the START/STOP/ENGINE indicator light illuminates when the headlights are turned on.

Fail-safe

- Function not equipped.

2014 - Mazda3 - Body and Accessories

KEYLESS WARNING ALARM

Purpose

- The keyless warning alarm notifies the driver that the presence of the remote transmitter cannot be verified.

Function

- When the instrument cluster receives the keyless warning alarm request signal sent from the start stop unit via the CAN signal, the keyless warning alarm sounds.
- The start stop unit sends a keyless warning alarm request signal to the instrument cluster via CAN signal.
    - Driver's door latch switch on signal (door open) is received with ignition switched to ACC (pattern A)
    - Remote transmitter cannot be detected inside vehicle when off signals for all door latch switches (doors closed) is received with ignition not switched to off (pattern B)
- The keyless warning alarm sound pattern is as follows:

Pattern A

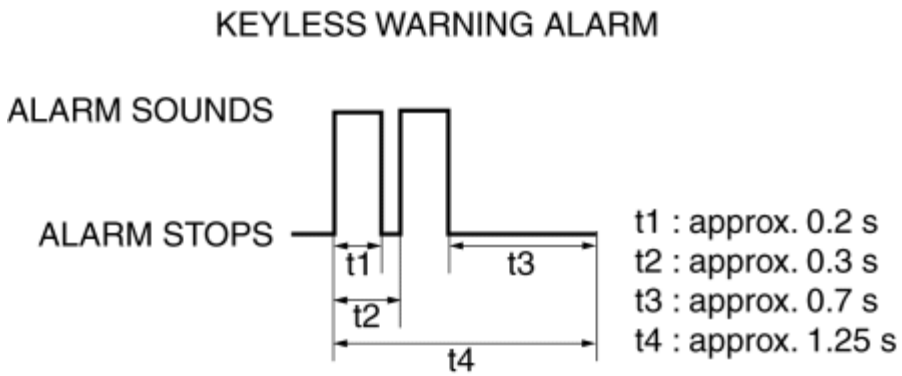

Pattern B

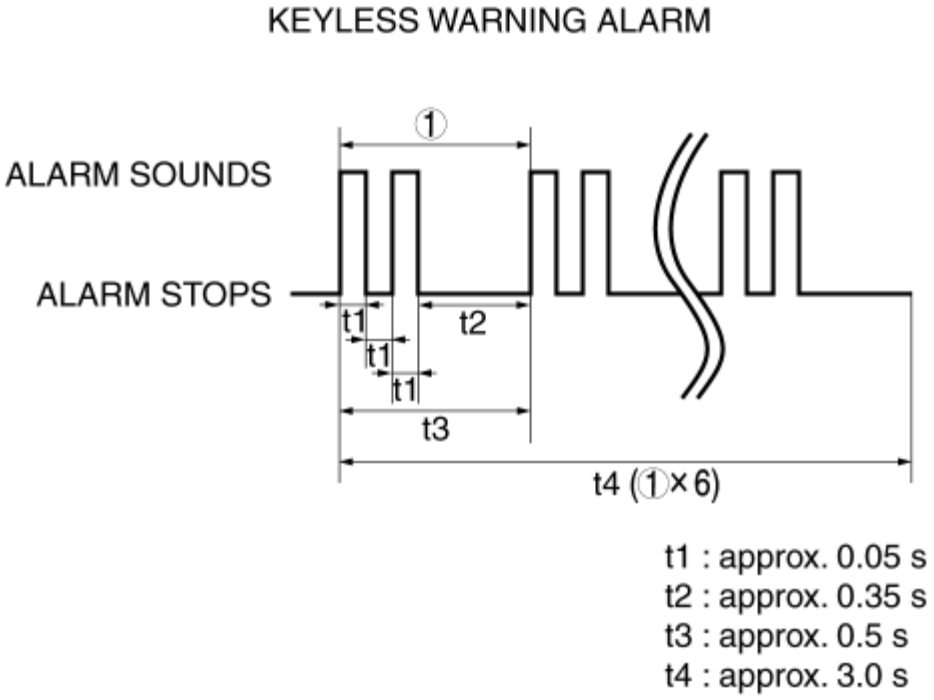

Construction

- The keyless warning alarm sounds using the buzzer built into the instrument cluster.

Operation

1. The start stop unit sends (1) a keyless warning alarm request signal to the instrument cluster.

2. The instrument cluster microcomputer turns the transistor on (2) based on the keyless warning alarm request signal.

3. When the transistor turns on, the ground circuit of the alarm is established and the alarm sounds (3).

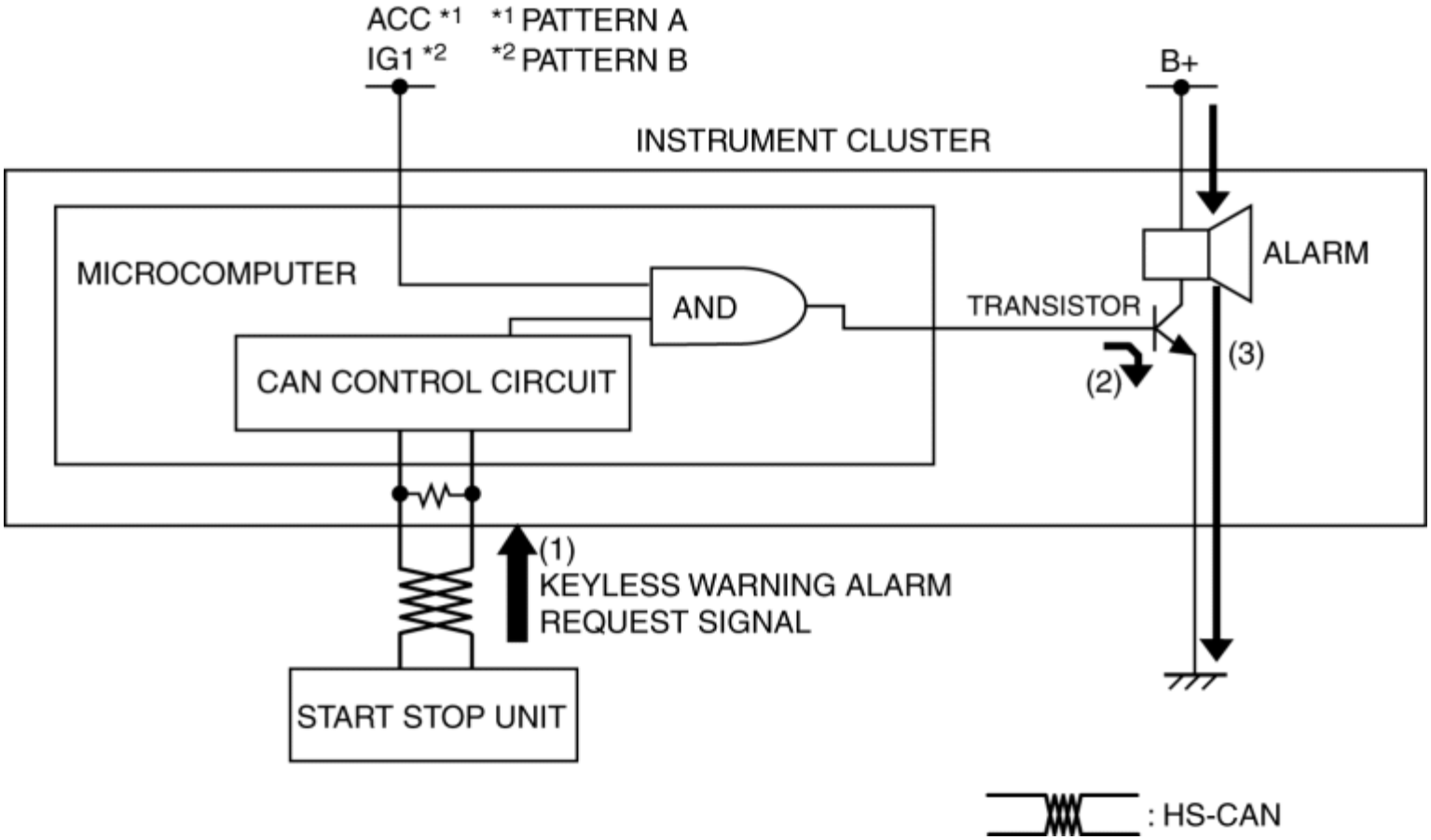

Fail-safe

- Function not equipped.

2014 - Mazda3 - Body and Accessories

ON-BOARD DIAGNOSIS SYSTEM [ADVANCED KEYLESS ENTRY SYSTEM]

Outline

- The advanced keyless entry system has an on-board diagnostic function to facilitate system diagnosis.
- The on-board diagnostic function consists of the following functions:
  - A malfunction detection function, which detects overall malfunctions in the advanced keyless entry system-related parts.
  - A memory function, which stores detected DTCs.
  - A display function, which indicates malfunction locations and status via DTC output.
  - A PID/data monitoring function, which reads out specific input/output signals and verifies the input/output condition.
- Using the Mazda Modular Diagnostic System (M-MDS), DTCs can be read out and deleted, and the PID/data monitoring function can be activated.

Malfunction detection function

- Detects malfunctions in input/output signals.
- If a malfunction occurs, the start stop unit records the malfunction as a DTC. A recorded DTC can be read by the Mazda Modular Diagnostic System (M-MDS).

×: Applicable—: Not applicable

DTC No.	KEY warning light (red)	Description	Fail-safe function	Drive cycle	Self test type*1	Memory function
B10C6:1F	On	Keyless antenna (exterior, rear) circuit malfunction	×	—	C, D	×
B10C7:1F	On	Keyless antenna (interior, rear) circuit malfunction	×	—	C, D	×
B10C9:1F	On	Keyless antenna (interior, front) circuit malfunction	×	—	C, D	×
B10D1:23	On	Request switch (LF) circuit malfunction	—	—	C	×

B10D3:23	On	Request switch (RF) circuit malfunction	—	—	C	×
B11C4:23*2	On	Request switch (liftgate) circuit malfunction	—	—	C	×
B11FD:1F	On	Keyless antenna (exterior, LF) circuit malfunction	×	—	C, D	×
B1210:1F	On	Keyless antenna (exterior, RF) circuit malfunction	×	—	C, D	×
B13C3:04	On	LF control unit internal malfunction	×	—	C	×
B13C3:09	On	LF control unit malfunction	×	—	C	×
B13C3:16	On	LF control unit power supply voltage low input	×	—	C	×
B13C3:29	On	Communication error between start stop unit and LF control unit	×	—	C	×

*1

C: CMDTC self test, D: ODDTC self test

*2

5HB

DTC 7-digit code definition

- When related systems or components have failed, the CM stores the DTC of the malfunctioning part in the CM memory, and allows for the retrieval of the store data using scanning tool when necessary. The DTCs are indicated using seven digits. Each digit indicates the following.

B 1 0 D 5 : 1 F

· Specify the area failure sub type
1F: Circuit intermittent
16: Circuit voltage below threshold
04: System Internal Failures
23: Signal stuck low
09: Component Failures
29: Signal signal invalid

· Manufacturer controlled

· Indicates subgroup

Powertrain (P code)	Network Electrical (U code)	Body (B code)	Chassis (C code)
0: Fuel and air metering and auxiliary emission controls	0: Network Electrical	Manufacturer controlled	Manufacturer controlled
	1: Network communication		
	2: Network communication		
	3: Network software		
	4: Network data		
	5: Network data		

· Indicates who was responsible for DTC definition
0: ISO/SAE controlled
1: Manufacturer controlled
2: There are ISO/SAE controlled just for powertrain, all others are manufacturer controlled.
3: For P3000 to P3399 is manufacturer controlled, all others are ISO/SAE controlled.

· Indicates DTC function
P: Powertrain
B: Body
C: Chassis
U: Network Electrical

Status byte for DTC

- The two digits (two digits after hyphen (-)) after the seven-digit DTC.

P 0 0 1 1 : 0 0 − * *

STATUS BYTE

- A code which indicates the pending code, current/past malfunction status, or warning illumination status.
- Can be read by performing a CMDTC self-test using the Mazda Modular Diagnostic System (M-MDS).

For details on the status byte, refer to the explanation on the Mazda Modular Diagnostic System (M-MDS) when reading the DTC.

Detection condition for the applicable DTC

DTC	System malfunction location	Detection condition
B10C6:1F	Keyless antenna (exterior, rear) circuit malfunction	Start stop unit detects an open circuit or short to ground in the keyless antenna (exterior, rear) circuit with the ignition switched off.
B10C7:1F	Keyless antenna (interior, rear) circuit malfunction	Start stop unit detects an open circuit or short to ground in the keyless antenna (interior, rear) circuit with the ignition switched off.
B10C9:1F	Keyless antenna (interior, front) circuit malfunction	Start stop unit detects an open circuit or short to ground in the keyless antenna (interior, front) circuit with the ignition switched off.
B10D1:23	Request switch (LF) circuit malfunction	• Start stop unit detected any of the following conditions at a vehicle speed of 5 km/h {3 mph} or more. ▪ The request switch (LF) is continuously ON for 2 min or more. ▪ The request switch (LF) was ON 7 times before the vehicle speed decreased to less than 5 km/h {3 mph}.
B10D3:23	Request switch (RF) circuit malfunction	• Start stop unit detected any of the following conditions at a vehicle speed of 5 km/h {3 mph} or more. ▪ The request switch (RF) is continuously ON for 2 min or more. ▪ The request switch (RF) was ON 7 times before the vehicle speed decreased to less than 5 km/h {3 mph}.
B11C4:23*1	Request switch (liftgate) circuit malfunction	• Start stop unit detected any of the following conditions at a vehicle speed of 5 km/h {3 mph} or more. ▪ The request switch (liftgate) is continuously ON for 2 min or more. ▪ The request switch (liftgate) was ON 7 times before the vehicle speed decreased to less than 5 km/h {3 mph}.
	Keyless antenna	Start stop unit detects an open circuit or short to ground in the keyless antenna (exterior, LF) circuit with the ignition

B11FD:1F	(exterior, LF) circuit malfunction	switched off.
B1210:1F	Keyless antenna (exterior, RF) circuit malfunction	Start stop unit detects an open circuit or short to ground in the keyless antenna (exterior, RF) circuit with the ignition switched off.
B13C3:04	LF control unit internal malfunction	Start stop unit detects the LF control unit internal malfunction.
B13C3:09	LF control unit malfunction	• Start stop unit detects that the LF state signal of the LF control unit is low for 5 s or more. • With the communication between the start stop unit and LF control unit being performed normally, there is no response from the LF control unit even though there is the signal transmission request from the start stop unit to the LF control unit, and the LF state signal becomes low.
B13C3:16	LF control unit power supply voltage low input	Start stop unit power supply circuit voltage of 8.5 V or more or less than 16.5 V and LF control unit power supply circuit voltage of 5 V or more or less than 8.5 V are detected for 5 s or more.
B13C3:29	Communication error between start stop unit and LF control unit	Start stop unit detects the communication error with the LF control unit 10 times.

*1

5HB

Data monitor function

- With the PID/data monitor function, input/output signal monitor items set in the start stop unit can be selected and read out in real-time.

PID	Unit/Operation	Data contents	Data read/use method	Module control terminal
LG/T_LK_SW*1	Off/On	Request switch (liftgate) operation condition • Off: Request switch (liftgate) is off. • On: Request switch (liftgate) is on.	The request switch (liftgate) input is an input signal to the start stop unit through the LF control unit.	2F (LF control unit communication)

RQ_SW_LF	Off/On	Request switch (LF) operation condition • Off: Request switch (LF) is off. • On: Request switch (LF) is on.	The signal is input to the start stop unit through the LF control unit of the request switch (LF).	2F (LF control unit communication)
RQ_SW_RF	Off/On	Request switch (RF) operation condition • Off: Request switch (RF) is off. • On: Request switch (RF) is on.	The signal is input to the start stop unit through the LF control unit of the request switch (RF).	2F (LF control unit communication)

*1

5HB

Active Command Modes Function

- The active command modes are shown below.

Simulation item	Unit/Operation	Data contents	Data read/use method	Output part name
BZR_OUT	Off/On	• Off: Keyless beeper does not sound. • On: Keyless	• When the simulation item BZR_OUT is turned on, a force override signal is sent to the LF control unit from the start stop unit, and the LF control unit drives (sounds) the keyless beeper. • With adoption of a separate excitation buzzer to the keyless beeper, buzzer does not sound normally even if the voltage is applied to the buzzer unit because there is no oscillation circuit. The integrity of the keyless beeper is determined using the simulation item BZR_OUT. • If the keyless buzzer does not sound even though the simulation function BZR_OUT is on, perform diagnosis using the following procedure. ▪ Press the remote transmitter lock/unlock button repeatedly and measure the terminal voltage of the keyless buzzer when the button is pressed.	Keyless beeper

		beeper sounds.	**Voltage is output** • Keyless buzzer malfunction may have occurred. **Voltage is not output** • Related wiring harness, or LF control unit malfunction may have occurred.	

2014 - Mazda3 - Body and Accessories

ON-BOARD DIAGNOSIS SYSTEM [START STOP UNIT]

Outline

- The on-board diagnostic function consists of the following functions:
  - A malfunction detection function, which detects overall malfunctions in the start stop unit-related parts.
  - A memory function, which stores detected DTCs.
  - A display function, which indicates malfunction locations and status via DTC output.
  - A PID/data monitoring function, which reads out specific input/output signals and verifies the input/output condition.
- Using the Mazda Modular Diagnostic System (M-MDS), DTCs can be read out and deleted, and the PID/data monitoring function can be activated.

Malfunction detection function

- Detects malfunctions in input/output signals.
- If a malfunction occurs, the start stop unit records the malfunction as a DTC. A recorded DTC can be read by the Mazda Modular Diagnostic System (M-MDS).

×: Applicable—: Not applicable

DTC No.	KEY warning indicator light (red)	Push button start indicator light (amber)	Description	Fail-safe function	Drive cycle	Self test type*1	Memory function
B108B:23	—	Flash	Push button start switch 1 circuit malfunction	×	—	C	×
B108B:24	—	Flash	Push button start switch 1 circuit malfunction	—	—	C	×
B108C:23	—	Flash	Push button start switch 2 circuit malfunction	×	—	C	×
B108C:24	—	Flash	Push button start switch 2 circuit malfunction	—	—	C	×
B10AC:13*2	—	—	Cruise control switch circuit malfunction	—	—	C	×
B10AC:23*2	—	—	Cruise control switch circuit malfunction	—	—	C	×

B10C6:1F*3	On	—	Keyless antenna (exterior, rear) circuit malfunction	×	—	C, D	×
B10C7:1F*3	On	—	Keyless antenna (interior, rear) circuit malfunction	×	—	C, D	×
B10C9:1F	On	—	Keyless antenna (interior, center) circuit malfunction (With keyless entry system)	—	—	C, D	×
	On	—	Keyless antenna (interior, front) circuit malfunction (With advanced keyless entry system)	×	—	C, D	×
B10D1:23*3	On	—	Request switch (LF) circuit malfunction	—	—	C	×
B10D3:23*3	On	—	Request switch (RF) circuit malfunction	—	—	C	×
B10D9:87	—	Flash	Coil antenna (built into push button start) error	—	—	C	—
B10DA:51	—	—	Communication error with PCM (data received failure)	—	—	C	—
B10DA:62	—	—	Communication error with PCM (code mis-matched)	—	—	C	—
B10E7:11	—	Flash	IG1 relay circuit malfunction	—	—	C	×
B10E7:12	—	Flash	IG1 relay circuit malfunction	—	—	C	×
B10E7:16	—	Flash	IG1 relay circuit malfunction	—	—	C	×
B10E7:17	—	Flash	IG1 relay circuit malfunction	—	—	C	×
B112A:11	—	Flash	IG2 relay circuit malfunction	—	—	C	×
B112A:12	—	Flash	IG2 relay circuit malfunction	—	—	C	×
B11C4:23*3	On	—	Request switch (liftgate) circuit malfunction	—	—	C	×
B11FD:1F*3	On	—	Keyless antenna (exterior, LF) circuit malfunction	×	—	C, D	×
B1210:1F*3	On	—	Keyless antenna (exterior, RF) circuit malfunction	×	—	C, D	×
B124C:56	—	—	Turn switch circuit malfunction	—	—	C	×
B13C3:04*3	On	—	LF control unit internal malfunction	×	—	C	×

B13C3:09*3	On	—	LF control unit malfunction	×	—	C	×
B13C3:16*3	On	—	LF control unit power supply voltage low input	×	—	C	×
B13C3:29*3	On	—	Communication error between start stop unit and LF control unit	×	—	C	×
B13D3:05	—	—	Remote transmitter program error	—	—	C	—
B13D3:16	—	—	Low remote transmitter battery voltage	—	—	C	×
B13D3:4A	On	—	Remote transmitter assembly malfunction	—	—	C	×
B13D3:51	—	Flash	Unregistered remote transmitter is detected	—	—	C	—
B13D3:94	—	—	Communication error with remote transmitter	—	—	C	—
B13D3:97	—	—	Remote transmitter registration work not completed	—	—	C	×
B13D4:00	On	—	Insufficient remote transmitter programming number	—	—	C	—
B1C53:13	—	—	Windshield wiper switch circuit malfunction	—	—	C	×
C0040:23*5	—	Flash	Brake switch (No.1 signal) circuit malfunction	×	—	C	×
C0040:24*5	—	Flash	Brake switch (No.1 signal) circuit malfunction	×	—	C	×
C0051:2F*4	—	—	Steering angle sensor signal error	—	—	C	×
C0051:95*4	—	—	Steering angle sensor assembly malfunction	—	—	C	×
C0052:14*4	—	—	Steering angle sensor A signal circuit malfunction	—	—	C	×
C0052:2F*4	—	—	Steering angle sensor A signal malfunction	—	—	C	×
C0053:14*4	—	—	Steering angle sensor B signal circuit malfunction	—	—	C	×
C0053:2F*4	—	—	Steering angle sensor B signal malfunction	—	—	C	×
C2003:13	—	—	Open circuit in steering switch	—	—	C	×

P0615:11	—	Flash	Starter relay circuit malfunction	—	—	C	×
P0615:12	—	Flash	Starter relay circuit malfunction	×	—	C	×
P0615:13	—	Flash	Starter relay circuit malfunction	—	—	C	×
P0615:16	—	Flash	Starter relay circuit malfunction	—	—	C	×
P0616:23	—	—	Circuit malfunction on downstream side of starter relay	—	—	C	×
P0616:24	—	—	Circuit malfunction on downstream side of starter relay	—	—	C	×
P0616:29	—	—	Downstream side of starter relay signal malfunction	—	—	C	×
P081C:23 *5	—	Flash	NOT P position switch circuit malfunction	×	—	C	×
P081C:24 *5	—	Flash	NOT P position switch circuit malfunction	×	—	C	×
P081D:29 *6	—	Flash	Neutral switch error signal received	×	—	C	×
P081D:2F *6	—	Flash	Neutral switch signal mismatch	×	—	C	×
P0830:23 *6	—	Flash	CPP switch circuit malfunction	×	—	C	×
P0850:23 *5	—	Flash	Transaxle range sensor circuit malfunction	×	—	C	×
P0850:24 *5	—	Flash	Transaxle range sensor circuit malfunction	×	—	C	×
P0930:71 *5	—	—	Shift-lock solenoid circuit malfunction	×	—	C	×
P1708:24 *6	—	Flash	Starter interlock switch circuit malfunction	×	—	C	×
P1708:29 *6	—	Flash	Starter interlock switch circuit or CPP switch circuit malfunction	×	—	C	×
P1794:16	—	Flash	Start stop unit power supply voltage (terminal 2W) low input	—	—	C	×
U0001:88	On	Flash	Module communication error (HS-CAN)	×	—	C	×
U0028:87	On	—	Communication error with rear body control module (RBCM)	—	—	C	×

U0100:00	On	Flash	Communication error with PCM	×	—	C	×
U0100:87	—	—	Communication error with PCM (no response or data mis-match)	—	—	C	—
U0101:00 *5	—	Flash	Communication error with TCM	×	—	C	×
U0121:00	On	Flash	Communication error with DSC HU/CM	×	—	C	×
U0121:87	On	Flash	Communication error with DSC HU/CM	×	—	C	×
U0131:00	—	—	Communication error with EPS control module	×	—	C	×
U0140:00	—	—	Communication error with front body control module (FBCM)	×	—	C	×
U0146:00	On	Flash	Communication error with instrument cluster	×	—	C	×
U0151:00	On	Flash	Communication error with SAS control module	×	—	C	×
U0155:00	On	Flash	Communication error with instrument cluster	×	—	C	×
U0447:86	On	Flash	Error signal received from instrument cluster	×	—	C	×
U201F:11	On	—	Keyless receiver circuit malfunction	—	—	C	×
U201F:12	On	—	Keyless receiver circuit malfunction	—	—	C	×
U2100:00	On	—	Start stop unit configuration not completed	×	—	C	×
U2300:00	—	—	Configuration data not received from instrument cluster	×	—	C	×
U3000:01 *4	—	—	Start stop unit internal malfunction	—	—	C	×
U3000:49	On	Flash	Start stop unit internal malfunction	×	—	C	×
U3000:96	On	Flash	Start stop unit malfunction	—	—	C	×
	On	Flash	Start stop unit malfunction	—	—	C	×
U3003:16	On	—	Start stop unit power supply voltage (terminal 1A) low input	×	—	C	×
U3004:11	—	Flash	ACC relay circuit malfunction	—	—	C	×

U3004:12	—	Flash	ACC relay circuit malfunction	—	—	C	×
U3004:16	—	—	ACC relay circuit malfunction	—	—	C	×
U3004:17	—	—	ACC relay circuit malfunction	—	—	C	×

*1
C: CMDTC self test, D: ODDTC self test
*2
With cruise control system
*3
With advanced keyless entry system
*4
With AFS or smart city brake support (SCBS) system
*5
ATX
*6
MTX

Snapshot Data

NOTE:

- The start stop unit stores the following two types of information when a DTC is detected and displays snapshot data in the Mazda Modular Diagnostic System (M-MDS).
  - Vehicle information detected by start stop unit
  - Vehicle information detected by instrument cluster and received by start stop unit via CAN signal
- The data for all DTCs currently detected is stored.

—: Not applicable

Snapshot data item	Unit		Data contents	Data read/use method	Corresponding data monitor items
AAT	°C	°F	Ambient temperature	—	—
APP_STATUS	Accelerator Pedal Off/Under20%/Over20%/FAIL		Accelerator pedal position status	—	—
CFG_STATUS	Config Complete/Not Configured/Config Error		Instrument cluster configuration status	—	—

ECT_STATUS	Under 0 degrees C/0 - Under 80 degrees C/Over 80 degrees C/FAIL	Engine coolant temperature status	—	—
IC_VPWR	V	Instrument cluster power supply voltage	• The start stop unit constantly receives the power supply voltage value of the instrument cluster sent via CAN signal from the instrument cluster. • If a DTC is detected, the start stop unit records the power supply voltage of the instrument cluster when the DTC was detected, and it is displayed in the Mazda Modular Diagnostic System (M-MDS).	VPWR*1
IG-ON_TIMER	hh:mm:ss*2	Elapsed time since ignition was switched ON (engine off or on) **NOTE:** • The instrument cluster records the elapsed time since the ignition was switched ON (engine off or on).	• The start stop unit constantly receives the elapsed time since the ignition was switched ON (engine off or on) sent via CAN signal from the instrument cluster. • If a DTC is detected, the start stop unit records the elapsed time since the ignition was switched ON (engine off or on) when the DTC was detected, and it is displayed in the Mazda Modular Diagnostic System (M-MDS).	—
PWR_MODE_KEY	Key Out/Key Recently Out (Position 0)/Accessory (Position 1)/Post Ignition (Position 2)/Ignition On (Position 2)/Running (Position 2)/Running - Starting	• Key Out: Ignition switched off • Key Recently Out (Position 0): Elapsed time **within 3 s** since ignition was switched off • Accessory (Position 1): Ignition is switched to ACC • Post Ignition (Position 2): Elapsed time **within 3 s** since ignition was switched ON (engine off	• The start stop unit constantly receives the ignition switch status sent via CAN signal from the instrument cluster. • If a DTC is detected, the start stop unit records the ignition switch status when the DTC was detected, and it is displayed in the Mazda Modular Diagnostic System	—

			or on) • Ignition On (Position 2): Ignition switched ON (engine off) • Running (Position 2): Ignition switched ON (engine on) • Running - Starting: Cranking condition	(M-MDS).	
RPM_STATUS	Engine Stop/Under1500rpm/Over1500rpm/FAIL		Engine speed status	• The start stop unit constantly receives the engine speed sent via CAN signal from the instrument cluster. • If a DTC is detected, the start stop unit records the engine speed when the DTC was detected, and it is displayed in the Mazda Modular Diagnostic System (M-MDS).	TACHOMTR*1
SHIFT_STATUS	P/N/D/R/FAIL		Selector lever position status	• The start stop unit constantly receives the selector lever position sent via CAN signal from the instrument cluster. • If a DTC is detected, the start stop unit records the selector lever position when the DTC was detected, and it is displayed in the Mazda Modular Diagnostic System (M-MDS).	—
TOTAL_DIST	km	Miles	Accumulated total traveled distance from completion of vehicle until start stop unit detects DTC (Odometer value in instrument cluster)	The total traveled distance from which the start stop unit detects DTCs to the present can be calculated by performing the following procedure. • Verify the odometer value in the instrument cluster. • Verify the snapshot data item TOTAL_DIST. • Subtract 2 from 1.	—
			Accumulated total elapsed time since vehicle completion until start stop unit detects a DTC	The elapsed time from which the start stop unit detects	

TOTAL_TIME	hh:mm:ss*2	**NOTE:** • When the ROOM fuse is removed, and the ignition is switched off, the time is not included in the elapsed time.	DTCs to the present can be calculated by performing the following procedure. • Verify the instrument cluster PID item TOTAL_TIME. • Verify the snapshot data item TOTAL_TIME. • Subtract 2 from 1.	TOTAL_TIME*1
TRNS_NUM_L	Initial/No.1/No.2/No.3/No.4/No.5/No.6	Registration number of the remote transmitter	If the start stop unit detects DTC B13D3:16 (Low remote transmitter battery voltage), inspect the remote transmitter in which the malfunction is occurring using the following procedure to display the registration number of the remote transmitter that was operated. • Verify the registration number of the remote transmitter in the snapshot data. • Display the start stop unit PID item RF_TRNS_NUM and inspect the battery voltage of the remote transmitter having the same registration number as the recorded remote transmitter registration number.	—
VPWR	V	Start stop unit power supply voltage	—	VPWR_B2
VPWR_B1	V	Start stop unit power supply voltage (ROOM fuse)	—	VPWR_B1
VSPD_STATUS	Stop/0-10km/h/Over10km/h/FAIL	Vehicle speed status	• The start stop unit constantly receives the vehicle speed sent via CAN signal from the instrument cluster. • If a DTC is detected, the start stop unit records the vehicle speed when the DTC was detected, and it is displayed in the Mazda Modular Diagnostic System (M-MDS).	SPEEDOMTR*1

*1

Instrument cluster PID (See ON-BOARD DIAGNOSTIC [INSTRUMENT CLUSTER].)

*2

The seconds may be indicated after the decimal point.

DTC 7-digit code definition

- When related systems or components have failed, the CM stores the DTC of the malfunctioning part in the CM memory, and allows for the retrieval of the store data using scanning tool when necessary. The DTCs are indicated using seven digits. Each digit indicates the following.

B 1 0 D 5 : 1 3

· Specify the area failure sub type

1F: Circuit intermittent
2F: Signal erratic
4A: Incorrect component installed
00: No sub type information
01: General electrical failure
04: System internal failures
05: System programming malfunctions
09: Component failures
11: Circuit short to ground
12: Circuit short to battery
13: Open circuit
14: Circuit short to ground or open
16: Circuit voltage below threshold
17: Circuit voltage above threshold
23: Signal stuck low
24: Signal stuck high
29: Signal signal invalid
49: Internal electronic malfunction
51: Not programmed
56: ISO/SAE reserved
62: Signal compare malfunction
71: Actuator stuck
81: Invalid serial data received
86: Signal invalid
87: Missing message
88: Bus off
92: Performance or incorrect operation
94: Unexpected operation
95: Incorrect assembly
96: Component internal malfunction
97: Component or system operation obstructed or blocked

· Manufacturer controlled

· Indicates subgroup

Powertrain (P code)	Network Electrical (U code)	Body (B code)	Chassis (C code)
0: Fuel and air metering and auxiliary emission controls	0: Network Electrical	Manufacturer controlled	Manufacturer controlled
	1: Network communication		
	2: Network communication		
	3: Network software		
	4: Network data		
	5: Network data		

· Indicates who was responsible for DTC definition

0: ISO/SAE controlled
1: Manufacturer controlled
2: There are ISO/SAE controlled just for powertrain, all others are manufacturer controlled.
3: For P3000 to P3399 is manufacturer controlled, all others are ISO/SAE controlled.

· Indicates DTC function

P: Powertrain
B: Body
C: Chassis
U: Network Electrical

Status byte for DTC

- The two digits (two digits after hyphen (-)) after the seven-digit DTC.

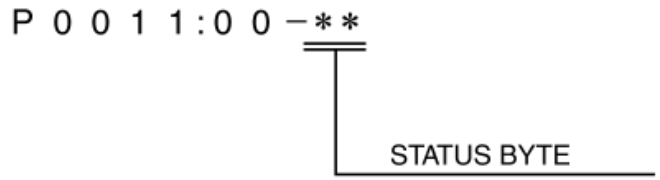

- A code which indicates the pending code, current/past malfunction status, or warning illumination status.
- Can be read by performing a CMDTC self-test using the Mazda Modular Diagnostic System (M-MDS).
- For details on the status byte, refer to the explanation on the Mazda Modular Diagnostic System (M-MDS) when reading the DTC.

Detection condition for the applicable DTC

DTC	System malfunction location	Detection condition
B108B:23	Push button start switch 1 circuit malfunction	Start stop unit detects that the push button start switch 1 is stuck on for 120 s or more.
B108B:24	Push button start switch 1 circuit malfunction	Start stop unit detects that the push button start switch 1 is kept in an off condition 5 times or more even though the push button start switch 2 is on.
B108C:23	Push button start switch 2 circuit malfunction	Start stop unit detects the push button start switch 2 is stuck on for 120 s or more.
B108C:24	Push button start switch 2 circuit malfunction	Start stop unit detects that the push button start switch 2 is kept in an off condition 5 times or more even though the push button start switch 1 is on.
B10AC:13*1	Cruise control switch circuit malfunction	Start stop unit detected an open circuit in the cruise control switch circuit for 5 s or more with the ignition switched ON (engine off or on).
B10AC:23*1	Cruise control switch circuit malfunction	Start stop unit detects any cruise control switch stuck on for 2 min or more with the ignition switched ON (engine off or on).
B10C9:1F	Keyless antenna (interior, center) circuit malfunction (With keyless entry system)	Start stop unit detects an open circuit or short to ground in the keyless antenna (interior, center) with the ignition switched off.
B10E7:11	IG1 relay circuit malfunction	Start stop unit detects the voltage from the IG1 relay output monitor as less than 2.5 V for 0.5 s or more while the engine is not being cranked with the ignition switched ON (engine off or on).
		Start stop unit detects the IG1 relay output monitor voltage of 2.5 V or more for 0.5 s or more with the ignition

B10E7:12	IG1 relay circuit malfunction	switched off or ACC.
B10E7:16	IG1 relay circuit malfunction	Start stop unit detects the IG1 monitor voltage of less than 2.5 V for 1 s or more while the engine is not being cranked with the ignition switched ON (engine off or on).
B10E7:17	IG1 relay circuit malfunction	Start stop unit detects the IG1 monitor voltage of 2.5 V or more for 1 s or more with the ignition switched off or ACC.
B112A:11	IG2 relay circuit malfunction	Start stop unit detects the IG2 relay output monitor voltage of 2.5 V or less for 0.5 s or more with the ignition switched ON (engine off or on).
B112A:12	IG2 relay circuit malfunction	Start stop unit detects the IG2 relay output monitor voltage of 2.5 V or more for 0.5 s or more with the ignition switched off or to ACC.
B124C:56	Turn switch circuit malfunction	Start stop unit detects that the turn switch LH and RH are turned on simultaneously for 5 s or more.
B13D3:16	Low remote transmitter battery voltage	Start stop unit detects the low remote transmitter battery voltage in any of the programmed transmitters 3 times continuously.
B13D3:4A	Remote transmitter assembly malfunction	Start stop unit detects a remote transmitter different from the one equipped to the vehicle.
B13D3:97	Remote transmitter registration work not completed	Start stop unit detects that the registration of a remote transmitter has not been completed.
B1C53:13	Windshield wiper switch circuit malfunction	Start stop unit detects an open circuit, short to ground, or short to power supply in the windshield wiper switch circuit for 5 s or more with the ignition switched ON (engine off or on).
C0040:23*3	Brake switch (No.1 signal) circuit malfunction	Start stop unit detects that the brake switch No.1 signal is in the off condition for 3 s or more continuously for a continuous 5 times even though brake switch No.2 signal changes with the ignition switched ON (engine off or on).
C0040:24*3	Brake switch (No.1 signal) circuit malfunction	Start stop unit detects that the brake switch No.1 signal is in the on condition for 3 s or more continuously for a continuous 5 times even though brake switch No.2 signal changes with the ignition switched ON (engine off or on).
C0051:2F*2	Steering angle sensor signal error	Start stop unit detects the steering angle sensor signal error for 5 s or more with the ignition switched ON (engine off or on).
C0051:95*2	Steering angle sensor assembly malfunction	• Start stop unit receives the following signals with the ignition switched ON (engine off or on). ▪ Steering angle sensor assembly malfunction from EPS control module for 1 s or more ▪ Improper assembly of steering angle sensor at 360° ▪ Steering wheel angle of 720° or more for 0.048 s or more

C0052:14*2	Steering angle sensor A signal circuit malfunction	Start stop unit detects an open circuit or short to ground in the steering angle sensor A signal circuit.
C0052:2F*2	Steering angle sensor A signal malfunction	• Start stop unit detected the sudden change in steering angle sensor A signal. • Start stop unit detected that the steering angle sensor A signal is stuck with the ignition switched ON (engine off or on).
C0053:14*2	Steering angle sensor B signal circuit malfunction	Start stop unit detects an open circuit or short to ground in steering angle sensor B signal circuit.
C0053:2F*2	Steering angle sensor B signal malfunction	• Start stop unit detects the sudden change in steering angle sensor B signal. • Start stop unit detects that the steering angle sensor B signal is stuck with the ignition switched ON (engine off or on).
C2003:13	Open circuit in steering switch	Start stop unit detects an open circuit in the steering switch circuit for 5 s or more with the ignition switched ON (engine off or on).
P0615:11	Starter relay circuit malfunction	Start stop unit detects that the starter relay monitor circuit voltage of less than 2.2 V for 0.2 s or more with the ignition switched off.
P0615:12	Starter relay circuit malfunction	Start stop unit detects that the starter relay circuit voltage of specification or more for 0.1 s or more with the ignition switched off.
P0615:13	Starter relay circuit malfunction	Start stop unit detects an open circuit in the starter relay circuit for 0.075 s or more with the ignition switched off.
P0615:16	Starter relay circuit malfunction	Start stop unit detects that the starter relay circuit voltage that is less than the specification for 0.05 s or more during cranking.
P0616:23	Circuit malfunction on downstream side of starter relay	Start stop unit detects a short to ground in the starter relay downstream circuit continuously for 0.5 s or more for a continuous 5 times.
P0616:24	Circuit malfunction on downstream side of starter relay	Start stop unit detects an open circuit in the starter relay downstream circuit continuously for 0.5 s or more for a continuous 5 times.
P0616:29	Downstream side of starter relay signal malfunction	• Start stop unit detects that the following signals are unmatched for 0.5 s or more for a continuous 5 times. ▪ Transaxle range sensor (ATX) or starter interlock switch (MTX) condition ▪ Starter relay downstream circuit condition ▪ PCM control result ▪ CAN signal condition output from PCM

P081C:23*3	NOT P position switch circuit malfunction	Start stop unit detects that the NOT P position switch is stuck on for 5 s or more for a continuous 5 times with the ignition switched ON (engine off or on).
P081C:24*3	NOT P position switch circuit malfunction	Start stop unit detects that the NOT P position switch is stuck off for 5 s or more for a continuous 5 times with the ignition switched ON (engine off or on).
P081D:29*4	Neutral switch error signal received	Start stop unit receives the neutral switch signal error signal from the PCM for 1 min or more with the ignition switched ON (engine off or on).
P081D:2F*4	Neutral switch signal mismatch	Start stop unit detects that the vehicle speed changes from 0 km/h {0 mph} to 10 km/h {6.2 mph} for a continuous 5 times or more even though the neutral signal from the PCM is being received with the ignition switched ON (engine off or on).
P0830:23*4	CPP switch circuit malfunction	Start stop unit detects that the CPP switch is stuck on for 10 min or more.
P0850:23*3	Transaxle range sensor circuit malfunction	Start stop unit detects that the transaxle range sensor signal is P or N position for 1 s or more continuously for a continuous 5 times or more even though the TCM CAN signal is other than P and N position with the ignition switched ON (engine off or on).
P0850:24*3	Transaxle range sensor circuit malfunction	Start stop unit detects that the transaxle range sensor signal is other than P and N position for 1 s or more continuously for a continuous 5 times or more even though the TCM CAN signal is in P or N position with the ignition switched ON (engine off or on).
P0930:71*3	Shift-lock solenoid circuit malfunction	Start stop unit detects the shift-lock solenoid is stuck on for 30 min or more with the ignition switched ON (engine off or on).
P1708:24*4	Starter interlock switch circuit malfunction	Start stop unit detects an open circuit in the starter interlock switch circuit for 0.5 s or more for a continuous 5 times with the ignition switched ON (engine off or on).
P1708:29*4	Starter interlock switch circuit or CPP switch circuit malfunction	Start stop unit detects that the starter interlock switch circuit is stuck on for 0.2 s or more, or the CPP switch circuit is stuck off for 0.25 s or more.
P1794:16	Start stop unit power supply voltage (terminal 2W) low input	Start stop unit power supply circuit voltage (terminal 2W) of less than 6.5 V is detected for 5 s or more.
U0001:88	Module communication error (HS-CAN)	Start stop unit detects the CAN bus communication line (HS-CAN) malfunction 10 times continuously.
U0028:87	Communication error with rear body control module (RBCM)	Start stop unit detects the communication error with rear body control module (RBCM) 10 times continuously.
U0100:00	Communication error with PCM	Start stop unit could not receive the CAN signal from the PCM for 1 s or more.
U0101:00*3	Communication error with TCM	Start stop unit could not receive the CAN signal from the TCM for 1 s or more.

U0121:00	Communication error with DSC HU/CM	Start stop unit could not receive the CAN signal from the DSC HU/CM for 1 s or more.
U0121:87	Communication error with DSC HU/CM	Start stop unit could not receive the CAN signal from the DSC HU/CM for 10 s or more.
U0131:00	Communication error with EPS control module	Start stop unit could not receive the CAN signal from the EPS control module for 1.2 s or more.
U0140:00	Communication error with front body control module (FBCM)	Start stop unit could not receive the CAN signal from the front body control module (FBCM) for 5 s or more.
U0146:00	Communication error with instrument cluster	Start stop unit cannot receive the CAN signal from the instrument cluster for 5 s or more with the ignition switched ON (engine off or on).
U0151:00	Communication error with SAS control module	Start stop unit could not receive the CAN signal from the SAS control module for 1 s or more.
U0155:00	Communication error with instrument cluster	Start stop unit could not receive the CAN signal from the instrument cluster for 5 s or more.
U0447:86	Error signal received from instrument cluster	Start stop unit receives the error signals from the instrument cluster for 5 s or more with the ignition switched ON (engine off or on).
U201F:11	Keyless receiver circuit malfunction	Start stop unit detects that the keyless receiver circuit voltage of less than 3.4 V for 0.5 s or more.
U201F:12	Keyless receiver circuit malfunction	Start stop unit detects that the keyless receiver circuit voltage of 6.2 V or more for 0.5 s or more.
U2100:00	Start stop unit configuration not completed	Start stop unit configuration not completed.
U2300:00	Configuration data not received from instrument cluster	Start stop unit cannot receive the configuration data from the instrument cluster for 1 s or more with the ignition switched ON (engine off or on).
U3000:01 *2	Start stop unit internal malfunction	Start stop unit detects the internal malfunction.
U3000:49	Start stop unit internal malfunction	Start stop unit detects the internal malfunction.
U3000:96	Start stop unit malfunction	Start stop unit malfunction detected.
U3003:16	Start stop unit power supply voltage (terminal 1A) low input	Start stop unit power supply circuit voltage (terminal 1A) of 5V or more, less than 8.5 V is detected for 5 s or more.
U3004:11	ACC relay circuit malfunction	Start stop unit detects that the ACC relay output monitor voltage of less than specification for 0.05 s or more with the ignition switched to ACC or ON (engine off or on).

U3004:12	ACC relay circuit malfunction	Start stop unit detects that the ACC relay output monitor voltage of 2.5 V or more for 0.5 s or more with the ignition switched off.
U3004:16	ACC relay circuit malfunction	Start stop unit detects that the ACC monitor voltage of less than 2.5 V for 1 s or more with the ignition switched to ACC or ON (engine off or on).
U3004:17	ACC relay circuit malfunction	Start stop unit detects that the ACC monitor voltage of 2.5 V or more for 5 s or more with the ignition switched off.

*1 **With cruise control system**

*2 **With AFS or smart city brake support (SCBS) system**

*3 **ATX**

*4 **MTX**

Data monitor function

- With the PID/data monitor function, input/output signal monitor items set in the start stop unit can be selected and read out in real-time.

—: Not applicable

PID	Unit/Operation	Data contents	Data read/use method	Module control terminal
BRAKE_SW1*1	Off/On	Brake switch (No.1 signal) signal input status • Off: Brake switch (No.1 signal) is off. • On: Brake switch (No.1 signal) is on.	—	1C (Brake switch)
CLUT_CUT_SW*2	Off/On	Starter interlock switch input status • Off: Starter interlock switch is off. • On: Starter interlock switch is on.	—	1F (Starter interlock switch)
CLUTCH_SW*2	Off/On	Clutch switch input status • Off: CPP switch is off.	—	2E (Clutch pedal position

		• On: CPP switch is on.		switch)
COMM_ST_TSP	Off/On	Displays operation condition of the immobilizer system key code read function • Off: Key code read function not performed • On: Code read function is performed and coil antenna reads key code from remote transmitter transponder.	Key code reading function of immobilizer system is performed and when a brake switch, clutch switch, or push button start signal is input, the coil antenna reads the key code from the transponder of the remote transmitter, and displays On while the key code is being sent to the start stop unit.	• 1AC (PATS+) • 1AE (PATS-)
CRU_CON_SW*3	Not_Pressed/On/Off/On/Off/Cancel/Resume/Fault/Set (+)/Set (-)/Distance (+)/Distance (-)	Cruise control switch operation condition • Not_Pressed: Each switch of cruise control switch is not pressed. • On: Cruise ON switch is pressed. • Off: Cruise OFF switch is pressed. • On/Off: — • Cancel: CANCEL switch is pressed. • Resume: RESUME (RES) switch is pressed. • Fault: Cruise control switch has a malfunction. • Set (+): SET (+) switch is pressed. • Set (-): SET (-) switch is pressed. • Distance (+): — • Distance (-): —	—	1Y (Cruise control switch signal)

ES_UL_SW	Not_Unlock/Unlock	**NOTE:** • Displays in the Mazda Modular Diagnostic System (M-MDS) but it does not operate.	—	—
ES_UL_SW_M	Not_Unlock/Unlock	**NOTE:** • Displays in the Mazda Modular Diagnostic System (M-MDS) but it does not operate.	—	—
ES_ULL_SW	Off/On	**NOTE:** • Displays in the Mazda Modular Diagnostic System (M-MDS) but it does not operate.	—	—
ES_ULL_SW_M	Off/On	**NOTE:** • Displays in the Mazda Modular Diagnostic System (M-MDS) but it does not operate.	—	—
F_FOG_SW	Off/On	Front fog light switch operation condition • Off: Fog light switch is not in F.FOG position. • On: Fog light switch is in F.FOG position.	—	—
H/L_SW_HI	Off/On	Headlight switch (HI) operation condition • Off: Light switch is not in HI position. • On: Light switch is in HI position.	—	—
		Displays dimmer switch position of		

H/L_SW_LOW	Off/On	the light switch that is being input to the start stop unit • Off: Dimmer switch of light switch is not in LO position • On: Dimmer switch of light switch is in LO position	Verify if the monitor value switches when the dimmer switch of the light switch is switched between LO and HI positions. If the dimmer switch operation and monitor values do not match, inspect the light switch.	—
H/L_SW_OFF	Off/On	Headlight light switch (OFF) operation condition • Off: Light switch is not in OFF position. • On: Light switch is in OFF position.	—	—
H/L_SW_PASS	Off/On	Headlight switch (PASS) operation condition • Off: Light switch is not in passing position. • On: Light switch is in passing position.	—	—
H/L_SW_TNS	Off/On	Headlight switch (TNS) operation condition • Off: Light switch is not in TNS position. • On: Light switch is in TNS position.	—	—
HAZARD_SW	Off/On	Displays condition of hazard warning switch input to start stop unit • Off: Hazard warning switch is off. • On: Hazard warning switch is on.	—	1G (Hazard warning switch signal)
			• When the push button start is operated, the start	

IG_POSITION	OFF/ACC/ON/CRANK	Displays power status controlled by the start stop unit • OFF: Start stop unit controls ignition switch off • ACC: Start stop unit controls ignition switch ACC • ON: Start stop unit controls ignition switch ON (engine off) • CRANK: Start stop unit controls cranking at ignition switch ON	stop unit performs power source switching and displays the PID value of the power source position in which control was performed. • If the push button start operation and PID value do not match, and a power source status of another unit differs from the PID value, inspect the input power source of the other unit because the power source control of the start stop unit is normal.	—
		Steering switch operation condition • Off: Steering switch UP/DOWN/INFO switch is not pressed. • SW1_On: UP switch is pressed.		• 1AA

INFO_SW*4	Off/SW1_On/SW2_On/SW3_On/Unknown/Invalid	• SW2_On: DOWN switch is pressed. • SW3_On: INFO switch is pressed. • Unknown: Steering switch UP/DOWN/INFO switch signal is not determined. • Invalid: Steering switch malfunction is received.	Displays INFO switch position of steering switch input to start stop unit. Steering switch signal is input to start stop unit via clock spring.	(Steering switch signal) • 1AB (Steering switch ground)
INHIBIT_SW*1	Off/On	Transaxle range switch input status • Off: Selector lever is not in P and N positions. • On: Selector lever is in P or N position.	—	1F (Selector lever position switch)
LG/T_LK_SW*5	Off/On	Request switch (liftgate) operation condition • Off: Request switch (liftgate) is off. • On: Request switch (liftgate) is on.	The request switch (liftgate) input is an input signal to the start stop unit through the LF control unit.	2F (LF control unit communication)
LG/T_UNL_SW	Off/On	Trunk lid opener switch (exterior) (4SD)/liftgate opener switch (5HB) operation condition • Off: Trunk lid opener switch (exterior) (4SD)/liftgate opener switch (5HB) is off. • On: Trunk lid opener switch (exterior) (4SD)/liftgate opener switch (5HB) is on.	Trunk lid opener switch (exterior) (4SD)/liftgate opener switch (5HB) operation signal. The start stop unit and rear body control module (RBCM) transmit signals to perform trunk (4SD)/liftgate (5HB) unlatch operation.	1Q (Rear body control module (RBCM) communication)
LL_SW_D_LK	Off/On	Driver's door lock link switch (lock side) operation condition • Off: Front door lock-link switch (LH) is in unlock.	Driver's door lock link switch lock signal is input to start stop unit. The same signal may also be	1P (Lock input)

		• On: Front door lock-link switch (LH) is in lock.	sent to rear body control module (RBCM).	
NUM_TRNSMIT	—	Displays number of the remote transmitters programmed to the start stop unit	—	—
P_RANGE_SW*1	Off/On	P position switch condition • Off: NOT P position switch is off. • On: NOT P position switch is on.	—	1J (P position)
PAD_DOWN_SW*6	Off/On	Steering shift switch (DOWN) condition • Off: DOWN switch of steering shift switch is off. • On: DOWN switch of steering shift switch is on.	—	1N (Steering shift switch (down))
PAD_UP_SW*6	Off/On	Steering shift switch (UP) condition • Off: UP switch of steering shift switch is off. • On: UP switch of steering shift switch is on.	—	1L (Steering shift switch (up))
R_FOG_SW	Off/On	**NOTE:** • Displays in the Mazda Modular Diagnostic System (M-MDS) but it does not operate.	—	—
RELAY_ACC	Off/On	ACC relay operation condition • Off: ACC relay drive is off. • On: ACC relay drive is on.	—	2C (ACC relay control)

RELAY_IG1	Off/On	IG1 relay operation condition • Off: IG1 relay drive is off. • On: IG1 relay drive is on.	—	2S (IG1 relay control)
RELAY_IG2	Off/On	IG2 relay operation condition • Off: IG2 relay drive is off. • On: IG2 relay drive is on.	—	2D (IG2 relay control)
RF_RECEP_ST	Initial/Transmitter/RF_Response	Displays radio reception status from the remote transmitter • Initial: Signal from remote transmitter is not received by start stop unit • Transmitter: Signal by button operation on remote transmitter is received by start stop unit • RF_Response: During remote transmitter authorization, response signal from remote transmitter is received by start stop unit	When verifying the PID value while operating the remote transmitter buttons, if “Transmitter” is displayed it can be determined that the transmission between the remote transmitter, keyless receiver, and start stop unit is normal.	2R (Keyless receiver communication)
		When pressing the unlock button of the remote transmitter, the registration number of the remote transmitter sending radio waves to the start stop unit is displayed. • Initial: Registration number of remote transmitter cannot be received • No.1: Registration number No.1 remote transmitter is	When DTC B13D3:16 (Low remote transmitter battery	

RF_TRNS_NUM	Initial/No.1/No.2/No.3/No.4/No.5/No.6	received • No.2: Registration number No.2 remote transmitter is received • No.3: Registration number No.3 remote transmitter is received • No.4: Registration number No.4 remote transmitter is received • No.5: Registration number No.5 remote transmitter is received • No.6: Registration number No.6 remote transmitter is received	voltage) is detected, the registration number of the remote transmitter in which the battery voltage has decreased is displayed in the snapshot data item TRNS_NUM_L. Display the registration number of the remote transmitter using the PID, verify the remote transmitter with the low battery voltage, and inspect the battery condition of the target remote transmitter.	2R (Keyless receiver communication)
RQ_SW_LF*5	Off/On	Request switch (LF) operation condition • Off: Request switch (LF) is off. • On: Request switch (LF) is on.	The signal is input to the start stop unit through the LF control unit of the request switch (LF).	2F (LF control unit communication)
RQ_SW_RF*5	Off/On	Request switch (RF) operation condition • Off: Request switch (RF) is off. • On: Request switch (RF) is on.	The signal is input to the start stop unit through the LF control unit of the request switch (RF).	2F (LF control unit communication)
SECURITY_I	Off/On	Output condition of security indicator • Off: Security indicator light is turned off. • On: Security indicator light is illuminated.	Security indicator on request to instrument cluster	2M, 2O (CAN)

SFT_LK_SOL*1	Off (Lock)/On (Unlock)	Shift lock solenoid operation condition • Off (Lock): Shift-lock is operated. • On (Unlock): Shift-lock is released.	—	2G (Shift lock)
SPD_LIM_SW	Off/On/Unknown	**NOTE:** • Displays in the Mazda Modular Diagnostic System (M-MDS) but it does not operate.	—	—
SSB_1	Off/On	Push button start switch 1 input signal • Off: Push button start switch 1 is off. • On: Push button start switch 1 is on.	—	1H (Push button start 1)
SSB_2	Off/On	Push button start switch 2 input signal • Off: Push button start switch 2 is off. • On: Push button start switch 2 is on.	—	2J (Push button start 2)
SSB_AMBER	Off/On	Push button start indicator light (amber) illumination request • Off: Push button start indicator light (amber) is turned off. • On: Push button start indicator light (amber) is illuminated.	—	1M (Push button illumination (amber))
SSB_GREEN	Off/On	Push button start indicator light (green) illumination request • Off: Push button start indicator light (green) is turned off.	—	1K (Push button illumination (green))

		• On: Push button start indicator light (green) is illuminated.		
SSB_ILLMI	Off/On	Push button start illumination request • Off: START/STOP/ENGINE indicator light is turned off. • On: START/STOP/ENGINE indicator light is illuminated.	—	1I (Push button illumination)
START_RLY_1	V	Displays voltage at start stop unit terminal 2V	—	2V (Starter relay)
START_RLY_2	V	Displays voltage at start stop unit terminal 1D	—	1D (Starter monitor)
STR_A_ANG_A*7	° (deg)	Displays steering angle sensor A signal aiming angle	—	—
STR_A_ANG_B*7	° (deg)	Displays steering angle sensor B signal aiming angle	—	—
STR_AB_ANG*7	° (deg)	Displays steering angle signal (absolute angle) • Steering wheel in neutral position: Near **0 degrees** • Steering wheel turned to left: Changes from **0 degrees** to positive • Steering wheel turned to right: Changes from **0 degrees** to negative	—	—
STR_ANG_S*7	Without/With	Vehicle with/without steering angle sensor • Without: Steering angle sensor is not equipped.	—	—

		• With: Steering angle sensor is equipped.		
STR_ANG_S_A*7	V	Displays voltage at the steering angle sensor A signal	—	1U (Steering angle sensor (signal A/D1))
STR_ANG_S_B*7	V	Displays voltage at the steering angle sensor B signal	—	1W (Steering angle sensor (signal A/D1))
STR_ANG_S_V*7	V	Displays steering angle sensor power supply voltage **NOTE:** • “5 V” is displayed even if the voltage is **5 V or more**.	—	1S (Steering angle sensor power supply)
TURN_SW_L	Off/On	Turn switch (RH) input • Off: Turn switch is in position other than LH. • On: Turn switch is in LH position.	—	—
TURN_SW_R	Off/On	Turn switch (LH) input • Off: Turn switch is in position other than RH. • On: Turn switch is in RH position.	—	—
VPWR_ACC	V	Displays ACC power supply voltage input to start stop unit	If there is a malfunction in the ACC power supply voltage input to the start stop unit, the keyless entry system and push button start system do not operate normally because PID item VPWR_ACC is used for ACC power on/off determination.	1E (ACC monitor)
			If there is a malfunction in the B+ power supply (ROOM fuse) voltage input to the start stop unit, the	

VPWR_B1	V	Displays B+ power supply (ROOM fuse) voltage input to start stop unit	keyless entry system does not operate normally because PID item VPWR_B1 is used for determining whether or not there is a ROOM fuse inserted.	1A (Power supply)
VPWR_B2	V	Displays B+ power supply (AT fuse) voltage input to start stop unit	When the ROOM fuse is removed, the B+ power supply (AT fuse) is the start stop unit power supply. If there is a malfunction in the B+ power supply (AT fuse) voltage input to the start stop unit when the ROOM fuse is removed, the push button start system does not operate normally.	2W (Power supply)
VPWR_B3	V	**NOTE:** • Displays in the Mazda Modular Diagnostic System (M-MDS) but it does not operate.	—	—
VPWR_IG1	V	Displays IG1 power supply voltage input to start stop unit	If there is a malfunction in the IG1 power supply voltage input to the start stop unit, the keyless entry system and the push button start system do not operate normally because PID item VPWR_IG1 is used for IG1 power on/off determination.	1B (Power supply)
WASHER_F	Off/On	Windshield washer switch signal input status • Off: Windshield washer switch is in OFF position. • On: Windshield washer switch is in ON position.	—	—
		Rear washer switch signal input		

WASHER_R	Off/On	status • Off: Rear washer switch is not in ON position. • On: Rear washer switch is in ON position.	—	—
WIP_F_INT	Off/On	Windshield wiper switch (INT) signal input status • Off: Windshield wiper switch is not in INT and AUTO positions. • On: Windshield wiper switch is in INT or AUTO position.	—	—
WIP_F_LOW	Off/On	Windshield wiper switch (LO) signal input status • Off: Windshield wiper switch is not in LO position. • On: Windshield wiper switch is in LO position.	—	—
WIP_INT_E_A	Low/High	Wiper INT encoder A signal input status • Low: Windshield wiper switch INT encoder A value is low. • High: Windshield wiper switch INT encoder A value is high.	—	—
WIP_INT_E_B	Low/High	Wiper INT encoder B signal input status • Low: Windshield wiper switch INT encoder B value is low.	—	—

		• High: Windshield wiper switch INT encoder B value is high.		
WIP_INT_E_C	Low/High	Wiper INT encoder C signal input status • Low: Windshield wiper switch INT encoder C value is low. • High: Windshield wiper switch INT encoder C value is high.	—	—
WIP_R_INT	Off/On	Rear wiper switch (INT) signal input status • Off: Rear wiper switch is not in INT position. • On: Rear wiper switch is in INT position.	—	—
WIP_R_ON	Off/On	Rear wiper switch (ON) signal input status • Off: Rear wiper switch is not in ON position. • On: Rear wiper switch is in ON position.	—	—

*1 **ATX**

*2 **MTX**

*3 **With cruise control system**

*4 **With steering switch**

*5 **With advanced keyless entry system**

*6 **With steering shift switch**

*7

With AFS, smart city brake support (SCBS)

2014 - Mazda3 - Body and Accessories

IMMOBILIZER SYSTEM

Outline

- The immobilizer system is a vehicle theft prevention device that only allows remote transmitters that have been previously programmed to the vehicle to start the engine.
- The start stop unit performs immobilizer system fail-safe. (See **START STOP UNIT**.)

Structural View

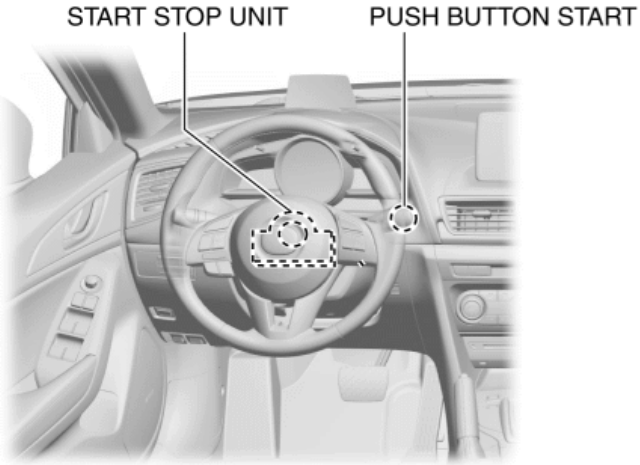

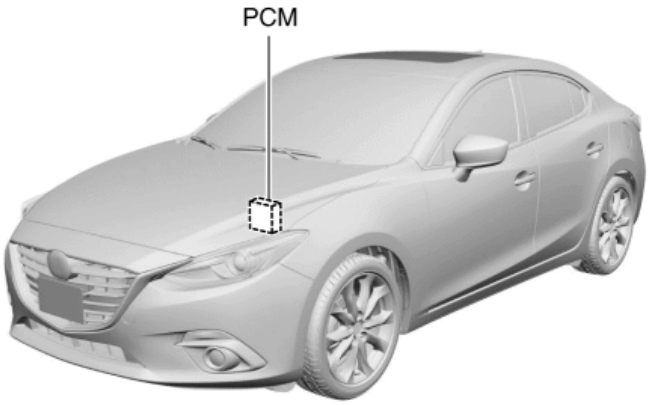

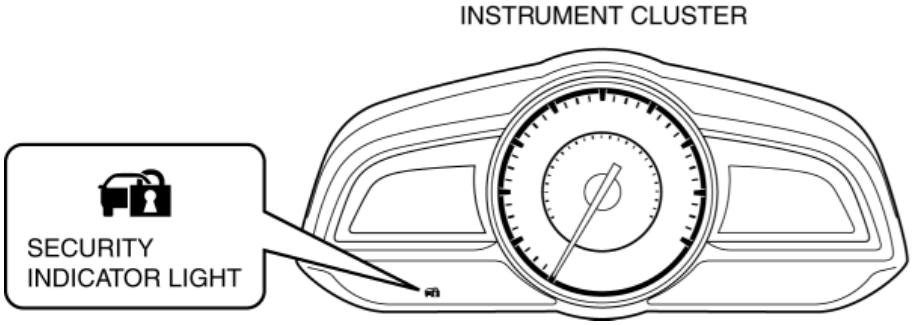

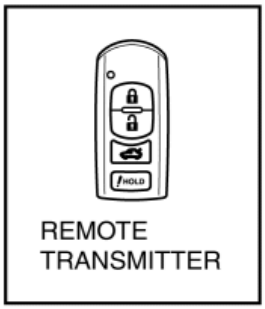

System Wiring Diagram

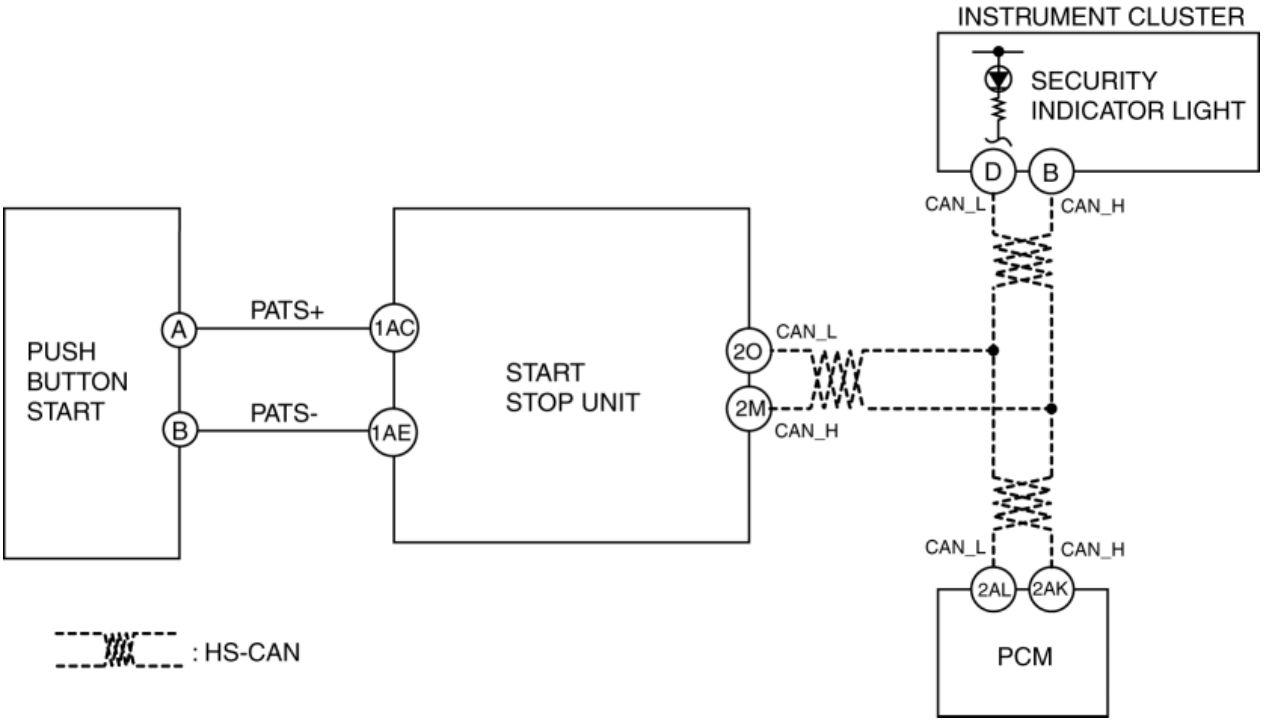

Function

- The immobilizer system-related parts programmed to the immobilizer system have a programmed key ID number, and starting the engine is only permitted when the key ID number matches.
- Immobilizer system-related parts can be programmed using the Mazda Modular Diagnostic System (M-MDS).
- A maximum 6 remote transmitters can be programmed to one vehicle.
- If the following parts are replaced, it is necessary to program them to the immobilizer system.
    - Remote transmitter (transponder)
    - PCM
    - Start stop unit

Key code read function

- The coil antenna is integrated with the push button start.
- By touching the upper part of the remote transmitter to the push button start, the coil antenna reads the key code from the transponder integrated with the remote transmitter.

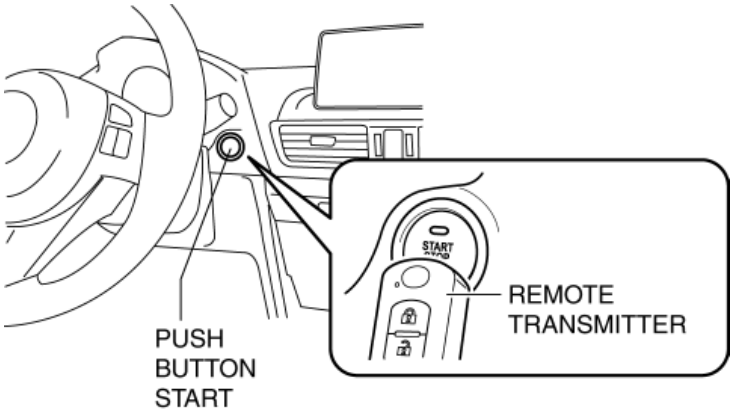

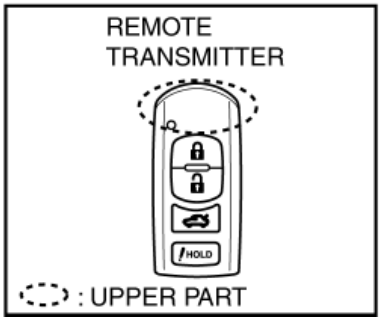

Operation

- Operate in the following order to allow engine starting.

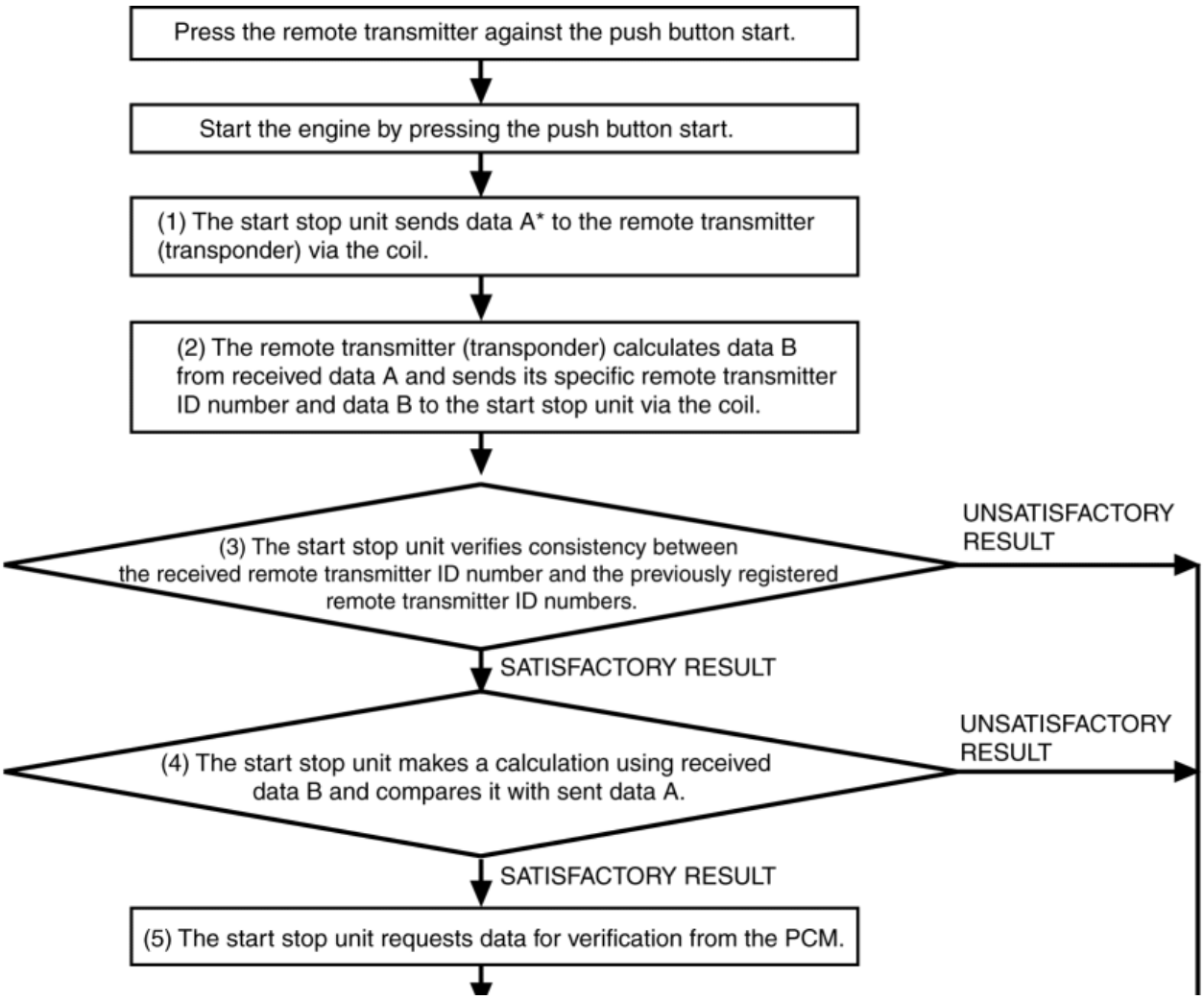

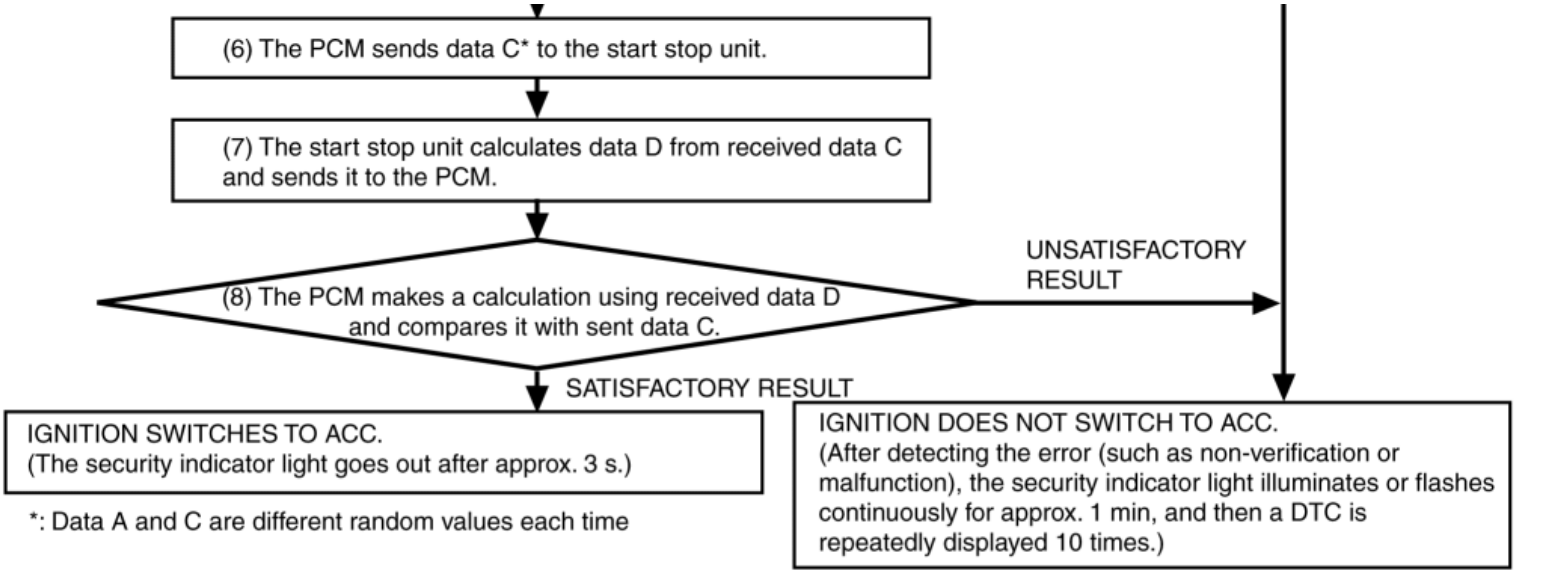

*: Data A and C are different random values each time

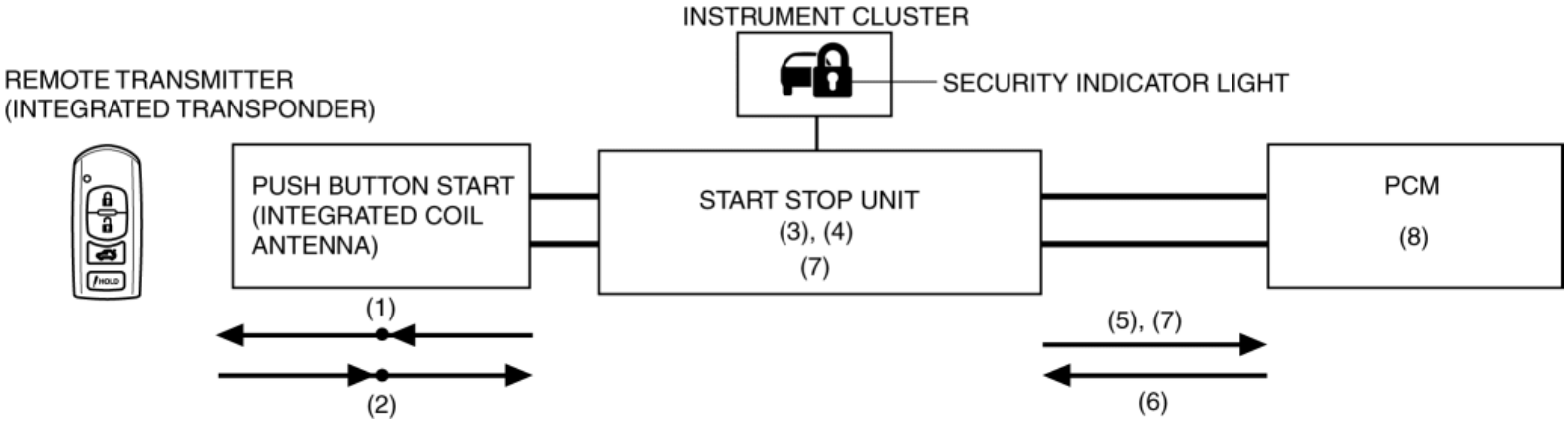

2014 - Mazda3 - Body and Accessories

COIL ANTENNA

Purpose

- Sends the ID data programmed to the electronic transmission device (transponder) in the remote transmitter to the start stop unit.

Function

- A magnetic field occurs around the push button start.

Construction, Operation

- The coil antenna built into the push button start sends a signal to the transponder and sends the returned signal to the start stop unit.

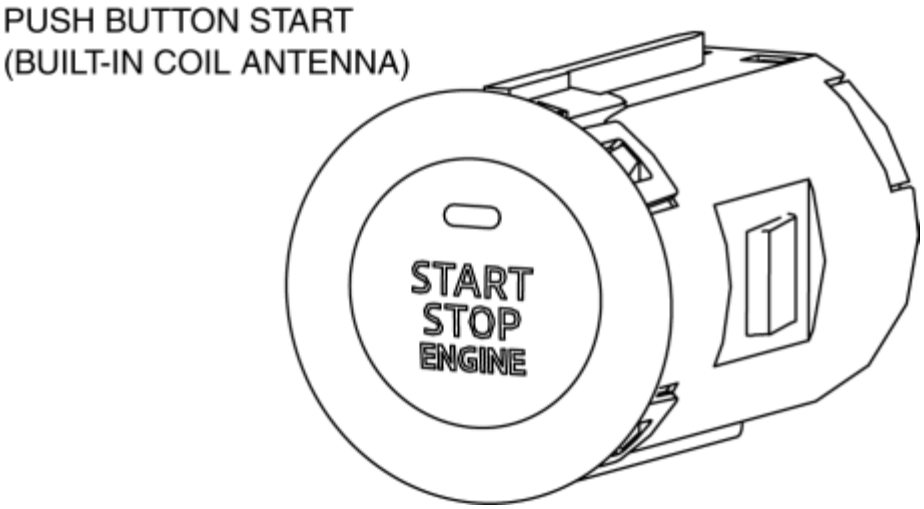

Fail-safe

- Function not equipped.

2014 - Mazda3 - Body and Accessories

KEY WARNING LIGHT (RED)/KEY INDICATOR LIGHT (GREEN)

Purpose

KEY warning light (red)

- The KEY warning light (red) notifies the user that the engine cannot be started, the remote transmitter is outside of the vehicle, or that there is a malfunction in the system.

KEY indicator light (green)

- The KEY indicator light (green) notifies the user that the engine starting conditions have been met or that the remote transmitter battery voltage is depleted.

Function

KEY warning light (red)

- When a malfunction is detected in the system, the KEY warning light (red) illuminates. (See **ON-BOARD DIAGNOSIS SYSTEM [ADVANCED KEYLESS ENTRY SYSTEM]**.)(See **ON-BOARD DIAGNOSIS SYSTEM [START STOP UNIT]**.)
    - For vehicles with center display, a warning message in the center display is displayed when the KEY warning light (red) is turned on. For the message content and verification method, refer to the CENTER DISPLAY. (See **CENTER DISPLAY [WITH CENTER DISPLAY]**.)
- The KEY warning light (red) flashes if the engine cannot be started and when the ignition is switched to ACC or ON (engine off or on) and the transmitter is taken outside of the vehicle. (See **ADVANCED KEYLESS ENTRY SYSTEM**.)(See **KEYLESS ENTRY SYSTEM**.)(See **PUSH BUTTON START SYSTEM [ADVANCED KEYLESS ENTRY SYSTEM]**.)(See **PUSH BUTTON START SYSTEM [KEYLESS ENTRY SYSTEM]**.)

KEY indicator light (green)

- When the engine-starting conditions have been met, the KEY indicator light (green) illuminates. (See **PUSH BUTTON START SYSTEM [ADVANCED KEYLESS ENTRY SYSTEM]**.)(See **PUSH BUTTON START SYSTEM [KEYLESS ENTRY SYSTEM]**.)
- If the remote transmitter battery voltage is depleted, the KEY indicator light (green) flashes. (See **ADVANCED KEYLESS ENTRY SYSTEM**.)(See **KEYLESS ENTRY SYSTEM**.)
    - For vehicles with center display, a warning message in the center display is displayed when the KEY indicator light (green) is flashing. For the message content and verification method, refer to the CENTER DISPLAY. (See **CENTER DISPLAY [WITH CENTER DISPLAY]**.)

Construction

- The KEY warning light (red)/KEY indicator light (green) are built into the instrument cluster.

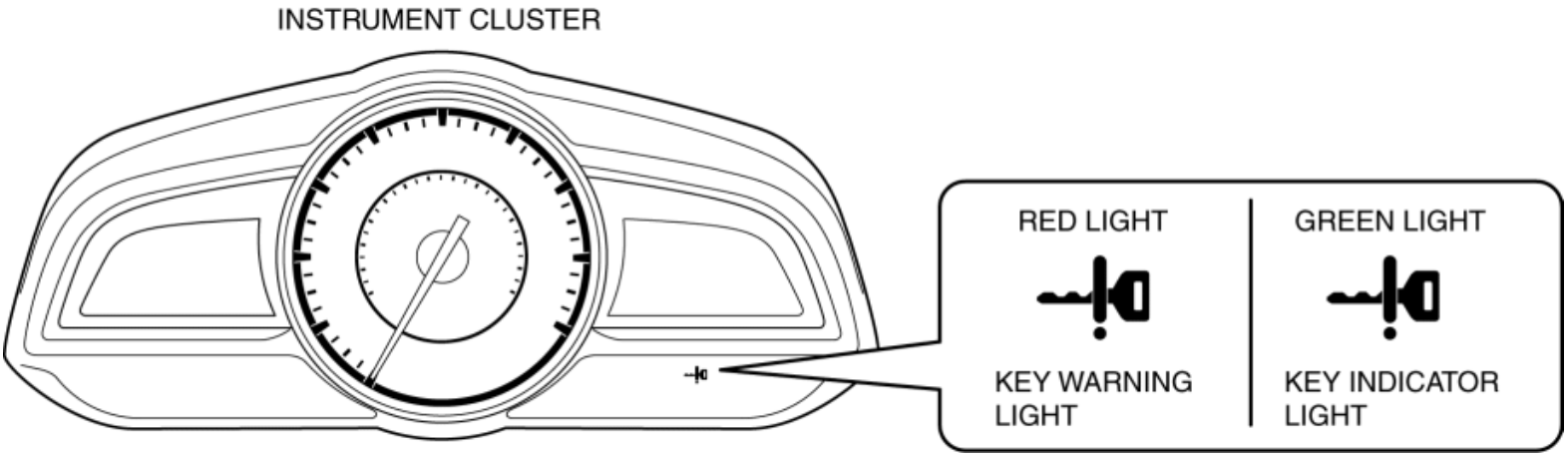

Operation

KEY warning light (red)

- If a malfunction is detected in the system, the engine cannot be started, or the remote transmitter is outside of the vehicle, the start stop unit sends a warning request signal via CAN transmission to the instrument cluster.

KEY indicator light (green)

- If the engine starting conditions have been met, the start stop unit sends a KEY indicator light (green) illumination request signal via CAN transmission to the instrument cluster.
- If the remote transmitter battery voltage has been depleted, the start stop unit sends a battery voltage depletion display request signal via CAN transmission to the instrument cluster.

Fail-safe

- Function not equipped.

2014 - Mazda3 - Body and Accessories

SECURITY INDICATOR LIGHT

Purpose

- Notifies the driver that the immobilizer system is operating.

Function

- If a malfunction is detected in the immobilizer system, the DTC can be verified by the flashing pattern of the security indicator light.

Construction

- The security indicator light is built into the instrument cluster.

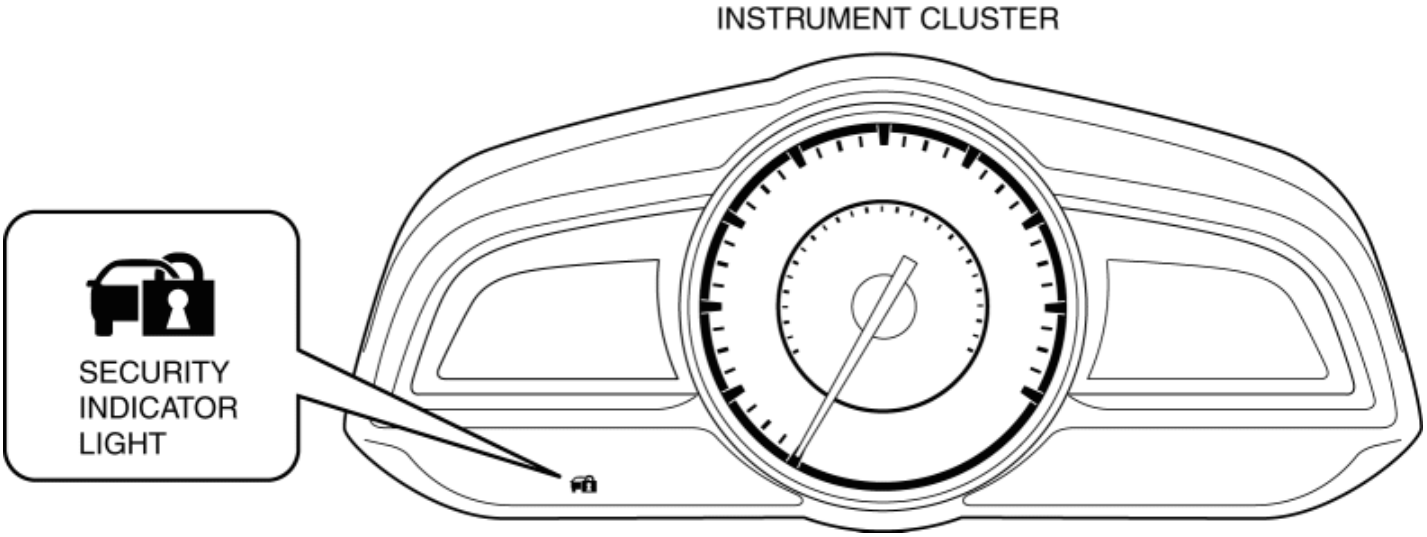

Operation

- When the immobilizer system is operating, it illuminates for **0.1 s every approx. 2 s**.

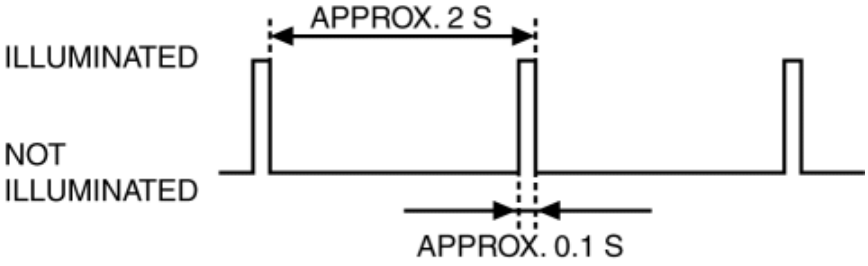

- If the immobilizer system is normal, the security indicator light illuminates for **approx. 3 s** and then

turns off after the push button start is pressed.

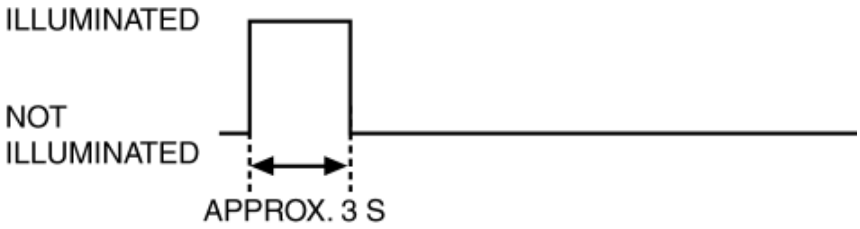

Fail-safe

- Function not equipped.

2014 - Mazda3 - Body and Accessories

ON-BOARD DIAGNOSIS SYSTEM [IMMOBILIZER SYSTEM]

Outline

- The immobilizer system has an on-board diagnostic function to facilitate system diagnosis.

Function

- The on-board diagnostic function consists of the following functions:
    - A malfunction detection function, which detects overall malfunctions in the immobilizer system-related parts.
    - A memory function, which stores detected DTCs.
    - A display function, which indicates system malfunctions via DTC display.
    - A PID/data monitoring function, which reads out specific input/output signals.
- Using the Mazda Modular Diagnostic System (M-MDS), DTCs can be read out and deleted, and PID/data monitoring can be performed.

On-board Diagnostic Function

Malfunction detection function

- Detects overall malfunctions in the immobilizer system-related parts.
- Malfunction diagnosis of the immobilizer system is automatically performed every time the engine is switched from OFF/LOCK (ACC) to ON (START).

Memory Function

- Malfunctions detected by the malfunction detection function are all recorded as DTCs in the following modules.
    - Start stop unit
    - PCM

CAUTION:

- Recorded immobilizer system DTCs are cleared when the ignition is switched ON from off/ACC.

Display Function

- If there is a malfunction in the immobilizer system, the security indicator light in the instrument cluster is illuminated to notify the driver. In addition, DTCs are displayed by the number of times that the security indicator light flashes.

  NOTE:

  - If two or more malfunctions are detected as a result of malfunction diagnosis, only the DTC with the lowest number of those detected will be indicated by the security indicator light.

- In the approx. 1 min after detecting a malfunction and before indicating the DTC, the security indicator light illuminates or flashes in the following patterns:

Security indicator light flash pattern (before displaying DTC)	DTC
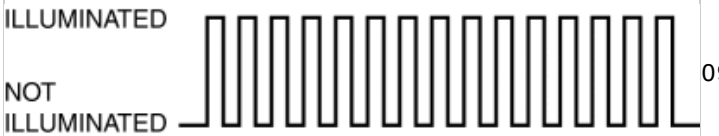	09, 11, 13, 15, 16
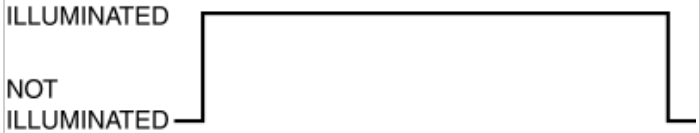	22, 23

- DTC 21 is displayed when the ignition is switched ON (engine off or on) and the security indicator light illumination turns off for approx. 1 min.
- Using the Mazda Modular Diagnostic System (M-MDS), DTCs can be read out and deleted.

  CAUTION:

  - If the security indicator light itself has a malfunction, it is possible that a DTC may not be indicated properly.

DTC table

×: Applicable—: Not applicable

DTC			KEY warning indicator light (red)	Push button start indicator light (amber)	Description	Fail-safe function	Drive cycle	Self test type*2	Memory function
Mazda Modular Diagnostic System (M-MDS) display*1		Security indicator light flash pattern							

Start stop unit	PCM									
U3000:96	P1260:00	09		On	Flash	Start stop unit malfunction	—	—	C	×
B10D9:87	P1260:00	11		—	Flash	Coil antenna (built into push button start) error	—	—	C	—
B13D3:05	P1260:00	13		—	—	Remote transmitter program error	—	—	C	—
B13D3:94	P1260:00	13		—	—	Communication error with remote transmitter	—	—	C	—
B13D3:51	P1260:00	15		—	Flash	Unregistered remote transmitter is detected	—	—	C	—
U0100:87	P1260:00	16		—	—	Communication error with PCM (no response or data mis-match)	—	—	C	—
B13D4:00	P1260:00	21		On	—	Insufficient remote transmitter programming number	—	—	C	—
B10DA:51	P1260:00	22		—	—	Communication error with PCM (data received failure)	—	—	C	—
B10DA:62	P1260:00	23		—	—	Communication error with PCM (code mis-matched)	—	—	C	—

*1

The letters at the beginning of each DTC are only displayed when using the Mazda Modular Diagnostic System (M-MDS), and refer to the following: B= Body system, P= Powertrain system, U= Network communication system.

*2

C: CMDTC self test, D: ODDTC self test

DTC 7-digit code definition

- When related systems or components have failed, the CM stores the DTC of the malfunctioning part in the CM memory, and allows for the retrieval of the store data using scanning tool when necessary. The DTCs are indicated using seven digits. Each digit indicates the following.

B 1 0 D 5 : 1 F

· Specify the area failure sub type

00: No sub type information
05: System programming malfunctions
13: Open circuit
14: Circuit short to ground or open
16: Circuit voltage below threshold
41: General checksum malfunction
42: General memory malfunction
49: Internal electronic malfunction
51: Not programmed
62: Signal compare malfunction
68: Event information
94: Unexpected operation
86: Signal invalid
87: Missing message
88: Bus off
92: Performance or incorrect operation
96: Component internal failure

· Manufacturer controlled

· Indicates subgroup

Powertrain (P code)	Network Electrical (U code)	Body (B code)	Chassis (C code)
0: Fuel and air metering and auxiliary emission controls	0: Network Electrical	Manufacturer controlled	Manufacturer controlled
	1: Network communication		
	2: Network communication		
	3: Network software		
	4: Network data		
	5: Network data		

· Indicates who was responsible for DTC definition

0: ISO/SAE controlled
1: Manufacturer controlled
2: There are ISO/SAE controlled just for powertrain, all others are manufacturer controlled.
3: For P3000 to P3399 is manufacturer controlled, all others are ISO/SAE controlled.

· Indicates DTC function

P: Powertrain
B: Body
C: Chassis
U: Network Electrical

Status byte for DTC

- The two digits (two digits after hyphen (-)) after the seven-digit DTC.

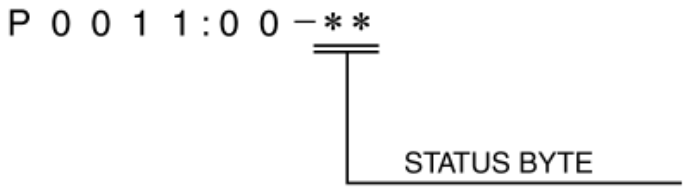

- A code which indicates the pending code, current/past malfunction status, or warning illumination status.
- Can be read by performing a CMDTC self-test using the Mazda Modular Diagnostic System (M-MDS).
- For details on the status byte, refer to the explanation on the Mazda Modular Diagnostic System (M-MDS) when reading the DTC.

Detection condition for the applicable DTC

DTC	System malfunction location	Detection condition
U3000:96/P1260:00	Start stop unit malfunction	Start stop unit malfunction detected.
B10D9:87/P1260:00	Coil antenna (built into push button start) error	Start stop unit detected a malfunction in the coil antenna, and remote transmitter communication is not possible.
B13D3:05/P1260:00	Remote transmitter program error	Start stop unit detects a remote transmitter program error.
B13D3:94/P1260:00	Communication error with remote transmitter	Start stop unit could not detect the remote transmitter communication or communication error was detected.
B13D3:51/P1260:00	Unregistered remote transmitter is detected	Start stop unit detects that the remote transmitter has not been programmed.
U0100:87/P1260:00	Communication error with PCM (no response or data mis-match)	Start stop unit detects a communication error (no response or immobilizer system cancel not possible) with the PCM.
B13D4:00/P1260:00	Insufficient remote transmitter programming number	Start stop unit detects that the number of programmed remote transmitters is less than 2.
B10DA:51/P1260:00	Communication error with PCM (data received failure)	Start stop unit detects a communication error (data received failure) with PCM.
B10DA:62/P1260:00	Communication error with PCM (code mis-matched)	Start stop unit detects a communication error (code mis-matched) with the PCM.

PID/data Monitor Function

- With the PID/data monitor function, items set in the module can be selected and read out in real-time.

—: Not applicable

PID	Unit/Operation	Data contents	Data read/use method	Module control terminal
NUM_TRNSMIT	—	Displays number of the remote transmitters programmed to the start stop unit	—	—

2014 - Mazda3 - Body and Accessories

THEFT-DETERRENT SYSTEM

Outline

- The theft-deterrent system operates the theft-deterrent horn and hazard warning lights if a door, liftgate/trunk lid or the hood is improperly opened.
- An answer-back function has been adopted which allows visual verification of the theft-deterrent system operation.
- Signal input/output of the theft-deterrent system is controlled by the rear body control module (RBCM).
- The rear body control module (RBCM) performs theft-deterrent system fail-safe. (See **REAR BODY CONTROL MODULE (RBCM)**.)

Structural View

4SD

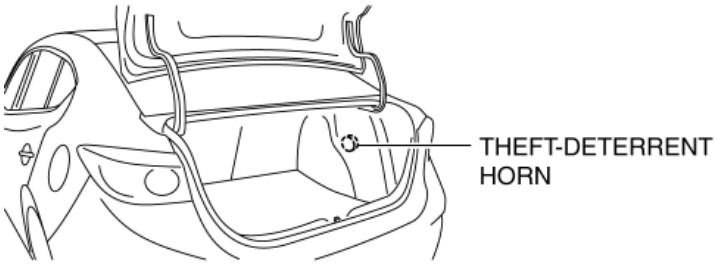

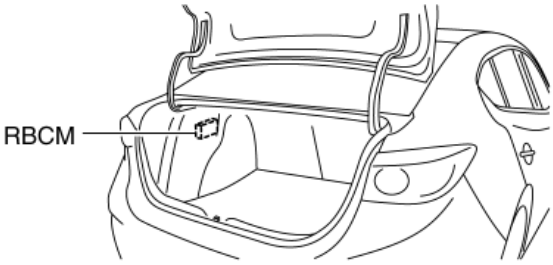

5HB

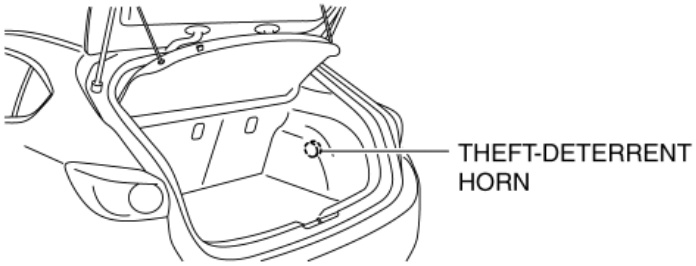

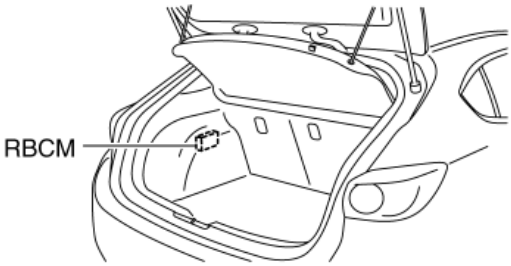

System Wiring Diagram

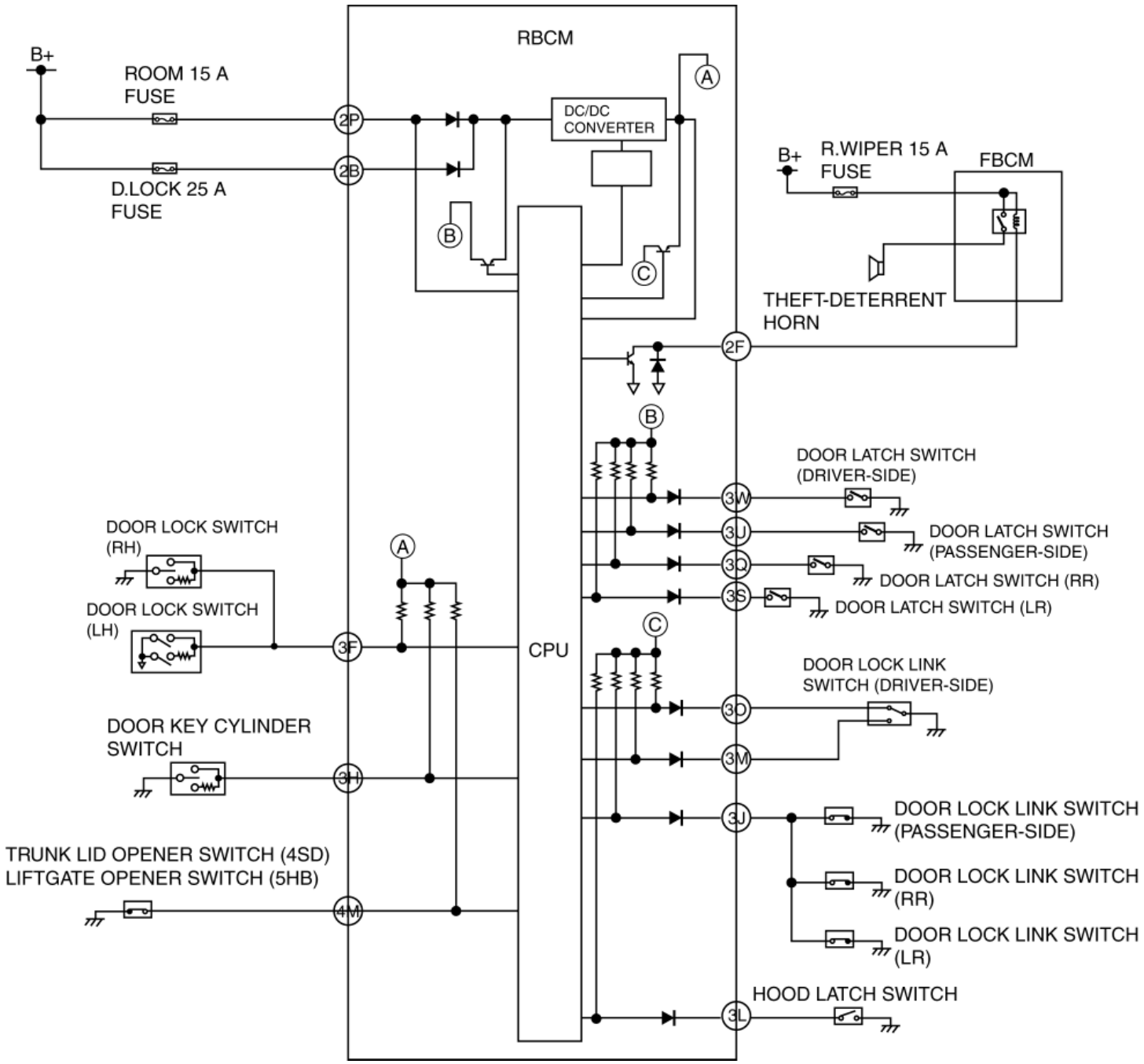

Function

Answer back function

- When a locking operation is performed using the remote transmitter is in stand-by preparation mode, stand-by mode, the hazard warning lights flash once.
- When an unlocking operation is performed using the remote transmitter is in initial mode, the hazard warning lights flash twice.

Operation

Mode transition

- The rear body control module (RBCM) switches the theft-deterrent system mode based on the ignition switch and door conditions.

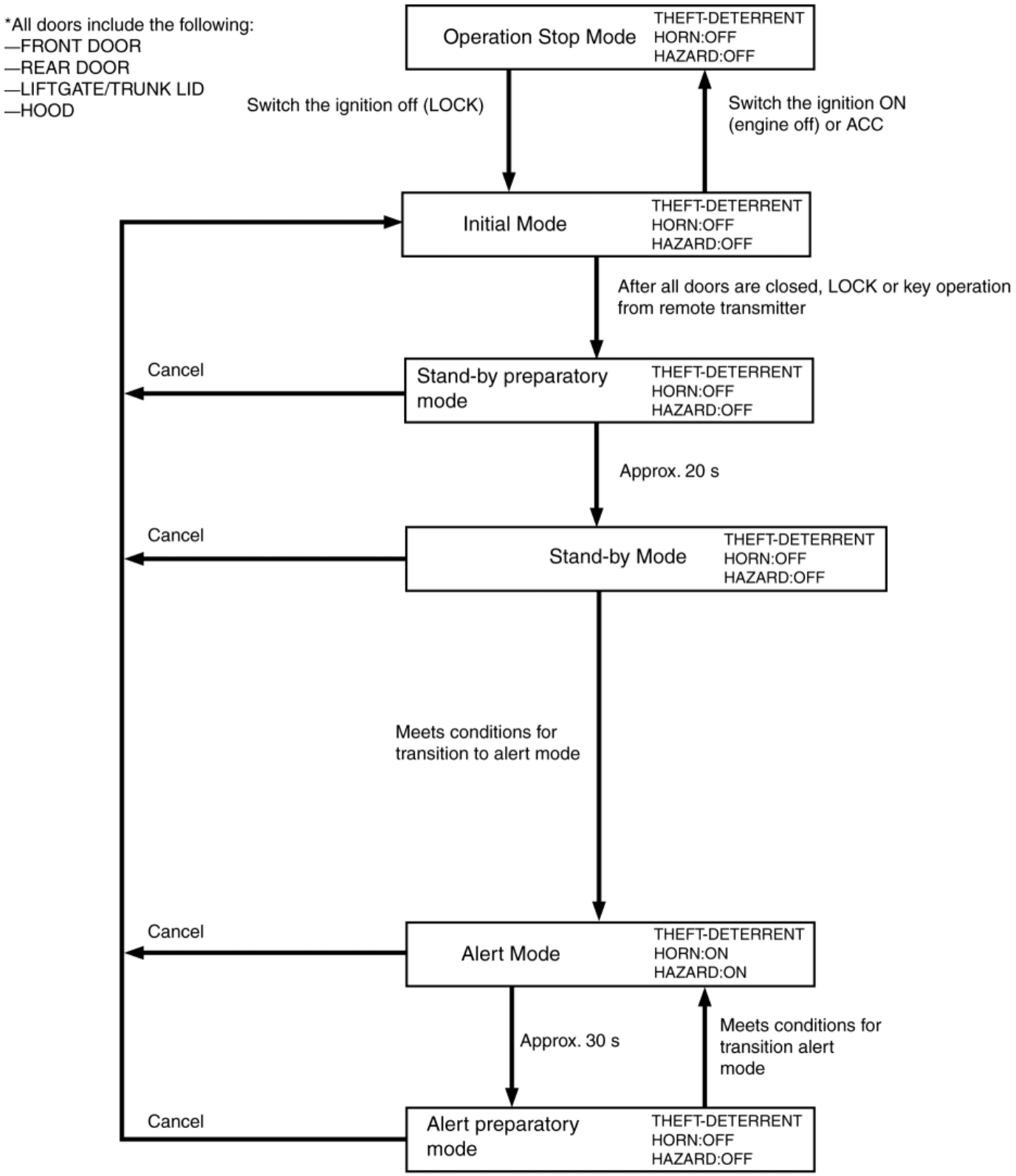

Operation stop mode

- In this mode, all theft-deterrent system operations are stopped.
- The system changes to the operation stop mode when ACC or ON the following condition is met.
    - Ignition is switched to ACC or ON (engine off).

Initial mode

- This mode is the preparatory mode before changing to the stand-by mode. The system does not change directly to the alert mode from this mode.

Transition condition to the initial mode

- The system changes from the operation stop mode to the initial mode if the following condition is met.
    - Ignition is switched off
- The system transitions from stand-by preparatory mode, stand-by mode, alert mode, and alert preparatory mode to the initial mode if the cancel conditions in each mode are met.

Transition condition to the stand-by preparatory mode

- The system changes to the stand-by preparatory mode if the following condition is met.
    - A lock operation was performed using the remote transmitter lock button or key with all the doors, trunk lid, and hood closed.

Stand-by preparatory mode

- This is the mode prior to the stand-by mode.
- If the cancel conditions are met, the system changes to the initial mode.

Transition condition to the stand-by mode

- If the stand-by preparatory mode continues for approx. 20 s, the system changes to the stand-by mode.

Cancel conditions

- If any of the following conditions is met, the stand-by preparation mode is canceled and the system changes to the initial mode.
    - Any front door latch switch is on (door is open), or any rear door latch switch is on (rear door is open), or liftgate/trunk lid latch switch is on (liftgate/trunk lid is open), or hood latch switch is off (hood is open)
    - Any door lock-link switch UNLOCK
    - Switch the ignition to ACC or ON (engine off)
    - Unlock operation using remote transmitter
    - Open the liftgate/trunk lid using the liftgate/trunk lid opener switch (With advanced keyless entry system)

Stand-by mode

- The system starts monitoring approx. 20 s after the doors are locked for unauthorized door opening/closing. If any unauthorized operation is detected, the system changes to the alert mode.
- If the cancel conditions are met, the system changes to the initial mode.

Transition condition to the alert mode

- If any of the following conditions is met, the system changes to the alert mode.
    - Ignition is switched ON (engine off)
    - Door latch switch on (door is open)
    - Liftgate/trunk lid latch switch on (liftgate/trunk lid is open)
    - Hood latch switch off (hood is open)
    - Door lock-link switch UNLOCK
    - Unlock operation using front door key cylinder

Cancel condition

- If any of the following conditions is met, the stand-by mode is canceled and the system changes to the initial mode.
    - Unlock operation using remote transmitter
    - Ignition is switched to ACC or ON (engine off).

Alert mode

- In this mode, the theft-deterrent horn and hazard warning lights are operated to alert the surrounding area.
- When the alarm period (approx. 30 s) has elapsed, the system changes to the alert preparatory mode.

- If the cancel conditions are met, the system changes to the initial mode.

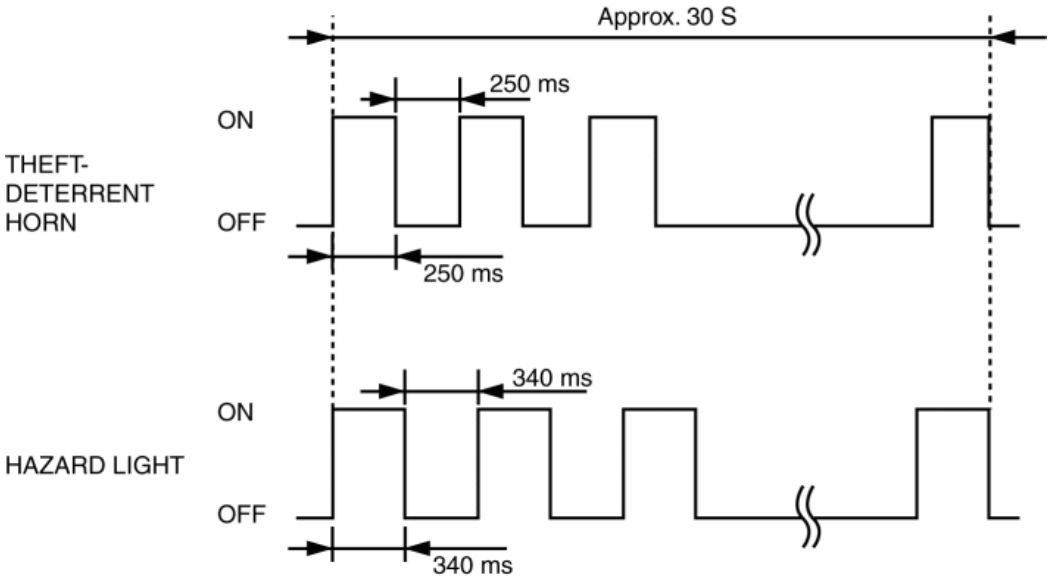

Transition condition to the alert preparatory mode

- When the alarm period (approx. 30 s) has elapsed, the system changes to the alert preparatory mode.
- The alarm period is not extended even if a transition condition to alert mode is met again during an alarm period.

Cancel condition

- If any of the following conditions is met, the alert mode is canceled, and the system changes to the initial mode.
    - Unlock operation using remote transmitter
    - Ignition is switched ON (engine off), and engine started
    - Open the liftgate/trunk lid using the liftgate/trunk lid opener switch (With advanced keyless entry system)

Alert preparatory mode

- In the alert preparatory mode, the theft-deterrent horn and hazard warning light are not operated, however, the alarm triggers immediately if the condition is changed.
- If the cancel conditions are met, the system changes to the initial mode.

Transition condition to alert mode

- The system changes to the alert mode if any of the following conditions is met.
    - Ignition switched from ON to off, or from off to ON
    - Door latch switch turned from on (door open) to off (door closed), or from off (door closed) to on (door open)
    - Liftgate/trunk lid latch switch turned from on (liftgate/trunk lid open) to off (liftgate/trunk lid closed), or from off (liftgate/trunk lid closed) to on (liftgate/trunk lid open)
    - Hood latch switch turned from off (hood open) to on (hood closed) or from on (hood closed) to off (hood open)
    - Door lock-link switch locked from unlock, or unlocked from lock
    - The front door key cylinder is locked from unlock, or unlocked from lock

Cancel condition

- If any of the following conditions is met, the alert preparatory mode is canceled and the system changes to the initial mode.
    - Unlock operation using remote transmitter
    - Ignition is switched ON, and engine started
    - Liftgate/trunk lid opened using the liftgate/trunk lid opener switch (With advanced keyless entry system)

2014 - Mazda3 - Body and Accessories

HOOD LATCH SWITCH

Purpose

- Detects the open/closed condition of the hood.

Function

- The hood latch switch is utilized in the theft-deterrent system control.
    - For the theft-deterrent system, refer to (see **THEFT-DETERRENT SYSTEM**.).

Construction

- Built into the hood latch.
- Switch turns on and off by the rotation of the latch bar.
- When the hood is completely closed, the hood latch switch is on (contact point: closed).

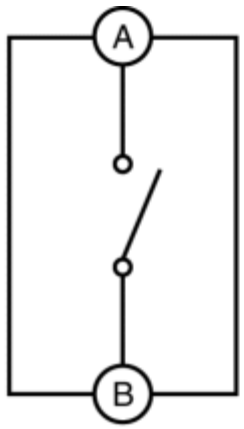

HOOD OPEN : OFF

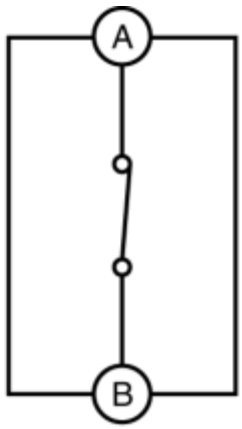

HOOD CLOSE : ON

Operation

Hood close (latch) operation

1. When the hood is closed, the hood lock striker enters the latch lever groove.

2. When the hood is then further closed, the latch lever is pressed by the hood lock striker and rotates.

3. When the hood is completely closed, the latch lever is in a latched condition and presses the hood latch switch which turns the switch on.

Hood open (unlatch) operation

1. When the hood release lever is pulled, the hood opens and the latch lever is in an unlatched condition, and the hood latch switch turns off.

Fail-safe

- Function not equipped.

2014 - Mazda3 - Body and Accessories

DOOR LOCK SYSTEM OPERATION RECORD

Purpose

- Stores the record of the user's operation and the door lock system operation corresponding to the user's operation.

Function

- The door lock system operation record is stored by the rear body control module (RBCM) and displayed using the Mazda Modular Diagnostic System (M-MDS).
- The rear body control module (RBCM) stores the following when the front/rear door lock actuator operates.
    - Time and date
    - Part or function which output unlock signal
    - Part or function which output lock signal
    - Operated actuator
    - Vehicle condition

Construction

- Based on the stored record, the rear body control module (RBCM) displays the following operation record on the M-MDS screen.

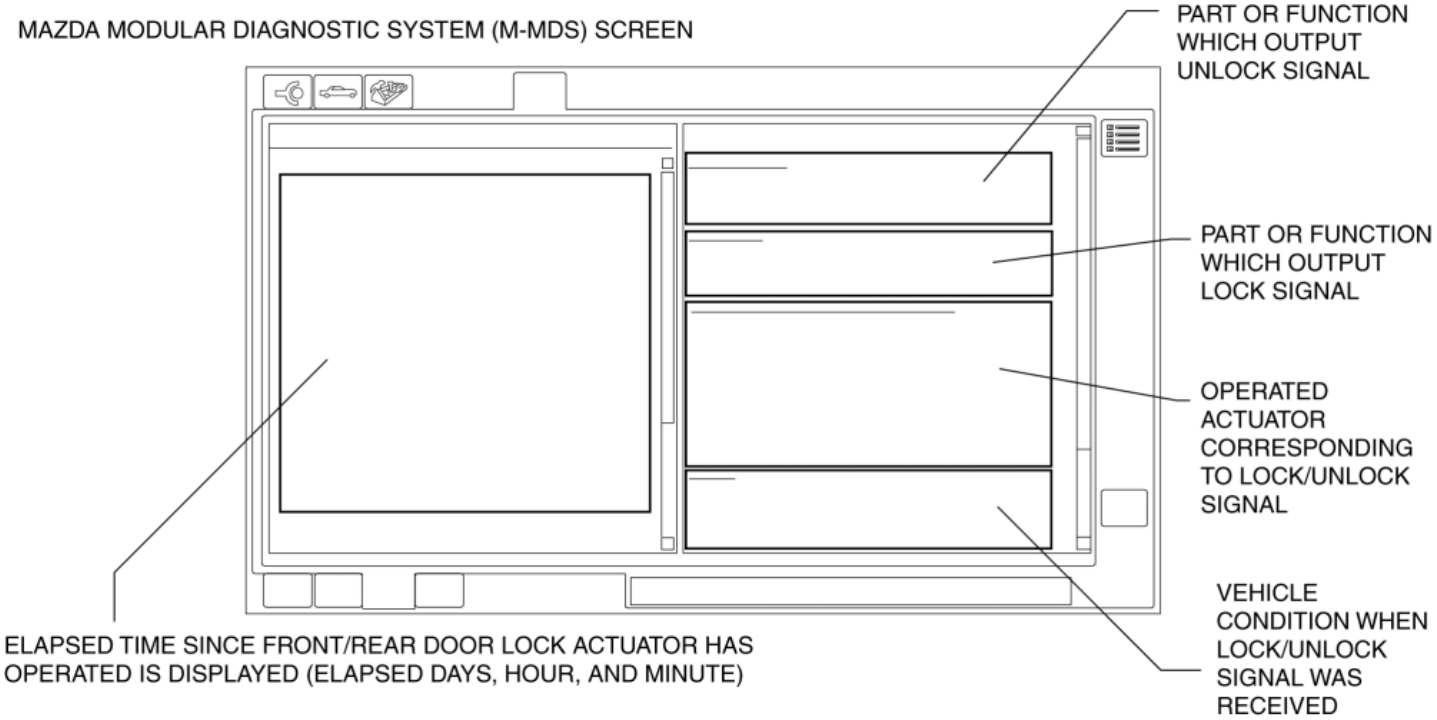

Operation

- Based on the lock/unlock signal, the rear body control module (RBCM) sends an operation signal to the front/rear door lock actuator motor, and stores the operation record at the same time.

  CAUTION:

    - Because it takes time from when the front/rear door lock actuator motor operates until lock/unlock is performed, the

operation record may be stored before the lock/unlock switching is completed.

Fail-safe

- Function not equipped.

2014 - Mazda3 - Body and Accessories

THEFT-DETERRENT SYSTEM OPERATION RECORD

Purpose

- The theft-deterrent system operation history is a record of the theft-deterrent system operation.

Function

- The theft-deterrent system operation record is stored by the rear body control module (RBCM) and displayed using the Mazda Modular Diagnostic System (M-MDS).
- The rear body control module (RBCM) records the following when the theft-deterrent system is operated.
    - Time and date
    - Theft-deterrent system operation time
    - Location in theft-deterrent system where operation was triggered

Construction

- Based on the stored record, the rear body control module (RBCM) displays the following operation record on the M-MDS screen.

MAZDA MODULAR DIAGNOSTIC SYSTEM (M-MDS) SCREEN

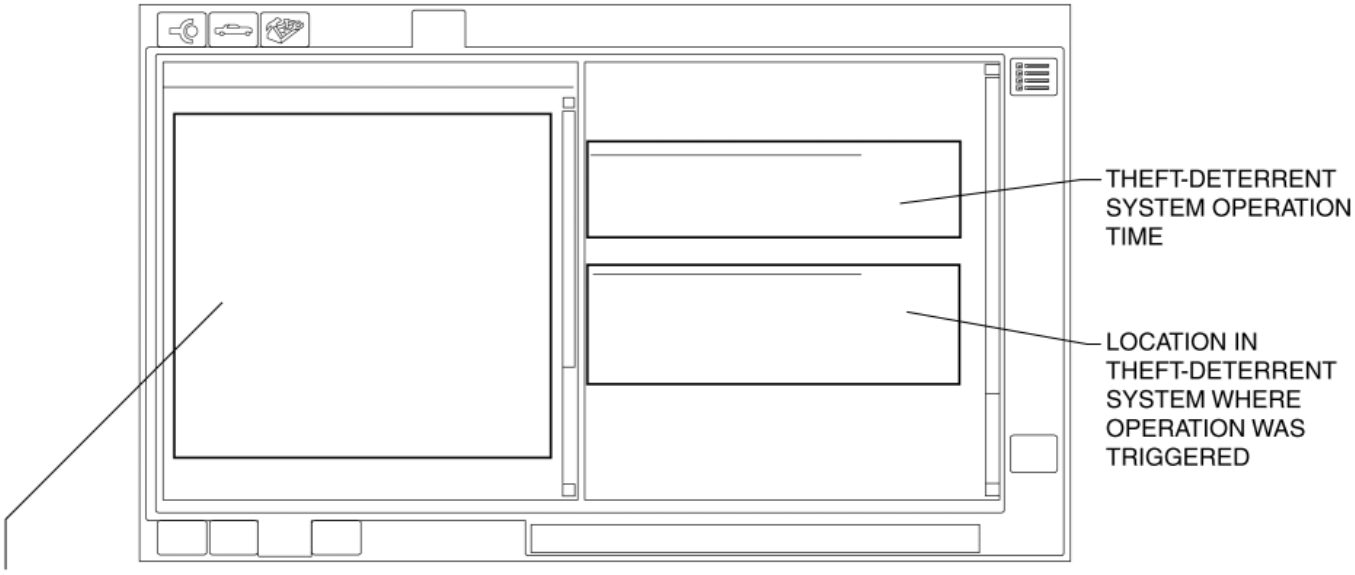

Displays the elapsed time from the operation of the theft-deterrent system (elapsed days, elapsed time, elapsed minutes)

Operation

- The rear body control module (RBCM) sends an alarm sound signal to the theft-deterrent siren or theft-deterrent horn, and records the operation history simultaneously.

Fail-safe

- Function not equipped.

THEFT-DETERRENT SYSTEM OPERATION RECORD

2014 - Mazda3 - Body and Accessories

SUNROOF

Outline

- An electric sunroof with tilt up mechanism has been adopted.
- A deflector has been added to reduce noise.
- A system control using pulse sensors (Hall effect switches) has been adopted for system simplification.
- A sunroof motor with an integrated CPU has been adopted.

Specification

Item		Specification
Slide system		Inner slide
Opening measurement	(mm {in})	280 × 740 {11.0 × 29.1}
Tilt-up amount	(mm {in})	27—31 {1.1—1.2}
Opening/closing time	(s)	Slide: 3.0—6.0, Tilt: 0.5—1.5

Function

Tilt up/open/close

- When the sunroof switch (tilt position) is operated, the sunroof tilts up.
- When the sunroof switch (open position) is operated, the sunroof opens.
- When the sunroof switch (close position) is operated, the sunroof closes and tilts down.

Initial setting

- If the following operations have been performed, the initial setting is reset, and operation is disabled except for the tilt operation. Therefore, performing the initial setting is necessary.
    - Negative battery cable is disconnected.
    - Sunroof system power supply fuse is removed.

Sunroof System Structural View

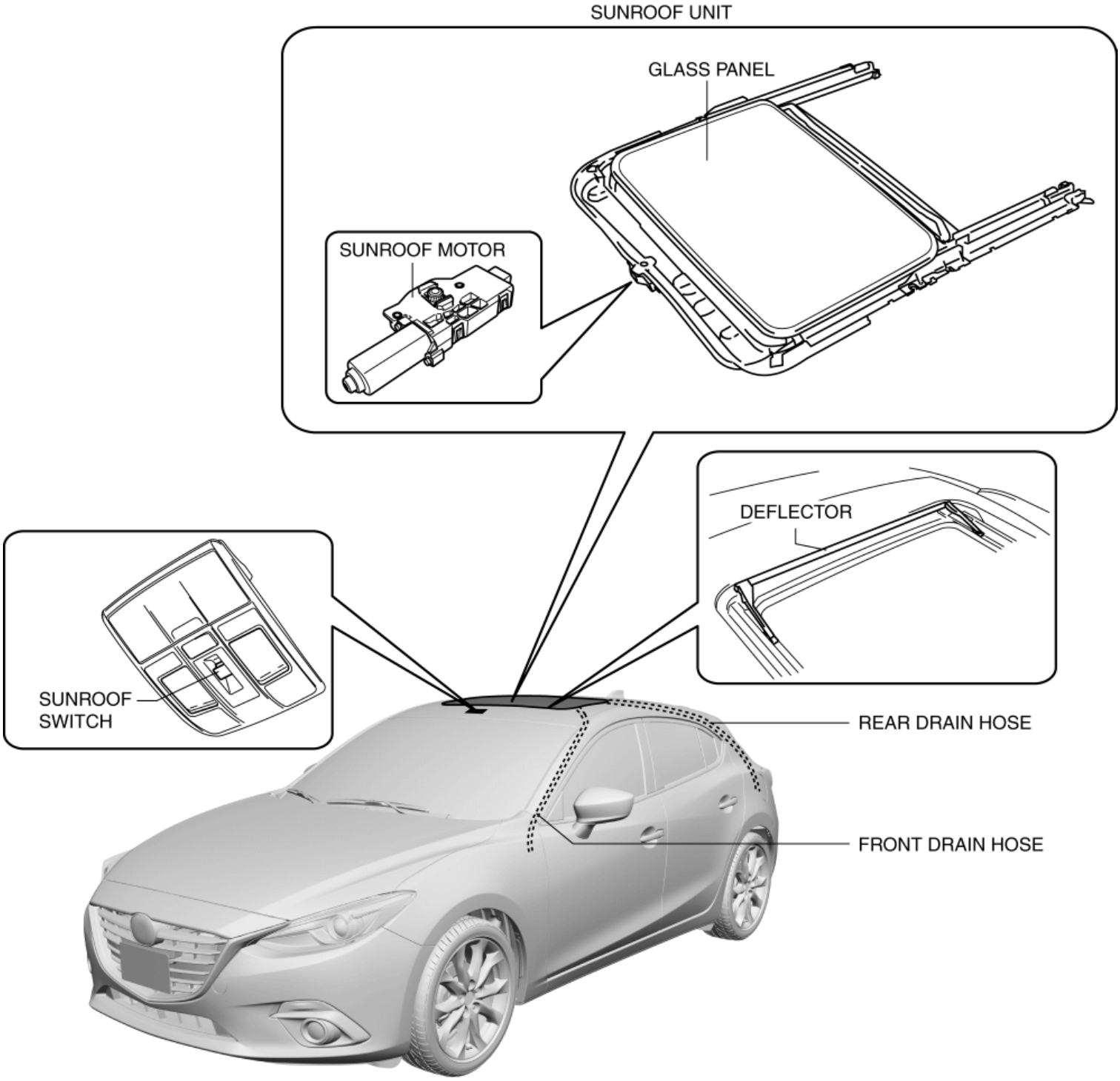

System Wiring Diagram

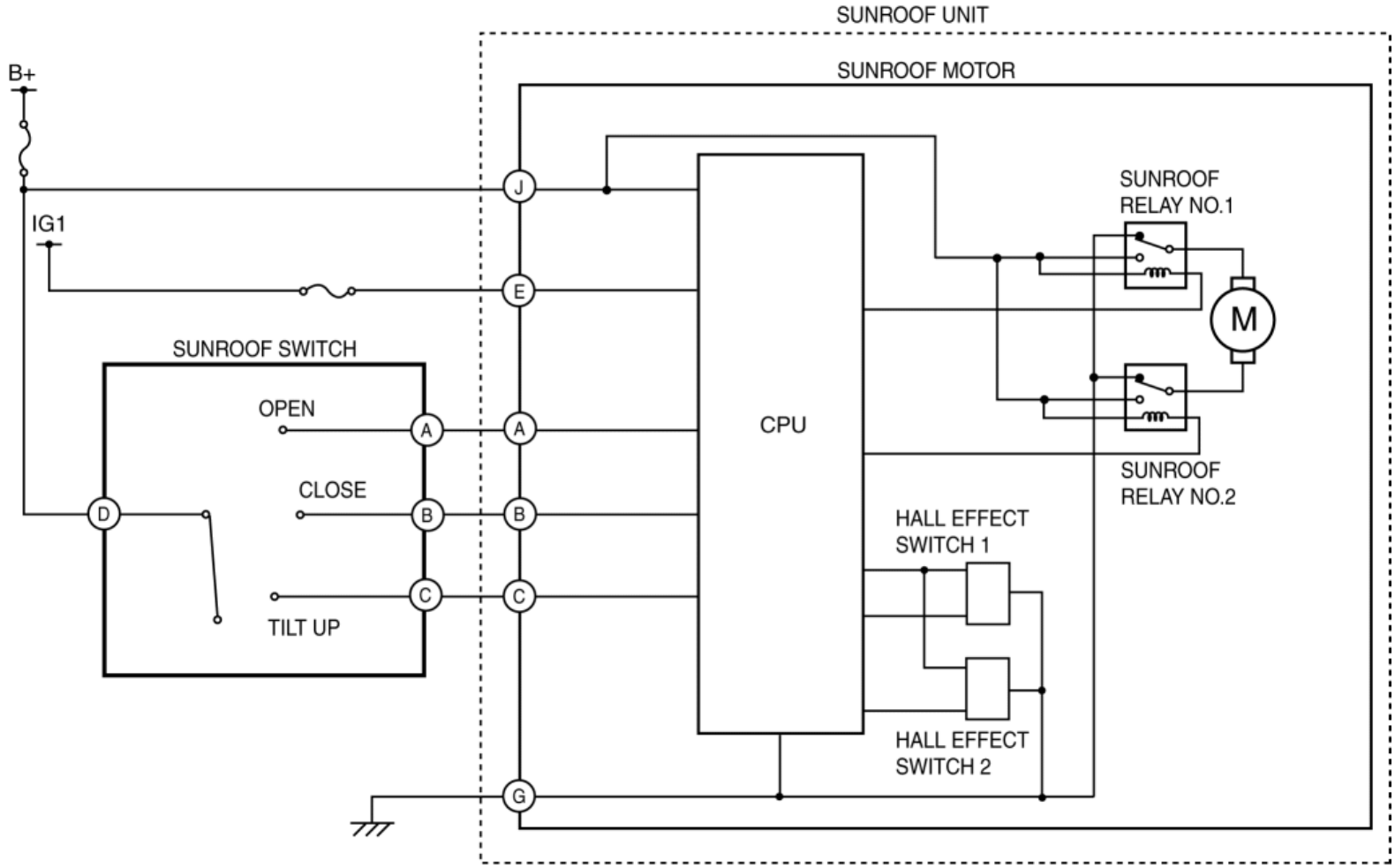

Operation

- The glass panel opens/closes using tilting and sliding operations.
- When the ignition is switched ON (engine off or on), the sunroof operates by use of the sunroof switch.
- If the ignition is switched OFF or switched to ACC position while the sunroof is operating, it will stop.
- One-touch operation of the tilt or the slide open switch provides auto-operation.
- If any switch is operated during auto-operation, the sunroof stops.

Tilt up operation

1. When the sunroof switch is operated for tilt up operation, the CPU receives a tilt up signal. (1)
2. When the CPU receives a tilt up signal, it turns on relay No.2. (2)
3. When relay No.2 is turned on, the sunroof motor starts tilt up operation.(3)
4. When **approx. 1 s.** has elapsed after the sunroof motor was started, the timer control of the CPU turns off sunroof relay No.2 automatically to stop the tilt up operation.

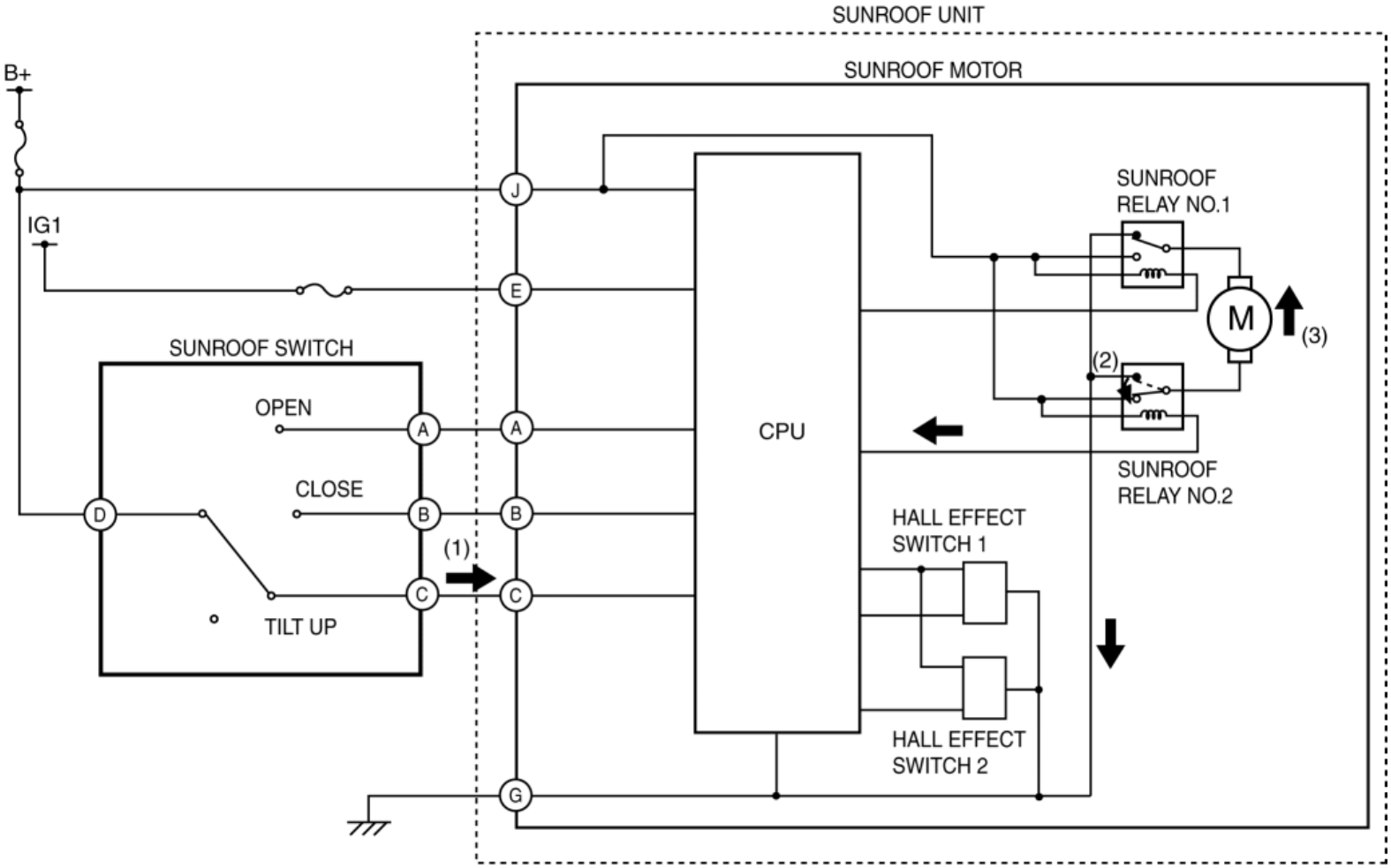

Open operation

1. When the sunroof switch is operated for an open operation, the CPU receives an open signal. (1)
2. When the CPU receives an open signal, it turns on relay No.1. (2)
3. When the relay No.1 is turned on, the sunroof motor starts the open operation.(3)

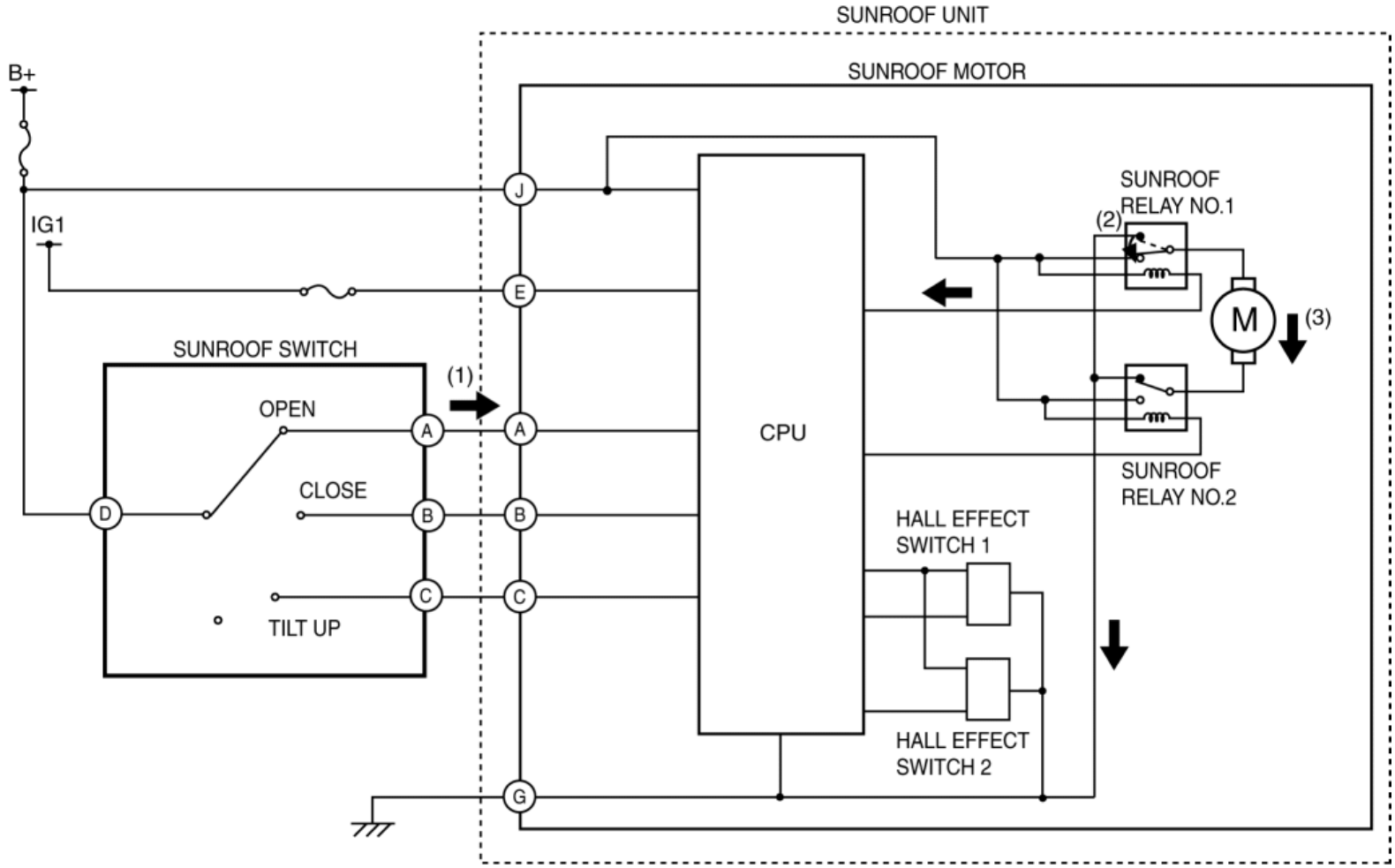

Close operation (glass panel open)

1. When the sunroof switch is operated for a close operation, the CPU receives a close signal. (1)
2. When the CPU receives the close signal, it turns on relay No.2. (2)
3. When relay No.2 is turned on, the sunroof motor starts the close operation.(3)

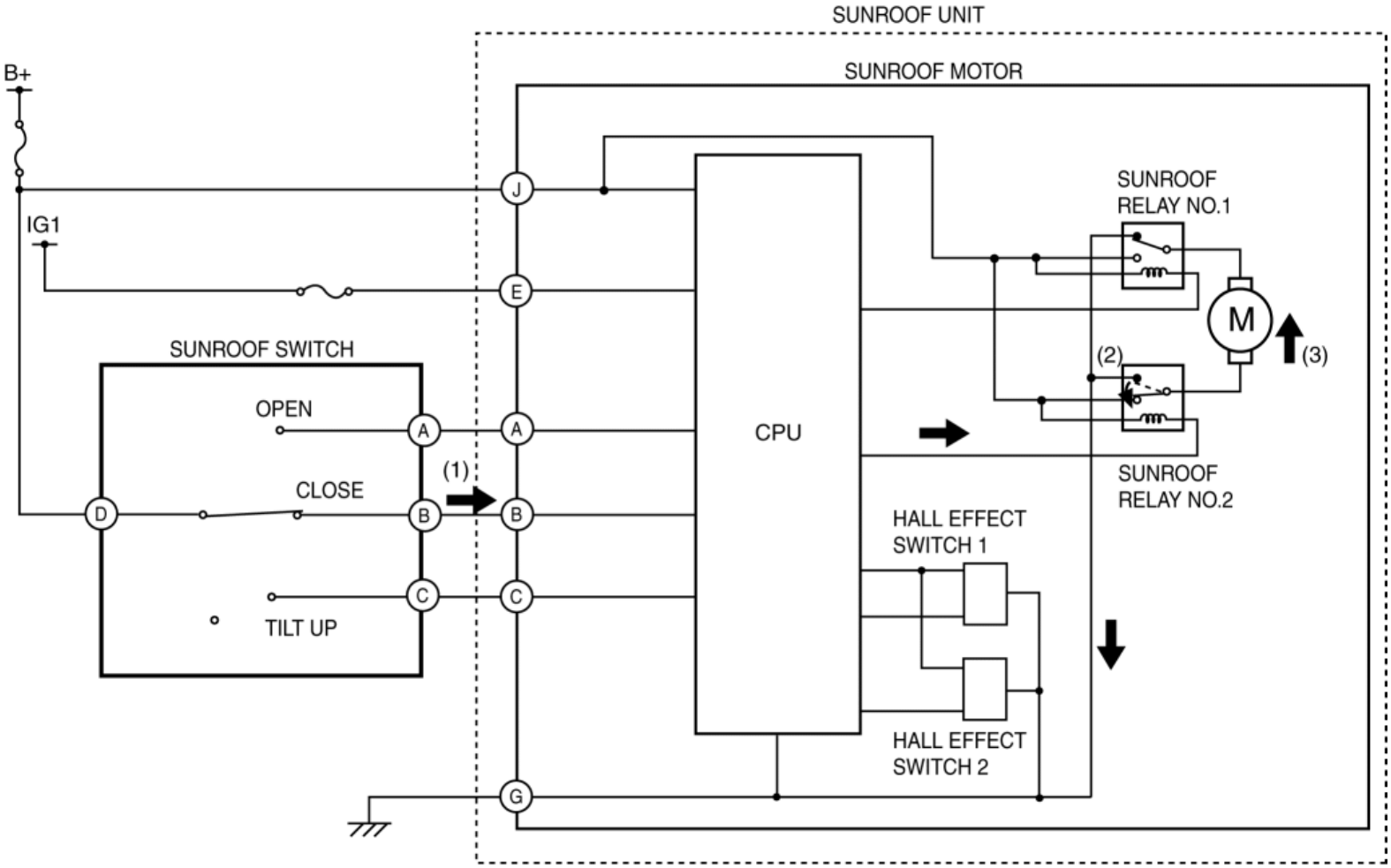

Close operation (glass panel tilt up)

1. When the sunroof switch is operated for a close operation, the CPU receives a close signal. (1)
2. When the CPU receives the close signal, it turns on relay No.1. (2)
3. When relay No.1 is turned on, the sunroof motor starts the close operation.(3)

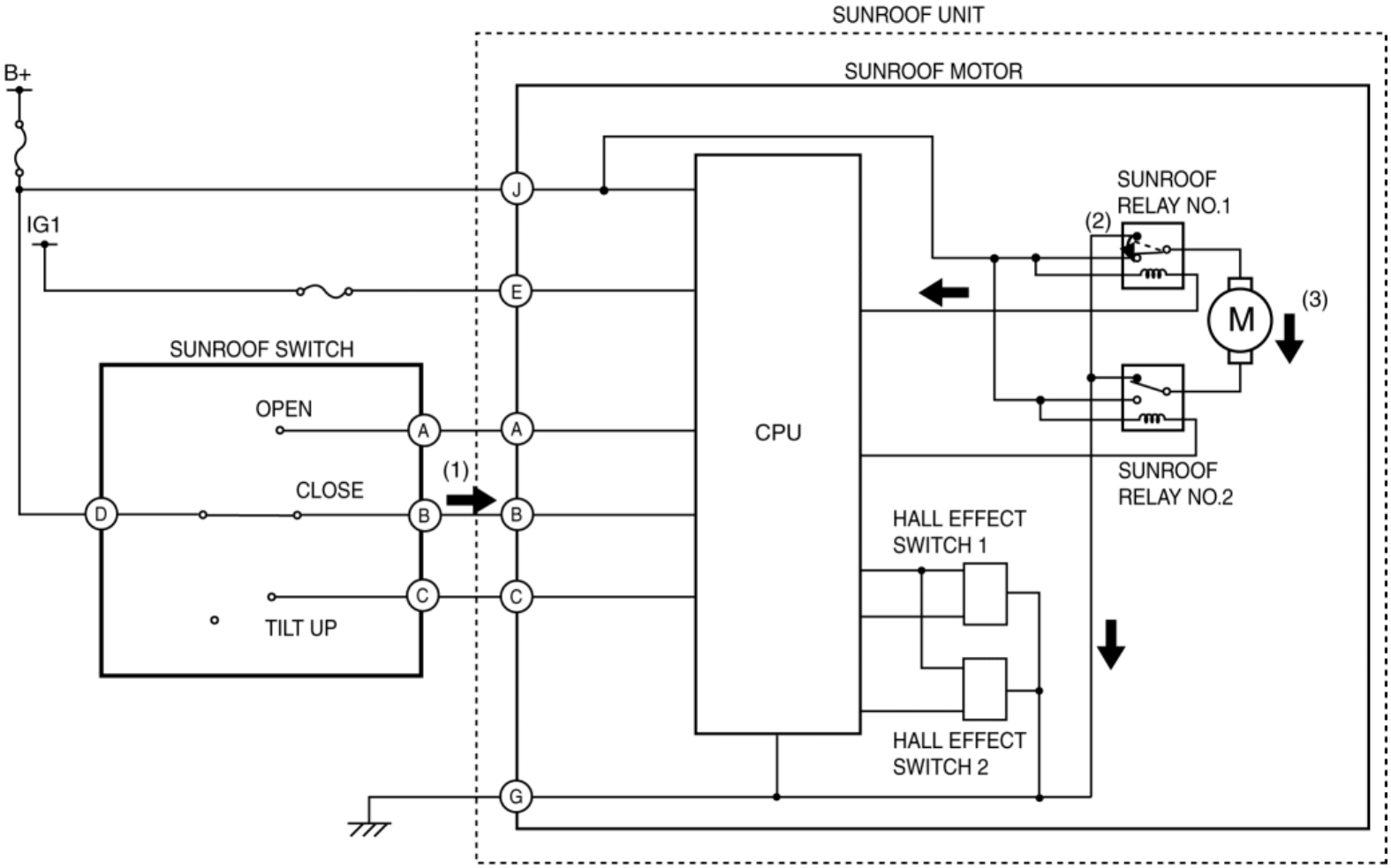
SUNROOF UNIT
SUNROOF MOTOR
B+
IG1
J
E
A
B
C
G
D
SUNROOF SWITCH
OPEN
CLOSE
TILT UP
(1)
CPU
SUNROOF
RELAY NO.1
(2)
M
(3)
SUNROOF
RELAY NO.2
HALL EFFECT
SWITCH 1
HALL EFFECT
SWITCH 2

2014 - Mazda3 - Body and Accessories

SUNROOF UNIT

Purpose / Function

- The glass panel tilts up/down or slides open/closed by the operation of the sunroof unit.

Construction / Operation

- The drive cables inside the frame of the sunroof unit are engaged to the sunroof motor drive gear.
- When the sunroof motor rotates normally or in reverse, the drive cables operate in the same direction.
- The glass panel is fixed to the guides so that the panel moves by the drive cables sliding the guides.

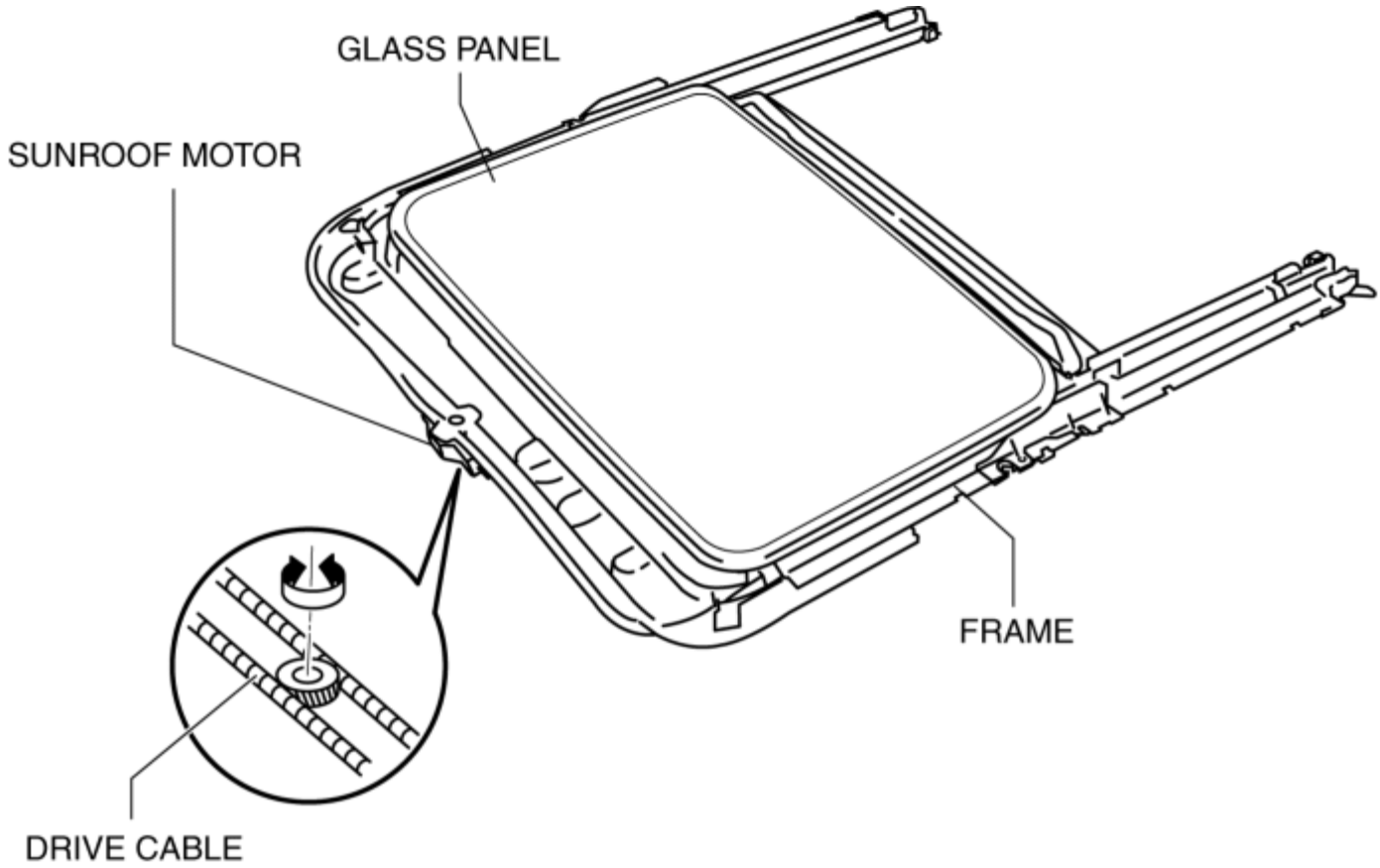

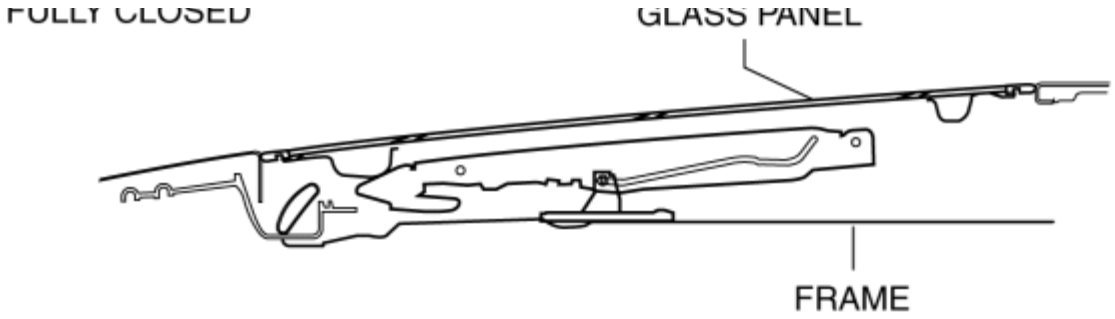

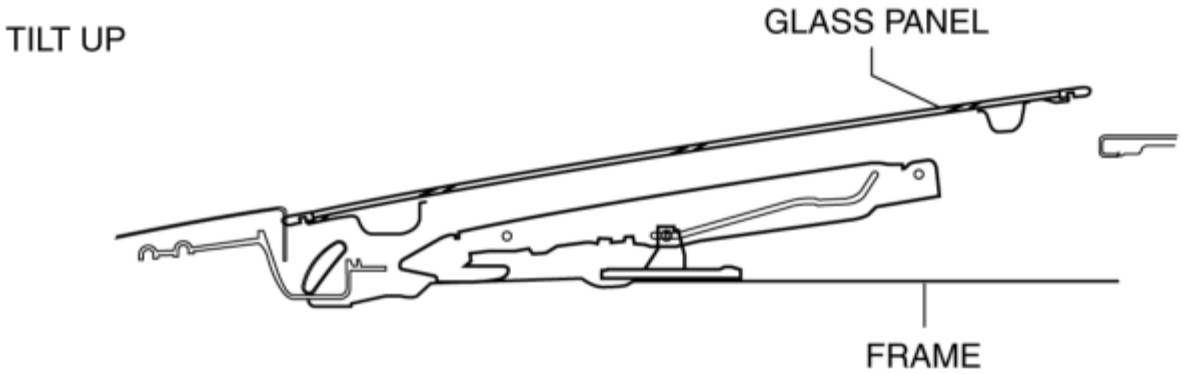

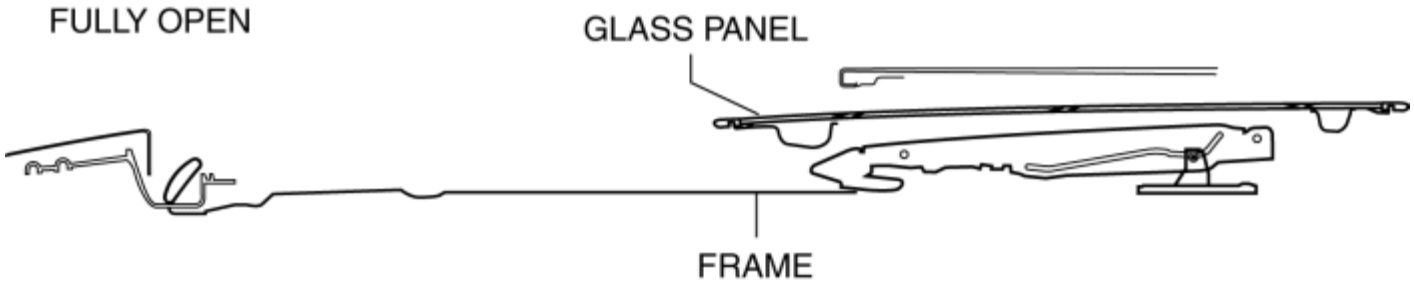

Fail-safe

- Function not equipped.

2014 - Mazda3 - Body and Accessories

SUNROOF MOTOR

Purpose / Function

- The sunroof motor transmits drive force to the drive cables.
- When the sunroof motor rotates normally or in reverse, the tilt up and open/close of the glass panel operates.

Construction / Operation

- The sunroof motor built-in the following parts:
    - CPU
    - Hall effect switch
    - Sunroof relay
    - Motor shaft
    - Gear
- Two Hall effect switches are provided in the control part.
- The control module detects the rotation direction, speed and amount based on pulse signals from the two Hall effect switches, and controls the position and static load of the glass panel accordingly.

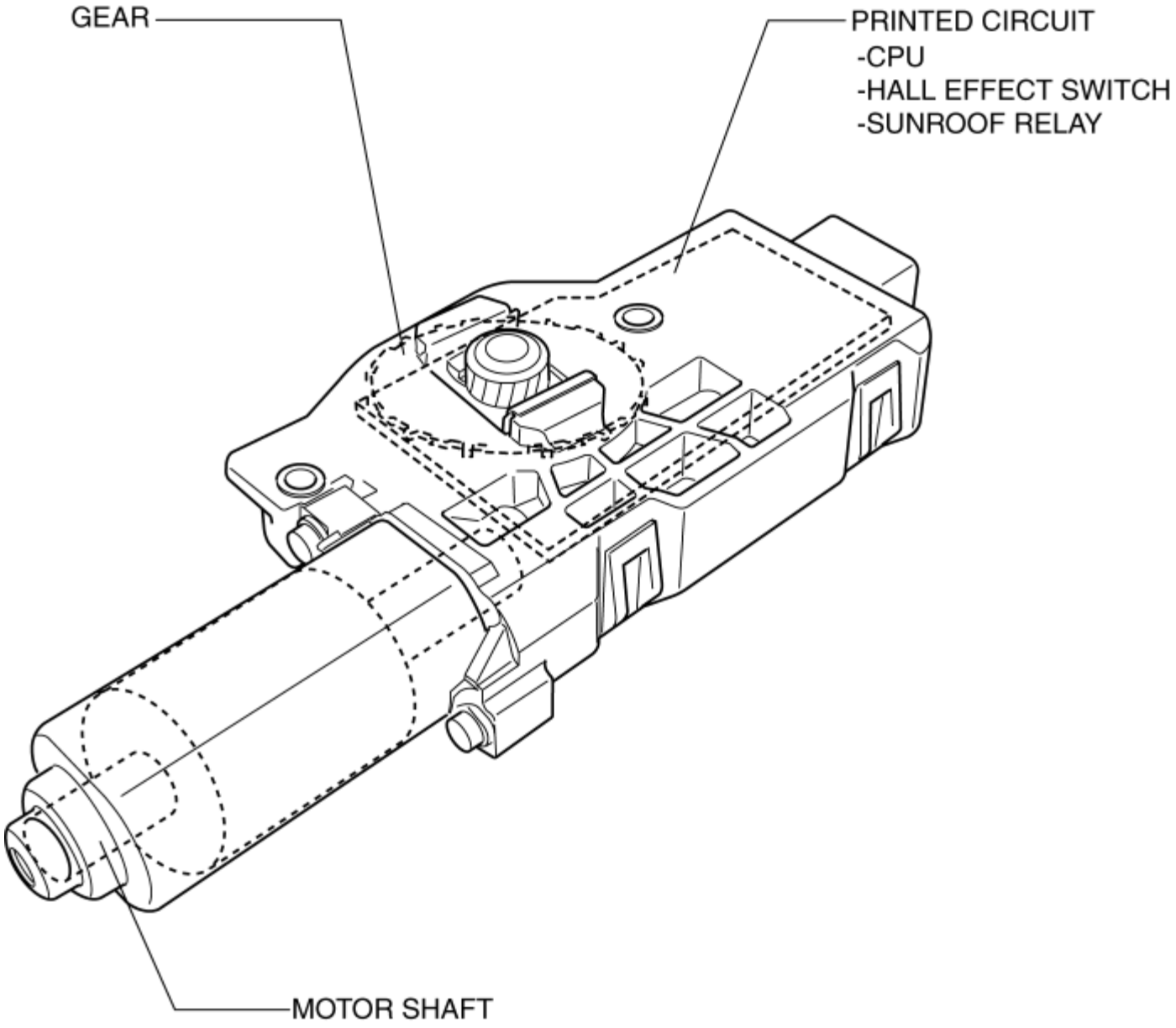

Fail-safe

- Function not equipped.

2014 - Mazda3 - Body and Accessories

EXTERIOR TRIM

Structure View

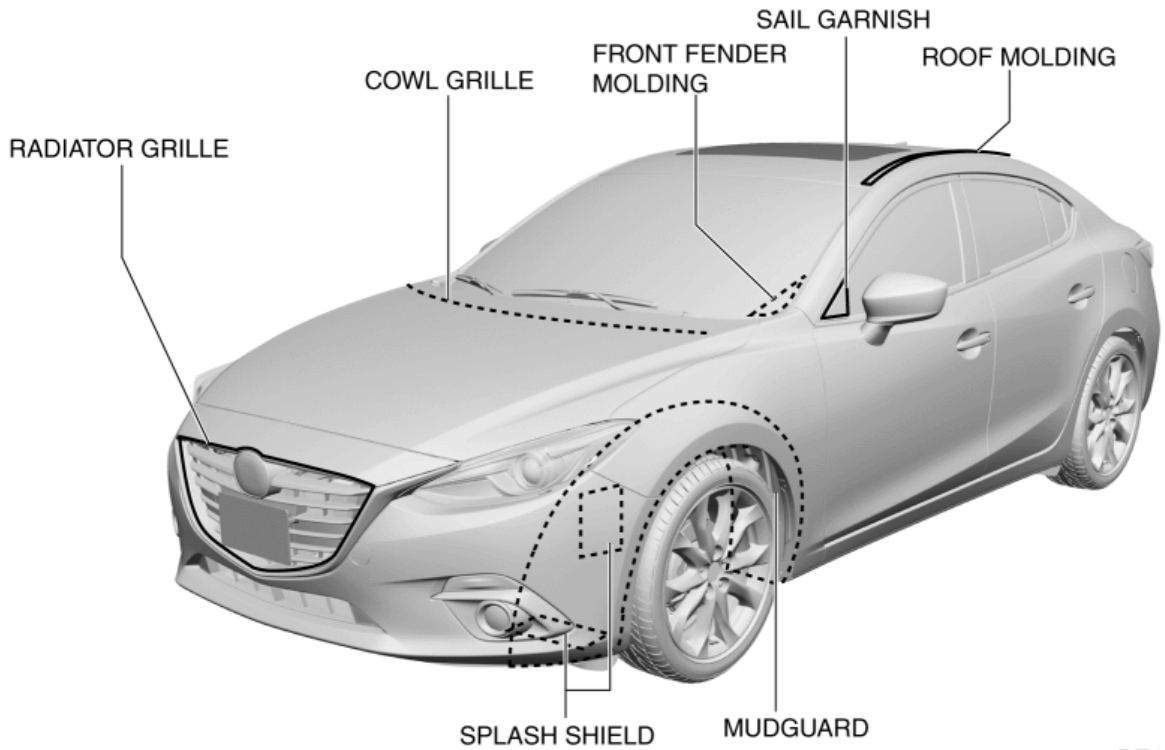

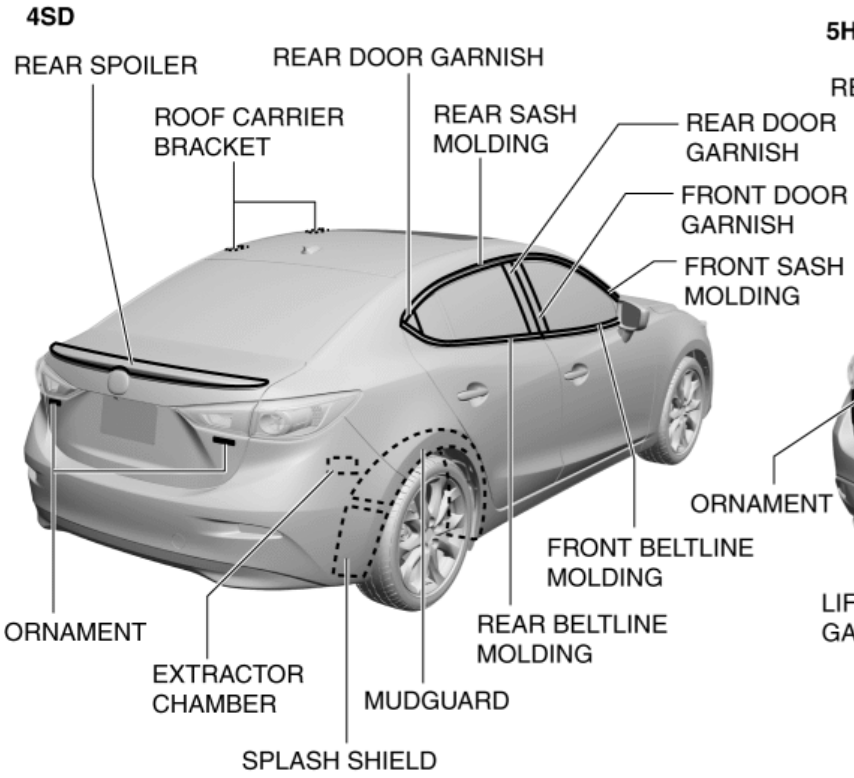

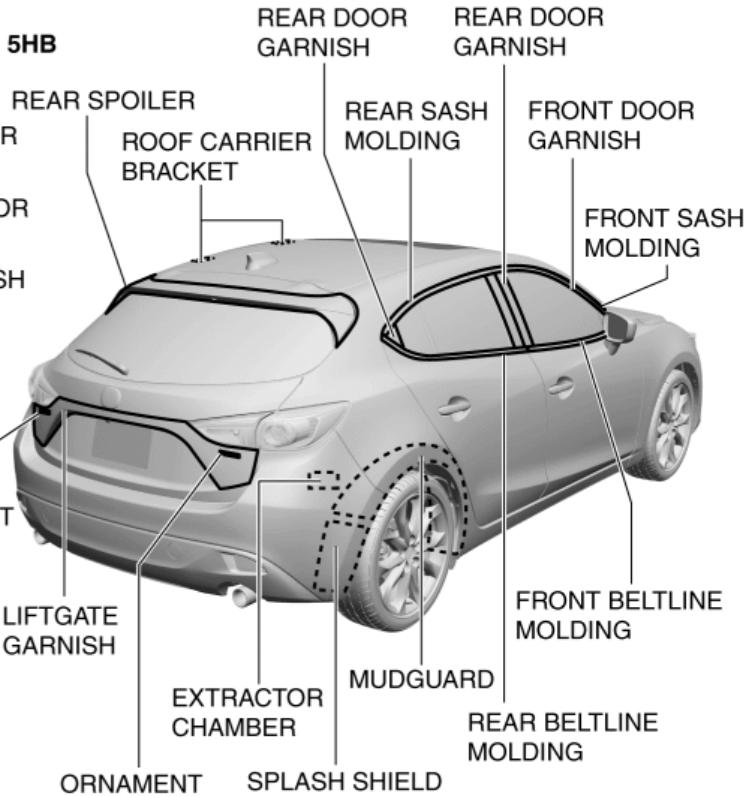

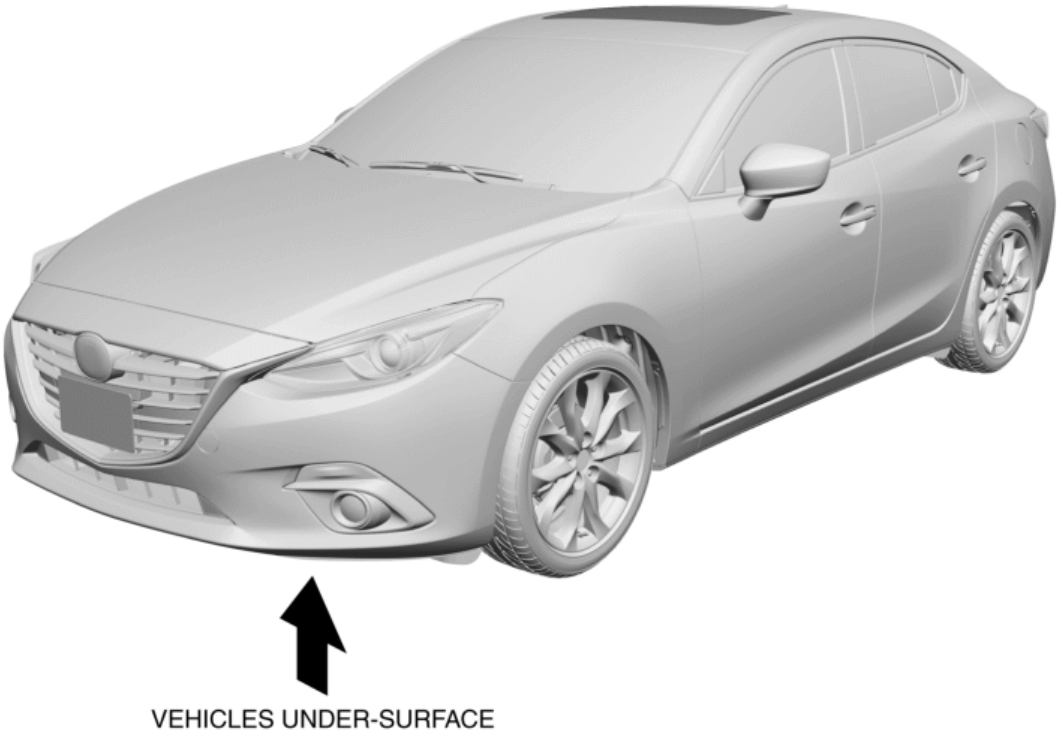

UNDERSIDE OF VEHICLE

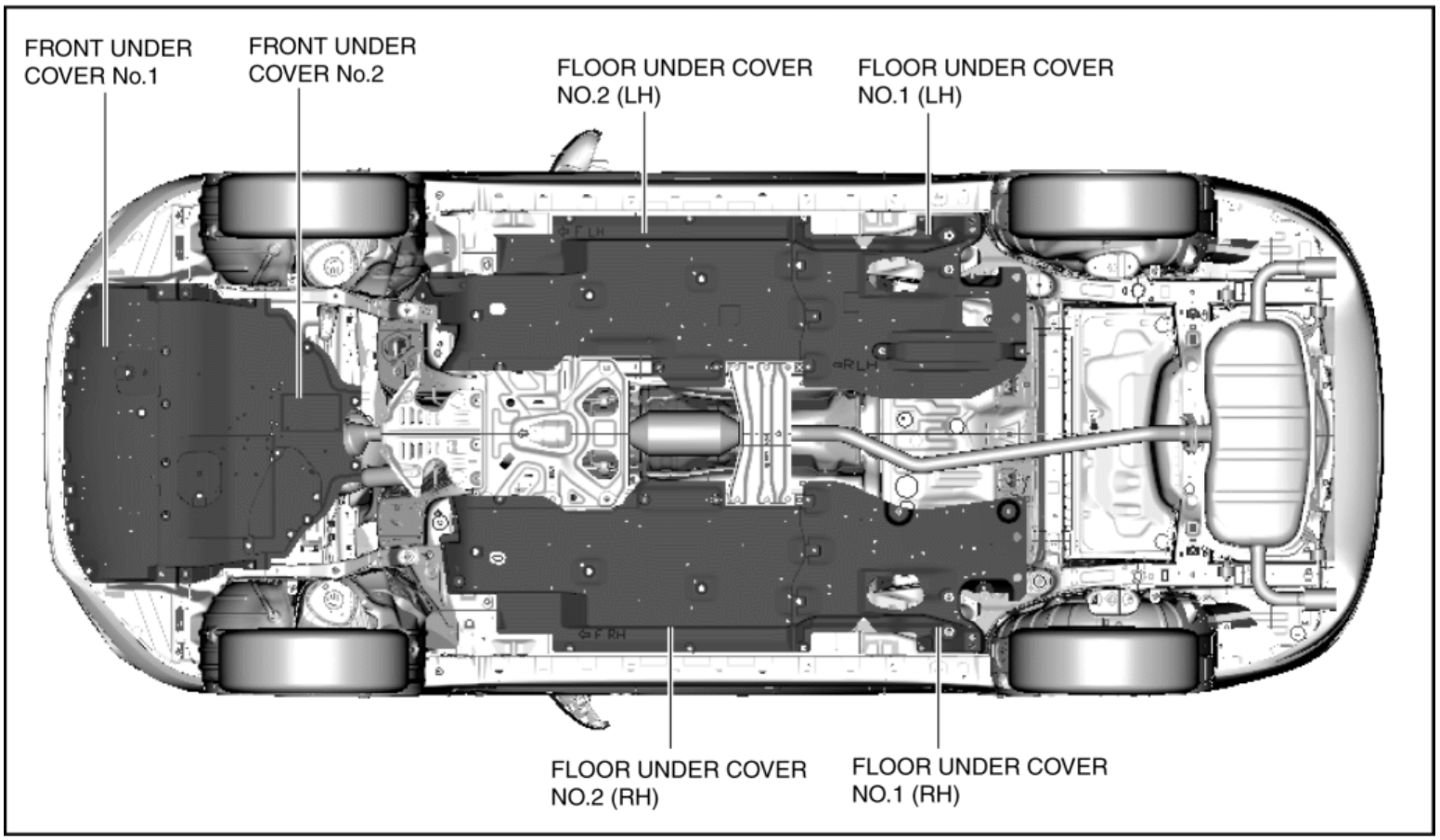

2014 - Mazda3 - Body and Accessories

AERODYNAMIC

Purpose, Function

- Undercovers have been adopted which flatten out the irregularities on the underside of the engine compartment and floor to rectify wind flowing under the vehicle while the vehicle is being driven.

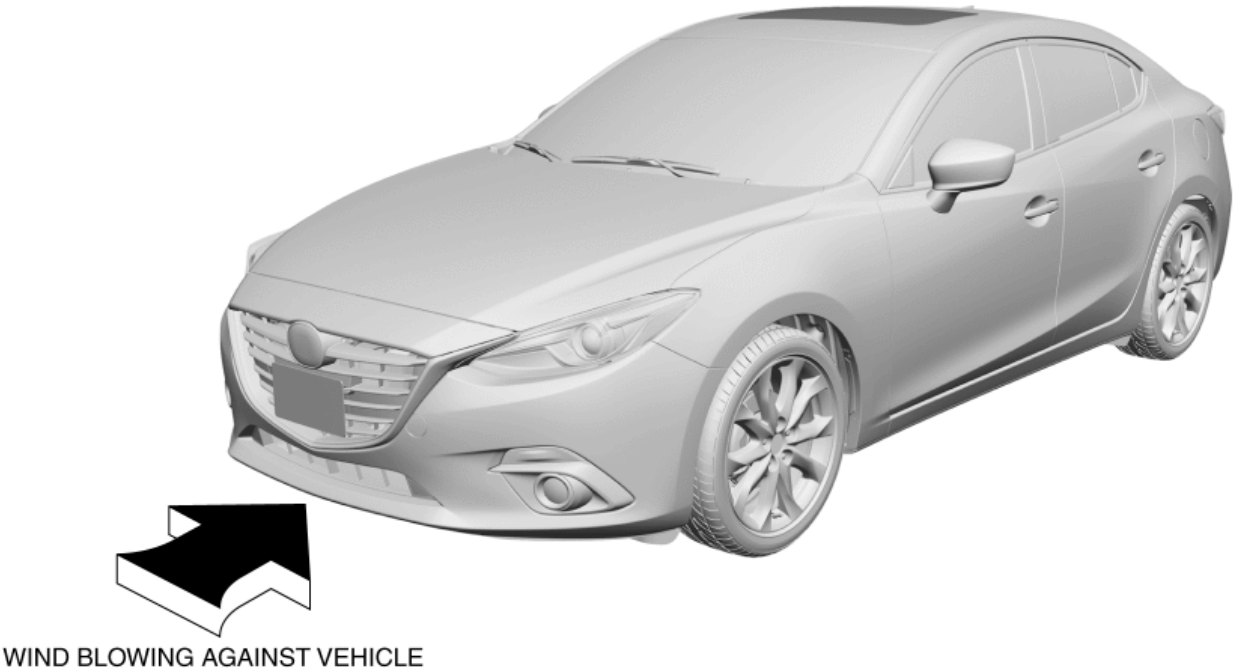

UNDERSIDE OF VEHICLE

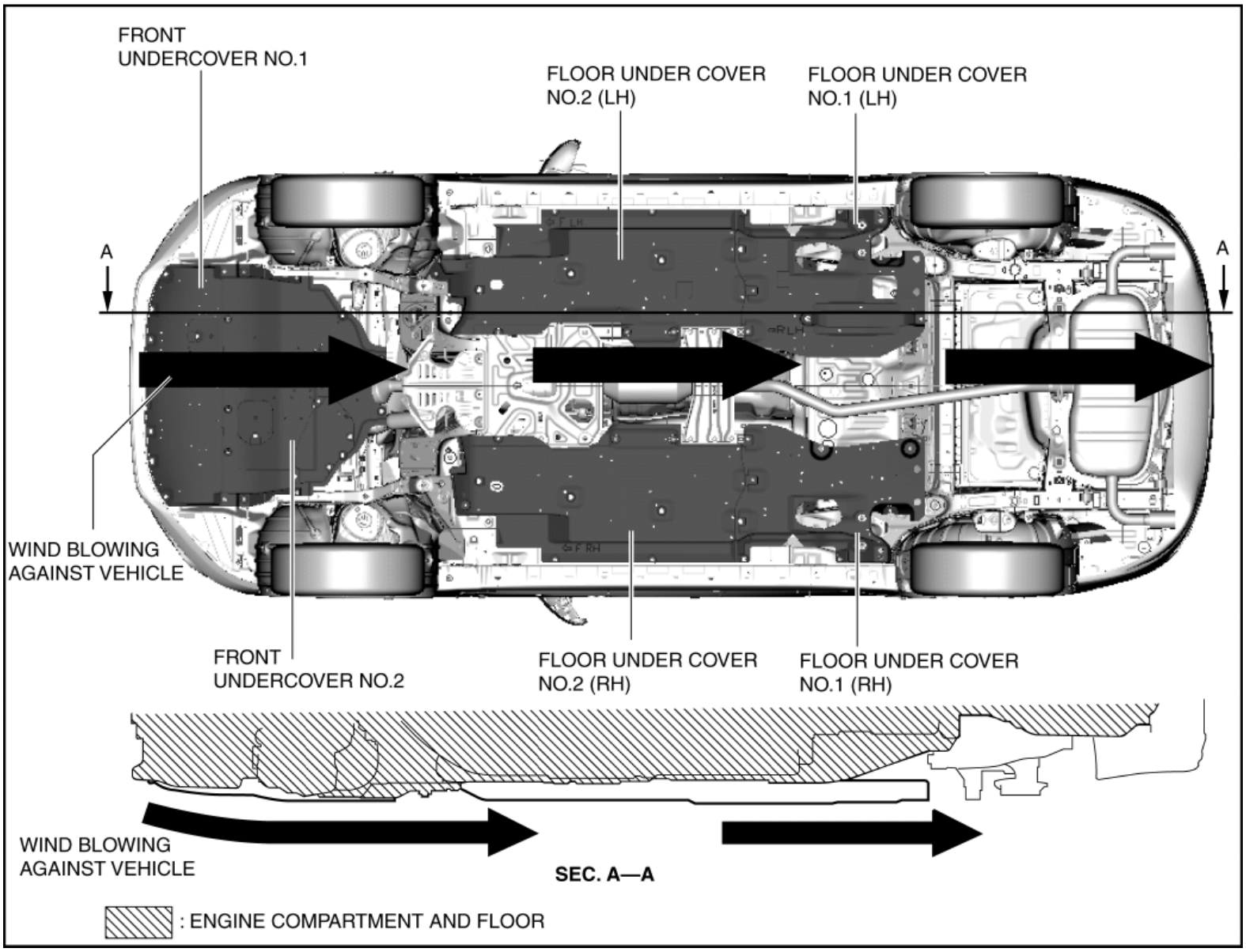

Construction

- The following 4 types of undercovers are equipped.
  - Front undercover No.1
  - Front undercover No.2
  - Floor under cover No.1
  - Floor under cover No.2

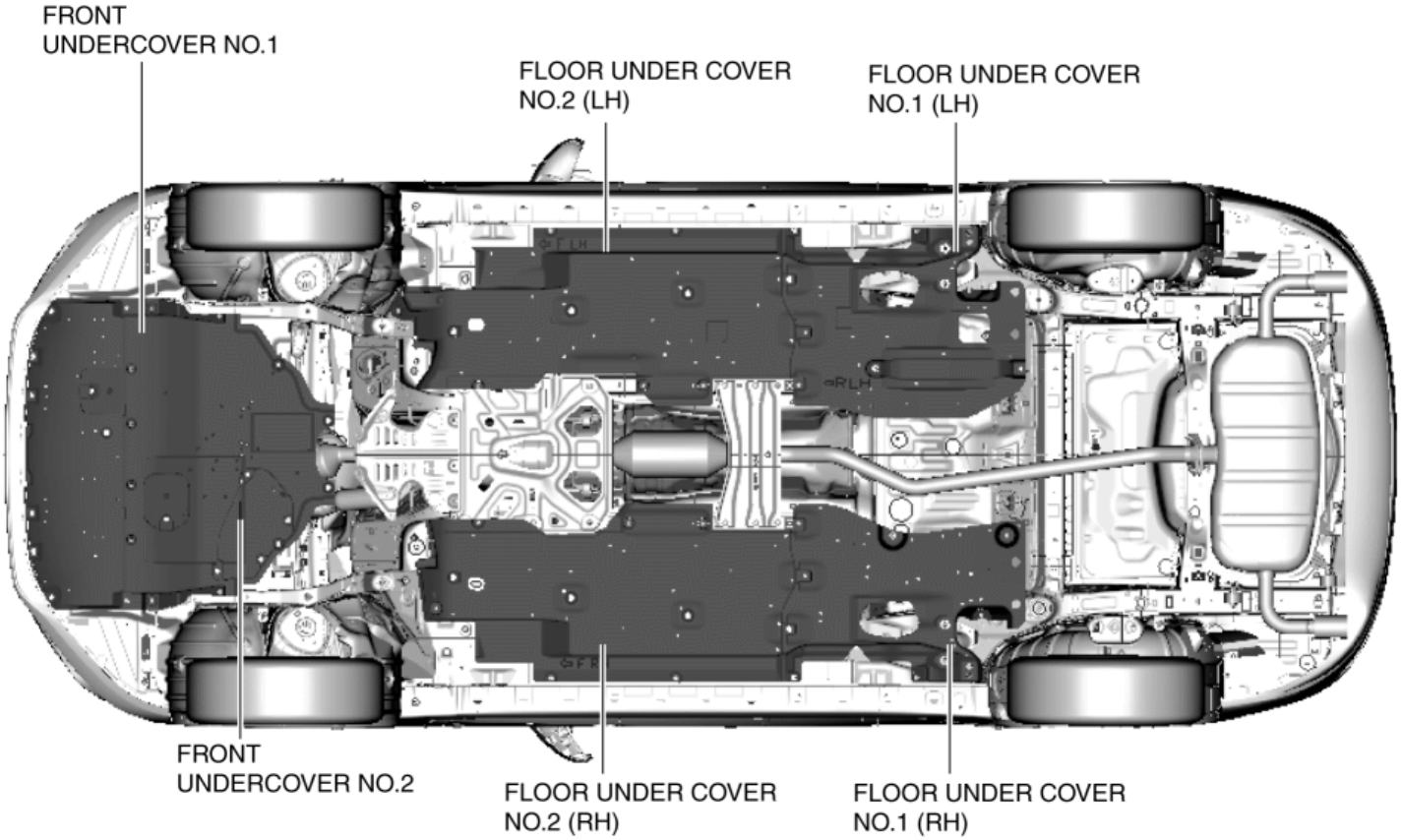

Fail-safe

- Function not equipped.

2014 - Mazda3 - Body and Accessories

INTERIOR TRIM

Structure View

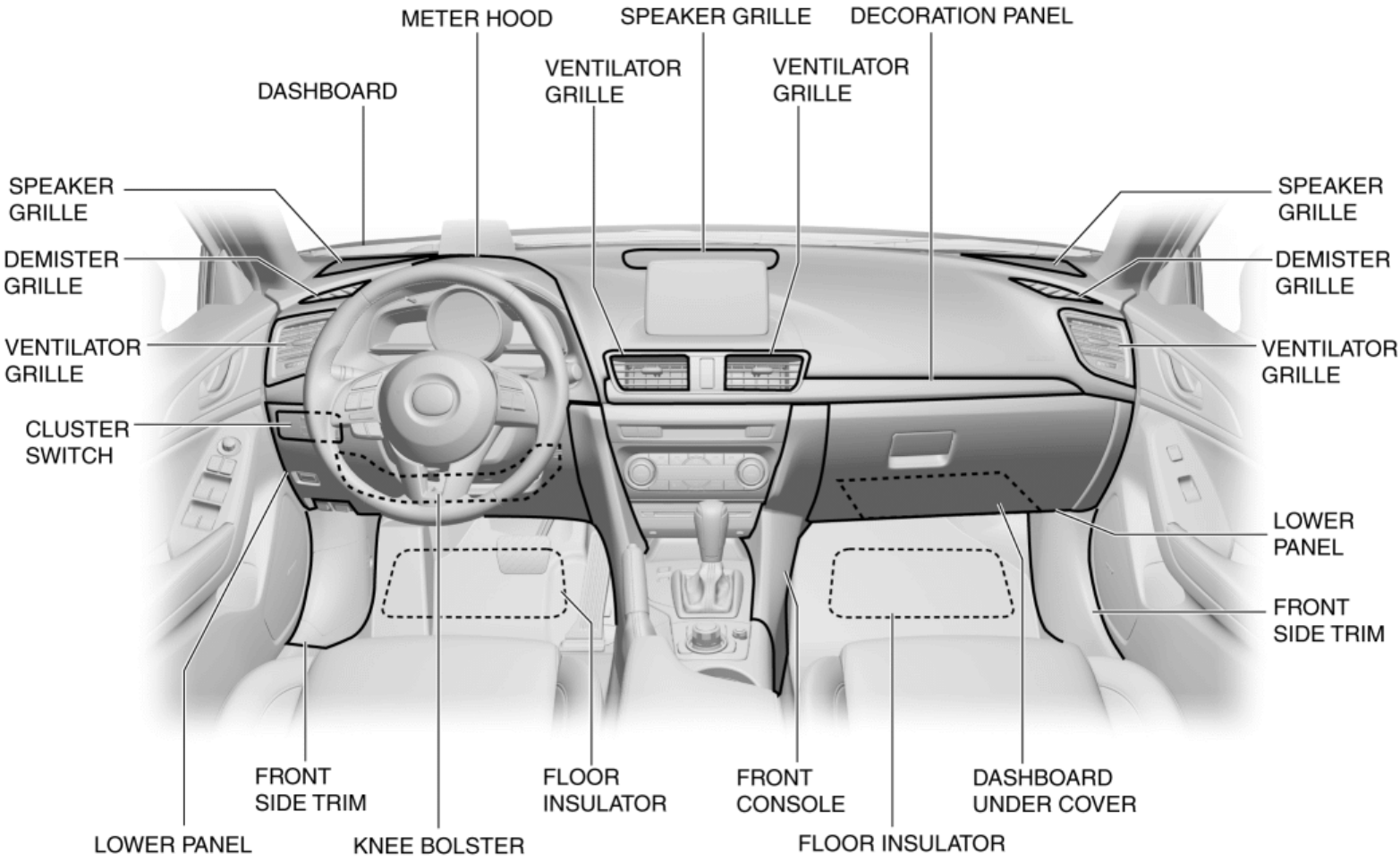

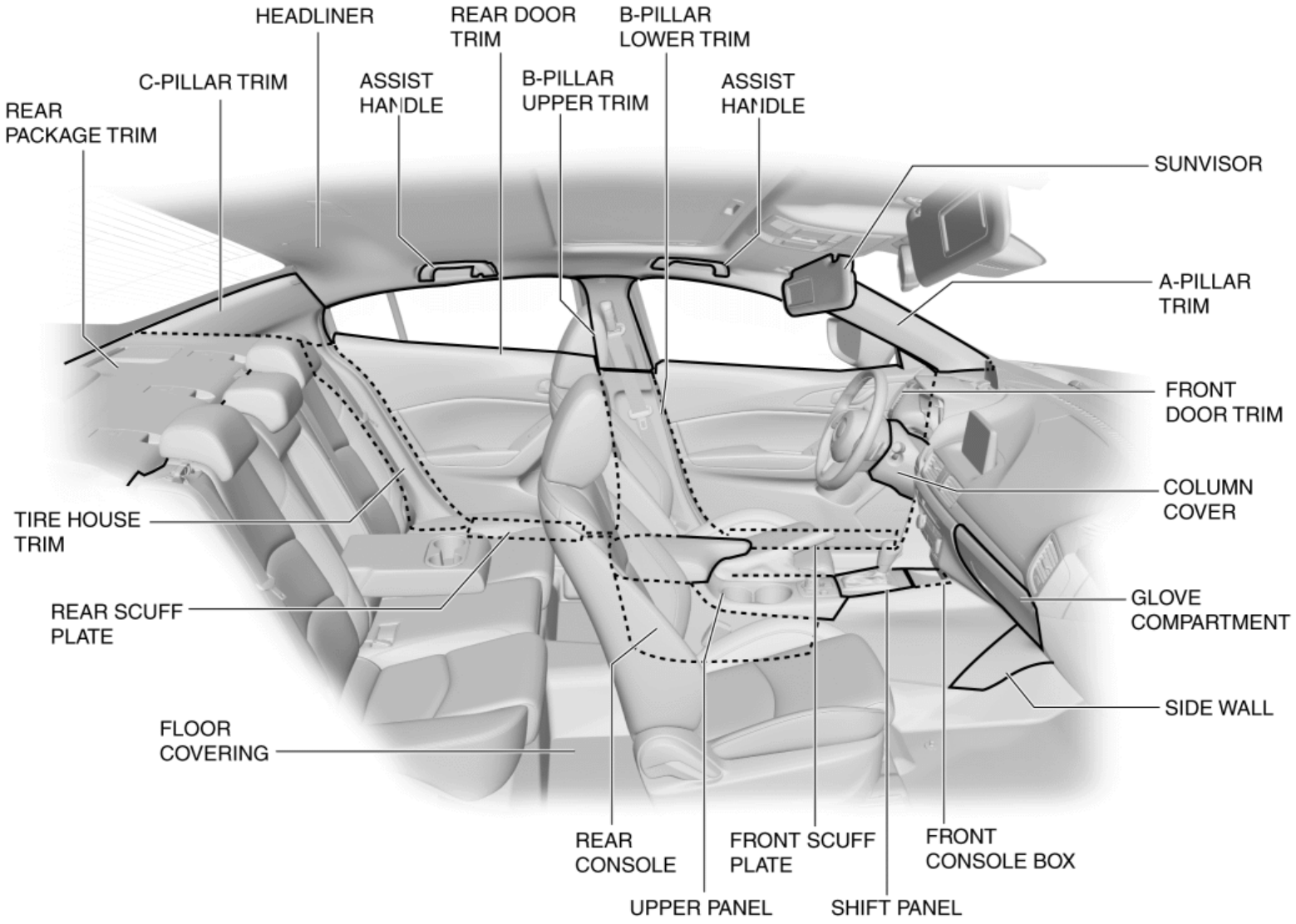
HEADLINER
REAR DOOR TRIM
B-PILLAR LOWER TRIM
C-PILLAR TRIM
ASSIST HANDLE
B-PILLAR UPPER TRIM
ASSIST HANDLE
REAR PACKAGE TRIM
SUNVISOR
A-PILLAR TRIM
FRONT DOOR TRIM
COLUMN COVER
TIRE HOUSE TRIM
REAR SCUFF PLATE
GLOVE COMPARTMENT
SIDE WALL
FLOOR COVERING
REAR CONSOLE
FRONT SCUFF PLATE
FRONT CONSOLE BOX
UPPER PANEL
SHIFT PANEL

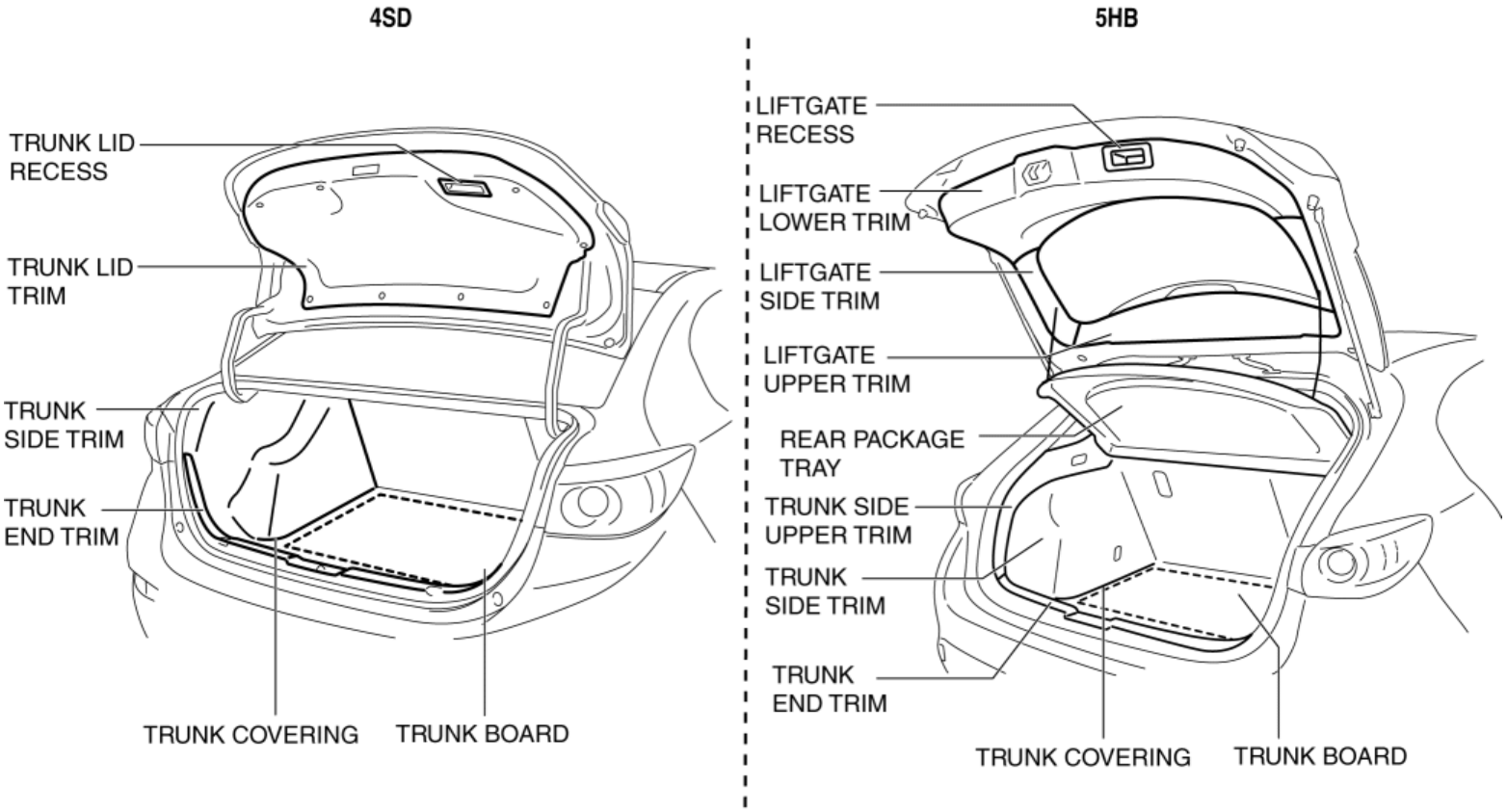
4SD
TRUNK LID RECESS
TRUNK LID TRIM
TRUNK SIDE TRIM
TRUNK END TRIM
TRUNK COVERING
TRUNK BOARD
5HB
LIFTGATE RECESS
LIFTGATE LOWER TRIM
LIFTGATE SIDE TRIM
LIFTGATE UPPER TRIM
REAR PACKAGE TRAY
TRUNK SIDE UPPER TRIM
TRUNK SIDE TRIM
TRUNK END TRIM
TRUNK COVERING
TRUNK BOARD

2014 - Mazda3 - Body and Accessories

FRONT CONSOLE BOX

Purpose, Function

- A front console box has been adopted which allows storage of small objects such as a smartphone.

Construction

- Effective vibration and sound absorbing material has been adopted on the front console box to reduce vibration and noise transmitted to small objects such as a smartphone.

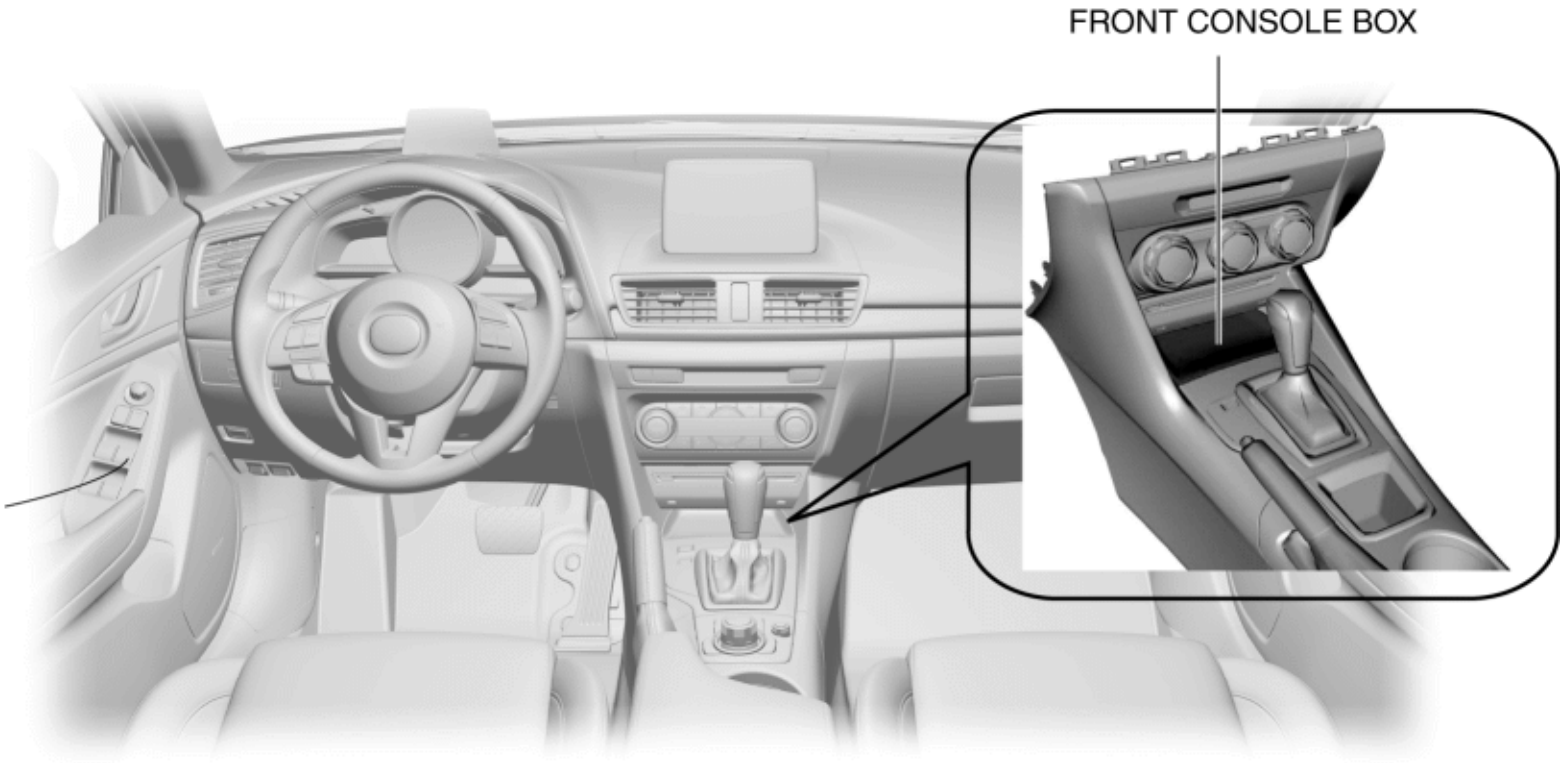

Fail-safe

- Function not equipped.

2014 - Mazda3 - Body and Accessories

REAR CONSOLE

Purpose, Function

- A rear console has been adopted which assures a storage space with a capacity of approx. 4.0 L. In addition, a storage box which allows storage of small objects such as a smartphone has been adopted.

Construction

- The rear console consists of the following parts.
    - Armrest
    - Parking brake lever
    - Cup holder
    - Storage box
- Sound absorbing material has been adopted on the storage box to reduce vibration and noise transmitted during travel to small objects such as a smartphone.

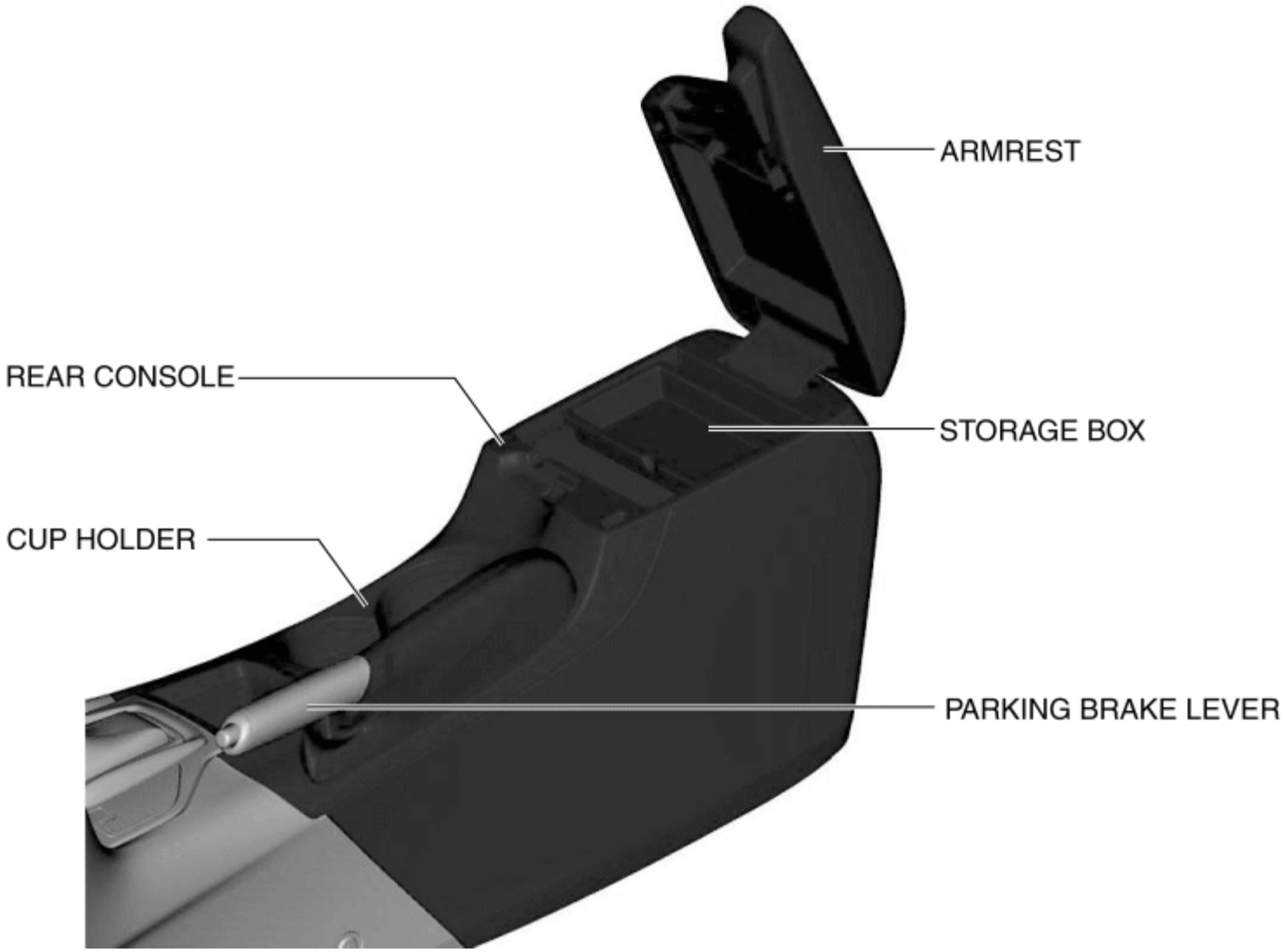

Fail-safe

- Function not equipped.

2014 - Mazda3 - Body and Accessories

DOOR TRIM

Purpose

- The door trim mediates impact to occupants in the event of a vehicle collision.

Function

- If an occupant hits the door trim, the slit in the armrest panel splits and the impact is mediated by the change in the shape of the hollow space in the armrest.

Construction

- A slit has been made in the door armrest panel.
- The interior of the door armrest panel has been hollowed.

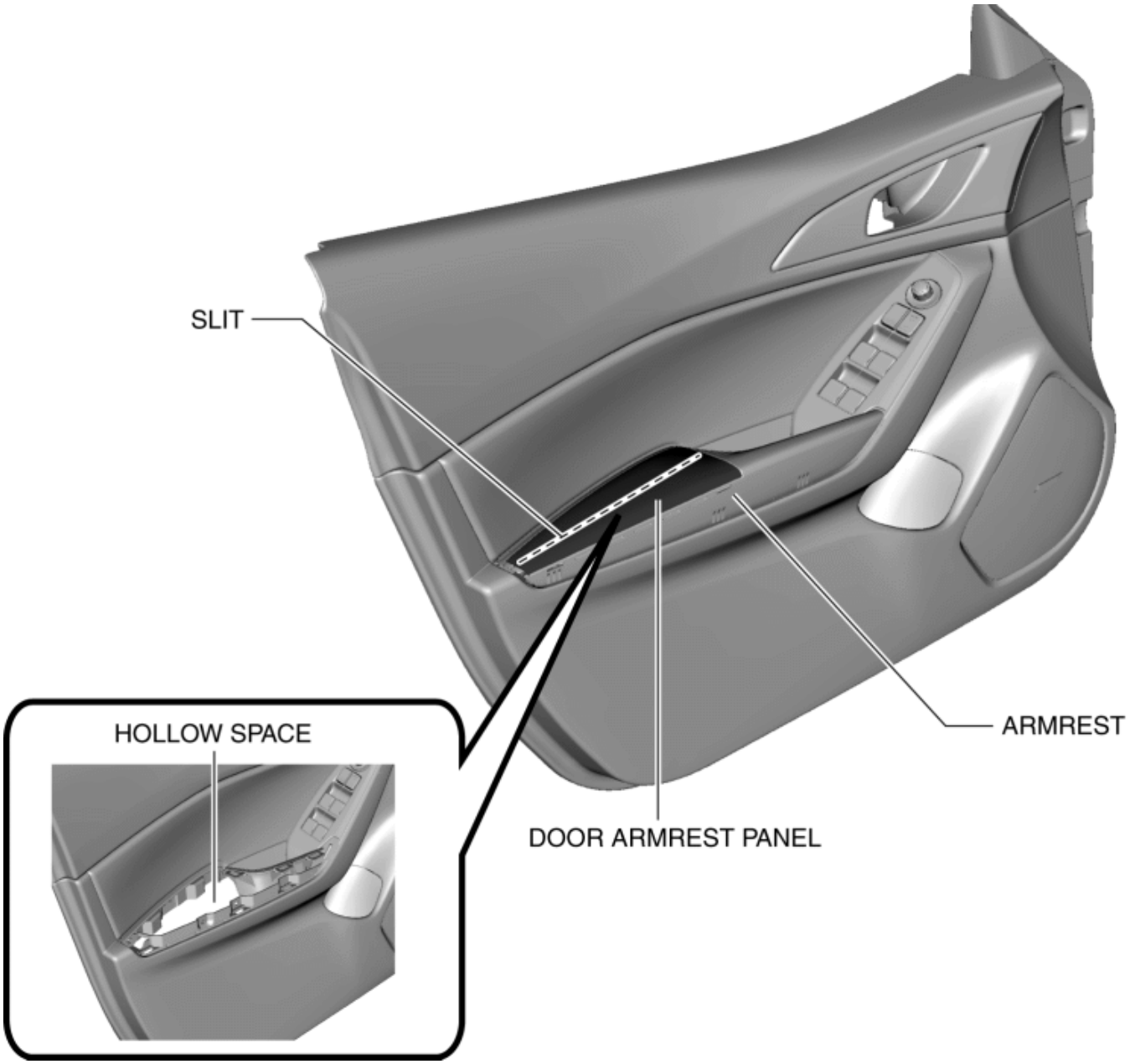

Fail-safe

- Function not equipped.

2014 - Mazda3 - Body and Accessories

TRUNK SIDE TRIM

Purpose, Function, Construction

- Fuel economy improvement and road noise reduction have been achieved by adopting lightweight, sound absorbing material to the trunk side trim (5HB) lower area.

Construction

Fail-safe

- Function not equipped.

TRUNK SIDE TRIM

2014 - Mazda3 - Body and Accessories

LIGHTING SYSTEMS

Outline

- Front combination lights have been adopted with parts related to the front exterior lights grouped and housed together.
- The following systems have been adopted to the headlights.
    - Discharge headlight system (With discharge headlight system)
    - Auto light system (With auto light system)
    - Headlight manual leveling system (With headlight manual leveling system)
    - Headlight auto leveling system (With headlight auto leveling system)
    - Adaptive front lighting system (AFS) (With adaptive front lighting system (AFS))
    - High beam control (HBC) system (With high beam control (HBC) system)
    - Auto light-off system
- Front fog lights have been adopted. (With front fog lights)
- LED type parking lights have been adopted. (With discharge headlight system)
- LED type side turn lights have been adopted. (With side turn light)
- LED type brake lights/taillights have been adopted. (With LED type brake light/taillight)
- LED type high-mount brake light has been adopted.
- A room light control system has been adopted in which illumination time and illumination level of the room lights change.

Specification

Item			Spec (W) × Quantity
Exterior	Headlight LO bulb	Halogen type	55 × 2
	Headlight HI bulb		60 × 2
	Headlight HI/LO bulb	Discharge type	35 × 2
	Front side marker light/parking light bulb (without discharge headlight system)		5 × 2
	Front side marker light bulb (with discharge headlight system)		5 × 2
	Parking light/DRL (LED)*1 (with discharge headlight system)		4 / 14
	Front turn light bulb		21 × 2
	Front fog light bulb		55 × 2
	Side turn light (LED)		0.6
	Rear turn light bulb		21 × 2

	Brake light/rear side marker light/taillight	Bulb type	21 / 5 × 2
		LED type*2	2.7 / 2.1
	Back-up light bulb	4SD	18 × 2
		5HB	21 × 2
	Taillight (LED) (trunk lid light (4SD)/liftgate light (5HB))		1.3
	High-mount brake light (LED)	Rear window glass: Clear glass (4SD)	1.8
		Rear window glass: Dark tinted glass (4SD)	2.4
		5HB	1.8
	License plate light bulb		5 × 2
Interior	Front map light bulb	Dual light type	8 × 2
		Single light type	10 × 1
	Rear map light bulb		10 × 1
	Trunk compartment light bulb (4SD)		3 × 1
	Cargo compartment light bulb (5HB)		5 × 1
	Vanity mirror illumination bulb		2 × 2

*1

The LED for the parking light cannot be replaced separately. If there is any malfunction in the LED, replace the front combination light as a single unit.

*2

The LED for the LED type brake light/rear side marker light/taillight cannot be replaced separately. If there is any malfunction in the LED, replace the rear combination light as a single unit.

Structural View

Exterior

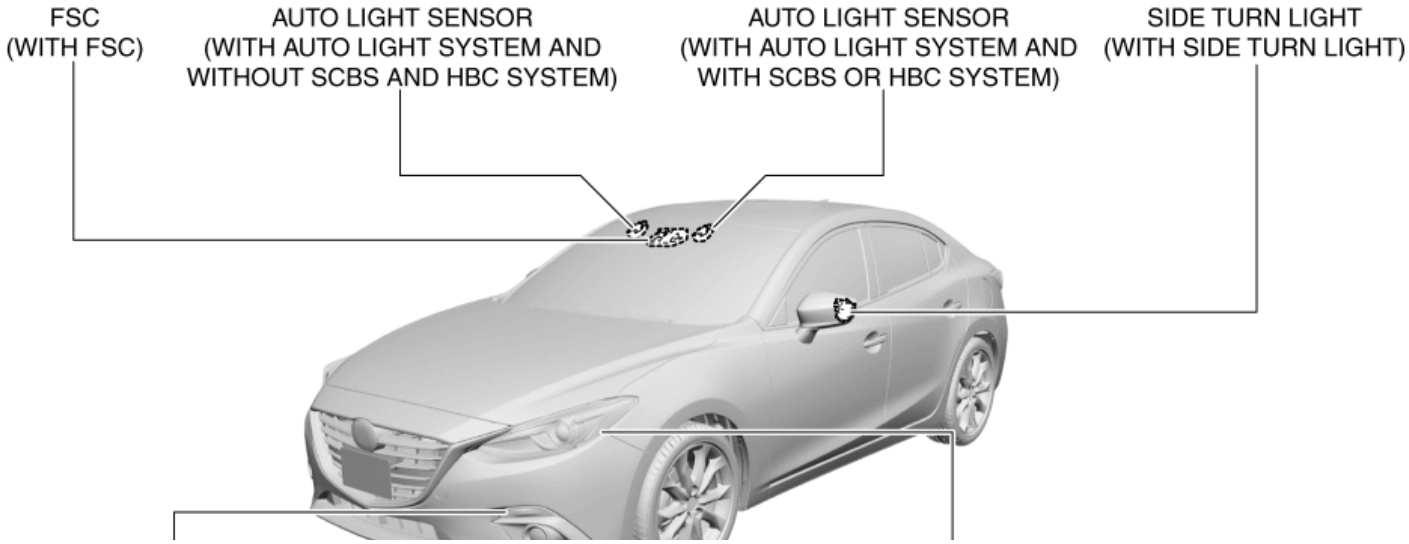

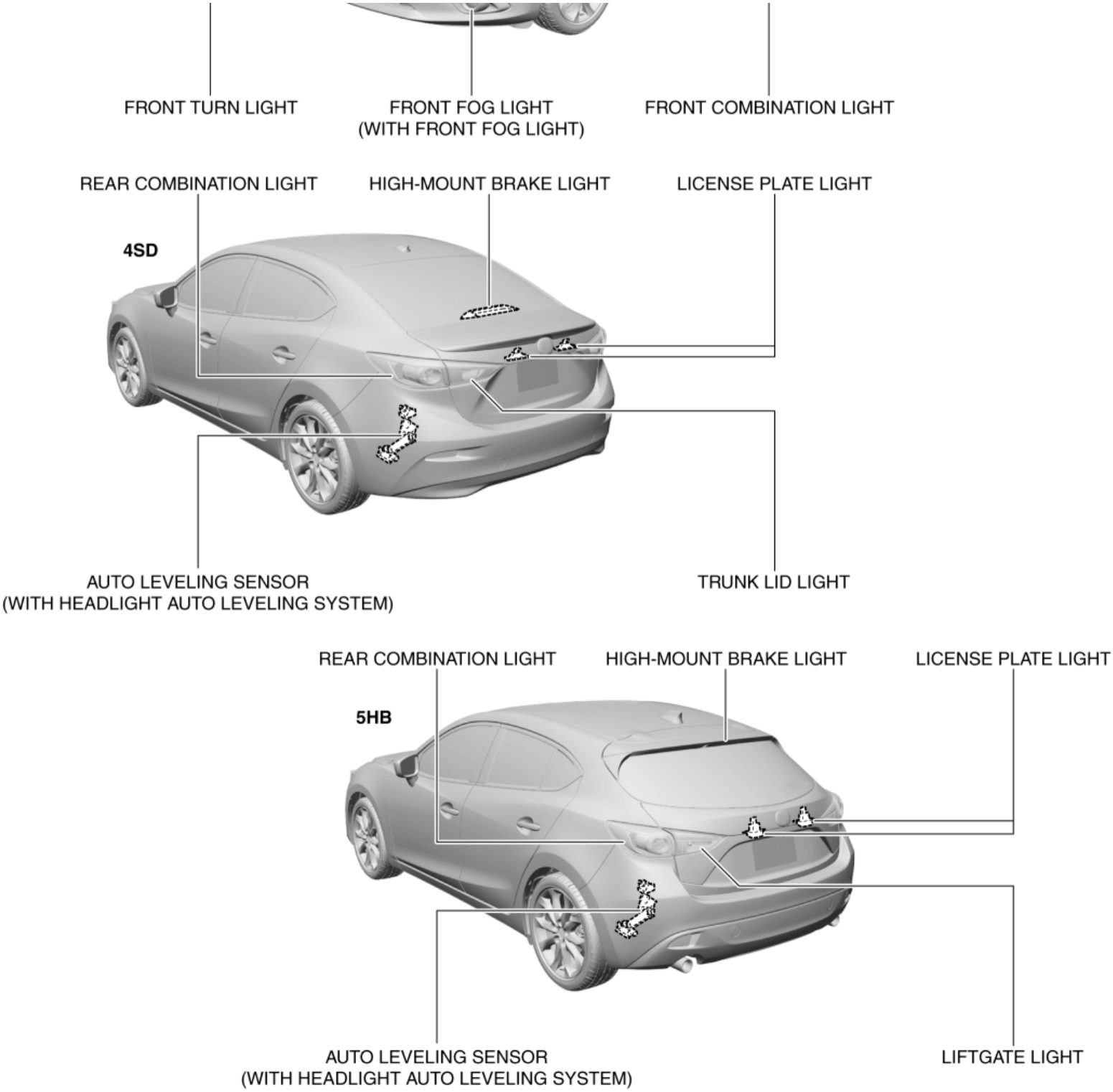
FRONT TURN LIGHT
FRONT FOG LIGHT
(WITH FRONT FOG LIGHT)
FRONT COMBINATION LIGHT
REAR COMBINATION LIGHT
HIGH-MOUNT BRAKE LIGHT
LICENSE PLATE LIGHT
4SD
AUTO LEVELING SENSOR
(WITH HEADLIGHT AUTO LEVELING SYSTEM)
TRUNK LID LIGHT
REAR COMBINATION LIGHT
HIGH-MOUNT BRAKE LIGHT
LICENSE PLATE LIGHT
5HB
AUTO LEVELING SENSOR
(WITH HEADLIGHT AUTO LEVELING SYSTEM)
LIFTGATE LIGHT

Interior

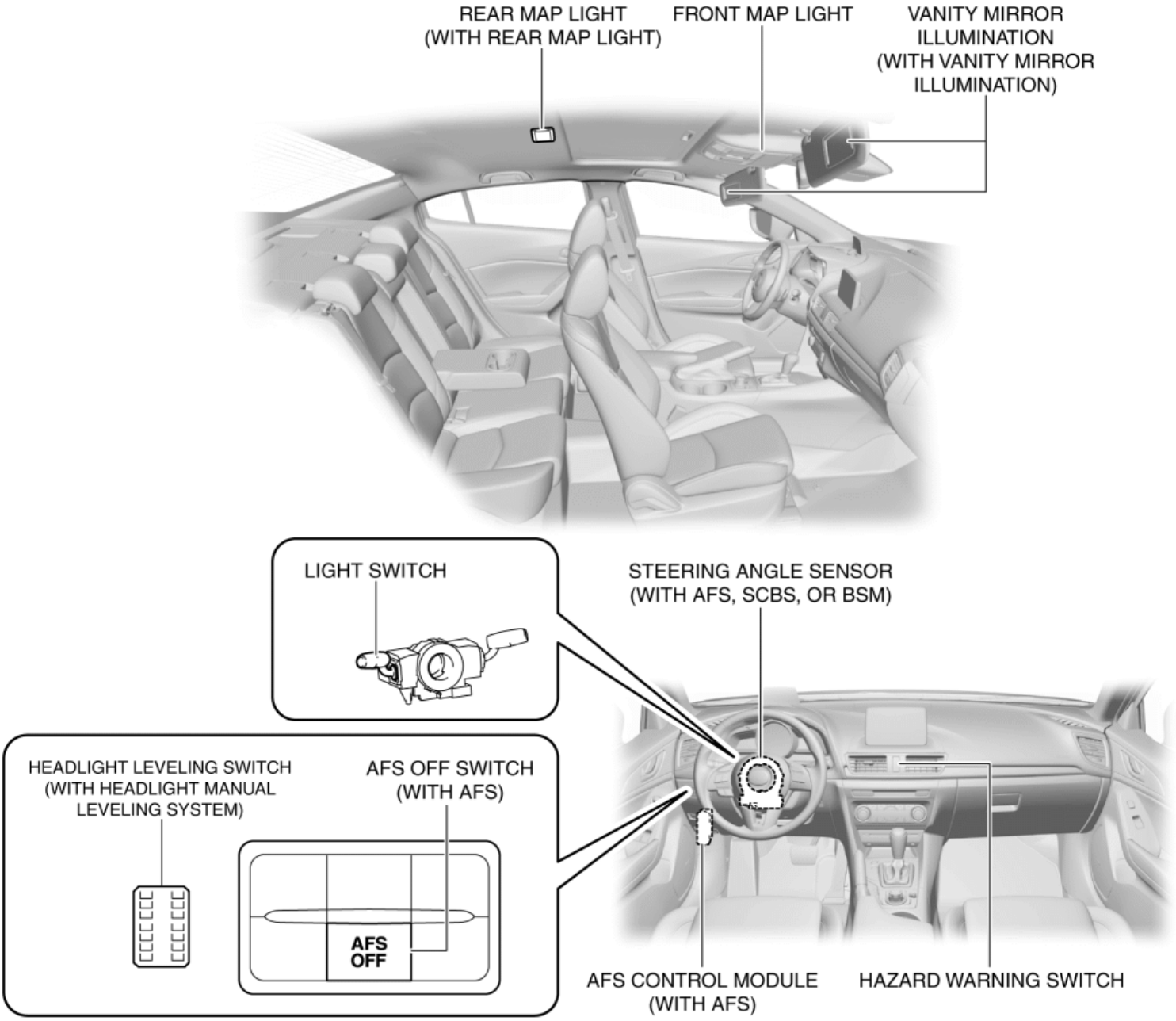
REAR MAP LIGHT
(WITH REAR MAP LIGHT)
FRONT MAP LIGHT
VANITY MIRROR
ILLUMINATION
(WITH VANITY MIRROR
ILLUMINATION)
LIGHT SWITCH
STEERING ANGLE SENSOR
(WITH AFS, SCBS, OR BSM)
HEADLIGHT LEVELING SWITCH
(WITH HEADLIGHT MANUAL
LEVELING SYSTEM)
AFS OFF SWITCH
(WITH AFS)
AFS
OFF
AFS CONTROL MODULE
(WITH AFS)
HAZARD WARNING SWITCH

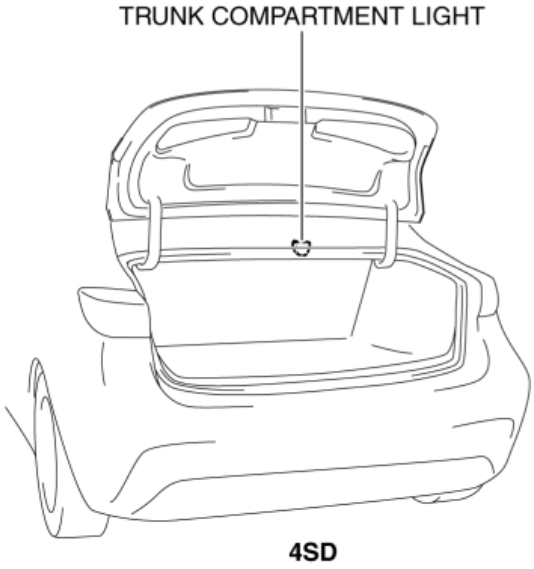
TRUNK COMPARTMENT LIGHT
4SD

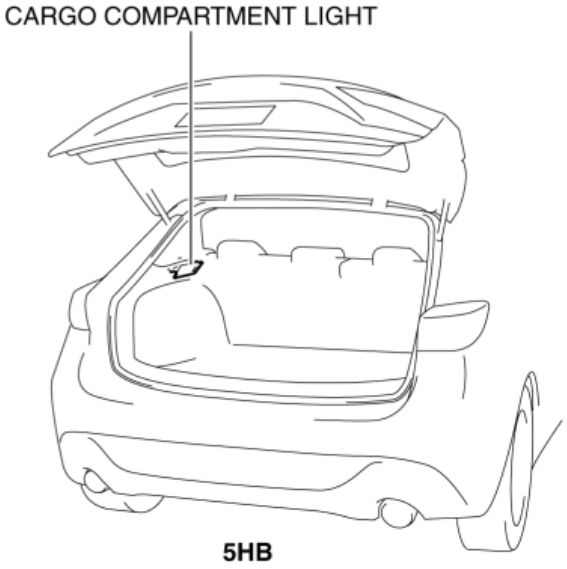
CARGO COMPARTMENT LIGHT
5HB

2014 - Mazda3 - Body and Accessories

LIGHTING SYSTEM PERSONALIZATION

- A personalization function has been adopted with which settings for each function can be changed.

Turn Light System

Using Mazda Modular Diagnostic System (M-MDS)

Mazda Modular Diagnostic System (M-MDS) display	Function	Initial setting	Setting contents	Control module
3-Flash Turn Signal.	The turn light system can be switched between operable and inoperable.	ON	Not Adopted./OFF/ON	Rear body control module (RBCM)

Using center display

Display of center display	Function	Initial setting	Setting contents	Control module
3-Flash Turn Signal	The turn light system can be switched between operable and inoperable.	On	On / Off	Rear body control module (RBCM)

Auto Light System

Using Mazda Modular Diagnostic System (M-MDS)

Mazda Modular Diagnostic System (M-MDS) display	Function	Initial setting	Setting contents	Control module
Auto-headlight On.	Auto light sensor sensitivity can be changed.	Medium	Not Adopted./Dark/Medium Dark/Medium/Medium Light/Light	Rear body control module (RBCM)

Using center display

Display of center display	Function	Initial setting	Setting contents	Control module
Auto-headlight On	Auto light sensor sensitivity can be changed.	Medium	Light / Medium Light / Medium / Medium Dark / Dark	Rear body control module (RBCM)

- Auto light sensitivity setting illuminates/turns off the headlights LO and TNS according to the following illumination level.

NOTE:

- The following illumination level is a reference. It varies depending on conditions in the surrounding area (weather, reflection off buildings).

Setting contents	**Illumination operation**	**Lights off operation**
	TNS ON	TNS OFF
	Headlights LO ON	Headlights LO OFF
Light	4,000 lux	8,000 lux
Medium Light	3,000 lux	6,000 lux
Medium	2,000 lux	4,000 lux
Medium Dark	1,000 lux	2,000 lux
Dark	500 lux	1,000 lux

Auto Light-Off System

Using Mazda Modular Diagnostic System (M-MDS)

Mazda Modular Diagnostic System (M-MDS) display	Function	Initial setting	Setting contents	Control module
Headlight Off Timer.	The headlight emitted time of the auto light off timer can be changed.	30 seconds.	Not Adopted./0 seconds./30 seconds./60 seconds./90 seconds./120 seconds.	Rear body control module (RBCM)

Using center display

Display of center display	Function	Initial setting	Setting contents	Control module
Headlight Off Timer	The headlight emitted time of the auto light off timer can be changed.	30 seconds	120 seconds / 90 seconds / 60 seconds / 30 seconds / Off	Rear body control module (RBCM)

High Beam Control (HBC) System

Using Mazda Modular Diagnostic System (M-MDS)

Mazda Modular Diagnostic System (M-MDS) display	Function	Initial setting	Setting contents	Control module
High Beam Control.	The high beam control (HBC) system can be switched between operable and inoperable.	ON	Not Adopted./OFF/ON	Forward sensing camera (FSC)

Using center display

Display of center display	Function	Initial setting	Setting contents	Control module
High Beam Control	The high beam control (HBC) system can be switched between operable and inoperable.	On	On / Off	Forward sensing camera (FSC)

Room Light Control System

Using Mazda Modular Diagnostic System (M-MDS)

Mazda Modular Diagnostic System (M-MDS) display	Function	Initial setting	Setting contents	Control module
Interior Light Timeout - Door Open.	• The front/rear map light illumination time after any door is opened can be changed. • The trunk compartment light (4SD)/cargo compartment light (5HB) illumination time after the trunk lid (4SD)/liftgate (5HB) is opened can be changed.	30 minutes.	Not Adopted./30 minutes./60 minutes./10 minutes.	Rear body control module (RBCM)
Interior Light Timeout - Door Closed.	The front/rear map light illumination time after all the doors are closed can be changed.	15 seconds.	Not Adopted./15 seconds./7.5 seconds./30 seconds./60 seconds.	Rear body control module (RBCM)

Using center display

Display of center display	Function	Initial setting	Setting contents	Control module

Interior Light Timeout - Door Open	• The front/rear map light illumination time after any door is opened can be changed. • The trunk compartment light (4SD)/cargo compartment light (5HB) illumination time after the trunk lid (4SD)/liftgate (5HB) is opened can be changed.	30 minutes	60 minutes / 30 minutes / 10 minutes	Rear body control module (RBCM)
Interior Light Timeout - Door Closed	The front/rear map light illumination time after all the doors are closed can be changed.	15 seconds	60 seconds / 30 seconds / 15 seconds / 7.5 seconds	Rear body control module (RBCM)

DRL System (Except Canada Specs.)

NOTE:

- Refer to the workshop manual for the detailed setting procedure.

Function	Initial setting	Setting contents	Control module
The DRL system function can be set.	On (DRL illumination)	Off (DRL non-illumination)/On (DRL illumination)	Front body control module (FBCM)

2014 - Mazda3 - Body and Accessories

EXTERIOR LIGHTING SYSTEM

Outline

- Projector type headlights have been adopted to the front combination lights.
- Auto light system has been adopted in which TNS and headlights automatically and optimally illuminate and turn off. (With auto light system)
- A high beam control (HBC) system has been adopted which automatically changes the headlights to low beams when it recognizes an oncoming vehicle, a vehicle ahead, or travel through city streets. (With high beam control (HBC) system)
- Discharge headlights that emit light over a wide area have been adopted. (With discharge headlight system)
- A headlight manual leveling system has been adopted which changes the headlight LO optical axis according to the operation of the headlight leveling switch. (With headlight manual leveling system)
- A headlight auto leveling system has been adopted which automatically adjusts the headlight optical axis up and down. (With headlight auto leveling system)
- An adaptive front lighting system (AFS) has been adopted which changes the optical axis to the direction in which the vehicle is moving according to the amount of steering operation. (With adaptive front lighting system (AFS))
- Front turn lights have been adopted in the front bumper.
- Front fog lights have been adopted in the front bumper. (With front fog lights)
- Outer mirrors with built-in front side turn lights have been adopted. (With side turn lights)
- LED type parking lights have been adopted. (With discharge headlight system)
- LED type side turn lights have been adopted. (With side turn lights)
- LED type brake lights/taillights have been adopted. (With LED type brake light/taillight)
- LED type high-mount brake light has been adopted.
- Secondary collision reduction (SCR) hazard warning light has been adopted.
- The front body control module (FBCM) performs exterior lighting system fail-safe. (See **FRONT BODY CONTROL MODULE (FBCM)**.)

Structural View

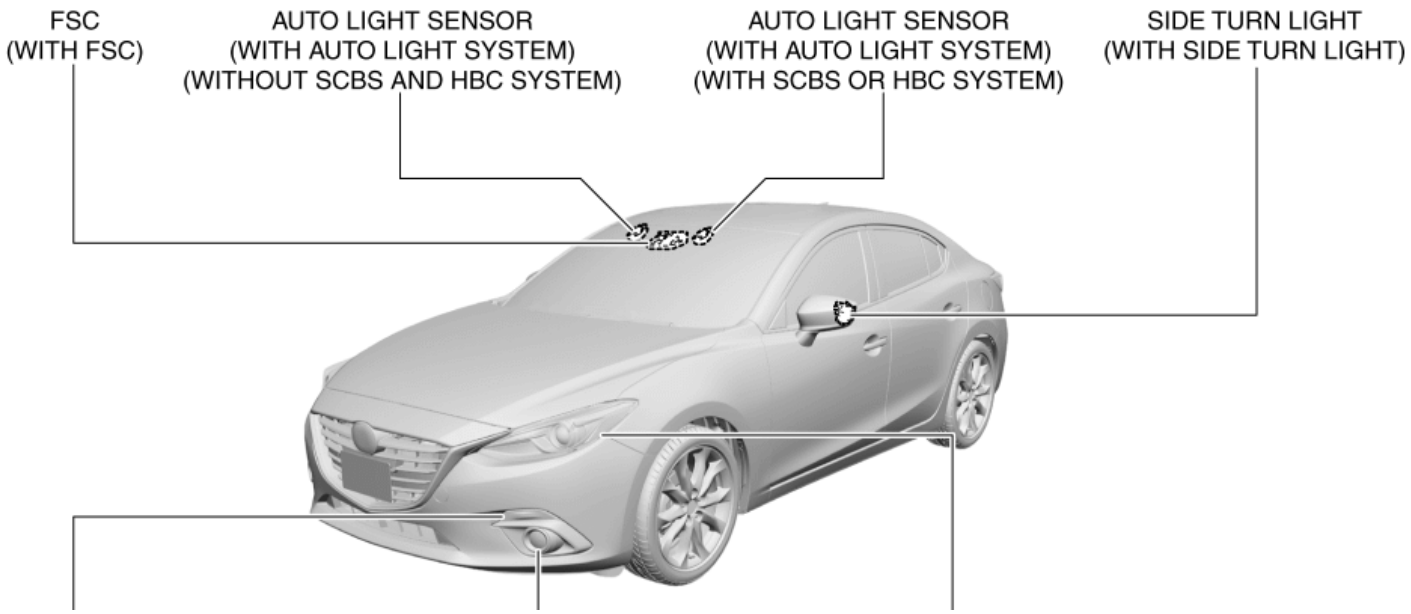

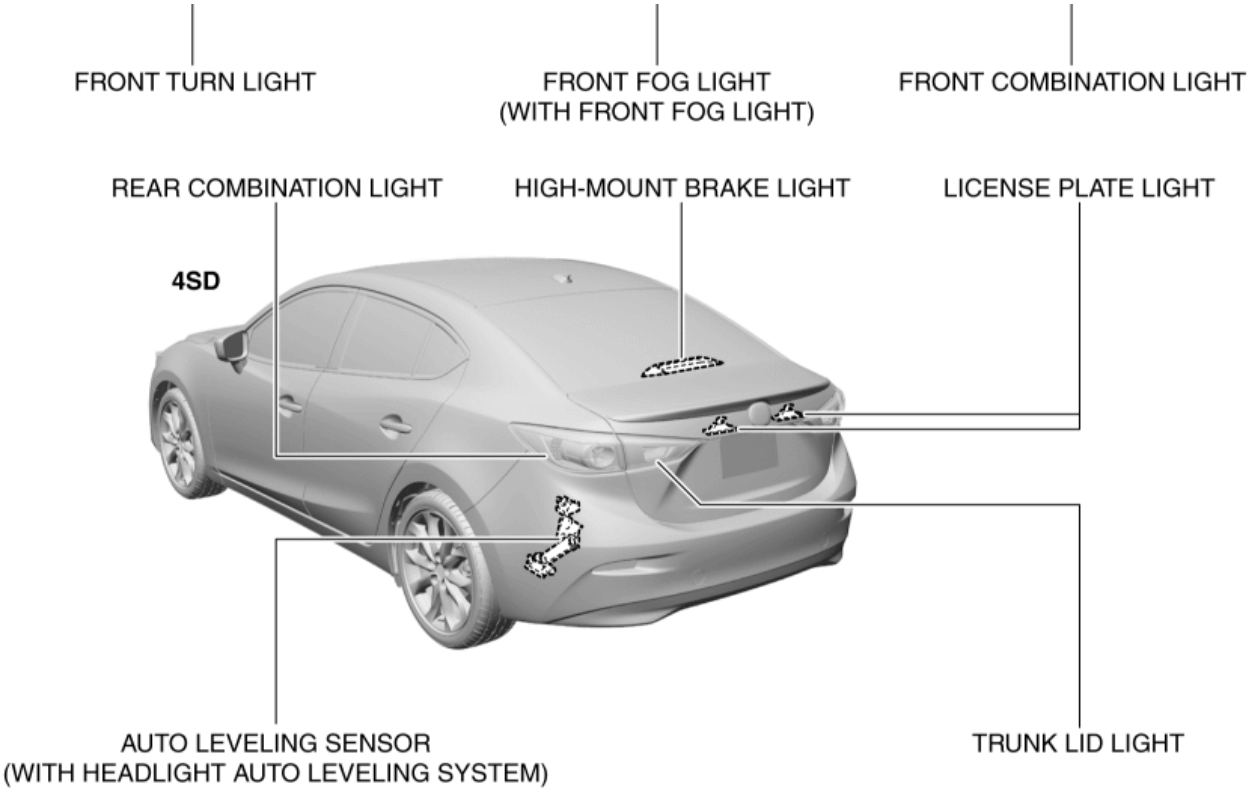

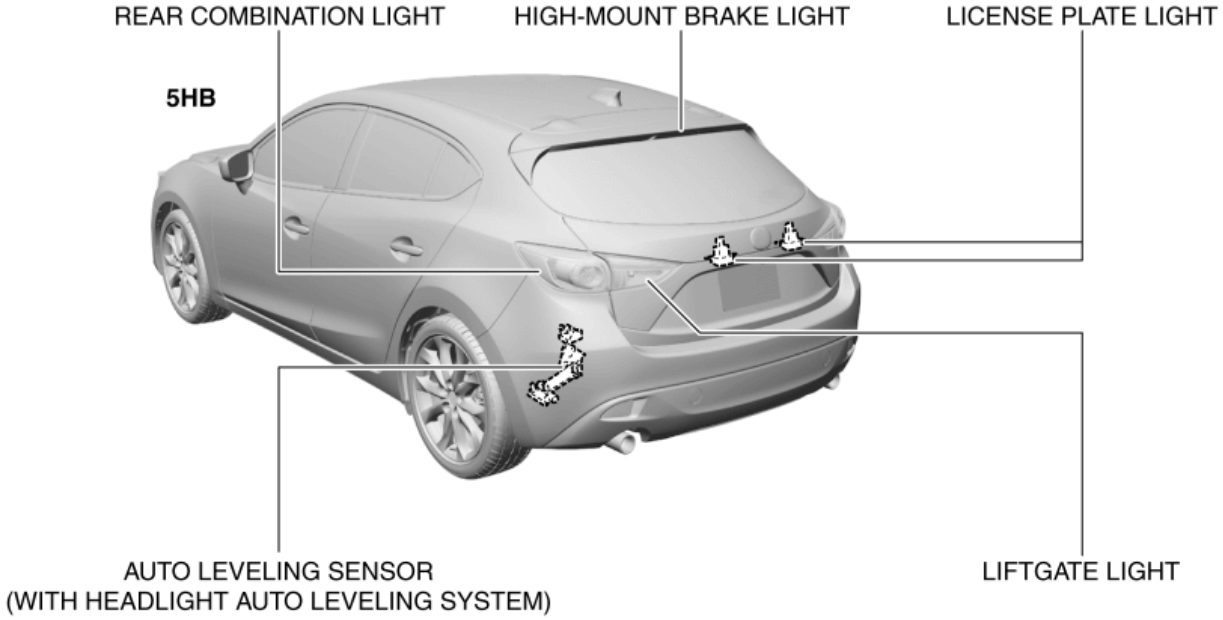

System Wiring Diagram

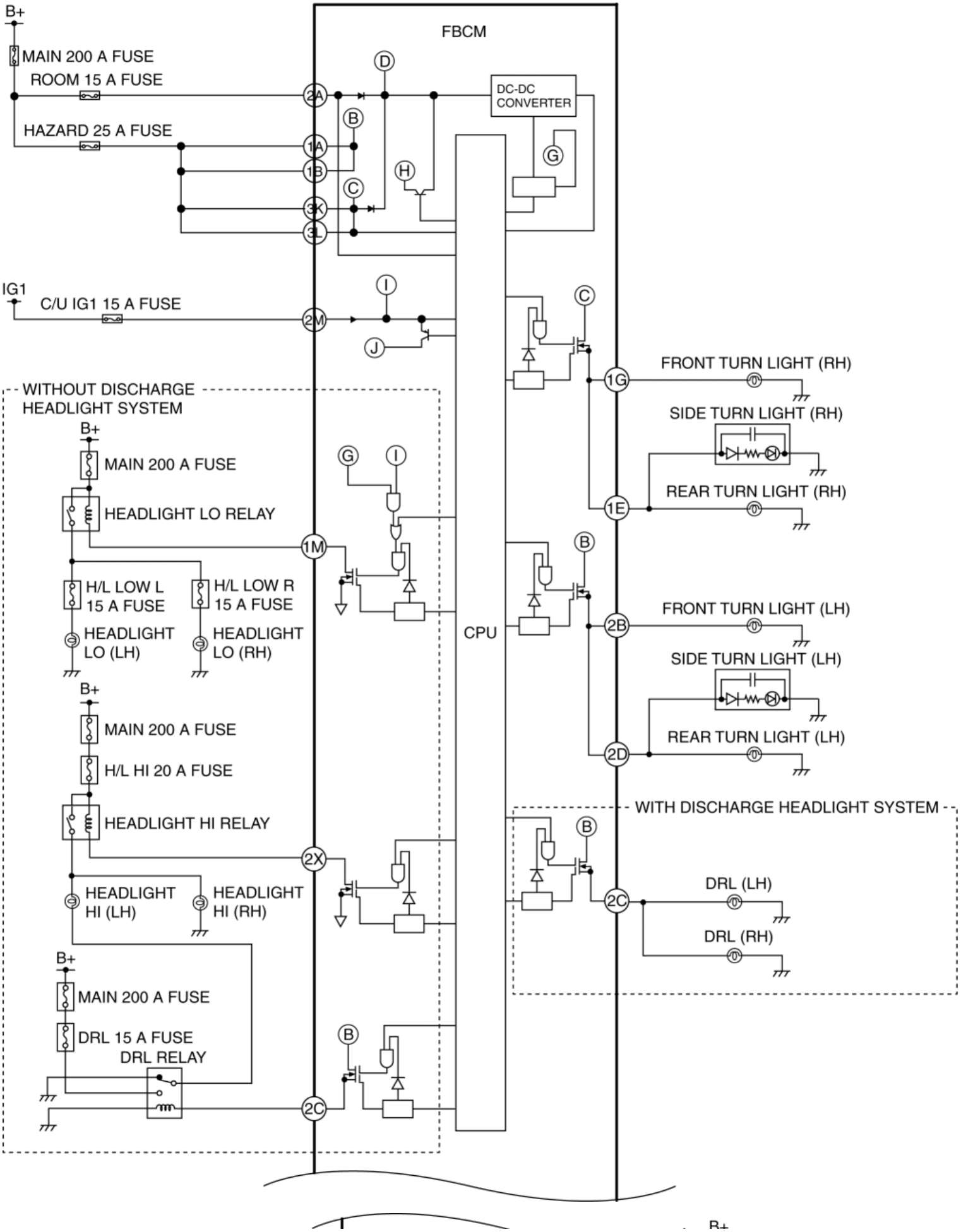
B+
MAIN 200 A FUSE
ROOM 15 A FUSE
HAZARD 25 A FUSE
FBCM
DC-DC CONVERTER
2A
1A
1B
3K
3L
IG1
C/U IG1 15 A FUSE
2M
WITHOUT DISCHARGE HEADLIGHT SYSTEM
MAIN 200 A FUSE
HEADLIGHT LO RELAY
1M
H/L LOW L 15 A FUSE
H/L LOW R 15 A FUSE
HEADLIGHT LO (LH)
HEADLIGHT LO (RH)
MAIN 200 A FUSE
H/L HI 20 A FUSE
HEADLIGHT HI RELAY
2X
HEADLIGHT HI (LH)
HEADLIGHT HI (RH)
MAIN 200 A FUSE
DRL 15 A FUSE
DRL RELAY
2C
CPU
FRONT TURN LIGHT (RH)
1G
SIDE TURN LIGHT (RH)
REAR TURN LIGHT (RH)
1E
FRONT TURN LIGHT (LH)
2B
SIDE TURN LIGHT (LH)
REAR TURN LIGHT (LH)
2D
WITH DISCHARGE HEADLIGHT SYSTEM
DRL (LH)
DRL (RH)
2C

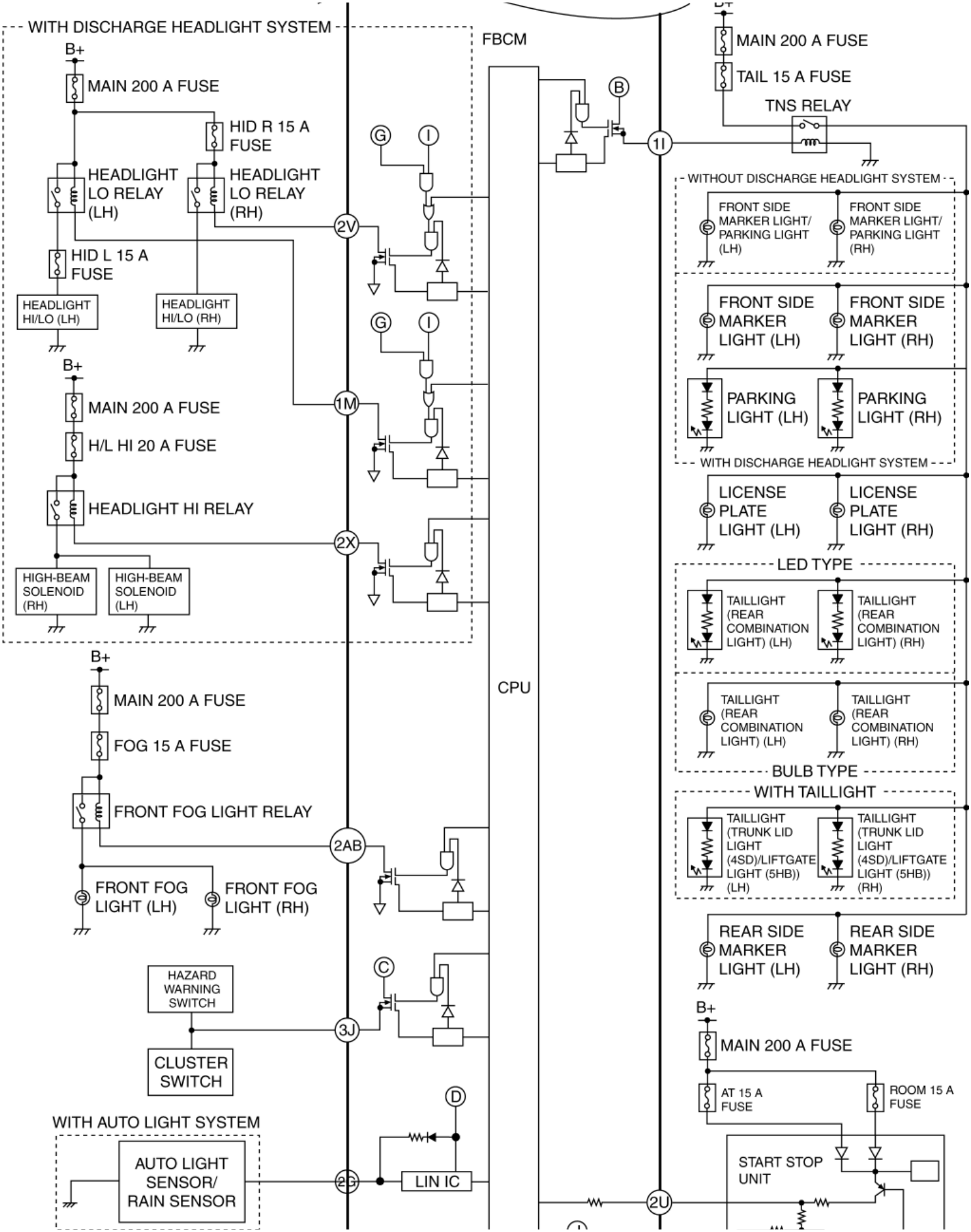
WITH DISCHARGE HEADLIGHT SYSTEM
B+
MAIN 200 A FUSE
HID R 15 A FUSE
HEADLIGHT LO RELAY (LH)
HEADLIGHT LO RELAY (RH)
HID L 15 A FUSE
HEADLIGHT HI/LO (LH)
HEADLIGHT HI/LO (RH)
B+
MAIN 200 A FUSE
H/L HI 20 A FUSE
HEADLIGHT HI RELAY
HIGH-BEAM SOLENOID (RH)
HIGH-BEAM SOLENOID (LH)
FBCM
G
I
2V
1M
2X
CPU
B+
MAIN 200 A FUSE
FOG 15 A FUSE
FRONT FOG LIGHT RELAY
2AB
FRONT FOG LIGHT (LH)
FRONT FOG LIGHT (RH)
HAZARD WARNING SWITCH
CLUSTER SWITCH
C
3J
WITH AUTO LIGHT SYSTEM
AUTO LIGHT SENSOR/ RAIN SENSOR
D
LIN IC
B
1I
2U
B+
MAIN 200 A FUSE
TAIL 15 A FUSE
TNS RELAY
WITHOUT DISCHARGE HEADLIGHT SYSTEM
FRONT SIDE MARKER LIGHT/ PARKING LIGHT (LH)
FRONT SIDE MARKER LIGHT/ PARKING LIGHT (RH)
FRONT SIDE MARKER LIGHT (LH)
FRONT SIDE MARKER LIGHT (RH)
PARKING LIGHT (LH)
PARKING LIGHT (RH)
WITH DISCHARGE HEADLIGHT SYSTEM
LICENSE PLATE LIGHT (LH)
LICENSE PLATE LIGHT (RH)
LED TYPE
TAILLIGHT (REAR COMBINATION LIGHT) (LH)
TAILLIGHT (REAR COMBINATION LIGHT) (RH)
TAILLIGHT (REAR COMBINATION LIGHT) (LH)
TAILLIGHT (REAR COMBINATION LIGHT) (RH)
BULB TYPE
WITH TAILLIGHT
TAILLIGHT (TRUNK LID LIGHT (4SD)/LIFTGATE LIGHT (5HB)) (LH)
TAILLIGHT (TRUNK LID LIGHT (4SD)/LIFTGATE LIGHT (5HB)) (RH)
REAR SIDE MARKER LIGHT (LH)
REAR SIDE MARKER LIGHT (RH)
B+
MAIN 200 A FUSE
AT 15 A FUSE
ROOM 15 A FUSE
START STOP UNIT

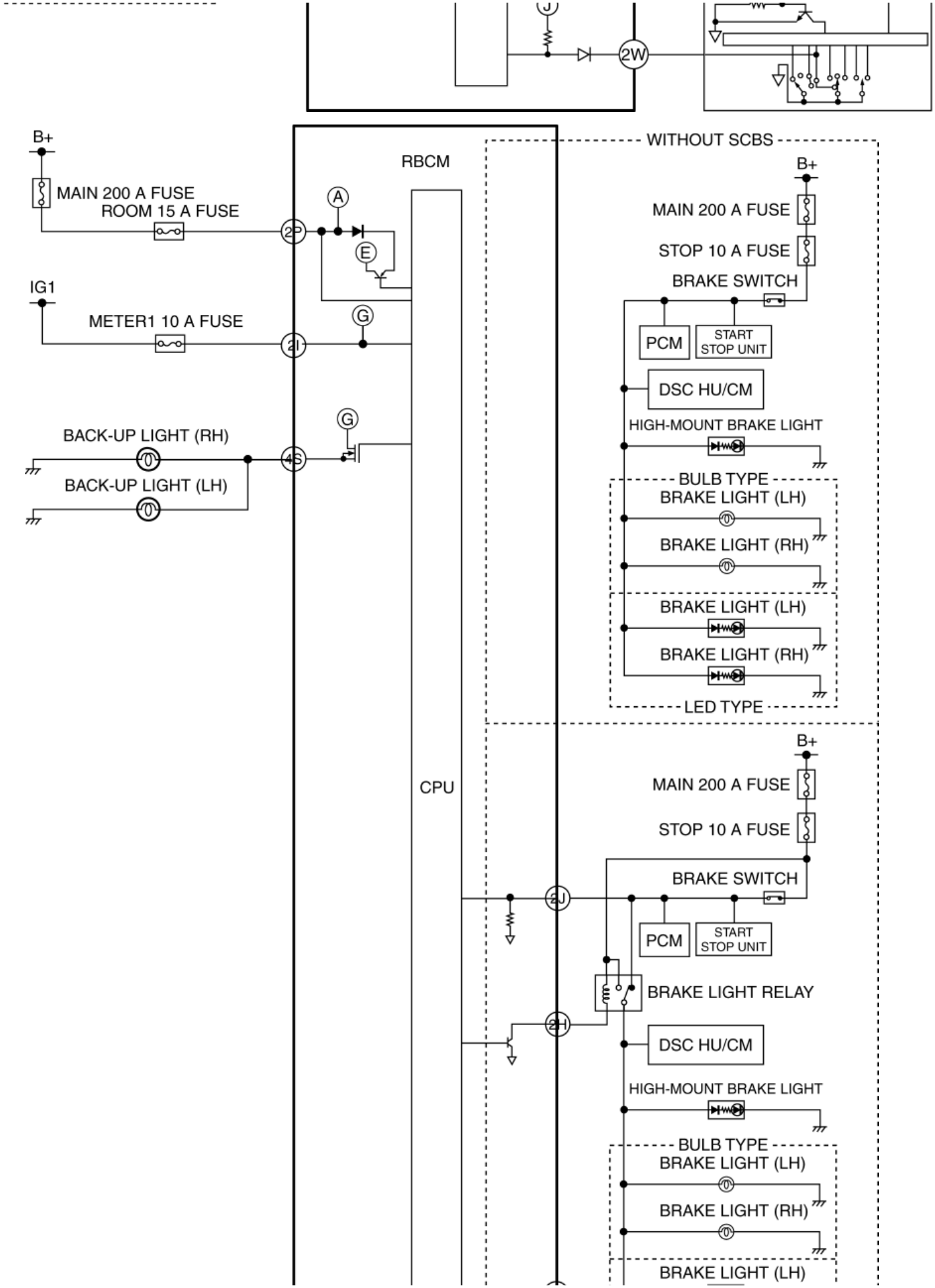
2W
B+
MAIN 200 A FUSE
ROOM 15 A FUSE
2P
A
E
IG1
METER1 10 A FUSE
2I
G
BACK-UP LIGHT (RH)
BACK-UP LIGHT (LH)
4S
RBCM
CPU
WITHOUT SCBS
B+
MAIN 200 A FUSE
STOP 10 A FUSE
BRAKE SWITCH
PCM
START STOP UNIT
DSC HU/CM
HIGH-MOUNT BRAKE LIGHT
BULB TYPE
BRAKE LIGHT (LH)
BRAKE LIGHT (RH)
BRAKE LIGHT (LH)
BRAKE LIGHT (RH)
LED TYPE
B+
MAIN 200 A FUSE
STOP 10 A FUSE
BRAKE SWITCH
2J
PCM
START STOP UNIT
BRAKE LIGHT RELAY
2H
DSC HU/CM
HIGH-MOUNT BRAKE LIGHT
BULB TYPE
BRAKE LIGHT (LH)
BRAKE LIGHT (RH)
BRAKE LIGHT (LH)

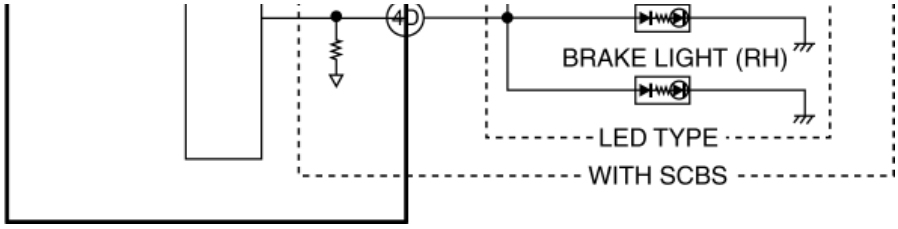

Operation

Headlights LO (halogen type), headlights HI (halogen type), parking lights, front side marker lights

- Refer to the front combination light. (See **FRONT COMBINATION LIGHT**.)

Headlights HI/LO (discharge type)

- Refer to the discharge headlight system. (See **DISCHARGE HEADLIGHT SYSTEM**.)

Front turn lights

- Refer to the front turn light. (See **FRONT TURN LIGHT**.)

Front fog lights (with front fog lights)

- Refer to the front fog light. (See **FRONT FOG LIGHT**.)

Side turn lights (with side turn lights)

- Refer to the side turn light. (See **SIDE TURN LIGHT**.)

Rear turn lights, brake lights, taillights, rear side marker lights

- Refer to the rear combination light. (See **REAR COMBINATION LIGHT**.)

Back-up lights, taillights (with taillights)

- Refer to the trunk lid light (4SD)/liftgate light (5HB). (See **TRUNK LID LIGHT (4SD)/LIFTGATE LIGHT (5HB)**.)

Hazard warning lights

- Refer to the front turn light. (See **FRONT TURN LIGHT**.)
- Refer to the side turn light. (with side turn lights) (See **SIDE TURN LIGHT**.)
- Refer to the rear combination light. (See **REAR COMBINATION LIGHT**.)

Secondary collision reduction (SCR) hazard warning light

- If the SAS control module detects a collision with another vehicle, it outputs a secondary collision reduction signal to the front body control module (FBCM).
- The front body control module (FBCM) flashes the turn lights during a collision to caution surrounding vehicles when it detects a certain amount of impact.

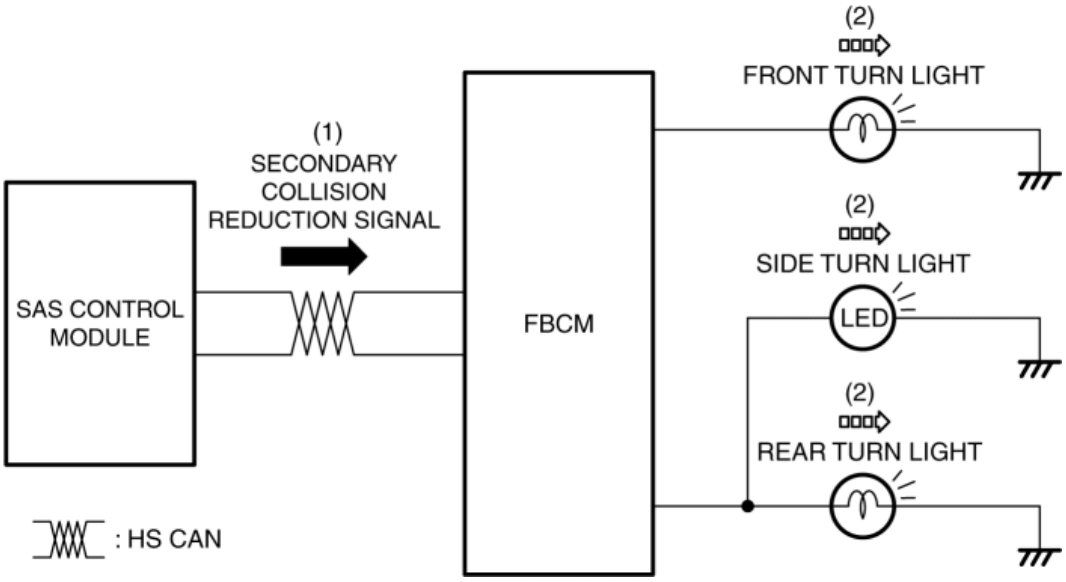

- While the secondary collision reduction (SCR) hazard warning light is operating, all the turn lights are flashed automatically. The secondary collision reduction (SCR) hazard warning light can be turned off by pressing the hazard warning switch two times.

High-mount brake light

- Refer to the high-mount brake light. (See **HIGH-MOUNT BRAKE LIGHT**.)

License plate lights

- Refer to the license plate light. (See **LICENSE PLATE LIGHT**.)

2014 - Mazda3 - Body and Accessories

FRONT COMBINATION LIGHT

Purpose

- Parts related to the front exterior lights are grouped and housed together such as the headlight, parking light, headlight leveling actuator, wiring harnesses, and connectors.

Function

- Each light illuminates or flashes when the light switch, turn switch, or hazard warning switch is operated.

Construction

- A halogen type or discharge type headlight is available for the front combination light.

Halogen type

- The following parts are an integrated structure.
  - Headlight LO bulb
  - Headlight HI bulb
  - Front side marker light/parking light bulb
- A projector type headlight has been adopted for the headlight LO.
- A clear lens has been adopted for the front combination lights.

  NOTE:

  - Fogging or condensation on the inside of the front combination lights may occur, however, it is a natural phenomenon occurring as a result of a temperature difference between the interior and exterior of the front combination lights and has no effect on the light performance.
  - Fogging or condensation occurring as a natural phenomenon will dissipate when the temperature inside the front combination lights rises after the headlights are illuminated and a period of time has elapsed.

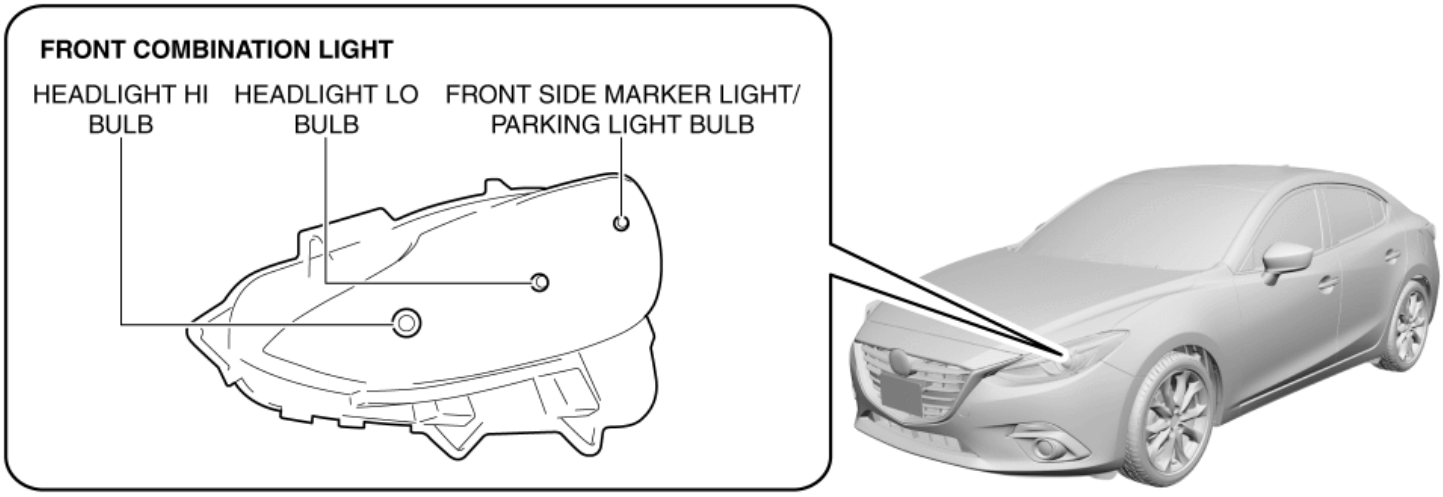

Discharge type

- The following parts are an integrated structure.
    - Headlight HI/LO bulb
    - Parking light (LED)
    - Front side marker light bulb
    - Igniter
    - Discharge headlight control module
    - Headlight leveling actuator
    - Swivel actuator
- A projector type headlight has been adopted for the headlight HI/LO.
- A clear lens has been adopted for the front combination lights.

NOTE:

- Fogging or condensation on the inside of the front combination lights may occur, however, it is a natural phenomenon occurring as a result of a temperature difference between the interior and exterior of the front combination lights and has no effect on the light performance.
- Fogging or condensation occurring as a natural phenomenon will dissipate when the temperature inside the front combination lights rises after the headlights are illuminated and a period of time has elapsed.

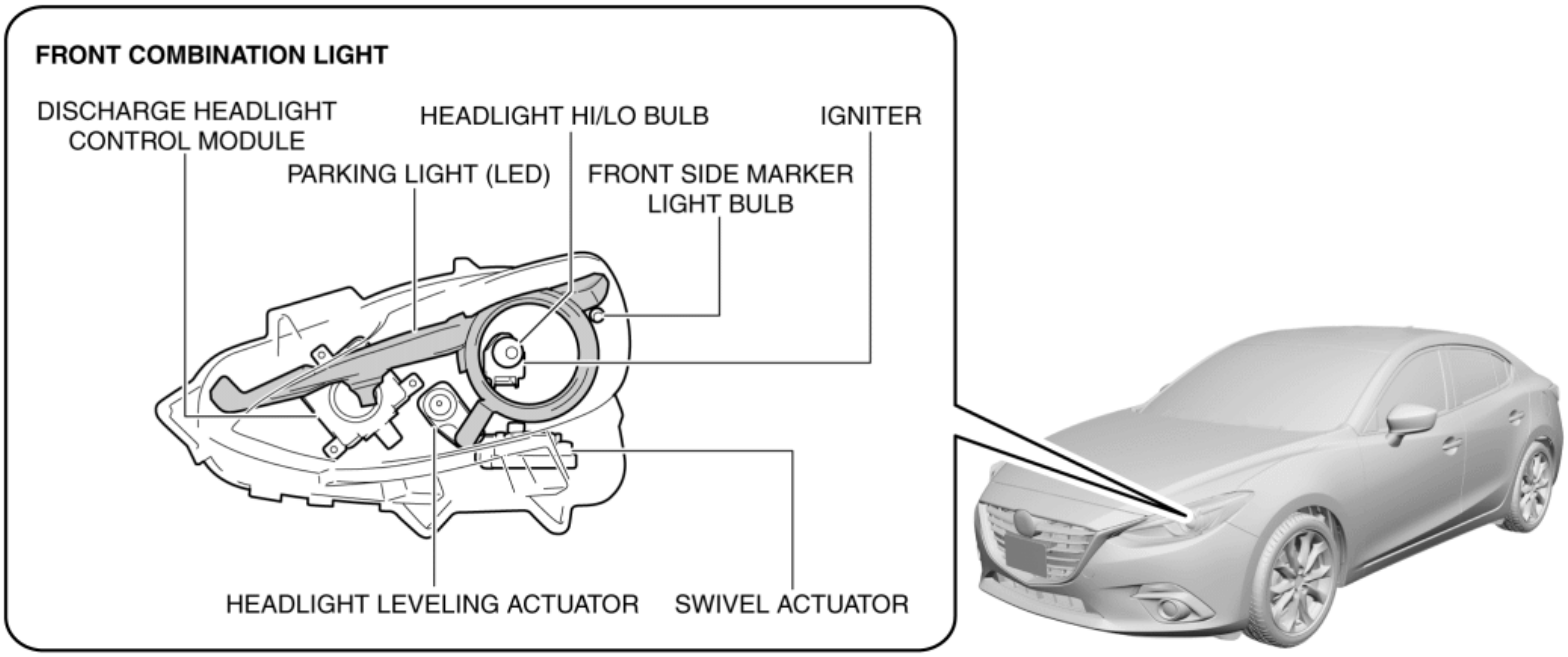

Operation

Headlight LO

Halogen type

- When the light switch is operated to the HEAD position, the start stop unit detects a light switch LO signal.
- The start stop unit sends the light switch LO signal to the front body control module (FBCM) as a CAN signal.
- When the front body control module (FBCM) receives the light switch LO signal, it turns the headlight LO relay on.
- When the headlight LO relay turns on, the headlight LO is illuminated.

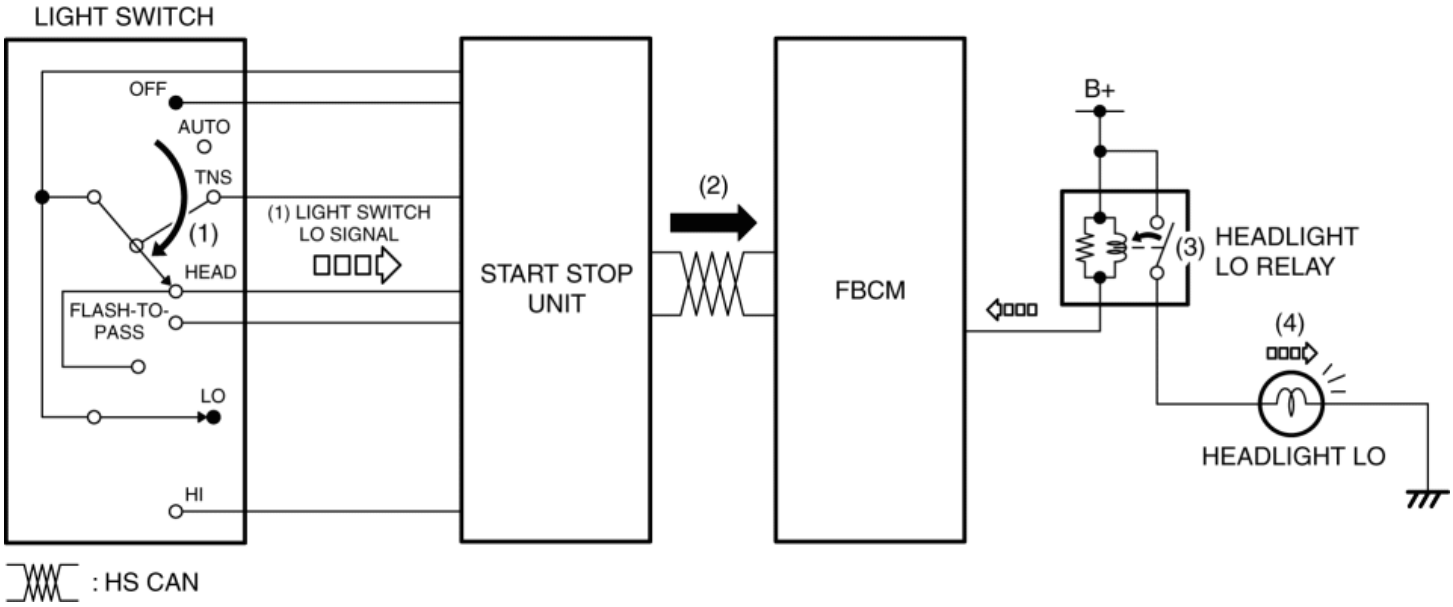

Discharge type

- Refer to the discharge headlight system. (See **DISCHARGE HEADLIGHT SYSTEM**.)

Headlight HI

Halogen type

- When the light switch is operated to the HI position while the headlight LO is turned on, the start stop unit detects a light switch HI signal.
- The start stop unit sends the light switch HI signal to the front body control module (FBCM) as a CAN signal.
- When the front body control module (FBCM) receives the light switch HI signal, it turns the headlight HI relay on.
- When the headlight HI relay turns on, the headlight HI is illuminated.

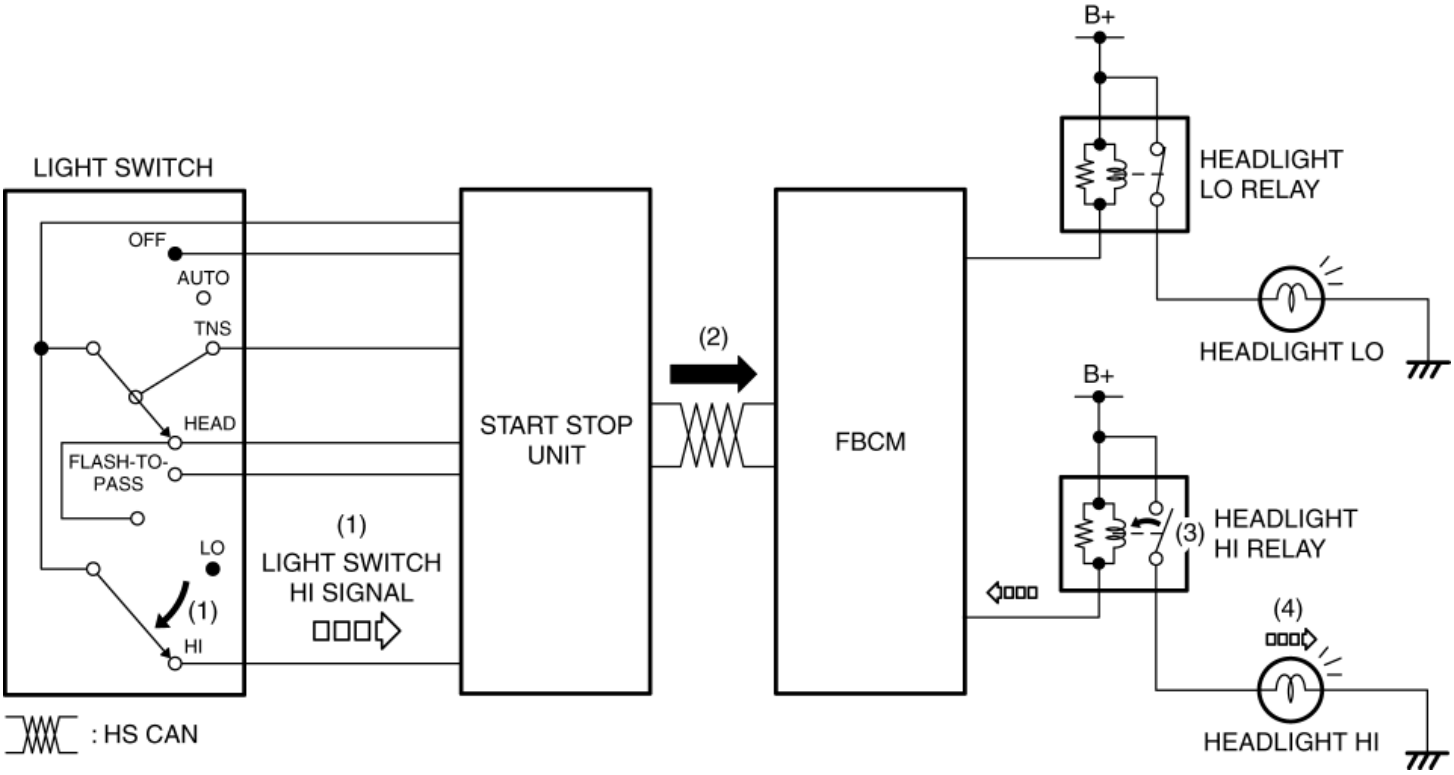

Discharge type

- Refer to the discharge headlight system. (See **DISCHARGE HEADLIGHT SYSTEM**.)

Flash-to-pass

Halogen type

- When the light switch is operated to the FLASH-TO-PASS position, the start stop unit detects a light switch FLASH-TO-PASS signal.
- The start stop unit sends the light switch FLASH-TO-PASS signal to the front body control module (FBCM) as a CAN signal.
- When the front body control module (FBCM) receives the light switch FLASH-TO-PASS signal, it turns the headlight LO and HI relays on.
- When the headlight LO and HI relays turn on, the headlight LO and HI are illuminated.

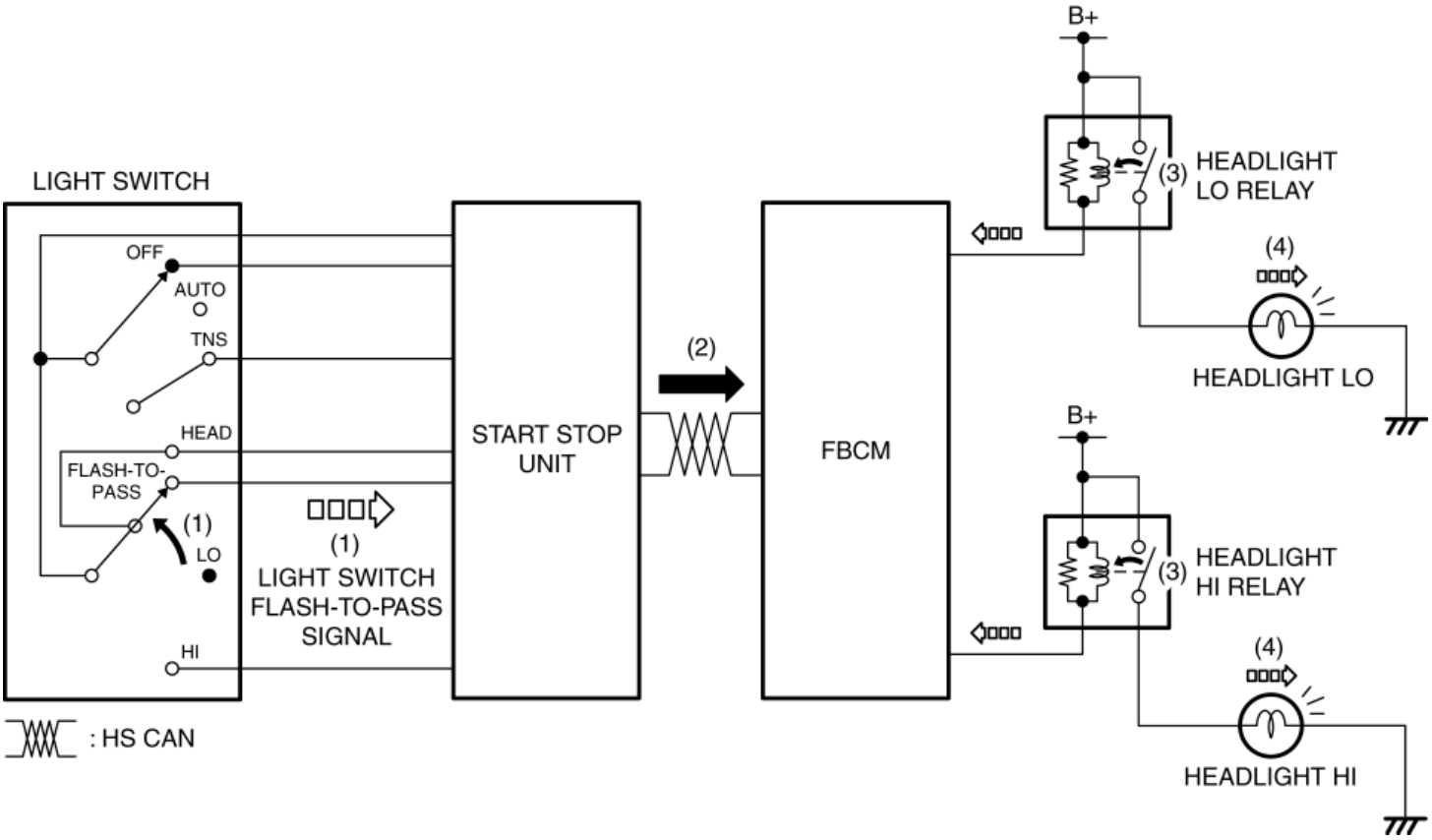

Discharge type

- Refer to the discharge headlight system. (See **DISCHARGE HEADLIGHT SYSTEM**.)

Front side marker light, parking light

Without discharge headlight system

- When the light switch is operated to the TNS position, the start stop unit detects a light switch TNS signal.
- The start stop unit sends the light switch TNS signal to the front body control module (FBCM) as a CAN signal.
- When the front body control module (FBCM) receives the light switch TNS signal, it turns the TNS relay on.
- When the TNS relay turns on, the parking lights/front side marker lights are illuminated.

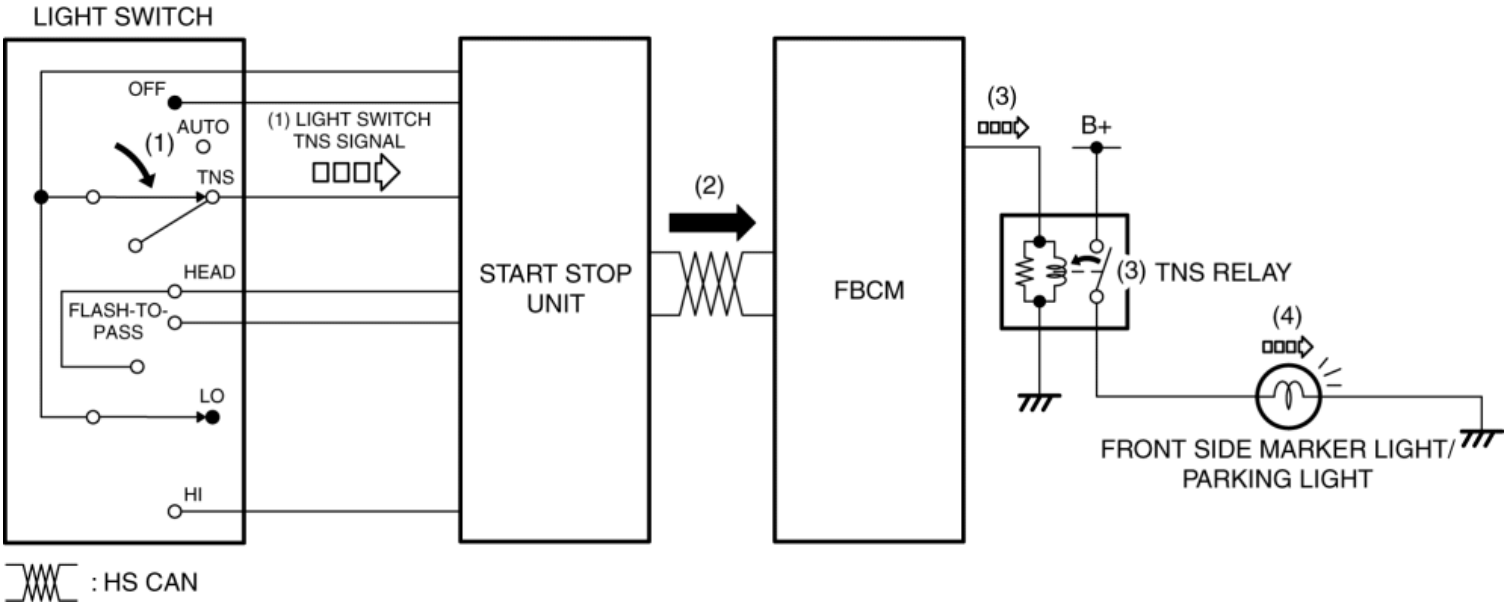

With discharge headlight system

- When the light switch is operated to the TNS position, the start stop unit detects a light switch TNS signal.
- The start stop unit sends the light switch TNS signal to the front body control module (FBCM) as a CAN signal.
- When the front body control module (FBCM) receives the light switch TNS signal, it turns the TNS relay on.
- When the TNS relay turns on, the parking lights and front side marker lights are illuminated.

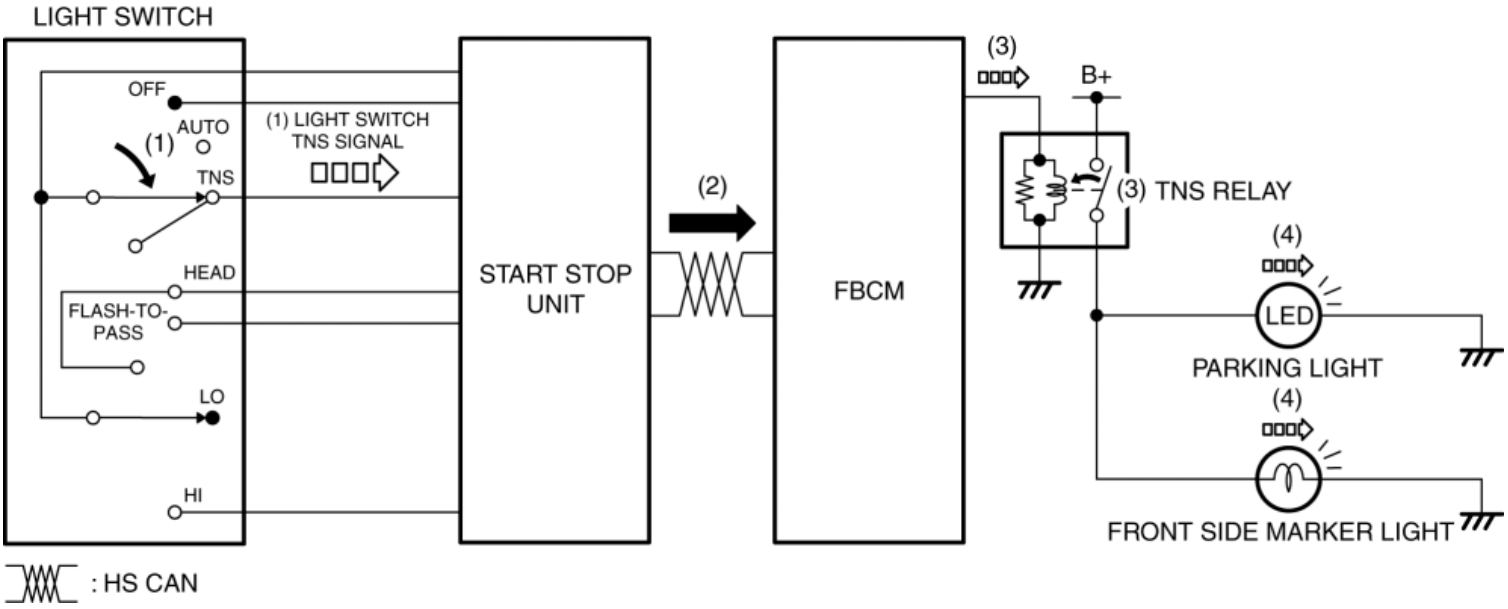

Headlight leveling actuator

- Refer to the headlight leveling actuator. (See **HEADLIGHT LEVELING ACTUATOR**.)

Swivel actuator (With adaptive front lighting system (AFS))

- Refer to the swivel actuator. (See **SWIVEL ACTUATOR**.)

Fail-safe

- Function not equipped.

FRONT COMBINATION LIGHT

2014 - Mazda3 - Body and Accessories

LIGHTS-ON INDICATOR LIGHT

Purpose

- Notifies the user that the TNS or the headlights LO are on.

Function

- Illuminates when the illumination conditions for the TNS, headlights LO, or flash-to-pass are met.

Construction

- Displayed in the instrument cluster.

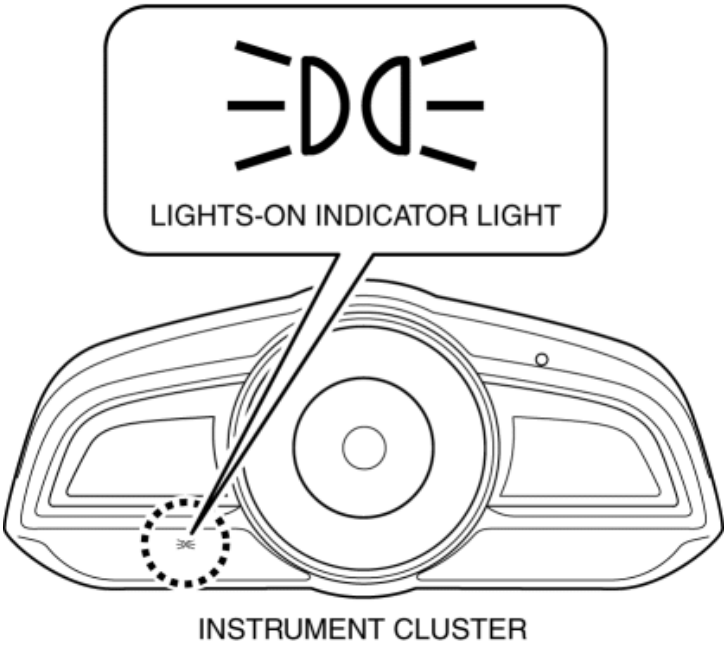

Operation

1. When the light switch is operated to the TNS, HEAD, or FLASH-TO-PASS position, the start stop unit detects a light switch TNS, LO, or FLASH-TO-PASS signal.

2. The start stop unit sends the light switch TNS, LO, or FLASH-TO-PASS signal to the front body control module (FBCM) as a CAN signal.

3. The front body control module (FBCM) sends the light switch TNS, LO, or FLASH-TO-PASS signal to the instrument cluster as a TNS illumination or headlight LO illumination signal.

4. When the instrument cluster receives the TNS illumination, or headlight LO illumination signal, it illuminates the lights-on indicator light.

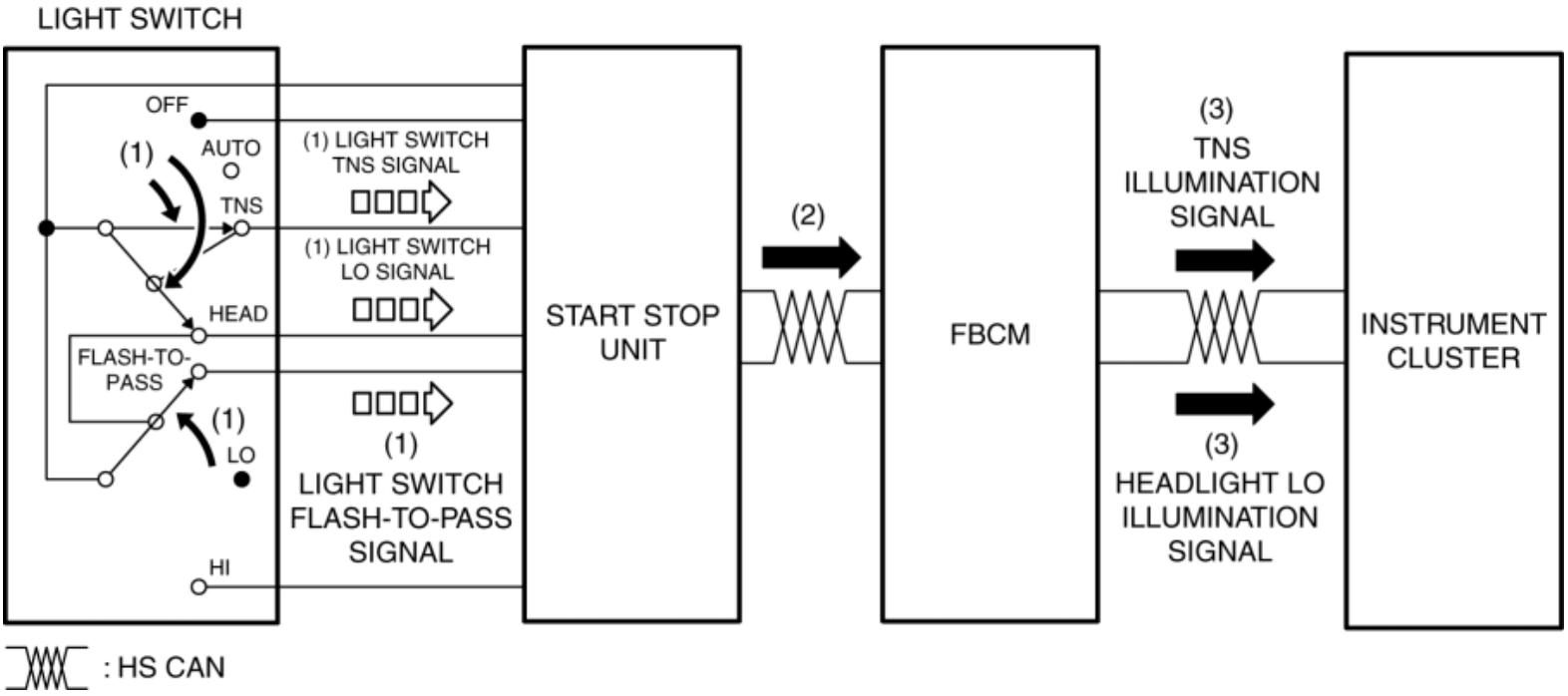

Fail-safe

- Function not equipped.

2014 - Mazda3 - Body and Accessories

HEADLIGHT HIGH-BEAM INDICATOR LIGHT

Purpose

- Notifies the user that the headlights HI are illuminated.

Function

- Illuminates when the headlight HI or flash-to-pass illumination conditions are met.

Construction

- Displayed in the instrument cluster.

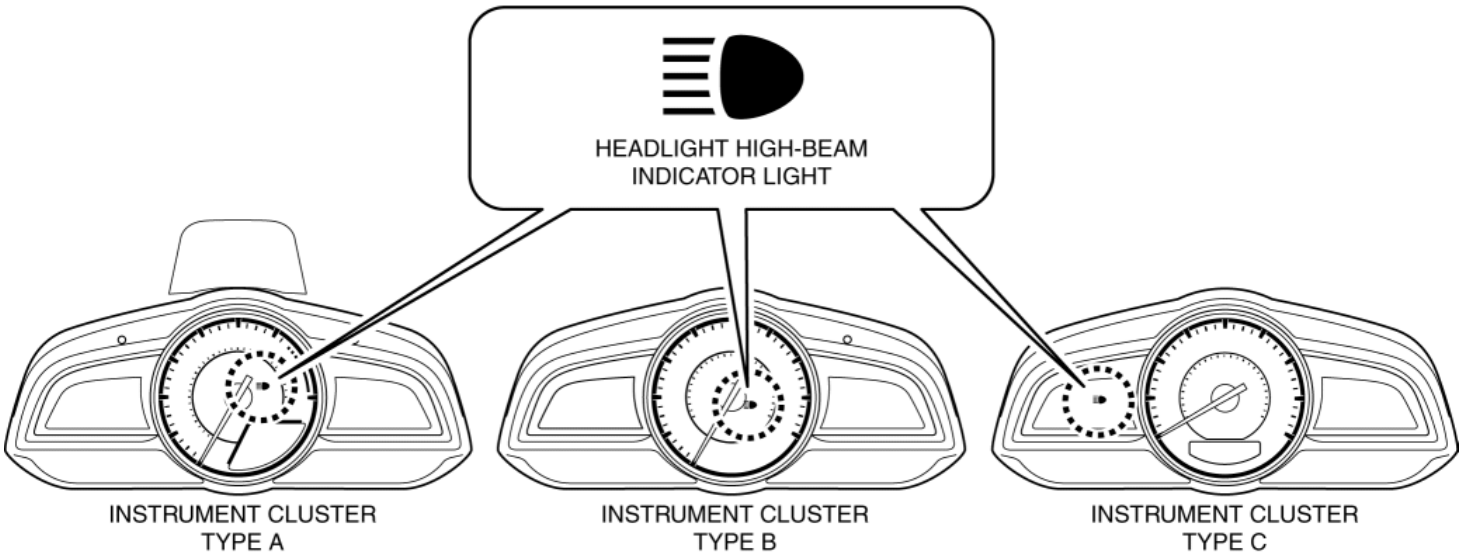

Operation

1. When the light switch is operated to the HI position while the headlight LO is turned on or FLASH-TO-PASS position, the start stop unit detects a light switch HI or FLASH-TO-PASS signal.

2. The start stop unit sends the light switch HI or FLASH-TO-PASS signal to the front body control module (FBCM) as a CAN signal.

3. The front body control module (FBCM) sends the light switch HI or FLASH-TO-PASS signal to the instrument cluster as a headlight HI illumination signal.

4. When the instrument cluster receives the headlight HI illumination signal, it illuminates the headlight high-beam indicator light.

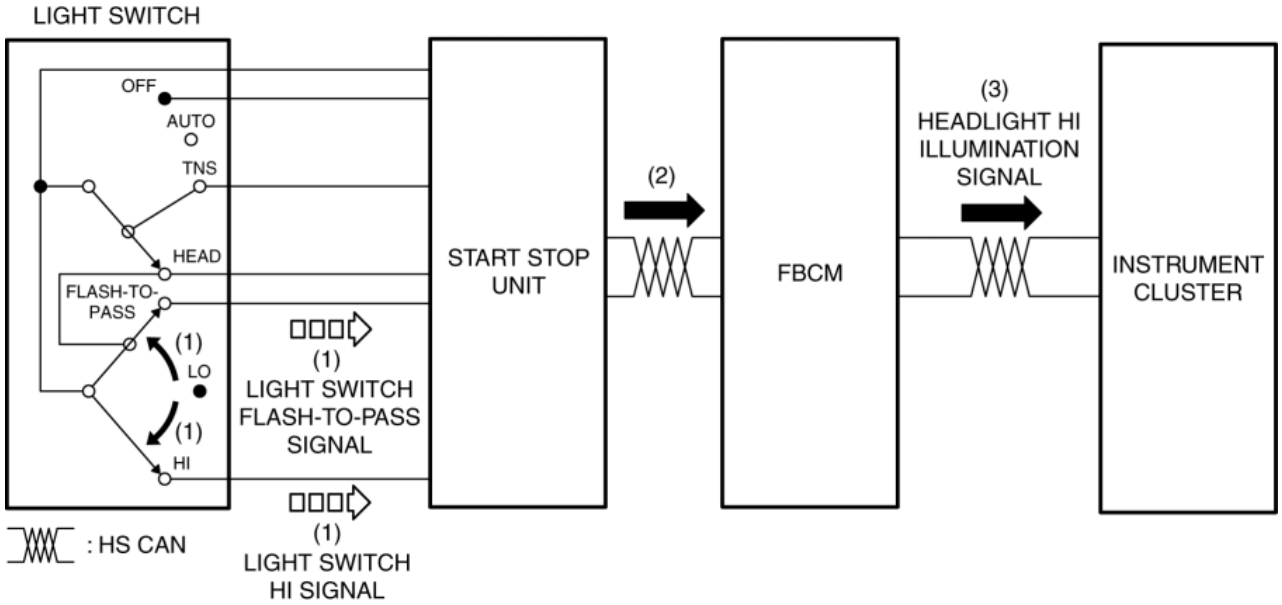

Fail-safe

- Function not equipped.

2014 - Mazda3 - Body and Accessories

TURN SIGNAL/HAZARD WARNING INDICATOR LIGHTS

Purpose

- Notifies the user that the turn lights are flashing.

Function

- Flashes according to the turn switch and hazard warning switch operations.

Construction

- Displayed in the instrument cluster.

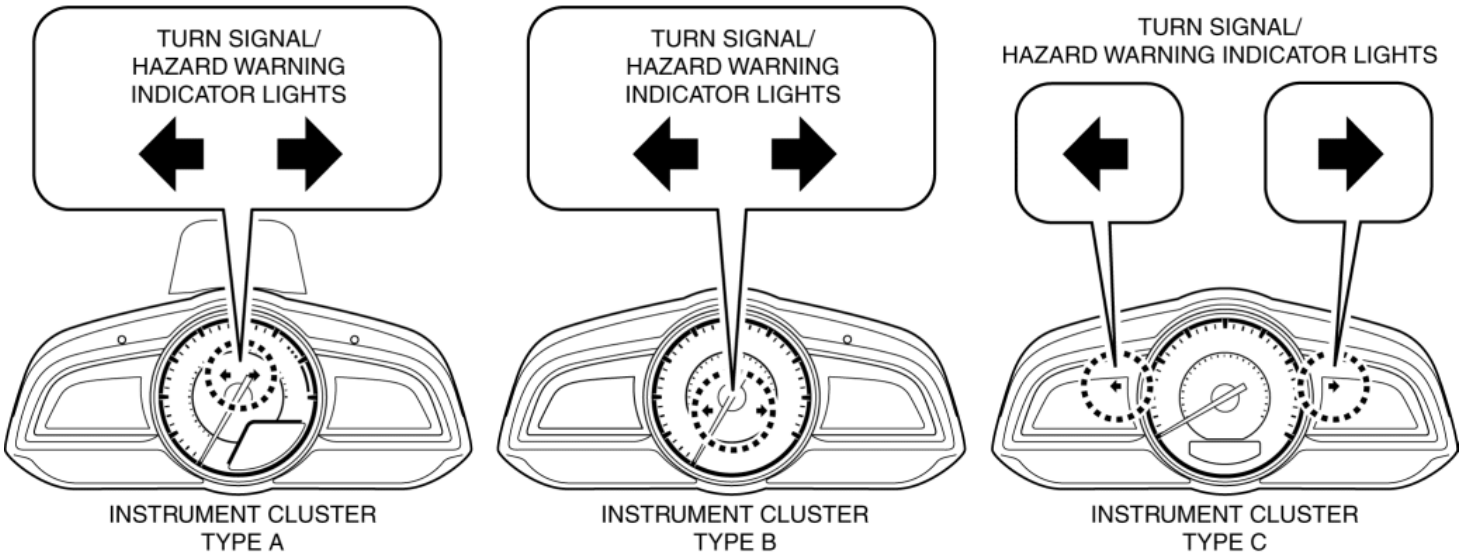

Operation

Turn light system

1. When the turn switch is operated to the LH or RH position, the start stop unit detects a turn switch LH or RH signal.
2. The start stop unit sends the turn switch LH or RH signal to the front body control module (FBCM) as a CAN signal.
3. The front body control module (FBCM) sends the turn switch RH or LH signal to the instrument cluster as a turn signal indicator signal.
4. When a turn signal indicator signal is received, the instrument cluster flashes the turn signal indicator light.

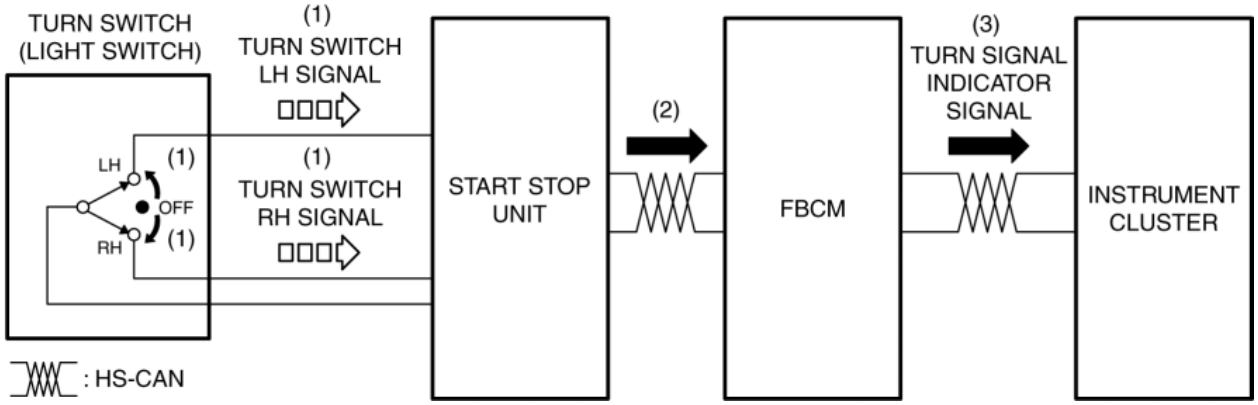

Hazard warning system

1. When the hazard warning switch is turned on, the start stop unit detects a hazard warning switch on signal.
2. When the start stop unit detects a hazard warning switch on signal, it sends a hazard warning signal to the front body control module (FBCM) as a CAN signal.
3. The front body control module (FBCM) sends the hazard warning signal to the instrument cluster as a hazard warning indicator signal.
4. When the hazard warning indicator signal is received, the instrument cluster flashes the hazard warning indicator light.

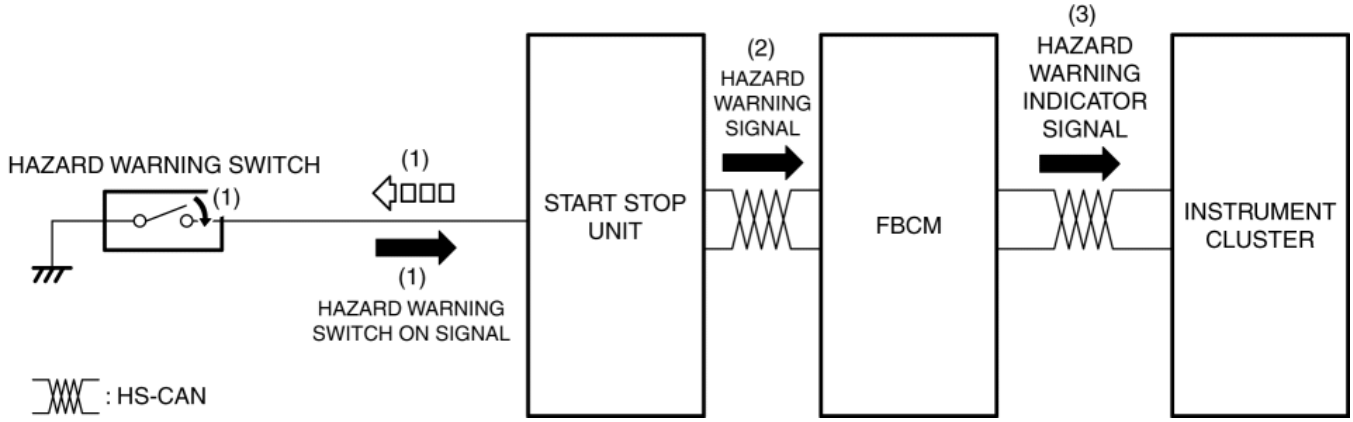

Fail-safe

- Function not equipped.

2014 - Mazda3 - Body and Accessories

DISCHARGE HEADLIGHT SYSTEM

Outline

- The discharge headlight system utilizes a gas discharge type light to emit a white light resembling sunlight over a wide area. Also, use of the gas discharge type light realizes high efficiency, low power consumption lighting.
- The discharge headlight control module performs discharge headlight system fail-safe. (See **DISCHARGE HEADLIGHT CONTROL MODULE**.)

Structural View

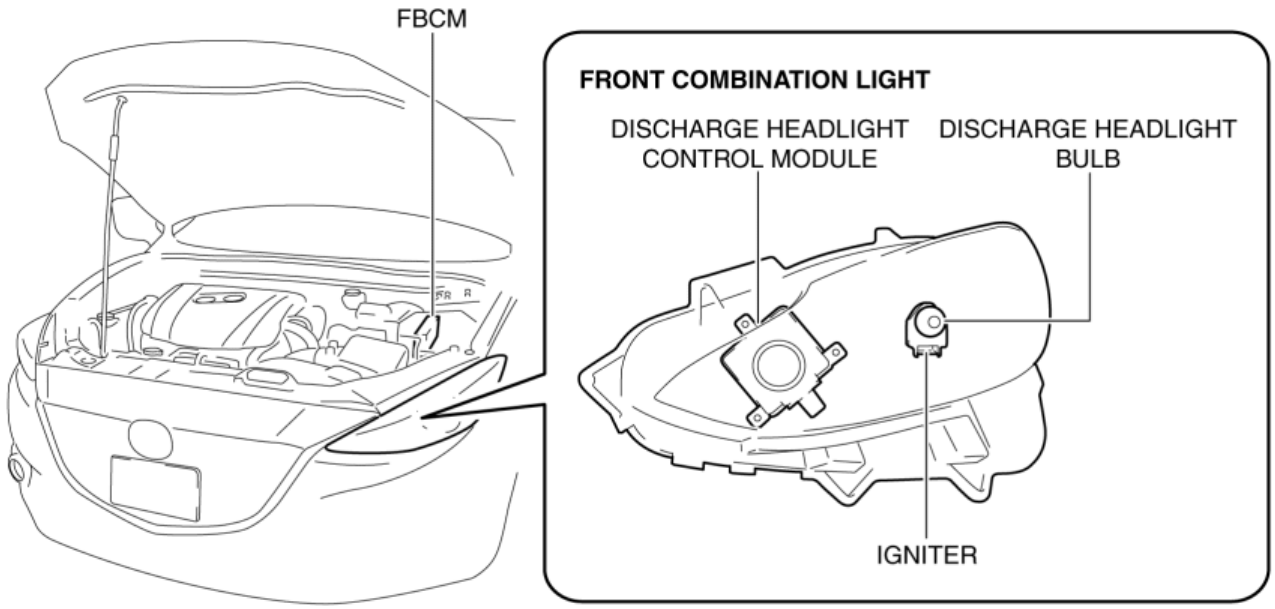

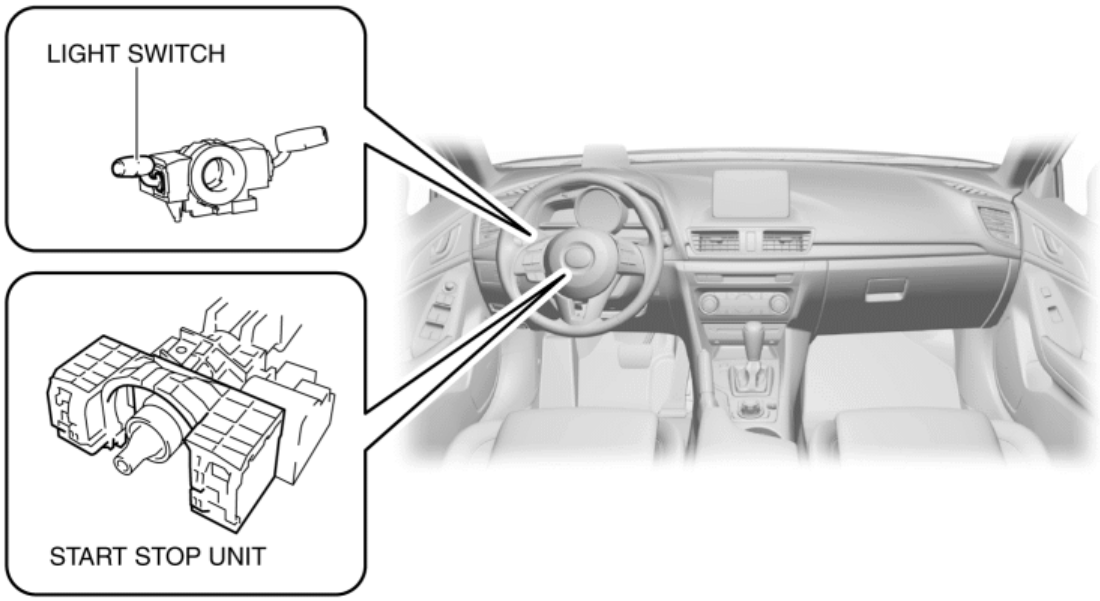

System Wiring Diagram

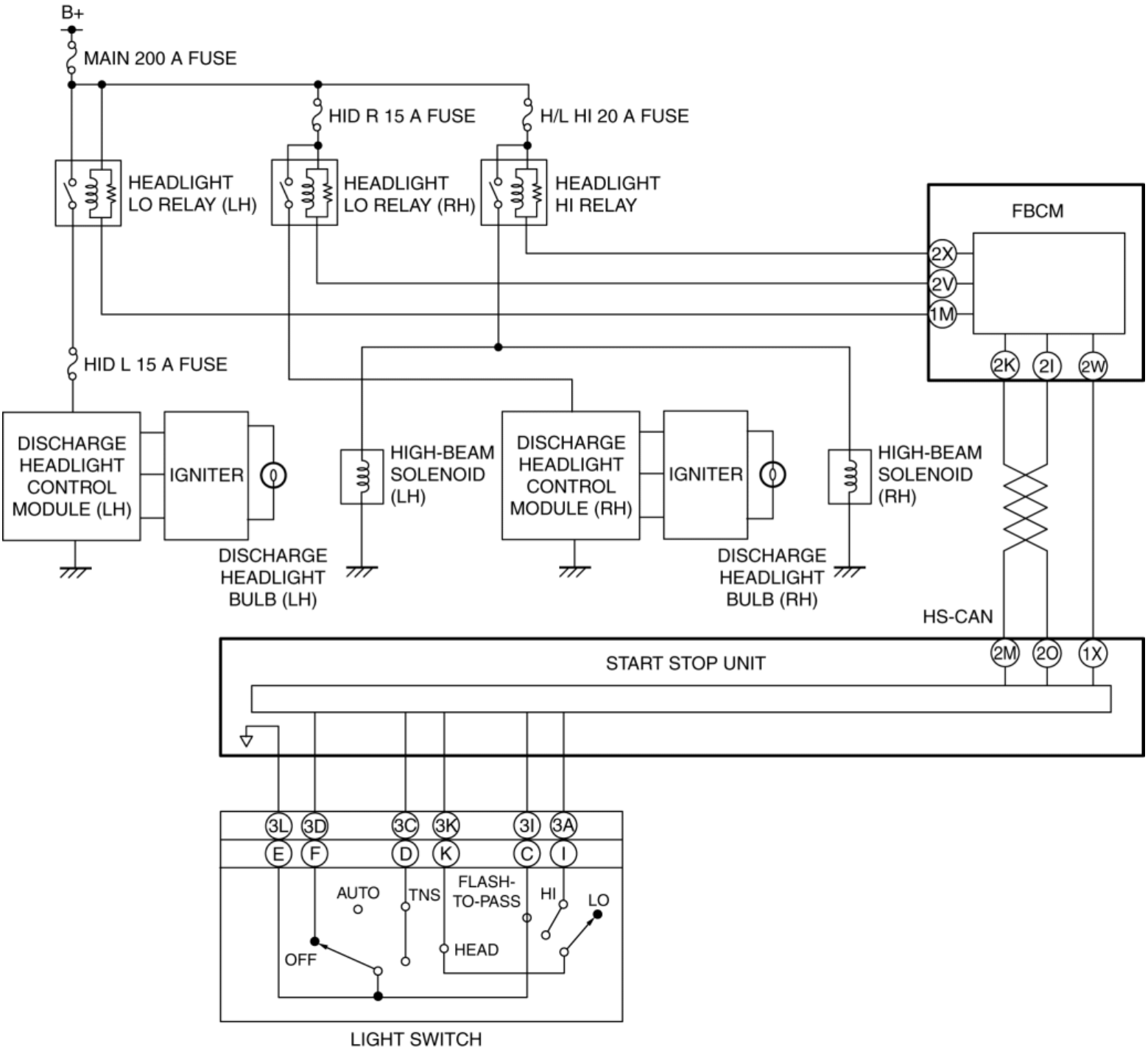

Operation

Headlight low beam

- When the light switch is operated to the HEAD position, the start stop unit detects a light switch LO signal.
- The start stop unit sends the light switch LO signal to the front body control module (FBCM) as a CAN signal.
- When the front body control module (FBCM) receives the light switch LO signal, it turns the headlight LO relay on.
- When the headlight LO relay turns on, the igniter raises the DC voltage from the battery to approx. 25,000 V and outputs it to the discharge headlight bulb so that the xenon gas emits light.
- When the discharge headlight bulb (xenon gas) emits light, the discharge headlight control module converts the DC voltage from the battery to AC voltage (approx. 42 V) and outputs it to the discharge headlight bulb.
- The shade blocks the high beam light and only the low beam light is illuminated forward.

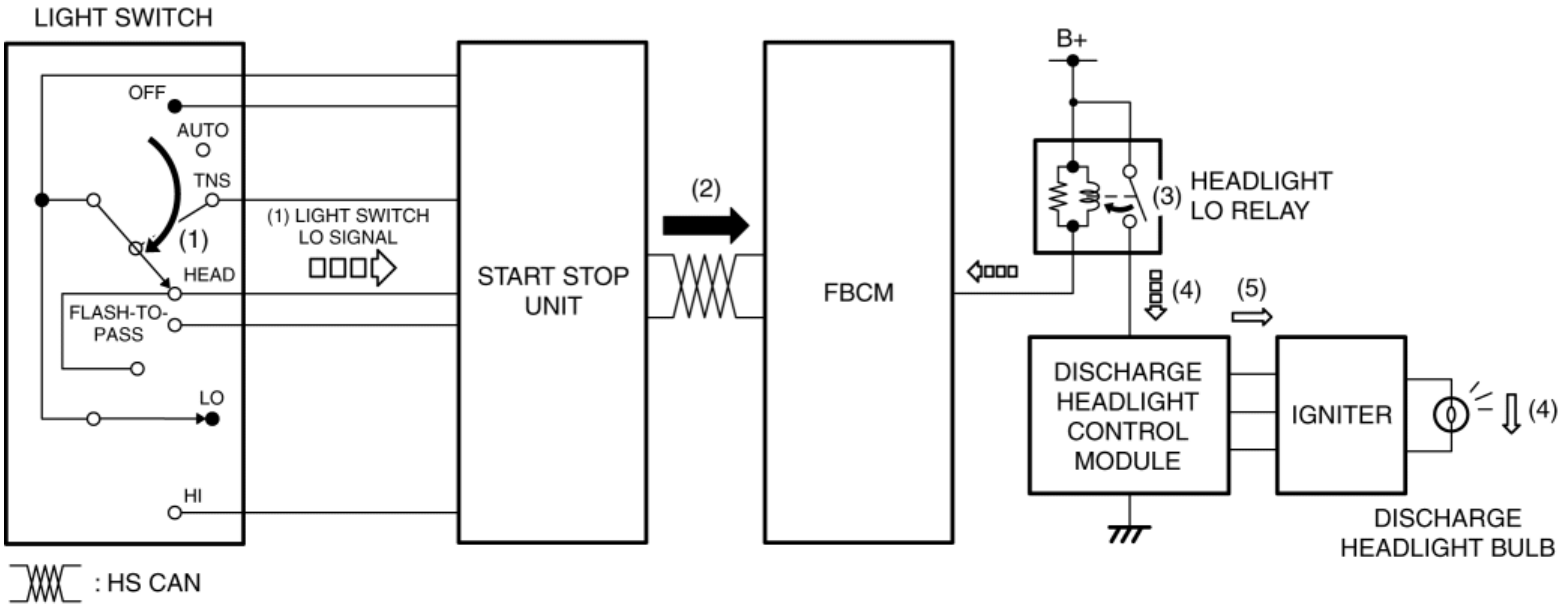

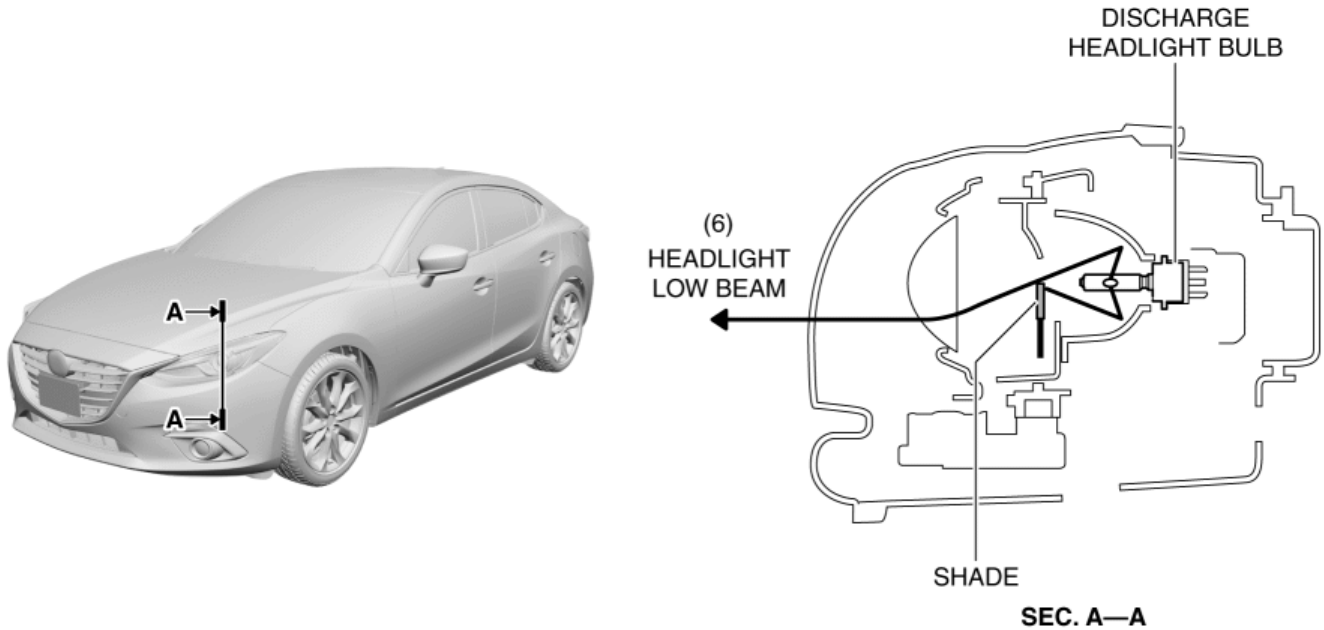

Headlight high beam

- When the light switch is operated to the HI position while the headlight LO is turned on or FLASH-TO-PASS position, the start stop unit detects a light switch HI or FLASH-TO-PASS signal.
- The start stop unit sends the light switch HI or FLASH-TO-PASS signal to the front body control module (FBCM) as a CAN signal.
- When the front body control module (FBCM) receives the light switch HI or FLASH-TO-PASS signal, it turns the headlight HI relay on.
- When the headlight HI relay is turned on, the high-beam solenoid is energized and the shade is rotated.
- When the shade is rotated, the high-beam light which was blocked by the shade is illuminated forward.

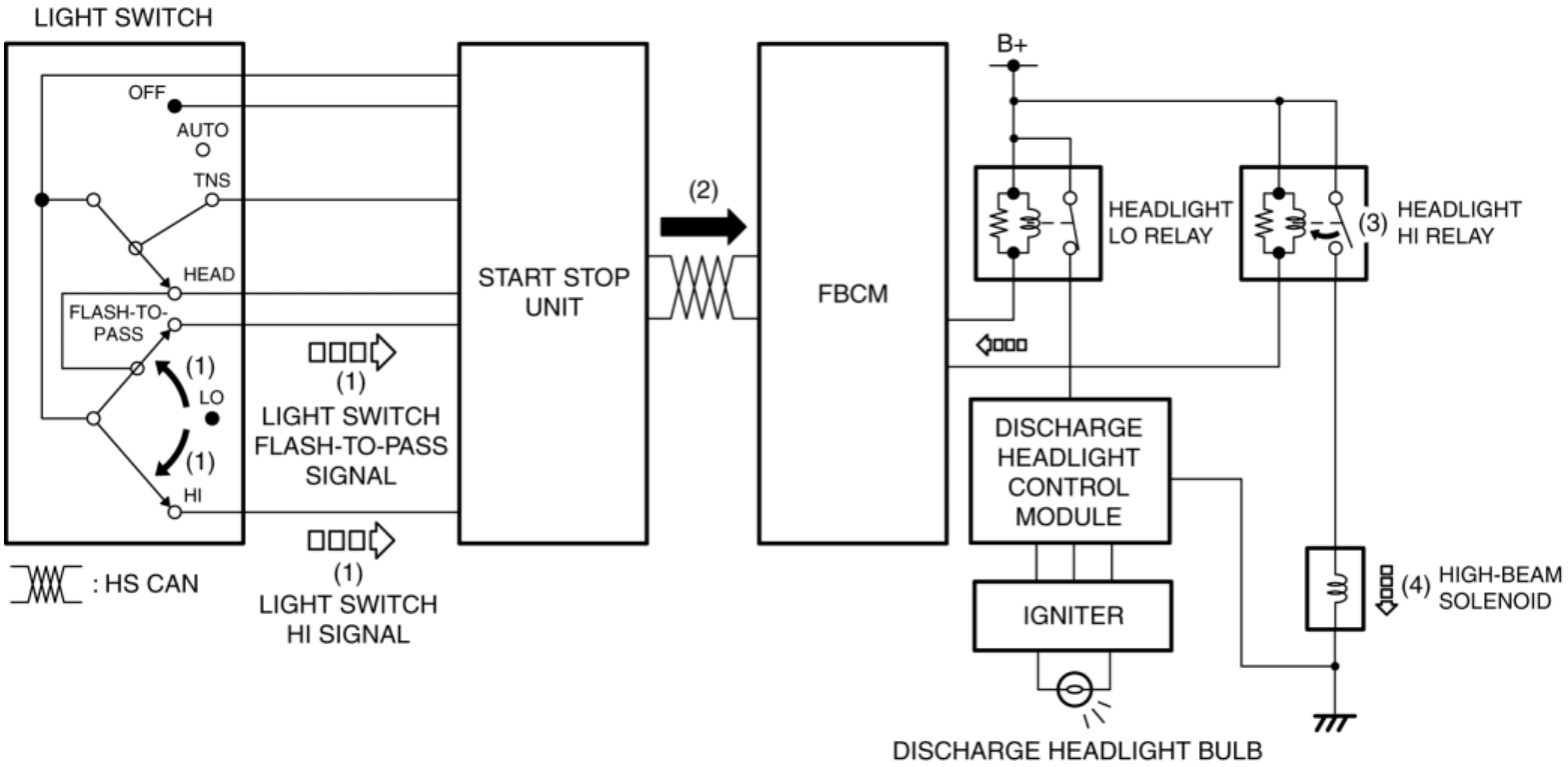
LIGHT SWITCH
OFF
AUTO
TNS
HEAD
FLASH-TO-PASS
(1)
LO
(1)
HI
: HS CAN
START STOP UNIT
(1)
LIGHT SWITCH FLASH-TO-PASS SIGNAL
(1)
LIGHT SWITCH HI SIGNAL
(2)
FBCM
B+
HEADLIGHT LO RELAY
(3)
HEADLIGHT HI RELAY
DISCHARGE HEADLIGHT CONTROL MODULE
IGNITER
(4)
HIGH-BEAM SOLENOID
DISCHARGE HEADLIGHT BULB

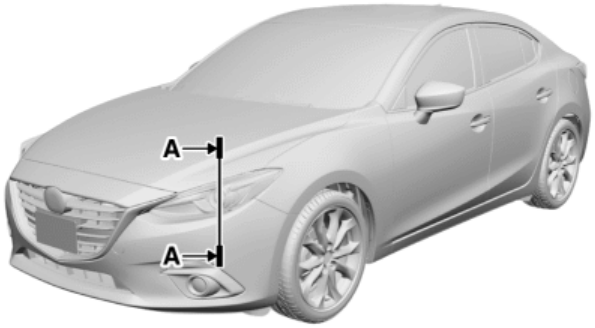
A
A

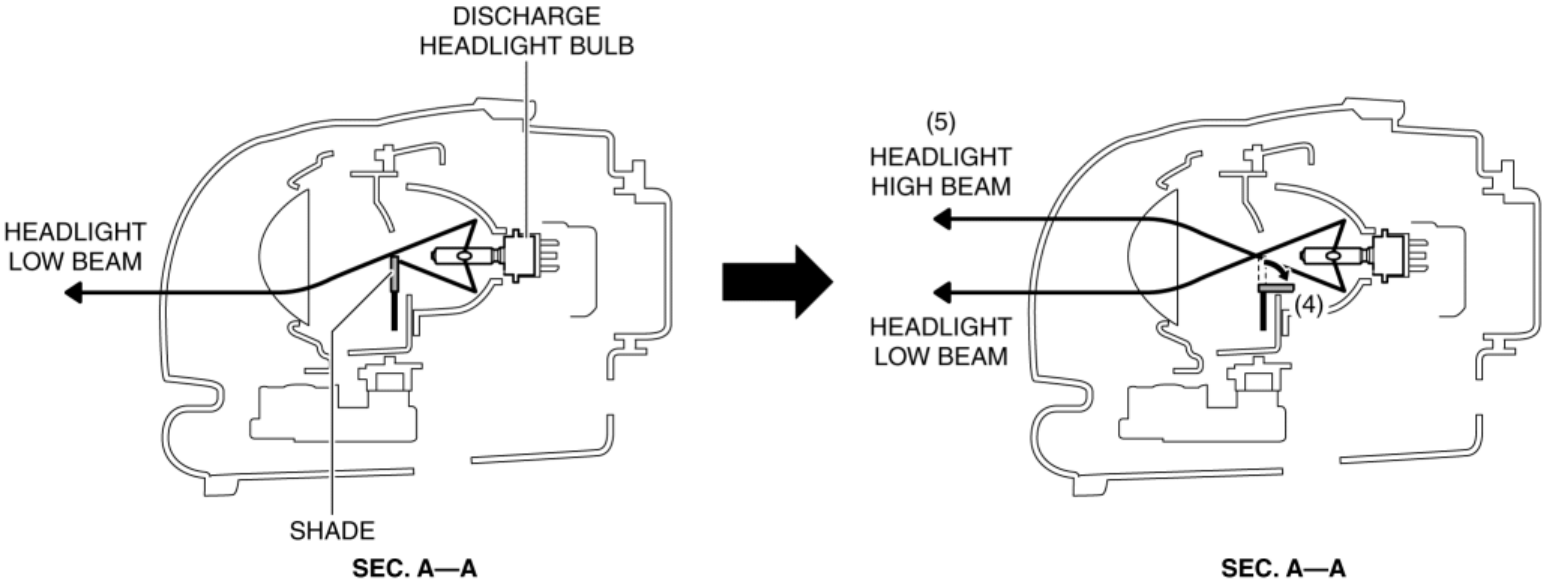
DISCHARGE HEADLIGHT BULB
HEADLIGHT LOW BEAM
SHADE
SEC. A—A
(5)
HEADLIGHT HIGH BEAM
HEADLIGHT LOW BEAM
(4)
SEC. A—A

2014 - Mazda3 - Body and Accessories

DISCHARGE HEADLIGHT CONTROL MODULE

Purpose

- Converts DC voltage from the battery to AC voltage and outputs the stabilized voltage to the discharge headlight.

Function

- The discharge headlight control module controls the voltage from the battery to illuminate the discharge headlight.
- The discharge headlight control module has a fail-safe function which turns off the discharge headlight if an input/output voltage malfunction occurs for the prevention of part mis-operation and protection.

Construction

- The discharge headlight control module consists of an igniter which raises the voltage from the battery to approx. 25,000 V, and an inverter which converts the DC voltage from the battery to AC voltage.
- The inverter is integrated with the discharge headlight control module.
- The igniter is installed to the discharge headlight bulb.

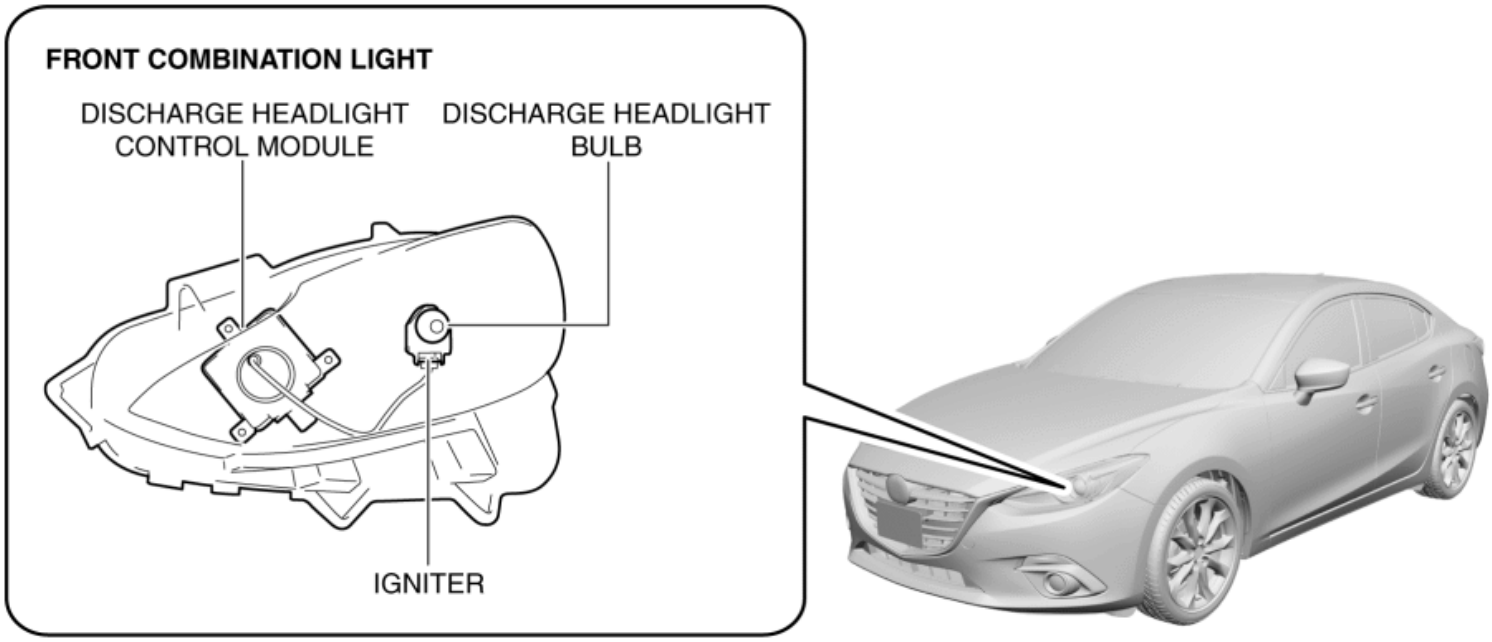

Operation

1. When the headlight LO relay turns on, the discharge headlight control module raises the DC voltage from the battery from approx. 12 V to approx. 25,000 V using the igniter, and outputs it to the discharge headlight bulb.

2. After the discharge headlight is illuminated, the discharge headlight control module converts the DC voltage from the battery to AC voltage (approx. 42 V) using the inverter, and outputs it to the discharge headlight bulb.

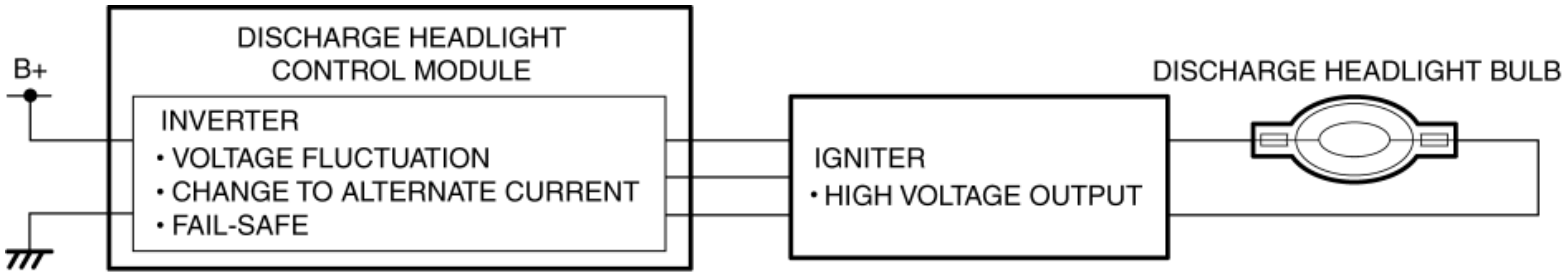

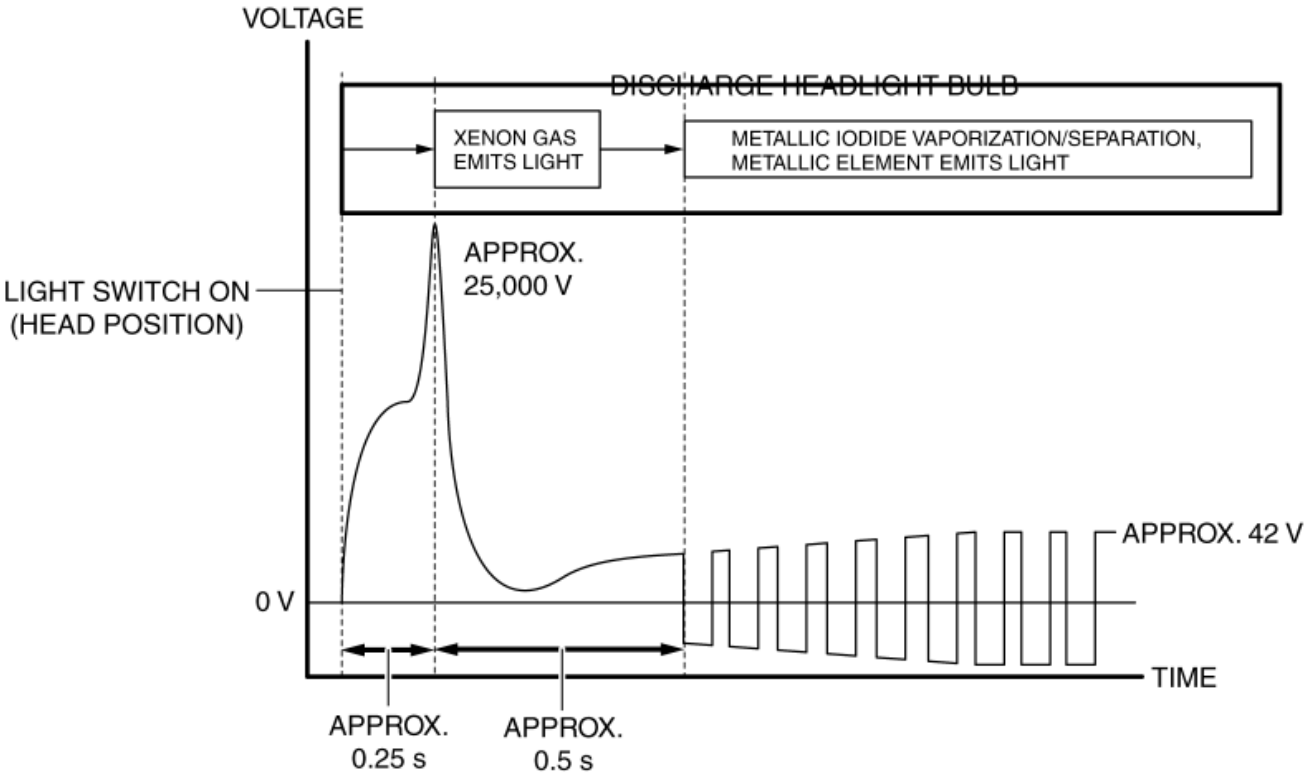

Fail-safe

- If the following input/output voltage malfunctions occur, the fail-safe function is activated.

Operation condition	Fail-safe	Recovery condition
Input voltage from discharge headlight control module is outside of 6—18 V range (except for voltage reduction directly after discharge headlight illumination).	Turns off discharge headlights	Normal input voltage detected
Malfunction is detected in output voltage from discharge headlight control module (open circuit or short to ground in wiring harness).	Turns off discharge headlights	Light switch turned to OFF position, and then back to HEAD position.

2014 - Mazda3 - Body and Accessories

DISCHARGE HEADLIGHT BULB

Purpose, Function

- Charges the internal metallic element and emits white light resembling sunlight.

Construction

- A mercury-free bulb has been adopted for the discharge headlight bulb.
- The discharge headlight bulb is assembled to the front combination light.
- The discharge headlight bulb consists of xenon gas, a luminous tube in which metallic iodide is enclosed, a lead wire and electrodes which pass electricity, and an exterior tube.

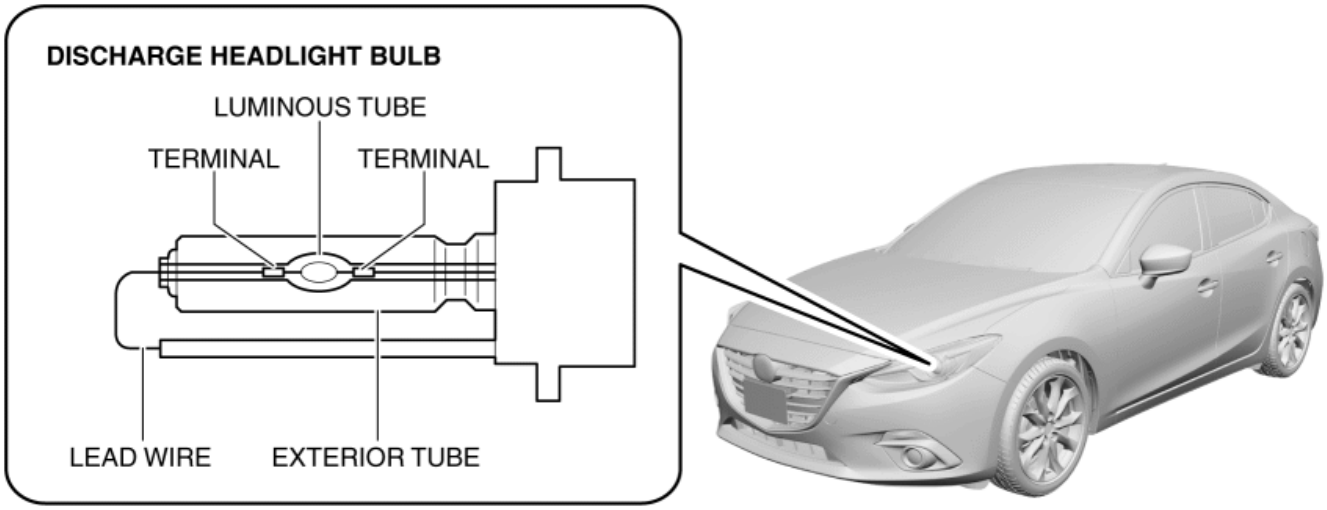

Operation

1. When high DC voltage (approx. 25,000 V) from the discharge headlight control module is input to the electrodes, the insulation between the electrodes is broken down and electrical current flows between the electrodes.

2. When electrical current flows between the electrodes of the discharge headlight bulb, the xenon gas is energized and emits light.

3. When the xenon gas emits light, temperature inside the discharge headlight bulb rises, the metallic iodide vaporizes/separates, and the metallic element discharges and emits light.

4. Luminance of the metallic element is maintained by the DC voltage (approx. 42 V) from the discharge headlight control module.

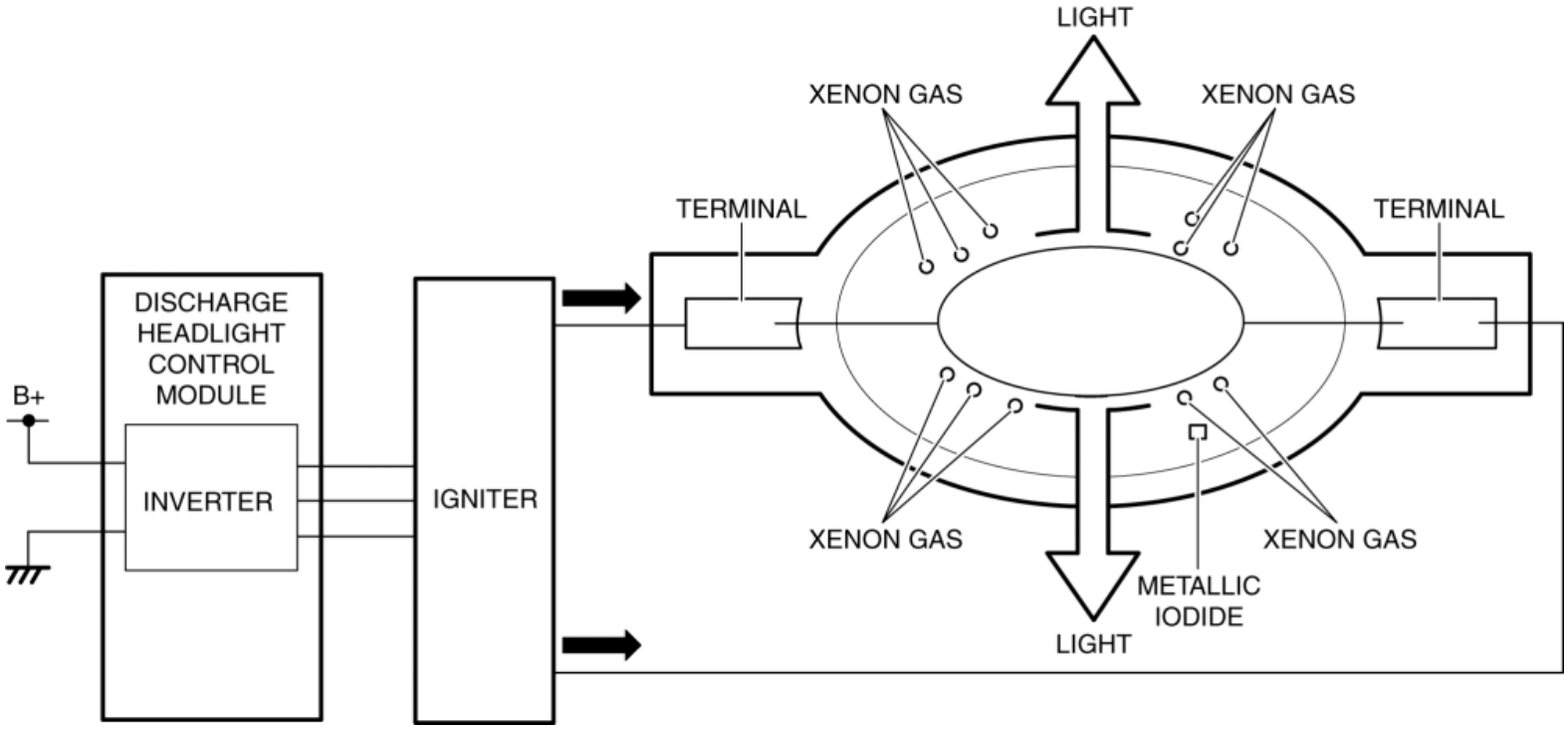

Fail-safe

- Function not equipped.

2014 - Mazda3 - Body and Accessories

AUTO LIGHT-OFF SYSTEM

Outline

- The auto light-off system turns off the TNS or headlights automatically.
- The front body control module (FBCM) performs auto light-off system fail-safe. (See **FRONT BODY CONTROL MODULE (FBCM)**.)

Function

- The auto light-off system controls the front body control module (FBCM).
- The front body control module (FBCM) controls the auto light-off system based on the following signals and conditions:
    - IG power supply condition
    - TNS or headlight illumination condition
    - Light switch signal sent from start stop unit via CAN signal
- If the front body control module (FBCM) detects that the ignition is switched off when the TNS and headlights are turned on, the TNS and headlights are turned on for a certain period of time and turned off after a certain period of time has elapsed.
- A personalization feature has been adopted which can change the illumination time of the TNS or headlights. For details on the personalization features, refer to the **LIGHTING SYSTEM PERSONALIZATION**.

Structural View

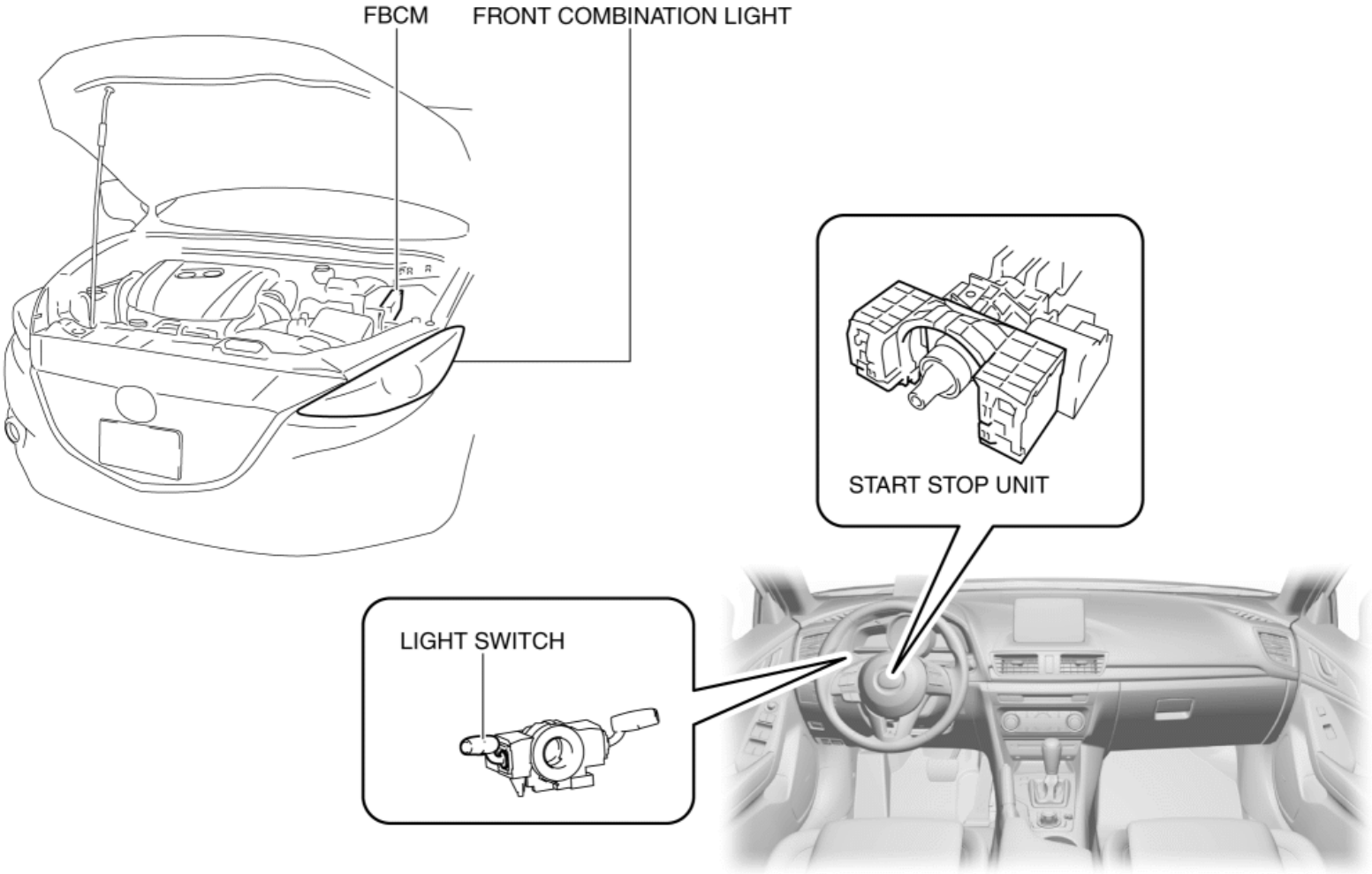

System Wiring Diagram

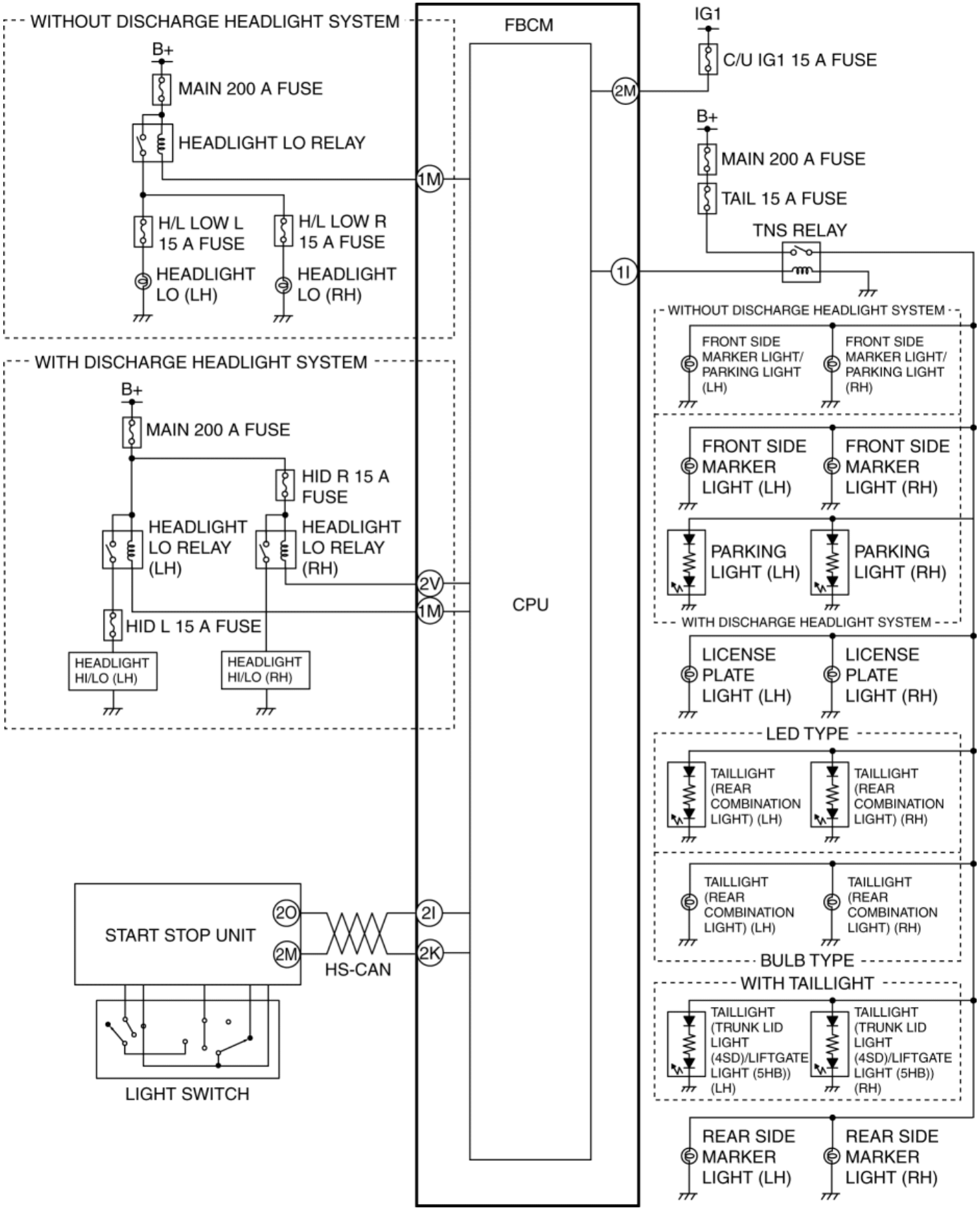
WITHOUT DISCHARGE HEADLIGHT SYSTEM
B+
MAIN 200 A FUSE
HEADLIGHT LO RELAY
H/L LOW L 15 A FUSE
H/L LOW R 15 A FUSE
HEADLIGHT LO (LH)
HEADLIGHT LO (RH)
WITH DISCHARGE HEADLIGHT SYSTEM
B+
MAIN 200 A FUSE
HID R 15 A FUSE
HEADLIGHT LO RELAY (LH)
HEADLIGHT LO RELAY (RH)
HID L 15 A FUSE
HEADLIGHT HI/LO (LH)
HEADLIGHT HI/LO (RH)
FBCM
CPU
1M
2V
1M
2I
2K
2M
1I
IG1
C/U IG1 15 A FUSE
B+
MAIN 200 A FUSE
TAIL 15 A FUSE
TNS RELAY
START STOP UNIT
2O
2M
HS-CAN
LIGHT SWITCH
WITHOUT DISCHARGE HEADLIGHT SYSTEM
FRONT SIDE MARKER LIGHT/ PARKING LIGHT (LH)
FRONT SIDE MARKER LIGHT/ PARKING LIGHT (RH)
FRONT SIDE MARKER LIGHT (LH)
FRONT SIDE MARKER LIGHT (RH)
PARKING LIGHT (LH)
PARKING LIGHT (RH)
WITH DISCHARGE HEADLIGHT SYSTEM
LICENSE PLATE LIGHT (LH)
LICENSE PLATE LIGHT (RH)
LED TYPE
TAILLIGHT (REAR COMBINATION LIGHT) (LH)
TAILLIGHT (REAR COMBINATION LIGHT) (RH)
TAILLIGHT (REAR COMBINATION LIGHT) (LH)
TAILLIGHT (REAR COMBINATION LIGHT) (RH)
BULB TYPE
WITH TAILLIGHT
TAILLIGHT (TRUNK LID LIGHT (4SD)/LIFTGATE LIGHT (5HB)) (LH)
TAILLIGHT (TRUNK LID LIGHT (4SD)/LIFTGATE LIGHT (5HB)) (RH)
REAR SIDE MARKER LIGHT (LH)
REAR SIDE MARKER LIGHT (RH)

Operation

1. When the front body control module (FBCM) receives a light switch TNS or HEAD signal from the start stop unit with the ignition switched ACC or off, the TNS or headlights are turned on and counting of the illumination time begins.

2. When the pre-set time has passed, the front body control module (FBCM) turns off the TNS or headlights.

NOTE:

- When the front body control module (FBCM) detects the change in the light switch HEAD signal from the TNS signal or the TNS signal from the HEAD signal during counting of the illumination time, the count is reset and counting is restarted.
- The flash-to-pass function operates independently regardless of whether it is during or after the illumination time counting.

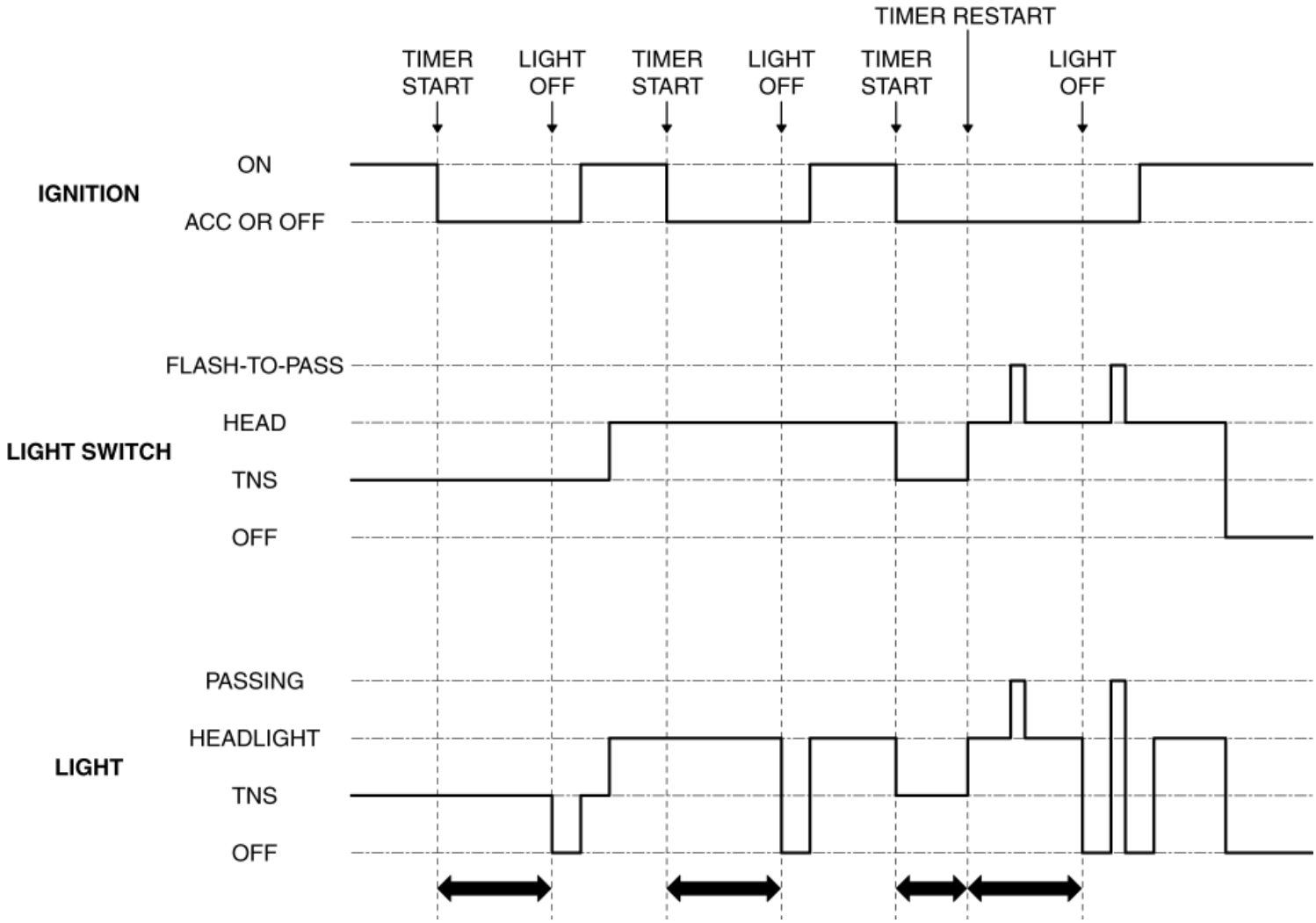

2014 - Mazda3 - Body and Accessories

AUTO LIGHT SYSTEM

Outline

- The auto light system automatically turns the TNS and headlights on/off according to the illumination level above and in front of the vehicle.
- The auto light system is controlled by the front body control module (FBCM).
- The front body control module (FBCM) performs auto light system fail-safe. (See **FRONT BODY CONTROL MODULE (FBCM)**.)

Function

- The auto light system receives a headlight illumination/off request signal from the auto light sensor and the front body control module (FBCM) turns the headlights on and off.
- If the upward and forward illumination sensors detect the illumination level at which the headlights should be illuminated/turned off, the auto light sensor sends a headlight illumination/off request signal.
- The front body control module (FBCM) does not illuminate the headlights for a 15 s period after the front body control module (FBCM) receives the headlight illumination request signal from the auto light system while the daytime vehicle speed is 1 km/h {0.6 mph} or more. As a result, headlight flicker occurring by the headlights being illuminated for a short period while in places such as a short tunnel is prevented.

Structural View

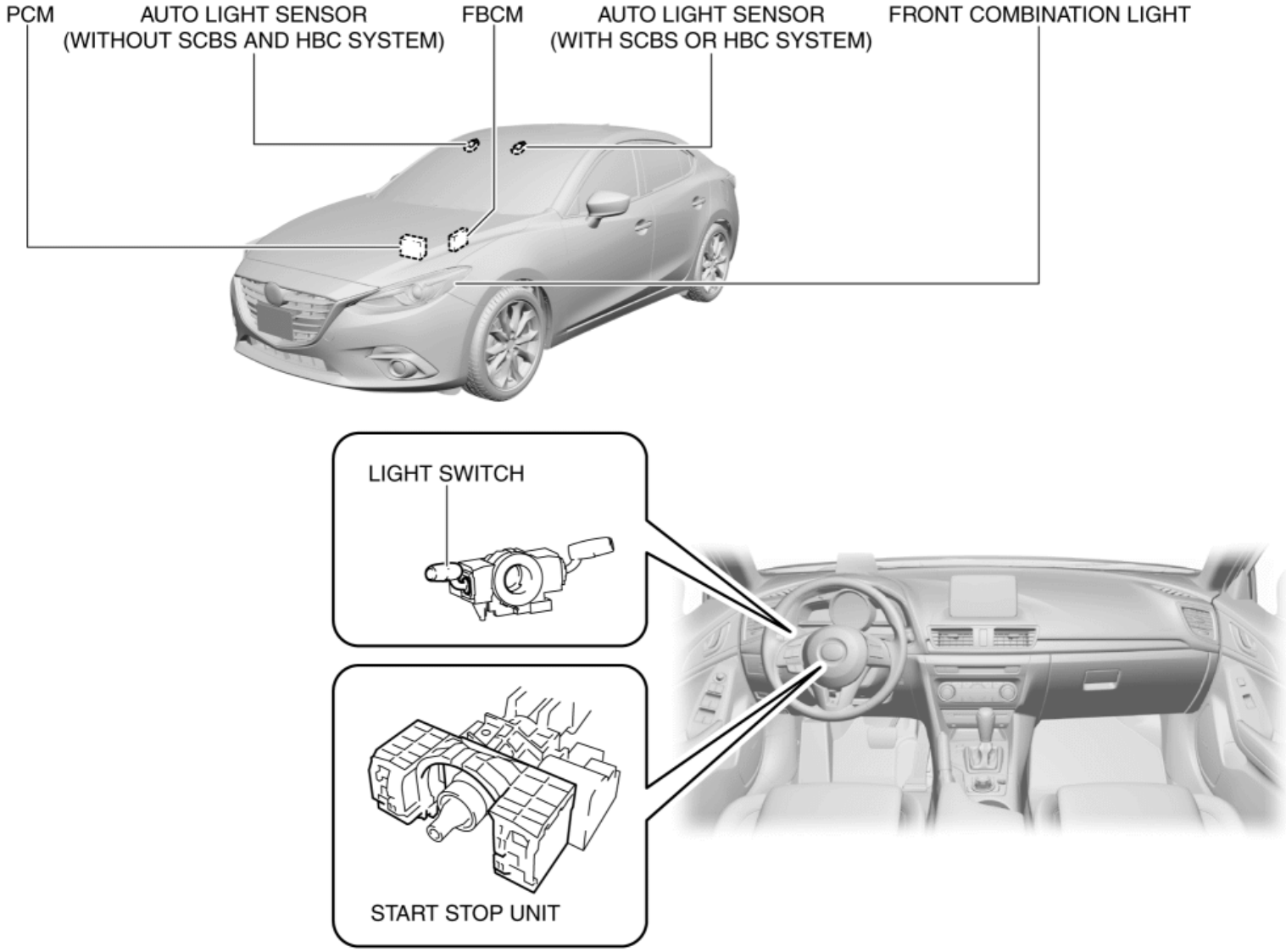

System Wiring Diagram

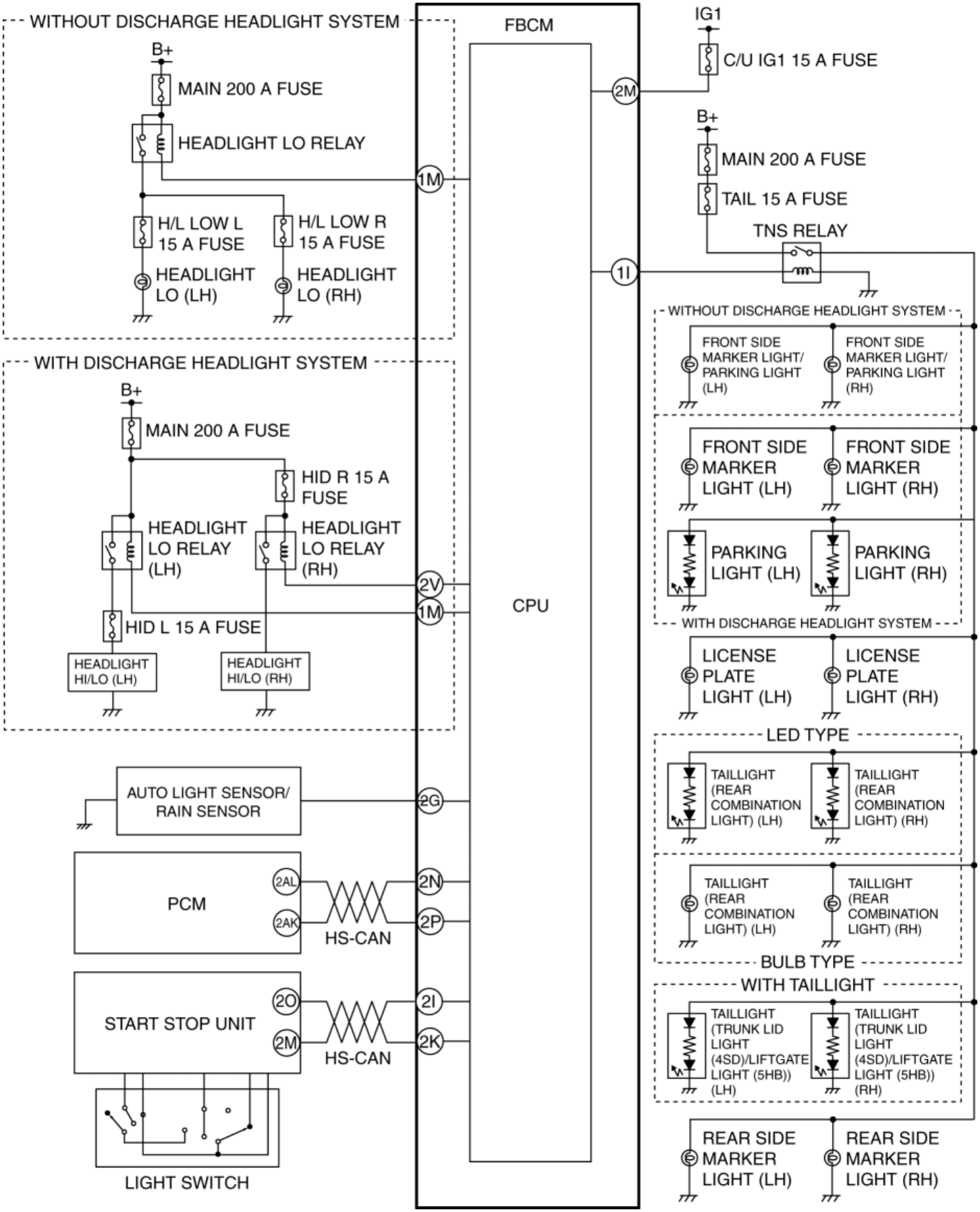

Operation

- The auto light system operates when the ignition is switched ON (engine off or on) and the light switch is in the AUTO

position.

NOTE:

- The following illumination level is for reference because it varies depending on the surrounding conditions (weather, reflection off buildings).
- The illumination level sensitivity of the auto light sensor can be changed. The illumination level in the explanation for the following operations is the value when setting to "Medium". (See **LIGHTING SYSTEM PERSONALIZATION**.)

Illumination operation

1. When the light switch is operated to the AUTO position with the ignition switched ON (engine off or on), the start stop unit detects a light switch AUTO signal.

2. The start stop unit sends the light switch AUTO signal to the front body control module (FBCM) as a CAN signal.

3. The auto light sensor detects the illumination level above the vehicle.

4. If the auto light sensor detects an average lux value of 2,000 or less of upward illumination during a 1 min period, it sends a TNS and headlight on signal to the front body control module (FBCM) via a LIN signal.

5. When the front body control module (FBCM) receives a TNS and headlight on signal, it turns the TNS relay and headlight LO relay on and illuminates the TNS and headlights.

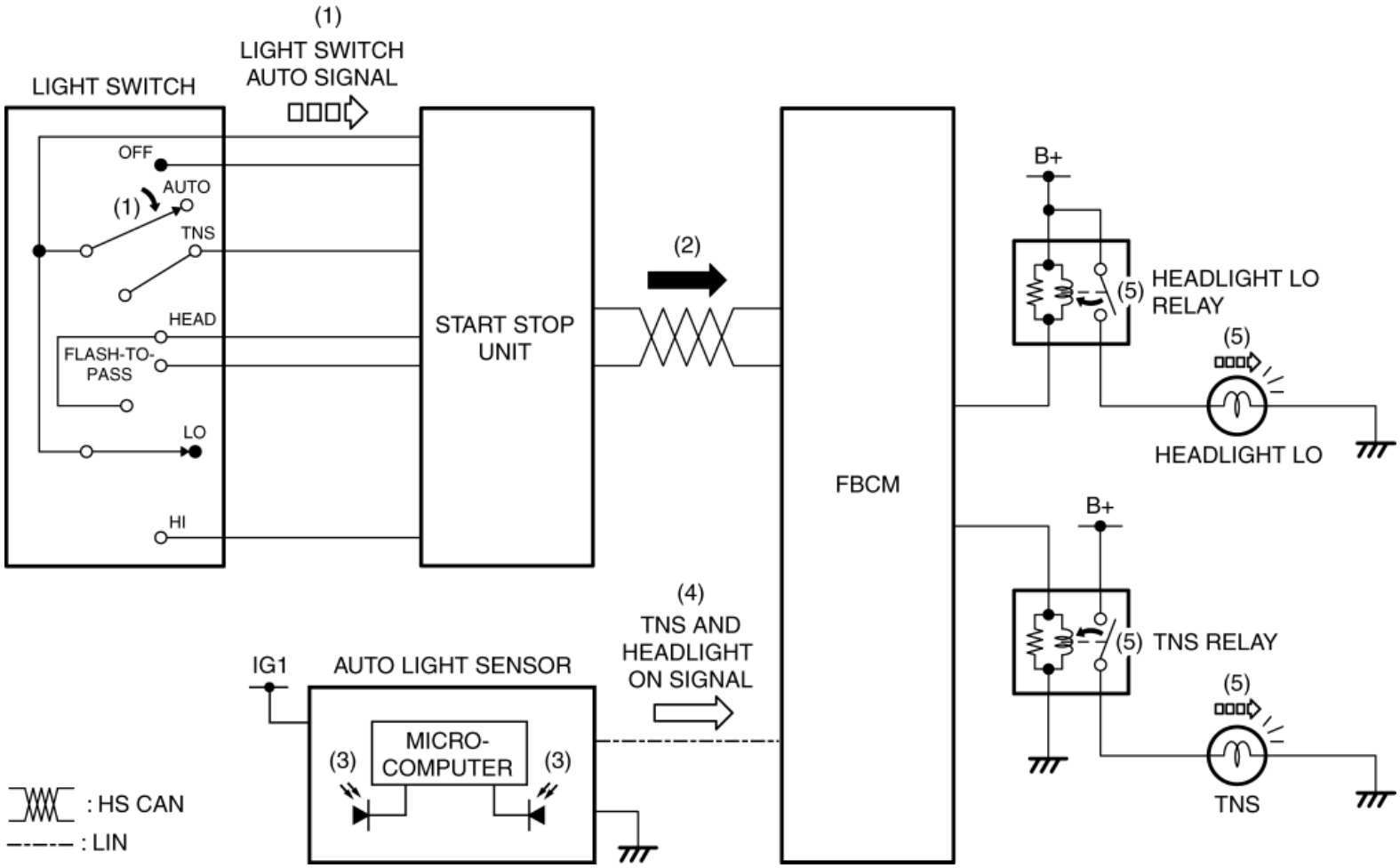

Lights off operation

1. When the light switch is operated to the AUTO position with the ignition switched ON (engine off or on), the start stop unit detects a light switch AUTO signal.

2. The start stop unit sends the light switch AUTO signal to the front body control module (FBCM) as a CAN signal.

3. The auto light sensor detects the illumination level above and in front of the vehicle.

4. If the auto light sensor detects the following illumination, it sends a TNS and headlight off signal to the front body control

module (FBCM) via a LIN signal.

After ignition is switched ON, 30 min have not elapsed:

- Upward and forward illumination is 4,000 lux or more

After ignition is switched ON, 30 min have elapsed:

- Average value of upward and forward illumination during 1 min period is 4,000 lux or more

5. When the front body control module (FBCM) receives a TNS and headlight off signal, it turns the TNS relay and headlight LO relay off and turns the TNS and headlights off.

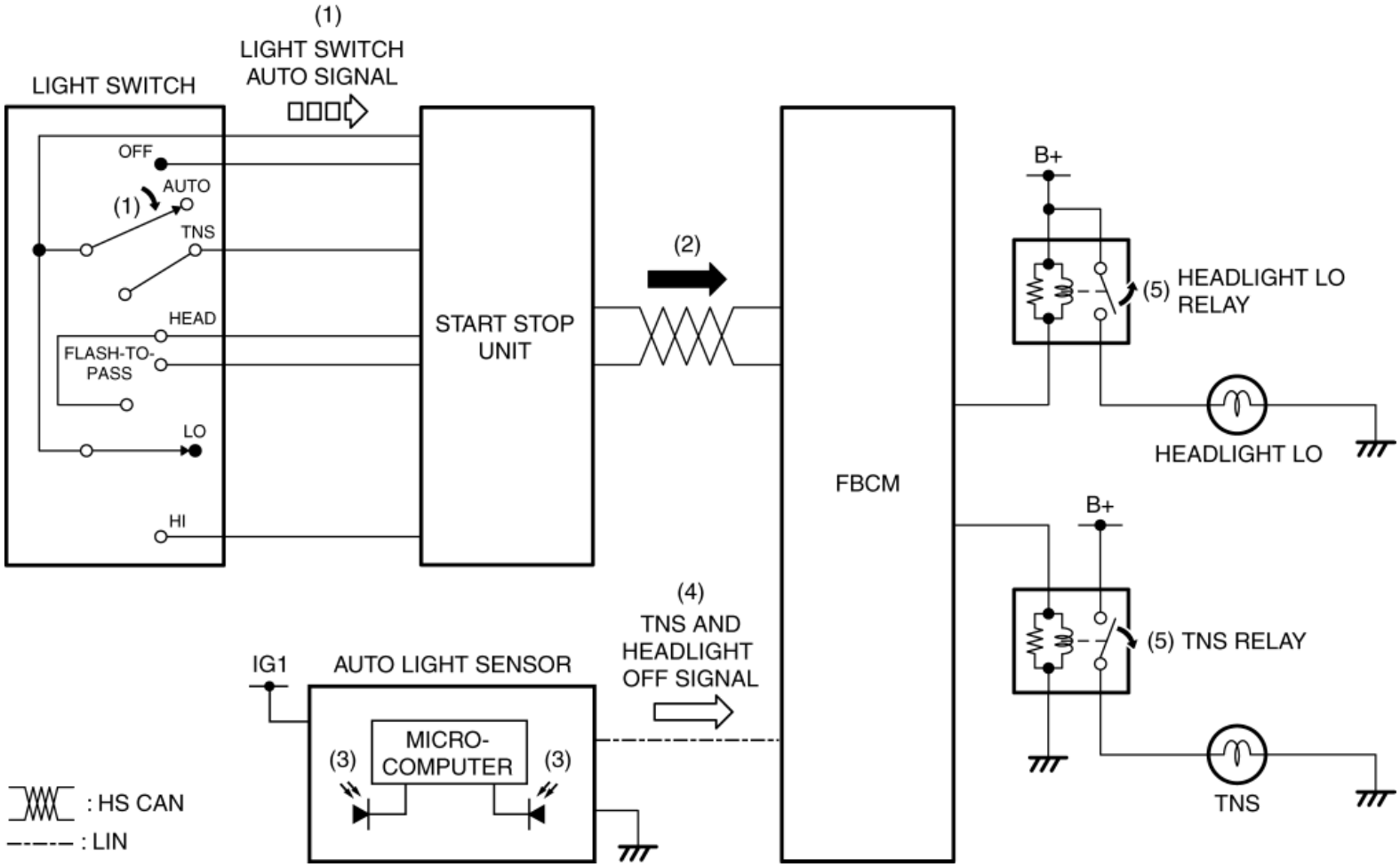

2014 - Mazda3 - Body and Accessories

AUTO LIGHT SENSOR

Purpose

- The auto light sensor detects the illumination level above and in front of the vehicle and outputs it to the front body control module (FBCM).

Function

- The auto light sensor uses the upward illumination level sensor to detect the illumination level above the vehicle, and uses the forward illumination level sensor to detect the illumination level in front of the vehicle.

Illumination level adjustment function

- The illumination level can be switched through 5 levels using the Mazda Modular Diagnostic System (M-MDS) or the center display (with center display). (See **LIGHTING SYSTEM PERSONALIZATION**.)

On-board diagnostic function

- Notifies front body control module (FBCM) of a malfunction in the auto light sensor, and a DTC is detected from the front body control module (FBCM).
- For details on DTCs, refer to the ON-BOARD DIAGNOSTIC [FRONT BODY CONTROL MODULE (FBCM)], DTC table in the Workshop Manual.

Construction

- The auto light sensor is integrated with the rain sensor as a single unit.
- The auto light sensor consists of the lens, forward illumination level sensor (photodiode), upward illumination level sensor (photodiode), and microcomputer.

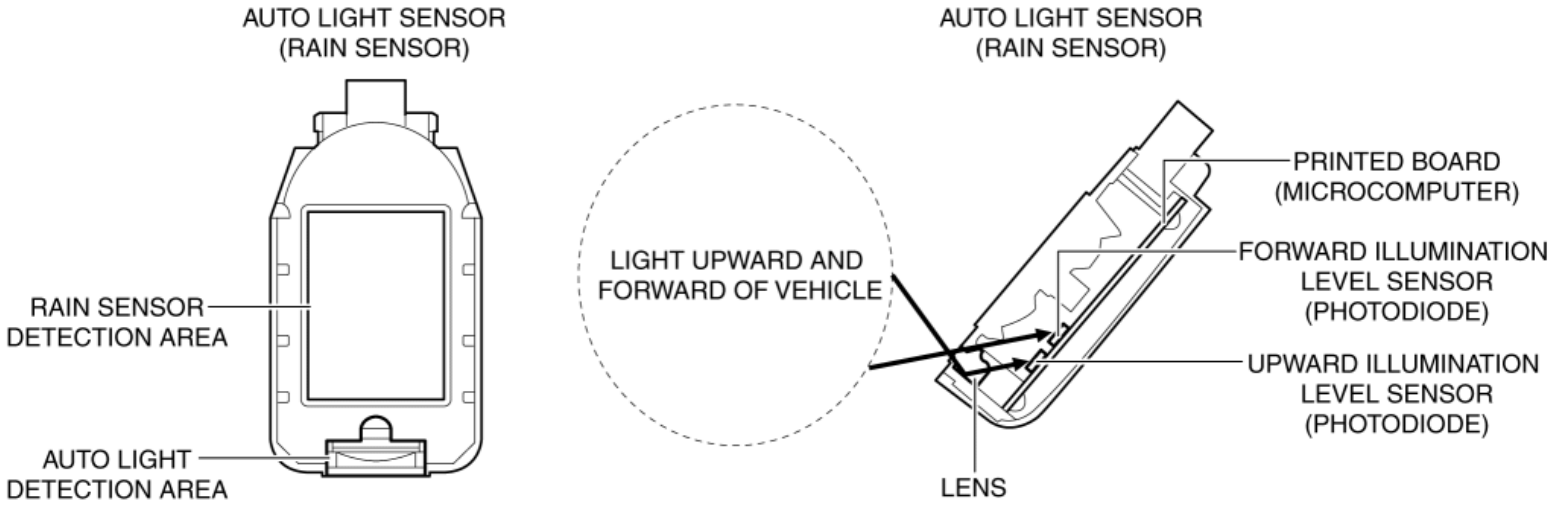

Operation

CAUTION:

Correct illumination level detection is not be possible under the following conditions and could cause the system to operate incorrectly.

- Stickers or labels are attached to the auto-light sensor detection area on the windshield.
- The auto-light sensor detection area on the windshield is dirty.

1. The auto light sensor detects the illumination level above and in front of the vehicle when the ignition is switched ON (engine off or on) and the light switch is operated to the AUTO position.

2. The auto light sensor outputs a TNS and headlight LO on or off signal to the front body control module (FBCM) according to the detected illumination level.

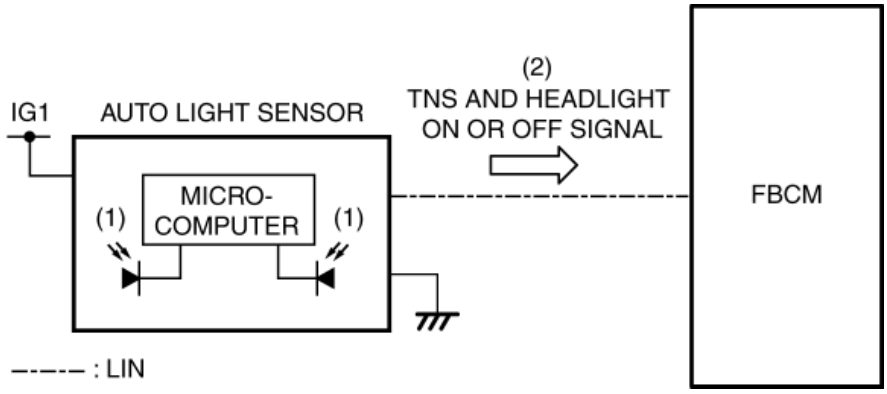

Fail-safe

- Function not equipped.

2014 - Mazda3 - Body and Accessories

HEADLIGHT MANUAL LEVELING SYSTEM

Outline

- The headlight manual leveling system changes the headlight LO optical axis according to the operation of the headlight leveling switch to prevent driver dazzle in oncoming vehicles from headlight glare and to assure a range of visibility.

Structural View

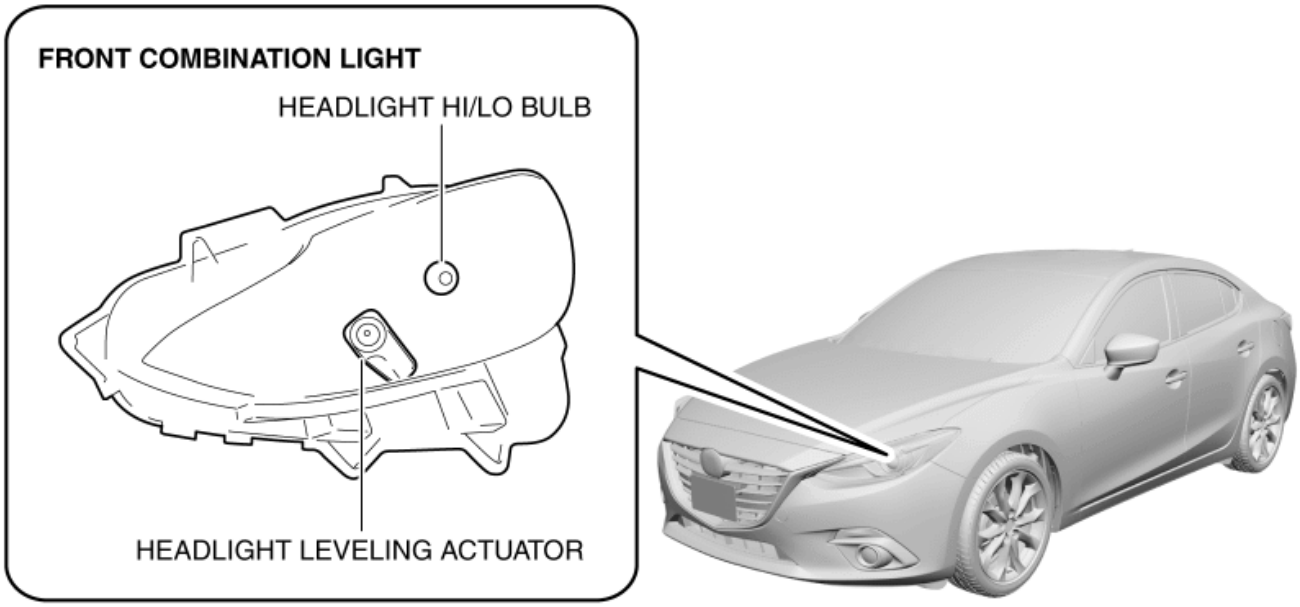

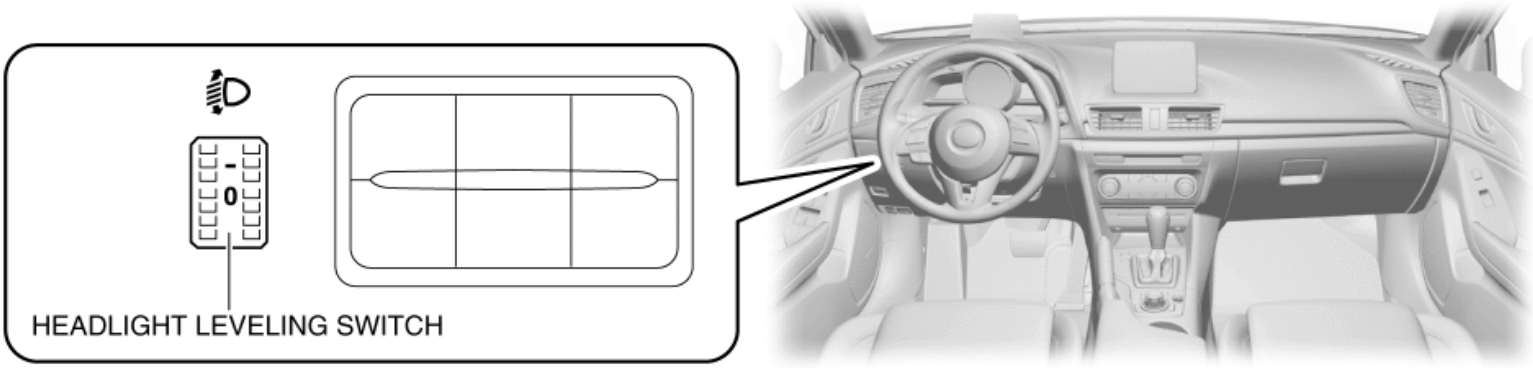

System Wiring Diagram

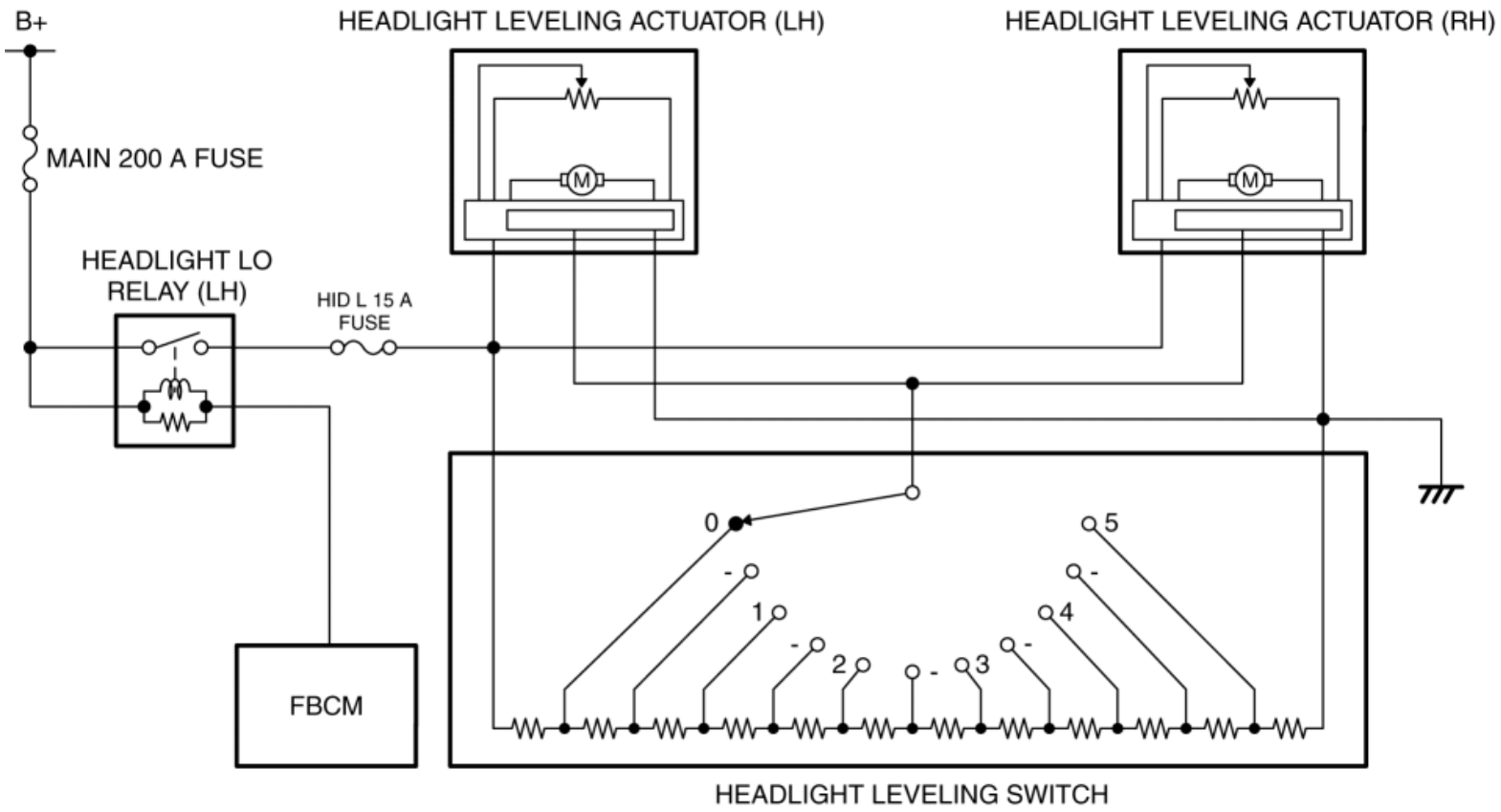

Operation

1. When the headlight leveling switch is operated with the headlights LO turned on, the resistance value changes according to the changed position, and electric current flows to the headlight leveling actuator.

2. When electric current flows to the headlight leveling actuator, the motor inside the actuator operates and the headlight LO optical axis changes.

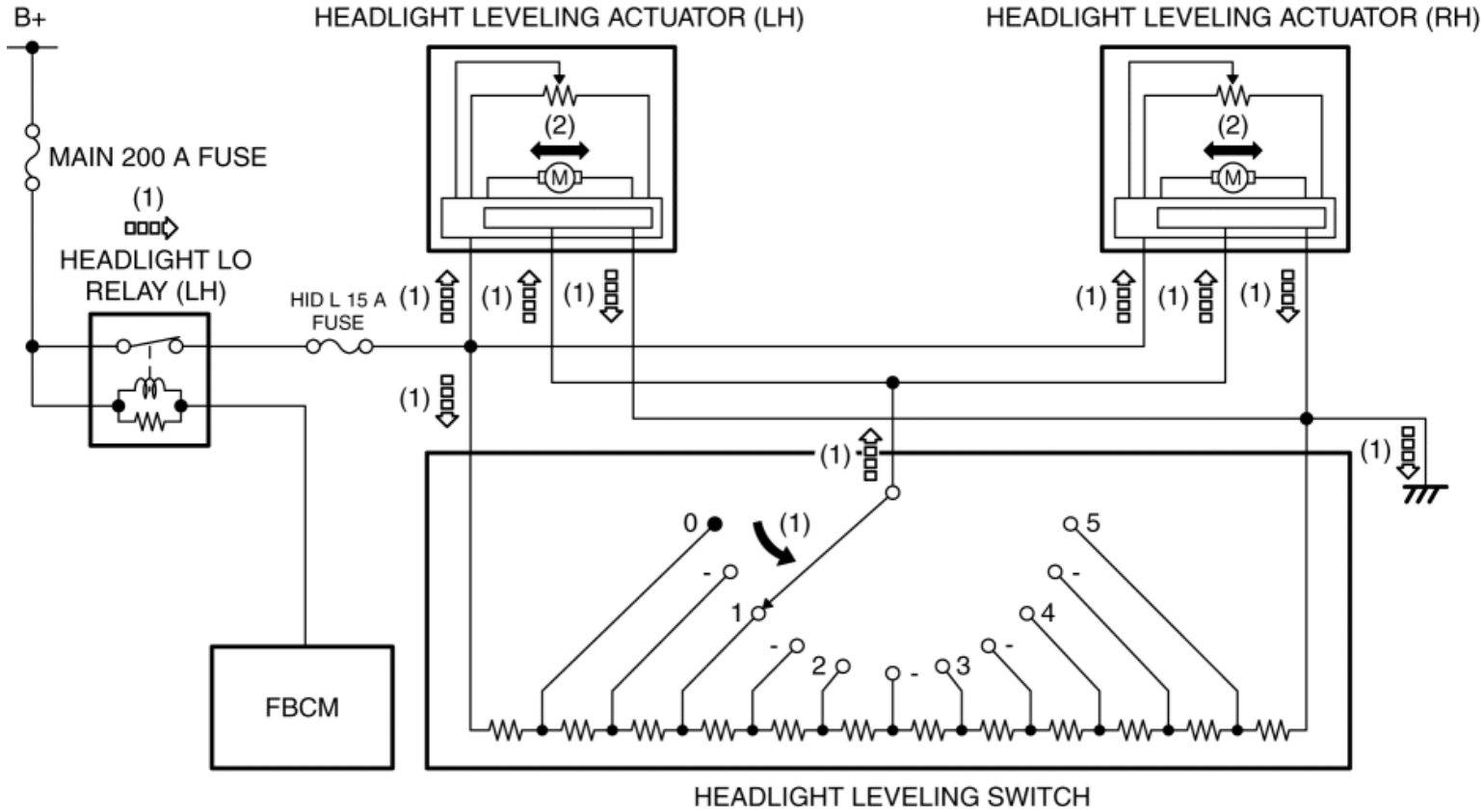
B+
HEADLIGHT LEVELING ACTUATOR (LH)
HEADLIGHT LEVELING ACTUATOR (RH)
MAIN 200 A FUSE
(1)
HEADLIGHT LO RELAY (LH)
HID L 15 A FUSE
(2)
M
FBCM
0
1
2
3
4
5
HEADLIGHT LEVELING SWITCH

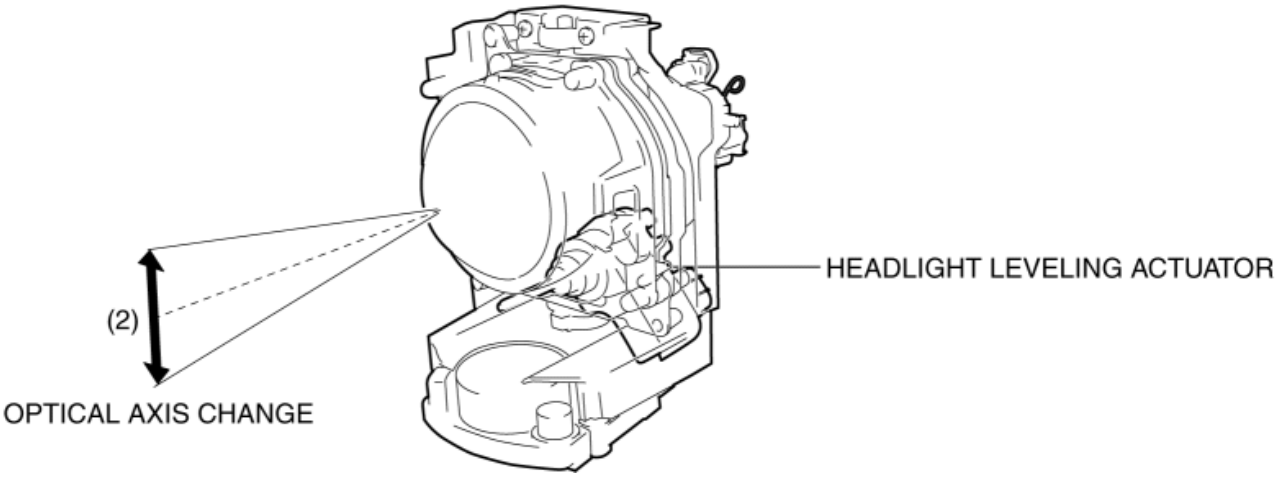
HEADLIGHT LEVELING ACTUATOR
(2)
OPTICAL AXIS CHANGE

2014 - Mazda3 - Body and Accessories

HEADLIGHT LEVELING SWITCH

Purpose

- Changes the resistance value according to the position which the headlight leveling switch has been changed.

Function

- The position of the headlight leveling switch can be switched between 11 levels: 0 to 5.
- When the headlight leveling switch is turned upward, the headlight LO optical axis moves upward. When the switch is turned downward, the axis moves downward.

Construction

- Built into the cluster switch.

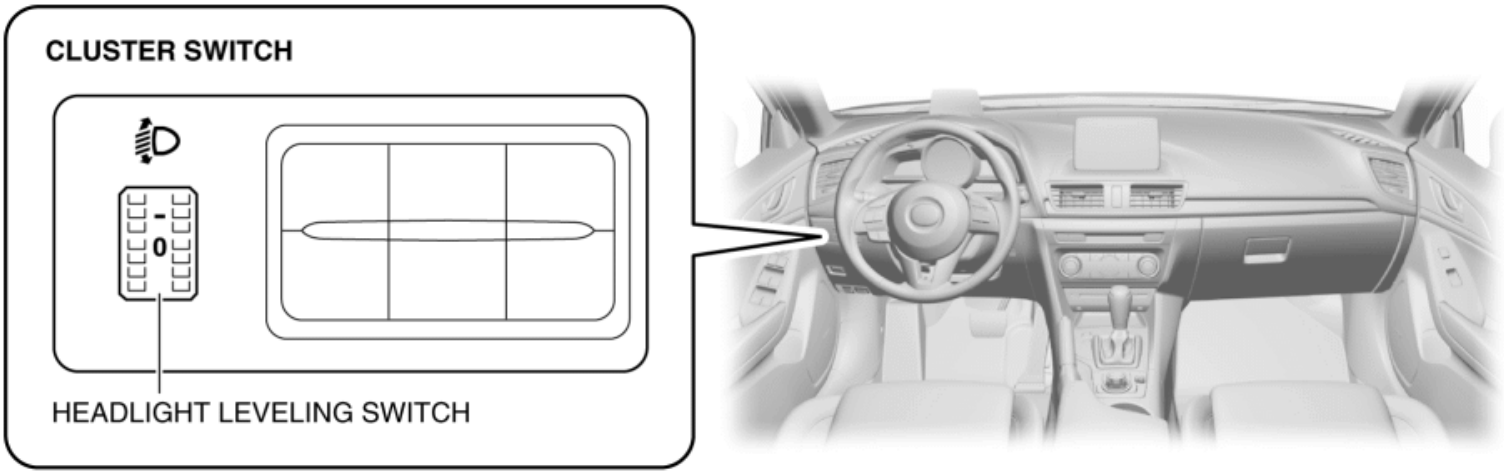

Operation

1. When the headlight leveling switch is operated with the headlights turned on, the resistance value changes according to the changed position, and electric current flows to the headlight leveling actuator.

2. When the motor is driven, the shaft moves back and forth and the reflector moves to change the optical axis.

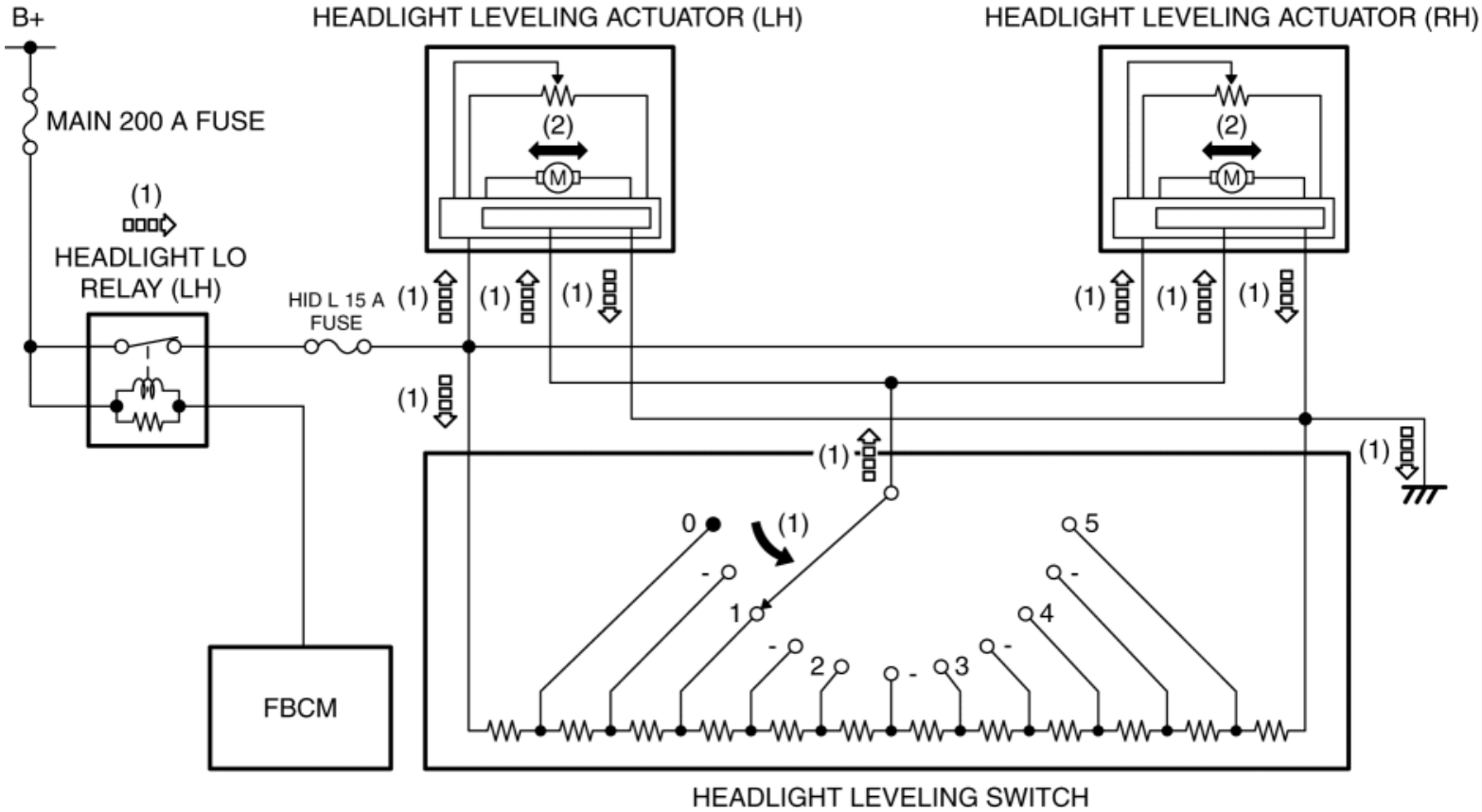

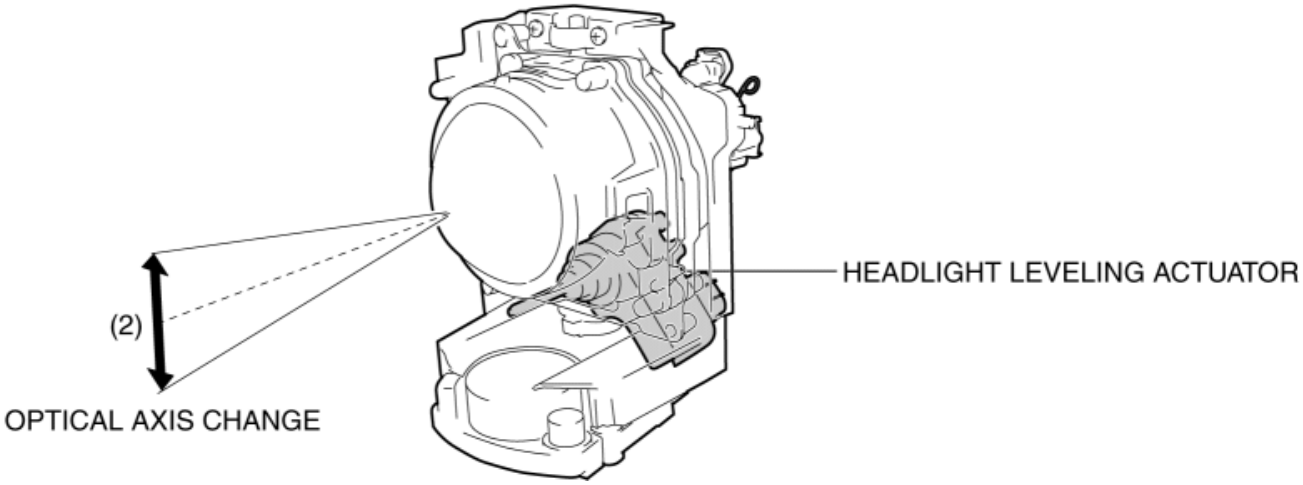

Fail-safe

- Function not equipped.

2014 - Mazda3 - Body and Accessories

HEADLIGHT AUTO LEVELING SYSTEM

Outline

- Automatically adjusts the headlight optical axis in response to changes in load and passenger conditions to prevent blinding of oncoming vehicles from headlight glare and to assure a range of visibility.
- The AFS control module performs headlight auto leveling system fail-safe. (See **ADAPTIVE FRONT LIGHTING SYSTEM (AFS) CONTROL MODULE**.)

Function

- The headlight auto leveling system is controlled by the AFS control module.
- The AFS control module also controls the adaptive front lighting system (AFS) which changes the optical axis to the direction in which the vehicle is travelling according to the steering wheel operation and vehicle speed while the headlights are turned on. (See **ADAPTIVE FRONT LIGHTING SYSTEM (AFS)**.)

Optical axis adjustment function

- If the ignition is switched ON (engine on or off) and there is a vehicle height change when the headlights LO are illuminated, the AFS control module automatically adjusts the headlight optical axis.
- The AFS control module controls the optical axis adjustment function based on the following CAN signals.

CAN signal sending module	Signal name
PCM	Vehicle speed signal
Instrument cluster	Ignition switch status signal
Front body control module (FBCM)	Headlight illumination status signal

Structural View

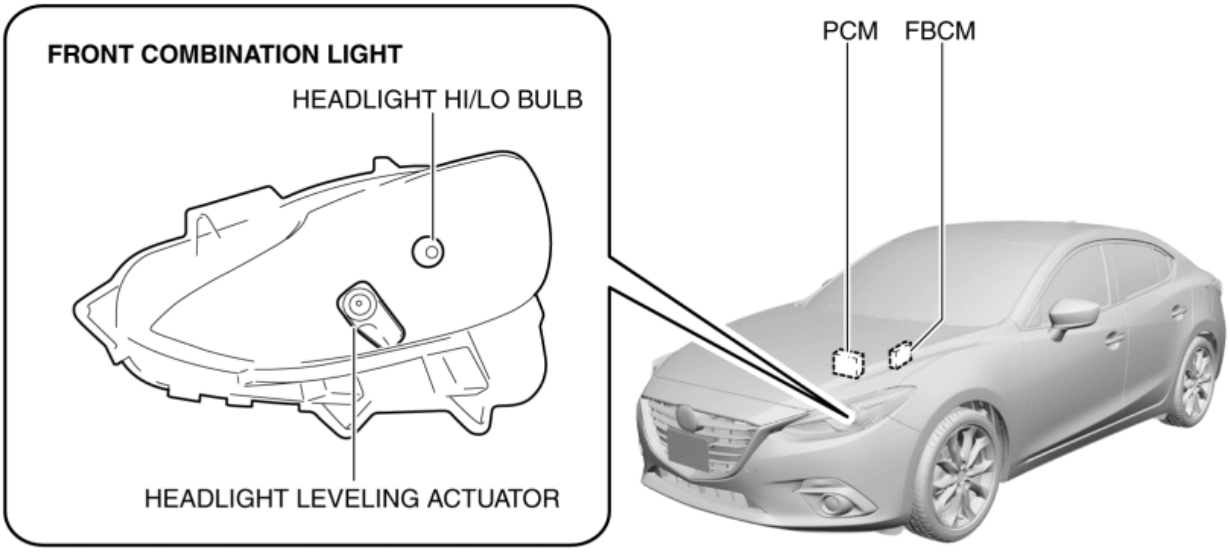

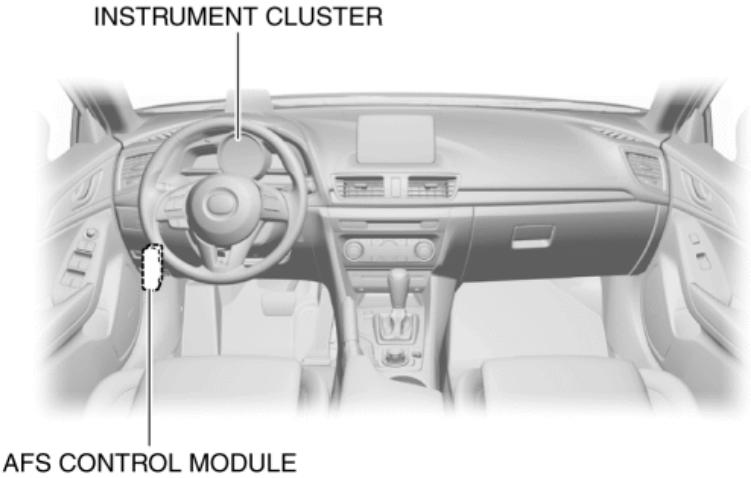

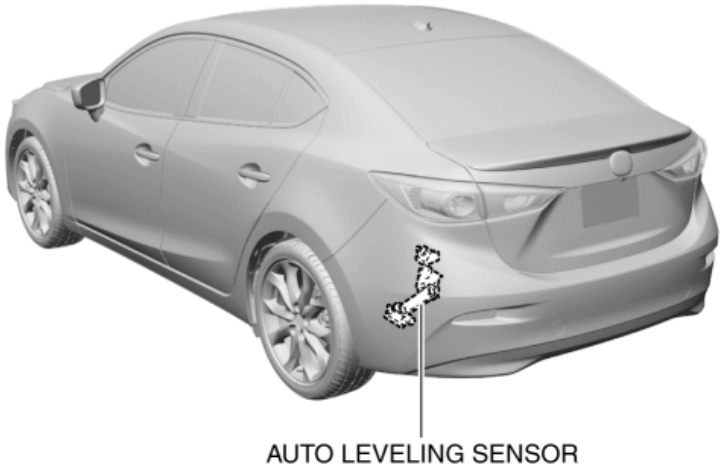

System Wiring Diagram

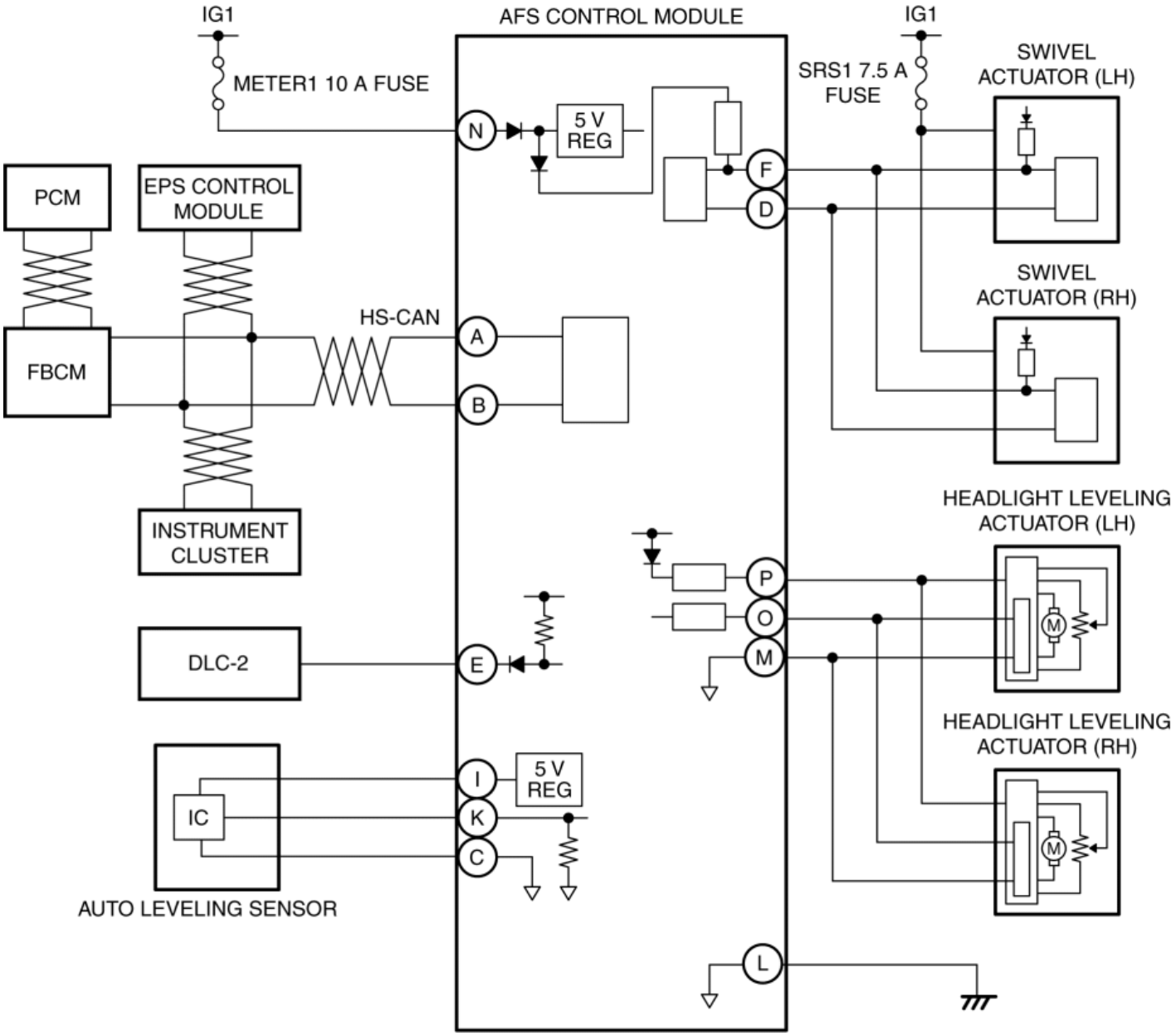

Operation

Vehicle height changes while vehicle is stopped

Operation condition

- Operates when all of the following conditions are met:
  - Vehicle speed is 0 km/h {0 mph}
  - Ignition switch ON (engine off or on)
  - Headlight LO illumination (headlight LO illumination signal reception)
  - Detects change in vehicle height amount* at specified value or more

Operation

- When the ignition is switched ON (engine off or on), the auto leveling sensor sends a vehicle height signal to the AFS control module.
- When the headlights LO turn on, the AFS control module calculates the amount of change in the vehicle height* based on the vehicle height signal.

- When the amount of change in the vehicle height * is the specified value or more, the AFS control module calculates the target optical axis based on the calculated amount of change in the vehicle height*.
- The AFS control module outputs the calculated target optical axis signal to the headlight leveling actuator.
- The headlight leveling actuator drives the motor when the target optical axis signal is input.

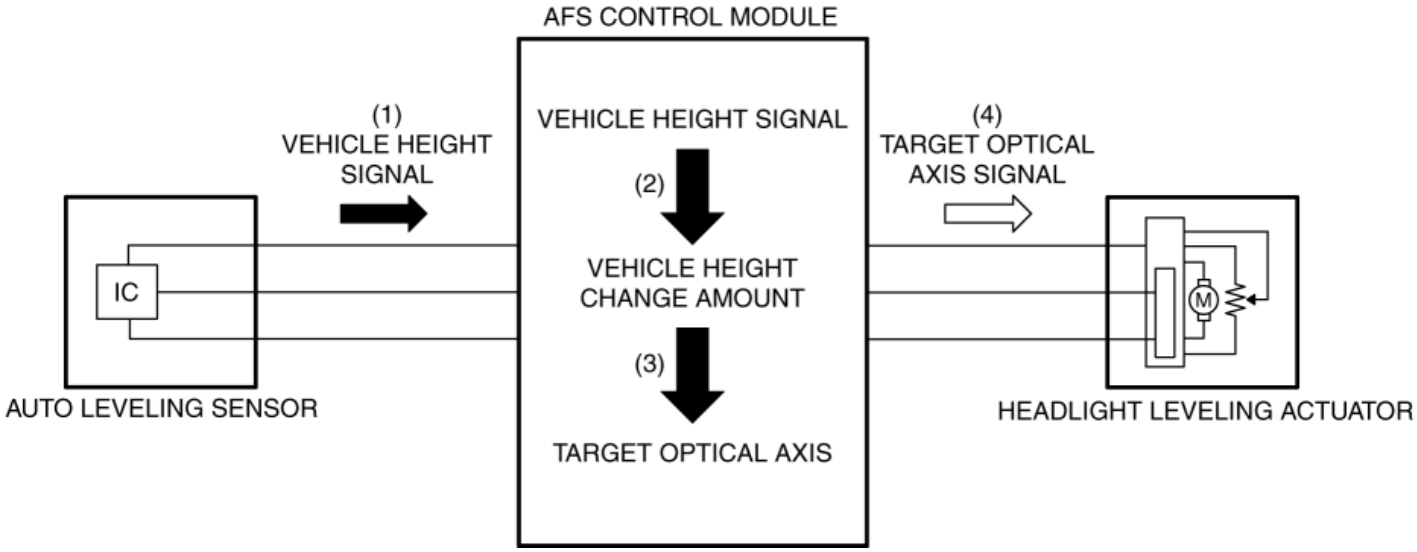

Vehicle height changes while vehicle is moving

Operation condition

- Operates when all of the following conditions are met:
  - Vehicle speed 30 km/h {19 mph} or more
  - Headlight LO illumination (headlight LO illumination signal reception)
  - Detects change in vehicle speed of 3 km/h {2 mph} or less for continuous period of 25 s
  - Detects change in vehicle height amount* at specified value or more

Operation

- While the vehicle is travelling, the auto leveling sensor sends a vehicle height signal to the AFS control module.
- When the headlights LO turn on, the AFS control module calculates the amount of change in the vehicle height* based on the vehicle height signal.
- When the vehicle speed is 30 km/h {19 mph} or more, the detected change in vehicle speed is 3 km/h {2 mph} or less for a continuous 25 s, and the change in the amount of vehicle height* is the specified value or more, the AFS control module calculates the target optical axis based on the calculated change in the amount of vehicle height*.
- The AFS control module outputs the calculated target optical axis signal to the headlight leveling actuator.
- The headlight leveling actuator drives the motor when the target optical axis signal is input.

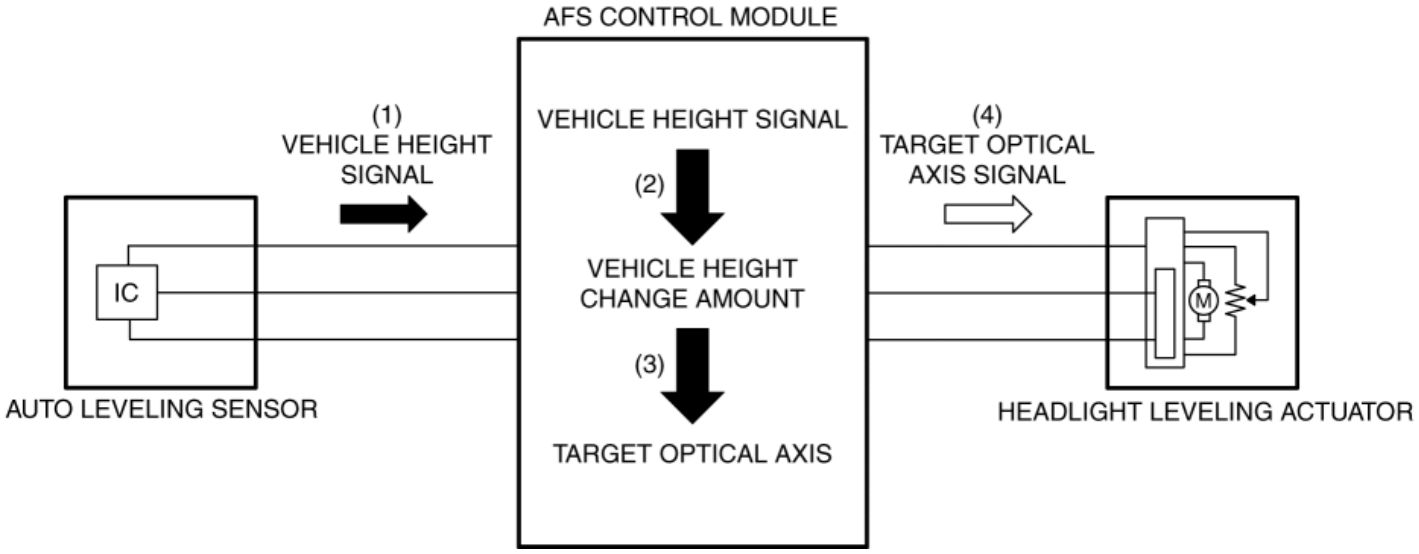

*

The change in the amount of vehicle height is the calculated 1 s average value of the vehicle height signal which the AFS control module detects every 0.1 s.

2014 - Mazda3 - Body and Accessories

AUTO LEVELING SENSOR

Purpose

- Detects the vehicle height and outputs it to the AFS control module.

Function

- Changes the detected vehicle height into a voltage value and outputs it to the AFS control module.

Construction

- Installed to the rear crossmember.
- Consists of link No. 1, link No.2 and the Hall sensor.

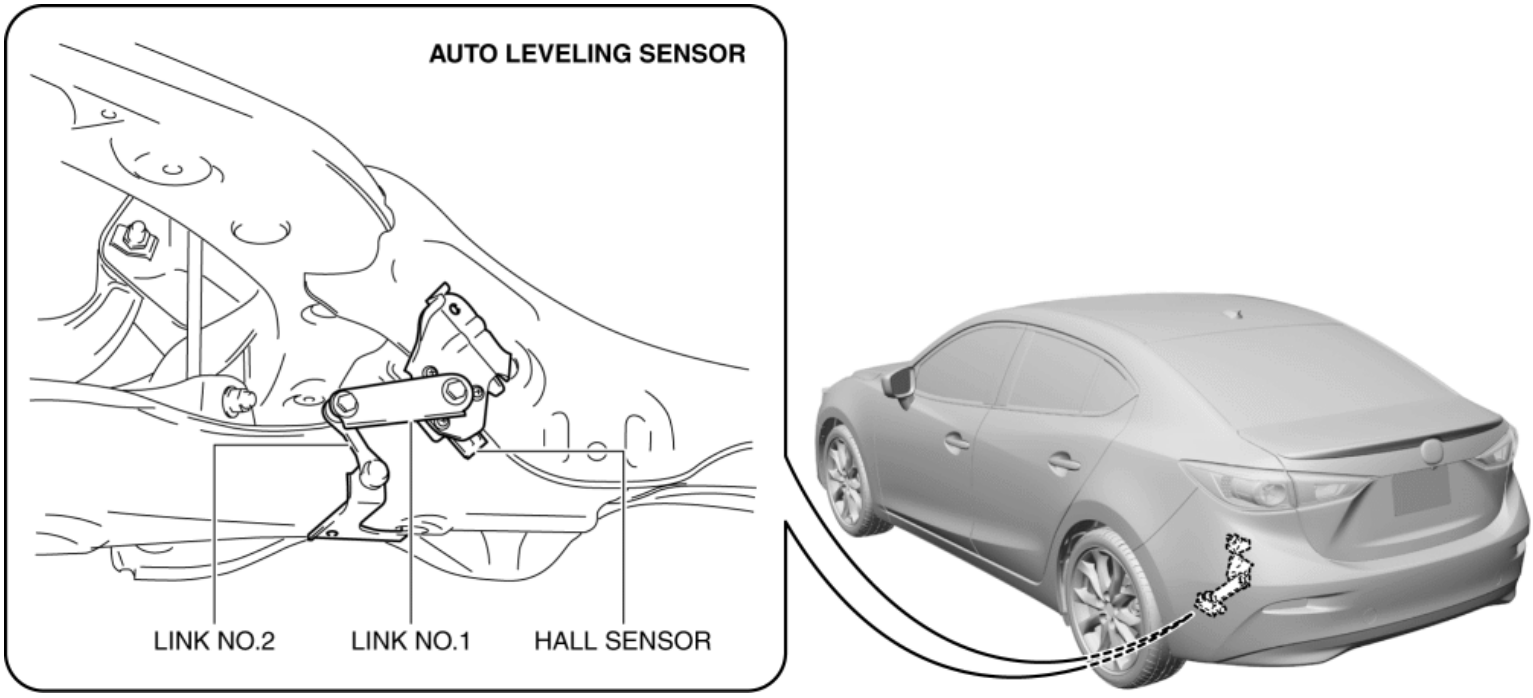

Operation

1. If the rear crossmember slumps under a load and passengers, the auto leveling sensor link changes.
2. The auto leveling sensor changes the voltage value according to the angles of the links and outputs to the AFS control module.

VEHICLES CONDITION

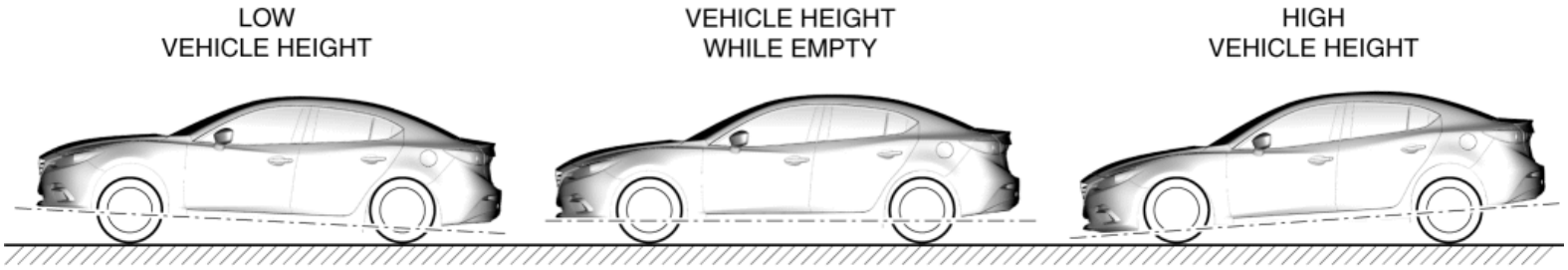

AUTO LEVELING SENSOR CONDITION

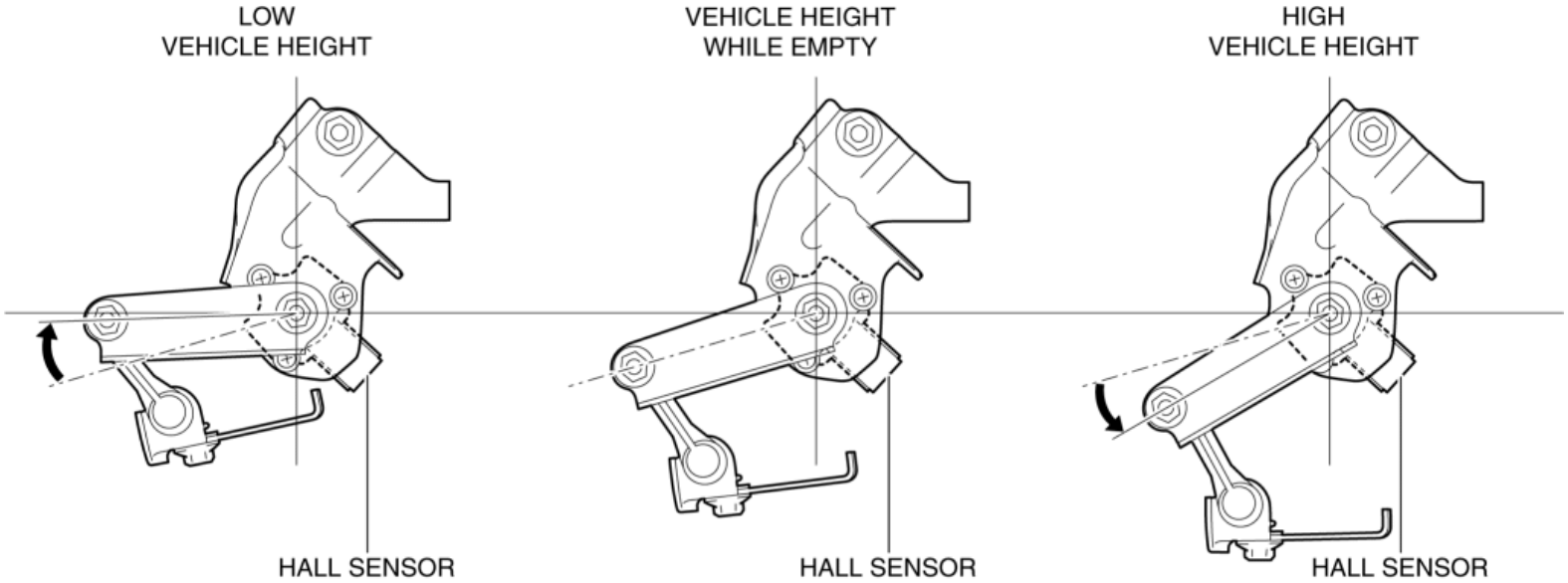

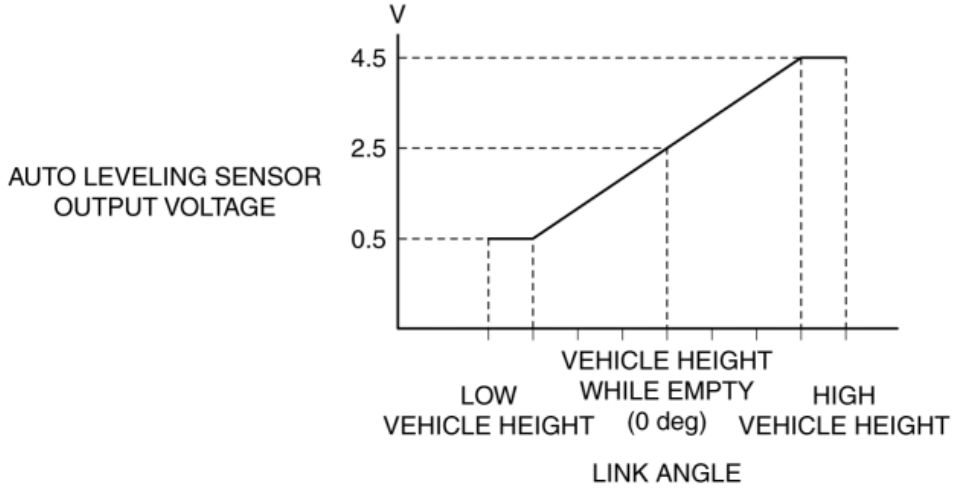

Fail-safe

- Function not equipped.

2014 - Mazda3 - Body and Accessories

HEADLIGHT LEVELING ACTUATOR

Purpose, Function

With headlight manual leveling system

- The headlight leveling actuator drives the motor using the electrical current from the headlight leveling switch to change the optical axis of the headlights.

With headlight auto leveling system

- The headlight leveling actuator drives the motor based on the target optical axis voltage, which is input from the AFS control module, to change the optical axis of the headlights.

Construction

- Built into the front combination lights.
- Consists of a motor which expands/retracts the shaft, a shaft, and a microcomputer which calculates the shaft expansion/contraction amount.

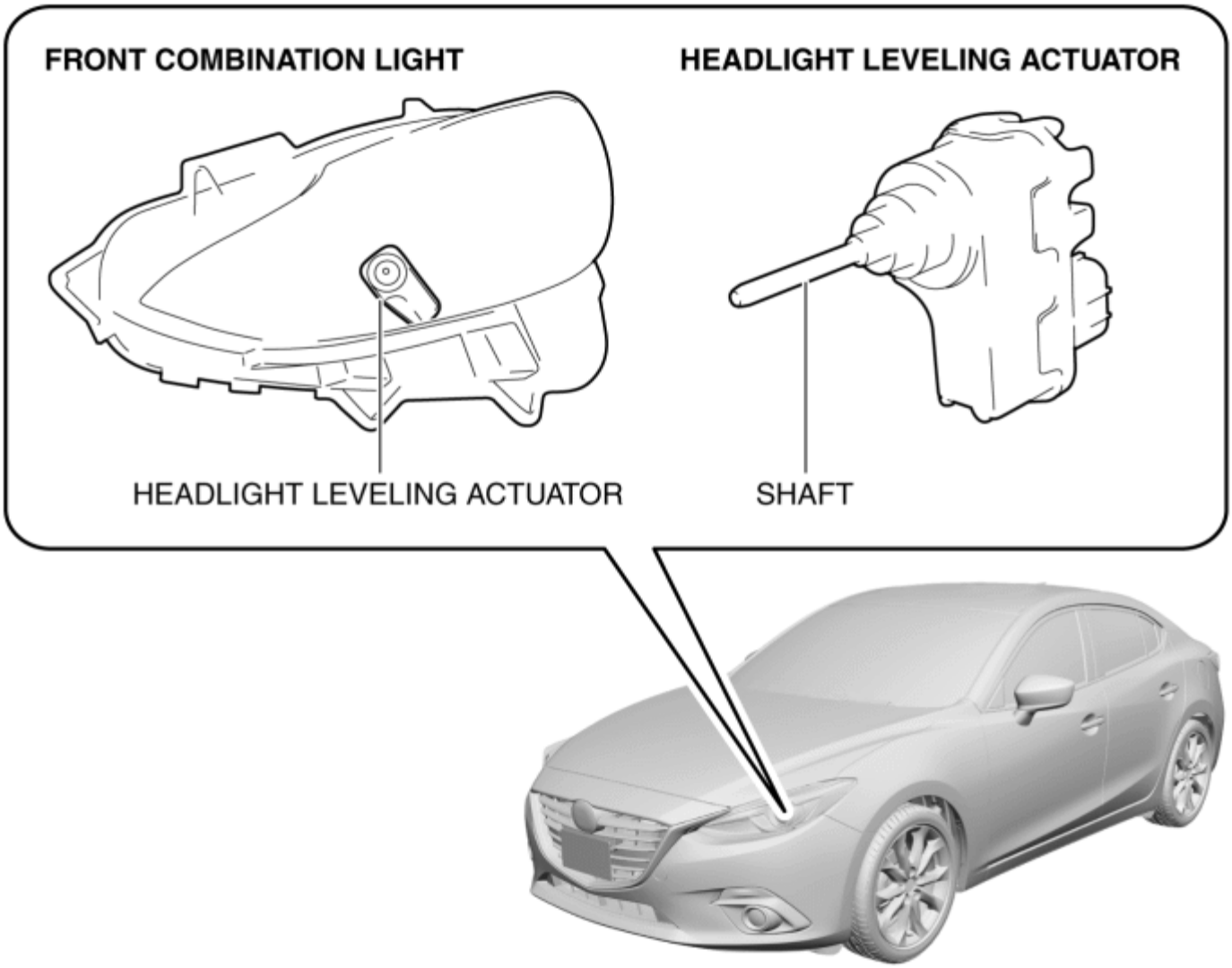

Operation

With headlight manual leveling system

1. The headlight leveling actuator drives the motor using the electrical current from the headlight leveling switch until the optical axis reaches the target optical axis position.

2. When the motor is driven, the shaft moves back and forth and the reflector moves to change the optical axis.

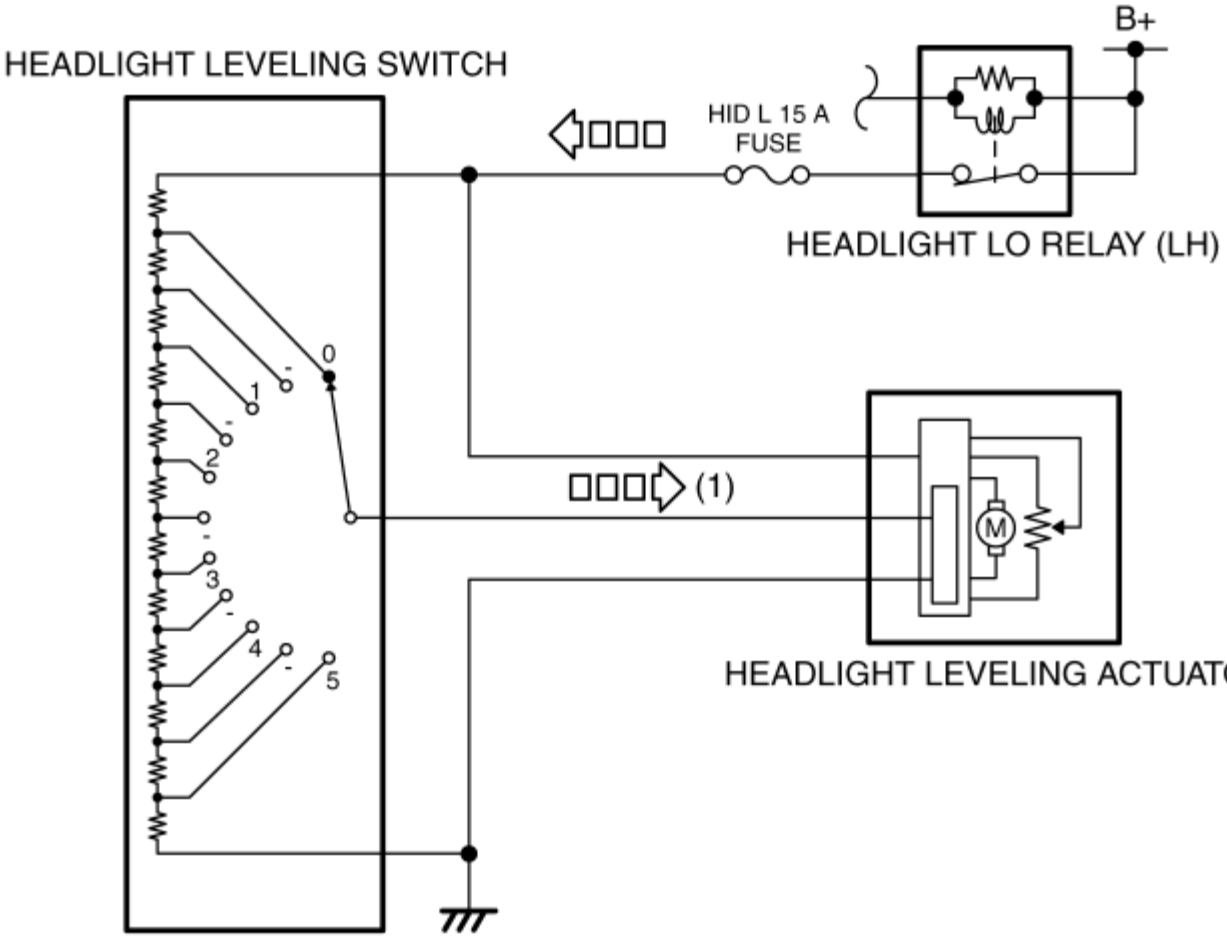

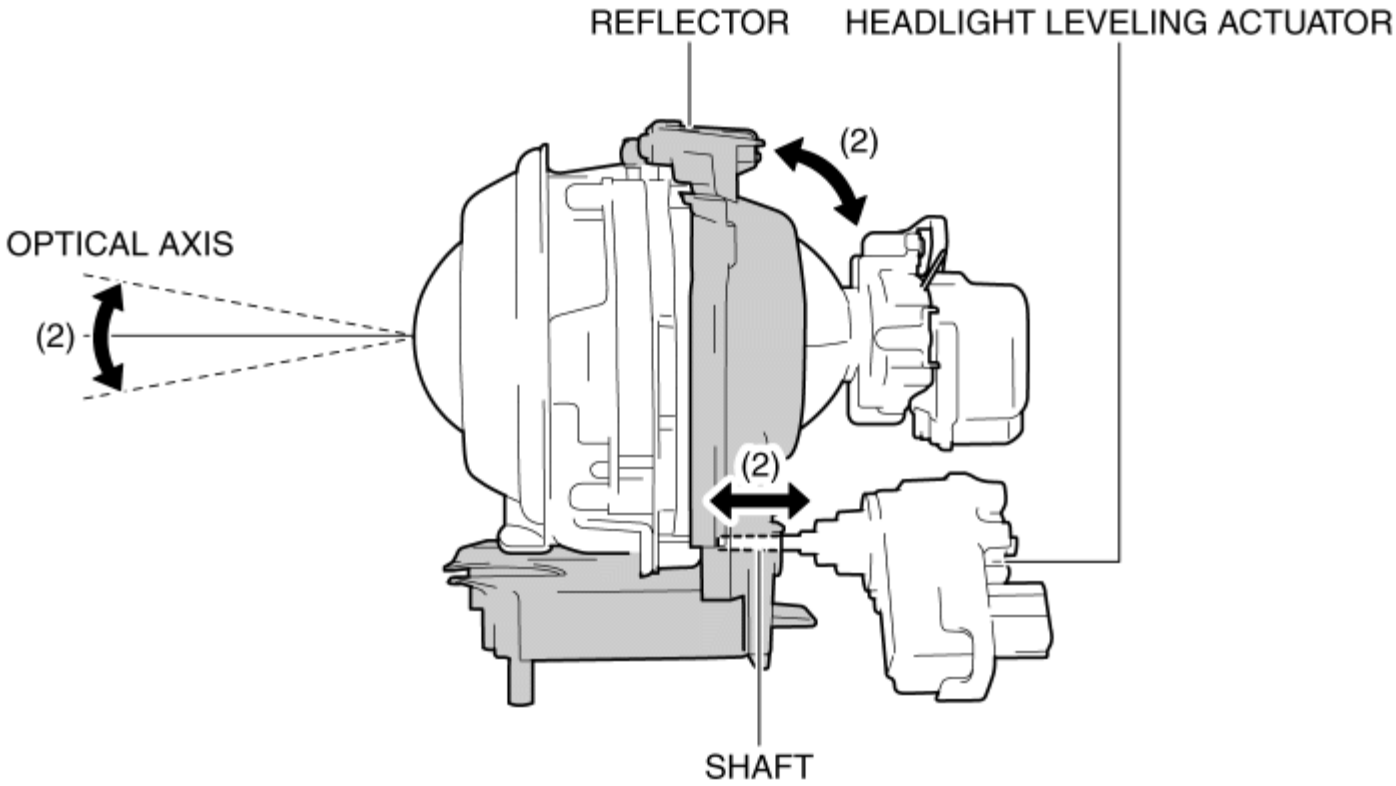

With headlight auto leveling system

1. The headlight leveling actuator calculates the motor drive amount based on the target optical axis signal from the AFS control module and drives the motor until the headlight reaches the target optical axis.

2. When the motor is driven, the shaft moves back and forth and the reflector moves to change the optical axis.

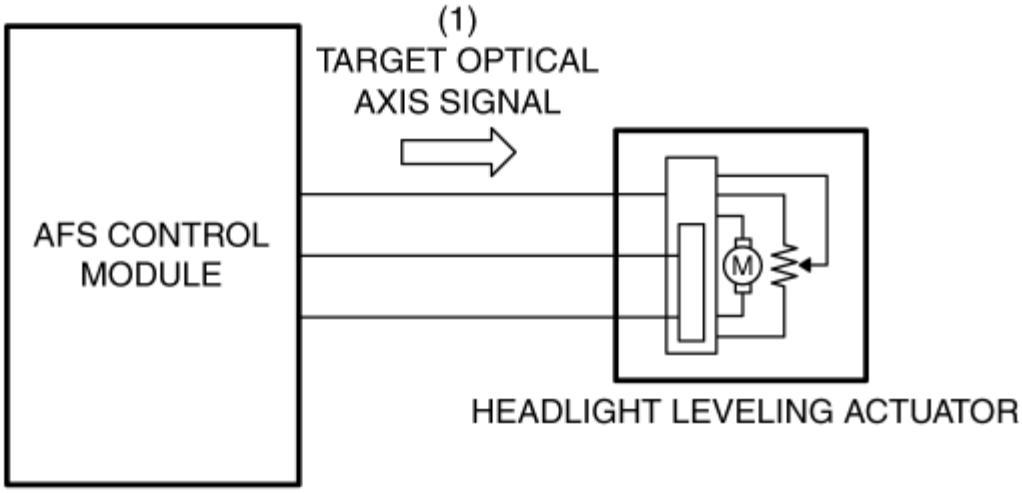

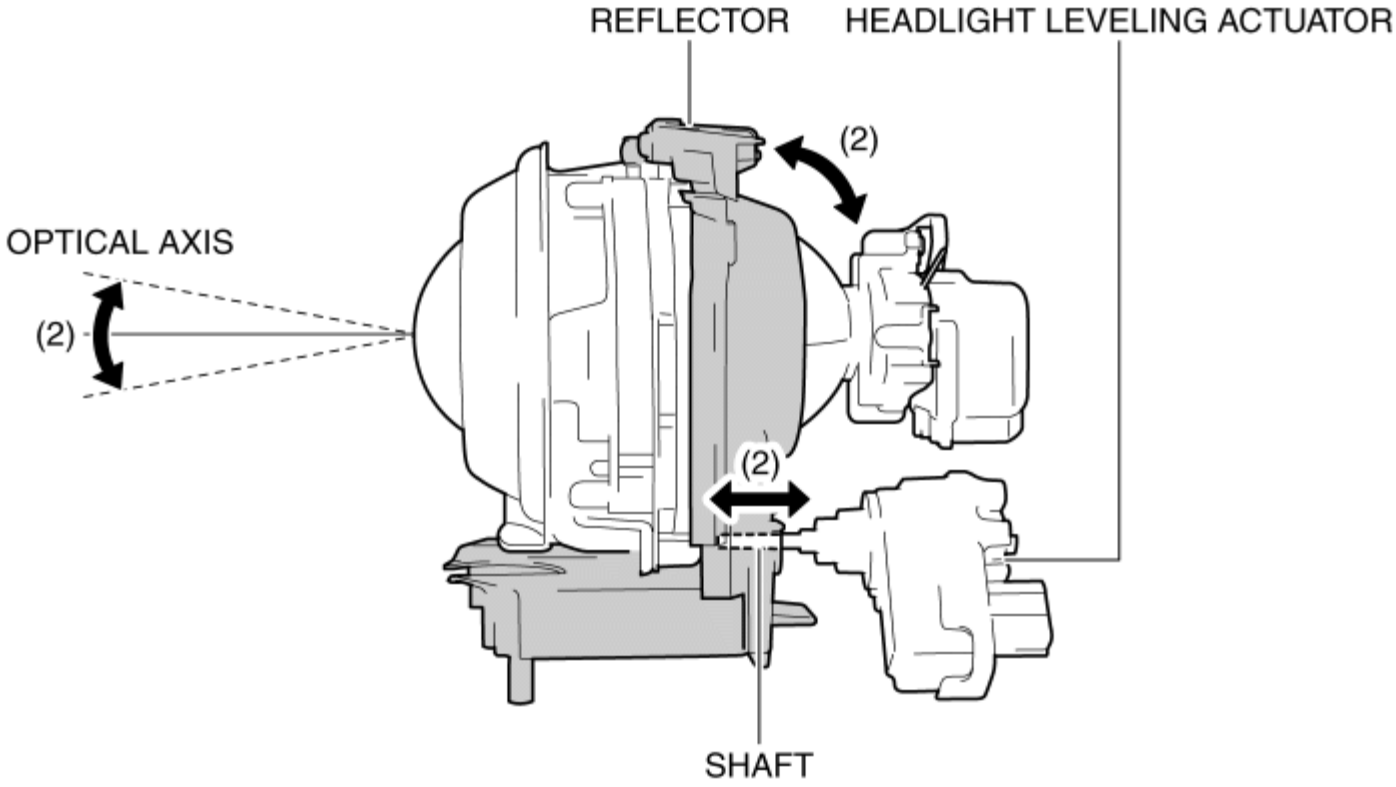

Fail-safe

- Function not equipped.

HEADLIGHT LEVELING ACTUATOR

2014 - Mazda3 - Body and Accessories

ADAPTIVE FRONT LIGHTING SYSTEM (AFS)

Outline

- The adaptive lighting system (AFS) is a system which enhances the range of visibility when the headlights are turned on by pointing the optical axis of the headlights in the direction in which the vehicle is advancing according to the steering operation.
- The AFS control module performs adaptive front lighting system (AFS) fail-safe. (See **ADAPTIVE FRONT LIGHTING SYSTEM (AFS) CONTROL MODULE**.)

Function

- The adaptive front lighting system (AFS) is controlled by the AFS control module.
- The AFS control module controls the auto leveling function to adjust the headlight optical axis up or down in response to changes in load and passenger conditions. (See **HEADLIGHT AUTO LEVELING SYSTEM**.)

Swivel function

- The AFS control module changes the optical axis to the direction in which the vehicle is travelling according to the steering wheel operation and vehicle speed while the headlights are turned on.
- The AFS control module controls the swivel function based on the following CAN signals.

CAN signal sending module	Signal name
EPS control module	Steering angle signal (absolute steering angle)
	Steering angle signal (estimated steering angle)
PCM	Vehicle speed signal
Instrument cluster	Ignition switch status signal
	Back-up light illumination request signal
	AFS OFF switch status signal
Front body control module (FBCM)	Headlight illumination status signal

Initial position learning function

- When the ignition is switched ON (engine on) at a vehicle speed of 0 km/h {0 mph}, the AFS control module calculates the initial position of the swivel actuator for left/right operation, and the headlight optical axis stops at the front position.
- The AFS control module controls the initial position learning function based on the following CAN signals.

CAN signal sending module	Signal name
PCM	Vehicle speed signal
Instrument cluster	Ignition switch status signal

Construction

- The swivel actuator for adjusting the optical axis is built into the front combination light, and it is an integrated construction with the headlights.
- The swivel actuator has an internal Hall sensor and sends the current position of the headlight to the AFS control module.
- The variation (swivel angle) of the optical axis of the headlights is 15 degrees for the right and left.
- Changes in the headlight optical axis (swivel angle) are controlled freely (non-step) based on the vehicle speed and the steering angle, and the swivel angle differs for each of the conditions.
- The steering wheel angle amount changes according to the vehicle speed until reaching the maximum value of the swivel angle (15 degrees).

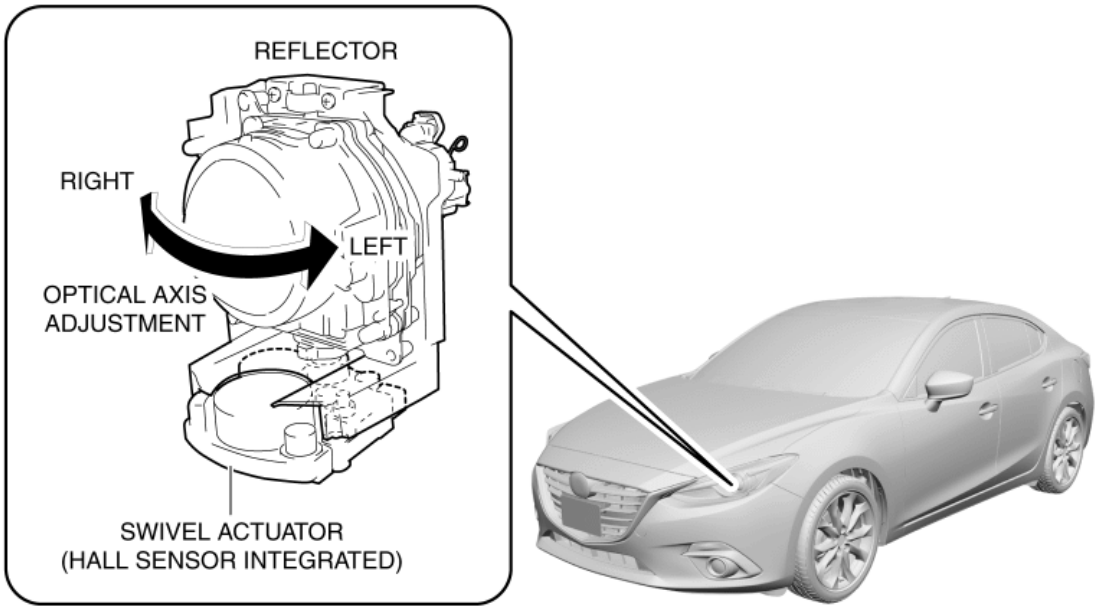
REFLECTOR
RIGHT
LEFT
OPTICAL AXIS ADJUSTMENT
SWIVEL ACTUATOR (HALL SENSOR INTEGRATED)

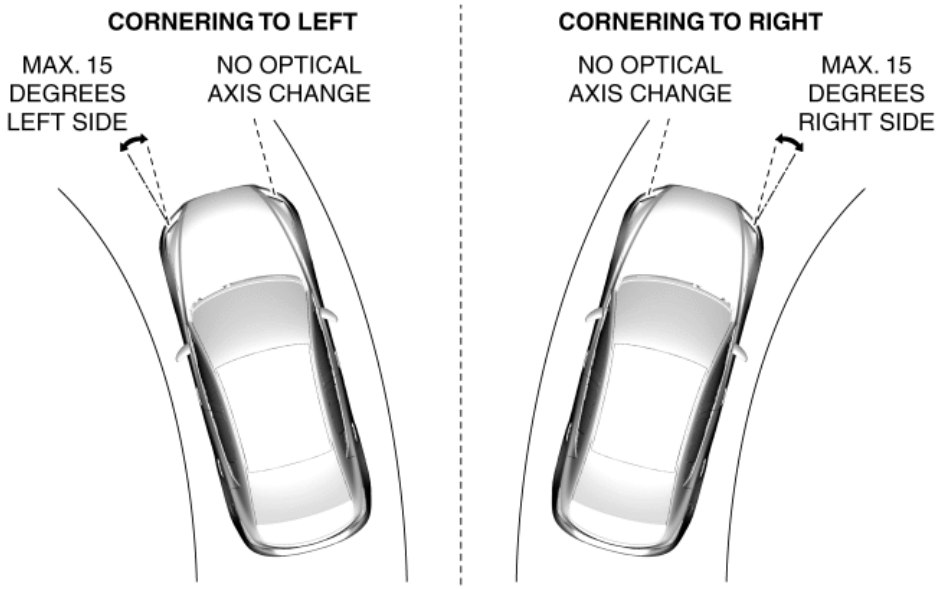
CORNERING TO LEFT
MAX. 15 DEGREES LEFT SIDE
NO OPTICAL AXIS CHANGE
CORNERING TO RIGHT
NO OPTICAL AXIS CHANGE
MAX. 15 DEGREES RIGHT SIDE

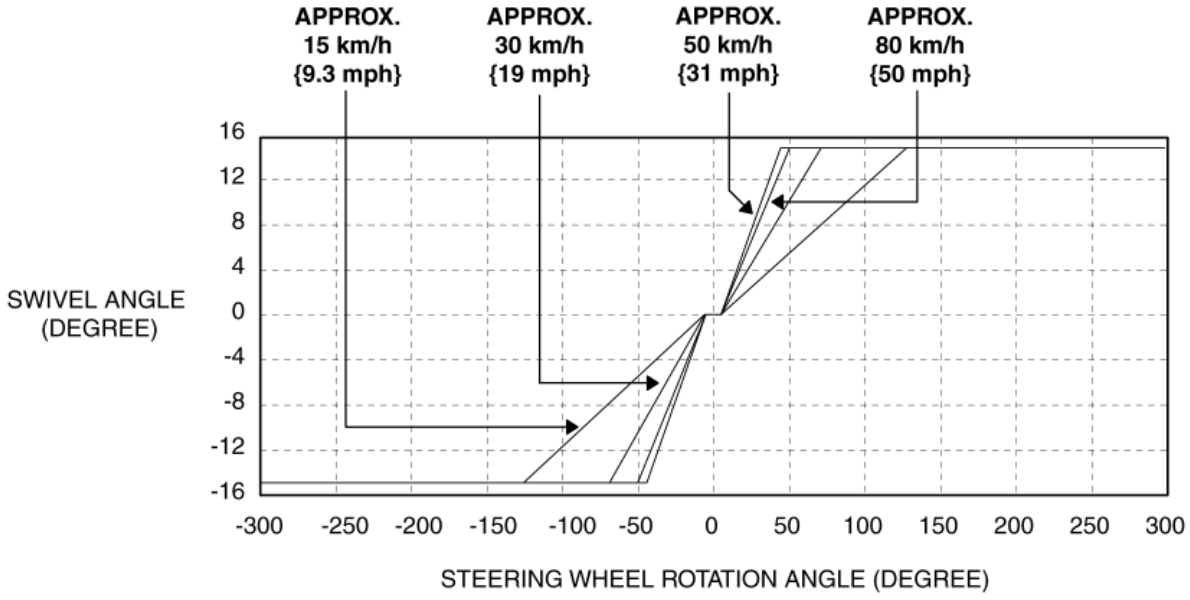
APPROX. 15 km/h {9.3 mph}
APPROX. 30 km/h {19 mph}
APPROX. 50 km/h {31 mph}
APPROX. 80 km/h {50 mph}
SWIVEL ANGLE (DEGREE)
16
12
8
4
0
-4
-8
-12
-16
-300
-250
-200
-150
-100
-50
0
50
100
150
200
250
300
STEERING WHEEL ROTATION ANGLE (DEGREE)

Structural View

- The adaptive front lighting system (AFS) consists of the following parts:

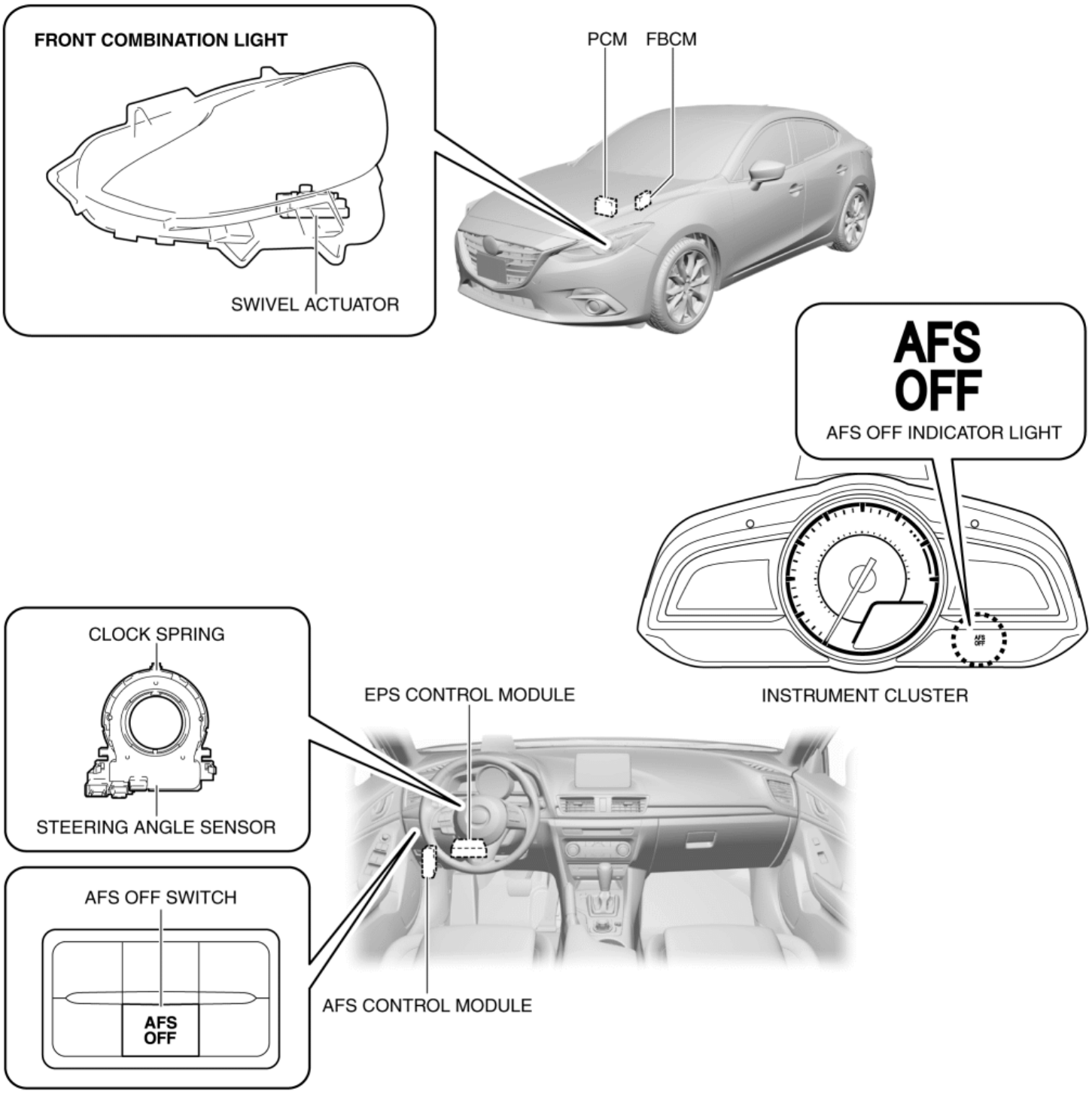

System Wiring Diagram

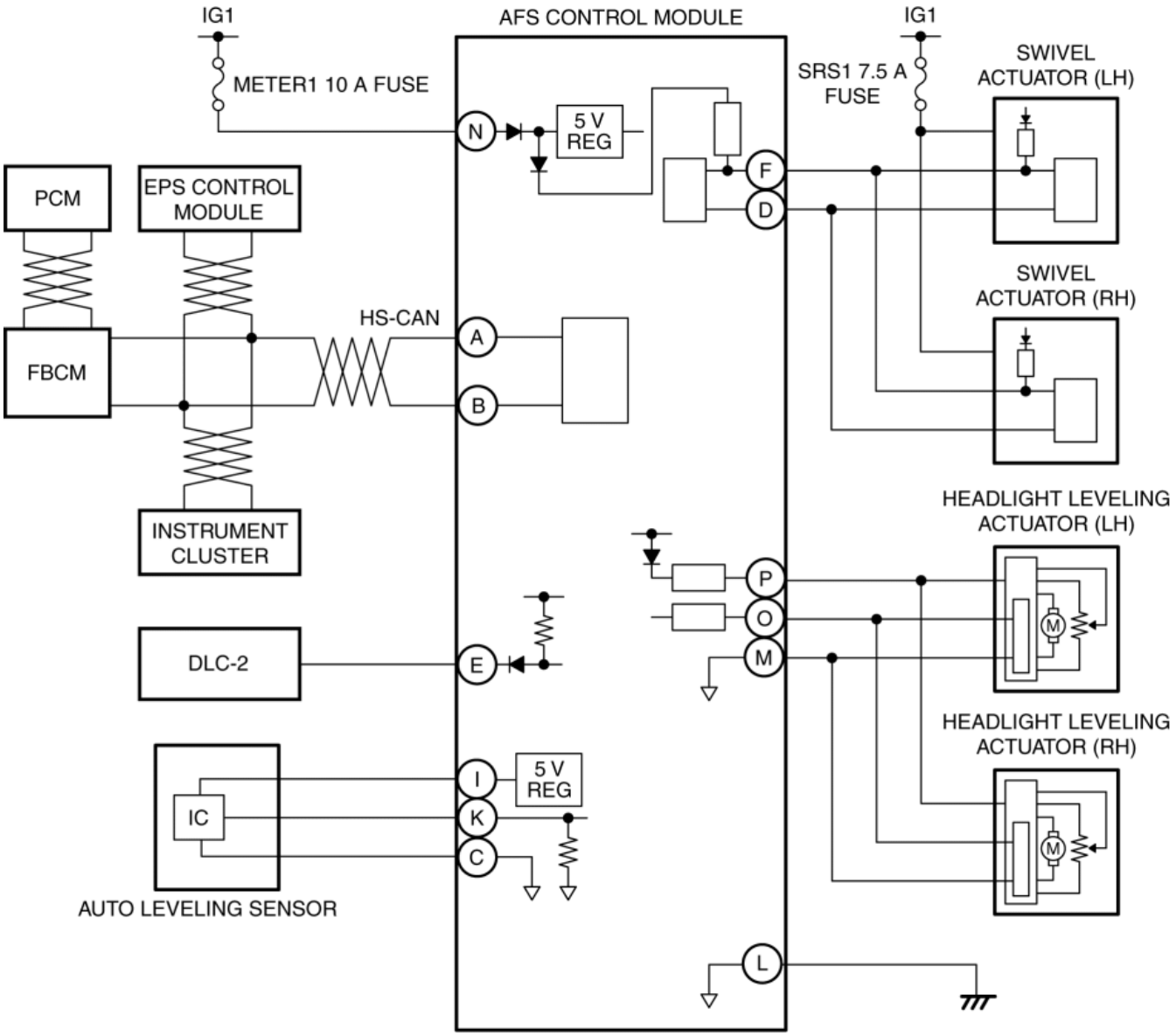

Operation

Swivel function

- When the ignition is switched ON (engine off or on), the AFS control module constantly calculates the swivel actuator control amount based on the steering angle signal and vehicle speed signal.
- If the following operation conditions are met, the AFS control module controls the swivel actuator based on the calculated amount of control, and adjusts the headlight optical axis.

Operation condition

Item	Condition
Initial position learning	After normal completion
Headlight	ON (illumination)
AFS OFF switch	OFF (control status)
Gear position signal	• Except R position (ATX) • Except reverse position (MTX)

Vehicle speed	Control start: 2 km/h {1 mph} or more

- The swivel actuator drives the motor based on the signal from the AFS control module.
- Changes in the swivel angle of the headlights are detected by the Hall sensor and input to the AFS control module.

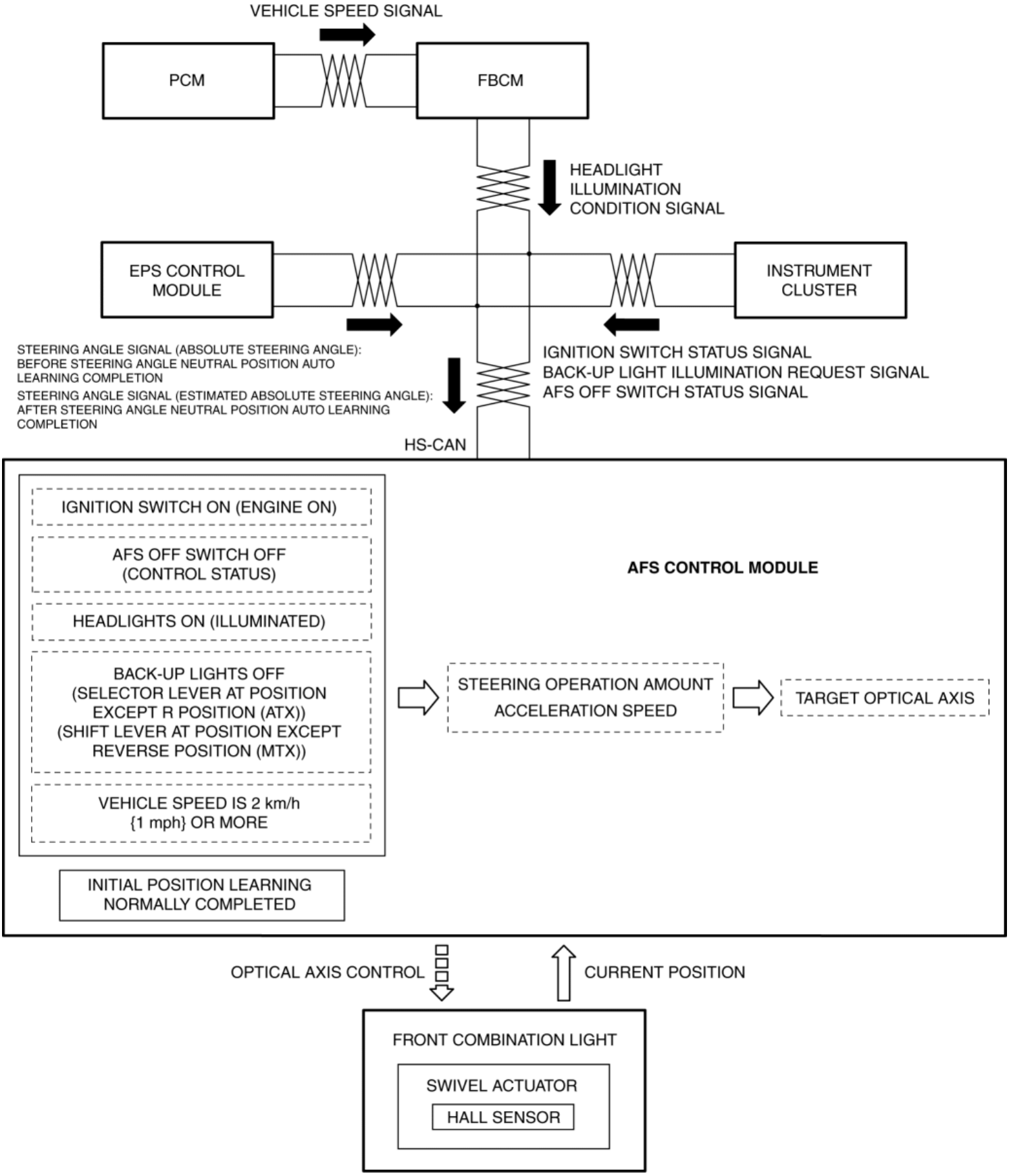

2014 - Mazda3 - Body and Accessories

ADAPTIVE FRONT LIGHTING SYSTEM (AFS) CONTROL MODULE

Purpose

- The AFS control module calculates the target optical axis based on the vehicle height signal and outputs the target optical axis signal to the headlight leveling actuator.
- The AFS control module outputs the target headlight optical axis signal to the swivel actuator according to the steering wheel operation while the headlights are turned on.

Function

- The AFS control module performs control of the adaptive front lighting system (AFS) and headlight auto leveling system.
- The AFS control module records the vehicle height while it is unoccupied.
- Even if the battery is disconnected, the unoccupied vehicle height recorded by the AFS control module is not erased.
- The new AFS control module does not record the vehicle height while it is unoccupied.
- When the headlight auto leveling system initialization is performed after the AFS control module is replaced, the AFS control module inputs the vehicle height from the auto leveling sensor and records the vehicle height in unloaded condition.

Automatic configuration function

- The AFS control module prior to replacement stores the vehicle specification information.
- A new AFS control module does not store any vehicle specification information.
- When the ignition is switched ON after the AFS control module is replaced, the AFS control module reads the vehicle specification information sent via CAN transmission from the instrument cluster using the automatic configuration function, and stores it.

On-board diagnostic function

- The AFS control module is equipped with an on-board diagnosis function which records DTCs in the event of a malfunction.

  Malfunction detection function

  - Detects malfunctions of the adaptive front lighting system (AFS) and the

headlight auto leveling system related parts.

Display Function

- If any malfunction is detected, the AFS OFF indicator light in the instrument cluster flashes to notify the driver of a system malfunction.

Operation

- For the AFS control module operation, refer to "**HEADLIGHT AUTO LEVELING SYSTEM**" and "**ADAPTIVE FRONT LIGHTING SYSTEM (AFS)**".

Fail-safe

DTC No.	Fail-safe function
B1041:54	• The swivel actuator is moved to the center. • The headlight leveling actuator is stopped at the position when the malfunction is determined.
B1044:01	• The swivel actuator is moved to the center. • The headlight leveling actuator is stopped at the position when the malfunction is determined.
B10A3:86	• The swivel actuator (LH) is stopped at the position when the malfunction is determined. • The swivel actuator (RH) is moved to the center. • Control of the headlight auto leveling system is continued with the headlight leveling actuator positioned **−0.6°** from where the malfunction is determined.
B10A3:87	• The swivel actuator (LH) is stopped at the position when the malfunction is determined. • The swivel actuator (RH) is moved to the center, or the swivel actuators (LH) and (RH) are moved to the center. • Control of the headlight auto leveling system is continued with the headlight leveling actuator positioned **−0.6°** from where the malfunction is determined.
B10A4:86	• The swivel actuator (RH) is stopped at the position when the malfunction is determined. • The swivel actuator (LH) is moved to the center. • Control of the headlight auto leveling system is continued with the headlight leveling actuator positioned **−0.6°** from where the malfunction is determined.

B10A4:87	• The swivel actuator (RH) is stopped at the position when the malfunction is determined. • The swivel actuator (LH) is moved to the center, or the swivel actuators (LH) and (RH) are moved to the center. • Control of the headlight auto leveling system is continued with the headlight leveling actuator positioned **−0.6°** from where the malfunction is determined.
C0051:86	• The swivel actuator is moved to the center. • Control of the headlight auto leveling system is continued.
U0001:88	• The swivel actuator is moved to the center. • The headlight leveling actuator is stopped at the position when the malfunction is determined.
U0100:00	• The swivel actuator is moved to the center. • The headlight leveling actuator is stopped at the position when the malfunction is determined.
U0131:00	• The swivel actuator is moved to the center. • Control of the headlight auto leveling system is continued.
U0140:00	• The swivel actuator is moved to the center. • The headlight leveling actuator is stopped at the position when the malfunction is determined.
U0155:00	• The swivel actuator is moved to the center. • Control of the headlight auto leveling system is continued.
U0320:09	• The swivel actuator is moved to the center. • Control of the headlight auto leveling system is continued.
U0420:68	• The swivel actuator is moved to the center. • Control of the headlight auto leveling system is continued.

	• AFS OFF switch error signal
	  ▪ Control of the swivel actuator is continued with the AFS OFF switch fixed in the condition when the malfunction is detected.
	  ▪ Control of the headlight auto leveling system is continued.
	• Ignition switch error signal

U0423:68	▪ Control of the AFS is continued with the ignition switched ON (engine on). ▪ Control of the headlight auto leveling system is continued. • Selector lever R position (ATX)/shift lever reverse (MTX) signal error ▪ The swivel actuator is moved to the center. ▪ Control of the headlight auto leveling system is continued. • Selector lever R position (ATX)/shift lever reverse (MTX) signal not determined ▪ Control of the swivel actuator is continued with the transaxle range sensor (ATX)/back-up light switch (MTX) fixed in the condition when the malfunction is determined. ▪ Control of the headlight auto leveling system is continued.
U2005:86	• The swivel actuator is moved to the center. • The headlight leveling actuator is stopped at the position when the malfunction is determined.
U2300:54	• Control of the AFS is continued. • Control of the headlight auto leveling system is continued.
U2300:55	• The swivel actuator is moved to the center. • The headlight leveling actuator is stopped at the position when the malfunction is determined.
U2300:56	• Control of the AFS is continued. • Control of the headlight auto leveling system is continued.
U3000:42	• The swivel actuator is moved to the center. • The headlight leveling actuator is stopped at the position when the malfunction is determined.
U3000:49	• RAM/ROM malfunction ▪ The swivel actuator is moved to the center. ▪ The headlight leveling actuator is stopped at the position when the malfunction is determined. • AFS function malfunction ▪ Not applicable • CAN hardware malfunction ▪ The swivel actuator is moved to the center. ▪ The headlight leveling actuator is stopped at the position when

	the malfunction is determined.
U3003:16	• The swivel actuator is stopped at the position when the malfunction is determined. • The headlight leveling actuator is stopped at the position when the malfunction is determined.
U3003:17	• The swivel actuator is stopped at the position when the malfunction is determined. • The headlight leveling actuator is stopped at the position when the malfunction is determined.

2014 - Mazda3 - Body and Accessories

SWIVEL ACTUATOR

Purpose

- The swivel actuator drives the motor based on the signal from the AFS control module when the headlights are illuminated to change the direction of the optical axis of the headlights according to the steering wheel operation.

Function

- The swivel actuator constantly detects the headlight swivel angle from the Hall sensor built into the actuator, and inputs the swivel angle to the AFS control module via LIN communication.

Construction

- The swivel actuator is built into the front combination lights.
- The swivel actuator has an integrated Hall sensor.

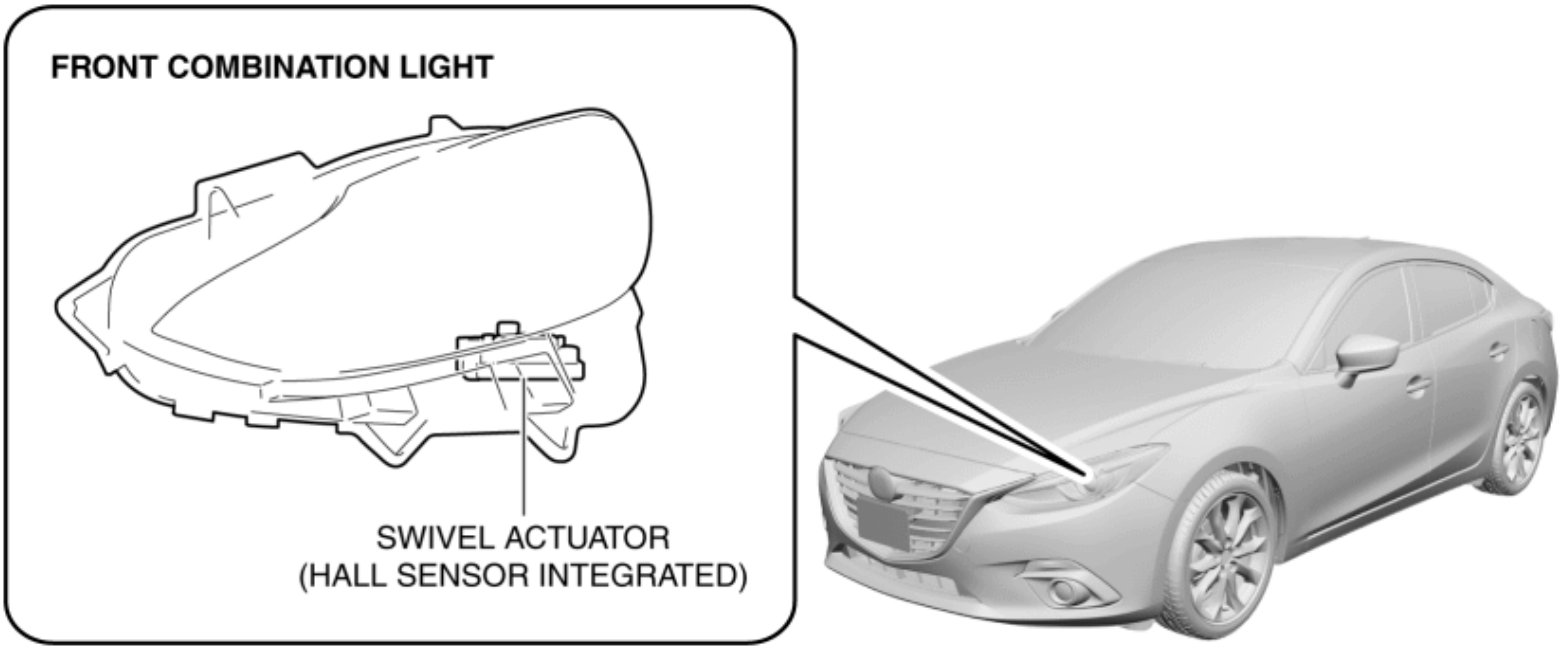

Operation

1. The AFS control module sends the target optical axis signal to the swivel actuator based on the headlight current position signal from the swivel actuator.

2. The swivel actuator calculates the amount of motor drive based on the target headlight optical axis signal from the AFS control module and drives the motor until the headlights reach the target headlight optical axis position.

3. The motor is driven and changes the optical axis by moving the reflector left and right.

4. The swivel actuator detects the current position of the headlights based on the Hall sensor, and sends the current position of the headlights to the AFS control module.

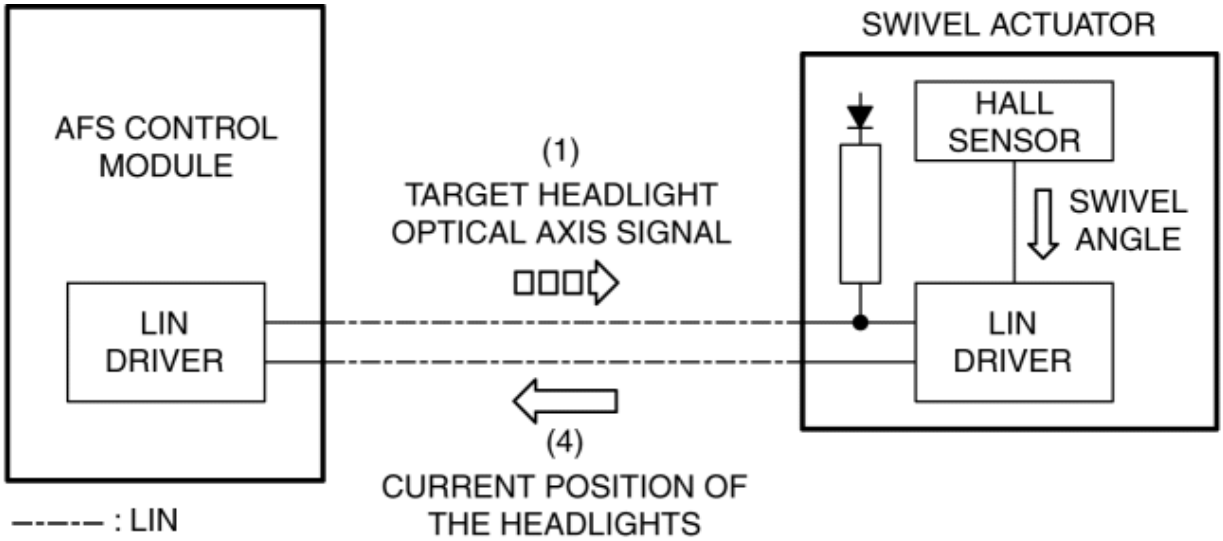

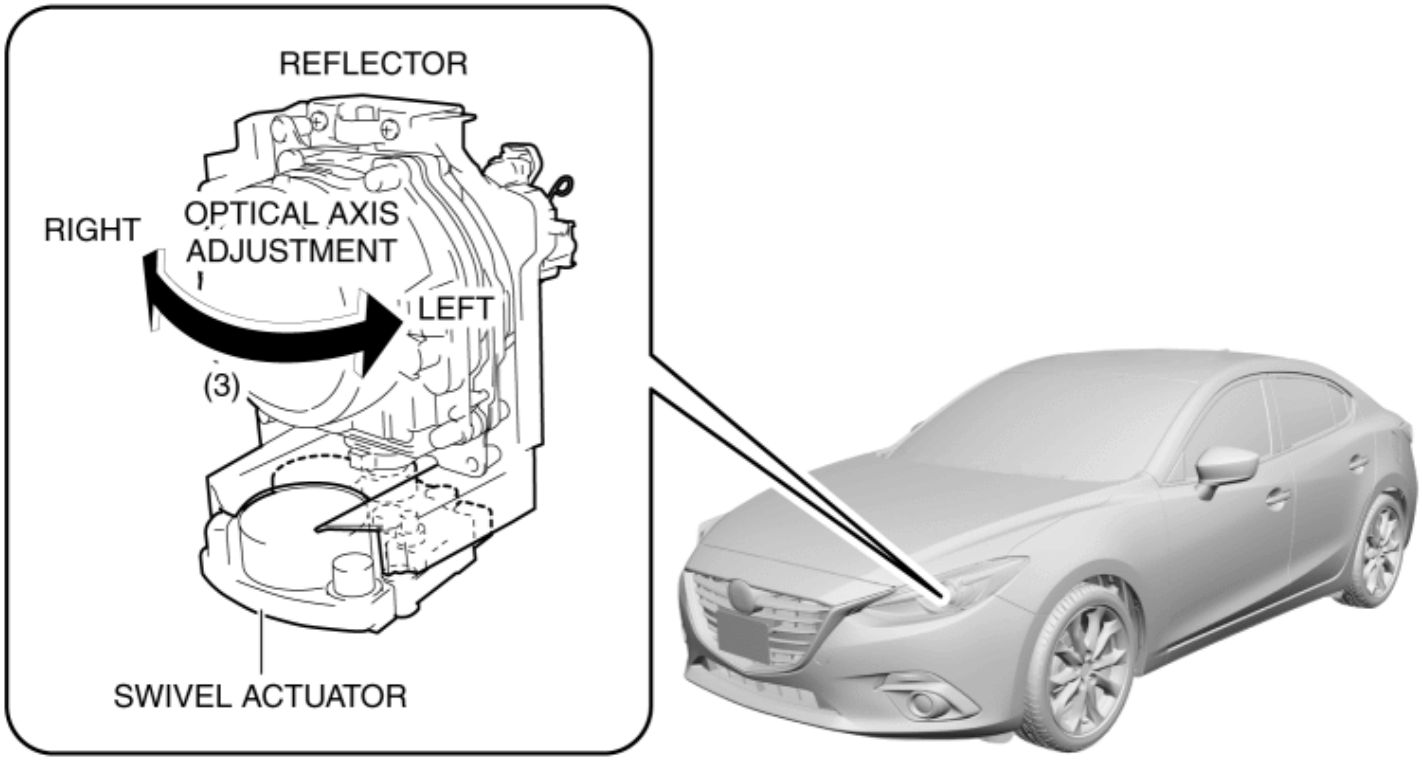

Fail-safe

- Function not equipped.

SWIVEL ACTUATOR

2014 - Mazda3 - Body and Accessories

AFS OFF INDICATOR LIGHT

Purpose

- The AFS OFF indicator light notifies the user that the adaptive front lighting system (AFS) is stopped or a malfunction occurs in the adaptive front lighting system (AFS).

Function

- The AFS OFF indicator light illuminates when the adaptive front lighting system (AFS) is stopped and flashes when a malfunction occurs in the adaptive front lighting system (AFS) or the headlight auto leveling system.
- For vehicles with center display, a warning message in the center display is displayed when the AFS OFF indicator light is flashed. For the message content and verification method, refer to the CENTER DISPLAY. (See **CENTER DISPLAY [WITH CENTER DISPLAY]**.)

Construction

- Displayed in the instrument cluster.

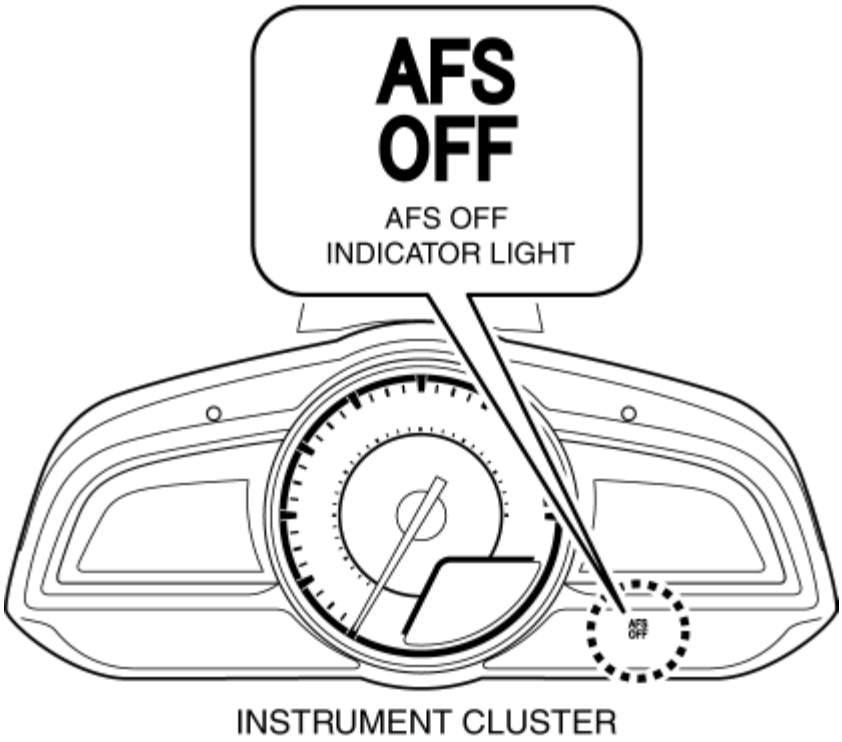

Operation

NOTE:

- When the ignition is switched ON (engine off or on), the AFS control module illuminates the AFS OFF indicator light for 3 s to check the light bulb and notifies that the AFS OFF indicator light bulb is normal.
- The AFS control module sends a AFS OFF indicator light illumination/flash request signal to the instrument cluster via the CAN signal when the adaptive front lighting system (AFS) is stopped or a malfunction occurs in the adaptive front lighting system (AFS) or the headlight auto leveling system.
- The instrument cluster illuminates/flashes the AFS OFF indicator light based on the AFS OFF indicator light illumination/flash request signal.

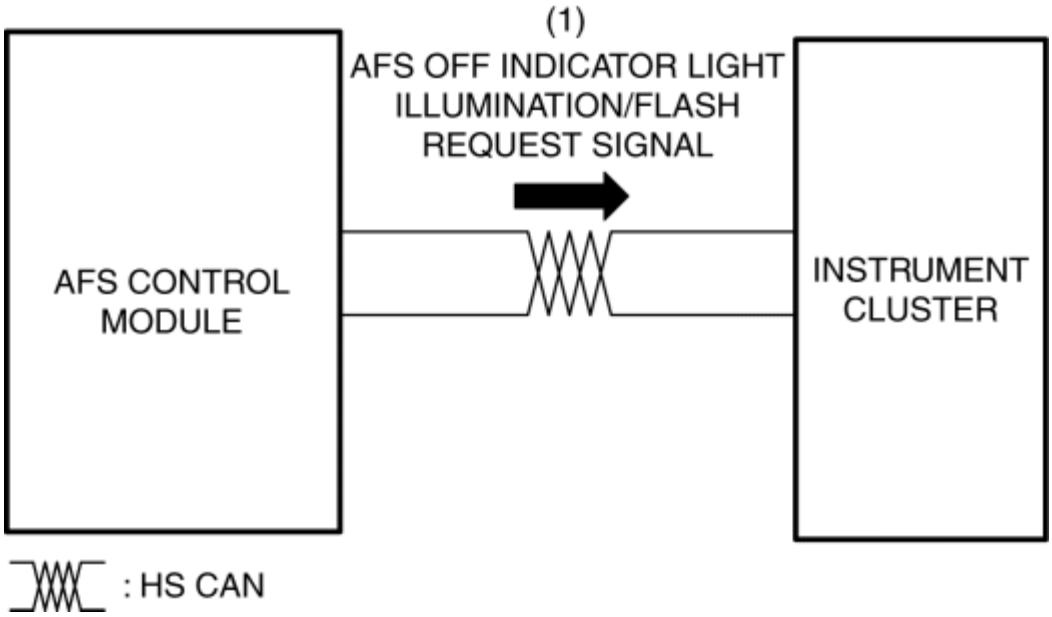

Fail-safe

- Function not equipped.

2014 - Mazda3 - Body and Accessories

ON-BOARD DIAGNOSTIC [ADAPTIVE FRONT LIGHTING SYSTEM (AFS)]

Outline

- The on-board diagnostic function consists of the following functions.
    - A malfunction detection function, which detects overall malfunctions in the AFS control module-related parts.
    - A memory function, which stores detected DTCs.
    - A display function, which indicates malfunction locations and status via DTC output.
    - A PID/data monitor function, which reads out specific input/output signals and verifies the input/output condition.
- Using the Mazda Modular Diagnostic System (M-MDS), DTCs can be read out and deleted, and the PID/data monitor function can be activated.

Malfunction Detection Function

- Detects malfunctions in input/output signals.
- If a malfunction occurs, the AFS control module records the malfunction as a DTC. A recorded DTC can be read by the Mazda Modular Diagnostic System (M-MDS).

NOTE:

- AFS control module flashes the AFS OFF indicator light as follows if there is a malfunction in the system.

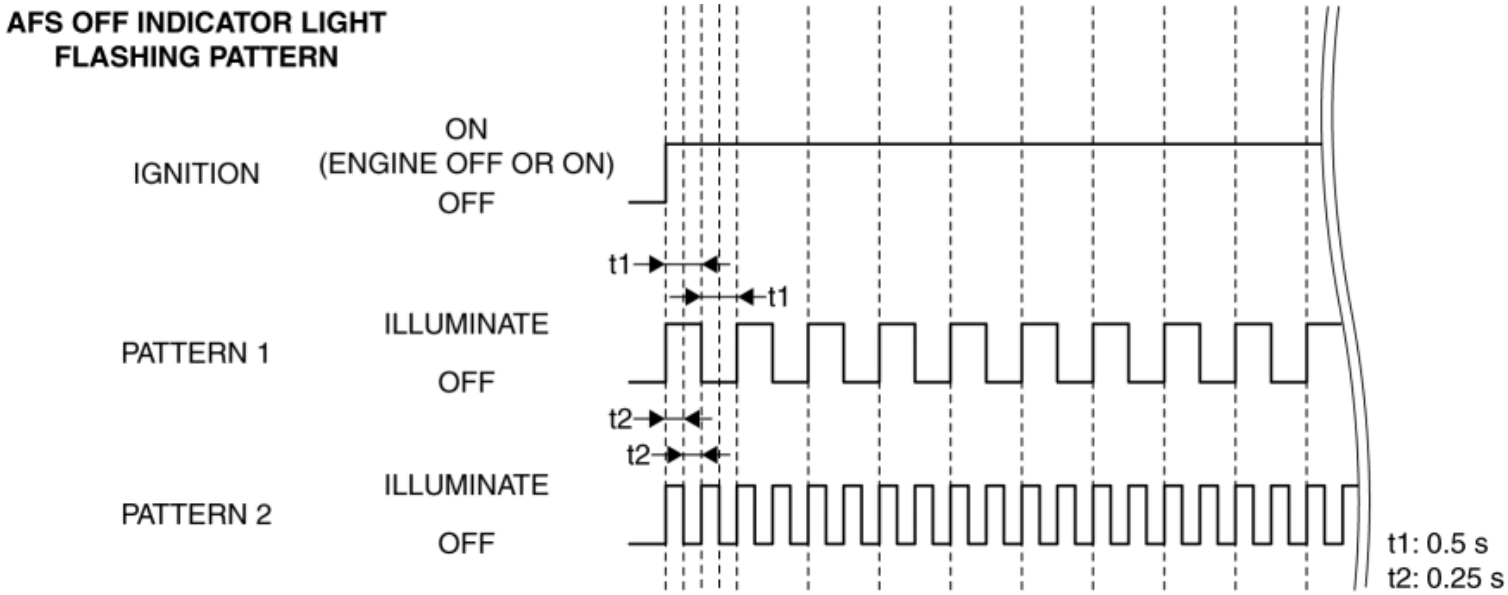

DTC table

×: Applicable—: Not applicable

DTC No.	AFS OFF indicator light	Description	Fail-safe function	Drive cycle	Self test type*1	Memory function
B1041:54	Flash (Pattern 2)	Headlight auto leveling system initialization error	×	—	D	×
B1044:01	Flash (Pattern 1)	Auto leveling sensor circuit malfunction	×	—	D	×
B10A3:86	Flash (Pattern 1)	Communication error with swivel actuator (LH)	×	—	D	×
B10A3:87	Flash (Pattern 1)	Communication error with swivel actuator (LH)	×	—	D	×
B10A4:86	Flash (Pattern 1)	Communication error with swivel actuator (RH)	×	—	D	×
B10A4:87	Flash (Pattern 1)	Communication error with swivel actuator (RH)	×	—	D	×
C0051:86	Flash (Pattern 1)	Steering angle error signal received from EPS control module	×	—	C, D	×
U0001:88	Flash (Pattern 1)	Unit communication error (HS-CAN)	×	—	C, D	×

U0100:00	Flash (Pattern 1)	Communication error with PCM	×	—	C, D	×
U0131:00	Flash (Pattern 1)	Communication error with EPS control module	×	—	C, D	×
U0140:00	Flash (Pattern 1)	Communication error with front body control module (FBCM)	×	—	C, D	×
U0155:00	Flash (Pattern 1)	Communication error with instrument cluster	×	—	C, D	×
U0320:09	Flash (Pattern 1)	Error signal received from EPS control module	×	—	C, D	×
U0420:68	Flash (Pattern 1)	Error signal received from EPS control module	×	—	C, D	×
U0423:68	—	Error signal received from instrument cluster • AFS OFF switch error signal	×	—	C, D	—
	—	Error signal received from instrument cluster • Ignition switch error signal	×	—	C, D	—
	Flash (Pattern 1)	Error signal received from instrument cluster • Selector lever R position (ATX)/shift lever reverse (MTX) signal error	×	—	C, D	×
	—	Error signal received from instrument cluster • Selector lever R position (ATX)/shift lever reverse (MTX) signal not determined	×	—	C, D	—
U2005:86	Flash (Pattern 1)	Error signal received from PCM	×	—	C, D	×
U2300:54	Flash (Pattern 1)	Error configuration data received from instrument cluster	×	—	C, D	×
U2300:55	—	Instrument cluster configuration not implemented	×	—	C, D	×
U2300:56	Flash (Pattern 1)	Configuration data unmatched with instrument cluster	×	—	C, D	×
U3000:42	Flash (Pattern 1)	AFS control module internal malfunction	×	—	C, D	×
	Flash (Pattern 1)	AFS control module internal malfunction • RAM/ROM malfunction	×	—	C, D	×

U3000:49	—	AFS control module internal malfunction • AFS function malfunction	—	—	C, D	—
	Flash (Pattern 1)	AFS control module internal malfunction • CAN hardware malfunction	×	—	C, D	×
U3003:16	—	AFS control module low power supply voltage input	×	—	C, D	—
U3003:17	—	AFS control module high power supply voltage input	×	—	C, D	—

*1

C: CMDTC self test, D: ODDTC self test

DTC 7-digit code definition

- When related systems or components have failed, the CM stores the DTC of the malfunctioning part in the CM memory, and allows for the retrieval of the store data using scanning tool when necessary. The DTCs are indicated using seven digits. Each digit indicates the following.

B 1 0 D 5 : 1 3

· Specify the area failure sub type

00: No sub type information
01: General electrical failure
05: System programming malfunctions
09: Component failures
13: Open circuit
14: Circuit short to ground or open
16: Circuit voltage below threshold
17: Circuit voltage above threshold
41: General checksum malfunction
42: General memory malfunction
49: Internal electronic malfunction
51: Not programmed
54: Missing calibration
55: Not configured
62: Signal compare malfunction
68: Event information
81: Invalid serial data received
86: Signal invalid
87: Missing message
88: Bus off
92: Performance or incorrect operation
94: Unexpected operation

· Manufacturer controlled

· Indicates subgroup

Powertrain (P code)	Network Electrical (U code)	Body (B code)	Chassis (C code)
0: Fuel and air metering and auxiliary emission controls	0: Network Electrical	Manufacturer controlled	Manufacturer controlled
	1: Network communication		
	2: Network communication		
	3: Network software		
	4: Network data		
	5: Network data		

· Indicates who was responsible for DTC definition

0: ISO/SAE controlled
1: Manufacturer controlled
2: There are ISO/SAE controlled just for powertrain, all others are manufacturer controlled.
3: For P3000 to P3399 is manufacturer controlled, all others are ISO/SAE controlled.

· Indicates DTC function

P: Powertrain
B: Body
C: Chassis
U: Network Electrical

Status byte for DTC

- The two digits (two digits after hyphen (-)) after the 7-digit DTC.

7-DIGIT DTC

P 1 2 6 0 : 0 0 − * *

STATUS BYTE

- A code which indicates the pending code, current/past malfunction status, or warning illumination status.
- Can be read by performing a CMDTC self-test using the Mazda Modular Diagnostic System (M-MDS).
- For details on the status byte, refer to the explanation on the Mazda Modular Diagnostic System (M-MDS) when reading the DTC.

Detection condition for the applicable DTC

DTC No.	Description	Detection condition
B1041:54	Headlight auto leveling system initialization error	• Headlight auto leveling system initialization is not performed.
B1044:01	Auto leveling sensor circuit malfunction	• AFS control module detected the auto leveling sensor circuit voltage of **0.25 V or less** or **4.75 V or more** for **10 s or more** with the ignition switched ON (engine off or on).
B10A3:86	Communication error with swivel actuator (LH)	• AFS control module received error signals from the swivel actuator (LH) **three times** continuously with the ignition switched ON (engine off or on). • AFS control module could not receive the signal from the swivel actuator (LH) for **5 s** or more with the ignition switched ON (engine off or on).
B10A3:87	Communication error with swivel actuator (LH)	• AFS control module detected communication error with the swivel actuator (LH) for **5 s or more** with the ignition switched ON (engine off or on).
B10A4:86	Communication error with swivel actuator (RH)	• AFS control module received error signals from the swivel actuator (RH) **three times** continuously with the ignition switched ON (engine off or on). • AFS control module could not receive the signal from the swivel actuator (RH) for **5 s** or more with the ignition switched ON (engine off or on).
B10A4:87	Communication error with swivel actuator (RH)	• AFS control module detected communication error with the swivel actuator (RH) for **5 s or more** with the ignition switched ON (engine off or on).
C0051:86	Steering angle error signal received from EPS control module	• Either a condition in which the steering angle sensor has a malfunction and the EPS control module has not performed steering angle neutral position auto learning, or a condition in which the EPS control module has a malfunction is detected for **5 s or more** with the ignition switched ON (engine off or on).
U0001:88	Unit communication error (HS-CAN)	• AFS control module detected the CAN bus communication line (HS-CAN) malfunction **10 times** continuously.
U0100:00	Communication error with PCM	• AFS control module could not receive the CAN signal from the PCM for **5 s or more**.

U0131:00	Communication error with EPS control module	• AFS control module could not receive the CAN signal from the EPS control module for **5 s or more**.
U0140:00	Communication error with front body control module (FBCM)	• AFS control module could not receive the CAN signal from the front body control module (FBCM) for **5 s or more**.
U0155:00	Communication error with instrument cluster	• AFS control module could not receive the CAN signal from the instrument cluster for **5 s or more**.
U0320:09	Error signal received from EPS control module	• AFS control module received the error signal from the EPS control module for **5 s or more** with the ignition switched ON (engine off or on).
U0420:68	Error signal received from EPS control module	• AFS control module received the error signal from the EPS control module for **5 s or more** with the ignition switched ON (engine off or on).
U0423:68	Error signal received from instrument cluster • AFS OFF switch error signal	• AFS control module received the AFS OFF switch error signal for **5 s or more** with the ignition switched ON (engine off or on).
	Error signal received from instrument cluster • Ignition switch error signal	• AFS control module received the ignition switch error signal for **5 s or more** with the ignition switched ON (engine off or on).
	Error signal received from instrument cluster • Selector lever R position (ATX)/shift lever reverse (MTX) signal error	• AFS control module received the selector lever R position (ATX)/shift lever reverse (MTX) signal error for **5 s or more** with the ignition switched ON (engine off or on).
	Error signal received from instrument cluster • Selector lever R position (ATX)/shift lever reverse (MTX) signal not determined	• AFS control module detected the undetermined selector lever R position (ATX)/shift lever reverse (MTX) signal.

U2005:86	Error signal received from PCM	• AFS control module received the vehicle speed signal error from the PCM for **5 s or more** with the ignition switched ON (engine off or on).
U2300:54	Error configuration data received from instrument cluster	• AFS control module received the error configuration data from the instrument cluster for **30 s or more** with the ignition switched ON (engine off or on).
U2300:55	Instrument cluster configuration not implemented	• AFS control module received a signal which indicates the instrument cluster configuration is not performed.
U2300:56	Configuration data unmatched with instrument cluster	• Configuration data of the AFS control module and instrument cluster are not matched.
U3000:42	AFS control module internal malfunction	• AFS control module detects the internal EEPROM malfunction.
U3000:49	AFS control module internal malfunction • RAM/ROM malfunction	• AFS control module detected a malfunction in the internal RAM/ROM.
	AFS control module internal malfunction • AFS function malfunction	• AFS control module detected AFS function malfunction **three times** continuously.
	AFS control module internal malfunction • CAN hardware malfunction	• AFS control module detected CAN hardware malfunction **three times** continuously.
U3003:16	AFS control module low power supply voltage input	• AFS control module power supply circuit voltage of **9.0 V or less** is detected for **5 s or more** with the ignition switched ON (engine off or on).
U3003:17	AFS control module high power supply voltage input	• AFS control module power supply circuit voltage of **18.1 V or more** is detected for **5 s or more** with the ignition switched ON (engine off or on).

Snapshot data

- The data for all DTCs currently detected is stored.

Snapshot data table—: Not applicable

Snapshot data item	Unit		Data contents	Data read/use method	Corresponding data monitor items
AAT	°C	°F	Ambient temperature	—	—
APP_STATUS	Accelerator Pedal Off/Under20%/Over20%/FAIL		Accelerator pedal position status	—	—
CFG_STATUS	Config Complete/Not Configured/Config Error		Instrument cluster configuration status	—	—
ECT_STATUS	Under 0 degrees C/0 - Under 80 degrees C/Over 80 degrees C/FAIL		Engine coolant temperature status	—	—
IC_VPWR	V		Instrument cluster power supply voltage	• The AFS control module constantly receives the power supply voltage value of the instrument cluster sent via CAN signal from the instrument cluster. • If a DTC is detected, the AFS control module records the power supply voltage of the instrument cluster when the DTC was detected, and it is displayed in the Mazda Modular Diagnostic System (M-MDS).	VPWR*1
IG-ON_TIMER	hh:mm:ss*2		Elapsed time since ignition was switched ON (engine off or on) **NOTE:** • The instrument cluster records the elapsed time since the ignition was switched ON (engine off or on).	• The AFS control module constantly receives the elapsed time since the ignition was switched ON (engine off or on) sent via CAN signal from the instrument cluster. • If a DTC is detected, the AFS control module records the elapsed time since the ignition was switched ON (engine off or on) when the DTC was detected, and it is displayed in the Mazda Modular Diagnostic System (M-MDS).	—
			• Key Out: Ignition switched off		

PWR_MODE_KEY	Key Out/Key Recently Out (Position 0)/Accessory (Position 1)/Post Ignition (Position 2)/Ignition On (Position 2)/Running (Position 2)/Running - Starting	• Key Recently Out (Position 0): Elapsed time **within 3 s** since ignition was switched off • Accessory (Position 1): Ignition is switched to ACC • Post Ignition (Position 2): Elapsed time **within 3 s** since ignition was switched ON (engine off or on) • Ignition On (Position 2): Ignition switched ON (engine off) • Running (Position 2): Ignition switched ON (engine on) • Running - Starting: Cranking condition	• The AFS control module constantly receives the ignition switch status sent via CAN signal from the instrument cluster. • If a DTC is detected, the AFS control module records the ignition switch status when the DTC was detected, and it is displayed in the Mazda Modular Diagnostic System (M-MDS).	—
RPM_STATUS	Engine Stop/Under1500rpm/Over1500rpm/FAIL	Engine speed status	• The AFS control module constantly receives the engine speed sent via CAN signal from the instrument cluster. • If a DTC is detected, the AFS control module records the engine speed when the DTC was detected, and it is displayed in the Mazda Modular Diagnostic System (M-MDS).	TACHOMTR*1

SHIFT_STATUS	P/N/D/R/FAIL		Selector lever position status	• The AFS control module constantly receives the selector lever position sent via CAN signal from the instrument cluster. • If a DTC is detected, the AFS control module records the selector lever position when the DTC was detected, and it is displayed in the Mazda Modular Diagnostic System (M-MDS).	—
TOTAL_DIST	km	Miles	Accumulated total traveled distance from completion of vehicle until AFS control module detects DTC (Odometer value in instrument cluster)	The total traveled distance from which the AFS control module detects DTCs to the present can be calculated by performing the following procedure. • Verify the odometer value in the instrument cluster. • Verify the snapshot data item TOTAL_DIST. • Subtract 2 from 1.	—
TOTAL_TIME	hh:mm:ss*2		Accumulated total elapsed time since vehicle completion until AFS control module detects a DTC **NOTE:** • When the ROOM fuse is removed, and the ignition is switched off, the time is not included in the elapsed time.	The elapsed time from which the AFS control module detects DTCs to the present can be calculated by performing the following procedure. • Verify the instrument cluster PID item TOTAL_TIME. • Verify the snapshot data item TOTAL_TIME. • Subtract 2 from 1.	TOTAL_TIME*1
VPWR	V		AFS control module power supply voltage	—	VPWR_IG
VSPD_STATUS	Stop/0-10km/h/Over10km/h/FAIL		Vehicle speed status	• The AFS control module constantly receives the vehicle speed sent via CAN signal from the instrument cluster. • If a DTC is detected, the AFS control module records the vehicle speed when the DTC was	SPEEDOMTR*1

			detected, and it is displayed in the Mazda Modular Diagnostic System (M-MDS).	

*1

Instrument cluster PID (See ON-BOARD DIAGNOSTIC [INSTRUMENT CLUSTER].)

*2

The seconds may be indicated after the decimal point.

PID/Data Monitor Function

- With the PID/data monitor function, input/output signal monitor items set in the AFS control module can be selected and read out in real-time.

PID/data monitor table

PID	Unit/Operation	Data contents	Module control terminal
AFS_ST	Off/On	• Off: AFS is not operated. • On: AFS is operated.	A, B (CAN)
R_HGT_S	V	Displays voltage at auto leveling sensor	C, I, K (Auto leveling sensor output voltage)
R_HGT_S_INI	V	Displays voltage at headlight auto leveling system initial setting	C, I, K (Auto leveling sensor output voltage)
VPWR_IG	V	Displays AFS control module power supply voltage	• N (Power supply) • L (Ground)
VSPD	KPH, MPH	Displays vehicle speed	A, B (CAN)

2014 - Mazda3 - Body and Accessories

DRL (DAYTIME RUNNING LIGHT) SYSTEM

Outline

- The DRL system automatically switches the headlights to HI beams (50 % dim) or illuminates the DRL when the ignition is switched ON (engine off or on), the parking brake is released, and the selector lever is in a position other than P (ATX).
- The front body control module (FBCM) performs DRL system fail-safe. (See **FRONT BODY CONTROL MODULE (FBCM)**.)

Structural View

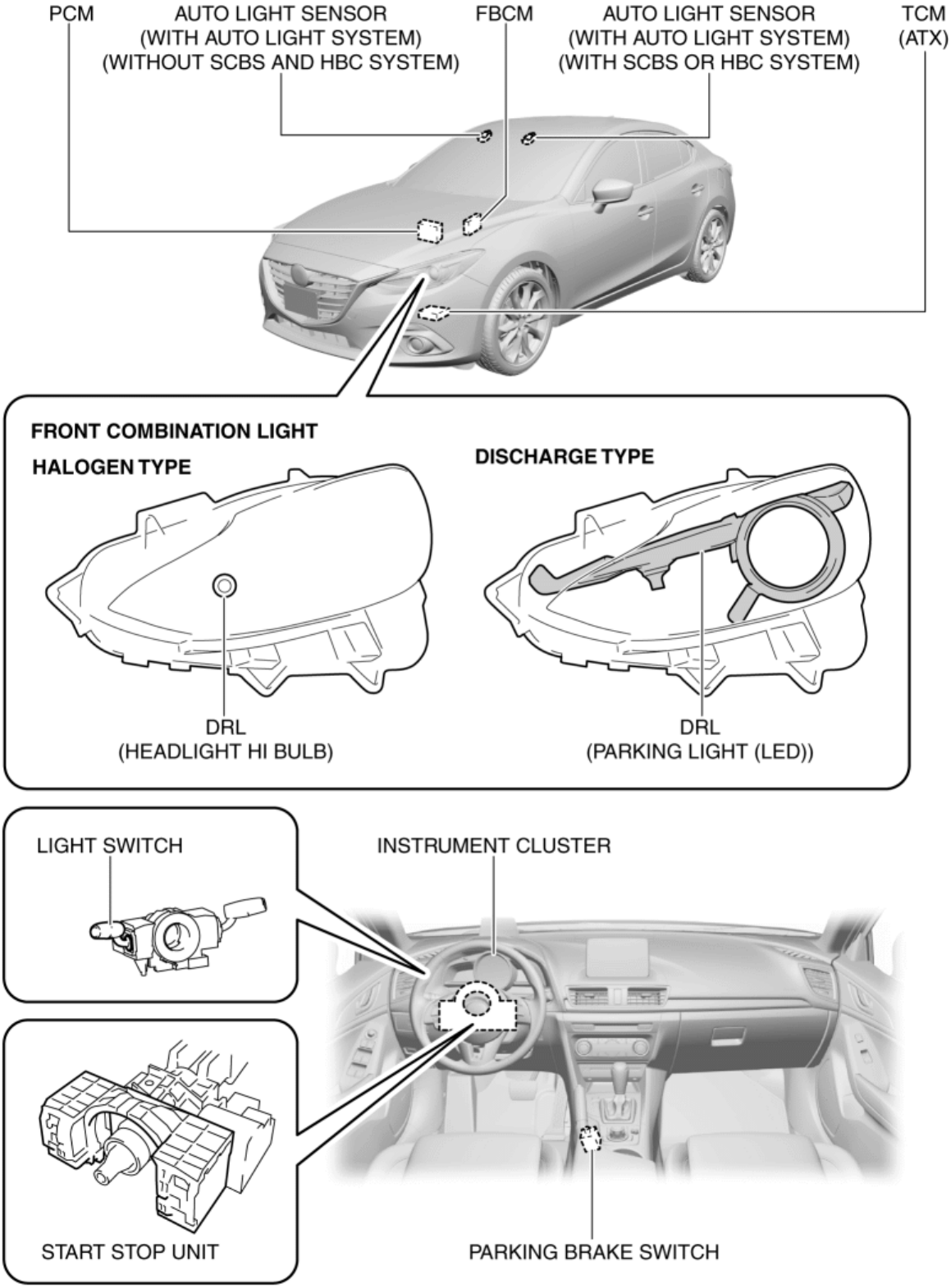

System Wiring Diagram

Without discharge headlight system

DRL (DAYTIME RUNNING LIGHT) SYSTEM

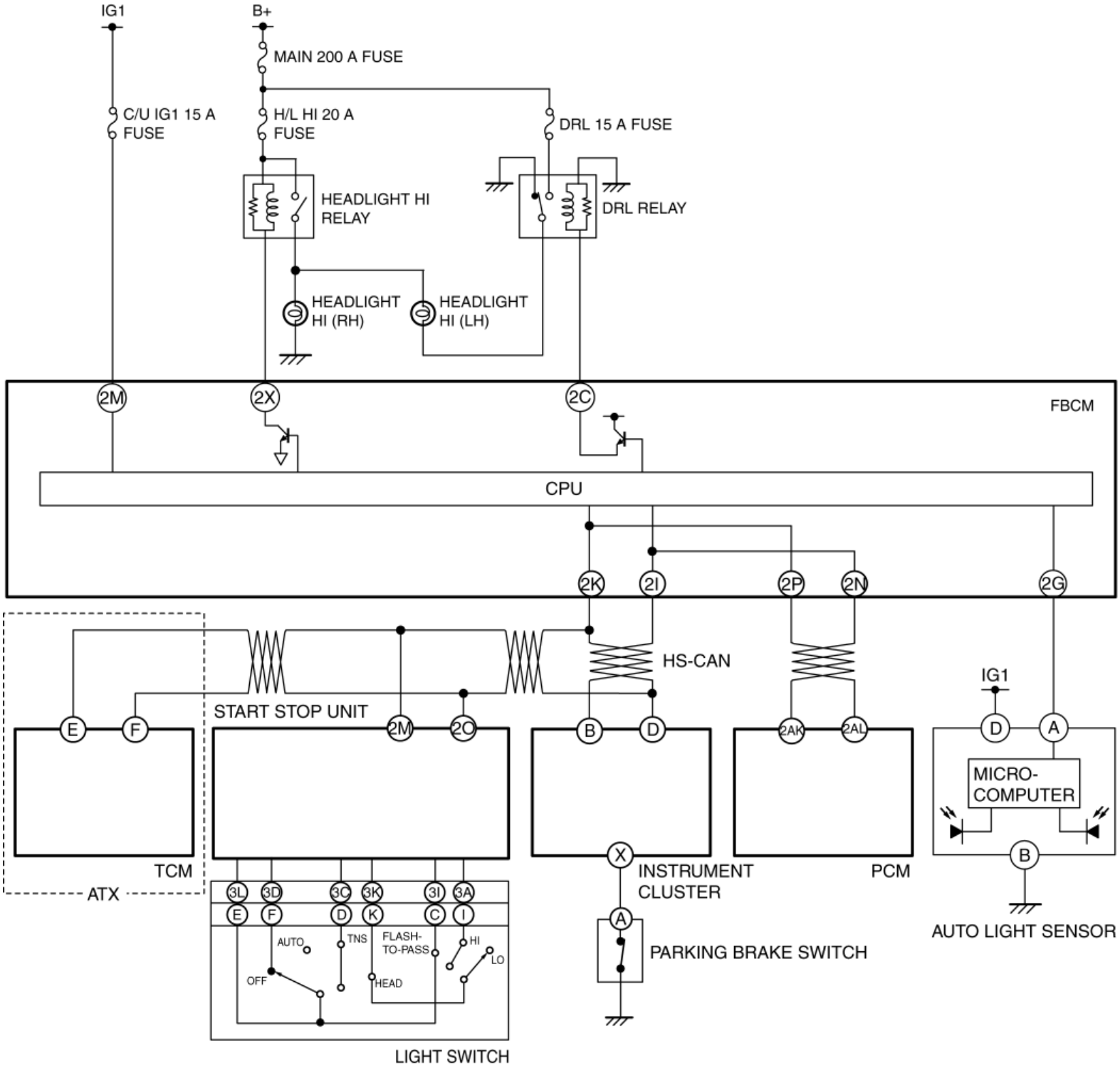

With discharge headlight system

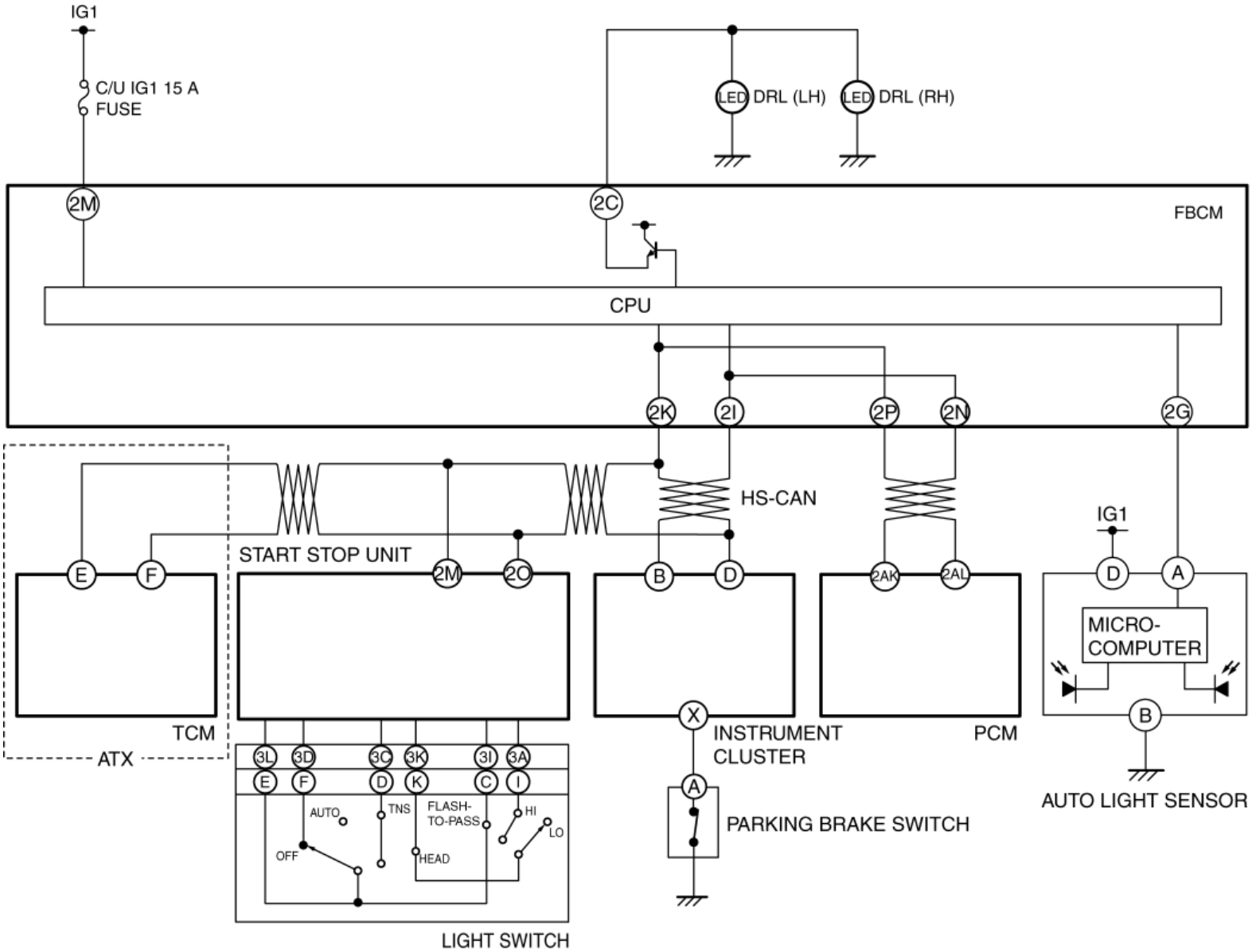

Operation

Operation condition—: Not applicable

Engine switch	Parking brake	Selector lever position (ATX)	Light switch	Dimmer switch	Auto light system	DRL
			OFF	LO	—	On
				HI		On
				FLASH-TO-PASS		Off
			AUTO	LO	Off	On
					On	Off
				HI	Off	On
					On	Off
ON (engine off or on)	Released	Except P			Off	Off

				FLASH-TO-PASS	On	Off
			TNS	LO	—	On
				HI		On
				FLASH-TO-PASS		Off
			HEAD	LO	—	Off
				HI		Off
				FLASH-TO-PASS		Off

Without discharge headlight system

1. If the operation conditions are met, the front body control module (FBCM) turns on the DRL circuit transistor.

2. When the transistor turns on, the DRL relay turns on.

3. If the DRL relay turns on, the electrical current flows in-line relative to the left/right headlight HI circuits and the headlights HI turn on at half the brightness of normal illumination.

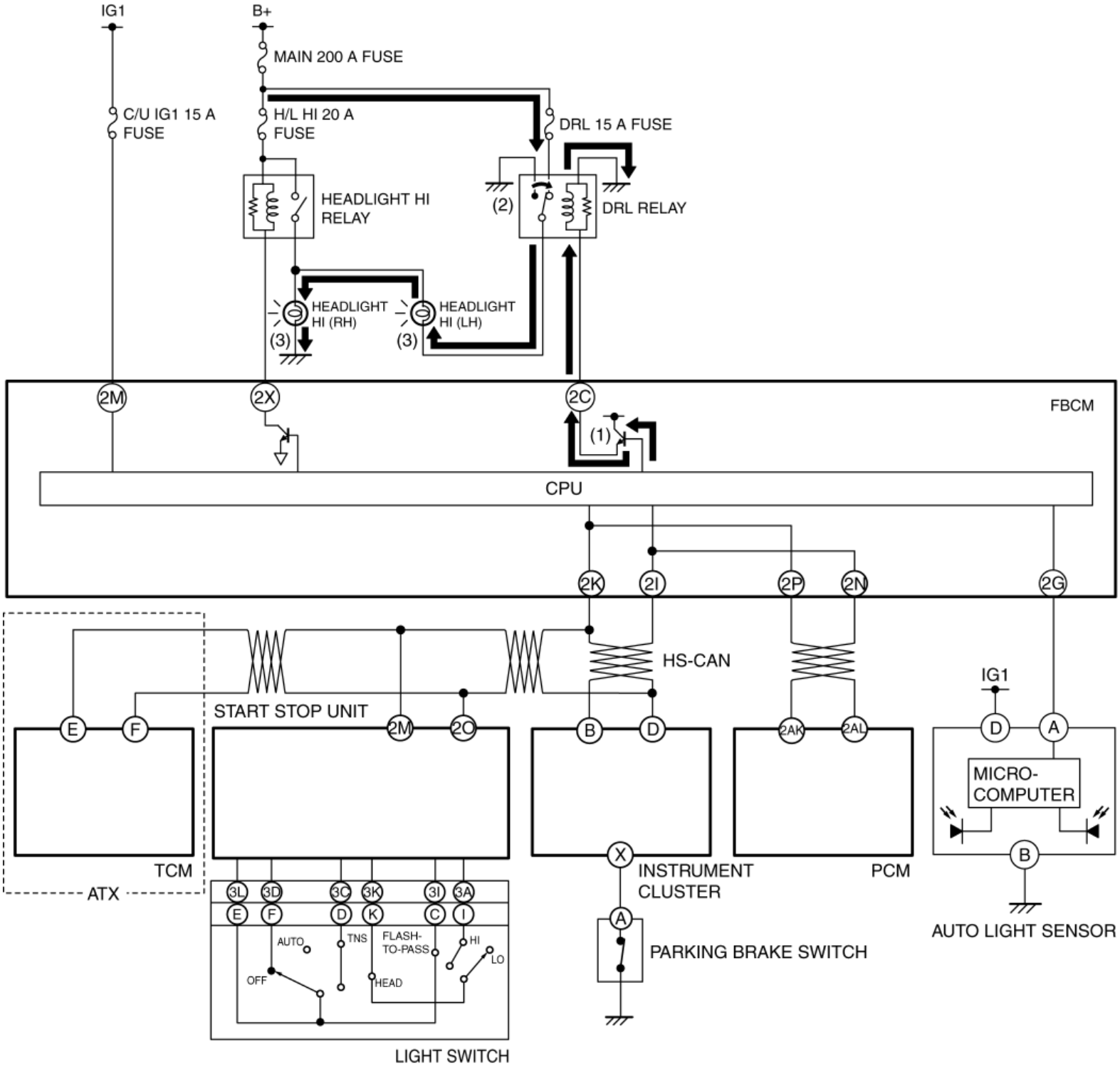

With discharge headlight system

1. If the operation conditions are met, the front body control module (FBCM) turns on the DRL circuit transistor.
2. When the transistor turns on, the DRLs are illuminated.

DRL (DAYTIME RUNNING LIGHT) SYSTEM

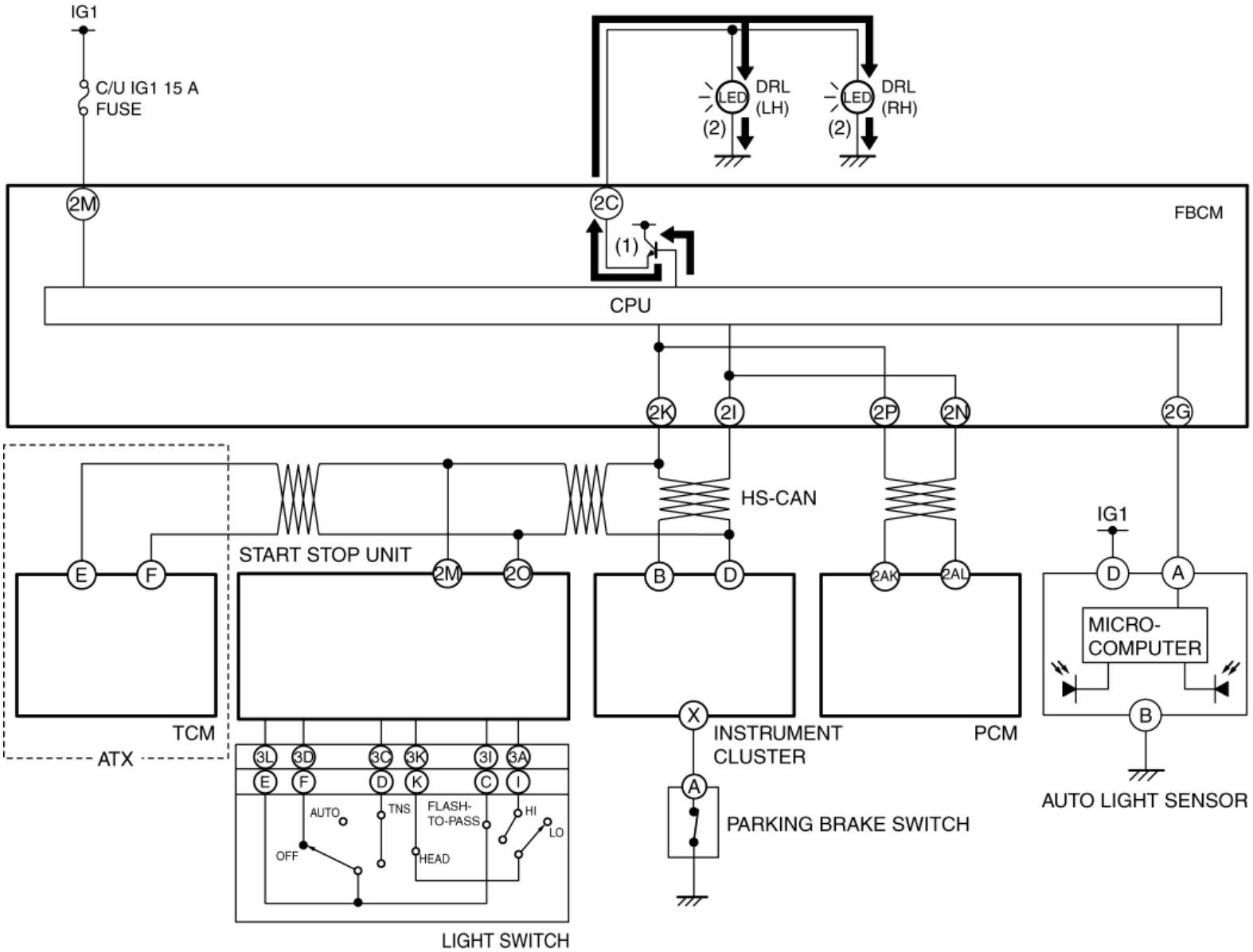

2014 - Mazda3 - Body and Accessories

HIGH BEAM CONTROL (HBC) SYSTEM

Outline

- The high beam control (HBC) system performs automatic switching to low beams only when the forward sensing camera (FSC) installed to the windshield recognizes an on-coming vehicle, a vehicle that is ahead or when traveling through towns and cities to prevent blinding of other vehicles from headlight glare and to assure visibility of drivers.

CAUTION:

- Under the following conditions the ability of the forward sensing camera (FSC) to detect light-emitting objects decreases, which could result in the system not operating normally and the inability to detect on-coming vehicles or vehicles ahead.
    - Brightness of moonlight in surrounding area
    - Poor visibility due to rain and fog
    - Scratches or soiling on the camera lens or windshield glass
- Do not rely solely on the high beam control (HBC) system, and perform the appropriate switching operation based on a visual determination of the conditions.
- If the FSC aiming for the high beam control (HBC) system is not completed, the camera shot angle for the FSC cannot be recorded and the high beam control (HBC) system may not operate. When performing the following servicing, always perform the FSC aiming. Refer to the FSC aiming procedure in the workshop manual.
    - FSC replacement
    - FSC clip replacement
    - Windshield replacement

Function

- With the light switch in the AUTO and HI position and when the headlights are turned on, the forward sensing camera (FSC) automatically switches to low beams when it recognizes a light-emitting object (on-coming vehicle, vehicle ahead, town and city streets).
- Refer to FORWARD SENSING CAMERA (FSC) for details on the forward sensing camera (FSC). (See **FORWARD SENSING CAMERA (FSC)**.)

Setting function for control order of precedence

- If several light-emitting objects are recognized (on-coming vehicles, vehicles ahead, town/city streets), control is conducted according to the following order of precedence.
    - Closest on-coming vehicle
    - Closest vehicle ahead (no on-coming vehicles)
    - Traveling through towns and cities

System conditions display function

- The forward sensing camera (FSC) displays system conditions using the HBC indicator light (green), and HBC warning light (amber).

Condition	HBC indicator light (green)	HBC warning light (amber)
Light switch is in position other than AUTO and HI position		

Headlights off	Illumination off	Illumination off
While vehicle is stopped		
System set to off by personalization		
Light switch is in AUTO and HI position and headlights turned on	Illumination on	Illumination off
Forward sensing camera (FSC) detects camera fogging	Illumination off	Illumination on
Forward sensing camera (FSC) detects camera soiling		
Malfunction in high beam control (HBC) occurs		Flashes
Malfunction in forward sensing camera (FSC) occurs		

Structural View

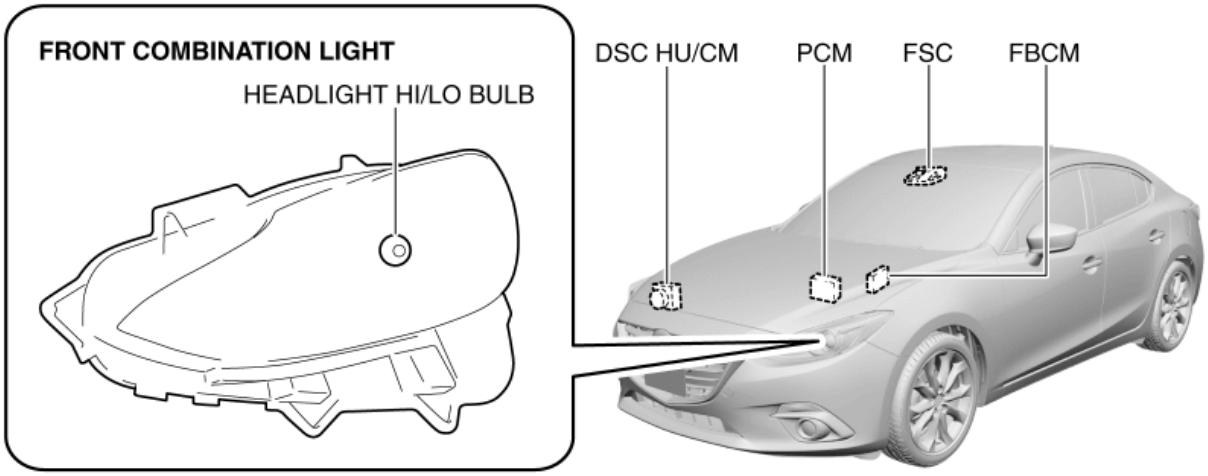

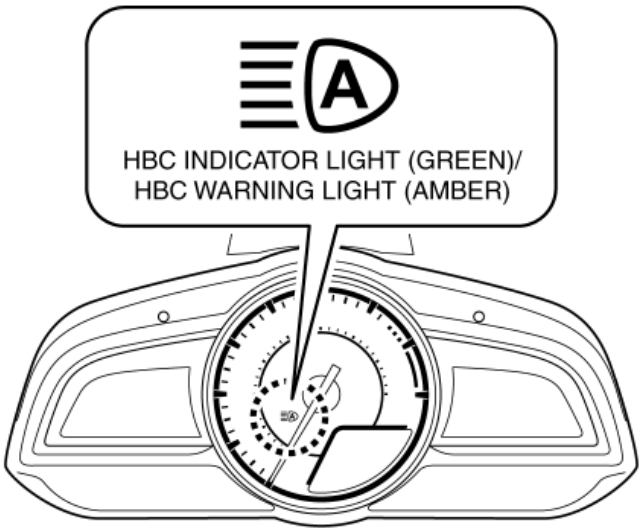

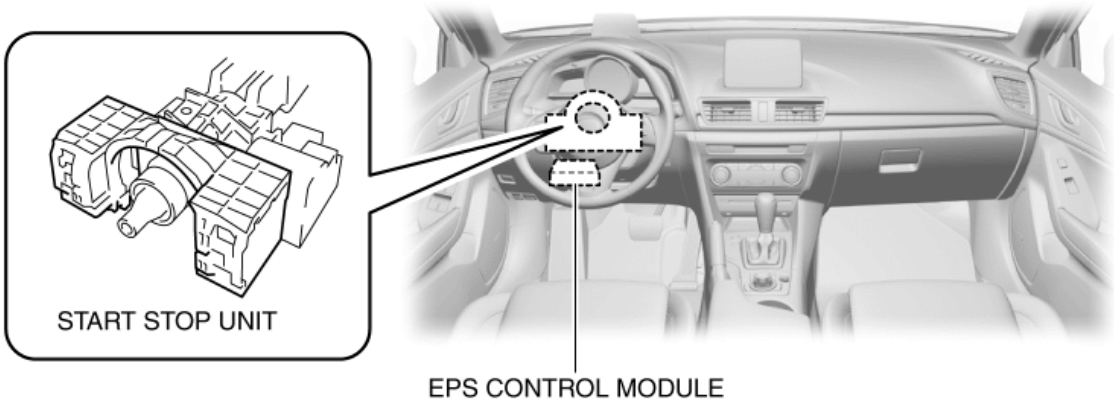

System Wiring Diagram

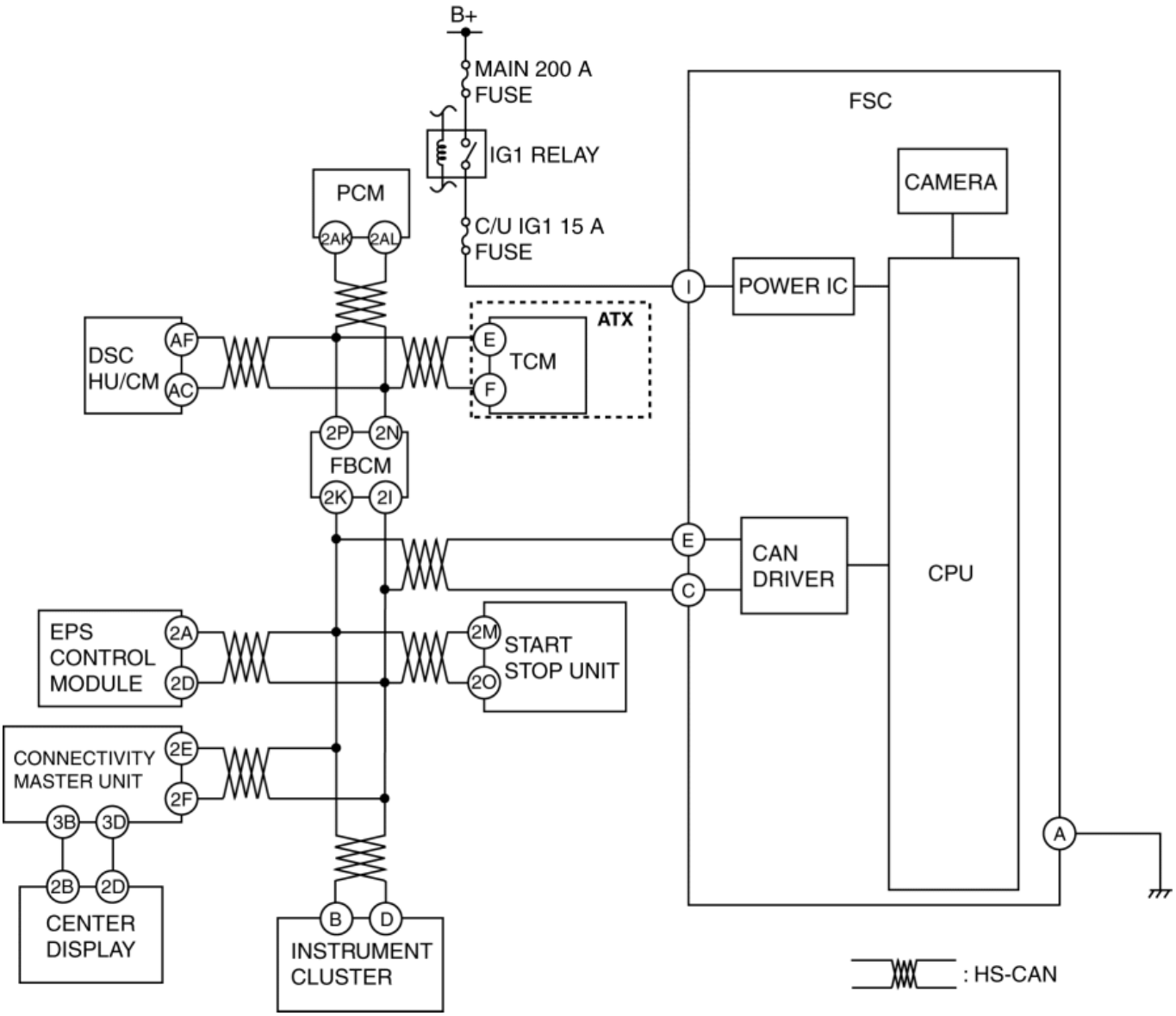

Block Diagram

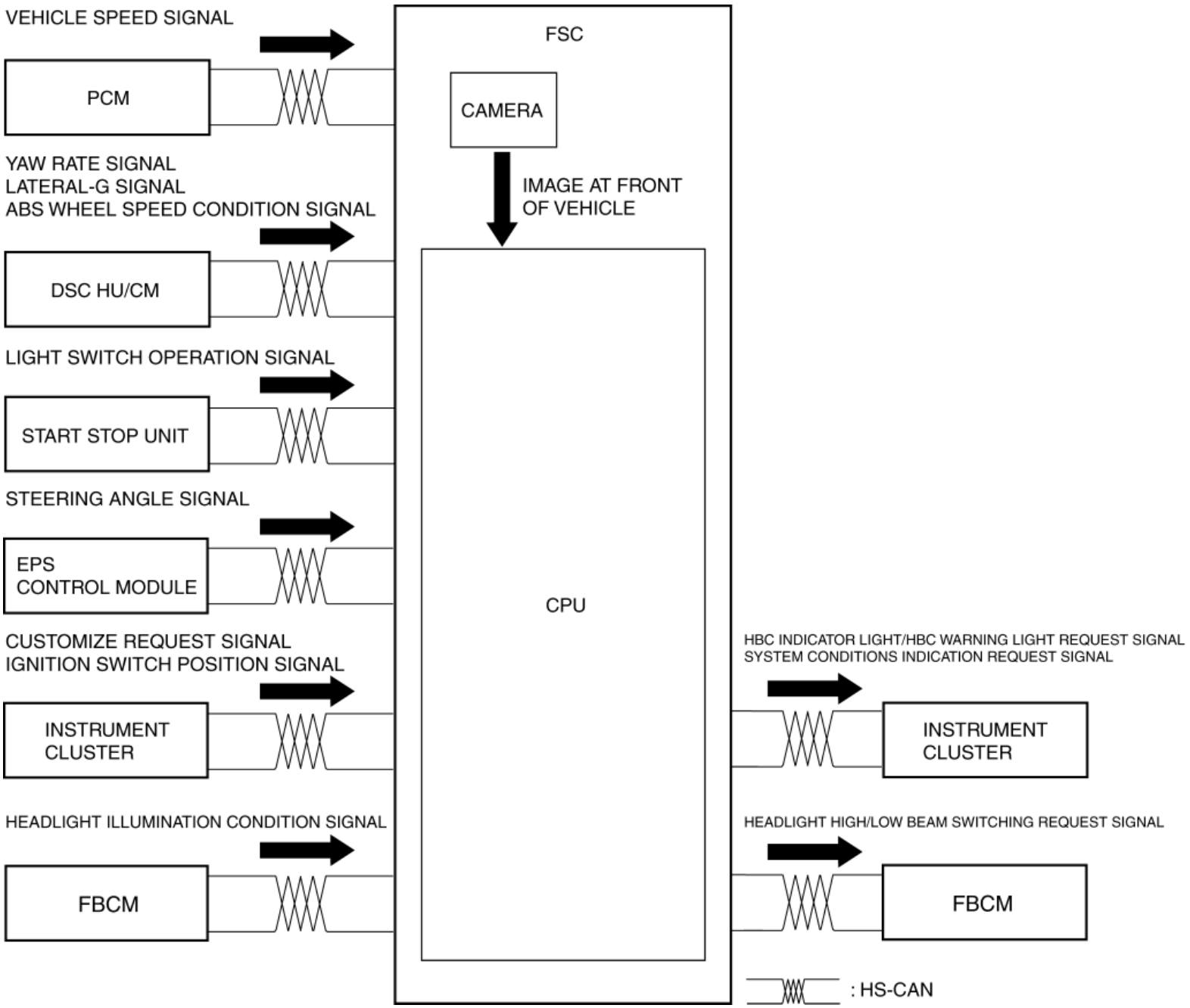

Operation

Low beam switching operation

Operation condition

- With the light switch in the AUTO and HI position and when the headlights are turned on, the headlights are switched to low beams when any of the following conditions are met:
    - On-coming vehicles, vehicles ahead, town/city streets are recognized.
    - Vehicle speed is 20 km/h {12 mph} or less.
- When the forward sensing camera (FSC) recognizes a light-emitting object (on-coming vehicles, vehicles ahead, town/city streets) or detects a vehicle speed of 20 km/h {12 mph} or less, it sends a headlight low beam switching request signal to the front body control module (FBCM).
- When the front body control module (FBCM) receives the headlight low beam switching request signal from the forward sensing camera (FSC), it switches the headlight to low beams.

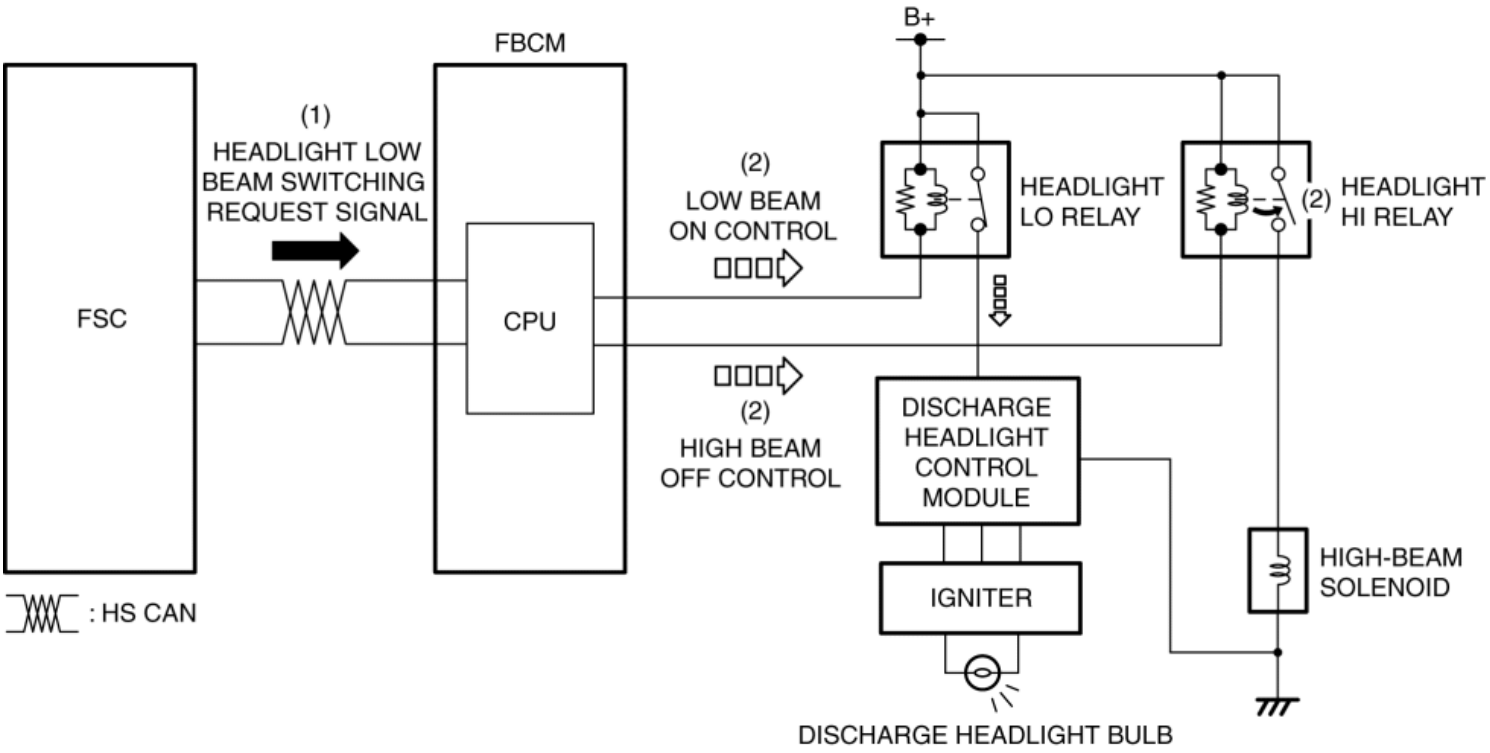

High beam return operation

Operation condition

- If the following conditions are met, the headlights are switched to high beams.
  - If vehicle speed is 30 km/h {19 mph} and on-coming vehicles, vehicles ahead or street lights are not recognized.

On-coming vehicles

- If a recognized on-coming vehicle moves away from the camera range, the forward sensing camera (FSC) sends a headlight high beam switching request signal to the front body control module (FBCM).
- When the front body control module (FBCM) receives the headlight high beam switching request signal from the forward sensing camera (FSC), it switches the headlight to high beams.

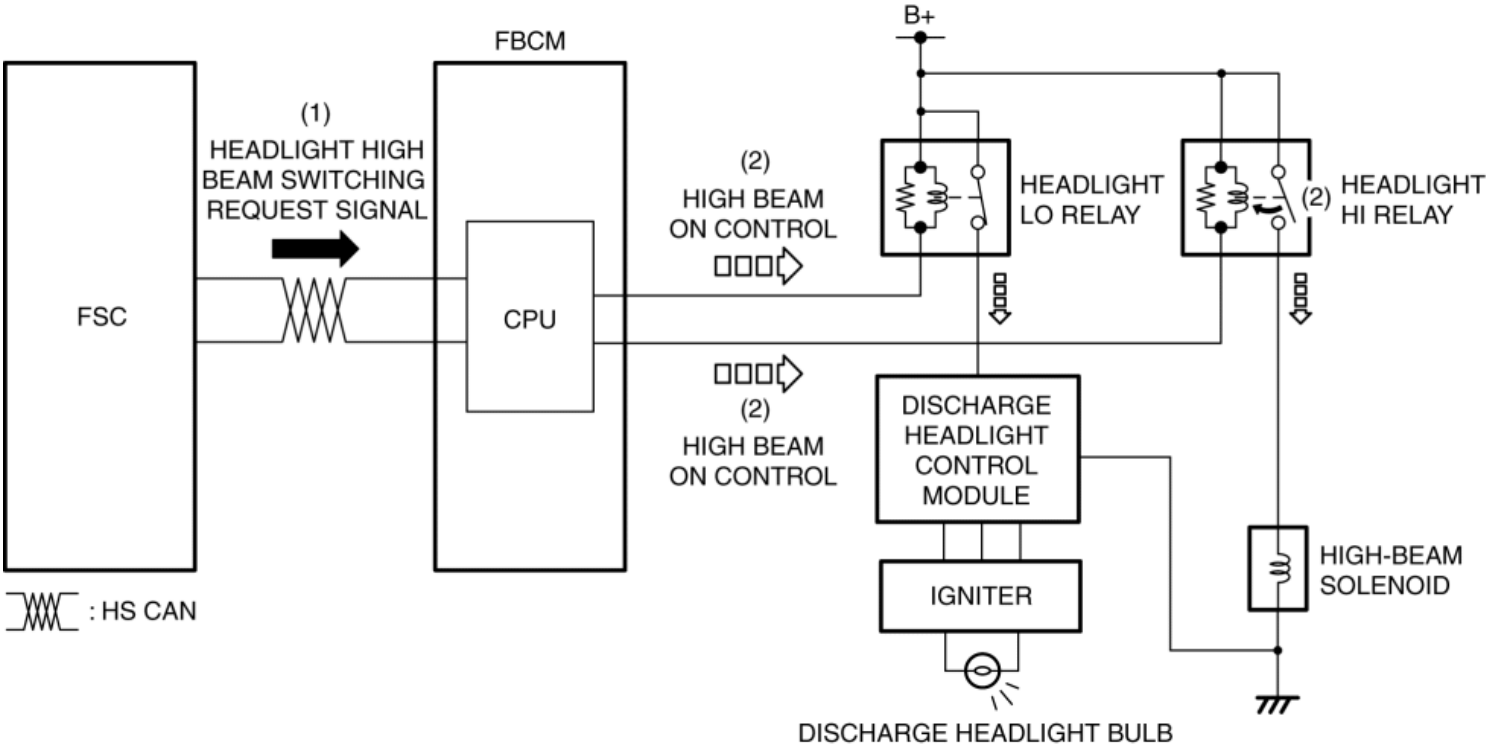

Vehicle ahead or town/city streets (street lights)

- If a recognized vehicle ahead moves away from the camera range, or town/city streets (street lights) are no longer detected in the camera range, the low beams are maintained for a certain period of time.
- If a vehicle ahead or town/city streets (street lights) are not detected for a certain period of time, the forward sensing camera (FSC) sends a headlight high beam switching request signal to the front body control module (FBCM).
- When the front body control module (FBCM) receives the headlight high beam switching request signal from the forward sensing camera (FSC), it switches the headlight to high beams.

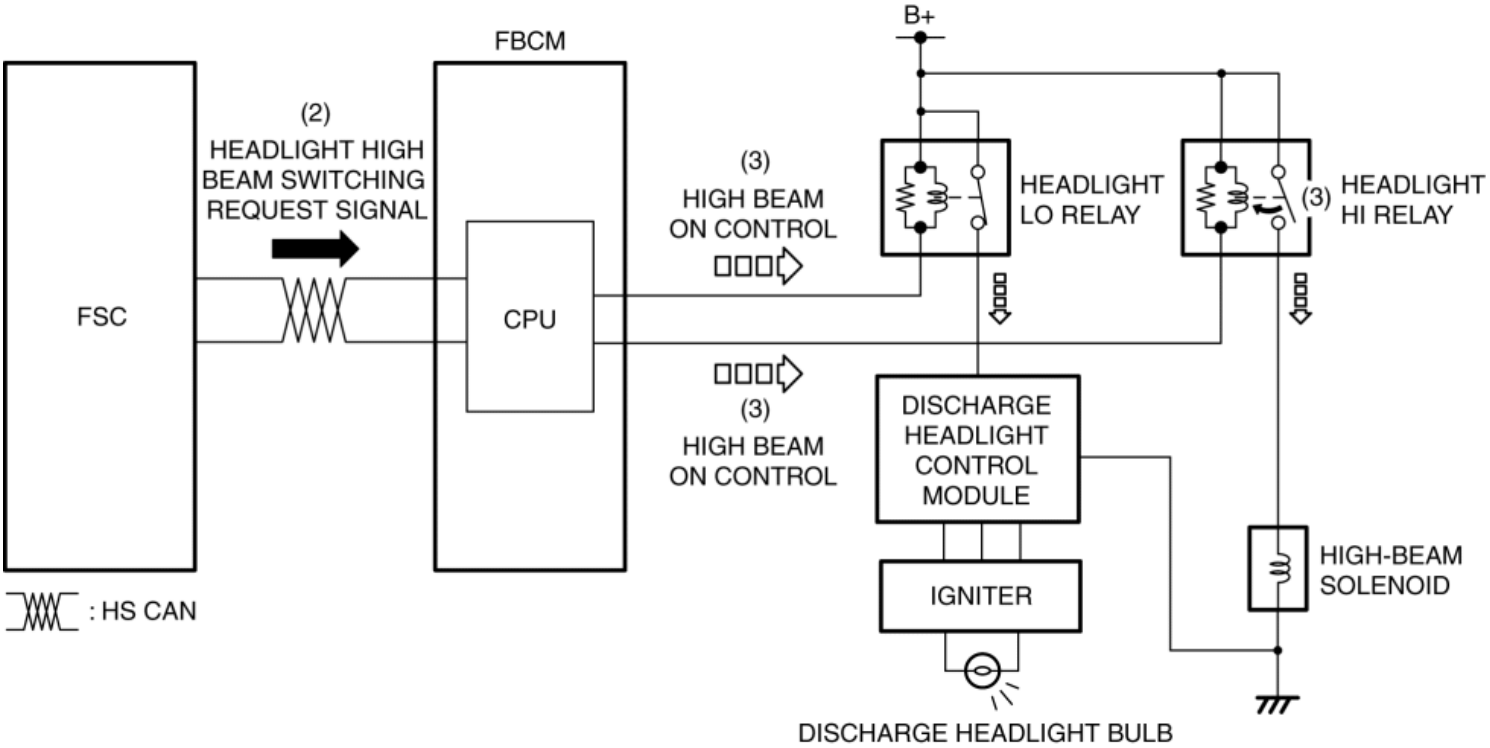

Forward sensing camera (FSC) loses sight of vehicle ahead which is cornering

- If the forward sensing camera (FSC) loses sight of a recognized vehicle which is cornering, the forward sensing camera (FSC) maintains the low beams until reaching the locus at which the forward sensing camera (FSC) lost sight of it.
- If the vehicle ahead is not detected at the locus at which the forward sensing camera (FSC) had lost sight of it, the headlights

are switched to high beams. If the vehicle ahead is detected, the low beams are maintained.

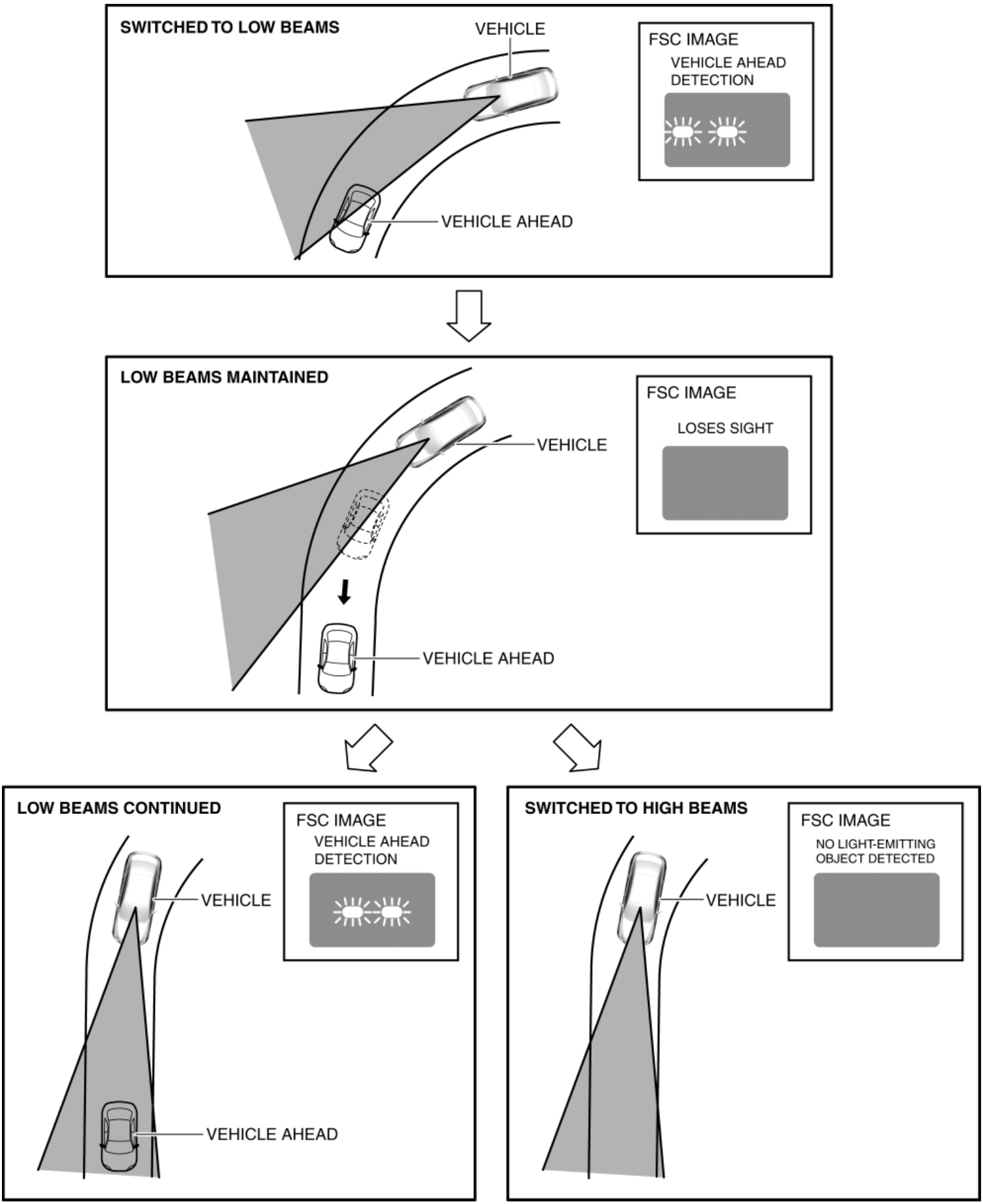

Forward sensing camera (FSC) suddenly loses sight of light-emitting object (on-coming vehicles, vehicles

ahead, town/city streets (street lights))

- If the forward sensing camera (FSC) suddenly loses sight of a recognized light-emitting object in the camera range, the low beams are maintained for a certain period of time.
- Depending on whether a light-emitting object is detected or not after the certain period of time has elapsed, the headlights are switched to high beams or the system determines that the low beams are to be maintained.

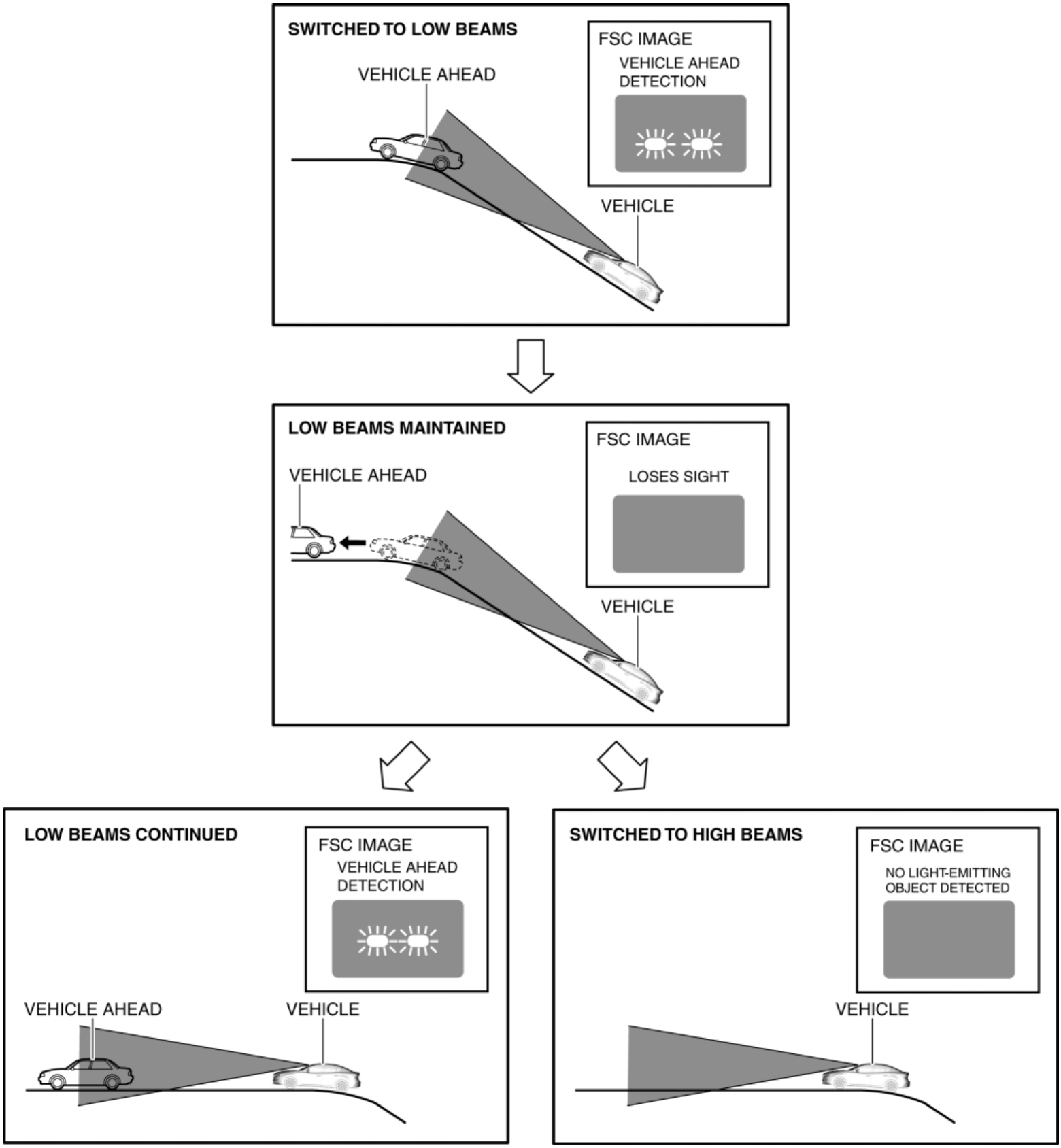

Fail-safe

- If a malfunction is detected in the system, control is inhibited and the headlights are switched to high beams.

2014 - Mazda3 - Body and Accessories

HBC INDICATOR LIGHT (GREEN)/HBC WARNING LIGHT (AMBER)

Purpose

HBC indicator light (green)

- The HBC indicator light (green) notifies the driver that the high beam control (HBC) system is operating.

HBC warning light (amber)

- The HBC warning light (amber) warns the driver that a malfunction is occurring in the high beam control (HBC) system.

Function

HBC indicator light (green)

- The instrument cluster illuminates the HBC indicator light (green) based on the system conditions display request signal sent via a CAN signal from the forward sensing camera (FSC).

HBC warning light (amber)

- The instrument cluster illuminates the HBC warning light (amber) based on the system conditions display request signal sent via a CAN signal from the forward sensing camera (FSC).
- The instrument cluster flashes the HBC warning light (amber) based on the system malfunction display request signal sent via a CAN signal from the forward sensing camera (FSC).
- The flash pattern of the HBC warning light (amber) is as shown in the figure.

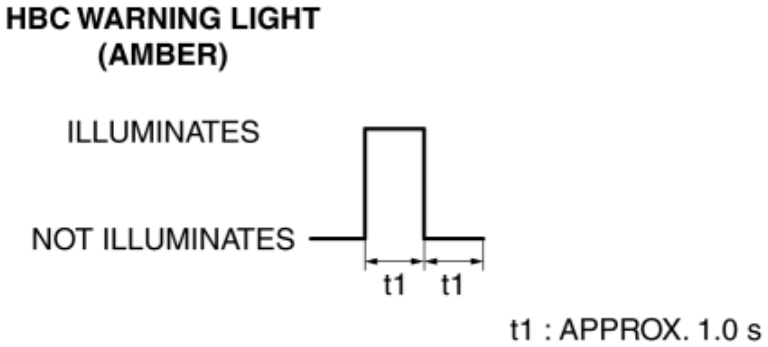

- For vehicles with center display, a warning message in the center display is displayed when the HBC warning light (amber) is flashed. For the message content and verification method, refer to the

CENTER DISPLAY. (See **CENTER DISPLAY [WITH CENTER DISPLAY]**.)

Construction

- The HBC indicator light (green) and HBC warning light (amber) are equipped in the instrument cluster.

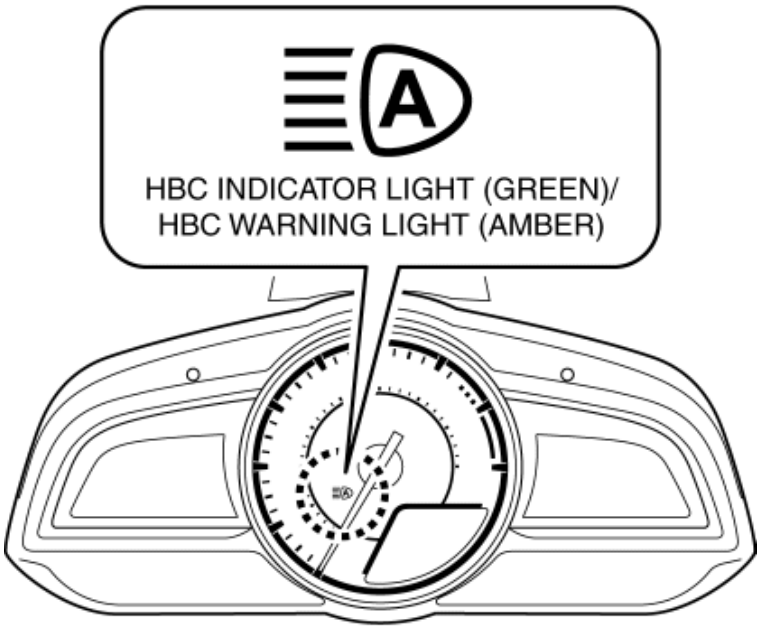

INSTRUMENT CLUSTER

Operation

HBC indicator light (green)

1. The instrument cluster receives the system conditions display request signal from the forward sensing camera (FSC) via the CAN signal.

2. The instrument cluster turns the transistor on based on the system conditions display request signal.

3. When the transistor turns on, a ground circuit with the HBC indicator light (green) is established, and the HBC indicator light (green) illuminates.

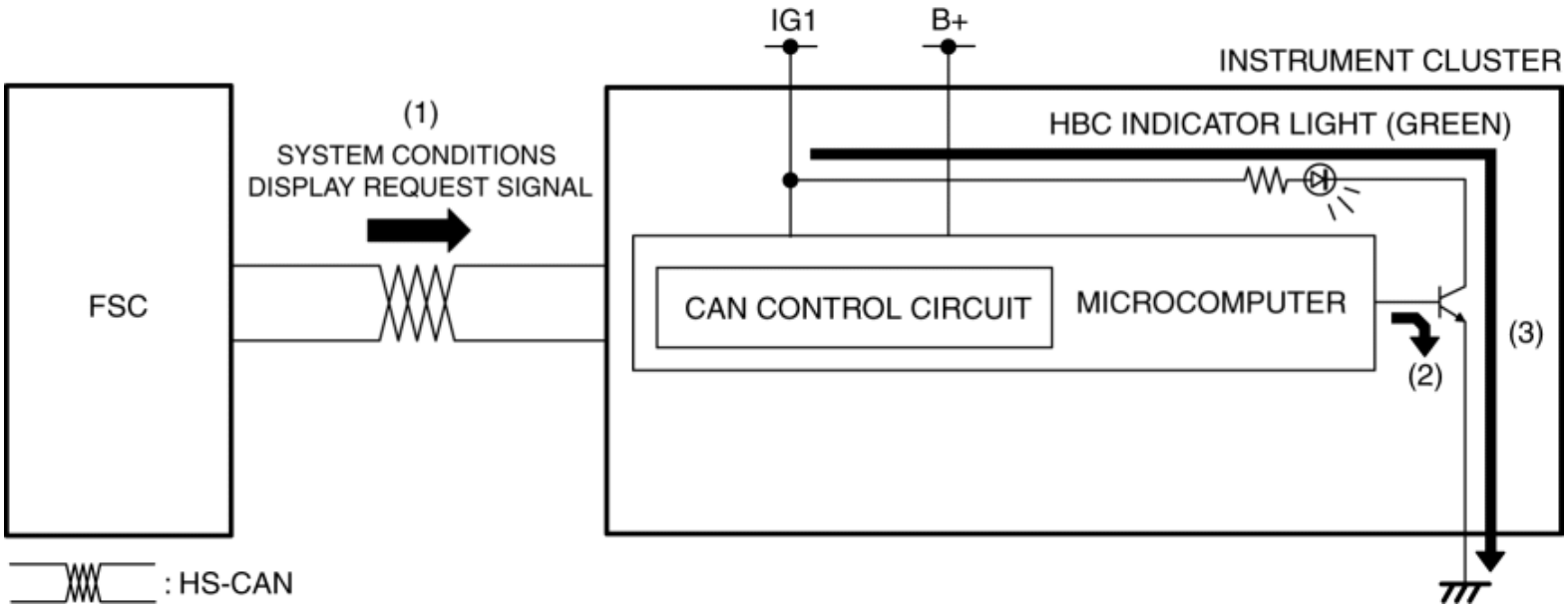

HBC warning light (amber)

1. The instrument cluster receives the system conditions display request signal or a system malfunction display request signal from the forward sensing camera (FSC) via a CAN signal.

2. The instrument cluster turns the transistor on intermittently for a system malfunction display request signal, and continuously for a system conditions display request signal.

3. When the transistor is turned on intermittently, the HBC warning light (amber) flashes, and when it is turned on continuously, the HBC warning light (amber) illuminates.

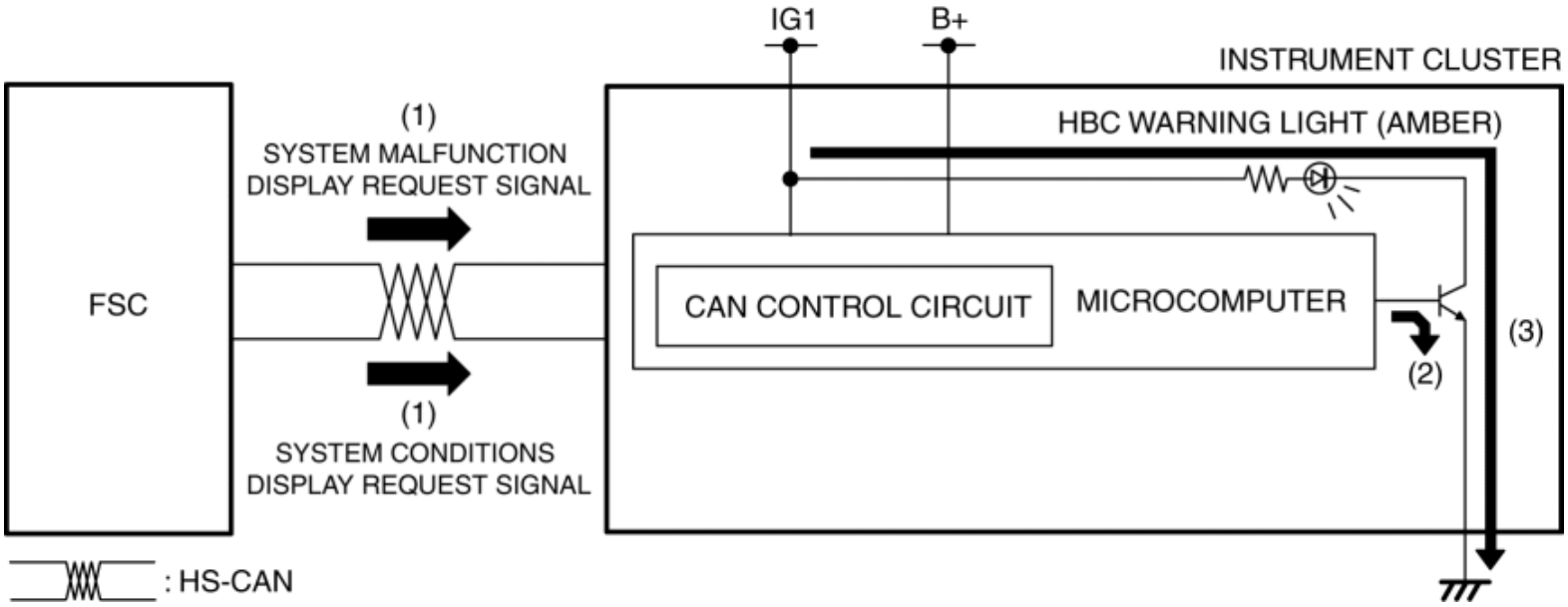

Fail-safe

- Function not equipped.

HBC INDICATOR LIGHT (GREEN)/HBC WARNING LIGHT (AMBER)

2014 - Mazda3 - Body and Accessories

FRONT TURN LIGHT

Purpose

- The front turn lights notify pedestrians and other vehicles of the vehicle making a left or right turn.

Function

- The front turn lights flash according to the operation of the turn switch or the hazard warning switch.

Construction

- The front turn lights are assembled to the front bumper.
- Clear lenses have been adopted on the front turn lights.

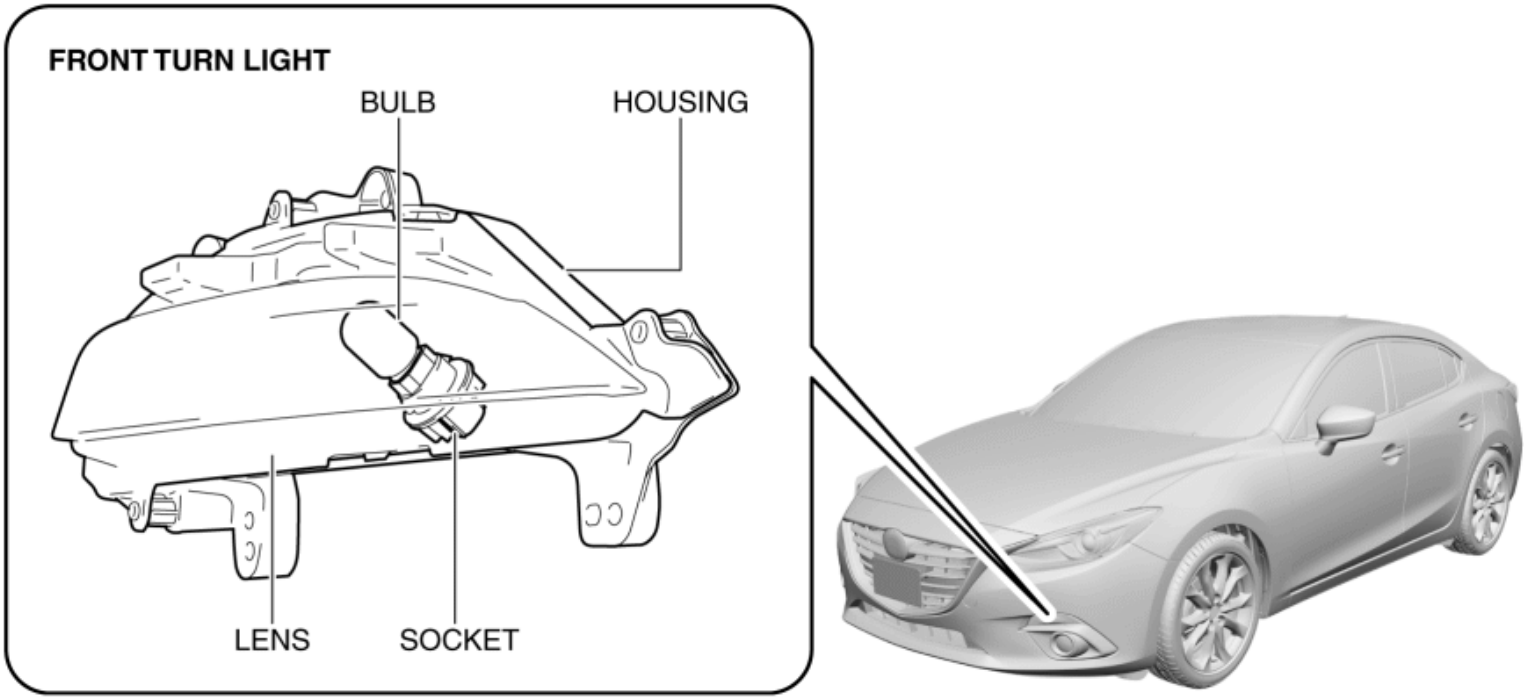

Operation

Turn light system

1. When the turn switch is operated to the LH or RH position, the start stop unit detects a turn switch LH or RH signal.

2. The start stop unit sends the turn switch LH or RH signal to the front body control module (FBCM) as a CAN signal.

3. When the front body control module (FBCM) receives the turn switch LH or RH signal, the front turn light (LH) or (RH) is flashed.

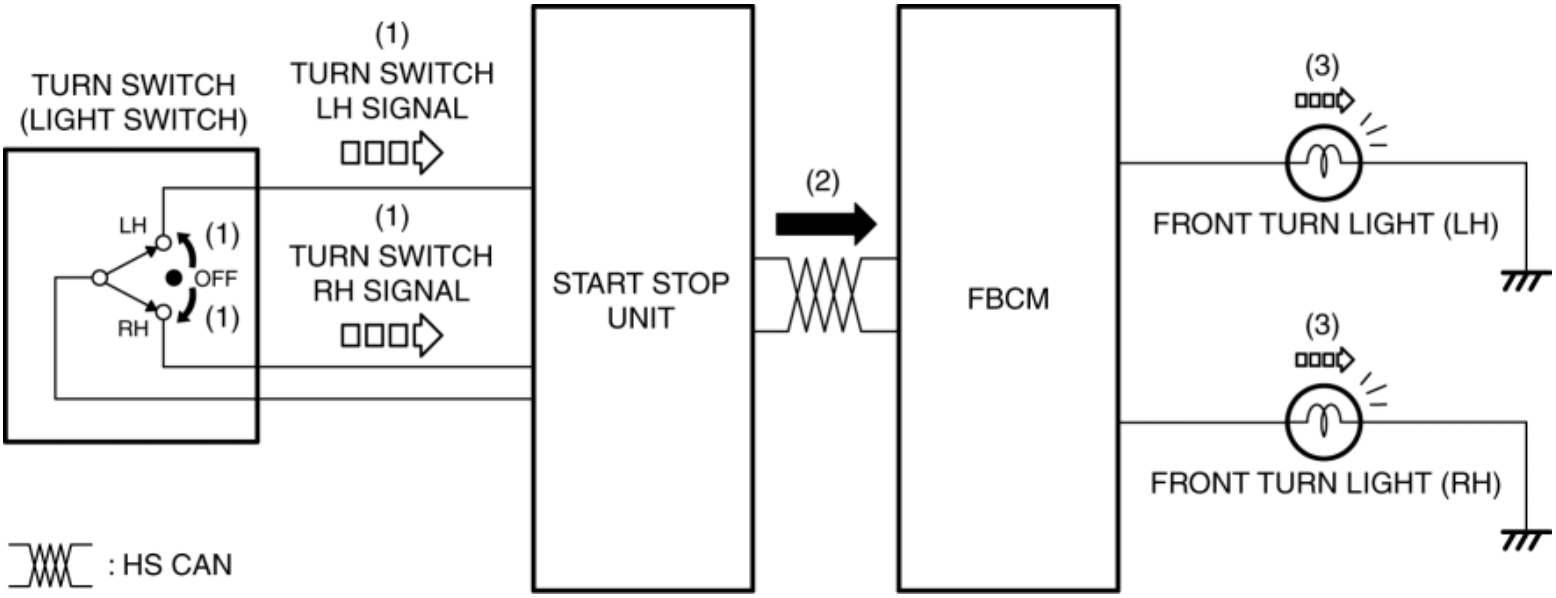

Hazard warning system

1. When the hazard warning switch is turned on, the start stop unit detects a hazard warning switch on signal.

2. When the start stop unit detects a hazard warning switch on signal, it sends the hazard warning signal to the front body control module (FBCM) via a CAN signal.

3. When the front body control module (FBCM) receives the hazard warning signal, the front turn lights (RH) and (LH) flash.

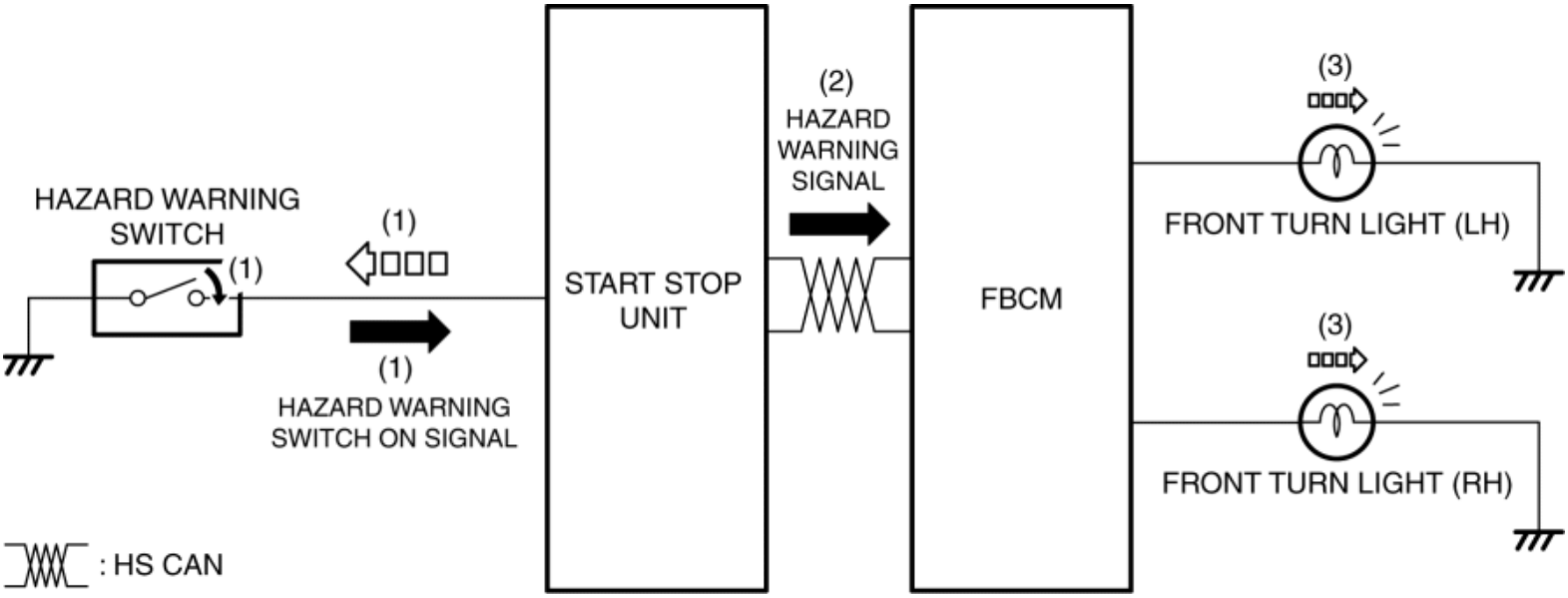

Fail-safe

- Function not equipped.

FRONT TURN LIGHT

2014 - Mazda3 - Body and Accessories

FRONT FOG LIGHT

Purpose

- By shining light in a wider area in front of the vehicle than the light from the headlights, visibility during poor weather conditions, such as rain and fog, has been improved. In addition, the visibility of the vehicle from on-coming vehicles, pedestrians, and other people has been improved.

Function

- Illuminates according to the light switch and front fog light switch operation.

Construction

- Round-type front fog lights are installed to the front bumper.
- Clear lenses have been adopted to the front fog lights.

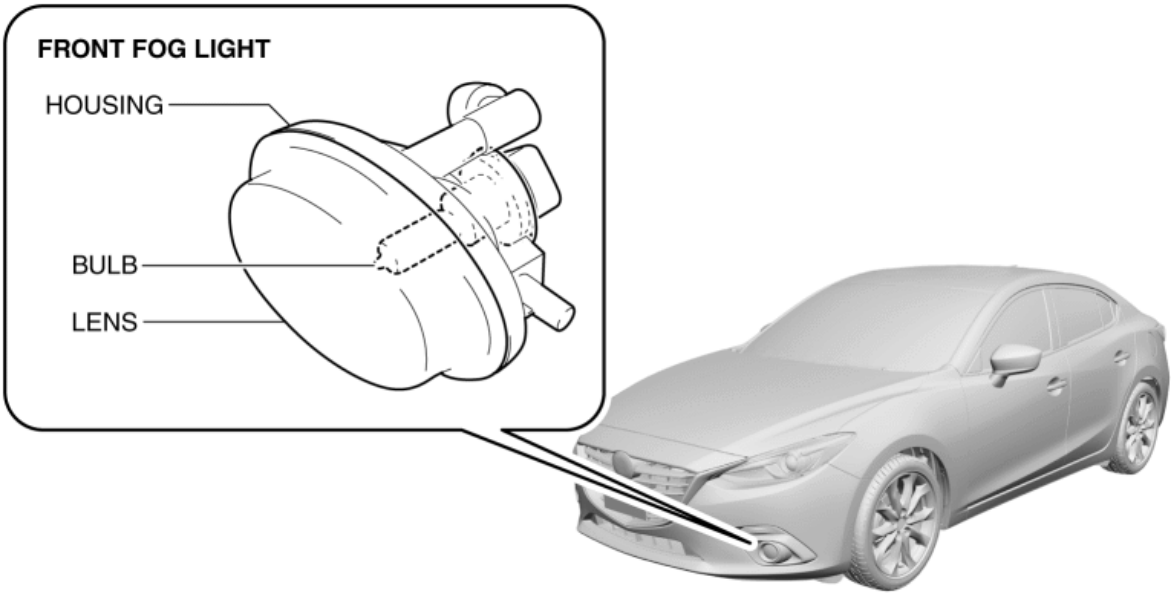

Operation

1. With the light switch in the TNS or HEAD position, the start stop unit detects a front fog light switch signal when the fog light switch is operated to the F.FOG position.
2. The start stop unit sends the front fog light switch signal to the front body control module (FBCM) as a CAN signal.
3. When the front body control module (FBCM) receives the front fog light switch signal, it turns the front fog light relay on.
4. When the front fog light relay turns on, the front fog light illuminates.

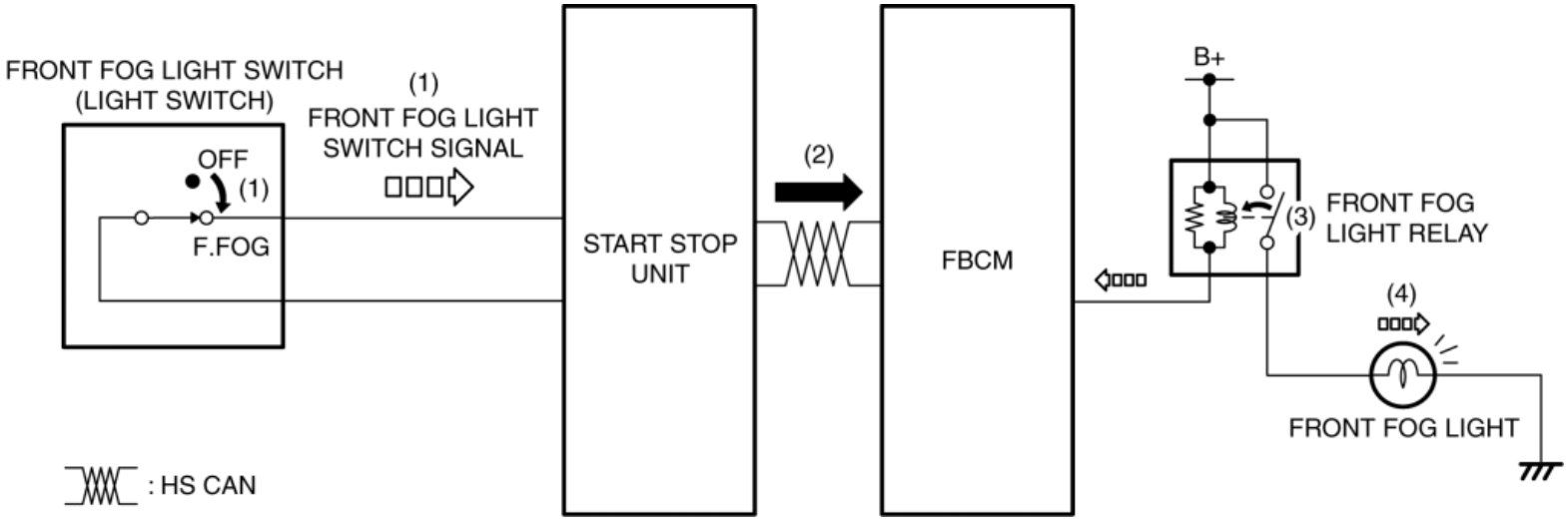

Fail-safe

- Function not equipped.

2014 - Mazda3 - Body and Accessories

TURN LIGHT SYSTEM

Purpose

- The turn light system flashes the turn light three times automatically according to the turn switch operation.
- The front body control module (FBCM) performs turn light system fail-safe. (See **FRONT BODY CONTROL MODULE (FBCM)**.)

Function

- The front body control module (FBCM) performs control based on the turn switch LH or RH signal sent from the start stop unit via the CAN signal as follows:
    - On-signal receive time of turn switch is less than 0.65 s: Operates the turn light system.
    - On-signal receive time of turn switch is 0.65 s or more: Flashes the turn light according to the receive time.

Structural View

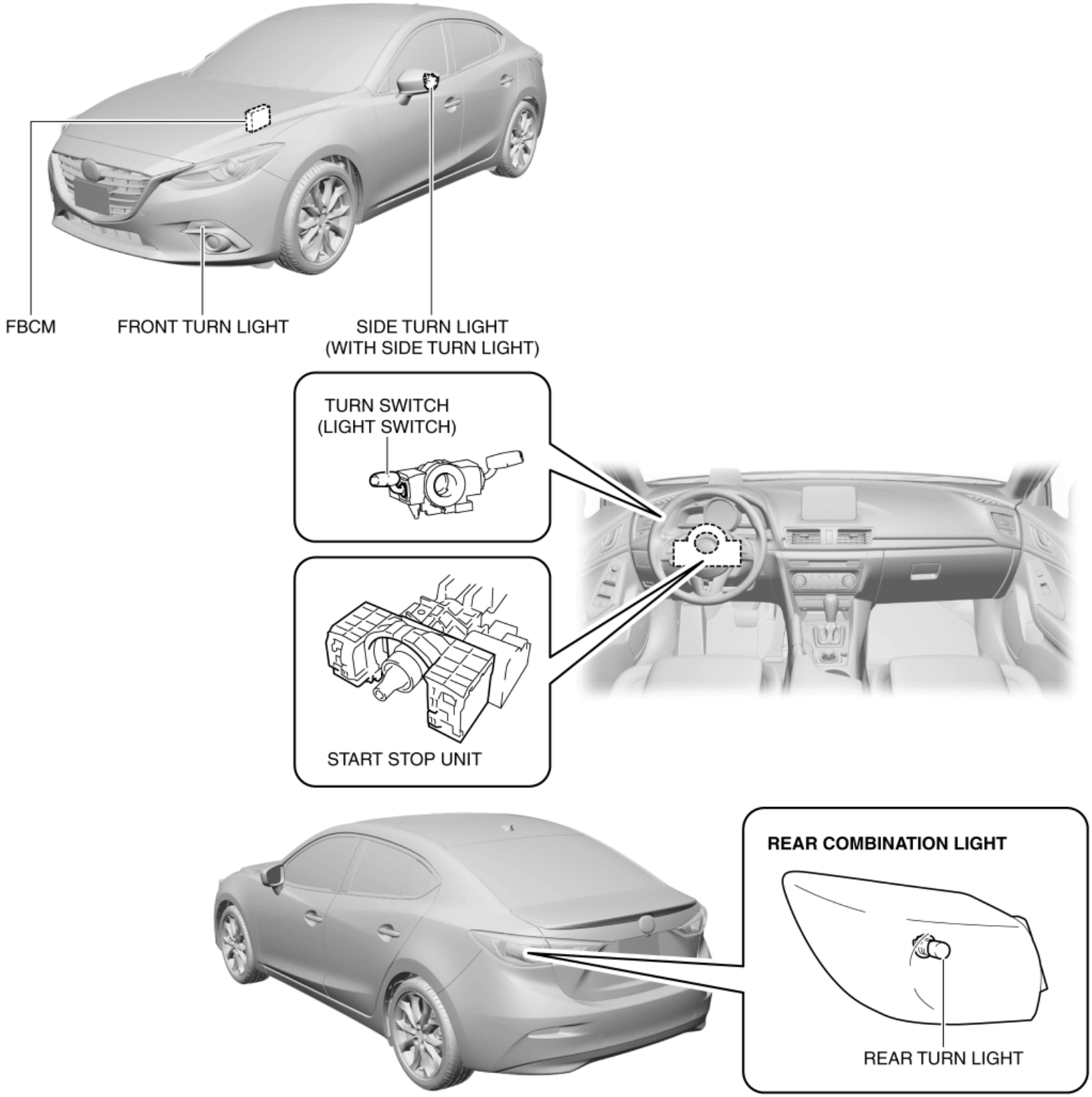

System Wiring Diagram

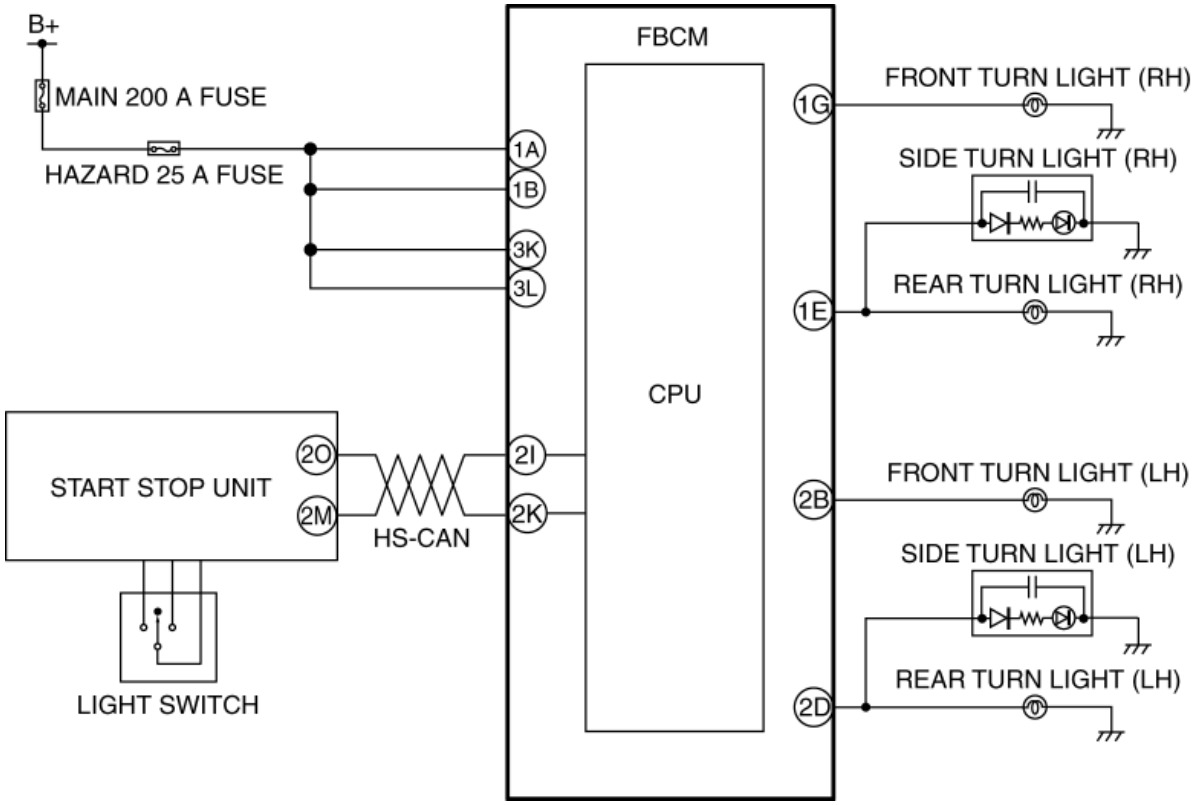

Operation

- If the front body control module (FBCM) receives the turn switch LH or RH signal from the start stop unit for less than 0.65 s when the ignition is switched ON (engine off or on), it flashes the turn light LH or RH three times.
- While the turn light system is operating, if the front body control module (FBCM) receives a turn switch on signal from the opposite side, the turn light system is cancelled. However, if the front body control module (FBCM) receives the turn switch on signal from the opposite side for 0.2 s or more, it flashes the turn lights while receiving the turn switch on signal.

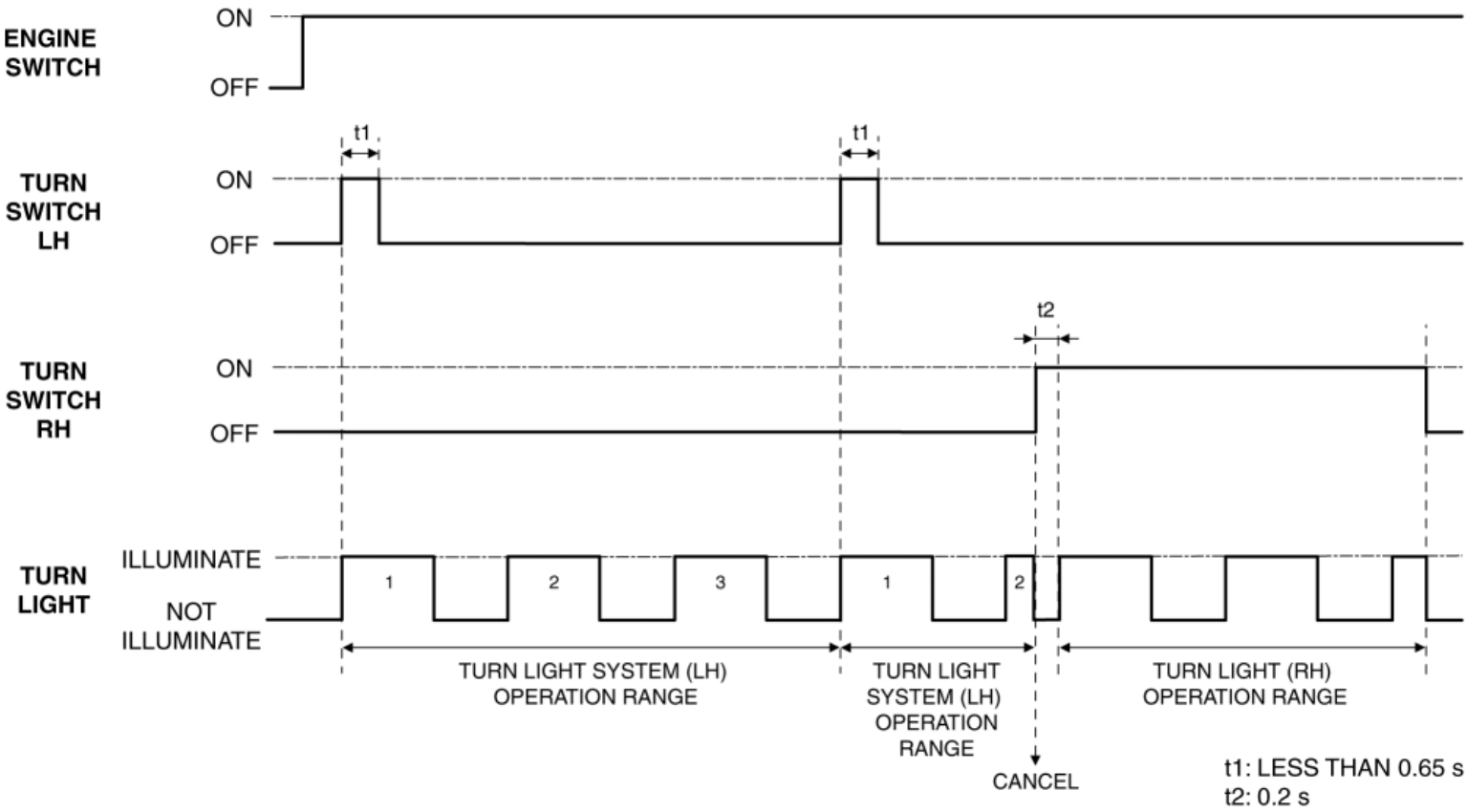

2014 - Mazda3 - Body and Accessories

SIDE TURN LIGHT

Purpose

- The side turn lights are used to signal vehicles/people at the side of the vehicle that the vehicle is going to make a right or left turn.

Function

- The side turn lights flash according to the operation of the turn switch or the hazard warning switch.

Construction

- Side turn lights built into the outer mirrors have been adopted.
- LED type side turn lights have been adopted.

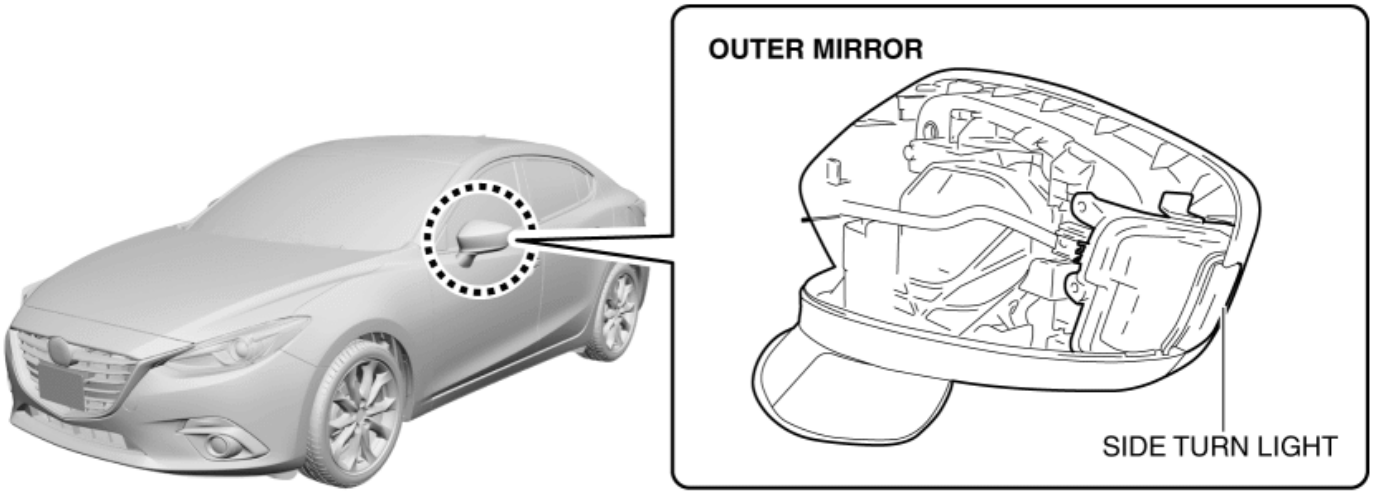

Operation

Turn light system

1. When the turn switch is operated to the LH or RH position, the start stop unit detects a turn switch LH or RH signal.
2. The start stop unit sends the turn switch LH or RH signal to the front body control module (FBCM) as a CAN signal.
3. When the front body control module (FBCM) receives the turn switch LH or RH signal, the side turn light (LH) or (RH) flashes.

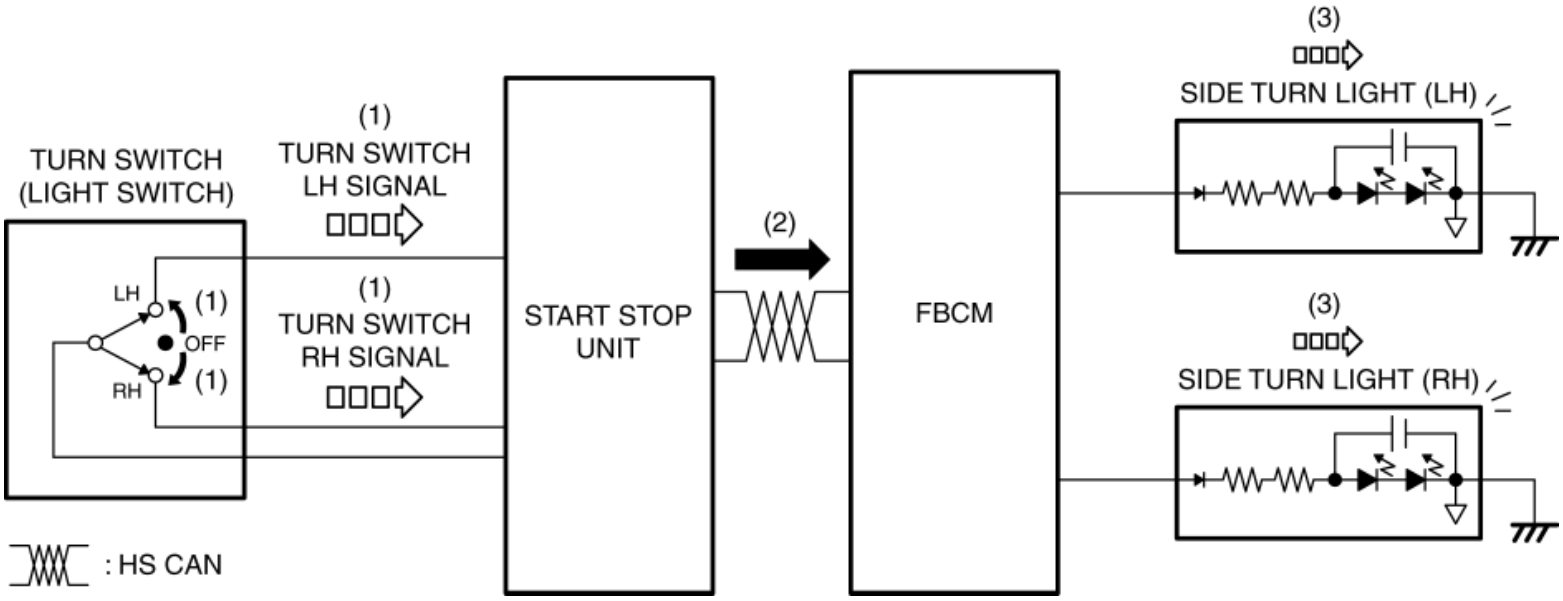

Hazard warning system

1. When the hazard warning switch is turned on, the start stop unit detects a hazard warning switch on signal.

2. When the start stop unit detects a hazard warning switch on signal, it sends a hazard warning signal to the front body control module (FBCM) as a CAN signal.

3. When the front body control module (FBCM) receives the hazard warning signal, the side turn light (LH) and (RH) flash.

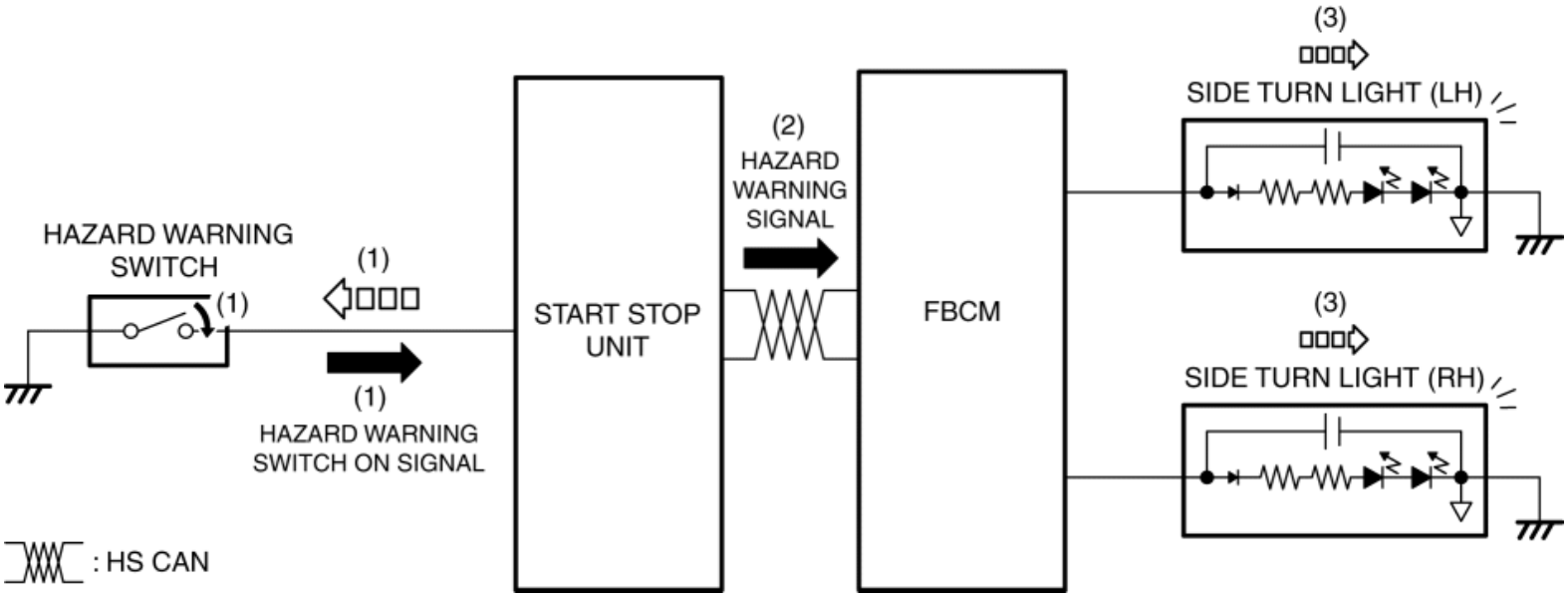

Fail-safe

- Function not equipped.

2014 - Mazda3 - Body and Accessories

REAR COMBINATION LIGHT

Purpose

- The rear combination lights are used to signal the following conditions to vehicles/people at the rear.
    - Rear turn lights: Signals a left or right turn of the vehicle.
    - Brake lights: Signals a vehicle stop.
    - Taillights: Signals the presence of the vehicle to vehicles/people at the rear during nighttime.
    - Rear side marker lights: Signals the presence of the vehicle to vehicles/people at the adjacent rear during nighttime.

Function

- The related light turns on or flashes according to the operation of each switch.

Operation switch	Related light	Operation condition
Light switch (TNS)	Taillight	Turns on
	Rear side marker light	Turns on
Brake switch	Brake light	Turns on
Turn switch	Rear turn light	Flashes
Hazard warning switch		

Construction

- The following parts are an integrated structure.
    - Rear turn light bulb
    - Brake light/rear side marker light/taillight bulb (with bulb type)
    - Brake light/rear side marker light/taillight (LED) (with LED type)
- The brake light/rear side marker light/taillight has adopted a LED. (with LED type)
- A clear lens has been adopted for the rear combination light.

NOTE:

- Fogging or condensation on the inside of the rear combination lights may occur, however, it is a natural phenomenon occurring as a result of a temperature difference between the interior and exterior of the combination lights and has no effect on the light performance. Fogging or condensation will dissipate when the temperature inside the rear combination lights rises after the rear turn lights are illuminated and a period of time has elapsed.

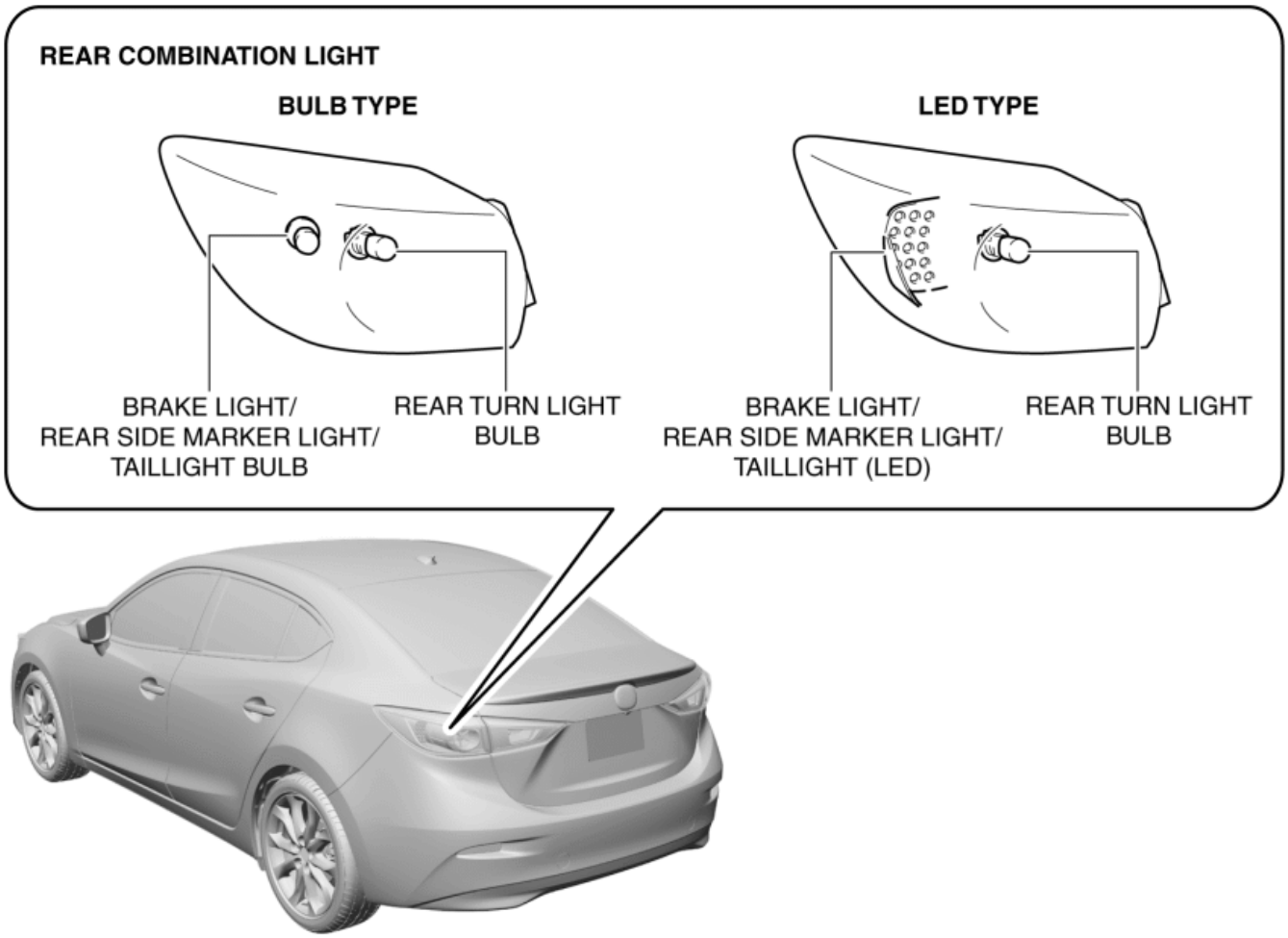

Operation

Rear side marker lights/taillights

1. When the light switch is operated to the TNS position, the start stop unit detects a light switch TNS signal.
2. The start stop unit sends the light switch TNS signal to the front body control module (FBCM) as a CAN signal.
3. When the front body control module (FBCM) receives the light switch TNS signal, it turns the TNS relay on.
4. When the TNS relay turns on, the rear side marker lights/taillights are illuminated.

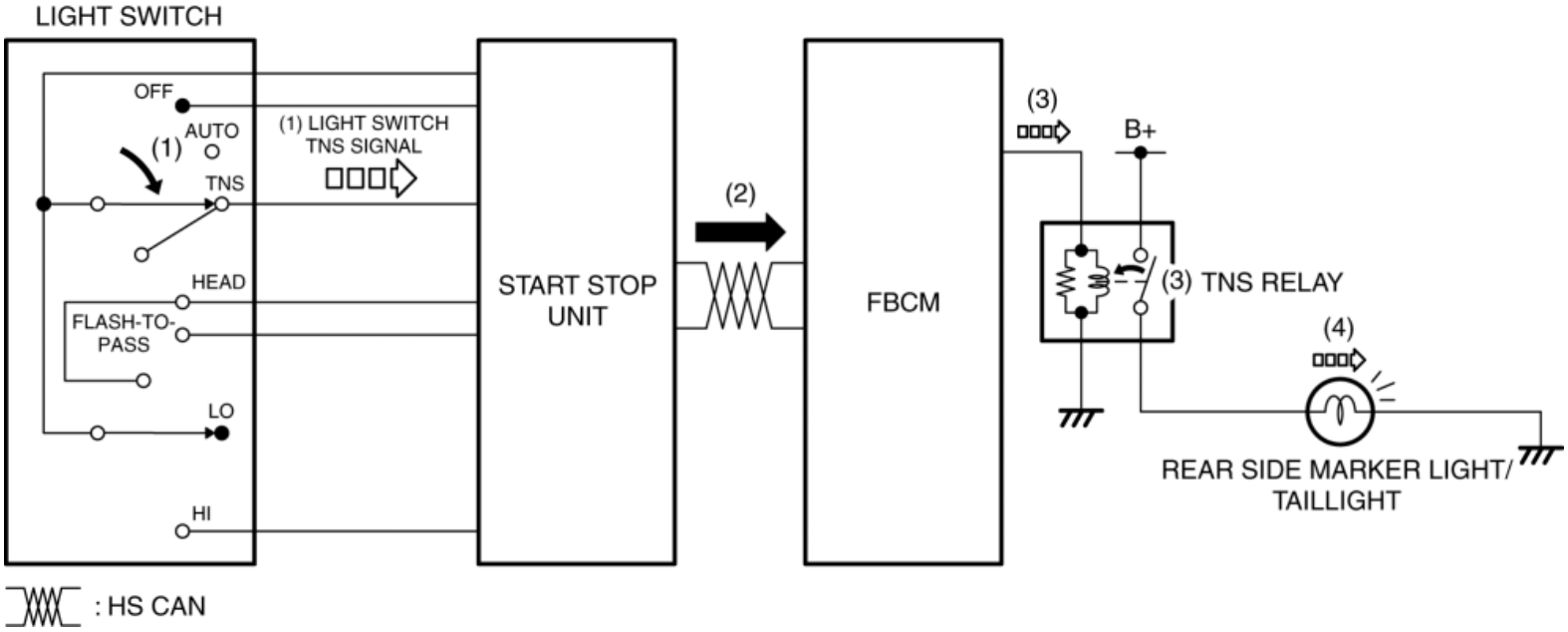

Brake lights

- **Operation due to brake pedal operation**

  Without smart city brake support (SCBS) system

  - When the brake pedal is depressed, the brake switch (No.1 signal) turns on.
  - When the brake switch (No.1 signal) turns on, current flows from the battery to the brake lights.
  - The brake lights turn on.

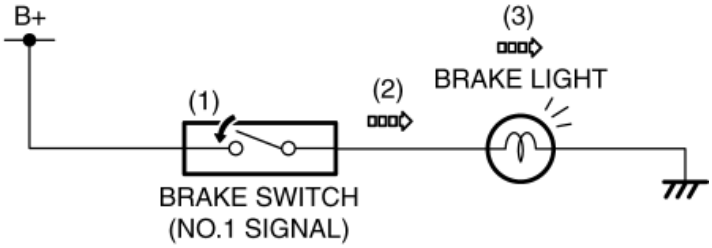

  With smart city brake support (SCBS) system

  - When the brake pedal is depressed, the brake switch (No.1 signal) turns on.
  - When the brake switch (No.1 signal) turns on, current flows from the battery to the brake lights.
  - The brake lights turn on.

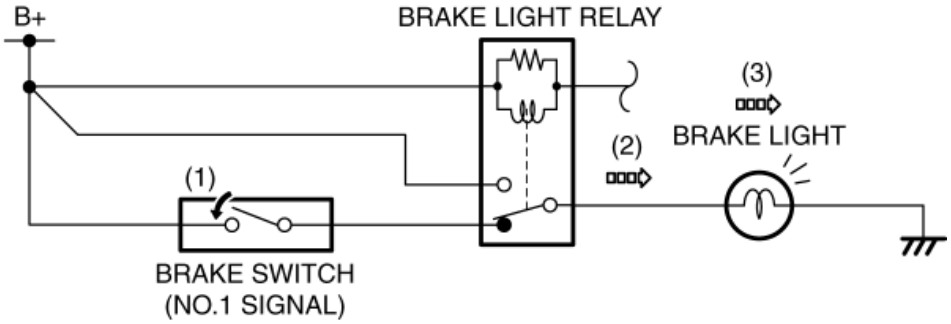

- **Operation due to operation request signal from rear body control module (RBCM)**

  NOTE:

  - Refer to "**SMART CITY BRAKE SUPPORT (SCBS)**" for details.

With smart city brake support (SCBS) system

- When the operation conditions are met, the rear body control module (RBCM) turns on the transistor inside the rear body control module (RBCM).
- When the transistor inside the rear body control module (RBCM) turns on, the brake light relay turns on.
- When the brake light relay turns on, current flows from the battery to the brake lights.
- The brake lights turn on.

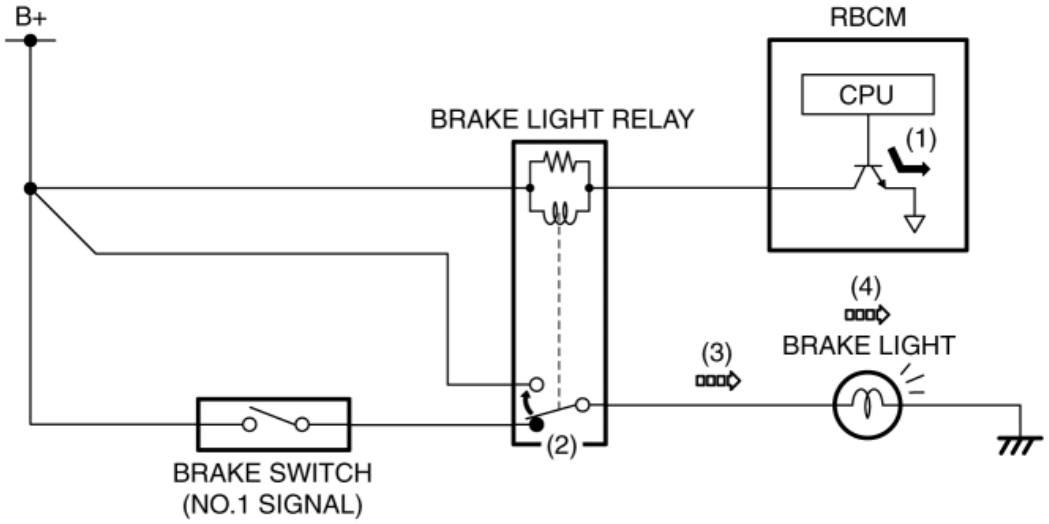

Rear turn lights (Turn light system)

1. When the turn switch is operated to the LH or RH position, the start stop unit detects a turn switch LH or RH signal.

2. The start stop unit sends the turn switch LH or RH signal to the front body control module (FBCM) as a CAN signal.

3. When the front body control module (FBCM) receives the turn switch LH or RH signal, the rear turn light (LH) or (RH) flashes.

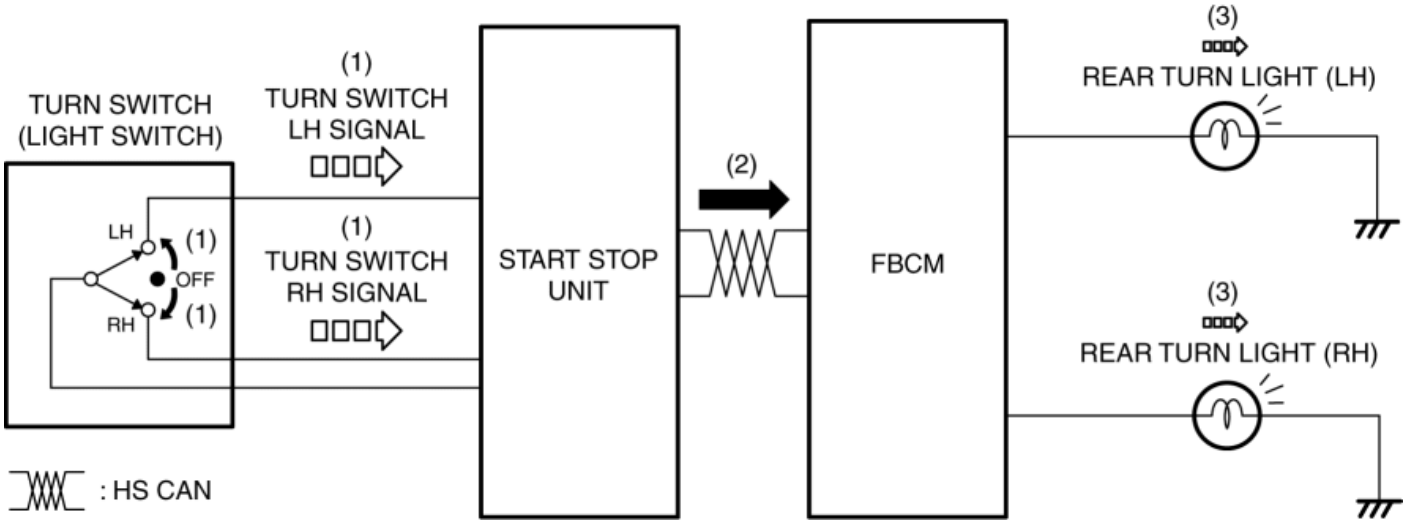

Rear turn lights (Hazard warning system)

1. When the hazard warning switch is turned on, the start stop unit detects a hazard warning switch on signal.

2. The start stop unit detects a hazard warning switch on signal, it sends a hazard warning signal to the front body control module (FBCM) as a CAN signal.

3. When the front body control module (FBCM) receives the hazard warning signal, the rear turn light (LH) and (RH) flash.

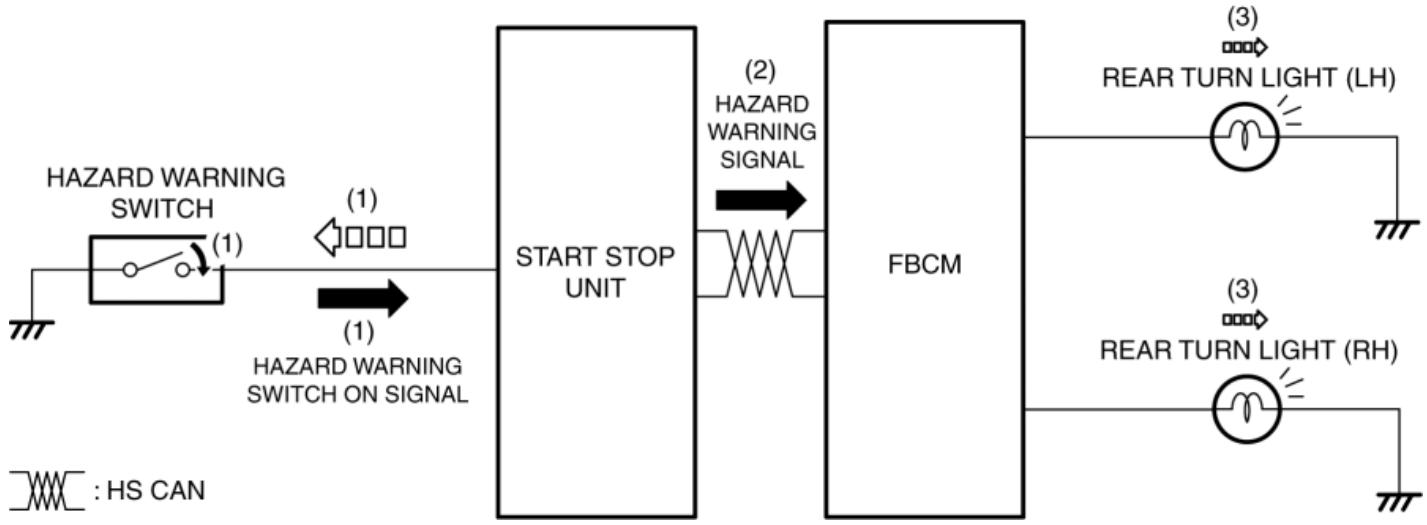

Fail-safe

- Function not equipped.

2014 - Mazda3 - Body and Accessories

TRUNK LID LIGHT (4SD)/LIFTGATE LIGHT (5HB)

Purpose

- The trunk lid lights (4SD)/liftgate lights (5HB) are used to signal the following conditions to vehicles/people at the rear.
    - Back-up lights: Signals that the vehicle is backing up.
    - Taillights (with taillights): Signals the presence of the vehicle during nighttime.

Function

- The back-up lights are illuminated in conjunction with the selector lever (ATX)/shift lever (MTX) operation.
- The taillights are illuminated in conjunction with the light switch operation (TNS). (with taillights)

Construction

- The following parts are an integrated structure.
    - Back-up light bulb
    - Taillight (LED) (with taillights)
- A clear lens has been adopted for the trunk lid light (4SD)/liftgate light (5HB).

NOTE:

- Fogging or condensation may occur inside the trunk lid lights (4SD)/liftgate lights (5HB), however, it is a natural phenomenon occurring as a result of a temperature difference between the interior and exterior of the trunk lid lights (4SD)/liftgate lights (5HB) and has no effect on the light performance. Fogging or condensation will dissipate when the temperature inside the trunk lid lights (4SD)/liftgate lights (5HB) rises after the back-up light is illuminated and a period of time has elapsed.

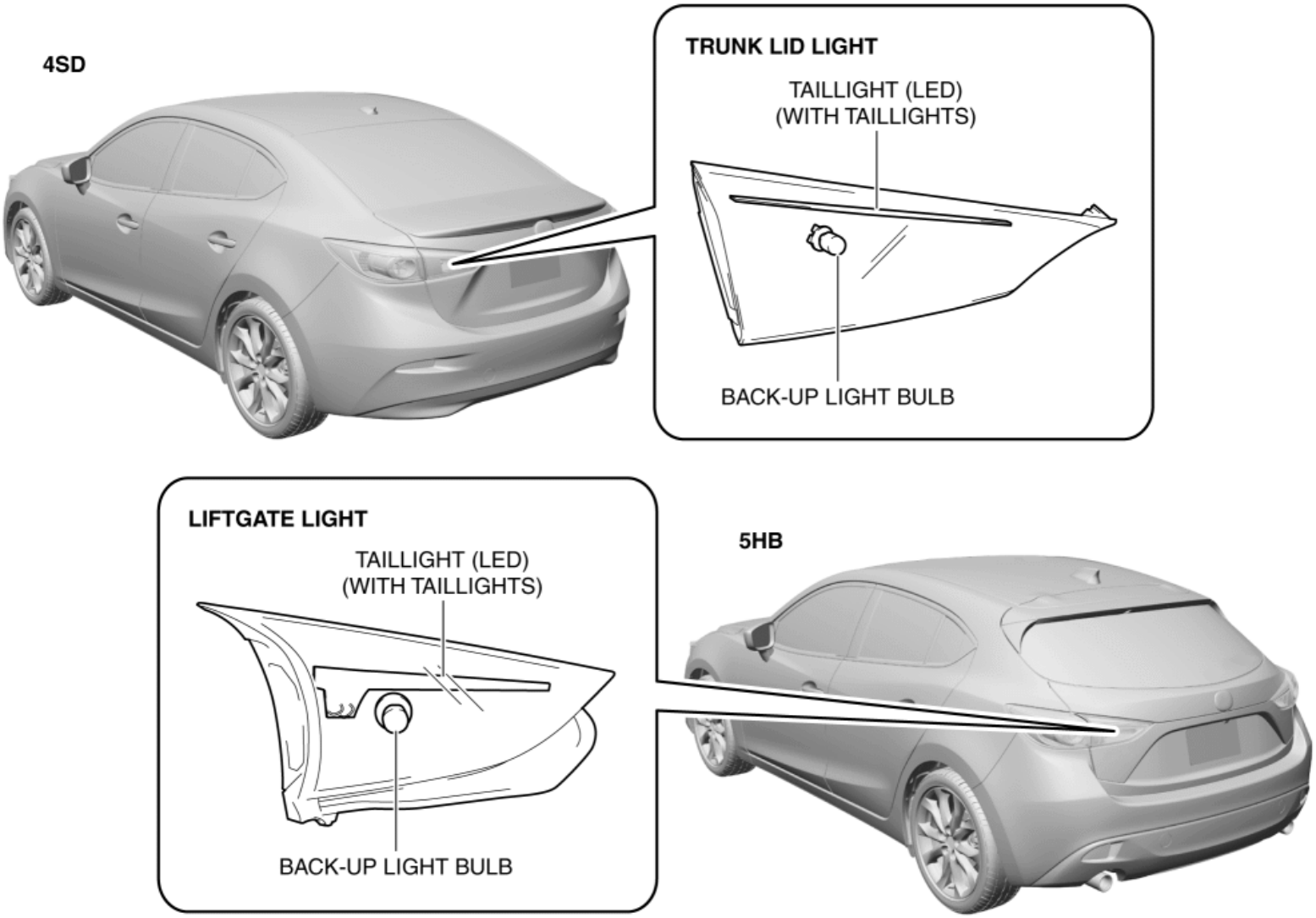

Operation

Taillights (with taillights)

1. When the light switch is operated to the TNS position, the start stop unit detects a light switch TNS signal.
2. The start stop unit sends the light switch TNS signal to the front body control module (FBCM) as a CAN signal.
3. When the front body control module (FBCM) receives the light switch TNS signal, it turns the TNS relay on.
4. When the TNS relay turns on, the taillights are illuminated.

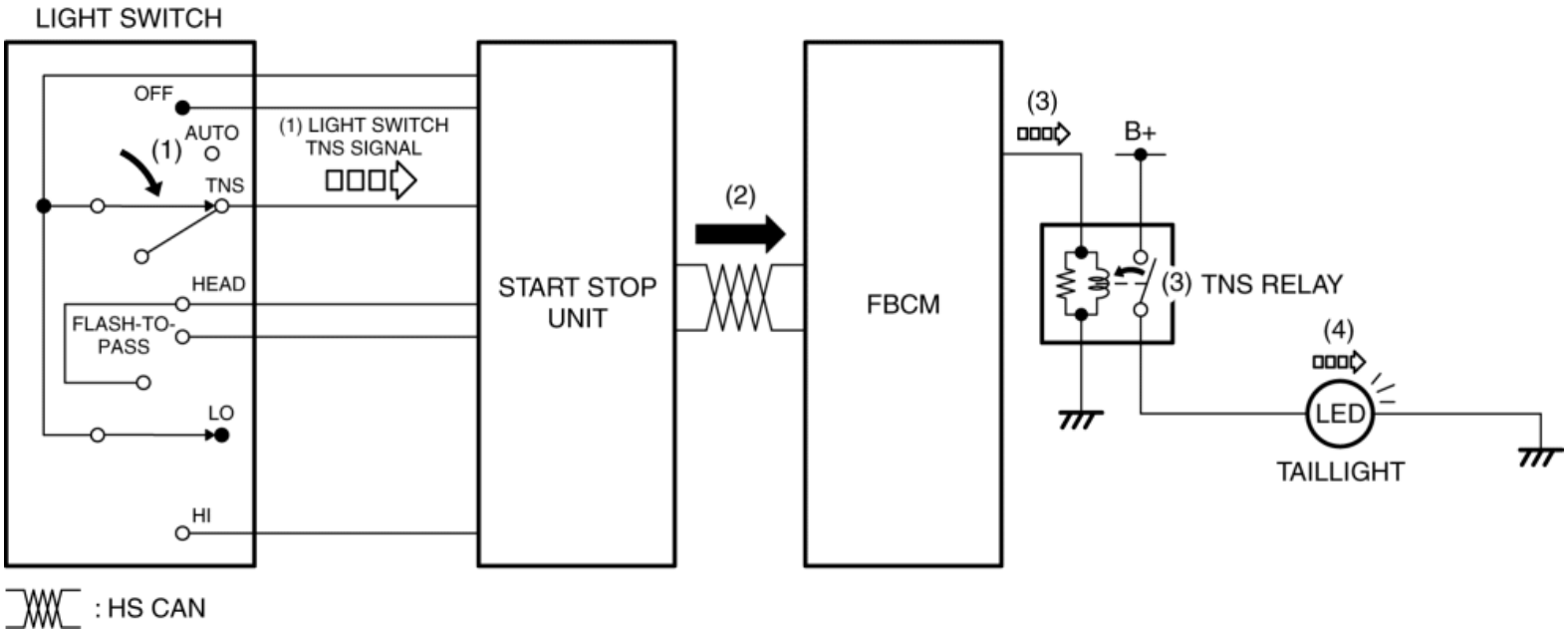

Buck-up lights (ATX)

1. When the selector lever is operated to the R position, the TCM sends a R position signal to the PCM as a CAN signal.
2. When the PCM receives the R position signal, it sends a back-up light on signal to the instrument cluster.
3. The instrument cluster sends the back-up light on signal to the rear body control module (RBCM).
4. When the rear body control module (RBCM) receives the back-up light on signal, the back-up lights are illuminated.

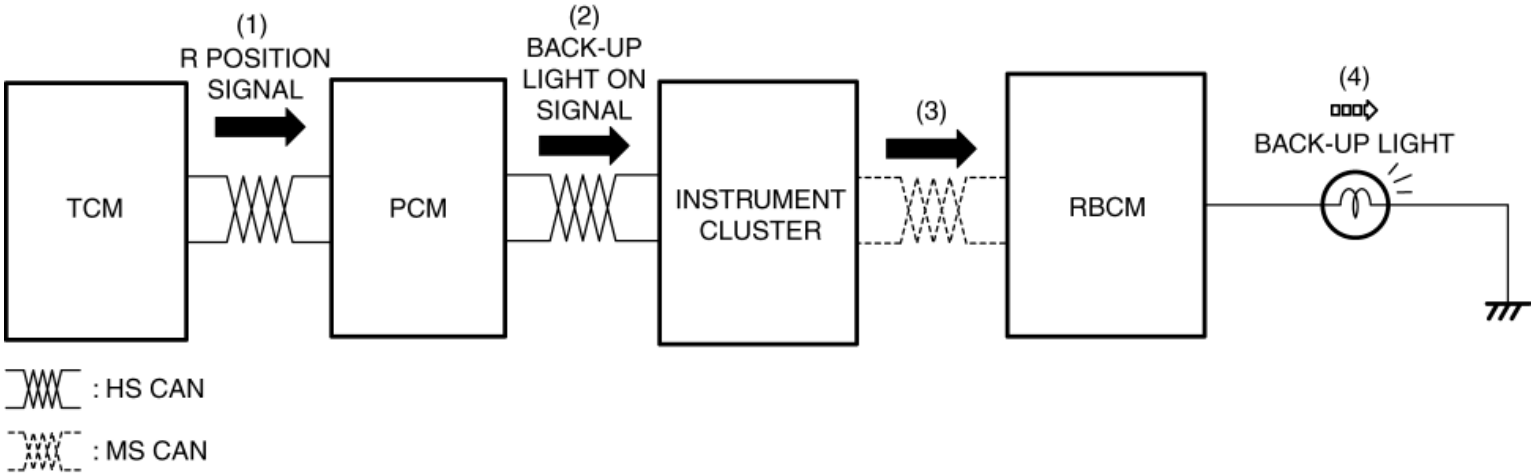

Buck-up lights (MTX)

1. When the shift lever is operated to the reverse position, the back-up light switch is turned on.
2. When the back-up light switch is turned on, the PCM detects a back-up light switch on signal.
3. When the PCM detects a back-up light switch on signal, it sends the back-up light signal to the instrument cluster as a CAN signal.
4. The instrument cluster sends the back-up light signal to the rear body control module (RBCM).
5. When the rear body control module (RBCM) receives the back-up light signal, the back-up lights are illuminated.

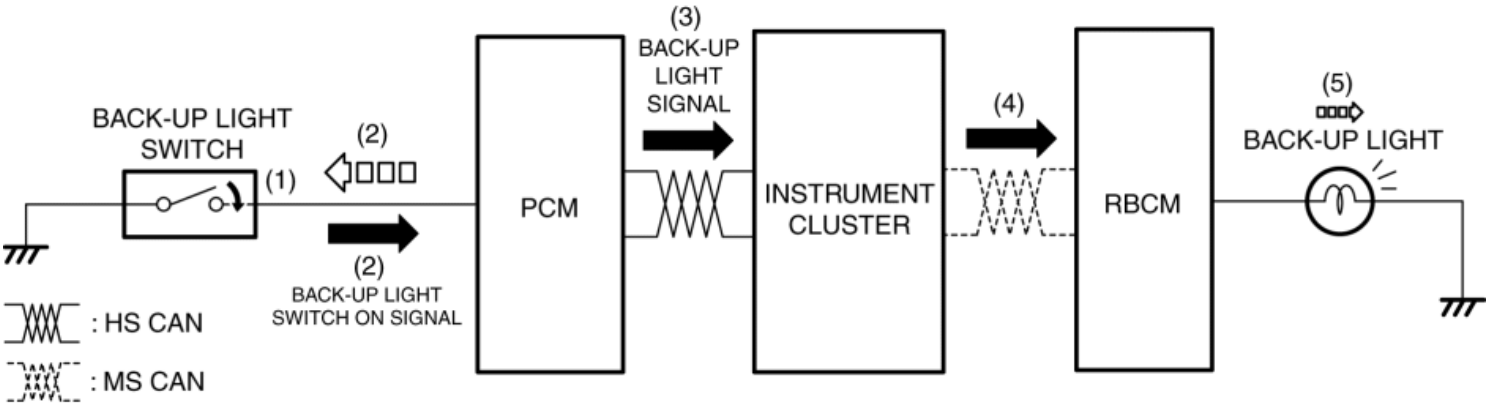

Fail-safe

- Function not equipped.

2014 - Mazda3 - Body and Accessories

HIGH-MOUNT BRAKE LIGHT

Purpose

- The high-mount brake light signals vehicles to the rear that the vehicle is stopped.

Function

- The high-mount brake light illuminates in conjunction with the operation of the brake pedal.

Construction

- The high-mount brake light is installed to the rear package trim (4SD)/rear spoiler (5HB).
- The high-mount brake light has adopted a LED.

NOTE:

- Fogging or condensation on the inside of the high-mount brake light may occur, however, it is a natural phenomenon occurring as a result of a temperature difference between the interior and exterior of the high-mount brake light and has no effect on the light performance. Fogging or condensation will dissipate when the temperature inside the high-mount brake light rises after the high-mount brake light is illuminated and a period of time has elapsed.

4SD

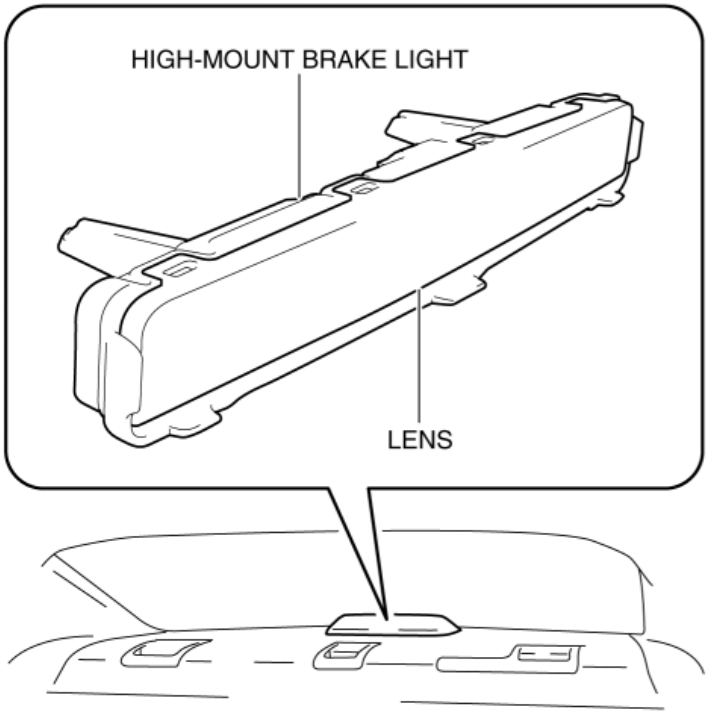

5HB

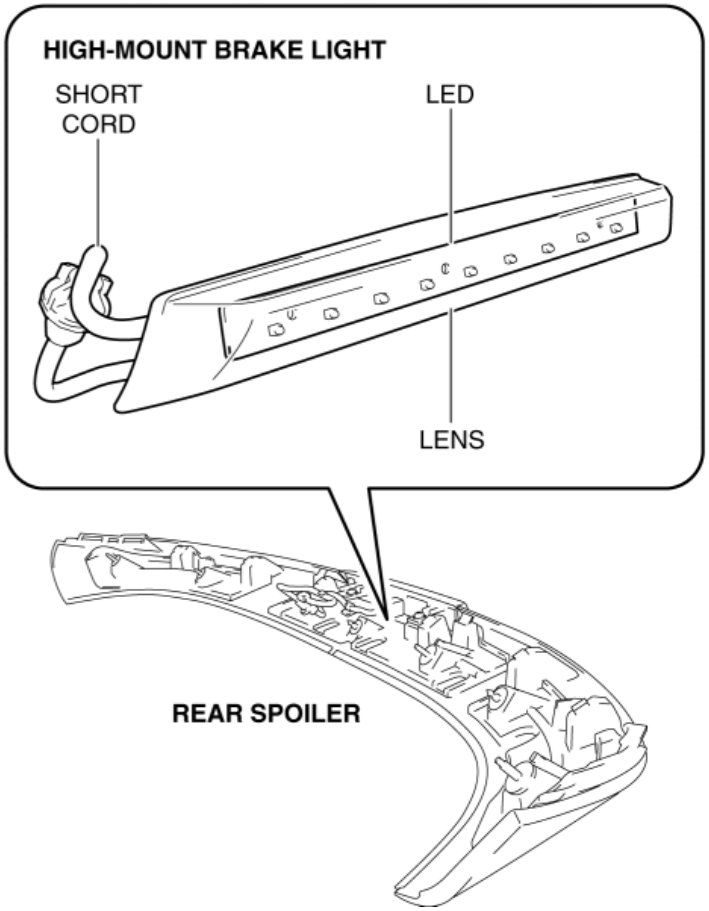

Operation

Operation due to brake pedal operation

Without smart city brake support (SCBS) system

- When the brake pedal is depressed, the brake switch (No.1 signal) turns on.
- When the brake switch (No.1 signal) turns on, current flows from the battery to the high-mount brake light.
- The high-mount brake light turns on.

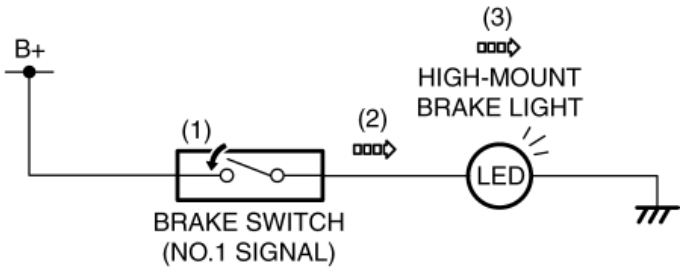

With smart city brake support (SCBS) system

- When the brake pedal is depressed, the brake switch (No.1 signal) turns on.
- When the brake switch (No.1 signal) turns on, current flows from the battery to the high-mount brake light.
- The high-mount brake light turns on.

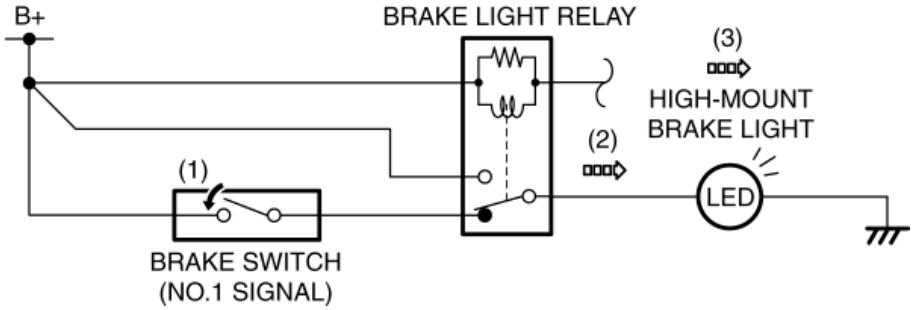

Operation due to operation request signal from rear body control module (RBCM)

NOTE:

- Refer to "**SMART CITY BRAKE SUPPORT (SCBS)**" for details.

With smart city brake support (SCBS) system

- When the operation conditions are met, the rear body control module (RBCM) turns on the transistor inside the rear body control module (RBCM).
- When the transistor inside the rear body control module (RBCM) turns on, the brake light relay turns on.
- When the brake light relay turns on, current flows from the battery to the high-mount brake light.
- The high-mount brake light turns on.

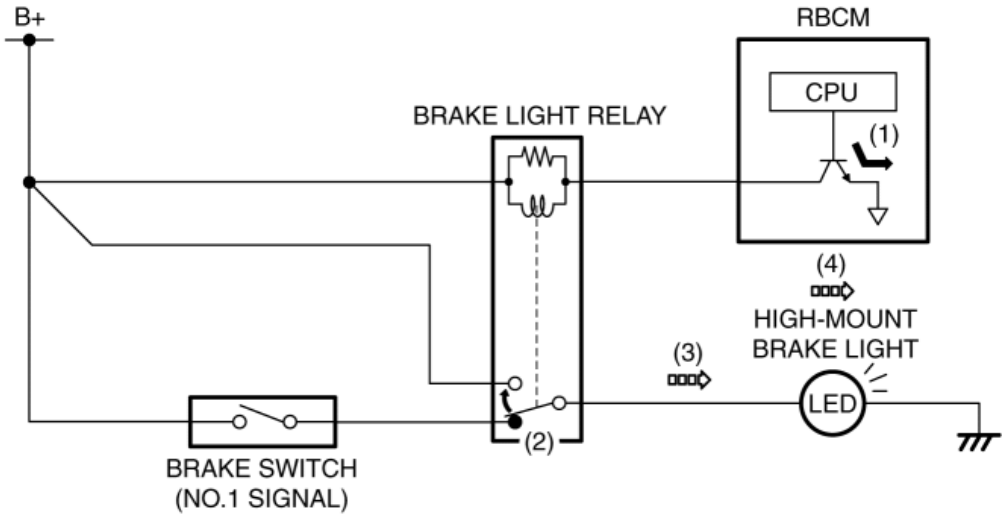

Fail-safe

- Function not equipped.

2014 - Mazda3 - Body and Accessories

LICENSE PLATE LIGHT

Purpose

- The license plate lights shine light on the license plate during nighttime driving.

Function

- The license plate lights illuminate in conjunction with the operation of the light switch (TNS).

Construction

- The license plate lights are installed to the trunk lid (4SD)/liftgate (5HB).

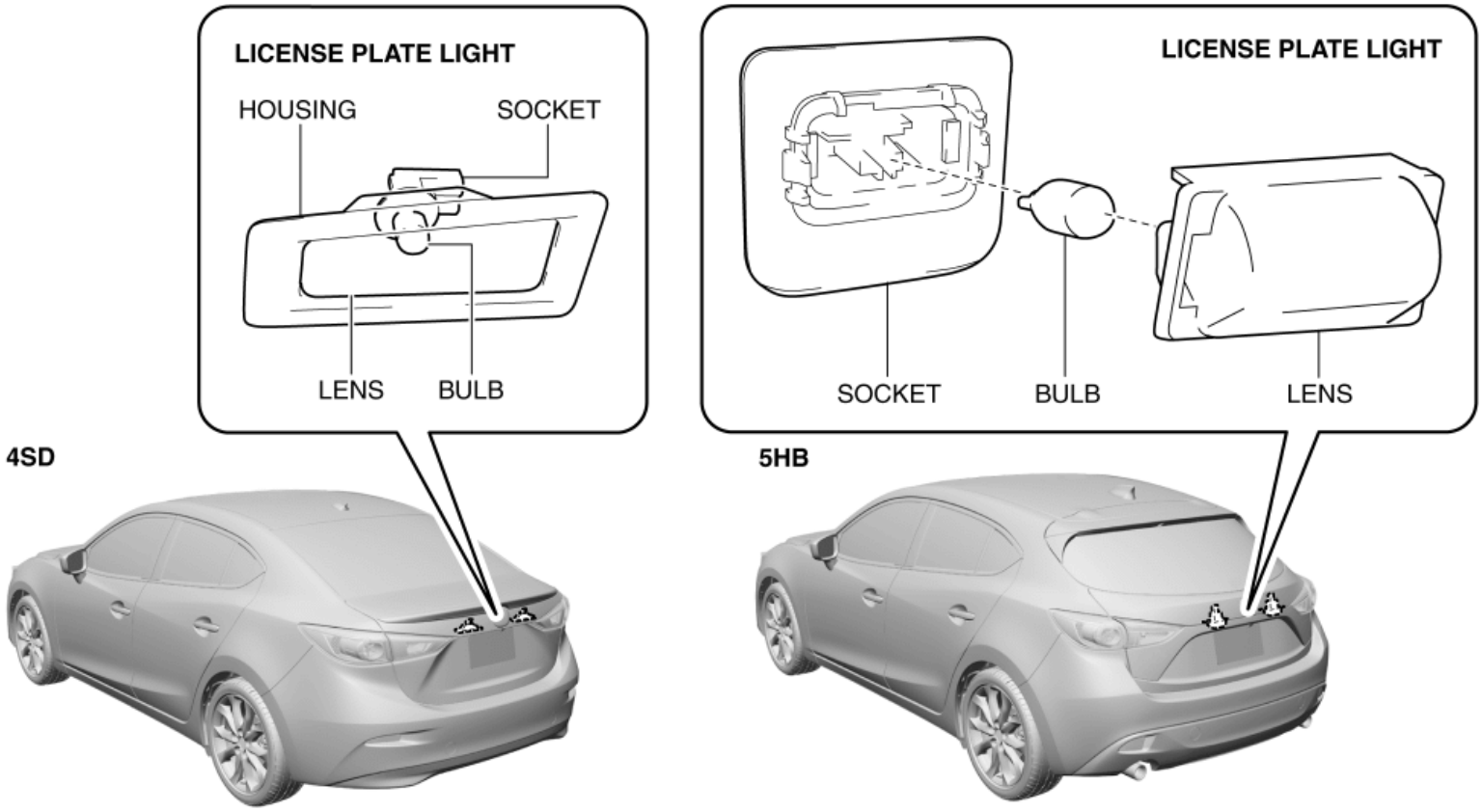

Operation

1. When the light switch is operated to the TNS position, the start stop unit detects a light switch TNS signal.
2. The start stop unit sends the light switch TNS signal to the front body control module (FBCM) as a CAN signal.
3. When the front body control module (FBCM) receives the light switch TNS signal, it turns the TNS relay on.
4. When the TNS relay turns on, the license plate lights are illuminated.

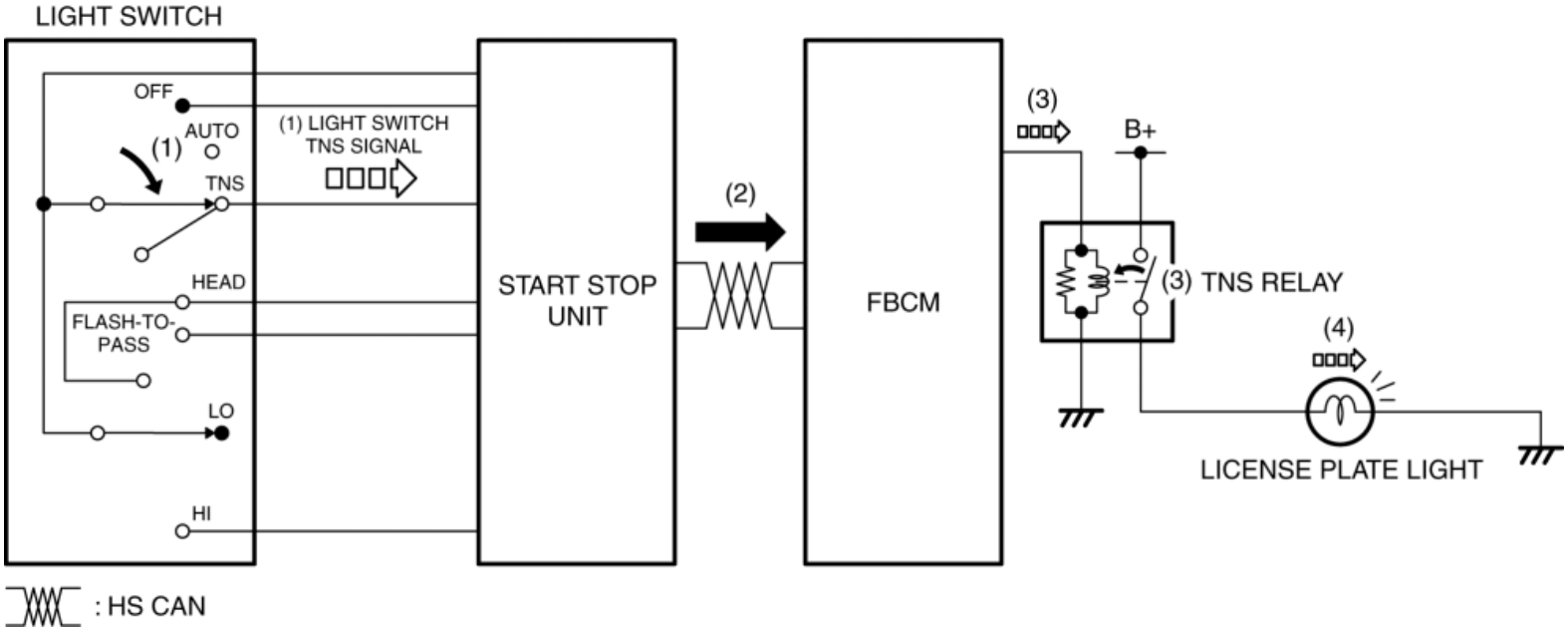

Fail-safe

- Function not equipped.

2014 - Mazda3 - Body and Accessories

INTERIOR LIGHTING SYSTEM

Outline

- A room light control system has been adopted in which illumination time and illumination level of the interior lights change.

Structural View

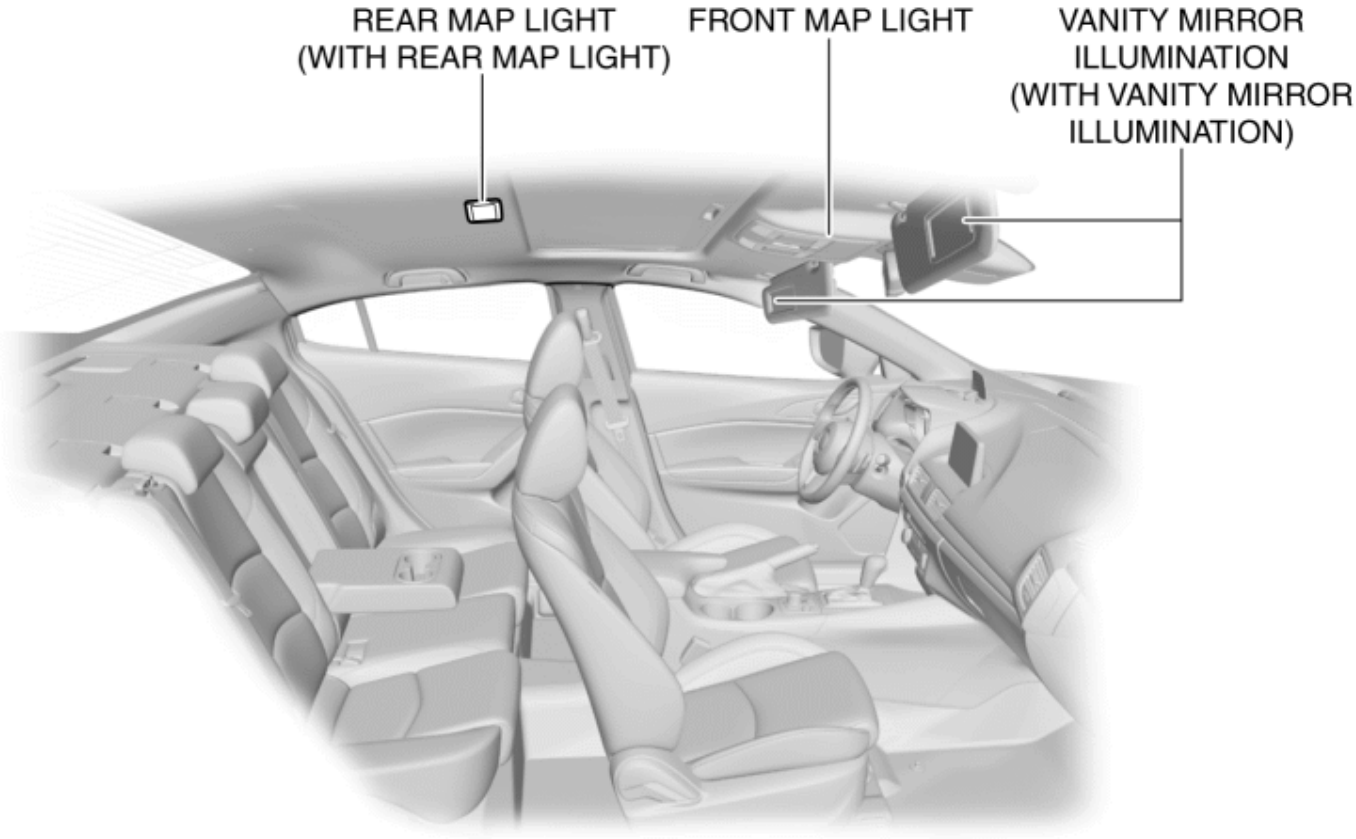

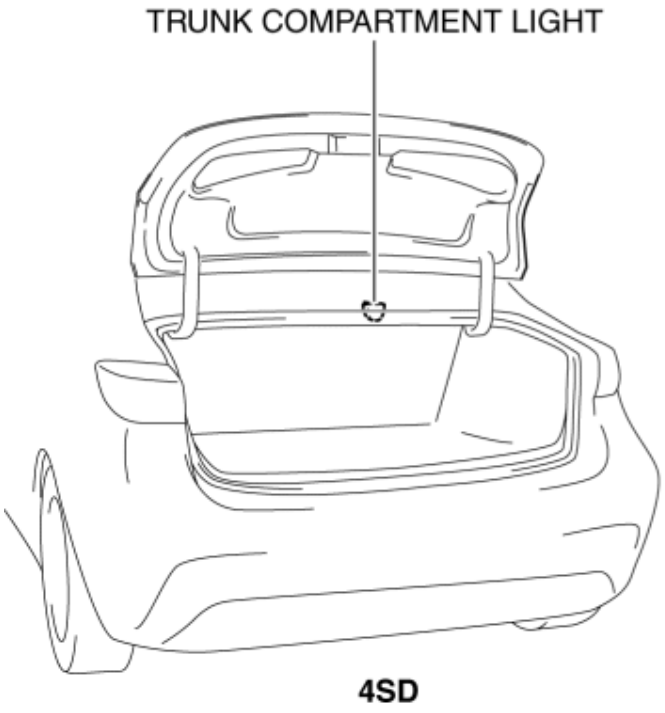

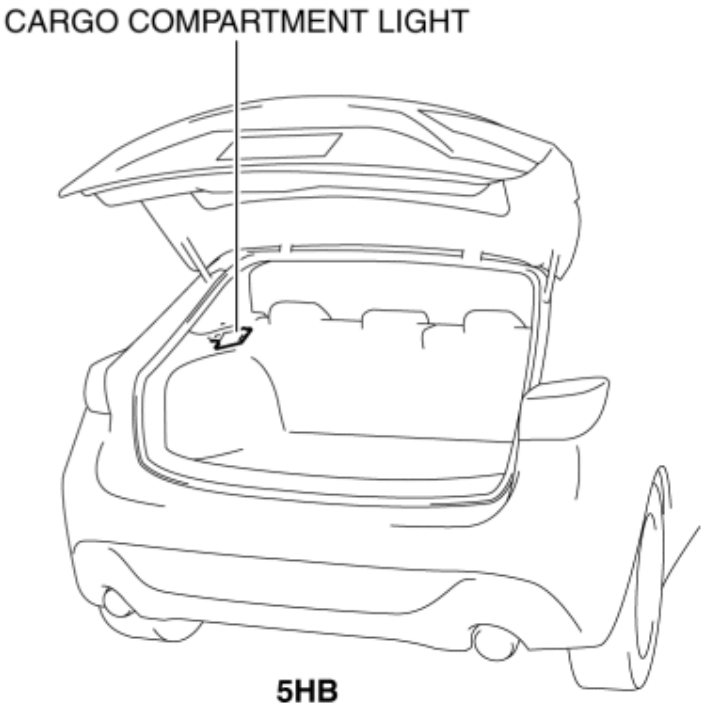

System Wiring Diagram

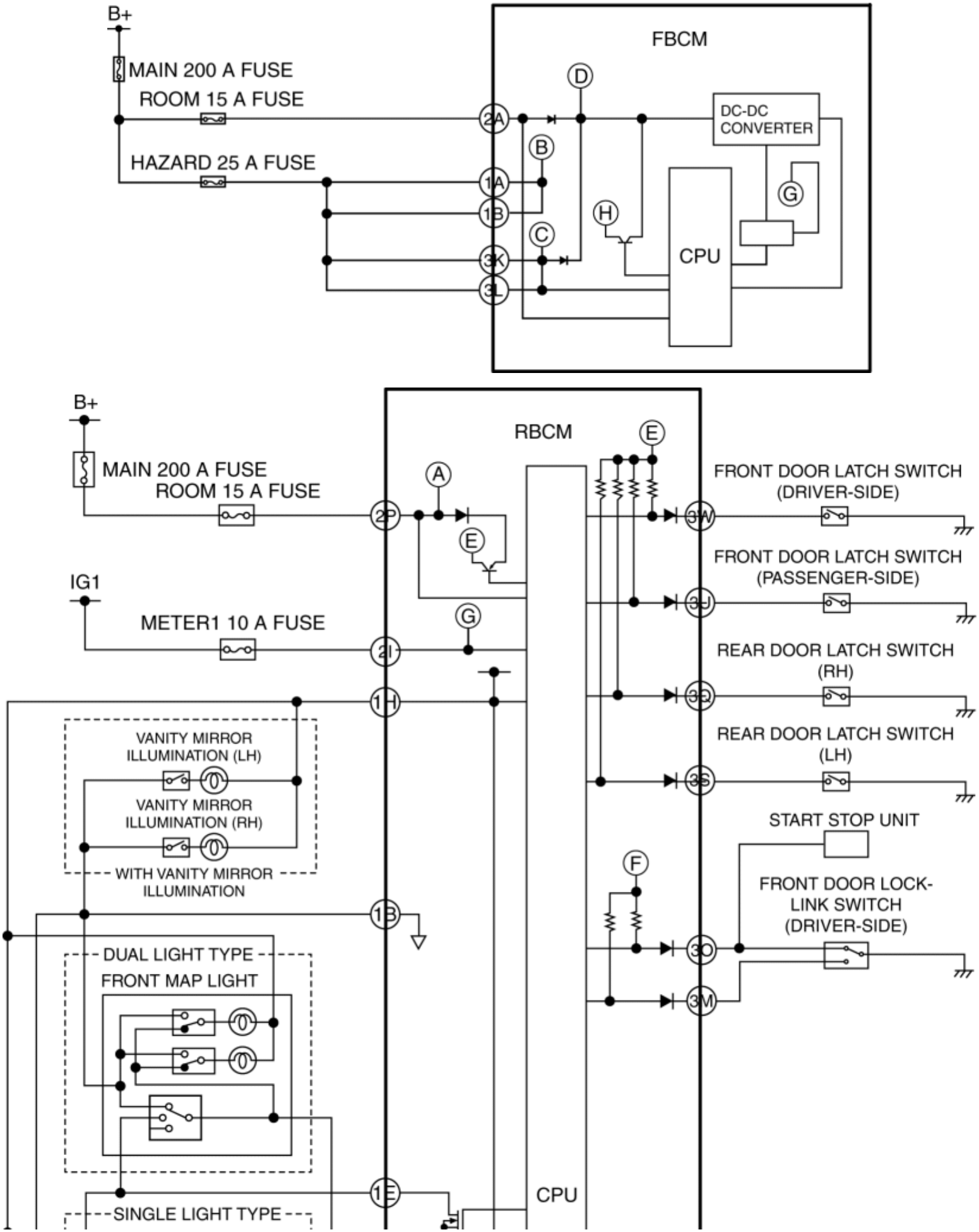
B+
MAIN 200 A FUSE
ROOM 15 A FUSE
HAZARD 25 A FUSE
FBCM
DC-DC CONVERTER
CPU
2A
1A
1B
3K
3L
D
B
C
H
G
B+
MAIN 200 A FUSE
ROOM 15 A FUSE
IG1
METER1 10 A FUSE
RBCM
A
E
G
2P
2I
1H
1B
1E
3W
3U
3Q
3S
3O
3M
F
CPU
FRONT DOOR LATCH SWITCH (DRIVER-SIDE)
FRONT DOOR LATCH SWITCH (PASSENGER-SIDE)
REAR DOOR LATCH SWITCH (RH)
REAR DOOR LATCH SWITCH (LH)
START STOP UNIT
FRONT DOOR LOCK-LINK SWITCH (DRIVER-SIDE)
VANITY MIRROR ILLUMINATION (LH)
VANITY MIRROR ILLUMINATION (RH)
WITH VANITY MIRROR ILLUMINATION
DUAL LIGHT TYPE
FRONT MAP LIGHT
SINGLE LIGHT TYPE

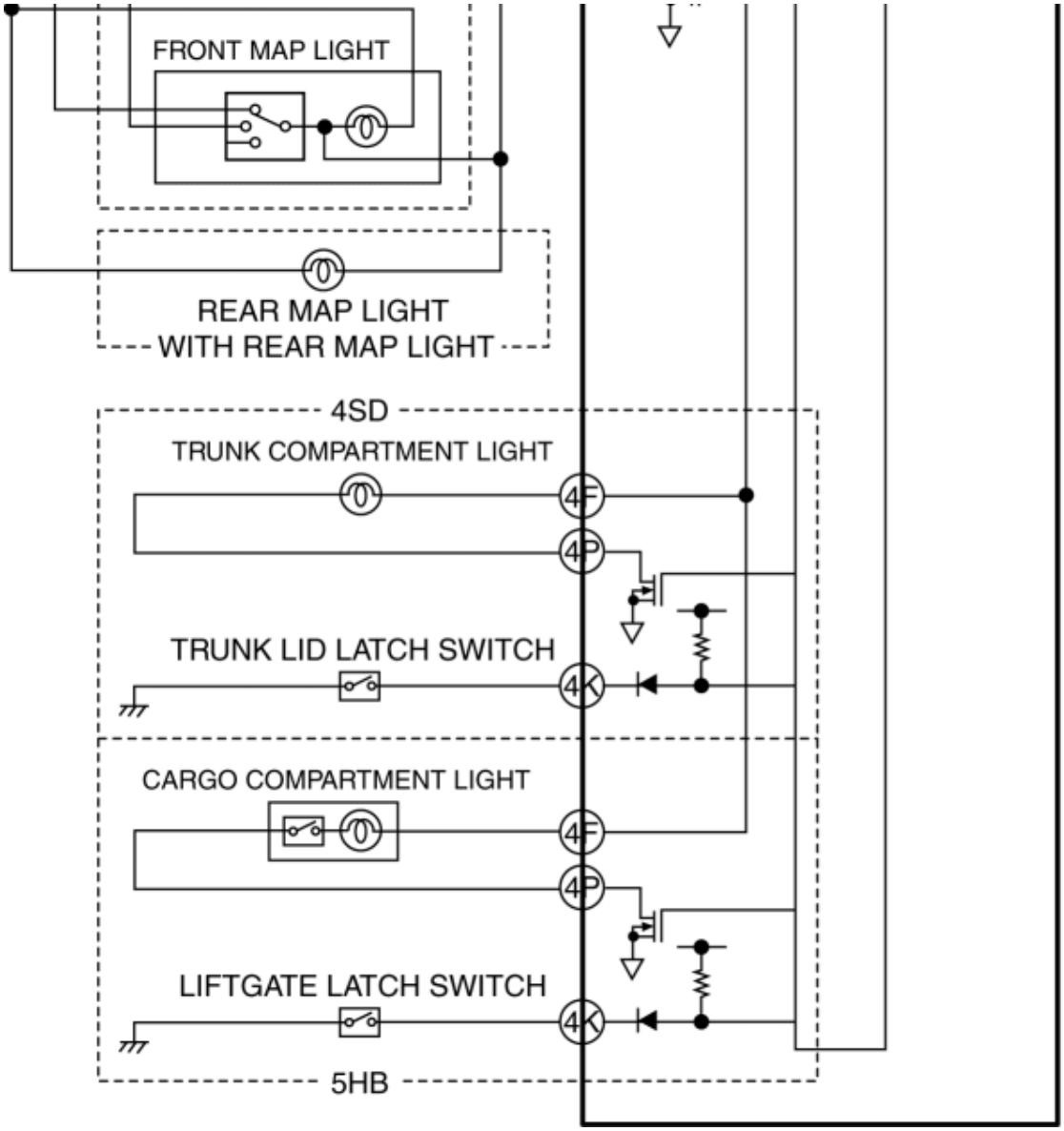
FRONT MAP LIGHT
REAR MAP LIGHT
WITH REAR MAP LIGHT
4SD
TRUNK COMPARTMENT LIGHT
4F
4P
TRUNK LID LATCH SWITCH
4K
CARGO COMPARTMENT LIGHT
4F
4P
LIFTGATE LATCH SWITCH
4K
5HB

2014 - Mazda3 - Body and Accessories

ROOM LIGHT CONTROL SYSTEM

Outline

- The room light control system changes the illumination condition and illumination level of the room lights (door position) according to whether the doors are opened/closed and locked/unlocked.
- The room light control system is controlled by the rear body control module (RBCM).
- The rear body control module (RBCM) performs room light control system fail-safe. (See **REAR BODY CONTROL MODULE (RBCM)**.)

Structural View

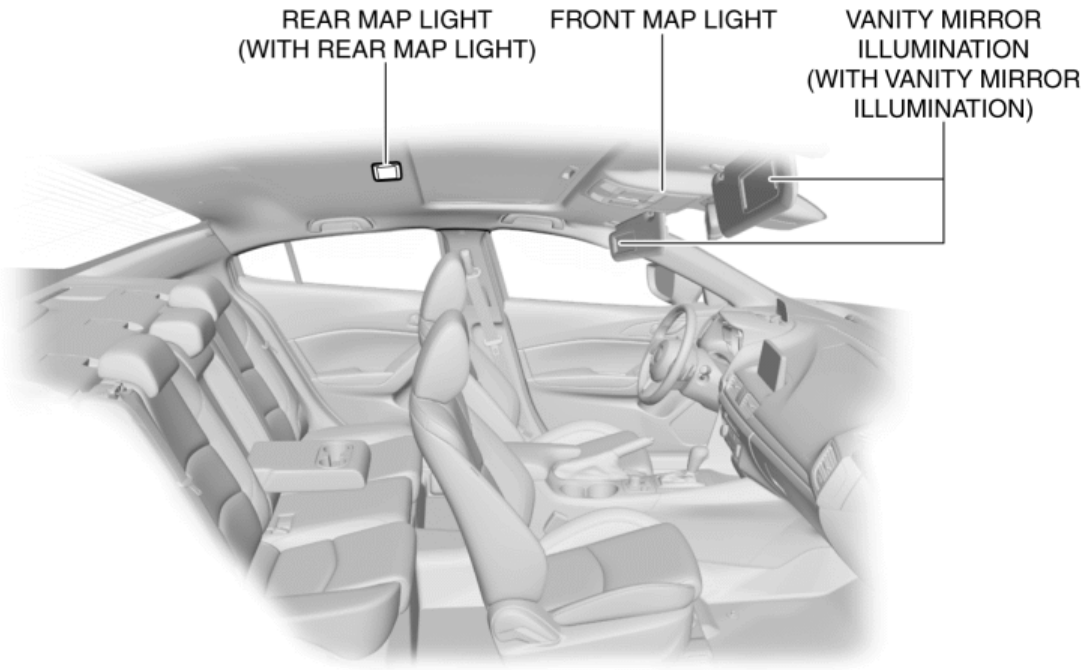

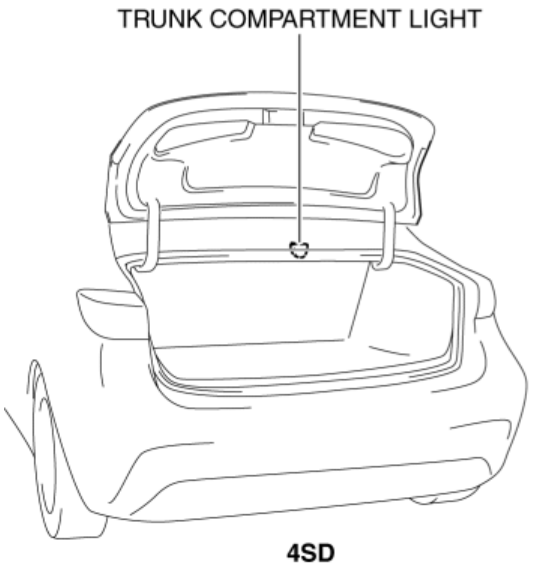

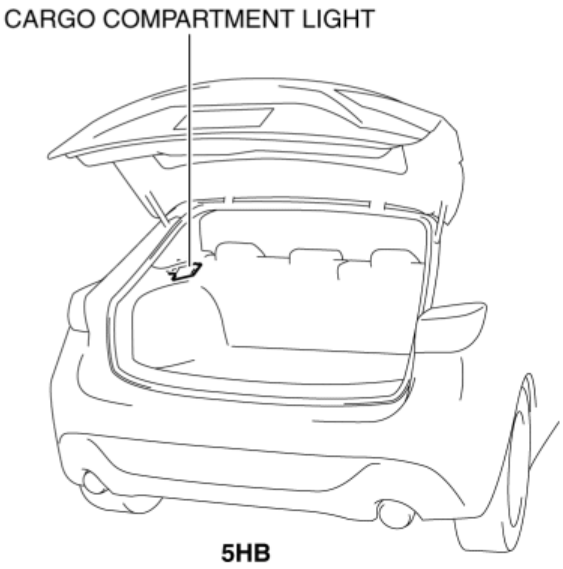

System Wiring Diagram

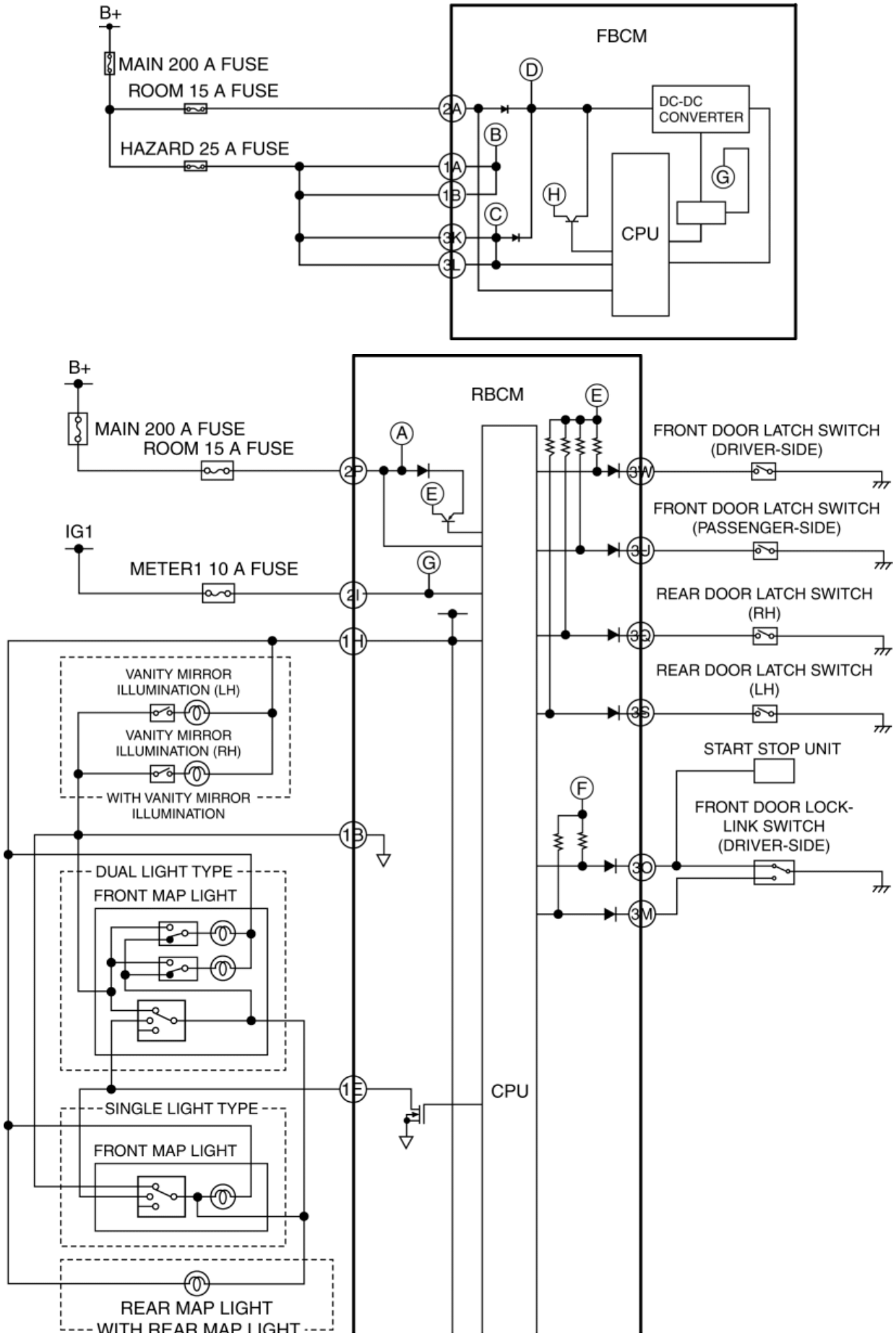

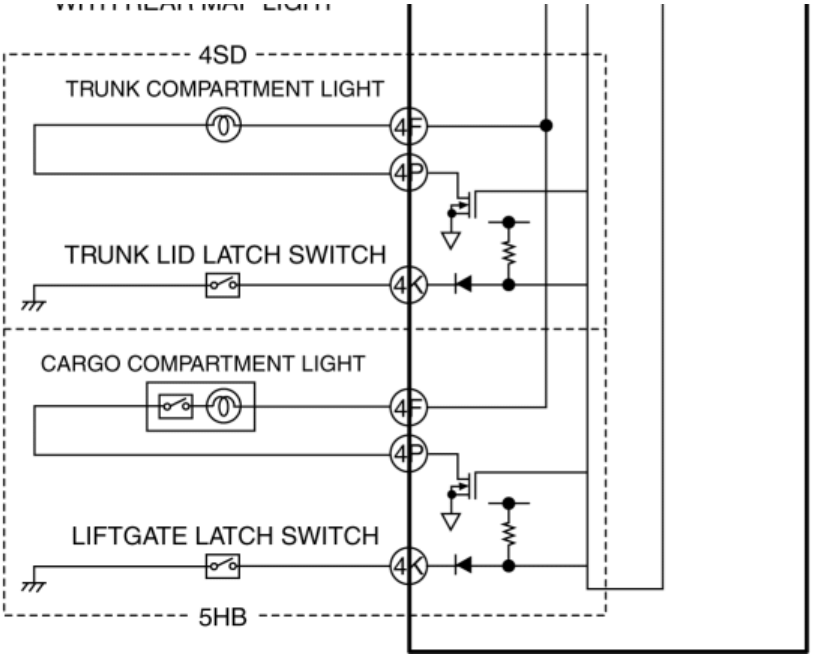

Operation

Operation condition	Interior light		Lights off condition (Any of the following conditions is met)
	Illumination period	Brightness level	
With all doors closed (all door latch switches are off) while ignition is switched off or ACC, a condition is detected where any door is opened (any door latch switch is on).	Approx. 30 min*1	100 %	• After illumination time elapses*2 • All doors closed except for trunk lid (4SD)/liftgate (5HB). (All door latch switches are off.)
With any door opened (any door latch switch is on) while ignition is switched off or ACC, a condition is detected where all doors are closed (all door latch switches are off).	• Approx. 5 s*3 • Approx. 15 s*1, *4	60 %	• After illumination time elapses • Lock driver's door lock knob. (Door lock-link switch is in lock position.) • Ignition is switched ON (engine off or on).
With all doors closed (all door latch switches are off) while ignition is switched off or ACC, the driver's door lock knob is switched from lock to unlock.	Approx. 30 s	100 %	• After illumination time elapses • Lock driver's door lock knob. (Door lock-link switch is in lock position.) • Ignition is switched ON (engine off or

			on).
With all doors closed (all door latch switches are off) while ignition is switched ON (engine off or on), an ignition switched off condition is detected.	Approx. 15 s	100 %	• After illumination time elapses • Lock driver's door lock knob. (Door lock-link switch is in lock position.) • Ignition is switched ON (engine off or on).
• The trunk lid is opened. (4SD) • With the cargo compartment light switch is on, the liftgate is opened. (5HB)	Approx. 30 min*1	100 %	• After illumination time elapses • Trunk lid (4SD)/liftgate (5HB) closed. • Cargo compartment light switch is off. (5HB)

*1

The illumination time can be switched by using the Mazda Modular Diagnostic System (M-MDS) or the center display (with center display). (See LIGHTING SYSTEM PERSONALIZATION.)

*2

After the interior light is turned off according to the cancel conditions, it turns on again if any one of the following conditions is met.

- Ignition is switched ON (engine off or on).
- After all doors are closed, any door is re-opened (after all door latch switches are off, any door latch switch is on).

*3

There is no remote transmitter inside vehicle.

*4

There is a remote transmitter inside vehicle.

×: With room light control system—: No airflow

Type			Installation position	Room light control system
Front map light	Without sunglasses holder (Single light type)		Front area of roof	×
	Without sunglasses holder (Dual light type)	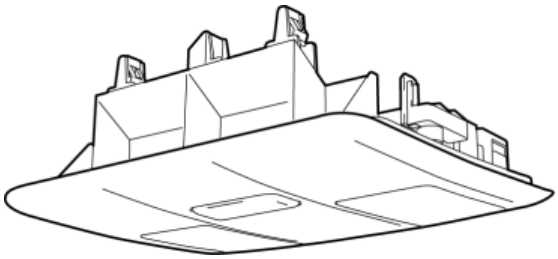		×

	With sunglasses holder	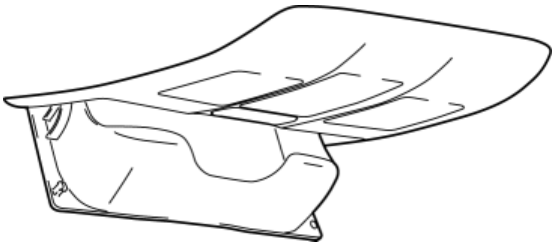		×
Rear map light (With rear map light)		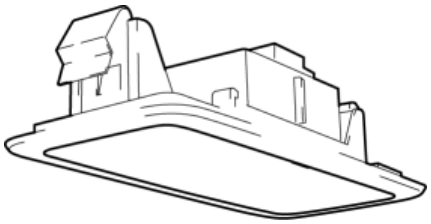	Center area of roof	×
Trunk compartment light (4SD)		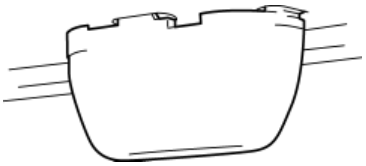	Trunk compartment	×
Cargo compartment light (5HB)		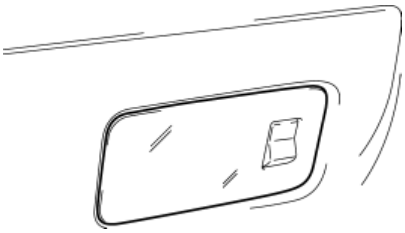	Cargo compartment	×
Vanity mirror illumination (With vanity mirror illumination)		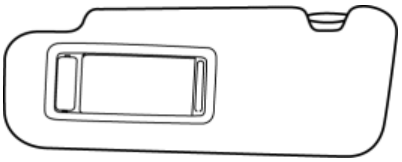	Sunvisor	—

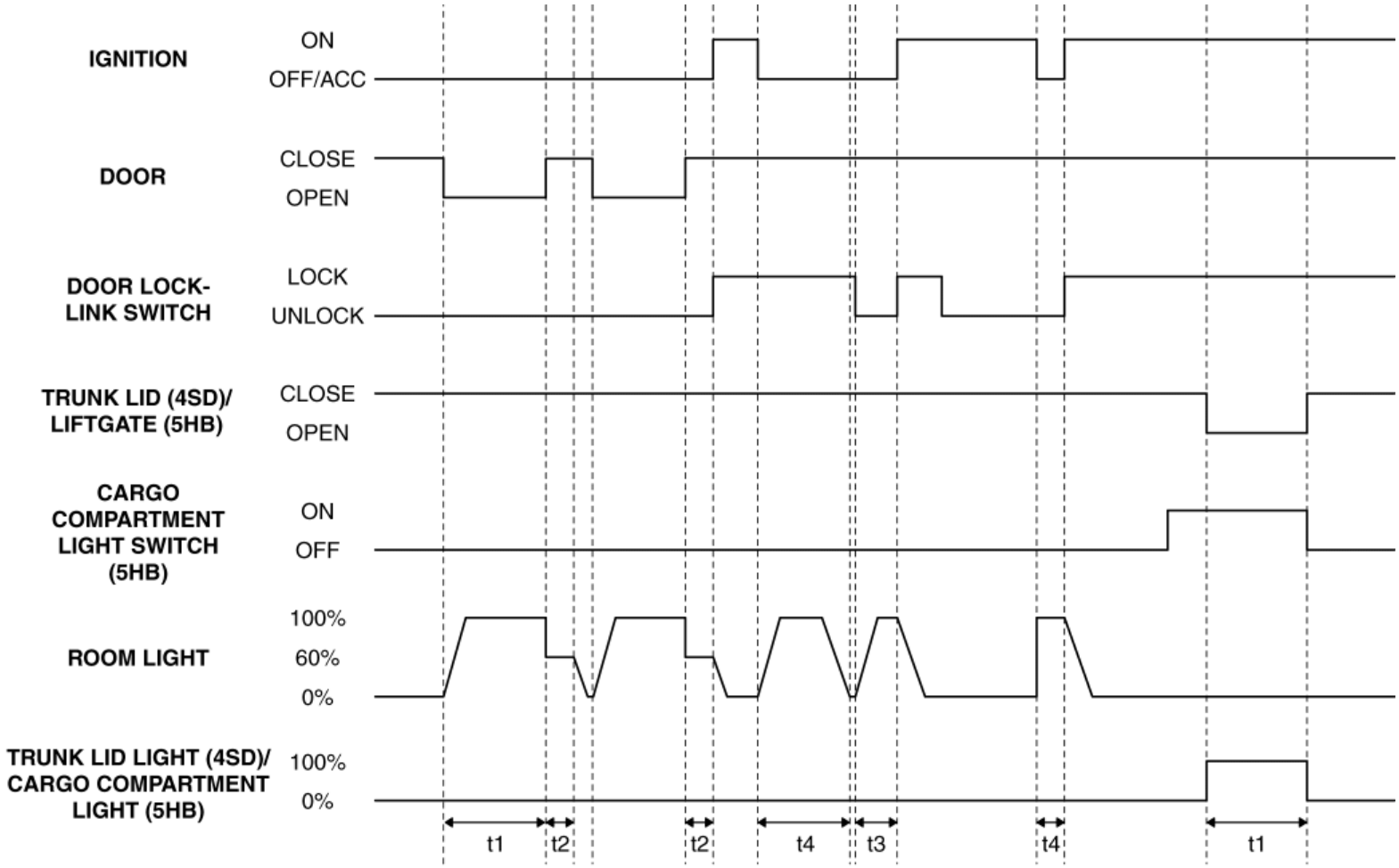

t1: APPROX. 30 min
t2: APPROX. 5 s
(THERE IS NO REMOTE TRANSMITTER INSIDE VEHICLE.)
APPROX. 15 s
(THERE IS A REMOTE TRANSMITTER INSIDE VEHICLE.)
t3: APPROX. 30 s
t4: APPROX. 15 s

2014 - Mazda3 - Body and Accessories

FRONT MAP LIGHT

Purpose

- The front map lights shine light at the front of the vehicle interior.

Function

- The front map lights illuminate when the front map light switch is turned on or room light switch is in the ON position.
- The front map lights illuminate according to the lock condition of the driver's door and open/close conditions of the doors under the rear body control module (RBCM) control when the room light switch is in the DOOR position.

Construction

- The front map lights are assembled to front area of the headliner.

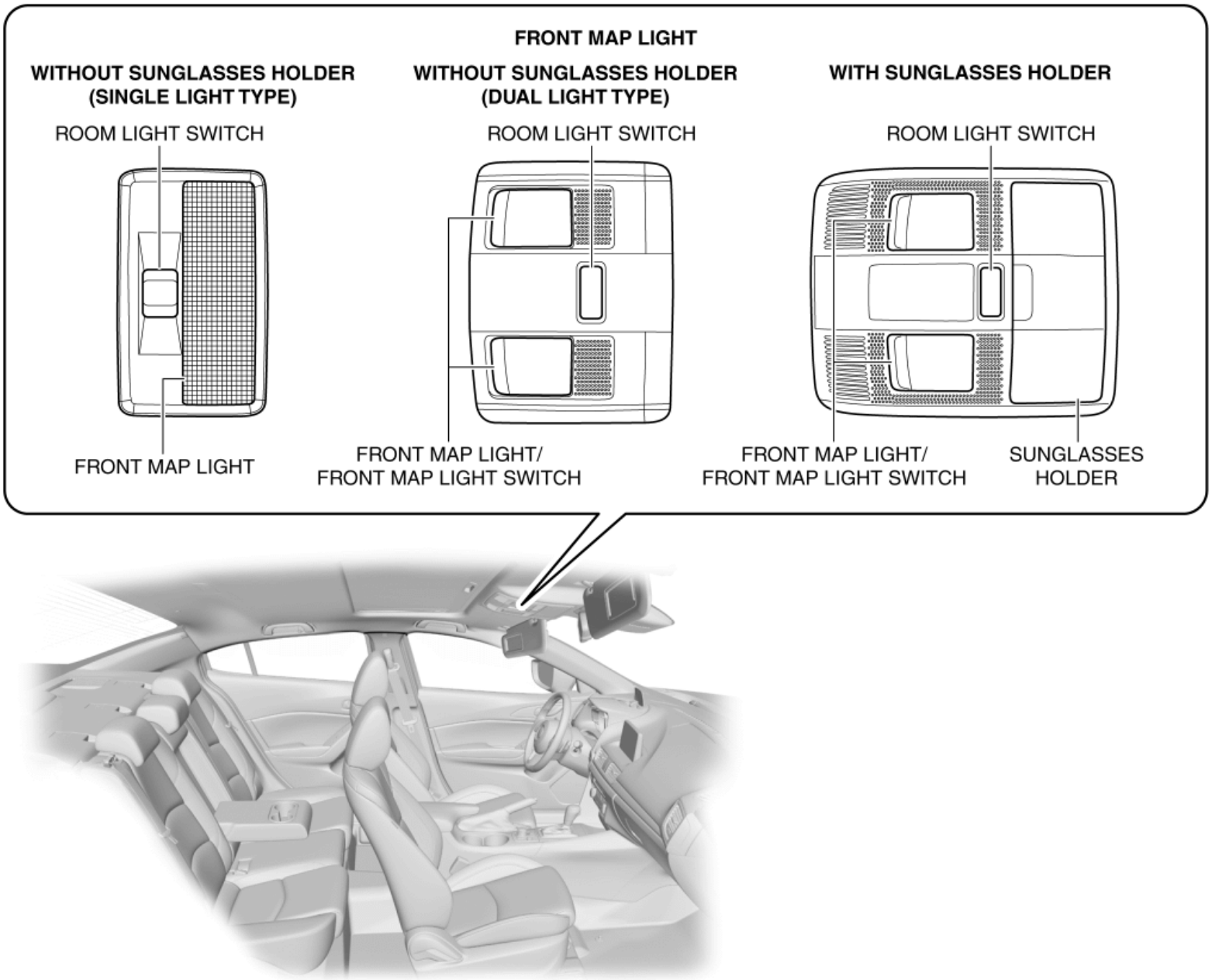

Operation

Front map light switch operation (Dual light type)

1. Turn the front map light switch on.
2. The battery current flows to the front map light bulb from the rear body control module (RBCM).
3. The front map lights illuminate.

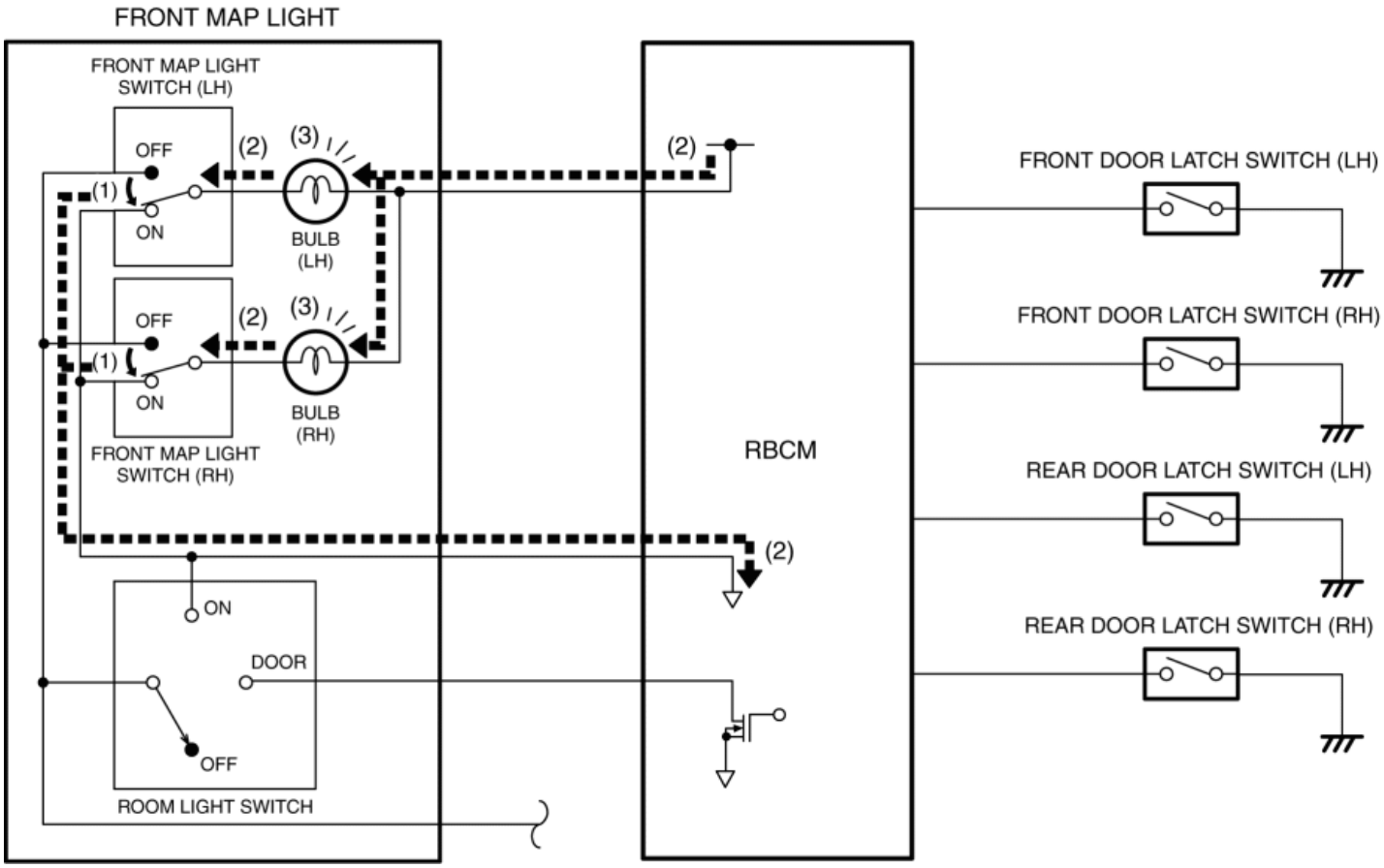

Room light switch operation

ON position

- Room light switch is in the ON position.
- The battery current flows to the front map light bulb from the rear body control module (RBCM).
- The front map lights illuminate.

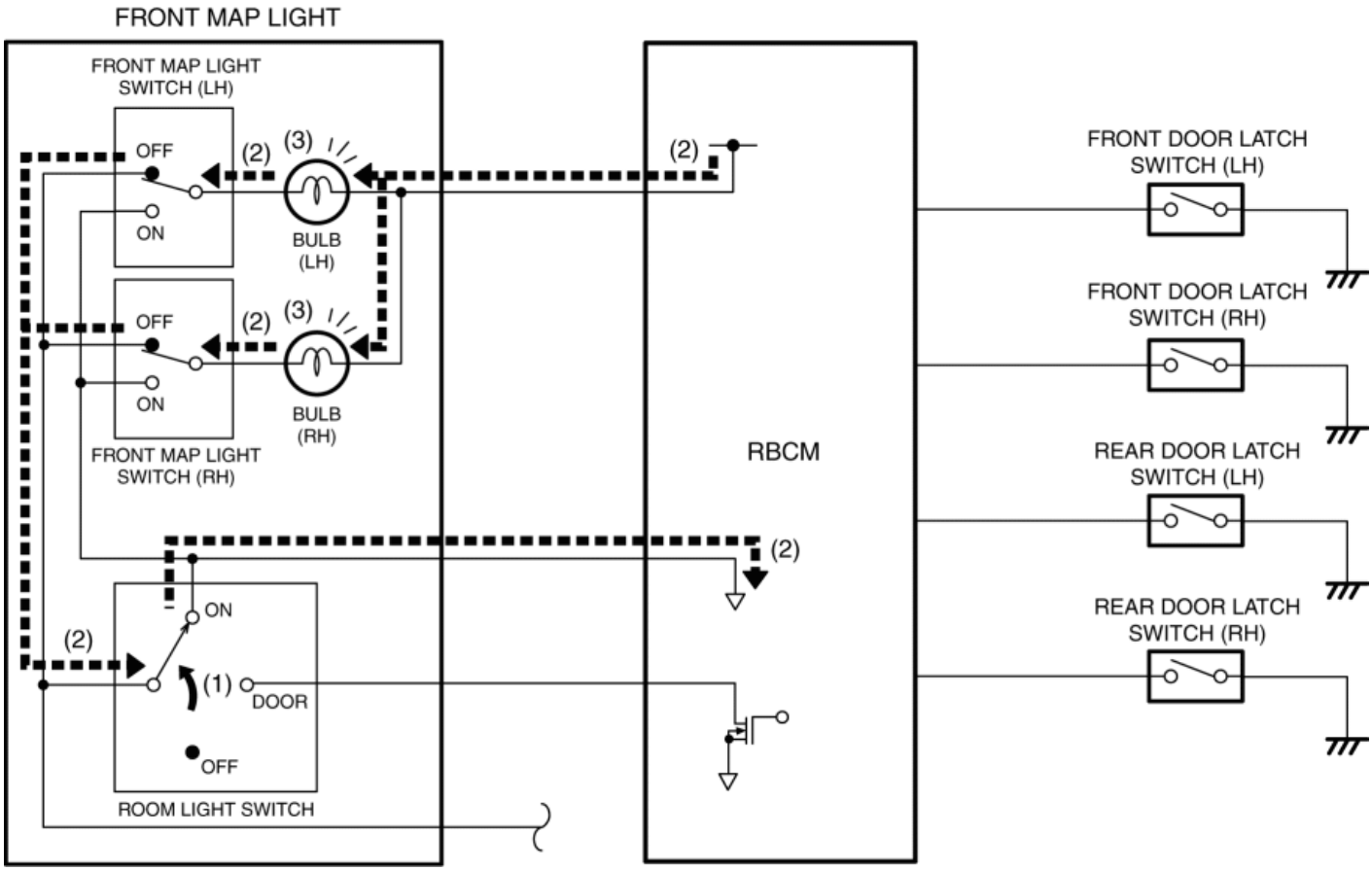

DOOR position

- Room light switch is in the DOOR position.
- When any door is opened, the door open signal is input to the rear body control module (RBCM).
- When the rear body control module (RBCM) receives the door open signal, it turns on the transistor.
- When the transistor turns on, the battery current flows to the front map light bulbs from the rear body control module (RBCM).
- The front map lights illuminate.

NOTE:

- When the room light switch is in the DOOR position, the front map light illumination on/off timing is controlled by the room light control system. For details, refer to the "**ROOM LIGHT CONTROL SYSTEM**".

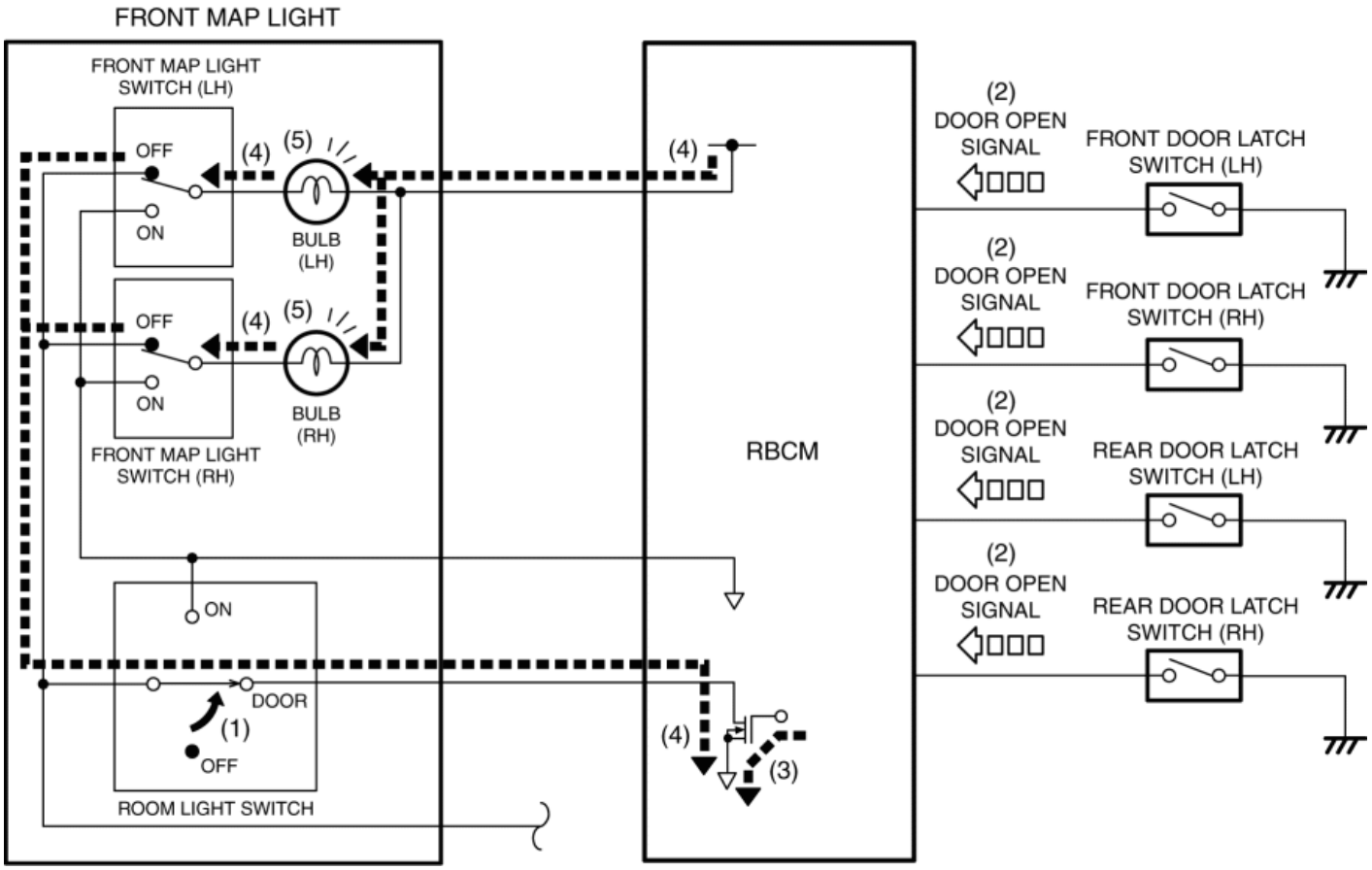

Fail-safe

- Function not equipped.

2014 - Mazda3 - Body and Accessories

REAR MAP LIGHT

Purpose

- The rear map light shines light at the center of the vehicle interior.

Function

- The rear map light illuminates when the room light switch for front map light is in the ON position.
- The rear map light illuminates according to the lock condition of the driver's door and open/close conditions of the doors under the rear body control module (RBCM) control when the room light switch for front map light is in the DOOR position.

Construction

- The rear map light is assembled to center area of the headliner.

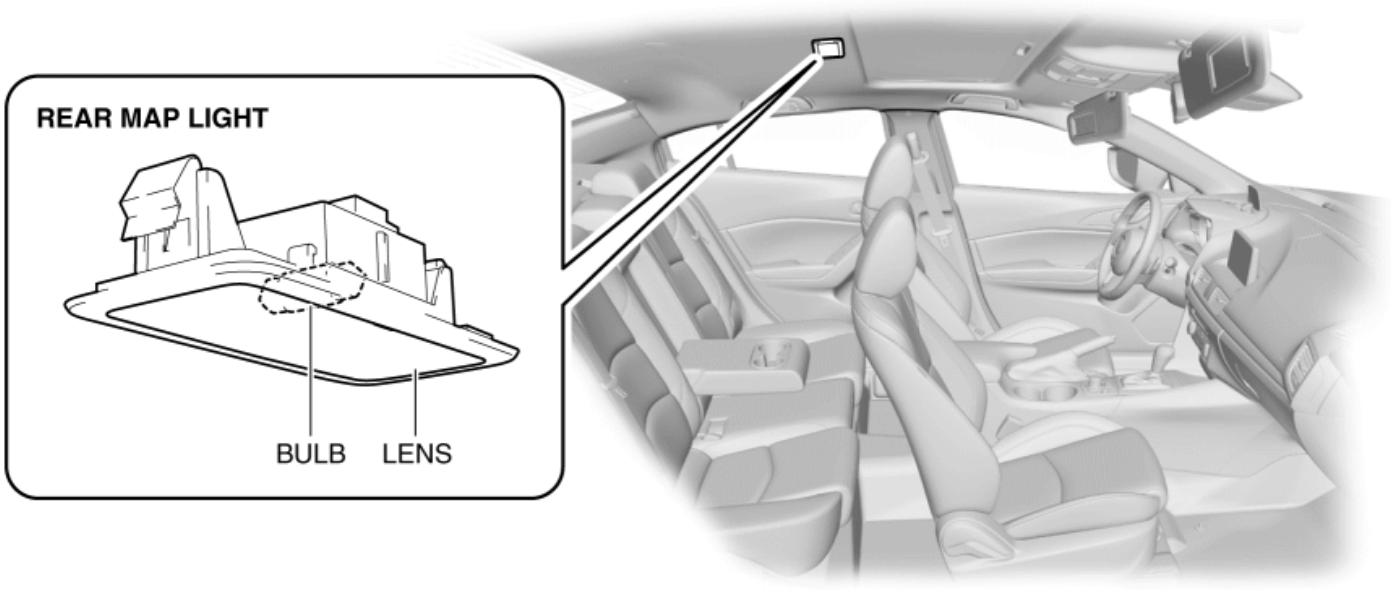

Operation

Room light switch for front map light operation

ON position

- Room light switch for front map light is in the ON position.

- The battery current flows to the rear map light bulb from the rear body control module (RBCM).
- The rear map light illuminates.

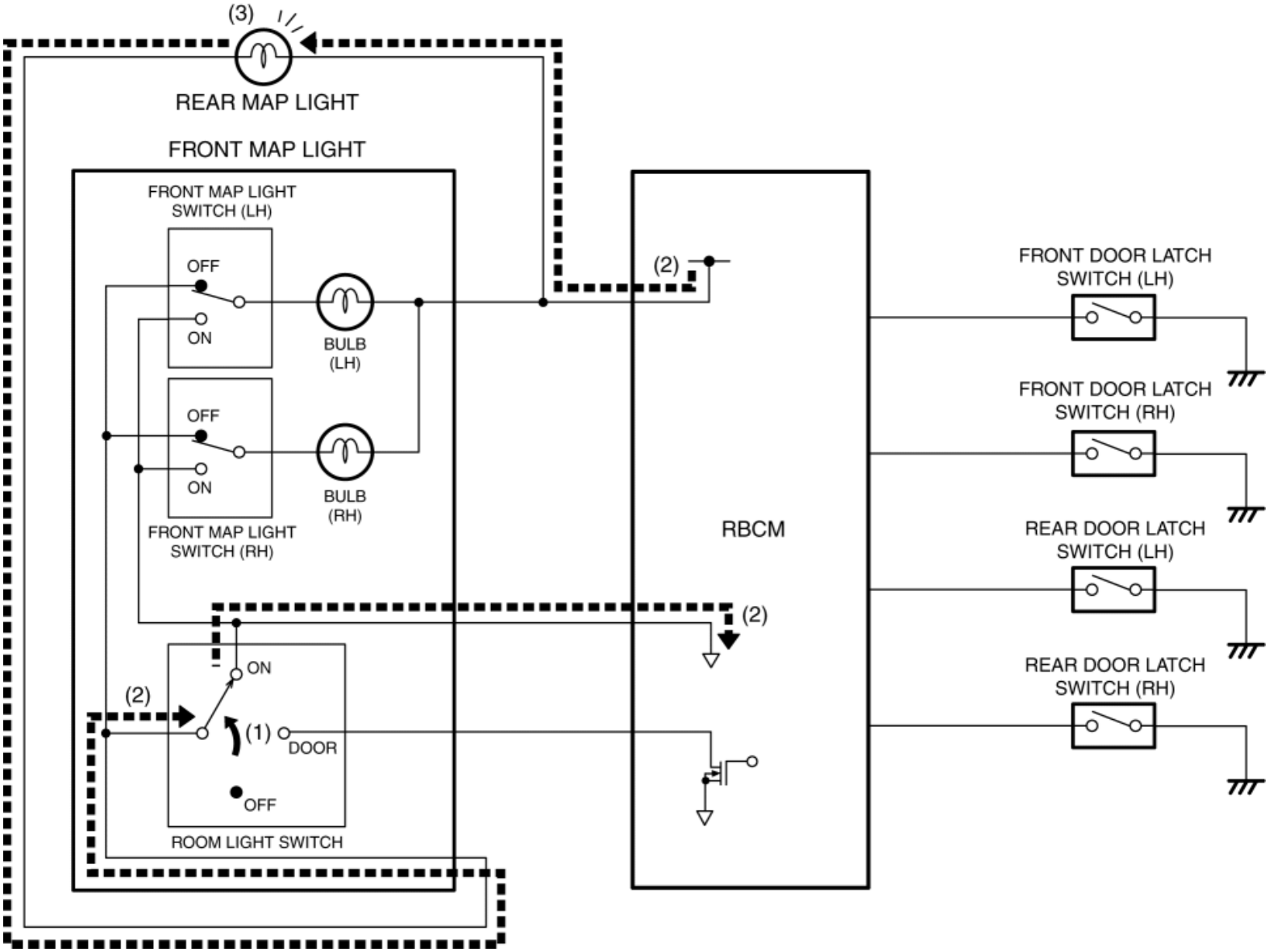

DOOR position

- Room light switch for front map light is in the DOOR position.
- When any door is opened, the door open signal is input to the rear body control module (RBCM).
- When the rear body control module (RBCM) receives the door open signal, it turns on the transistor.
- When the transistor turns on, the battery current flows to the rear map light bulb from the rear body control module (RBCM).
- The rear map light illuminates.

NOTE:

- When the room light switch for front map light is in the DOOR position, the rear map light illumination on/off timing is controlled by the room light control system. For details, refer to the "**ROOM LIGHT CONTROL SYSTEM**".

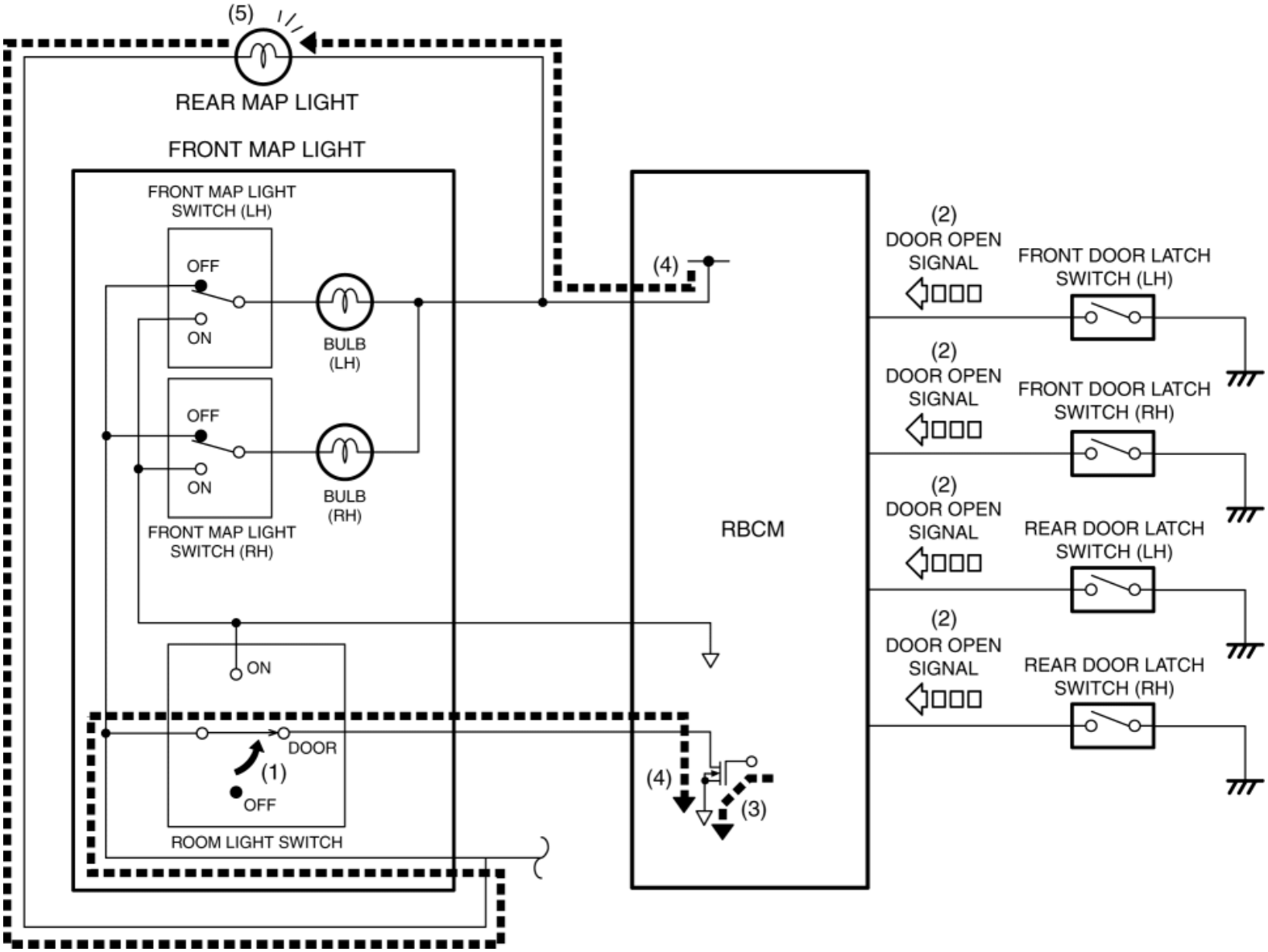

Fail-safe

- Function not equipped.

2014 - Mazda3 - Body and Accessories

CARGO COMPARTMENT LIGHT

Purpose

- The cargo compartment light illuminates the cargo compartment interior when the liftgate is opened.

Function

- When the liftgate is opened, illuminates by the cargo compartment light switch turning on.

Construction

- The cargo compartment light is installed to the trunk side upper trim.

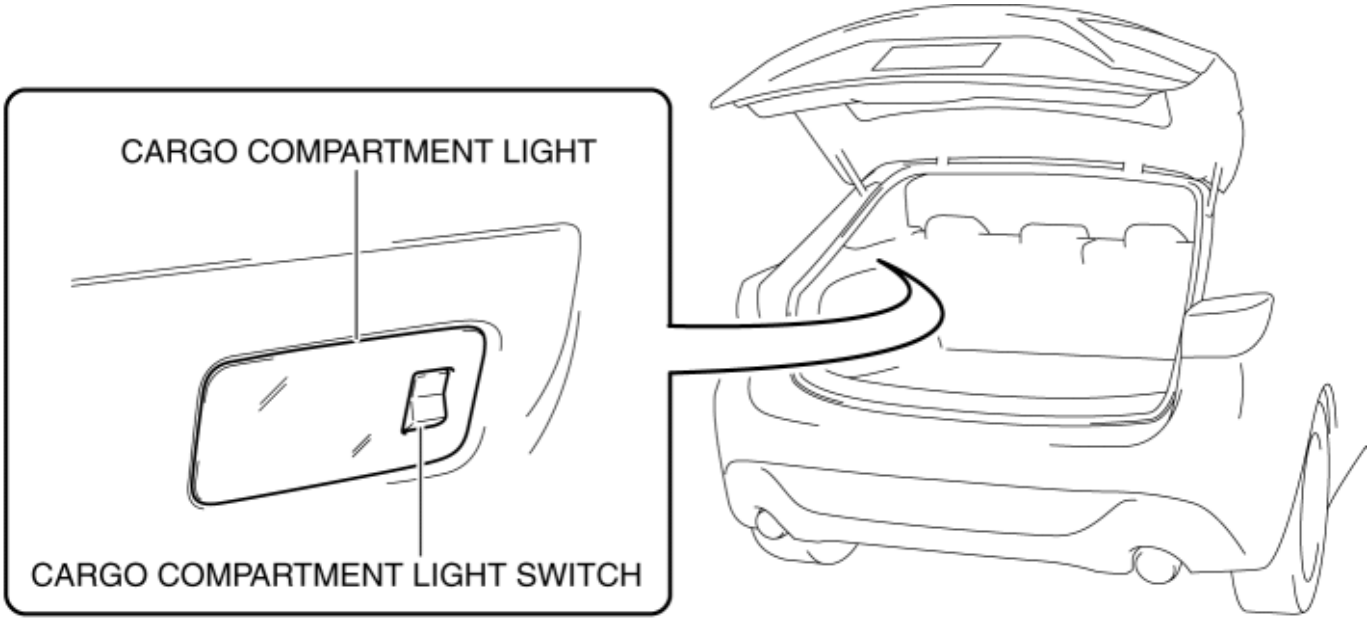

Operation

1. When the liftgate opens, the liftgate latch switch turns on and the rear body control module (RBCM) detects a liftgate latch switch on signal.

2. When the rear body control module (RBCM) detects the liftgate latch switch on signal, electric current flows to the cargo compartment light.

3. When the cargo compartment light switch turns on, electric current flows to the cargo

compartment light bulb.

4. When electric current flows to the cargo compartment light bulb, the cargo room light bulb illuminates.

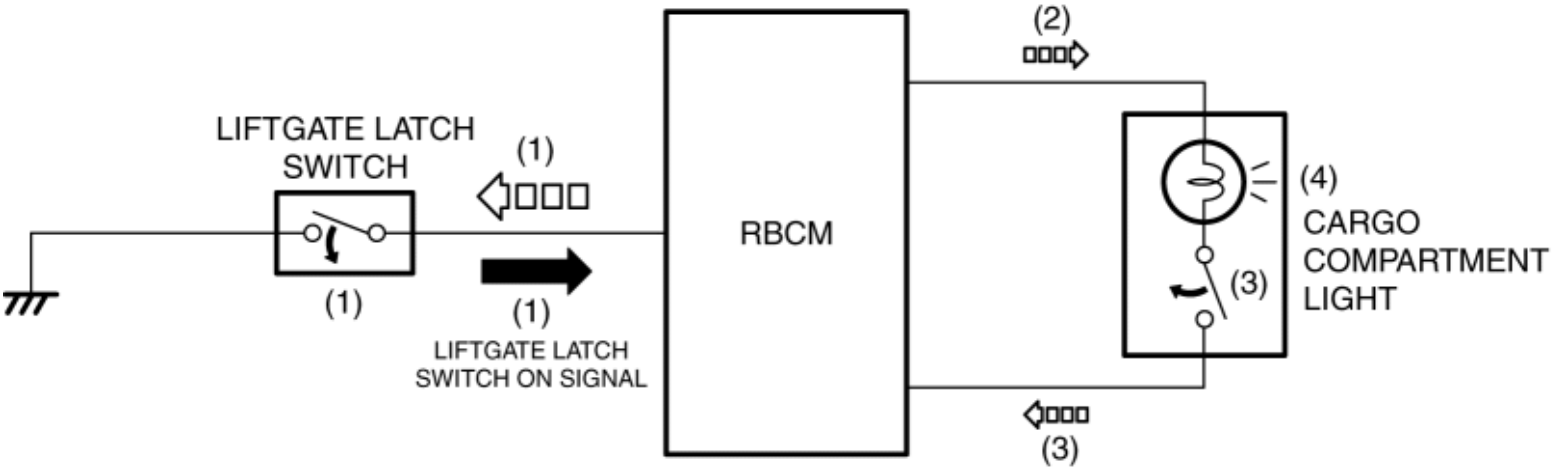

Fail-safe

- Function not equipped.

2014 - Mazda3 - Body and Accessories

STEERING ANGLE SENSOR

Purpose, Function

- The steering angle sensor detects the steering angle and sends it to the start stop unit as a steering angle (absolute steering angle) signal.

NOTE:

- The steering angle sensor is equipped if any of the following systems is equipped.
    - Adaptive front lighting system (AFS)
    - Smart city brake support (SCBS)

Construction

- The steering angle sensor is installed to the clock spring.
- Consists of a sensor unit in which a photo transistor and LED are positioned opposite each other, and a slit disc which moves together with the steering wheel.

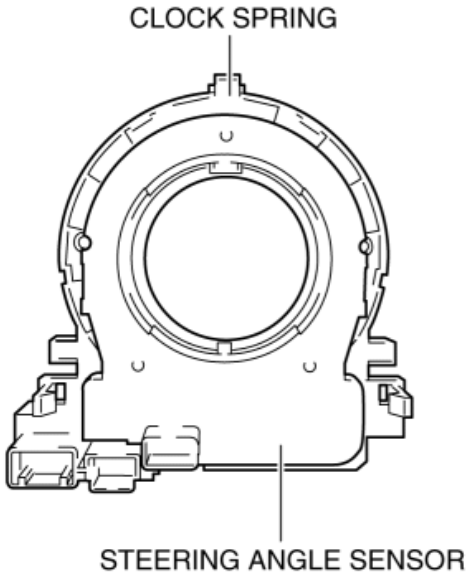

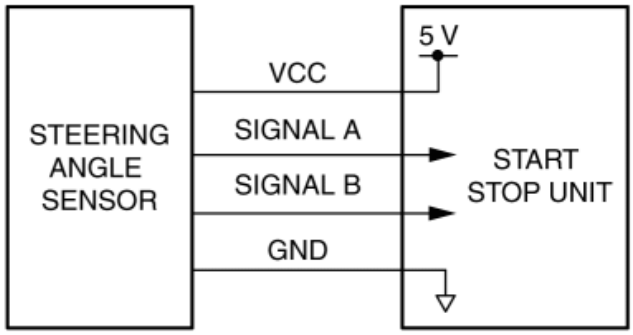

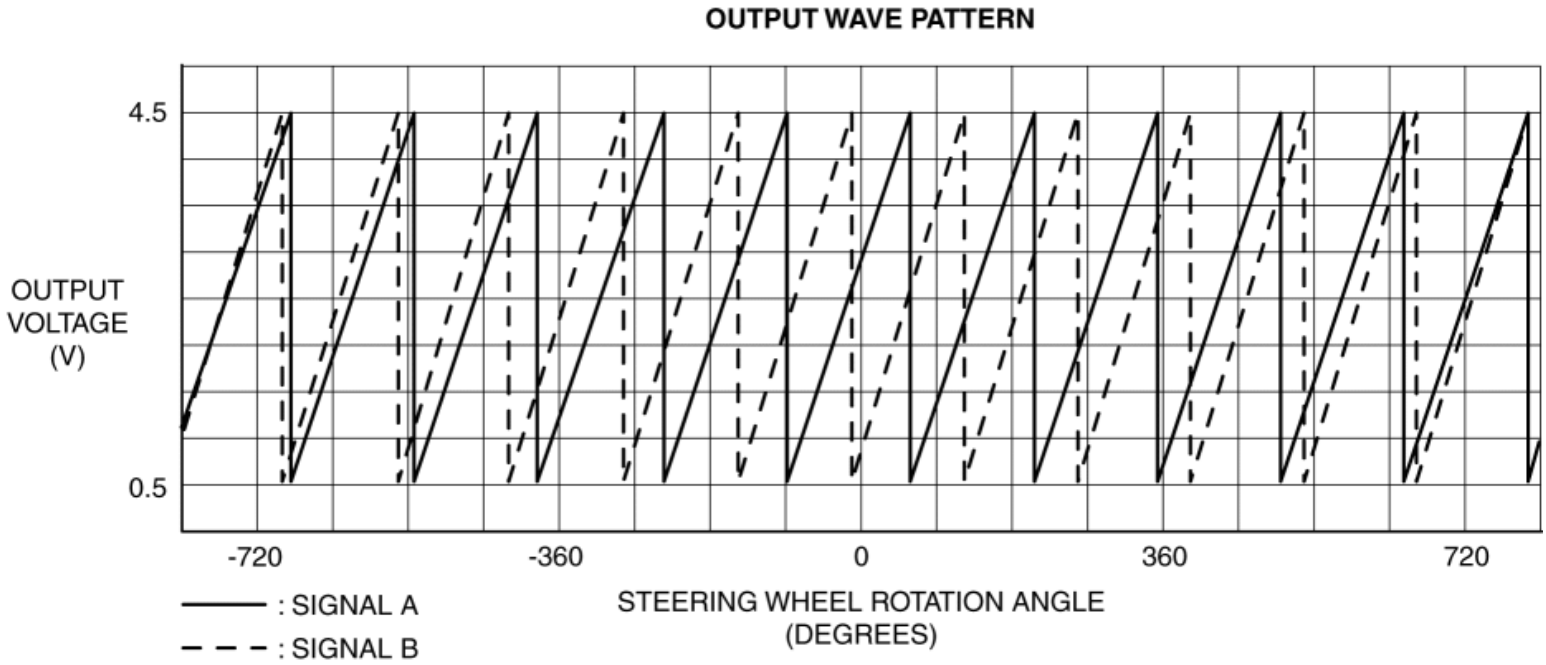

Operation

- As the disc moves with the steering wheel operation, the LED light received by the photo transistor varies due to the slits on the disc.
- The photo transistor reads the variation of the light and outputs the steering angle (absolute steering angle) signal to the start stop unit.

Fail-safe

- Function not equipped.

2014 - Mazda3 - Body and Accessories

WIPER/WASHER SYSTEM

Outline

- The following wiper/washer system has been adopted.
    - Windshield wiper/washer system
    - Rear wiper/washer system (5HB)
    - Auto wiper system (with auto wiper system)
    - Washer fluid-level warning system (with washer fluid-level sensor)

Specification

- Windshield wiper system with continuous (low/high), auto-stop, one-touch wiper, intermittent wiper, and synchronized washer and wiper operation adopted.
    - CAN communication has been adopted for the windshield wiper/washer system.
    - Windshield washer nozzles have been adopted in which the area where the washer fluid is sprayed can be adjusted.
- Rear wiper system with continuous, auto-stop, intermittent wiper, and synchronized washer and wiper operation adopted. (5HB)
    - CAN communication has been adopted for the rear wiper/washer system.
    - Rear washer nozzle have been adopted in which the area where the washer fluid is sprayed can be adjusted.
- An auto wiper system adopted which enables fully automatic windshield wiper operation. (with auto wiper system)
    - CAN communication has been adopted for the auto wiper system.
    - A rain sensor integrated with the lens has been adopted which aggregates infrared light to detect the amount of rainfall.
    - Auto wiper system personalization features has been adopted.
- A washer fluid-level sensor is installed in the washer tank. (with washer fluid-level sensor)
- Washer tank capacity
    - With the washer fluid-level sensor: **4.2 L {4.4 US qt, 3.7 Imp qt}**
    - Without the washer fluid-level sensor: **2.2 L {2.3 US qt, 1.9 Imp qt}**

Structural View

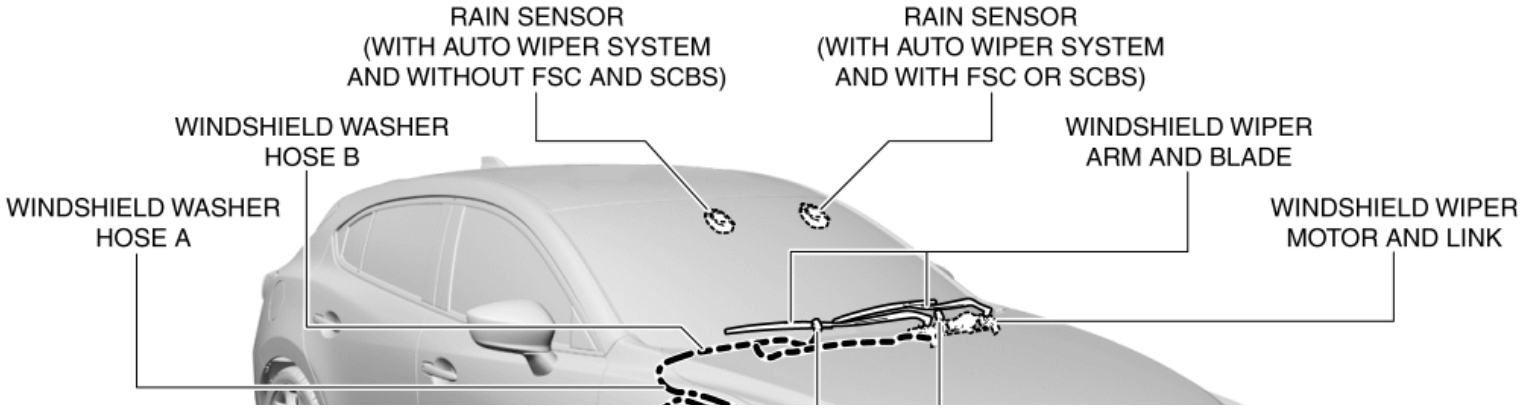

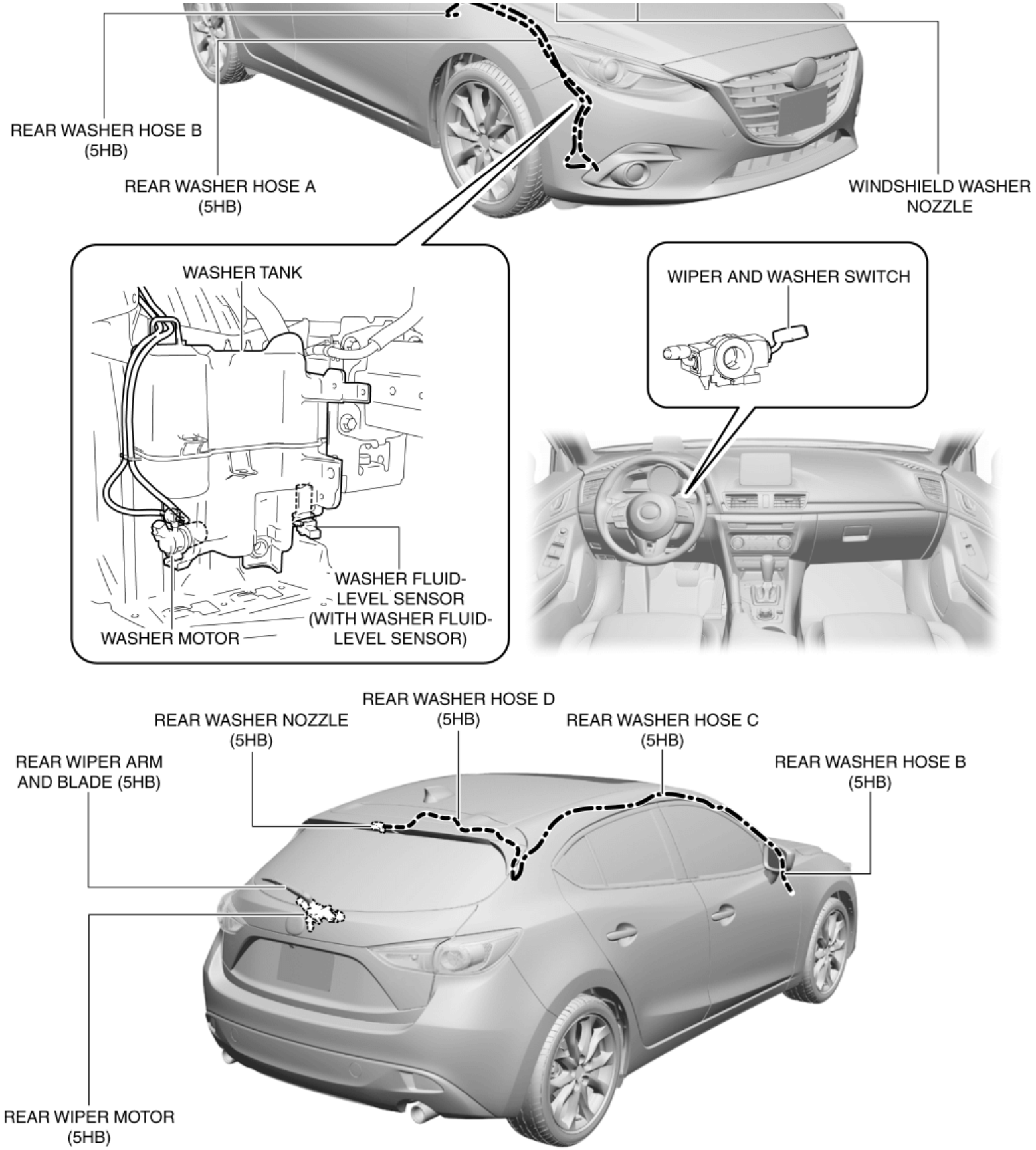
REAR WASHER HOSE B
(5HB)
REAR WASHER HOSE A
(5HB)
WINDSHIELD WASHER
NOZZLE
WASHER TANK
WASHER FLUID-
LEVEL SENSOR
(WITH WASHER FLUID-
LEVEL SENSOR)
WASHER MOTOR
WIPER AND WASHER SWITCH
REAR WASHER HOSE D
(5HB)
REAR WASHER NOZZLE
(5HB)
REAR WASHER HOSE C
(5HB)
REAR WIPER ARM
AND BLADE (5HB)
REAR WASHER HOSE B
(5HB)
REAR WIPER MOTOR
(5HB)

2014 - Mazda3 - Body and Accessories

WIPER/WASHER SYSTEM PERSONALIZATION

- A customize function has been adopted which switches the auto wiper system between operable/inoperable.

Auto Wiper System

Using mazda modular diagnostic system (M-MDS)

- The auto wiper function can be enabled or disabled using the Mazda Modular Diagnostic System (M-MDS). Refer to the Workshop Manual for the customize function setting procedure.

Mazda Modular Diagnostic System (M-MDS) display	Function	Initial setting	Setting contents	Control module
Rain Sensing Wipers.	Auto wiper system can be set to operable or inoperable.	On (Rain Sensing)	Not Adopted./ Off (Intermittent)/On (Rain Sensing)	Rear body control module (RBCM)

Using center display

- The user can enable or disable the auto wiper function by operating the center display. Refer to the Workshop Manual for the detailed customize function setting procedure.

Display of center display	Function	Initial setting	Setting contents	Control module
Wipers	Auto wiper system can be set to operable or inoperable.	On (Rain Sensing)	On (Rain Sensing) / Off (Intermittent)	Rear body control module (RBCM)

2014 - Mazda3 - Body and Accessories

WINDSHIELD WIPER/WASHER SYSTEM

Outline

- Equipped with continuous (low/high), auto-stop, one-touch wiper, intermittent wiper (without auto wiper system), auto wiper (with auto wiper system), windshield washer, and synchronized washer and wiper operation.
- The front body control module (FBCM) performs windshield wiper and washer system fail-safe. (See **FRONT BODY CONTROL MODULE (FBCM)**.)

Structural View

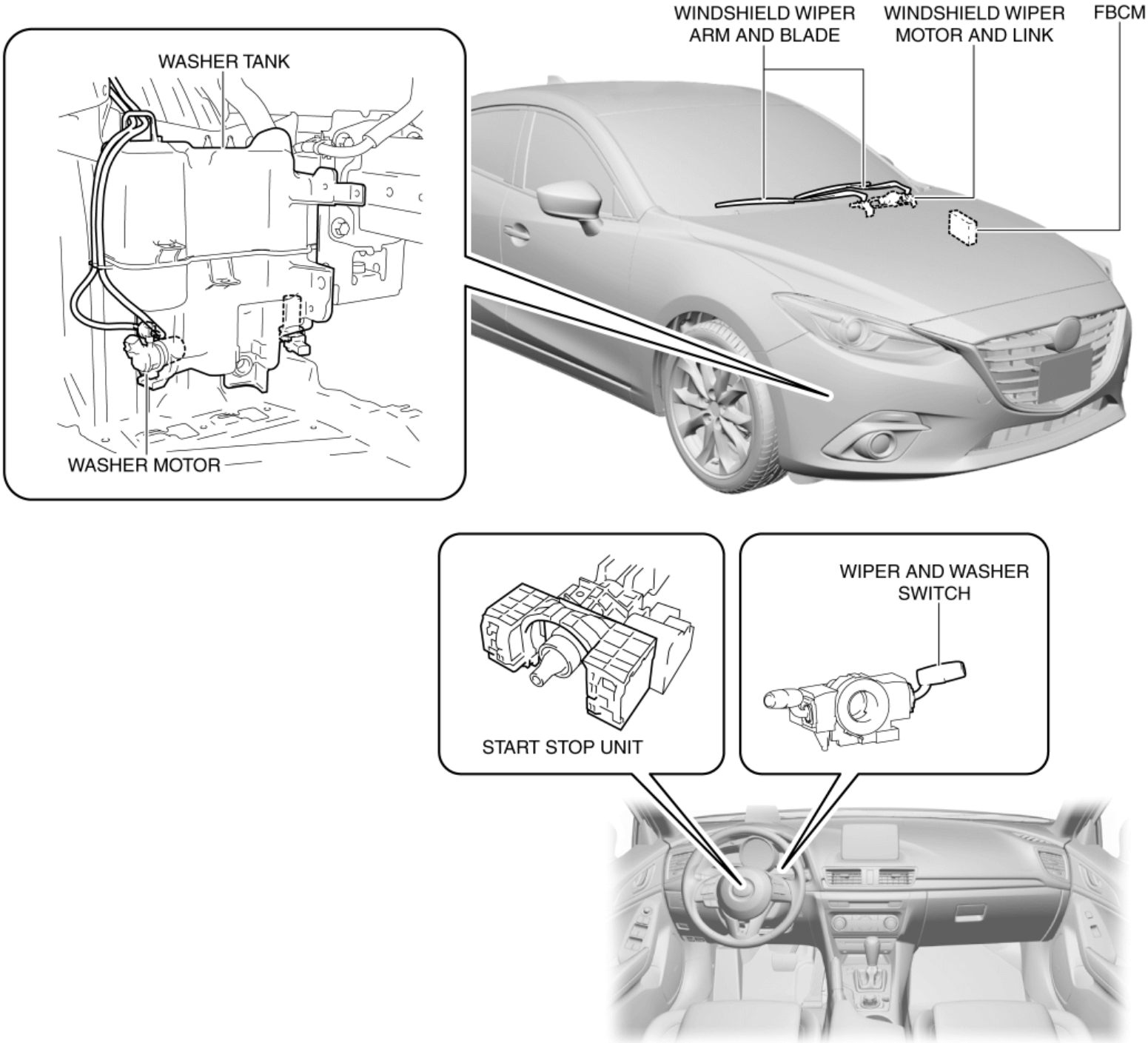

System Wiring Diagram

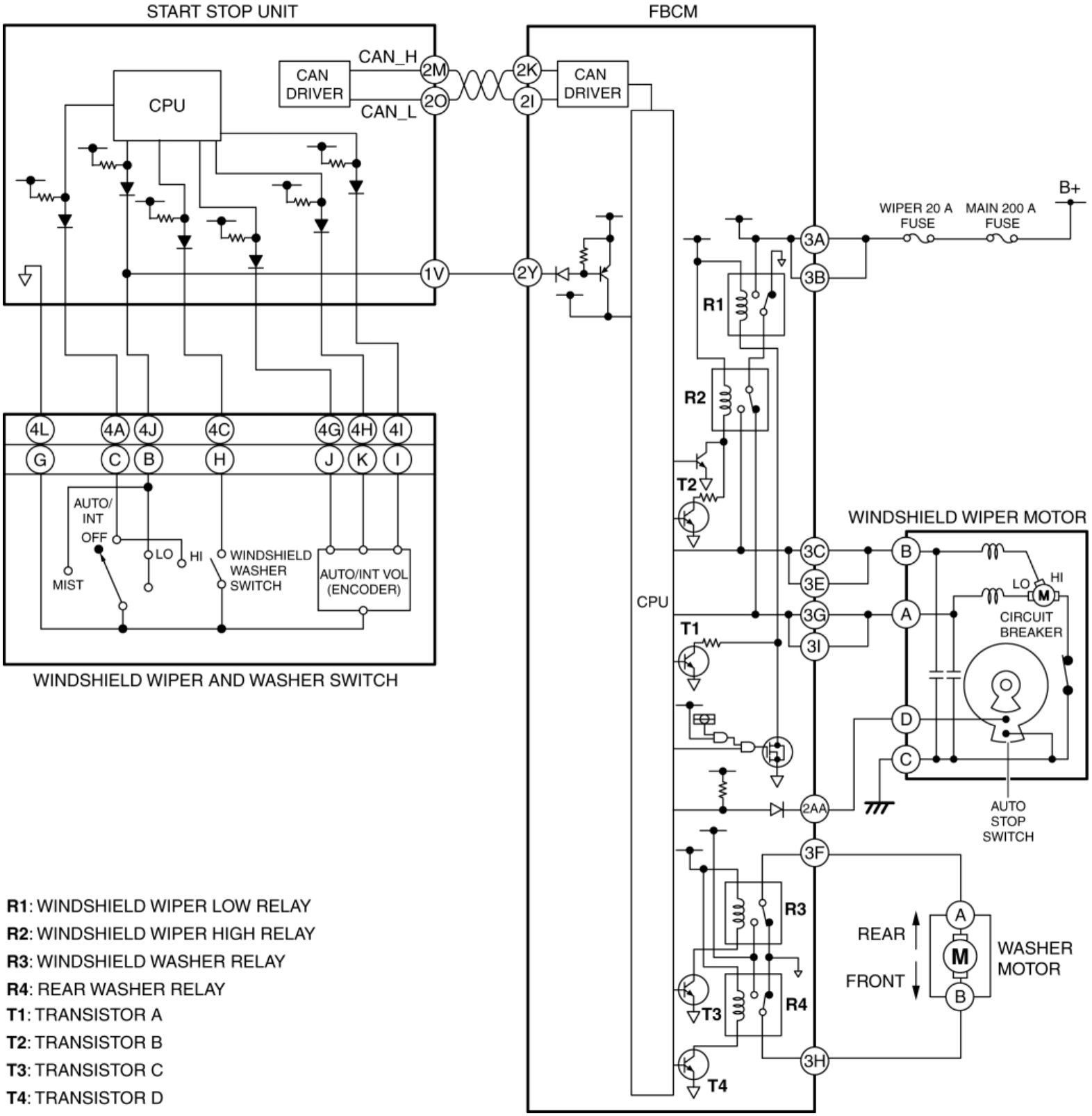

Operation

Continuous low operation

1. When the windshield wiper switch is moved to the LO position with the ignition switched ON (engine off or on), the start stop unit detects a windshield wiper switch signal (LO).

2. When the start stop unit detects the windshield wiper switch signal (LO), it send a windshield wiper switch position signal (LO) to the front body control module (FBCM) as a CAN signal.

3. When the front body control module (FBCM) receives the windshield wiper switch position signal (LO), it supplies the base current from the internal CPU to transistor A, and turns transistor A on.

4. When the transistor A is turned on, collector current flows from the internal power supply, turning the windshield wiper low relay on.

5. When the windshield wiper low relay is turned on, current flows from the battery to the windshield wiper motor and the windshield wipers operate continuously at low speed.

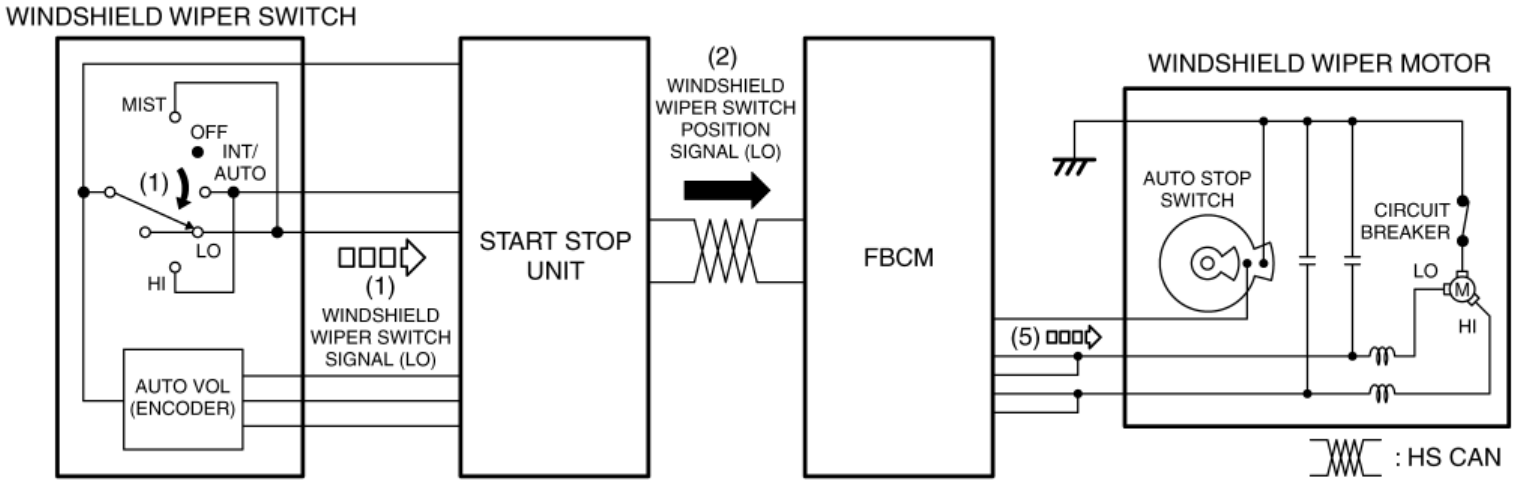

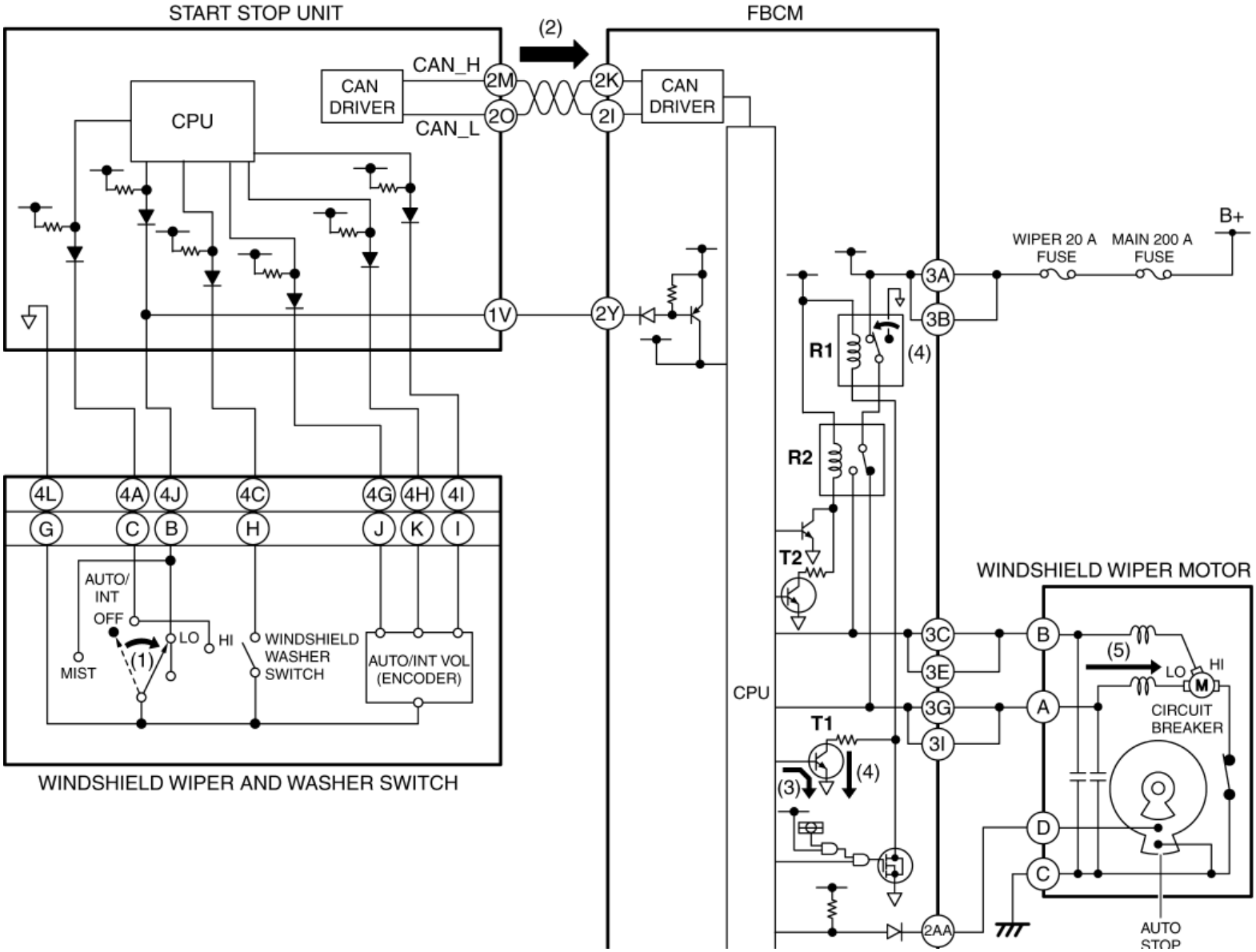

R1: WINDSHIELD WIPER LOW RELAY
R2: WINDSHIELD WIPER HIGH RELAY
R3: WINDSHIELD WASHER RELAY
R4: REAR WASHER RELAY
T1: TRANSISTOR A
T2: TRANSISTOR B
T3: TRANSISTOR C
T4: TRANSISTOR D

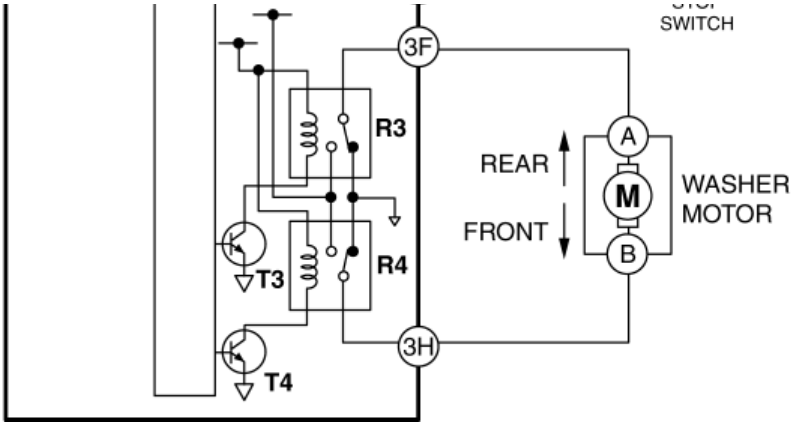

Continuous high operation

1. When the windshield wiper switch is moved to the HI position with the ignition switched ON (engine off or on), the start stop unit detects a windshield wiper switch signal (HI).

2. When the start stop unit detects the windshield wiper switch signal (HI), it send a windshield wiper switch position signal (HI) to the front body control module (FBCM) as a CAN signal.

3. When the front body control module (FBCM) receives the windshield wiper switch position signal (HI), it supplies the base current from the internal CPU to transistors A and B, and turns transistors A and B on.

4. When the transistors A and B are turned on, collector current flows from the internal power supply, turning the windshield wiper low relay and windshield wiper high relay on.

5. When the windshield wiper low relay and windshield wiper high relay are turned on, current flows from the battery to the windshield wiper motor and the windshield wipers operate continuously at high speed.

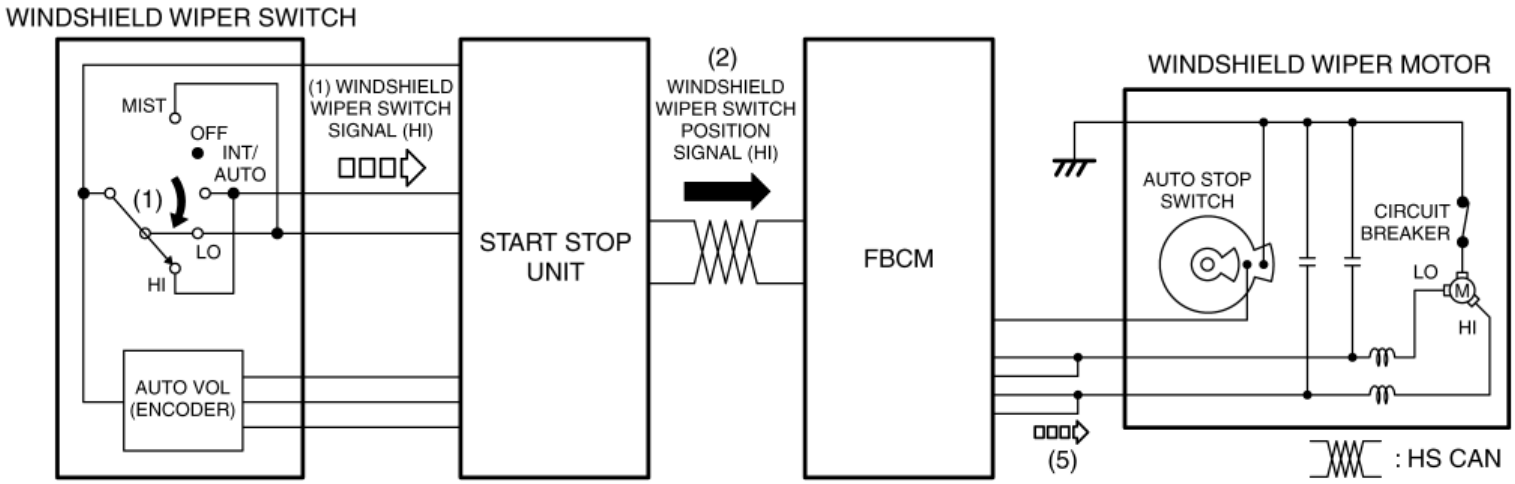

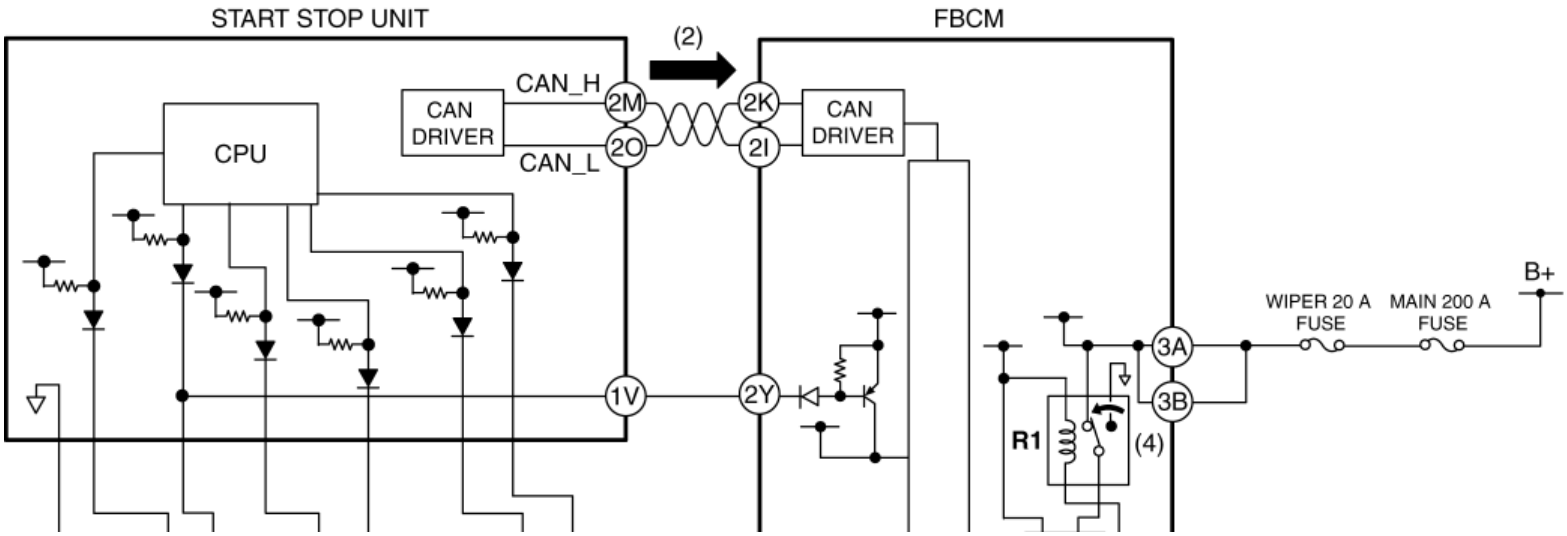

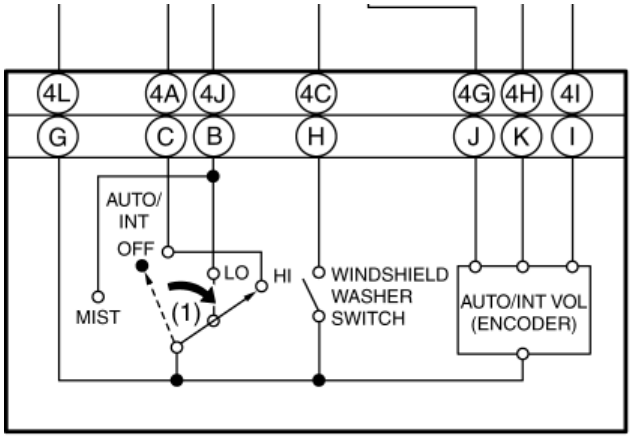

WINDSHIELD WIPER AND WASHER SWITCH

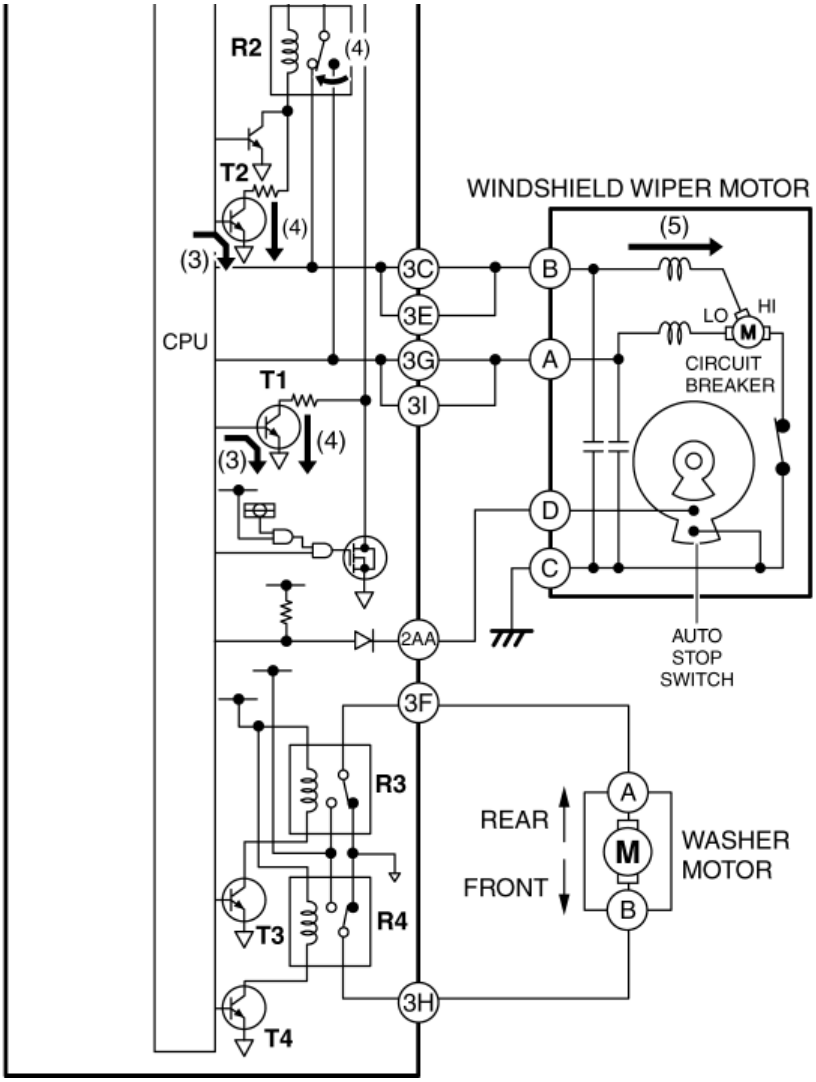

R1: WINDSHIELD WIPER LOW RELAY
R2: WINDSHIELD WIPER HIGH RELAY
R3: WINDSHIELD WASHER RELAY
R4: REAR WASHER RELAY
T1: TRANSISTOR A
T2: TRANSISTOR B
T3: TRANSISTOR C
T4: TRANSISTOR D

Auto-stop operation

1. The auto-stop switch inside the windshield wiper motor operates as follows according to the operation position of the windshield wipers.

- Windshield wipers stopped in park position: On
- Windshield wipers stopped in position other than park: Off

2. When the windshield wiper switch is in the OFF position during windshield wiper operation, the windshield wipers operate continuously because the auto-stop switch is off.

3. The auto-stop switch turns on when the windshield wipers move to the park position.

4. When the front body control module (FBCM) detects that the auto-stop switch is on, it stops the base current to transistor A and turns off transistor A.

5. When transistor A is turned off, collector current stops and the windshield wiper low relay turns off.

6. When the windshield wiper low relay is turned off, the windshield wipers stop at the park position.

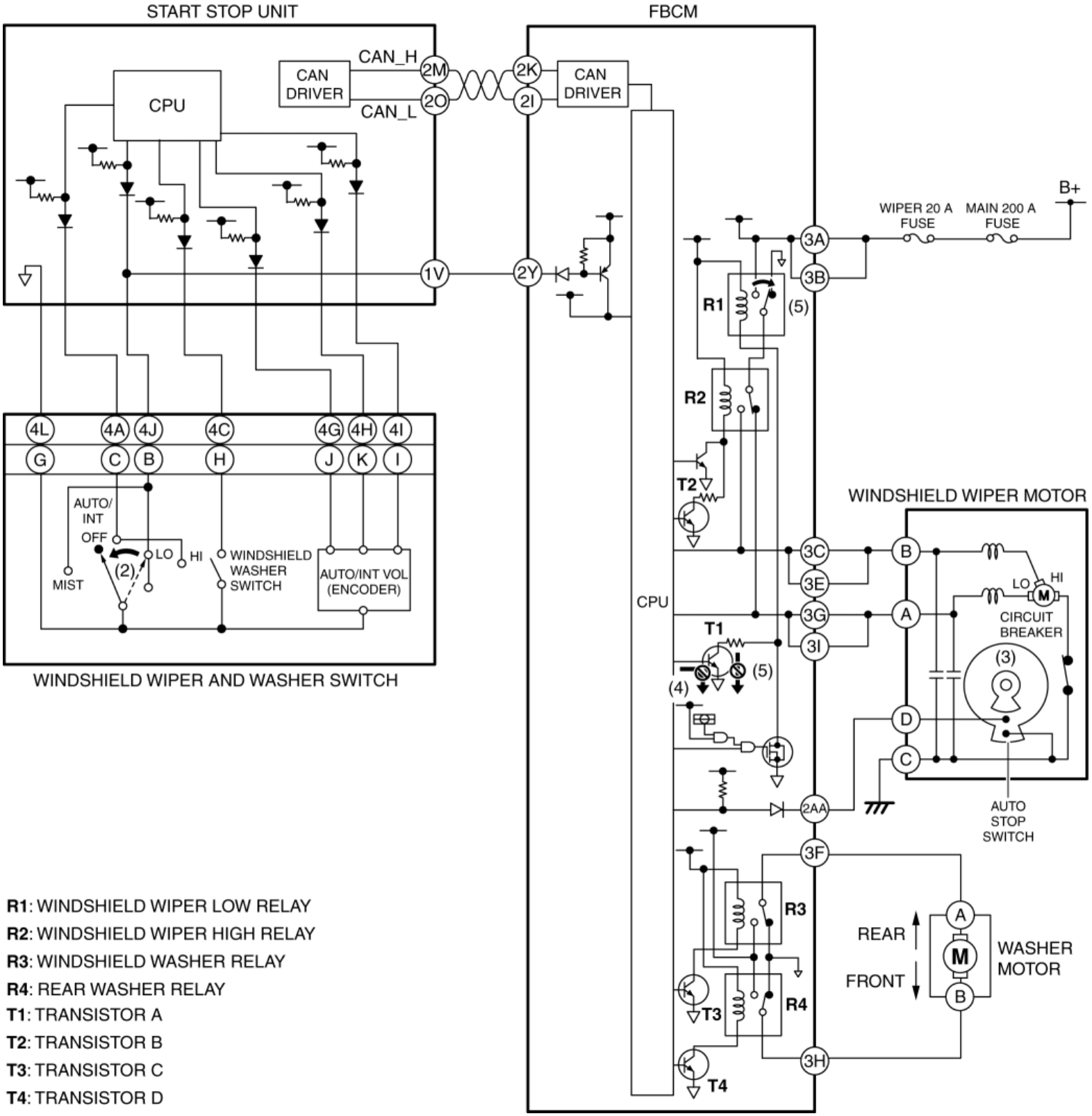

One-touch wiper operation

1. When the windshield wiper switch is moved up (MIST position) with the ignition switched ON (engine off or on), the start stop unit detects a windshield wiper switch signal (LO).

2. When the start stop unit detects a windshield wiper switch signal (LO), it send a windshield wiper switch position signal (LO) to the front body control module (FBCM) as a CAN signal.

3. When the front body control module (FBCM) receives the windshield wiper switch position signal (LO), it supplies the base current from the internal CPU to transistor A, and turns transistor A on.

4. When the transistor A is turned on, collector current flows from the internal power supply, turning the windshield wiper low relay on.

5. When the windshield wiper low relay is turned on, current flows from the battery to the windshield wiper motor and the windshield wipers operate continuously at low speed.

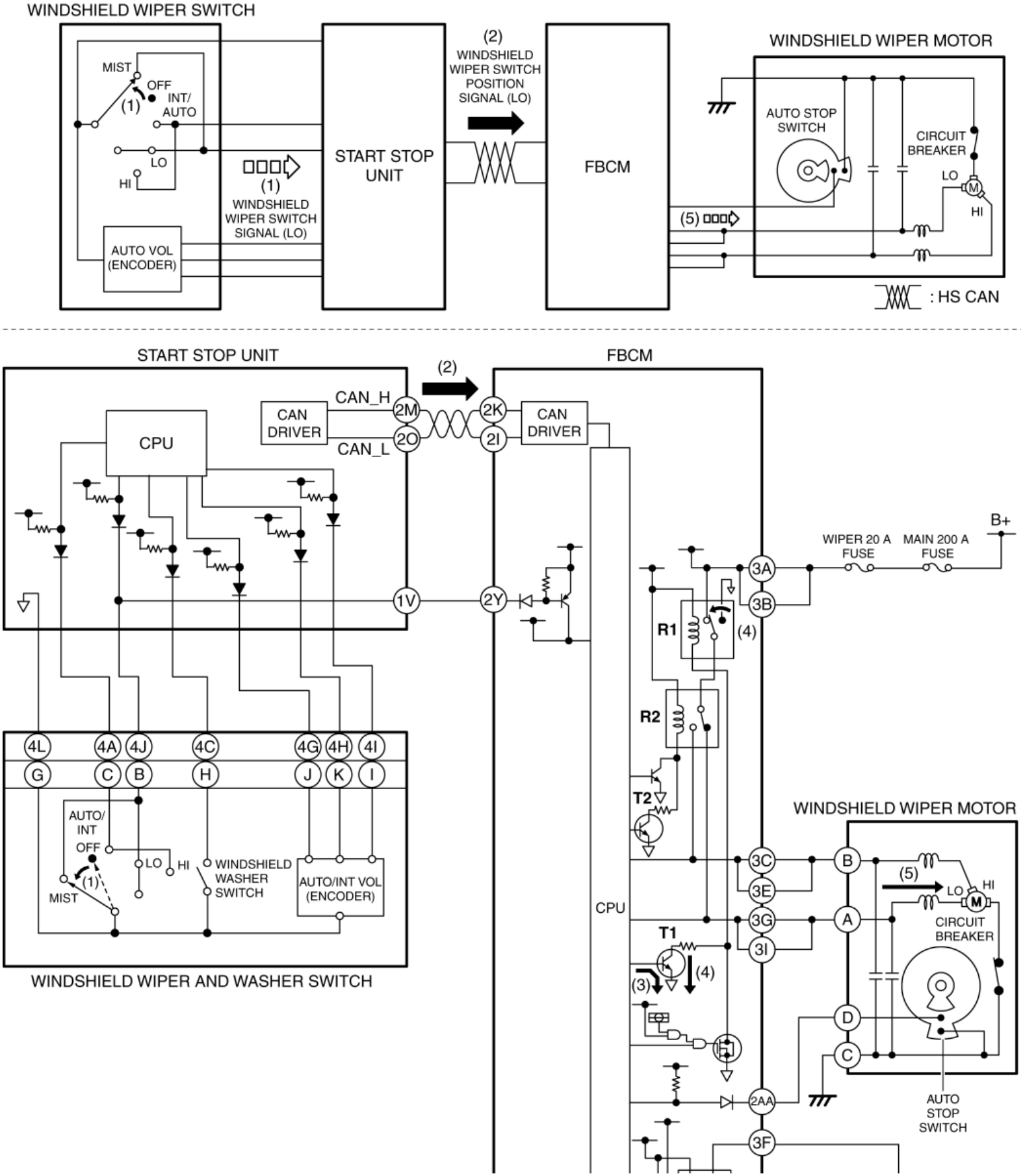

R1: WINDSHIELD WIPER LOW RELAY
R2: WINDSHIELD WIPER HIGH RELAY
R3: WINDSHIELD WASHER RELAY
R4: REAR WASHER RELAY
T1: TRANSISTOR A
T2: TRANSISTOR B
T3: TRANSISTOR C
T4: TRANSISTOR D

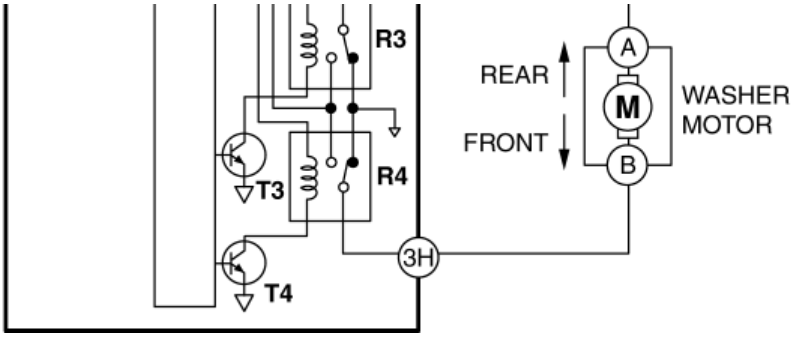

Intermittent wiper operation (without auto wiper system)

1. When the windshield wiper switch is moved to the INT position with the ignition switched ON (engine off or on), the start stop unit detects a windshield wiper switch signal (INT).

2. When the start stop unit detects a windshield wiper switch signal (INT), it send a windshield wiper switch position signal (INT) and an INT volume signal to the front body control module (FBCM) as CAN signals.

3. When the front body control module (FBCM) receives the windshield wiper switch position signal (INT), it supplies the base current from the internal CPU to transistor A, and collector current flows from the internal power supply, and turns transistor A on.

4. When the transistor A is turned on, collector current flows from the internal power supply, turning the windshield wiper low relay on.

5. When the windshield wiper low relay is turned on, current flows from the battery to the windshield wiper motor and the windshield wipers operate continuously at low speed.

6. The windshield wipers stop at the park position due to the auto-stop operation, and after a certain period of time has elapsed, which was calculated based on the INT volume signal, the front body control module (FBCM) operates the windshield wipers at a low speed. By repeating this, the windshield wipers operate intermittently.

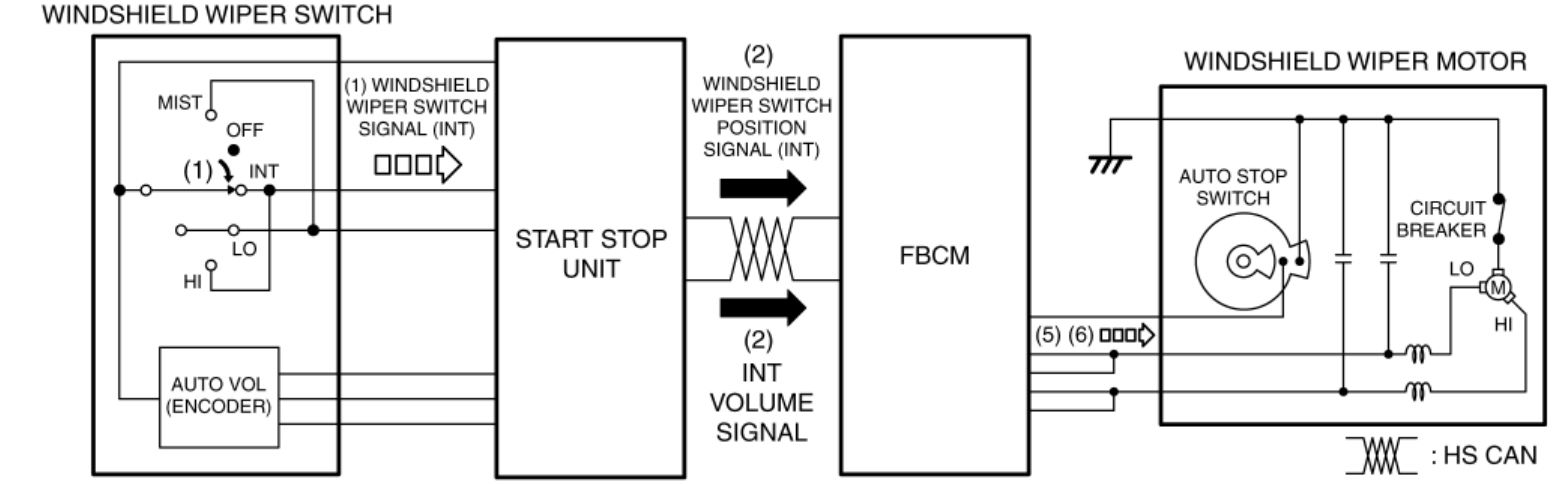

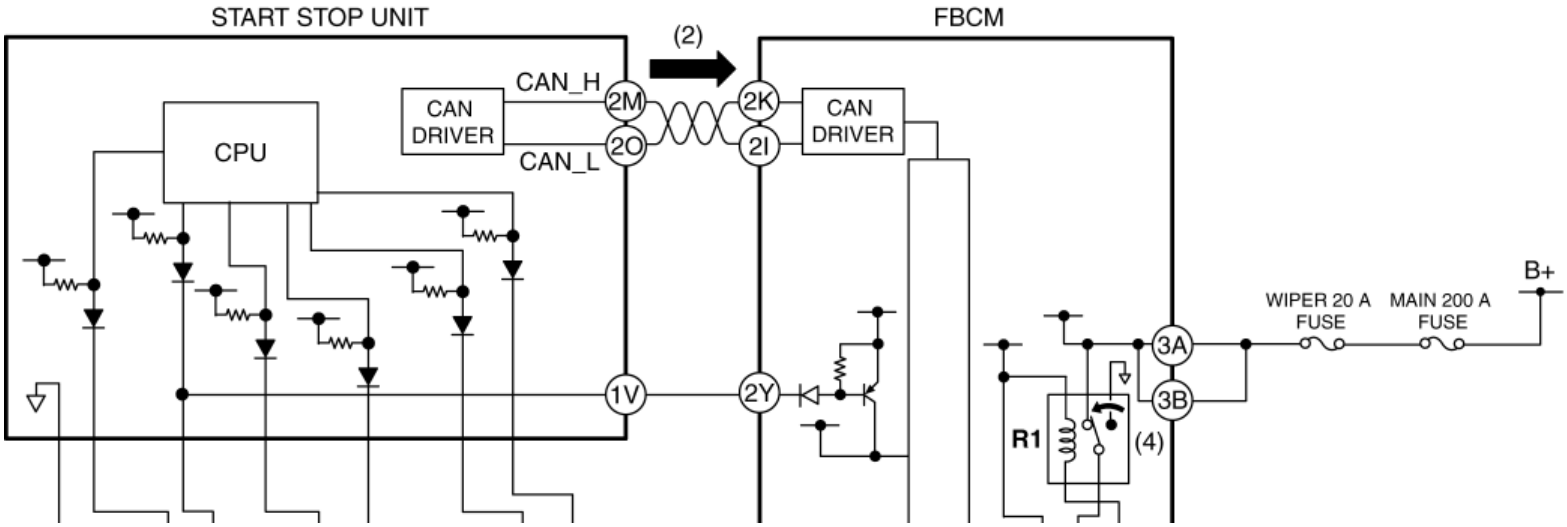

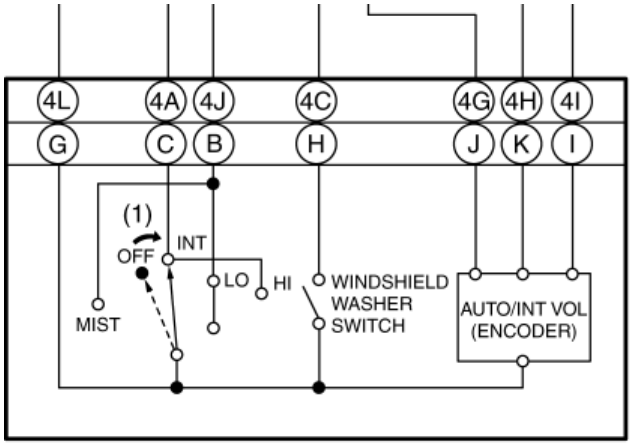

WINDSHIELD WIPER AND WASHER SWITCH

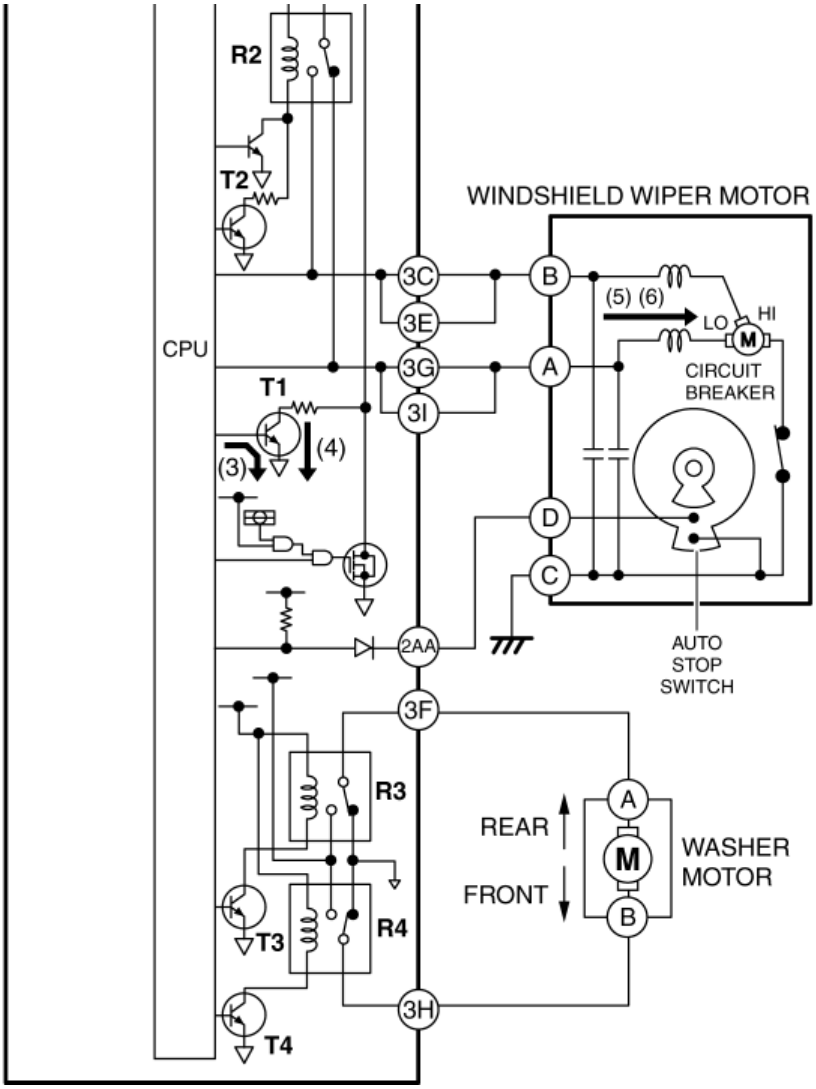

R1: WINDSHIELD WIPER LOW RELAY
R2: WINDSHIELD WIPER HIGH RELAY
R3: WINDSHIELD WASHER RELAY
R4: REAR WASHER RELAY
T1: TRANSISTOR A
T2: TRANSISTOR B
T3: TRANSISTOR C
T4: TRANSISTOR D

Auto wiper operation (with auto wiper system)

- Refer to AUTO WIPER SYSTEM for a detailed explanation of the auto wiper operation. (See **AUTO WIPER SYSTEM**.)

Synchronized washer and wiper operation

1. When the windshield washer switch is turned on with the ignition switched ON (engine off or on) and the windshield wipers not operated, the start stop unit detects a windshield washer switch ON signal.

2. When the start stop unit detects a windshield washer switch ON signal, it send a windshield washer switch position signal (ON) to the front body control module (FBCM) as a CAN signal.

3. When the front body control module (FBCM) receives the windshield washer switch position signal (ON), it supplies the base current from the internal CPU to transistor C, and collector current flows from the internal power supply, and turns transistor C on.

4. When the transistor C is turned on, collector current flows from the internal power supply, turning the windshield washer relay on.

5. When the windshield washer relay is turned on, current flows from the power supply inside the front body control module (FBCM) to the washer motor and the washer motor operates, and washer fluid is sprayed from the windshield washer nozzles.

6. When the front body control module (FBCM) receives the windshield washer switch position signal (ON) for a certain period of time, it operates the windshield wipers at low speed.

7. When the windshield washer switch is turned off, the operation stops after the windshield wipers operate two times.

NOTE:

- If the windshield washer switch is turned on while the windshield wipers are operating, windshield wiper operation is continued and the windshield washer operation, from (3) to (7), is performed.

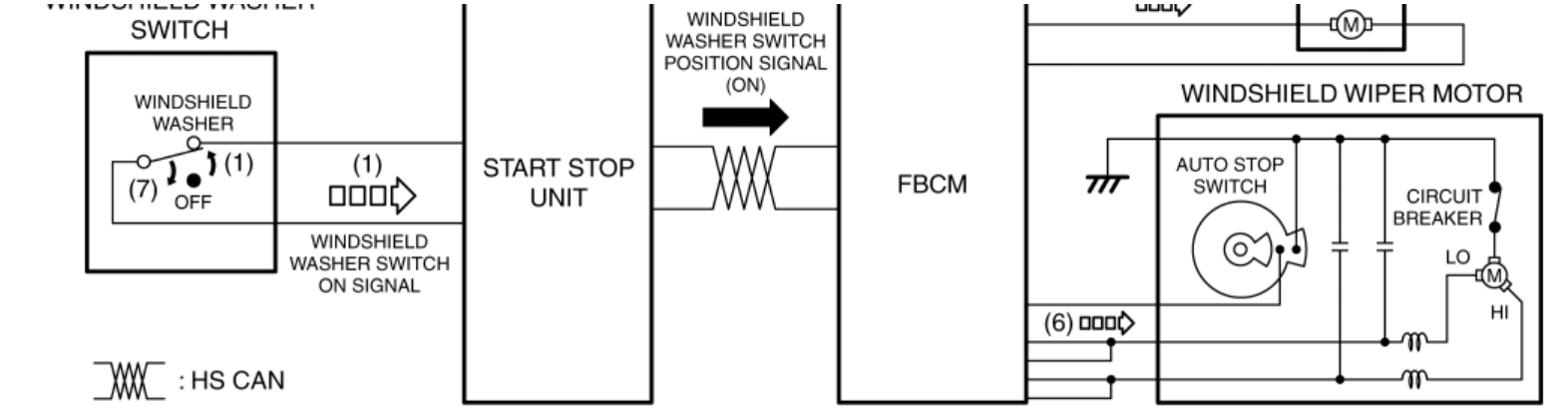

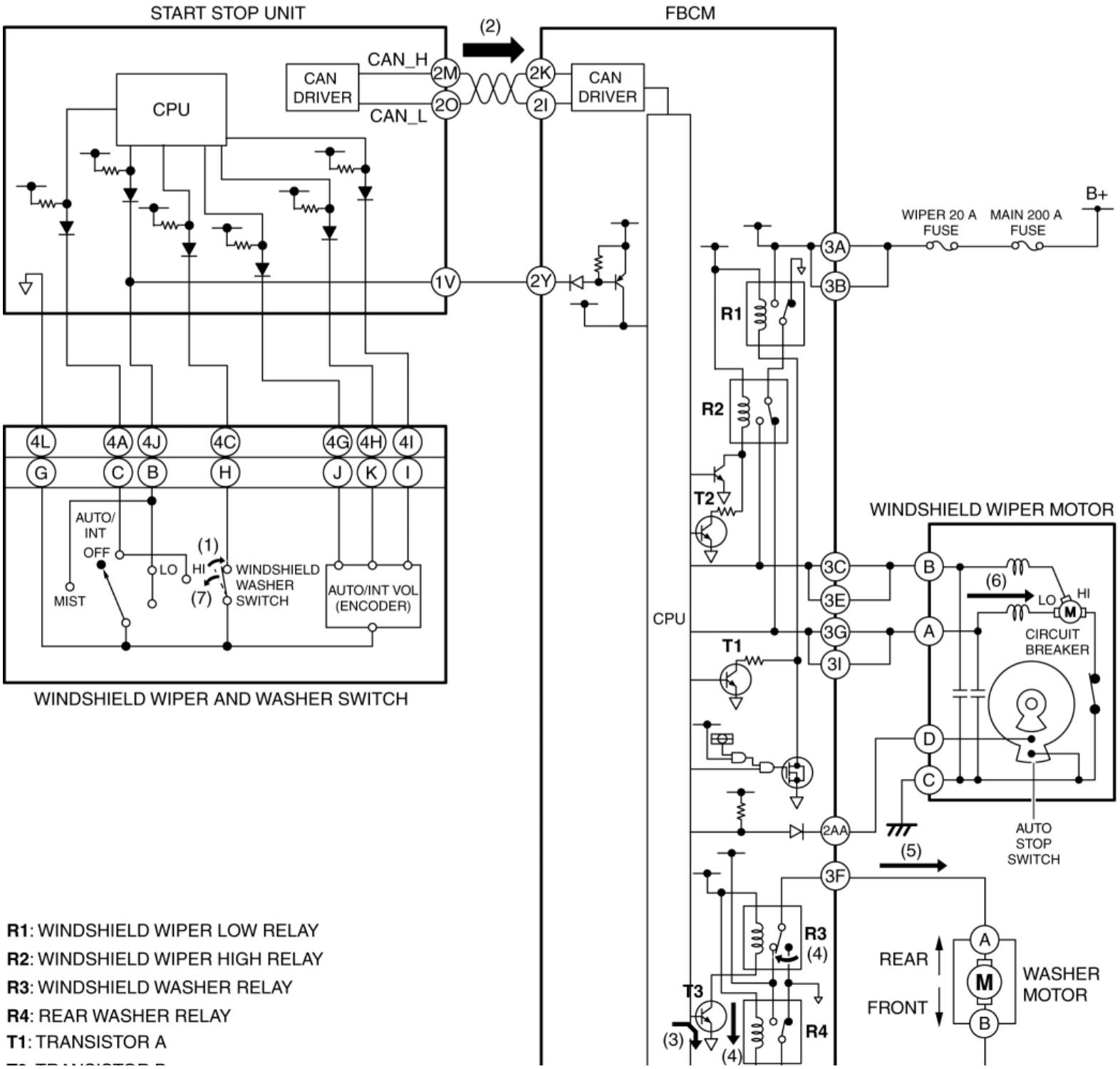

R1: WINDSHIELD WIPER LOW RELAY
R2: WINDSHIELD WIPER HIGH RELAY
R3: WINDSHIELD WASHER RELAY
R4: REAR WASHER RELAY
T1: TRANSISTOR A

T2: TRANSISTOR B
T3: TRANSISTOR C
T4: TRANSISTOR D

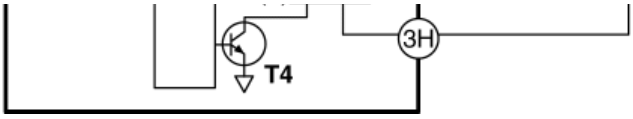

LO/HI Detection Function

- The LO/HI detection function is used in the fail-safe function during a system malfunction.
  - The front body control module (FBCM) detects that the windshield wiper switch is in the LO or HI position and monitors it.

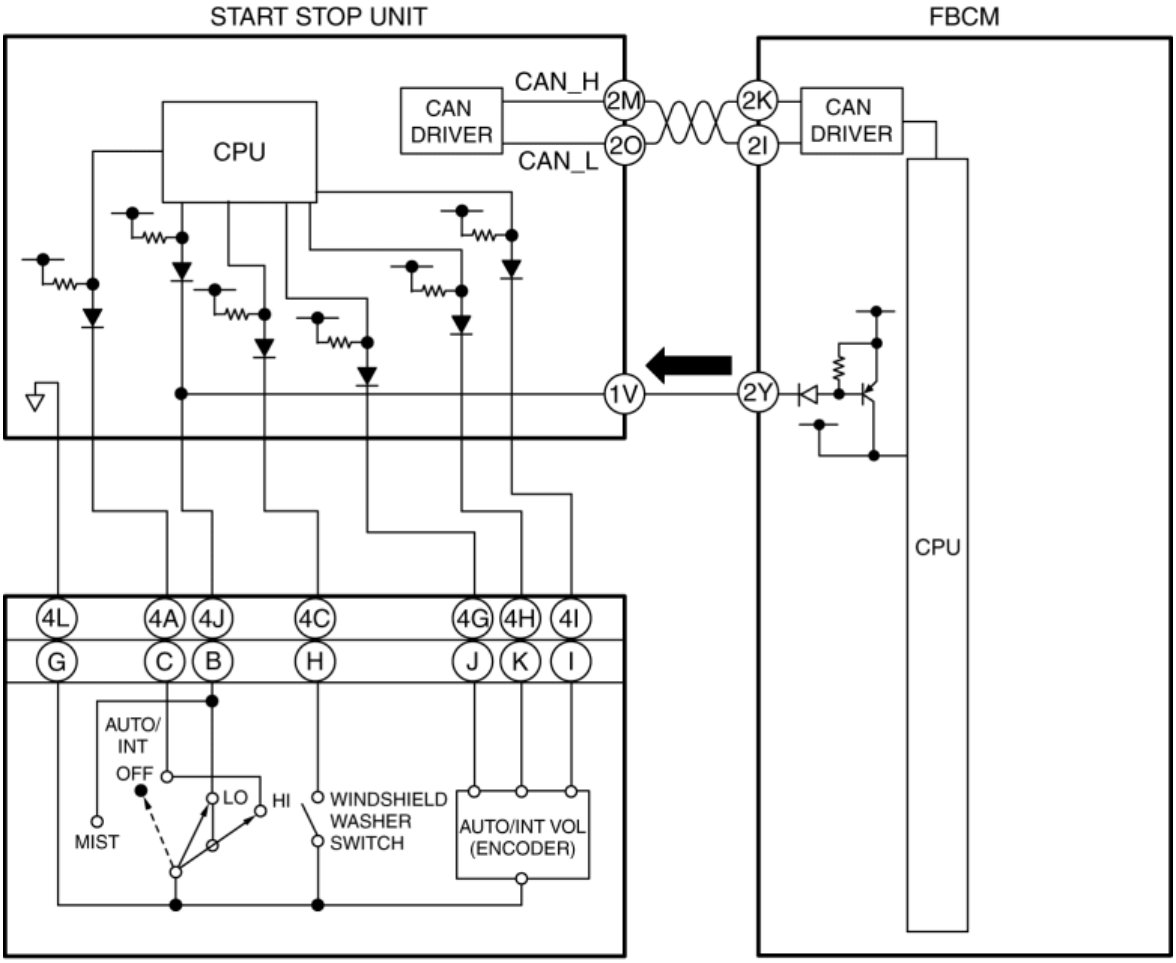

WINDSHIELD WIPER AND WASHER SWITCH

2014 - Mazda3 - Body and Accessories

WINDSHIELD WIPER MOTOR

Purpose

- The windshield wiper motor transmits rotation force to the windshield wiper link to operate the windshield wiper arms and blades.

Function

- The windshield wiper motor operates using the current from the front body control module (FBCM) which is input according to the windshield wiper and washer switch operation, and generates rotation force for the low/high 2 system.

Construction

- The windshield wiper motor is integrated with the windshield wiper link.

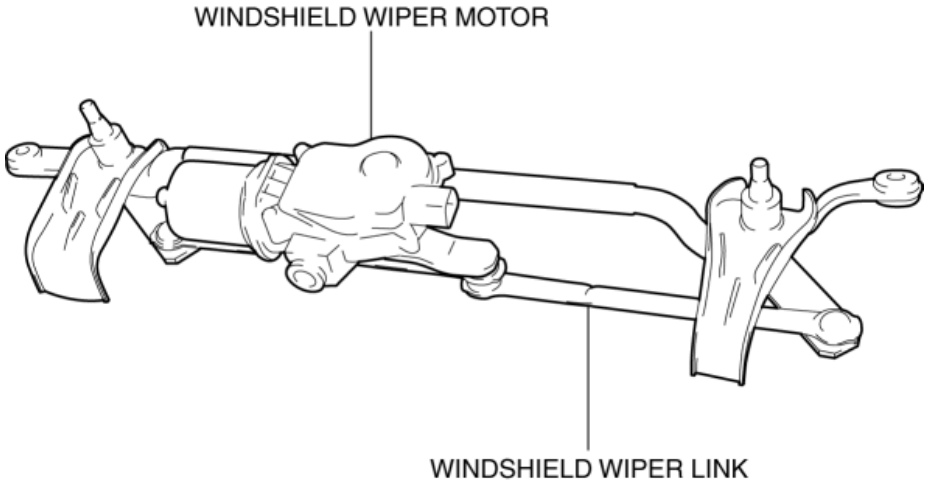

Operation

1. The windshield wiper motor rotates the motor based on the current from the front body control module (FBCM).

2. When the motor rotates, rotation force is transmitted to the windshield wiper link and converted to the reciprocating movement of the windshield wiper link.

3. When the reciprocating movement of the windshield wiper link is converted, the windshield wiper arm and blade operates.

4. When the windshield wiper arms and blades are operated to the park position, the auto stop switch turns on and the windshield wiper arms and blades stop at the park position.

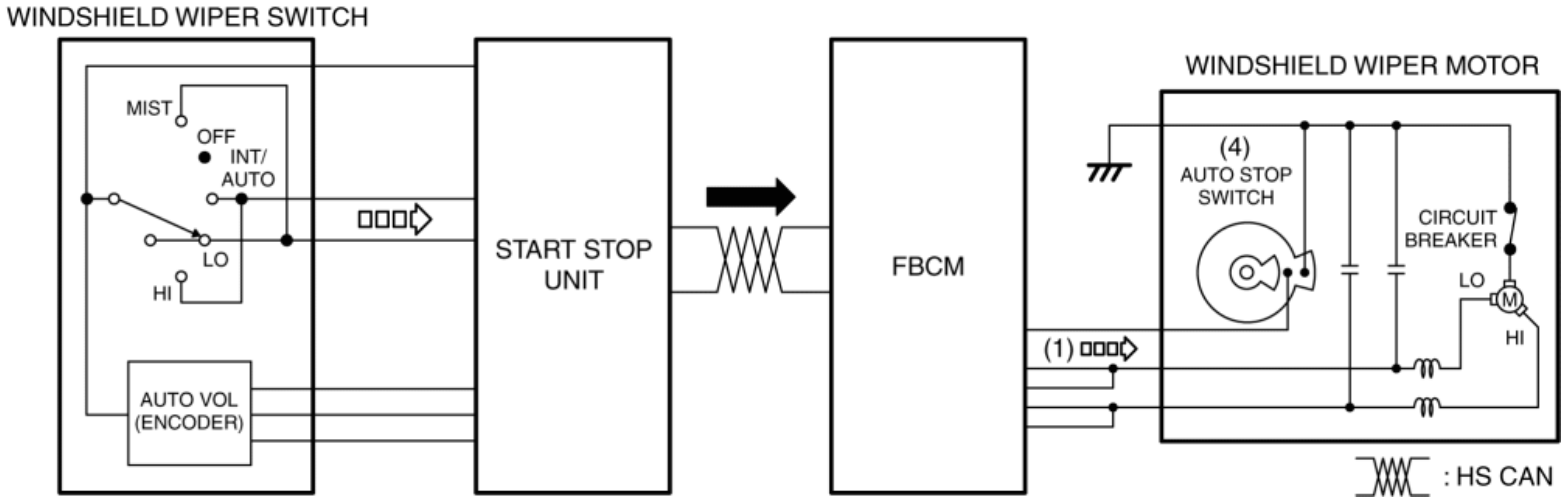

Fail-safe

- Function not equipped.

2014 - Mazda3 - Body and Accessories

WINDSHIELD WASHER NOZZLE

Purpose

- The windshield washer nozzle sprays the washer fluid sent from the washer motor to the optimum positions on the windshield.

Construction

- A ball-shaped spray orifice is set inside the windshield washer nozzle which can be adjusted up, down, left or right.
- The windshield washer nozzle is moved up, down, left and right using the adjustment holes.

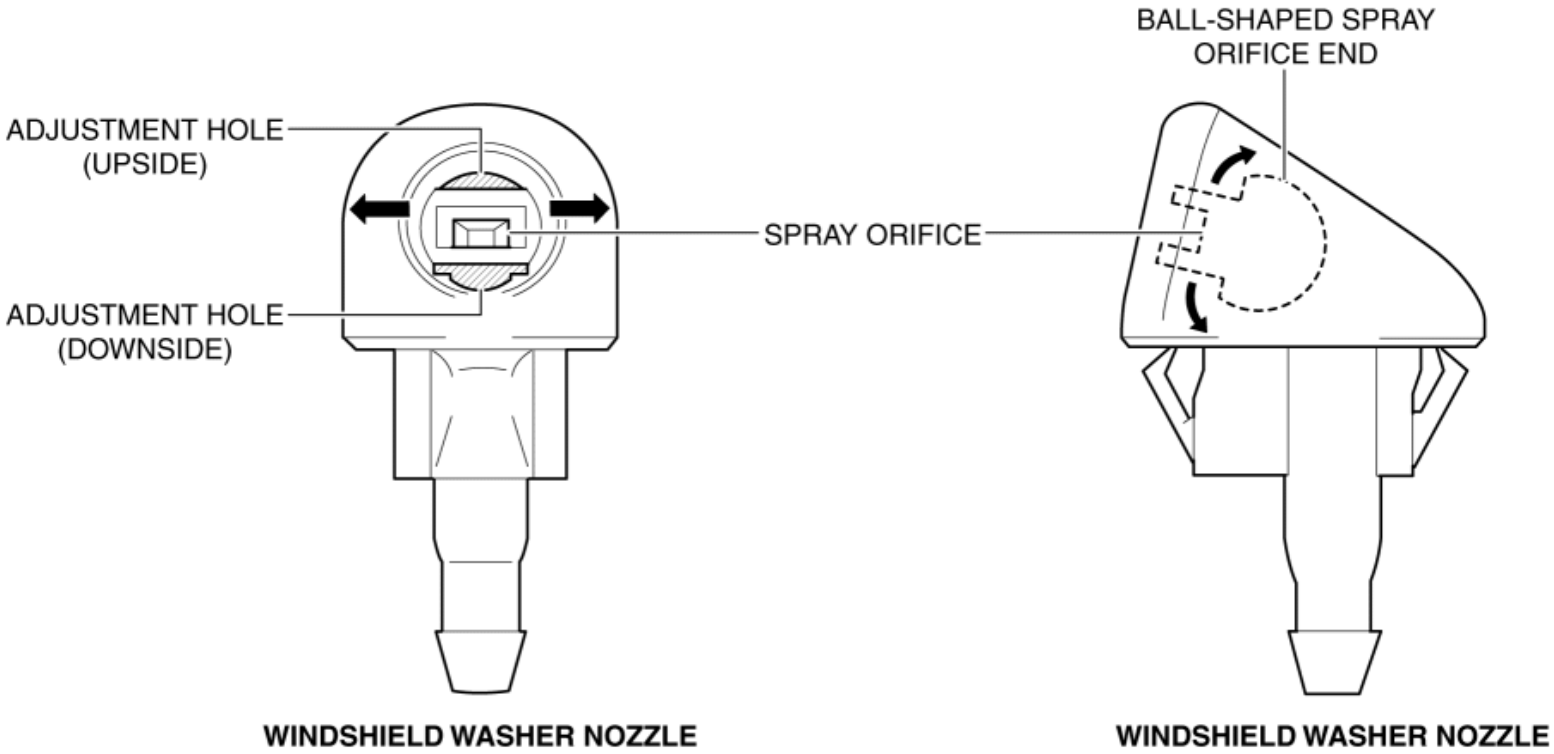

Fail-safe

- Function not equipped.

2014 - Mazda3 - Body and Accessories

REAR WIPER/WASHER SYSTEM

Outline

- Equipped with continuous, auto-stop, intermittent wiper, and synchronized washer and wiper operation.
- The front body control module (FBCM) and rear body control module (RBCM) perform rear wiper and washer system fail-safe. (See **FRONT BODY CONTROL MODULE (FBCM)**.) (See **REAR BODY CONTROL MODULE (RBCM)**.)

Structural View

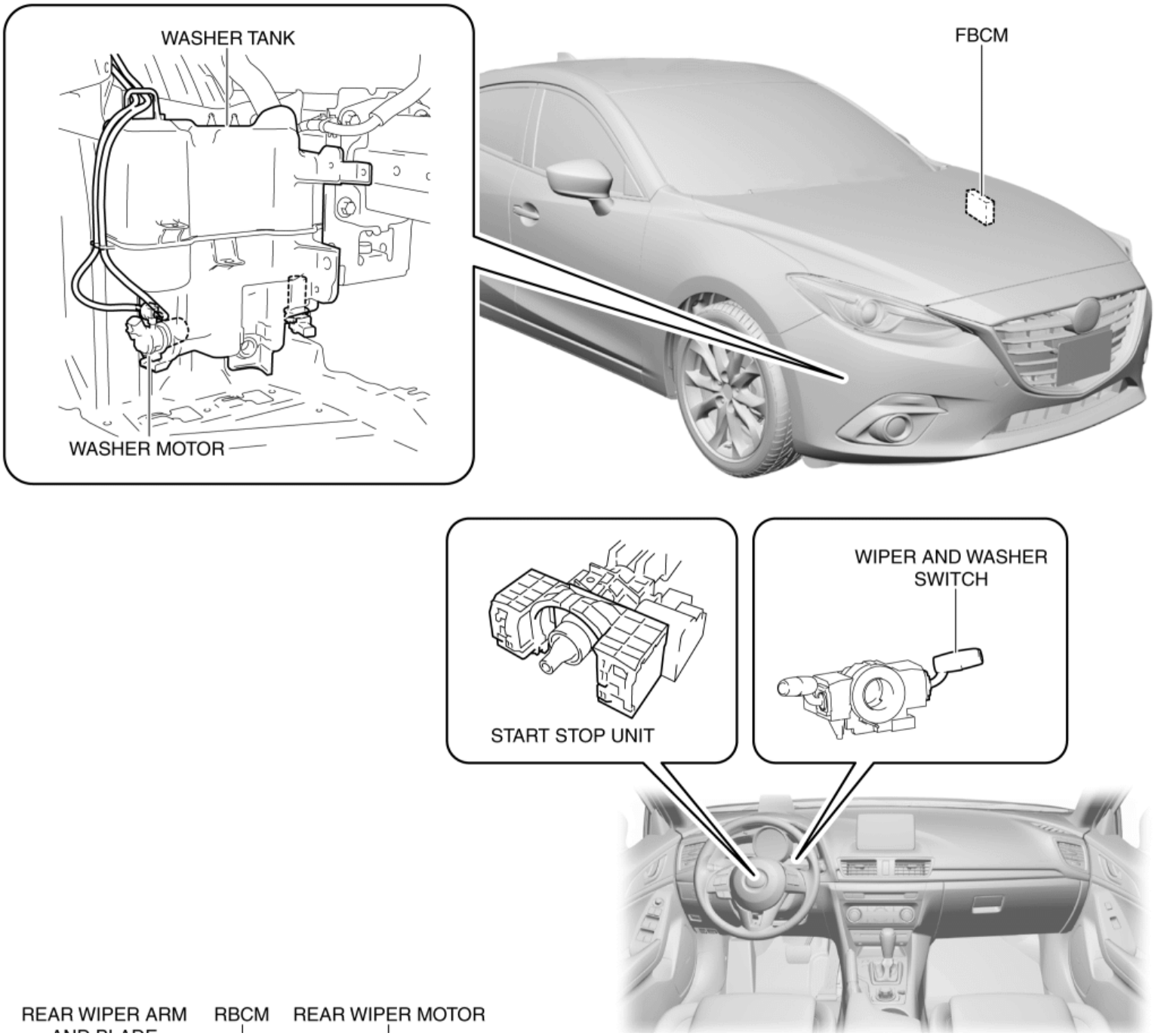

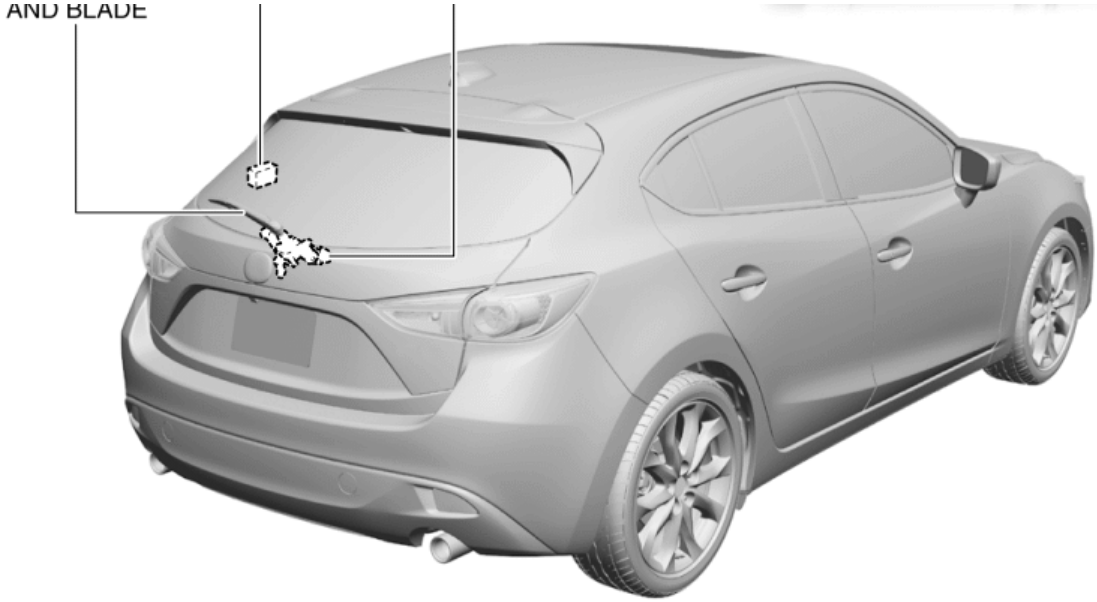

System Wiring Diagram

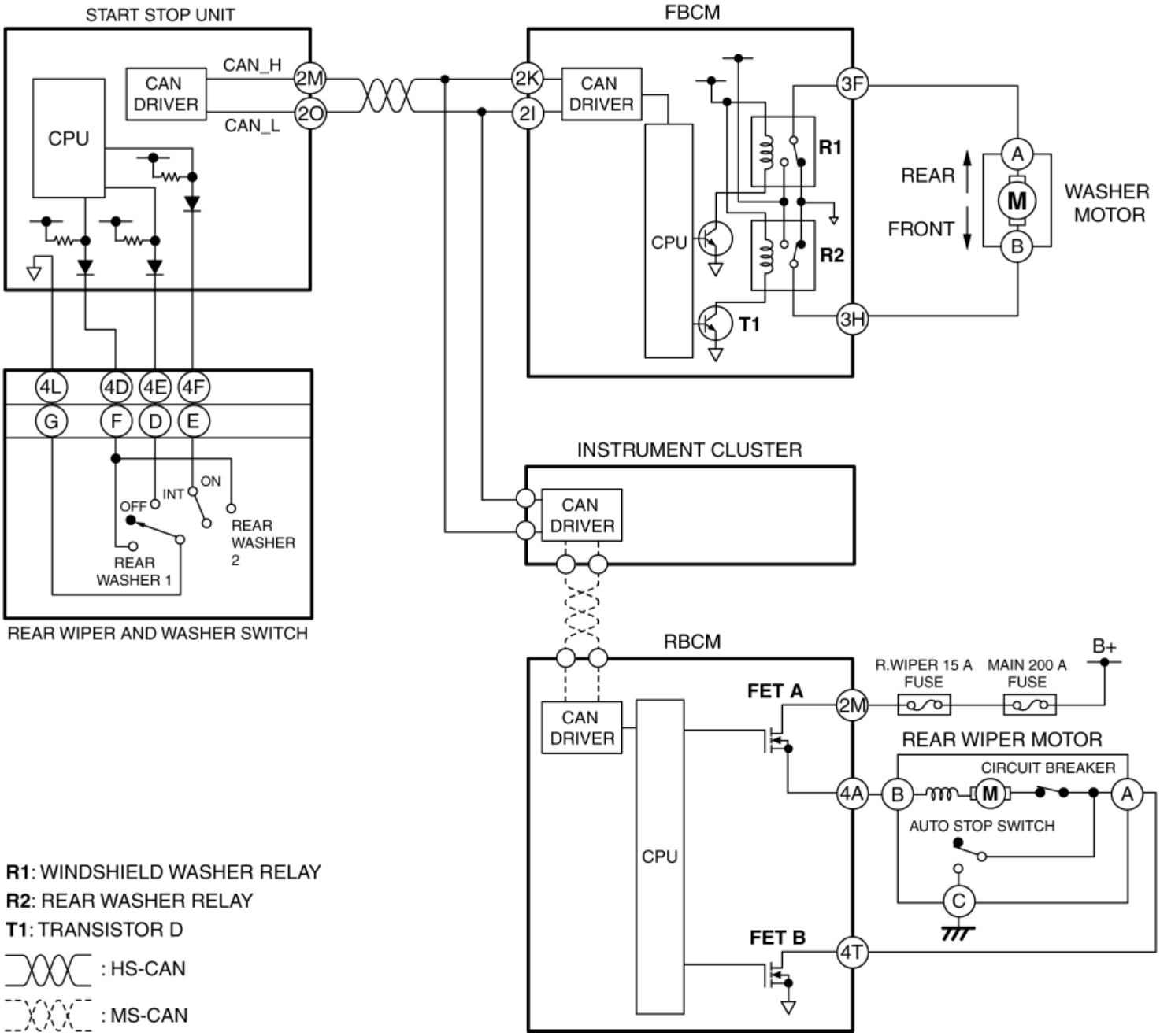

Operation

Continuous operation

1. When with the ignition switched ON (engine off or on), the rear body control module (RBCM) turns FET A on.

2. When the rear wiper and washer switch is turned to the ON position, the start stop unit detects a rear wiper switch ON signal.

3. When the start stop unit detects a rear wiper switch ON signal, it send a rear wiper switch position signal (ON) to the front body control module (FBCM) as a CAN signal.

4. When the front body control module (FBCM) receives the rear wiper switch position signal (ON), it sends a rear wiper operation request signal to the rear body control module (RBCM) via the instrument cluster as a CAN signal.

5. When the rear body control module (RBCM) receives the rear wiper operation request signal, it supplies the gate current from the internal CPU to FET B, and turns FET B on.

6. When FET B is turned on, and current flows from the battery to the rear wiper motor and the rear wiper operates continuously.

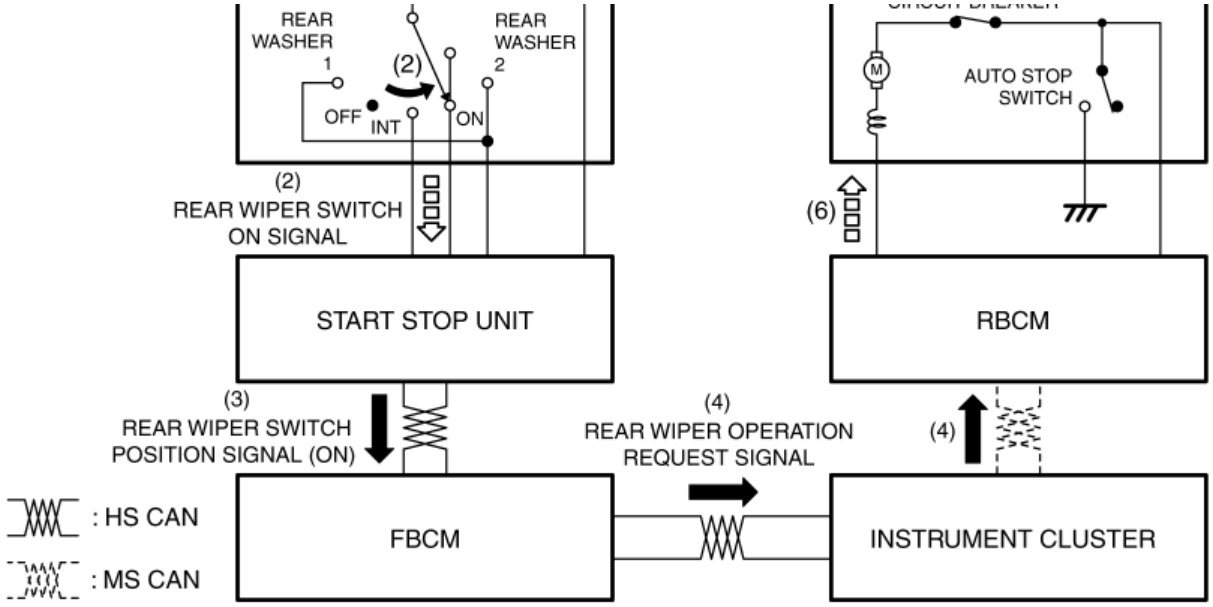

START STOP UNIT

CAN DRIVER

CAN_H

CAN_L

CPU

2M

2O

(3)

FBCM

2K

2I

CAN DRIVER

CPU

(4)

R1

R2

T1

3F

3H

REAR

FRONT

A

M

B

WASHER MOTOR

4L 4D 4E 4F

G F D E

(2)

OFF INT ON

REAR WASHER 1

REAR WASHER 2

REAR WIPER AND WASHER SWITCH

INSTRUMENT CLUSTER

CAN DRIVER

(4)

RBCM

CAN DRIVER

CPU

(1)

FET A

(6)

2M

4A

B+

R.WIPER 15 A FUSE

MAIN 200 A FUSE

REAR WIPER MOTOR

CIRCUIT BREAKER

AUTO STOP SWITCH

C

FET B

4T

(5)

(6)

R1: WINDSHIELD WASHER RELAY

R2: REAR WASHER RELAY

T1: TRANSISTOR D

: HS-CAN

Auto-stop operation

1. The auto-stop switch inside the rear wiper motor operates as follows according to the operation position of the rear wipers.
   - Rear wiper stopped in park position: Off
   - Rear wiper stopped in position other than park: On

2. When the rear wiper and washer switch is in the OFF position during rear wiper operation, the rear wiper operation request signal sent to the rear body control module (RBCM) via the instrument cluster from the front body control module (FBCM) turns off.

3. When the rear wiper operation request signal turns off, the rear body control module (RBCM) turns the FET B off.

4. The rear wiper operates continuously because the auto-stop switch is on.

5. The auto-stop switch in the rear wiper motor turns off if the rear wiper stops at the correct position, and the rear wiper stops based on this.

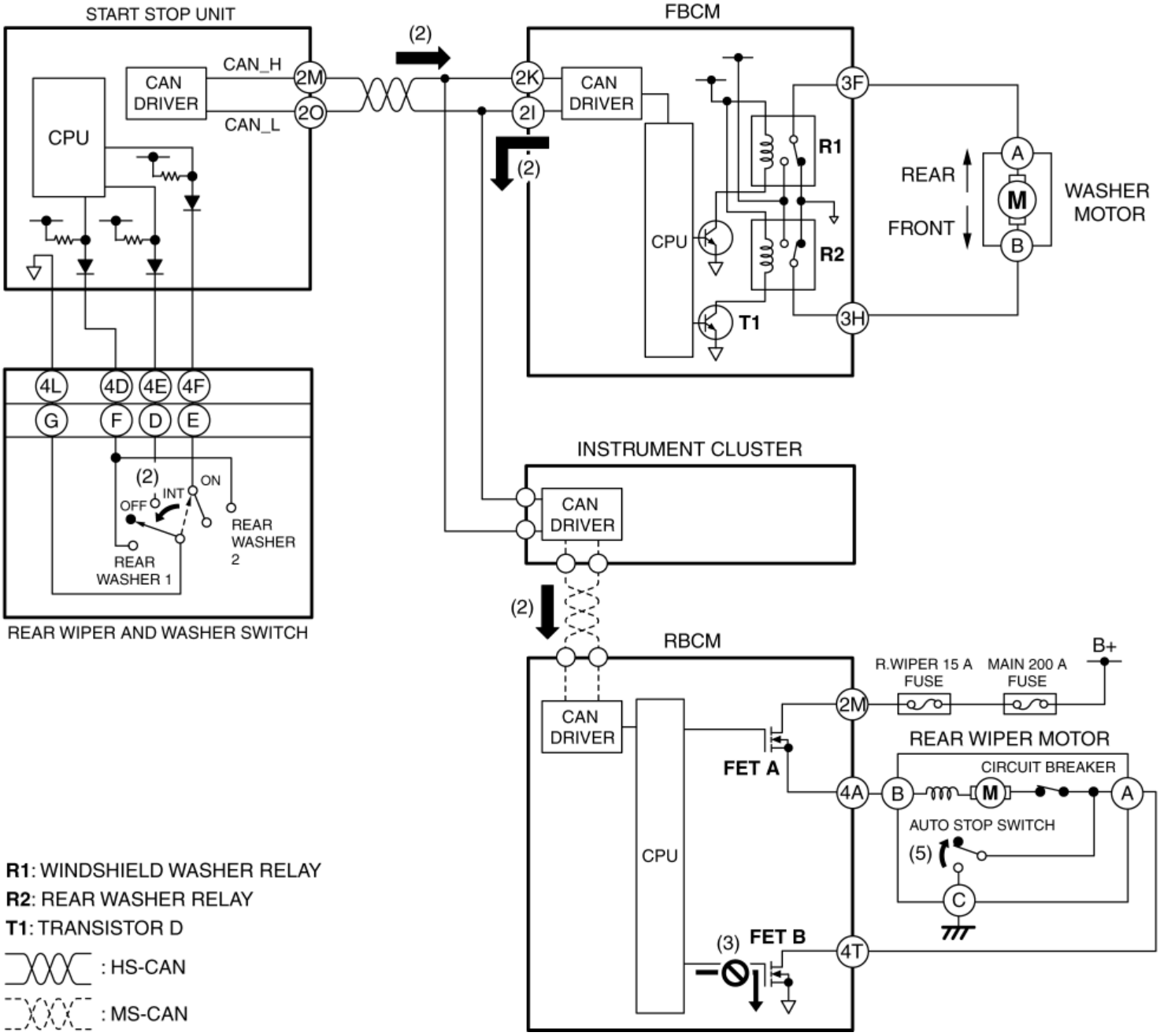

Intermittent wiper operation

1. When the ignition is switched ON (engine on or off), the rear body control module (RBCM) turns FET A on.

2. When the rear wiper and washer switch is moved to the INT position, the start stop unit detects a rear wiper switch signal (INT).

3. When the start stop unit detects a rear wiper switch signal (INT), it send a rear wiper switch position signal (INT) to the front body control module (FBCM) as a CAN signal.

4. When the front body control module (FBCM) receives the rear wiper switch position signal (INT), it sends a rear wiper operation request signal to the rear body control module (RBCM) via the instrument cluster as a CAN signal.

5. When the rear body control module (RBCM) receives the rear wiper operation request signal, it supplies the gate current from the internal CPU to FET B, and turns FET B on.

6. When FET B is turned on, and current flows from the battery to the rear wiper motor and the rear wiper operates continuously.

7. The front body control module (FBCM) sends a rear wiper operation request signal to the rear body control module (RBCM) via the instrument cluster at regular intervals. Due to this, the rear wiper operates intermittently.

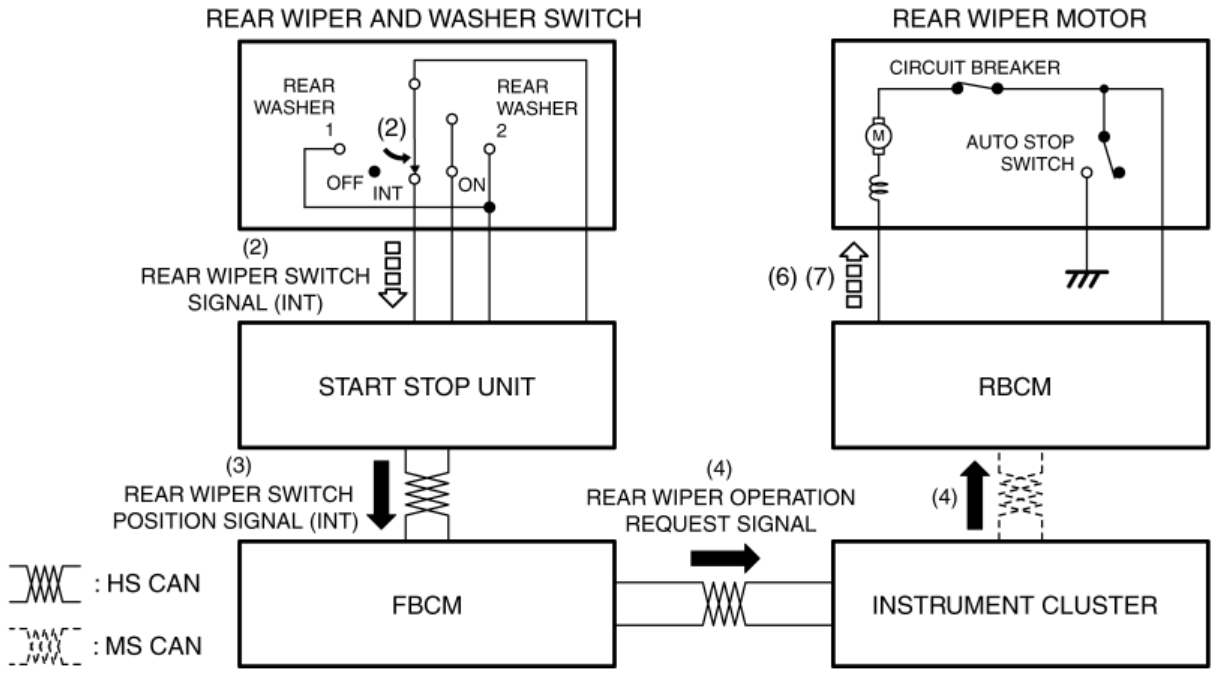

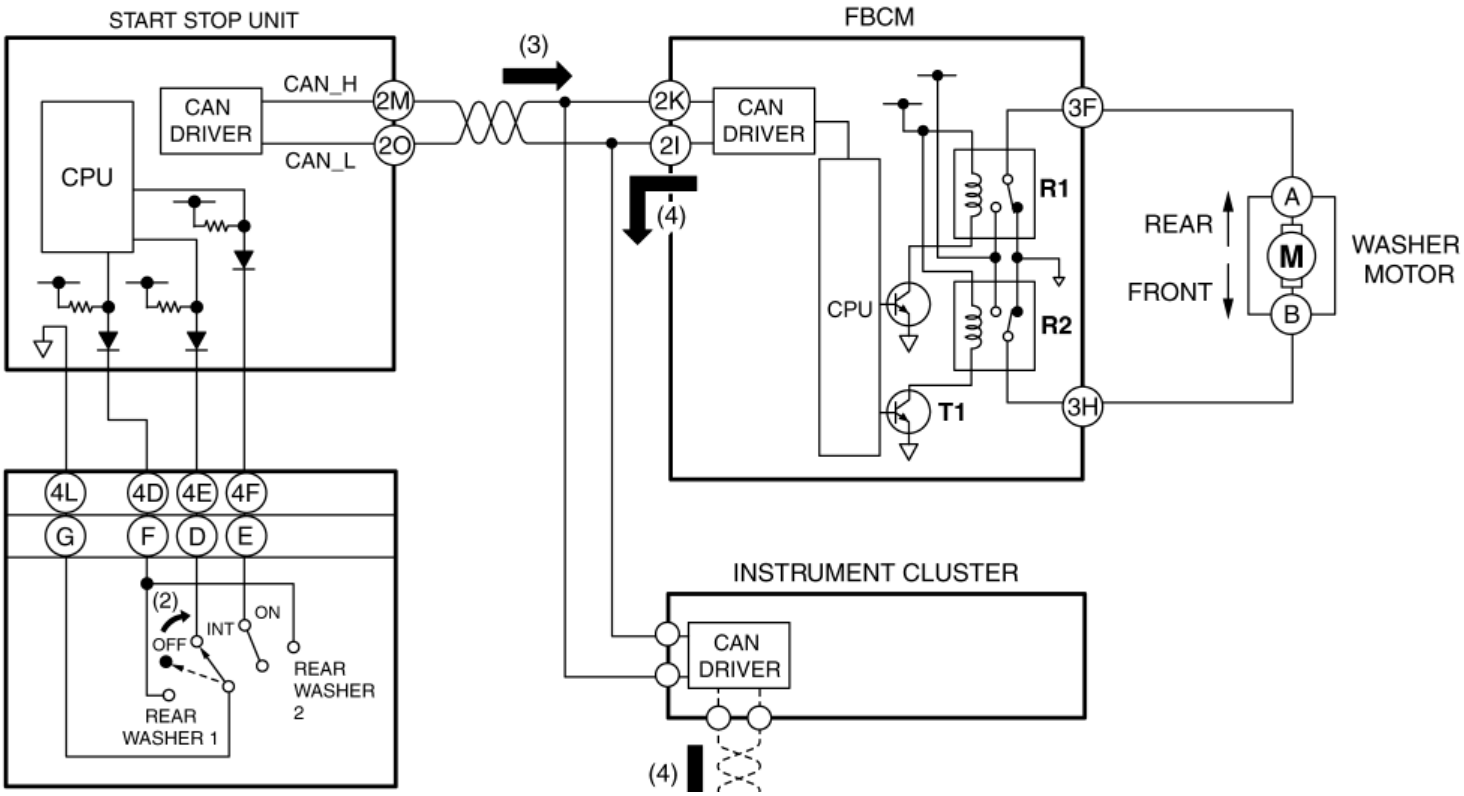

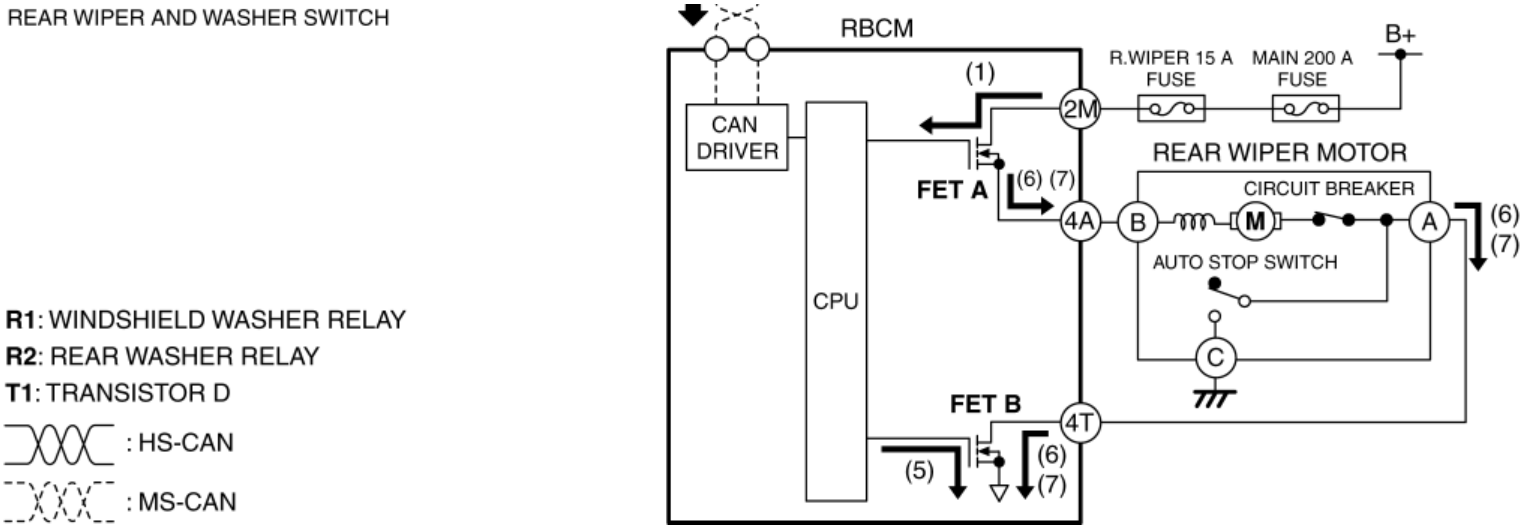

Synchronized washer and wiper operation

1. When the rear wiper and washer switch is turned to the rear washer 2 position with the ignition switched ON (engine off or on), the start stop unit detects a rear washer switch ON signal.

2. When the start stop unit detects a rear washer switch ON signal, it send a rear washer switch position signal (ON) to the front body control module (FBCM) as a CAN signal.

3. When the front body control module (FBCM) receives the rear washer switch position signal (ON), it supplies the base current from the internal CPU to transistor D, and collector current flows from the internal power supply, and turns transistor D on.

4. When the transistor D is turned on, collector current flows from the internal power supply, turning the rear washer relay on.

5. When the rear washer relay is turned on, current flows to the washer motor and the washer motor operates, and washer fluid is sprayed from the rear washer nozzle.

6. When the front body control module (FBCM) receives the rear washer switch position signal (ON) for a certain period of time, it sends a rear wiper operation request signal to the rear body control module (RBCM) via the instrument cluster as a CAN signal.

7. When the rear body control module (RBCM) receives the rear wiper operation request signal, it operates the rear wiper.

8. When the rear washer switch is turned off, the rear wiper stops after it operates for **approx. 2.6 s**.

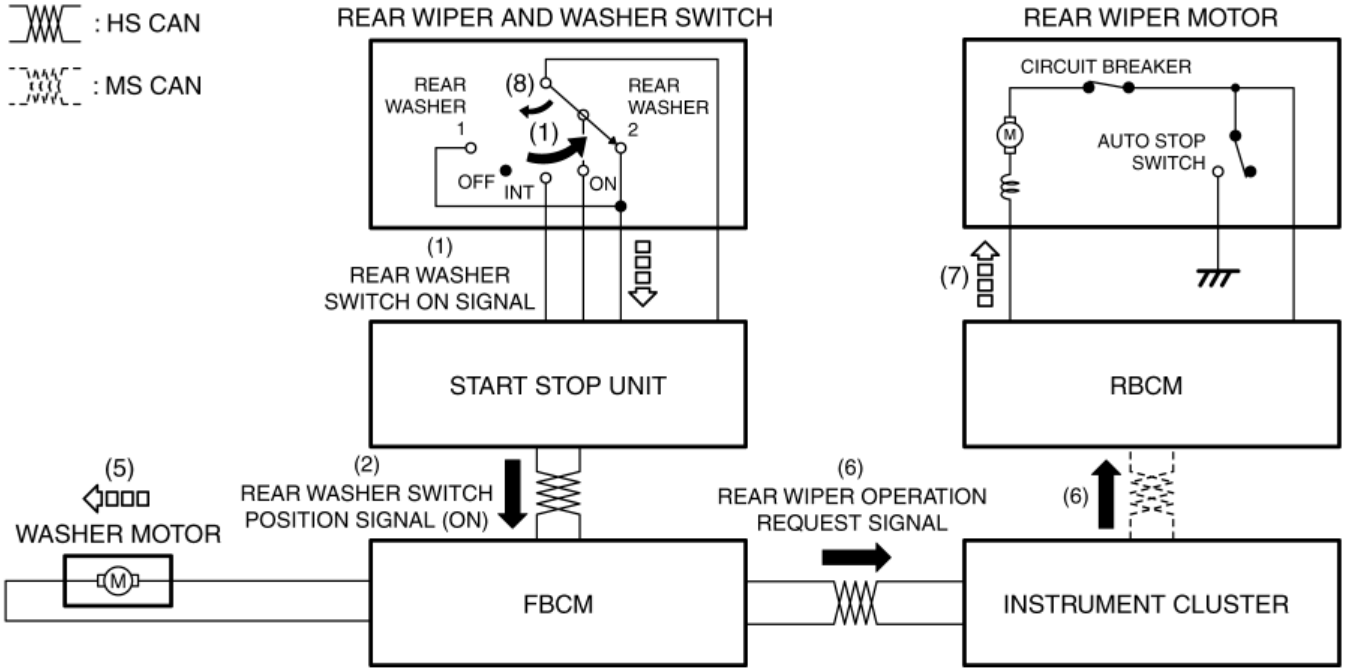

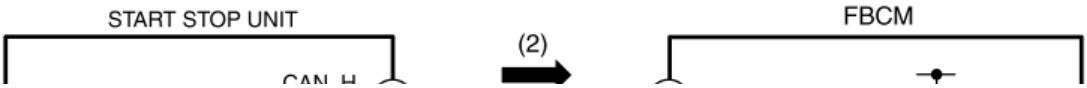

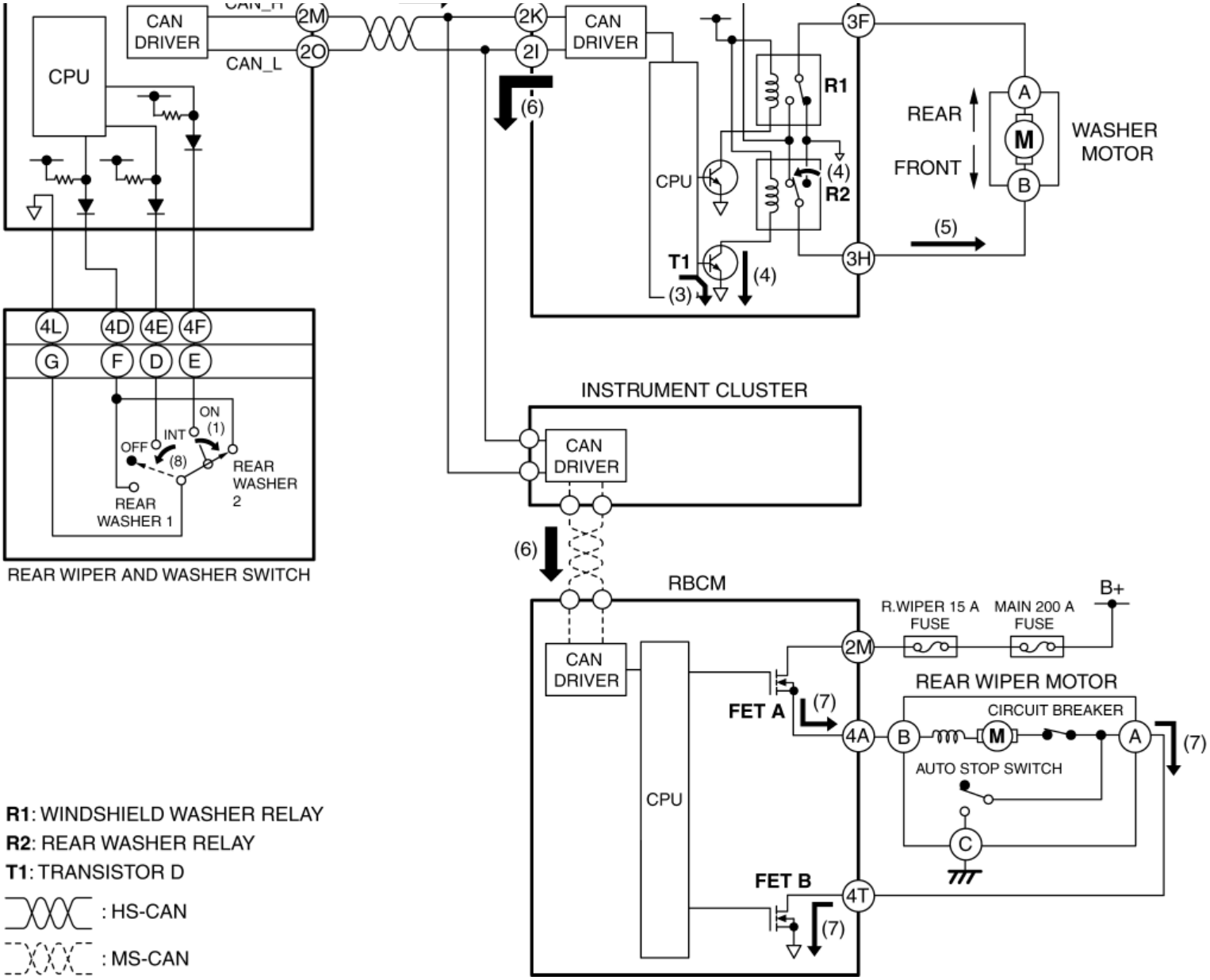
CAN DRIVER
CAN_H
CAN_L
2M
2O
2K
2I
CPU
(6)
R1
R2
(4)
T1
(3)
3F
3H
REAR
FRONT
A
M
B
WASHER MOTOR
(5)
4L
4D
4E
4F
G
F
D
E
ON
(1)
INT
OFF
(8)
REAR WASHER 2
REAR WASHER 1
REAR WIPER AND WASHER SWITCH
INSTRUMENT CLUSTER
RBCM
B+
R.WIPER 15 A FUSE
MAIN 200 A FUSE
REAR WIPER MOTOR
CIRCUIT BREAKER
FET A
(7)
4A
AUTO STOP SWITCH
C
FET B
4T
R1: WINDSHIELD WASHER RELAY
R2: REAR WASHER RELAY
T1: TRANSISTOR D
: HS-CAN
: MS-CAN

2014 - Mazda3 - Body and Accessories

REAR WIPER MOTOR

Purpose

- The rear wiper motor operates the rear wiper arm and blade using the motor rotation.

Function

- The rear wiper motor generates rotation force using the current from the rear body control module (RBCM) which is input according to the rear wiper and washer switch operation.

Construction

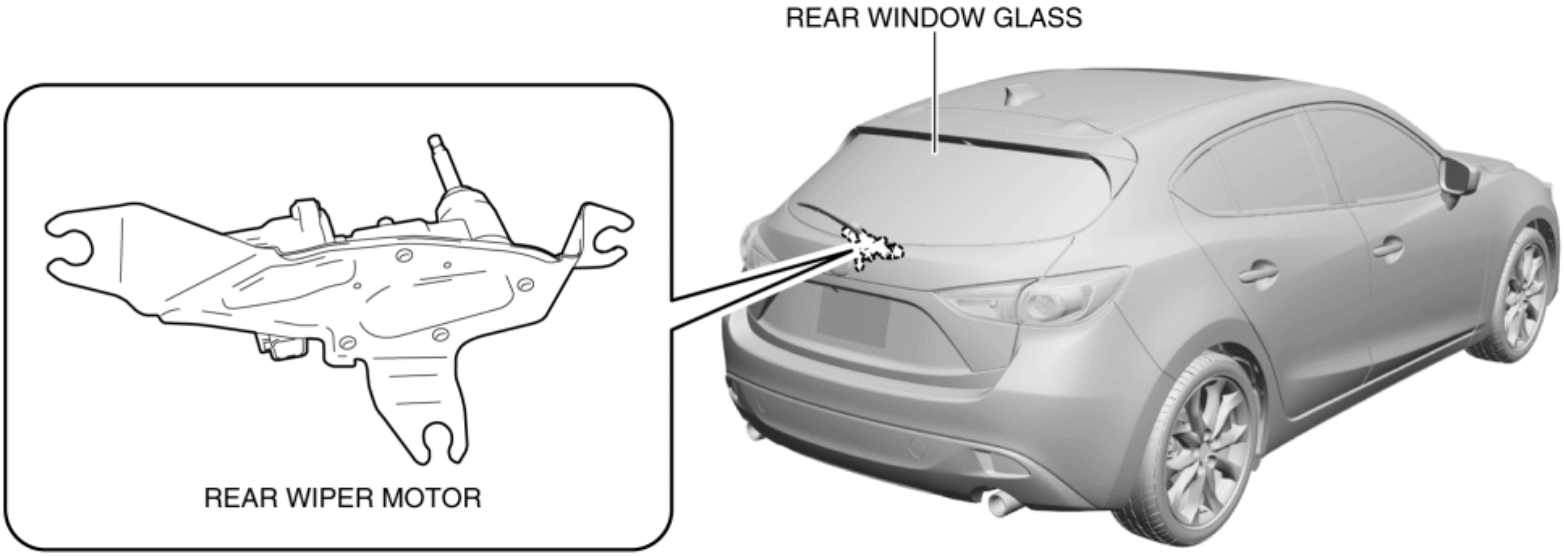

Operation

1. The rear wiper motor rotates the motor based on the current from the rear body control module (RBCM).
2. When the motor rotates, rotation force is transmitted to the rear wiper arm and blade to operate it.
3. When the rear wiper arm and blade is operated to the park position, the auto stop switch turns on and the rear wiper arm and blade stops at the park position.

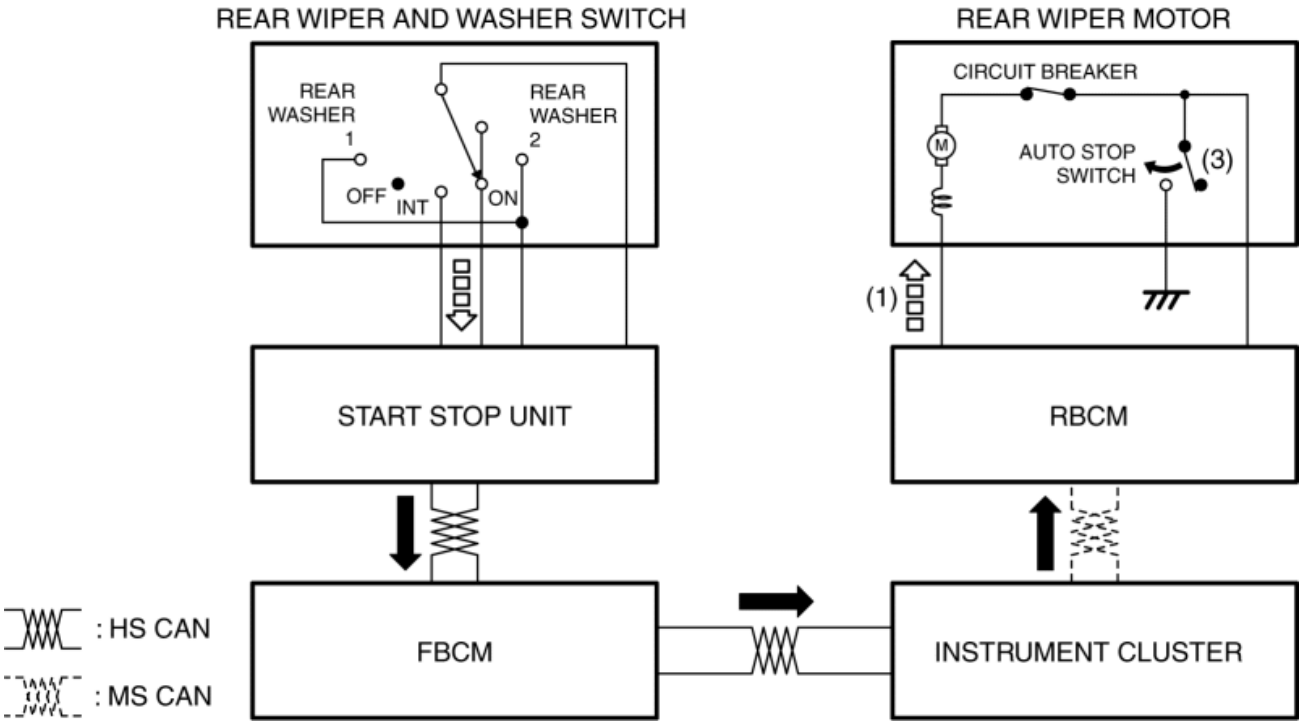

Fail-safe

- Function not equipped.

2014 - Mazda3 - Body and Accessories

REAR WASHER NOZZLE

Purpose

- The rear washer nozzle sprays the washer fluid sent from the washer motor to the optimum positions on the rear window glass.

Construction

- The rear washer nozzle which can be adjusted up, down, left or right.
- The rear washer nozzle is moved up, down, left and right using the injection nozzles.

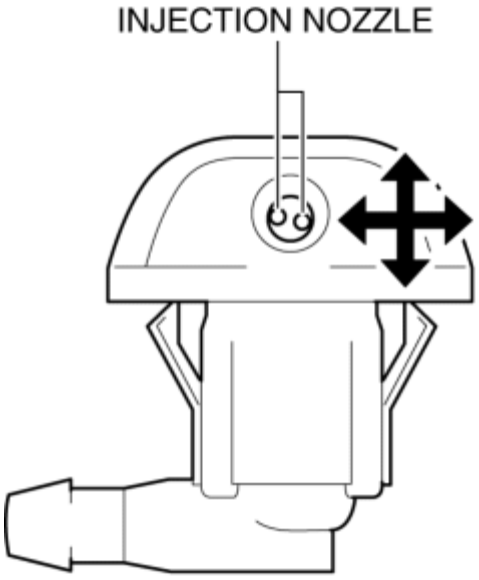

REAR WASHER NOZZLE

Fail-safe

- Function not equipped.

2014 - Mazda3 - Body and Accessories

WASHER MOTOR

Purpose, Function

- Supplies washer fluid in the washer tank to the washer nozzles.

Construction

- The washer motor is installed to the washer tank.

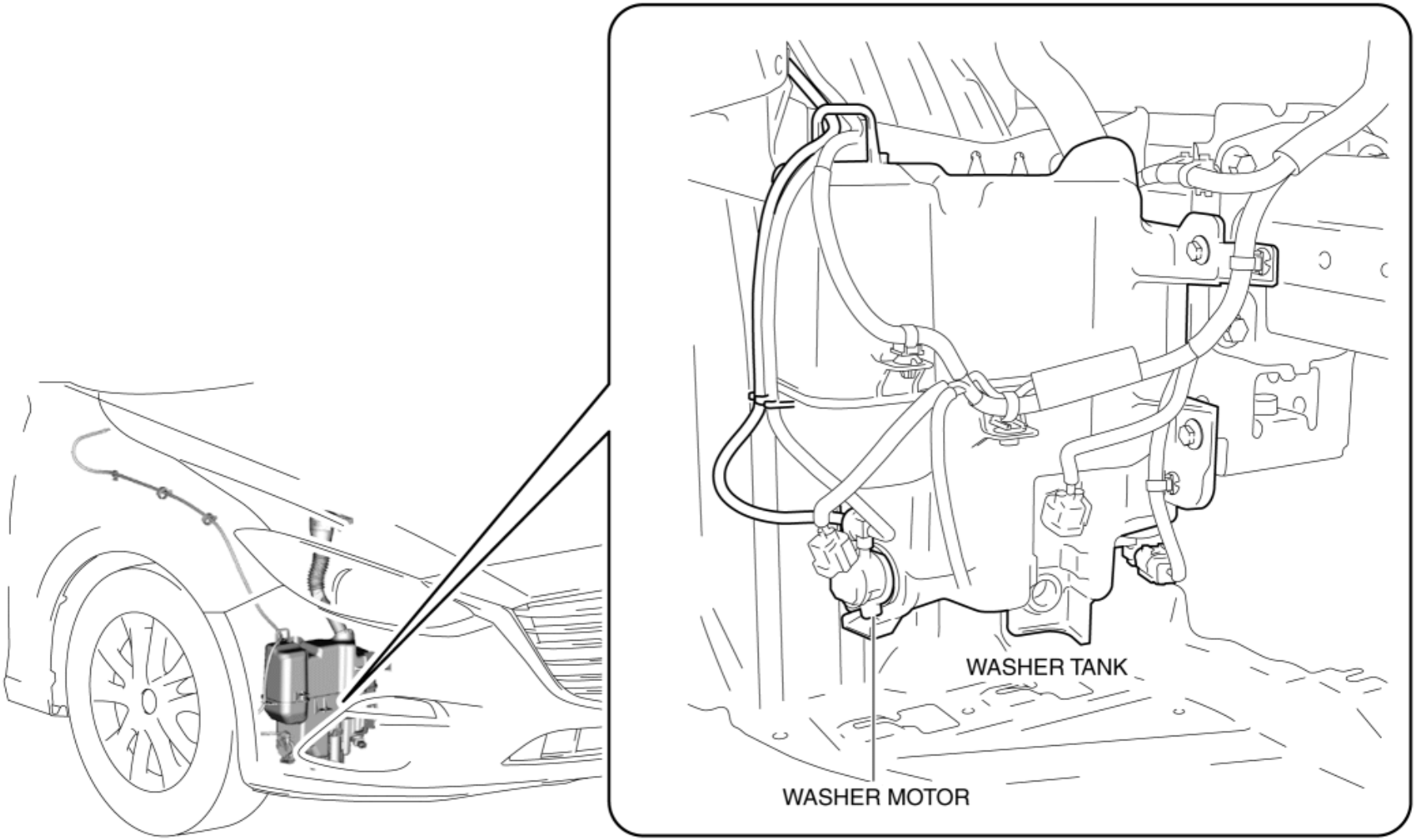

Operation

Windshield washer

1. When the windshield washer switch is on, the windshield washer relay turns on and current flows to the washer motor.

2. When current flows from the windshield washer relay to the washer motor, the washer motor operates to supply washer fluid to the windshield washer nozzles.

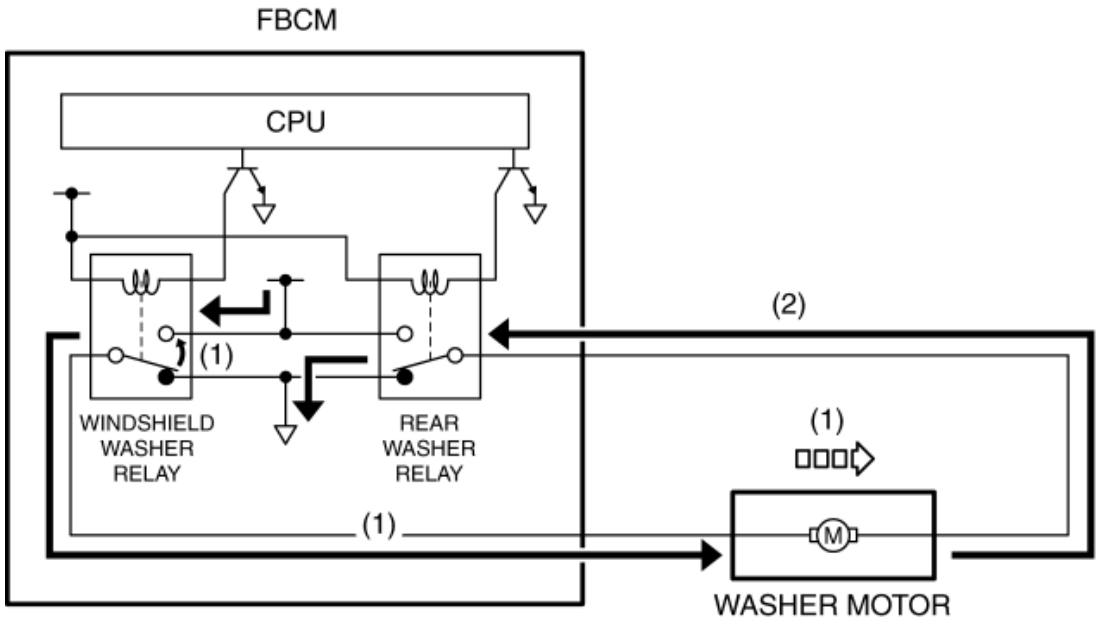

Rear washer (5HB)

1. When the rear washer switch is on, the rear washer relay turns on and current flows to the washer motor.

2. When current flows from the rear washer relay to the washer motor, the washer motor operates to supply washer fluid to the rear washer nozzle.

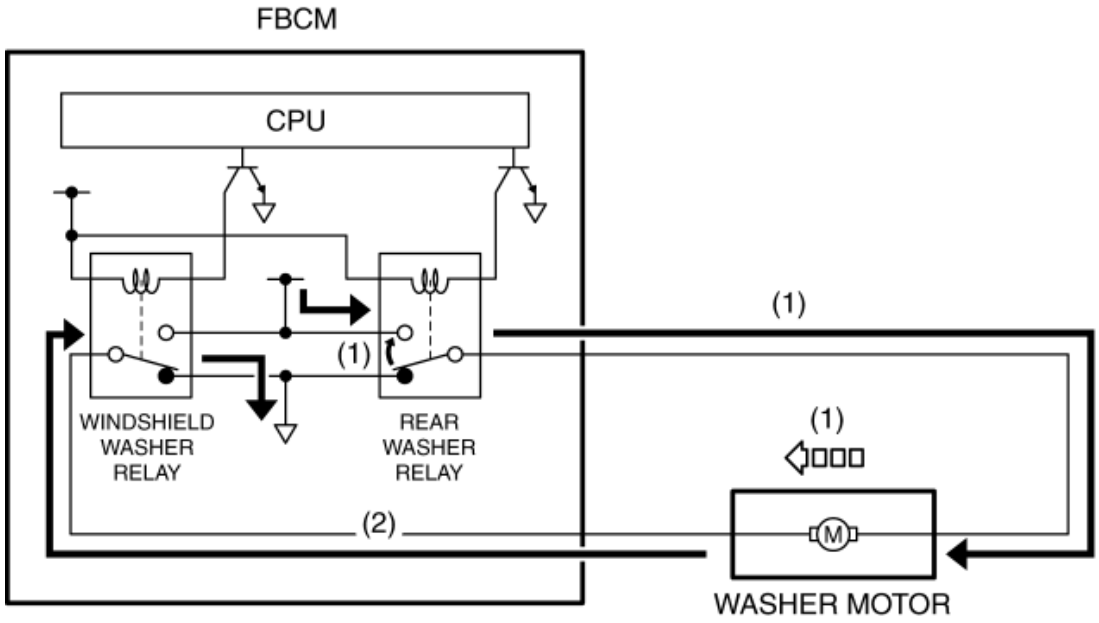

Fail-safe

- Function not equipped.

2014 - Mazda3 - Body and Accessories

AUTO WIPER SYSTEM

Outline

- The auto wiper system performs windshield wiper operation and stopping according to the rainfall amount on the windshield glass.
- Equipped with intermittent, and continuous low and high operation.
- The front body control module (FBCM) performs auto wiper system fail-safe. (See **FRONT BODY CONTROL MODULE (FBCM)**.)

Function

- The front body control module (FBCM) control the windshield wipers based on the windshield wiper operation signal from the rain sensor.
  - Intermittent operation control
    - When the rain sensor detects an amount of rainfall, the windshield wipers are operated once at low speed.
    - The intermittent operation of the windshield wipers is switched at 5 levels according to the amount of rainfall detected by the rain sensor.
  - Continuous low speed operation control
    - When the rain sensor detects an amount of rainfall greater than the amount required for intermittent operation control, the windshield wipers are operated continuously at low speed.
  - High speed operation control
    - When the vehicle speed is **4 km/h {2 mph} or more** and the rain sensor detects an amount of rainfall greater than the amount required for continuous low speed operation control, the windshield wipers are operated twice at high speed.
    - Afterwards, if the rain sensor detects the necessary amount of rainfall for high speed operation, the windshield wipers are operated continuously at high speed.
    - When the vehicle speed is **4 km/h {2 mph} or less** and the rain sensor detects an amount of rainfall greater than the amount required for continuous low speed operation, the windshield wipers are operated continuously at low speed.
  - Sensitivity adjustment function
    - The sensitivity adjustment function can adjust the rain sensor rain detection sensitivity by operation of the wiper and washer switch sensitivity adjustment volume.
    - When the windshield wipers are stopped during an interval and the sensitivity adjustment volume is operated in the direction of high sensitivity, the windshield wipers operate one time to notify the driver that the rain detection sensitivity has been changed.

Customize function

- The auto wiper system customize function uses the rear body control module (RBCM) control to enable or disable the auto wiper functions.
- If the auto wiper system is set to disabled, intermittent operation is performed.
- Refer to **WIPER/WASHER SYSTEM PERSONALIZATION** for the detailed customize function.

On-board diagnostic function

- If a malfunction occurs in the auto wiper control-related switch, sensor, and circuit, the front body control module (FBCM) detects DTCs.

- For details on DTCs, refer to the ON-BOARD DIAGNOSTIC [FRONT BODY CONTROL MODULE (FBCM)], DTC table in the Workshop Manual.

Structural View

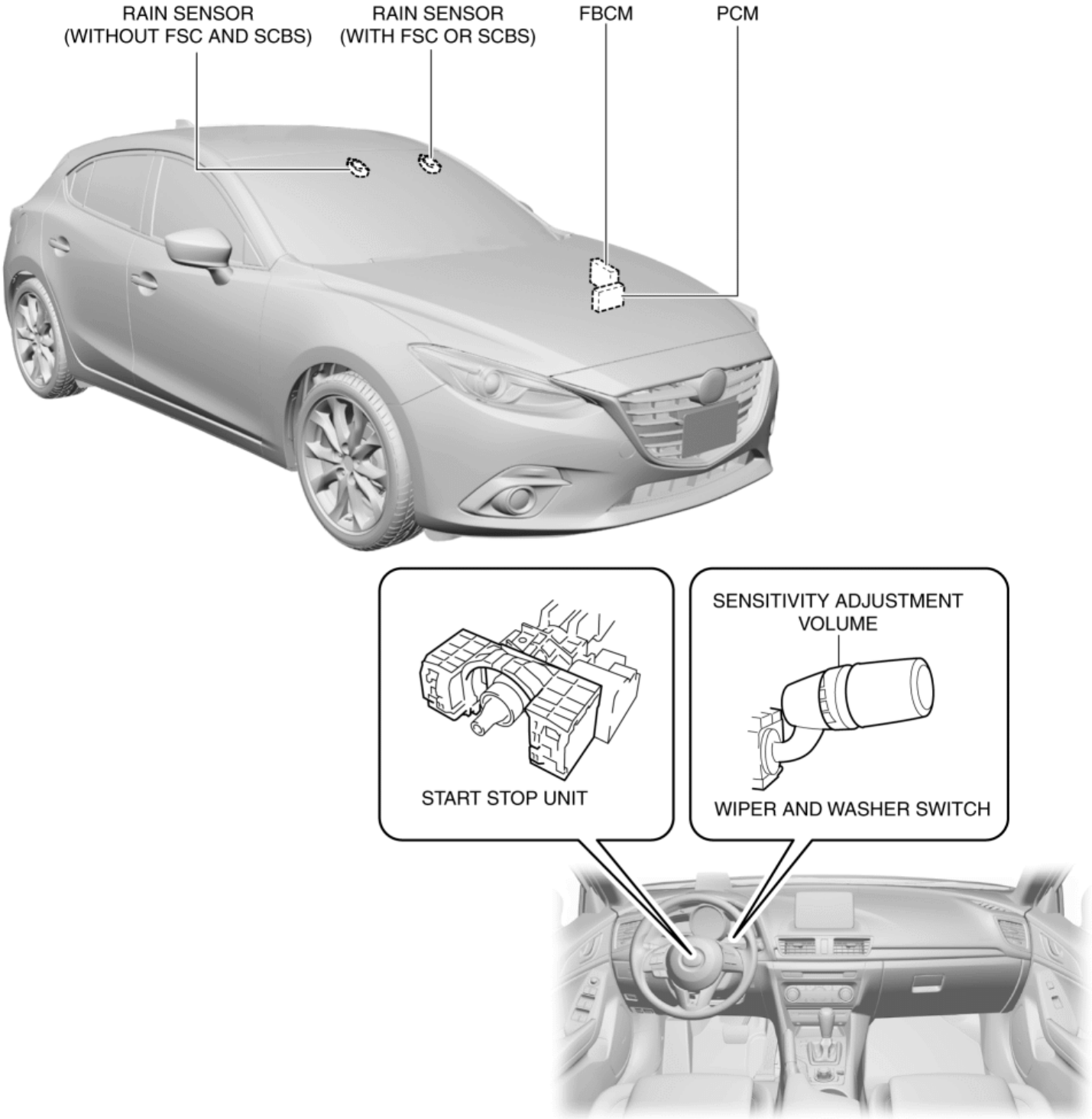

System Wiring Diagram

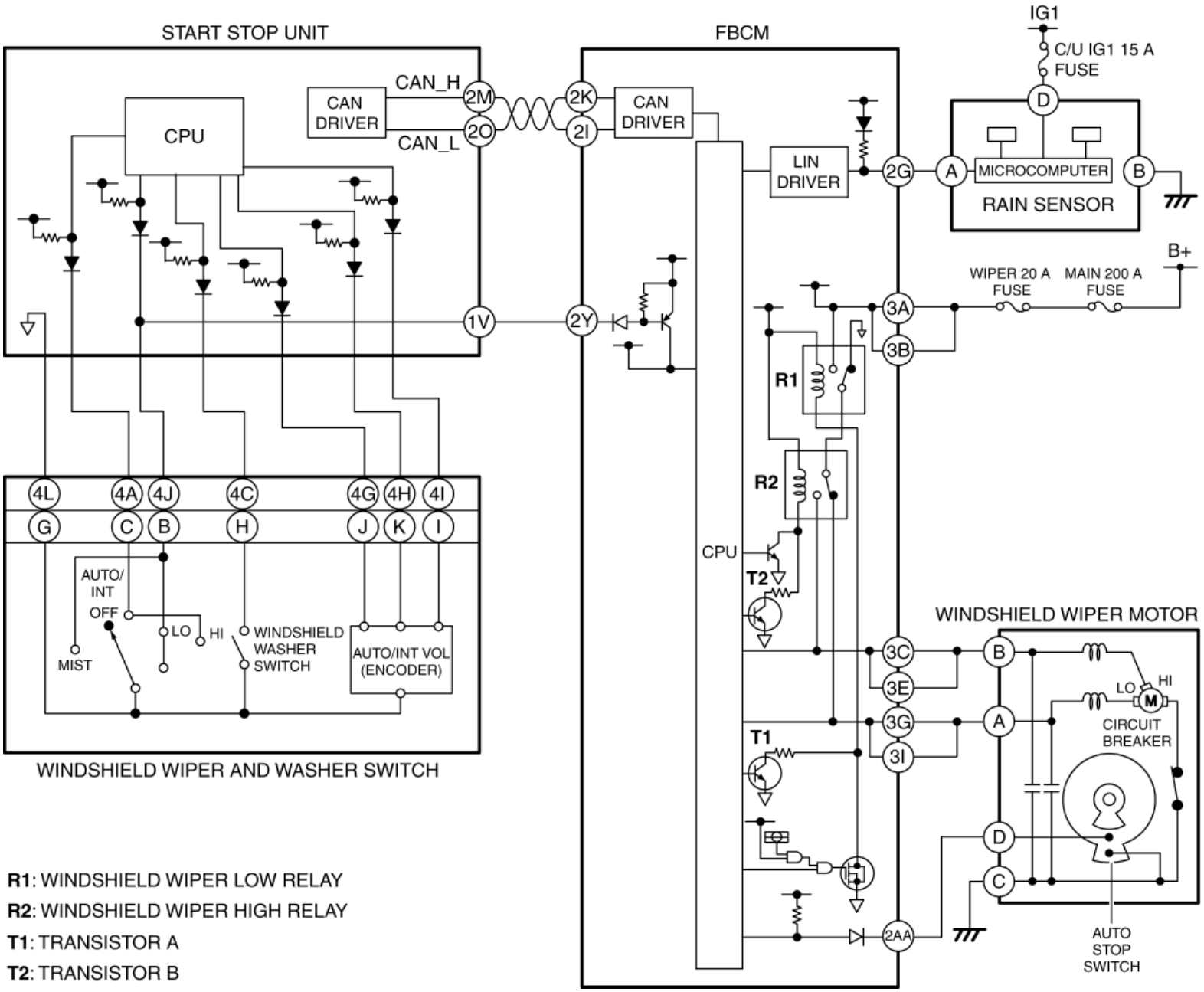

Operation

WARNING:

- If servicing such as vehicle washing is performed with the ignition switched ON (engine off or on) and the wiper and washer switch in the AUTO position, the windshield wipers may operate automatically and your finger or hand is pinched, leading to an injury or wiper system malfunction. Always switch the ignition off or turn the wiper and washer switch to the OFF position before servicing.

Intermittent operation/continuous low speed operation

1. When the windshield wiper switch is moved to the AUTO position with the ignition switched ON (engine off or on), the start stop unit detects a windshield wiper switch signal (AUTO).

2. When the start stop unit detects a windshield wiper switch signal (AUTO), it sends a windshield wiper switch position signal (AUTO) and an AUTO volume signal to the front body control module (FBCM) as CAN signals.

3. When the front body control module (FBCM) receives the windshield wiper switch position signal (AUTO), it sends the windshield wiper switch position signal (AUTO) and the AUTO volume signal to the rain sensor as LIN signals. At the same time, it sends a vehicle speed signal from the PCM to the rain sensor as a LIN signal.

4. When the rain sensor receives the windshield wiper switch position signal (AUTO), it detects amount of rainfall and illumination

level.

5. The rain sensor determines the operation interval of the windshield wipers based on the detected rainfall amount, illumination level and the signal from the front body control module (FBCM), and sends a windshield wiper low speed operation signal to the front body control module (FBCM).

6. When the front body control module (FBCM) receives the windshield wiper low speed operation signal, it supplies the base current from the internal CPU to transistor A, and collector current flows from the internal power supply, and turns transistor A on.

7. When the transistor A is turned on, collector current flows from the internal power supply, turning the windshield wiper low relay on.

8. When the windshield wiper low relay is turned on, current flows from the battery to the windshield wiper motor and the windshield wipers operate intermittently or continuously at low speed.

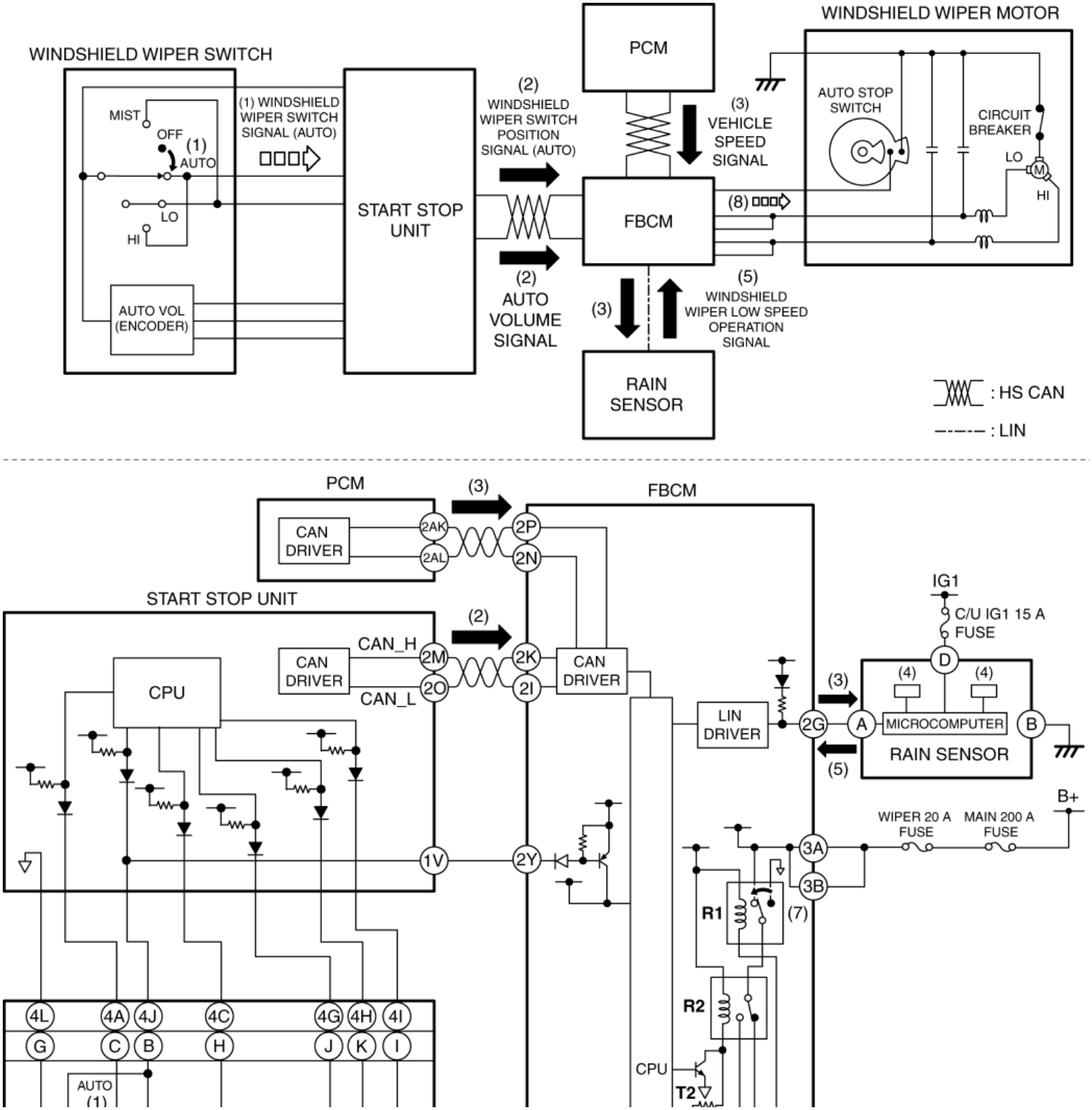

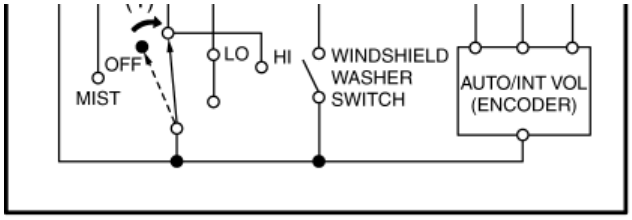

WINDSHIELD WIPER AND WASHER SWITCH

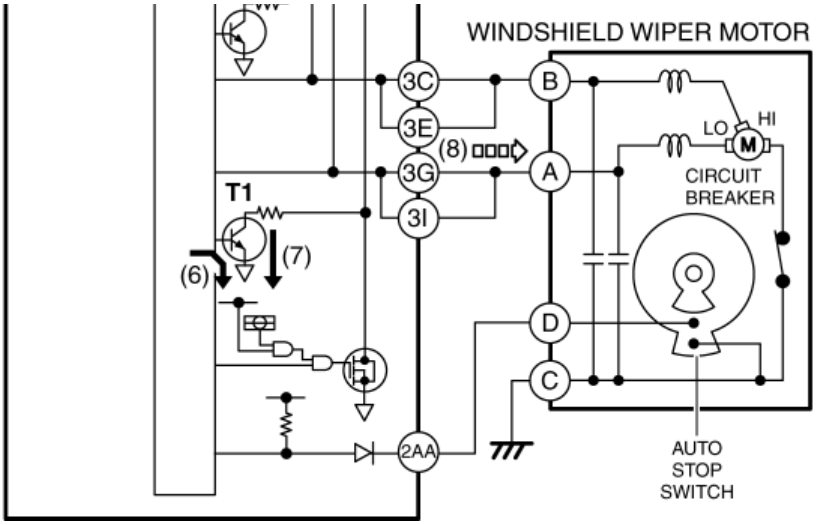

R1: WINDSHIELD WIPER LOW RELAY

R2: WINDSHIELD WIPER HIGH RELAY

T1: TRANSISTOR A

T2: TRANSISTOR B

High speed operation

1. When the windshield wiper switch is moved to the AUTO position with the ignition switched ON (engine off or on), the start stop unit detects a windshield wiper switch signal (AUTO).

2. When the start stop unit detects a windshield wiper switch signal (AUTO), it sends a windshield wiper switch position signal (AUTO) and an AUTO volume signal to the front body control module (FBCM) as CAN signals.

3. When the front body control module (FBCM) receives the windshield wiper switch position signal (AUTO), it sends the windshield wiper switch position signal (AUTO) and the AUTO volume signal to the rain sensor as LIN signals. At the same time, it sends a vehicle speed signal from the PCM to the rain sensor as a LIN signal.

4. When the rain sensor receives the windshield wiper switch position signal (AUTO), it detects amount of rainfall and illumination level.

5. Based on the detected rainfall amount, illumination level and the signal from the front body control module (FBCM), the rain sensor sends a windshield wiper high speed operation signal to the front body control module (FBCM).

6. When the front body control module (FBCM) receives the windshield wiper high speed operation signal, it supplies the base current from the internal CPU to transistors A and B, and collector current flows from the internal power supply, and turns transistor A and B on.

7. When the transistor A and B are turned on, collector current flows from the internal power supply, turning the windshield wiper low relay and windshield wiper high relay on.

8. When the windshield wiper low relay and windshield wiper high relay are turned on, current flows from the battery to the windshield wiper motor and the windshield wipers operate at high speed.

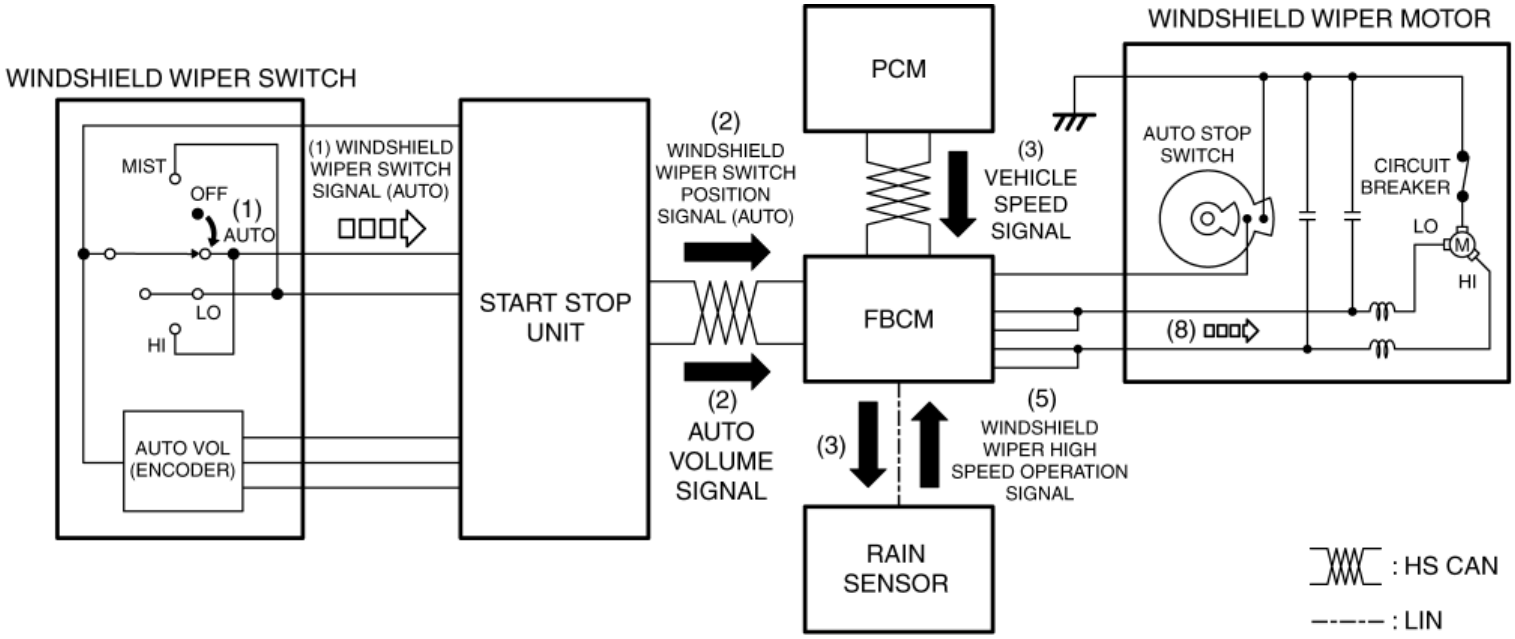

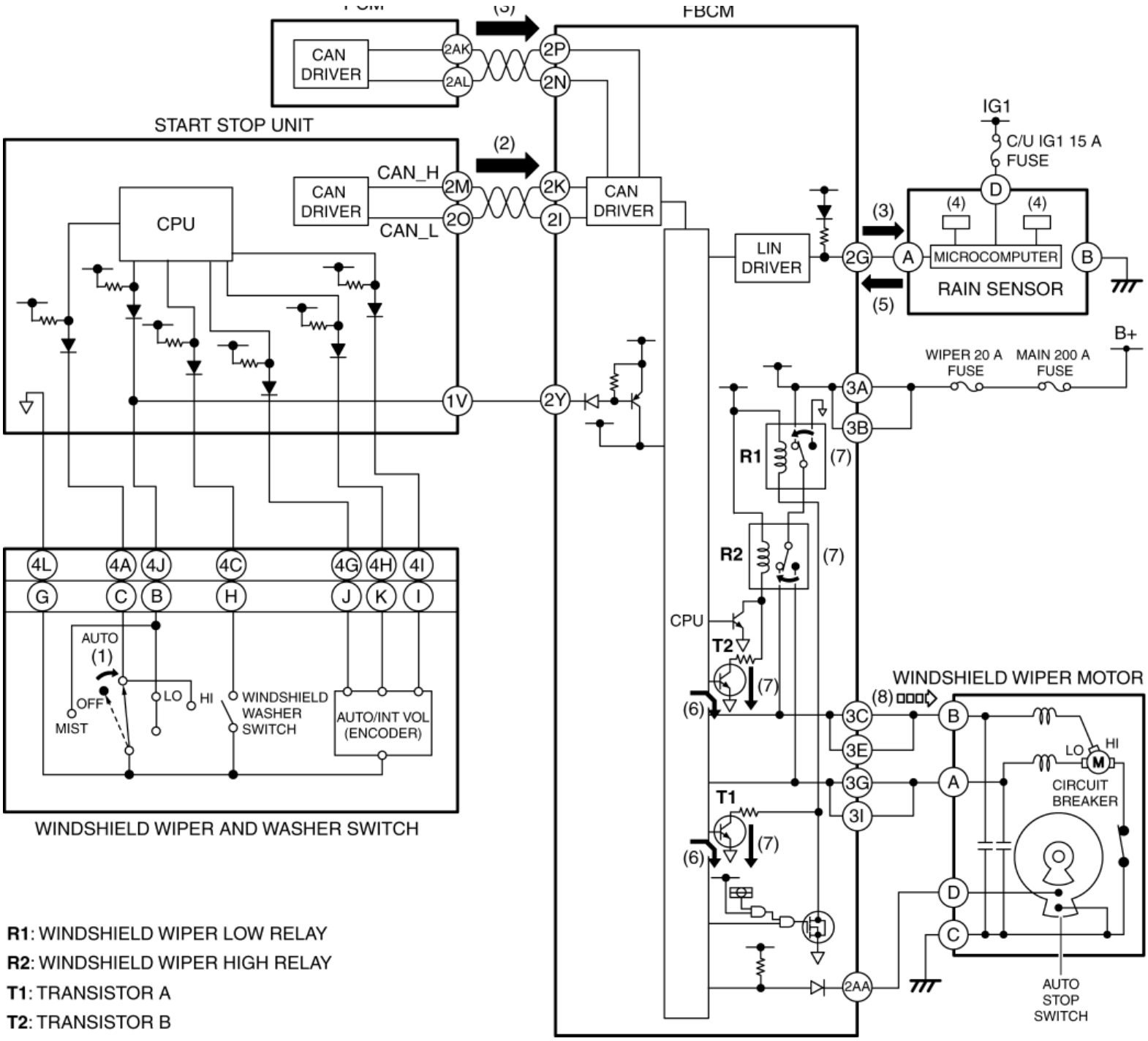

R1: WINDSHIELD WIPER LOW RELAY

R2: WINDSHIELD WIPER HIGH RELAY

T1: TRANSISTOR A

T2: TRANSISTOR B

2014 - Mazda3 - Body and Accessories

RAIN SENSOR

Outline

- The rain sensor detects the amount of rainfall on the windshield and calculates the windshield wiper operation speed based on the detected amount of rainfall.
- The rain sensor outputs the calculated windshield wiper operation signal to the front body control module (FBCM).
- The front body control module (FBCM) performs rain sensor fail-safe. (See **FRONT BODY CONTROL MODULE (FBCM)**.)

Function

Rainfall amount detection function

CAUTION:

- If the windshield is under any of the following conditions, the rain sensor cannot detect the amount of rainfall correctly and the windshield wipers operate incorrectly.
    - Stickers or labels are adhered to the rain sensor detection area in the upper part of the windshield.
    - The rain sensor detection area in the upper part of the windshield is dirty.
- The rain sensor detects the amount of rainfall by the rate of reflected infrared light emitted from the built-in LED.
- The windshield wiper operation signal is calculated based on the detected amount of rainfall.

Initial setting function

- When the ignition is switched ON (engine off or on), the rain sensor detects and records the transparency of the windshield surface, which varies depending on wear and accumulation of dust.
- As a result, the rain sensor determines the optimal speed (LO/HI) for the windshield wipers and sends the windshield wiper operation signal to the front body control module (FBCM).
- The initial setting is performed every time the ignition is switched ON (engine off or on).

Sensitivity adjustment function

- While the auto wiper is operating, sensitivity of the rain sensor can be optionally adjusted by operating the sensitivity adjustment volume on the wiper and washer switch which changes the volume signal input to the front body control module (FBCM).
- Sensitivity of the rain sensor can be adjusted between 1 (low sensitivity) and 5 (high sensitivity) by operating the sensitivity adjustment volume according to the conditions such as rain intensity.
- While the auto wiper is operating, the sensitivity of the rain sensor is adjusted automatically according to the vehicle speed signal sent from the PCM via the front body control module (FBCM).
- While the auto wiper is operating, the rain sensor (auto light sensor) detects the illumination level above and in front of the vehicle.
- When the rain sensor detects an illumination level higher than a level required for turning on the TNS, the sensitivity of the rain sensor increases.

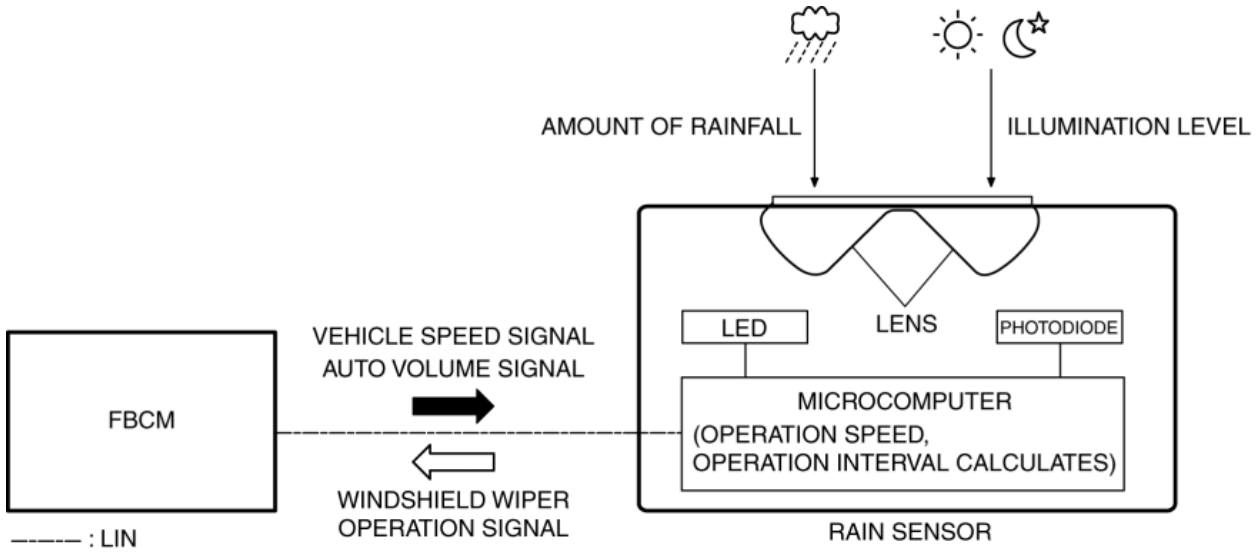

On-board diagnostic function

- The rain sensor performs on-board diagnostics when the ignition is switched ON (engine off or on).
- If a malfunction is detected in the rain sensor, an error signal is sent to the front body control module (FBCM).
- The front body control module (FBCM) outputs DTCs based on error signals from the rain sensor.
- For details on DTCs, refer to the ON-BOARD DIAGNOSTIC [FRONT BODY CONTROL MODULE (FBCM)], DTC table in the Workshop Manual.

Construction

- The rain sensor is installed to the bracket in the upper center part of the windshield.

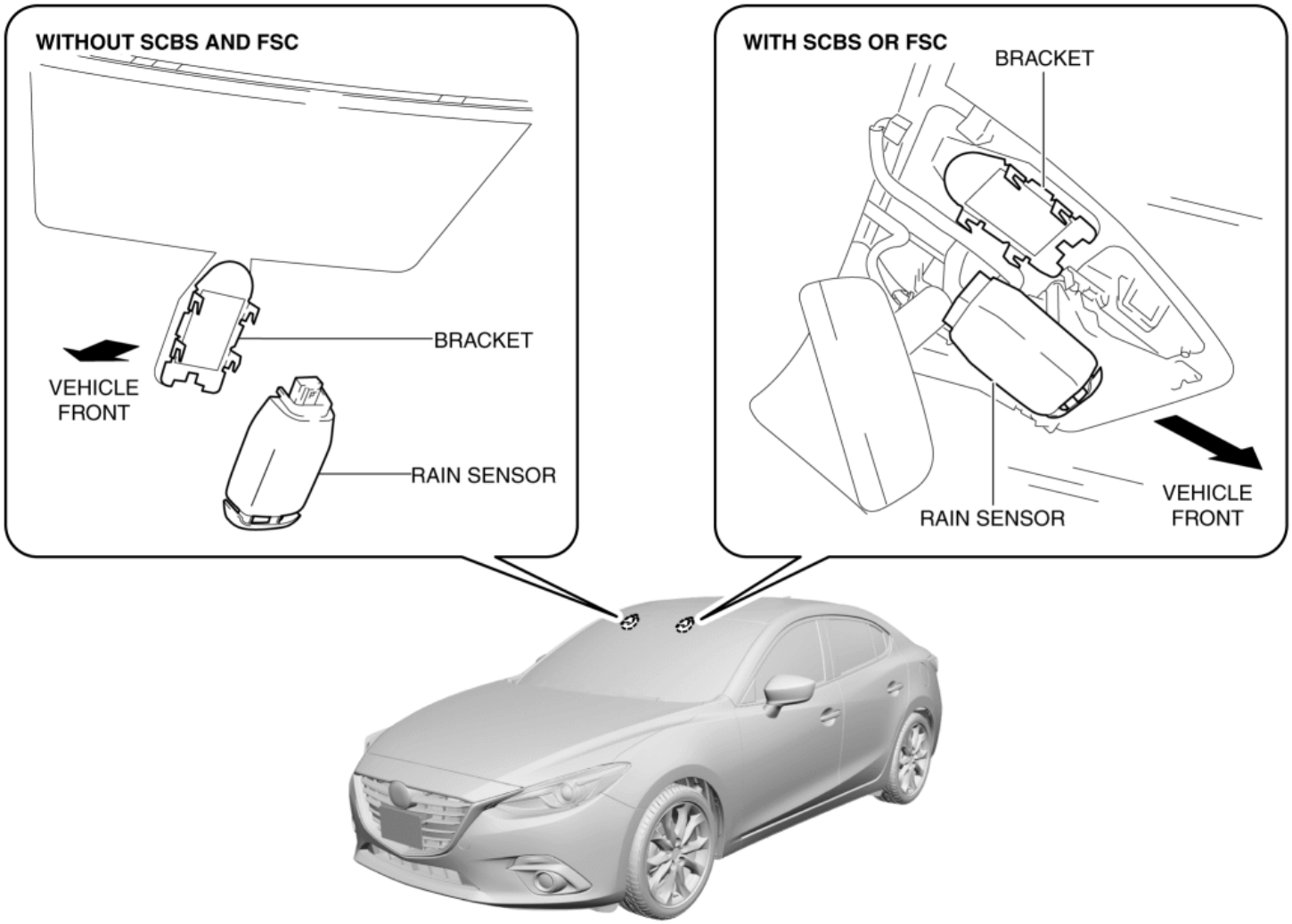

- The rain sensor is integrated with the auto light sensor.
- The rain sensor consists of the lens, LED, photodiode, and microcomputer.
- The rain sensor sends/receives signals between the front body control module (FBCM) using LIN communication.

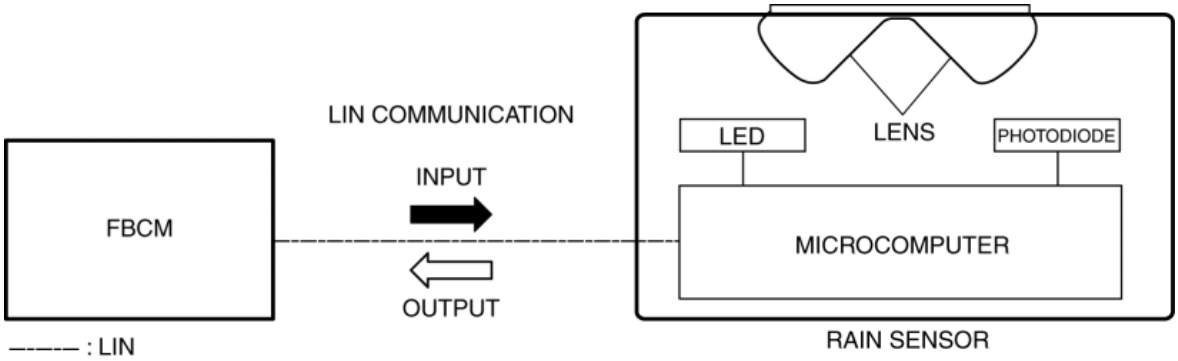

Operation

Operation with no rainfall contacting windshield

1. Infrared light is emitted from the LED in the rain sensor towards the windshield.
2. The emitted infrared light reflects off the windshield.
3. The infrared light reflected off the windshield is received by the photodiode in the rain sensor.
4. When the photodiode receives the light, the microcomputer in the rain sensor calculates the rainfall amount from the reflection rate, and sends a windshield wiper control signal to the front body control module (FBCM).

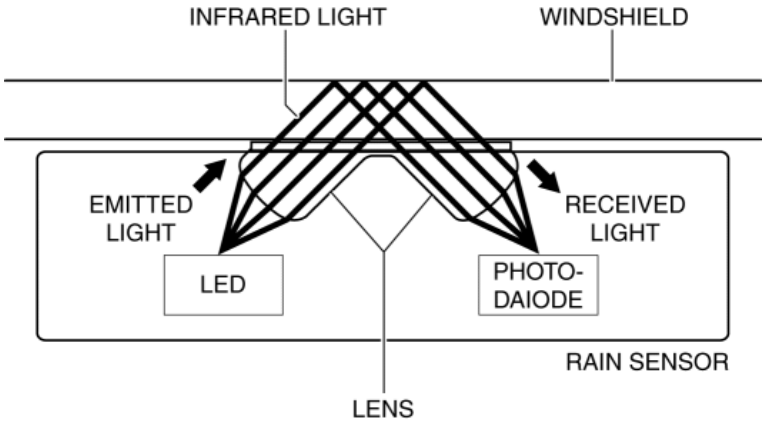

Operation with rainfall contacting windshield

1. Infrared light is emitted from the LED in the rain sensor towards the windshield.

2. Emitted infrared light goes through the windshield and penetrates the rain drops on the windshield.

3. The infrared light which cannot penetrate is reflected off the windshield and is received by the photodiode in the rain sensor.

4. When the photodiode receives the light, the microcomputer in the rain sensor calculates the rainfall amount from the reflection rate, converts this to an electrical signal and sends a windshield wiper control signal to the front body control module (FBCM).

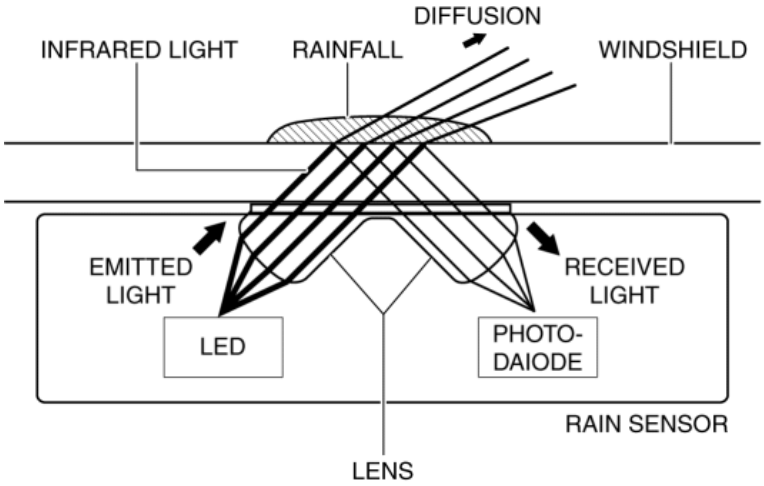

Fail-safe

- Function not equipped.

2014 - Mazda3 - Body and Accessories

WASHER FLUID LEVEL WARNING SYSTEM

Outline

- The washer fluid level warning system notifies the user of a low washer fluid level in the washer tank.

Function

- The front body control module (FBCM) controls the washer fluid level warning system based on the signals from the washer fluid-level sensor.
- When the washer fluid level in the washer tank becomes low, the front body control module (FBCM) turns the low washer fluid level warning light on in the instrument cluster.
- For vehicles with center display, a warning message in the center display is displayed when the low washer fluid level warning light is turned on. For the message content and verification method, refer to the CENTER DISPLAY. (See **CENTER DISPLAY [WITH CENTER DISPLAY]**.)

Structural View

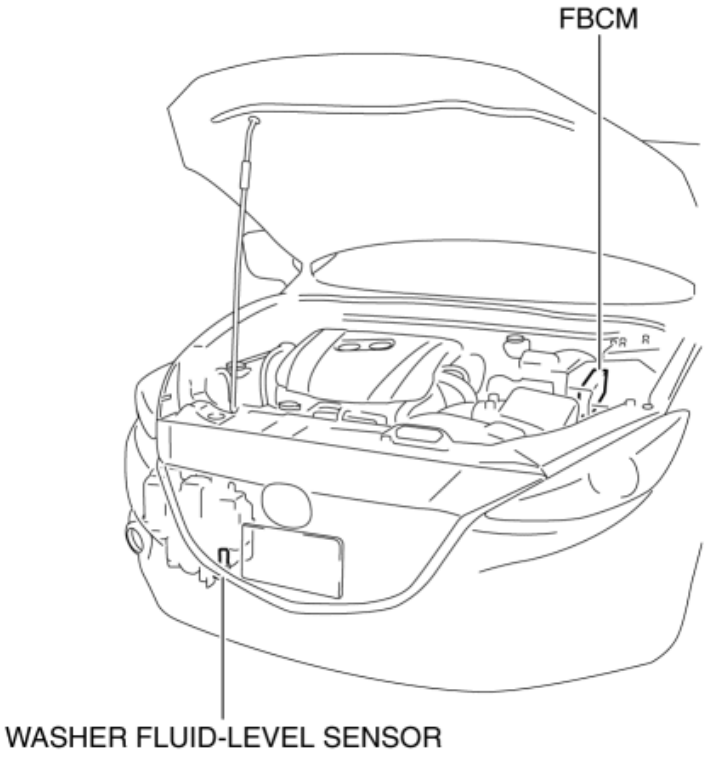

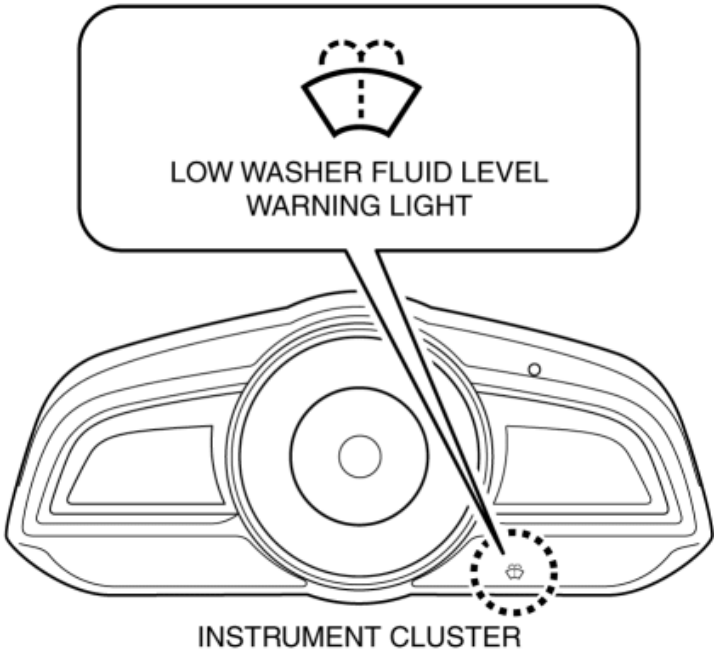

System Wiring Diagram

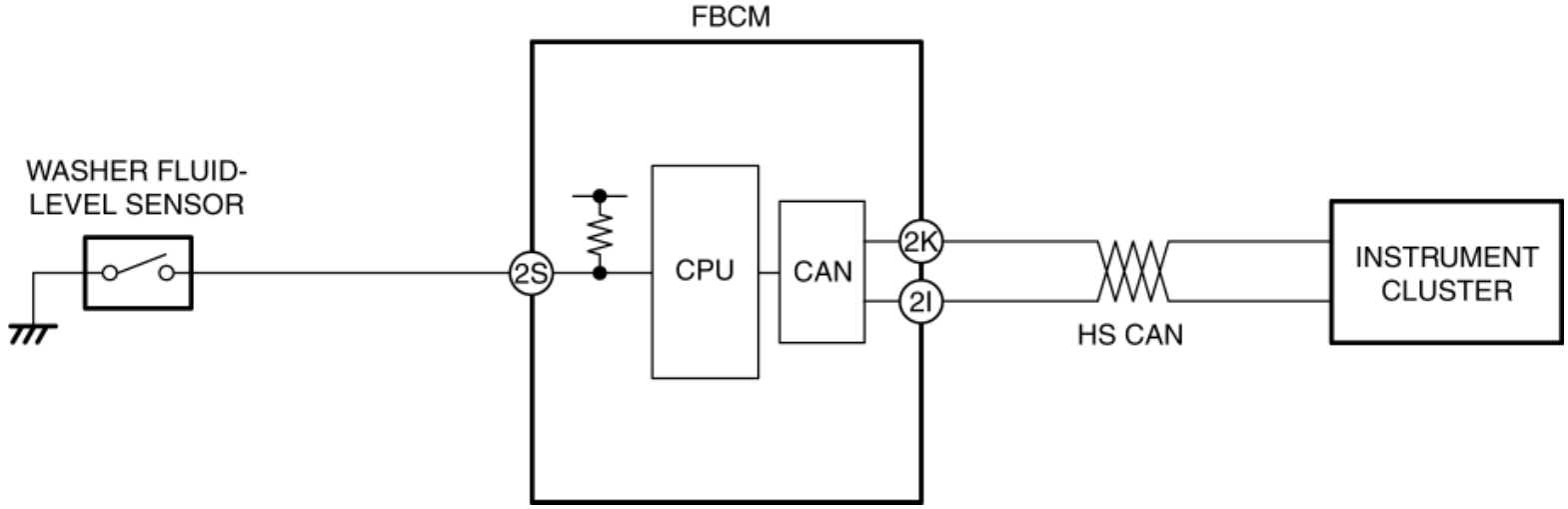

Operation

1. When the washer fluid level in the washer tank becomes low, the front body control module (FBCM) detects a washer fluid-level sensor on signal.

2. When the front body control module (FBCM) receives the washer fluid-level sensor on signal, it sends a low washer fluid level warning light on request signal to the instrument cluster as a CAN signal.

3. When the instrument cluster receives the low washer fluid level warning light on request signal, it turns the low washer fluid level warning light on.

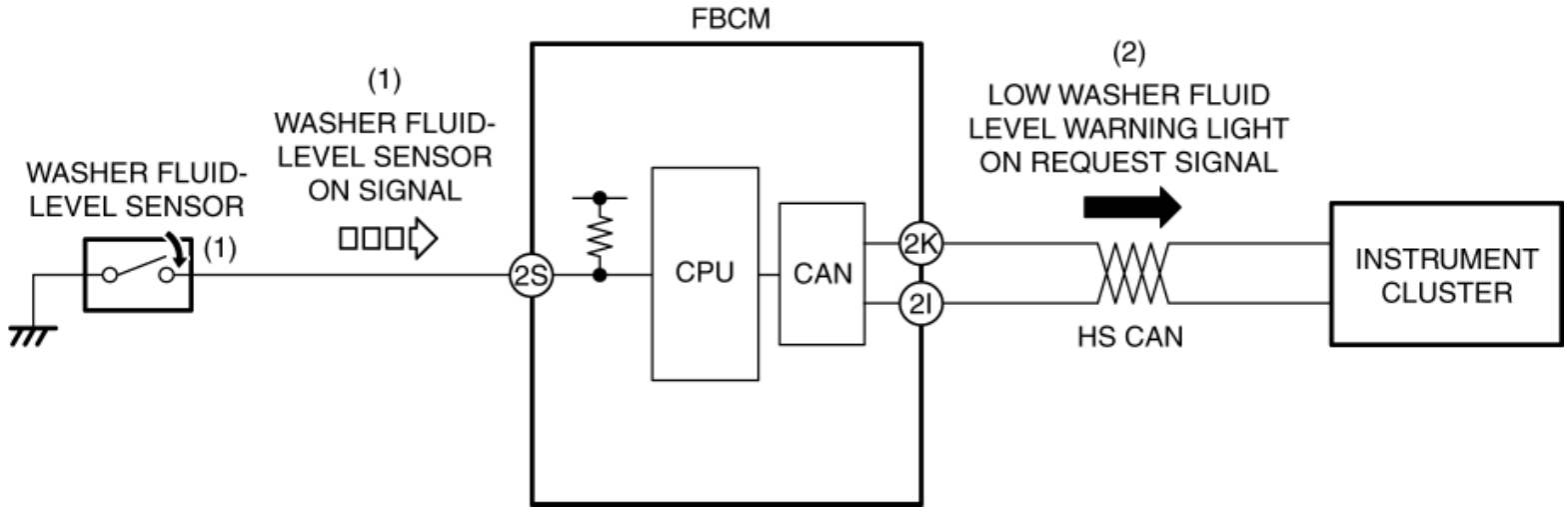

2014 - Mazda3 - Body and Accessories

WASHER FLUID-LEVEL SENSOR

Purpose

- The washer fluid-level sensor illuminates the low washer fluid level warning light when the washer fluid level is lowered.

Function

- The washer fluid-level sensor detects the decrease in the washer fluid level.

Construction

- The washer fluid-level sensor consists of the following parts:
    - Connector (switch)
    - Float
    - Grommet
    - Case
- The float has an integrated magnet which creates a magnetic field.

Operation

When washer fluid is added

1. Washer fluid enters the case of the washer fluid-level sensor, the float rises, and the connector switch turns off.

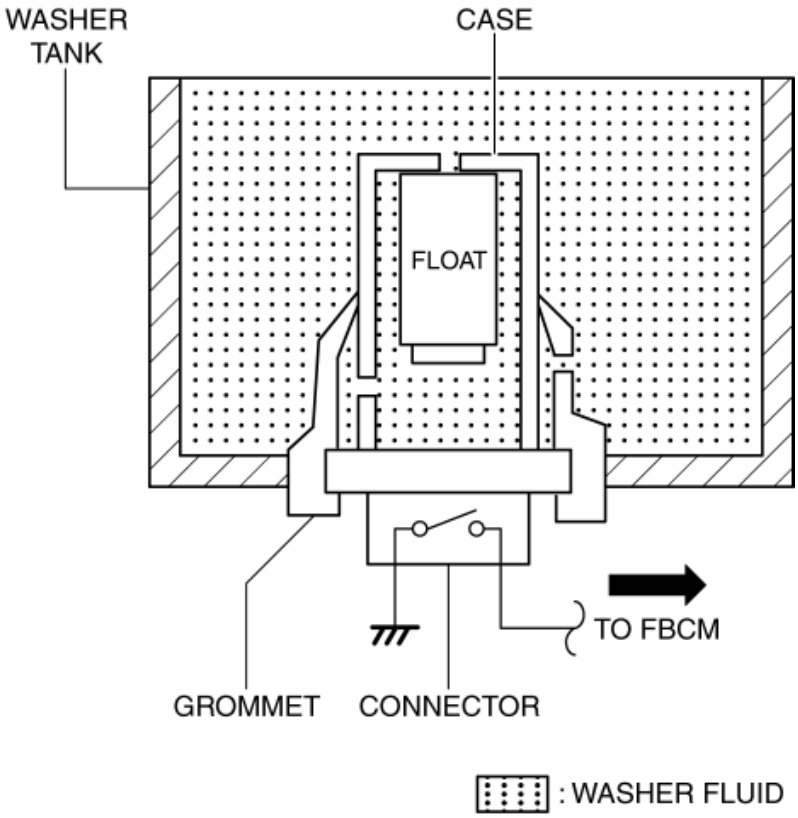

When washer fluid is decreased

1. When washer fluid inside the case of the washer fluid-level sensor decreases, the float comes close to the connector switch.

2. When the float approaches the switch, the magnetic field inside the float acts on the switch and the switch turns on.

3. When the switch is turned on, the front body control module (FBCM) detects that a washer fluid-level sensor on signal and sends a low washer fluid level warning light on request signal to the instrument cluster as a CAN signal.

4. When the instrument cluster receives a low washer fluid level warning light on request signal, it illuminates the low washer fluid level warning light.

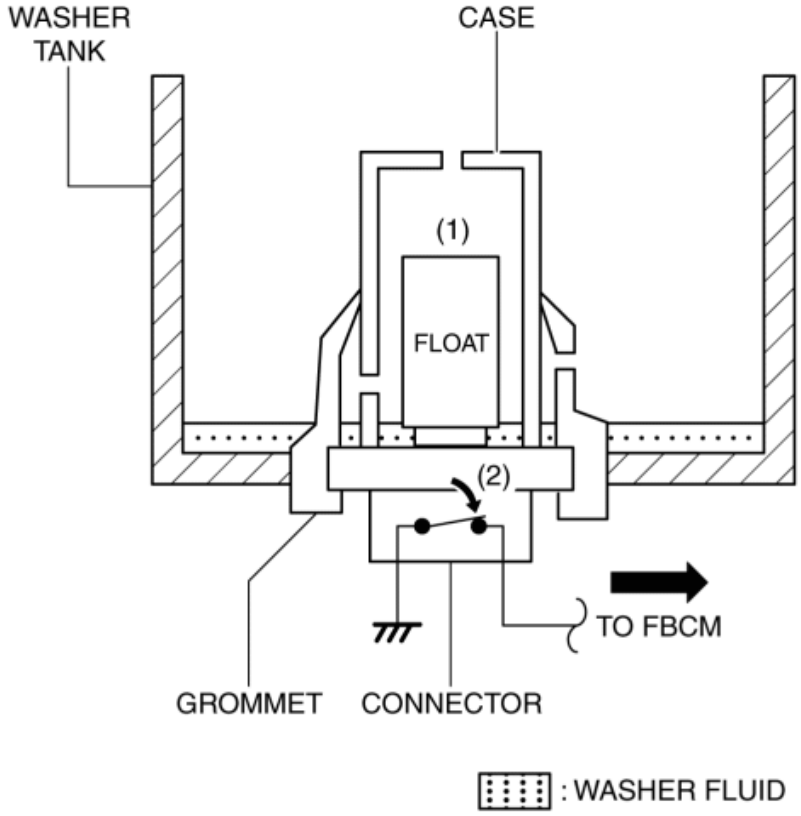

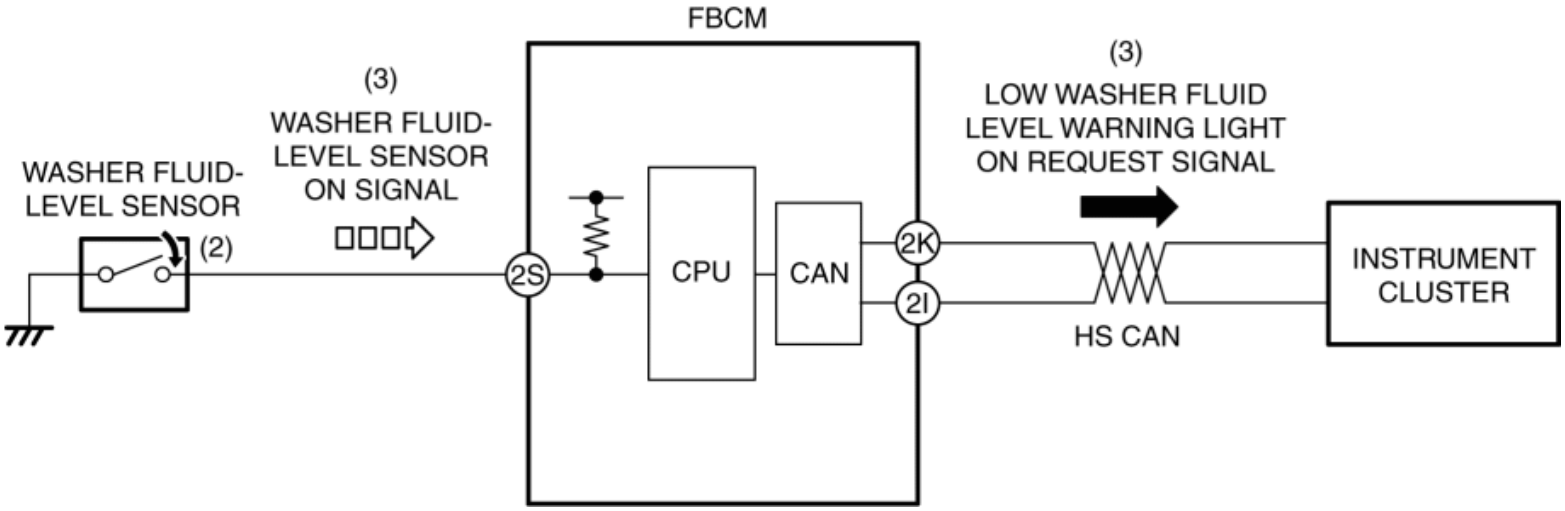

Fail-safe

- Function not equipped.

2014 - Mazda3 - Body and Accessories

ENTERTAINMENT SYSTEM [WITHOUT CENTER DISPLAY]

Outline

- The entertainment system enables listening of radio, CD and music information over the unit equipped on the vehicle.

Function

AM/FM radio

- AM and FM radio broadcast can be listened to.

AUX/USB audio

- By connecting an on-market portable audio/USB device/iPod to the auxiliary jack/USB port, audio from the external device can be listened to.

CD playback (with CD player)

- CDs and CD-R (MP3/WMA (Windows Media Audio)/ACC (Advanced Audio Coding)) can be listened to.

Bluetooth® audio (with Bluetooth® unit)

- By pairing a Bluetooth® enabled device with the audio unit, audio from the Bluetooth® device can be listened to.

Hands-free telephone (HF/TEL) function (with Bluetooth® unit)

- Answering and receiving telephone calls can be performed without having to directly connect a Bluetooth® enabled mobile device such as a mobile phone or Smartphone.

Bluetooth® pairing (with Bluetooth® unit)

- Pairing of a Bluetooth® enabled device can be performed.

NOTE:

- For the Bluetooth® pairing set up method, refer to the workshop manual.

Voice recognition function (with Bluetooth® unit)

- The Bluetooth® unit is preset with voice commands. If the voice spoken into the microphone for the voice recognition matches the voice command, the Bluetooth® unit performs the task set to the voice command.

Structural view

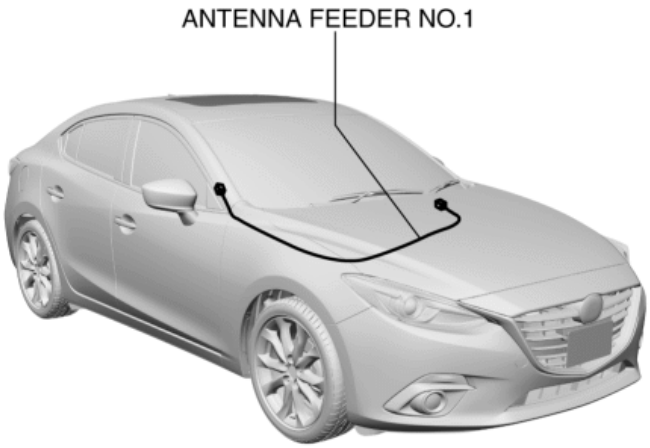
ANTENNA FEEDER NO.1

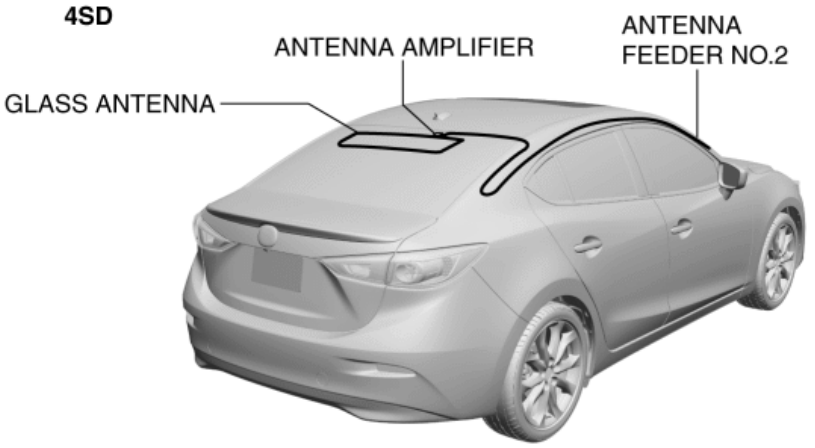
4SD
ANTENNA AMPLIFIER
ANTENNA FEEDER NO.2
GLASS ANTENNA

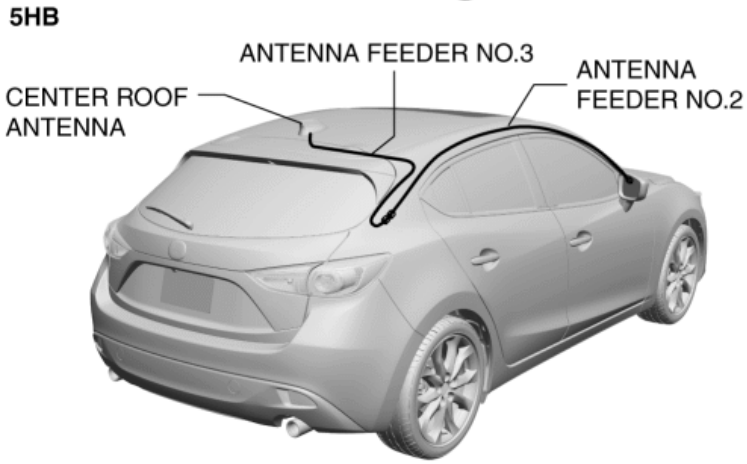
5HB
ANTENNA FEEDER NO.3
ANTENNA FEEDER NO.2
CENTER ROOF ANTENNA

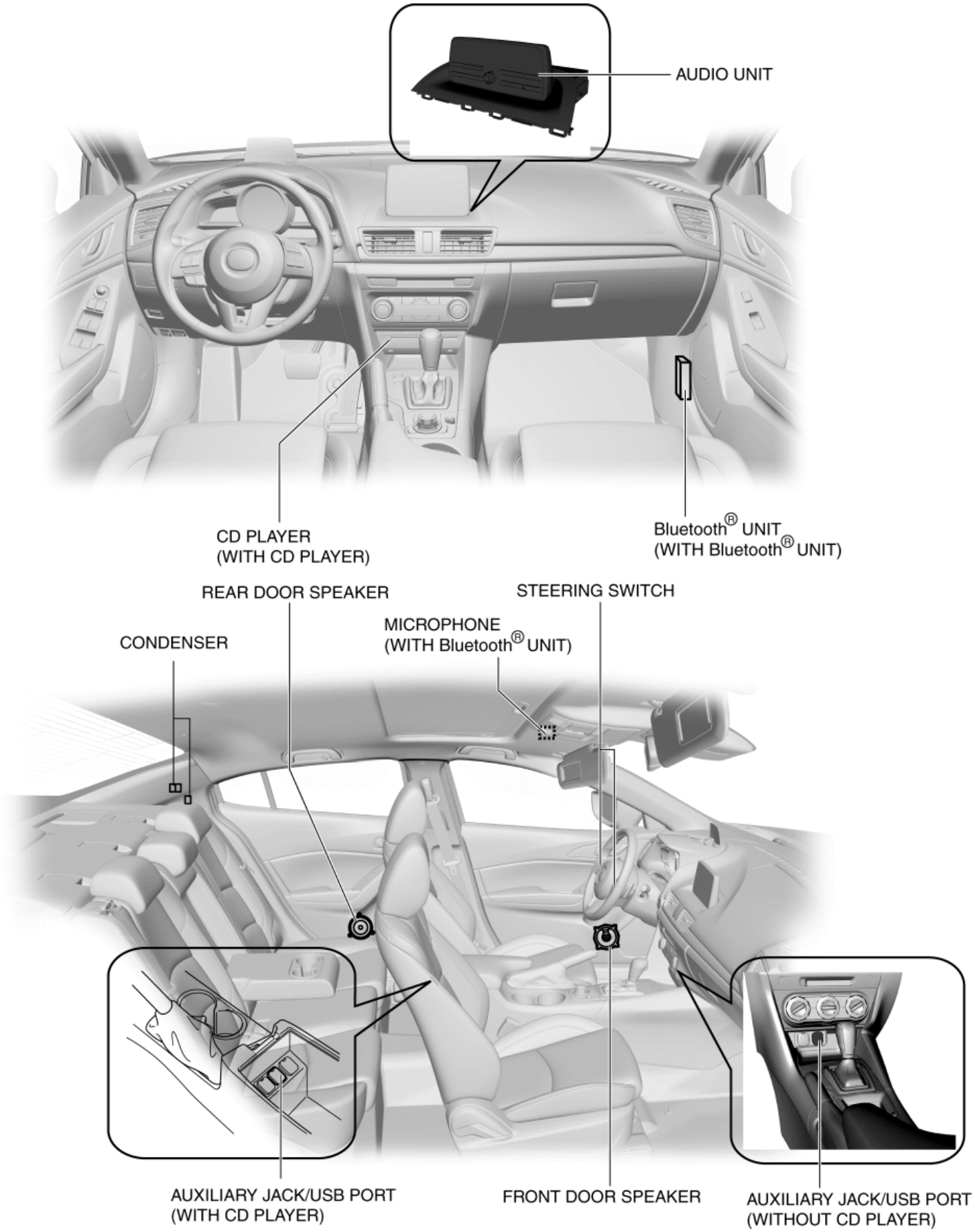

System diagram

ENTERTAINMENT SYSTEM [WITHOUT CENTER DISPLAY]

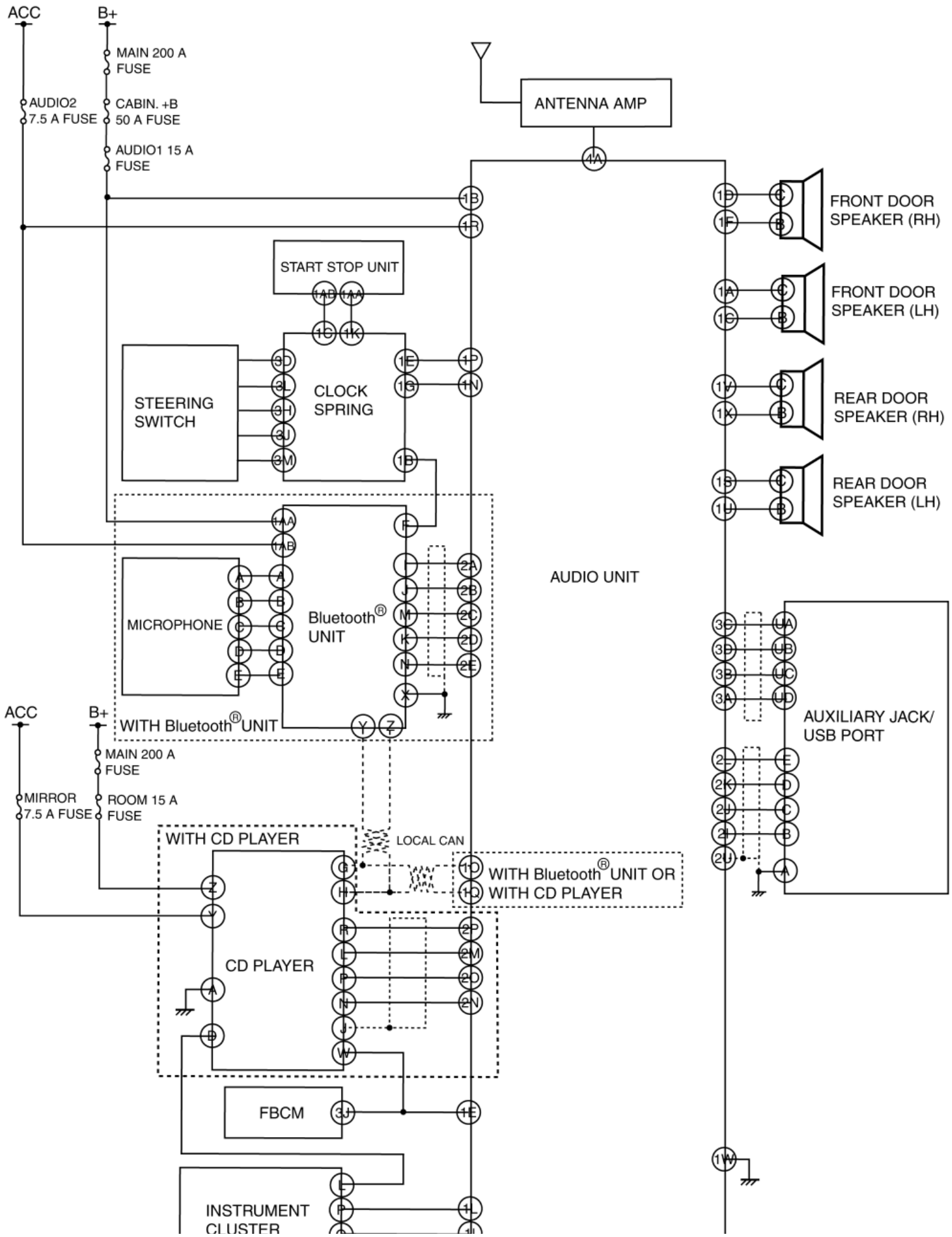

Operation

AM radio/FM radio

- If the radio mode is selected when the ignition is switched to ACC or ON (engine off), the audio unit supplies power to the antenna amplifier (4SD)/amplifier (5HB) in the center roof antenna.
- The audio unit detects the radio broadcast selected by the user using the radio tuner in the audio unit based on the electrical signal sent from the antenna amplifier (4SD)/center roof antenna (5HB). The audio signal from the detected radio broadcast is sent to the speakers, and the image signal of the detected radio broadcast is sent to the display of the audio unit.
- The speakers output the audio based on the audio signal sent from the audio unit. The display of the audio unit displays the radio information based on the image signal.

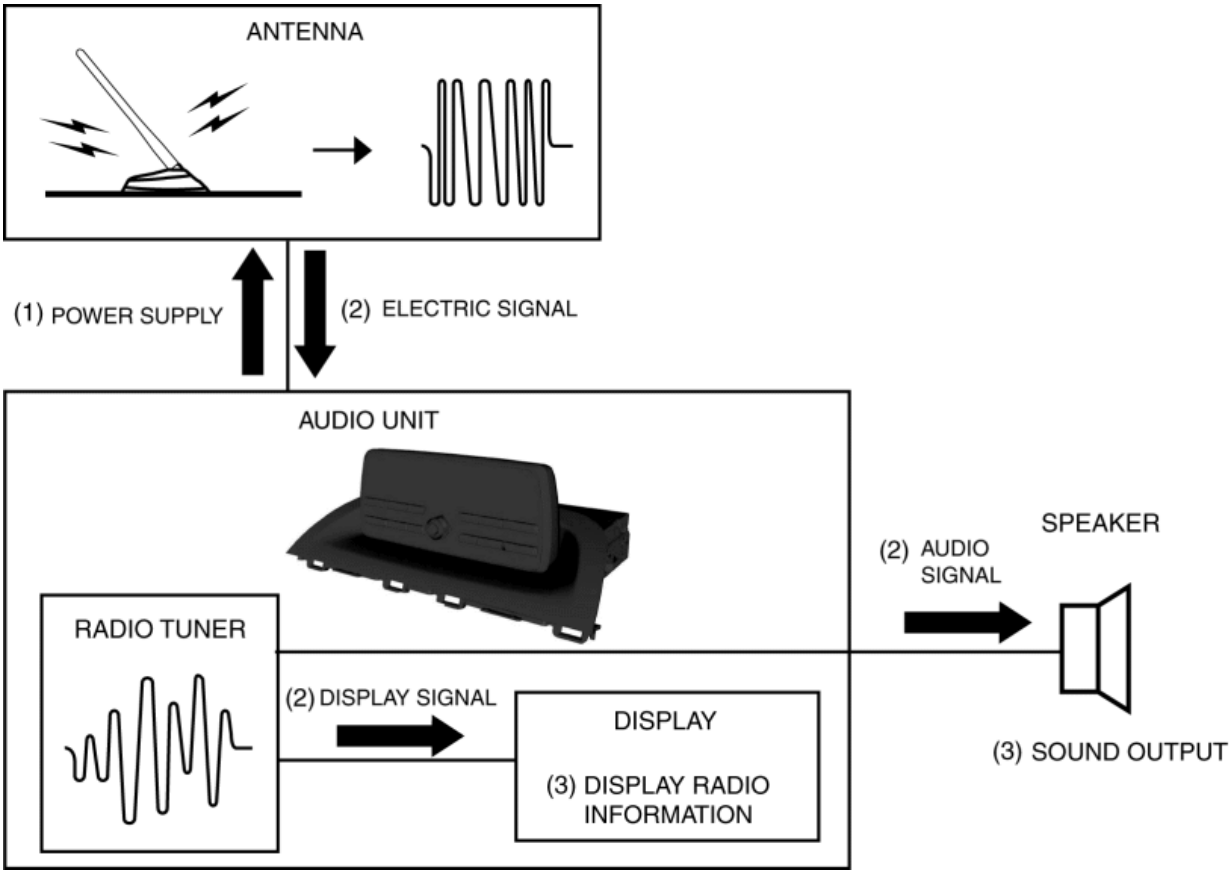

AUX/USB audio (AUX)

- When the plug of a portable audio unit is connected to the auxiliary jack/USB port, the auxiliary jack/USB port sends an analog signal (audio signal) from the portable audio device to the audio unit.
- The audio unit sends the audio signal received from the auxiliary jack/USB port to the speakers.
- The speakers output the audio based on the received audio signal.

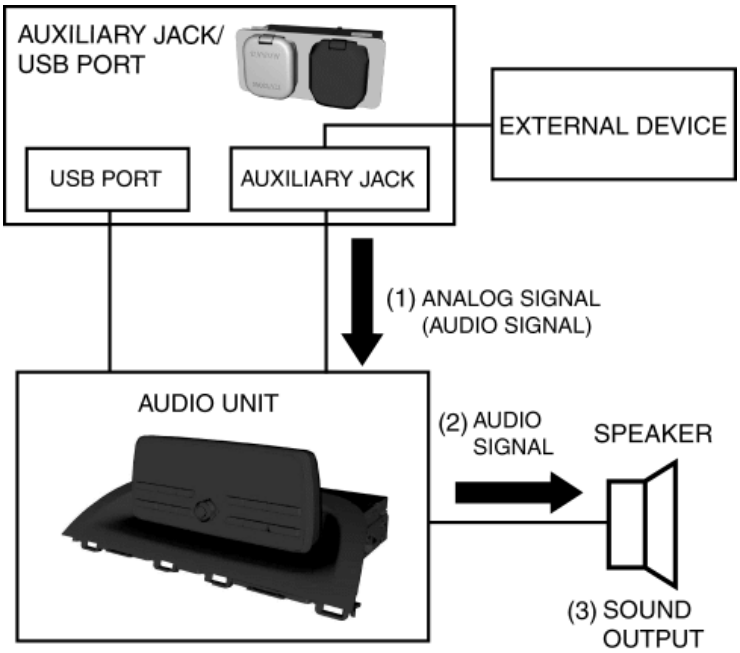

AUX/USB audio (USB)

- When the USB media such as a USB device/iPod is connected to the USB port of the auxiliary jack/USB port, the auxiliary jack/USB port sends the digital data (audio signal/text data signal) of the USB media to the audio unit.
- The audio unit sends the audio signal received from the auxiliary jack/USB port to the speakers.
- The speakers output the audio based on the received audio signal.

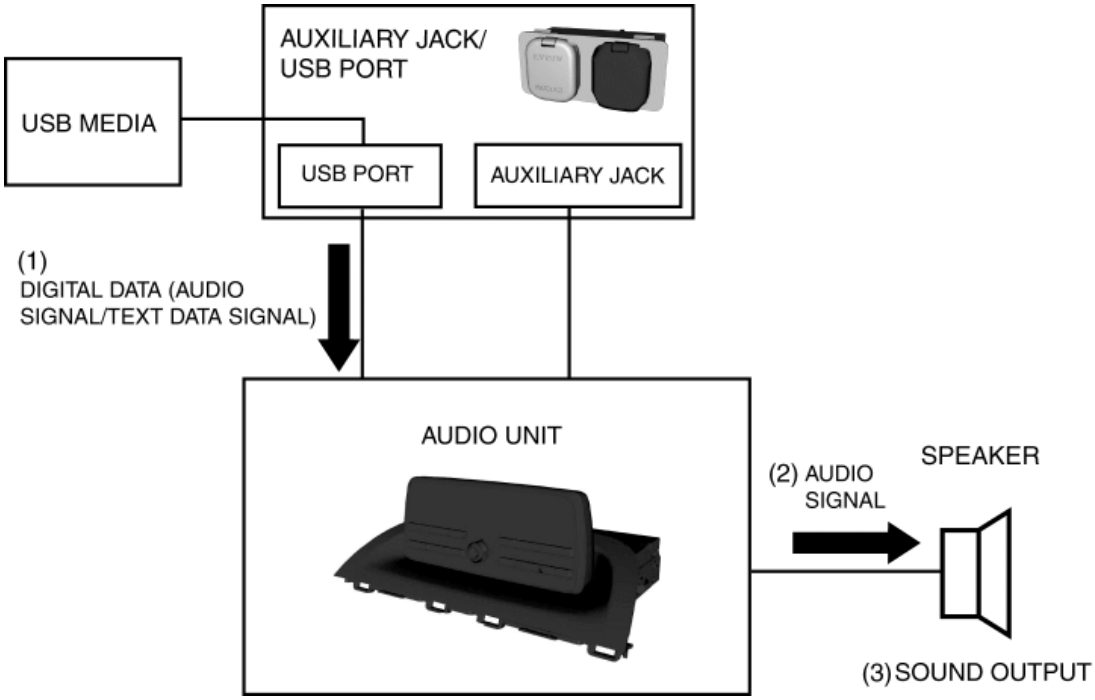

CD playback (with CD player)

- With a CD inserted in the CD player and the CD mode selected, the audio unit sends a control signal to the CD player.
- The CD player emits laser light to the inserted CD when the control signal is received. The reflected light is detected by the light sensor and the data recorded in the CD is converted from a digital signal to an electric signal.
- The CD player converts the electric signal to an audio signal and video signal using the electrical circuit in the CD player. The converted audio and video signals are sent to the audio unit.

- The audio unit sends the audio signal received from the CD player to the speakers. In addition, the CD information based on the text data signal is displayed in the display.
- The speakers output the audio based on the received audio signal.

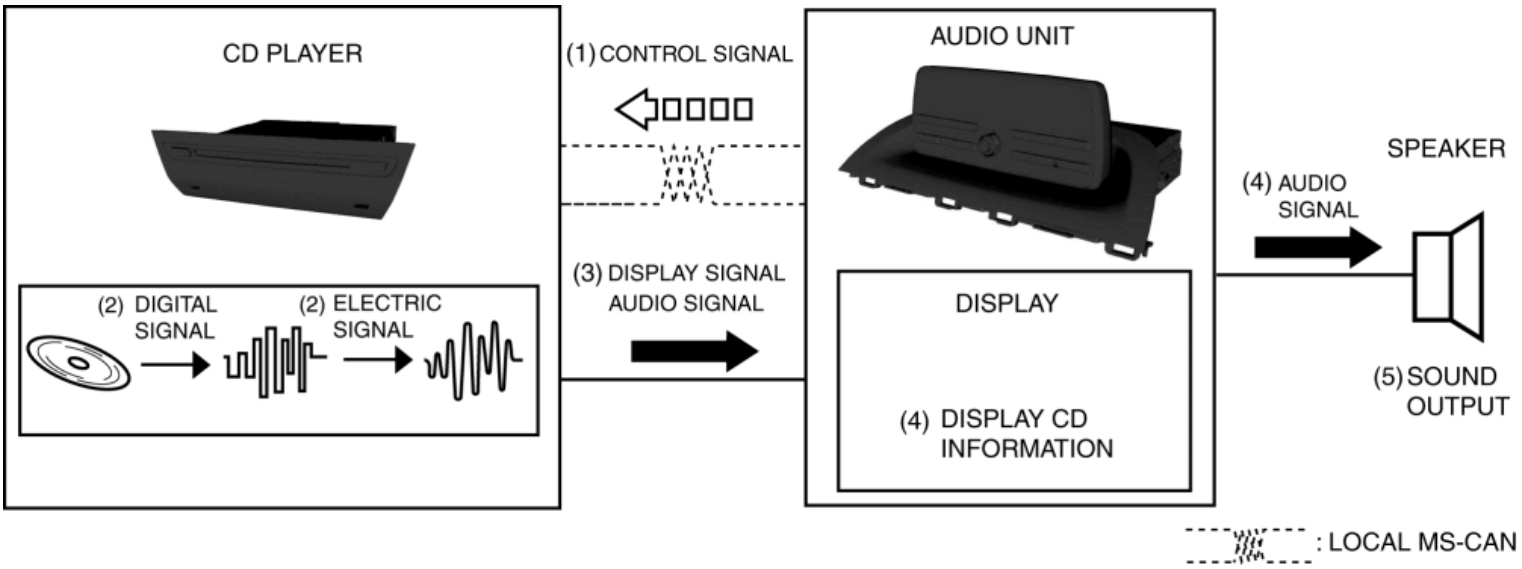

Bluetooth® audio (with Bluetooth® unit)

- The Bluetooth® unit sends the digital data received from the Bluetooth® enabled device to the audio unit.
- The audio unit sends the audio signal of the digital data to the speakers, and the text data signal signal to the display of the audio unit.
- The speakers output the audio based on the received audio signal, and the audio unit display displays the Bluetooth® audio information based on the video signal.
- When the audio panel is operated, the audio unit sends the operation information to the Bluetooth® unit.
- The Bluetooth® unit sends an operation signal to a Bluetooth® enabled device such as a Smartphone.

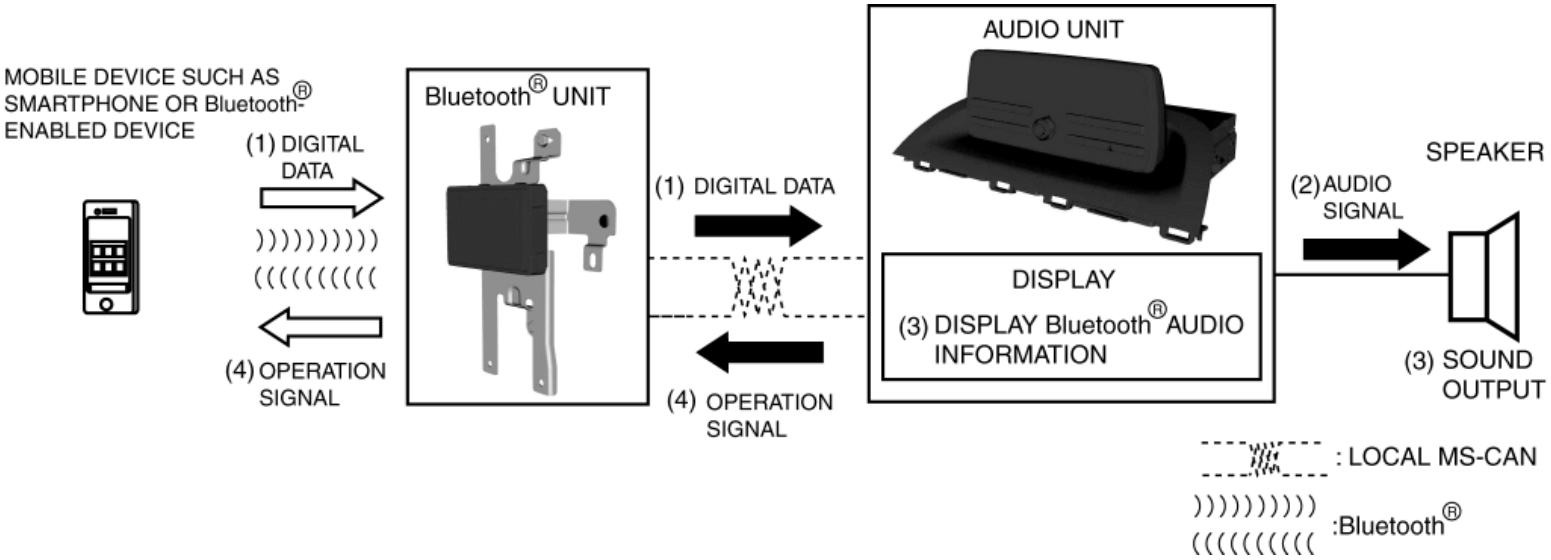

Hands-free telephone (HF/TEL) function (incoming call)

- When an incoming call is received, a mobile device such as a Smartphone/Bluetooth® enabled mobile phone sends the incoming call signal to the Bluetooth® unit.
- The Bluetooth® unit sends the incoming call signal to the audio unit when it receives the incoming call signal.
- The audio unit switches the tuner inside the unit to HF/TEL mode when it receives the incoming call signal. In addition, the incoming call number is displayed in the display of the audio unit.

- If the TALK button on the steering switch is pressed while the incoming call number is displayed, the Bluetooth® unit detects the steering switch operation.
- The Bluetooth® unit sends a call answer signal to a mobile device such as a Smartphone/Bluetooth® enabled mobile phone when the steering switch operation is detected, and the call is initiated.
- The mobile device, such as a Smartphone/Bluetooth® enabled mobile phone, sends a receive audio signal to the Bluetooth® unit, which is output from the speakers via the audio unit.
- The voice recognition-use microphone sends the send audio signal to the Bluetooth® unit.
- The Bluetooth® unit sends the signal to a mobile device such as a Smartphone/Bluetooth® enabled mobile telephone.

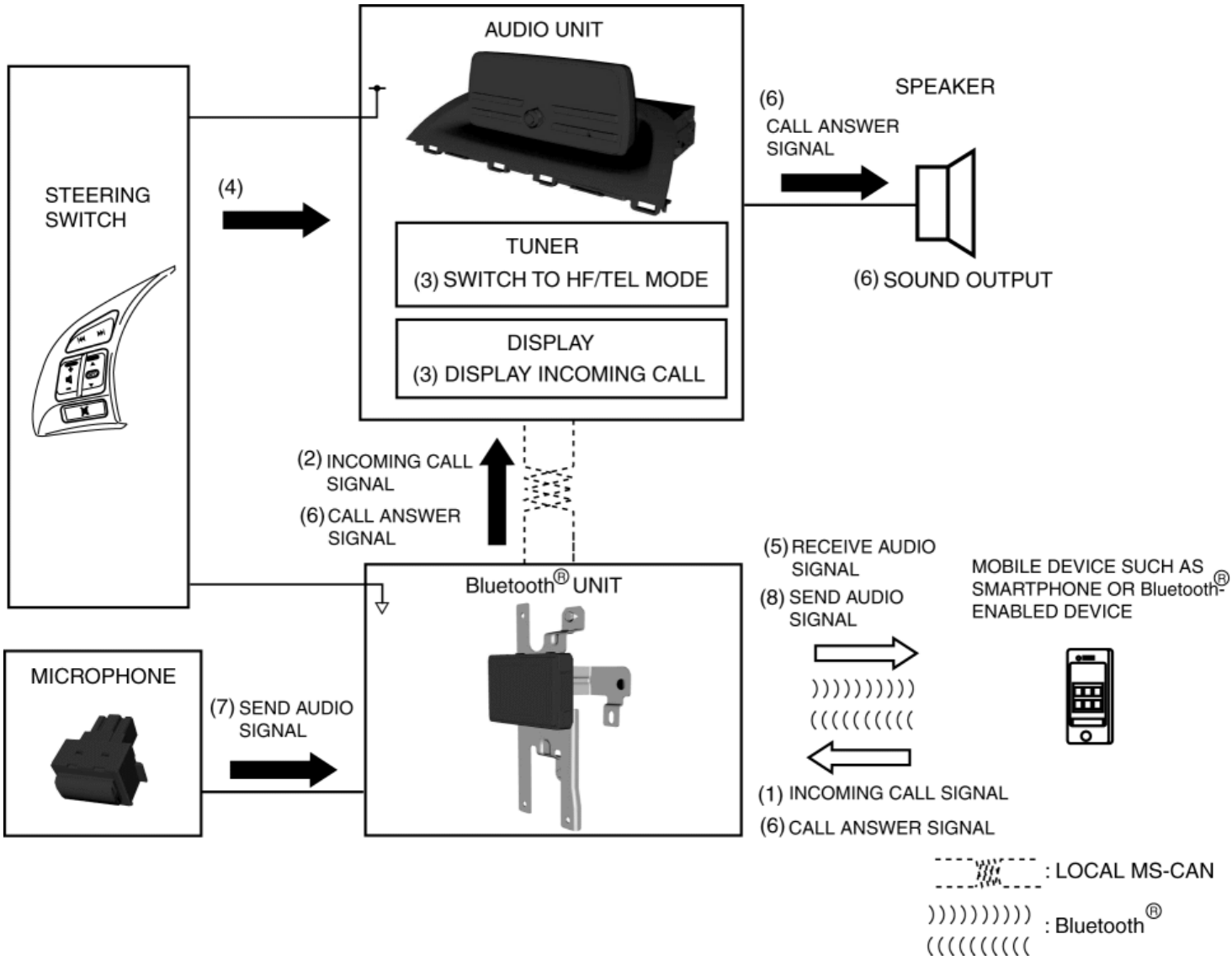

Hands-free telephone (HF/TEL) function (outgoing call)

- When the TALK button on the steering switch is pressed, the Bluetooth® unit detects the steering switch operation.
- When the steering switch operation is detected, the Bluetooth® unit sends a steering switch operation signal to the audio unit.
- When the steering switch operation signal is received, the audio unit sends a guidance audio signal to the speakers, and the speakers output the guidance audio.
- The voice recognition microphone converts the words (voice commands) produced by the user after the guidance audio output to an audio signal and sends it to the Bluetooth® unit.
- The Bluetooth® unit sends the voice signal to a mobile device such as a Smartphone or Bluetooth® enabled mobile phone when the audio signal from the voice recognition microphone is received, and the call is initiated.
- The mobile device, such as a Smartphone or Bluetooth® enabled mobile phone, sends the received audio signal to the Bluetooth® unit, and the signal is output from the speakers via the audio unit.
- The voice recognition microphone sends the send audio signal of the user to the Bluetooth® unit, and the Bluetooth® unit

sends the received send audio signal to a mobile device such as Smartphone or Bluetooth® enabled mobile phone.

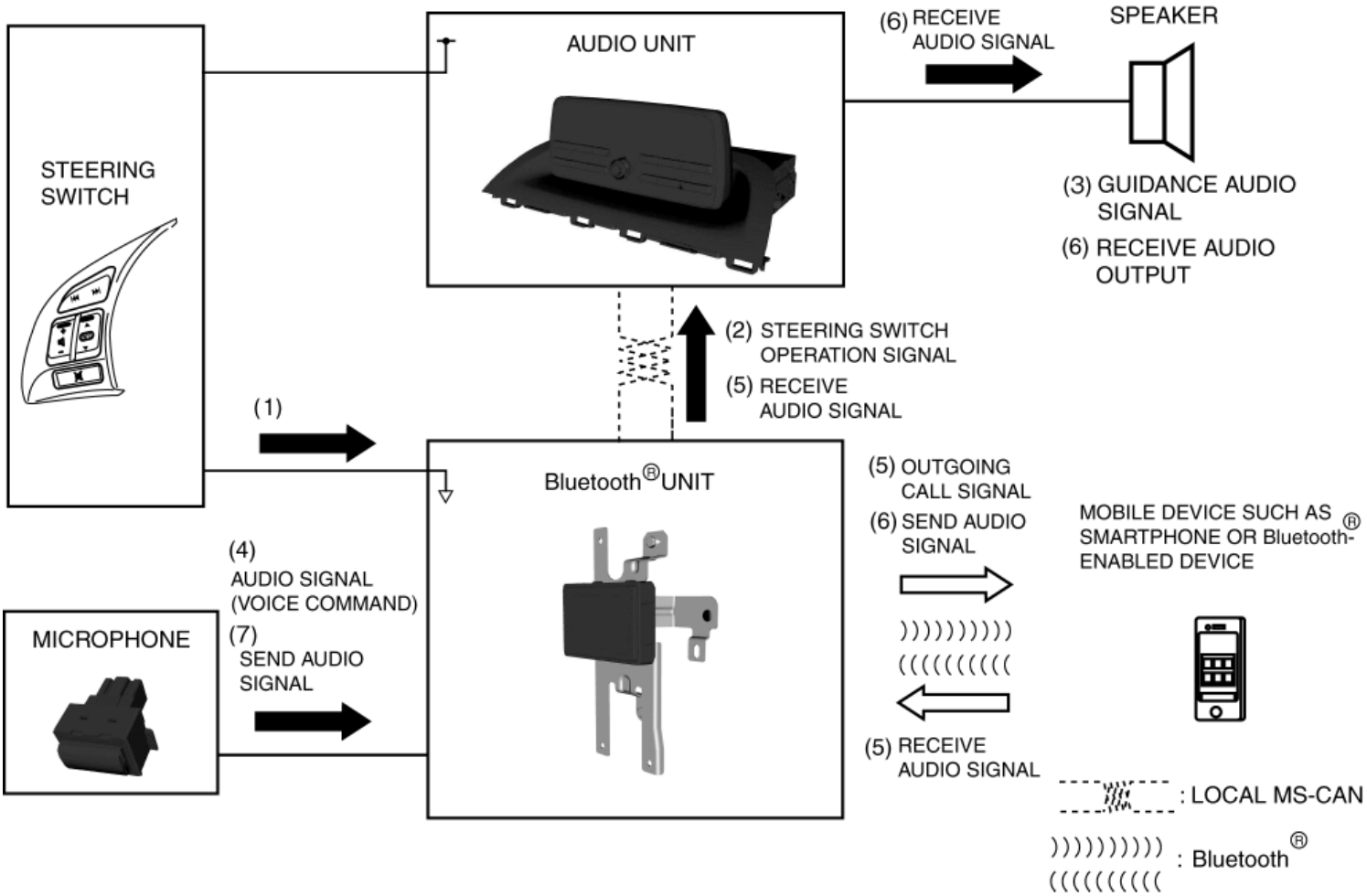

Bluetooth® pairing

- When the audio unit panel button is operated and [PAIR DEVICE] is selected, "PIN 0000" is displayed after "ENTER PIN" is displayed for approx. 3 s in the display of the audio unit.
- If the audio unit panel button is operated while "PIN 0000" is displayed and a pair code (optional 4-digit number) is input, the audio unit sends a control signal to the Bluetooth® unit. Additionally, "PAIRING" flashes in the display of the audio unit.
- The Bluetooth® unit sends a search signal to a Bluetooth® enabled device near the Bluetooth® unit.
- If a Bluetooth®-enabled device receives a search signal, the Bluetooth® unit is displayed on the Bluetooth® setting screen.
- If a Bluetooth®-enabled device is operated, the Bluetooth® unit is selected, and a pairing code is input, the Bluetooth®-enabled device sends the input pairing code to the Bluetooth® unit.
- When the Bluetooth® unit receives the pairing code, it stores the Bluetooth® enabled device information and sends a notification control signal indicating pairing completion with the audio unit.
- When the audio unit receives the control signal, it displays "Musical note symbol" and "PAIR SUCCESS" in the display for approx. 3 s, and the pairing is completed.

NOTE:

- If 7 Bluetooth® devices (maximum) have been programmed, "MEMORY FULL" is indicated in the audio unit display, and Bluetooth® pairing is canceled.
- If the pairing programming fails, "Err" flashes in the audio unit display for approx. 3 s and the screen returns to the [PAIR DEVICE] screen.

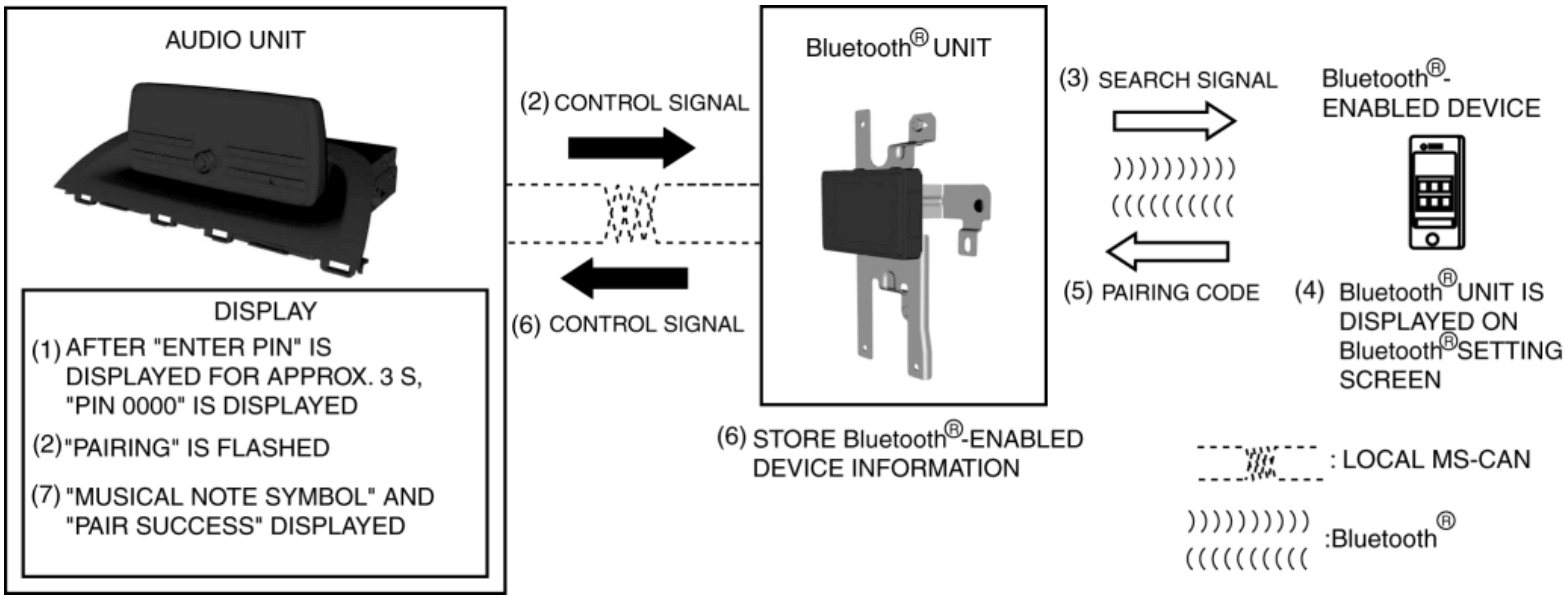
AUDIO UNIT
DISPLAY
(1) AFTER "ENTER PIN" IS DISPLAYED FOR APPROX. 3 S, "PIN 0000" IS DISPLAYED
(2) "PAIRING" IS FLASHED
(7) "MUSICAL NOTE SYMBOL" AND "PAIR SUCCESS" DISPLAYED
(2) CONTROL SIGNAL
(6) CONTROL SIGNAL
Bluetooth® UNIT
(6) STORE Bluetooth®-ENABLED DEVICE INFORMATION
(3) SEARCH SIGNAL
(5) PAIRING CODE
Bluetooth®-ENABLED DEVICE
(4) Bluetooth® UNIT IS DISPLAYED ON Bluetooth® SETTING SCREEN
: LOCAL MS-CAN
:Bluetooth®

2014 - Mazda3 - Body and Accessories

AUDIO UNIT [WITHOUT CENTER DISPLAY]

NOTE:

- “iPod” is a registered trademark of Apple Inc.

Purpose

- The audio unit controls the entertainment system-related parts.

Function

Display Function

- Displays audio information such as radio and CD related information in the audio unit display.

ALC (auto level control) function

- Compensates for the passengers' sense of a lack of audio volume which occurs as a result of external noise while driving.

Audio sound adjustment function

- Operates the MENU button and the POWER/VOLUME button on the audio panel to change the sound quality as follows:

Indication	Setting value	
	Turn Left	Turn Right
ALC (Automatic volume adjustment)	Level decrease	Level increase
BASS (Low pitch sound)	Decrease bass	Increase bass
TREB (Treble sound)	Decrease treble	Increase treble
FADE (Front/back volume balance)	Shift the sound to the front	Shift the sound to the rear
BAL (Left/right volume balance)	Shift the sound to the left	Shift the sound to the right
BEEP (Audio operation sound)	Off	On
BT SETUP*1	Select mode	
12Hr< >24Hr	12Hr (Flashing)	24Hr (Flashing)

*1

With Bluetooth® unit

On-board diagnostic function

- The audio unit has an on-board diagnostic function to facilitate system diagnosis. In case a malfunction occurs, DTCs are recorded. For details, refer to the DIAGNOSTIC SYSTEM. (See **ON-BOARD DIAGNOSTIC [ENTERTAINMENT SYSTEM (WITHOUT CENTER DISPLAY)]**.)

Diagnostic Assist Function

- A diagnostic assist function is equipped which can verify the following. For details, refer to the DIAGNOSTIC SYSTEM. (See **ON-BOARD DIAGNOSTIC [ENTERTAINMENT SYSTEM (WITHOUT CENTER DISPLAY)]**.)
    - Related-part connection condition
    - Related-part operation condition
    - Related-part specification

Specification

Item			Specification
Rated voltage		(V)	12
Frequency range	AM	(kHz)	530—1710
	FM	(MHz)	87.75—107.9
Amplifier maximum output		(W)	25×4
Output impedance		(ohm)	4

Construction

Input/output signal table

Audio unit

Terminal		Signal
	1A	Front door speaker LH (+)
	1B	B+
	1C	Front door speaker LH (-)
	1D	Front door speaker RH (+)
	1E	TNS signal
	1F	Front door speaker RH (-)
	1G	Illumination (-)
	1H	—
	1I	Vehicle speed signal
	1J	—

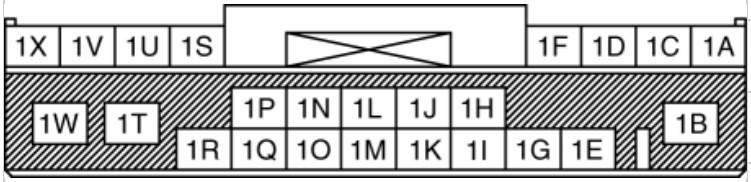

1K	—
1L	DIM cancel
1M	—
1N	Steering switch1
1O	Local MS-CAN (+)
1P	Steering switch2
1Q	Local MS-CAN (-)
1R	ACC
1S	Rear door speaker LH (+)
1T	—
1U	Rear door speaker LH (-)
1V	Rear door speaker RH (+)
1W	Ground
1X	Rear door speaker RH (-)

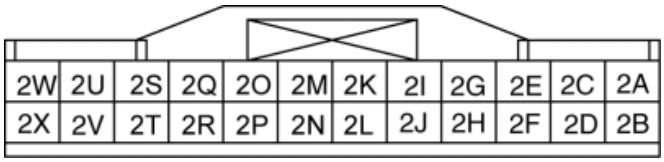

2A	TEL (+)*1
2B	TEL (-)*1
2C	Bluetooth® audio input LH (+)
2D	Bluetooth® audio input LR (-)
2E	Bluetooth® audio input RH (+)
2F	—
2G	—
2H	—
2I	AUX audio input LH (+)
2J	AUX audio input LR (-)
2K	AUX audio input RH (+)
2L	AUX connection detection
2M	CD audio input LH (+)

	2N	CD audio input LH (-)
	2O	CD audio input RH (+)
	2P	CD audio input RH (-)
	2Q	—
	2R	—
	2S	—
	2T	—
	2U	AUX connection detection ground
	2V	—
	2W	—
	2X	—
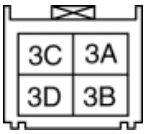	3A	USB power supply ground
	3B	USB data (+)
	3C	USB power supply
	3D	USB data (-)

Antenna feeder connector

Terminal		Signal
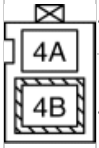	4A	ANT control
	4B	Antenna

*1

With Bluetooth® unit

Button position

AUDIO UNIT [WITHOUT CENTER DISPLAY]

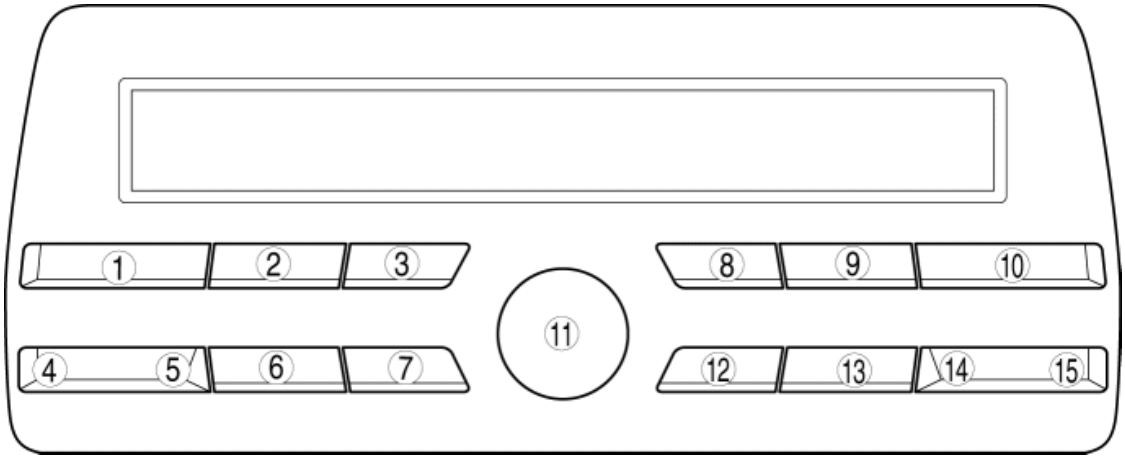

No.	Button name	Function
1	Preset button 1	Switches to radio station programmed in Preset 1.
2	Preset button 2	Switches to radio station programmed in Preset 2.
3	Preset button 3	Switches to radio station programmed in Preset 3.
4	TUNE button (down)	Changes CD tracks or switches radio stations.
5	TUNE button (up)	Changes CD tracks or switches radio stations.
6	FM/AM/CLOCK button	• Switches to radio mode. • Switches to clock adjustment mode. (When pressed continuously for 1.5 s or more)
7	MEDIA/SCAN button	• Switches the mode. • Search and selection of receivable radio station is possible.
8	Preset button 4	Switches to radio station programmed in Preset 4.
9	Preset button 5	Switches to radio station programmed in Preset 5.
10	Preset button 6	Switches to radio station programmed in Preset 6.
11	POWER/VOLUME button	• Audio power on/off and volume adjustment are possible. • Audio sound quality can be adjusted.
12	MENU button	• Switches to sound quality adjustment mode. The display switches in the following order. ▪ ALC→BASS→TREB→FADE→BAL→BEEP→BT SETUP→12Hr< >24Hr
13	AUTO-M button	Stores up to six receivable stations.
14	FOLDER button (down)	Selects folder to be played.
15	FOLDER button (up)	Selects folder to be played.

Operation

ALC (auto level control) operation

- The audio unit automatically changes the volume and audio quality based on the vehicle speed signal sent from the instrument cluster.

HIGHER VEHICLE SPEED

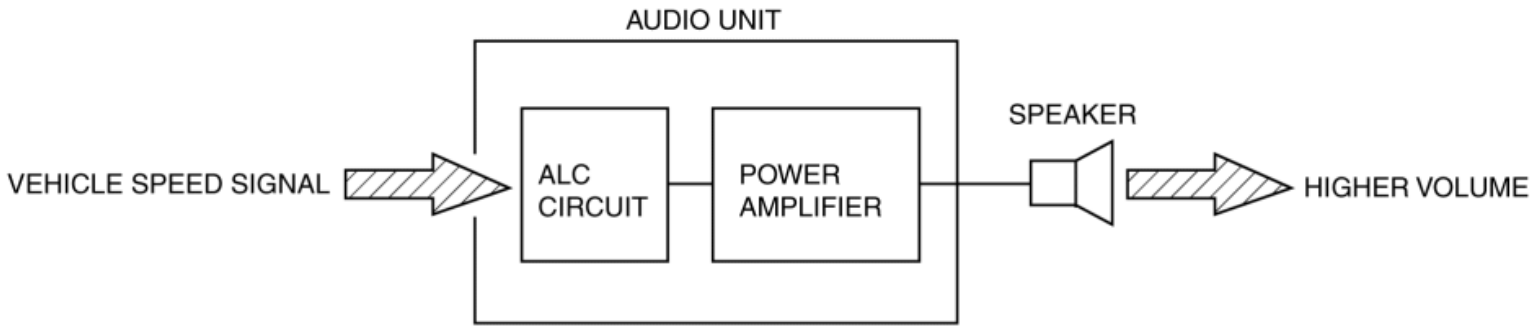

LOWER VEHICLE SPEED

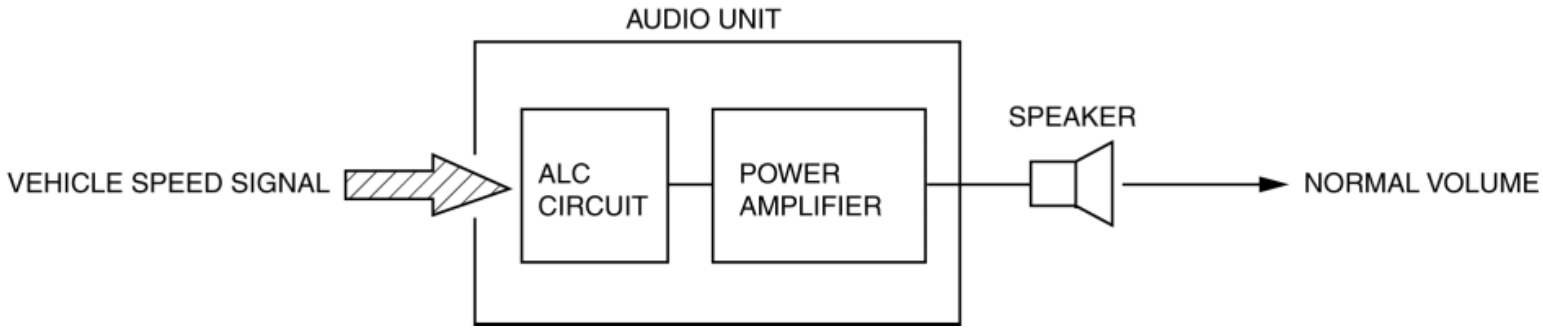

- The ALC function is divided into 7 levels. When the level is in the high range, the volume correction range and correction amount is large. The maximum correction amount is 14dB. The ALC function can be stopped by selecting ALC OFF.

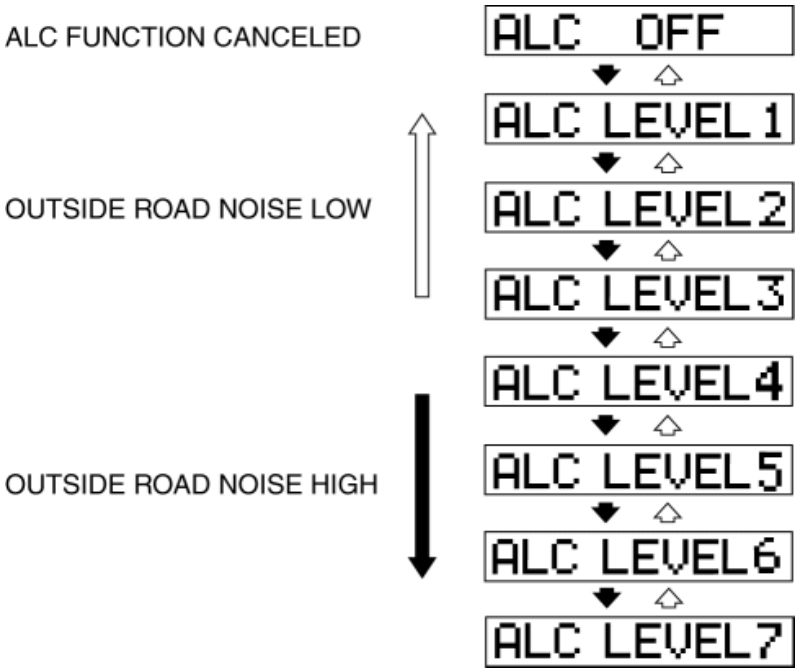

Fail-safe

- Function not equipped.

2014 - Mazda3 - Body and Accessories

CD PLAYER [WITHOUT CENTER DISPLAY]

Purpose, Function

- The CD player sends the audio signal and text data of the inserted CD to the audio unit.

Specification

Type	Playback function file
Music/MP3/WMA/AAC CD player	• Music data (CD-DA) • MP3/WMA (Windows Media Audio)/AAC (Advanced Audio Coding) file

Construction

- A CD player is installed to the front console.

CD PLAYER [WITHOUT CENTER DISPLAY]

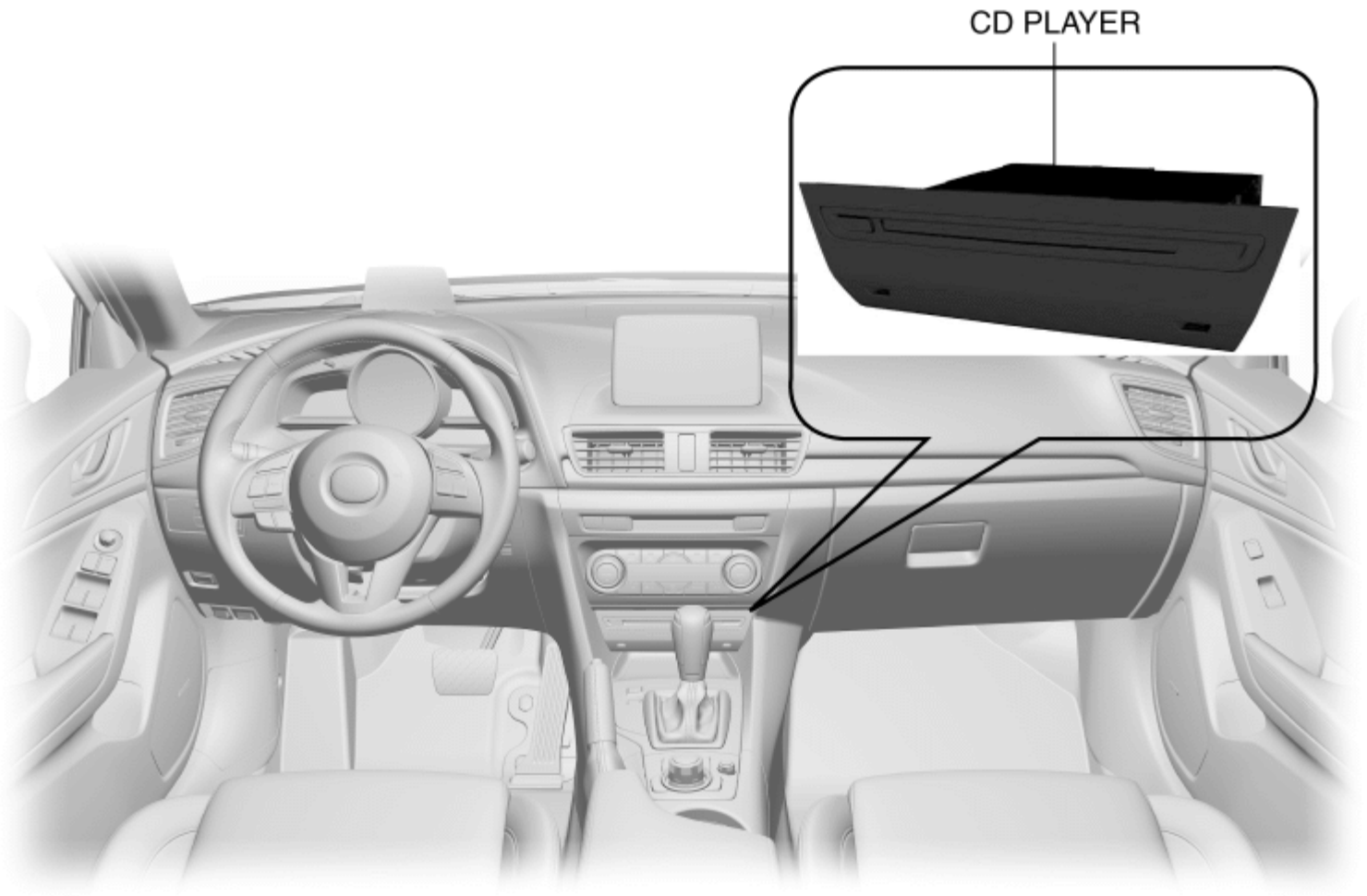

Input/output signal table

Terminal		Signal
	1A	Ground
	1B	—
	1C	—
	1D	Illumination (-)
	1F	—
	1G	Local MS-CAN (+)
	1H	Local MS-CAN (-)

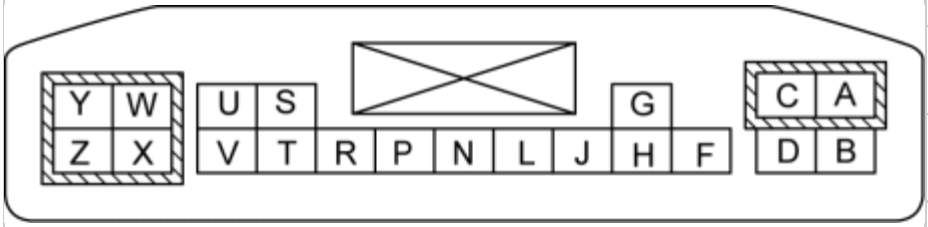

1J	Shield GND
1L	CD audio output LH (+)
1N	CD audio output LH (-)
1P	CD audio output RH (+)
1R	CD audio output RH (-)
1S	—
1T	Shield GND
1U	Video signal output
1V	Video signal output ground
1W	TNS
1X	—
1Y	ACC
1Z	B+

Operation

- For the CD player operation, refer to the ENTERTAINMENT SYSTEM. (See **ENTERTAINMENT SYSTEM [WITHOUT CENTER DISPLAY]**.)

Fail-safe

- Function not equipped.

2014 - Mazda3 - Body and Accessories

SPEAKER [WITHOUT Bose®, WITHOUT CENTER DISPLAY]

Purpose

- Converts the audio signal from the audio unit to sound.

Function

- Full-range speakers, which can output wide-range sound from low to high frequency, have been adopted.

Specification

Item		Front door speaker	Rear speaker
Max. input	(W)	25	25
Rated impedance	(ohm)	3.4 — 4.6	3.4 — 4.6
Size	(cm {in})	16.5 {6.5}	16.5 {6.5}

Construction

- A cone-shaped dynamic speaker has been adopted for each speaker.
- A weight reduction was achieved by using pulp for the cone material and adopting a ferrite magnet.

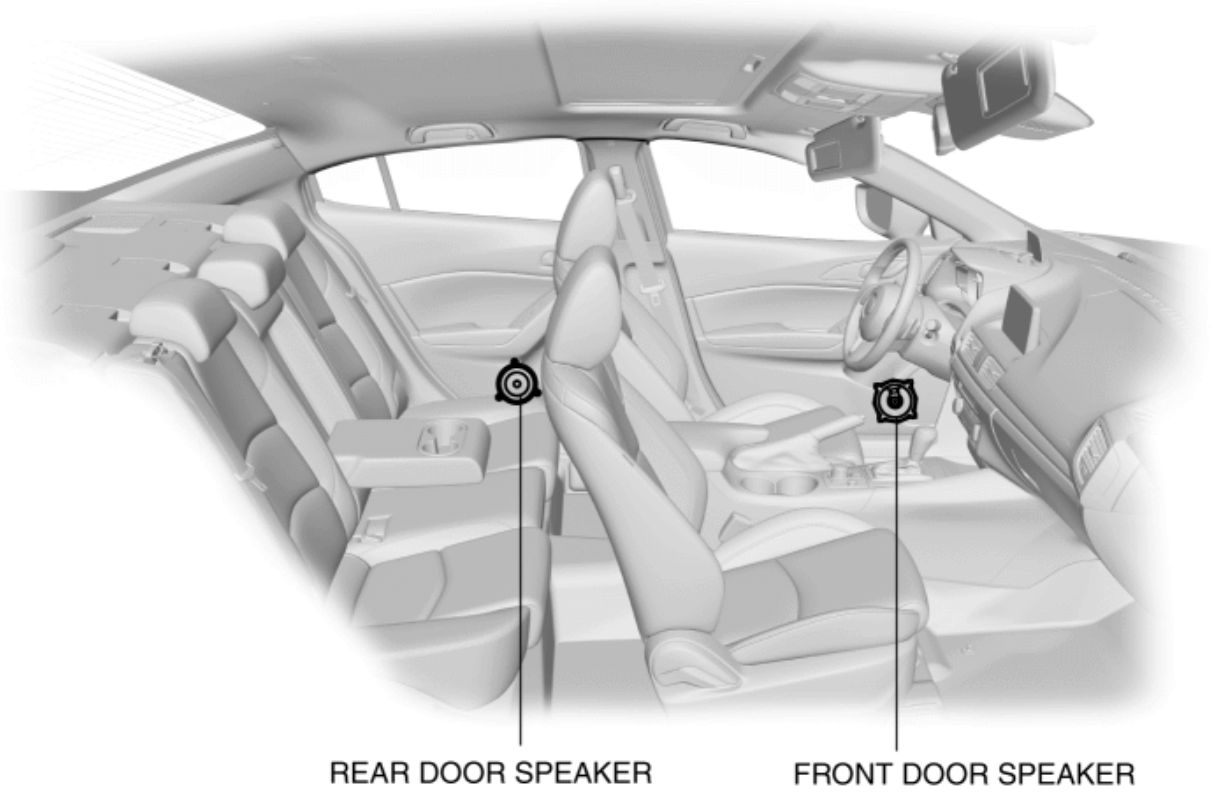

Operation

- The speaker sends the audio signal (current) from the audio unit to the voice coil.
- When the audio signal (current) is sent to the voice coil, the coil becomes magnetized and a magnetic field occurs. Because the voice coil and the magnet pull and repel each other in the magnetic field, the voice coil vibrates.
- Because the voice coil is wrapped around the voice coil bobbin, the voice coil bobbin vibrates when the voice coil vibrates.
- When the voice coil bobbin vibrates, the cone (diaphragm) installed to the voice coil bobbin vibrates and generates sound.

SPEAKER [WITHOUT Bose®, WITHOUT CENTER DISPLAY]

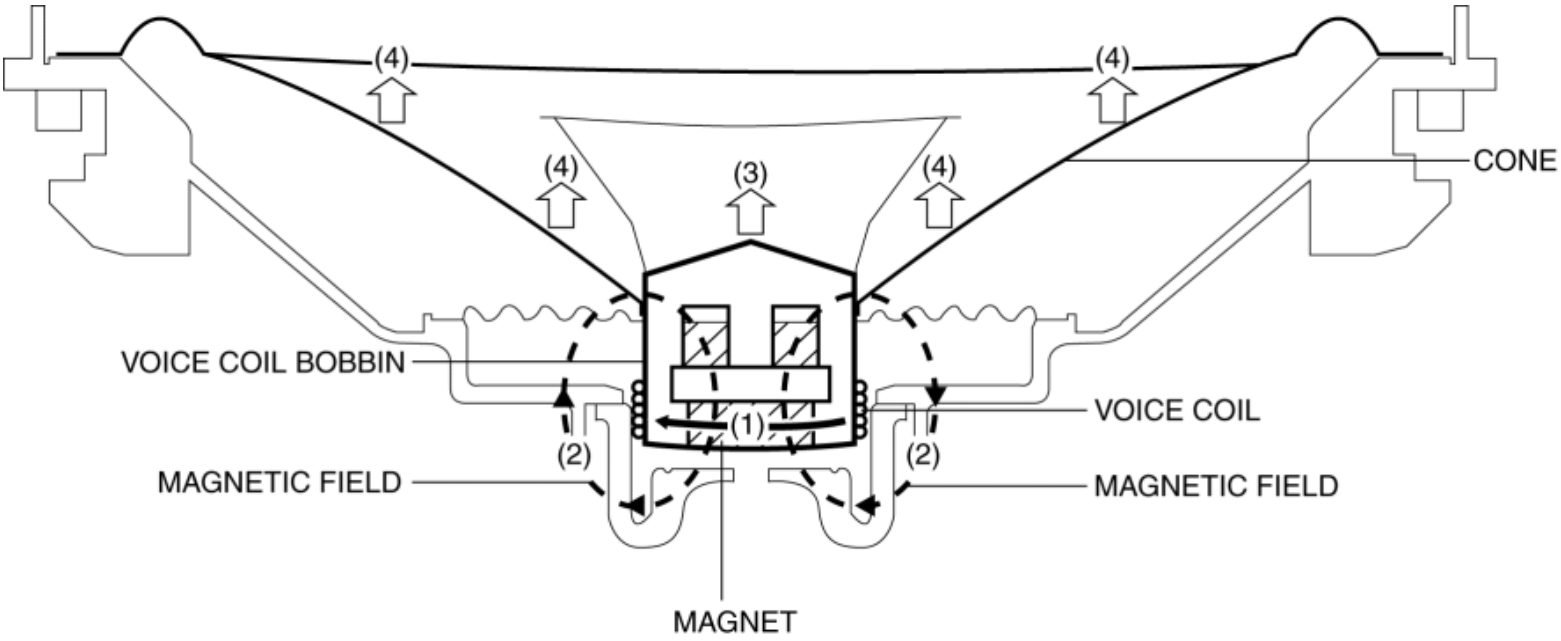

Fail-safe

- Function not equipped.

2014 - Mazda3 - Body and Accessories

CENTER ROOF ANTENNA [WITHOUT CENTER DISPLAY]

Purpose, Function

- Converts radio broadcast waves to electric signals and sends the signals to the audio unit.

Construction

- The center roof antenna consists of an antenna rod which converts the received radio waves to electric signals, and an antenna base with a built-in antenna amplifier which amplifies the electric signals.
- To prevent the roof antenna from contacting obstructions above the vehicle, the antenna rod is manually foldable to 127 ° It is also removable.

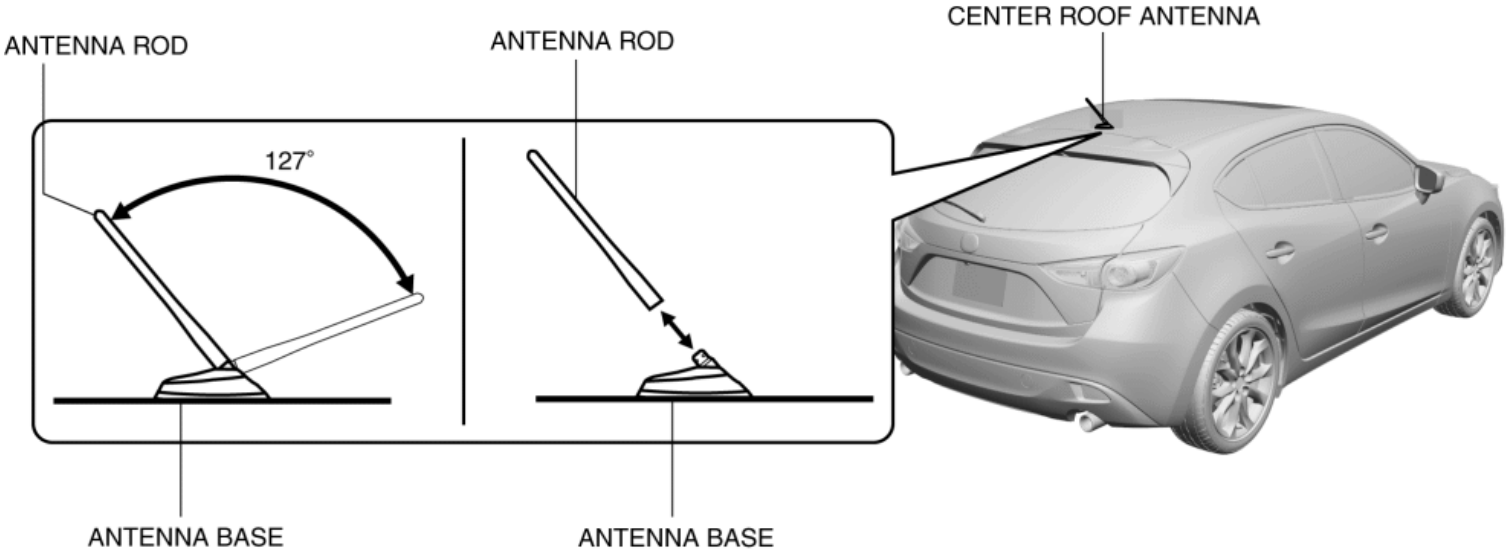

Operation

- When the ignition is switched to ACC or ON (engine off or on), power is supplied from the audio unit to the antenna amplifier inside the center roof antenna.
- The center roof antenna converts the received radio waves of a radio broadcast to an electric signal.
- The center roof antenna amplifies the converted electric signal using the antenna amplifier and sends the signal to the audio unit.

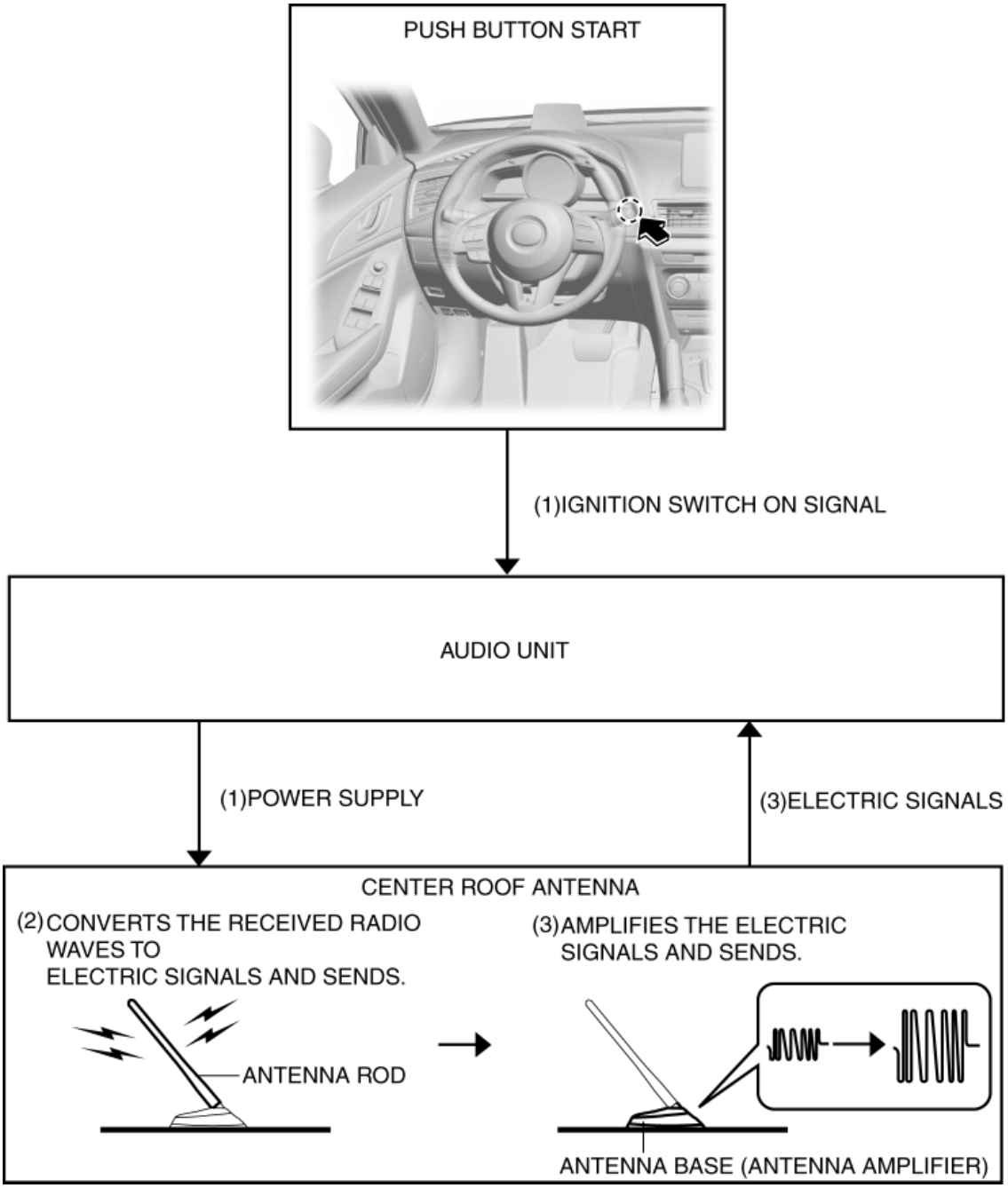

Fail-safe

- Function not equipped.

2014 - Mazda3 - Body and Accessories

GLASS ANTENNA [WITHOUT CENTER DISPLAY]

Purpose, Function

- Converts radio broadcast waves to electric signals and sends the signals to the antenna amplifier.

Construction

- An antenna with excellent noise resistance has been adopted to the rear window glass.

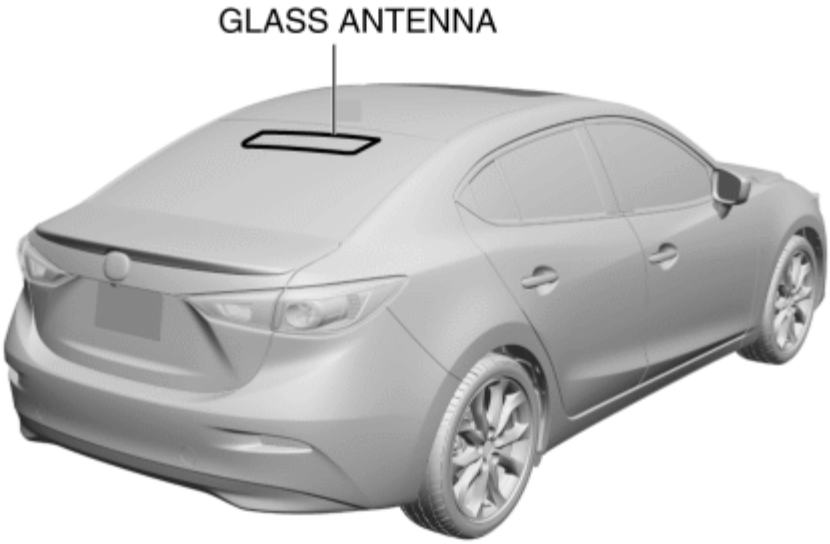

Fail-safe

- Function not equipped.

2014 - Mazda3 - Body and Accessories

ANTENNA AMPLIFIER [WITHOUT CENTER DISPLAY]

Purpose, Function

- Amplifies the electric signal from the glass antenna and sends it to the audio unit.

Construction

- The antenna amplifier is positioned in the rear header.

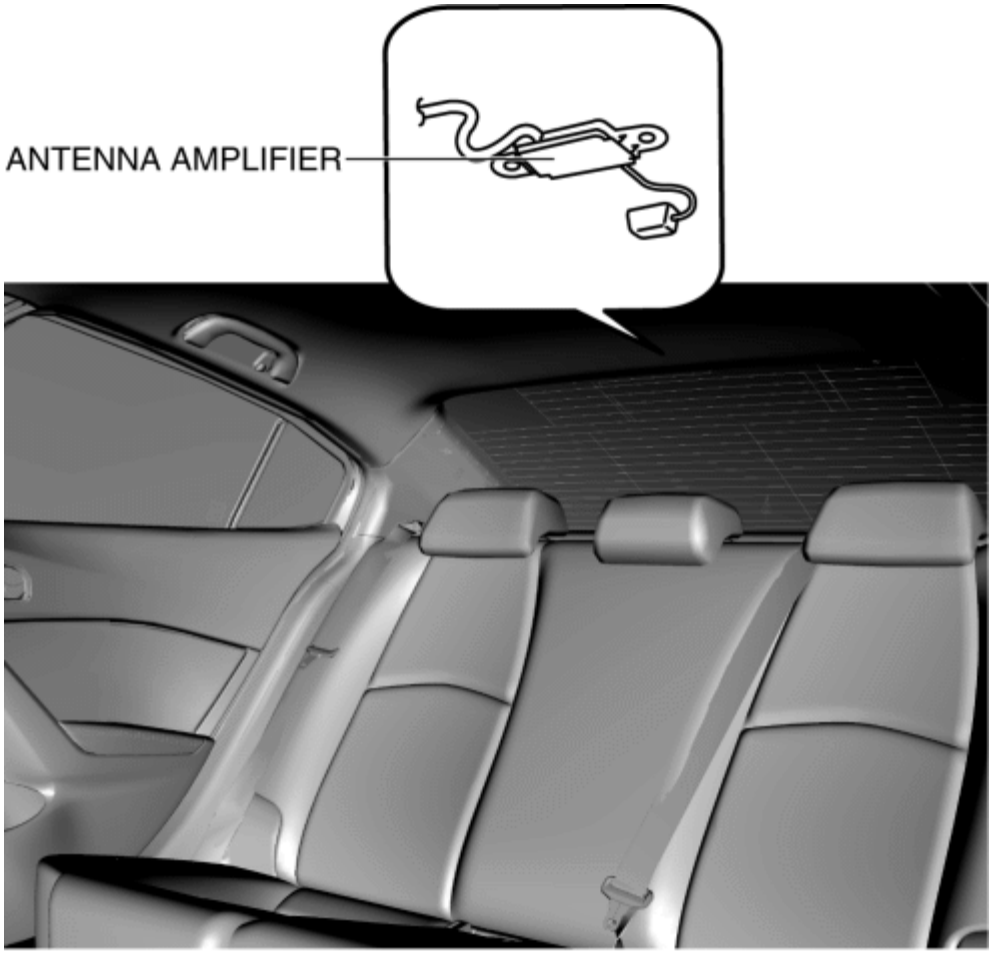

Fail-safe

- Function not equipped.

ANTENNA AMPLIFIER [WITHOUT CENTER DISPLAY]

2014 - Mazda3 - Body and Accessories

STEERING SWITCH [WITHOUT CENTER DISPLAY]

Purpose, Function

- Operation of the audio system and change of the instrument cluster display are possible without a change in driving posture.

Construction

- The steering switch is located on the spoke of the steering wheel.
- The resistance is built into each switch.

Without Bluetooth® system

- The steering switch consists of a volume adjustment (+) or (-) switch, cue/automatic band selector (up) or (down) switch, INFO button, up switch, down switch, and mute button.

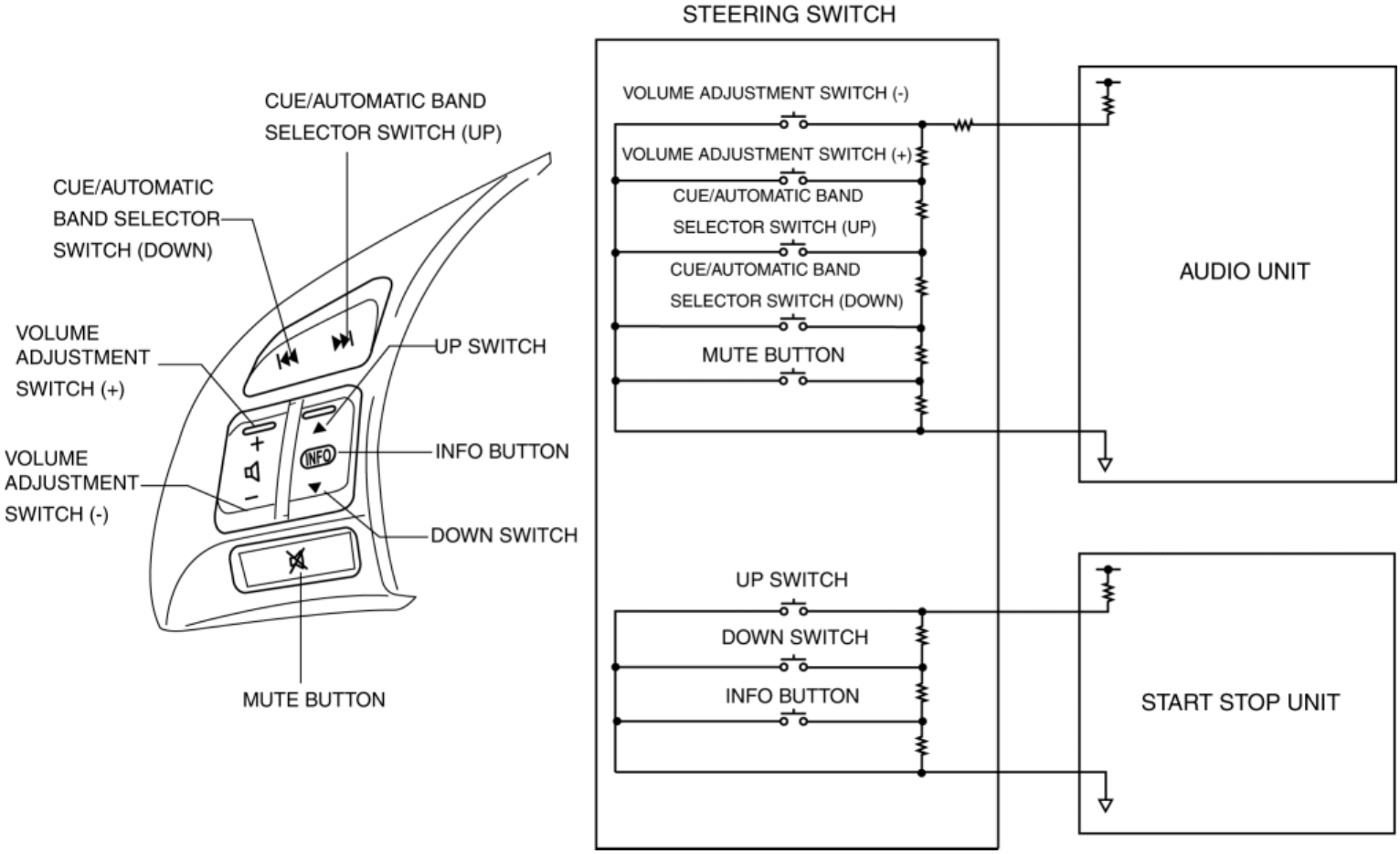

With Bluetooth® system

- The steering switch consists of a volume adjustment (+) or (-) switch, cue/automatic band selector (up) or (down) switch, INFO button, up switch, down switch, TALK button, PICK-UP button, and HANG-UP button.

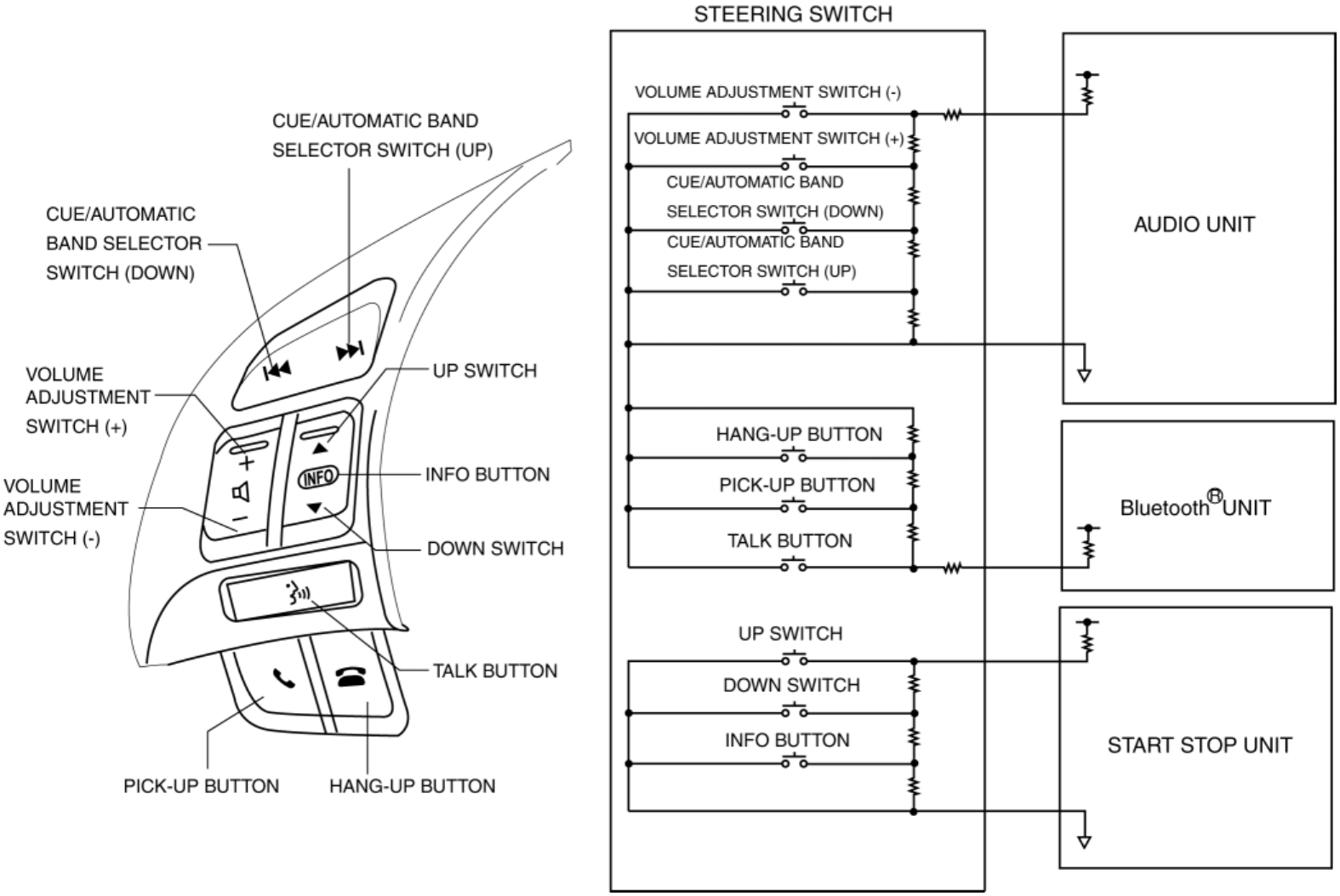

Operation

Switch name	Operation
Volume adjustment switch	Audio volume can be adjusted.
Cue/Automatic band selector switch	Cue of CD tracks and selection of radio band are possible.
Mute button (Without Bluetooth® system)	Audio volume can be muted. Pressing again after muting returns to previous volume level.
INFO button	Instrument cluster display can be changed. Refer to trip computer information system for display content. (See **TRIP COMPUTER INFORMATION SYSTEM**.)
Up/down switch	Instrument cluster display can be changed. trip computer information system for display content. (See **TRIP COMPUTER INFORMATION SYSTEM**.)
TALK button (With Bluetooth® unit)	Launches the voice recognition function.
Pick-up button (With Bluetooth® unit)	Receives a phone call.

Hang-up button (With Bluetooth® unit)	Hangs up a phone call.

Fail-safe

- Function not equipped.

2014 - Mazda3 - Body and Accessories

AUXILIARY JACK/USB PORT [WITHOUT CENTER DISPLAY]

NOTE:

- “iPod” is a registered trademark of Apple Inc.

Purpose, Function

- The auxiliary jack/USB port outputs the audio signal from an on-market, portable audio or USB device, connected to the auxiliary jack/USB port, to the audio unit.

Specification

Type	Playable data
USB mode	MP3/WMA/AAC file

Construction

Without CD player

- The auxiliary jack/USB port is installed to the front console.

With CD player

- The auxiliary jack/USB port is installed inside the rear console.

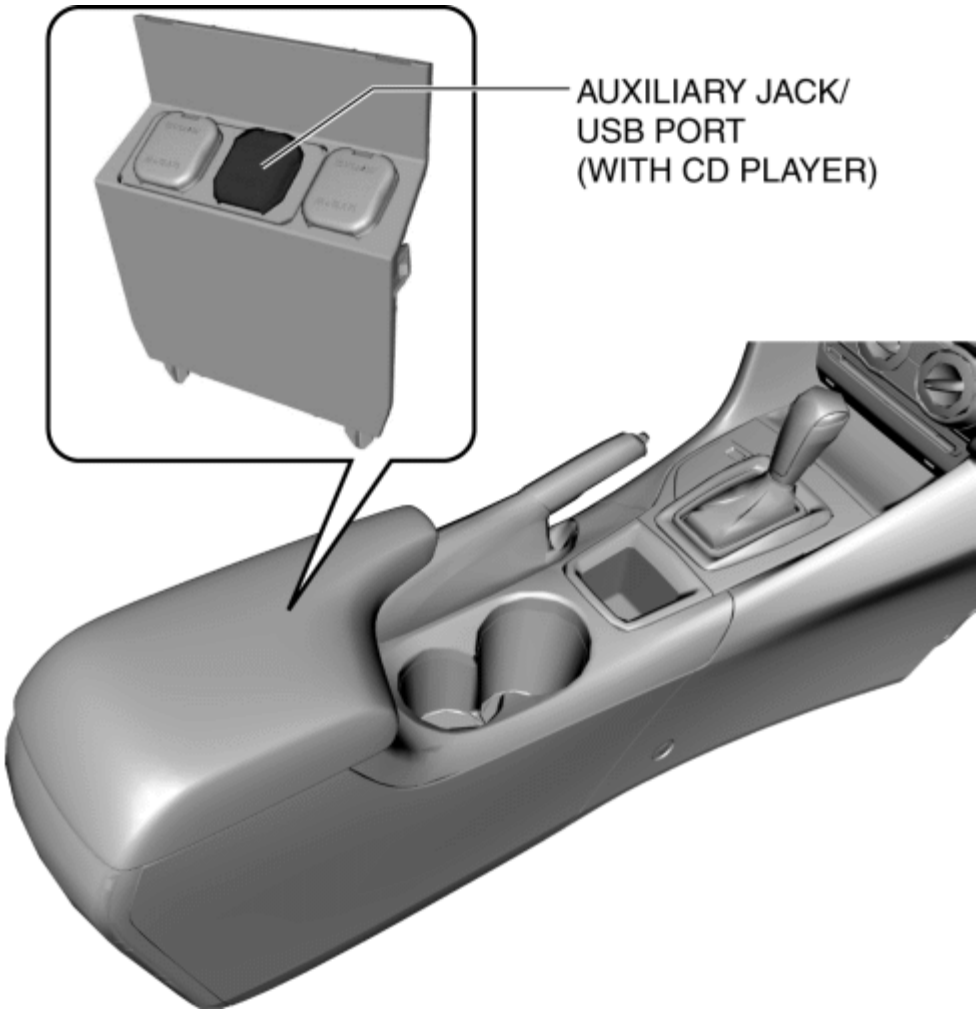

Operation

Auxiliary jack

1. When the plug of a portable audio unit is connected to the auxiliary jack/USB port, the auxiliary jack/USB port sends the audio signal from the portable audio device to the audio unit.

2. The audio unit sends the audio signal received from the auxiliary jack/USB port to the speakers.

3. The speakers output the audio based on the received audio signal.

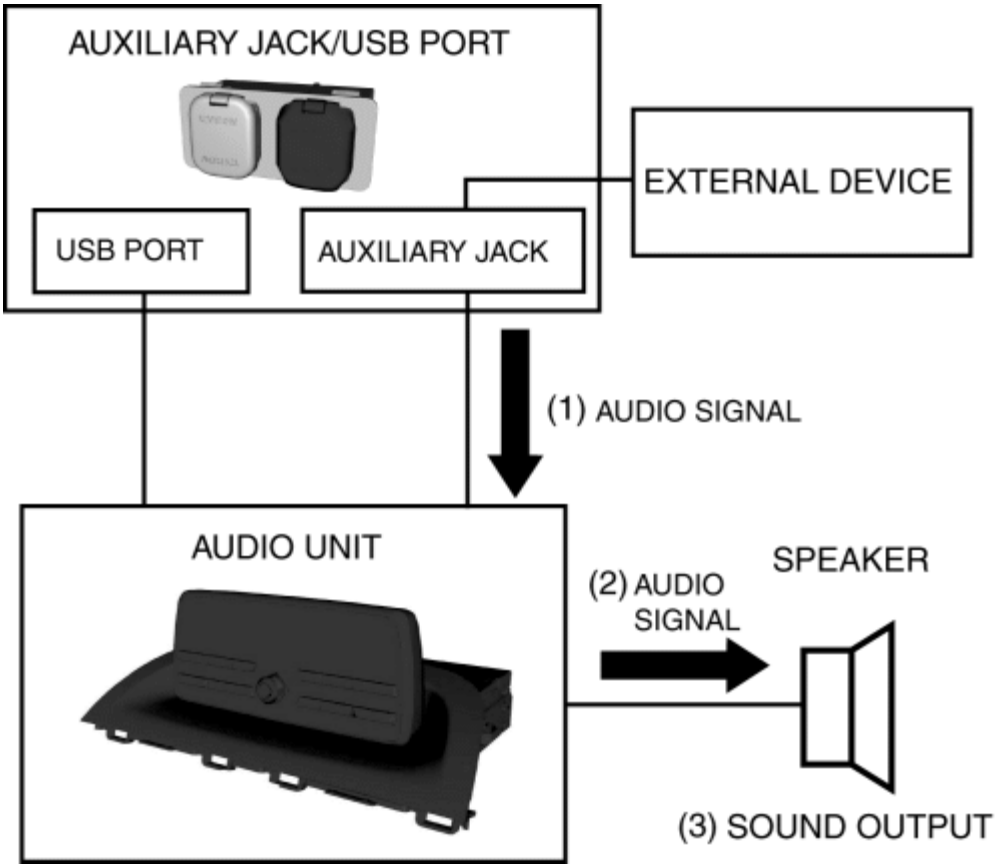

USB port

1. When the USB device/iPod is connected to the USB port of the auxiliary jack/USB port, the auxiliary jack/USB port sends the audio signal of the USB device/iPod to the audio unit.

2. The audio unit sends the audio signal received from the auxiliary jack/USB port to the speakers.

3. The speakers output the audio based on the received audio signal.

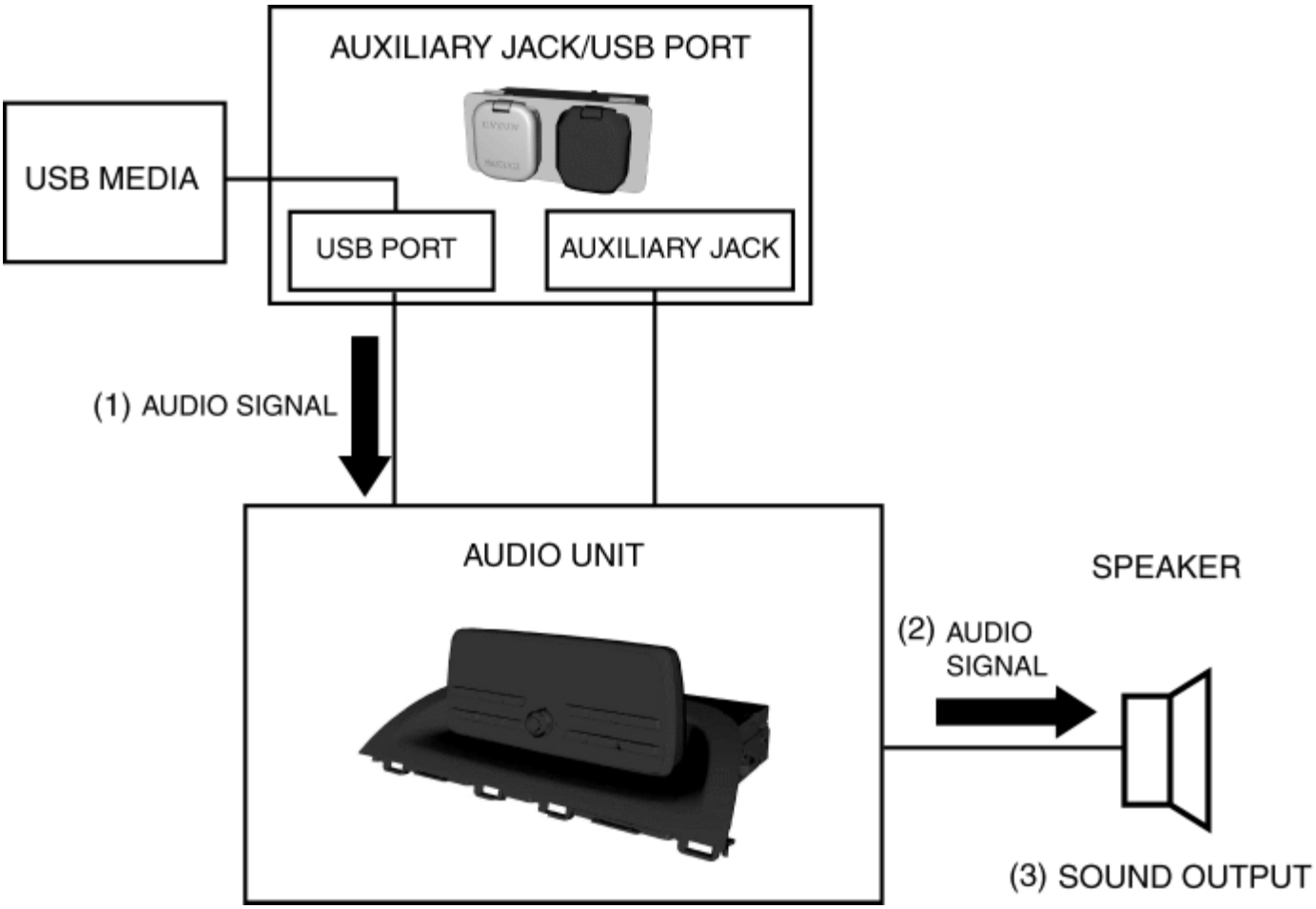

Fail-safe

USB port

- If a short circuit is detected between the USB power supply and ground, the auxiliary jack/USB port cuts the power supply to the USB media.

2014 - Mazda3 - Body and Accessories

Bluetooth® UNIT [WITHOUT CENTER DISPLAY]

Purpose, Function

- The Bluetooth® unit performs wireless transmission with a paired, Bluetooth® enabled mobile phone/portable audio device.

Specification

Item		Function
Profile	A2DP (Advanced audio distribution profile)	A2DP is a profile for transmitting high quality audio data by means of a Bluetooth® device and wireless transmission technology.
	AVRCP 1.0/1.3 (Audio/video remote control profile)	AVRCP is a profile which provides a standard interface which controls television and audio devices. The function differs depending on the version.
	HFP 1.5 (Hands-free profile)	HFP is a profile for making and receiving telephone calls by means of a Bluetooth® device and wireless transmission technology.
	DUN 1.1 (Dial-up Networking Profile)	DUN is a profile for accessing a dial-up service such as the Internet or other service via a Bluetooth® radio wave connection.
	PBAP 1.0 (Phone book access profile)	PBAP is a profile for transmitting telephone book data.
Maximum number of programmable devices		7
Number of programmed devices which can be used simultaneously		1

Construction

- The Bluetooth® unit is installed inside the glove compartment.

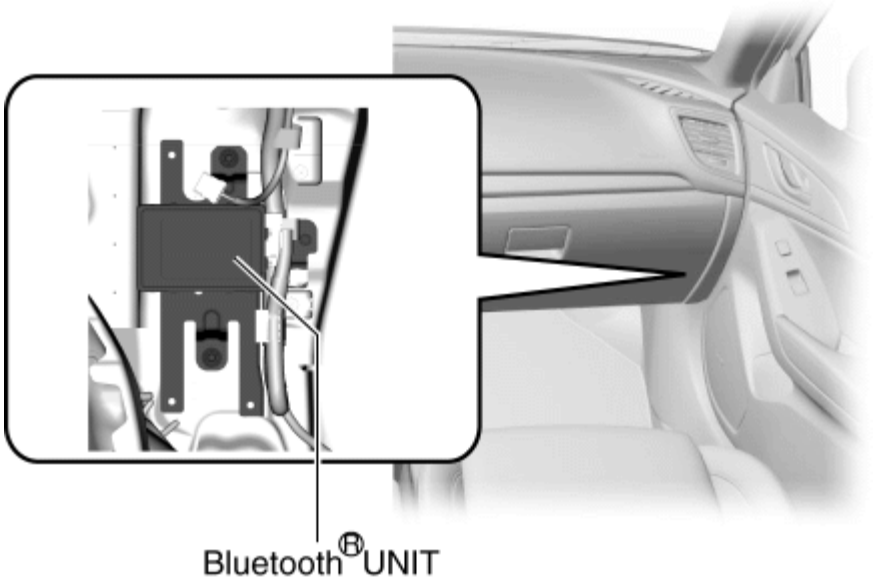

Terminal layout and signal

Terminal		Signal
	1A	Microphone signal input (+)
	1B	Microphone signal input (-)
	1C	Microphone power
	1D	Microphone signal shield line
	1E	Microphone detection
	1F	ST-SW
	1G	Microphone signal output (+)
	1H	Microphone signal output (-)
	1I	Differential audio output (+)
	1J	Differential audio output (-)

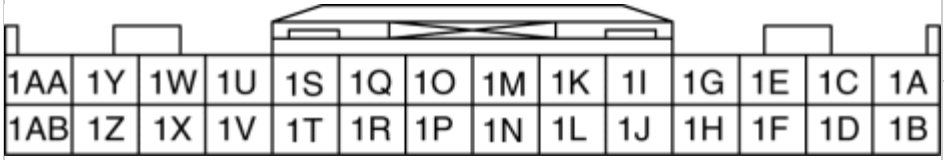

1K	Audio ground
1L	Audio signal shield line
1M	Single audio output LH
1N	Single audio output RH
1O	Open (Debug-use UART TX)
1P	Open (Debug-use UART RX)
1Q	AUX GND
1R	AUX signal shield line
1S	AUX single unit audio output LH
1T	AUX single audio output RH
1U	AUX connection detection
1V	—
1W	—
1X	Ground
1Y	Local CAN (+)
1Z	Local CAN (-)
1AA	B+
1AB	ACC

Operation

- For the Bluetooth® unit operation, refer to ENTERTAINMENT SYSTEM. (See **ENTERTAINMENT SYSTEM [WITHOUT CENTER DISPLAY]**.)

Fail-safe

- Function not equipped.

2014 - Mazda3 - Body and Accessories

MICROPHONE [WITHOUT CENTER DISPLAY]

Purpose, Function

- Converts the voice commands spoken into the microphone by the user to an electrical signal and sends the signal to the Bluetooth® unit.

Construction

- Noise due to the vehicle being driving or air blown by the air conditioner has been reduced by locating the microphone next to the map light.

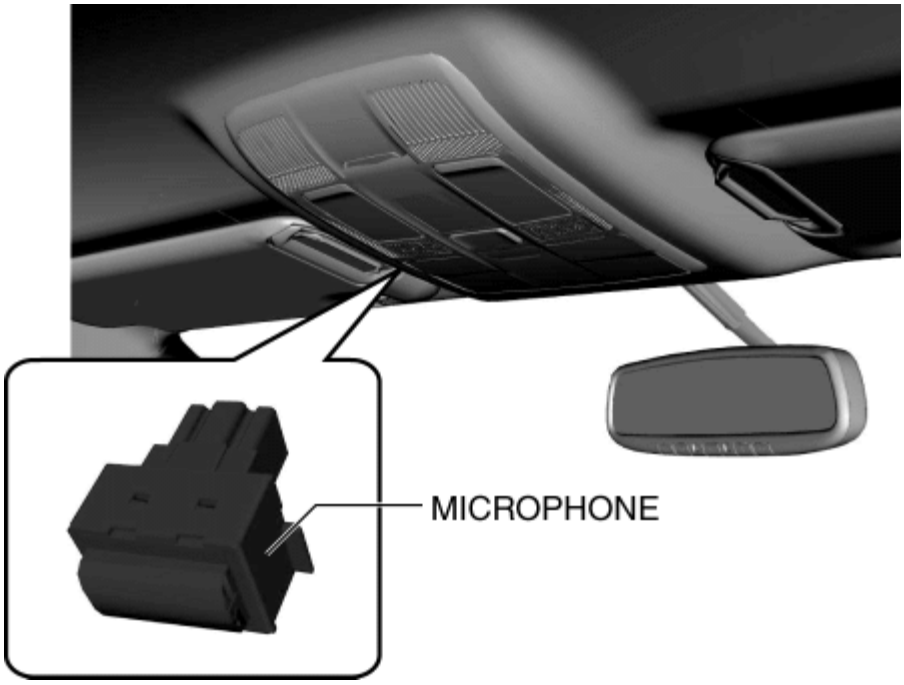

Operation

- For the voice recognition microphone operation, refer to the ENTERTAINMENT SYSTEM. (See **ENTERTAINMENT SYSTEM [WITHOUT CENTER DISPLAY]**.)

Fail-safe

- Function not equipped.

MICROPHONE [WITHOUT CENTER DISPLAY]

2014 - Mazda3 - Body and Accessories

ON-BOARD DIAGNOSTIC [ENTERTAINMENT SYSTEM (WITHOUT CENTER DISPLAY)]

NOTE:

- “iPod” is a registered trademark of Apple Inc.

Outline

- The entertainment system has an on-board diagnostic function and diagnostic assist function to facilitate system diagnosis.

On-board Diagnostic Function

Malfunction detection function

- The on-board diagnostic function consists of the following functions:
    - A malfunction detection function, which detects overall malfunctions in the audio system-related parts.
    - A memory function, which stores detected DTCs.
    - A display function, which indicates system malfunctions via a DTC display.
- Detects a malfunction in the entertainment system.

Memory function

- If the audio unit detects a malfunction in the entertainment system, it stores the DTC in the audio unit.

Target	Maximum memory number
Audio unit	3
CD player	3
Bluetooth® unit	0*

*

Because the Bluetooth® unit only displays the currently detected DTC, the memory function is not available.

- If the audio unit has already stored the maximum number of DTCs and detects another malfunction, it clears the oldest DTC and stores the new DTC.
- DTCs stored in the audio unit are cleared if the negative battery cable is disconnected (if backup power is interrupted).

Display Function

- To display DTCs in the audio unit display that have been recorded in the memory function, activate the on-board diagnostic function by operating the audio unit. Refer to the Workshop Manual for the activation procedure of the on-board diagnostic function.

  The DTCs consist of the following:

  - Supplier code (supplier name)

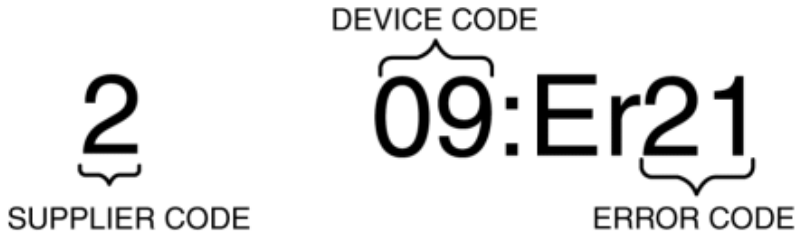

  - Device code (malfunction location)
  - Error code (malfunction contents)

Supplier code	Supplier name
01	SANYO Automedia
02	Panasonic
03	CLARION
04	PIONEER
05	VISTEON
06	DESAY

Device code	Device name
09	Audio unit
16	CAN system
26	Bluetooth® unit

28	USB
29	iPod
30	MCP3CD player

Error code	Malfunction contents
01	Mechanical malfunction
07	Poor data read-outs
09	No playable File/Track
12	CAN line (communication line) error
20	Insufficient power supply
21	Amplifier related circuit
30	Temperature abnormality

DTC table

× **Applicable**

— **Not applicable**

Audio

DTC	Description	Fail-safe	Drive cycle	Memory function
09:Er20	Low voltage input from battery	—	—	×
09:Er21	Audio unit internal malfunction	—	—	×
16:Er12	Unit communication error (MS-CAN)	—	—	×
28:Er01	USB mechanism malfunction	—	—	×
28:Er09	No USB playback function file/track	—	—	×
29:Er01	iPod mechanism malfunction	—	—	×
29:Er09	No iPod playback file/track	—	—	×

No Err	DTCs are not stored.	—	—	—

CD player

DTC	Description	Fail-safe	Drive cycle	Memory function
30:Er01	CD player mechanism malfunction	—	—	—
30:Er07	CD player data read error	—	—	—
30:Er30	CD player temperature abnormality	—	—	—
No Err	DTCs are not stored.	—	—	—

Bluetooth® unit

DTC	Description	Fail-safe	Drive cycle	Memory function
26:Er81	Low voltage input from battery	—	—	×
26:Er82	Audio unit internal malfunction	—	—	×
26:Er83	Unit communication error (MS-CAN)	—	—	×
26:Er84	USB mechanism malfunction	—	—	×
26:Er85	No USB playback function file/track	—	—	×
26:Er86	iPod mechanism malfunction	—	—	×
No Err	DTCs are not stored.	—	—	—

Diagnostic Assist Function

- The entertainment system related parts are forcibly operated to enable verification of the connection condition and operation status of the entertainment system related parts. In addition, the specifications for the entertainment system related parts are displayed in the audio unit display to enable their verification. Refer to the workshop manual for the diagnostic assist function activation procedure.

Diagnostic assist function table

Display	Function	Content

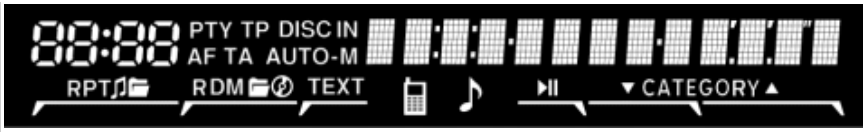	LCD inspection	Displays all characters in the audio unit display.
—	Button inspection	Sounds buzzer when the audio unit button is operated.
—	Speaker inspection	• Outputs sound from the speakers in the following order: 1. Front door speaker (LH) and tweeter (LH) 2. Front door speaker (RH) and tweeter (RH) 3. Rear door speaker (RH) 4. Rear door speaker (LH)
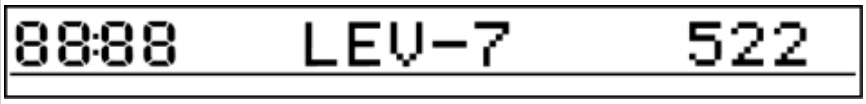	Radio reception condition inspection	Displays the radio reception status in the audio unit display.
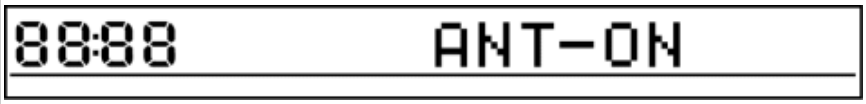 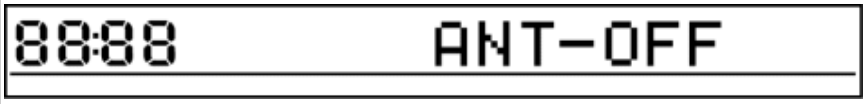	Antenna control inspection	Displays the power supply output status to the antenna amplifier in the information display.
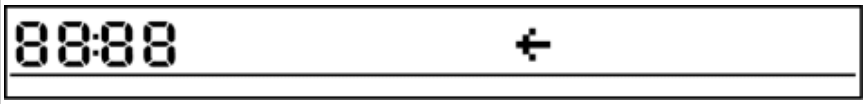 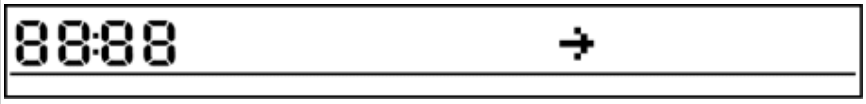	Dial inspection	Displays the rotation direction of the operated dial switch in the audio unit display.

88:88 N	Audio amplifier specification verification	Displays the audio amplifier specification in the audio unit display.
88:88 CD DEFECTIVE 88:88 CD-DRIVE DISPLAYS ALTERNATELY EVERY 2 S 88:88 MALFUNCTION	CD inspection	Displays the result of the CD inspection in the audio unit display. **NOTE:** • If the CD inspection cannot be performed normally, “TEST REJECTED” is displayed in the audio unit display.
—	Hands-free password clearing	Clears the Hands-free password.
88:88 CD UPDATING	Software reset	Resets the audio unit software. **NOTE:** • If the software is reset, the radio preset is reset simultaneously.
88:88 CD RESET	CD software reset	Resets the CD player software.
88:88 CD UPDATING	CD software update	Updates the CD player software.
88:88 BHN9-669G0-A	CD part number verification	Displays the CD player part number in the audio unit display.

2014 - Mazda3 - Body and Accessories

ENTERTAINMENT SYSTEM [WITH CENTER DISPLAY]

Outline

- In addition to the conventional audio and navigation functions, communication tools such as Internet radio and e-mail, SMS (Short Message Service), SNS (Social Networking Service), and Hands-free telephone (HF/TEL) functions can be operated as one function of the vehicle by connecting a mobile device such as a customer's Smartphone or tablet terminal.

Schematic Diagram

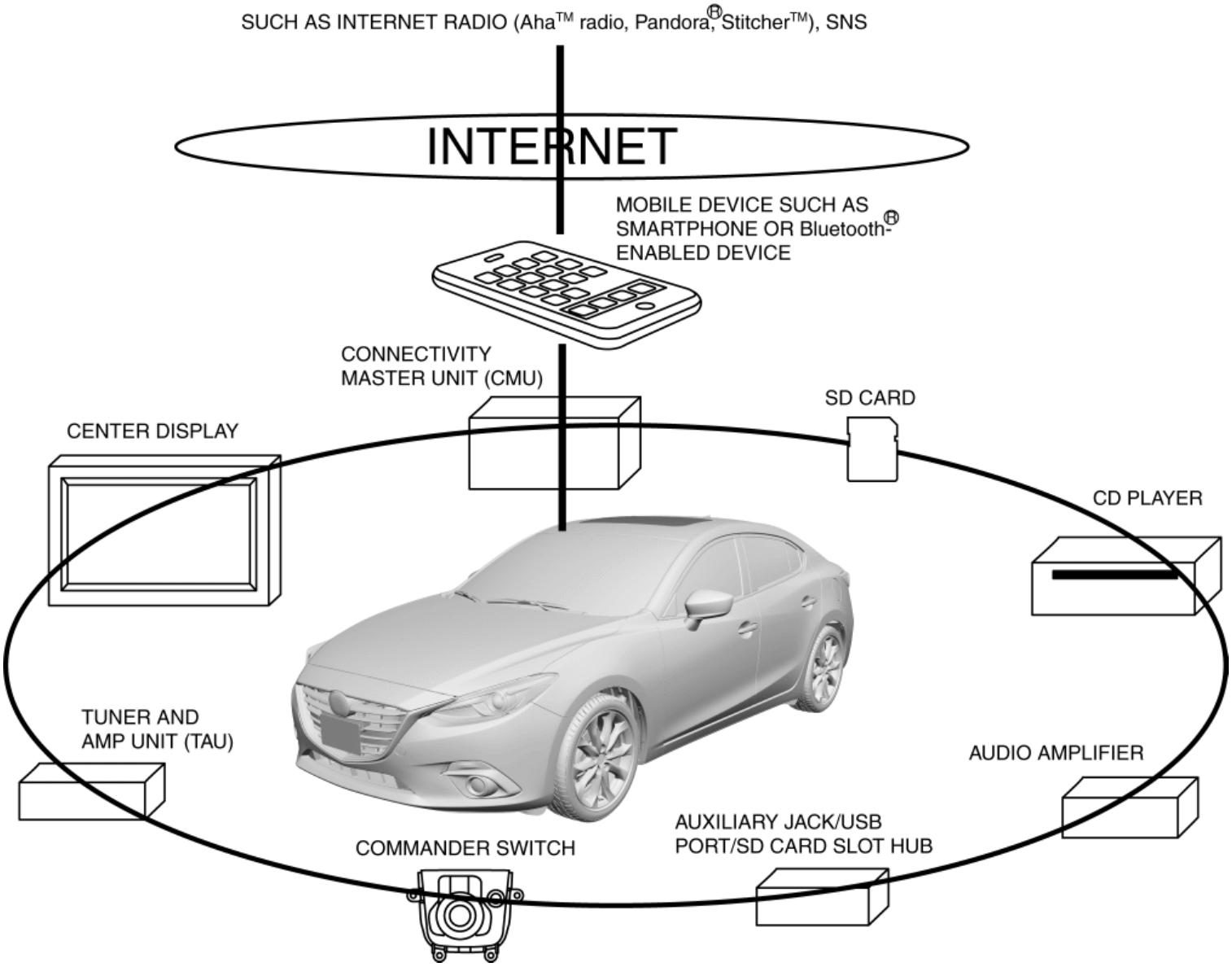

Reference List Table

Item	Content/function	Reference
Operation signal reception	The entertainment system receives operation signals sent from the center display, command switch, or the voice recognition function to operate each function.	**Operation** • (See .)
Audio function	Music media listening such as radio, CD, and iPod is available.	**Function** • (See) **Operation** • (See)
Communication function	E-mail, SMS (Short Message Service), SNS (Social Networking Service), and Hands-free telephone (HF/TEL) functions can be used.	**Function** • (See) **Operation** • (See)
Navigation function	Provides guidance and information to destination.	**Function** • (See) **Operation** • (See)
Setting function	Changes the vehicle settings such as the display and sound.	**Function** • (See) **Operation** • (See)
Application function	Average fuel consumption, maintenance information, and warning information can be verified.	**Function** • (See) **Operation** • (See)
Structural diagram	—	(See)
System diagram	—	(See)

Function

Audio function

AM/FM radio

- AM and FM radio broadcast can be listened to.

RBDS

- RBDS can be listened to. When RBDS begins, the audio switches automatically to traffic information.

HD radio™

- HD radio™ can be listened to.

NOTE:

- HD radio broadcasts deliver digital audio quality like a CD. Display of song information (genre type, song title, artist name, album title) during a broadcast is also available. HD radio™ broadcasts may also include several channels (multi-cast channels) in the same frequency. A maximum of 7 multi-cast channels can be received.

SiriusXM satellite radio

- Satellite radio broadcasts can be listened to.

Aha™ radio*1/Pandora®*2/Sticher™ radio*3

- By downloading an application to a mobile device such as a Smartphone and pairing with the connectivity master unit (CMU), Internet broadcasts (Aha™ radio/Pandora® /Stitcher™radio) can be listened to.

NOTE:

- Aha™ radio is an application which personalizes various Internet content such as Internet radio and podcasts, and allows easy access. Feeds of friends linked to Facebook and Twitter can be verified. Local restaurants and coffee shops can be searched using the Location Based Services, and by obtaining traffic information in real time, the user's travel is supported. The service content provided by Aha™ differs depending on the country in which the user resides. For detailed information regarding Aha™ radio, go to http://www.aharadio.com/.
- Pandora® is non-fee, personalized Internet radio. Pandora® is not simply an application for playing user requests, rather it is used to create a personalized station by matching the user's likes using key words such as artist and song name input by the user, and providing the music.
- Stitcher™ radio is an application which streams Internet radio and podcasts on demand. Desired content can be registered to the user's likes, and by giving a Thumbs-up or down, recommended content is automatically selected. For detailed information regarding Stitcher™ radio, go to http://stitcher.com/.

*1

Aha™, the Aha™ logo, and the Aha™ are trademarks or registered trademarks of Harman International Industries, Inc., used with permission.

*2

***Pandora®, the Pandora® logo, and the Pandora® are trademarks or registered trademarks of Pandora Media, Inc., used with permission.**

*3

Stitcher™, the Stitcher™ logo, and the Stitcher™ are trademarks or registered trademarks of Stitcher, Inc., used with permission.

AUX/USB audio

- By connecting an on-market portable audio/USB device/iPod to the auxiliary jack/USB port/SD card slot hub, audio from the external device can be listened to.

Bluetooth® audio

- By pairing a Bluetooth® enabled device with the CMU, audio from the Bluetooth® device can be listened to.

CD playback

- CDs and CD-R (MP3/WMA (Windows Media Audio)/ACC (Advanced Audio Coding)) can be listened to.

Gracenote

- The CMU supports Gracenote. Gracenote can perform updates by connecting a USB, in which update information has been saved, to the auxiliary jack/USB port/SD card slot hub.

NOTE:

- Music recognition technology and related data are provided by Gracenote®. Gracenote is the industry standard in music recognition technology and related content delivery. For more information visit www.gracenote.com.
- The Gracenote update information can be installed from the Mazda Handsfree website. Regarding information related to the most recent Gracenote database available and installation specifications, go to the Mazda Handsfree website (http://www.mazdahandsfree.com).

Centerpoint®2*4 (with Bose®)

- Centerpoint®2 is a virtual surround sound function for vehicles. The 5.1-channel surround signal converted using an independently optimized algorithm delivers three-dimensional, well-balanced surround acoustics from the 9 speakers equipped on the vehicle to passengers. Centerpoint®2 can be set to ON/OFF.

*4

Centerpoint®2 is a registered trademark of Bose Corporation.

Communication function

E-mail/SMS (Short Message Service)

- Additionally, read-out using voice recognition is possible.

Hands-free telephone (HF/TEL) function

- Answering and receiving telephone calls can be performed without having to directly connect a Bluetooth® enabled mobile device such as a mobile phone or Smartphone.

Mobile 911 (U.S.A./Canada)

- Mobile 911 is a function which automatically calls a PSAP (Public Safety Answering Point) in the event that the vehicle is involved in an accident using a mobile device such as a Bluetooth® enabled mobile phone or Smartphone to notify the PSAP of the vehicle position and to conduct a call.

NOTE:

- Depending on how the vehicle was affected by the collision, a malfunction in the communication system could occur, and depending on the condition of the related parts, Mobile 911 may not operate normally.

Navigation function

Displays maps and provides route guidance

- Calculates routes to the destination set by the user and provides guidance using maps and audio.

Turn-by-turn (TBT)

- Displays the direction of travel in the active driving display.

Setting function

Bluetooth® pairing

- Pairing of a Bluetooth® enabled device can be performed.

NOTE:

- For the Bluetooth® pairing set up method, refer to the workshop manual.

Clock setting

- The following items can be set using the clock setting.

Item	Content
Adjust Time	Displays the currently set time. When + is selected, the time/minutes move forward, and when - is selected, the time/minutes move back. AM/PM selection is only possible during 12-hour clock time display.
GPS Sync	When ON is selected, “Adjust Time“ and “Time Zone Select“ are disabled.
Time Format	Changes the display between 12 and 24-hour clock time.
Time Zone Select	Selects the time zone.

System setting

- The following items can be set using the system setting.

Item	Content
Language	The language can be changed.
Temp	Switches temperature unit between F°/C° *5.
Distance	The distance unit can be switched between miles/km*6.

Music Database Update	Initiates the music database update.
Factory Reset	Settings other than sound are reset to the factory settings.
Agreements and Disclaimers	Agreement and disclaimer items can be verified.

*5

When the temperature unit is changed using Temp, the displayed unit on the climate control unit (dial type) also changes simultaneously.

*6

When the distance unit is changed using Distance, the displayed unit in the instrument cluster also changes simultaneously.

Display setting

- The following items can be set using the display setting.

Item	Content
Display	The display can be switched ON/OFF. When CLOCK is displayed, the display turns off and the time is displayed.
Mode	Switches the display between daytime mode/nighttime mode. When AUTO is selected, the mode switches automatically between daytime/nighttime mode depending on the headlight illumination condition.
Brightness	Adjusts the display brightness.
Contrast	Adjusts the display contrast.
Reset	Resets the display to the factory settings.

Sound setting

- The following items can be set using the sound setting.

Item	Setting contents
Bass(Low pitch sound)	+ side:Low pitch enhancement - side:Low pitch reduction
Treble(Treble sound)	+ side:Treble enhancement - side:Treble reduction
Fade(Front/back volume balance)	Back side:Front speaker volume reduction Front side:Rear speaker volume reduction
Balance(Left/right volume balance)	Right side:Left side volume reduction Left side:Right side volume reduction
Auto Level Control*7 (Automatic volume adjustment)	OFF/LEVEL 1/LEVEL 2/LEVEL 3/LEVEL 4/LEVEL 5/LEVEL 6/LEVEL 7
Centerpoint*8 (Automatic surround level adjustment)	ON/OFF
AudioPilot*8	ON/OFF

(Automatic volume adjustment)	
Beep (Audio operation sound)	ON/OFF

*7

Without Bose®

*8

With Bose®

Volume setting

- The volume can be adjusted by operating the volume dial on the command switch or the volume button on the steering switch.

Personalization setting feature

- The following personalization settings for the system can be changed using the center display. For details, refer to the each system personalization feature.

System name		Reference
Smart City Brake Support (SCBS) System		(See **SMART CITY BRAKE SUPPORT (SCBS) PERSONALIZATION**.)
Blind Spot Monitoring (BSM) System		(See **INSTRUMENTATION/DRIVER INFO. PERSONALIZATION**.)
Lane Departure Warning System (LDWS)		
Auto Wiper System		(See **WIPER/WASHER SYSTEM PERSONALIZATION**.)
Door Locks Systems	Power door lock system	(See **SECURITY AND LOCKS PERSONALIZATION**.)
	Advanced keyless entry system	
	Keyless entry system	
Turn Light System		(See **LIGHTING SYSTEM PERSONALIZATION**.)
Lighting Systems	Room light control system	
	High beam control (HBC) system	
	Lights-on reminder warning alarm	
	Auto light-off system	
	DRL system (Except Canada specs.)	
	Auto light system	

Active driving display setting

- Each type of setting for the active driving display can be performed. For details, refer to the active driving display. (See **ACTIVE DRIVING DISPLAY**.)

Application function

Fuel economy monitor

- The fuel consumption display displays the following information in the center display. For details, refer to the fuel consumption display of the center display. (See **CENTER DISPLAY [WITH CENTER DISPLAY]**.)
    - Fuel Consumption Display

- Control Status Display (With i-ELOOP)

Maintenance monitor

- The maintenance monitor displays the following information in the center display. For details, refer to the maintenance monitor of the center display. (See CENTER DISPLAY [WITH CENTER DISPLAY])
  - Scheduled maintenance
  - Tire rotation
  - Oil change

Warning guidance

- Currently activated warnings can be verified. For details, refer to the warning guidance of the center display. (See **CENTER DISPLAY [WITH CENTER DISPLAY]**.)

Structural view

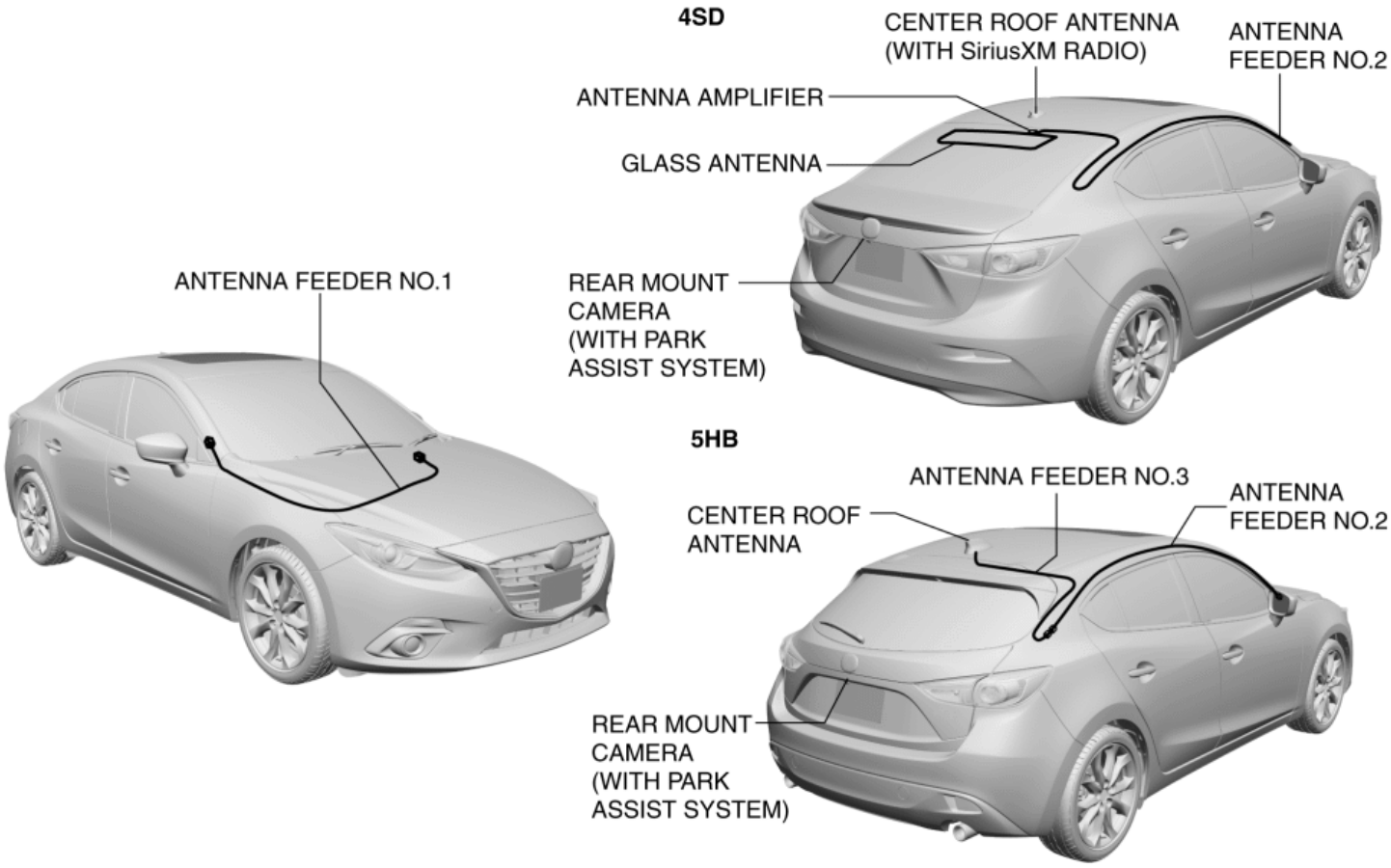

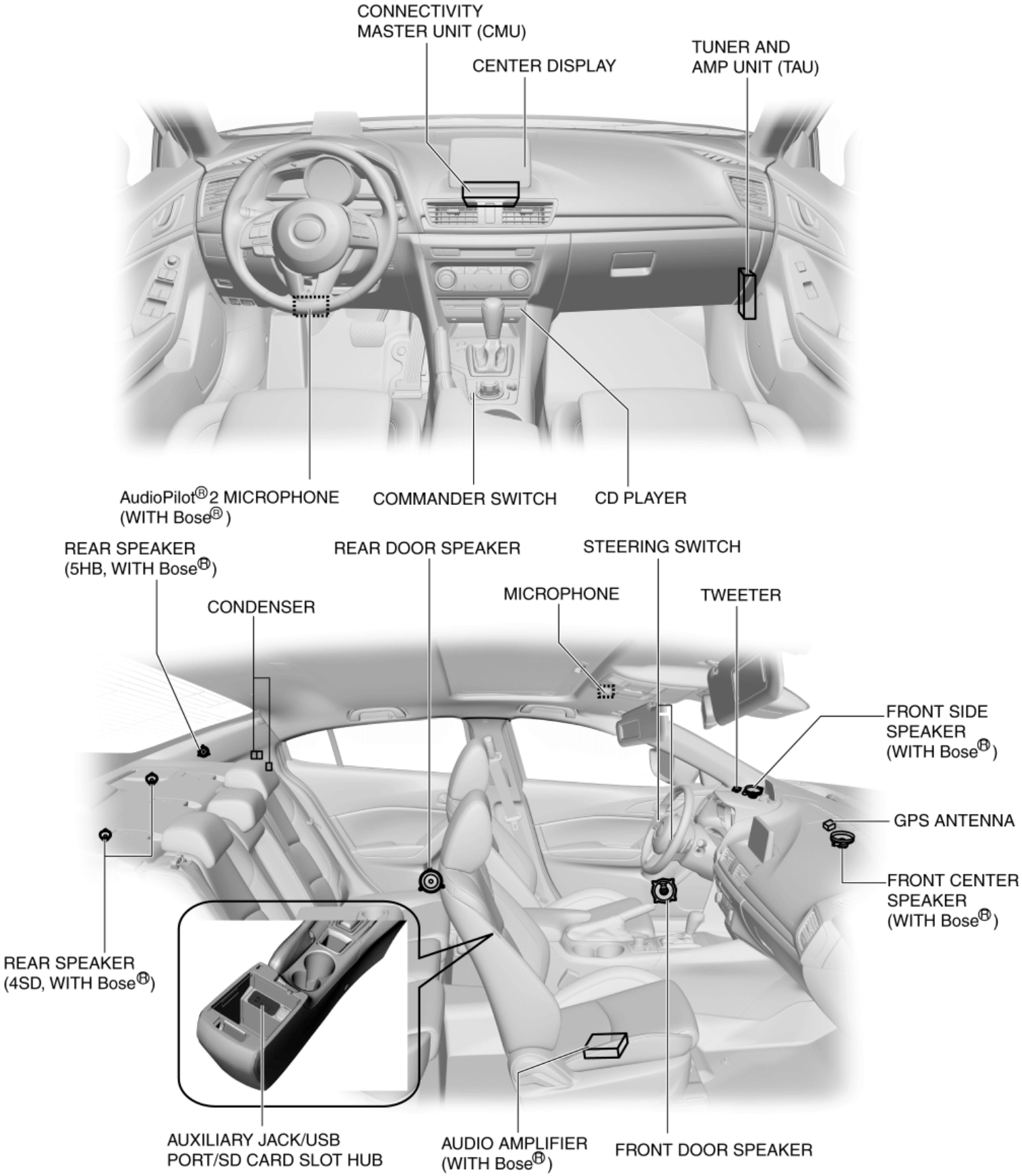

System diagram

Without Bose®

ENTERTAINMENT SYSTEM [WITH CENTER DISPLAY]

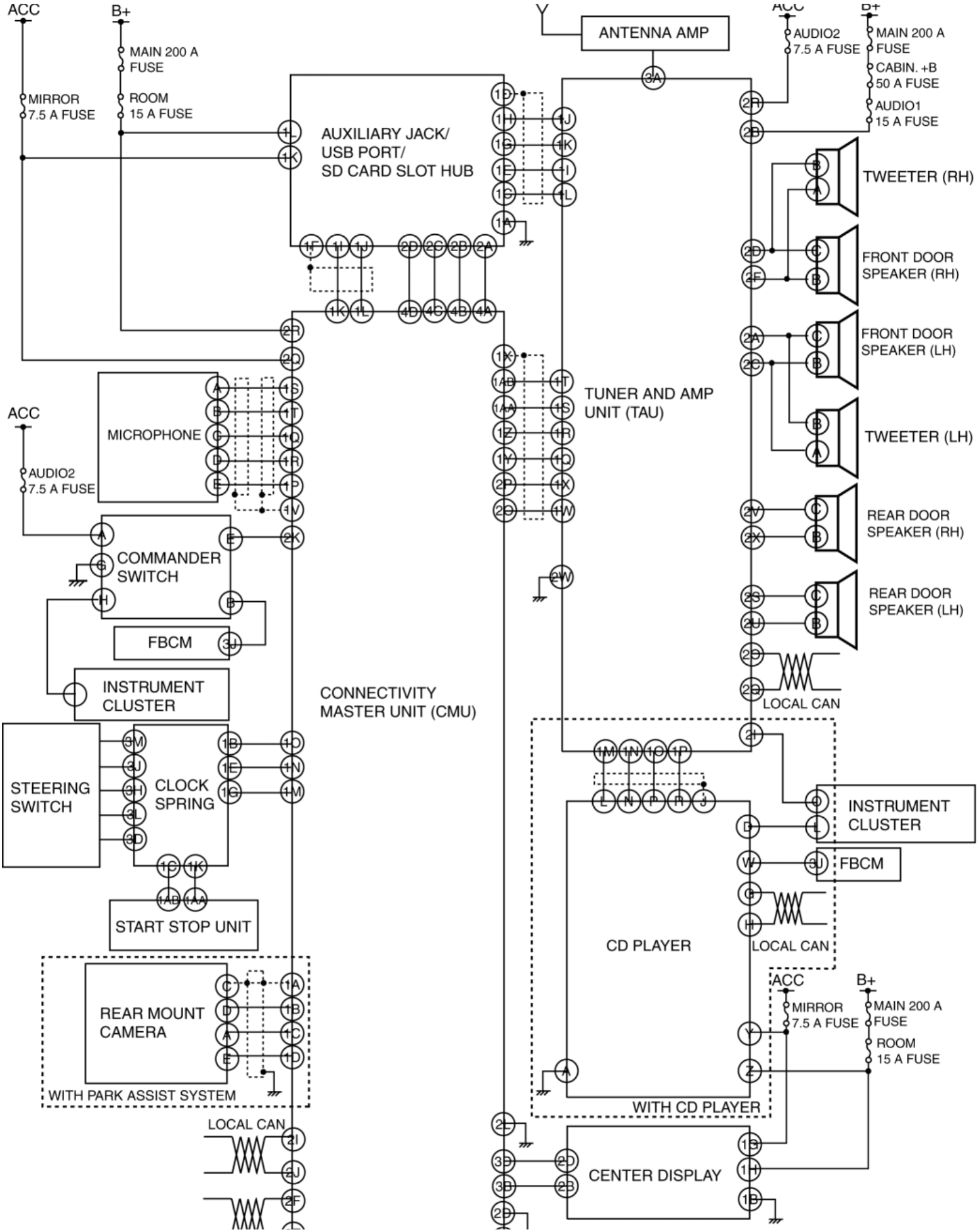

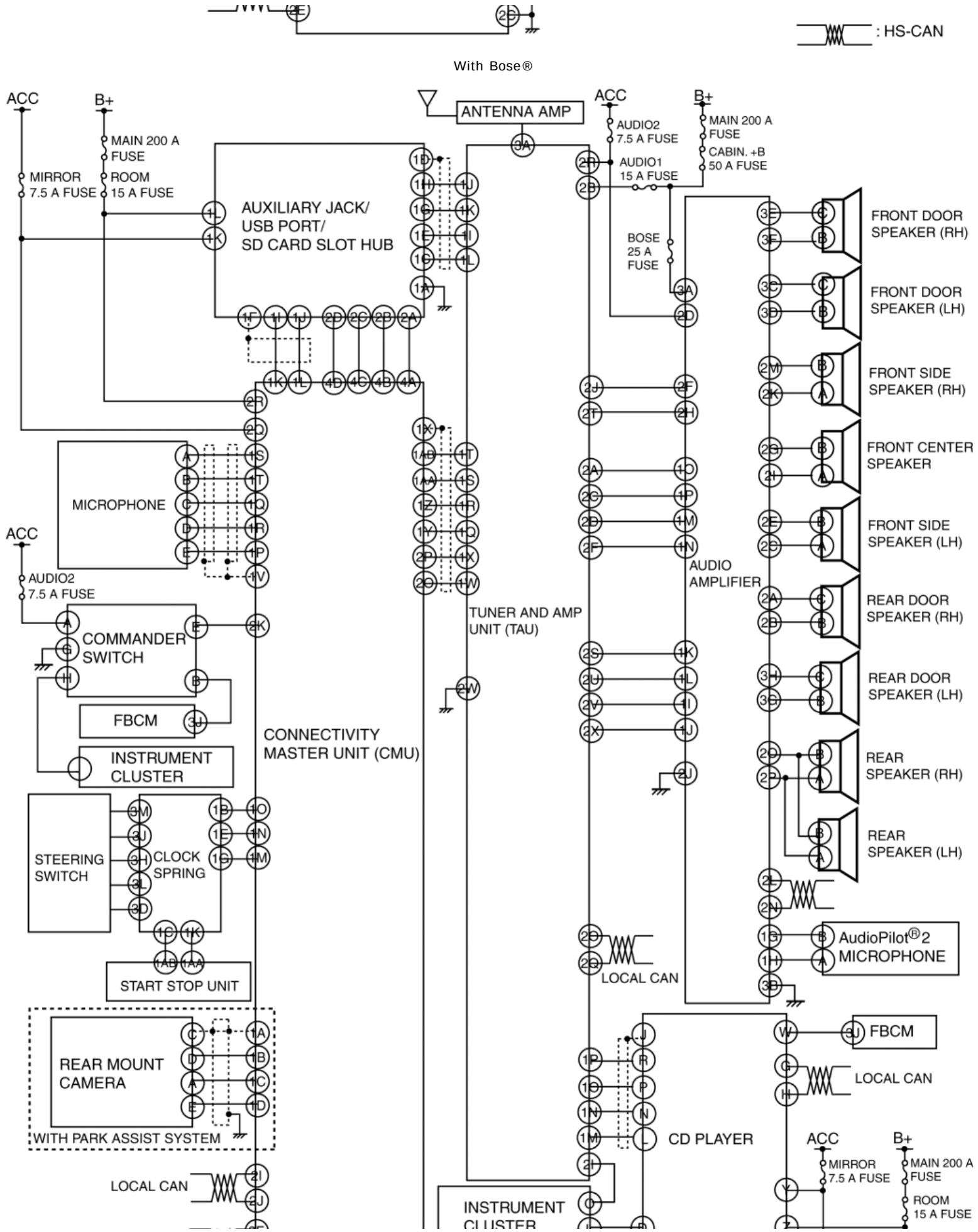
: HS-CAN
With Bose®
ACC
B+
MAIN 200 A FUSE
MIRROR 7.5 A FUSE
ROOM 15 A FUSE
AUXILIARY JACK/ USB PORT/ SD CARD SLOT HUB
ANTENNA AMP
AUDIO2 7.5 A FUSE
AUDIO1 15 A FUSE
CABIN. +B 50 A FUSE
BOSE 25 A FUSE
FRONT DOOR SPEAKER (RH)
FRONT DOOR SPEAKER (LH)
FRONT SIDE SPEAKER (RH)
FRONT CENTER SPEAKER
FRONT SIDE SPEAKER (LH)
REAR DOOR SPEAKER (RH)
REAR DOOR SPEAKER (LH)
REAR SPEAKER (RH)
REAR SPEAKER (LH)
MICROPHONE
AUDIO AMPLIFIER
COMMANDER SWITCH
FBCM
INSTRUMENT CLUSTER
TUNER AND AMP UNIT (TAU)
CONNECTIVITY MASTER UNIT (CMU)
STEERING SWITCH
CLOCK SPRING
START STOP UNIT
AudioPilot® 2 MICROPHONE
LOCAL CAN
REAR MOUNT CAMERA
WITH PARK ASSIST SYSTEM
CD PLAYER
INSTRUMENT CLUSTER

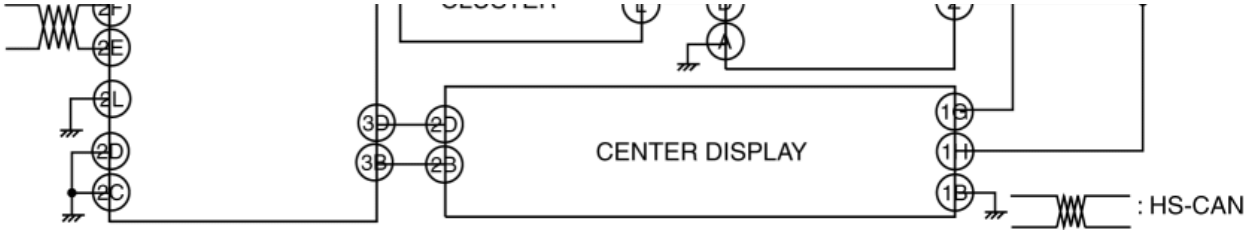

Operation

Operation signal reception

- Each function of the entertainment system operates if any of the operations in the following table is performed.

× **Operates**

— **Does not operate**

Function		Center display operation (touch position signal)	Command switch operation	Voice recognition function operation (steering switch operation and audio signal (voice command))
Audio function	AM/FM radio	×	×	×
	HD radio™	×	×	×
	SiriusXM satellite radio	×	×	×
	Aha™ radio/Pandora®/Stitcher™ radio	×	×	×
	AUX/USB audio	×	×	×
	Bluetooth® audio	×	×	×
	CD playback	×	×	×
	Centerpoint®2	—	—	—
Communication function	E-mai, SMS (Short Message Service)	×	×	×
	Hands-free telephone (HF/TEL) function	×	×	×
	Mobile 911	×	×	—
Navigation function	Map display, route guidance	×	×	×
	Turn-by-turn (TBT)	—	—	—
	Bluetooth® pairing	×	×	—
	System setting	×	×	—

Setting function	Display setting	×	×	—
	Sound setting	×	×	—
	Volume setting	×	×	—
	Personalization features setting	×	×	—
	Active driving display setting	×	×	—
Application function	Fuel economy monitor	×	×	—
	Maintenance monitor	×	×	—
	Warning guidance	×	×	—

Operation signal reception from center display

- When the center display is operated, the center display detects the touch position.
- The center display sends a touch position signal to the CMU based on the detected touch position.
- The CMU sends the control signal to the related units based on the received touch position signal.

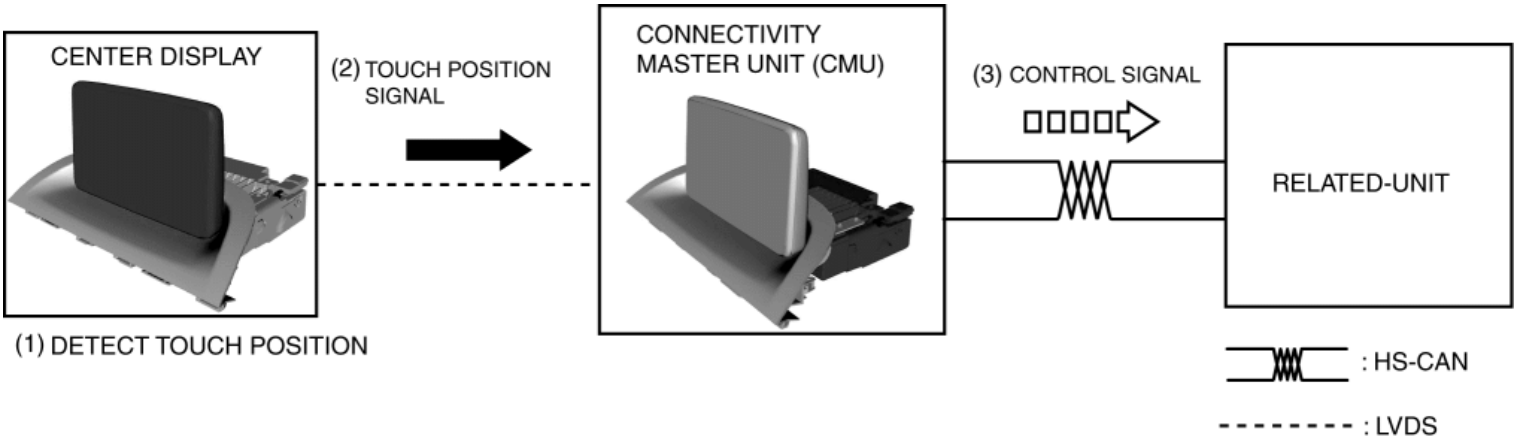

Operation signal reception from command switch

- When the command switch is operated, the CMU detects the command switch operation.
- The CMU sends the display signal to the center display based on the detected command switch operation. In addition, it sends a control signal to the related units.

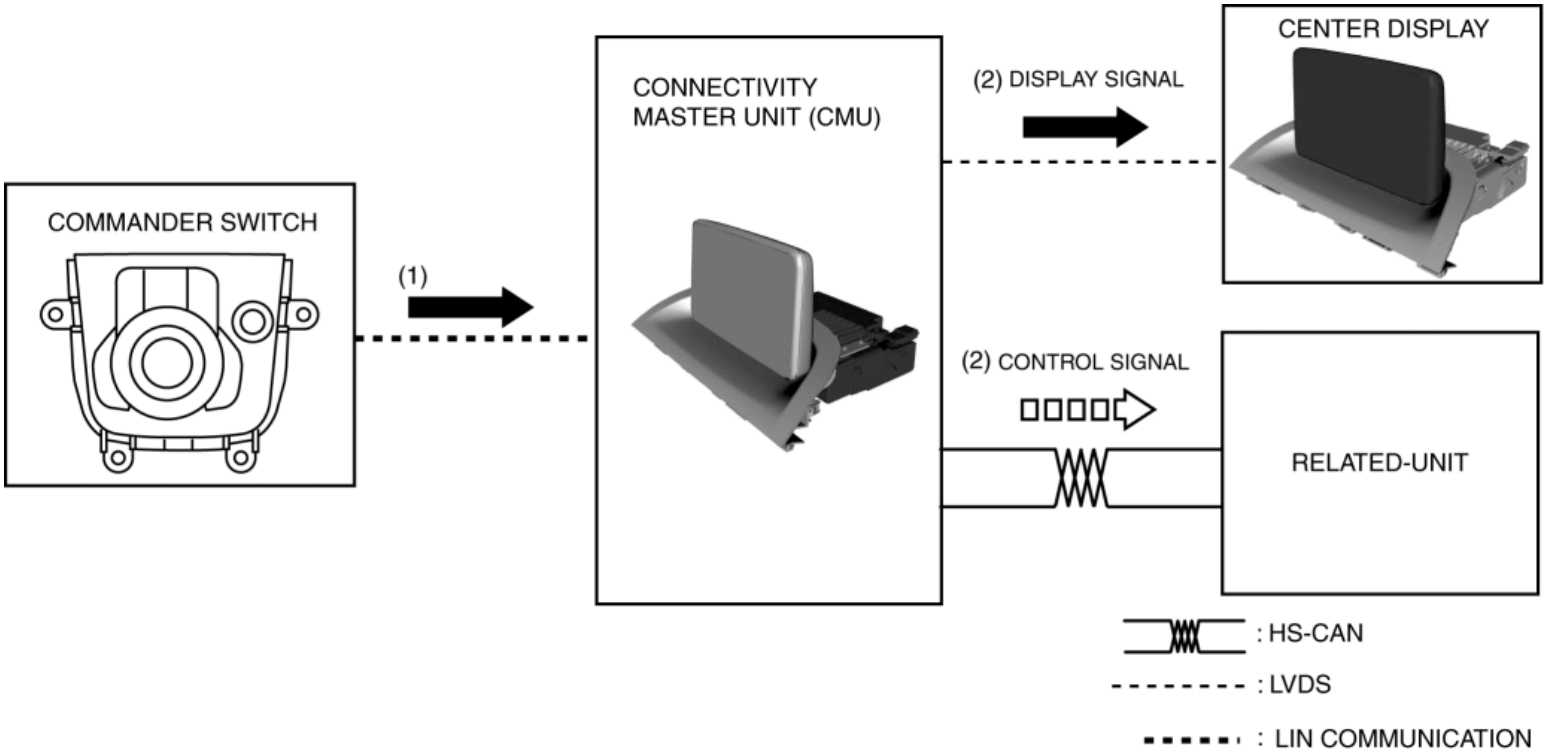

Operation signal reception from voice recognition function

- When the TALK button on the steering switch is pressed, the CMU detects the steering switch operation.
- The CMU sends a guidance audio signal to the tuner and amplifier unit (TAU) when it detects the TALK button operation.
- The TAU sends the guidance audio signal to the speakers and the speakers output guidance audio.
- The microphone converts the words (voice commands) produced by the user after the guidance audio output to an audio signal and sends it to the CMU.
- The CMU sends the control signal to the related parts based on the audio signal received from the voice recognition microphone.

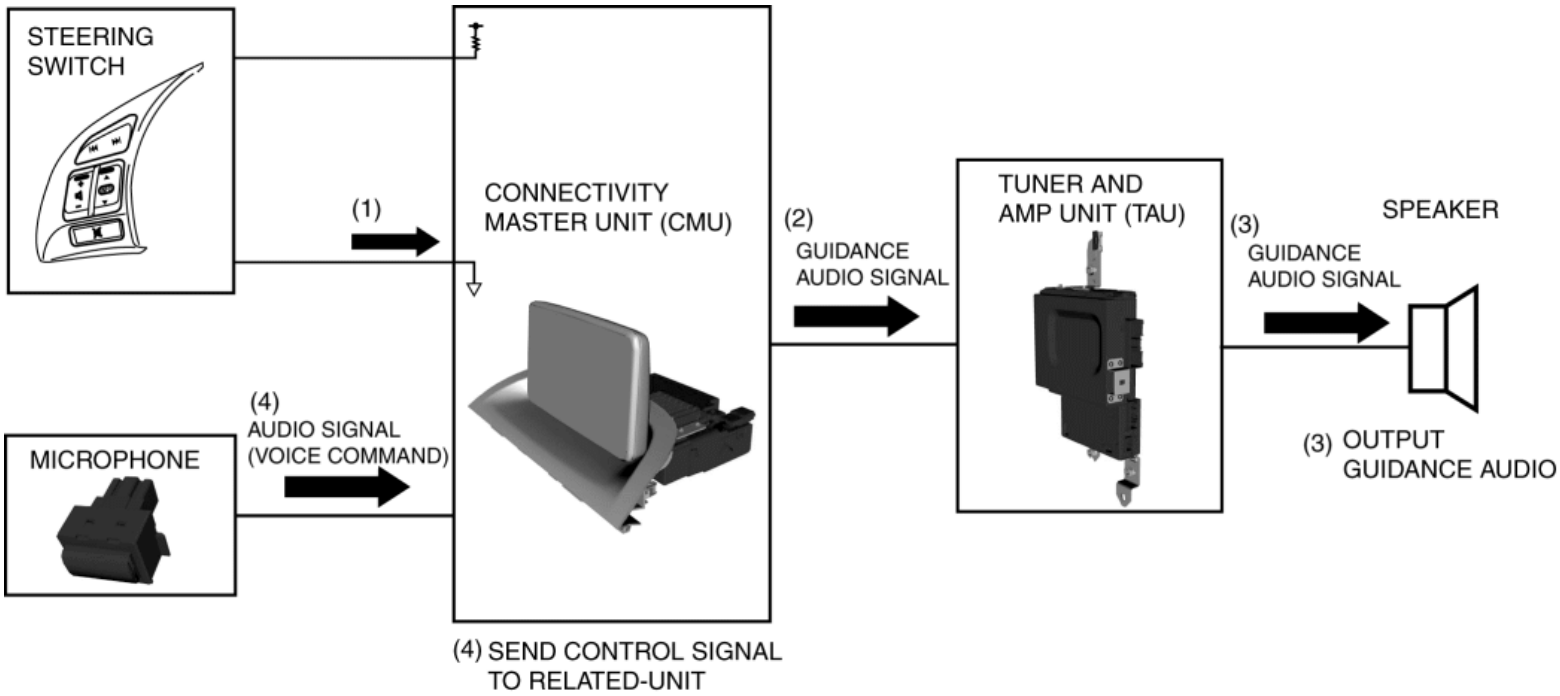

Audio function

AM radio/FM radio

- When the CMU receives an operation signal/detects a switch operation, it sends a control signal to the TAU.

- When the TAU receives the control signal, it switches the tuner in the TAU to radio mode and initiates the reception of radio broadcasts.
- The TAU detects the radio station of the radio broadcast selected by the user using the tuner in the TAU based on the electrical signal sent from the antenna amplifier (4SD)/center roof antenna. The audio signal from the detected radio broadcast is sent to the speakers. Additionally, the frequency of the radio station being listened to is sent to the CMU.
- The CMU converts the radio broadcast received from the TAU to a LVDS signal and sends the LVDS signal to the center display.
- The speakers output the audio based on the audio signal sent from the TAU. In addition, the center display indicates the radio station based on the LVDS signal.

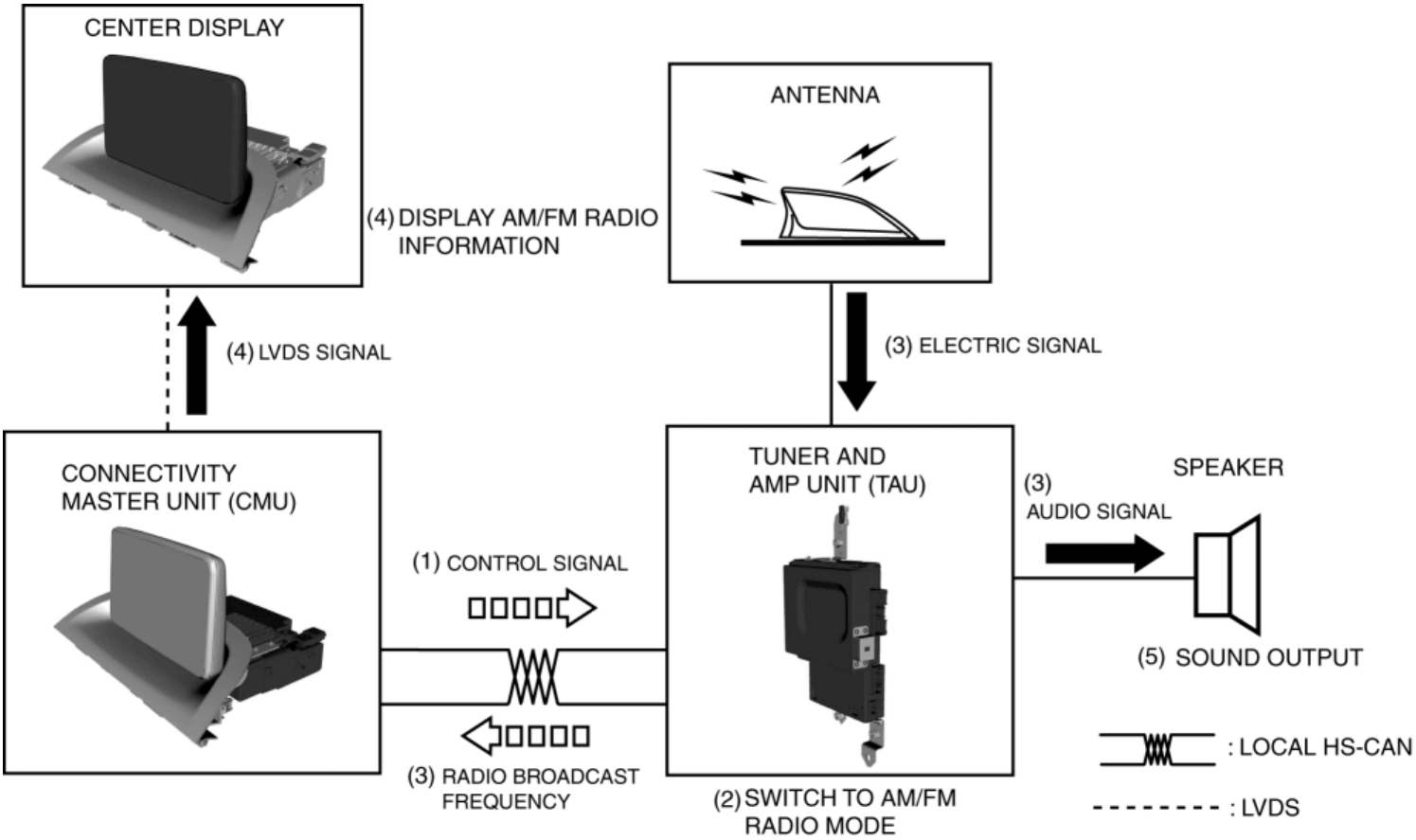

RBDS

- The antenna amplifier (4SD)/center roof antenna (5HB) converts the radio waves to an electric signal and sends it to the TAU.
- When RBDS data from the electric signal is detected, the TAU converts information such as radio station name and song information to a RS485 signal and sends the converted RS485 *9 signal to the CMU.
- The CMU converts the text information received from the TAU to a LVDS signal and sends the LVDS signal to the center display.
- The center display displays the traffic information based on the received LVDS signal.

*9

RS485 corresponds to a linear, multi-drop configuration with bi-directional transmission, which is one of the possible types of serial communication standards, having a maximum transmission speed of 10 Mbps.

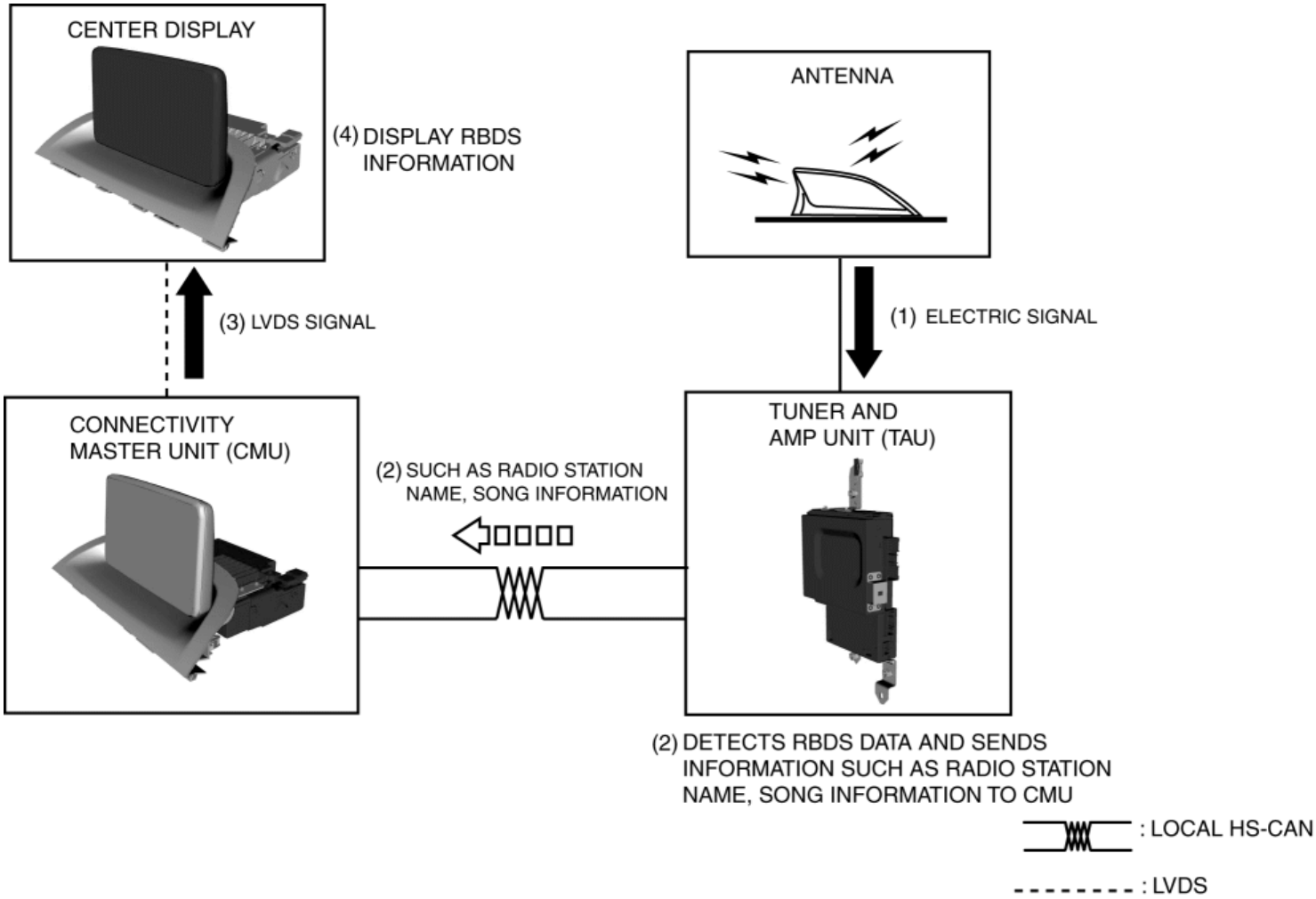

HD radio™

- When the CMU receives the operation signal/detects the switch operation, is sends the control signal to the TAU.
- When the TAU receives the control signal, it switches the tuner in the TAU to radio mode and initiates reception of the radio broadcast.
- The TAU detects the radio broadcast selected by the user using the tuner in the TAU based on the electrical signal sent from the antenna amplifier (4SD)/center roof antenna (5HB). The audio signal from the detected radio broadcast is sent to the speakers. In addition, the detected radio broadcast logo or album is converted to the RS485 signal and the signal is sent to the CMU.
- The CMU converts the video signal sent from the TAU to a LVDS signal and sends the LVDS signal to the center display.
- The speakers output the audio based on the audio signal sent from the TAU. In addition, the center display indicates the HD radio™ information based on the LVDS signal.

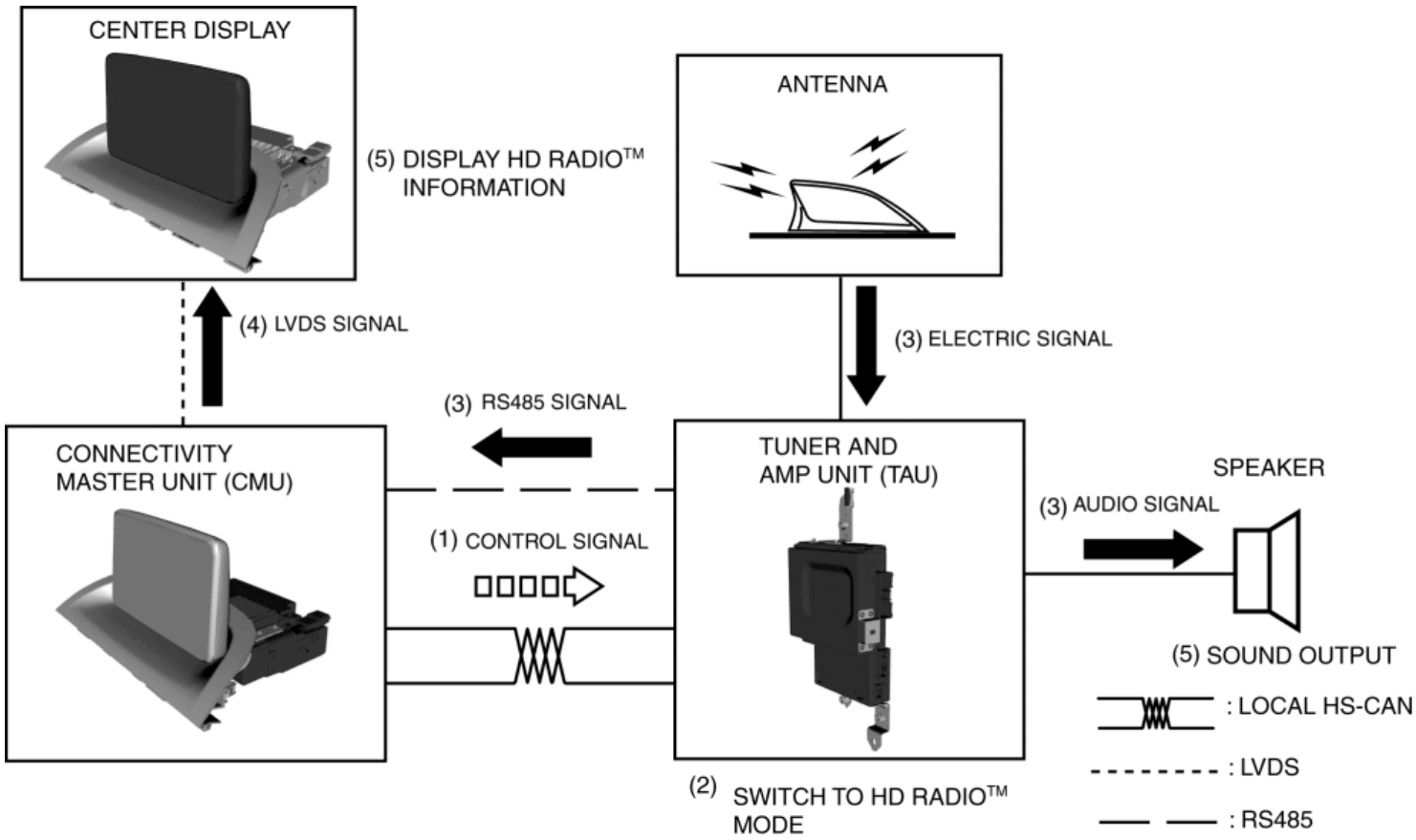

SiriusXM satellite radio

- When the CMU receives the operation signal/detects the switch operation, it sends the control signal to the TAU.
- When the TAU receives the control signal, it switches the tuner inside the TAU to SiriusXM satellite radio mode and initiates reception of radio broadcasts.
- The TAU detects the radio broadcast selected by the user using the tuner in the TAU based on the radio station selected by the user. The audio signal from the detected radio broadcast is sent to the speakers. The speakers output the audio based on the audio signal.
- The center display displays the SiriusXM satellite radio information based on the LVDS signal sent from the CMU.

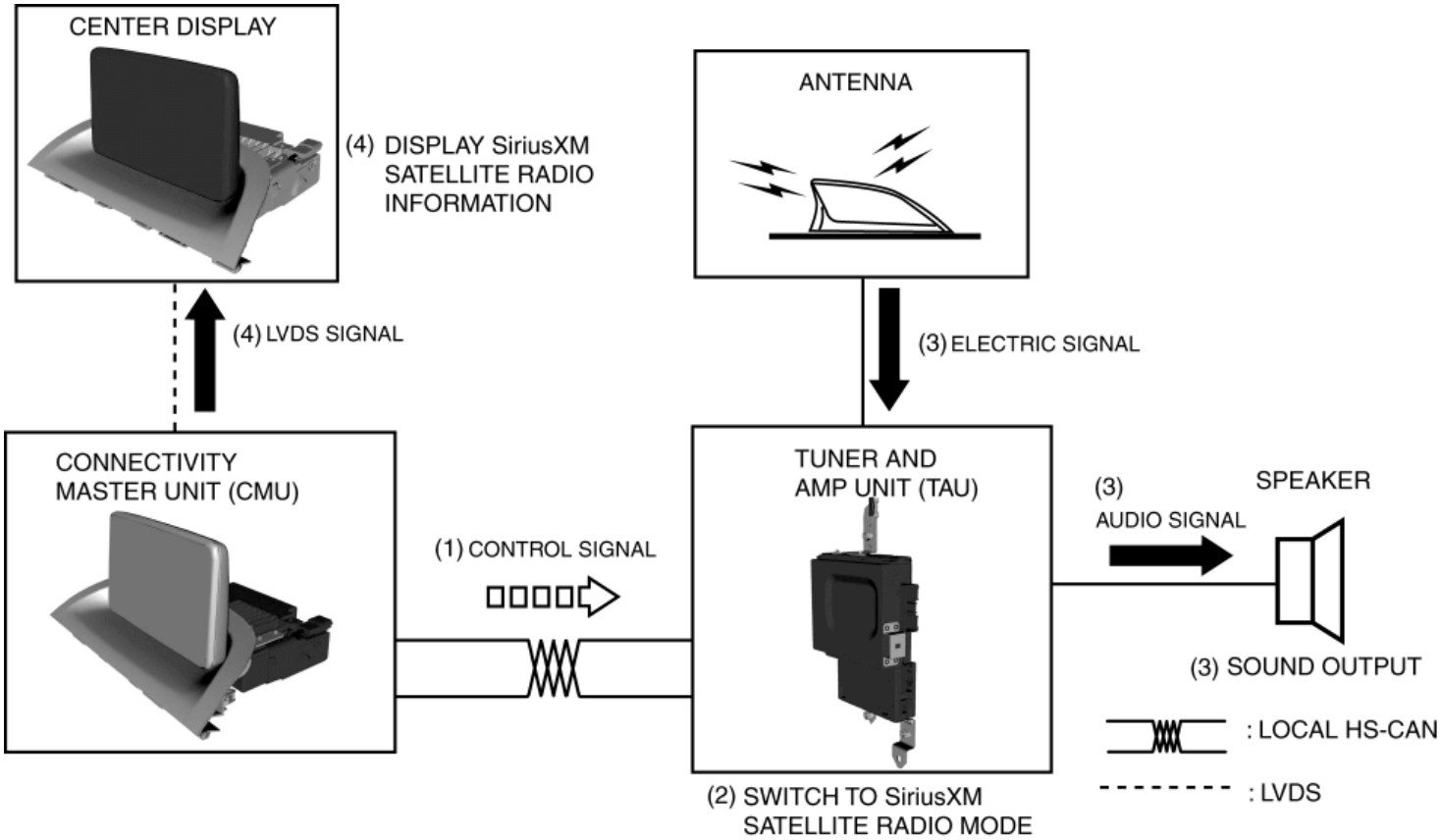

Aha™ radio / Pandora® / Stitcher™ radio

- When the CMU receives the operation signal/detects the switch operation, it sends the control signal to the TAU and a mobile device such as a Smartphone.
- When the mobile device such as a Smartphone receives the control signal it receives the Aha™ radio/Pandora® /Stitcher™ radio and sends the digital data to the CMU.
- The CMU converts the received video signal of the digital data to a LVDS signal and sends the LVDS signal to the center display. In addition, it sends the audio signal to the TAU.
- The center display indicates the radio information based on the LVDS signal received from the CMU. In addition, the TAU sends the received audio signal to the speakers. The speakers output the audio based on the received audio signal.

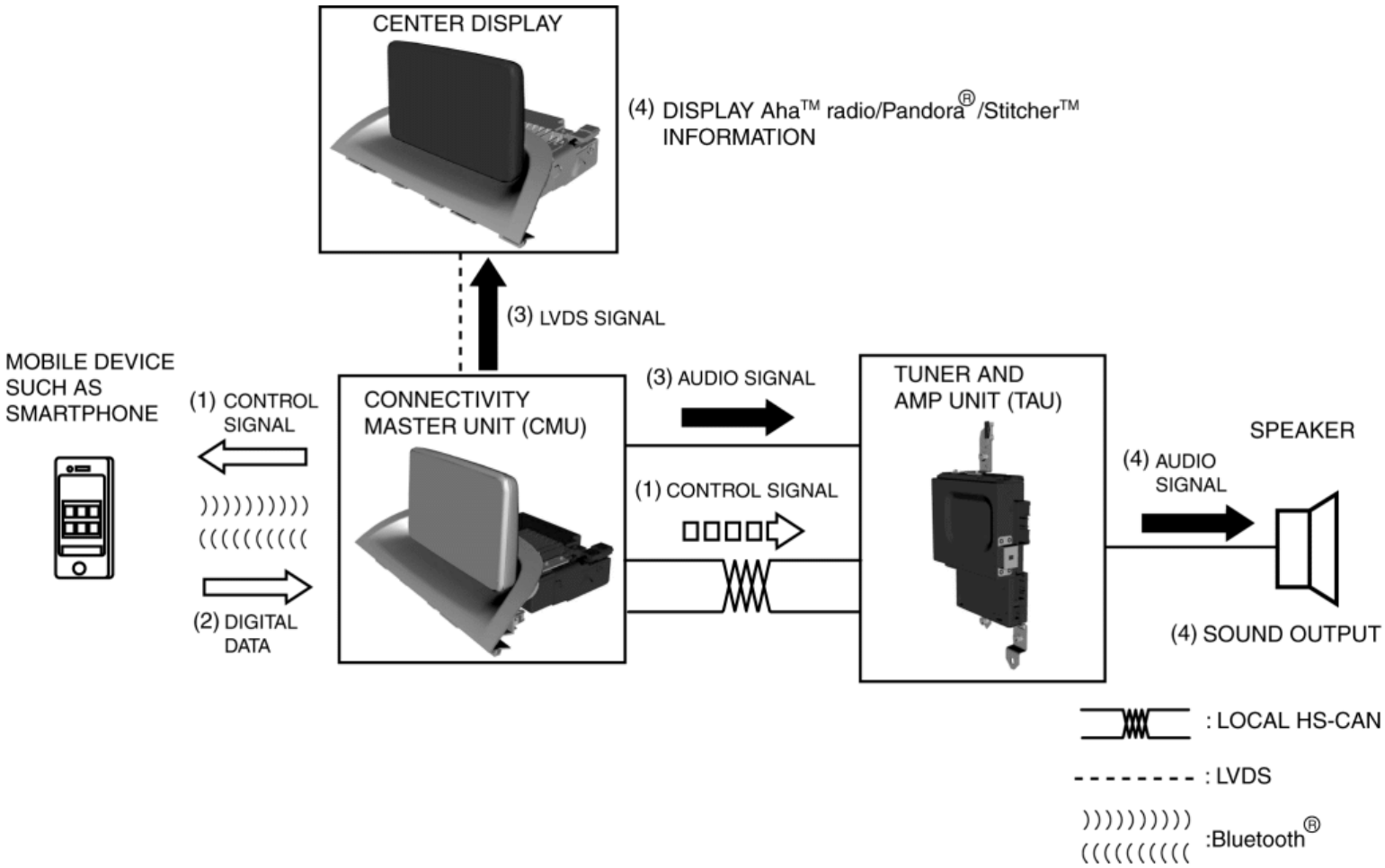

AUX / USB audio (AUX)

- When the CMU receives the operation signal/detects the switch operation, it sends the control signal to the TAU.
- The TAU sends the received audio signal to the speakers and the speakers output the audio based on the received audio signal.

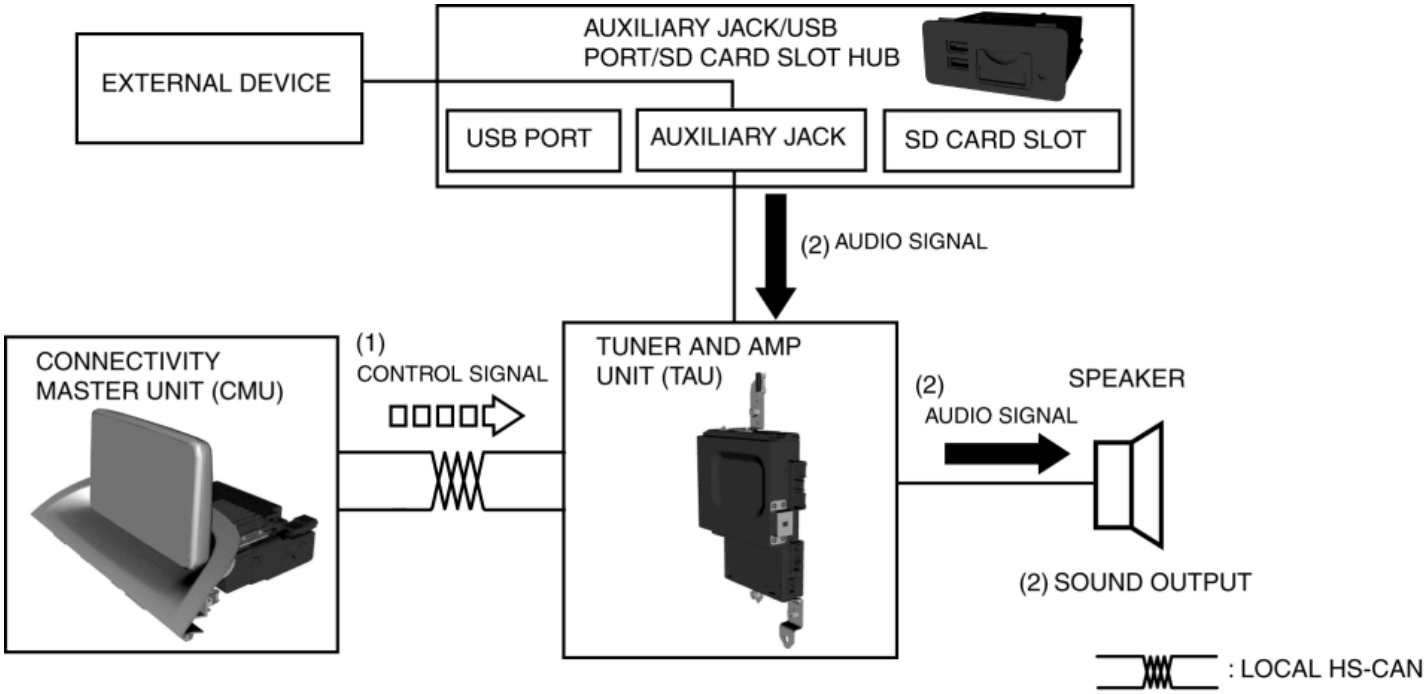

AUX / USB audio (USB)

- When the CMU receives the operation signal/detects the switch operation, it sends the control signal to the TAU.
- The TAU sends the received audio signal to the speakers and the speakers output the audio based on the audio signal.

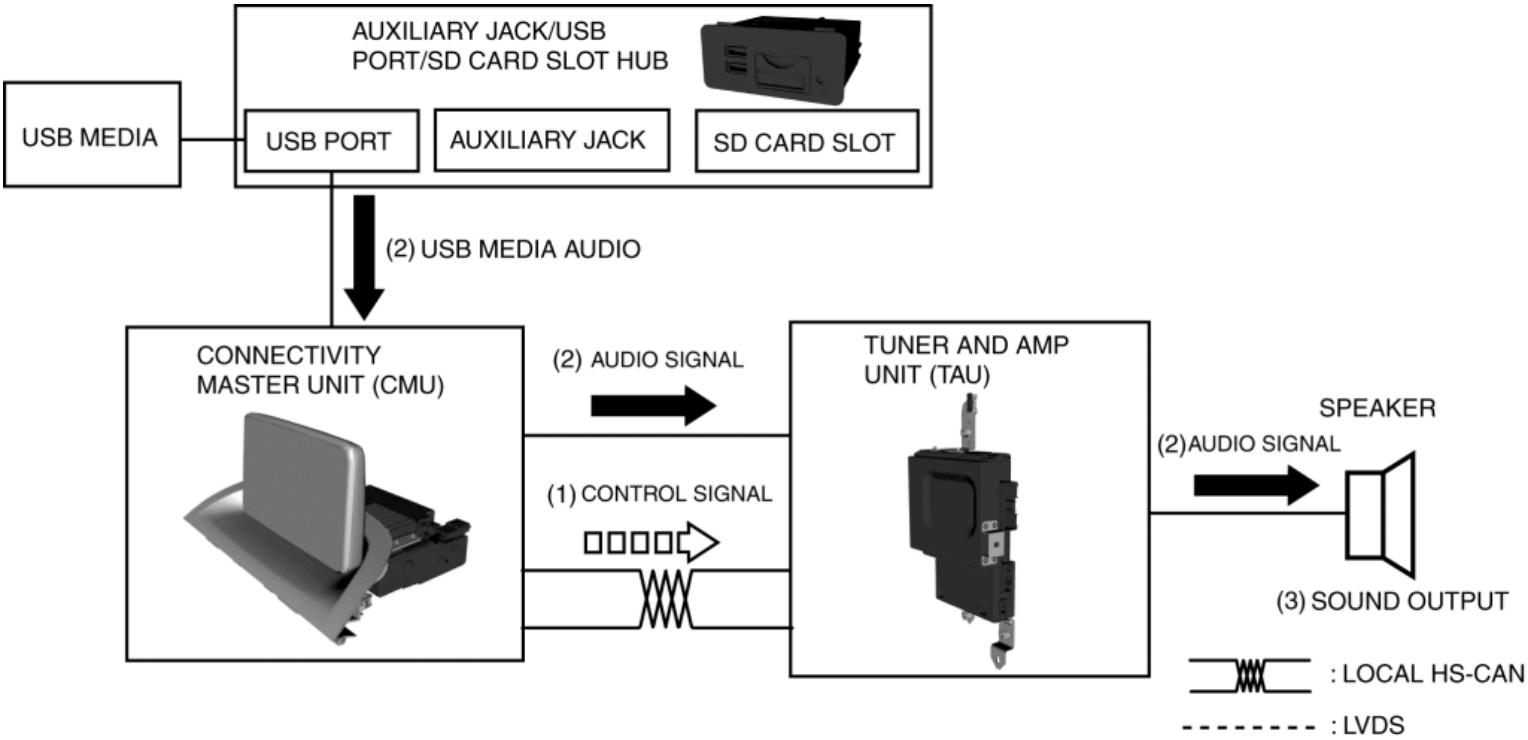

Bluetooth® audio function

- When the CMU receives the operation signal/detects the switch operation, it sends the control signal to the TAU and a mobile device such as Smartphone or a Bluetooth® enabled device.
- When the mobile device such as a Smartphone or a Bluetooth® enabled device receives the control signal, the digital data is sent to the CMU.
- The CMU converts the video signal of the digital data to a LVDS signal and sends it to the center display. In addition, it sends the audio signal to the TAU.
- The TAU switches the received audio signal to an audio signal for output to the speakers, and sends it to the speakers.
- The center display indicates the music information based on the LVDS signal. In addition, the speakers output the audio based on the received audio signal.

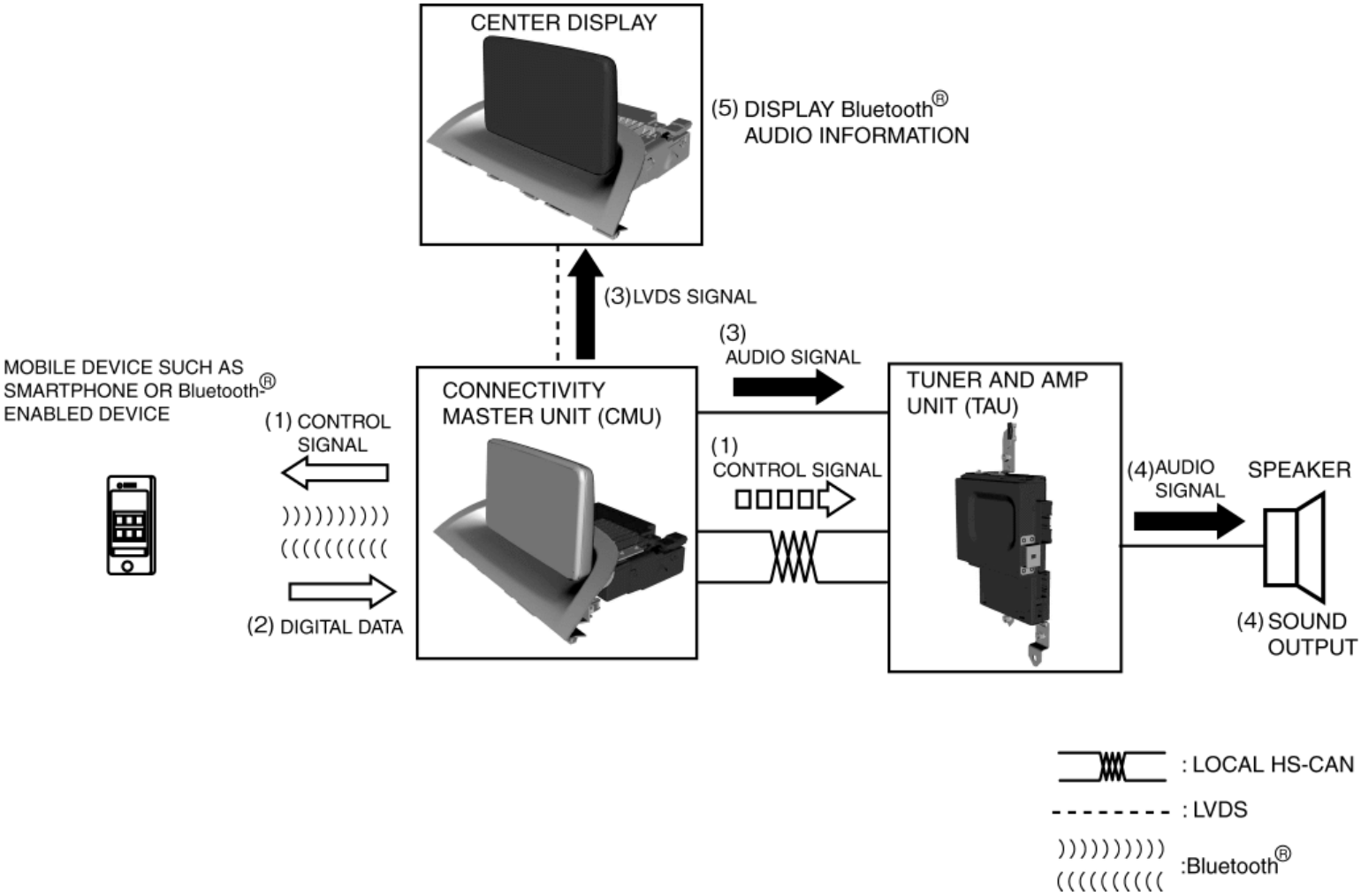

CD playback

- When the CMU receives the operation signal/detects the switch operation, it sends the control signal to the TAU and the CD player.
- When the CD player receives the control signal, it sends music information such as the song name and artist name of the inserted CD to the CMU and sends the audio signal to the TAU.
- The CMU converts the received video signal to a LVDS signal and sends it to the center display. The TAU sends the received audio signal to the speakers.
- The center display displays the video based on the LVDS signal, and the speakers output the audio based on the received audio signal.

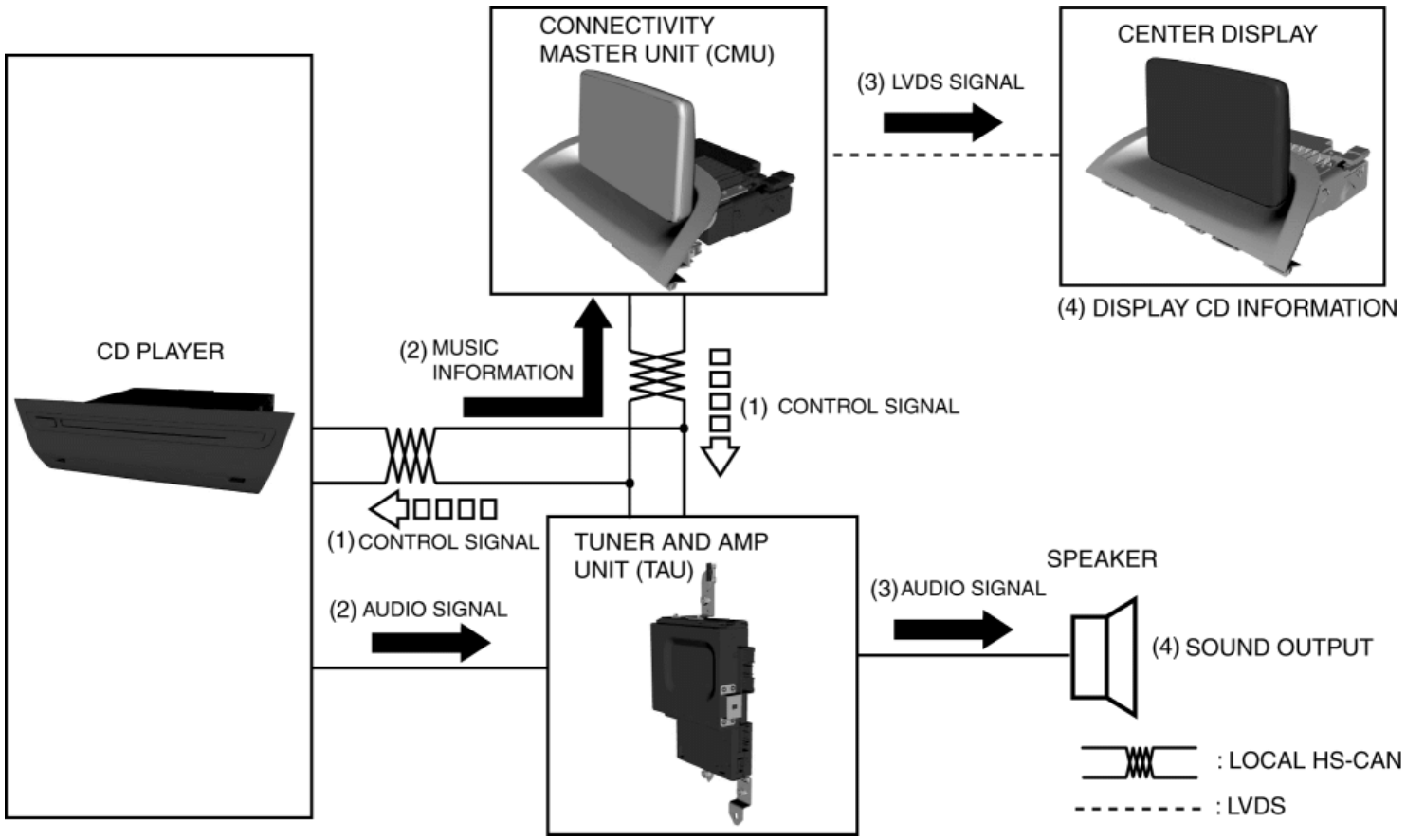

Gracenote updating

- The auxiliary jack/USB port/SD card slot hub sends the Gracenote update information on the USB device.
- The CMU verifies the Gracenote update information received from the auxiliary jack/USB port/SD card slot hub and performs the update.

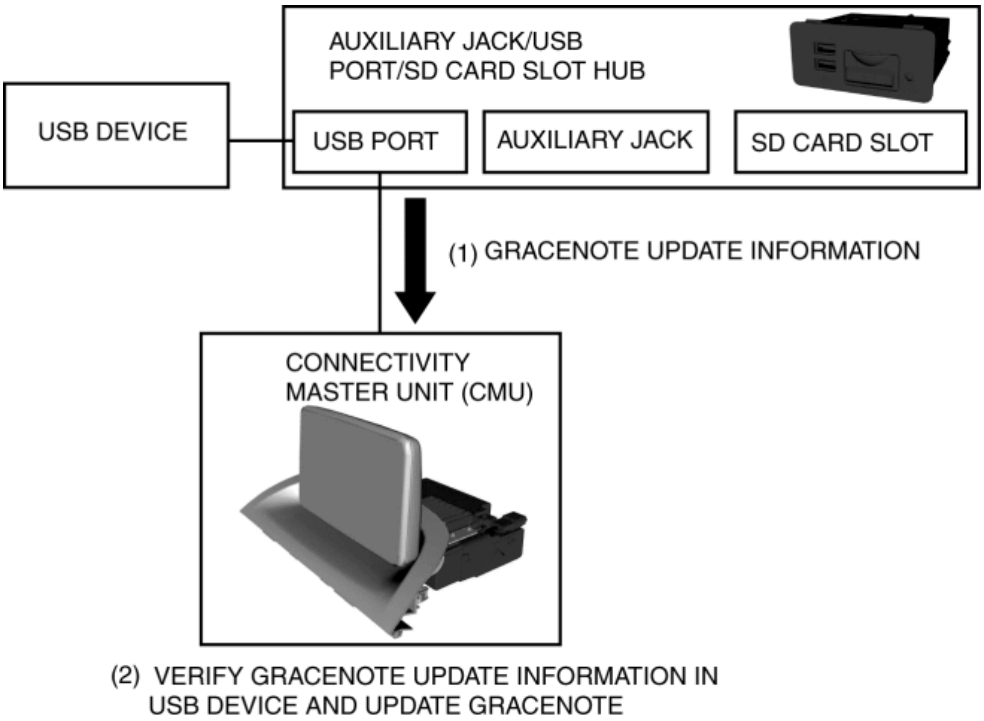

Communication function

E-mail/SMS (Short Message Service)

- When the CMU receives the operation signal/detects the switch operation, is sends a control signal to a mobile device such as a Smartphone or Bluetooth® enabled mobile phone.
- When the device receives the control signal, it sends the E-mail/SMS information digital data to the CMU.
- The CMU converts the video signal of the digital data to a LVDS signal and sends the LVDS signal to the center display.
- The center display indicates the E-mail/SMS information based on the received LVDS signal.

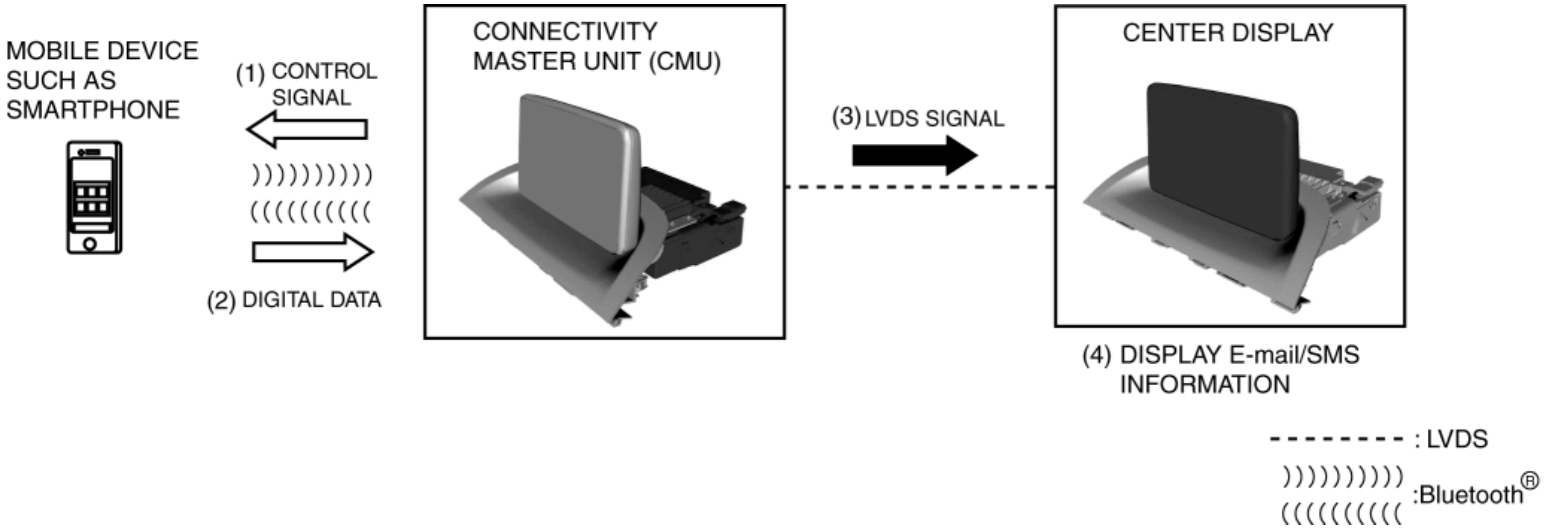

Hands-free telephone (HF/TEL) function (incoming call)

- When an incoming call is received, a mobile device such as a Smartphone/Bluetooth® enabled mobile phone sends the incoming call signal to the CMU.
- When the CMU receives the incoming call signal, it sends the incoming call pop-up screen display signal (LVDS signal) to the center display.
- When the center display receives the signal, it displays the incoming call pop-up screen.
- If the TALK button on the steering switch is pressed while the incoming call pop-up screen is displayed, the CMU detects the steering switch operation.
- When the CMU detects the steering switch operation, the call answer signal is sent to a mobile device such as a Smartphone/Bluetooth® enabled mobile phone, and the call is initiated.
- The mobile device, such as a Smartphone/Bluetooth® enabled mobile phone, sends a receive audio signal to the CMU, which is output from the speakers via the TAU.
- The microphone sends the send audio signal of the user to the CMU, and the CMU sends the received send audio signal to a mobile device such as Smartphone or Bluetooth® enabled mobile phone.

NOTE:

- When the call initiates, the incoming call pop-up screen switches to the call screen.

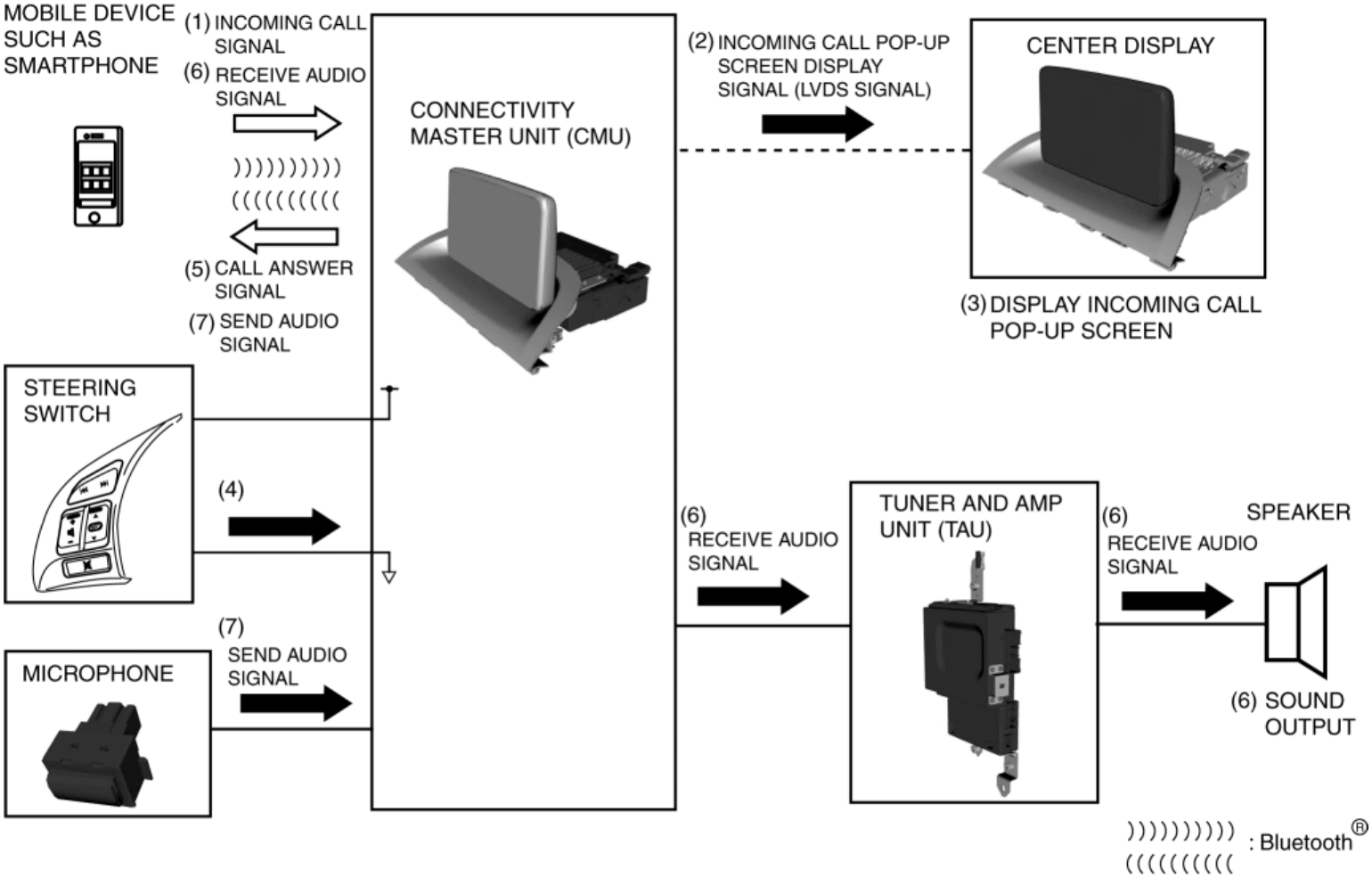

Hands-free telephone (HF/TEL) function (outgoing call)

- When the TALK button on the steering switch is pressed, the CMU detects the steering switch operation.
- When the CMU detects the steering switch operation, the CMU sends a guidance audio signal to the TAU.
- The TAU sends the guidance audio signal to the speakers and the speakers output the guidance audio.
- The microphone converts the words (voice commands) produced by the user after the guidance audio output to an audio signal and sends it to the CMU.
- The Bluetooth® sends the outgoing call signal to a mobile device such as a Smartphone or Bluetooth® enabled mobile phone when the CMU receives the audio signal from the microphone, and the call is initiated.
- The mobile device, such as a Smartphone or Bluetooth® enabled mobile phone, sends the receive audio signal to the CMU, and the signal is output from the speakers via the TAU.
- The voice recognition-use microphone sends the send audio signal of the user to the CMU, and the CMU sends the received send audio signal to a mobile device such as Smartphone or Bluetooth® enabled mobile phone.

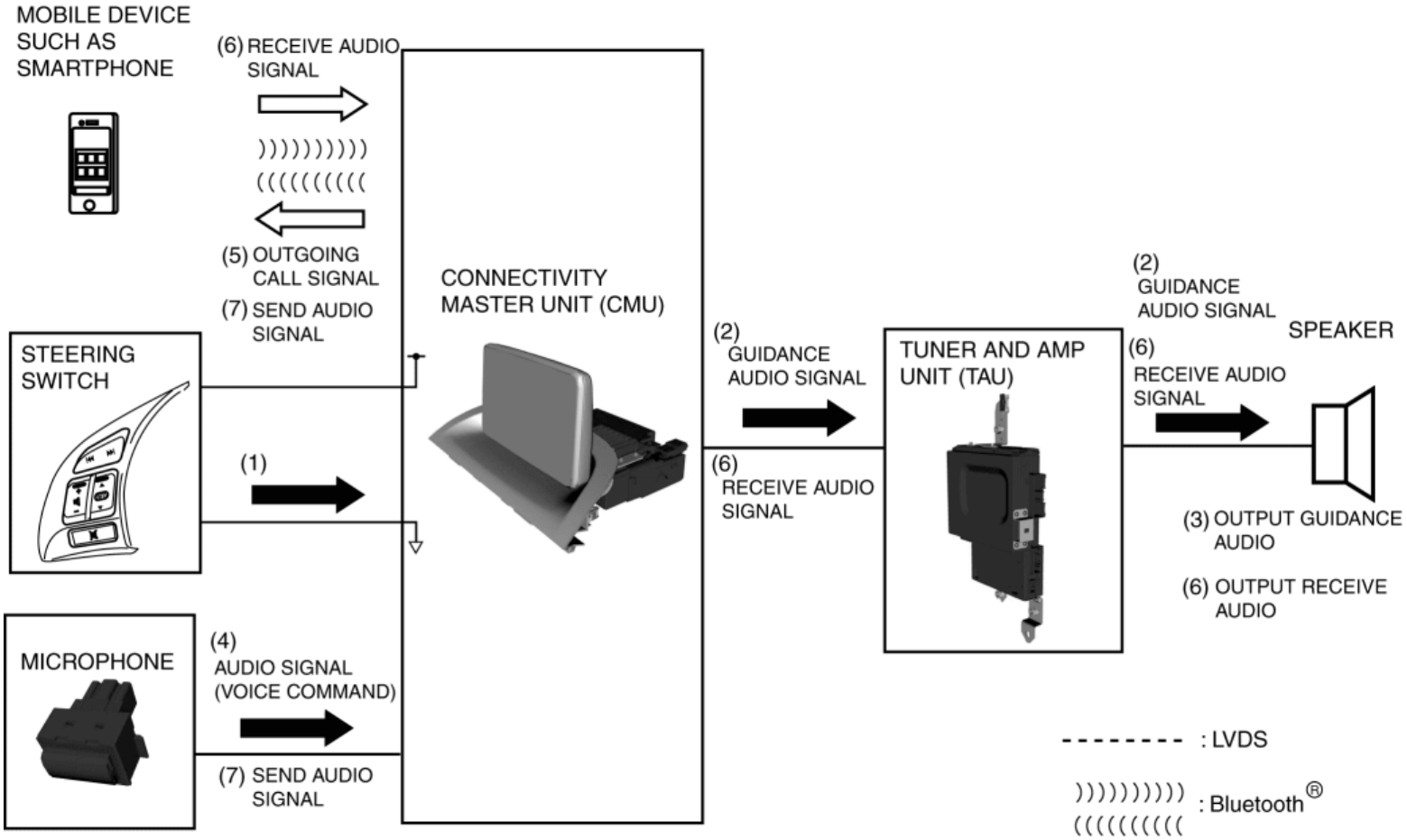

Mobile 911 (Auto outgoing call performed)

- When an accident occurs under specified conditions, the SAS control module sends a fuel cut request signal to the CMU.
- When the CMU receives the fuel cut request signal from the SAS control module, it sends the guidance audio signal to the TAU. In addition, it sends the Mobile 911 screen display signal (LVDS signal) to the center display.
- The TAU sends the guidance audio signal to the speakers and the speakers output the guidance audio. In addition, the center display displays the Mobile 911 screen.
- The CMU executes the 10 s timer after the guidance audio output.
- After 10 s have elapsed on the timer, the CMU sends an outgoing call signal to a mobile device such as a Smartphone or Bluetooth® enabled mobile telephone.
- The mobile device calls the PSAP (Public Safety Answering Point) when it receives the outgoing call signal.
- After connecting to the PSAP (Public Safety Answering Point), the CMU outputs the vehicle position information from the vehicle speakers and initiates the call.

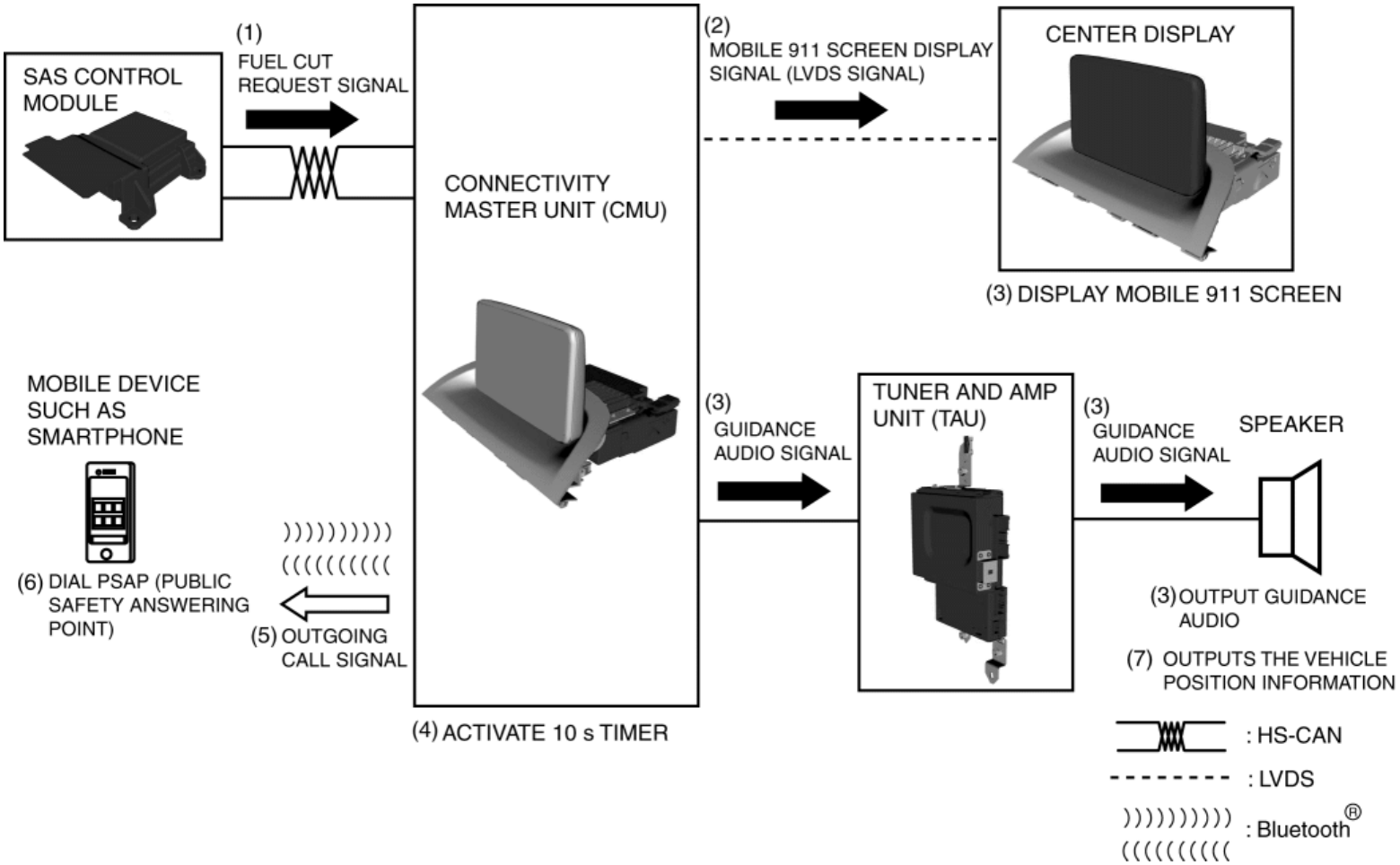

Mobile 911 (auto outgoing call canceled)

- When the SAS control module operates the air bags, a fuel cut request signal is sent to the CMU.
- When the CMU receives the fuel cut request signal from the SAS control module, it sends the guidance audio signal to the TAU. In addition, it sends the Mobile 911 screen display signal (LVDS signal) to the center display.
- The TAU sends the guidance audio signal to the speakers and the speakers output the guidance audio. In addition, the center display displays the Mobile 911 screen.
- The CMU executes the 10 s timer after the guidance audio output.
- If the Cancel Call to 911 operator is selected on the center display/Hang-up button on the steering switch is pressed while the timer executes the 10 s timer, the center display/steering switch sends a cancel signal to the CMU.
- When the CMU receives the cancel signal, it stops the 10 s timer and cancels the auto outgoing call to the PSAP (Public Safety Answering Point).

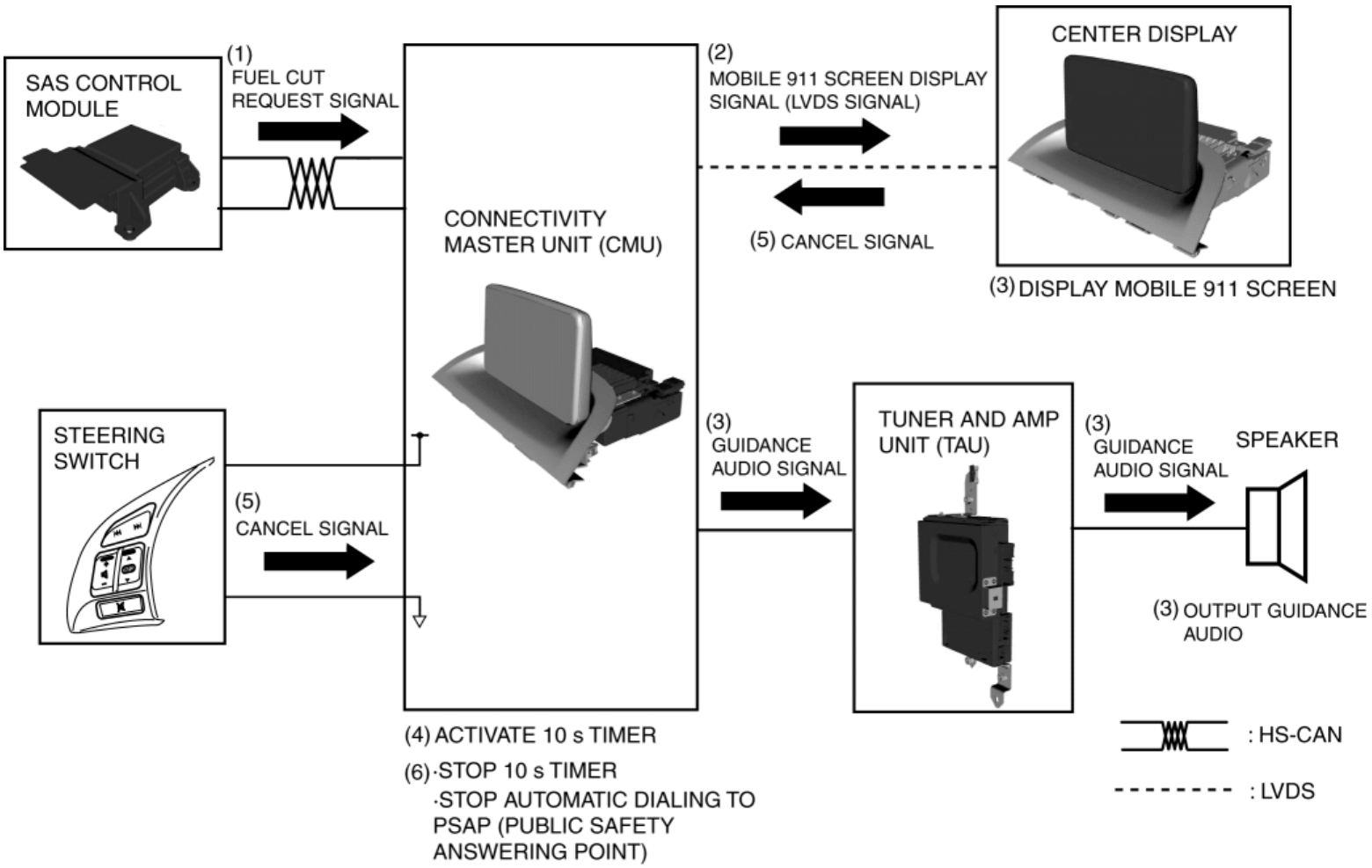

Navigation function

Map display, route guidance

- When the CMU receives the operation signal/detects the switch operation, it sends the control signal to the TAU.
- The CMU reads the map data of the SD card inserted in the auxiliary jack/USB port/SD card slot hub. In addition, reception of the GPS information from the GPS antenna is initiated.
- The CMU sends the navigation screen display signal (LVDS signal) to the center display based on the SD card map data and the position information from the GPS antenna.
- The center display displays the navigation screen based on the received navigation screen display signal (LVDS signal).
- The CMU detects the route to the destination set by the user and sends the guidance audio signal to the TAU after deciding the route.
- The TAU sends the guidance audio signal to the speakers and the speakers output the guidance audio.

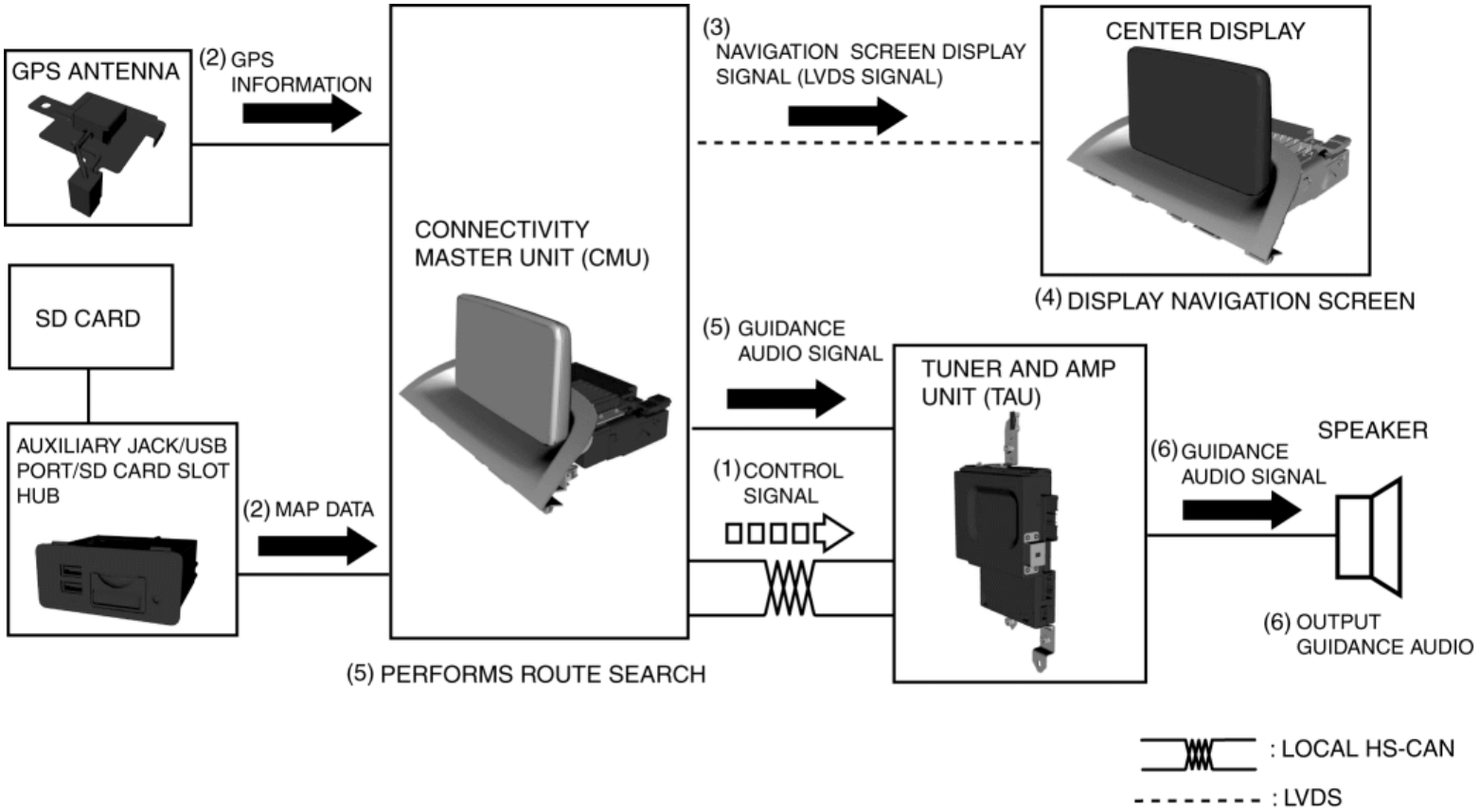

Turn-by-turn (TBT)

- The CMU sends the travel direction display request signal to the instrument cluster.
- The instrument cluster displays the travel direction in the active driving display based on the received travel direction display request signal.

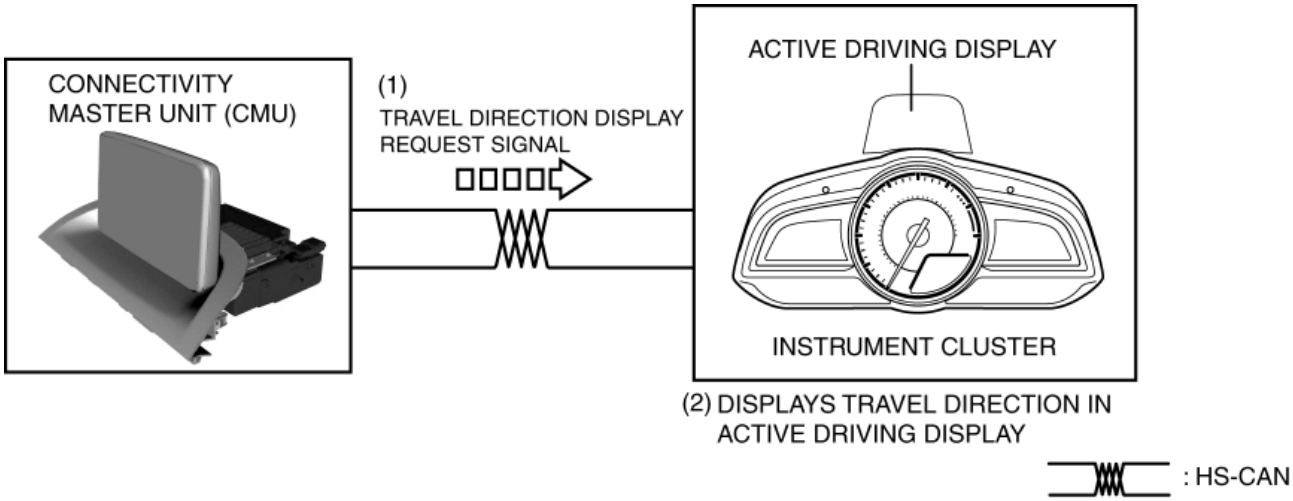

Setting function

Bluetooth® pairing

- When the CMU receives the operation signal/detects the switch operation, is transmits a search signal to a Bluetooth® enabled device near the CMU and sends the Bluetooth® device search screen signal to the center display.
- The Bluetooth® enabled device near the CMU sends a Bluetooth® device signal to the CMU. In addition, the center display displays the Bluetooth® device search screen (LVDS signal).
- The CMU programs the Bluetooth® enabled device information based on the Bluetooth® device signal (LVDS signal).

NOTE:

- In the following cases, Bluetooth® pairing is canceled.
  - Seven (maximum of 7) Bluetooth® devices have been programmed
  - Bluetooth® device signal is not received during period of 180 s
  - Cancel is selected during Bluetooth® device search screen display

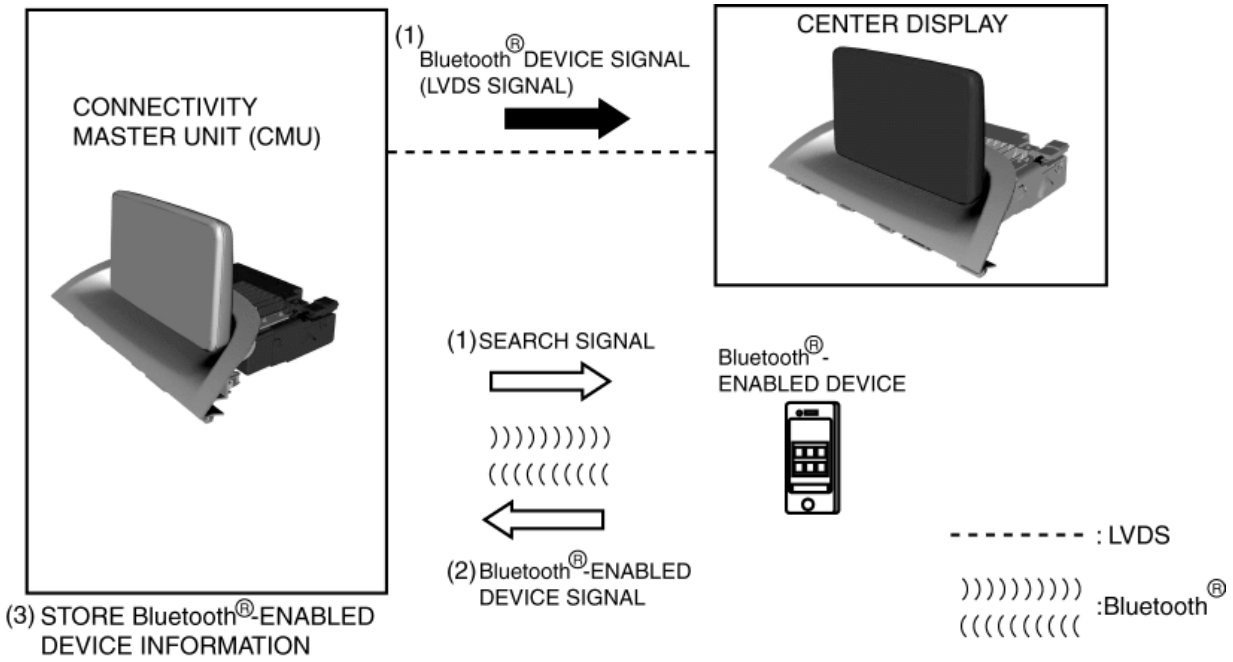

System setting / display setting / clock setting

- When an operation signal is received/switch operation is detected, the CMU changes each function setting based on the information from the user operations.

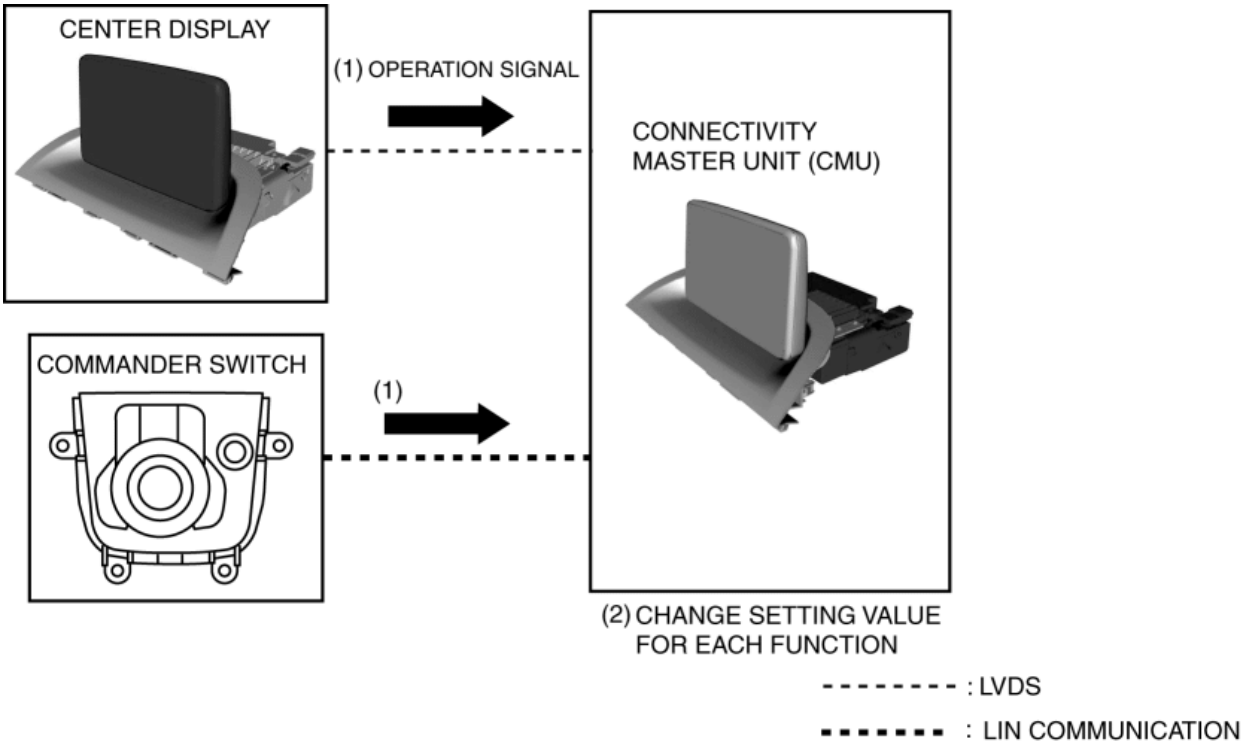

Sound setting / volume setting

- When an operation signal is received/switch operation is detected, the CMU sends a sound setting information signal to the TAU based on the information from the user operations.
- The TAU changes the setting value for each function based on the received sound setting information signal.

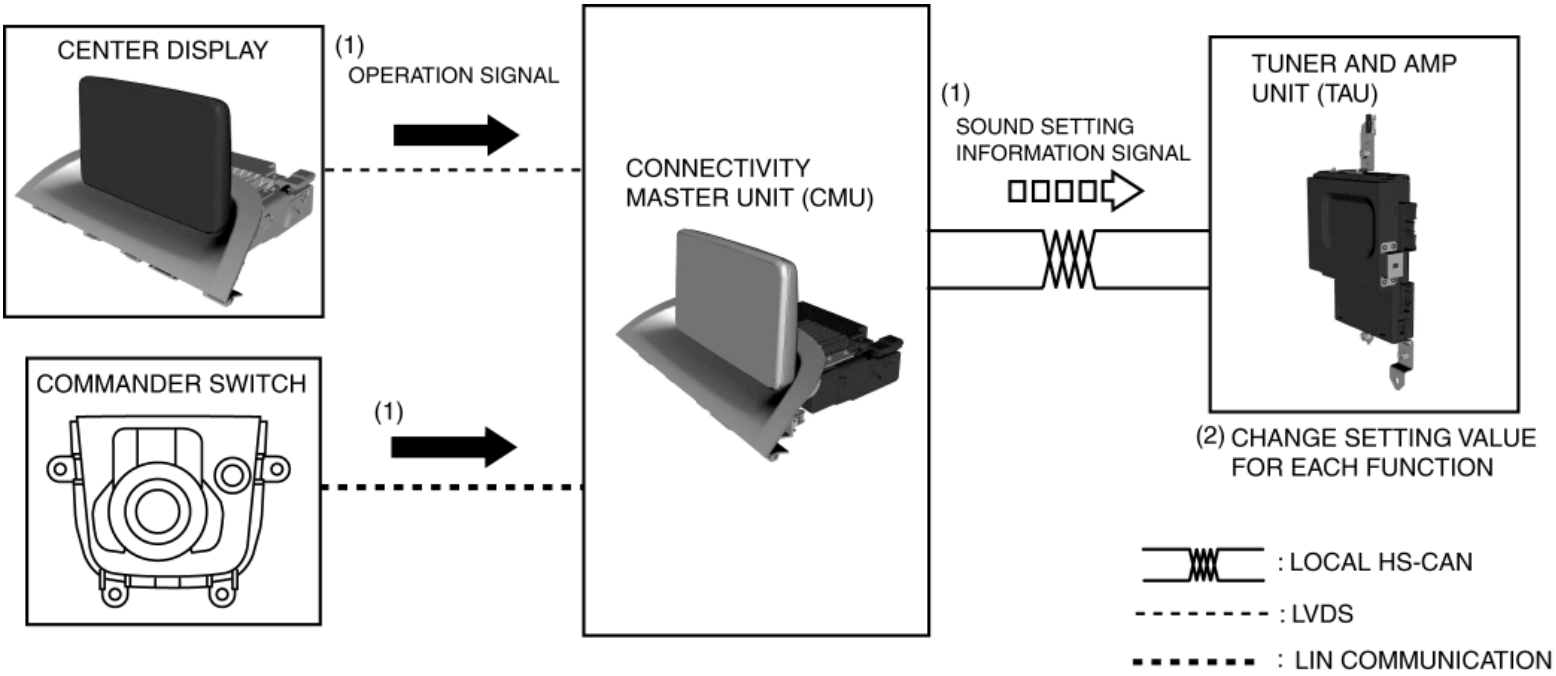

Active driving display setting

- When an operation signal is received/switch operation is detected, the CMU sends a setting information signal to the instrument cluster based on the information from the user operations.
- The instrument cluster changes the setting value of the active driving display based on the setting information signal.

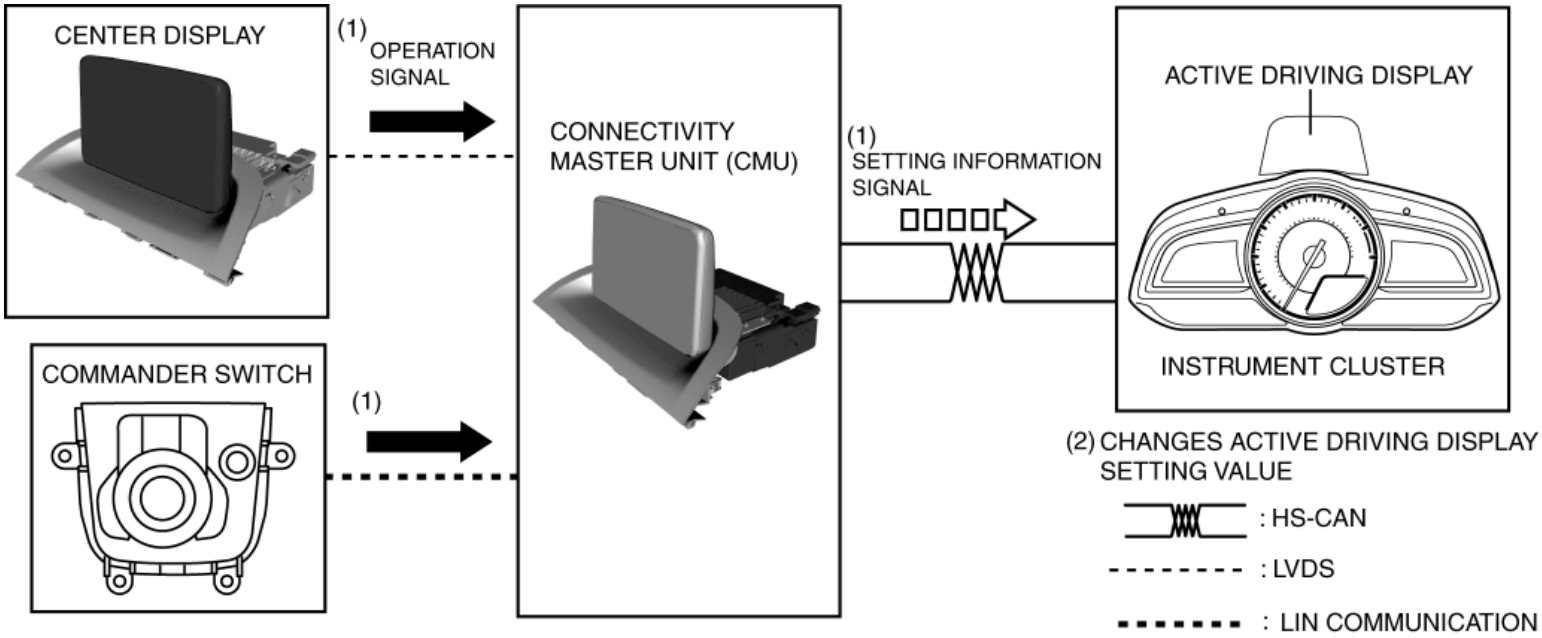

Personalization feature setting

- When an operation signal is received/switch operation is detected, the CMU sends a personalization operation signal to related units based on the information from the user operations.
- The related unit changes each function setting based on the personalization operation signal.

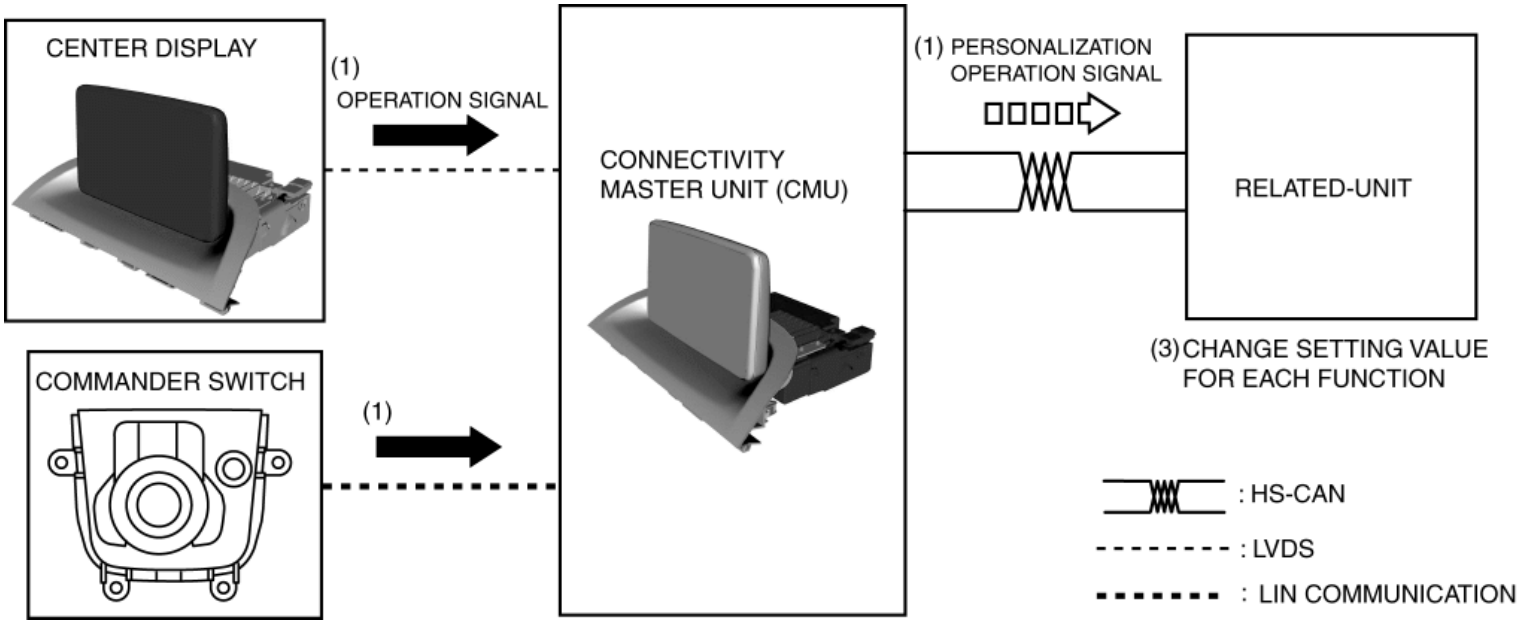

Application function

Fuel economy monitor

- For details on the fuel economy monitor operation, refer to the fuel consumption display of the center display. (See **CENTER DISPLAY [WITH CENTER DISPLAY]**.)

Warning guidance

- For details on the warning guidance, refer to the warning guidance of the center display. (See **CENTER DISPLAY [WITH CENTER DISPLAY]**.)

Maintenance monitor

- For details on the maintenance monitor operation, refer to the maintenance monitor of the center display. (See **CENTER DISPLAY [WITH CENTER DISPLAY]**.)

2014 - Mazda3 - Body and Accessories

CONNECTIVITY MASTER UNIT [WITH CENTER DISPLAY]

Purpose, Function

- The connectivity master unit (CMU) controls the entire system such as communication between mobile devices and Bluetooth®, and the sending/receiving of video/audio signals from units related to the entertainment system.

Bluetooth® communication function

- The CMU uses the integrated Bluetooth® driver and antenna to perform communication between Bluetooth® enabled mobile devices, such as a Smartphone, and Bluetooth®.
- To perform Bluetooth® communication, pairing of mobile device with the CMU is required to specify the Bluetooth® enabled mobile device. Refer to the workshop manual for the pairing method.

Specification

Item		Content
Profile	A2DP 1.0/1.2 (Advanced audio distribution profile)	A2DP is a profile for transmitting high quality audio data by means of a Bluetooth® device and wireless transmission technology.
	AVRCP 1.0/1.3/1.4 (Audio/video remote control profile)	AVRCP is a profile which provides a standard interface which controls television and audio devices. The function differ depending on the version.
Maximum number of programmable devices		7
Number of programmed devices which can be used simultaneously		1

NOTE:

- The profile indicates the wireless communication standard. If the profile of Bluetooth®-enabled devices differs from the CMU, wireless communication is not possible. In addition, depending on the profile version, corresponding functions differ.

Operation signal reception function

- The CMU controls units related to the entertainment system based on the following operation signals which are sent in conjunction with the user operations.

Operation signal output unit	Operation signal
Center display	LVDS signal (touch position operation signal)
Commander switch	Command switch operation signal
Steering switch	Steering switch operation signal
Microphone	Voice signal (voice command)

LVDS *1 signal conversion function

- LVDS communication occurring between CMU and center display.
- The CMU converts signals sent from the following units to a LVDS *1 signal and displays each type of information in the center display. (See **CENTER DISPLAY [WITH CENTER DISPLAY]**.)

Output unit	Video signal/display request signal
TAU	• Radio broadcast logo, album art, song name (RS485*2 signal)
CD player	• Playback file information (artist/song name)
Auxiliary jack/USB port/SD card slot hub	• Information for file being played (artist/song name)
Mobile device such as Smartphone	• Telephone book, incoming call record • Radio broadcast logo, album art, song name
Rear mount camera	• Image at rear of vehicle
	• Incoming call pop-up screen display • Fuel economy monitor screen

CMU	• Mobile 911 screen display (U.S.A./Canada) • Navigation screen display • Warning guidance screen display

- By converting the video signal to a LVDS*1 signal, the CMU is able to display stable images in the center display virtually free from the effects of noise.
- The communication pathway between the CMU and the center display corresponds to HDCP*3.

*1

The LVDS displays the electrical properties of the signal using low-voltage differential signaling. The LVDS is a digital, wired transmission technology for short range which adopts a differential interface having the characteristics of low voltage and low power consumption.

*2

RS485 corresponds to a linear, multi-drop configuration with bi-directional transmission, which is one of the possible types of serial communication standards, having a maximum transmission speed of 10 Mbps.

*3

HDCP (High-bandwidth Digital Content Protection system) is a copyright protection technology which prevents content from being copied fraudulently. The pathway in a display device such as a display, which sends/receives digital signals from a video playback device such as a computer, is encrypted.

Audio transmission signal function

- The CMU transmits the audio signal received from a mobile device such as the following auxiliary jack/USB port/SD card slot hub and Smartphone devices to the TAU. The CMU receives audio signals from the voice recognition microphone and performs operations according to the commands.

Fuel economy monitor function

- The CMU receives fuel consumption amount and travel distance information sent from the instrument cluster via CAN to calculate the average fuel consumption. The calculated average fuel consumption information is displayed as fuel economy monitor in the center display. For details, refer to the fuel economy monitor of the center display. (See **CENTER DISPLAY [WITH CENTER DISPLAY]**.)

Mobile 911 function

- The CMU receives the fuel cut request signal sent from the SAS control module via CAN, executes the Mobile 911 function, and performs the following. For details, refer to the entertainment system Mobile 911 operation. (See **ENTERTAINMENT SYSTEM [WITH CENTER DISPLAY]**.)
    - Mobile 911 guidance audio signal transmission

- Mobile 911 screen display signal transmission
- Auto dial to PSAP (call initialized)
- Auto replay of location information audio

Navigation function

- The CMU performs map display and route guidance based on the map data received from the GPS signal and the auxiliary jack/USB port/SD card slot hub. For details, refer to the entertainment system navigation function. (See **ENTERTAINMENT SYSTEM [WITH CENTER DISPLAY]**.)

  Turn-by-turn (TBT)

- The TBT function displays the travel direction of the route guidance in the active driving display. The TBT operates when all of the following conditions have been met. For details, refer to the TBT of entertainment system navigation function. (See **ENTERTAINMENT SYSTEM [WITH CENTER DISPLAY]**.)
  - Route guidance of navigation function is operating
  - Navigation is set to ON using the active driving display personalization feature
- The CMU sends the TBT display request signal to the instrument cluster to display the travel direction in the active driving display (See **ACTIVE DRIVING DISPLAY**.)

Automatic configuration function

- When the ignition is switched ON (engine off or on) after the CMU is replaced, the CMU reads the vehicle specification information sent via CAN communication from the instrument cluster, and stores the vehicle specification information.

On-board diagnostic function

- The CMU has an on-board diagnostic function to facilitate system diagnosis. DTCs are stored in the event of a malfunction occurring. For details, refer to the on-board diagnostic system. (See **ON-BOARD DIAGNOSTIC [ENTERTAINMENT SYSTEM (WITH CENTER DISPLAY)]**.)

Diagnostic Assist Function

- The CMU has a diagnostic assist function which can verify the following. For details, refer to the on-board diagnostic system. (See **ON-BOARD DIAGNOSTIC [ENTERTAINMENT SYSTEM (WITH CENTER DISPLAY)]**.)
  - Connection status of related parts
  - Operation status of related parts
  - Related part specifications

Construction

- The CMU is installed centrally to the inside of the dashboard.
- The CMU has an integrated Bluetooth® driver and antenna.

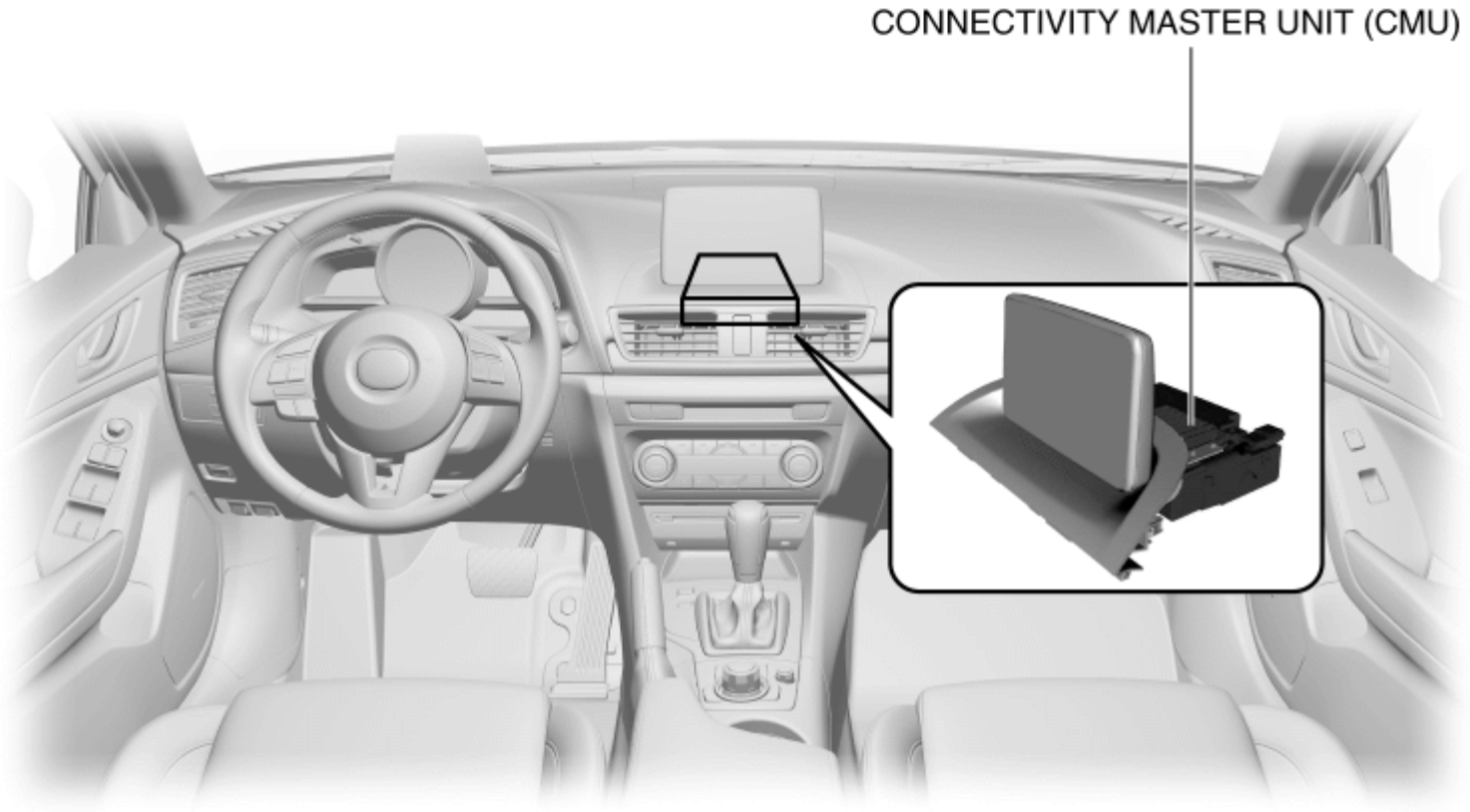

Input/output signal table

Terminal		Signal
	1A	Rear mount camera video signal input
	1B	Rear mount camera signal ground
	1C	Rear mount camera power supply
	1D	Rear mount camera power supply ground
	1E	—

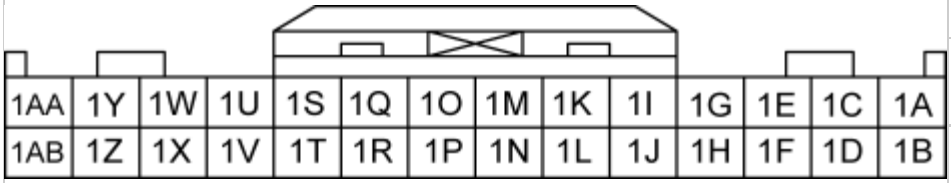

1F	—
1G	—
1H	—
1I	—
1J	—
1K	—
1L	—
1M	ST-SW1
1N	ST-SW2
1O	ST-SW3
1P	Microphone connection detection
1Q	Microphone power supply
1R	Microphone power supply ground
1S	Microphone voice input (+)
1T	Microphone voice input (-)
1U	—
1V	Shield ground
1W	—
1X	Shield ground
1Y	CMU audio output LH (+)
1Z	CMU audio output LH (-)
1AA	CMU audio output RH (+)

	1AB	CMU audio output RH (-)
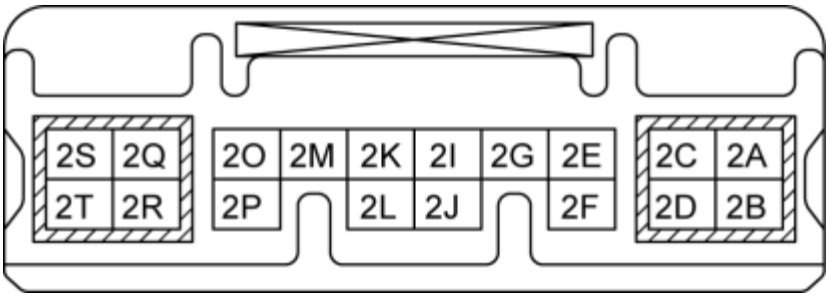	2A	—
	2B	—
	2C	Ground
	2D	Ground
	2E	HS-CAN (+)
	2F	HS-CAN (-)
	2G	—
	2I	LOCAL HS-CAN (+)
	2J	LOCAL HS-CAN (-)
	2K	LIN
	2L	Ground
	2M	—
	2O	RS485 (+)
	2P	RS485 (-)
	2Q	ACC
	2R	B+
	2S	—
	2T	—
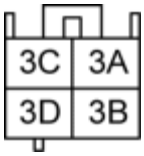	3A	—
	3B	LVDS (+)
	3C	—

	3D	LVDS (-)
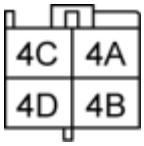	4A	Ground
	4B	USB data (+)
	4C	USB power supply
	4D	USB data (-)
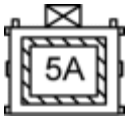	5A	GPS

Fail-safe

- Function not equipped.

2014 - Mazda3 - Body and Accessories

TUNER AND AMP UNIT [WITH CENTER DISPLAY]

Purpose

- Controls the audio signal from the entertainment system-related parts.

Function

Tuner switching function

- The tuner and amp unit (TAU) switches the tuner mode built-into the TAU based on the operation signal sent from the connectivity master unit (CMU).

Audio signal output function

- The TAU outputs the audio signal sent from the following units to the speakers.
    - CMU
    - CD player
    - Auxiliary jack/USB port/SD card slot hub (auxiliary jack only)

RS485*1 signal conversion function (HD radio™, RBDS)

- The TAU creates data from the radio waves received from the antenna amplifier (4SD)/center roof antenna (5HB) and converts the created image data to a RS485*1 signal and sends it to the CMU.

*1

RS485 corresponds to a linear, multi-drop configuration with bi-directional transmission, which is one of the possible types of serial communication standards, having a maximum transmission speed of 10 Mbps.

ALC (auto level control) function (without Bose®)

- When the TAU receives the vehicle speed signal sent from the CMU, it automatically changes the volume and audio quality according to the vehicle speed and compensates for the passengers' sense of a lack of audio volume which occurs as a result of external noise

while driving.

Road noise correction system (AudioPilot®2) (with Bose®)

- The volume of the music constituent covered by noise is corrected by the audio amplifier based on the cabin noise measured by the AudioPilot®2 microphone and the vehicle speed signal sent from the CMU as a local CAN.

Specification

Item			Specification
Rated voltage		(V)	12
Frequency range	AM	(kHz)	530—1710
	FM	(MHz)	87.75—107.9
Amplifier maximum output		(W)	25×4
Output impedance		(ohm)	4

Construction

TUNER AND AMP UNIT [WITH CENTER DISPLAY]

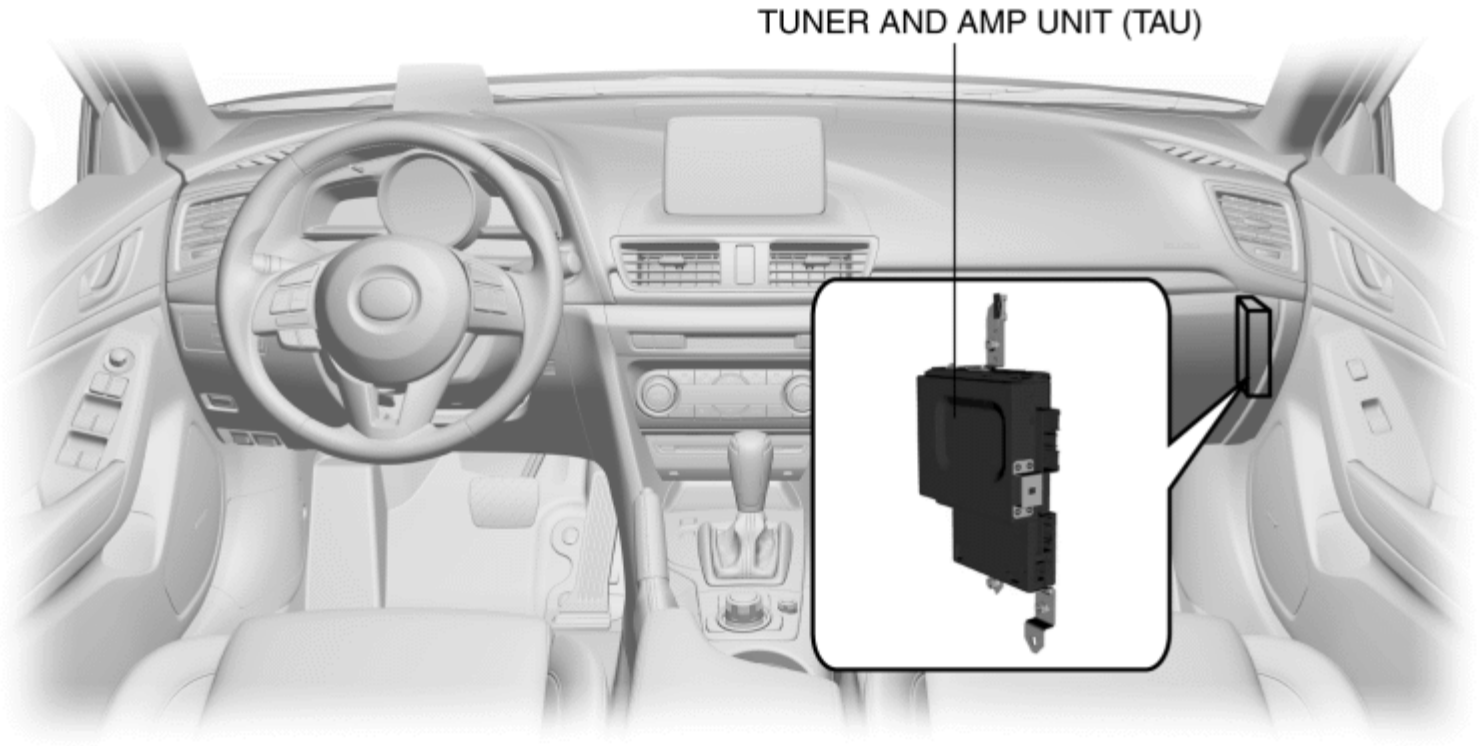

Input/output signal table

Terminal		Signal
	1A	—
	1B	—
	1C	—
	1D	—
	1E	—
	1F	—
	1G	—
	1H	—
	1I	AUX audio input LH (+)
	1J	AUX audio input LH RH (-)

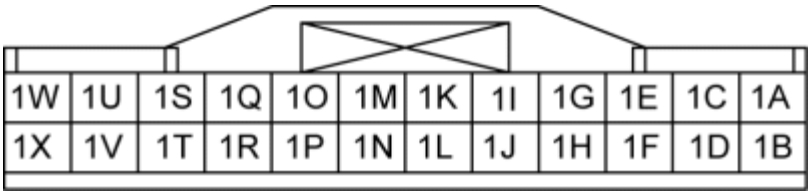

1K	AUX audio input RH (+)
1L	AUX connection detection
1M	CD audio input LH (+)
1N	CD audio input LH (-)
1O	CD audio input RH (+)
1P	CD audio input RH (-)
1Q	CMU audio input LH (+)
1R	CMU audio input LH (-)
1S	CMU audio input RH (+)
1T	CMU audio input RH (-)
1U	—
1V	—
1W	HD image transfer (+)
1X	HD image transfer (-)
2A	Front door speaker output LH (+)
2B	B+
2C	Front door speaker output LH (-)
2D	Front door speaker output RH (+)
2E	—
2F	Front door speaker output RH (-)
2G	—
2H	—

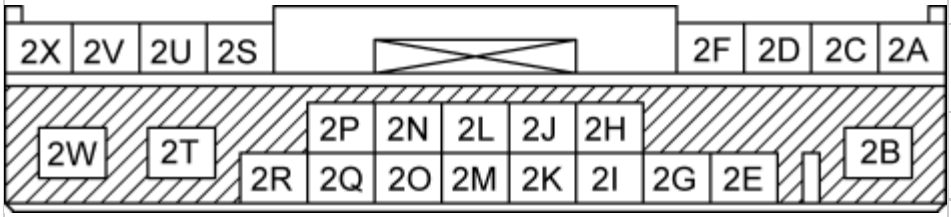	2I	Vehicle speed output signal*2
	2J	AMP control*3
	2K	—
	2L	—
	2M	—
	2N	—
	2O	Local HS-CAN (+)
	2P	—
	2Q	Local HS-CAN (-)
	2R	ACC
	2S	Rear door speaker output LH (+)
	2T	AudioPilot®2*3
	2U	Rear door speaker output LH (-)
	2V	Rear door speaker output RH (+)
	2W	Ground
	2X	Rear door speaker output RH (-)
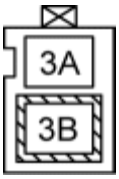	3A	ANT AMP power supply
	3B	Radio antenna input
	4A	XM*4

*2

Without Bose®

*3

With Bose®

*4

With SiriusXM satellite radio

Fail-safe

- Function not equipped.

2014 - Mazda3 - Body and Accessories

CENTER DISPLAY [WITH CENTER DISPLAY]

Outline

- The center display displays vehicle information and entertainment system information.

Function

- The center display displays images based on the signals sent from the connectivity master unit (CMU) as LVDS*1 signals.
- The center display is a touch panel-type LCD. It sends the touch-position information to the CMU as LVDS*1 signals.
- The communication pathway between the CMU and the center display corresponds to HDCP*2.

*1

Low-Voltage Differential Signaling indicates the electrical characteristics of the signal. LVDS is a digital, wired transmission technology for the short range which adopts a differential interface having the characteristics of low voltage and low power consumption.

*2

HDCP (High-bandwidth Digital Content Protection system) is a copyright protection technology which prevents unauthorized copying of content by encrypting the digital signal transmission pathway from a video playback device such as a personal computer to a display device such as a display.

Display information

- The center display displays the following information. Refer to the referenced section for details of the displayed information.

Display content	Reference
Home screen	(See **Home screen**.)
Applications screen	(See **Applications screen**.)
Audio screen	(See **Audio screen**.)

Communication screen	(See **Communication screen**.)
Navigation screen	(See **Navigation screen**.)
Settings screen	(See **Settings screen**.)

Home screen

- The home screen displays the entertainment system information.
- When the ignition is switched to ACC or ON (engine off or on), the center display displays the home screen.

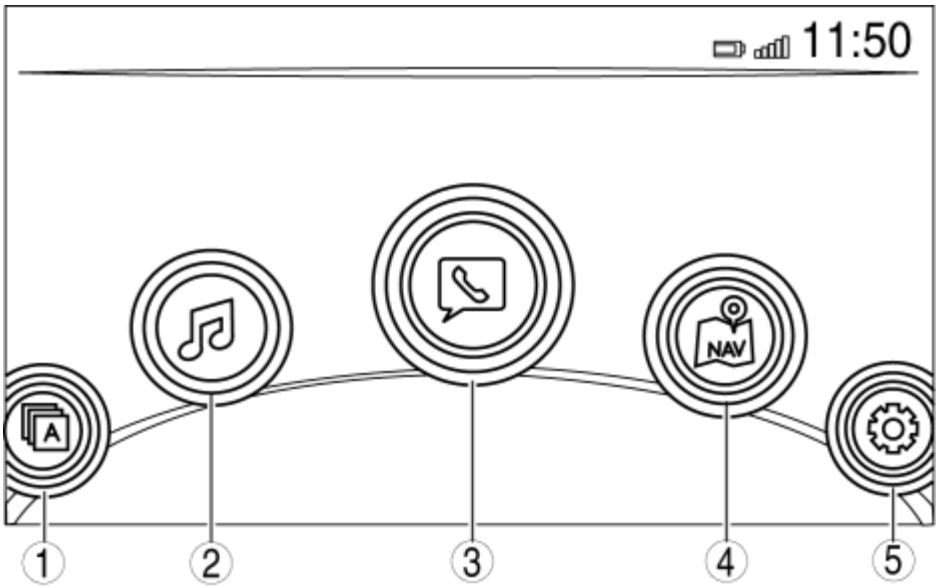

Display area	Button name
1	Applications
2	Audio
3	Communication
4	Navigation (with car-navigation system)
5	Settings

Applications screen

- Information concerning fuel economy, maintenance, and warnings can be verified.

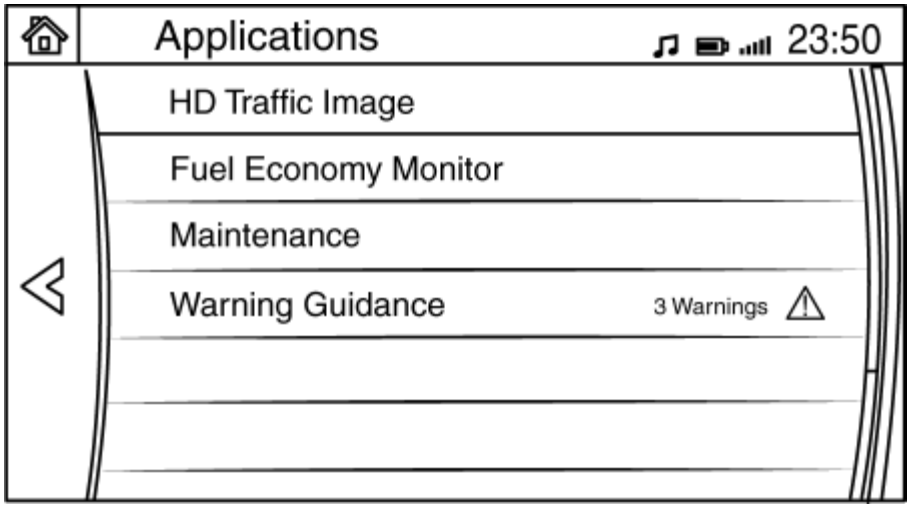

Display content (item name)	Reference
HD Traffic Image	—
Fuel economy monitor	(See **Fuel Economy Monitor**.)
Maintenance monitor	(See **MAINTENANCE MONITOR [WITH CENTER DISPLAY]**.)
Warning guidance	(See **Warning guidance**.)

Fuel Economy Monitor

- Displays the fuel economy and i-ELOOP system information.

Fuel economy monitor verification procedure

- Select the “Applications” button on the Home screen.
- Select “Fuel Economy Monitor” on the Applications screen to display the warning guidance.

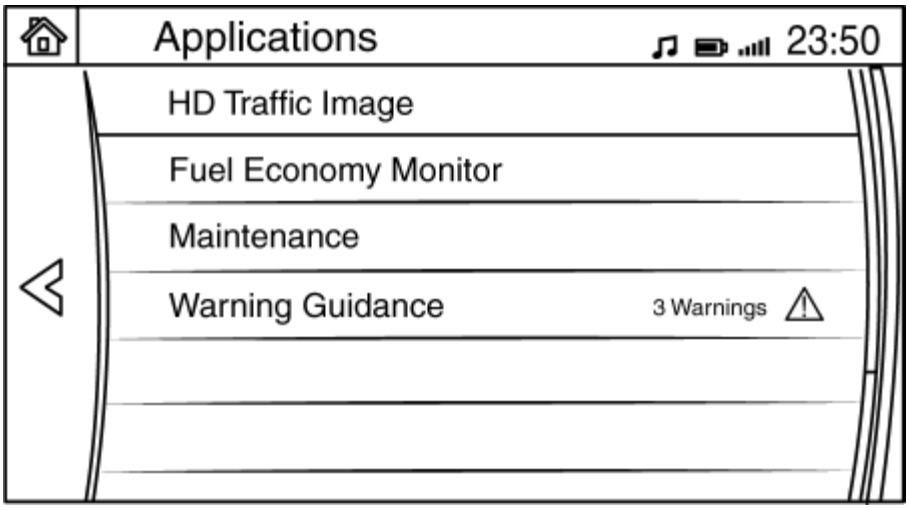

- The buttons on the menu screen operate as follows:

Display		Content	Reference
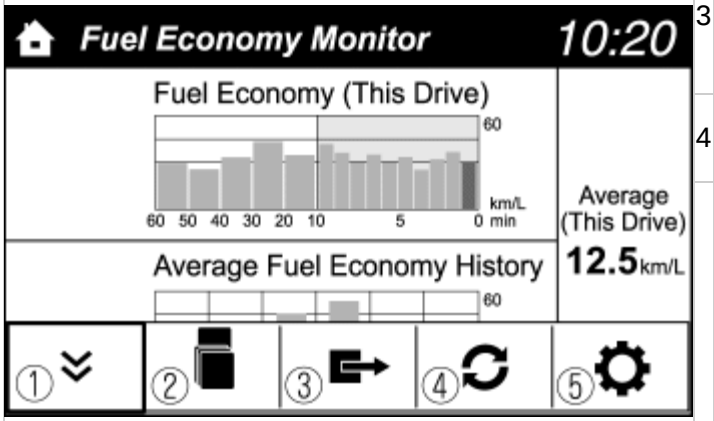	1	Switches display/non-display of the menu screen.	—
	2	Displays the application menu screen.	
	3	Switches the Fuel Economy Monitor in the order of Control Status, Fuel Consumption, and Effectiveness.	
	4	Resets the fuel economy data.	
	5	• Displays the following SETTING screen. ▪ Ending screen on/off switching ▪ On/off switching for function which synchronizes reset fuel economy data to trip meter	

Fuel Consumption Display

- The information regarding the fuel economy is displayed.

Display		Content	Reference
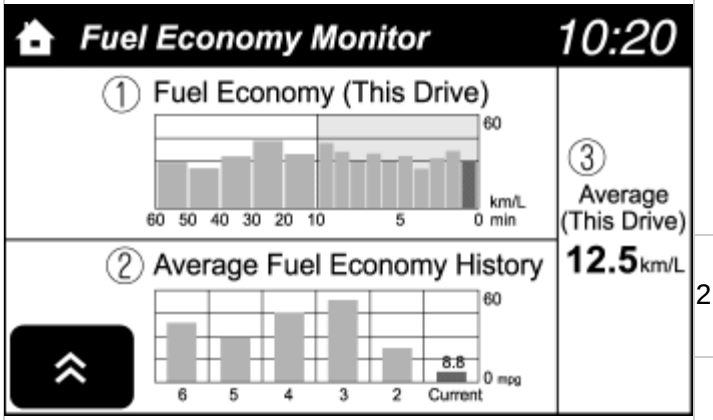	1	• Displays the fuel economy for the past 60 minutes. ▪ Displays the fuel economy every minute for the past 1 to 10 minutes. ▪ Displays the fuel economy every 10 minutes for the past 10 to 60 minutes.	—
	2	Displays the average fuel economy over the past 5 resets and after the current reset.	
	3	• Displays the average fuel economy from when the ignition is switched ON (engine on) to the current time. • The average fuel economy is updated every 60 s. • If there is no average fuel economy data, displays "——".	

Control Status Display

- The power generating status is displayed.

Display		Content	Reference
	1	Displays the level of electricity generated by regenerative braking.	
	2	Displays the amount of the electricity stored in the capacitor.	

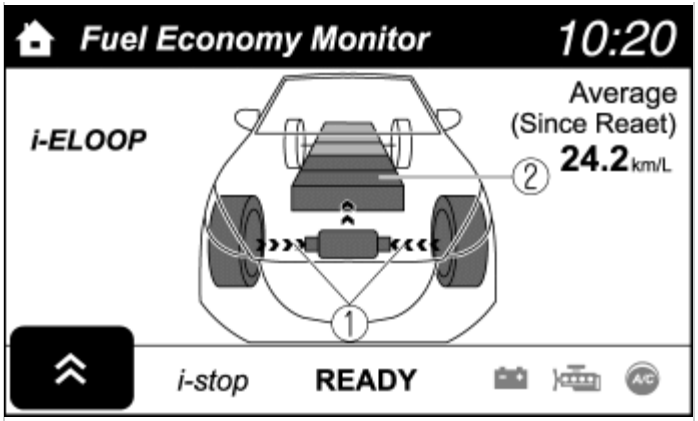		(See **i-ELOOP [i-ELOOP]**.)
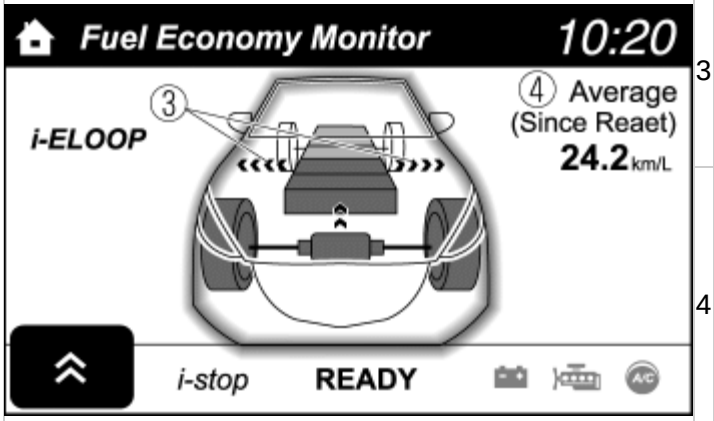	3 Displays the status of the electricity stored in the capacitor and being supplied to the electrical devices (whole vehicle in display is illuminated simultaneously).	
	4 Displays the accumulated fuel economy.	

Warning guidance

- When the center display receives a warning guidance display signal (LVDS signal) from the CMU, it displays the warning guidance screen.

NOTE:

- Display method of the warning guidance varies depending on the emergency level.

  Pop-up display

  - Warning message of a higher emergency level is displayed on the pop-up screen at the time the warning occurred regardless of the display content of the center display. When “OK” on the pop-up screen is selected, it switches to the previous screen before the pop-up display. The pop-up display warning can also be verified in the warning guidance list.

  List display

  - Warning messages displayed by methods other than pop-up display can be verified in the warning guidance screen.

Warning guidance verification procedure

- Select the “Applications” button on the Home screen.
- Select “Warning Guidance” on the Applications screen to display the warning guidance.

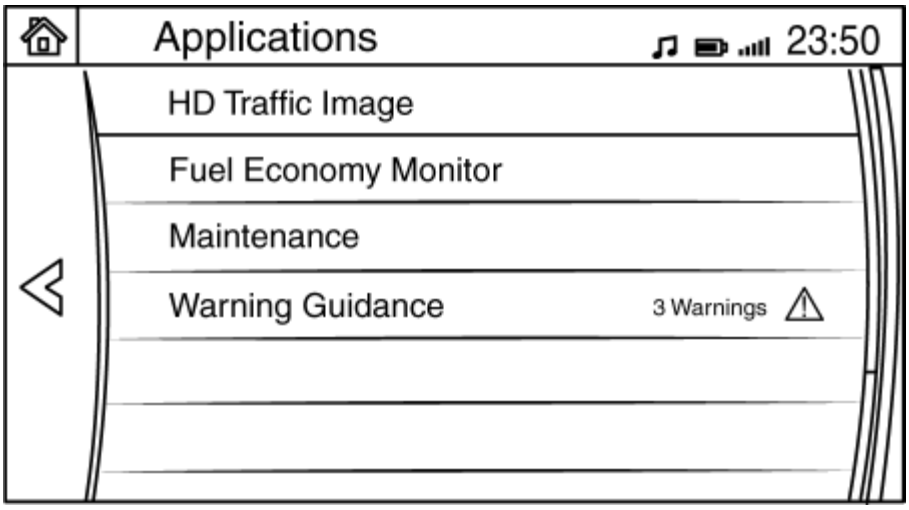

- Select a desired warning from the warning guidance screen.

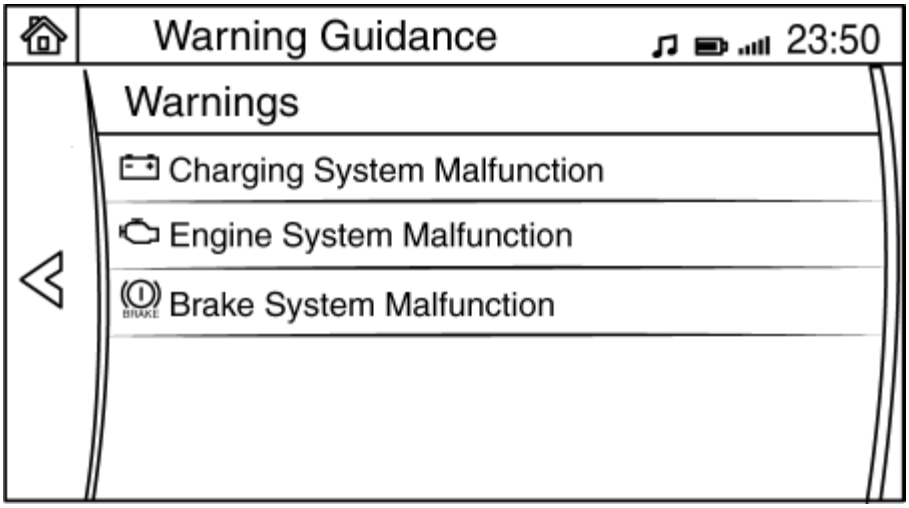

NOTE:

- If there is no warning, No Warnings found is displayed on the warning guidance screen.

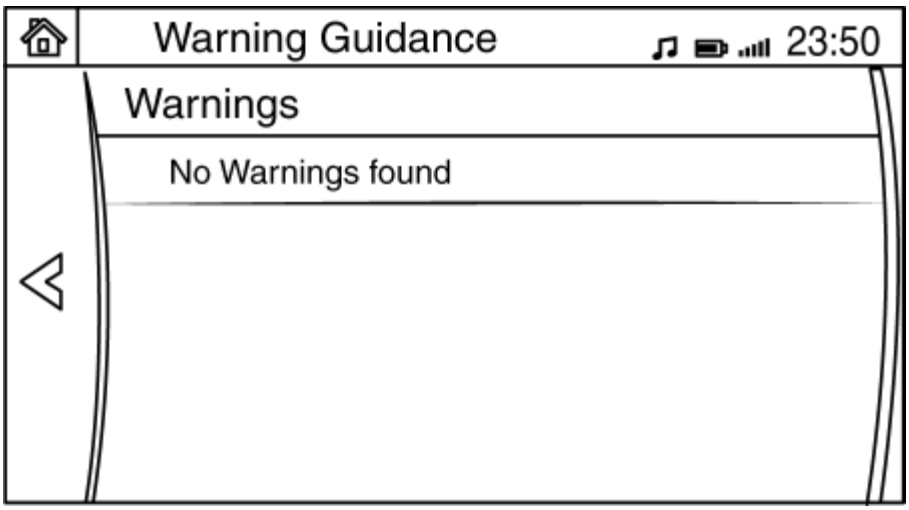

Pop-up display

Screen display		Related	Reference/function

Pop-up screen	Message (list display)	unit	
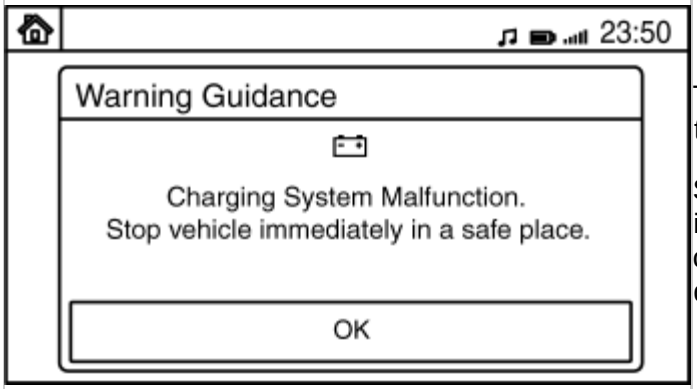	There is an error in the charging system Stop car immediately in a safe place, and contact a Mazda dealer	PCM	(See **CHARGING SYSTEM WARNING LIGHT [SKYACTIV-G 2.0, SKYACTIV-G 2.5]**.)
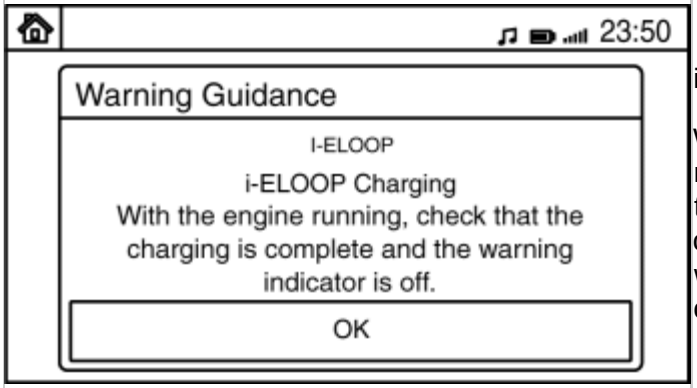	i-ELOOP Charging. With the engine running, check that the charging is complete and the warning indicator is off.	PCM	(See **i-ELOOP [i-ELOOP]**.)
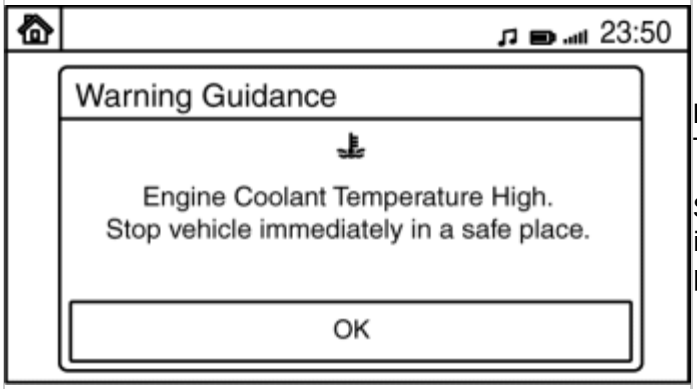	Engine Coolant Temperature High. Stop vehicle immediately in a safe place.	Instrument cluster	(See **LOW ENGINE COOLANT TEMPERATURE INDICATOR LIGHT (BLUE) / HIGH ENGINE COOLANT TEMPERATURE WARNING LIGHT (RED)**.)

List display

Screen display			Related unit	Reference/function
Warning light	Title	Message		
	Engine hydraulic pressure malfunction	Low engine oil pressure.Stop the vehicle immediately in a safe place, turn off the engine, and inspect the engine oil level. Add oil if necessary. Have the vehicle checked by a dealer immediately if this indicator turns on after adding oil or the engine oil level is OK.	PCM	(See **ENGINE OIL WARNING LIGHT [SKYACTIV-G 2.0, SKYACTIV-G 2.5]**.)

	i-ELOOP system malfunction	i-ELOOP system malfunction. Have the vehicle checked by a dealer if this indicator stays on.	PCM (i-ELOOP)	(See **MASTER WARNING LIGHT**.)
BRAKE	Low brake fluid level	Brake fluid level is low. Stop the vehicle immediately in a safe place and have the vehicle checked by a dealer.	Front body control module (FBCM)	(See **BRAKE SYSTEM / ABS WARNING LIGHT**.)
BRAKE	Brake system malfunction	Electronically-controlled brake system malfunction. Stop the vehicle immediately in a safe place and have the vehicle checked by a dealer.	DSC	
	Low tire air pressure	Low tire air pressure in one or more tires. Check the air pressure of the tires and adjust to the correct air pressure. Press the TPMS SET switch after adjusting the tire pressure until you hear a beep.	DSC	(See **TIRE PRESSURE MONITORING SYSTEM WARNING LIGHT**.)
	High engine coolant temperature	Engine is starting to run hot. Drive slowly or stop the vehicle until the indicator stops flashing. If it keeps flashing, even after stopping the vehicle, take proper actions. Refer to the Owner's Manual.	Instrument cluster	(See **LOW ENGINE COOLANT TEMPERATURE INDICATOR LIGHT (BLUE) / HIGH ENGINE COOLANT TEMPERATURE WARNING LIGHT (RED)**.)
	Low remaining fuel amount	Fuel tank level is low. Refuel the vehicle soon.	Instrument cluster	(See **LOW FUEL WARNING LIGHT**.)
	Fuel cap inspection	The fuel cap may not be installed properly. Check that the fuel cap has been installed and tightened properly. After installing and tightening the fuel cap properly, this indicator will not turn off for a few drive cycles until it can be confirmed that the system is OK. Have the vehicle checked by a dealer if this indicator stays on.	PCM	(See **CHECK FUEL CAP WARNING LIGHT [SKYACTIV-G 2.0, SKYACTIV-G 2.5]**.)
	Power steering system malfunction	Electric power steering malfunction. Stop the vehicle in a safe place and turn off the engine. Have the vehicle checked by a dealer if this indicator stays on.	EPS control module	(See **POWER STEERING MALFUNCTION INDICATOR LIGHT**.)

	Engine system malfunction	Engine system malfunction. Have the vehicle checked by a dealer immediately.	PCM	(See **CHECK ENGINE LIGHT [SKYACTIV-G 2.0, SKYACTIV-G 2.5]**.)
	Air bag system malfunction	Airbag/seatbelt malfunction. Have the vehicle checked by a dealer immediately	SAS control module	(See **AIR BAG SYSTEM WARNING LIGHT [TWO-STEP DEPLOYMENT CONTROL SYSTEM]**.) (See **AIR BAG SYSTEM WARNING LIGHT [STANDARD DEPLOYMENT CONTROL SYSTEM]**.)
ABS	ABS system malfunction	Anti-lock brake system (ABS) malfunction. Have the vehicle checked by a dealer immediately.	DSC	(See **BRAKE SYSTEM/ABS WARNING LIGHT**.)
	DSC system malfunction	Dynamic stability control (DSC) or traction control system (TCS) malfunction. Have the vehicle checked by a dealer immediately.	DSC	(See **TCS/DSC INDICATOR LIGHT**.)
BSM OFF	BSM system malfunction	Blind spot monitoring (BSM)/Rear cross traffic alert (RCTA) malfunction. Check for abnormalities in the rear bumper surface and clean if dirty or covered with snow. Have the vehicle checked by a dealer if this indicator stays on.	BSM control module	(See **BLIND SPOT MONITORING (BSM) OFF INDICATOR LIGHT**.)
AFS OFF	AFS system malfunction	Adaptive front-lighting system (AFS) malfunction. Have the vehicle checked by a dealer if this indicator keeps flashing.	AFS control module	(See **AFS OFF INDICATOR LIGHT**.)
	TPMS system malfunction	Tire pressure monitoring system (TPMS) malfunction. Have the vehicle checked by a dealer.	DSC HU/CM	(See **TIRE PRESSURE MONITORING SYSTEM WARNING LIGHT**.)
	Key Battery Low	Key battery is low. Replace the key battery immediately.	Start stop unit	(See **KEY WARNING LIGHT (RED)/KEY INDICATOR LIGHT (GREEN)**.)
	Keyless system malfunction	Keyless entry system malfunction. Have the vehicle checked by a dealer.	Start stop unit	
	Automatic	Automatic transmission malfunction.		

AT	transmission system malfunction	Damage to the vehicle may occur if you continue to drive. Have the vehicle checked by a dealer immediately.	TCM	(See **AUTOMATIC TRANSAXLE WARNING LIGHT [FW6A-EL]**.)
	Battery management system malfunction	Battery management system malfunction. Have the vehicle checked by a dealer.	PCM	(See **MASTER WARNING LIGHT**.)
	Brake override system malfunction	Brake switch malfunction. Have the vehicle checked by a dealer immediately.	PCM	
	SCBS system malfunction	Smart city brake support (SCBS) malfunction. Have the vehicle checked by a dealer immediately.	Laser sensor	
	SCBS Clean front windshield	Smart city brake support (SCBS) malfunction. Clean the front windshield. Have the vehicle checked by a dealer if this indicator stays on.	Laser sensor	
	SCBS not available	Smart city brake support (SCBS) currently unavailable.	Laser sensor	
	LDWS system malfunction	Lane departure warning system (LDWS) malfunction. Have the vehicle checked by a dealer.	FSC	(See **LDWS INDICATOR LIGHT (GREEN) / LDWS WARNING LIGHT (AMBER)**.)
	HBC system malfunction	High beam control (HBC) malfunction. Have the vehicle checked by a dealer.	FSC	(See **HBC INDICATOR LIGHT (GREEN) / HBC WARNING LIGHT (AMBER)**.)
	HBC/LDWS camera interrupted	High beam control (HBC)/Lane departure warning system (LDWS) malfunction. Clean the windshield. Have the vehicle checked by a dealer if this indicator stays on.	FSC	(See **MASTER WARNING LIGHT**.)
	HBC/LDWS system malfunction	High beam control (HBC)/Lane departure warning system (LDWS) malfunction. Have the vehicle checked by a dealer if this indicator stays on.	FSC	
	HBC/LDWS windshield fogged	High beam control (HBC)/Lane departure warning system (LDWS) malfunction. Defrost the windshield. Have the vehicle checked by	FSC	

		a dealer if this indicator stays on.		
	Vehicle system malfunction	Vehicle system malfunction. Have the vehicle checked by a dealer.	PCM	
	Low washer fluid level	Washer fluid level is low. Refill the washer fluid.	Front body control module (FBCM)	(See **WASHER FLUID-LEVEL SENSOR**.)
	Low engine coolant temperature	Engine coolant is cold and no warm air is available for heater/defroster. Vehicle can be driven with the indicator on or off. Have the vehicle checked by a dealer if this indicator stays on.	Instrument cluster	(See **LOW ENGINE COOLANT TEMPERATURE INDICATOR LIGHT (BLUE)/HIGH ENGINE COOLANT TEMPERATURE WARNING LIGHT (RED)**.)

Audio screen

- When the audio button on the home screen is selected, the audio screen is displayed. The following audio functions in the table below are available.

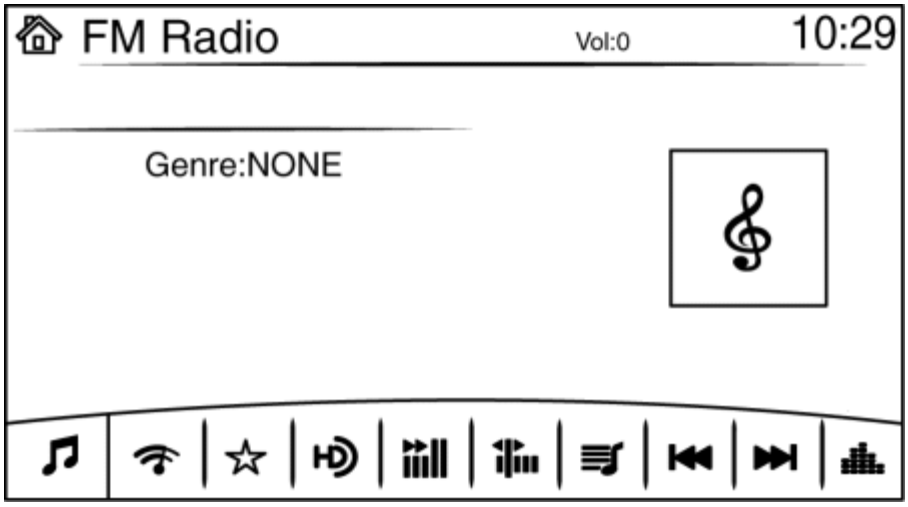

Display content (item name)	Function
Traffic Information	If a particular equipment item is not available, the item is not indicated in the center display.
FM	Switches to FM radio screen.

AM	Switches to AM radio screen.
XM	Switches to SiriusXM satellite radio screen.
Pandora®	Switches to Pandora® screen. **NOTE:** • Pandora® is not displayed in gray even if the connected mobile device is not compatible with Pandora®.
Stitcher™	Switches to Stitcher. **NOTE:** • Stitcher™ is not displayed in gray even if the connected mobile device is not compatible with Stitcher™.
Aha™ Radio	Switches to Aha™ radio screen. **NOTE:** • Aha™ radio is not displayed in gray even if the connected mobile device is not compatible with Aha™ radio.
Bluetooth <Device Name>	Switches to Bluetooth® audio screen. **NOTE:** • If available, the connecting device name is displayed. When Bluetooth® is not available, such as no device is connected, only Bluetooth® is displayed.
USB1 <Device Name>	Switches to USB audio screen. **NOTE:** • If available, the connecting device name is displayed. When USB1 is not available, such as no device is connected, only USB1 is displayed.
USB2 <Device Name>	Switches to USB audio screen. **NOTE:** • If available, the connecting device name is displayed. When USB2 is not available, such as no device is connected, only USB2 is displayed.
CD	Switches to CD screen.
AUX	Switches to AUX screen.

DVD	If a particular equipment item is not available, the item is not indicated in the center display.
TV	If a particular equipment item is not available, the item is not indicated in the center display.

NOTE:

- Items requiring media, such as CDs or AUX, are displayed in gray and not available if connection of the media cannot be detected.

Communication screen

- E-mail, SMS (Short Message Service), and Hands-free telephone (HF/TEL) functions can be used.

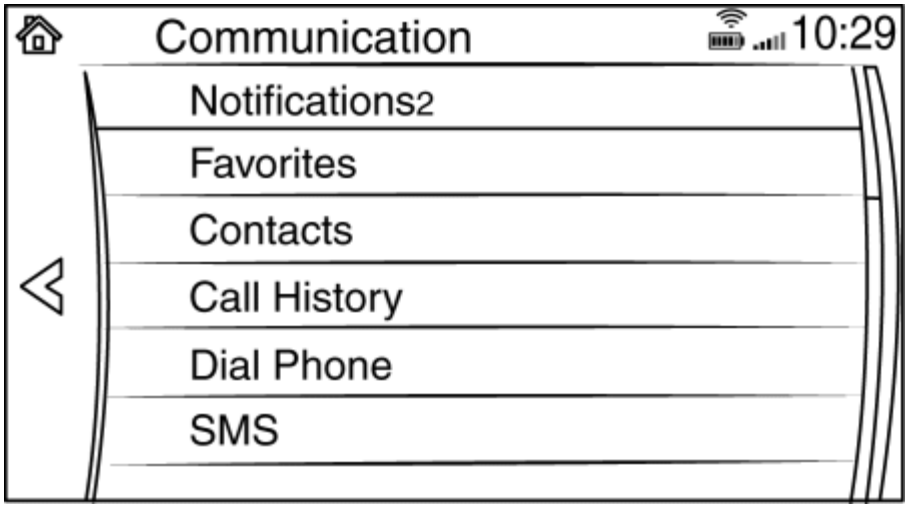

Display content (item name)	Function
Active Call	Switches to the incoming call screen. (when receiving an incoming call)
Notifications	Switches to the notification screen. **NOTE:** • When there is no notification, displayed in gray and not available.
Favorites	Switches to the favorite screen.
Contacts	Displays the phone book.
Call History	Displays the call history.

Dial Phoned	Switches to the dial screen for phone number input.
SMS	Switches to the SMS screen.
E-mail	Switches to the e-mail screen.
Setting	Switches ON/OFF of the e-mail/SMS notification function.

NOTE:

- If Bluetooth® communication is not established between a mobile device such as a Bluetooth®-enabled smart phone, the functions dependent on the mobile device are displayed in gray and they are not available.
- When there is unread notification, e-mail. or SMS, the number of unread messages is displayed beside each item name. The number of missed call is displayed next to “Call History”.

Navigation screen

- When the navigation button on the home screen is selected, the navigation screen is displayed. Navigation information such as the current position and route guidance to destination is displayed on this screen.

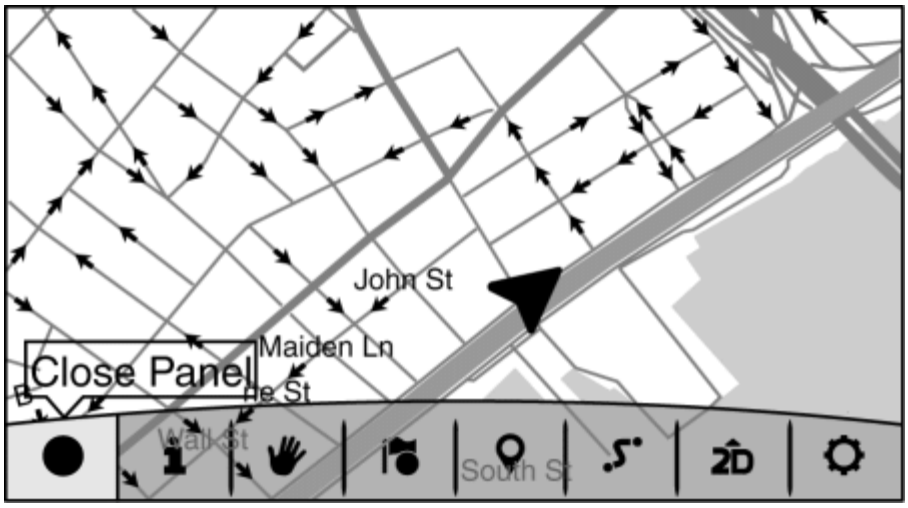

Settings screen

- The following settings can be changed. For details, refer to the entertainment system setting function. (See **ENTERTAINMENT SYSTEM [WITH CENTER DISPLAY]**.)

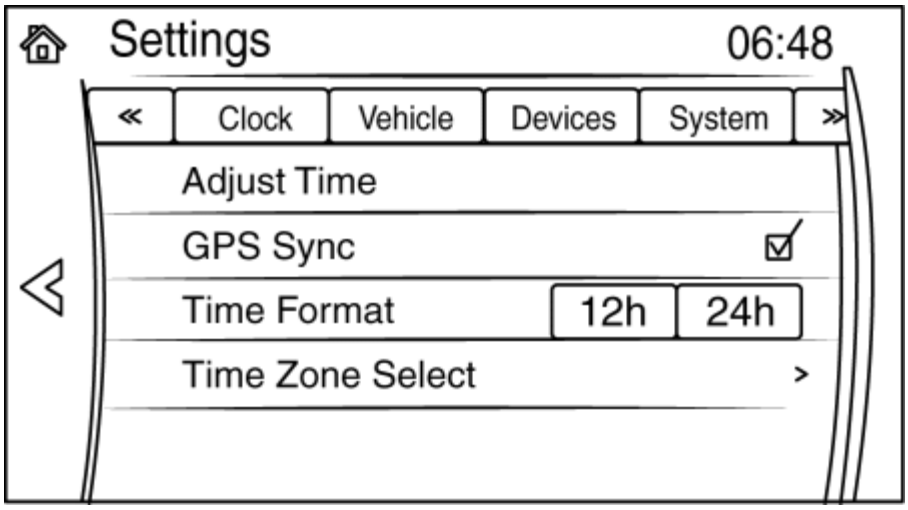

Tab	Reference	
AD-Disp	(See **ENTERTAINMENT SYSTEM [WITH CENTER DISPLAY]**.)	Active driving display setting
Display		Display setting
Safety		Personalization setting function (vehicle setting)
Sound		Sound setting
Clock		Clock setting
Vehicle		Personalization setting function (vehicle setting)
Devices		Bluetooth® pairing
System		System setting

Construction

- The center display is installed in the center of the instrument panel.

CENTER DISPLAY [WITH CENTER DISPLAY]

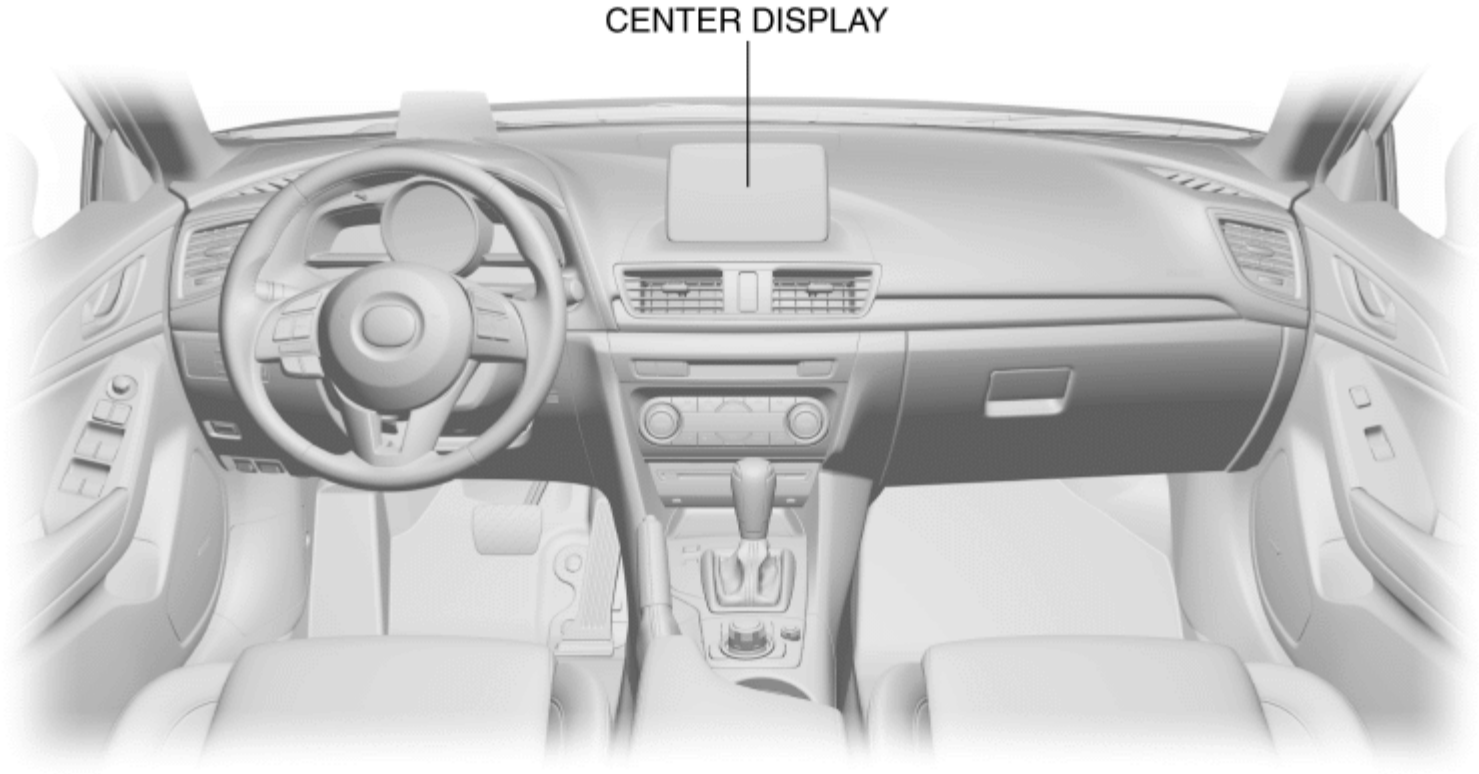

Input/output signal table

Terminal		Signal
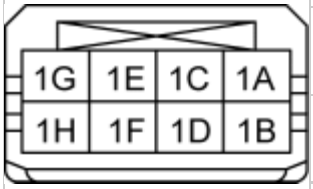	1A	—
	1B	GND
	1C	—
	1D	—
	1E	—
	1F	—
	1G	ACC
	1H	B+
	2A	—

CENTER DISPLAY [WITH CENTER DISPLAY]

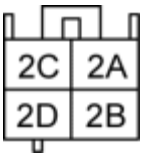	2B	LVDS (+)
	2C	—
	2D	LVDS (-)

Fail-safe

- Function not equipped.

2014 - Mazda3 - Body and Accessories

MAINTENANCE MONITOR [WITH CENTER DISPLAY]

Outline

- When the preset maintenance period approaches, the maintenance monitor displays a message in the center display to inform the driver.

Function / Construction

- The maintenance monitor has the following items.
- Display/non-display of the scheduled maintenance, tire rotation, and oil change*1*2 can be optionally set by the user. Refer to the Workshop Manual for the setting procedure.
- The connectivity master unit (CMU) stores the maintenance monitor setting content, and the elapsed time and traveled distance from when the setting was made. The stored information is not cleared even if the battery cables are disconnected.

NOTE:

- The maintenance monitor setting information recorded in the CMU cannot be written to a new CMU, therefore, the maintenance monitor is set to the initial setting value if the CMU is replaced. Before replacing the CMU, explain to the customer that the maintenance monitor is reset to the initial setting value.

*1

The engine oil maintenance monitor can be set using the center display or the Mazda modular diagnostic unit (M-MDS). Refer to the Workshop Manual for the setting procedure.

*2

The engine oil maintenance monitor is displayed in the center display based on the received display request signal which the CMU receives from the PCM. For details, refer to the engine oil maintenance monitor. (See ENGINE OIL MAINTENANCE MONITOR [SKYACTIV-G 2.0, SKYACTIV-G 2.5].)

Maintenance monitor table

NOTE:

- For vehicles without the center display, the oil inspection period setting can only be changed using the Mazda Modular Diagnostic System (M-MDS). For details, refer to the wrench indication light. (See **WRENCH WARNING INDICATOR LIGHT [SKYACTIV-G 2.0, SKYACTIV-G 2.5]**.)
- If the Setting Interval setting of the oil inspection period is changed using the Mazda Modular Diagnostic System (M-MDS), only select Flexible.

Tab	Item	Content
Scheduled Maintenance	Setting (ON/OFF)	The notifications can be switched on/off.
	Time (months)	Displays the period and distance until maintenance. When selected, the maintenance period can be set. When the set period has elapsed, Scheduled Maintenance Due! is displayed in red.
	Distance (mile or km)	
	Reset	Returns the remaining time and distance to the initial values.
Tire Rotation	Setting (ON/OFF)	The notifications can be switched on/off.
	Distance (mile or km)	Displays the distance until tire rotation. When selected, the tire rotation period can be set. When the set period has elapsed, Tire Rotation Due! is displayed in red.
	Reset	Returns the remaining time and distance to the initial values.
Oil Change	**Setting interval (Canada)** • ON*3/OFF **Setting interval (U.S.A. and Puerto Rico)** • OFF/Fixed/Flexible*3	**Canada** • Display/non-display of the oil inspection/replacement period can be set. **U.S.A. and Puerto Rico** • Display (Fixed, Flexible)/non-display of the oil inspection/replacement period can be set.
	Distance (mile or km)*4	Distance to display of oil inspection/replacement period can be set. When the set period has elapsed, Oil Change Due! is displayed in red.
	Oil life (%)*5	Oil life to oil inspection/replacement period can be displayed. Displays the percentage of the engine oil amount which has not deteriorated out of the total engine oil amount. When the scheduled maintenance period has elapsed, Oil Change Due! is displayed in red.
	Reset	Maintenance monitor setting can be reset to the initial value.

*3

When "Flexible" is selected, the engine oil deterioration condition is calculated based on the frequency of engine starts and the distance travelled. Because the engine oil deterioration condition cannot be calculated correctly if engine oil other than Mazda genuine oil (0W-20) or Castrol oil (0W-20) is used, use Mazda genuine oil (0W-20) or Castrol oil (0W-20) when selecting "Flexible".

*4

If "Fixed" is selected in setting

*5

If "Flexible" is selected in setting

Operation

- If any of the following display conditions is met during the preset maintenance period, the maintenance monitor displays a message.

  Display condition

  - Day setting: Remaining days are 15 days or less
  - Distance setting: Remaining distance is 250 mile/500 km
  - Display request signal is sent from PCM (oil inspection period only)

2014 - Mazda3 - Body and Accessories

CD PLAYER [WITH CENTER DISPLAY]

Purpose, Function

- The CD player sends the inserted CD file information to the connectivity master unit (CMU), and an audio signal to the tuner and amp unit (TAU).

Specification

Type	Playback function file
Music/MP3/WMA/AAC CD player	• Music data (CD-DA) • MP3/WMA (Windows Media Audio)/AAC (Advanced Audio Coding) file

Construction

- A CD player is installed to the front console.

CD PLAYER [WITH CENTER DISPLAY]

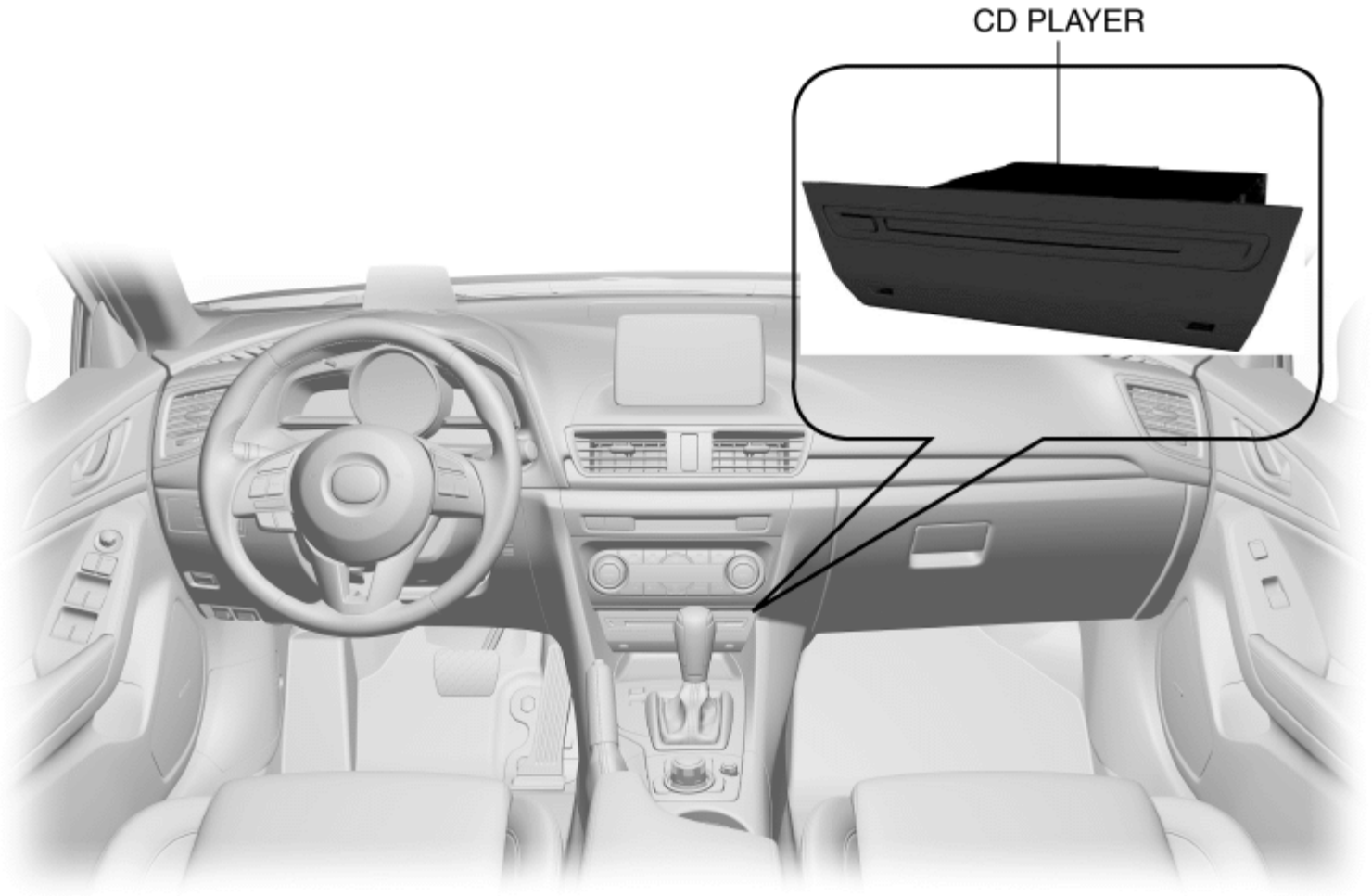

Input/output signal table

Terminal		Signal
	A	Ground
	B	—
	C	—
	D	Illumination (-)
	F	—
	G	Local HS-CAN (+)
	H	Local HS-CAN (-)

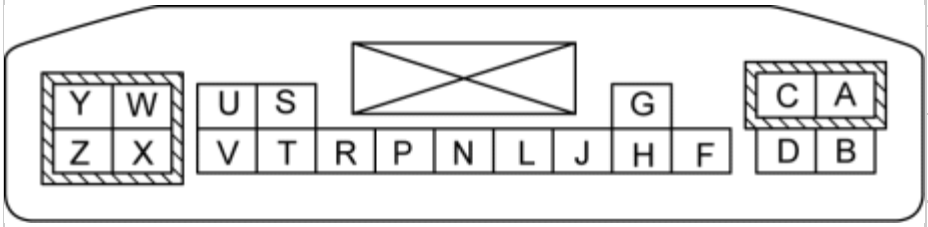

J	Shield ground
L	CD audio output LH (+)
N	CD audio output LH (-)
P	CD audio output RH (+)
R	CD audio output RH (-)
S	—
T	—
U	—
V	—
W	TNS
X	—
Y	ACC
Z	B+

Operation

- For the CD player operation, refer to the ENTERTAINMENT SYSTEM. (See **ENTERTAINMENT SYSTEM [WITH CENTER DISPLAY]**.)

Fail-safe

- Function not equipped.

2014 - Mazda3 - Body and Accessories

SPEAKER [WITHOUT Bose®, WITH CENTER DISPLAY]

Purpose

- Converts the audio signal from the audio unit to sound.

Function

- Full-range speakers, which can output wide-range sound from low to high frequency, have been adopted.

Specification

Item		Front door speaker	Rear speaker	Tweeter
Max. input	(W)	25	25	25
Rated impedance	(ohm)	3.4 — 4.6	3.4 — 4.6	3.4 — 4.6
Size	(cm {in})	16.5 {6.5}	16.5 {6.5}	3 {1}

Construction

Front door speaker, rear door speaker

- A cone-shaped dynamic speaker has been adopted for each speaker.
- A weight reduction was achieved by using pulp for the cone material and adopting a ferrite magnet.

Tweeter

- A cone-shaped dynamic speaker has been adopted for each speaker.
- A weight reduction was achieved by using polyetherimide for the cone material and adopting a ferrite magnet.

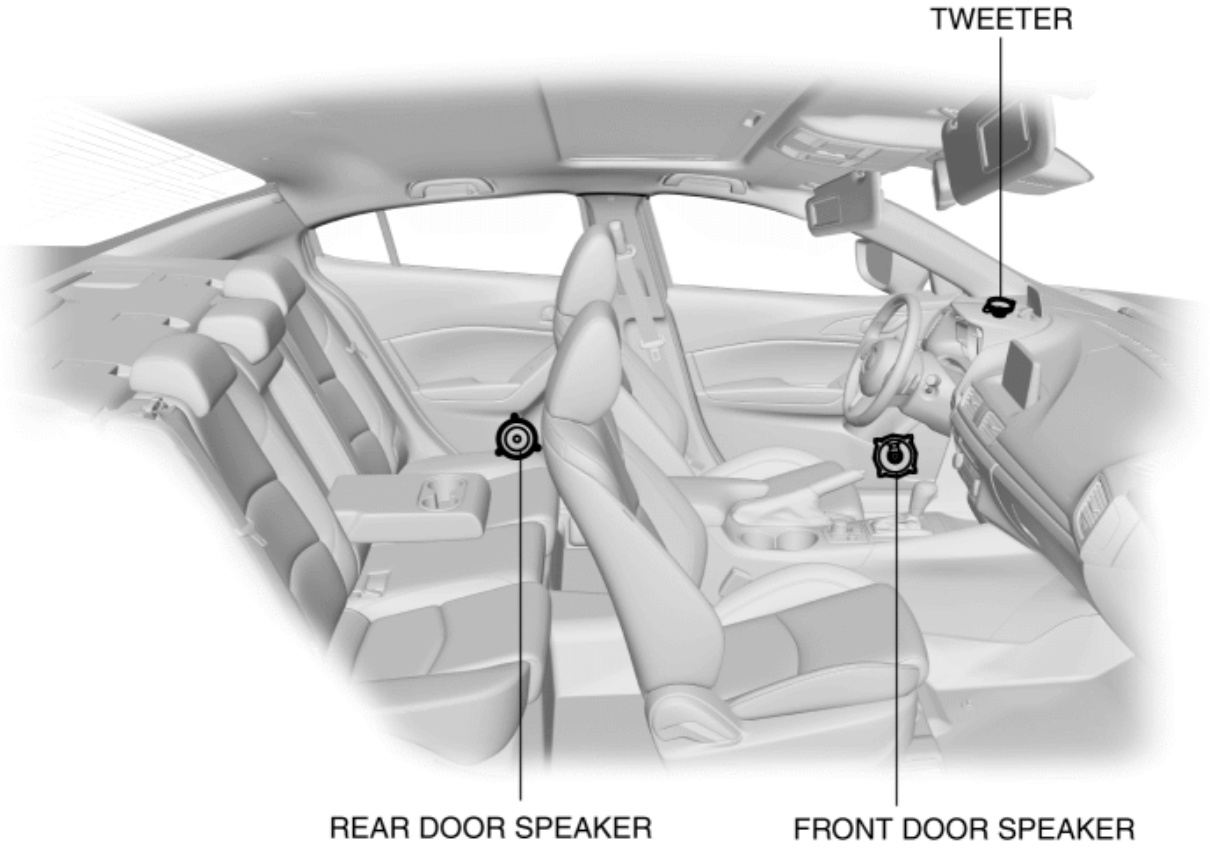

Operation

- The speaker sends the audio signal (current) from the audio unit to the voice coil.
- When the audio signal (current) is sent to the voice coil, the coil becomes magnetized and a magnetic field occurs. Because the voice coil and the magnet pull and repel each other in the magnetic field, the voice coil vibrates.
- Because the voice coil is wrapped around the voice coil bobbin, the voice coil bobbin vibrates when the voice coil vibrates.
- When the voice coil bobbin vibrates, the cone (diaphragm) installed to the voice coil bobbin vibrates and generates sound.

SPEAKER [WITHOUT Bose®, WITH CENTER DISPLAY]

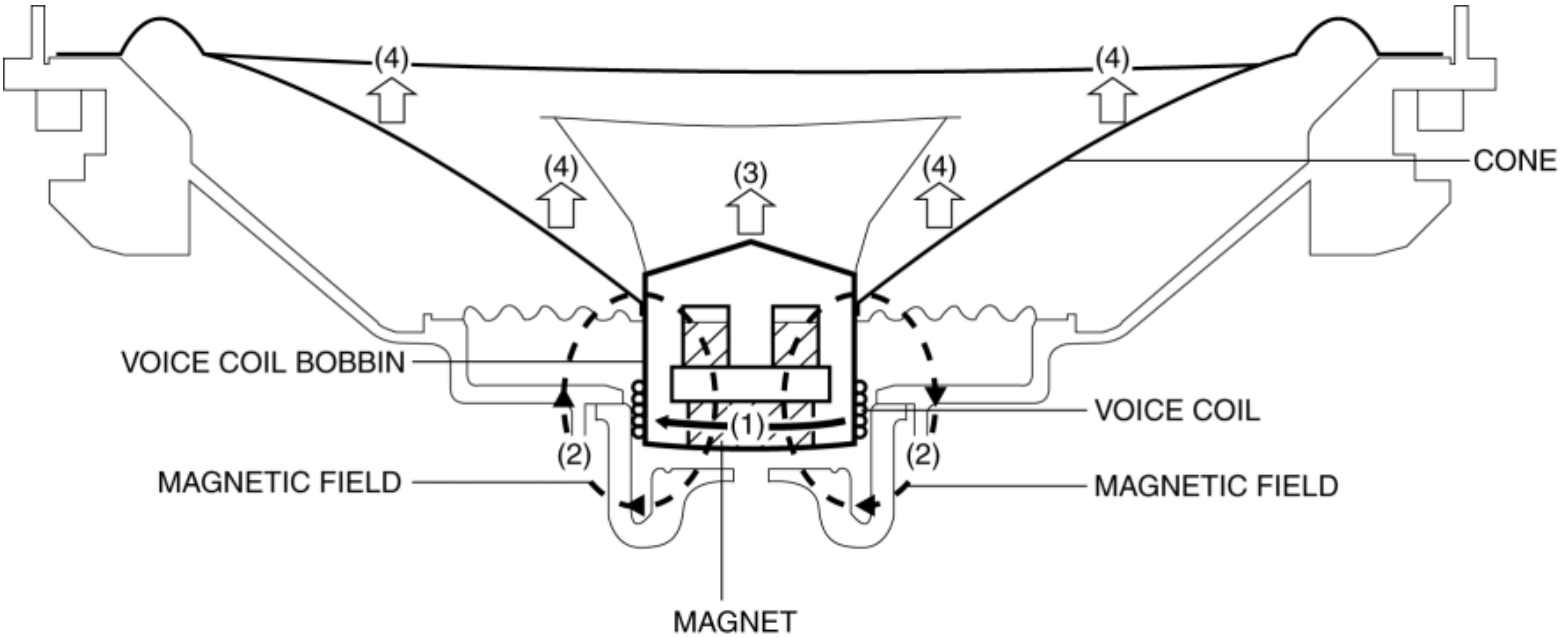

Fail-safe

- Function not equipped.

2014 - Mazda3 - Body and Accessories

SPEAKER [WITH Bose®, WITH CENTER DISPLAY]

Purpose

- Converts the audio signal from the audio unit to sound.
- High quality sound is provided for the driver and passengers.

Function

- Full-range speakers, which can output wide-range sound from low to high frequency, have been adopted.
- A better sound effect and clear sound have been achieved by using tweeters (speaker for upper register sound range) which differ the range of the output sound and front door speaker (speaker for lower register sound range).

Specification

Item		Front door speaker	Rear door speaker	Front side speaker	Front center speaker	Rear speaker (4SD)	Rear speaker (5HB)
Rated impedance	(ohm)	1.25	3.7	3.4 — 4.6	3.24 — 3.96	3.24 — 3.96	3.24 — 3.96
Size	(cm {in})	16.5 {6.5}	16.5 {6.5}	8 {3}	8 {3}	8 {3}	8 {3}

Construction

Front door speaker, front center speaker

- A cone-shaped dynamic speaker has been adopted for each speaker.
- A weight reduction was achieved by using pulp for the cone material and adopting a neodymium magnet.

Rear door speaker, front side speaker, rear door speaker

- A cone-shaped dynamic speaker has been adopted for each speaker.
- A weight reduction was achieved by using pulp for the cone material and adopting a ferrite magnet.

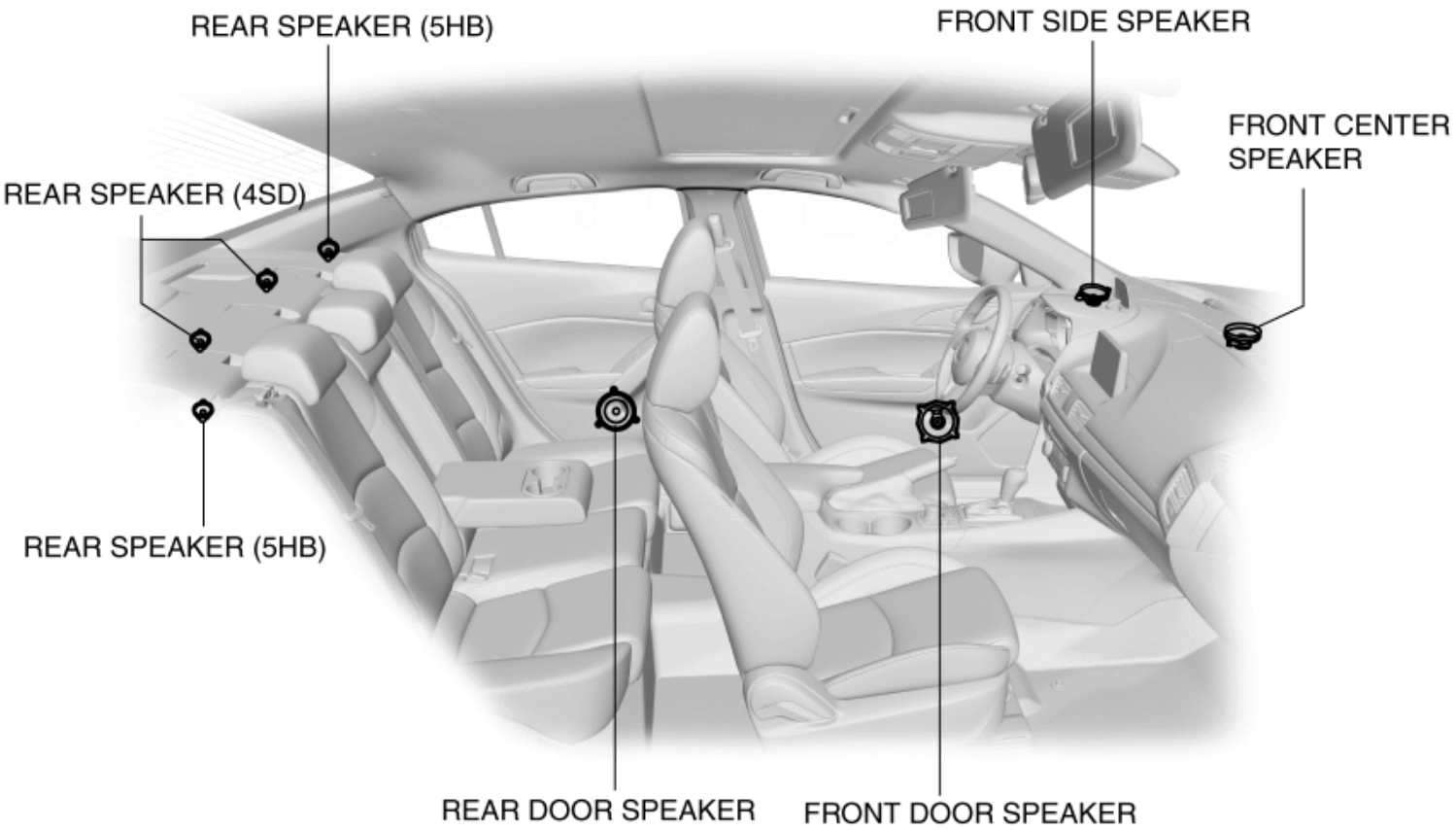

- A better sound effect is achieved by the use of speakers which differ the range of the output sound.
    - Front door speaker (speaker for deep bass sound range)
    - Rear door speaker (speaker for all sound ranges)
    - Front center speaker (speaker for medium-to-high-sound range)
    - Front side speaker (speaker for medium-to-high-sound range)
    - Rear door speaker (speaker for medium-to-high-sound range)

Operation

- The speaker sends the audio signal (current) from the audio unit to the voice coil.
- When the audio signal (current) is sent to the voice coil, the coil becomes magnetized and a magnetic field occurs. Because the voice coil and the magnet pull and repel each other in the magnetic field, the voice coil vibrates.
- Because the voice coil is wrapped around the voice coil bobbin, the voice coil bobbin vibrates when the voice coil vibrates.
- When the voice coil bobbin vibrates, the cone (diaphragm) installed to the voice coil bobbin vibrates and generates sound.

SPEAKER [WITH Bose®, WITH CENTER DISPLAY]

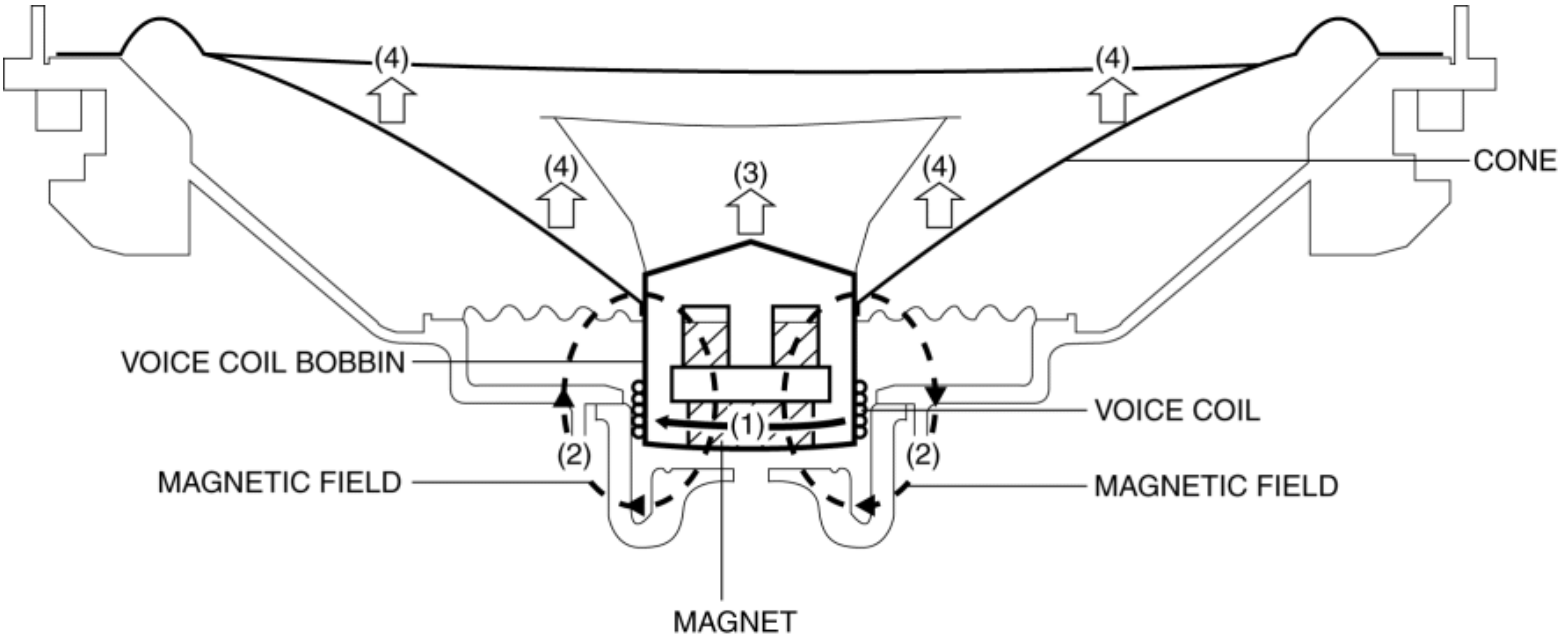

Fail-safe

- Function not equipped.

2014 - Mazda3 - Body and Accessories

AUDIO AMPLIFIER [WITH CENTER DISPLAY]

Purpose, Function

- The audio signal (analog voltage waveform) output from the unit equipped on the vehicle is converted into a digital pulse. The converted digital pulse signal is amplified, converted to an analog signal again, and sent to the speakers.

Construction

- The audio amplifier is positioned under the front seat (RH).

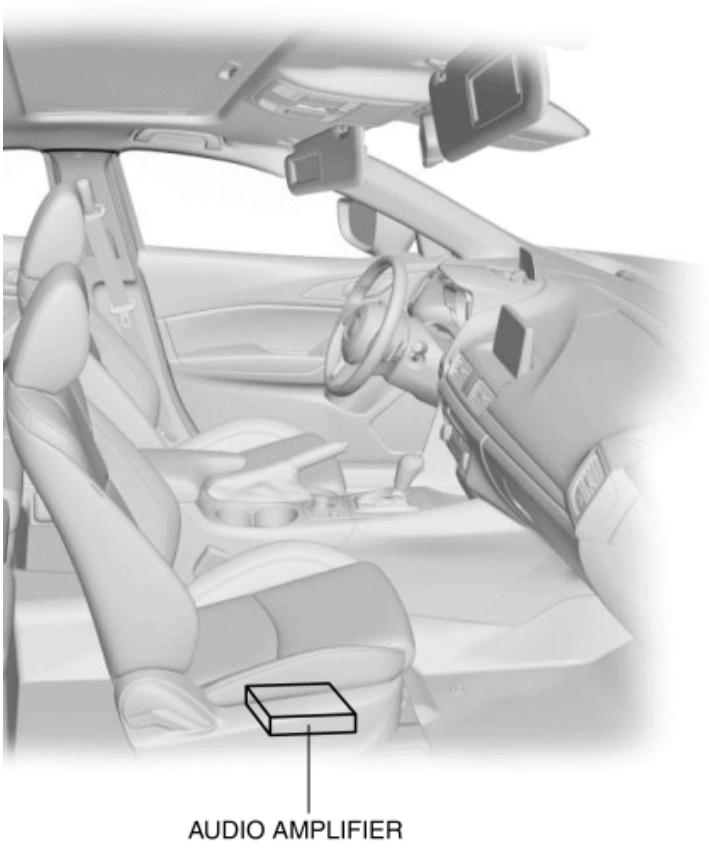

Terminal Layout and Signal

Terminal		Signal
	1A	—
	1B	—

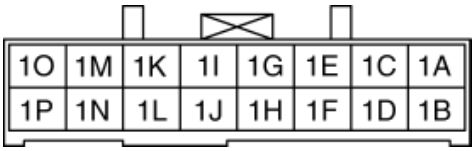

1C	—
1D	—
1E	—
1F	—
1G	AudioPilot®2 (+)
1H	AudioPilot®2 (-)
1I	Rear door speaker input RH (+)
1J	Rear door speaker input RH (-)
1K	Rear door speaker input LH (+)
1L	Rear door speaker input LH (-)
1M	Front door speaker input RH (+)
1N	Front door speaker input RH (-)
1O	Front door speaker input LH (+)
1P	Front door speaker input LH (-)

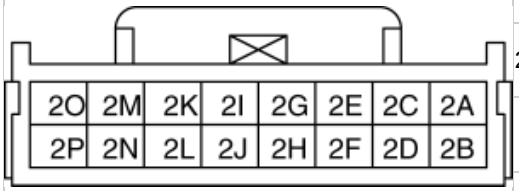

2A	Rear door speaker output LH (+)
2B	Rear door speaker output LH (-)
2C	Front side speaker output LH (-)
2D	ACC
2E	Front side speaker output LH (+)
2F	AMP control
2G	Front center speaker output (+)
2H	PWM control
2I	Front center speaker output (-)
2J	—
2K	Front side speaker output RH (-)
2L	CAN_H

	2M	Front side speaker output RH (+)
	2N	CAN_L
	2O	Rear speaker output (+)
	2P	Rear speaker output (-)
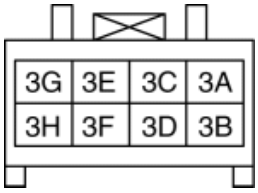	3A	B+
	3B	GND
	3C	Front door speaker output LH (+)
	3D	Front door speaker output LH (-)
	3E	Front door speaker output RH (+)
	3F	Front door speaker output RH (-)
	3G	Rear door speaker output LH (-)
	3H	Rear door speaker output LH (+)

Operation

- The audio amplifier amplifies the audio signal sent from the tuner and amp unit (TAU) and sends it to the speakers.
- The speakers produce audio based on the audio signal sent from the TAU.

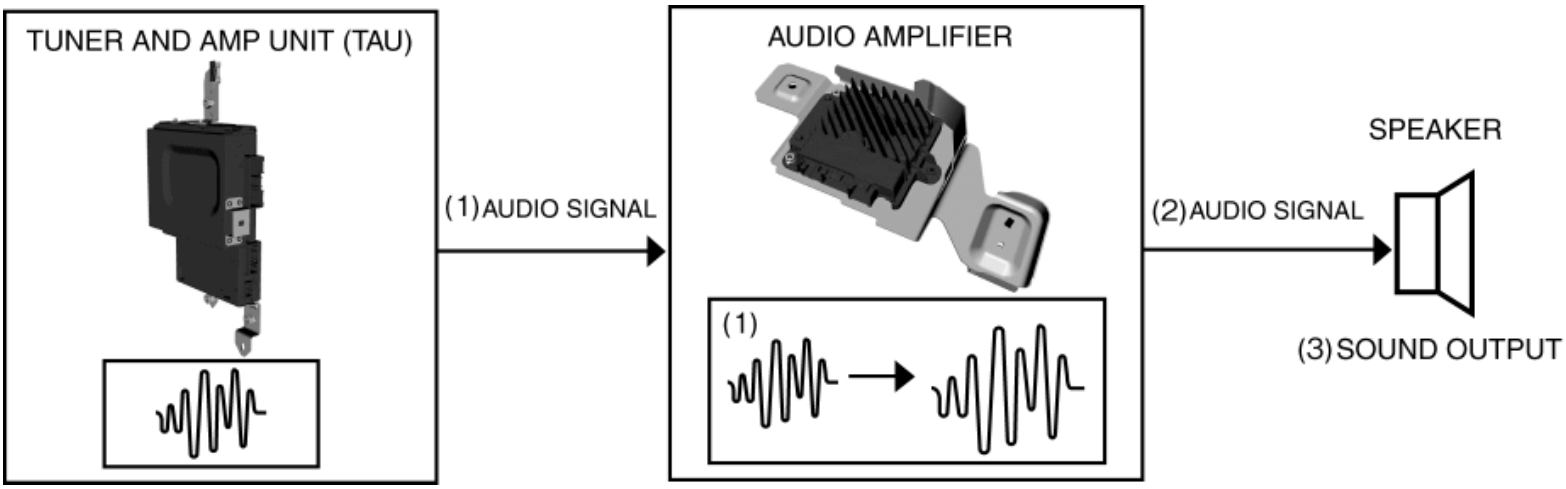

Fail-safe

- Function not equipped.

2014 - Mazda3 - Body and Accessories

CENTER ROOF ANTENNA [WITH CENTER DISPLAY]

Purpose, Function

- Converts radio broadcast waves to electric signals and sends the signals to the tuner and amp unit (TAU).
- Satellite radio programming (SIRIUS XM radio) can be listened to (with SIRIUS XM radio).

Construction

- Two types of center roof antennas are available as follows:
    - Type A (with rod)
    - Type B (without rod)

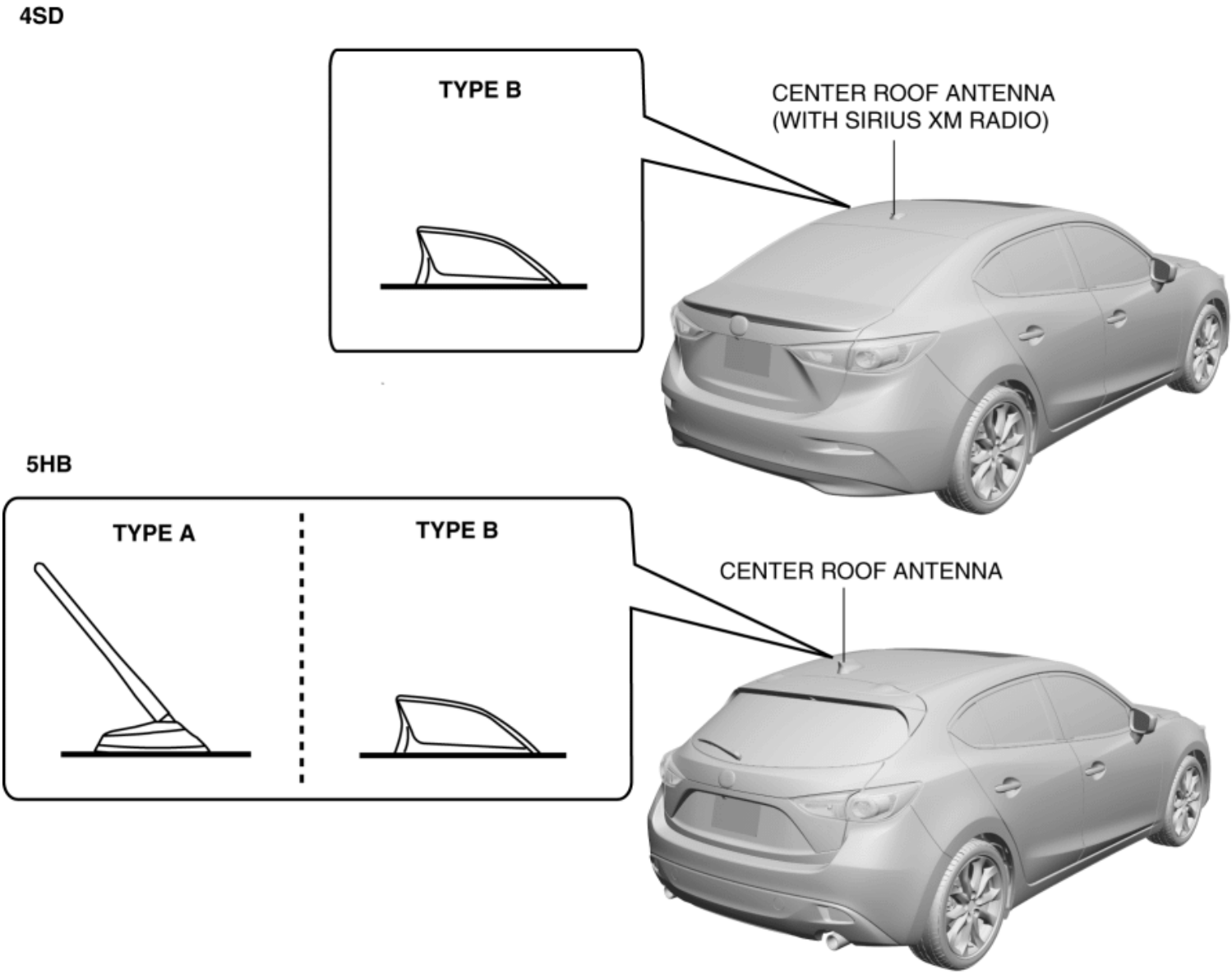

Type A

- The center roof antenna consists of an antenna rod which converts the received radio waves to electric signals, and an antenna base with a built-in antenna amplifier which amplifies the electric signals.
- To prevent the roof antenna from contacting obstructions above the vehicle, the antenna rod is manually foldable to 127°. It is also removable.

Type B

- A center roof antenna has been adopted which does not require retraction or removal before going through an automatic car wash machine.
- The center roof antenna has an integrated antenna amplifier which amplifies the electric signal.

Operation

- When the ignition is switched to ACC or ON (engine off or on), power is supplied from the TAU to the antenna amplifier inside the center roof antenna.
- The center roof antenna converts the received radio waves of a radio broadcast to an electric signal.
- The center roof antenna amplifies the converted electric signal using the antenna amplifier and sends the signal to the TAU.

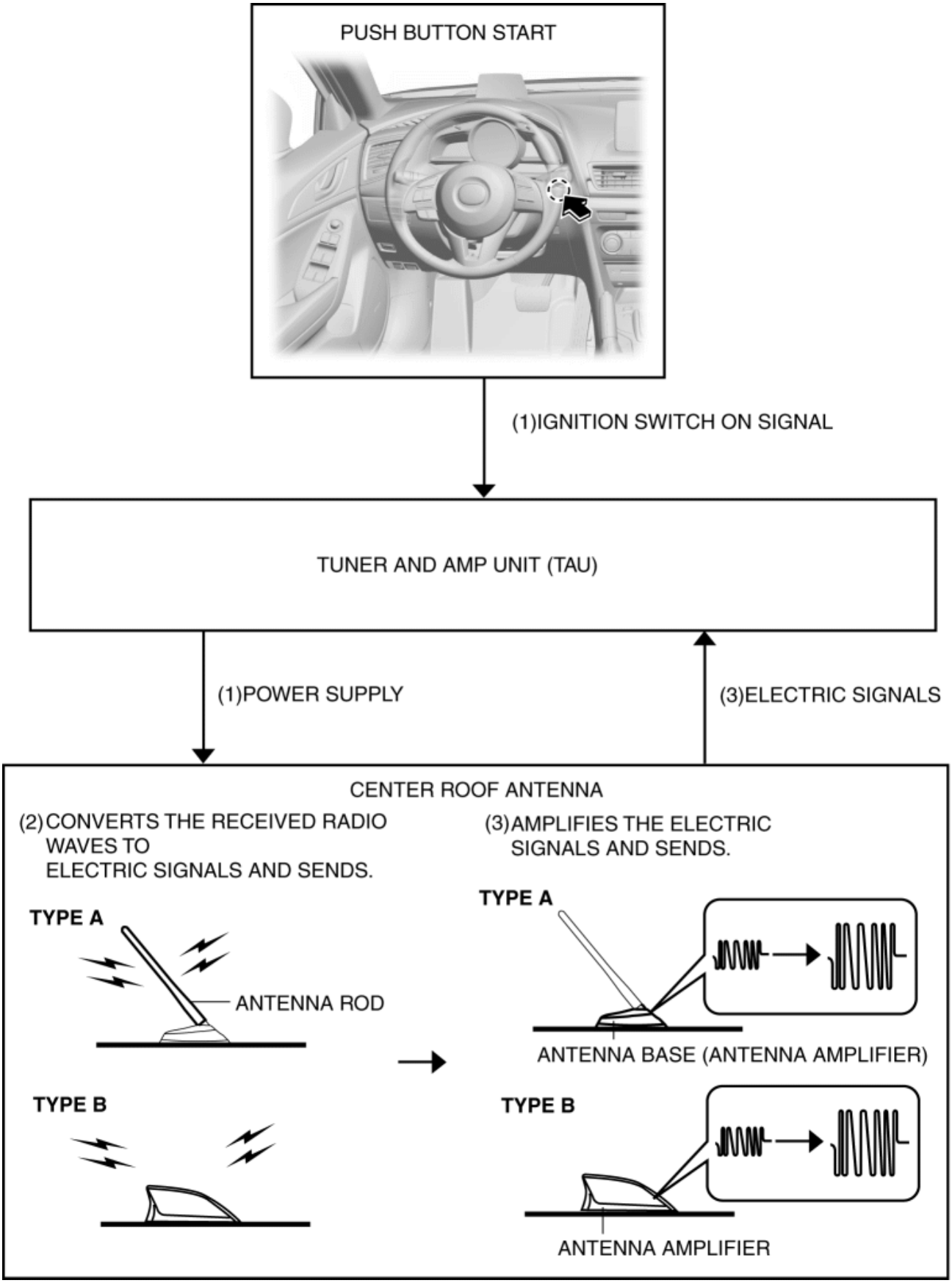

Fail-safe

- Function not equipped.

CENTER ROOF ANTENNA [WITH CENTER DISPLAY]

2014 - Mazda3 - Body and Accessories

GLASS ANTENNA [WITH CENTER DISPLAY]

Purpose, Function

- Converts radio broadcast waves to electric signals and sends the signals to the antenna amplifier.

Construction

- An antenna with excellent noise resistance has been adopted to the rear window glass.

Fail-safe

- Function not equipped.

2014 - Mazda3 - Body and Accessories

GLOBAL POSITIONING SYSTEM (GPS) ANTENNA [WITH CENTER DISPLAY]

Purpose, Function

- The GPS antenna receives signals sent from GPS satellites and sends them to the connectivity master unit (CMU).

NOTE:

- GPS (Global Positioning System) was developed by the Pentagon (U.S.A.) as an object locating system using satellites. The GPS antenna receives signals from several of the satellites orbiting at an altitude of approx. 21, 000 km {13,049 mile} to detect the current position of the vehicle.

Construction

- The GPS antenna is installed inside the center part of the instrument panel.

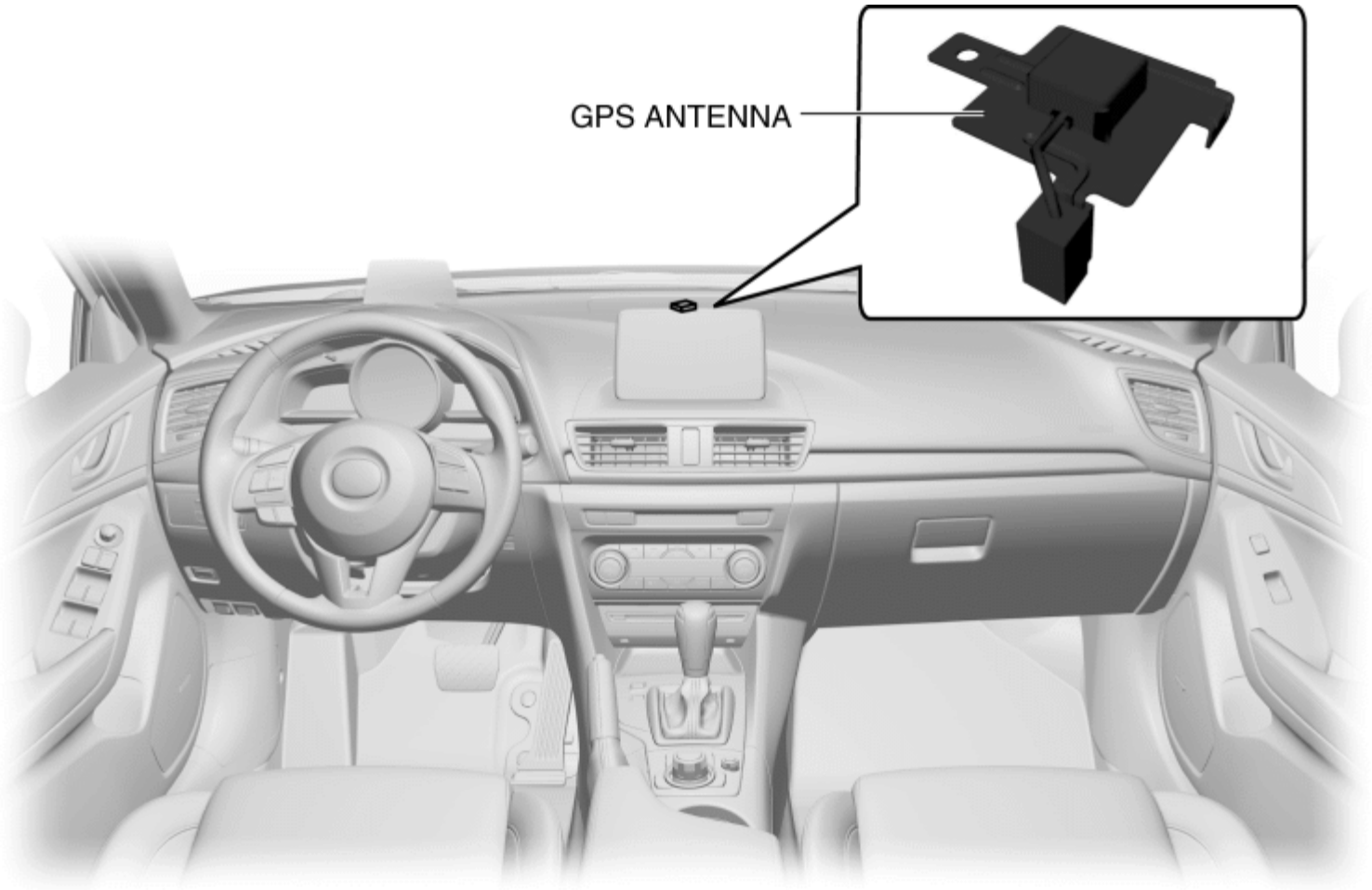

Fail-safe

- Function not equipped.

2014 - Mazda3 - Body and Accessories

ANTENNA AMPLIFIER [WITH CENTER DISPLAY]

Purpose, Function

- Amplifies the electric signal from the glass antenna and sends it to the tuner and amp unit (TAU).

Construction

- The antenna amplifier is positioned in the rear header.

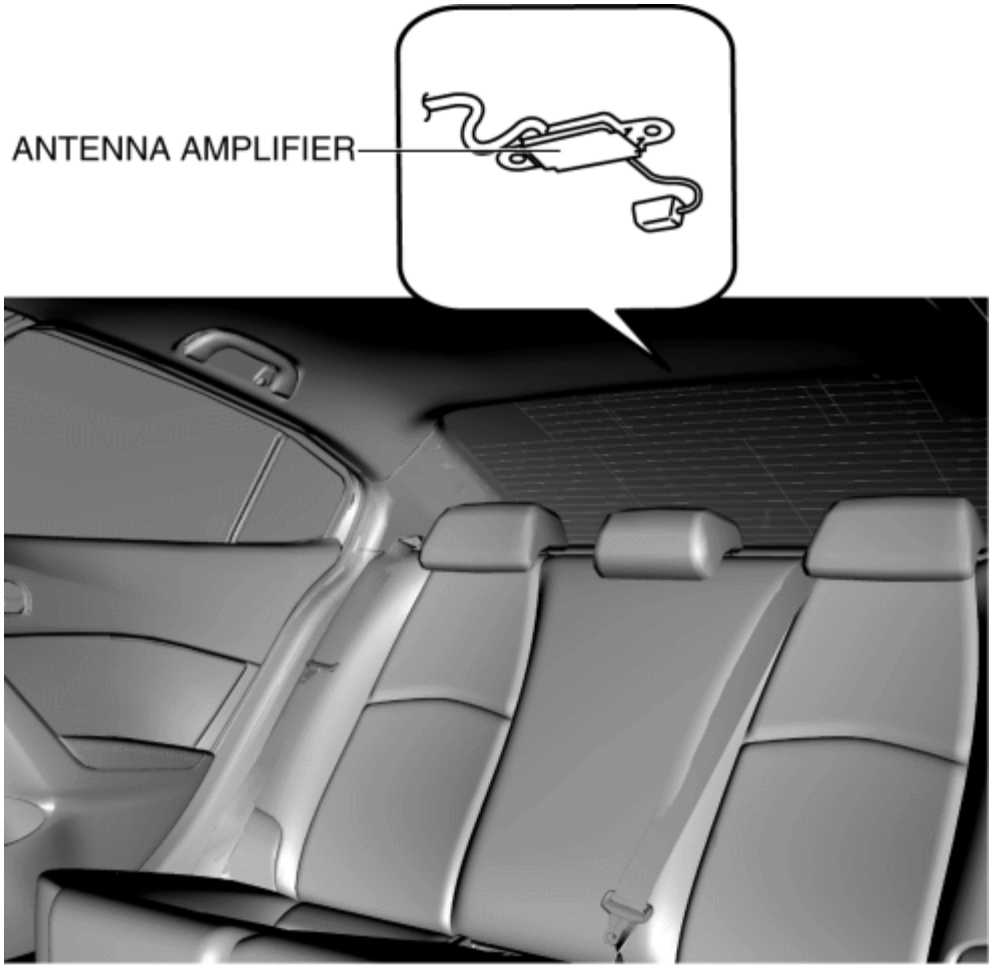

Fail-safe

- Function not equipped.

ANTENNA AMPLIFIER [WITH CENTER DISPLAY]

2014 - Mazda3 - Body and Accessories

STEERING SWITCH [WITH CENTER DISPLAY]

Purpose, Function

- Operation of the entertainment system and change of the instrument cluster display are possible without a change in driving posture.

Construction

- The steering switch is located on the spoke of the steering wheel.
- The resistance is built into each switch.
- The steering switch consists of a volume adjustment (+) or (-) switch, cue/automatic band selector (up) or (down) switch, INFO button, up switch, down switch, TALK button, PICK-UP button, and HANG-UP button.

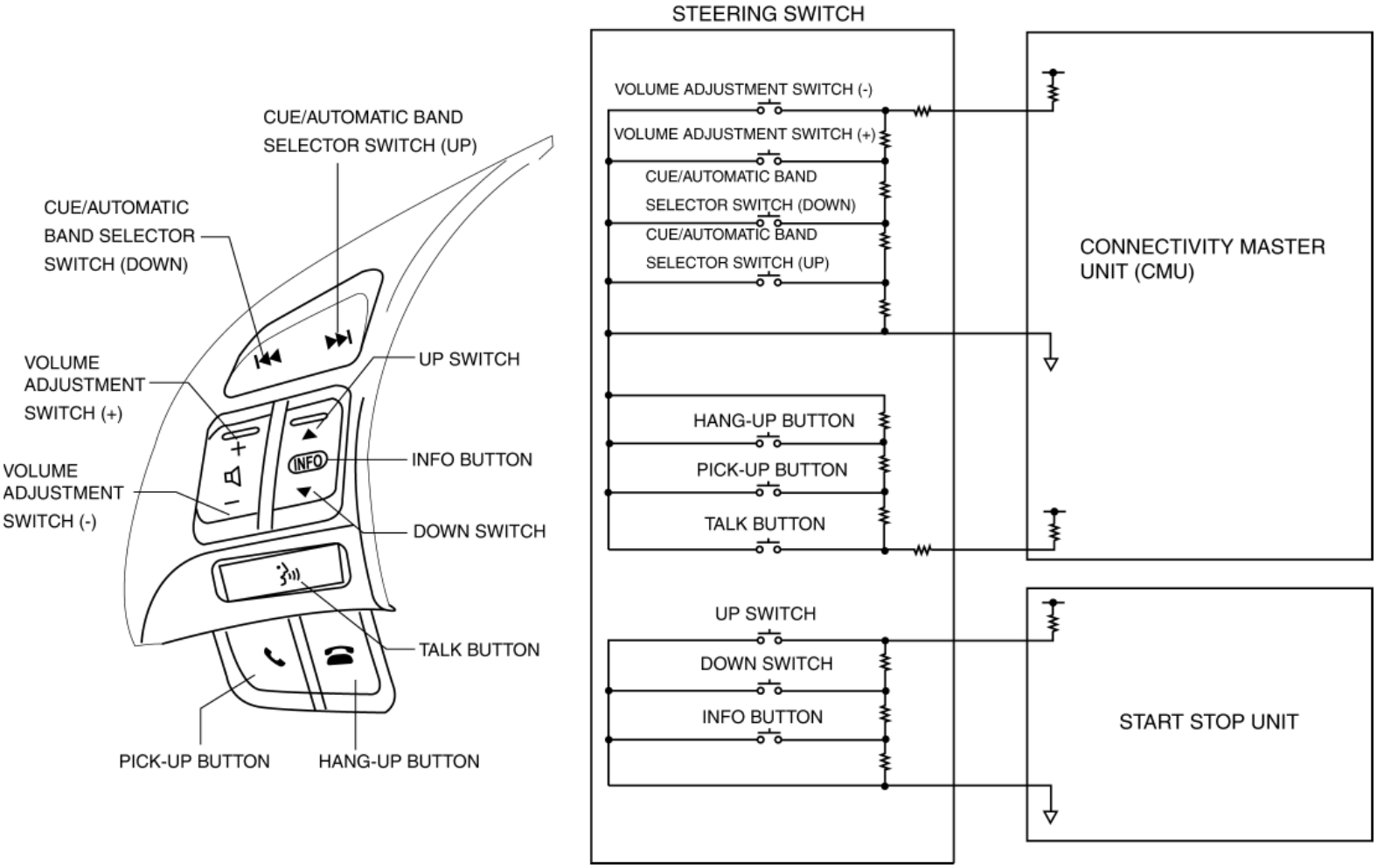

Operation

Switch name	Operation
Volume adjustment switch	Audio volume can be adjusted.

Cue/Automatic band selector switch	Cue of CD tracks and selection of radio band are possible.
Mute button (Without Bluetooth system)	Audio volume can be muted. Pressing again after muting returns to previous volume level.
INFO button	Instrument cluster display can be changed. Refer to **TRIP COMPUTER INFORMATION SYSTEM** for display content.
Up/down switch	Instrument cluster display can be changed. Refer to **TRIP COMPUTER INFORMATION SYSTEM** for display content.
TALK button	Launches the Bluetooth® mode.
Pick-up button	Receives a phone call.
Hang-up button	Hangs up a phone call.

Fail-safe

- Function not equipped.

2014 - Mazda3 - Body and Accessories

COMMANDER SWITCH [WITH CENTER DISPLAY]

Purpose, Function

- The entertainment system can be operated without having to change the driving posture.
- The commander switch consists of the following buttons, dial, and knobs.

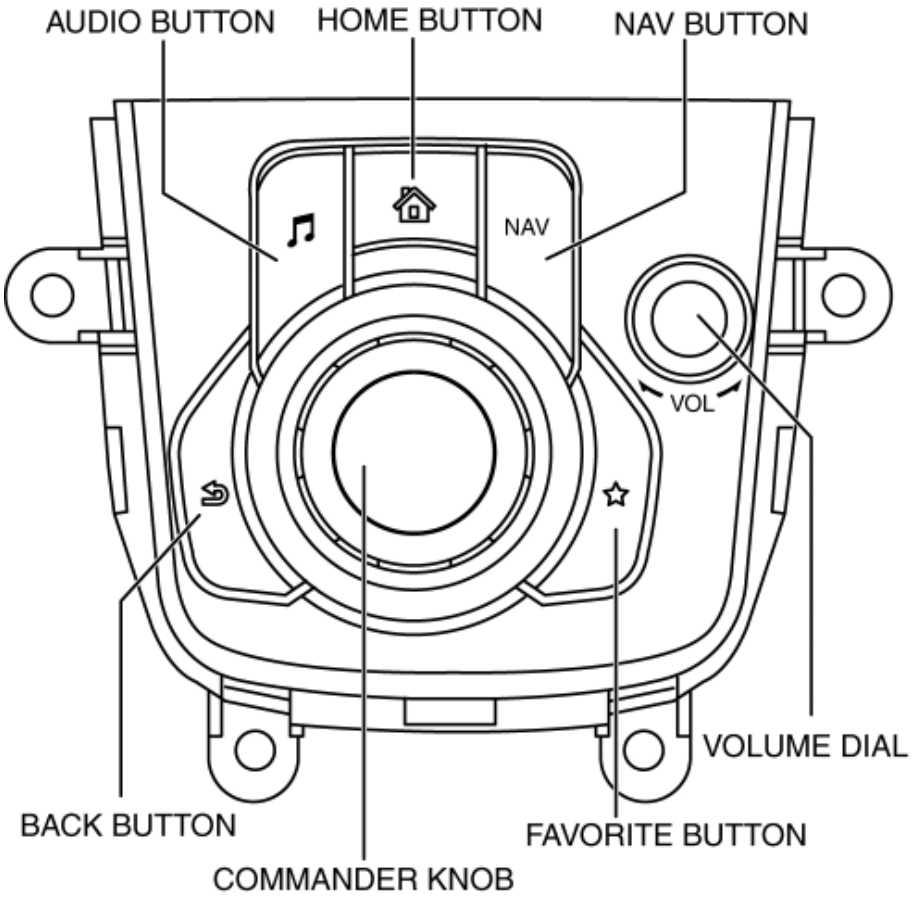

Button/knob/dial name	Function
AUDIO button	Switches the display screen of the center display to the audio screen.
HOME button	Switches the display screen of the center display to the home screen.
NAV button	Switches the display screen of the center display to the navigation screen.

BACK button	Switches to the screen directly previous to the currently displayed screen. • If at the top tier, the display content does not change even if the BACK button is pressed down again.
FAVORITE button	• Switches the display screen of the center display to the favorite screen. After changing to the favorite screen, the display content does not change even if the switch is pressed down again. • When the FAVORITE button is long-pressed with the item to be added selected, the targeted item is added to favorites.
Volume dial	• When the volume dial is rotated, the volume can be adjusted. • When the volume dial is pressed, the volume can be muted. Pressing again after muting returns to previous volume level.
Commander knob (tilt*1)	Moves the selection area on the center display screen. The selection area can be tilted in the lateral direction for left/right, and the longitudinal direction for forward/back.
Commander knob (rotation)	Moves the selection area on the center display screen. The selection area moves according to the rotation direction.
Commander knob (click*2)	• Switches to the selected menu screen. • Launches the selected menu.

*1
Tilting of the commander knob forward/back, left/right.
*2
Pressing down of the commander knob.

Construction

- Installed to the upper part of the rear console.

COMMANDER SWITCH [WITH CENTER DISPLAY]

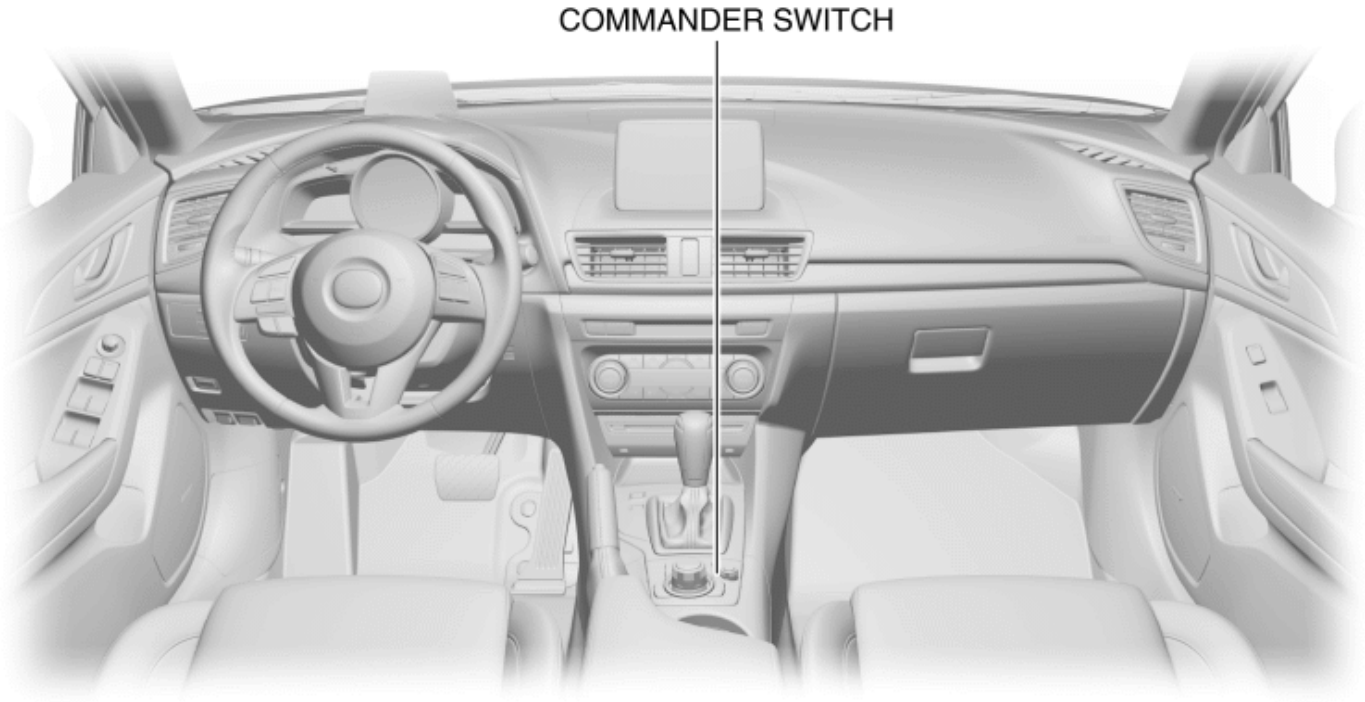

Input/output signal table

Terminal		Signal
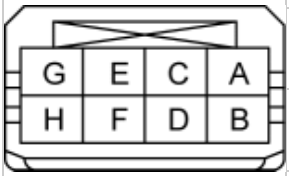	A	ACC
	B	TNS
	C	—
	D	—
	E	LIN
	F	—
	G	Ground
	H	Illumination (-)

Fail-safe

- Function not equipped.

COMMANDER SWITCH [WITH CENTER DISPLAY]

2014 - Mazda3 - Body and Accessories

PARK ASSIST SYSTEM [WITH CENTER DISPLAY]

CAUTION:

- The park assist system is a supplementary system which displays the conditions at the rear of the vehicle when reversing. Always directly confirm the safety of the surrounding area visually when reversing.

Outline

- When the vehicle is reversing, the rear mount camera installed to the trunk lid (4SD)/liftgate (5HB) displays the images at the rear of the vehicle in the center display for verification of the presence of pedestrians and obstructions at the rear of the vehicle.

Function

Guide line display

- The rear mount camera displays the distance reference lines and vehicle width extension lines based on the images shot at the rear of the vehicle by the camera.

Structural View

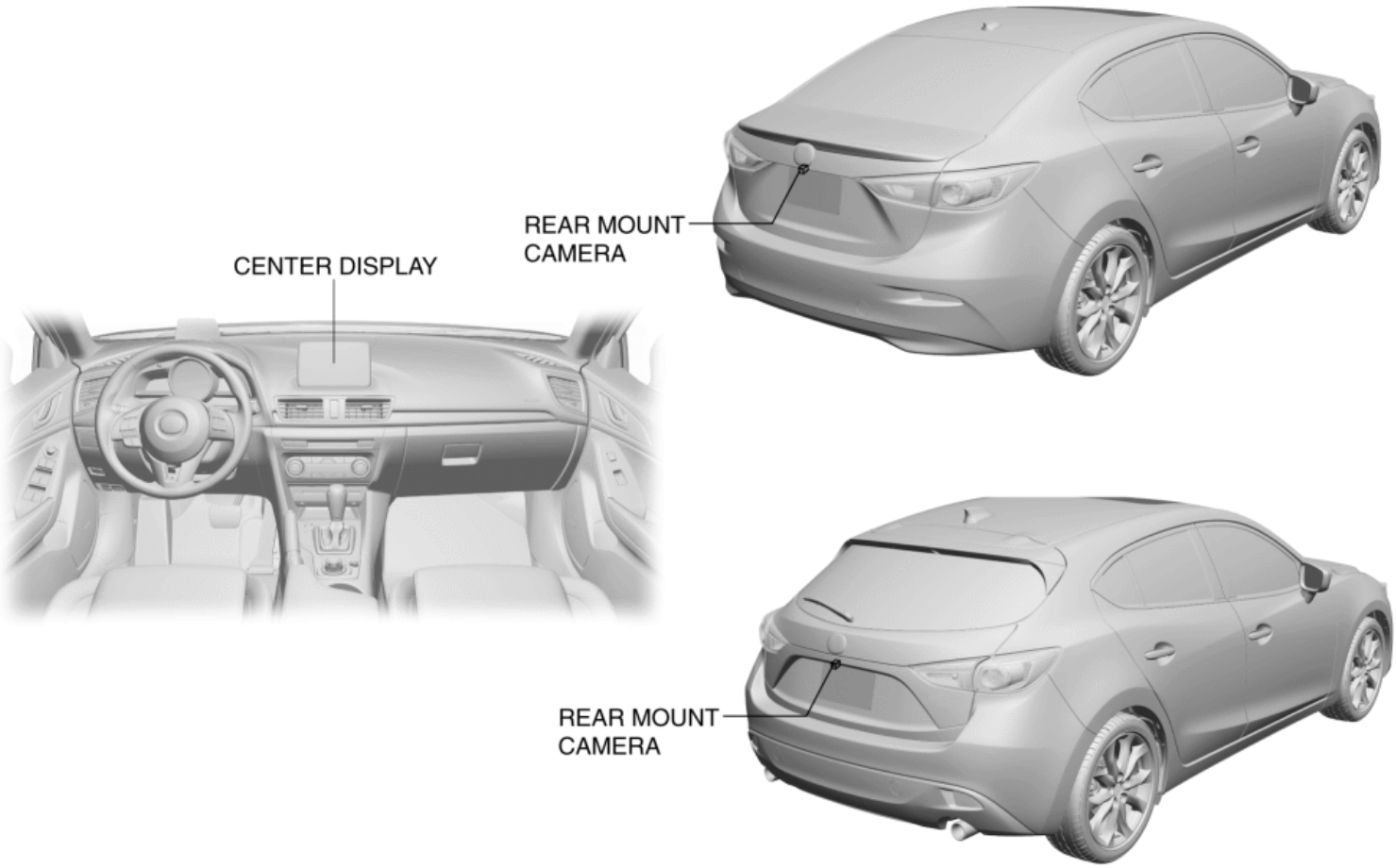

Block diagram

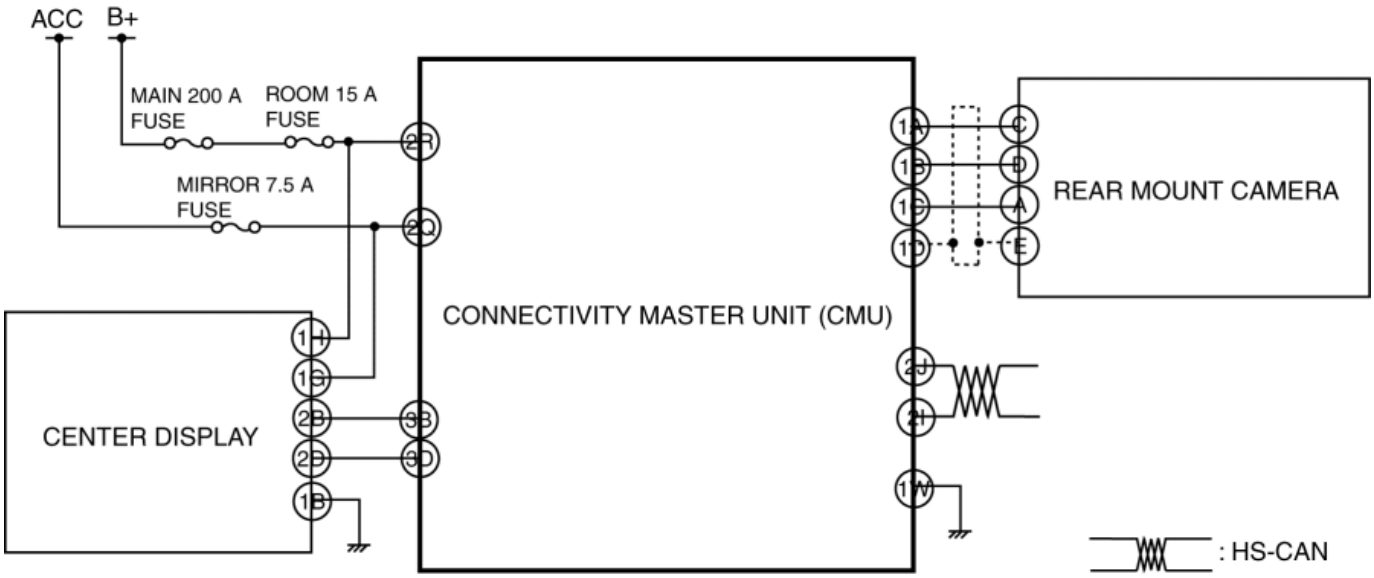

Image range

NOTE:

- The image range may differ depending on the road surface conditions and the vehicle conditions. In addition, images near both sides of the rear bumper and below the rear bumper cannot be obtained.

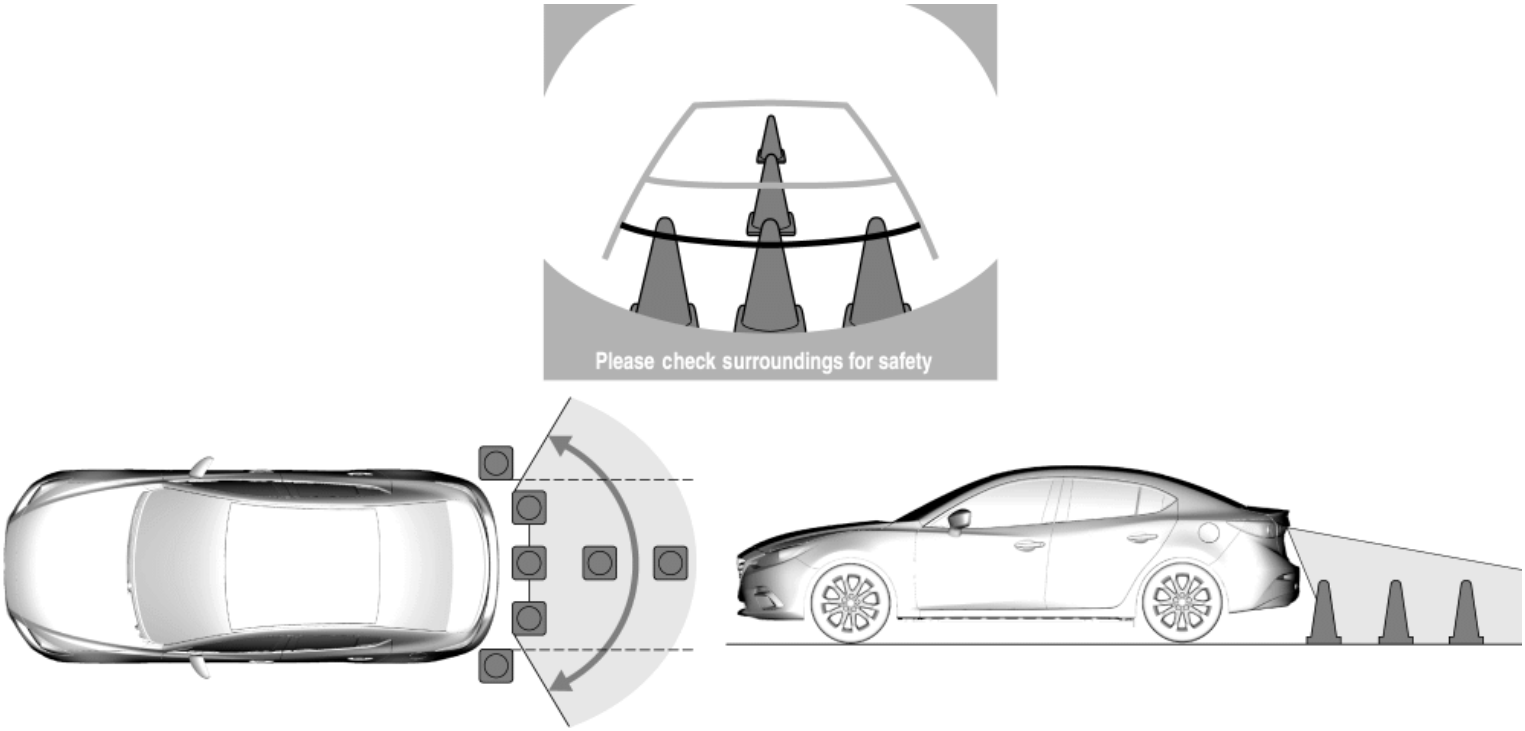

Rear view monitor screen

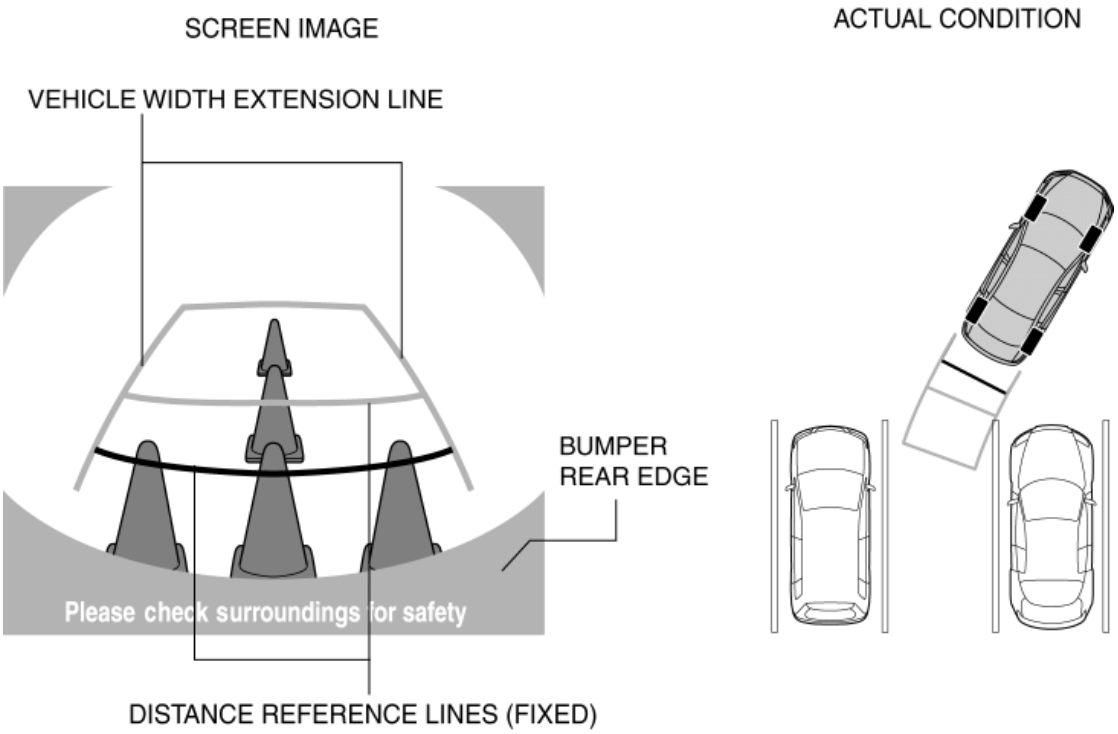

Display item	Display line color	Function
		• Shows distance reference line 0.5 m from the rear of the rear bumper.

Distance reference lines (fixed)	Red	• Not in conjunction with steering operation.
	Yellow	• Shows distance reference line 1.0 m from the rear of the rear bumper. • Not in conjunction with steering operation.
	Yellow	• Shows distance reference line 2.7 m from the rear of the rear bumper. • Not in conjunction with steering operation.
Vehicle width extension line	Yellow	• Vehicle width extension line. (Length: 2.7 m, width: vehicle width)

Operation

CAUTION:

- Images displayed by the rear mount monitor camera differ depending on the actual conditions resulting from road surface conditions, the number of passengers, and cargo load. Even though it may appear that the vehicle will not come into contact with an object as seen in the image, it may actually come into contact with it. When reversing the vehicle, always verify the surroundings visually.
- When the ignition is switched to ACC or ON (engine off or on) and an R position signal from the selector lever is received, the CMU supplies power to the rear mount camera.
- The rear mount camera shoots the conditions at the rear of the vehicle in color which is converted to a video signal.
- The rear mount camera combines the distance reference lines (fixed lines) and the vehicle width extension lines with the camera images and converts them to a video signal.
- The rear mount camera sends the converted video signal to the connectivity master unit (CMU).
- When a video signal is received from the rear mount camera, the CMU sends the received video signal (LVDS signal) to the center display.
- The center display displays the images at the rear of the vehicle taken by the rear mount camera based on the received video signal (LVDS signal).

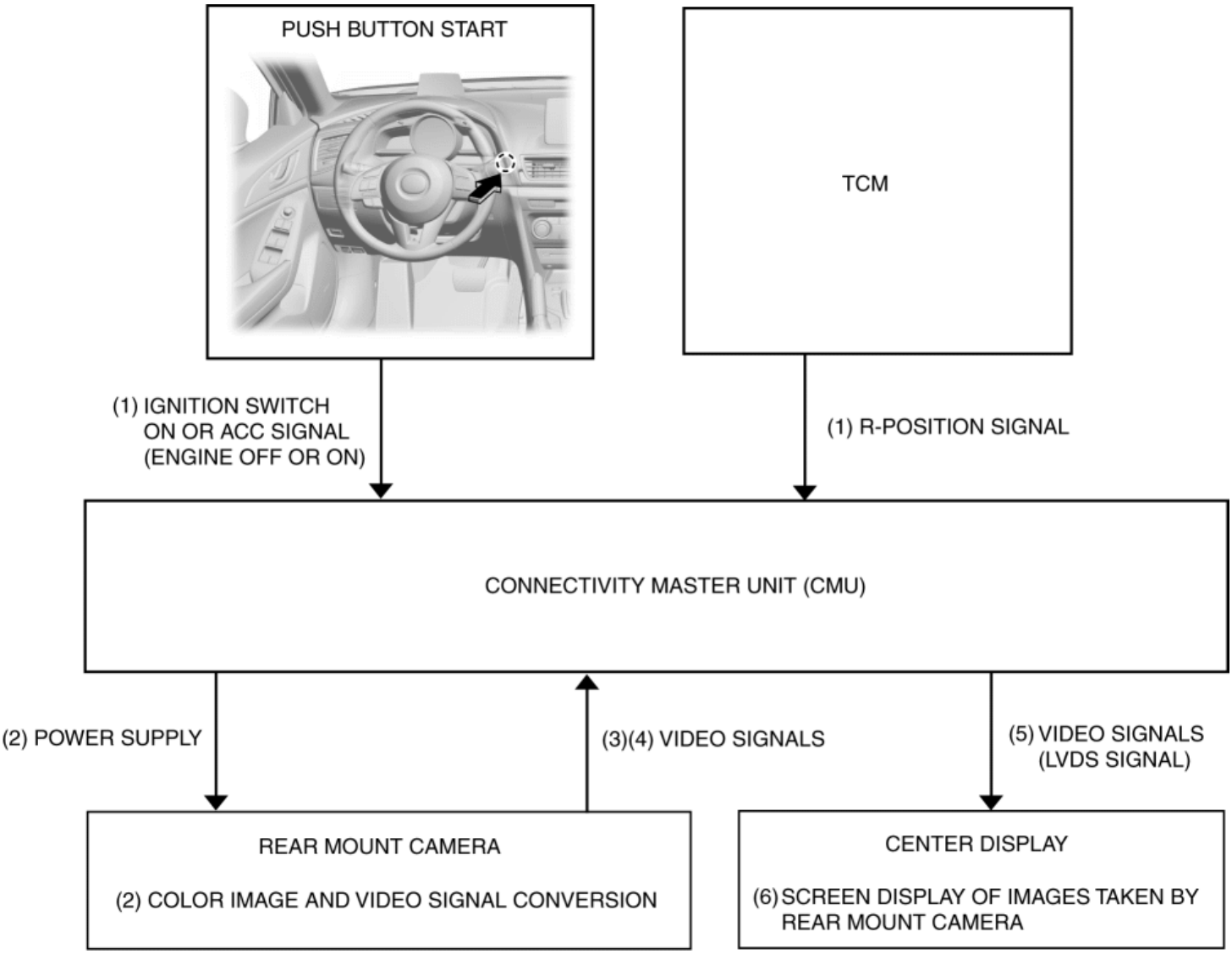

NOTE:

- It may be difficult to see the display under the following conditions; however, it does not indicate a malfunction:
  - When the temperature around the lens is high/low.
  - When the camera is wet such as on a rainy day or during period of high humidity.
  - When foreign material such as mud is stuck around the camera.
  - When the camera lens reflects sunlight or headlight beams.

2014 - Mazda3 - Body and Accessories

REAR MOUNT CAMERA [WITH CENTER DISPLAY]

Purpose

- The rear mount camera has the purpose of assuring visibility at the rear of the vehicle which cannot be directly verified from the driver's seat.

Function

- The rear mount camera shoots the conditions at the rear of the vehicle in color, and after converting the video signal, it outputs the signal to the connectivity master unit (CMU).

Construction

- The rear mount camera is installed to the trunk lid (4SD)/liftgate (5HB).

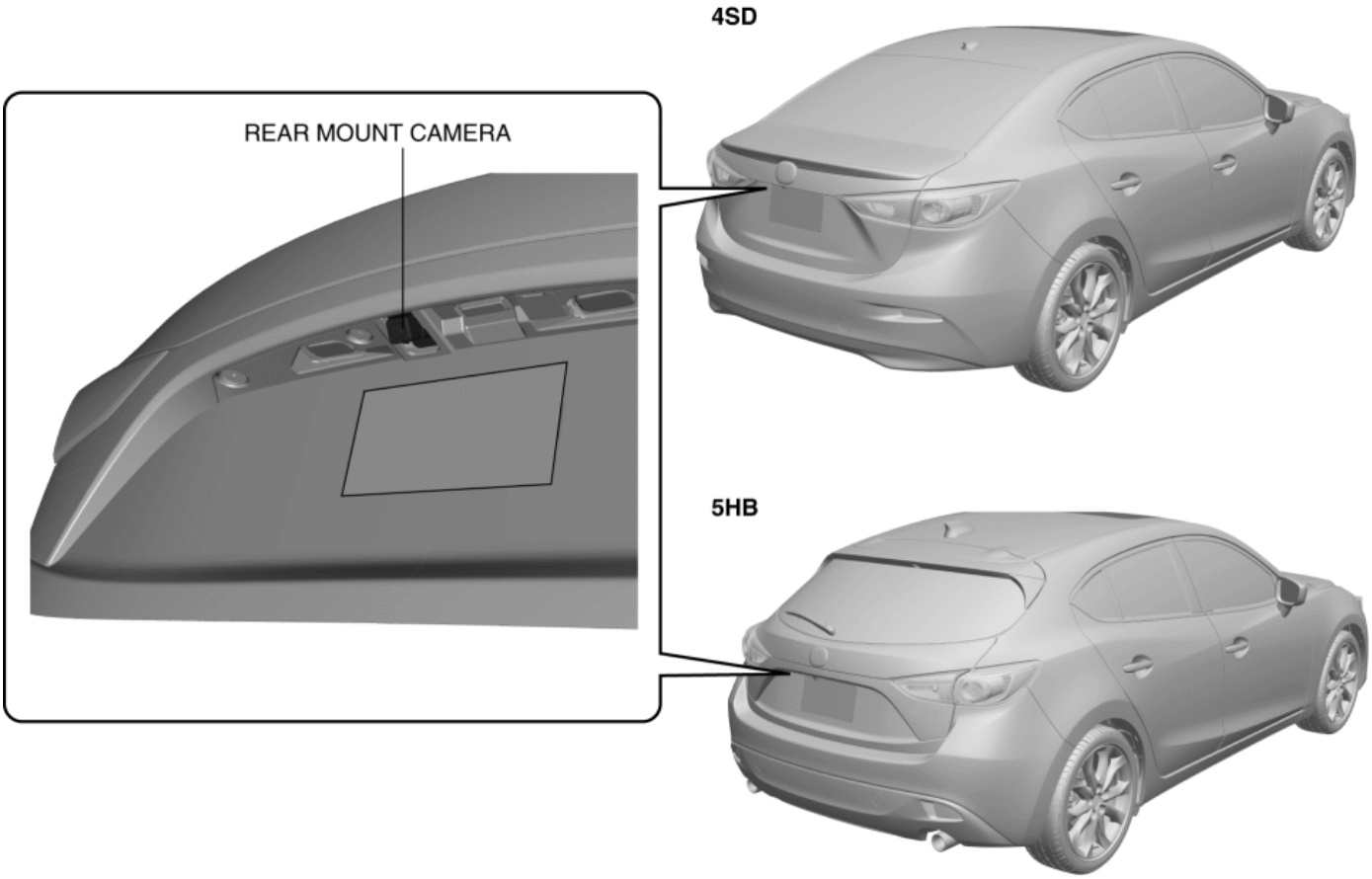

- A super-wide angle lens which can shoot images in a wide parameter is assembled to the compact (1/3.6 in), color CMOS camera which has a high precision CMOS *1 imaging element.

*1

Complementary Metal-Oxide Semiconductor

Operation

- For the rear mount camera operation, refer to the park assist system. (See **PARK ASSIST SYSTEM [WITH CENTER DISPLAY]**.)

Fail-safe

- Function not equipped.

2014 - Mazda3 - Body and Accessories

AUXILIARY JACK/USB PORT/SD SLOT HUB [WITH CENTER DISPLAY]

NOTE:

- “iPod” is a registered trademark of Apple Inc.

Purpose, Function

- The auxiliary jack/USB port/SD card slot hub outputs the audio signal from an on-market, portable audio or USB device, connected to the auxiliary jack/USB port/SD card slot hub, and the map information of the SD card to the connectivity master unit (CMU).

Specification

Type	Playable data
USB mode	MP3/WMA/AAC/OGG file

Construction

- The auxiliary jack, USB port and SD card slot are built into the auxiliary jack/USB port/SD card slot hub.
- The auxiliary jack/USB port/SD card slot hub is installed to the rear console.

Operation

Auxiliary jack

- When the AUX mode is selected by operating the center display or the commander switch, the CMU sends a control signal to the tuner and amp unit (TAU).
- The auxiliary jack/USB port/SD card slot hub sends the audio signal sent from the portable audio device connected to the auxiliary jack.
- The TAU sends the received audio signal to the speakers and the speakers output the audio based on the received audio signal. (See **ENTERTAINMENT SYSTEM [WITH CENTER DISPLAY]**.)

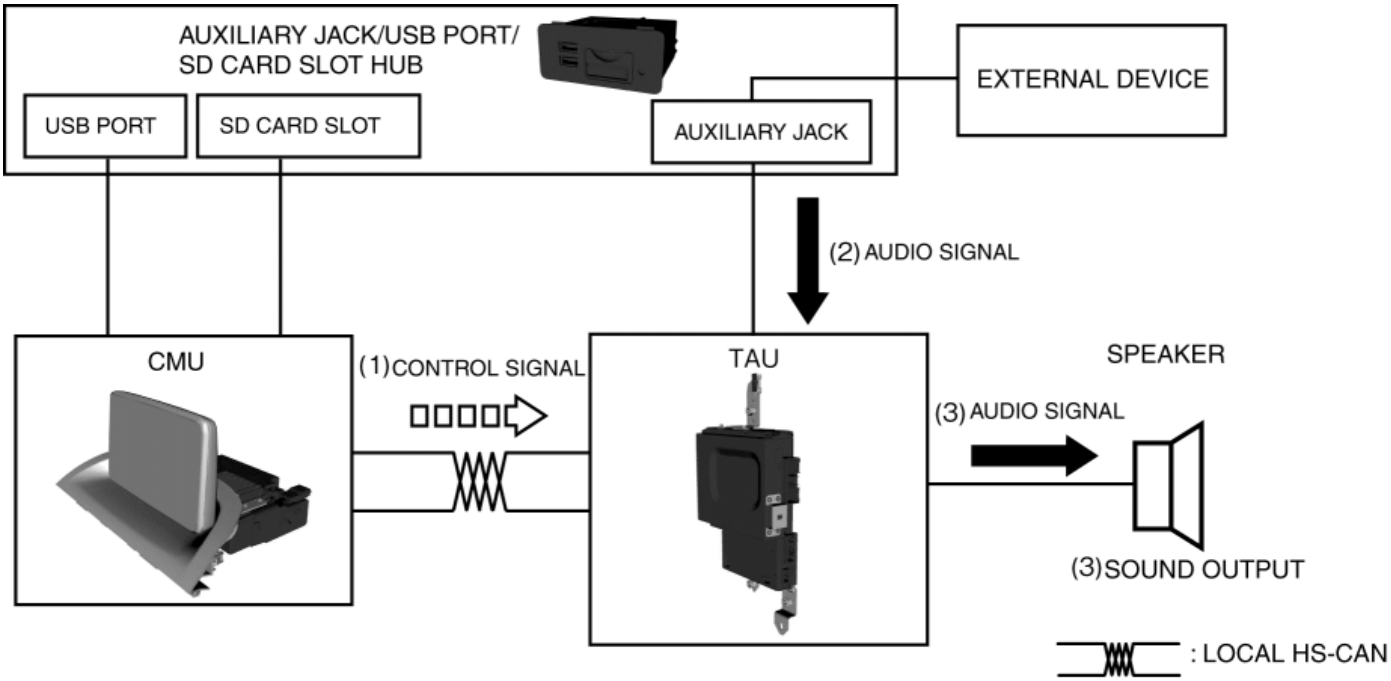

USB port

- When the USB mode is selected by operating the center display or the commander switch, the CMU sends a control signal to the TAU.
- The auxiliary jack/USB port/SD card slot hub sends the audio signal and video signal of the USB device/iPod connected to the USB port to the CMU.
- The CMU transmits the received audio signal to the TAU, converts the video signal to a LVDS signal, and displays the signal in the center display.
- The TAU sends the received audio signal to the speakers and the speakers output the audio based on the received audio signal. (See **ENTERTAINMENT SYSTEM [WITH CENTER DISPLAY]**.)

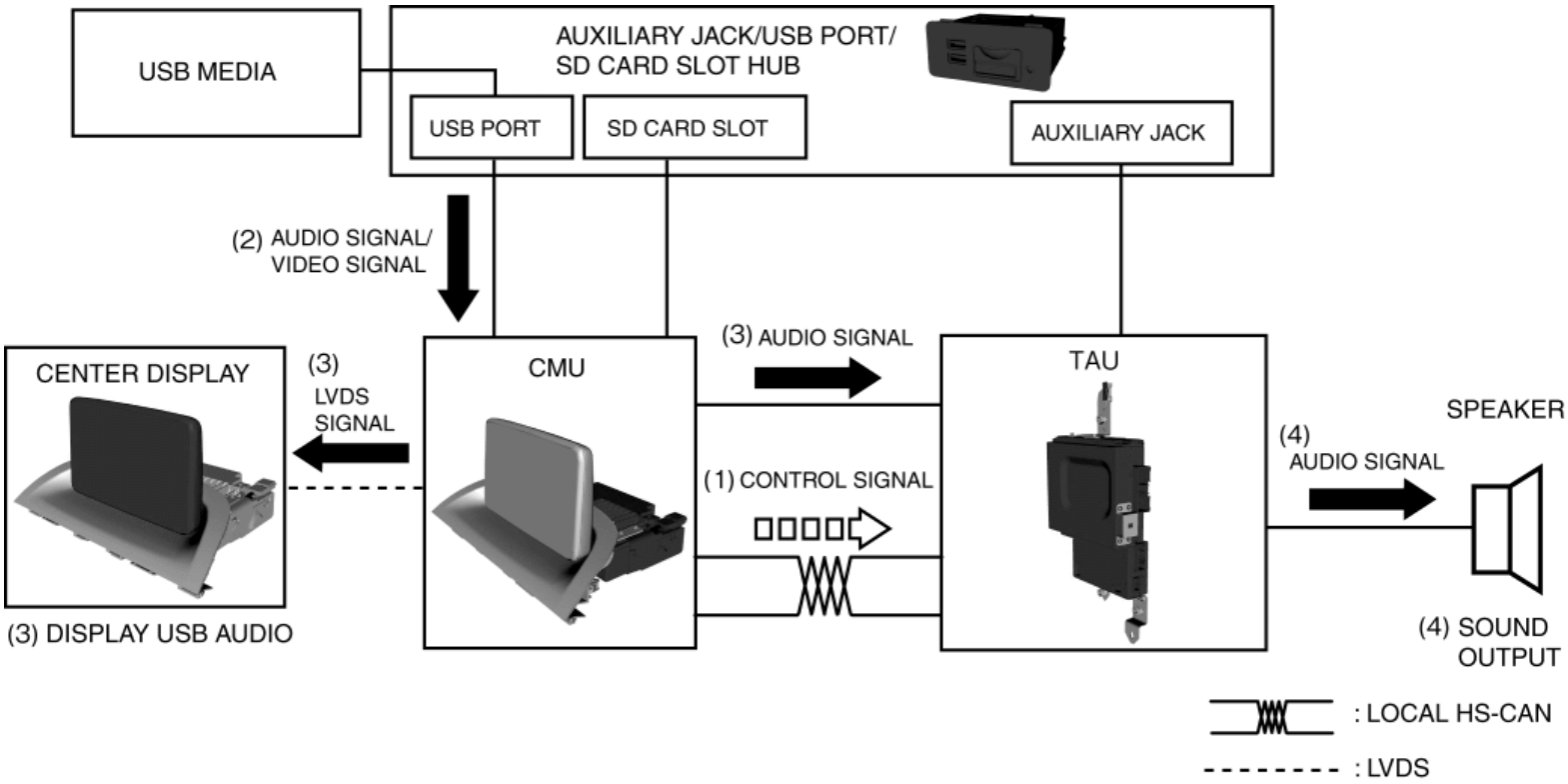

SD card slot

NOTE:

- The auxiliary jack/USB port/SD card slot hub can only read map information on the SD card (genuine Mazda). Music and image information stored on an SD card (genuine Mazda) and the information stored on an SD card other than a genuine Mazda SD card cannot be read.
- When the navigation mode is selected by operating the center display or the commander switch, the CMU sends a control signal to the TAU.
- The auxiliary jack/USB port/SD card slot hub sends the map information of the SD card inserted into the SD card slot to the CMU.
- The CMU converts the video signal to a LVDS signal based on the received map information, and displays the signal in the center display. (See **ENTERTAINMENT SYSTEM [WITH CENTER DISPLAY]**.)

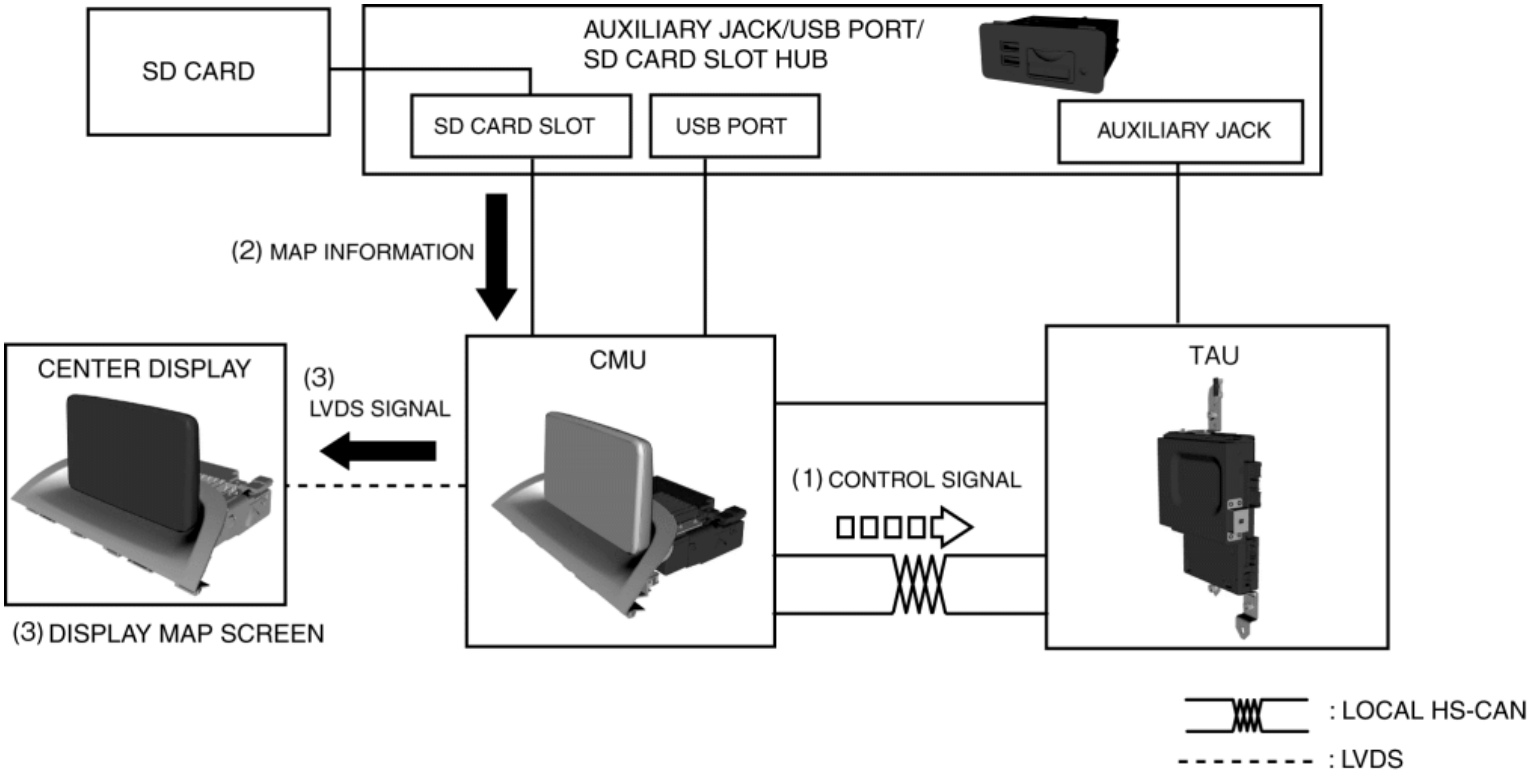

Fail-safe

- Function not equipped.

2014 - Mazda3 - Body and Accessories

MICROPHONE [WITH CENTER DISPLAY]

Purpose, Function

- Converts the voice commands spoken into the microphone by the user to an electrical signal and sends the signal to the connectivity master unit (CMU).

Construction

- Noise due to the vehicle being driving or air blown by the air conditioner has been reduced by locating the microphone next to the map light.

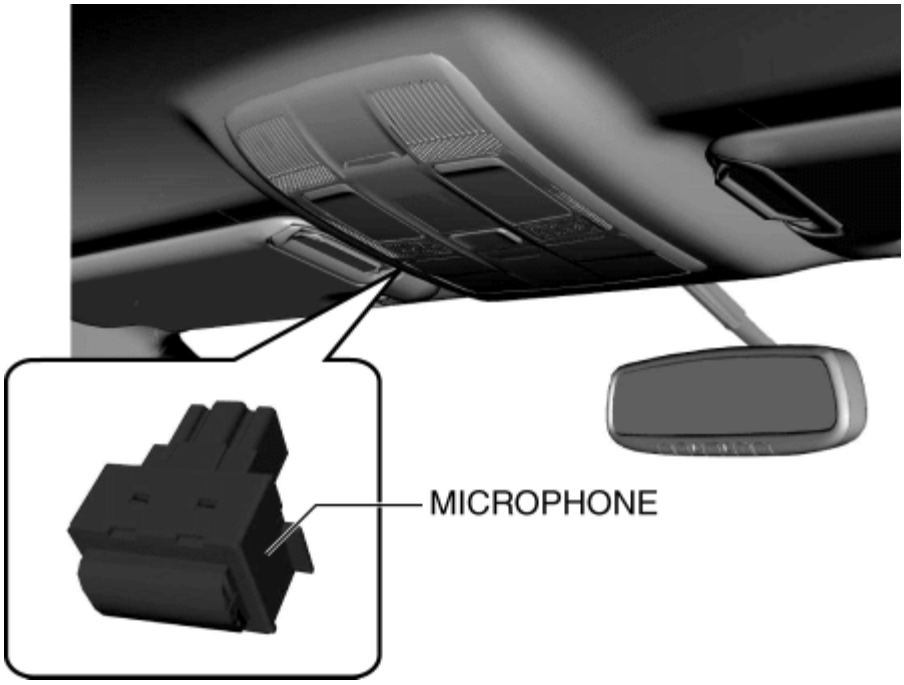

Operation

- For the microphone operation, refer to the ENTERTAINMENT SYSTEM. (See **ENTERTAINMENT SYSTEM [WITH CENTER DISPLAY]**.)

Fail-safe

- Function not equipped.

MICROPHONE [WITH CENTER DISPLAY]

2014 - Mazda3 - Body and Accessories

ON-BOARD DIAGNOSTIC [ENTERTAINMENT SYSTEM (WITH CENTER DISPLAY)]

NOTE:

- “iPod” is a registered trademark of Apple Inc.

Outline

- The entertainment system (vehicles with center display) has an on-board diagnostic function and diagnostic assist function to facilitate system diagnosis.

On-board diagnostic function

- The on-board diagnostic function consists of the following functions:
    - A malfunction detection function, which detects overall malfunctions in the entertainment system-related parts (with center display)
    - A memory function, which stores detected DTCs
    - A display function, which indicates system malfunctions via a DTC display.

Malfunction detection function

- Detects malfunctions in the entertainment system (with center display).

Memory function

- If a malfunction is detected in the entertainment system, the connectivity master unit (CMU) stores a DTC.

Display Function

Mazda Modular Diagnostic System (M-MDS) not used

- To display DTCs on the center display that have been recorded in the memory function, activate the on-board diagnostic function in the CMU. Refer to the Workshop Manual for the activation procedure of the on-board diagnostic function.

Mazda Modular Diagnostic System (M-MDS) used

- When DTC inspection is performed using the Mazda modular diagnostic system (M-MDS), the audio system malfunction diagnosis begins. Refer to the Workshop Manual for the DTC troubleshooting procedure.

DTC table

× **Applicable**

— **Not applicable**

DTC	Diagnostic assist code*1	Warning/indicator lights	Description	Fail-safe	Drive cycle	Self test type*2	Memory function
B1087:87	03/04	—	Communication error with commander switch	—	—	C, D	—
B108E:04	03/04	—	Center display internal malfunction	—	—	C, D	—
B108E:06	03/04	—	HDCP authorization error	—	—	C, D	—
B108E:1C	03/04	—	Low power supply voltage input to center display	—	—	C, D	—
B108E:87	03/04	—	Center display circuit malfunction	×	—	C, D	—
B116A:11	03/04	—	Microphone circuit malfunction	—	—	C, D	—
B116A:12	03/04	—	Microphone circuit malfunction	—	—	C, D	—
B116A:92	03/04	—	Microphone circuit malfunction	—	—	C, D	—
B119F:11	03/04	—	GPS antenna circuit malfunction	—	—	C, D	—
B119F:13	03/04	—	GPS antenna circuit malfunction	—	—	C, D	—
B119F:1D	03/04	—	GPS antenna circuit malfunction	—	—	C, D	—
B119F:92	03/04	—	GPS antenna circuit malfunction	—	—	C, D	—
B11BA:11	03/04	—	Steering switch circuit malfunction	—	—	C, D	—
B11BA:15	03/04	—	Steering switch circuit malfunction	—	—	C, D	—
B1201:11	03/04	—	Steering switch circuit malfunction	—	—	C, D	—
B1201:15	03/04	—	Steering switch circuit malfunction	—	—	C, D	—
			Without Bose®				

B1238:01	03/05	—	• Speaker circuit malfunction **With Bose®** • Audio amplifier circuit malfunction	—	—	C, D	—
B1238:16	03/05	—	Tuner and amp unit low power supply voltage input	—	—	C, D	—
B1238:87	03/04	—	HD image transfer circuit error	—	—	C, D	—
B1252:09	03/04	—	Auxiliary jack/USB port/SD card slot hub circuit malfunction	—	—	C, D	—
B1252:1D	03/04	—	Auxiliary jack/USB port/SD card slot hub circuit malfunction	—	—	C, D	—
B1252:87	03/04	—	Communication error with auxiliary jack/USB port/SD card slot hub	—	—	C, D	—
B12BD:11*3	03/04	—	Rear mount camera circuit malfunction	—	—	C, D	—
B12BD:87*3	03/04	—	Rear mount camera transmission error	—	—	C, D	—
B1A89:13*4	03/05	—	SiriusXM radio antenna feeder malfunction	—	—	C, D	—
B1A89:42*4	03/05	—	TAU internal malfunction	—	—	C, D	—
B1D19:64*5	03/06	—	Incompatible disc inserted	—	—	C, D	—
B1D19:79*5	03/06	—	CD player disc read error	—	—	C, D	—
B1D19:98*5	03/06	—	Abnormal CD player temperature	—	—	C, D	—
U0001:88	03/04	—	Module communication error (HS-CAN)	—	—	C, D	—
U0028:88	03/04	—	Unit communication error (PRIVATE-CAN)	—	—	C, D	—
U0100:00	03/04	—	Communication error with PCM	—	—	C, D	—
U0101:00*6	03/04	—	Communication error with TCM	—	—	C, D	—

U0121:00	03/04	—	Communication error with DSC HU/CM	—	—	C, D	—
U0131:00	03/04	—	Communication error with EPS control module	—	—	C, D	—
U0140:00	03/04	—	Communication error with front body control module (FBCM)	—	—	C, D	—
U0151:00	03/04	—	Communication error with SAS control module	—	—	C, D	—
U0155:00	03/04	—	Communication error with instrument cluster	—	—	C, D	—
U0182:00*7	03/04	—	Communication error with AFS control module	—	—	C, D	—
U0184:00	03/04	—	Communication error with TAU	—	—	C, D	—
U0187:00	03/04	—	Communication error with CD player	—	—	C, D	—
U0214:00	03/04	—	Communication error with start stop unit	—	—	C, D	—
U0235:00*8	03/04	—	Communication error with laser sensor	—	—	C, D	—
U023A:00*9	03/04	—	Communication error with forward sensing camera (FSC)	—	—	C, D	—
U2300:54	03/04	—	Configuration data not received from instrument cluster	—	—	C, D	—
U2300:55	03/04	—	Instrument cluster configuration not implemented	—	—	C, D	—
U3000:42	03/04	—	CMU internal malfunction (poor data read-outs)	—	—	C, D	—
U3003:16	03/04	—	Low ACC power supply voltage input to CMU	—	—	C, D	—

*1

The double-digit number indicates the diagnostic assist code with which DTCs can be detected during the DTC inspection using the diagnostic assist function. (See .)

*2

C: CMDTC self test, D:ODDTC self test

*3

With rear mount camera

*4 **With SiriusXM satellite radio system**

*5 **With CD player**

*6 **ATX**

*7 **With AFS (Adaptive Front Lighting System)**

*8 **With smart city brake support (SCBS)**

*9 **With forward sensing camera (FSC)**

Diagnostic Assist Function

- The diagnostic assist function is a function for forcibly operating entertainment system related parts to verify their connection condition and operation status. In addition, the specifications of the entertainment system related parts are displayed in the center display where they can be verified. Refer to the workshop manual for the diagnostic assist function activation procedure.

Diagnostic assist code list

No.	Center display (diagnostic content)	Function	Content
01	CD Test	CD player inspection	The CD player inspection results are displayed in the center display.
02	Clear DTC	DTC clear	Clears the DTCs. **NOTE:** • DTC clearing is performed in the following order, and a message is displayed each time to indicate the DTCs are cleared. ▪ CMU ▪ TAU ▪ CD player
03	Read AVC DTC	DTC inspection	Displays the DTCs of the entertainment system related parts. **NOTE:** • Detection of DTCs is limited if the ignition is in the ACC position. Refer to the workshop manual for details.
04	Read CMU DTC	DTC inspection	The CMU DTCs are displayed in the center display.

05	Read TAU DTC	DTC inspection	The tuner and amplifier unit (TAU) DTCs are displayed in the center display.
06	Read CD DTC	Does not operate due to unavailability of applicable DTC.	Does not operate due to unavailability of applicable DTC.
07	Read DTV DTC	Do not operate because not equipped to vehicle.	Do not operate because not equipped to vehicle.
08	Software Reset AVC	Software reset	Resets the software.
09	Software Version Display (CD)	Software version verification	Displays the CD player software version.
10	Part Number Readout CD/DVD	Part number verification	Displays the CD player part number (first four digits)
25	Antenna Continuity Status	Antenna control output condition inspection	Displays the power supply output status to the center roof antenna to the audio unit display for examination of the center roof antenna, audio unit and wiring harness (between audio unit and center roof antenna). **NOTE:** • Even if the system is normal, radio reception may be difficult depending on where the system is inspected (indoors/outdoors, or conditions at the location). Before inspecting the system, verify that radio reception is adequate. • When performing the inspection, select the best area for receiving radio frequencies.
26	DTV TEST ON	Do not operate because item is for manufacturer use.	Do not operate because item is for manufacturer use.
27	DTV TEST ON	Do not operate because item is for manufacturer use.	Do not operate because item is for manufacturer use.

53	Software Version Display (CMU)	Software version verification	Displays the CMU (overall entertainment system) software version.
57	Software Version Display (VIP)	Software version verification	Displays the CMU (overall communication with vehicle) software version.
58	Vehicle Info	Configuration information verification	• Displays the following configuration information in the center display. ▪ Destination ▪ CMU Types
59	CMU Serial Number Readout	Unique number verification	Displays the unique number verification of the CMU in the center display.
61	Vehicle Signal (Unit Status)	Vehicle signal verification	• Displays the following vehicle number information in the center display. ▪ Steering switch signal input condition ▪ Commander switch signal input condition ▪ GPS antenna signal input condition ▪ Voice recognition-use microphone signal input condition ▪ Auxiliary jack/USB port/SD card slot hub 1 signal input condition ▪ Auxiliary jack/USB port/SD card slot hub 2 signal input condition ▪ RS-485 signal input condition ▪ SD card insertion condition ▪ CD or DVD equipment recognition condition ▪ DVD equipment recognition condition
65	Commander and Switch Check	Switch Inspection	Displays the steering switch or commander switch operation content in the center display. **NOTE:** • If the operation content previously detected is being displayed in the center display, newly detected content is added over it.
68	Software version display (TFT Display)	Software version verification	Displays the center display (TFT LCD screen control) software version.

69	Software version display (Touch Panel)	Software version verification	Displays the center display (touch panel control) software version.

70	Display Check	Display/touch panel inspection	• Displays the display/touch panel inspection results in the center display.
			  ◦ Unicolor screen in the following colors
			  ▪ White→Black→Red→Green→Blue
			  ◦ Horizontal-striped screen in black and the following colors
			  ▪ Red→Green→Blue
			  ◦ Vertical-striped screen in black and the following colors
			  ▪ Red→Green→Blue
			  ◦ Checkered screen in black and the following colors
			  ▪ Red→Green→Blue
			  ◦ Returns to 1.
			NOTE:
			• The display/touch panel inspection is repeated periodically until the same location on the center display is touched for **10 s or more**.

72	GPS Data	GPS information verification	• Displays the following GPS information in the center display.
			  ▪ Degree of longitude in GPS information of the current location
			  ▪ Degree of latitude in GPS information of the current location
			  ▪ Date and time information (GMT)
			  ▪ Number of satellites being received

84	Manufacturer Code Display TAU	Manufacturer name verification	Displays the TAU manufacturer in the center display.
85	Part Number Readout TAU	Part number verification	Displays the TAU part number (first 4 digits).
87	HD Certification (Main Tuner)	Do not operate because item is for	Do not operate because item is for manufacturer use.

		manufacturer use.	
88	HD Certification (Sub Tuner)	Do not operate because item is for manufacturer use.	Do not operate because item is for manufacturer use.
89	Part Number Readout TAU	XM Certification	Do not operate because item is for manufacturer use.
90	AM Reception Sensitivity Level Test	Radio reception condition verification	Displays the radio reception condition in the center display.
91	Radio Test Mode (Main)	Do not operate because not equipped to vehicle.	Do not operate because not equipped to vehicle.
92	Radio Test Mode (Sub)	Do not operate because not equipped to vehicle.	Do not operate because not equipped to vehicle.
93	Software Version Display (TAU)	Software version verification	Displays the TAU software version.
94	Speaker Cyclic Test	Speaker Inspection	• Outputs sound from the speakers in the following order: **Without Bose®** 1. Front door speaker (LH) and tweeter (LH) 2. Front door speaker (RH) and tweeter (RH) 3. Rear door speaker (RH) 4. Rear door speaker (LH) **With Bose®** 1. Front door speaker (LH) 2. Front door speaker (RH) 3. Rear door speaker (RH) 4. Rear door speaker (LH)

95	Vehicle Info Display (TAU)	Do not operate because not equipped to vehicle.	Do not operate because not equipped to vehicle.
96	XM Serial Number	XM tuner unique number (ESN) verification	Displays the unique number (ESN) of the XM tuner in the TAU in the center display.
97	Radio Electric Field Strength (AM)	AM radio field strength verification	• Displays the following information in the center display. ▪ AM radio station frequency (kHz) being received ▪ Frequency field strength (dBuV) **NOTE:** • Frequencies can be changed by turning the commander knob.
98	Radio Electric Field Strength (FM)	FM radio electric field strength verification	• Displays the following information in the center display. ▪ FM radio station frequency (MHz) being received ▪ Frequency field strength (dBuV) **NOTE:** • Frequencies can be changed by turning the commander knob.
99	Software Update	Do not operate because not equipped to vehicle.	Do not operate because not equipped to vehicle.

2014 - Mazda3 - Body and Accessories

ON-BOARD DIAGNOSTIC [AUDIO AMPLIFIER (WITH CENTER DISPLAY)]

Outline

- The audio amplifier has an on-board diagnostic function to facilitate system diagnosis.

Function

- The on-board diagnostic function consists of the following functions:
  - A malfunction detection function, which detects overall malfunctions in the audio amplifier-related parts.
  - A memory function, which stores detected DTCs; a display function, which indicates system malfunctions via DTC display.

On-board Diagnostic Function

Malfunction detection function

- Detects overall malfunctions in the immobilizer system-related parts.
- If a malfunction occurs, the start stop unit records the malfunction as a DTC. A recorded DTC can be read by the Mazda Modular Diagnostic System (M-MDS).

DTC table

×

Applicable

—

Not applicable

DTC No.	Warning/indicator light	Description	Fail-safe function	Drive cycle	Self test type*1	Memory function
U0001:88	—	Module communication error (HS-CAN)	—	—	C	×
U2300:54	—	Configuration error (data not received)	—	—	C	×
U2300:55	—	Configuration error (not configured)	—	—	C	×
U2300:56	—	Configuration error (not configured)	—	—	C	×
U2300:64	—	Configuration error (error value read)	—	—	C	×
U3003:16	—	Voltage decrease input from battery	—	—	C	×
U3003:17	—	Audio amplifier high power supply voltage input	—	—	C	×
U3000:49	—	Audio amplifier internal malfunction	—	—	C	×

*1

C: CMDTC self test

DTC 7-digit code definition

- When related systems or components have failed, the CM stores the DTC of the malfunctioning part in the CM memory, and allows for

the retrieval of the store data using scanning tool when necessary. The DTCs are indicated using seven digits. Each digit indicates the following.

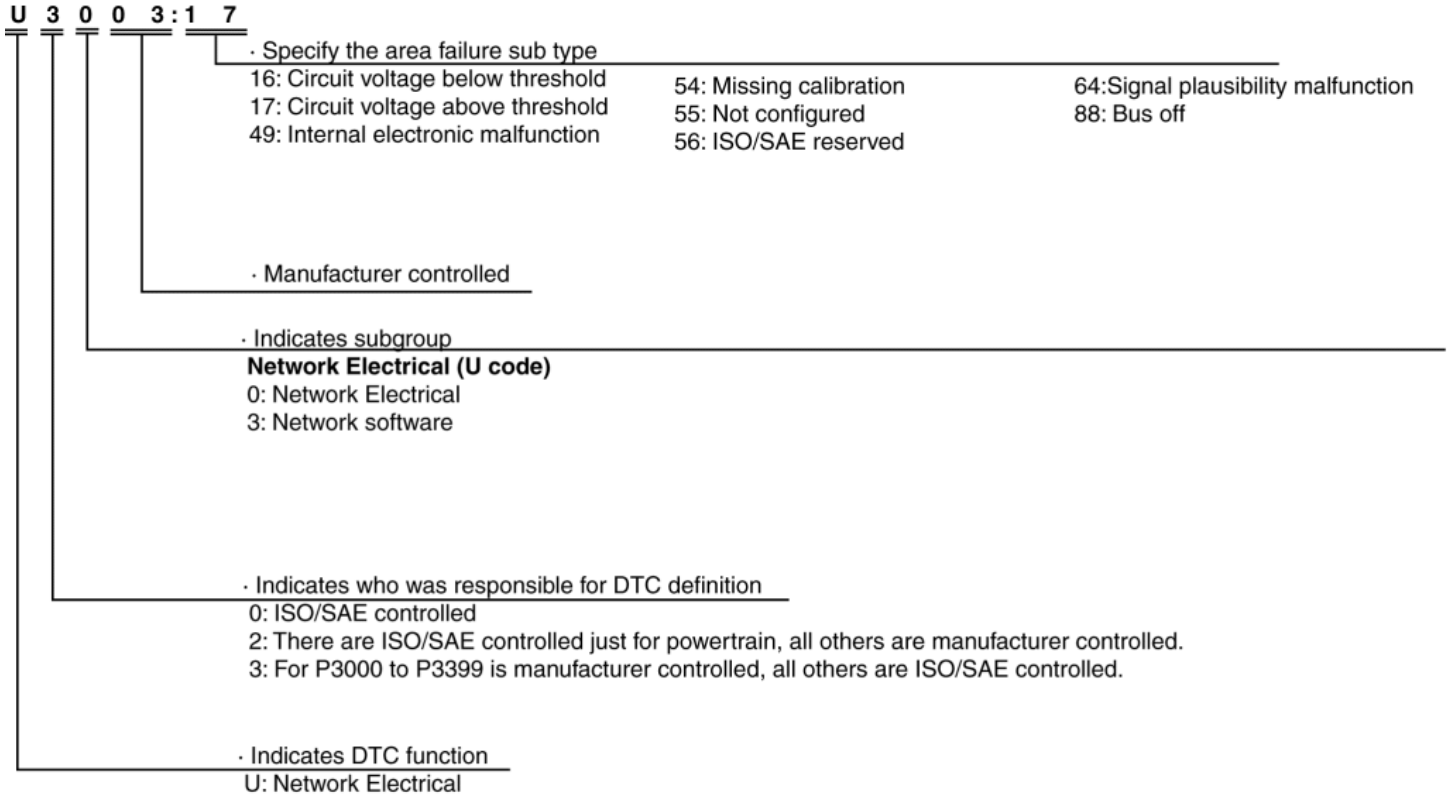

Status byte for DTC

- The two digits (two digits after hyphen (-)) after the seven-digit DTC.

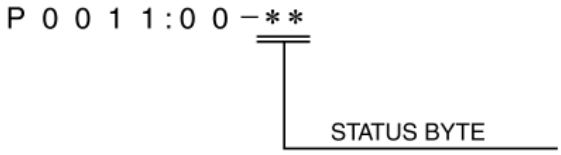

- A code which indicates the pending code, current/past malfunction status, or warning illumination status.
- Can be read by performing a CMDTC self-test using the Mazda Modular Diagnostic System (M-MDS).
- For details, refer to the explanation on the M-MDS when reading the DTC.

2014 - Mazda3 - Body and Accessories

POWER SYSTEMS

Outline

- System in which electric current from the battery supplies power to each electrical part.
- There are mainly three types of electric power supply as follows, which are divided into system-supplied power and power used by parts.
    - Supply of direct power from battery
    - Supply of power by switching ignition ON (engine off)
    - Supply of power by switching ignition ON (engine on)

Specification

Component parts	Specification	
Relay and fuse block	Wiring harness-integrated type	
Fuse block	Wiring harness-integrated type	
Main fuse	EPS fuse rating	60 A
	MAIN fuse rating	200 A
	STARTER fuse rating	250 A
Multiplex slow blow fuse	CABIN+B fuse rating	50 A
	ABS/DSCM fuse rating	50 A
	ENG.MAIN fuse rating	40 A
	HEATER fuse rating	40 A
	DEFOG fuse rating	40 A
	INJECTOR fuse rating	30 A
	ADD FAN GE fuse rating	30 A
	FAN GE fuse rating	30 A
Accessory socket	Rated voltage	DC 12 V
	Rated load	10 A

Structural view

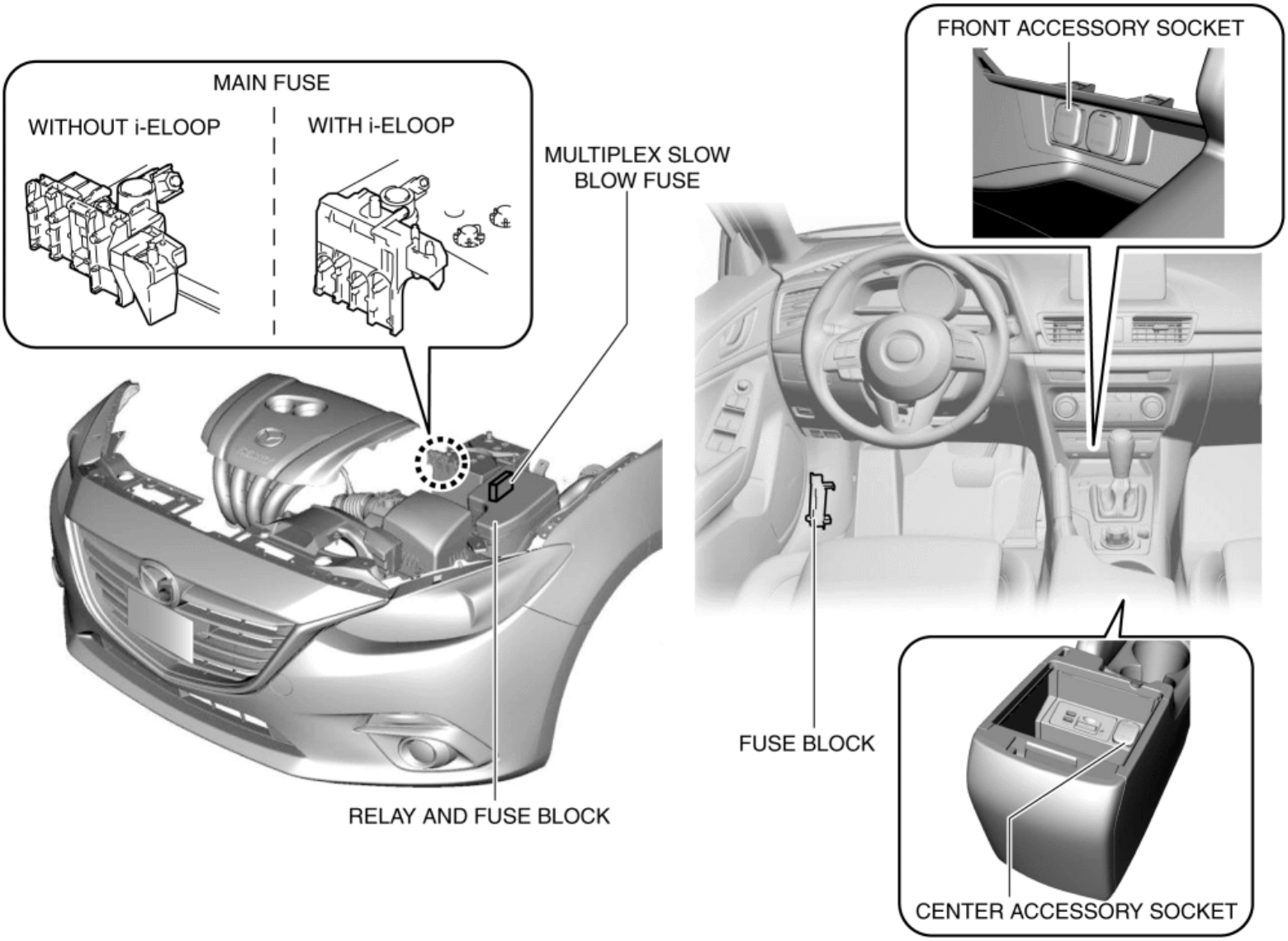

2014 - Mazda3 - Body and Accessories

RELAY AND FUSE BLOCK

Purpose

- Relays and fuses used by each system are grouped and housed together for smooth inspection and replacement servicing.

Function

- Relays and fuses used by each system are grouped and housed together.

Construction

- Installed in the engine compartment.

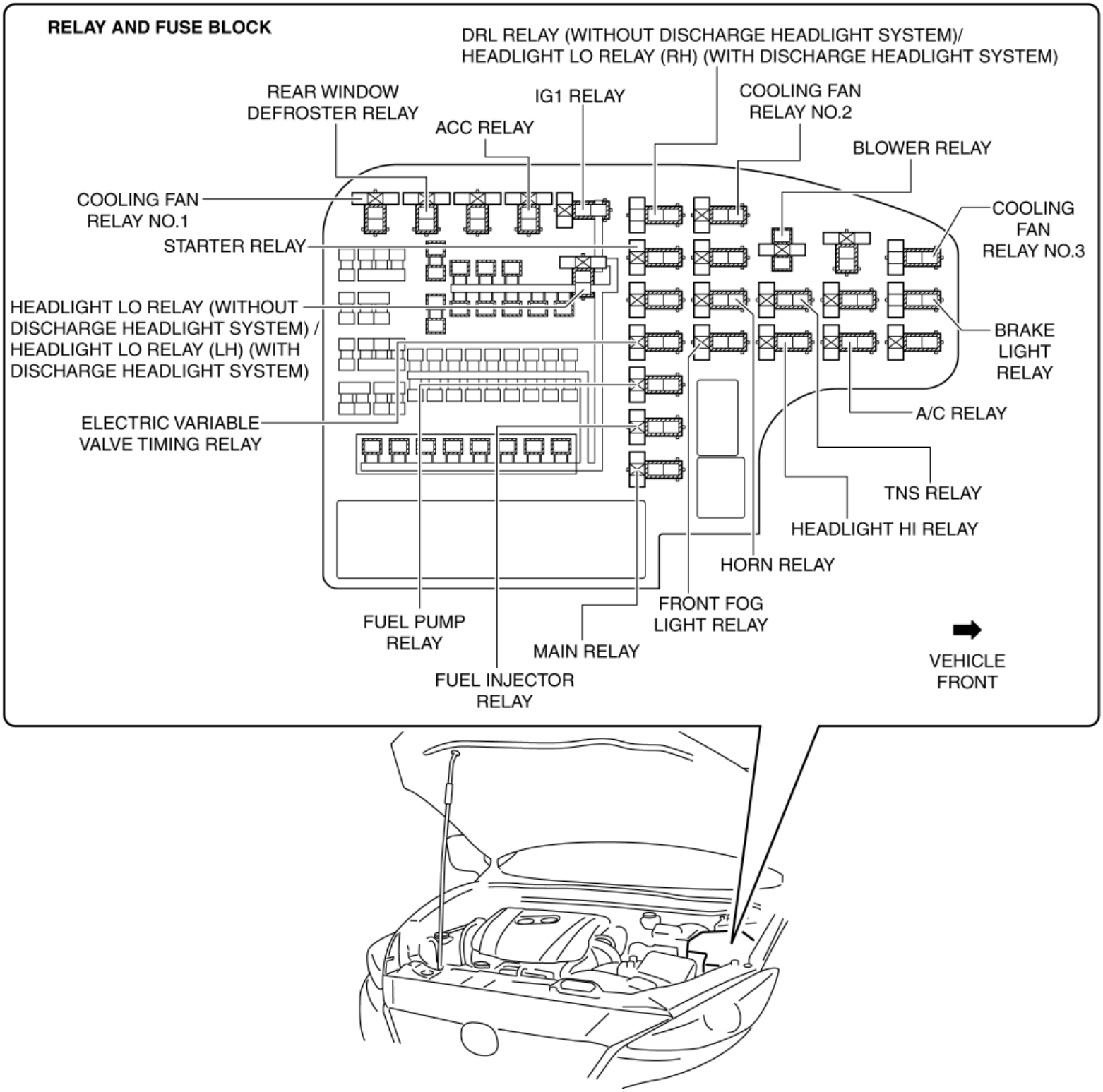

Operation

Relay operation

1. When electric current flows to the coil, electromagnetic power is generated.
2. The switch is attracted by the generated electromagnetic power and switches on.

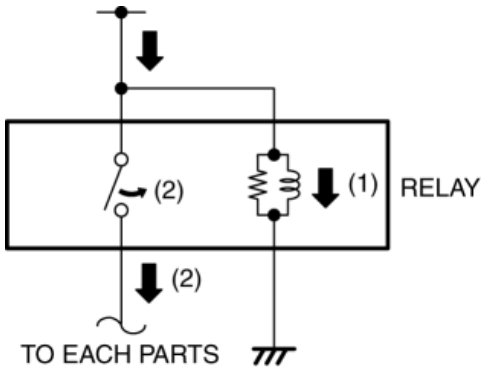

Fuse operation

1. If electric current to each fuse is the specified value or more, the fuse melts due to heat generation.
2. Current between the fuse and ground is interrupted.

Fail-safe

- Function not equipped.

2014 - Mazda3 - Body and Accessories

MULTIPLEX SLOW BLOW FUSE

Purpose

- Size reduction of the relay and fuse block has been realized by aggregating 8 fuses together and downsizing.

Function

- Fuses used by each system are grouped and housed together.

Construction

- Installed in the relay and fuse block.
- The multiplex slow blow fuse is installed to the relay and fuse block using a bolt. Refer to the workshop manual for the multiplex slow blow fuse removal/installation.

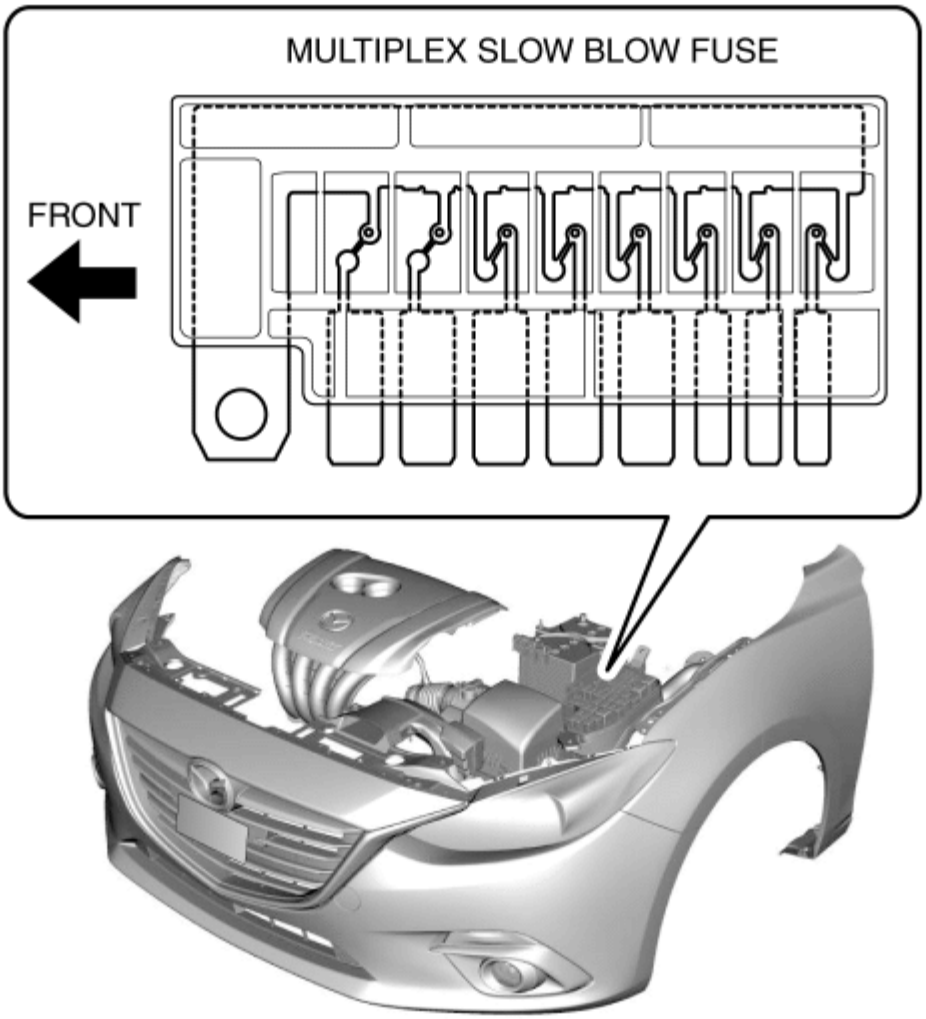

Operation

Fuse operation

1. If electric current to each fuse is the specified value or more, the fuse melts due to heat generation.

2. Current between the fuse and ground is interrupted.

Fail-safe

- Function not equipped.

2014 - Mazda3 - Body and Accessories

FUSE BLOCK

Purpose

- Fuses used by each system are grouped and housed together for smooth inspection and replacement servicing.

Function

- Fuses used by each system are grouped and housed together.

Construction

- Installed inside the front side trim (LH).

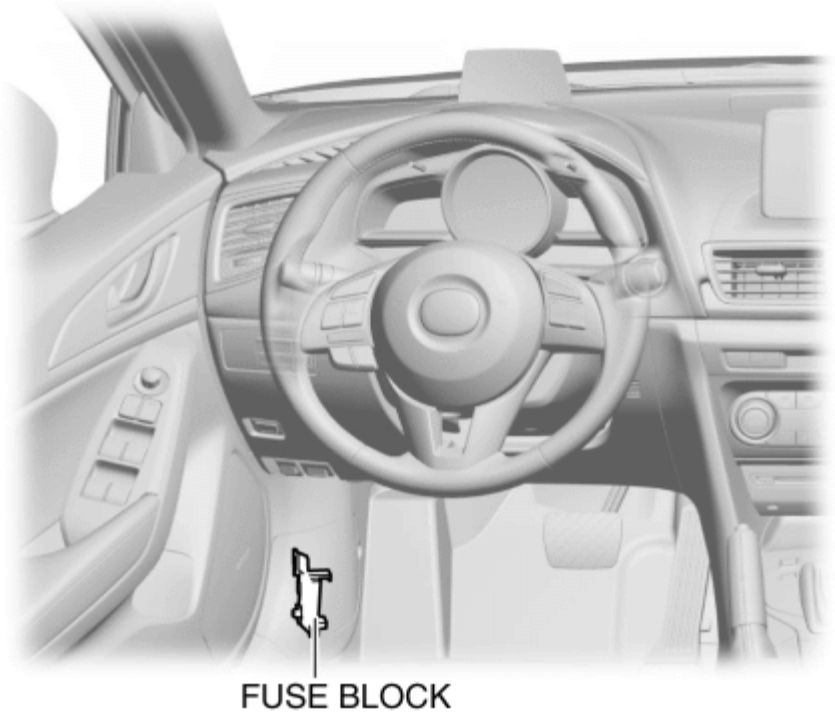

Operation

Fuse operation

1. If electric current to each fuse is the specified value or more, the fuse melts due to heat generation.

2. Current between the fuse and ground is interrupted.

Fail-safe

- Function not equipped.

2014 - Mazda3 - Body and Accessories

MAIN FUSE

Purpose

- If electric current of the specified value or more flows to each fuse, the fuse melts due to heat generation to protect the systems and parts downstream of the fuse.

Function

- If electric current to each fuse is the specified value or more, the fuse melts due to heat generation.

Construction

- Installed to the battery terminal (+).

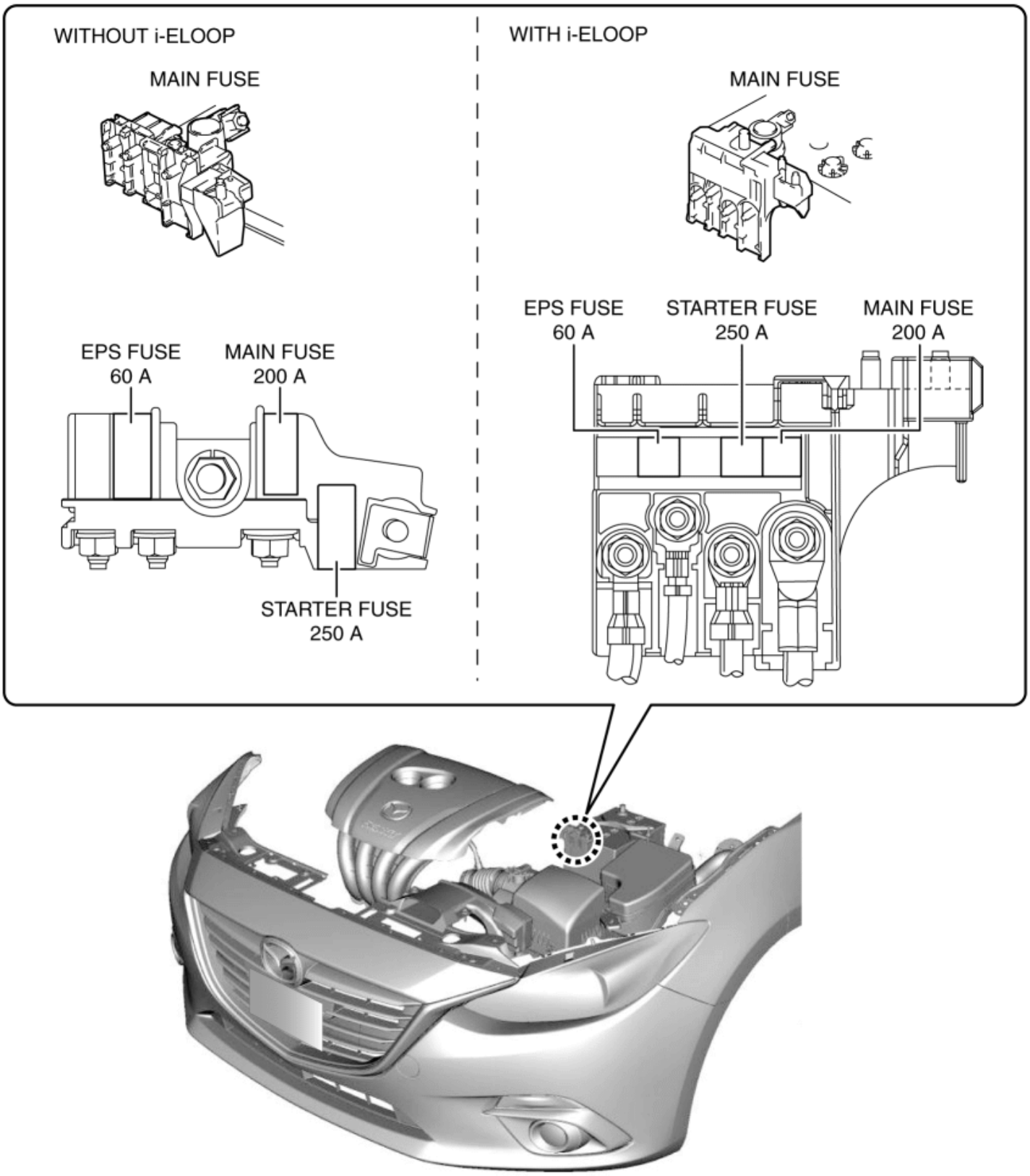

Operation

1. If electric current to each fuse is the specified value or more, the fuse melts due to heat generation.
2. Current between the fuse and ground is interrupted.

Fail-safe

- Function not equipped.

2014 - Mazda3 - Body and Accessories

ACCESSORY SOCKET

Purpose

- By inserting the plug of an electrical device, 12 V (maximum 120 W) of power is supplied enabling use of the electrical device in the vehicle.

Function

- When the ignition is switched to ACC or ON (engine off or on), 12 V (maximum 120 W) of power is supplied.

Construction

- A cap is installed to prevent penetration of foreign matter in the socket such as dust.
- A front accessory socket is installed to the front console. (With front accessory socket)
- A center accessory socket is installed inside the rear console. (With center accessory socket)

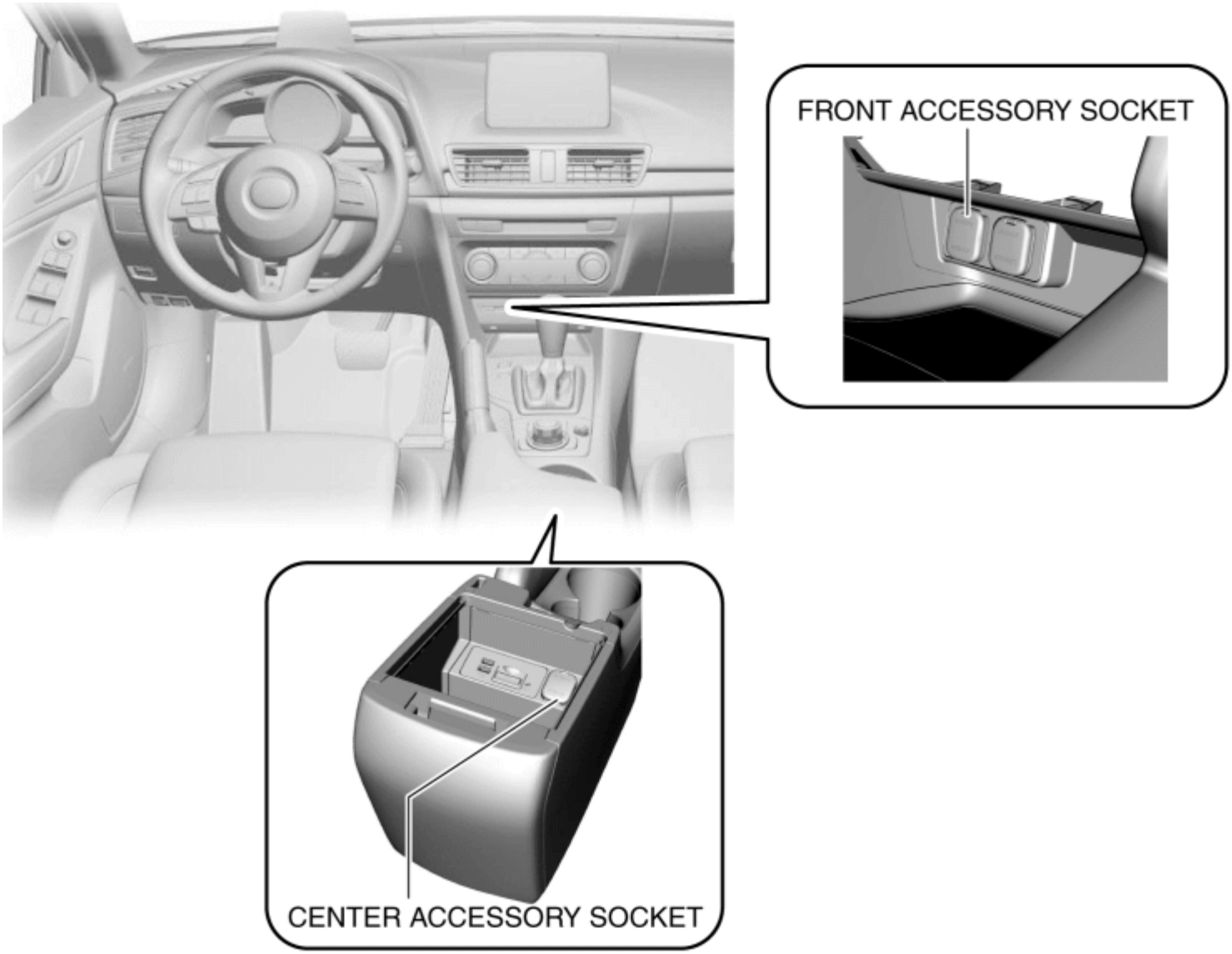

Operation

Front accessory socket

1. When the ignition is switched to ACC or ON (engine on or off), power is supplied constantly.

Center accessory socket

1. Power is supplied constantly.

Fail-safe

- Function not equipped.

ACCESSORY SOCKET

2014 - Mazda3 - Body and Accessories

INSTRUMENTATION/DRIVER INFO.

Outline

- The following warning/indication systems have been adopted.
  - Instrument cluster
  - Blind spot monitoring (BSM) system (with blind spot monitoring (BSM) system)
  - Lane departure warning system (LDWS) (With lane departure warning system (LDWS))
  - Indicator unit
- An instrument cluster integrated with an active driving display has been adopted which displays the driving speed, warning screen, and direction of vehicle travel (with car-navigation system). (Type A instrument cluster)
- A blind spot monitoring (BSM) system has been adopted which notifies the driver of vehicles approaching from behind on the left or right adjacent lanes in the driver's blind spot, and warns the driver if the driver tries to change lanes to the side of the approaching vehicle. (With blind spot monitoring (BSM) system)
- A lane departure warning system (LDWS) has been adopted which recognizes vehicle lane lines on the road using the forward sensing camera (FSC) installed to the windshield and notifies the driver if the vehicle may depart from its lane unbeknownst to the driver. (With lane departure warning system (LDWS))
- An indicator unit has been adopted which displays the passenger seat belt warning light and PAD indicator light.

Specification

Item				Specification
	Warning lights	Brightness level	(cd/m^2)	200—300
		Light source		LED
	Indicator lights	Brightness level	(cd/m^2)	18—300
		Light source		LED
	Warning beep	Oscillation frequency	(Hz)	800—2,000
		Output sound pressure	(dB)	65—80
	Speedometer (Type A)	System		Digital type
		Display		Digital
		Input signal communication system		CAN system

Instrument cluster	Speedometer (Type B, type C)	System	Stepping motor type
		Display	Analog needle
		Input signal communication system	CAN system
	Tachometer (Type A)	System	Stepping motor type
		Display	Analog needle
		Input signal communication system	CAN system
	Tachometer (Type B)	System	Digital type
		Display	Digital
		Input signal communication system	CAN system
	Low engine coolant temperature indicator light/High engine coolant temperature warning light	Operation	(See **LOW ENGINE COOLANT TEMPERATURE INDICATOR LIGHT (BLUE) / HIGH ENGINE COOLANT TEMPERATURE WARNING LIGHT (RED)**.)
		Input signal communication system	CAN system

Instrument cluster	Fuel gauge	System		LCD														
		Input signal source		Fuel gauge sender unit														
		Remaining fuel quantity (L {US gal, Imp gal}) in fuel tank	Segment indication number	1	2	3	4	5	6	7	8	9	10	11	12	13	14	15
			SKYACTIV-G 2.0, 2.5	6—8 {1.6—2.1, 1.4—1.7}	8—10 {3.0—2.6, 2.0—2.1}	10—11 {2.7—2.9, 2.2—2.4}	11—13 {3.0—3.4, 2.5—2.8}	13—14 {3.5—3.6, 2.9—3.0}	14—16 {3.7—4.2, 3.1—3.5}	16—19 {4.3—5.0, 3.6—4.1}	19—22 {5.1—5.8, 4.2—4.8}	22—26 {5.9—6.8, 4.9—5.7}	26—29 {6.9—7.6, 5.8—6.3}	29—32 {7.7—8.4, 6.4—7.0}	32—35 {8.5—9.2, 7.1—7.6}	35—38 {9.3—10.0, 7.7—8.3}	38—42 {10.1—11, 8.4—9.2}	42—50 {12—13, 9.3—10.0}
		Remaining fuel level (L {US gal, Imp gal}) when fuel tank level warning light illuminates		Approx. 9 {2, 2}														
		Invalid remaining fuel level. (L {US gal, Imp gal})		Approx. 0.75 {0.20, 0.16}														
		System		LCD														

	Odometer	Display area		0—999999
		Minimum display unit	(km {mile})	1 {0.6}
		Input signal communication system		CAN system
	Tripmeter	System		LCD
		Display area		Returns to 0.0 from 99999.9, calculation continues
		Minimum display unit	(km {mile})	0.1 {0.06}
		Input signal communication system		CAN system
Horn		Oscillation frequency	(Hz)	390—440
		Waveform		Spiral

Structural view

Interior

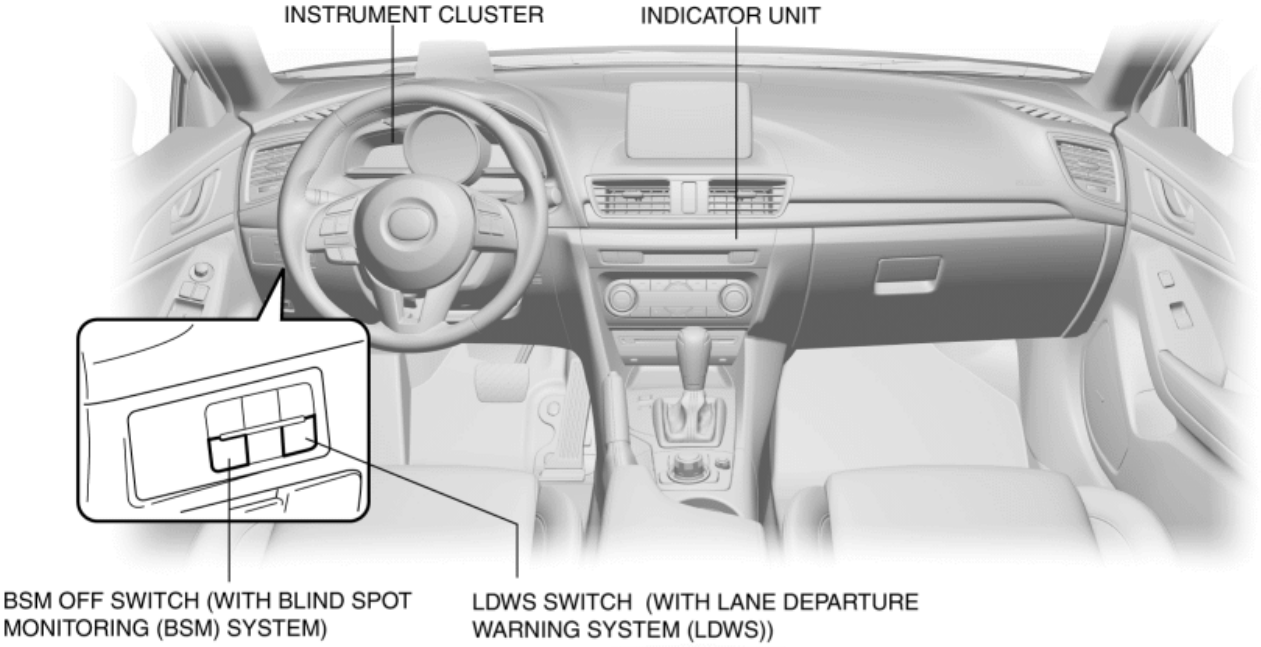
INSTRUMENT CLUSTER
INDICATOR UNIT
BSM OFF SWITCH (WITH BLIND SPOT MONITORING (BSM) SYSTEM)
LDWS SWITCH (WITH LANE DEPARTURE WARNING SYSTEM (LDWS))

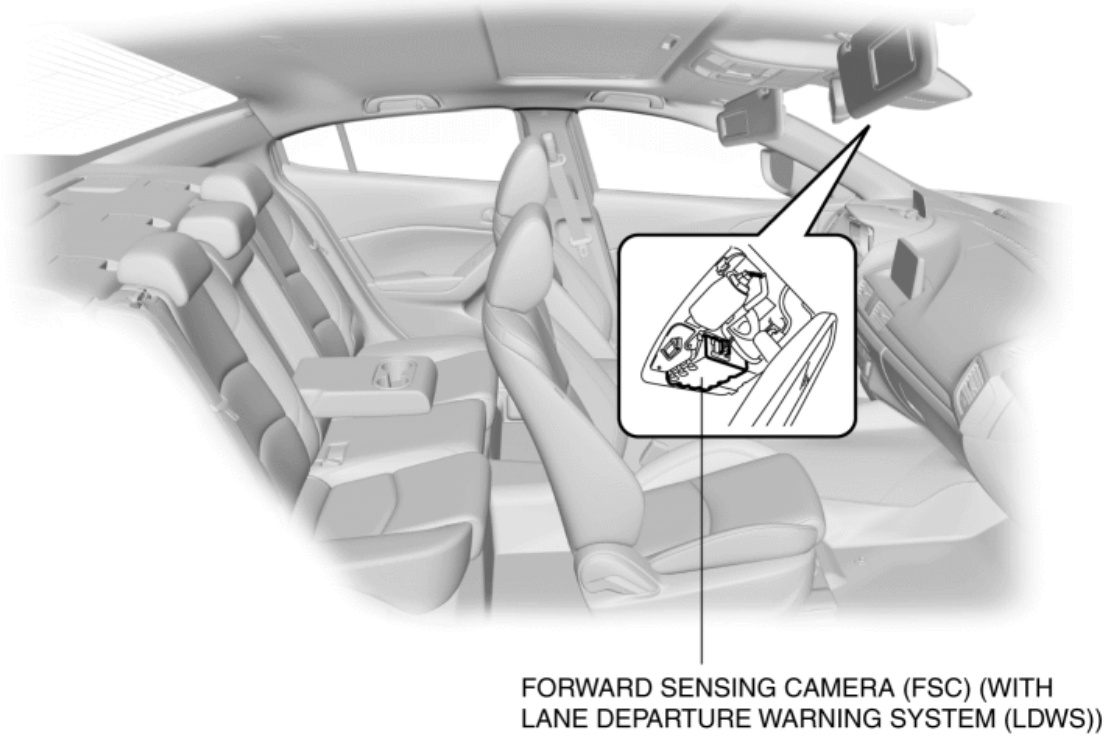
FORWARD SENSING CAMERA (FSC) (WITH LANE DEPARTURE WARNING SYSTEM (LDWS))

Exterior

4SD

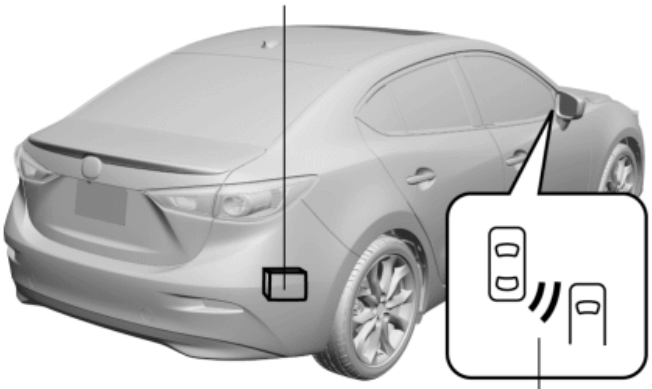

5HB

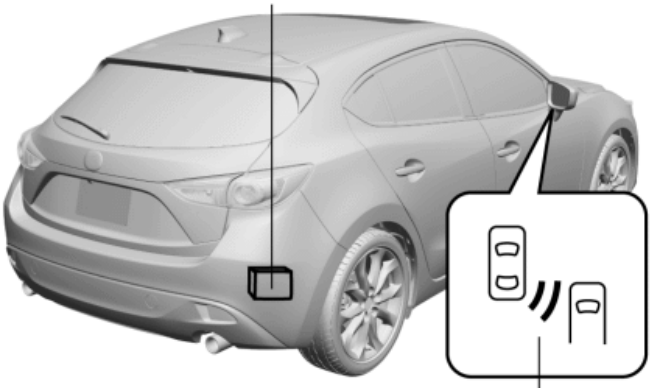

*1: ILLUSTRATION INDICATES RH (SAME AS LH)

2014 - Mazda3 - Body and Accessories

INSTRUMENTATION/DRIVER INFO. PERSONALIZATION

- A personalization function has been adopted with which settings for each function can be changed.

Instrument Cluster

Using Mazda Modular Diagnostic System (M-MDS)

Mazda Modular Diagnostic System (M-MDS) display	Function	Initial setting	Setting contents	Control unit
Lights-on Reminder Volume.	The volume for the lights-on reminder warning alarm can be changed.	OFF*1	Not Adopted. / OFF / Low / High	Instrument cluster
Turn Signal Volume.	The volume of the turn and hazard indicator alarm can be changed.	High	Not Adopted. / Low / High	Instrument cluster

Using center display

Display of center display	Function	Initial setting	Setting contents	Control unit
Lights-on Reminder Volume.	The volume for the lights-on reminder warning alarm can be changed.	Off	High / Low / Off	Instrument cluster
Turn Signal Volume	The volume of the turn and hazard indicator alarm can be changed.	High	High / Low	Instrument cluster
Distance	The distance unit can be changed.	Miles or Km*2	Miles / Km	Instrument cluster
*3	The temperature unit can be changed.	*2	F / C	Instrument

Temp		F or C		cluster

Using instrument cluster (without center display)

Instrument cluster LCD	Function	Initial setting	Setting contents	Control unit
°F or °C*3	The temperature unit can be changed.	°F or °C*2	°F / °C	Instrument cluster

*1

The setting of the lights-on reminder can be changed with the time setting of auto light off system set to Off.

*2

The initial value differs depending on the market.

*3

When the ambient temperature display is switched, the set A/C cabin temperature display is also changed. (with dual type)

Blind Spot Monitoring (BSM) System

Using Mazda Modular Diagnostic System (M-MDS)

Mazda Modular Diagnostic System (M-MDS) display	Function	Initial setting	Setting contents	Control unit
BSM Volume.	The volume of the blind spot monitoring (BSM) warning alarm can be changed.	High	Not Adopted. / OFF / Low / High	Instrument cluster

Using center display

Display of center display	Function	Initial setting	Setting contents	Control unit
Blind Spot	The volume of the blind spot monitoring (BSM)		High / Low	Instrument

Monitoring Volume	warning alarm can be changed.	High	/ OFF	cluster

Lane Departure Warning System (LDWS)

Using Mazda Modular Diagnostic System (M-MDS)

Mazda Modular Diagnostic System (M-MDS) display	Function	Initial setting	Setting contents	Control unit
LDWS Timing.	The distance between the warning-trigger lines for the Lane Departure Warning System (LDWS) and vehicle lanes can be changed.	Late	Not Adopted / Adaptive / Early / Medium / Late	Forward sensing camera (FSC)
LDWS Warning.	The warning operation sensitivity of the lane departure warning system (LDWS) can be changed.	Often	Not Adopted. / Often / Medium / Rare	Forward sensing camera (FSC)
LDWS Sound.	The type of the LDWS warning alarm can be changed.	Beep	Beep / Rumble	Instrument cluster

Using center display

Display of center display	Function	Initial setting	Setting contents	Control unit
Timing	The distance between the warning-trigger lines for the Lane Departure Warning System (LDWS) and vehicle lanes can be changed.	Before line	Before line / At line	Forward sensing camera (FSC)
Warning	The warning operation sensitivity of the lane departure warning system (LDWS) can be changed.	Low	High / Low	Forward sensing camera (FSC)
Sound	The type of LDWS warning alarm can be changed.	Beep	Beep / Rumble	Instrument cluster

Rumble Strip Volume	The volume of the LDWS warning alarm (Rumble) can be changed.	High	High / Mid / Low	Instrument cluster
Beep Volume	The volume of the LDWS warning alarm (Beep) can be changed.	High or Low*1	High / Low	Instrument cluster

*1

The initial value differs depending on the market.

2014 - Mazda3 - Body and Accessories

INSTRUMENT CLUSTER

Outline

- The following three types of instrument clusters have been set.
  - TYPE A (Digital speedometer type)

    Specification

    - Digital speedometer
    - Analog tachometer
    - Odometer/tripmeter
    - Fuel gauge
    - Indicator/warning lights
    - Alarm
    - Trip computer
    - Active driving display
  - TYPE B (Analog speedometer type (with tachometer))

    Specification

    - Analog speedometer
    - Digital tachometer
    - Odometer/tripmeter
    - Fuel gauge
    - Indicator/warning lights
    - Alarm
    - Trip computer
  - TYPE C (Analog speedometer type (without tachometer))

    Specification

    - Analog speedometer
    - Odometer/tripmeter
    - Fuel gauge
    - Indicator/warning lights
    - Alarm

Function

- The instrument cluster displays the following information to notify the user of the vehicle conditions.

- Vehicle speed (speedometer)
- Engine speed (tachometer)
- Remaining fuel quantity (fuel gauge)
- Traveled distance (odometer/tripmeter)
- Average fuel economy, average vehicle speed, instantaneous fuel economy, remaining distance to empty (trip computer)
- Indicator/warning lights

Speedometer display function

- The instrument cluster controls the speedometer based on the vehicle speed signal sent via CAN transmission from the PCM, and displays the current vehicle speed. For details on the speedometer, refer to SPEEDOMETER. (See **SPEEDOMETER**.)

Tachometer display function

- The instrument cluster controls the tachometer based on the engine speed signal sent via CAN transmission from the PCM, and displays the current engine speed. For details on the tachometer, refer to TACHOMETER. (See **TACHOMETER**.)

Fuel gauge display function

- The instrument cluster displays the remaining fuel quantity based on the fuel gauge resistance signal sent via CAN transmission from the RBCM, and the fuel injection amount signal sent via CAN transmission from the PCM. For details on the fuel gauge, refer to FUEL GAUGE. (See **FUEL GAUGE**.)

Odometer/tripmeter display function

- The instrument cluster displays the total traveled distance/traveled distance over a specific interval based on the travel distance signal sent via CAN transmission from the PCM. For details on the odometer/tripmeter, refer to ODOMETER/TRIPMETER. (See **ODOMETER/TRIPMETER**.)

Trip computer calculation function

- The instrument cluster calculates the average fuel economy, average vehicle speed, instantaneous fuel economy, and the remaining distance to empty, and displays it on the LCD in the instrument cluster. For details on the trip computer, refer to TRIP COMPUTER INFORMATION SYSTEM. (See **TRIP COMPUTER INFORMATION SYSTEM**.)

Warning/Indicator lights illuminate/flash function

- The instrument cluster illuminates/flashes the indicator/warning lights to notify the user of the vehicle system conditions.
- The types of indicator/warning lights are as follows: Refer to reference for details on each indicator/warning light.
- For vehicles with the center display, a warning message in the center display is displayed when the indicator/warning light is turned on or flashed. For the message content and verification method, refer to the CENTER DISPLAY. (See **CENTER DISPLAY [WITH CENTER DISPLAY]**.)

TYPE A (Digital speedometer type)

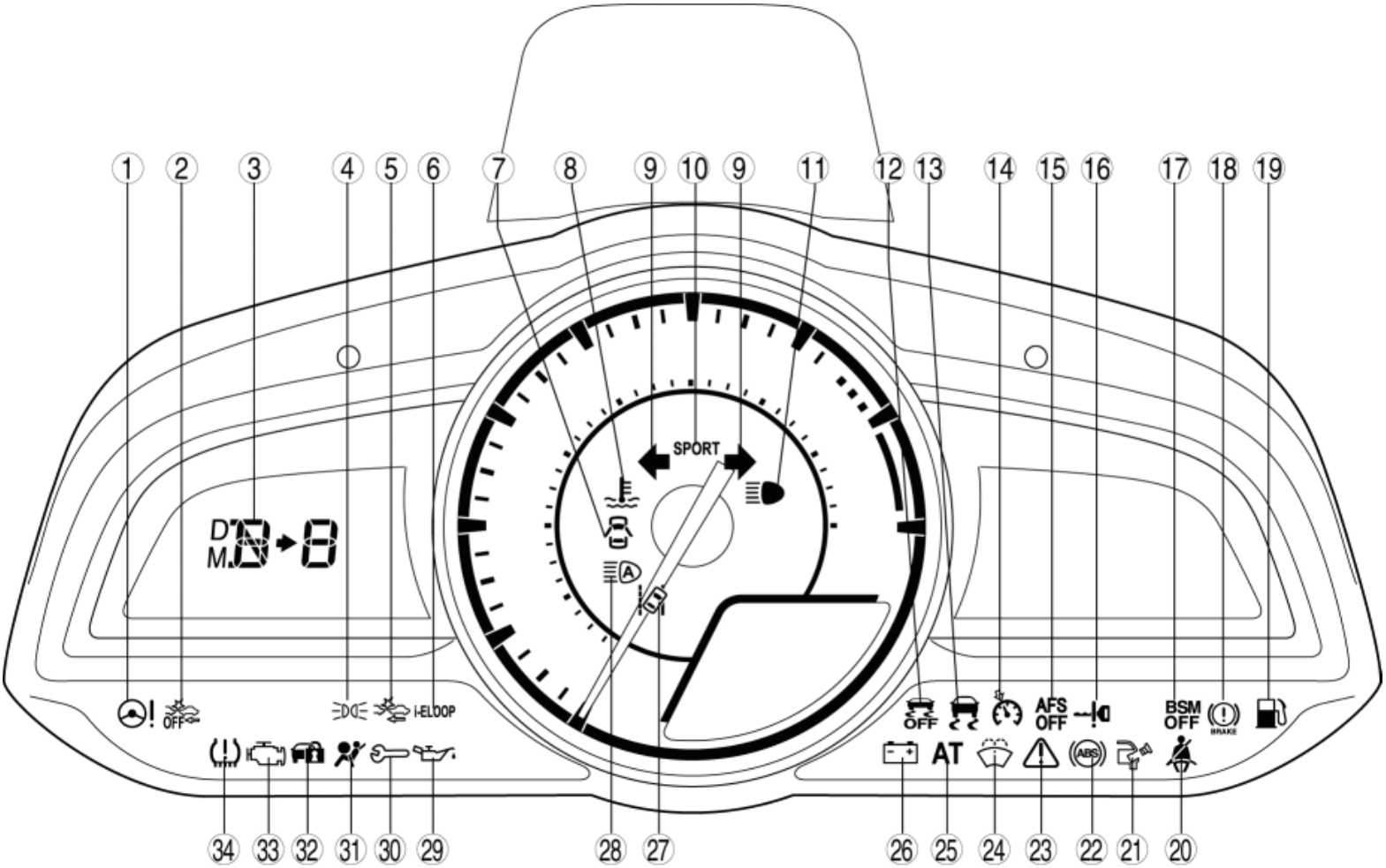

×: Applicable—: Not applicable

No.	Warning/Indicator lights	Name	Messages in center display are displayed when indicator/warning light is turned on or flashed	Comment	Warning/indicator lights which illuminate during initial check	Reference
1		Power steering malfunction indicator light	×	—	×	(See **POWER STEERING MALFUNCTION INDICATOR LIGHT**.)
2		Smart city brake support (SCBS) OFF indicator light	—	With SCBS	×	(See **SMART CITY BRAKE SUPPORT (SCBS) OFF INDICATOR LIGHT**.)
3		Shift position indicator light/gear position indicator	—	ATX	—	(See **SHIFT POSITION INDICATOR LIGHT [FW6A-EL]**.) (See **GEAR POSITION INDICATOR [FW6A-EL]**.)
		Gear shift indicator	—	MTX	—	(See **GEAR SHIFT INDICATOR [SKYACTIV-G 2.0, SKYACTIV-G 2.5]**.)
						(See **LIGHTS-ON**

4		Lights-on indicator light	—	—	—	**INDICATOR LIGHT**.)
5		Smart city brake support (SCBS) warning light (red)/Smart city brake support (SCBS) indicator light (amber)	×	With SCBS	×	(See **SMART CITY BRAKE SUPPORT (SCBS) INDICATOR LIGHT/SMART CITY BRAKE SUPPORT (SCBS) WARNING LIGHT**.)
6	i-ELOOP	i-ELOOP indicator light	×	With i-ELOOP	—	(See **i-ELOOP INDICATOR LIGHT [i-ELOOP]**.)
7		Door-ajar warning light	—	—	—	(See **DOOR-AJAR WARNING LIGHT**.)
8		Low engine coolant temperature indicator light (blue)/high engine coolant temperature warning light (red)	×	—	×	(See **LOW ENGINE COOLANT TEMPERATURE INDICATOR LIGHT (BLUE)/HIGH ENGINE COOLANT TEMPERATURE WARNING LIGHT (RED)**.)
9		Turn signal/hazard warning indicator lights	—	—	—	(See **TURN SIGNAL/HAZARD WARNING INDICATOR LIGHTS**.)
10	SPORT	SPORT mode Indicator Light	—	With drive selection	—	(See **SPORT MODE INDICATOR LIGHT [SKYACTIV-G 2.0, SKYACTIV-G 2.5]**.)
11		Headlight high-beam indicator light	—	—	—	(See **HEADLIGHT HIGH-BEAM INDICATOR LIGHT**.)
12	OFF	DSC OFF indicator light	—	—	×	(See **DSC OFF SWITCH, DSC OFF INDICATOR LIGHT**.)
13		TCS/DSC indicator light	×	—	×	(See **TCS/DSC INDICATOR LIGHT**.)
14		Cruise main indicator light (amber)/cruise set indicator light (green)	—	With cruise control system	—	(See **CRUISE MAIN INDICATOR LIGHT (AMBER), CRUISE SET INDICATOR LIGHT (GREEN) [SKYACTIV-G 2.0, SKYACTIV-G 2.5]**.)
15	AFS OFF	AFS OFF indicator light	×	With AFS	×	(See **AFS OFF INDICATOR LIGHT**.)
16		KEY warning light (red)/KEY indicator light (green)	×	—	—	(See **KEY WARNING LIGHT (RED)/KEY INDICATOR LIGHT (GREEN)**.)
17	BSM OFF	BSM OFF indicator light	×	With BSM	×	(See **BLIND SPOT MONITORING (BSM) OFF INDICATOR LIGHT**.)

18	BRAKE	Brake system warning light	×	—	×	(See **BRAKE SYSTEM/ABS WARNING LIGHT**.)
19		Low fuel warning light	×	—	—	(See **LOW FUEL WARNING LIGHT**.)
20		Seat belt warning light	—	—	—	(See **SEAT BELT WARNING LIGHT**.)
21		Check fuel cap warning light	×	—	×	(See **CHECK FUEL CAP WARNING LIGHT [SKYACTIV-G 2.0, SKYACTIV-G 2.5]**.)
22	ABS	ABS warning light	×	—	×	(See **BRAKE SYSTEM/ABS WARNING LIGHT**.)
23		Master warning light	×	—	×	(See **MASTER WARNING LIGHT**.)
24		Low washer fluid level warning light	×	—	—	(See **WASHER FLUID-LEVEL SENSOR**.)
25	AT	Automatic transaxle warning light	×	ATX	×	(See **AUTOMATIC TRANSAXLE WARNING LIGHT [FW6A-EL]**.)
26		Charging system warning light	×	—	×	(See **CHARGING SYSTEM WARNING LIGHT [SKYACTIV-G 2.0, SKYACTIV-G 2.5]**.)
27		Lane departure warning system (LDWS) warning light (amber)/lane departure warning system (LDWS) indicator light (green)	×	With LDWS	×	(See **LDWS INDICATOR LIGHT (GREEN)/LDWS WARNING LIGHT (AMBER)**.)
28	A	High beam control (HBC) system warning light (amber)/high beam control (HBC) system indicator light (green)	×	With HBC system	×	(See **HBC INDICATOR LIGHT (GREEN)/HBC WARNING LIGHT (AMBER)**.)
29		Engine oil warning light	×	—	×	(See **ENGINE OIL WARNING LIGHT [SKYACTIV-G 2.0, SKYACTIV-G 2.5]**.)
30		Wrench warning indicator light	×	—	×	(See **WRENCH WARNING INDICATOR LIGHT [SKYACTIV-G 2.0, SKYACTIV-G 2.5]**.)
31		Air bag/front seat belt pretensioner system warning	×	—	×	(See **AIR BAG SYSTEM WARNING LIGHT [TWO-STEP DEPLOYMENT CONTROL SYSTEM]**.)

		light				(See **AIR BAG SYSTEM WARNING LIGHT [STANDARD DEPLOYMENT CONTROL SYSTEM]**.)
32		Security indicator light	—	—	×	(See **SECURITY INDICATOR LIGHT**.)
33		Check engine light	×	—	×	(See **CHECK ENGINE LIGHT [SKYACTIV-G 2.0, SKYACTIV-G 2.5]**.)
34		Tire pressure monitoring system warning light	×	With TPMS	×	(See **TIRE PRESSURE MONITORING SYSTEM WARNING LIGHT**.)

TYPE B (Analog speedometer type (with tachometer))

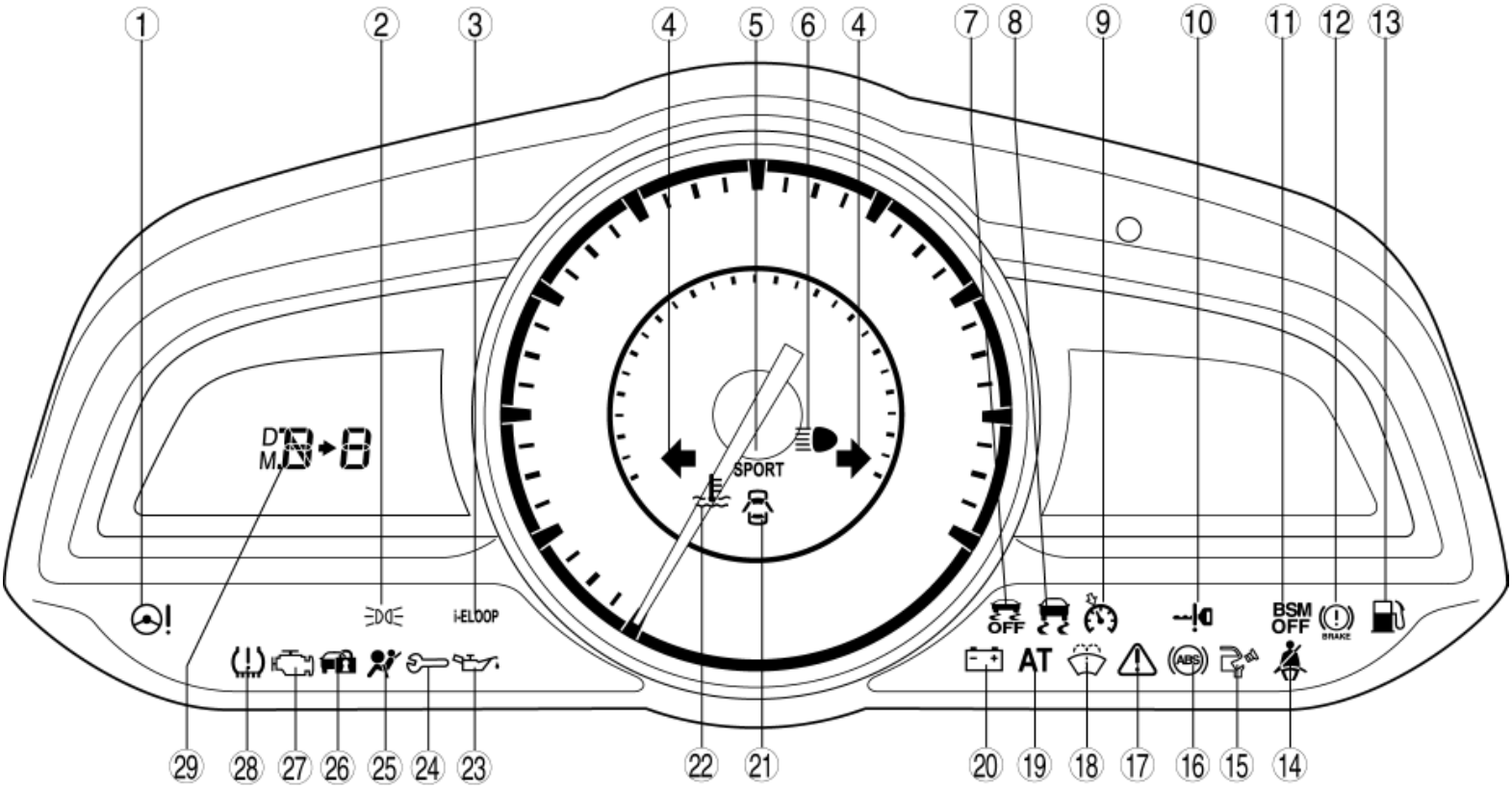

×: Applicable—: Not applicable

No.	Warning/Indicator lights	Name	Messages in center display are displayed when indicator/warning light is turned on or flashed	Comment	Warning/indicator lights which illuminate during initial check	Reference
1		Power steering malfunction indicator light	×	—	×	(See **POWER STEERING MALFUNCTION INDICATOR LIGHT**.)
2		Lights-on indicator light	—	—	—	(See **LIGHTS-ON INDICATOR LIGHT**.)

3	i-ELOOP	i-ELOOP indicator light	×	With i-ELOOP	—	(See **i-ELOOP INDICATOR LIGHT [i-ELOOP]**.)
4		Turn signal/hazard warning indicator lights	—	—	—	(See **TURN SIGNAL/HAZARD WARNING INDICATOR LIGHTS**.)
5	SPORT	SPORT mode Indicator Light	—	With drive selection	—	(See **SPORT MODE INDICATOR LIGHT [SKYACTIV-G 2.0, SKYACTIV-G 2.5]**.)
6		Headlight high-beam indicator light	—	—	—	(See **HEADLIGHT HIGH-BEAM INDICATOR LIGHT**.)
7	OFF	DSC OFF indicator light	—	—	×	(See **DSC OFF SWITCH, DSC OFF INDICATOR LIGHT**.)
8		TCS/DSC indicator light	×	—	×	(See **TCS/DSC INDICATOR LIGHT**.)
9		Cruise main indicator light (amber)/cruise set indicator light (green)	—	With cruise control system	—	(See **CRUISE MAIN INDICATOR LIGHT (AMBER), CRUISE SET INDICATOR LIGHT (GREEN) [SKYACTIV-G 2.0, SKYACTIV-G 2.5]**.)
10		KEY warning light (red)/KEY indicator light (green)	×	—	—	(See **KEY WARNING LIGHT (RED)/KEY INDICATOR LIGHT (GREEN)**.)
11	BSM OFF	BSM OFF indicator light	×	With BSM	×	(See **BLIND SPOT MONITORING (BSM) OFF INDICATOR LIGHT**.)
12	BRAKE	Brake system warning light	×	—	×	(See **BRAKE SYSTEM/ABS WARNING LIGHT**.)
13		Low fuel warning light	×	—	—	(See **LOW FUEL WARNING LIGHT**.)
14		Seat belt warning light	—	—	—	(See **SEAT BELT WARNING LIGHT**.)
15		Check fuel cap warning light	×	—	×	(See **CHECK FUEL CAP WARNING LIGHT [SKYACTIV-G 2.0, SKYACTIV-G 2.5]**.)
16	ABS	ABS warning light	×	—	×	(See **BRAKE SYSTEM/ABS WARNING LIGHT**.)
17		Master warning light	×	—	×	(See **MASTER WARNING LIGHT**.)
18		Low washer fluid level warning light	×	—	—	(See **WASHER FLUID-LEVEL SENSOR**.)

19	AT	Automatic transaxle warning light	×	ATX	×	(See **AUTOMATIC TRANSAXLE WARNING LIGHT [FW6A-EL]**.)
20		Charging system warning light	×	—	×	(See **CHARGING SYSTEM WARNING LIGHT [SKYACTIV-G 2.0, SKYACTIV-G 2.5]**.)
21		Door-ajar warning light	—	—	—	(See **DOOR-AJAR WARNING LIGHT**.)
22		Low engine coolant temperature indicator light (blue)/high engine coolant temperature warning light (red)	×	—	×	(See **LOW ENGINE COOLANT TEMPERATURE INDICATOR LIGHT (BLUE)/HIGH ENGINE COOLANT TEMPERATURE WARNING LIGHT (RED)**.)
23		Engine oil warning light	×	—	×	(See **ENGINE OIL WARNING LIGHT [SKYACTIV-G 2.0, SKYACTIV-G 2.5]**.)
24		Wrench warning indicator light	×	—	×	(See **WRENCH WARNING INDICATOR LIGHT [SKYACTIV-G 2.0, SKYACTIV-G 2.5]**.)
25		Air bag/front seat belt pretensioner system warning light	×	—	×	(See **AIR BAG SYSTEM WARNING LIGHT [TWO-STEP DEPLOYMENT CONTROL SYSTEM]**.) (See **AIR BAG SYSTEM WARNING LIGHT [STANDARD DEPLOYMENT CONTROL SYSTEM]**.)
26		Security indicator light	—	—	×	(See **SECURITY INDICATOR LIGHT**.)
27		Check engine light	×	—	×	(See **CHECK ENGINE LIGHT [SKYACTIV-G 2.0, SKYACTIV-G 2.5]**.)
28		Tire pressure monitoring system warning light	×	With TPMS	×	(See **TIRE PRESSURE MONITORING SYSTEM WARNING LIGHT**.)
29	D M	Shift position indicator light/gear position indicator	—	ATX	—	(See **SHIFT POSITION INDICATOR LIGHT [FW6A-EL]**.) (See **GEAR POSITION INDICATOR [FW6A-EL]**.)
		Gear shift indicator	—	MTX	—	(See **GEAR SHIFT INDICATOR [SKYACTIV-G 2.0, SKYACTIV-G 2.5]**.)

TYPEC (Analog speedometer type (without tachometer))

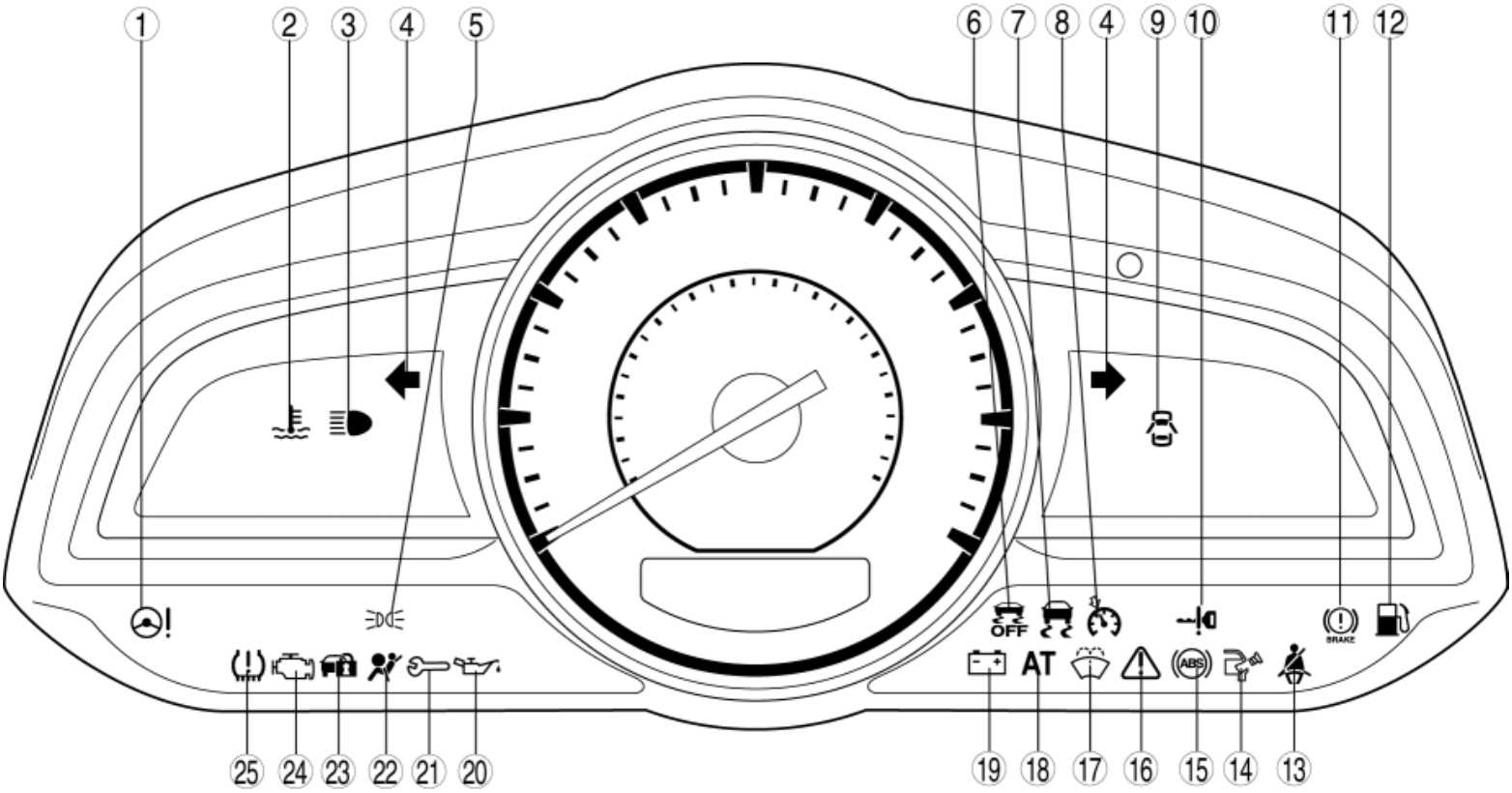

×: Applicable—: Not applicable

No.	Warning/Indicator lights	Name	Comment	Warning/indicator lights which illuminate during initial check	Reference
1		Power steering malfunction indicator light	—	×	(See **POWER STEERING MALFUNCTION INDICATOR LIGHT**.)
2		Low engine coolant temperature indicator light (blue)/high engine coolant temperature warning light (red)	—	×	(See **LOW ENGINE COOLANT TEMPERATURE INDICATOR LIGHT (BLUE)/HIGH ENGINE COOLANT TEMPERATURE WARNING LIGHT (RED)**.)
3		Headlight high-beam indicator light	—	—	(See **HEADLIGHT HIGH-BEAM INDICATOR LIGHT**.)
4		Turn signal/hazard warning indicator lights	—	—	(See **TURN SIGNAL/HAZARD WARNING INDICATOR LIGHTS**.)
5		Lights-on indicator light	—	—	(See **LIGHTS-ON INDICATOR LIGHT**.)
6	OFF	DSC OFF indicator light	—	×	(See **DSC OFF SWITCH, DSC OFF INDICATOR LIGHT**.)
7		TCS/DSC indicator light	—	×	(See **TCS/DSC INDICATOR LIGHT**.)
8		Cruise main indicator light (amber)/cruise set indicator light	With cruise	—	(See **CRUISE MAIN INDICATOR LIGHT (AMBER), CRUISE SET INDICATOR LIGHT**

		(green)	control system		**(GREEN) [SKYACTIV-G 2.0, SKYACTIV-G 2.5]**.)
9		Door-ajar warning light	—	—	(See **DOOR-AJAR WARNING LIGHT**.)
10		KEY warning light (red)/KEY indicator light (green)	—	—	(See **KEY WARNING LIGHT (RED)/KEY INDICATOR LIGHT (GREEN)**.)
11	BRAKE	Brake system warning light	—	×	(See **BRAKE SYSTEM/ABS WARNING LIGHT**.)
12		Low fuel warning light	—	—	(See **LOW FUEL WARNING LIGHT**.)
13		Seat belt warning light	—	—	(See **SEAT BELT WARNING LIGHT**.)
14		Check fuel cap warning light	—	×	(See **CHECK FUEL CAP WARNING LIGHT [SKYACTIV-G 2.0, SKYACTIV-G 2.5]**.)
15	ABS	ABS warning light	—	×	(See **BRAKE SYSTEM/ABS WARNING LIGHT**.)
16		Master warning light	—	×	(See **MASTER WARNING LIGHT**.)
17		Low washer fluid level warning light	—	—	(See **WASHER FLUID-LEVEL SENSOR**.)
18	AT	Automatic transaxle warning light	ATX	×	(See **AUTOMATIC TRANSAXLE WARNING LIGHT [FW6A-EL]**.)
19		Charging system warning light	—	×	(See **CHARGING SYSTEM WARNING LIGHT [SKYACTIV-G 2.0, SKYACTIV-G 2.5]**.)
20		Engine oil warning light	—	×	(See **ENGINE OIL WARNING LIGHT [SKYACTIV-G 2.0, SKYACTIV-G 2.5]**.)
21		Wrench warning indicator light	—	×	(See **WRENCH WARNING INDICATOR LIGHT [SKYACTIV-G 2.0, SKYACTIV-G 2.5]**.)
22		Air bag/front seat belt pretensioner system warning light	—	×	(See **AIR BAG SYSTEM WARNING LIGHT [TWO-STEP DEPLOYMENT CONTROL SYSTEM]**.) (See **AIR BAG SYSTEM WARNING LIGHT [STANDARD DEPLOYMENT CONTROL SYSTEM]**.)
23		Security indicator light	—	×	(See **SECURITY INDICATOR LIGHT**.)
24		Check engine light	—	×	(See **CHECK ENGINE LIGHT [SKYACTIV-G 2.0, SKYACTIV-G 2.5]**.)
25		Tire pressure monitoring system warning light	With TPMS	×	(See **TIRE PRESSURE MONITORING SYSTEM WARNING LIGHT**.)

Alarm operation function

- The instrument cluster sounds the alarm using the buzzer built into the instrument cluster to notify the user of the vehicle conditions.
- The alarm types are as follows: Refer to reference for details on each alarm.

Name	Reference
Lights-on reminder warning alarm	(See **LIGHTS-ON REMINDER WARNING ALARM**.)
Seat belt warning alarm	(See **SEAT BELT WARNING ALARM**.)
Air bag system warning alarm	(See **AIR BAG SYSTEM WARNING ALARM [TWO-STEP DEPLOYMENT CONTROL SYSTEM]**.) (See **AIR BAG SYSTEM WARNING ALARM [STANDARD DEPLOYMENT CONTROL SYSTEM]**.)
Keyless warning alarm	(See **KEYLESS WARNING ALARM**.)
Tire pressure monitoring sysstem warning alarm (with TPMS)	(See **TIRE PRESSURE MONITORING SYSTEM WARNING ALARM**.)
Panel light control indicator alarm	(See **PANEL LIGHT CONTROL INDICATOR ALARM**.)
Turn and hazard indicator alarm	(See **TURN AND HAZARD INDICATOR ALARM**.)
Smart city brake support (SCBS) warning alarm (with SCBS)	(See **SMART CITY BRAKE SUPPORT (SCBS)**.)
RCTA warning alarm (with BSM system)	(See **BLIND SPOT MONITORING (BSM) SYSTEM**.)
Blind spot monitoring (BSM) warning alarm (with BSM system)	(See **BLIND SPOT MONITORING (BSM) WARNING ALARM**.)
LDWS warning alarm (with lane departure warning system (LDWS))	(See **LDWS WARNING ALARM**.)
i-ELOOP warning alarm	(See **i-ELOOP WARNING ALARM [i-ELOOP]**.)
Power steering warning buzzer	(See **POWER STEERING WARNING BUZZER**.)
Over rev. warning alarm (Type C instrument cluster only)	(See **OVER REV. WARNING ALARM [SKYACTIV-G 2.0, SKYACTIV-G 2.5]**.)

- If several alarm request signals are received simultaneously, the alarms sound according to the order of precedence in the following table.

Ignition is switched off

Order or precedence	Name

1	Keyless warning alarm (pattern A)
2	Lights-on reminder warning alarm
3	Keyless warning alarm (pattern B, C)
4	Turn and hazard indicator alarm
5	Panel light control indicator alarm

Ignition switch ON (engine off or on)

Order or precedence	Name
1	Over rev. warning alarm (Type C instrument cluster only)
2	Seat belt warning alarm (Driver/passenger)
3	Tire pressure warning alarm (Tire pressure monitoring system initialization) (with TPMS)
4	Tire pressure warning alarm (Tire pressure monitoring system operating) (with TPMS)
5	Smart city brake support (SCBS) warning alarm (with SCBS)
6	RCTA warning alarm (with BSM system)
7	Blind spot monitoring (BSM) warning alarm (with BSM system)
8	LDWS warning alarm (with lane departure warning system (LDWS))
9	Keyless warning alarm
10	Air bag system warning alarm
11	i-ELOOP warning alarm
12	Power steering warning buzzer
13	Turn and hazard indicator alarm
14	Panel light control indicator alarm

Panel light control function

- The instrument cluster changes the panel light brightness according to the ignition switch being turned ON (engine off or on) or the TNS being illuminated. For details on the panel light, refer to PANEL LIGHT. (See **PANEL LIGHT**.)

Vehicle specification information transmission function

- The instrument cluster sends vehicle specification information stored during configuration to the following modules via CAN transmission.
    - PCM
    - TCM (ATX)
    - DSC HU/CM
    - EPS control module
    - SAS control module
    - Start stop unit
    - AFS control module (with AFS)
    - Laser sensor (with smart city brake support (SCBS))
    - Connectivity master unit (CMU)
    - Audio amplifier (with Bose®)
    - Rear body control module (RBCM)
    - Climate control unit (with full-auto A/C)
    - Blind spot monitoring (BSM) control module (with BSM system)

Battery discharge suppression function

NOTE:

- This function is established for suppressing battery discharge during vehicle manufacture and shipment, however, if a room fuse is removed from a vehicle while the total traveled distance is low, the function may operate when the vehicle is in the market.
- The battery discharge suppression is a function in which the instrument cluster sends a battery discharge suppression signal to the following units based on the room fuse condition and the total traveled distance, and suppresses battery discharge by restricting the operation of electric load for the following units.

Unit	Control description
Front body control module (FBCM)	Day time running light turns off 5 min after it is illuminated. (Only when engine stopped)
Start stop unit	Ignition is switched off 25 min after ignition is switched to ACC or ON (engine off) (For ATX, only when selector lever is in P position).

- The battery discharge suppression function operates when the total traveled distance is the threshold or less and the room fuse has been removed.
- When the battery discharge suppression function is operated, the instrument cluster displays F0-002, F0-HHH, F0-LLL in the odometer/tripmeter of the instrument cluster to indicate that the battery discharge suppression function is operating.
- The battery discharge suppression function is stopped under the following conditions.
    - Room fuse is installed
    - Engine is started
    - Total traveled distance exceeds the threshold value

Memory function

- The instrument cluster stores personalization setting information. The stored information is not cleared even if the battery power is disconnected.

NOTE:

- Because the personalization setting information stored in the instrument cluster cannot be written to a new instrument cluster, if the instrument cluster is replaced, the personalization setting information is at the initial setting. Therefore, before replacing the instrument cluster, verify the personalization setting information and reset the replaced instrument cluster with the information.

Structural View

TYPE A

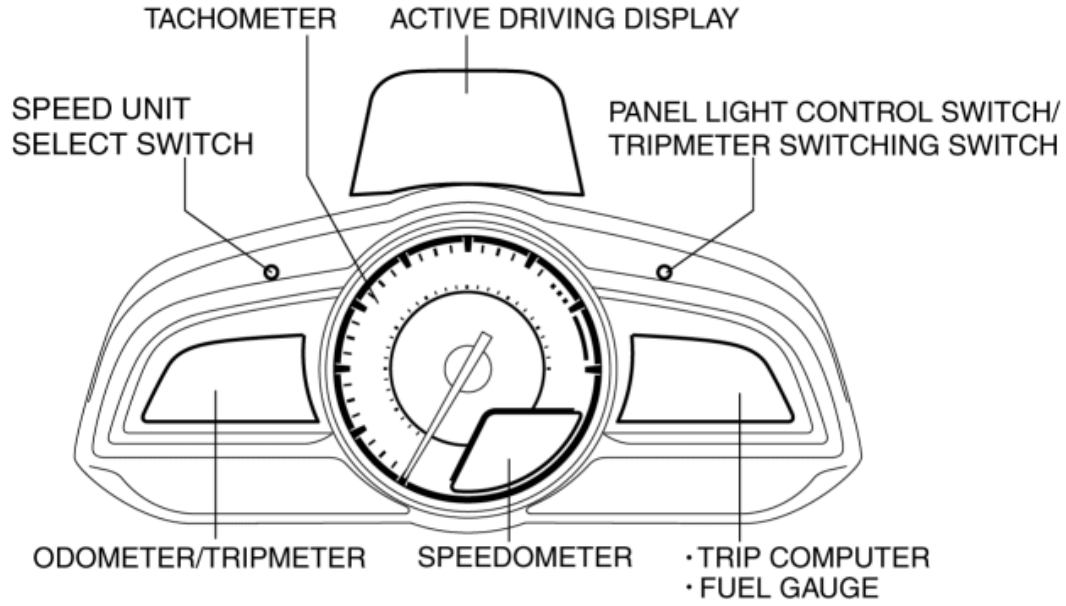

TYPE B

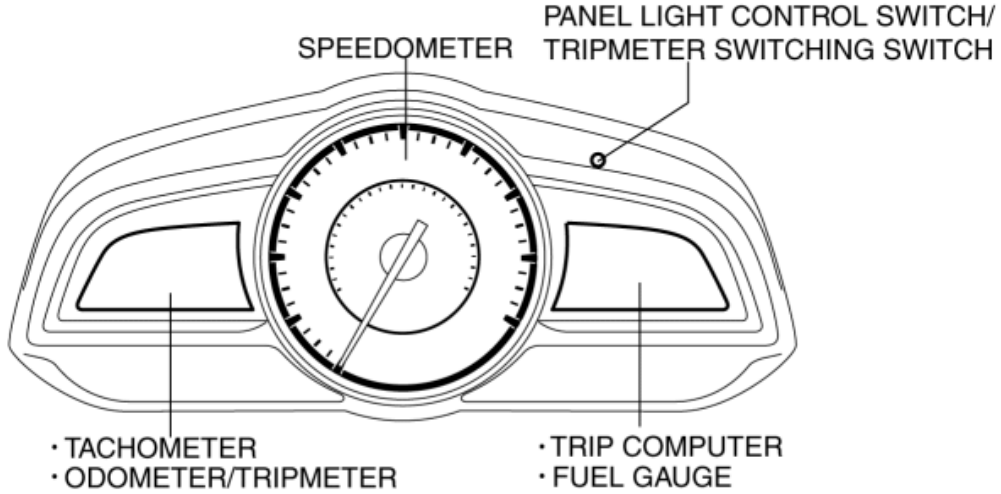

TYPE C

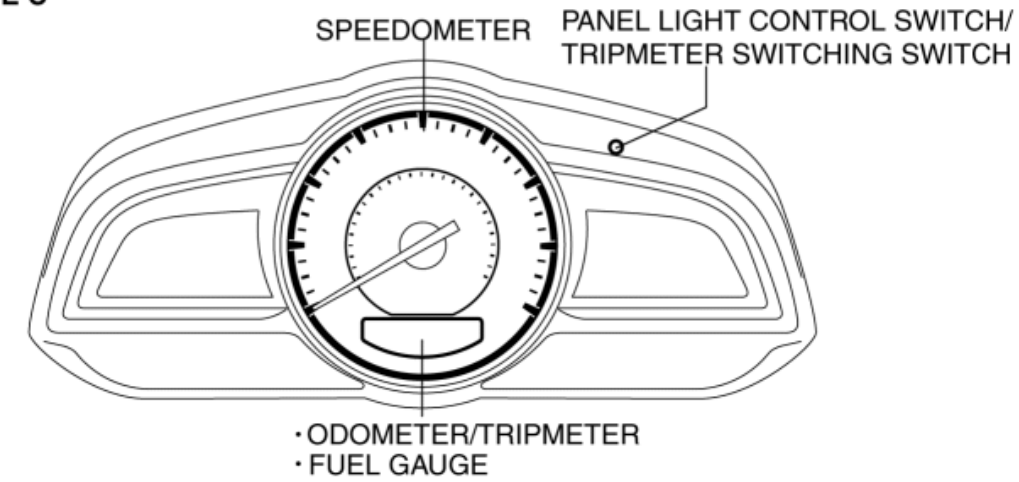

System Wiring Diagram

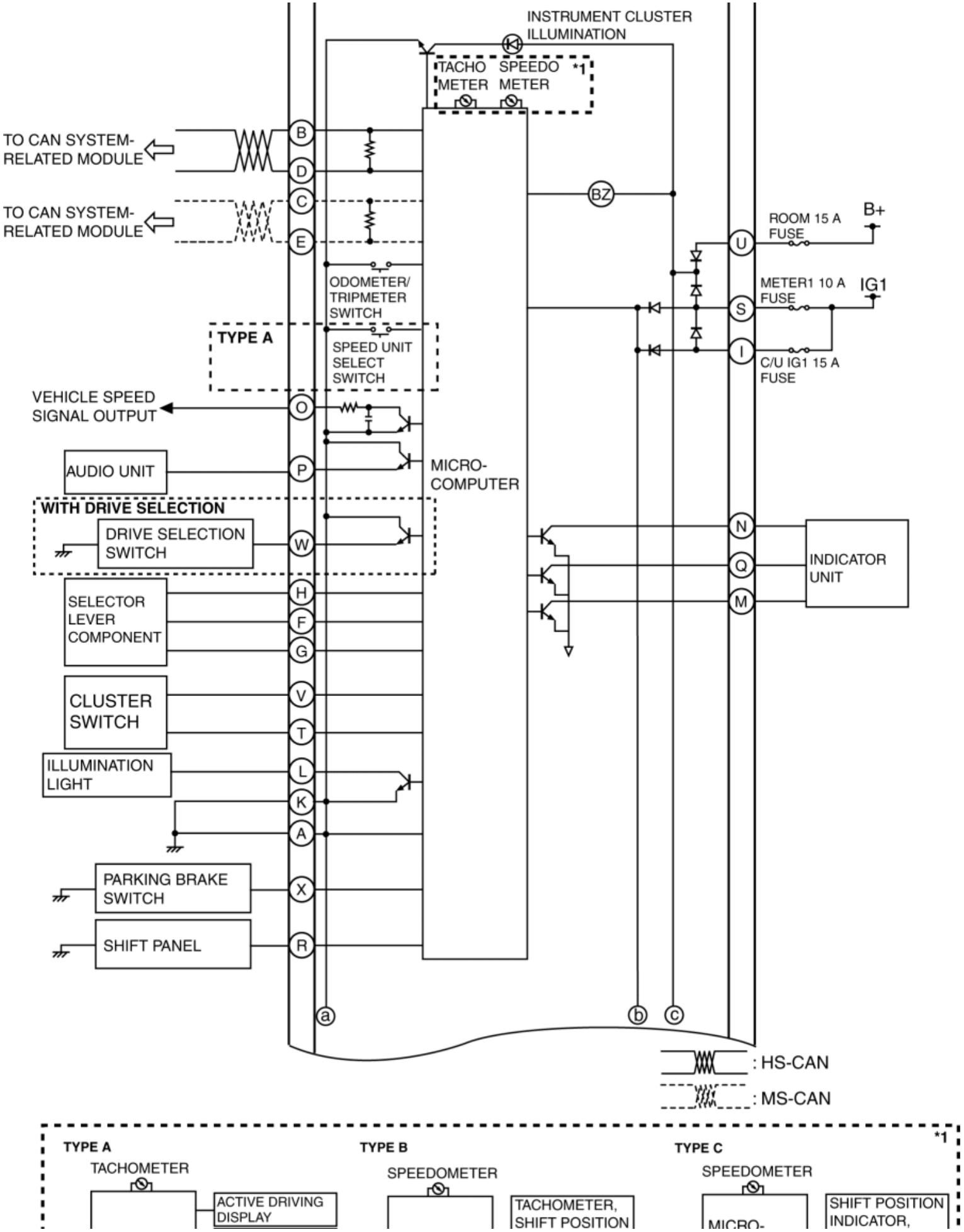
INSTRUMENT CLUSTER ILLUMINATION
TACHO METER
SPEEDO METER
*1
TO CAN SYSTEM-RELATED MODULE
TO CAN SYSTEM-RELATED MODULE
B
D
C
E
BZ
ROOM 15 A FUSE
B+
U
METER1 10 A FUSE
IG1
S
C/U IG1 15 A FUSE
I
ODOMETER/ TRIPMETER SWITCH
TYPE A
SPEED UNIT SELECT SWITCH
VEHICLE SPEED SIGNAL OUTPUT
O
AUDIO UNIT
P
MICRO-COMPUTER
WITH DRIVE SELECTION
DRIVE SELECTION SWITCH
W
N
Q
M
INDICATOR UNIT
SELECTOR LEVER COMPONENT
H
F
G
CLUSTER SWITCH
V
T
ILLUMINATION LIGHT
L
K
A
PARKING BRAKE SWITCH
X
SHIFT PANEL
R
a
b
c
: HS-CAN
: MS-CAN
TYPE A
TACHOMETER
ACTIVE DRIVING DISPLAY
TYPE B
SPEEDOMETER
TACHOMETER, SHIFT POSITION
TYPE C
SPEEDOMETER
SHIFT POSITION INDICATOR,
*1

INSTRUMENT CLUSTER

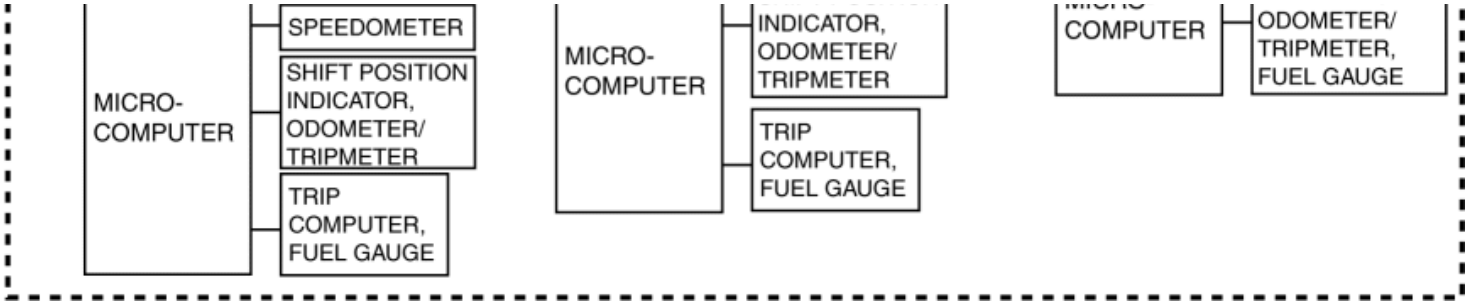

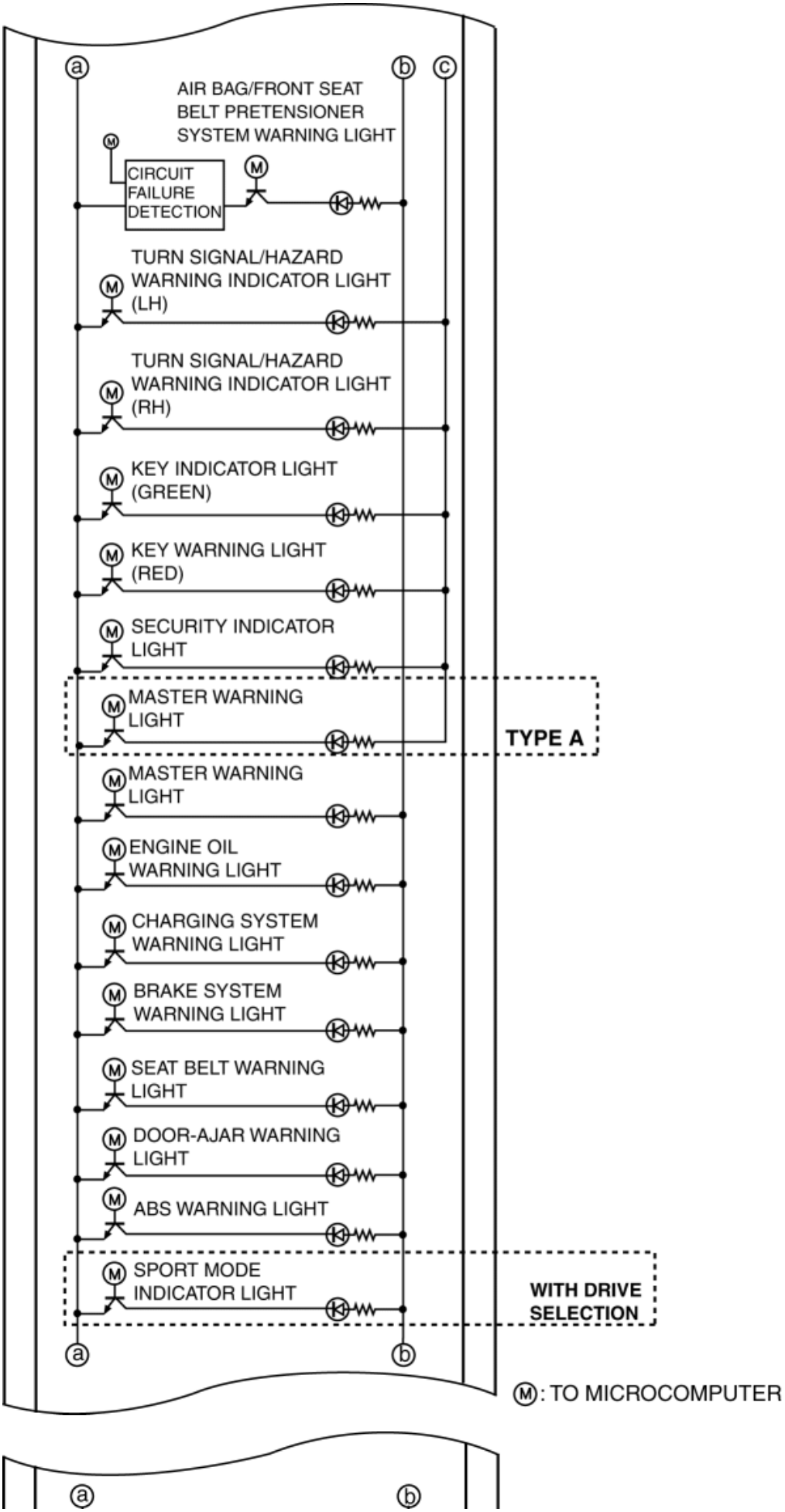
a
b
c
AIR BAG/FRONT SEAT BELT PRETENSIONER SYSTEM WARNING LIGHT
CIRCUIT FAILURE DETECTION
TURN SIGNAL/HAZARD WARNING INDICATOR LIGHT (LH)
TURN SIGNAL/HAZARD WARNING INDICATOR LIGHT (RH)
KEY INDICATOR LIGHT (GREEN)
KEY WARNING LIGHT (RED)
SECURITY INDICATOR LIGHT
MASTER WARNING LIGHT
TYPE A
MASTER WARNING LIGHT
ENGINE OIL WARNING LIGHT
CHARGING SYSTEM WARNING LIGHT
BRAKE SYSTEM WARNING LIGHT
SEAT BELT WARNING LIGHT
DOOR-AJAR WARNING LIGHT
ABS WARNING LIGHT
SPORT MODE INDICATOR LIGHT
WITH DRIVE SELECTION
a
b
M: TO MICROCOMPUTER

a
b

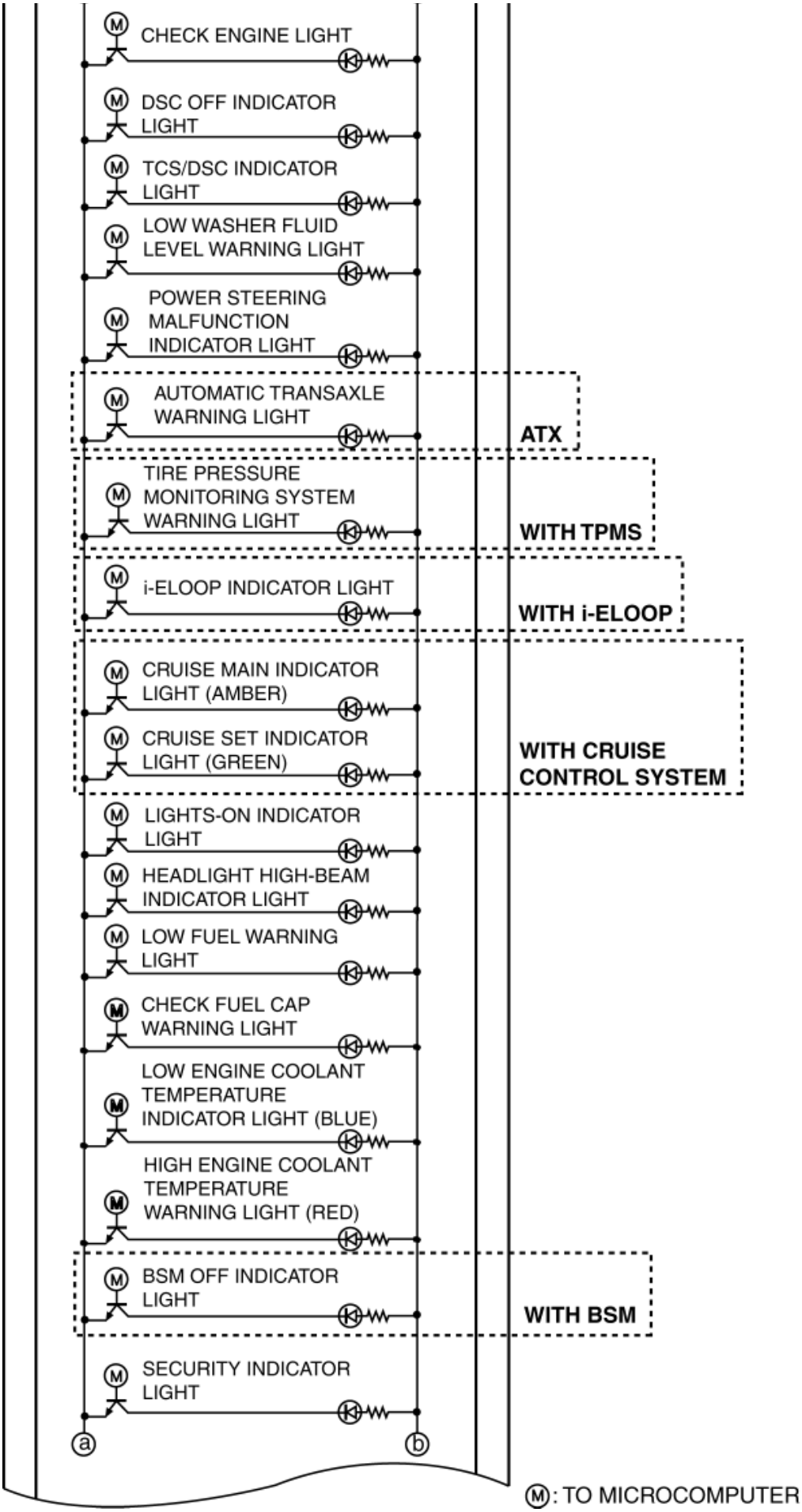
CHECK ENGINE LIGHT
DSC OFF INDICATOR LIGHT
TCS/DSC INDICATOR LIGHT
LOW WASHER FLUID LEVEL WARNING LIGHT
POWER STEERING MALFUNCTION INDICATOR LIGHT
AUTOMATIC TRANSAXLE WARNING LIGHT
ATX
TIRE PRESSURE MONITORING SYSTEM WARNING LIGHT
WITH TPMS
i-ELOOP INDICATOR LIGHT
WITH i-ELOOP
CRUISE MAIN INDICATOR LIGHT (AMBER)
CRUISE SET INDICATOR LIGHT (GREEN)
WITH CRUISE CONTROL SYSTEM
LIGHTS-ON INDICATOR LIGHT
HEADLIGHT HIGH-BEAM INDICATOR LIGHT
LOW FUEL WARNING LIGHT
CHECK FUEL CAP WARNING LIGHT
LOW ENGINE COOLANT TEMPERATURE INDICATOR LIGHT (BLUE)
HIGH ENGINE COOLANT TEMPERATURE WARNING LIGHT (RED)
BSM OFF INDICATOR LIGHT
WITH BSM
SECURITY INDICATOR LIGHT
a
b
M: TO MICROCOMPUTER

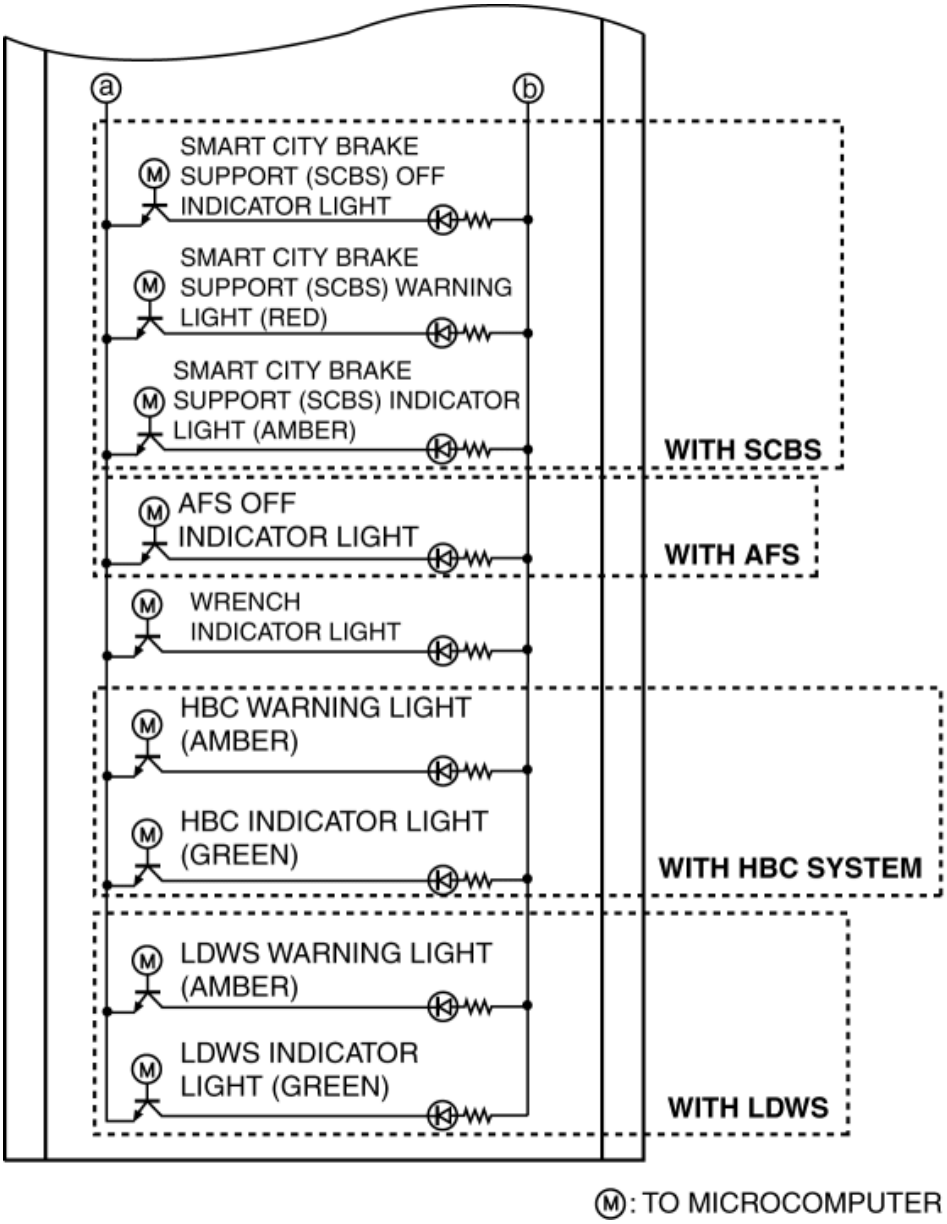

Fail-safe

Speedometer

- If the CAN signal cannot be received normally, the instrument cluster displays the 0 mark.

Tachometer

- If the CAN signal cannot be received normally, the instrument cluster displays the 0 mark.

Fuel gauge

- If the CAN signal cannot be received normally, the instrument cluster turns off one segment at regular time intervals since the segments calculated based on the signal last received are displayed.

Odometer/tripmeter

- If the instrument cluster detects a malfunction in the internal CPU, the instrument cluster displays the “— —“.

Warning lights

- If the CAN signal cannot be received normally, the instrument cluster turns the warning light on.

Indicator lights

- If the CAN signal cannot be received normally, the instrument cluster turns the indicator light off.

Alarm

- If the CAN signal cannot be received normally, the instrument cluster stops the alarm.

Panel light

- If the CAN signal cannot be received normally, the instrument cluster turns the panel light on.

Trip computer information system

- If the instrument cluster detects a malfunction in the internal CPU, the instrument cluster displays the “— —“.

Ambient temperature display

- If the CAN signal cannot be received normally, the instrument cluster displays the “— —“.

2014 - Mazda3 - Body and Accessories

LIGHTS-ON REMINDER WARNING ALARM

Purpose

- The lights-on reminder warning alarm notifies the driver that the TNS and headlights are not turned off.

Function

- The instrument cluster receives the following vehicle condition signals via the CAN signal from the start stop unit, rear body control module (RBCM) and front body control module (FBCM).
    - TNS switch ON signal from start stop unit (TNS and headlights illuminate)
    - Driver's front door latch switch ON signal from rear body control module (RBCM)
    - Auto light OFF system OFF signal from front body control module (FBCM)
- If the ignition is switched to OFF or ACC when all the above vehicle condition signals are received, the instrument cluster operates the lights-on reminder alarm.
- The lights-on reminder warning alarm sound pattern is as shown in the figure.

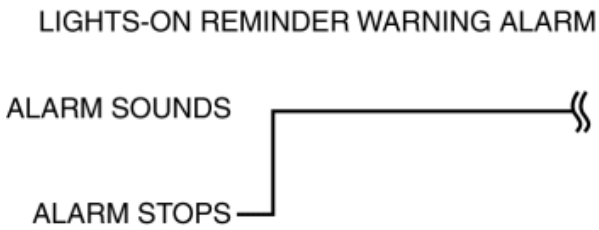

Construction

- The lights-on reminder warning alarm sounds using the buzzer built into the instrument cluster.

Operation

1. The instrument cluster receives (1) the TNS switch ON signal from the start stop unit, the driver’s front door latch switch ON signal from the rear body control module (RBCM), and the auto light OFF system OFF signal from the front body control module (FBCM).

2. When the ignition is switched to OFF or ACC while each signal is received, the instrument cluster turns on (2) the transistor.

3. When the transistor turns on, the ground circuit of the alarm is established and the alarm sounds (3).

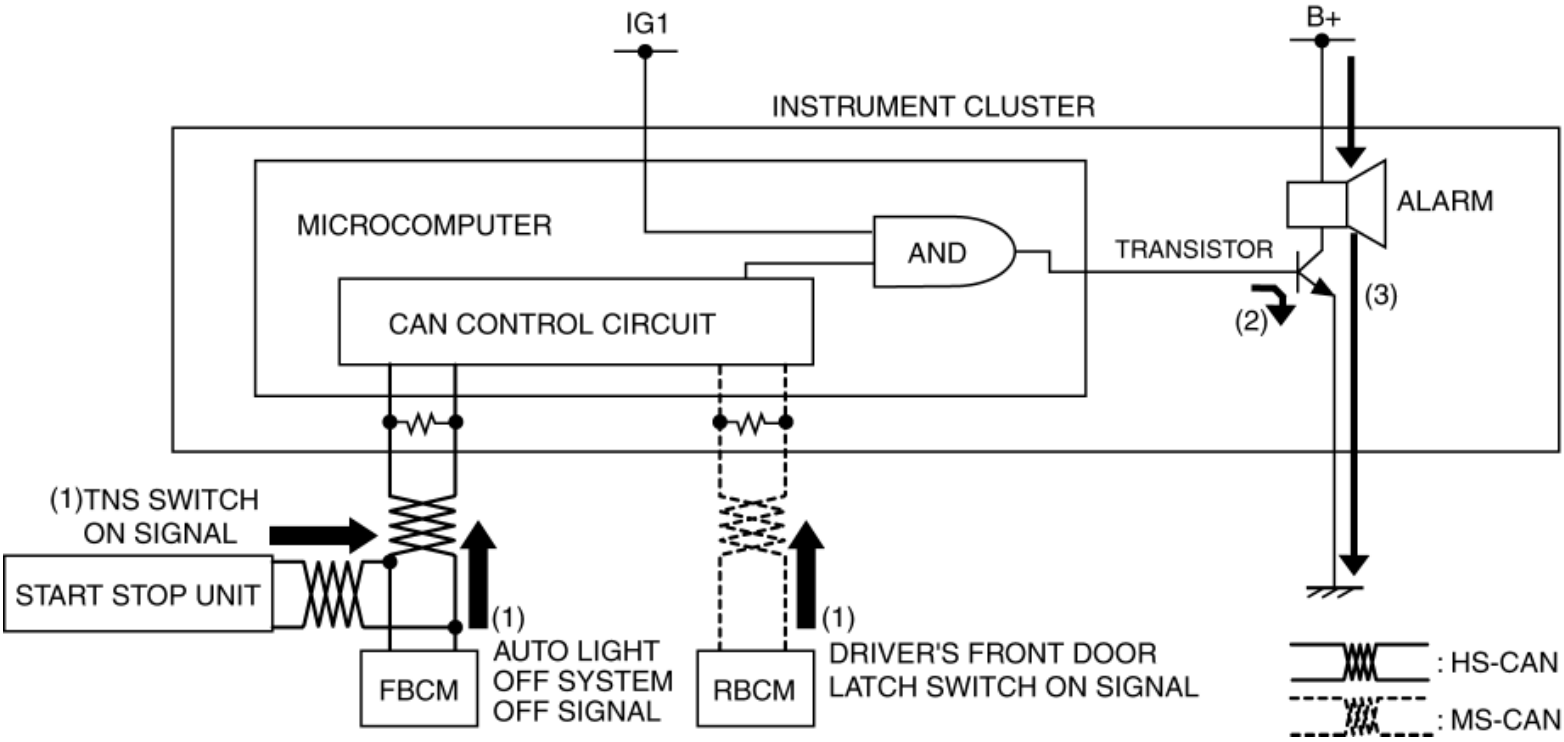

Fail-safe

- Function not equipped.

2014 - Mazda3 - Body and Accessories

SEAT BELT WARNING ALARM

Purpose

- The seat belt warning alarm warns occupants that a seat belt is not fastened.

Function

- The instrument cluster sounds the seat belt warning alarm based on the following CAN signals:
  - Vehicle speed signal sent from PCM
  - Driver/passenger buckle switch signal, occupancy sensor signal sent from SAS control module

Driver/passenger seat belt warning alarm sound function

- The driver/passenger seat belt warning alarm has a warning for when the vehicle is stopped, while the vehicle is being driven, and subsequent warnings while the vehicle is being driven.

Warning while vehicle is stopped

- When all of the following conditions have been met, the alarm sounds.
  - Ignition switch ON (engine off or on)
  - Driver/passenger buckle switch on signal (seat belt unfastened) is detected
  - Occupancy sensor on signal (occupant in passenger seat) is detected (passenger seat belt warning light only)
- The driver/passenger seat belt warning alarm sound pattern is as shown in the figure.

DRIVER/PASSENGER SEAT BELT WARNING ALARM

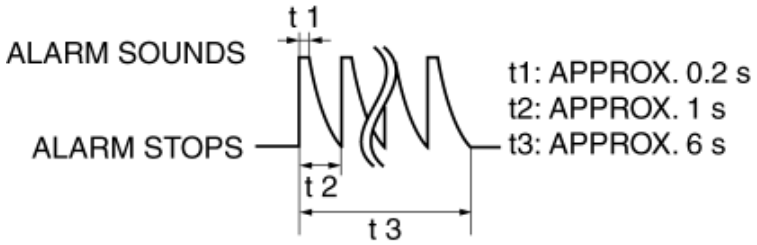

Warning while vehicle is being driven

- When all of the following conditions are met, the alarm sounds.
  - Vehicle speed is approx. 20 km/h {12 mph} or more
  - Driver/passenger buckle switch on signal (seat belt unfastened) is detected

- Occupancy sensor on signal (occupant in passenger seat) is detected (passenger seat belt warning light only)

- The driver/passenger seat belt warning alarm sound pattern is as shown in the figure.

DRIVER/PASSENGER SEAT BELT WARNING ALARM

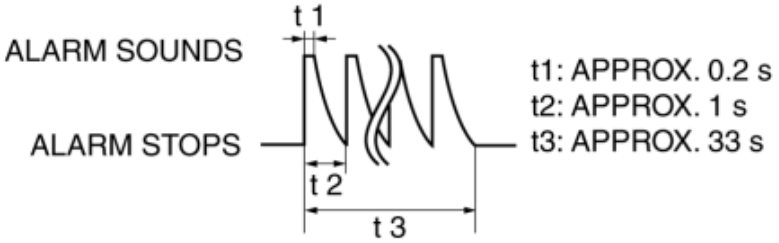

Subsequent warning

- When all of the following conditions are met, the alarm sounds.
  - Vehicle speed is approx. 20 km/h {12 mph} or more
  - Occupancy sensor on signal (occupant in passenger seat) is detected (passenger seat belt warning light only)
  - After initial warning operates, buckle switch off signal (seat belt fastened) to on signal (seat belt unfastened) is detected
- The driver/passenger seat belt warning alarm sound pattern is as shown in the figure.

DRIVER/PASSENGER SEAT BELT WARNING ALARM

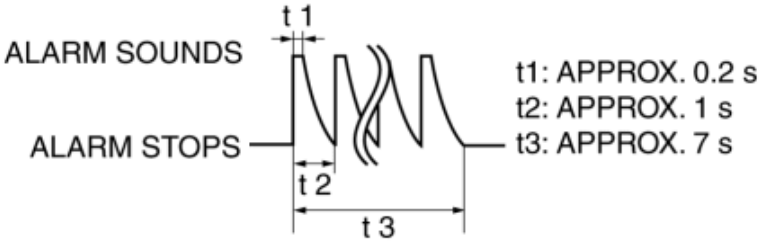

Construction

- The seat belt warning alarm sounds using the buzzer built into the instrument cluster.

Operation

1. The instrument cluster receives (1) the vehicle speed signal from the PCM, the driver/passenger buckle switch signal and occupancy sensor signal from the SAS control module when the ignition is switched ON (engine off or on).

2. The instrument cluster microcomputer turns the transistor on (2) based on each signal.

3. When the transistor turns on, a ground circuit with the alarm is established and the alarm sounds (3).

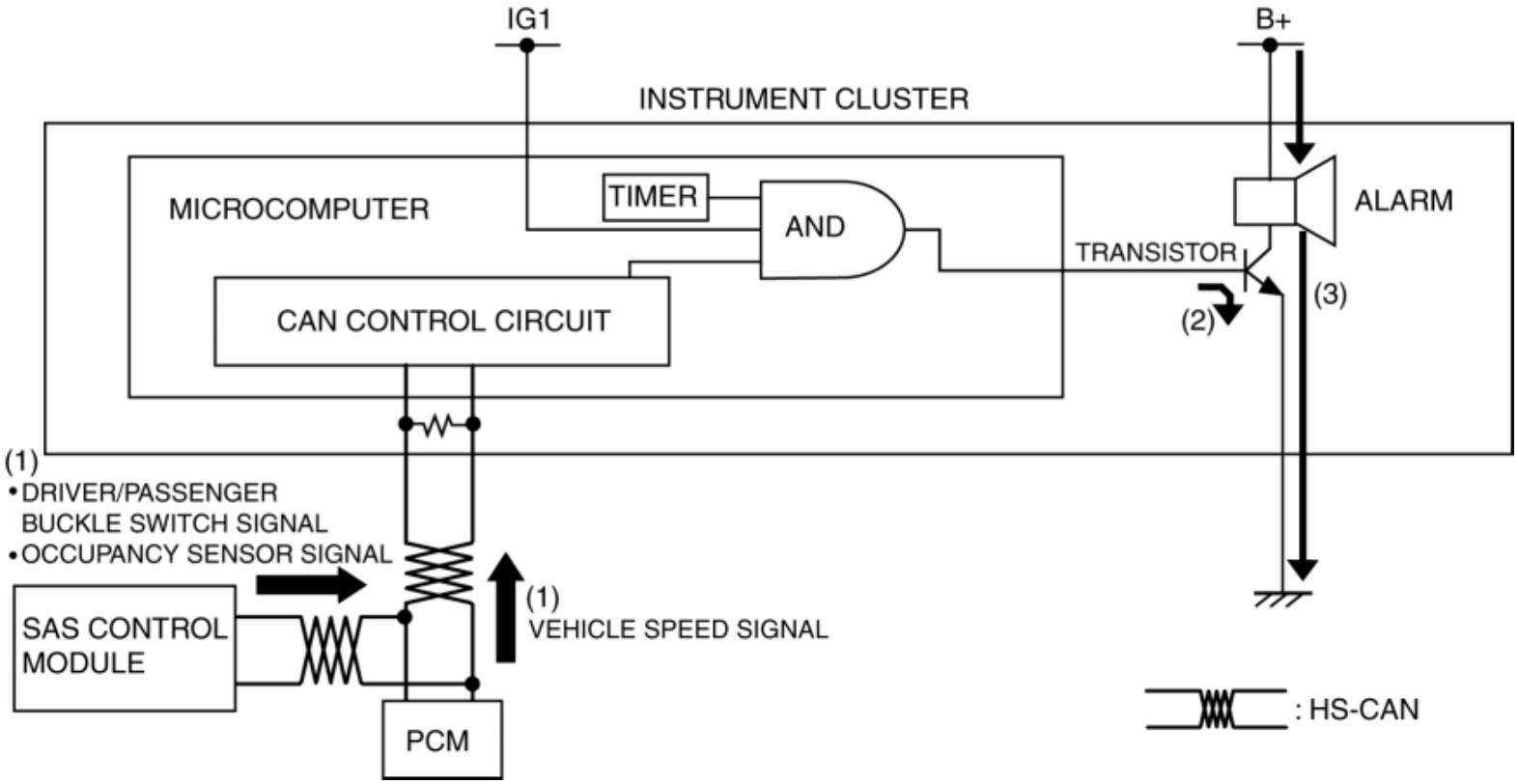

Fail-safe

- Function not equipped.

2014 - Mazda3 - Body and Accessories

PANEL LIGHT CONTROL INDICATOR ALARM

Purpose

- The panel light control indicator alarm notifies the driver that the panel light brightness is either at maximum or minimum.

Function

- If the panel light control switch is in the maximum rotation position right or left when the TNS switch ON signal (TNS and headlights illuminate) sent from the start stop unit via the CAN signal is received, the instrument cluster sounds the panel light control indicator alarm.
- The panel light control indicator alarm sound pattern is as shown in the figure.

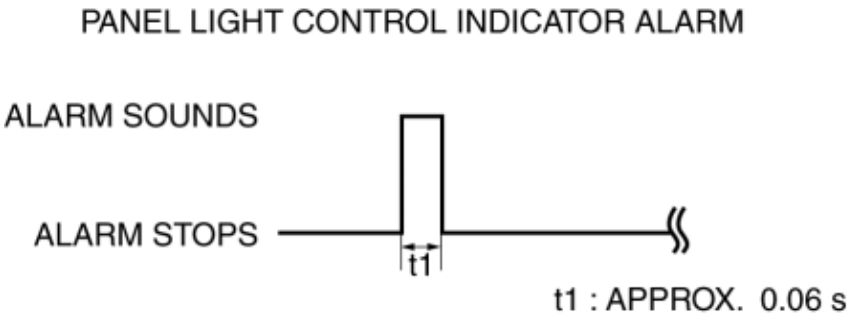

Construction

- The panel light control indicator alarm sounds using the buzzer built into the instrument cluster.

Operation

1. The instrument cluster receives (1) the TNS switch ON signal from the start stop unit.

2. If the maximum rotation position of the panel light control switch is detected (2) when the TNS switch ON signal is received, the instrument cluster microcomputer turns on (3) the transistor.

3. When the transistor turns on, a ground circuit with the alarm is established and the alarm sounds (4).

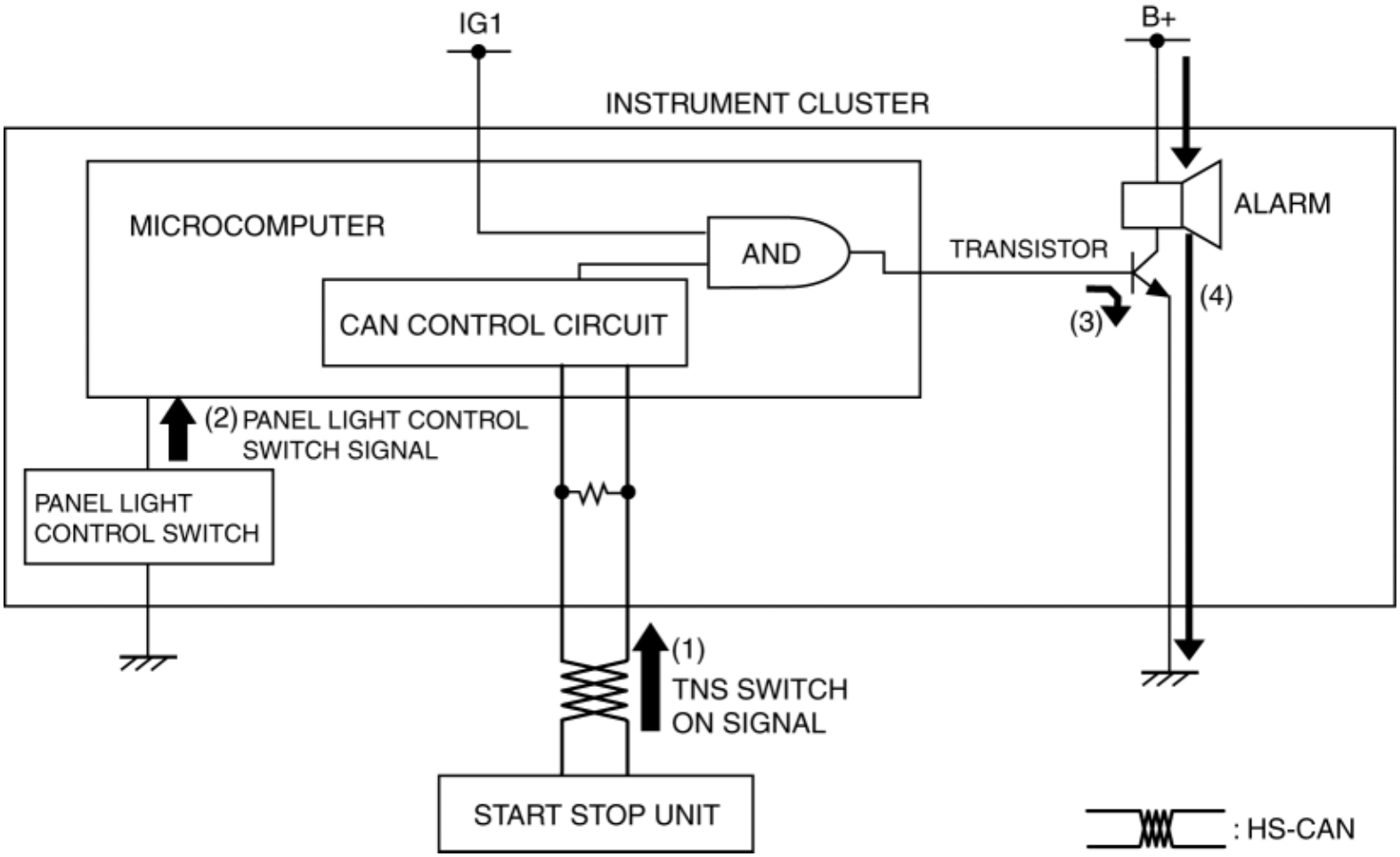

Fail-safe

- Function not equipped.

2014 - Mazda3 - Body and Accessories

TURN AND HAZARD INDICATOR ALARM

Purpose

- The turn and hazard indicator alarm notifies the driver that a turn light or the hazard warning lights are flashing.

Function

- When the instrument cluster receives the turn signal/hazard warning indicator light illumination request signal sent from the front body control module (FBCM) via the CAN signal, the turn and hazard indicator alarm sounds simultaneously with illumination on/off of the direction/hazard warning indicator lights.
- The turn and hazard indicator alarm sound pattern is as follows:

Sound frequency (Hz)	Alarm when turn signal/hazard warning indicator lights illumination off → on: 1,400 Alarm when turn signal/hazard warning indicator lights illumination on → off: 1,300
Sound frequency	Continuously
Wave pattern	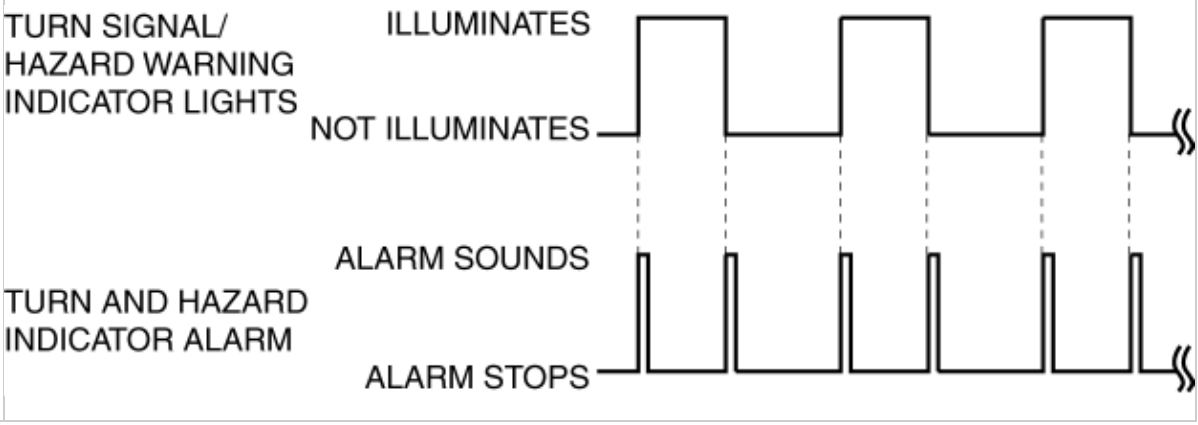

Construction

- The turn and hazard indicator alarm sounds using the buzzer built into the instrument cluster.

Construction, Operation

1. The instrument cluster receives (1) the turn signal/hazard warning indicator light request signal from the front body control module (FBCM).

2. The instrument cluster microcomputer turns the transistor on (2) based on the turn signal/hazard warning indicator light request signal.

3. When the transistor turns on, a ground circuit with the alarm is established and the alarm sounds (3).

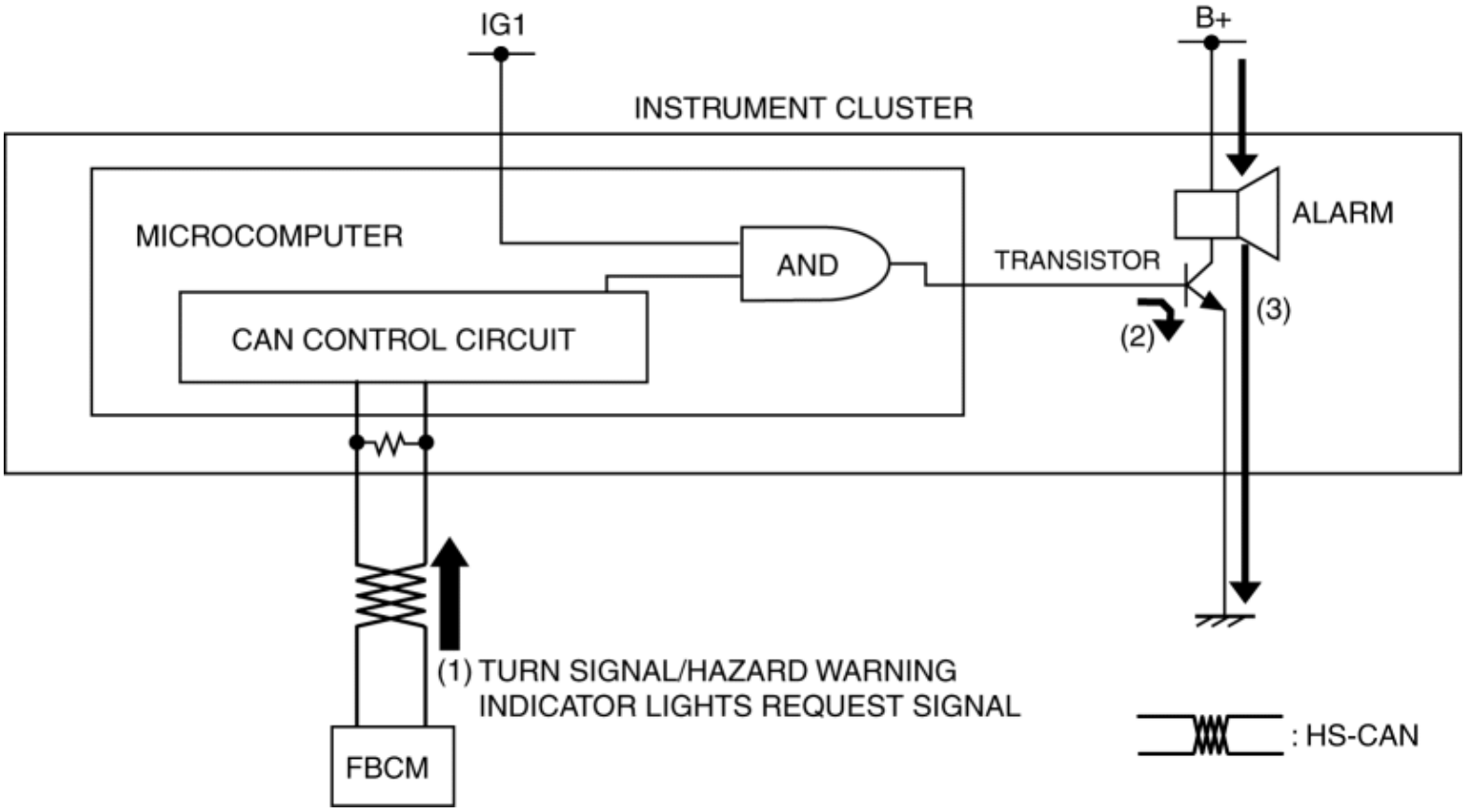

Fail-safe

- Function not equipped.

2014 - Mazda3 - Body and Accessories

LOW ENGINE COOLANT TEMPERATURE INDICATOR LIGHT (BLUE)/HIGH ENGINE COOLANT TEMPERATURE WARNING LIGHT (RED)

Purpose

Low engine coolant temperature indicator light (blue)

- The low engine coolant temperature indicator light (blue) notifies the driver that the engine coolant temperature is low and vaporization of the fuel is difficult.

High engine coolant temperature warning light (red)

- The high engine coolant temperature warning light (red) notifies the driver that the engine coolant temperature is high and that there is the danger of overheating.

Function

Low engine coolant temperature indicator light (blue)

- The low engine coolant temperature indicator light (blue) illuminates when the engine coolant temperature is low.
- The illumination condition of the low engine coolant temperature indicator light (blue) is as shown in the figure.

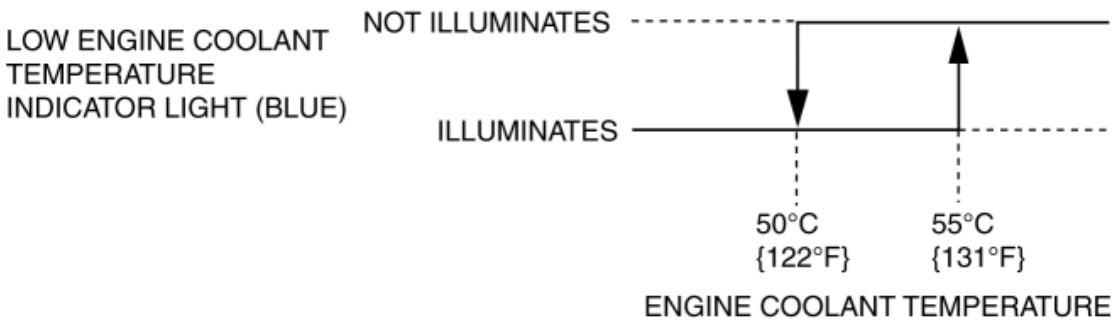

- For vehicles with center display, a warning message in the center display is displayed when the low engine coolant temperature indicator light (blue) is turned on. For the message content and verification method, refer to the CENTER DISPLAY. (See **CENTER DISPLAY [WITH CENTER DISPLAY]**.)

High engine coolant temperature warning light (red)

- The high engine coolant temperature warning light (red) flashes at 0.5 s intervals when the engine coolant temperature exceeds the set value, and illuminates if the temperature increases further.
- The flashing/illumination condition of the high engine coolant temperature warning light (red) is as shown in the figure.

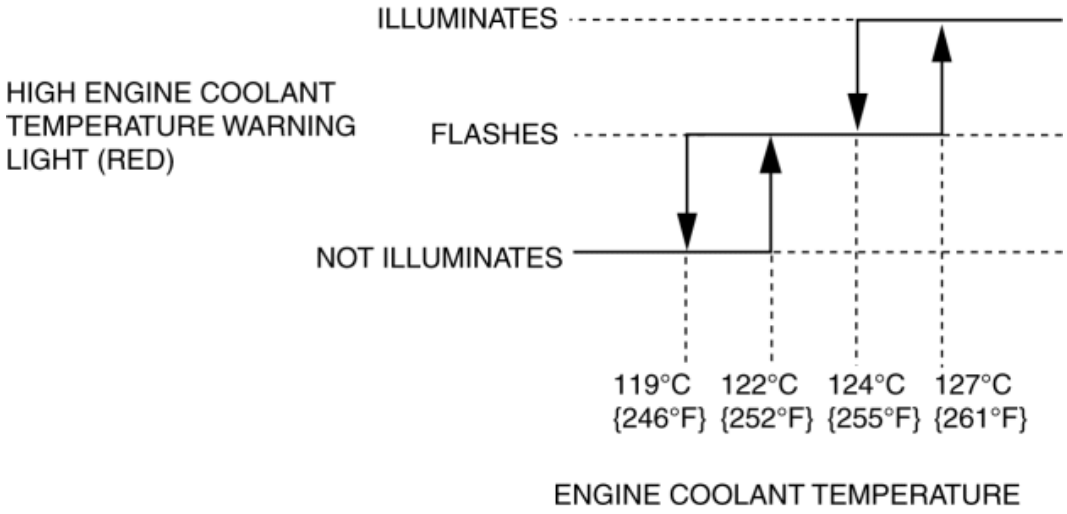

- For vehicles with center display, a warning message in the center display is displayed when the high engine coolant temperature warning light (red) is turned on or flashing. For the message content and verification method, refer to the CENTER DISPLAY. (See **CENTER DISPLAY [WITH CENTER DISPLAY]**.)

Construction

- Illumination, flashing, or turning off of the low engine coolant temperature indicator light (blue)/high engine coolant temperature warning light (red) is controlled by the instrument cluster microcomputer based on the engine coolant temperature signal from the PCM.
- The low engine coolant temperature indicator light (blue)/high engine coolant temperature warning light (red) is set in the instrument cluster.

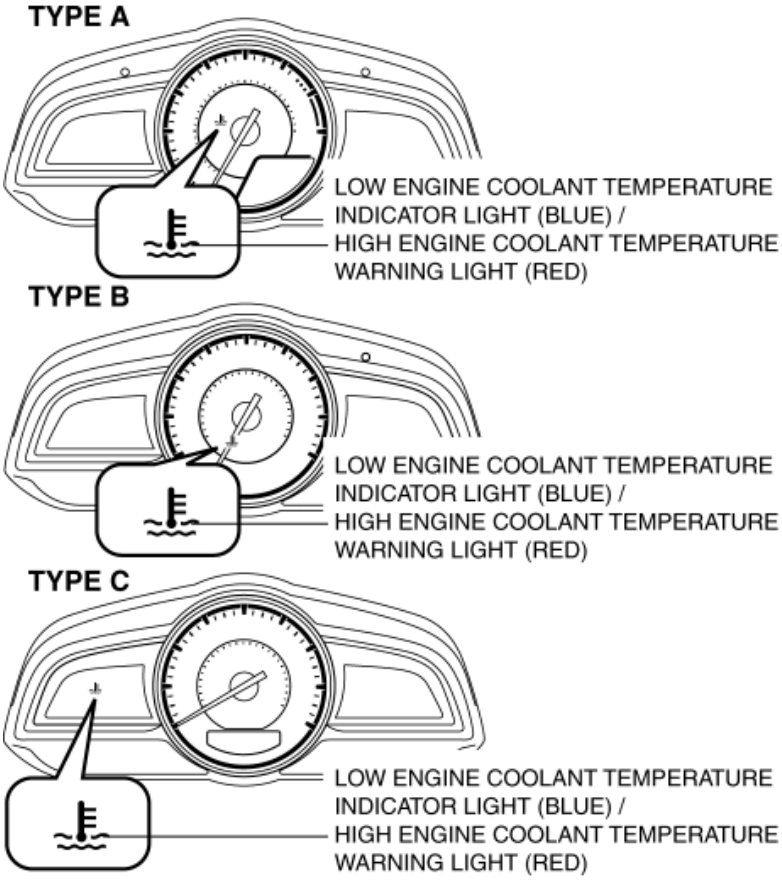

Operation

Low engine coolant temperature indicator light (blue)

1. When the ignition is switched ON (while engine is running), the instrument cluster receives (1) the engine coolant temperature signal from the PCM via the CAN signal.

2. The instrument cluster turns the transistor on (2) based on the engine coolant temperature signal.

3. When the transistor turns on, the ground circuit of the low engine coolant temperature indicator light (blue) is established and the low engine coolant temperature indicator light (blue) illuminates (3).

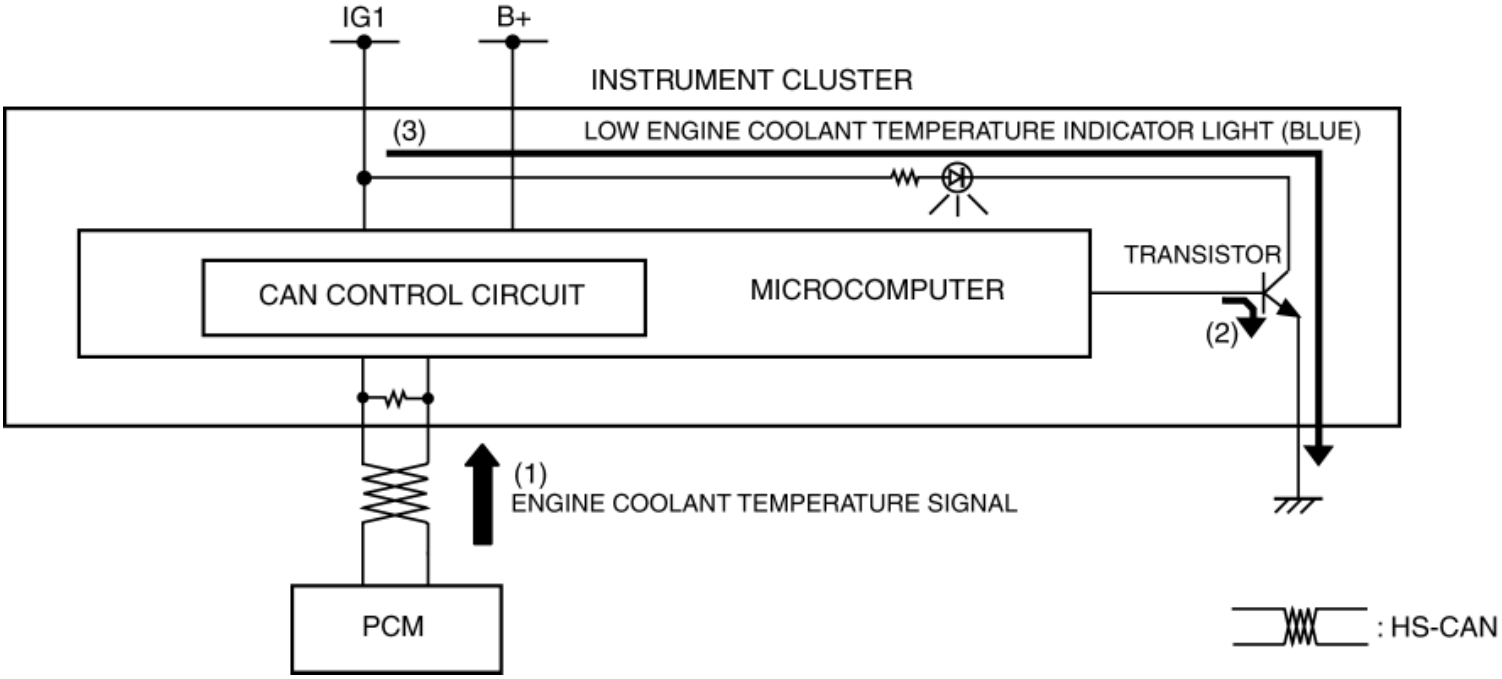

High engine coolant temperature warning light (red)

1. When the ignition is switched ON (while engine is running), the instrument cluster receives (1) the engine coolant temperature signal from the PCM via the CAN signal.

2. The instrument cluster turns the transistor on (2) intermittently for flashing and continuously for illumination based on the engine coolant temperature signal.

3. The high engine coolant temperature warning light (red) flashes (3) when the transistor is turned on intermittently, and it illuminates (3) when the transistor is turned on continuously.

LOW ENGINE COOLANT TEMPERATURE INDICATOR LIGHT (BLUE)/HIGH ENGINE COOLANT TEMPERATURE WARNING LIGHT (RED)

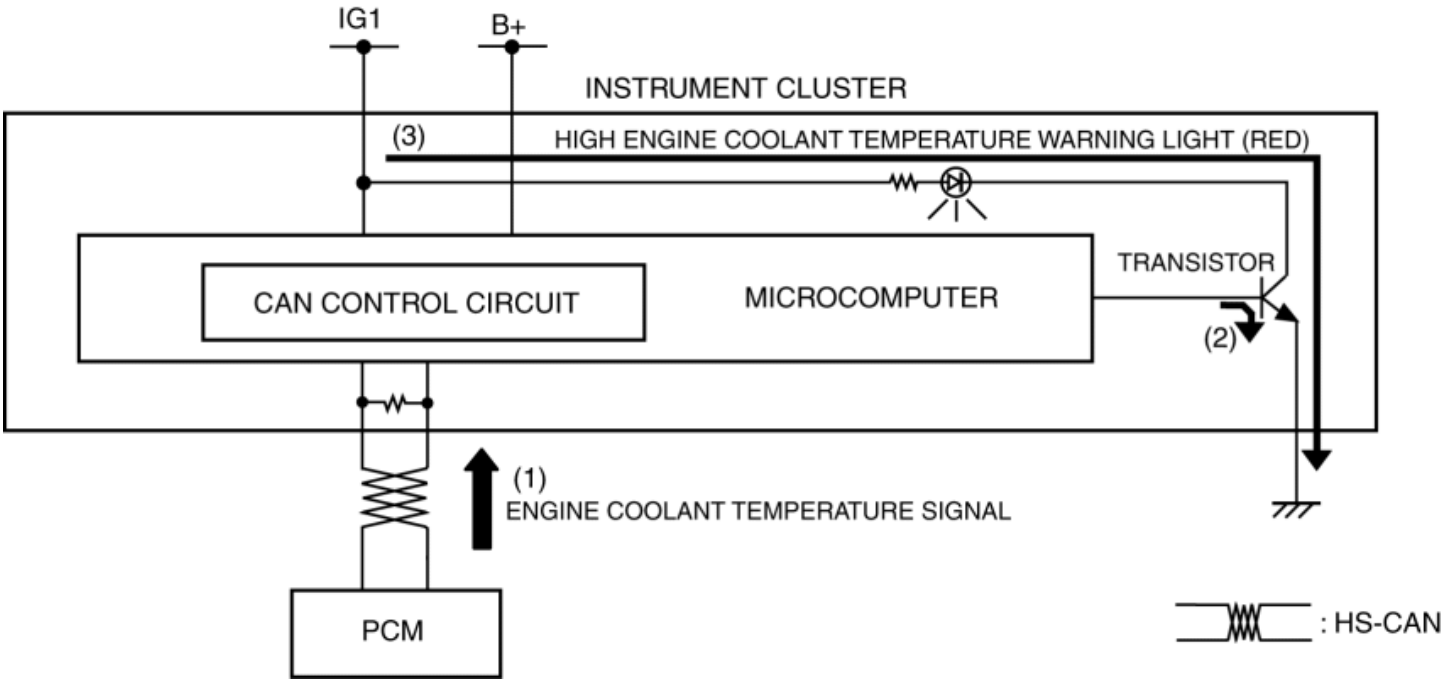

Fail-safe

- Function not equipped.

2014 - Mazda3 - Body and Accessories

DOOR-AJAR WARNING LIGHT

Purpose

- The door-ajar warning light notifies the driver that any door or the trunk lid (4SD)/liftgate (5HB) is open.

Function

- When the instrument cluster receives any of the following signals sent from the rear body control module (RBCM) via the CAN signal, the door-ajar warning light illuminates.
    - Door latch switch ON signal (door open)
    - Trunk lid latch switch ON signal (trunk lid open) (4SD)
    - Liftgate latch switch ON signal (liftgate open) (5HB)

Construction

- The instrument cluster controls illumination on/off of the door-ajar warning light using the instrument cluster microcomputer based on the door latch or trunk lid (4SD)/liftgate (5HB) latch position signal from the rear body control module (RBCM).
- The door-ajar warning light is set in the instrument cluster.

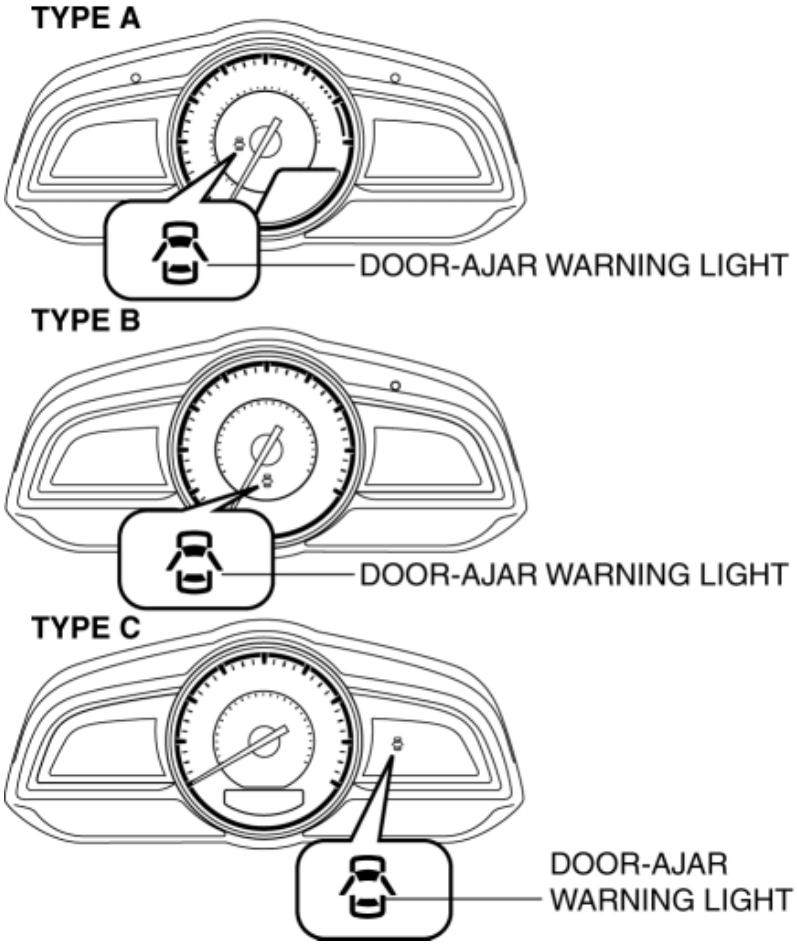

Operation

1. The instrument cluster receives (1) the door latch switch ON signal or trunk lid (4SD)/liftgate (5HB) latch switch ON signal from the rear body control module (RBCM).

2. The instrument cluster microcomputer turns the transistor on (2) based on each signal.

3. When the transistor turns on, a ground circuit with the door-ajar warning light is established and the door-ajar warning light illuminates (3).

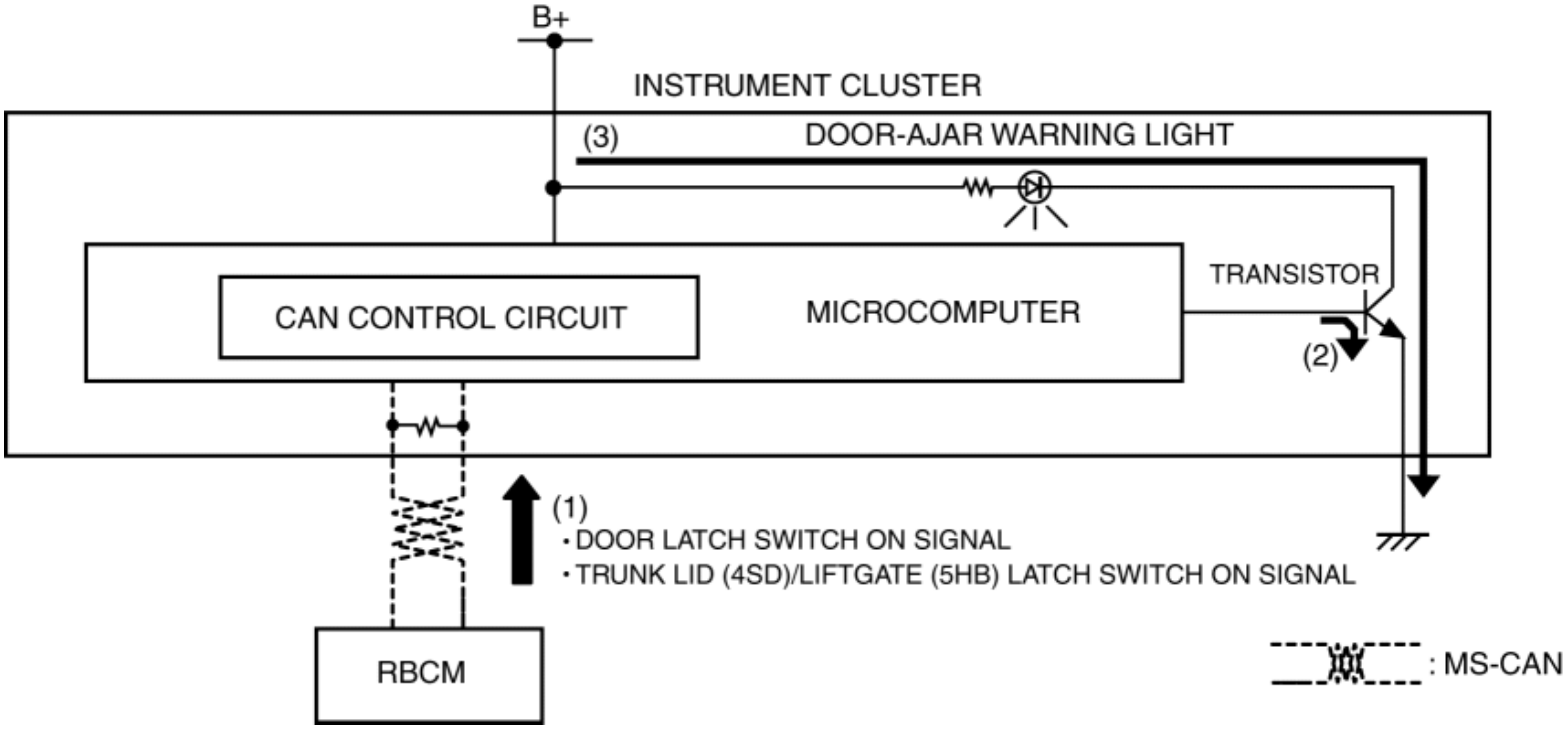

Fail-safe

- Function not equipped.

2014 - Mazda3 - Body and Accessories

SEAT BELT WARNING LIGHT

Purpose

- The seat belt warning light warns the driver that a seat belt is not fastened.

Function

- The instrument cluster flashes/illuminates the seat belt warning light based on the following CAN signals:
  - Vehicle speed signal sent from PCM
  - Driver/passenger buckle switch signal, occupancy detection sensor signal sent from SAS control module

Driver/passenger seat belt warning light display function

- The driver/passenger seat belt warning light has a warning for when the vehicle is stopped, while the vehicle is being driven, and subsequent warnings while the vehicle is being driven.

Warning when vehicle is stopped

- When all of the following conditions are met, it flashes/illuminates.
  - Ignition switch ON (engine off or on)
  - Driver/passenger buckle switch on signal (seat belt unfastened) is detected
  - Occupancy sensor on signal (occupant in passenger seat) is detected (passenger seat belt warning light only)
- The driver/passenger seat belt warning flash/illumination pattern is as shown in the figure.

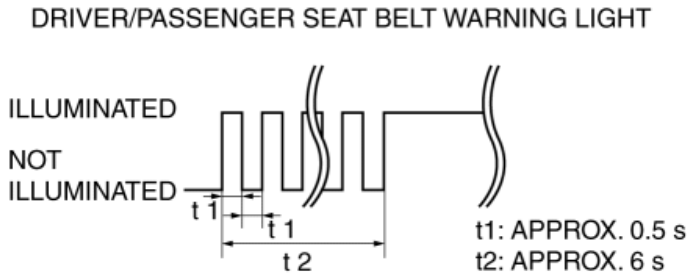

Warning while vehicle is driven

- When all of the following conditions are met, it flashes/illuminates
  - Vehicle speed is approx. 20 km/h {12 mph} or more
  - Driver/passenger buckle switch on signal (seat belt unfastened) is detected
  - Occupancy sensor on signal (occupant in passenger seat) is detected (passenger seat belt warning light only)
- The driver/passenger seat belt warning flash/illumination pattern is as shown in the figure.

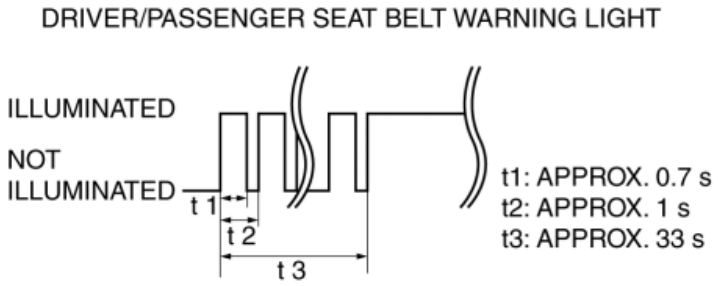

Subsequent warning while vehicle is driven

- When all of the following conditions are met, it flashes/illuminates
  - Vehicle speed is approx. 20 km/h {12 mph} or more
  - Occupancy sensor on signal (occupant in passenger seat) is detected (passenger seat belt warning light only)
  - After warning while vehicle is being driven operates, buckle switch off signal (seat belt fastened) to on signal (seat belt unfastened) is detected
- The driver/passenger seat belt warning flash/illumination pattern is as shown in the figure.

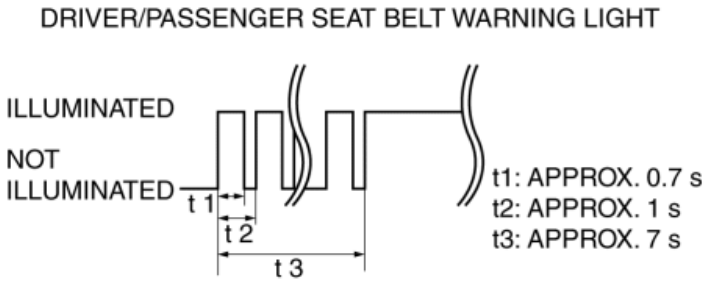

Construction

- The microcomputer in the instrument cluster controls the illumination/flashing/turning off of the seat belt warning light based on the driver/passenger buckle switch signal and occupancy sensor signal from the SAS control module, and the vehicle speed signal from the PCM.
- The driver seat belt warning light is set in the instrument cluster.

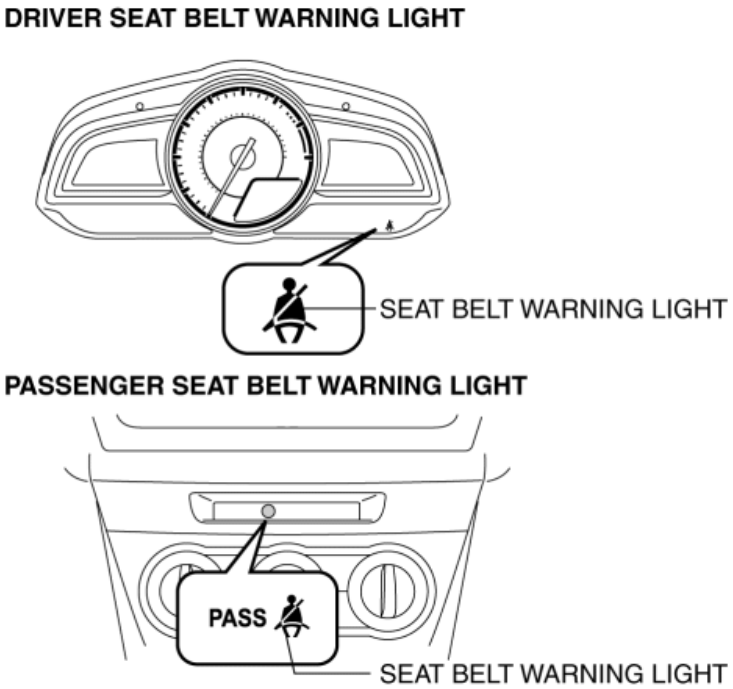

- The passenger seat belt warning light are set in the indicator unit. For details on the passenger seat belt warning light,

refer to INDICATOR UNIT. (See **INDICATOR UNIT**.)

Operation

1. The instrument cluster receives (1) a vehicle speed signal from the PCM, and a driver/passenger seat buckle switch signal and occupancy sensor signal from the SAS control module.

2. The instrument cluster microcomputer turns the transistor on (2) intermittently for flashing and continuously for illumination based on the each signal. In addition, it sends a passenger seat belt warning request signal to the indicator unit.

3. When the transistor turns on intermittently, the driver seat belt warning light flashes (3), when it turns on continuously, the driver seat belt warning light illuminates (3).

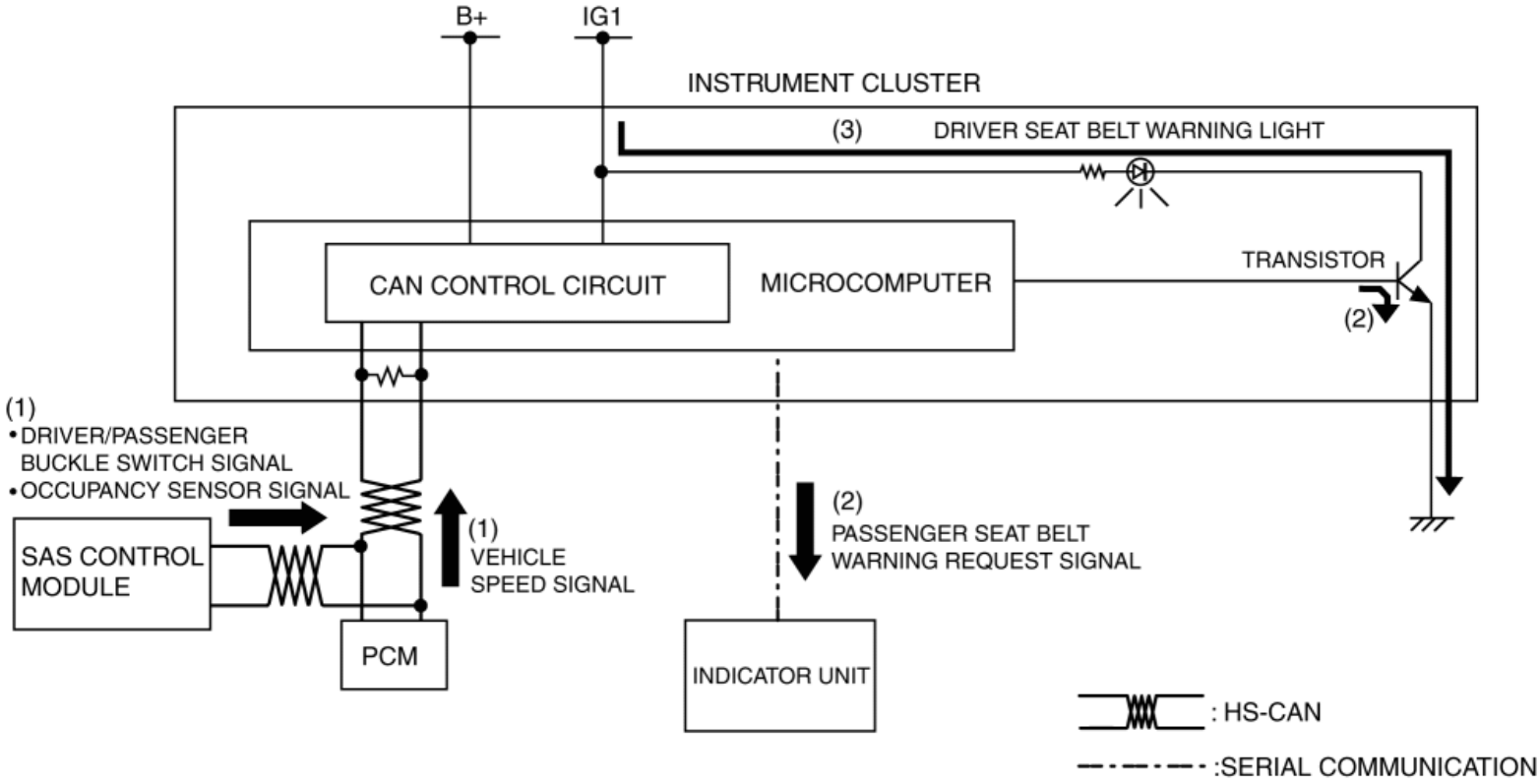

Fail-safe

- Function not equipped.

2014 - Mazda3 - Body and Accessories

LOW FUEL WARNING LIGHT

Purpose

- The low fuel warning light warns the driver that the remaining fuel level is low.

Function

- The instrument cluster calculates the fuel quantity based on the following CAN signals, and if a remaining fuel amount of approx. 9 L {2 US gal, 2 Imp gal} (fuel gauge displays remaining two segments) is detected, the low fuel warning light illuminates.
    - Fuel gauge sender unit voltage signal sent from rear body control module (RBCM)
    - Fuel injection amount signal, vehicle speed signal sent from PCM
- For vehicles with center display, a warning message in the center display is displayed when the low fuel warning light is turned on. For the message content and verification method, refer to the CENTER DISPLAY. (See **CENTER DISPLAY [WITH CENTER DISPLAY]**.)

Construction

- The instrument cluster microcomputer controls the low fuel warning light illumination on/off based on the remaining fuel amount calculation that is calculated by the instrument cluster.
- The low fuel warning light is set in the instrument cluster.

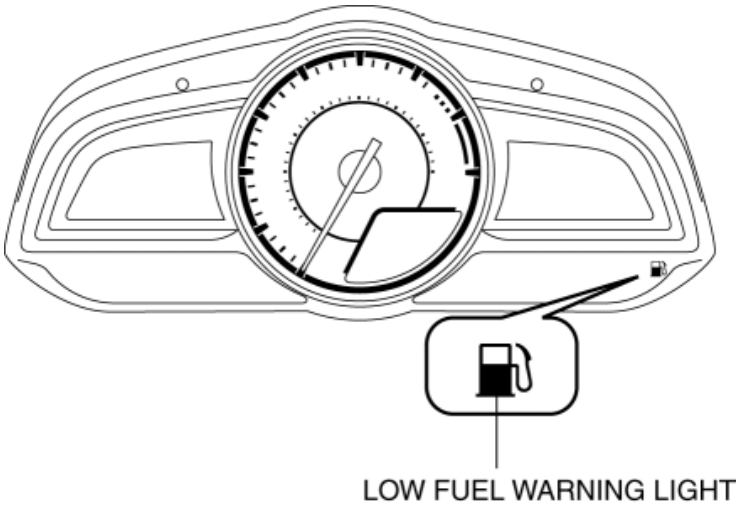

Operation

- When the ignition is switched ON (engine off or on) the instrument cluster receives (1) the fuel gauge sender unit voltage signal from the rear body control module (RBCM), and the fuel injection amount signal from the PCM.
- The instrument cluster turns the transistor on (2) if the calculated remaining fuel amount based on each signal is approx. 9 L {2 US gal, 2 Imp gal}.

- When the transistor turns on, a ground circuit with the low fuel warning light is established and the low fuel warning light illuminates (3).

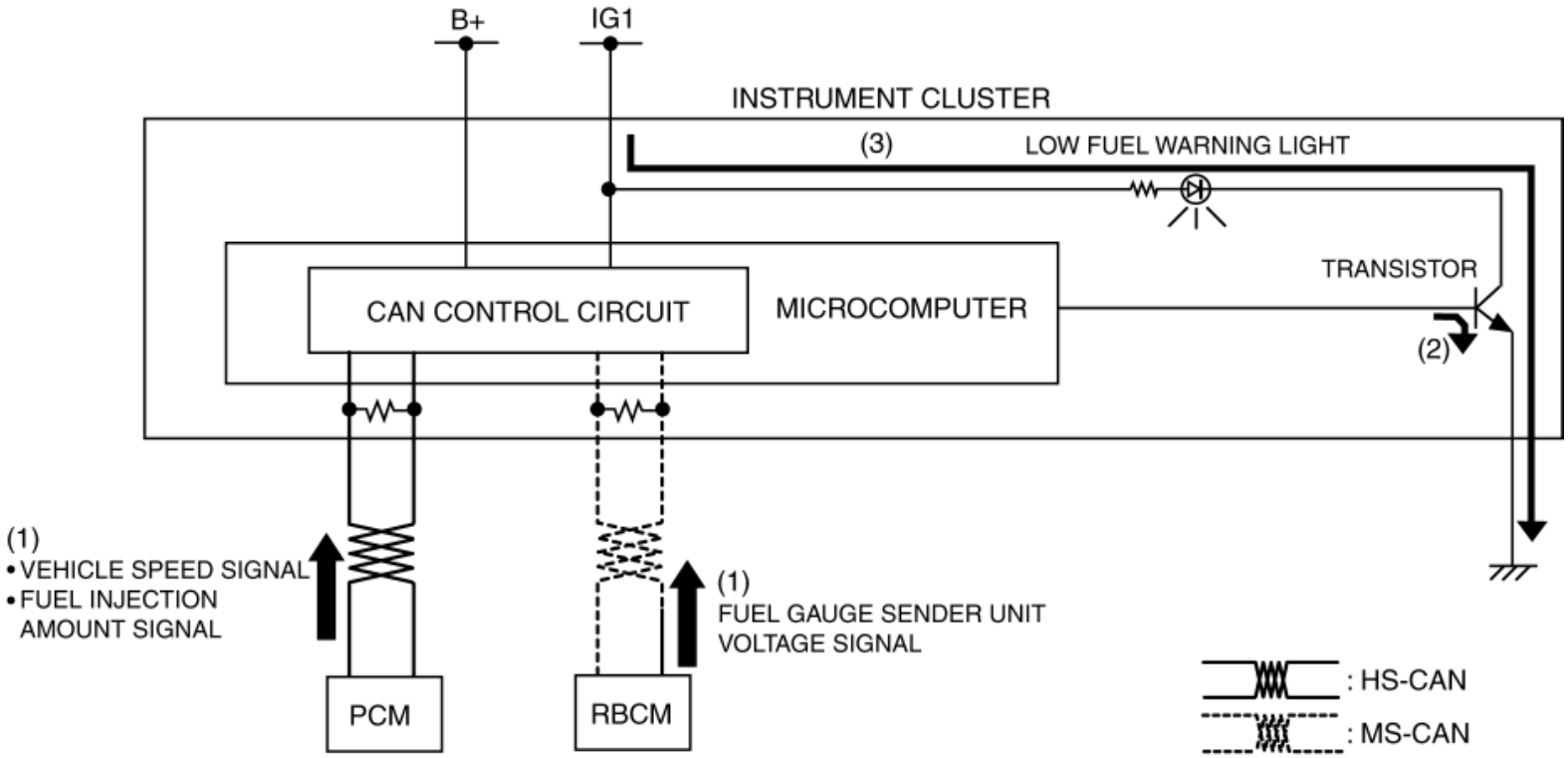

Fail-safe

- Function not equipped.

2014 - Mazda3 - Body and Accessories

MASTER WARNING LIGHT

Purpose

With center display

- The master warning light warns the driver that the instrument cluster has received a message from a related unit.

Without center display

- The master warning light warns the driver that any of the following malfunctions is occurring.
  - Brake switch malfunction
  - Engine oil solenoid valve malfunction
  - Global central configuration malfunction
  - Active air shutter system malfunction (with active air shutter system)
  - i-ELOOP system malfunction (with i-ELOOP system)

Function

With center display

- When the instrument cluster receives a message request signal from the related unit, the master warning light illuminates.
- The master warning light is turned on and the displayed messages in the center display are as follows:

NOTE:

- For the warning screen display method, refer to the CENTER DISPLAY. (See **CENTER DISPLAY [WITH CENTER DISPLAY]**.)

×: Applicable—: Not applicable

Center display		Related unit	Reference/function
List title	messages		
i-ELOOP System Malfunction	i-ELOOP system malfunction. Have the vehicle checked by a dealer if this indicator stays on.	PCM	(See **i-ELOOP [i-ELOOP]**.)

Battery Management System Malfunction	Battery management system malfunction. Have the vehicle checked by a dealer.	PCM	(See **CHARGING SYSTEM WARNING LIGHT [SKYACTIV-G 2.0, SKYACTIV-G 2.5]**.) (See **i-ELOOP [i-ELOOP]**.)
Brake Override System Malfunction	Brake switch malfunction. Have the vehicle checked by a dealer immediately.	PCM	(See **DRIVE-BY-WIRE CONTROL [SKYACTIV-G 2.0, SKYACTIV-G 2.5]**.)
SCBS Malfunction	Smart city brake support (SCBS) malfunction. Have the vehicle checked by a dealer immediately.	Laser sensor	(See **SMART CITY BRAKE SUPPORT (SCBS)**.)
	Smart city brake support (SCBS) malfunction.Clean the front windshield. Have the vehicle checked by a dealer if this indicator stays on.	Laser sensor	
SCBS Unavailable	Smart city brake support (SCBS) currently unavailable.	Laser sensor	
HBC/LDWS Camera Malfunction	High beam control (HBC)/Lane departure warning system (LDWS) malfunction.Clean the windshield. Have the vehicle checked by a dealer if this indicator stays on.	Forward sensing camera (FSC)	(See **HIGH BEAM CONTROL (HBC) SYSTEM**.) (See **LANE DEPARTURE WARNING SYSTEM (LDWS)**.)
HBC/LDWS System Malfunction	High beam control (HBC)/Lane departure warning system (LDWS) malfunction. Have the vehicle checked by a dealer if this indicator stays on.	FSC	
	High beam control (HBC)/Lane departure warning system (LDWS) malfunction.Defrost the windshield. Have the vehicle checked by a dealer if this indicator stays on.	FSC	
Vehicle System Malfunction	Vehicle system malfunction. Have the vehicle checked by a dealer.	PCM (Global central configuration error or active air shutter system malfunction)	(See **ON-BOARD DIAGNOSTIC SYSTEM TEST MODE [SKYACTIV-G 2.0, SKYACTIV-G 2.5]**.) (See **ACTIVE AIR SHUTTER CONTROL**.)

- If the cancel procedure for preventing unnecessary operation of the brake override system is implemented, the PCM sends a master warning light flash request signal to the instrument cluster as a CAN signal. The instrument cluster flashes the master warning light based on the master warning light flash request signal sent from the PCM. For the cancel procedure to prevent unnecessary operation of the brake override system, refer to the DRIVE-BY-WIRE CONTROL. (See **DRIVE-BY-WIRE CONTROL [SKYACTIV-G 2.0, SKYACTIV-G 2.5]**.)
- The master warning light flashing pattern is as indicated in the figure.

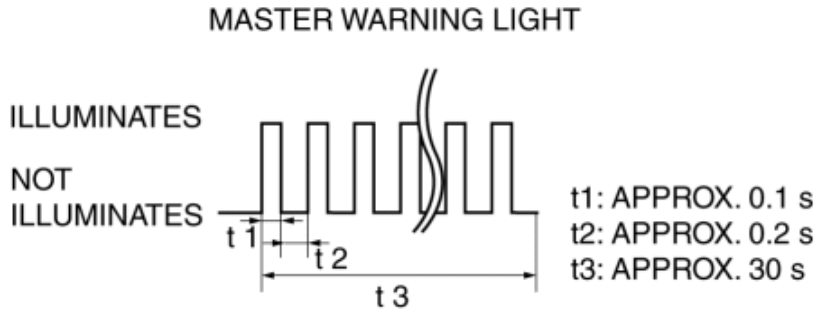

Without center display

- The instrument cluster illuminates the master warning light based on the following CAN signals:
    - Brake switch No.1 error signal, brake switch No.2 error signal, engine oil solenoid valve error signal, current sensor error signal, power supply system error signal, global central configuration error signal, active air shutter error signal (with active air shutter system), and i-ELOOP system error signal (with i-ELOOP system) sent from the PCM

NOTE:

- There are warning lights which are illuminated/flashed simultaneously when the master warning light is illuminated. For the warning lights which are illuminated/flashed simultaneously when the master warning light is illuminated, refer to the ON-BOARD DIAGNOSTIC SYSTEM TEST MODE. (See **ON-BOARD DIAGNOSTIC SYSTEM TEST MODE [SKYACTIV-G 2.0, SKYACTIV-G 2.5]**.)
- If the cancel procedure for preventing unnecessary operation of the brake override system is implemented, the PCM sends a master warning light flash request signal to the instrument cluster as a CAN signal. The instrument cluster flashes the master warning light based on the master warning light flash request signal sent from the PCM. For the cancel procedure to prevent unnecessary operation of the brake override system, refer to the DRIVE-BY-WIRE CONTROL. (See **DRIVE-BY-WIRE CONTROL [SKYACTIV-G 2.0, SKYACTIV-G 2.5]**.)
- The master warning light flashing pattern is as indicated in the figure.

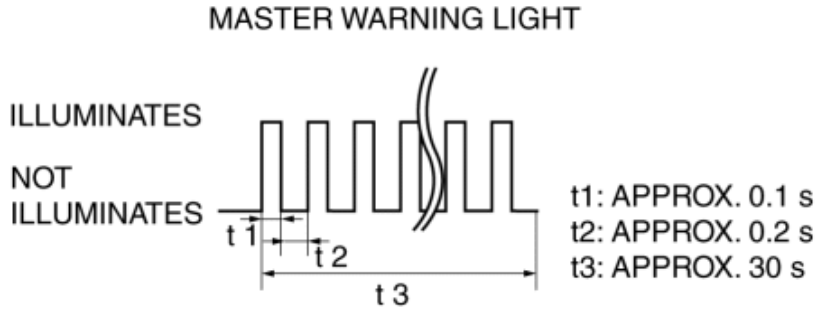

Construction

- The instrument cluster microcomputer controls the illumination/flashing/turning off of the master warning light based on each error signal sent from the PCM or a message request signal (with center display) from the related system.
- The master warning light is set in the instrument cluster.

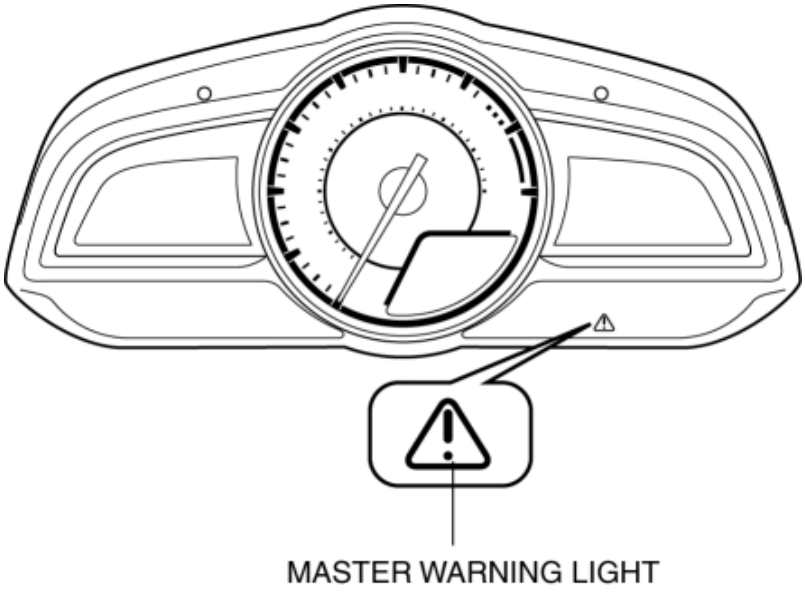

Operation

- When the ignition is switched ON (engine off or on), the instrument cluster receives (1) each error signal or a master warning light flash request signal from the PCM, or a message request signal (with center display) from the related unit.
- The instrument cluster turns the transistor on (2) intermittently for flashing and continuously for illumination based on each signal.
- The master warning light flashes (3) when the transistor is turned on intermittently, and it illuminates (3) when the transistor is turned on continuously.

With center display

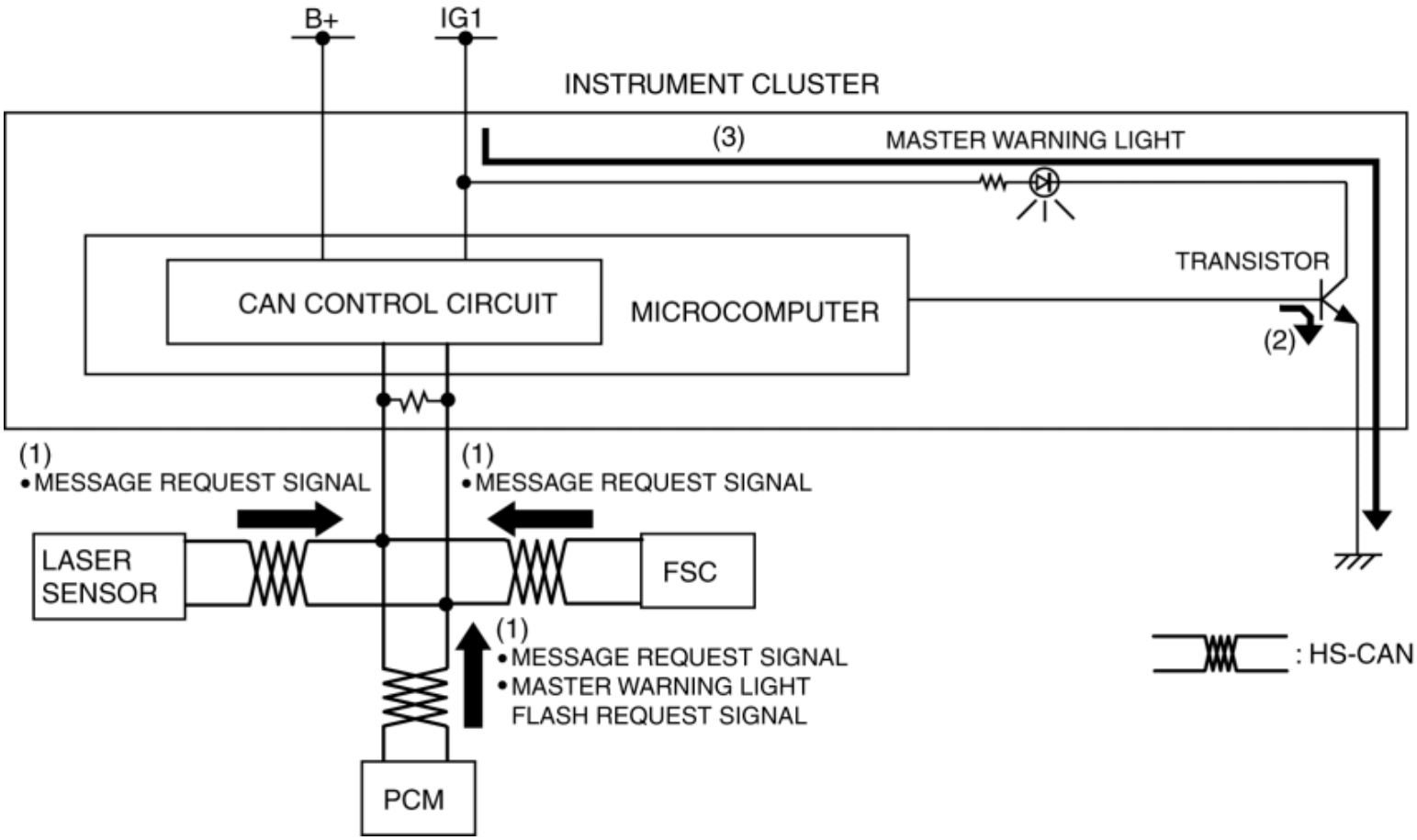

Without center display

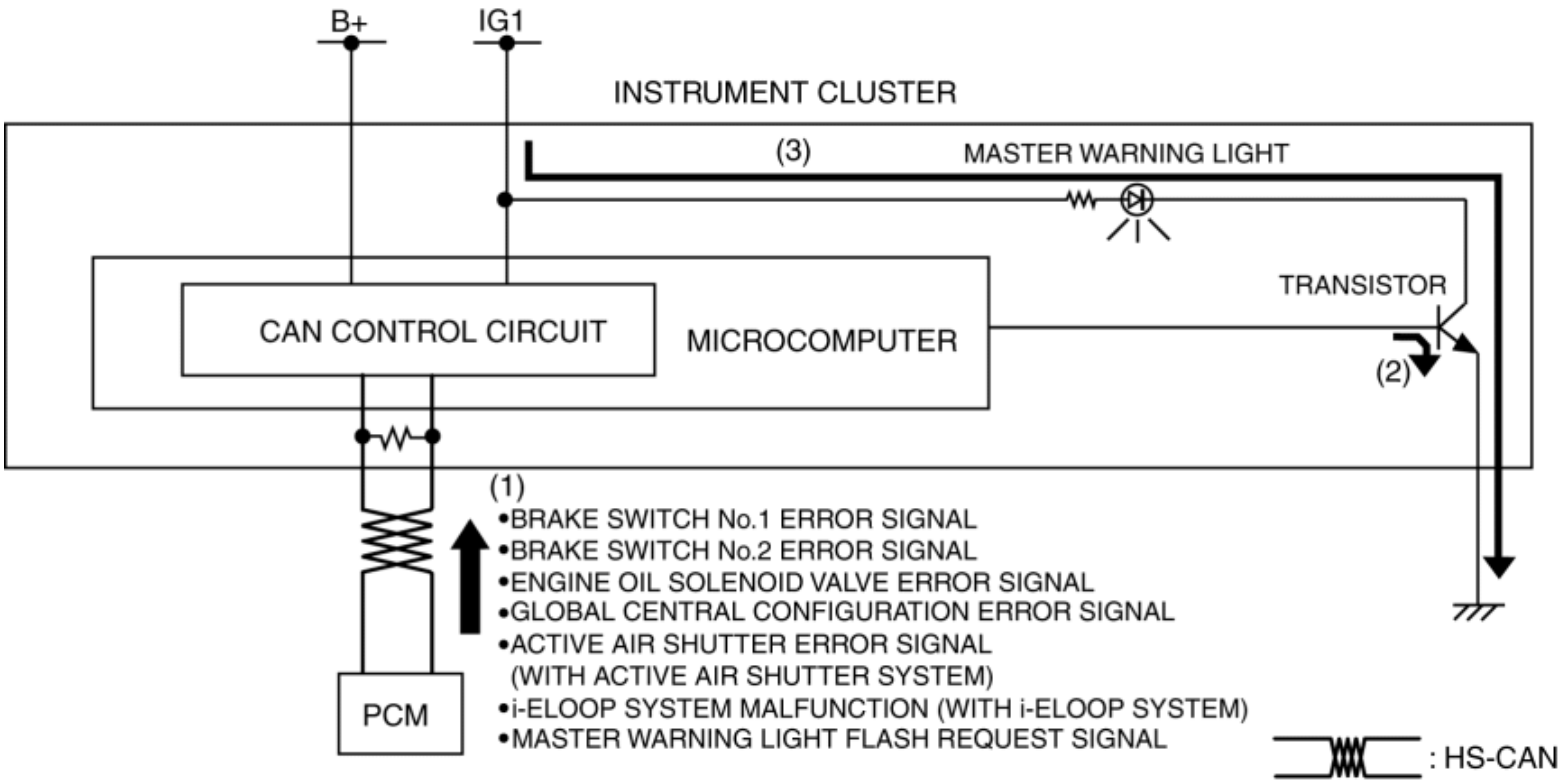

Fail-safe

Function not equipped.

2014 - Mazda3 - Body and Accessories

SPEEDOMETER

Purpose

- The speedometer notifies the driver of the speed at which the vehicle is traveling.

Function

Type A instrument cluster

- The instrument cluster displays the current vehicle speed based on the vehicle speed signal from the PCM.

Type B or type C instrument cluster

- The instrument cluster controls the speedometer needle based on the vehicle speed signal from the PCM and displays the current vehicle speed.

Construction

Type A instrument cluster

- A digital display speedometer has been adopted.
- The current vehicle speed is displayed in the speedometer display and the active driving display.

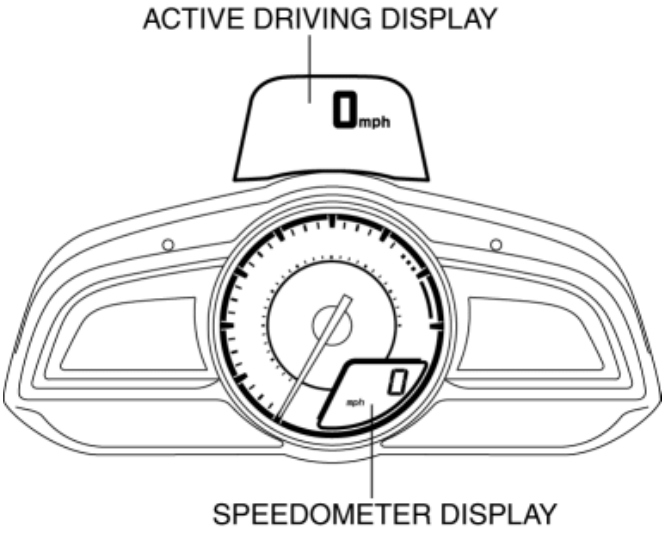

Type B or type C instrument cluster

- An analog needle display speedometer with a stepping motor mechanism has been adopted.

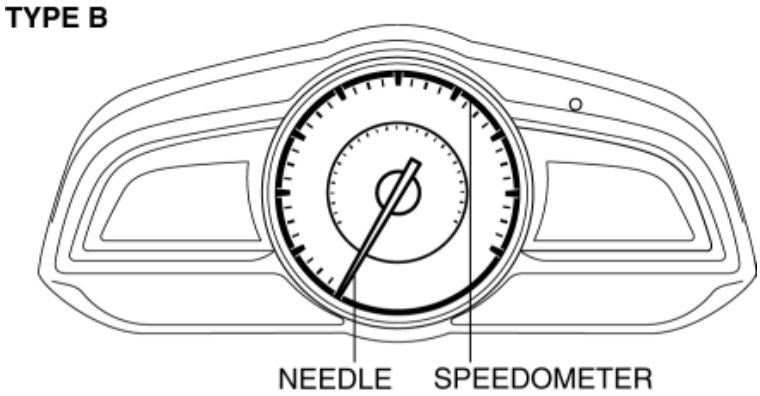

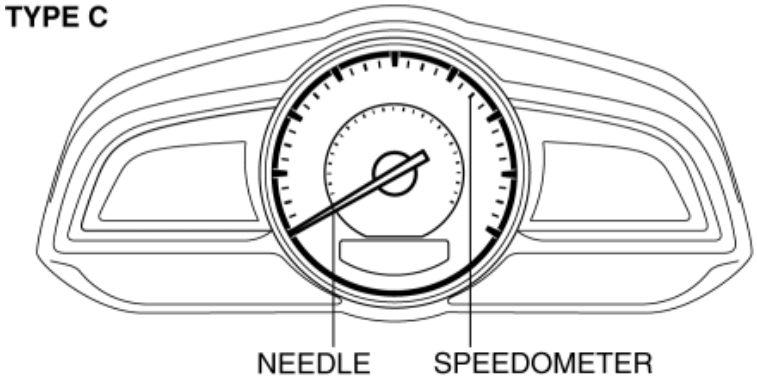

Operation

Type A instrument cluster

- The instrument cluster receives (1) the vehicle speed signal from the PCM when the ignition is switched ON (engine on).
- The instrument cluster displays (2) the current vehicle speed based on the vehicle speed signal.

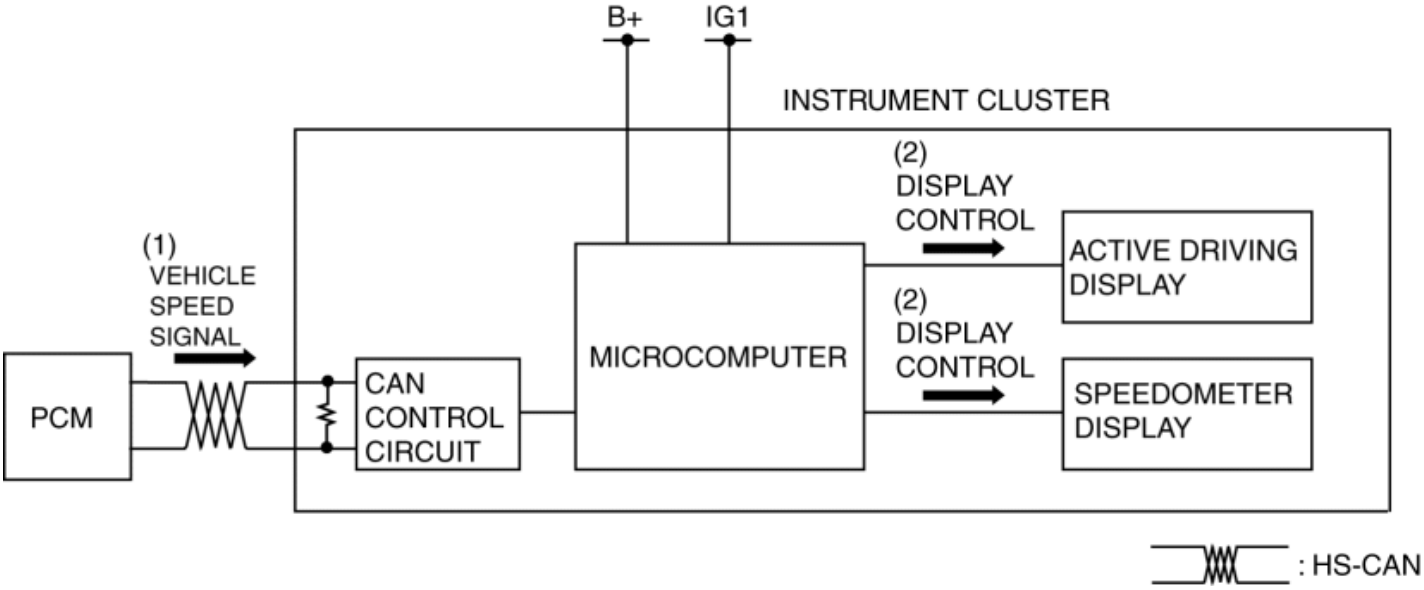

Type B or type C instrument cluster

- The instrument cluster receives (1) the vehicle speed signal from the PCM when the ignition is switched ON (engine on).
- The instrument cluster moves the needle based on the vehicle speed signal and displays (2) the current vehicle speed.

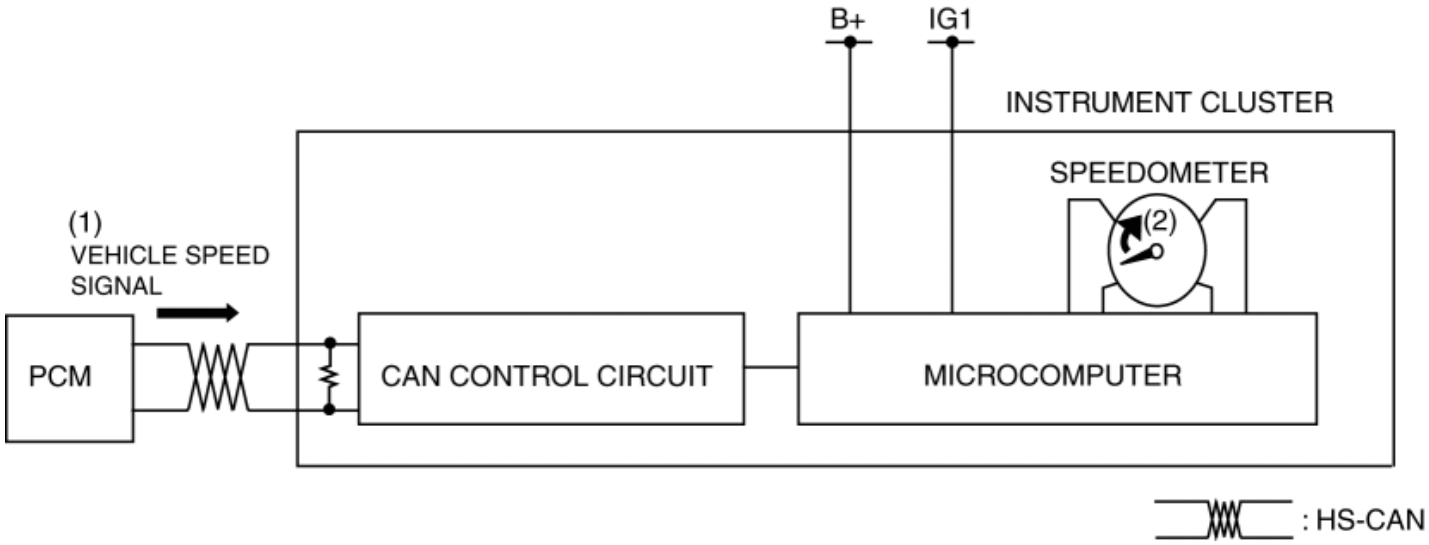

Fail-safe

- Function not equipped.

2014 - Mazda3 - Body and Accessories

TACHOMETER

Purpose

- The tachometer notifies the driver of the engine speed. In addition, it warns the driver to change gears using the red zone, which indicates that the engine is running at excess engine speed, and the striped zone, which indicates that the engine is on the verge of running at excess engine speed.

Function

Type A instrument cluster

- The instrument cluster controls the tachometer needle based on the engine speed signal from the PCM and displays the engine speed per minute.

Type B instrument cluster

- The instrument cluster displays the engine speed per minute based on the engine speed signal from the PCM.

Construction

Type A instrument cluster

- An analog needle display tachometer with a stepping motor mechanism has been adopted.
- The striped zone, which indicates that the engine is on the verge of running at excess speed, and the red zone, which indicates the engine is running at excess speed, are printed on the tachometer.

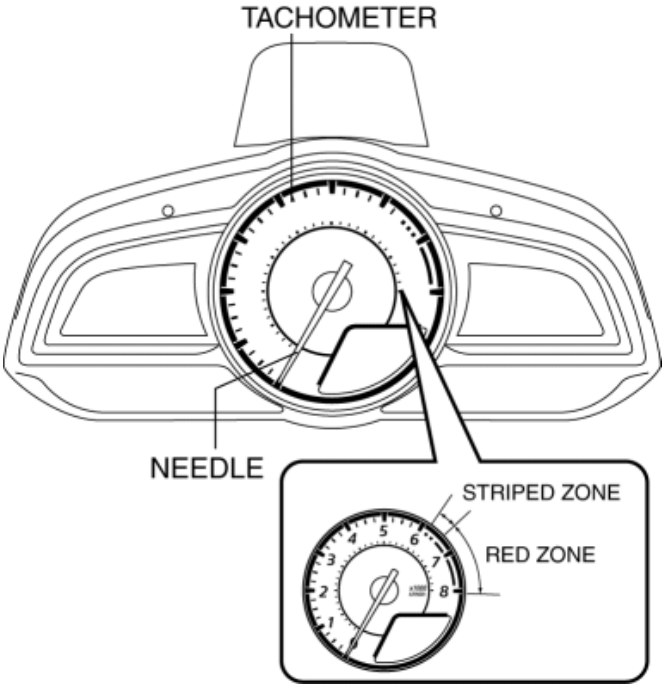

Type B instrument cluster

- A digital display tachometer has been adopted.
- The tachometer displays a striped zone, which indicates that the engine is on the verge of running at excess speed, and the red zone, which indicates the engine is running at excess speed.

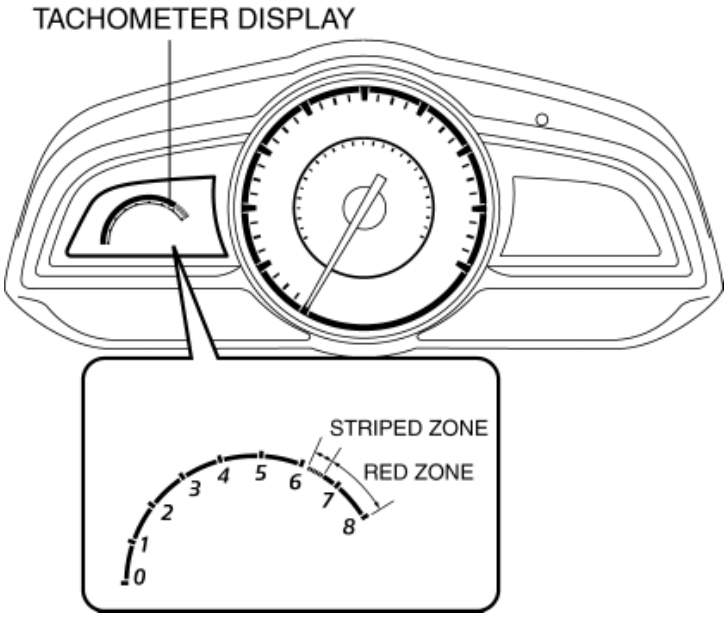

Operation

Type A instrument cluster

- The instrument cluster receives (1) the engine speed signal from the PCM when the ignition is switched ON (engine on).
- The instrument cluster moves the needle based on the engine speed signal and displays (2) the current engine speed.

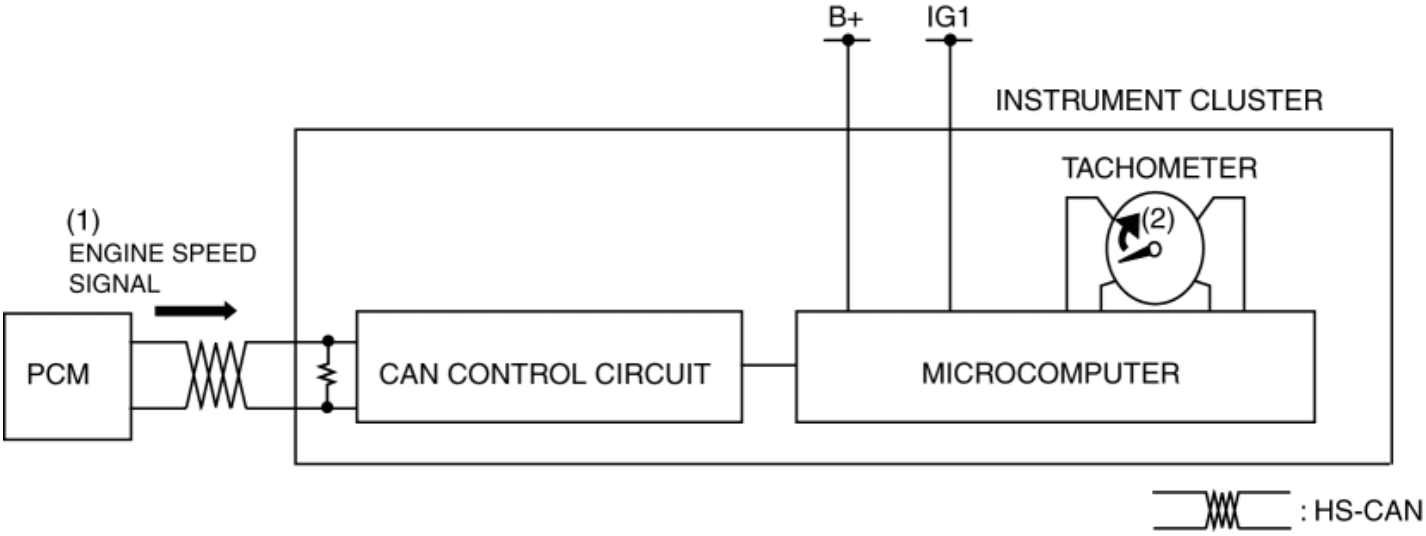

Type B instrument cluster

- The instrument cluster receives (1) the engine speed signal from the PCM when the ignition is switched ON (engine on).
- The instrument cluster displays (2) the current engine speed based on the engine speed signal.

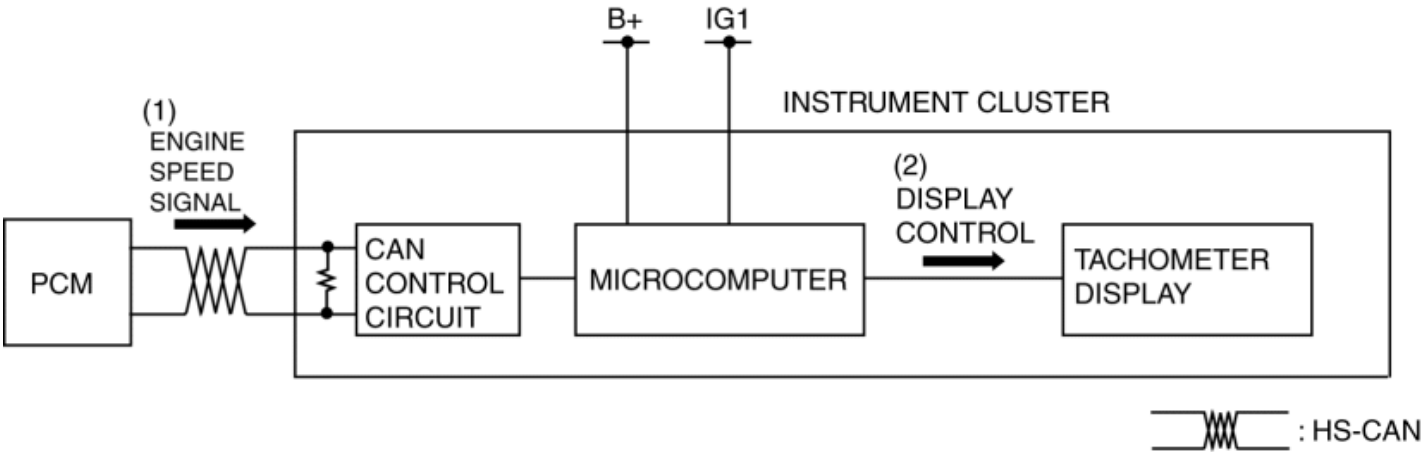

Fail-safe

- Function not equipped.

2014 - Mazda3 - Body and Accessories

FUEL GAUGE

Purpose

- The fuel gauge notifies the user of the amount of remaining fuel.

Function

- The instrument cluster calculates the amount of fuel in the fuel tank based on the following CAN signals and displays the fuel gauge segments.
    - Fuel gauge sender unit voltage signal sent from rear body control module (RBCM)
    - Fuel injection amount signal, vehicle speed signal sent from PCM

Fuel gauge flicker prevention function

- When the instrument cluster determines that the vehicle is being driven, it retards the response with which the calculated amount of fuel is reflected to the fuel gauge. As a result, fuel gauge flicker caused by the variation of fuel surface during driving is prevented.

Refuel determination function

- If the amount of fuel is changed by 5 L {1 US gal, 1 Imp gal}/2 L {0.5 US gal, 0.4 Imp gal}*1 or more while the vehicle is stopped, the instrument cluster determines that the vehicle is refueled and displays the fuel gauge segments based on the fuel gauge sender unit voltage signal from the rear body control module (RBCM).

*1

5 L {1 US gal, 1 Imp gal} when the number of fuel gauge segments is 14 or less/2 L {0.5 US gal, 0.4 Imp gal} when the number of fuel gauge segments is 15 or more.

Construction

- The fuel gauge is displayed in the LCD of the instrument cluster.
- The fuel gauge is consists of 15 segments.

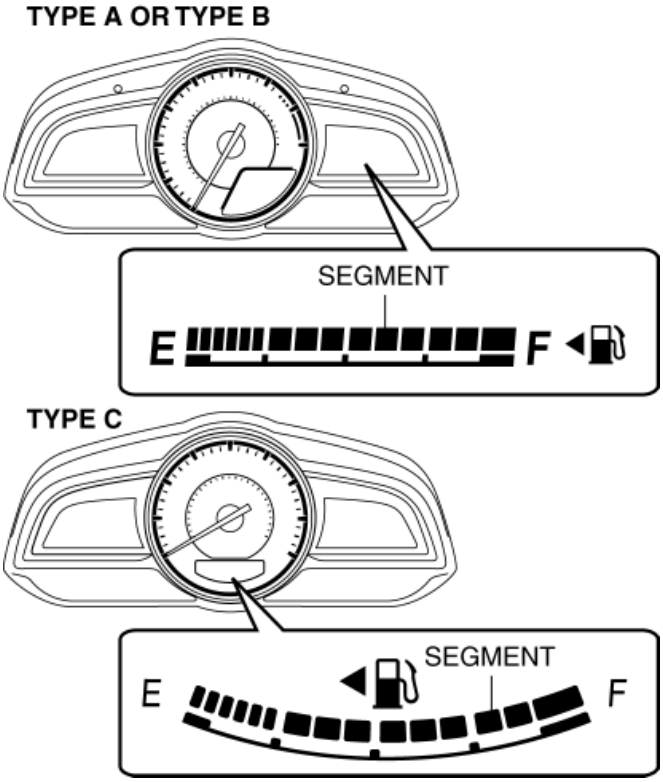

Operation

- When the ignition is switched ON (engine off or on), the rear body control module (RBCM) converts the resistance from the fuel gauge sender unit to voltage and sends it to the instrument cluster as a fuel gauge sender unit voltage signal (1).
- The instrument cluster receives the fuel gauge sender unit voltage signal from the rear body control module (RBCM), and it also receives the fuel injection amount control signal and vehicle speed signal from the PCM (2).
- The instrument cluster calculates the amount of fuel in the fuel tank based on the signals (3).
- The instrument cluster displays/turns off the fuel gauge segments according to the calculation result (4).

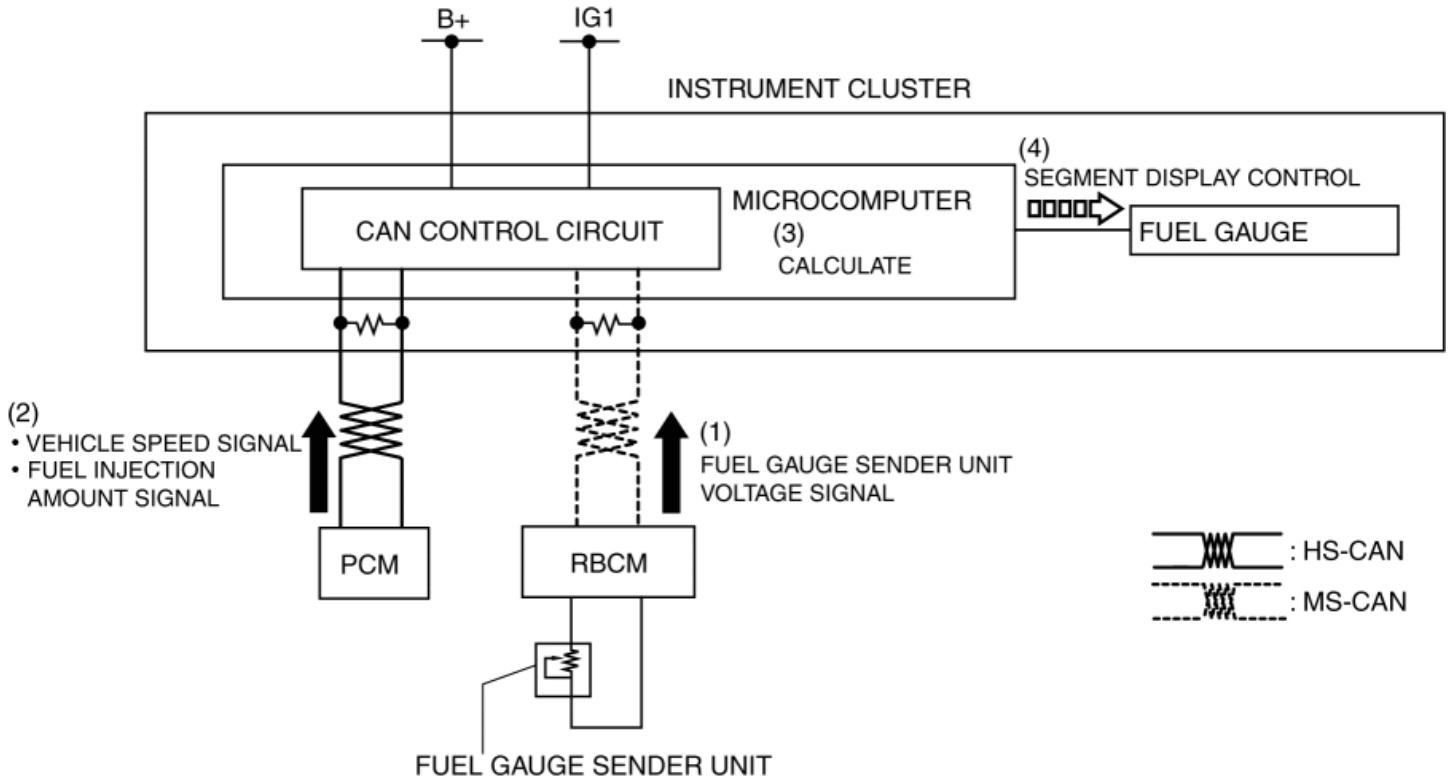

Fail-safe

- Function not equipped.

2014 - Mazda3 - Body and Accessories

ODOMETER/TRIPMETER

Purpose

- The odometer/tripmeter notifies the user of the total travel distance or the traveled distance over a specific interval.

Function

- The instrument cluster calculates the traveled distance based on the traveled distance signal from the PCM and displays it.
- The instrument cluster stores the calculated travel distance in the microcomputer of the instrument cluster.

Odometer calculation function

- The instrument cluster calculates the total traveled distance based on the traveled distance signal from the PCM and the stored traveled distance, and displays it.
- The total traveled distance which can be displayed is from 0 to 999,999.

Tripmeter A/B calculation function

- The instrument cluster calculates the traveled distance based on the traveled distance signal from the PCM and the traveled distance from when the tripmeter is reset, and displays it.
- There are A and B tripmeters and the display for each can be switched with each press of the tripmeter switch.
- If the tripmeter switch is continuously pressed for **approx. 1 s or more**, the tripmeter traveled distance is reset (0.0)
- The traveled distance which can be displayed is from 0.0 to 999.9. After 999.9, it returns to 0.

Construction

- The odometer/tripmeter is displayed in the LCD of the instrument cluster.

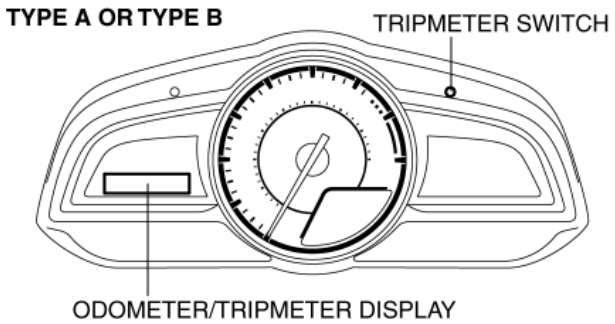

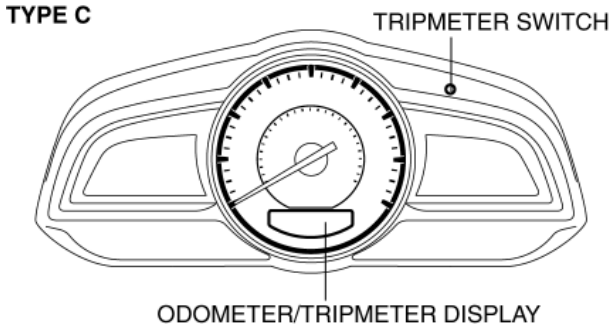

- The tripmeter switch is installed to the instrument cluster.

- The calculation for the odometer/tripmeter display and the traveled distance is performed by the instrument cluster microcomputer.

Operation

- The instrument cluster receives (1) the traveled distance signal from the PCM when the ignition is switched ON (engine on).
- The instrument cluster calculates the traveled distance (2) in the recorded total traveled distance (odometer) data and the traveled distance over a specific interval (tripmeter) based on the received traveled distance signal.
- The instrument cluster displays (3) the calculated travel distance in the LCD.

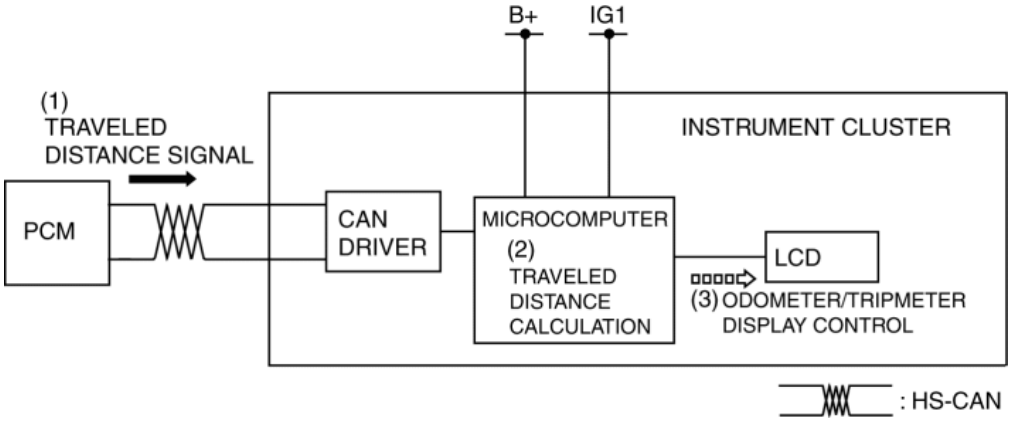

Odometer/tripmeter switching operation

- The instrument cluster switches the odometer/tripmeter display when a tripmeter switch ON is detected.
- The instrument cluster returns the traveled distance display to 0.0 when a tripmeter switch ON is detected for 1 s or more while tripmeter A or B is displayed.

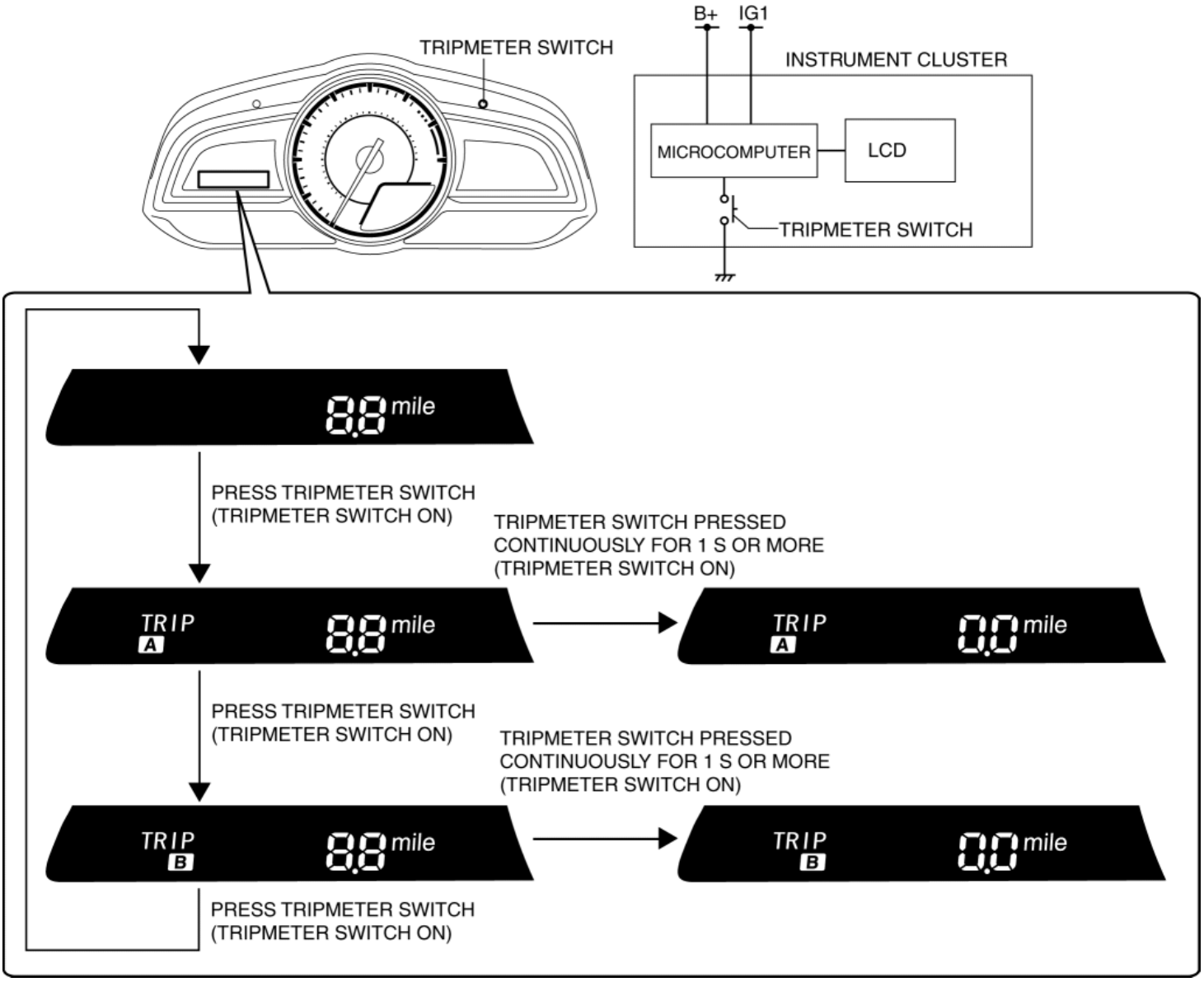

Fail-safe

- Function not equipped.

2014 - Mazda3 - Body and Accessories

PANEL LIGHT

Purpose

- The panel light adjusts the instrument cluster and steering switch illumination brightness.

Function

- The instrument cluster adjusts the brightness of the following illumination lights when a TNS illumination signal sent via CAN transmission from the front body control module (FBCM) is received.
    - Instrument cluster
    - Climate control unit
    - Steering switch
    - Cluster switch
    - Hazard warning switch
    - Selector illumination
    - Trunk lid opener switch (4SD)
    - Audio unit (without center display)
    - CD Player (with CD Player)
    - Commander switch (with center display)
- The instrument cluster changes the brightness of the illumination lights according to the rotation signal of the panel light control switch.

Construction

- The panel light control switch is set in the instrument cluster.

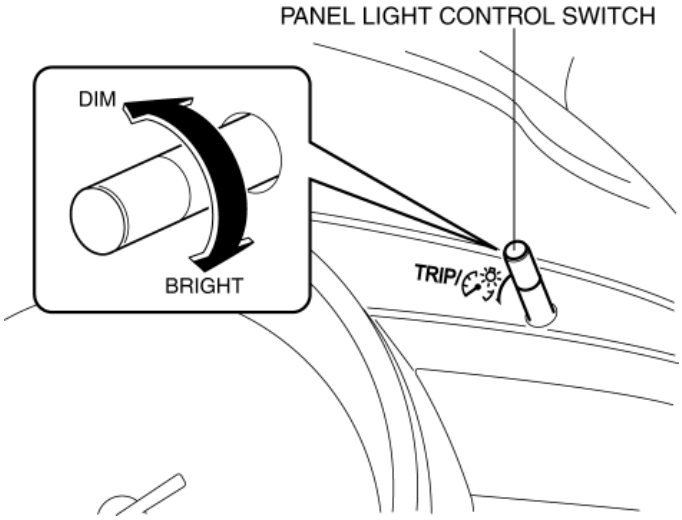

Operation

- When the ignition is switched ON (engine off or on), the instrument cluster receives (1) the TNS illumination signal from the front body control module (FBCM).
- The instrument cluster performs the following controls when it receives the TNS illumination signal.

- Changes the brightness of the instrument panel illumination (2).
- Outputs a panel light signal via CAN signal to the climate control unit (with full auto A/C) (2).
- Turns on the panel light circuit transistor (2).

- When the transistor turns on, a ground circuit with the panel light is established and the panel light illuminates.

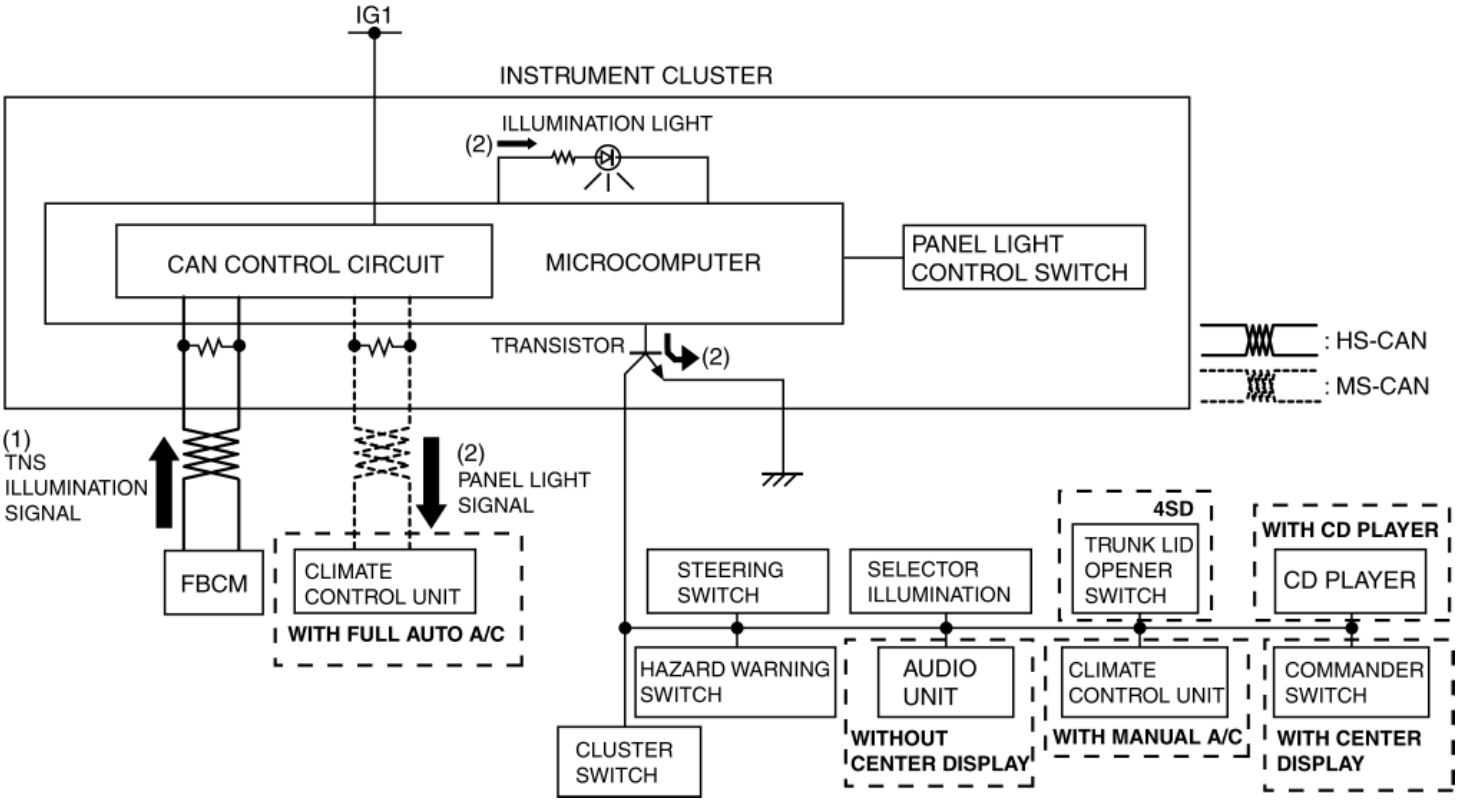

Panel light control switch operation

- When the ignition is switched ON (engine off or on), the instrument cluster receives (1) the TNS illumination signal from the front body control module (FBCM).
- The instrument cluster changes the brightness of the panel light according to the rotation angle when it receives a panel light control switch rotation signal while receiving the TNS illumination signal (2).
- The instrument cluster outputs a panel light signal to related units (3).

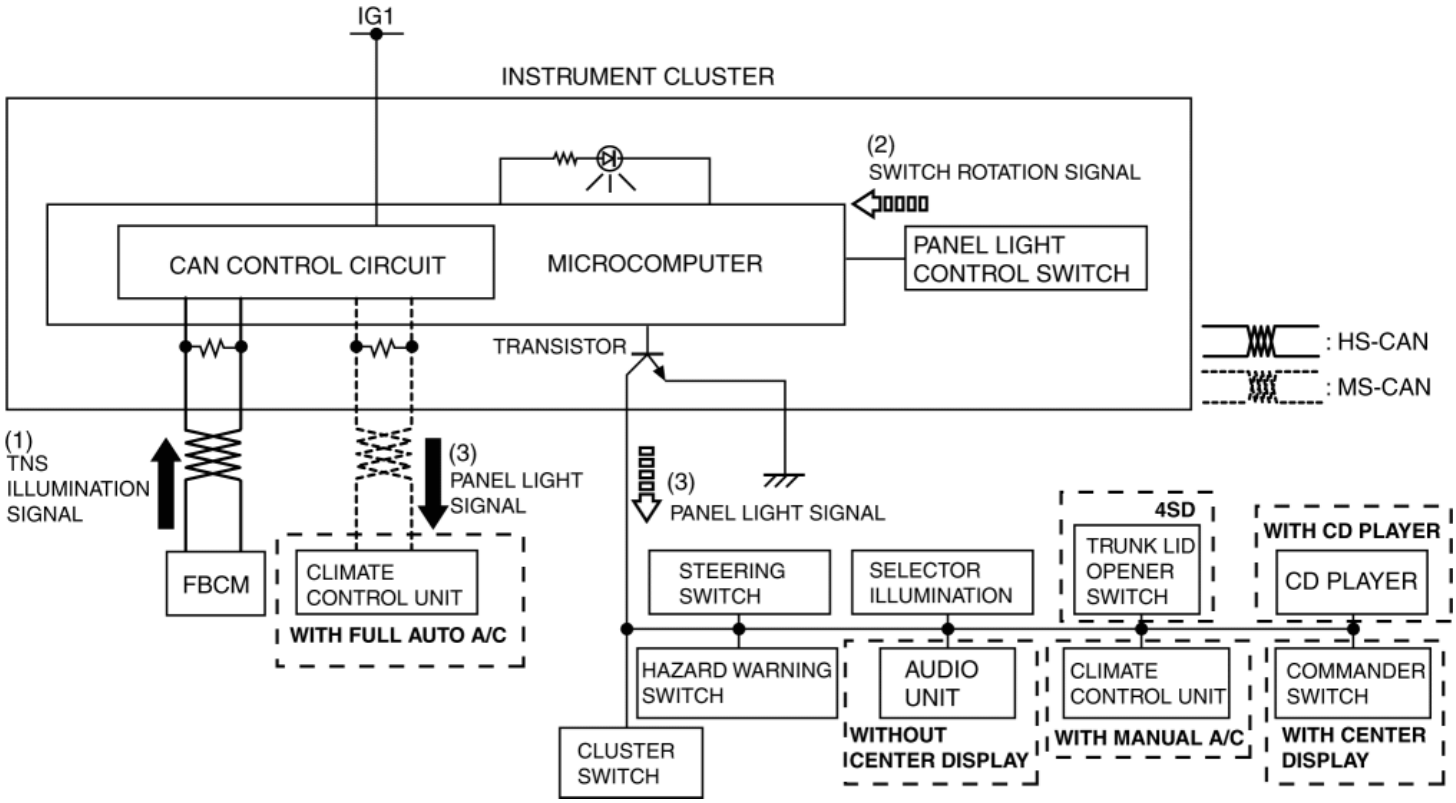

Fail-safe

- Function not equipped.

2014 - Mazda3 - Body and Accessories

TRIP COMPUTER INFORMATION SYSTEM

Outline

- The trip computer system displays the instantaneous fuel economy, average fuel economy, remaining distance to empty, and the average vehicle speed.
- The instrument cluster performs trip computer system fail-safe. (See **INSTRUMENT CLUSTER**.)

Function

- The instrument cluster controls the trip computer system based on the following CAN signals.
  - Vehicle speed signal, fuel injection amount signal, traveled distance signal sent from PCM
  - Fuel gauge sender unit voltage signal sent from rear body control module (RBCM)
  - Steering switch operation signal sent from start stop unit

Remaining travel distance calculation function

- The instrument cluster calculates the remaining travel distance based on the instantaneous fuel economy, cumulative fuel economy and the fuel tank level. In addition, the calculation results are updated every second.

Remaining travel distance formula

A TYPE

$$\text{REMAINING TRAVEL DISTANCE (miles)} = \frac{\text{FUEL TANK LEVEL (L)}}{\text{CUMULATIVE FUEL ECONOMY}^{*1}\text{ (L/mile)} \times (1500-1)/1500 + \text{INSTANTANEOUS FUEL ECONOMY (L/mile) IN PAST 0.06 mile INTERVAL}/1500}$$

B TYPE

$$\text{REMAINING TRAVEL DISTANCE (km)} = \frac{\text{FUEL TANK LEVEL (L)}}{\text{CUMULATIVE FUEL ECONOMY}^{*1}\text{ (L/km)} \times (1500-1)/1500 + \text{INSTANTANEOUS FUEL ECONOMY (L/km) IN PAST 0.1 km INTERVAL}/1500}$$

*1: SUM OF FUEL ECONOMY EVERY 0.1 km {0.06 mile} FROM CONNECTING BATTERY TO PRESENT

- When the fuel tank level reaches 6 L {2 US gal, 1 Imp gal} or less, the instrument cluster displays <0 km> or <0 miles>.

Average fuel economy calculation function

- The instrument cluster calculates the average fuel economy based on the traveled distance and fuel consumption from connecting the battery or resetting the average fuel economy. In addition, the calculation results are updated every minute.

Average fuel economy formula

A TYPE

$$\text{AVERAGE FUEL ECONOMY (mpg)} = \frac{\text{CUMULATIVE TRAVELED DISTANCE}^{*2}\text{ (mile)}}{\text{CUMULATIVE FUEL CONSUMPTION}^{*1}\text{ (gallon)}}$$

B TYPE

$$\text{AVERAGE FUEL ECONOMY (L/100 km)} = \frac{\text{CUMULATIVE FUEL CONSUMPTION}^{*1}\text{ (L)} \times 100}{\text{CUMULATIVE TRAVELED DISTANCE}^{*2}\text{ (km)}}$$

*1: SUM OF FUEL CONSUMPTION FROM CONNECTING BATTERY OR RESETTING AVERAGE FUEL ECONOMY TO PRESENT
*2: SUM OF TRAVELED DISTANCE FROM CONNECTING BATTERY OR RESETTING AVERAGE FUEL ECONOMY TO PRESENT

- If the cumulative traveled distance is 0 km, <99.9 L/100 km> or <0.0 mpg> is displayed.

If the INFO button is pressed for approx. 1.5 s or more while the average fuel economy is displayed, the cumulative fuel economy and cumulative traveled distance data are reset.

- If tripmeter A is reset, the average fuel economy is also reset.
- During the 1 min period after the data has been reset, <--- L/100 km> or <--- mpg> is displayed.

Instantaneous fuel economy calculation function

- The instrument cluster calculates the instantaneous fuel economy based on the fuel consumption and traveled distance over the past 2 s when the vehicle speed is at the set value or more. In addition, the calculation results are updated every 2 s.

Instantaneous fuel economy formula

A TYPE

$$\text{INSTANTANEOUS FUEL ECONOMY (mpg)} = \frac{\text{TRAVELED DISTANCE (mile) OVER PAST 2 s}}{\text{FUEL CONSUMPTION (gallon) OVER PAST 2 s}}$$

B TYPE

$$\text{INSTANTANEOUS FUEL ECONOMY (L/100 km)} = \frac{\text{FUEL CONSUMPTION (L) OVER PAST 2 s} \times 100}{\text{TRAVELED DISTANCE (km) OVER PAST 2 s}}$$

- When there is no fuel consumption, such as during engine braking, <0.0 L/100 km> or <99.9 mpg> is displayed.
- The instantaneous fuel economy is displayed when the vehicle speed is 7.06 km/h {4.39 mph} or more, and <--- L/100 km> or <--- mpg> is displayed when the vehicle speed is 4.24 km/h {2.63 mph} or less.

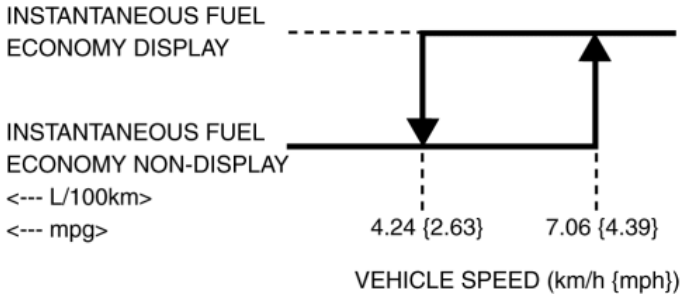

Average vehicle speed calculation function

- The instrument cluster calculates the average vehicle speed based on the cumulative traveled distance and cumulative traveled time from connecting the battery or resetting the average vehicle speed. In addition, the calculation results are updated every 10 s.

Average vehicle speed formula

A TYPE

$$\text{AVERAGE VEHICLE SPEED (mph)} = \frac{\text{CUMULATIVE TRAVELED DISTANCE (mile)}}{\text{CUMULATIVE TRAVELED TIME (h)}}$$

B TYPE

$$\text{AVERAGE VEHICLE SPEED (km/h)} = \frac{\text{CUMULATIVE TRAVELED DISTANCE (km)}}{\text{CUMULATIVE TRAVELED TIME (h)}}$$

- If the INFO button is pressed for approx.1.5 s or more while the average vehicle speed is displayed, the average vehicle speed (cumulative traveled distance and cumulative traveled time data) is reset.
- During the 1 min period after the data has been reset, <--- km/h> or <--- mph> is displayed.

Structural View

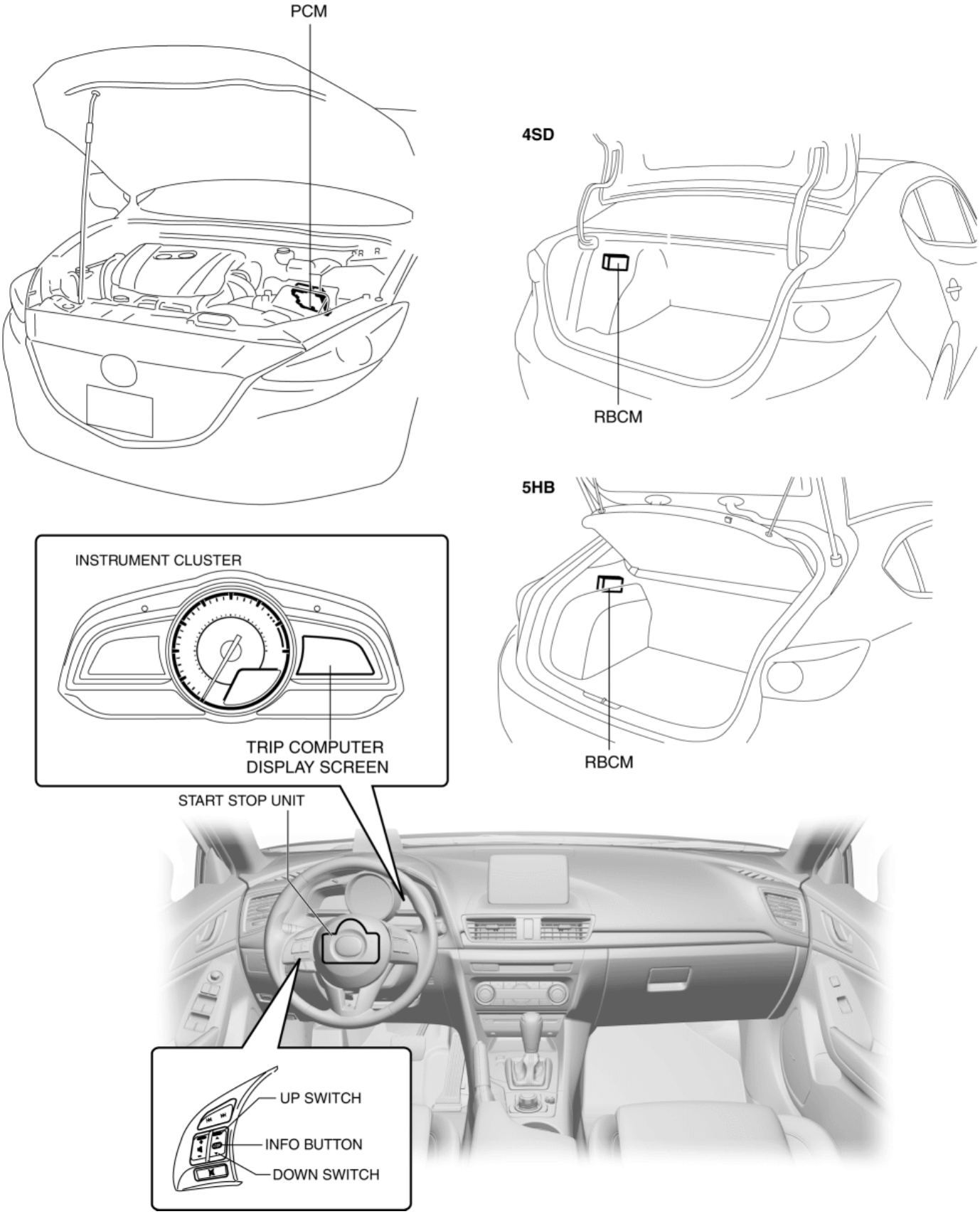

System Wiring Diagram

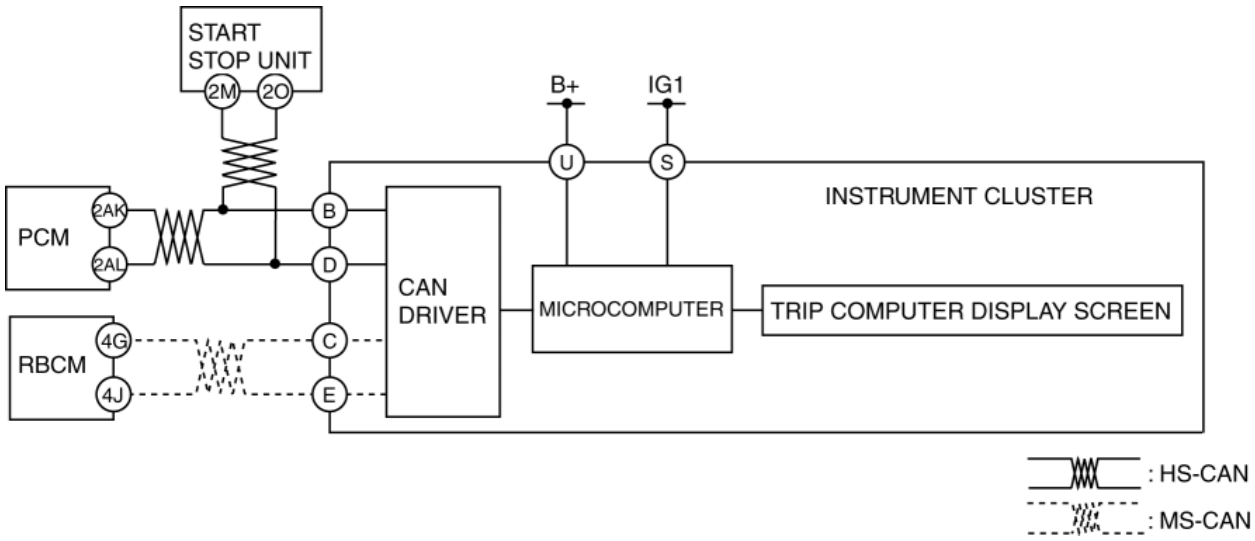

Operation

- When the ignition is switched ON (engine on), the instrument cluster receives (1) the vehicle speed signal, fuel injection amount signal, traveled distance signal from the PCM, the fuel gauge sender unit voltage signal from the rear body control module (RBCM), and the steering switch operation signal from the start stop unit.
- The instrument cluster microcomputer calculates (2) the instantaneous fuel economy and average fuel economy based on the received data.
- The instrument cluster microcomputer displays (3) the calculated results in the trip computer display screen.

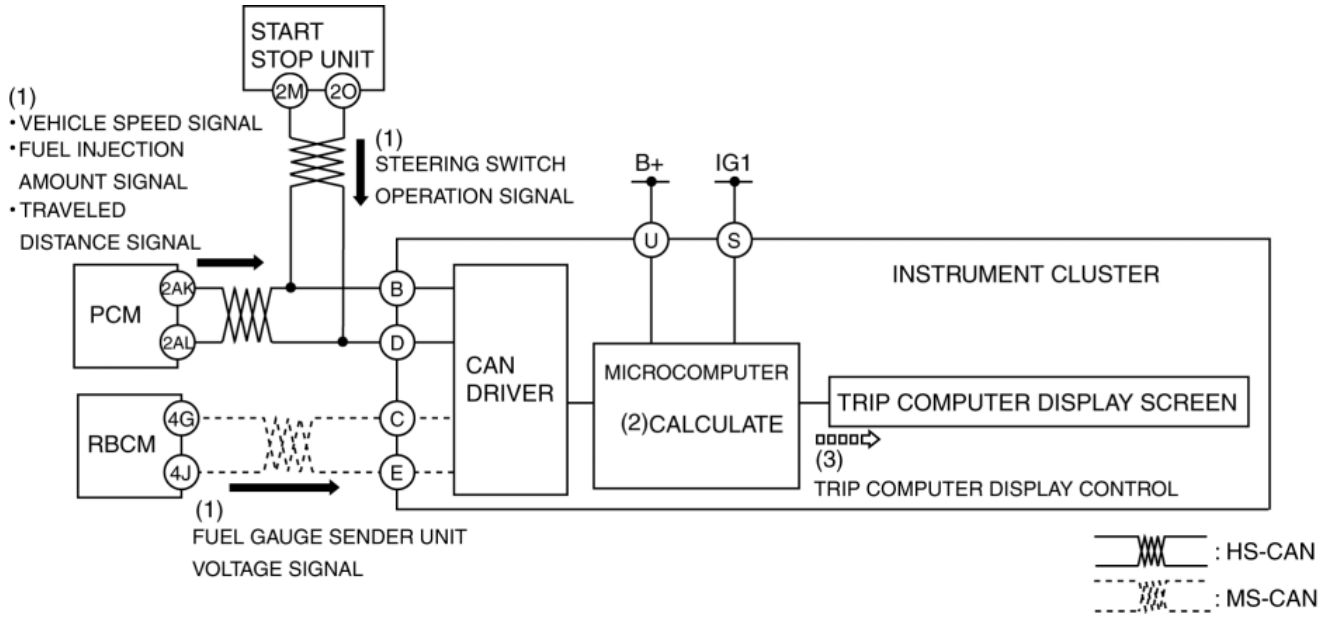

Trip computer display switching operation

- The instrument cluster switches the trip computer display content as follows based on the steering switch operation signal from the start stop unit.

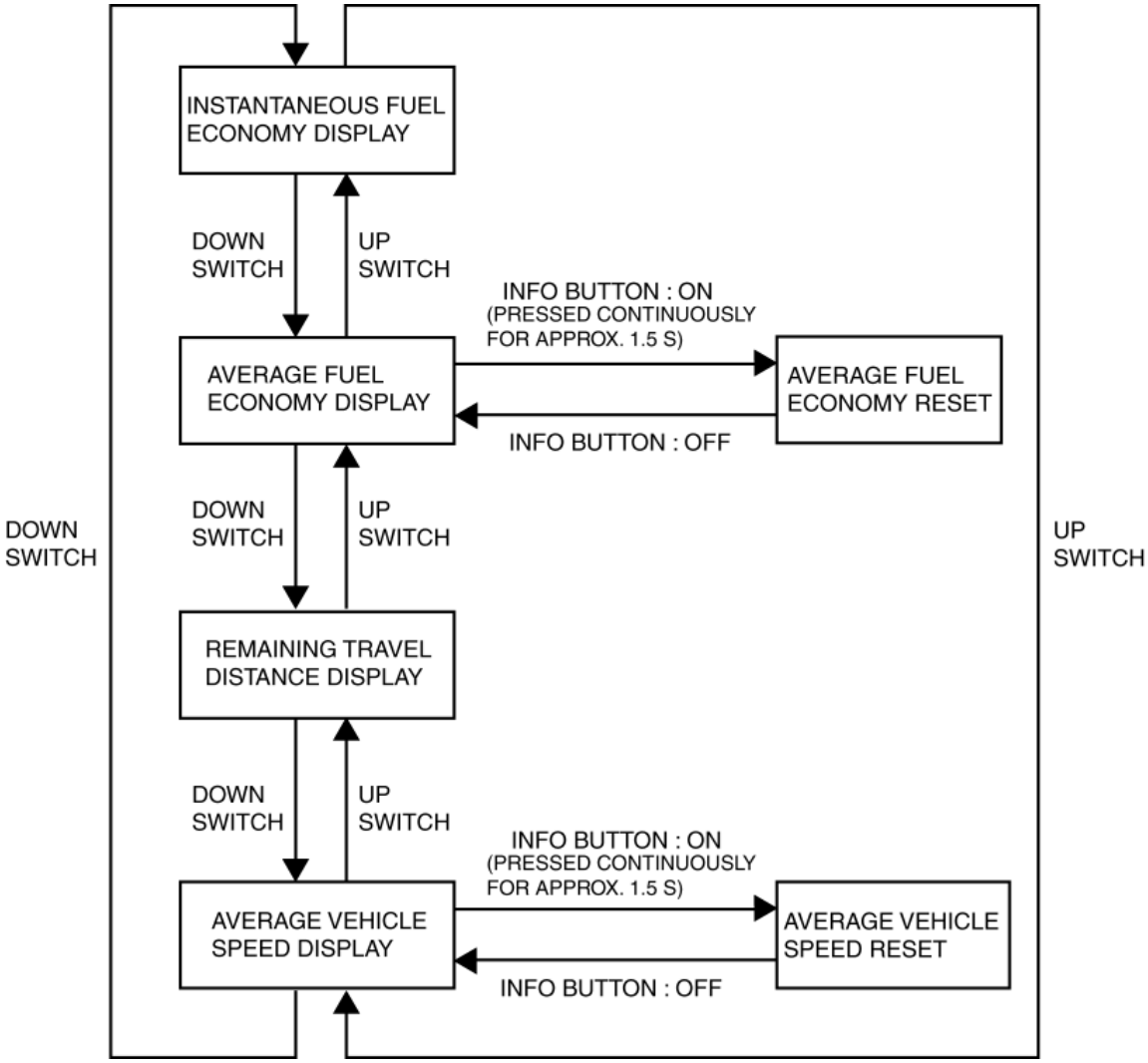

Display screen table

TYPE	REMAINING TRAVEL DISTANCE	AVERAGE FUEL ECONOMY	INSTANTANEOUS FUEL ECONOMY	AVERAGE VEHICLE SPEED
A TYPE	RANGE 100.0 miles	AVG 22.4 mpg	CURRENT 19.7 mpg	AVG 25.0 mph
B TYPE	RANGE 100.0 km	AVG 22.4 L /100km	CURRENT 19.7 L /100km	AVG 25.0 km/h

2014 - Mazda3 - Body and Accessories

ACTIVE DRIVING DISPLAY

Purpose

- The active driving display displays the vehicle information in the set display within the visual range of the driver allowing verification of the vehicle information with only the slightest change in the line of vision.

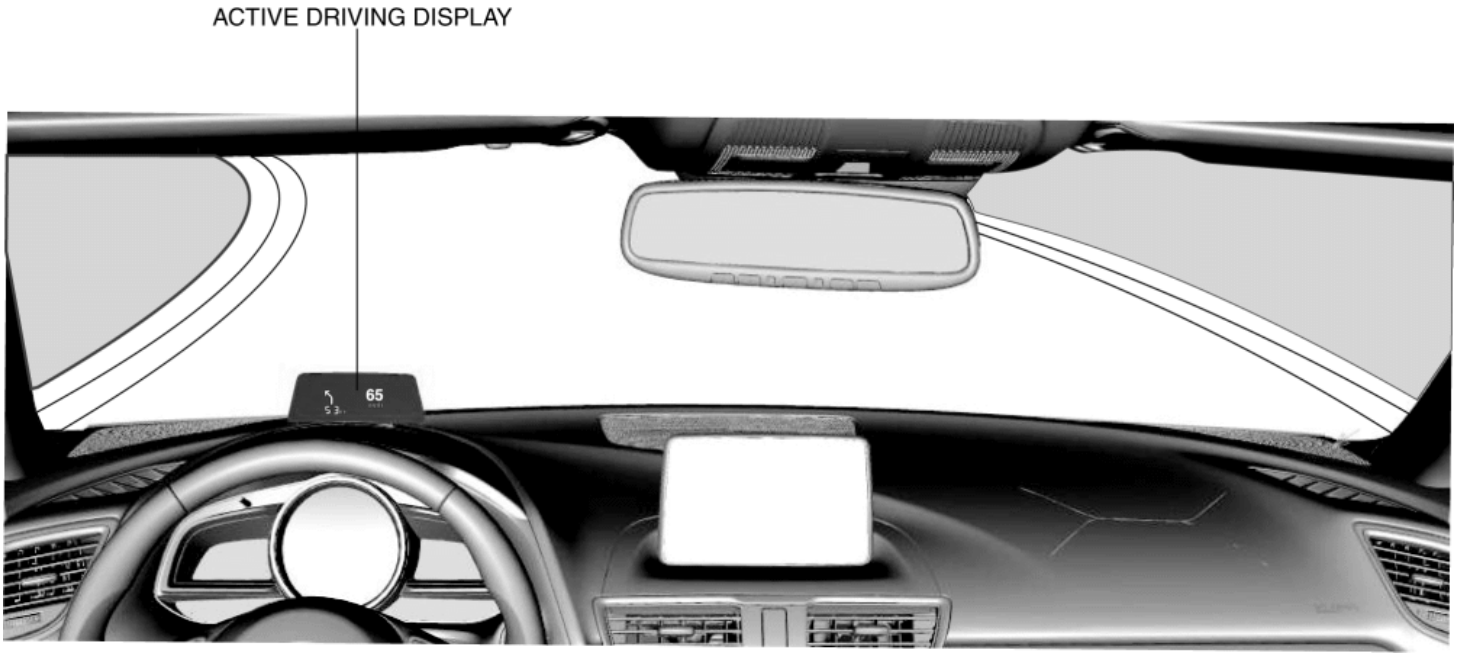

Function

- The active driving display displays the following vehicle information.
  - Current vehicle speed
  - Cruise control set vehicle speed (with cruise control system)
  - Smart city brake support (SCBS) warning display (with SCBS)
  - Lane departure warning system (LDWS) operation status or warning display (with LDWS)
  - Travel direction (turn by turn (TBT)) display (with car navigation system)
- The active driving display displays the following content based on the following CAN signals when the engine is started. Refer to reference for details on display content.

CAN signal sending module	Signal name	Display content	Display example	Reference
PCM	Vehicle speed signal	Current vehicle speed		(See **SPEEDOMETER**.)

PCM	Cruise control set vehicle speed display signal	Cruise control set vehicle speed	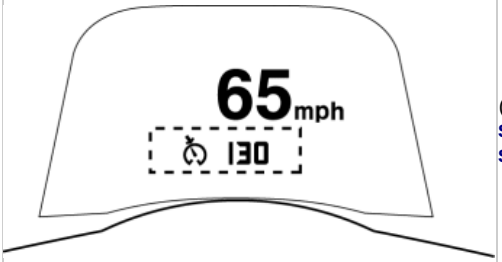	(See **CRUISE CONTROL SYSTEM [SKYACTIV-G 2.0, SKYACTIV-G 2.5]**.)
Laser sensor	Warning display request signal	Warning screen		(See **SMART CITY BRAKE SUPPORT (SCBS)**.)
Forward sensing camera (FSC)	Operation display request signal	Vehicle lane display	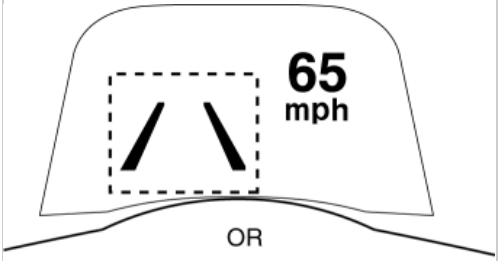 OR 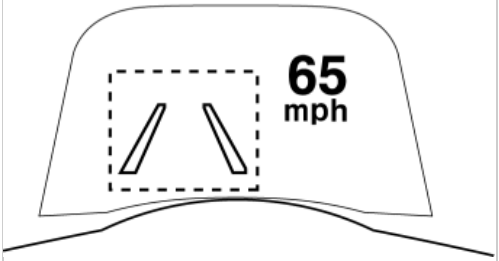	(See **LANE DEPARTURE WARNING SYSTEM (LDWS)**.)
	Warning display request signal	Warning screen	 OR 	

Connectivity master unit (CMU)	Turn-by-turn (TBT) display request signal	Travel direction display	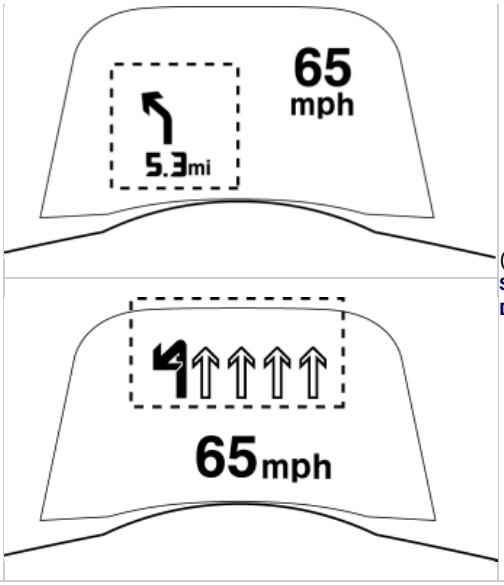	(See **ENTERTAINMENT SYSTEM [WITH CENTER DISPLAY]**.)

Personalization features

- The following items can be set on the active driving display.

Item	Setting contents
Height	The combiner open/close angle can be adjusted.
Brightness Control	The display brightness can be switched between automatic/manual.
Calibration	The automatic dimness adjustment level can be switched. (Can only be changed when Auto is selected in the brightness control)
Brightness	The brightness of the display can be adjusted. (Can only be changed when Manual is selected in the brightness control)
Navigation	The turn-by-turn (TBT) display can be switched on/off.
Active Driving Display	The active driving display can be switched between ON/OFF.
Reset	The active driving display setting can be changed to the initial setting.

Demonstration function

NOTE:

- The demonstration function force-displays the active driving display without the engine being started, such as on an indoor exhibition vehicle, so that customers can verify the display status.
- The demonstration function executes the active driving display with the ignition switched ON (engine off) to display the vehicle information in the display.

Demonstration function on/off setting procedure

- If any door is opened with the odometer/tripmeter switch in the instrument cluster pressed, switch the ignition as follows.
  - Ignition OFF→Ignition ON (engine off)→Ignition OFF→Ignition ON (engine off)
- If “test” is displayed in the instrument cluster, release the odometer/tripmeter switch.

NOTE:

        - With “test” displayed in the instrument cluster, the entire instrument cluster is illuminated when the odometer/tripmeter switch is released.
    - Press the odometer/tripmeter switch and 06 on or 06 off is displayed in the instrument cluster.
        - Select 06 on to turn on the demonstration function.
        - Select 06 off to turn off the demonstration function.
    - Switch the ignition off.

    NOTE:

        - If the ignition is switched off with 06 on displayed (demonstration function on) in the instrument cluster, the demonstration function will operate the next time the ignition is switched ON (engine off).
        - If the following is performed with the demonstration function on, the demonstration function turns off.
            - The battery power is interrupted or the room fuse is removed.
            - The vehicle is driven at approx. 20 km/h {12 mph} or more.

Construction

- The active driving display is assembled to the instrument cluster.
- The active driving display consists of a display device which produces the display content and emits the content over a light beam, a reflector which reflects the light beam emitted from the display device, a combiner which reflects the light beam from the reflection and displays the screen, a motor which opens/closes the combiner, and a photo sensor which detects the brightness surrounding the display device.
- The combiner is a processed, clear panel for reflecting the light beam from the display device.
- The combiner opens at the top of the meter hood and displays vehicle information in the forward visual range of the driver. As a result, the time in which the driver's line of vision changes from the view at the front of the vehicle to the view of the vehicle information reflected in the combiner has been shortened.
- By using a concave shaped combiner, the image reflected in the combiner is positioned virtually 1.5 m {4.9 ft} forward of the eye point. As a result, the eye point adjustment time in which the driver's line of vision changes from the view at the front of the vehicle to the view of the vehicle information reflected in the combiner has been reduced.

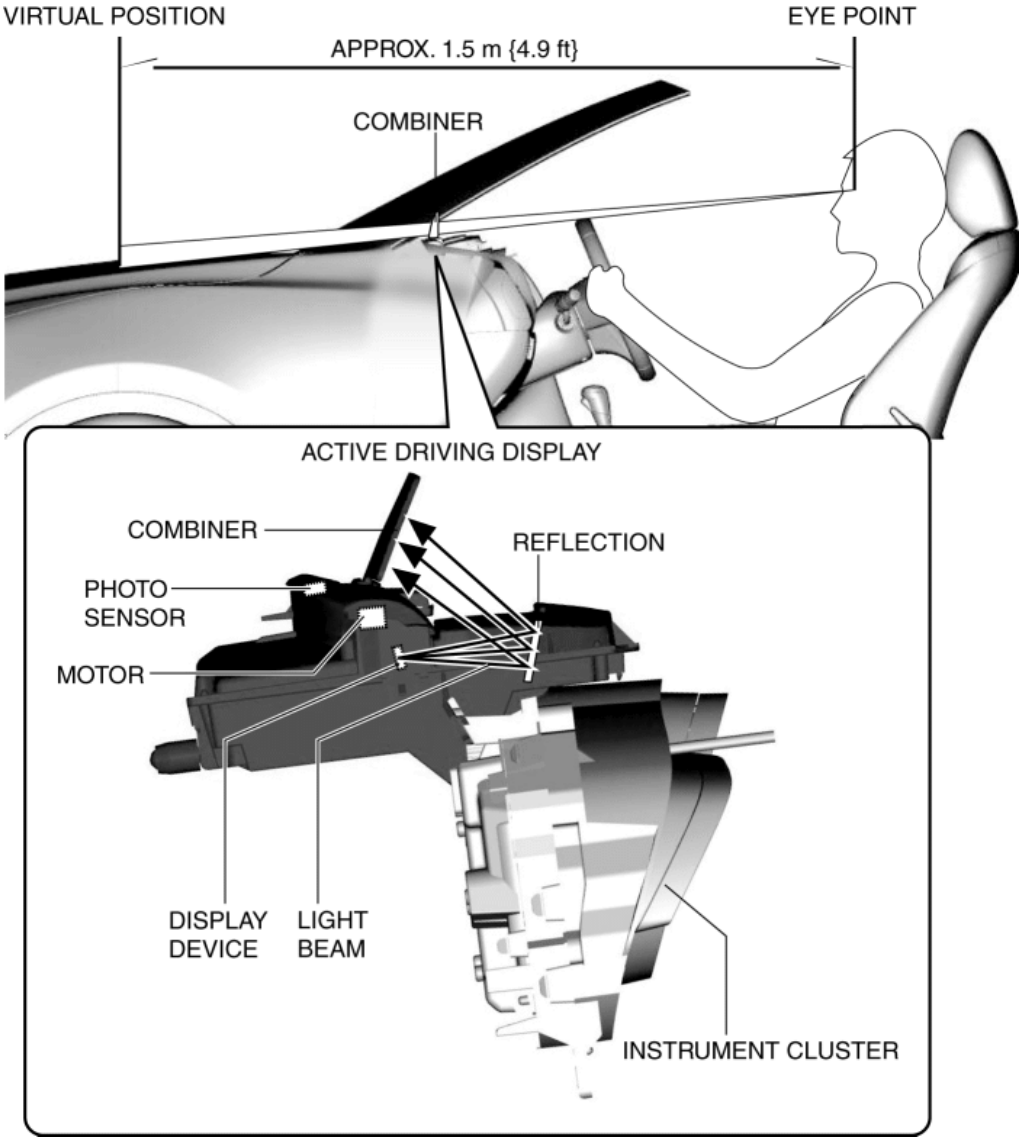

Operation

- When the ignition is switched ON (engine on), the combiner is opened based on the following CAN signals.
  - ROOM fuse status signal from rear body control module (RBCM)
  - Combiner target angle signal from connectivity master unit (CMU)
- When the combiner opens, the instrument cluster displays the opening screen (vehicle name) for approx. 2 s. In addition, an active driving display execute signal and combiner current position signal (2) are sent to the CMU.

  NOTE:

  - The CMU records the current position of the combiner based on the combiner current position signal from the instrument cluster. When the ignition is switched from OFF to ON (engine running), the target angle signal is sent based on the recorded current position.
  - Even if the battery power is disconnected, the combiner current position recorded by the CMU is not cleared.
  - If the combiner current position is not recorded, the CMU sends the target angle signal of the initial value.
- The instrument cluster displays the current vehicle speed based on the vehicle speed signal (3) from the PCM after opening screen is turned off, and displays warning screens based on request signals (3) from related units.

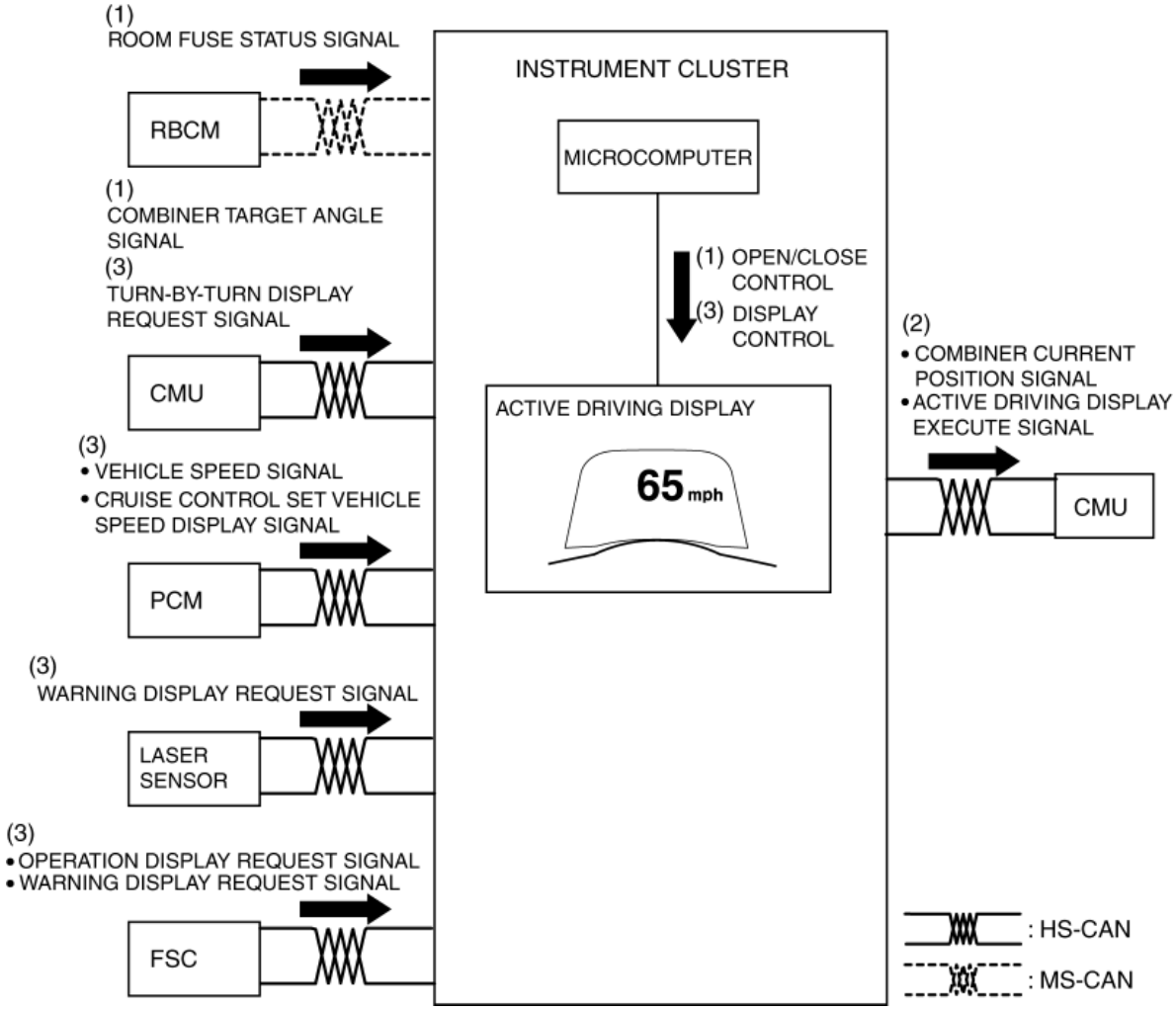

Fail-safe

- The instrument cluster turns off the active driving display images under the following conditions and stops the display at the current position.
  - Error signal from CMU is received, and CMU malfunction is determined
  - Communication with CMU is interrupted
  - Motor malfunction for combiner operation is detected

2014 - Mazda3 - Body and Accessories

AMBIENT TEMPERATURE DISPLAY

Purpose

- The ambient temperature display notifies the user of the ambient temperature.

Function

- The instrument cluster displays the ambient temperature based on the ambient temperature signal sent from the PCM as a CAN signal.
- The ambient temperature is displayed between -40—70°C {-40—160°F} If the ambient temperature is -40°C {-40°F} or less, -40°C {-40°F} is displayed, and 70°C {160°F} is displayed if the temperature is 70°C {160°F} or more.

Construction

- The ambient temperature is displayed on the LCD in the instrument cluster.

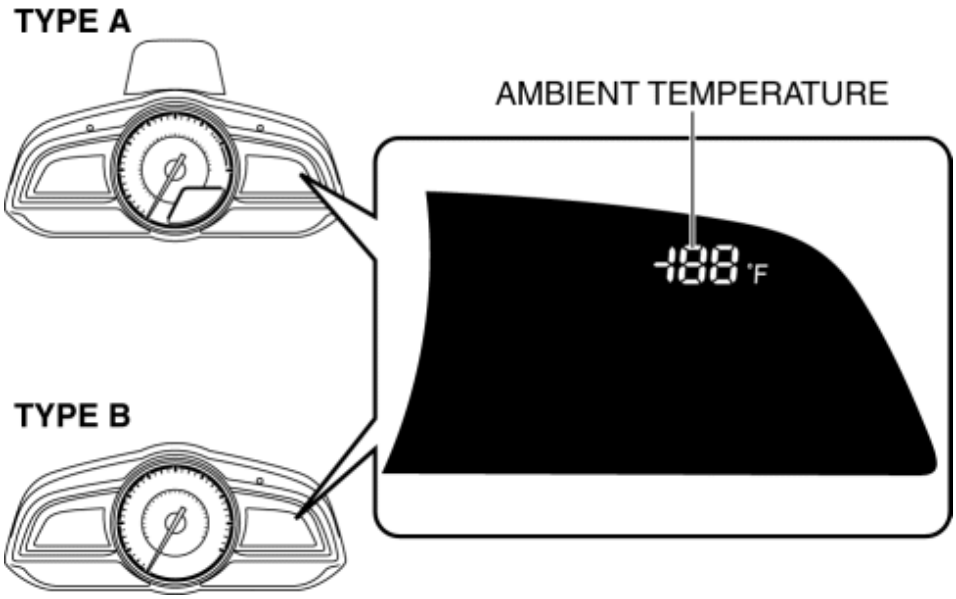

Operation

1. When the ignition is switched ON, the instrument cluster receives an ambient temperature signal from the PCM (1).

2. Based on the ambient temperature signal, the instrument cluster displays the ambient temperature and ice mark on the LCD (2).

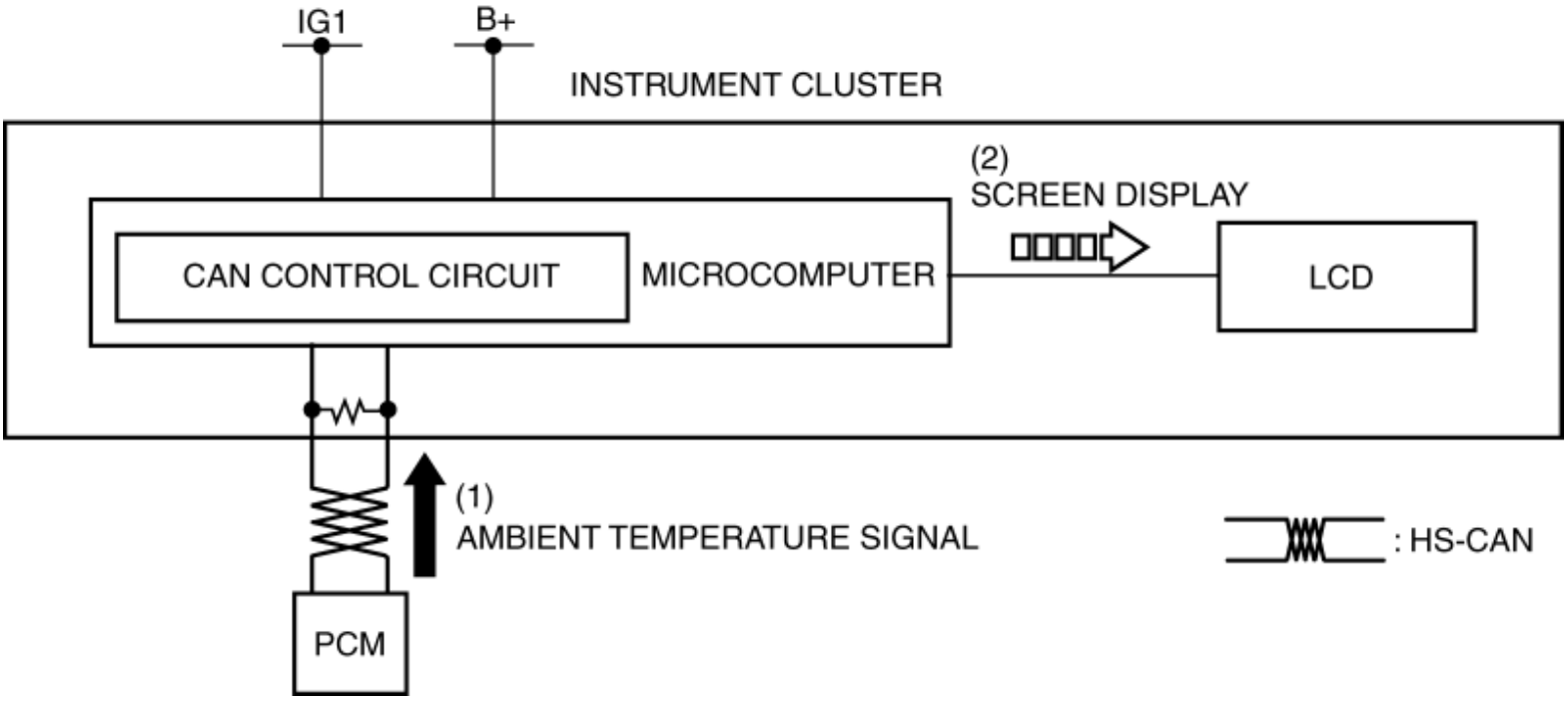

Fail-safe

- Function not equipped.

2014 - Mazda3 - Body and Accessories

BLIND SPOT MONITORING (BSM) SYSTEM

Outline

- The blind spot monitoring (BSM) system detects a vehicle in the blind-spot area at the rear of the vehicle to alert the driver of the possible collision with a target vehicle using the BSM indicator light on the outer mirror glass and the blind spot monitoring (BSM) warning alarm.
- The blind spot monitoring (BSM) control module performs the blind spot monitoring (BSM) system fail-safe. (See **BLIND SPOT MONITORING (BSM) CONTROL MODULE**.)

Function

- The blind spot monitoring (BSM) system emits microwaves from the radar of the BSM control module to detect a target vehicle in the blind-spot area at the rear of the vehicle based on the reflected microwaves to alert and inform the driver. For the target vehicle detection method, refer to the blind spot monitoring (BSM) control module. (See **BLIND SPOT MONITORING (BSM) CONTROL MODULE**.)
- The blind spot monitoring (BSM) system has a blind spot monitoring (BSM) function for when the vehicle is moving forward and a rear crossing traffic alert (RCTA) function when the vehicle is reversing.

Blind spot monitoring (BSM) function

- The blind spot monitoring (BSM) control module monitors other vehicles traveling around the detecting vehicle based on the reflected microwaves.
- If a target vehicle enters the following monitored area that has been previously registered, the blind spot monitoring (BSM) control module illuminates the blind spot monitoring (BSM) indicator light.

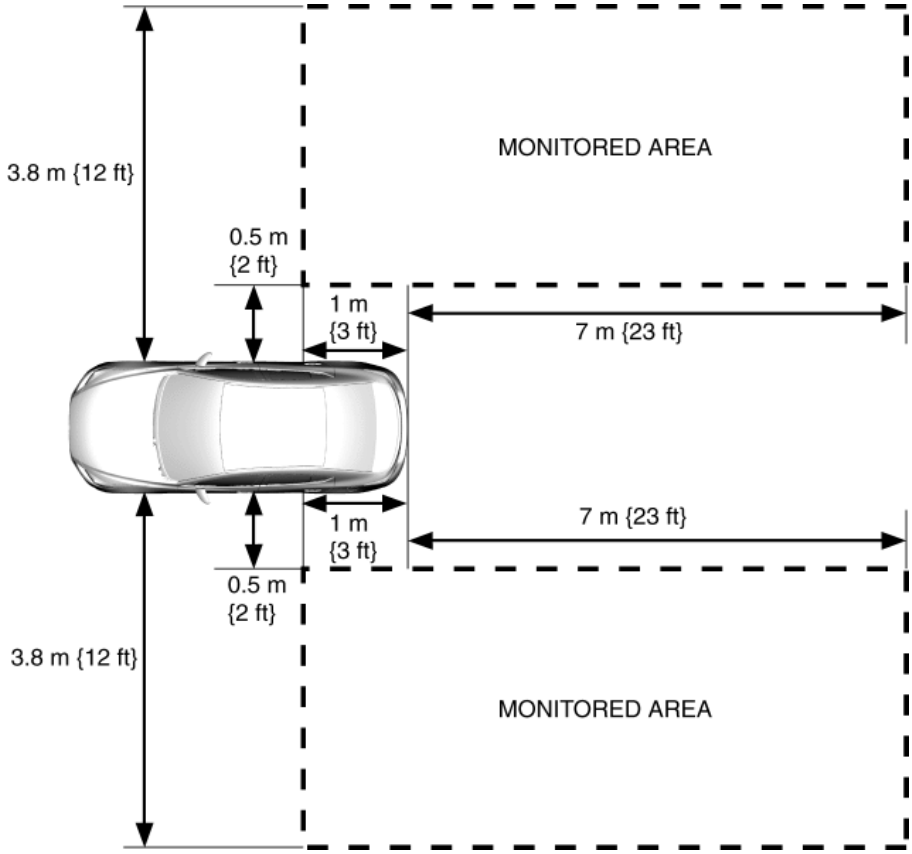

- If a turn switch signal on the side where a target vehicle has been detected is received during a warning operation (when blind spot monitoring (BSM) indicator light is illuminated), the blind spot monitoring (BSM) control module flashes the blind spot monitoring (BSM) indicator light and sounds the blind spot monitoring (BSM) warning alarm.

Rear crossing traffic alert (RCTA) function

- The blind spot monitoring (BSM) control module determines an object moving at a different speed from the vehicle and approaching the following monitoring line, which has been stored at an angle of approx. 55° or more, 125° or less, as the target vehicle based on the reflected microwaves to calculate the difference in the relative speed between the vehicle and the target vehicle. The blind spot monitoring (BSM) control module estimates the time at which another vehicle will reach the monitoring line based on the calculated relative vehicle speeds and when the estimated reach time decreases below the threshold, the BSM indicator light is flashed and the blind spot monitoring (BSM) warning alarm sounds.

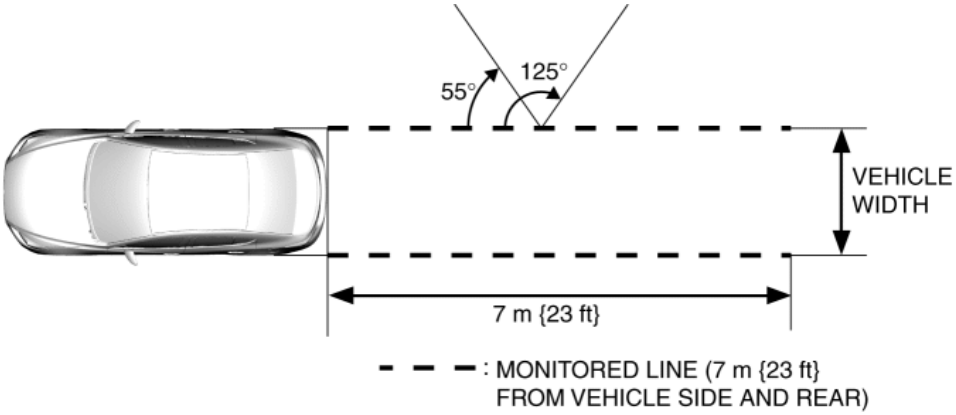

System ON/OFF switching function

- The blind spot monitoring (BSM) system can be turned on (operational) or off (non-operational) by operating the BSM OFF switch.
- If the blind spot monitoring (BSM) system is turned off (non-operational), the BSM OFF indicator light in the instrument cluster is illuminated.
- Because the blind spot monitoring (BSM) control module does not store the system on (operational)/off (non-operational), the BSM system is turned on (operational) if the ignition is switched off or on (engine off or on) from ACC.

Structural View

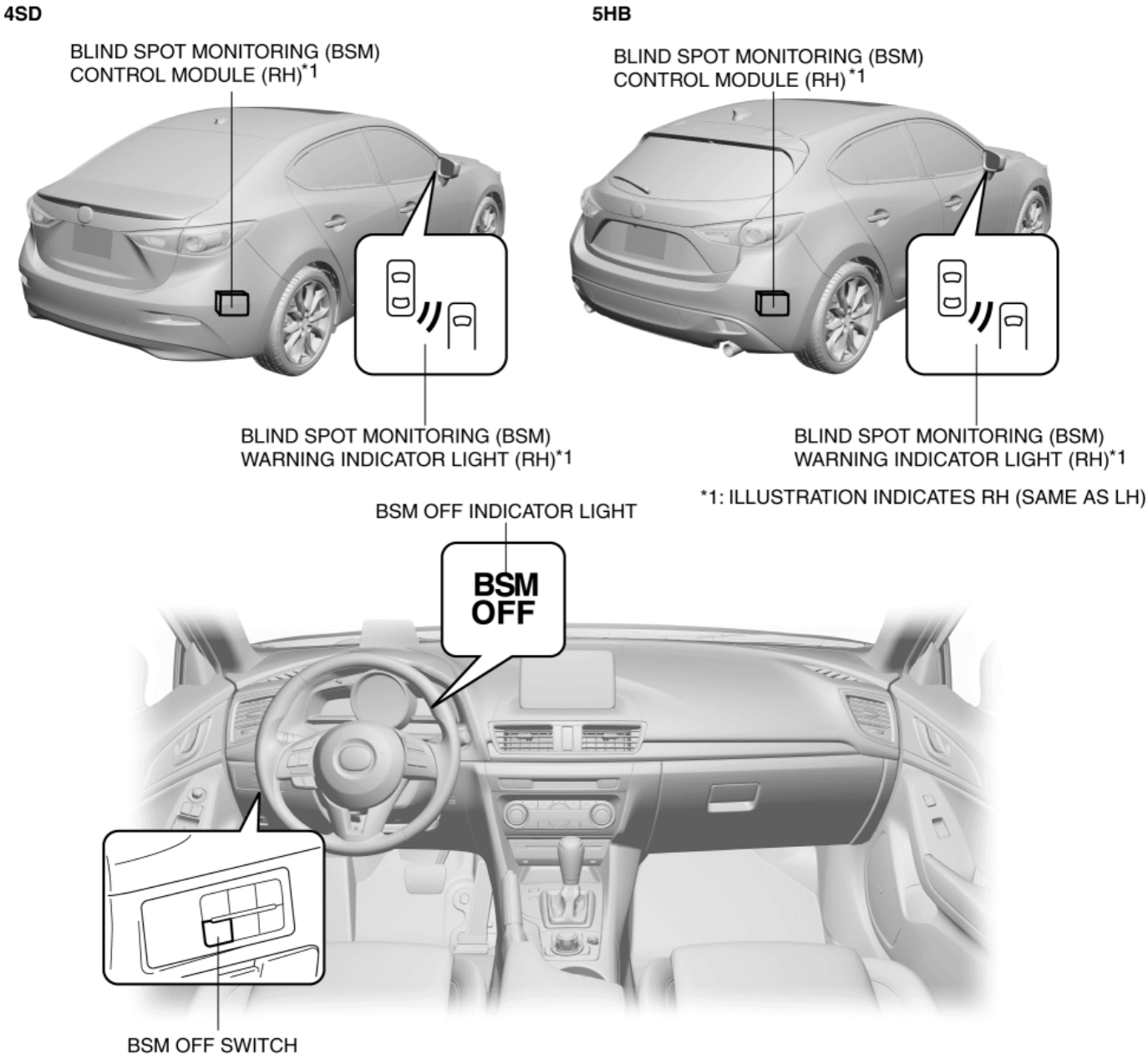

System wiring diagram

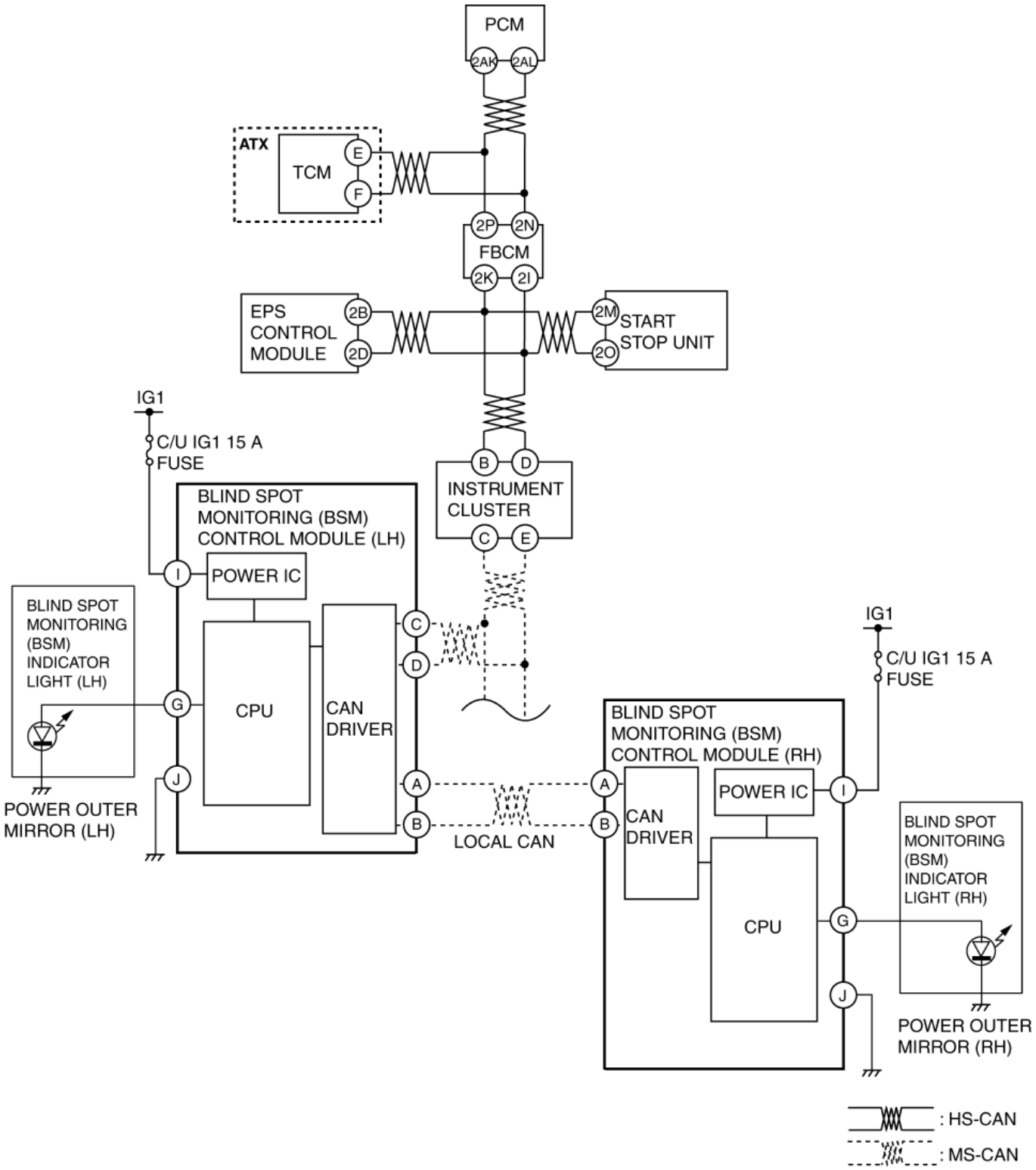

Operation

WARNING:

- Because the BSM system has various restrictions in the operation, the BSM indicator light might not illuminate or it may be delayed even if there is a vehicle traveling around the vehicle.
- Perform radar test for the BSM control module if the rear bumper has received an impact.
- The BSM system may not operate normally under the following conditions:
    - Dirt, ice or snow is adhering to the rear bumper surface.
    - The vehicle is driven in heavy rain or snowfall, or under conditions where water on the road is sprayed by the vehicle.

- The vehicle is towing a trailer.
- The vehicle accelerates from a standing-start with a target vehicle alongside.
- A target vehicle moves laterally from a lane two lanes over to the adjacent lane.
- The difference in vehicle speed between the vehicle and a target vehicle is higher with the target vehicle passing through the detection area in a very short period.
- On a steep incline, or if there is a difference in height between lanes.

- The BSM control module may not detect all types of vehicles. In particular, detection of the following types of vehicles may not occur:
  - A vehicle driving at a low speed
  - Small vehicles such as motorcycles
  - Vehicles with body shapes that may not reflect radar such as unloaded trailers
  - Vehicles with low vehicle height
  - The difference in vehicle speed between the vehicle and a target vehicle is extremely high.
  - A target vehicle accelerates suddenly from the rear of the vehicle and changes to the adjacent lane.
  - A target vehicle is traveling in the vehicle's blind spot at nearly the same speed for long periods
- The BSM indicator light may be difficult to view under the following conditions:
  - Sunlight at sunrise and sunset is reflected in and around the BSM indicator light
  - A lighting device with strong illumination is used in the vehicle
- On a road with a narrower lane width, the system could detect vehicles on a lane next to the adjacent lane and cause the warning light and beep to operate. (Conversely, on a road with a wider lane width, the system may not detect vehicles on the adjacent lane and may not operate the warning light/beep.)

CAUTION:

- If the rear bumper installation position is changed or individual differences (coating film/thickness) occur, the radar angle will deviate and the BSM system may not operate properly. Perform the radar test using the SSTs (Service Special Tools) and Mazda Modular Diagnostic System (M-MDS) when any of the following items have been performed.
  - BSM control module is replaced
  - Rear bumper is repaired or replaced
  - Vehicle’s rear area is repaired due to collision
- Refer to the Workshop Manual for the radar test procedure.

Blind spot monitoring (BSM) operation

Operation condition

- The warning is triggered and the alarm sounds when all of the following conditions are met:
  - BSM OFF indicator light is turned off (system ON)
  - Vehicle speed is approx. **10 km/h {6.2 mph} or more**
  - Selector lever (ATX)/shift position (MTX) is not in R position (ATX)/reverse position (MTX)
  - Vehicle being detected enters the monitored area
  - Turn switch signal on side that blind spot monitoring (BSM) indicator light is illuminated is received (only operations of BSM indicator light flashing and BSM warning alarm sound)
- When the ignition is switched ON (engine off or on) and the BSM OFF indicator light is turned off (system on), the blind spot monitoring (BSM) control module activates the system and when the speed of the detecting vehicle reaches approx. **10 km/h {6.2 mph} or more**, it begins detecting other vehicles.
- When the vehicle speed is **approx. 10 km/h {6.2 mph} or more** and the detected target vehicle enters the monitored area, the blind spot monitoring (BSM) control module illuminates the BSM indicator light on the side the target vehicle is detected.

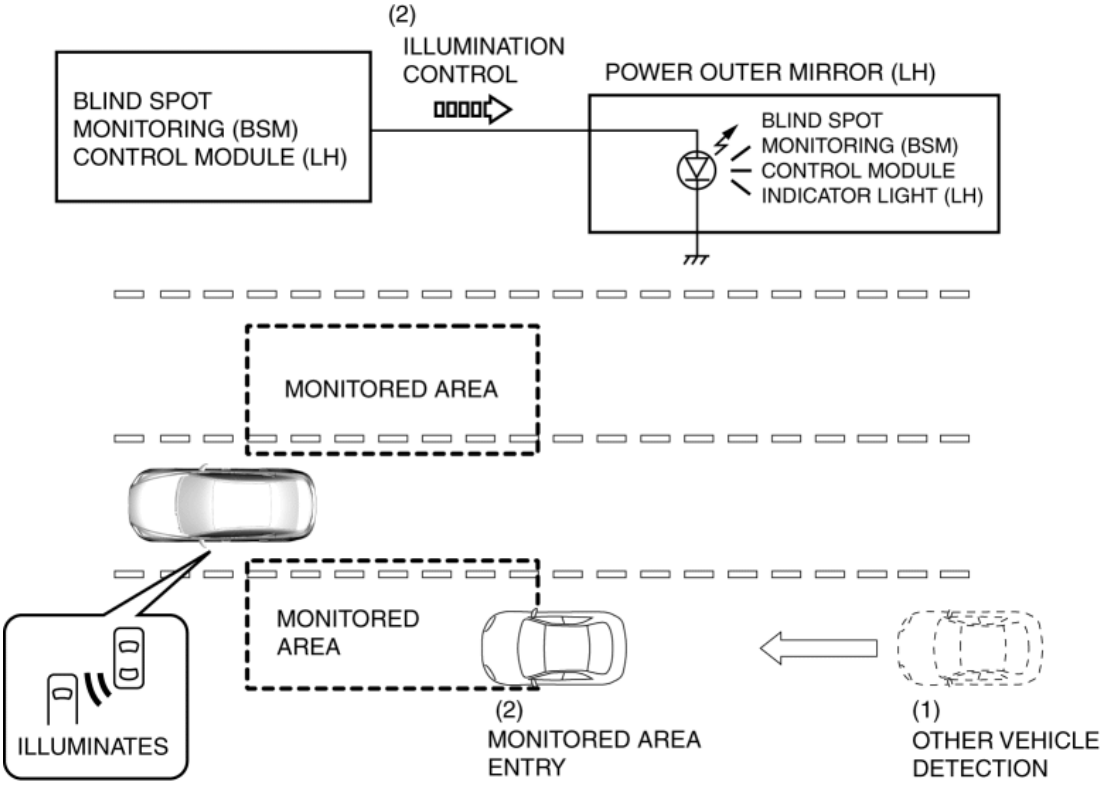

- When a turn switch signal on the side the target vehicle is detected is received via CAN signal from the start stop unit while the blind spot monitoring (BSM) indicator light is illuminated, the BSM control module flashes the BSM indicator light. In addition, a BSM warning alarm request signal is sent via CAN signal to the instrument cluster.
- The instrument cluster operates the BSM warning alarm based on a request signal from the BSM control module.

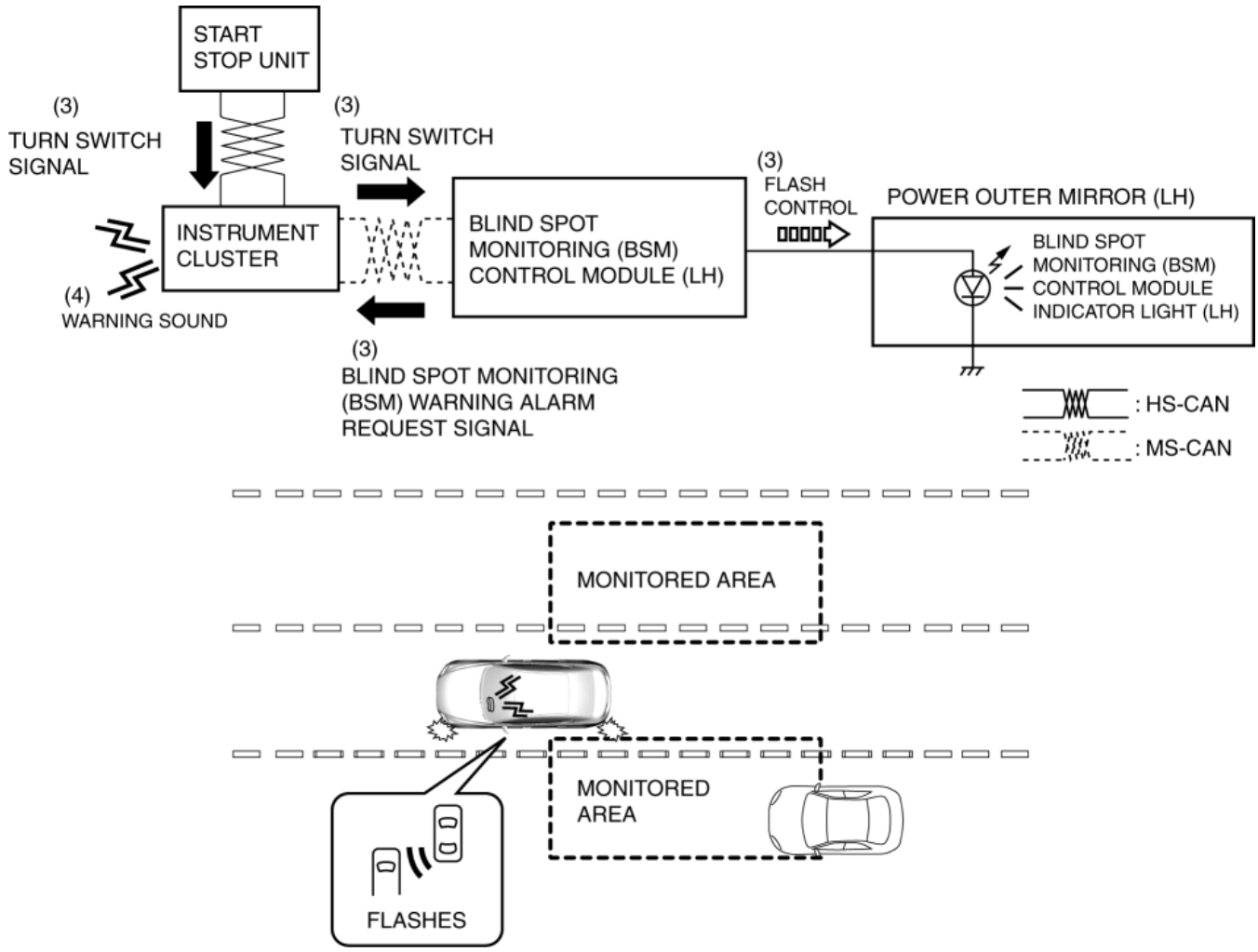

Rear crossing traffic alert (RCTA) operation

Operation condition

- The warning is triggered when all of the following conditions are met:
  - BSM OFF indicator light is turned off (system ON)
  - Selector lever (ATX)/shift position (MTX) is in R position (ATX)/reverse position (MTX)
  - Estimated time until detected target vehicle reaches monitoring line decreases below threshold
- When the ignition is switched ON (engine on) and the BSM OFF switch is ON (system ON) and the selector lever (ATX)/shift position (MTX) is in R position (ATX)/reverse position (MTX), the blind spot monitoring (BSM) control module starts detection of a target vehicle.
- If the approach to the monitoring line is from a direction of approx. 55° or more and 125° or less and the estimated reach time decreases below the threshold, the following controls are performed.
  - Flashes blind spot monitoring (BSM) indicator light
  - Sends blind spot monitoring (BSM) warning alarm request signal via CAN signal to instrument cluster
- The instrument cluster operates the BSM warning alarm based on a request signal from the BSM control module.

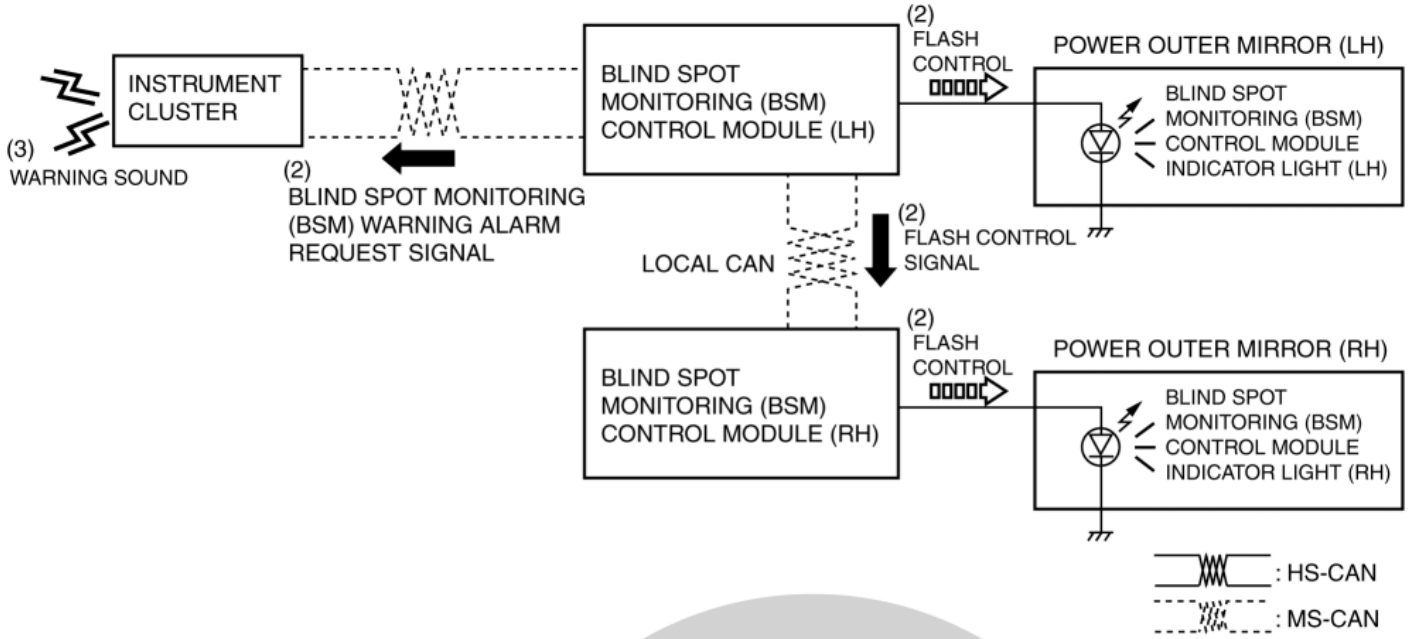
INSTRUMENT CLUSTER
(3)
WARNING SOUND
(2)
BLIND SPOT MONITORING (BSM) WARNING ALARM REQUEST SIGNAL
BLIND SPOT MONITORING (BSM) CONTROL MODULE (LH)
(2)
FLASH CONTROL
POWER OUTER MIRROR (LH)
BLIND SPOT MONITORING (BSM) CONTROL MODULE INDICATOR LIGHT (LH)
LOCAL CAN
(2)
FLASH CONTROL SIGNAL
BLIND SPOT MONITORING (BSM) CONTROL MODULE (RH)
(2)
FLASH CONTROL
POWER OUTER MIRROR (RH)
BLIND SPOT MONITORING (BSM) CONTROL MODULE INDICATOR LIGHT (RH)
: HS-CAN
: MS-CAN

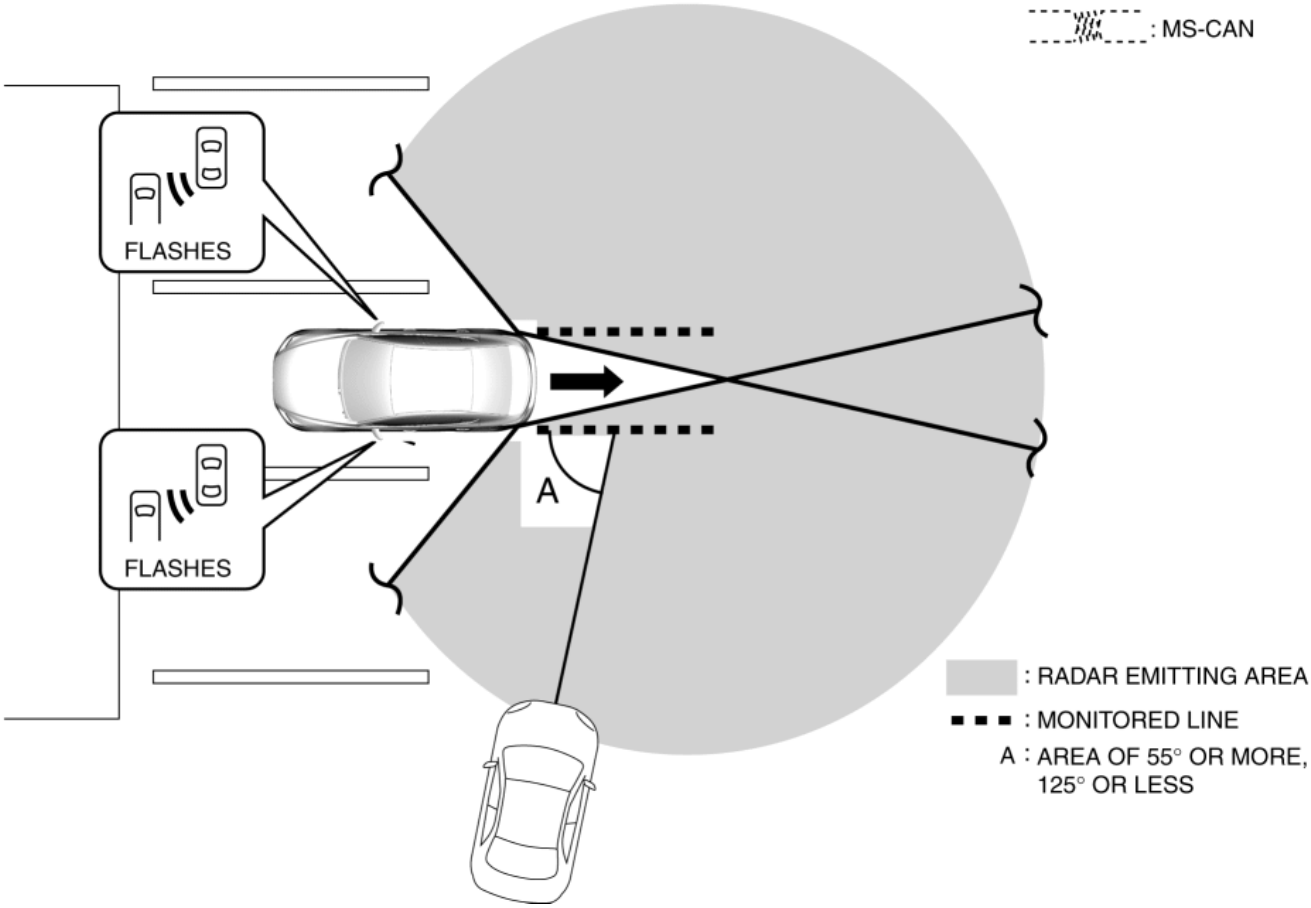
FLASHES
FLASHES
A
: RADAR EMITTING AREA
: MONITORED LINE
A : AREA OF 55° OR MORE, 125° OR LESS

2014 - Mazda3 - Body and Accessories

BLIND SPOT MONITORING (BSM) CONTROL MODULE

Purpose

- The blind spot monitoring (BSM) control module detects a target vehicle in the blind-spot at the rear of the vehicle by emitting microwaves from the radar to control the blind spot monitoring (BSM) system.

Function

- The blind spot monitoring (BSM) control module controls the BSM system based on the following CAN signals:

CAN signal sending module	Signal name
PCM	Vehicle speed signal
EPS control module	Steering angle (estimated absolute angle) signal
Start stop unit	Light switch position signal
	Turn switch signal
Instrument cluster	Ignition switch position signal
	Panel light signal
	BSM OFF switch position signal
	Back-up light illumination request signal

- The blind spot monitoring (BSM) control module (LH) transmits with the related unit using CAN. The BSM control modules (LH) and (RH) transmit via local CAN lines.
- The blind spot monitoring (BSM) control module (LH) transmits the CAN signal received from the related unit to the BSM control module (RH) and sends the CAN signal received from the BSM control module (RH) to the related unit.

Target vehicle detection function

- The blind spot monitoring (BSM) control module emits microwaves to the following area to detect an object in the blind-spot at the rear of the vehicle from the reflected microwaves.

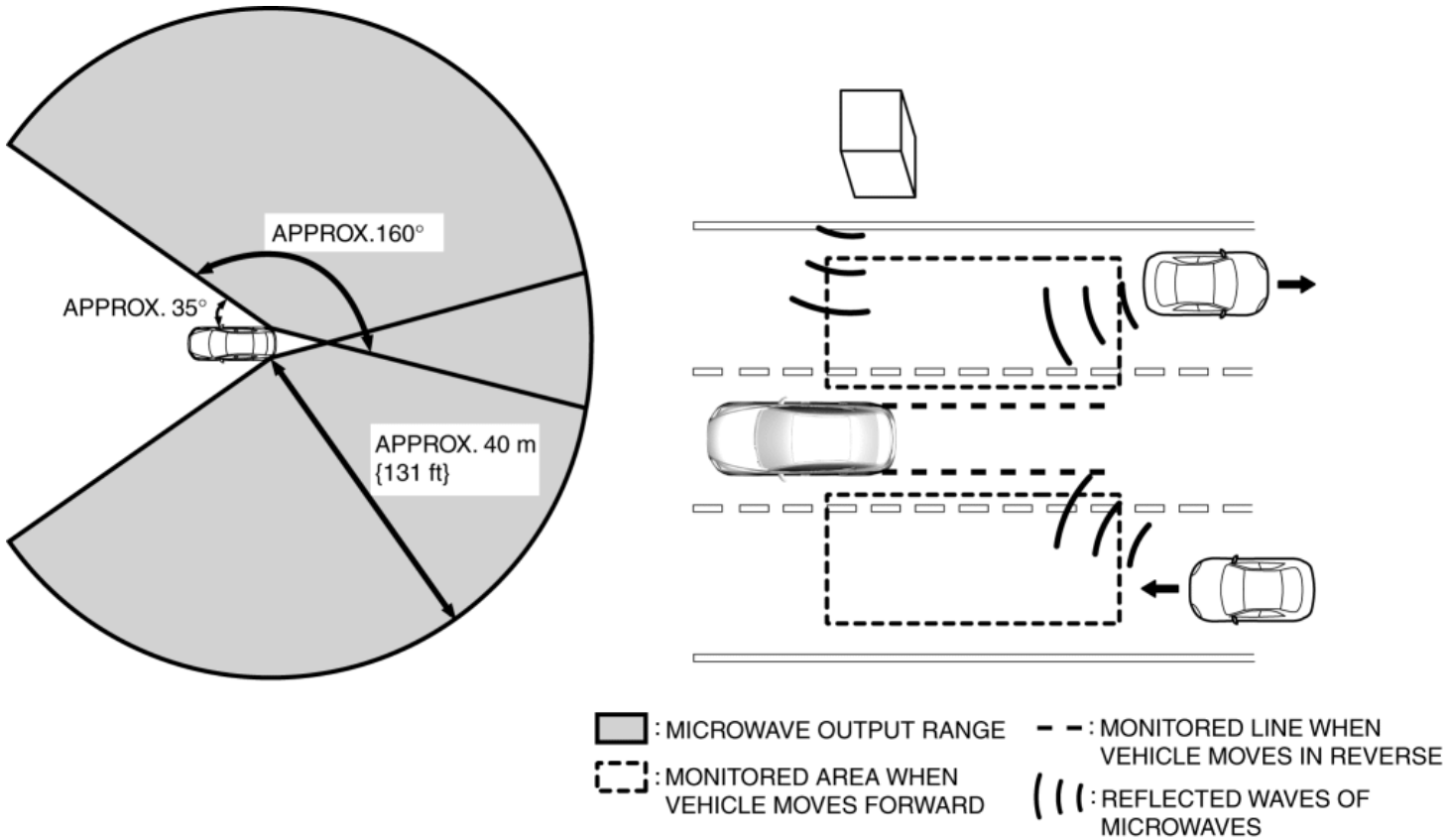

- The blind spot monitoring (BSM) control module calculates the position, direction of vehicle travel, and relative speed of the detected object from the reflected microwaves, vehicle speed, and steering angle (estimated absolute angle) signal to detect an object which approaches the blind-spot at the rear of the vehicle as a target vehicle for monitoring.

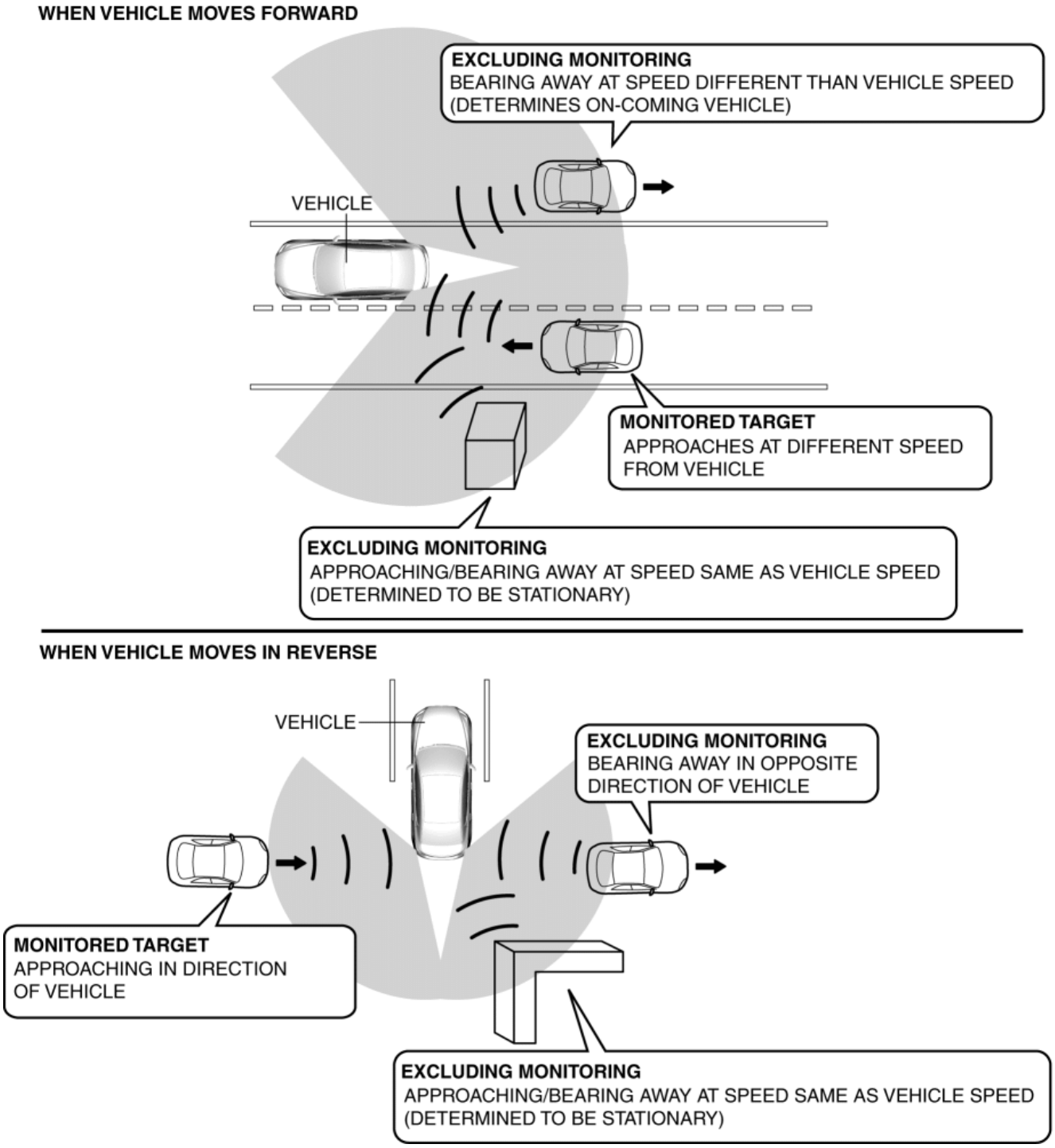

Changing function brightness of blind spot monitoring (BSM) indicator light

- When the blind spot monitoring (BSM) control module receives the panel light signal from the instrument cluster, it determines that the vehicle is being driven at night or in a dark place and decreases the brightness of the blind spot monitoring (BSM) indicator light. As a result, visibility of the blind spot monitoring (BSM) indicator light at night has been improved.

On-board diagnostic function

- The blind spot monitoring (BSM) control module detects dirt, transmission errors, and internal malfunctions of the module and stores DTCs. In addition, the BSM off indicator light in the instrument cluster flashes to indicate a system error. For DTC details, refer to ON-BOARD DIAGNOSTIC. (See **ON-BOARD DIAGNOSTIC [BLIND SPOT MONITORING (BSM) SYSTEM]**.)

Construction

The blind spot monitoring (BSM) control modules are positioned on the left and right sides of the body inside the rear bumper.

- The blind spot monitoring (BSM) control module is integrated with the radar, which emits microwaves and receives the reflected waves, and the control module.

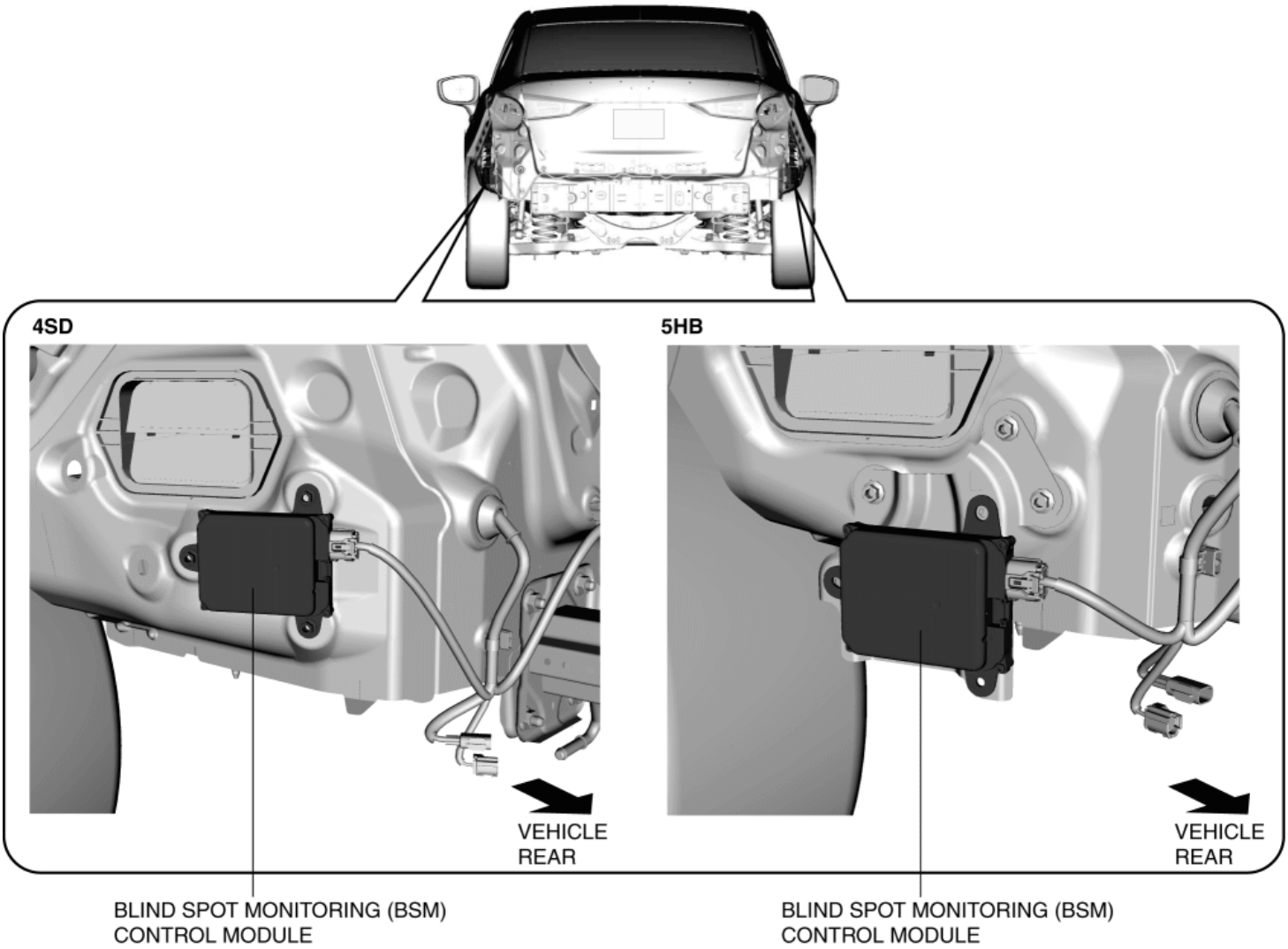

Operation

- For the operation of the blind spot monitoring (BSM) control module, refer to the BSM system. (See **BLIND SPOT MONITORING (BSM) SYSTEM**.)

Fail-safe

DTC No.	Fail-safe function
B118C:11	
B118C:15	
U0001:88	
U0100:00	
U0131:00	
U0155:00	

U0214:00	
U0233:00	
U0401:68	
U0420:68	
U0423:68	
U0515:68	Blind spot monitoring (BSM) system is stopped.
U2300:51	
U2300:54	
U2300:56	
U2300:64	
U3000:01	
U3000:09	
U3000:54	
U3000:97	
U3003:04	
U3003:16	
U3003:17	

2014 - Mazda3 - Body and Accessories

BLIND SPOT MONITORING (BSM) OFF INDICATOR LIGHT

Purpose

- The BSM OFF indicator light informs the driver that the blind spot monitoring (BSM) system is turned off or there is a malfunction in the system.

Function

- If the instrument cluster constantly receives a BSM OFF indicator signal via CAN signal from the blind spot monitoring (BSM) control module (LH), it illuminates the BSM OFF indicator light.
- If the instrument cluster periodically receives a BSM OFF indicator signal via CAN signal from the blind spot monitoring (BSM) control module (LH), it flashes the BSM OFF indicator light.
- The flash pattern of the BSM OFF indicator light is as shown in the figure.

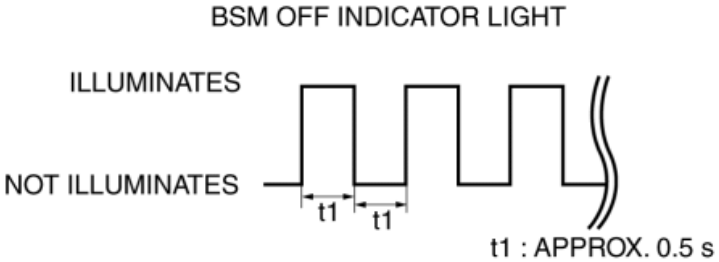

- For vehicles with center display, a warning message in the center display is displayed when the BSM OFF indicator light is flashed. For the message content and verification method, refer to the CENTER DISPLAY. (See **CENTER DISPLAY [WITH CENTER DISPLAY]**.)

Construction

- The BSM OFF indicator light are equipped in the instrument cluster.

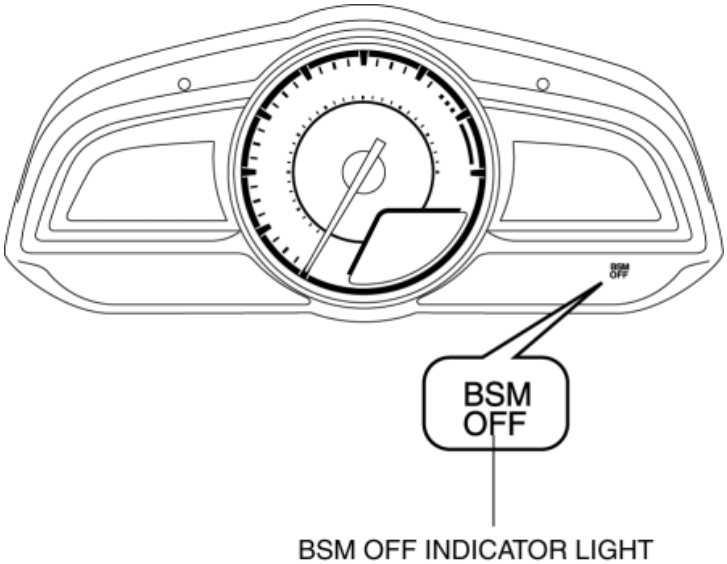

- For vehicles with center display, a warning message in the center display is displayed when the BSM OFF indicator

light is flashed. For the message content and verification method, refer to the CENTER DISPLAY. (See **CENTER DISPLAY [WITH CENTER DISPLAY]**.)

Operation

- The instrument cluster receives (1) the BSM OFF indicator signal from the blind spot monitoring (BSM) control module (LH) via the CAN signal.
- The instrument cluster turns the transistor on (2) intermittently when the BSM OFF indicator signal is periodically received and continuously when the signal is constantly received.
- When the transistor turns on intermittently, the BSM OFF indicator light flashes (3) and when it turns on continuously, the BSM OFF indicator light illuminates (3).

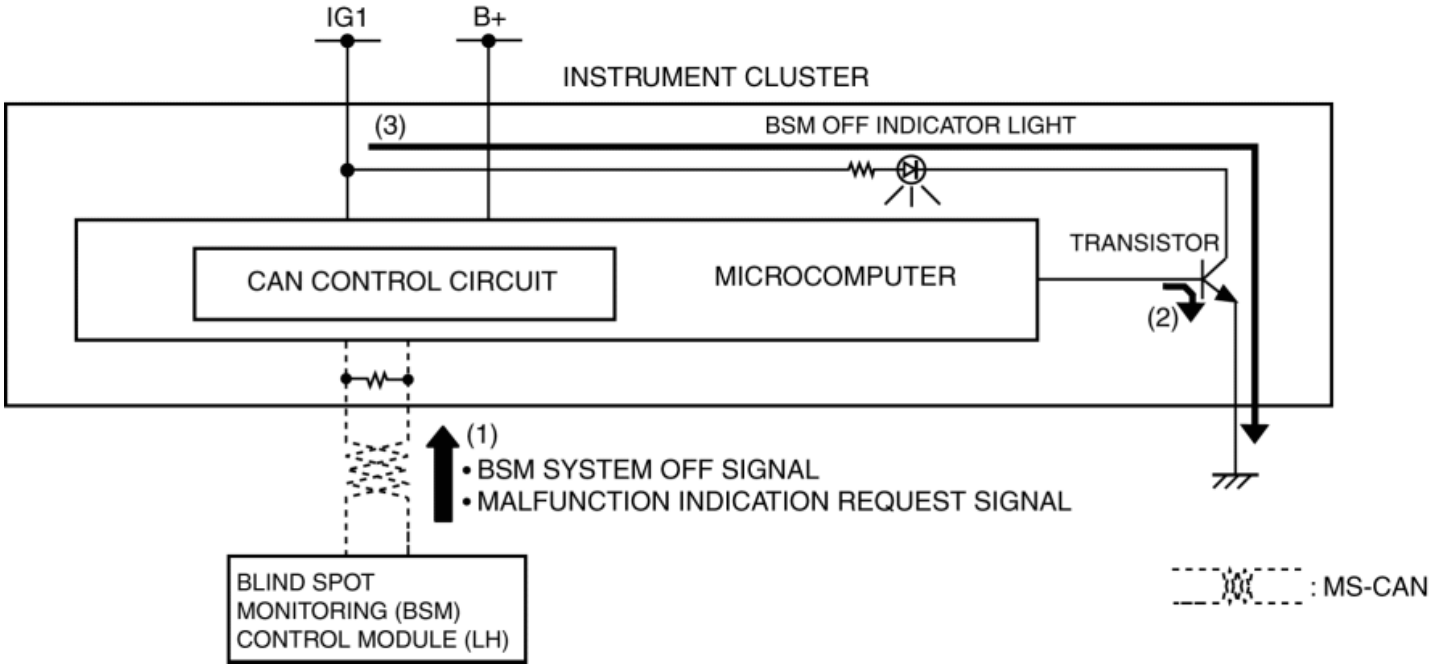

Fail-safe

- Function not equipped.

2014 - Mazda3 - Body and Accessories

BLIND SPOT MONITORING (BSM) OFF SWITCH

Purpose

- The blind spot monitoring (BSM) system can be turned on or off optionally by the driver.

Function

- The switch operation signal is sent to the instrument cluster.

Construction

- The BSM OFF switch is built into the cluster switch.
- The resistance is built into each switch.

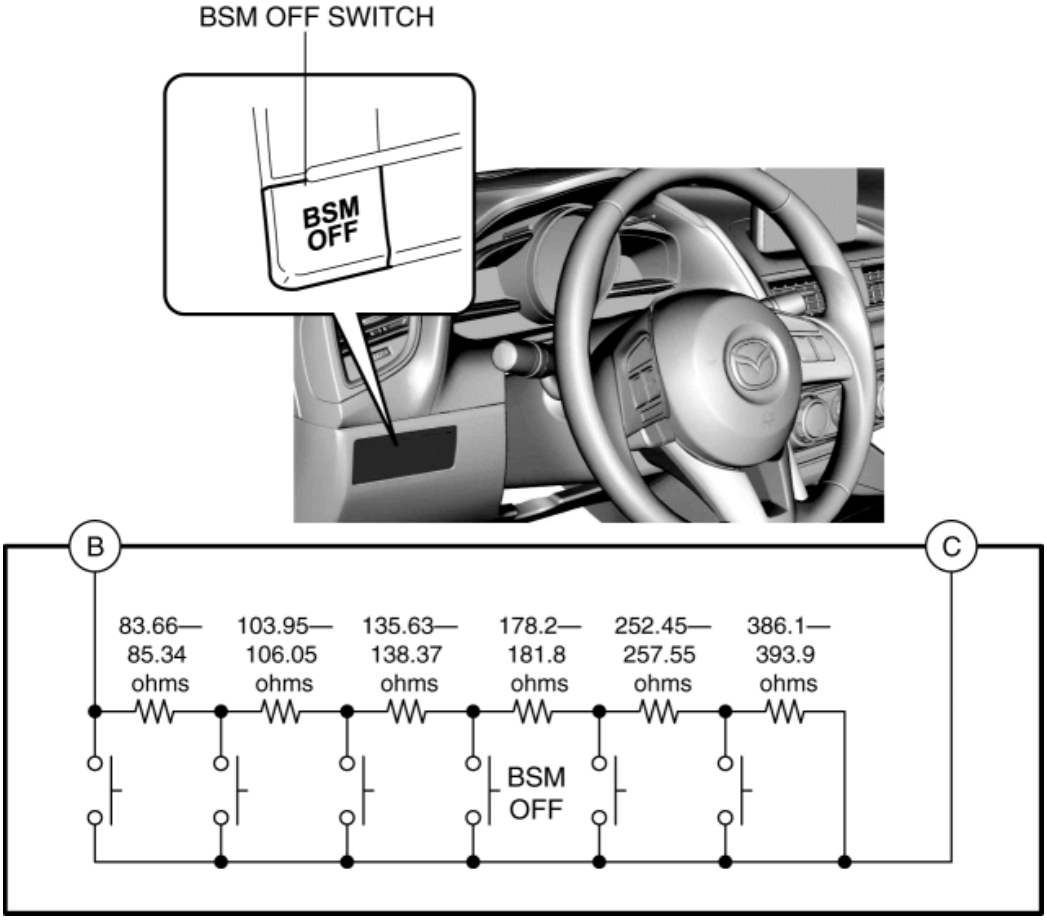

Operation

- When the BSM OFF switch operates, the BSM OFF switch operation signal is sent to the instrument cluster.
- The instrument cluster sends a BSM OFF switch operation signal to the blind spot monitoring (BSM) control module

(LH) based on the received voltage value (switch operation signal).

- The blind spot monitoring (BSM) control module switches the blind spot monitoring (BSM) system on/off when it receives the BSM OFF switch operation signal from the instrument cluster.

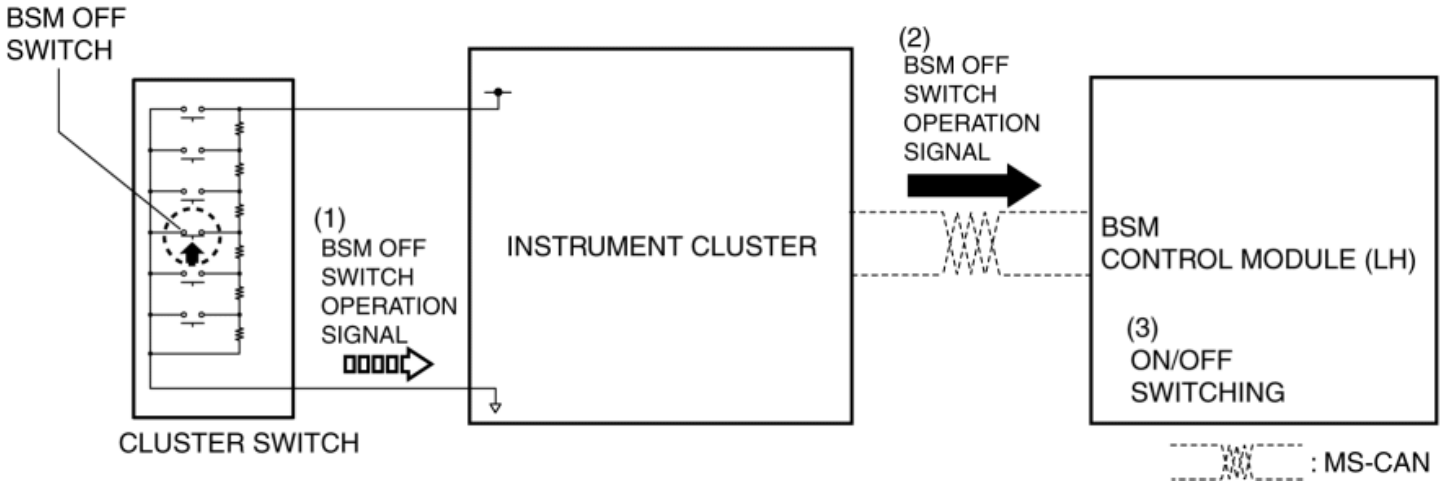

Fail-safe

- Function not equipped.

2014 - Mazda3 - Body and Accessories

BLIND SPOT MONITORING (BSM) WARNING ALARM

Purpose

- The blind spot monitoring (BSM) warning alarm warns the driver of a possible accident.

Function

- If the instrument cluster receives a warning sound request signal from the blind spot monitoring (BSM) control module (LH), it sounds the blind spot monitoring (BSM) warning alarm using the buzzer in the instrument cluster.
- The blind spot monitoring (BSM) warning alarm sound pattern is as shown in the figure.

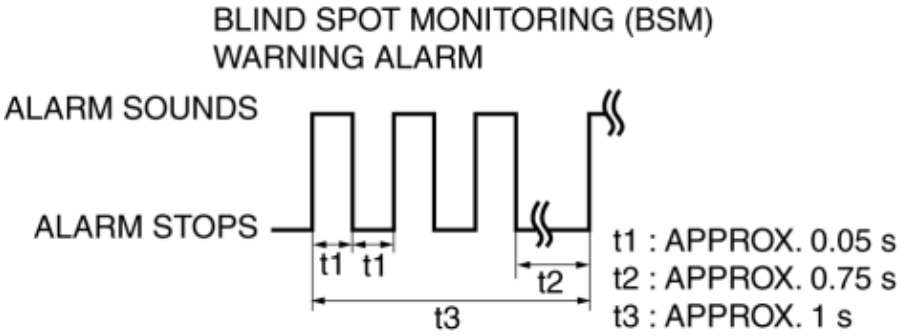

Construction

- The blind spot monitoring (BSM) warning alarm sounds using the buzzer built into the instrument cluster.

Operation

- The instrument cluster receives (1) the warning sound request signal from the blind spot monitoring (BSM) control module (LH).
- The instrument cluster turns the transistor on (2) based on the warning sound request signal.
- When the transistor turns on, a ground circuit with the alarm is established and the alarm sounds (3).

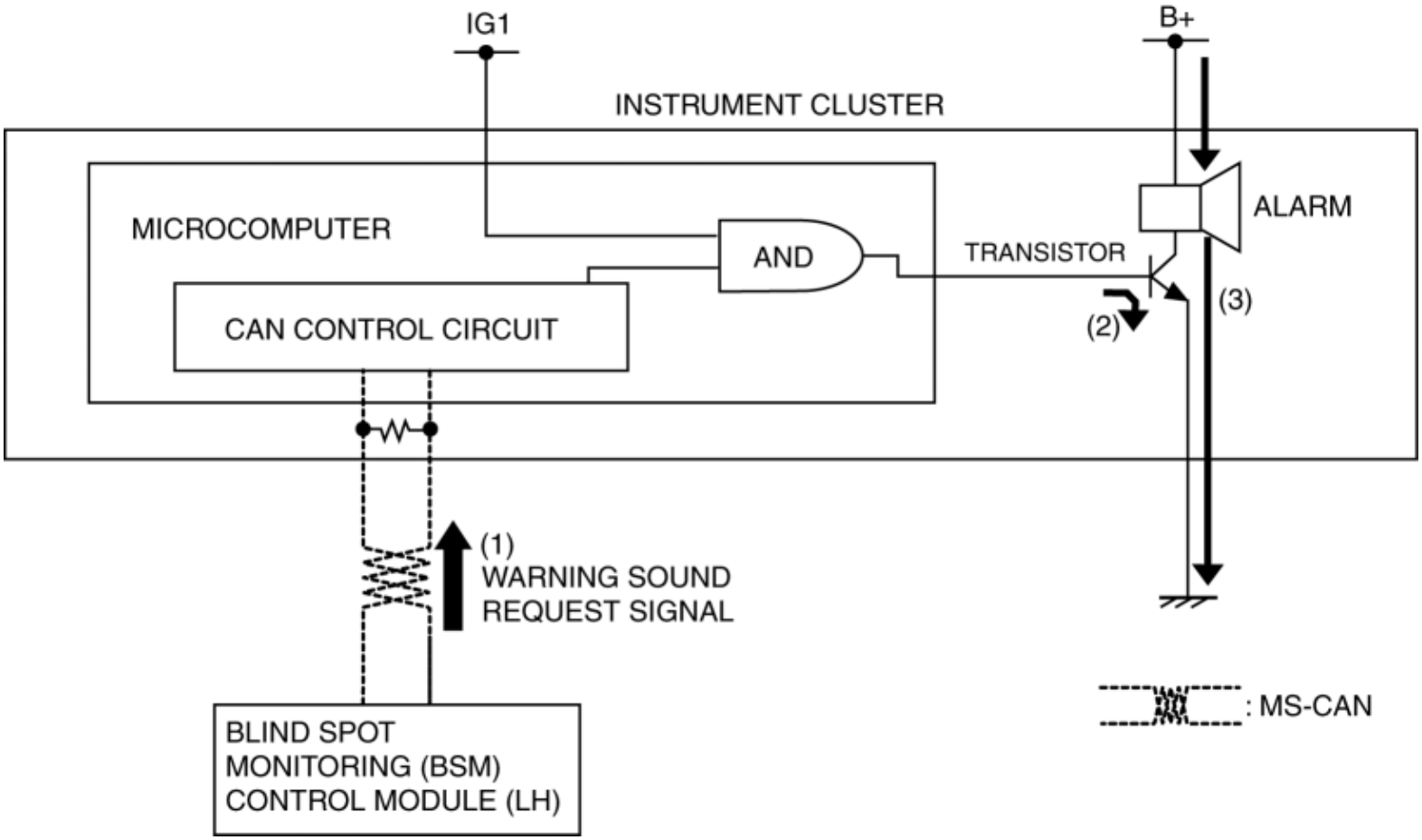

Fail-safe

- Function not equipped.

2014 - Mazda3 - Body and Accessories

HORN

Purpose

- The horn sounds according to the horn switch operation.

Function

- Sound is harmonized between high and low pitch.

Construction

- Installed to the inside of the front grille.
- The diaphragm is vibrated to apply vibration to the air and produce sound.

Operation

1. When the horn switch turns on (1), the horn relay turns on (2).
2. When the horn relay turns on, the horn sounds.

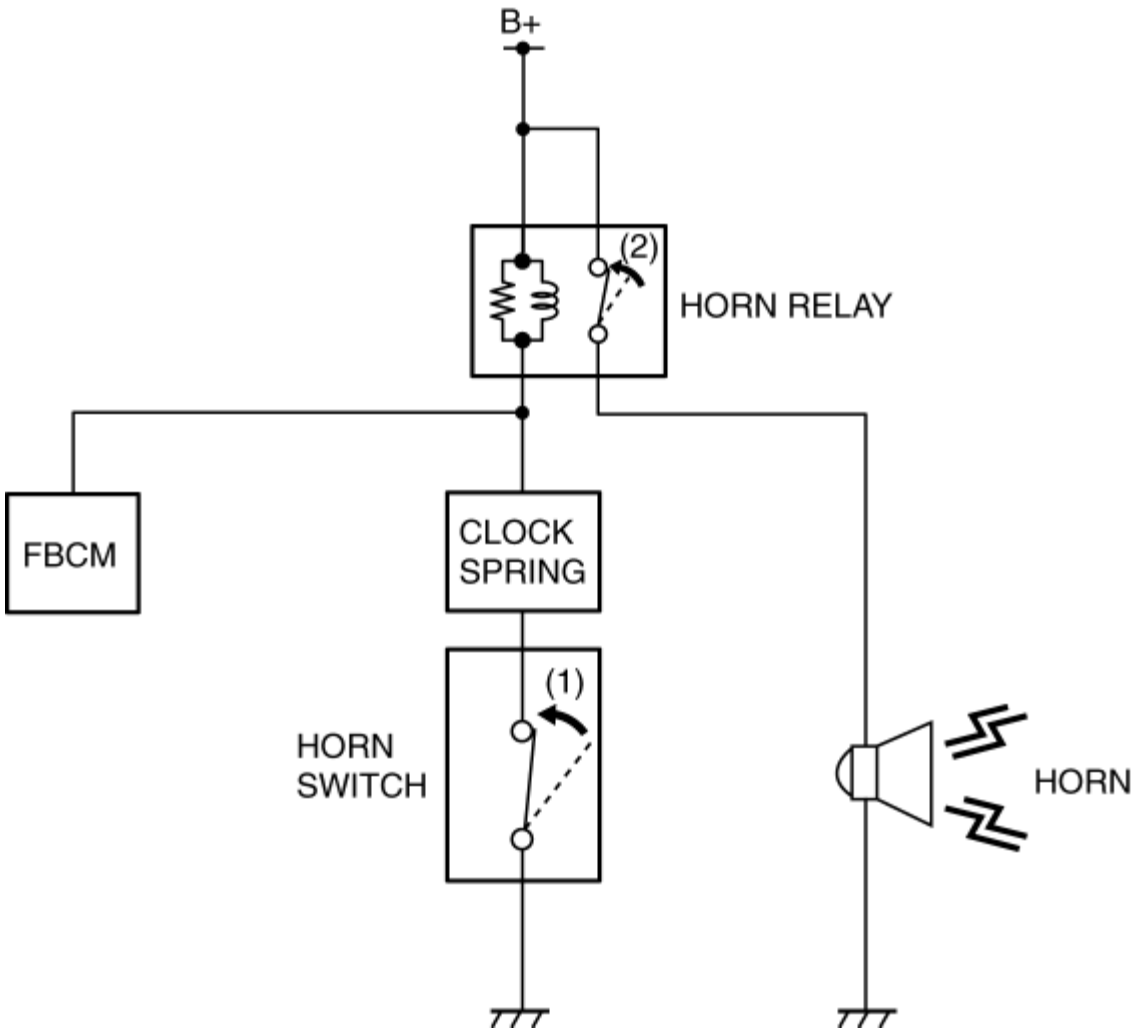

Fail-safe

- Function not equipped.

2014 - Mazda3 - Body and Accessories

LANE DEPARTURE WARNING SYSTEM (LDWS)

Outline

- The Lane Departure Warning System (LDWS) recognizes vehicle lane lines on a road using the forward sensing camera (FSC) installed to the windshield, and if the vehicle departs from its lane unbeknownst to the driver, the system alerts the driver of the lane departure using a warning indication and warning sound.

WARNING:

- LDWS is only a supplementary system for the prevention of a lane departure, however the LDWS functions have limitations. Relying solely on the LDWS and neglecting prudent steering wheel operation could cause an unexpected accident resulting in death or serious injury. Do not rely solely on the LDWS. Always make lane corrections using the steering wheel and drive safely.
- The LDWS may not operate normally under the following conditions:
    - Poor vehicle lane line visibility due to adverse weather (rain, snow, fog)
    - Poor vehicle lane line visibility due to backlight, snow on the road, water puddles, road ruts
    - Poor vehicle lane line visibility due to cracks and fissures in the vehicle lane
    - Vehicle lane lines intersect with complexity due to additions or reductions of driving lanes
    - Vehicle lane marking is not completely erased after road maintenance, two or more lane lines next to each other
    - Vehicle lane lines not recognized due to vehicle ahead

CAUTION:

- If the FSC aiming for the LDWS is not completed, the camera shot angle for the FSC cannot be recorded and the LDWS may not operate. When performing the following servicing, always perform the FSC aiming. Refer to the FSC aiming procedure in the workshop manual.
    - FSC replacement
    - FSC clip replacement
    - Windshield replacement

Function

- The FSC sets warning-trigger lines based on the vehicle lane lines recognized by the camera, and if the vehicle contacts one of these warning-trigger lines it activates the warning indicator and warning sound. Refer to for FSC and warning-trigger line details. (See **FORWARD SENSING CAMERA (FSC)**.)

Driver operation determination function

- The FSC determines the driver's intentions according to the following driving operations, and controls the warning-trigger operation.
  - After the turn switch is operated and the vehicle lane is changed within 6 s.
  - The steering wheel is turned at a certain angle or more, and the vehicle lane is changed.
  - The accelerator pedal is depressed a certain amount or more, and the vehicle lane is changed.
  - The brake pedal is depressed a certain amount or more and the vehicle departs from its lane.

System status display function

- The FSC displays the system status using the LDWS indicator light (green), LDWS warning light (amber), and the active driving display.

LDWS Switch	Condition	LDWS indicator light (green)	LDWS warning light (amber)	Master warning light	Active driving display
OFF	System is off	Off	Off	Off	No display
ON	Vehicle lanes recognized at vehicle speed of approx. 65 km/h {40 mph} or more	On	Off	Off	
	While warning is triggered	Flash	Off	Off	OR
	Vehicle speed is approx. 60 km/h {37 mph} or less	Off	On	Off	

	Vehicle lanes not recognized	Off	On	Off	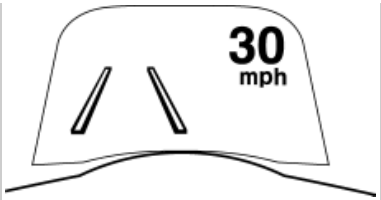
	FSC detects camera fogging	Off	Off	On	No display
	FSC detects camera dirty	Off	Off	On	No display
	Malfunction in LDWS occurs	Off	Flash	Off	No display
	Malfunction in FSC occurs	Off	Off	On	No display

Structural View

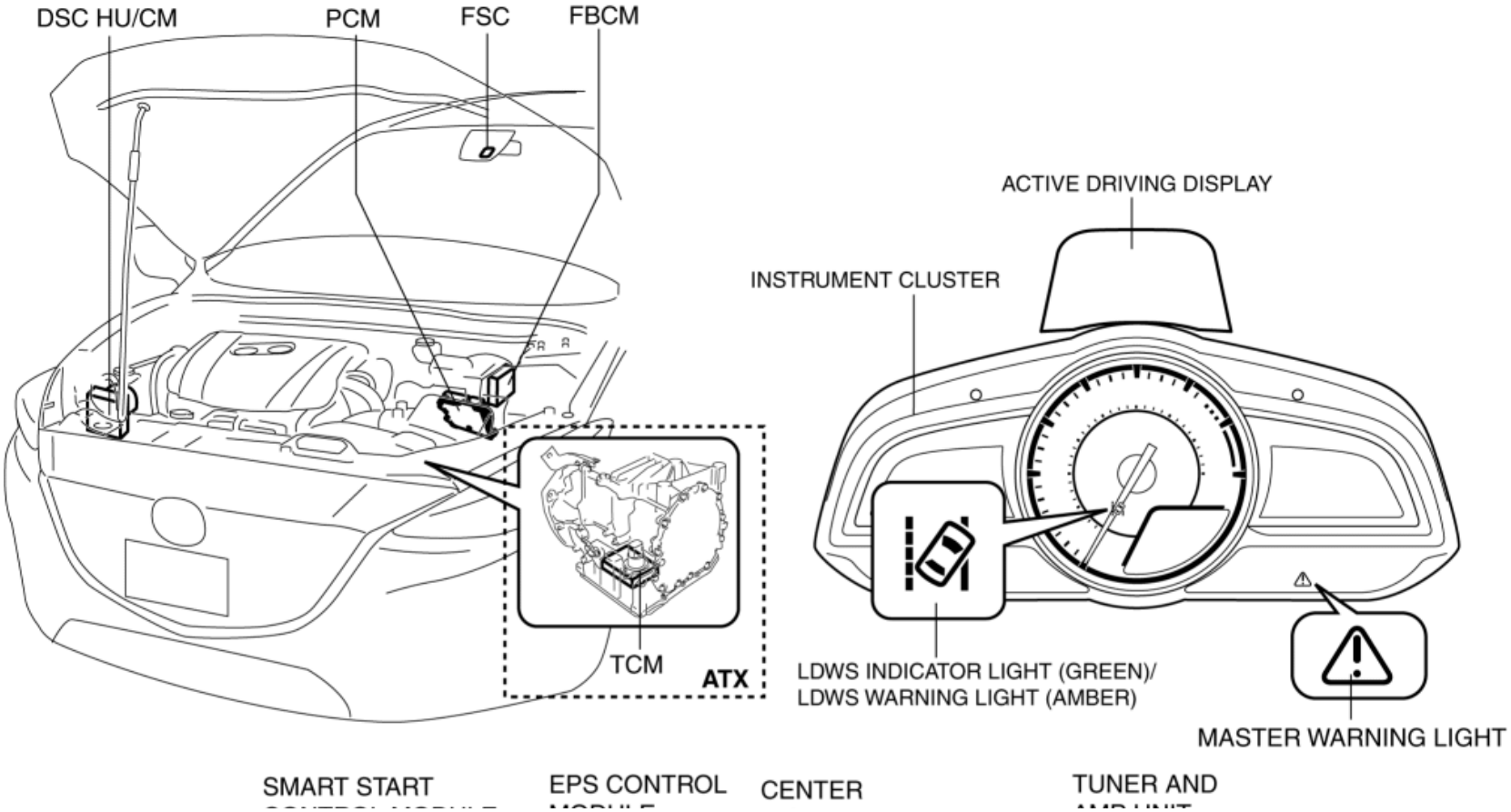

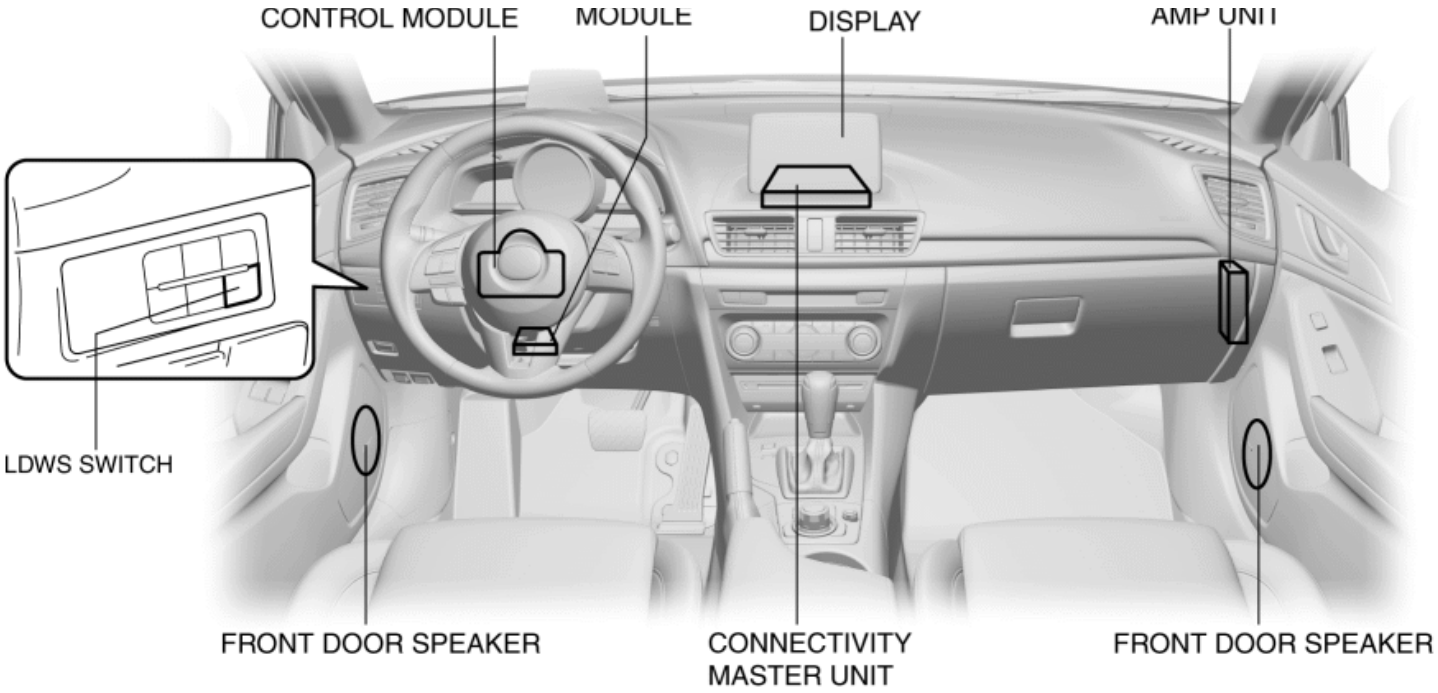

System Wiring Diagram

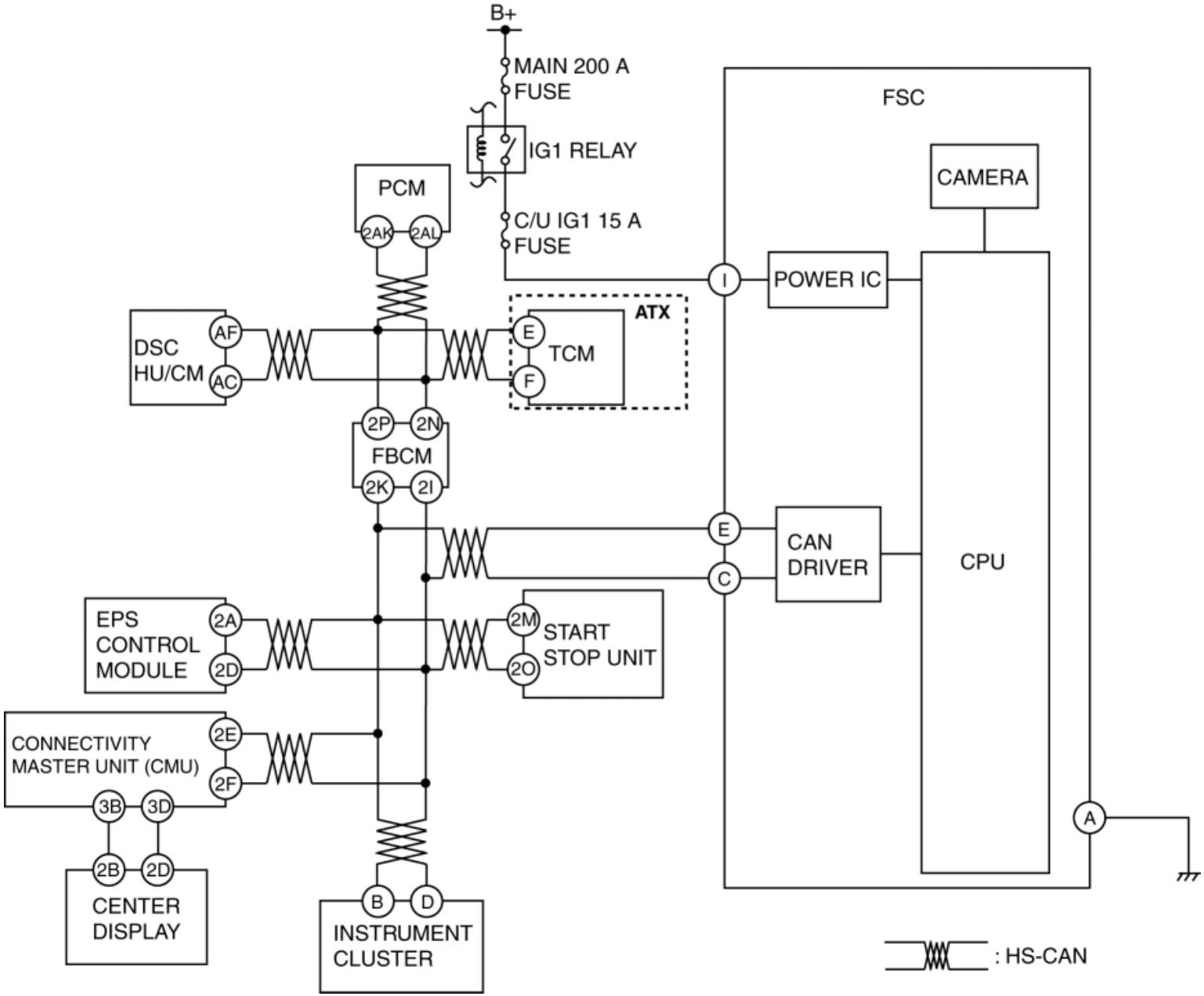

Block diagram

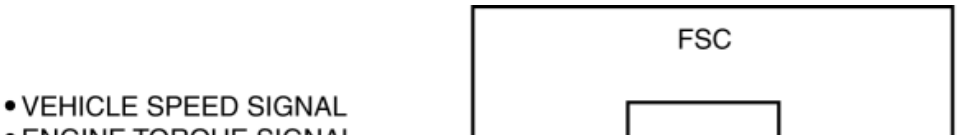

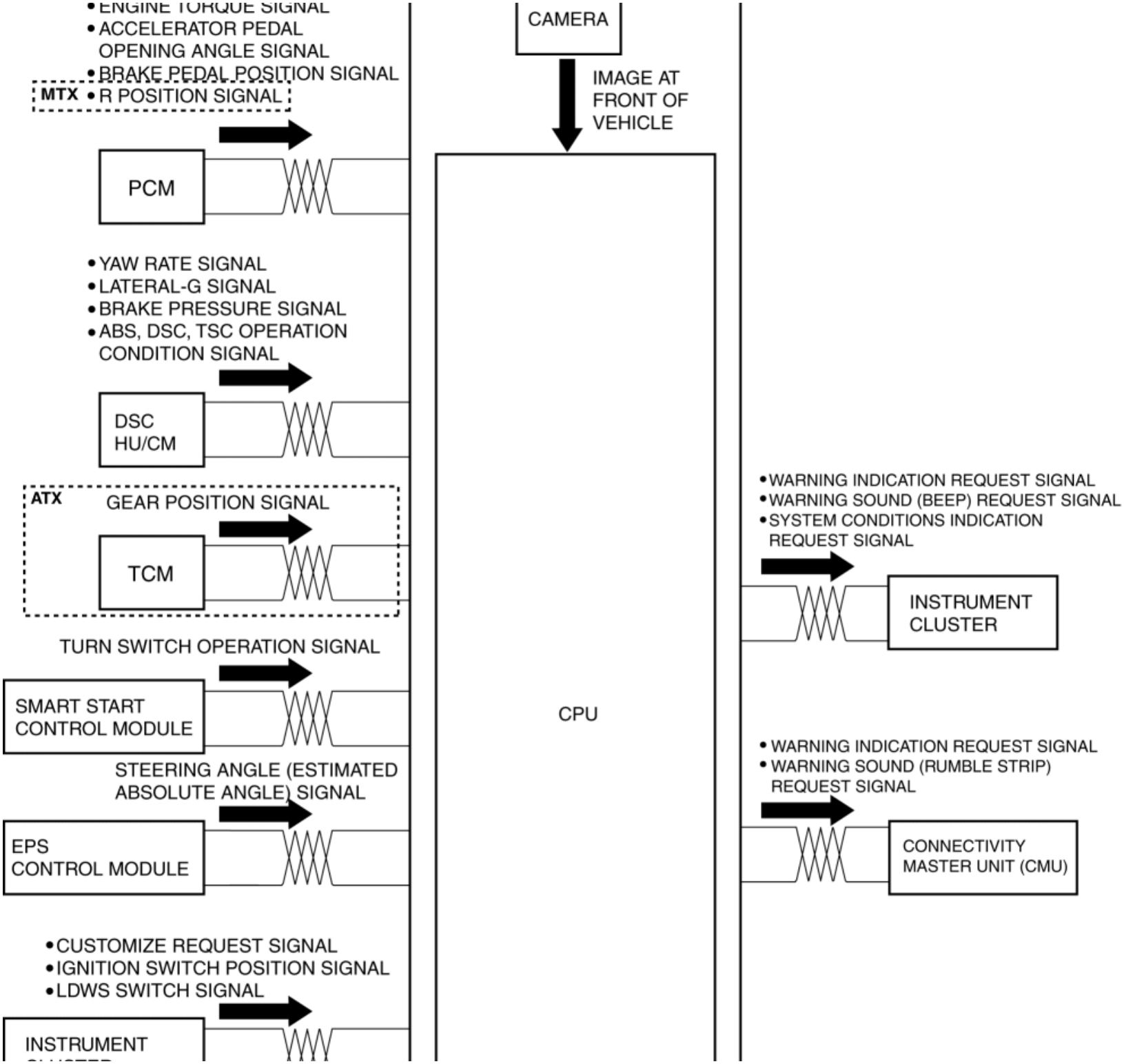
• ENGINE TORQUE SIGNAL
• ACCELERATOR PEDAL OPENING ANGLE SIGNAL
• BRAKE PEDAL POSITION SIGNAL
MTX • R POSITION SIGNAL
PCM
CAMERA
IMAGE AT FRONT OF VEHICLE
• YAW RATE SIGNAL
• LATERAL-G SIGNAL
• BRAKE PRESSURE SIGNAL
• ABS, DSC, TSC OPERATION CONDITION SIGNAL
DSC HU/CM
ATX
GEAR POSITION SIGNAL
TCM
TURN SWITCH OPERATION SIGNAL
SMART START CONTROL MODULE
STEERING ANGLE (ESTIMATED ABSOLUTE ANGLE) SIGNAL
EPS CONTROL MODULE
• CUSTOMIZE REQUEST SIGNAL
• IGNITION SWITCH POSITION SIGNAL
• LDWS SWITCH SIGNAL
INSTRUMENT
CPU
• WARNING INDICATION REQUEST SIGNAL
• WARNING SOUND (BEEP) REQUEST SIGNAL
• SYSTEM CONDITIONS INDICATION REQUEST SIGNAL
INSTRUMENT CLUSTER
• WARNING INDICATION REQUEST SIGNAL
• WARNING SOUND (RUMBLE STRIP) REQUEST SIGNAL
CONNECTIVITY MASTER UNIT (CMU)

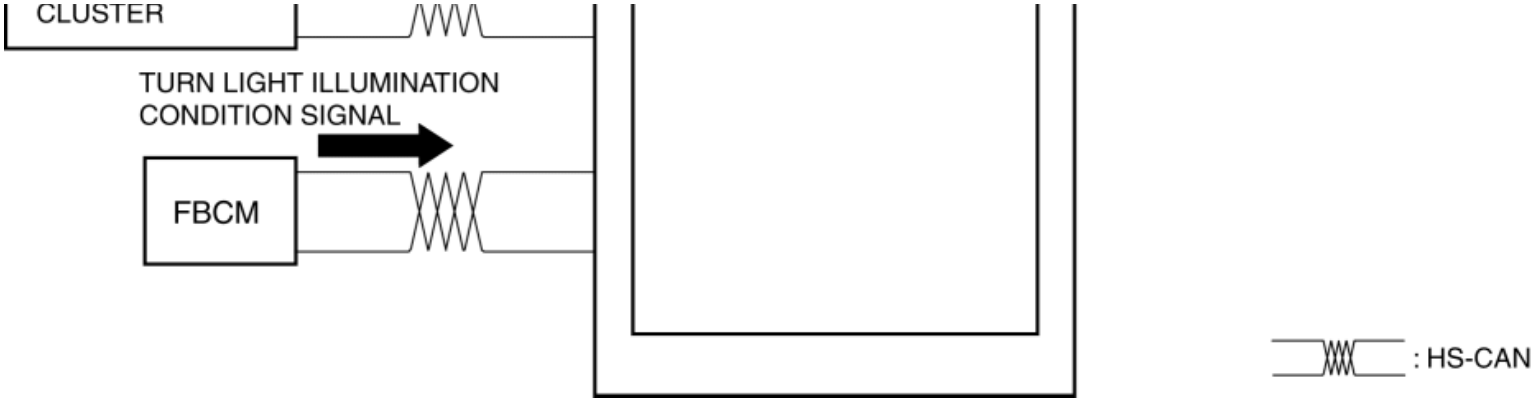

Operation

Operation conditions

- The warning is triggered when all of the following conditions are met:
  - LDWS switch is on (system on)
  - Vehicle speed signal of approx. 65 km/h {40 mph} or more from PCM is received
  - Vehicle contacts warning-trigger line unbeknownst to driver

Operation

- The warning operation time differs depending on how long the vehicle contacts the warning-trigger line.
  - Vehicle contacts warning-trigger line for less than 1 s: Warning triggers for 1 s
  - Vehicle contacts warning-trigger line for 1 s or more: Warning triggers for 1.5 s
- If the warning is triggered one time, the warning will not trigger again if the vehicle travels within the warning-trigger lines for a period of 2 s.
- The warning operation sound has the following two types:
  - The warning operation sound (beep) is output from the instrument cluster.
  - The warning operation sound (rumble strip sound*1) is output from the tuner and amp unit.

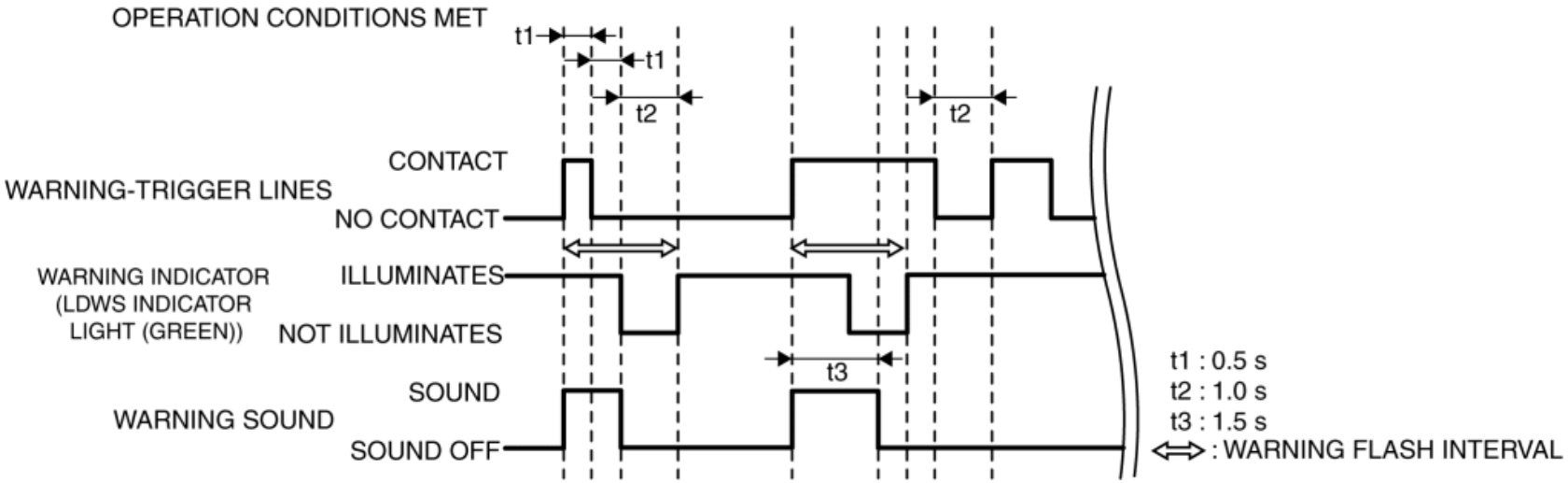

*1

A rumble strip is a series of grooves in the road pavement surface positioned at specific intervals, and when the vehicle passes over it a rumble sound is produced and an uncomfortable vibration can be felt which alerts the driver that the vehicle is departing from the lane lines. The rumble strip sound is a reproduction of the sound which occurs when a vehicle passes over a rumble strip.

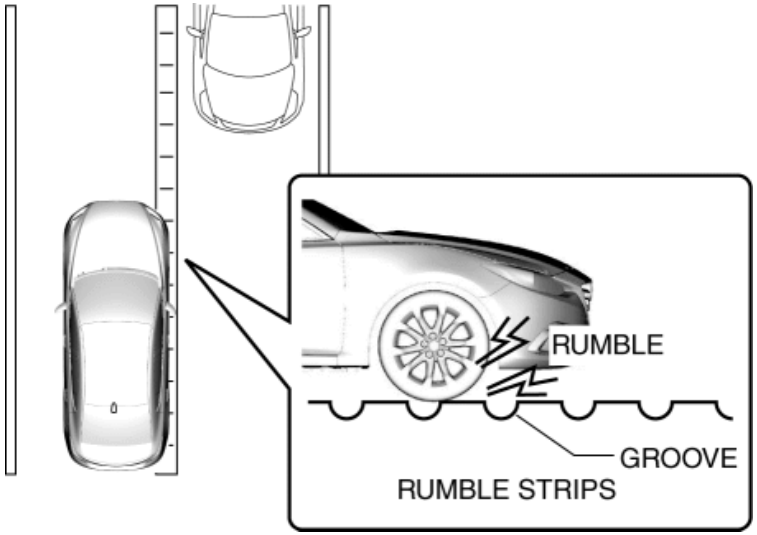

Rumble strip sound

- If the FSC determines that the vehicle has contacted a warning-trigger line, it sends a warning indication request signal to the instrument cluster and a warning sound request signal to the connectivity master unit (CMU).
- When the instrument cluster receives the warning indication request signal from the FSC, it flashes the LDWS indicator light (green) and displays the warning screen in the active driving display.
- When the CMU receives the warning sound request signal from the FSC, it sends the warning sound request signal to the tuner and amp unit.
- When the tuner and amp unit receives the warning sound request signal from the CMU, it stops sound output from either the front left or right door speaker according to the request signal and outputs a rumble strip sound.

NOTE:

- If the user is conversing using the HF/TEL, or the voice recognition function is outputting voice, the rumble strip sound is not output.

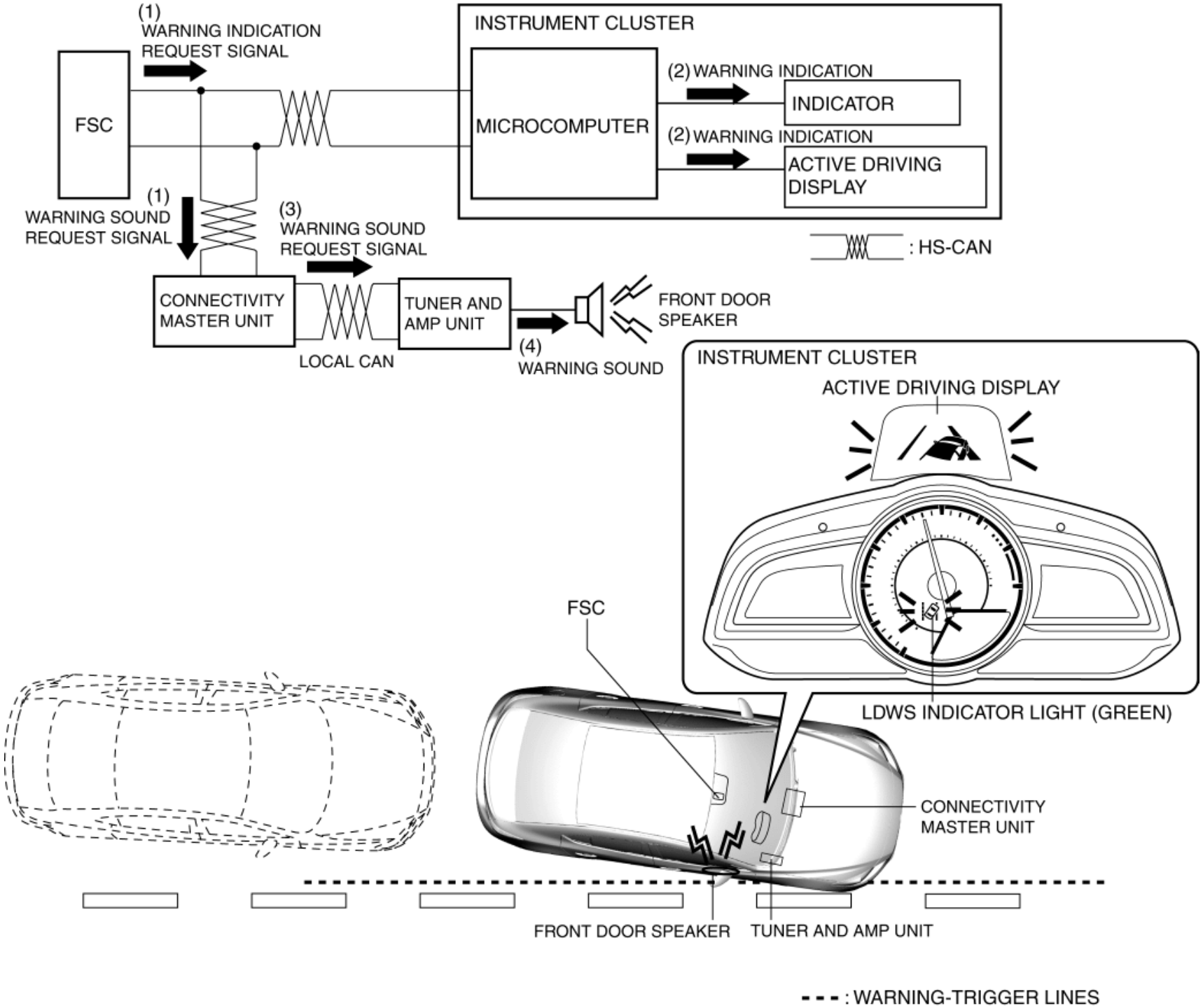
(1)
WARNING INDICATION
REQUEST SIGNAL
FSC
INSTRUMENT CLUSTER
MICROCOMPUTER
(2) WARNING INDICATION
INDICATOR
(2) WARNING INDICATION
ACTIVE DRIVING
DISPLAY
(1)
WARNING SOUND
REQUEST SIGNAL
(3)
WARNING SOUND
REQUEST SIGNAL
: HS-CAN
CONNECTIVITY
MASTER UNIT
TUNER AND
AMP UNIT
FRONT DOOR
SPEAKER
LOCAL CAN
(4)
WARNING SOUND
INSTRUMENT CLUSTER
ACTIVE DRIVING DISPLAY
FSC
LDWS INDICATOR LIGHT (GREEN)
CONNECTIVITY
MASTER UNIT
FRONT DOOR SPEAKER
TUNER AND AMP UNIT
: WARNING-TRIGGER LINES

Beep sound

For the operation, refer to LDWS WARNING ALARM. (See **LDWS WARNING ALARM**.)

2014 - Mazda3 - Body and Accessories

FORWARD SENSING CAMERA (FSC)

Purpose

- The camera recognizes light-emitting objects and vehicle lane lines based on the images picked up at the front of the vehicle, and controls the high beam control (HBC) system and lane departure warning system (LDWS).

Function

Light-emitting object (on-coming vehicle, vehicle ahead, street lights) recognition function

- The camera analyzes the light-emitting object it picks up, and recognizes it as an on-coming vehicle, vehicle ahead, or street lights (traveling on town/city streets).

  On-coming vehicle recognition function

- The FSC recognizes a light-emitting object that is within at least approx. 600 m {1,969 ft} from the detecting vehicle as an on-coming vehicle when any of the following conditions are met:
  - Light-emitting object approaches having brightness of specified value or more
  - Light-emitting object approaches having white color and certain level of brightness or more (if it approaches and brightness changes, determination made at point of image capture)

    NOTE:

    - If the on-coming vehicle and the surrounding conditions are as follows, the FSC may require time until it recognizes an on-coming vehicle.
      - Poor visibility due to rain and fog
      - On-coming vehicle is travelling with only TNS or fog lights
      - Brightness of light source, such as vehicle, lowers

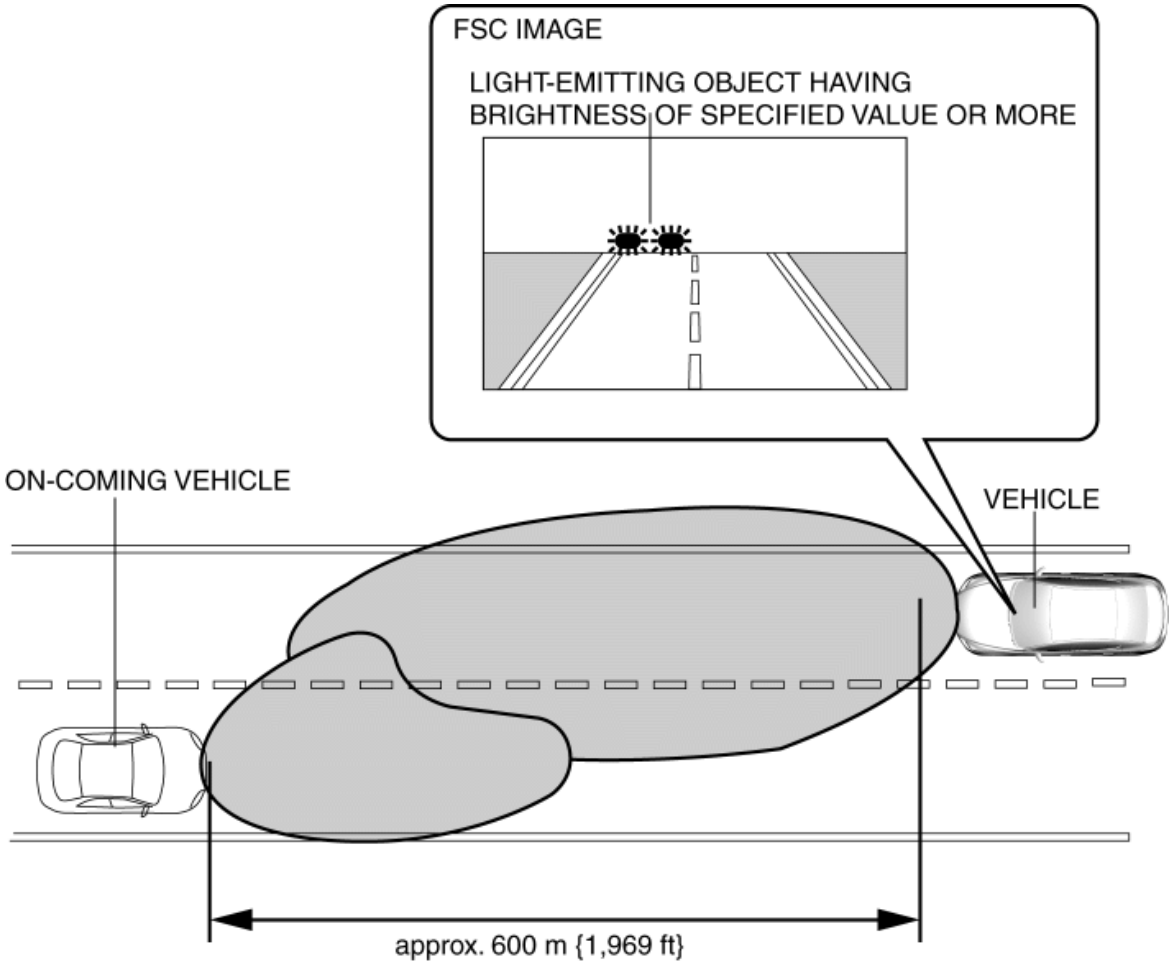

Vehicle ahead recognition function

- The FSC recognizes a light-emitting object that is within at least approx. 500 m {1,640 ft} of the detecting vehicle as a vehicle ahead, and when any of the following conditions is met:
    - Red light emitted from light-emitting object is detected
    - Determines that there is a pair of light-emitting objects

    NOTE:

    - Because prevention of dazzling from other vehicles is made a priority, the system could recognize reflecting objects on the road surface or a guard rail as a vehicle ahead (switches to low beams).
    - If visibility is poor due to rain or fog, a vehicle ahead may not be recognized even though one may exist (maintains high beams).

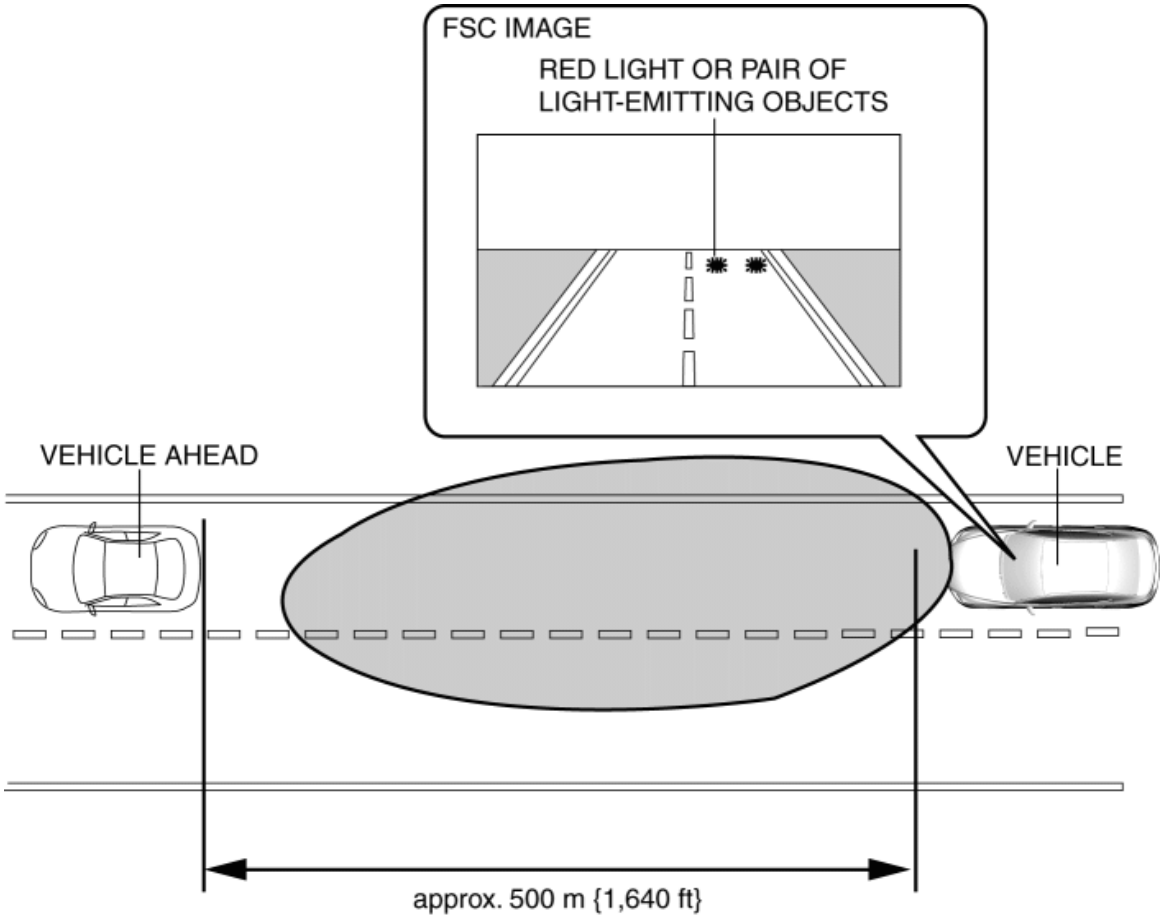

Town/city streets recognition function

- Travel on town/city streets is recognized in the following cases:
  - Several light-emitting objects of certain height or more from road surface along same line are detected
  - Camera image gray color is certain level or more

    NOTE:

    - Even during travel other than at night or on town/city streets, if the road surface is bright from moonlight, the system may recognize that the vehicle is traveling on town/city streets (switches to low beams).

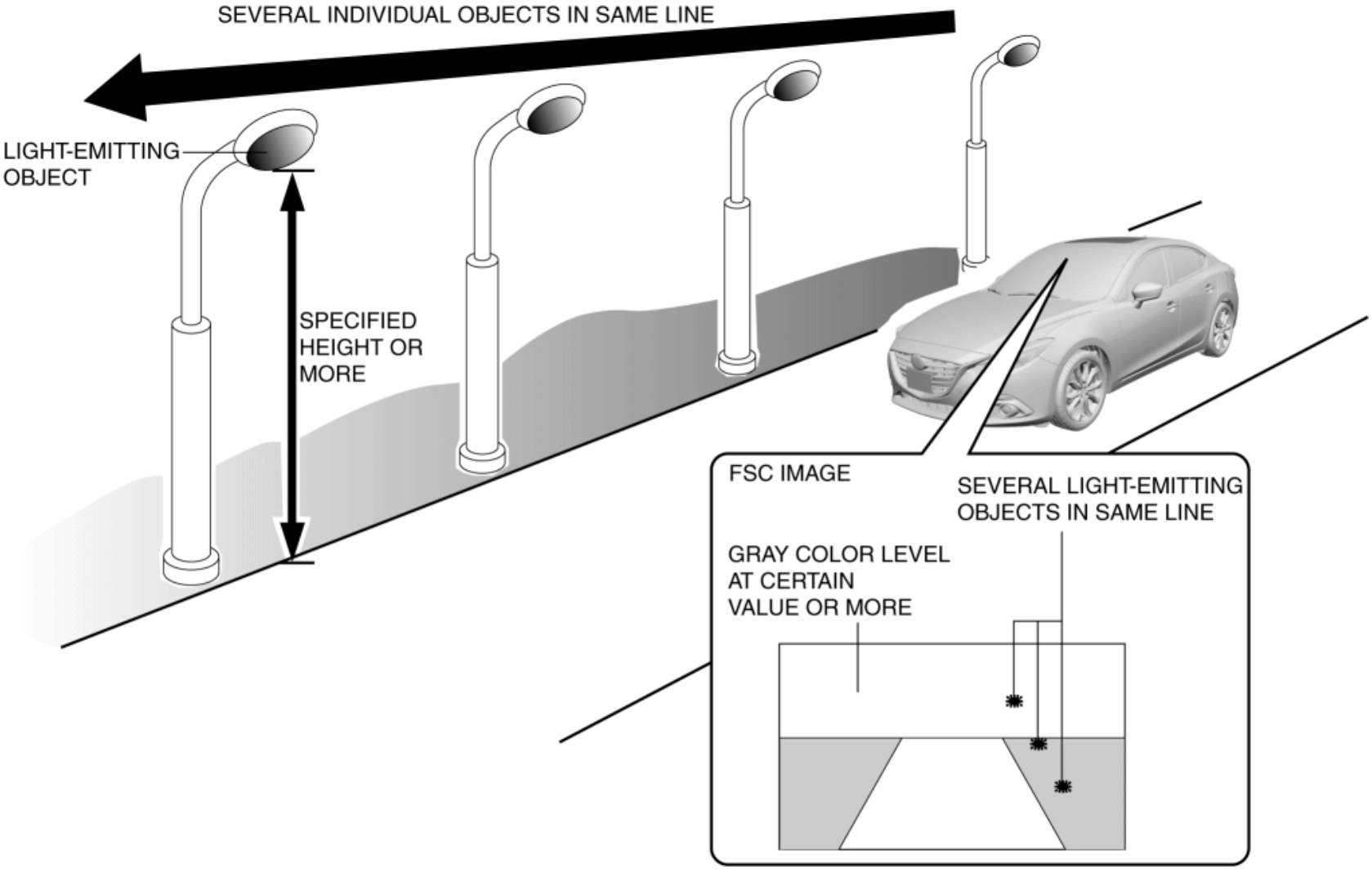

Vehicle lane lines and travel lane recognition function

- The FSC recognizes line shapes which are paler than the surrounding color, and white/yellow lines as vehicle lane lines by the contrast (color density) of the camera image.
- If the vehicle lane lines are continuous they are recognized as actual lines, if discontinuous they are recognized as broken lines.
- The travel lanes recognized from the vehicle lane lines on the left and right of the vehicle are used to calculate the width.
- Traveling in a straight line or cornering is determined by the status of the vehicle lane lines.

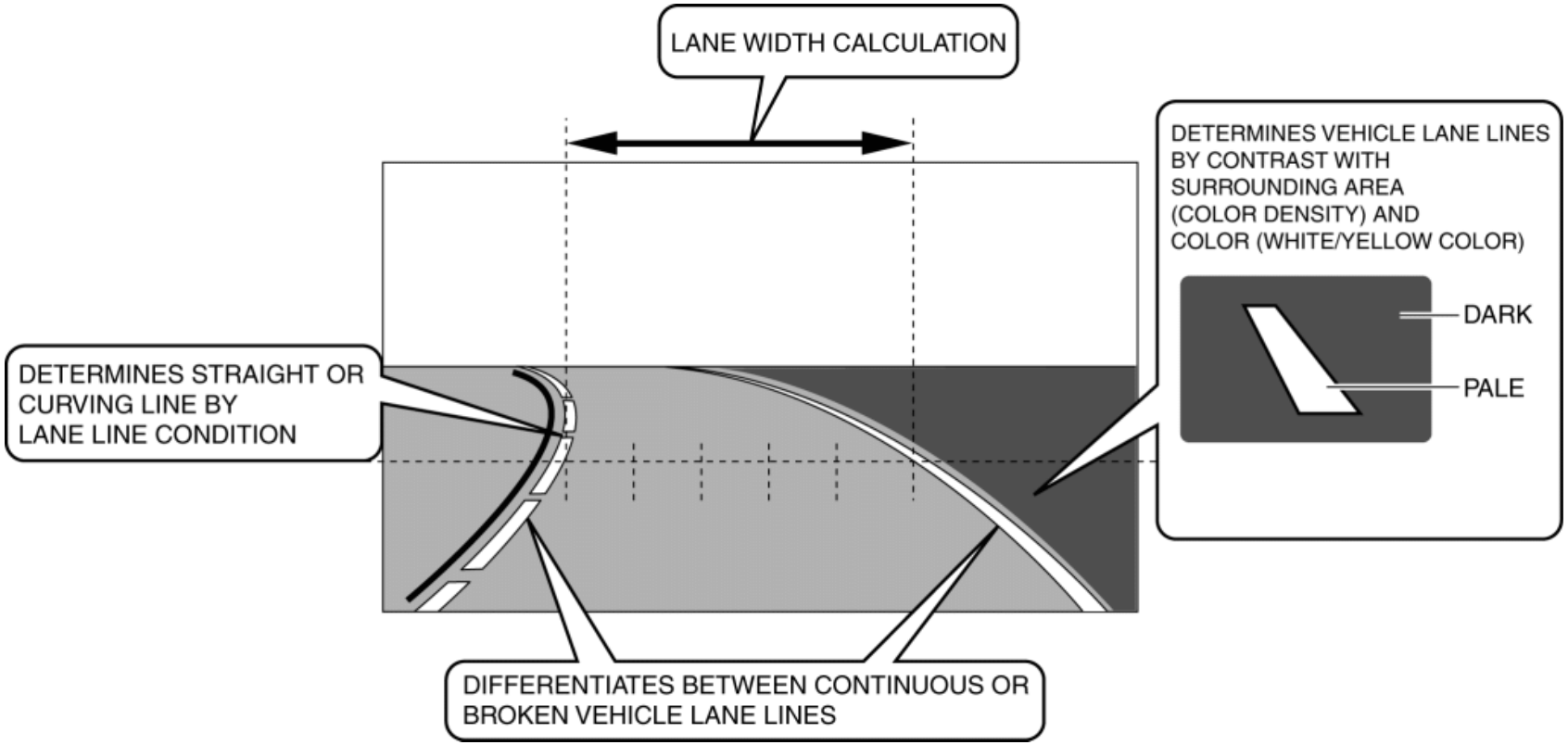

LDWS warning-trigger line setting function

- The FSC sets the LDWS warning-trigger lines *1 at approx.5 cm {2 in} inside of the recognized vehicle lane lines.

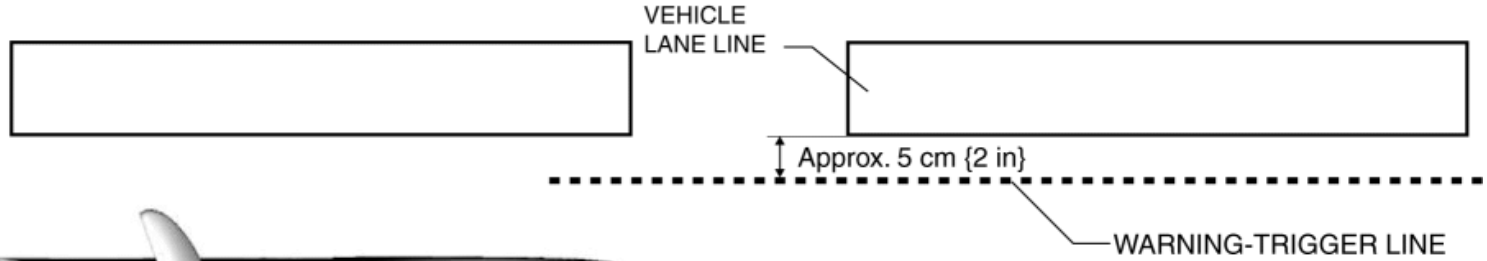

- If there is only one vehicle lane line or only one vehicle lane line can be recognized, the warning-trigger line is set to only the recognized vehicle lane line.
- If the FSC recognizes both broken vehicle lane lines and actual vehicle lane lines, the warning-trigger line is set to the actual vehicle lane line.

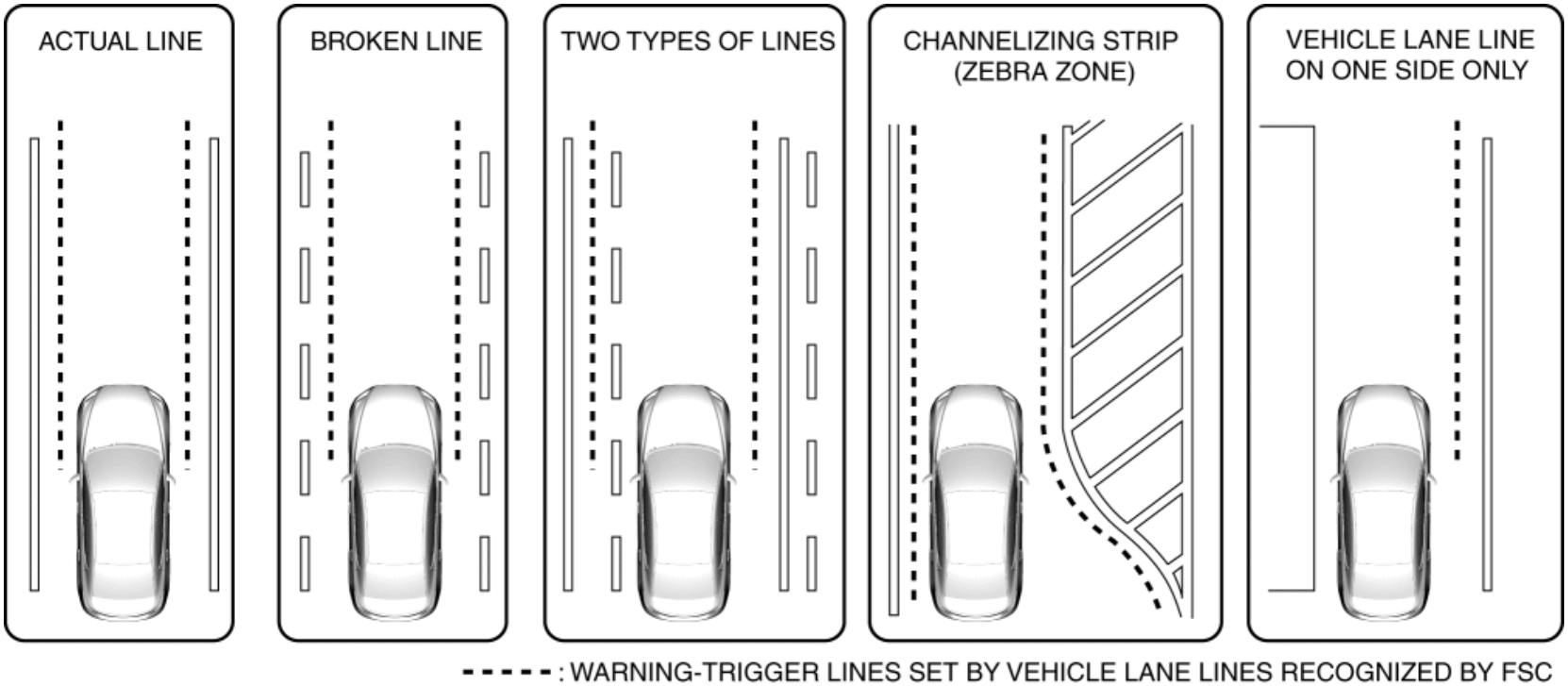

*1

The distance between the vehicle lane lines and the warning-trigger lines can be changed using the personalization feature. Refer to INSTRUMENTATION/DRIVER INFO. PERSONALIZATION for details. (See INSTRUMENTATION/DRIVER INFO. PERSONALIZATION.)

LDWS warning-trigger line auto-adjust function

- The FSC automatically adjusts the set warning-trigger lines within the adjustment range in the following cases:

Detection state	Adjustment
Distance of vehicle to vehicle lane line recognized by FSC detected (such as staying to left) continuously as closer than specified value for certain period of	

time.	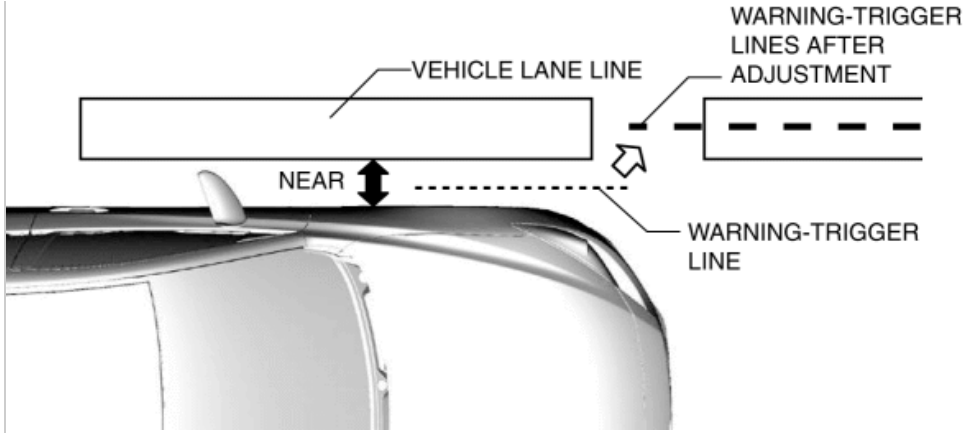
Recognized travel lane width decreases to certain width or less	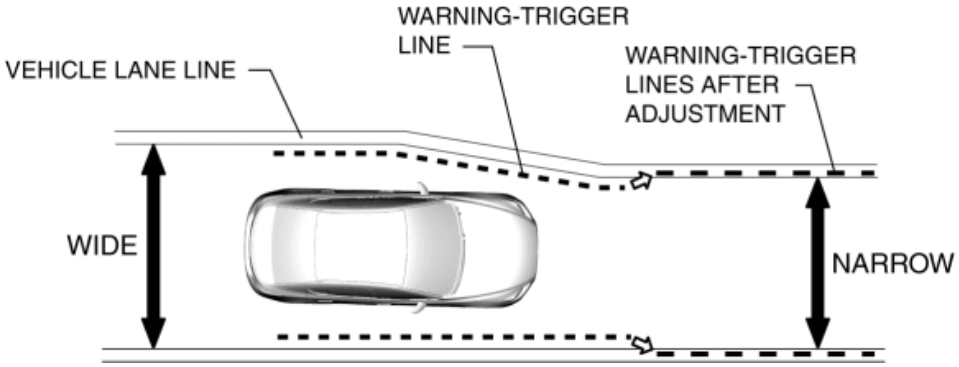
Recognized vehicle lane line curves for certain period of time or more and system determines that vehicle is cornering (out-in-out travel)	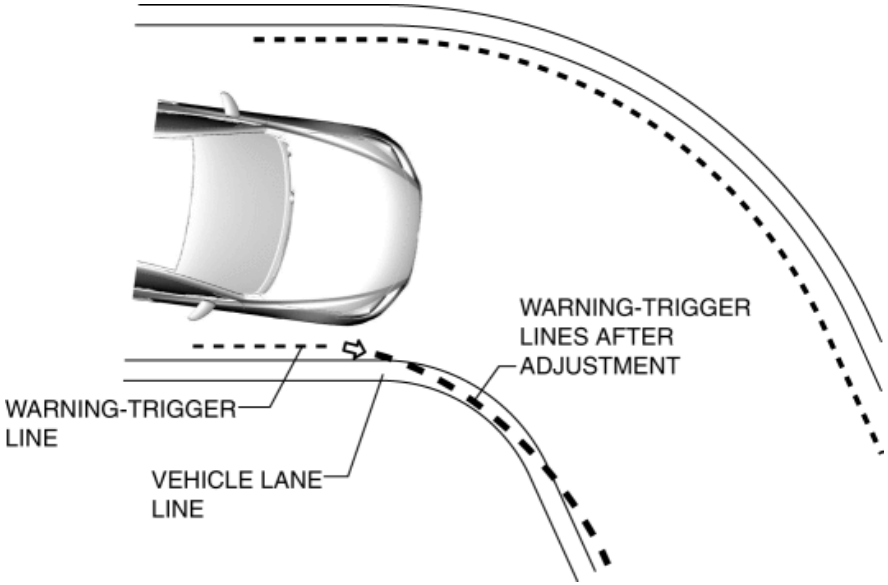

Recognized travel lane width is wider than certain width	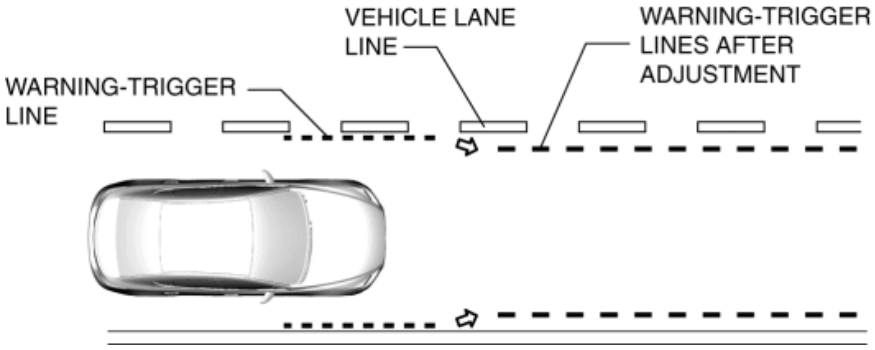

Aiming correction function

- The FSC adjusts the camera shot angle by aiming, and stores the vanishing point *1. The stored vanishing point and the current vanishing point are compared and if there is a deviation of a certain value or more in the vanishing point, the current vanishing point is stored as the new vanishing point.

*1

The vehicle lane lines on the road surface are parallel and do not intersect, however, when viewed by the camera image, the lines converge in the distance and eventually cross. The point at which the lines cross is called the vanishing point.

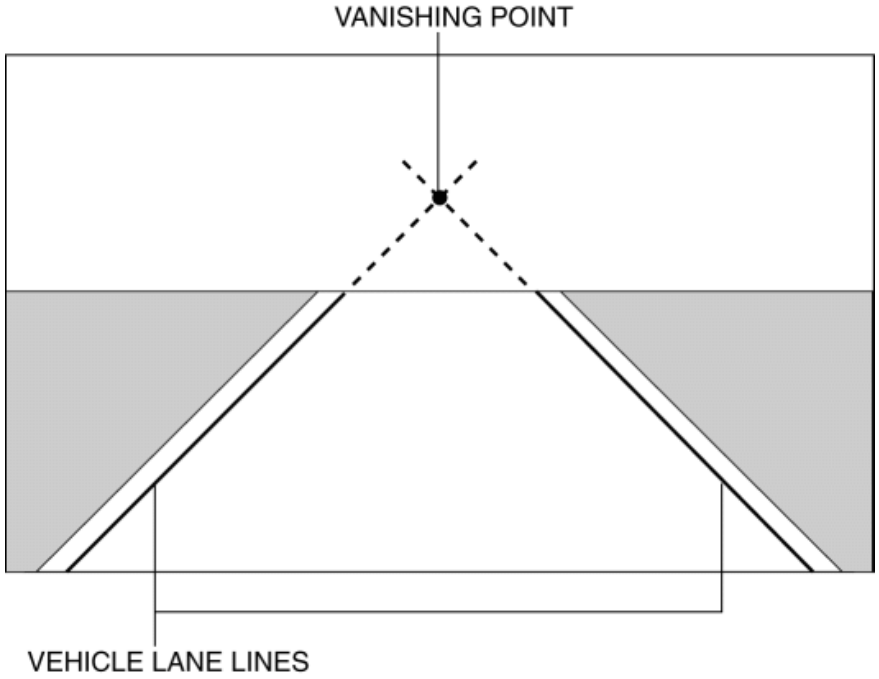

HBC indicator light (green)/HBC warning light (amber) and LDWS indicator light (green)/LDWS warning light (amber) blown fuse check function

- When the ignition is switched ON, the FSC illuminates the HBC warning light (amber)/LDWS warning light (amber) for approx. 3 s and performs a blown fuse check of each indicator light/warning light.

On-board diagnostic function

- The FSC detects dirt and fogging of the camera lens and windshield glass, FSC transmission errors, FSC internal malfunctions, and outputs DTCs. For DTC details, refer to the ON-BOARD DIAGNOSTIC [FSC]. (See **ON-BOARD DIAGNOSTIC [FORWARD SENSING CAMERA (FSC)]**.)

Construction

- Installed to the windshield.
- By integrating a small, color CMOS camera *1 with the control module, lightness and size reduction have been achieved.
- The FSC transmits between other modules using CAN.

*1

Camera with high sensitivity CMOS (Complementary Metal-Oxide Semiconductor) picture element

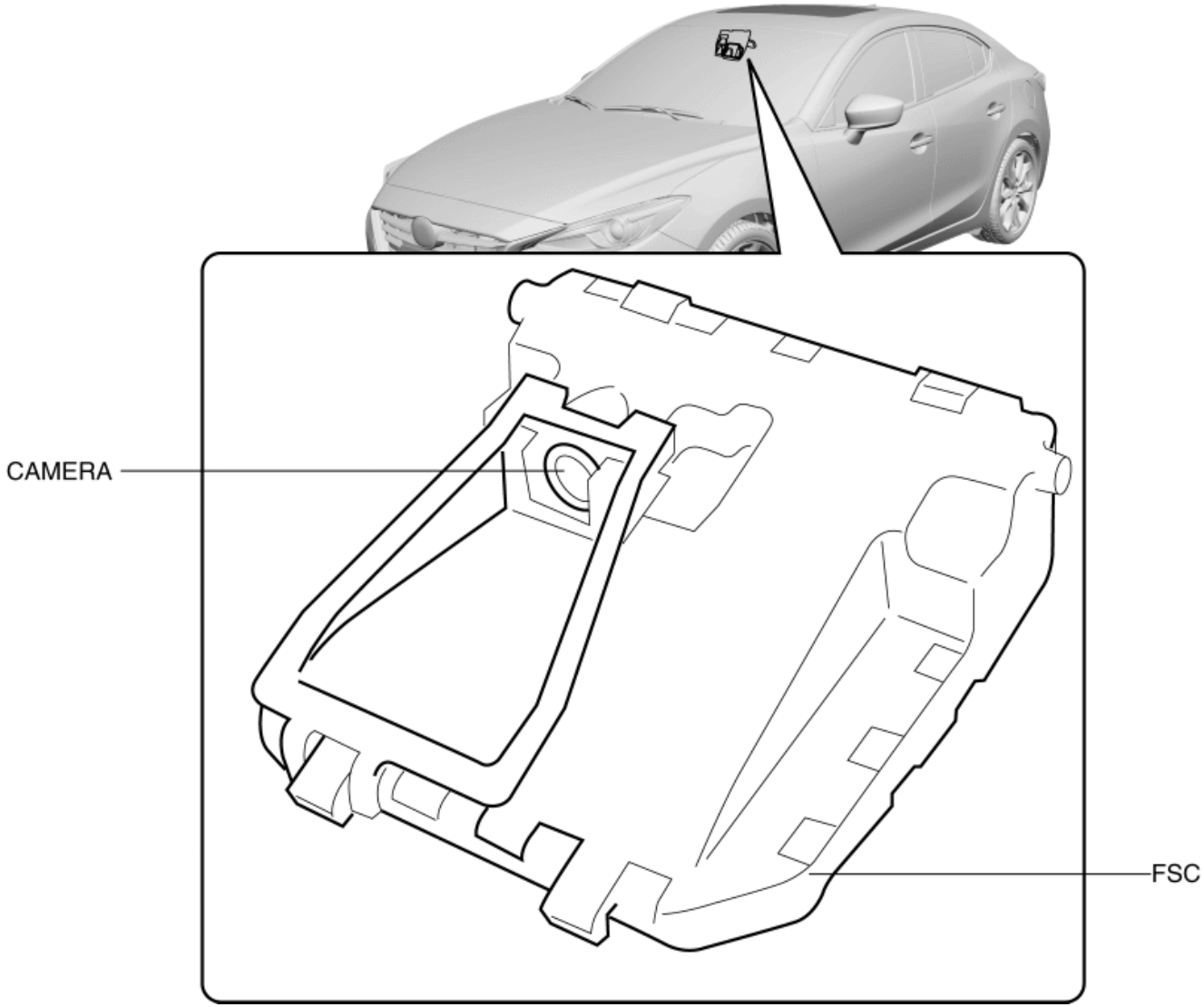

Operation

Camera range

- The FSC camera shoots in the following range.

NOTE:

- The FSC may be unable to pickup an object within the camera range in front of the vehicle, and not recognize it as a controlled target object depending on the surrounding conditions (ascending roads, winding roads, walls).

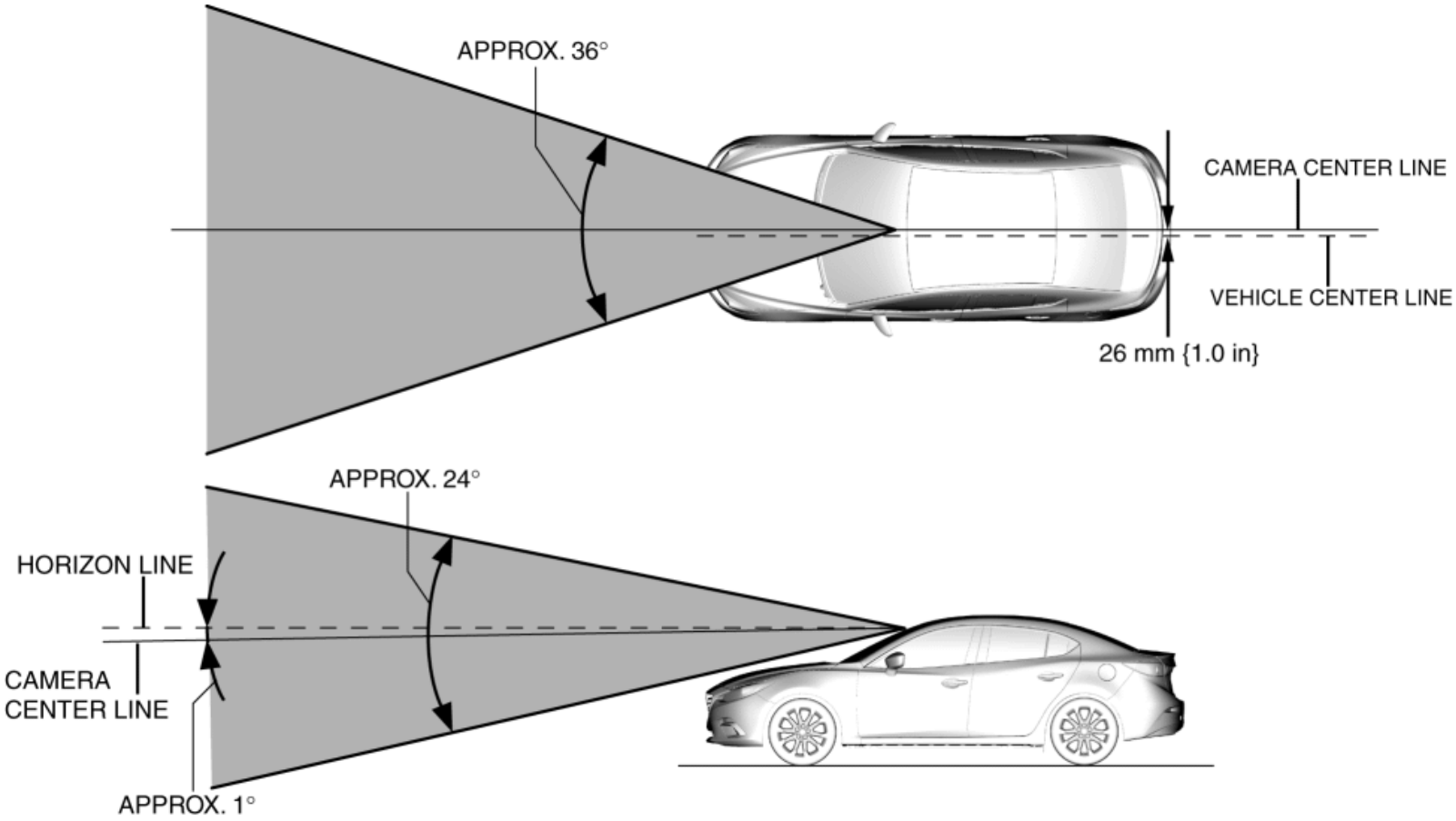

Position calculation

- When an object appears on the screen, the FSC determines the position coordinates, and from the coordinates it calculates the distance of the vehicle to the object and the direction.

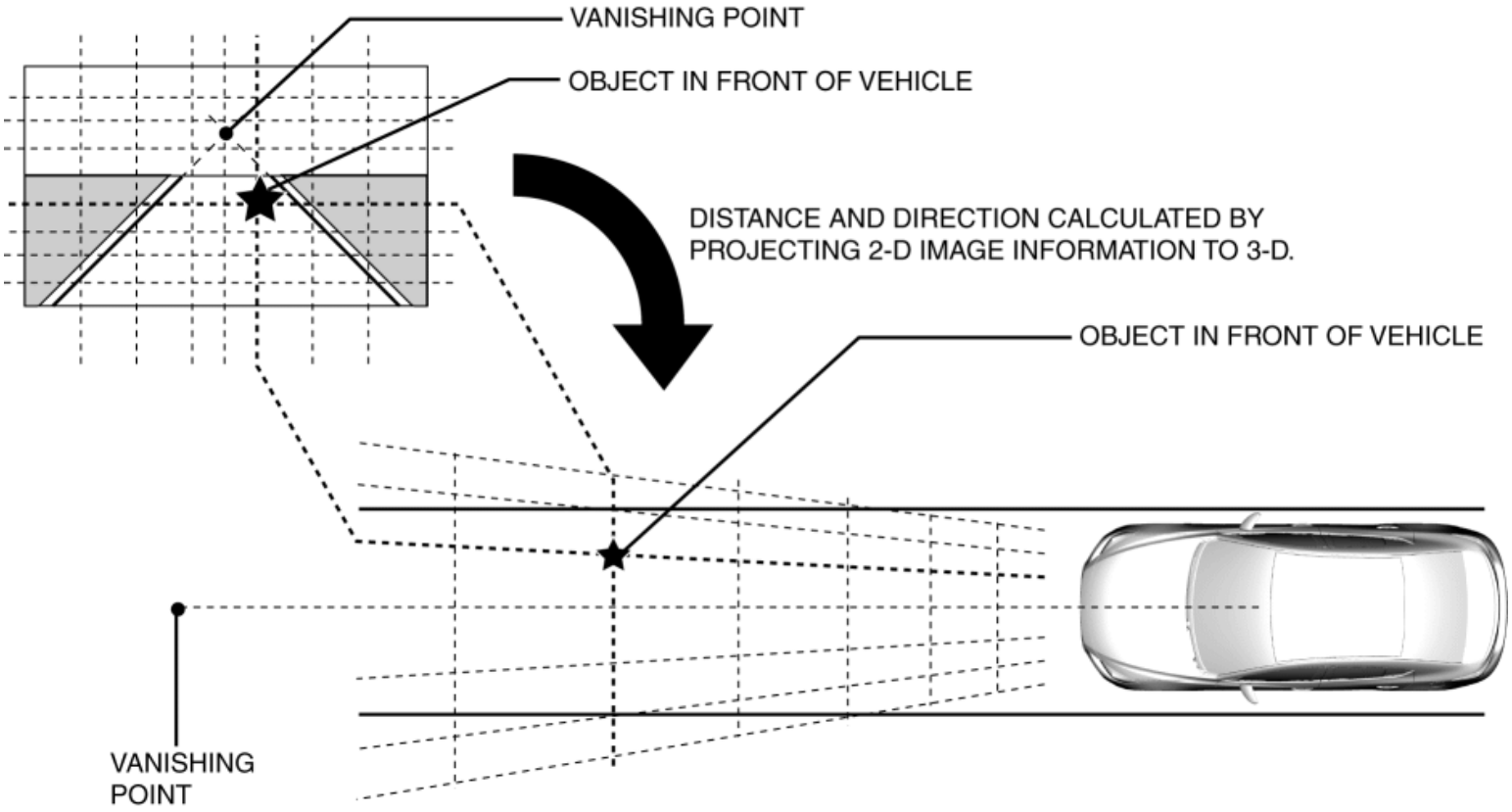

Fail-safe

DTC No.	Fail-safe function
B115E:54	• Inhibits the lane departure warning system (LDWS). • Inhibits the high beam control system (HBC).
B13A6:11	• Inhibits the lane departure warning system (LDWS).
C1001:92	
C1001:97	
U0001:88	

U0100:00	• Inhibits the lane departure warning system (LDWS). • Inhibits the high beam control system (HBC).
U0121:00	
U0131:00	
U0140:00	
U0155:00	
U0214:00	
U0401:68	
U0415:68	
U0420:68	• Inhibits the lane departure warning system (LDWS).
U0423:68	
U0515:68	• Inhibits the lane departure warning system (LDWS). • Inhibits the high beam control system (HBC).
U2005:86	
U2100:00	
U2101:00	
U3000:04	
U3000:09	
U3000:42	
U3000:49	
U3003:16	
U3003:17	

FORWARD SENSING CAMERA (FSC)

2014 - Mazda3 - Body and Accessories

LDWS SWITCH

Purpose

- The lane departure warning system (LDWS) can be turned on or off optionally by the driver.

Function

- The switch operation signal is sent to the instrument cluster.

Construction

- The LDWS switch is built into the cluster switch.
- The resistance is built into each switch.

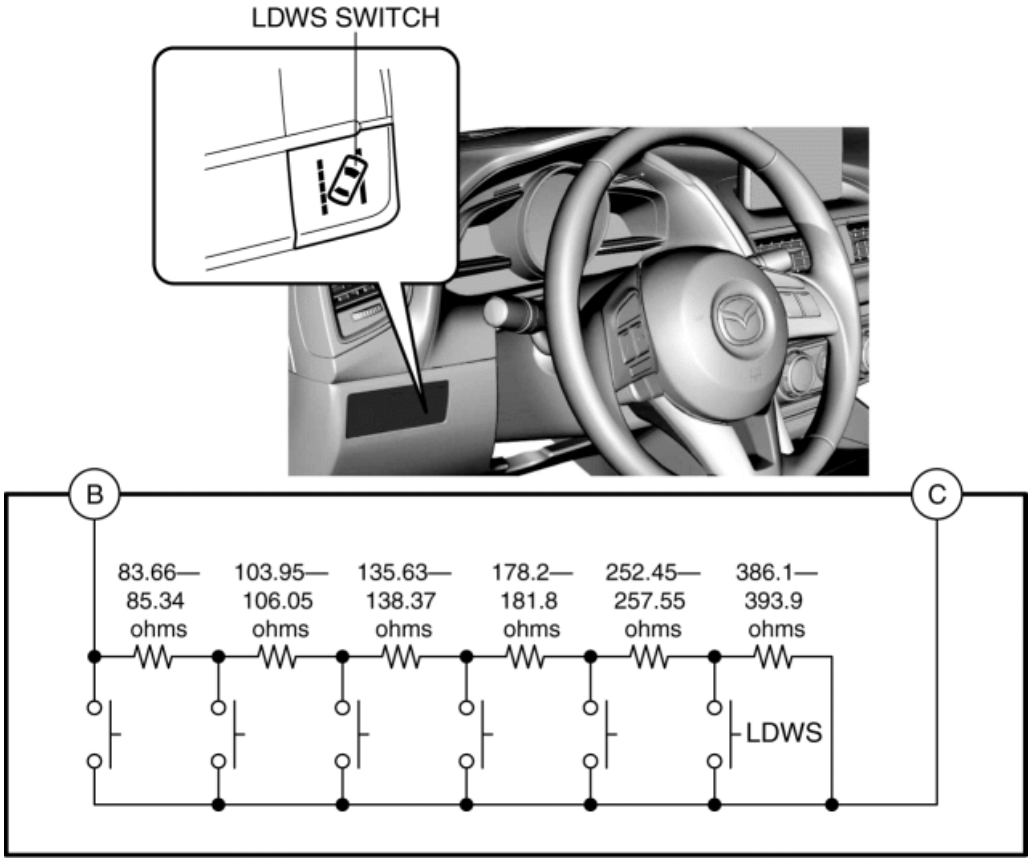

Operation

- When the LDWS switch operates, the LDWS switch operation signal is sent to the instrument cluster.
- The instrument cluster determines that the switch has been operated based on the received voltage value (switch operation signal), and the LDWS switch operation signal is sent to the FSC.
- When the FSC receives the LDWS switch operation signal from the instrument cluster, it switches the LDWS on/off.

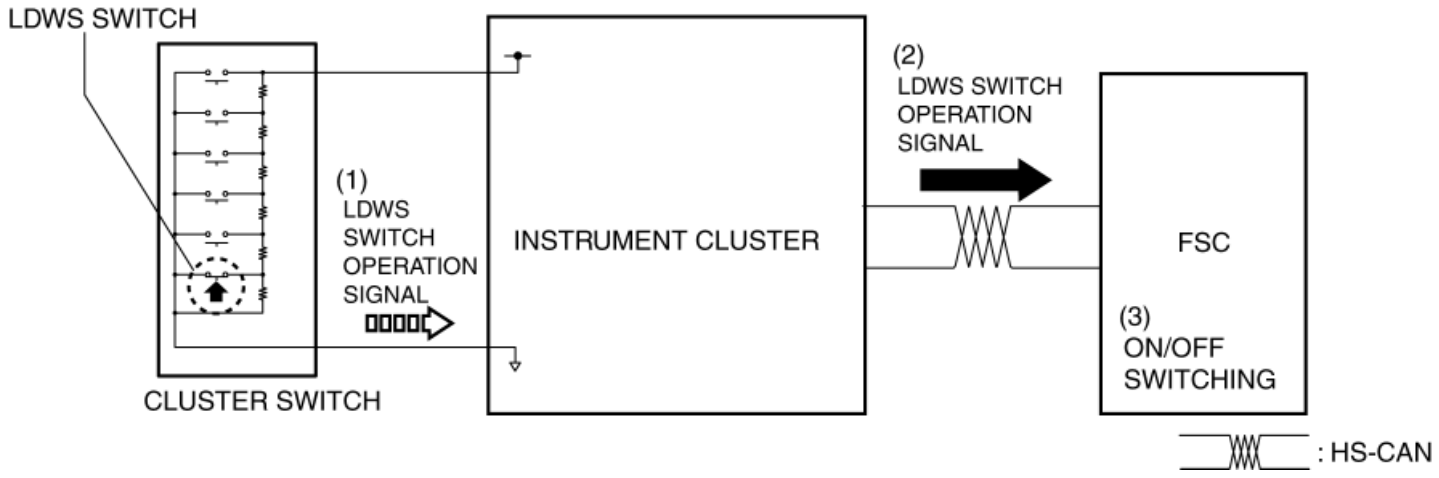

Fail-safe

- Function not equipped.

2014 - Mazda3 - Body and Accessories

LDWS WARNING ALARM

Purpose

- The LDWS warning alarm warns the user of a possible lane departure.

Function

Beep sound

- If the instrument cluster receives a warning sound request signal from the FSC, is sounds the LDWS warning alarm using the buzzer in the instrument cluster.
- The LDWS warning alarm patterns are as shown in the figure.

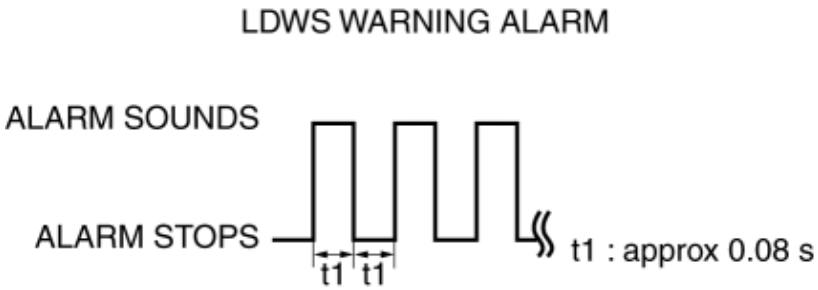

Rumble strip sound

- For the LDWS warning alarm on vehicles with the tuner and amp unit, refer to LANE DEPARTURE WARNING SYSTEM (LDWS). (See **LANE DEPARTURE WARNING SYSTEM (LDWS)**.)

Construction

- The LDWS warning alarm sounds using the buzzer built into the instrument cluster.

Operation

Beep sound

1. The instrument cluster receives (1) the warning sound request signal from the FSC.

2. The instrument cluster turns the transistor on (2) based on the warning sound request signal.

3. When the transistor turns on, a ground circuit with the alarm is established and the alarm sounds (3).

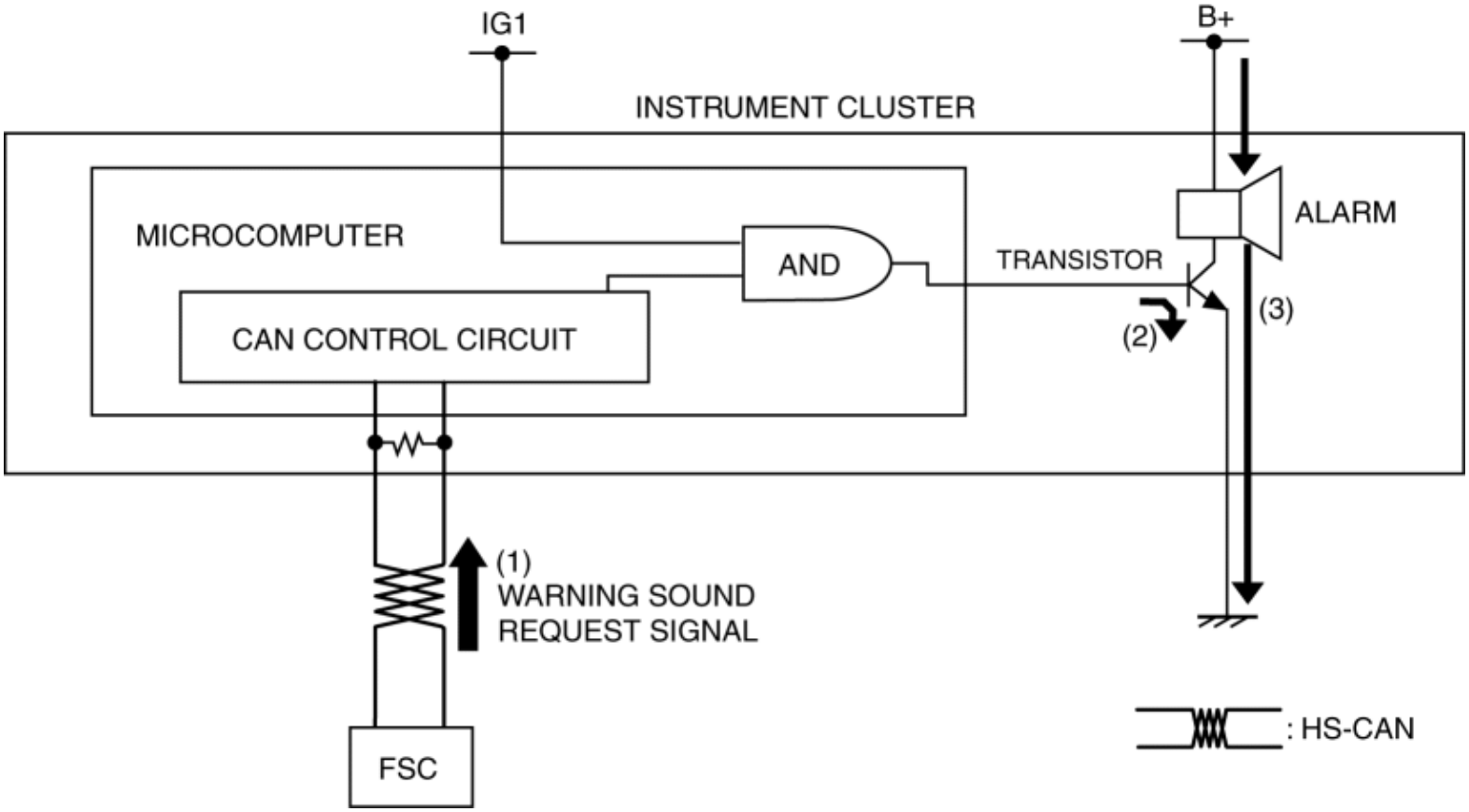

Rumble strip sound

- For operation with vehicles having tuner and amp unit, refer to LANE DEPARTURE WARNING SYSTEM (LDWS). (See **LANE DEPARTURE WARNING SYSTEM (LDWS)**.)

Fail-safe

- If the instrument cluster receives the following CAN signals when the LDWS warning alarm is set at rumble, the LDWS warning alarm is sounded using a beep.
    - Communication error signal with tuner and amplifier unit (TAU) from connectivity master unit (CMU)
    - Warning indication request signal from forward sensing camera (FSC)

2014 - Mazda3 - Body and Accessories

LDWS INDICATOR LIGHT (GREEN)/LDWS WARNING LIGHT (AMBER)

Purpose

LDWS indicator light (green)

- The LDWS indicator light (green) notifies the driver of the vehicle lane lines being recognized or that the vehicle may be departing from its lane.

LDWS warning light (amber)

- The LDWS warning light (amber) warns the driver that a malfunction is occurring in the Lane Departure Warning System (LDWS).

Function

LDWS indicator light (green)

- The instrument cluster illuminates the LDWS indicator light (green) based on the system condition display request signal sent via a CAN signal from the FSC.
- The instrument cluster flashes the LDWS indicator light (green) based on the warning indication request signal sent via a CAN signal from the FSC.
- The flash pattern of the LDWS indicator light (green) is as shown in the figure.

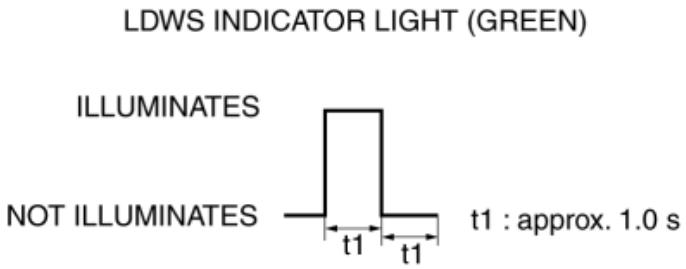

LDWS warning light (amber)

- The instrument cluster illuminates the LDWS warning light (amber) based on the system condition display request signal sent via a CAN signal from the FSC.
- The instrument cluster flashes the LDWS warning light (amber) based on the malfunction indication request signal sent via a CAN signal from the FSC.
- The flash pattern of the LDWS warning light (amber) is as shown in the figure.

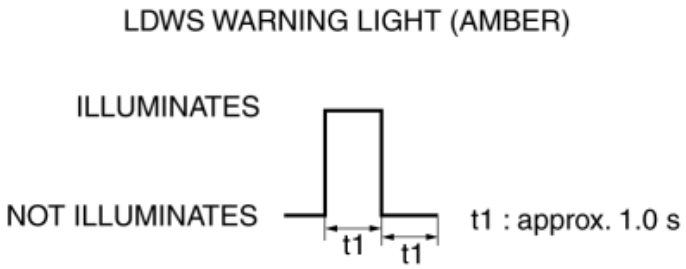

- For vehicles with center display, a warning message in the center display is displayed when the LDWS warning light (amber) is flashed. For the message content and verification method, refer to the CENTER DISPLAY. (See **CENTER DISPLAY [WITH CENTER DISPLAY]**.)

Construction

- The LDWS indicator light (green) and LDWS warning light (amber) are equipped in the instrument cluster.

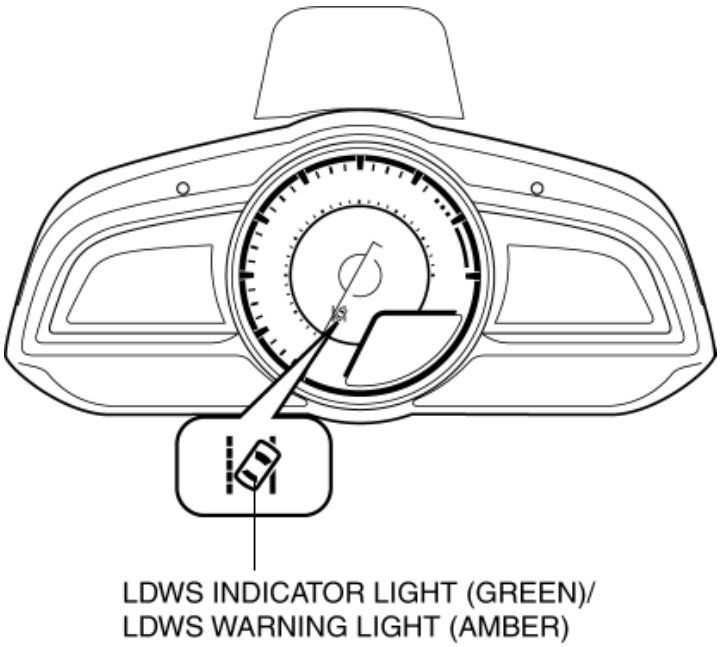

Operation

LDWS indicator light (green)

1. The instrument cluster receives (1) the system conditions indication request signal or warning indication request signal from the FSC via the CAN signal.

2. The instrument cluster turns the transistor on (2) intermittently for a warning indication request signal and continuously for a system conditions indication request signal.

3. When the transistor turns on intermittently, the LDWS indicator light (green) flashes (3) and when it turns on continuously, the LDWS indicator light (green) illuminates (3).

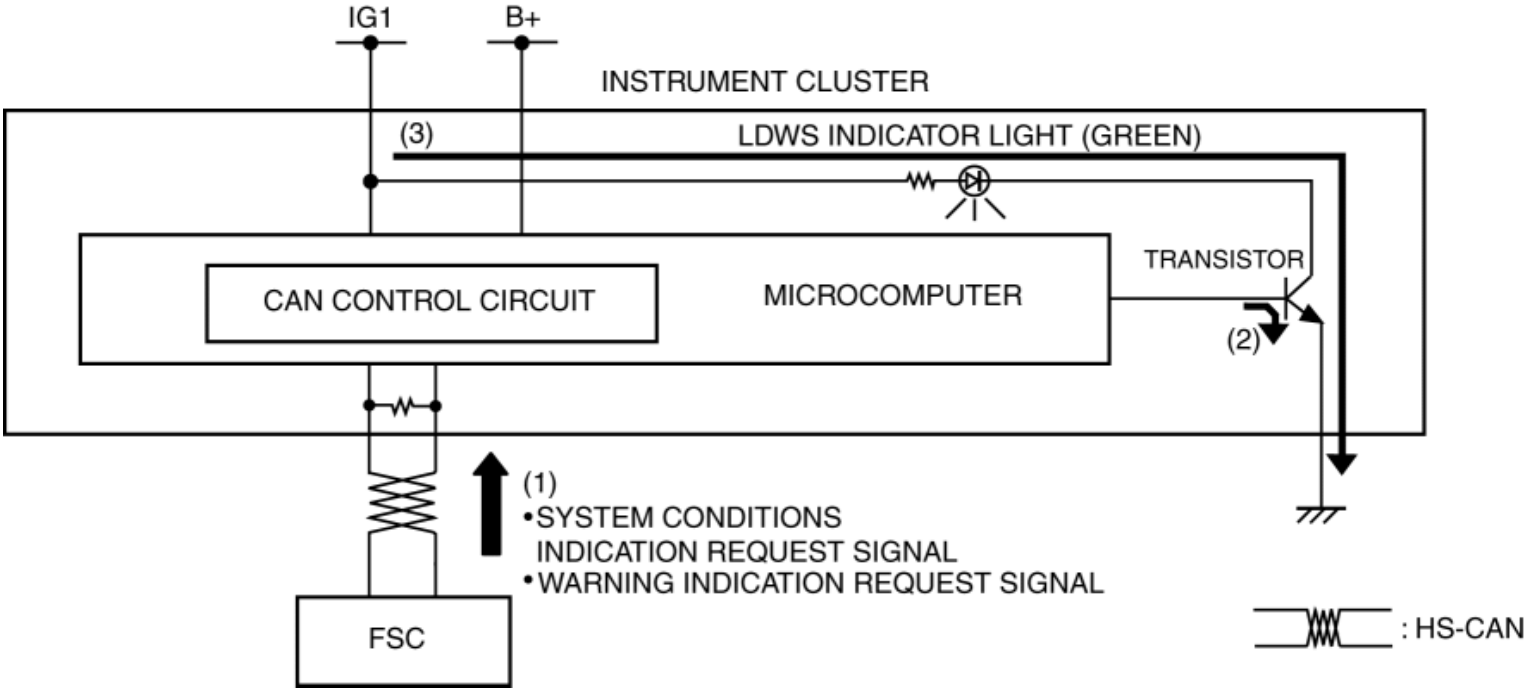

LDWS warning light (amber)

1. The instrument cluster receives (1) the system conditions display request signal from the FSC or the system malfunction indication request signal via the CAN signal.

2. The instrument cluster turns the transistor on (2) intermittently for a system malfunction indication request signal and continuously for a system conditions indication request signal.

3. When the transistor turns on intermittently, the LDWS warning light (amber) flashes (3), and the when it turns on continuously, the LDWS warning light (amber) illuminates (3).

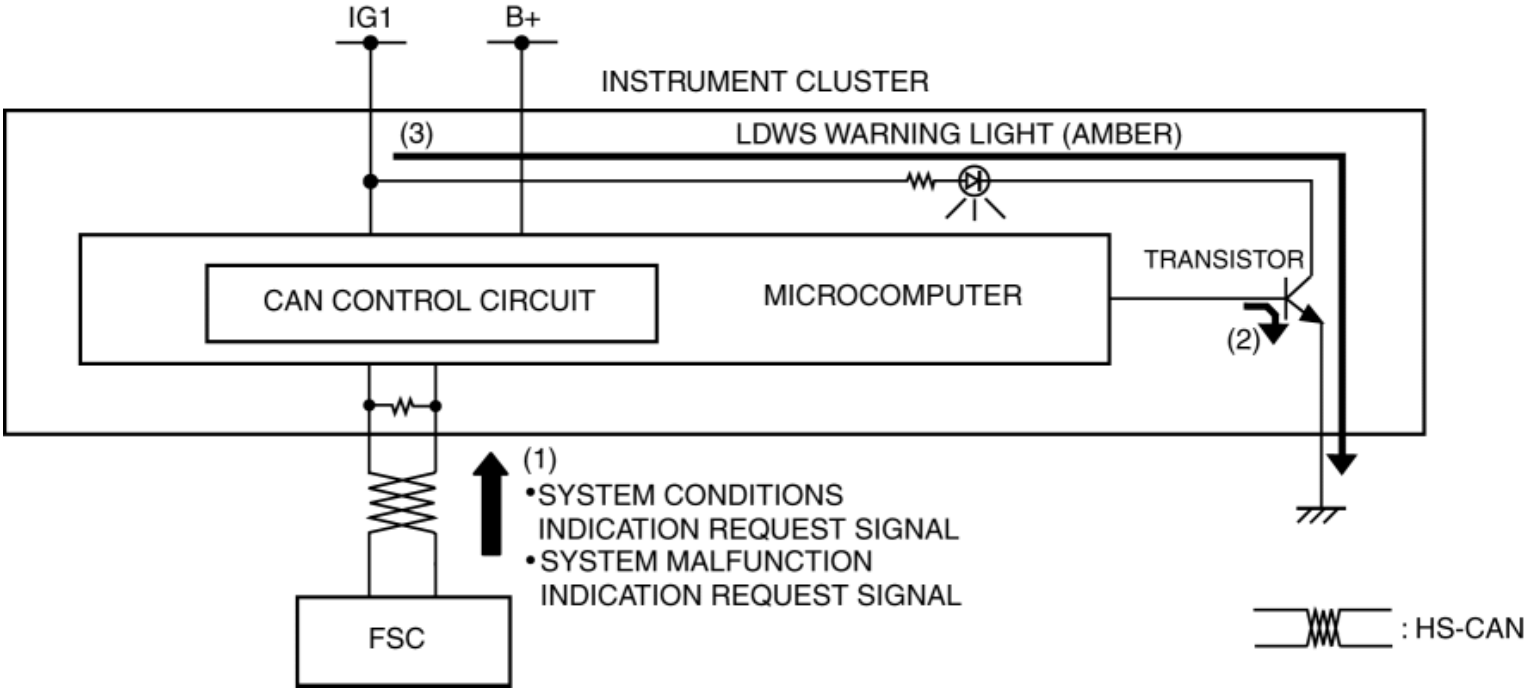

Fail-safe

- Function not equipped.

LDWS INDICATOR LIGHT (GREEN)/LDWS WARNING LIGHT (AMBER)

2014 - Mazda3 - Body and Accessories

INDICATOR UNIT

Purpose

- The indicator unit notifies the user of the following conditions.
    - Passenger seat belt status
    - Passenger air bag deactivation (PAD) switch status (with passenger air bag deactivation (PAD) system)
    - Seat warmer operation status (with seat warmer system)

Function

- The indicator unit turns the passenger seat belt warning light on/off based on the request signal sent from the instrument cluster.
- The indicator unit turns the seat warmer switch (with seat warmer system) on/off based on the panel light signal sent from the instrument cluster. For details on the panel light, refer to PANEL LIGHT. (See **PANEL LIGHT**.)

Seat warmer switch function (with seat warmer system)

- The indicator unit switches the temperature level (number of times indicator illuminated) in the order of 3, 2, 1, and OFF according to the seat warmer switch operation and sends the temperature level signal to the seat warmer unit.
- The indicator unit records the temperature level (number of times indicator illuminated) when the ignition is switched from ON (engine off or on) to OFF, and operates the recorded temperature level (number of indicator illumination) when the ignition is switched ON (engine off or on) again.
- If the battery power supply is disconnected, the temperature level recorded by the indicator unit is eliminated.

Construction

- The indicator unit is assembled to the climate control unit.
- The indicator unit consists of the following parts:
    - Display which displays passenger seat belt warning light, passenger air

bag deactivation (PAD) lettering illumination, and PAD OFF indicator light (with passenger air bag deactivation (PAD) system)

- Seat warmer switch (with seat warmer system)

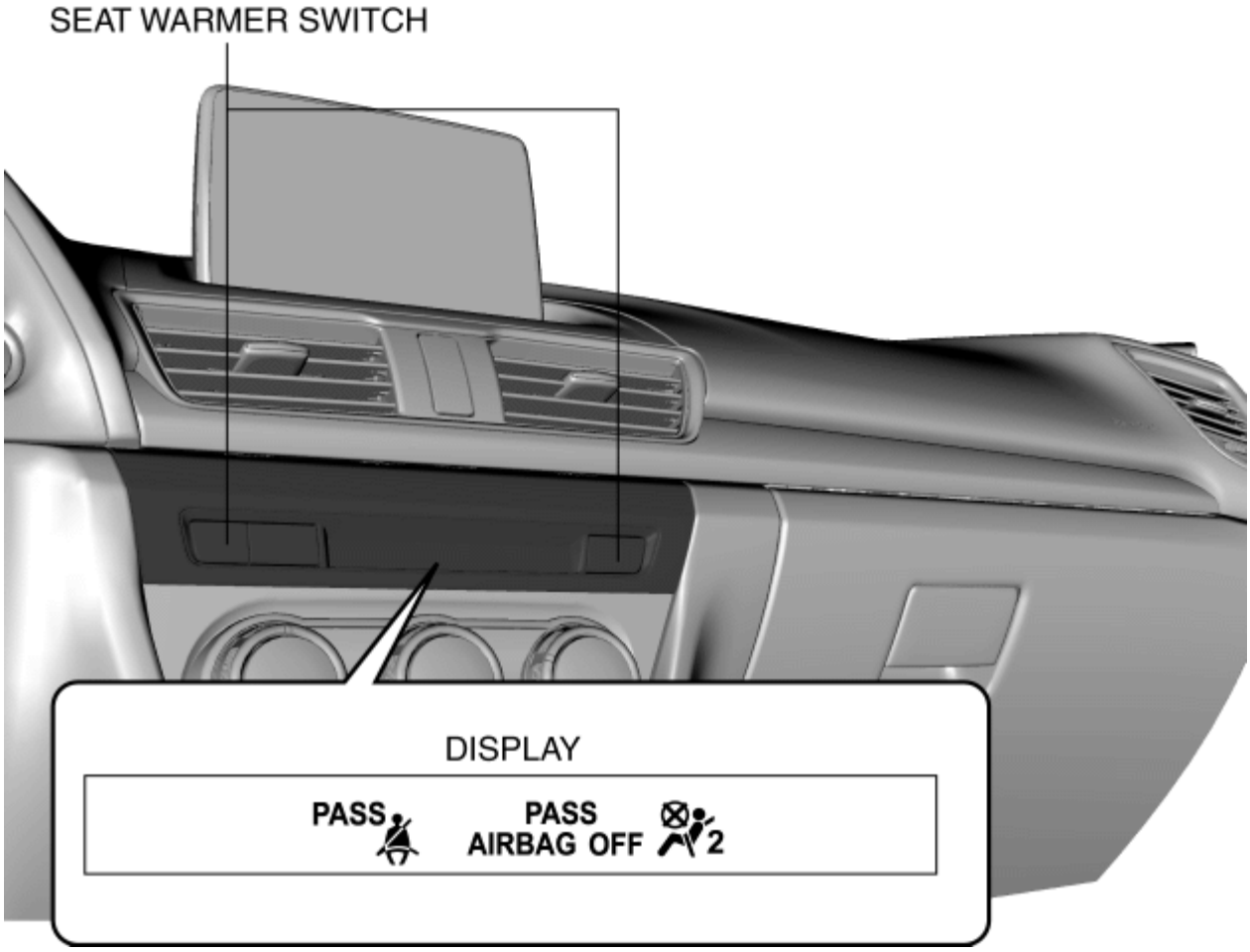

Operation

Seat belt warning light

- When the ignition is switched ON (engine off or on), the indicator unit receives (1) the passenger seat belt warning light illumination request signal from the instrument cluster.
- The indicator unit turns the transistor on (2) based on the request signal from the instrument cluster.
- When the transistor turns on, a ground circuit with passenger seat belt warning light is established, and the passenger seat belt warning light turns on (3).

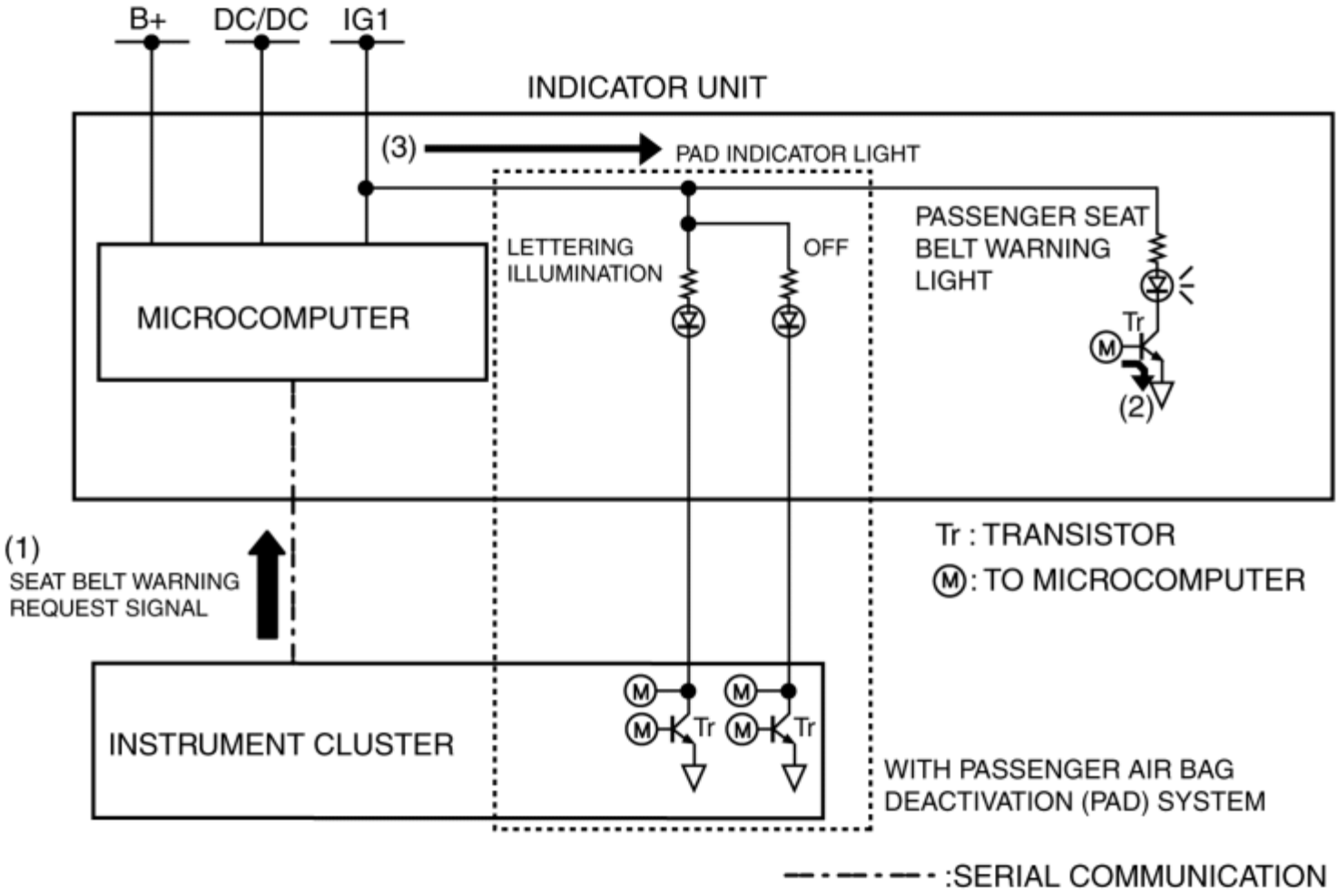

PAD indicator light (with passenger air bag deactivation (PAD) system)

- When the ignition is switched ON (engine off or on), the instrument cluster turns the PAD indicator light transistor on (1) based on the PAD indicator light illumination request signal from the SAS control module.
- When the transistor in the instrument cluster turns on, the PAD indicator light in the indicator unit turns on (2).

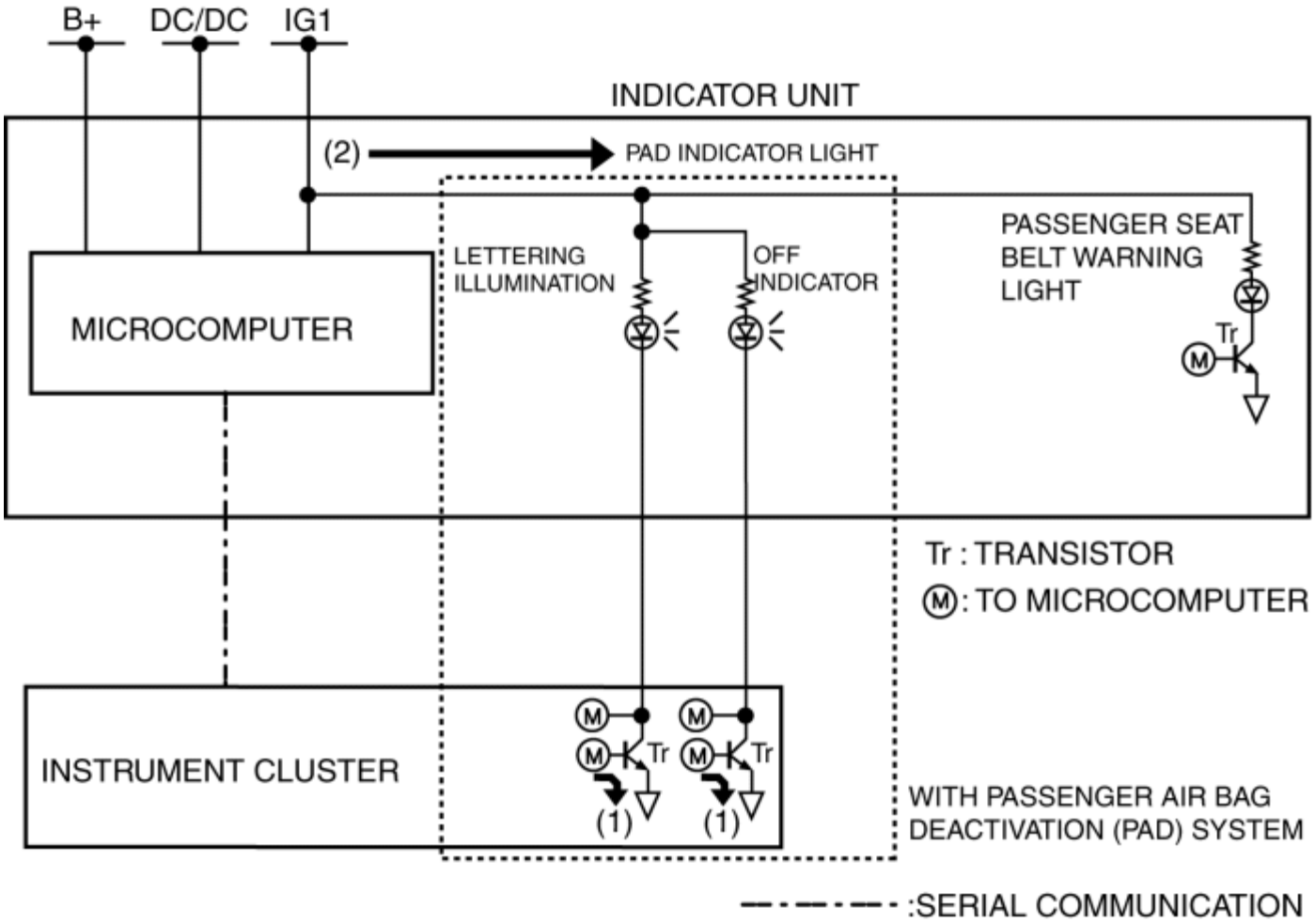

Seat warmer switch (with seat warmer system)

- For details on the seat warmer switch operation, refer to SEAT WARMER SYSTEM. (See **SEAT WARMER SYSTEM**.)

Fail-safe

- Function not equipped.

2014 - Mazda3 - Body and Accessories

ON-BOARD DIAGNOSTIC [INSTRUMENT CLUSTER]

Outline

- The on-board diagnostic function consists of the following functions:
  - A malfunction detection function, which detects overall malfunctions in the instrument cluster-related parts.
  - A memory function, which stores detected DTCs.
  - A display function, which indicates malfunction locations and status via DTC output.
  - A PID/data monitoring function, which reads out specific input/output signals and verifies the input/output condition.
- Using the Mazda Modular Diagnostic System (M-MDS), DTCs can be read out and deleted, and the PID/data monitoring function can be activated.

Malfunction detection function

- Detects malfunctions in input/output signals.
- If a malfunction occurs, the instrument cluster records the malfunction as a DTC. A recorded DTC can be read by the Mazda Modular Diagnostic System (M-MDS).

×: Applicable—: Not applicable

DTC No.	Warning/indicator light	Description	Fail-safe function	Drive cycle	Self test type*1	Memory function
B11D4:53*2	—	Laser sensor malfunction	×	—	C, D	×
U0001:88	—	Module communication error (HS-CAN)	—	—	C, D	×
U0010:88	—	Module communication error (MS-CAN)	—	—	C, D	×
U0100:00	Illuminated/Flash	Communication error with PCM	—	—	C, D	×
U0101:00*3	—	Communication error with TCM	—	—	C, D	×

U0121:00	Illuminated/Flash	Communication error with DSC HU/CM	—	—	C, D	×
U0131:00	Illuminated/Flash	Communication error with EPS control module	—	—	C, D	×
U0140:00	Illuminated/Flash	Communication error with front body control module (FBCM)	—	—	C, D	×
U0142:00	—	Communication error with rear body control module (RBCM)	—	—	C, D	×
U0151:00	Illuminated/Flash	Communication error with SAS control module	—	—	C, D	×
U0182:00*4	Illuminated/Flash	Communication error with AFS control module	—	—	C, D	×
U0214:00	Illuminated/Flash	Communication error with start stop unit	—	—	C, D	×
U0232:00*5	Illuminated/Flash	Communication error with BSM control module (LH)	—	—	C, D	×
U0235:00*2	—	Communication error with laser sensor	×	—	C, D	×
U023A:00*6	Illuminated/Flash	Communication error with forward sensing camera (FSC)	—	—	C, D	×
U0300:00	—	Instrument cluster configuration error	—	—	C, D	×
U0401:68	Illuminated/Flash	Error signal received from PCM	—	—	C, D	×
U0402:68*3	—	Error signal received from transmission/transaxle	—	—	C, D	×
U0422:68	Illuminated/Flash	Error signal received from front body control module (FBCM)	—	—	C, D	×
U0433:00*2	—	Error signal received from laser sensor	×	—	C, D	×
U0433:68*2	—	Error signal received from laser sensor	×	—	C, D	×
U0515:68	Illuminated/Flash	Error signal received from start stop unit	—	—	C, D	×
U053B:00*6	Illuminated/Flash	Error signal received from forward sensing camera (FSC)	—	—	C, D	×
U2005:86	—	Error signal received from PCM	—	—	C, D	×

U2013:13	—	Cluster switch circuit malfunction	—	—	C, D	×
U2100:00	—	Instrument cluster configuration error	—	—	C, D	×
U2300:41	—	Instrument cluster configuration error	—	—	C, D	×
U2300:51	—	Instrument cluster configuration error	—	—	C, D	×
U2300:56	—	Instrument cluster configuration error	—	—	C, D	×
U2300:57	—	Instrument cluster configuration error	—	—	C, D	×
U3000:41	—	Instrument cluster internal malfunction	—	—	C, D	×
U3003:16	—	Low power supply voltage input to instrument cluster	—	—	C, D	×

*1 **C: CMDTC self test, D: ODDTC self test**

*2 **With smart city brake support (SCBS)**

*3 **ATX**

*4 **With AFS**

*5 **With blind spot monitoring (BSM) system**

*6 **With forward sensing camera (FSC)**

DTC 7-digit code definition

- When related systems or components have failed, the CM stores the DTC of the malfunctioning part in the CM memory, and allows for the retrieval of the store data using scanning tool when necessary. The DTCs are indicated using seven digits. Each digit indicates the following.

B 1 0 D 5 : 1 3

· Specify the area failure sub type

00: No sub type information
05: System programming malfunctions
13: Open circuit
14: Circuit short to ground or open
16: Circuit voltage below threshold
41: General checksum malfunction
42: General memory malfunction
49: Internal electronic malfunction
51: Not programmed
62: Signal compare malfunction
68: Event information
81: Invalid serial data received
86: Signal invalid
87: Missing message
88: Bus off
92: Performance or incorrect operation
94: Unexpected operation

· Manufacturer controlled

· Indicates subgroup

Powertrain (P code)
0: Fuel and air metering and auxiliary emission controls

Network Electrical (U code)
0: Network Electrical
1: Network communication
2: Network communication
3: Network software
4: Network data
5: Network data

Body (B code)
Manufacturer controlled

Chassis (C code)
Manufacturer controlled

· Indicates who was responsible for DTC definition

0: ISO/SAE controlled
1: Manufacturer controlled
2: There are ISO/SAE controlled just for powertrain, all others are manufacturer controlled.
3: For P3000 to P3399 is manufacturer controlled, all others are ISO/SAE controlled.

· Indicates DTC function

P: Powertrain
B: Body
C: Chassis
U: Network Electrical

Status byte for DTC

- The two digits (two digits after hyphen (-)) after the 7-digit DTC.

7-DIGIT DTC

P 1 2 6 0 : 0 0 − * *

STATUS BYTE

- A code which indicates the pending code, current/past malfunction status, or warning illumination status.
- Can be read by performing a CMDTC self-test using the Mazda Modular Diagnostic System (M-MDS).
- For details on the status byte, refer to the explanation on the Mazda Modular Diagnostic System (M-MDS) when reading the DTC.

Detection condition for the applicable DTC

DTC No.	System malfunction location	Detection condition
B11D4:53*1	Laser sensor malfunction	• Instrument cluster detects the following malfunctions ▪ Laser sensor malfunction ▪ Malfunction in smart city brake support related system (laser sensor, DSC HU/CM, PCM)
U0001:88	Module communication error (HS-CAN)	Instrument cluster detects a CAN bus communication line (HS-CAN) malfunction.
U0010:88	Module communication error (MS-CAN)	Instrument cluster detects a CAN bus communication line (MS-CAN) malfunction.
U0100:00	Communication error with PCM	Instrument cluster cannot receive the CAN signal from the PCM.
U0101:00*2	Communication error with TCM	Instrument cluster cannot receive the CAN signal from the TCM for 1 s or more.
U0121:00	Communication error with DSC HU/CM	Instrument cluster cannot receive the CAN signal from the DSC HU/CM for 1 s or more.
U0131:00	Communication error with EPS control module	Instrument cluster cannot receive the CAN signal from the EPS control module for 1 s or more.
U0140:00	Communication error with front body control module (FBCM)	Instrument cluster cannot receive the CAN signal from the front body control module (FBCM) for 5 s or more.
U0142:00	Communication error with rear body control module (RBCM)	Instrument cluster cannot receive the CAN signal from the rear body control module (RBCM) for 5 s or more.
U0151:00	Communication error with SAS control module	Instrument cluster cannot receive the CAN signal from the SAS control module for 2 s or more.
U0182:00*3	Communication error with AFS control module	Instrument cluster cannot receive the CAN signal from the AFS control module for 5 s or more.

U0214:00	Communication error with start stop unit	Instrument cluster cannot receive the CAN signal from the start stop unit for 5 s or more.
U0232:00*4	Communication error with BSM control module (LH)	Instrument cluster cannot receive the CAN signal from the BSM control module (LH) for 1.5 s or more.
U0235:00*1	Communication error with laser sensor	Instrument cluster cannot receive the CAN signal from the laser sensor for 1 s or more.
U023A:00*5	Communication error with forward sensing camera (FSC)	Instrument cluster cannot receive the CAN signal from the forward sensing camera (FSC) for 1 s or more.
U0300:00	Instrument cluster configuration error	Instrument cluster configuration error (incorrect value write) detected.
U0401:68	Error signal received from PCM	Instrument cluster receives the error signals from the PCM with the ignition switched ON (engine off or on).
U0402:68*2	Error signal received from transmission/transaxle	Instrument cluster received the error signals from the transmission/transaxle for 1 s or more with the ignition switched ON (engine off or on).
U0422:68	Error signal received from front body control module (FBCM)	Instrument cluster receives the error signals from the front body control module (FBCM) for 5 s or more with the ignition switched ON (engine off or on).
U0433:00*1	Error signal received from laser sensor	Instrument cluster detects the following conditions: ▪ The smart city brake support operated normally in the past. ▪ Malfunction of laser sensor or smart city brake support related system (laser sensor, DSC HU/CM, PCM) ▪ Laser sensor control is temporarily inhibited.
U0433:68*1	Error signal received from laser sensor	Instrument cluster detects a malfunction in the laser sensor.
U0515:68	Error signal received from start stop unit	Instrument cluster receives the error signals from the start stop unit with the ignition switched ON (engine off or on).
U053B:00*5	Error signal received from forward sensing camera (FSC)	Instrument cluster receives the error signals from the forward sensing camera (FSC) for 1 s or more with the ignition switched ON (engine off or on).
U2005:86	Error signal received from PCM	Instrument cluster receives the vehicle speed signal error from the PCM for 1 s or more with the ignition switched ON (engine off or on).
U2013:13	Cluster switch circuit malfunction	Instrument cluster detects an open circuit in the cluster switch circuit for 5 s or more with the ignition switched ON (engine off or on).

U2100:00	Instrument cluster configuration error	Instrument cluster configuration error detected as follows: ▪ No configuration of instrument cluster ▪ Instrument cluster configuration has not been correctly performed.
U2300:41	Instrument cluster configuration error	Instrument cluster configuration error (data error) detected.
U2300:51	Instrument cluster configuration error	Instrument cluster configuration error (no configuration) detected.
U2300:56	Instrument cluster configuration error	Instrument cluster configuration error (incorrect value write) detected.
U2300:57	Instrument cluster configuration error	Instrument cluster configuration error (data size error) detected.
U3000:41	Instrument cluster internal malfunction	Instrument cluster detects the internal malfunction.
U3003:16	Low power supply voltage input to instrument cluster	Instrument cluster power supply circuit voltage of less than 10V is detected.

*1 **With smart city brake support**

*2 **ATX**

*3 **With AFS**

*4 **With blind spot monitoring (BSM) system**

*5 **With forward sensing camera (FSC)**

Snapshot Data

- The data for all DTCs currently detected is stored.

Snapshot data table—: Not applicable

PID	Unit/Operation	Data contents	Module control terminal
AFS_OFF_SW*1	Off/On	• Off: AFS OFF switch is off. • On: AFS OFF switch is on.	T, V (AFS OFF switch operation signal)
		• Off: AFS not operated	

AFS_ST*1	Off/On	• On: AFS operated	B, D (CAN)
AT_MAN_M_SW*2	Off/On/Unknown	• Off: M position switch is off. • On: M position switch is on. • Unknown: M position switch signal is not determined.	H (M position switch signal)
AT_S_DWN_SW*2	Off/On/Unknown	• Off: Down switch is off. • On: Down switch is on. • Unknown: Down switch signal is not determined.	G (Down switch signal)
AT_S_UP_SW*2	Off/On/Unknown	• Off: Up switch is off. • On: Up switch is on. • Unknown: Up switch signal is not determined.	F (UP switch signal)
BSM/RVM_SW*3	Off/On	• Off: BSM OFF switch is off. • On: BSM OFF switch is on.	T, V (BSM OFF switch operation signal)
DSC_OFF_SW	Off/On	• Off: DSC OFF switch is off. • On: DSC OFF switch is on.	T, V (DSC OFF switch operation signal)
FUEL_GAUGE	L	Displays fuel level detected by the fuel gauge	—
FUEL_SEN_M	ohm	Displays fuel gauge sender unit resistance value	—
FUEL_SEN_S	ohm	**NOTE:** • Displays in the Mazda Modular Diagnostic System (M-MDS) but it does not operate.	—
I_ILLUMI_M	Off (Day)/On (Night)	• Off (Day): TNS switch is off. • On (Night): TNS switch is on.	B, D (CAN)
I-ST_OFF_SW	Off/On	**NOTE:** • Displays in the Mazda Modular Diagnostic System (M-MDS) but it does not operate.	—

LDWS_ON_SW*4	Off/On	• Off: LDWS switch is off. • On: LDWS switch is on.	T, V (LDWS switch operation signal)
MULTI_SW_ST	O.K./FAULT	• O.K.: Cluster switch is normal. • FAULT: Cluster switch is malfunctioning.	T, V (Cluster switch operation signal)
ODO_CNT	km, ft, mi	Displays rolling count of the odometer	—
P_BRAKE_SW	Off/On	• Off: Parking brake not applied • On: Parking brake applied	X (Parking brake switch signal)
R_GEAR_SW	Off/On	**ATX** • Off: Selector lever is in other than R position. • On: Selector lever is in R position. **MTX** • Off: Back-up light switch is off. • On: Back-up light switch is on.	B, D (CAN)
R_LMP	Off/On/Unknown/Fault	• Off: Back-up light is turned off. • On: Back-up light is turned on. • Unknown: Back-up light signal is not determined. • Fault: Back-up light malfunction	B, D (CAN)
SPEEDOMTR	KPH, MPH	Displays vehicle speed (**100 %** = **300 km/h {186 mph}**)	—
TACHOMTR*5	RPM	Displays engine speed (**100 %** = **10,000 rpm**)	—
TOTAL_TIME	hh:mm:ss	Displays cumulative elapsed time since vehicle completion	—
TPMS_CAL_SW*6	Off/On	• Off: Tire pressure monitoring system (TPMS) set switch is off. • On: Tire pressure monitoring system (TPMS) set switch is on.	T, V (Tire pressure monitoring system (TPMS) set switch status signal)
VPWR	V	Displays power supply voltage	S, U (Power supply)

*1 **With AFS**

*2 **ATX**

*3 **With blind spot monitoring (BSM) system**

*4 **With lane departure warning system (LDWS)**

*5 **Type A or type B instrument cluster only**

*6 **With tire pressure monitoring system (TPMS)**

Data Monitor Function

- The PID/data monitor function performs reading in real time of optionally selected input/output signal monitor items that are set in the instrument cluster.

PID/data monitor table—: Not applicable

PID	Unit/Operation	Data contents	Module control terminal
AFS_ST*1	Off/On	• Off: AFS not operated • On: AFS operated	B, D (CAN)
AT_MAN_M_SW*2	Off/On/Unknown	• Off: M position switch is off. • On: M position switch is on. • Unknown: M position switch signal is not determined.	H (M position switch signal)
AT_S_DWN_SW*2	Off/On/Unknown	• Off: Down switch is off. • On: Down switch is on. • Unknown: Down switch signal is not determined.	G (Down switch signal)
AT_S_UP_SW*2	Off/On/Unknown	• Off: Up switch is off. • On: Up switch is on. • Unknown: Up switch signal is not determined.	F (UP switch signal)

BSM/RVM_SW*3	Off/On	Off: BSM OFF switch is off. • On: BSM OFF switch is on.	T, V (BSM OFF switch operation signal)
DSC_OFF_SW	Off/On	• Off: DSC OFF switch is off. • On: DSC OFF switch is on.	T, V (DSC OFF switch operation signal)
FUEL_GAUGE	L	Displays fuel level detected by the fuel gauge	—
FUEL_SEN_M	ohm	Displays fuel gauge sender unit resistance value	—
FUEL_SEN_S	ohm	**NOTE:** • Displays in the M-MDS but it does not operate.	—
I_ILLUMI_M	Off (Day)/On (Night)	• Off (Day): TNS switch is off. • On (Night): TNS switch is on.	B, D (CAN)
I-ST_OFF_SW	Off/On	**NOTE:** • Displays in the M-MDS but it does not operate.	—
LDWS_ON_SW*4	Off/On	• Off: LDWS switch is off. • On: LDWS switch is on.	T, V (LDWS switch operation signal)
MULTI_SW_ST	O.K./FAULT	• O.K.: Cluster switch is normal. • FAULT: Cluster switch is malfunctioning.	T, V (Cluster switch operation signal)
ODO_CNT	km, ft, mi	Displays rolling count of the odometer	—
P_BRAKE_SW	Off/On	• Off: Parking brake not applied • On: Parking brake applied	X (Parking brake switch signal)
R_GEAR_SW	Off/On	**ATX** • Off: Selector lever is in other than R position. • On: Selector lever is in R position. **MTX**	B, D (CAN)

		• Off: Back-up light switch is off. • On: Back-up light switch is on.	
R_LMP	Off/On/Unknown/Fault	• Off: Back-up light is turned off. • On: Back-up light is turned on. • Unknown: Back-up light signal is not determined. • Fault: Back-up light malfunction	B, D (CAN)
SPEEDOMTR	KPH, MPH	Displays vehicle speed (**100 %** = **300 km/h {186 mph}**)	—
TACHOMTR*5	RPM	Displays engine speed (**100 %** = **10,000 rpm**)	—
TOTAL_TIME	hh:mm:ss	Displays cumulative elapsed time since vehicle completion	—
TPMS_CAL_SW*6	Off/On	• Off: Tire pressure monitoring system (TPMS) set switch is off. • On: Tire pressure monitoring system (TPMS) set switch is on.	T, V (Tire pressure monitoring system (TPMS) set switch status signal)
VPWR	V	Displays power supply voltage	S, U (Power supply)

*1 **With AFS**

*2 **ATX**

*3 **With blind spot monitoring (BSM) system**

*4 **With lane departure warning system (LDWS)**

*5 **Type A or type B instrument cluster only**

*6 **With tire pressure monitoring system (TPMS)**

Active Command Modes Function

- The active command modes are shown below.

Simulation item	Unit/Operation	Data contents	Output part name
ALARM	On/Off	• On: Warning alarm sounds. • Off: Warning alarm does not sound.	Warning alarm (instrument cluster)
LCD_SEG	Off/On	• Off: Turns off the LCD. • On: Fully displays LCD.	LCD
SPEEDOMTR*1	Off/60 Km/h/120 Km/h	• Off: Speedometer needle moves to the bottommost position. • 60 Km/h: Speedometer needle moves to **approx. 57—63 km/h {35—40 mph}**. • 120 Km/h: Speedometer needle moves to **approx. 116—124 km/h {72—77 mph}**.	Speedometer (instrument cluster)
TACHOMTR*2	Off/3000 RPM/6000 RPM	• Off: Tachometer needle moves to bottommost position. • 3000 RPM: Tachometer needle moves to **approx. 3,050 rpm**. • 6000 RPM: Tachometer needle moves to **approx. 6,100 rpm**.	Tachometer (instrument cluster)
WL+IL	Off/On	• Off: Turns off all warning lights, indicator lights. • On: Illuminates all warning lights, indicator lights.	Warning lights, indicator lights (instrument cluster)

*1 **Analog speedometer type**

*2 **Analog tachometer type**

2014 - Mazda3 - Body and Accessories

ON-BOARD DIAGNOSTIC [BLIND SPOT MONITORING (BSM) SYSTEM]

Outline

- The on-board diagnostic function consists of the following functions:
  - A malfunction detection function, which detects overall malfunctions in the BSM control module-related parts.
  - A memory function, which stores detected DTCs.
  - A display function, which indicates malfunction locations and status via DTC output.
  - A PID/data monitoring function, which reads out specific input/output signals and verifies the input/output condition.
- Using the Mazda Modular Diagnostic System (M-MDS), DTCs can be read out and deleted, and the PID/data monitoring function can be activated.

Malfunction Detection Function

- Detects malfunctions in input/output signals.
- If a malfunction occurs, the BSM control module (LH) records the malfunction as a DTC. A recorded DTC can be read by the Mazda Modular Diagnostic System (M-MDS).

DTC table

BSM control module (LH) ×: Applicable—: Not applicable

DTC No.	BSM OFF indicator light	Description	Fail-safe function	Drive cycle	Self test type*1	Memory function
B118C:11	Flash	BSM indicator light (LH) circuit malfunction	×	—	C, D	×
B118C:15	Flash	BSM indicator light (LH) circuit malfunction	×	—	C, D	×
U0001:88	Flash	Module communication error (HS-CAN)	×	—	C, D	×

U0100:00	Flash	Communication error with PCM	×	—	C, D	×
U0131:00	Flash	Communication error with EPS control module	×	—	C, D	×
U0155:00	Flash	Communication error with instrument cluster	×	—	C, D	×
U0214:00	Flash	Communication error with start stop unit	×	—	C, D	×
U0233:00	Flash	Communication error with BSM control module (RH)	×	—	C, D	×
U0401:68	Flash	Error signal received from PCM	×	—	C, D	×
U0420:68	Flash	Error signal received from EPS control module	×	—	C, D	×
U0423:68	Flash	Error signal received from instrument cluster	×	—	C, D	×
U0515:68	Flash	Error signal received from start stop unit	×	—	C, D	×
U2300:54	Flash	Configuration signal not received	×	—	C, D	×
U2300:56	Flash	Configuration data unmatched with instrument cluster	×	—	C, D	×
U2300:64	Flash	Instrument cluster configuration error	×	—	C, D	×
U3000:01	Flash	Electrical malfunction inside BSM control module	×	—	C, D	×
U3000:09	Flash	BSM control module internal malfunction	×	—	C, D	×
U3000:54	Flash	Radar performance malfunction	×	—	C, D	×
U3000:97	Flash	Radar performance malfunction	×	—	C, D	×
U3003:04	Flash	Instrument cluster configuration error	×	—	C, D	×
U3003:16	Flash	BSM control module low power supply voltage input (**less than 8.2 V**)	×	—	C, D	×
U3003:17	Flash	BSM control module high power supply voltage input (**16.8 V or more**)	×	—	C, D	×

BSM control module (RH) ×: Applicable—: Not applicable

DTC No.	BSM OFF indicator light	Description	Fail-safe function	Drive cycle	Self test type*1	Memory function
B118D:11	Flash	BSM indicator light (RH) circuit malfunction	×	—	C, D	×
B118D:15	Flash	BSM indicator light (RH) circuit malfunction	×	—	C, D	×
U0001:88	Flash	Module communication error (HS-CAN)	×	—	C, D	×
U0100:00	Flash	Communication error with PCM	×	—	C, D	×
U0131:00	Flash	Communication error with EPS control module	×	—	C, D	×
U0155:00	Flash	Communication error with instrument cluster	×	—	C, D	×
U0214:00	Flash	Communication error with start stop unit	×	—	C, D	×
U0232:00	Flash	Communication error with BSM control module (LH)	×	—	C, D	×
U0401:68	Flash	Error signal received from PCM	×	—	C, D	×
U0420:68	Flash	Error signal received from EPS control module	×	—	C, D	×
U0423:68	Flash	Error signal received from instrument cluster	×	—	C, D	×
U0515:68	Flash	Error signal received from start stop unit	×	—	C, D	×
U2300:54	Flash	Configuration signal not received	×	—	C, D	×
U2300:56	Flash	Configuration data unmatched with instrument cluster	×	—	C, D	×
U2300:64	Flash	Instrument cluster configuration error	×	—	C, D	×
U3000:01	Flash	Electrical malfunction inside BSM control module	×	—	C, D	×
U3000:09	Flash	BSM control module internal malfunction	×	—	C, D	×
U3000:54	Flash	Radar performance malfunction	×	—	C, D	×

U3000:97	Flash	Radar performance malfunction	×	—	C, D	×
U3003:04	Flash	Instrument cluster configuration error	×	—	C, D	×
U3003:16	Flash	BSM control module low power supply voltage input (**less than 8.2 V**)	×	—	C, D	×
U3003:17	Flash	BSM control module high power supply voltage input (**16.8 V or more**)	×	—	C, D	×

*1

C: CMDTC self test, D:ODDTC self test

DTC 7-digit code definition

- When related systems or components have failed, the CM stores the DTC of the malfunctioning part in the CM memory, and allows for the retrieval of the store data using scanning tool when necessary. The DTCs are indicated using seven digits. Each digit indicates the following.

B 1 0 D 5 : 1 3

· Specify the area failure sub type

00: No sub type information
01: General electrical failure
05: System programming malfunctions
09: Component failures
13: Open circuit
11: Circuit short to ground
14: Circuit short to ground or open
15: Circuit short to battery or open
16: Circuit voltage below threshold
17: Circuit voltage above threshold
41: General checksum malfunction
42: General memory malfunction
49: Internal electronic malfunction
4A: Incorrect component installed
51: Not programmed
62: Signal compare malfunction
68: Event information
81: Invalid serial data received
86: Signal invalid
87: Missing message
88: Bus off
92: Performance or incorrect operation
94: Unexpected operation
97: Component or system operation obstructed or blocked

· Manufacturer controlled

· Indicates subgroup

Powertrain (P code)
0: Fuel and air metering and auxiliary emission controls

Network Electrical (U code)
0: Network Electrical
1: Network communication
2: Network communication
3: Network software
4: Network data
5: Network data

Body (B code)
Manufacturer controlled

Chassis (C code)
Manufacturer controlled

· Indicates who was responsible for DTC definition

0: ISO/SAE controlled
1: Manufacturer controlled
2: There are ISO/SAE controlled just for powertrain, all others are manufacturer controlled.
3: For P3000 to P3399 is manufacturer controlled, all others are ISO/SAE controlled.

· Indicates DTC function

P: Powertrain
B: Body
C: Chassis
U: Network Electrical

Status byte for DTC

- The two digits (two digits after hyphen (-)) after the 7-digit DTC.

7-DIGIT DTC

P 1 2 6 0 : 0 0 − * *

STATUS BYTE

- A code which indicates the pending code, current/past malfunction status, or warning illumination status.
- Can be read by performing a CMDTC self-test using the Mazda Modular Diagnostic System (M-MDS).
- For details on the status byte, refer to the explanation on the Mazda Modular Diagnostic System (M-MDS) when reading the DTC.

Detection condition for the applicable DTC

BSM control module (LH)

DTC No.	System malfunction location	Detection condition
B118C:11	BSM indicator light (LH) circuit malfunction	BSM control module (LH) performs measurement at 0.01 s intervals and a short to ground in the BSM indicator light (LH) circuit is detected 48 times continuously.
B118C:15	BSM indicator light (LH) circuit malfunction	BSM control module (LH) performs measurement at 0.01 s intervals and a short to power supply in the BSM indicator light (LH) circuit is detected 48 times continuously.
U0001:88	Module communication error (HS-CAN)	BSM control module detected a CAN bus communication line (HS-CAN) malfunction for 0.4 s or more.
U0100:00	Communication error with PCM	BSM control module cannot receive a CAN signal from the PCM for 1.5 s or more.
U0131:00	Communication error with EPS control module	BSM control module cannot receive a CAN signal from the EPS control module for 1.5 s or more.
U0155:00	Communication error with instrument cluster	BSM control module cannot receive a CAN signal from the instrument cluster.
U0214:00	Communication error with start stop unit	BSM control module cannot receive a CAN signal from the start stop unit for 1.5 s or more.
U0233:00	Communication error with BSM control module (RH)	No communication between BSM control module (LH) and (RH) for 1 s or more.
U0401:68	Error signal received from PCM	BSM control module receives the error signal from the PCM for 1 s or more.
U0420:68	Error signal received from EPS control module	BSM control module receives the error signal from the EPS control module for 1 s or more.
U0423:68	Error signal received from instrument cluster	BSM control module receives the error signal from the instrument cluster for 1 s or more.
U0515:68	Error signal received from start stop unit	BSM control module receives the error signal from the start stop unit for 1 s or more.

U2300:54	Configuration signal not received	BSM control module cannot receive the configuration signal it is supposed to receive.
U2300:56	Configuration data unmatched with instrument cluster	Configuration data of the BSM control module and instrument cluster are not matched.
U2300:64	Instrument cluster configuration error	Instrument cluster configuration error (signal error) detected.
U3000:01	Electrical malfunction inside BSM control module	BSM control module is detected an electrical malfunction inside.
U3000:09	BSM control module internal malfunction	BSM control module detected a malfunction inside the voltage control oscillator.
U3000:54	Radar performance malfunction	BSM control module detected malfunction in misalignment.
U3000:97	Radar performance malfunction	• BSM control module internal radar sensor sensitivity is decreased. • BSM control module internal radar sensor axis is deviated.
U3003:04	Instrument cluster configuration error	Instrument cluster configuration error detected.
U3003:16	BSM control module low power supply voltage input (**less than 8.2 V**)	BSM control module power supply voltage of less than 8.2 V is detected for 2 s or more.
U3003:17	BSM control module high power supply voltage input (**16.8 V or more**)	BSM control module power supply voltage of 16.8 V or more is detected for 2 s or more.

BSM Control Module (RH)

DTC No.	Description	Detection condition
B118D:11	BSM indicator light (RH) circuit malfunction	BSM control module (RH) performs measurement at 0.01 s intervals and a short to ground in the BSM indicator light (RH) circuit is detected 48 times continuously.
B118D:15	BSM indicator light (RH) circuit malfunction	BSM control module (RH) performs measurement at 0.01 s intervals and a short circuit to power supply in the BSM indicator light (RH) circuit is detected 48 times continuously.
U0001:88	Module communication error (HS-CAN)	BSM control module detected a CAN bus communication line (HS-CAN) malfunction for 0.4 s or more.
U0100:00	Communication error with PCM	BSM control module cannot receive a CAN signal from the PCM for 1.5 s or more.
U0131:00	Communication error with EPS control module	BSM control module cannot receive a CAN signal from the EPS control module for 1.5 s or more.

U0155:00	Communication error with instrument cluster	BSM control module cannot receive a CAN signal from the instrument cluster.
U0214:00	Communication error with start stop unit	BSM control module cannot receive a CAN signal from the start stop unit for 1.5 s or more.
U0232:00	Communication error with BSM control module (LH)	No communication between BSM control module (LH) and (RH) for 1 s or more.
U0401:68	Error signal received from PCM	BSM control module receives the error signal from the PCM for 1 s or more.
U0420:68	Error signal received from EPS control module	BSM control module receives the error signal from the EPS control module for 1 s or more.
U0423:68	Error signal received from instrument cluster	BSM control module receives the error signal from the instrument cluster for 1 s or more.
U0515:68	Error signal received from start stop unit	BSM control module receives the error signal from the start stop unit for 1 s or more.
U2300:54	Configuration signal not received	BSM control module cannot receive the configuration signal it is supposed to receive.
U2300:56	Configuration data unmatched with instrument cluster	Configuration data of the BSM control module and instrument cluster are not matched.
U2300:64	Instrument cluster configuration error	Instrument cluster configuration error (signal error) detected.
U3000:01	Electrical malfunction inside BSM control module	BSM control module is detected an electrical malfunction inside.
U3000:09	BSM control module internal malfunction	BSM control module detected a malfunction inside the voltage control oscillator.
U3000:54	Radar performance malfunction	BSM control module detected malfunction in misalignment.
U3000:97	Radar performance malfunction	Instrument cluster configuration error detected.
U3003:04	Instrument cluster configuration error	• BSM control module internal radar sensor sensitivity is decreased. • BSM control module internal radar sensor axis is deviated.
U3003:16	BSM control module low power supply voltage input (**less than 8.2 V**)	BSM control module power supply voltage of less than 8.2 V is detected for 2 s or more.
	BSM control module high power supply	

U3003:17	voltage input (**16.8 V or more**)	BSM control module power supply voltage of 16.8 V or more is detected for 2 s or more.

Snap shot data

- The data for all DTCs currently detected is stored.

—: Not applicable

Snapshot data item	Unit		Data contents	Data read/use method	Corresponding data monitor items
AAT	°C	°F	Ambient temperature	—	—
APP_STATUS	Accelerator Pedal Off/Under20%/Over20%/FAIL		Accelerator pedal position status	—	—
CFG_STATUS	Config Complete/Not Configured/Config Error		Instrument cluster configuration status	—	—
ECT_STATUS	Under 0 degrees C/0 - Under 80 degrees C/Over 80 degrees C/FAIL		Engine coolant temperature status	—	—
IC_VPWR	V		Instrument cluster power supply voltage	• The BSM control module (LH) or (RH) constantly receives the power supply voltage value of the instrument cluster sent via CAN signal from the instrument cluster. • If a DTC is detected, the BSM control module (LH) or (RH) records the power supply voltage of the instrument cluster when the DTC was detected, and it is displayed in the Mazda Modular Diagnostic System (M-MDS).	VPWR*1
			Elapsed time since ignition was switched ON (engine off or on) **NOTE:** • The instrument	• The BSM control module (LH) or (RH) constantly receives the elapsed time since the ignition was switched ON (engine off or on) sent via CAN signal from the instrument cluster.	

IG-ON_TIMER	hh:mm:ss*2	cluster records the elapsed time since the ignition was switched ON (engine off or on).	• If a DTC is detected, the BSM control module (LH) or (RH) records the elapsed time since the ignition was switched ON (engine off or on) when the DTC was detected, and it is displayed in the Mazda Modular Diagnostic System (M-MDS).	—
PWR_MODE_KEY	Key Out/Key Recently Out (Position 0)/Accessory (Position 1)/Post Ignition (Position 2)/Ignition On (Position 2)/Running (Position 2)/Running - Starting	• Key Out: Ignition switched off • Key Recently Out (Position 0): Elapsed time **within 3 s** since ignition was switched off • Accessory (Position 1): Ignition is switched to ACC • Post Ignition (Position 2): Elapsed time **within 3 s** since ignition was switched ON (engine off or on) • Ignition On (Position 2): Ignition switched ON (engine off) • Running (Position 2): Ignition switched ON (engine on) • Running - Starting: Cranking condition	• The BSM control module (LH) or (RH) constantly receives the ignition switch status sent via CAN signal from the instrument cluster. • If a DTC is detected, the BSM control module (LH) or (RH) records the ignition switch status when the DTC was detected, and it is displayed in the Mazda Modular Diagnostic System (M-MDS).	—

RPM_STATUS	Engine Stop/Under1500rpm/Over1500rpm/FAIL		Engine speed status	• The BSM control module (LH) or (RH) constantly receives the engine speed sent via CAN signal from the instrument cluster. • If a DTC is detected, the BSM control module (LH) or (RH) records the engine speed when the DTC was detected, and it is displayed in the Mazda Modular Diagnostic System (M-MDS).	TACHOMTR*1
SHIFT_STATUS	P/N/D/R/FAIL		Selector lever position status	• The BSM control module (LH) or (RH) constantly receives the selector lever position sent via CAN signal from the instrument cluster. • If a DTC is detected, the BSM control module (LH) or (RH) records the selector lever position when the DTC was detected, and it is displayed in the Mazda Modular Diagnostic System (M-MDS).	—
TOTAL_DIST	km	Miles	Accumulated total traveled distance from completion of vehicle until BSM control module (LH) or (RH) detects DTC (Odometer value in instrument cluster)	The total traveled distance from which the BSM control module (LH) or (RH) detects DTCs to the present can be calculated by performing the following procedure. • Verify the odometer value in the instrument cluster. • Verify the snapshot data item TOTAL_DIST. • Subtract 2 from 1.	—
TOTAL_TIME	hh:mm:ss*2		Accumulated total elapsed time since vehicle completion until BSM control module (LH) or (RH) detects a DTC **NOTE:** • When the ROOM fuse is removed, and the ignition is switched off,	The elapsed time from which the BSM control module (LH) or (RH) detects DTCs to the present can be calculated by performing the following procedure. • Verify the instrument cluster PID item TOTAL_TIME. • Verify the snapshot data item TOTAL_TIME.	TOTAL_TIME*1

		the time is not included in the elapsed time.	• Subtract 2 from 1.	
VPWR	V	BSM control module (LH) or (RH) power supply voltage	—	VPWR_IG1
VSPD_STATUS	Stop/0-10km/h/Over10km/h/FAIL	Vehicle speed status	• The BSM control module (LH) or (RH) constantly receives the vehicle speed sent via CAN signal from the instrument cluster. • If a DTC is detected, the BSM control module (LH) or (RH) records the vehicle speed when the DTC was detected, and it is displayed in the Mazda Modular Diagnostic System (M-MDS).	SPEEDOMTR*1

*1

Instrument cluster PID (See ON-BOARD DIAGNOSTIC [INSTRUMENT CLUSTER].)

*2

The seconds may be indicated after the decimal point.

Data Monitor Function

- With the PID/data monitor function, input/output signal monitor items set in the BSM control module can be selected and read out in real-time.

PID/data monitor table

BSM Control Module (LH)—: Not applicable

PID	Unit/Operation	Data contents	Module control terminal
DTC_CNT	—	Displays number of DTCs stored in the BSM control module (LH)	—
IL_MODE	Off/On	• Off: BSM OFF indicator light is illuminated in night mode. • On: BSM OFF indicator light is illuminated in daytime mode.	C, D (CAN)
RCTA_BUZZER	Off/On	• Off: RCTA warning alarm does not sound.	C, D (CAN)

		On: RCTA warning alarm sounds.	
RCTA_OFF_IL	Off/On	• Off: BSM OFF indicator light is not illuminated. • On: BSM OFF indicator light is illuminated.	C, D (CAN)
RCTA_WARN	Off/On	• Off: BSM indicator lights are not illuminated. • On: BSM indicator lights are illuminated.	C, D (CAN)
SHIFT_R	Not_R/R	**ATX** • Not_R: Selector lever is in position other than R. • R: Selector lever is in R position. **MTX** • Not_R: Shift lever is in position other than reverse. • R: Shift lever is in reverse position.	C, D (CAN)
SWA_POS	° (deg)	Displays steering angle signal (estimated absolute angle) • Steering wheel in neutral position: Near **0 degrees** • Steering wheel turned to left: Changes from **0 degrees** to positive • Steering wheel turned to right: Changes from **0 degrees** to negative	C, D (CAN)
VPWR_IG1	V	Displays BSM control module (LH) power supply voltage	I (Power supply)
VSPD	KPH, MPH	Displays vehicle speed	C, D (CAN)
WRN_IND_L	Off/On	• Off: BSM indicator light (LH) is not illuminated. • On: BSM indicator light (LH) is illuminated.	• G (BSM indicator light (LH) signal) • J (Ground)

BSM Control Module (RH)—: Not applicable

PID	Unit/Operation	Data contents	Module control terminal
DTC_CNT	—	Displays number of DTCs stored in the BSM control module (RH)	—
		• Off: BSM OFF indicator light is illuminated in night mode.	

IL_MODE	Off/On	• On: BSM OFF indicator light is illuminated in daytime mode.	A, B (CAN)
RCTA_OFF_IL	Off/On	• Off: BSM OFF indicator light is not illuminated. • On: BSM OFF indicator light is illuminated.	A, B (CAN)
SHIFT_R	Not_R/R	**ATX** • Not_R: Selector lever is in position other than R. • R: Selector lever is in R position. **MTX** • Not_R: Shift lever is in position other than reverse. • R: Shift lever is in reverse position.	A, B (CAN)
SWA_POS	° (deg)	Displays steering angle signal (estimated absolute angle) • Steering wheel in neutral position: Near **0 degrees** • Steering wheel turned to left: Changes from **0 degrees** to positive • Steering wheel turned to right: Changes from **0 degrees** to negative	A, B (CAN)
VPWR_IG1	V	Displays BSM control module (RH) power supply voltage	I (Power supply)
VSPD	KPH, MPH	Displays vehicle speed	A, B (CAN)
WRN_IND_R	Off/On	• Off: BSM indicator light (RH) is not illuminated. • On: BSM indicator light (RH) is illuminated.	• G (BSM indicator light (RH) signal) • J (Ground)

Active Command Modes Function

- The active command modes are shown below.

Active command modes table

BSM control module (LH)

Simulation item	Unit/Operation	Data contents	Output part name
BSM_OFF_IL	On/Off	• On: Illuminates BSM OFF indicator light. • Off: Turns off BSM OFF indicator light.	BSM OFF indicator light (Instrument cluster)
Buzzer	On/Off	• On: Operates BSM warning alarm. • Off: Stops BSM warning alarm.	BSM warning alarm (Instrument cluster)
IL_MODE	Off/On	• Off: Illuminates BSM OFF indicator light in night mode. • On: Illuminates BSM OFF indicator light in daytime mode.	BSM OFF indicator light (Instrument cluster)
RCTA_BUZZER	Off/On	• Off: RCTA warning alarm does not sound. • On: RCTA warning alarm sounds.	RCTA warning alarm (Instrument cluster)
VSPD	OFF/ON	• OFF: Does not input vehicle speed. • ON: Inputs vehicle speed of **34 km/h {21 mph}**.	BSM control module (LH)
WRN_IND_L	Off/On	• Off: Turns off BSM indicator light (LH). • On: Illuminates BSM indicator light (LH).	BSM indicator light (LH) (Power outer mirror (LH))

BSM Control Module (RH)

Simulation item	Unit/Operation	Data contents	Output part name
IL_MODE	Off/On	• Off: Illuminates BSM OFF indicator light in night mode. • On: Illuminates BSM OFF indicator light in daytime mode.	BSM OFF indicator light (Instrument cluster)
RCTA_BUZZER	Off/On	• Off: RCTA warning alarm does not sound. • On: RCTA warning alarm sounds.	RCTA warning alarm (Instrument cluster)
VSPD	OFF/ON	• OFF: Does not input vehicle speed. • ON: Inputs vehicle speed of **34 km/h {21 mph}**.	BSM control module (RH)
		• Off: Turns off BSM indicator light (RH).	BSM indicator light (RH) (Power outer mirror

WRN_IND_R	Off/On	• On: Illuminates BSM indicator light (RH).	(RH))

2014 - Mazda3 - Body and Accessories

ON-BOARD DIAGNOSTIC [FORWARD SENSING CAMERA (FSC)]

Outline

- The on-board diagnostic function consists of the following functions:
  - A malfunction detection function, which detects overall malfunctions in the forward sensing camera (FSC)-related parts.
  - A memory function, which stores detected DTCs.
  - A display function, which indicates malfunction locations and status via DTC output.
  - A PID/data monitoring function, which reads out specific input/output signals and verifies the input/output condition.
- Using the Mazda Modular Diagnostic System (M-MDS), DTCs can be read out and deleted, and the PID/data monitoring function can be activated.

Malfunction detection function

- Detects malfunctions in input/output signals.
- If a malfunction occurs, the FSC records the malfunction as a DTC. A recorded DTC can be read by the Mazda Modular Diagnostic System (M-MDS).

×: Applicable—: Not applicable

DTC No.	HBC system warning light (amber)/LDWS warning light (amber)	Description	Fail-safe function	Drive cycle	Self test type*1	Memory function
B115E:54	Flash	Forward sensing camera (FSC) aiming not completed	×	—	C, D	×
B13A6:11	Flash	LDWS switch circuit malfunction	×	—	C, D	×
C1001:92	Illuminated	Poor functioning of forward sensing camera (FSC)	×	—	C, D	×
C1001:97	Illuminated	Forward sensing camera (FSC) poor visibility	×	—	C, D	×

U0001:88	Flash	Module communication error (HS-CAN)	×	—	C, D	×
U0100:00	Flash	Communication error with PCM	×	—	C, D	×
U0121:00	Flash	Communication error with DSC HU/CM	×	—	C, D	×
U0131:00	Flash	Communication error with EPS control module	×	—	C, D	×
U0140:00	Flash	Communication error with front body control module (FBCM)	×	—	C, D	×
U0155:00	Flash	Communication error with instrument cluster	×	—	C, D	×
U0214:00	Flash	Communication error with start stop unit	×	—	C, D	×
U0401:68	Flash	Error signal received from PCM	×	—	C, D	×
U0415:68	Flash	Error signal received from DSC HU/CM	×	—	C, D	×
U0420:68	Flash	Error signal received from EPS control module	×	—	C, D	×
U0423:68	Flash	Error signal received from instrument cluster	×	—	C, D	×
U0515:68	Flash	Error signal received from start stop unit	×	—	C, D	×
U2005:86	Flash	Error signal received from PCM	×	—	C, D	×
U2100:00	Illuminated	Forward sensing camera (FSC) configuration error	×	—	C, D	×
U2101:00	Illuminated	Forward sensing camera (FSC) configuration error	×	—	C, D	×
U3000:04	Flash	Forward sensing camera (FSC) internal malfunction	×	—	C, D	×
U3000:09	Flash	Forward sensing camera (FSC) internal malfunction	×	—	C, D	×
U3000:42	Flash	Forward sensing camera (FSC) internal malfunction	×	—	C, D	×

U3000:49	Flash	Forward sensing camera (FSC) internal malfunction	×	—	C, D	×
U3003:16	Flash	Forward sensing camera (FSC) low power supply voltage input	×	—	C, D	×
U3003:17	Flash	Forward sensing camera (FSC) high power supply voltage input	×	—	C, D	×

*1

C: CMDTC self test, D: ODDTC self test

DTC 7-digit code definition

- When related systems or components have failed, the CM stores the DTC of the malfunctioning part in the CM memory, and allows for the retrieval of the store data using scanning tool when necessary. The DTCs are indicated using seven digits. Each digit indicates the following.

B 1 0 D 5 : 1 3

· Specify the area failure sub type

00: No sub type information
05: System programming malfunctions
11: Circuit short to ground
13: Open circuit
14: Circuit short to ground or open
16: Circuit voltage below threshold
41: General checksum malfunction
09: Component failures
17: Circuit voltage above threshold
42: General memory malfunction
49: Internal electronic malfunction
51: Not programmed
62: Signal compare malfunction
68: Event information
81: Invalid serial data received
04: System internal failures
86: Signal invalid
87: Missing message
88: Bus off
92: Performance or incorrect operation
94: Unexpected operation
97: Component or system operation obstructed or blocked

· Manufacturer controlled

· Indicates subgroup

Powertrain (P code)	Network Electrical (U code)	Body (B code)	Chassis (C code)
0: Fuel and air metering and auxiliary emission controls	0: Network Electrical	Manufacturer controlled	Manufacturer controlled
	1: Network communication		
	2: Network communication		
	3: Network software		
	4: Network data		
	5: Network data		

· Indicates who was responsible for DTC definition

0: ISO/SAE controlled
1: Manufacturer controlled
2: There are ISO/SAE controlled just for powertrain, all others are manufacturer controlled.
3: For P3000 to P3399 is manufacturer controlled, all others are ISO/SAE controlled.

· Indicates DTC function

P: Powertrain
B: Body
C: Chassis
U: Network Electrical

Status byte for DTC

- The two digits (two digits after hyphen (-)) after the 7-digit DTC.

7-DIGIT DTC

P 1 2 6 0 : 0 0 − * *

STATUS BYTE

- A code which indicates the pending code, current/past malfunction status, or warning illumination status.
- Can be read by performing a CMDTC self-test using the Mazda Modular Diagnostic System (M-MDS).
- For details on the status byte, refer to the explanation on the Mazda Modular Diagnostic System (M-MDS) when reading the DTC.

Detection condition for the applicable DTC

DTC No.	Description	Detection condition
B115E:54	Forward sensing camera (FSC) aiming not completed	Forward sensing camera (FSC) aiming not completed is detected.
B13A6:11	LDWS switch circuit malfunction	Forward sensing camera (FSC) detects that LDWS switch is held pressed for 10 s or more.
C1001:92	Poor functioning of forward sensing camera (FSC)	With the LDWS switch on or the high beam control (HBC) system operating, it is detected that the area around the forward sensing camera (FSC) is excessively bright, and the system is inoperable for 10 min.
C1001:97	Forward sensing camera (FSC) poor visibility	With the LDWS switch on or the high beam control (HBC) system operating, it is detected that the forward sensing camera (FSC) field of view is obstructed for 10 min.
U0001:88	Module communication error (HS-CAN)	• Forward sensing camera (FSC) cannot receive the CAN bus communication signal (HS-CAN) for 1 s or more. • Forward sensing camera (FSC) detects the CAN bus communication line (HS-CAN) malfunction 10 times continuously.
U0100:00	Communication error with PCM	Forward sensing camera (FSC) cannot receive the CAN signal from the PCM for 1 s or more.
U0121:00	Communication error with DSC HU/CM	Forward sensing camera (FSC) cannot receive the CAN signal from the DSC HU/CM for 1 s or more.
U0131:00	Communication error with EPS control module	Forward sensing camera (FSC) cannot receive the CAN signal from the EPS control module for 1 s or more.
U0140:00	Communication error with front body control module (FBCM)	Forward sensing camera (FSC) cannot receive the CAN signal from the front body control module (FBCM) for 5 s or more.
U0155:00	Communication error with instrument cluster	Forward sensing camera (FSC) cannot receive the CAN signal from the instrument cluster for 5 s or more.
	Communication error with start	

U0214:00	stop unit	Forward sensing camera (FSC) cannot receive the CAN signal from the start stop unit for 1 s or more.
U0401:68	Error signal received from PCM	Forward sensing camera (FSC) receives the error signal from the PCM for 1 s or more.
U0415:68	Error signal received from DSC HU/CM	Forward sensing camera (FSC) receives the error signal from the DSC HU/CM for 1 s or more.
U0420:68	Error signal received from EPS control module	Forward sensing camera (FSC) receives the error signal from the EPS control module for 1 s or more.
U0423:68	Error signal received from instrument cluster	Forward sensing camera (FSC) receives the error signal from the instrument cluster for 5 s or more.
U0515:68	Error signal received from start stop unit	Forward sensing camera (FSC) receives the error signal from the start stop unit for 1 s or more.
U2005:86	Error signal received from PCM	Forward sensing camera (FSC) receives the vehicle speed signal error from the PCM for 1 s or more.
U2100:00	Forward sensing camera (FSC) configuration error	Forward sensing camera (FSC) configuration not completed is detected.
U2101:00	Forward sensing camera (FSC) configuration error	Detects that forward sensing camera (FSC) has unsupported configuration data.
U3000:04	Forward sensing camera (FSC) internal malfunction	Forward sensing camera (FSC) detects an error in the image-related circuit in the forward sensing camera (FSC) with the ignition switched ON (engine off or on).
U3000:09	Forward sensing camera (FSC) internal malfunction	Forward sensing camera (FSC) detects an internal temperature sensor malfunction in the forward sensing camera (FSC) with the ignition switched ON (engine off or on).
U3000:42	Forward sensing camera (FSC) internal malfunction	Forward sensing camera (FSC) detects a NVRAM error in the forward sensing camera (FSC) with the ignition switched ON (engine off or on).
U3000:49	Forward sensing camera (FSC) internal malfunction	Forward sensing camera (FSC) detects a malfunction in the forward sensing camera (FSC) with the ignition switched ON (engine off or on).
U3003:16	Forward sensing camera (FSC) low power supply voltage input	Forward sensing camera (FSC) power supply circuit voltage of 8.0 Å} 0.8 V or less is detected for 5 s or more with the ignition switched ON (engine off or on).
U3003:17	Forward sensing camera (FSC) high power supply voltage input	Forward sensing camera (FSC) power supply circuit voltage of 16.0 Å} 0.8 V or more is detected for 5 s or more with the ignition switched ON (engine off or on).

Snap shot data

- The data for all DTCs currently detected is stored.

—: Not applicable

Snapshot data item	Unit		Data contents	Data read/use method	Corresponding data monitor items
ECU_IN_TMP	°C	°F	ECU Internal Temperature	—	—
IG-ON_TIMER	hh:mm:ss*1		Elapsed time since ignition was switched ON (engine off or on) **NOTE:** • The instrument cluster records the elapsed time since the ignition was switched ON (engine off or on).	• The forward sensing camera (FSC) constantly receives the elapsed time since the ignition was switched ON (engine off or on) sent via CAN signal from the instrument cluster. • If a DTC is detected, the forward sensing camera (FSC) records the elapsed time since the ignition was switched ON (engine off or on) when the DTC was detected, and it is displayed in the Mazda Modular Diagnostic System (M-MDS).	—
OPE_MODE	Normal/CALIBRATION/EMERGENCY		Operation Mode	—	—
VSPD	KPH	MPH	Vehicle speed	—	—

*1

The seconds may be indicated after the decimal point.

Data Monitor Function

- The PID/data monitor function performs reading in real time of optionally selected input/output signal monitor items that are set in the FSC.

PID/data monitor table

			Module

PID	Unit/Operation	Data contents	control terminal
A_ANG_PITCH	° (deg)	Displays forward sensing camera (FSC) aiming angle (pitch)	C, E (CAN)
A_ANG_ROLL	° (deg)	Displays forward sensing camera (FSC) aiming angle (roll)	C, E (CAN)
A_ANG_YAW	° (deg)	Displays forward sensing camera (FSC) aiming angle (yaw)	C, E (CAN)
BRAKE_SW	Off/On	• Off: Brake switch (No. 2 signal) is off. (Brake pedal is depressed.) • On: Brake switch (No. 2 signal) is on. (Brake pedal is not depressed.)	C, E (CAN)
DSP_LANE_ST	Off/Dash_Lane/Solid_Lane	• Off: Off: Vehicle lanes not displayed in the active driving display (ADD) • Dash_Lane: Displays broken lines in the active driving display (ADD) • Solid_Lane: Displays actual lanes in the active driving display (ADD)	C, E (CAN)
		• Off: Warning not displayed in the center display • LDWS_Left: Warning related to lane departure on vehicle left side is displayed in the center display. • LDWS_Right: Warning related to lane departure on vehicle right side is displayed in the center display. • LDWS_Fail: Warning related to malfunction in lane departure warning	

DSP_WRN_ST	Off/LDWS_Left/LDWS_Right/LDWS_Fail/HBC_Fail/Camera_BLK/FSC_Fail/Camera_DRDT	system (LDWS) is displayed in the center display. • HBC_Fail: Warning related to malfunction in high beam control (HBC) system is displayed in the center display. • Camera_BLK: Warning related to dirt of the forward sensing camera (FSC) is displayed in the center display. • FSC_Fail: Warning related to malfunction in forward sensing camera (FSC) is displayed in the center display. • Camera_DRDT: Warning related to fogging of the forward sensing camera (FSC) is displayed in the center display.	C, E (CAN)
HBC_H/L_CS	Hi_Request/Low_Request/Invalid	• Hi_Request: HI beam switch signal received • Low_Request: LO beam switch signal received • Invalid: Error in HI/LO beam switch request signal	C, E (CAN)
IL_ST_HBC	Off/Green_On/Green_Flash/Amber_On/Amber_Flash	• Off: HBC system indicator light (green) and HBC system warning indicator light (amber) turned off • Green_On: HBC system indicator light (green) is illuminated. • Green_Flash: HBC system indicator light (green) is flashing. • Amber_On: HBC system warning light (amber) is illuminated.	C, E (CAN)

		• Amber_Flash: HBC system warning light (amber) is flashing.	
IL_ST_LDWS	Off/Green_On/Green_Flash/Amber_On/Amber_Flash	• Off: LDWS indicator light (green) and LDWS warning light (amber) turned off • Green_On: LDWS indicator light (green) illuminated • Green_Flash: LDWS indicator light (green) is flashing. • Amber_On: LDWS warning light (amber) is illuminated. • Amber_Flash: LDWS warning light (amber) is flashing.	C, E (CAN)
LDWS_BUZZER	Off/On	• Off: LDWS warning alarm does not sound. • On: LDWS warning alarm sounds.	C, E (CAN)
LDWS_SW	Off/On	• Off: LDWS switch is off. • On: LDWS switch is on.	C, E (CAN)
RS_SOUND_CS	Off/Left/Right	• Off: Rumble strip sound is not heard. • Left: Left side rumble strip sound heard. • Right: Right side rumble strip sound heard.	C, E (CAN)
VPWR_IG1	V	Displays forward sensing camera (FSC) power supply voltage	I (Power supply)
VSPD	KPH, MPH	Displays vehicle speed	C, E (CAN)

2014 - Mazda3 - Body and Accessories

INSTRUMENT CLUSTER OPERATION RECORD

Purpose

- The instrument cluster operation record stores the record of the illumination or flashing of the warning light.

Function

- The operation record is stored by the instrument cluster and displayed using the Mazda Modular Diagnostic System (M-MDS).
- The instrument cluster stores the following when any of the warning lights illuminates or flashes.
    - Time and date
    - Control module which sent warning light illumination/flash request
    - Battery voltage

Construction

- Based on the stored record, the instrument cluster displays the following operation record on the M-MDS screen.

MAZDA MODULAR DIAGNOSTIC SYSTEM (M-MDS) SCREEN

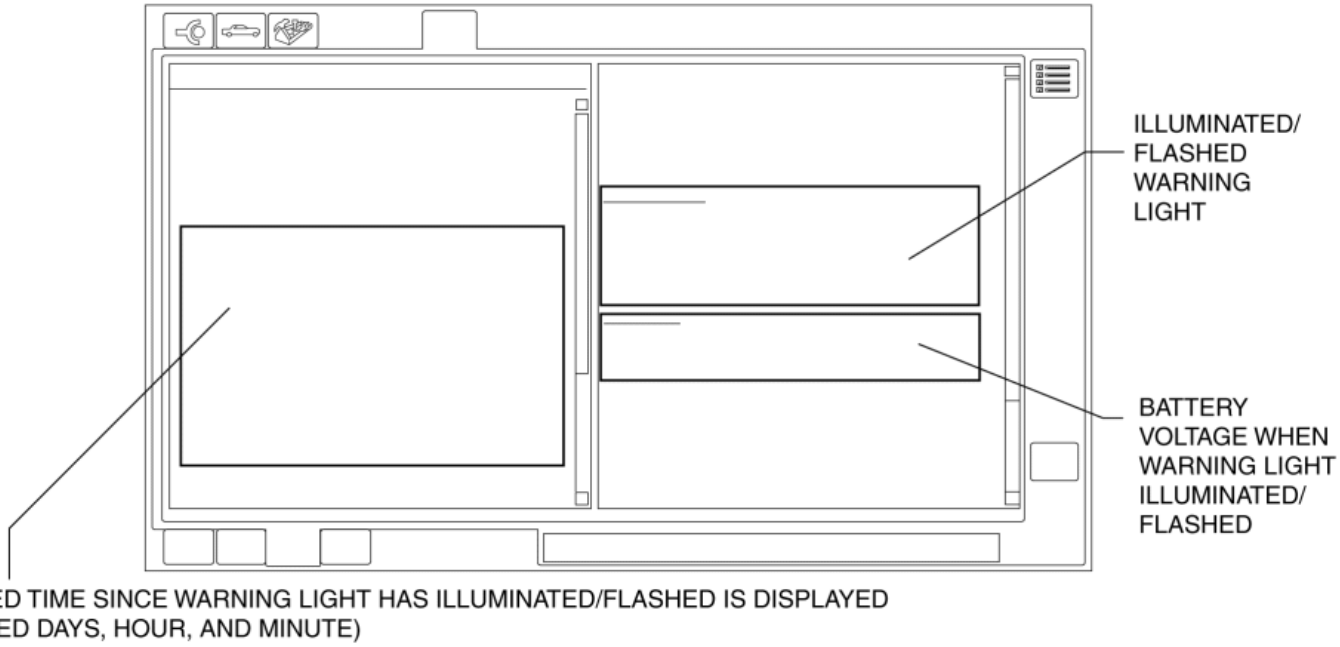

Operation

- When the instrument cluster receives a CAN signal or a warning light illumination/flash request signal sent from each switch, it controls the warning light to illuminate/flash and stores the operation record at the same time.

Fail-safe

- Function not equipped.

2014 - Mazda3 - Body and Accessories

ACTIVE AIR SHUTTER SYSTEM

Outline

- The active air shutter system controlled by the PCM reduces turbulent air*1 occurring around the vehicle which reduces air resistance. It does this by closing the active air shutter behind the front bumper mesh while the vehicle is being driven to control the air flowing into the engine compartment. In addition, by closing the shutter and blocking the air flow while the vehicle is driven during cold temperatures, the engine warms up more efficiently. By reducing the air resistance and improving the engine warm-up efficiency, the fuel economy has been improved.

*1

Air flowing into the engine compartment from the front bumper mesh while the vehicle is driven flows underneath the floor and the tire housings and collides with the air flowing around the vehicle, creating turbulence.

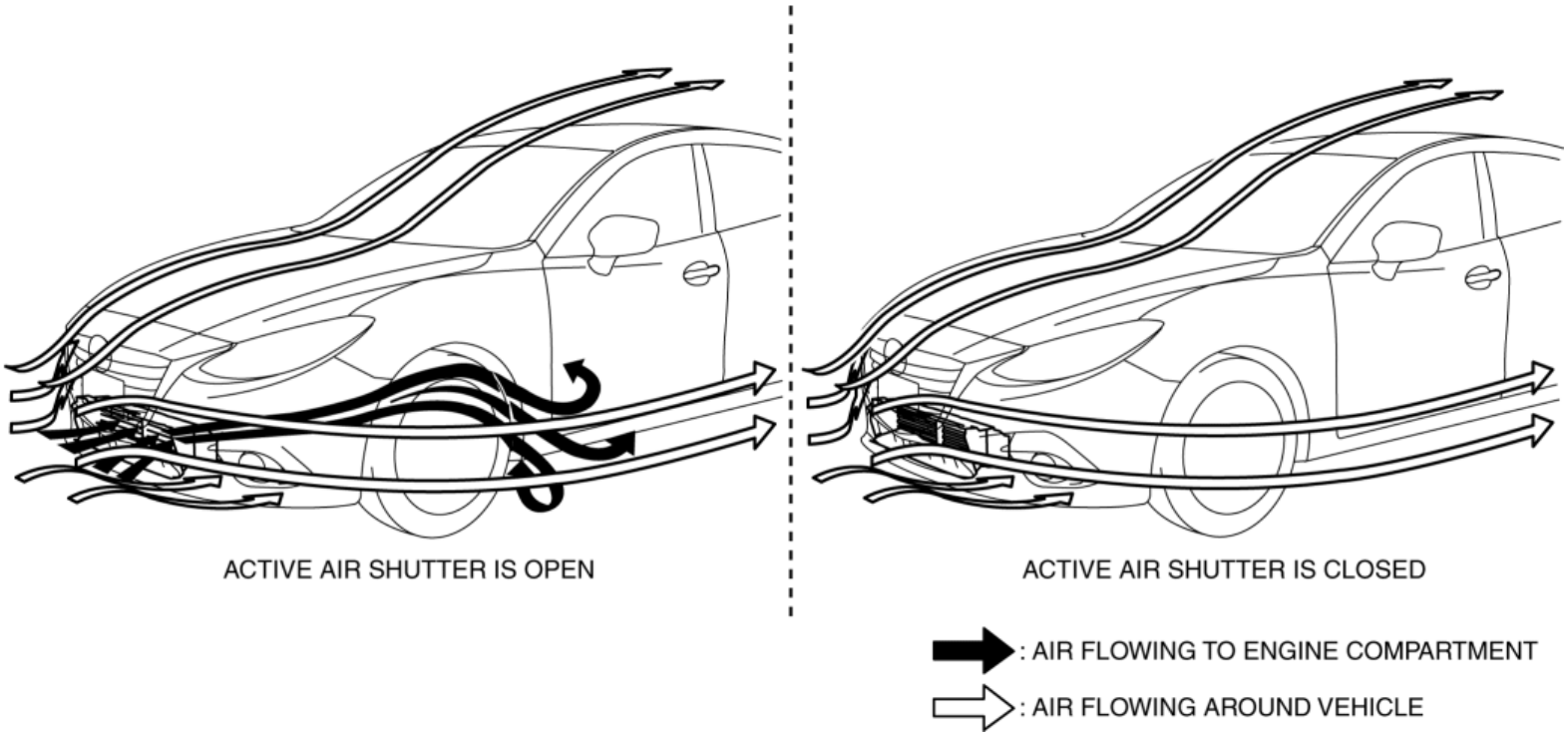

Structural View

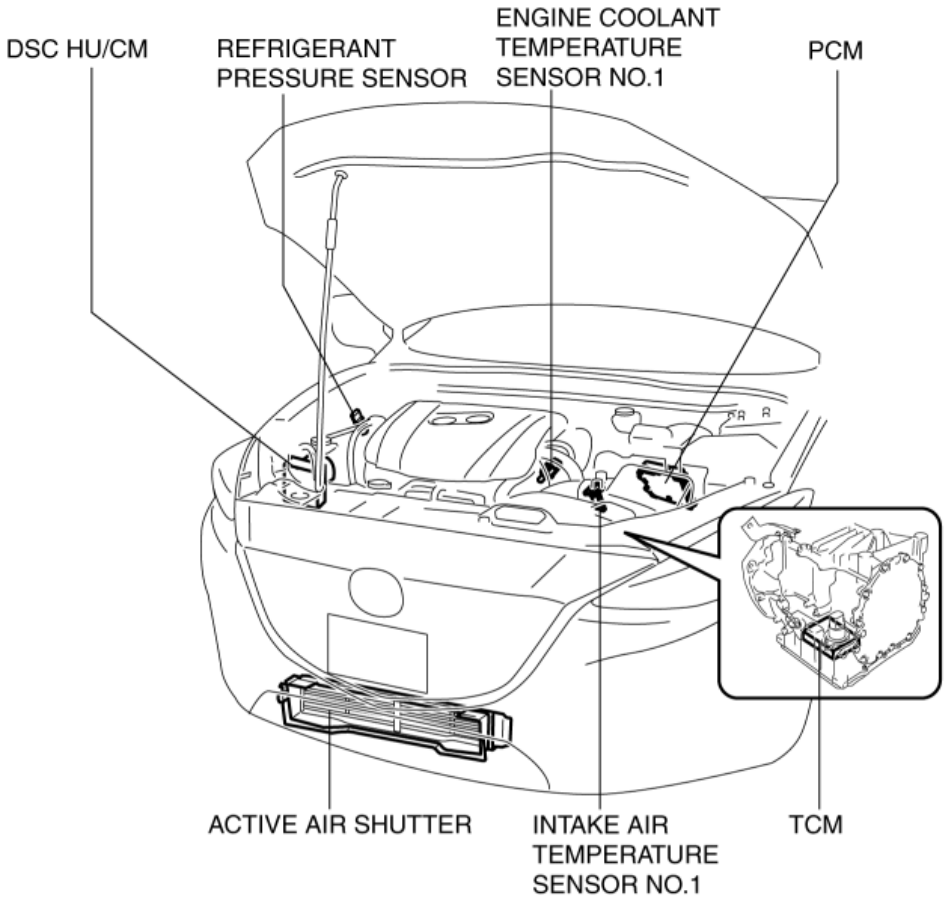

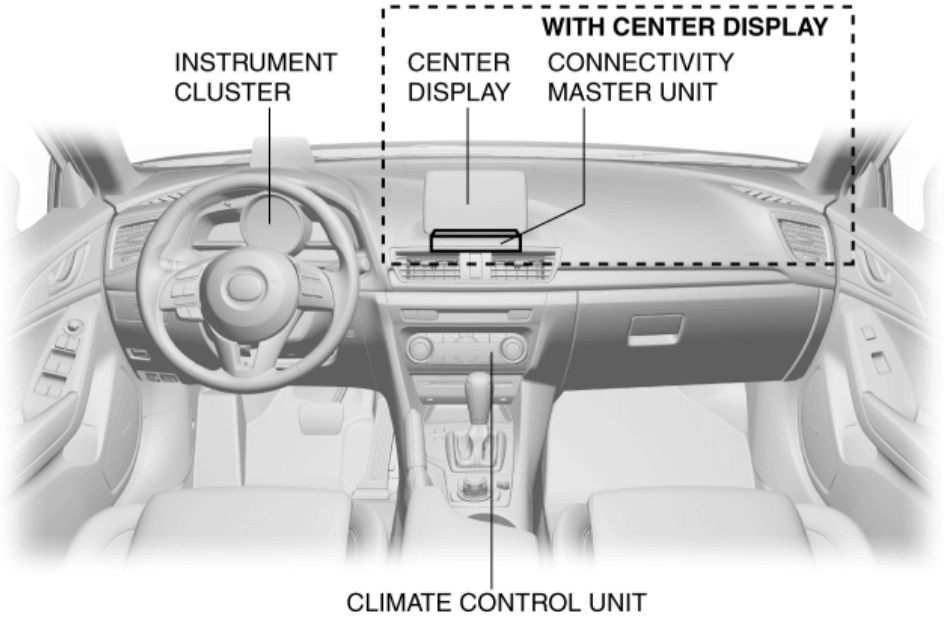

Component parts	Function
PCM	The PCM controls the actuator of the active air shutter according to the driving and engine conditions.
Active air shutter	The active air shutter opens/closes the shutter according to the request signal from the PCM.
DSC HU/CM	The DSC HU/CM sends the vehicle speed signal to the PCM.
TCM	The TCM sends the cooling fan operation request signal to the PCM.

Climate control unit	The climate control unit sends the A/C operation signal to the PCM.
Intake air temperature sensor No.1	Intake air temperature sensor No.1 detects the intake air temperature before it passes through the throttle body.
Engine coolant temperature sensor No.1	Engine coolant temperature sensor No.1 detects the engine coolant temperature.
Refrigerant pressure sensor	The refrigerant pressure sensor detects the refrigerant pressure.
Instrument cluster	The instrument cluster turns on the master warning light when a system malfunction occurs.
Connectivity master unit (with center display)	The connectivity master unit displays the warning screen in the center display based on the warning display request signal from the PCM.
Center display (with center display)	The center display displays the warning screen when a system malfunction occurs.

- For the active air shutter system control, refer to ACTIVE AIR SHUTTER SYSTEM CONTROL. (See **ACTIVE AIR SHUTTER CONTROL**.)
- For details on the active air shutter, refer to ACTIVE AIR SHUTTER. (See **ACTIVE AIR SHUTTER**.)

2014 - Mazda3 - Body and Accessories

ACTIVE AIR SHUTTER CONTROL

Outline

- In the active air shutter control, the PCM controls the active air shutter actuator to open/close the shutter.
- The controlled functions are as follows:

Control Table

Control	Function	Content
Basic control	1. Basic function (See **1. Basic function**.)	• Opens/closes the shutter according to the vehicle speed, engine coolant temperature, or the load condition due to A/C operation.
	2. Shutter fully open/closed position learning function (See **2. Shutter fully open/closed position learning function**.)	• Learns the shutter fully open/closed positions by opening/closing the shutter.
Protection control	1. Engine protection function (See **1. Engine protection function**.)	• Opens the shutter to protect the engine if it is estimated that the engine coolant temperature is high or the engine oil temperature increases excessively.
	2. ATX protection function (See **2. ATX protection function**.)	• Opens the shutter to protect the ATX if the ATF temperature is high.
	3. Throttle valve protection function (See **3. Throttle valve protection function**.)	• Opens the shutter to prevent the engine oil temperature from increasing rapidly when the intake air temperature is low.
Fail-safe (See **Fail-safe**.)		• Opens the shutter if the active air shutter control has a malfunction.

Block Diagram

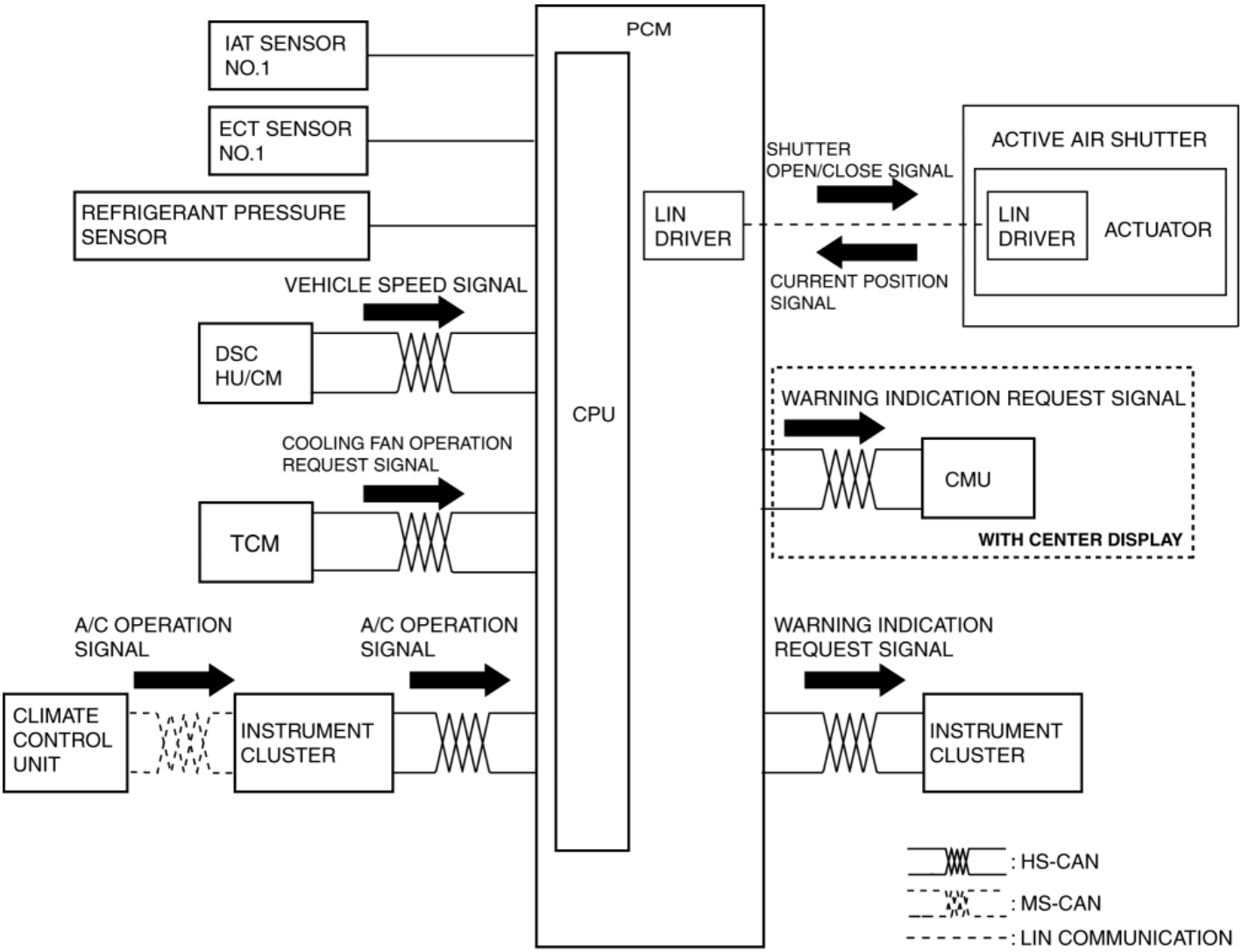

Operation

- The shutter is fully open when the ignition is switched off.
- The shutter is controlled in three positions; 0 ° (fully closed), 66 ° (66 ° open from fully closed position), and 90 ° (fully open).

NOTE:

- With the shutter opened to the 66 ° position, more air flows to the radiator and condenser while driving than with the shutter fully open.

SHUTTER OPEN/CLOSED POSITION

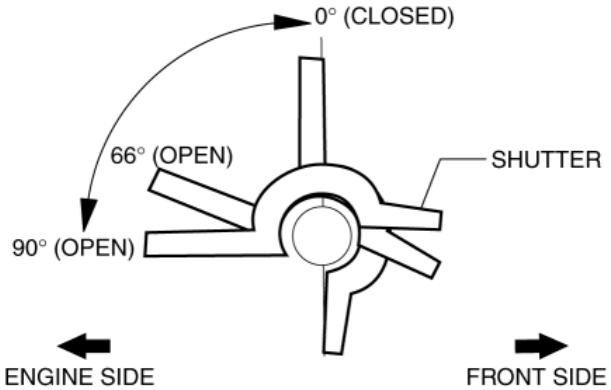

- The PCM opens/closes the active air shutter depending on the conditions after the shutter fully open/closed position learning is completed.
- The PCM opens/closes the shutter in the following control sections.

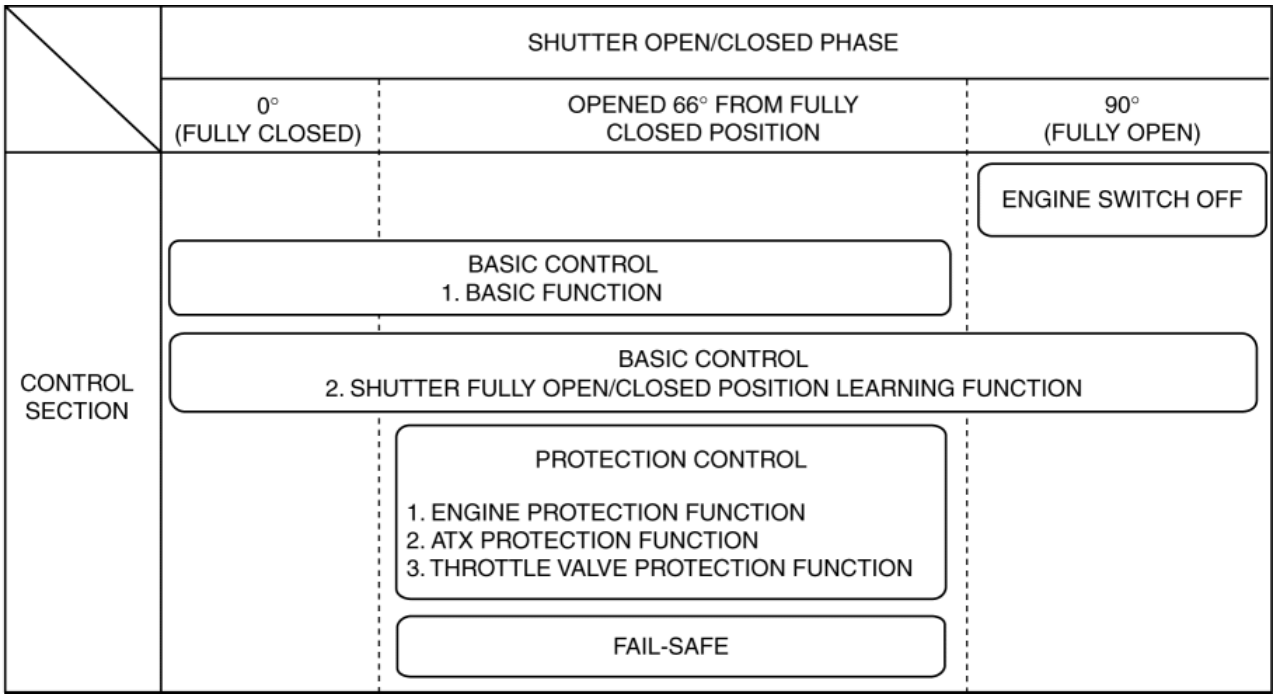

Basic Control

1. Basic function

- The PCM fully closes the shutter when all the following conditions are met.
  - Vehicle speed: less than 140 km/h {87.0 mph}
  - Engine coolant temperature: less than 100 °C {212 °F}
  - Load condition due to A/C operation: vehicle speed and refrigerant pressure during A/C operation are the specified values or less
  - Protection control is not operating
- If any of the following conditions is met, the PCM opens the shutter to the 66 ° position.
  - Vehicle speed: 140 km/h {87.0 mph} or more
  - Engine coolant temperature: 100 °C {212 °F} or more
  - A/C operation is in the following range (to cool the condenser)

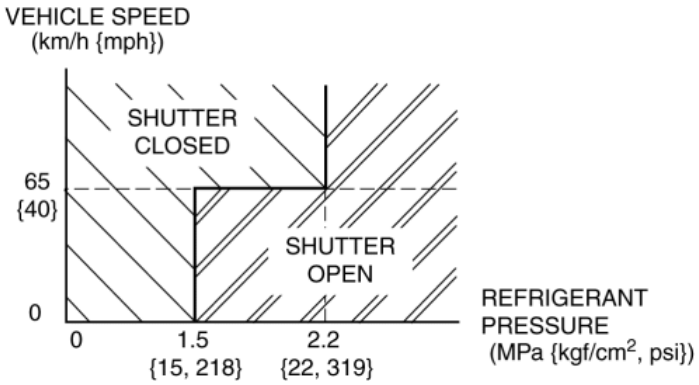

2. Shutter fully open/closed position learning function

NOTE:

- After the main relay turns off (specified time has elapsed since ignition is switched off), the shutter fully open/closed positions recorded in the active air shutter actuator are cleared.

Shutter fully open/closed position learning function flow

- After the ignition is switched ON, the PCM moves the shutter to the 90 ° (fully open) position when the vehicle speed is 10 km/h {6.2 mph} or more.
- After the shutter reaches the 90 ° (fully open) position, the PCM moves the shutter to the 0 ° (fully closed) position.
- When the shutter reaches the 0 ° (fully closed) position, the shutter fully open/closed position learning function is completed.

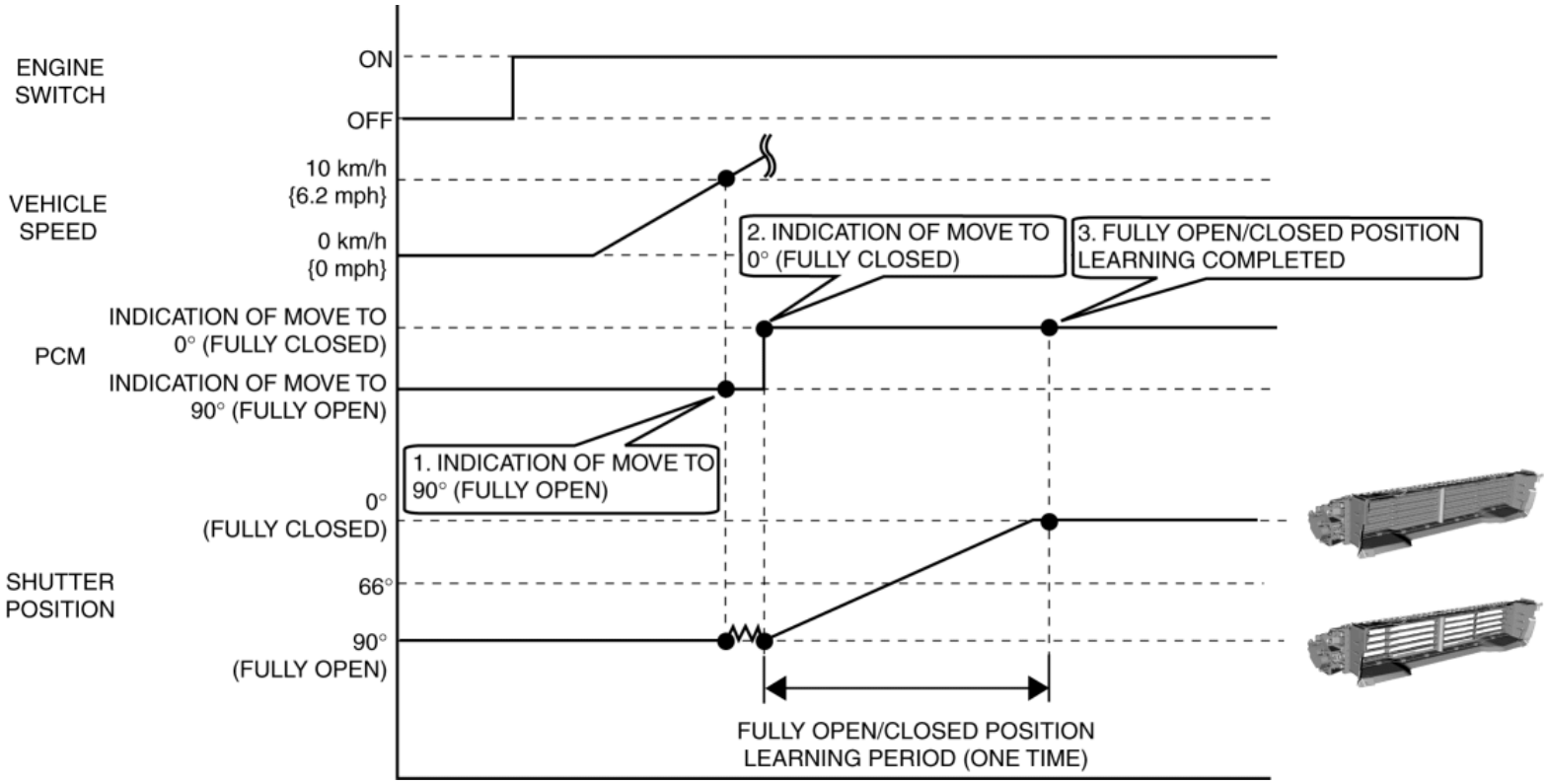

- If an error occurs during the shutter fully open/closed position learning and the learning is not completed, the PCM performs the learning again (to maximum 3 times).

Protection Control

1. Engine protection function

- If any of the following conditions is met, the PCM opens the shutter to the 66 ° position to protect the engine until the ignition is switched off.
  - Engine coolant temperature: 116 °C {241 °F} or more
  - Engine oil temperature control of drive-by-wire control is operating*
  - *: This function is synchronized with the engine oil temperature control of the drive-by-wire control. For details on the engine oil temperature control, refer to the DRIVE-BY-WIRE CONTROL. (See **DRIVE-BY-WIRE CONTROL [SKYACTIV-G 2.0, SKYACTIV-G 2.5]**.) In addition, when this function operates, the PCM sends a master warning light on request to the instrument cluster. (See **MASTER WARNING LIGHT**.)

2. ATX protection function

- For ATX protection, when the PCM receives a cooling fan operation request signal from the TCM, the PCM opens the shutter to the 66 ° position until the ignition is switched off to prevent the ATF temperature from being excessively high, and also to lower the frequency of fail-safe operations which operate when the ATF temperature is high.

3. Throttle valve protection function

- When the intake air temperature is -5 °C {23 °F} or less, the PCM opens the shutter to the 66 ° position to prevent the engine oil temperature from increasing rapidly.
- By opening the shutter, a rapid increase in engine oil temperature is suppressed to prevent the blow-by gas from freezing and adhering to the throttle valve.

NOTE:

- If the flow amount exceeds the allowable flow amount of the PCV valve, the blow-by gas flows inside the air hose via the ventilation hose.

The blow-by gas is cooled by the cool intake air and condenses to water, and the water freezes by being cooled furthermore. If this ice adheres to the throttle valve, it may affect the throttle valve operation. In addition, if the engine oil temperature increases rapidly, fluid in the engine oil in the crank case evaporates and mixes with the blow-by gas. To prevent this, the shutter is opened when the intake air temperature is low to suppress rapid increase in the engine oil temperature.

Fail-safe

- If any of the following DTCs is stored, the PCM opens the shutter to the 66 ° position.
  - Intake air temperature sensor No.1 malfunction (P0112:00, P0113:00)
  - Engine coolant temperature sensor malfunction (P0117:00, P0118:00)
  - Vehicle speed signal error (P0500:00)
  - Active air shutter malfunction (P059F:00, P05A0:00)

2014 - Mazda3 - Body and Accessories

ACTIVE AIR SHUTTER

Purpose, Function

- The active air shutter opens/closes the shutter based on the open/close signal from the PCM. In addition, the active air shutter sends the current position of the shutter to the PCM.

Construction

CAUTION:

- The active air shutter cannot be disassembled. If the active air shutter is disassembled, the active air shutter system will not operate correctly. Therefore do not disassemble.
- The active air shutter consists of the following parts.
    - Shutter (9)
    - Shaft-integrated shutter (1)
    - Link connecting individual shutters
    - Actuator which drives shaft-integrated shutter
    - Frame assembling shutter and actuator together
    - Cover
    - Bracket
- A Hall sensor, which detects the current position, and the LIN driver, which performs communication with the PCM, are built into the actuator.

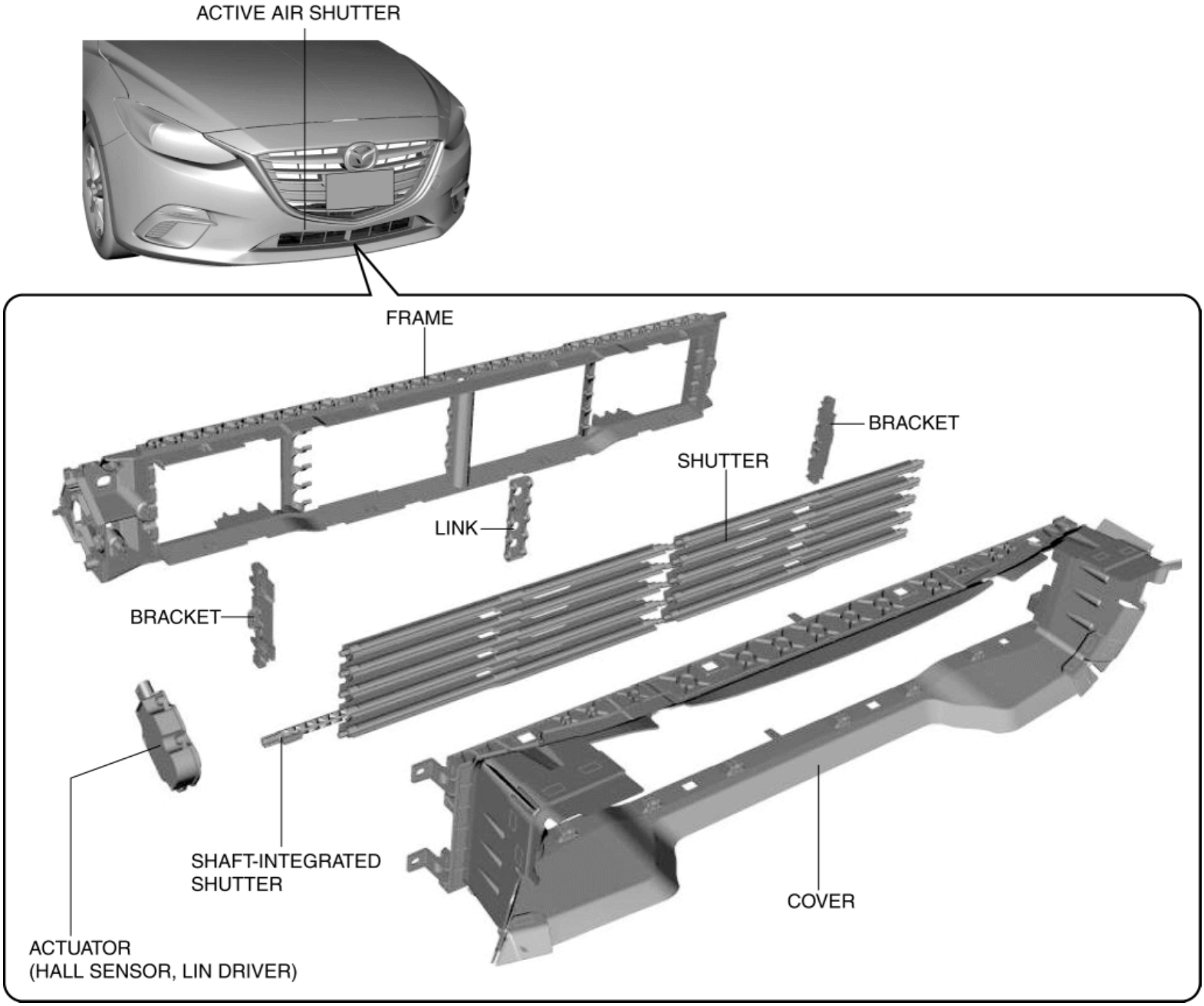

Operation

- When the open/close signal from the PCM is received, the active air shutter operates the actuator (1).
- When the actuator operates, the shaft-integrated shutter rotates (2).
- When the shaft- integrated shutter rotates, the link activates to rotate the remaining shutters simultaneously (3).
- The actuator detects the opening angle of the shutter using the Hall sensor and sends the current position signal of the shutter to the PCM (4).

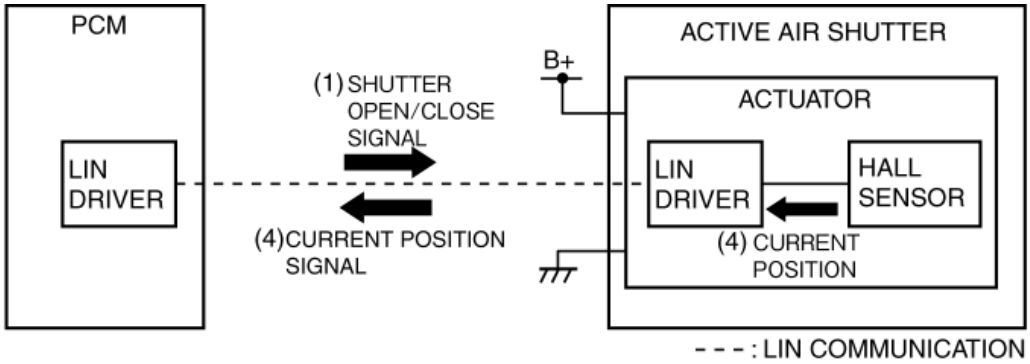

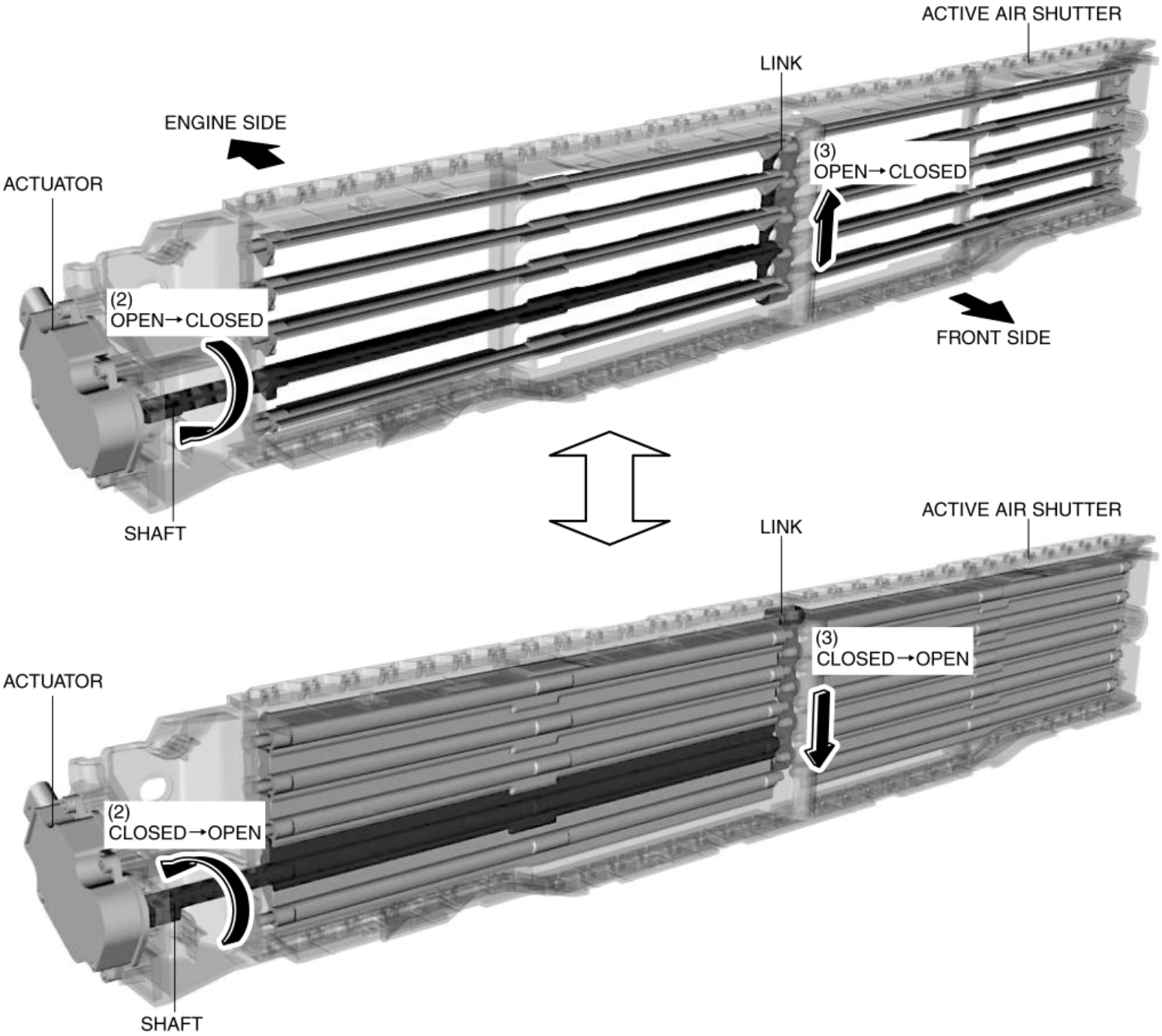

- The shutter fully opens when the ignition is switched off.
- The shutter fully closes when the ignition is switched ON (engine running) and a shutter close signal is received.
- When the ignition is switched ON (engine on) and a shutter open signal is received, the shutter opens to the position 66° from the fully closed position to facilitate air flow to the radiator and condenser.

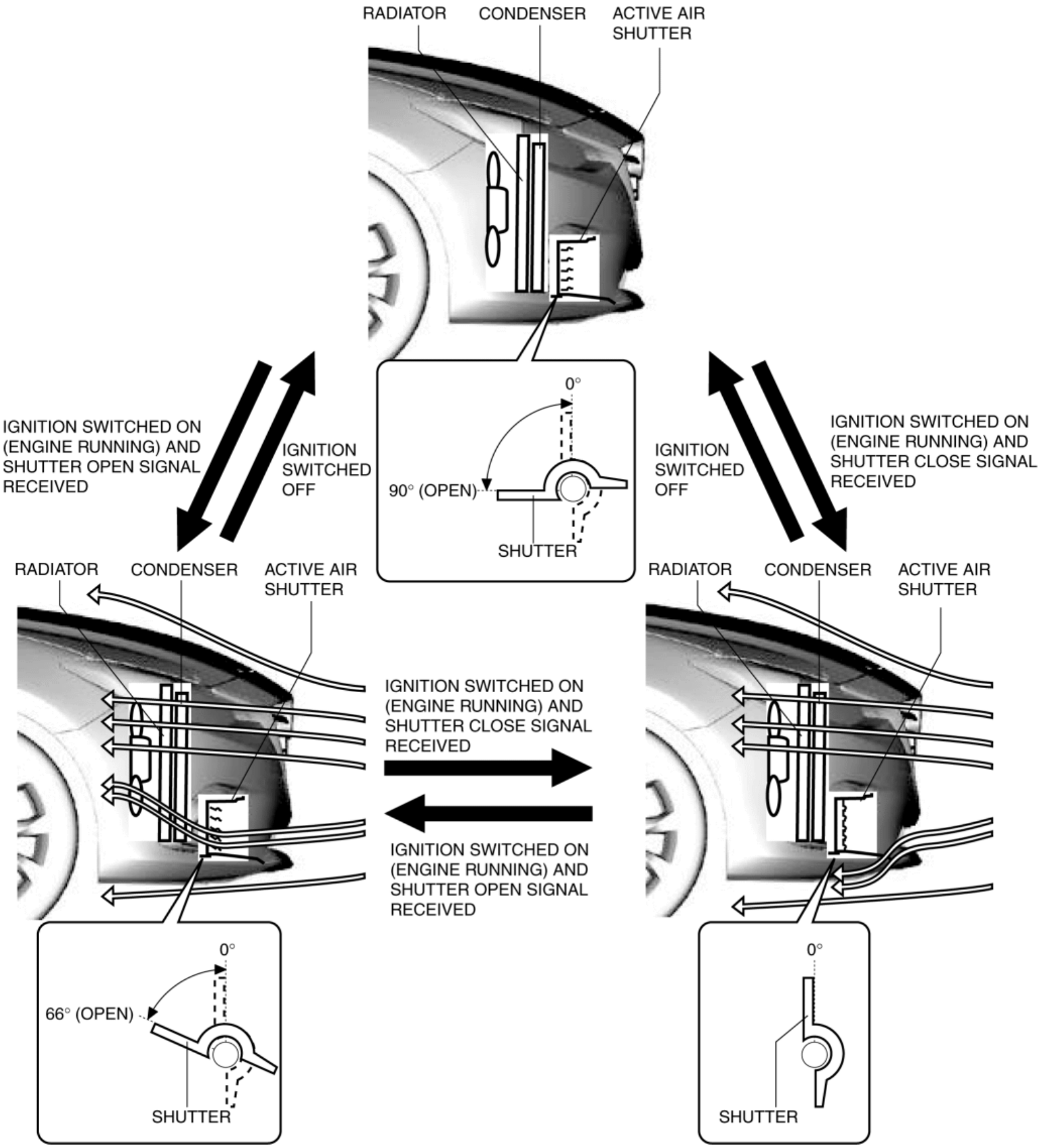

Fail-safe

- If communication with the PCM is interrupted, the active air shutter operates the actuator to open the shutter to the fully open position.

NOTE:

- If the vehicle continues to be driven with the active air shutter in a fully closed condition, air will not contact the radiator and condenser, and the engine coolant temperature and ATF temperature will increase. To prevent overheating from an excessive rise in temperatures, the active air shutter opens the shutter to the fully open position if communication with the PCM is interrupted.

2014 - Mazda3 - Body and Accessories

CONTROL SYSTEM

Outline

- A front body control module (FBCM) has been adopted for the vehicle front which controls systems such as the headlights, windshield wipers, and turn lights.
- A rear body control module (RBCM) has been adopted for the vehicle rear which controls systems such as the power door lock, rear wiper, and interior light.

2014 - Mazda3 - Body and Accessories

FRONT BODY CONTROL MODULE (FBCM)

Outline

- Located at the front of the vehicle, the front body control module (FBCM) performs numerous system controls for functions at the front of the vehicle.

Function

- The front body control module (FBCM) controls the system based on the input/output signals.
- The functions which are controlled are as follows:

Control table

Control	Content	Reference
Front combination light control	Each light illuminates or flashes in conjunction with the operation of the light switch, turn switch and hazard warning switch.	(See **FRONT COMBINATION LIGHT**.)
Horn control	Sound is harmonized between high and low pitch.	(See **HORN**.)
Rear defroster system control	Warms the rear window glass and the outer mirror glass using heat filaments to defog the glass surface.	(See **REAR WINDOW DEFROSTER/OUTER MIRROR HEATER**.)
Front fog light control	By shining light in a wider area in front of the vehicle than the light from the headlights, visibility during poor weather conditions, such as rain and fog, has been improved. In addition, the visibility of the vehicle from on-coming vehicles, pedestrians, has been improved.	(See **FRONT FOG LIGHT**.)
Front wiper system control	Equipped with continuous (low/high), auto-stop, one-touch wiper, intermittent wiper, and synchronized washer and wiper operation.	(See **WINDSHIELD WIPER/WASHER SYSTEM**.)
CAN (Controller Area Network)	Sends and receives signals between CAN system-related modules using CAN system.	(See **MULTIPLEX COMMUNICATION SYSTEM**.)
ON-BOARD DIAGNOSTIC SYSTEM	The front body control module (FBCM) is equipped with an on-board diagnosis function which records DTCs in the event of a malfunction.	(See **ON-BOARD DIAGNOSTIC SYSTEM [FRONT BODY CONTROL MODULE (FBCM)]**.)

Structural view

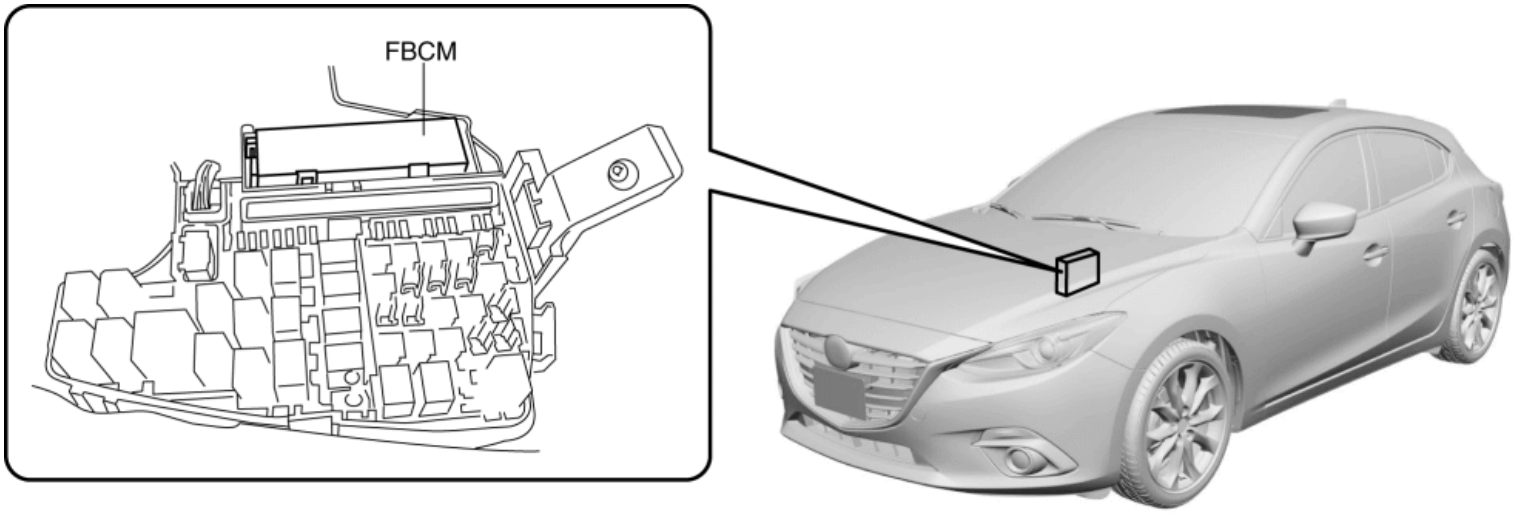

System wiring diagram

Rear defroster, blower motor

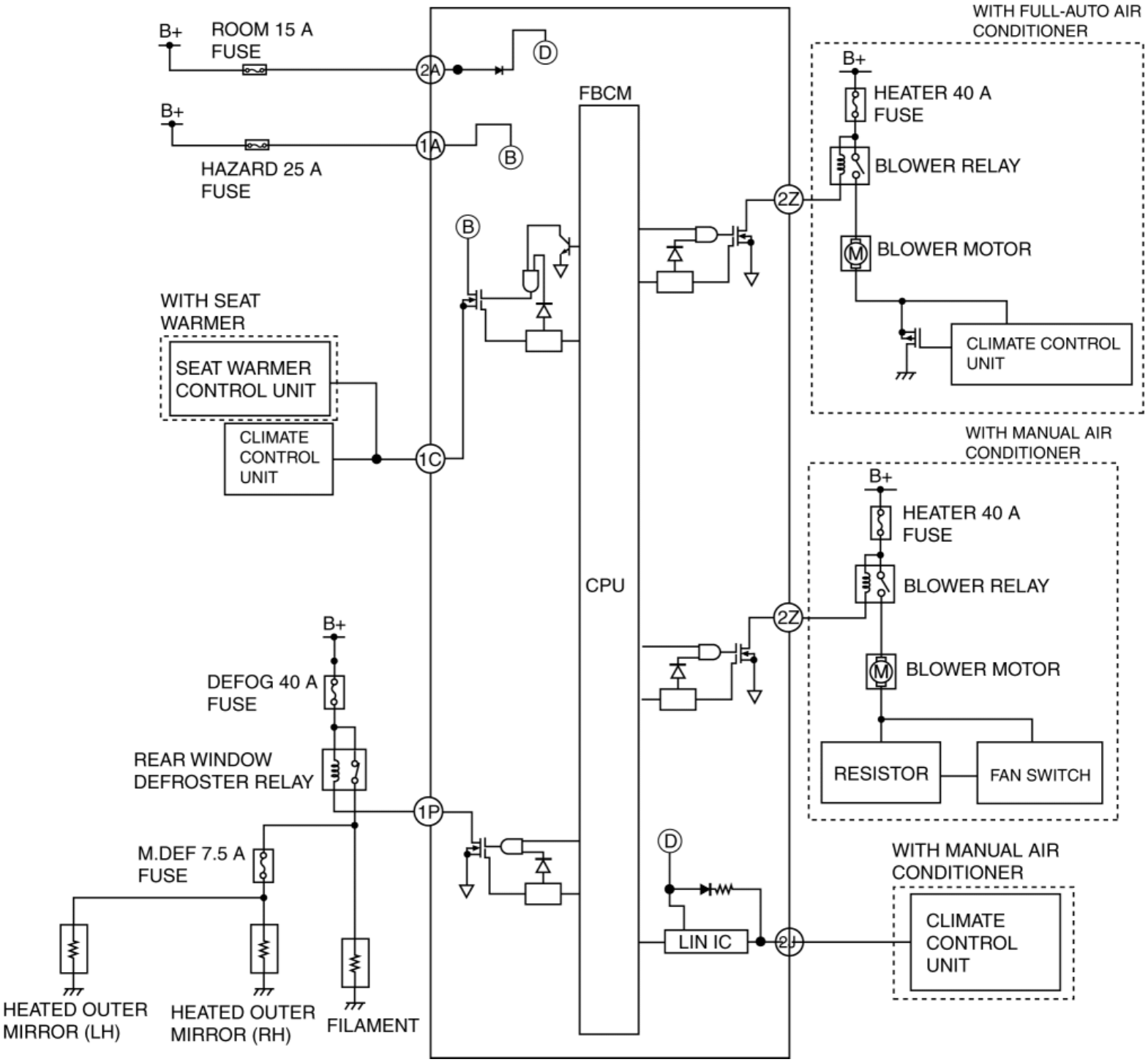

Headlights, turn lights, front fog lights

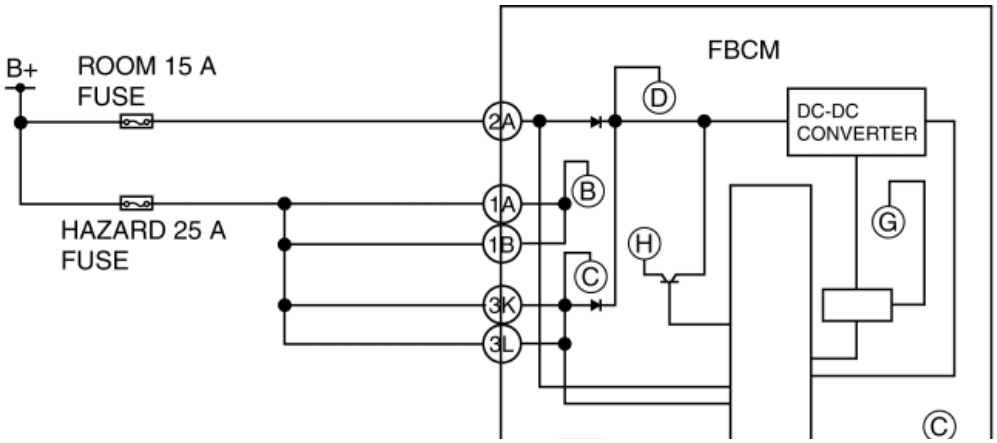

FRONT BODY CONTROL MODULE (FBCM)

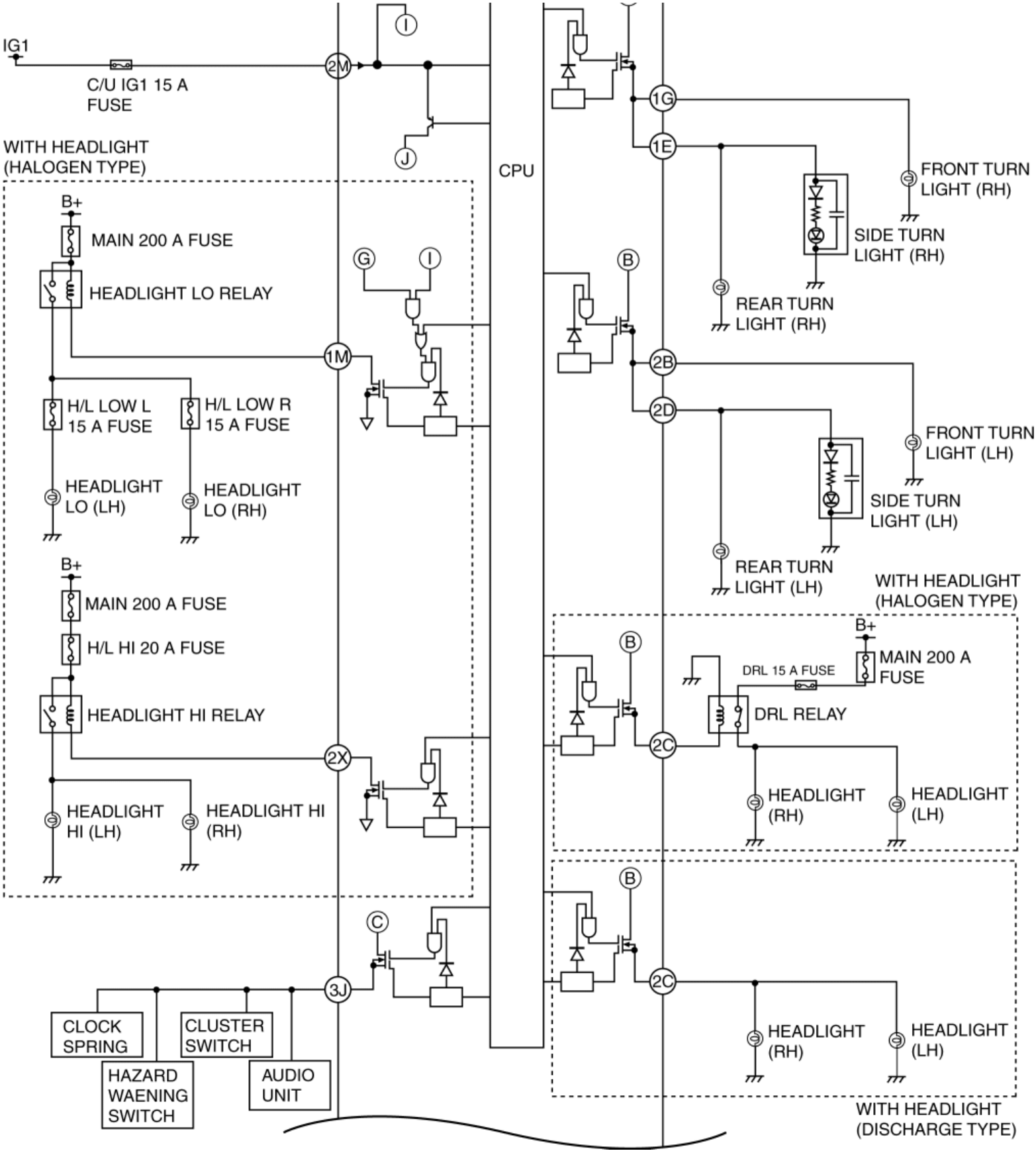

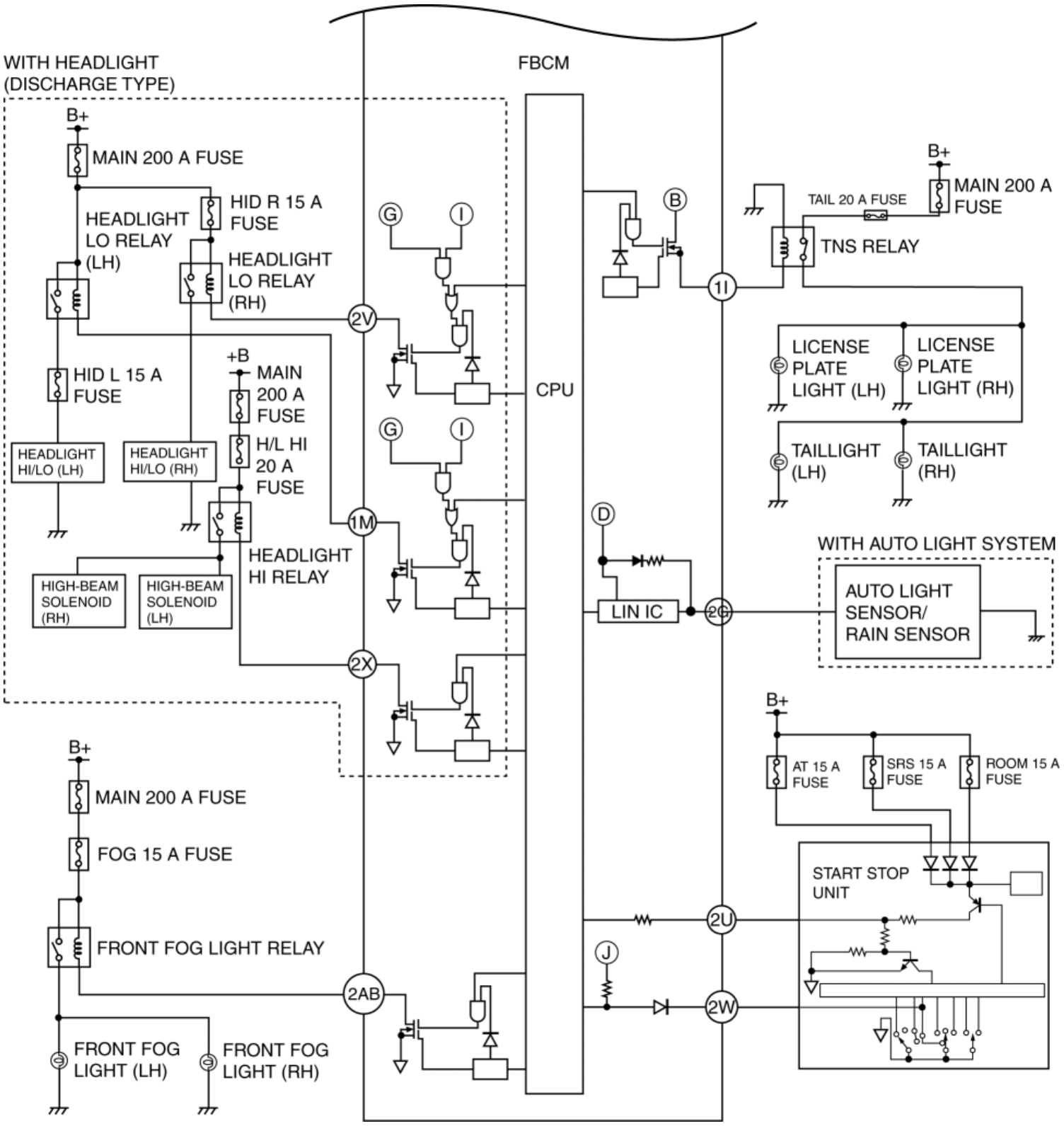

Windshield wipers, front washer

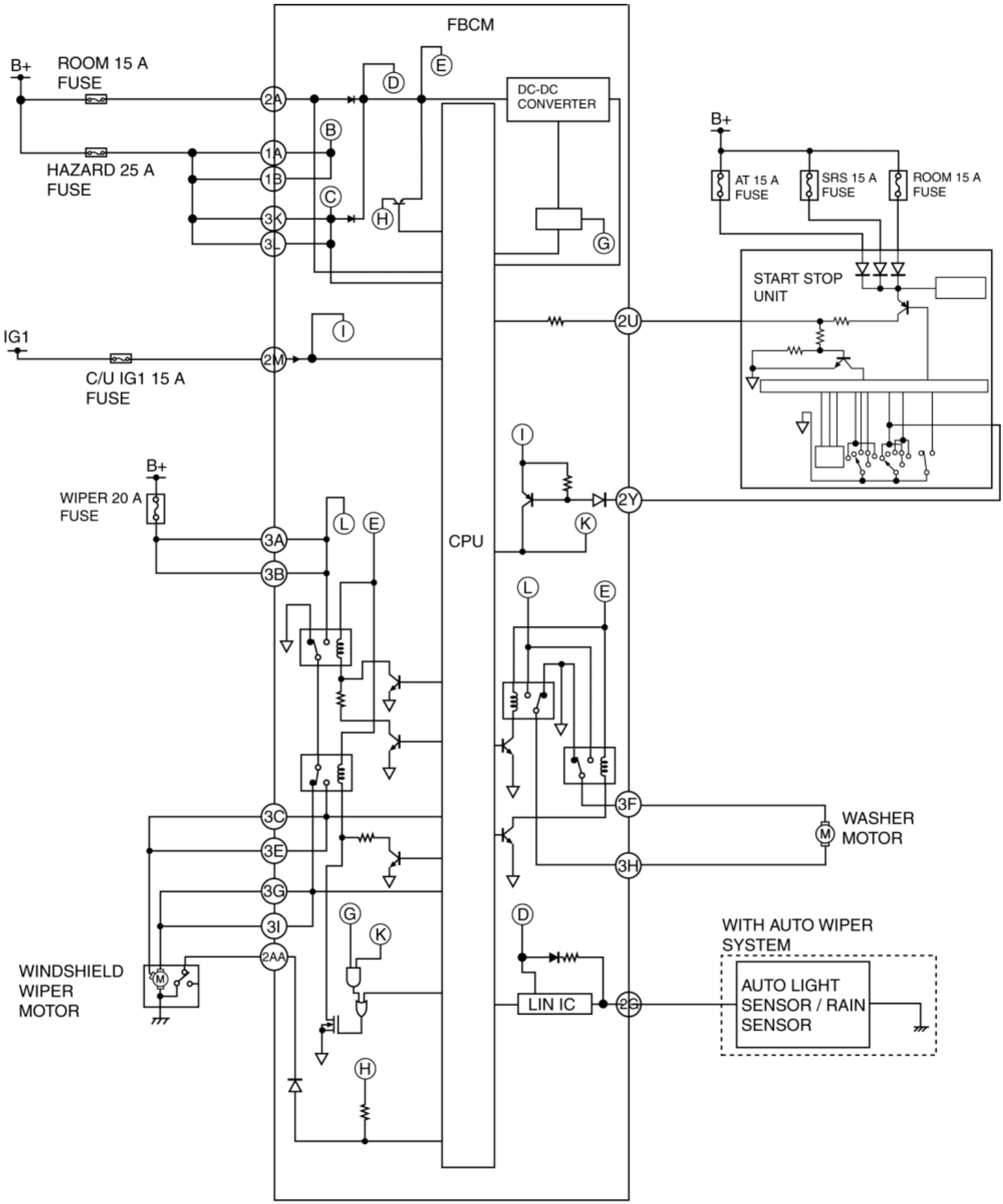

Theft-deterrent system, horn, sensors

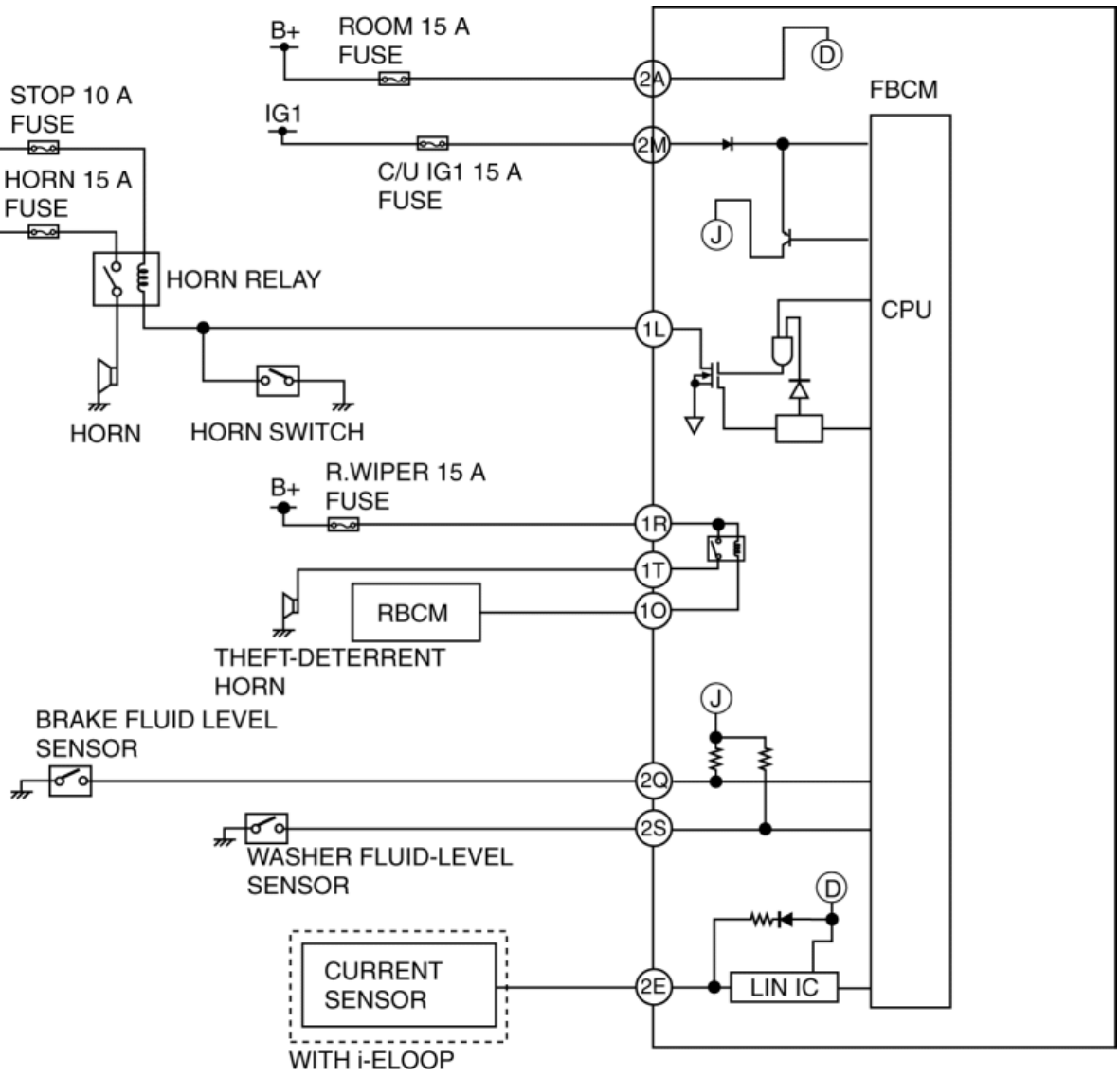

CAN system

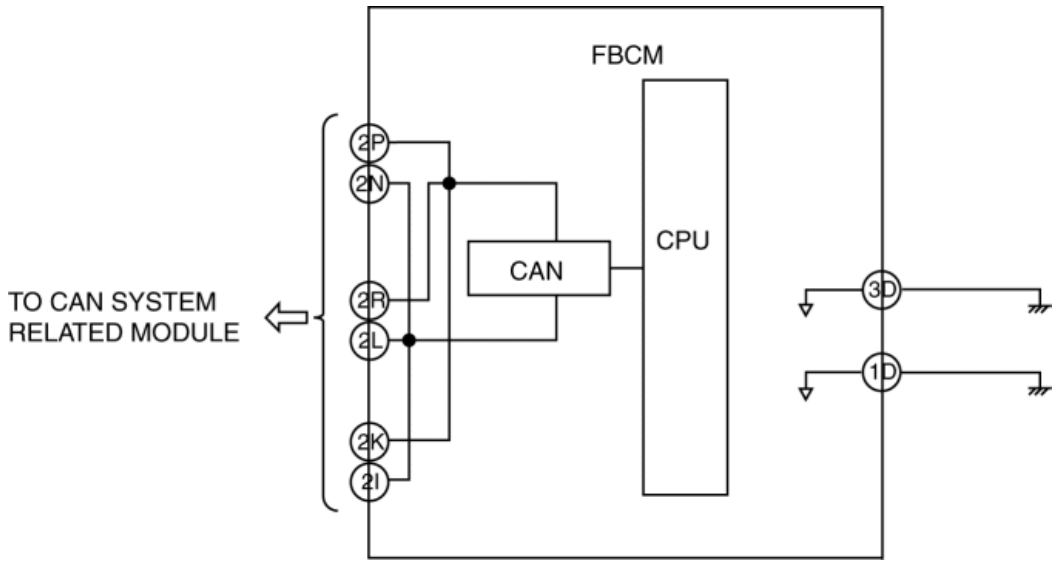

Battery Discharge Suppression Function

- The front body control module (FBCM) monitors the battery charge condition and, according to the condition, it stops the seat warmer and rear window defroster functions to prevent a battery discharge or battery life deterioration.

Fail-safe

Exterior lighting system

- If the CAN signal cannot be received normally, the front body control module (FBCM) performs the following controls:
    - Light is illuminated: Continues to illuminate until the ignition is switched off.
    - Light is turned off: Turns on/off according to the light switch operation. If the light switch is off, the TNS is forced on. When the ignition is switched off, the light turns off.

Auto light system

- If there is a communication error in the rain sensor while the light is illuminated, the front body control module (FBCM) continues to illuminate the light until the ignition is switched off or the light switch is operated to the position other than AUTO.

DRL system

- Function not equipped.

Turn light system

- If the CAN signal cannot be received normally, the front body control module (FBCM) controls the turn light system based on the signal last received. If the CAN signal cannot be received normally for 5 s or more, the front body control module (FBCM) stops the turn light system control.

Rear defroster system control

- Function not equipped.

Horn control

- Function not equipped.

Windshield wiper and washer system

- If the front body control module (FBCM) detects a malfunction in the internal CPU, it controls as follows:
    - When the wiper and washer switch is in the LO or HI position: LO operation control is performed.
    - When the wiper and washer switch is in the OFF position: Windshield wiper operation is stopped.
- If the front body control module (FBCM) cannot receive a windshield wiper switch position signal because of a malfunction in the start stop unit or a CAN communication error between the start stop unit, or if it detects an error in the windshield wiper switch position signal, it continues the control before detecting the malfunction. However, if the driver operates the wiper and washer switch, it controls as follows:
    - When the front body control module (FBCM) detects LO/HI ON using the LO/HI detection function: The windshield wipers are operated at low speed.
    - When the front body control module (FBCM) detects LO/HI OFF using the LO/HI detection function: The windshield wipers are stopped at the park position.
- If the windshield wiper switch position, which is monitored by the LO/HI detection function of the front body control module (FBCM), does not match the one sent from the start stop unit as a CAN signal, the windshield wipers are controlled according to the CAN signal for a certain period of time. After the certain period of time has elapsed, they are controlled as follows:
    - When the front body control module (FBCM) detects LO/HI ON using the LO/HI detection function: The windshield wipers are operated at low speed.

    - When the front body control module (FBCM) detects LO/HI OFF using the LO/HI detection function: The windshield wipers are stopped at the park position.

- If the front body control module (FBCM) detects a malfunction in the auto stop switch circuit while the windshield wipers are operating, it allows the windshield wipers to operate for a certain period of time and then stops the operation. However, if the driver operates the wiper and washer switch, or if the ignition is switched off and switched ON (engine off or on) again, it operates the windshield wipers again.
- If the front body control module (FBCM) cannot receive an INT volume signal because of a CAN communication error between the start stop unit or a malfunction in the start stop unit, it continues the operation at a certain intermittent timing.
- If the front body control module (FBCM) detects an error in the INT volume signal from the start stop unit, it continues the operation according to the INT volume signal before detecting the malfunction.
- If the front body control module (FBCM) cannot receive a windshield washer operation request signal because of a CAN communication error between the start stop unit or a malfunction in the start stop unit, it controls as follows:
    - When the windshield washer is operated: The washer operation is continued for a certain period of time and then stopped.
    - When the windshield washer is not operated: The washer is not operated.
- If the windshield washer is continuously operated for a long period (**1 min. or more**), the operation is stopped temporarily to prevent the windshield washer relay from overheating.

Auto wiper system

- If the front body control module (FBCM) cannot receive a CAN signal (vehicle speed signal) from the PCM normally, it continues the control using the vehicle speed signal before detecting the malfunction.
- If there is a malfunction in the rain sensor or a communication error between the rain sensor and front body control module (FBCM), and if the front body control module (FBCM) detects a signal error ten times in a series, the operation before the malfunction was detected is continued.
- If the rain sensor detects rainfall and then detects no change in the detected amount after the wipers have been operated approx. 2 times, the windshield is determined to be dirty and windshield wiper operation is stopped.
    - If the windshield is dirty, set the wiper and washer switch to LO or HI position to operate the windshield wiper. Or, remove the dirt from the windshield, then operate the auto wiper.
- If the temperature sensor in the rain sensor detects **-10 °C {14 °F}** or less when the ignition is switched ON (engine off or on), the windshield wipers do not operate even though it may be snowing.

2014 - Mazda3 - Body and Accessories

ON-BOARD DIAGNOSTIC SYSTEM [FRONT BODY CONTROL MODULE (FBCM)]

Outline

- The on-board diagnostic function consists of the following functions:
  - A malfunction detection function, which detects overall malfunctions in the front body control module (FBCM)-related parts.
  - A memory function, which stores detected DTCs.
  - A display function, which indicates malfunction locations and status via DTC output.
  - A PID/data monitoring function, which reads out specific input/output signals and verifies the input/output condition.
- Using the Mazda Modular Diagnostic System (M-MDS), DTCs can be read out and deleted, and the PID/data monitoring function can be activated.

Malfunction detection function

- Detects malfunctions in input/output signals.
- If a malfunction occurs, the front body control module (FBCM) records the malfunction as a DTC. A recorded DTC can be read by the Mazda Modular Diagnostic System (M-MDS).

DTC table

×: Applicable—: Not applicable

DTC No.	Warning/indicator light	Description	Fail-safe function	Drive cycle	Self test type*1	Memory function
B1008:02	—	Windshield wiper control signal mismatch	×	—	C, D	×
B1008:62	—	Windshield wiper LO switch signal mismatch	×	—	C, D	×
B1048:7B	—	Brake fluid level sensor circuit malfunction	—	—	C, D	×

B1087:88	—	LIN communication error	—	—	C, D	×
B1088:88	—	LIN communication error	—	—	C, D	×
B1092:11*2	—	DRL relay circuit malfunction	—	—	C, D	×
B109A:12	—	Headlight HI relay circuit malfunction	—	—	C, D	×
B109A:14	—	Headlight HI relay circuit malfunction	—	—	C, D	×
B10A6:64*3	—	Light switch error signal received	×	—	C, D	×
B10A8:12*2	—	Headlight LO relay circuit malfunction	—	—	C, D	×
B10AD:86*4	—	Error signal received from auto light sensor/rain sensor	—	—	C, D	×
B10AF:12	—	Blower relay circuit malfunction	—	—	C, D	×
B1142:13	—	IG1 relay circuit malfunction	—	—	C, D	×
B1143:13	—	IG2 relay control circuit malfunction	—	—	C, D	×
B11DB:86*5	—	Error signal received from current sensor	—	—	C, D	×
B1314:11	—	Illumination output circuit malfunction	—	—	C, D	×
B134D:02	—	Headlight control signal error	×	—	C, D	×
B13CF:19	—	IG2 power supply output circuit malfunction	—	—	C, D	×
B13D0:11	—	TNS circuit malfunction	—	—	C, D	×
B13D2:12*6	—	Front fog light relay circuit malfunction	—	—	C, D	×
B13FE:12*7	—	Headlight LO relay (RH) circuit malfunction	—	—	C, D	×
B13FE:14*7	—	Headlight LO relay (RH) circuit malfunction	—	—	C, D	×
B141E:12*7	—	Headlight LO relay (LH) circuit malfunction	—	—	C, D	×

B1C84:12	—	Rear window defroster relay circuit malfunction	—	—	C, D	×
B1C84:14	—	Rear window defroster relay circuit malfunction	—	—	C, D	×
B1D06:11	—	Turn light (LH) circuit malfunction	—	—	C, D	×
B1D06:13	—	Turn light (LH) circuit malfunction	—	—	C, D	×
B1D07:11	—	Turn light (RH) circuit malfunction	—	—	C, D	×
B1D07:13	—	Turn light (RH) circuit malfunction	—	—	C, D	×
U0001:88	—	Module communication error (HS-CAN)	×	—	C, D	×
U0100:00	—	Communication error with PCM	×	—	C, D	×
U0101:00*8	—	Communication error with TCM	×	—	C, D	×
U0151:00	—	Communication error with SAS control module	×	—	C, D	×
U0155:00	—	Communication error with instrument cluster	×	—	C, D	×
U0164:68*9	—	Communication error with climate control unit	—	—	C, D	×
U0214:00	—	Communication error with start stop unit	×	—	C, D	×
U0231:68*4	—	Communication error with auto light sensor/rain sensor	—	—	C, D	×
U023A:00*10	—	Communication error with forward sensing camera (FSC)	×	—	C, D	×
U0338:09	—	Error light switch signal received from start stop unit	×	—	C, D	×
U0401:68	—	Error signal received from PCM	—	—	C, D	×
U053B:68*10	—	Error signal received from forward sensing camera (FSC)	—	—	C, D	×
U1007:68*5	—	Communication error with current sensor	—	—	C, D	×
U2005:68	—	Error vehicle speed signal received from PCM	—	—	C, D	×

U2100:00	—	Front body control module (FBCM) configuration error	—	—	C, D	×
U2101:00	—	Front body control module (FBCM) configuration error	—	—	C, D	×
U3000:49	—	Front body control module (FBCM) internal malfunction	—	—	C, D	×
U3000:56	—	Front body control module (FBCM) configuration error	—	—	C, D	×
U3003:16	—	Front body control module (FBCM) power supply voltage (+B power supply) low input	—	—	C, D	×
U3003:17	—	Front body control module (FBCM) power supply voltage high input	—	—	C, D	×
U3006:62	—	Front body control module (FBCM) power supply voltage mismatch	—	—	C, D	×

*1 **C: CMDTC self test, D: ODDTC self test**

*2 **Without discharge headlight system**

*3 **Without auto light sensor/rain sensor**

*4 **With auto light sensor/rain sensor**

*5 **With i-ELOOP**

*6 **With front fog light**

*7 **With discharge headlight system**

*8 **ATX**

*9 **With manual A/C**

*10 **With forward sensing camera (FSC)**

DTC 7-digit code definition

- When related systems or components have failed, the CM stores the DTC of the malfunctioning part in the CM memory, and allows for the retrieval of the stored data using the scanning tool when necessary. The DTCs are indicated using seven digits. Each digit indicates the following.

B 1 0 D 5 : 1 3

· Specify the area failure sub type

00: No sub type information
02: General signal failure
09: Component failures
11: Circuit short to ground
12: Circuit short to battery
13: Open circuit
14: Circuit short to ground or open
16: Circuit voltage below threshold
17: Circuit voltage above threshold
19: Circuit current above threshold
49: Internal electronic failure
56: ISO/SAE reserved
62: Signal compare malfunction
64: Signal plausibility failure
68: Event information
7B: Low fluid level
72: Actuator stuck open
73: Actuator stuck closed
86: Signal invalid
88: Bus off
97: Component or system operation obstructed or blocked

· Manufacturer controlled

· Indicates subgroup

Powertrain (P code)	Network Electrical (U code)	Body (B code)	Chassis (C code)
1: Fuel and air metering	0: Network Electrical 1: Network communication	Manufacturer controlled	Manufacturer controlled

· Indicates who was responsible for DTC definition

0: ISO/SAE controlled
1: Manufacturer controlled
2: There are ISO/SAE controlled just for powertrain, all others are manufacturer controlled.
3: For P3000 to P3399 is manufacturer controlled, all others are ISO/SAE controlled.

· Indicates DTC function

P: Powertrain
B: Body
U: Network Electrical

Status byte for DTC

- The two digits (two digits after hyphen (-)) after the 7-digit DTC.

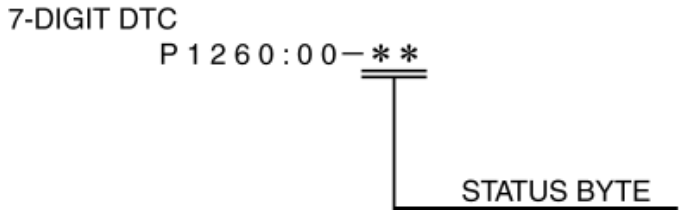

- A code which indicates the pending code, current/past malfunction status, or warning illumination status.
- Can be read by performing a CMDTC self-test using the Mazda Modular Diagnostic System (M-MDS).
- For details on the status byte, refer to the explanation on the Mazda Modular Diagnostic System (M-MDS) when reading the DTC.

Detection condition for the applicable DTC

DTC	System malfunction location	Detection condition
B1008:02	Windshield wiper control signal mismatch	Front body control module (FBCM) receives the error signals from the start stop unit with the ignition switched ON (engine off or on).
B1008:62	Windshield wiper LO switch signal mismatch	The condition in which the CAN and module signals are compared and no match is detected between the signals for 5 s or more with the ignition switched ON (engine off or on).
B1048:7B	Brake fluid level sensor circuit malfunction	Front body control module (FBCM) detected that the brake fluid level is less than MIN with the ignition switched ON (engine off or on).
B1087:88	LIN communication error	LIN bus communication line malfunction detected for 1 s or more
B1088:88	LIN communication error	LIN bus communication line malfunction detected for 1 s or more
B1092:11*1	DRL relay circuit malfunction	Front body control module (FBCM) detects a short to ground in the DRL relay circuit with the ignition switched ON (engine off or on).
B109A:12	Headlight HI relay circuit malfunction	Front body control module (FBCM) detects a short to power supply in the headlight HI relay circuit with the ignition switched ON (engine off or on).
B109A:14	Headlight HI relay circuit malfunction	Front body control module (FBCM) detects an open circuit or short to ground in the headlight HI relay circuit with the ignition switched ON (engine off or on).
B10A6:64*2	Light switch error signal received	Front body control module (FBCM) receives the error signals from the start stop unit for 5 s or more with the ignition switched ON (engine off or on).

B10A8:12*1	Headlight LO relay circuit malfunction	Front body control module (FBCM) detects a short to power supply in the headlight LO relay circuit with the ignition switched ON (engine off or on).
B10AD:86*3	Error signal received from auto light sensor/rain sensor	Front body control module (FBCM) receives the error signals from the auto light sensor/rain sensor 10 times continuously with the ignition switched ON (engine off or on).
B10AF:12	Blower relay circuit malfunction	Front body control module (FBCM) detects a short to power supply in the blower relay circuit with the ignition switched ON (engine off or on).
B1142:13	IG1 relay circuit malfunction	Front body control module (FBCM) detects an open circuit in the IG1 relay circuit for 2 s or more with the ignition switched ON (engine off or on).
B1143:13	IG2 relay control circuit malfunction	Front body control module (FBCM) detects an open circuit in the IG2 relay control circuit for 2 s or more with the ignition switched ON (engine off or on).
B11DB:86*4	Error signal received from current sensor	Front body control module (FBCM) receives the error signals from the current sensor for 5 s or more with the ignition switched ON (engine off or on).
B1314:11	Illumination output circuit malfunction	Front body control module (FBCM) detects a short to ground in the illumination output circuit with the ignition switched ON (engine off or on).
B134D:02	Headlight control signal error	Front body control module (FBCM) receives the error signal from the start stop unit for 5 s or more with the ignition switched ON (engine off or on).
B13CF:19	IG2 power supply output circuit malfunction	Front body control module (FBCM) detects over-current in the IG2 power supply output circuit with the ignition switched ON (engine off or on).
B13D0:11	TNS circuit malfunction	Front body control module (FBCM) detects a short to ground in the TNS relay circuit with the ignition switched ON (engine off or on).
B13D2:12*5	Front fog light relay circuit malfunction	Front body control module (FBCM) detects a short to power supply in the front fog light relay circuit with the ignition switched ON (engine off or on).
B13FE:12*6	Headlight LO relay (RH) circuit malfunction	Front body control module (FBCM) detects a short to power supply in the headlight LO relay (RH) circuit with the ignition switched ON (engine off or on).
B13FE:14*6	Headlight LO relay (RH) circuit malfunction	Front body control module (FBCM) detects an open circuit or short to ground in the headlight LO relay (RH) circuit with the ignition switched ON (engine off or on).
B141E:12*6	Headlight LO relay (LH) circuit malfunction	Front body control module (FBCM) detects a short to power supply in the headlight LO relay (LH) circuit with the ignition switched ON (engine off or on).
B1C84:12	Rear window defroster relay circuit	Front body control module (FBCM) detects a short to power supply in the rear window defroster

	malfunction	relay circuit with the ignition switched ON (engine off or on).
B1C84:14	Rear window defroster relay circuit malfunction	Front body control module (FBCM) detects an open circuit or short to ground in the rear window defroster relay circuit with the ignition switched ON (engine off or on).
B1D06:11	Turn light (LH) circuit malfunction	Front body control module (FBCM) detects a short to ground in the turn light (LH) circuit with the ignition switched ON (engine off or on).
B1D06:13	Turn light (LH) circuit malfunction	Front body control module (FBCM) detects an open circuit or short to power supply in the turn light (LH) circuit with the ignition switched ON (engine off or on).
B1D07:11	Turn light (RH) circuit malfunction	Front body control module (FBCM) detects a short to ground in the turn light (RH) circuit with the ignition switched ON (engine off or on).
B1D07:13	Turn light (RH) circuit malfunction	Front body control module (FBCM) detects an open circuit or short to power supply in the turn light (RH) circuit with the ignition switched ON (engine off or on).
U0001:88	Module communication error (HS-CAN)	Front body control module (FBCM) detects a CAN bus communication line (HS-CAN) malfunction 10 times continuously.
U0100:00	Communication error with PCM	Front body control module (FBCM) could not receive the CAN signal from the PCM for 5 s or more.
U0101:00 *7	Communication error with TCM	Front body control module (FBCM) could not receive the CAN signal from the TCM for 5 s or more.
U0151:00	Communication error with SAS control module	Front body control module (FBCM) could not receive the CAN signal from the SAS control module for 5 s or more.
U0155:00	Communication error with instrument cluster	Front body control module (FBCM) could not receive the CAN signal from the instrument cluster for 5 s or more.
U0164:68 *8	Communication error with climate control unit	Front body control module (FBCM) could not receive signals from the climate control unit for 5 s or more with the ignition switched ON (engine off or on).
U0214:00	Communication error with start stop unit	Front body control module (FBCM) could not receive the CAN signal from the start stop unit for 5 s or more.
U0231:68 *3	Communication error with auto light sensor/rain sensor	Front body control module (FBCM) could not receive the signals from the auto light sensor/rain sensor for 5 s or more with the ignition switched ON (engine off or on).
U023A:00 *9	Communication error with forward sensing camera (FSC)	Front body control module (FBCM) could not receive the CAN signal from the forward sensing camera (FSC) for 5 s or more.
U0338:09	Error light switch signal received from	Front body control module (FBCM) receives the CAN error signals from the start stop unit 3 times

	start stop unit	with the ignition switched ON (engine off or on).
U0401:68	Error signal received from PCM	Front body control module (FBCM) receives the error ECT sensor or ambient temperature sensor signals from the PCM for 5 s or more with the ignition switched ON (engine off or on).
U053B:68 *9	Error signal received from forward sensing camera (FSC)	Front body control module (FBCM) receives the error signals from the forward sensing camera (FSC) for 5 s or more with the ignition switched ON (engine off or on).
U1007:68 *4	Communication error with current sensor	Front body control module (FBCM) could not receive signals from the current sensor for 5 s or more with the ignition switched ON (engine off or on).
U2005:68	Error vehicle speed signal received from PCM	Front body control module (FBCM) receives the vehicle speed signal error from the PCM for 5 s or more with the ignition switched ON (engine off or on).
U2100:00	Front body control module (FBCM) configuration error	Front body control module (FBCM) configuration error (no configuration) detected.
U2101:00	Front body control module (FBCM) configuration error	Front body control module (FBCM) configuration error detected.
U3000:49	Front body control module (FBCM) internal malfunction	Front body control module (FBCM) detects the internal malfunction.
U3000:56	Front body control module (FBCM) configuration error	Front body control module (FBCM) configuration error detected.
U3003:16	Front body control module (FBCM) power supply voltage (+B power supply) low input	Front body control module (FBCM) power supply circuit voltage of 8.8 V or less is detected for 10 s or more with the ignition switched ON (engine off or on).
U3003:17	Front body control module (FBCM) power supply voltage high input	Front body control module (FBCM) power supply circuit voltage of 14.2 V or more is detected for 10 s or more with the ignition switched ON (engine off or on).
U3006:62	Front body control module (FBCM) power supply voltage mismatch	Front body control module (FBCM) terminal 1A, 1B, 3K, and 3L voltages of 2 V or more lower than the voltage of terminal 2A are detected for 5 s or more with the ignition switched ON (engine off or on).

*1

Without discharge headlight system

*2

Without auto light sensor / rain sensor

*3

With auto light sensor / rain sensor

*4

*5 **With i-ELOOP**

*6 **With front fog light**

*7 **With discharge headlight system**

*8 **ATX**

*9 **With manual A/C**

With forward sensing camera (FSC)

Snapshot data

- The front body control module (FBCM) stores the following two types of snapshot data (vehicle information) when a DTC is detected and displays them in the Mazda Modular Diagnostic System (M-MDS).
  - Vehicle information detected by front body control module (FBCM)
  - Vehicle information detected by instrument cluster and received by front body control module (FBCM) via CAN signal

Snapshot data table—: Not applicable

Snapshot data item	Unit		Data contents	Data read/use method	Corresponding data monitor items
AAT	°C	°F	Ambient temperature	—	—
APP_STATUS	Accelerator Pedal Off/Under20%/Over20%/FAIL		Accelerator pedal position status	—	—
CFG_STATUS	Config Complete/Not Configured/Config Error		Instrument cluster configuration status	—	—
ECT_STATUS	Under 0 degrees C/0 - Under 80 degrees C/Over 80 degrees C/FAIL		Engine coolant temperature status	—	—
IC_VPWR	V		Instrument cluster power supply voltage	• The front body control module (FBCM) constantly receives the power supply voltage value of the instrument cluster sent via CAN signal from the instrument cluster. • If a DTC is detected, the front body control module (FBCM)	VPWR*1

			records the power supply voltage of the instrument cluster when the DTC was detected, and it is displayed in the Mazda Modular Diagnostic System (M-MDS).	
IG-ON_TIMER	hh:mm:ss*2	Elapsed time since ignition was switched ON (engine off or on) **NOTE:** • The instrument cluster records the elapsed time since the ignition was switched ON (engine off or on).	• The front body control module (FBCM) constantly receives the elapsed time since the ignition was switched ON (engine off or on) sent via CAN signal from the instrument cluster. • If a DTC is detected, the front body control module (FBCM) records the elapsed time since the ignition was switched ON (engine off or on) when the DTC was detected, and it is displayed in the Mazda Modular Diagnostic System (M-MDS).	—
PWR_MODE_KEY	Key Out/Key Recently Out (Position 0)/Accessory (Position 1)/Post Ignition (Position 2)/Ignition On (Position 2)/Running (Position 2)/Running - Starting	• Key Out: Ignition switched off • Key Recently Out (Position 0): Elapsed time **within 3 s** since ignition was switched off • Accessory (Position 1): Ignition is switched to ACC • Post Ignition (Position 2): Elapsed time **within 3 s** since ignition was switched ON (engine off or on) • Ignition On (Position 2): Ignition	• The front body control module (FBCM) constantly receives the ignition switch status sent via CAN signal from the instrument cluster. • If a DTC is detected, the front body control module (FBCM) records the ignition switch status when the DTC was detected, and it is displayed in the Mazda Modular Diagnostic System (M-MDS).	—

			switched ON (engine off) • Running (Position 2): Ignition switched ON (engine on) • Running - Starting: Cranking condition		
RPM_STATUS	Engine Stop/Under1500rpm/Over1500rpm/FAIL		Engine speed status	• The front body control module (FBCM) constantly receives the engine speed sent via CAN signal from the instrument cluster. • If a DTC is detected, the front body control module (FBCM) records the engine speed when the DTC was detected, and it is displayed in the Mazda Modular Diagnostic System (M-MDS).	TACHOMTR*1
SHIFT_STATUS	P/N/D/R/FAIL		Selector lever position status	• The front body control module (FBCM) constantly receives the selector lever position sent via CAN signal from the instrument cluster. • If a DTC is detected, the front body control module (FBCM) records the selector lever position when the DTC was detected, and it is displayed in the Mazda Modular Diagnostic System (M-MDS).	—
TOTAL_DIST	km	Miles	Accumulated total traveled distance from completion of vehicle until front body control module (FBCM) detects DTC (Odometer value in instrument cluster)	The total traveled distance from which the front body control module (FBCM) detects DTCs to the present can be calculated by performing the following procedure. • Verify the odometer value in the instrument cluster. • Verify the snapshot data item TOTAL_DIST. • Subtract 2 from 1.	—

TOTAL_TIME	hh:mm:ss*2	Accumulated total elapsed time since vehicle completion until front body control module (FBCM) detects a DTC **NOTE:** • When the ROOM fuse is removed, and the ignition is switched off, the time is not included in the elapsed time.	The elapsed time from which the front body control module (FBCM) detects DTCs to the present can be calculated by performing the following procedure. • Verify the instrument cluster PID item TOTAL_TIME. • Verify the snapshot data item TOTAL_TIME. • Subtract 2 from 1.	TOTAL_TIME*1
VPWR	V	Front body control module (FBCM) power supply voltage	—	VPWR_B
VSPD_STATUS	Stop/0-10km/h/Over10km/h/FAIL	Vehicle speed status	• The front body control module (FBCM) constantly receives the vehicle speed sent via CAN signal from the instrument cluster. • If a DTC is detected, the front body control module (FBCM) records the vehicle speed when the DTC was detected, and it is displayed in the Mazda Modular Diagnostic System (M-MDS).	SPEEDOMTR*1

*1 **Instrument cluster PID (See ON-BOARD DIAGNOSTIC [INSTRUMENT CLUSTER].)**

*2 **The seconds may be indicated after the decimal point.**

Data monitor function

- With the PID/data monitor function, input/output signal monitor items set in the front body control module (FBCM) can be selected and read out in real-time.

PID/data monitor table

—: Not applicable

PID	Unit/Operation	Data contents	Data read/use method	Module control terminal
ABK_CS_BG*1	Off/On	Theft-deterrent system answer-back signal input status • Off: Theft-deterrent system answer-back signal is not received. • On: Theft-deterrent system answer-back signal is received.	Theft-deterrent system answer-back request signal input from rear body control module (RBCM) **NOTE:** • Operates only if the ignition is switched off.	2I, 2K (CAN)
ABK_CS_KEY	Off/On	Keyless entry system answer-back signal input status • Off: Keyless entry system answer-back signal is not received. • On: Keyless entry system answer-back signal is received.	Answer-back request signal input for keyless entry system from rear body control module (RBCM)	2I, 2K (CAN)
ABK_HD_CS_R	Off/On	**NOTE:** • It is displayed, however, if an accessory part is installed, it cannot be used.	—	—
ABK_HN_CS_R	Off/On	**NOTE:** • It is displayed, however, if an accessory part	—	—

		is installed, it cannot be used.		
ABK_HN_KEY	Off/On	Keyless entry system horn answer-back signal input status • Off: Keyless entry system horn answer-back signal is not received. • On: Keyless entry system horn answer-back signal is received.	Keyless entry system horn answer-back request signal input from rear body control module (RBCM)	2I, 2K (CAN)
BAT_TMP	°C, °F	Displays battery temperature (estimated).	Estimated battery temperature transmitted by LIN communication from current sensor	2E (LIN)
BG_ALARM_CS*1	Off/On	Theft-deterrent system alarm signal input status • Off: Hazard warning light flashing request signal is not received • On: Hazard warning light flashing request signal is received	Theft-deterrent system alarm request signal input from rear body control module (RBCM) **NOTE:** • Operates only if the ignition is switched off.	2I, 2K (CAN)
BLWR_MT_RY	Off/On	Blower motor relay output signal status • Off: Blower relay is off. • On: Blower relay is on.	—	2Z (Blower motor relay control)
		Brake switch operation status • Off: Brake switch (No. 2 signal) is off.		

BRAKE_SW	Off/On	(Brake pedal is depressed.) • On: Brake switch (No. 2 signal) is on. (Brake pedal is not depressed.)	Brake switch signal status detected by PCM	2N, 2P (CAN)
BRK_F_L_SW	Normal/Low/Unknown	Brake fluid level condition • Normal: Brake fluid level is between MAX and MIN. • Low: Brake fluid level is lower than MIN. • Unknown: Brake fluid level is not determined.	—	2Q (Brake fluid level switch signal)
DCDC_CVT_ST	**NOTE:** • Displays in the Mazda Modular Diagnostic System (M-MDS) but it does not operate.			
DCDC_VLT_I	**NOTE:** • Displays in the Mazda Modular Diagnostic System (M-MDS) but it does not operate.			
DCDC_VLT_O	**NOTE:** • Displays in the Mazda Modular Diagnostic System (M-MDS) but it does not operate.			
DEFOG_F_CS	Off/On	**NOTE:** • It is displayed, however, if an accessory part is installed, it cannot be used.	—	—
		Rear defroster operation request signal from heater		

DEFOG_R_CS	Off/On	control unit • Off: Rear window defroster control signal is not received. • On: Rear window defroster control signal is received.	For manual A/C vehicles, request signal transmission is via LIN communication.	2I, 2K (CAN)
ENG_C_TMP	°C, °F	Displays the engine coolant temperature value from the PCM.	—	2N, 2P (CAN)
ESS_ST	**NOTE:** • Displays in the Mazda Modular Diagnostic System (M-MDS) but it does not operate.			
F_FOG_LMP*2	Off/On	Front fog light control signal • Off: Front fog light is turned off. • On: Front fog light is turned on.	—	—
F_FOG_SW*2	Off/On	Front fog light switch input signal from start stop unit • Off: Front fog light switch F.FOG signal is not received. • On: Front fog light switch F.FOG signal is received.	—	2I, 2K (CAN)
		Headlight control signal • OFF: Headlight is turned off. • DRL: DRL is		

H/L	OFF/DRL/TNS/H/L_LOW/H/L_HI	turned on. • TNS: TNS is turned on. • H/L_LOW: Headlight (LO) is turned on. • H/L_HI: Headlight (HI) is turned on.	—	—
H/L_CLN_RY	**NOTE:** • Displays in the Mazda Modular Diagnostic System (M-MDS) but it does not operate.			
H/L_CS_RLS*3	Off/TNS_On/TNS+H/L_On	Headlight control input signal from auto light sensor/rain sensor • Off: TNS and headlight on request signal is not received from auto light sensor. • TNS_On: TNS on signal is received from auto light sensor. • TNS+H/L_On: TNS and headlight LO on signal is received from auto light sensor.	—	2G (LIN)
H/L_HI	Off/On	Headlight HI beams • Off: Headlight HI is turned off. • On: Headlight HI is turned on.	—	—

H/L_SW_HI	Off/On	Light switch position (HI) condition via CAN signal from start stop unit • Off: Light switch HI signal is not received. • On: Light switch HI signal is received.	—	2I, 2K (CAN)
H/L_SW_LOW1	Off/On	Displays dimmer switch position of light switch sent from start stop unit via CAN signal • Off: Other than dimmer switch LO position of light switch is received • On: Dimmer switch LO position of light switch is received	Verify if the monitor value switches when the dimmer switch of the light switch is switched between LO and HI positions. If the dimmer switch operation and monitor values do not match, inspect the start stop unit or CAN communication. **NOTE:** • If PID items H/L_SW_LOW1 and H/L_SW_LOW2 do not match, the front body control module (FBCM) detects a DTC. Also, the headlight (low) may be constantly illuminated.	2I, 2K (CAN)
H/L_SW_LOW2	Off/On	Displays dimmer switch position of light switch connected to front body control module (FBCM) terminal 2W • Off: Other than dimmer switch LO position of light switch is received • On: Dimmer switch LO position of light switch is received	Verify if the monitor value switches when the dimmer switch of the light switch is switched between LO and HI positions. If the dimmer switch operation and monitor values do not match, inspect the light switch or related wiring harness. **NOTE:** • If PID items H/L_SW_LOW1 and H/L_SW_LOW2 do not match, the front body control module (FBCM) detects a DTC. Also, the headlight (low) may be constantly illuminated.	2W (Headlight (LO) switch signal)
		Light switch position (OFF) condition via CAN signal from		

H/L_SW_OFF	Off/On	start stop unit • Off: Light switch OFF signal is not received. • On: Light switch OFF signal is received.	—	2I, 2K (CAN)
H/L_SW_PASS	Off/On	Light switch position (PASS) condition via CAN signal from start stop unit • Off: Light switch FLASH-TO-PASS signal is not received. • On: Light switch FLASH-TO-PASS signal is received.	—	2I, 2K (CAN)
H/L_SW_TNS	Off/On	Light switch position (TNS) status via CAN signal from start stop unit • Off: Light switch TNS signal is not received. • On: Light switch TNS signal is received.	—	2I, 2K (CAN)
H/L_TNS	Off/On	Light switch (TNS) output signal • Off: TNS is turned off. • On: TNS is turned on.	—	—
		Hazard light output signal		

HAZARD_LMP	Off/On	• Off: Hazard light is turned off. • On: Hazard light is turned on.	—	—
HAZARD_SW	Off/On/Unknown	Hazard switch input signal from start stop unit • Off: Hazard warning switch is not pressed. • On: Hazard warning switch is pressed. • Unknown: Hazard warning switch on/off is not determined.	—	2I, 2K (CAN)
HBC_CS*4	Off/On/Invalid	High beam control (HBC) system control signal input from forward sensing camera (FSC) • Off: High beam control (HBC) system signal is not received. • On: High beam control (HBC) system signal is received. • Invalid: High beam control (HBC) system signal has error.	—	2I, 2K (CAN)
HBC_ST*4	Off/On	Operation status of high beam control (HBC) system • Off: High beam control (HBC) system is not	Control status of high beam control (HBC) system of front body control module	2I, 2K

		operated. • On: High beam control (HBC) system is operated.	(FBCM) by signal from forward sensing camera (FSC)	(CAN)
HEAT_CS_R	**NOTE:** • Displays in the Mazda Modular Diagnostic System (M-MDS) but it does not operate.			
IG_ST	Off/On	Ignition switch status • Off: IG1 is off. • On: IG1 is on.	—	2I, 2K (CAN)
L_OFF_AUTO	Off/On	Operation status of lights off function by auto-light function • Off: TNS or headlight off control by auto light off system is not operated. • On: TNS or headlight off control by auto light off system is operated.	If the lights are turned off by the auto-light function (ignition is switched off), the value becomes On.	—
L_OFF_BS	**NOTE:** • Displays in the Mazda Modular Diagnostic System (M-MDS) but it does not operate.			
OIL_P_SW	**NOTE:** • Displays in the Mazda Modular Diagnostic System (M-MDS) but it does not operate.			
OUT_CAR_TMP	°C, °F	Displays the ambient temperature value input from the PCM.	—	2N, 2P (CAN)
		Parking brake switch status having input from instrument cluster		

P_BRAKE_SW	Off/On	• Off: Parking brake switch is off. (Parking brake lever is not pulled.) • On: Parking brake switch is on. (Parking brake lever is pulled.)	—	2I, 2K (CAN)
PNC_CS	Off/On	Panic signal input from rear body control module (RBCM) • Off: Panic control signal is not received. • On: Panic control signal is received.	—	2I, 2K (CAN)
PNC_HD_CS_R	Off/On	**NOTE:** • It is displayed, however, if an accessory part is installed, it cannot be used.	—	—
PNC_HN_CS_R	Off/On	**NOTE:** • It is displayed, however, if an accessory part is installed, it cannot be used.	—	—
PTC_HEAT_CS	**NOTE:** • Displays in the Mazda Modular Diagnostic System (M-MDS) but it does not operate.			
R_FOG_LMP	**NOTE:** • Displays in the Mazda Modular Diagnostic System (M-MDS) but it does not operate.			
	NOTE:			

R_FOG_SW	• Displays in the Mazda Modular Diagnostic System (M-MDS) but it does not operate.			
RES_CS	Off/On	**NOTE:** • It is displayed, however, if an accessory part is installed, it cannot be used.	—	—
RLS_FLT*3	O.K./FAULT	Fail determination signal of auto light sensor/rain sensor • O.K.: Rain sensor is normal. • FAULT: Rain sensor has a malfunction.	If normal, the value is O.K.. If abnormal, FAULT.	2G (LIN)
S_HT_CUT*5	No_Request/Cut	Seat warmer cut status • No_Request: Except below • Cut: Seat warmer is turned off or lowered.	—	—
SHIFT_L_POS*7	Between/P/R/N/D/S(2)/L(1)	Selector lever position signal from TCM • Between: Selector lever is between two positions. • P: Selector lever is in P position. • R: Selector lever is in R position. • N: Selector lever is in N position.	—	2I, 2K (CAN)

		• D: Selector lever is in D position. • S(2): Selector lever is in D position 2nd gear. • L(1): Selector lever is in D position 1st gear.		
TURN_L_L	Off/On	Turn light (LH) output signal • Off: Turn light (LH) is turned off. • On: Turn light (LH) is turned on.	—	—
TURN_L_R	Off/On	Turn light (RH) output signal • Off: Turn light (RH) is turned off. • On: Turn light (RH) is turned on.	—	—
TURN_SW	Off/Turn_R_On/Turn_L_On/Unknown	Turn switch signal input from start stop unit • Off: Turn switch is in OFF position. • Turn_R_On: Turn switch is in RH position. • Turn_L_On: Turn switch is in LH position. • Unknown: Turn switch position is not	—	2I, 2K (CAN)

		determined.		
VPWR_B	V	Displays front body control module (FBCM) power supply voltage	—	2A, 3K, 3L (Power supply)
VSPD	KPH, MPH	Displays the vehicle speed signal from the PCM.	—	2N, 2P (CAN)
WAS_FLUID_L*6	Normal/Low/Unknown	Washer fluid level • Normal: Washer fluid level is normal. • Low: Washer fluid level is low. • Unknown: Washer fluid level is not determined.	—	2S (Washer level switch signal)
WAS_MT_RY_F	Off/On	Windshield washer motor relay operation signal • Off: Windshield washer motor relay is off. • On: Windshield washer motor relay is on.	—	3F (Windshield washer motor control)
WAS_MT_RY_R*8	Off/On	Rear washer motor relay operation signal • Off: Rear washer motor relay is off. • On: Rear washer motor relay is on.	—	3H (Rear window washer motor control)
		Windshield washer switch input signal from start stop unit • Off: Windshield		

WASHER_F	Off/On	washer switch is off. • On: Windshield washer switch is on.	—	2I, 2K (CAN)
WASHER_R*8	Off/On	Rear washer switch input signal from start stop unit • Off: Rear wiper and washer switch is not in rear washer position. • On: Rear wiper and washer switch is in rear washer position.	—	2I, 2K (CAN)
WIP_CS_RLS*3	Off/Single_Wipe/F_Wiper_LOW/F_Wiper_HI/Failure	Auto wiper input signal from auto light sensor/rain sensor • Off: Wiper operation signal is not received from rain sensor. • Single_Wipe: Signal to operate wiper once is received from rain sensor. • F_Wiper_LOW: Signal to operate wiper at low speed is received from rain sensor. • F_Wiper_HI: Signal to operate wiper at high speed is received from rain sensor.	—	2G (LIN)

		• Failure: Communication with rain sensor is failed.		
WIP_F	OFF/LOW/HI/INT / AUTO	Windshield wiper switch input signal from start stop unit • OFF: Windshield wiper switch is in OFF position. • LOW: Windshield wiper switch is in LO position. • HI: Windshield wiper switch is in HI position. • INT / AUTO: Windshield wiper switch is in INT or AUTO position.	—	2I, 2K (CAN)
WIP_F_INT_L	%	Displays the windshield wiper intermittent interval time input signal from start stop unit.	—	2I, 2K (CAN)
WIP_F_LOW	Off/On	Windshield wiper LO switch input status • Off: Windshield wiper switch is not in LO position. • On: Windshield wiper switch is in LO position.	—	2Y (Windshield wiper (LO) switch signal)
		Windshield wiper stop position signal input • Stop: Windshield		

WIP_F_MST	Stop/Move	wipers stop at normal position • Move: Windshield wipers do not stop at normal position	If windshield wipers are operating, Move-Stop is repeated.	2AA (Autostop switch signal)
WIP_F_RY_HI	Off/On	Windshield wiper HI relay output signal • Off: Windshield wiper HI relay is off. • On: Windshield wiper HI relay is on.	—	3C, 3E (Windshield wiper motor (HI) control)
WIP_F_RY_LO	Off/On	Windshield wiper relay LO output signal • Off: Windshield wiper LO relay is off. • On: Windshield wiper LO relay is on.	—	3G, 3I (Windshield wiper motor (LOW) control)
WIP_R*8	OFF/LOW/INT	Rear wiper operation condition input signal from start stop unit • OFF: Rear wiper switch is in OFF position. • LOW: Rear wiper switch is in ON position. • INT: Rear wiper switch is in INT position.	—	2I, 2K (CAN)
		Rear wiper relay drive signal • Off: Rear wiper motor is not		

WIP_R_RY*8	Off/On	operated. • On: Rear wiper motor is operated.	—	2I, 2K (CAN)

*1 **With theft-deterrent system**

*2 **With front fog light**

*3 **With auto light sensor/rain sensor**

*4 **With high beam control (HBC) system**

*5 **With seat warmer**

*6 **With washer fluid-level sensor**

*7 **ATX**

*8 **With rear wiper and washer**

Active Command Modes Function

- The output parts set in the front body control module (FBCM) can be operated regardless of the FBCM control condition.
- Items which can be operated are as follows:

Simulation item	Unit/Operation	Data contents	Output part name
DEFOG_F_ST	**NOTE:** • Displays in the Mazda Modular Diagnostic System (M-MDS) but it does not operate.		
DEFOG_R_ST	Off/On	• Off: Stops rear window defroster. • On: Operates rear window defroster.	Filament
ESS_ST	**NOTE:** • Displays in the Mazda Modular Diagnostic System (M-MDS) but it does not operate.		

F_FOG_LMP*1	Off/On	• Off: Turns off front fog light. • On: Illuminates front fog light.	Front fog light
H/L	OFF/DRL/TNS/H/L_LOW/H/L_HI	• Off: Turns off headlight. • DRL: Illuminates DRL. • TNS: Illuminates TNS. • H/L_LOW: Illuminates headlight LO. • H/L_HI: Illuminates headlight HI.	• Headlight LO/HI • Parking light • Taillight • License plate light • DRL
H/L_CLN_RY	**NOTE:** • Displays in the Mazda Modular Diagnostic System (M-MDS) but it does not operate.		
HAZARD_LMP	Off/On	• Off: Turns off hazard warning light. • On: Flashes hazard warning light.	• Front turn light • Side turn light*3 • Rear turn light
PTC_HEAT_ST	**NOTE:** • Displays in the Mazda Modular Diagnostic System (M-MDS) but it does not operate.		
WAS_MT_RY_F	Off/On	• Off: Turns front washer motor relay off. • On: Turns front washer motor relay on.	Front body control module (FBCM)
WAS_MT_RY_R*2	Off/On	• Off: Turns rear washer motor relay off. • On: Turns rear washer motor relay on.	Front body control module (FBCM)

*1 **With front fog light**

*2 **With rear wiper and washer**

*3 **With side turn light**

2014 - Mazda3 - Body and Accessories

REAR BODY CONTROL MODULE (RBCM)

Outline

- Positioned at the rear of the vehicle, the rear body control module (RBCM) performs numerous system controls for functions at the vehicle rear.

Function

- The rear body control module (RBCM) controls the system based on the input/output signals.
- The functions which are controlled are as follows:

Control table

Control	Content	Reference
Interior light control system control	The rear body control module (RBCM) changes the illumination condition and illumination level of the interior light (door position) according to whether the doors are opened/closed.	(See **INTERIOR LIGHTING SYSTEM**.)
Back-up light control	The back-up light illuminates in conjunction with the shift operation.	(See **REAR COMBINATION LIGHT**.)
Power door lock system control	A power door lock system has been adopted in which all doors and the liftgate are locked/unlocked when the driver's door is locked/unlocked using the driver's door lock knob, or the door key cylinder is operated.	(See **POWER DOOR LOCK SYSTEM**.)
Trunk lid opener system control	A trunk lid opener system has been adopted in which the trunk lid can be opened just by pressing the trunk lid opener switch.	(See **TRUNK LID OPENER SYSTEM**.)
CAN (Controller Area Network)	Sends and receives signals between CAN system-related modules using the CAN system.	(See **MULTIPLEX COMMUNICATION SYSTEM**.)
ON-BOARD DIAGNOSTIC SYSTEM	The rear body control module (RBCM) is equipped with an on-board diagnosis function which records DTCs in the event of a malfunction.	(See **ON-BOARD DIAGNOSTIC SYSTEM [REAR BODY CONTROL MODULE (RBCM)]**.)

Structural view

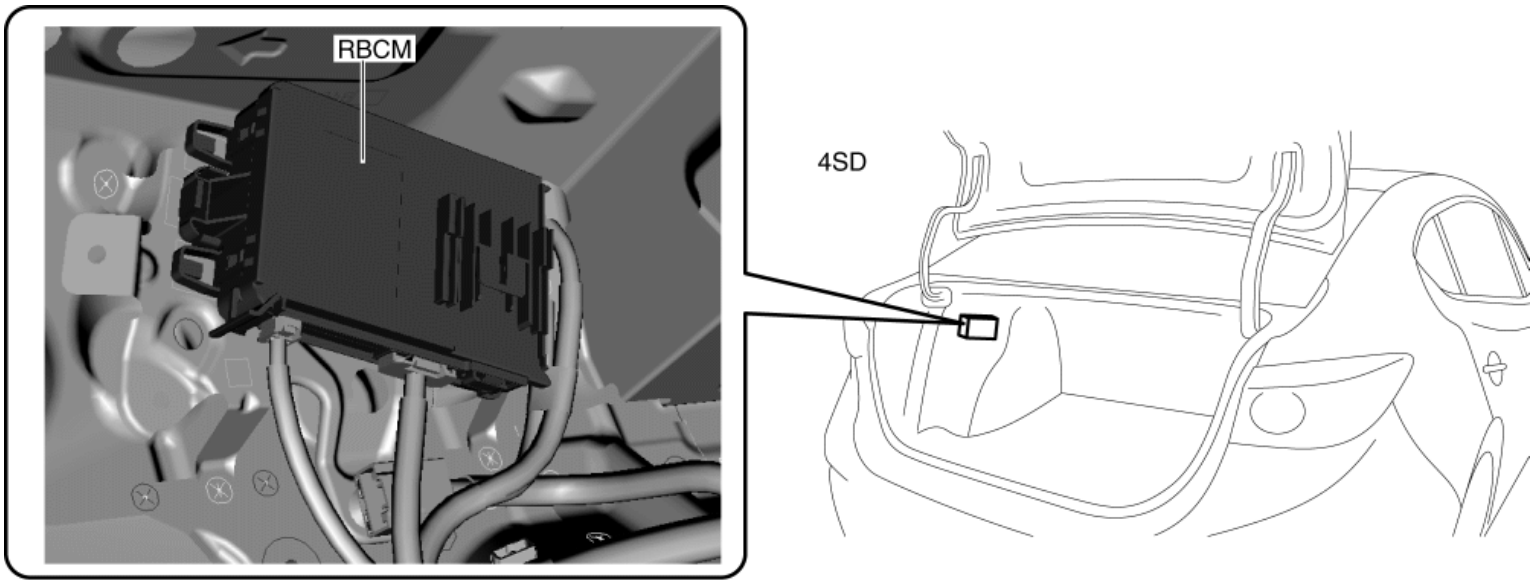

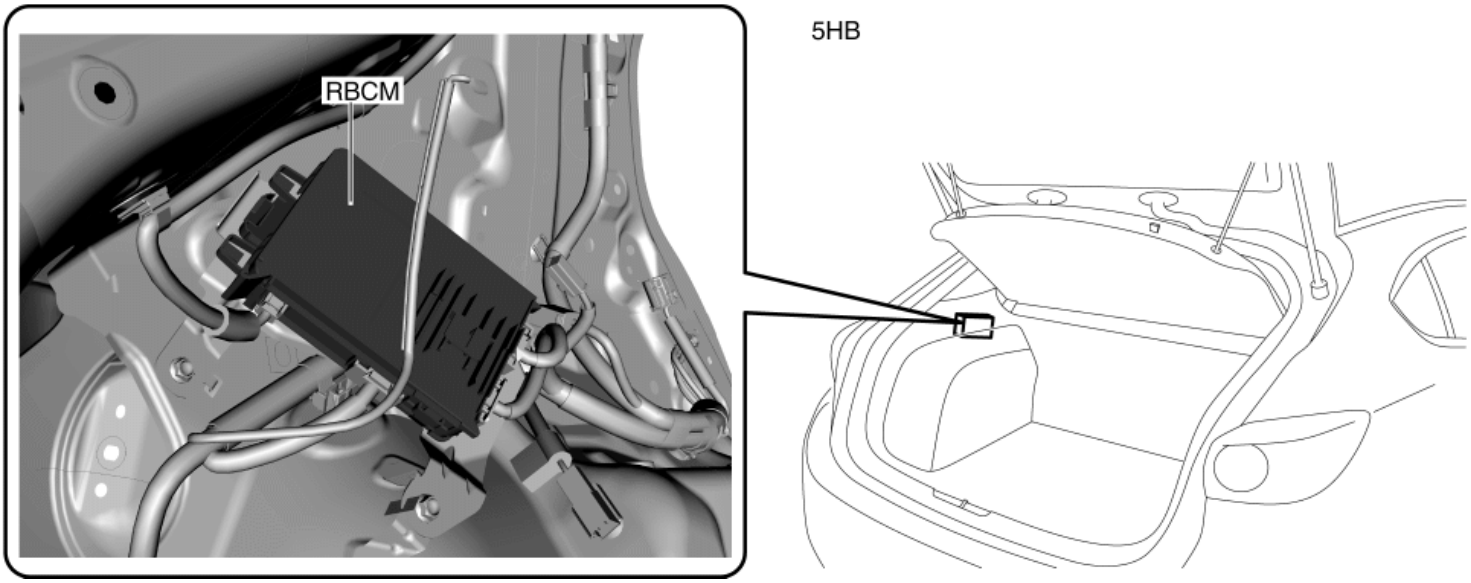

System wiring diagram

Power window system, auto dimming mirror

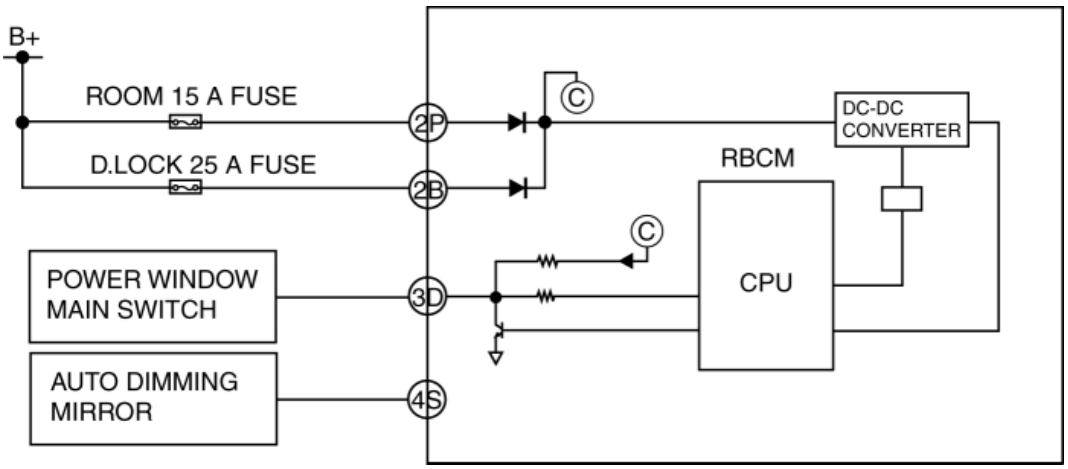

Power door lock system, theft-deterrent system

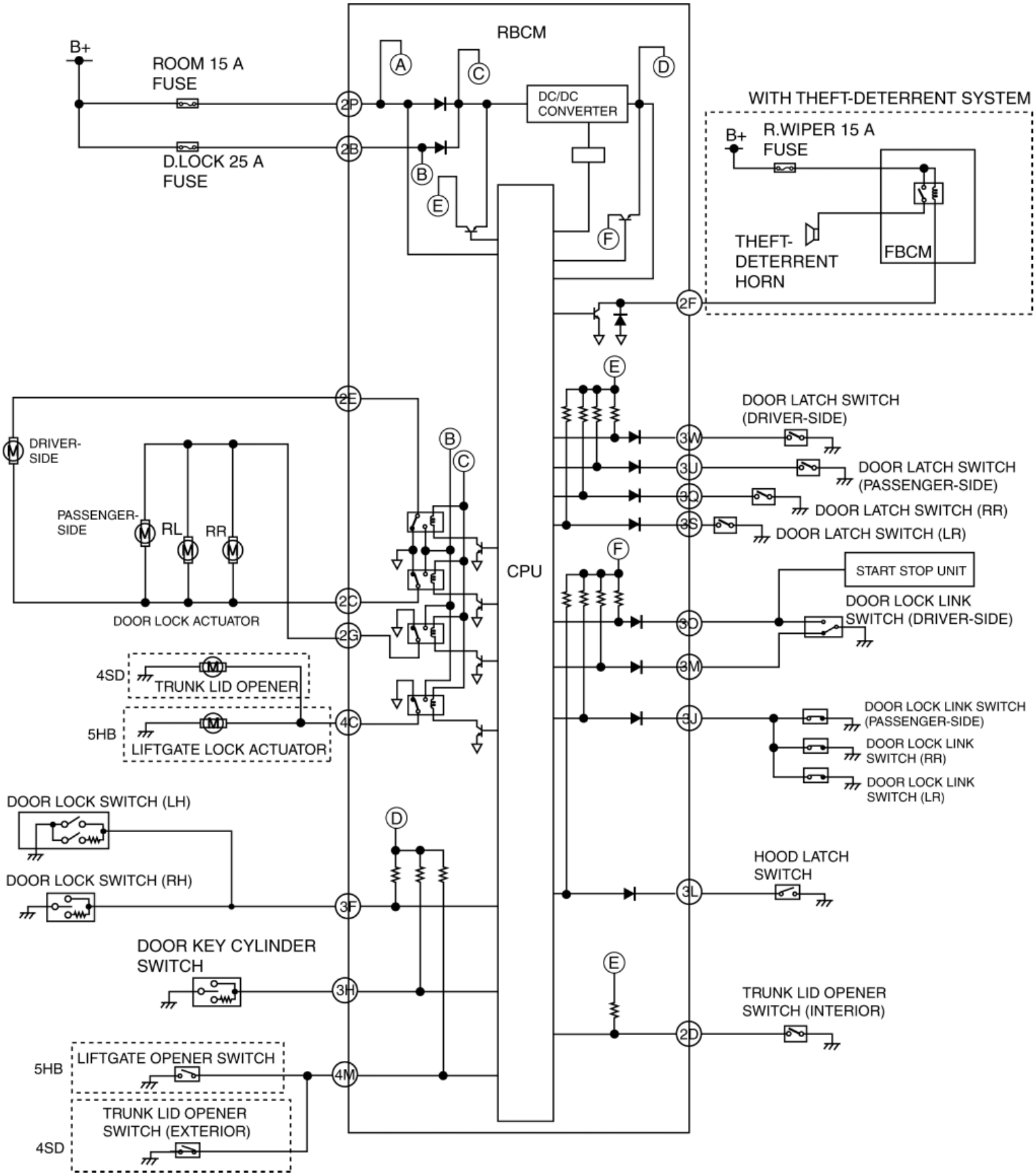

Room lights, brake light system

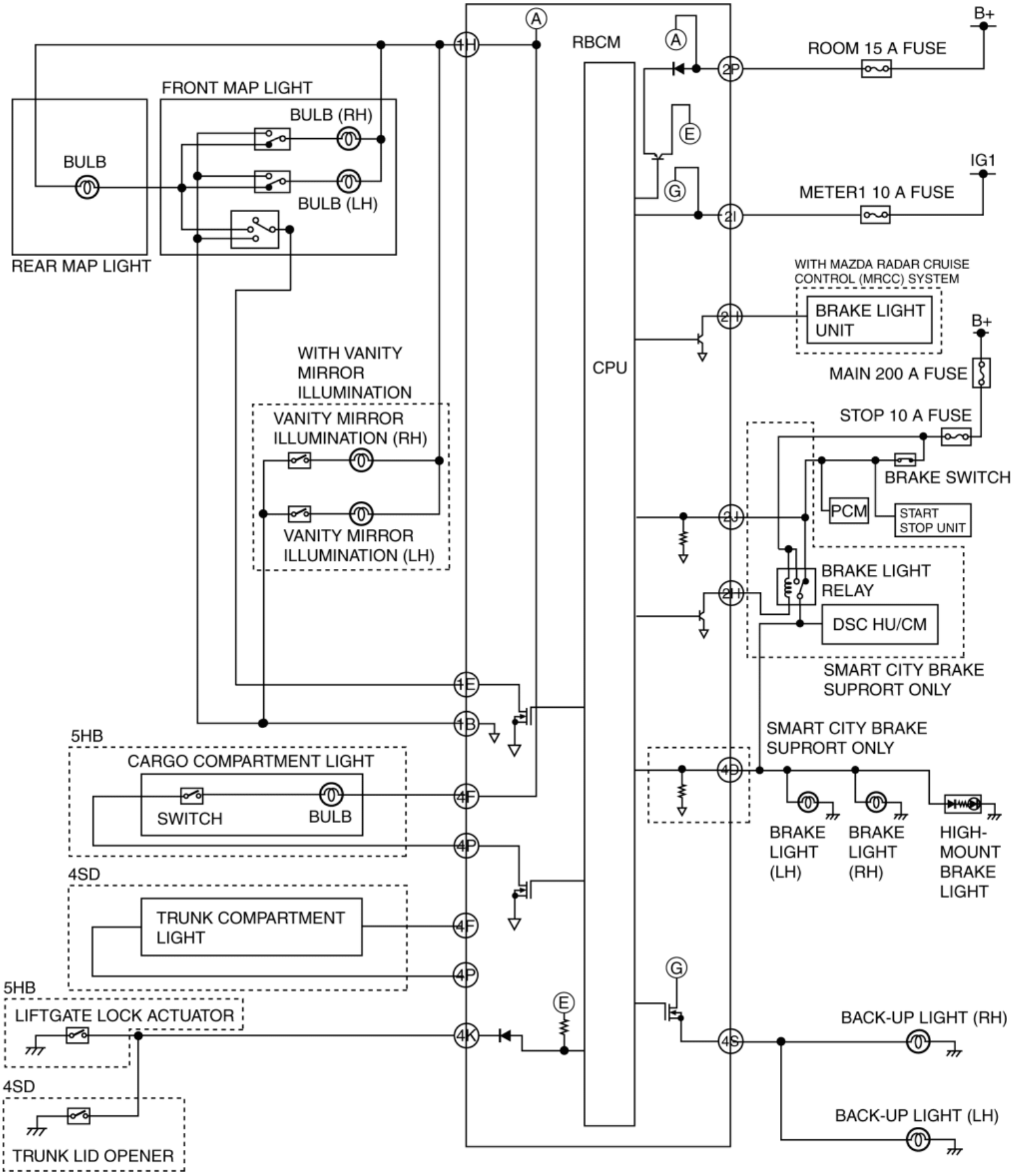

Rear wiper system

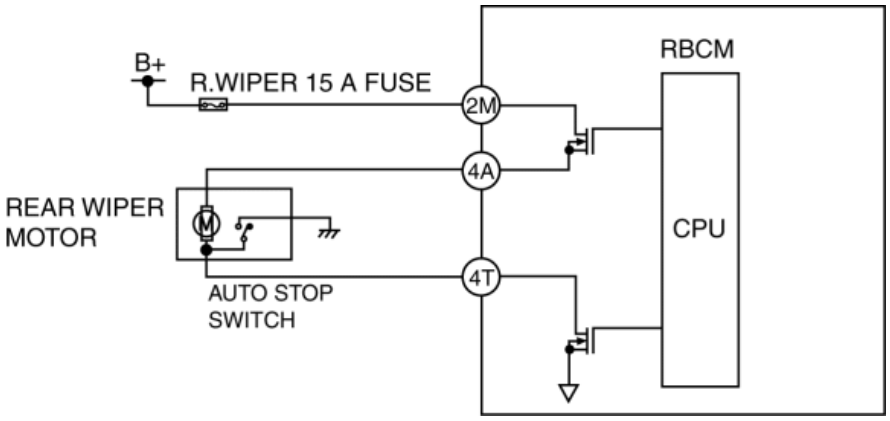

Fuel-level sensor, rear seat belt reminder system

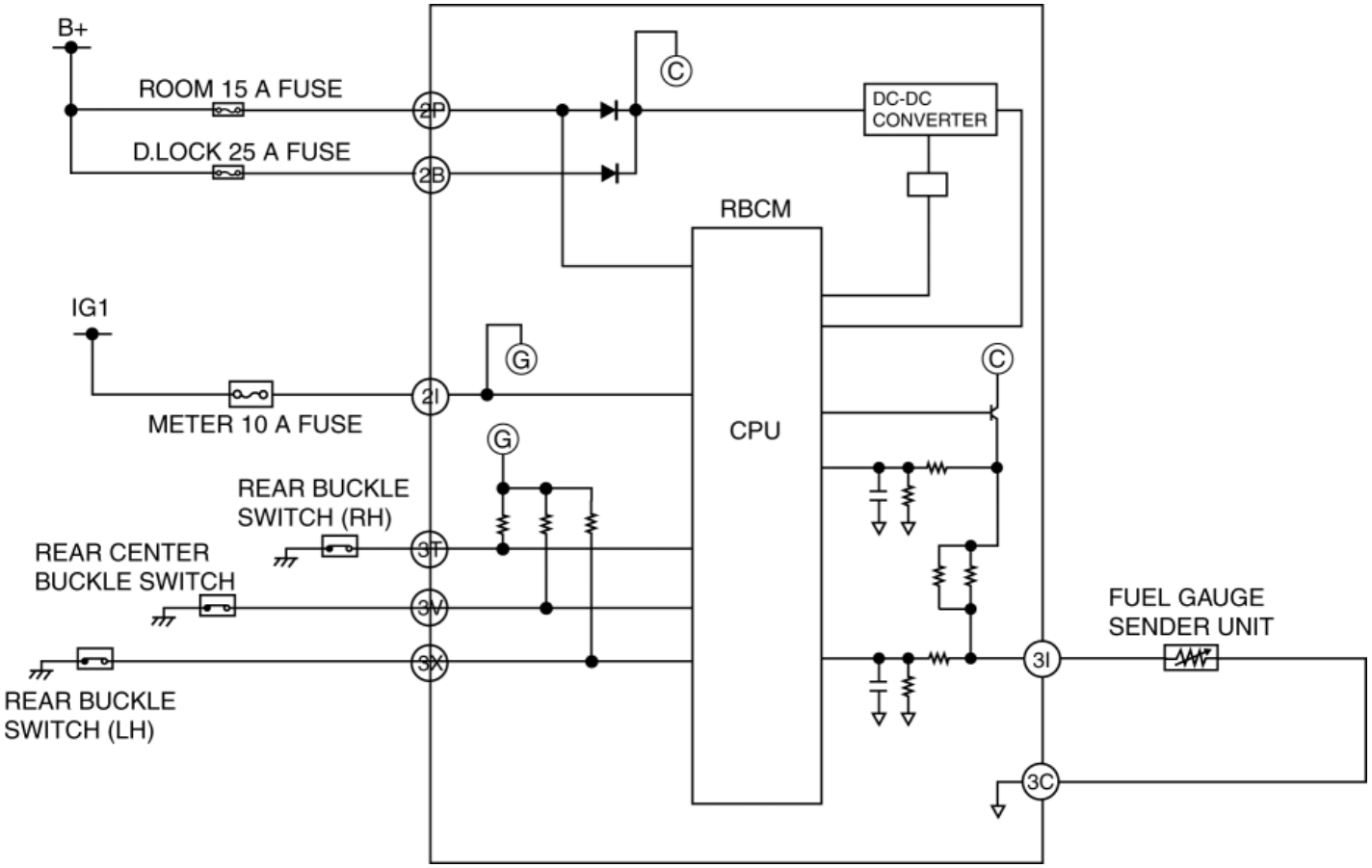

CAN system

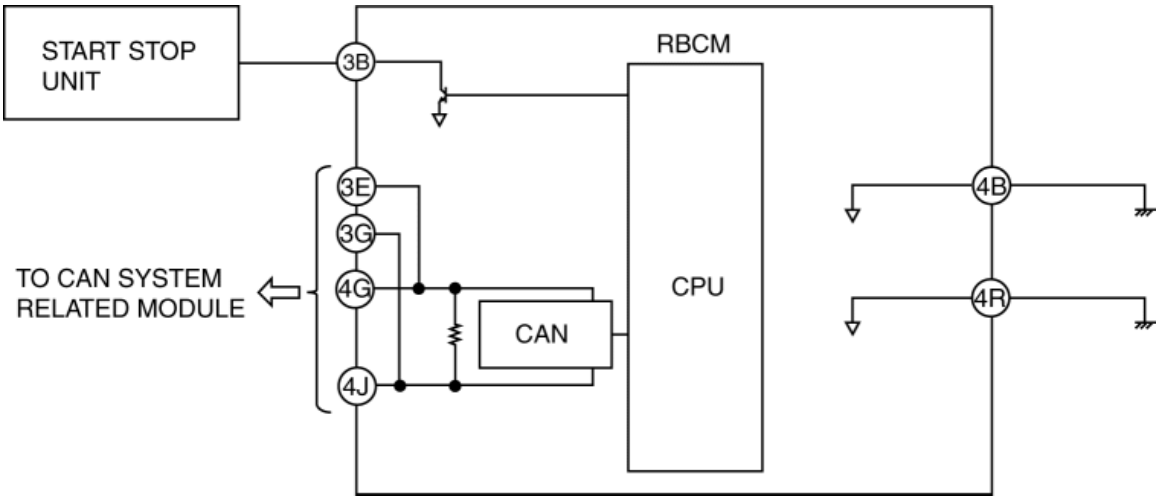

Fail-safe

Room light control system

- If an error is detected in a combination of the door lock-link switch signals, the rear body control module (RBCM) controls the interior light based on the signal before the error occurred.
- If the CAN signal cannot be received normally, the rear body control module (RBCM) controls the interior light based on the signal last received. If the CAN signal cannot be received normally for 5 s or more, the rear body control module (RBCM) stops the interior light control.

Back-up light

- Function not equipped.

Power door lock system

- Function not equipped.

Theft-deterrent system

- Function not equipped.

< Previous

2014 - Mazda3 - Body and Accessories

ON-BOARD DIAGNOSTIC SYSTEM [REAR BODY CONTROL MODULE (RBCM)]

Outline

- The on-board diagnostic function consists of the following functions:
  - A malfunction detection function, which detects overall malfunctions in the rear body control module (RBCM)-related parts.
  - A memory function, which stores detected DTCs.
  - A display function, which indicates malfunction locations and status via DTC output.
  - A PID/data monitoring function, which reads out specific input/output signals and verifies the input/output condition.
- Using the Mazda Modular Diagnostic System (M-MDS), DTCs can be read out and deleted, and the PID/data monitoring function can be activated.

Malfunction detection function

- Detects malfunctions in input/output signals.
- If a malfunction occurs, the rear body control module (RBCM) records the malfunction as a DTC. A recorded DTC can be read by the Mazda Modular Diagnostic System (M-MDS).

×: Applicable—: Not applicable

DTC No.	Warning/indicator light	Description	Fail-safe function	Drive cycle	Self test type*1	Memory function
B1079:13*2	—	Hood latch switch circuit malfunction	—	—	D	—
B108F:16	—	Door lock switch circuit malfunction	—	—	D	—
B109E:87	—	Communication error with start stop unit	—	—	C, D	×
B113E:11*3, *4	—	**4SD** • Trunk lid opener switch (exterior) circuit malfunction **5HB** • Liftgate opener switch circuit malfunction	—	—	D	—
B1172:11	—	Front door lock-link switch (LH) unlock circuit malfunction	—	—	D	—
B1172:13	—	Front door lock-link switch (LH) unlock circuit malfunction	—	—	D	—
B1174:11	—	**Without theft-deterrent system** • Front door lock-link switch (RH) unlock circuit malfunction **With theft-deterrent system** • Door lock-link switch unlock circuit malfunction	—	—	D	—
		Without theft-deterrent system • Front door lock-link switch (RH) unlock circuit malfunction				

B1174:13	—	**With theft-deterrent system** • Door lock-link switch unlock circuit malfunction	—	—	D	—
B1175:11	—	Front door latch switch (LH) circuit malfunction	—	—	D	—
B1176:11	—	Front door latch switch (RH) circuit malfunction	—	—	D	—
B1178:11	—	**4SD** • Trunk lid latch switch circuit malfunction **5HB** • Liftgate latch switch circuit malfunction	—	—	D	—
B11DA:16	—	Front door key cylinder switch (LH) circuit malfunction	—	—	D	—
B11E9:11	—	Rear door latch switch (LH) circuit malfunction	—	—	D	—
B11EA:11	—	Rear door latch switch (RH) circuit malfunction	—	—	D	—
B1219:11*5	—	Trunk lid opener switch (interior) circuit malfunction	—	—	D	—
B126A:11	—	Front door lock-link switch (LH) lock circuit malfunction	—	—	D	—
B126A:13	—	Front door lock-link switch (LH) lock circuit malfunction	—	—	D	—
C0023:14*6	—	Brake light circuit malfunction	—	—	C, D	×
U0010:88	—	Unit communication error (MS-CAN)	—	—	C, D	×
U0155:00	—	Communication error with instrument cluster	—	—	C, D	×
U2100:00	—	Rear body control module (RBCM) configuration error	—	—	C, D	×
U3000:49	—	Rear body control module (RBCM) internal malfunction	—	—	C, D	×
U3003:16	—	Rear body control module (RBCM) power supply voltage low input	—	—	C, D	×

*1 **C: CMDTC self test, D: ODDTC self test**

*2 **With hood latch switch**

*3 **5HB**

*4 **With trunk lid opener switch (exterior)**

*5 **With trunk lid opener switch (interior)**

*6 **With smart city brake support (SCBS)**

DTC 7-digit code definition

- When related systems or components have failed, the CM stores the DTC of the malfunctioning part in the CM memory, and allows for the retrieval of the stored data using the scanning tool when necessary. The DTCs are indicated using seven digits. Each digit indicates the following.

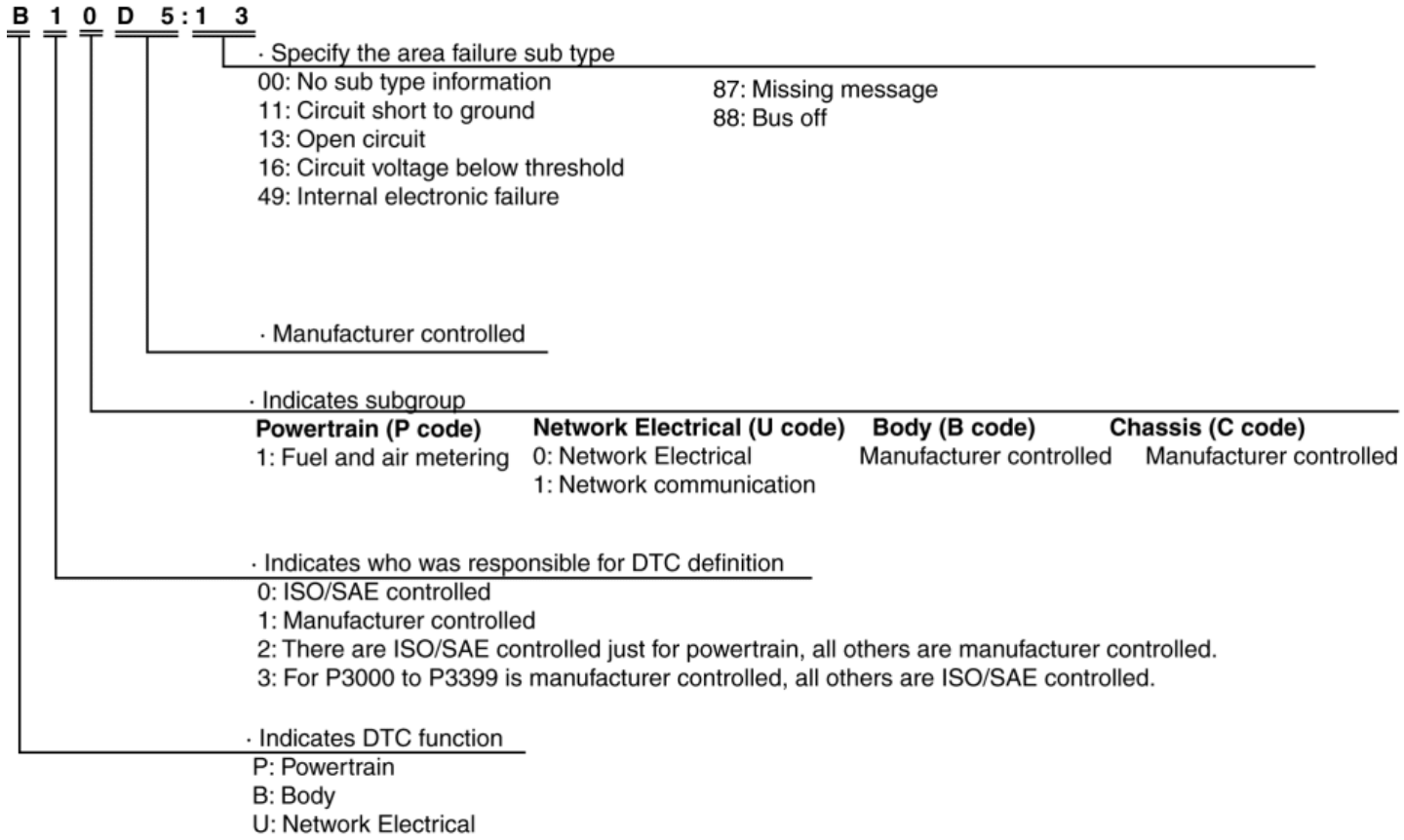

Status byte for DTC

- The two digits (two digits after hyphen (-)) after the 7-digit DTC.

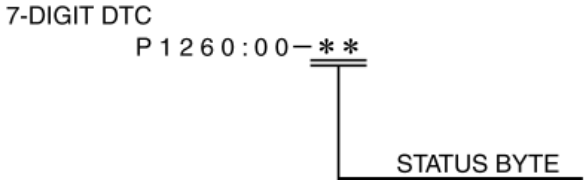

- A code which indicates the pending code, current/past malfunction status, or warning illumination status.
- Can be read by performing a CMDTC self-test using the Mazda Modular Diagnostic System (M-MDS).
- For details on the status byte, refer to the explanation on the Mazda Modular Diagnostic System (M-MDS) when reading the DTC.

Detection condition for the applicable DTC

×: Applicable—: Not applicable

DTC	System malfunction location	Detection condition
B1079:13*1	Hood latch switch circuit malfunction	Rear body control module (RBCM) detects an open circuit in hood latch switch circuit.
B108F:16	Door lock switch circuit malfunction	With the door lock switch off, the rear body control module (RBCM) detects door lock switch circuit voltage of 4 V or less.
B109E:87	Communication error with start stop unit	Rear body control module (RBCM) detects a communication error with the start stop unit for 10 times continuously.
	4SD	

B113E:11 *2, *3	• Trunk lid opener switch (exterior) circuit malfunction **5HB** • Liftgate opener switch circuit malfunction	Rear body control module (RBCM) detects a short to ground in the trunk lid opener switch (exterior) (4SD)/liftgate opener switch (5HB) circuit
B1172:11	Front door lock-link switch (LH) unlock circuit malfunction	Rear body control module (RBCM) detects a short to ground in the front door lock-link switch (LH) unlock circuit with the front door lock-link switch (LH) locked.
B1172:13	Front door lock-link switch (LH) unlock circuit malfunction	Rear body control module (RBCM) detects an open circuit in the front door lock-link switch (LH) unlock circuit with the front door lock-link switch (LH) unlocked.
B1174:11	**Without theft-deterrent system** • Front door lock-link switch (RH) unlock circuit malfunction **With theft-deterrent system** • Door lock-link switch unlock circuit malfunction	**Without Theft-Deterrent System** • Rear body control module (RBCM) detects a short to ground in the front door lock-link switch (RH) unlock circuit with the front door lock-link switch (RH) not unlocked. **With Theft-Deterrent System** • Rear body control module (RBCM) detects a short to ground in the door lock-link switch unlock circuit with the front door lock-link switch (RH)/rear door lock-link switch (LH)/(RH) not unlocked.
B1174:13	**Without theft-deterrent system** • Front door lock-link switch (RH) unlock circuit malfunction **With theft-deterrent system** • Door lock-link switch unlock circuit malfunction	**Without Theft-Deterrent System** • Rear body control module (RBCM) detects an open circuit in the front door lock-link switch (RH) unlock circuit with the front door lock-link switch (RH) unlocked. **With Theft-Deterrent System** • Rear body control module (RBCM) detects an open circuit in the door lock-link switch unlock circuit with the front door lock-link switch (RH)/rear door lock-link switch (LH)/(RH) unlocked.
B1175:11	Front door latch switch (LH) circuit malfunction	Rear body control module (RBCM) detects a short to ground in the front door latch switch (LH) circuit with the front door (LH) closed (front door latch switch (LH) off).
B1176:11	Front door latch switch (RH) circuit malfunction	Rear body control module (RBCM) detects a short to ground in the front door latch switch (RH) circuit with the front door (RH) closed (front door latch switch (RH) off).
B1178:11	**4SD** • Trunk lid latch switch circuit malfunction **5HB** • Liftgate latch switch circuit malfunction	**4SD** • Rear body control module (RBCM) detects short to ground in trunk lid latch switch circuit with the trunk closed (trunk lid latch switch off). **5HB** • Rear body control module (RBCM) detects short to ground in liftgate latch switch circuit with the liftgate closed (liftgate latch switch off).
B11DA:16	Front door key cylinder switch (LH) circuit malfunction	Rear body control module (RBCM) detects the front door key cylinder switch (LH) circuit voltage of 4 V or less with the front door key cylinder switch (LH) off.
B11E9:11	Rear door latch switch (LH) circuit malfunction	Rear body control module (RBCM) detects a short to ground in the rear door latch switch (LH) circuit with the rear door (LH) closed (rear door latch switch (LH) off).
B11EA:11	Rear door latch switch (RH) circuit malfunction	Rear body control module (RBCM) detects a short to ground in the rear door latch switch (RH) circuit with the rear door (RH) closed (rear door latch switch (RH) off).

B1219:11*4	Trunk lid opener switch (interior) circuit malfunction	Rear body control module (RBCM) detects a short to ground in trunk lid opener switch (interior) circuit
B126A:11	Front door lock-link switch (LH) lock circuit malfunction	Rear body control module (RBCM) detects a short to ground in the front door lock-link switch (LH) lock circuit with the front door lock-link switch (LH) unlocked.
B126A:13	Front door lock-link switch (LH) lock circuit malfunction	Rear body control module (RBCM) detects an open circuit in the front door lock-link switch (LH) lock circuit with the front door lock-link switch (LH) locked.
C0023:14*5	Brake light circuit malfunction	• Rear body control module (RBCM) detects any of the following conditions: ▪ Brake lights/high-mount brake light illuminated even though driver or system does not illuminate brake lights/high-mount brake lights. ▪ Brake lights/high-mount brake light not illuminated even though driver depresses brake pedal. ▪ Brake lights/high-mount brake light not illuminated even though system illuminates brake lights/high-mount brake light.
U0010:88	Unit communication error (MS-CAN)	Rear body control module (RBCM) detects a CAN communication line (MS-CAN) error with the ignition switched ON (engine off or on).
U0155:00	Communication error with instrument cluster	Rear body control module (RBCM) cannot receive the CAN signals from the instrument cluster for 5 s or more with the ignition switched ON (engine off or on).
U2100:00	Rear body control module (RBCM) configuration error	Rear body control module (RBCM) configuration error (no configuration) detected.
U3000:49	Rear body control module (RBCM) internal malfunction	Rear body control module (RBCM) detects the internal malfunction.
U3003:16	Rear body control module (RBCM) power supply voltage low input	Rear body control module (RBCM) power supply circuit voltage of 5 V or more, less than 9 V is detected for 10 s or more.

*1 **With hood latch switch**

*2 **5HB**

*3 **With trunk lid opener switch (exterior)**

*4 **With trunk lid opener switch (interior)**

*5 **With smart city brake support (SCBS)**

Snapshot data

- The rear body control module (RBCM) stores the following two types of snapshot data (vehicle information) when a DTC is detected and displays them in the Mazda Modular Diagnostic System (M-MDS).
  - Vehicle information detected by rear body control module (RBCM)
  - Vehicle information detected by instrument cluster and received by rear body control module (RBCM) via CAN signal

Snapshot data table—: Not applicable

Snapshot data item	Unit		Data contents	Data read/use method	Corresponding data monitor items
AAT	°C	°F	Ambient temperature	—	—
APP_STATUS	Accelerator Pedal Off/Under20%/Over20%/FAIL		Accelerator pedal position status	—	—

CFG_STATUS	Config Complete/Not Configured/Config Error	Instrument cluster configuration status	—	—
ECT_STATUS	Under 0 degrees C/0 - Under 80 degrees C/Over 80 degrees C/FAIL	Engine coolant temperature status	—	—
IC_VPWR	V	Instrument cluster power supply voltage	• The rear body control module (RBCM) constantly receives the power supply voltage value of the instrument cluster sent via CAN signal from the instrument cluster. • If a DTC is detected, the rear body control module (RBCM) records the power supply voltage of the instrument cluster when the DTC was detected, and it is displayed in the Mazda Modular Diagnostic System (M-MDS).	VPWR*1
IG-ON_TIMER	hh:mm:ss*2	Elapsed time since ignition was switched ON (engine off or on) **NOTE:** • The instrument cluster records the elapsed time since the ignition was switched ON (engine off or on).	• The rear body control module (RBCM) constantly receives the elapsed time since the ignition was switched ON (engine off or on) sent via CAN signal from the instrument cluster. • If a DTC is detected, the rear body control module (RBCM) records the elapsed time since the ignition was switched ON (engine off or on) when the DTC was detected, and it is displayed in the Mazda Modular Diagnostic System (M-MDS).	—
PWR_MODE_KEY	Key Out/Key Recently Out (Position 0)/Accessory (Position 1)/Post Ignition (Position 2)/Ignition On (Position 2)/Running (Position 2)/Running - Starting	• Key Out: Ignition switched off • Key Recently Out (Position 0): Elapsed time **within 3 s** since ignition was switched off • Accessory (Position 1): Ignition is switched to ACC • Post Ignition (Position 2): Elapsed time **within 3 s** since ignition was switched ON (engine off or on) • Ignition On (Position 2):	• The rear body control module (RBCM) constantly receives the ignition switch status sent via CAN signal from the instrument cluster. • If a DTC is detected, the rear body control module (RBCM) records the ignition switch status when the DTC was detected, and it is displayed in the Mazda Modular Diagnostic System (M-MDS).	—

			Ignition switched ON (engine off) • Running (Position 2): Ignition switched ON (engine on) • Running - Starting: Cranking condition		
RPM_STATUS	Engine Stop/Under1500rpm/Over1500rpm/FAIL		Engine speed status	• The rear body control module (RBCM) constantly receives the engine speed sent via CAN signal from the instrument cluster. • If a DTC is detected, the rear body control module (RBCM) records the engine speed when the DTC was detected, and it is displayed in the Mazda Modular Diagnostic System (M-MDS).	TACHOMTR*1
SHIFT_STATUS	P/N/D/R/FAIL		Selector lever position status	• The rear body control module (RBCM) constantly receives the selector lever position sent via CAN signal from the instrument cluster. • If a DTC is detected, the rear body control module (RBCM) records the selector lever position when the DTC was detected, and it is displayed in the Mazda Modular Diagnostic System (M-MDS).	—
TOTAL_DIST	km	Miles	Accumulated total traveled distance from completion of vehicle until rear body control module (RBCM) detects DTC (Odometer value in instrument cluster)	The total traveled distance from which the rear body control module (RBCM) detects DTCs to the present can be calculated by performing the following procedure. • Verify the odometer value in the instrument cluster. • Verify the snapshot data item TOTAL_DIST. • Subtract 2 from 1.	—
TOTAL_TIME	hh:mm:ss*2		Accumulated total elapsed time since vehicle completion until rear body control module (RBCM) detects a DTC **NOTE:** • When the ROOM fuse is removed, and the ignition is switched off, the time is not included	The elapsed time from which the rear body control module (RBCM) detects DTCs to the present can be calculated by performing the following procedure. • Verify the instrument cluster PID item TOTAL_TIME. • Verify the snapshot data item TOTAL_TIME. • Subtract 2 from 1.	TOTAL_TIME*1

		in the elapsed time.		
VPWR	V	Rear body control module (RBCM) power supply voltage	—	VPWR_IG1
VSPD_STATUS	Stop/0-10km/h/Over10km/h/FAIL	Vehicle speed status	• The rear body control module (RBCM) constantly receives the vehicle speed sent via CAN signal from the instrument cluster. • If a DTC is detected, the rear body control module (RBCM) records the vehicle speed when the DTC was detected, and it is displayed in the Mazda Modular Diagnostic System (M-MDS).	SPEEDOMTR*1

*1
Instrument cluster PID (See ON-BOARD DIAGNOSTIC [INSTRUMENT CLUSTER].)

*2
The seconds may be indicated after the decimal point.

Data monitor function

- With the PID/data monitor function, input/output signal monitor items set in the rear body control module (RBCM) can be selected and read out in real-time.

PID/data monitor table

—: Not applicable

PID	Unit/Operation	Data contents	Data read/use method	Module control terminal
AT_DL_IG	Off/On	Auto door lock function (IG) • Off: Door lock actuator does not operate to unlock in conjunction with ignition off. • On: Door lock actuator operates to unlock in conjunction with ignition off.	If the personalization features setting for the auto door lock is set to auto door lock in conjunction with the ignition, displays if the auto door lock set in conjunction with the ignition being switched off is applicable. Operates when the ignition is switched from ON to OFF.	—
AT_DL_SHIFT	Off/On	Auto door lock function (shift) • Off: Door lock actuator does not operate to lock or unlock in conjunction with shifting. • On: Door lock actuator operate to lock or unlock in conjunction with shifting.	If the personalization features setting for the auto door lock is set to auto door lock in conjunction with the AT shifting, displays if the auto door lock set in conjunction with gear shifting is applicable. Operates when the gear is shifted.	—
		Auto door lock function (vehicle speed)		

AT_DL_VSPD	Off/On	• Off: Door lock actuator does not operate to lock in conjunction with vehicle speed. • On: Door lock actuator operates to lock in conjunction with vehicle speed.	If the personalization features setting for the auto door lock is set in conjunction with the vehicle speed, displays if the auto door lock set in conjunction with the vehicle speed is applicable. Operates at a vehicle speed of **20 km/h {12 mph} or more**.	—
BG_HORN_RLY*1	Off/On	Theft-deterrent horn relay operation output • Off: Theft-deterrent horn relay is off. • On: Theft-deterrent horn relay is on.	—	2F (Theft-deterrent horn relay control)
BRAKE_SW*2	Off/On	Brake switch input signal • Off: Brake switch (No.1 signal) is off (brake pedal is not depressed). • On: Brake switch (No.1 signal) is on (brake pedal is depressed).	—	2J (Brake switch signal)
C_DL_SW_LK	Off/On	Door lock switch (lock side) input signal • Off: Door lock switch is not in lock. • On: Door lock switch is in lock.	—	3F (Door lock switch signal)
C_DL_SW_UNL	Off/On	Door lock switch (unlock side) input signal • Off: Door lock switch is not in unlock. • On: Door lock switch is in unlock.	—	3F (Door lock switch signal)
CNT_S_COMM	—	The rear body control module (RBCM) counts the lock/unlock request signal (serial transmission) received from the start stop unit. **NOTE:** • If number of times **exceeds 15**, display returns to 0.	If the lock/unlock operation is performed by the remote transmitter or request switch, the start stop unit sends the lock/unlock request signal to the rear body control module (RBCM). If the lock/unlock request signal is received normally, the rear body control module (RBCM) increases the counter by one for the PID. When monitoring PID item CNT_S_COMM, switch the ignition off because the start stop unit does not output the lock/unlock signal when the ignition is switched ON.	3B (Serial communication)
DL_MT_A_LK	Off/On	All-door lock motor lock output • Off: All door lock actuators are not operated to lock. • On: All door lock actuators are operated to lock.	—	—
		All-door lock motor unlock output • Off: All door lock actuators are not		

DL_MT_A_UNL	Off/On	operated to unlock. • On: All door lock actuators are operated to unlock.	—	—
DL_MT_D_UNL	Off/On	Driver's door lock motor unlock output • Off: Front door lock actuator (LH) is not operated to unlock. • On: Front door lock actuator (LH) is operated to unlock.	—	—
DL_MT_S-LK	**NOTE:** • Displays in the Mazda Modular Diagnostic System (M-MDS) but it does not operate.			
DOOR_ALL	Close/OPEN	Open/closed condition of all doors • Close: All doors are closed. • OPEN: Any door is open.	If all doors (including trunk (4SD)/liftgate (5HB)) are closed, Close, or if not, OPEN	—
DOOR_D	Close/OPEN	Door switch input on driver's door • Close: Front door (LH) is closed. • OPEN: Front door (LH) is open.	—	3W (Front door switch (driver's door) signal)
ELAT_MT_RLY	Off/On	Electric latch motor relay operation output • Off: Trunk lid latch (4SD)/liftgate latch (5HB) is not operated to unlock. • On: Trunk lid latch (4SD)/liftgate latch (5HB) is operated to unlock.	—	4C (Trunk lid release/Liftgate lock actuator control)
ELAT_UNL	Off/On	Electric latch motor (unlock) operation output • Off: Trunk lid latch (4SD)/liftgate latch (5HB) is not operated to unlock. • On: Trunk lid latch (4SD)/liftgate latch (5HB) is operated to unlock.	—	—
FUEL_SEN_M	V	Displays input voltage of fuel gauge sender unit input from rear body control module (RBCM)	If the fuel tank level is low, the rear body control module (RBCM) input voltage increases because the fuel gauge sender unit resistance decreases.	3I (Fuel sensor signal)
FUEL_SEN_S	V	Displays fuel gauge sender unit (SUB) input voltage input from rear body control module (RBCM)	If there is no fuel gauge sender unit (SUB), a constant **5 V** is output.	—
		Displays power voltage supplied to fuel gauge sender unit from rear body control module (RBCM)		

FUEL_SEN_SV	V	**CAUTION:** • The battery voltage is supplied to the fuel gauge sender unit from the rear body control module (RBCM), however display of the PID item is controlled by the microcomputer and therefore **5 V** is displayed. Accordingly, even if the actual terminal voltage differs from the PID item display, this does not indicate an abnormality.	After switching the ignition off, supply of the battery voltage to the fuel gauge sender unit from the rear body control module (RBCM) continues until the CAN communication is in the sleep mode.	2P (Power supply)
HOOD*1	Close/OPEN	Hood latch switch condition • Close: Hood is closed. • OPEN: Hood is open.	—	3L (Hood latch switch signal)
IG1_SW	Off/On	Displays power input condition of rear body control module (RBCM) • Off: IG1 power is not input to rear body control module (RBCM) • On: IG1 power is input to rear body control module (RBCM)	If there is a malfunction in the IG1 power supply input to the rear body control module (RBCM), the door lock and interior light controls, which the rear body control module (RBCM) controls, do not operate normally because PID item IG1_SW is used for determining ignition on/off for the rear body control module (RBCM).	2I (Ignition power supply)
KC_SW_D_LK	Off/On	Driver's key cylinder switch (lock side) operation condition • Off: Front door key cylinder switch is not in lock. • On: Front door key cylinder switch is in lock.	—	3H (Driver's door key cylinder switch signal)
KC_SW_D_UNL	Off/On	Driver's key cylinder switch (unlock side) operation condition • Off: Front door key cylinder switch is not in unlock. • On: Front door key cylinder switch is in unlock.	—	3H (Driver's door key cylinder switch signal)
LL_P/R*1	Unlock/Other	Passenger/rear door lock link operation condition • Unlock: Front door lock-link switch (RH), rear door lock-link switch (LH), rear door lock-link switch (RH) are in unlock. • Other: Front door lock-link switch (RH), rear door lock-link switch (LH), rear door	—	3J (Lock input (lock-link switch (passenger, rear door)))

		lock-link switch (RH) are in other than unlock.		
LL_SW_D_LK	Off/On	Driver's door lock link switch (lock side) operation condition • Off: Front door lock-link switch (LH) is in unlock. • On: Front door lock-link switch (LH) is in lock.	—	3O (Lock input (front door lock-link switch (driver's door)))
LL_SW_D_UNL	Off/On	Driver's door lock link switch (unlock side) operation condition • Off: Front door lock-link switch (LH) is in lock. • On: Front door lock-link switch (LH) is in unlock.	—	3M (Unlock input (front door lock-link switch (driver's door)))
R_FOG_L_CS	**NOTE:** • Displays in the Mazda Modular Diagnostic System (M-MDS) but it does not operate.			
R_FOG_LMP	**NOTE:** • Displays in the Mazda Modular Diagnostic System (M-MDS) but it does not operate.			
R_LMP	Off/On	Back-up light operation output signal • Off: Back-up light is turned off. • On: Back-up light is turned on.	—	—
R_LMP_CS	Off/On/Unknown/Fault	Back-up light operation request signal from instrument cluster • Off: Back-up light off signal is received. • On: Back-up light on signal is received. • Unknown: Back-up light control signal not determined • Fault: Communication with instrument cluster is failed.	—	3E, 3G (CAN)
R_WIP_MT_LO*3	Off/On	Rear wiper motor operation output signal • Off: Rear wiper motor is not operated. • On: Rear wiper motor is operated.	—	4T (Rear wiper motor control (LO))
ROOM_LMP	Off/On	Interior light output signal • Off: Front map light is turned off. • On: Front map light is turned on.	—	1E (Door unlock control)

SEAT_B_2C*4	Unbuckled/Buckled	Rear seat belt switch condition (center seat) • Unbuckled: Second-row center seat belt is not fastened. • Buckled: Second-row center seat belt is fastened.	—	3V (Rear seat belt (center) switch)
SEAT_B_2L*4	Unbuckled/Buckled	Rear seat belt switch condition (left-side seat) • Unbuckled: Second-row left-side seat belt is not fastened. • Buckled: Second-row left-side seat belt is fastened.	—	3X (Rear seat belt (LH) switch)
SEAT_B_2R*4	Unbuckled/Buckled	Rear seat belt switch condition (right-side seat) • Unbuckled: Second-row right-side seat belt is not fastened. • Buckled: Second-row right-side seat belt is fastened.	—	3T (Rear seat belt (RH) switch signal)
SEAT_B_3C	**NOTE:** • Displays in the Mazda Modular Diagnostic System (M-MDS) but it does not operate.			
SEAT_B_3L	**NOTE:** • Displays in the Mazda Modular Diagnostic System (M-MDS) but it does not operate.			
SEAT_B_3R	**NOTE:** • Displays in the Mazda Modular Diagnostic System (M-MDS) but it does not operate.			
STOP_LMP*2	Off/On	Brake light output control signal • Off: Brake light is turned off. • On: Brake light is turned on.	—	2H (Brake light control)
STOP_LMP_CS*2	Off/On	Brake light on monitor • Off: Brake light off signal is received. • On: Brake light on signal is received.	—	4D (Brake light control)
T_ROOM_LMP	Off/On	Trunk compartment light (4SD)/cargo compartment (5HB) output control condition • Off: Trunk compartment light (4SD)/cargo compartment light (5HB) is turned off. • On: Trunk compartment light (4SD)/cargo compartment light	—	4P (Trunk compartment light (4SD)/cargo compartment light (5HB) signal)

		(5HB) is turned on.		
T_UNL_SW*5	Off/On	Trunk lid opener switch (exterior) (4SD)/liftgate opener switch (5HB) input status • Off: Trunk lid opener switch (exterior) (4SD)/liftgate opener switch (5HB) is not pressed. • On: Trunk lid opener switch (exterior) (4SD)/liftgate opener switch (5HB) is pressed.	—	4M (Trunk lid opener switch (exterior) (4SD)/liftgate opener switch (5HB) signal)
T_UNL_SW_IP*6	Off/On	Trunk lid opener switch (interior) condition • Off: Trunk lid opener switch (interior) is not pressed. • On: Trunk lid opener switch (interior) is pressed.	—	2D (Trunk lid opener switch signal (interior))
TRUNK	Close/OPEN	Trunk lid latch switch (4SD)/liftgate latch switch (5HB) input status • Close: Trunk (4SD)/liftgate (5HB) is closed. • OPEN: Trunk (4SD)/liftgate (5HB) is open.	—	4K (Trunk lid/liftgate latch switch signal)
VPWR_B_R	V	Displays voltage at rear body control module (RBCM) terminal 2P (power supply)	—	2P (Power supply)
VPWR_IG1	V	Displays voltage at rear body control module (RBCM) terminal 2I (ignition power supply)	—	2I (Ignition power supply)

*1 **With theft-deterrent system**

*2 **With smart city brake support (SCBS)**

*3 **With rear wiper and washer**

*4 **With rear seat belt reminder system**

*5 **With trunk lid opener switch (exterior) (4SD)/liftgate opener switch (5HB)**

*6 **With trunk lid opener switch (interior)**

Active Command Modes Function

- The output parts set in the rear body control module (RBCM) can be operated regardless of the RBCM control condition.
- Items which can be operated are as follows:

Simulation item	Unit/Operation	Data contents	Output part name

BG_HORN_RLY*1	Off/On	• Off: Stops theft-deterrent horn. • On: Sounds the theft-deterrent horn.	Rear body control module (RBCM)
DL_MT_A	Lock/Unlock	• Lock: Locks all of the doors. • Unlock: Unlocks all of the doors.	Door lock actuator
ELAT_MT_RLY	Off/On	• Off: Stops the trunk lid latch (4SD)/liftgate latch (5HB) release operation. • On: Releases the trunk lid latch (4SD)/liftgate latch (5HB).	**4SD** • Trunk lid latch and release actuator **5HB** • Liftgate latch and lock actuator
ELAT_UNL	Off/On	• Off: Stops the trunk lid latch (4SD)/liftgate latch (5HB) release operation. • On: Releases the trunk lid latch (4SD)/liftgate latch (5HB).	**4SD** • Trunk lid latch and release actuator **5HB** • Liftgate latch and lock actuator
R_FOG_LMP	**NOTE:** • Displays in the Mazda Modular Diagnostic System (M-MDS) but it does not operate.		
R_LMP	Off/On	• Off: Turns off back-up light. • On: Illuminates back-up light.	Back-up light
R_WIP_MT_LO*2	Off/On	• Off: Stops rear wiper motor. • On: Operates rear wiper motor.	Rear wiper motor
STOP_LMP_CS*3	Off/On	• Off: Turns off brake light. • On: Illuminates brake light.	• Brake light • High-mount brake light

*1 **With theft-deterrent horn**

*2 **With rear wiper and washer**

*3 **With smart city brake support (SCBS)**

< Previous

2014 - Mazda3 - Multiplex Communication System

MULTIPLEX COMMUNICATION SYSTEM

Outline

- A controller area network (CAN) system has been adopted in which multiplex communication is performed using a single communication path.
- For individual communication between the control modules, a local CAN, ISO communication, and LIN communication have been adopted in consideration of the required communication speed and cost.

System Wiring Diagram

CAN/LIN communication/ISO communication/local CAN

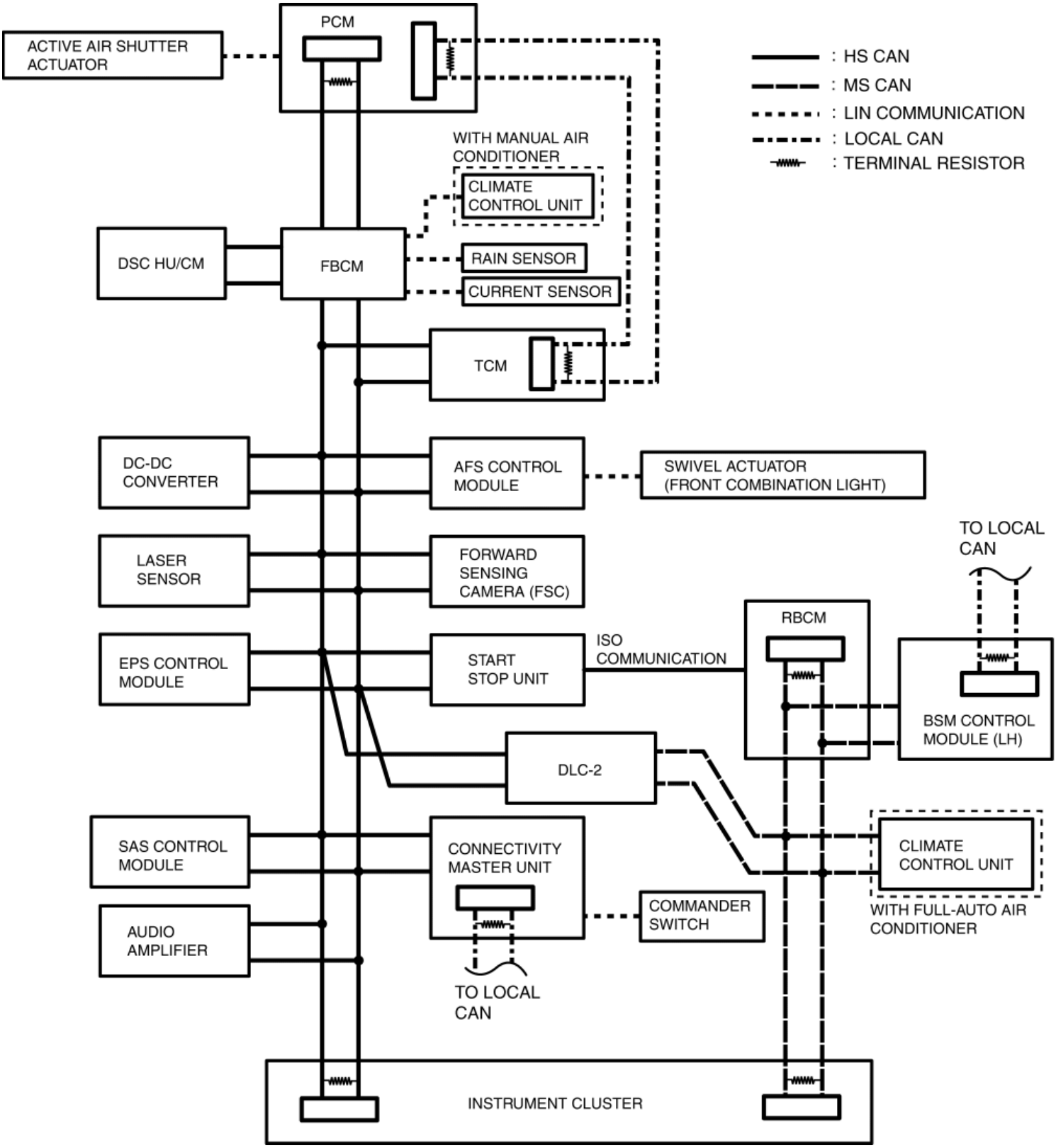
PCM
ACTIVE AIR SHUTTER ACTUATOR
: HS CAN
: MS CAN
: LIN COMMUNICATION
: LOCAL CAN
: TERMINAL RESISTOR
WITH MANUAL AIR CONDITIONER
CLIMATE CONTROL UNIT
DSC HU/CM
FBCM
RAIN SENSOR
CURRENT SENSOR
TCM
DC-DC CONVERTER
AFS CONTROL MODULE
SWIVEL ACTUATOR (FRONT COMBINATION LIGHT)
TO LOCAL CAN
LASER SENSOR
FORWARD SENSING CAMERA (FSC)
RBCM
EPS CONTROL MODULE
START STOP UNIT
ISO COMMUNICATION
BSM CONTROL MODULE (LH)
DLC-2
SAS CONTROL MODULE
CONNECTIVITY MASTER UNIT
CLIMATE CONTROL UNIT
WITH FULL-AUTO AIR CONDITIONER
AUDIO AMPLIFIER
COMMANDER SWITCH
TO LOCAL CAN
INSTRUMENT CLUSTER

Local CAN

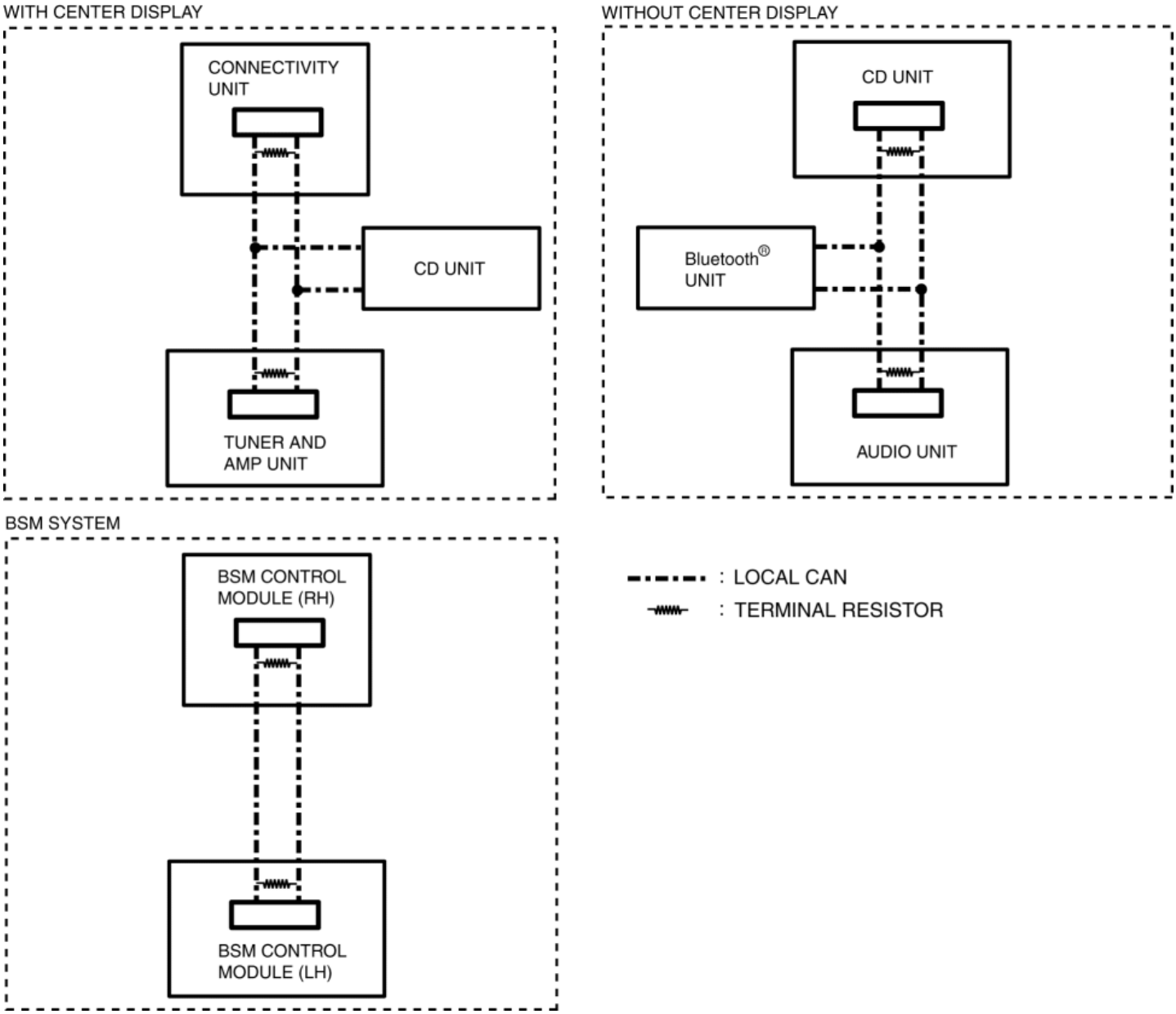

Structural view

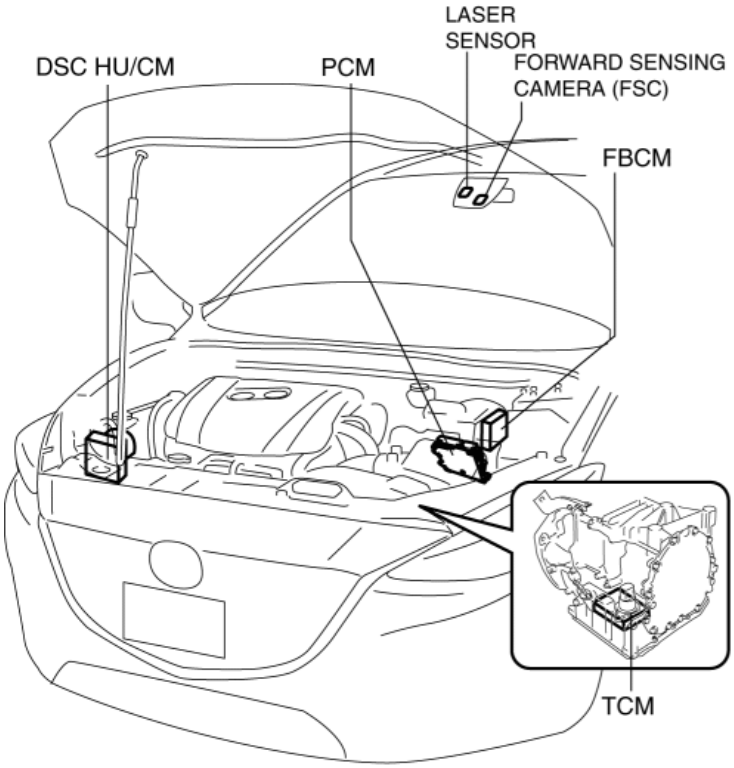
LASER
SENSOR
DSC HU/CM
PCM
FORWARD SENSING
CAMERA (FSC)
FBCM
TCM

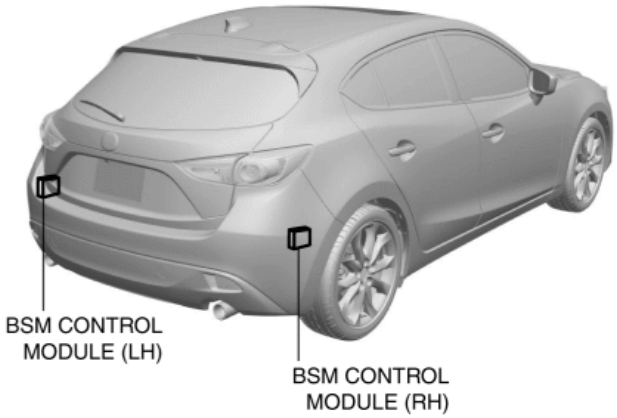
BSM CONTROL
MODULE (LH)
BSM CONTROL
MODULE (RH)

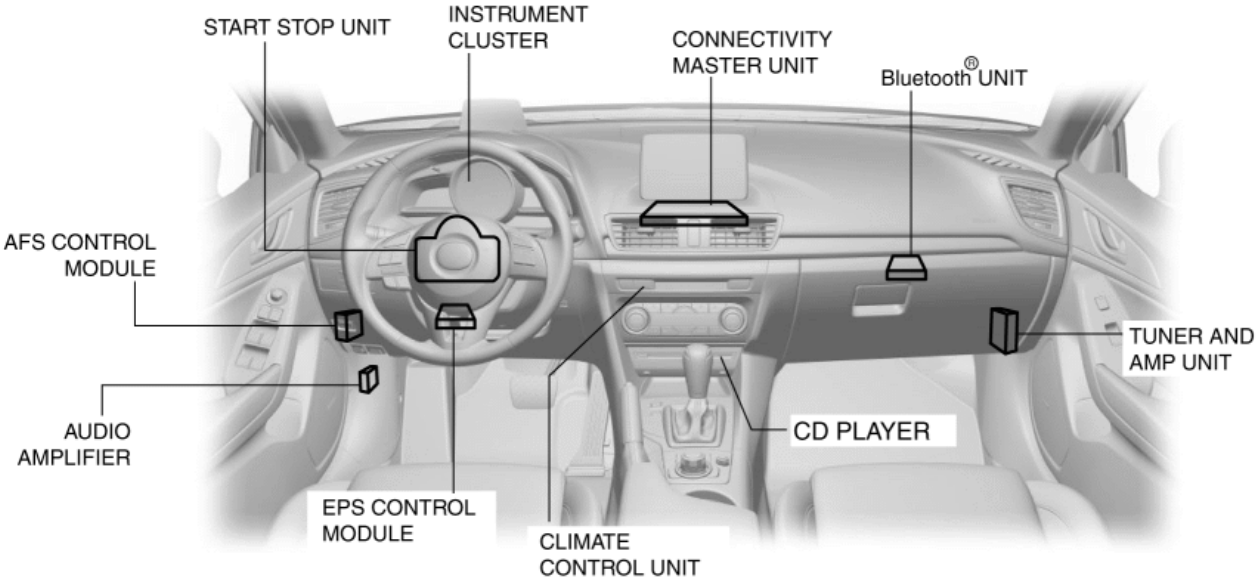
START STOP UNIT
INSTRUMENT
CLUSTER
CONNECTIVITY
MASTER UNIT
Bluetooth® UNIT
AFS CONTROL
MODULE
TUNER AND
AMP UNIT
AUDIO
AMPLIFIER
CD PLAYER
EPS CONTROL
MODULE
CLIMATE
CONTROL UNIT

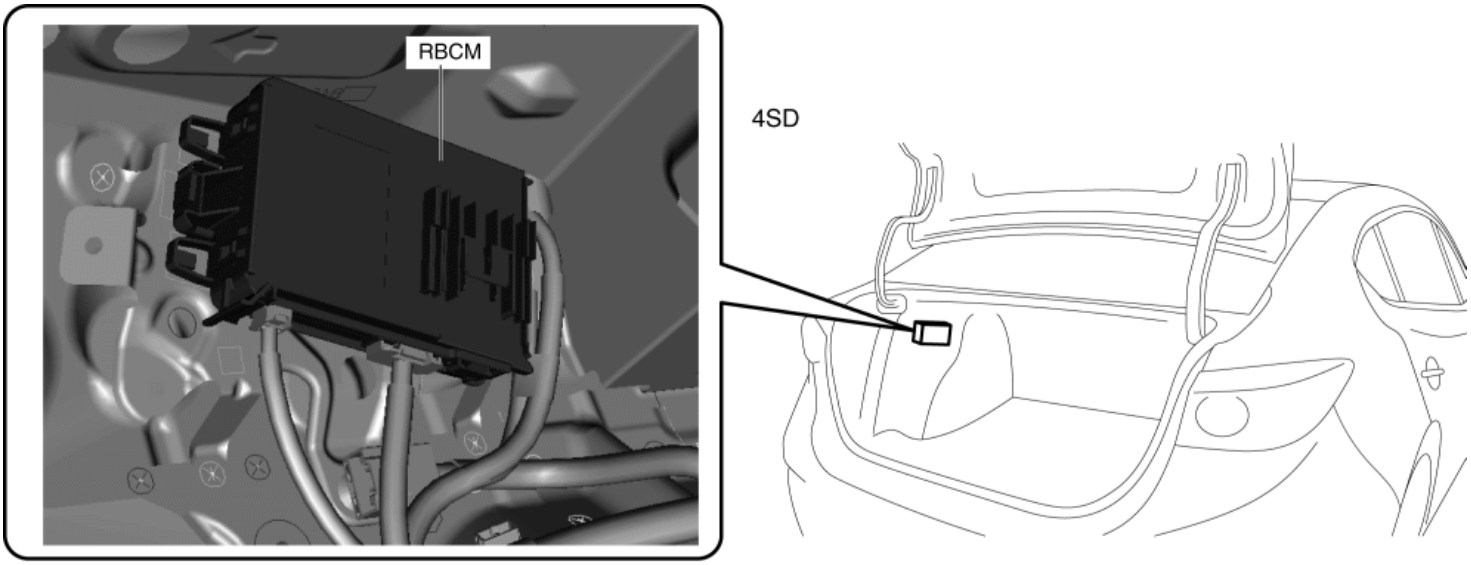

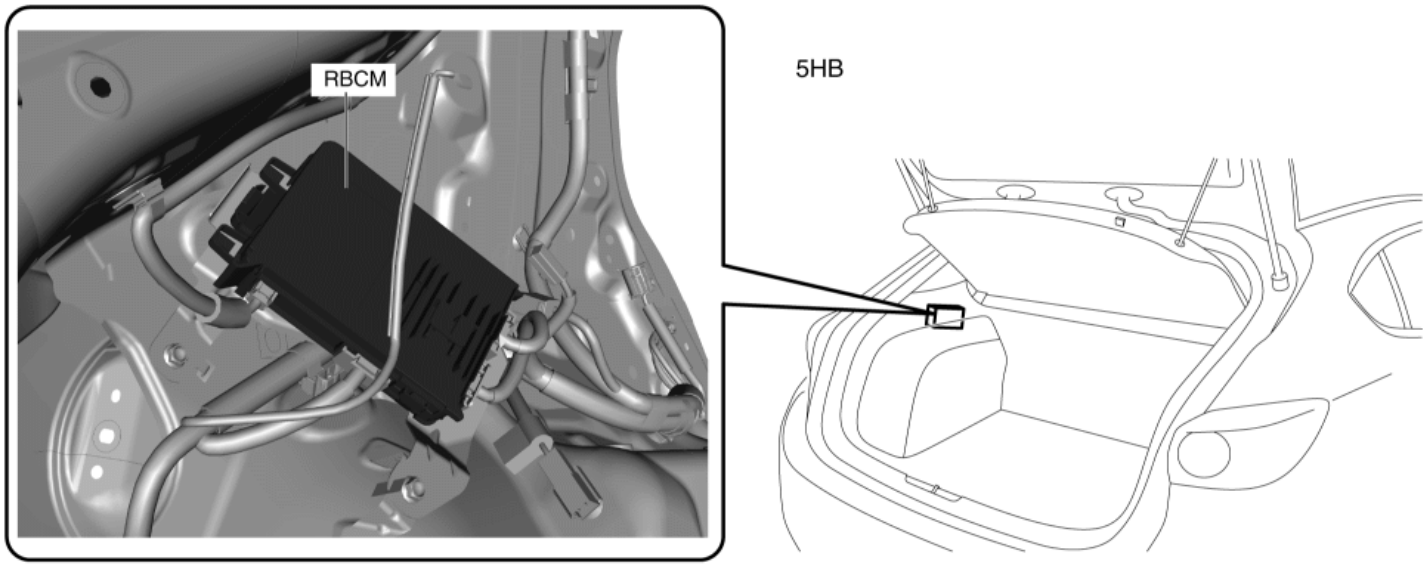

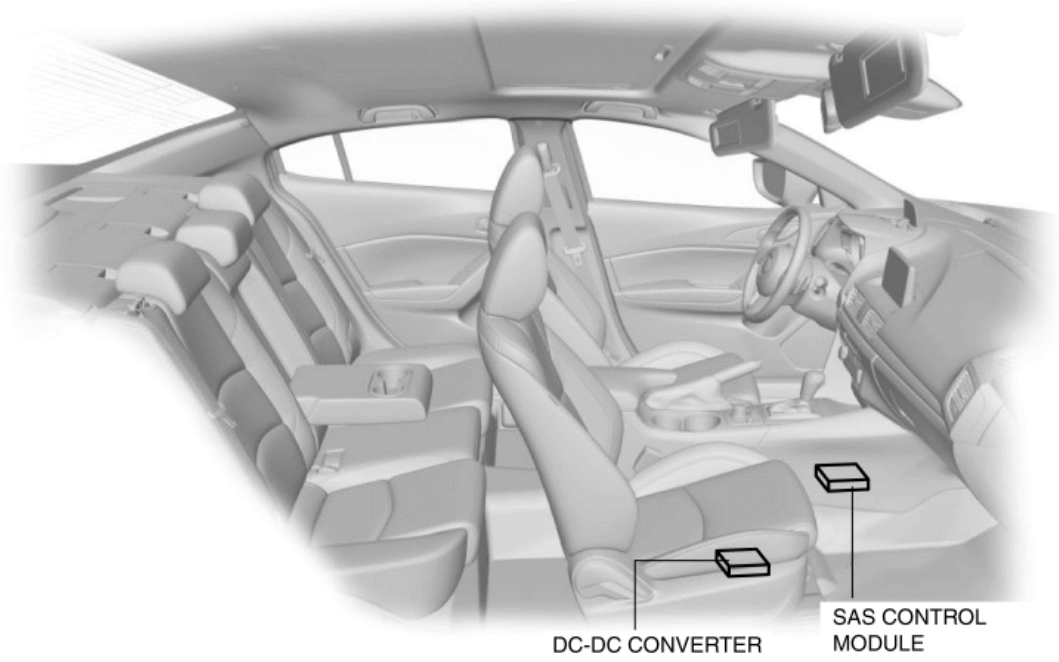

Function

CAN (controller area network) system

- HS-CAN (high-speed controller area network) is used for communication between the following modules:
  - PCM
  - DSC HU/CM
  - Front body control module (FBCM)
  - TCM (ATX)
  - DC-DC converter (With i-ELOOP system)
  - AFS control module (with AFS)
  - Laser sensor (with smart city brake support)
  - Forward sensing camera (FSC) (with forward sensing camera)
  - Start stop unit
  - EPS control module
  - SAS control module
  - Connectivity master unit (with center display)
  - Audio amplifier (with Bose®)
  - Instrument cluster
- MS-CAN (mid-speed controller area network) is used for communication between the following modules:
  - Instrument cluster
  - Climate control unit (full-auto air conditioner)
  - BSM control module (LH) (with BSM system)
  - Rear body control module (RBCM)
- Signals transmitted using the CAN system are as follows:

HS-CAN communication tableOUT: Output (sends signal)IN: Input (receives signal)

Signal	CAN system related module													
	PCM	TCM	AFS control module	Laser sensor	DSC HU/CM	EPS control module	Front body control module (FBCM)	Forward sensing camera (FSC)	Instrument cluster	Start stop unit	SAS control module	DC-DC converter	Connectivity master unit	Audio amplifier
AFS OFF switch status	–	–	IN	–	–	–	–	–	OUT	–	–	–	–	–
AT shift position	IN	OUT	–	–	–	–	–	–	–	–	–	–	–	–
Accelerator pedal position	OUT	–	–	IN	–	–	–	–	–	–	–	–	–	–
Accelerator pedal opening angle	OUT	–	–	–	IN	–	–	IN	IN	–	IN	–	IN	IN
	OUT	–	–	–	IN	–	–	IN	IN	–	IN	–	IN	–
Air bag system warning light on request	–	–	–	–	–	–	–	–	OUT	–	IN	–	–	–
	–	–	–	IN	IN	–	IN	–	OUT	IN	–	–	IN	–
	–	–	–	–	–	–	–	–	IN	–	OUT	–	IN	–
Air bag system-related information	–	–	–	–	–	–	–	–	IN	–	OUT	–	IN	–
	IN	IN	IN	IN	IN	IN	IN	–	OUT	–	IN	–	IN	–

Ambient temperature	OUT	–	–	–	IN	–	–	–	–	–	–	–	IN	–
	OUT	–	–	IN	IN	–	IN	–	IN	–	–	–	IN	–
Audio configuration information	–	–	–	–	–	–	–	–	OUT	–	–	–	IN	–
A/C operation signal	IN	–	–	–	–	–	–	–	OUT	–	–	–	IN	–
Answer-back-related information	–	–	–	–	–	–	IN	–	OUT	–	–	–	–	–
Acceleration signal status	–	–	–	–	IN	–	–	–	–	–	OUT	–	–	–
AFS system warning light status	–	–	OUT	–	–	–	–	–	IN	–	–	–	IN	–
Battery charge status	IN	–	IN	IN	IN	IN	IN	–	OUT	IN	IN	–	IN	–
Blower motor relay status	–	–	–	–	–	–	OUT	–	IN	–	–	–	–	–
Brake fluid level	–	–	–	–	–	–	OUT	–	IN	–	–	–	IN	–
Back-up light on request	–	–	IN	IN	IN	–	–	–	OUT	–	–	–	IN	–
Back-up light switch	OUT	–	–	–	IN	–	–	IN	IN	–	–	–	IN	–
Brake switch malfunction determination	OUT	–	–	–	–	–	–	–	IN	–	–	–	IN	–
Battery regeneration status	OUT	–	–	–	–	–	–	–	IN	–	–	–	IN	–
Brake pedal depressed status	OUT	–	–	IN	–	–	–	–	–	–	–	–	–	–
Brake switch (No.1 signal)	OUT	IN	–	–	IN	–	IN	IN	IN	–	–	–	IN	–
Brake switch (No.2 signal)	OUT	IN	–	–	–	–	–	IN	IN	IN	IN	–	IN	–
	OUT	–	–	–	–	–	–	–	–	IN	–	–	–	–
Brake switch status	OUT	–	–	IN	–	–	–	–	–	–	–	–	–	–
Blower speed	–	–	–	–	–	–	–	–	OUT	–	–	–	IN	–
Brake light status	–	–	–	–	IN	–	–	–	OUT	–	–	–	IN	–
BSM system personalization-related information	–	–	–	–	–	–	–	–	IN	–	–	–	OUT	–
	–	–	–	–	–	–	–	–	OUT	–	–	–	IN	–
Battery current	IN	–	–	–	–	–	OUT	–	–	–	–	–	–	–
Battery temperature	IN	–	–	–	–	–	OUT	–	–	–	–	–	–	–
Battery voltage	IN	–	–	–	–	–	OUT	–	–	–	–	–	–	–
Battery charge condition	IN	–	–	–	–	–	OUT	–	–	–	–	–	–	–
Cranking start	IN	–	–	–	–	–	IN	–	IN	OUT	–	–	–	–

Cruise control switch signal	IN	–	–	–	IN	–	–	–	–	OUT	–	–	–	–
	IN	–	–	–	–	–	–	–	–	OUT	–	–	–	–
Cluster switch status	–	–	IN	–	–	–	–	IN	OUT	–	–	–	–	–
Cranking time	OUT	–	–	–	–	–	–	–	–	IN	–	–	IN	–
Clutch status	OUT	–	–	–	–	–	–	–	–	–	–	–	IN	–
Cruise control switch signal	OUT	–	–	–	–	–	–	–	IN	IN	–	–	IN	–
Clutch pedal stroke sensor	OUT	–	–	–	IN	–	–	–	–	–	–	–	–	–
Cruise control system-related information	OUT	–	–	–	IN	–	–	–	–	–	–	–	–	–
	IN	–	–	–	OUT	–	–	–	–	–	–	–	–	–
	–	–	–	OUT	–	–	–	–	IN	–	–	–	IN	–
	–	–	–	OUT	–	–	–	–	IN	–	–	–	–	–
	–	–	–	OUT	IN	–	–	–	IN	–	–	–	IN	–
	–	–	–	OUT	IN	–	–	–	IN	–	–	–	–	–
Cruise control set speed	OUT	–	–	–	IN	–	–	–	–	–	–	–	–	–
Cruise control control status	OUT	–	–	–	IN	–	–	–	–	–	–	–	–	–
Cruise control switch	OUT	–	–	–	IN	–	–	–	–	–	–	–	–	–
Collision detection (front, side, roll over)	IN	–	–	–	IN	–	IN	–	–	–	OUT	–	IN	–
Collision detection (rear)	IN	–	–	–	IN	–	IN	–	–	–	OUT	–	IN	–
Check engine light on request	OUT	–	–	–	–	–	–	–	IN	–	–	–	IN	–
Cooling fan operation request	IN	OUT	–	–	–	–	–	–	–	–	–	–	–	–
Combiner current position signal	–	–	–	–	–	–	–	–	OUT	–	–	–	IN	–
Combiner target angle signal	–	–	–	–	–	–	–	–	IN	–	–	–	OUT	–
Combiner auto-dimming level signal	–	–	–	–	–	–	–	–	IN	–	–	–	OUT	–
Combiner dimming switch signal	–	–	–	–	–	–	–	–	IN	–	–	–	OUT	–
Combiner manual-dimming level signal	–	–	–	–	–	–	–	–	IN	–	–	–	OUT	–
DSC OFF switch status	–	–	–	–	IN	–	–	–	OUT	–	–	–	–	–
Dimmer cancel	–	–	–	–	–	–	–	–	OUT	IN	–	–	IN	–

DSC system-related information	IN	–	–	–	OUT	–	–	–	–	–	–	–	–	–
	IN	IN	–	–	OUT	IN	IN	IN	–	–	IN	–	IN	–
	–	–	–	–	OUT	–	–	–	–	–	–	–	IN	–
	–	–	–	–	OUT	–	IN	–	–	–	IN	–	IN	–
	IN	IN	–	–	OUT	IN	–	IN	–	–	–	–	IN	–
	IN	IN	–	–	OUT	IN	–	IN	–	–	–	–	IN	–
	IN	IN	–	–	OUT	–	–	IN	–	–	–	–	IN	–
	IN	IN	–	–	OUT	–	–	–	–	–	–	–	IN	–
	IN	–	–	–	OUT	–	–	–	–	–	–	–	IN	–
	IN	IN	–	–	OUT	–	IN	–	–	–	–	–	IN	–
	–	–	–	–	OUT	–	–	–	IN	–	–	–	IN	–
	–	IN	–	–	OUT	–	–	–	IN	–	–	–	IN	–
	–	IN	–	–	OUT	–	–	–	–	–	–	–	–	–
	–	–	–	IN	OUT	–	–	–	IN	–	–	–	IN	–
	–	–	–	IN	OUT	–	–	–	–	–	–	–	–	–
	–	–	–	IN	OUT	–	–	–	IN	–	–	–	–	–
Driver-side buckle switch status	IN	–	–	–	–	–	–	–	IN	IN	OUT	–	IN	–
DC-DC converter condition	IN	–	–	–	–	–	OUT	–	–	–	–	–	–	–
Distance unit switch signal	–	–	–	–	–	–	–	–	IN	–	–	–	OUT	–
Driving condition	IN	–	IN	IN	IN	IN	IN	–	OUT	IN	IN	–	IN	–
Door status	IN	–	–	–	–	–	–	–	OUT	IN	–	–	IN	–
	IN	–	–	–	–	–	–	–	OUT	–	–	–	IN	IN
	–	–	–	–	–	–	–	–	OUT	–	–	–	IN	IN
	–	–	–	–	–	–	–	–	OUT	–	–	–	IN	–
Engine-off time	IN	IN	–	–	–	–	–	–	OUT	–	–	–	IN	–
Engine status	OUT	–	–	–	–	–	–	–	IN	–	–	–	–	–
	OUT	–	–	IN	–	–	–	–	IN	–	–	–	–	–
	OUT	–	–	IN	–	–	–	–	–	–	–	–	–	–
	OUT	–	–	IN	–	–	–	–	IN	–	–	–	IN	–

	OUT	–	–	–	–	–	–	–	–	IN	–	–	IN	–
	OUT	IN	–	–	–	–	–	–	IN	–	–	–	IN	–
Engine speed	OUT	IN	–	–	–	–	–	–	–	–	–	–	–	–
	OUT	–	–	–	IN	IN	IN	IN	IN	IN	IN	–	IN	IN
Engine torque	OUT	–	–	–	IN	–	–	–	–	–	–	–	–	–
EPS status	IN	–	–	–	–	OUT	–	–	–	–	–	–	IN	–
	–	–	–	–	–	OUT	–	–	IN	–	–	–	IN	–
	–	–	–	–	–	OUT	–	–	–	–	–	–	IN	–
Engine coolant temperature	OUT	–	–	–	–	–	IN	–	IN	–	–	–	IN	–
Engine status at idle	OUT	–	–	–	–	–	–	–	IN	–	–	–	–	–
Engine torque	OUT	–	–	–	–	–	IN	–	–	–	–	–	–	–
Engine stop request	IN	–	–	–	–	–	–	–	OUT	–	–	–	IN	–
Engine displacement	OUT	–	–	–	IN	–	–	–	IN	–	–	–	–	IN
Front fog light information	–	–	–	–	–	–	OUT	IN	IN	–	–	–	IN	–
Fuel tank level	IN	–	–	–	–	–	–	–	OUT	–	–	–	IN	–
Fuel cut request	IN	–	–	–	–	–	IN	–	IN	–	OUT	–	IN	–
	IN	–	–	–	IN	–	–	–	–	–	OUT	–	–	–
Fuel injection amount	OUT	–	–	–	–	–	–	–	IN	–	–	–	IN	–
Fuel cap warning light on request	OUT	–	–	–	–	–	–	–	IN	–	–	–	IN	–
Front combination light on request	–	–	–	–	–	–	IN	OUT	–	–	–	–	–	–
Forward sensing camera (FSC) personalization-related information	–	–	–	–	–	–	–	IN	–	–	–	–	OUT	–
	–	–	–	–	–	–	–	OUT	–	–	–	–	IN	–
Fuel economy information reset request signal	–	–	–	–	–	–	–	–	IN	–	–	–	OUT	–
Gear position	OUT	–	–	–	–	–	–	–	IN	–	–	–	IN	–
	OUT	–	–	–	–	–	–	–	IN	–	–	–	–	–
	OUT	–	–	–	–	–	–	–	IN	–	–	–	–	IN
Generator warning light on request	OUT	–	–	–	–	–	IN	–	IN	–	–	–	IN	–
Hazard warning switch information	–	–	–	–	–	–	IN	IN	IN	OUT	–	–	–	–

Horn control	–	–	–	–	–	–	IN	–	–	OUT	–	–	–	–
High-beam indicator	–	–	–	–	–	–	OUT	IN	IN	–	–	–	IN	–
Headlight information	IN	–	IN	–	–	–	OUT	IN	IN	–	–	–	IN	–
Headlight status	–	–	–	–	–	–	OUT	IN	–	–	–	–	IN	–
Headlight warning request signal	–	–	–	–	–	–	OUT	–	IN	–	–	–	IN	–
Hood status	IN	–	–	–	–	–	–	–	OUT	IN	–	IN	IN	–
Immobilizer system related information	OUT	–	–	–	–	–	–	–	–	IN	–	–	–	–
	IN	–	–	–	–	–	–	–	–	OUT	–	–	–	–
i-ELOOP-related information	IN	IN	–	–	–	–	–	–	–	–	–	OUT	IN	–
	OUT	IN	–	–	–	–	–	–	–	–	–	IN	IN	–
	OUT	IN	–	–	–	–	–	–	IN	–	–	IN	IN	–
	OUT	–	–	–	–	–	–	–	–	–	–	IN	IN	–
Ignition switch status	–	–	–	–	–	–	OUT	–	IN	–	–	–	IN	–
Ignition key status	IN	–	IN	IN	IN	IN	IN	–	OUT	IN	IN	–	IN	–
Ignition switch status	–	–	IN	–	–	IN	IN	IN	OUT	–	–	–	IN	IN
Ignition off timer	IN	IN	IN	IN	IN	IN	IN	–	OUT	IN	IN	–	IN	–
Instrument cluster personalization-related information	–	–	–	–	–	–	–	–	IN	–	–	–	OUT	–
	–	–	–	–	–	–	–	–	OUT	–	–	–	IN	–
Key status	OUT	–	–	–	–	–	–	–	–	IN	–	–	IN	–
Keyless warning buzzer operation request	–	–	–	–	–	–	–	–	IN	OUT	–	–	IN	–
Keyless warning light on request	–	–	–	–	–	–	–	–	IN	OUT	–	–	IN	–
Laser sensor-related information	IN	–	–	OUT	–	–	–	–	–	–	–	–	IN	–
Lane departure warning system (LDWS) warning indication request signal	–	–	–	–	–	–	–	OUT	IN	–	–	–	–	–
Lane departure warning system (LDWS) warning sound request signal	–	–	–	–	–	–	–	OUT	IN	–	–	–	–	–
	–	–	–	–	–	–	–	OUT	–	–	–	–	IN	–
Manual air conditioner operation request	–	–	–	–	–	–	OUT	–	IN	–	–	–	–	–
Manual shift control	IN	OUT	–	–	IN	–	–	–	–	–	–	–	–	–

Master warning light flash request signal	OUT	–	–	–	–	–	IN	–	IN	–	–	–	IN	–
Master warning light illumination request signal	OUT	–	–	–	–	–	–	–	IN	–	–	–	IN	–
Maintenance monitor-related information	–	–	–	–	–	–	–	–	IN	–	–	–	OUT	–
Manual shift control	–	IN	–	–	–	–	–	–	OUT	–	–	–	–	–
	IN	–	–	–	–	–	–	–	OUT	–	–	–	IN	–
Master warning light on request signal	–	–	–	–	–	–	–	–	IN	–	–	–	OUT	–
Neutral switch	OUT	IN	–	–	–	–	–	–	–	–	–	–	IN	–
Oil pressure warning light on request	OUT	–	–	–	–	–	–	–	IN	–	–	–	IN	–
Power supply status	IN	–	–	–	–	–	IN	–	IN	OUT	–	–	–	–
Power supply status	IN	–	–	–	–	–	IN	–	–	OUT	–	–	–	–
Parking brake status	IN	–	–	–	IN	–	IN	–	OUT	–	–	–	IN	–
Panel light level	–	–	–	–	–	–	–	–	OUT	IN	–	–	IN	–
PAD indicator on status	–	–	–	–	–	–	–	–	OUT	–	IN	–	–	–
PAD indicator on request	–	–	–	–	–	–	–	–	IN	–	OUT	–	IN	–
Power supply status	–	–	–	–	–	–	–	–	IN	OUT	–	–	IN	–
Push button system-related information	–	–	–	–	–	–	–	–	IN	OUT	–	–	IN	–
Passenger-side buckle switch status	–	–	–	–	–	–	–	–	IN	–	OUT	–	IN	–
Rolling counter	–	–	–	–	IN	–	–	–	–	–	OUT	–	–	–
Rear wiper status	–	–	–	–	–	–	IN	–	–	OUT	–	–	–	–
Rear washer switch information	–	–	–	–	–	–	IN	–	–	OUT	–	–	–	–
ROOM fuse status	–	IN	–	–	–	–	–	IN	OUT	–	–	IN	–	–
Rear wiper information	–	–	–	–	–	–	OUT	IN	IN	–	–	–	IN	–
Rear window defroster information	IN	–	–	–	–	–	OUT	–	IN	–	–	–	IN	–
Rear window defroster operation request	–	–	–	–	–	–	IN	–	OUT	–	–	–	–	–
RBCM personalization-related information	–	–	–	–	–	–	–	–	IN	–	–	–	OUT	–
	–	–	–	–	–	–	–	–	OUT	–	–	–	IN	–

ROOM fuse status	–	–	–	–	–	–	–	–	OUT	–	–	–	IN	–
Steering switch information	–	–	–	–	–	–	IN	IN	IN	OUT	–	–	–	–
	–	–	–	–	–	–	IN	IN	–	OUT	–	–	–	–
	–	–	–	–	–	–	IN	–	–	OUT	–	–	–	–
Steering angle (absolute steering angle) signal	–	–	–	–	–	IN	–	–	–	OUT	–	–	–	–
Steering angle (relative steering angle) signal	–	–	–	–	IN	OUT	–	IN	IN	–	–	–	–	–
Steering angle (estimated absolute steering angle) signal	IN	IN	IN	IN	–	OUT	–	IN	IN	IN	–	–	IN	–
Steering shift switch	–	IN	–	–	–	–	–	–	–	OUT	–	–	–	–
Seat warmer cut status	–	–	–	–	–	–	OUT	–	IN	–	–	–	–	–
Starter relay status	OUT	–	–	–	–	–	–	–	–	IN	–	–	–	–
Shift range position	OUT	–	–	–	–	–	–	–	IN	IN	–	–	IN	–
Supply power status	OUT	–	–	IN	–	–	–	–	–	–	–	–	–	–
Selector lever position	IN	OUT	–	–	IN	–	IN	IN	IN	IN	–	–	IN	–
	–	OUT	–	–	–	–	–	–	IN	–	–	–	IN	–
Shift range position	–	OUT	–	–	IN	–	–	–	IN	–	–	–	IN	–
Steering angle condition	IN	–	–	IN	–	OUT	–	–	–	–	–	–	IN	–
	–	IN	–	–	–	–	–	–	OUT	–	–	–	IN	IN
Security indicator on request	–	–	–	–	–	–	–	–	IN	OUT	–	–	IN	–
Steering lock system-related information	–	–	–	–	–	–	–	–	IN	OUT	–	–	IN	–
Security indicator light on request	–	–	–	–	–	–	–	–	OUT	–	–	–	IN	–
Seat belt status	–	–	–	–	–	–	–	–	OUT	–	–	–	IN	–
Start stop unit personalization-related information	–	–	–	–	–	–	–	–	–	IN	–	–	OUT	–
	–	–	–	–	–	–	–	–	–	OUT	–	–	IN	–
Smart City Brake Support (SCBS)-related information	–	–	–	–	–	–	–	–	IN	–	–	–	OUT	–
Temperature unit switch signal	–	–	–	–	–	–	–	–	IN	–	–	–	OUT	–
Theft-deterrent system status	–	–	–	–	–	–	–	–	OUT	IN	–	–	IN	–

Transmission type	OUT	IN	–	–	–	–	IN	–	IN	IN	–	–	–	–
TAU communication status signal	–	–	–	–	–	–	–	–	IN	–	–	–	OUT	–
Temperature control dial status	IN	–	–	–	–	–	–	–	OUT	–	–	–	IN	–
Theft-deterrent system alarm-related information	–	–	–	–	–	–	IN	–	OUT	–	–	–	–	–
Tire size	IN	IN	–	–	IN	–	–	–	OUT	–	–	–	IN	–
Traveled distance	OUT	–	–	–	–	–	–	–	IN	–	–	–	IN	–
Turn indicator light on request	–	–	–	–	–	–	OUT	IN	IN	–	–	–	IN	–
TNS status	–	–	–	–	–	–	OUT	–	IN	IN	–	–	IN	–
TPMS OFF switch status	–	–	–	–	IN	–	–	–	OUT	–	–	–	–	–
Target gear position	IN	OUT	–	–	IN	–	–	–	IN	–	–	–	IN	IN
Traveled distance	IN	IN	IN	IN	IN	IN	IN	–	OUT	IN	IN	–	IN	–
Vehicle speed	IN	–	–	IN	OUT	IN	–	IN	IN	–	–	–	–	–
	IN	–	–	–	OUT	IN	–	IN	–	–	–	–	–	–
	IN	–	–	IN	OUT	–	–	IN	–	–	–	–	–	–
	IN	–	–	–	OUT	–	–	IN	–	–	–	–	–	–
	OUT	–	IN	–	IN	IN	IN	IN	IN	IN	IN	–	IN	IN
	OUT	–	–	–	IN	–	–	–	IN	–	–	–	–	–
	IN	–	–	IN	OUT	–	–	–	–	IN	–	–	–	–
	IN	–	–	–	OUT	–	–	–	–	IN	–	–	–	–
	OUT	–	IN	–	IN	IN	IN	IN	IN	IN	IN	–	IN	–
Windshield wiper switch information	–	–	–	IN	–	–	IN	–	–	OUT	–	–	–	–
Windshield wiper status	–	–	–	–	–	–	IN	–	–	OUT	–	–	–	–
Windshield washer switch information	–	–	–	IN	–	–	IN	–	IN	OUT	–	–	–	–
Windshield wiper (INT) status	–	–	–	–	–	–	IN	–	–	OUT	–	–	–	–
Washer level sensor status	–	–	–	–	–	–	OUT	–	IN	–	–	–	IN	–
Windshield wiper operation status	IN	–	–	–	–	–	OUT	IN	IN	–	–	–	IN	–
Wheel speed (LF, RF, LR,	IN	IN	–	–	OUT	IN	IN	IN	IN	IN	–	–	IN	–

RR)	–	–	–	IN	OUT	–	–	IN	IN	–	–	–	–	–
Windshield wiper status	–	–	–	–	–	–	OUT	IN	–	–	–	–	IN	–
Warning guidance-related information	–	–	–	–	–	–	–	–	IN	–	–	–	OUT	–
Yaw rate	–	–	–	–	IN	–	–	–	–	–	OUT	–	–	–
	IN	IN	–	IN	OUT	IN	–	IN	–	–	–	–	IN	–
	IN	IN	–	–	OUT	–	–	IN	–	–	–	–	–	–
	IN	IN	–	IN	OUT	–	IN	IN	IN	–	–	–	IN	–
	IN	IN	–	IN	OUT	IN	–	IN	IN	–	–	–	IN	–

MS-CAN communication tableOUT: Output (sends signal)IN: Input (receives signal)

Signal	CAN system related module			
	Rear body control module (RBCM)	BSM control module (LH)	Climate control unit	Instrument cluster
Ambient temperature	IN	–	IN	OUT
	–	–	IN	OUT
A/C operation signal	–	–	OUT	IN
Answer-back-related information	OUT	–	–	IN
Alarm status	OUT	–	–	IN
Blower motor relay status	–	–	IN	OUT
Back-up light on request	IN	IN	–	OUT
Battery charge status	IN	–	IN	OUT
BSM control module configuration information	–	IN	–	OUT
BSM system alarm sound request	–	OUT	–	IN
BSM system-related information	–	OUT	–	IN
BSM switch information	–	IN	–	OUT
BSM system personalization-related information	–	IN	–	OUT
	–	OUT	–	IN
Blower speed	–	–	OUT	IN
Brake light status	OUT	–	–	IN
Brake light status	IN	–	–	OUT
Cranking start status	–	–	IN	OUT

Cluster switch status	–	IN	–	OUT
Climate control unit configuration information	–	–	IN	OUT
Dimmer cancel	–	IN	IN	OUT
Door status	OUT	–	–	IN
Driver's seat belt status	IN	–	–	OUT
Driving condition	IN	–	IN	OUT
Engine-off status	IN	–	IN	OUT
Engine coolant temperature	–	–	IN	OUT
Engine stop request	–	–	OUT	IN
Fuel cut request	IN	–	–	OUT
Fuel-level sensor-related information	OUT	–	–	IN
Hazard warning switch information	IN	–	–	OUT
Hood status	OUT	–	–	IN
Ignition switch status	IN	–	–	OUT
	IN	IN	IN	OUT
Ignition off timer	IN	–	IN	OUT
Ignition key status	IN	–	IN	OUT
Steering angle (estimated absolute steering angle) signal	–	IN	–	OUT
Steering switch information	–	IN	–	OUT
Windshield wiper operation status	–	–	IN	OUT
Parking brake status	IN	–	–	OUT
Priority recirculate request	–	–	IN	OUT
Rear wiper information	IN	–	–	OUT
Rear window defroster information	–	–	IN	OUT
ROOM fuse status	–	–	IN	OUT
Rear window defroster operation request	–	–	OUT	IN
ROOM fuse status	OUT	–	–	IN
RBCM personalization-related information	IN	–	–	OUT
	OUT	–	–	IN

Selector lever position	IN	–	–	OUT
Supply voltage	IN	–	IN	OUT
Security indicator light on request	OUT	–	–	IN
Seat belt status	OUT	–	–	IN
Traveled distance	IN	–	IN	OUT
Temperature control dial status	–	–	OUT	IN
Theft-deterrent system alarm-related information	OUT	–	–	IN
Theft-deterrent system status	OUT	–	–	IN
Vehicle speed signal	IN	IN	IN	OUT
Windshield defroster operation request	–	–	OUT	IN

Malfunction diagnosis procedure

- If a vehicle with a malfunction in a system controlled by a CAN system related module is brought in, verify the repair order form and the malfunctioning symptom first, then perform CAN malfunction diagnosis to determine if the malfunction cause is in the CAN system or not.
- For CAN malfunction diagnosis, the voltage at the CAN connection terminal on the DLC-2 is measured, and based on the measured value, the CAN circuit can be examined or the malfunction symptom can be determined.
- If the malfunction symptom is not an open circuit, inspect the voltage or continuity at the CAN circuit and determine the malfunctioning location.
- If the malfunction symptom is an open circuit, determine the area of the open circuit by using the displayed communication error DTC and the module in which communication has failed.

Ex.) Open circuit location determination procedure

1. Verify the CAN system-related module DTCs and the failed module using the Mazda Modular Diagnostic System (M-MDS).

DTC output module	Mazda Modular Diagnostic System (M-MDS) display	Output DTC
PCM	PCM	U0121:00
Front body control module (FBCM)	F_BCM	U0121:00
TCM	TCM	U0121:00
Laser sensor	SCBS	U0121:00
Forward sensing camera (FSC)	FSC	U0121:00
Start stop unit	SSU	U0121:00
Start stop unit	SSU	U0121:87
EPS control module	EPS	U0121:00
Connectivity master unit	CMU	U0121:00
Instrument cluster	IC	U0121:00

Module	Fail display
DSC HU/CM	×

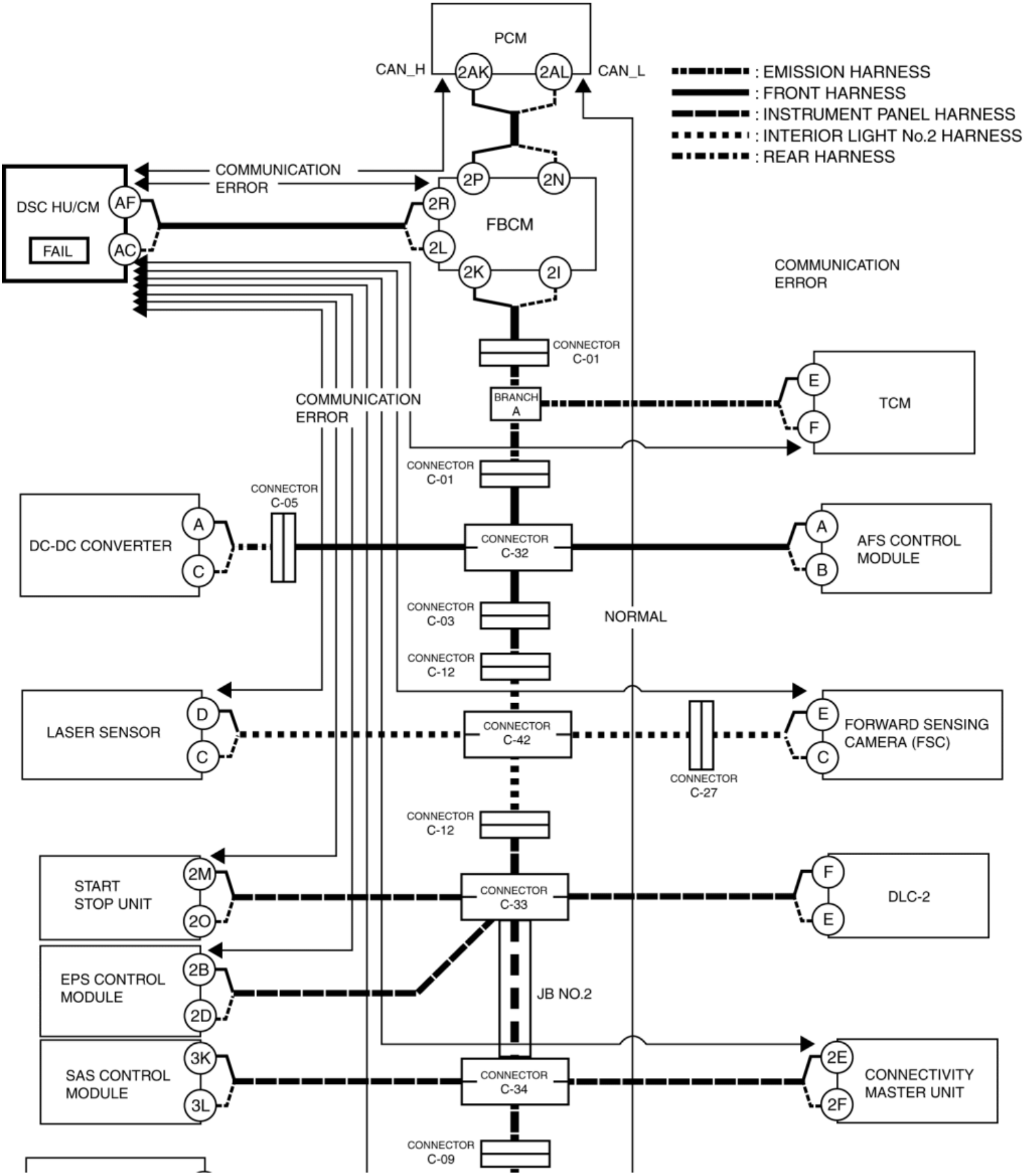

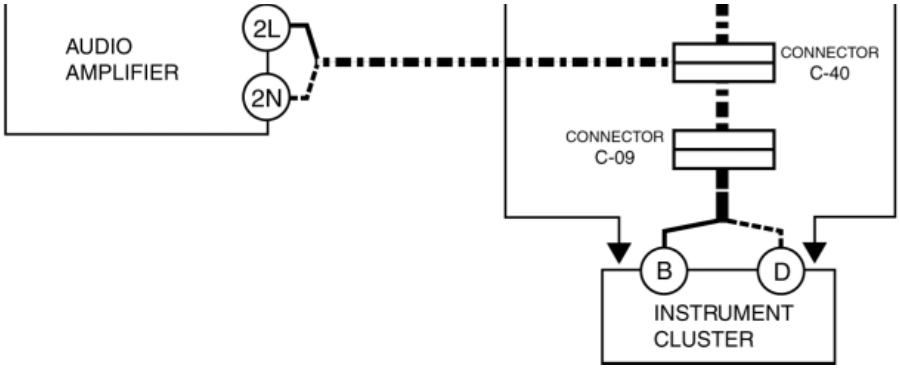

2. Although communication between the PCM and instrument cluster is normal, DTCs indicating communication error between the DSC HU/CM and PCM/front body control module (FBCM)/TCM/laser sensor/forward sensing camera (FSC)/start stop unit/EPS control module/connectivity master unit/instrument cluster are displayed, in addition, DSC HU/CM is displayed as failed. Therefore, there may be a malfunction in the wiring harness between the DSC HU/CM and front body control module (FBCM), or in the DSC HU/CM itself.

Local CAN

- Local CAN is used for communication between the following modules:
  - Between PCM and TCM
  - Between DSC HU/CM and SAS control module
  - Between connectivity master unit, CD unit, and tuner and amp unit (with center display)
  - Between audio unit, Bluetooth® unit, and CD unit (without center display)
  - Between BSM control module (LH) and BSM control module (RH)

LIN communication

- LIN communication is used for communication between the following modules:
  - Between front body control module (FBCM) and rain sensor
  - Between front body control module (FBCM) and current sensor
  - Between front body control module (FBCM) and climate control unit (manual air conditioner)
  - Between AFS control module and swivel actuator (front combination light)
  - Between PCM and active air shutter actuator
  - Between connectivity master unit and commander switch (without center display)

ISO communication

- ISO communication is used for communication between the following modules:
  - Between rear body control module (RBCM) and start stop unit

Construction

CAN

- The HS-CAN has terminator resistors built into the following units which form the CAN lines.
  - Between PCM terminals 2AK (CAN_H) and 2AL (CAN_L), resistance value: **124 ohms**
  - Between instrument cluster terminals B (CAN_H) and D (CAN_L), resistance value: **120 ohms**
- The MS-CAN has terminal resistors built into the following units which form the CAN lines.
  - Between rear body control module (RBCM) terminals 4G (CAN_H) and 4J (CAN_L), resistance value: **120 ohms**
  - Between instrument cluster terminals 2C (CAN_H) and 2E (CAN_L), resistance value: **120 ohms**

Local CAN

- The local CAN has terminator resistors built into the following units which form the CAN lines.
    - Between connectivity master unit terminals 2AK (CAN_H) and 2AL (CAN_L), resistance value: **124 ohms** (with center display)
    - Between tuner and amp unit terminals B (CAN_H) and D (CAN_L), resistance value: **120 ohms** (with center display)
    - Between CD unit terminals G (CAN_H) and H (CAN_L), resistance value: **120 ohms** (without center display)
    - Between audio unit terminals 1O (CAN_H) and 1Q (CAN_L), resistance value: **120 ohms** (without center display)
    - Between BSM control module (LH) terminals A (CAN_H) and B (CAN_L), resistance value: **120 ohms**
    - Between BSM control module (RH) terminals A (CAN_H) and B (CAN_L), resistance value: **120 ohms**
    - Between PCM terminals 1A (CAN_H) and 1B (CAN_L), resistance value: **120 ohms**
    - Between TCM terminals G (CAN_H) and H (CAN_L), resistance value: **120 ohms**

LIN communication

- The LIN communication has drivers built into the following units which form the LIN communication lines.
    - PCM
    - AFS control module
    - Front body control module (FBCM)
    - Rain sensor
    - Current sensor
    - Climate control unit (manual air conditioner)
    - Swivel actuator (front combination light)
    - Active air shutter actuator

ISO communication

- The ISO communication has drivers built into the following units which form the ISO communication lines.
    - Start stop unit
    - Rear body control module (RBCM)

Next >

2014 - Mazda3 - I-ELOOP

i-ELOOP [i-ELOOP]

Outline

- For improved fuel economy, electrical power is generated using kinetic energy during deceleration and retrieved as electrical energy, which decreases the amount of fuel used for supplying power.
- i-ELOOP is a Mazda-unique regenerative braking system* that generates and stores electrical energy during deceleration. Through efficient energy regeneration, storage, and usage, fuel economy improvement is achieved while driving.

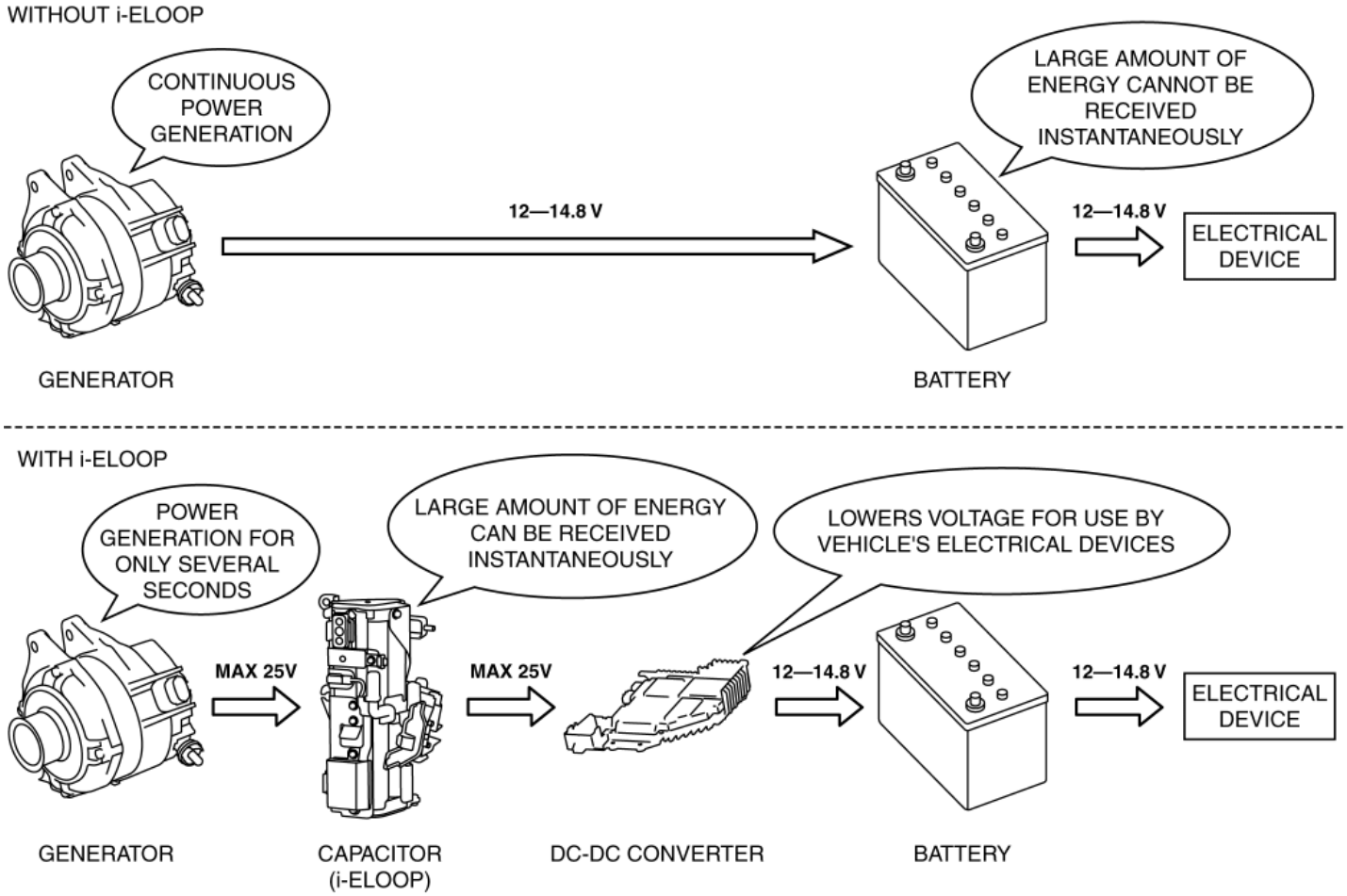

* **The regenerative braking system is a mechanism for converting kinetic energy during deceleration to electrical energy and storing it for reuse. The electricity stored from the regenerative braking is re-used as power for electrical devices such as the A/C and audio, which decreases the fuel consumption amount required by the engine to supply power.**

Structural View

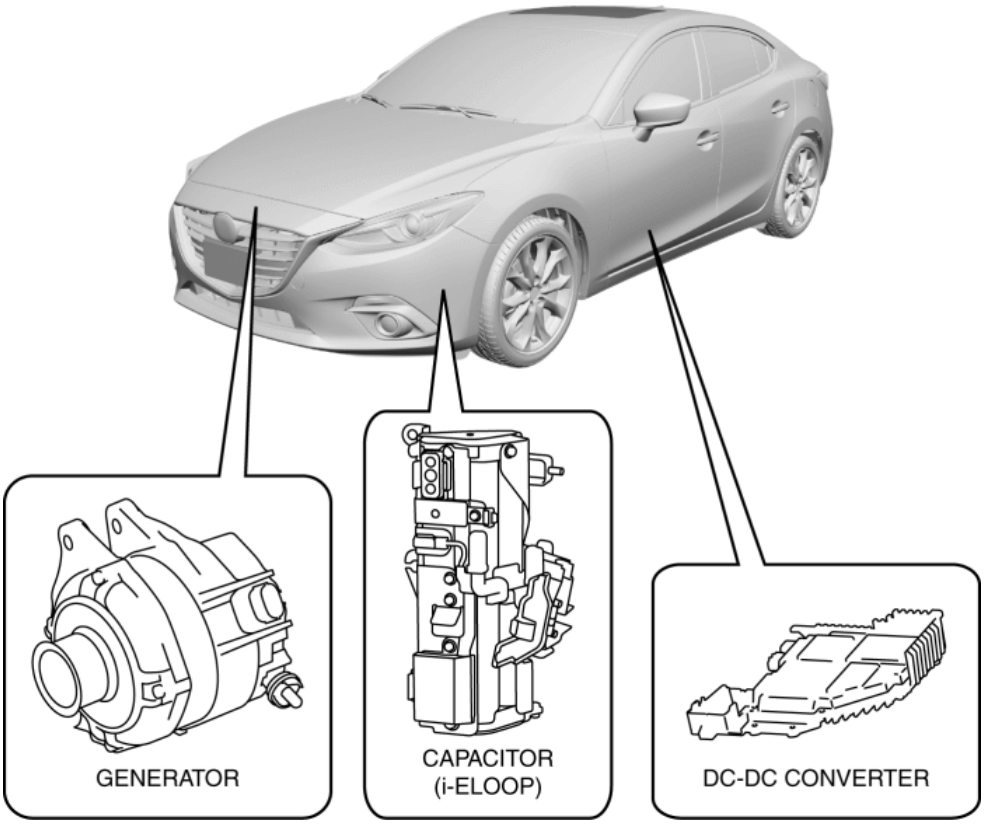

- i-ELOOP consists mainly of the following parts.

Capacitor (i-ELOOP)	(See **CAPACITOR (i-ELOOP) [i-ELOOP]**.)
DC-DC converter	(See **DC-DC CONVERTER [i-ELOOP]**.)
Generator	(See **GENERATOR [i-ELOOP]**.)

System Wiring Diagram

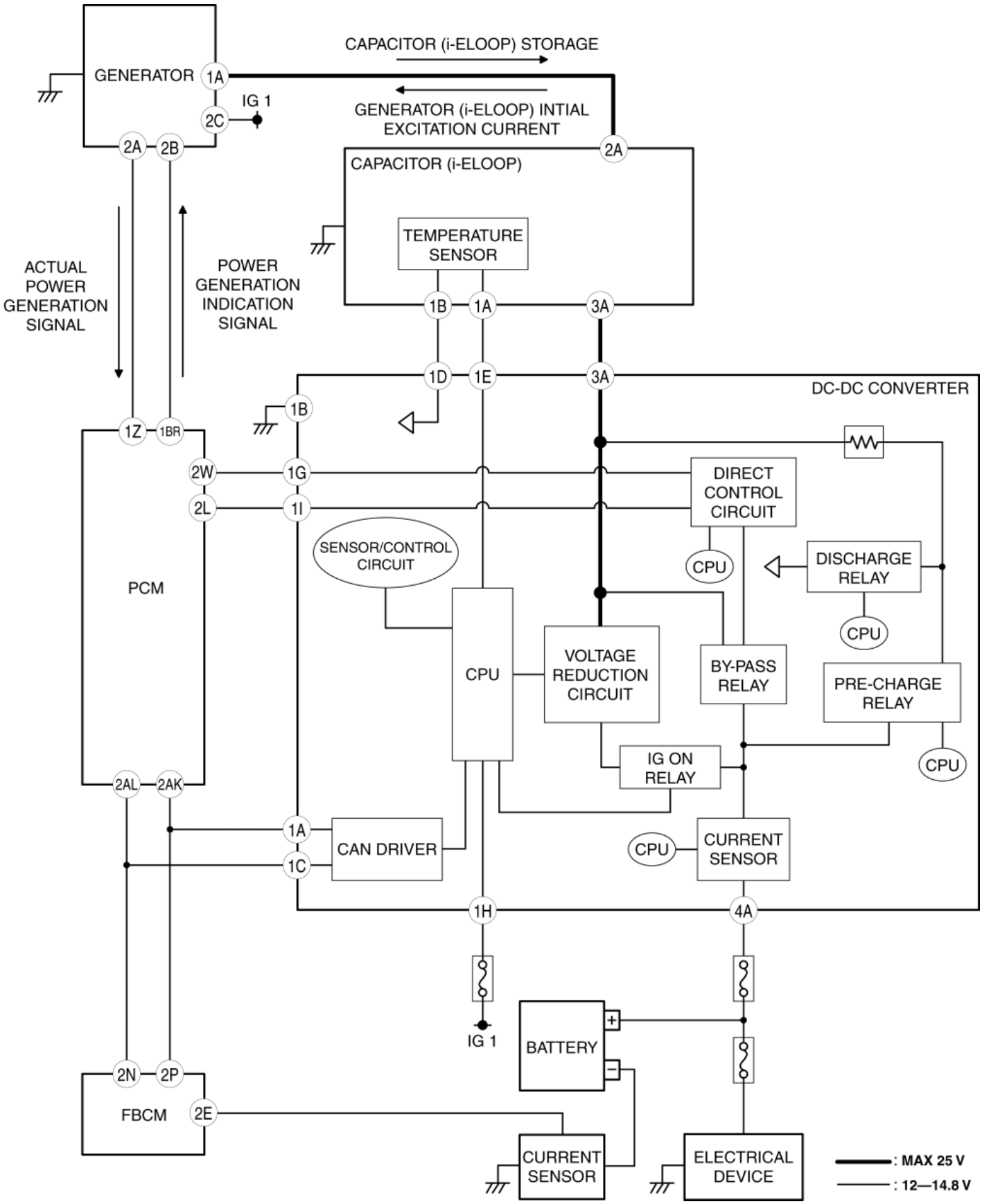

Operation

- The operation aspect of i-ELOOP is as follows.

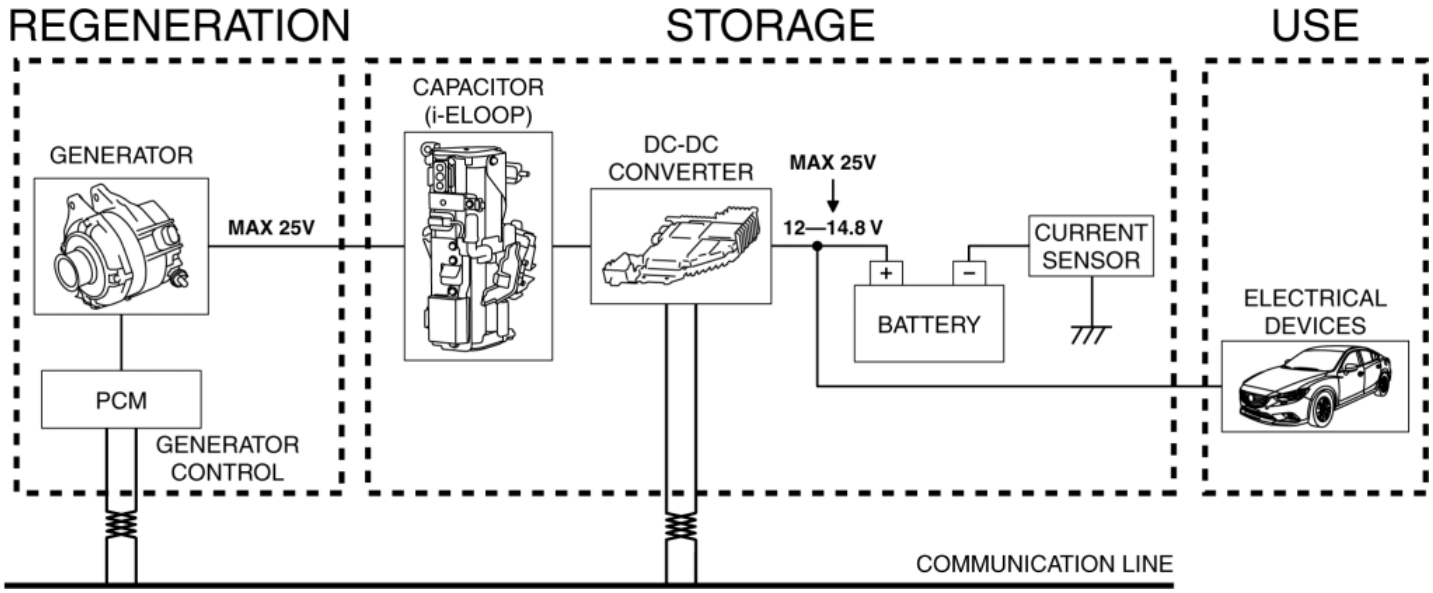

- The i-ELOOP operation mode varies depending on the vehicle driving conditions and the conditions of i-ELOOP-related parts.

Condition	Operation mode	Reference
Regeneration, storage	1.Regenerative braking mode	(See **1. Regenerative braking mode**.)
	2. Conventional power generation mode (no regenerative braking)	(See **2. Conventional power generation mode (no regenerative braking)**.)
Use	3. Capacitor (i-ELOOP) power supply mode	(See **3. Capacitor (i-ELOOP) power supply mode**.)
	4. Battery power supply mode	(See **4. Battery power supply mode**.)
	5. By-pass mode	(See **5. By-pass mode**.)
Other mode	6. Pre-charge mode	(See **6. Pre-charge mode**.)
	7. Capacitor (i-ELOOP) power generation mode	(See **7. Capacitor (i-ELOOP) power generation mode**.)

1. Regenerative braking mode

Purpose

- During deceleration, fuel economy is improved by the generator producing electricity.

Operation condition

- During fuel-cut by release of accelerator pedal and TCC engagement

Operation content

- Generator operates at full capacity and stores electricity in the Capacitor (i-ELOOP). The voltage stored in the Capacitor (i-ELOOP) is lowered by the DC-DC converter and electrical power is supplied to the vehicle electrical devices.

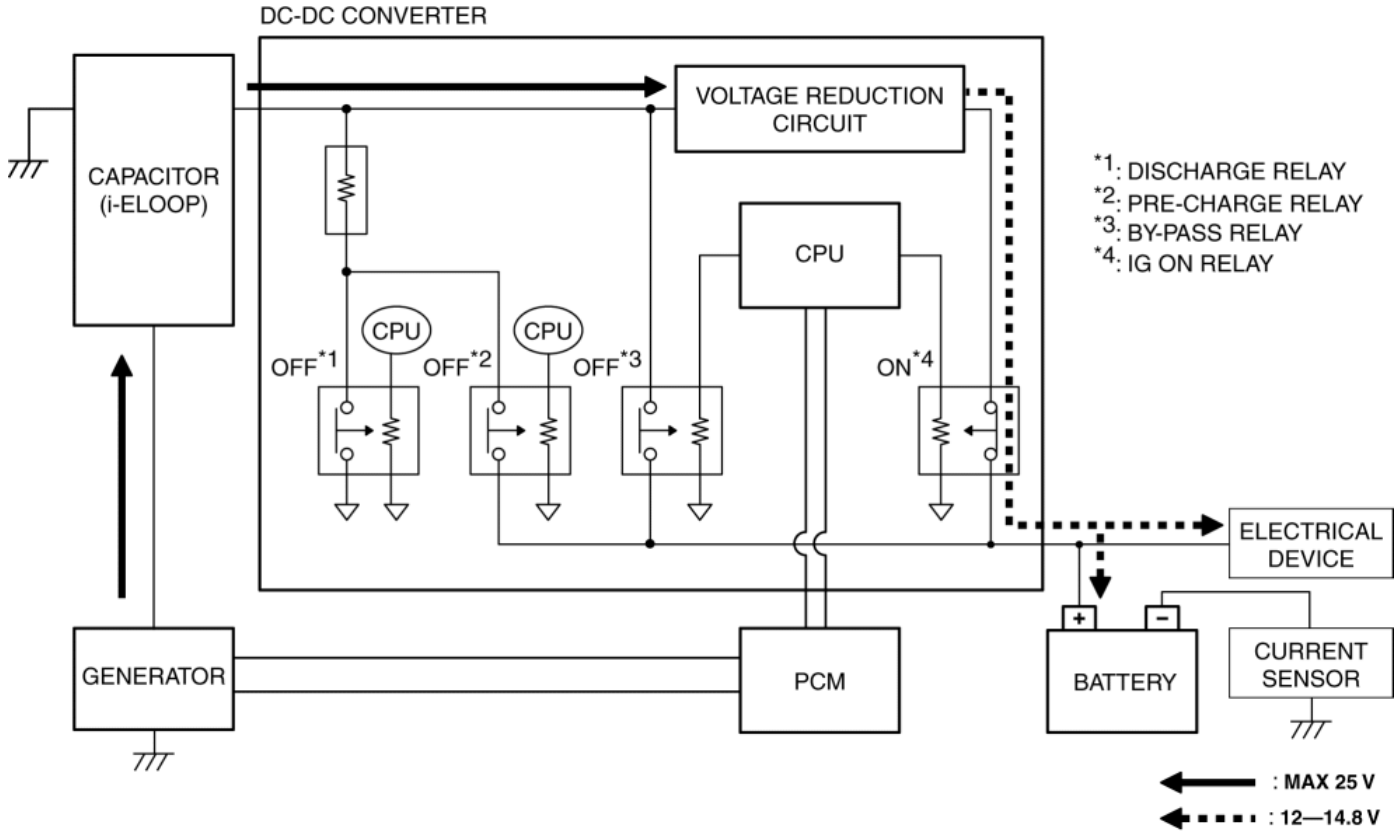

2. Conventional power generation mode (no regenerative braking)

Purpose

- During constant/acceleration travel, battery stability is maintained by the power generated by the generator.

Operation condition

- During engine rotation, battery voltage is certain value or less

Operation content

- Generator operates and 12 to 25 V of electrical power is stored in the Capacitor (i-ELOOP). The voltage stored in the Capacitor (i-ELOOP) is lowered by the DC-DC converter and electrical power is supplied to the vehicle electrical devices. (Compared to regenerative braking mode, amount of power generated by generator is low.)

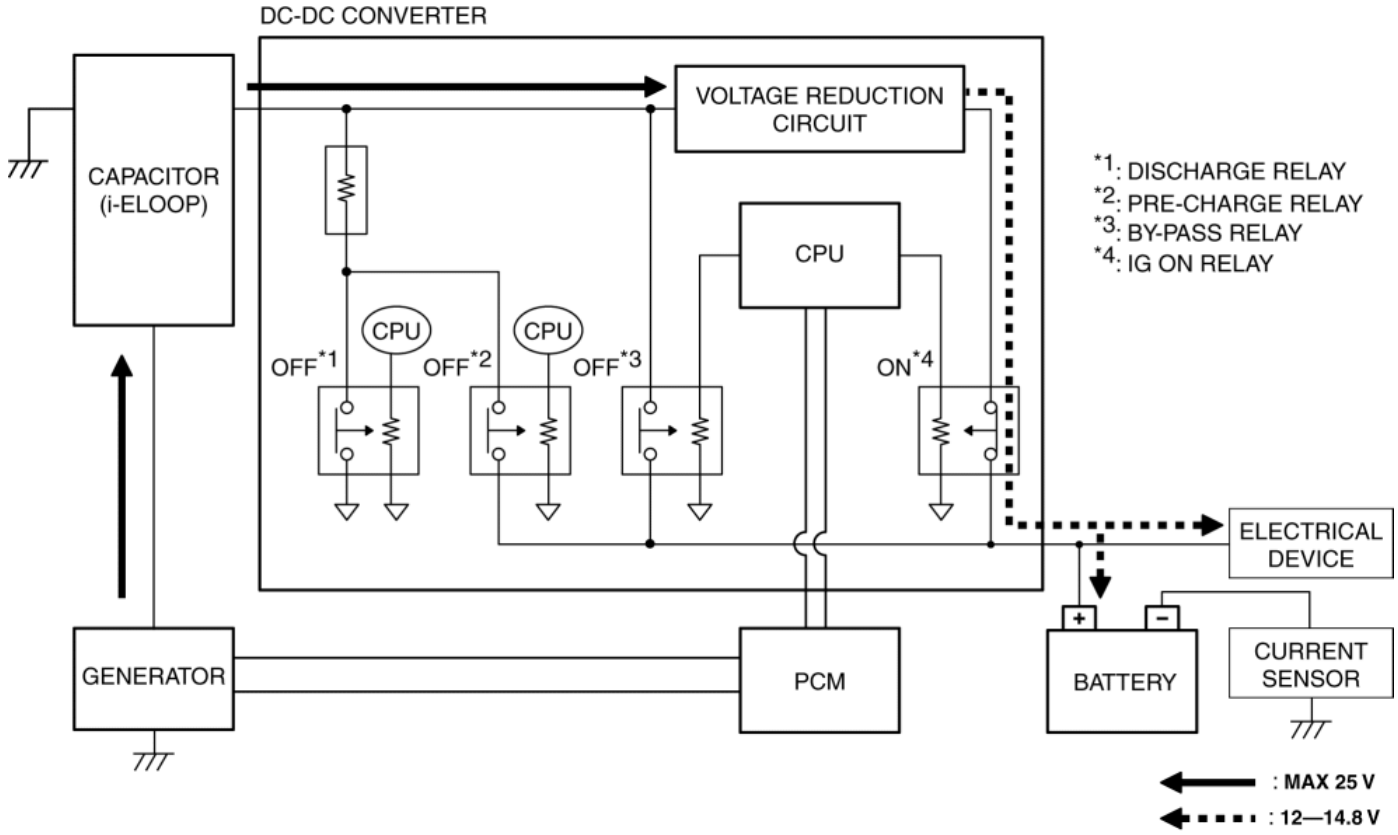

3. Capacitor (i-ELOOP) power supply mode

Purpose

- Electrical power is supplied to vehicle electrical devices from the Capacitor (i-ELOOP).

Operation condition

- Capacitor (i-ELOOP) voltage exceeds battery voltage.

Operation content

- The voltage stored in the Capacitor (i-ELOOP) is lowered by the DC-DC converter and electrical power is supplied to vehicle electrical devices.

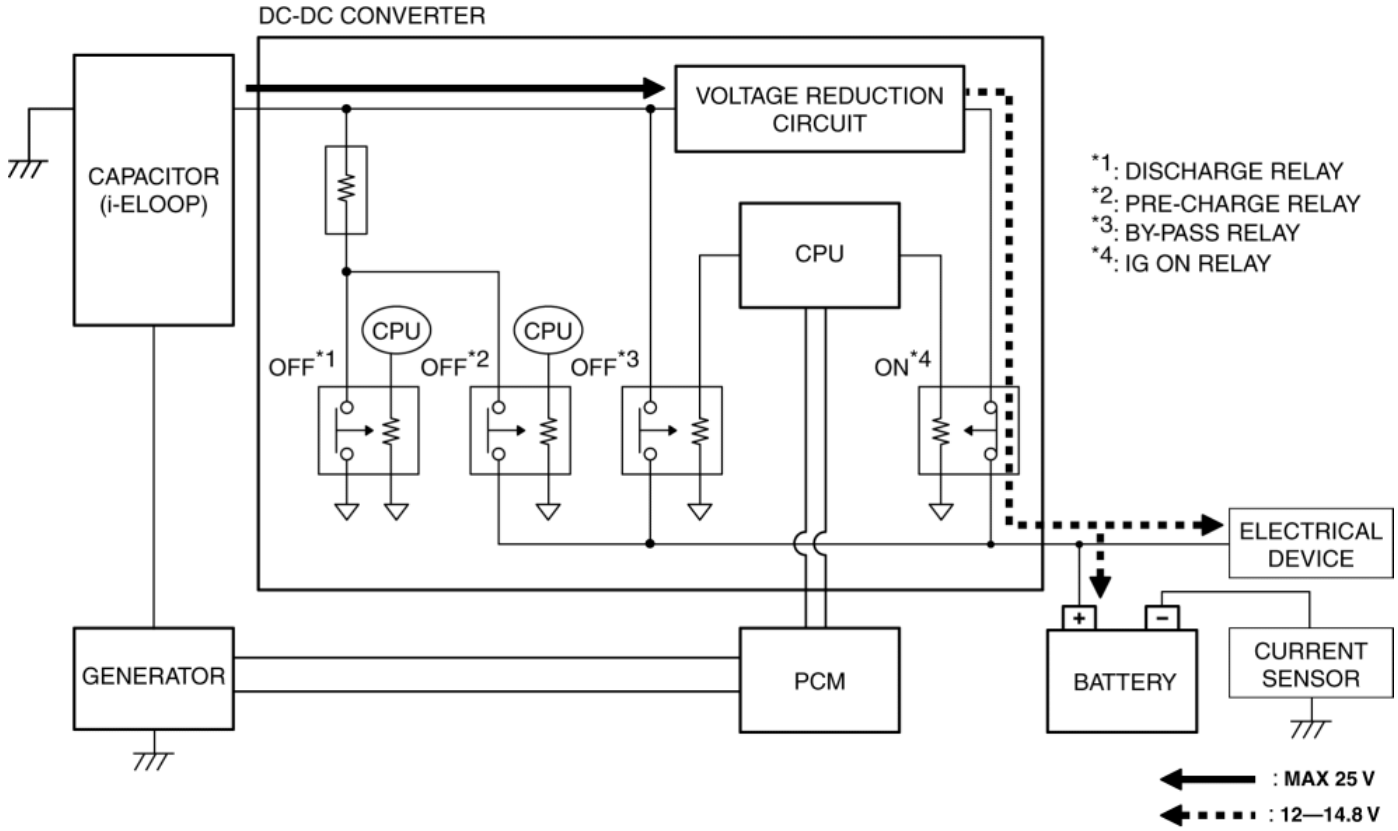

4. Battery power supply mode

Purpose

- Electrical power is supplied to vehicle electrical devices from the battery.

Operation condition

- Capacitor (i-ELOOP) voltage certain value or less, or during cranking.

Operation content

- The same as on contemporary vehicles, electrical power is supplied to vehicle electrical devices from the battery.

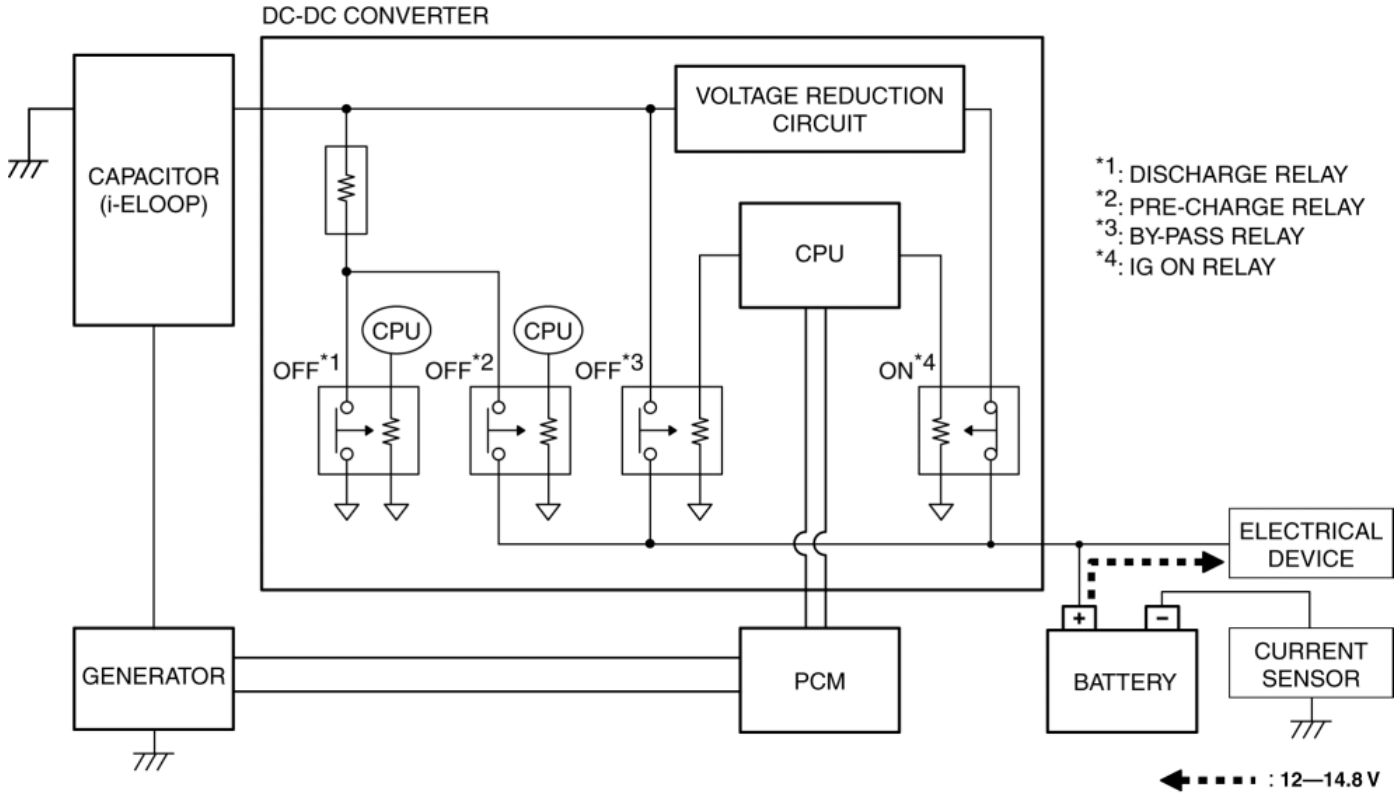

5. By-pass mode

NOTE:

- During by-pass mode, verification is not possible using the instrument cluster indication.
- If high-capacity audio or additional electrical devices are connected, the by-pass mode may operate frequently due to the increase in the vehicle electrical load.

Purpose

- If vehicle electrical load (consumption current) exceeds 50A or more, a bypass relay within the DC-DC converter is energized to supply power generated by the generator directly to the vehicle electrical devices.

Operation condition

- Bypass mode is operating due to the following conditions:
  - Vehicle electric load (current consumption) is 50 A or more
  - Voltage reduction circuit in DC-DC converter is malfunctioning
  - Ambient temperature is less than 0 °C {32 °F}
  - Battery charge condition is less than 65%

Operation content

- Turns the bypass relay in the DC-DC converter on and the power generated by the generator is also supplied directly to the vehicle's electrical devices.At this time, the amount of power generated by the generator is suppressed so that power can be supplied directly to the vehicle's electrical devices.

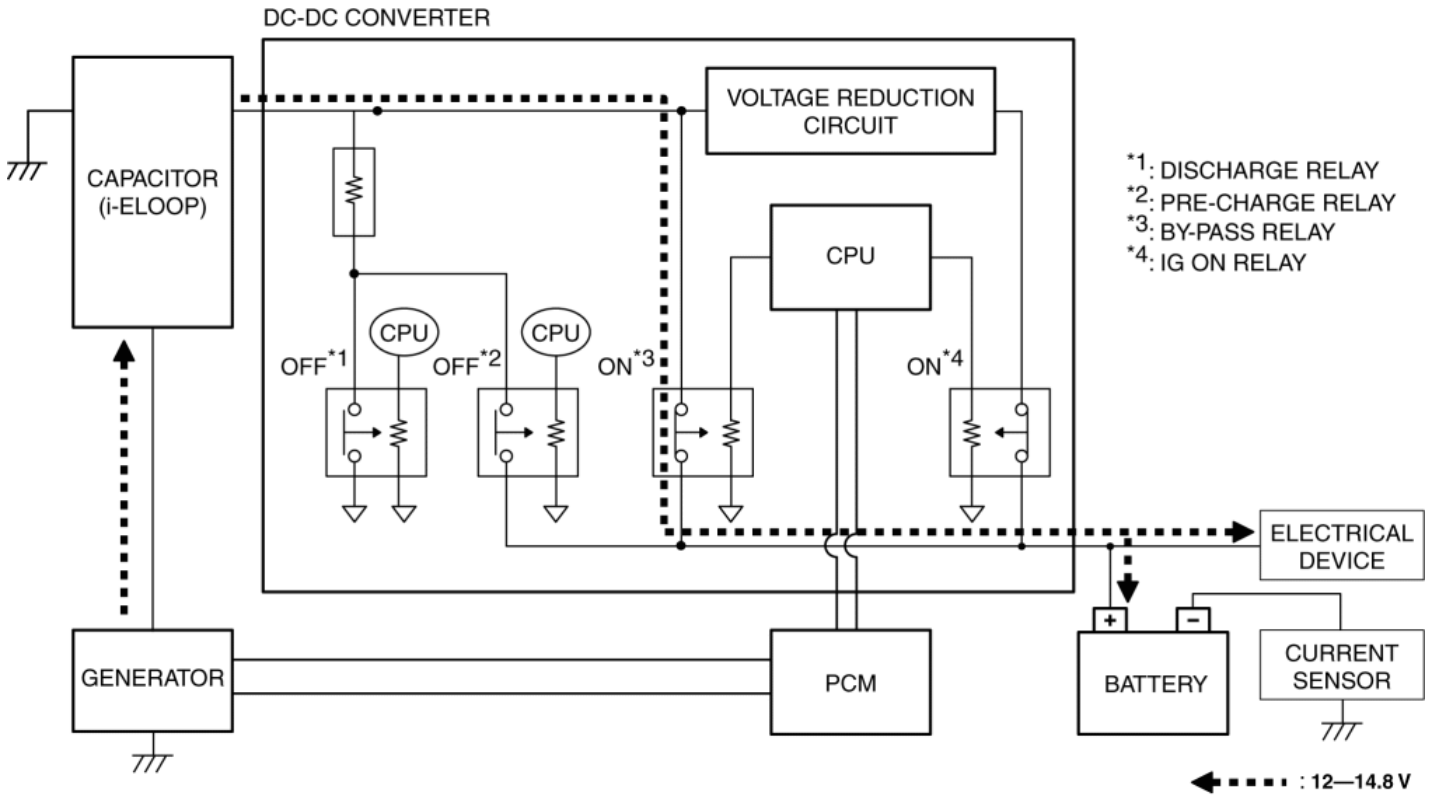

6. Pre-charge mode

NOTE:

- If the Capacitor (i-ELOOP) continues to self-discharge (vehicle left for long periods with engine not started)/excess back-up current consumption, the pre-charge mode may operate due to the decrease in Capacitor (i-ELOOP) voltage.
- If the vehicle is jump started, leave the jumper connected until the warning message is no longer displayed.
- If vehicle is driven while the warning is displayed, a warning sound will be heard and power steering assist will be limited.

Purpose

- The Capacitor (i-ELOOP) charges for the following two reasons.
  - If the Capacitor (i-ELOOP) voltage is low, the excitation current to the generator lowers and the generator may not be able to generate power.
  - To supply power to the battery from the Capacitor (i-ELOOP), a higher electrical load than the battery is required.

Operation condition

- If the Capacitor (i-ELOOP) voltage is a certain value or less (stops operation when Capacitor (i-ELOOP) voltage reaches certain value or more.)

Operation content

- Depending on each type of condition, the method for charging the Capacitor (i-ELOOP) varies.

Condition	Power supply method	Instrument cluster display
Negative battery cable is connected	Power supplied from battery to Capacitor (i-ELOOP)	Not applicable
Ignition switched ON (engine off) while engine is stopped	Power supplied from battery to Capacitor (i-ELOOP)	Not applicable
Engine is started	Power supplied from generator to Capacitor (i-ELOOP)	Applicable

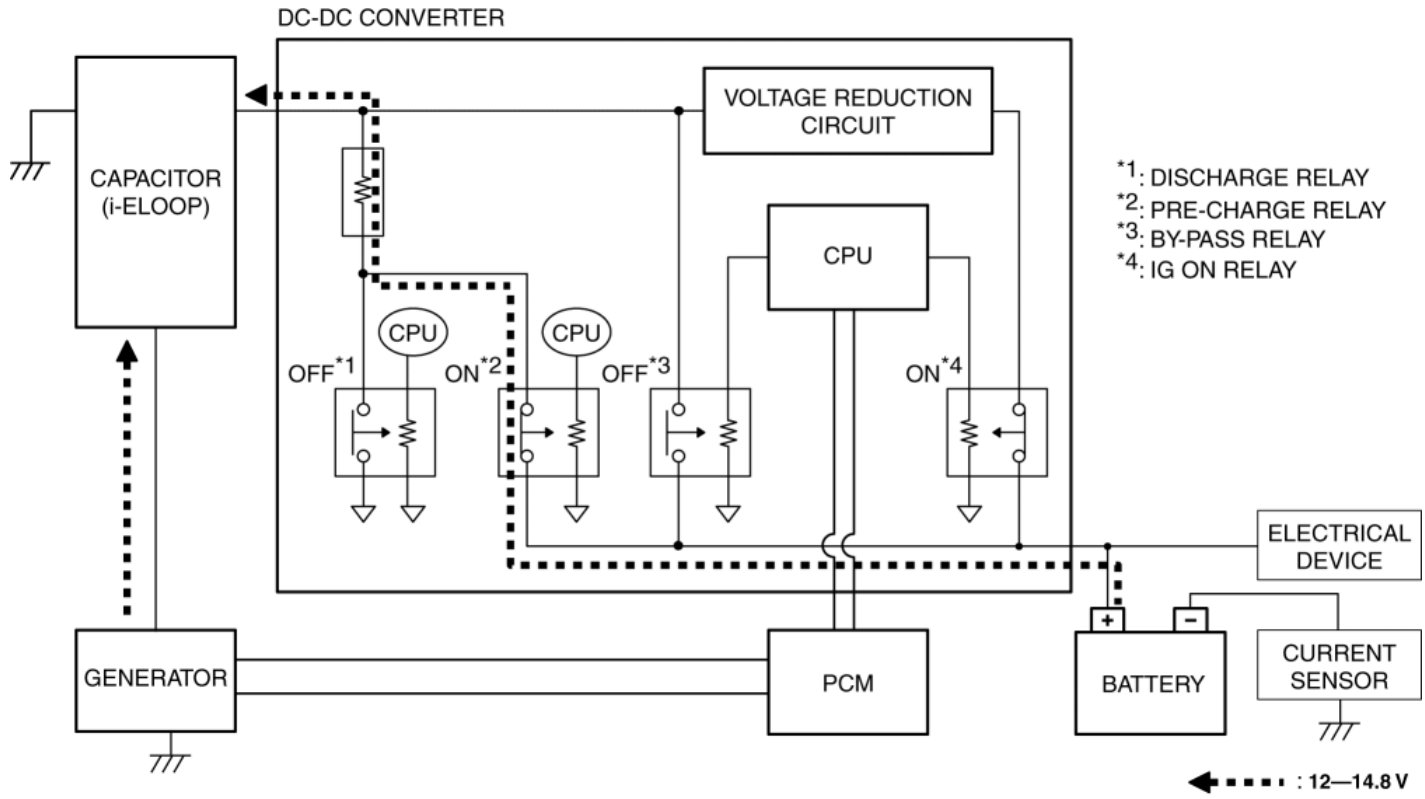

- The PCM sends an i-ELOOP indicator light flash request to the instrument cluster during capacitor pre-charge when the engine is started.
- If the vehicle is driven with the i-ELOOP indicator light flashing, the PCM sends an i-ELOOP warning alarm operation request to the instrument cluster.
- For details on the i-ELOOP warning alarm, refer to i-ELOOP warning alarm. (See **i-ELOOP WARNING ALARM [i-ELOOP]**.)

With center display

- The PCM sends a message display request signal to the CMU during capacitor (i-ELOOP) pre-charge when the engine is started.

7. Capacitor (i-ELOOP) power generation mode

Purpose

- Surplus power stored in the Capacitor (i-ELOOP) charges the battery.

Operation condition

- With ignition switched off and hood closed, Capacitor (i-ELOOP) voltage is certain voltage or more.

Operation content

- During normal operation, extra voltage from the capacitor is used to charge the battery. If the battery voltage is high and power cannot be supplied from the capacitor to the battery, capacitor voltage flows to the ground side.

Normal operation

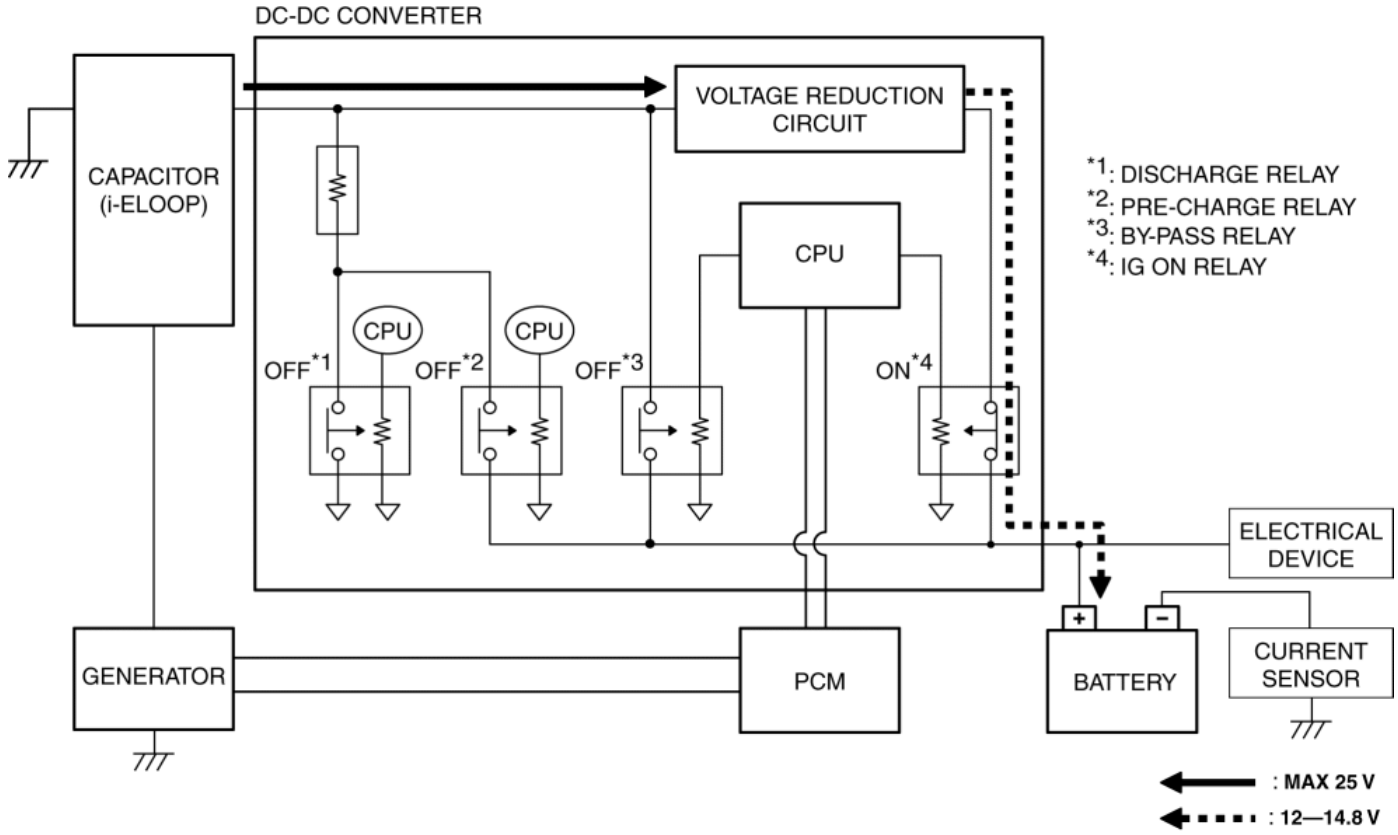

When power cannot be supplied to battery

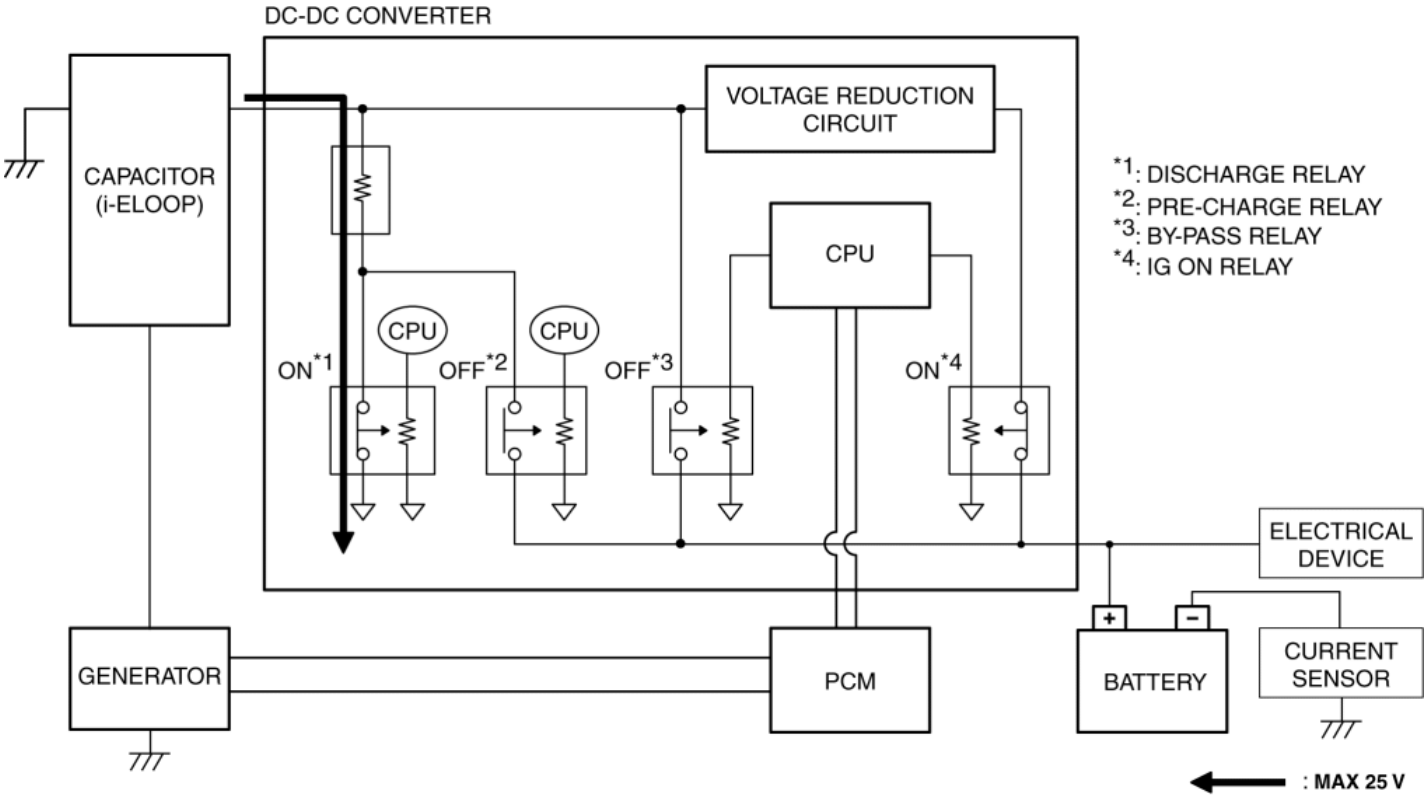

- The following are examples of the i-ELOOP operation in each mode.

RUN PATTERN	VEHICLE CONDITION				
	NORMAL	HIGH ELECTRICAL LOAD	LOW CAPACITOR (i-ELOOP) VOLTAGE	LOW BATTERY VOLTAGE	i-ELOOP MALFUNCTION
IGNITION SWITCH: OFF	CAPACITOR (i-ELOOP) ⑦ POWER GENERATION MODE	—	⑥ PRE-CHARGE MODE	CAPACITOR (i-ELOOP) ⑦ POWER GENERATION MODE	④ BATTERY POWER SUPPLY MODE
IGNITION SWITCH: ACC	④ BATTERY POWER SUPPLY MODE			④ BATTERY POWER SUPPLY MODE	
IGNITION SWITCH: ON (ENGINE OFF)					
CRANKING	④ BATTERY POWER SUPPLY MODE				
ENGINE ON (IDLE)	③ CAPACITOR (i-ELOOP) POWER SUPPLY MODE	⑤ BY-PASS MODE	⑥ PRE-CHARGE MODE	⑤ BY-PASS MODE	
ENGINE ON (ACCELERATION/CRUISE)			② CONVENTIONAL POWER GENERATION MODE (NO REGENERATIVE BRAKING)		
ENGINE ON (DECELERATION)	① REGENERATIVE BRAKING MODE		① REGENERATIVE BRAKING MODE		

i-ELOOP operation status

Without center display

- The i-ELOOP operation status can be determined by the illumination/flashing of the i-ELOOP indicator light.
- For details on the i-ELOOP indicator light, refer to i-ELOOP indicator light. (See **i-ELOOP INDICATOR LIGHT [i-ELOOP]**.)

With center display

- The i-ELOOP operation status can be determined using the center display.
- For details on the center display, refer to center display. (See **CENTER DISPLAY [WITH CENTER DISPLAY]**.)

Next >

2014 - Mazda3 - I-ELOOP

i-ELOOP WARNING ALARM [i-ELOOP]

Purpose

- The i-ELOOP warning alarm is a function which warns the driver if the vehicle is driven before pre-charging is completed and while “i-ELOOP charging” is displayed in the LCD.

Function

- The i-ELOOP warning alarm sound pattern is as shown in the figure.

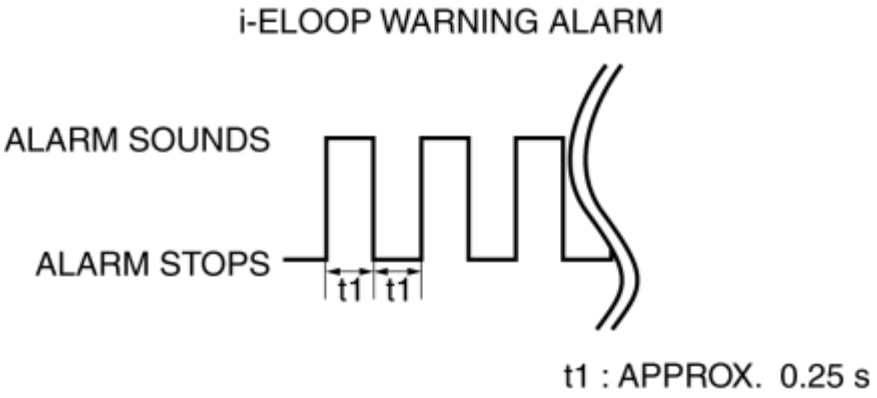

Construction

- The i-ELOOP warning alarm sounds using the buzzer built into the instrument cluster.

Operation

1. The instrument cluster receives (1) the i-ELOOP warning alarm request signal from the PCM.

2. The instrument cluster microcomputer turns the transistor on (2) based on the i-ELOOP warning alarm request signal.

3. When the transistor turns on, a ground circuit with the alarm is established and the alarm sounds (3).

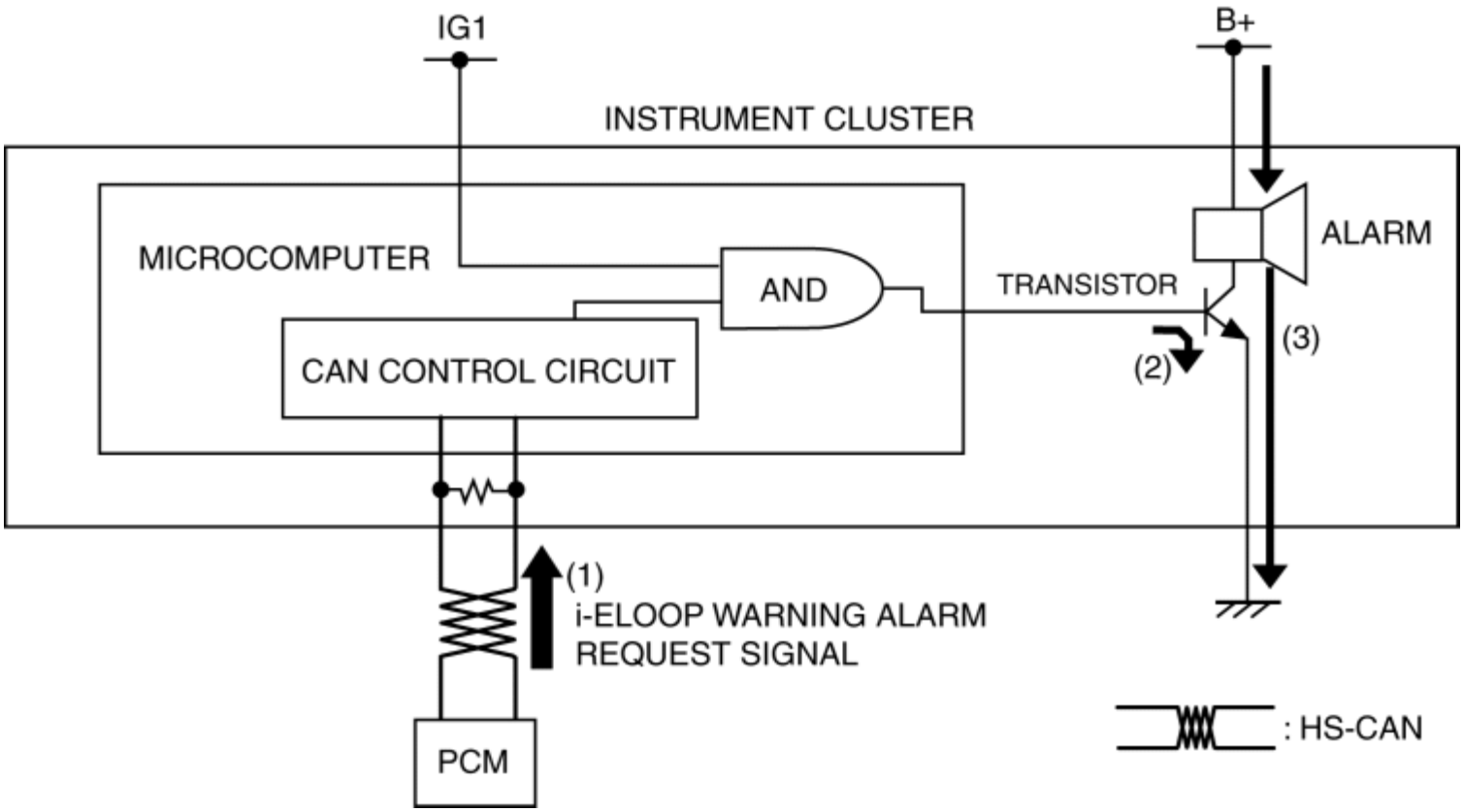

Fail-safe

- Function not equipped.

2014 - Mazda3 - I-ELOOP

i-ELOOP INDICATOR LIGHT [i-ELOOP]

Purpose, Function

- The i-ELOOP indicator light turns on/flashes according to the i-ELOOP control status to notify the driver of the i-ELOOP control status.

Construction

- The i-ELOOP indicator light is built into the instrument cluster. (See **INSTRUMENT CLUSTER**.)

Operation

- The i-ELOOP indicator light illumination conditions are as follows:

  i-ELOOP indicator light illumination conditions

  - i-ELOOP control is in regenerative braking mode

  i-ELOOP indicator light flashing conditions

  - i-ELOOP control is in pre-charge mode
- The PCM sends a i-ELOOP indicator light illumination request to the instrument cluster via CAN communication.

2014 - Mazda3 - I-ELOOP

GENERATOR [i-ELOOP]

Purpose, Function

- With the adoption of i-ELOOP, a variable voltage type generator has been adopted which generates 12 to 25 V.
- 12 to 25 V is generated according to the vehicle conditions to charge the capacitor (i-ELOOP).

Construction

- The generator is installed on the engine left front side.
- The generator consists of the following parts:

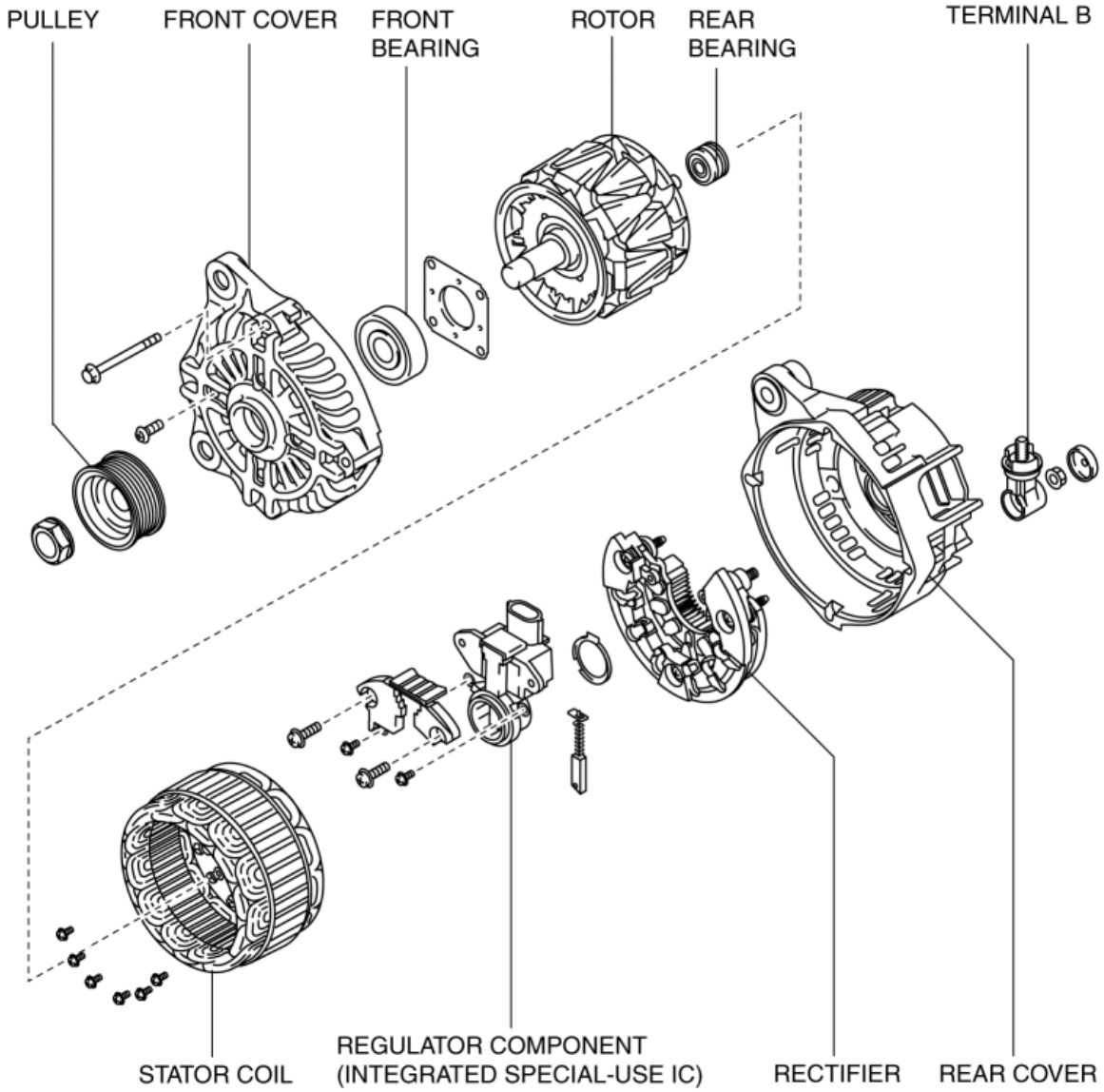

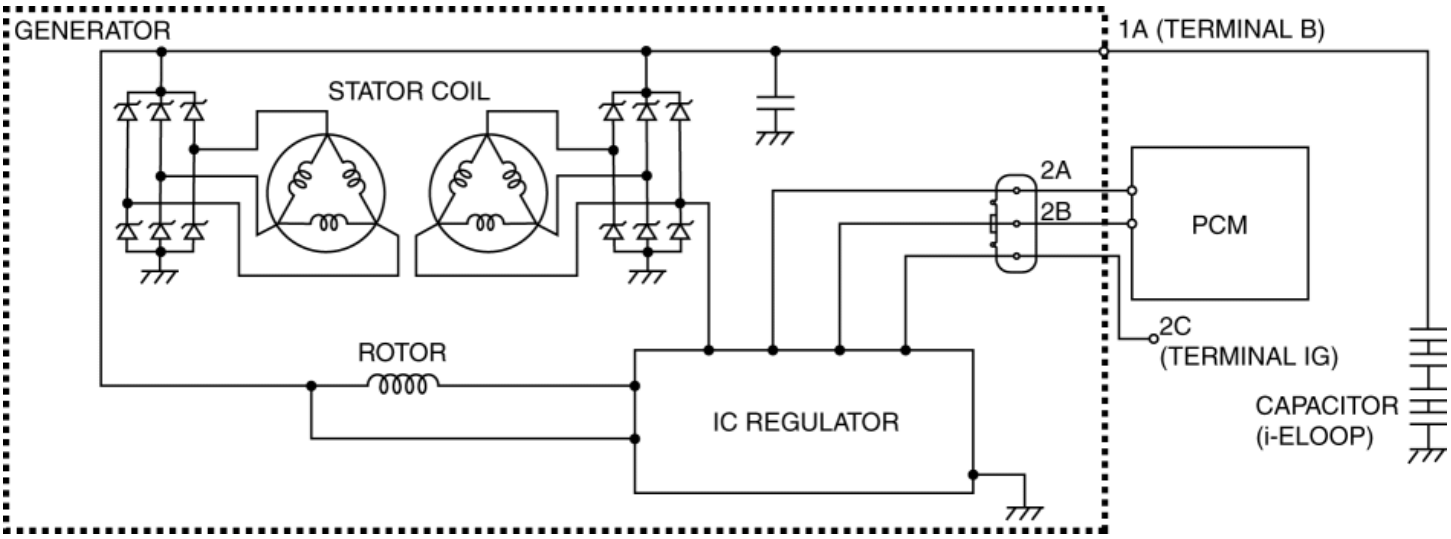

- To handle a maximum of 25 V, the voltage resistance performance of the diode has been improved.
- With the adoption of i-ELOOP, an IC regulator with the following protection functions has been adopted.

  Excess temperature protection function

  - If the IC regulator reaches the specified temperature, the generator output current is restricted to suppress a rise in the temperature of the generator.

  Excess voltage protection function

  - If an excess excitation current control signal from the PCM is input, the generator output voltage is restricted to suppress application of excess voltage to the capacitor (i-ELOOP).

  Excess-current protection function

  - If the excitation current reaches the specified value, the excitation current is interrupted to restrict power generation by the generator.
- The initial excitation current to the rotors is supplied from the capacitor (i-ELOOP). When excitation current is supplied from the capacitor (i-ELOOP) and the generator begins generating electricity, the excitation current from the capacitor (i-ELOOP) is interrupted. After the generator begins generating electricity, the power generated by the generator is used for excitation current.

Fail-safe

DTC	Fail-safe
P2502:00	• Generator switch to default mode requested (14.5 V constant voltage power generation).
P2503:00	• Generator switch to default mode requested (14.5 V constant voltage power generation).
P2504:00	• Generator switch to default mode requested (14.5 V constant voltage power generation).

2014 - Mazda3 - I-ELOOP

CAPACITOR (i-ELOOP) [i-ELOOP]

Purpose, Function

- The capacitor (i-ELOOP) is a storage battery which can be charged with/discharge large amounts of current instantaneously. In conjunction with the variable voltage type generator which can generate a maximum of 25 V, the capacitor (i-ELOOP) can also be charged efficiently with the generated power in a short period of time.

Construction

- The capacitor (i-ELOOP) is installed directly below the front combination light (LH).
- The capacitor (i-ELOOP) is equipped with service plug. A short circuit can be prevented by pulling out the service plug because 25 V related power is interrupted.
- A thermistor type temperature sensor is equipped inside the capacitor (i-ELOOP). The temperature sensor detects the temperature of the capacitor (i-ELOOP) and inputs the signal to the DC-DC converter.
- A discharge box is equipped in the capacitor (i-ELOOP). The discharge box serves the purpose of assuring safety when the capacitor (i-ELOOP) is discarded. By forcing the capacitor (i-ELOOP) to discharge using the resistor, the capacitor (i-ELOOP) will not ignite even when pressed.

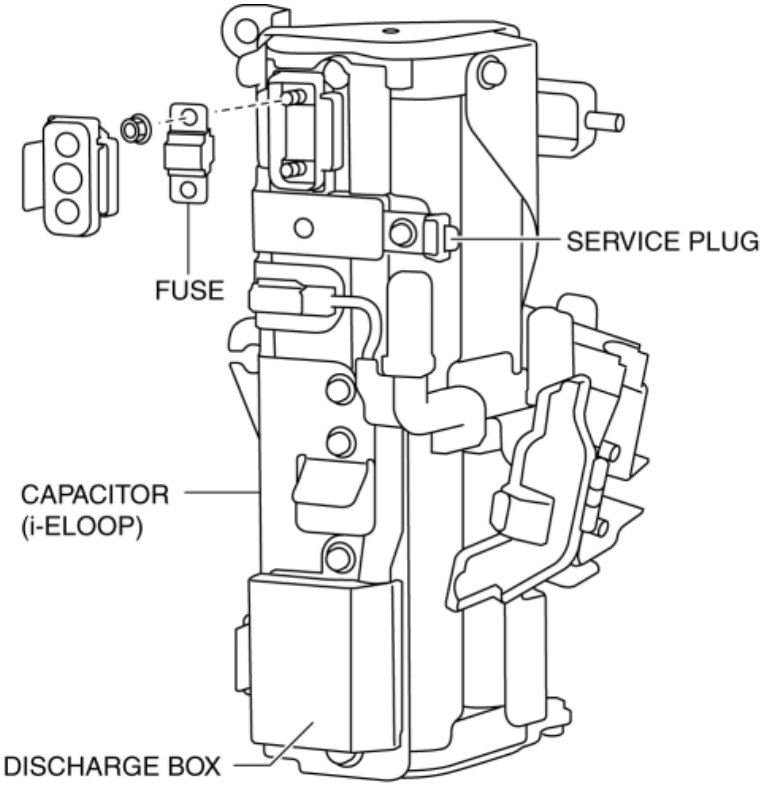

- The capacitor (i-ELOOP) has the following input/outputs.

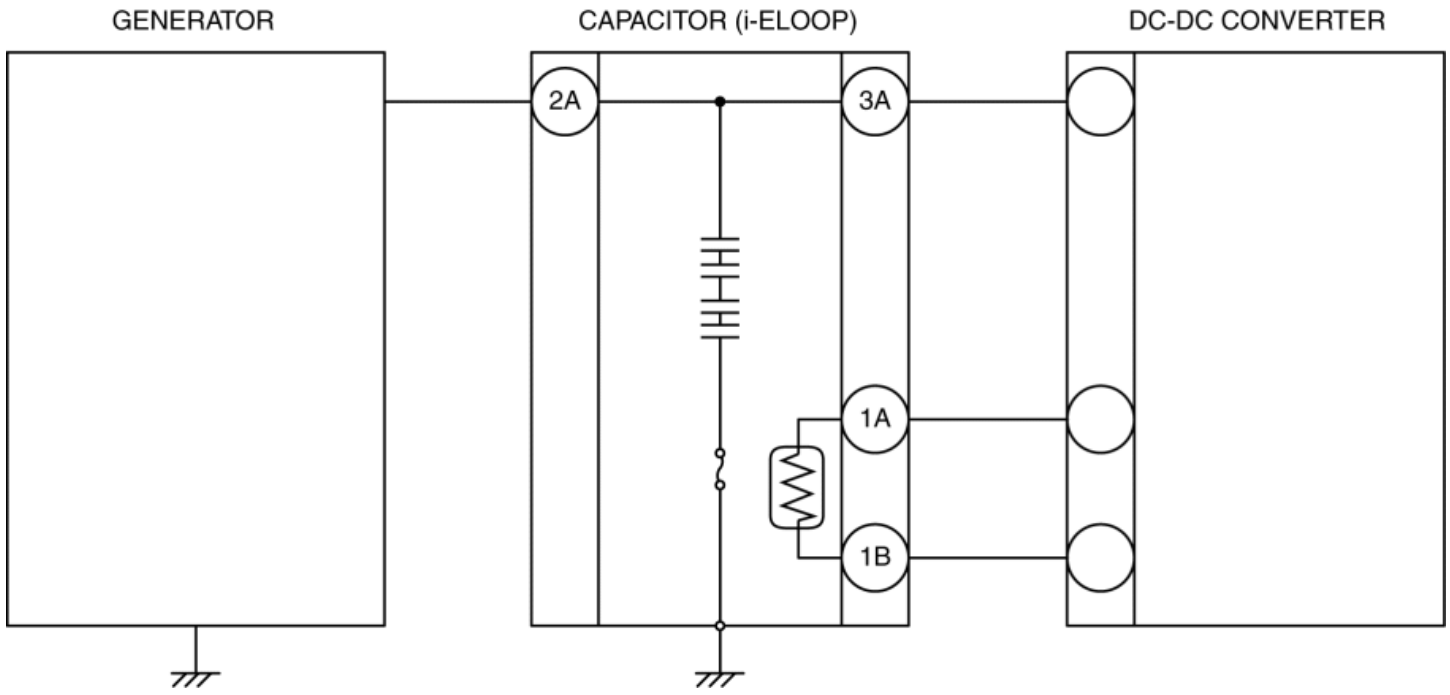

Terminal signal	Input/output
2A	Power input from generator.
3A	Power output to DC-DC converter.
1A	Temperature sensor signal output to DC-DC converter.
1B	GND

- Although the battery generates chemical reactions to charge/discharge electricity, the capacitor (i-ELOOP) does not; instead, it charges/discharges physically. As a result, the capacitor (i-ELOOP) is able to charge/discharge large amounts of electricity more rapidly than the battery, and deterioration of the electrodes is gradual with a long service life.

  Charging

  - Electrical charge adheres to surface of electrodes.

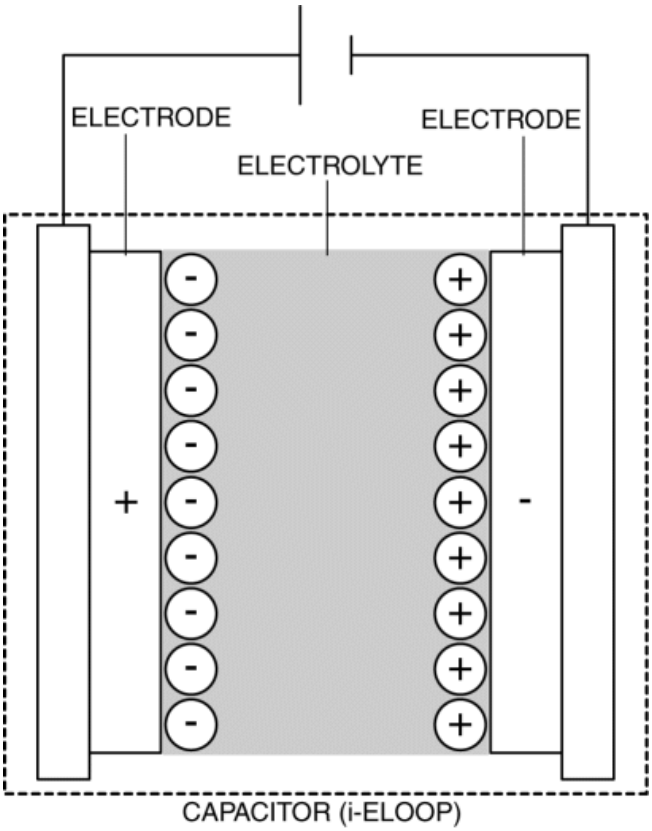

Discharging

- Electrical charge separates and moves from surface of electrodes.

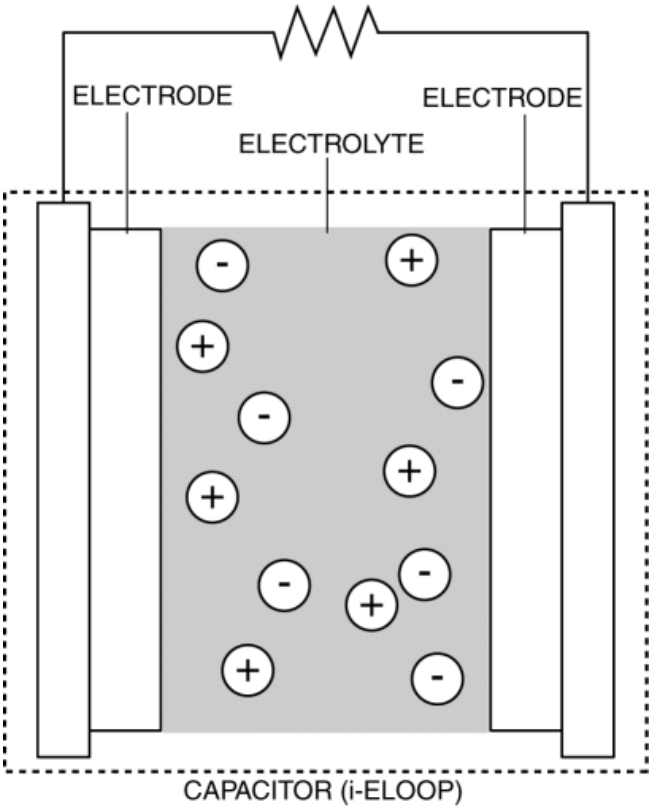

Fail-safe

DTC	Fail-safe
P1794:00	• Inhibits the i-ELOOP function.

< Previous

2014 - Mazda3 - I-ELOOP

DC-DC CONVERTER [i-ELOOP]

Purpose, Function

- The DC-DC converter supplies the electricity supplied from the capacitor (i-ELOOP) to the vehicle's electrical devices.
- If the electricity supplied from the capacitor (i-ELOOP) exceeds the rated voltage of an electrical device, the DC-DC converter lowers the voltage to 12 V and then supplies the electricity to the electrical devices.

Construction

- The DC-DC converter is installed directly under the front seat (LH).
- The DC-DC converter has the following inputs/outputs.

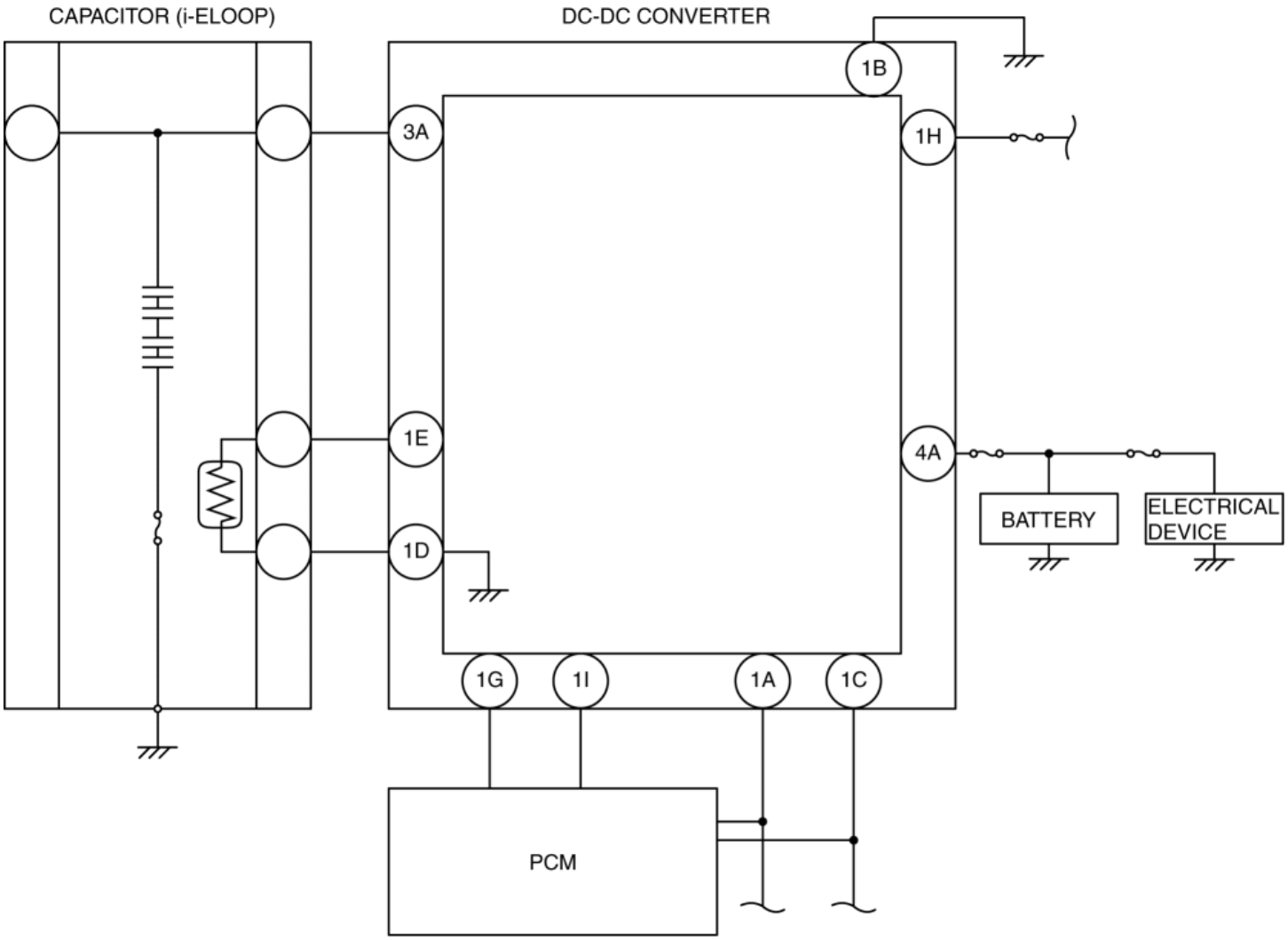

Terminal signal	Input/output
3A	Power is input from capacitor (i-ELOOP). Power is output to capacitor (i-ELOOP). (Pre-charge)

4A	Power is output to battery and electrical device. Power is input from battery. (Pre-charge)
1A	CAN communication
1B	GND
1C	CAN communication
1D	GND
1E	Temperature sensor signal input from capacitor (i-ELOOP).
1G	The by-pass relay on signal from the PCM is input.
1H	Battery power via IG1 relay is input.
1I	The by-pass relay on signal from the PCM is input.

- The DC-DC converter switches the operation content according to the vehicle conditions. Refer to “i-ELOOP” for details. (See **i-ELOOP [i-ELOOP]**.)

Fail-safe

DTC	Fail-safe
P0A12:00	• Depending on the type of malfunction, any of the following controls may be implemented. ▪ Transition to i-ELOOP bypass mode. ▪ i-ELOOP bypass mode inhibited.
P0A94:00	• The following fail-safe differ depending on the type of malfunction ▪ Transition to i-ELOOP bypass mode. ▪ i-ELOOP bypass mode inhibited.

< Previous